EA11-003

CHRYSLER

12-9-2011

Enclosure 10

Dealer-Field Communication

Quick Reference Guides

RAM

RAM TRUCKS 1500/2500/3500

USER GUIDE





RAM

RAM TRUCKS 1500/2500/3500

The driver's primary responsibility is the safe operation of the vehicle. Driving while distracted can result in loss of vehicle control, resulting in an accident and personal injury. Chrysler Group LLC strongly recommends that the driver use extreme caution when using any device or feature that may take their attention off the road. Use of any electrical devices such as cell phones, computers, portable radios, vehicle navigation or other devices by the driver while the vehicle is moving is dangerous and could lead to a serious accident. Texting while driving is also dangerous and should never be done while the vehicle is moving. If you find yourself unable to devote your full attention to vehicle operation, pull off the road to a safe location and stop your vehicle. Some States or Provinces prohibit the use of cellular telephones or texting while driving. It is always the driver's responsibility to comply with all local laws.

IMPORTANT: This User Guide is intended to familiarize you with the important features of your vehicle. The DVD enclosed contains your Owner's Manual, Navigation/Media Center Manuals, Warranty Booklets, Tire Warranty and 24-Hour Towing Assistance (new vehicles purchased in the U.S.) or Roadside Assistance (new vehicles purchased in Canada) in electronic format. We hope you find it useful. If you are the first registered owner of your vehicle, you may obtain a printed copy of the Owner's Manual, Navigation/Media Center Manuals or Warranty Booklet by calling 1-866-726-4636 (U.S.) or 1-800-387-1143 (Canada) or by contacting your dealer. Replacement DVD kits may be purchased by visiting www.techauthority.com. Copyright 2010 Chrysler Group LLC

TABLE OF CONTENTS

INTRODUCTION/WELCOME
Welcome From Chrysler Group LLC . . . 2

CONTROLS AT A GLANCE
Driver Cockpit 4
Instrument Cluster 6

GETTING STARTED
Key FOB 8
Remote Start 9
Theft Alarm 9
Seat Belt 9
Supplemental Restraint System (SRS) — Airbags 10
Child Restraints 11
Front Seats 14
Heated/Ventilated Seats 16
Heated Steering Wheel 17
Tilt Steering Column / Adjustable Pedals 18
Diesel Engine Starting Procedures . . 19

OPERATING YOUR VEHICLE
Turn Signals/Wiper/Washer/High Beams Lever 20
Headlight Switch 21
Speed Control Lever 22
Electronic Range Select (ERS) Operation 23
Manual Climate Controls 24
Automatic Temperature Control (ATC) . . 24
Parksense® Rear Park Assist 25
Parkview® Rear Back-Up Camera . . . 25
Diesel Exhaust Brake (Engine Braking) 26
Idle-Up Feature (Diesel/Automatic Transmission Only) 26
Tire Pressure Monitor System (TPMS) – 2500 Models Only 27
Power Sliding Rear Window 27
Power Sunroof 28
Wind Buffeting 29

ELECTRONICS
Your Vehicle's Sound System 30
Non-Touch-Screen Radios 32
Touch-Screen Radios 34
Steering Wheel Audio Controls 40
Uconnect™ Phone 41
Uconnect™ Voice Command 43
iPod® Control 44
Video Entertainment System (VES)™ . . 46
Electronic Vehicle Information Center (EVIC) 48
Programmable Features 48
Universal Garage Door Opener (HomeLink®) 50
Power Inverter 52
Power Outlet 53

OFF-ROAD CAPABILITIES
Four-Wheel Drive Operation 54

UTILITY
Easy-Off Tailgate 56
Rambox® 57
Trailer Towing Weights (Maximum Trailer Weight Ratings) 60
Integrated Trailer Brake Module 60
Recreational Towing (Behind Motorhome, Etc.) 61

WHAT TO DO IN EMERGENCIES
24-Hour Towing Assistance - U.S. Only 63
Instrument Cluster Warning Lights . . 63
If Your Engine Overheats 67
Jacking And Tire Changing 68
Jump-Starting 75
Emergency Tow Hooks 77
Shift Lever Override 78
Towing A Disabled Vehicle 79
Freeing A Stuck Vehicle 80
Event Data Recorder (EDR) 81

MAINTAINING YOUR VEHICLE
Opening The Hood 82
Engine Compartment 83
Fuel Filter/Water Separator — Diesel Only 87
Exhaust Regeneration — Diesel Only . . 88
Fluids And Capacities 89
Maintenance Chart 92
Fuses 97
Tire Pressures 99
Wheel And Wheel Trim Care 100
Exterior Bulbs 100

CONSUMER ASSISTANCE
Chrysler Group LLC Customer Center . .101
Chrysler Canada Inc. Customer Center 101
Assistance For The Hearing Impaired . .101
Publications Ordering 101
Reporting Safety Defects In The 50 United States And Washington, D.C. . .102

MOPAR ACCESSORIES
MOPAR® Accessories 103

INDEX 104

INTRODUCTION/WELCOME

WELCOME FROM CHRYSLER GROUP LLC

Congratulations on selecting your new Chrysler Group LLC vehicle. Be assured that it represents precision workmanship, distinctive styling, and high quality - all essentials that are traditional to our vehicles.

Your new Chrysler Group LLC vehicle has characteristics to enhance the driver's control under some driving conditions. These are to assist the driver and are never a substitute for attentive driving. They can never take the driver's place. Always drive carefully.

Your new vehicle has many features for the comfort and convenience of you and your passengers. Some of these should not be used when driving because they take your eyes from the road or your attention from driving. Never text while driving or take your eyes more than momentarily off the road.

This guide illustrates and describes the operation of features and equipment that are either standard or optional on this vehicle. This guide may also include a description of features and equipment that are no longer available or were not ordered on this vehicle. Please disregard any features and equipment described in this guide that are not available on this vehicle. Chrysler Group LLC reserves the right to make changes in design and specifications and/or make additions to or improvements to its products without imposing any obligation upon itself to install them on products previously manufactured.

The User Guide has been prepared to help you quickly become acquainted with the important features of your vehicle. It contains most everything you will need to operate and maintain the vehicle, including emergency information.

The DVD includes a computer application containing detailed owner's information which can be viewed on a personal computer or MAC computer. The multimedia DVD also includes videos which can be played on any standard DVD player (including the Media Center Touch-Screen Radios). Additional DVD operational information is located on the back of the DVD sleeve.

For complete owner information, refer to your Owner's Manual on the DVD in the owner's kit provided at the time of new vehicle purchase. For your convenience, the information contained on the DVD may also be printed and saved for future reference.

Chrysler Group LLC is committed to protecting our environment and natural resources. By converting from paper to electronic delivery for the majority of the user information for your vehicle, together we greatly reduce the demand for tree-based products and lessen the stress on our environment.

Vehicles Sold In Canada

With respect to any vehicles sold in Canada, the name Chrysler Group LLC shall be deemed to be deleted and the name Chrysler Canada Inc. used in substitution therefore.

WARNING!

- Pedals that cannot move freely can cause loss of vehicle control and increase the risk of serious personal injury.
- Always make sure that objects cannot fall into the driver foot well while the vehicle is moving. Objects can become trapped under the brake pedal and accelerator pedal causing a loss of vehicle control.
- Failure to properly follow floor mat installation or mounting can cause interference with the brake pedal and accelerator pedal operation causing loss of control of the vehicle.
- Never use the 'PARK' position as a substitute for the parking brake. Always apply the parking brake fully when parked to guard against vehicle movement and possible injury or damage.
- Refer to your Owner's Manual on the DVD for further details.

CHRYSLER, DODGE, JEEP, ATF+4, MOPAR and Uconnect are registered trademarks of Chrysler Group LLC.

COPYRIGHT ©2010 CHRYSLER GROUP LLC

CONTROLS AT A GLANCE

DRIVER COCKPIT



CONTROLS AT A GLANCE



CONTROLS AT A GLANCE

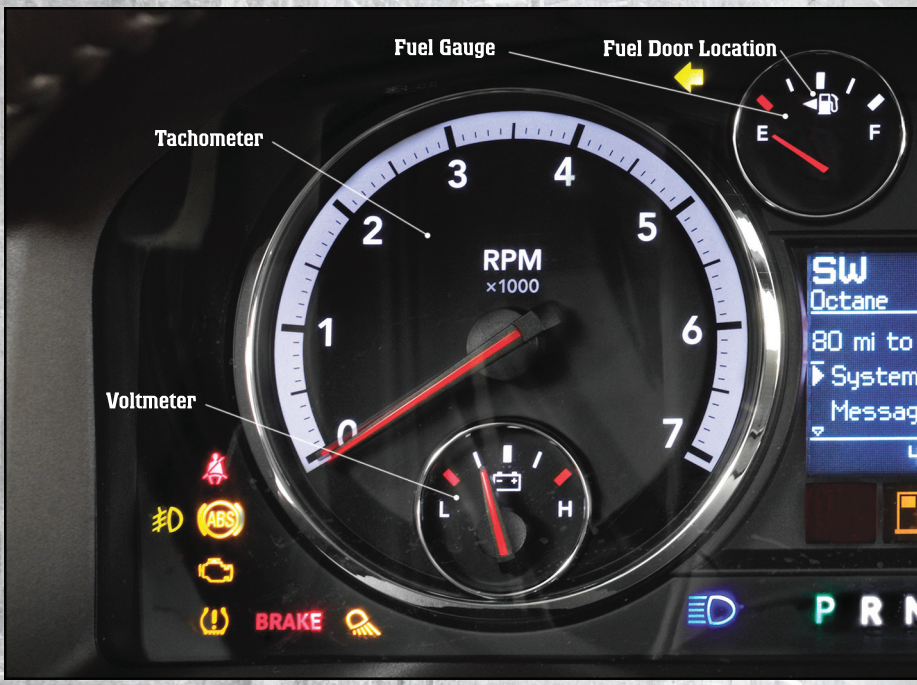

INSTRUMENT CLUSTER

Warning Lights

- Low Fuel Warning Light
- Charging System Light**
- Oil Pressure Warning Light**
- Anti-Lock Brake (ABS) Light**
- Airbag Warning Light**
- Electronic Throttle Control (ETC) Light
- Tire Pressure Monitoring System (TPMS) Light
- Engine Temperature Warning Light
- Transmission Temperature Warning Light
- Seat Belt Reminder Light

BRAKE - Brake Warning Light**

- Malfunction Indicator Light (MIL)**
- Electronic Stability Control (ESC) Activation/Malfunction Indicator Light**

SERV 4WD - SERV (Service) 4WD Indicator Light

(See page 63 for more information.)



Indicators

- - Turn Signal Indicators
- - High Beam Indicator
- - Front Fog Light Indicator
- - Vehicle Security Indicator*
- TOW/HAUL - TOW/HAUL Indicator
- 4 LOW - Four-Wheel Drive LOW Mode Indicator
- 4WD - Four-Wheel Drive and 4LOCK Mode Indicator
- 4WD AUTO - 4WD Auto Indicator
- - Electronic Stability Control (ESC) Off Indicator
- - Cargo Lamp On Indicator
- - Exhaust Brake Indicator (Diesel Only)
- - Door Ajar Indicator
- - Electronic Speed Control On Indicator
- - Loose Gas Cap Indicator

Odometer Messages

ECO - Fuel Saver Indicator Off
ECO-ON - Fuel Saver Indicator On
Lo tirE - Low Tire Pressure
LoWASH - Low Washer Fluid
* If equipped
** Bulb Check with Key On

noFUSE* - Fuse Fault
CHAngE OIL* - Change Engine Oil
Water in Fuel - (Diesel Only)
Wait to Start - (Diesel Only)

GETTING STARTED

KEY FOB



Locking And Unlocking The Doors

- Press the LOCK button once to lock all the doors. Press the UNLOCK button once to unlock the driver's door only and twice within five seconds to unlock all the doors.
- All doors can be programmed to unlock on the first press of the UNLOCK button. Refer to Programmable Features in this guide.

Panic Alarm

- Press the PANIC button once to turn the panic alarm on.
- Wait approximately three seconds and press the button a second time to turn the panic alarm off.

Express Window Feature

- To remotely lower both front door windows at the same time, press and release the UNLOCK button and then immediately press and hold the UNLOCK button until the windows lower to the level desired or until they lower completely.

Emergency Key

- Should the battery in the vehicle or the Key Fob transmitter go dead, there is an emergency key located in the Key Fob. To remove the emergency key, slide the button at the top of the Key Fob sideways with your thumb and then pull the key out with your other hand.

WARNING!

- Leaving unattended children in a vehicle is dangerous for a number of reasons. A child or others could be severely injured or killed. Children should be warned not to touch the parking brake, brake pedal, or the shift lever. Do not leave the Key Fob inside the vehicle or in the ignition. A child could start the vehicle, operate power windows, other controls, or move the vehicle.
- Do not leave children or animals inside parked vehicles in hot weather. Interior heat build-up may cause them to be severely injured or killed.

REMOTE START

- Press the REMOTE START button (x2) twice within five seconds. Pressing the REMOTE START button a third time shuts the engine off.
- In order to allow proper engine pre-heating (diesel engine only), depending on engine temperature, there may be a delay of up to 30 seconds before the engine starts.
- To drive the vehicle, press the UNLOCK button, insert the Key Fob in the ignition and turn to the ON/RUN position.
- With remote start, the engine will only run for 15 minutes (timeout) unless the ignition Key Fob is placed in the ON/RUN position.
- The vehicle must be started with the Key Fob after two consecutive timeouts.

WARNING!

- Do not start or run an engine in a closed garage or confined area. Exhaust gas contains Carbon Monoxide (CO) which is odorless and colorless. Carbon Monoxide is poisonous and can cause you or others to be severely injured or killed when inhaled.
- Keep Key Fob transmitters away from children. Operation of the Remote Start System, windows, door locks or other controls could cause you and others to be severely injured or killed.

THEFT ALARM

To Arm

- Press the Key Fob LOCK button or the power door lock switch while the door is open.

To Disarm

- Press the Key Fob UNLOCK button and turn the ignition to the ON/RUN position.

SEAT BELT

- Be sure everyone in your vehicle is in a seat and using a seat belt properly.
- Position the lap belt across your thighs, below your abdomen. To remove slack in the lap portion, pull up a bit on the shoulder belt. To loosen the lap belt if it is too tight, tilt the latch plate and pull on the lap belt. A snug belt reduces the risk of sliding under the belt in a collision.
- Position the shoulder belt on your chest so that it is comfortable and not resting on your neck. The retractor will withdraw any slack in the belt.
- A shoulder belt placed behind you will not protect you from injury during a collision. You are more likely to hit your head in a collision if you do not wear your shoulder belt. The lap and shoulder belt are meant to be used together.

- A belt that is too loose will not protect you properly. In a sudden stop you could move too far forward, increasing the possibility of injury. Wear your seat belt snugly.
- A frayed or torn belt could rip apart in a collision and leave you with no protection. Inspect the belt system periodically, checking for cuts, frays, or loose parts. Damaged parts must be replaced immediately. Do not disassemble or modify the system. Seat belt assemblies must be replaced after a collision if they have been damaged (bent retractor, torn webbing, etc.).
- The seat belts for both front seating positions may be equipped with pretensioning devices that are designed to remove slack from the seat belt in the event of a collision.
- A deployed pretensioner or a deployed airbag must be replaced immediately.

WARNING!

In a collision, you and your passengers can suffer much greater injuries if you are not buckled up properly. You can strike the interior of your vehicle or other passengers, or you can be thrown out of the vehicle. Always be sure you and others in your vehicle are buckled up properly.

SUPPLEMENTAL RESTRAINT SYSTEM (SRS) — AIRBAGS

- This vehicle has Advanced Front Airbags for both the driver and right front passenger as a supplement to the seat belt restraint system. The Advanced Front Airbags will not deploy in every type of collision.
- Advanced Front Airbags are designed to provide additional protection by supplementing the seat belts in certain frontal collisions depending on the severity and type of collision. Advanced Front Airbags are not expected to reduce the risk of injury in rear, side, or rollover collisions.
- This vehicle may be equipped with Supplemental Side Airbag Inflatable Curtains to protect the driver, front and rear passengers sitting next to a window.
- This vehicle may be equipped with Supplemental Seat-Mounted Side Airbags to provide enhanced protection to help protect an occupant during a side impact.
- If the Airbag Warning Light is not on during starting, stays on, or turns on while driving, have the vehicle serviced by an authorized service center immediately.
- Refer to the Owner's Manual on the DVD for further details regarding the Supplemental Restraint System (SRS).

WARNING!

- Relying on the airbags alone could lead to more severe injuries in a collision. The airbags work with your seat belt to restrain you properly. In some collisions, the airbags won't deploy at all. Always wear your seat belts even though you have airbags.
- Being too close to the steering wheel or instrument panel during Advanced Front Airbag deployment could cause serious injury, including death. Airbags need room to inflate. Sit back, comfortably extending your arms to reach the steering wheel or instrument panel.
- Supplemental Side Airbag Inflatable Curtains and Supplemental Seat-Mounted Side Airbags need room to inflate. Do not lean against the door or window. Sit upright in the center of the seat.
- Being too close to the Supplemental Side Airbag Inflatable Curtain and/or Seat-Mounted Side Airbag during deployment could cause you to be severely injured or killed.
- Do not drive your vehicle after the airbags have deployed. If you are involved in another collision, the airbags will not be in place to protect you.
- After any collision, the vehicle should be taken to an authorized dealer immediately.

CHILD RESTRAINTS

- Children 12 years and under should ride properly buckled up in a rear seat, if available. According to crash statistics, children are safer when properly restrained in the rear seats rather than in the front.
- Every state in the United States and all Canadian provinces require that small children ride in proper restraint systems. This is the law, and you can be prosecuted for ignoring it.

Installing The LATCH - Compatible Child Restraint System

- Your vehicle's second row passenger seats are equipped with the child restraint anchorage system called LATCH, which stands for Lower Anchors and Tether for CHildren. LATCH child restraint anchorage systems are installed in the rear seat outboard positions.
- LATCH equipped seating positions have both lower anchor bars, located at the back of the seat cushion, and tether strap anchorages, located behind the seat back.

Installing The Lower Attachments:

- The vehicle lower anchorages are round bars located at the rear of the seat cushion where it meets the seatback. The rear seat lower anchors can be readily identified by the symbol located on the seatback directly above the anchorages and are just visible when you lean into the rear seat to install the child restraint.

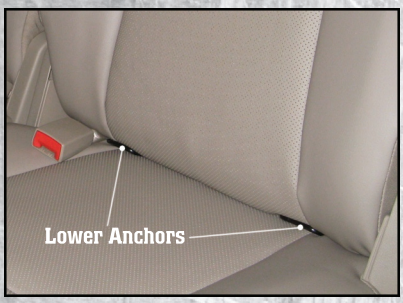

- Loosen the child seat adjusters on the lower straps and on the tether strap so that you can attach the hooks or connectors to the vehicle anchors more easily.
- Attach the lower hooks or connectors over the top of the seatcover material.
- Then tighten the straps as you push the child restraint rearward and downward into the seat.

Installing The Top Tether Strap (With Either Lower Anchors Or Vehicle Seat Belt) - Regular Cab - Front Seat:

- Place the child restraint on the seat and adjust the tether strap so that it will reach over the seat back under the head restraint to the tether anchor directly behind the seat.



- Lift the cover (if equipped), and attach the hook to the square opening in the sheet metal.
- Install the child restraint and remove the slack in the tether strap according to the manufacturer's instructions.

Installing The Top Tether Strap (With Either Lower Anchors Or Vehicle Seat Belt) - Quad Cab®/Crew Cab - Rear Seats:

- Obtain tether straps by raising the head restraints and reaching between the rear glass and rear seat. The tether strap may be retained with an elastic band. Accessibility to the tether strap is greatly improved by raising the seat cushion to the “up” position. Remove the elastic before use.
- Place a child restraint on each outboard rear seat and adjust the tether strap so that it will reach under the head restraint to the tether anchor directly behind the seat and then to the anchor directly behind the center rear seat.
- Pass each tether strap hook under the head restraint and through the loop of webbing behind the child seat.
- Route each tether strap to the anchor behind the center seat, and attach the hooks to the metal ring.
- Place a child restraint on the center rear seat and adjust the tether strap so that it will reach under the head restraint to the tether anchor directly behind the seat and to the anchor directly behind the right seat.

- Install the child restraint and remove the slack in the tether strap according to the manufacturer's instructions.

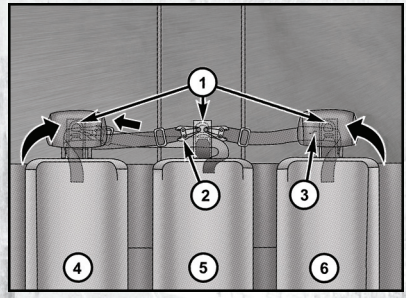

1. Inner Anchor Strap Ring(s)
2. Snap Hook
3. Tether Strap
4. Passenger's Side Rear Child Seat
5. Rear Center Child Seat
6. Driver's Side Rear Child Seat

Installing The Child Restraint Using The Vehicle Seat Belts

- To install a child restraint, first, pull enough of the seat belt webbing from the retractor to route it through the belt path of the child restraint and slide the latch plate into the buckle.
- Next, extract all the seat belt webbing out of the retractor and then allow the belt to retract into the retractor. Finally, pull on any excess webbing to tighten the lap portion around the child restraint. Any seat belt system will loosen with time, so check the belt occasionally, and pull it tight if necessary.
- Route the tether strap to provide the most direct path for the strap between the anchor and the child seat, preferably between the head restraint posts underneath the head restraint.
- Attach the tether strap hook of the child restraint to the tether anchor and remove slack in the tether strap according to the child restraint manufacturer's instructions.

NOTE: Ensure that the tether strap does not slip into the opening between the seatbacks as you remove slack in the strap.

WARNING!

- In a collision, an unrestrained child, even a tiny baby, can become a projectile inside the vehicle. The force required to hold even an infant on your lap could become so great that you could not hold the child, no matter how strong you are. The child and others could be severely injured or killed. Any child riding in your vehicle should be in a proper restraint for the child's size.
- Improper installation of a child restraint to the LATCH anchorages can lead to failure of an infant or child restraint. The child could be severely injured or killed. Follow the manufacturer's directions exactly when installing an infant or child restraint.

(Continued)

WARNING! *(Continued)*

- An incorrectly anchored tether strap could lead to increased head motion and possible injury to the child. Use only the anchor positions directly behind the child seat to secure a child restraint top tether strap.
- Rearward-facing child seats must never be used in the front seat of a vehicle with a front passenger airbag. An airbag deployment could cause infants in this position to be severely injured or killed.

FRONT SEATS

Power Seats

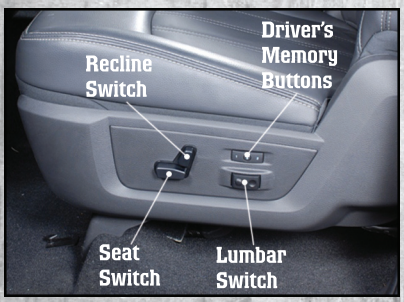

- The seat switch controls forward/backward and up/down.
- The recline switch controls the angle of the seatback. Push switch forward or rearward and the seatback will move in either direction.

Power Lumbar

- The lumbar controls are located on the outboard side of the seat cushion. The lumbar support can be increased by pressing the front of the switch and decreased by pressing the back of the switch.

Memory Seats

- The memory seat feature allows you to save the driver's seat position (excluding lumbar position), driver's outside mirror position, adjustable brake and accelerator pedals, Automatic Temperature Control (ATC) temperature setting and radio station preset settings. The driver's memory buttons are located on the outboard side of the driver's seat cushion.
- Adjust all memory profile settings, press the SET button, then press 1 or 2 within five seconds.
- To program a Key Fob to the memory position, place the ignition switch in the LOCK position and remove the Key Fob, press and release the LOCK button on the Key Fob to be programmed within 5 seconds of pressing button 1 or 2.
- Press 1 or 2 to recall the saved positions, or press UNLOCK on the programmed Key Fob.
- Refer to the Owner's Manual on the DVD for further details.

Manual Seats

Forward/Rearward



- Lift up on the adjusting bar located at the front of the seat near the floor and release at the desired position, then release the handle to lock the seat into position.

Recliner



- Lift the recliner lever located on the outboard side of the seat, lean back and release at the desired position.

CAUTION!

Do not place any article under a power seat or impede its ability to move as it may cause damage to the seat controls. Seat travel may become limited if movement is stopped by an obstruction in the seat's path.

WARNING!

- Adjusting a seat while the vehicle is moving is dangerous. The sudden movement of the seat could cause you to lose control. The seat belt might not be properly adjusted, and you could be severely injured or killed. Only adjust a seat while the vehicle is parked.

(Continued)

WARNING! *(Continued)*

- Actuating the recliner handle will allow the seatback to swing (dump) forward on manual recliner seats. Do not stand or lean in front of the seat while actuating the handle. The seatback may swing forward and hit you, causing injury. This dump feature allows access to the storage bin behind the seat. To avoid injury, place your hand on the seatback and actuate the handle, then position the seatback in the desired position.
- Do not ride with the seatback reclined so that the seat belt is no longer resting against your chest. In a collision, you could slide under the seat belt and be severely injured or killed. Use the recliner only when the vehicle is parked.

HEATED/VENTILATED SEATS

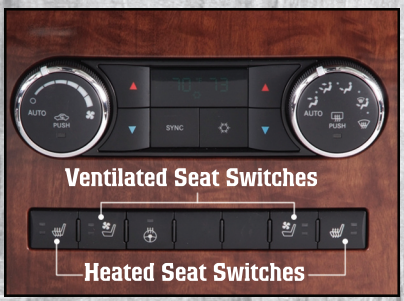

Front Heated Seats

- The controls for front heated seats are located on the center instrument panel below the climate controls.
- Press the switch once to select High-level heating. Press the switch a second time to select Low-level heating. Press the switch a third time to shut the heating elements Off.

Front Ventilated Seats

- Small fans that draw the air from around the occupant and exhaust it underneath the seat and into the passenger compartment are located in the seat cushion and seatback. The fans draw this air across the surface of the seat using air ducts and fine perforations in the covering to help keep the driver cooler in higher ambient temperatures.
- The ventilated seat switches are located in the center instrument panel below the climate controls. Press the switch once to select High speed. Press the switch a second time to select Low speed. Press the switch a third time to turn the fans Off.

Rear Heated Seats

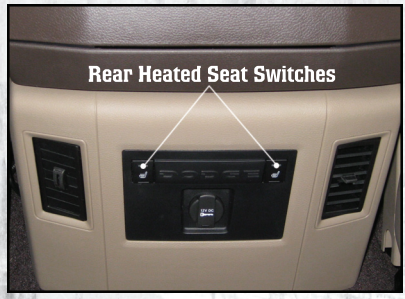

- Second row heated seat switches are located on the rear of the center console.
- Press the switch once to select High-level heating. Press the switch a second time to select Low-level heating. Press the switch a third time to shut the heating elements Off.

CAUTION!

Repeated overheating of the seat could damage the heating element and/or degrade the material of the seat.

WARNING!

- Persons who are unable to feel pain to the skin because of advanced age, chronic illness, diabetes, spinal cord injury, medication, alcohol use, exhaustion or other physical conditions must exercise care when using the seat heater. It may cause burns even at low temperatures, especially if used for long periods of time.
- Do not place anything on the seat that insulates against heat, such as a blanket or cushion. This may cause the seat heater to overheat. Sitting in a seat that has been overheated could cause serious burns due to the increased surface temperature of the seat.

HEATED STEERING WHEEL



- The steering wheel contains a heating element that heats the steering wheel to one temperature setting.
- The heated steering wheel switch is located on the center instrument panel below the climate controls.
- Press the switch once to turn the heating element On. Press the switch a second time to turn the heating element Off.

- Once the heated steering wheel has been turned on, it will operate for approximately 58 to 70 minutes before automatically shutting off. The heated steering wheel can shut off early or may not turn on when the steering wheel is already warm.

TILT STEERING COLUMN / ADJUSTABLE PEDALS



Tilt Steering Column

- The tilt lever is located on the steering column, below the turn signal lever.
- Pull forward on the lever and move the steering wheel up or down as desired.
- Release the lever to lock the steering wheel into position.

Adjustable Pedals

- Press the switch located on the left side of the steering column forward to move the brake and accelerator pedals away from the driver and press the switch rearward to move the pedals closer to the driver.

NOTE: The pedals cannot be adjusted when the vehicle is in REVERSE or when the Electronic Speed Control is set.

CAUTION!

Do not place any article under the adjustable pedals or impede its ability to move, as it may cause damage to the pedal controls. Pedal travel may become limited if movement is stopped by an obstruction in the adjustable pedal's path.

WARNING!

- Tilting the steering column while the vehicle is moving is dangerous. Without a stable steering column, you could lose control of the vehicle and have a collision. Adjust the column only while the vehicle is stopped. Be sure it is locked before driving.
- Do not adjust the pedals while the vehicle is moving. You could lose control and have a collision. Always adjust the pedals while the vehicle is parked.

DIESEL ENGINE STARTING PROCEDURES

Engine Block Heater

- For ambient temperatures below 0°F (-18°C), engine block heater usage is recommended.
- For ambient temperatures below –20°F (-29°C), engine block heater usage is required.
- The engine block heater cord is routed under the hood to the right side and can be located just behind the grille near the headlamp.
- Connect the heater cord to a ground-fault interrupter protected 110–115 volt AC electrical outlet with a grounded, three-wire extension cord.

NOTE: The block heater will require 110 volts AC and 6.5 amps to activate the heater element.

- The block heater must be plugged in at least one hour to have an adequate warming effect on the coolant.

Water In Fuel Message

- If a Water In Fuel message or  indicator appears in the cluster and a chime sounds five times, the fuel/water separator will need to be drained immediately to prevent engine damage.
- Refer to Maintaining Your Vehicle in this guide for draining instructions or see your dealer.

Cold Start Procedure

- Turn the ignition switch to the ON position. If the Wait To Start  light appears in the cluster, wait for the light to turn off before starting.
- In extremely cold conditions, when the engine temperature may be below 0°F (-18°C), cycle the manifold heaters twice with a five-second pause between cycles.
- Refer to the Owner's Manual Diesel Supplement on the DVD for further details.

WARNING!

Remember to disconnect the cord before driving. Damage to the 110–115 volt electrical cord could cause electrocution.

TURN SIGNALS/WIPER/WASHER/HIGH BEAMS LEVER

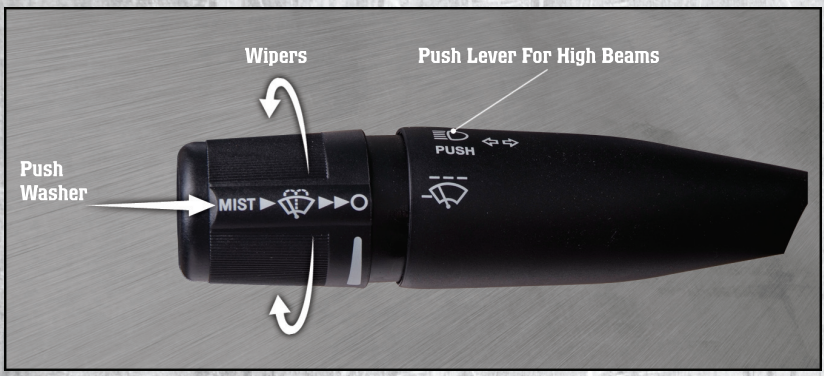

Turn Signals/Lane Change Assist

- Tap the lever up or down once and the turn signal (right or left) will flash three times and automatically turn off.

Wipers

Intermittent, Low And High Operation

- Rotate the end of the lever to the first detent position for one of five intermittent settings, the second detent for low wiper operation and the third detent for high wiper operation.

Washer Operation

- Push the end of the lever inward to the second detent and hold for as long as spray is desired.

High Beams

- Push the lever away from you to activate the high beams.
- A high beam symbol will illuminate in the cluster to indicate the high beams are on.

NOTE: For safe driving, turn off the high beams when oncoming traffic is present to prevent headlight glare and as a courtesy to other motorists.

HEADLIGHT SWITCH

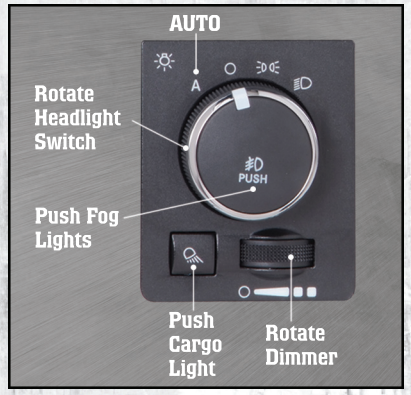

Automatic Headlights/Parking Lights/Headlights

- Rotate the headlight switch, located on the instrument panel to the left of the steering wheel, to the first detent for parking lights and to the second detent for headlights .
- With the parking lights or low beam headlights on, push the headlight switch once for fog lights.
- Rotate the headlight switch to “A” for AUTO headlights.
- When set to “A” (AUTO), the system automatically turns the headlights on or off based on ambient light levels.

Instrument Panel Dimmer

- Rotate the dimmer control to the extreme left position to fully dim the instrument panel lights and prevent the interior lights from illuminating when a door is opened.
- Rotate the dimmer control right to increase the brightness of the instrument panel when the parking lights or headlights are on.
- Rotate the dimmer control right to the next detent position to fully brighten the odometer and radio when the parking lights or headlights are on. Refer to your Media Center/Radio User Manual on the DVD for display dimming.
- Rotate the dimmer control right to the last detent position to turn on the interior lighting.

Cargo Light

- The cargo light is strategically placed lighting that helps illuminate the bed area of the truck. A cargo light symbol will illuminate in the cluster to indicate the light is on.
- Push the button to turn ON/OFF the cargo lighting.

SPEED CONTROL LEVER



Cruise ON/OFF

- Push the ON/OFF button to activate the Speed Control.
- The cruise symbol or CRUISE will appear on the instrument cluster to indicate the Speed Control is on.
- Push the ON/OFF button a second time to turn the system off.

Set

- With Speed Control on, push down and release the lever to set a desired speed.

Accel/Decel

- Push and hold the lever up to accelerate or down to decelerate the vehicle; release the lever to save the new set speed.
- Once a speed is set, tapping the lever up or down will increase or decrease the set speed approximately 1 mph (2 km/h).
- Push and hold the lever up to accelerate in 5 mph (8 km/h) increments or push and hold the lever down to decelerate in 5 mph (8 km/h) increments; release the lever to save the new set speed.

Resume

- To resume a previously selected speed in memory, push the lever up and release.

Cancel

- Pull the lever toward you, push the clutch pedal or apply the brakes to cancel the set speed and maintain the set speed in memory.
- Push the ON/OFF button to turn the system off and erase the set speed memory.

WARNING!

- Leaving the Electronic Speed Control system on when not in use is dangerous. You could accidentally set the system or cause it to go faster than you want. You could lose control and have a collision. Always leave the Electronic Speed Control system off when you are not using it.

(Continued)

WARNING! *(Continued)*

- Electronic Speed Control can be dangerous where the system cannot maintain a constant speed. Your vehicle could go too fast for the conditions, and you could lose control. A collision could be the result. Do not use Electronic Speed Control in heavy traffic or on roads that are winding, icy, snow-covered or slippery.

ELECTRONIC RANGE SELECT (ERS) OPERATION

- Electronic Range Select (ERS) allows you to limit the highest available transmission gear, and can be activated during any driving condition. When towing a trailer or operating the vehicle in off-road conditions, using ERS shift control will help you maximize both performance and engine braking.
- Move the console shift lever left (-) or right (+), or toggle the switch on the column shift lever down (-) or up (+) to select the desired top gear.
- For maximum deceleration (engine braking) move the console shift lever left (-) and hold, or toggle the switch on the column shift lever down (-) and hold. Your vehicle will automatically select the lowest safe gear for optimal engine braking.
- To disable ERS, push and hold the console shift lever to the right (+) or push and hold the column shift lever switch up (+) until “D” is displayed in the odometer.
- Switching between ERS and DRIVE mode can be done at any vehicle speed.
- Refer to your Owner's Manual on the DVD for further details.

MANUAL CLIMATE CONTROLS



Air Recirculation /Max A/C

- Rotate the Temperature Control to the MAX A/C position to automatically turn on both Air Conditioning and Recirculation.
- For window defogging, turn the recirculation button off.
- Recirculation is not allowed in defrost, floor, defrost/floor (mix) modes.

AUTOMATIC TEMPERATURE CONTROL (ATC)

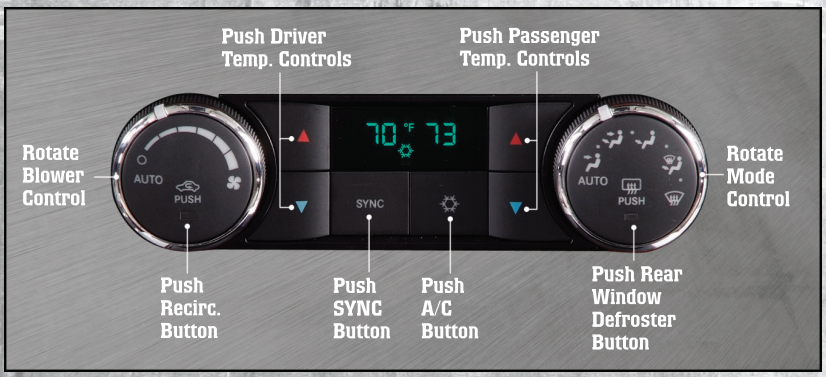

- Rotate both the Mode Control and Blower Control to the AUTO position.
- Select the desired temperature by pushing the up or down temperature buttons for the driver or passenger.
- The system will maintain the set temperature automatically.

Air Conditioning (A/C)

- If the A/C button is pushed while in the AUTO mode, the indicator light may flash three times to indicate the cabin air is being controlled automatically.

SYNC Temperature Button

- Push the SYNC button once to control the driver and passenger temperatures simultaneously. Push the SYNC button a second time to control the temperatures individually.

Air Recirculation 

- Use recirculation for maximum A/C operation.
- For window defogging turn the recirculation button off.
- If the recirculation button is pushed while in the AUTO mode, the indicator light may flash three times to indicate the cabin air is being controlled automatically.

PARKSENSE® REAR PARK ASSIST

- If an object is detected behind the rear bumper while the vehicle is in REVERSE, a warning will display in the instrument cluster and a tone, that changes speed depending on the distance of the object from the bumper, will sound.

Enable/Disable ParkSense®

- ParkSense® can be enabled and disabled with a switch located in the switch bank of the instrument panel or through the Customer-Programmable Features section of the EVIC. When the switch is pressed to disable the system, the instrument cluster will display the “PARK ASSIST SYSTEM OFF” message for approximately five seconds.

PARKVIEW® REAR BACK-UP CAMERA

- You can see an on-screen image of the rear of your vehicle whenever the shift lever is put into REVERSE. The ParkView® Rear Back-Up Camera image will be displayed on the radio display screen, located on the center stack of the instrument panel.

WARNING!

Drivers must be careful when backing up even when using the ParkView® Rear Back-Up Camera. Always check carefully behind your vehicle, and be sure to check for pedestrians, animals, other vehicles, obstructions, or blind spots before backing up. You must continue to pay attention while backing up. Failure to do so can result in serious injury or death.

OPERATING YOUR VEHICLE

DIESEL EXHAUST BRAKE (ENGINE BRAKING)

- The exhaust brake feature will only function when the driver turns the exhaust brake switch to the ON position.
- The switch is located on the switch bank below the audio system.
- Once the switch is in the ON position and the vehicle is moving faster than 5 mph (8 km/h), the exhaust brake will automatically operate when the driver removes pressure from the accelerator pedal.
- Exhaust braking is most effective when the engine RPM is higher.

NOTE: For optimum braking power, it is recommended to use the exhaust brake while in TOW/HAUL mode.

CAUTION!

Use of aftermarket exhaust brakes is not recommended and could lead to engine damage.

WARNING!

Do not use the exhaust brake feature when driving in icy or slippery conditions as the increased engine braking can cause the rear wheels to slide and the vehicle to swing around with the possible loss of vehicle control, which may cause a collision possibly resulting in personal injury or death.

IDLE-UP FEATURE (DIESEL/AUTOMATIC TRANSMISSION ONLY)

- The Idle-Up Feature uses the speed control switches to increase engine idle speed and quickly warm the vehicle's interior. This feature must be enabled by your dealer. See your local dealer.
- With the transmission in PARK, the parking brake applied, and the engine running, push the speed control ON/OFF switch on, then push the SET switch.
- The engine RPM will go up to 1100 RPM. To increase the RPM, push and hold the ACCEL/RESUME switch and the idle speed will increase to approximately 1500 RPM. To decrease the RPM, push and hold the DECEL switch and the idle speed will decrease to approximately 1100 RPM.
- To cancel the Idle Up Feature, either push the CANCEL switch, push the ON/OFF switch or push the brake pedal.

TIRE PRESSURE MONITOR SYSTEM (TPMS) – 2500 MODELS ONLY

Tire Light Load Inflation Switch Description

- The Tire Pressure Monitoring System on your vehicle has two different tire pressure settings based on vehicle loading. The Tire Light Load Switch is located on the Instrument Panel below the climate controls.
- The "Light Load Inflation" and "Max Load Inflation" tire pressures recommended for your vehicle based on vehicle loading are found on the Supplemental Tire Pressure Information Label located on the rear face of the driver front door.
- When the vehicle is in the "Light Load Inflation" setting, the Tire Light Load Inflation switch is On. The indicator light is Off when in the "Max Load Inflation" setting.

Light Load Inflation (Indicator Light On)

- If the passenger and cargo weights are less than the Light Load Pressure Definition shown on the Supplemental Tire Pressure Information Label, inflate or deflate tires to the correct "Light Load Inflation" pressure. If the indicator light is not on, **the mode can be changed by pushing the switch once.**
- If the light on the switch flashes On and Off, **after the button is pressed to switch between modes, this indicates conditions are not correct to switch modes.** The system will not allow switching modes until the tire pressures have been set to Light Load Inflation as indicated on the Supplemental Tire Pressure Information Label.

Max Load Inflation (Indicator Light Off)

- If the passenger and cargo weights exceed the Light Load Pressure Definition shown on the Supplemental Tire Pressure Information Label, adjust tires to the correct "Max Load Inflation" pressure. If the indicator is on, reset by pushing the switch once.
- If the tire pressure monitoring light and a "low tire" message appears in the cluster, inflate the tire pressures to the "Max Load Inflation" setting as indicated in the Supplemental Tire Pressure Information Label.
- After any tire pressure adjustment, the vehicle may need to be driven for up to 20 minutes at speeds over 15 mph for the tire pressure information to be updated, or for a low tire pressure warning to go out.
- For additional information, refer to the Owner's Manual on the DVD.

POWER SLIDING REAR WINDOW

- The switch for the power sliding rear window is located on the overhead console.
- Pull the switch to open the glass and push the switch to close the glass.

POWER SUNROOF

- The power sunroof switch is located on the overhead console.

Opening Sunroof

Express

- Press the switch rearward and release. The sunroof will fully open and stop automatically.

Closing Sunroof

Express

- Press the switch forward and release. The sunroof will close automatically from any position.

Manual Open/Close

- Press and hold the switch rearward to open or forward to close the sunroof. Any release of the switch will stop the movement, and the sunroof will remain in a partially open or closed position until the switch is pressed again.

Venting Sunroof

- Press and release the "VENT" button, and the sunroof will open to the vent position. This is called “Express Vent” and will occur regardless of sunroof position. During Express Vent operation, any movement of the switch will stop the sunroof.

Pinch Protection Feature

- This feature will detect an obstruction in the opening of the sunroof during Express Close operation. If an obstruction in the path of the sunroof is detected, the sunroof will automatically return to the open position.

NOTE: Pinch protection is disabled while the switch is pressed and held during manual opening and closing of the sunroof.

WARNING!

- Never leave children in a vehicle with the key in the ignition switch. Occupants, particularly unattended children, can become entrapped by the power sunroof while operating the power sunroof switch. Such entrapment may result in serious injury or death.
- In a collision, there is a greater risk of being thrown from a vehicle with an open sunroof. You could also be severely injured or killed. Always fasten your seat belt properly and make sure all passengers are properly secured too.
- Do not allow small children to operate the sunroof. Never allow your fingers, other body parts, or any object to project through the sunroof opening. Injury may result.

WIND BUFFETING

- Wind buffeting can be described as a helicopter-type percussion sound. If buffeting occurs with the rear windows open, adjust the front and rear windows together.
- If buffeting occurs with the sunroof open, adjust the sunroof opening, or adjust any window. This will minimize buffeting.

ELECTRONICS

YOUR VEHICLE'S SOUND SYSTEM



Bluetooth Streaming Audio – allows you to control your Bluetooth device through the radio, steering wheel audio controls, or voice commands. See the Uconnect™ Phone section for more details. Also, Bluetooth device must be compatible. Refer to your Bluetooth device's manual to see if it supports A2DP+AVCRP 1.3 protocol.


Audio Jack – works with iPod® devices or other players with a headphones jack and a 3.5mm cable.
USB Port on Radio – for copying files from a memory stick to your radio's hard drive.
Your Radio Sales Code
iPod® Control Port* (located inside upper glove box) – when connected, allows you to control your iPod® using the radio or steering wheel audio controls.
OR
USB Port** (located inside upper glove box) – when connected, allows you to control your iPod® or memory stick using the radio or steering wheel audio controls.
*If equipped with Media Center 730N (Sales Code RER)
**If equipped with Media Center 130 with Satellite Radio (Sales Code RES + RSC) or Media Center 430/430N (Sales Code RBZ/RHB)

ELECTRONICS

NON-TOUCH-SCREEN RADIOS

Media Center 130 (Sales Code RES)



Media Center 130 with Satellite Radio (Sales Code RES + RSC)

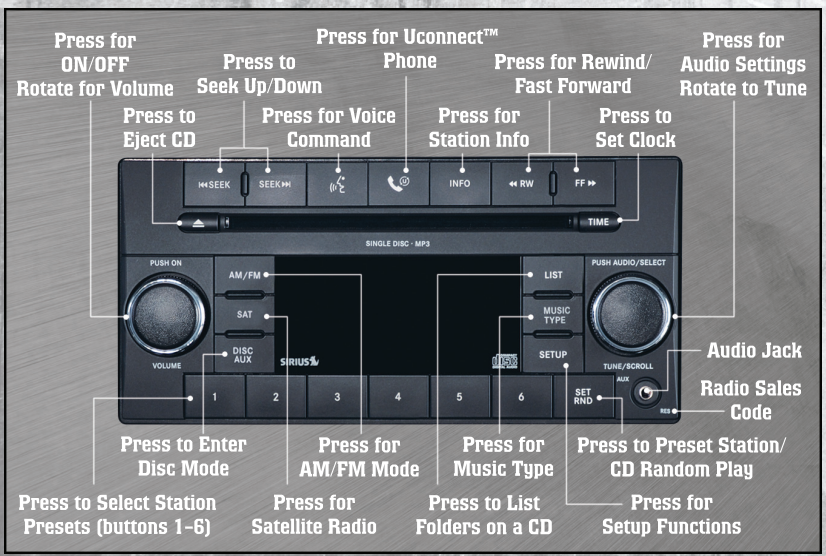

NOTE: Your radio may not be equipped with Voice Command or Uconnect™ Phone. To determine if your radio has this feature, press the Voice Command button on the radio. You will hear a voice prompt if you have the feature, or see a message on the radio stating "Uconnect Phone not available" if you do not.

- Your radio has many features that add to the comfort and convenience of you and your passengers. Some of these radio features should not be used when driving because they take your eyes from the road or your attention from driving.
- The radio sales code is located on the lower right side of the radio faceplate.

Seek Up/Down Buttons

- Press to seek through radio stations in AM, FM, or SAT bands. Seek through tracks in CD mode.
- Hold either button to bypass stations without stopping.

Audio Settings

- Press the TUNE/SCROLL control knob and BASS, MID, TREBLE, BALANCE and FADE will display. Rotate the TUNE/SCROLL control knob to select the desired setting.

Audio Jack

- The Audio Jack allows a portable device, such as an MP3 player or a cassette player, to be plugged into the radio and utilize the vehicle's audio system, using a 3.5 mm audio cable, to amplify the source and play through the vehicle speakers.
- Pressing the AUX button will change the mode to auxiliary device if the Audio Jack is connected, allowing the music from your portable device to be heard through the vehicle's speakers.
- The functions of the portable device are controlled using the device buttons. The volume may be controlled using the radio or portable device.

Clock Setting

- Press and hold the TIME button until the hours blink; turn the TUNE/SCROLL control knob to set the hours.
- Press the TUNE/SCROLL control knob until the minutes begin to blink; turn the TUNE/SCROLL control knob to set the minutes.
- Press the TUNE/SCROLL control knob to save the time change.
- To exit, press any button/knob or wait five seconds.

Store Radio Presets

- Press the SET/RND button once and SET 1 will show in the display. Then select the button (1–6).
- A second station may be added to each push button. Press the SET/RND button twice and SET 2 will show in the display, then select button (1–6).

ELECTRONICS

TOUCH-SCREEN RADIOS

Media Center 730N CD/DVD/HDD/NAV (Sales Code RER)

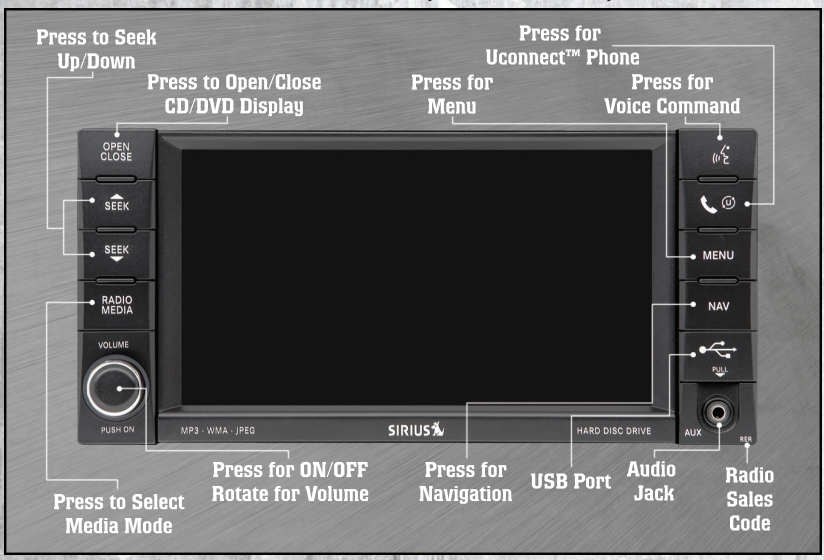

Media Center 430/430N CD/DVD/HDD (Sales Code RBZ/RHB)

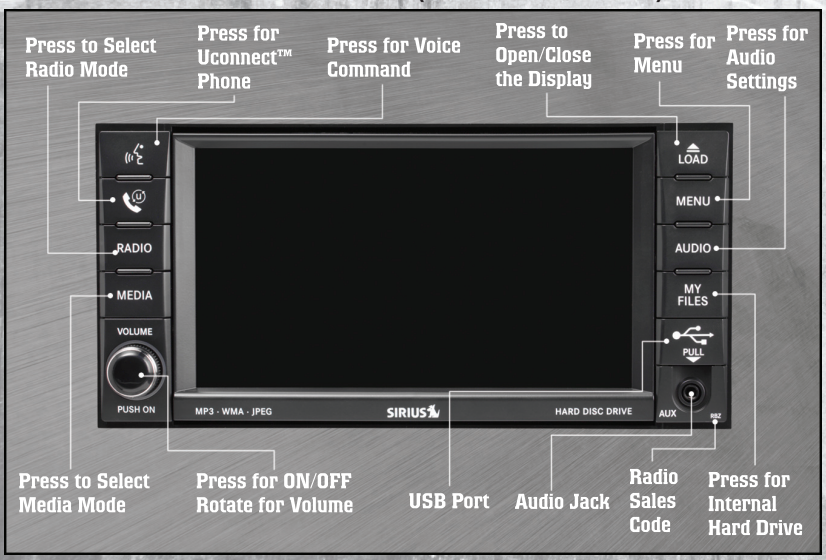

NOTE: Your radio may not be equipped with Uconnect Voice Command or Uconnect Phone. To determine if your radio has this feature, press the Voice Command button on the radio. You will hear a voice prompt if you have the feature, or see a message on the radio stating "Uconnect Phone not available" if you do not.

- Your radio has many features that add to the comfort and convenience of you and your passengers. Some of these radio features should not be used when driving because they take your eyes from the road or your attention from driving.
- The radio sales code is located on the lower right side of the radio faceplate.

Seek Up/Down

- Media Center 730N: Press the SEEK hard-key to seek through radio stations in AM, FM, or SAT bands. Seek through tracks in CD or iPod® modes or through songs in the HDD playlist.
- Media Center 430/430N: Press the SEEK up/down arrow soft-keys to change the currently playing station in AM, FM or SAT bands. Seek through tracks in CD or iPod® modes or through songs in the HDD playlist.

Audio Jack

- The Audio Jack allows a portable device, such as an MP3 player or a cassette player, to be plugged into the radio and utilize the vehicle's audio system, using a 3.5 mm audio cable, to amplify the source and play through the vehicle speakers.
- Pressing the AUX button will change the mode to auxiliary device if the Audio Jack is connected, allowing the music from your portable device to be heard through the vehicle's speakers.
- The functions of the portable device are controlled using the device buttons. The volume may be controlled using the radio or portable device.

Clock Setting

- Turn the radio on, then touch the screen where the time is displayed.
- Touch the USER CLOCK soft-key (Navigation radio only).
- To adjust the hours, touch either the HOUR FORWARD or HOUR BACKWARD soft-key.
- To adjust the minutes, touch either the MINUTE FORWARD or MINUTE BACKWARD soft-key.
- To save the new time setting, touch the screen where the word "Save" is displayed.

Store Radio Presets

- Media Center 730N: Press the RADIO/MEDIA hard-key until AM FM SAT is displayed in the upper left corner of the screen.
- Media Center 430/430N: Press the RADIO hard-key to display AM FM SAT in the upper left corner of the screen.
- Select the radio band by touching either the AM, FM, or SAT soft-key.

- Find the station to store by either pressing the SEEK UP/DOWN hard-key (Media Center 730N), touching the right and left arrow soft-keys (Media Center 430/430N), touching the SCAN soft-key, or by using the DIRECT TUNE soft-key.
- Once the station is found, touch and hold one of the PRESET soft-keys in the list to the right, until you hear a confirmation beep.

Hard Disk Drive Operation

Copy Complete Audio Disc To Hard-Drive

- Media Center 730N: Press the OPEN/CLOSE hard-key.
- Media Center 430/430N: Press the LOAD hard-key.
- Insert a disc, then press the MENU hard-key.
- Touch the MY FILES soft-key, then select MY MUSIC.
- Touch the Add Music Files to HDD soft-key, then touch the From Disc soft-key in the next screen to start the process.

Copying From USB

- The USB port on the radio face plate is for copying files to your hard drive. To access, lift up on the cover.
- Insert a USB device (e.g. thumb drive or memory stick), then select MY MUSIC.
- Touch the Add Music Files to HDD soft-key, then touch the From USB soft-key in the next screen.
- Select the folders or titles you would like to copy, then touch the DONE soft-key to start the copy process.

Copy Pictures To The Hard-Drive

- Insert either a CD or a USB device containing your pictures in JPEG format into the USB port on the radio face.
- Touch the MY FILES soft-key, then go to the MANAGE MY FILES screen.
- Touch the MY PICTURES soft-key to get an overview of the currently stored images.
- Touch one of the ADD PICTURES soft-keys, then select the type of media inserted.
- Use the PAGE soft-keys to page through a list of pictures and press the picture you would like to import.
- Confirm your selection by touching the YES soft-key. The imported picture is now available in the MANAGE MY PICTURES screen.
- In order to display the imported picture in the radio screen, touch the desired picture soft-key.
- Select this picture by pressing the PICTURE VIEW soft-key. A check mark indicates the currently used picture.

Cleaning Your Touch-Screen Radio

- Do not spray any liquid or caustic chemicals directly on the screen. Use a clean and dry micro fiber lens cleaning cloth in order to clean the touch-screen.
- If necessary, use a lint-free cloth dampened with a cleaning solution such as isopropyl alcohol or an isopropyl alcohol and water solution ratio of 50:50. Be sure to follow the solvent manufacturer's precautions and directions.

USB Port

- The USB Port on the radio allows you to copy songs from a connected USB drive or supported media device onto your Media Center hard drive.
- Media Center 430 and 430N also offer the ability to play songs from connected USB drives, or supported media devices, through the USB port located in the upper glove box. Supported devices may be controlled through the vehicles steering wheel or radio controls, or even with voice commands, and may be charged through the USB port.

Navigation – Media Center 730N (Sales Code RER) Only

- Navigation radios require digital data from a navigation database. The data in the navigation database is licensed from Navigation Technologies®. Not all roads are digitized.
- For software updates, visit http://www.chrysler.com/owners website, visit http://www.navteq.com website, or contact your authorized dealer for the latest available software.

NOTE: Many features of this radio are speed dependent. For your own safety, it is not possible to use the touch-screen keyboard to enter a name (e.g., street name) while the vehicle is in motion. Pull over at a safe location to complete your task or use Voice Command.

- The Navigation system receives GPS signals from satellites to display the position of your vehicle.

New Destination

- Press the NAV hard-key to access the Navigation Main Menu.
- Touch the NEW DESTINATION soft-key to program a destination, then select the destination soft-key of your choice.
- Media Center 730N allows destinations to be input by voice while in motion. Press the Voice Command button on the radio to begin.

Program/Storing Home Address

- Press the NAV hard-key to access the Navigation Main Menu.
- Touch the GUIDE ME HOME soft-key, then touch the STREET ADDRESS soft-key.
- Touch the STATE soft-key, then enter your state name into the speller; select your state from the list and press the CHANGE soft-key.
- Touch the INPUT STREET NAME soft-key and enter your street name into the speller.

- Touch the CONTINUE soft-key and enter your address into the speller; touch the CONTINUE soft-key again.
- Touch the city name and touch the SAVE soft-key to complete programming.

Change Stored Home Address

- Press the MENU hard-key, then touch the MY FILES soft-key.
- Touch the MY ADDRESS BOOK soft-key, then touch the HOME soft-key.
- In the Home Address Information screen, touch the EDIT CONTACT soft-key, then touch the CHANGE ADDRESS soft-key in the next screen.
- Touch the INPUT STREET NAME soft-key and enter your street name into the speller.
- Touch the CONTINUE soft-key and enter your address into the speller; touch the CONTINUE soft-key again.
- Touch the city name and touch the SAVE soft-key to complete programming.

Guide Me Home

- Press the NAV hard-key to access the Navigation Main Menu.
- Touch the GUIDE ME HOME soft-key to route you back to your home destination from your current location. Touch the GO soft-key to start your trip.

Local Address Book Features

- Your navigation-equipped radio can store destinations into its local address book so that you can recall them later.
- To save your current location to the local address book, touch the cursor on the screen, next touch SELECT, then touch CURSOR POINT, next touch OPTIONS, then touch SAVE DESTINATION, and lastly touch ADDRESS BOOK.
- To add or delete destinations from your local address book stored on the radio, press the MENU hard key, then touch MY FILES, next touch ADDRESS BOOK, and last touch DEFAULT FOLDER (or any added folder).
- To route to a destination that is saved in your local address book, press the MENU hard key, then touch MY FILES, next touch ADDRESS BOOK, and last touch DEFAULT FOLDER and select the contact you want to route to.

Map

- Press the NAV hard-key to access the Navigation Main Menu.
- Touch the MAP soft-key to display a map of your current position.

Navigation – Media Center 430N (Sales Code RHB) Only

- For software updates, visit http://www.garmin.com/chrysler website, or contact your authorized dealer for the latest available software.
- The Navigation system receives GPS signals from satellites to display the position of your vehicle. You may experience interruptions or delays in receiving navigation information in garages, tunnels, large cities, or other situations where the vehicle does not have a direct line of sight to the sky.
- Voice Command is not available for navigation commands on this radio (although Voice Command functions for all other radio functions).

New Destination

- Touch the NAV soft-key in the upper-right corner of your radio screen, to access the Navigation system.
- Touch the **Where To?** soft-key to program a destination.
- Next touch one of the subcategories to search for your destination. Address, Points of Interest, Recently Found, Favorites and Intersection are a few of the options.
- After touching one of the subcategories, follow the on-screen steps to complete the process and be routed to your destination.

Program/Storing Home Location

- Touch the NAV soft-key in the upper-right corner of your radio screen, to access the Navigation system.
- Touch the **Where To?** soft-key, then touch **Go Home**.
- Next, select from:
  - Enter My Address – enter an address for the location using the on-screen keyboard.
  - Use my current location – sets your current location as your Home Location.
  - Choose from Recently Found – select a location from your recently found locations.
- After you set your Home Location, touch **Where To?** , then touch **Go Home**.

Change Stored Home Location

- Touch the NAV soft-key in the upper-right corner of your radio screen, to access the Navigation system.
- Touch the **Where To?** soft-key, then touch **Favorites**.
- Touch the location you want to edit.
- Next, touch **Press for More**.
- Touch **Edit**.
- Follow the on-screen steps for editing the Home Location.

Guide Me Home

- Touch the NAV soft-key in the upper-right corner of your radio screen, to access the Navigation system.
- Touch **Where To?** , then touch **Go Home**.

Map

- Touch the NAV soft-key in the upper-right corner of your radio screen, to access the Navigation system.
- Touch the **View Map** soft-key to display a map of your current position.

SIRIUS Travel Link (Media Center 430N Only)

- To access SIRIUS Travel Link, press the MENU hard-key then touch the Travel Link soft-key.

ELECTRONICS

NOTE: SIRIUS Travel Link requires a subscription, sold separately after trial subscription included with vehicle purchase.

- SIRIUS Travel Link brings a wealth of useful information into your vehicle and right to your fingertips:
- **Weather**
  - View detailed weather conditions at your current location.
- **Ski Info**
  - View ski and snowboarding conditions at ski resorts.
- **Fuel Prices**
  - Check detailed price information for fuel stations near your current location.
- **Movie Listings**
  - Check which movies (includes start times, ratings, run lengths and summaries) are playing at theaters near your current location.
- **Sports Scores**
  - View scores and upcoming events for all major sports.
- Your favorite location, theater and sports teams can be stored for quick access.
- Refer to your Media Center 430/430N (RBZ/RHB) User's Manual for more details.

STEERING WHEEL AUDIO CONTROLS



- The steering wheel audio controls are located on the rear surface of the steering wheel.

Right Switch

- Press the switch up or down to increase or decrease the volume.
- Press the button in the center to change modes AM/FM/CD/SAT.

Left Switch

- Press the switch up or down to search for the next listenable station or select the next or previous CD track.
- Press the button in the center to select the next preset station (radio) or to change CDs if equipped with a CD Changer.

Uconnect™ Phone

- To determine if your vehicle is equipped with Uconnect™ Phone, press the Uconnect™ Phone button . If your vehicle has this feature, you will hear a voice prompt. If not, you will see a message on the radio “Uconnect phone not available”.
- The Uconnect™ Phone is a voice-activated, hands-free, in-vehicle communications system with Voice Command Capability (see Voice Command section).
- The Uconnect™ Phone allows you to dial a phone number with your mobile phone using simple voice commands.
- For vehicles equipped with Video Entertainment System (VES)™, refer to the Uconnect™ Phone section of the Uconnect™ User's Manual on the DVD for further details.
- For vehicles not equipped with VES™, refer to your vehicle Owner's Manual on the DVD for further details.

NOTE: The Uconnect™ Phone requires a mobile phone equipped with the Bluetooth® Hands-Free Profile, Version 0.96 or higher. For Uconnect™ customer support, call 1–877–855–8400 or visit jeep.com/uconnect for Jeep vehicles, dodge.com/uconnect for Dodge and Ram Truck vehicles, or chrysler.com/uconnect for Chrysler vehicles.

Phone Pairing

NOTE: Pairing is a one-time initial setup before using the phone. You will also need to follow the Bluetooth® instructions in your cell phone user guide to complete the phone pairing setup.

- Press the Phone button to begin.
- Wait for the “ready” prompt and BEEP.
- (After the BEEP), say “Uconnect setup”.
- (After the BEEP), say “phone pairing”.
- (After the BEEP), say “pair a phone”.
- Follow the audible prompts.
- You will be asked to enter a four-digit Personal Identification Number (PIN), which you will later need to enter into your mobile phone. You can enter any four-digit PIN. You will not need to remember this PIN after the initial pairing process.
- You will then be prompted to give the phone pairing a name (each phone paired should have a unique name).
- Next you will be asked to give this new pairing a priority of 1 thru 7 (up to seven phones may be paired); 1 is the highest and 7 is the lowest priority. The system will only connect to the highest priority phone that exists within the proximity of the vehicle.

Making A Phone Call

- Press the Phone button .
- (After the BEEP), say “dial” (or “call” a name).
- (After the BEEP), say number (or name).

Phonebook Edit

- Press the Phone button .
- (After the BEEP), say “phonebook”.
- (After the BEEP), say “new entry” or “list names” or “delete”.
- Follow the prompts.

Receiving A Call – Accept (And End)

- When an incoming call rings/is announced on Uconnect™, press the Phone button .
- To end a call, press the Phone button .

Mute (Or Unmute) Microphone During Call

- During a call, press the Voice Command button VR .
- (After the BEEP), say “mute on” (or “mute off”).

Transfer Ongoing Call Between Handset And Vehicle

- During a call, press the Voice Command button VR .
- (After the BEEP), say “transfer call”.

Bluetooth Streaming Audio (Media Center 430N Only)

- Music can be streamed from your Bluetooth mobile phone through Uconnect™ Phone and played through the vehicle's sound system.
- This feature allows you to control your Bluetooth device through the radio, steering wheel audio controls or voice commands.

Changing The Volume

- Start a dialogue by pressing the Phone button , then adjust the volume during a normal call.
- Use the radio ON/OFF VOLUME rotary knob to adjust the volume to a comfortable level while the Uconnect™ system is speaking. Please note the volume setting for Uconnect™ is different than the audio system.

NOTE: To access the tutorial, press the Uconnect™ hard-key. After the BEEP, say “tutorial”. Press any hard-key/button or touch the display (Touch-Screen radio) to cancel the tutorial.

WARNING!

- Any voice commanded system should be used only in safe driving conditions following local laws and phone use. All attention should be kept on the roadway ahead. Failure to do so may result in a collision causing you and others to be severely injured or killed.
- In an emergency, to use Uconnect™ Phone, your mobile phone must be:
  - turned on,
  - paired to Uconnect™ Phone,
  - and have network coverage.

Uconnect™ VOICE COMMAND

- The Uconnect™ Voice Command system allows you to control your AM, FM radio, satellite radio, disc player, Uconnect™ Phone, a memo recorder, and supported portable media devices. The Voice Command system also provides limited capability to select and play music by artist, song, album, music, genre, or playlist from your compatible iPod® device (this capability is available for Media Center 430/430N when connected to the USB port in the center console).
- When you press the Voice Command button VR located on the radio faceplate or steering wheel, you will hear a beep. The beep is your signal to give a command. If you do not say a command within a few seconds, the system will present you with a list of options. If you ever wish to interrupt the system while it lists options, press the Voice Command button VR, listen for the BEEP, and say your command.

Voice Command for Text Messaging (Media Center 430/430N/230/130 only)

- If equipped with Uconnect™ Voice Command, your Media Center 430N radio can play incoming SMS messages through the vehicle sound system.
- It also allows you to respond by selecting from various pre-defined phrases.
- Not all phones are compatible with this feature. Refer to the phone compatibility list at jeep.com/uconnect for Jeep vehicles, dodge.com/uconnect for Dodge and Ram Truck vehicles, or chrysler.com/uconnect for Chrysler vehicles. Connected mobile phones must be bluetooth-compatible, and paired with your radio.
- For vehicles equipped with Video Entertainment System (VES)™, refer to the Uconnect™ Voice Command section of the Uconnect™ User's Manual on the DVD for further details.
- For vehicles not equipped with VES™, refer to your vehicle Owner's Manual on the DVD for Uconnect™ Voice Command information.

Changing The Volume

- Start a dialogue by pressing the Voice Command button VR, then say a command (for example, “tutorial”).

- Use the radio ON/OFF VOLUME rotary knob to adjust the volume to a comfortable level while the Voice Command system is speaking. The volume setting for Voice Command is different than the audio system.
- For vehicles equipped with Video Entertainment System (VES)™, refer to the Uconnect™ Voice Command section of the Uconnect™ User's Manual on the DVD for further details.
- For vehicles not equipped with VES™, refer to your vehicle Owner's Manual on the DVD for Uconnect™ Voice Command information.

NOTE: To access the tutorial, press the Voice Command button VR. After the BEEP, say "tutorial". Press any hard-key/button or touch the display (Touch-Screen radio) to cancel the tutorial.

WARNING!

Any voice commanded system should be used only in safe driving conditions following local laws and phone use. All attention should be kept on the roadway ahead. Failure to do so may result in a collision causing you and others to be severely injured or killed.

iPod® CONTROL

- There are many ways to play music from iPod® players or other portable devices through your vehicle's speakers. Your choices depend on what radio your vehicle is equipped with.
- The radio sales code is located on the lower right side of the radio faceplate.

If Equipped with Media Center 730N (Sales Code RER)

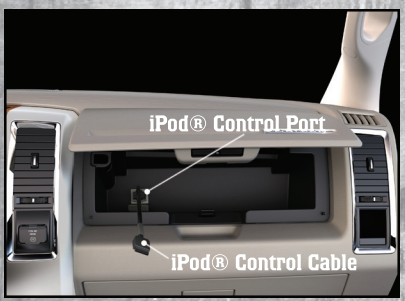

- This feature allows you to plug an iPod® device into the vehicle's sound system through the iPod® Control port.
- The iPod® Control port is located inside the upper glove box. To get into the iPod® Control mode from a touch-screen radio, press the MEDIA hard-key, then touch the AUX or iPod® soft-key.

- The iPod® Control cable may be equipped with a piece of VELCRO® for mounting purposes, the VELCRO® is attached to the end of the iPod® Control cable that plugs into the iPod®. To adhere the VELCRO®, remove the paper backing and stick the adhesive side of the VELCRO® to the right side of the storage bin being careful that the storage bin door will still close when the iPod® is mounted or when the cable is stowed.

- When connected to this feature:
  - The iPod® audio can be played on the vehicle's sound system.
  - The iPod® can be controlled using the radio buttons to Play, Browse, and List the iPod® contents. Refer to the Owner's Manual on the DVD for details.
  - The iPod® battery charges when plugged into the iPod® Control port (if supported by the specific audio device).

NOTE:

- iPod® Control supports Mini, 4G, Photo, Nano, 5G iPod® and iPhone® devices. Some iPod® software versions may not fully support the iPod® Control features. Please visit Apple's website for software updates.

If Equipped with Media Center 130 with Satellite Radio (Sales Code RES + RSC) or Media Center 430/430N (Sales Code RBZ/RHB)



- The radio sales code is located on the lower right side of the radio faceplate.
- The USB port located inside the upper glove box, allows you to plug an iPod® into the vehicle's sound system.

- To hear audio from devices connected to this port from a non-touch-screen radio, press the AUX button on the radio faceplate. From a touch-screen radio, press the MEDIA hard-key, then touch the AUX or iPod® soft-key.
- When connected to this feature:
  - The iPod® audio can be played on the vehicle's sound system.
  - The iPod® can be controlled using the radio buttons to Play, Browse, and List the iPod® or external devices contents. Refer to the Owner's Manual on the DVD for details.
  - The iPod® battery charges when plugged into the USB port (if supported by the specific audio device).
  - Compatible iPod® devices may also be controllable using voice commands (Media Center 430/430N with Uconnect™ Phone required). Refer to the Owner's Manual on the DVD for details.

Bluetooth® Streaming Audio (Media Center 430/430N/230/130 only)

If equipped with Uconnect™ Voice Command, your bluetooth-equipped iPod® devices, cellphones or other media players, may also be able to stream music to your vehicle's speakers. Your connected device must be bluetooth-compatible, and paired with your Media Center radio (see Uconnect™ Phone for pairing instructions). Press the AUX button on the radio faceplate until "BT" is displayed on the radio screen.

NOTE:

- The USB port supports certain Mini, Classic, Nano, Touch, and iPhone® devices. The USB port also supports playing music from compatible external USB Mass Storage Class memory devices. For supported audio file formats, refer to the USB Port section on the Owner's Manual on the DVD. Refer to www.jeep.com/uconnect website for a list of tested iPod®s. Some iPod® software versions may not fully support the USB port features. Please visit Apple's website for iPod® software updates.

WARNING!

Do not plug in or remove the iPod® or external device while driving. Failure to follow this warning could result in a collision.

VIDEO ENTERTAINMENT SYSTEM (VES)™



System Operation

- The screen is located on the headliner behind the front seat. To lower the screen, press the release button located in the rear of the overhead console.
- The system may be controlled by the front seat occupants using the touch-screen radio, or by the rear seat occupants using the remote control.
- The video screen displays information in a split screen format. The left side of the screen is referred to as Channel 1 and the right side of the screen is referred to as Channel 2. All modes except video modes are displayed in a split screen format.
- To use the headphones, press the power button located on the right ear cup. Select the channel on the headphones (1 or 2) that corresponds to the channel selected on the VES™ screen.

Operation Of The Touch-Screen Radio

- To view a DVD video press the OPEN/CLOSE or LOAD hard-key and insert the disc. Playback will begin automatically after the DVD is recognized by the disc drive. If playback does not begin automatically follow these steps:
  - Press the MENU hard-key, then touch the Rear VES™ soft-key. If a chapter list appears on the right side of the screen touch the HIDE LIST soft-key to display the Rear VES™ Control screen.
  - Touch the 1 soft-key to select an audio channel, then touch the DISC soft-key in the MEDIA column.

SIRIUS Backseat TV™

- Press the MENU hard-key, then touch the Rear VES™ soft-key. If a chapter list appears on the right side of the screen, touch the HIDE LIST soft key to display the Rear VES™ Control screen.
- Touch the 1 soft-key to select an audio channel, then touch the TV soft-key in the RADIO column to select SIRIUS Backseat TV™.
- To view SIRIUS Backseat TV™ using the remote, set the remote control channel selector switch to channel 1. Press the MODE button, then using the arrow buttons select TV and press ENTER.

Operation Of The Remote

- The remote control operates similarly to any DVD remote you have used before and allows the rear seat passengers to change stations, tracks, discs and audio/video modes.
- The remote control is designed to control either channel by using the selector switch located on the right side of the remote.
- Pressing the power button will turn the VES™ system ON/OFF.
- Pressing the MODE button causes the Mode Selection menu to appear on the VES™ screen. Use the remote control arrow buttons to scroll through the available modes, then press ENTER to select the desired mode.

Auxiliary Audio/Video Input Jacks

- The Aux jacks are located on the rear of the center console.
- Connect the video game or other external media devices to the AUX jacks following the color coding for VES™ jacks.
- Using either the touch-screen radio or remote control, select AUX from the Rear VES™ Control or Mode Selection screen.
- Refer to “Uconnect™ Multimedia – Video Entertainment System (VES)™” in the Uconnect™ User's Manual on the DVD for further details.

ELECTRONICS

ELECTRONIC VEHICLE INFORMATION CENTER (EVIC)



- The EVIC features a driver interactive display that is located in the instrument cluster. Pressing the controls on the steering wheel allows the driver to select vehicle information and Personal Settings. For additional information, refer to Programmable Features in this guide.

- Press and release the UP △ button to scroll upward through the menus and sub menus.
- Press and release the DOWN ▽ button to scroll downward through the main menus and sub menus.
- Press and release the SELECT ▷ SELECT button for access to main menus or to select a personal setting in the setup menu.
- Press the BACK ◁ BACK button to scroll back to a previous menu.

PROGRAMMABLE FEATURES

Electronic Vehicle Information Center (EVIC) – If Equipped

- The EVIC can be used to program the following Personal Settings. Press the UP △ or DOWN ▽ button until SYSTEM SETUP displays, then press the SELECT button ▷ SELECT. Scroll through the settings using the UP or DOWN button. Press the SELECT button to change the setting.

- Select Language
- Nav-Turn By Turn
- Park Assist System
- Auto Door Locks
- Auto Unlock Doors
- Remote Unlock Sequence
- RKE Linked To Memory
- Remote Start Comfort Sys.
- Horn With Remote Start
- Horn With Remote Lock
- Flash Lamps With Lock
- Headlamp Off Delay
- Headlamps With Wipers
- Wiper Mode – If Equipped
- Easy Exit Seat – If Equipped
- Tilt Mirror In Reverse
- Key-Off Power Delay
- Illuminated Approach
- Hill Start Assist (HSA)
- Display Fuel Saver – If Equipped
- Compass Variance
- Calibrate Compass

Key Fob Programmable Features

- The following features may also be programmed by using the Key Fob transmitter or the ignition switch and driver's door lock switch.

NOTE: Pressing the LOCK button while you are inside the vehicle will activate the Vehicle Security Alarm. Opening a door with the Vehicle Security Alarm activated will cause the alarm to sound. Press the UNLOCK button to deactivate the Vehicle Security Alarm.

Unlock On First Press

- To unlock either the driver's side, or all doors, on the first press of the UNLOCK button:
  - Press and hold the LOCK button for at least 4 seconds, but no longer than 10 seconds. Then, press and hold the UNLOCK button while still holding the LOCK button.
  - Release both buttons at the same time.

Auto Unlock Doors On Exit

- To have all of the vehicle doors unlock when any door is opened:
  - Enter your vehicle, close all the doors and fasten your seat belt.
  - Within 15 seconds, cycle the ignition switch from the OFF position to the ON position a minimum of four times, ending in the OFF position (do not start the engine).
  - Within 30 seconds, press the driver's door lock switch in the UNLOCK direction. A single chime will indicate that programming is complete.

Auto Door Lock

- To have the doors lock automatically when the vehicle's speed exceeds 15 mph (24 km/h):
  - Enter your vehicle, close all the doors and fasten your seat belt.
  - Within 15 seconds, cycle the ignition switch from the OFF position to the ON position a minimum of four times, ending in the OFF position (do not start the engine).
  - Within 30 seconds, press the driver's door lock switch in the LOCK direction. A single chime will indicate that programming is complete.

Sound Horn With Lock

- To turn the horn chirp on or off when the doors are locked:
  - Press the LOCK button for at least 4 seconds, but no longer than 10 seconds. Then, press the PANIC button while still holding the LOCK button.
  - Release both buttons at the same time.

Flashing Lights With Lock

- The turn signal lights flashing feature, when the doors are locked or unlocked, can be turned on or off. To turn this feature on or off:
  - Press and hold the UNLOCK button for at least 4 seconds, but no longer than 10 seconds. Then, press and hold the LOCK button while still holding the UNLOCK button.
  - Release both buttons at the same time.

UNIVERSAL GARAGE DOOR OPENER (HomeLink®)



Programming HomeLink®

Begin Programming

- The HomeLink® buttons are located in the overhead console.
- Erase all channels before you begin programming by holding the two outside buttons for up to 20 seconds until the red indicator flashes.
- Park your vehicle outside of the garage and turn the ignition switch to the ON/RUN position.
- Place the hand-held transmitter 1 to 3 in (3 to 8 cm) from the HomeLink® buttons while keeping the indicator light in view.
- Simultaneously, press and hold both the chosen HomeLink® button and the hand-held transmitter button until the HomeLink® indicator flash rate changes from a slow to a rapidly blinking light, then release both the HomeLink® and the hand-held transmitter buttons. This may take up to 30 seconds, or longer in rare cases.
- Press and hold the just-programmed HomeLink® button; if the indicator light stays on constantly, programming is complete and the garage door should open.

NOTE:

- Only use this transceiver with a garage door opener that has a “stop and reverse” feature as required by Federal safety standards. This includes most garage door opener models manufactured after 1982. Do not use a garage door opener without these safety features. Call toll-free 1–800–355–3515 or, on the Internet, at www.HomeLink.com for safety information or assistance.
- If you are having difficulty programming your HomeLink® and your garage door opener was manufactured after 1995, you may have a rolling code. Follow the steps below for Programming A Rolling Code System.

Programming A Rolling Code System

- At the garage door opener motor (in the garage), locate the “learn” or “programming” button. This can usually be found where the hanging antenna wire is attached to the garage door opener motor (it is NOT the button normally used to open and close the door).
- Firmly press and release the “learn” or “programming” button. The name and color of the button may vary by manufacturer. Within 30 seconds, return to the vehicle and press the programmed HomeLink® button twice (holding the button for two seconds each time). If the device is plugged in and activates, programming is complete.
- If the device does not activate, press the button a third time (for two seconds) to complete the programming.

Using HomeLink®

- To operate, simply press and release the programmed HomeLink® button and the programmed device will operate.
- Refer to your Owner’s Manual on the DVD for further details. If you have any problems programming HomeLink®, or require assistance, please call toll-free 1–800–355–3515 or, on the Internet, at www.HomeLink.com.

WARNING!

- Your motorized door or gate will open and close while you are programming the universal transceiver. Do not program the transceiver if people or pets are in the path of the door or gate.
- Do not run your vehicle in a closed garage or confined area while programming the transceiver. Exhaust gas from your vehicle contains Carbon Monoxide (CO) which is odorless and colorless. Carbon Monoxide is poisonous when inhaled and can cause you and others to be severely injured or killed.

ELECTRONICS

POWER INVERTER



- A 115 Volt, 150 Watt power inverter outlet is located on the lower instrument panel next to the climate control knob. This outlet can power cellular phones, electronics and other low power devices requiring power up to 150 Watts.
- To turn on the power outlet, press the switch once.
- Press the switch a second time to turn the power outlet off. The status indicator of the AC power inverter indicates whether the inverter is producing AC power.

NOTE: The power inverter is designed with built-in overload protection. If the power rating of 150 Watts is exceeded, the power inverter will automatically shut down. Once the electrical device has been removed from the outlet, the inverter should automatically reset. If the power rating exceeds approximately 170 Watts, the power inverter may have to be reset manually. To reset the inverter manually, unplug the device and plug it in again. To avoid overloading the circuit, check the power ratings on electrical devices prior to using the inverter.

WARNING!

To avoid serious injury or death: Do not use a three-prong adapter. Do not insert any objects into the receptacles. Do not touch with wet hands. Close the lid when not in use. If this outlet is mishandled it may cause an electric shock and failure.

POWER OUTLET

- There are four 12 Volt power outlets located in the vehicle. Lower left and lower right of the instrument panel – without floor mounted shifter. Inside the top storage tray – with floor mounted shifter. Inside the upper lid of the center storage compartment. Rear of the center console storage compartment – Quad Cab® or Crew Cab. A key symbol on the outlet cover indicates that the key must be in the ON or ACC positions for the outlet to provide power. The battery symbol on the outlet cover indicates that the outlet is connected to the battery, and can provide power at all times. All accessories connected to the outlet(s) should be removed or turned off when the vehicle is not in use to protect the battery against discharge.

NOTE:

- Do not exceed the maximum power of 160 Watts (13 Amps) at 12 Volts. If the 160 Watt (13 Amp) power rating is exceeded, the fuse protecting the system will need to be replaced.
- Power outlets are designed for accessory plugs only. Do not insert any other object in the power outlet as this will damage the outlet and blow the fuse. Improper use of the power outlet can cause damage not covered by your warranty.

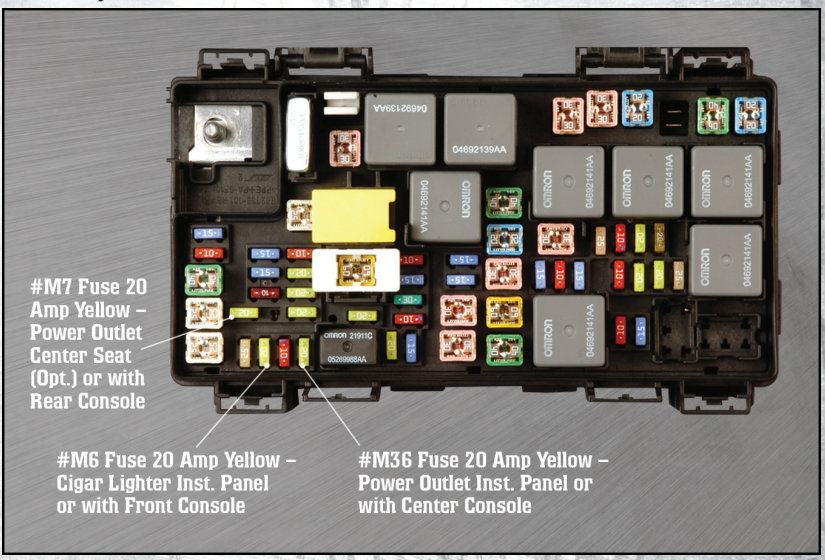

OFF-ROAD CAPABILITIES

FOUR-WHEEL DRIVE OPERATION

Four-Position Transfer Case



- The transfer case provides four mode positions:
  - Two-wheel drive high range (2H)
  - Four-wheel drive high range (4H)
  - NEUTRAL (N)
  - Four-wheel drive low range (4L)
- This transfer case is intended to be driven in the 2H position for normal street and highway conditions, such as dry, hard-surfaced roads.
- When additional traction is required, the 4H and 4L positions can be used to lock the front and rear driveshafts together.
- When operating your vehicle in 4L, do not exceed 25 mph (40 km/h).

Shifting Procedure

- Shifting between 2H and 4H can be made with the vehicle stopped or in motion at speeds up to 55 mph (88 km/h).
- Shifting between 2H or 4H and 4L must be made with the transmission in NEUTRAL and the vehicle stopped or rolling at 2 to 3 mph (3 to 5 km/h).

Five-Position Transfer Case



- This electronically shifted transfer case provides five mode positions:
  - Two-wheel drive high range (2WD)
  - Four-wheel drive automatic range (4WD AUTO)
  - Four-wheel drive lock range (4WD LOCK)
  - Four-wheel drive low range (4WD LOW)
  - NEUTRAL (N)
- This electronically shifted transfer case is designed to be driven in the two-wheel drive position (2WD) or four-wheel drive position (4WD AUTO) for normal street and highway conditions on dry, hard-surfaced roads.
- Driving the vehicle in 2WD will have greater fuel economy benefits as the front axle is not engaged in 2WD.

Shifting Procedure

- Shifting between 2H and 4WD AUTO or 4WD LOCK can be made with the vehicle stopped or in motion.

- Shifting between 2H or 4H and 4L must be made with the transmission in NEUTRAL and the vehicle stopped or rolling at 2 to 3 mph (3 to 5 km/h).

NOTE: It is preferred to have the engine running and the vehicle moving at 2 to 3 mph (3 to 5 km/h).

WARNING!

You or others could be injured if you leave the vehicle unattended with the transfer case in the NEUTRAL position without first fully engaging the parking brake. The transfer case NEUTRAL position disengages both the front and rear driveshafts from the powertrain and will allow the vehicle to move regardless of the transmission position. The parking brake should always be applied when the driver is not in the vehicle.

EASY-OFF TAILGATE

- To simplify mounting of a camper unit with an overhang, the tailgate can be removed.

NOTE: If your vehicle is equipped with a rear camera the electrical connector must be disconnected prior to removing the tailgate.

Removing the Tailgate

- Disconnect the wiring harness for the rear camera (if equipped).
- Unlatch the tailgate and remove the support cables by releasing the lock tang from the pivot.
- Raise the right side of the tailgate until the right side pivot clears the hanger bracket.
- Slide the entire tailgate to the right to free the left side pivot.
- Remove the tailgate from the vehicle.

NOTE: Do not carry the tailgate loose in the truck pickup box.

Locking Tailgate

- The lock is located next to the tailgate handle. The tailgate can be locked using the vehicle key.

WARNING!

To avoid inhaling carbon monoxide, which is deadly, the exhaust system on vehicles equipped with “Cap or Slide-In Campers” should extend beyond the overhanging camper compartment and be free of leaks.

RAMBOX®



- The RamBox® system is an integrated pickup box storage and cargo management system consisting of three features:
  - Integrated box side storage bins
  - Cargo extender/divider
  - Bed rail tie-down system

RamBox® Integrated Box Side Storage Bins

- The cargo storage bins provide watertight, lockable, illuminated storage for up to 150 lbs (68 kg) of evenly distributed cargo.
- To open a storage bin, press and release the pushbutton located on the lid.
- The interior of the RamBox® will automatically illuminate when the lid is opened. Pushing the switch once will turn off the bin lights, pushing the switch again will turn the lights back on.
- Storage bins feature two removable drain plugs (to allow water to drain from bins). To remove plug, pull up on the edge. To install, push plug downward into drain hole.
- The RamBox® storage bins can be locked using the vehicle key.

NOTE: Provisions are provided in the bins for cargo dividers and shelf supports. These accessories (in addition to other RamBox® accessories) are available from MOPAR®.

RamBox® Storage Bin Cover Emergency Release Lever

- As a security measure, a Storage Bin Cover Emergency Release is built into the storage bin cover latching mechanism.

NOTE: In the event of an individual being locked inside the storage bin, the storage bin cover can be opened from inside of the bin by pulling on the glow-in-the-dark lever attached to the storage bin cover latching mechanism.

Bed Extender

- The bed extender has three functional positions:
  - Storage Position
  - Divider Position
  - Extender Position

Storage Position

- The storage position for the bed extender is at the front of the truck bed.
- To install the bed extender into the storage position, perform the following:
  - Make sure the center handle is unlocked using the vehicle key and rotate the center handle vertically to release the extender side gates.
  - With the side gates open, position the extender fully forward in the bed against the front panel.
  - Rotate the side gates closed allowing the outboard ends to be positioned in front of the cargo tie-down loops.
  - Rotate the center handle horizontally to secure the side gates in the closed position.
  - Lock the center handle using the vehicle key to secure the panel into place and assist against theft.

Divider Position

- There are 11 divider slots along the bed inner panels which allow for various positions to assist in managing your cargo.
- To install the bed extender into a divider position perform the following:
  - Make sure the center handle is unlocked using the vehicle key and rotate the center handle vertically to release the extender side gates.
  - With the side gates open, position the extender so the outboard ends align with the intended slots in the sides of the bed.
  - Rotate the side gates closed so that the outboard ends are secured into the intended slots of the bed.
  - Rotate the center handle horizontally to secure the side gates in the closed position.
  - Lock the center handle to secure the panel into place and assist against theft.

Extender Position

- The bed extender will add an additional 15 in (38 cm) in the back of the truck when additional cargo room is needed.
- To install the bed extender into the extender position, perform the following:
  - Lower the tailgate.
  - Make sure the center handle is unlocked and rotate the center handle vertically in order to release the extender side gates.
  - Fit the end of the side gate ends onto the pin and handle.
  - Rotate the handles to the horizontal position to secure into place.

Bed Rail Tie-Down System

- There are two adjustable cleats on each side of the bed that can be used to assist in securing cargo.
- Each cleat must be located and tightened down in one of the detents, along either rail, in order to keep cargo properly secure.
- To move the cleat to any position on the rail, turn the nut counterclockwise, approximately three turns. Then, pull out on the cleat and slide it to the detent nearest the desired location. Make sure the cleat is seated in the detent and tighten the nut.
- To remove the cleats from the utility rail, remove the end cap by pushing up on the locking tab, located on the bottom of the end cap. Slide the cleat off the end of the rail.

CAUTION!

- Failure to follow the following items could cause damage to the vehicle:
  - Assure that all cargo inside the storage bins is properly secured.
  - Do not exceed cargo weight rating of 150 lb (68 kg) per bin.
- Leaving the lid open for extended periods of time could cause the vehicle battery to discharge. If the lid is required to stay open for extended periods of time, it is recommended that the bin lights be turned off manually using the on/off switch.
- Ensure cargo bin lids are closed and latched before moving or driving vehicle.
- Loads applied to the top of the bin lid should be minimized to prevent damage to the lid and latching/hinging mechanisms.
- Damage to the RamBox® bin may occur due to heavy/sharp objects placed in bin that shift due to vehicle motion. In order to minimize potential for damage, secure all cargo to prevent movement and protect inside surfaces of bin from heavy/sharp objects with appropriate padding.
- The maximum load per cleat should not exceed 250 lbs (113 kg) and the angle of the load on each cleat should not exceed 60 degrees above horizontal, or damage to the cleat or cleat rail may occur.

WARNING!

- Always close the storage bin covers when your vehicle is unattended or in motion.
- Do not allow children to have access to the storage bins. Once in the storage bin, young children may not be able to escape. If trapped in the storage bin, children can die from suffocation or heat stroke.
- In a collision, serious injury could result if the storage bin covers are not properly latched.
- Do not use a storage bin latch as a tie down.
- To reduce the risk of potential injury or property damage:
  - Cargo must be secured.
  - Do not exceed cargo load rating of your vehicle.
  - Secure all loads to truck utilizing cargo tie-downs.
  - Extender should not be used as cargo tie-down.
  - When vehicle is in motion do not exceed 150 lbs (68 kg) load on the tailgate.
  - The bed extender is not intended for off road use.
  - When not in use, the extender/divider should be in stowed or divider position with the tailgate closed.
  - When in use, all handles are to be in the locked position.

TRAILER TOWING WEIGHTS (MAXIMUM TRAILER WEIGHT RATINGS)

NOTE: For additional trailer towing information (maximum trailer weight ratings) refer to the following website addresses:

- **http://www.ramtrucks.com.**
- **http://www.ramtrucks.ca** (Canada).

INTEGRATED TRAILER BRAKE MODULE

- The Integrated Trailer Brake Controller allows you to automatically or manually activate the electronic brakes on properly equipped trailers for greater stopping power on downhill grades. The controller and status display are on the instrument panel to the left of the steering wheel, and the included control lever can activate the trailer brakes independent of the truck's brakes.

GAIN Adjustment Buttons (+/-)

- Pressing the +/- buttons, located on the left side of the module, will increase/decrease the brake control power output to the trailer brakes in 0.5 increments. The GAIN setting can be increased to a maximum of 10 or decreased to a minimum of 0 (no trailer braking).
- Refer to your Owner's Manual on the DVD for further details.

WARNING!

The ITBM module has been designed and verified for electric trailer brakes. Connecting a trailer that is not compatible with the ITBM system may result in reduced or complete loss of trailer braking. There may be a increase in stopping distance or trailer instability which could result in personal injury.

RECREATIONAL TOWING (BEHIND MOTORHOME, ETC.)

Recreational Towing – Two-Wheel Drive Models

- Recreational towing of two-wheel drive models is not allowed. Towing with the rear wheels on the ground can result in severe transmission damage.

Recreational Towing – Four-Wheel Drive Models

NOTE: Both the manual shift and electronic shift transfer cases must be shifted into NEUTRAL for recreational towing. Automatic transmissions must be shifted into the PARK position for recreational towing. Refer to the following for the proper transfer case NEUTRAL shifting procedure for your vehicle.

Recreational Towing Procedure — Manual Shift Transfer Case

- Bring the vehicle to a complete stop, shut off the engine and depress the brake pedal.
- Shift the transmission and transfer case into NEUTRAL.
- Start the engine and shift the transmission into REVERSE.
- Release the brake pedal for five seconds and ensure that there is no vehicle movement.
- Repeat the previous two steps with the transmission in DRIVE.
- Shut OFF the engine and place the ignition key in the unlocked OFF position.
- Shift the transmission into PARK and apply the parking brake.
- Attach the vehicle to the tow vehicle with the tow bar and release the parking brake.

Recreational Towing Procedure — Electronic Shift Transfer Case

- Use the following procedure to prepare your vehicle for recreational towing:
- Bring the vehicle to a complete stop, turn the ignition key to the ON/RUN position, but do not start the engine.
- Press the brake pedal and shift the transmission into NEUTRAL.
- Press and hold the transfer case switch NEUTRAL button for four seconds.
- After the shift is completed and the NEUTRAL light turns on, release the NEUTRAL button.
- Start the engine and shift the transmission into REVERSE.
- Release the brake pedal for five seconds and ensure that there is no vehicle movement.
- Repeat the previous two steps with the transmission in DRIVE.
- Turn the engine OFF and place the ignition key in the unlocked OFF position.
- Shift the transmission into PARK and apply the parking brake.
- Attach the vehicle to the tow vehicle with the tow bar and release the parking brake.

NOTE:

- The first two steps are requirements that must be met prior to depressing the NEUTRAL button, and must continue to be met until the four seconds elapse and the shift has been completed. If any of these requirements (with the exception of Key ON) are not met prior to depressing the NEUTRAL button or are no longer met during the four second timer, then the NEUTRAL indicator light will flash continuously until all requirements are met or until the NEUTRAL button is released.
- The flashing NEUTRAL indicator light indicates that shift requirements have not been met.
- Refer to your Owner's Manual on the DVD for further details.

CAUTION!

Failure to follow these requirements can cause severe damage to the transmission and/or transfer case.

24-HOUR TOWING ASSISTANCE - U.S. ONLY

- Dial toll-free 1-800-521-2779 or 1-800-363-4869 for Canadian residents.
- Provide your name, vehicle identification number and license plate number.
- Provide your location, including telephone number, from which you are calling.
- Briefly describe the nature of the problem and answer a few simple questions.
- You will be given the name of the service provider and an estimated time of arrival. If you feel you are in an “unsafe situation”, please let us know. With your consent, we will contact local police or safety authorities.

INSTRUMENT CLUSTER WARNING LIGHTS

- Electronic Stability Program (ESP) Indicator Light

- If this indicator light flashes during acceleration, apply as little throttle as possible. While driving, ease up on the accelerator. Adapt your speed and driving to the prevailing road conditions. To improve the vehicle's traction when starting off in deep snow, sand or gravel, it may be desirable to switch the ESP system off.

- Tire Pressure Monitoring System (TPMS) Light

- Each tire, including the spare (if provided), should be checked monthly, when cold and inflated to the inflation pressure recommended by the vehicle manufacturer on the vehicle placard or tire inflation pressure label. (If your vehicle has tires of a different size than the size indicated on the vehicle placard or tire inflation pressure label, you should determine the proper tire inflation pressure for those tires.)
- As an added safety feature, your vehicle has been equipped with a Tire Pressure Monitoring System (TPMS) that illuminates a low tire pressure telltale when one or more of your tires is significantly under-inflated. Accordingly, when the low tire pressure telltale illuminates, you should stop and check your tires as soon as possible, and inflate them to the proper pressure. Driving on a significantly under-inflated tire causes the tire to overheat and can lead to tire failure. Under-inflation also reduces fuel efficiency and tire tread life, and may affect the vehicle’s handling and stopping ability.
- Please note that the TPMS is not a substitute for proper tire maintenance, and it is the driver’s responsibility to maintain correct tire pressure, even if under-inflation has not reached the level to trigger illumination of the TPMS low tire pressure telltale.
- Your vehicle has also been equipped with a TPMS malfunction indicator to indicate when the system is not operating properly. The TPMS malfunction indicator is combined with the low tire pressure telltale. When the system detects a malfunction, the telltale will flash for approximately one minute and then remain continuously illuminated. This sequence will continue upon subsequent vehicle start-ups as long as the malfunction exists.

- When the malfunction indicator is illuminated, the system may not be able to detect or signal low tire pressure as intended. TPMS malfunctions may occur for a variety of reasons, including the installation of replacement or alternate tires or wheels on the vehicle that prevent the TPMS from functioning properly. Always check the TPMS malfunction telltale after replacing one or more tires or wheels on your vehicle, to ensure that the replacement or alternate tires and wheels allow the TPMS to continue to function properly.

CAUTION!

The TPMS has been optimized for the original equipment tires and wheels. TPMS pressures and warning have been established for the tire size equipped on your vehicle. Undesirable system operation or sensor damage may result when using replacement equipment that is not of the same size, type, and/or style. Aftermarket wheels can cause sensor damage. Do not use tire sealant from a can, or balance beads if your vehicle is equipped with a TPMS, as damage to the sensors may result.

- Engine Temperature Warning Light

- This light warns of an overheated engine condition.
- If the light turns on and a warning chime sounds while driving, safely pull over and stop the vehicle. If the A/C system is on, turn it off. Also, shift the transmission into NEUTRAL and idle the vehicle. If the temperature reading does not return to normal, turn the engine off immediately.
- We recommend that you do not operate the vehicle or engine damage will occur. Have the vehicle serviced immediately.

WARNING!

A hot engine cooling system is dangerous. You or others could be badly burned by steam or boiling coolant. You may want to call an authorized service center for service if your vehicle overheats.

BRAKE - Brake Warning Light

- The Brake Warning light illuminates when there is either a system malfunction or the parking brake is applied. If the light is on and the parking brake is not applied, it indicates a possible brake hydraulic malfunction, brake booster problem or an Anti-Lock Brake System problem.
- We recommend you drive to the nearest service center and have the vehicle serviced immediately.

WARNING!

Driving a vehicle with the red brake light on is dangerous. Part of the brake system may have failed. It will take longer to stop the vehicle. You could have a collision. Have the vehicle checked immediately.

- Malfunction Indicator Light (MIL)

- Certain conditions, such as a loose or missing gas cap, poor fuel quality, etc., may illuminate the MIL after engine start. The vehicle should be serviced if the light stays on through several typical driving cycles. In most situations, the vehicle will drive normally and not require towing.
- If the MIL flashes when the engine is running, serious conditions may exist that could lead to immediate loss of power or severe catalytic converter damage. We recommend you do not operate the vehicle. Have the vehicle serviced immediately.

ESP BAS - Electronic Stability Program (ESP) Indicator Light/Brake Assist System (BAS) Warning Light

- If the ESP/BAS warning light comes on continuously with the engine running, a malfunction has been detected.
- If this light remains on after several ignition cycles, and the vehicle has been driven several miles (kilometers) at speeds greater than 30 mph (48 km/h), we recommend you drive to the nearest service center and have the vehicle serviced immediately.

- Charging System Light

- This light shows the status of the electrical charging system. If the charging system light remains on, it means that the vehicle is experiencing a problem with the charging system.
- We recommend you do not continue driving if the charging system light is on. Have the vehicle serviced immediately.

- Oil Pressure Warning Light

- This light indicates low engine oil pressure. If the light turns on while driving, stop the vehicle and shut off the engine as soon as possible. A chime will sound for four minutes when this light turns on.
- We recommend you do not operate the vehicle or engine damage will occur. Have the vehicle serviced immediately.

(ABS) - Anti-Lock Brake (ABS) Light

- This light monitors the Anti-Lock Brake System (ABS).
- If the light is not on during starting, stays on, or turns on while driving, we recommend you drive to the nearest service center and have the vehicle serviced immediately.

WHAT TO DO IN EMERGENCIES

- Electronic Throttle Control (ETC) Light

- This light informs you of a problem with the Electronic Throttle Control (ETC) system.
- If a problem is detected, the light will come on while the engine is running. Cycle the ignition when the vehicle has completely stopped and the shift lever is placed in the PARK position; the light should turn off.
- If the light remains lit with the engine running, your vehicle will usually be drivable; however, see an authorized service center immediately. If the light is flashing when the engine is running, immediate service is required and you may experience reduced performance, an elevated/rough idle or engine stall and your vehicle may require towing.

- Airbag Warning Light

- If the light is not on during starting, stays on, or turns on while driving, have the vehicle serviced by an authorized service center immediately.

SERV 4WD - SERV (Service) 4WD Indicator Light

- If the light stays on or comes on during driving, it means that the 4WD system is not functioning properly and that service is required. We recommend you drive to the nearest service center and have the vehicle serviced immediately.

- Transmission Temperature Warning Light

- This light indicates that there is excessive transmission fluid temperature that might occur with severe usage such as trailer towing. If this light turns on, stop the vehicle and run the engine at idle, with the transmission in NEUTRAL, until the light turns off. Once the light turns off, you may continue to drive normally.

- Fuel Cap/Loose Gas Cap Message

- If a “gas cap” message (shown as gASCAP) appears, tighten the gas cap until a “clicking” sound is heard.
- Press the odometer reset button to turn the message off.
- If the message continues to appear for more than three days after tightening the gas cap, see your authorized service center.

Oil Change Indicator

Message

- If an “oil change” message (shown as CHAngE OIL) appears and a single chime sounds, it is time for your next required oil change.

Resetting The Light After Servicing

- Turn the ignition switch to the ON/RUN position (do not start engine).
- Fully depress the accelerator pedal three times within 10 seconds.
- Turn the ignition switch to the OFF/LOCK position.

IF YOUR ENGINE OVERHEATS

- In any of the following situations, you can reduce the potential for overheating by taking the appropriate action.
  - On the highways — slow down.
  - In city traffic — while stopped, shift transmission into NEUTRAL, but do not increase engine idle speed.

NOTE: There are steps that you can take to slow down an impending overheat condition:

- If your air conditioner (A/C) is on, turn it off. The A/C system adds heat to the engine cooling system and turning the A/C off can help remove this heat.
- You can also turn the Temperature Control to maximum heat, the Mode Control to floor and the Fan Control to high. This allows the heater core to act as a supplement to the radiator and aids in removing heat from the engine cooling system.
- If the temperature reading does not return to normal, turn the engine off immediately.
- We recommend that you do not operate the vehicle or engine damage will occur. Have the vehicle serviced immediately.

CAUTION!

Driving with a hot cooling system could damage your vehicle. If the temperature gauge reads HOT (H), pull over and stop the vehicle. Idle the vehicle with the air conditioner turned off until the pointer drops back into the normal range. If the pointer remains on HOT (H), and you hear continuous chimes, turn the engine off immediately and call for service.

WARNING!

You or others can be badly burned by hot engine coolant (antifreeze) or steam from your radiator. If you see or hear steam coming from under the hood, do not open the hood until the radiator has had time to cool. Never try to open a cooling system pressure cap when the radiator or coolant bottle is hot.

WHAT TO DO IN EMERGENCIES

JACKING AND TIRE CHANGING

Jack Location



- The jack and jack tools are stored under the front passenger seat.
- Remove the plastic access cover, located on the side of the seat, by pulling the front part of the cover (closest to the front of the seat) toward you to release a locking tab.
- Once the front of the cover is loose, slide the cover toward the front of the seat until it is free from the seat frame.
- Remove the jack and tools by removing the wing bolt and sliding the assembly from under the seat.

Spare Tire Stowage

NOTE: Remove the spare tire before attempting to jack up the truck.

- To remove the spare tire, remove the jack-handle components from the storage area and assemble them.
- Attach the wheel wrench to the jack extension tube and insert the tube through the access hole in the rear bumper and into the winch mechanism tube.
- Rotate the wheel wrench handle counterclockwise until the spare tire is on the ground with enough cable slack to allow you to pull it out from under the vehicle.
- When the spare is clear, tilt the retainer at the end of the cable and pull it through the center of the wheel.

Preparations For Jacking

- Park on a firm, level surface. Avoid ice or slippery areas.
- Set the parking brake and shift the automatic transmission into PARK, or a manual transmission into REVERSE. On Four-Wheel Drive vehicles, shift the transfer case to the 4L position.
- Turn the ignition to LOCK and turn on the Hazard Warning flasher.

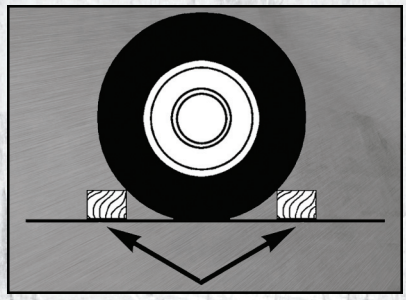

- Block both the front and rear of the wheel diagonally opposite of the jacking position. For example, if changing the right front tire, block the left rear wheel.

Hub Caps/Wheel Covers — If Equipped

- The hub caps must be removed before raising the vehicle off the ground.
- For 2500/3500 single rear-wheel (SRW) models, use the blade on the end of the lug wrench to pry the hub cap off. Insert the blade end into the pry-off notch and carefully pop off the hub cap with a back-and-forth motion.
- On 3500 models with dual rear wheels (DRW), position the hook on the jack handle driver into the notch on the hub cap and pull out firmly. The hub cap should pop off. The wheel skins can now be removed. For the front hub cap on 3500 models, use the blade on the end of the lug wrench to pry the caps off. The wheel skins can now be removed by using the flat end of the lug wrench to pry them off. Insert the flat tip completely and using a back-and-forth motion, loosen the wheel skin.

NOTE: Passengers should not remain in the vehicle when the vehicle is being jacked.

WHAT TO DO IN EMERGENCIES

Jacking And Tire Changing Instructions

- Remove the spare tire, jack and tools from the stored location.
- Loosen (but do not remove) the wheel lug nuts by turning them counterclockwise one turn while the wheel is still on the ground.
- Assemble the jack and jacking tools. Connect the jack handle driver to the extension, then to the lug wrench.

1500-Series Trucks

- For front wheels, place the scissors jack under the rear portion of the lower control arm.



Front 4x2 Jacking Location



- For rear wheels, place the jack under the axle between the wheel and the shock bracket with the jack drive tubes extending to the rear.
- Turn the jack screw clockwise to firmly engage the jack saddle with the lift area.



2500/3500-Series Trucks

- For **4x2 front wheels,** place the bottle jack under the frame rail behind the wheel. Locate the jack as far forward as possible on the straight part of the frame.

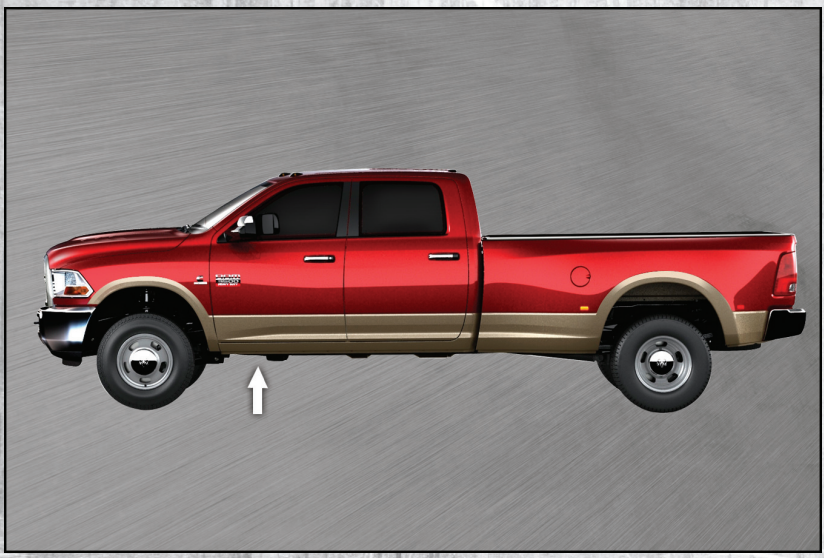

- For **4x4 front wheels,** place the jack under the axle as close to the tire as possible with the drive tubes extending to the front.

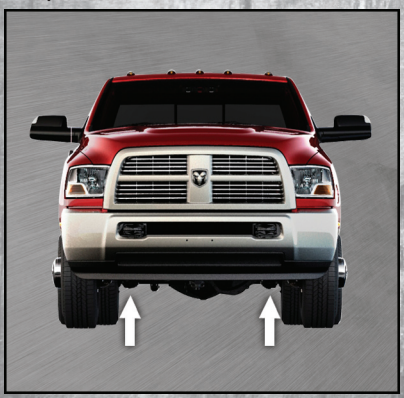

- For **rear wheels,** place the jack under the axle between the spring and the shock absorber with the drive tubes extending to the rear.

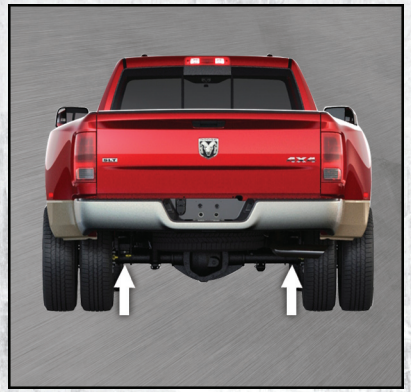

- Turn the jack screw clockwise to firmly engage the jack saddle with the lift area.
- Raise the vehicle by turning the jack screw clockwise. Raise the vehicle only until the tire just clears the surface and enough clearance is obtained to install the spare tire.
- Remove the lug nuts and wheel.

- Position the spare wheel/tire on the vehicle and install the lug nuts with the cone-shaped end toward the wheel. Lightly tighten the lug nuts clockwise. To avoid the risk of forcing the vehicle off the jack, do not tighten the nuts fully until the vehicle has been lowered.
- Lower the vehicle by turning the jack screw counterclockwise, and remove the jack and wheel blocks.

NOTE: If the jack will not lower by turning the screw by hand, it may be necessary to use the jack drive tube in order to lower the jack.

- Finish tightening the lug nuts using a crisscross pattern. Push down on the wrench while tightening for increased leverage. The correct wheel nut tightness is:
  - 130 ft lbs (177 N·m) torque for 1500 Series,
  - 135 ft lbs (183 N·m) torque for 2500/3500 single-rear wheel (SRW) models,
  - 145 ft lbs (197 N·m) for 3500 dual rear-wheel models.
- If in doubt about the correct tightness, have them checked with a torque wrench by your authorized dealer or at a service station.
- Install the wheel center cap and remove the wheel blocks. Do not install chrome or aluminum wheel center caps on the spare wheel. This may result in cap damage.
- Secure the tire, jack, and tools in their proper locations.
- Position the wheel so that the valve stem is facing the ground. Slide the wheel retainer through the center of the wheel and position it properly across the wheel opening.

NOTE: Aluminum wheels cannot be stored under the vehicle because the wheel retainer will not fit through the wheel pilot hole. Secure the flat tire in the bed of the truck. Have the flat tire repaired or replaced immediately.

WHAT TO DO IN EMERGENCIES

CAUTION!

Before raising the wheel off the ground, make sure that the jack will not damage surrounding truck parts and adjust the jack position as required.

WARNING!

- Do not attempt to change a tire on the side of the vehicle close to moving traffic. Pull far enough off the road to avoid the danger of being hit when operating the jack or changing the wheel.
- Getting under a jacked-up vehicle is dangerous. The vehicle could slip off the jack and fall on you. You could be crushed. Never get any part of your body under a vehicle that is on a jack. If you need to get under a raised vehicle, take it to a service center where it can be raised on a lift.
- The jack is designed to use as a tool for changing tires only. The jack should not be used to lift the vehicle for service purposes. The vehicle should be jacked on a firm, level surface only. Avoid ice or slippery areas.
- If it is necessary to retrieve the spare tire from under the vehicle on the side of the vehicle close to moving traffic, pull far enough off the road to avoid the danger of being hit.
- Carefully follow these tire changing procedures to help prevent personal injury or damage to your vehicle: Always park on a firm, level surface as far from the edge of the roadway as possible before raising the vehicle.
- Raising the vehicle higher than necessary can make the vehicle less stable and could cause it to slip off the jack and hurt someone near it. Raise the vehicle only enough to remove the tire.
- A loose tire or jack, thrown forward in a collision or hard stop, could endanger the occupants of the vehicle. Always stow the jack parts and the spare tire in the places provided.

JUMP-STARTING



- If your vehicle has a discharged battery it can be jump-started using a set of jumper cables and a battery in another vehicle or by using a portable battery booster pack.
- Jump-starting can be dangerous if done improperly so please follow the procedures in this section carefully.

NOTE: When using a portable battery booster pack follow the manufacturer's operating instructions and precautions.

Preparations for Jump-Start

- The battery in your vehicle is located in the front of the engine compartment, behind the left headlight assembly.

NOTE: The positive battery post is covered with a protective cap. Lift up on the cap to gain access to the positive battery post.

- Set the parking brake, shift the automatic transmission into PARK and turn the ignition to LOCK.
- Turn off the heater, radio, and all unnecessary electrical accessories.
- If using another vehicle to jump-start the battery, park the vehicle within the jumper cables reach, set the parking brake and make sure the ignition is OFF.

WHAT TO DO IN EMERGENCIES

Jump-Starting Procedure

- Connect the positive (+) end of the jumper cable to the positive (+) post of the discharged vehicle.
- Connect the opposite end of the positive (+) jumper cable to the positive (+) post of the booster battery.
- Connect the negative end (-) of the jumper cable to the negative (-) post of the booster battery.
- Connect the opposite end of the negative (-) jumper cable to a good engine ground (exposed metal part of the discharged vehicle's engine) away from the battery and the fuel injection system.
- Start the engine in the vehicle that has the booster battery, let the engine idle a few minutes, and then start the engine in the vehicle with the discharged battery.

Once the engine is started, remove the jumper cables in the reverse sequence:

- Disconnect the negative (-) jumper cable from the engine ground of the vehicle with the discharged battery.
- Disconnect the negative end (-) of the jumper cable from the negative (-) post of the booster battery.
- Disconnect the opposite end of the positive (+) jumper cable from the positive (+) post of the booster battery.
- Disconnect the positive (+) end of the jumper cable from the positive (+) post of the discharged vehicle.
- If frequent jump-starting is required to start your vehicle you should have the battery and charging system inspected at your authorized dealer.

CAUTION!

- Do not use a portable battery booster pack or any other booster source with a system voltage greater than 12 Volts or damage to the battery, starter motor, alternator or electrical system may occur.
- Failure to follow these procedures could result in damage to the charging system of the booster vehicle or the discharged vehicle.
- Accessories that can be plugged into the vehicle power outlets draw power from the vehicle's battery, even when not in use (i.e., cellular phones, etc.). Eventually, if plugged in long enough, the vehicle's battery will discharge sufficiently to degrade battery life and/or prevent the engine from starting.

WARNING!

- When temperatures are below the freezing point, electrolyte in a discharged battery may freeze. Do not attempt jump-starting because the battery could rupture or explode and cause personal injury. Battery temperature must be brought above the freezing point before attempting a jump-start.

(Continued)

WARNING! *(Continued)*

- Take care to avoid the radiator cooling fan whenever the hood is raised. It can start anytime the ignition switch is on. You can be injured by moving fan blades.
- Remove any metal jewelry, such as watch bands or bracelets, that might make an inadvertent electrical contact. You could be severely injured.
- Batteries contain sulfuric acid that can burn your skin or eyes and generate hydrogen gas which is flammable and explosive. Keep open flames or sparks away from the battery.
- Do not allow vehicles to touch each other as this could establish a ground connection and personal injury could result.
- Failure to follow this procedure could result in personal injury or property damage due to battery explosion.
- Do not connect the cable to the negative post (-) of the discharged battery. The resulting electrical spark could cause the battery to explode and could result in personal injury.

EMERGENCY TOW HOOKS

- If your vehicle is equipped with tow hooks, they are mounted in the front.
- For off-road recovery, it is recommended to use both of the front tow hooks to minimize the risk of damage to the vehicle.

CAUTION!

Tow hooks are for emergency use only, to rescue a vehicle stranded off-road. Do not use tow hooks for tow truck hookup or highway towing. You could damage your vehicle. Tow straps are recommended when towing the vehicle; chains may cause vehicle damage.

WARNING!

- Chains are not recommended for freeing a stuck vehicle. Chains may break, causing serious injury or death.
- Stand clear of vehicles when pulling with tow hooks. Tow straps and chains may break, causing serious injury.

WHAT TO DO IN EMERGENCIES

SHIFT LEVER OVERRIDE



- If a malfunction occurs and the shift lever cannot be moved out of the PARK position, you can use the following procedure to temporarily move the shift lever.

Column Shifter

- Tilt the steering wheel to the full up position and firmly set the parking brake.
- Turn the Key Fob to the ACC or ON/RUN position without starting the engine.
- Press and maintain firm pressure on the brake pedal.
- Using a screwdriver, press and hold the override tab through the access port (ringed circle) on the bottom of the steering column.
- Move the shift lever into the NEUTRAL position and start the vehicle.
- Release the parking brake.

Center Console Shifter

- Firmly set the parking brake.
- Turn the Key Fob to the ACC or ON/RUN position without starting the engine.
- Press and maintain firm pressure on the brake pedal.
- Using a screwdriver, press and hold the override tab through the access port on the center console.
- Move the shift lever into the NEUTRAL position and start the vehicle.
- Release the parking brake.
- Have your vehicle inspected by your local authorized dealer immediately if the shift lever override has been used.

TOWING A DISABLED VEHICLE

Model	Flat Towing (all four wheels on the ground)	Flatbed Towing (all four wheels suspended OFF the ground)	Front Wheels Raised, Rear Wheels on the Ground	Rear Wheels Raised, Front Wheels on the Ground
Two-Wheel Drive - Transmission not operable	Not Permitted	Recommended Method	NOT Permitted without towing dolly	Permitted
Two-Wheel Drive - Transmission operable	Not Permitted	Recommended Method	Shift lever must be in NEUTRAL, the speed less than 30 mph (48 km/h) and the distance traveled less than 15 mi (24 km).	Permitted
Four-Wheel Drive	Transfer case must be in NEUTRAL and transmission in PARK Ignition key must be in unlocked OFF position Must use appropriate tow bar device	Recommended Method	Transfer case must be in NEUTRAL and transmission in PARK	Transfer case must be in NEUTRAL and transmission in PARK

WHAT TO DO IN EMERGENCIES

FREEING A STUCK VEHICLE

- If your vehicle becomes stuck in mud, sand or snow, it can often be moved by a rocking motion. Turn your steering wheel right and left to clear the area around the front wheels. Then, move the shift lever back and forth between REVERSE and DRIVE. Using minimal accelerator pedal pressure to maintain the rocking motion, without spinning the wheels, is most effective.
- Allow the engine to idle with the transmission shift lever in NEUTRAL for at least one minute after every five rocking-motion cycles. This will minimize overheating and reduce the risk of transmission failure during prolonged efforts to free a stuck vehicle.

NOTE: If your vehicle is equipped with Electronic Stability Program (ESP) or Traction Control , turn the system off before attempting to "rock" the vehicle.

CAUTION!

Revving the engine or spinning the wheels too fast may lead to transmission overheating and failure. It can also damage the tires. Do not spin the wheels above 30 mph (48 km/h) while in gear (no transmission shifting occurring).

WARNING!

Fast spinning tires can be dangerous. Forces generated by excessive wheel speeds may cause tire damage or failure. A tire could explode and injure someone. Do not spin your vehicle's wheels faster than 30 mph (48 km/h) when you are stuck. Do not let anyone near a spinning wheel, no matter what the speed.

EVENT DATA RECORDER (EDR)

- This vehicle is equipped with an event data recorder (EDR). The main purpose of an EDR is to record, in certain crash or near crash-like situations, such as an air bag deployment or hitting a road obstacle, data that will assist in understanding how a vehicle's systems performed. The EDR is designed to record data related to vehicle dynamics and safety systems for a short period of time, typically 30 seconds or less. The EDR in this vehicle is designed to record such data as:
  - How various systems in your vehicle were operating;
  - Whether or not the driver and passenger safety belts were buckled/fastened;
  - How far (if at all) the driver was depressing the accelerator and/or brake pedal; and,
  - How fast the vehicle was traveling.
- These data can help provide a better understanding of the circumstances in which crashes and injuries occur.

NOTE: EDR data are recorded by your vehicle only if a non-trivial crash situation occurs; no data are recorded by the EDR under normal driving conditions and no personal data (e.g. name, gender, age, and crash location) are recorded. However, other parties, such as law enforcement, could combine the EDR data with the type of personally identifying data routinely acquired during a crash investigation.

- To read data recorded by an EDR, special equipment is required, and access to the vehicle or the EDR is needed. In addition to the vehicle manufacturer, other parties such as law enforcement, that have the special equipment, can read the information if they have access to the vehicle or the EDR.

OPENING THE HOOD

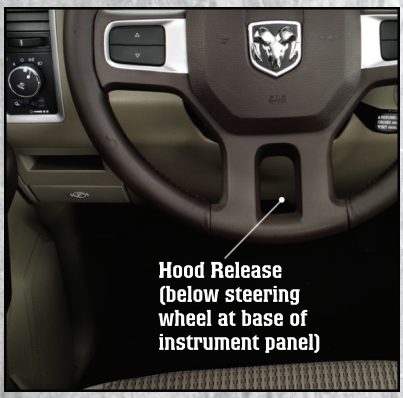

- Pull the hood release lever located below the steering wheel at the base of the instrument panel.
- Reach into the opening beneath the center of the hood and move the safety latch lever while lifting the hood at the same time.

WARNING!

Be sure the hood is fully latched before driving your vehicle. If the hood is not fully latched, it could open when the vehicle is in motion and block your vision. Failure to follow this warning could result in serious injury or death.

ENGINE COMPARTMENT

3.7L Engine

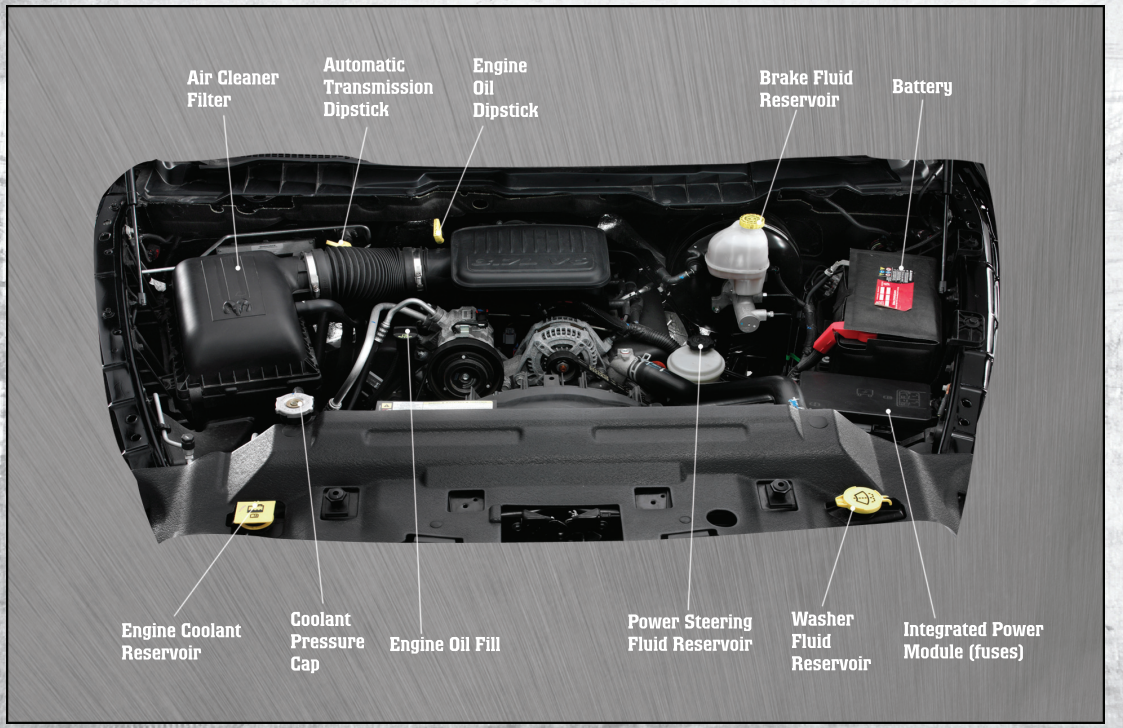

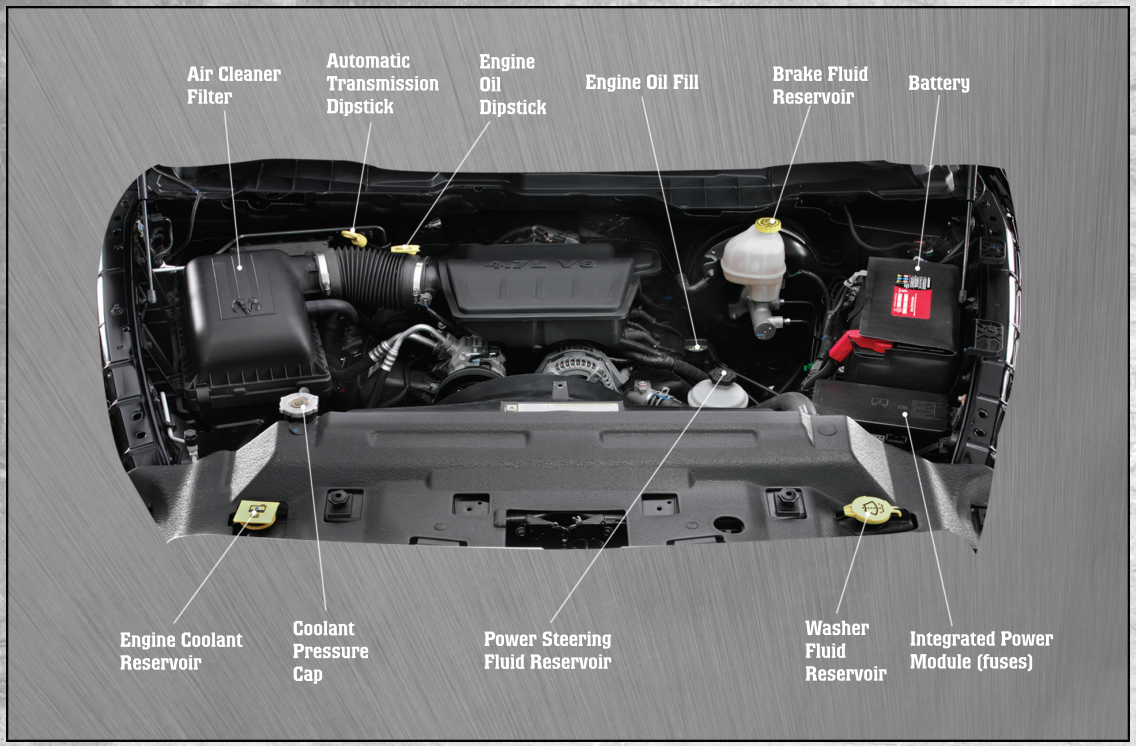
Air Cleaner Filter
Automatic Transmission Dipstick
Engine Oil Dipstick
Engine Oil Fill
Brake Fluid Reservoir
Battery
Engine Coolant Reservoir
Coolant Pressure Cap
Power Steering Fluid Reservoir
Washer Fluid Reservoir
Integrated Power Module (fuses)

5.7L Engine

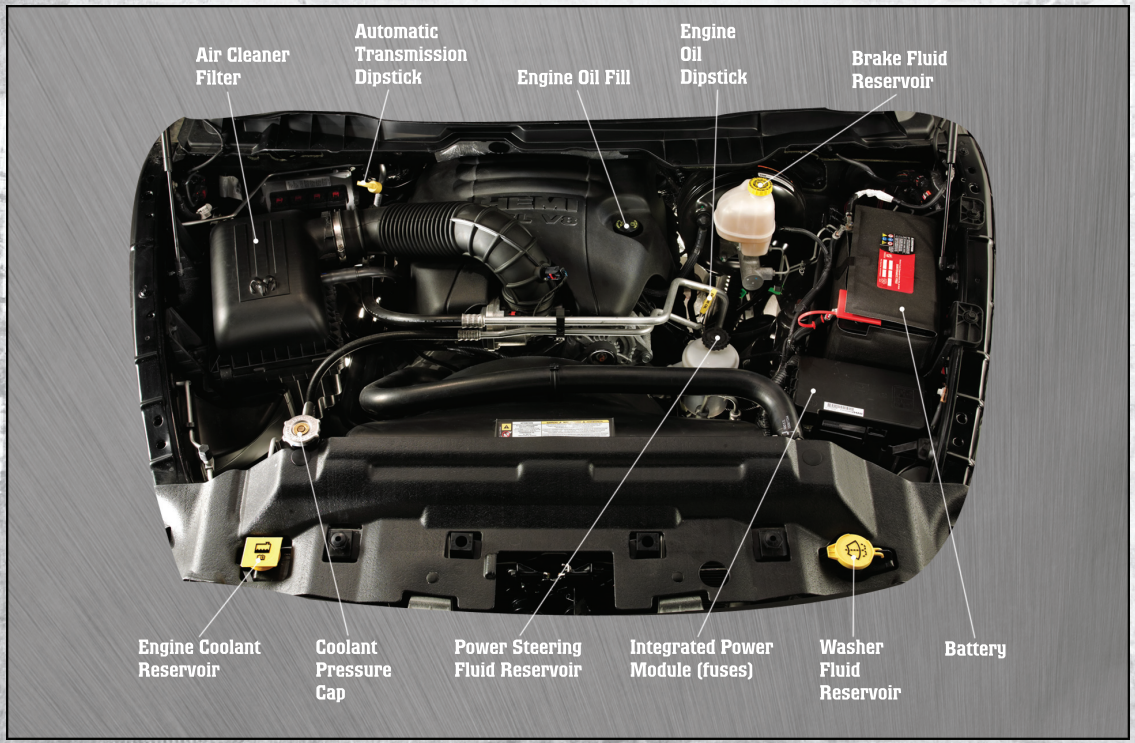
Air Cleaner Filter
Automatic Transmission Dipstick
Engine Oil Fill
Engine Oil Dipstick
Brake Fluid Reservoir
Engine Coolant Reservoir
Coolant Pressure Cap
Power Steering Fluid Reservoir
Integrated Power Module (fuses)
Washer Fluid Reservoir
Battery

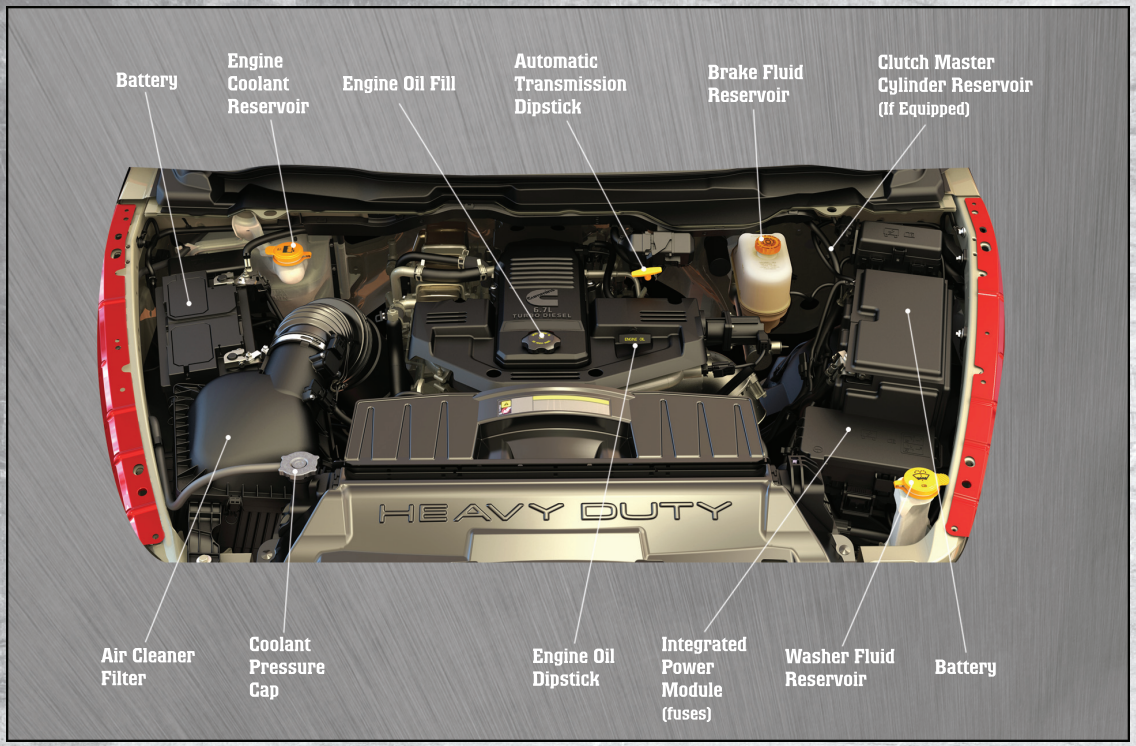
Battery
Engine Coolant Reservoir
Engine Oil Fill
Automatic Transmission Dipstick
Brake Fluid Reservoir
Clutch Master Cylinder Reservoir (If Equipped)
Air Cleaner Filter
Coolant Pressure Cap
Engine Oil Dipstick
Integrated Power Module (fuses)
Washer Fluid Reservoir
Battery
HEAVY DUTY

FUEL FILTER/WATER SEPARATOR — DIESEL ONLY

Draining Fuel/Water Separator

- If the “Water in Fuel” indicator light is illuminated and an audible chime is heard five times, you should stop the engine and drain the water from the separator.
- The drain is located on the bottom of the Fuel Filter and Water Separator assembly which is located on the driver's side of the engine.
- Turn the drain valve (located on the side of the filter) counterclockwise 1/4 turn, then turn the ignition switch to the ON/RUN position to allow any accumulated water to drain.
- When clean fuel is visible, close the drain and switch the ignition to OFF.
- Refer to the Owner's Manual on the DVD for further details.

Fuel Filter Replacement — Diesel Only

- With the engine off and a drain pan under the fuel filter drain hose, open the water drain valve 1/4 turn counterclockwise and completely drain fuel and water into the approved container.
- Close the water drain valve and remove the lid using a socket or strap wrench; rotate counterclockwise for removal. Remove the used o-ring and discard it.
- Remove the used filter cartridge from the housing and dispose of according to your local regulations.
- Wipe clean the sealing surfaces of the lid and housing and install the new o-ring into ring groove on the filter housing and lubricate with clean engine oil.
- Install a new filter in the housing. Push down on the cartridge to ensure it is properly seated. **Do not pre-fill the filter housing with fuel.**
- Install the lid onto the housing and tighten to 22.5 ft lbs (30.5 Nm). Do not overtighten the lid.
- Start the engine and confirm no leaks are present.

CAUTION!

- Diesel fuel will damage blacktop paving surfaces. Drain the filter into an appropriate container.
- Do not prefill the fuel filter when installing a new fuel filter. There is a possibility debris could be introduced into the fuel filter during this action. It is best to install the filter dry and allow the in-tank lift pump to prime the fuel system.
- If the “Water In Fuel Indicator Light” remains on, DO NOT START the engine before you drain water from the fuel filter to avoid engine damage.
- Diesel fuel will damage blacktop paving surfaces. Drain the filter into an appropriate container.

EXHAUST REGENERATION — DIESEL ONLY

- Under certain conditions, your Cummins® diesel engine and exhaust after-treatment system may never reach the conditions required to remove the trapped particulate matter. If this occurs, the "Exhaust System — Regeneration Required Now" message will be displayed on the EVIC screen in your cluster and you will hear one chime to alert you of this condition. Driving your vehicle at highway speeds for as little as 45 minutes can remedy the condition and allow the engine and exhaust after-treatment system to remove the trapped particulate matter.
- PLEASE NOTE: Under typical operating conditions, NO indications of regeneration state will be displayed. If you do reach 80% of filter capacity, the following messages will assist you in inducing and understanding the regeneration process.

Exhaust System — Regeneration Required Now

- "Exhaust System—Regeneration Required Now" will be displayed on the EVIC if the exhaust particulate filter reaches 80% of its maximum storage capacity.

Exhaust Filter XX% Full

- Indicates that the Diesel Particulate Filter (DPF) is approaching full.

Exhaust System — Regeneration in Process

- Indicates that the Diesel Particulate Filter (DPF) is self-cleaning. Maintain your current driving condition until regeneration is completed.

Exhaust System — Regeneration Completed

- Indicates that the Diesel Particulate Filter (DPF) self-cleaning is completed. If this message is displayed, you will hear one chime to assist in alerting you of this condition.

Service Required — See Dealer Now

- Regeneration has been disabled due to a system malfunction. The Powertrain control Module (PCM) will register a fault code and the instrument panel will display the MIL light.

Exhaust Filter Full — Power Reduced See Dealer

- The PCM derates the engine in order to limit the likelihood of permanent damage to the after-treatment system. If this condition is not corrected and a dealer service is not performed, extensive exhaust after-treatment damage can occur. Have your vehicle serviced by your local authorized dealer.

CAUTION!

- See your authorized dealer, as damage to the exhaust system could occur soon with continued operation.

FLUIDS AND CAPACITIES

Component	Fluid, Lubricant, or Genuine Part	Capacities
Engine Coolant 3.7L, 4.7L	MOPAR® Antifreeze/Coolant Five Year/100,000 Mile Formula HOAT (Hybrid Organic Additive Technology) or equivalent.	14 Quarts (13 Liters)
Engine Coolant 5.7L 1500 Models	MOPAR® Antifreeze/Coolant Five Year/100,000 Mile Formula HOAT (Hybrid Organic Additive Technology) or equivalent.	16 Quarts (15 Liters)
Engine Coolant 5.7L 2500/3500 Models	MOPAR® Antifreeze/Coolant Five Year/100,000 Mile Formula HOAT (Hybrid Organic Additive Technology) or equivalent.	18.7 Quarts (17.7 Liters)
Engine Coolant 5.7L 2500/3500 Models w/Heavy Duty	MOPAR® Antifreeze/Coolant Five Year/100,000 Mile Formula HOAT (Hybrid Organic Additive Technology) or equivalent.	19.2 Quarts (18.2 Liters)
Engine Coolant 6.7L Turbo Diesel Engine	MOPAR® Antifreeze/Coolant Five Year/100,000 Mile Formula HOAT (Hybrid Organic Additive Technology) or equivalent.	5.7 Gallons (21.4 Liters)
Engine Oil with Filter 3.7L, 4.7L, 5.7L	API certified 5W-20 engine oil, meeting the requirements of Chrysler Material Standard MS-6395. Refer to your oil filler cap for correct SAE grade.	3.7L 5 Quarts (4.7 Liters) 4.7L 6 Quarts (5.7 Liters) 5.7L 7 Quarts (6.6 Liters)
Engine Oil with Filter 5.7L For 2500/3500 trucks operating with a gross combined weight rating greater than 14,000 lbs/ (6,350 kg).	Use API Certified SAE 5W-30 engine oil, meeting the requirements of Chrysler Material Standard MS-6395. Refer to your engine oil filler cap for correct SAE grade.	5.7L 7 Quarts (6.6 Liters)
Engine Oil with Filter 6.7L Turbo Diesel Engine	In ambient temperatures below 0°F (-18°C), 5W-40 synthetic engine oil that meets Chrysler Materials Standard MS-10902 and the API CJ-4 engine oil category is required. In ambient temperatures above 0°F (-18°C), 15W-40 engine oil that meets Chrysler Materials Standard MS-10902 and the API CJ-4 engine oil category is required.	12 Quarts (11.4 Liters)

Component	Fluid, Lubricant, or Genuine Part	Capacities
Fuel Selection 3.7L, 4.7L	87 Octane	1500 Regular Cab Shortbed/Crew Quad Cab - 26 Gallons (98 Liters) 1500 Regular Cab Longbed/Crew Quad Cab (Optional) - 32 Gallons (121 Liters) 2500/3500 Shortbed - 34 Gallons (129 Liters) 2500/3500 Longbed - 35 Gallons (132 Liters)
Fuel Selection 5.7L	87 Octane Acceptable. 89 Octane Recommended.	1500 Regular Cab Shortbed/Crew Quad Cab - 26 Gallons (98 Liters) 1500 Regular Cab Longbed/Crew Quad Cab (Optional) - 32 Gallons (121 Liters) 2500/3500 Shortbed - 34 Gallons (129 Liters) 2500/3500 Longbed - 35 Gallons (132 Liters)
Fuel Selection 6.7L Turbo Diesel	Use good quality diesel fuel from a reputable supplier in your vehicle. Federal law requires that you must fuel this vehicle with Ultra Low Sulfur Highway Diesel fuel (15 ppm Sulfur maximum) and prohibits the use of Low Sulfur Highway Diesel fuel (500 ppm Sulfur maximum) to avoid damage to the emissions control system. For most year-round service, No. 2 diesel fuel meeting ASTM specification D-975 Grade S15 will provide good performance. If the vehicle is exposed to extreme cold (below 20°F or -7°C), or is required to operate at colder-than-normal conditions for prolonged periods, use climatized No. 2 diesel fuel or dilute the No. 2 diesel fuel with 50% No. 1 diesel fuel. This will provide better protection from fuel gelling or wax-plugging of the fuel filters. This vehicle is fully compatible with biodiesel blends up to 5% biodiesel meeting ASTM specification D-975.	2500/3500 Shortbed - 34 Gallons (129 Liters) 2500/3500 Longbed - 35 Gallons (132 Liters)
Engine Oil Filter 3.7L, 4.7L, 5.7L, 6.7L	MOPAR® Engine Oil Filter or equivalent.	—

Component	Fluid, Lubricant, or Genuine Part	Capacities
Engine Fuel Filter 6.7L Turbo Diesel	MOPAR® Fuel Filter or equivalent. Must meet 5 micron rating. Using a fuel filter that does not meet the manufacturers filtration and water separating requirements can severely impact fuel system life and reliability.	—
Crankcase Ventilation Filter 6.7L Turbo Diesel	MOPAR® CCV Filter or equivalent.	—
Spark Plug 3.7L	ZFR6F-11G (Gap 0.043 in [1.09 mm])	—
Spark Plug 4.7L	Upper Bank — FR8TE2 (Gap 0.039 in [0.99 mm]) Lower Bank — FR8T1332 (Gap 0.051 in [1.30 mm]).	—
Spark Plug 5.7L	LZFR5C-11 (Gap 0.043 in [1.09 mm])	—
Automatic Transmission	MOPAR® ATF+4® Automatic Transmission Fluid or equivalent licensed ATF+4® product.	—
Clutch Linkage	MOPAR® Multi-Purpose Grease, NLGI Grade 2 E.P. or equivalent.	—
Manual Transmission G-56	MOPAR® ATF+4® Automatic Transmission Fluid or equivalent licensed ATF+4® product.	—
Transfer Case	MOPAR® ATF+4® Automatic Transmission Fluid or equivalent licensed ATF+4® product.	—
Transfer Case NVG 246 Only	MOPAR® NVG 246 Automatic Transmission Fluid or equivalent.	—
Front Axle 1500 Four-Wheel Drive Models	GL-5 SAE 75W-90 MS-9763 or equivalent.	—
Rear Axle 1500 Models	MOPAR® Synthetic Gear Lubricant SAE 75W-140 MS-8985. Limited-Slip Rear Axles require the addition of 118 ml (4 oz.) MOPAR® Limited Slip Additive MS-10111 or equivalent.	—
Front and Rear Axle 2500/3500 Models	Synthetic, GL-5 SAE, 75W-90 or equivalent. Limited-Slip 10.5/11.5 inch Rear Axles **Limited slip additive is not required.**	—
Brake Master Cylinder	MOPAR® DOT 3 and SAE J1703 should be used or equivalent. If DOT 3 is not available, then DOT 4 is acceptable. Use only recommended Brake Fluids.	—
Power Steering Reservoir	MOPAR® Power Steering Fluid +4 or MOPAR® ATF+4® Automatic Transmission Fluid or equivalent licensed ATF+4® product.	—

MAINTENANCE CHART

Gasoline Engine

Miles:	8,000	16,000	24,000	32,000	40,000	48,000	56,000	64,000	72,000	80,000	88,000	96,000	104,000
Or Months:	6	12	18	24	30	36	42	48	54	60	66	72	78
Or Kilometers:	13,000	26,000	39,000	52,000	65,000	78,000	91,000	104,000	117,000	130,000	143,000	156,000	169,000
Change the engine oil and filter.	X	X	X	X	X	X	X	X	X	X	X	X	X
Rotate the tires, rotate at the first sign of irregular wear, even if it occurs before scheduled maintenance.	X	X	X	X	X	X	X	X	X	X	X	X	X
If using your vehicle for any of the following: dusty or off-road conditions. Inspect the engine air cleaner filter; replace if necessary.		X				X				X			
Lubricate the front drive shaft fittings (2500/3500 4x4 models only).	X	X	X	X	X	X	X	X	X	X	X	X	X
Inspect the brake linings; replace if necessary.		X		X		X		X		X		X	
Inspect the CV joints.		X	X			X			X			X	
Inspect the exhaust system.		X	X			X			X			X	
Replace the engine air cleaner filter.				X				X				X	
Inspect the front and rear axle fluid, change if using your vehicle for police, taxi, fleet, off-road or frequent trailer towing.			X			X			X			X	
Inspect the transfer case fluid.				X								X	
Change the transfer case fluid if using your vehicle for any of the following: police, taxi, fleet, or frequent trailer towing.								X					
Change the automatic transmission fluid and filter if using your vehicle for any of the following: police, taxi, fleet or frequent trailer towing.								X					

Miles:	8,000	16,000	24,000	32,000	40,000	48,000	56,000	64,000	72,000	80,000	88,000	96,000	104,000
Or Months:	6	12	18	24	30	36	42	48	54	60	66	72	78
Or Kilometers:	13,000	26,000	39,000	52,000	65,000	78,000	91,000	104,000	117,000	130,000	143,000	156,000	169,000
Inspect the front suspension, tie rod ends and boot seals for cracks or leaks and all parts for damage, wear, improper looseness or end play; replace if necessary.		X		X		X		X		X		X	
Adjust parking brake on vehicles equipped with four-wheel disc brakes.				X				X				X	
Replace the spark plugs (3.7L and 5.7L engine).				X				X				X	
Replace top row of spark plugs (4.7L engine).						X							
Replace the top row and side row of spark plugs (4.7L Engine).												X	
Replace ignition cables (3.7L Engine).								X					
Replace ignition cables (4.7L Engine).												X	
Inspect and replace PCV valve if necessary.												X	
Flush and replace the engine coolant if not done at 104,000 miles (173 000 km).										X			
Flush and replace the engine coolant if not done at 60 months.													X

- Refer to the Owner's Manual on the DVD for the complete maintenance schedule.

Maintenance Record (Gasoline Engine)

	Odometer	Date	Signature, Authorized Service Center
8,000 Miles (13,000 km) or 6 Months			
16,000 Miles (26,000 km) or 12 Months			
24,000 Miles (39,000 km) or 18 Months			
32,000 Miles (52,000 km) or 24 Months			
40,000 Miles (65,000 km) or 30 Months			
48,000 Miles (78,000 km) or 36 Months			
56,000 Miles (91,000 km) or 42 Months			
64,000 Miles (104,000 km) or 48 Months			
72,000 Miles (117,000 km) or 54 Months			
80,000 Miles (130,000 km) or 60 Months			
88,000 Miles (143,000 km) or 66 Months			
96,000 Miles (156,000 km) or 72 Months			
104,000 Miles (169,000 km) or 78 Months			

Diesel Engine

Miles:	7,500	15,000	22,500	30,000	37,500	45,000	52,500	60,000	67,500	75,000	82,500	90,000	97,500
Or Months:	6	12	18	24	30	36	42	48	54	60	66	72	78
Or Kilometers:	12,000	24,000	36,000	40,000	60,000	72,000	84,000	96,000	108,000	120,000	132,000	144,000	156,000
When prompted by the Engine Oil Indicator System, the engine oil and filter must be changed. If not prompted by the Engine Oil Indicator System within 7,500 miles (12 000 km) or six months since the last oil and filter change, change the engine oil and engine oil filter. Under no circumstances should oil change intervals exceed 7,500 miles (12 000 km) or six months, whichever comes first.	X	X	X	X	X	X	X	X	X	X	X	X	X
Rotate the tires.	X	X	X	X	X	X	X	X	X	X	X	X	X
Lubricate front drive shaft fitting (4x4).	X	X	X	X	X	X	X	X	X	X	X	X	X
Replace fuel filter element.		X		X		X		X		X		X	
Inspect the brake linings.			X			X			X			X	
Inspect and adjust parking brake.			X			X			X			X	
Inspect the front (4x4) and rear axle fluid, change if using your vehicle for police, taxi, fleet, off-road or frequent trailer towing.		X		X		X		X		X		X	
Inspect drive belt; replace as required.			X			X			X			X	
Check the transfer case fluid (4x4).				X								X	
Change the transfer case fluid (4x4).								X					
Inspect the manual transmission fluid, add if necessary.								X					
Inspect the front suspension, tie rod ends and boot seals for cracks or leaks and all parts for damage, wear, improper looseness or end play; replace if necessary.		X		X		X		X		X		X	
Inspect wheel bearings.				X				X				X	
Change automatic transmission fluid.				X				X				X	

- Refer to the Owner's Manual on the DVD for the complete maintenance schedule.

Maintenance Record (Diesel Engine)

	Odometer	Date	Signature, Authorized Service Center
7,500 Miles (12,000 km) or 6 Months			
15,000 Miles (24,000 km) or 12 Months			
22,500 Miles (36,000 km) or 18 Months			
30,000 Miles (40,000 km) or 24 Months			
37,500 Miles (60,000 km) or 30 Months			
45,000 Miles (72,000 km) or 36 Months			
52,500 Miles (84,000 km) or 42 Months			
60,000 Miles (96,000 km) or 48 Months			
67,500 Miles (108,000 km) or 54 Months			
75,000 Miles (120,000 km) or 60 Months			
82,500 Miles (132,000 km) or 66 Months			
90,000 Miles (144,000 km) or 72 Months			
97,500 Miles (156,000 km) or 78 Months			

FUSES

Integrated Power Module (fuses)

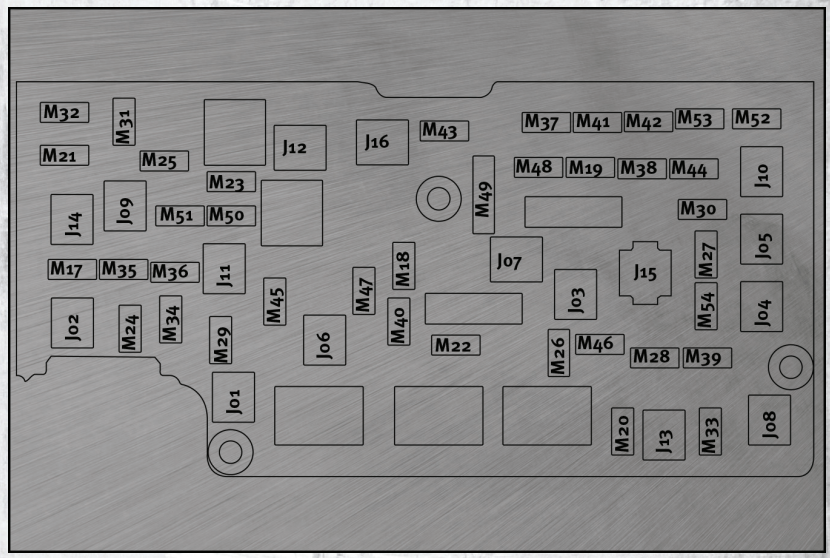

The integrated power module is located in the engine compartment near the battery. This center contains cartridge fuses and mini fuses. A description of each fuse and component may be stamped on the inside cover, otherwise the cavity number of each fuse is stamped on the inside cover that corresponds to the following chart.

Cavity	Cartridge Fuse	Mini Fuse	Description
J01	40 Amp Green		Trailer Tow
J02	30 Amp Pink		Electric Brake
J03	30 Amp Pink		Diesel PCM – If Equipped
J04	25 Amp Natural		Driver Door Node
J05	25 Amp Natural		Passenger Door Node
J06	40 Amp Green		ABS Pump Feed/ESP
J07	30 Amp Pink		ABS Valve Feed/ESP
J08	40 Amp Green		Power Seat
J11	30 Amp Pink		DTCM
J13	60 Amp Yellow		Streaming Video Module/ VES3 Module/VES2 Module/DISP/DVD
J14	20 Amp Blue		Trailer Tow Lamps/Park Lamps
J15	30 Amp Pink		IGN RUN EBL
J17	40 Amp Green		Starter Motor Solenoid Feed
J18	20 Amp Blue		NGC/PCM Transmission Range

Cavity	Cartridge Fuse	Mini Fuse	Description
J19	60 Amp Yellow		Rad Fan Motor HI/Rad Fan Motor Low
J20	30 Amp Pink		Front Wiper Ground/Frt Wiper Motor Low/Frt Wiper Motor High
J21	20 Amp Blue		Front Washer Control
J22	25 Amp Natural		PWR Batt – Sunroof Mod
M1		15 Amp Blue	Sw Stop Switch Lamp Feed
M5		25 Amp Natural	Inverter
M6		20 Amp Yellow	Power Outlet #1 (Cigar Lighter)/Rain Snsr
M7		20 Amp Yellow	Power Outlet #2 (Switchable)
M8		20 Amp Yellow	Front Heated Seat & Steering Wheel
M9		20 Amp Yellow	Rear Heated Seats
M10		20 Amp Yellow	HFM/Vanity Lamp/UGDO Mod
M11		10 Amp Red	HVAC (ATC)
M12		30 Amp Green	Radio/Amplifier
M13		20 Amp Yellow	Main #2 CCN/WIN/ITM/Siren/ Multifunction Switch (SCM)
M14		20 Amp Yellow	Back Up Camera (Domestic Only)
M15		20 Amp Yellow	Power Seat Module(s)/Audio Telematics/DRL Relay/CCN/ Transfer Case Module
M16		10 Amp Red	ORC
M19		25 Amp Natural	ASD 1 and 2
M20		15 Amp Blue	CCN Interior Lighting Feed/Sw Steering Wheel/ Sw Bank/SCM (EVIC)
M21		20 Amp Yellow	ASD 3
M22		10 Amp Red	Horns (Low/High) – Right
M23		10 Amp Red	Horns (Low/High) – Left
M25		20 Amp Yellow	Fuel Pump Motor Output/Diesel Lift Pump – If Equipped
M26		—	Spare
M27		10 Amp Red	Ignition Switch Feed/WIN/PEM
M28		15 Amp Blue	PCM Feed/TCM
M29		10 Amp Red	CORAX TPM
M30		15 Amp Blue	J1962 Diag Connector
M32		10 Amp Red	ORC Feed
M33		10 Amp Red	NGC (PCM)/TCM
M34		10 Amp Red	Park Assist Module/HVAC Module/IR Sensor/Compass Module

Cavity	Cartridge Fuse	Mini Fuse	Description
M35		15 Amp Blue	LH Front & Rear Parklamps
M36		20 Amp Yellow	Power Outlet
M37		10 Amp Red	ABS/ESP Module/Stoplamp Switch Sensor
M38		25 Amp Natural	All Door Lock &Unlock

CAUTION!

- When installing the integrated power module cover, it is important to ensure the cover is properly positioned and fully latched. Failure to do so may allow water to get into the integrated power module and possibly result in a electrical system failure.
- When replacing a blown fuse, it is important to use only a fuse having the correct amperage rating. The use of a fuse with a rating other than indicated may result in a dangerous electrical system overload. If a properly rated fuse continues to blow, it indicates a problem in the circuit that must be corrected.

TIRE PRESSURES

- Check the inflation pressure of each tire, including the spare tire, at least monthly and inflate to the recommended pressure for your vehicle.
- The tire pressures recommended for your vehicle are found on the “Tire and Loading Information” label located on the driver’s side door opening.

NOTE: Refer to the Owner's Manual on the DVD for more information regarding tire warnings and instructions.

WARNING!

- Overloading of your tires is dangerous. Overloading can cause tire failure, affect vehicle handling, and increase your stopping distance. Use tires of the recommended load capacity for your vehicle. Never overload them.
- Improperly inflated tires are dangerous and can cause collisions. Under-inflation is the leading cause of tire failure and may result in severe cracking, component separation, or “blow out”. Over-inflation reduces a tire’s ability to cushion shock. Objects on the road and chuck holes can cause damage that results in tire failure. Unequal tire pressures can cause steering problems. You could lose control of your vehicle. Over-inflated or under-inflated tires can affect vehicle handling and can fail suddenly, resulting in loss of vehicle control.

WHEEL AND WHEEL TRIM CARE

- All wheels and wheel trim, especially aluminum and chrome plated wheels, should be cleaned regularly with a mild soap and water to prevent corrosion.
- To remove heavy soil and/or excessive brake dust, use MOPAR® Wheel Cleaner or equivalent or select a non-abrasive, non-acidic cleaner.

CAUTION!

Do not use scouring pads, steel wool, a bristle brush, or metal polishes. Do not use oven cleaner. These products may damage the wheel's protective finish. Avoid automatic car washes that use acidic solutions or harsh brushes that may damage the wheel's protective finish. Only MOPAR® Wheel Cleaner or equivalent is recommended.

EXTERIOR BULBS

LIGHT BULBS – Exterior	Bulb Number
Backup	921
Center High-Mounted Stop Lamp (CHMSL)	921
Fog Lamp – If Equipped	9145
Front Park/Turn Signal	3757A
Front Side Marker	3757A
Front Position Lamp	W5W
Dual Headlamp	H13
Quad Headlamp – Low Beam	H11
Quad Headlamp – High Beam	9005
Side Marker (Dual Headlamp)	3157K
Side Marker (Quad Headlamp)	3157NA
Rear Cargo Lamp	921
Rear Tail/Turn and Stop	3157K
Cab Roof Marker Lamps	194NA
Side Marker Lamps (Dual Rear Wheels)	194
Rear Lamp Bar ID Marker Lamp	194
License Lamp	194

CHRYSLER GROUP LLC CUSTOMER CENTER

P.O. Box 21–8004

Auburn Hills, MI 48321–8004

Phone: 1–866–726–4636

CHRYSLER CANADA INC. CUSTOMER CENTER

P.O. Box 1621

Windsor, Ontario N9A 4H6

Phone: 1–800–465–2001

ASSISTANCE FOR THE HEARING IMPAIRED

- To assist customers who have hearing difficulties, the manufacturer has installed special TDD (Telecommunication Devices for the Deaf) equipment at its customer center. Any hearing or speech impaired customer, who has access to a TDD or a conventional teletypewriter (TTY) in the United States, can communicate with the manufacturer by dialing 1–800–380–CHRY. Canadian residents with hearing difficulties that require assistance can use the special needs relay service offered by Bell Canada. For TTY teletypewriter users, dial 711 and for Voice callers, dial 1–800–855–0511 to connect with a Bell Relay Service operator.

WARNING!

Engine exhaust, some of its constituents, and certain vehicle components contain, or emit, chemicals known to the State of California to cause cancer and birth defects, or other reproductive harm. In addition, certain fluids contained in vehicles and certain products of component wear contain, or emit, chemicals known to the State of California to cause cancer and birth defects, or other reproductive harm.

PUBLICATIONS ORDERING

- **If you are the first registered retail owner of your vehicle,** you may obtain one free printed copy of the Owner's Manual, Warranty Booklet or Radio Manuals on your DVD by calling 1–877–726–4636 (U.S.) or 1–800–387–1143 (Canada) or by contacting your dealer.
- Replacement User Guide kits or DVDs or, if you prefer, additional printed copies of the Owner's Manual, Warranty Booklet or Radio Manuals may be purchased by visiting www.techauthority.com or by calling 1–800–890–4038 (U.S.) or 1–800–387–1143 (Canada). Visa, Master Card, American Express and Discover orders are accepted. If you prefer mailing your order, please call the above numbers for an order form.

NOTE: A street address is required when ordering manuals (no P.O. Boxes).

NOTE:

- The Owner's Manual and User Guide electronic files are also available on the Chrysler, Jeep and Dodge websites.

CONSUMER ASSISTANCE

- Click on the "For Owners" tab, select "Owner/Service Manuals", then select your desired model year and vehicle from the drop down lists.

REPORTING SAFETY DEFECTS IN THE 50 UNITED STATES AND WASHINGTON, D.C.

- If you believe that your vehicle has a defect that could cause a collision or cause injury or death, you should immediately inform the National Highway Traffic Safety Administration (NHTSA) in addition to notifying the manufacturer.
- If NHTSA receives similar complaints, it may open an investigation, and if it finds that a safety defect exists in a group of vehicles, it may order a recall and remedy campaign. However, NHTSA cannot become involved in individual problems between you, your authorized dealer, and the manufacturer.
- To contact NHTSA, you may either call the Auto Safety Hotline toll free at 1–888–327–4236 (TTY: 1–800–424– 9153), or go to http://www.safercar.gov; or write to: Administrator, NHTSA, 1200 New Jersey Avenue, SE., West Building, Washington, D.C. 20590. You can also obtain other information about motor vehicle safety from http://www.safercar.gov.

In Canada

- If you believe that your vehicle has a safety defect, you should contact the Customer Service Department immediately. Canadian customers who wish to report a safety defect to the Canadian government should contact Transport Canada, Motor Vehicle Defect Investigations and Recalls at 1-800-333-0510 or go to http://www.tc.gc.ca/roadsafety/
- French Canadian customers who wish to report a safety defect to the Canadian government should contact Transport Canada, Motor Vehicle Defect Investigations and Recalls at 1-800-333-0510 or go to http://www.tc.gc.ca/securiteroutiere/

MOPAR® ACCESSORIES

- The following highlights just some of the Authentic Ram Truck Accessories by MOPAR® that are available to customize your Ram Truck.
- To see the full line of accessories, stop by your dealer or visit MOPAR.com.

CHROME:

- Exhaust Tip
- Chrome Cast Aluminum Wheels
- Tubular Side Steps
- Front Air Deflector
- Fuel Filler Door
- Grille

EXTERIOR:

- Under-The-Rail Bedliner
- Fiberglass Tonneau Cover
- Snapless Tonneau Cover
- Molded Splash Guards
- Running Boards
- Bed Extender
- Bed Step
- Hitch Receiver
- Fender Flares
- Bed Mat
- Tool Box
- Sports Performance Hood

INTERIOR:

- Premium Carpet Floor Mats
- Ambient Light Kit
- Door Sill Guards
- Bright Pedal Kit
- Slush Mats
- Heated Seats

ELECTRONICS:

- Portable Navigation Systems
- iPod® Adapter
- Kicker® Sound Systems
- Uconnect™ Web (WiFi)
- Media Center 730N (RER)
- Head Restraint DVD Rear Seat Video
- Sirius Satellite Radio
- Media Center 430/430N (REN/RBZ)
- DVD Rear Seat Video™

CARRIERS:

- Bed Mounted Bike Carrier
- Bed Mounted Ski and Snowboard Carrier
- Bed Mounted Cargo Basket With Cargo Net
- Cargo Bed Divider
- Cargo Ramps
- Diamond Plate Toolbox

- iPod® is a registered trademark of Apple, Inc.
- Kicker® is a registered trademark of Stillwater Designs and Audio, Inc.

INDEX

Adjustable Pedals 18
Air Conditioning 24
Airbag 10
Airbag Light 66
Alarm, Panic 8
Anti-Lock Brake System (ABS) . . . 65
Arming Theft System (Security Alarm) 9
Automatic Headlights 21,66
Automatic Temperature Control (ATC) 24
Automatic Transmission
  Fluid Type 89
Axle Fluid 89

Back-Up Camera 25
Battery
  Charging System Light 65
Belts, Seat 9
Brake Fluid 89
Brake System
  Warning Light 64
Bulb Replacement 100

Cargo Light 21
Change Oil Indicator 66
Charging System Light 65
Check Engine Light (Malfunction Indicator Light) 65
Child Restraint 11
Child Restraint Tether Anchors . . . 11
Climate Control 24
Clock Setting 33,35
Cooling System
  Coolant Capacity 89
Crankcase Emission Control System 21
Cruise Control (Speed Control) . . . 22
Cruise Light 22
Customer Assistance 101

Defects, Reporting 102
Defroster, Rear Window 24
Defroster, Windshield 24
Dimmer Control 21
Disarming, Theft System 9
Driver Cockpit 4

Electronic Range Select (ERS) . . . 23
Electronic Speed Control (Cruise Control) 22
Electronic Stability Program (ESP) 63,65
Electronic Throttle Control Warning Light 66
Electronic Vehicle Information Center (EVIC) 48
Engine
  Block Heater 19
  Compartment 83
  Malfunction Indicator (Check Engine) 65
  Oil Selection 89
  Overheating 67
Event Data Recorder 81
Exhaust Brake 26
Express Down Windows 8
Exterior Lights 100

Fluid Capacities 89
Fluids 89
Fog Lights 21
Four Wheel Drive Operation 54
Freeing A Stuck Vehicle 80
Front Heated Seats 16
Fuel
  Filler Cap (Gas Cap) 66
  Specifications 89
Fuses 97

Garage Door Opener (HomeLink®) 50

Hard Disk Drive 36
Headlights
  Automatic 21
  Dimmer Switch 21
  High Beam 20
Heater, Engine Block 19
High Beam/Low Beam Select (Dimmer) Switch 20
HomeLink® (Garage Door Opener) Transmitter 50
Hood Release 82

Idle Up Feature 26
Instrument Cluster 6
Instrument Cluster Warning Lights 6,63
Integrated Power Module (Fuses) 97
Integrated Trailer Brake Controls . . 60
Intermittent Wipers (Delay Wipers) 20
Introduction 2
Inverter Outlet (115V) 52
Inverter, Power 52

iPod® Control 44

Jack Location 68
Jump Starting 75

Key Fob 8
Key Fob Programmable Features . . 49

Lane Change Assist 20
LATCH (Lower Anchors and Tether for CHildren) 11
Lights
  Turn Signal 20
  Warning (Instrument Cluster Description) 6

Maintenance Record 94,96
Maintenance Schedule 92,95
Malfunction Indicator Light (Check Engine) 65
Memory Seat 14
Message Center
  Water in Fuel 19
MOPAR® Accessories 103

Oil Change Indicator 66
Oil Change Indicator, Reset 66
Oil, Engine
  Capacity 89
Oil Pressure Light 65
Overheating, Engine 67

Panic Alarm 8
Park Sense System, Rear 25
Pedals, Adjustable 18
Phone (Pairing) 41
Phone (Uconnect) 41
Power
  Glass Sunroof 28
  Inverter 52
  Outlet (Auxiliary Electrical Outlet) 53
  Seats 14
  Sliding Rear Window 27
  Steering 89
Preparation for Jacking 68
Programmable Electronic Features 48

Radio Operation 32,34
Rain Sensitive Wiper System 20
Rear Camera 25
Rear Heated Seats 17
Rear Park Sense System 25
Recreational Towing 61
Remote Starting System 9
Replacement Bulbs 100
Restraints, Child 11

Seat Belts 9
Seats 14
  Adjustment 15
  Lumbar Support 14
  Memory 14
  Power 14
  Ventilated 16
Setting the Clock 33,35
Shift Lever Override 78
Signals, Turn 20
Spare Tire 68
Spark Plugs 89
Speed Control (Cruise Control) . . . 22
Starting
  Cold Weather 19
  Remote 9
Starting Procedures (Diesel Engines) 19
Steering
  Tilt Column 18
  Wheel, Heated 17

INDEX

Steering Wheel Audio Controls . . . 40
Store Radio Presets 33,35
Sun Roof 28
Supplemental Restraint System - Airbag 10

Tailgate 56
Temperature Control, Automatic (ATC) 24
Theft Alarm (Security Alarm) 9
Theft System Arming 9
Theft System Disarming 9
Tilt Steering Column 18
Tires
- Air Pressure 99
- Changing 70
- Flat Changing 70
- Jacking 70
- Pressure Monitor System (TPMS) 27
- Pressure Warning Light 63

Tow Hooks, Emergency 77
Towing 60
- 24-Hour Towing Assistance . . . 63
- Disabled Vehicle 79
- Recreational 61

Towing Vehicle Behind a Motor Home 61
Trailer Towing
- Trailer and Tongue Weight 60

Trailer Weight 60
Transfer Case
- Fluid 89

Transmission
- Fluid 89
- Warning Light 66

Turn Signals 20

Uconnect™ Phone 41
USB Port 37,45

Video Entertainment System™ (Rear Seat Video System) 46
Voice Command 43

Washers, Windshield 20
Water in Fuel 19
Wheel and Wheel Trim Care 100
Wind Buffeting 29
Windows, Express Down 8
Windshield Washers 20
Windshield Wipers 20

NOTES

NOTES

NOTES

NOTES

NOTES

NOTES

Driving and Alcohol: Drunken driving is one of the most frequent causes of accidents. Your driving ability can be seriously impaired with blood alcohol levels far below the legal minimum. If you are drinking, don't drive. Ride with a designated non-drinking driver, call a cab, a friend, or use public transportation.

WARNING!

Driving after drinking can lead to an accident. Your perceptions are less sharp, your reflexes are slower, and your judgment is impaired when you have been drinking. Never drink and then drive.

RAMTRUCKS.COM

This guide has been prepared to help you get quickly acquainted with your new RAM and to provide a convenient reference source for common questions. However, it is not a substitute for your Owner's Manual.

For complete operational instructions, maintenance procedures and important safety messages, please consult your Owner's Manual, Navigation/Media Center Manuals, Multimedia User Manual and other Warning Labels in your vehicle.

Not all features shown in this guide may apply to your vehicle. For additional information on accessories to help personalize your vehicle, visit www.mopar.com or your local RAM dealer.

11D241-926-AA
Ram Trucks 1500/2500/3500
Second Edition
User Guide

RAM

RAM TRUCKS 1500/2500/3500

USER GUIDE



If you are the first registered retail owner of your vehicle, you may obtain a complimentary printed copy of the Owner's Manual, Navigation/Media Center Manuals or Warranty Booklet by calling 1-866-726-4636 (U.S.) or 1-800-387-1143 (Canada) or by contacting your dealer.

The driver's primary responsibility is the safe operation of the vehicle. Driving while distracted can result in loss of vehicle control, resulting in a collision and personal injury. Chrysler Group LLC strongly recommends that the driver use extreme caution when using any device or feature that may take their attention off the road. Use of any electrical devices such as cell phones, computers, portable radios, vehicle navigation or other devices by the driver while the vehicle is moving is dangerous and could lead to a serious collision. Texting while driving is also dangerous and should never be done while the vehicle is moving. If you find yourself unable to devote your full attention to vehicle operation, pull off the road to a safe location and stop your vehicle. Some States or Provinces prohibit the use of cellular telephones or texting while driving. It is always the driver's responsibility to comply with all local laws.

IMPORTANT: This User Guide is intended to familiarize you with the important features of your vehicle. The DVD enclosed contains your Owner's Manual, Navigation/Media Center Manuals, Warranty Booklets, Tire Warranty and 24-Hour Towing Assistance (new vehicles purchased in the U.S.) or Roadside Assistance (new vehicles purchased in Canada) in electronic format. We hope you find it useful. Replacement DVD kits may be purchased by visiting www.techauthority.com.

Copyright 2011 Chrysler Group LLC.

TABLE OF CONTENTS

INTRODUCTION/WELCOME
Welcome From Chrysler Group LLC . . . 2

CONTROLS AT A GLANCE
Driver Cockpit 4
Instrument Cluster 6

GETTING STARTED
Key Fob 8
Remote Start 9
Theft Alarm 9
Seat Belt 10
Supplemental Restraint System (SRS) — Air Bags 10
Child Restraints 11
Front Seats 14
Heated/Ventilated Seats 16
Heated Steering Wheel 17
Tilt Steering Column / Adjustable Pedals 18

OPERATING YOUR VEHICLE
Engine Break-In Recommendations . . 19
Turn Signals/Wiper/Washer/High Beams Lever 19
Headlight Switch 20
Speed Control Lever 21
Electronic Range Select (ERS) Operation 23
Manual Climate Controls 24
Automatic Temperature Control (ATC) . 24
Parksense® Rear Park Assist 25
Parkview® Rear Back-Up Camera . . . 26
Tire Pressure Monitor System (TPMS) – 2500 Models Only 26
Power Sliding Rear Window 27
Power Sunroof 27
Wind Buffeting 29

ELECTRONICS
Your Vehicle's Sound System 30
Media Center 130 (Sales Code RES) . 32
Media Center 130 With Satellite Radio (Sales Code RES + RSC) 34
Media Center 430/430N (Sales Code RBZ/RHB) 36
Media Center 730N (Sales Code RHR) 45
Sirius Satellite Radio/Travel Link 54
Steering Wheel Audio Controls 57
iPod®/USB/MP3 Control 58
Uconnect™ Phone 58
Uconnect™ Voice Command 61
Bluetooth® Streaming Audio 63
Video Entertainment System (VES)™ . 64
Electronic Vehicle Information Center (EVIC) 65
Programmable Features 66
Universal Garage Door Opener (HomeLink®) 67
Power Inverter 69
Power Outlets 70

OFF-ROAD CAPABILITIES
Four-Wheel Drive Operation 72

UTILITY
Easy-Off Tailgate 74
Rambox® 75
Towing & Payload 78
Tow/Haul Mode 80
Integrated Trailer Brake Module 81
Recreational Towing (Behind Motorhome, Etc.) 82

DIESEL
Engine Break-In Recommendations . . 84
Diesel Engine Starting Procedures . . 84
Diesel Exhaust Brake (Engine Braking) 86
Idle-Up Feature (Automatic Transmission Only) 87
Fuel Filter/Water Separator 87
Exhaust Regeneration 88
Cool–Down Idle Chart 90

WHAT TO DO IN EMERGENCIES
24-Hour Towing Assistance 91
Instrument Cluster Warning Lights . . 91
If Your Engine Overheats 95
Jacking And Tire Changing 96
Jump-Starting 108
Emergency Tow Hooks 110
Shift Lever Override 111
Towing A Disabled Vehicle 112
Freeing A Stuck Vehicle 113
Event Data Recorder (EDR) 114

MAINTAINING YOUR VEHICLE
Opening The Hood 115
Engine Compartment 116
Fluids And Capacities 120
Maintenance Chart 125
Fuses 130
Tire Pressures 133
Wheel And Wheel Trim Care 134
Exterior Bulbs 134

CONSUMER ASSISTANCE
Chrysler Group LLC Customer Center .135
Chrysler Canada Inc. Customer Center 135
Assistance For The Hearing Impaired .135
Publications Ordering 135
Reporting Safety Defects In The 50 United States And Washington, D.C. 136

MOPAR ACCESSORIES
Authentic Accessories By MOPAR® . .137

INDEX 138

FAQ (How To?)
Frequently Asked Questions 141

INTRODUCTION/WELCOME

WELCOME FROM CHRYSLER GROUP LLC

Congratulations on selecting your new Chrysler Group LLC vehicle. Be assured that it represents precision workmanship, distinctive styling, and high quality - all essentials that are traditional to our vehicles.

Your new Chrysler Group LLC vehicle has characteristics to enhance the driver's control under some driving conditions. These are to assist the driver and are never a substitute for attentive driving. They can never take the driver's place. Always drive carefully.

Your new vehicle has many features for the comfort and convenience of you and your passengers. Some of these should not be used when driving because they take your eyes from the road or your attention from driving. Never text while driving or take your eyes more than momentarily off the road.

This guide illustrates and describes the operation of features and equipment that are either standard or optional on this vehicle. This guide may also include a description of features and equipment that are no longer available or were not ordered on this vehicle. Please disregard any features and equipment described in this guide that are not available on this vehicle. Chrysler Group LLC reserves the right to make changes in design and specifications and/or make additions to or improvements to its products without imposing any obligation upon itself to install them on products previously manufactured.

This User Guide has been prepared to help you quickly become acquainted with the important features of your vehicle. It contains most things you will need to operate and maintain the vehicle, including emergency information.

The DVD includes a computer application containing detailed owner's information which can be viewed on a personal computer or MAC computer. The multimedia DVD also includes videos which can be played on any standard DVD player (including the Media Center Touch-Screen Radios). Additional DVD operational information is located on the back of the DVD sleeve.

For complete owner information, refer to your Owner's Manual on the DVD in the owner's kit provided at the time of new vehicle purchase. For your convenience, the information contained on the DVD may also be printed and saved for future reference.

Chrysler Group LLC is committed to protecting our environment and natural resources. By converting from paper to electronic delivery for the majority of the user information for your vehicle, together we greatly reduce the demand for tree-based products and lessen the stress on our environment.

Vehicles Sold In Canada

With respect to any vehicles sold in Canada, the name Chrysler Group LLC shall be deemed to be deleted and the name Chrysler Canada Inc. used in substitution therefore.

WARNING!

- Pedals that cannot move freely can cause loss of vehicle control and increase the risk of serious personal injury.
- Always make sure that objects cannot fall into the driver foot well while the vehicle is moving. Objects can become trapped under the brake pedal and accelerator pedal causing a loss of vehicle control.
- Failure to properly follow floor mat installation or mounting can cause interference with the brake pedal and accelerator pedal operation causing loss of control of the vehicle.
- Never use the 'PARK' position as a substitute for the parking brake. Always apply the parking brake fully when parked to guard against vehicle movement and possible injury or damage.
- Refer to your Owner's Manual on the DVD for further details.

USE OF AFTERMARKET PRODUCTS (ELECTRONICS)

The use of aftermarket devices including cell phones, MP3 players, GPS systems, or chargers may affect the performance of on-board wireless features including Keyless Enter-N-Go and Remote Start range. If you are experiencing difficulties with any of your wireless features, try disconnecting your aftermarket devices to see if the situation improves. If your symptoms persist, please see an authorized dealer.

CHRYSLER, DODGE, JEEP, RAM TRUCK, ATF+4, MOPAR and Uconnect are registered trademarks of Chrysler Group LLC.
COPYRIGHT ©2011 CHRYSLER GROUP LLC



DRIVER COCKPIT

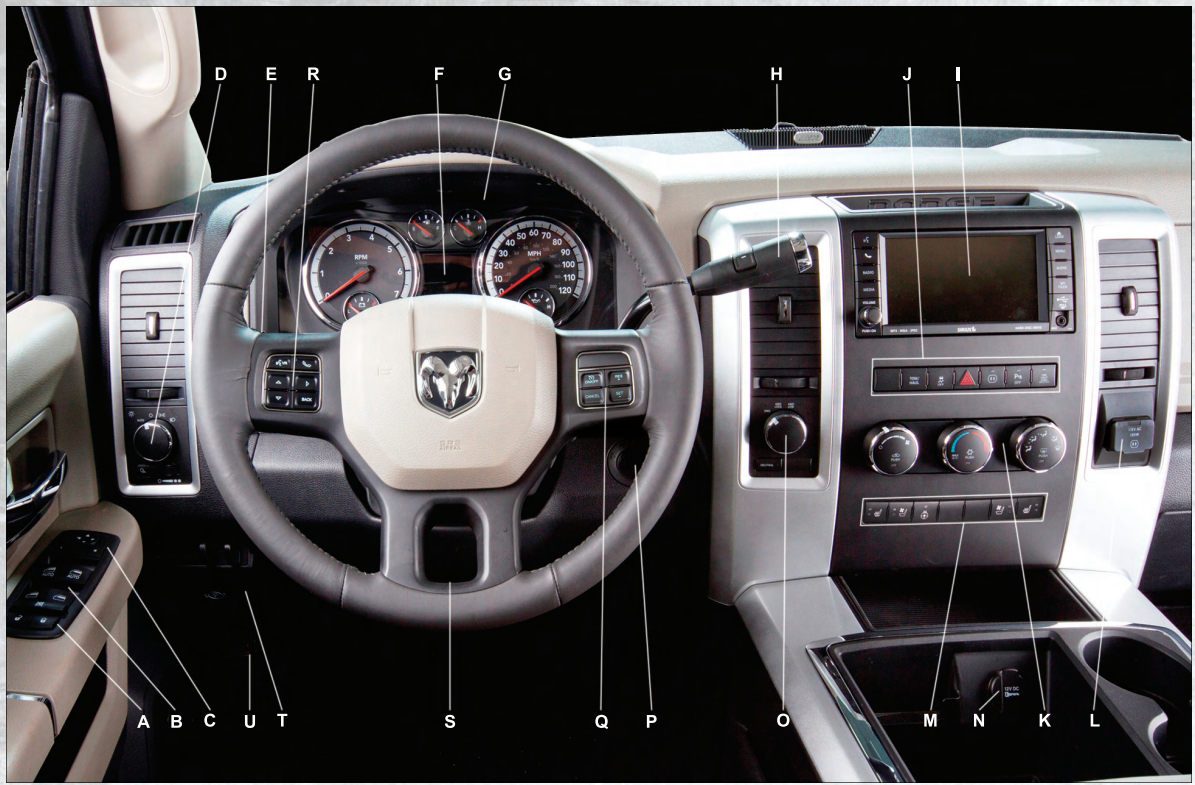

A. Power Door Locks

B. Power Windows

C. Power Mirrors

D. Headlight Switch pg. 20

E. Turn Signal/Wiper/Washer/High Beams Lever (behind steering wheel) pg. 19

F. Electronic Vehicle Information Center (EVIC) Display pg. 65

G. Instrument Cluster pg. 6

H. Transmission Gear Selector

I. Audio System (touch-screen-radio shown) pg. 30

J. SWITCH PANEL

- Diesel Exhaust Brake pg. 86
- Tow/Haul pg. 80
- Electronic Stability Control pg. 91
- Hazard Switch
- Power Inverter pg. 69
- Park Assist pg. 25
- Tire Pressure Monitoring System (TPMS) Light Load pg. 26

K. Climate Controls pg. 24

L. Power Inverter Outlet pg. 69

M. SWITCH PANEL

- Heated Seats pg. 16
- Ventilated Seats pg. 16
- Heated Steering Wheel pg. 17

N. Power Outlet pg. 70

O. Transfer Case Position Switch pg. 72

P. Ignition Switch

Q. Speed Control pg. 21

R. EVIC Controls pg. 65

S. Hood Release (below steering wheel at base of instrument panel) pg. 115

T. Integrated Trailer Brake Module pg. 81

U. Parking Brake Release

CONTROLS AT A GLANCE



INSTRUMENT CLUSTER

Warning Lights

- Low Fuel Warning Light
- Charging System Light**
- Oil Pressure Warning Light**
- Anti-Lock Brake (ABS) Light**
- Air Bag Warning Light**
- Electronic Throttle Control (ETC) Light
- Tire Pressure Monitoring System (TPMS) Light
- Engine Temperature Warning Light
- Transmission Temperature Warning Light
- Seat Belt Reminder Light

BRAKE - Brake Warning Light**

- Malfunction Indicator Light (MIL)**
- Electronic Stability Control (ESC) Activation/Malfunction Indicator Light**

SVC 4WD - SVC (Service) 4WD Indicator Light

(See page 91 for more information.)

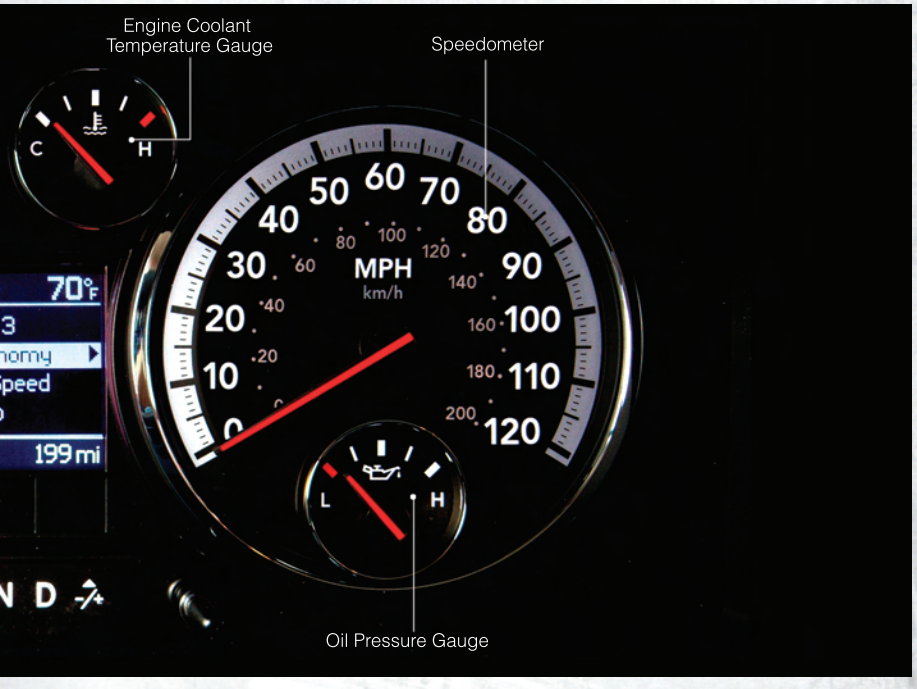

Indicators

- Turn Signal Indicators
- High Beam Indicator
- Front Fog Light Indicator
- Vehicle Security Indicator*
- TOW/HAUL Indicator
- Four-Wheel Drive LOW Mode Indicator
- Four-Wheel Drive and 4LOCK Mode Indicator
- 4WD Auto Indicator
- Electronic Stability Control (ESC) Off Indicator
- Cargo Lamp On Indicator
- Exhaust Brake Indicator (Diesel Only)
- Door Ajar Indicator
- Electronic Speed Control Set Indicator
- Loose Gas Cap Indicator

Odometer Messages

ECO - Fuel Saver Indicator Off
ECO-ON - Fuel Saver Indicator On
LoW tirE - Low Tire Pressure
ESCOFF - Electronic Stability Control Off
gASCAP - Gas Cap Loose
noFUSE* - Fuse Fault
CHANgE OIL* - Change Engine Oil
Water in Fuel - (Diesel Only)
Wait to Start - (Diesel Only)
HOTOIL - Engine Oil Too Hot

* If equipped
** Bulb Check with Key On

GETTING STARTED

KEY FOB



Locking And Unlocking The Doors

- Press the LOCK button once to lock all the doors. Press the UNLOCK button once to unlock the driver's door only and twice within five seconds to unlock all the doors.
- All doors can be programmed to unlock on the first press of the UNLOCK button. Refer to Programmable Features in this guide.

Panic Alarm

- Press the PANIC button once to turn the panic alarm on.
- Wait approximately three seconds and press the button a second time to turn the panic alarm off.

Emergency Key

- Should the battery in the vehicle or the Key Fob transmitter go dead, there is an emergency key located in the Key Fob that can be used for locking and unlocking the doors. To remove the emergency key, slide the button at the top of the Key Fob sideways with your thumb and then pull the key out with your other hand.

CAUTION!

- If your vehicle battery becomes low or dead, your Key Fob will become locked in the ignition.
- Do not attempt to remove the Key Fob while in this condition, damage could occur to the Key Fob or ignition module. Only remove the emergency key for locking and unlocking the doors.
- Leave the Key Fob in the ignition and either:
  - Jump Start the vehicle.
  - Charge the battery.
  - Contact your dealer for assistance on how to remove the Key Fob using the manual over ride method.

WARNING!

- Leaving unattended children in a vehicle is dangerous for a number of reasons. A child or others could be severely injured or killed. Children should be warned not to touch the parking brake, brake pedal, or the shift lever. Do not leave the Key Fob inside the vehicle or in the ignition. A child could start the vehicle, operate power windows, other controls, or move the vehicle.
- Do not leave children or animals inside parked vehicles in hot weather. Interior heat build-up may cause them to be severely injured or killed.

REMOTE START

- Press the REMOTE START button (x2) twice within five seconds. Pressing the REMOTE START button a third time shuts the engine off.
- In order to allow proper engine pre-heating (diesel engine only), depending on engine temperature, there may be a delay of up to 30 seconds before the engine starts.
- To drive the vehicle, press the UNLOCK button, insert the Key Fob in the ignition and turn to the ON/RUN position.
- With remote start, the engine will only run for 15 minutes (timeout) unless the ignition Key Fob is placed in the ON/RUN position.
- The vehicle must be started with the Key Fob after two consecutive timeouts.

WARNING!

- Do not start or run an engine in a closed garage or confined area. Exhaust gas contains Carbon Monoxide (CO) which is odorless and colorless. Carbon Monoxide is poisonous and can cause you or others to be severely injured or killed when inhaled.
- Keep Key Fob transmitters away from children. Operation of the Remote Start System, windows, door locks or other controls could cause you and others to be severely injured or killed.

THEFT ALARM

To Arm

- Press the Key Fob LOCK button or the power door lock switch while the door is open.

To Disarm

- Press the Key Fob UNLOCK button and turn the ignition to the ON/RUN position.

GETTING STARTED

SEAT BELT

- Be sure everyone in your vehicle is in a seat and using a seat belt properly.
- Position the lap belt across your thighs, below your abdomen. To remove slack in the lap portion, pull up a bit on the shoulder belt. To loosen the lap belt if it is too tight, tilt the latch plate and pull on the lap belt. A snug belt reduces the risk of sliding under the belt in a collision.
- Position the shoulder belt on your chest so that it is comfortable and not resting on your neck. The retractor will withdraw any slack in the belt.
- A shoulder belt placed behind you will not protect you from injury during a collision. You are more likely to hit your head in a collision if you do not wear your shoulder belt. The lap and shoulder belt are meant to be used together.
- A belt that is too loose will not protect you properly. In a sudden stop you could move too far forward, increasing the possibility of injury. Wear your seat belt snugly.
- A frayed or torn belt could rip apart in a collision and leave you with no protection. Inspect the belt system periodically, checking for cuts, frays, or loose parts. Damaged parts must be replaced immediately. Do not disassemble or modify the system. Seat belt assemblies must be replaced after a collision if they have been damaged (bent retractor, torn webbing, etc.).
- The seat belts for both front seating positions may be equipped with pretensioning devices that are designed to remove slack from the seat belt in the event of a collision.
- A deployed pretensioner or a deployed air bag must be replaced immediately.

WARNING!

In a collision, you and your passengers can suffer much greater injuries if you are not buckled up properly. You can strike the interior of your vehicle or other passengers, or you can be thrown out of the vehicle. Always be sure you and others in your vehicle are buckled up properly.

SUPPLEMENTAL RESTRAINT SYSTEM (SRS) — AIR BAGS

- This vehicle has Advanced Front Air Bags for both the driver and right front passenger as a supplement to the seat belt restraint system. The Advanced Front Air Bags will not deploy in every type of collision.
- Advanced Front Air Bags are designed to provide additional protection by supplementing the seat belts in certain frontal collisions depending on the severity and type of collision. Advanced Front Air Bags are not expected to reduce the risk of injury in rear, side, or rollover collisions.
- This vehicle may be equipped with Supplemental Side Air Bag Inflatable Curtains to protect the driver, front and rear passengers sitting next to a window.

- This vehicle may be equipped with Supplemental Seat-Mounted Side Air Bags to provide enhanced protection to help protect an occupant during a side impact.
- If the Air Bag Warning Light is not on during starting, stays on, or turns on while driving, have the vehicle serviced by an authorized service center immediately.
- Refer to the Owner's Manual on the DVD for further details regarding the Supplemental Restraint System (SRS).

WARNING!

- Relying on the air bags alone could lead to more severe injuries in a collision. The air bags work with your seat belt to restrain you properly. In some collisions, the air bags won't deploy at all. Always wear your seat belts even though you have air bags.
- Being too close to the steering wheel or instrument panel during Advanced Front Air Bag deployment could cause serious injury, including death. Air bags need room to inflate. Sit back, comfortably extending your arms to reach the steering wheel or instrument panel.
- Supplemental Side Air Bag Inflatable Curtains and Supplemental Seat-Mounted Side Air Bags need room to inflate. Do not lean against the door or window. Sit upright in the center of the seat.
- Being too close to the Supplemental Side Air Bag Inflatable Curtain and/or Seat-Mounted Side Air Bag during deployment could cause you to be severely injured or killed.
- Do not drive your vehicle after the air bags have deployed. If you are involved in another collision, the air bags will not be in place to protect you.
- After any collision, the vehicle should be taken to an authorized dealer immediately.

CHILD RESTRAINTS

- Children 12 years and under should ride properly buckled up in a rear seat, if available. According to crash statistics, children are safer when properly restrained in the rear seats rather than in the front.
- Every state in the United States and all Canadian provinces require that small children ride in proper restraint systems. This is the law, and you can be prosecuted for ignoring it.

Installing The LATCH - Compatible Child Restraint System

- Your vehicle's second row passenger seats are equipped with the child restraint anchorage system called LATCH, which stands for Lower Anchors and Tether for CHildren. LATCH child restraint anchorage systems are installed in the rear seat outboard positions.

- LATCH equipped seating positions have both lower anchor bars, located at the back of the seat cushion, and tether strap anchorages, located behind the seat back.

Installing The Lower Attachments:

- The vehicle lower anchorages are round bars located at the rear of the seat cushion where it meets the seatback. The rear seat lower anchors can be readily identified by the symbol located on the seatback directly above the anchorages and are just visible when you lean into the rear seat to install the child restraint.

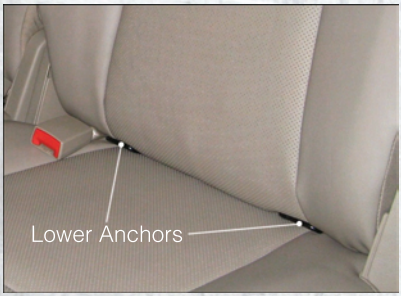

- Loosen the child seat adjusters on the lower straps and on the tether strap so that you can attach the hooks or connectors to the vehicle anchors more easily.
- Attach the lower hooks or connectors over the top of the seatcover material.
- Then tighten the straps as you push the child restraint rearward and downward into the seat.

Installing The Top Tether Strap (With Either Lower Anchors Or Vehicle Seat Belt) - Regular Cab - Front Seat:

- Place the child restraint on the seat and adjust the tether strap so that it will reach over the seat back under the head restraint to the tether anchor directly behind the seat.

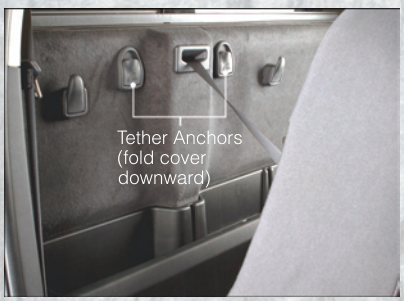

- Lift the cover (if equipped), and attach the hook to the square opening in the sheet metal.
- Install the child restraint and remove the slack in the tether strap according to the manufacturer's instructions.

Installing The Top Tether Strap (With Either Lower Anchors Or Vehicle Seat Belt) - Quad Cab®/Crew Cab - Rear Seats:

- Obtain tether straps by raising the head restraints and reaching between the rear glass and rear seat. The tether strap may be retained with an elastic band. Accessibility to the tether strap is greatly improved by raising the seat cushion to the “up” position. Remove the elastic before use.
- Place a child restraint on either outboard rear seat and adjust the tether strap so that it will reach under the head restraint to the tether anchor directly behind the seat and then to the anchor directly behind the center rear seat.

- Pass each tether strap hook under the head restraint and through the loop of webbing behind the child seat.
- Route each tether strap to the anchor behind the center seat, and attach the hooks to the anchor loop.
- Place a child restraint on the center rear seat and adjust the tether strap so that it will reach under the head restraint to the tether anchor directly behind the seat and to the anchor directly behind the right seat.
- Install the child restraint and remove the slack in the tether strap according to the manufacturer's instructions.

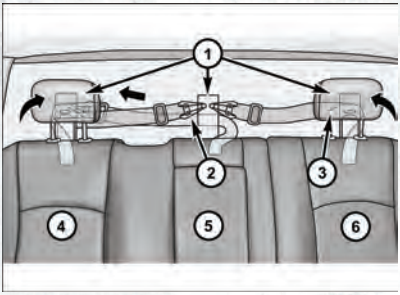

1. Anchor Loops
2. Snap Hook
3. Tether Strap
4. Passenger's Side Rear Child Seat
5. Rear Center Child Seat
6. Driver's Side Rear Child Seat

Installing The Child Restraint Using The Vehicle Seat Belts

- To install a child restraint, first, pull enough of the seat belt webbing from the retractor to route it through the belt path of the child restraint and slide the latch plate into the buckle.
- Next, extract all the seat belt webbing out of the retractor and then allow the belt to retract into the retractor. Finally, pull on any excess webbing to tighten the lap portion around the child restraint. Any seat belt system will loosen with time, so check the belt occasionally, and pull it tight if necessary.
- Route the tether strap to provide the most direct path for the strap between the anchor and the child seat, preferably between the head restraint posts underneath the head restraint.
- Attach the tether strap hook of the child restraint to the tether anchor and remove slack in the tether strap according to the child restraint manufacturer's instructions.

NOTE: Ensure that the tether strap does not slip into the opening between the seatbacks as you remove slack in the strap.

WARNING!

- In a collision, an unrestrained child, even a tiny baby, can become a projectile inside the vehicle. The force required to hold even an infant on your lap could become so great that you could not hold the child, no matter how strong you are. The child and others could be severely injured or killed. Any child riding in your vehicle should be in a proper restraint for the child's size.
- Improper installation of a child restraint to the LATCH anchorages can lead to failure of an infant or child restraint. The child could be severely injured or killed. Follow the manufacturer's directions exactly when installing an infant or child restraint.
- An incorrectly anchored tether strap could lead to increased head motion and possible injury to the child. Use only the anchor positions directly behind the child seat to secure a child restraint top tether strap.
- Rearward-facing child seats must never be used in the front seat of a vehicle with a front passenger air bag. An air bag deployment could cause infants in this position to be severely injured or killed.

FRONT SEATS

Power Seats



- The seat switch controls forward/backward and up/down.
- The recline switch controls the angle of the seatback. Push switch forward or rearward and the seatback will move in either direction.

Power Lumbar

- The lumbar controls are located on the outboard side of the seat cushion. The lumbar support can be increased by pressing the front of the switch and decreased by pressing the back of the switch.

Memory Seats



- The memory seat feature allows you to save the driver's seat position (excluding lumbar position), driver's outside mirror position, adjustable brake and accelerator pedals, Automatic Temperature Control (ATC) temperature setting and radio station preset settings. The driver's memory buttons are located on the outboard side of the driver's seat cushion.

- Adjust all memory profile settings, press the SET button, then press 1 or 2 within five seconds.
- To program a Key Fob to the memory position, place the ignition switch in the LOCK position and remove the Key Fob, press and release the LOCK button on the Key Fob to be programmed within 5 seconds of pressing button 1 or 2.
- Press 1 or 2 to recall the saved positions, or press UNLOCK on the programmed Key Fob.
- Refer to the Owner's Manual on the DVD for further details.

Manual Seats



Forward/Rearward

- Lift up on the adjusting bar located at the front of the seat near the floor and release at the desired position, then release the handle to lock the seat into position.

Recliner

- Lift the recliner lever located on the outboard side of the seat, lean back and release at the desired position.

CAUTION!

Do not place any article under a power seat or impede its ability to move as it may cause damage to the seat controls. Seat travel may become limited if movement is stopped by an obstruction in the seat's path.

WARNING!

- Adjusting a seat while the vehicle is moving is dangerous. The sudden movement of the seat could cause you to lose control. The seat belt might not be properly adjusted, and you could be severely injured or killed. Only adjust a seat while the vehicle is parked.
- Actuating the recliner handle will allow the seatback to swing (dump) forward on manual recliner seats. Do not stand or lean in front of the seat while actuating the handle. The seatback may swing forward and hit you, causing injury. This dump feature allows access to the storage bin behind the seat. To avoid injury, place your hand on the seatback and actuate the handle, then position the seatback in the desired position.
- Do not ride with the seatback reclined so that the seat belt is no longer resting against your chest. In a collision, you could slide under the seat belt and be severely injured or killed. Use the recliner only when the vehicle is parked.

HEATED/VENTILATED SEATS

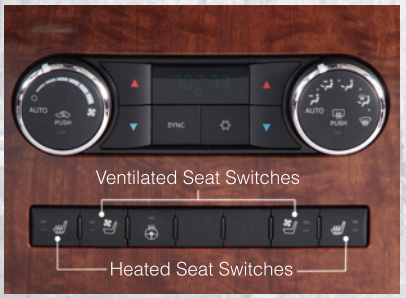

Front Heated Seats

- The controls for front heated seats are located on the center instrument panel below the climate controls.
- Press the switch once to select High-level heating. Press the switch a second time to select Low-level heating. Press the switch a third time to shut the heating elements Off.
- If the High-level setting is selected, the system will automatically switch to Low-level after approximately 60 minutes. The Low-level setting will turn Off automatically after approximately 45 minutes.

Front Ventilated Seats

- Located in the seat cushion and seatback are small fans that draw the air from the passenger compartment and blow air through fine perforations in the seat cover to help keep the driver and front passenger cooler in higher ambient temperatures.
- The ventilated seat switches are located in the switch bank in the center stack of the instrument panel, just below the climate controls. The fans operate at two speeds, HIGH and LOW. Press the switch once to select High speed. Press the switch a second time to select Low speed. Press the switch a third time to turn the fans Off.

Rear Heated Seats

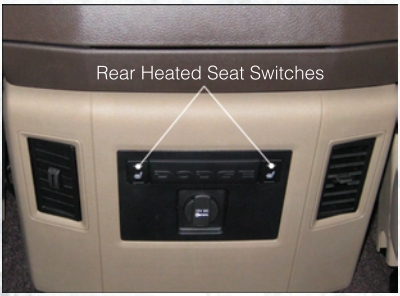

- Second row heated seat switches are located on the rear of the center console.
- Press the switch once to select High-level heating. Press the switch a second time to select Low-level heating. Press the switch a third time to shut the heating elements Off.

- If the High-level setting is selected, the system will automatically switch to Low-level after approximately 60 minutes. The Low-level setting will turn Off automatically after approximately 45 minutes.

WARNING!

- Persons who are unable to feel pain to the skin because of advanced age, chronic illness, diabetes, spinal cord injury, medication, alcohol use, exhaustion or other physical conditions must exercise care when using the seat heater. It may cause burns even at low temperatures, especially if used for long periods of time.
- Do not place anything on the seat that insulates against heat, such as a blanket or cushion. This may cause the seat heater to overheat. Sitting in a seat that has been overheated could cause serious burns due to the increased surface temperature of the seat.

HEATED STEERING WHEEL



- The steering wheel contains a heating element that heats the steering wheel to one temperature setting.
- The heated steering wheel switch is located on the center instrument panel below the climate controls.
- Press the switch once to turn the heating element On. Press the switch a second time to turn the heating element Off.

- Once the heated steering wheel has been turned on, it will operate for approximately 58 to 70 minutes before automatically shutting off. The heated steering wheel can shut off early or may not turn on when the steering wheel is already warm.

TILT STEERING COLUMN / ADJUSTABLE PEDALS



Tilt Steering Column

- The tilt lever is located on the steering column, below the turn signal lever.
- Pull forward on the lever and move the steering wheel up or down as desired.
- Release the lever to lock the steering wheel into position.

Adjustable Pedals

- Press the switch located on the left side of the steering column forward to move the brake and accelerator pedals away from the driver and press the switch rearward to move the pedals closer to the driver.

NOTE: The pedals cannot be adjusted when the vehicle is in REVERSE or when the Electronic Speed Control is set.

CAUTION!

Do not place any article under the adjustable pedals or impede its ability to move, as it may cause damage to the pedal controls. Pedal travel may become limited if movement is stopped by an obstruction in the adjustable pedal's path.

WARNING!

- Tilting the steering column while the vehicle is moving is dangerous. Without a stable steering column, you could lose control of the vehicle and have a collision. Adjust the column only while the vehicle is stopped. Be sure it is locked before driving.
- Do not adjust the pedals while the vehicle is moving. You could lose control and have a collision. Always adjust the pedals while the vehicle is parked.

ENGINE BREAK-IN RECOMMENDATIONS

- A long break-in period is not required for the engine and drivetrain (transmission and axle) in your vehicle.
- Drive moderately during the first 300 miles (500 km). After the initial 60 miles (100 km), speeds up to 50 or 55 mph (80 or 90 km/h) are desirable.
- While cruising, brief full-throttle acceleration within the limits of local traffic laws contributes to a good break-in. Wide-open throttle acceleration in low gear can be detrimental and should be avoided.
- The engine oil installed in the engine at the factory is a high-quality energy conserving type lubricant. Oil changes should be consistent with anticipated climate conditions under which vehicle operations will occur. For the recommended viscosity and quality grades, refer to “Maintaining Your Vehicle”. NON-DETERGENT OR STRAIGHT MINERAL OILS MUST NEVER BE USED.
- A new engine may consume some oil during its first few thousand miles (kilometers) of operation. This should be considered a normal part of the break-in and not interpreted as an indication of difficulty.

TURN SIGNALS/WIPER/WASHER/HIGH BEAMS LEVER



Turn Signals/Lane Change Assist

- Tap the lever up or down once and the turn signal (right or left) will flash three times and automatically turn off.

Wipers

Intermittent, Low And High Operation

- Rotate the end of the lever to the first detent position for one of five intermittent settings, the second detent for low wiper operation and the third detent for high wiper operation.

Washer Operation

- Push the end of the lever inward to the second detent and hold for as long as spray is desired.

Mist Feature

- When a single wipe to clear off road mist or spray from a passing vehicle is needed, push the washer knob, located on the end of the multifunction lever, inward to the first detent and release. The wipers will cycle one time and automatically shut off.

High Beams

- Push the lever away from you to activate the high beams.
- A high beam symbol will illuminate in the cluster to indicate the high beams are on.

NOTE: For safe driving, turn off the high beams when oncoming traffic is present to prevent headlight glare and as a courtesy to other motorists.

HEADLIGHT SWITCH

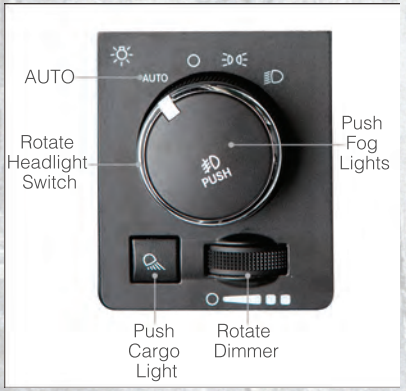

Automatic Headlights/Parking Lights/Headlights

- Rotate the headlight switch, located on the instrument panel to the left of the steering wheel, to the first detent for parking lights and to the second detent for headlights .
- With the parking lights or low beam headlights on, push the headlight switch once for fog lights.
- Rotate the headlight switch to "AUTO" for AUTO headlights.

- When set to AUTO, the system automatically turns the headlights on or off based on ambient light levels.

Instrument Panel Dimmer

- Rotate the dimmer control to the extreme left position to fully dim the instrument panel lights and prevent the interior lights from illuminating when a door is opened.
- Rotate the dimmer control right to increase the brightness of the instrument panel when the parking lights or headlights are on.
- Rotate the dimmer control right to the next detent position to fully brighten the odometer and radio when the parking lights or headlights are on. Refer to your Media Center/Radio User Manual on the DVD for display dimming.
- Rotate the dimmer control right to the last detent position to turn on the interior lighting.

Cargo Light

- The cargo light is strategically placed lighting that helps illuminate the bed area of the truck. A cargo light symbol will illuminate in the cluster to indicate the light is on.
- Push the button to turn ON/OFF the cargo lighting.

SPEED CONTROL LEVER



- The speed control switches are located on the steering wheel.

Cruise ON/OFF

- Push the ON/OFF switch to activate the Speed Control.
- The cruise symbol will appear on the instrument cluster to indicate the Speed Control is on.
- Push the ON/OFF switch a second time to turn the system off.

Set

- With the Speed Control on, push and release the SET switch to set a desired speed.

Accel/Decel

- Push and hold the RESUME/ACCEL switch to accelerate or push and hold the DECEL switch to decelerate the vehicle; release the switch to save the new set speed.

- Once a speed is set, pushing the RESUME/ACCEL switch once or the DECEL switch once will increase or decrease the set speed approximately 1 mph (2 km/h).

Resume

- To resume a previously selected set speed in memory, push the RESUME/ACCEL switch and release.

Cancel

- Push the CANCEL switch or apply the brakes to cancel the set speed and maintain the set speed memory.
- Push the ON/OFF switch to turn the system off and erase the set speed memory.

WARNING!

- Leaving the Electronic Speed Control system on when not in use is dangerous. You could accidentally set the system or cause it to go faster than you want. You could lose control and have a collision. Always leave the Electronic Speed Control system off when you are not using it.
- Electronic Speed Control can be dangerous where the system cannot maintain a constant speed. Your vehicle could go too fast for the conditions, and you could lose control. A collision could be the result. Do not use Electronic Speed Control in heavy traffic or on roads that are winding, icy, snow-covered or slippery.

ELECTRONIC RANGE SELECT (ERS) OPERATION



- Electronic Range Select (ERS) allows you to limit the highest available transmission gear, and can be activated during any driving condition. When towing a trailer or operating the vehicle in off-road conditions, using ERS shift control will help you maximize both performance and engine braking.
- Move the console shift lever left (-) or right (+), or toggle the switch on the column shift lever down (-) or up (+) to select the desired top gear.



- For maximum deceleration (engine braking) move the console shift lever left (-) and hold, or toggle the switch on the column shift lever down (-) and hold. Your vehicle will automatically select the lowest safe gear for optimal engine braking.
- To disable ERS, push and hold the console shift lever to the right (+) or push and hold the column shift lever switch up (+) until “D” is displayed in the odometer.
- Switching between ERS and DRIVE mode can be done at any vehicle speed.
- Refer to your Owner's Manual on the DVD for further details.

MANUAL CLIMATE CONTROLS

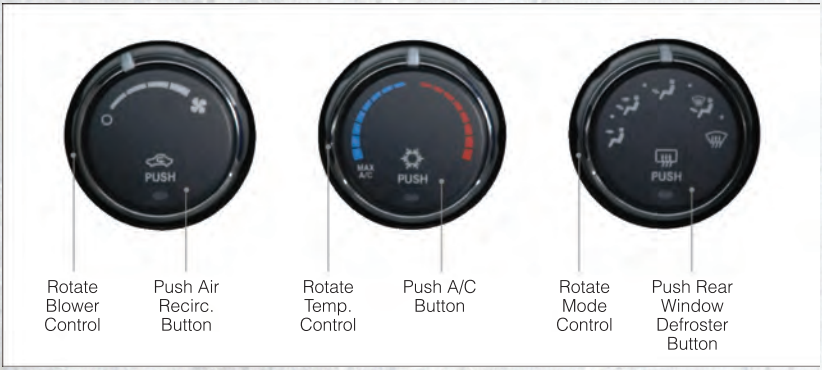

Air Recirculation /Max A/C

- Rotate the Temperature Control to the MAX A/C position to automatically turn on both Air Conditioning and Recirculation.
- For window defogging, turn the recirculation button off.
- Recirculation is not allowed in defrost, floor, defrost/floor (mix) modes.

Heated Mirrors

- The mirrors are heated to melt frost or ice. This feature is activated whenever you turn on the rear window defroster.

AUTOMATIC TEMPERATURE CONTROL (ATC)

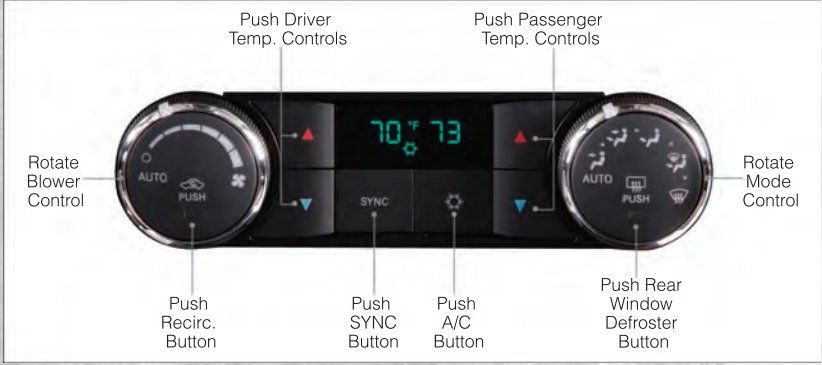

- Rotate both the Mode Control and Blower Control to the AUTO position.
- Select the desired temperature by pushing the up or down temperature buttons for the driver or passenger.
- The system will maintain the set temperature automatically.

Air Conditioning (A/C)

- If the A/C button is pushed while in the AUTO mode, the indicator light may flash three times to indicate the cabin air is being controlled automatically.

SYNC Temperature Button

- Push the SYNC button once to control the driver and passenger temperatures simultaneously. Push the SYNC button a second time to control the temperatures individually.

Air Recirculation

- Use recirculation for maximum A/C operation.
- For window defogging turn the recirculation button off.
- If the recirculation button is pushed while in the AUTO mode, the indicator light may flash three times to indicate the cabin air is being controlled automatically.

Heated Mirrors

- The mirrors are heated to melt frost or ice. This feature is activated whenever you turn on the rear window defroster.

PARKSENSE® REAR PARK ASSIST

- If an object is detected behind the rear bumper while the vehicle is in REVERSE, a warning will display in the instrument cluster and a tone, that changes speed depending on the distance of the object from the bumper, will sound.

Service The ParkSense® Rear Park Assist System

- When the ParkSense® Rear Park Assist System is malfunctioning, the instrument cluster will actuate a single chime, once per ignition cycle, and it will display the “CLEAN PARK ASSIST SENSORS” or the “SERVICE PARK ASSIST SYSTEM” message.
- If “CLEAN PARK ASSIST SENSORS” appears in the Electronic Vehicle Information Center (EVIC) and the rear fascia/bumper is clean and clear of snow, ice, mud, dirt or other obstruction, see your authorized dealer.
- If “SERVICE PARK ASSIST SYSTEM” appears in the EVIC, see your authorized dealer.

Enable/Disable ParkSense®

- ParkSense® can be enabled and disabled with a switch located in the switch bank of the instrument panel or through the Customer-Programmable Features section of the EVIC. When the switch is pressed to disable the system, the instrument cluster will display the “PARK ASSIST SYSTEM OFF” message for approximately five seconds.

PARKVIEW® REAR BACK-UP CAMERA

- You can see an on-screen image of the rear of your vehicle whenever the shift lever is put into REVERSE. The ParkView® Rear Back-Up Camera image will be displayed on the radio display screen, located on the center stack of the instrument panel.
- If the radio display screen appears foggy, clean the camera lens located on the tailgate.

WARNING!

Drivers must be careful when backing up even when using the ParkView® Rear Back-Up Camera. Always check carefully behind your vehicle, and be sure to check for pedestrians, animals, other vehicles, obstructions, or blind spots before backing up. You must continue to pay attention while backing up. Failure to do so can result in serious injury or death.

TIRE PRESSURE MONITOR SYSTEM (TPMS) – 2500 MODELS ONLY

Tire Light Load Inflation Switch Description

- The Tire Pressure Monitoring System on your vehicle has two different tire pressure settings based on vehicle loading. The Tire Light Load Switch is located on the Instrument Panel above the climate controls.
- The “Light Load Inflation” and “Max Load Inflation” tire pressures recommended for your vehicle based on vehicle loading are found on the Supplemental Tire Pressure Information Label located on the rear face of the driver front door.
- When the vehicle is in the “Light Load Inflation” setting, the Tire Light Load Inflation switch is On. The indicator light is Off when in the “Max Load Inflation” setting.

Light Load Inflation (Indicator Light On)

- If the passenger and cargo weights are less than the Light Load Pressure Definition shown on the Supplemental Tire Pressure Information Label, inflate or deflate tires to the correct “Light Load Inflation” pressure. If the indicator light is not on, **the mode can be changed by pushing the switch once.**
- If the light on the switch flashes On and Off, **after the button is pressed to switch between modes, this indicates conditions are not correct to switch modes.** The system will not allow switching modes until the tire pressures have been set to Light Load Inflation as indicated on the Supplemental Tire Pressure Information Label.
- **IF THE LIGHT STARTS FLASHING TO SHOW LOW AIR PRESSURE, BRING THE AIR PRESSURE IN THAT TIRE TO THE PLACARD VALUE SHOWN ON THE LABEL ON THE DRIVER DOOR. NOTE: AFTER INFLATION, THE VEHICLE MAY NEED TO BE DRIVEN FOR UP TO 20 MINUTES BEFORE THE FLASHING LIGHT WILL GO OFF.**

Max Load Inflation (Indicator Light Off)

- If the passenger and cargo weights exceed the Light Load Pressure Definition shown on the Supplemental Tire Pressure Information Label, adjust tires to the correct “Max Load Inflation” pressure. If the indicator is on, reset by pushing the switch once.
- If the tire pressure monitoring light and a “low tire” message appears in the cluster, inflate the tire pressures to the “Max Load Inflation” setting as indicated in the Supplemental Tire Pressure Information Label.
- **After any tire pressure adjustment, the vehicle may need to be driven for up to 20 minutes at speeds over 15 mph for the tire pressure information to be updated, or for a low tire pressure warning to go out.**
- For additional information, refer to the Owner's Manual on the DVD.

POWER SLIDING REAR WINDOW



- The switch for the power sliding rear window is located on the overhead console.
- Push the switch right to open the glass and pull the switch left to close the glass.

POWER SUNROOF

- The power sunroof switch is located on the overhead console.

Opening Sunroof

Express

- Press the switch rearward and release. The sunroof will fully open and stop automatically.

Closing Sunroof

Express

- Press the switch forward and release. The sunroof will close automatically from any position.

Manual Open/Close

- Press and hold the switch rearward to open or forward to close the sunroof. Any release of the switch will stop the movement, and the sunroof will remain in a partially open or closed position until the switch is pressed again.

Venting Sunroof

- Press and release the "VENT" button, and the sunroof will open to the vent position. This is called “Express Vent” and will occur regardless of sunroof position. During Express Vent operation, any movement of the switch will stop the sunroof.

Pinch Protection Feature

- This feature will detect an obstruction in the opening of the sunroof during Express Close operation. If an obstruction in the path of the sunroof is detected, the sunroof will automatically return to the open position.

NOTE: Pinch protection is disabled while the switch is pressed and held during manual opening and closing of the sunroof.

WARNING!

- Never leave children in a vehicle with the key in the ignition switch. Occupants, particularly unattended children, can become entrapped by the power sunroof while operating the power sunroof switch. Such entrapment may result in serious injury or death.
- In a collision, there is a greater risk of being thrown from a vehicle with an open sunroof. You could also be severely injured or killed. Always fasten your seat belt properly and make sure all passengers are properly secured.
- Do not allow small children to operate the sunroof. Never allow your fingers, other body parts, or any object to project through the sunroof opening. Injury may result.

WIND BUFFETING

- Wind buffeting can be described as a helicopter-type percussion sound. If buffeting occurs with the rear windows open, adjust the front and rear windows together.
- If buffeting occurs with the sunroof open, adjust the sunroof opening, or adjust any window. This will minimize buffeting.

ELECTRONICS

YOUR VEHICLE'S SOUND SYSTEM



Bluetooth Streaming Audio – allows you to control your Bluetooth device through the radio, steering wheel audio controls or voice commands. See Uconnect™ Phone in this section for more details. Also, Bluetooth device must be compatible. Refer to your Bluetooth device's manual to see if it supports A2DP+AVCRP 1.3 protocol.


USB Port on Radio – for copying files from a memory stick to your radio's hard drive.
Audio Jack – works with iPod® devices or other players with a headphones jack and a 3.5mm cable.
Your Radio Sales Code
USB Port (located inside upper glove box) – when connected, allows you to control your iPod® or memory stick using the radio or steering wheel audio controls.

Media Center 130 (Sales Code RES)

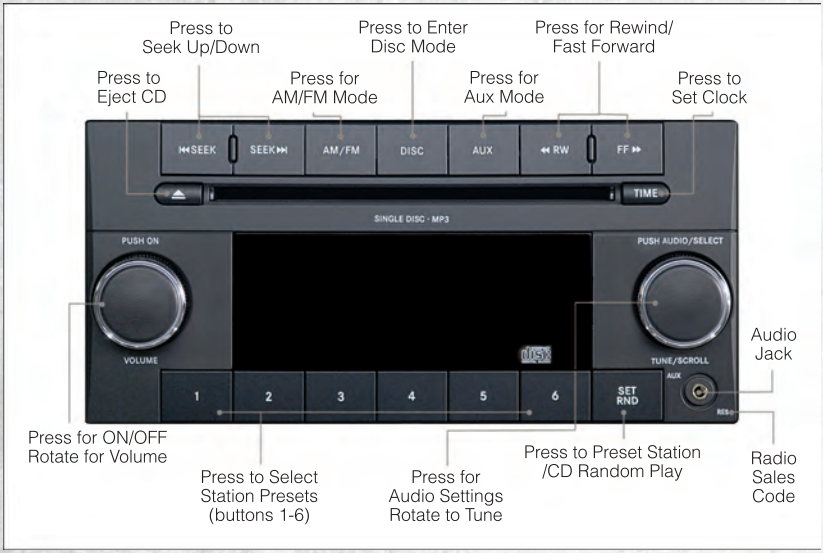

NOTE:

- Your radio has many features that add to the comfort and convenience of you and your passengers. Some of these radio features should not be used when driving because they take your eyes from the road or your attention from driving.

Clock Setting

- Press and hold the “TIME” button until the hours blink; turn the “TUNE/ SCROLL” control knob to set the hours.
- Press the “TUNE/SCROLL” control knob until the minutes begin to blink; turn the “TUNE/SCROLL” control knob to set the minutes.
- Press the “TUNE/SCROLL” control knob to save the time change.
- To exit, press any button/knob or wait five seconds.

Equalizer, Balance And Fade

- Press the “TUNE/SCROLL” control knob and BASS, MID, TREBLE, BALANCE and FADE will display. Rotate the “TUNE/SCROLL” control knob to select the desired setting.

Radio Operation

Seek Up/Down Buttons

- Press to seek through radio stations in AM, FM, or SAT bands.
- Hold either button to bypass stations without stopping.

Store Radio Presets

- Press the “SET/RND” button once and SET 1 will show in the display. Then select button (1–6).
- A second station may be added to each push button. Press the “SET/RND” button twice and SET 2 will show in the display. Then select button (1–6).

CD/DISC Operation

Seek Up/Down Buttons

- Press to seek through CD tracks.
- Hold either button to bypass tracks without stopping.

SET/RND Button (Random Play)

- Press this button while the CD is playing to activate Random Play.
- This feature plays the selections on the CD in random order to provide an interesting change of pace.

Audio Jack Operation

- The Audio Jack allows a portable device, such as an MP3 player or a cassette player, to be plugged into the radio and utilize the vehicle’s audio system, using a 3.5 mm audio cable, to amplify the source and play through the vehicle speakers.
- Pressing the “AUX” button will change the mode to auxiliary device if the Audio Jack is connected, allowing the music from your portable device to play through the vehicle's speakers.
- The functions of the portable device are controlled using the device buttons. The volume may be controlled using the radio or portable device.

Media Center 130 with Satellite Radio (Sales Code RES + RSC)

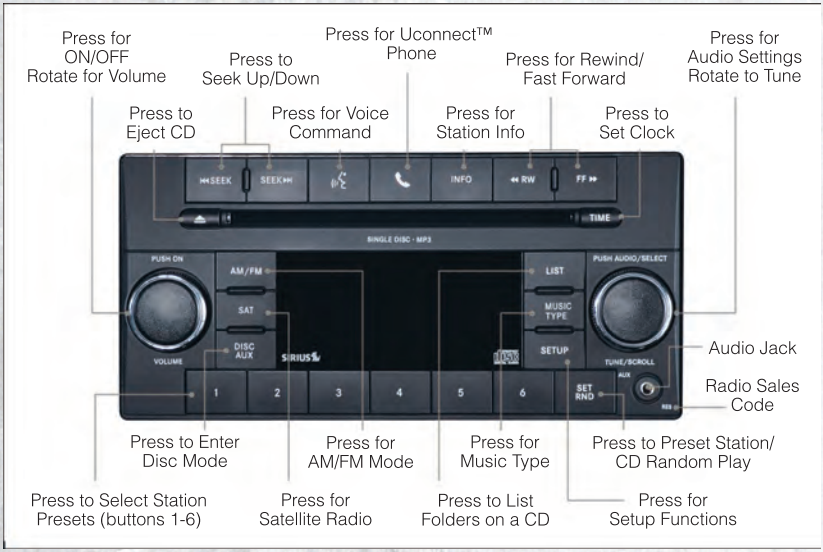

NOTE:

- Your radio may not be equipped with the Uconnect™ Voice Command and Uconnect™ Phone features. To determine if your radio has these features, press the Voice Command button on the radio. You will hear a voice prompt if you have the feature, or see a message on the radio stating “Uconnect Phone not available” if you do not.
- Your radio has many features that add to the comfort and convenience of you and your passengers. Some of these radio features should not be used when driving because they take your eyes from the road or your attention from driving.

Clock Setting

- Press and hold the “TIME” button until the hours blink; turn the “TUNE/ SCROLL” control knob to set the hours.
- Press the “TUNE/SCROLL” control knob until the minutes begin to blink; turn the “TUNE/SCROLL” control knob to set the minutes.
- Press the “TUNE/SCROLL” control knob to save the time change.
- To exit, press any button/knob or wait five seconds.

Equalizer, Balance And Fade

- Press the “TUNE/SCROLL” control knob and BASS, MID, TREBLE, BALANCE and FADE will display. Rotate the “TUNE/SCROLL” control knob to select the desired setting.

Radio Operation

Seek Up/Down Buttons

- Press to seek through radio stations in AM, FM, or SAT bands.
- Hold either button to bypass stations without stopping.

Store Radio Presets

- Press the “SET/RND” button once and SET 1 will show in the display. Then select button (1–6).
- A second station may be added to each push button. Press the “SET/RND” button twice and SET 2 will show in the display. Then select button (1–6).

Music Type

- Press the “MUSIC TYPE” button to activate this mode. Press the “MUSIC TYPE” button again or turn the “TUNE/SCROLL” control knob to select the desire music type (Adult Hits, Country, Jazz, Oldies, Rock, etc.).
- Once a music type is chosen and the icon is displayed, press either “SEEK” button and the radio will only search for stations with the selected music type.

NOTE: The Music Type function only operates when in FM mode.

SETUP Button

- Pressing the “SETUP” button allows you to select between items that are available in that particular mode.
- Turn the “TUNE/SCROLL” control knob to scroll through the entries. Push the “AUDIO/SELECT” button to select an entry and make changes.

SIRIUS Satellite Radio

- SIRIUS Satellite Radio gives you over 130 channels, including 100% commercial-free music from nearly every genre, plus all your favorite sports, news, talk and entertainment channels –all with crystal clear, coast-to-coast coverage, all in one place and all at your fingertips.
- To access SIRIUS Satellite Radio, press the “SAT” hard-key.

CD/DISC Operation

Seek Up/Down Buttons

- Press to seek through CD tracks.
- Hold either button to bypass tracks without stopping.

SET/RND Button (Random Play)

- Press this button while the CD is playing to activate Random Play.
- This feature plays the selections on the CD in random order to provide an interesting change of pace.

LIST Button

- Press the “LIST” button to bring up a list of all folders on the CD. Scroll up or down the list by turning the “TUNE/SCROLL” control knob.

- To select a folder from the list, press the “TUNE/SCROLL” control knob and the radio will begin playing the files contained in that folder.

Audio Jack Operation

- The Audio Jack allows a portable device, such as an MP3 player or a cassette player, to be plugged into the radio and utilize the vehicle’s audio system, using a 3.5 mm audio cable, to amplify the source and play through the vehicle speakers.
- Pressing the “AUX” button will change the mode to auxiliary device if the Audio Jack is connected, allowing the music from your portable device to play through the vehicle's speakers.
- The functions of the portable device are controlled using the device buttons. The volume may be controlled using the radio or portable device.

Media Center 430/430N (Sales Code RBZ/RHB)

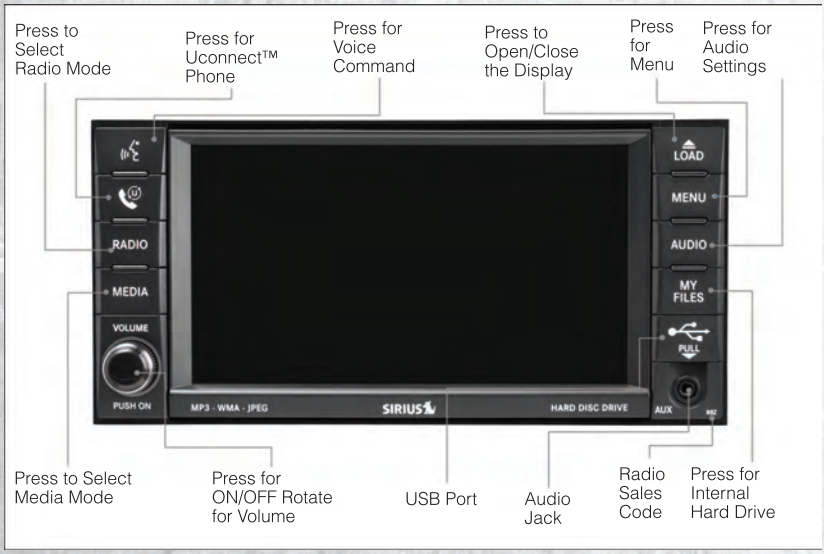

NOTE:

- Your radio may not be equipped with the Uconnect™ Voice Command and Uconnect™ Phone features. To determine if your radio has these features, press the Voice Command button on the radio. You will hear a voice prompt if you have the feature, or see a message on the radio stating “Uconnect Phone not available” if you do not.
- Your radio has many features that add to the comfort and convenience of you and your passengers. Some of these radio features should not be used when driving because they take your eyes from the road or your attention from driving.

Clock Setting

- Turn the radio on, then touch the screen where the time is displayed.
- Touch the “USER CLOCK” soft-key (Navigation radio only).
- To adjust the hours, touch either the “HOUR FORWARD” or “HOUR BACKWARD” soft-key.
- To adjust the minutes, touch either the “MINUTE FORWARD” or “MINUTE BACKWARD” soft-key.
- To save the new time setting, touch the screen where the word “Save” is displayed.

Menu

- Press the “MENU” hard-key to access the System Setup menu and the My Files menu.
- Press the “MENU” hard-key in an active mode (SAT, CD, AUX, etc.) in order to change mode specific settings.

Equalizer, Balance And Fade

Audio Control Menu



- Press the “AUDIO” hard-key on the right side of the radio.
- Use either the arrow soft-keys or the cross-hair on the screen to change Balance and Fade. The “CENTER” soft-key resets the settings.

- Touch the “Equalizer” soft-key and use either the arrow soft-keys or the sliders on the screen to adjust BASS, MID, and/or TREBLE.

Display Settings



- Press the “MENU” hard-key and touch the “Display Settings” soft-key to access the Display Settings menu.
- Select the “Daytime Colors” soft-key to switch to manual daytime mode and to adjust the brightness of the display using daytime colors.

- Select the “Nighttime Colors” soft-key to switch to manual nighttime mode and to adjust the brightness of the display using nighttime colors.

- Select the “Auto Color Mode” soft-key to switch to automatic daytime/nighttime mode and to control the brightness of the display using the dimmer switch of the vehicle.
- Touch the “EXIT” soft-key to save your settings.

Radio Operation

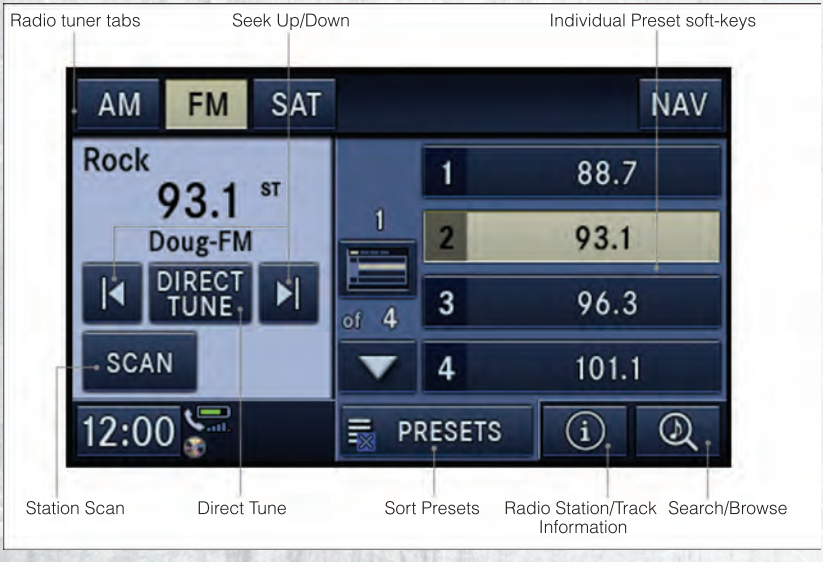

- To access Radio Mode, touch the “RADIO” hard-key on the right side of the faceplate, then touch the “AM,” “FM” or “SAT” soft-key at the top of the screen to select the band.

Seek Up/Seek Down

- Press the “Seek Up” or “Seek Down” soft-keys to seek through radio stations in AM, FM, or SAT bands. Hold either Seek to bypass stations without stopping.

Store Radio Presets

- Select the radio band by touching either the “AM,” “FM,” or “SAT” soft-key.
- Find the station to store by either pressing the “Seek Up” or “Seek Down” soft-keys, touching the “SCAN” soft-key, or by using the “DIRECT TUNE” soft-key.
- Once the station is found, touch and hold one of the “PRESET” soft-keys in the list to the right, until you hear a confirmation beep.

NOTE: If the Presets are not visible on the right side of the screen, press the “Presets” soft-key.

CD/DVD Disc Operation



- Press the “MEDIA” hard key to display the media source tabs at the top of the screen. Select the source by touching the “HDD,” “DISC,” or “AUX” media source soft-key tab.

NOTE: Your Touch-Screen Radio will usually automatically switch to the appropriate mode when something is first connected or inserted into the system.

Insert a CD/DVD Disc

- To insert a disc, press the or “LOAD” hard-key.
- With the printed side upwards, insert the disc into the disc slot of the radio. The radio pulls the disc in automatically and closes the flip screen. The radio selects the appropriate mode after the disc is recognized, and starts playing the first track. The display shows “Reading...” during this process.

Seek Up/Seek Down

- Press the “Seek Up” or “Seek Down” soft-keys to seek through tracks in Disc Mode. Hold either Seek to bypass tracks without stopping.

Audio Jack Operation

- The Audio Jack allows a portable device, such as an MP3 player or a cassette player, to be plugged into the radio and utilize the vehicle’s audio system, using a 3.5 mm audio cable, to amplify the source and play through the vehicle speakers.
- Pressing the “MEDIA” hard-key and then the “AUX” soft-key to change the mode to auxiliary device if the Audio Jack is connected, allowing the music from your portable device to play through the vehicle's speakers.

- The functions of the portable device are controlled using the device buttons. The volume may be controlled using the radio or portable device.

Hard Disk Drive (HDD) Operation

- The Hard Disk Drive (HDD) mode gives you access to the audio files on the internal hard disk drive. It functions similar to a CD player, with the exception that the internal HDD can hold more tracks.
- It is also possible to import display pictures to the internal hard disk drive. The pictures can be displayed on the right half of the radio screen.
- Before using the HDD mode, you will need to copy songs and pictures to the internal hard drive. Songs and pictures can be added to the hard drive by using a CD or USB device (e.g. thumb drive or memory stick).

NOTE: WMA/MP3 Files and Selective Songs from a CD can also be added to the HDD. See the Media Center 430/430N User's Manual for more information.

Copying Music From CD

- Press the “LOAD” hard-key.
- Insert a disc, then press the “MENU” hard-key.



- Touch the “MY FILES” soft-key, then select “MY MUSIC.”
- Touch the “Add Music Files to HDD” soft-key, then touch the “From Disc” soft-key in the next screen to start the process.



NOTE:

- You might need to select the folder or title depending on the CD, then press “DONE” to start the copy process.
- The copy progress is shown in the lower left corner of the screen.

Copying Music From USB

- The USB port on the radio face plate allows you to copy files to your hard drive. To access, lift up on the cover.
- Insert a USB device (e.g. thumb drive or memory stick), then select “MY MUSIC.”
- Touch the “Add Music Files to HDD” soft-key, then touch the “From USB” soft-key in the next screen.



- Select the folders or titles you would like to copy, then touch the “DONE” soft-key to start the copy process.

NOTE: The copy progress is shown in the lower left corner of the screen.

Copying Pictures To The HDD

- Insert either a CD or a USB device containing your pictures in JPEG format.
- Press the “MY FILES” hard-key.
- Touch the “My Pictures” soft-key to get an overview of the currently stored images, then touch the “Add” soft-key.



- Touch the “DISC” or “Front USB” soft-key, then select the folders or pictures you wish to copy to the HDD. Use the “PAGE” soft-keys to page through the list of pictures.
- Touch the desired pictures or press the “All” soft-key for all pictures. Confirm your selections by touching the “SAVE” soft key.

NOTE: The copy progress is shown in the lower left corner of the screen.

Display a Picture on the Radio Screen

- Once the import is complete, the pictures will then be available in the “MY PICTURES” screen.
- Press the “MY FILES” hard-key, then touch the “My Pictures” soft-key. Touch the desired picture, then touch the “Set as Picture View” soft-key and then touch the “Exit” soft-key. Lastly press the “MENU” hard-key and then touch the “Picture View” soft-key to display the chosen picture on the radio screen.

NOTE:

- A check mark in the My Pictures screen indicates the currently used picture.
- You can also delete pictures by touching the “Delete” soft-key.

Playing Music From The HDD



- Press the “MEDIA” hard key to display the media source tabs at the top of the screen. Touch the “HDD” soft-key tab. Touch the desired track soft-key to play or touch the “SEARCH/BROWSE” soft-key to search by artist, by album, by song, by genre, from a folder, or from Favorites.

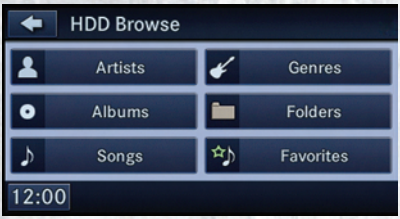

Cleaning Your Touch-Screen Radio

- Do not spray any liquid or caustic chemicals directly on the screen. Use a clean and dry micro fiber lens cleaning cloth in order to clean the touch-screen.
- If necessary, use a lint-free cloth dampened with a cleaning solution such as isopropyl alcohol or an isopropyl alcohol and water solution ratio of 50:50. Be sure to follow the solvent manufacturer's precautions and directions.

Garmin® Navigation

- Media Center 430N integrates Garmin's consumer-friendly navigation into your vehicle. Garmin Navigation includes a database with over 6 million points of interest.
- Touch the "NAV" soft-key in the upper right corner of the screen to access the Navigation system

NOTE: For your own safety and the safety of others, it is not possible to use the certain features while the vehicle is in motion.



Main Navigation Menu

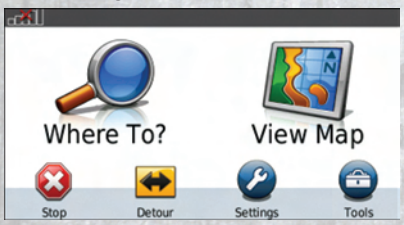

Finding Points Of Interest

- From the main Navigation menu, touch "Where To?," then touch "Points of Interest."
- Select a Category and then a subcategory, if necessary.
- Select your destination and touch "Go."

Finding A Place By Spelling The Name

- From the Main Navigation Menu, touch “Where to?,” then touch “Points of Interest” and then touch “Spell Name.”
- Enter the name of your destination.
- Touch “Done.”
- Select your destination and touch “Go.”

Entering A Destination Address

- From the main Navigation menu, touch “Where To?,” then touch “Address.”
- Follow the on-screen prompts to enter the address and touch “Go.”

Searching Near Another Location

- From the main Navigation menu, touch “Where To?,” then touch a destination and then touch “Near.”
- Select an option from the available choices.

Following Your Route

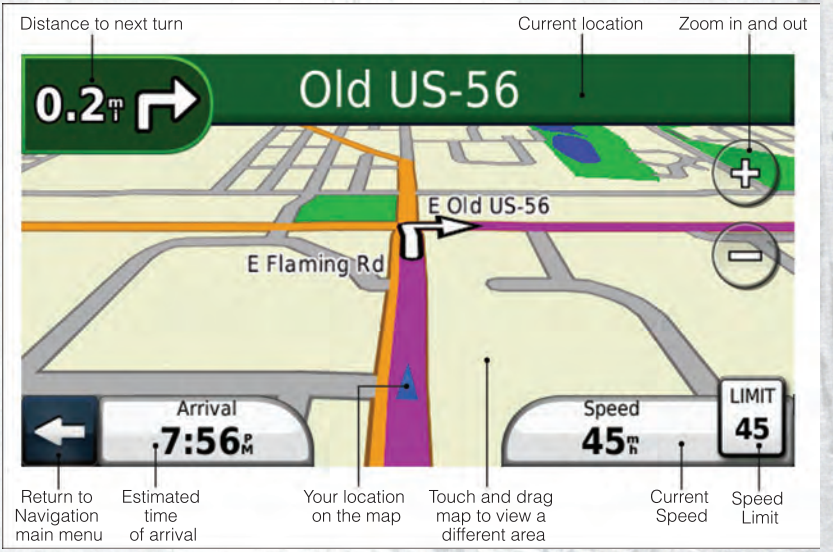

- Your route is marked with a magenta line on the map. If you depart from the original route, your route is recalculated. A speed limit icon could appear as you travel on major roadways.

Adding A Via Point

- To add a stop (Via Point) you must be navigating a route.
- Touch the “back arrow icon” to return to the Main Navigation menu.

- Touch “Where To?,” then search for the extra stop. Then select the stop to add from the search results.
- Touch “Go,” then touch “Add to Current Route.”

Taking A Detour

- To take a detour you must be navigating a route
- Touch the “back arrow” icon to return to the Main Navigation menu.
- Touch “Detour.”

NOTE: If the route you are currently taking is the only reasonable option, the device might not calculate a detour.

Setting Your Home Location

- From the main Navigation menu, touch “Where To?,” then touch “Go Home.”
- You may enter your address directly, use your current location as your home address, or choose from recently found locations.

Edit Home Location

- From the main Navigation menu, touch “Where To?,” then touch “Favorites.”
- Next, touch the location you would like to edit, then touch “Press for More,” and then “Edit.”

Go Home

- A Home location must be saved in the system. From the Main Navigation menu, touch “Where To?,” then touch “Go Home.”

Acquiring Satellites

- The GPS Satellite strength bars indicate the strength of your satellite reception.
- Acquiring satellite signals can take a few minutes. When at least one of the bars is green, your device has acquired satellite signals.
- You may experience delays in acquisition of satellite signals when in areas with an obstructed view to the sky, such as garages, tunnels, or large cities with tall buildings.

Media Center 730N (Sales Code RHR)

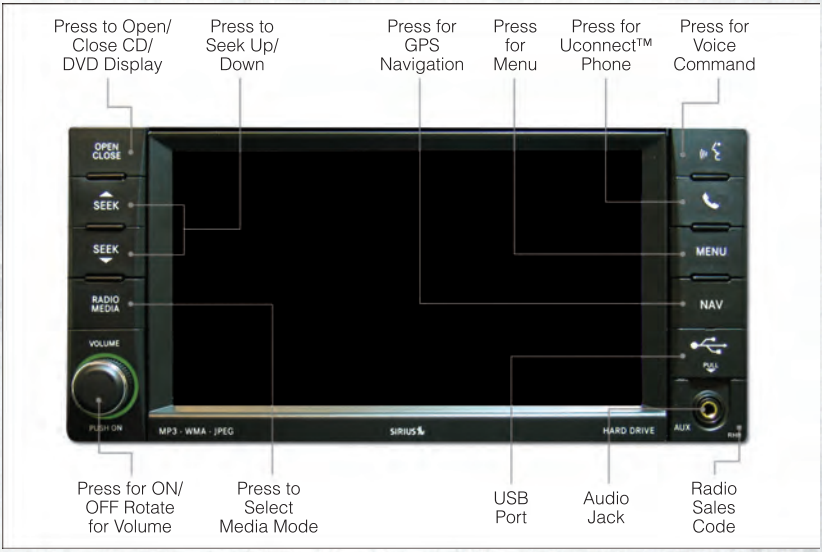

NOTE: Your radio may not be equipped with the Uconnect™ Voice Command and Uconnect™ Phone features. To determine if your radio has these features, press the Voice Command button on the radio. You will hear a voice prompt if you have the feature, or see a message on the radio stating "Uconnect Phone not available" if you do not.

- Your radio has many features that add to the comfort and convenience of you and your passengers. Some of these radio features should not be used when driving because they take your eyes from the road or your attention from driving.

Clock Setting

- Turn the radio on, then touch the screen where the time is displayed.
- Touch the "USER CLOCK" soft-key.
- To adjust the hours, touch either the "HOUR FORWARD" or "HOUR BACKWARD" soft-key.
- To adjust the minutes, touch either the "MINUTE FORWARD" or "MINUTE BACKWARD" soft-key.
- To save the new time setting, touch the screen where the word "Save" is displayed.

Menu

- Press the "MENU" hard-key to access the System Setup menu and the My Files menu.

- Press the “MENU” hard-key in an active mode (SAT, CD, AUX, etc.) in order to change mode specific settings.

Equalizer, Balance And Fade

Audio Control Menu



- Press the “MENU” hard-key on the right side of the radio. Then press the “Audio Control” soft-key to get to the audio control menu.
- Use either the arrow soft-keys or the cross-hair on the screen to change Balance and Fade. The “CENTER” soft-key resets the settings.

- Touch the “Equalizer” soft-key and use either the arrow soft-keys or the sliders on the screen to adjust BASS, MID, and/or TREBLE.

Display Settings



- Press the “MENU” hard-key and touch the Display Settings soft-key to access the Display Settings menu.
- Select the “Daytime Colors” soft-key to switch to manual daytime mode and to adjust the brightness of the display using daytime colors.

- Select the “Nighttime Colors” soft-key to switch to manual nighttime mode and to adjust the brightness of the display using nighttime colors.
- Select the “Auto Color Mode” soft-key to switch to automatic daytime/nighttime mode and to control the brightness of the display using the dimmer switch of the vehicle.
- Touch the “EXIT” soft-key to save your settings.

Radio Operation

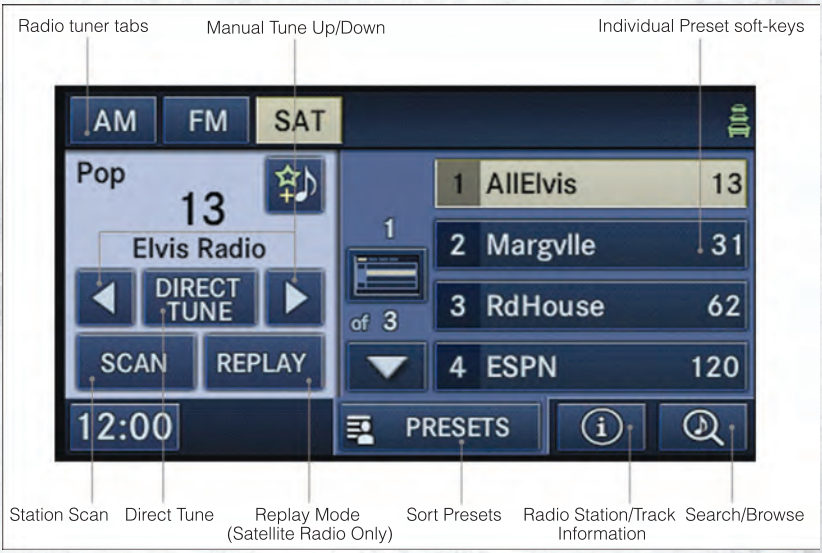

- To access Radio Mode, touch the “RADIO/MEDIA” hard-key on the right side of the faceplate repeatedly until AM/FM/SAT appears at the top of the screen, then touch the “AM,” “FM” or “SAT” soft-key to select the band.

Seek Up/Seek Down

- Press the “Seek Up” or “Seek Down” hard-keys to seek through radio stations in AM, FM, or SAT bands. Hold either Seek to bypass stations without stopping.

Store Radio Presets

- Select the radio band by touching either the “AM,” “FM,” or “SAT” soft-key.
- Find the station to store by either pressing the “Seek Up” or “Seek Down” hard-keys, touching the “SCAN” soft-key, or by using the “DIRECT TUNE” soft-key.
- Once the station is found, touch and hold one of the PRESET soft-keys in the list to the right, until you hear a confirmation beep.

NOTE: If the Presets are not visible on the right side of the screen, press the “Presets” soft-key.

CD/DVD Disc Operation



- Press the “RADIO/MEDIA” hard key until the media source tabs are displayed at the top of the screen. Select the source by touching the “HDD,” “DISC,” or “AUX” media source soft-key tab.

NOTE: Your Touch-Screen Radio will usually automatically switch to the appropriate mode when something is first connected or inserted into the system.

Insert a CD/DVD Disc

- To insert a disc, press the “OPEN/CLOSE” hard-key
- With the printed side upwards, insert the disc into the disc slot of the radio. The radio pulls the disc in automatically and closes the flip screen. The radio selects the appropriate mode after the disc is recognized, and starts playing the first track. The display shows “Reading...” during this process.

Seek Up/Seek Down

- Press the “Seek Up” or “Seek Down” hard-keys to seek through tracks in Disc Mode. Hold either Seek to bypass tracks without stopping.

Audio Jack Operation

- The Audio Jack allows a portable device, such as an MP3 player or a cassette player, to be plugged into the radio and utilize the vehicle’s audio system, using a 3.5 mm audio cable, to amplify the source and play through the vehicle speakers.
- Pressing the “RADIO/MEDIA” hard-key and then the “AUX” soft-key to change the mode to auxiliary device if the Audio Jack is connected, allowing the music from your portable device to play through the vehicle's speakers.

- The functions of the portable device are controlled using the device buttons. The volume may be controlled using the radio or portable device.

Hard Disk Drive (HDD) Operation

- The Hard Disk Drive (HDD) mode gives you access to the audio files on the internal hard disk drive. It functions similar to a CD player, with the exception that the internal HDD can hold more tracks.
- It is also possible to import display pictures to the internal hard disk drive. The pictures can be displayed on the right half of the radio screen.
- Before using the HDD mode, you will need to copy songs and pictures to the internal hard drive. Songs and pictures can be added to the hard drive by using a CD or USB device (e.g. thumb drive or memory stick).

NOTE: WMA/MP3 Files and Selective Songs from a CD can also be added to the HDD. See the Media Center 730N User's Manual for more information.

Copying Music From CD

- Press the “OPEN/CLOSE” hard-key.
- Insert a disc, then press the “MENU” hard-key.



- Touch the “MY FILES” soft-key, then select “MY MUSIC.”
- Touch the “Add Music Files to HDD” soft-key, then touch the “From Disc” soft-key in the next screen to start the process.



NOTE:

- You might need to select the folder or title depending on the CD, then press “Done” to start the copy process.
- The copy progress is shown in the lower left corner of the screen.

Copying Music From USB

- The USB port on the radio face plate allows you to copy files to your hard drive. To access, lift up on the cover.
- Insert a USB device (e.g. thumb drive or memory stick), then select “MY FILES”.



- Touch the “MY MUSIC” soft-key, then touch the “Add Music Files” to HDD soft-key.



- Touch “Front USB” soft-key, then select the folders or titles you would like to copy, and then touch the “SAVE” soft-key to start the copy process.

NOTE: The copy progress is shown in the lower left corner of the screen.

Copying Pictures To The HDD

- Insert either a CD or a USB device containing your pictures in JPEG format.
- Press the “MENU” hard-key to access the Settings Menu, then touch the “My Files” soft-key.
- Touch the “My Pictures” soft-key to get an overview of the currently stored images, then touch the “Add” soft-key.



- Touch the “DISC” or “Front USB” soft-key, then select the folders or pictures you wish to copy to the HDD. Use the “PAGE” soft-keys to page through the list of pictures.
- Touch the desired pictures or press the “All” soft-key for all pictures. Confirm your selections by touching the “SAVE” soft key.

NOTE: The copy progress is shown in the lower left corner of the screen.

Display a Picture on the Radio Screen

- Once the import is complete, the pictures will then be available in the “MY PICTURES” screen.
- Press the “MENU” hard-key to access the Settings Menu, then touch the “My Files” soft-key and then touch the “My Pictures” soft-key. Touch the desired picture, then touch the “Set as Picture View” soft-key and then touch the “Exit” soft-key. Lastly press the “MENU” hard-key and then touch the “Picture View” soft-key to display the chosen picture on the radio screen.

NOTE:

- A check mark in the My Pictures screen indicates the currently used picture.
- You can also delete pictures by touching the “Delete” soft-key.

Playing Music From The HDD



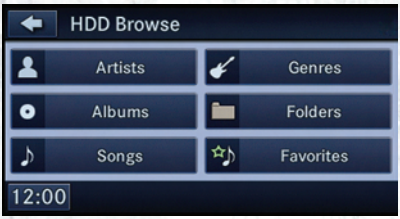

- Press the “RADIO/MEDIA” hard key until the media source tabs are displayed at the top of the screen. Touch the “HDD” soft-key tab. Touch the desired track soft-key to play or touch the “SEARCH/BROWSE” soft-key to search by artist, by album, by song, by genre, from a folder, or from Favorites.

Cleaning Your Touch-Screen Radio

- Do not spray any liquid or caustic chemicals directly on the screen. Use a clean and dry micro fiber lens cleaning cloth in order to clean the touch-screen.
- If necessary, use a lint-free cloth dampened with a cleaning solution such as isopropyl alcohol or an isopropyl alcohol and water solution ratio of 50:50. Be sure to follow the solvent manufacturer's precautions and directions.

NAVIGATION

- Your navigation system receives GPS signals from up to 16 satellites to display the position of your vehicle. Map and database information is supplied through a hard disk drive.
- Touch the “NAV” hard-key on the radio face plate to access the Navigation system and the NAV – Main Menu

NOTE: For your own safety and the safety of others, it is not possible to use the certain features while the vehicle is in motion.



Main Navigation Menu



Finding Points Of Interest

- From the NAV main menu, touch the “Points of Interest” soft-key.
- Select a Category and then a subcategory, if necessary.
- Select your destination and touch “GO.”

Finding A Place By Entering The Street Address

- From the NAV main menu, touch “New Destination,” then touch “Street Address.”

NOTE: If the wrong State and/or Country displayed are incorrect, touch the corresponding soft-key to make the correction.

- Once the Country and State are set and the Street Address screen is displayed, begin spelling the street name in the speller. In the upper right corner the number of possible roads decreases.
- Touch the “LIST” soft-key to display a list of possible street names. Select the correct street name.
- Next input the number
- In the Confirm Route screen the navigation radio displays the complete address, a map of the destination area, and the current routing method for you to verify.
- Touch the “GO” soft-key to activate the route guidance.

Where Am I Now?

- From the NAV main menu, touch “Where Am I Now?.” The Where Am I Now? menu displays location information for the current vehicle position.
- Touch the “NEARBY POI”soft-key to search for a local Point of Interest.
- Touch the “SAVE LOCATION” soft-key to save the current location in the Saved Locations memory.

Route Guidance

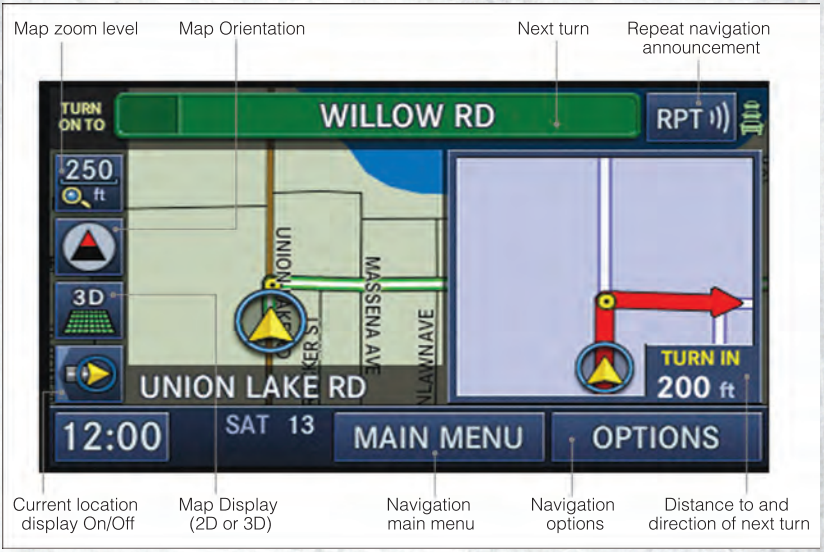

- After starting route guidance, the system calculates the route and announces: “Follow the arrows on the display.” You will receive navigation recommendations by voice messages and screen displays.

Route Options

- After pressing the “OPTIONS” soft-key in the Route Guidance Menu, the following information is displayed:
  - In the left half of the screen, the current position and the current routing method are displayed.
  - “Take Detour” will allow you to calculate a different route.
  - Touch “Find Nearby POI” to search for a local POI.
  - “Destination Info” displays destination information.
  - “View Turn List” lists streets utilized for the current route.
  - Touch the “Save Destination” to save the destination address.
  - “Change Method” will allow you to change the routing method.

Entering Your Home Location

- Press the “NAV” hard-key on the right side of the radio.
- From the Nav – Main Menu, touch Guide Me Home to enter your home address. If no home address has been set, touch “YES” to access the Enter Home Address menu.
- Touch “Street Address” to enter your address. Touch the soft-key with your state’s name and enter your street name into the speller.
- Once the street name has been input, touch “CONTINUE” to confirm. Enter the house number into the next screen. If more than one city has this address, you will then need to select your city from a list.
- Once the address is entered completely, the system shows a map of your home address area. Touch “SAVE” to confirm the address. The system will then ask if you want to go there, yes or no.

Change Home Address

- This procedure will allow you to change your Home Address if one has already been entered.
  - Press the “MENU” hard-key, touch “My Files” and then touch “My Address Book.”
  - Touch “Home,” then touch “Edit Contacts” and then “Change Address.”
  - Touch the soft-key with your state’s name and enter your street name into the speller.
  - Once the street name has been input, touch “CONTINUE” to confirm.
  - Enter the house number into the next screen. If more than one city has this address, you will then need to select your city from a list.
  - Touch the “SAVE” soft-key to confirm the address.

Go Home

- From the NAV main menu, touch “Guide Me Home” when you want to route to your home destination.

SIRIUS SATELLITE RADIO/TRAVEL LINK

- The following describes features that are available when in SIRIUS Satellite Radio mode.

Info

- Touch the “i” soft-key to view detailed information about the current SIRIUS Satellite channel.

SIRIUS Parental Controls

- SIRIUS offers the option to permanently block selected channels. Call 1-888-539-7474 and request the Family Package.

- Media Center 430/430N and 730N: Press the “MENU” hard-key while in SIRIUS Satellite Radio Mode, then touch the “Channel Lock” to enable and/or disable desired channels. The SEEK and SCAN function will then only display channels without Channel lock.

Search/Browse

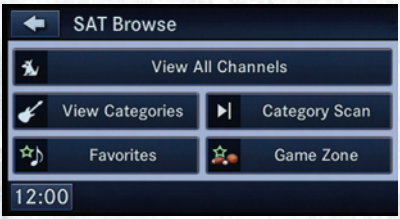

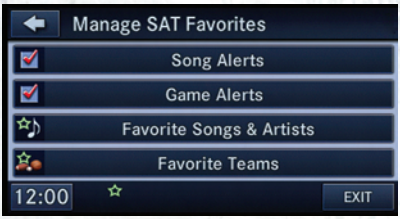

- Touch the “magnifying glass” soft-key to search/browse the SIRIUS channel listing by Favorites and Categories such as Song, Artist and Channel Name. The Search/Browse also allows you manage your Favorites.

SIRIUS Satellite Radio Favorites (SAT Favorites)

- You can save 50 favorite songs and 50 favorite artists.
- Touch the “add favorite” soft-key to add either the song or the artist of the currently playing program to the SAT Favorites list.

- You will see a favorite star indicator in the lower left side of the screen and a pop up will alert you that a favorite song or artist is currently playing on one of the SIRIUS satellite radio channels.



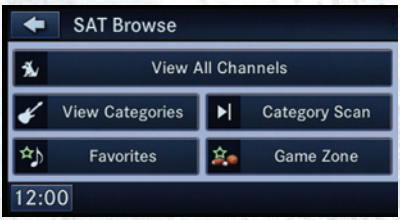

NOTE: Refer to your Media Center 730N or Media Center 430/430N User's Manual for more information.

Display SAT Favorites List

- Touch the “Search/Browse” soft-key and select “Favorites” from the SAT Browse screen.
- Touch the desired favorites soft-key to switch the SAT tuner to the corresponding channel.

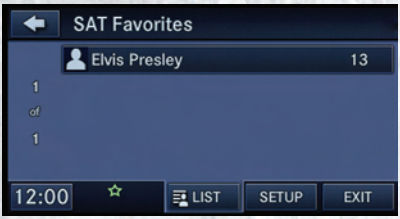

- You may use the “LIST” soft-key to toggle between:
  - Favorite Songs.
  - Favorite Artists.
  - Currently playing favorites.

Replay



- While you are in SAT mode, you can replay 44 minutes of the current SIRIUS channel (when the channel is changed, this audio buffer is erased). Press the REPLAY button to listen to the stored audio.

- You can touch the on-screen controls to pause and rewind audio playback, touch the SCAN button to preview each of the tracks stored in the buffer, or select a track from the list.
- The time displayed below the bar indicates how much time is present between the current buffer play position and the live broadcast.

Replay Option	Option Description
Play/Pause	Touch to Pause content playback. Touch Pause/Play again to resume playback.
Rewind/RW	Rewinds the channel content in steps of 5 seconds. Touch and hold to rewind continuously, then release to begin playing content at that point.
Fast Forward/FW	Forwards the content, and works similarly to Rewind/RW. However, Fast Forward/FW can only be used when content has been previously rewound
Replay Time	Displays the amount of time in the upper center of the screen by which your content lags the Live channel.
Live	Resumes playback of Live content at any time while replaying rewound content.

SIRIUS Travel Link (Media Center 730N (RHR) & Media Center 430N (RHB) Only)

- SIRIUS Travel Link brings a wealth of useful information into your vehicle and right to your fingertips.
- To access Travel Link, press the MENU hard-key, then the Travel Link soft-key.

NOTE: SIRIUS Travel Link requires a subscription, sold separately after the 1 year trial subscription included with your vehicle purchase.



1 – Favorites	View and store your favorite location, theater and sport teams for quick access.
2 – Forecast	View detailed weather conditions, forecasts and ski/snowboarding conditions at local resorts.
3 – Ski Info	View ski and snowboarding conditions at local ski resorts.
4 – Fuel Prices	View detailed price information for fuel stations near your current location.
5 – Movies	View information on movies that are playing at theaters near your current location.
6 – Sports	View sports scores and upcoming events for all major sports.

STEERING WHEEL AUDIO CONTROLS



- The steering wheel audio controls are located on the rear surface of the steering wheel.

Right Switch

- Press the switch up or down to increase or decrease the volume.
- Press the button in the center to change modes AM/FM/CD/SAT.

Left Switch

- Press the switch up or down to search for the next listenable station or select the next or previous CD track.
- Press the button in the center to select the next preset station (radio) or to change CDs if equipped with a CD Changer.

iPod®/USB/MP3 CONTROL

- There are many ways to play music from iPod® players or other portable devices through your vehicle's speakers.



- The USB port located inside the upper glove box, allows you to plug an iPod® into the vehicle's sound system.
- To hear audio from devices connected to this port from a non-touch-screen radio, press the AUX button on the radio faceplate. From a touch-screen radio, press the MEDIA hard-key, then touch the AUX or iPod® soft-key.

- When connected to this feature:
  - The iPod® audio can be played on the vehicle's sound system.
  - The iPod® can be controlled using the radio buttons to Play, Browse, and List the iPod® or external devices contents. Refer to the Owner's Manual on the DVD for details.
  - The iPod® battery charges when plugged into the USB port (if supported by the specific audio device).

NOTE:

- The USB port supports certain Mini, Classic, Nano, Touch, and iPhone® devices. The USB port also supports playing music from compatible external USB Mass Storage Class memory devices. For supported audio file formats, refer to the USB Port section on the Owner's Manual on the DVD. Refer to www.ramtrucks.com/uconnect website for a list of tested iPod®s. Some iPod® software versions may not fully support the USB port features. Please visit Apple's website for iPod® software updates.

WARNING!

Do not plug in or remove the iPod® or external device while driving. Failure to follow this warning could result in a collision.

Uconnect™ Phone

- To determine if your vehicle is equipped with Uconnect™ Phone, press the "Uconnect™ Phone" button . If your vehicle has this feature, after a couple seconds you will hear a voice prompt. If not, you will see a message on the radio "Uconnect phone not available".
- The Uconnect™ Phone is a voice-activated, hands-free, in-vehicle communications system with Voice Command Capability (see Voice Command section).

NOTE: To access the tutorial, press the “Uconnect™ Phone” button . After the BEEP, say “tutorial”. Press any hard-key/button or touch the display (Touch-Screen radio) to cancel the tutorial.

- The Uconnect™ Phone allows you to dial a phone number with your mobile phone using simple voice commands.
- Refer to your vehicle Owner's Manual on the DVD for further details.

NOTE: The Uconnect™ Phone requires a mobile phone equipped with the Bluetooth® Hands-Free Profile, Version 1.0 or higher. For Uconnect™ customer support, call 1–877–855–8400 or visit www.ramtrucks.com/uconnect.

Phone Pairing

NOTE: Pairing is a one-time initial setup before using the phone.

- Press the “Phone” button to begin.
- Wait for the “ready” prompt and BEEP.
- (After the BEEP), say ”setup” or “Uconnect device setup”.
- (After the BEEP), say “device pairing”.

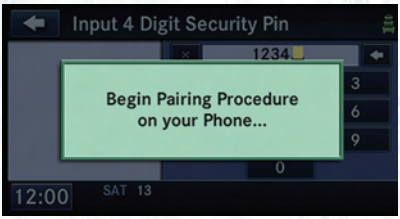

- (After the BEEP), say “pair a device”.
- Follow the audible prompts.
- You will be asked to say a four-digit Personal Identification Number (PIN), which you will later need to enter into your mobile phone. You can say any four-digit PIN. You will not need to remember this PIN after the initial pairing process.
- You will then be prompted to give the phone pairing a name (each phone paired should have a unique name).
- Next you will be asked to give this new pairing a priority of 1 thru 7 (up to seven phones may be paired); 1 is the highest and 7 is the lowest priority. The system will only connect to the highest priority phone that exists within the proximity of the vehicle.
- You will then need to start the pairing procedure on your cell phone. Follow the Bluetooth® instructions in your cell phone Owner's Manual to complete the phone pairing setup.

Phonebook

Phonebook Download – Automatic Phonebook Transfer From Mobile Phone



If equipped and specifically supported by your phone, Uconnect™ Phone automatically downloads names (text names) and number entries from your mobile phone's phonebook. Specific Bluetooth® Phones with Phone Book Access Profile may support this feature. Automatic Transfer is indicated by a green arrow at the bottom of the screen. See Uconnect™ website for supported phones.

- Automatic download and update, if supported, begins as soon as the Bluetooth® wireless phone connection is made to the Uconnect™ Phone, for example, after you start the vehicle.
- A maximum of 1000 entries per phone will be downloaded and updated every time a phone is connected to the Uconnect™ Phone.
- Depending on the maximum number of entries downloaded, there may be a short delay before the latest downloaded names can be used. Until then, if available, the previously downloaded phonebook is available for use.
- Only the phonebook of the currently connected mobile phone is accessible.
- Only the mobile phone's phonebook is downloaded. SIM card phonebook is not part of the Mobile phonebook.
- This downloaded phonebook cannot be edited or deleted on the Uconnect™ Phone. These can only be edited on the mobile phone. The changes are transferred and updated to Uconnect™ Phone on the next phone connection.

Phonebook Edit

- Press the "Phone" button .
- (After the BEEP), say "phonebook".
- (After the BEEP), say "new entry" or "list names" or "delete".
- Follow the prompts.

Making A Phone Call

- Press the "Phone" button .
- (After the BEEP), say "dial" (or "call" a name).
- (After the BEEP), say number (or name).

Receiving A Call – Accept (And End)

- When an incoming call rings/is announced on Uconnect™, press the Phone button .
- To end a call, press the Phone button .

Mute (Or Unmute) Microphone During Call

- During a call, press the "Voice Command" button VR .
- (After the BEEP), say "mute" (or "mute off").

Transfer Ongoing Call Between Handset And Vehicle

- During a call, press the "Voice Command" button VR .
- (After the BEEP), say "transfer call".

Changing The Volume

- Start a dialogue by pressing the "Phone" button , then adjust the volume during a normal call.
- Use the radio ON/OFF VOLUME rotary knob to adjust the volume to a comfortable level while the Uconnect™ system is speaking. Please note the volume setting for Uconnect™ is different than the audio system.

WARNING!

- Any voice commanded system should be used only in safe driving conditions following local laws and phone use. All attention should be kept on the roadway ahead. Failure to do so may result in a collision causing you and others to be severely injured or killed.
- In an emergency, to use Uconnect™ Phone, your mobile phone must be:
  - turned on,
  - paired to Uconnect™ Phone,
  - and have network coverage.

Uconnect™ VOICE COMMAND

- The Uconnect™ Voice Command system allows you to control your AM, FM radio, satellite radio, disc player, HDD, Uconnect™ Phone, a memo recorder, and supported portable media devices.
- When you press the "Voice Command" button VR located on the radio faceplate or steering wheel, you will hear a beep. The beep is your signal to give a command. If you do not say a command within a few seconds, the system will present you with a list of options. If you ever wish to interrupt the system while it lists options, press the "Voice Command" button VR , listen for the BEEP, and say your command.



Voice Command Operation

- Start a dialogue by pressing the "Voice Command" button VR , you will hear a beep. The beep is your signal to give a command. Below are a list of voice commands for each of the different modes.

Common Voice Commands (Examples)

Main Menu	“Radio” (to switch to the radio mode) “Disc” (to switch to the disc mode) “Memo” (to switch to the memo recorder) “System Setup” (to switch to system setup)
Radio Mode	“Frequency” (to change the frequency) “Next Station” (to select the next station) “Previous Station” (to select the previous station) “Radio Menu” (to switch to the radio menu) “Main Menu” (to switch to the main menu)
SIRIUS Satellite Radio Mode	“Channel Number” (to change the channel by its spoken number) “Next Channel” (to select the next channel) “Previous Channel” (to select the previous channel) “List Channel” (to hear a list of available channels) “Select Name” (to say the name of a channel) “Radio Menu” (to switch to the radio menu) “Main Menu” (to switch to the main menu)
Disc Mode	“Track” (#) (to change the track) “Next Track” (to play the next track) “Previous Track” (to play the previous track) “Main Menu” (to switch to the main menu)
Memo Mode	To switch to the voice recorder mode, say “Memo”. The following are common voice commands for this mode: “New Memo” (to record a new memo) — During the recording, you may press the Voice Command button VR to stop recording. You proceed by saying one of the following commands: — “Save” (to save the memo) — “Continue” (to continue recording) — “Delete” (to delete the recording) — “Play Memos” (to play previously recorded memos) — During the playback you may press the Voice Command button VR to stop playing memos. You proceed by saying one of the following commands: — “Repeat” (to repeat a memo) — “Next” (to play the next memo) — “Previous” (to play the previous memo) — “Delete” (to delete a memo) — “Delete All” (to delete all memos)

Voice Command for Text Messaging

- If equipped with Uconnect™ Voice Command, your Media Center 430N & 730N radios may be able to play incoming Short Message Service (SMS) messages (text messages) through the vehicle's sound system.
- It also allows you to respond by selecting from various pre-defined phrases.

- Not all phones are compatible with this feature. Refer to the phone compatibility list at www.ramtrucks.com/uconnect. Connected mobile phones must be bluetooth-compatible, and paired with your radio.
- Press the “Voice Command” button VR and after the BEEP, say “SMS” to get started.

NOTE: To access the tutorial, press the “Voice Command” button VR . After the BEEP, say “tutorial”. Press any hard-key/button or touch the display (Touch-Screen radio) to cancel the tutorial.

WARNING!

Any voice commanded system should be used only in safe driving conditions following local laws and phone use. All attention should be kept on the roadway ahead. Failure to do so may result in a collision causing you and others to be severely injured or killed.

Bluetooth® STREAMING AUDIO



- If equipped with Uconnect™ Voice Command, your Bluetooth-equipped iPod® devices, cell phones or other media players, may also be able to stream music to your vehicle's speakers. Your connected device must be Bluetooth-compatible, and paired with your Media Center radio (see Uconnect™ Phone for pairing instructions). Non-Touch-Screen Radios: Press the “AUX” button on the radio faceplate until "BT" or “Audio Streaming” is displayed on the radio screen. Touch-Screen-Radios: Press the “RADIO/MEDIA” or “MEDIA” hard-key and then touch the “AUX” soft-key tab.

VIDEO ENTERTAINMENT SYSTEM (VES)™



System Operation

- The screen is located on the headliner behind the front seat. To lower the screen, press the release button located in the rear of the overhead console.
- The system may be controlled by the front seat occupants using the touch-screen radio, or by the rear seat occupants using the remote control.
- The video screen displays information in a split screen format. The left side of the screen is referred to as Channel 1 and the right side of the screen is referred to as Channel 2. All modes except video modes are displayed in a split screen format.
- To use the headphones, press the power button located on the right ear cup. Select the channel on the headphones (1 or 2) that corresponds to the channel selected on the VES™ screen.

Operation Of The Touch-Screen Radio

- To view a DVD video press the OPEN/CLOSE or LOAD hard-key and insert the disc. Playback will begin automatically after the DVD is recognized by the disc drive. If playback does not begin automatically follow these steps:
  - Press the MENU hard-key, then touch the Rear VES™ soft-key. If a chapter list appears on the right side of the screen touch the HIDE LIST soft-key to display the Rear VES™ Control screen.
  - Touch the 1 soft-key to select an audio channel, then touch the DISC soft-key in the MEDIA column.

Operation Of The Remote

- The remote control operates similarly to any DVD remote you have used before and allows the rear seat passengers to change stations, tracks, discs and audio/video modes.
- The remote control is designed to control either channel by using the selector switch located on the right side of the remote.
- Pressing the power button will turn the VES™ system ON/OFF.
- Pressing the MODE button causes the Mode Selection menu to appear on the VES™ screen. Use the remote control arrow buttons to scroll through the available modes, then press ENTER to select the desired mode.

Auxiliary Audio/Video Input Jacks

- The Aux jacks are located on the rear of the center console.
- Connect the video game or other external media devices to the AUX jacks following the color coding for VES™ jacks.
- Using either the touch-screen radio or remote control, select AUX from the Rear VES™ Control or Mode Selection screen.
- Refer to your vehicle Owner's Manual on the DVD for further details.

ELECTRONIC VEHICLE INFORMATION CENTER (EVIC)



- The EVIC features a driver interactive display that is located in the instrument cluster. Pressing the controls on the left side of the steering wheel allows the driver to select vehicle information and Personal Settings. For additional information, refer to Programmable Features in this guide.

- Press and release the UP △ button to scroll upward through the main menus (Fuel Economy, Vehicle Info, Tire PSI, Cruise, Messages, Units, System Setup) and sub menus.
- Press and release the DOWN ▽ button to scroll downward through the main menus and sub menus.
- Press and release the SELECT ▷ button for access to main menus, sub menus or to select a personal setting in the setup menu.
- Press the BACK button to scroll back to a previous menu or sub menu.

Compass Calibration

- This compass is self-calibrating, which eliminates the need to set the compass manually. When the vehicle is new, the compass may appear erratic and the EVIC will display “CAL” until the compass is calibrated.
- You may also calibrate the compass by completing one or more 360 degree turns (in an area free from large metal or metallic objects) until the “CAL” message displayed in the EVIC turns off. The compass will now function normally.

ECO

- The ECO message will appear in your EVIC display whenever you are driving in a fuel efficient manner.
- This feature allows you to monitor when you are driving in a fuel efficient manner, and it can be used to modify driving habits in order to increase fuel economy.

PROGRAMMABLE FEATURES

Electronic Vehicle Information Center (EVIC) – If Equipped

- The EVIC can be used to view or change the following settings. Press the UP △ or DOWN ▽ button until System Setup displays, then press the SELECT ▷ button. Scroll through the settings using the UP or DOWN buttons. Press the SELECT ▷ button to change the setting. Press the BACK button to scroll back to a previous menu or sub menu.
  - Select Language
  - Nav-Turn By Turn
  - Park Assist System
  - Auto Unlock Doors
  - Remote Unlock Sequence
  - RKE Linked To Memory
  - Remote Start Comfort Sys.
  - Horn With Remote Start
  - Sound Horn With Lock
  - Flash Lamps With Lock
  - Headlamp Off Delay
  - Headlamps With Wipers
  - Automatic High Beams – If Equipped
  - Intermittent Wiper Options – If Equipped
  - Easy Entry/Exit Seat – If Equipped
  - Key-Off Power Delay
  - Illuminated Approach
  - Hill Start Assist (HSA)
  - Display Fuel Saver – If Equipped
  - Forward Collision Warning (FCW) Sensitivity – If Equipped
  - Compass Variance
  - Calibrate Compass

Key Fob Programmable Features

- The following features may also be programmed by using the Key Fob transmitter or the ignition switch and driver's door lock switch.

NOTE: Pressing the LOCK button while you are inside the vehicle will activate the Vehicle Security Alarm. Opening a door with the Vehicle Security Alarm activated will cause the alarm to sound. Press the UNLOCK button to deactivate the Vehicle Security Alarm.

Unlock On First Press

- To unlock either the driver's side, or all doors, on the first press of the UNLOCK button:
  - Press and hold the LOCK button for at least 4 seconds, but no longer than 10 seconds. Then, press and hold the UNLOCK button while still holding the LOCK button.
  - Release both buttons at the same time.

Auto Unlock Doors On Exit

- To have all of the vehicle doors unlock when any door is opened:
  - Enter your vehicle, close all the doors and fasten your seat belt.
  - Within 15 seconds, cycle the ignition switch from the OFF position to the ON position a minimum of four times, ending in the OFF position (do not start the engine).

- Within 30 seconds, press the driver's door lock switch in the UNLOCK direction. A single chime will indicate that programming is complete.

Sound Horn With Lock

- To turn the horn chirp on or off when the doors are locked:
  - Press the LOCK button for at least 4 seconds, but no longer than 10 seconds. Then, press the PANIC button while still holding the LOCK button.
  - Release both buttons at the same time.

Flash Lamps With Lock

- The turn signal lights flashing feature, when the doors are locked or unlocked, can be turned on or off. To turn this feature on or off:
  - Press and hold the UNLOCK button for at least 4 seconds, but no longer than 10 seconds. Then, press and hold the LOCK button while still holding the UNLOCK button.
  - Release both buttons at the same time.

UNIVERSAL GARAGE DOOR OPENER (HomeLink®)

- HomeLink® replaces up to three hand-held transmitters that operate devices such as garage door openers, motorized gates, lighting or home security systems. The HomeLink® unit is powered by your vehicles 12 Volt battery.
- The HomeLink® buttons that are located in the overhead console or sunvisor designate the three different HomeLink® channels.
- The HomeLink® indicator is located above the center button.



Before You Begin Programming HomeLink®

- Be sure that your vehicle is parked outside of the garage before you begin programming.
- For more efficient programming and accurate transmission of the radio-frequency signal it is recommended that a new battery be placed in the hand-held transmitter of the device that is being programmed to the HomeLink® system.

- Erase all channels before you begin programming. To erase the channels, place the ignition switch into the ON/RUN position, then press and hold the two outside HomeLink® buttons (I and III) for up 20 seconds or until the red indicator flashes.

ELECTRONICS

NOTE:

- Erasing all channels should only be performed when programming HomeLink® for the first time. Do not erase channels when programming additional buttons.
- If you have any problems, or require assistance, please call toll-free 1–800–355–3515 or, on the Internet at www.HomeLink.com for information or assistance.

Programming A Rolling Code

- For programming Garage Door Openers that were manufactured after 1995. These Garage Door Openers can be identified by the "LEARN" or "TRAIN" button located where the hanging antenna is attached to the Garage Door Opener. It is NOT the button that is normally used to open and close the door. The name and color of the button may vary by manufacturer.
- Place the ignition switch into the ON/RUN position.
- Place the hand-held transmitter 1 to 3 in (3 to 8 cm) away from the HomeLink® button you wish to program while keeping the HomeLink® indicator light in view.
- Simultaneously press and hold both the Homelink button you want to program and the hand-held transmitter button.
- Continue to hold both buttons and observe the indicator light. The Homelink® indicator will flash slowly and then rapidly after Homelink® has received the frequency signal from the hand-held transmitter. Release both buttons after the indicator light changes from slow to rapid.
- At the garage door opener motor (in the garage), locate the "LEARN" or "TRAINING" button. This can usually be found where the hanging antenna wire is attached to the garage door opener motor. Firmly press and release the "LEARN" or "TRAINING" button.

NOTE: You have 30 seconds in which to initiate the next step after the LEARN button has been pressed.

- Return to the vehicle and press the programmed HomeLink® button twice (holding the button for two seconds each time). If the device is plugged in and activates, programming is complete.

NOTE: If the device does not activate, press the button a third time (for two seconds) to complete the training.

- To program the remaining two HomeLink® buttons, repeat each step for each remaining button. DO NOT erase the channels.

Programming A Non-Rolling Code

- For programming Garage Door Openers manufactured before 1995.
- Turn the ignition switch to the ON/RUN position.
- Place the hand-held transmitter 1 to 3 in (3 to 8 cm) away from the HomeLink® button you wish to program while keeping the HomeLink® indicator light in view.
- Simultaneously press and hold both the Homelink button you want to program and the hand-held transmitter button.

- Continue to hold both buttons and observe the indicator light. The Homelink® indicator will flash slowly and then rapidly after Homelink® has received the frequency signal from the hand-held transmitter. Release both buttons after the indicator light changes from slow to rapid.
- Press and hold the programmed HomeLink® button and observe the indicator light.

NOTE:

- If the indicator light stays on constantly, programming is complete and the garage door (or device) should activate when the HomeLink® button is pressed.
- To program the two remaining HomeLink® buttons, repeat each step for each remaining button. DO NOT erase the channels.

Using HomeLink®

- To operate, press and release the programmed HomeLink® button. Activation will now occur for the programmed device (i.e., garage door opener, gate operator, security system, entry door lock, home/office lighting, etc.,). The hand-held transmitter of the device may also be used at any time.

WARNING!

- Your motorized door or gate will open and close while you are programming the universal transceiver. Do not program the transceiver if people or pets are in the path of the door or gate.
- Do not run your vehicle in a closed garage or confined area while programming the transceiver. Exhaust gas from your vehicle contains Carbon Monoxide (CO) which is odorless and colorless. Carbon Monoxide is poisonous when inhaled and can cause you and others to be severely injured or killed.

POWER INVERTER

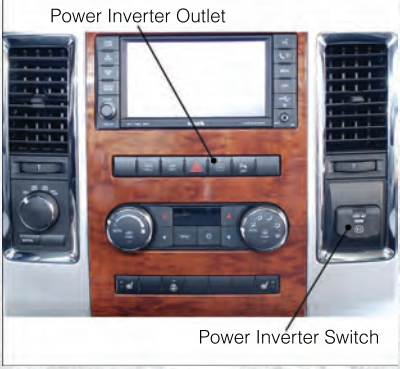

- A 115 Volt, 150 Watt power inverter outlet is located on the lower instrument panel next to the climate control knob. This outlet can power cellular phones, electronics and other low power devices requiring power up to 150 Watts.
- To turn on the power outlet, press the switch once.
- Press the switch a second time to turn the power outlet off. The status indicator of the AC power inverter indicates whether the inverter is producing AC power.

ELECTRONICS

NOTE: The power inverter is designed with built-in overload protection. If the power rating of 150 Watts is exceeded, the power inverter will automatically shut down. Once the electrical device has been removed from the outlet, the inverter should automatically reset. If the power rating exceeds approximately 170 Watts, the power inverter may have to be reset manually. To reset the inverter manually, unplug the device and plug it in again. To avoid overloading the circuit, check the power ratings on electrical devices prior to using the inverter.

WARNING!

To avoid serious injury or death: Do not use a three-prong adapter. Do not insert any objects into the receptacles. Do not touch with wet hands. Close the lid when not in use. If this outlet is mishandled it may cause an electric shock and failure.

POWER OUTLETS

- The auxiliary 12 Volt (13 Amp) power outlets can provide power for in-cab accessories designed for use with the standard “cigar lighter” plug. The 12 Volt power outlets have a cap attached to the outlet indicating “12V DC”, together with either a key symbol or a battery symbol.
- The auxiliary power outlets can be found in the following locations:
  - Lower left and lower right of the center stack — without floor mounted shifter.
  - Inside the top storage tray — with floor mounted shifter.
  - Inside the upper lid of the center storage compartment — if equipped.
  - Rear of the center console storage compartment — Quad Cab® or Crew Cab.

NOTE:

- **Do not exceed the maximum power of 160 Watts (13 Amps) at 12 Volts. If the 160 Watt (13 Amp) power rating is exceeded, the fuse protecting the system will need to be replaced.**
- **Power outlets are designed for accessory plugs only. Do not insert any other object in the power outlet as this will damage the outlet and blow the fuse. Improper use of the power outlet can cause damage not covered by your new vehicle warranty.**



#M7 Fuse 20 Amp Yellow – Power Outlet Center Seat (Opt.) or with Rear Console

#M6 Fuse 20 Amp Yellow – Cigar Lighter Inst. Panel or with Front Console

#M36 Fuse 20 Amp Yellow – Power Outlet Inst. Panel or with Center Console

OFF-ROAD CAPABILITIES

FOUR-WHEEL DRIVE OPERATION

Four-Position Transfer Case



- The transfer case provides four mode positions:
  - Two-wheel drive high range (2WD)
  - Four-wheel drive high range (4WD LOCK)
  - NEUTRAL (N)
  - Four-wheel drive low range (4WD LOW)
- This transfer case is intended to be driven in the 2H position for normal street and highway conditions, such as dry, hard-surfaced roads.
- When additional traction is required, the 4H and 4L positions can be used to lock the front and rear driveshafts together.
- When operating your vehicle in 4L, do not exceed 25 mph (40 km/h).

Shifting Procedure

- Shifting between 2H and 4H can be made with the vehicle stopped or in motion at speeds up to 55 mph (88 km/h).
- Shifting between 2H or 4H and 4L must be made with the transmission in NEUTRAL and the vehicle stopped or rolling at 2 to 3 mph (3 to 5 km/h).

Five-Position Transfer Case



- This electronically shifted transfer case provides five mode positions:
  - Two-wheel drive high range (2WD)
  - Four-wheel drive automatic range (4WD AUTO)
  - Four-wheel drive lock range (4WD LOCK)
  - Four-wheel drive low range (4WD LOW)
  - NEUTRAL (N)
- This electronically shifted transfer case is designed to be driven in the two-wheel drive position (2WD) or four-wheel drive position (4WD AUTO) for normal street and highway conditions on dry, hard-surfaced roads.
- Driving the vehicle in 2WD will have greater fuel economy benefits as the front axle is not engaged in 2WD.

Shifting Procedure

- Shifting between 2H and 4WD AUTO or 4WD LOCK can be made with the vehicle stopped or in motion.
- Shifting between 2H or 4H and 4L must be made with the transmission in NEUTRAL and the vehicle stopped or rolling at 2 to 3 mph (3 to 5 km/h).

NOTE: It is preferred to have the engine running and the vehicle moving at 2 to 3 mph (3 to 5 km/h).

WARNING!

You or others could be injured if you leave the vehicle unattended with the transfer case in the NEUTRAL position without first fully engaging the parking brake. The transfer case NEUTRAL position disengages both the front and rear driveshafts from the powertrain and will allow the vehicle to move regardless of the transmission position. The parking brake should always be applied when the driver is not in the vehicle.

EASY-OFF TAILGATE

- To simplify mounting of a camper unit with an overhang, the tailgate can be removed.

NOTE: If your vehicle is equipped with a rear camera the electrical connector must be disconnected prior to removing the tailgate.

Removing the Tailgate

- Disconnect the wiring harness for the rear camera (if equipped).
- Unlatch the tailgate and remove the support cables by releasing the lock tang from the pivot.
- Raise the right side of the tailgate until the right side pivot clears the hanger bracket.
- Slide the entire tailgate to the right to free the left side pivot.
- Remove the tailgate from the vehicle.

NOTE: Do not carry the tailgate loose in the truck pickup box.

Locking Tailgate

- The lock is located next to the tailgate handle. The tailgate can be locked using the vehicle key.

WARNING!

To avoid inhaling carbon monoxide, which is deadly, the exhaust system on vehicles equipped with “Cap or Slide-In Campers” should extend beyond the overhanging camper compartment and be free of leaks.

RAMBOX®



- The RamBox® system is an integrated pickup box storage and cargo management system consisting of three features:
  - Integrated box side storage bins
  - Cargo extender/divider
  - Bed rail tie-down system

RamBox® Integrated Box Side Storage Bins

- The cargo storage bins provide watertight, lockable, illuminated storage for up to 150 lbs (68 kg) of evenly distributed cargo.
- To open a storage bin, press and release the pushbutton located on the lid.
- The interior of the RamBox® will automatically illuminate when the lid is opened. Pushing the switch once will turn off the bin lights, pushing the switch again will turn the lights back on.
- Storage bins feature two removable drain plugs (to allow water to drain from bins). To remove plug, pull up on the edge. To install, push plug downward into drain hole.
- The RamBox® storage bins can be locked using the vehicle key.

NOTE: Provisions are provided in the bins for cargo dividers and shelf supports. These accessories (in addition to other RamBox® accessories) are available from MOPAR®.

RamBox® Storage Bin Cover Emergency Release Lever

- As a security measure, a Storage Bin Cover Emergency Release is built into the storage bin cover latching mechanism.

NOTE: In the event of an individual being locked inside the storage bin, the storage bin cover can be opened from inside of the bin by pulling on the glow-in-the-dark lever attached to the storage bin cover latching mechanism.

Bed Extender

- The bed extender has three functional positions:
  - Storage Position
  - Divider Position
  - Extender Position

Storage Position

- The storage position for the bed extender is at the front of the truck bed.
- To install the bed extender into the storage position, perform the following:
  - Make sure the center handle is unlocked using the vehicle key and rotate the center handle vertically to release the extender side gates.
  - With the side gates open, position the extender fully forward in the bed against the front panel.
  - Rotate the side gates closed allowing the outboard ends to be positioned in front of the cargo tie-down loops.
  - Rotate the center handle horizontally to secure the side gates in the closed position.
  - Lock the center handle using the vehicle key to secure the panel into place and assist against theft.

Divider Position

- There are 11 divider slots along the bed inner panels which allow for various positions to assist in managing your cargo.
- To install the bed extender into a divider position perform the following:
  - Make sure the center handle is unlocked using the vehicle key and rotate the center handle vertically to release the extender side gates.
  - With the side gates open, position the extender so the outboard ends align with the intended slots in the sides of the bed.
  - Rotate the side gates closed so that the outboard ends are secured into the intended slots of the bed.
  - Rotate the center handle horizontally to secure the side gates in the closed position.
  - Lock the center handle to secure the panel into place and assist against theft.

Extender Position

- The bed extender will add an additional 15 in (38 cm) in the back of the truck when additional cargo room is needed.

- To install the bed extender into the extender position, perform the following:
  - Lower the tailgate.
  - Make sure the center handle is unlocked and rotate the center handle vertically in order to release the extender side gates.
  - Fit the end of the side gate ends onto the pin and handle.
  - Rotate the handles to the horizontal position to secure into place.

Bed Rail Tie-Down System

- There are two adjustable cleats on each side of the bed that can be used to assist in securing cargo.
- Each cleat must be located and tightened down in one of the detents, along either rail, in order to keep cargo properly secure.
- To move the cleat to any position on the rail, turn the nut counterclockwise, approximately three turns. Then, pull out on the cleat and slide it to the detent nearest the desired location. Make sure the cleat is seated in the detent and tighten the nut.
- To remove the cleats from the utility rail, remove the end cap by pushing up on the locking tab, located on the bottom of the end cap. Slide the cleat off the end of the rail.

CAUTION!

- Failure to follow the following items could cause damage to the vehicle:
  - Assure that all cargo inside the storage bins is properly secured.
  - Do not exceed cargo weight rating of 150 lb (68 kg) per bin.
- Leaving the lid open for extended periods of time could cause the vehicle battery to discharge. If the lid is required to stay open for extended periods of time, it is recommended that the bin lights be turned off manually using the on/off switch.
- Ensure cargo bin lids are closed and latched before moving or driving vehicle.
- Loads applied to the top of the bin lid should be minimized to prevent damage to the lid and latching/hinging mechanisms.
- Damage to the RamBox® bin may occur due to heavy/sharp objects placed in bin that shift due to vehicle motion. In order to minimize potential for damage, secure all cargo to prevent movement and protect inside surfaces of bin from heavy/sharp objects with appropriate padding.
- The maximum load per cleat should not exceed 250 lbs (113 kg) and the angle of the load on each cleat should not exceed 60 degrees above horizontal, or damage to the cleat or cleat rail may occur.

WARNING!

- Always close the storage bin covers when your vehicle is unattended or in motion.
- Do not allow children to have access to the storage bins. Once in the storage bin, young children may not be able to escape. If trapped in the storage bin, children can die from suffocation or heat stroke.
- In a collision, serious injury could result if the storage bin covers are not properly latched.
- Do not use a storage bin latch as a tie down.
- To reduce the risk of potential injury or property damage:
  - Cargo must be secured.

(Continued)

WARNING! *(Continued)*

- Do not exceed cargo load rating of your vehicle.
- Secure all loads to truck utilizing cargo tie-downs.
- Extender should not be used as cargo tie-down.
- When vehicle is in motion do not exceed 150 lbs (68 kg) load on the tailgate.
- The bed extender is not intended for off road use.
- When not in use, the extender/divider should be in stowed or divider position with the tailgate closed.
- When in use, all handles are to be in the locked position.

TOWING & PAYLOAD

Ram 1500 4x2

	ST	SLT/ Outdoorsman/ Sport	Laramie
3.7L V-6 4–Speed Automatic Transmission	Towing: 3750 lbs - max Payload: 1860 lbs - max	–	–
4.7L V-8 6–Speed Automatic Transmission	Towing: 5000 lbs - std 7600 lbs - max Payload: 1700 lbs - max	Towing: 5000 lbs - std 7650 lbs - max Payload: 1730 lbs - max	–
5.7L HEMI®V-8 6–Speed Automatic Transmission	Towing: 5000 lbs - std 10400 lbs - max Payload: 1660 lbs - max	Towing: 5000 lbs - std 10450 lbs - max Payload: 1670 lbs - max	Towing: 5000 lbs - std 10050 lbs - max Payload: 1610 lbs - max

Ram 1500 4x4

	ST	SLT/ Outdoorsman/ Sport	Laramie
4.7L V-8 6–Speed Automatic Transmission	Towing: 5000 lbs - std 7400 lbs - max Payload: 1540 lbs - max	Towing: 5000 lbs - std 7450 lbs - max Payload: 1560 lbs - max	—
5.7L HEMI®V-8 6–Speed Automatic Transmission	Towing: 5000 lbs - std 10250 lbs - max Payload: 1510 lbs - max	Towing: 5000 lbs - std 10250 lbs - max Payload: 1530 lbs - max	Towing: 5000 lbs - std 9850 lbs - max Payload: 1610 lbs - max

Ram 2500 & 3500

	2500 Power Wagon®	2500 ST SLT Bighorn/Lonestar Laramie Outdoorsman	3500 ST SLT Bighorn/Lonestar Laramie Outdoorsman
5.7L HEMI® V-8 6-Speed Automatic Transmission	Towing: 10,100 lbs - max Payload: 1780 lbs - max	Towing: 12,300 lbs - max Payload: 3120 lbs - max	—
6.7L Cummins® Turbo Diesel I-6 6-Speed Manual Transmission	—	Towing: 13350 lbs - max Payload: 2490 lbs - max	Towing: 14,050 lbs - max Payload: 5050 lbs - max
6.7L Cummins® Turbo Diesel I-6 6-Speed Automatic Transmission	—	Towing: 15,450 lbs - max Payload: 2580 lbs - max	Towing: 22,700 lbs - max Payload: 5130 lbs - max

NOTE: For additional trailer towing information (maximum trailer weight ratings) refer to the following website addresses:

- **http://www.ramtrucks.com.**
- **http://www.ramtruck.ca** (Canada).

TOW/HAUL MODE

- When driving in hilly areas, towing a trailer, carrying a heavy load, etc., and frequent transmission shifting occurs, press the TOW/HAUL switch to select TOW/HAUL mode. This will improve performance and reduce the potential for transmission overheating or failure due to excessive shifting. When operating in TOW/HAUL mode, transmission upshifts are delayed, and the transmission will automatically downshift (for engine braking) during steady braking maneuvers.

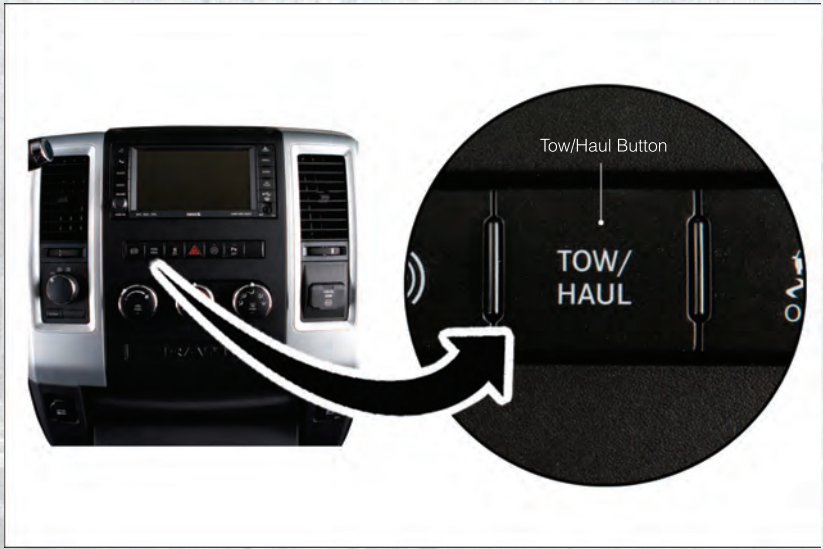

- The “TOW/HAUL Indicator Light” will illuminate in the instrument cluster to indicate that TOW/HAUL mode has been activated. Pressing the switch a second time restores normal operation. If the TOW/HAUL mode is desired, the switch must be pressed each time the engine is started.

INTEGRATED TRAILER BRAKE MODULE



Integrated Trailer Brake Module

- The Integrated Trailer Brake Controller allows you to automatically or manually activate the electronic brakes on properly equipped trailers for greater stopping power on downhill grades. The controller and status display are on the instrument panel to the left of the steering wheel, and the included control lever can activate the trailer brakes independent of the truck's brakes.

GAIN Adjustment Buttons (+/-)



- Pressing the +/- buttons, located on the left side of the module, will increase/decrease the brake control power output to the trailer brakes in 0.5 increments. The GAIN setting can be increased to a maximum of 10 or decreased to a minimum of 0.
- Refer to your Owner's Manual on the DVD for further details.

WARNING!

The ITBM module has been designed and verified for electric trailer brakes. Connecting a trailer that is not compatible with the ITBM system may result in reduced or complete loss of trailer braking. There may be a increase in stopping distance or trailer instability which could result in personal injury.

RECREATIONAL TOWING (BEHIND MOTORHOME, ETC.)

Towing This Vehicle Behind Another Vehicle

Towing Condition	Wheels OFF The Ground	Two-Wheel Drive Models	Four-Wheel Drive Models
Flat Tow	NONE	**NOT ALLOWED**	See Instructions • Automatic transmission in PARK • Manual transmission in gear (NOT in NEUTRAL) • Transfer case in NEUTRAL (N) • Tow in forward direction
Dolly Tow	Front	**NOT ALLOWED**	**NOT ALLOWED**
	Rear	OK	**NOT ALLOWED**
On Trailer	ALL	OK	OK

Recreational Towing – Two-Wheel Drive Models

- **DO NOT flat tow this vehicle. Damage to the drivetrain will result.**
- Recreational towing (for two-wheel drive models) is allowed ONLY if the rear wheels are OFF the ground. This may be accomplished using a tow dolly or vehicle trailer. If using a tow dolly, follow this procedure:
- Properly secure the dolly to the tow vehicle, following the dolly manufacturer's instructions.
- Drive the rear wheels onto the tow dolly.
- Firmly set the parking brake. Place automatic transmission in PARK, manual transmission in gear (not in Neutral).
- Properly secure the rear wheels to the dolly, following the dolly manufacturer's instructions.
- Remove the key fob from the ignition switch.
- Install a suitable clamping device, designed for towing, to secure the front wheels in the straight position.

Recreational Towing – Four-Wheel Drive Models

NOTE: Both the manual shift and electronic shift transfer cases must be shifted into NEUTRAL (N) for recreational towing. Automatic transmissions must be shifted into PARK for recreational towing. Manual transmissions must be placed in gear (NOT in NEUTRAL) for recreational towing. Refer to the following for the proper transfer case NEUTRAL (N) shifting procedure for your vehicle.

CAUTION!

- Towing with the rear wheels on the ground will cause severe transmission damage. Damage from improper towing is not covered under the New Vehicle Limited Warranty.
- Do not disconnect the driveshaft because fluid may leak from the transmission, causing damage to internal parts.
- Front or rear wheel lifts should not be used. Internal damage to the transmission or transfer case will occur if a front or rear wheel lift is used when recreational towing.
- Tow only in the forward direction. Towing this vehicle backwards can cause severe damage to the transfer case.
- Automatic transmissions must be placed in the PARK position for recreational towing.
- Manual transmissions must be placed in gear (not in Neutral) for recreational towing.

(Continued)

CAUTION! *(Continued)*

- Before recreational towing, perform the procedure outlined under "Shifting Into NEUTRAL (N)" to be certain that the transfer case is fully in NEUTRAL (N). Otherwise, internal damage will result.
- Towing this vehicle in violation of the above requirements can cause severe transmission and/or transfer case damage. Damage from improper towing is not covered under the New Vehicle Limited Warranty.
- Do not disconnect the rear driveshaft because fluid will leak from the transfer case, causing damage to internal parts.
- Do not use a bumper-mounted clamp-on tow bar on your vehicle. The bumper face bar will be damaged.

DIESEL

ENGINE BREAK-IN RECOMMENDATIONS

- The Cummins® turbocharged diesel engine does not require a break-in period due to its construction. Normal operation is allowed, providing the following recommendations are followed:
- Warm up the engine before placing it under load.
- Do not operate the engine at idle for prolonged periods.
- Use the appropriate transmission gear to prevent engine lugging.
- Observe vehicle oil pressure and temperature indicators.
- Check the coolant and oil levels frequently.
- Vary throttle position at highway speeds when carrying or towing significant weight.

NOTE: Light duty operation such as light trailer towing or no load operation will extend the time before the engine is at full efficiency. Reduced fuel economy and power may be seen at this time.

- Because of the construction of the Cummins® turbocharged diesel engine, engine run-in is enhanced by loaded operating conditions which allow the engine parts to achieve final finish and fit during the first 6,000 miles (10 000 km).

DIESEL ENGINE STARTING PROCEDURES

Engine Block Heater

- For ambient temperatures below 0°F (-18°C), engine block heater usage is recommended.
- For ambient temperatures below –20°F (-29°C), engine block heater usage is required.
- The engine block heater cord is routed under the hood to the right side and can be located just behind the grille near the headlamp.
- Connect the heater cord to a ground-fault interrupter protected 110–115 volt AC electrical outlet with a grounded, three-wire extension cord.

NOTE: The block heater will require 110 volts AC and 6.5 amps to activate the heater element.

- The block heater must be plugged in at least one hour to have an adequate warming effect on the coolant.

Water In Fuel Message

- If a Water In Fuel message or  indicator appears in the cluster and a chime sounds five times, the fuel/water separator will need to be drained immediately to prevent engine damage.
- Refer to Maintaining Your Vehicle in this guide for draining instructions or see your dealer.

Cold Start Procedure

- Turn the ignition switch to the ON position. If the Wait To Start light appears in the cluster, wait for the light to turn off before starting.
- In extremely cold weather below 0°F (-18°C) it may be beneficial to cycle the manifold heaters twice before attempting to start the engine. This can be accomplished by turning the ignition OFF for at least five seconds and then back ON after the “Wait To Start Light” has turned off, but before the engine is started. However, excessive cycling of the manifold heaters will result in damage to the heater elements or reduced battery voltage.
- Refer to the Owner's Manual Diesel Supplement on the DVD for further details.

Engine Idling

- Avoid prolonged engine idling. Long periods of idling may be harmful to your engine because combustion chamber temperatures can drop so low that the fuel may not burn completely.
- Incomplete combustion allows carbon and varnish to form on piston rings, engine valves, and injector nozzles. Also, the unburned fuel can enter the crankcase, diluting the oil and causing rapid wear to the engine.
- If the engine is allowed to idle, under some conditions the idle speed may increase to 900 RPM then return to normal idle speed. This is normal operation.

WARNING!
Remember to disconnect the cord before driving. Damage to the 110–115 volt electrical cord could cause electrocution.

DIESEL EXHAUST BRAKE (ENGINE BRAKING)

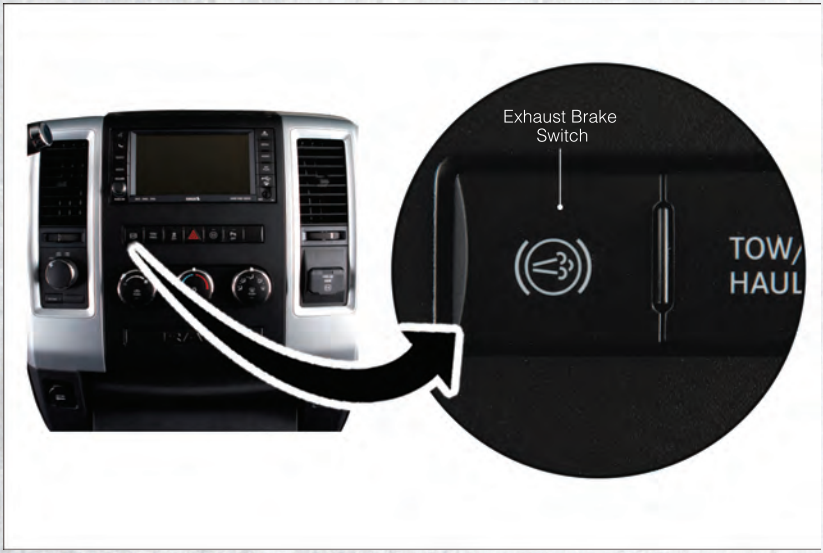

- The exhaust brake feature will only function when the driver turns the exhaust brake switch to the ON position.
- The switch is located on the switch bank below the audio system.
- Once the switch is in the ON position and the vehicle is moving faster than 5 mph (8 km/h), the exhaust brake will automatically operate when the driver removes pressure from the accelerator pedal.
- Exhaust braking is most effective when the engine RPM is higher.

NOTE: For optimum braking power, it is recommended to use the exhaust brake while in TOW/HAUL mode.

CAUTION!

Use of aftermarket exhaust brakes is not recommended and could lead to engine damage.

WARNING!

Do not use the exhaust brake feature when driving in icy or slippery conditions as the increased engine braking can cause the rear wheels to slide and the vehicle to swing around with the possible loss of vehicle control, which may cause a collision possibly resulting in personal injury or death.

IDLE-UP FEATURE (AUTOMATIC TRANSMISSION ONLY)



- The Idle-Up Feature uses the speed control switches to increase engine idle speed and quickly warm the vehicle's interior. This feature must be enabled by your dealer. See your local dealer.
- With the transmission in PARK, the parking brake applied, and the engine running, push the speed control ON/OFF switch on, then push the SET switch.
- The engine RPM will go up to 1100 RPM. To increase the RPM, push and hold the ACCEL/RESUME switch and the idle speed will increase to approximately 1500 RPM. To decrease the RPM, push and hold the DECEL switch and the idle speed will decrease to approximately 1100 RPM.
- To cancel the Idle Up Feature, either push the CANCEL switch, push the ON/OFF switch or push the brake pedal.

FUEL FILTER/WATER SEPARATOR

Draining Fuel/Water Separator

- If the "Water in Fuel" indicator light is illuminated and an audible chime is heard five times, you should stop the engine and drain the water from the separator.
- The drain is located on the bottom of the Fuel Filter and Water Separator assembly which is located on the driver's side of the engine.
- Turn the drain valve (located on the side of the filter) counterclockwise 1/4 turn, then turn the ignition switch to the ON/RUN position to allow any accumulated water to drain.

- When clean fuel is visible, close the drain and switch the ignition to OFF.
- Refer to the Owner's Manual on the DVD for further details.

Fuel Filter Replacement

- With the engine off and a drain pan under the fuel filter drain hose, open the water drain valve 1/4 turn counterclockwise and completely drain fuel and water into the approved container.
- Close the water drain valve and remove the lid using a socket or strap wrench; rotate counterclockwise for removal. Remove the used o-ring and discard it.
- Remove the used filter cartridge from the housing and dispose of according to your local regulations.
- Wipe clean the sealing surfaces of the lid and housing and install the new o-ring into ring groove on the filter housing and lubricate with clean engine oil.
- Install a new filter in the housing. Push down on the cartridge to ensure it is properly seated. **Do not pre-fill the filter housing with fuel.**
- Install the lid onto the housing and tighten to 22.5 ft lbs (30.5 Nm). Do not overtighten the lid.
- Start the engine and confirm no leaks are present.

CAUTION!

- Diesel fuel will damage blacktop paving surfaces. Drain the filter into an appropriate container.
- Do not prefill the fuel filter when installing a new fuel filter. There is a possibility debris could be introduced into the fuel filter during this action. It is best to install the filter dry and allow the in-tank lift pump to prime the fuel system.
- If the “Water In Fuel Indicator Light” remains on, DO NOT START the engine before you drain water from the fuel filter to avoid engine damage.

EXHAUST REGENERATION

- Under certain conditions, your Cummins® diesel engine and exhaust after-treatment system may never reach the conditions required to remove the trapped particulate matter. If this occurs, the “Exhaust System — Regeneration Required Now” message will be displayed on the EVIC screen in your cluster and you will hear one chime to alert you of this condition. Driving your vehicle at highway speeds for as little as 45 minutes can remedy the condition and allow the engine and exhaust after-treatment system to remove the trapped particulate matter.
- PLEASE NOTE: Under typical operating conditions, NO indications of regeneration state will be displayed. If you do reach 80% of filter capacity, the following messages will assist you in inducing and understanding the regeneration process.

Perform Service

- Your vehicle will require emissions maintenance at a set interval. To help remind you when this maintenance is due, the Electronic Vehicle Information Center (EVIC) will display “Perform Service”. When the “Perform Service” message is displayed on the EVIC it is necessary to have the emissions maintenance performed. Emissions maintenance may include replacing the Closed Crankcase Ventilation (CCV) filter element, and cleaning of the EGR Cooler. The procedure for clearing and resetting the "Perform Service" indicator message is located in the appropriate Service Information.

Exhaust System — Regeneration Required Now

- “Exhaust System—Regeneration Required Now” will be displayed on the EVIC if the exhaust particulate filter reaches 80% of its maximum storage capacity.

Exhaust Filter XX% Full

- Indicates that the Diesel Particulate Filter (DPF) is approaching full.

Exhaust System — Regeneration in Process

- Indicates that the Diesel Particulate Filter (DPF) is self-cleaning. Maintain your current driving condition until regeneration is completed.

Exhaust System — Regeneration Completed

- Indicates that the Diesel Particulate Filter (DPF) self-cleaning is completed. If this message is displayed, you will hear one chime to assist in alerting you of this condition.

Exhaust Service Required — See Dealer Now

- Regeneration has been disabled due to a system malfunction. The Powertrain control Module (PCM) will register a fault code and the instrument panel will display the MIL light.

Exhaust Filter Full — Power Reduced See Dealer

- The PCM derates the engine in order to limit the likelihood of permanent damage to the after-treatment system. If this condition is not corrected and a dealer service is not performed, extensive exhaust after-treatment damage can occur. Have your vehicle serviced by your local authorized dealer.

CAUTION!

- See your authorized dealer, as damage to the exhaust system could occur soon with continued operation.

COOL–DOWN IDLE CHART

TURBOCHARGER "COOL DOWN" CHART			
Driving Conditions	Load	Turbocharger Temperature	Idle Time (in minutes) Before Shut Down
Stop and Go	Empty	Cool	Less than 1
Stop and Go	Medium	Warm	1
Highway Speeds	Medium	Warm	2
City Traffic	Max. GCWR	Warm	3
Highway Speeds	Max. GCWR	Warm	4
Uphill Grade	Max. GCWR	Hot	5

24-HOUR TOWING ASSISTANCE

- Dial toll-free 1-800-521-2779 or 1-800-363-4869 for Canadian residents.
- Provide your name, vehicle identification number and license plate number.
- Provide your location, including telephone number, from which you are calling.
- Briefly describe the nature of the problem and answer a few simple questions.
- You will be given the name of the service provider and an estimated time of arrival. If you feel you are in an “unsafe situation”, please let us know. With your consent, we will contact local police or safety authorities.

INSTRUMENT CLUSTER WARNING LIGHTS

- Electronic Stability Control (ESC) Indicator Light

- If this indicator light flashes during acceleration, apply as little throttle as possible. While driving, ease up on the accelerator. Adapt your speed and driving to the prevailing road conditions. To improve the vehicle's traction when starting off in deep snow, sand or gravel, it may be desirable to switch the ESP system off.

- Tire Pressure Monitoring System (TPMS) Light

- Each tire, including the spare (if provided), should be checked monthly, when cold and inflated to the inflation pressure recommended by the vehicle manufacturer on the vehicle placard or tire inflation pressure label. (If your vehicle has tires of a different size than the size indicated on the vehicle placard or tire inflation pressure label, you should determine the proper tire inflation pressure for those tires.)
- As an added safety feature, your vehicle has been equipped with a Tire Pressure Monitoring System (TPMS) that illuminates a low tire pressure telltale when one or more of your tires is significantly under-inflated. Accordingly, when the low tire pressure telltale illuminates, you should stop and check your tires as soon as possible, and inflate them to the proper pressure. Driving on a significantly under-inflated tire causes the tire to overheat and can lead to tire failure. Under-inflation also reduces fuel efficiency and tire tread life, and may affect the vehicle’s handling and stopping ability.
- **IF THE LIGHT STARTS FLASHING INDICATING A LOW TIRE PRESSURE, ADJUST THE AIR PRESSURE IN THE LOW TIRE TO THE AIR PRESSURE SHOWN ON THE VEHICLE PLACARD OR TIRE INFLATION PRESSURE LABEL LOCATED ON THE DRIVER'S DOOR. NOTE: AFTER INFLATION, THE VEHICLE MAY NEED TO BE DRIVEN FOR 20 MINUTES BEFORE THE FLASHING LIGHT WILL TURN OFF.**
- Please note that the TPMS is not a substitute for proper tire maintenance, and it is the driver’s responsibility to maintain correct tire pressure, even if under-inflation has not reached the level to trigger illumination of the TPMS low tire pressure telltale.

- Your vehicle has also been equipped with a TPMS malfunction indicator to indicate when the system is not operating properly. The TPMS malfunction indicator is combined with the low tire pressure telltale. When the system detects a malfunction, the telltale will flash for approximately one minute and then remain continuously illuminated. This sequence will continue each time the vehicle is restarted as long as the malfunction exists.
- When the malfunction indicator is illuminated, the system may not be able to detect or signal low tire pressure as intended. TPMS malfunctions may occur for a variety of reasons, including the installation of replacement or alternate tires or wheels on the vehicle that prevent the TPMS from functioning properly. Always check the TPMS malfunction telltale after replacing one or more tires or wheels on your vehicle, to ensure that the replacement or alternate tires and wheels allow the TPMS to continue to function properly.

NOTE: Tire pressures change by approximately 1 psi (7 kPa) per 12° F (7° C) of air temperature change. Keep this in mind when checking tire pressure inside a garage, especially in the Winter. Example: If garage temperature is 68°F (20°C) and the outside temperature is 32°F (0°C), then the cold tire inflation pressure should be increased by 3 psi (21 kPa), which equals 1 psi (7 kPa) for every 12°F (7°C) for this outside temperature condition.

CAUTION!

The TPMS has been optimized for the original equipment tires and wheels. TPMS pressures and warning have been established for the tire size equipped on your vehicle. Undesirable system operation or sensor damage may result when using replacement equipment that is not of the same size, type, and/or style. Aftermarket wheels can cause sensor damage. Do not use tire sealant from a can, or balance beads if your vehicle is equipped with a TPMS, as damage to the sensors may result.

- Engine Temperature Warning Light

- This light warns of an overheated engine condition.
- If the light turns on and a warning chime sounds while driving, safely pull over and stop the vehicle. If the A/C system is on, turn it off. Also, shift the transmission into NEUTRAL and idle the vehicle. If the temperature reading does not return to normal, turn the engine off immediately.
- We recommend that you do not operate the vehicle or engine damage will occur. Have the vehicle serviced immediately.

WARNING!

A hot engine cooling system is dangerous. You or others could be badly burned by steam or boiling coolant. You may want to call an authorized service center for service if your vehicle overheats.

BRAKE - Brake Warning Light

- The Brake Warning light illuminates when there is either a system malfunction or the parking brake is applied. If the light is on and the parking brake is not applied, it indicates a possible brake hydraulic malfunction, brake booster problem or an Anti-Lock Brake System problem.
- Please have your vehicle serviced immediately.

WARNING!

Driving a vehicle with the red brake light on is dangerous. Part of the brake system may have failed. It will take longer to stop the vehicle. You could have a collision. Have the vehicle checked immediately.

- Malfunction Indicator Light (MIL)

- Certain conditions, such as a loose or missing gas cap, poor fuel quality, etc., may illuminate the MIL after engine start. The vehicle should be serviced if the light stays on through several typical driving cycles. In most situations, the vehicle will drive normally and not require towing.
- If the MIL flashes when the engine is running, serious conditions may exist that could lead to immediate loss of power or severe catalytic converter damage. We recommend you do not operate the vehicle. Have the vehicle serviced immediately.

- Electronic Stability Control (ESC) Indicator Light

- If the ESC indicator light comes on continuously with the engine running, a malfunction has been detected.
- If this light remains on after several ignition cycles, and the vehicle has been driven several miles (kilometers) at speeds greater than 30 mph (48 km/h), we recommend you drive to the nearest service center and have the vehicle serviced immediately.

- Charging System Light

- This light shows the status of the electrical charging system. If the charging system light remains on, it means that the vehicle is experiencing a problem with the charging system.
- We recommend you do not continue driving if the charging system light is on. Have the vehicle serviced immediately.

- Oil Pressure Warning Light

- This light indicates low engine oil pressure. If the light turns on while driving, stop the vehicle and shut off the engine as soon as possible. A chime will sound for four minutes when this light turns on.
- We recommend you do not operate the vehicle or engine damage will occur. Have the vehicle serviced immediately.

WHAT TO DO IN EMERGENCIES

- Anti-Lock Brake (ABS) Light

- This light monitors the Anti-Lock Brake System (ABS).
- If the light is not on during starting, stays on, or turns on while driving, we recommend you drive to the nearest service center and have the vehicle serviced immediately.

- Electronic Throttle Control (ETC) Light

- This light informs you of a problem with the Electronic Throttle Control (ETC) system.
- If a problem is detected, the light will come on while the engine is running. Cycle the ignition when the vehicle has completely stopped and the shift lever is placed in the PARK position; the light should turn off.
- If the light remains lit with the engine running, your vehicle will usually be drivable; however, see an authorized service center immediately. If the light is flashing when the engine is running, immediate service is required and you may experience reduced performance, an elevated/rough idle or engine stall and your vehicle may require towing.

- Air Bag Warning Light

- If the light is not on during starting, stays on, or turns on while driving, have the vehicle serviced by an authorized service center immediately.

SVC 4WD - SVC (Service) 4WD Indicator Light

- The SVC 4WD light monitors the electric shift four-wheel drive system. If the SVC 4WD light stays on or comes on during driving, it means that the four-wheel drive system is not functioning properly and that service is required.
- For vehicles equipped with a premium cluster this indicator will display in the Electronic Vehicle Information Center (EVIC).

- Transmission Temperature Warning Light

- This light indicates that there is excessive transmission fluid temperature that might occur with severe usage such as trailer towing. If this light turns on, stop the vehicle and run the engine at idle, with the transmission in NEUTRAL, until the light turns off. Once the light turns off, you may continue to drive normally.

- Fuel Cap/Loose Gas Cap Message

- If a “gas cap” message (shown as gASCAP) appears, tighten the gas cap until a “clicking” sound is heard.
- Press the odometer reset button to turn the message off.
- If the message continues to appear for more than three days after tightening the gas cap, see your authorized service center.

Oil Change Indicator

Message

- If an “oil change” message (shown as CHANgE OIL) appears and a single chime sounds, it is time for your next required oil change.

Resetting The Light After Servicing

- Turn the ignition switch to the ON/RUN position (do not start engine).
- Fully depress the accelerator pedal three times within 10 seconds.
- Turn the ignition switch to the OFF/LOCK position.

IF YOUR ENGINE OVERHEATS

- In any of the following situations, you can reduce the potential for overheating by taking the appropriate action.
- On the highways — slow down.
- In city traffic — while stopped, place the transmission in NEUTRAL, but do not increase engine idle speed.

NOTE: There are steps that you can take to slow down an impending overheat condition:

- If your air conditioner (A/C) is on, turn it off. The A/C system adds heat to the engine cooling system and turning the A/C off can help remove this heat.
- You can also turn the temperature control to maximum heat, the mode control to floor and the blower control to high. This allows the heater core to act as a supplement to the radiator and aids in removing heat from the engine cooling system.

CAUTION!

Driving with a hot cooling system could damage your vehicle. If the temperature gauge reads 240°F (116 °C) or greater pull over and stop the vehicle. Idle the vehicle with the air conditioner turned off until the pointer drops back into the normal range 200–230°F (93–110°C). If the pointer remains at 240°F (116°C) or greater and you hear a chime, turn the engine off immediately and call for service.

WARNING!

You or others can be badly burned by hot engine coolant (antifreeze) or steam from your radiator. If you see or hear steam coming from under the hood, do not open the hood until the radiator has had time to cool. Never try to open a cooling system pressure cap when the radiator or coolant bottle is hot.

JACKING AND TIRE CHANGING

Jack Location

- The jack and jack tools are stored under the front passenger seat.

Removal

- To access the jack and jack tools you must remove the plastic access cover, located on the side of the seat. To remove the cover, pull the front part of the cover (closest to the front of the seat) toward you to release a locking tab. Once the front of the cover is loose, slide the cover toward the front of the seat until it is free from the seat frame.



- Remove the jack and tools by removing the wing bolt and sliding the assembly from under the seat.

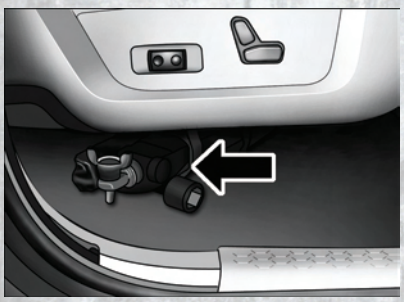

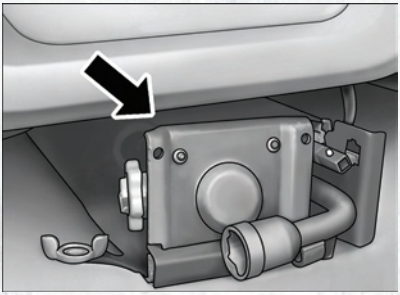

Reinstalling The Jack And Tools (1500 Series)

1. Lower the jack all the way down by turning the jack turn-screw until the jack is snug.
2. Position the jack and tool bag (unrolled). Make sure the lug wrench is under the jack near the jack turn-screw.

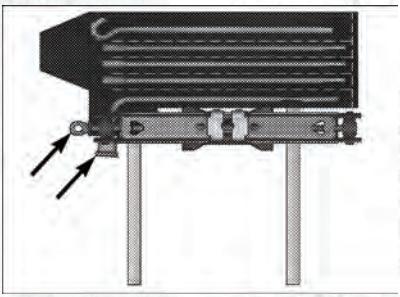

3. Fold the flap and roll the jack tool kit into a cylindrical package (in direction of arrows) and tie to the jack using the tie straps.

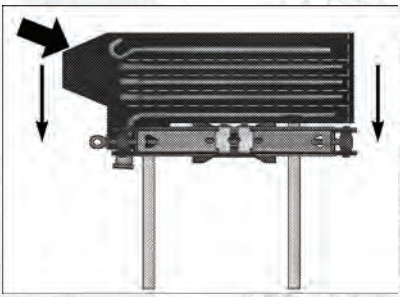

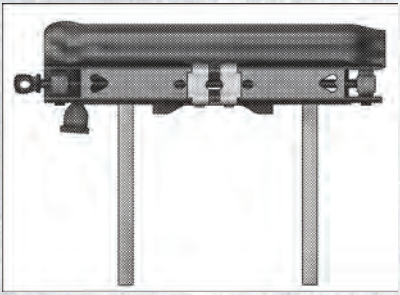

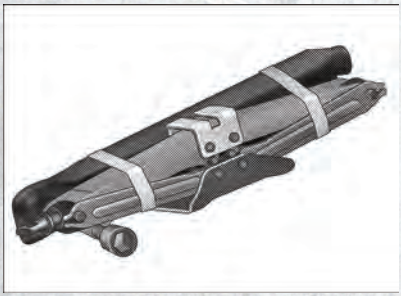

4. Place the jack and tools in the storage position holding the jack by the jack turn-screw, slip the jack and tools under the seat so that the bottom slot engages into the fastener on the floor, and then secure to the floor pan using the wing bolt. Reinstall the plastic cover.

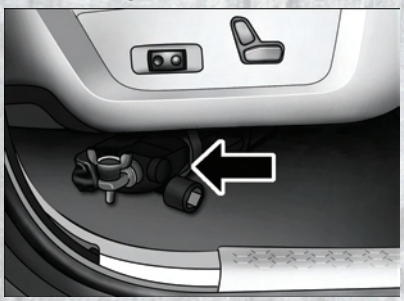

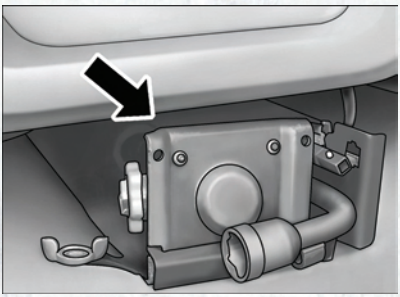

Removing The Spare Tire

- Remove the spare tire before attempting to jack up the truck. Attach the wheel wrench to the jack extension tube. Insert the tube through the access hole between the lower tailgate and the top of the bumper and into the winch mechanism tube. Rotate the wheel wrench handle counterclockwise until the spare tire is on the ground with enough cable slack to allow you to pull it out from under the vehicle. When the spare is clear, tilt the retainer at the end of the cable and pull it through the center of the wheel.

NOTE: Always stow the spare tire with the valve stem facing the ground.

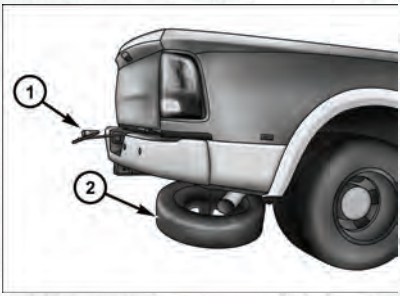

1 — Wheel Wrench
2 — Spare Tire

- It is recommended that you stow the flat or spare to avoid tangling the loose cable.

NOTE: The winch mechanism is designed for use with the jack extension tube only. Use of an air wrench or other power tools is not recommended and can damage the winch.

WHAT TO DO IN EMERGENCIES

Preparations

1. Park the vehicle on a firm, level surface. Avoid ice or slippery areas.
2. Turn on the Hazard Warning flasher.
3. Set the parking brake.
4. Place the shift lever into PARK. On four-wheel drive vehicles, shift the transfer case to the 4L position.
5. Turn the ignition OFF.

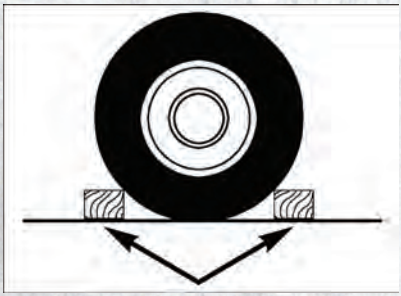

- Block both the front and rear of the wheel diagonally opposite the jacking position. For example, if the right front wheel is being changed, block the left rear wheel.

NOTE: Passengers should not remain in the vehicle when the vehicle is being jacked.

Instructions



1. Remove the spare wheel, jack, and tools from storage.
2. Using the wheel wrench, loosen, but do not remove, the wheel nuts by turning them counterclockwise one turn while the wheel is still on the ground.
3. Placement of the jack:

- 1500 Series Trucks

When changing a front wheel, place the scissors jack under the rear portion of the lower control arm as shown below.





Operate the jack using the jack drive tube and the wheel wrench. The tube extension may be used but is not required.

WHAT TO DO IN EMERGENCIES

For 4x2 and 4x4 trucks, when changing a rear wheel, assemble the jack drive tube to the jack and connect the drive tube to the extension tube. Place the jack under the axle between the wheel and the shock bracket with the drive tubes extending to the rear.



Rear 4x4 Jacking Location

Connect the jack tube extension and wheel wrench.

- 2500/3500 Series Trucks

For 2500/3500 4x2 series trucks, when changing a front wheel, place the bottle jack under the frame rail behind the wheel. Locate the jack as far forward as possible on the straight part of the frame.

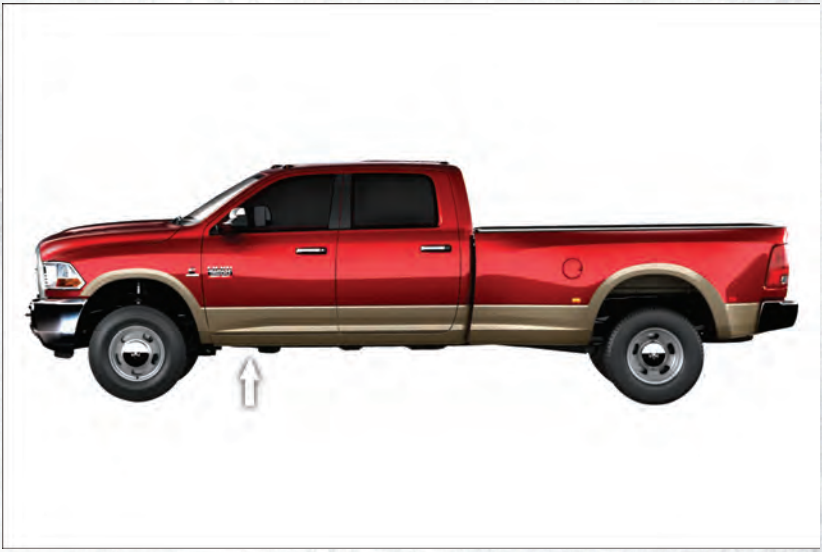

Operate the jack using the jack drive tube and the wheel wrench. The tube extension, may be used, but is not required.

For 2500/3500 4x4 series trucks, when changing the front wheel, assemble the jack drive tube to the jack and connect the drive tube to the extension tube. Place the jack under the axle as close to the tire as possible with the drive tubes extending to the front. Connect the jack tube extension and wheel wrench.



For 4x2 and 4x4 trucks, when changing a rear wheel, assemble the jack drive tube to the jack and connect the drive tube to the extension tube. Place the jack under the axle between the spring and the shock absorber with the drive tubes extending to the rear.



Connect the jack tube extension and wheel wrench.

NOTE: If the bottle jack will not lower by turning the dial (thumbwheel) by hand, it may be necessary to use the jack drive tube in order to lower the jack.

4. By rotating the wheel wrench clockwise, raise the vehicle until the wheel just clears the surface.
5. Remove the wheel nuts and pull the wheel off. On single rear-wheel (SRW) trucks, install the spare wheel and wheel nuts with the cone shaped end of the wheel nuts toward the wheel. On 3500 dual rear-wheel models (DRW) the wheel nuts are a two-piece assembly with a flat face. Lightly tighten the wheel nuts. To avoid the risk of forcing the vehicle off the jack, do not fully tighten the wheel nuts until the vehicle has been lowered.
6. Using the wheel wrench, finish tightening the wheel nuts using a crisscross pattern. The correct wheel nut tightness is 130 ft lbs (177 N·m) torque (1500 Series), 135 ft lbs (183 N·m) torque for 2500/3500 single-rear wheel (SRW) models, and 145 ft lbs (197 N·m) for 3500 dual rear-wheel models. If in doubt about the correct tightness, have them checked with a torque wrench by your authorized dealer or at a service station.
7. Install the wheel center cap and remove the wheel blocks. Do not install chrome or aluminum wheel center caps on the spare wheel. This may result in cap damage.
8. Lower the jack to its fully closed position. If the bottle jack will not lower by turning the dial (thumbwheel) by hand, it may be necessary to use the jack drive tube in order to lower the jack. Stow the replaced tire, jack, and tools as previously described.
9. Adjust the tire pressure when possible.

NOTE: Do not oil wheel studs. For chrome wheels, do not substitute with chrome plated wheel nuts.

Hub Caps/Wheel Covers

- The hub caps must be removed before raising the vehicle off the ground.
- For 2500/3500 single rear-wheel (SRW) models, use the blade on the end of the lug wrench to pry the hub cap off. Insert the blade end into the pry-off notch and carefully pop off the hub cap with a back-and-forth motion.

- On 3500 models with dual rear wheels (DRW), you must first remove the hub caps. The jack handle driver has a hook at one end that will fit in the pry off notch of the rear hub caps. Position the hook and pull out on the ratchet firmly. The hub cap should pop off. The wheel skins can now be removed. For the front hub cap on 3500 models use the blade on the end of the lug wrench to pry the caps off. The wheel skin can now be removed.
- You must use the flat end of the lug wrench to pry off the wheel skins. Insert the flat tip completely and using a back-and-forth motion, loosen the wheel skin. Repeat this procedure around the tire until the skin pops off.
- Replace the wheel skins first using a rubber mallet. When replacing the hub caps, tilt the cap retainer over the lug nut bolt circle and strike the high side down with a rubber mallet. Be sure that the hub caps and wheel skins are firmly seated around the wheel.

Wheel Nuts

- All wheel nuts should be tightened occasionally to eliminate the possibility of wheel studs being sheared or the bolt holes in the wheels becoming elongated. This is especially important during the first few hundred miles/kilometers of operation to allow the wheel nuts to become properly set. All wheel nuts should first be firmly seated against the wheel. The wheel nuts should then be tightened to recommended torque. Tighten the wheel nuts to final torque in increments. Progress around the bolt circle, tightening the wheel nut opposite to the wheel nut just previously tightened until final torque is achieved. Recommended torques are shown in the following chart.

Disc Wheels	TypeNut	StudSize	Hex Size	Torque Ft Lbs	Torque Newton Meters
	Cone	M14 x 1.5	22 mm	120-150	160-200
	Flanged	M14 x 1.5	22 mm	130-160	190-220

8-Stud — Dual Rear Wheels

- Dual wheels are flat-mounted and center-piloted. The lug nuts are a two-piece assembly. When the tires are being rotated or replaced, clean these lug nuts and add two drops of oil at the interface between the hex and the washer.

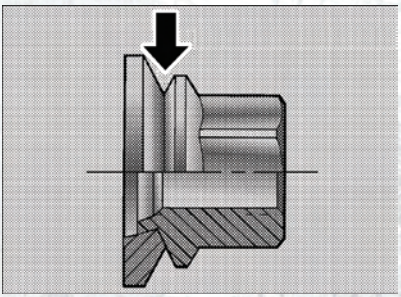

- Slots in the wheels will assist in properly orienting the inner and outer wheels. Align these slots when assembling the wheels for best access to the tire valve on the inner wheel. The tires of both dual wheels must be completely off the ground when tightening, to ensure wheel centering and maximum wheel clamping.

- Dual wheel models require a special heavy-duty lug nut tightening adapter (included with the vehicle) to correctly tighten the lug nuts. Also, when it is necessary to remove and install dual rear wheels, use a proper vehicle lifting device.

NOTE: When installing a spare tire as part of a dual rear wheel end combination, the tire diameter of the two individual tires must be compared. If there is a significant difference, the larger tire should be installed in a front location. The correct direction of rotation for dual tire installations must also be observed.

These dual rear wheels should be tightened as follows:

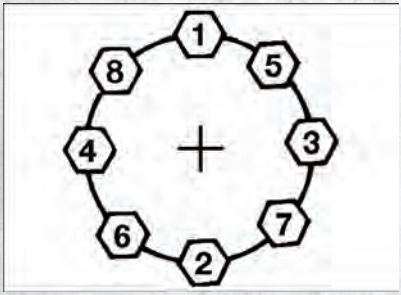

1. Tighten the wheel nuts in the numbered sequence to a snug fit.
2. Retighten the wheel nuts in the same sequence to the torques listed in the table. Go through the sequence a second time to verify that specific torque has been achieved. Retighten to specifications at 100 miles (160 km) and after 500 miles (800 km).

- It is recommended that wheel stud nuts be kept torqued to specifications at all times. Torque wheel stud nuts to specifications at each lubrication interval.

To Stow The Flat Or Spare

NOTE: Vehicles equipped with aluminum wheels cannot be stored under the vehicle because the wheel retainer will not fit through the wheel pilot hole. Secure the flat tire in the bed of the truck. **Have the flat tire repaired or replaced immediately.**

- Turn the wheel so that the valve stem is down. Slide the wheel retainer through the center of the wheel and position it properly across the wheel opening.
- For convenience in checking the spare tire inflation, stow with the valve stem toward the rear of the vehicle.
- Attach the wheel wrench to the extension tube. Rotate the winch mechanism until the wheel is drawn into place against the underside of the vehicle. Continue to rotate until you feel the winch mechanism slip, or click three or four times. It cannot be overtightened. Push against the tire several times to be sure it is firmly in place.

CAUTION!

- Do not attempt to raise the vehicle by jacking on locations other than those indicated in the Jacking Instructions for this vehicle.

(Continued)

CAUTION! *(Continued)*

- Before raising the wheel off the ground, make sure that the jack will not damage surrounding truck parts and adjust the jack position as required.
- Use a back-and-forth motion to remove the hub cap. Do not use a twisting motion when removing the hub cap, damage to the hub cap finish may occur.
- The rear hub caps on the dual rear wheel has two pry-off notches. Make sure that the hook of the jack handle driver is located squarely in the cap notch before attempting to pull off.

WARNING!

- Do not attempt to change a tire on the side of the vehicle close to moving traffic. Pull far enough off the road to avoid the danger of being hit when operating the jack or changing the wheel.
- Being under a jacked-up vehicle is dangerous. The vehicle could slip off the jack and fall on you. You could be crushed. Never put any part of your body under a vehicle that is on a jack.
- Never start or run the engine while the vehicle is on a jack. If you need to get under a raised vehicle, take it to a service center where it can be raised on a lift.
- The jack is designed to be used as a tool for changing tires only. The jack should not be used to lift the vehicle for service purposes. The vehicle should be jacked on a firm level surface only. Avoid ice or slippery areas.
- After using the jack and tools, always reinstall them in the original carrier and location. While driving you may experience abrupt stopping, rapid acceleration or sharp turns. A loose jack, tools, bracket or other objects in the vehicle may move around with force, resulting in serious injury.
- Do not attempt to change a tire on the side of the vehicle close to moving traffic, pull far enough off the road to avoid the danger of being hit when operating the jack or changing the wheel.
- Carefully follow these tire changing warnings to help prevent personal injury or damage to your vehicle:
- Always park on a firm, level surface as far from the edge of the roadway as possible before raising the vehicle.
- Turn on the Hazard Warning flasher.
- Block the wheel diagonally opposite the wheel to be raised.
- Set the parking brake firmly and set an automatic transmission in PARK; a manual transmission in REVERSE.
- Never start or run the engine with the vehicle on a jack.
- Do not let anyone sit in the vehicle when it is on a jack.
- Do not get under the vehicle when it is on a jack.

(Continued)

WARNING! ***(Continued)***

- Only use the jack in the positions indicated and for lifting this vehicle during a tire change.
- If working on or near a roadway, be extremely careful of motor traffic.
- To assure that spare tires, flat or inflated, are securely stowed, spares must be stowed with the valve stem facing the ground.
- Raising the vehicle higher than necessary can make the vehicle unstable and cause a collision. It could slip off the jack and hurt someone near it. Raise the vehicle only enough to remove the tire.
- A loose tire or jack thrown forward in a collision or hard stop could injure someone in the vehicle. Always stow the jack parts and the extra tire and wheel in the places provided.
- A loose tire thrown forward in a collision or hard stop could injure the occupants in the vehicle. Have the deflated (flat) tire repaired or replaced immediately.

JUMP-STARTING



- If your vehicle has a discharged battery it can be jump-started using a set of jumper cables and a battery in another vehicle or by using a portable battery booster pack.
- Jump-starting can be dangerous if done improperly so please follow the procedures in this section carefully.

NOTE: When using a portable battery booster pack follow the manufacturer's operating instructions and precautions.

Preparations for Jump-Start

- The battery in your vehicle is located in the front of the engine compartment, behind the left headlight assembly.

NOTE: The positive battery post is covered with a protective cap. Lift up on the cap to gain access to the positive battery post.

- Set the parking brake, shift the automatic transmission into PARK and turn the ignition to LOCK.
- Turn off the heater, radio, and all unnecessary electrical accessories.
- If using another vehicle to jump-start the battery, park the vehicle within the jumper cables reach, set the parking brake and make sure the ignition is OFF.

Jump-Starting Procedure

- Connect the positive (+) end of the jumper cable to the positive (+) post of the discharged vehicle.
- Connect the opposite end of the positive (+) jumper cable to the positive (+) post of the booster battery.
- Connect the negative end (-) of the jumper cable to the negative (-) post of the booster battery.
- Connect the opposite end of the negative (-) jumper cable to a good engine ground (exposed metal part of the discharged vehicle's engine) away from the battery and the fuel injection system.
- Start the engine in the vehicle that has the booster battery, let the engine idle a few minutes, and then start the engine in the vehicle with the discharged battery.

Once the engine is started, remove the jumper cables in the reverse sequence:

- Disconnect the negative (-) jumper cable from the engine ground of the vehicle with the discharged battery.
- Disconnect the negative end (-) of the jumper cable from the negative (-) post of the booster battery.
- Disconnect the opposite end of the positive (+) jumper cable from the positive (+) post of the booster battery.
- Disconnect the positive (+) end of the jumper cable from the positive (+) post of the discharged vehicle.
- If frequent jump-starting is required to start your vehicle you should have the battery and charging system inspected at your authorized dealer.

CAUTION!

- Do not use a portable battery booster pack or any other booster source with a system voltage greater than 12 Volts or damage to the battery, starter motor, alternator or electrical system may occur.
- Failure to follow these procedures could result in damage to the charging system of the booster vehicle or the discharged vehicle.
- Accessories that can be plugged into the vehicle power outlets draw power from the vehicle's battery, even when not in use (i.e., cellular phones, etc.). Eventually, if plugged in long enough, the vehicle's battery will discharge sufficiently to degrade battery life and/or prevent the engine from starting.

WHAT TO DO IN EMERGENCIES

WARNING!

- When temperatures are below the freezing point, electrolyte in a discharged battery may freeze. Do not attempt jump-starting because the battery could rupture or explode and cause personal injury. Battery temperature must be brought above the freezing point before attempting a jump-start.
- Take care to avoid the radiator cooling fan whenever the hood is raised. It can start anytime the ignition switch is on. You can be injured by moving fan blades.
- Remove any metal jewelry, such as watch bands or bracelets, that might make an inadvertent electrical contact. You could be severely injured.
- Batteries contain sulfuric acid that can burn your skin or eyes and generate hydrogen gas which is flammable and explosive. Keep open flames or sparks away from the battery.
- Do not allow vehicles to touch each other as this could establish a ground connection and personal injury could result.
- Failure to follow this procedure could result in personal injury or property damage due to battery explosion.
- Do not connect the cable to the negative post **(-)** of the discharged battery. The resulting electrical spark could cause the battery to explode and could result in personal injury.

EMERGENCY TOW HOOKS

- If your vehicle is equipped with tow hooks, they are mounted in the front.
- For off-road recovery, it is recommended to use both of the front tow hooks to minimize the risk of damage to the vehicle.

CAUTION!

Tow hooks are for emergency use only, to rescue a vehicle stranded off-road. Do not use tow hooks for tow truck hookup or highway towing. You could damage your vehicle. Tow straps are recommended when towing the vehicle; chains may cause vehicle damage.

WARNING!

- Chains are not recommended for freeing a stuck vehicle. Chains may break, causing serious injury or death.
- Stand clear of vehicles when pulling with tow hooks. Tow straps and chains may break, causing serious injury.

SHIFT LEVER OVERRIDE

- If a malfunction occurs and the shift lever cannot be moved out of the PARK position, you can use the following procedure to temporarily move the shift lever.
- Have your vehicle inspected by your local authorized dealer immediately if the shift lever override has been used.

Column Shifter



- Tilt the steering wheel to the full up position and firmly set the parking brake.
- Turn the Key Fob to the ACC or ON/RUN position without starting the engine.
- Press and maintain firm pressure on the brake pedal.
- Using a screwdriver, press and hold the override tab through the access port (ringed circle) on the bottom of the steering column.
- Move the shift lever into the NEUTRAL position and start the vehicle.
- Release the parking brake.

Center Console Shifter

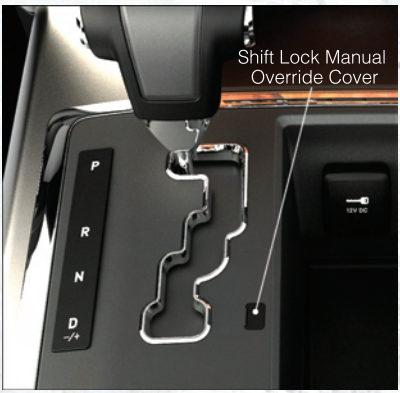

- Firmly set the parking brake.
- Turn the Key Fob to the ACC or ON/RUN position without starting the engine.
- Press and maintain firm pressure on the brake pedal.
- Using a screwdriver, press and hold the override tab through the access port on the center console.
- Move the shift lever into the NEUTRAL position and start the vehicle.
- Release the parking brake.

TOWING A DISABLED VEHICLE

Towing Condition	Wheels OFF the Ground	2WD Models	4WD Models
Flat Tow	NONE	If transmission is operable: • Transmission in **NEUTRAL** • 30 mph (48 km/h)**max** • 15 miles (24 km) **max** distance	• Auto Transmission in **PARK** • Manual Transmission in gear (**NOT** NEUTRAL) • Transfer Case in **NEUTRAL** • Tow in **forward** direction
Wheel Lift or Dolly Tow	Front		**NOT ALLOWED**
	Rear	OK	**NOT ALLOWED**
Flatbed	**ALL**	**BEST METHOD**	**BEST METHOD**

FREEING A STUCK VEHICLE

- If your vehicle becomes stuck in mud, sand or snow, it can often be moved by a rocking motion. Turn your steering wheel right and left to clear the area around the front wheels. Then, move the shift lever back and forth between REVERSE and DRIVE. Using minimal accelerator pedal pressure to maintain the rocking motion, without spinning the wheels, is most effective.
- Allow the engine to idle with the transmission shift lever in NEUTRAL for at least one minute after every five rocking-motion cycles. This will minimize overheating and reduce the risk of transmission failure during prolonged efforts to free a stuck vehicle.

NOTE: If your vehicle is equipped with Electronic Stability Control (ESC) or Traction Control , turn the system off before attempting to “rock” the vehicle.

CAUTION!

Revving the engine or spinning the wheels too fast may lead to transmission overheating and failure. It can also damage the tires. Do not spin the wheels above 30 mph (48 km/h) while in gear (no transmission shifting occurring).

WARNING!

Fast spinning tires can be dangerous. Forces generated by excessive wheel speeds may cause tire damage or failure. A tire could explode and injure someone. Do not spin your vehicle's wheels faster than 30 mph (48 km/h) when you are stuck. Do not let anyone near a spinning wheel, no matter what the speed.

EVENT DATA RECORDER (EDR)

- This vehicle is equipped with an event data recorder (EDR). The main purpose of an EDR is to record, in certain crash or near crash-like situations, such as an air bag deployment or hitting a road obstacle, data that will assist in understanding how a vehicle's systems performed. The EDR is designed to record data related to vehicle dynamics and safety systems for a short period of time, typically 30 seconds or less. The EDR in this vehicle is designed to record such data as:
  - How various systems in your vehicle were operating;
  - Whether or not the driver and passenger safety belts were buckled/fastened;
  - How far (if at all) the driver was depressing the accelerator and/or brake pedal; and,
  - How fast the vehicle was traveling.
- These data can help provide a better understanding of the circumstances in which crashes and injuries occur.

NOTE: EDR data are recorded by your vehicle only if a non-trivial crash situation occurs; no data are recorded by the EDR under normal driving conditions and no personal data (e.g. name, gender, age, and crash location) are recorded. However, other parties, such as law enforcement, could combine the EDR data with the type of personally identifying data routinely acquired during a crash investigation.

- To read data recorded by an EDR, special equipment is required, and access to the vehicle or the EDR is needed. In addition to the vehicle manufacturer, other parties such as law enforcement, that have the special equipment, can read the information if they have access to the vehicle or the EDR.

OPENING THE HOOD



Hood Release
(below steering wheel at
base of instrument panel)

- Pull the hood release lever located below the steering wheel at the base of the instrument panel.
- Reach into the opening beneath the center of the hood and move the safety latch lever while lifting the hood at the same time.

WARNING!

Be sure the hood is fully latched before driving your vehicle. If the hood is not fully latched, it could open when the vehicle is in motion and block your vision. Failure to follow this warning could result in serious injury or death.

ENGINE COMPARTMENT

3.7L Engine

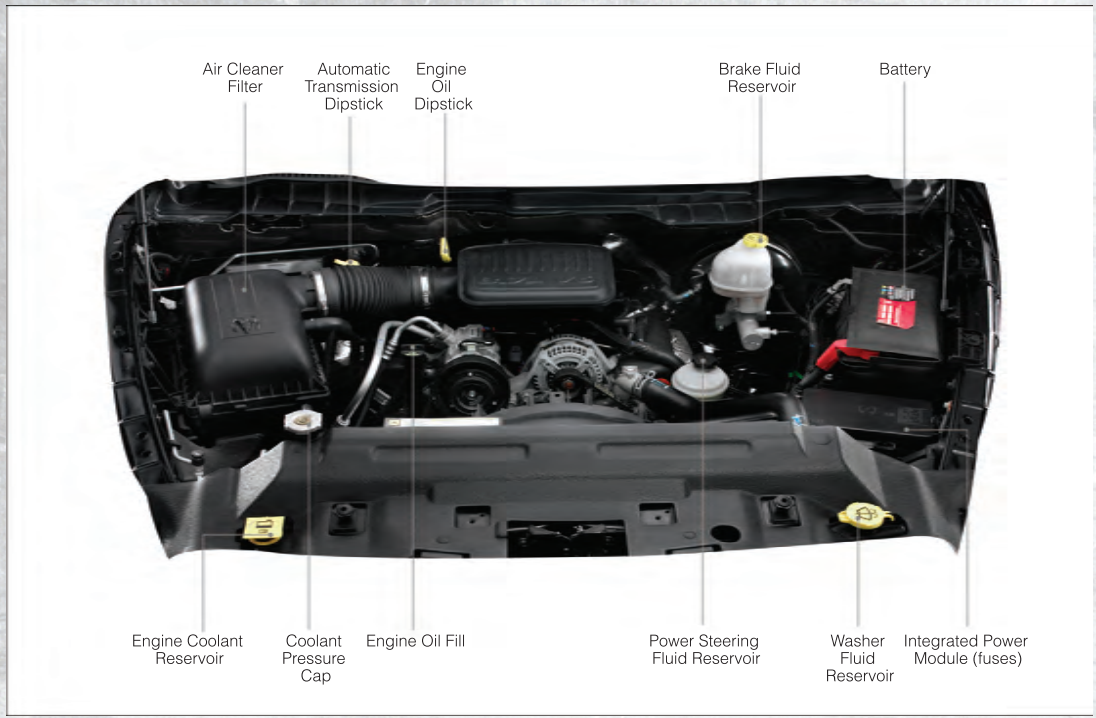

4.7L Engine

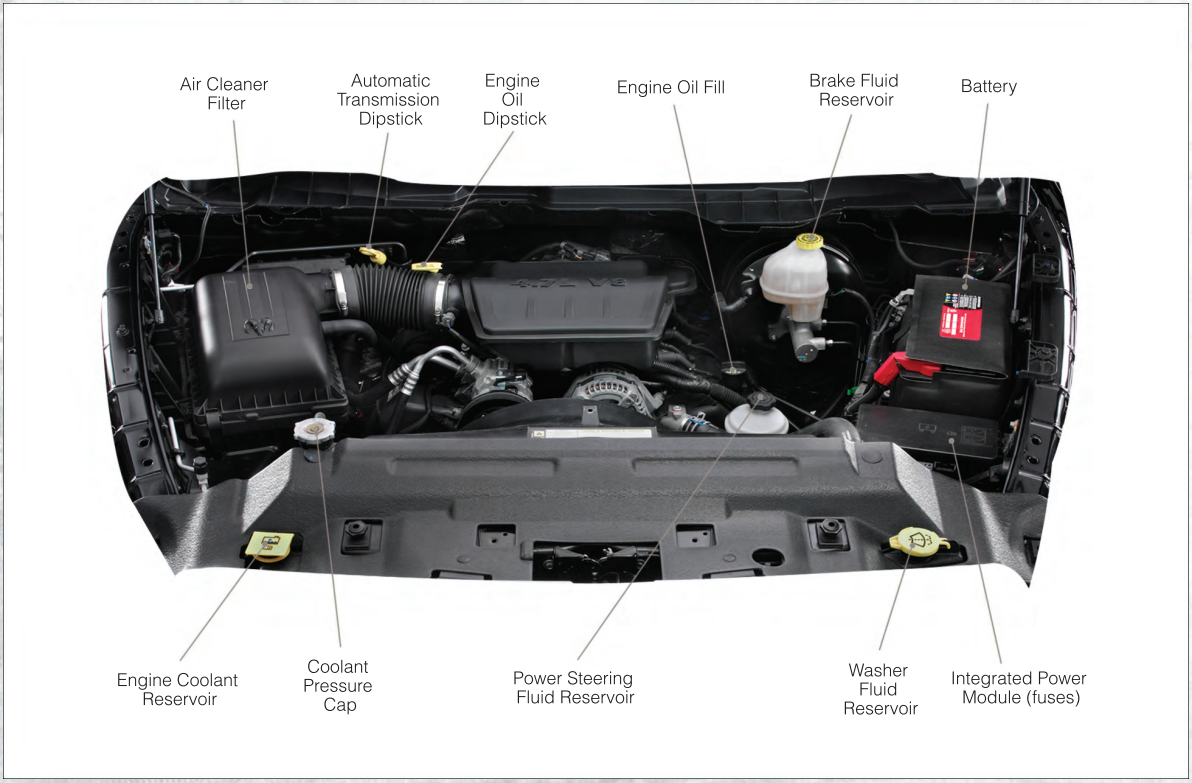
Air Cleaner Filter
Automatic Transmission Dipstick
Engine Oil Dipstick
Engine Oil Fill
Brake Fluid Reservoir
Battery
Engine Coolant Reservoir
Coolant Pressure Cap
Power Steering Fluid Reservoir
Washer Fluid Reservoir
Integrated Power Module (fuses)

5.7L Engine

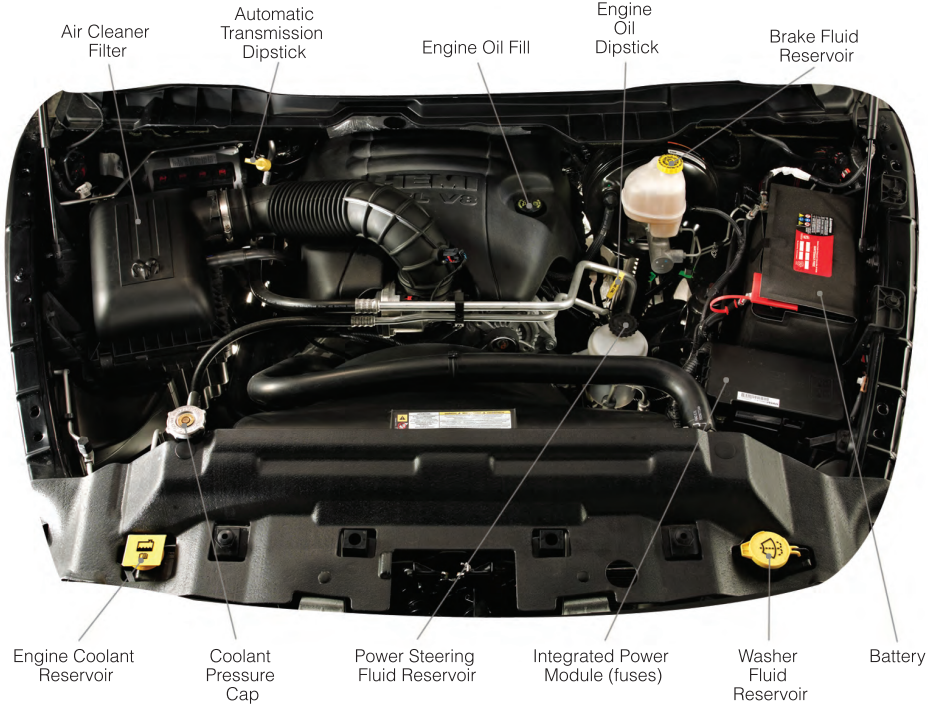
Air Cleaner Filter
Automatic Transmission Dipstick
Engine Oil Fill
Engine Oil Dipstick
Brake Fluid Reservoir
Engine Coolant Reservoir
Coolant Pressure Cap
Power Steering Fluid Reservoir
Integrated Power Module (fuses)
Washer Fluid Reservoir
Battery

6.7L Diesel Engine

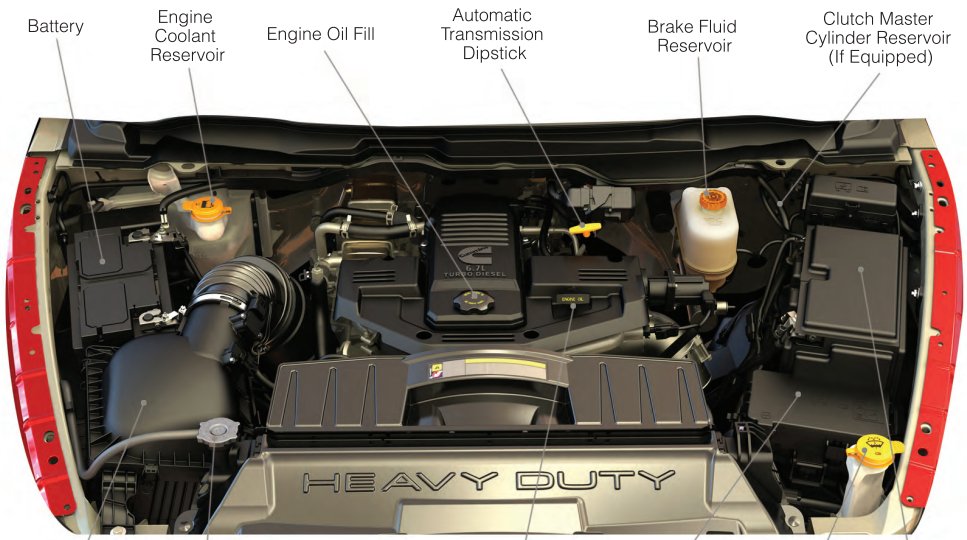

FLUIDS AND CAPACITIES

Gasoline Versions

Component	Fluid, Lubricant, or Genuine Part	Capacities
Engine Coolant 3.7L, 4.7L	MOPAR® Antifreeze/ Coolant Five Year/100,000 Mile Formula HOAT (Hybrid Organic Additive Technology) or equivalent.	14 Quarts (13 Liters)
Engine Coolant 5.7L 1500 Models	MOPAR® Antifreeze/ Coolant Five Year/100,000 Mile Formula HOAT (Hybrid Organic Additive Technology) or equivalent.	16 Quarts (15 Liters)
Engine Coolant 5.7L 2500/3500 Models	MOPAR® Antifreeze/ Coolant Five Year/100,000 Mile Formula HOAT (Hybrid Organic Additive Technology) or equivalent.	18.7 Quarts (17.7 Liters)
Engine Coolant 5.7L 2500/3500 Models w/Heavy Duty	MOPAR® Antifreeze/ Coolant Five Year/100,000 Mile Formula HOAT (Hybrid Organic Additive Technology) or equivalent.	19.2 Quarts (18.2 Liters)
Engine Oil with Filter 3.7L, 4.7L, 5.7L	API certified 5W-20 engine oil, meeting the requirements of Chrysler Material Standard MS-6395. Refer to your oil filler cap for correct SAE grade.	3.7L 5 Quarts (4.7 Liters) 4.7L 6 Quarts (5.7 Liters) 5.7L 7 Quarts (6.6 Liters)
Engine Oil with Filter 5.7L For 2500/3500 trucks operating with a gross combined weight rating greater than 14,000 lbs/(6,350 kg).	Use API Certified SAE 5W-30 engine oil, meeting the requirements of Chrysler Material Standard MS-6395. Refer to your engine oil filler cap for correct SAE grade.	5.7L 7 Quarts (6.6 Liters)

Component	Fluid, Lubricant, or Genuine Part	Capacities
Fuel Selection 3.7L, 4.7L	87 Octane	1500 Regular Cab Shortbed/Crew Quad Cab - 26 Gallons (98 Liters) (Approximate) 1500 Regular Cab Longbed/Crew Quad Cab (Optional) - 32 Gallons (121 Liters) (Approximate) 2500/3500 Shortbed - 34 Gallons (129 Liters) (Approximate) 2500/3500 Longbed - 35 Gallons (132 Liters) (Approximate)
Fuel Selection 5.7L	87 Octane Acceptable. 89 Octane Recommended.	1500 Regular Cab Shortbed/Crew Quad Cab - 26 Gallons (98 Liters) (Approximate) 1500 Regular Cab Longbed/Crew Quad Cab (Optional) - 32 Gallons (121 Liters) (Approximate) 2500/3500 Shortbed - 34 Gallons (129 Liters) (Approximate) 2500/3500 Longbed - 35 Gallons (132 Liters) (Approximate)
Engine Oil Filter 3.7L, 4.7L, 5.7L, 6.7L	MOPAR® Engine Oil Filter or equivalent.	—
Spark Plug 3.7L	ZFR6F-11G (Gap 0.043 in [1.09 mm])	—
Spark Plug 4.7L	Upper Bank — FR8TE2 (Gap 0.039 in [0.99 mm]) Lower Bank — FR8T1332 (Gap 0.051 in [1.30 mm]).	—
Spark Plug 5.7L	LZFR5C-11 (Gap 0.043 in [1.09 mm])	—
Automatic Transmission	MOPAR® ATF+4® Automatic Transmission Fluid or equivalent licensed ATF+4® product.	—
Clutch Linkage	MOPAR® Multi-Purpose Grease, NLGI Grade 2 E.P. or equivalent.	—
Manual Transmission G-56	MOPAR® ATF+4® Automatic Transmission Fluid or equivalent licensed ATF+4® product.	—

Component	Fluid, Lubricant, or Genuine Part	Capacities
Transfer Case	MOPAR® ATF+4® Automatic Transmission Fluid or equivalent licensed ATF+4® product.	—
Transfer Case NVG 246 Only	MOPAR® NVG 246 Automatic Transmission Fluid or equivalent.	—
Front Axle 1500 Four-Wheel Drive Models	GL-5 SAE 75W-90 MS-9763 or equivalent.	—
Rear Axle 1500 Models	MOPAR® Synthetic Gear Lubricant SAE 75W-140 MS-8985. Limited-Slip Rear Axles require the addition of 118 ml (4 oz.) MOPAR® Limited Slip Additive MS-10111 or equivalent.	—
Front and Rear Axle 2500/3500 Models	Synthetic, GL-5 SAE, 75W-90 or equivalent. Limited-Slip 10.5/11.5 inch Rear Axles **Limited slip additive is not required.**	—
Brake Master Cylinder	MOPAR® DOT 3 and SAE J1703 should be used or equivalent. If DOT 3 is not available, then DOT 4 is acceptable. Use only recommended Brake Fluids.	—
Power Steering Reservoir	MOPAR® Power Steering Fluid +4 or MOPAR® ATF+4® Automatic Transmission Fluid or equivalent licensed ATF+4® product.	—

Diesel Versions

Component	Fluid, Lubricant, or Genuine Part	Capacities
Engine Coolant 6.7L Turbo Diesel Engine	MOPAR® Antifreeze/Coolant Five Year/100,000 Mile Formula HOAT (Hybrid Organic Additive Technology) or equivalent.	5.7 Gallons (21.4 Liters)
Engine Oil with Filter 6.7L Turbo Diesel Engine	In ambient temperatures below 0°F (-18°C), 5W-40 synthetic engine oil that meets Chrysler Materials Standard MS-10902 and the API CJ-4 engine oil category is required. In ambient temperatures above 0°F (-18°C), 15W-40 engine oil that meets Chrysler Materials Standard MS-10902 and the API CJ-4 engine oil category is required.	12 Quarts (11.4 Liters)
Fuel Selection 6.7L Turbo Diesel	Use good quality diesel fuel from a reputable supplier in your vehicle. Federal law requires that you must fuel this vehicle with Ultra Low Sulfur Highway Diesel fuel (15 ppm Sulfur maximum) and prohibits the use of Low Sulfur Highway Diesel fuel (500 ppm Sulfur maximum) to avoid damage to the emissions control system. For most year-round service, No. 2 diesel fuel meeting ASTM specification D-975 Grade S15 will provide good performance. If the vehicle is exposed to extreme cold (below 20°F or -7°C), or is required to operate at colder-than-normal conditions for prolonged periods, use climatized No. 2 diesel fuel or dilute the No. 2 diesel fuel with 50% No. 1 diesel fuel. This will provide better protection from fuel gelling or wax-plugging of the fuel filters. This vehicle is fully compatible with biodiesel blends up to 5% biodiesel meeting ASTM specification D-975.	2500/3500 Shortbed - 34 Gallons (129 Liters) (Approximate) 2500/3500 Longbed - 35 Gallons (132 Liters) (Approximate)
Engine Oil Filter 3.7L, 4.7L, 5.7L, 6.7L	MOPAR® Engine Oil Filter or equivalent.	—

Component	Fluid, Lubricant, or Genuine Part	Capacities
Engine Fuel Filter 6.7L Turbo Diesel	MOPAR® Fuel Filter or equivalent. Must meet 5 micron rating. Using a fuel filter that does not meet the manufacturers filtration and water separating requirements can severely impact fuel system life and reliability.	–
Crankcase Ventilation Filter 6.7L Turbo Diesel	MOPAR® CCV Filter or equivalent.	–
Diesel Exhaust Fluid – Chassis Cab Only	MOPAR® Diesel Exhaust Fluid (API Certified) (DEF) or equivalent that has been API Certified to the ISO 22241 standard. Use of fluids not API Certified to ISO 22241 may result in system damage. You can receive assistance in locating DEF by calling 866-RAM-INFO (866-726-4636).	8 Gallons (30 Liters) (Approximate)

MAINTENANCE CHART

Gasoline Engine

Miles:	8,000	16,000	24,000	32,000	40,000	48,000	56,000	64,000	72,000	80,000	88,000	96,000	104,000
Or Months:	6	12	18	24	30	36	42	48	54	60	66	72	78
Or Kilometers:	13,000	26,000	39,000	52,000	65,000	78,000	91,000	104,000	117,000	130,000	143,000	156,000	169,000
Change the engine oil and filter.	X	X	X	X	X	X	X	X	X	X	X	X	X
Rotate the tires, rotate at the first sign of irregular wear, even if it occurs before scheduled maintenance.	X	X	X	X	X	X	X	X	X	X	X	X	X
If using your vehicle for any of the following: dusty or off-road conditions. Inspect the engine air cleaner filter; replace if necessary.		X				X				X			
Lubricate the front drive shaft fittings (2500/3500 4x4 models only).	X	X	X	X	X	X	X	X	X	X	X	X	X
Inspect the brake linings; replace if necessary.		X		X		X		X		X		X	
Inspect the CV joints.			X			X			X			X	
Inspect the exhaust system.		X	X			X			X			X	
Replace the engine air cleaner filter.				X				X				X	
Inspect the front and rear axle fluid, change if using your vehicle for police, taxi, fleet, off-road or frequent trailer towing.			X			X			X			X	
Inspect the transfer case fluid.				X								X	
Change the transfer case fluid if using your vehicle for any of the following: police, taxi, fleet, or frequent trailer towing.								X					
Change the automatic transmission fluid and filter if using your vehicle for any of the following: police, taxi, fleet or frequent trailer towing.								X					

Miles:	8,000	16,000	24,000	32,000	40,000	48,000	56,000	64,000	72,000	80,000	88,000	96,000	104,000
Or Months:	6	12	18	24	30	36	42	48	54	60	66	72	78
Or Kilometers:	13,000	26,000	39,000	52,000	65,000	78,000	91,000	104,000	117,000	130,000	143,000	156,000	169,000
Inspect the front suspension, tie rod ends and boot seals for cracks or leaks and all parts for damage, wear, improper looseness or end play; replace if necessary.		X		X		X		X		X		X	
Adjust parking brake on vehicles equipped with four-wheel disc brakes.				X				X				X	
Replace the spark plugs (3.7L and 5.7L engine).				X				X				X	
Replace top row of spark plugs (4.7L engine).						X							
Replace the top row and side row of spark plugs (4.7L Engine).												X	
Replace ignition cables (3.7L Engine).								X					
Replace ignition cables (4.7L Engine).												X	
Inspect and replace PCV valve if necessary.												X	
Flush and replace the engine coolant if not done at 104,000 miles (173 000 km).										X			
Flush and replace the engine coolant if not done at 60 months.													X

- Refer to the Owner's Manual on the DVD for the complete maintenance schedule.

Maintenance Record (Gasoline Engine)

	Odometer	Date	Signature, Authorized Service Center
8,000 Miles (13,000 km) or 6 Months			
16,000 Miles (26,000 km) or 12 Months			
24,000 Miles (39,000 km) or 18 Months			
32,000 Miles (52,000 km) or 24 Months			
40,000 Miles (65,000 km) or 30 Months			
48,000 Miles (78,000 km) or 36 Months			
56,000 Miles (91,000 km) or 42 Months			
64,000 Miles (104,000 km) or 48 Months			
72,000 Miles (117,000 km) or 54 Months			
80,000 Miles (130,000 km) or 60 Months			
88,000 Miles (143,000 km) or 66 Months			
96,000 Miles (156,000 km) or 72 Months			
104,000 Miles (169,000 km) or 78 Months			

Diesel Engine

Miles:	7,500	15,000	22,500	30,000	37,500	45,000	52,500	60,000	67,500	75,000	82,500	90,000	97,500
Or Months:	6	12	18	24	30	36	42	48	54	60	66	72	78
Or Kilometers:	12,000	24,000	36,000	40,000	60,000	72,000	84,000	96,000	108,000	120,000	132,000	144,000	156,000
When prompted by the Engine Oil Indicator System, the engine oil and filter must be changed. If not prompted by the Engine Oil Indicator System within 7,500 miles (12 000 km) or six months since the last oil and filter change, change the engine oil and engine oil filter. Under no circumstances should oil change intervals exceed 7,500 miles (12 000 km) or six months, whichever comes first.	X	X	X	X	X	X	X	X	X	X	X	X	X
Rotate the tires.	X	X	X	X	X	X	X	X	X	X	X	X	X
Lubricate front drive shaft fitting (4x4).	X	X	X	X	X	X	X	X	X	X	X	X	X
Lubricate outer tie rod ends.	X	X	X	X	X	X	X	X	X	X	X	X	X
Replace fuel filter element.		X		X		X		X		X		X	
Inspect the brake linings.			X			X			X			X	
Inspect and adjust parking brake.			X			X			X			X	
Inspect the front (4x4) and rear axle fluid, change if using your vehicle for police, taxi, fleet, off-road or frequent trailer towing.		X		X		X		X		X		X	
Inspect drive belt; replace as required.			X			X			X			X	
Check the transfer case fluid (4x4).				X								X	
Change the transfer case fluid (4x4).								X					
Inspect the manual transmission fluid, add if necessary.								X					
Inspect the front suspension, tie rod ends and boot seals for cracks or leaks and all parts for damage, wear, improper looseness or end play; replace if necessary.		X		X		X		X		X		X	
Inspect wheel bearings.				X				X				X	
Change automatic transmission fluid.				X				X				X	

- Refer to the Owner's Manual on the DVD for the complete maintenance schedule.

Maintenance Record (Diesel Engine)

	Odometer	Date	Signature, Authorized Service Center
7,500 Miles (12,000 km) or 6 Months			
15,000 Miles (24,000 km) or 12 Months			
22,500 Miles (36,000 km) or 18 Months			
30,000 Miles (40,000 km) or 24 Months			
37,500 Miles (60,000 km) or 30 Months			
45,000 Miles (72,000 km) or 36 Months			
52,500 Miles (84,000 km) or 42 Months			
60,000 Miles (96,000 km) or 48 Months			
67,500 Miles (108,000 km) or 54 Months			
75,000 Miles (120,000 km) or 60 Months			
82,500 Miles (132,000 km) or 66 Months			
90,000 Miles (144,000 km) or 72 Months			
97,500 Miles (156,000 km) or 78 Months			

FUSES

Integrated Power Module (fuses)

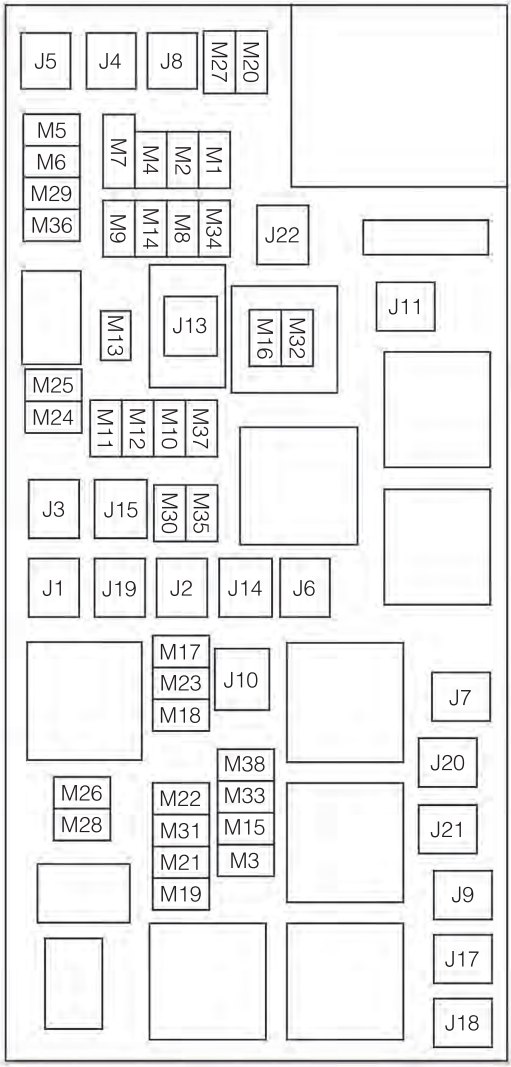

The Integrated Power Module is located in the engine compartment near the battery. This center contains cartridge fuses and mini fuses. A description of each fuse and component may be stamped on the inside cover, otherwise the cavity number of each fuse is stamped on the inside cover that corresponds to the following chart.

Cavity	Cartridge Fuse	Mini Fuse	Description
J01	40 Amp Green		Trailer Tow
J02	30 Amp Pink		Electric Brake
J03	30 Amp Pink		Diesel Powertrain Control Module – If Equipped
J04	25 Amp Natural		Driver Door Node
J05	25 Amp Natural		Passenger Door Node
J06	40 Amp Green		Antilock Brakes Pump/Stability Control System
J07	30 Amp Pink		Antilock Brakes Valve/Stability Control System
J08	40 Amp Green		Power Seat
J10	30 Amp Pink		Sway Bar Module – If Equipped
J11	30 Amp Pink		Transfer Case Module
J12	30 Amp Pink		Rear Defroster
J13	60 Amp Yellow		Main Ignition Off Draw (IOD) Fuse
J14	20 Amp Blue		Trailer Tow Lamps/Park Lamps
J15	40 Amp Green		Front Blower
J17	40 Amp Green		Starter Motor Solenoid
J18	20 Amp Blue		Powertrain Control Module Transmission Range
J19	60 Amp Yellow		Rad Fan Motor HI/Rad Fan Motor Low
J20	30 Amp Pink		Front Wiper Ground/Low/High
J21	20 Amp Blue		Washer Control
J22	25 Amp Natural		Sunroof Module
M1		15 Amp Blue	Stop Switch Lamp
M5		25 Amp Natural	115V AC Inverter
M6		20 Amp Yellow	Power Outlet (Instrument Panel or Front Console)/Rain Snsr
M7		20 Amp Yellow	Power Outlet (Rear Console or Center Seat)
M8		20 Amp Yellow	Front Heated Seat & Steering Wheel
M9		20 Amp Yellow	Rear Heated Seats
M10		15 Amp Blue	Hands Free Module/Vanity Lamp/Universal Garage Door Opener Module
M11		10 Amp Red	Climate Control System

Cavity	Cartridge Fuse	Mini Fuse	Description
M12		30 Amp Green	Radio/Amplifier
M13		20 Amp Yellow	Main #2 Instrument Cluster/Wireless Control Module/ITM/Siren/Multifunction Switch (Steering Column Module)
M14		20 Amp Yellow	Back Up Camera (Domestic Only)
M15		20 Amp Yellow	Power Seat Module(s)/Audio Telematics/Daytime Running Lights Relay/Instrument Cluster/Transfer Case Module
M16		10 Amp Red	Airbag Module
M18		15 Amp Blue	Center Stop Lamp
M19		25 Amp Natural	Automatic Shutdown 1 and 2
M20		15 Amp Blue	Instrument Cluster Interior Lighting /Sw Steering Wheel/Sw Bank
M21		20 Amp Yellow	Automatic Shutdown 3
M22		10 Amp Red	Horns (Low/High) – Right
M23		10 Amp Red	Horns (Low/High) – Left
M25		20 Amp Yellow	Fuel Pump Motor/Diesel Lift Pump – If Equipped
M26		10 Amp Red	Driver's Door Switch
M27		10 Amp Red	Ignition Switch
M28		15 Amp Blue	Powertrain Control Module
M29		10 Amp Red	Tire Pressure Monitor
M30		15 Amp Blue	J1962 Diag Connector
M31		20 Amp Yellow	Back-Up Lamps
M32		10 Amp Red	Airbag Module
M33		10 Amp Red	Powertrain Control Module
M34		10 Amp Red	Park Assist Module/Climate Control System Module/IR Sensor/Compass Module
M35		15 Amp Blue	Left Front & Rear Parklamps
M36		20 Amp Yellow	Power Outlet (Instrument Panel or Center Console)
M37		10 Amp Red	Antilock Brakes/Stability Control System Module/Stoplamp Switch
M38		25 Amp Natural	All Door Lock &Unlock

CAUTION!

- When installing the totally integrated power module cover, it is important to ensure the cover is properly positioned and fully latched. Failure to do so may allow water to get into the totally integrated power module and possibly result in a electrical system failure.
- When replacing a blown fuse, it is important to use only a fuse having the correct amperage rating. The use of a fuse with a rating other than indicated may result in a dangerous electrical system overload. If a properly rated fuse continues to blow, it indicates a problem in the circuit that must be corrected.

TIRE PRESSURES

- Check the inflation pressure of each tire, including the spare tire, at least monthly and inflate to the recommended pressure for your vehicle.
- The tire pressures recommended for your vehicle are found on the “Tire and Loading Information” label located on the driver’s side door opening.

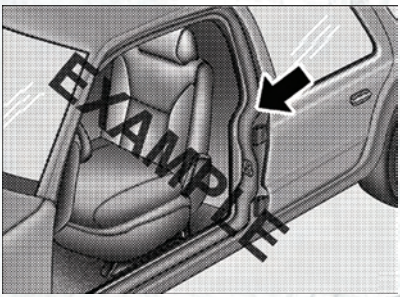

NOTE: Refer to the Owner's Manual on the DVD for more information regarding tire warnings and instructions.

WARNING!

- Overloading of your tires is dangerous. Overloading can cause tire failure, affect vehicle handling, and increase your stopping distance. Use tires of the recommended load capacity for your vehicle. Never overload them.
- Improperly inflated tires are dangerous and can cause collisions. Under-inflation is the leading cause of tire failure and may result in severe cracking, component separation, or “blow out”. Over-inflation reduces a tire’s ability to cushion shock. Objects on the road and chuck holes can cause damage that results in tire failure. Unequal tire pressures can cause steering problems. You could lose control of your vehicle. Over-inflated or under-inflated tires can affect vehicle handling and can fail suddenly, resulting in loss of vehicle control.

MAINTAINING YOUR VEHICLE

WHEEL AND WHEEL TRIM CARE

- All wheels and wheel trim, especially aluminum and chrome plated wheels, should be cleaned regularly with a mild soap and water to prevent corrosion.
- To remove heavy soil and/or excessive brake dust, use MOPAR® Wheel Cleaner or equivalent or select a non-abrasive, non-acidic cleaner.

CAUTION!

Do not use scouring pads, steel wool, a bristle brush, or metal polishes. Do not use oven cleaner. These products may damage the wheel's protective finish. Avoid automatic car washes that use acidic solutions or harsh brushes that may damage the wheel's protective finish. Only MOPAR® Wheel Cleaner or equivalent is recommended.

EXTERIOR BULBS

LIGHT BULBS – Exterior	Bulb Number
Dual Headlamp	H13
Quad Headlamp – Low Beam	H11
Quad Headlamp – High Beam	9005
Front Turn Signal Lamp (Dual Headlamp)	3157K
Front Turn Signal Lamp (Quad Headlamp)	3157NA
Fog Lamp	9145
Center High Mounted Stop Lamp (CHMSL)	921
Rear Cargo Lamp	921
Cab Roof Marker Lamps	194NA
Rear Tail/Turn and Stop Lamp	3157K
Rear Lamp Bar ID Marker Lamp	194
Side Marker Lamps (Dual Rear Wheels)	194
Backup Lamp	921
Rear License Plate Lamp	194

CHRYSLER GROUP LLC CUSTOMER CENTER

P.O. Box 21–8004

Auburn Hills, MI 48321–8004

Phone: 1–866–726–4636

CHRYSLER CANADA INC. CUSTOMER CENTER

P.O. Box 1621

Windsor, Ontario N9A 4H6

Phone: 1–800–465–2001 (English)

Phone: 1–800–387–9983 (French)

ASSISTANCE FOR THE HEARING IMPAIRED

- To assist customers who have hearing difficulties, the manufacturer has installed special TDD (Telecommunication Devices for the Deaf) equipment at its customer center. Any hearing or speech impaired customer, who has access to a TDD or a conventional teletypewriter (TTY) in the United States, can communicate with the manufacturer by dialing 1–800–380–CHRY. Canadian residents with hearing difficulties that require assistance can use the special needs relay service offered by Bell Canada. For TTY teletypewriter users, dial 711 and for Voice callers, dial 1–800–855–0511 to connect with a Bell Relay Service operator.

WARNING!

Engine exhaust, some of its constituents, and certain vehicle components contain, or emit, chemicals known to the State of California to cause cancer and birth defects, or other reproductive harm. In addition, certain fluids contained in vehicles and certain products of component wear contain, or emit, chemicals known to the State of California to cause cancer and birth defects, or other reproductive harm.

PUBLICATIONS ORDERING

- **If you are the first registered retail owner of your vehicle,** you may obtain one free printed copy of the Owner's Manual, Warranty Booklet or Radio Manuals on your DVD by calling 1–866–726–4636 (U.S.) or 1–800–387–1143 (Canada) or by contacting your dealer.
- Replacement User Guide kits or DVDs or, if you prefer, additional printed copies of the Owner's Manual, Warranty Booklet or Radio Manuals may be purchased by visiting www.techauthority.com or by calling 1–800–890–4038 (U.S.) or 1–800–387–1143 (Canada). Visa, Master Card, American Express and Discover orders are accepted. If you prefer mailing your order, please call the above numbers for an order form.

CONSUMER ASSISTANCE

NOTE: A street address is required when ordering manuals (no P.O. Boxes).

NOTE:

- The Owner's Manual and User Guide electronic files are also available on the Chrysler, Jeep, Ram Truck and Dodge websites.
- Click on the "For Owners" tab, select "Owner/Service Manuals", then select your desired model year and vehicle from the drop down lists.

REPORTING SAFETY DEFECTS IN THE 50 UNITED STATES AND WASHINGTON, D.C.

- If you believe that your vehicle has a defect that could cause a collision or cause injury or death, you should immediately inform the National Highway Traffic Safety Administration (NHTSA) in addition to notifying the manufacturer.
- If NHTSA receives similar complaints, it may open an investigation, and if it finds that a safety defect exists in a group of vehicles, it may order a recall and remedy campaign. However, NHTSA cannot become involved in individual problems between you, your authorized dealer, and the manufacturer.
- To contact NHTSA, you may either call the Auto Safety Hotline toll free at 1–888–327–4236 (TTY: 1–800–424– 9153), or go to http://www.safercar.gov; or write to: Administrator, NHTSA, 1200 New Jersey Avenue, SE., West Building, Washington, D.C. 20590. You can also obtain other information about motor vehicle safety from http://www.safercar.gov.

In Canada

- If you believe that your vehicle has a safety defect, you should contact the Customer Service Department immediately. Canadian customers who wish to report a safety defect to the Canadian government should contact Transport Canada, Motor Vehicle Defect Investigations and Recalls at 1-800-333-0510 or go to http://www.tc.gc.ca/roadsafety/
- French Canadian customers who wish to report a safety defect to the Canadian government should contact Transport Canada, Motor Vehicle Defect Investigations and Recalls at 1-800-333-0510 or go to http://www.tc.gc.ca/securiteroutiere/

AUTHENTIC ACCESSORIES BY MOPAR®

- The following highlights just some of the many Authentic Ram Truck Accessories by Mopar featuring a fit, finish, and functionality specifically for your Ram Truck.
- In choosing Authentic Accessories you gain far more than expressive style, premium protection, or extreme entertainment, you also benefit from enhancing your vehicle with accessories that have been thoroughly tested and factory-approved.
- For the full line of Authentic Ram Truck Accessories by Mopar, visit your local Ram Truck dealership or online at mopar.com.

CHROME:

- Exhaust Tip
- Front Air Deflector
- Tubular Side Steps
- Grille
- Fuel Filler Door

EXTERIOR:

- Bedliners
- Fiberglass Tonneau Cover
- Snapless Tonneau Cover
- Molded Splash Guards
- Running Boards
- Bed Extender
- Bed Step
- Hitch Receiver
- Fender Flares
- Bed Mat
- Tool Boxes
- Sports Performance Hood

INTERIOR:

- Premium Carpet Floor Mats
- Ambient Light Kit
- Door Sill Guards
- Bright Pedal Kit
- Slush Mats
- Heated Seats

ELECTRONICS:

- Portable Navigation Systems
- iPod® Adapter
- Kicker® Sound Systems
- Uconnect™ Web (WiFi)
- Media Center upgrades
- Head Restraint DVD Rear Seat Video
- Electronic Vehicle Tracking System
- DVD Rear Seat Video™

CARRIERS:

- Bed Mounted Bike Carrier
- Bed Mounted Ski and Snowboard Carrier
- Bed Mounted Cargo Basket With Cargo Net
- Cargo Bed Divider
- Cargo Ramps

- iPod® is a registered trademark of Apple, Inc.
- Kicker® is a registered trademark of Stillwater Designs and Audio, Inc.

INDEX

Adjustable Pedals 18
Air Conditioning 24,25
Airbag 10
Airbag Light 94
Alarm, Panic 8
Anti-Lock Brake System (ABS) . . . 94
Arming Theft System (Security Alarm) 9
Audio Settings 32,33,34,36,39,48
Automatic Headlights 20,94
Automatic Temperature Control (ATC) 24
Automatic Transmission
  Fluid Type 120,123
Auxiliary Audio/Video Input Jacks . 65
Axle Fluid 120,123

Back-Up Camera 26
Battery
  Charging System Light 93
Belts, Seat 10
Brake Fluid 120,123
Brake System
  Warning Light 93
Break-In Recommendations, New Vehicle 19
Bulb Replacement 134

Calibration, Compass 65
Cargo Light 21
Change Oil Indicator 94
Charging System Light 93
Check Engine Light (Malfunction Indicator Light) 93
Child Restraint 11
Child Restraint Tether Anchors . . . 11
Climate Control 24
Clock Setting 32,34,37,45
Compass Calibration 65
Cooling System
  Coolant Capacity 120,123
Crankcase Emission Control System 20
Cruise Control (Speed Control) . . . 21
Cruise Light 21
Customer Assistance 135

Defects, Reporting 136
Defroster, Rear Window 24
Defroster, Windshield 24
Dimmer Control 20
Disarming, Theft System 9
Dual Rear Wheels 105

ECO 65
Electronic Range Select (ERS) . . . 23
Electronic Speed Control (Cruise Control) 21
Electronic Stability Program (ESP) 91,93
Electronic Throttle Control Warning Light 94
Electronic Vehicle Information Center (EVIC) 65,66
Electronics
  Your Vehicle's Sound System . . . 30
Emergency Key 8
Emergency, In Case of
  Overheating 95
Engine
  Block Heater 84
  Break-In Recommendations . 19,84
  Compartment 116
  Malfunction Indicator (Check Engine) 93
  Oil Selection 120,123
  Overheating 95
Event Data Recorder 114
Exhaust Brake 86
Exterior Lights 134

Flat Tire Stowage 106
Fluid Capacities 120,123
Fluids 120,123
Fog Lights 20
Four Wheel Drive Operation 72
Freeing A Stuck Vehicle 113
Front Heated Seats 16
Fuel
  Filler Cap (Gas Cap) 94
  Specifications 120,123
Fuses 130

Garage Door Opener (HomeLink®) . 67

Headlights
Automatic 20
Dimmer Switch 20
High Beam 20
Heated Mirrors 24,25
Heated Steering Wheel 17
Heater, Engine Block 84
High Beam/Low Beam Select (Dimmer) Switch 20
HomeLink® (Garage Door Opener) Transmitter 67
Hood Release 115
Hub Caps 104

Idle Up Feature 87
Instrument Cluster 6
Indicators 7
Instrument Cluster Warning Lights 6,91
Integrated Power Module (Fuses) . 130
Integrated Trailer Brake Controls . . 81
Intermittent Wipers (Delay Wipers) . 19
Introduction 2
Inverter Outlet (115V) 69
Inverter, Power 69

iPod®/USB/MP3 Control 58
Bluetooth Streaming Audio 63

Jack Location 96
Jump Starting 108

Key Fob 8
Key Fob Programmable Features . . 66

Lane Change and Turn Signals . . . 19
Lane Change Assist 19
LATCH (Lower Anchors and Tether for CHildren) 11
Lights
Turn Signal 19
Warning (Instrument Cluster Description) 6

Maintenance Record 127,129
Maintenance Schedule 125,128
Malfunction Indicator Light (Check Engine) 93
Media Center Radio 32,34
Memory Seat 15
Message Center
Water in Fuel 84
Mirrors
Heated 24,25
MOPAR® Accessories 137

Navigation 42,51
New Vehicle Break-In Period . . . 19,84

Oil Change Indicator 94
Oil Change Indicator, Reset 94
Oil Pressure Light 93
Oil, Engine
Capacity 120,123
Outlet
Power 70
Overheating, Engine 95

Panic Alarm 8
Park Sense System, Rear 25
Pedals, Adjustable 18
Phone (Pairing) 59
Phone (Uconnect) 58
Placard, Tire and Loading Information 133
Power
Glass Sunroof 27
Inverter 69
Outlet (Auxiliary Electrical Outlet) 70
Seats 14
Sliding Rear Window 27
Steering 120,123
Programmable Electronic Features . 66

Radio Operation 36,45
Rain Sensitive Wiper System 19
Rear Camera 26
Rear Heated Seats 17
Rear Park Sense System 25,26
Recreational Towing 82
Remote Starting System 9
Replacement Bulbs 134

INDEX

Reporting Safety Defects 136
Restraints, Child 11

Seat Belts 10
Seats 14
  Adjustment 15
  Lumbar Support 14
  Memory 15
  Power 14
  Ventilated 16
Seek Button 32,33,35
Setting the Clock 32,34,37,45
Shift Lever Override 111
Signals, Turn 19
SIRIUS Travel Link 56
Spark Plugs 120,123
Speed Control (Cruise Control) . . . 21
Starting
  Cold Weather 85
  Remote 9
Starting Procedures (Diesel Engines) 84
Steering
  Tilt Column 18
  Wheel, Heated 17
Steering Wheel Audio Controls . . . 57
Store Radio Presets 33,35
Sun Roof 27
Supplemental Restraint System - Airbag 10

Tailgate 74
Temperature Control, Automatic (ATC) 24
Temperature Gauge, Engine Coolant 95
Theft Alarm (Security Alarm) 9
Theft System Arming 9
Theft System Disarming 9
Tilt Steering Column 18
Tires
  Air Pressure 133
  Dual 105
  Pressure Monitor System (TPMS) 26
  Pressure Warning Light 91
Tow Hooks, Emergency 110
Tow/Haul 80
Towing
  24-Hour Towing Assistance 91
  Disabled Vehicle 112
  Recreational 82
Transfer Case
  Fluid 120,123
Transmission
  Fluid 120,123
  Warning Light 94
Turn Signals 19

Uconnect™ Phone 58
Uconnect™ Voice Command 61

Ventilated Seats 16
Video Entertainment System™ (Rear Seat Video System) 64
Voice Command 61

Washers, Windshield 19
Water in Fuel 84
Wheel and Wheel Trim Care 134
Wheel Cover 104
Wheel Nut Torque 105
Wind Buffeting 29
Windshield Washers 19
Windshield Wipers 19

FREQUENTLY ASKED QUESTIONS

GETTING STARTED

- How do I install my LATCH Equipped Child Seat? pg. 11
- How do I program my Front Seat Memory? pg. 15

OPERATING YOUR VEHICLE

- How does the Electronic Range Select (ERS) operate? pg. 23
- Where is the Light Load Inflation switch located? pg. 26

ELECTRONICS

- Which radio is in my vehicle? pg. 32, 34, 36, 45
- How do I activate the Audio Jack? pg. 33, 36, 39, 48
- How do I set the clock on my radio? pg. 32, 34, 37, 45
- How do I use the Navigation feature? pg. 51
- How do I pair my cell phone via Bluetooth® with the UConnect™ Hands-Free Voice Activation System? pg. 58
- How do I use my iPod®? pg. 58
- How do I use my USB port to listen to audio through my touch-screen radio? pg. 58
- What does the ECO message mean on the EVIC display? pg. 65
- How do I configure my Universal Garage Door Opener (HomeLink)? pg. 67

OFF-ROAD CAPABILITIES

- How do I shift into different four-wheel drive selections? pg. 72

DIESEL

- How do I operate my diesel? pg. 84

UTILITY

- How do I know how much I can tow with my Ram Truck? pg. 78
- How do I adjust the gain on the Integrated Trailer Brake Module? pg. 81

WHAT TO DO IN EMERGENCIES

- What do I do if my TPMS warning light is blinking? pg. 91
- How do I change a flat tire? pg. 96
- How do I Jump-Start my vehicle? pg. 108

MAINTAINING YOUR VEHICLE

- Where is my Fuse Block located? pg. 130
- What type of oil do I use? pg. 120
- How often should I change my engine's oil? pg. 125
- What should my tire pressure be set at? pg. 133

NOTES

NOTES

NOTES

RAMTRUCKS.COM

This guide has been prepared to help you get quickly acquainted with your new RAM and to provide a convenient reference source for common questions. However, it is not a substitute for your Owner's Manual.

For complete operational instructions, maintenance procedures and important safety messages, please consult your Owner's Manual, Navigation/Media Center Manuals, Multimedia User Manual and other Warning Labels in your vehicle.

Not all features shown in this guide may apply to your vehicle. For additional information on accessories to help personalize your vehicle, visit www.mopar.com or your local RAM dealer.

Driving and Alcohol: Drunken driving is one of the most frequent causes of collisions. Your driving ability can be seriously impaired with blood alcohol levels far below the legal minimum. If you are drinking, don't drive. Ride with a designated non-drinking driver, call a cab, a friend, or use public transportation.

WARNING!

Driving after drinking can lead to a collision. Your perceptions are less sharp, your reflexes are slower, and your judgment is impaired when you have been drinking. Never drink and then drive.

Download a FREE electronic copy
of the Owner's Manual or Warranty Booklet
by visiting the ***Ownership tab*** at:

www.ramtrucks.com (U.S.) or
www.ramtruck.ca (Canada).

12D241-926-AA
Ram Trucks 1500/2500/3500
First Edition
User Guide

EA11-003

CHRYSLER

12-9-2011

Enclosure 10

Dealer-Field Communication

Service Bulletins

Search Result

Case Number	K55150452
Vehicle Issue	No Start. Actual Fuel (Rail) Pressure Is Low. May have fuel system related codes such as P0148, P1011, P1012 or P0251, or No Codes.;The Actual Fuel Pressure (AFP) reading on the StarSCAN is: erratic (varies more than 1000 psi), or the AFP reading may be low while cranking (less than 3000 psi). Make sure the batteries are properly charged and a battery charger is being used to maintain the battery voltage during testing. Minimum cranking speed should be above 180 rpm. Reference Service Information, Injector Return - No Start Diagnostics. Fuel supply flow volume and quality is good. Greater than 570 mL (19 oz) in 10 seconds. The high pressure pump output volume is greater than 70 mL (cranking the engine for three 10 second cycles). There is no fuel flowing from the Pressure Limiting Valve while cranking the engine. While cranking the engine for two 15 second cycles (30 seconds total), return fuel flow from the high pressure pump is less than 500 mL. While cranking the engine for two 15 second cycles (30 seconds total), return fuel flow from the injectors should be less than 20 mL.
System or Component	No Start,Engine Cranks;Customer Concern (No DTCs);Group 14 - Fuel System,Group 18 - Vehicle Performance / Driveability;Yes - Continuously;Fuel Pressure Low
Recommendation	Using tool #9864, cap off each port of the high pressure manifold (rail) and try to start the engine. If the engine starts, remove and inspect the High Pressure Connector Tube and the injector from the capped off cylinder. Inspect for any loose or damaged connections. If necessary, replace the effected parts. If the total injector return is greater than 70 mL while cranking the engine (two 15 second cycles), it may be necessary to replace all six injectors.
Modification Date	08/06/08 1:16 PM

DODGE CHRYSLER Jeep SERVICE

STICK WITH THE SPECIALISTS®

Warranty Bulletin

TO: Dealer Principal, Service Mgr., Parts Mgr., and Warranty Claims Administrator	**NO:** D-08-24 **DATE:** August, 2008
SUBJECT: Sterling Bullet Truck	**FOR:** X Dealers Business Centers

PURPOSE:
To clarify the fact that Chrysler does **NOT** provide Warranty Coverage for the Sterling Bullet Truck.

TIMING:
Effective Immediately

ACTION:
Do **NOT** provide Warranty service for the Sterling Bullet even though VIP may indicate Warranty Coverage. Any claims for these trucks will reject with message code VJ1-Chrysler dealer cannot repair a joint partner vehicle. ***These claims cannot be paid.***

These trucks must be repaired by an authorized Sterling dealer or repair center.

Please ensure that all affected dealership personnel are aware of this bulletin.

WARRANTY OPERATIONS

29 - Non-DTC Diagnostics/Drivability - Diesel, 6.7L/Diagnosis and Testing

DIESEL FUEL CONTAMINATION TESTING PROCEDURE

OVERVIEW

This procedure explains the proper method for extracting a fuel sample and specific methods to inspect for contamination of any kind. The contamination we are looking for on the clean side of the Fuel Filter is very small. We don't say dirt because it may be metal, water, plastic or any other contamination, other than clean diesel fuel. The smallest we can see with naked eye is about 30 Microns. Our Fuel Filters have a 5 Micron rating. The only way we can see this size of contamination is to properly collect it and view it. The fuel sample needs to be taken from the clean side of the system. In order to get a good clean side sample to inspect, perform the following procedure exactly.

Required Equipment
ONE LITER GLASS MEASURING CUP
FOUR FEET OF CLEAR, FLEXIBLE TUBING, 5/16 ID (available at the local hardware)
MULTI-BULB LED FLASHLIGHT
HPDP FUEL RETURN HOSE
BRAKE CLEANER SPRAY
SELF LIGHTING MAGNIFIER (Optional)
All items used for collecting fuel MUST be cleaned with clean diesel fuel, brake clean, and air ONLY. Failure to clean these items will contaminate the fuel sample. Do Not use towels to wipe out the measuring cup.

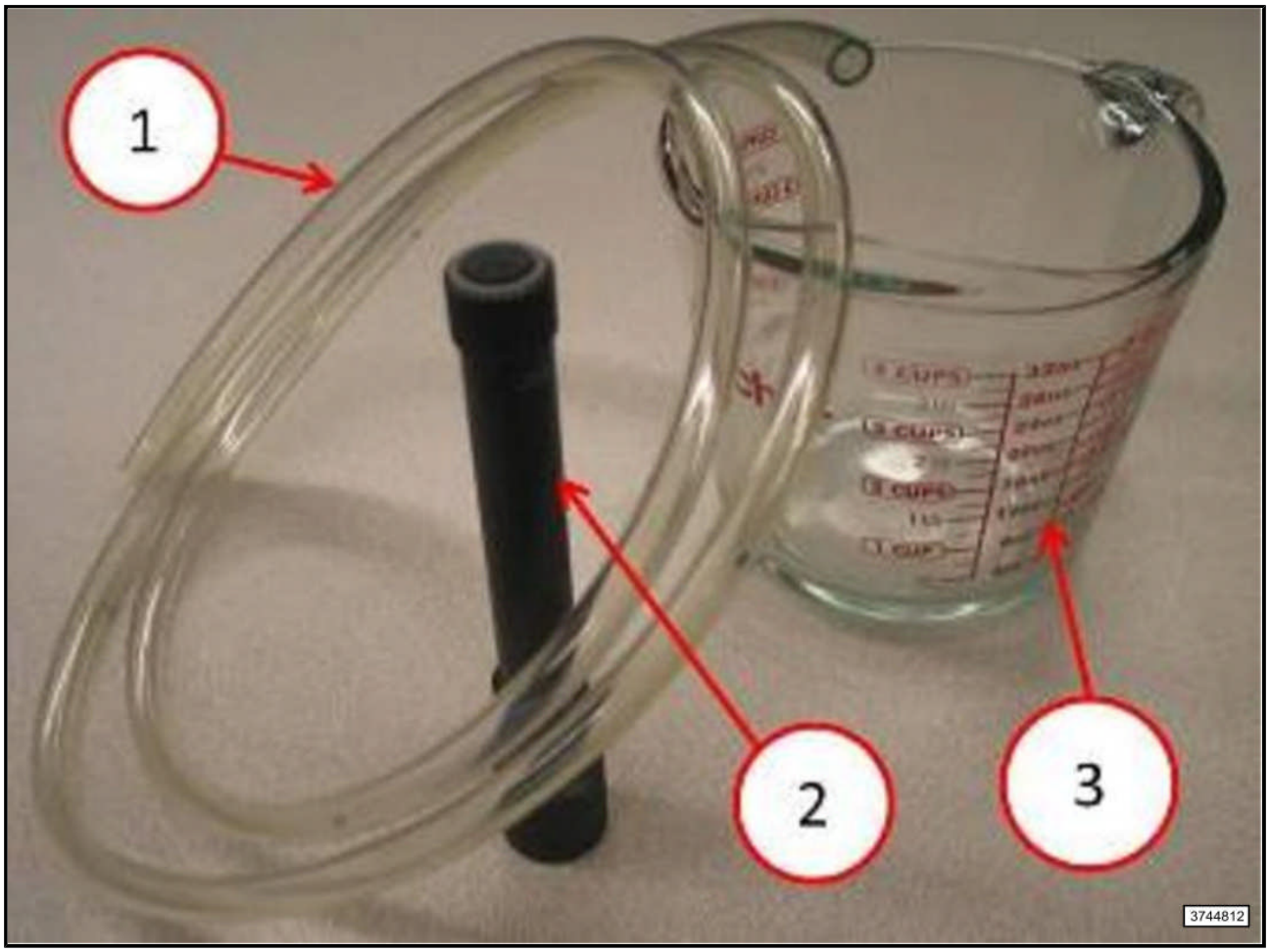

1. 5/16” CLEAR TUBING (20' Length)

2. MULTI-BULB LED FLASHLIGHT

3. 4 CUP (1 LITER) “PYREX” STYLE MEASURING CUP

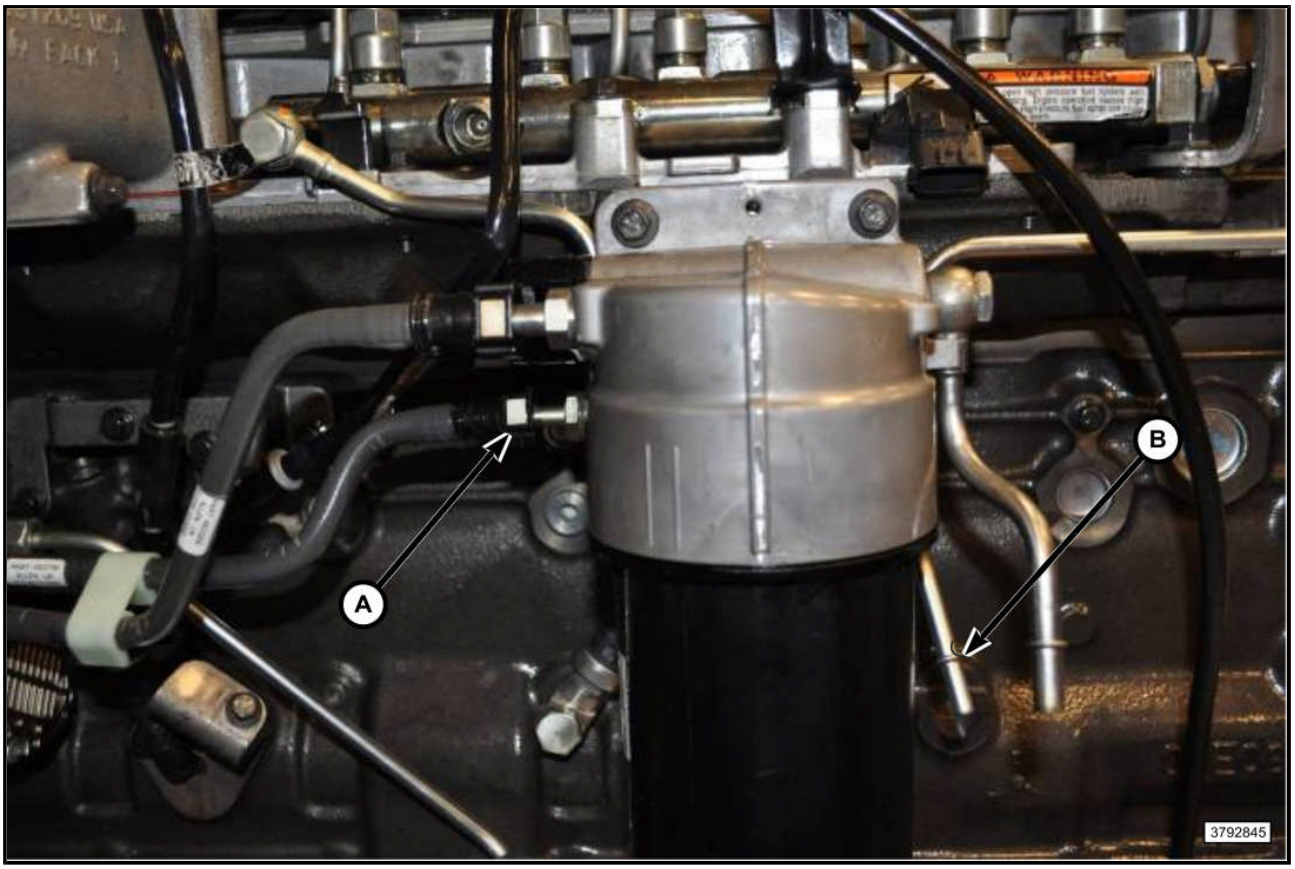

A. HPDP return flow quick disconnect (at front of Fuel Filter mount)

B. Engine fuel drain tube connection - All return flow to tank

1.CLEAN SIDE DIESEL FUEL SAMPLE COLLECTION AND INSPECTION

NOTE: The three photos in this test step illustrate the steps in this test procedure for clarification.

NOTE: The fuel filter MUST NOT be removed or replaced prior to taking sample in order to get accurate results.

NOTE: Warm the engine before collecting the fuel sample.

1. Start the engine and using a scan tool, monitor the Coolant Temperature Sensor reading in Data Display.
2. While the engine is warming up, clean the clear tubing with clean diesel fuel and the glass measuring cup using brake clean and compressed air only. Do not use a towel.

NOTE: Do not use brake clean or other chemicals on any vehicle parts for the fuel handling system such as lines, pumps or fittings.

3. Monitor the scan tool until the vehicle has reached an operating temperature of 180°F (82°C).
4. Turn the engine off.
5. Remove the HPDP return line quick disconnect from the fitting located at the front of the Fuel Filter housing at the banjo bolt joining the Pressure Limiting Valve return (Connection A in the fuel system connections figure above).

NOTE: The fuel flowing from the return of the High Pressure Delivery Pump (HPDP) MUST NOT be part of our sample. We are looking primarily for injector return fuel. The easiest way is to eliminate the HPDP return line and pull the injector return flow sample from the filter mount, on the front side.

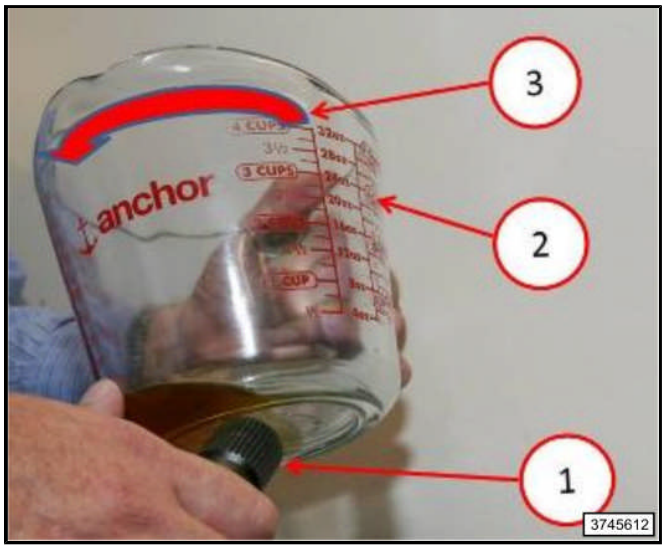

1. LED FLASHLIGHT

2. MEASURING CUP

3. SLOWLY TILT THE CUP TOWARD YOU

6. Cap off the male fitting that the HPDP return line was disconnected from.
7. Disconnect the quick connect fitting for the fuel return line located on the back side of the Fuel Filter housing (Connection B in the fuel system connections figure above).
8. Attach the four foot length of 5/16" clear tubing to this exposed male fitting and orientate it on a downhill angle in to a drain pan. This will be your sample source hose.
9. Using a hose with two male fittings, attach one end to the HPDP return line disconnected in step 5. Connect the other end to the fuel return line disconnected in step 7. This will return the High Pressure Pump return flow back to the tank while collecting the sample.
10. Start the engine, and continue monitoring the coolant temperature to maintain the 180°F (82°C).
11. Using the scan tool, navigate to PCM > System Tests > Fuel Pressure Override Test and select start.
12. Initiate the Fuel Pressure Override Test two consecutive times to further warm the fuel and allow the tubing to be thoroughly rinsed clean.

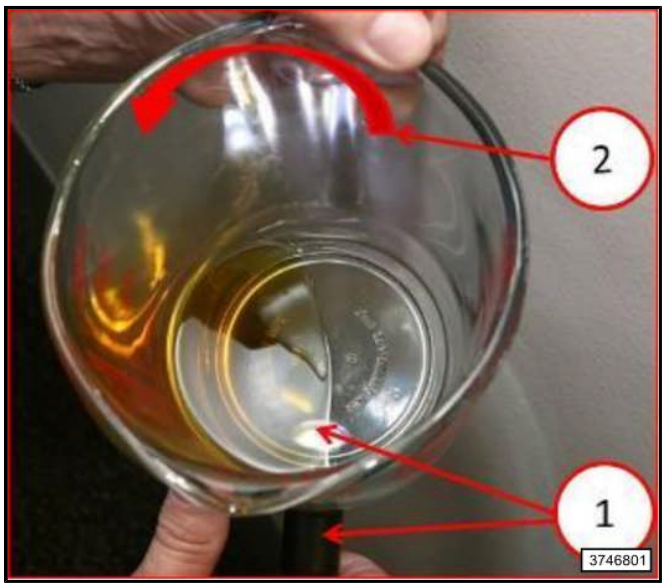

1. LED FLASHLIGHT POINTING THROUGH BOTTOM OF CUP (Shine Toward the Handle)

2. SLOWLY TILT THE CUP TOWARD YOU

13. Start the Fuel Pressure Override Test a third time. At mid stream of the test move the clear tube to the measuring cup. Collect a sample of approximately 1/4 inch of fuel in the measuring cup.
14. Turn the engine off.

NOTE: Follow these next steps exactly to inspect the sample for contamination.

15. Allow the sample to sit for 10 minutes in a dust free environment to allow the debris to settle to the bottom. **It is important to not allow any air born contaminates to get into the fuel sample. Do not shake, swirl, or agitate the fuel in any way. The contamination should settle to the bottom.**
16. Hold the measuring cup (2) by the handle in one hand and shine the LED flashlight (1) through the bottom of the container toward the handle of the cup.
17. Slowly tilt the measuring cup (2) toward you and keep the LED flashlight (1) at the **trailing edge** of the fuel as it comes down the bottom of the cup and inspect for contamination.
    - Any dirt in the fuel will collect and be pulled by this trailing edge of fuel **(Number one in the last figure)**. It may be any color and sometimes looks as though the fuel is cloudy. **This is the contamination.**.
    - If you see **ANYTHING AT ALL**, the fuel is contaminated.

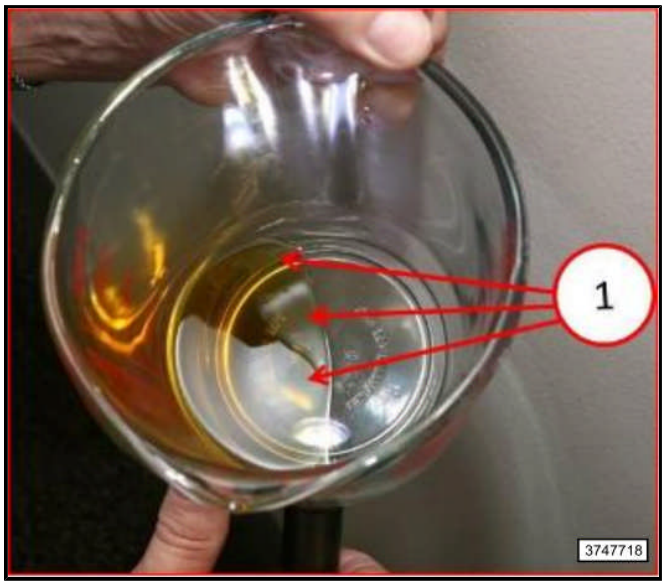

1. Contamination will gather at the trailing edge of fuel.

VIEW CAREFULLY, LOOKING FOR VERY SMALL PARTICULATE MATTER (May Look Cloudy)

View the following repair options:

The fuel sample is found to be contaminated:

- To ensure that the In Tank Lift Pump is operating properly, perform the Lift Pump Flow Test. For instruction and specifications on this procedure, refer to the CHECKING THE FUEL DELIVERY SYSTEM procedure, test step 5. After checking the In Tank Lift Pump operation, perform the DIESEL FUEL SYSTEM CLEANING PROCEDURE. (Refer to 14 - Fuel System/Fuel Delivery - Standard Procedure) .
- Go To **2**

The Fuel sample is clean:

- Install new fuel filter and Mopar (CRC) fuel injector cleaner into the fuel tank at a ratio four times the recommend concentration.
- Go To **2**

2.DIAGNOSTIC PATH

Were you instructed to inspect for Fuel Contamination from the MIL LIGHT ON PRETEST PROCEDURE?

Yes

- Perform the diagnostic trouble code test that was found to be present. (Refer to 28 - DTC-Based Diagnostics/MODULE, Engine Control (ECM) - Diagnosis and Testing).

No

- Go To **3**

3.DIAGNOSTIC PATH CONTINUED

Were you instructed to inspect for Fuel Contamination from a Non-DTC TEST PROCEDURE?

Yes

- Perform the DIESEL AFTERTREATMENT VALIDATION 6.7L procedure. (Refer to 28 - DTC-Based Diagnostics/MODULE, Engine Control (ECM) - Standard Procedure).

No

- Return to Diagnostic Test that directed you to inspect for fuel contamination.

Cummins 6.7L Turbo Diesel Drivability Diagnostic Process Tutorial

Index

- Process Overview
- 6.7L Cummins Diesel Diagnostic Process
- Locating 6.7L Cummins Diesel Diagnostic Worksheets
- Creating a 6.7L Cummins Diesel Diagnostic Worksheet

Process Overview

1. Customers Concern
   - Diagnostics starts with Symptom Based Diagnostics
2. Collect Data
   - Always collect data to aid in root cause analysis of the customer's concern
3. Root Cause Analysis
   - Analyze the data collected to determine the "Real" root of the customer's concern
4. Determine Repair Direction
   - Once the root of the customer's concern has been identified, a repair action can be determined
5. Implement Corrective Action
   - Then, perform the repair action
6. Validate Repair
   - And finally, to ensure the repair action has eliminated the customer's concern, validate the repair

Process Overview

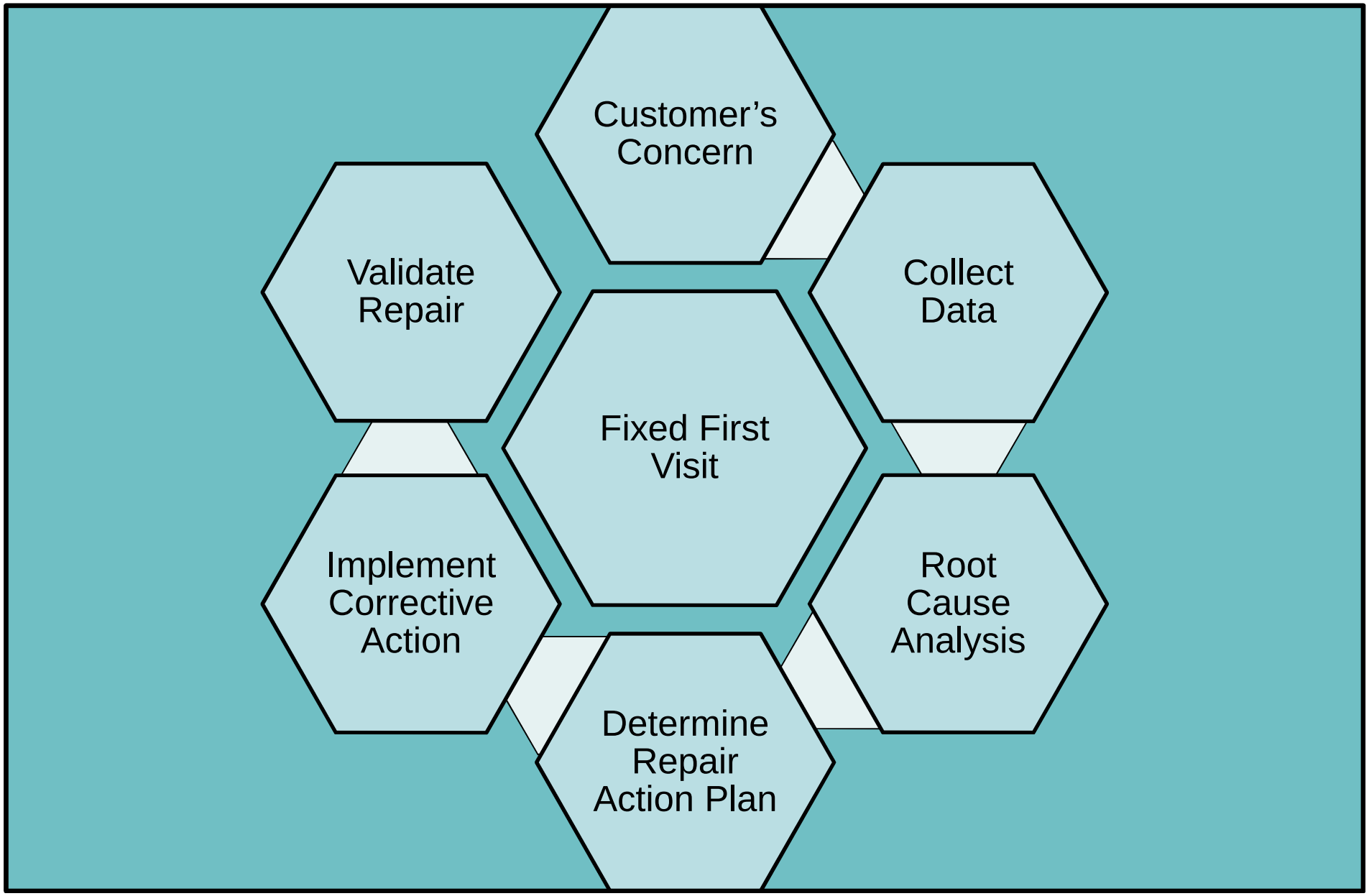

Customer's Concern

This process was developed for any drivability concern on the 6.7L Cummins Diesel Engine. Non-drivability engine issues or engine cooling system issues are not in the scope of this process.

The process begins by identifying the customer's concern and applying it to one of the following symptoms:

- MIL Illumination
- Engine Cranks But Does Not Start or Starts and Immediately Stalls
- Engine Surges, Bucks, Misfires, Runs Rough – No MIL
- Intermittent Low Power, No Throttle Response – No MIL
- Engine Noise – No MIL
- Excessive Black Smoke Out Exhaust – No MIL
- Excessive White Smoke Out Exhaust – No MIL
- Excessive Blue Smoke Out Exhaust – No MIL

If the MIL is illuminated, your process begins in TechCONNECT>Service Info>28 – DTC Based Diagnostics>MODULE, Engine Control (ECM), 6.7L>Standard Procedure>PRE-DIAGNOSTIC TROUBLESHOOTING PROCEDURE.

If the MIL is **NOT** illuminated, your process begins in TechCONNECT>Service Info>29 – Non-DTC Diagnostics>Drivability - Diesel, 6.7L>Diagnosis and Testing>PRE-DIAGNOSTIC TROUBLESHOOTING PROCEDURE.

In each case, the test procedure will request that a 6.7L Diesel Diagnostic Worksheet (Collecting Data – Next page) be completed before proceeding. Once the data has been collected and analyzed, then the diagnostic process can continue.

Collect Data

Vehicle Information

Vehicle Maintenance

EVIC Information

Control Module Information

Cummins Diesel Diagnostic Worksheet

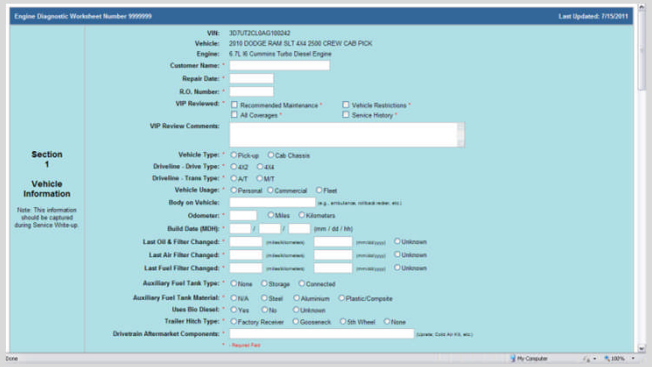

Root Cause Analysis

- Utilize All Data Collected to Help Determine the Root Cause for the Customer's Concern
- Don't perform any repairs until all data is collected and root cause analysis has been performed.
- Don't leave any stone unturned – Even a bottle of fuel injector cleaner in the bed of the truck may help determine root cause.
- Keep Asking "WHY" Until You No Longer Can Provide an Answer

Example:

Why do I have the MIL Illuminated? Because the ECM has a Stored P1011 and Active P1451, and P242F DTC's

Why are there Active P1451 and P242F DTC's? Because the Diesel Particulate Filter could be plugged

Why is the DPF plugged? Because there is excessive fuel being pushed down the exhaust

Why is there excessive fuel being pushed down the exhaust? Because the fuel injector(s) are leaking

Why are the fuel injectors leaking? Because they have been exposed to contamination

Why has the fuel injectors been exposed to contamination? Because the fuel filter exceeded it's maintenance interval.

Etc., Etc.

Determine Repair Action Plan

Your repair action plan may have to be multi faceted.

- Your root cause may have directed you to a single DTC or a single concern however, there may be many possible solutions and it may be possible to have more than one solution required to correct the concern. Always analyze the cause and effect of how the systems operate independently and together.

  Example:

  You have determined that the fuel filter has exceeded the maintenance interval. You will need to determine whether or not fuel contamination has been allowed to pass the fuel filter. A fuel contamination test must be done on the "current" fuel filter.

NOTE: IF YOUR TESTING IS DONE AFTER THE FUEL FILTER HAS BEEN REPLACED, THEN THE NEW FILTER WILL CAUSE YOUR TESTING TO BE INACCURATE.

If the fuel is found to be contaminated, then besides a fuel filter replacement , a complete fuel system cleaning is required. To ensure that the in-tank delivery pump is operating properly, the in-tank delivery pump test must be performed before the fuel tank is dropped so that if a fuel pump is needed, it is replaced while the tank is out of the vehicle.

New diagnostic test procedures have been developed to help ensure that the proper repair action plan is taken.

Implement Corrective Action

The Diagnostic Test Procedures provide corrective action direction.

Validate the Repair

1. Powertrain Verification Test is performed after all repairs.
2. Diesel Aftertreatment Validation
   - Performed **only** when repairs have been made that have an effect on producing too much soot
   - Validation performed when repairs are made to correct DTC's P000F, P0087, P0402, P042E, P0489, P1011, P1451, P2262, P226B, P242F, P245A, P2A00, P2A01, and/or P2563

Locating 6.7L Cummins Diesel Diagnostic Worksheets

CHRYSLER GROUP LLC

Access to Worksheets

6.7L Cummins Diesel Diagnostic Worksheets are created, stored, and located in DealerCONNECT>TechCONNECT> Search.

Process is started by inserting the VIN into the vehicle configuration box in TechCONNECT, then press submit.

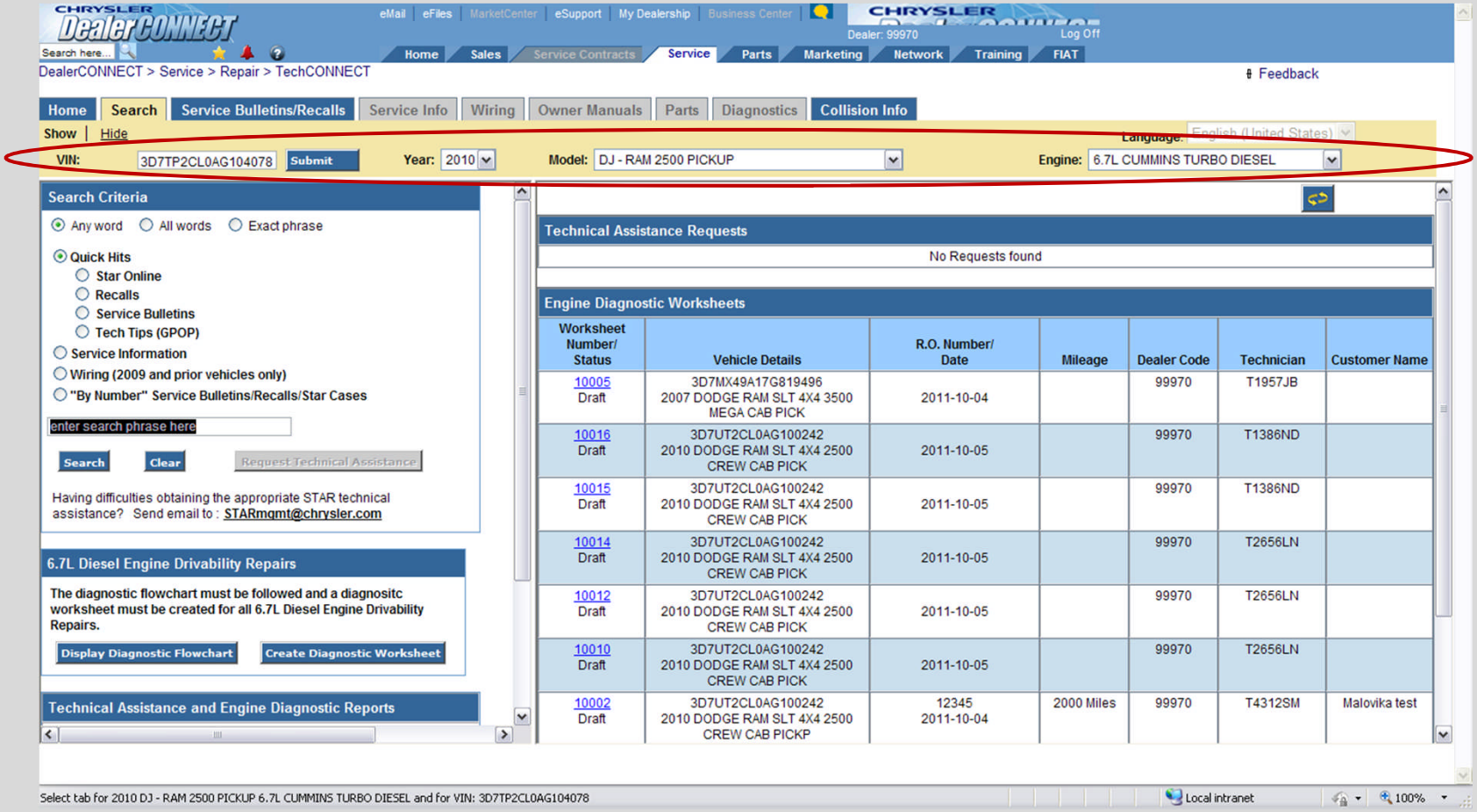

Locating 6.7L Cummins Diesel Diagnostic Worksheets

CHRYSLER GROUP LLC

Access to Worksheets

Your dealerships Technical Assistance Requests and 6.7L Cummins Diesel Diagnostic Worksheets will appear on the right side of the window.

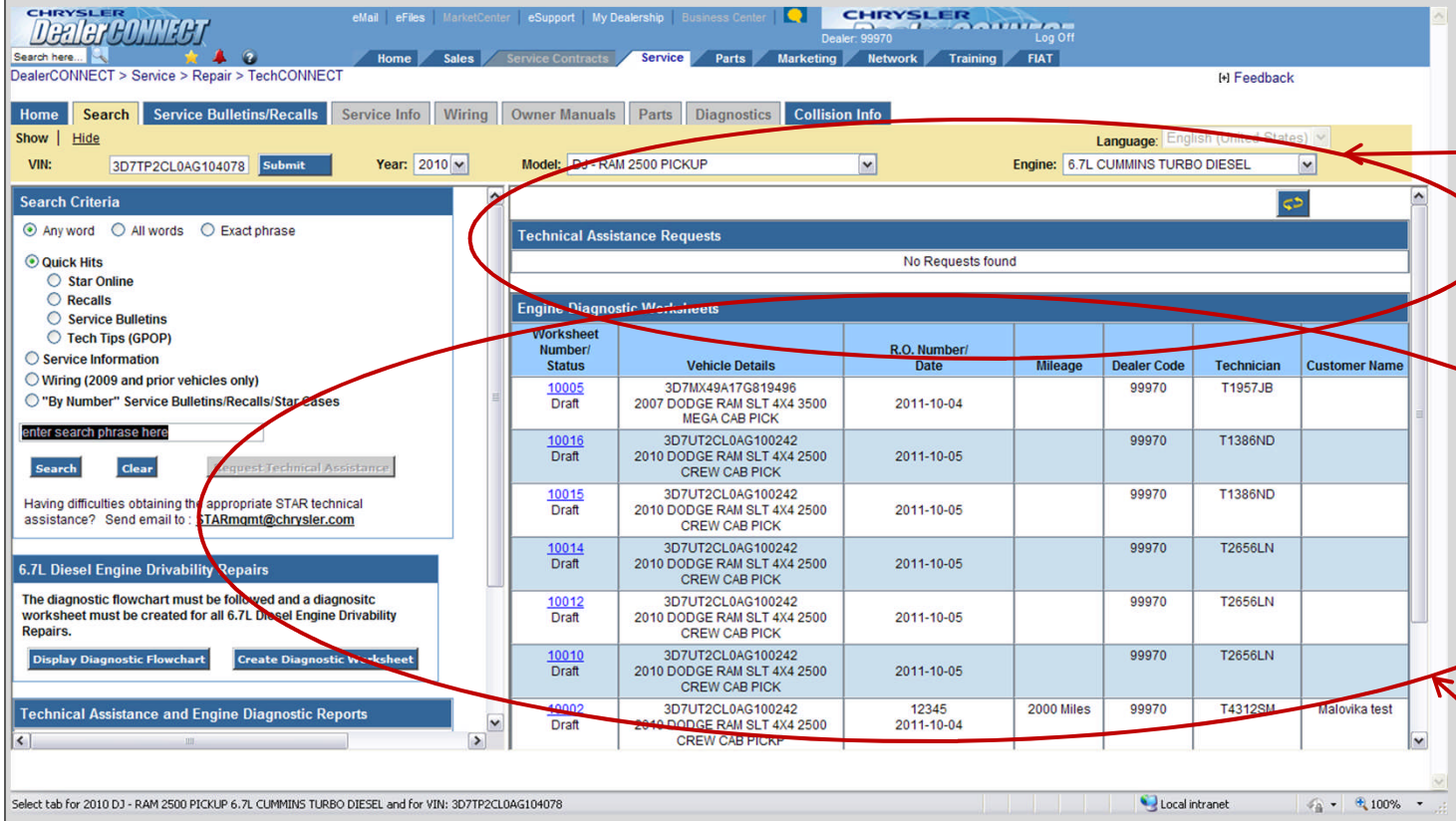

Locating 6.7L Cummins Diesel Diagnostic Worksheets

CHRYSLER GROUP LLC

Access to Worksheets

All of your dealers 6.7L Cummins Diesel Diagnostic worksheets will be displayed as well as any worksheet that has been “COMPLETED” or is in “DRAFT” mode by **any dealer** for the VIN inserted in the vehicle configuration section. However, only dealers that originate the worksheet have the ability to **EDIT** “DRAFT” worksheets.

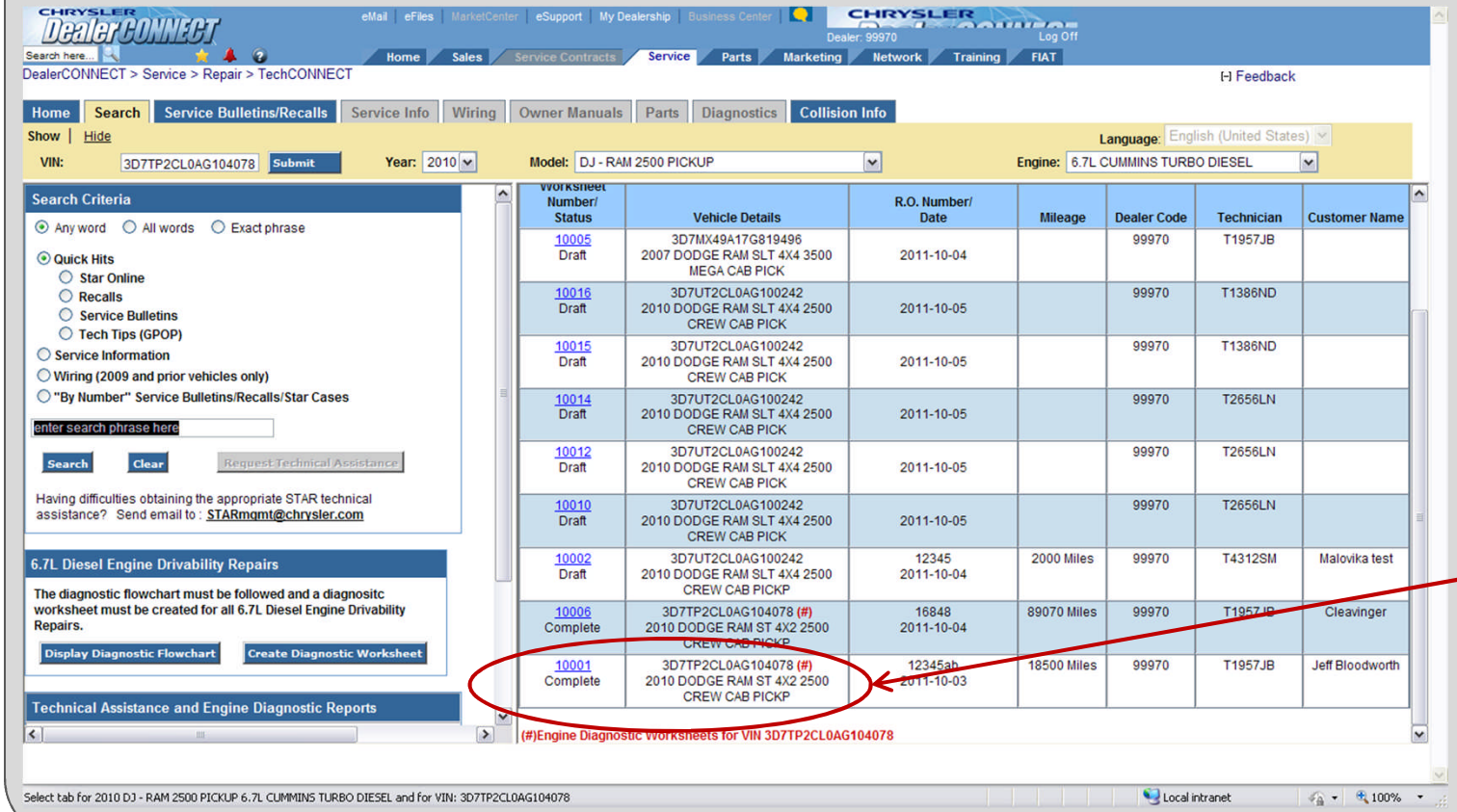

Locating 6.7L Cummins Diesel Diagnostic Worksheets

CHRYSLER GROUP LLC

Access to Worksheets

Worksheets displayed will include information such as:

- Worksheet Number and Status
- Vehicle Identification Number (VIN)
- R.O. Number and Date
- Mileage
- Dealer Code
- Technician SID
- Customer Name

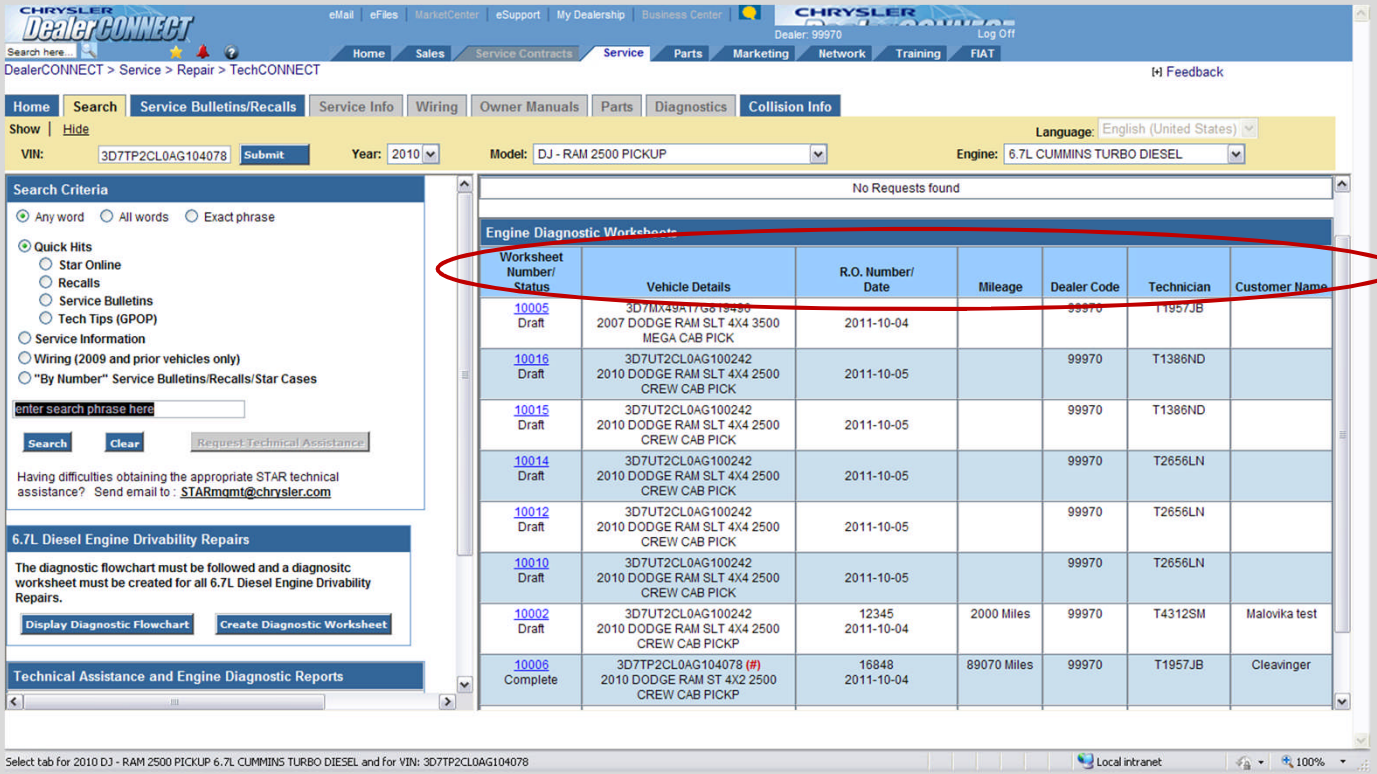

Locating 6.7L Cummins Diesel Diagnostic Worksheets

Access to Worksheets

Any worksheet that has been created by your dealership can be edited by any individual in your dealership whose SID is recognized in the Technical Assistance Request System as long as the worksheet is in the OPEN or DRAFT status. Once a worksheet has been completed, it can no longer be updated.

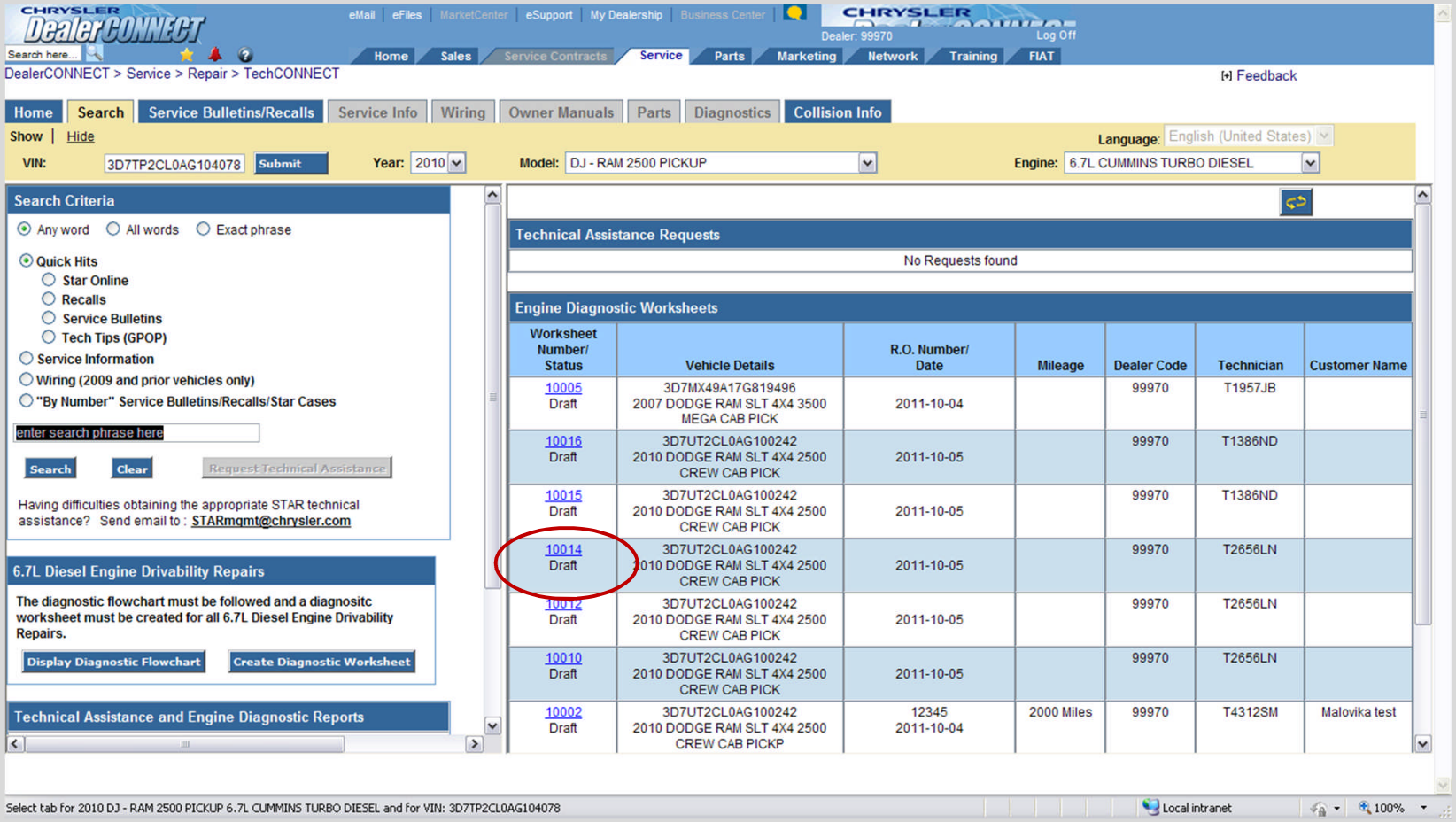

Locating 6.7L Cummins Diesel Diagnostic Worksheets

CHRYSLER GROUP LLC

Access to Worksheets

To edit a worksheet, click on the 6.7L Cummins Diesel Worksheet ID Number.

Worksheet ID Number

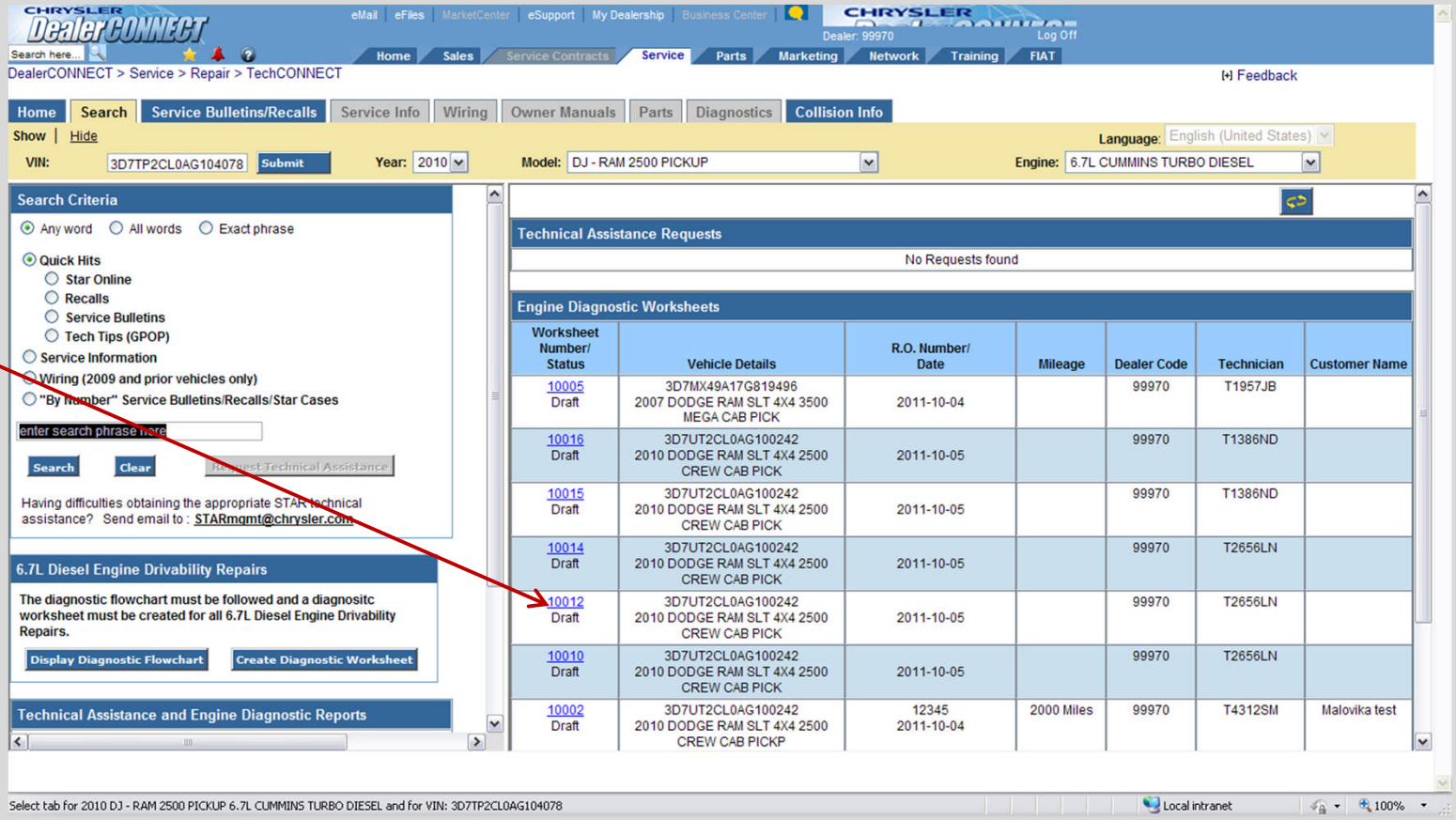

Locating 6.7L Cummins Diesel Diagnostic Worksheets

CHRYSLER GROUP LLC

Access to Worksheets

To view a COMPLETED worksheet, click on the 6.7L Cummins Diesel Worksheet ID Number.

Worksheet ID Number

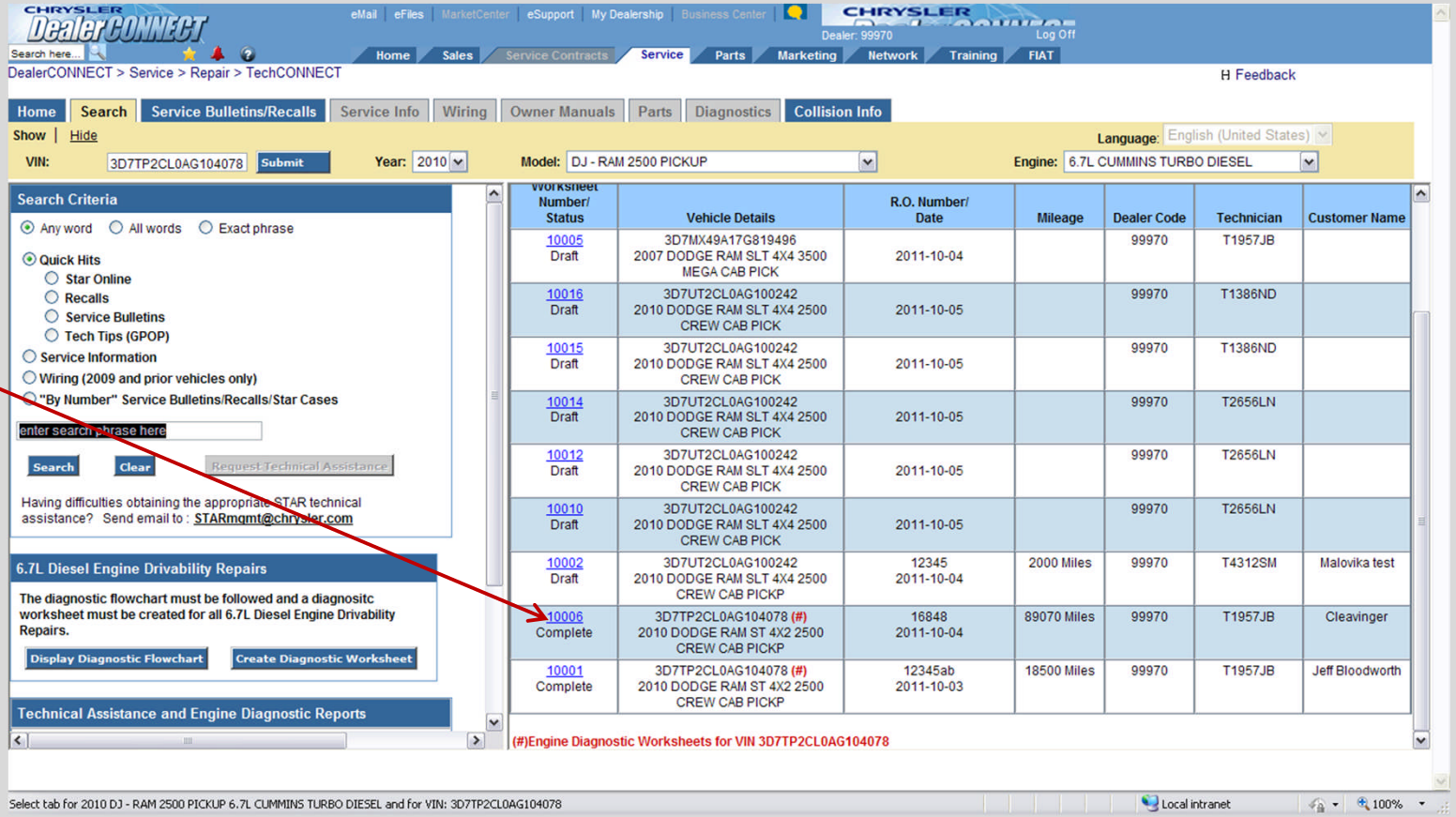

Creating Worksheets

6.7L Cummins Diesel Diagnostic Worksheets are created, stored, and located in DealerCONNECT>TechCONNECT> Search.

Process is started by inserting the VIN into the vehicle configuration box in TechCONNECT, then press submit.

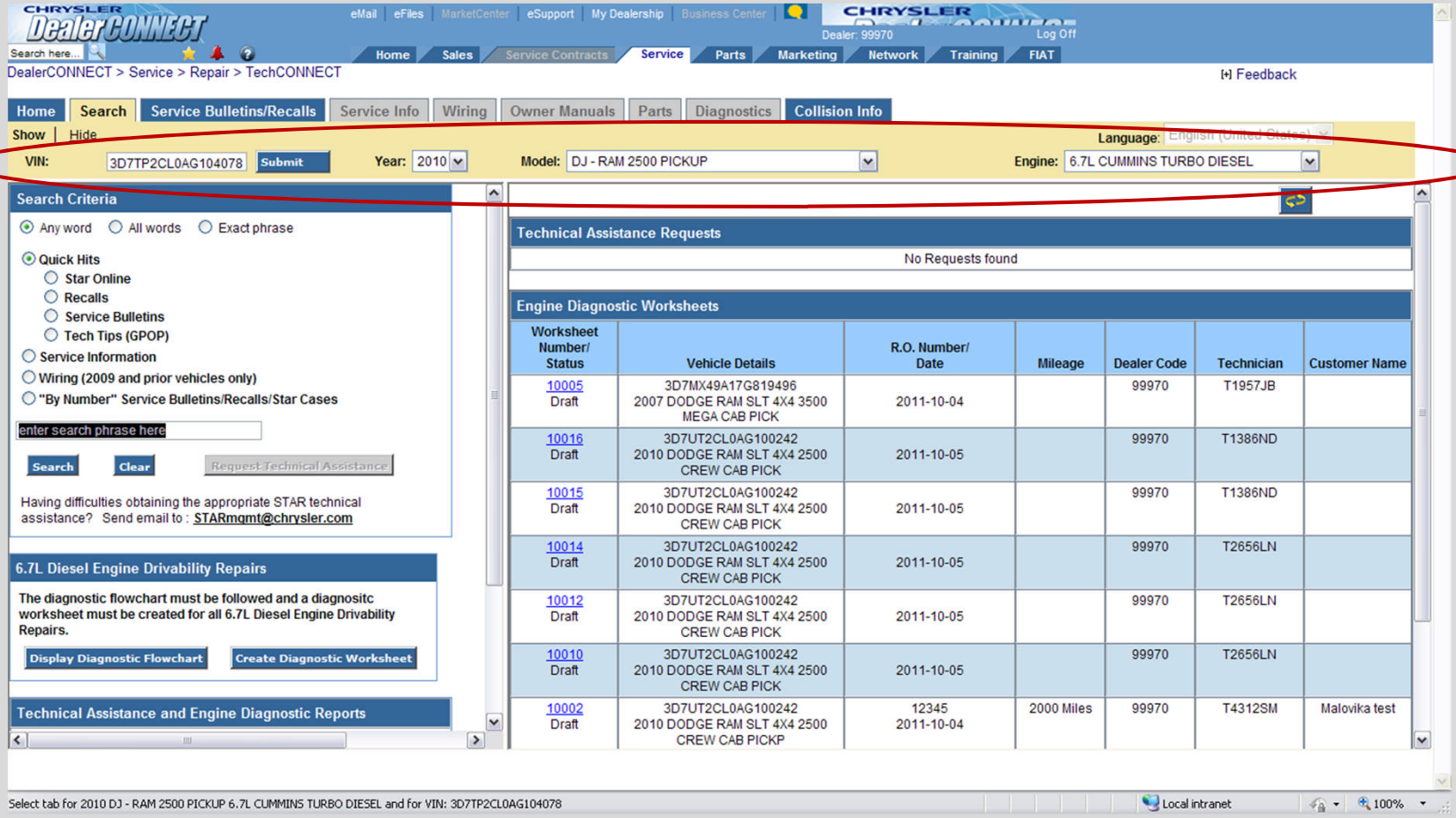

Creating Worksheets

The 6.7L Cummins Diesel Engine Drivability Repair box will appear on the left side of the window.

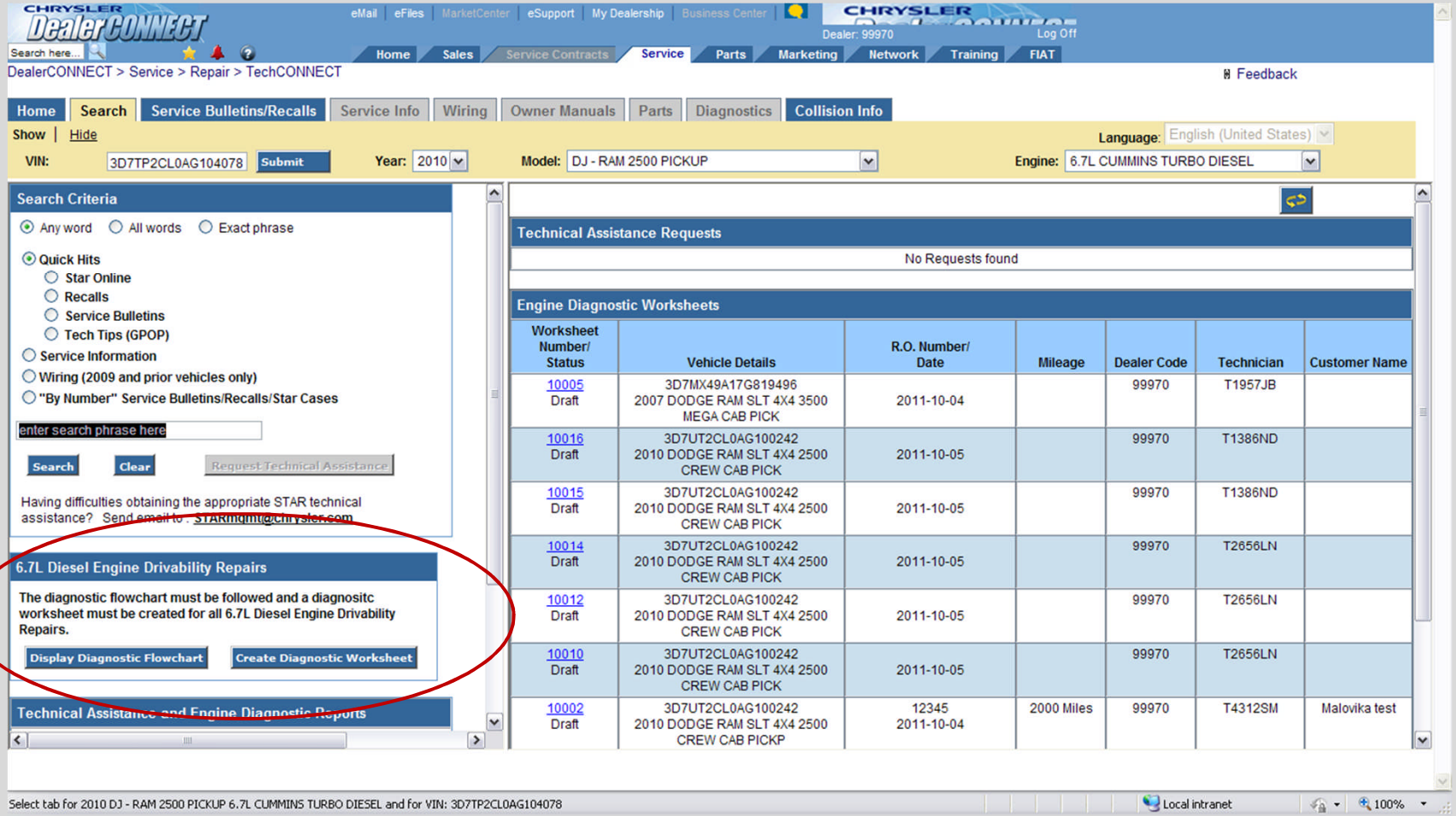

Creating Worksheets

To CREATE a new 6.7L Cummins Diesel Worksheet, click on the “CREATE DIAGNOSTIC WORKSHEET” button.

Create Diagnostic Worksheet

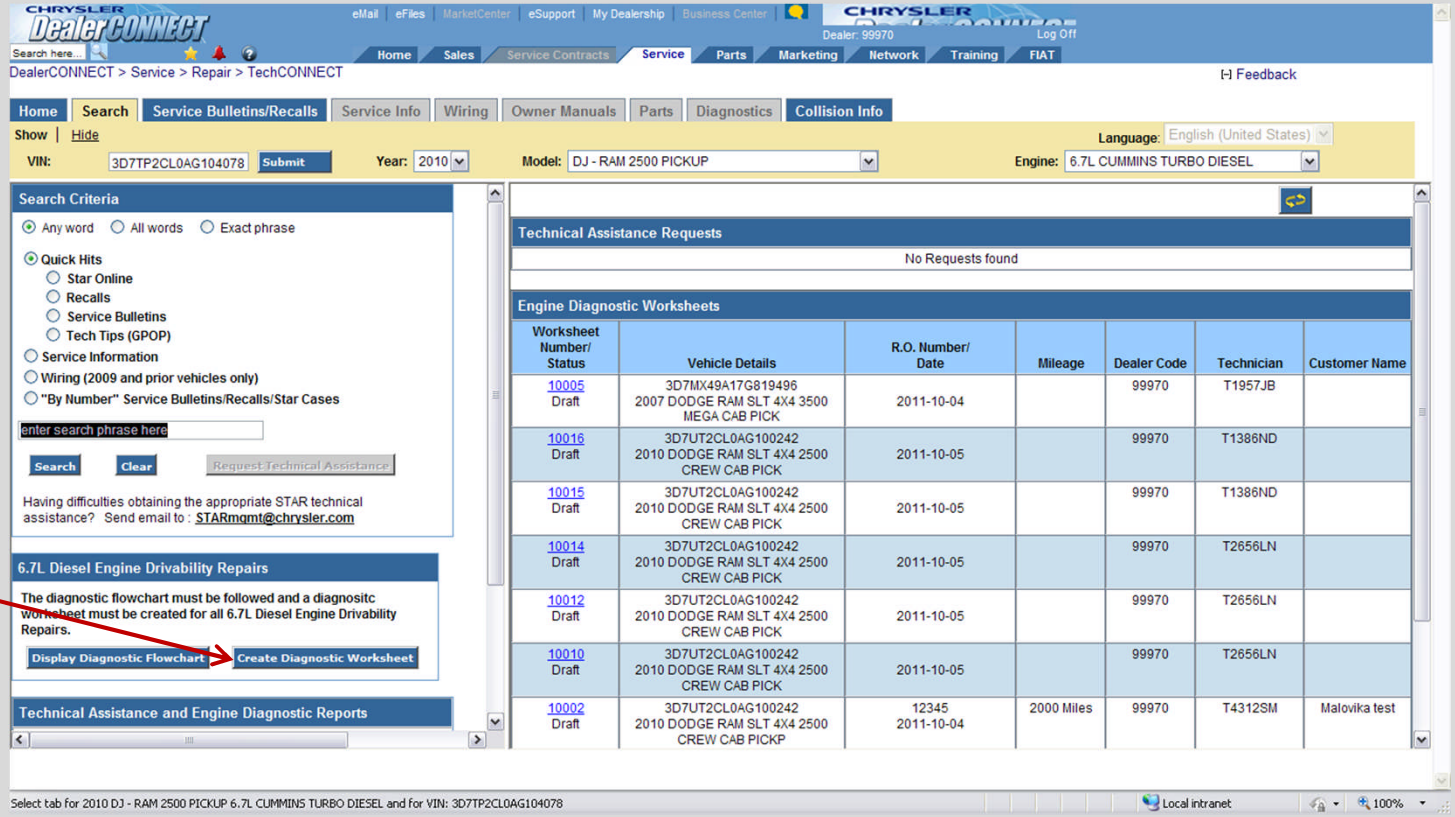

Worksheet Number/ Status	Vehicle Details	R.O. Number/ Date	Mileage	Dealer Code	Technician	Customer Name
10005 Draft	3D7MX49A17G819496 2007 DODGE RAM SLT 4X4 3500 MEGA CAB PICK	2011-10-04		99970	T1957JB	
10016 Draft	3D7UT2CL0AG100242 2010 DODGE RAM SLT 4X4 2500 CREW CAB PICK	2011-10-05		99970	T1386ND	
10015 Draft	3D7UT2CL0AG100242 2010 DODGE RAM SLT 4X4 2500 CREW CAB PICK	2011-10-05		99970	T1386ND	
10014 Draft	3D7UT2CL0AG100242 2010 DODGE RAM SLT 4X4 2500 CREW CAB PICK	2011-10-05		99970	T2656LN	
10012 Draft	3D7UT2CL0AG100242 2010 DODGE RAM SLT 4X4 2500 CREW CAB PICK	2011-10-05		99970	T2656LN	
10010 Draft	3D7UT2CL0AG100242 2010 DODGE RAM SLT 4X4 2500 CREW CAB PICK	2011-10-05		99970	T2656LN	
10002 Draft	3D7UT2CL0AG100242 2010 DODGE RAM SLT 4X4 2500 CREW CAB PICKP	12345 2011-10-04	2000 Miles	99970	T4312SM	Malovika test

Creating Worksheet – Section 1

Section 1 – Vehicle Information

- Section 1 should be completed in the service write-up area. Information collected in this section is obtained from the customer and while performing a visual inspection of the vehicle.

NOTE: ALL FIELDS IN SECTION 1 ARE REQUIRED TO BE FILLED IN PRIOR TO COMPLETION. HOWEVER, A BUTTON HAS BEEN PROVIDED IN SECTION 1 TO ALLOW THE WORKSHEET TO BE SAVED AS A DRAFT.

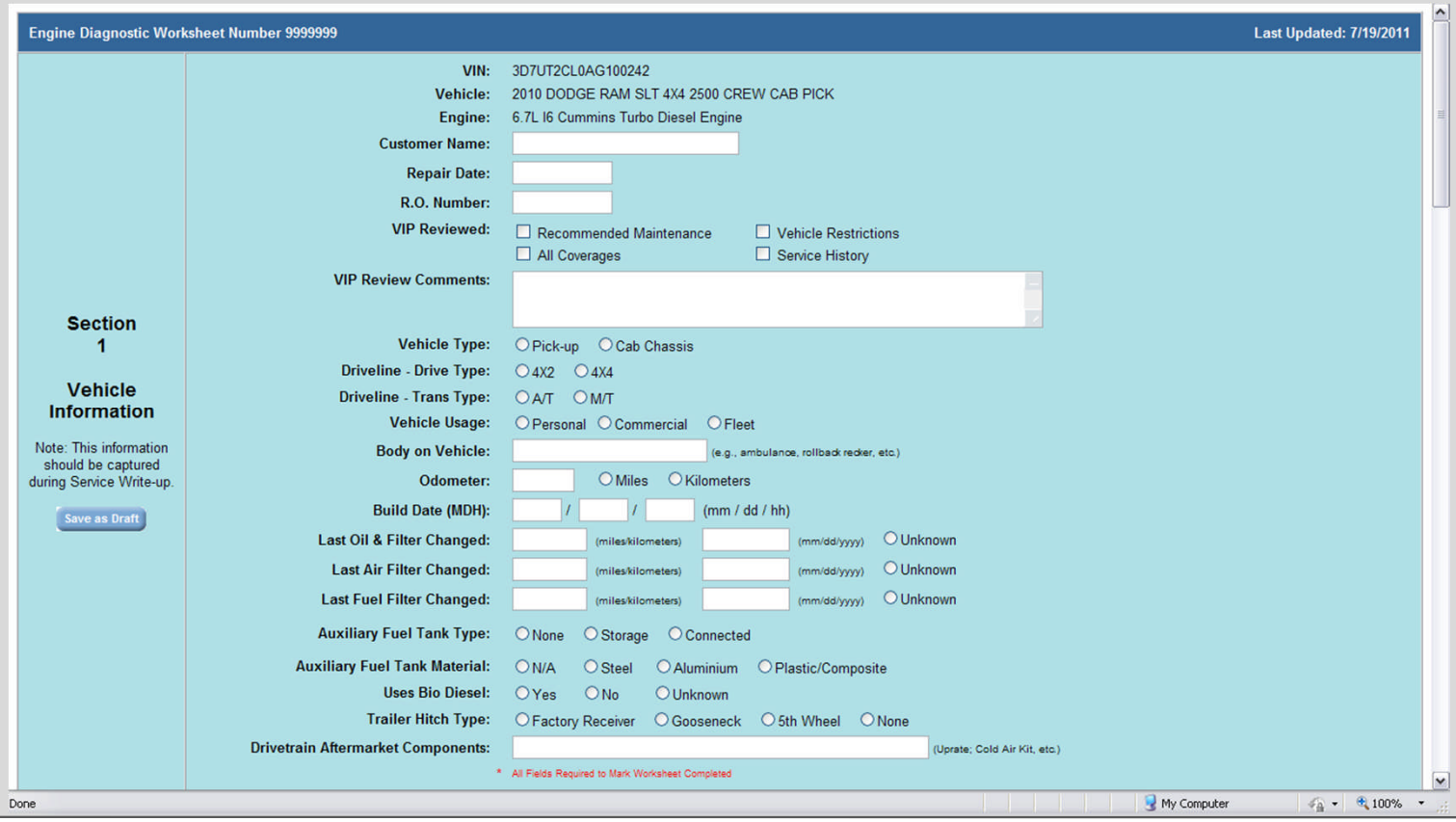

Filling Out Section 1

1. VIN, Vehicle, and Engine are automatically populated from Chrysler's data bases.
2. Record the Customer Name
3. Record the Repair Date
4. Record the Repair Order Number
5. Record your Dealer Code
6. Perform a VIP search on the vehicle. Print a copy of the VIP Summary Report and attach to the repair order. Take note of the following and place a check in the box beside each category once reviewed:
    - Vehicle Restriction Warnings
    - All Coverage's
    - Vehicle Service History
    - Recommended Maintenance

NOTE **Record any pertinent information in Section 4B of the worksheet such as Warranty Restrictions, outstanding Recalls/Rapid Response Transmittals, recent repair history, and any recommended maintenance information in "Additional Details" and/or "Recommended Repair Actions".**

7. Vehicle Type – Select PICK UP or CAB CHASSIS – Ram 2500/3500 PICKUP emission systems are different than Ram 3500/4500/5500 CAB CHASSIS vehicles.
8. Driveline Type – Drive Type - Select 4X2 or 4X4
9. Driveline Type - Trans Type – Select Automatic (A/T) or Manual (M/T)
10. Vehicle Usage – Select, PERSONAL, COMMERCIAL, or FLEET
11. Body on Vehicle – Insert the type of body that is on the chassis E.G. Flatbed, Ambulance, Rollback Wrecker, etc.
12. Record the Vehicle Mileage
13. Record the vehicle's build Month-Date-Hour (MDH)

Filling Out Section 1

14. Record the mileage and date of the last known oil and oil filter change. Ask the customer (or look at their maintenance records) for the last known Oil and Filter change.
15. Record the mileage and date of the last known air filter change. Ask the customer (or look at their maintenance records) for the last known Air Filter change
16. Record the mileage and date of the last known fuel filter change. Ask the customer (or look at their maintenance records) for the last known Fuel Filter change.
17. Record whether or not the vehicle is equipped with an Auxiliary Fuel Tank (Figure 1) and if it is, whether it is CONNECTED to the truck's fuel system or used as a STORAGE tank to fill the truck from. In either case, the auxiliary fuel tank may be a source of fuel contamination and could be the root cause of the customer's concern. **Select NONE if there is no Auxiliary Fuel Tank.**

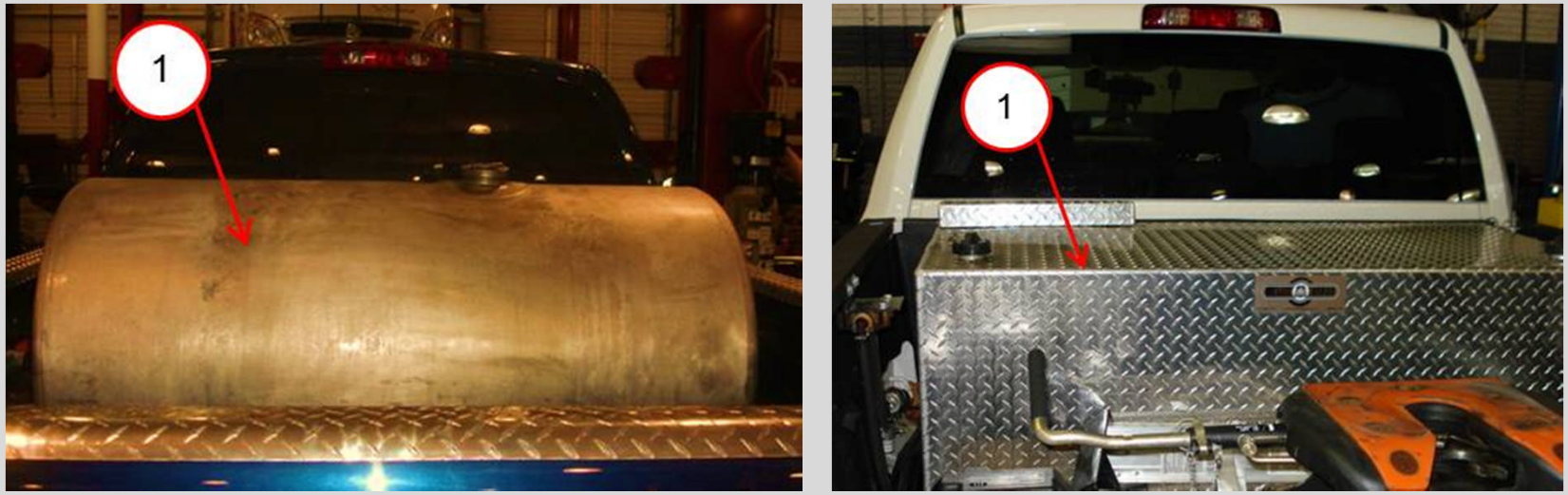

Figure 1 – Auxiliary Fuel Tanks

1 – Auxiliary Fuel Tank

Filling Out Section 1

18. If there is an Auxiliary Fuel Tank, what material is the Auxiliary Fuel Tank manufactured from - STEEL, ALUMINUM, or PLASTIC/COMPOSITE. **Select N/A if there is no Auxiliary Fuel Tank.**
19. Ask the customer if he/she is using bio diesel and if they know what percentage of bio diesel is being used. Chrysler does not recommend any higher than 5% bio diesel in most Cummins 6.7L Turbo Diesel engines with the exception of fleet customers that have purchased the Bio Diesel package, Sales Code XXJ. These vehicles can run up to 20% bio diesel as long as it meets the minimum fuel requirements as stated in the Owner's Manual. These packages have a reduced oil change interval due to oil dilution when using bio diesel fuels.
20. Record the type of trailer tow hitch is on the vehicle - FACTORY RECEIVER, GOOSENECK, FIFTH WHEEL, or NONE.
21. If the vehicle has any Drivetrain Aftermarket Components on it, record these in the space provided.
22. Any additional information that may aid in diagnosis of the drivability concern can be recorded on Section 4B in the section identified as “Additional Pertinent Details”. Things to consider could be:
    - If equipped with an auxiliary fuel tank, perform a quick visual inspection of the quality of fuel in the tank and verify that the tank has its own filtration system (Refer to Service Bulletin 14-007-06)
    - “Hotrod” or aftermarket parts decals. The customer concern that is being addressed may be due to a performance software enhancement that may be difficult to identify.

Filling Out Section 1

- Fuel stains on outside and inside of truck box/bed. This may be in indication that the driver is fueling the vehicle from an auxiliary source. The customer concern that is being addressed may be due to fuel contamination (Figure 2).

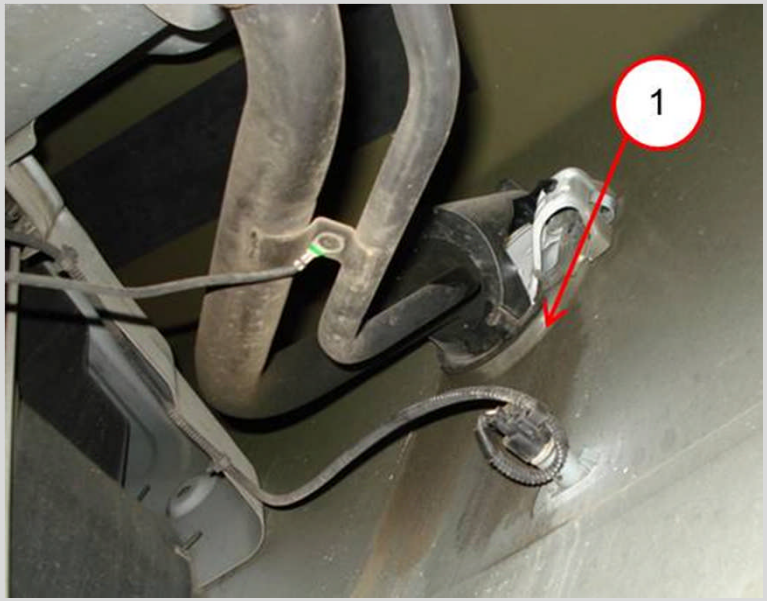

Figure 2 – Inner Fender Panel

1 – Stains on the inside of the fender liner

- Based on the truck's overall condition of the equipment on the vehicle, try to determine how the truck is used.
- Look in the bed of the truck. Empty bottles of injector cleaner or fuel additives could indicate that the owner has had drivability issues for a while and has tried to address fuel contamination on their own.
- Inspect for unused holes in the truck's bed. Unused holes may mean at some point in time, the vehicle may have been equipped with an auxiliary fuel tank. Further inspection of the fuel lines and fuel tank venting system should be made to verify whether or not an auxiliary fuel tank was connected to the vehicles fuel system.

Filling Out Section 1

- Inspect the top of the vehicle's fuel tank for excessive oily dirt stains. Sometimes, gravity feed auxiliary fuel tank installers may feed the vehicle's fuel tank from the auxiliary tank through the fuel tank vent valves (Figure 3).

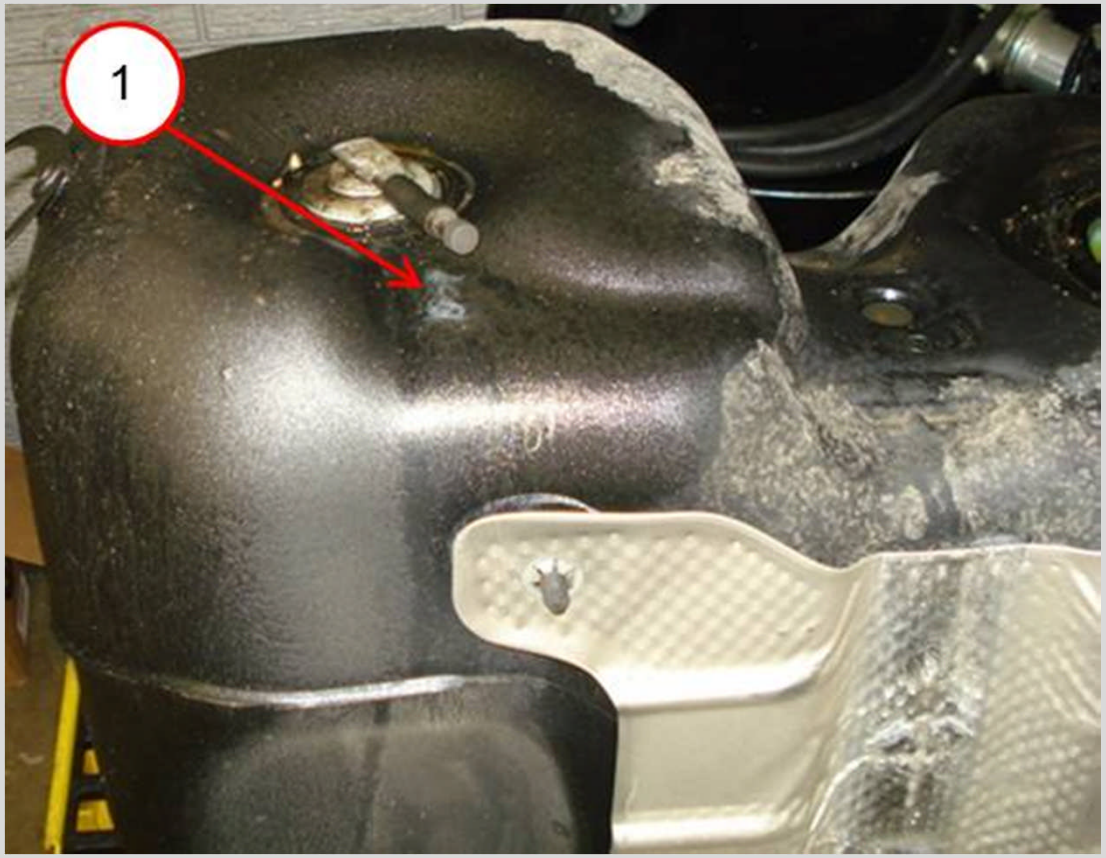

Figure 3 – Fuel Tank

1 – Fuel stains on top of the fuel tank

Filling Out Section 1

- Also, inspect the fuel tank vent valves for dirt or moisture contamination (Figure 4).



Figure 4 – Fuel Tank Vents

1 – Plugged Fuel Tank Vent Valve

- If the truck is equipped with an utility bed, look at the routing or location of the filler tube and the cavity/location where the filler cap and filler tube is housed in. If not protected, road splash may be able to work its way in through the filler cap and tube

Filling Out Section 1

- Inspect the fuel filler cap, filler tube, and fuel filler cavity for signs of dirt and possible overfilling. Most auxiliary fuel tanks do not contain automatic shut off filler valves which may lead to over filling of the fuel tank. The customer concern that is being addressed may be due to fuel contamination from an outside source such as an auxiliary fuel tank (Figure 5).

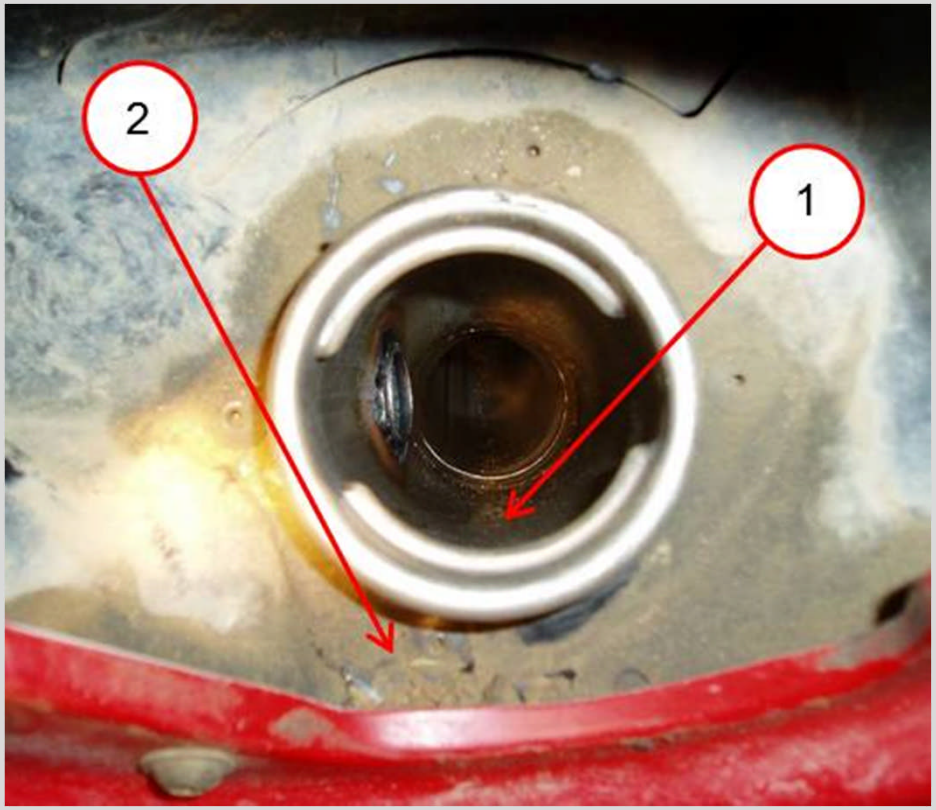

Figure 5 – Fuel Filler

1 – Fuel stains in fuel filler neck

Creating Worksheet – Section 2

Section 2 – Vehicle Maintenance Information

- Section 2 can be completed by the technician. Information collected in this section is obtained by performing visual inspections of different vehicle systems.

NOTE: ALL FIELDS IN SECTION 2 MUST BE FILLED IN PRIOR TO COMPLETION FOR MOST MODEL YEAR VEHICLES. FIELDS THAT ARE LIMITED BY SPECIFIC MODEL YEARS ARE IDENTIFIED IN THESE WORK INSTUCTIONS. A BUTTON HAS BEEN PROVIDED IN SECTION 2 TO ALLOW THE USER TO SAVE THE WORKSHEET AS A DRAFT.

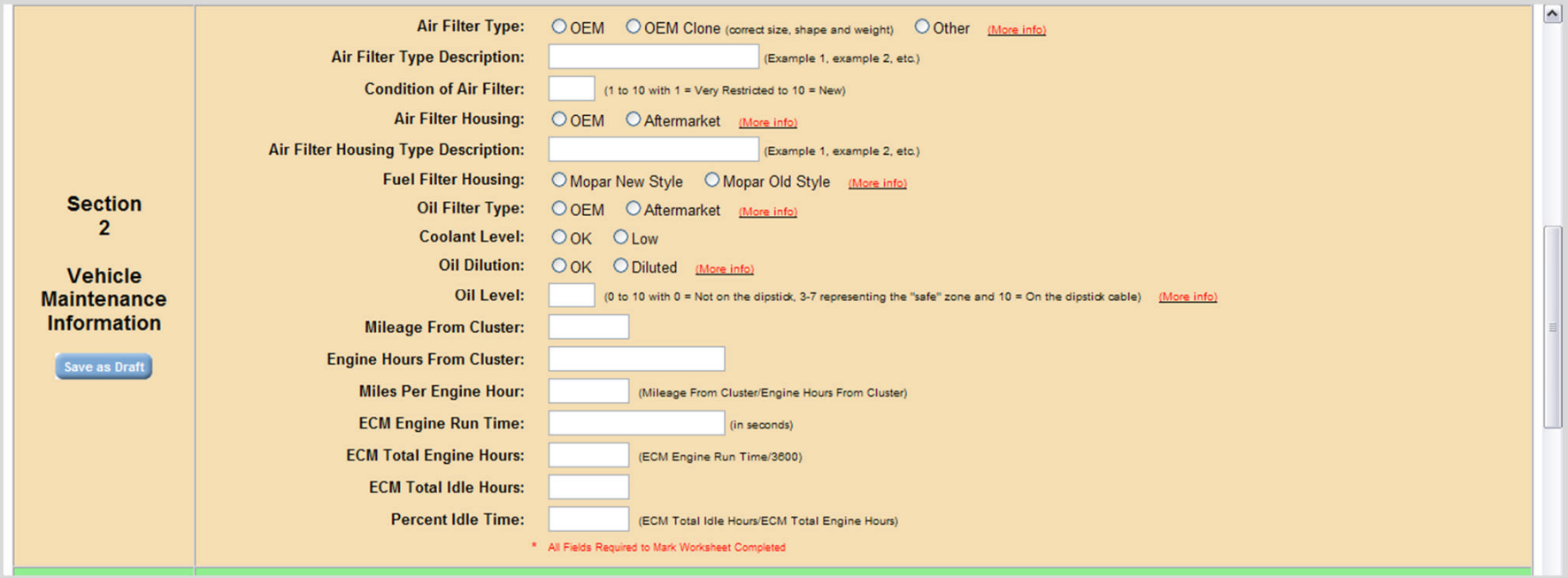

Filling Out Section 2

1. Connect the Diagnostic Scan Tool to the Diagnostic Data link Connector. Allow tool to boot up while gathering the following information.
2. Inspect the Air Filter
   - Identify whether the air filter is a MOPAR (OEM), OEM CLONE (exact same size and shape as a MOPAR air filter), or OTHER.
   - Identify the condition of the air filter (1=air flow restricted – 10=new)
   - Identify whether the air filter housing is Original Equipment (OEM) or Aftermarket
   - Describe the type of air filter housing used (if OEM – type OEM)
   - Check for dirt on the clean side of the air filter housing

NOTE: Make sure that the air cleaner clip is properly installed upon reassembly. If the clip is missing, replace it with a new clip (p/n 5277576).

3. Inspect the Fuel Filter Housing
   - 2007 – January 2009, the Cummins Diesel Engine used a 7 micron fuel filter. In January 2009, the Cummins Diesel Engine used a dual stage 10/5 micron filter. This newer filter's housing changed and can be easily identified (Figure 6). Mopar discontinued offering the 7 micron fuel filter for 6.7L engines in 2009. If a 2007 – 2009 vehicle is using the old style fuel filter, it may be possible that the fuel filter is not being serviced at its proper maintenance interval. 2010 and newer pickup trucks and 2011 and newer cab chassis vehicles all use a top load dual stage fuel filter. If working on a 2010 and newer vehicle, this section does not need to be completed.



Figure 6 – Fuel Filter Housings

1	New Style 10/5 Micron Fuel Filter
2	2007 – January 2009 7 Micron Fuel Filter

Filling Out Section 2

4. Oil Filter
   - Identify whether the oil filter is a Mopar or an Aftermarket type oil filter.
5. Coolant
   - Identify whether the coolant level is normal (OK) or LOW. Low coolant may indicate a coolant leak. Further inspection of the cooling system should be performed.
6. Oil
   - Check the level and dilution of the engine crankcase oil.

NOTE: In order to obtain an accurate oil level reading on the 6.7L Cummins Turbocharged Diesel engine, the engine must be allowed to set for thirty (30) minutes after the ignition key has been turned off before reading the dip stick.

Normal oil level is in the SAFE section on the dipstick (Figure 7). 0 = Below the dipstick, 2-5 = SAFE, 6-10 = High Oil Level. Low oil may indicate a leak. High oil may indicate oil dilution.

Engine oil will become diluted as the engine is running. It is imperative that the oil be changed at proper intervals. Excessive idling may cause premature oil dilution and on Pick-up Models, the “Oil Change Required” message to come on in less than the normal 7500 mile oil change interval.

An oil dilution test can be performed by allowing a drop of oil from the dipstick land on a piece of corrugated card board. If the oil level is too high and the oil dissipates quickly (within 5 – 7 minutes, oil dilution is probable.

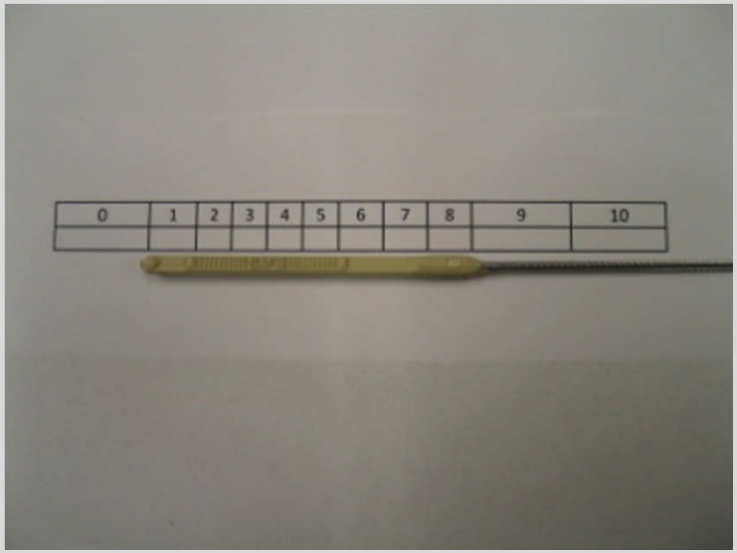

Figure 7 – Engine Oil Dip Stick

Filling Out Section 2

7. Turn the ignition key on and record the mileage from the cluster.
8. On 2007 – 2009 Ram 2500/3500 Pickup trucks and 2007 – 2010 Ram 3500/4500/5500 Cab Chassis trucks, press and hold the Trip Odometer reset button for approximately 6 - 8 seconds. Record the Engine Hours identified in the cluster odometer. For 2010 and later Ram 2500/3500 Pickup trucks and 2011 and later 3500/4500/5500 Cab Chassis trucks, the Engine Hour information is available in the EVIC.
9. The next field will automatically populate the average miles per hour.
10. With the Diagnostic Scan Tool, go to the Trip Information Accumulators (Figure 8) and record the ECM Run Time. This function is not available on 2010 – 2012 model year vehicles.
11. The next field will automatically populate the ECM Total Engine Hours.
12. With the Diagnostic Scan Tool, record the ECM Total Idle Hours. This function is not available on 2010 – 2012 model year vehicles.
13. The next field will automatically populate the Percent of Idle Time. A customer that spends a lot time at idle may not have provided the operating parameters for the ECM to perform a passive regeneration.

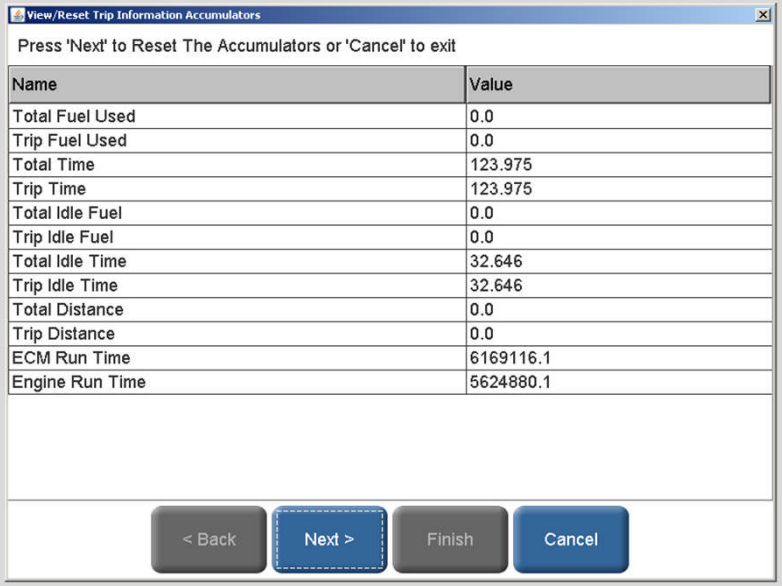

Creating Worksheet – Section 3

Section 3 – EVIC Message

- Section 3 should be completed by the technician. Information collected in this section is obtained by starting the engine (if possible) and performing a visual inspection of the messages displayed by the EVIC.

NOTE: ALL FIELDS IN SECTION 3 MUST BE FILLED IN PRIOR TO COMPLETION.

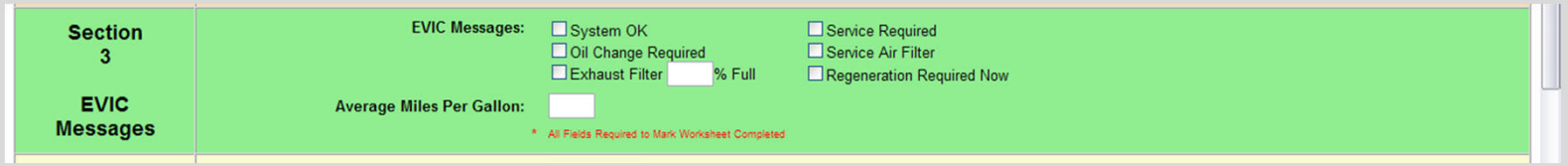

Filling Out Section 3

1. Monitor the Electronic Vehicle Information Center (EVIC) for the following messages. It may be necessary to cycle through the monitor to locate the correct information.
2. Record the Average Miles Per Gallon. Fuel economy that is too good to be true may be an indication of performance enhancing ECM software.

Creating Worksheet – Section 4A

Section 4A – Control Module Information

- Section 4A can be completed by the technician. Information collected in this section is obtained from the Diagnostic Scan Tool and visual inspections.

NOTE: ALL FIELDS IN SECTION 4 MUST BE FILLED IN PRIOR TO COMPLETION. A BUTTON HAS BEEN PROVIDED IN SECTION 4 TO ALLOW THE USER TO SAVE THE WORKSHEET AS A DRAFT.

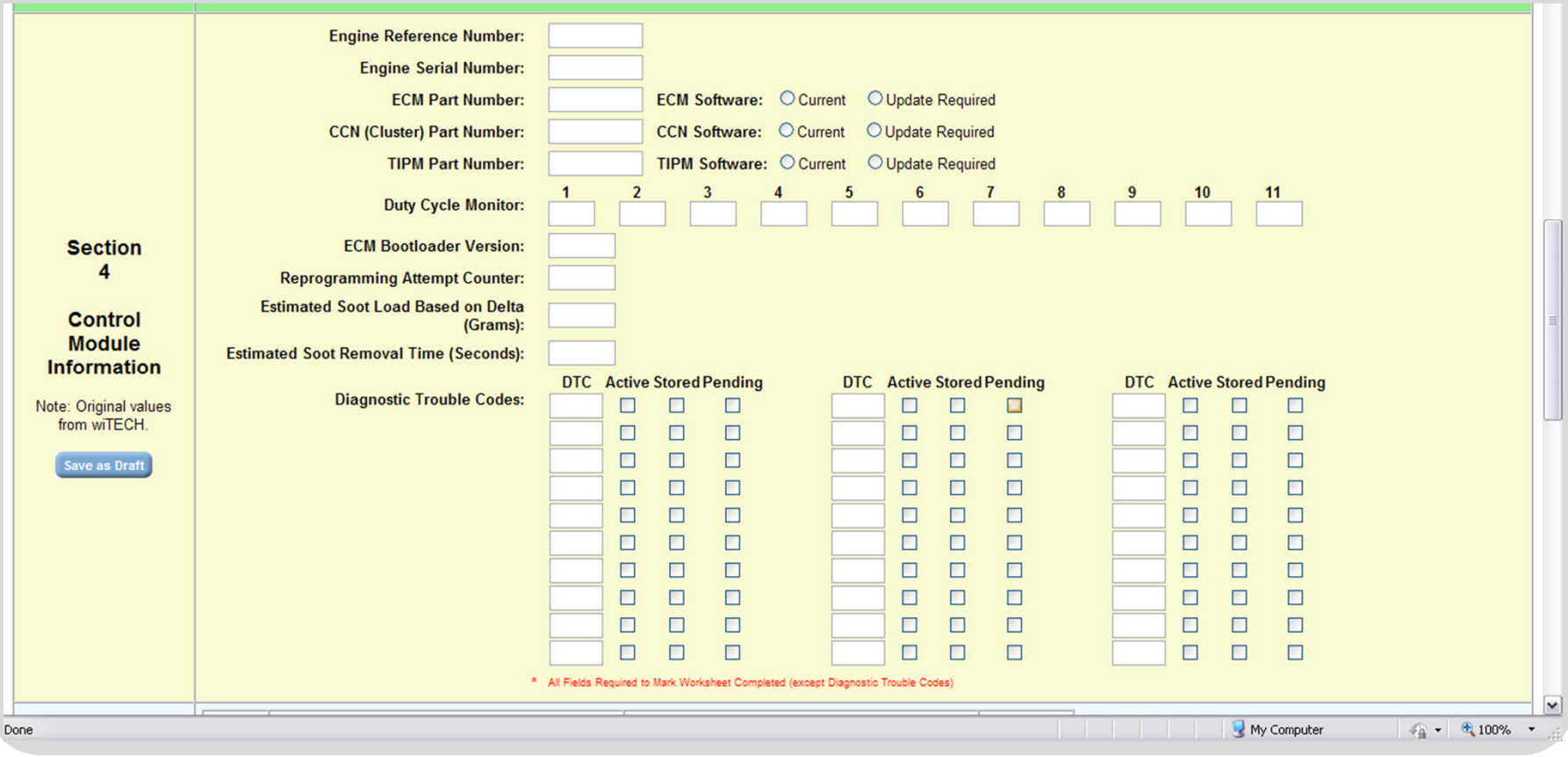

Filling Out Section 4A

1. Locate the Engine Data Plate which is located on the side of the engine cover (also known as “Bat Wing”)(Figure 9).
2. Record the Engine Reference number.
3. Record the Engine Serial Number.

NOTE: THE ENGINE SERIAL NUMBER CAN ALSO BE LOCATED ON THE BACK OF THE ENGINE VALVE COVER (FIGURE 11).

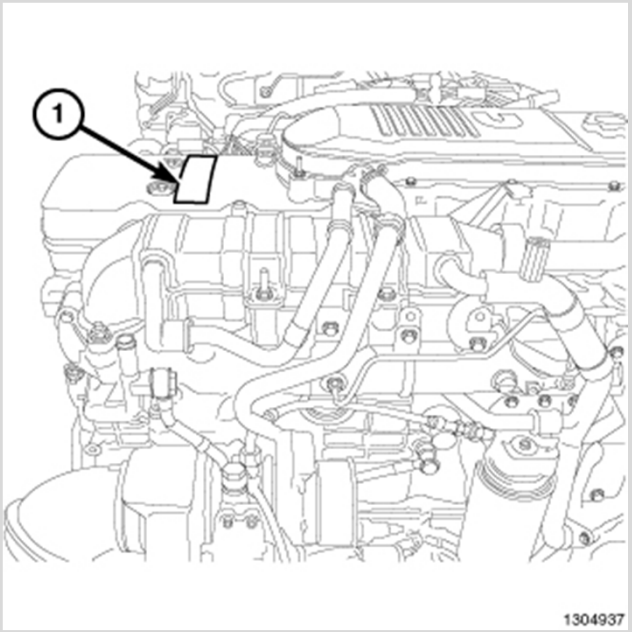

Figure 11 – Valve Cover Engine Data Plate



Figure 9 – Engine Data Plate



Figure 10 – Engine Data Plate

NOTE: IF THE ENGINE DATA PLATE IS MISSING, THE ENGINE SERIAL NUMBER IS STAMPED ON THE SIDE OF THE BLOCK, ON TOP OF THE OIL COOLER CAVITY.

Filling Out Section 4A

4. Using the Diagnostic Scan Tool, locate and record the ECM part number/software number.
   - Is the ECM software up to date? Record the value by marking the appropriate button.
   - Also, verify whether or not the VIN in the ECM matches the vehicle VIN? If not, record this information in Section 4B.
5. If the vehicle is a 2007 model year vehicle, locate the ECM Bootloader Version (Software (Boot) Part Number) and record the value in the space provided.
6. Locate the Reprogramming Attempt Counter and record the value in the space provided.
7. Using the Diagnostic Scan Tool, locate and record the CCN (Cluster Control Node) part number/software number.
   - Is the CCN software up to date? Record the value by marking the appropriate button.
   - Also, verify whether or not the VIN in the CCN matches the vehicle VIN? If not, record this information in Section 4B.
8. Using the Diagnostic Scan Tool, locate and record the TIPM (Totally Integrated Power Module) part number/software number.
   - Is the TIPM software up to date? Record the value by marking the appropriate button.
   - Also, verify whether or not the VIN in the TIPM matches the vehicle VIN? If not, record this information in Section 4B.
9. If the vehicle is a 2007 – 2009 Ram Pickup or a 2007 – 2010 Ram Cab Chassis, locate the ECM Duty Cycle Monitor (located in Misc Functions) and record the percent of time operating at each throttle/load position.
10. Locate Estimated Soot Load Based on Delta (Grams) and record the value in the space provided.
11. Locate Estimated Soot Removal Time (Seconds) and record the value in the space provided.
12. Record all ECM/PCM Diagnostic Trouble Codes and identify whether the DTC is Active or Stored.

Creating 6.7L Cummins Diesel Diagnostic Worksheets

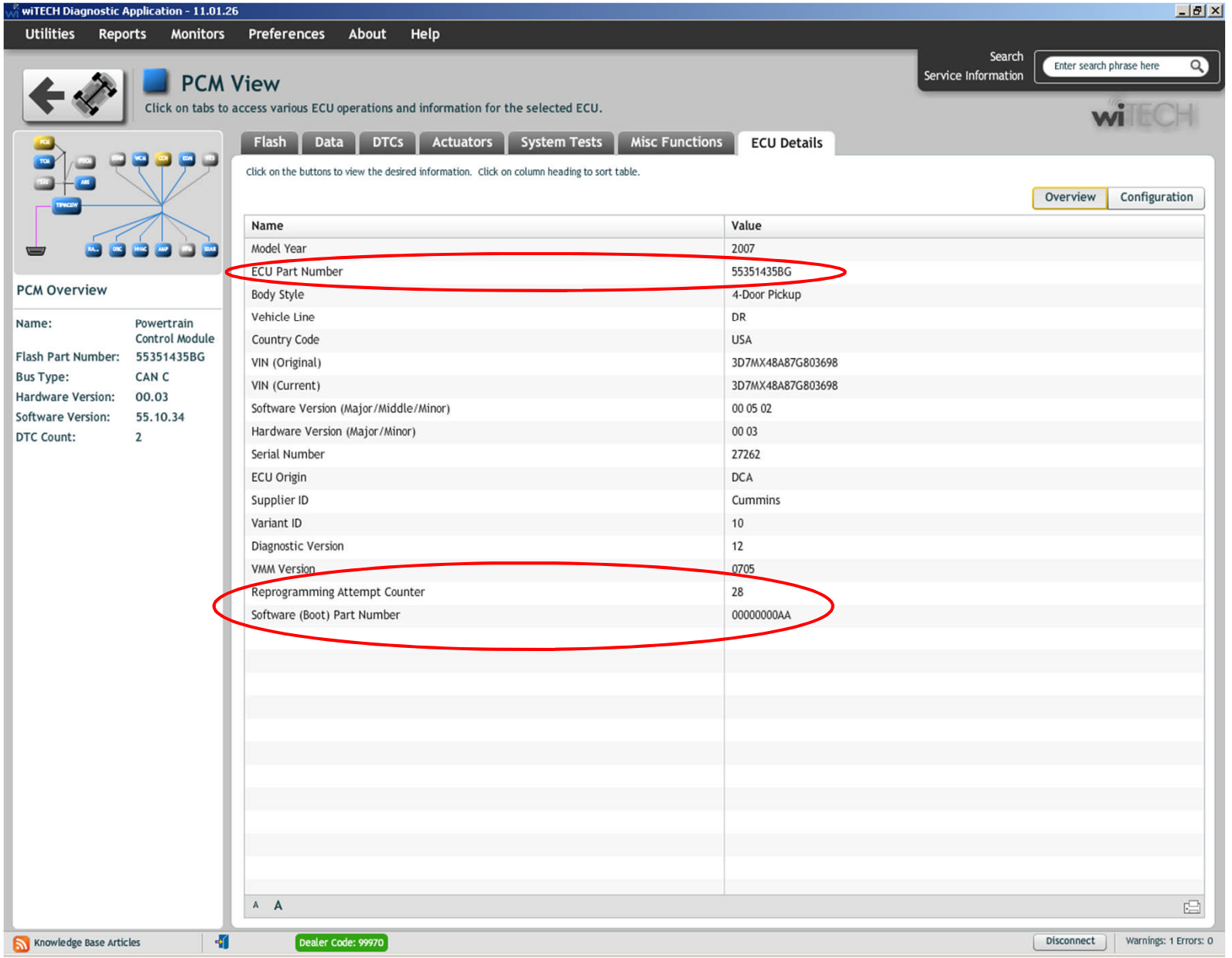

Creating Worksheet – Section 4B

Section 4B – Other Pertinent Details

- Section 4B can be completed by the Technician and/or the Service Advisor. This section provides an area for dealership personnel to document any additional information they think may be pertinent for the proper repair of the vehicle. Seven boxes have been provided to allow the user to document Additional Details and seven boxes have been provided to allow the user to document the Recommended Repair Actions. The Recommended Repair Actions boxes also have buttons to indicate whether or not the repair action is warrantable or customer pay. Each box can be filled with free form text and can accommodate one or multiple topics.

Section 4B

Other Pertinent Details

Item Number	Additional Details	Recommended Repair Actions	Repair Paid By
1			○ Warranty ○ Customer
2			○ Warranty ○ Customer
3			○ Warranty ○ Customer
4			○ Warranty ○ Customer
5			○ Warranty ○ Customer
6			○ Warranty ○ Customer
7			○ Warranty ○ Customer

Creating Worksheet – Section 4C

Section 4C – Technician Contact Information

- Section 4C will automatically default to the individual that logs into DealerCONNECT as long as that individual is a registered technician and has a valid SID. If the information displayed is not the technician performing the repairs, the contact information can be updated.

NOTE: WHEN UPDATING THE CONTACT INFORMATION, INSERT YOUR TECHNICIAN SID AND THE FORM WILL PULL UP THE SID CONTACT INFORMATION THAT CHRYSLER HAS ON FILE FOR THAT SID. EDITING THE SID CONTACT INFORMATION IN THIS FORM AND SAVING THE FORM WILL AUTOMATICALLY UPDATE THE CHRYSLER CONTACT INFORMATION DATABASE.

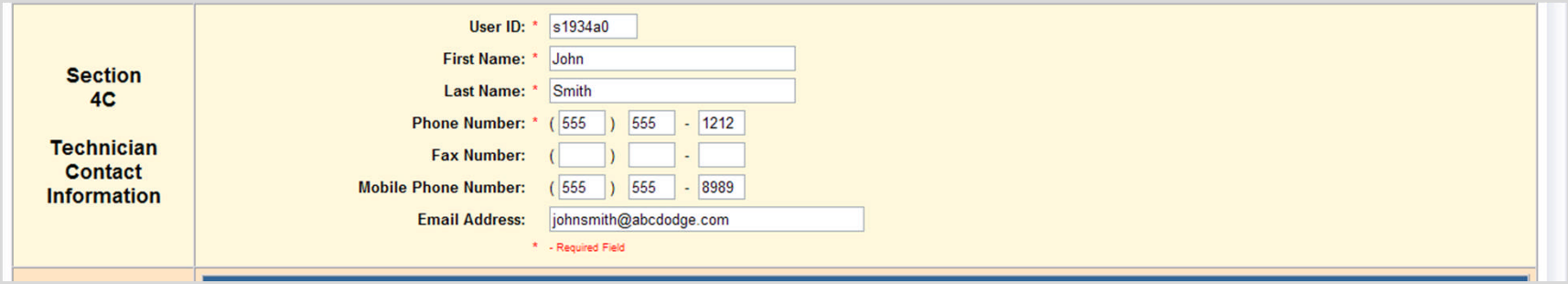

Creating Worksheet – Section 4D

Section 4D – Aftertreatment Vehicle Validation

- Section 4D is to be completed by the dealership Porter (individual driving the vehicle during the road test) and the Technician. This Aftertreatment Validation is to be performed **ONLY** if a repair has been made that has an effect on the creation of soot in the Aftertreatment System and only after the "Powertrain Verification Test" in the Service Information Section of TechCONNECT has been completed first.

NOTE: THIS AFTERTREATMENT VEHICLE VALIDATION REQUIRES THE VEHICLE TO BE DRIVEN APPROXIAMTLEY 50 MINUTES. DURING THIS 50 MINUTE DRIVE CYCLE, THE TECHNICIAN IS NOT REQUIRED TO MONITOR ANY INFORAMTION ON THE WITECH. IF THE VEHICLE'S DRIVABILITY ISSUE RETURNS, THE MIL ILLUMINATES, OR ANY OTHER CONCERN IS IDENTIFIED, THE DRIVER OF THE VEHICLE SHOULD RETURN TO THE DEALERSHIP IMMEDIATELY AND PROPERLY REPAIR THE VEHICLE.

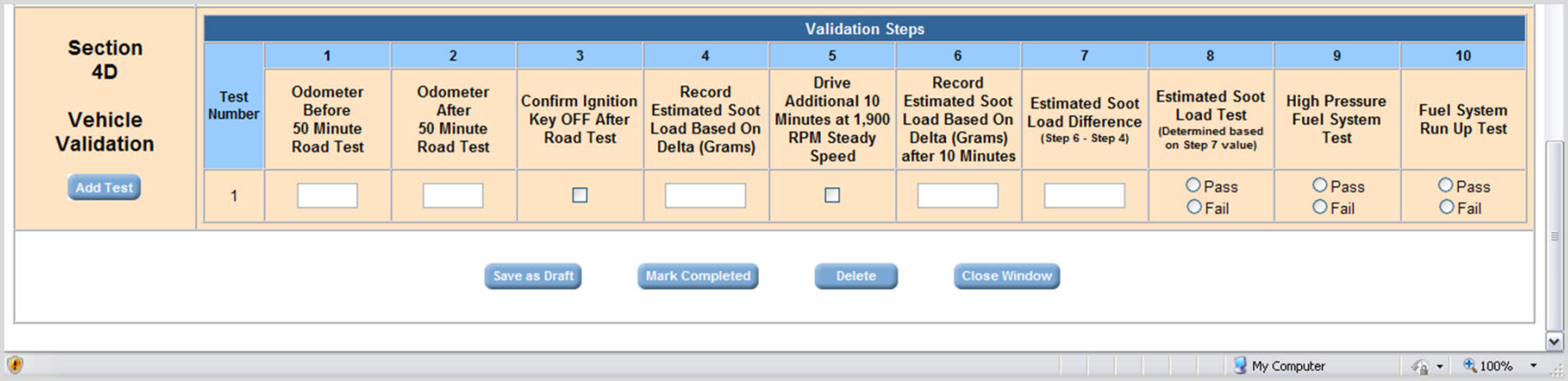

Filling Out Section 4D

1. Is the vehicle is a 2007 – 2009 Ram 2500/3500 Pickup or a 2007 – 2010 Ram 3500/4500/5500 Cab Chassis?
   YES - Proceed to the next step.
   NO - Proceed to Step XX
2. Before starting the validation, confirm on the scan tool that the engine is still at an operating temperature of 180 F (82 C).
3. Using the scan tool, navigate to System Tests and perform the High Pressure Fuel System diagnostic procedure.

NOTE: THE HIGH PRESSURE FUEL SYSTEM TEST IS A COMPREHENSIVE FUEL SYSTEM TEST THAT OPERATES THE ENGINE AND FUEL SYSTEM UNDER SEVERAL DIAGNOSTIC OPERATING CONDITIONS. WHEN THE TEST IS COMPLETE, THE ENGINE WILL STALL. IN MOST CASES, THIS TEST CAN DETERMINE IF THERE ARE ANY FUEL SYSTEM ISSUES, AND IF SO, WHETHER DIAGNOSTICS SHOULD BEGIN AT THE LOW PRESSURE SIDE OR THE HIGH PRESSURE SIDE OF THE SYSTEM. BASED ON THE RESULTS OF THE TEST ROUTINE, YOU WILL BE DIRECTED TO EITHER START TESTING AT THE LOW PRESSURE SIDE (STEP 5) OF THE SYSTEM OR GO DIRECTLY INTO THE HIGH PRESSURE SIDE OF THE SYSTEM IN ORDER TO SHORTCUT THE DIAGNOSTIC TIME. HOWEVER, IF THE TEST ROUTINE FAILS AND YOU ARE DIRECTED TO THE HIGH PRESSURE SIDE OF THE SYSTEM AND DO NOT FIND AN ISSUE AT THE COMPLETION OF THE TEST, IT IS RECOMMENDED THAT YOU GO BACK TO TEST STEP 5 AND CONTINUE WITH THE REST OF THE FUEL SYSTEM TESTING. THIS TEST ROUTINE SHOULD ALSO BE USED TO VALIDATE THAT THE SYSTEM IS OPERATING PROPERLY AFTER THE FUEL SYSTEM HAS BEEN DIAGNOSED AND REPAIRS ARE COMPLETED.

4. Did the High Pressure Fuel System PASS?
   YES - Record the results into step 9 of section 4D “After Treatment Validation Test” then, go to the next step.
   NO - Vehicle is **NOT** repaired. Perform the CHECKING THE FUEL DELIVERYSYSTEM test procedure to diagnose and repair the vehicle. (Refer to TechCONNECT>Service Info>29 - Non-DTC Diagnostics/Drivability - Diesel - Diagnosis and Testing).
5. Using the scan tool, perform the Fuel System Run Up test procedure.

NOTE: THIS TEST WILL TAKE APPROXIMATELY 270 SECONDS TO COMPLETE. THE PCM WILL CUT OUT EACH INDIVIDUAL FUEL INJECTOR THREE TIMES AND CALCULATE THE DELTA RPM CHANGE. BASED ON THE DELTA RPM CHANGE, THE TEST WILL INDICATE A BAD CYLINDER BASED ON THE LIMITS THAT HAVE BEEN SET. WHEN THE TEST IS COMPLETE, THE ENGINE WILL RETURN TO IDLE. THIS TEST ROUTINE SHOULD ALSO BE USED TO VALIDATE THAT THE SYSTEM IS OPERATING PROPERLY AFTER THE REPAIRS ARE COMPLETED.

Filling Out Section 4D

6. Do the results indicate that a cylinder is out of spec?
   YES - Vehicle is NOT repaired. Perform the CHECKING ENGINE MISFIRE / RUNS ROUGH / PERFORMANCE TEST procedure and continue troubleshooting the faulty cylinder condition starting at test step 9. (Refer to TechCONNECT>Service Info>29 - Non-DTC Diagnostics/Drivability - Diesel - Diagnosis and Testing) .
   NO - Record the results into step 10 of section 4D “After Treatment Validation Test” then, go to the next step.

NOTE: THE FOLLOWING PROCEDURE WILL PROVIDE THE NECESSARY DRIVE CYCLE TO ALLOW THE ECM TO LEARN NORMAL SYSTEM OPERATION AND THE ABILITY TO DETECT MOST AFTERTREATMENT SOOTING ISSUES. IT IS NOT NECESSARY TO HAVE A TECHNICIAN PERFORM THE 50 MINUTE DRIVE CYCLE. HOWEVER, THE TECHNICIAN MUST VERIFY ESTIMATED SOOT LOAD BASED ON DELTA" (ESL/D), MEASURED IN GRAMS ONLY AFTER THE 50 MINUTE DRIVE CYCLE HAS BEEN COMPLETED AND WHILE THE VEHICLE IS DRIVEN AT A STEADY STATE SPEED. AT ANYTIME DURING THIS VALIDATION TEST THE MIL ILLUMINATES, THE VEHICLE’S PERFORMANCE DETERIORATES OR THE VEHICLE SHOULD BE RETRUNED TO THE DEALERSHIP TO BE PROPERLY REAPIRED.

7. The technician must perform a short light load steady state drive cycle to ensure the vehicle will operate normally and allow a passive regeneration if necessary during the next step. During the drive cycle monitor Estimated Soot Load Based on Delta" (ESL/D), measured in Grams for a short period to ensure that the Diesel Particulate Filter (DPF) will not plug during the next steps. In addition, illumination of the MIL during the drive cycle indicates that further diagnosis may be required before proceeding.

NOTE: IF THE SOOT LOAD THRESHOLD FOR A P242F DTC IS REACHED DURING THIS SHORT DRIVE CYCLE, THE MIL WILL ILLUMINATE AND PASSIVE REGENERATION WILL NOT OCCUR. PERFORM THE CHECKING ENGINE MISFIRE / RUNS ROUGH / PERFORMANCE TEST PROCEDURE AND CONTINUE TROUBLESHOOTING THE FAULTY CYLINDER CONDITION STARTING AT TEST STEP 9. (REFER TO TECHCONNECT>SERVICE INFO>29 - NON-DTC DIAGNOSTICS/DRIVABILITY - DIESEL - DIAGNOSIS AND TESTING).

8. Record the mileage from the vehicle odometer into section 4D “After Treatment Validation Test”.
9. Have an associate (porter) drive at the vehicle least 50 minutes at a steady state speed so the RPM is maintained at about 1900. If highway access is not available, use a lower gear on surface streets. A steady throttle is important. Use cruise control if possible.

Filling Out Section 4D

10. Once the initial 50 minute drive cycle is complete, return to the repair shop and record the mileage from the vehicle odometer into section 4D “After Treatment Validation Test” step 2. Turn the ignition key to **OFF**.
11. Have the associate restart the engine and record the key cycle event into step 3 of section 4D “After Treatment Validation Test”.
12. The technician will ride in the passenger seat while monitoring the scan tool. Monitor "Estimated Soot Load Based on Delta" (ESL/D), measured in Grams.
13. Drive the vehicle and maintain steady engine speed of 1800 - 1900 RPM. Use cruise control if possible, (steady throttle pressure).
14. ESL/D should maintain steady or even start to decrease slowly even though truck is NOT in deSoot mode. This is because the latest software may actually “scrub” soot when driving at higher speeds.
15. Ensure vehicle is operating in “Normal” mode. (Not in desoot, desox or denox mode).
16. Take a reading of the ESL/D. Record the ESLD into step 4 of section 4D “After Treatment Validation Test” and continue to drive for 10 minutes.
17. Record that the 10 minute drive cycle has been completed in step 5 of section 4D “After Treatment Validation Test”.
18. After 10 minutes, take another reading of the ESL/D and record this number step 6 of section 4D “After Treatment Validation Test”.
19. Step 7 of section 4D “After Treatment Validation Test” will automatically calculate the estimated soot load difference.
20. Step 8 of section 4D “After Treatment Validation Test” of the Diesel Diagnostic Worksheet will automatically PASS or FAIL based upon results of step 7 of section 4D “After Treatment Validation Test”.
21. If the Aftertreatment Test Fails, the vehicle is **NOT** repaired. Perform the ENGINE MISFIRE/RUNS ROUGH/POOR PERFORMANCE test procedure to diagnose and repair the vehicle. (Refer to TechCONNECT>Service Info>29 - Non-DTC Diagnostics/Drivability - Diesel - Diagnosis and Testing).
22. If the Aftertreatment Validation PASSES, the vehicle is properly repaired and can be returned to the customer.

SERVICE BULLETIN

NUMBER: 18-045-11

GROUP: Vehicle Performance

DATE: October 17, 2011

This bulletin is supplied as technical information only and is not an authorization for repair. No part of this publication may be reproduced, stored in a retrieval system, or transmitted, in any form or by any means, electronic, mechanical, photocopying, or otherwise, without written permission of Chrysler Group LLC.

THIS BULLETIN SUPERSEDES SERVICE BULLETINS 09-002-09 REV. A DATED JUNE 13, 2009, 09-003-09 DATED DECEMBER 2, 2009, AND 11-001-09 DATED JULY 23, 2009, WHICH SHOULD BE REMOVED FROM YOUR FILES. THIS IS A COMPLETE REVISION AND NO ASTERISKS HAVE BEEN USED TO HIGHLIGHT REVISIONS.

SUBJECT:

Cummins 6.7L Turbo Diesel Common Diagnostic Process

OVERVIEW:

New 6.7L Cummins®Turbo Diesel Common Diagnostic Process is now available as part of the standard diagnostic process located in TechCONNECT>Service Info. The special instructions from Service Bulletin 09-002-09, 09-003-09, and 11-001-09 are all now part of the common diagnostics process and these bulletins are no longer necessary.

MODELS:

2007 - 2010	DC	Ram 3500 Cab Chassis
2011 - 2012	DD	Ram 3500 Cab Chassis
2007 - 2009	DH	Ram 2500 Pickup
2010 - 2012	DJ	Ram 2500 Pickup
2011 - 2012	DP	Ram 4500/5500 Cab Chassis
2007 - 2010	DM	Ram 4500/5500 Cab Chassis
2007 - 2009	D1	Ram 3500 Pickup
2010 - 2012	D2	Ram 3500 Pickup

NOTE: This bulletin applies only to U.S. vehicles equipped with the Ultra Low Sulfur 6.7L Cummins Turbo Diesel engine (Sales Code ETJ) (will be equipped with a Diesel Particulate Filter).

DISCUSSION:
The 6.7L Cummins® Turbo Diesel Common Diagnostic Process was developed for any drivability concern on the 6.7L Cummins® Diesel Engine. Non-drivability engine issues or engine cooling system issues are not in the scope of this process.

The process begins by identifying the customer's concern and applying it to one of the following symptoms:

- MIL Illumination
- Engine Cranks But Does Not Start or Starts and Immediately Stalls
- Engine Surges, Bucks, Runs Rough - No MIL
- Engine Noise - No MIL
- Excessive Black Smoke Out Exhaust - No MIL
- Excessive White Smoke Out Exhaust - No MIL
- Excessive Blue Smoke Out Exhaust - No MIL

If the MIL is illuminated, for 2007 - 2009 DH/D1 and 2007 - 2010 DC/DM models, your process begins in TechCONNECT>Service Info>28 - DTC Based Diagnostics>MODULE, Engine Control (ECM), 6.7L>Standard Procedure>PRE-DIAGNOSTIC TROUBLESHOOTING PROCEDURE. 2010 - 2012 DJ/D2 models, your process begins in TechCONNECT>Service Info>28 - DTC Based Diagnostics>MODULE, Powertrain Control (PCM), 6.7L>Standard Procedure>PRE-DIAGNOSTIC TROUBLESHOOTING PROCEDURE. 2011 - 2012 DD/DP models, your process begins in TechCONNECT>Service Info>28 - DTC Based Diagnostics>MODULE, Powertrain Control (PCM), DD/DP - Chassis Cab>Standard Procedure>PRE-DIAGNOSTIC TROUBLESHOOTING PROCEDURE.

If the MIL is NOT illuminated, your process begins in TechCONNECT>Service Info>29 - Non-DTC Diagnostics>Drivability - Diesel, 6.7L>Diagnosis and Testing>PRE-DIAGNOSTIC TROUBLESHOOTING PROCEDURE.

In each case, the test procedure will request that a 6.7L Diesel Diagnostic Worksheet be completed before proceeding. Once the data has been collected and analyzed, then the diagnostic process can continue.

6.7L Cummins® Diesel Diagnostic Worksheets are created, stored, and located in DealerCONNECT>TechCONNECT> Search (Fig. 1). In order to create and/or view Cummins® 6.7L Diesel Diagnostic Worksheets, users must log into DealerCONNECT with a valid SID. If you have the ability to view and/or create a Ticket for Technical Assistance, than your SID is a valid SID. In addition, in order to create a Cummins 6.7L Diesel Diagnostic Worksheets, a valid Vehicle Identification Number (VIN) must be entered into the vehicle configuration box in TechCONNECT (Fig. 1), and then pressing submit. Work Instructions have been developed that discuss the new process and provides detailed instructions on how to properly complete the worksheets. These work instructions are located on the Home Page of TechCONNECT.

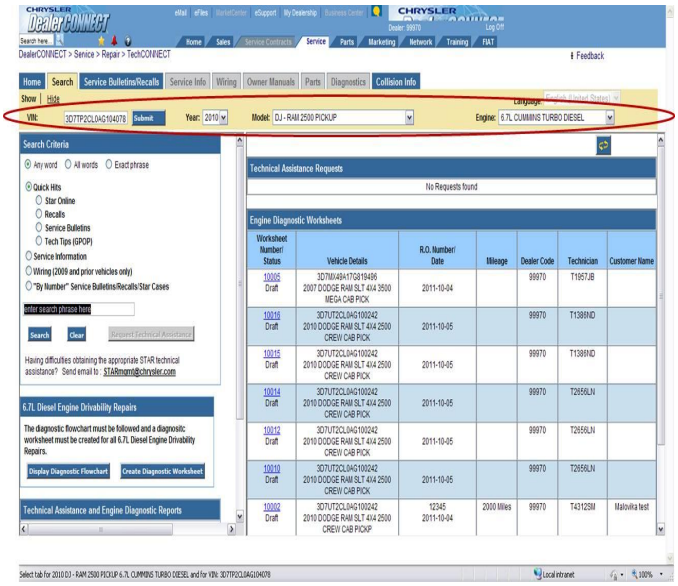

Fig. 1 Cummins Diesel Diagnostic Worksheet

Once the 6.7L Cummins® Diesel Diagnostic Worksheet has been created, the PRE-DIAGNOSTIC TROUBLESHOOTING PROCEDURE will guide you to the MIL LIGHT ON PRETEST PROCEDURE or to one of several Non-MIL related diagnostic tests. Follow the path for each test. The tests are designed to direct you to the diagnostic path that leads to corrective actions that repair conditions that occur most frequently for that specific concern.

Once the repair has been completed, the repair **MUST** be followed up by performing the Verification Procedure and if the repair is correcting a condition that relates to the Aftertreatment System, then the Aftertreatment Validation Procedure **MUST** also be performed.

Each of these procedures are designed to ensure that the condition will not repeat and ensure that components that may have had an effect on that concern will not contribute to a repeat repair.

POLICY:
Standard Diagnostic Warranty Reimbursement Policy applies to this new 6.7L Cummins® Turbo Diesel Common Diagnostic Process. However, the following unique labor operations have been created to reimburse dealers for completing the 6.7L Cummins® Diesel Diagnostic Worksheet, 6.7L Cummins Diesel Fuel System Inspections, and the Aftertreatment Validation Procedure. These Labor Operations can only be used in conjunction with a proper causal Labor Operation. Please refer to the U.S. Warranty Policy and Procedure Manual and to U.S. Warranty Bulletin D-11-55 dated October, 2011.

TIME ALLOWANCE:

Labor Operation No:	**Description**	**Amount**
14-01-10-74	Completing 6.7L Cummins® Turbo Diesel Diagnostic Worksheet, Sections 1 - 4	0.3 Hrs.
Related Operation: 14-01-10-50	Fuel System Inspection - 6.7L Diesel	0.3 Hrs.
14-01-10-51	Perform Repair Validation Procedure - 6.7L Diesel	
	2007 - 2009 DH/D1 and 2007 - 2010 DC/DM	0.5 Hrs.
	2010 - 2012 DJ/D2 and 2011- 2012 DD/DP	0.3 Hrs.
Special Service LOP 95-09-44-02	Perform Repair Validation Procedure - 6.7L Diesel - Porter's Time Reimbursement	$20.00
Special Service LOP 95-14-01-01	Perform Repair Validation Procedure - 6.7L Diesel - Fuel Allowance	$20.00

Warranty Bulletin

CHRYSLER GROUP LLC

TO: Dealer Principal, Service Mgr., Sales Mgr., and Warranty Claims Administrator **SUBJECT: Cummins 6.7L Turbo Diesel Diagnostic Process- Select 2007-2012 RAM Trucks**	**NO:** D-11-55 **DATE:** October, 2011 **FOR:** U. S. Dealers U. S. Business Centers

PURPOSE:
To announce the Cummins 6.7L Turbo Diesel Diagnostic process for select 2007-2012 Ram Trucks.

Affected Vehicles:

- 2007 – 2010 Ram 3500 Cab Chassis (DC)
- 2011 – 2012 Ram 3500 Cab Chassis (DD)
- 2007 – 2009 Ram 2500 Pickup (DH)
- 2010 – 2012 Ram 2500 Pickup (DJ)
- 2007 – 2010 Ram 4500/5500 Cab Chassis (DM)
- 2010 – 2012 Ram 4500/5500 Cab Chassis (DP)
- 2007 – 2009 Ram 3500 Pickup (D1)
- 2010 – 2012 Ram 3500 Pickup (D2)

BACKGROUND INFORMATION:
The Cummins 6.7L Turbo Diesel Diagnostic process was developed for any drivability concern on the Cummins 6.7L Diesel Engine. Non-drivability engine issues or engine cooling system issues are not in the scope of this process or bulletin.

Note: This bulletin applies only to U.S. vehicles equipped with the Ultra-Low Sulfur Cummins 6.7L Turbo Diesel engine (Sales Code ETJ) and equipped with a Diesel Particulate Filter (DPF).

TIMING:
Effective Immediately

ACTION:
Prior to servicing any referenced vehicle, a VIP must be run to identify if the vehicle fits the criteria **(Sales Code ETJ and has a DPF)** in this bulletin. If it does not fit the criteria, please follow normal service procedures as required.

However, if a vehicle fits the criteria **(Sales Code ETJ and has a DPF)** and the customer describes drivability and/or MIL illumination for engine concerns, reference Service Bulletin 18-045-11, dated October 13, 2011 for further information pertaining to the diagnostic and repair process.

Refer to Service Bulletin 18-045-11 for Diagnostic and LOP information.

Note: Unique LOPS have been created to reimburse dealers for completing the Cummins 6.7L Diesel Diagnostic Worksheet, Cummins 6.7L Diesel Fuel System Inspections and the After-Treatment Validation Procedure when required. Labor Operations noted in the Service Bulletin can only be used in conjunction with a proper causal LOP.

Reminder: You MUST complete the Cummins 6.7L Diesel Diagnostic Worksheet and attach the worksheet to the WRO or your claim will not be processed.

To create a Cummins 6.7L Diesel Diagnostic Worksheet, go to: *DealerCONNECT > TechCONNECT > Search (An appropriate Cummins 6.7L VIN is required in order for a form to be created.*

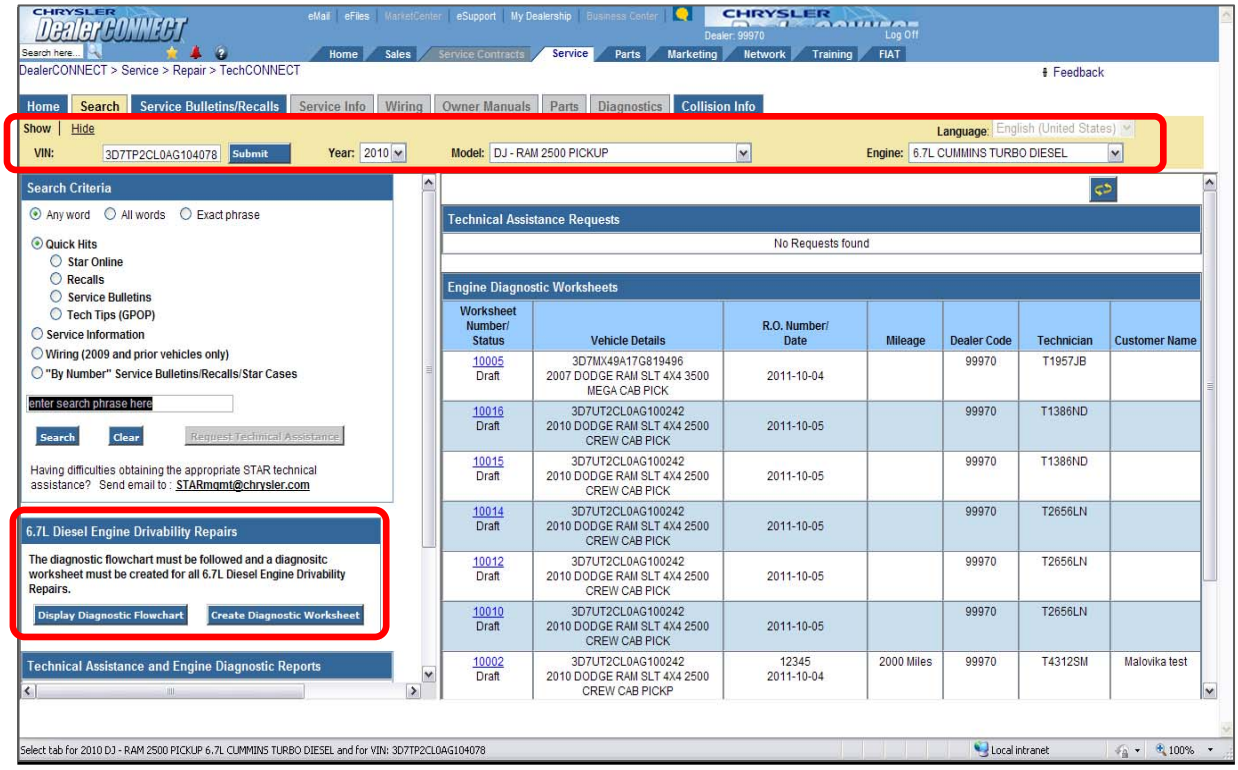

Reference the Home Page of TechCONNECT for work instructions highlighting the new process and detailed instructions on how to properly complete the diagnostic worksheets.

Please ensure that all affected dealership personnel are aware of this bulletin.

WARRANTY OPERATIONS

EA11-003

CHRYSLER

12-9-2011

Enclosure 10

Dealer-Field Communication

Service Manuals

DODGE

SERVICE MANUAL

2009
DODGE RAM 1500

VOLUME 1

To order the special service tools used and illustrated, please refer to the instructions on inside back cover.

NO PART OF THIS PUBLICATION MAY BE REPRODUCED, STORED IN A RETRIEVAL SYSTEM, OR TRANSMITTED, IN ANY FORM OR BY ANY MEANS, ELECTRONIC, MECHANICAL, PHOTOCOPYING, RECORDING, OR OTHERWISE, WITHOUT THE PRIOR WRITTEN PERMISSION OF CHRYSLER LLC.

Chrysler LLC reserves the right to make changes in design or to make additions to or improvements in its products without imposing any obligations upon itself to install them on its products previously manufactured.

Litho in U.S.A. Copyright © 2011 Chrysler LLC

00-000-00000

FOREWORD

The information contained in this service manual has been prepared for the professional automotive technician involved in daily repair operations. Information describing the operation and use of standard and optional equipment is included in the Owner's Manual provided with the vehicle.

Information in this manual is divided into groups. These groups contain description, operation, diagnosis, testing, adjustments, removal, installation, disassembly, and assembly procedures for the systems and components. To assist in locating a group title page, use the Group Tab Locator on the following page. The solid bar after the group title is aligned to a solid tab on the first page of each group. The first page of the group has a contents section that lists major topics within the group. If you are not sure which Group contains the information you need, look up the Component/System in the alphabetical index located in the rear of this manual.

A Service Manual Comment form is included at the rear of this manual. Use the form to provide Chrysler with your comments and suggestions.

Tightening torques are provided as a specific value throughout this manual. This value represents the midpoint of the acceptible engineering torque range for a given fastener application. These torque values are intended for use in service assembly and installation procedures using the correct OEM fasteners. When replacing fasteners, always use the same type (part number) fastener as removed.

Chrysler LLC reserves the right to change testing procedures, specifications, diagnosis, repair methods, or vehicle wiring at any time without prior notice or incurring obligation.

2009
DODGE RAM 1500

SERVICE MANUAL

GROUP TAB LOCATOR

00	Vehicle Data
01	Mopar Accessories
02	Front Suspension
03	Differential and Driveline
04	Vehicle Quick Reference
05	Brakes
07	Cooling
8A	Audio and Video
8B	Chime/Buzzer
8E	Electronic Control Modules
8F	Engine Systems
8G	Heated/Cooled Systems
8H	Horn
8I	Ignition Control
8J	Instrument Cluster
8L	Lamps and Lighting
8M	Message Systems
8N	Power Systems
8P	Speed Control
8Q	Vehicle Theft Security
8R	Wipers/Washers
8T	Navigation/Telecommunication
8W	Power Distribution
09	Engine
10	Restraints
11	Exhaust System
13	Frame and Bumpers
14	Fuel System
17	Rear Suspension
19	Steering
21	Transmission and Transfer Case
22	Tires and Wheels
23	Body
24	Heating and Air Conditioning
25	Emissions Control
28	DTC-Based Diagnostics
29	Non-DTC Diagnostics
	Component and System Index
	DTC Index
Service Manual Comment Forms	(Rear of Manual)

FOREWORD

The information contained in this service manual has been prepared for the professional automotive technician involved in daily repair operations. Information describing the operation and use of standard and optional equipment is included in the Owner's Manual provided with the vehicle.

Information in this manual is divided into groups. These groups contain description, operation, diagnosis, testing, adjustments, removal, installation, disassembly, and assembly procedures for the systems and components. To assist in locating a group title page, use the Group Tab Locator on the following page. The solid bar after the group title is aligned to a solid tab on the first page of each group. The first page of the group has a contents section that lists major topics within the group. If you are not sure which Group contains the information you need, look up the Component/System in the alphabetical index located in the rear of this manual.

A Service Manual Comment form is included at the rear of this manual. Use the form to provide Chrysler with your comments and suggestions.

Tightening torques are provided as a specific value throughout this manual. This value represents the midpoint of the acceptible engineering torque range for a given fastener application. These torque values are intended for use in service assembly and installation procedures using the correct OEM fasteners. When replacing fasteners, always use the same type (part number) fastener as removed.

Chrysler LLC reserves the right to change testing procedures, specifications, diagnosis, repair methods, or vehicle wiring at any time without prior notice or incurring obligation.

DODGE RAM

SERVICE MANUAL

GROUP TAB LOCATOR

00	Vehicle Data
01	Mopar Accessories
02	Front Suspension
03	Differential and Driveline
04	Vehicle Quick Reference
05	Brakes
07	Cooling
8A	Audio and Video
8B	Chime/Buzzer
8E	Electronic Control Modules
8F	Engine Systems
8G	Heated/Cooled Systems
8H	Horn
8I	Ignition Control
8J	Instrument Cluster
8L	Lamps and Lighting
8M	Message Systems
8N	Power Systems
8P	Speed Control
8Q	Vehicle Theft Security
8R	Wipers/Washers
8T	Navigation/Telecommunication
8W	Power Distribution
09	Engine
10	Restraints
11	Exhaust System
13	Frame and Bumpers
14	Fuel System
17	Rear Suspension
19	Steering
21	Transmission and Transfer Case
22	Tires and Wheels
23	Body
24	Heating and Air Conditioning
25	Emissions Control
28	DTC-Based Diagnostics
29	Non-DTC Diagnostics
	Component and System Index
	DTC Index
Service Manual Comment Forms	(Rear of Manual)

VEHICLE DATA

TABLE OF CONTENTS

page

VEHICLE DATA
VEHICLE INFORMATION 3

VEHICLE INFORMATION

TABLE OF CONTENTS

page

VEHICLE INFORMATION
- **FASTENER IDENTIFICATION**
  - DESCRIPTION . . . 4
- **FASTENER USAGE**
  - DESCRIPTION . . . 7
- **INTERNATIONAL VEHICLE CONTROL AND DISPLAY SYMBOLS**
  - DESCRIPTION . . . 7
- **LABEL, VEHICLE EMISSION CERTIFICATION INFORMATION (VECI)**
  - DESCRIPTION . . . 13
- **METRIC SYSTEM**
  - DESCRIPTION . . . 14
- **THREADED HOLE REPAIR**
  - DESCRIPTION . . . 15
- **TORQUE REFERENCES**
  - DESCRIPTION . . . 16
- **VEHICLE CERTIFICATION LABEL**
  - DESCRIPTION . . . 17
- **VEHICLE IDENTIFICATION NUMBER**
  - DESCRIPTION . . . 17

Vehicle Information

Fastener Identification

Description

The SAE bolt strength grades range from grade 2 to grade 8. The higher the grade number, the greater the bolt strength. Identification is determined by the line marks on the top of each bolt head. The actual bolt strength grade corresponds to the number of line marks plus 2. The most commonly used metric bolt strength classes are 8.9 and 10.9. The metric strength class identification number is imprinted on the head of the bolt. The higher the class number, the greater the bolt strength. Some metric nuts are imprinted with a single-digit strength class on the nut face. Refer to the Fastener Identification and Fastener Strength Charts.

BOLT MARKINGS AND TORQUES - METRIC

BOLT MARKINGS	8.8/8.9		10.9		12.9	
BOLT DIA.	N·M	FT. LBS.	N·M	FT. LBS.	N·M	FT. LBS.
6	12	105*	14	125*	16	12
8	25	250*	32	23	38	28
10	54	40	60	45	74	55
12	95	70	108	80	135	100
14	155	115	175	130	216	160
16	243	180	324	240	324	240
* Inch Lbs.						

BOLT MARKINGS AND TORQUES - U. S. CUSTOMARY

BOLT MARKINGS	GRADE 5		GRADE 8	
BOLT DIA.	N·M	FT. LBS.	N·M	FT. LBS.
1/4 - 20	10	95*	14	125*
1/4 - 28	10	95*	17	150*
5/16 - 18	22	200*	30	270*
5/16 - 24	26	240*	33	300*
3/8 - 16	40	30	55	40
3/8 - 24	47	35	60	45
7/16 - 14	68	50	88	65
7/16 - 20	74	55	95	70
1/2 - 13	101	75	135	100
1/2 - 20	115	85	150	110
9/16 - 12	135	100	182	135
9/16 - 18	155	115	202	150
5/8 - 11	202	150	263	195
5/8 - 18	215	160	284	210
3/4 - 10	230	170	297	220
3/4 - 16	236	175	304	225

BOLT MARKINGS AND TORQUES - U. S. CUSTOMARY, continued

BOLT MARKINGS	GRADE 5		GRADE 8	
BOLT DIA.	N·M	FT. LBS.	N·M	FT. LBS.
7/8 - 14	405	300	540	400
* Inch Lbs.				

HOW TO DETERMINE BOLT STRENGTH

	Mark	Class
Hexagon head bolt	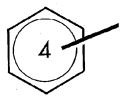 Bolt head No. 4 — 4T; 5 — 5T; 6 — 6T; 7 — 7T; 8 — 8T; 9 — 9T; 10 — 10T; 11 — 11T	
	 No mark	4T
Hexagon flange bolt w/washer hexagon bolt	 No mark	4T
Hexagon head bolt	 Two protruding lines	5T
Hexagon flange bolt w/washer hexagon bolt	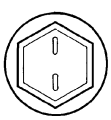 Two protruding lines	6T
Hexagon head bolt	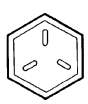 Three protruding lines	7T
Hexagon head bolt	 Four protruding lines	8T

	Mark	Class
Stud bolt	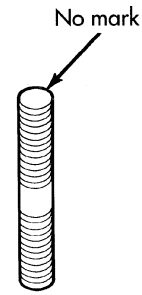	4T
	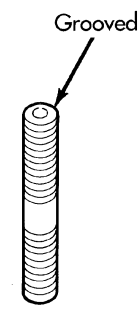	6T
Welded bolt	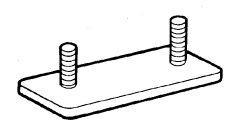	4T

95IN-4

Fastener Usage

Description

Fasteners and torque specifications references in this service information are identified in metric and SAE format. During any maintenance or repair procedures, it is important to salvage all fasteners (nuts, bolts, screws, etc.) for reassembly. If the fastener is not salvageable, a fastener of equivalent specification must be used.

International Vehicle Control and Display Symbols

Description

Chrysler LLC uses international symbols to identify various systems on the vehicle.

The graphic symbols illustrated are used to identify various instrument controls, vehicle controls and service information references. The symbols correspond to the controls and displays that are located on the instrument panel and throughout the vehicle.

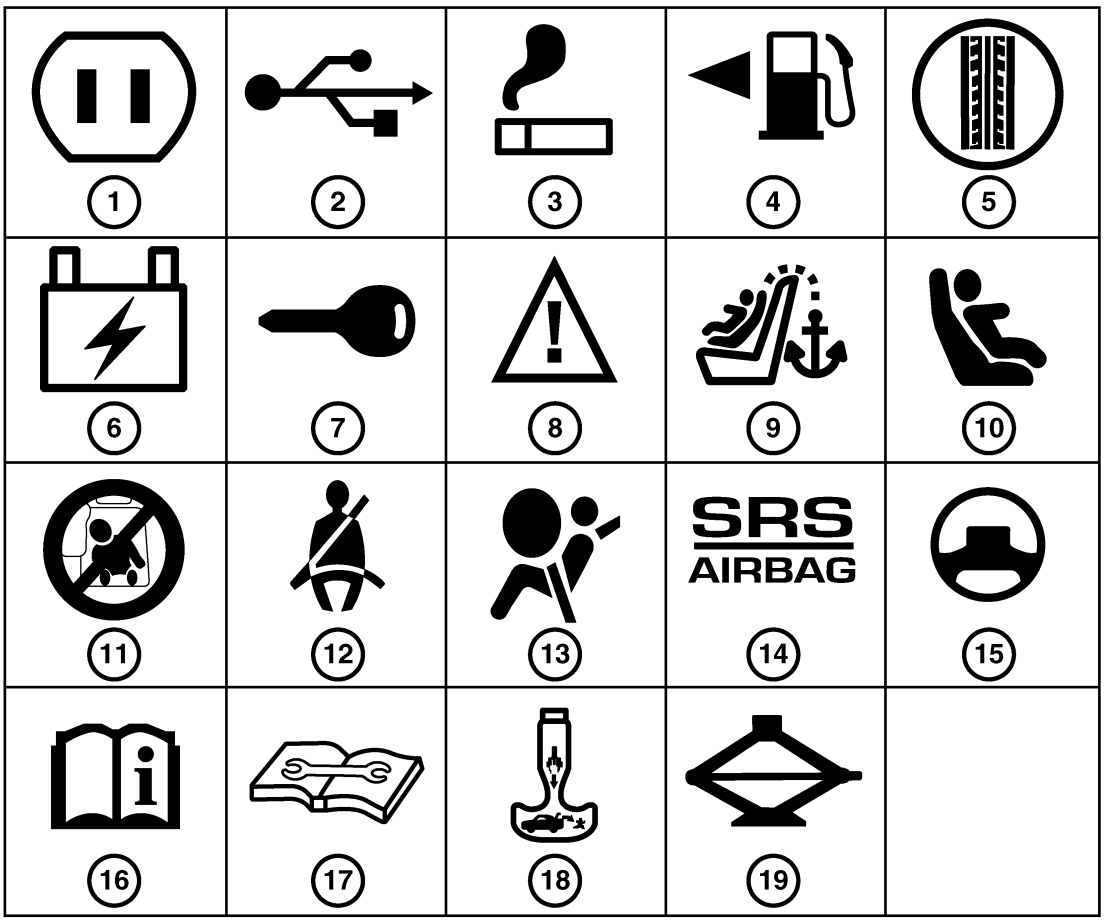

Information Symbols

INTERNATIONAL INFORMATION SYMBOL IDENTIFICATION

SYMBOL	DESCRIPTION	SYMBOL	DESCRIPTION
1	115-Volt Power Inverter	11	Side Airbag
2	USB Connector	12	Seat Belt
3	Lighter	13	Airbag
4	Fuel Fill Side	14	Supplemental Restraint System
5	Spare Tire Winch	15	Power Steering Fluid

INTERNATIONAL INFORMATION SYMBOL IDENTIFICATION, continued

SYMBOL	DESCRIPTION	SYMBOL	DESCRIPTION
6	Fuse	16	See Owner's Manual
7	Key Activate (Power Outlet)	17	See Appropriate Service Manual Section
8	Warning	18	Emergency Release Handle
9	Child Seat Tether Anchor	19	Jack/Jack Tools Location
10	Lower Anchors and Tether for Children (latch)		

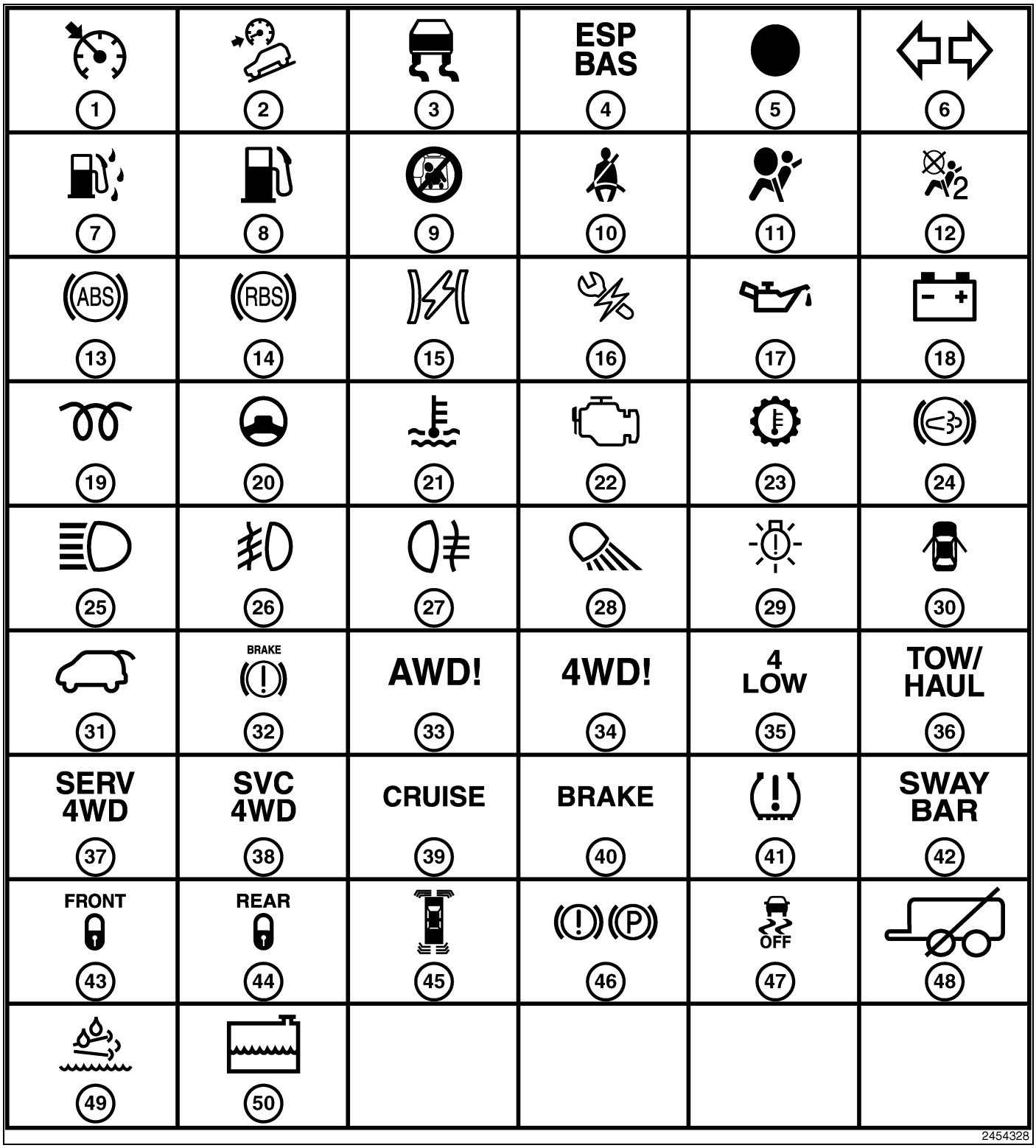

Indicator Symbols

INTERNATIONAL INDICATOR SYMBOL IDENTIFICATION

SYMBOL	DESCRIPTION	SYMBOL	DESCRIPTION
1	Electronic Speed Control	26	Front Fog Light
2	Hill Descent Control	27	Rear Fog Light

INTERNATIONAL INDICATOR SYMBOL IDENTIFICATION, continued

SYMBOL	DESCRIPTION	SYMBOL	DESCRIPTION
3	Traction Control	28	Cargo Lamp
4	Electronic Stability Program/Brake System Assist System	29	Exterior Bulb Failure
5	Security Indicator	30	Door Ajar
6	Turn Signals	31	Liftgate Open
7	Water In Fuel	32	Brake System Warning Parking Brake
8	Low Fuel	33	All Wheel Drive
9	Side Airbag	34	Four Wheel Drive
10	Seat Belt Reminder	35	Four Wheel Drive Low
11	Airbag Warning Light	36	Tow/Haul
12	Passenger Airbag Off	37	Service Four Wheel Drive
13	Failure Of Anti-Lock Braking System	38	Service Four Wheel Drive
14	HEV Brake Regenerative Light	39	Cruise Indicator
15	Electronic Throttle Control	40	Brake System Warning Parking Brake
16	HEV Service Light	41	Tire Pressure Monitor
17	Engine Oil	42	Sway Bar Disconnect Indicator
18	Battery Charging	43	Front Axle Lock
19	Glow Plug/Intake Air Heated	44	Rear Axle Lock
20	Power Steering Fluid	45	Park Asist Indicator
21	Engine Coolant Temperature	46	Park Brake Indicator
22	Malfunction Indicator Light	47	Electronic Stability Control/Traction Control Off
23	Transmission Oil Temperature Light	48	Trailer Brake System Off
24	Diesel Exhaust Brake	49	
25	High Beam	50	

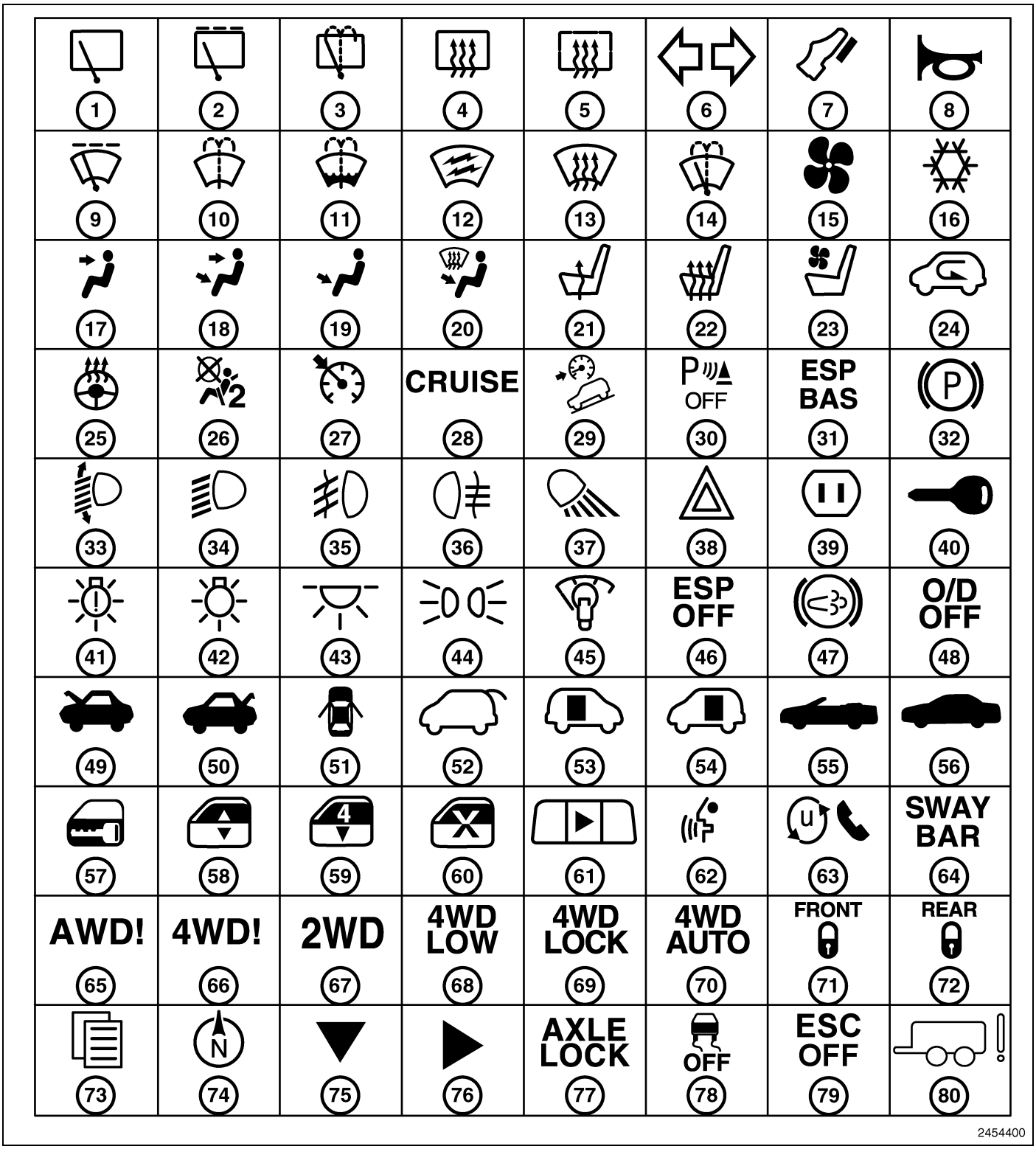

Control Symbols

INTERNATIONAL CONTROL SYMBOL IDENTIFICATION

SYMBOL	DESCRIPTION	SYMBOL	DESCRIPTION	SYMBOL	DESCRIPTION
1	Rear Window Wiper	26	Passenger Air Bag Off	51	Door Ajar

INTERNATIONAL CONTROL SYMBOL IDENTIFICATION, continued

SYMBOL	DESCRIPTION	SYMBOL	DESCRIPTION	SYMBOL	DESCRIPTION
2	Rear Window Intermittent Wiper	27	Electronic Speed Control	52	Liftgate Release
3	Rear Window Washer	28	Cruise Indicator	53	Sliding Door
4	Rear Window Defrost	29	Hill Descent Control	54	Sliding Door
5	Heated Mirror	30	Park Assist Off	55	Convertible Top Down
6	Turn Signals	31	Electronic Stability Program/Brake System Assist System	56	Convertible Top Up
7	Adjustable Pedals	32	Park Brake Release	57	Door Lock
8	Horn	33	Adjustable Headlights	58	Window Lift
9	Windshield Wiper Intermittent	34	Low Beam	59	Convertible 4 Window Down
10	Windshield Washer	35	Front Fog Light	60	Window Lock
11	Windshield Washer Fluid Level	36	Rear Fog Light	61	Power Rear Window
12	Windshield Electrically Heated	37	Cargo Lamp	62	Voice Recognition Button
13	Windshield Defrost	38	Hazard Lights	63	Uconnect™ Button
14	Windshield Wiper And Washer	39	115-Volt Power Inverter	64	SwayBar Disconnect
15	Ventilating Fan	40	Key Activate (Power Outlet)	65	All Wheel Drive
16	Air Conditioning	41	Exterior Bulb Failure	66	Four Wheel Drive
17	Upper Air Outlet	42	Master Lighting Switch	67	Two Wheel Drive
18	Upper And Lower Air Outlet	43	Dome Light	68	Four Wheel Drive Low
19	Lower Air Outlet	44	Park Lights	69	Four Wheel Drive Lock
20	Defrost And Lower Air Outlet	45	Instrument Panel Illumination	70	Four Wheel Drive Auto
21	Heated Seat Low	46	Electronic Stability Program Off	71	Front Axle Lock
22	Heated Seat High	47	Diesel Exhaust Brake	72	Rear Axle Lock
23	Ventilated Seat	48	Overdrive Off	73	EVIC Menu
24	Recirculation	49	Hood Release	74	Navigation Button
25	Heated Steering Wheel	50	Trunk/Deck Release	75	Step
76	Reset	77	Axle Lock Button	78	Traction Control Off
79	Electronic Stability Control Off	80	Trailer Brakes		

ENGINE COMPARTMENT

The graphic symbols illustrated are used to identify engine compartment lubricant and fluid inspection and fill locations. The symbols correspond to the caps located within the engine compartment.

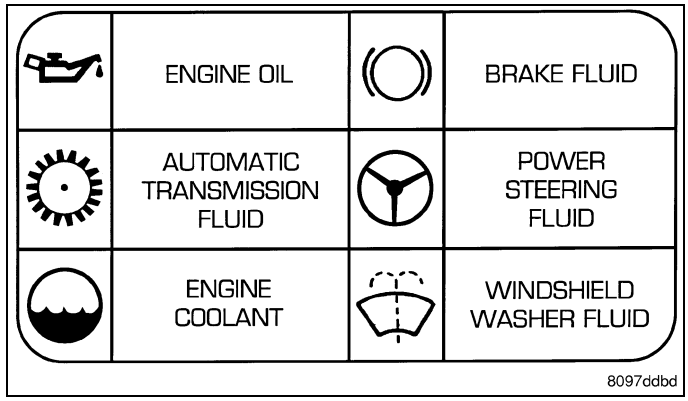

LABEL, Vehicle Emission Certification Information (VECI)

Description

NOTE: The Vehicle Emission Control Information (VECI) label(s) must be in place for the life of the vehicle. When replacing the component in which the VECI label is adhered, a new VECI label must also be adhered to the new component.

All models have a VECI Label (1). Chrysler LLC permanently attaches the label in the engine compartment. The label cannot be removed without defacing label information and destroying label.

There are unique labels for vehicles built for sale in the state of California and the country of Canada. Canadian labels are written in both the English and French languages.

The VECI label contains the following:

- Engine family and displacement.
- Evaporative family.
- Certification application.
- Engine timing specifications (if adjustable).
- Idle speeds (if adjustable).
- Spark plug and gap.

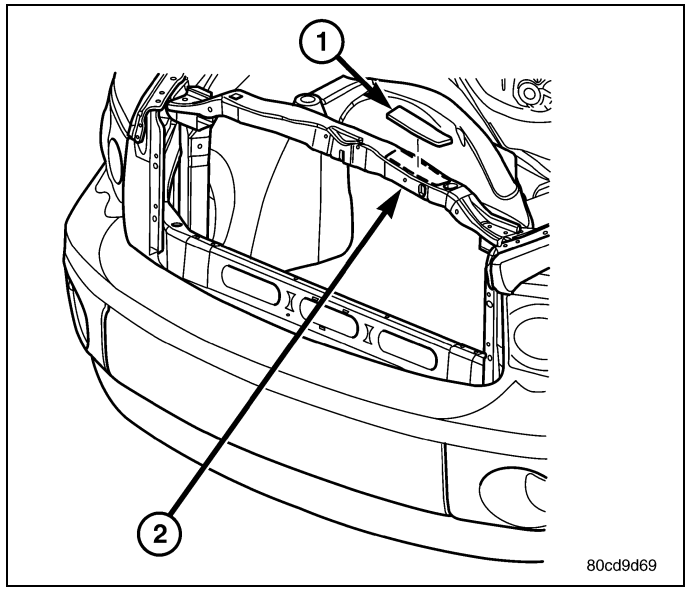

Metric System

Description

in-lbs to N•m

in- lb	N•m	in-lb	N•m	in-lb	N•m	in-lb	N•m	in-lb	N•m
2	.2260	42	4.7453	82	9.2646	122	13.7839	162	18.3032
4	.4519	44	4.9713	84	9.4906	124	14.0099	164	18.5292
6	.6779	46	5.1972	86	9.7165	126	14.2359	166	18.7552
8	.9039	48	5.4232	88	9.9425	128	14.4618	168	18.9811
10	1.1298	50	5.6492	90	10.1685	130	14.6878	170	19.2071
12	1.3558	52	5.8751	92	10.3944	132	14.9138	172	19.4331
14	1.5818	54	6.1011	94	10.6204	134	15.1397	174	19.6590
16	1.8077	56	6.3270	96	10.8464	136	15.3657	176	19.8850
18	2.0337	58	6.5530	98	11.0723	138	15.5917	178	20.1110
20	2.2597	60	6.7790	100	11.2983	140	15.8176	180	20.3369
22	2.4856	62	7.0049	102	11.5243	142	16.0436	182	20.5629
24	2.7116	64	7.2309	104	11.7502	144	16.2696	184	20.7889
26	2.9376	66	7.4569	106	11.9762	146	16.4955	186	21.0148
28	3.1635	68	7.6828	108	12.2022	148	16.7215	188	21.2408
30	3.3895	70	7.9088	110	12.4281	150	16.9475	190	21.4668
32	3.6155	72	8.1348	112	12.6541	152	17.1734	192	21.6927
34	3.8414	74	8.3607	114	12.8801	154	17.3994	194	21.9187
36	4.0674	76	8.5867	116	13.1060	156	17.6253	196	22.1447
38	4.2934	78	8.8127	118	13.3320	158	17.8513	198	22.3706
40	4.5193	80	9.0386	120	13.5580	160	18.0773	200	22.5966

N•m to in-lbs

N•m	in-lb	N•m	in-lb	N•m	in-lb	N•m	in-lb	N•m	in-lb
.2	1.7702	4.2	37.1747	8.2	72.5792	12.2	107.9837	16.2	143.3882
.4	3.5404	4.4	38.9449	8.4	74.3494	12.4	109.7539	16.4	145.1584
.6	5.3107	4.6	40.7152	8.6	76.1197	12.6	111.5242	16.6	146.9287
.8	7.0809	4.8	42.4854	8.8	77.8899	12.8	113.2944	16.8	148.6989
1	8.8511	5	44.2556	9	79.6601	13	115.0646	17	150.4691
1.2	10.6213	5.2	46.0258	9.2	81.4303	13.2	116.8348	17.2	152.2393
1.4	12.3916	5.4	47.7961	9.4	83.2006	13.4	118.6051	17.4	154.0096
1.6	14.1618	5.6	49.5663	9.6	84.9708	13.6	120.3753	17.6	155.7798
1.8	15.9320	5.8	51.3365	9.8	86.7410	13.8	122.1455	17.8	157.5500
2	17.7022	6	53.1067	10	88.5112	14	123.9157	18	159.3202
2.2	19.4725	6.2	54.8770	10.2	90.2815	14.2	125.6860	18.5	163.7458
2.4	21.2427	6.4	56.6472	10.4	92.0517	14.4	127.4562	19	168.1714
2.6	23.0129	6.6	58.4174	10.6	93.8219	14.6	129.2264	19.5	172.5970
2.8	24.7831	6.8	60.1876	10.8	95.5921	14.8	130.9966	20	177.0225
3	26.5534	7	61.9579	11	97.3624	15	132.7669	20.5	181.4480
3.2	28.3236	7.2	63.7281	11.2	99.1326	15.2	134.5371	21	185.8736
3.4	30.0938	7.4	65.4983	11.4	100.9028	15.4	136.3073	22	194.7247
3.6	31.8640	7.6	67.2685	11.6	102.6730	15.6	138.0775	23	203.5759
3.8	33.6342	7.8	69.0388	11.8	104.4433	15.8	139.8478	24	212.4270
4	35.4045	8	70.8090	12	106.2135	16	141.6180	25	221.2781

ft-lbs to N•m

ft-lb	N•m	ft-lb	N•m	ft-lb	N•m	ft-lb	N•m	ft-lb	N•m
1	1.3558	21	28.4722	41	55.5885	61	82.7049	81	109.8212
2	2.7116	22	29.8280	42	56.9444	62	84.0607	82	111.1770
3	4.0675	23	31.1838	43	58.3002	63	85.4165	83	112.5328
4	5.4233	24	32.5396	44	59.6560	64	86.7723	84	113.8888
5	6.7791	25	33.8954	45	61.0118	65	88.1281	85	115.2446
6	8.1349	26	35.2513	46	62.3676	66	89.4840	86	116.6004
7	9.4907	27	36.6071	47	63.7234	67	90.8398	87	117.9562
8	10.8465	28	37.9629	48	65.0793	68	92.1956	88	119.3120
9	12.2024	29	39.3187	49	66.4351	69	93.5514	89	120.6678
10	13.5582	30	40.6745	50	67.7909	70	94.9073	90	122.0236
11	14.9140	31	42.0304	51	69.1467	71	96.2631	91	123.3794
12	16.2698	32	43.3862	52	70.5025	72	97.6189	92	124.7352
13	17.6256	33	44.7420	53	71.8583	73	98.9747	93	126.0910
14	18.9815	34	46.0978	54	73.2142	74	100.3316	94	127.4468
15	20.3373	35	47.4536	55	74.5700	75	101.6862	95	128.8026
16	21.6931	36	48.8094	56	75.9258	76	103.0422	96	130.1586
17	23.0489	37	50.1653	57	77.2816	77	104.3980	97	131.5144
18	24.4047	38	51.5211	58	78.6374	78	105.7538	98	132.8702
19	25.7605	39	52.8769	59	79.9933	79	107.1196	99	134.2260
20	27.1164	40	54.2327	60	81.3491	80	108.4654	100	135.5820

N•m to ft-lbs

N•m	ft-lb	N•m	ft-lb	N•m	ft-lb	N•m	ft-lb	N•m	ft-lb
1	.7376	21	15.9888	41	30.2400	61	44.9913	81	59.7425
2	1.4751	22	16.2264	42	30.9776	62	45.7289	82	60.4801
3	2.2127	23	16.9639	43	31.7152	63	46.4664	83	61.2177
4	2.9502	24	17.7015	44	32.4527	64	47.2040	84	61.9552
5	3.6878	25	18.4391	45	33.1903	65	47.9415	85	62.6928
6	4.4254	26	19.1766	46	33.9279	66	48.6791	86	63.4303
7	5.1629	27	19.9142	47	34.6654	67	49.4167	87	64.1679
8	5.9005	28	20.6517	48	35.4030	68	50.1542	88	64.9545
9	6.6381	29	21.3893	49	36.1405	69	50.8918	89	65.6430
10	7.3756	30	22.1269	50	36.8781	70	51.6293	90	66.3806
11	8.1132	31	22.8644	51	37.6157	71	52.3669	91	67.1181
12	8.8507	32	23.6020	52	38.3532	72	53.1045	92	67.8557
13	9.5883	33	24.3395	53	39.0908	73	53.8420	93	68.5933
14	10.3259	34	25.0771	54	39.8284	74	54.5720	94	69.3308
15	11.0634	35	25.8147	55	40.5659	75	55.3172	95	70.0684
16	11.8010	36	26.5522	56	41.3035	76	56.0547	96	70.8060
17	12.5386	37	27.2898	57	42.0410	77	56.7923	97	71.5435
18	13.2761	38	28.0274	58	42.7786	78	57.5298	98	72.2811
19	14.0137	39	28.7649	59	43.5162	79	58.2674	99	73.0187
20	14.7512	40	29.5025	60	44.2537	80	59.0050	100	73.7562

in. to mm

in.	mm	in.	mm	in.	mm	in.	mm	in.	mm
.01	.254	.21	5.334	.41	10.414	.61	15.494	.81	20.574
.02	.508	.22	5.588	.42	10.668	.62	15.748	.82	20.828
.03	.762	.23	5.842	.43	10.922	.63	16.002	.83	21.082
.04	1.016	.24	6.096	.44	11.176	.64	16.256	.84	21.336
.05	1.270	.25	6.350	.45	11.430	.65	16.510	.85	21.590
.06	1.524	.26	6.604	.46	11.684	.66	16.764	.86	21.844
.07	1.778	.27	6.858	.47	11.938	.67	17.018	.87	22.098
.08	2.032	.28	7.112	.48	12.192	.68	17.272	.88	22.352
.09	2.286	.29	7.366	.49	12.446	.69	17.526	.89	22.606
.10	2.540	.30	7.620	.50	12.700	.70	17.780	.90	22.860
.11	2.794	.31	7.874	.51	12.954	.71	18.034	.91	23.114
.12	3.048	.32	8.128	.52	13.208	.72	18.288	.92	23.368
.13	3.302	.33	8.382	.53	13.462	.73	18.542	.93	23.622
.14	3.556	.34	8.636	.54	13.716	.74	18.796	.94	23.876
.15	3.810	.35	8.890	.55	13.970	.75	19.050	.95	24.130
.16	4.064	.36	9.144	.56	14.224	.76	19.304	.96	24.384
.17	3.318	.37	9.398	.57	14.478	.77	19.558	.97	24.638
.18	4.572	.38	9.652	.58	14.732	.78	19.812	.98	24.892
.19	4.826	.39	9.906	.59	14.986	.79	20.066	.99	25.146
.20	5.080	.40	10.160	.60	15.240	.80	20.320	1.00	25.400

mm to in.

mm	in.	mm	in.	mm	in.	mm	in.	mm	in.
.01	.00039	.21	.00827	.41	.01614	.61	.02402	.81	.03189
.02	.00079	.22	.00866	.42	.01654	.62	.02441	.82	.03228
.03	.00118	.23	.00906	.43	.01693	.63	.02480	.83	.03268
.04	.00157	.24	.00945	.44	.01732	.64	.02520	.84	.03307
.05	.00197	.25	.00984	.45	.01772	.65	.02559	.85	.03346
.06	.00236	.26	.01024	.46	.01811	.66	.02598	.86	.03386
.07	.00276	.27	.01063	.47	.01850	.67	.02638	.87	.03425
.08	.00315	.28	.01102	.48	.01890	.68	.02677	.88	.03465
.09	.00354	.29	.01142	.49	.01929	.69	.02717	.89	.03504
.10	.00394	.30	.01181	.50	.01969	.70	.02756	.90	.03543
.11	.00433	.31	.01220	.51	.02008	.71	.02795	.91	.03583
.12	.00472	.32	.01260	.52	.02047	.72	.02835	.92	.03622
.13	.00512	.33	.01299	.53	.02087	.73	.02874	.93	.03661
.14	.00551	.34	.01339	.54	.02126	.74	.02913	.94	.03701
.15	.00591	.35	.01378	.55	.02165	.75	.02953	.95	.03740
.16	.00630	.36	.01417	.56	.02205	.76	.02992	.96	.03780
.17	.00669	.37	.01457	.57	.02244	.77	.03032	.97	.03819
.18	.00709	.38	.01496	.58	.02283	.78	.03071	.98	.03858
.19	.00748	.39	.01535	.59	.02323	.79	.03110	.99	.03898
.20	.00787	.40	.01575	.60	.02362	.80	.03150	1.00	.03937

J901N-10

CONVERSION FORMULAS AND EQUIVALENT VALUES

MULTIPLY	BY	TO GET	MULTIPLY	BY	TO GET
in-lbs	x 0.11298	= Newton Meters (N·m)	N·m	x 8.851	= in-lbs
ft-lbs	x 1.3558	= Newton Meters (N·m)	N·m	x 0.7376	= ft-lbs
Inches Hg (60° F)	x 3.377	= Kilopascals (kPa)	kPa	x 0.2961	= Inches Hg
psi	x 6.895	= Kilopascals (kPa)	kPa	x 0.145	= psi
Inches	x 25.4	= Millimeters (mm)	mm	x 0.03937	= Inches
Feet	x 0.3048	= Meters (M)	M	x 3.281	= Feet
Yards	x 0.9144	= Meters (M)	M	x 1.0936	= Yards
mph	x 1.6093	= Kilometers/Hr. (Km/h)	Km/h	x 0.6214	= mph
Feet/Sec	x 0.3048	= Meters/Sec (M/S)	M/S	x 3.281	= Feet/Sec
mph	x 0.4470	= Meters/Sec (M/S)	M/S	x 2.237	= mph
Kilometers/Hr. (Km/h)	x 0.27778	= Meters/Sec (M/S)	M/S	x 3.600	Kilometers/Hr. (Km/h)

COMMON METRIC EQUIVALENTS	
1 inch = 25 Millimeters	1 Cubic Inch = 16 Cubic Centimeters
1 Foot = 0.3 Meter	1 Cubic Foot = 0.03 Cubic Meter
1 Yard = 0.9 Meter	1 Cubic Yard = 0.8 Cubic Meter
1 Mile = 1.6 Kilometers	

Threaded Hole Repair

Description

Most stripped threaded holes can be repaired using a Helicoil®. Follow the vehicle or Helicoil® recommendations for application and repair procedures.

Torque References

Description

SPECIFIED TORQUE FOR STANDARD BOLTS

Class	Diameter mm	Pitch mm	Specified torque					
			Hexagon head bolt			Hexagon flange bolt		
			N•m	kgf-cm	ft-lbf	N•m	kgf-cm	ft-lbf
4T	6	1	5	55	48 in.-lbf	6	60	52 in.-lbf
	8	1.25	12.5	130	9	14	145	10
	10	1.25	26	260	19	29	290	21
	12	1.25	47	480	35	53	540	39
	14	1.5	74	760	55	84	850	61
	16	1.5	115	1,150	83	—	—	—
5T	6	1	6.5	65	56 in.-lbf	7.5	75	65 in.-lbf
	8	1.25	15.5	160	12	17.5	175	13
	10	1.25	32	330	24	36	360	26
	12	1.25	59	600	43	65	670	48
	14	1.5	91	930	67	100	1,050	76
	16	1.5	140	1,400	101	—	—	—
6T	6	1	8	80	69 in.-lbf	9	90	78 in.-lbf
	8	1.25	19	195	14	21	210	15
	10	1.25	39	400	29	44	440	32
	12	1.25	71	730	53	80	810	59
	14	1.5	110	1,100	80	125	1,250	90
	16	1.5	170	1,750	127	—	—	—
7T	6	1	10.5	110	8	12	120	9
	8	1.25	25	260	19	28	290	21
	10	1.25	52	530	38	58	590	43
	12	1.25	95	970	70	105	1,050	76
	14	1.5	145	1,500	108	165	1,700	123
	16	1.5	230	2,300	166	—	—	—
8T	8	1.25	29	300	22	33	330	24
	10	1.25	61	620	45	68	690	50
	12	1.25	110	1,100	80	120	1,250	90
9T	8	1.25	34	340	25	37	380	27
	10	1.25	70	710	51	78	790	57
	12	1.25	125	1,300	94	140	1,450	105
10T	8	1.25	38	390	28	42	430	31
	10	1.25	78	800	58	88	890	64
	12	1.25	140	1,450	105	155	1,600	116
11T	8	1.25	42	430	31	47	480	35
	10	1.25	87	890	64	97	990	72
	12	1.25	155	1,600	116	175	1,800	130

Vehicle Certification Label

Description

A vehicle certification label is attached to every Chrysler LLC vehicle. The label certifies that the vehicle conforms to all applicable Federal Motor Vehicle Standards. The label also lists:

- Month and year of vehicle manufacture.
- Gross Vehicle Weight Rating (GVWR). The gross front and rear axle weight ratings (GAWR's) are based on a minimum rim size and maximum cold tire inflation pressure.
- Vehicle Identification Number (VIN).
- Type of vehicle.
- Type of rear wheels.
- Bar code.
- Month, Day and Hour (MDH) of final assembly.
- Paint and Trim codes.
- Country of origin.

The label is located on the driver-side door shut-face.

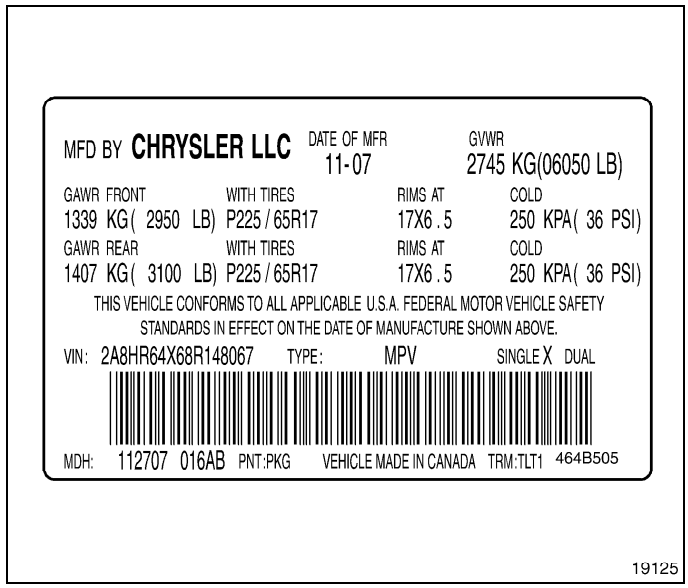

Vehicle Certification Label - Typical

Vehicle Identification Number

Description

The Vehicle Identification Number (VIN) plate (1) is located on the lower windshield fence near the left a-pillar. The VIN contains 17 characters that provide data concerning the vehicle. Refer to the VIN decoding chart to determine the identification of a vehicle.

The VIN is also imprinted on the:

- Equipment Identification Plate.
- Vehicle Safety Certification Label.
- Frame rail.

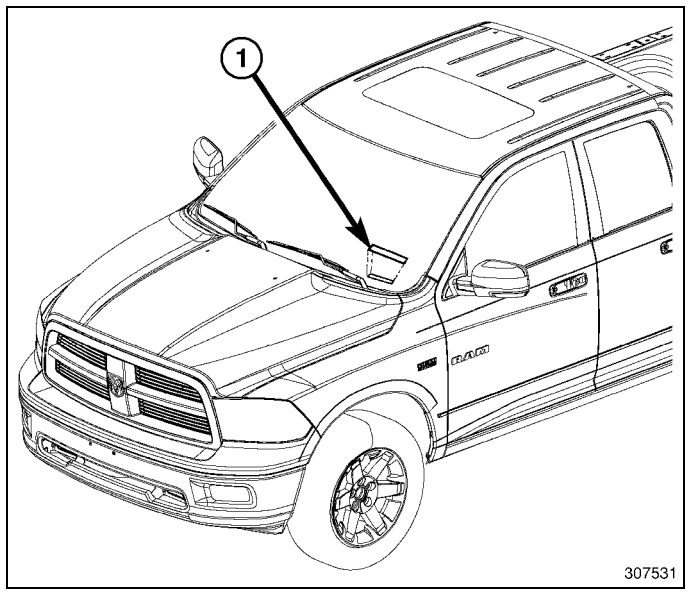

To protect the consumer from theft and possible fraud the manufacturer is required to include a Check Digit at the ninth position of the VIN. The check digit is used by the manufacturer and government agencies to verify the authenticity of the vehicle and official documentation. The formula to use the check digit is not released to the general public.

POSITION	INTERPRETATION	CODE = DESCRIPTION
1	Country of Origin	1 = Manufactured By Chrysler LLC
2	Make	D = Dodge

POSITION	INTERPRETATION	CODE = DESCRIPTION
3	Vehicle Type	3 = Truck With Side Airbag 7 = Truck Less Side Airbag
4	Gross Vehicle Weight Rating	H = 6,001-7,000 lbs. (2722 - 3175 KG)
5	Vehicle Line	B= Ram Pickup Light Duty (4x2) V= Ram Pickup Light Duty (4x4)
6	Series	1 = 1500
7	Body Style	3 = Crew Cab 6 = Regular Cab 8 = Quad Cab
8	Engine	K = 3.7L 6 CYL Gasoline Non – Turbo (EKG) P = 4.7L 8 CYL Gasoline Non – Turbo (EVE) T = 5.7L 8 CYL Gasoline Non – Turbo (EZD)
9	Check Digit	0 through 9 or X
10	Model Year	9 = 2009
11	Plant Location	S = Warren Truck Assembly J = St. Louis (North)
12 – 17	Vehicle Build Sequence	

MOPAR ACCESSORIES

TABLE OF CONTENTS

page

MOPAR ACCESSORIES
SPECIAL TOOLS 2
DRIVING CONVENIENCE 3
INTERIOR STORAGE 19
AUDIO AND ELECTRONICS 3
EXTERIOR APPEARANCE 15

Special Tools

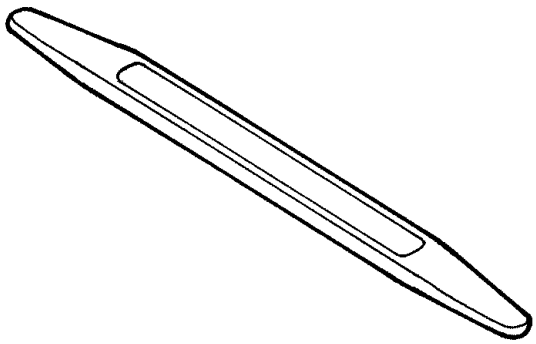

C-4755 - Trim Stick

DRIVING CONVENIENCE

TABLE OF CONTENTS

page

DRIVING CONVENIENCE
INSTRUCTION SHEET. 1

REMOTE START

DODGE RAM

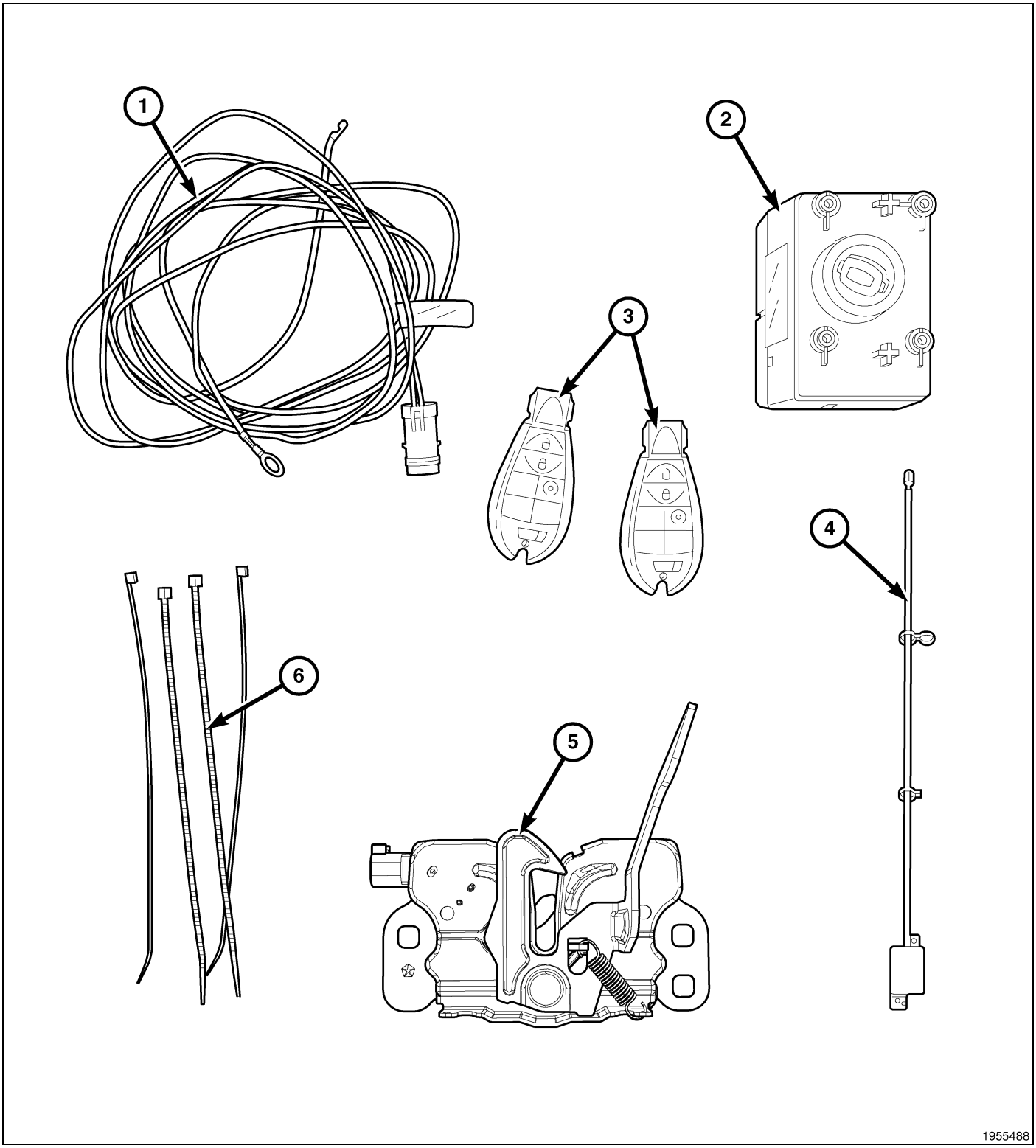

CALL OUT	DESCRIPTION	QUANTITY
1	Hood Switch Harness	1
2	Hood Switch	1
3	Wireless Ignition Module (WIN)	1
4	FOBIK	2
5	WIN Antenna	1
6	Hood Switch Bracket	1
7	Hood Switch Bracket Retainer	1
8	Zip Ties	10

CAUTION:
XBM remote start can ONLY be installed on vehicles that have the following factory options: Automatic Transmission, Remote Keyless Entry and Immobilizer.
WinFobik based vehicles, the sales code must be added to the database and the Restore Vehicle Configuration (using a diagnostic scan tool) must be performed prior to installing the new WIN module. Failure to do so will render the WIN module's remote start function inoperative.

The technician should wait 1/2 hour between adding XBM sales code in DealerConnect before installing the WIN module & restoring vehicle configuration. In the interim, the technician can install all other components except the WIN module.

UPDATE VEHICLE CONFIGURATION

1. VIN must be updated with the sales code of the added accessory in order to enable system functionality. Using the DealerCONNECT website and a diagnostic scan tool, complete the vehicle configuration.
2. Log on to https://dealerconnect.chrysler.com
3. In the "Vehicle Option" screen under the "Global Claims System" category in the "Service" tab, enter vehicle VIN and add sales code(s) noted below as a "Dealer Installed Option".

XBM (REMOTE START)

4. Confirm that the new sales code has been successfully added to the VIN.
5. With the diagnostic scan tool connected to both the internet (via Ethernet port or wireless connection) and the vehicle, perform the following steps from the Initial Start Up Screen:

- Select "VEHICLE PREPARATION"
- Select "RESTORE VEHICLE CONFIGURATION"
- Select "START"
- Select "NEXT"
- If necessary, select proper vehicle line and model year and select "NEXT"
- Confirm correct selection and select "NEXT"
- Enter vehicle VIN using On-Screen keyboard or confirm that auto-filled VIN plate and select "NEXT"
- Select "OK"
- Enter user ID, password and dealer code using On-Screen keyboard and Select "OK"
- Wait for vehicle configuration data to be downloaded and select "NEXT"
- Select "NEXT"
- Confirm that vehicle configuration has been programmed successfully
- Note On-Screen instructions and select "FINISH"

VALIDATION PROCESS

1. To validate that the remote start is activated in the system.

- Select "ECU VIEW"
- Select "TIPM/CGW"
- Select "MORE OPTIONS"
- Select "ECU DETAILS"
- Select "CONFIG INFO"

- Toggle down, verify:

NAME	VALUE
REMOTE START PRESENT	SET

PROCEDURE STEPS:

HOOD SWITCH AND HARNESS INSTALLATION

1. Disconnect and isolate the negative battery cable.
2. Remove the push pin retainers and the upper radiator seal.
3. Position the hood ajar switch striker (3) over the mounting hole in the inner hood panel (1) over the hood ajar switch.
4. Using hand pressure, press the hood ajar switch striker (3) upward into the mounting hole in the inner hood panel (1) until all three integral lock tabs (2) are fully engaged.

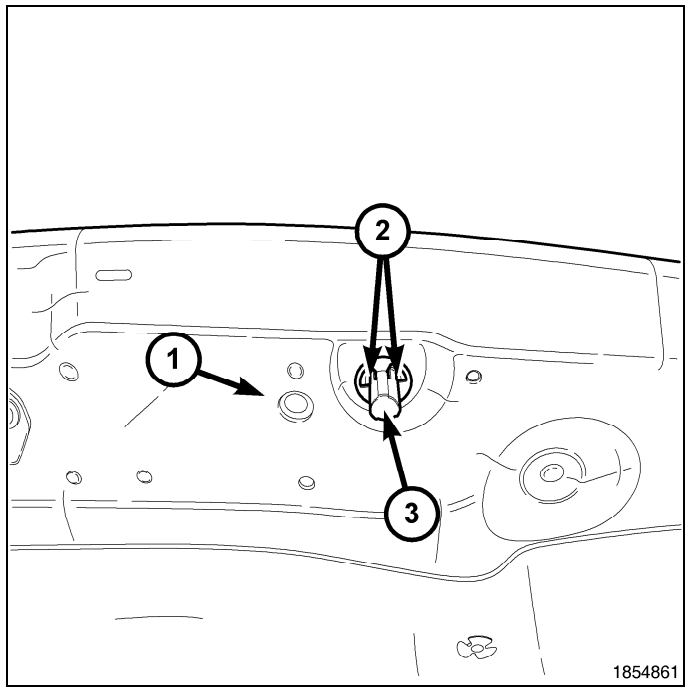

5. Position the hood ajar switch mounting bracket (3) onto the upper radiator cross member (1)
6. Install and tighten the fastener (2) that secures the mounting bracket to the upper radiator cross member, tighten the bolt to 8 N·m (71 in lbs.).
7. Position the hood ajar switch (4) near the mounting bracket (3) on the upper radiator cross member (1).
8. Route the jumper wire harness connector through the switch mounting bracket and reconnect it to the switch.
9. From the top of the mounting bracket, press the switch downward into the mounting hole until the integral switch latch tabs lock it into place.
10. There may be an unused factory installed hood switch harness taped back on the existing wiring harness near the hood switch mounting location. If equipped, route it through the switch mounting bracket and install the switch. If the vehicle is not equipped with the factory hood switch harness, follow steps 9 through 25.

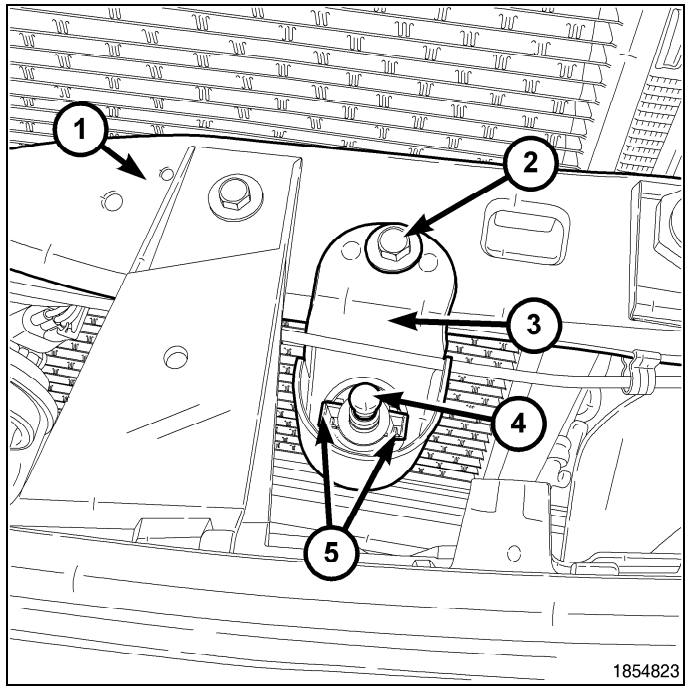

11. Remove the ground retainer (1) from the fender (3).

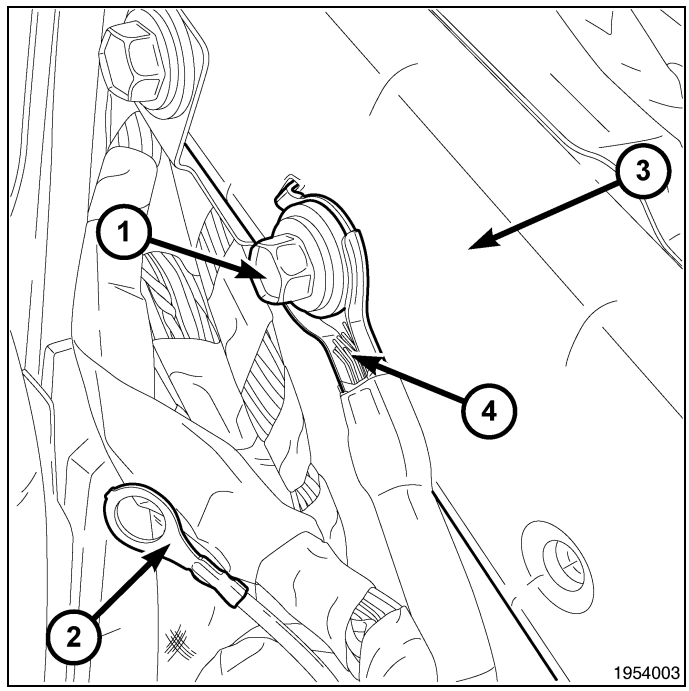

12. Remove the B+ terminal nut (1) from the Totally Integrated Power Module (3) (TIPM) B+ terminal. Remove the B+ cable (2) from the TIPM.
13. Using a suitable flat blade tool, disengage the TIPM upper retaining tabs from the battery tray bracket.

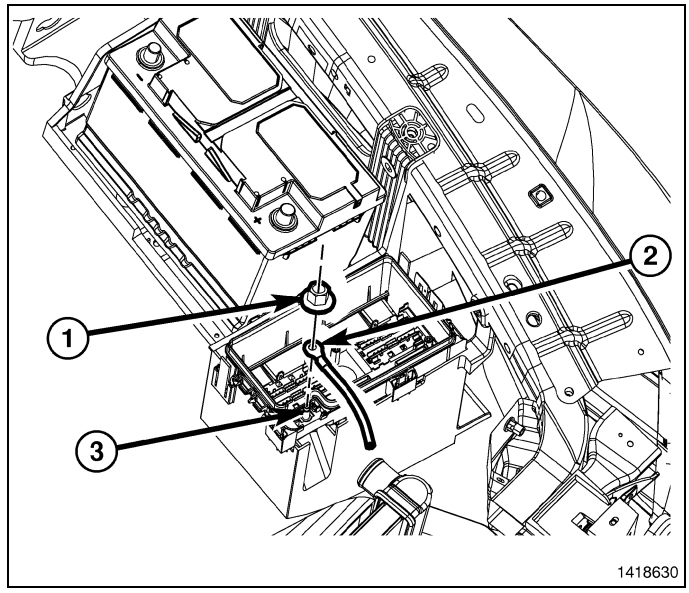

14. Grasp the TIPM (1) and rotate the assembly up to free it from its mounting bracket (3). Position the assembly upside down to access the electrical connectors located on the bottom of the unit.

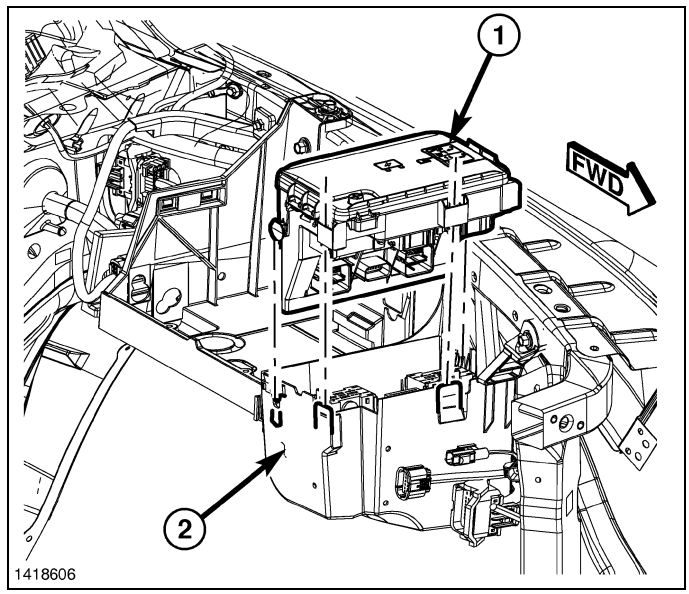

15. Disconnect the connector C4, letter D labeled on the bottom of the TIPM. Release by depressing the locking tab and rotating the connector arm outboard, until the connector is free from the TIPM assembly (1). Be certain to pull the connector straight off.

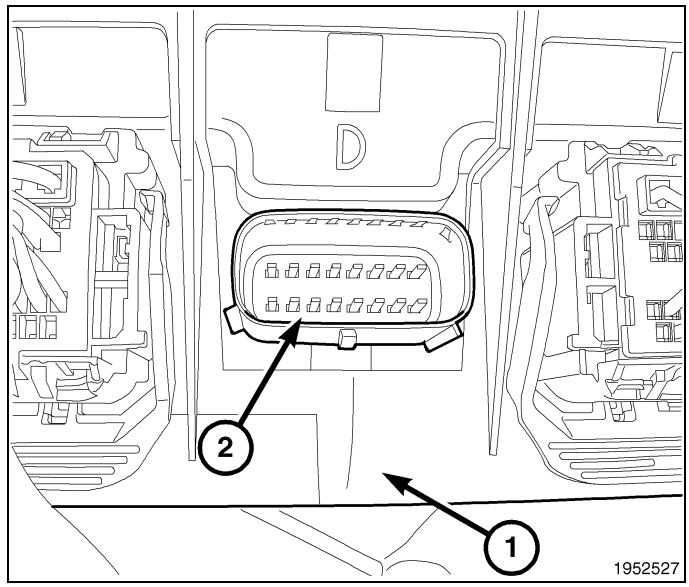

16. Route the pigtail wires down the harness to the TIPM and secure where necessary.
17. Remove the “Secondary Lock” from the rear of the connector.

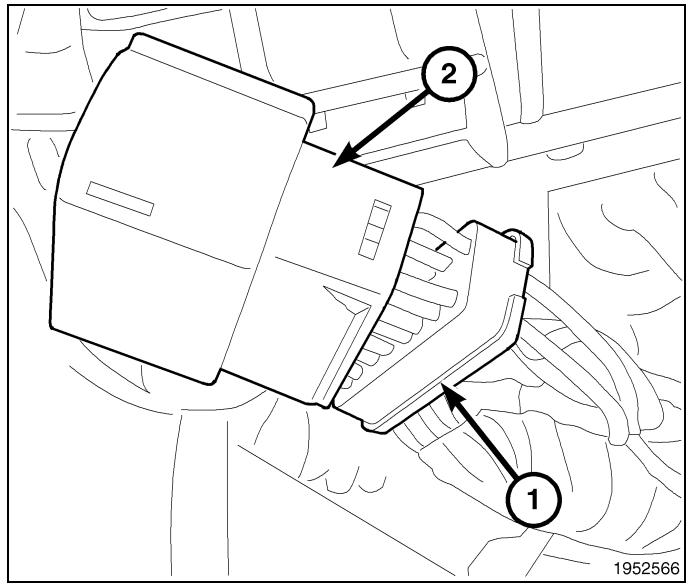

18. Remove the weather seal from the rear of the connector.

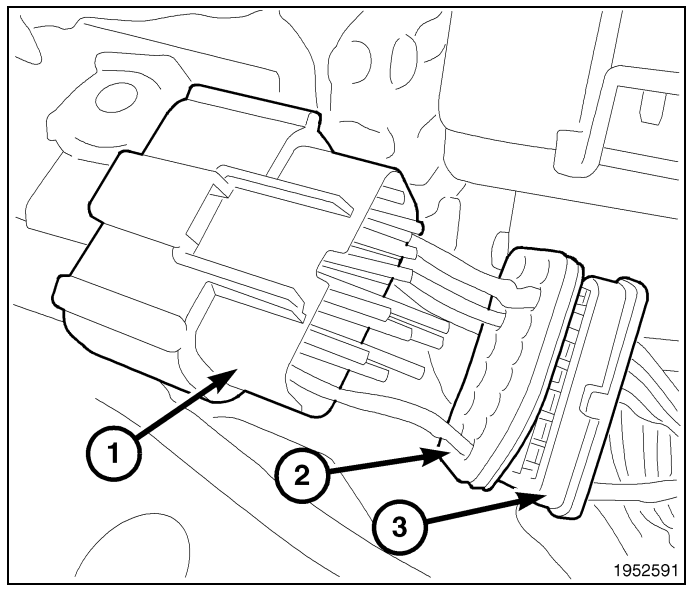

19. Remove the front portion of the connector from the connector housing. This portion of the connector aligns the terminals properly within the connector housing.

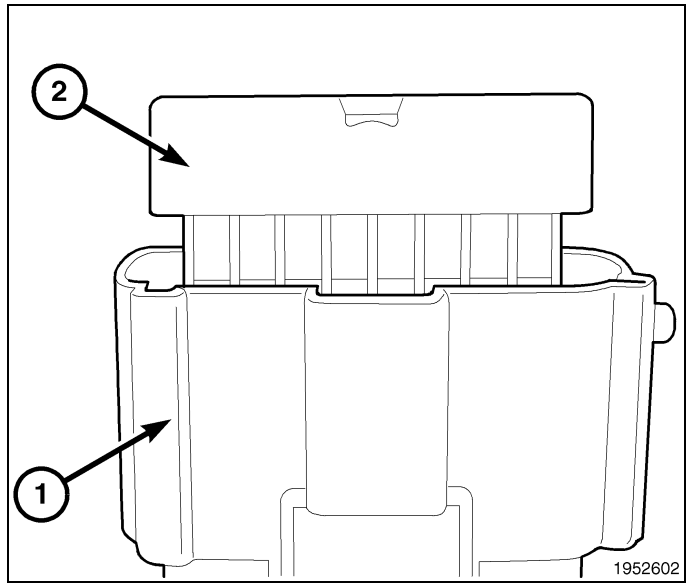

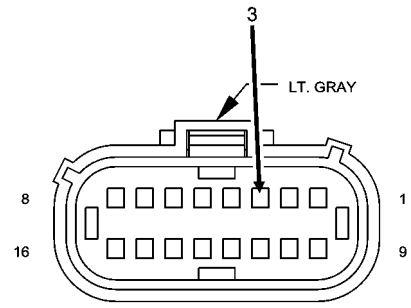

2000232

20. Route the Purple/White wire from the hood switch harness through the secondary lock, through the weather seal and into the terminal 3 (G70 circuit) slot of the connector housing.
21. Reinstall the front portion of the connector, making sure that all terminals are seated correctly and are in the right direction. Reinstall the weather seal and the secondary lock.

NOTE: Totally Integrated power module electrical connectors are color coded to ease location reference.

22. Connect the electrical connector by pushing straight on and rotating the connector arm inboard, until the connector is firmly locked in place on the TIPM assembly.
23. Turn the TIPM so that the connector side is facing down. Install the assembly onto the TIPM battery tray bracket making sure to line up the lower retaining tab with the retaining slot in the tray .
24. Push the TIPM (1) downward to lock the upper retaining clips into the bracket (2).

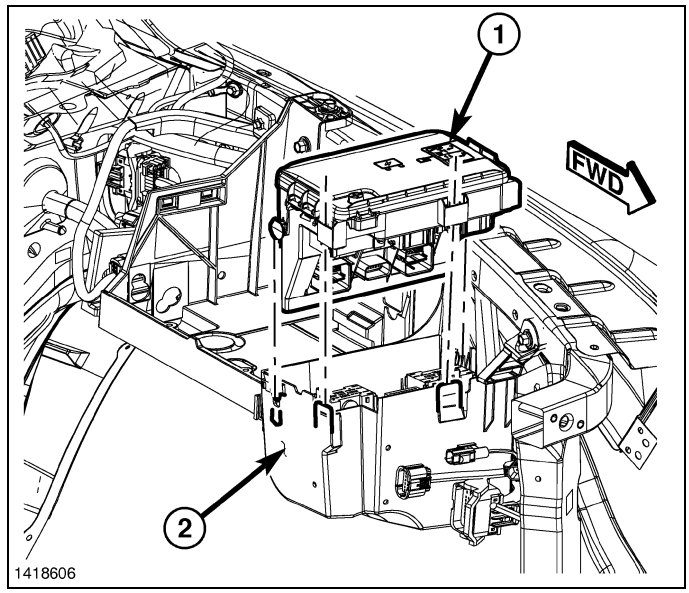

1418606

25. Install the B+ terminal cable (2) and nut (1) on the B+ terminal of the TIPM (3).
26. From the top of the mounting bracket, press the switch downward into the mounting hole until the integral switch latch tabs lock it into place.

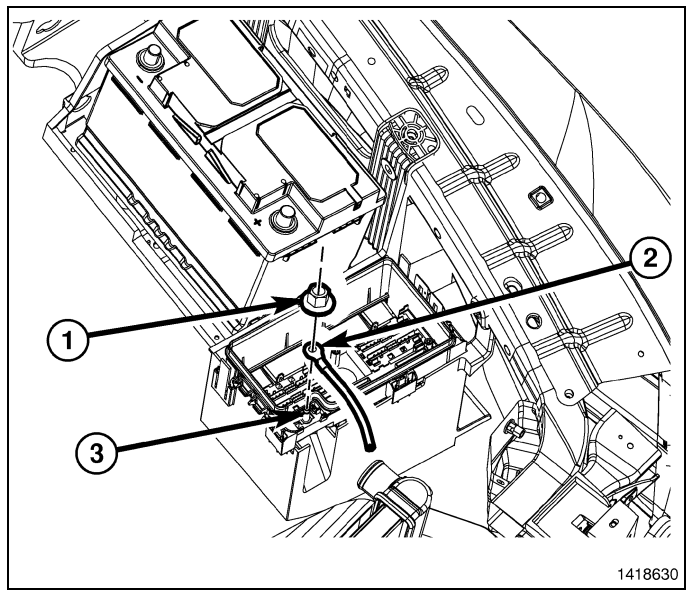

27. Install the ground from the pigtail harness (2), to the fender under the body ground (4).

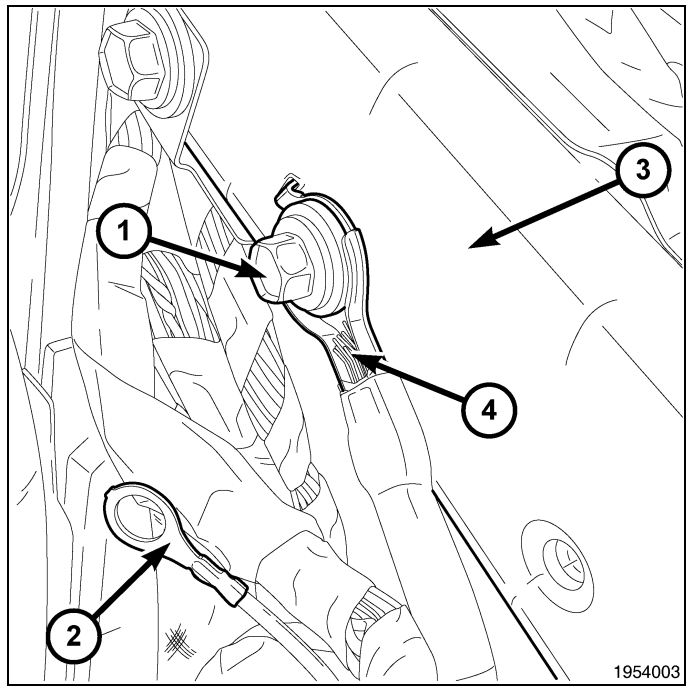

28. Install the radiator seal and the push pin retainers.

WIRELESS IGNITION MODULE (WIN) MODULE REMOVAL

1. Using a trim stick C-4755 or equivalent, disengage the retainer clip that secures the hood release to the steering column opening cover, and remove the hood release handle from the cover.
2. Remove the two fasteners (2) that secure the bottom of the steering column opening cover (1) to the instrument panel.

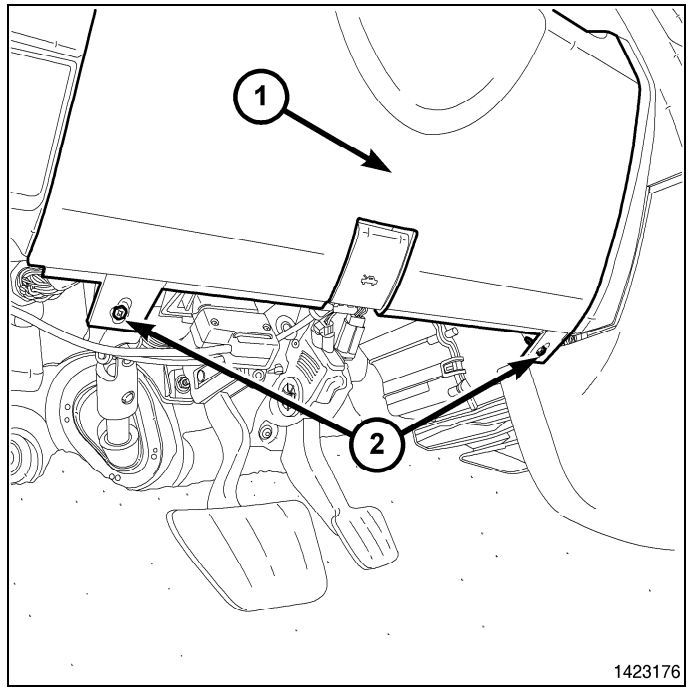

3. Remove the Data Link Connector (3) from the steering column opening cover (2) by pressing in the tabs (1) and pushing the connector through the opening on the back side of the cover.

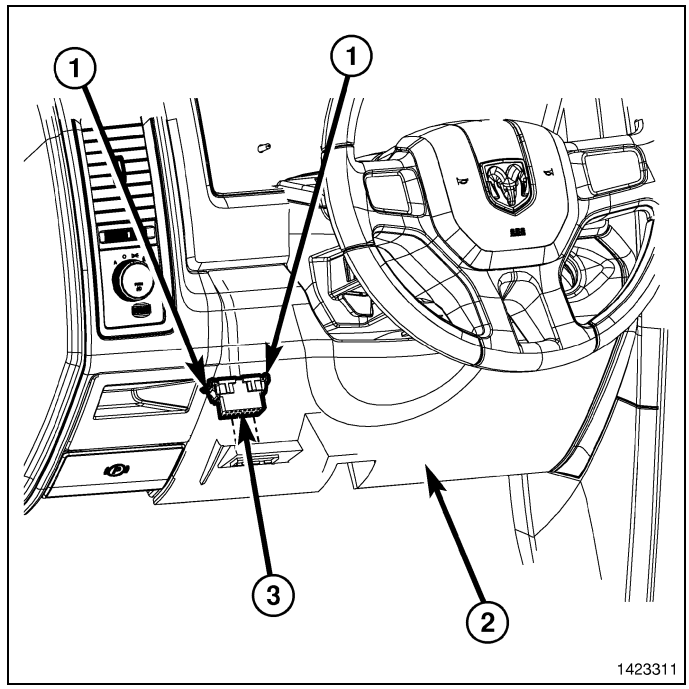

4. Using a trim stick C-4755 or equivalent, release the retainer clips that secure the steering column opening cover (1) to the instrument panel and remove the cover.

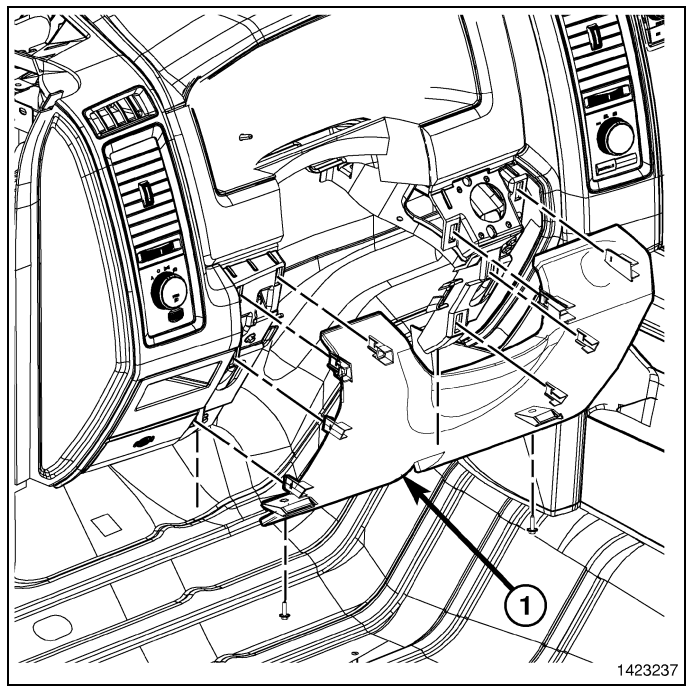

5. Remove the four WIN retainers (1).
6. Disconnect the WIN electrical connector.
7. Remove the WIN from the instrument panel opening.

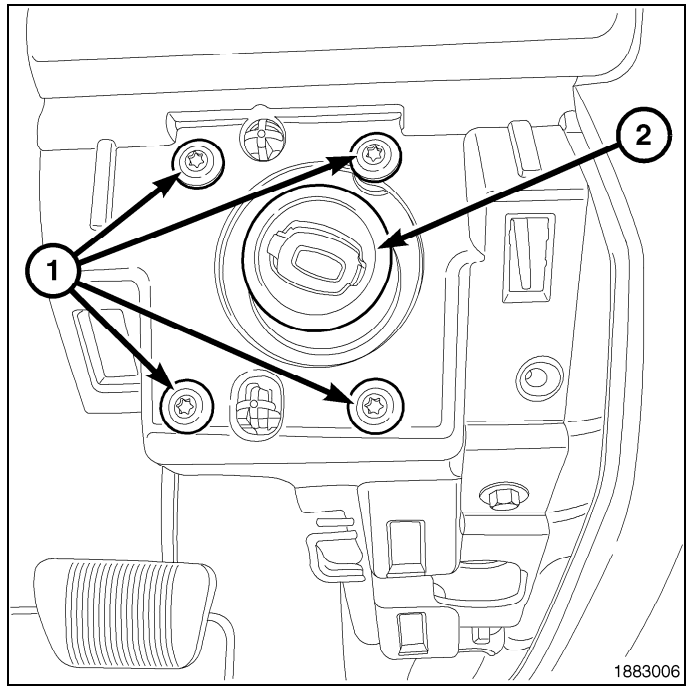

REMOTE START ANTENNA INSTALLATION

1. Open the glove box (2).
2. Release the two glove box stops (1) and lower the glove box (2) downward past the stops.

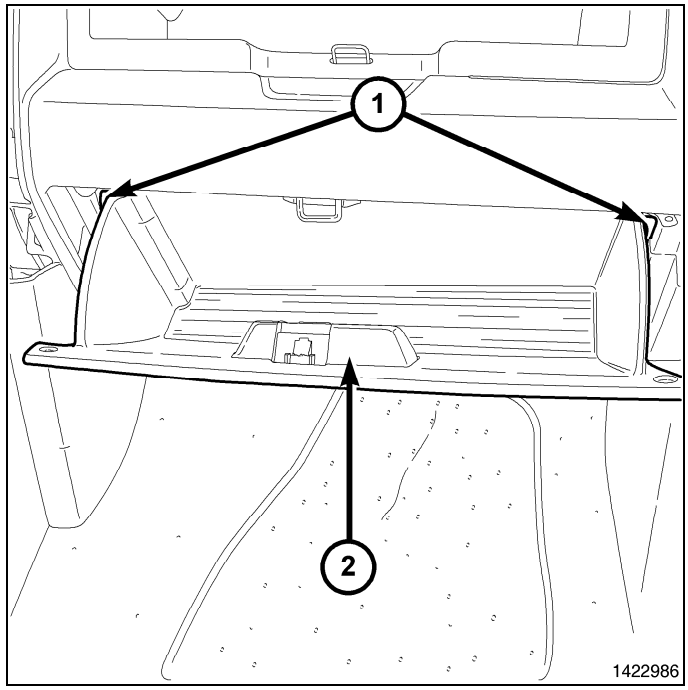

3. Disengage the glove box hinges (1) from the instrument panel and remove the glove box (2).

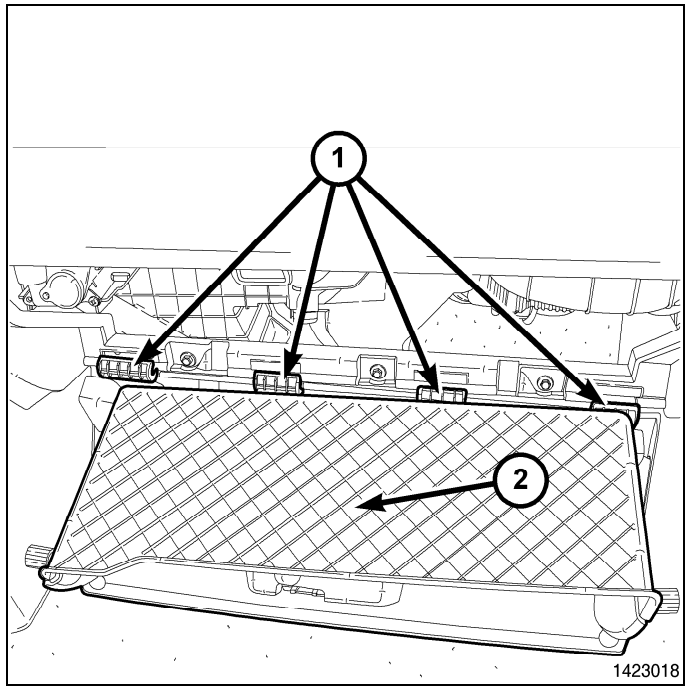

4. Through the glove box opening remove storage bin fastener (2) located at the back of the storage bin (1).

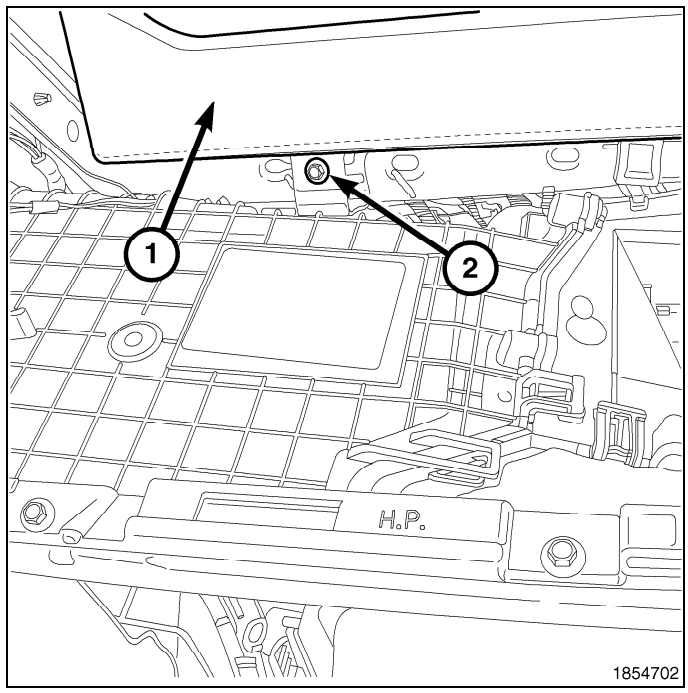

5. Open storage bin door (1).
6. Disengage the retainer clips that secure the storage bin (2) to the instrument panel (3).
7. Partial remove the storage bin and disconnect the storage bin light electrical connector.
8. Remove storage bin (2) from vehicle.

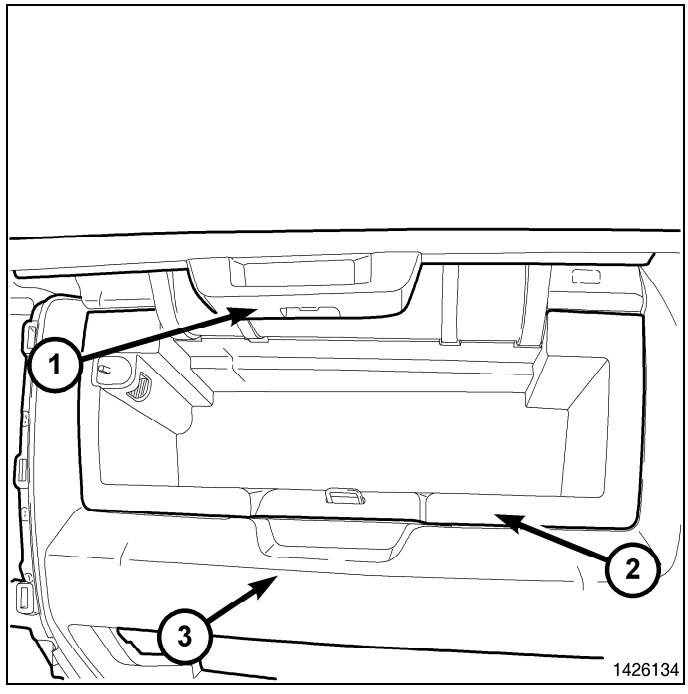

NOTE: The WIN antenna is located behind the left side of the storage bin.

9. Insert the right side of the WIN antenna module first, then push firmly on the right side to engage holding clip.
10. Secure the WIN antenna connector end to a stiff wire.
11. Route the antenna wire behind the radio toward the drives side of the vehicle.

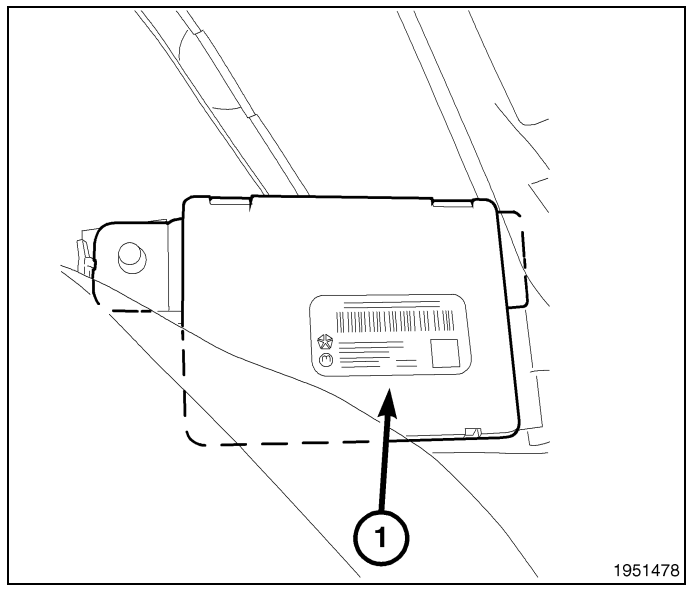

12. Partial install the storage bin and connect the storage bin light electrical connector.
13. Engage the storage bin retainer clips and fully seat the storage bin (2) to the instrument panel (3).
14. Close storage bin door (1).

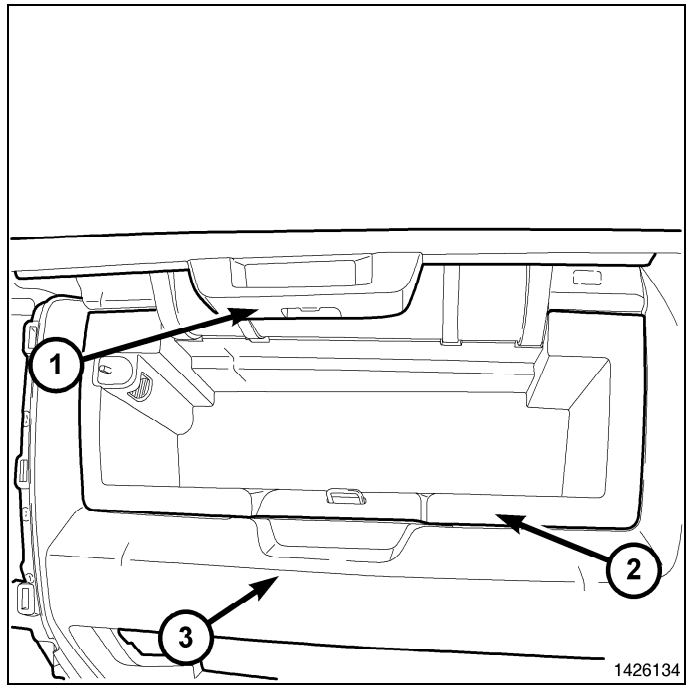

15. Through the glove box opening install the storage bin fastener (2) at rear of storage bin (1).

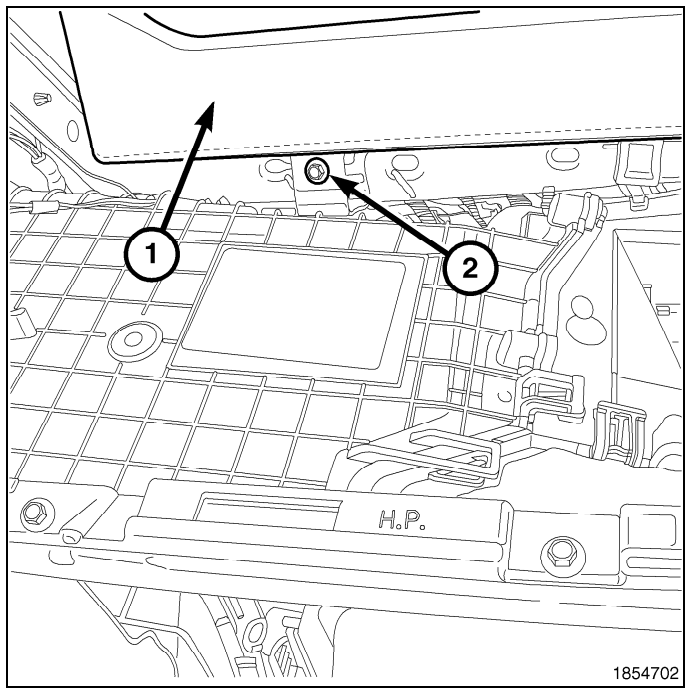

16. Engage the hinges (1) of the glove box (2) to the instrument panel.

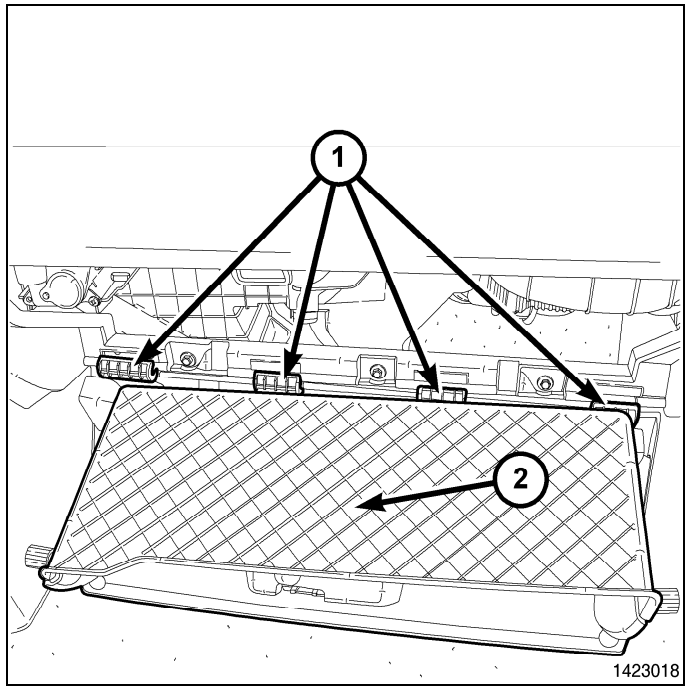

17. Press downward on the back edge of the glove box (2) and raise the glove box past the two stops (1).
18. Close the glove box.

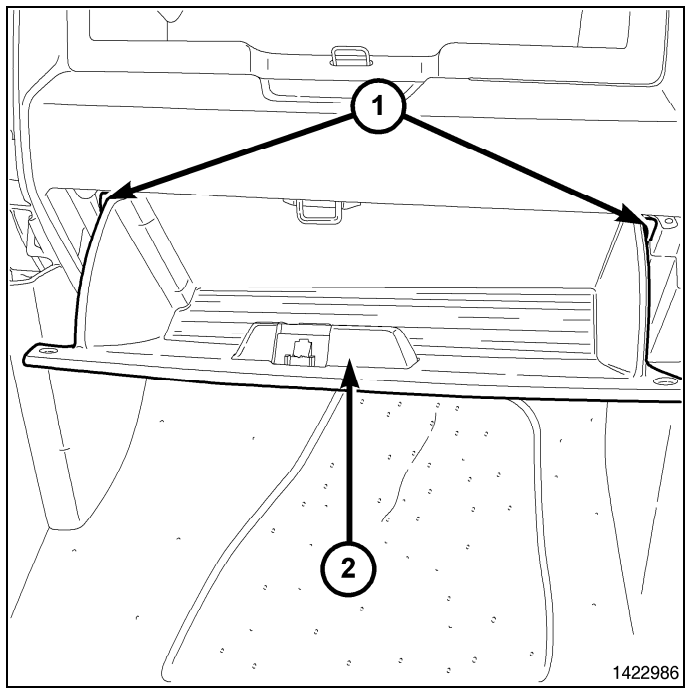

WIN MODULE INSTALLATION

1. Connect the WIN electrical connector.
2. Connect the antenna connector to the WIN.
3. Install the WIN (2) into the to instrument panel.

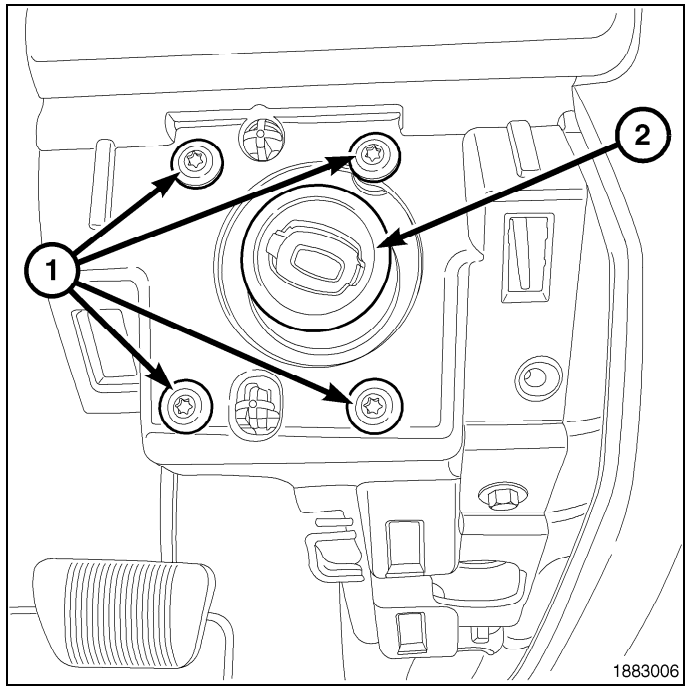

4. Position the steering column opening cover (2) to the instrument panel and fully engage the retainer clips to the instrument panel.

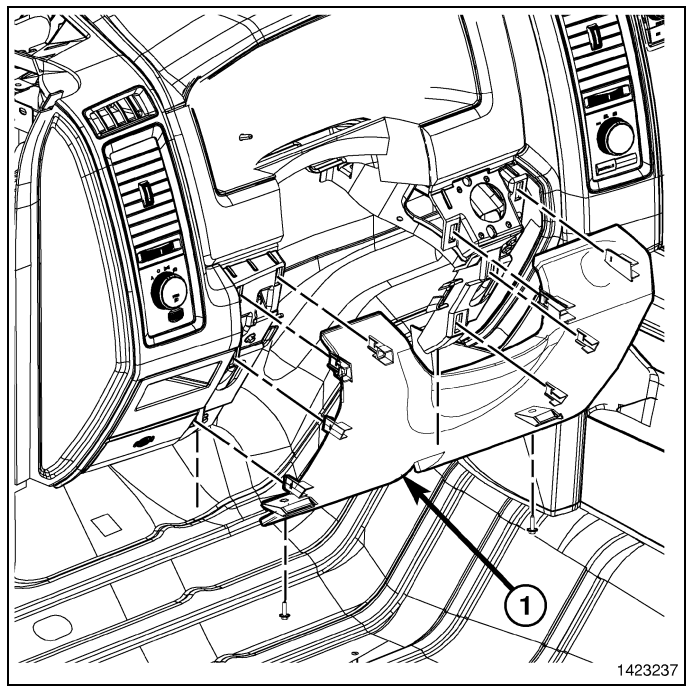

5. Install the Data Link Connector (3) to the steering column opening cover (2) by pushing the connector through the opening on the back side of the cover and fully engaging the lock tabs (1) of the connector.

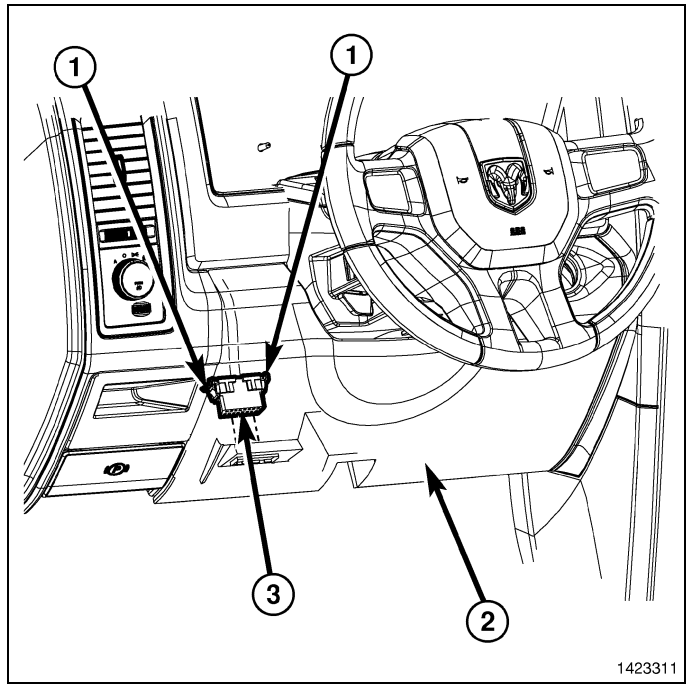

6. Install the two fasteners (2) that secure the steering column opening cover (1) to the instrument panel.
7. Position the hood release handle onto the column opening cover and fully engage the retainer clip that secures the hood release handle to the steering column opening cover.

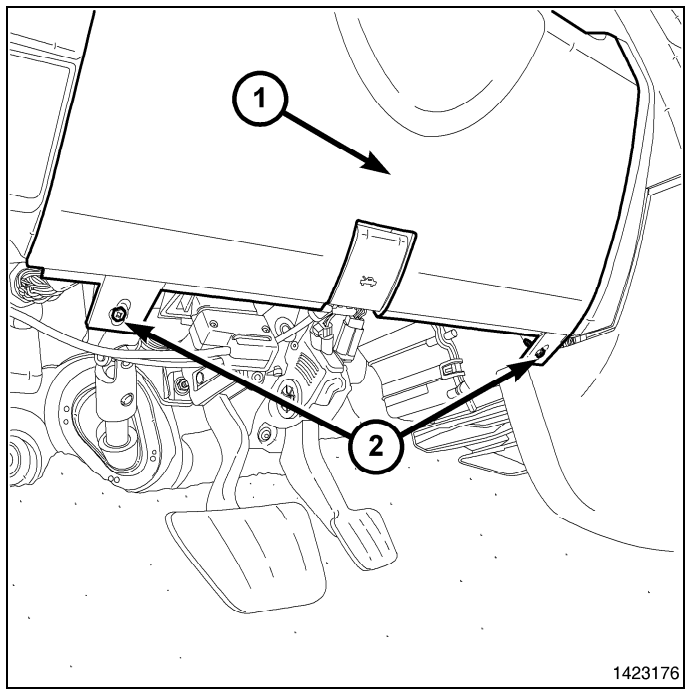

8. Connect the negative battery cable.

PROGRAMMING THE WIN

CAUTION: Read all notes and cautions for programming procedures.

1. Connect a battery charger to the vehicle.
2. Connect the scan tool.

NOTE: Have the vehicle PIN readily available before running the routine

CAUTION: If the PCM and WIN are replaced at the same time, the PCM MUST be programmed before the WIN.

3. Select “ECU View.”
4. Select “WCM”.
5. Select “Miscellaneous Functions.”
6. Select "WIN Replaced".
7. Enter the PIN when prompted.
8. Cycle ignition key after the successful routine completion.

PROGRAMMING IGNITION KEYS TO THE WIN

CAUTION: Read all notes and cautions for programming procedures.

1. Connect a battery charger to the vehicle.
2. Connect the scan tool.
3. Have a unique vehicle PIN readily available before running the routine.
4. Ignition key should be in RUN position.
5. Select “ECU View”.
6. Select “WCM Wireless Control”.
7. Select “Miscellaneous Functions.”
8. Select “Program Ignition Keys or Key FOBs”, Start
9. Enter the PIN when prompted.
10. Verify the correct information.
11. Cycle ignition key after the successful routine completion.

NOTE: If the original keys do not successfully program to the new WIN after the proper procedures are followed correctly, programming new keys will be necessary.

NOTE: A maximum of eight keys can be learned by the WIN. Once a key is learned by a WIN, that key has acquired the Secret Key for that WIN and cannot be transferred to any other vehicle.

ECU RESET

With the diagnostic scan tool connected to the vehicle, perform the following steps from the Initial Start Up Screen:

1. Select "ECU VIEW"
2. Select "WCM/WIN"
3. Select "MISC FUNCTIONS"
4. Select "RESET ECU"
5. Select "START"
6. Select "NEXT"

UPDATE PRESSURE THRESHOLDS

NOTE: You must know the PIN to do the steps below.

1. Select "ECU VIEW"
2. Select “TIPMCGW”
3. Select “MISC FUNCTIONS”
4. Select “UPDATE PRESSURE THRESHOLDS”
5. Get tire pressure data from placecard on drivers side door jam.
6. Select "NEXT"
7. Select "NEXT"
8. From the drop down menu select the tire pressure from the placecard.
9. Select "NEXT"
10. Enter the four digit PIN
11. Select "NEXT"
12. Select "FINISHED"

NOTE: The vehicle must be driven before the TPMS light will turn off.

REMOTE START DISABLE OVERRIDE

With the diagnostic scan tool, perform the following steps.

1. Select "ECU VIEW"
2. Select “TIPMCGW”
3. Select “MISC FUNCTIONS”
4. Select "Temporary Remote Start Disable"
5. Select "START"
6. Select "NEXT"
7. Verify that "Current state: Disabled" is displayed. If not select "DISABLE"
8. Select "FINISH"

CLEAR ALL DTC'S

1. Use the scan to clear all DTC's

ACTIVATE THE REMOTE START

To activate the remote start the vehicle must have been driven at least 35 MPH.

With the vehicle off, and the doors closed and locked, verify the remote start is functioning properly.

INTERIOR STORAGE

TABLE OF CONTENTS

page

INTERIOR STORAGE
INSTRUCTION SHEET
LOCKABLE GLOVE BOX 1
FLEXIBLE HIDDEN STORAGE LOCK 1

Interior Storage

Instruction Sheet

DODGE RAM

PROCEDURE STEPS:

1. Open the glove box.
2. Remove the retainers (1) from the glove box and remove the latch assembly.

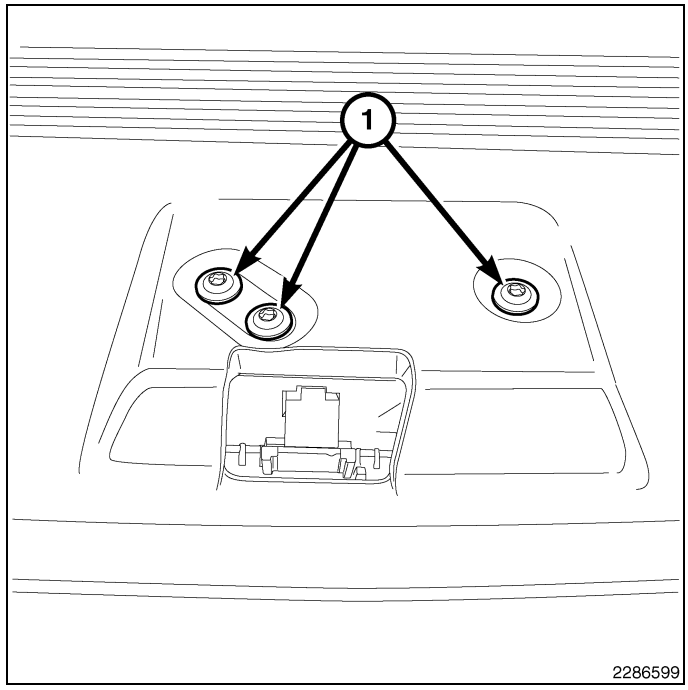

3. Insert the key into the lock cylinder (2), align the slot (1) on the lock cylinder with the tab on the latch (shown in step 4).

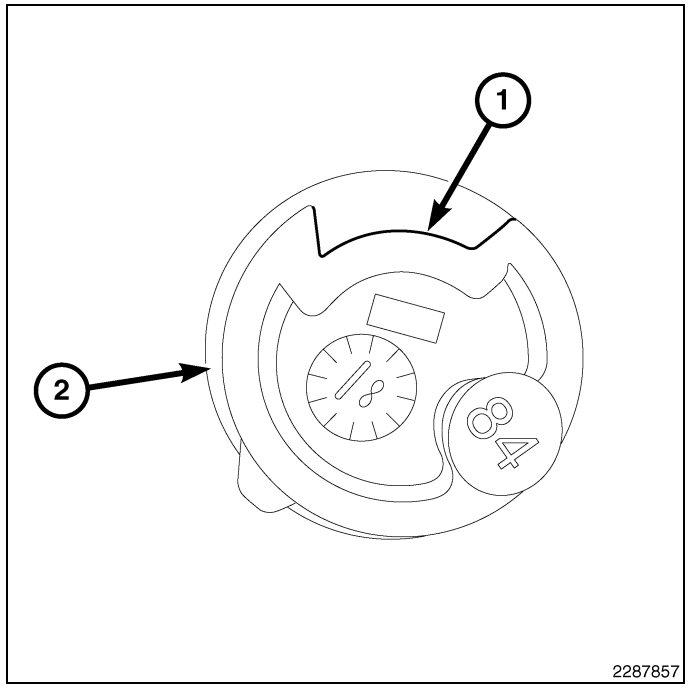

4. While aligning the slot with the tab (1) it may be necessary to move the key around in the cylinder to allow easier installation.

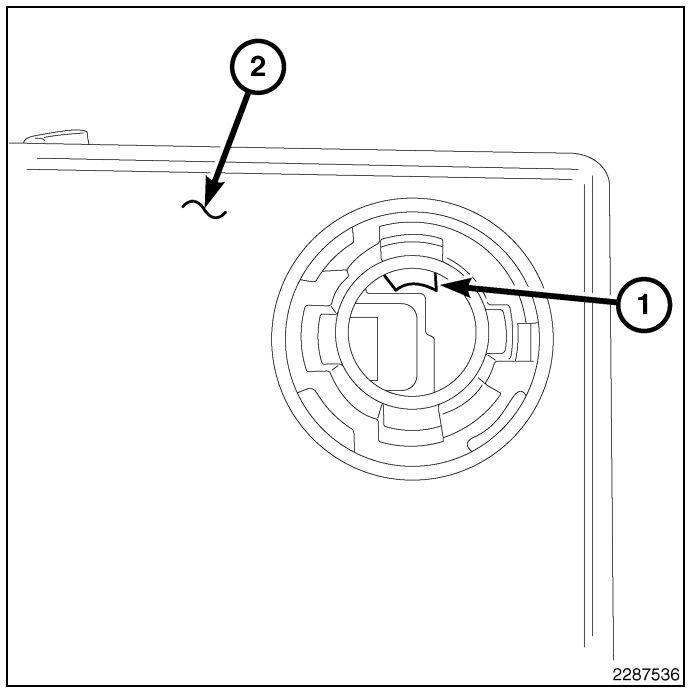

5. Turn the key counter clockwise until it clicks in a vertical position.
6. Remove the key from the handle.
7. Install the handle into the glove box and tighten the retainers (reverse step 1 for installation).
8. Verify that the glove box locks and unlocks.

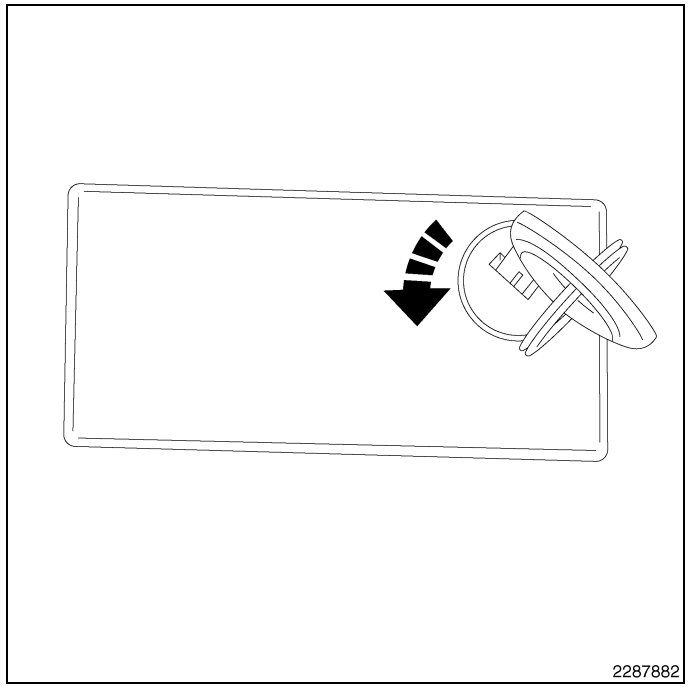

DODGE RAM

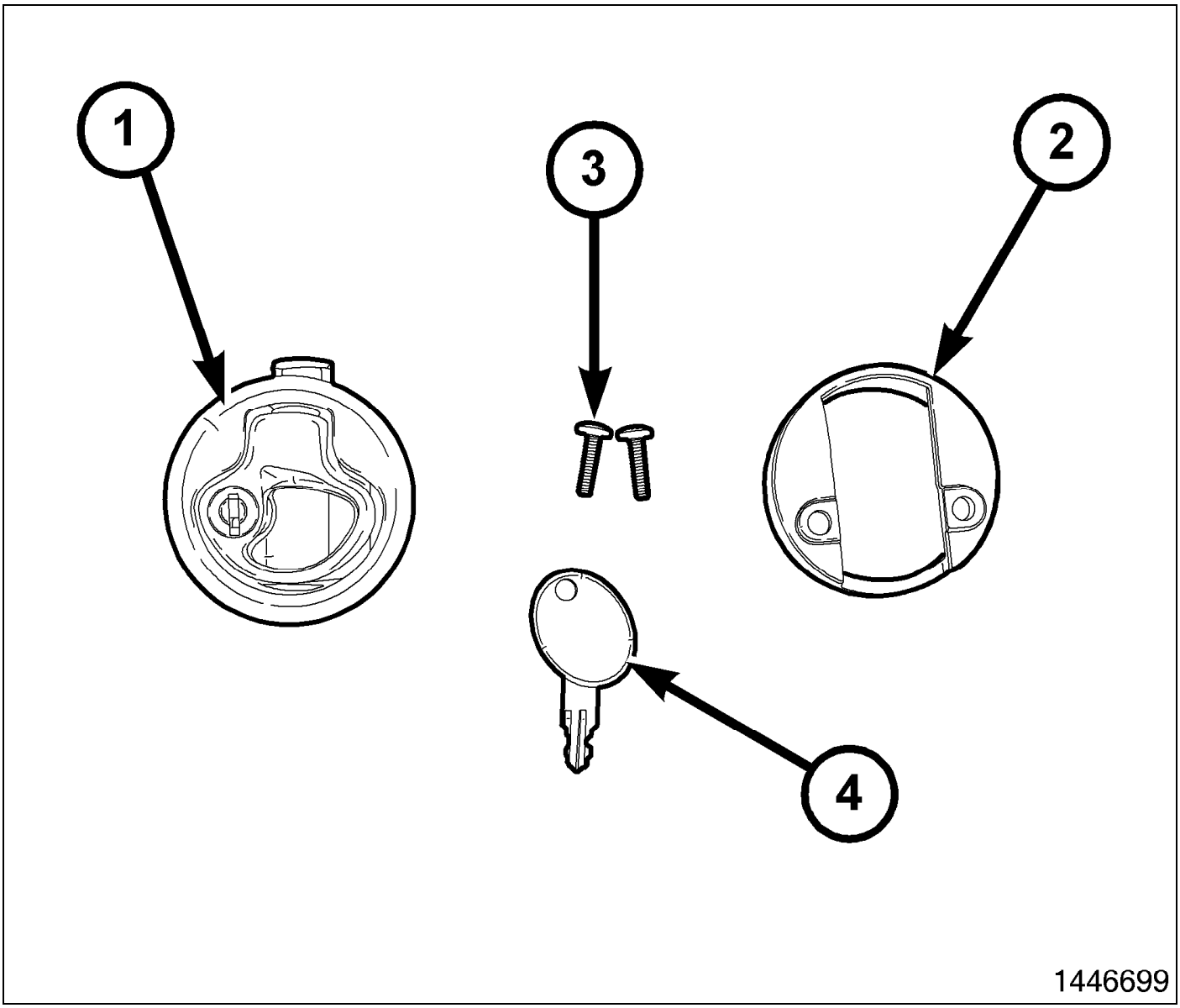

Call Out	Description	Parts	Quantity
1	Latch	Supplied in kit	2
2	Latch Back	Supplied in kit	2
3	Retaining Screw	Supplied in kit	4
4	Key	Supplied in kit	2

PROCEDURE STEPS:

1. Remove the two retaining screws (1) from the latch (2) and discard.
2. Remove and discard the latch (2) from the storage bin cover.

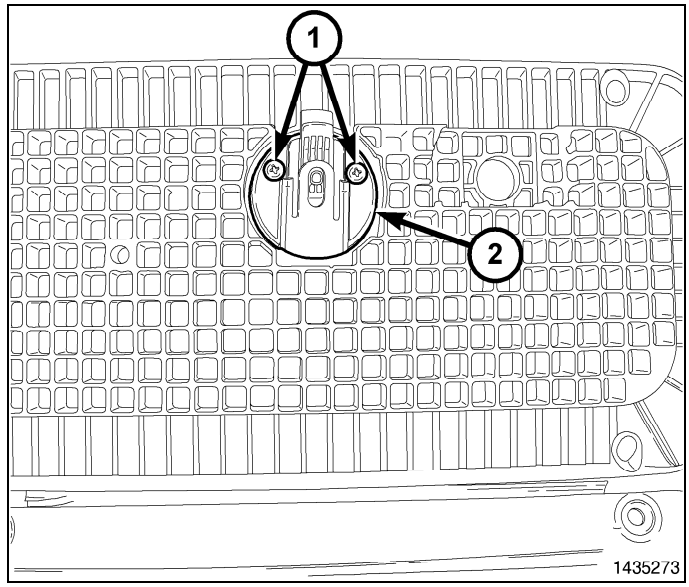

3. Install the new storage latch (2) into the storage bin cover.
4. Hand tighten the two supplied retaining screws (1) in the new storage latch (2).

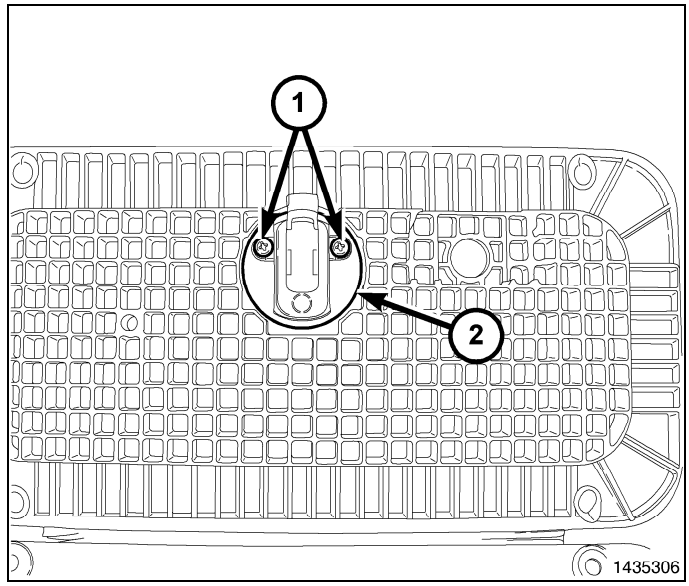

AUDIO AND ELECTRONICS

TABLE OF CONTENTS

page

AUDIO AND ELECTRONICS
INSTRUCTION SHEET
BACKUP CAMERA 1
WI-FI ROUTER 1
WI-FI ROUTER, REGULAR CAB. 1
SDARS ANTENNA 1

Audio And Electronics

Instruction Sheet

DODGE RAM

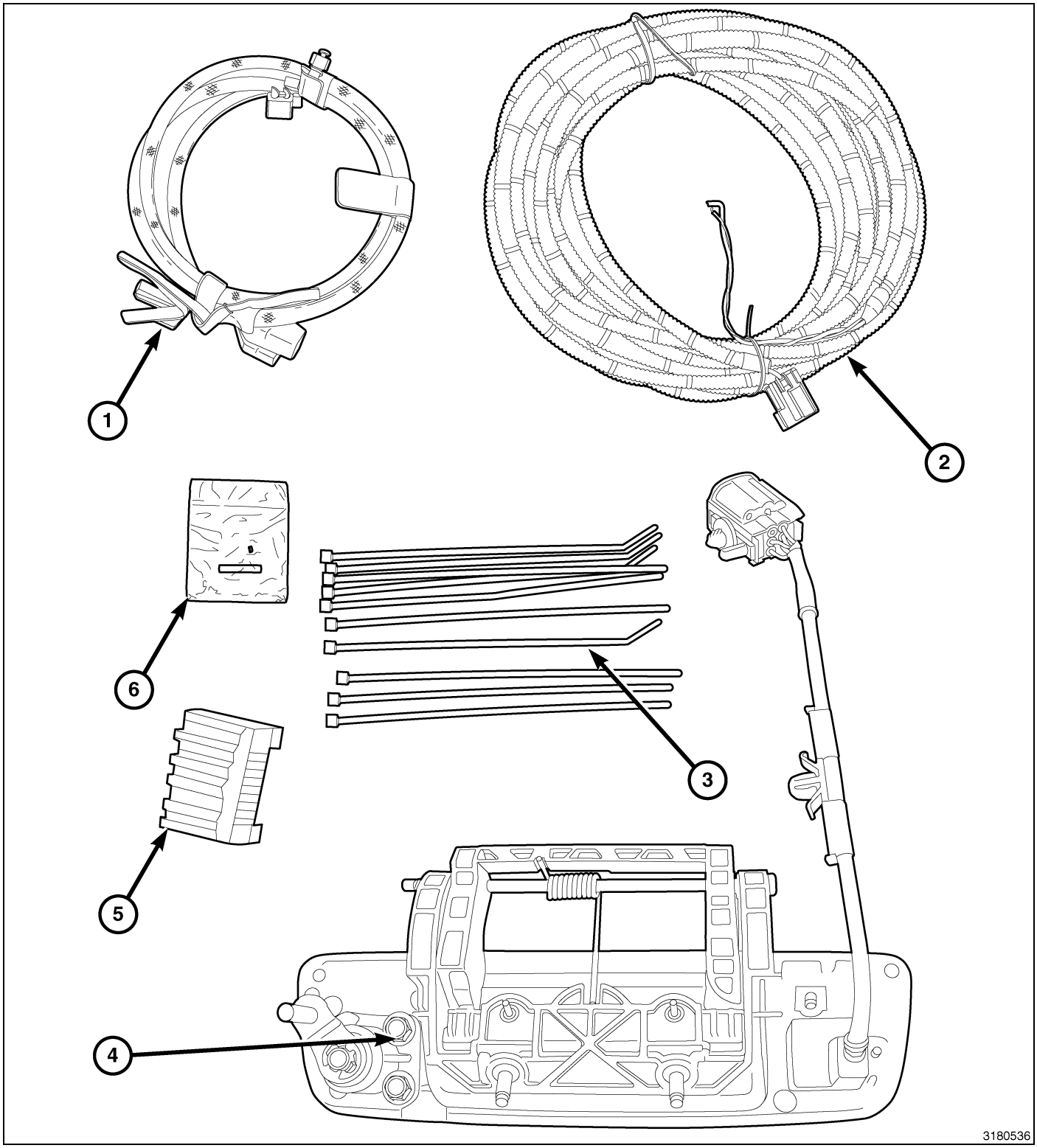

CALL OUT	DESCRIPTION	QUANTITY
1	Backup camera tailgate harness	1

CALL OUT	DESCRIPTION	QUANTITY
2	Backup camera overlay harness	1
3	Zip Ties	26
4	Tailgate release handle with backup camera	1
5	Backup camera radio connector	1
6	Splice Kit (includes one splice collar and shrink tube)	1

PROCEDURE STEPS:

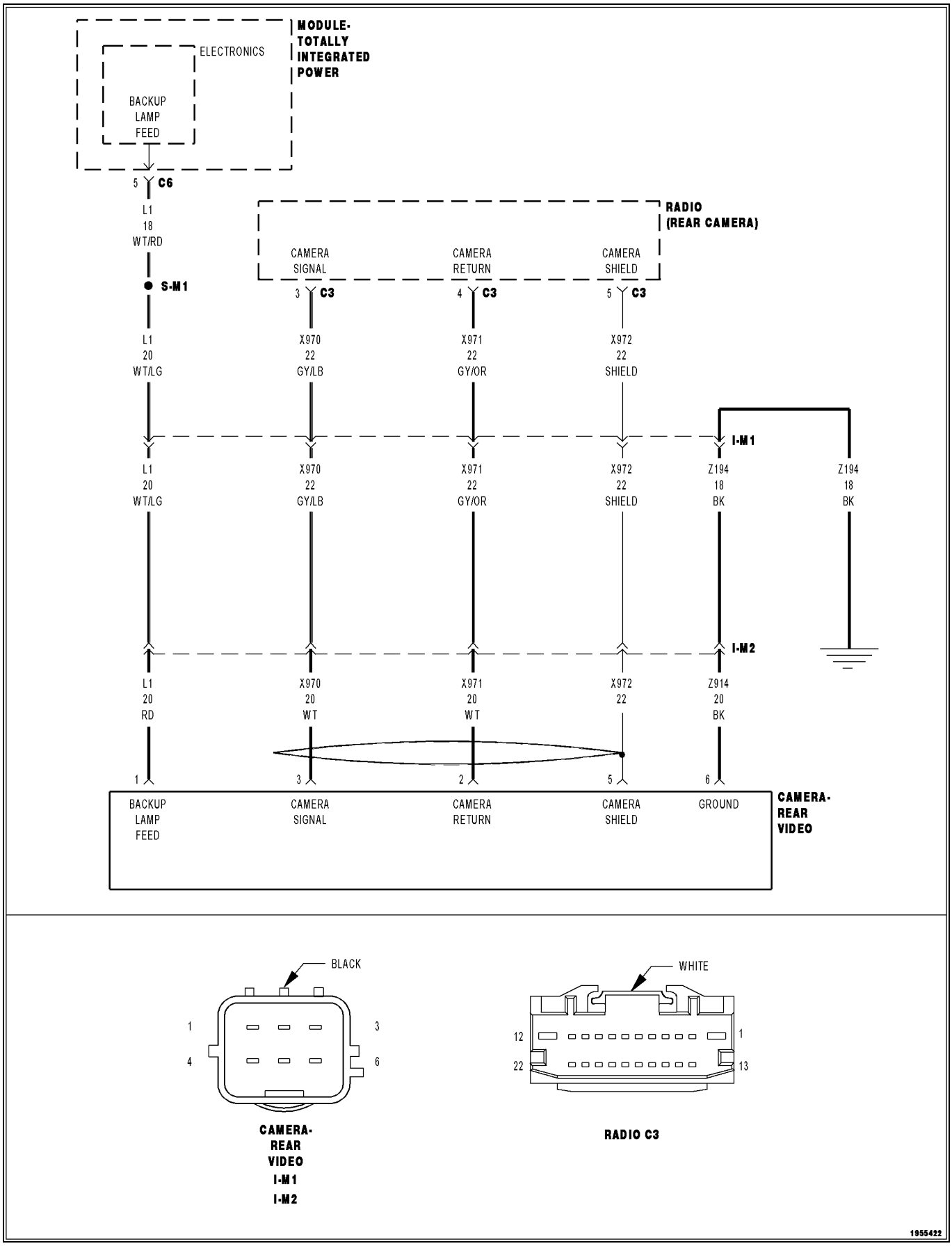

2009 - 2010 Ram 1500, 2010 - Current Ram 2500/3500

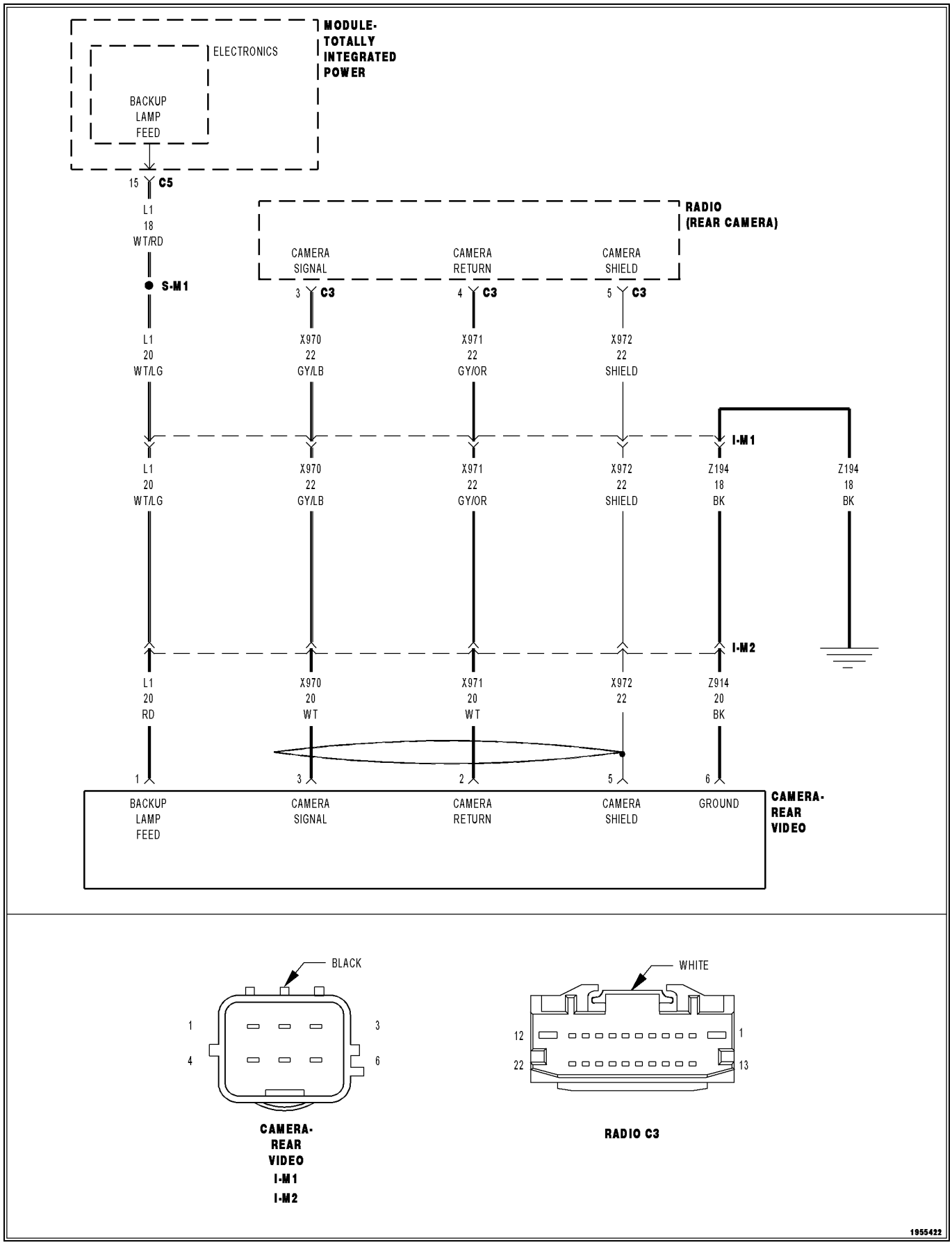

2011 - Current Ram 1500

WARNING: On vehicles equipped with airbags, disable the airbag system before attempting any steering wheel, steering column, seat belt tensioner, or instrument panel component diagnosis or service. Disconnect and isolate the battery negative (ground) cable, then wait two minutes for the airbag system capacitor to discharge before performing further diagnosis or service. This is the only sure way to disable the airbag system. Failure to take the proper precautions could result in accidental airbag deployment and personal or fatal injury .

1. Disconnect and isolate the negative battery cable.
2. Remove the upper and lower center bezel tray liners (1).

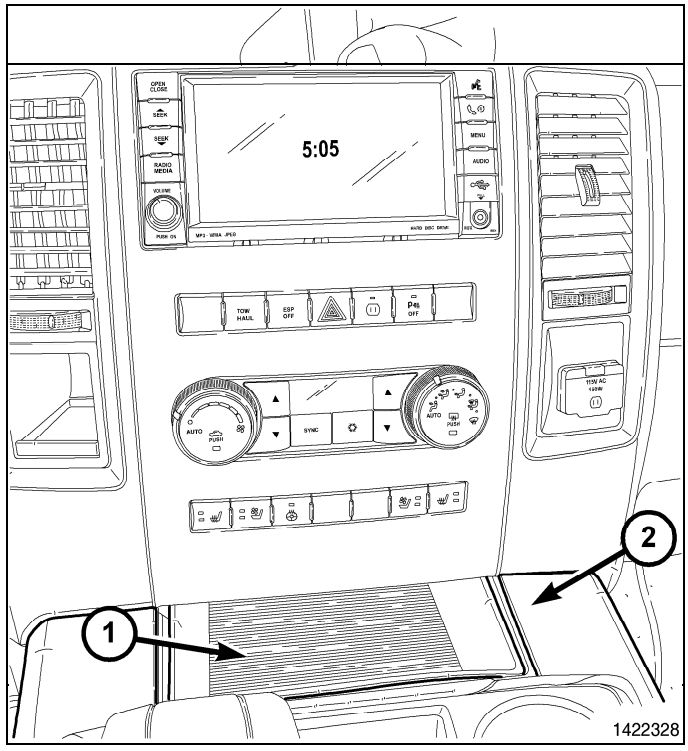

3. Using a trim stick C-4755 or equivalent, disengage the retainers clips that secure the power outlet trim bezel (1) to the center bezel (2).

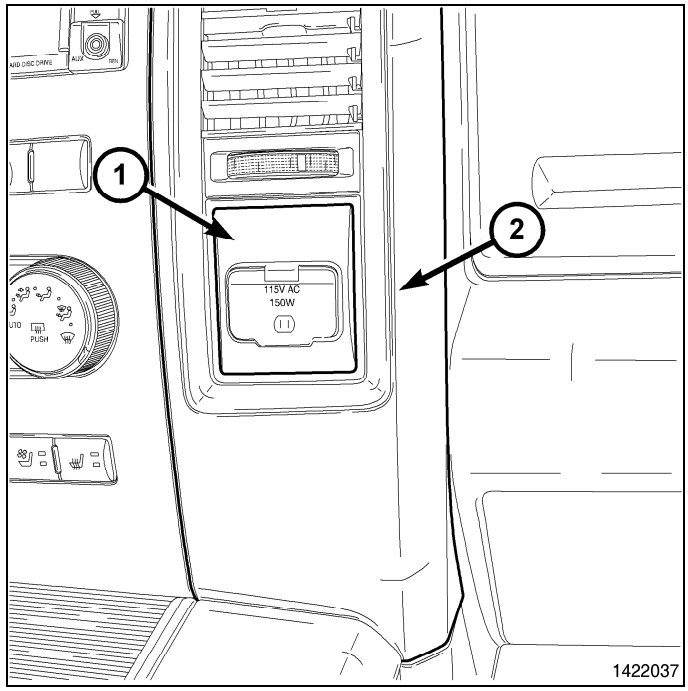

4. Remove the two top center bezel fasteners (1).

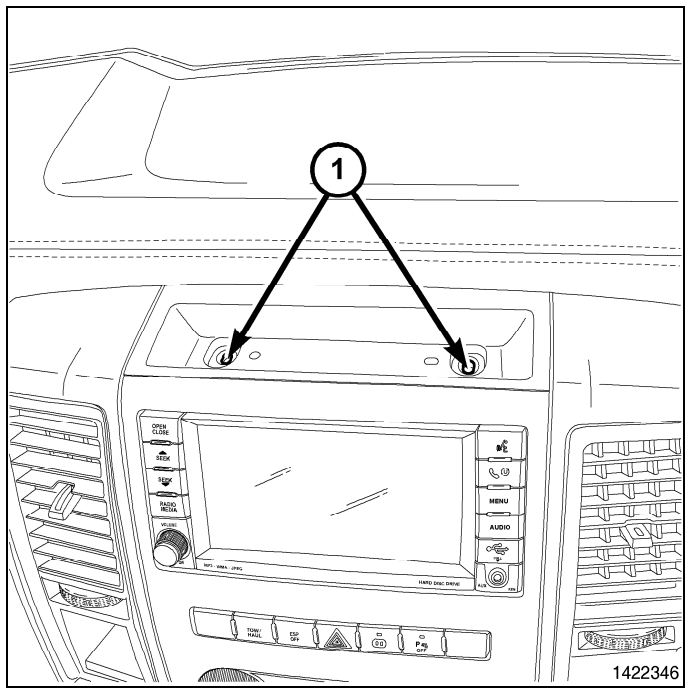

5. Remove the fasteners from the console bin (1).

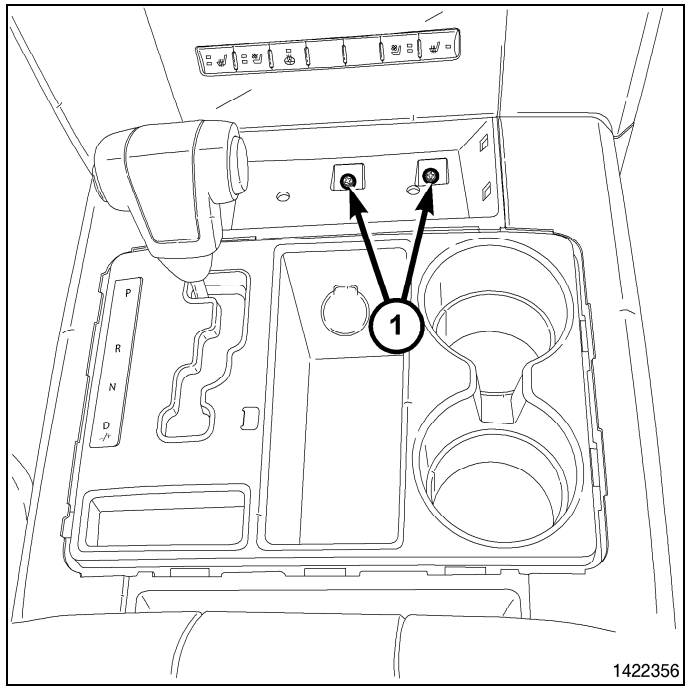

6. Remove the fastener from the power outlet (1).

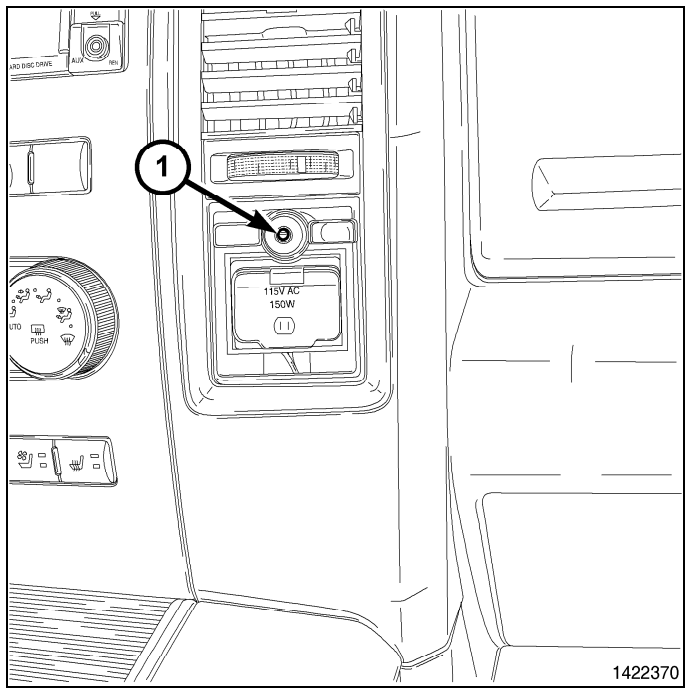

7. Using a trim stick C-4755 or equivalent, disengage the retainer clips that secure the trim ring to the floor console.

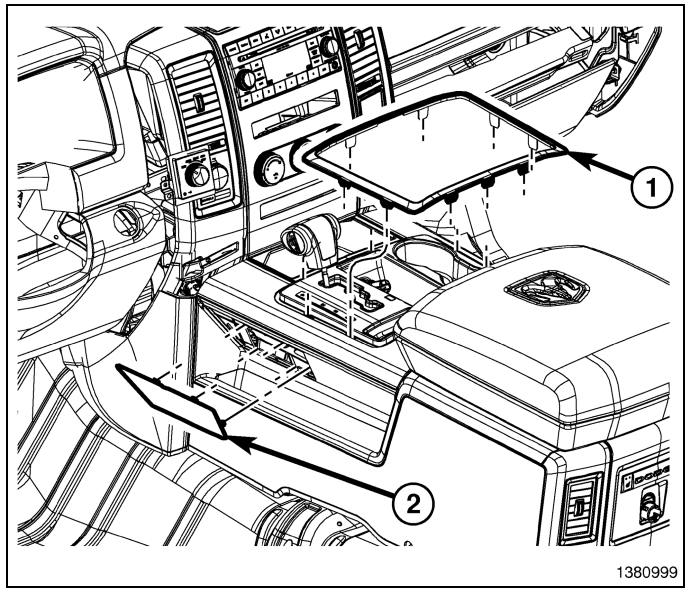

8. Using a trim stick C-4755 or equivalent, disengage the retainer clips that secure the shifter bezel to the floor console

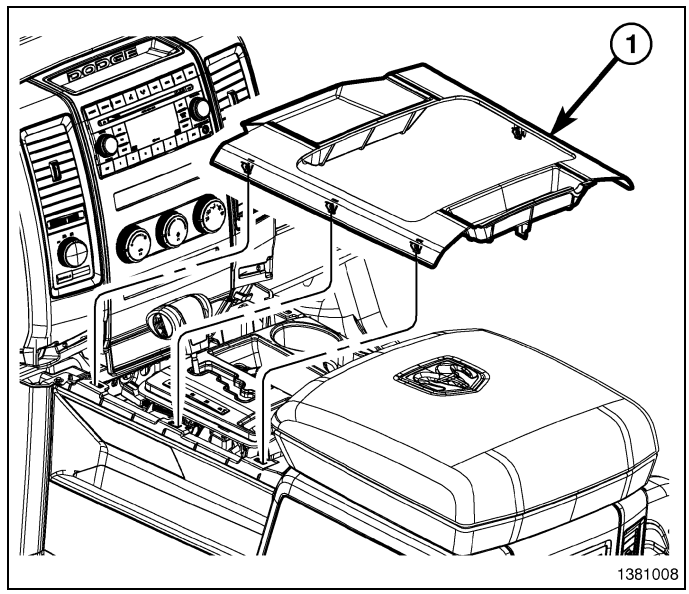

9. Using a trim stick C-4755 or equivalent, disengage the retainer clips that secure the instrument panel center bezel (1) to the instrument panel.
10. Disconnect the wire harness connectors (4) and remove the center bezel from the instrument panel.

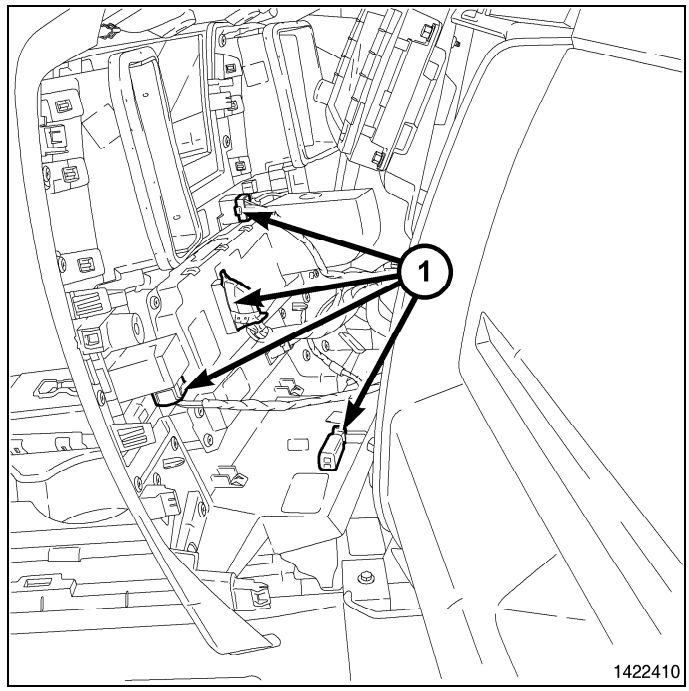

11. Using a trim stick C-4755 or equivalent, disengage the retainer clip that secures the hood release to the steering column opening cover, and remove the hood release handle from the cover.
12. Remove the two fasteners (2) that secure the bottom of the steering column opening cover (1) to the instrument panel.

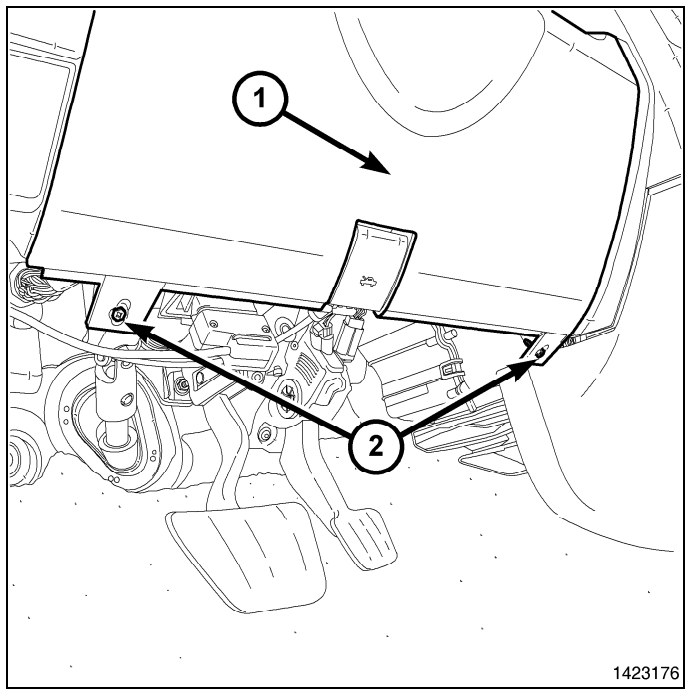

13. Remove the Data Link Connector (3) from the steering column opening cover (2) by pressing in the tabs (1) and pushing the connector through the opening on the back side of the cover.

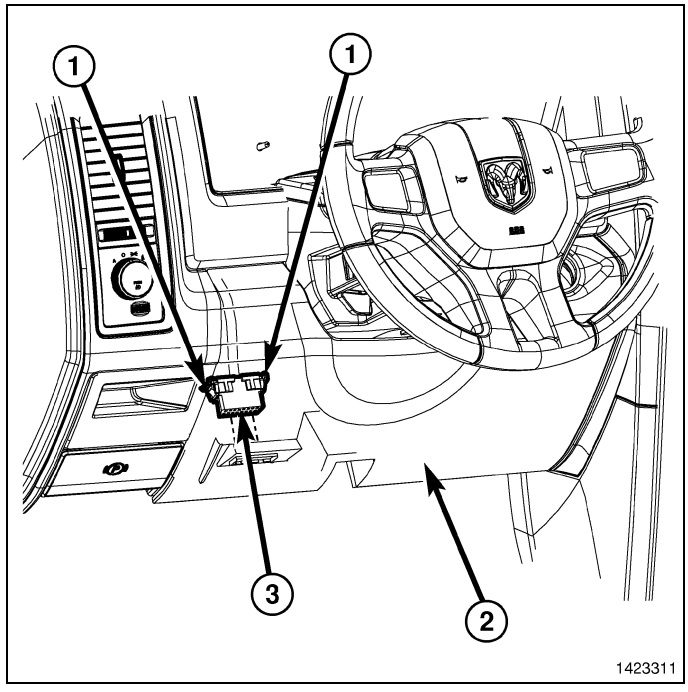

14. Using a trim stick C-4755 or equivalent, release the retainer clips that secure the steering column opening cover (1) to the instrument panel and remove the cover.

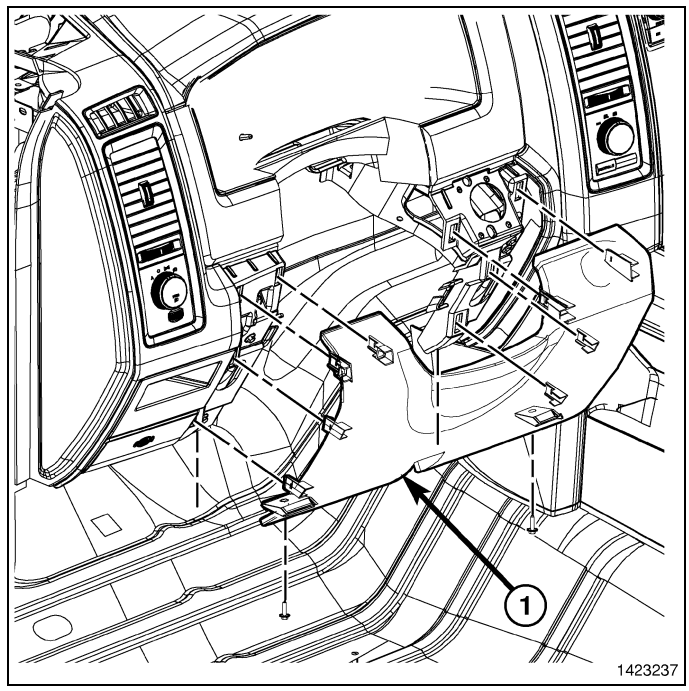

15. If equipped, remove the tailgate bedliner.
16. Remove the tailgate access cover.

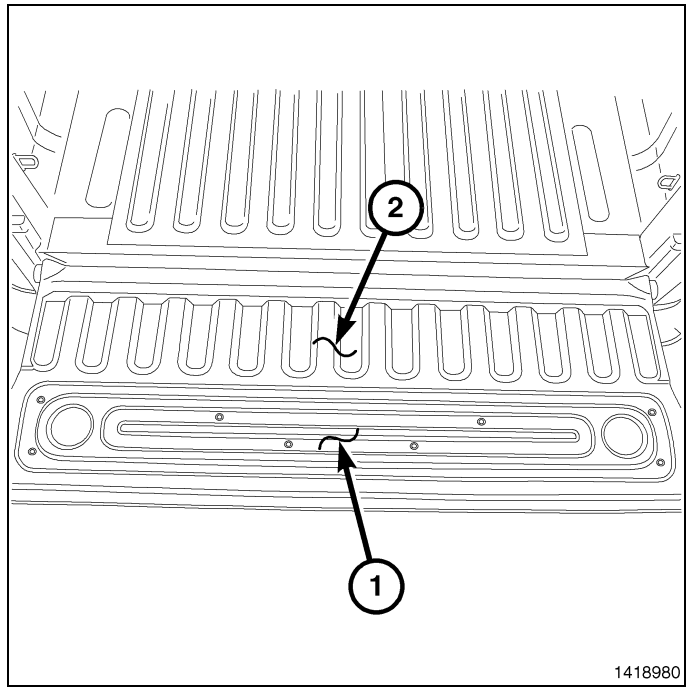

17. Using a grease pencil or equivalent, mark the location of the actuator rods at the control (2).
18. Disconnect the actuator rods from the control.
19. Remove the two nuts (3) that secure the release handle (1) and the control (2) to the tailgate.
20. Remove the control (2) and the release handle (1) from the tailgate.

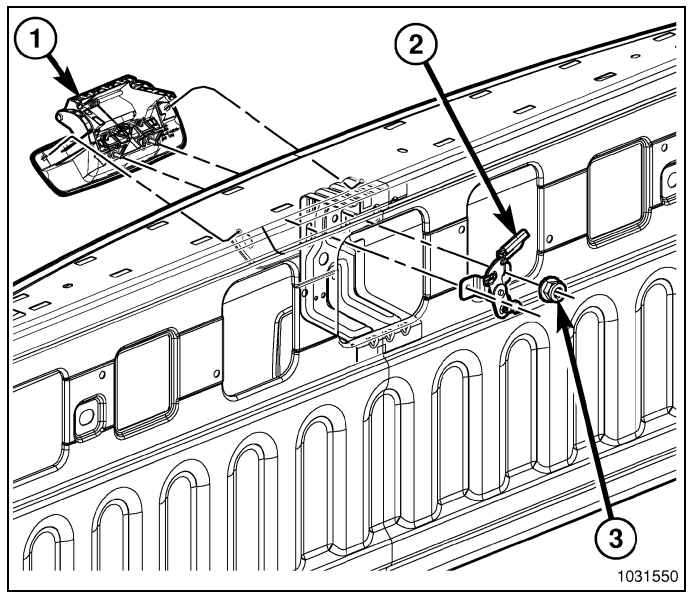

21. Install the new tailgate release handle with backup camera.
22. Install the two nuts (1) that secure the release handle and the control to the tailgate.
23. Connect the actuator rods (2) to the control.

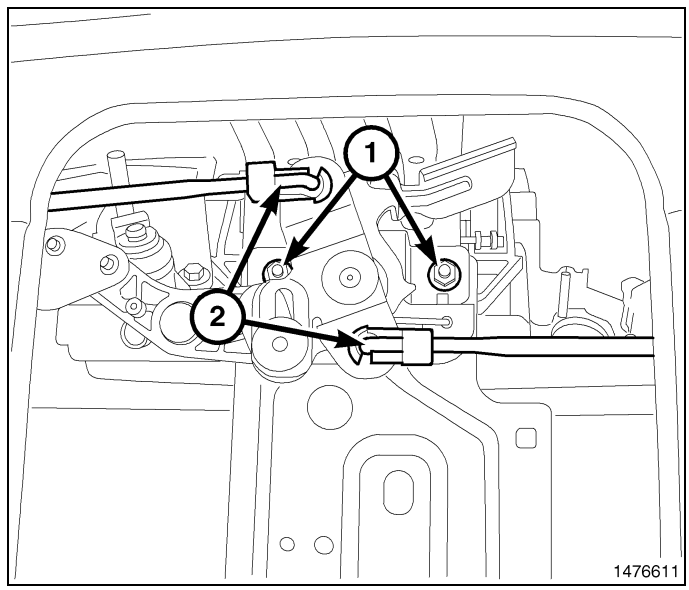

24. Route the camera harness under the actuator rods.
25. Clip backup camera harness into the two slots in the metal bracket.
26. Route the harness down the drivers side body harness and secure where necessary.
27. Route up through the fender well to the engine compartment.

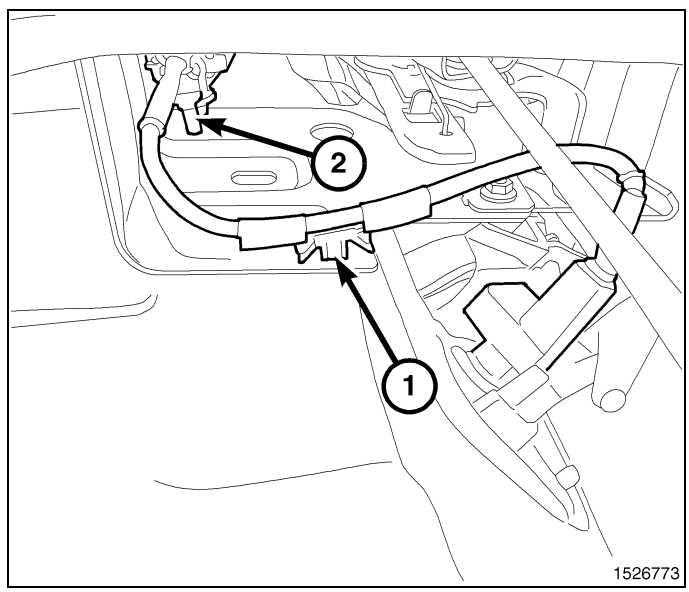

28. Cut the end off the dash panel grommet nipple (1) hanging off the bottom side of the body harness near the brake booster.

NOTE: Ensure when routing the wire not to damage the wire terminals.

29. Route the backup camera harness through the dash panel grommet nipple, except for the WT/LG and BK wire.
30. Apply Mopar® RTV 82300234 around the grommet nipple.

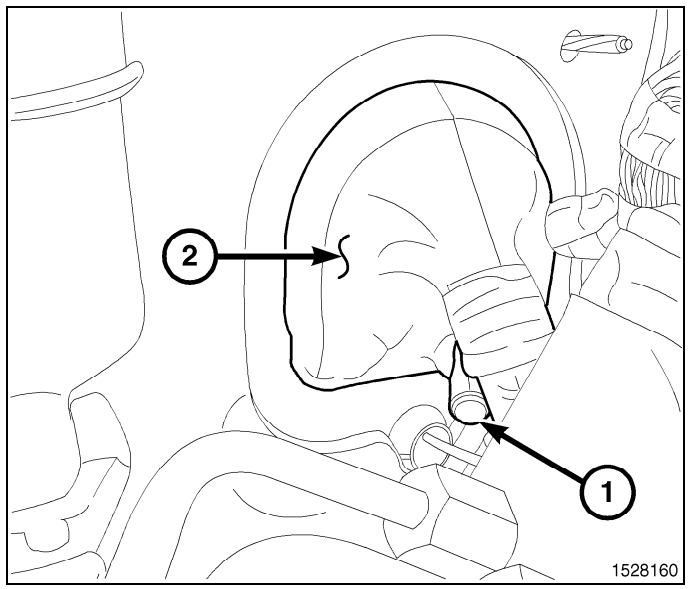

31. Remove the B+ terminal nut (1) from the Totally Integrated Power Module (3) (TIPM) B+ terminal. Remove the B+ cable (2) from the TIPM.
32. Using a suitable flat blade tool, disengage the TIPM upper retaining tabs from the battery tray bracket.

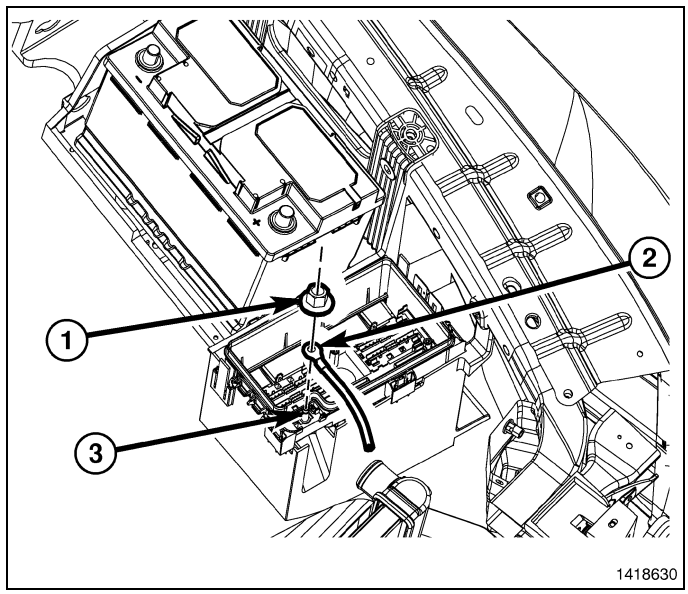

33. Grasp the TIPM (1) and rotate the assembly up to free it from its mounting bracket (2). Position the assembly upside down to access the electrical connectors located on the bottom of the unit.
34. **2009 - 2010 Ram 1500, 2010 Ram - Current 2500/3500**, Disconnect connector C6, letter F labeled on the bottom of the TIPM. Release by depressing the locking tab and rotating the connector arm outboard, until the connector is free from the TIPM assembly (1). Be certain to pull the connector straight off.
35. **2011 - Current Ram 1500**, Disconnect connector C5, letter E labeled on the bottom of the TIPM. Release by depressing the locking tab and rotating the connector arm outboard, until the connector is free from the TIPM assembly (1). Be certain to pull the connector straight off.
36. Cut the backup lamp feed wire to length.

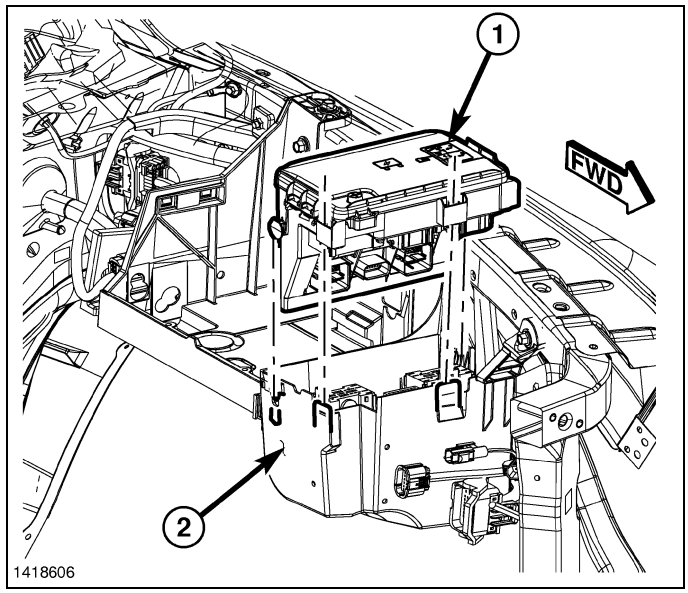

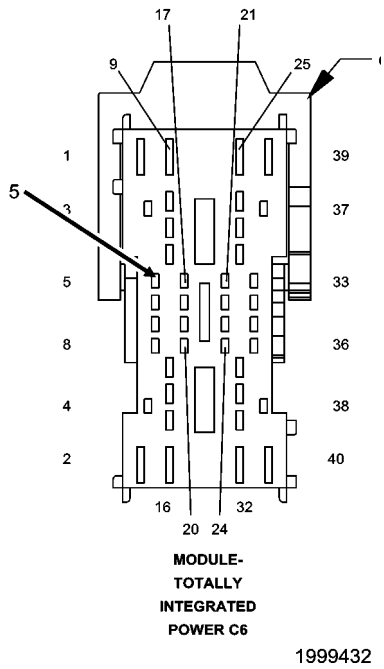

2009 - 2010 Ram 1500, 2010 - Current Ram 2500/3500

37. **2009 - 2010 Ram 1500, 2010 - Current Ram 2500/3500**, Cut the L1 circuit WT/RD from cavity 5, using steps 37 - 42, solder in the WT/LG backup lamp feed wire.

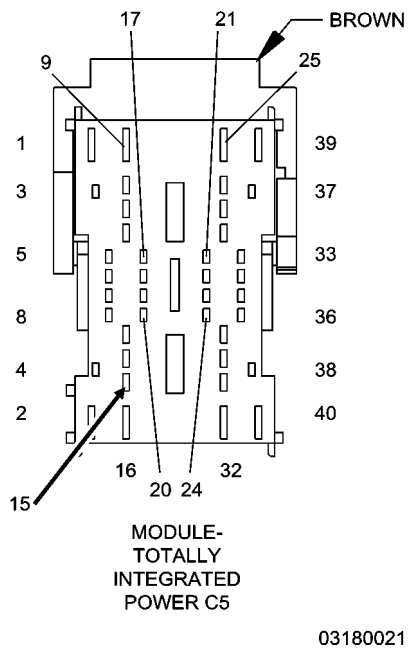

2011 - Current Ram 1500

38. **2011 - Current Ram 1500**, Cut the L1 circuit WT/LG from cavity 15, using steps 37 - 42, solder in the WT/LG backup lamp feed wire.
39. Cut each wire and remove 13mm (0.5 in.) of insulation from each wire that needs to be soldered/spliced.
40. Place a piece of supplied adhesive lined heat shrink tubing on one side of each cut wire. Insure the tubing will be long enough to cover and seal the entire soldered area.

CAUTION: Do not use acid core solder.

41. Place the strands of the power side wires overlapping each other inside of the splice clip (1).

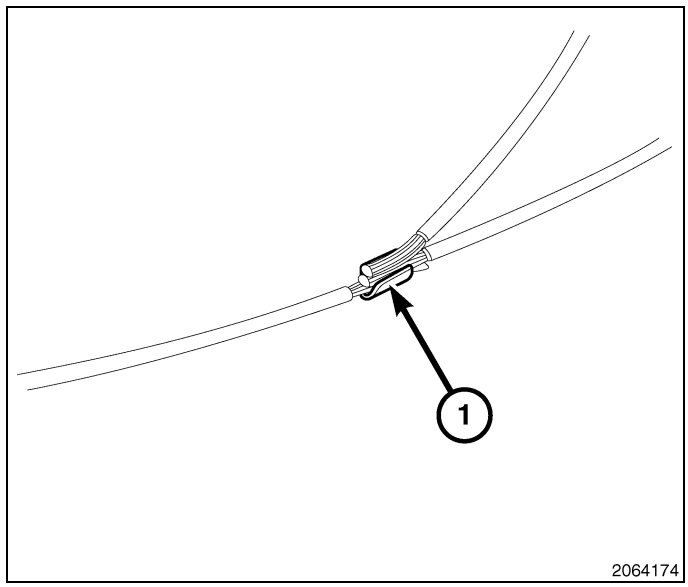

42. Using crimping tool (1), Mopar® p/n 05019912AA or equivalent, crimp the splice clip and wires together.

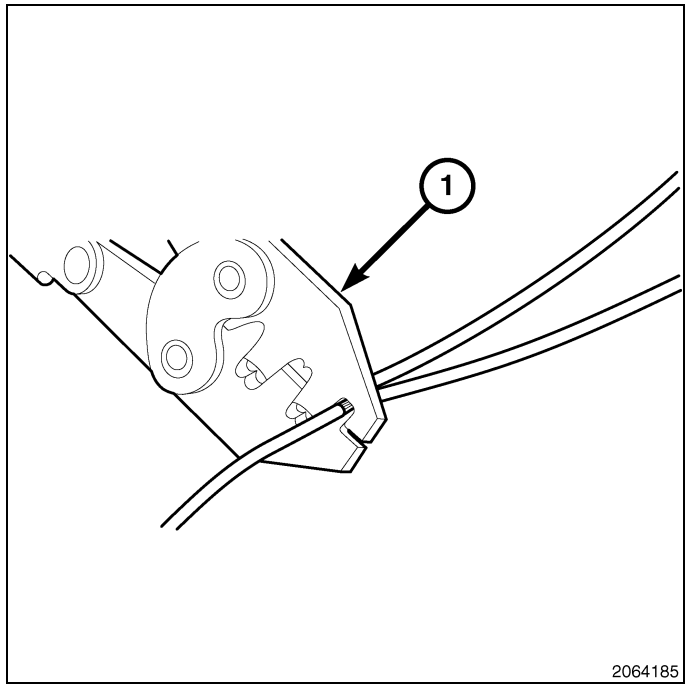

43. Solder (3) the connection (2) together using rosin core solder (1).

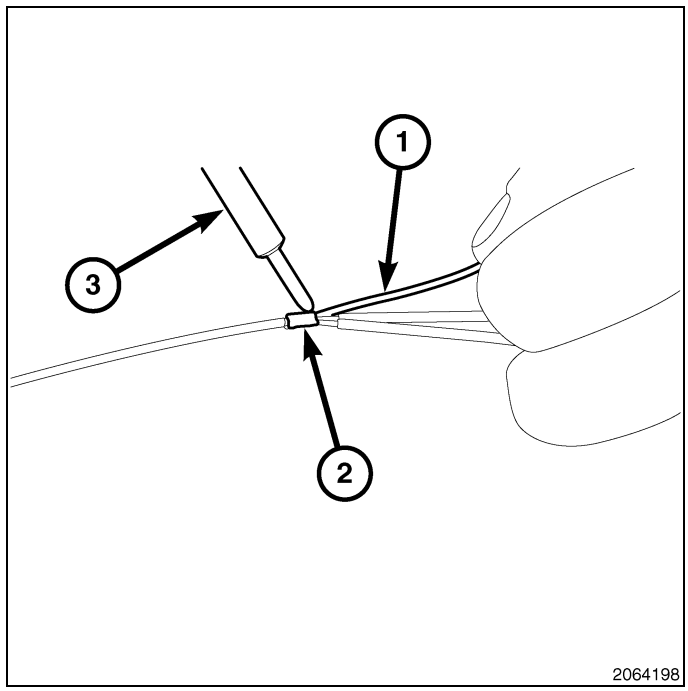

44. Center the heat shrink tubing (2) over the solder joint and heat using a heat gun. Heat the joint until the tubing is tightly sealed and sealant (1) comes out of both ends of the tubing.

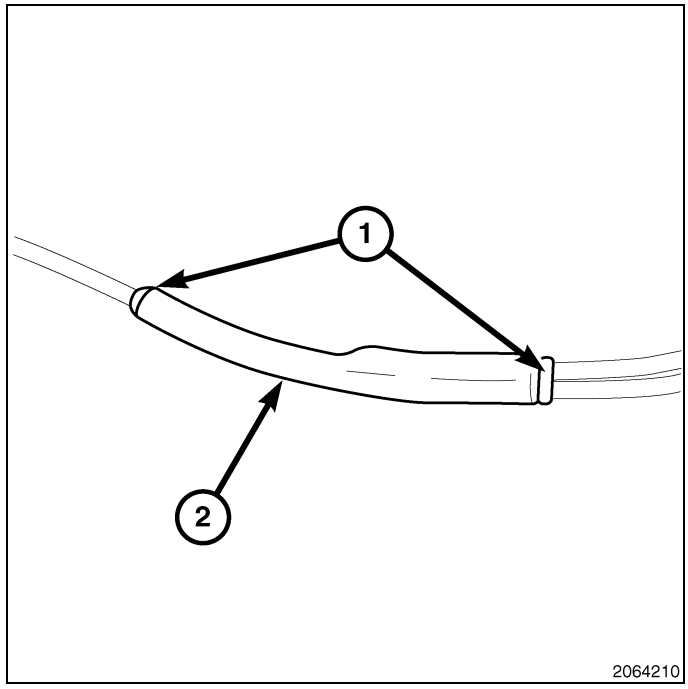

NOTE: Totally Integrated power module electrical connectors are color coded to ease location reference.

45. Connect the electrical connector by pushing straight on and rotating the connector arm inboard, until the connector is firmly locked in place on the TIPM assembly (1).
46. Turn the TIPM (1) so that the connector side is facing down. Install the assembly onto the TIPM battery tray bracket making sure to line up the lower retaining tab with the retaining slot in the tray .
47. Push the TIPM (1) downward to lock the upper retaining clips into the bracket (2).

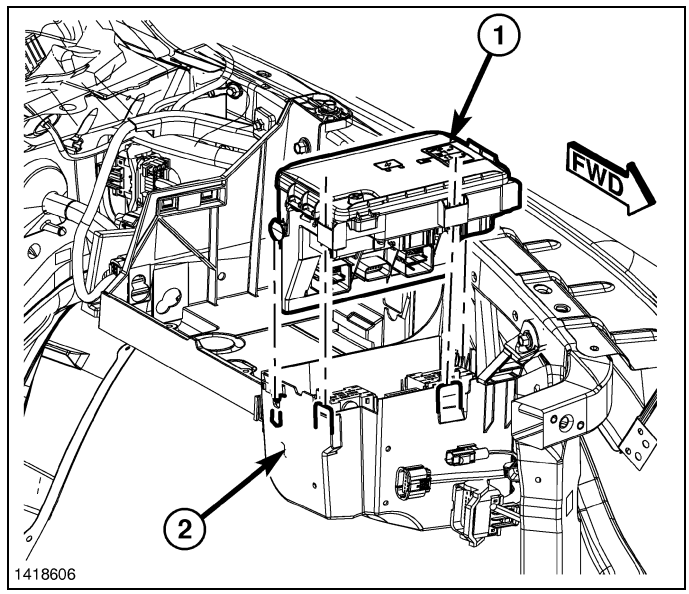

48. Install the B+ terminal cable (2) and nut (1) on the B+ terminal of the TIPM (3).

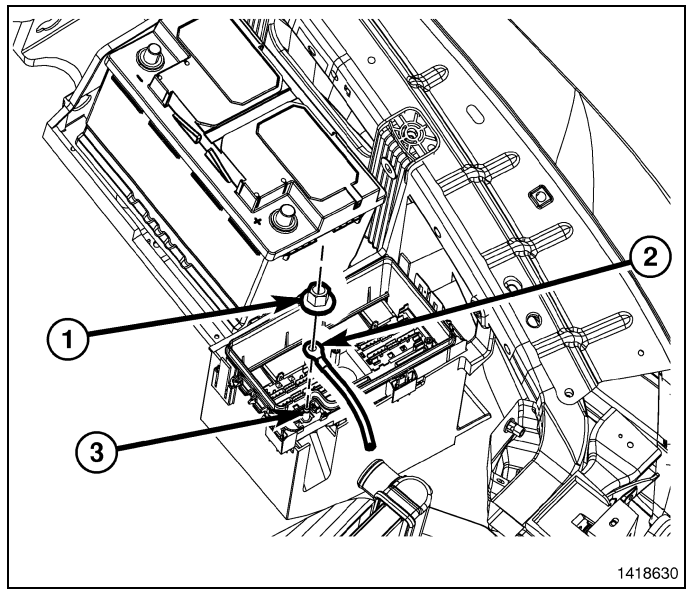

49. Remove the ground retainer (1) from the fender (3).
50. Install the ground from the pigtail harness (2), to the fender under the body ground (4).
51. Route the wire under the dash panel and out through the radio opening securing were necessary.

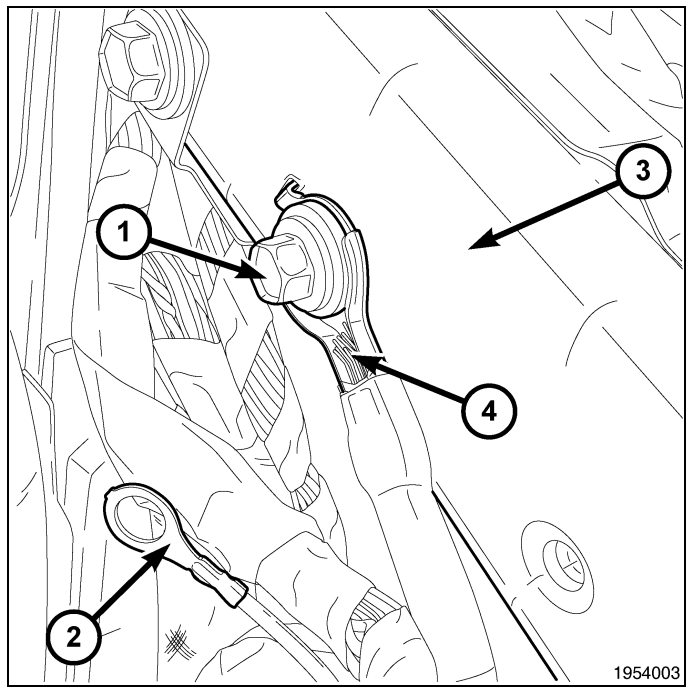

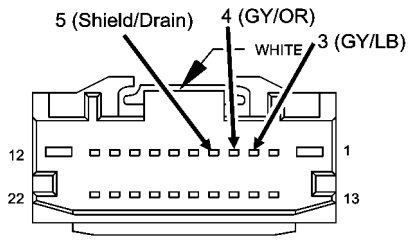

RADIO C3

01532869

NOTE: Install the harness into the existing C3 radio connector if equipped, if not use the kit supplied C3 connector.

52. Remove the white C3 connector from Radio (If Equipped). Some vehicles may have cavities 3,4, and 5, of the C3 connector populated remove existing terminals and proceed to next step.
53. Lift C3 terminal locking Tab, Insert Terminal as shown above. GY/LB into Cavity 3, GY/OR into cavity 4, Uninsulated shield wire into Cavity 5. Relocate terminal locking tab. If Vehicle is not equipped with white C3 connector Populate Connector supplied in kit.

54. Connect the electrical and antenna connectors to the radio.
55. Position the radio to the instrument panel.
56. Install and tighten the mounting fasteners.

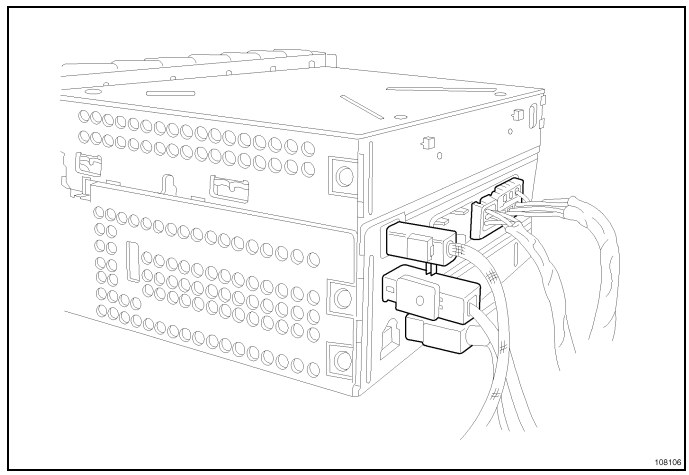

57. Position the steering column opening cover (2) to the instrument panel and fully engage the retainer clips to the instrument panel.

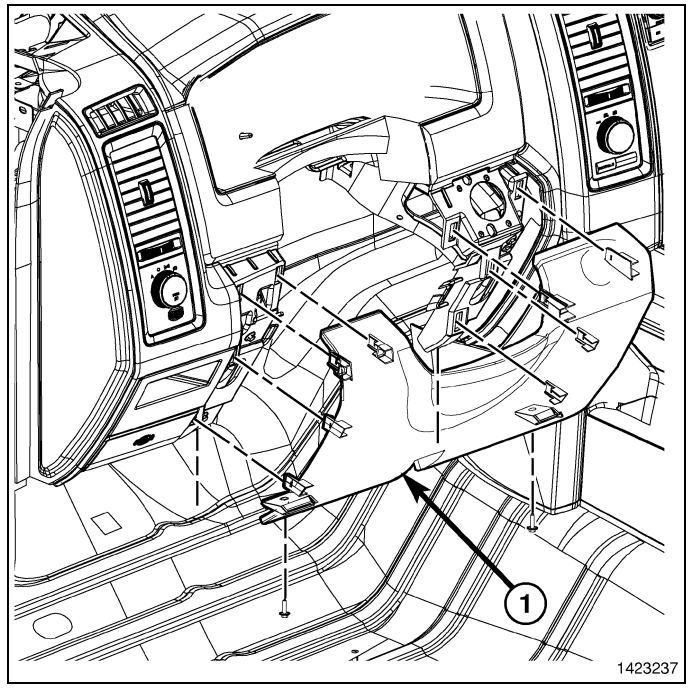

58. Install the Data Link Connector (3) to the steering column opening cover (2) by pushing the connector through the opening on the back side of the cover and fully engaging the lock tabs (1) of the connector.

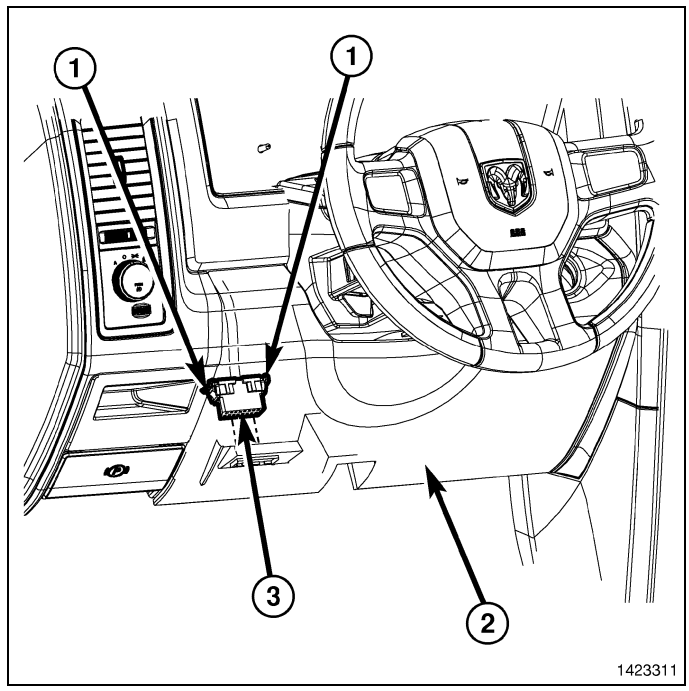

59. Install the two fasteners (2) that secure the steering column opening cover (1) to the instrument panel.
60. Position the hood release handle onto the column opening cover and fully engage the retainer clip that secures the hood release handle to the steering column opening cover.

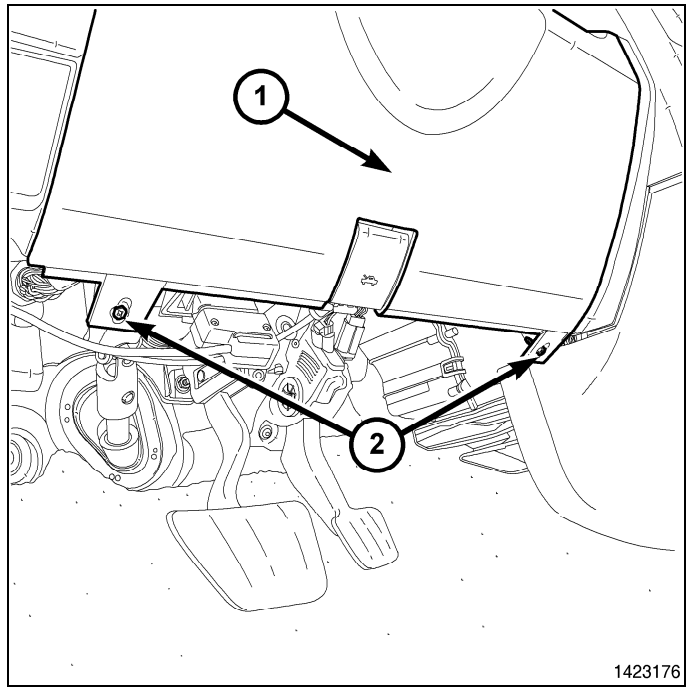

61. Position the instrument panel center bezel (1) near the instrument panel and connect the wire harness connectors (4).
62. Install the instrument panel center bezel (1) onto the instrument panel and fully engage the retainer clips.

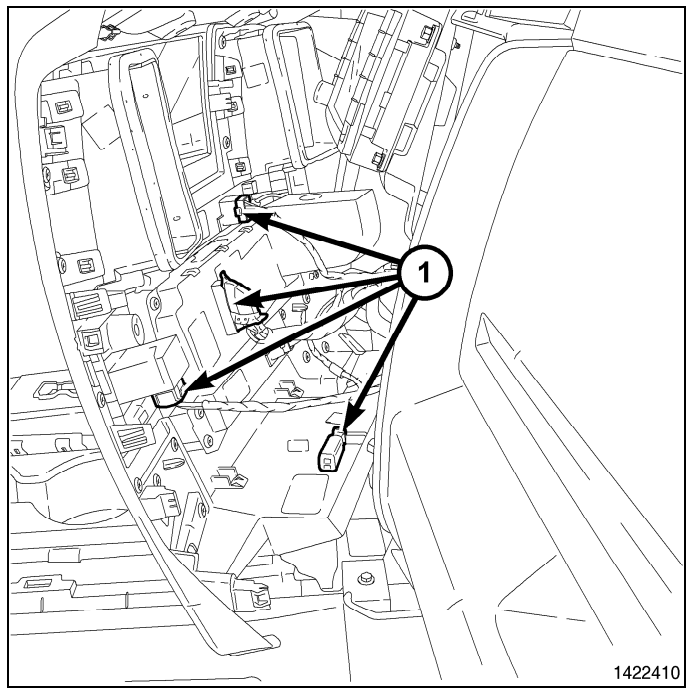

63. Install the shifter bezel to the floor console and fully engage the retainer clips.

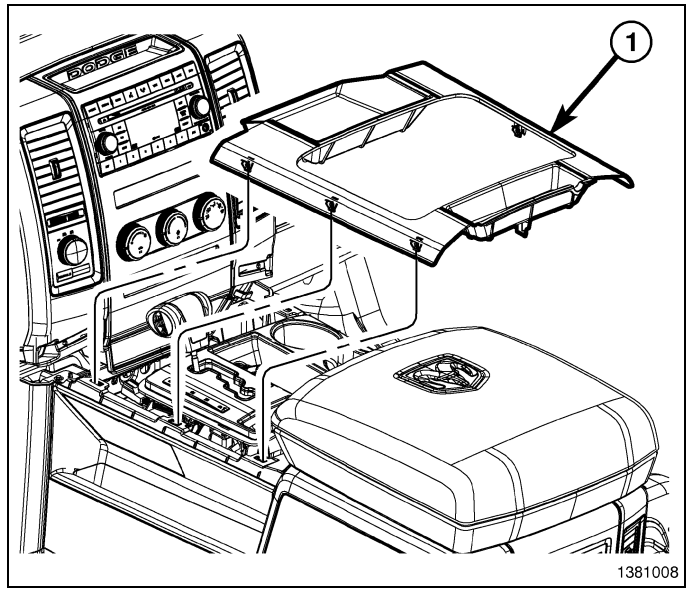

64. Install the shifter bezel trim ring and fully engage the retainer clips.

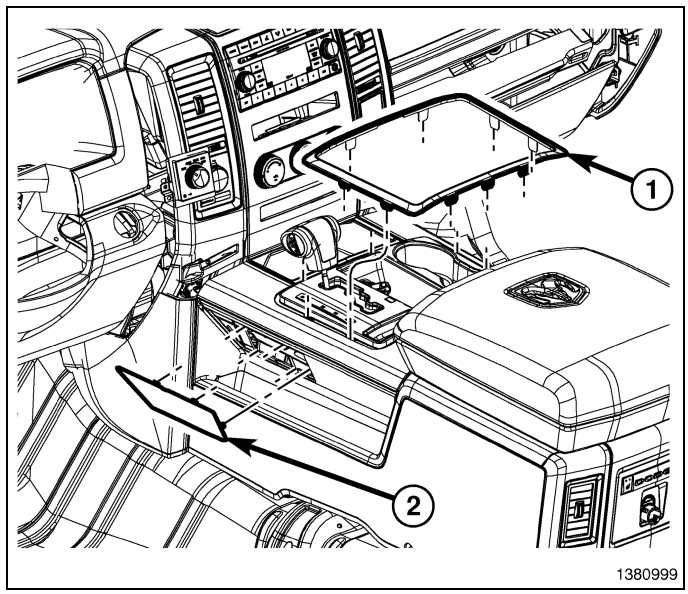

65. Install the five instrument panel fasteners.

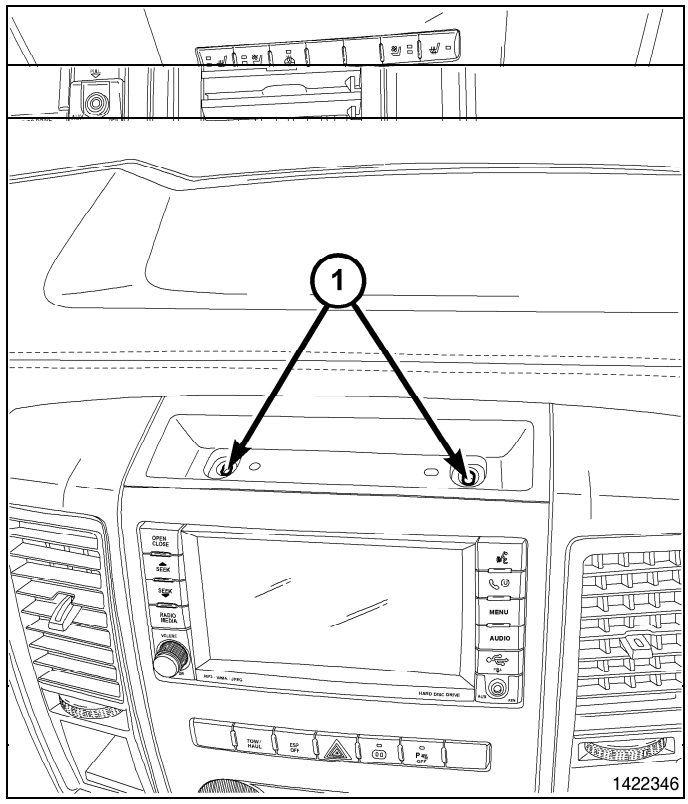

66. Install the power outlet trim bezel (1), to the center bezel (2), fully engaging the retainer clips.

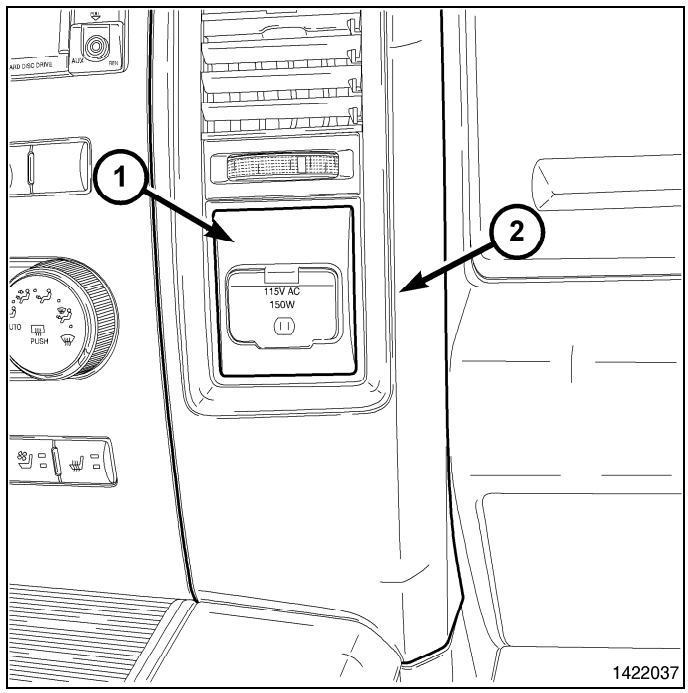

67. Install the upper and lower center bezel tray liners (1).

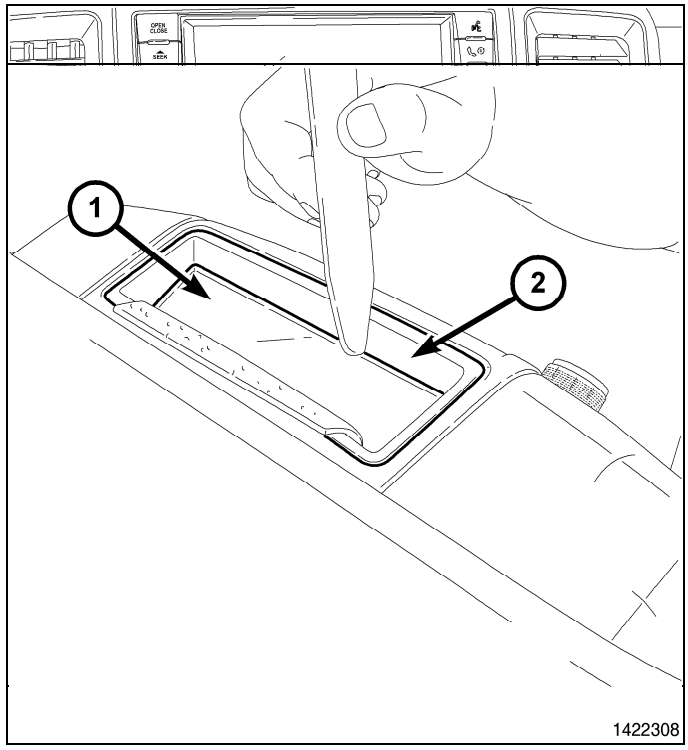

68. Install the tailgate access cover (1).
69. If equipped, install the tailgate bedliner.
70. Connect the battery negative cable.

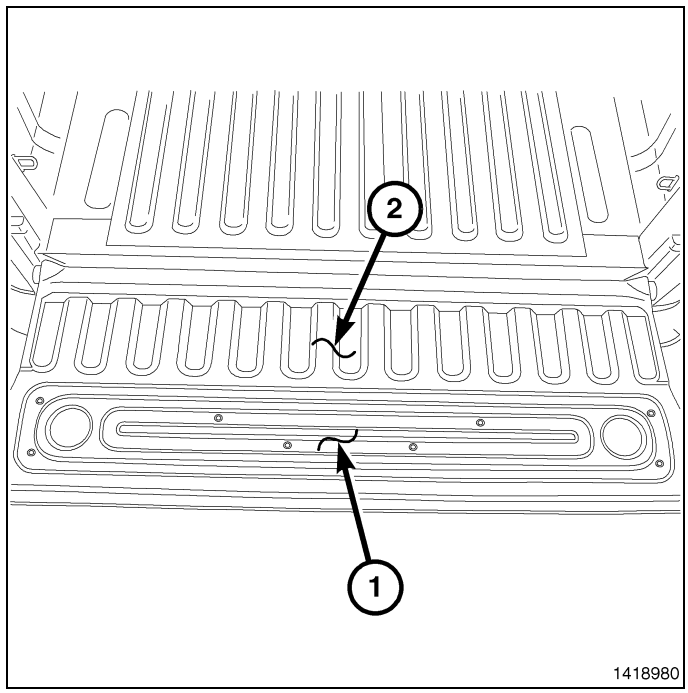

PARK VIEW REAR BACK-UP CAMERA VEHICLE CONFIGURATION

Vehicle VIN must be updated with the sales code of the added accessory in order to enable system functionality. Using the DealerCONNECT website and the scan tool, complete the procedure below:

1. Log on to https://dealerconnect.chrysler.com
2. In the “Vehicle Option” screen under the “Global Claims System” category in the “Service” tab, enter the vehicle VIN and add the sales code **XAC (Park View Rear Back-Up Camera)** as a “Dealer Installed Option”.
3. Confirm that the new sales code has been successfully added to the VIN.

With the scan tool connected to both the internet (via Ethernet port or wireless connection) and the vehicle, follow the steps below:

4. Using the scan tool select the **VEHICLE PREPARATION** and then select **RESTORE VEHICLE CONFIGURATION**.
5. Follow the step by step instructions on the scan tool to complete the Park View Rear Back-Up Camera vehicle configuration.
6. When the **Park View Rear Back-Up Camera Vehicle Configuration** is complete, go to the **Validation Process** to verify that the vehicle has been updated.

VALIDATION PROCESS

From the “Initial Start Up” screen on the scan tool follow the steps below:

1. Using the scan tool follow the menu to **ECU VIEW**, select **TIPMCGW CENTRAL GATEWAY**, **MORE OPTIONS**, **ECU DETAILS** and then **CONFIG INFO**
2. Verify **REAR CAMERA PRESET- - - -SET** is present.

DODGE RAM, QUAD/CREW CAB

PROCEDURE STEPS:

NOTE: Using a test light, verify the cigarette lighter outlet being used is ignition switched. Power must not be present with the ignition in the OFF position.

1. Disconnect and isolate the negative battery cable.
2. Open the glove box (1).
3. Release the two glove box stops (2) and lower the glove box downward past the stops.
4. Disengage the glove box hinges from the instrument panel and remove the glove box.

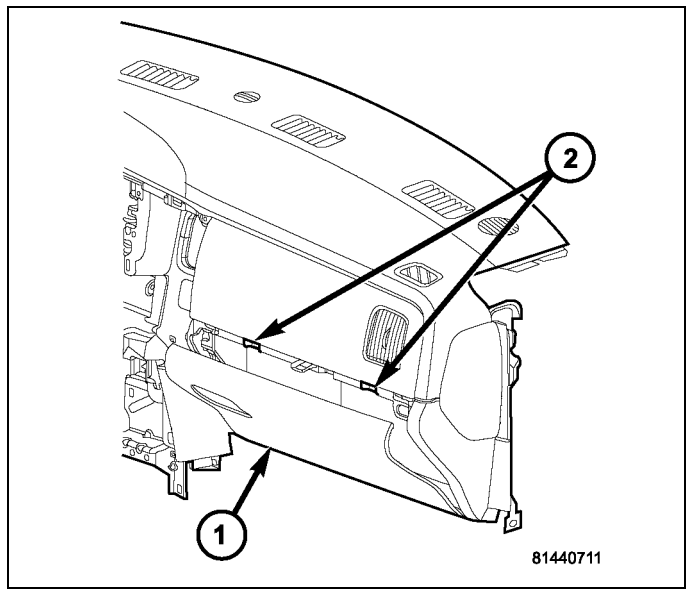

5. Using a trim stick C-4755 or equivalent, disengage the retaining tabs of the cowl trim panel (1) from the retainer clips (2) in the door sill (3).
6. Pull the cowl trim panel rearward and remove it from the vehicle.

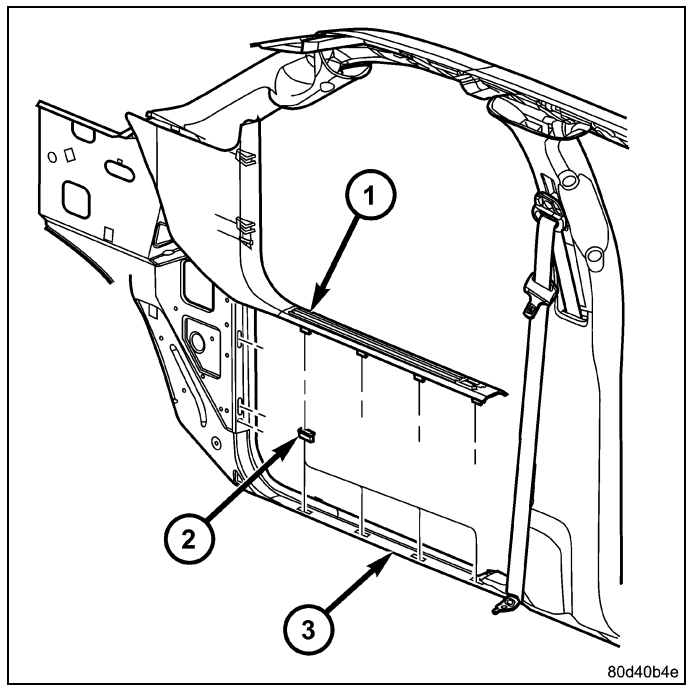

7. Remove the cap (1) and then the bolt (2) that secures the seat belt (3) to the top of the C-pillar (4) and position the seat belt out of the way.
8. Using a trim stick C-4755 or equivalent, disengage the retaining tabs that secure the upper C-pillar trim panel (5) to the C-pillar and remove the trim panel.

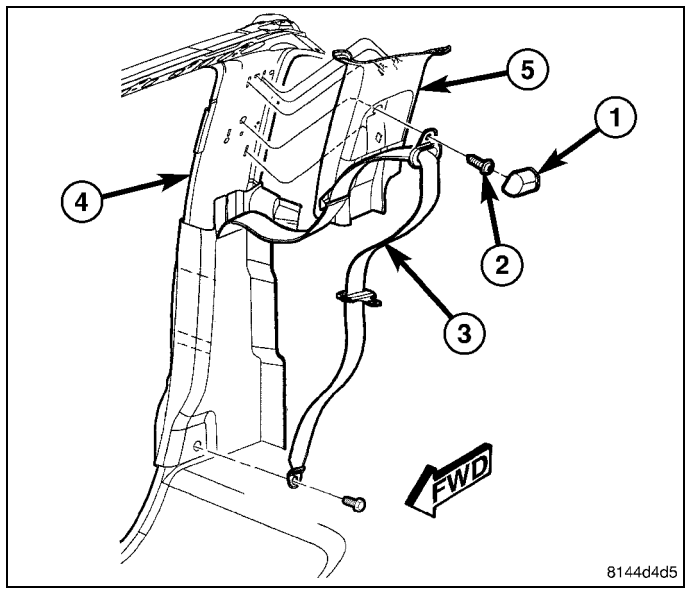

9. Remove the bolt (3) that secures the seat belt (2) to the bottom of the C-pillar (4) and position the seat belt out of the way.
10. Using a trim stick C-4755 or equivalent, disengage the retaining tabs that secure the lower C-pillar trim panel (1) to the C-pillar.
11. Remove the seat belt from the lower C-pillar trim panel through the slot provided and remove the trim panel.

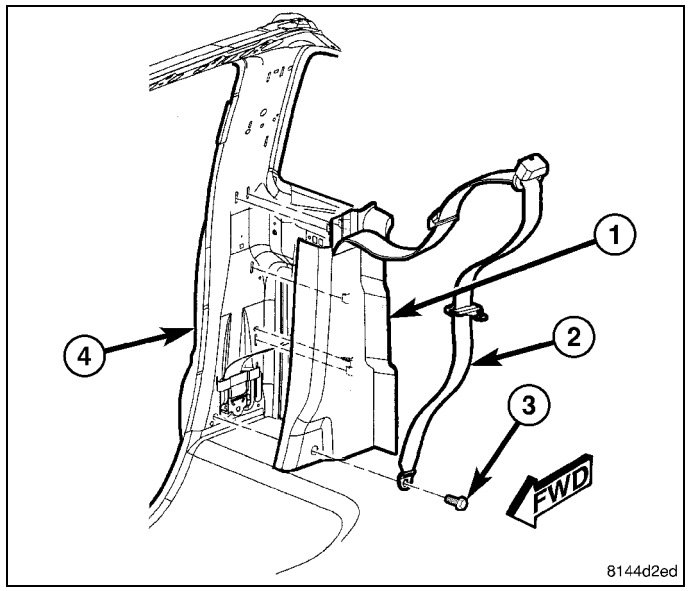

12. Using a trim stick C-4755 or equivalent, disengage the retaining tabs of the sill trim panel (1) from the retainer clips in the rear door sill (2) and remove the trim panel.

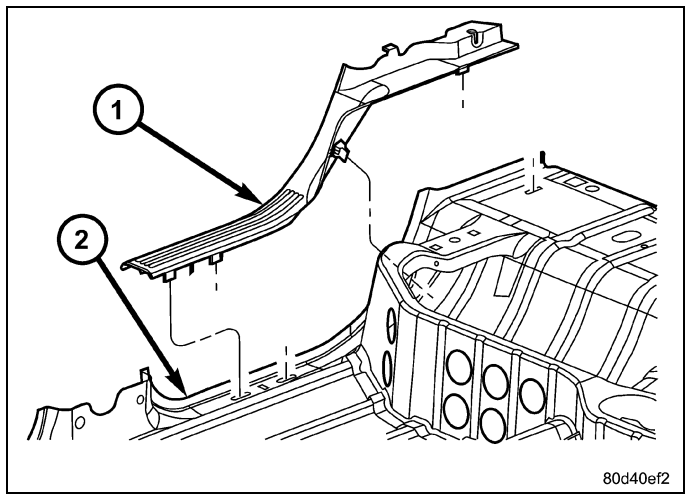

13. Install and secure the Wi-Fi router to the floor with the provided material.
14. Route the Wi-Fi power harness from the router along the sill securing where necessary.

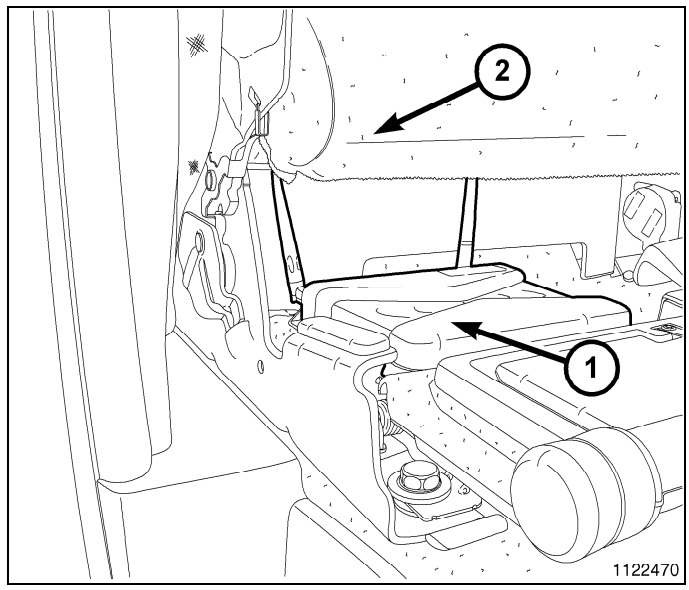

FULL CENTER CONSOLE

15. Remove the rubber mat (1).
16. Using a trim stick C-4755 or equivalent, disengage the retaining tabs of the shifter bezel ring (2).

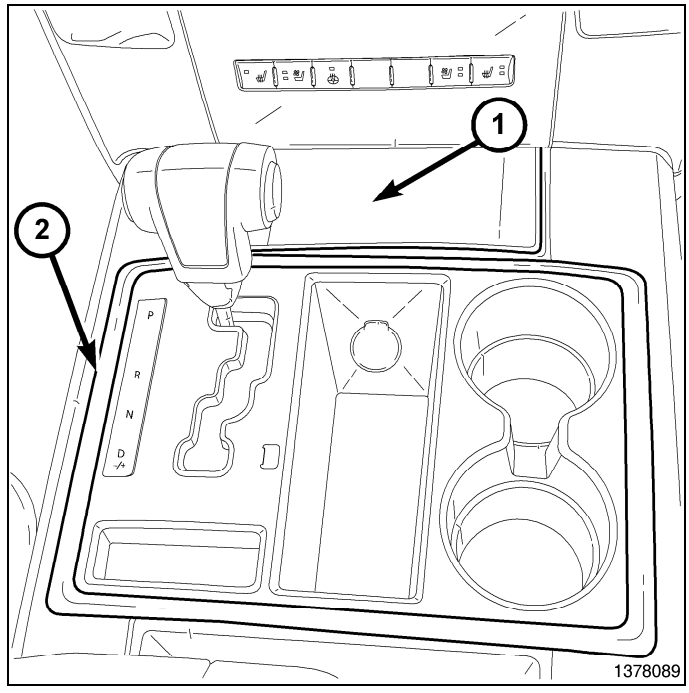

17. Remove the two center console retainers (1).
18. Using a trim stick C-4755 or equivalent, disengage the retaining tabs and remove the center console trim (2).

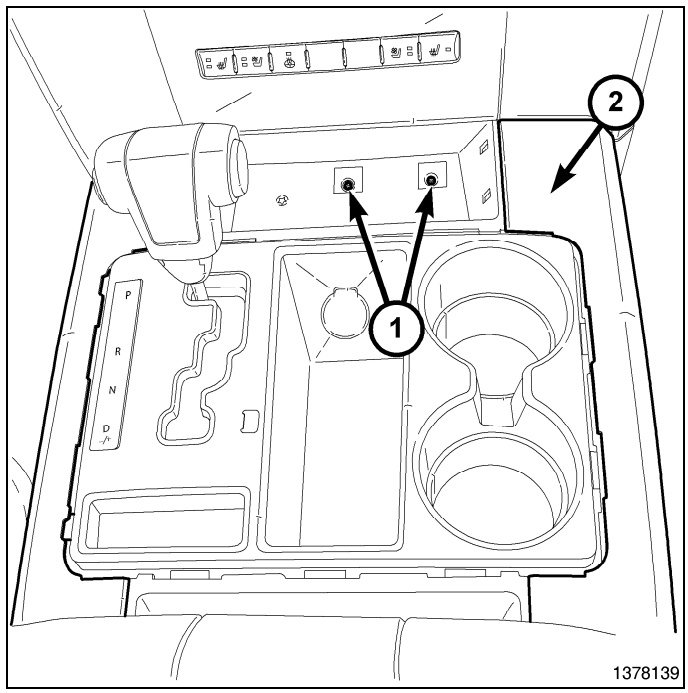

19. Disconnect the power outlet (1).
20. Route the Wi-Fi power harness behind the glove box and up to the key on power outlet and cut to length.

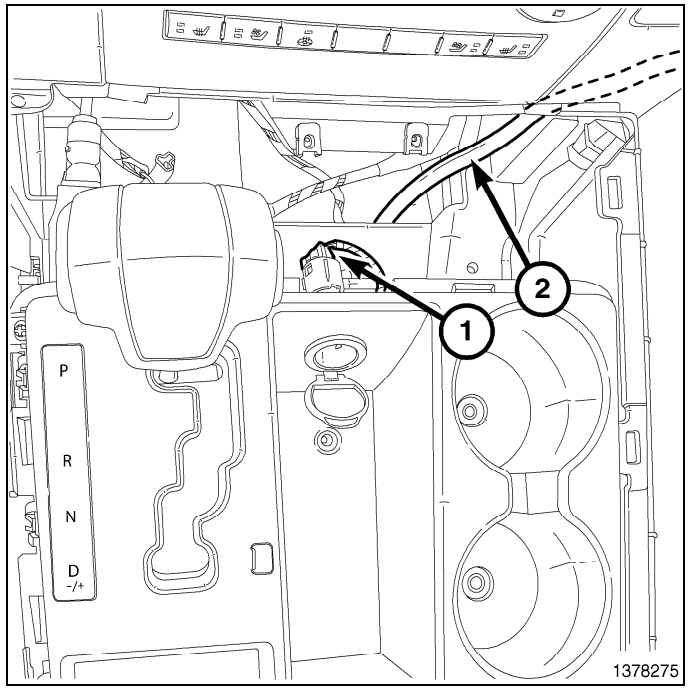

WITHOUT FULL CENTER CONSOLE

21. Using a trim stick C-4755 or equivalent, disengage the retaining tabs and remove the lower bezel panel (1).
22. Remove the two lower screws securing the cup holder to the IP.
23. Fold the cup holder down and lower the cup holder (2) close out panel by depressing the tab at the top of the panel.
24. Remove the two screws from behind the close out and remove the cup holder.
25. Using trim stick C-4755 or equivalent, disengage the power outlet retaining tabs and disconnect the power outlet electrical connectors.
26. Remove the lower IP surround from the vehicle.
27. Route the Wi-Fi power harness behind the glove box and up to the key on power outlet and cut to length.

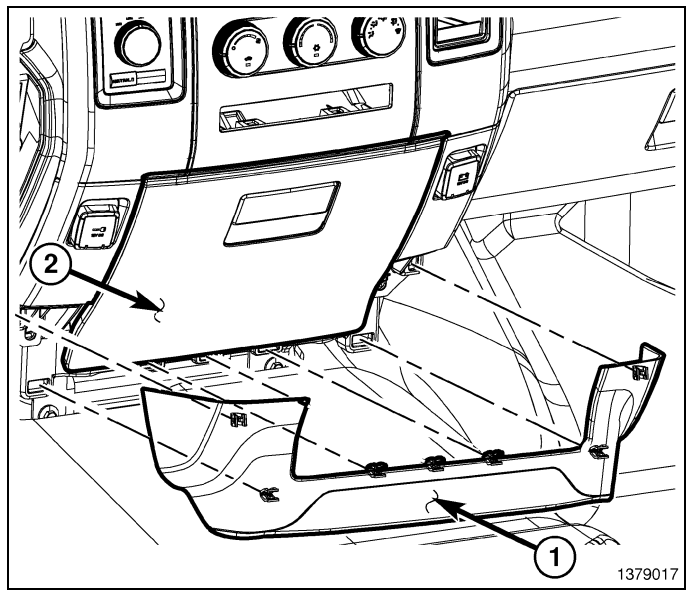

ALL

28. Locate the cigarette lighter outlet wiring harness.
29. Cut each wire and remove 13mm (0.5 in.) of insulation from each wire that needs to be soldered/spliced.
30. Place a piece of supplied adhesive lined heat shrink tubing on one side of each cut wire. Insure the tubing will be long enough to cover and seal the entire soldered area.

CAUTION: Do not use acid core solder.

31. Solder the supplied fused pigtail to Wi-Fi power harness power wire.

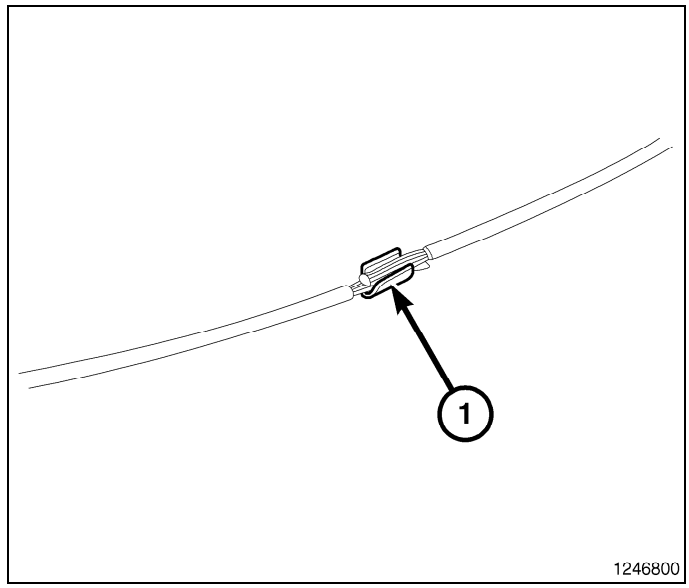

32. Place the strands of the power side wires overlapping each other inside of the splice clip (1).

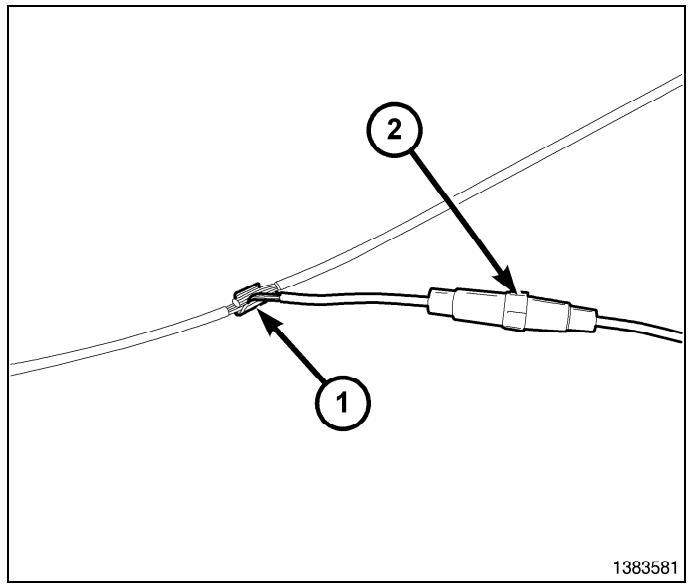

33. Using crimping tool (1), Mopar® p/n 05019912AA or equivalent, crimp the splice clip and wires together.
34. Repeat the previous two steps for the ground side wires.

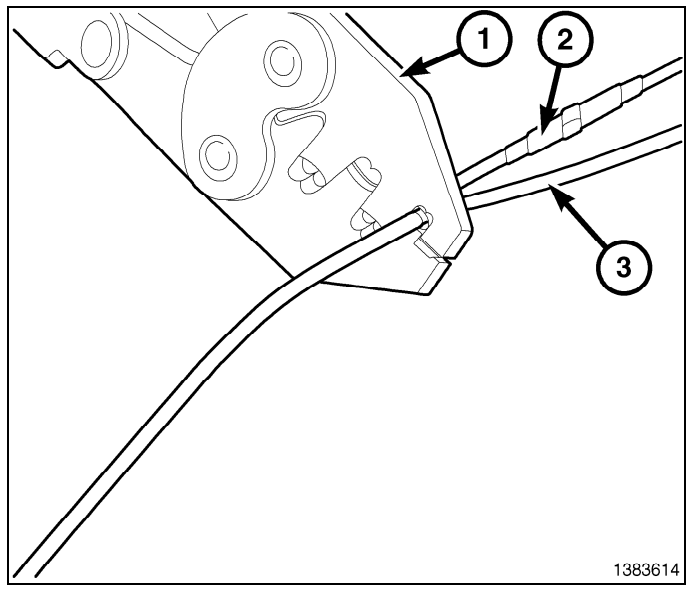

35. Solder (3) the connection (2) together using rosin core solder (1).

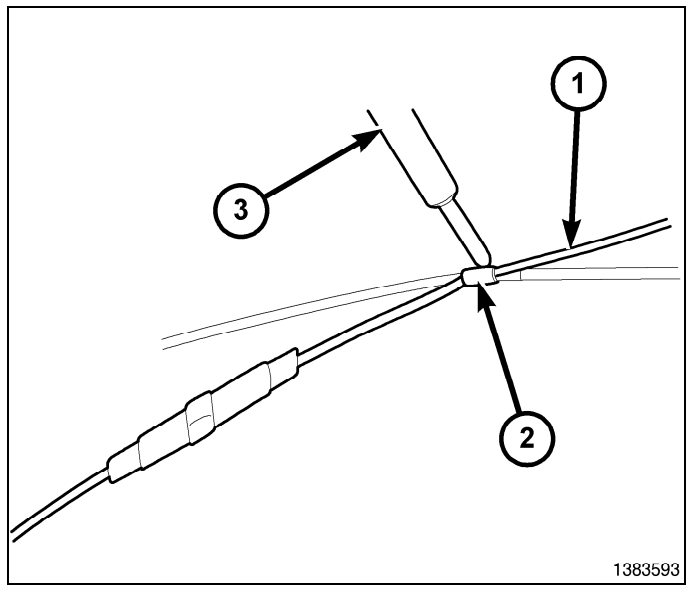

36. Center the heat shrink tubing (2) over the solder joint and heat using a heat gun. Heat the joint until the tubing is tightly sealed and sealant (1) comes out of both ends of the tubing.

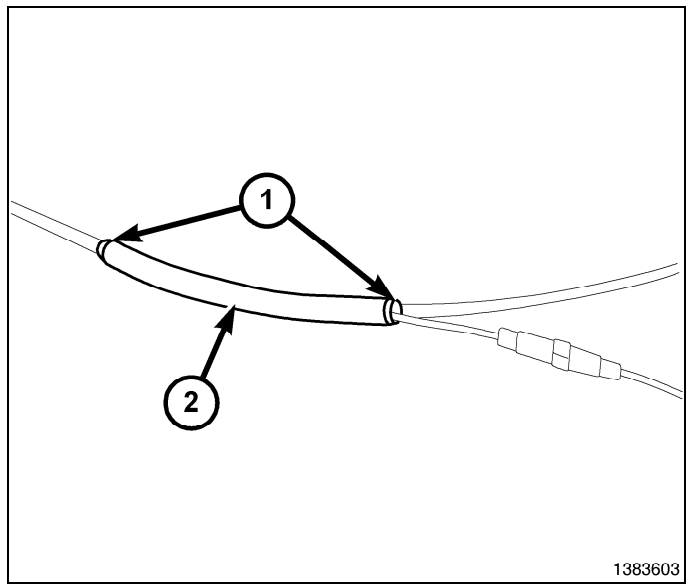

37. Install the center console trim (2).
38. Install the two retainers (1).

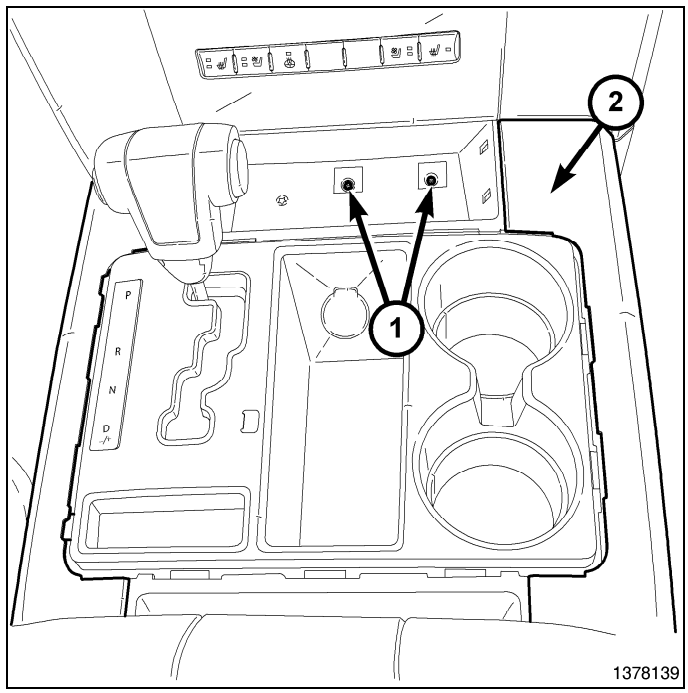

39. Install the rubber mat (1).
40. Install the shifter bezel ring (2).

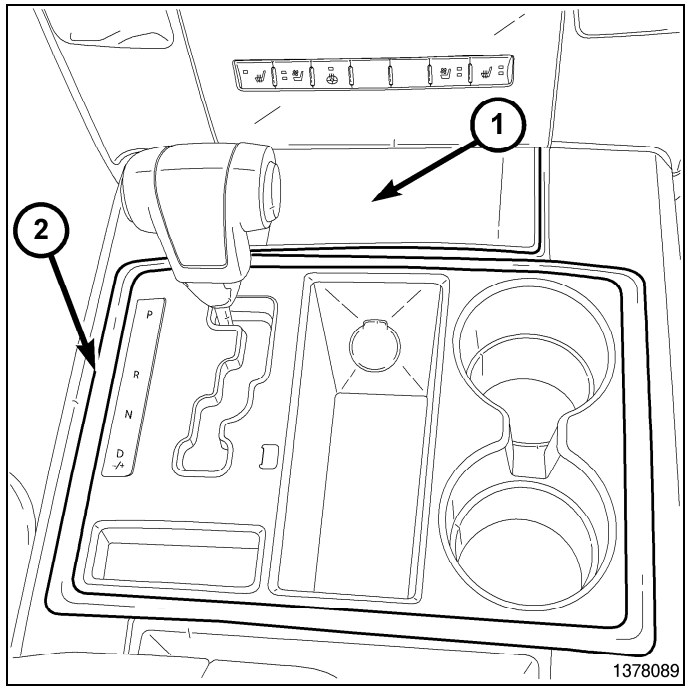

WITHOUT FULL CENTER CONSOLE

41. Install the lower IP surround to the vehicle.
42. Connect the power outlet electrical connectors and install the power outlet trim panel.
43. Close the close out panel by depressing the tab at the top of the panel.
44. Install the two screws behind the close out and install the cup holder (2).
45. Install the two lower screws securing the cup holder to the IP.
46. Install the lower bezel panel (1).

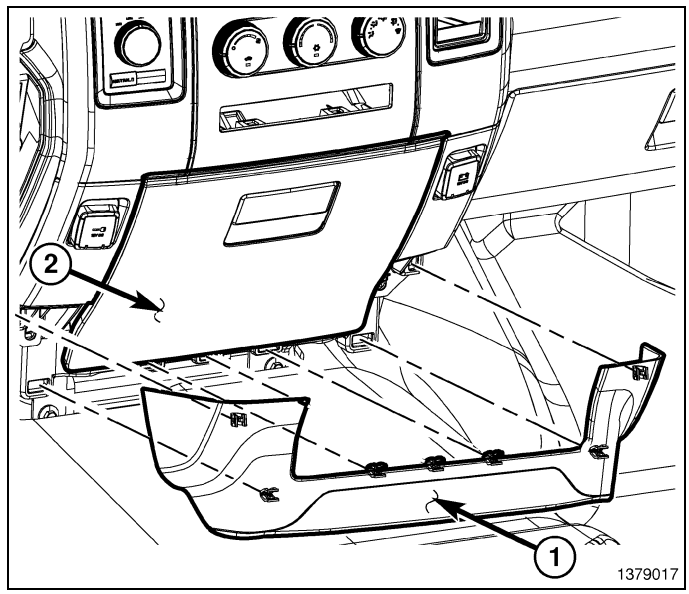

ALL

47. Position the cowl trim panel (1) onto the door sill (3).
48. Push the cowl trim panel forward and then engage the retaining tabs that secure the sill trim panel to the rear door sill.

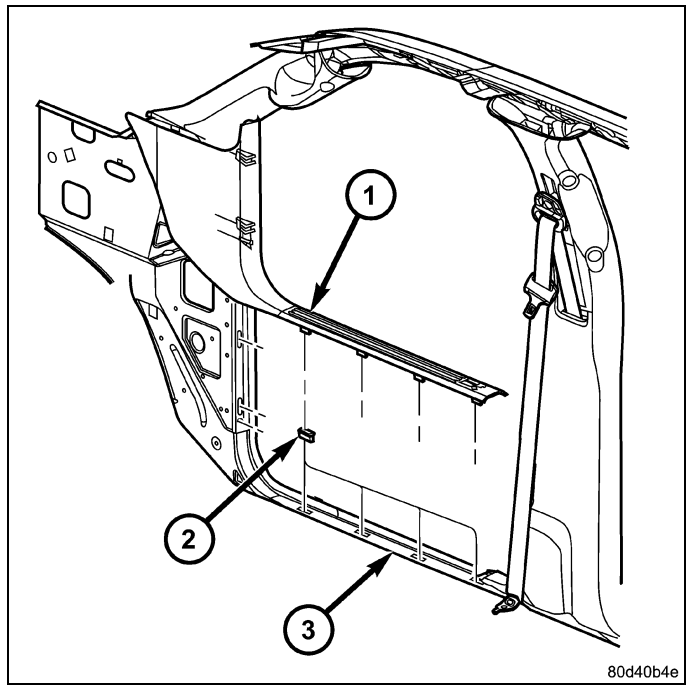

49. Route the seat belt (2) through the slot in the lower C-pillar trim panel (1) and position the trim panel to the C-pillar (4).
50. Engage the retaining tabs that secure the lower C-pillar trim panel to the C-pillar.
51. Install the bolt (3) that secures the seat belt to the bottom of the C-pillar. Tighten the bolt to 40 N·m (30 ft. lbs.).

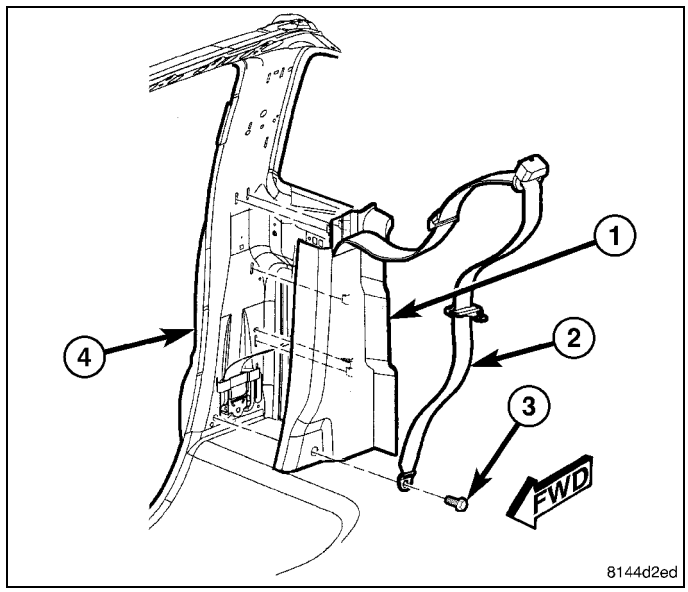

52. Position the upper C-pillar trim panel (5) to the C-pillar (4).
53. Engage the retaining tabs that secure the upper C-pillar trim panel to the C-pillar.
54. Install the bolt (2) that secures the seat belt (3) to the top of the C-pillar. Tighten the bolt to 40 N·m (30 ft. lbs.).
55. Install the cap (1) onto the seat belt.

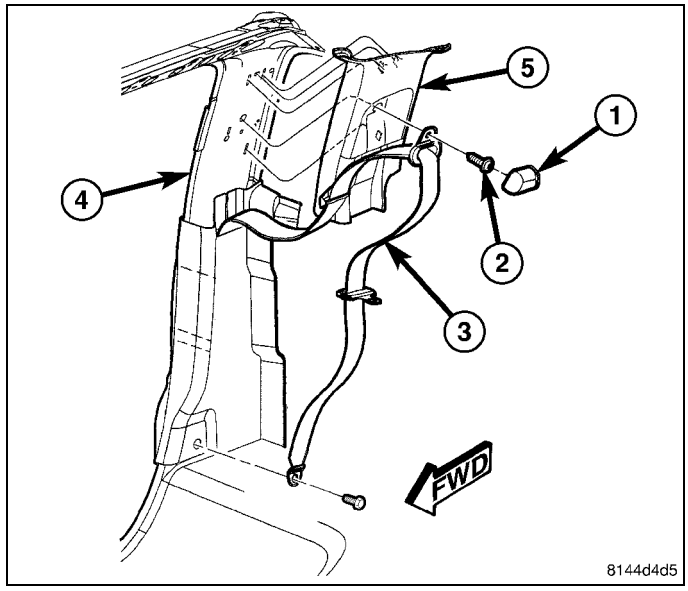

56. Connect the negative battery cable.

DODGE RAM-REGULAR CAB

PROCEDURE STEPS:

NOTE: Using a test light, verify the cigarette lighter outlet being used is ignition switched. Power must not be supplied with the ignition in the OFF position.

1. Disconnect and isolate the battery negative cable.
2. Using a trim stick C-4755 or equivalent, disengage the retaining tabs and remove the lower bezel panel (1).
3. Remove the two lower screws securing the cup holder to the IP.
4. Fold the cup holder down and lower the cup holder (2) close out panel by depressing the tab at the top of the panel.
5. Remove the two screws from behind the close out and remove the cup holder.
6. Using trim stick C-4755 or equivalent, disengage the retaining tabs and disconnect the power outlet electrical connectors.
7. Remove the lower IP surround from the vehicle.

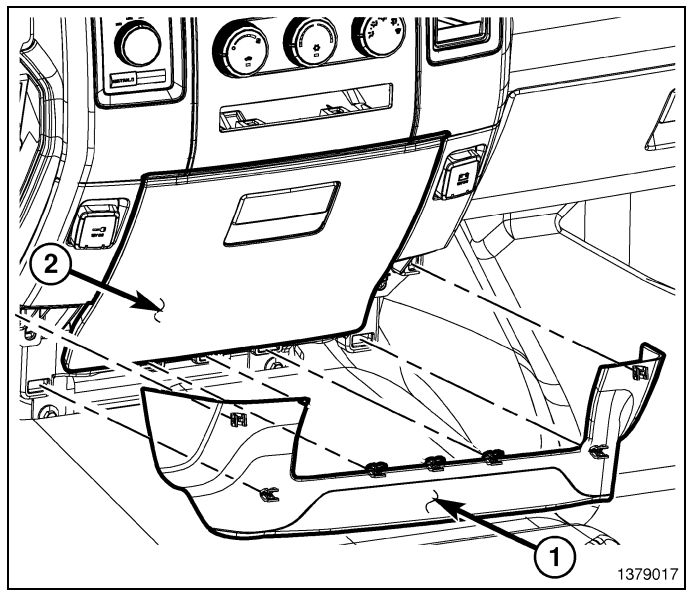

8. Open the glove box (1).
9. Release the two glove box stops (2) and lower the glove box downward past the stops.
10. Disengage the glove box hinges from the instrument panel and remove the glove box.

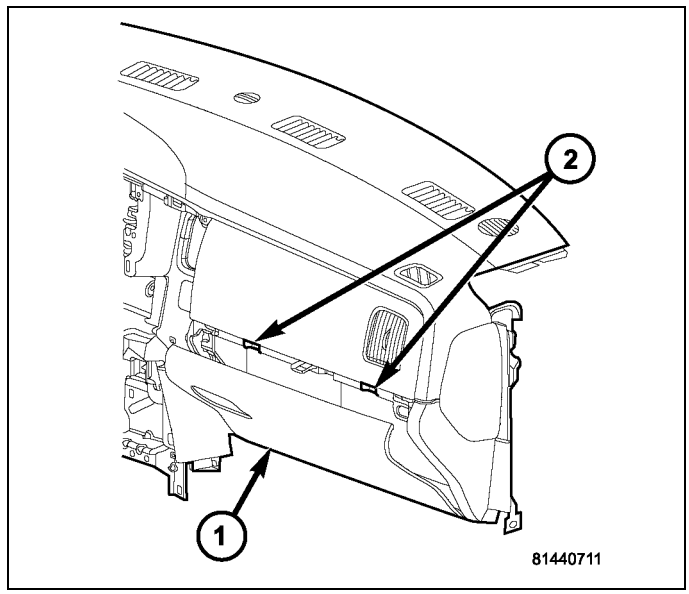

11. Using a trim stick C-4755 or equivalent, disengage the retaining tabs of the cowl trim panel (1) from the retainer clips (2) in the door sill (3).
12. Pull the cowl trim panel rearward and remove it from the vehicle.

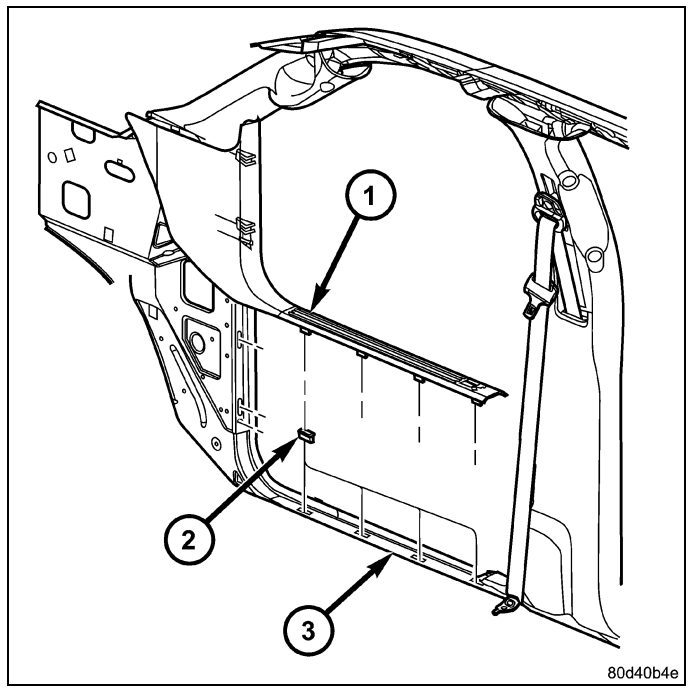

13. Remove the three bolts (1) that secure the rear storage compartment (2) to the floor panel (3) and remove the storage compartment from the rear cab trim panel (4).

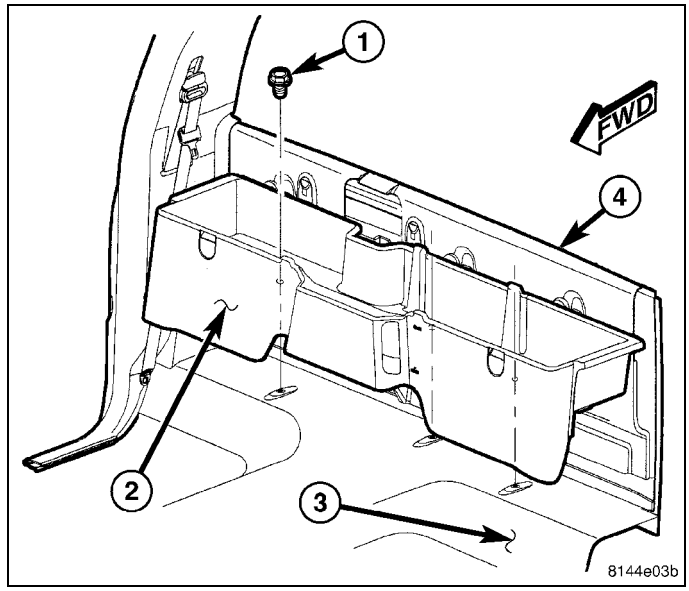

14. Remove the cap (1) and then the bolt (2) that secures the seat belt (3) to the top of the B-pillar (4) and position the seat belt out of the way.
15. Using a trim stick C-4755 or equivalent, disengage the retaining tabs that secure the upper B-pillar trim panel (5) to the B-pillar and remove the trim panel.

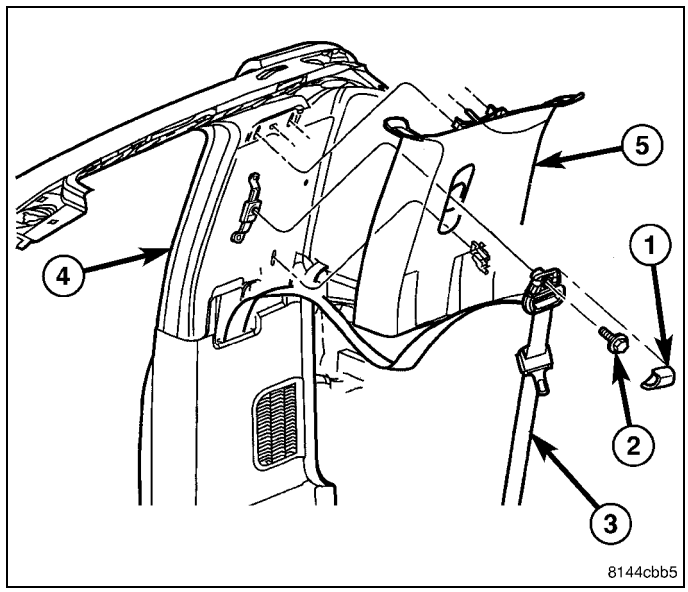

16. Remove the bolt (2) that secures the seat belt (1) to the bottom of the B-pillar (4) and position the seat belt out of the way.
17. Using a trim stick C-4755 or equivalent, disengage the retaining tabs that secure the lower B-pillar trim panel (3) to the B-pillar.
18. Remove the seat belt from the lower B-pillar trim panel through the slot provided and remove the trim panel.

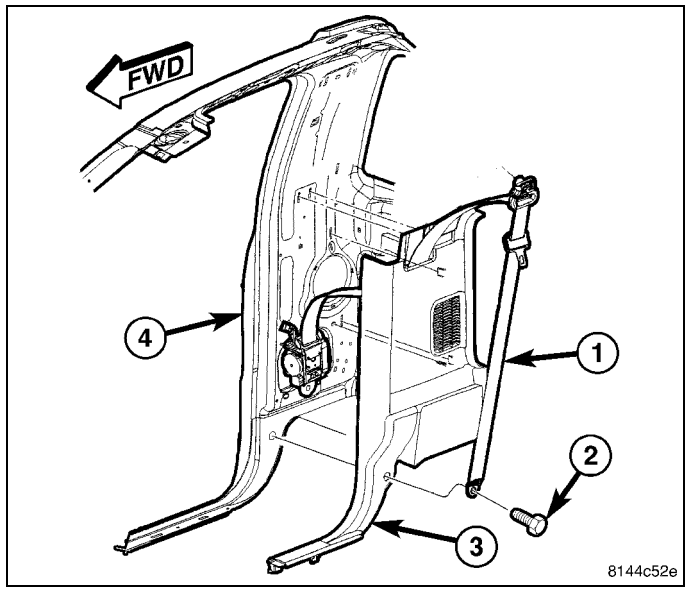

19. Remove the utility hooks (3) from the rear cab trim panel (1) and remove the trim panel.

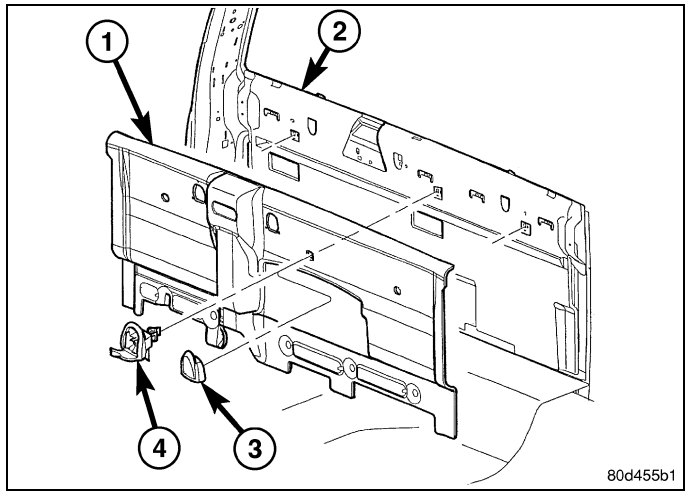

20. Install the WiFi router to the rear cab trim panel with the provided materials.
21. Make a small cut in the rear cab trim panel and route the WiFi router connector through
22. Place the rear cab trim panel into position in the vehicle.
23. Connect the wire harness to the WiFi router connector.
24. Route the wire harness down the back of the rear panel to the door sill.
25. Firmly seat the rear panel and install the utility hooks to the rear panel.
26. Continue to route the wire harness along the passenger side, under the glove box opening and behind the center stack and cut to the proper length.

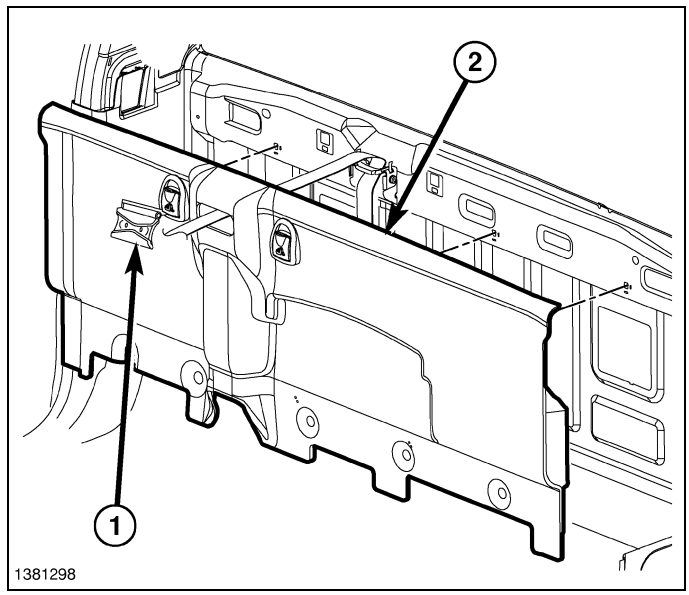

27. Locate the cigarette lighter outlet wiring harness.
28. Cut each wire and remove 13 mm (0.5 in.) of insulation from each wire that needs to be soldered/spliced.
29. Place a piece of supplied adhesive lined heat shrink tubing on one side of each cut wire. Insure the tubing will be long enough to cover and seal the entire soldered area.

CAUTION: Do not use acid core solder.

30. Solder the supplied fused pigtail to Wi-Fi power harness power wire.

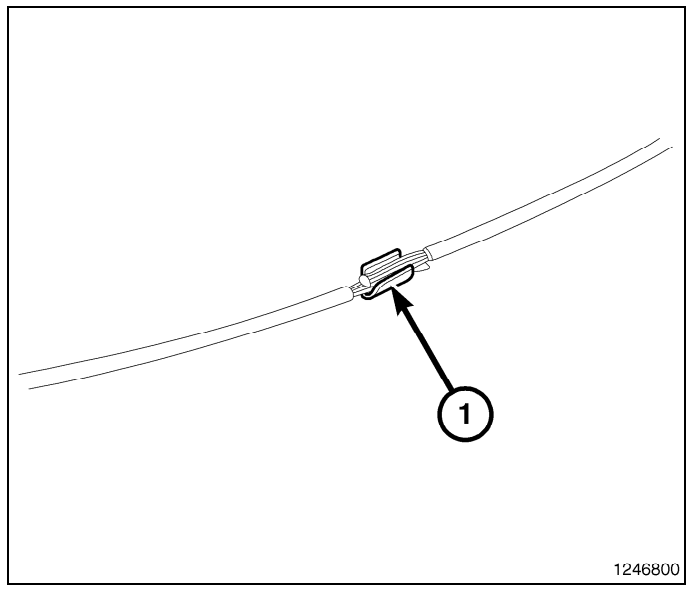

31. Place the strands of the power side wires overlapping each other inside of the splice clip (1).

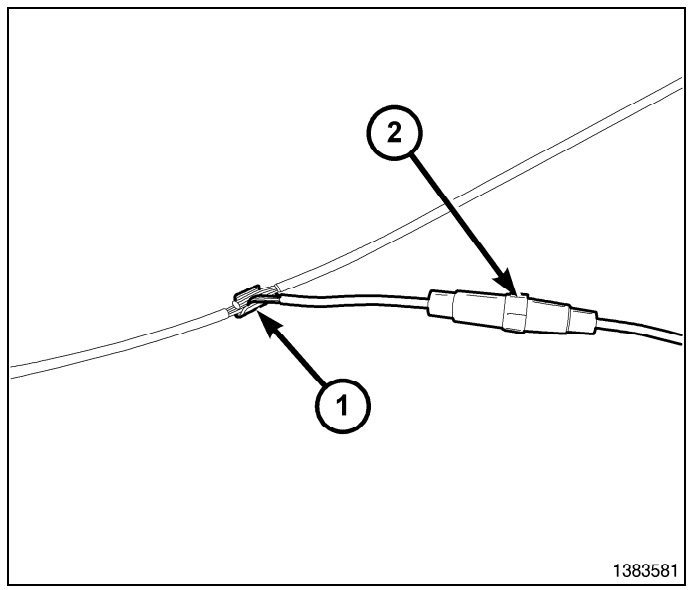

32. Using crimping tool (1), Mopar® p/n 05019912AA or equivalent, crimp the splice clip and wires together.
33. Repeat the previous two steps for the ground side wires.

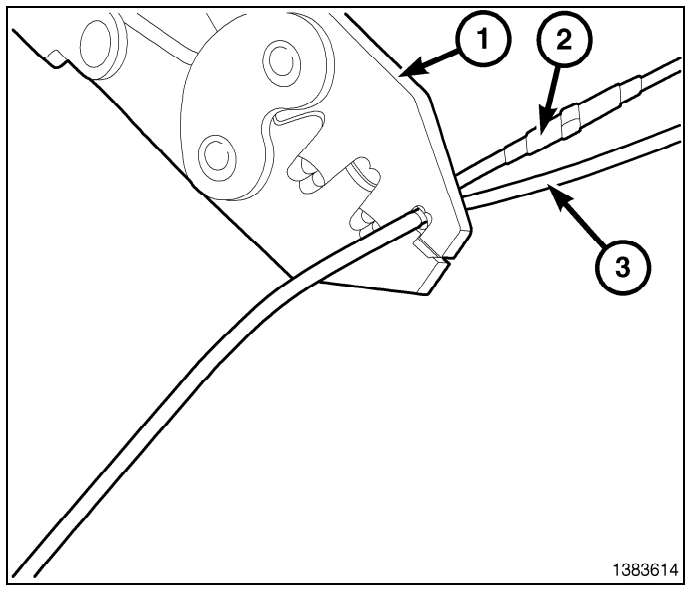

CAUTION: Do not use acid core solder.

34. Solder (3) the connection (2) together using rosin core solder (1).

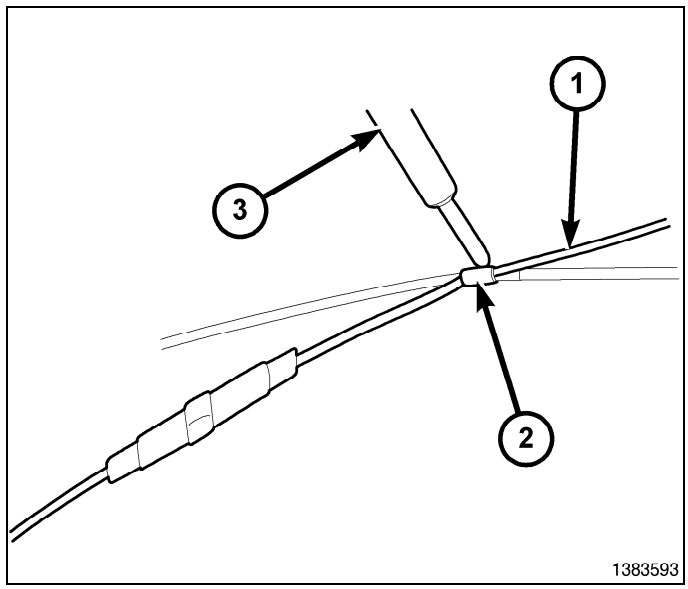

35. Center the heat shrink tubing (2) over the solder joint and heat using a heat gun. Heat the joint until the tubing is tightly sealed and sealant (1) comes out of both ends of the tubing.

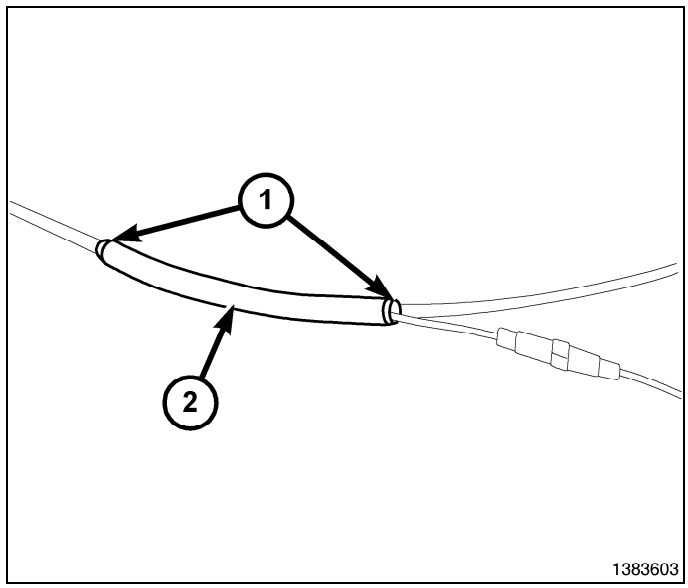

36. Place the lower B-pillar trim panel (3) into position and engage the retaining tabs that secure the trim panel to the B-pillar (4).
37. Route the seat belt through the slot provided in the B-pillar trim panel.
38. Install the bolt (2) that secures the seat belt (1) to the bottom of the B-pillar (4).

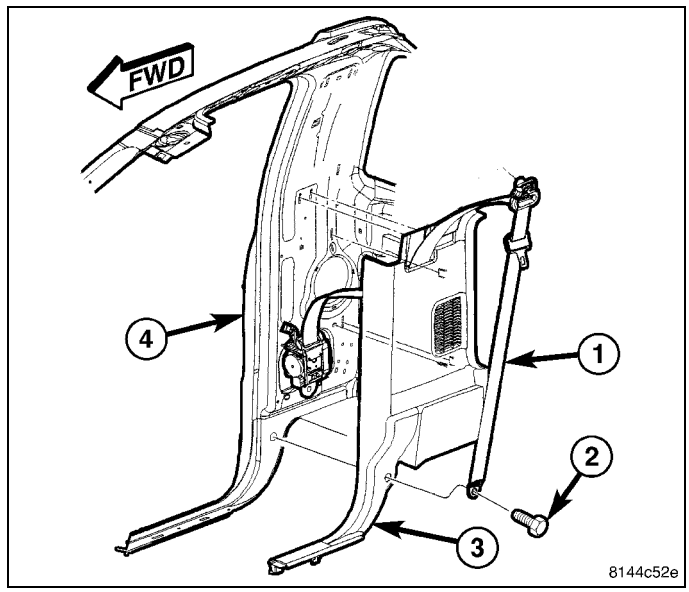

39. Place the upper B-pillar trim panel (5) into position and engage the retaining tabs that secure the trim panel to the B-pillar (4).
40. Install the bolt (2) that secures the seat belt (3) to the top of the B-pillar (4) and Install the cap (1).

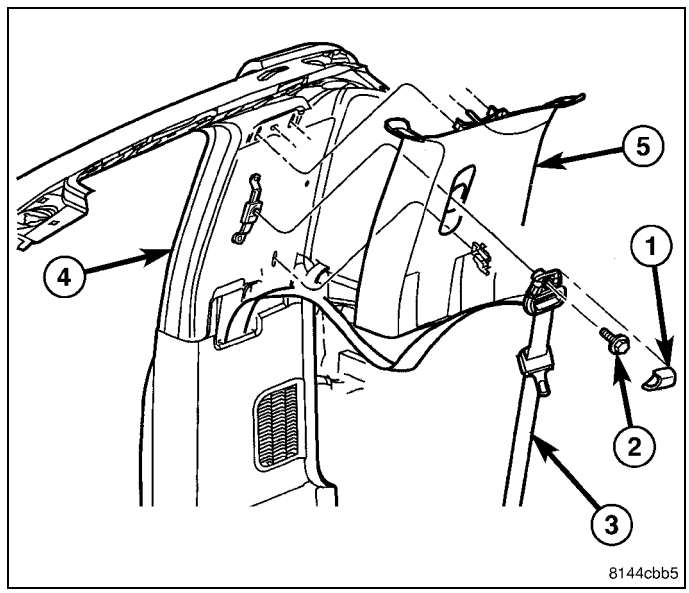

41. Install the storage compartment (2) to the rear cab and install the three fasteners (1) that secure the rear storage compartment to the floor panel (3).

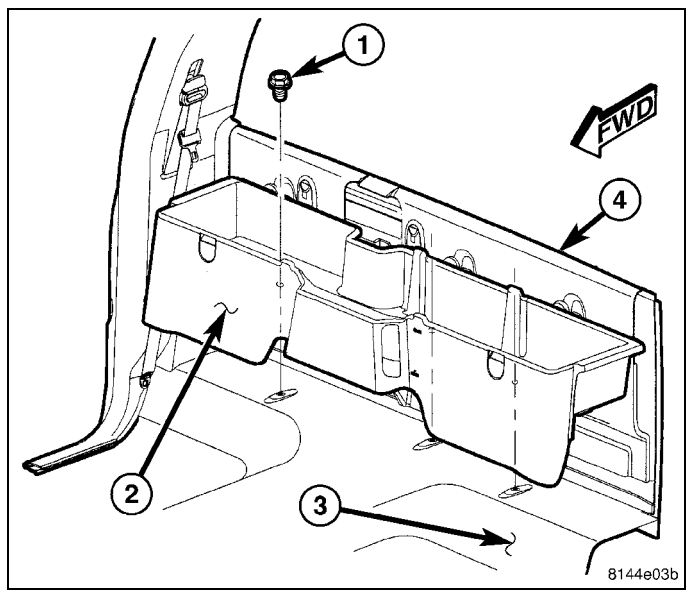

42. Place the cowl trim panel (1) into position and engage the retaining tabs to the door sill (3).

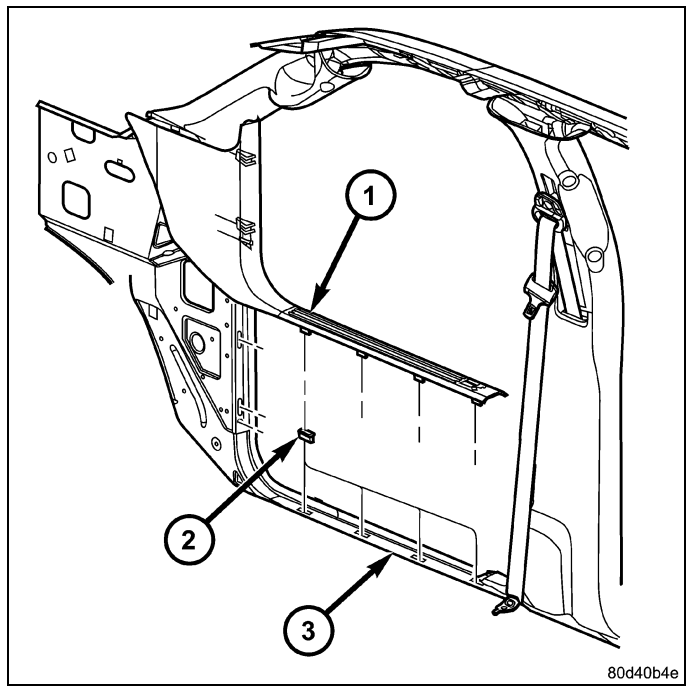

43. Engage the glove box (1) hinges to the instrument panel.
44. Press the two glove box stops (2) and raise the glove box upward.
45. Close the glove box.

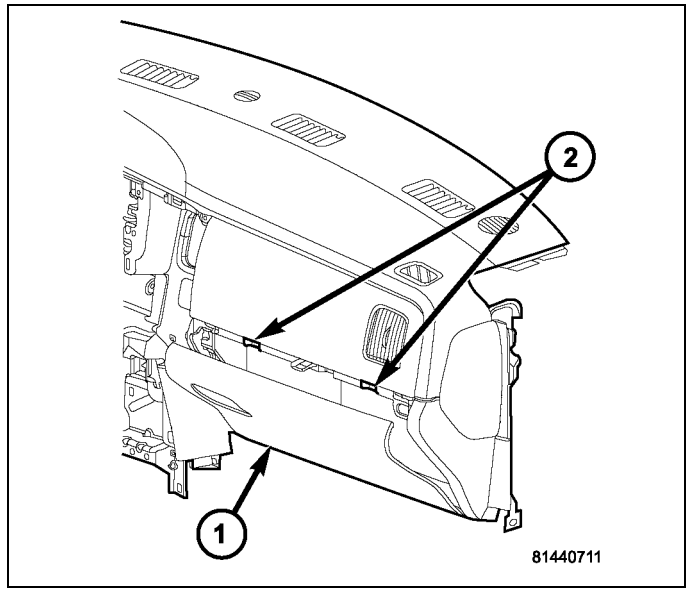

46. Connect the power outlet connectors and install the lower IP surround to the vehicle.
47. Place the cup holder into position and install the two screws behind the close out.
48. Fold the cup holder up and install the two lower screws securing the cup holder to the IP.
49. Install the lower bezel panel (1) ensuring the retaining tabs engage.
50. Connect the battery negative cable.

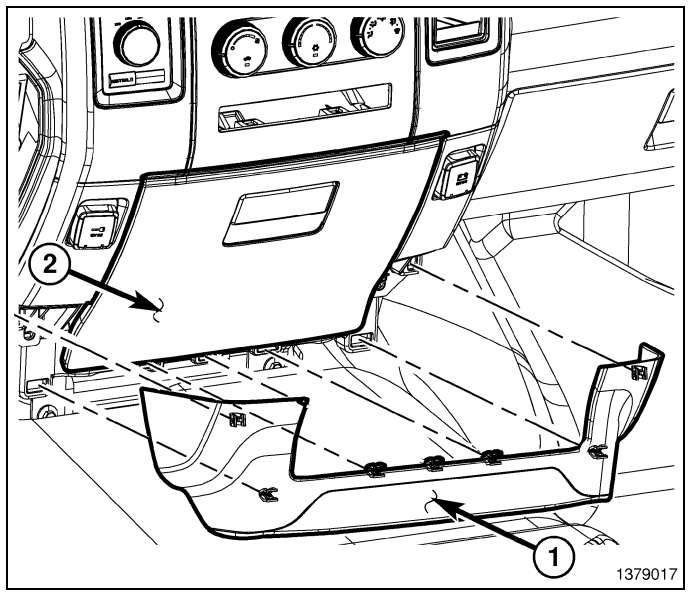

DODGE RAM

PROCEDURE STEPS:

NOTE: Verify that the radio is satellite compatible. Look for the SIRIUS® logo on the radio.

WARNING: Disable the airbag system before attempting any steering wheel, steering column, or instrument panel component diagnosis or service. Disconnect and isolate the negative battery (ground) cable. Wait two minutes for the airbag system capacitor to discharge before performing further diagnosis or service. This is the only sure way to disable the airbag system. Failure to follow these instructions may result in possible serious or fatal injury.

1. Disconnect and isolate the negative battery cable.
2. If equipped, remove the floor console.
3. Remove the cup holder if equipped.
4. On vehicles with a close out panel, remove the screws (3) and remove the close out panel (2).

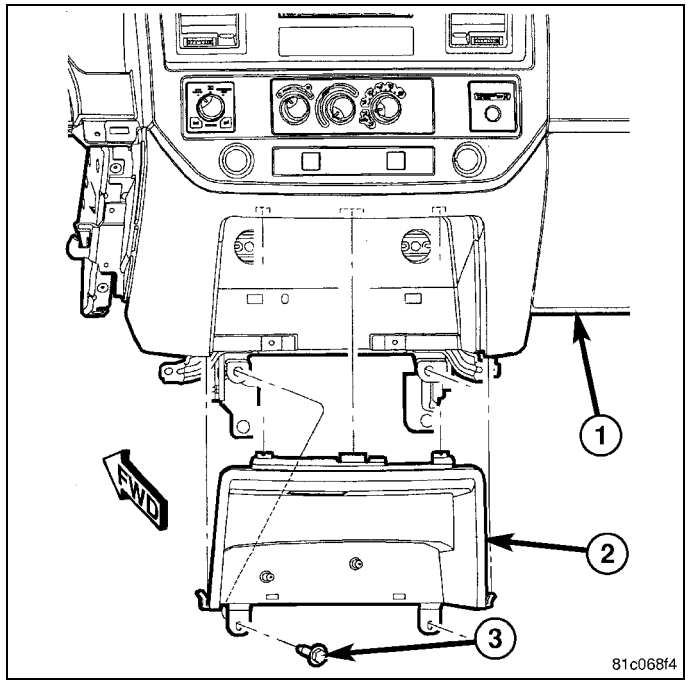

5. Remove the screws (2).
6. Using a trim stick C-4755 or equivalent, disengage the retainer clips that secure the instrument panel center bezel (1) to the instrument panel.
7. Disconnect the wire harness connectors (4) and remove the center bezel from the vehicle.

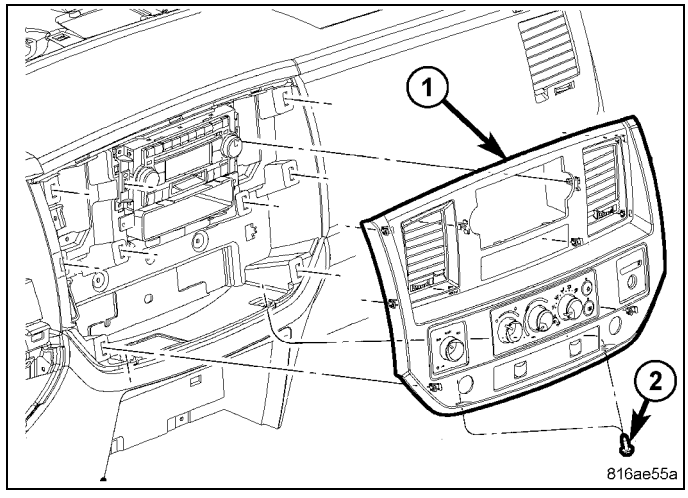

CAUTION: Pulling the antenna cable straight out of the radio without pulling on the locking antenna connector could damage the cable or radio.

8. Remove radio mounting fasteners.
9. Disconnect the antenna cable by pulling the locking antenna connector (2) away from the radio.
10. Disconnect electrical connectors.

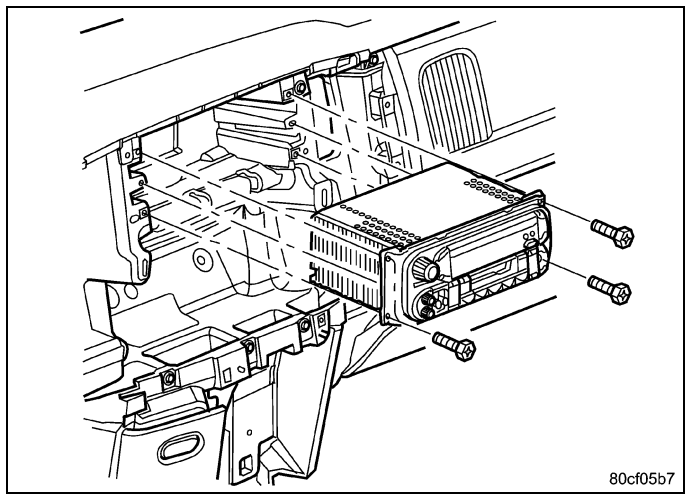

11. Open the glove box (1).
12. Release the two glove box stops (2) and lower the glove box downward past the stops.
13. Disengage the glove box hinges from the instrument panel and remove the glove box.

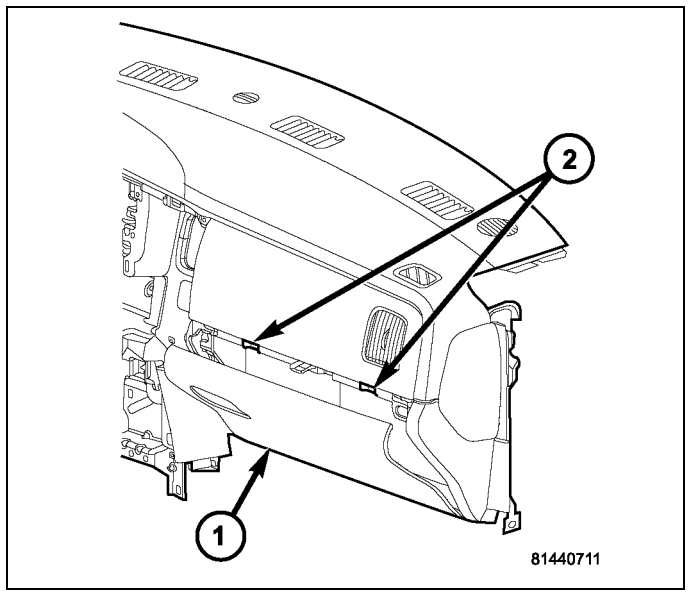

14. Using a trim stick C-4755 or equivalent, disengage the retaining tabs of the cowl trim panel (1) from the retainer clips (2) in the door sill (3).
15. Pull the cowl trim panel rearward and remove it from the vehicle.

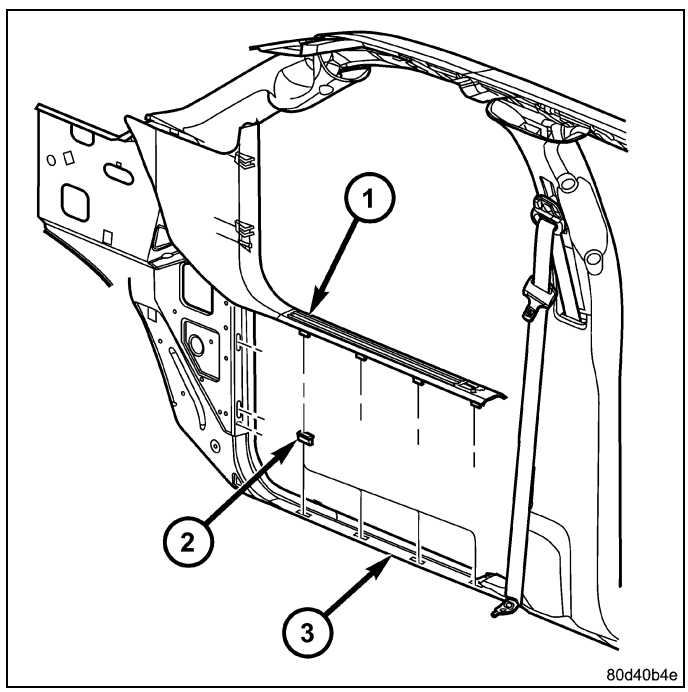

REGULAR CAB

16. Remove the cap (1) and then the bolt (2) that secures the seat belt (3) to the top of the B-pillar (4) and position the seat belt out of the way.
17. Using a trim stick C-4755 or equivalent, disengage the retaining tabs that secure the upper B-pillar trim panel (5) to the B-pillar and remove the trim panel.

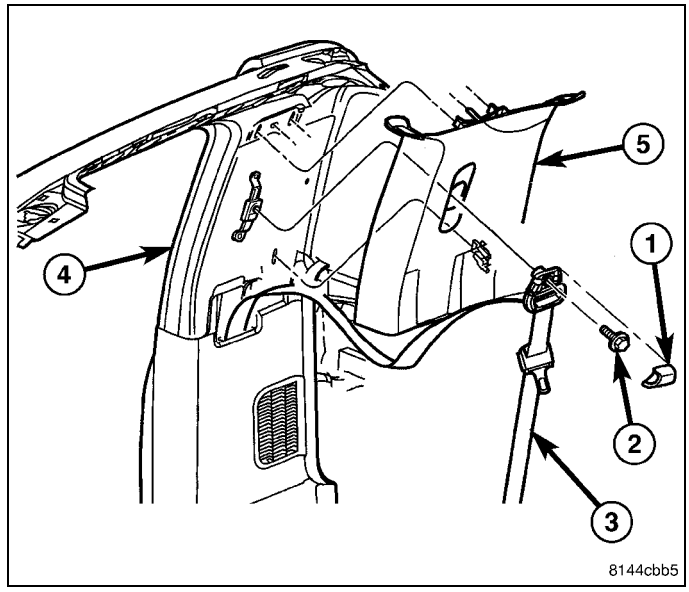

QUAD CAB

18. Move the rear seat cushion (1) to the up position.
19. Remove the two nuts (2) that secure the rear of the load floor (3) to the floor panel.

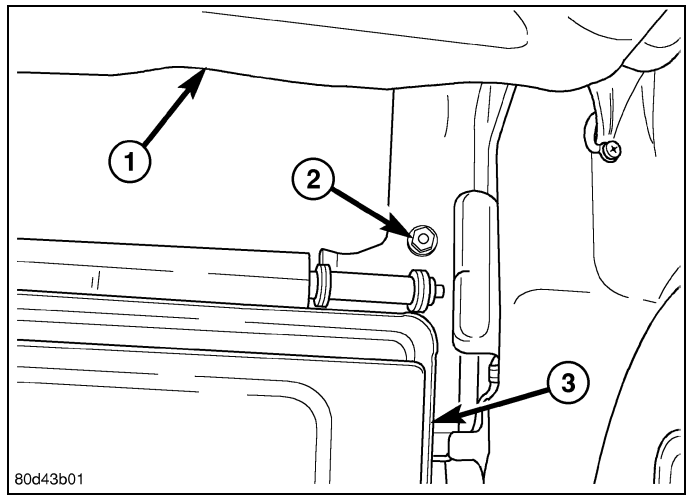

20. Move the load floor (2) to the up position.
21. Remove the two bolts (3) that secure the load floor to the floor panel (1) and remove the load floor.
22. If required, remove the support cylinder (4).

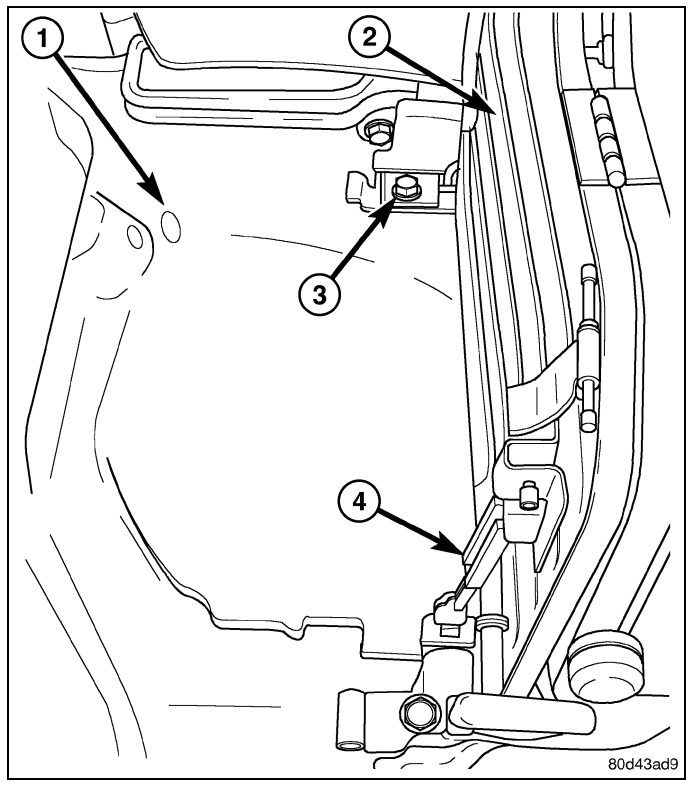

23. Using a small flat-bladed tool, carefully open the two fastener covers (2) located on the grab handle (1).
24. Remove the two bolts (3) that secure the grab handle to the B-pillar and remove the grab handle.

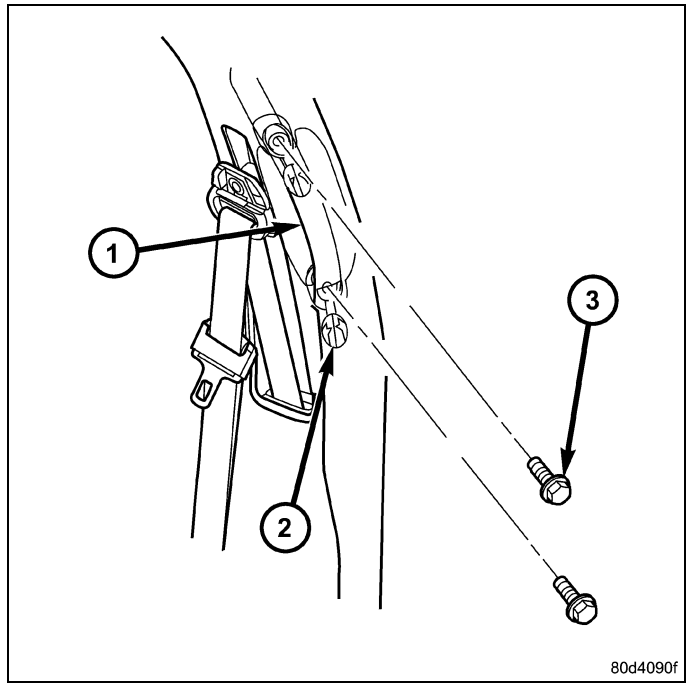

25. Remove the cap (1) and the bolt (2) that secures the seat belt (3) to the top of the B-pillar (4) and position the seat belt out of the way.
26. Using a trim stick C-4755 or equivalent, disengage the retaining tabs that secure the upper B-pillar trim panel (5) to the B-pillar and remove the trim panel.

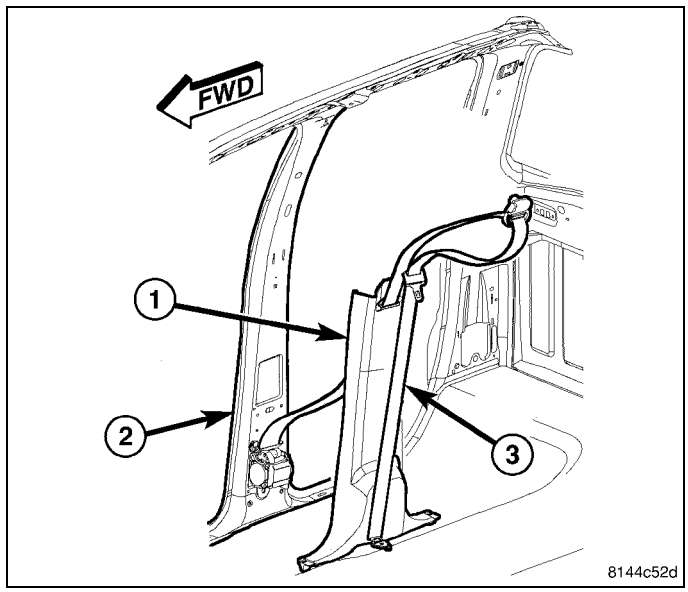

27. Remove the cap (1) and then the bolt (2) that secures the seat belt (3) to the top of the C-pillar (4) and position the seat belt out of the way.
28. Using a trim stick C-4755 or equivalent, disengage the retaining tabs that secure the upper C-pillar trim panel (5) to the C-pillar and remove the trim panel.
29. Remove the bolt (3) that secures the seat belt (2) to the bottom of the C-pillar (4) and position the seat belt out of the way.
30. Using a trim stick C-4755 or equivalent, disengage the retaining tabs that secure the lower C-pillar trim panel (1) to the C-pillar.
31. Remove the seat belt from the lower C-pillar trim panel through the slot provided and remove the trim panel.
32. Using a trim stick C-4755 or equivalent, disengage the retaining tabs of the sill trim panel (1) from the retainer clips in the rear door sill (2) and remove the trim panel.

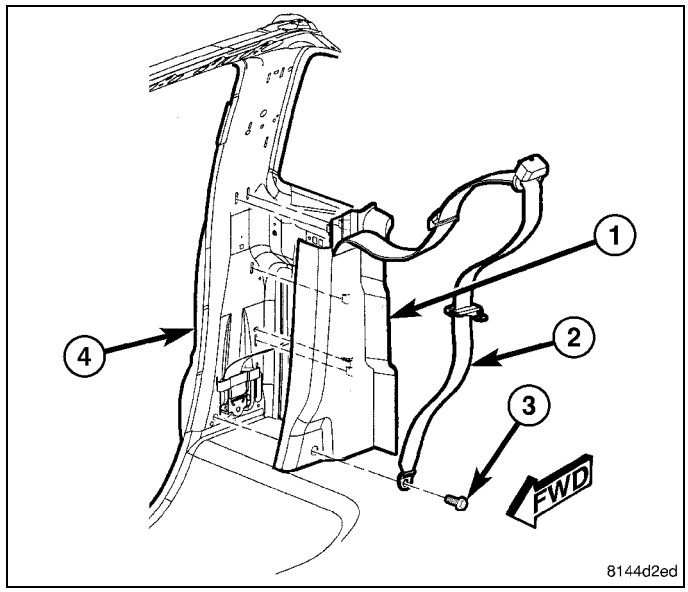

ALL

33. Using a trim stick C-4755 or equivalent, disengage the release clip (2) as shown and remove the coat hook (1) from the headliner (3)

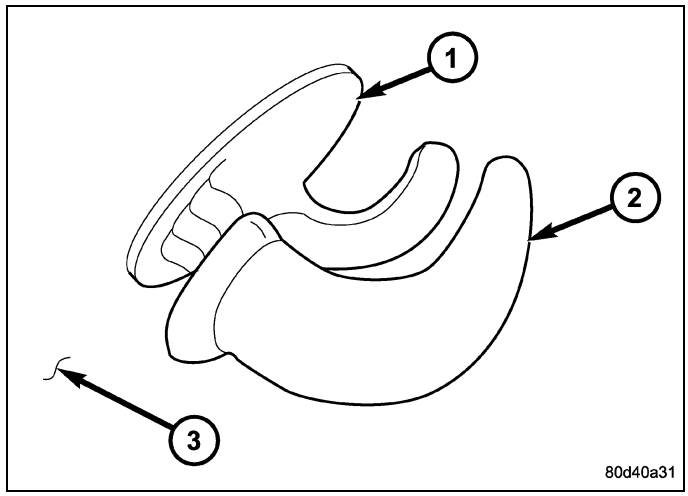

NOTE: There are two types of single lamp dome lamps available in this vehicle: one with a switch that is activated by depressing the lamp lens, and one without a switch. The bulb types and service procedures are identical for both of these lamps.

34. Gently pry the end (5) of the lens (2) outward until it unsnaps from the housing (1).
35. Swing the lens outward until it is perpendicular to the housing.
36. Pull the lens hinge/retainer end (3) of the housing outward slightly from the headliner, then slide the exposed end of the housing away from the mounting hole far enough to disengage the fixed retainer (4) on the notched end from the headliner.
37. Pull the lamp away from the headliner mounting hole far enough to access and disconnect the wire harness connector from the back of the lamp.
38. Remove the lamp from the vehicle and position the rear passenger side headliner down to access the antenna area.

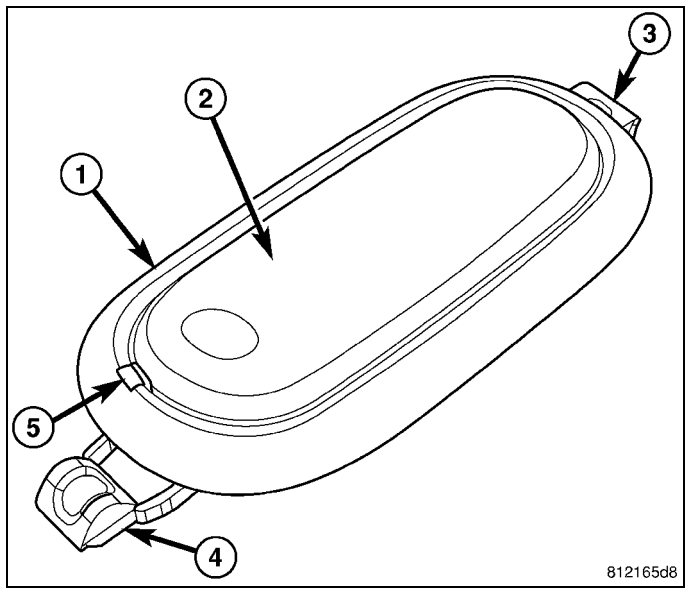

39. Cut out the template as marked.

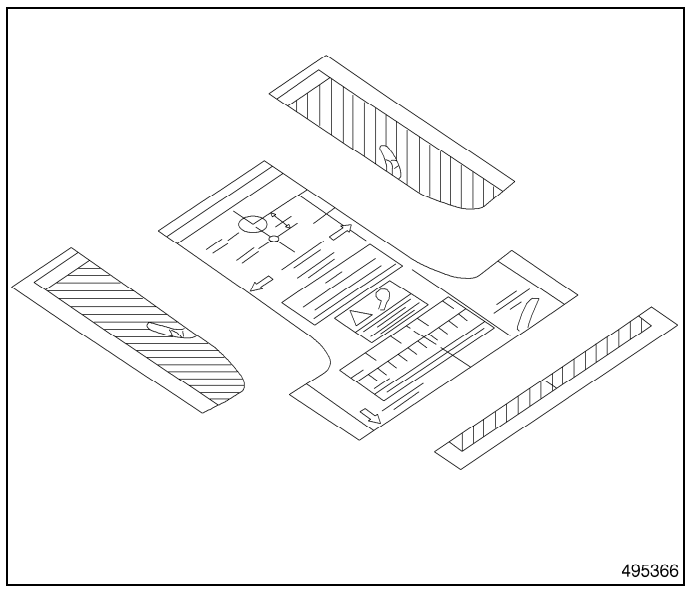

40. Lay out the template on the rear of the roof as indicated and tape in place.
41. Center punch the two marks ad directed, remove and discard the template.

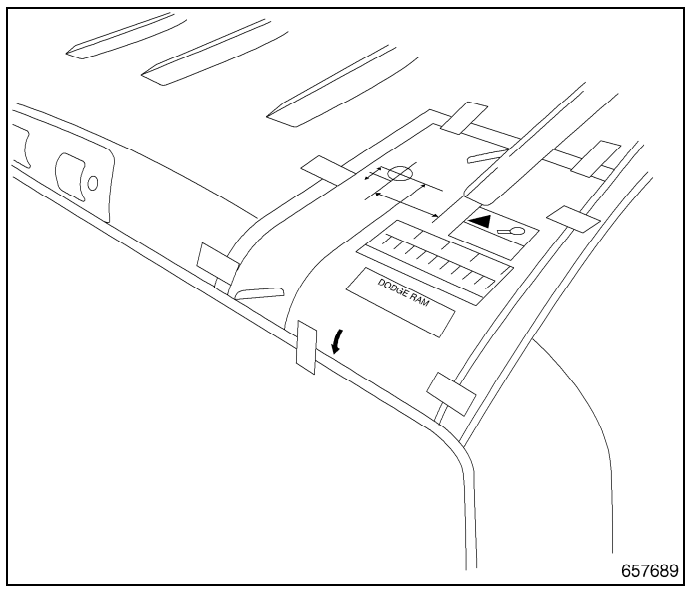

CAUTION: Do not drill more than a 6 mm (1/4 in.). Failure to do so results in damage to the vehicles headliner.

42. Drill a 3 mm (1/8 in.) pilot hole at each of the center punched locations.
43. Drill the rear hole to 5 mm (13/64 in.).
44. Drill the front hole to 19 mm (3/4 in.).
45. Debur both of the holes.
46. Apply Mopar® Corrosion Inhibitor, p/n 82300508, to the bare metal surface of the drilled holes.
47. Clean and prep the area for the antenna.
48. Install the satellite antenna. Tighten to 9 N·m (80 in. lbs.).
49. Connect the satellite antenna cable to the extension cable.
50. Secure the antenna cable to the headliner and route toward the right rear pillar.
51. Route the extension cable down the right rear pillar, along the scuff plate sill and up to the cowl and secure to the vehicles body electrical harness.

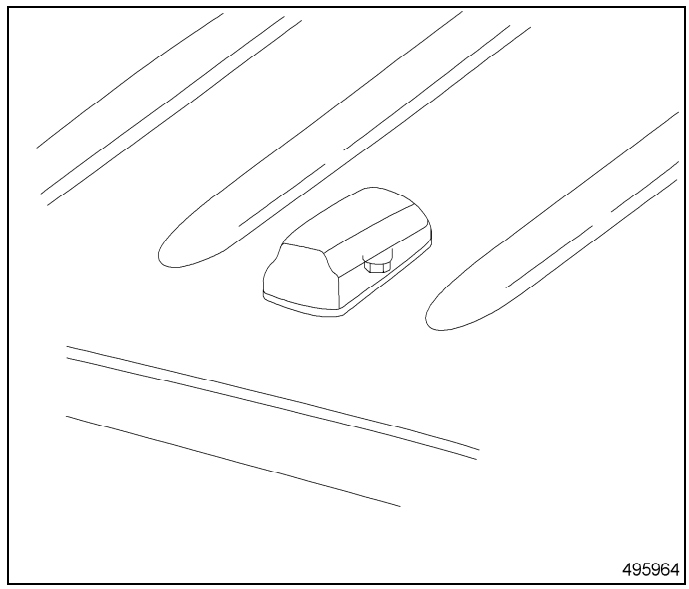

52. Position the coat hook (1) through the headliner (3) and fully seat the base of the support to the roof panel.
53. Engage the release clip (2).

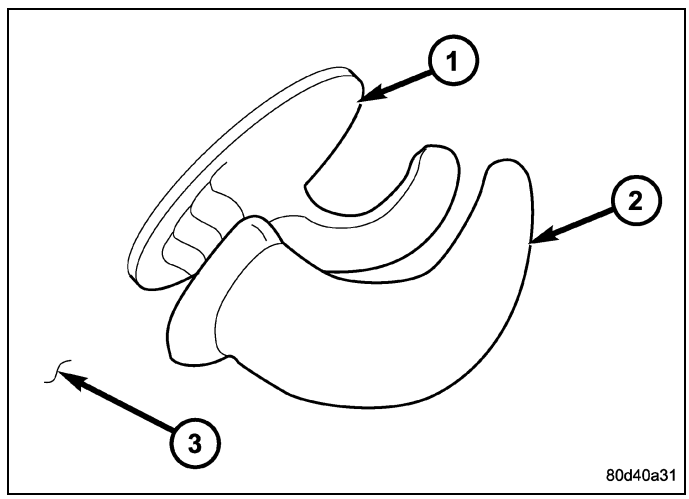

54. Position the dome lamp unit (1) to the mounting hole in the headliner.
55. Reconnect the wire harness connector to the connector on the back of the lamp.
56. Insert the fixed retainer on the notched end (4) of the lamp housing up into one side of the mounting hole in the headliner.
57. Slide the notched end of the housing into the mounting hole far enough to engage the lens hinge/retainer (3) into the opposite side of the hole in the headliner.
58. Gently and evenly press the lens hinge/retainer end of the lamp into the mounting hole until the bezel of the lamp housing is flush with the headliner.
59. Swing the notched end of the lamp lens (2) into position against the lamp housing, then press on the lens firmly and evenly until it snaps into the housing.

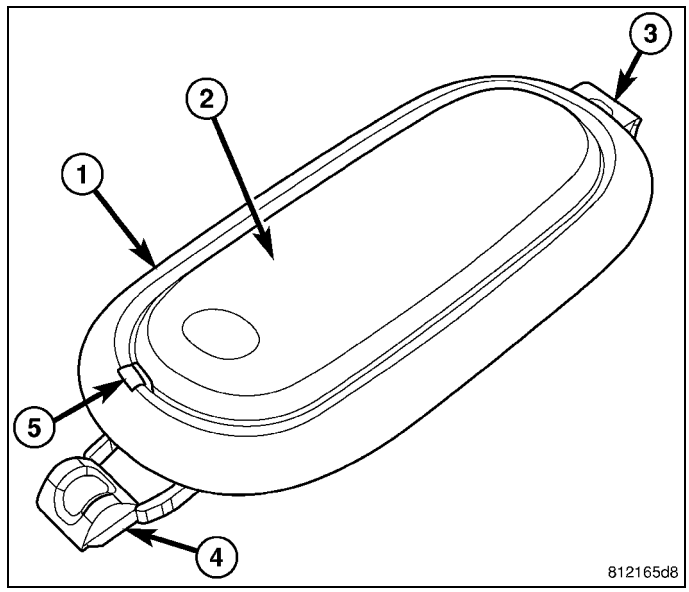

REGULAR CAB

60. Position the upper B-pillar trim panel (5) to the B-pillar (4).
61. Engage the retaining tabs that secure the upper B-pillar trim panel to the B-pillar
62. Install the bolt (2) that secures the seat belt (3) to the top of the B-pillar. Tighten the bolt to 40 N·m (30 ft. lbs.).
63. Install the cap (1) onto the seat belt.

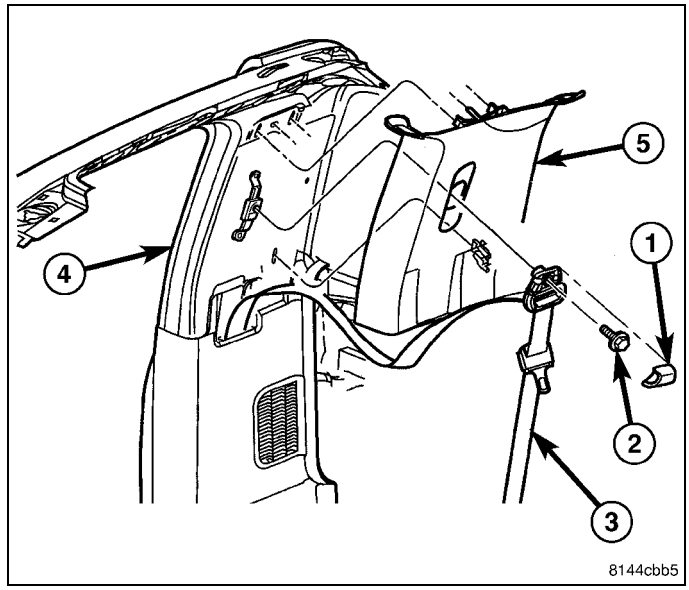

QUAD CAB

64. Route the seat belt (2) through the slot in the lower C-pillar trim panel (1) and position the trim panel to the C-pillar (4).
65. Engage the retaining tabs that secure the lower C-pillar trim panel to the C-pillar.
66. Install the bolt (3) that secures the seat belt to the bottom of the C-pillar. Tighten the bolt to 40 N·m (30 ft. lbs.).

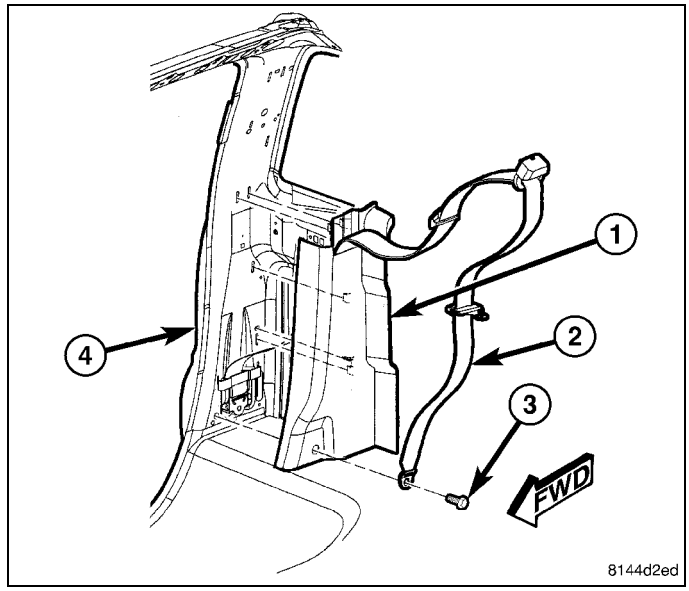

67. Position the upper C-pillar trim panel (5) to the C-pillar (4).
68. Engage the retaining tabs that secure the upper C-pillar trim panel to the C-pillar.
69. Install the bolt (2) that secures the seat belt (3) to the top of the C-pillar. Tighten the bolt to 40 N·m (30 ft. lbs.).
70. Install the cap (1) onto the seat belt.

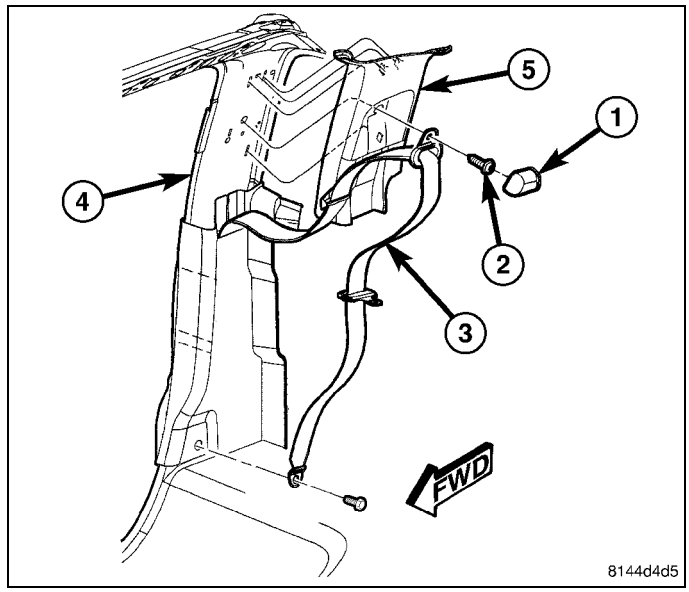

71. Position the upper B-pillar trim panel (5) to the B-pillar (4).
72. Engage the retaining tabs that secure the upper B-pillar trim panel to the B-pillar.
73. Install the bolt (2) that secures the seat belt (3) to the top of the B-pillar. Tighten the bolt to 40 N·m (30 ft. lbs.).
74. Install the cap (1) onto the seat belt.

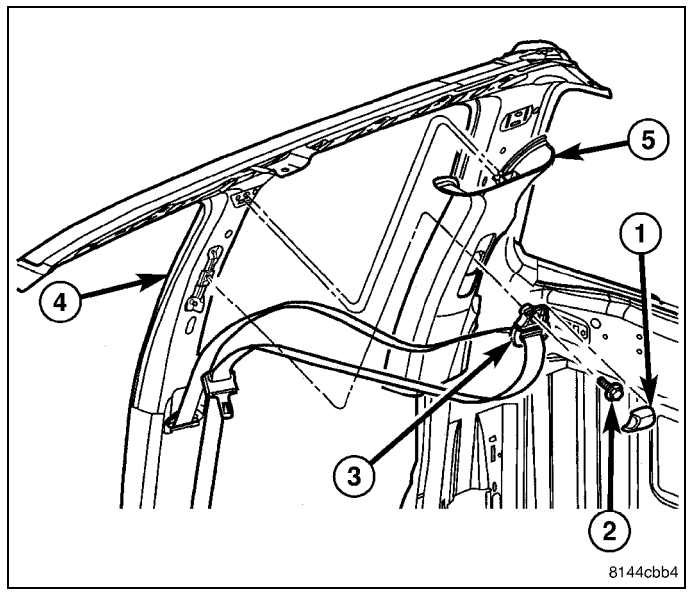

75. Install the grab handle (1) onto the B-pillar and install the two bolts (3). Tighten the bolts to 6 N·m (55 in. lbs.).
76. Close the two fastener covers (2) located on the grab handle.

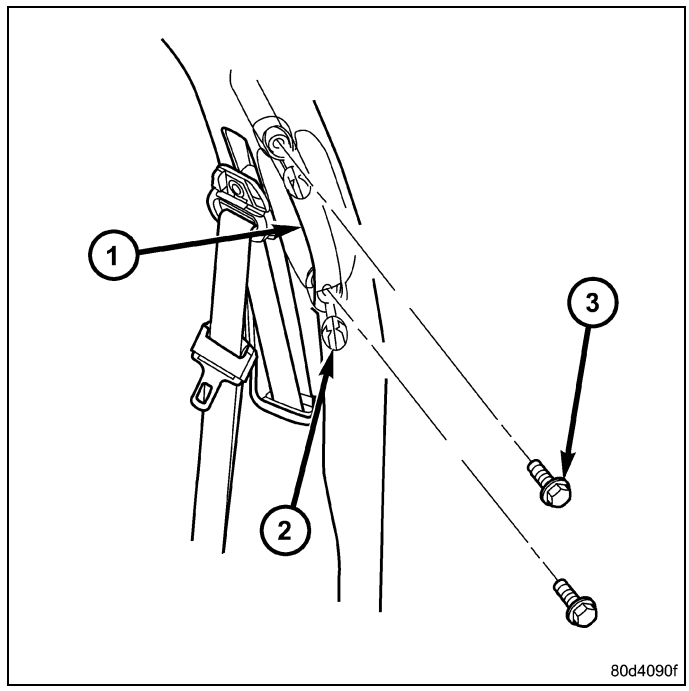

77. If removed, install the load floor support cylinder (4).
78. Position the load floor (2) into the vehicle and install the two bolts (3) that secure it to the floor panel (1). Tighten the bolts to 40 N·m (30 ft. lbs.).

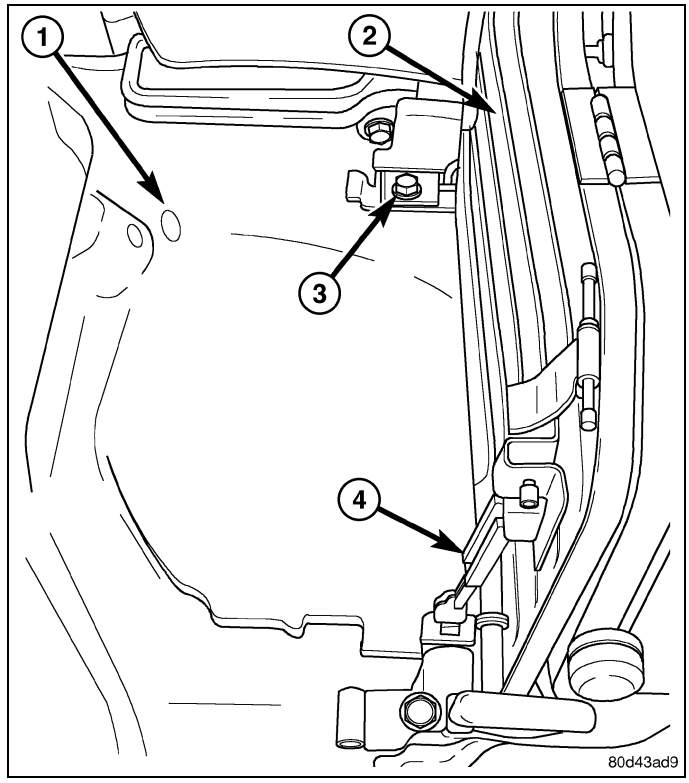

79. Move the load floor (3) to the down position and install the two nuts (2) that secure the load floor to the floor panel. Tighten the nuts to 25 N·m (18 ft. labs.
80. Move the rear seat cushion (1) to the down position.

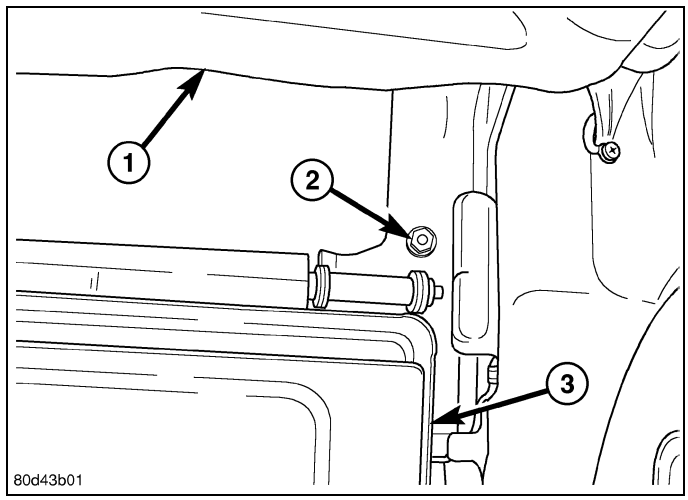

All

81. Position the cowl trim panel (1) onto the door sill (3).
82. Push the cowl trim panel forward and then engage the retaining tabs that secure the sill trim panel to the rear door sill.

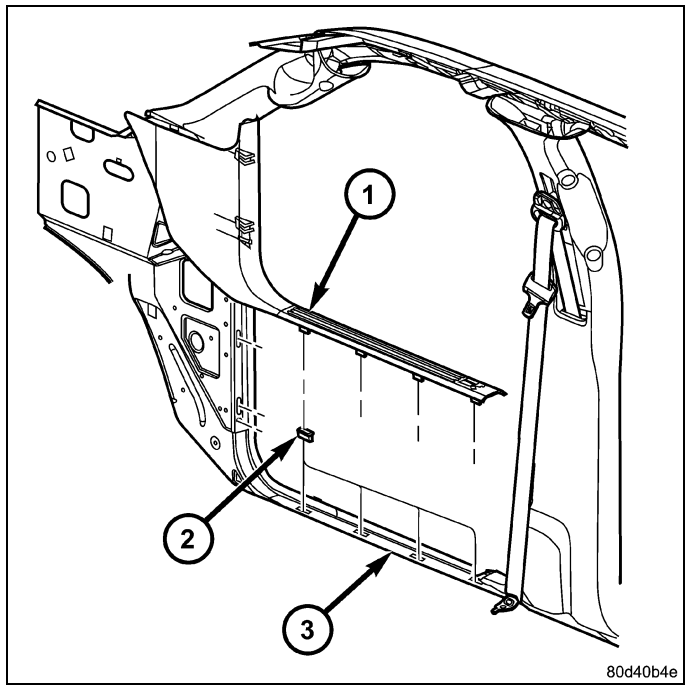

83. Route and secure antenna harness (1) along the HVAC harness (2) and up to the radio opening.

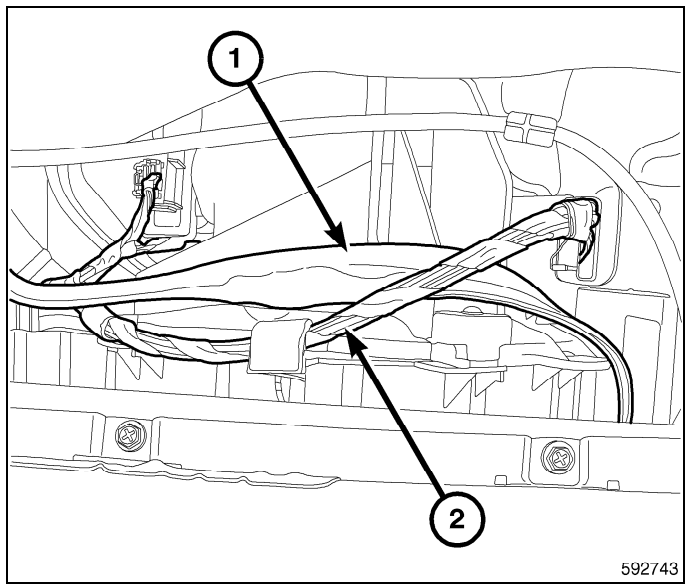

NOTE: The antenna ports are keyed and color coded for there specific antenna connection.

NOTE: All SDARS antenna connections are Yellow.

84. Connect electrical connectors to radio.

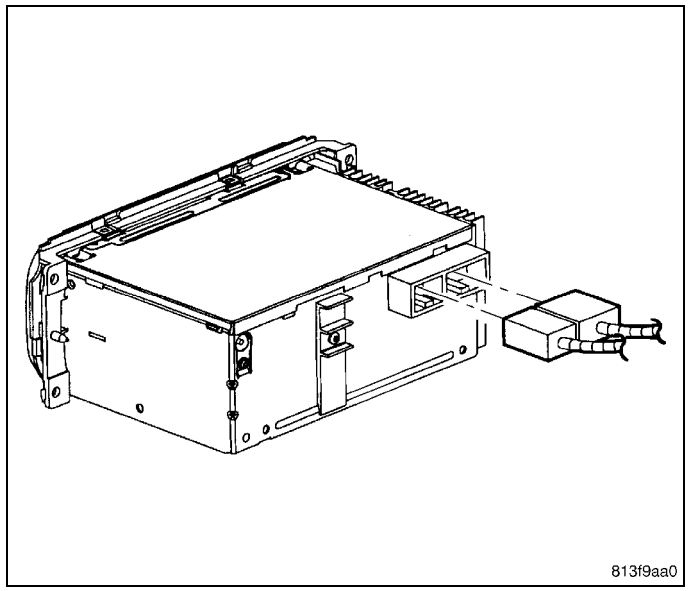

85. Position radio to instrument panel.
86. Install and tighten mounting fasteners.

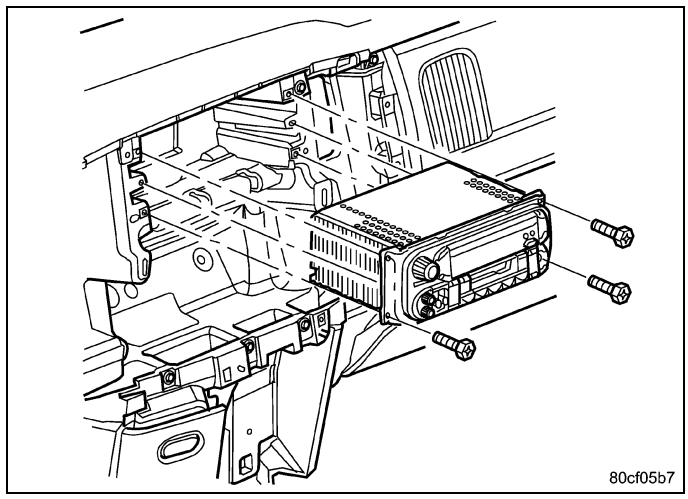

87. Position the instrument panel center bezel (1) near the instrument panel and connect the wire harness connectors (4).

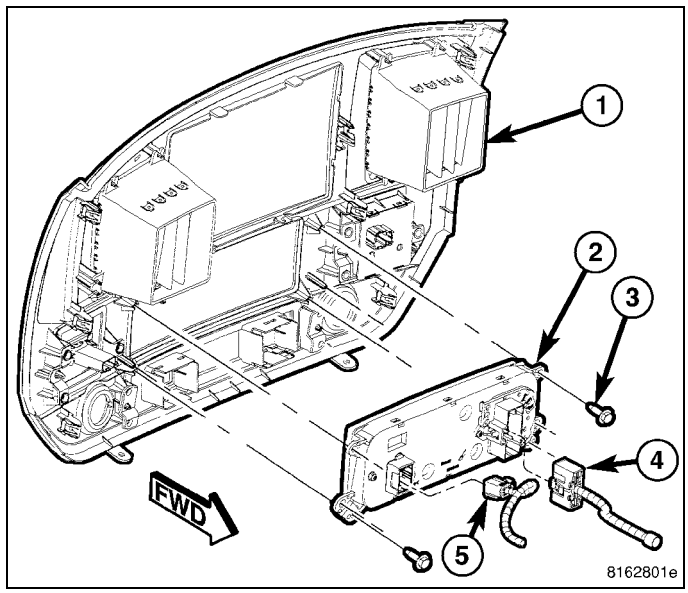

88. Install the instrument panel center bezel (1) onto the instrument panel and fully engage the retainer clips.
89. Install the two lower screws (2).

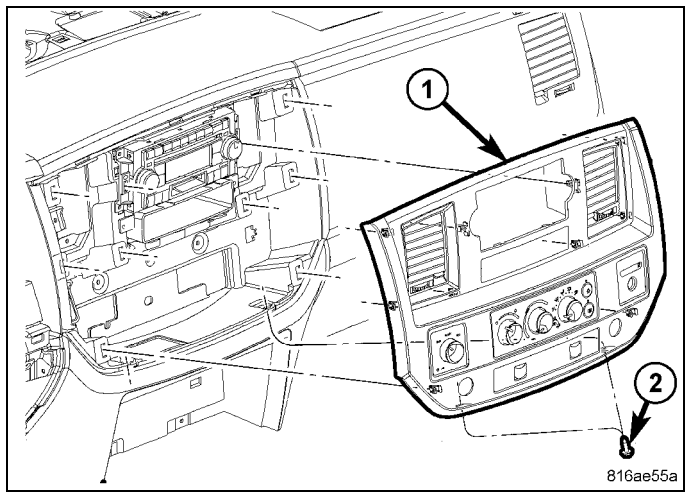

90. If necessary, install the close out panel (2) and install the screws (3).
91. Position the cup holder (2) onto the clips (1) and seat fully.
92. Install the screws (2).
93. Position the bezel and seat the clips fully.
94. Connect the negative battery cable.

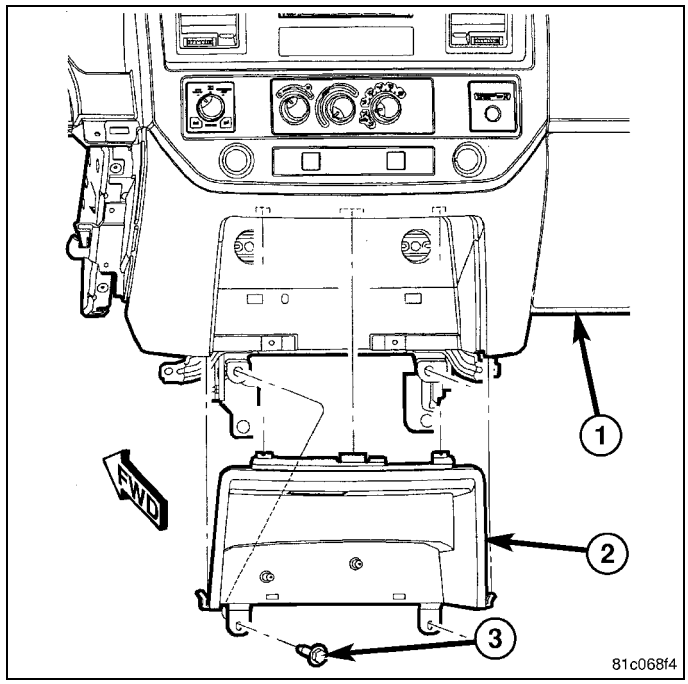

SDARS VEHICLE CONFIGURATION

Vehicle VIN must be updated with the sales code of the added accessory in order to enable system functionality.Using the DealerCONNECT website and a scantool, complete the procedure below.

- Log on to Http://dealerconnect.chrysler.com.
- In the "Vehicle Options" screen under the "Global Claims System" category in the "Service tab, enter the vehicle VIN and add the sales code **RSC (SIRIUS SATELLITE RADIO)** as a "Dealer Installed option".
- Confirm the new sales code has been successfully added to the VIN.

With the ScanTool connected to both the internet (via Ethernet port or wireless connection) and the vehicle, follow the steps below:

- In the "Initial Start Up" screen select **VEHICLE PREPARATION**
- Toggle down and highlight **RESTORE VEHICLE CONFIGURATION**
- Press **START**
- Press **NEXT**
- If necessary, select proper vehicle line and model year and press **NEXT**
- Confirm correct selection and press **NEXT**
- Enter vehicle VIN using the on screen keyboard or confirm that the Auto Filled VIN plate is correct and press **NEXT**
- Press **OK**
- Enter the user ID, password and dealer code using the one screen keyboard and press **OK**

NOTE: At this point the ScanTool is downloading the vehicle configuration from the network.

- Confirm that the new vehicle configuration has been successfully programmed, follow the on screen instructions and press **FINISH**

VALIDATION PROCESS

from the "Initial Start up" screen on the ScanTool follow the steps below:

- Using a ScanTool follow the menu to **ECU VIEW**, select either **TPIMCGW CENTRAL GATEWAY** or **FCMCGW CENTRAL GATEWAY** depending on the vehicle.
- Select **MORE OPTIONS, ECU DETAILS,** and then **CONFIG INFO**.
- Verify **SDARV - - - - SET** is present.
- Drive the vehicle outside for a clear satellite signal to the antenna and verify system operation.

EXTERIOR APPEARANCE

TABLE OF CONTENTS

page

EXTERIOR APPEARANCE
INSTRUCTION SHEET
ACCESSORY HOOD 1
LOCKING REAR TAILGATE AND KEYLESS LOCK ACTUATOR 1
TRAILER TOW MIRRORS 1
FRONT TOW HOOKS 1
FLARE MOLDINGS 1
DUAL EXHAUST 1

Exterior Appearance

Instruction Sheet

DODGE RAM

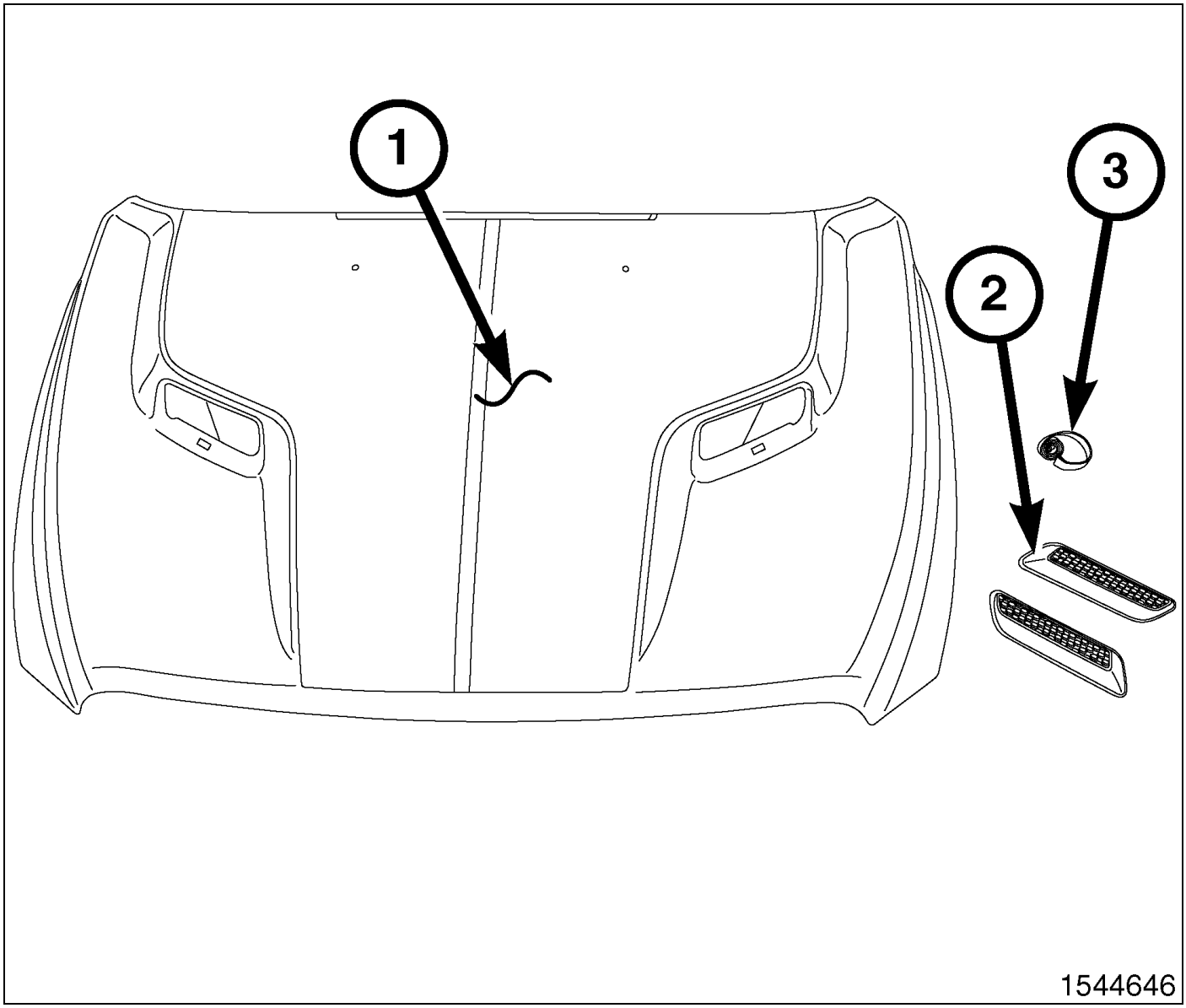

Call Out	Description	Parts	Quantity
1	Hood	Supplied in kit	1
2	Bezel	Supplied in kit	2
3	Foam tape	supplied in kit	1

PROCEDURE STEPS:

1. Disconnect the washer fluid hose (1) and release the hose from the retaining clips (2).

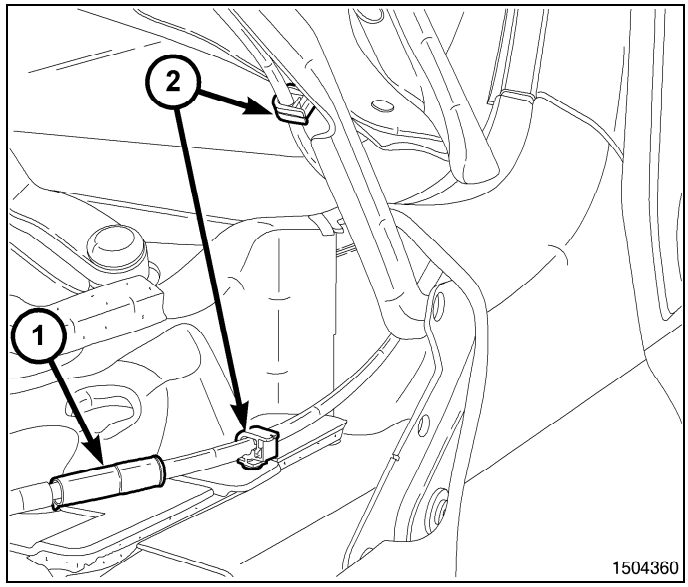

2. If equipped, disconnect the underhood lamp connector (1) and release the wire harness from the retaining clips. (2).

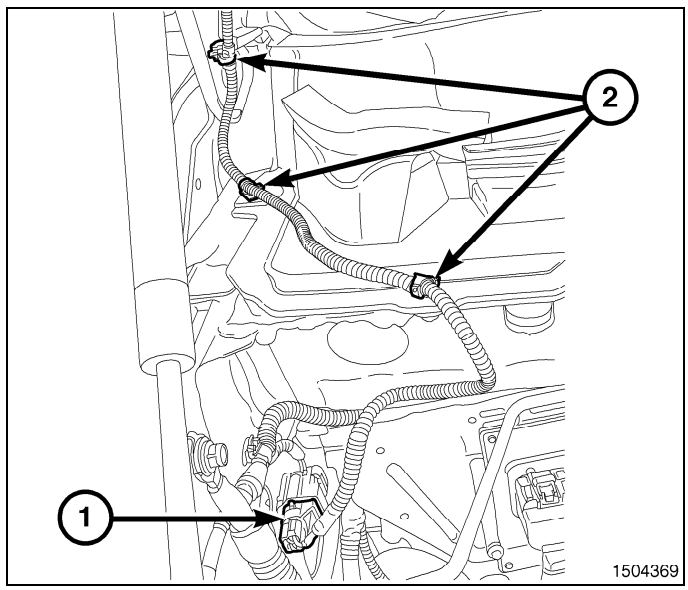

CAUTION: Be sure to not to damage the paint finish of the hood by placing the hood on non-abrasive surface.

3. With the help of an assistant, remove the two nuts (1) from the hinge (2). Repeat steps on opposite side and remove the hood.

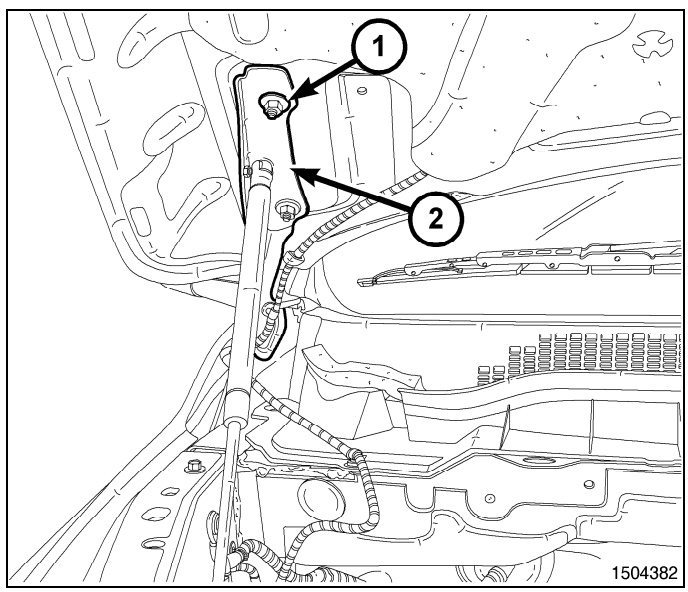

4. Remove the hood silencer pad by removing the seven retaining clips (4).

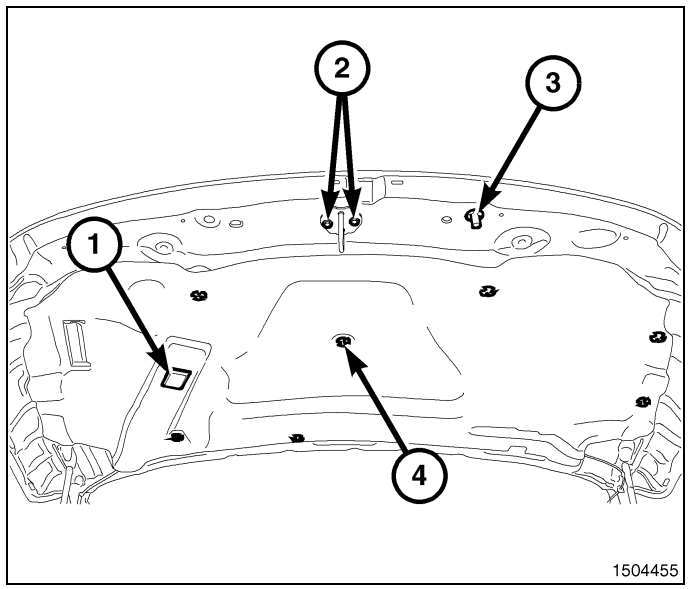

5. Disconnect the washer hose and washer nozzles by releasing the integral latch features of the washer nozzle by pushing the nozzle out through the mounting hole toward the top side of the hood. Install the nozzles on the new accessory hood.

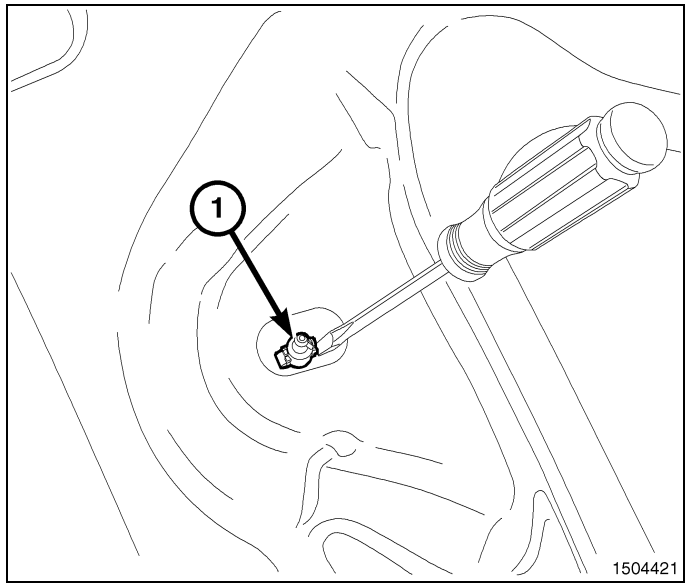

6. If equipped, transfer the underhood lamp (1) and remote starter plunger (3) to the new accessory hood.
7. Transfer the hood striker to the new accessory hood and tighten the bolts (2) to 17 N·m (12.5 ft. lbs.).
8. Install the hood silencer pad on the new accessory hood by pressing the seven retaining clips (4) into the new accessory hood.

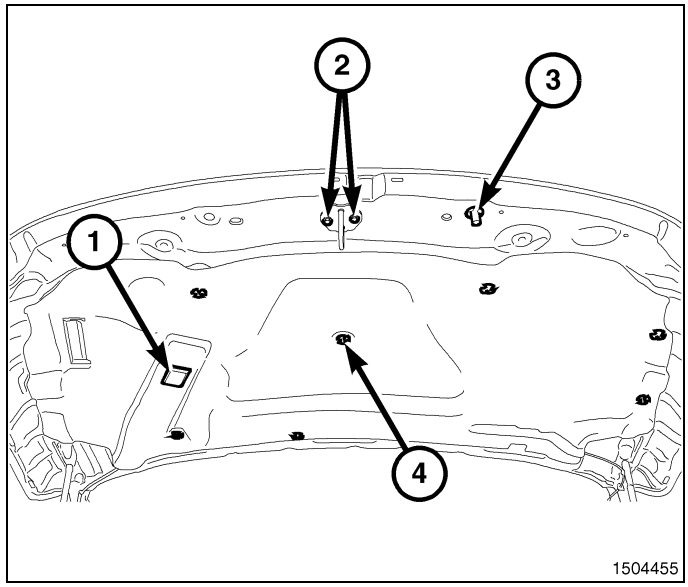

9. With the help of an assistant, position the hood onto the hood hinge (2) and loosely install the two nuts (1) that secure the hood to the hinge (2). Repeat steps for the opposite side.

NOTE: Quad Cab shown in Fig. 1, Regular Cab and Crew Cab similar.

10. Adjust the hood to the correct position, refer to Fig. 1 and the flushness chart. Once the hood is positioned properly, tighten the hood hinge nuts (1) to 18 N·m (13 ft. lbs.).

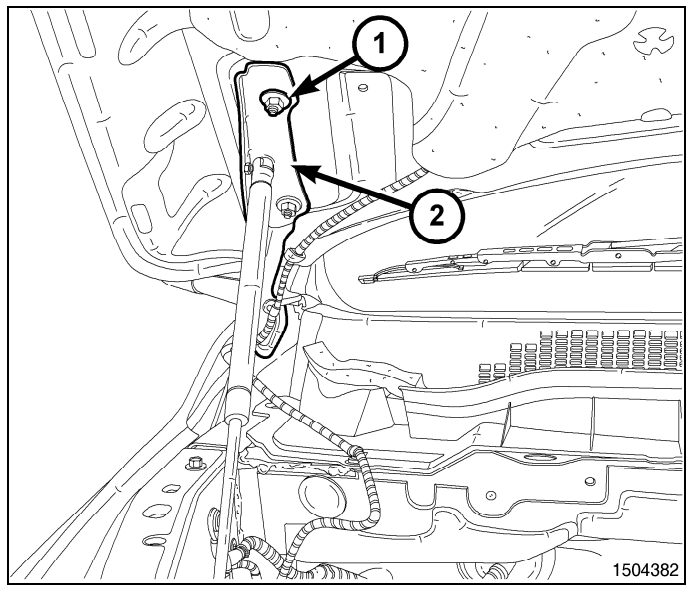

11. Connect the underhood lamp connector (1) and the wire harness retaining clips. (2).

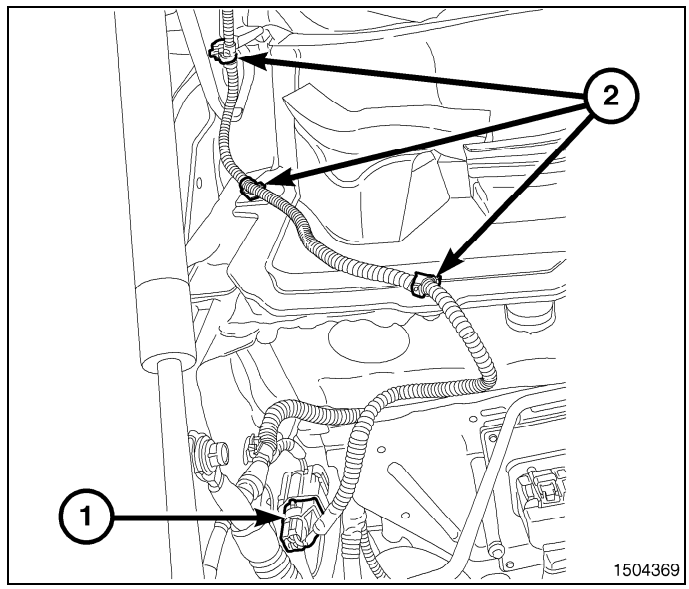

12. Connect the washer fluid hose (1) and the hose in the retaining clips (2).

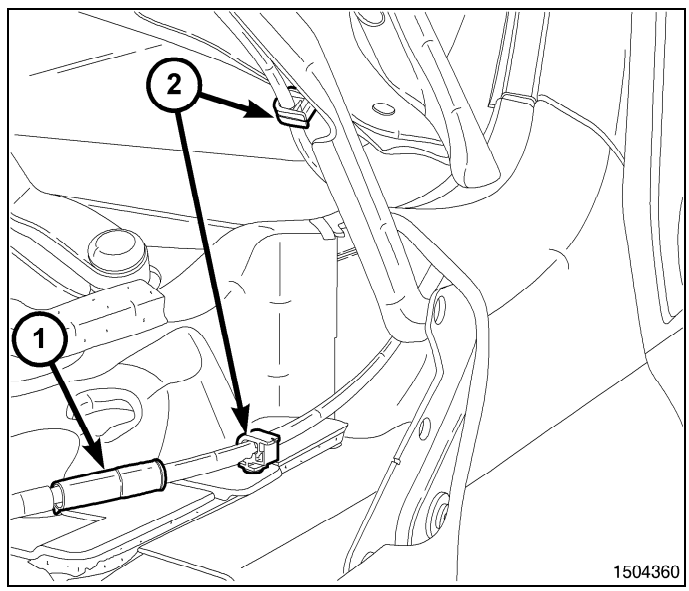

NOTE: Previous model year kits may include hood assemblies without center clip retainer openings. To determine which hood is in your kit, look for a small rectangular hole near the front of each bezel opening on the hood. If the center clip retainer openings are not present on the hood, foam tape will be required to install the bezels. If the center clip retainer openings are present on the hood, foam tape is not necessary to install the bezels.

13. If the center clip retainer openings are not present on the hood, remove the center clip (2) from the bezel (1). Repeat steps for the opposite side.

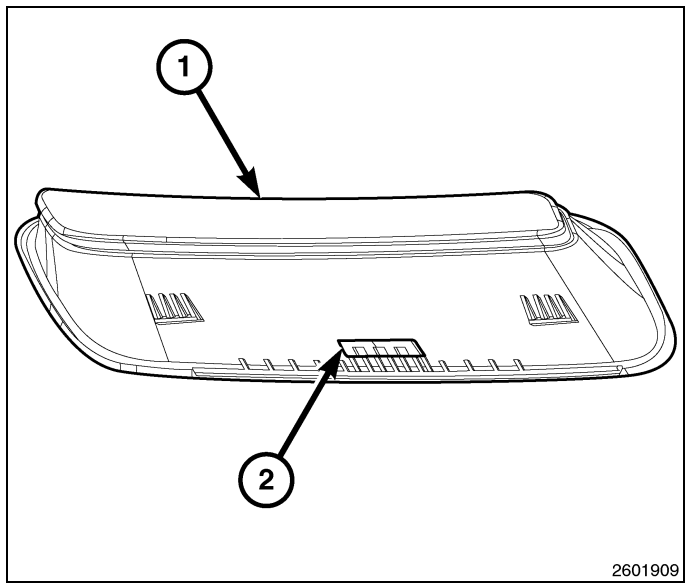

14. If the center clip retainer openings are not present on the hood, apply 152.4 mm (6 in.) (2) of the supplied foam tape to the hood bezels (1) as shown. Press down firmly for 30 seconds minimum to ensure good adhesion. Peel the tape protector back on a 45° angle on both ends of the tape. Repeat steps for the opposite side.

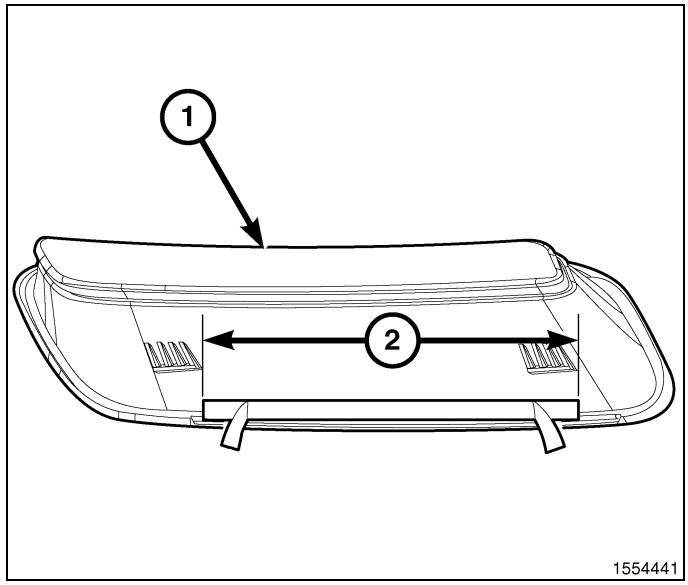

15. Install the bezel into the accessory hood.
    - If the clip retainer openings are present on the hood, position the bezel into the accessory hood by loading the top edge first (1), then push downward in the center of the bezel (3) to engage the center clip. Continue pushing downward in the center and rearward (4) until all the clips are engaged. Repeat steps for the opposite side.
    - If the clip retainer openings are not present on the hood, position the bezel properly into the accessory hood by loading the top edge first (1). Pushing downward in the center and rearward (4) until all the clips are engaged. Peel the tape protector (2) off to expose the tape adhesive. Press down firmly for 30 seconds minimum to ensure good adhesion. Repeat steps for the opposite side.

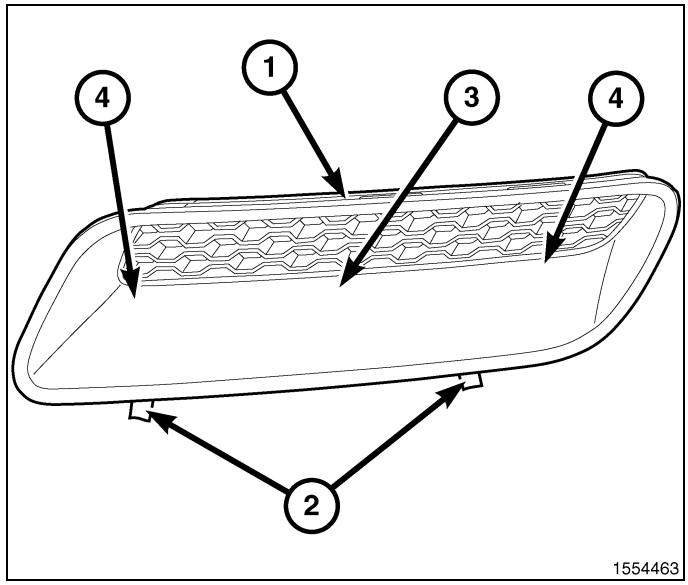

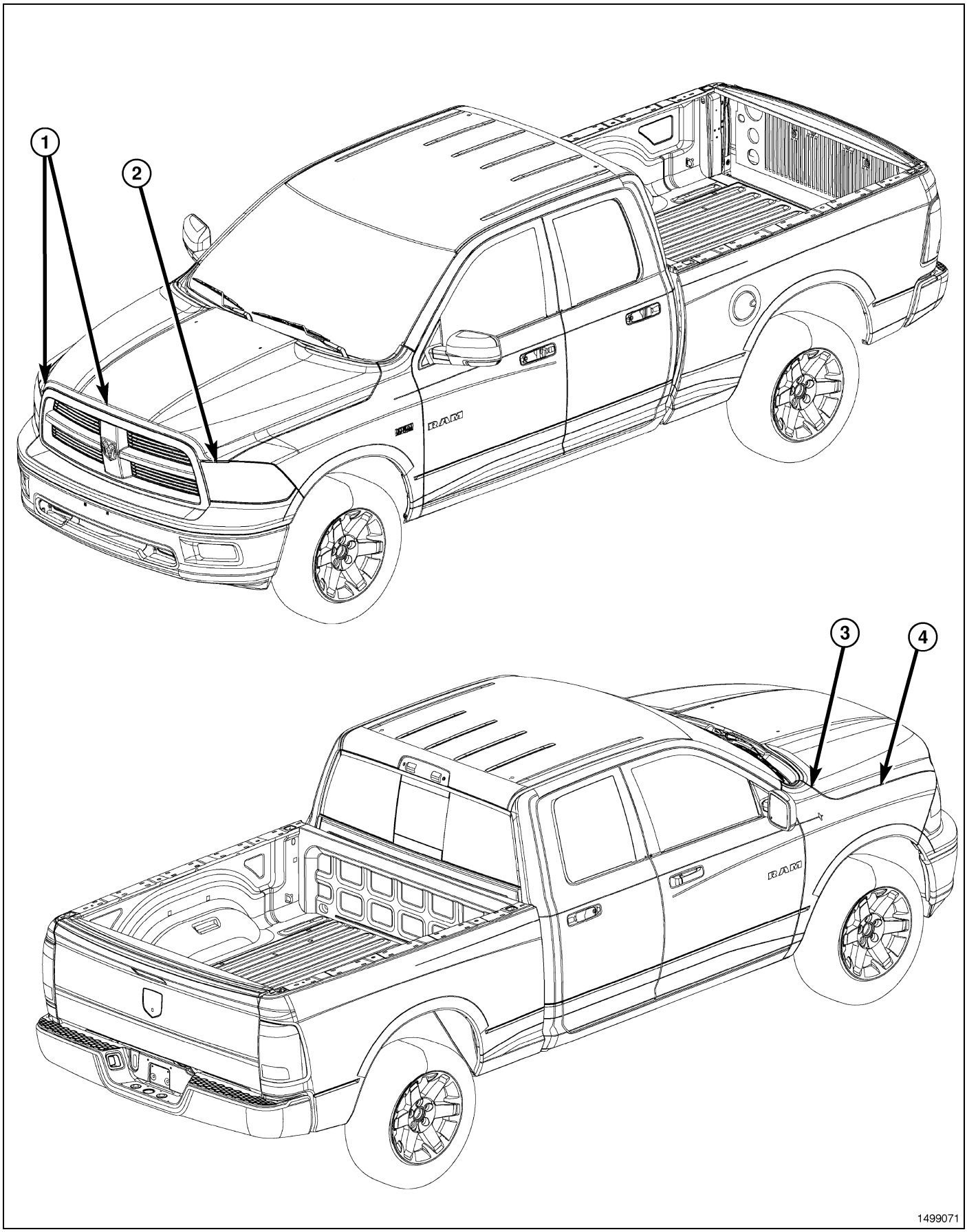

Fig. 1 QUAD CAB

HOOD FLUSHNESS CHART

NOTE: All measurements are in millimeters.

O/F = Over Flush,

U/D = Up/Down

U/F = Under Flush,

F/A = Fore/Aft

DIMENSION	DESCRIPTION	GAP	FLUSH
1	Hood to grille (along top)	7.0 +/- 2.0 transition to 4.5 after corner	Hood o/f 7.0 @ center to 5.5 @ corner to 1.0 around corner +/- 2.0
2	Headlamp to hood	7.0 +/- 2.0 Parallel within 2.0 Side to side within 3.0	Headlamp o/f 4.0 +/- 2.0 Parallel within 2.0 Side to side within 2.0
3	Fender to hood @ cowl	4.5 +/- 1.5 Parallel within 1.5 Side to side within 2.0	Fender u/d-u/f 0.75 +/- 1.5 Cross/car 0.0 +/- 1.5
4	Fender to hood	4.5 +/- 1.5 Parallel within 1.5 Side to side within 2.0	Fender o/f 0.5 +/- 1.5

DODGE RAM

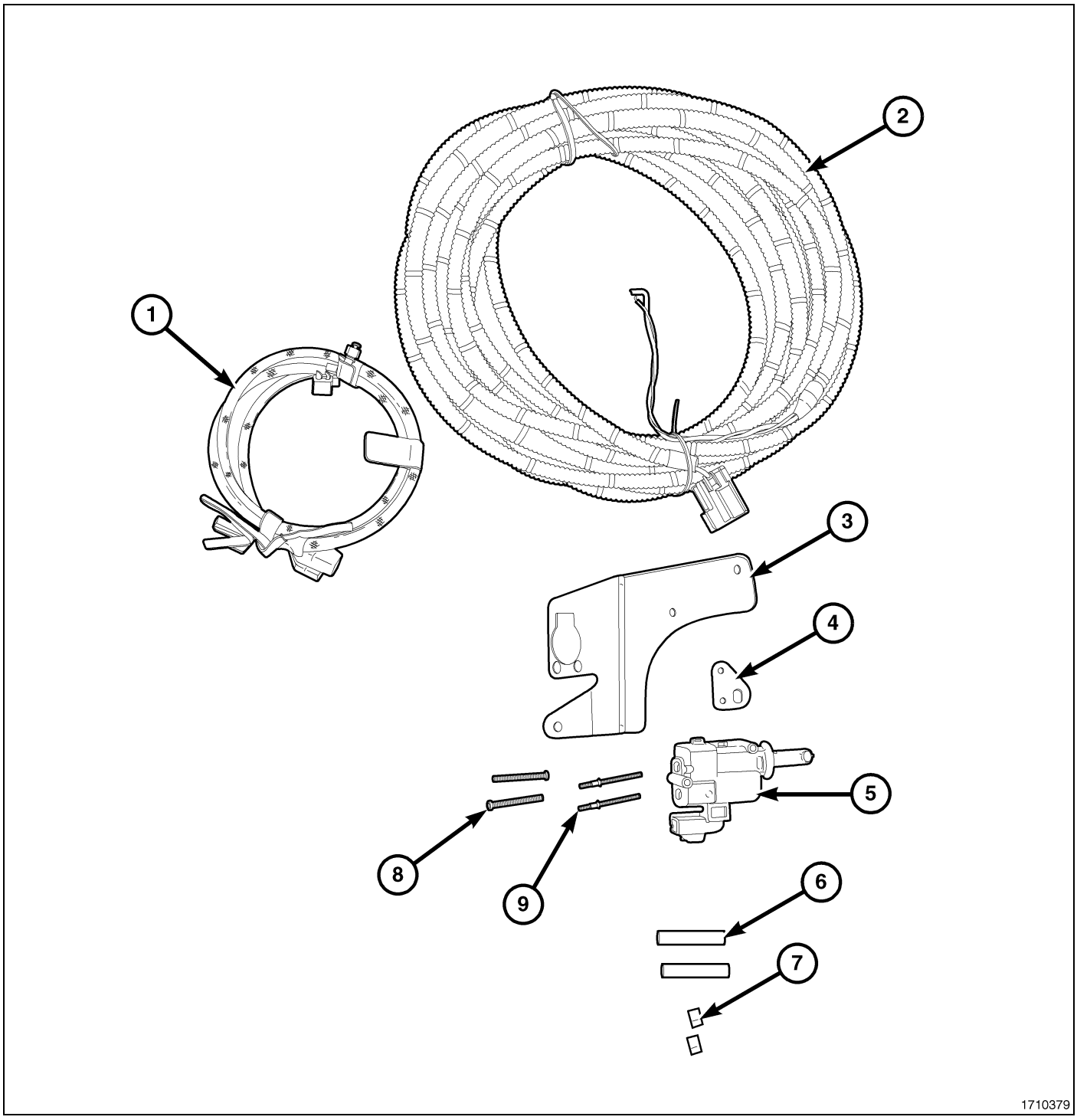

CALL OUT	DESCRIPTION	QUANTITY
1	Power Lock Actuator Tailgate Harness	1
2	Power Lock Actuator Body Harness	1
3	Power Lock Actuator Mounting Bracket	1
4	Power Lock Actuator Arm Bracket	1

CALL OUT	DESCRIPTION	QUANTITY
5	Liftgate Power Lock Actuator	1
6	Heat Shrink Tube	2
7	Splice Clips	2
8	Liftgate Power Lock Actuator T20 Torx® Screws	2
9	Rivets	2
	Zip Ties	22

PROCEDURE STEPS:

1. Disconnect and isolate the battery negative cable.
2. If equipped, remove the tailgate bedliner.
3. Remove the tailgate (2) access cover (1).

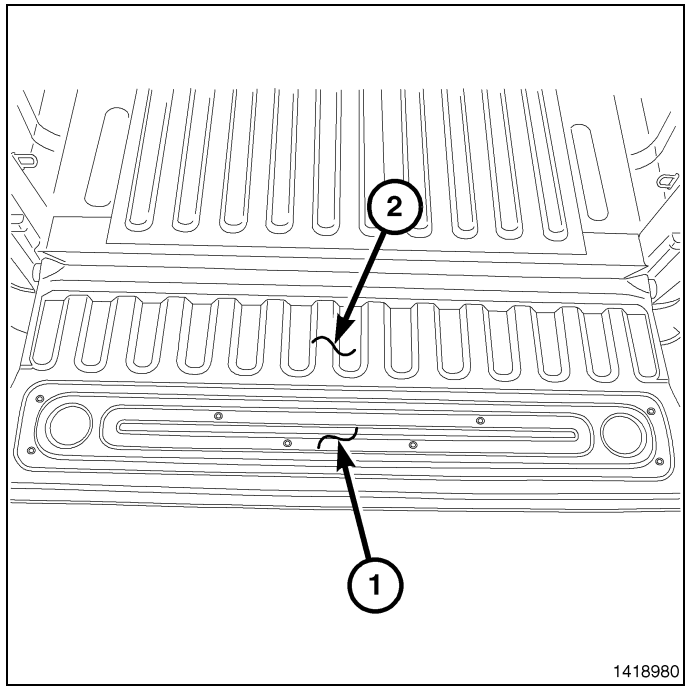

4. Using a grease pencil or equivalent, mark the location of the actuator rods at the control (2).
5. Disconnect the actuator rods from the control.
6. Remove the two nuts (3) that secure the release handle (1) and the control (2) to the tailgate.
7. Remove the control and the release handle from the tailgate.

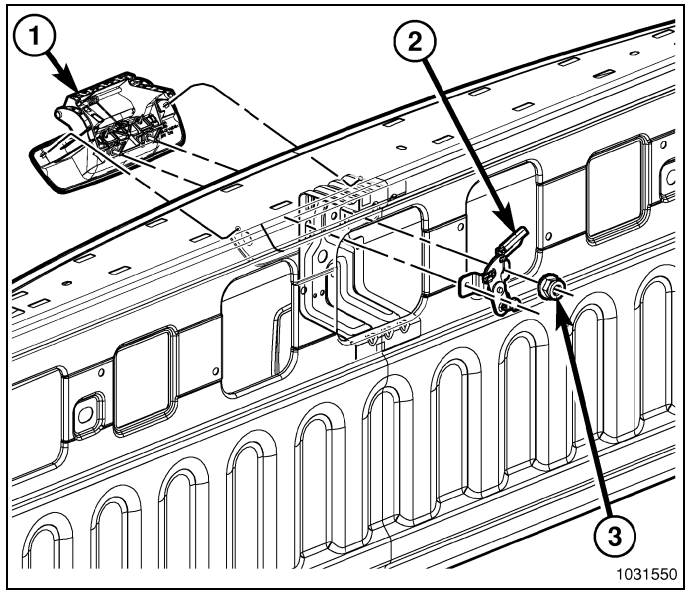

8. Remove the two retainers (1) holding in the lock cylinder (2) to the handle (3).

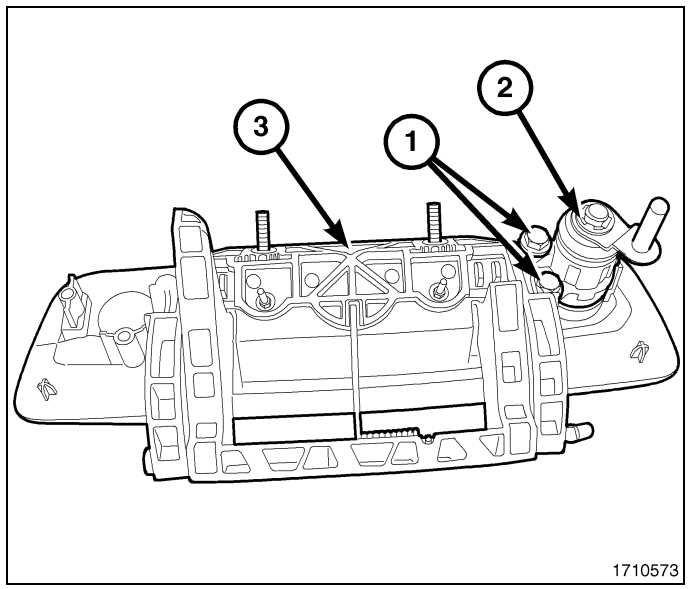

9. Drill two 4 mm (5/32 in.) holes (1) in the lock actuator arm (2).

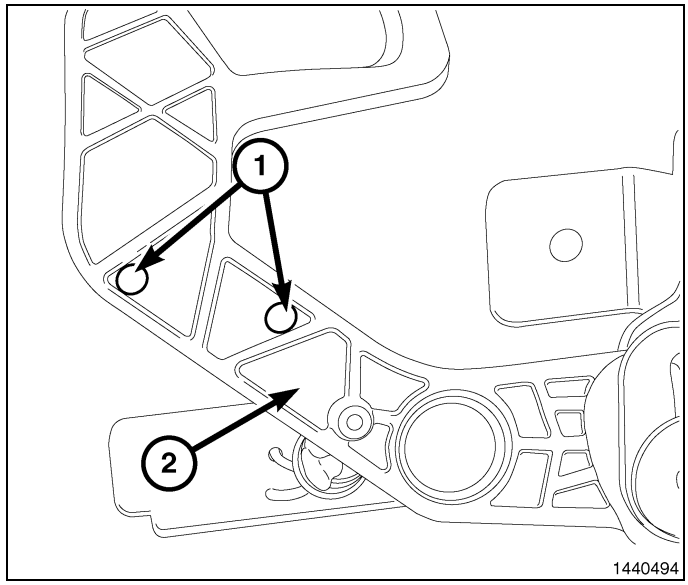

10. Align arm bracket (2) as outlined.

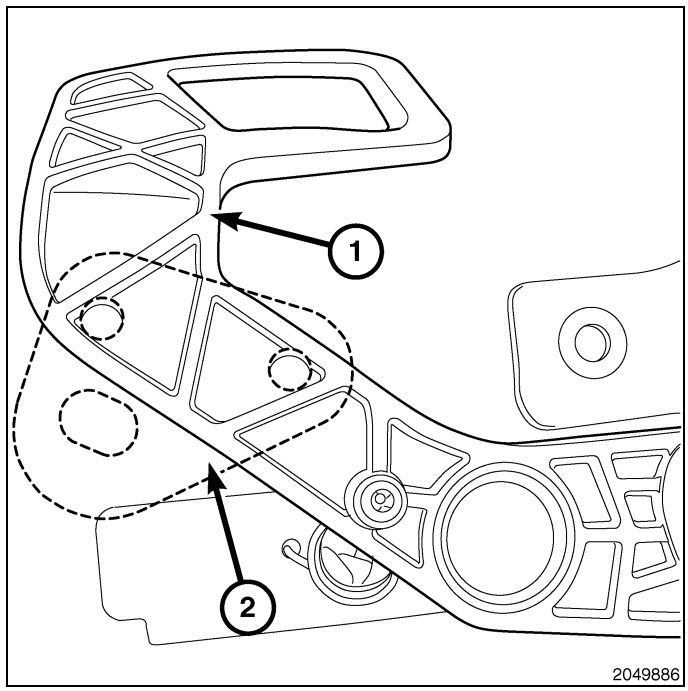

11. Rivet (2) the bracket (1) to the actuator arm.

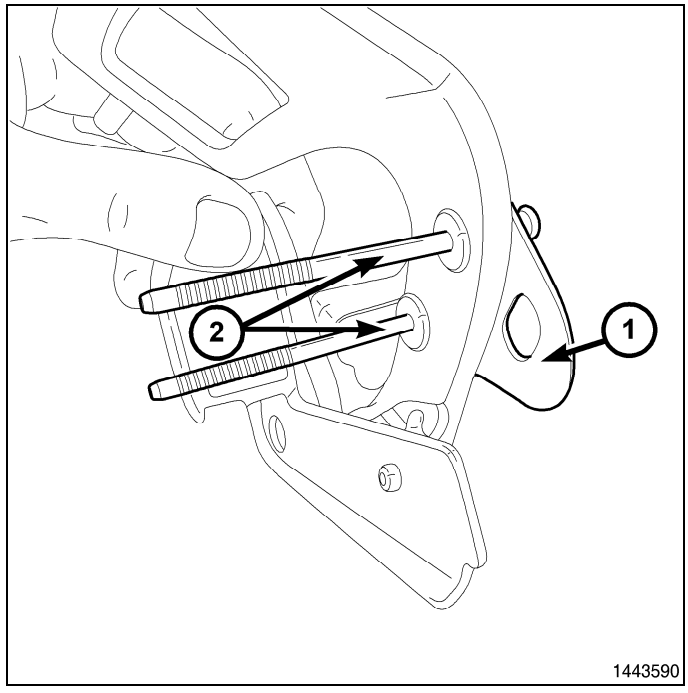

12. Mount the power lock actuator (3) to the bracket (2) with the two T20 Torx® screws (1) .
13. Insert the new handle into the liftgate.
14. Install the lock cylinder, do not install the retainers at this time.

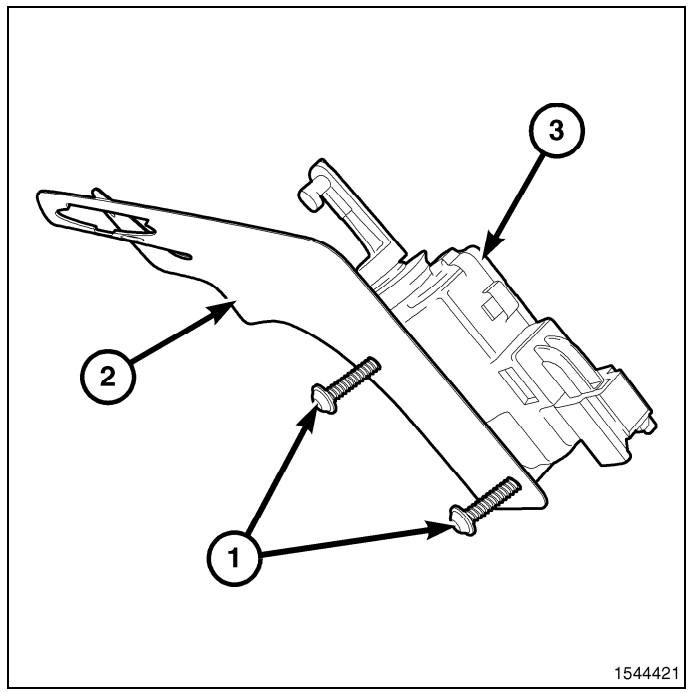

NOTE: Parts removed for clarity.

15. Install the power lock actuator bracket and the linkage control arm bracket.
16. Ensure that the power lock actuator bracket (2) over laps the linkage control arm bracket (1).

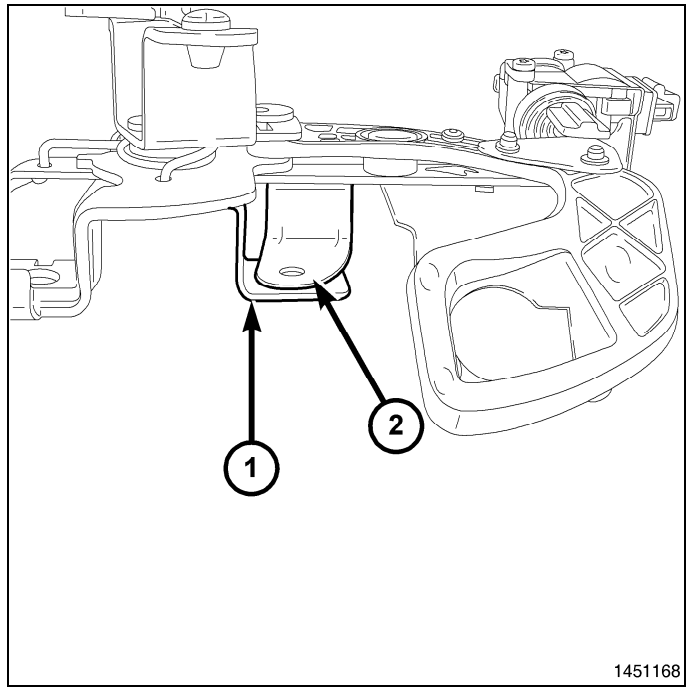

17. Install the two nuts (1) that secure the release handle and the control to the tailgate.
18. Install the two lock cylinder retainers.
19. Connect the actuator rods (2) to the control.

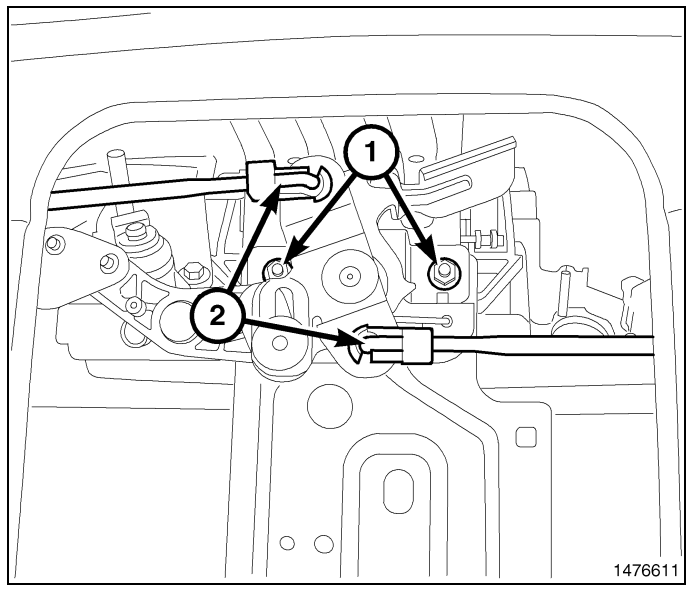

20. Connect the tailgate power lock actuator harness (2) to the lock actuator and clip onto tailgate support (3).

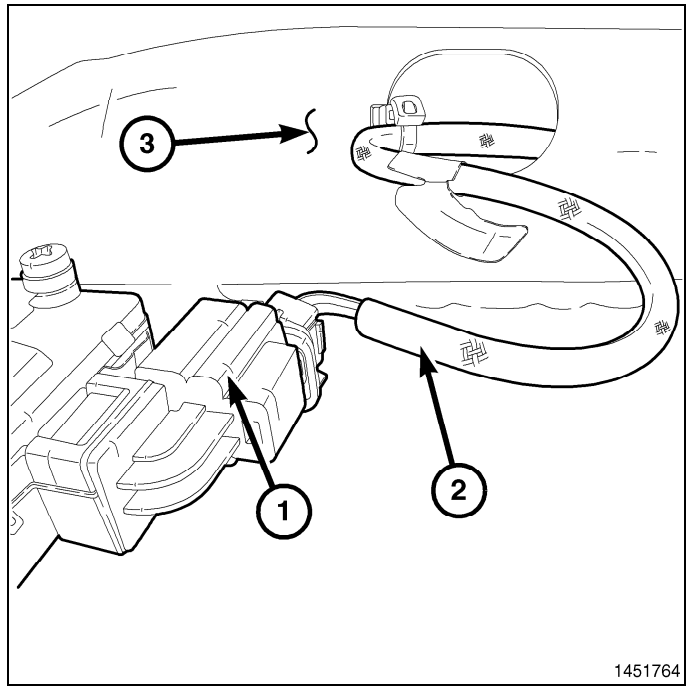

21. Route jumper wire harness (1) through the large hole in the bottom of the tailgate (2) .
22. Clip the harness (3) to the tailgate (2).

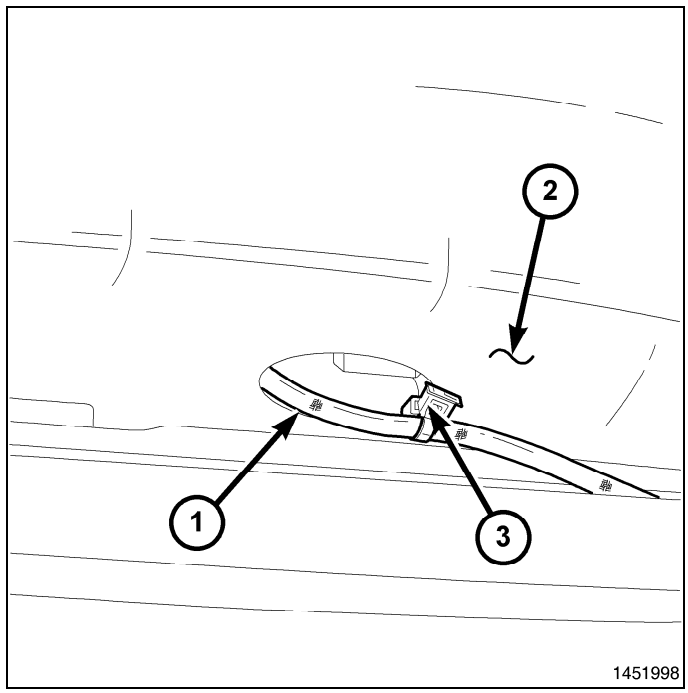

23. Secure wire so that the tailgate (1) does not pinch the harness (2) when open.

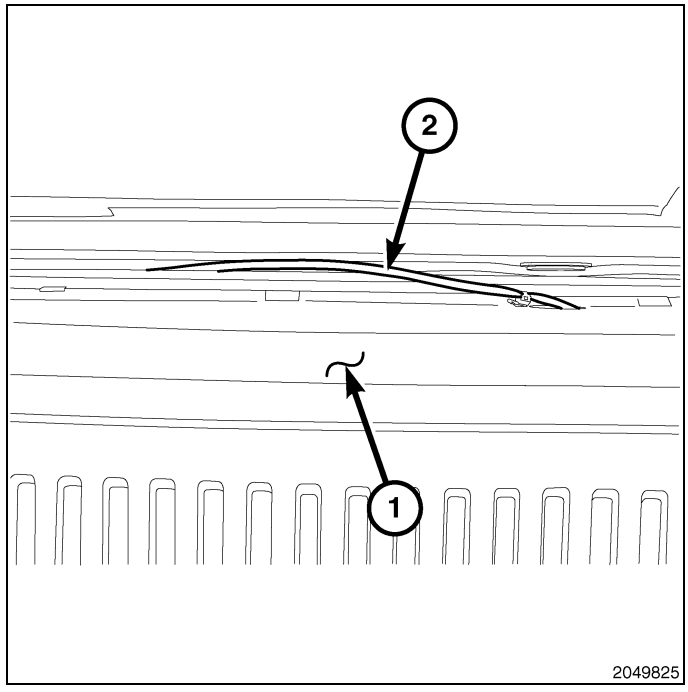

24. Connect the liftgate power lock jumper harness (1) to the liftgate power lock overlay body harness (2).
25. Route the harness down the drivers side body harness and secure where necessary.
26. Route up through the fender well to the engine compartment up to the Totally Integrated Power Module (TIPM).

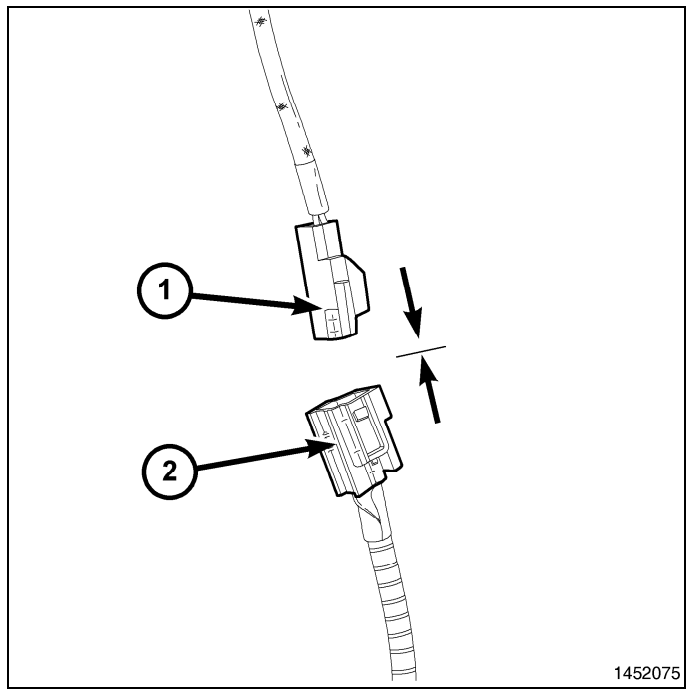

27. Remove the B+ terminal nut (1) from the Totally Integrated Power Module (3) (TIPM) B+ terminal. Remove the B+ cable (2) from the TIPM.
28. Using a suitable flat blade tool, disengage the TIPM upper retaining tabs from the battery tray bracket.

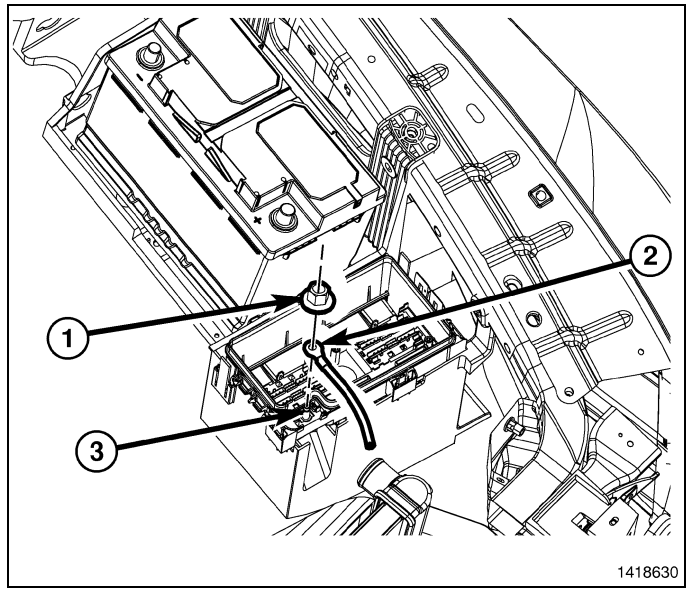

29. Grasp the TIPM (1) and rotate the assembly up to free it from its mounting bracket (3). Position the assembly upside down to access the electrical connectors located on the bottom of the unit.
30. Disconnect connector C5, letter E labeled on the bottom of the TIPM. Release by depressing the locking tab and rotating the connector arm outboard, until the connector is free from the TIPM assembly (1). Be certain to pull the connector straight off.
31. Cut the tailgate power lock harness to length.

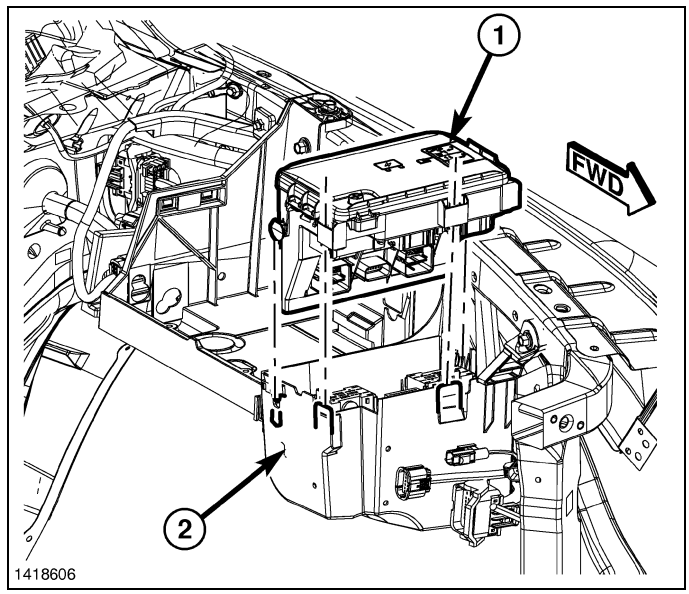

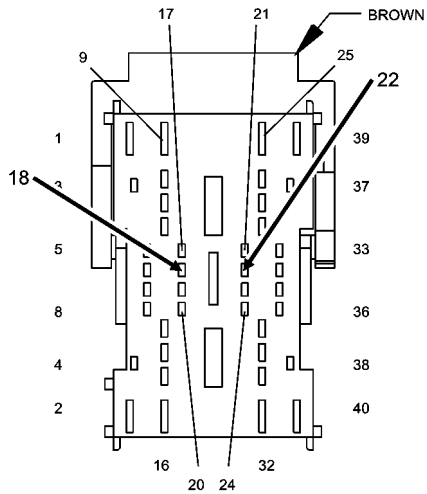

32. Cut the P34 circuit TN/LB from cavity 18, using steps 33 through 37 solder in the W/P tailgate wire.
33. Cut the P38 circuit TN/DB from cavity 22, using steps 33 through 37 solder in the BK/DB tailgate wire.
34. Cut each wire and remove 13mm (0.5 in.) of insulation from each wire that needs to be soldered/spliced.
35. Place a piece of supplied adhesive lined heat shrink tubing on one side of each cut wire. Insure the tubing will be long enough to cover and seal the entire soldered area.

CAUTION: Do not use acid core solder.

36. Place the strands of the power side wires overlapping each other inside of the splice clip (1).

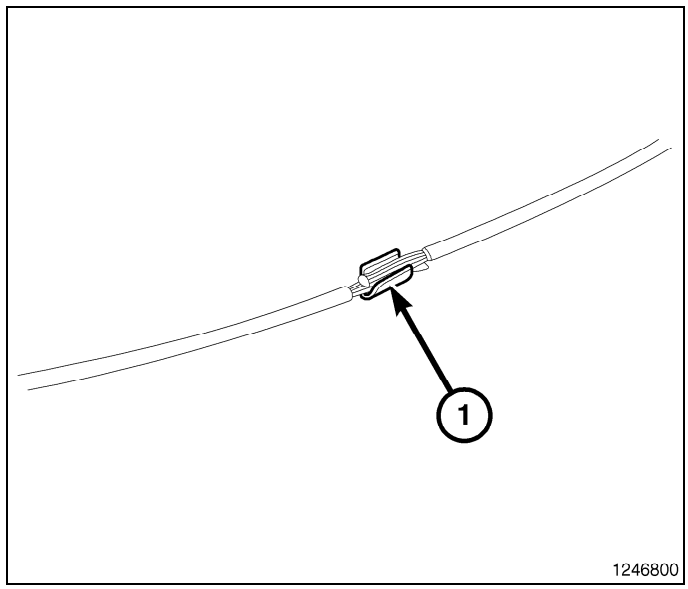

37. Using crimping tool (1), Mopar® p/n 05019912AA or equivalent, crimp the splice clip and wires together.

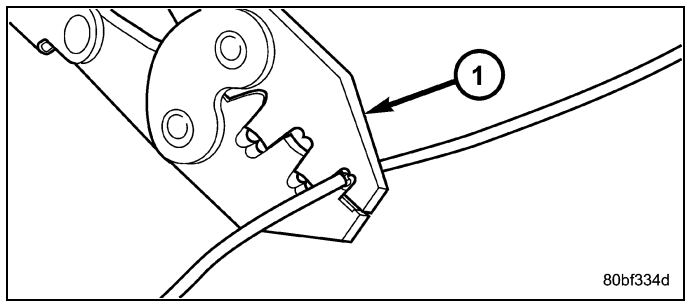

38. Solder (3) the connection (2) together using rosin core solder (1).

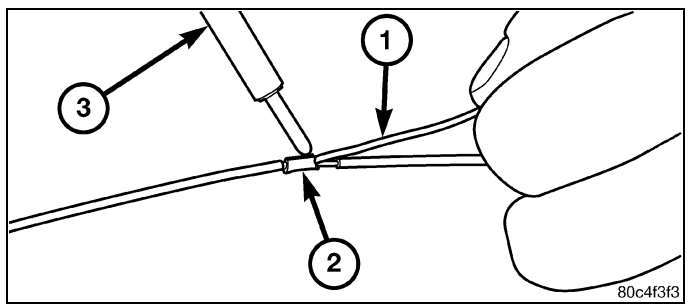

39. Center the heat shrink tubing (2) over the solder joint and heat using a heat gun. Heat the joint until the tubing is tightly sealed and sealant (1) comes out of both ends of the tubing.
40. Secure the power lock actuator harness to the TIPM harness.

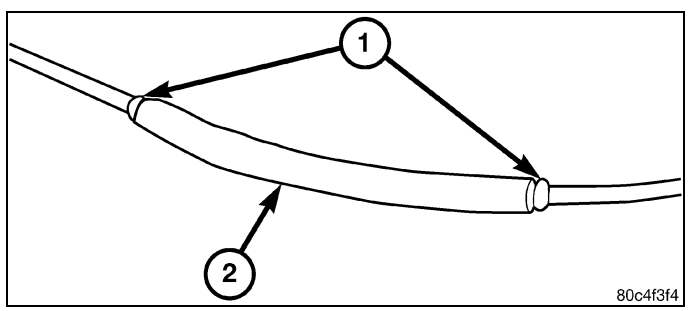

NOTE: Totally Integrated power module electrical connectors are color coded to ease location reference.

41. Connect the electrical connector by pushing straight on and rotating the connector arm inboard, until the connector is firmly locked in place on the TIPM assembly.
42. Turn the TIPM so that the connector side is facing down. Install the assembly onto the TIPM battery tray bracket making sure to line up the lower retaining tab with the retaining slot in the tray .
43. Push the TIPM (1) downward to lock the upper retaining clips into the bracket (2).

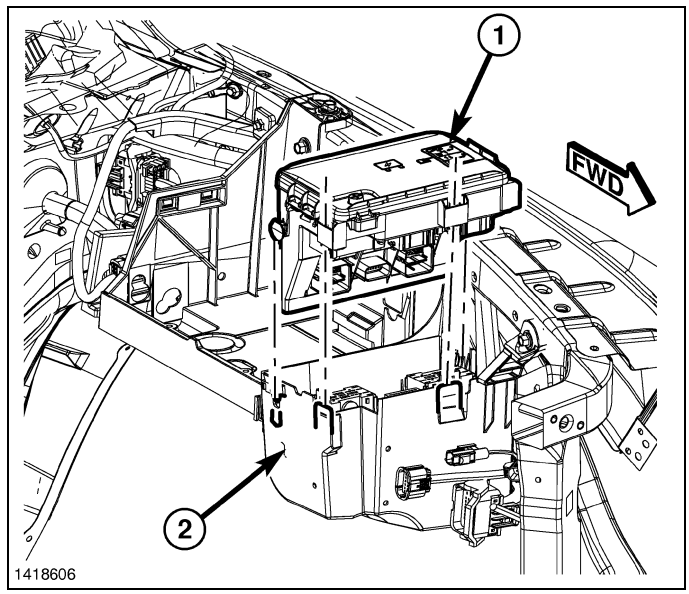

44. Install the B+ terminal cable (2) and nut (1) on the B+ terminal of the TIPM (3).

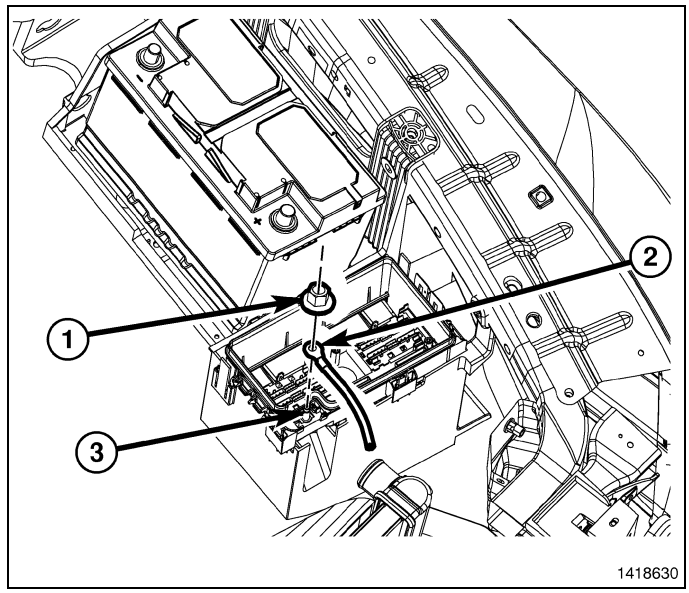

45. Install the tailgate (2) access cover (1).
46. If equipped, install the tailgate bedliner.
47. Connect the negative battery cable.

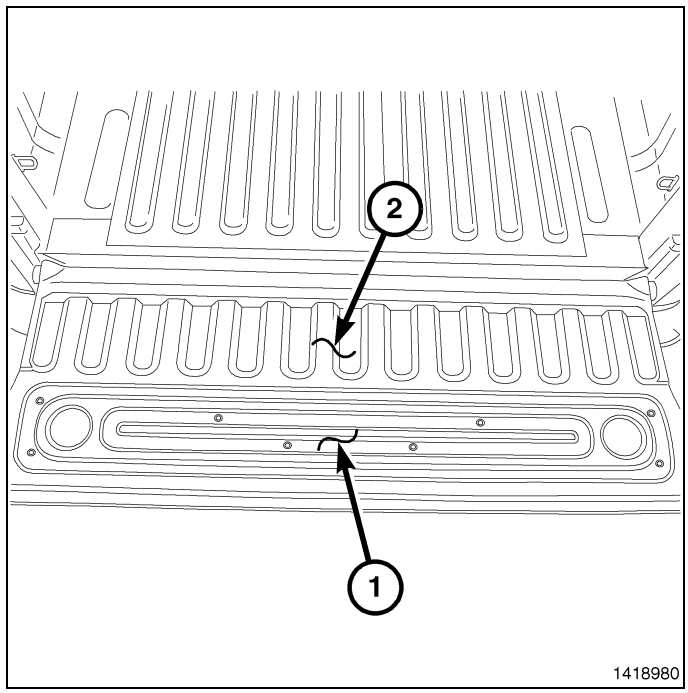

DODGE RAM

PROCEDURE STEPS:

NOTE: The following procedure applies to the driver and passenger doors.

1. Remove the screw (2) that secures the interior door handle trim (3) to the interior door panel (6).
2. Remove the interior door handle trim (3) from the interior door panel (6).

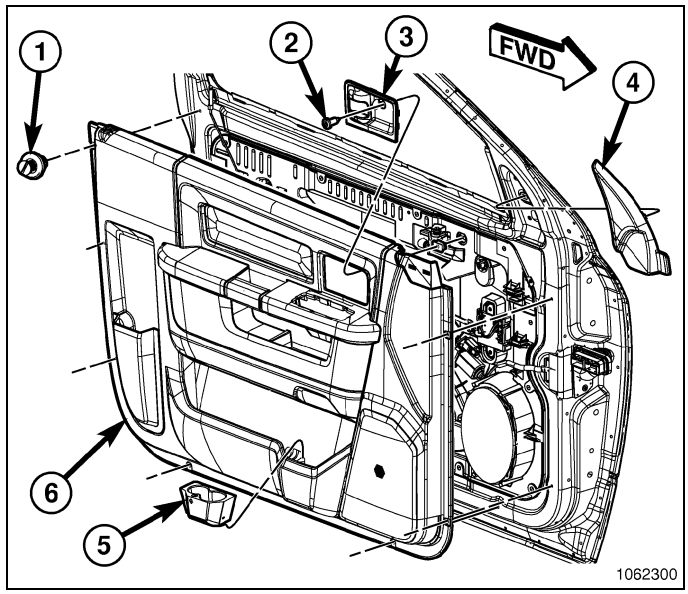

3. If equipped, remove the manual window crank (1) using a window crank removal tool (2).

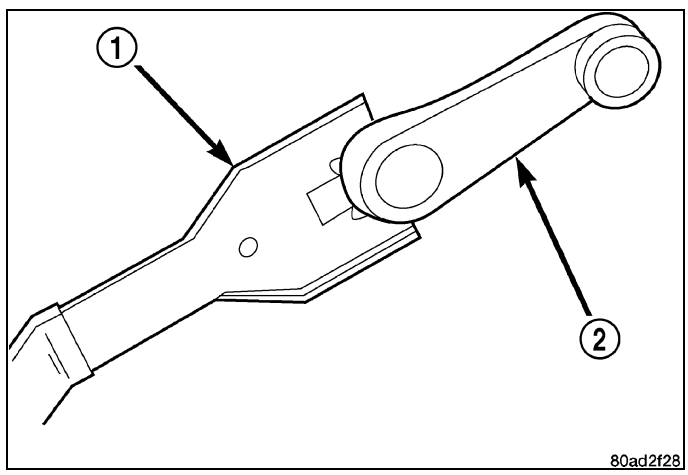

4. Remove the six screws (1) that secure the door trim panel (6).
5. Using a trim stick C-4755 or equivalent, remove the mirror trim cover (4).

CAUTION: The door trim panel is attached to the door by molded plastic retaining clips that are integral to the door trim panel. Do not pull the door trim panel directly off of the door or damage to the trim panel and/or the power switch assembly will occur.

6. Lift the door trim panel straight upward to disconnect the molded plastic retaining clips from the door.
7. If equipped, disconnect the door wire harness from the power door switch assembly and remove the door trim panel.

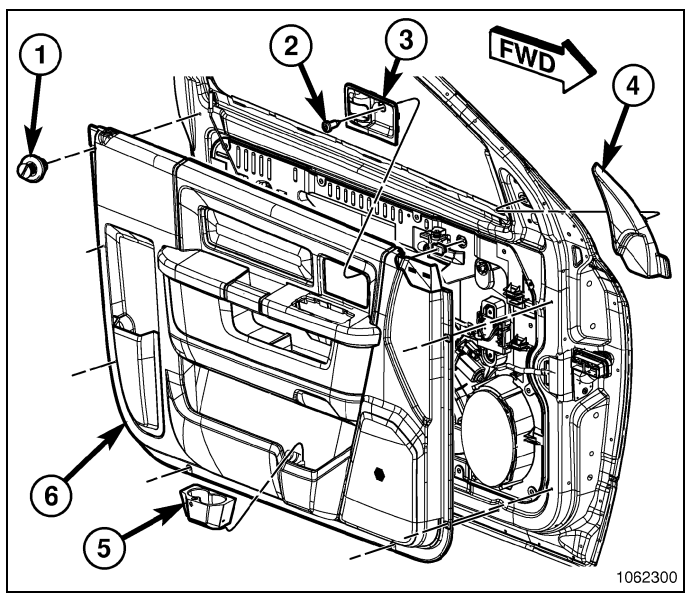

8. If equipped, disconnect the wire harness connector (2) from the door module (3) and separate the support clip.

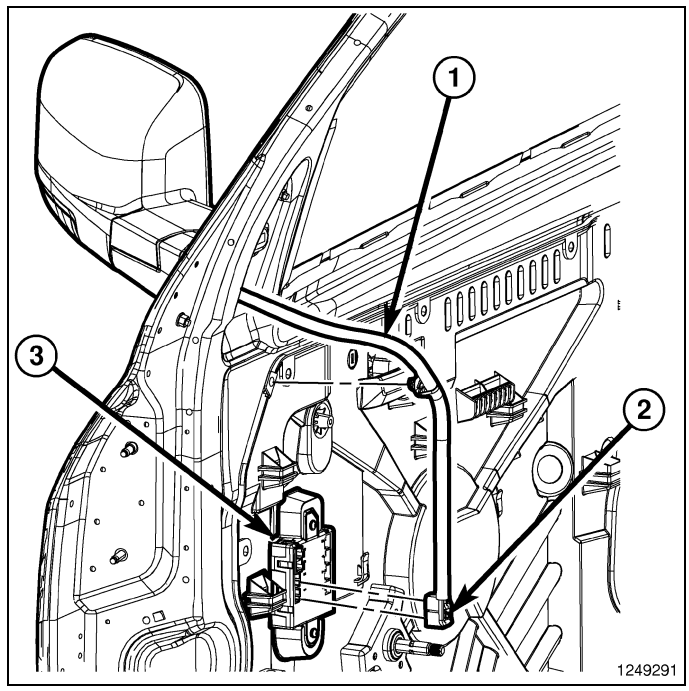

9. Remove the three nuts (2) that secure the mirror to the door and carefully remove the mirror.

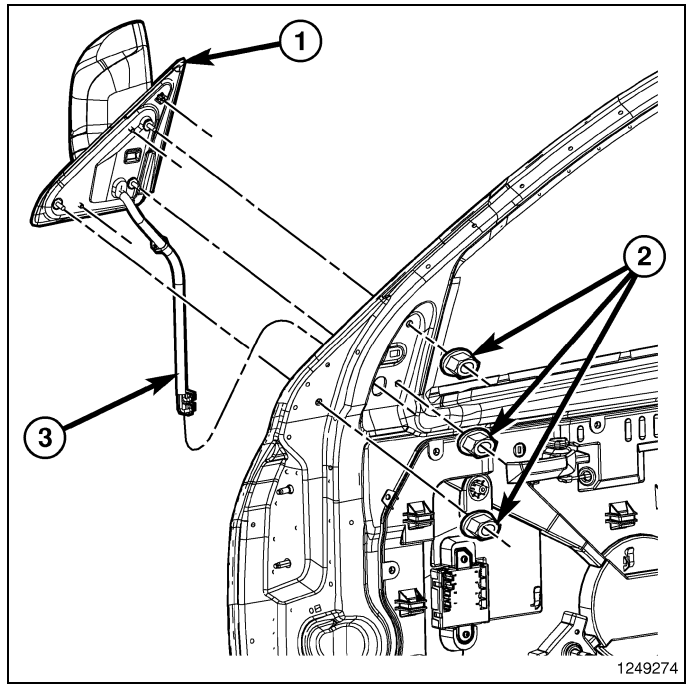

10. Install the trailer tow mirror (1).

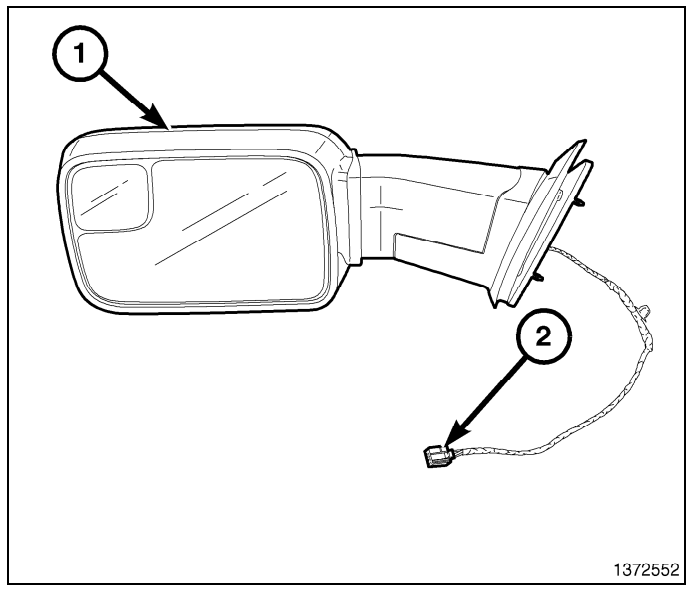

11. Position the wire harness (3) through the door.
12. Position the trailer tow mirror (1) onto the door.
13. Install the three nuts (2) that secure the trailer tow mirror to the door. Tighten the nuts to 7 N·m (60 in. lbs.).

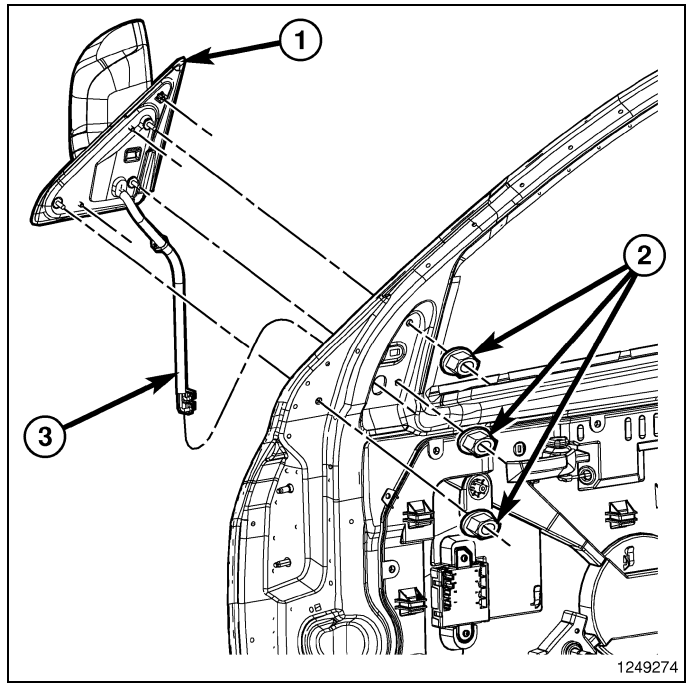

14. If equipped, connect the wire harness connector (2) to the door module (3).

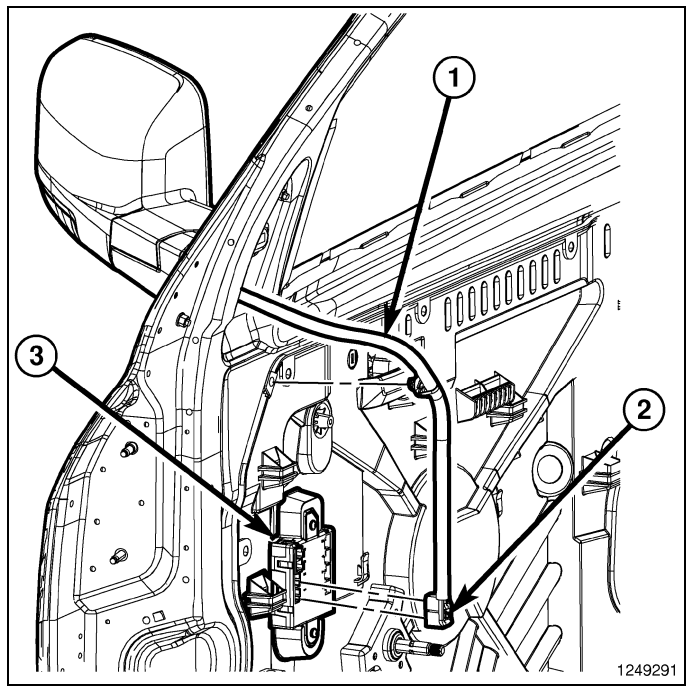

15. Install the left and right front interior door panels.
16. If equipped, connect the door wire harness to the power door switch assembly.

CAUTION: The door trim panel is attached to the door by molded plastic retaining clips that are integral to the door trim panel. Do not force the door trim panel onto the door or damage to the trim panel and/or the power switch assembly will occur.

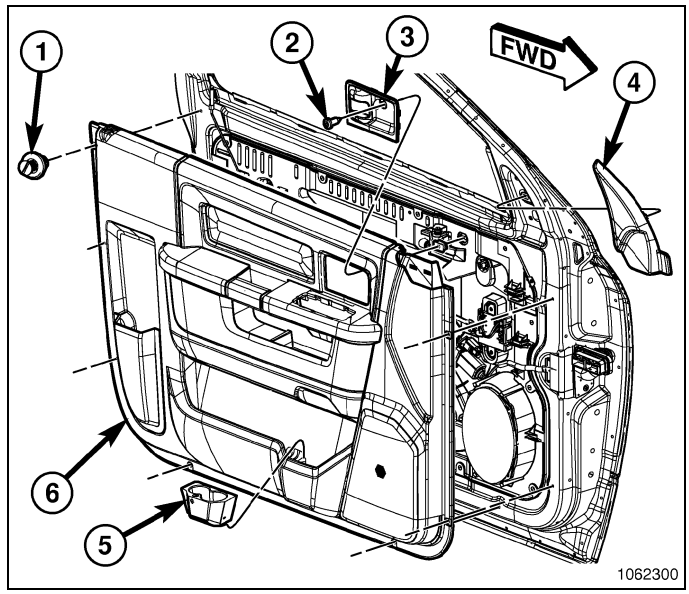

17. Position the door trim panel and align the molded plastic retaining clips to the door.
18. Push the door trim panel straight downward until all of the retaining clips are fully engaged to the door.
19. Install the six screws (1) that secure the door trim panel to the door (6).
20. If equipped, install the manual window crank.
21. Position the interior door handle trim (3) onto the interior door panel (6).
22. Install the screw (2) that secures the interior door handle trim to the interior door panel. Tighten the screw securely.
23. Install the mirror trim cover (4)

DODGE RAM

PROCEDURE STEPS:

1. Raise the vehicle on a hoist.
2. Remove the push pins (1) from the front bumper close out panel (2).

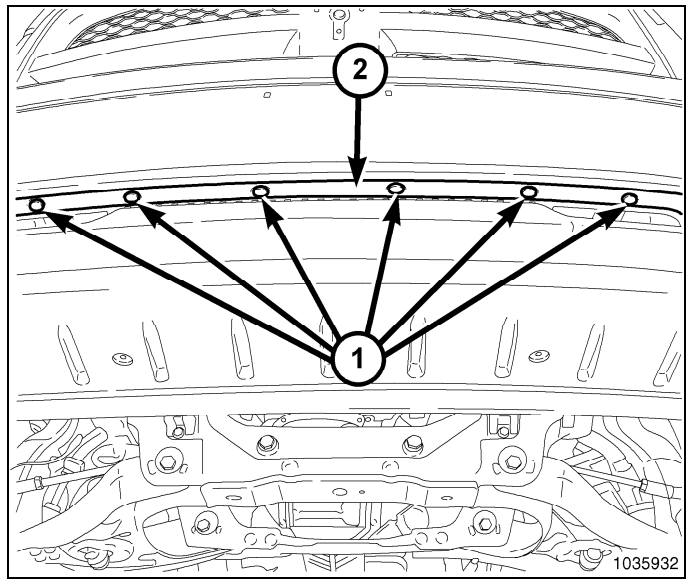

3. Remove the front bumper close out panel (1) from the front bumper (2).

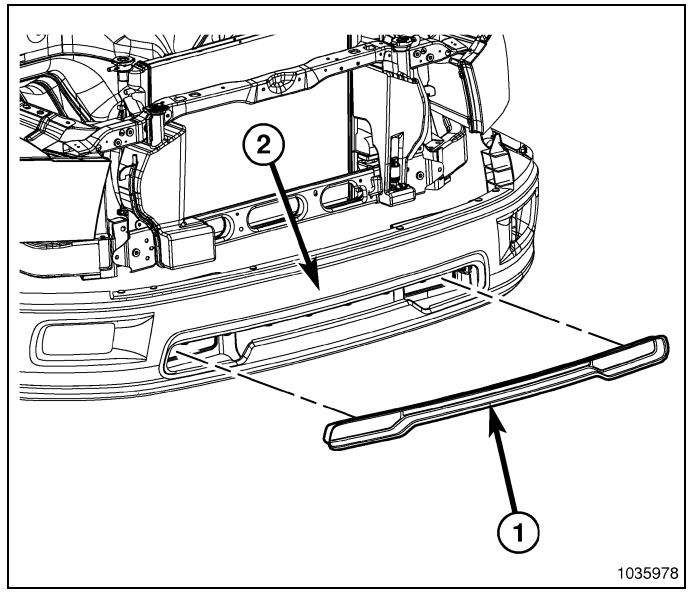

4. Cut out the tow hook area (2) of the close out panel (1).

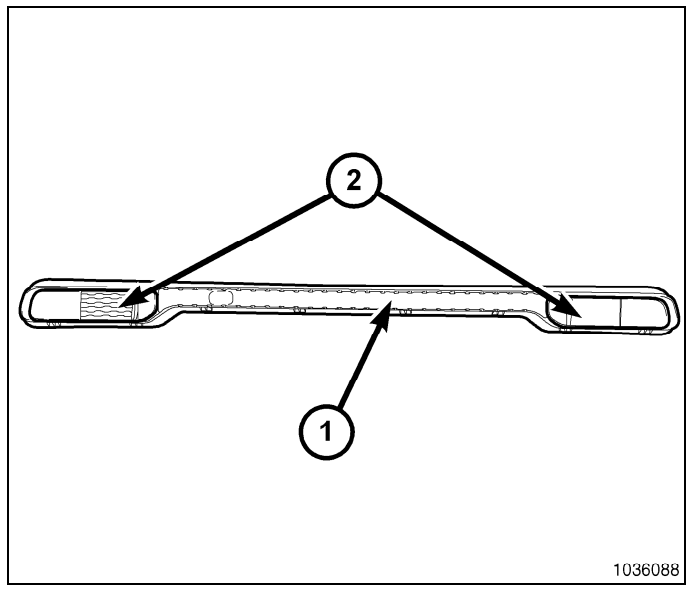

5. Remove the bumper bracket retainers (1) on each side.

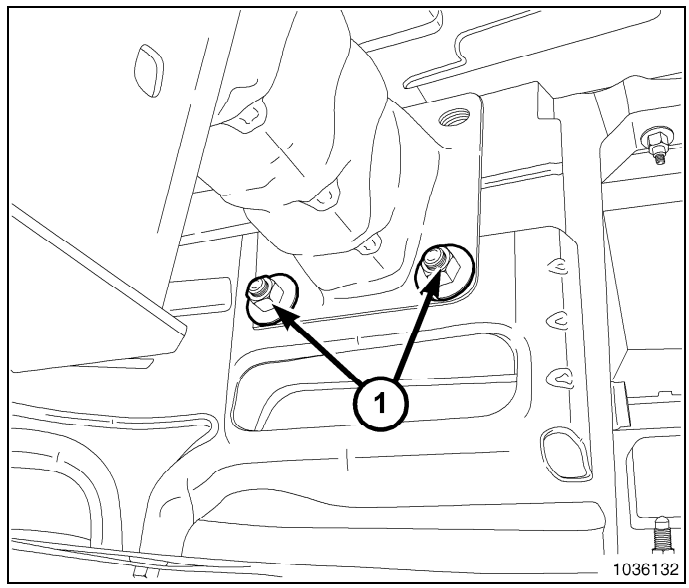

6. Install the front bumper close out panel (1) to the bumper (2).

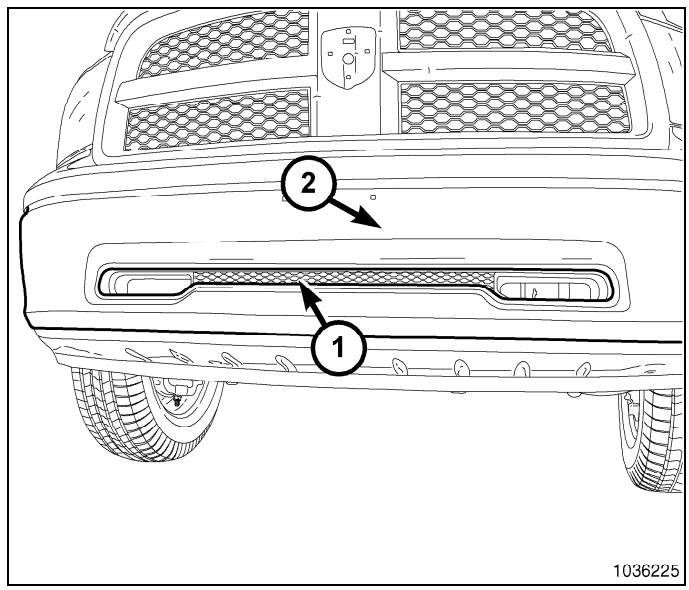

7. Install the push pins (1) into the front bumper close out panel (2).

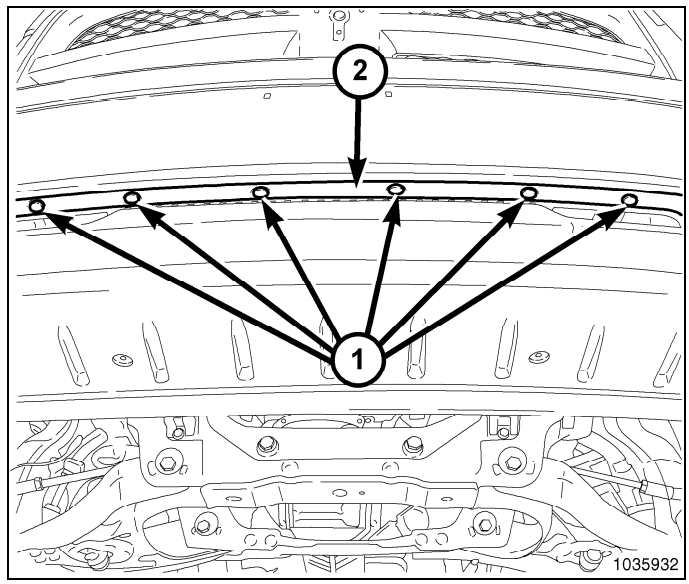

8. Install the tow hook and nuts (1). Tighten to 95 N·m (70 ft. ibs.). Repeat on other side.
9. Install the tow hook bolt (2). Tighten to 85 N·m (63 ft. lbs.). Repeat on other side.

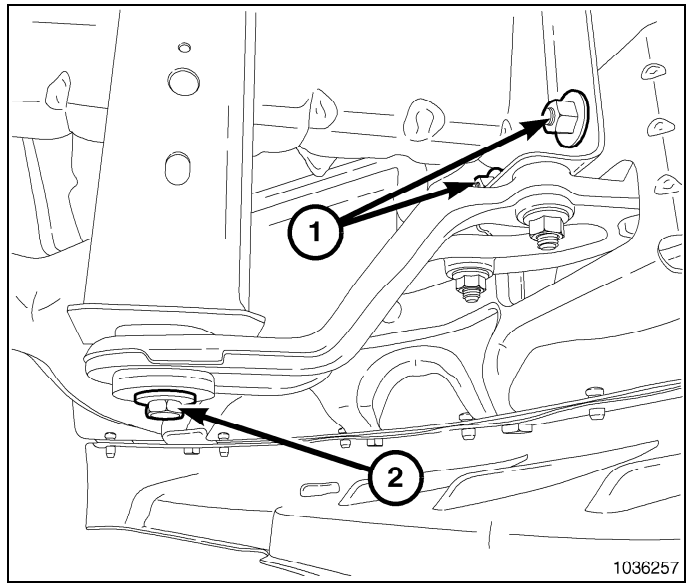

DODGE RAM

PROCEDURE STEPS:

FRONT WHEEL OPENING FLARE MOLDING

1. Remove the push pin (3) and screw (2) and remove the front wheel opening spat (1).

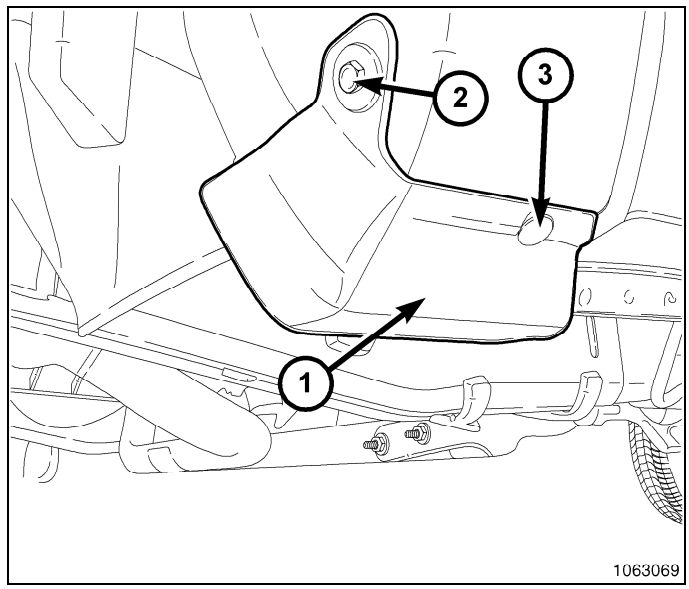

2. Install the supplied j-clips to the wheel opening.
3. Clean and prep the area where the flare molding will be attached.
4. Position the flare (1) to fender aligning attachment holes with holes in fender flange.

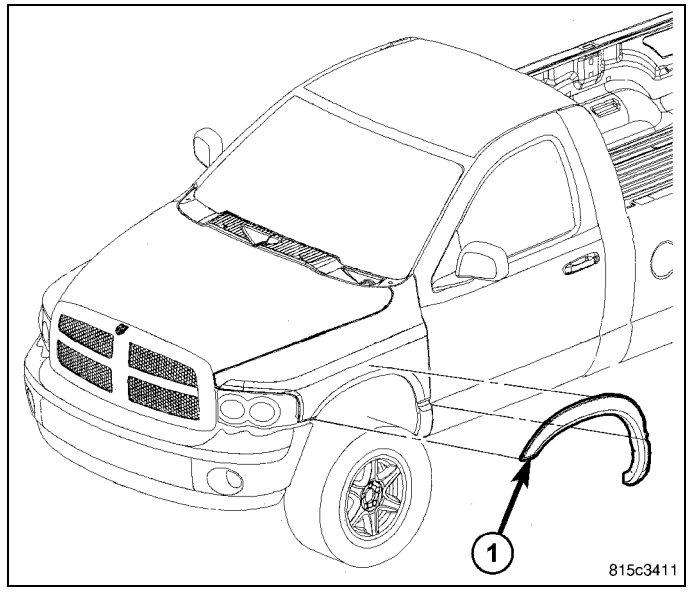

5. Install the push-pin (1) first for correct flare positioning. Install the six screws (2) in sequence starting from the center and proceeding outward. For a correct fit, hold the flare tight against the fender as the screws are tightened. Tighten to 2.3 N·m (20 In. lbs.).
6. Remove the protective film from the back of the fender flare and apply pressure.

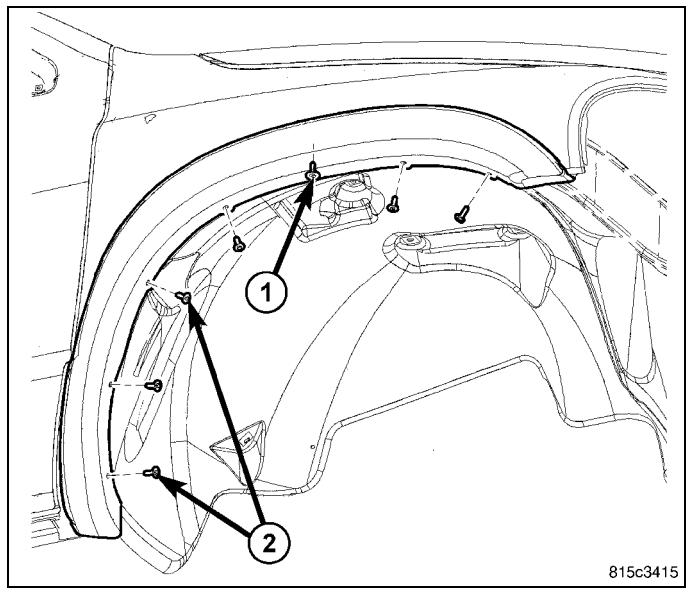

REAR WHEEL OPENING FLARE MOLDING

1. Remove the torx head retainers (2) and screw (1) and remove the rear wheel opening spat (3).

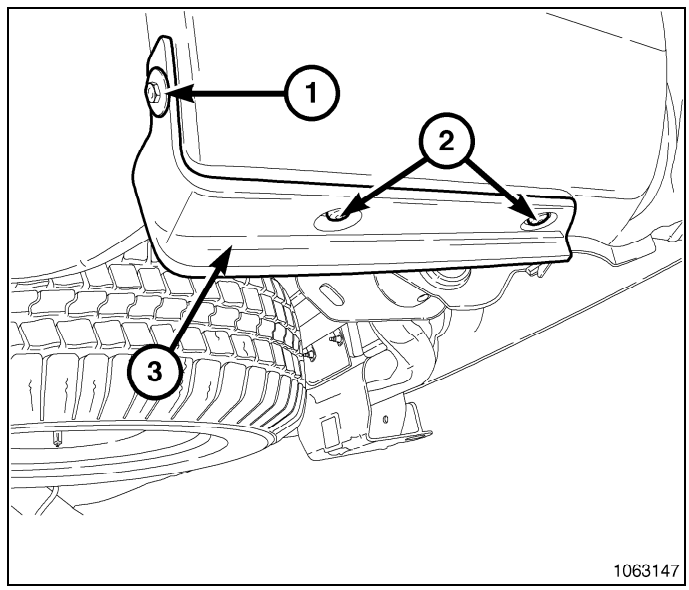

2. Install the supplied j-clips to the wheel opening.
3. Clean and prep the area where the flare molding will be attached.
4. Position the flare (1) to fender aligning attachment holes with holes in fender flange.

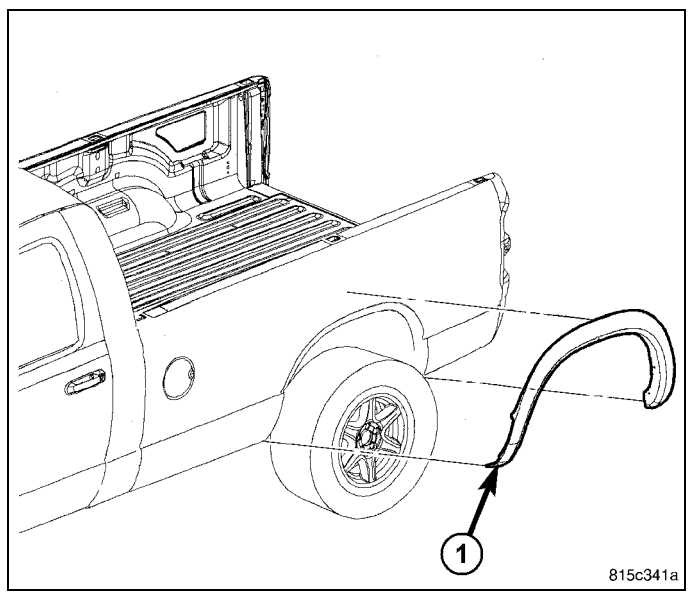

5. Install the push-pin (1) first for correct flare positioning. Install the six screws (2) in sequence starting from the center and proceeding outward. For a correct fit, hold the flare tight against the fender as the screws are tightened. Tighten to 2.3 N·m (20 In. lbs.).
6. Remove the protective film from the back of the fender flare and apply pressure.

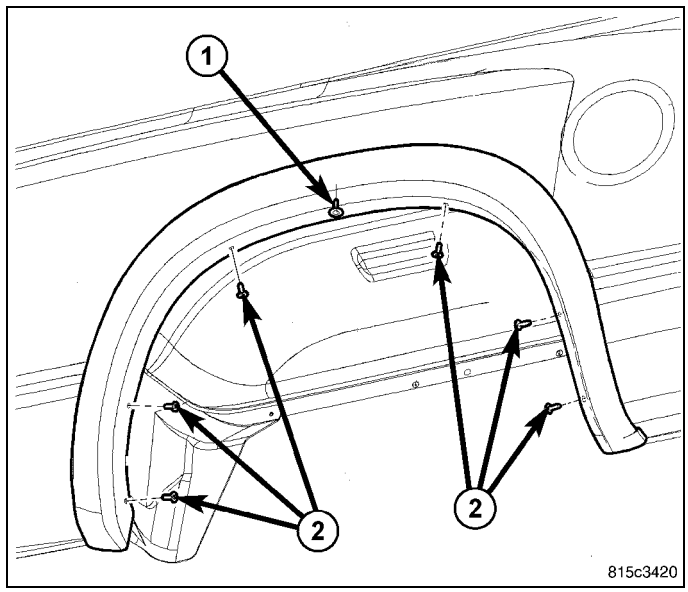

DODGE RAM

PROCEDURE STEPS:

1. Raise and support the vehicle.
2. Saturate the clamp nuts with spray lubricant (3).
3. Loosen the exhaust clamps (3).
4. Pull the exhaust tailpipe off of the isolator (2) and remove the exhaust tail pipe (1).

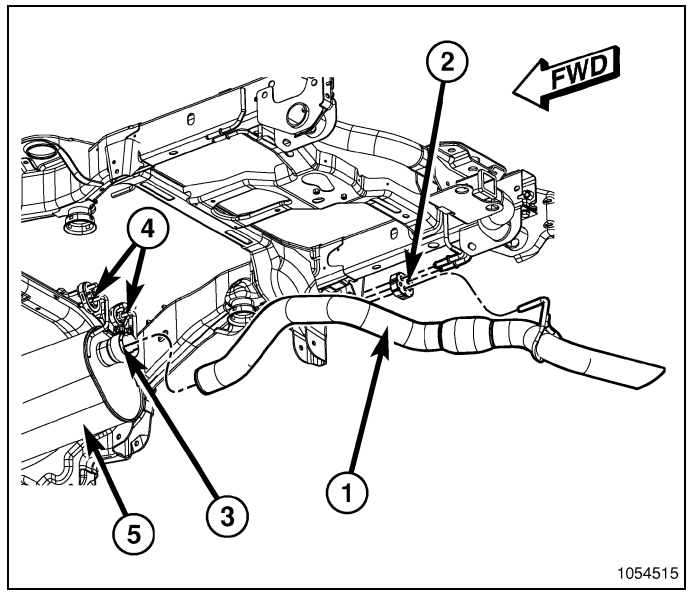

5. Loosen the muffler exhaust clamp (1).
6. Remove the muffler (2) from the isolators (4) and remove from the exhaust pipe (3).

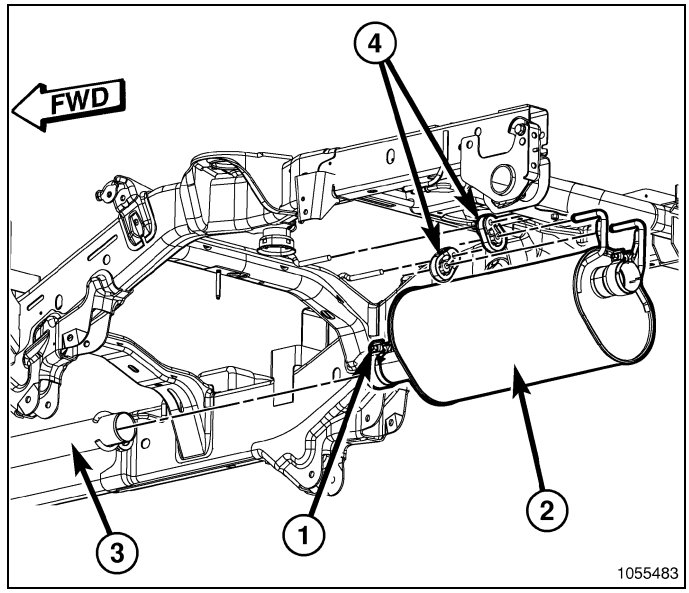

7. Hang the dual outlet muffler (2) from the isolators (4) and install on the exhaust pipe (3). Tighten to 57 N·m (42 ft. lbs.).

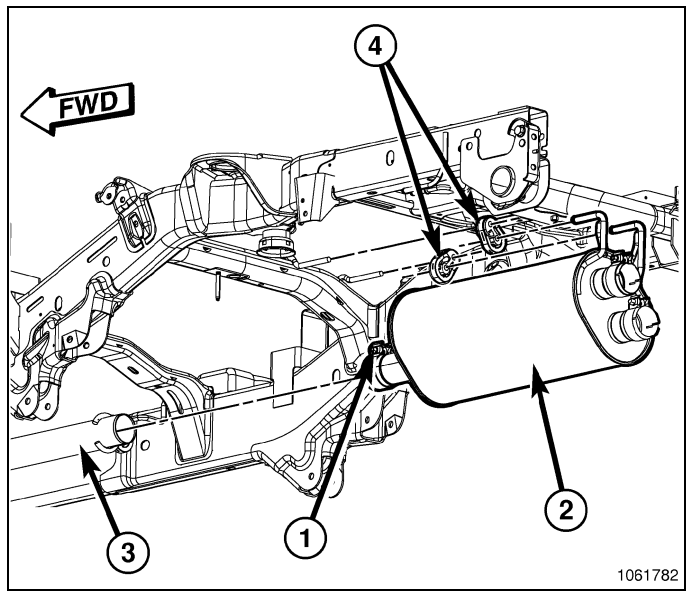

8. Install the new exhaust isolator (2) on the drivers side.
9. Install the dual tailpipes (1), hanging on the isolators and then inserting into the muffler (3). Tighten to 57 N·m (42 ft. lbs.).

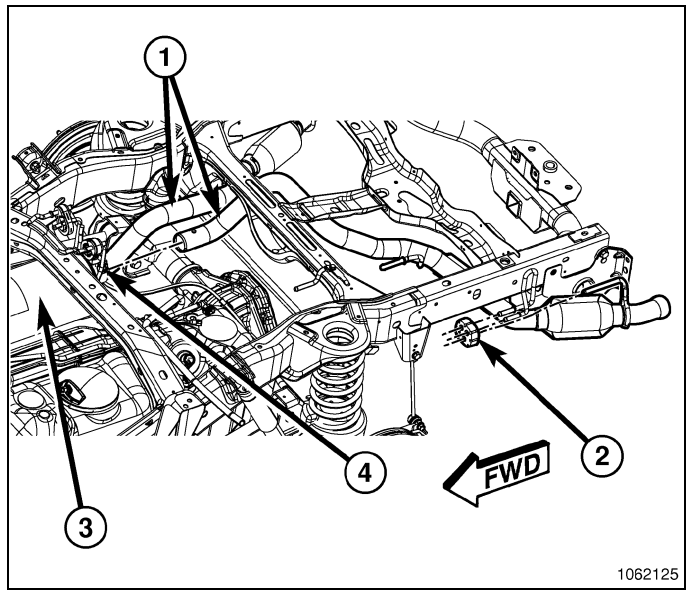

10. Snug the exhaust tailpips tips (1), do not torque the exhaust tailpipe tips (3) at this time.

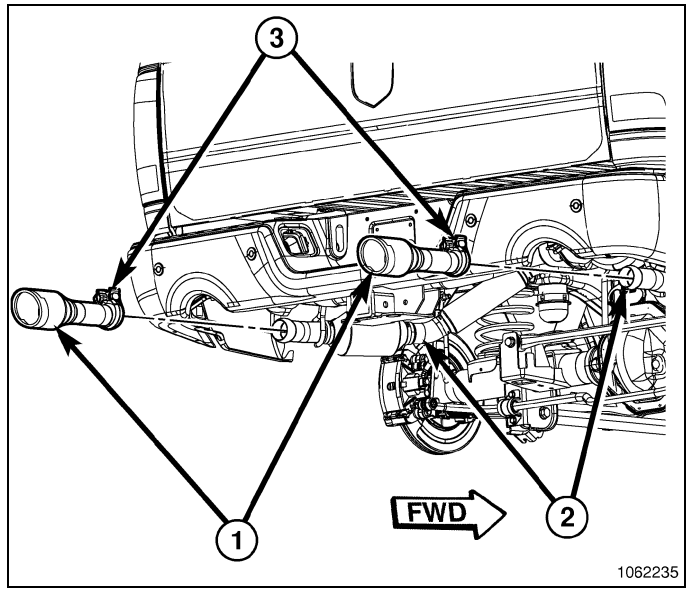

CUT OUT BUMPER

1. Adjust the exhaust tip so that they are 25 mm (0.984 in) below the bumper. Tighten to 25 N·m (19 ft. lbs.).

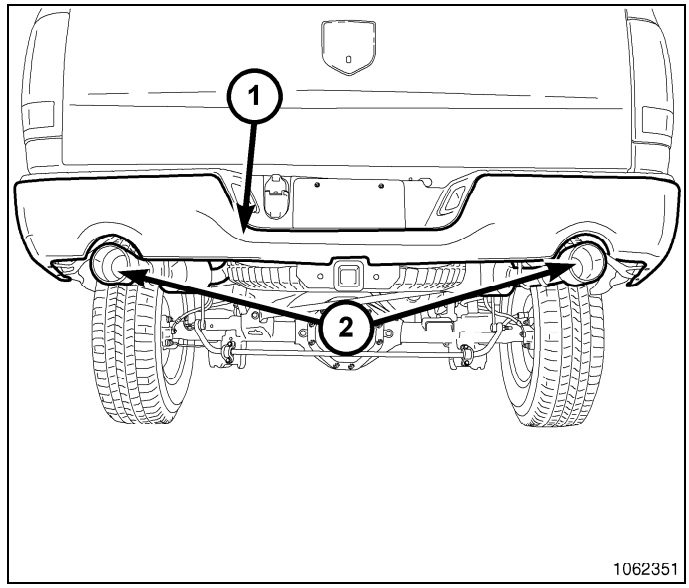

NON-CUT OUT BUMPER

1. Adjust the exhaust tip so that it is 25 mm (0.984 in) below the bumper. Tighten to 25 N·m (19 ft. lbs.).

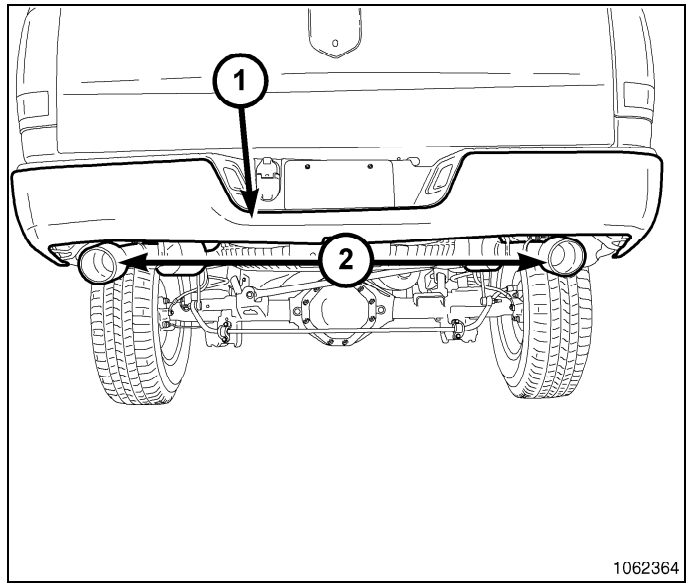

FRONT SUSPENSION

TABLE OF CONTENTS

page

FRONT SUSPENSION
SPECIAL TOOLS 2
WHEEL ALIGNMENT 5
FRONT. 15

Special Tools

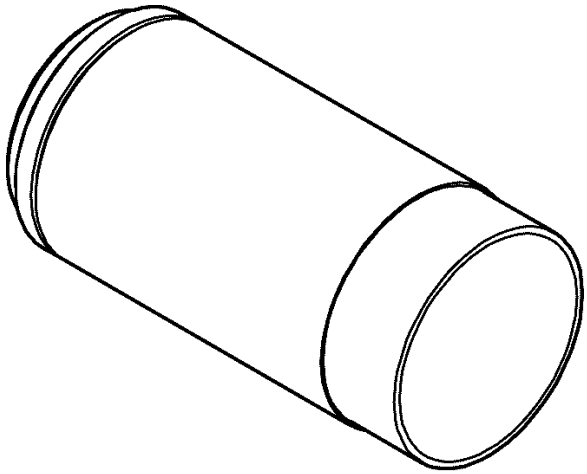

8445-1 - Installer, Cup

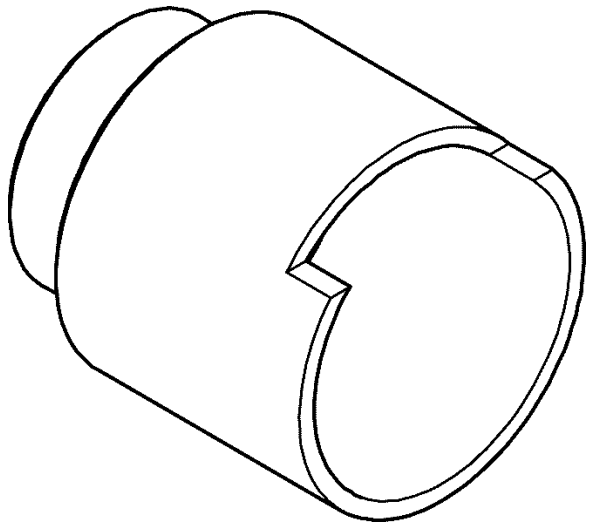

8698-2 - Remover, Receiver Cup

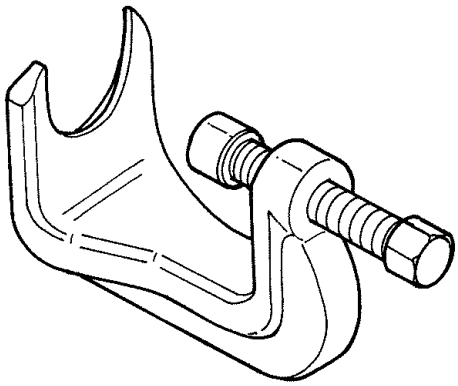

8677 - Remover, Ball Joint

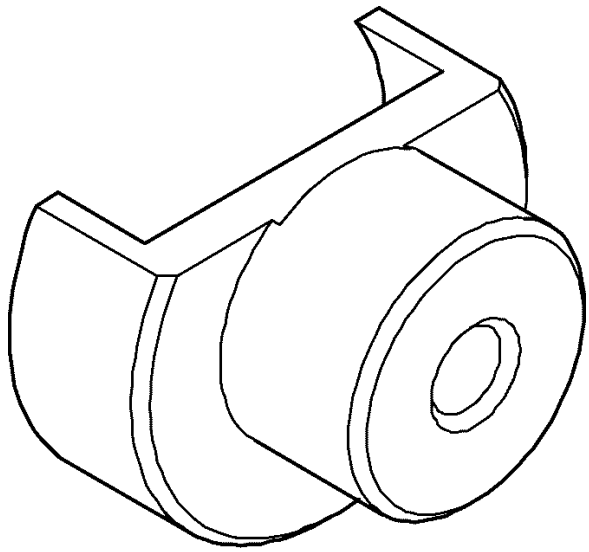

8698-3 - Installer/Remover

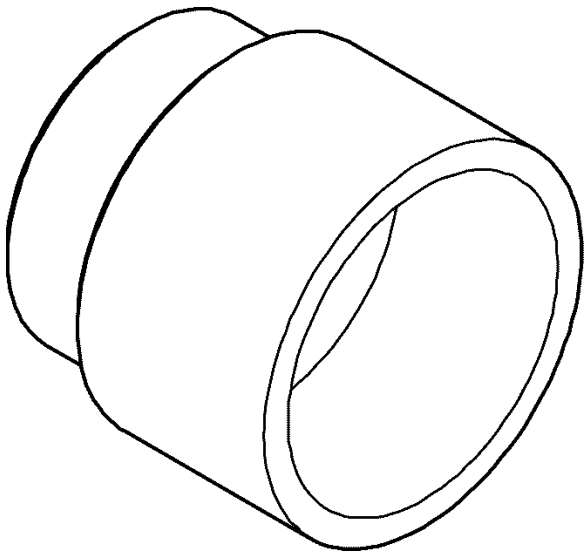

8698-1 - Installer, Balljoint

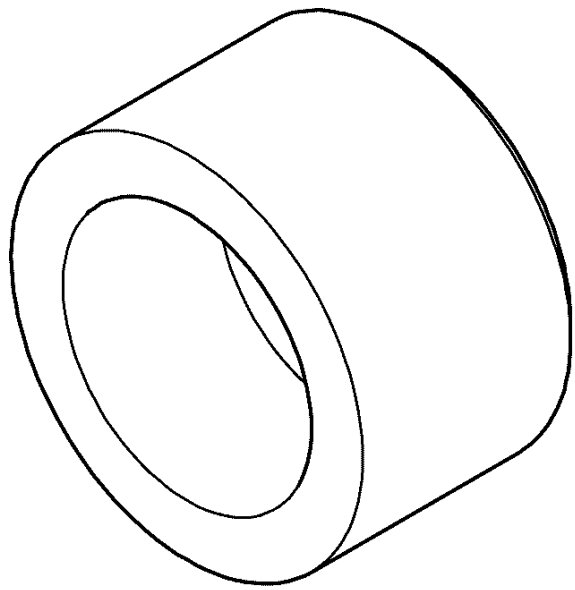

8836-6 - Remover, Bushing

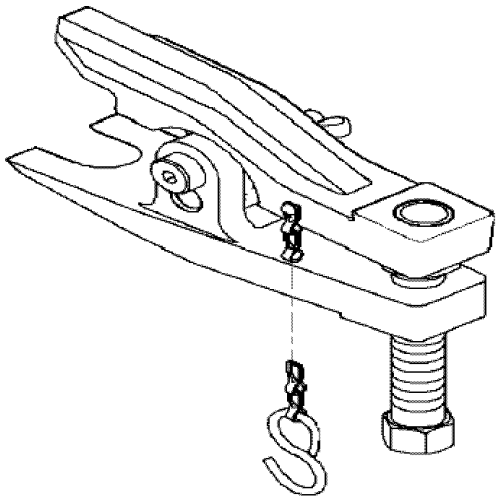

9360 - Remover, Ball Joint

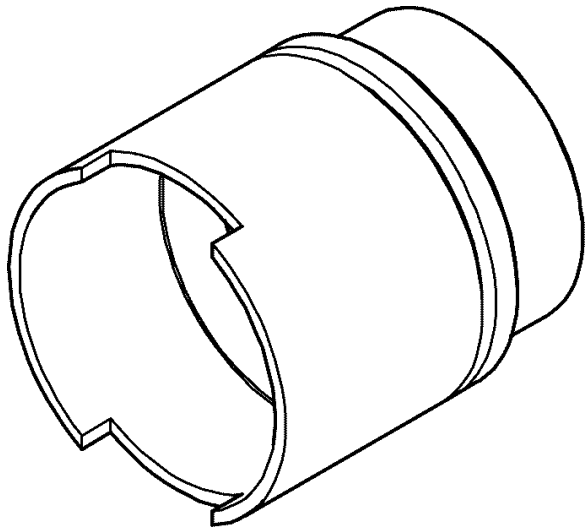

9770-1 - Reciever, Ball Joint

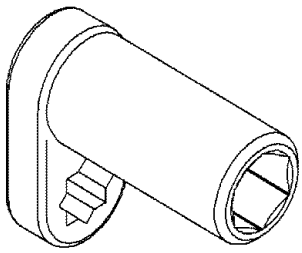

9362 - Wrench, Strut Nut

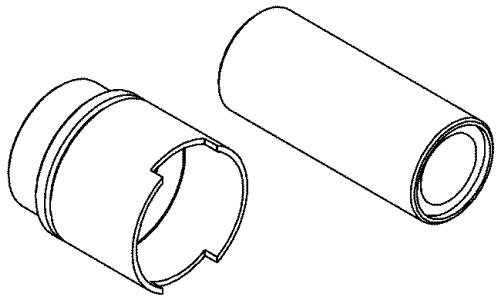

9770-2 - Remover, Ball Joint

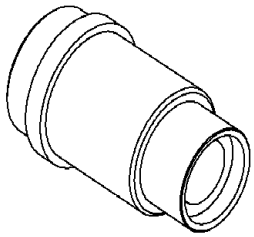

9652 - Remover/Installer, Ball Joint

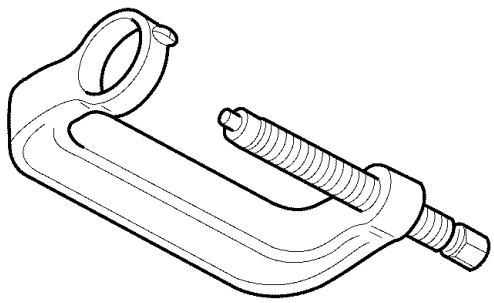

C-4212F - Press, Ball Joint

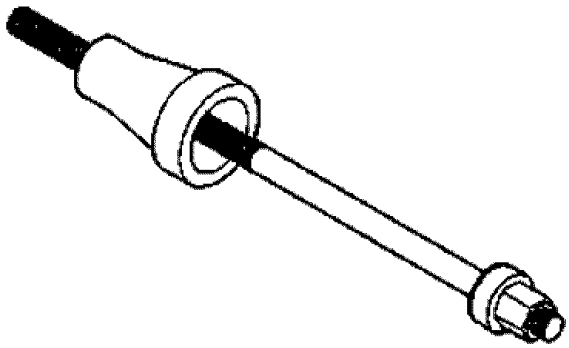

DD-1278 - Compressor, Front Spring

WHEEL ALIGNMENT

TABLE OF CONTENTS

page

WHEEL ALIGNMENT
DESCRIPTION 6
OPERATION 6
DIAGNOSIS AND TESTING 6

page

STANDARD PROCEDURE
CAMBER AND CASTER ADJUSTMENT 8
TOE ADJUSTMENT 8
CAMBER, CASTER AND TOE ADJUSTMENT . . 9
CURB HEIGHT MEASUREMENT 10
SPECIFICATIONS 12

Wheel Alignment

Description

NOTE: Suspension components with rubber/urethane bushings should be tightened with the vehicle at normal ride height. It is important to have the springs supporting the weight of the vehicle when the fasteners are torqued. If springs are not at their normal ride position, vehicle ride comfort could be affected and premature bushing wear may occur.

Wheel alignment involves the correct positioning of the wheels in relation to the vehicle. The positioning is accomplished through suspension and steering linkage adjustments. An alignment is considered essential for efficient steering, good directional stability and to minimize tire wear. The most important measurements of an alignment are caster, camber and toe .

CAUTION: Never attempt to modify suspension or steering components by heating or bending.

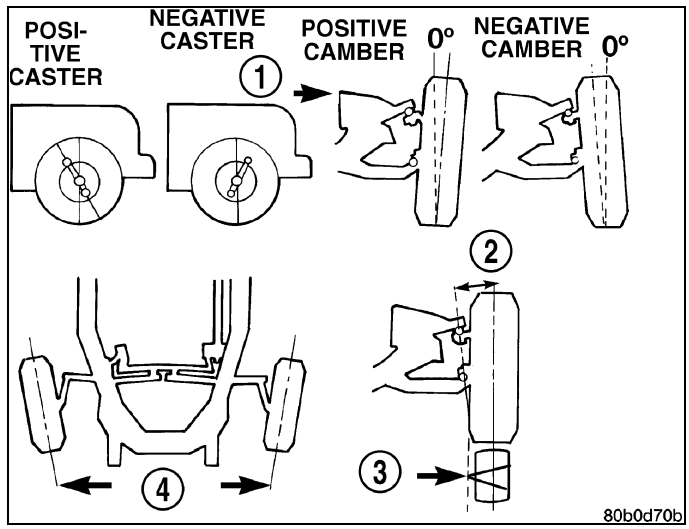

Operation

- **CASTER** is the forward or rearward tilt of the steering knuckle from vertical. Tilting the top of the knuckle forward provides less positive caster. Tilting the top of the knuckle rearward provides more positive caster. Positive caster promotes directional stability. This angle enables the front wheels to return to a straight ahead position after turns
- **CAMBER** is the inward or outward tilt of the wheel relative to the center of the vehicle. Tilting the top of the wheel inward provides negative camber. Tilting the top of the wheel outward provides positive camber. Incorrect camber will cause wear on the inside or outside edge of the tire
- **TOE** is the difference between the leading inside edges and trailing inside edges of the front tires. Wheel toe position out of specification cause's unstable steering, uneven tire wear and steering wheel off- center. The wheel toe position is the **final** front wheel alignment adjustment
- **THRUST ANGLE** is the angle of the rear axle relative to the centerline of the vehicle. Incorrect thrust angle can cause off-center steering and excessive tire wear. This angle is not adjustable, damaged component(s) must be replaced to correct the thrust angle

Diagnosis and Testing

Before starting wheel alignment, the following inspection and necessary corrections must be completed. Refer to Suspension and Steering System Diagnosis Chart below for additional information.

1. Inspect tires for size, air pressure and tread wear.
2. Inspect front wheel bearings for wear.
3. Inspect front wheels for excessive radial or lateral runout and balance.
4. Inspect ball studs, linkage pivot points and steering gear for looseness, roughness or binding.
5. Inspect suspension components for wear and noise.
6. Road test the vehicle.

SUSPENSION AND STEERING SYSTEM DIAGNOSIS

CONDITION	POSSIBLE CAUSES	CORRECTION
FRONT END NOISE	1. Loose or worn wheel bearing.	1. Replace wheel bearing.
	2. Loose or worn steering or suspension components.	2. Tighten or replace components as necessary.
	3. Loose or worn steering or suspension components.	3. Tighten or replace components as necessary.
EXCESSIVE PLAY IN STEERING	1. Loose or worn wheel bearing.	1. Replace wheel bearing.
	2. Loose or worn steering or suspension components.	2. Tighten or replace components as necessary.
	3. Loose or worn steering gear.	3. Replace steering gear.
FRONT WHEELS SHIMMY	1. Loose or worn wheel bearing.	1. Replace wheel bearing.
	2. Loose or worn steering or suspension components.	2. Tighten or replace components as necessary.
	3. Tires worn or out of balance.	3. Replace or balance tires.
	4. Alignment.	4. Align vehicle to specifications.
VEHICLE INSTABILITY	1. Loose or worn wheel bearing.	1. Replace wheel bearing.
	2. Loose or worn steering or suspension components.	2. Tighten or replace components as necessary.
	3. Tire pressure.	3. Adjust tire pressure.
	4. Alignment.	4. Align vehicle to specifications.
EXCESSIVE STEERING EFFORT	1. Loose or worn steering gear.	1. Replace steering gear.
	2. Column coupler binding.	2. Replace coupler.
	3. Tire pressure.	3. Adjust tire pressure.
	4. Alignment.	4. Align vehicle to specifications.
VEHICLE PULLS TO ONE SIDE	1. Tire pressure.	1. Adjust tire pressure.
	2. Tire.	2. Criss-Cross Front Tires.
	3. Alignment.	3. Align vehicle to specifications.
	4. Loose or worn steering or suspension components.	4. Tighten or replace components as necessary.
	5. Radial tire lead.	5. Rotate or replace tire as necessary.
	6. Brake pull.	6. Repair brake as necessary.
	7. Weak or broken spring.	7. Replace spring.

Standard Procedure

CAMBER AND CASTER ADJUSTMENT

Camber and caster angle adjustments involve changing the position of the lower control arm (2) in conjunction with the slotted holes in the frame brackets (1). Vehicle should be at normal ride height.

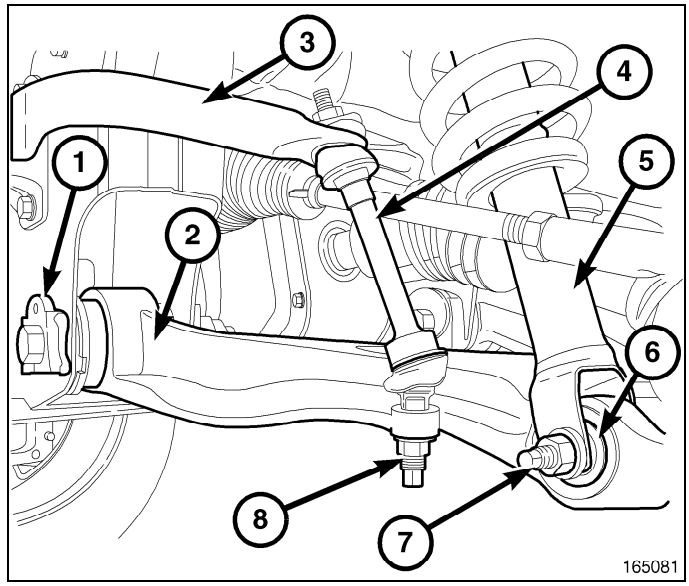

TOE ADJUSTMENT

The wheel toe position adjustment is the final adjustment.

1. Start the engine and turn wheels both ways before straightening the wheels. Secure the steering wheel with the front wheels in the straight-ahead position.
2. Loosen the tie rod jam nuts (1).

NOTE: Each front wheel should be adjusted for one-half of the total toe position specification. This will ensure the steering wheel will be centered when the wheels are positioned straight-ahead.

3. Adjust the wheel toe position by turning the inner tie rod (2) as necessary.
4. Tighten the tie rod jam nut (1) (on vehicles with rack and pinion) to 127 N·m (94 ft. lbs.). Tighten the clamps on all others. **Make sure the toe setting does not change during tightening.**

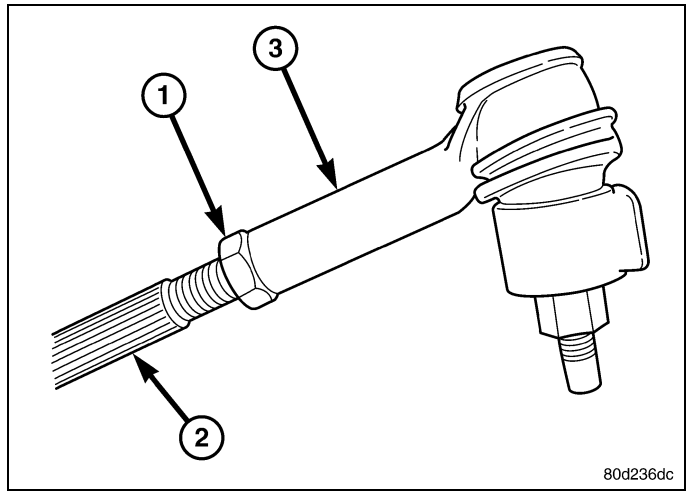

NOTE: After setting toe to specifications, normalization of the tie rod to knuckle must be verified to be sure that the adjustments are correct.

5. To normalize, verify the lower surface of the outer tie rod socket (2) is parallel to the upper surface of the knuckle (1). Rotate the drag link/tie rod until ball joint to knuckle is parallel.
6. Verify the specifications.
7. Turn off engine.

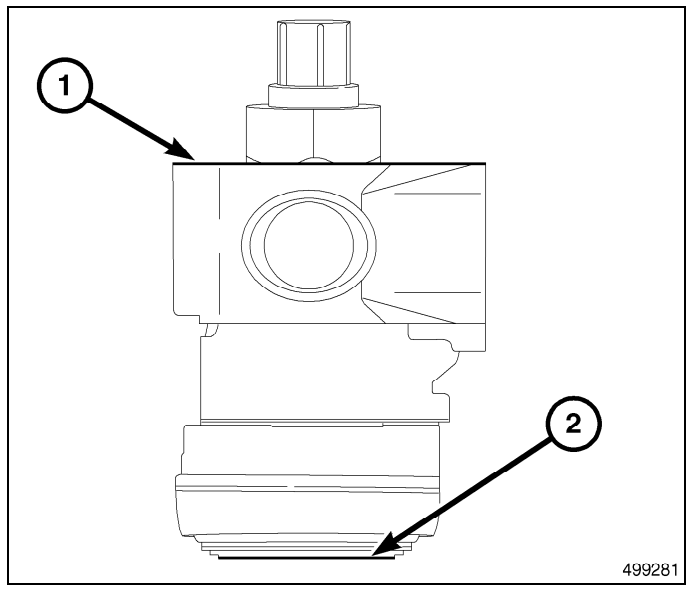

CAMBER, CASTER AND TOE ADJUSTMENT

Camber and caster angle adjustments involve changing the position of the lower control arm with the slots in the frame brackets (1).

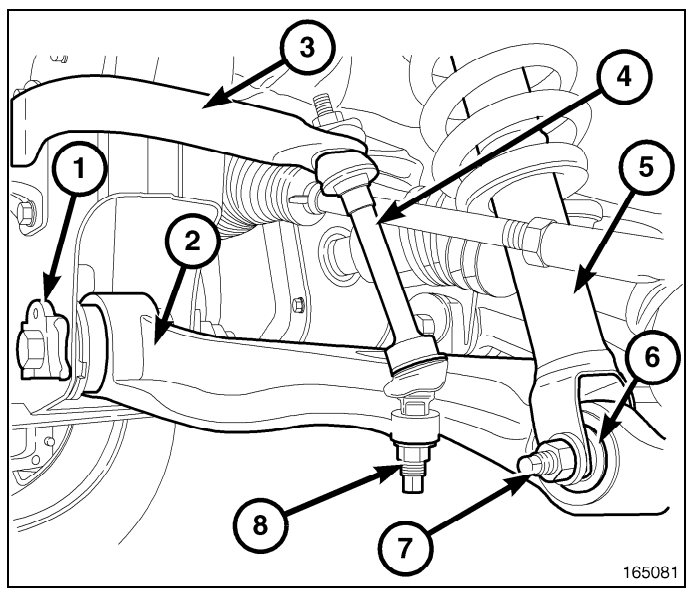

CASTER

Moving the front or rear position of the lower control arm in or out, will change the caster angle and camber angle significantly. To maintain the camber angle while adjusting caster, move one pivot bolt of the lower control arm in or out. Then move the other pivot bolt of the lower control arm in the opposite direction.

To increase positive caster angle, move the rear position of the lower control arm inward (toward the engine). Move the front of the lower control arm outward (away from the engine) slightly until the desired camber angle is obtained.

CAMBER

Move both pivot bolts of the lower control arm together in or out. This will change the camber angle significantly and little effect on the caster angle.

After adjustment is made tighten the lower control arm nuts to proper torque specification.

TOE ADJUSTMENT

The wheel toe position adjustment is the final adjustment.

1. Start the engine and turn wheels both ways before straightening the wheels. Secure the steering wheel with the front wheels in the straight-ahead position.

2. Loosen the tie rod jam nuts (1).

NOTE: Each front wheel should be adjusted for one-half of the total toe position specification. This will ensure the steering wheel will be centered when the wheels are positioned straight-ahead.

3. Adjust the wheel toe position by turning the inner tie rod (2) as necessary.
4. Tighten the tie rod jam nut (1) (on vehicles with rack and pinion) to 127 N·m (94 ft. lbs.). Tighten the clamps on all others. **Make sure the toe setting does not change during tightening.**

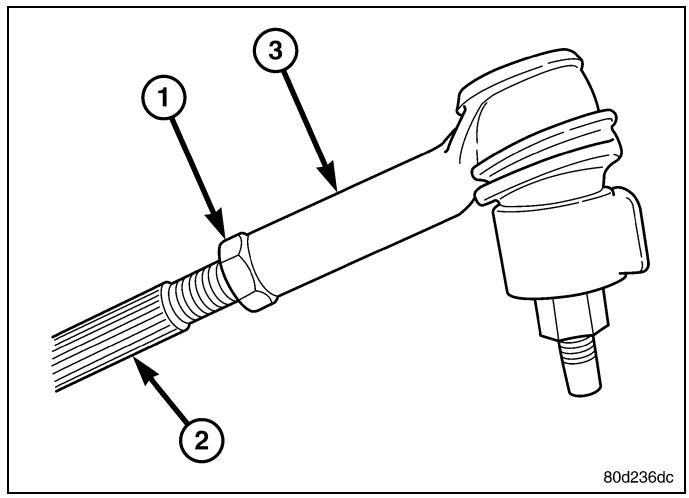

NOTE: After setting toe to specifications, normalization of the tie rod to knuckle must be verified to be sure that the adjustments are correct.

5. To normalize, verify the lower surface of the outer tie rod socket (2) is parallel to the upper surface of the knuckle (1). Rotate the drag link/tie rod until ball joint to knuckle is parallel.
6. Verify the specifications
7. Turn off engine.

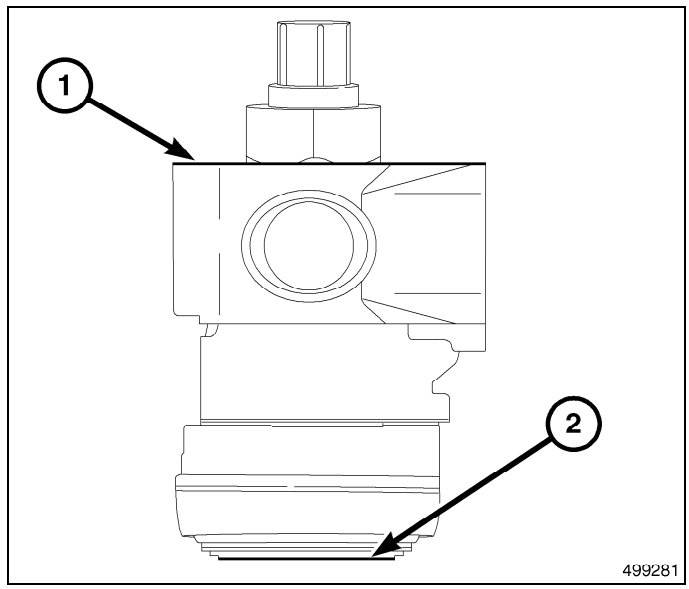

CURB HEIGHT MEASUREMENT

The wheel alignment is to be checked and all alignment adjustments made with the vehicle at its required curb height specification.

Vehicle height is to be checked with the vehicle on a flat, level surface, preferably a vehicle alignment rack. The tires are to be inflated to the recommended pressure. All tires are to be the same size as standard equipment. Vehicle height is checked with the fuel tank full of fuel, and no passenger or luggage compartment load.

Inspect the vehicle for bent or weak suspension components. Compare the parts tag on the suspect coil spring(s) to the parts book and the vehicle sales code, checking for a match. Once removed from the vehicle, compare the coil spring height to a correct new or known good coil spring. The heights should vary if the suspect spring is weak.

1. Front – On each side of the vehicle, measure the distance from the center of the rear lower control arm bolt (1) to the ground (2) **Record the measurement**. Next measure the distance from the spindle center (3) to the ground (4) **Record the measurement.**
2. Take the two measurements and subtract them to get the curb height specification.

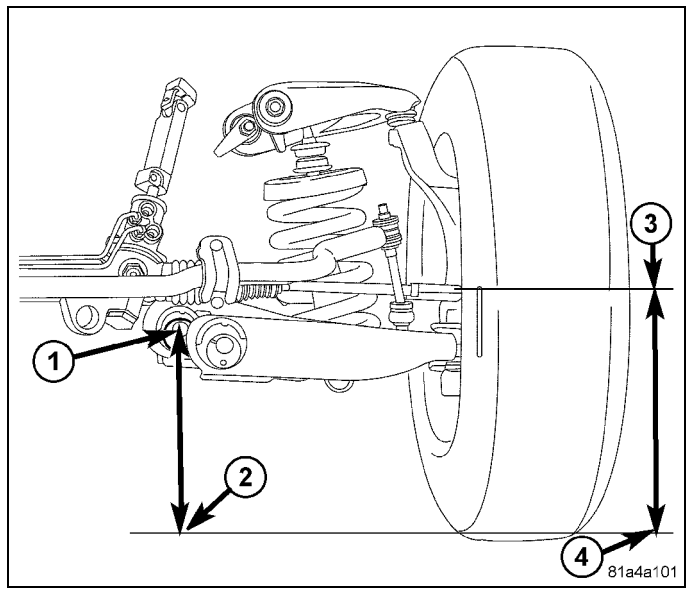

3. Rear – On each side of the vehicle, measure the distance from the center of the lower control arm forward bolt (2) to the ground (3) **Record the measurement**. Next measure the distance from the center of the rear wheel (1) to the ground (4) **Record the measurement.**
4. Subtract the control arm bolt to floor measurement from the wheel to floor measurement to calculate the ride height. (wheel - control arm = ride height).

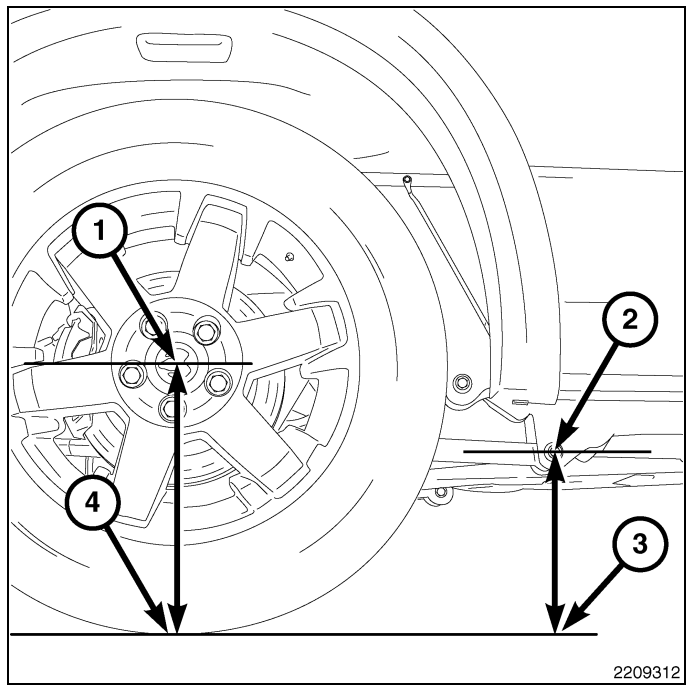

CURB HEIGHT SPECIFICATIONS - FRONT

MODEL	FRONT
4X4 Without TRX	64 mm - 84 mm 2.5 in. - 3.3 in.
4X4 With TRX	45 mm - 65 mm 1.77 in. - 2.5 in.
4X2 With TRX	35 mm - 55 mm 1.37 in. - 2.16 in.
4X2 With 17” Wheels Without TRX	47 mm - 67 mm 1.85 in. - 2.63 in.

CURB HEIGHT SPECIFICATIONS - FRONT, continued

MODEL	FRONT
4X2 With 20” wheels	35 mm - 55 mm 1.37 in. - 2.16 in.

CURB HEIGHT SPECIFICATIONS - REAR, 120 WHEELBASE

MODEL	REAR
4X4 Without TRX	60 mm - 80 mm 2.36 in. - 3.14 in
4X4 With TRX	48 mm - 68 mm 1.88 in. - 2.67 in
4X2 With TRX	72 mm - 92 mm 2.83 in. - 3.62 in
4X2 With 17” Wheels Without TRX	72 mm - 92 mm 2.83 in. - 3.62 in
4X2 With 20” wheels	69 mm - 89 mm 2.71 in. - 3.5 in

CURB HEIGHT SPECIFICATIONS - REAR, 140 WHEELBASE

MODEL	REAR
4X4 Without TRX	58 mm - 78 mm 2.28 in. - 3.07 in
4X4 With TRX	46 mm - 66 mm 1.81 in. - 2.59 in
4X2 With TRX	71 mm - 91 mm 2.79 in. - 2.8 in
4X2 With 17” Wheels Without TRX	71 mm - 91 mm 2 in. - 3.58 in
4X2 With 20” wheels	69 mm - 89 mm 2.71 in. - 3.5 in

Specifications

NOTE: All alignment specifications are in degrees.

NOTE: All wheel alignments are to be set with the vehicle at curb height. (Refer to 02 - Front Suspension/Wheel Alignment - Standard Procedure)

FRONT - 4X2 and 4X4

FRONT WHEEL ALIGNMENT	PREFERRED SETTING	ACCEPTABLE RANGE
CAMBER - LEFT	0.10°	-0.40° to 0.60°
CAMBER - RIGHT	-0.10°	-0.60° to 0.40°

FRONT - 4X2 and 4X4, continued

FRONT WHEEL ALIGNMENT	PREFERRED SETTING	ACCEPTABLE RANGE
CROSS - CAMBER (Maximum Side-To-Side Difference)	0.20°	-0.30° to 0.70°
CASTER -- LEFT	3.50°	3.00° to 4.00°
CASTER - RIGHT **(20 in. Tire)**	3.90°	3.40° to 4.40°
CROSS - CASTER **(20 in. Tire)**	-0.40°	-0.90° to 0.10°
CASTER - RIGHT **(17 in. Tire)**	3.75°	3.25° to 4.25°
CROSS - CASTER **(17 in. Tire)**	-0.25°	-0.75° to 0.25°
TOE - TOTAL*	0.10°	0.00° to 0.20°
Positive toe (+) is toe-in and negative toe (−) is Toe-out. * TOTAL TOE is the sum of both the left and right wheel toe settings. TOTAL TOE should be equally split between each wheel on the same axle to ensure the steering wheel is centered after setting toe.		

REAR - 4X2 and 4X4

REAR WHEEL ALIGNMENT	PREFERRED SETTING	ACCEPTABLE RANGE
CAMBER	-0.10°	-0.60° to 0.40°
CROSS - CAMBER (Maximum Side-To-Side Difference)	0.00°	-0.50° to 0.50°
TOE - TOTAL*	0.30°	-0.00° to 0.60°
THRUST ANGLE	0.00°	-0.30° to 0.30°
Positive toe (+) is toe-in and negative toe (−) is Toe-out. * TOTAL TOE is the sum of both the left and right wheel toe settings. TOTAL TOE should be equally split between each wheel on the same axle to ensure the steering wheel is centered after setting toe.		

FRONT

TABLE OF CONTENTS

page

FRONT
DESCRIPTION
4X2 . . . 16
4X4 . . . 16
CONTROL ARMS . . . 17
SPECIFICATIONS . . . 17
ARM, LOWER CONTROL
REMOVAL
4X2 . . . 18
4X4 . . . 20
INSTALLATION
4X2 . . . 23
4X4 . . . 25
ARM, UPPER CONTROL
REMOVAL . . . 27
INSTALLATION . . . 28
BALL JOINT, SUSPENSION, LOWER
DIAGNOSIS AND TESTING . . . 28
REMOVAL . . . 29
INSTALLATION . . . 29
BALL JOINT, SUSPENSION, UPPER
DIAGNOSIS AND TESTING . . . 30
REMOVAL . . . 30
INSTALLATION . . . 31
HUB AND BEARING
REMOVAL
4X2 . . . 31
4X4 . . . 32
INSTALLATION
4X2 . . . 33
4X4 . . . 33

page

KNUCKLE, STEERING
DESCRIPTION . . . 34
OPERATION . . . 34
REMOVAL . . . 34
INSTALLATION . . . 36
LINK, STABILIZER BAR
REMOVAL
4X2 . . . 36
4X4 . . . 37
INSTALLATION
4X2 . . . 37
4X4 . . . 38
SHOCK ABSORBER, SUSPENSION
DIAGNOSIS AND TESTING . . . 38
REMOVAL
4X2 . . . 38
4X4-COIL OVER . . . 39
INSTALLATION
4X2 . . . 41
4X4-COIL OVER . . . 41
SPRING, FRONT COIL
REMOVAL
4X2 . . . 43
4X4-COIL OVER . . . 44
INSTALLATION
4X2 . . . 46
4X4-COIL OVER . . . 47
STABILIZER BAR, FRONT
DESCRIPTION . . . 49
OPERATION . . . 49
REMOVAL . . . 49
INSTALLATION . . . 49

Front

Description

4X2

The front suspension is designed to allow each wheel to adapt to different road surfaces independently. The wheels are mounted to hub/bearings units bolted to the steering knuckle. The double-row hub bearings are sealed and lubricated for life. The steering knuckles turn (pivot) on ball joints.

The front suspension is comprised of:

- Shock Absorbers
- Coil Spring
- Control Arms (1 and 3)
- Steering Knuckles (2)
- Stabilizer Bar
- Stabilizer Link
- Tie Rod Ends
- Hub/Bearing
- Rack and Pinion
- Ball Joints

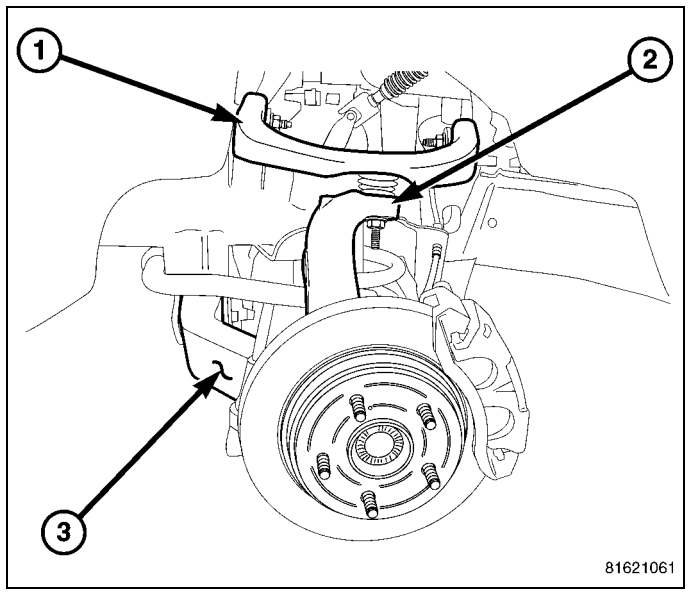

NOTE: Components attached with a nut must be torqued to specification.

NOTE: Suspension components with rubber/urethane bushings should be tightened with the vehicle at normal ride height. It is important to have the springs supporting the weight of the vehicle when the fasteners are torqued. If springs are not at their normal ride position, vehicle ride comfort could be affected and premature bushing wear may occur.

4X4

The front suspension is designed to allow each wheel to adapt to different road surfaces independently. The wheels are mounted to hub/bearings units bolted to the steering knuckle. The double-row hub bearings are sealed and lubricated for life. The steering knuckles turn (pivot) on ball joints.

The front suspension is comprised of:

- Coil over Shock absorbers (5)
- Coil over Springs (4)
- Control arms (1,7)
- Steering knuckles (3)
- Stabilizer bar (9)
- Stabilizer link (8)
- Tie Rod Ends (6)
- Hub/Bearing
- Rack and Pinion
- Ball Joints (2)

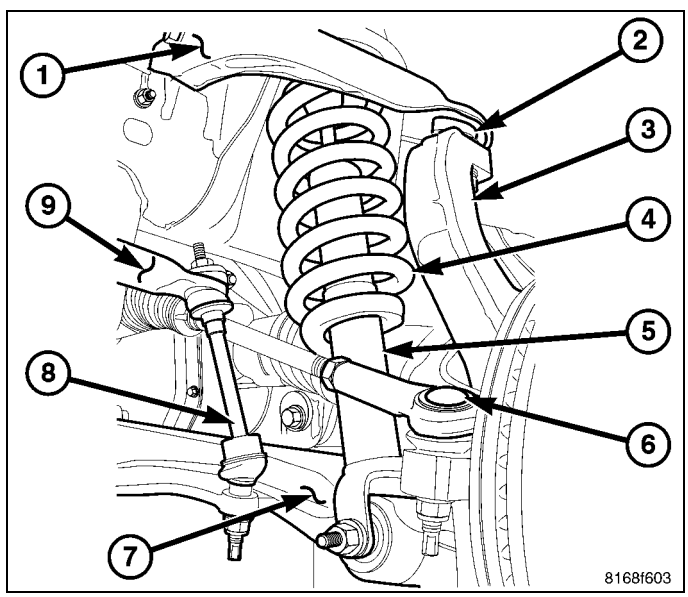

NOTE: Components attached with a nut must be torqued to specification.

NOTE: Suspension components with rubber/urethane bushings should be tightened with the vehicle at normal ride height. It is important to have the springs supporting the weight of the vehicle when the fasteners are torqued. If springs are not at their normal ride position, vehicle ride comfort could be affected and premature bushing wear may occur.

CONTROL ARMS

The lower control arm (2) bolts in frame brackets. The frame brackets have slotted holes which allow the arms (2) to be adjusted with cambolts (1) for caster and camber adjustment.

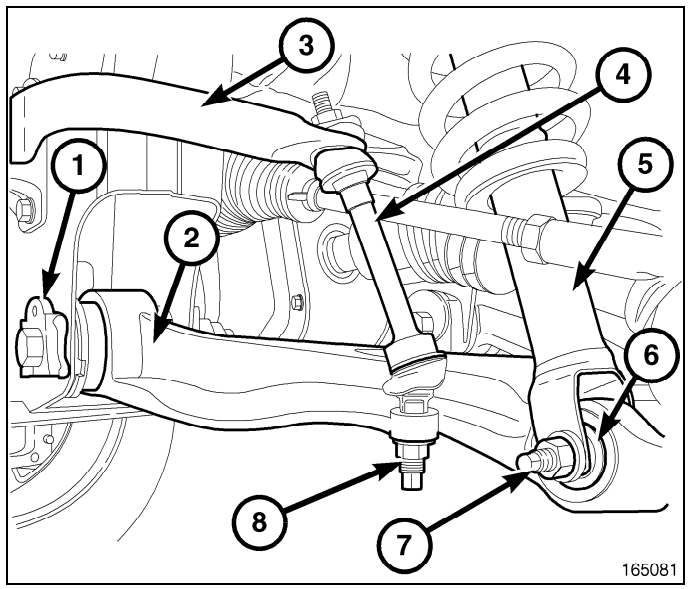

The upper control arms (2) bolt to the upper frame brackets and pivots through bushings.

The control arms have lube for life ball studs (3). The control arm travel (jounce) is limited through the use of rubber/urethane bumpers. Rebound travel is limited by the shock absorber.

Having the suspension at curb ride height when torquing bolts ensures good ride characteristics and longer bushing life by preventing excessive "wind-up" of the bushing.

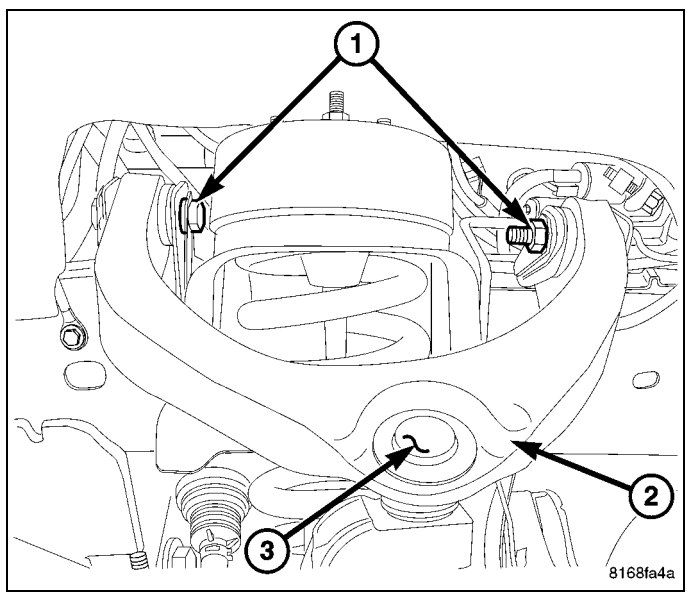

Specifications

DESCRIPTION	N·m	Ft. Lbs.	In. Lbs.
Shock Absorber Upper Nut - 4X4	61	45	—
Shock Absorber Lower Bolt - 4X4	210	155	—
Shock Absorber Upper Nut - 4X2	54	40	—

DESCRIPTION	N·m	Ft. Lbs.	In. Lbs.
Shock Absorber Lower Bolt - 4X2	26	19	250
Lower Control Arm Frame Nuts	210	155	—
Lower Control Arm Ball Joint Nut	51, Then an additional 90°	37.5, Then an additional 90°	—
Upper Control Arm Frame Nuts	176	130	—
Upper Control Arm Ball Joint Nut	54, Then an additional 200°	40, Then an additional 200°	—
Stabilizer Bar Frame Bolt	59	43.5	—
Stabilizer Link Lower Control Arm Nut	102	75	—
Stabilizer Link Stabilizer Bar Nut	27	20	—
Hub/Bearing Bolts	163	120	—
Half Shaft Nut	251	185	—
Tie Rod End Jamb Nut	75	55	
Tie Rod End Nut	61, Then an additional 90°	45, Then an additional 90°	—

ARM, Lower Control

Removal

4X2

1. Raise and support the vehicle.
2. Remove the tire and wheel assembly.
3. Support the lower control arm at the outboard side of the lower control arm to support vehicle weight.
4. Remove the shock (3) (Refer to 02 - Front Suspension/Front/SHOCK ABSORBER, Suspension - Removal).

NOTE: Do not allow the caliper to hang freely, support the caliper assembly.

5. Remove the disc brake caliper adapter, (Refer to 05 - Brakes/Hydraulic/Mechanical/ADAPTER, Disc Brake Caliper - Removal).
6. Remove the rotor.
7. Remove the upper ball joint nut.

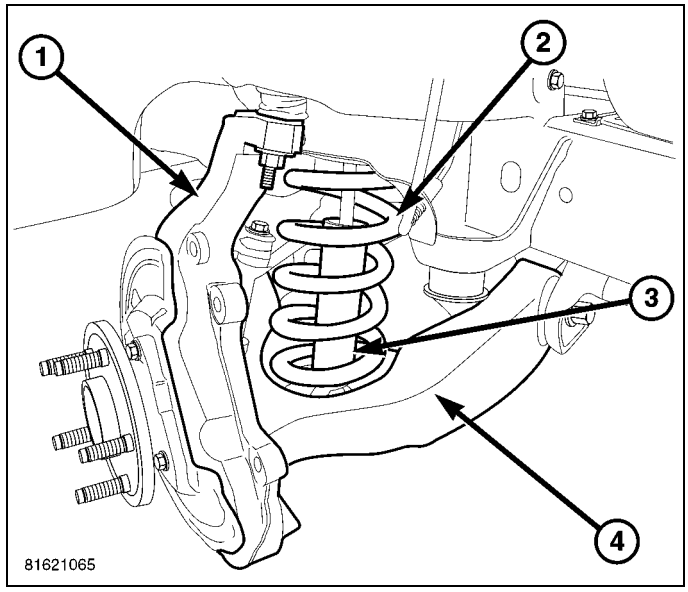

8. Install Front Spring Compressor DD-1278 (3) up through the lower control arm, coil spring (2) and shock hole in the frame. The bell-shaped adapter goes against the lower control arm. Install the nut on top of the tool at the shock hole.
9. Tighten the spring compressor nut against bell-shaped adapter finger tight then loosen 1/2 turn to hold the spring in place.

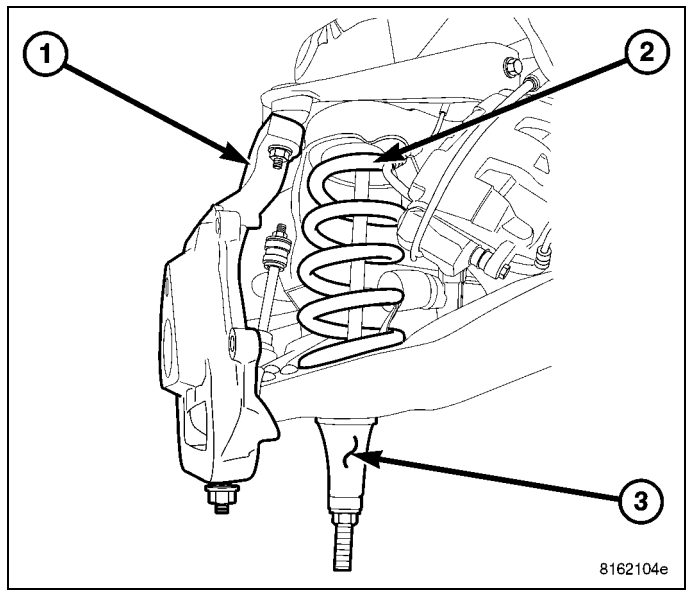

10. Separate the upper ball joint (4) from the knuckle (6) using Ball Joint Remover 9360 (5).
11. Remove the knuckle from the vehicle.
12. Remove the lower stabilizer link nut.

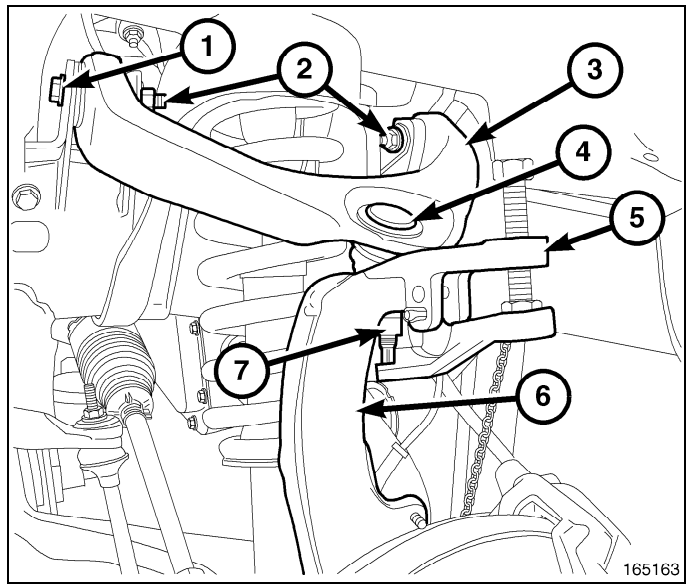

13. Remove the lower ball joint nut at the steering knuckle (1).
14. Separate the ball joint from the knuckle using Ball Joint Remover 8677 (2).

NOTE: Do not allow the upper control arm to rebound downward, it must be supported.

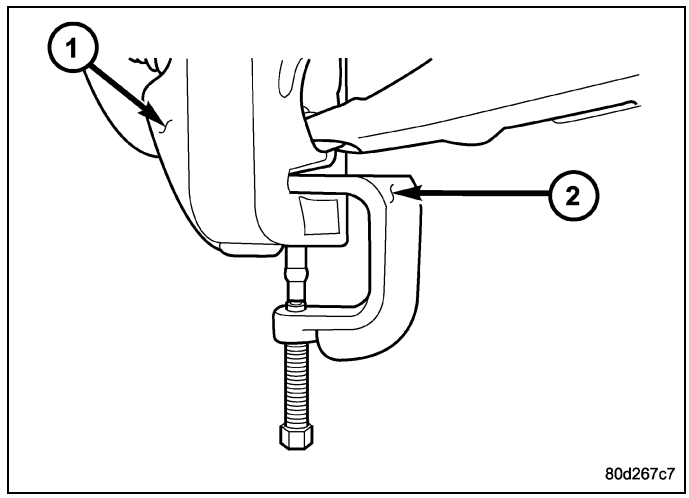

15. Remove the lower control arm support.
16. Tighten the spring compressor tool to allow clearance for the lower ball joint to be removed out of the knuckle.
17. Loosen the tension on the spring compressor tool (2) slowly allowing the lower control arm to pivot downward.
18. Remove the spring compressor tool (2) .
19. Remove coil spring (1) and isolator pad from the vehicle.
20. Remove the front and rear pivot bolts.
21. Remove the lower control arm.

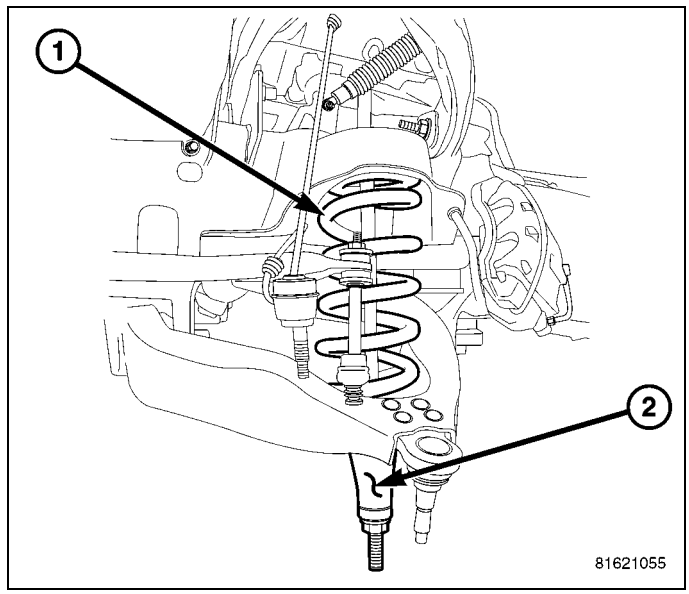

4X4

1. Raise and support the vehicle.
2. Remove the wheel and tire assembly.
3. Remove half shaft nut (1) from the shaft (2).

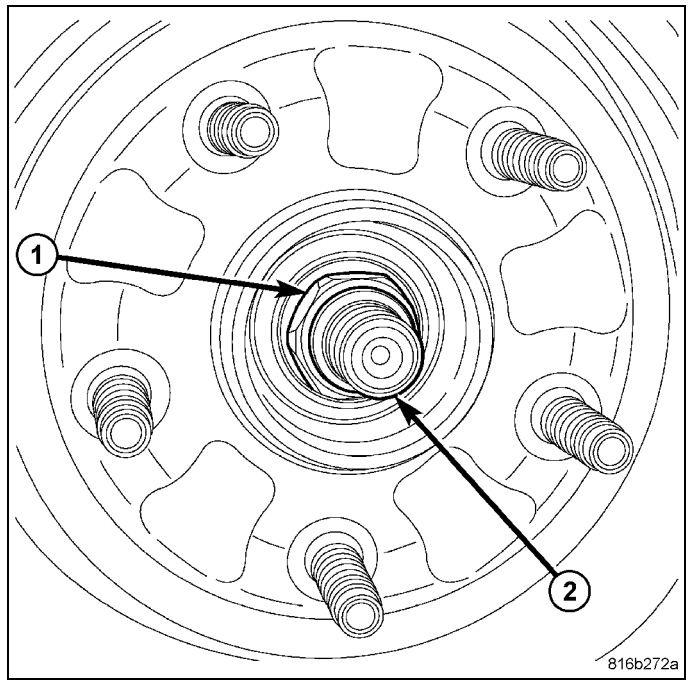

4. Compress the disc brake caliper (6).

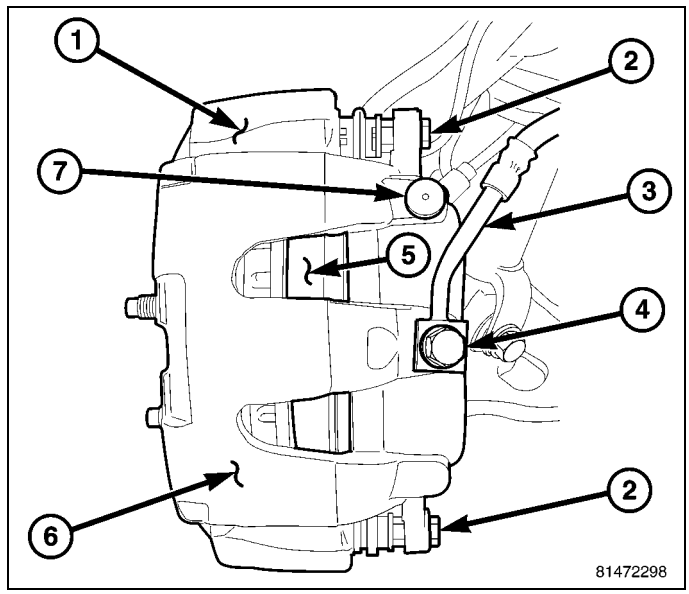

5. Remove the caliper adapter bolts (1)

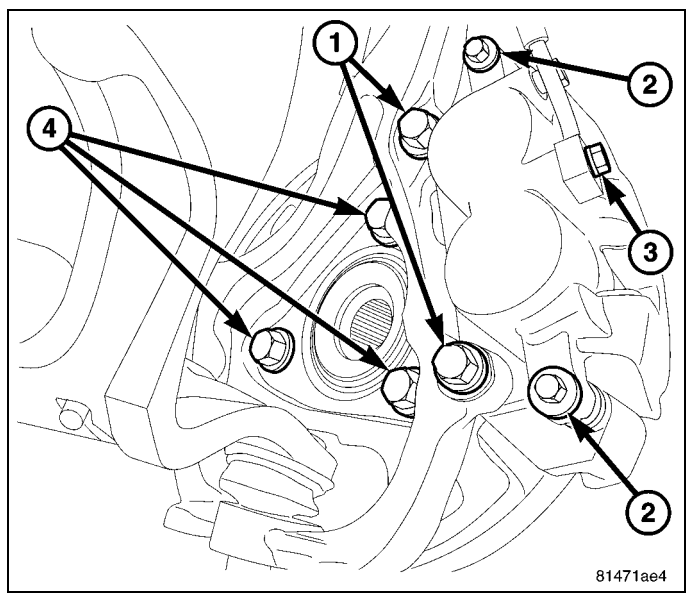

CAUTION: Never allow the disc brake caliper to hang from the brake hose. Damage to the brake hose will result. Provide a suitable support to hang the caliper securely.

6. Remove the disc brake caliper (1) and the caliper adapter (2) as an assembly.
7. Remove the rotor from the hub/bearing.
8. If equipped with ABS, remove the wheel speed sensor wiring clips and disconnect the electrical connector.

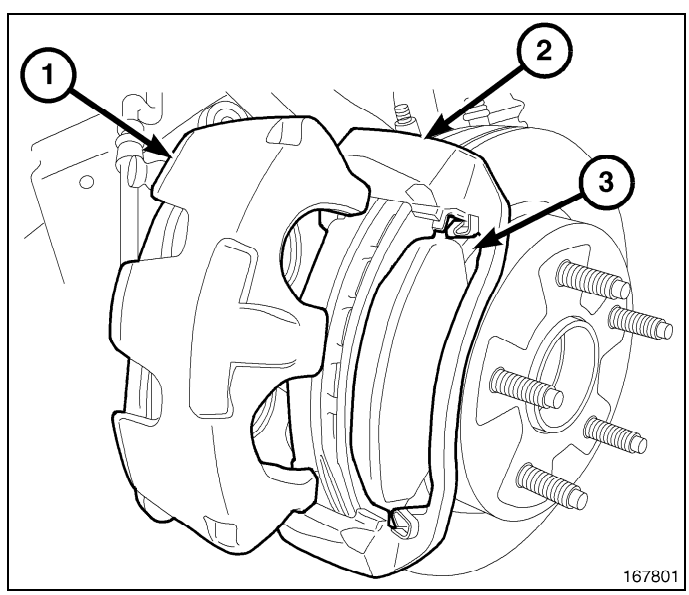

9. Remove the upper ball joint nut (7).
10. Separate the ball joint from the steering knuckle using Ball Joint Remover 9360 (5).

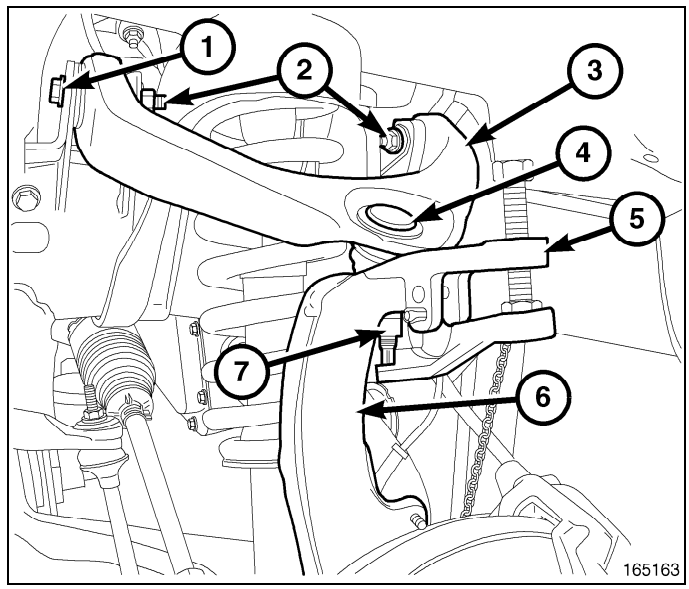

11. Disengage inner C/V joint (1) from axle shaft with two pry bars between the C/V housing and axle housing.
12. Remove the front halfshaft.

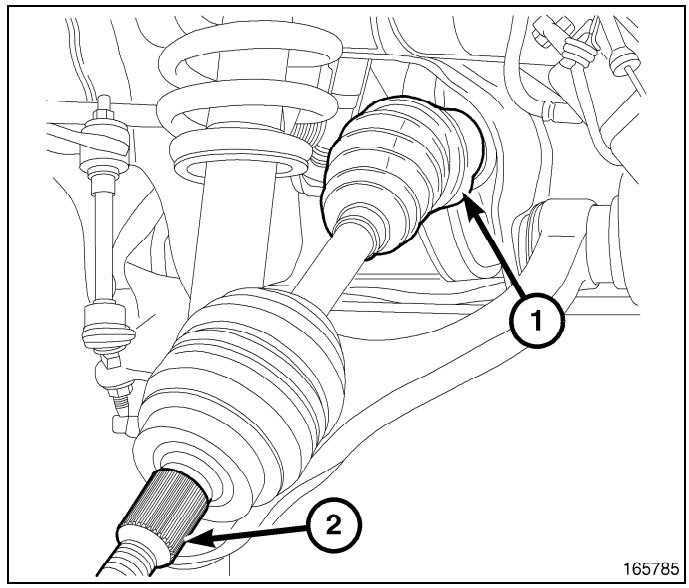

13. Remove the shock absorber lower nut/bolt (7).
14. Remove the stabilizer bar link lower nut (8).

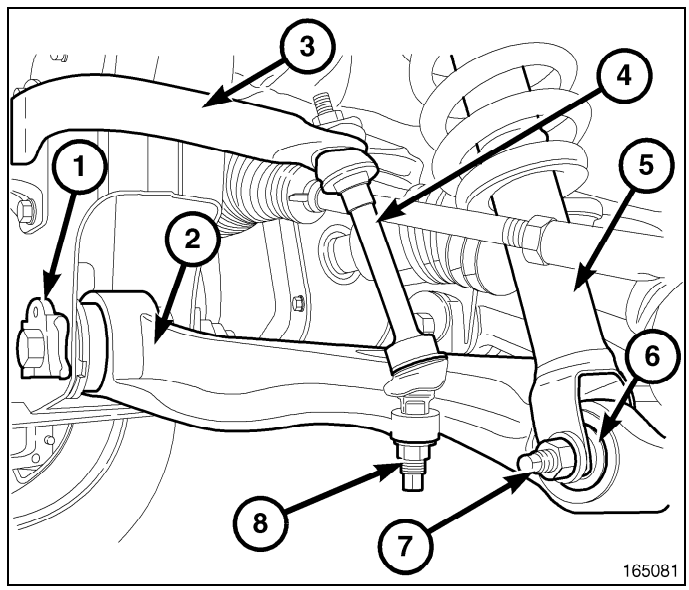

15. Using a suitable tie strap, support the knuckle. Remove the lower ball joint nut. Separate ball joint from the steering knuckle using Ball Joint Remover 8677 (2).

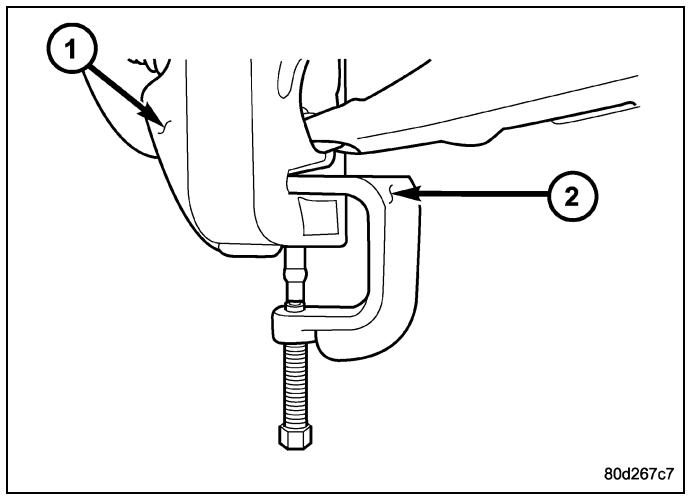

16. Remove the two control arm pivot bolts (1) and control arm (2) from frame rail brackets .

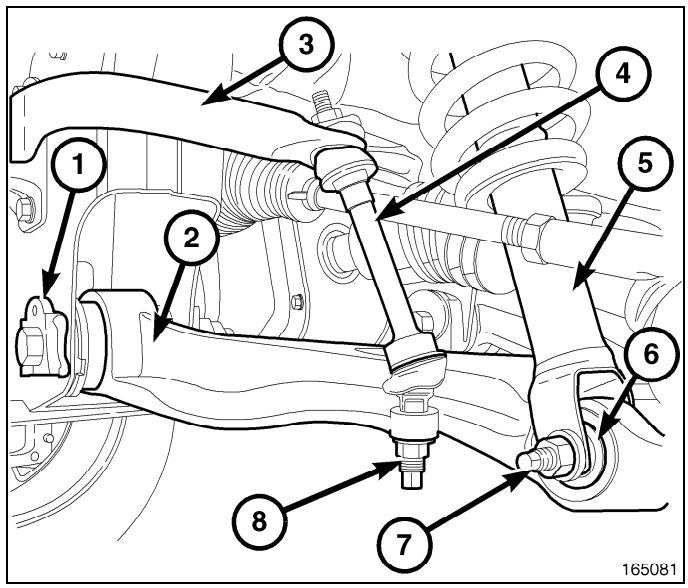

Installation

4X2

1. Install the lower control arm into place on the vehicle.
2. Install the front and rear control arm pivot bolts finger tight.

3. Install the coil spring (1) into the frame pocket (Refer to 02 - Front Suspension/Front/SPRING, Front Coil - Installation).
4. Install the Spring Compressor DD-1278 (2) up through the lower suspension arm, coil spring and shock hole in the frame.
5. Tighten the tool nut to compress the coil spring (1).

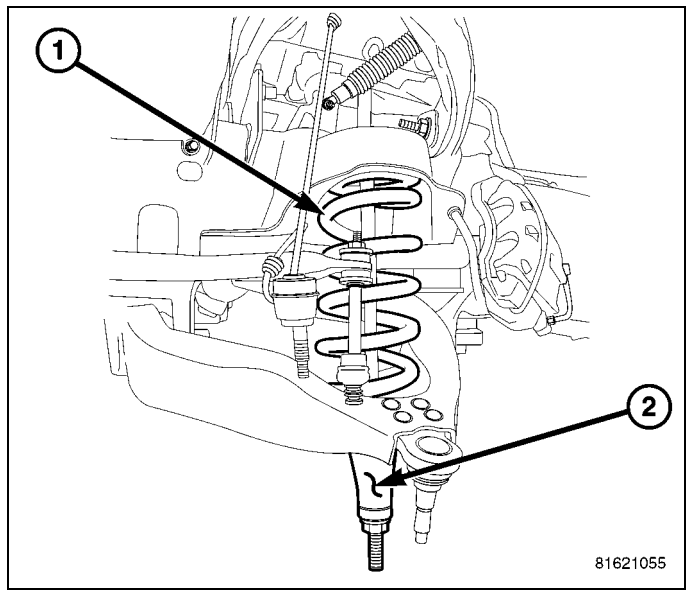

6. Install the knuckle (1) to the control arms.
7. Position the lower ball joint into the steering knuckle.
8. Install the retaining nut on the lower ball joint and tighten to specifications (Refer to 02 - Front Suspension/Front - Specifications).
9. Position the upper ball joint to the knuckle (1).
10. Install the retaining nut on the upper ball joint and tighten to specifications (Refer to 02 - Front Suspension/Front - Specifications).
11. Support the lower control arm at the outboard side of the lower control arm to support vehicle weight.
12. Remove the spring compressor tool (3).

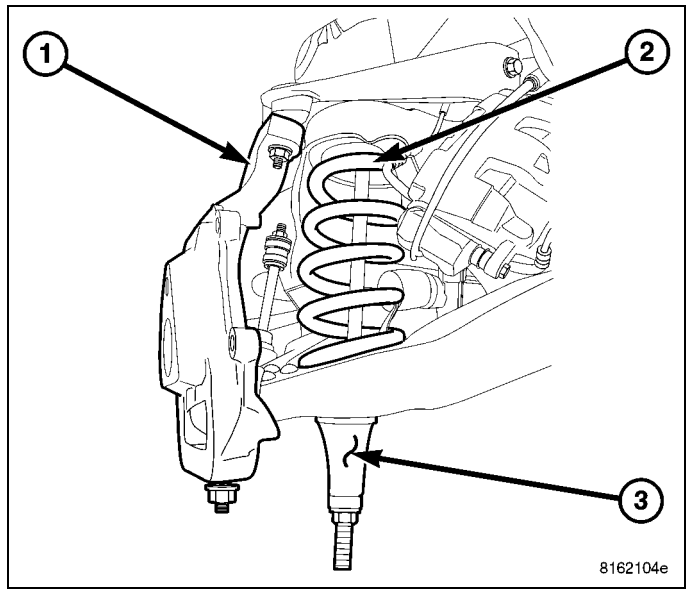

13. Install the shock absorber (Refer to 02 - Front Suspension/Front/SHOCK ABSORBER, Suspension - Installation).
14. Install the stabilizer link (Refer to 02 - Front Suspension/Front/LINK, Stabilizer Bar - Installation).
15. Remove the lower control arm support.
16. Install the wheel and tire assembly and lower the vehicle (Refer to 22 - Tires and Wheels/Wheels - Standard Procedure).
17. Lower the vehicle to the floor with vehicle weight and tighten the front and rear pivot bolts to the frame to specifications (Refer to 02 - Front Suspension/Front - Specifications).
18. Perform a wheel alignment (Refer to 02 - Front Suspension/Wheel Alignment - Standard Procedure).

4X4

1. Position the lower control arm (2) at the frame rail brackets. Install the pivot bolts (1) and nuts, and tighten the nuts finger-tight.

CAUTION: The ball joint stud taper must be CLEAN and DRY before installing the knuckle. Clean the stud taper with mineral spirits to remove dirt and grease.

2. Insert the lower ball joint stud into the steering knuckle. Install and tighten the retaining nut to specifications (Refer to 02 - Front Suspension/Front - Specifications).
3. Install shock absorber lower bolt/nut (7) and tighten to specifications (Refer to 02 - Front Suspension/Front - Specifications).
4. Install the stabilizer bar link lower nut (8) and tighten to specifications (Refer to 02 - Front Suspension/Front - Specifications).

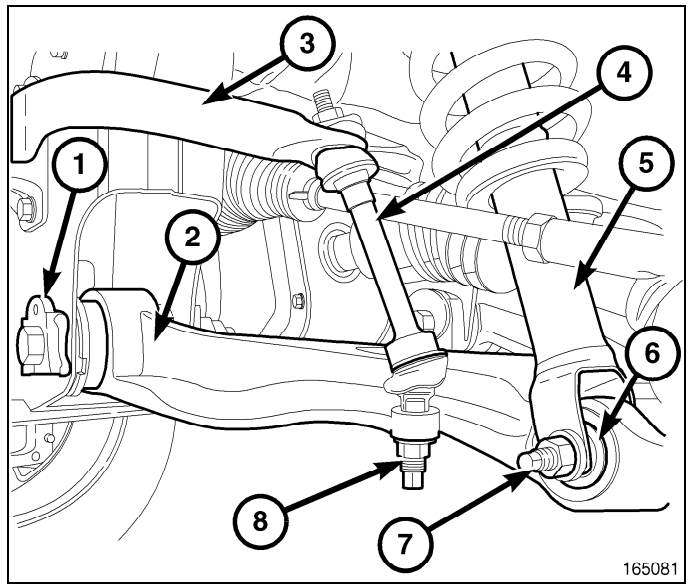

5. Install the front halfshaft to the axle by pushing the inner C/V (1) firmly to engage axle shaft snap ring into the inner C/V housing.
6. Clean hub bearing bore, hub bearing mating surface and half shaft splines (2) and apply a light coating of grease to the front axle shaft output splines.

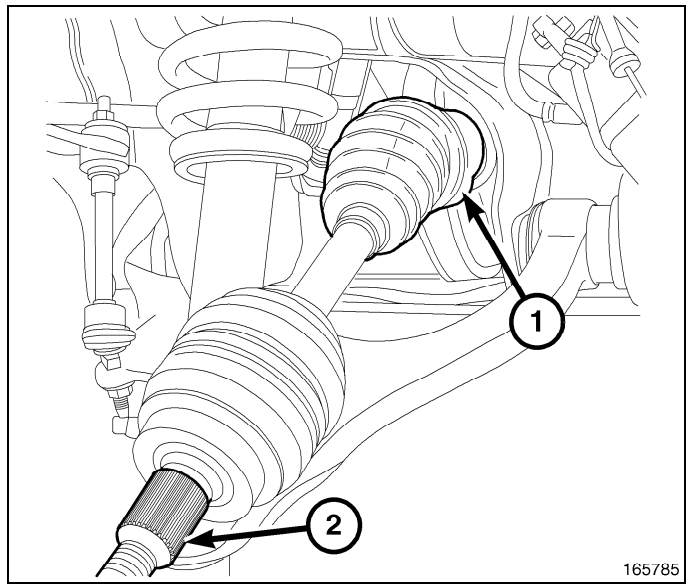

7. Install half shaft (2) into the knuckle.

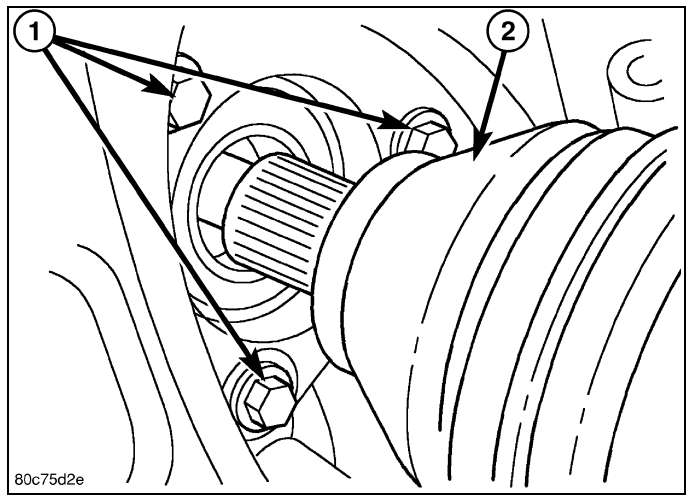

8. Insert the upper ball joint (4) into the steering knuckle (6).
9. Install and tighten the upper ball joint retaining nut to specifications (Refer to 02 - Front Suspension/Front - Specifications).

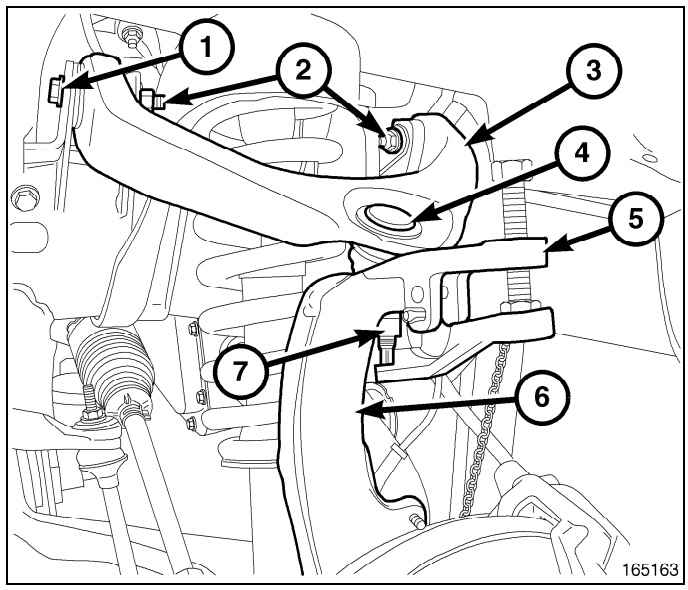

10. Tighten the lower control arm front pivot nut and rear pivot bolt to specifications (Refer to 02 - Front Suspension/Front - Specifications).
11. Install half shaft hub nut (1) and tighten to specifications (Refer to 02 - Front Suspension/Front - Specifications).
12. Install the wheel and tire assembly (Refer to 22 - Tires and Wheels/Wheels - Standard Procedure).
13. Remove the support and lower the vehicle.
14. Perform a wheel alignment (Refer to 02 - Front Suspension/Wheel Alignment - Standard Procedure).

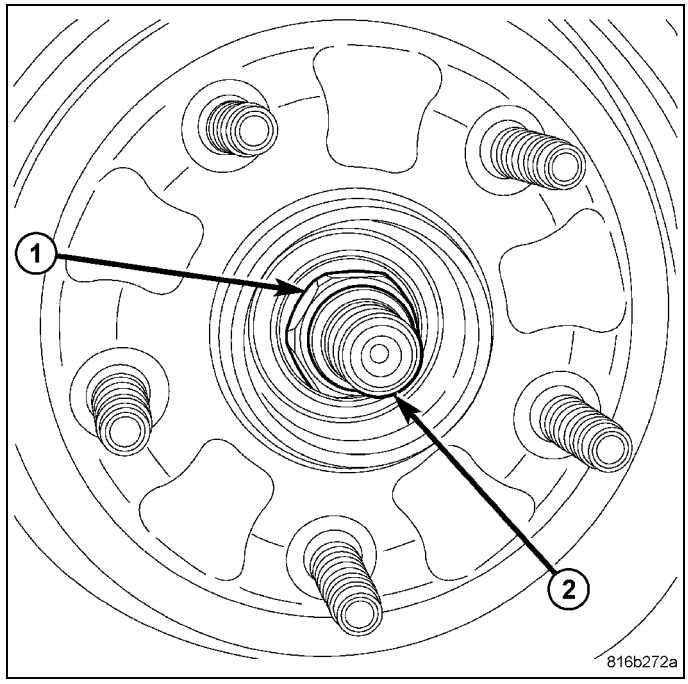

ARM, Upper Control

Removal

1. Raise and support the vehicle.
2. Remove wheel and tire assembly.
3. Remove the disc brake caliper adapter with the caliper (Refer to 05 - Brakes/Hydraulic/Mechanical/ADAPTER, Disc Brake Caliper - Removal).
4. Remove the rotor.
5. Remove the wheel speed sensor wire from the upper control arm.
6. Remove the nut from upper ball joint (4).

CAUTION: When installing Remover 9360 **(5) to separate the ball joint, be careful not to damage the ball joint seal.**

7. Separate upper ball joint (4) from the steering knuckle (6) with Ball Joint Remover 9360 (5).

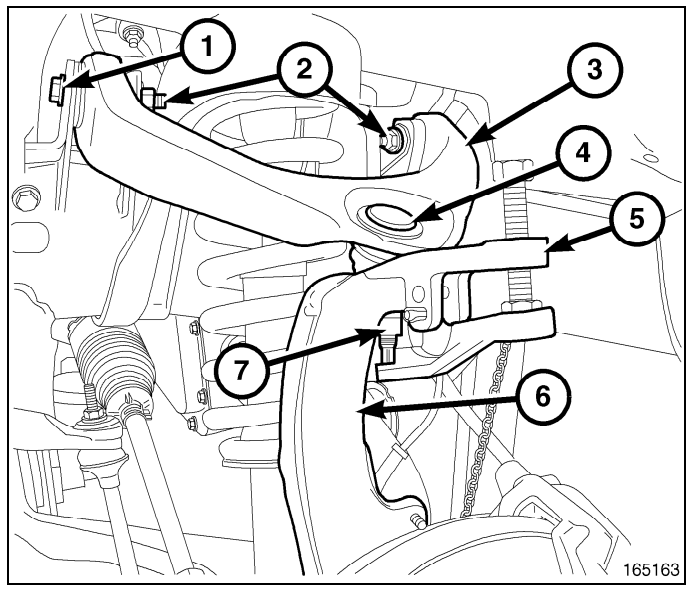

8. Remove the control arm pivot bolts (3) and flag nuts (2) remove control arm (1).

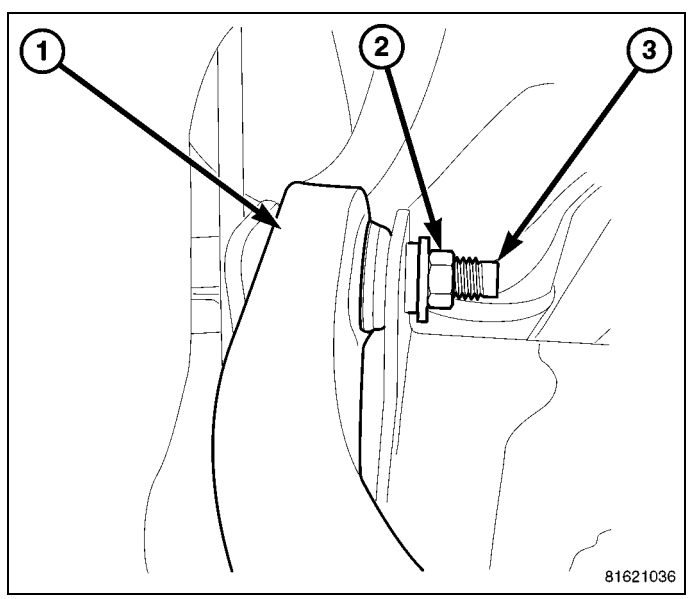

Installation

1. Position the control arm (1) into the frame brackets. Install bolt (3) and nut (2), and tighten to specifications (Refer to 02 - Front Suspension/Front - Specifications).

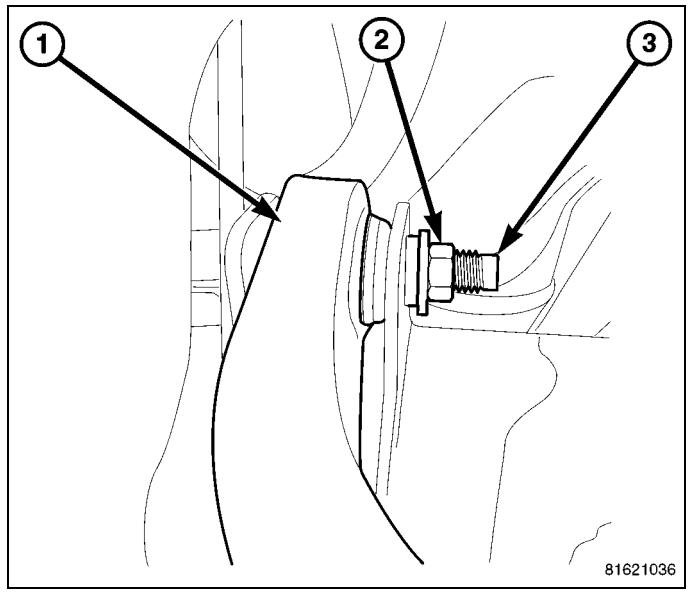

2. Insert the ball joint in the steering knuckle (3) and tighten the upper ball joint nut (2) to specifications (Refer to 02 - Front Suspension/Front - Specifications)..
3. Install the rotor to the hub.
4. Install the disc brake caliper and adapter to the knuckle (Refer to 05 - Brakes/Hydraulic/Mechanical/ADAPTER, Disc Brake Caliper - Installation).
5. Install the wheel speed sensor wire to the upper control arm.
6. Install the wheel and tire assembly (Refer to 22 - Tires and Wheels/Wheels - Standard Procedure).
7. Remove the support and lower vehicle.
8. Perform a wheel alignment (Refer to 02 - Front Suspension/Wheel Alignment - Standard Procedure).

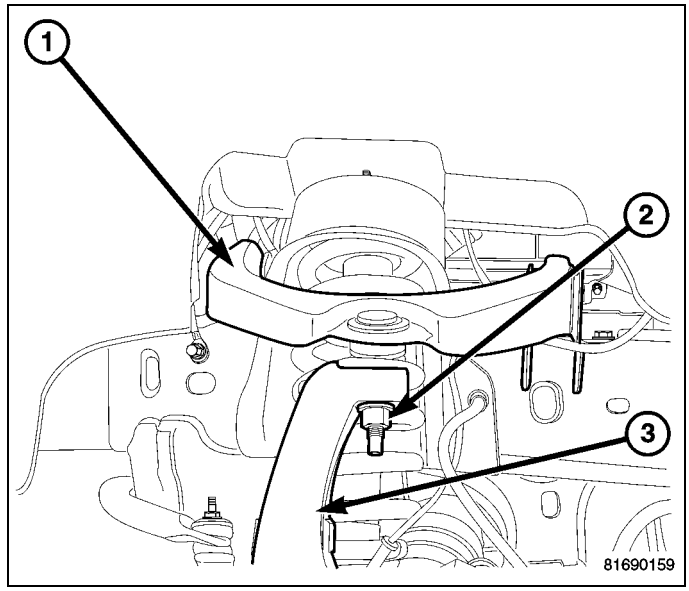

BALL JOINT, Suspension, Lower

Diagnosis and Testing

1. Raise and support the vehicle, (Refer to 04 - Vehicle Quick Reference/Hoisting - Standard Procedure).

NOTE: When using floor stands on aluminum control arms a wood block or similar should be placed between the stand and the control arm.

2. Place safety floor stands under both lower control arms as far outboard as possible. Lower the vehicle to allow the stands to support some or all of the vehicle weight.
3. Mount a dial indicator solidly to the topside of the lower control arm.

NOTE: The dial indicator plunger must be perpendicular to the machined surface of the steering knuckle.

4. Position the indicator plunger against the bottom surface of the steering knuckle and then zero the dial indicator.
5. Position a pry bar under the tire assembly. Pry upwards on the tire assembly.

NOTE: On the 4x4 replacement of the lower ball joint is not recommended. If the ball joint movement exceeds specifications, replacement of the lower control arm is necessary.

6. If the travel exceeds 0.5 mm (0.020 in.), replace the lower ball joint. **For 4x2** (Refer to 02 - Front Suspension/Front/BALL JOINT, Suspension - Removal), **or for 4x4** (Refer to 02 - Front Suspension/Front/ARM, Lower Control - Removal).

Removal

1. Raise and support the vehicle (Refer to 04 - Vehicle Quick Reference/Hoisting - Standard Procedure).
2. Remove the knuckle (Refer to 02 - Front Suspension/Front/KNUCKLE, Steering - Removal).

NOTE: Extreme pressure lubrication must be used on the threaded portions of the tool. This will increase the longevity of the tool and insure proper operation during the removal and installation process .

3. Press the ball joint from the lower control arm using Ball Joint Press C-4212F (PRESS) (1), Remover/Installer 8836-6 (DRIVER) (2) and Ball Joint Remover/Installer 8698-2 (RECEIVER) (3).

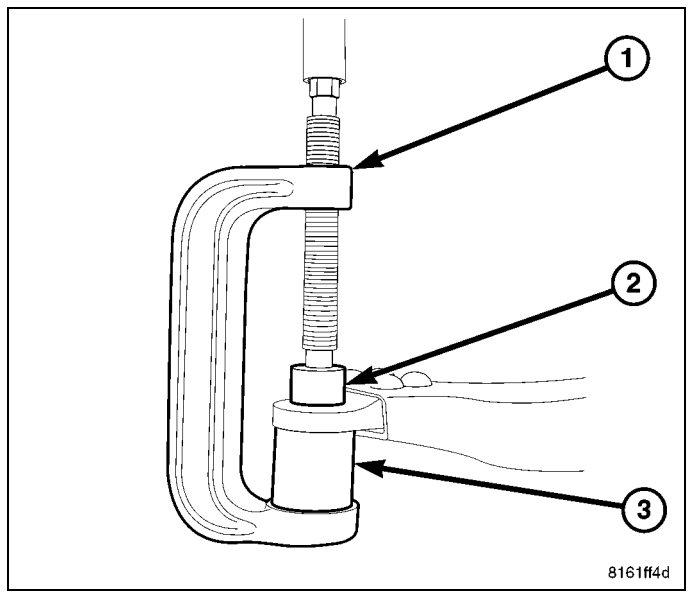

Installation

NOTE: Extreme pressure lubrication must be used on the threaded portions of the tool. This will increase the longevity of the tool and insure proper operation during the removal and installation process .

1. Install the ball joint (4) into the control arm (3) and press in using Ball Joint Press C-4212F (press) (1), Ball Joint Remover/Installer 8698-3 (driver) (2) and Ball Joint Remover/Installer 8698-1 (receiver) (5).
2. Stake the ball joint flange in four evenly spaced places around the ball joint flange, using a punch and hammer.

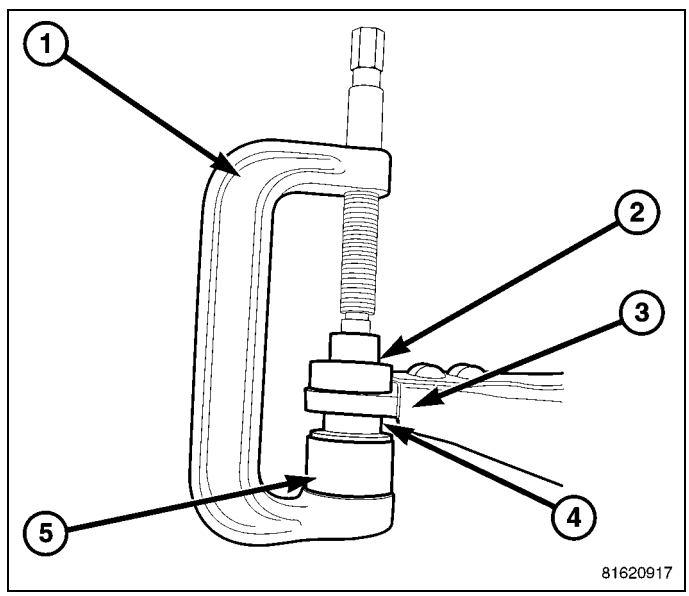

3. Install the steering knuckle (Refer to 02 - Front Suspension/Front/KNUCKLE, Steering - Installation).
4. Install the tie rod end into the steering knuckle (Refer to 19 - Steering/Linkage/END, Tie Rod - Installation).
5. Install the brake caliper and rotor (Refer to 05 - Brakes/Hydraulic/Mechanical/ROTOR, Brake - Installation).
6. Install the tire and wheel assembly (Refer to 22 - Tires and Wheels/Wheels - Standard Procedure).
7. Check the vehicle ride height (Refer to 02 - Front Suspension/Wheel Alignment - Standard Procedure).
8. Perform a wheel alignment (Refer to 02 - Front Suspension/Wheel Alignment - Standard Procedure).

BALL JOINT, Suspension, Upper

Diagnosis and Testing

1. Raise the front of the vehicle. Place safety floor stands under both lower control arms as far outboard as possible. Lower the vehicle to allow the stands to support some or all of the vehicle weight.
2. Remove the front tires.

NOTE: The dial indicator plunger must be perpendicular to the machined surface of the ball joint.

3. Mount a dial indicator solidly to the frame.

NOTE: Use care not to pry or tear the ball joint boot (5), when checking the free play.

4. Position dial indicator plunger on the topside of the upper ball joint and then zero the dial indicator.
5. Position a pry bar between the steering knuckle and the upper control arm. Pry upwards on the upper control arm.
6. If the travel exceeds 0.5 mm (0.020 in.), replace the upper ball joint (Refer to 02 - Front Suspension/Front/BALL JOINT, Suspension - Removal).
7. If the upper ball joint is within specs reinstall the front tires (Refer to 22 - Tires and Wheels/Wheels - Standard Procedure).

Removal

1. Raise vehicle and support the vehicle.
2. Remove the tire and wheel.
3. Remove the upper ball joint retaining nut.
4. Separate the upper ball joint (4) from the knuckle (6) using Ball Joint Remover 9360 (5).

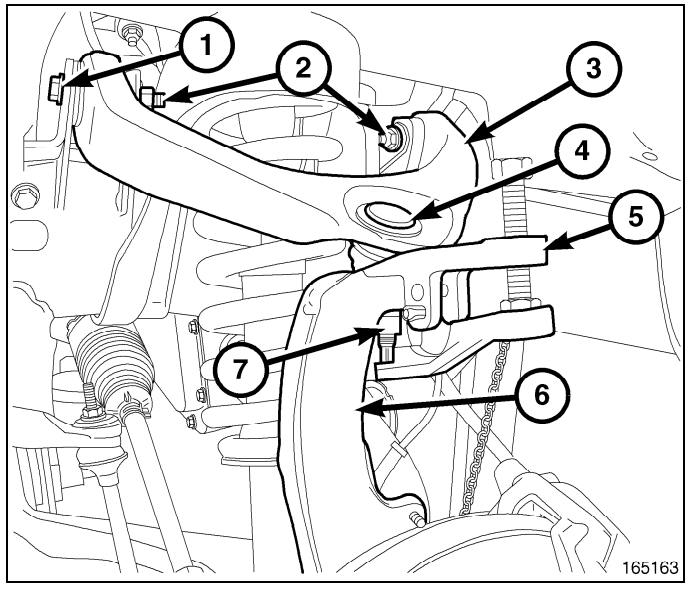

5. Remove the wheel speed sensor wire from the upper control arm.
6. Move the knuckle out of the way for access to remove the ball joint.
7. Remove the ball joint boot.

NOTE: It may be necessary to install a block of wood between the control arm and frame bracket to allow clearance for the ball joint press tool.

NOTE: Extreme pressure lubrication must be used on the threaded portions of the tool. This will increase the longevity of the tool and insure proper operation during the removal and installation process .

8. Remove the ball joint (4) from the upper control arm (3) using Ball Joint Press C-4212F (1), Ball Joint Remover 9770-1(2) and Ball Joint Remover 9770-2 (5).

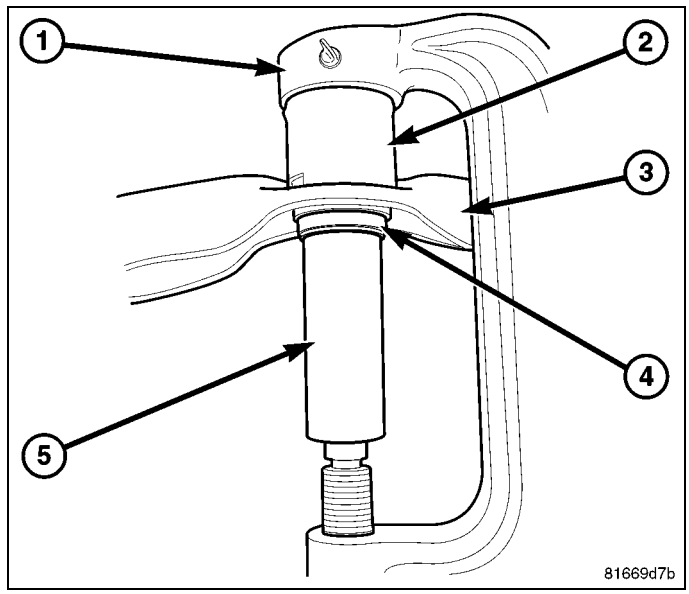

Installation

NOTE: Extreme pressure lubrication must be used on the threaded portions of the tool. This will increase the longevity of the tool and insure proper operation during the removal and installation process .

1. Install the ball joint (3) into the upper control arm (4) and press in using Ball Joint Press C-4212F (1), Ball Joint Installer 9652 (2) and Installer 8445-1 (5).

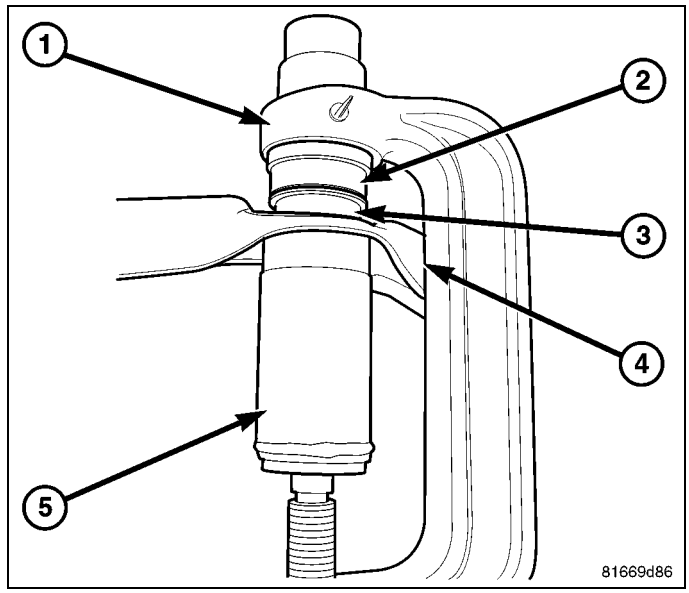

2. Install the upper ball joint into the knuckle.
3. Install the upper ball joint retaining nut and tighten to specifications (Refer to 02 - Front Suspension/Front - Specifications).
4. Install the wheel speed sensor wire to the upper control arm.
5. Install the tire and wheel.
6. Remove the supports and lower the vehicle.
7. Perform a wheel alignment (Refer to 02 - Front Suspension/Wheel Alignment - Standard Procedure).

HUB AND BEARING

Removal

4X2

1. Raise and support the vehicle.
2. Remove the wheel and tire assembly.

3. Remove the brake caliper and rotor, (Refer to 05 - Brakes/Hydraulic/Mechanical/ROTOR, Brake - Removal).
4. Remove the ABS wheel speed sensor if equipped (4), (Refer to 05 - Brakes/Electrical/SENSOR, Wheel Speed - Removal)
5. Remove the three hub/bearing mounting bolts (5) from the steering knuckle (3).
6. Slide the hub/bearing (1) out of the steering knuckle (3).
7. Remove the brake dust shield (2).

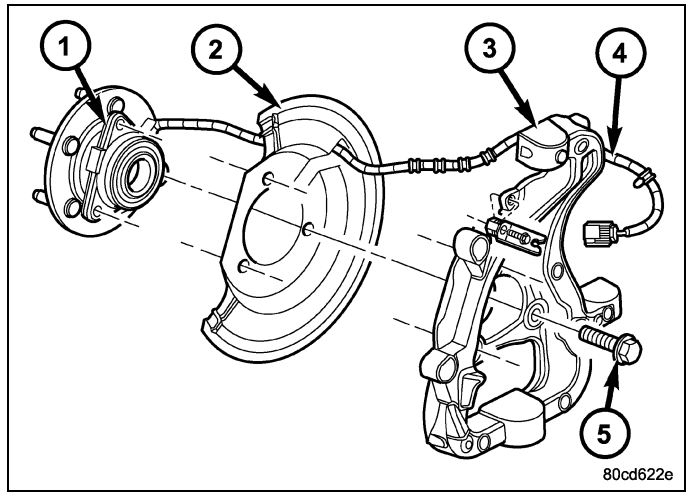

4X4

1. Raise and support the vehicle.
2. Remove the wheel and tire assembly.
3. Remove the brake caliper and rotor (Refer to 05 - Brakes/Hydraulic/Mechanical/ROTOR, Brake - Removal).
4. Remove the ABS wheel speed sensor if equipped, (Refer to 05 - Brakes/Electrical/SENSOR, Wheel Speed - Removal).
5. Remove the halfshaft nut.

NOTE: Do not strike the knuckle with a hammer to remove the tie rod end or the ball joint. Damage to the steering knuckle will occur.

6. Remove the tie rod end nut and separate the tie rod from the knuckle using Ball Joint Remover 9360.
7. Remove the upper ball joint nut and separate the upper ball joint from the knuckle using Ball Joint Remover 9360.
8. Pull down on the steering knuckle to separate the halfshaft (2) from the hub/bearing.
9. Remove the three hub/bearing mounting bolts (1) from the steering knuckle.
10. Slide the hub/bearing out of the steering knuckle.
11. Remove the brake dust shield.

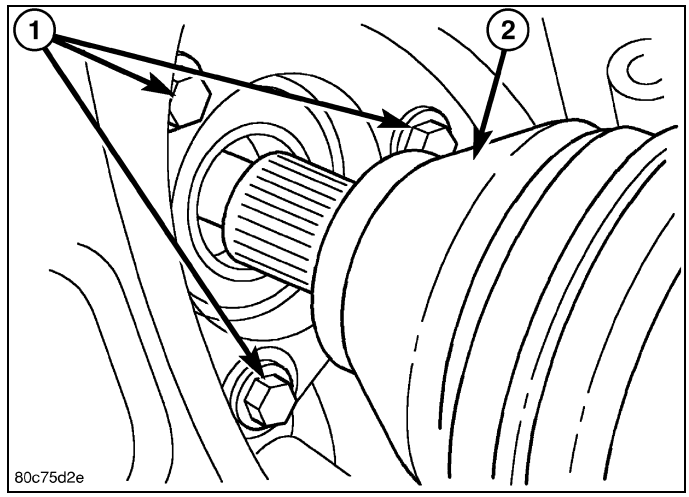

Installation

4X2

1. Install the brake dust shield (2).
2. Install the hub/bearing (1) into the steering knuckle (3) and tighten the bolts (5) to specifications (Refer to 02 - Front Suspension/Front - Specifications).
3. Install the brake rotor and caliper, (Refer to 05 - Brakes/Hydraulic/Mechanical/ROTOR, Brake - Installation).
4. Install the ABS wheel speed sensor (4) if equipped, (Refer to 05 - Brakes/Electrical/SENSOR, Wheel Speed - Installation).

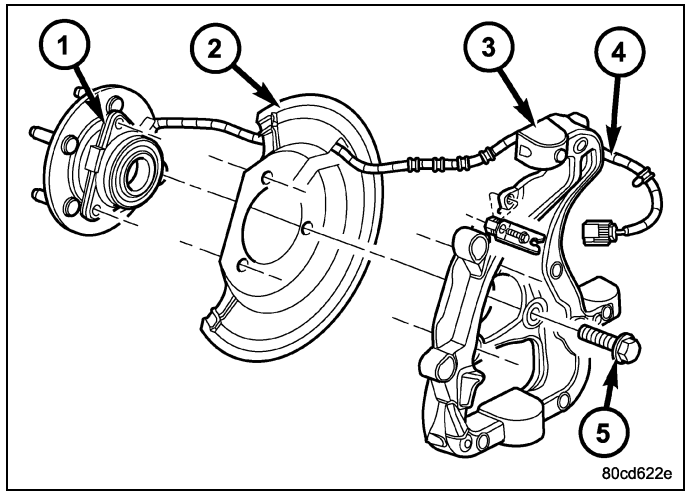

5. Install the wheel and tire assembly, (Refer to 22 - Tires and Wheels/Wheels - Standard Procedure).
6. Remove the support and lower vehicle.

4X4

1. Install the brake dust shield (2).
2. Install the hub/bearing (1) into the steering knuckle (3) and tighten the bolts to specifications (Refer to 02 - Front Suspension/Front - Specifications).

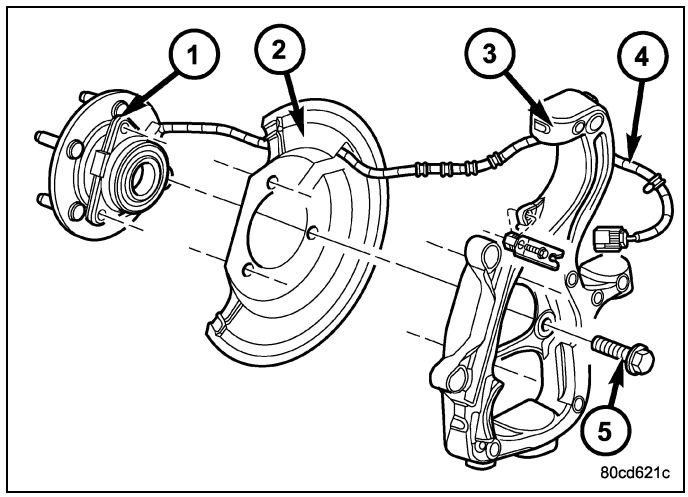

3. Install the brake rotor and caliper (Refer to 05 - Brakes/Hydraulic/Mechanical/ROTOR, Brake - Installation).
4. Install the ABS wheel speed sensor if equipped (Refer to 05 - Brakes/Electrical/SENSOR, Wheel Speed - Installation).
5. Install the upper ball joint nut to the steering knuckle and tighten to specifications (Refer to 02 - Front Suspension/Front - Specifications).
6. Install the tie rod end nut to the steering knuckle and tighten to specifications (Refer to 02 - Front Suspension/Front - Specifications).
7. Install the halfshaft nut and tighten to specifications (Refer to 02 - Front Suspension/Front - Specifications).
8. Install the wheel and tire assembly (Refer to 22 - Tires and Wheels/Wheels - Standard Procedure).
9. Remove the support and lower vehicle.

KNUCKLE, Steering

Description

The knuckle (1) is a single casting with legs machined for the upper and lower ball joints. The knuckle also has machined mounting locations for the front brake calipers and hub bearing.

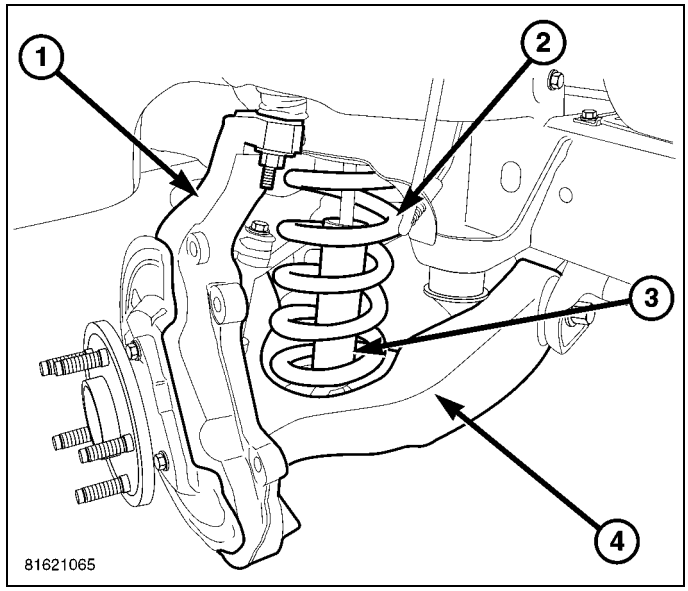

Operation

The steering knuckle pivot between the upper and lower ball joint. Steering linkage attached to the knuckle allows the vehicle to be steered.

Removal

1. Raise and support the vehicle (Refer to 04 - Vehicle Quick Reference/Hoisting - Standard Procedure).
2. Remove the wheel and tire assembly.
3. Remove the ABS wheel speed sensor, disconnecting the electrical harness as necessary to remove knuckle(Refer to 05 - Brakes/Electrical/SENSOR, Wheel Speed - Removal).
4. Remove the tie rod end nut from the ball stud.
5. Separate the tie rod ball stud (1) from the knuckle with Ball Joint Remover 9360 (2).
6. Remove the halfshaft nut (4X4 only).

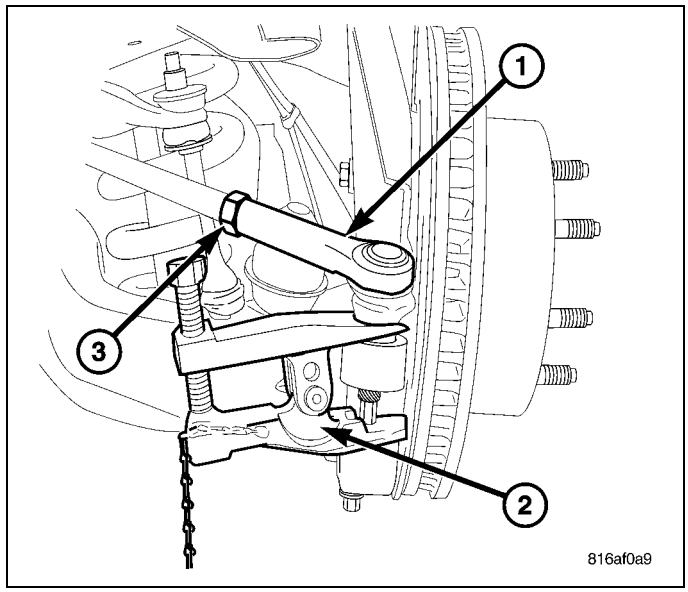

7. Remove the upper ball joint nut. Separate the ball joint (4) from the knuckle (6) with Ball Joint Remover 9360 (5)

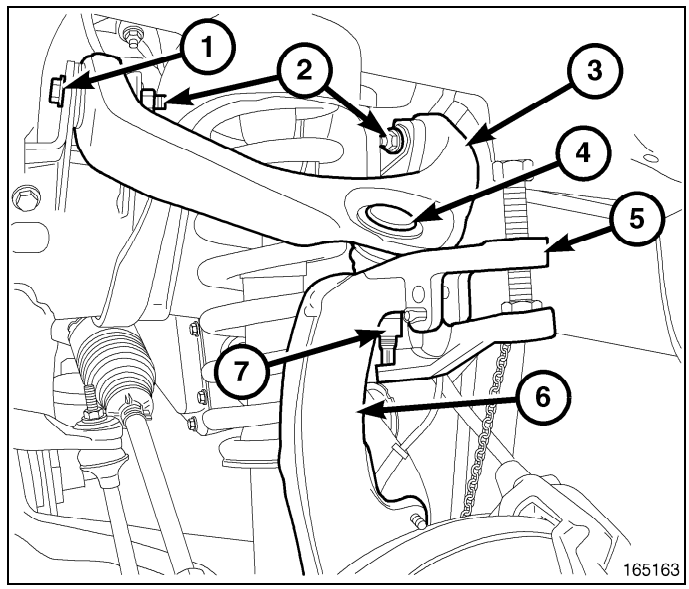

CAUTION: When installing puller 8677 **to separate the ball joint, be careful not to damage the ball joint seal.**

8. Support the outboard side of the lower control arm to support vehicle weight.
9. Remove the lower ball joint nut. Separate the ball joint from the knuckle with Ball Joint Remover 8677 (2).

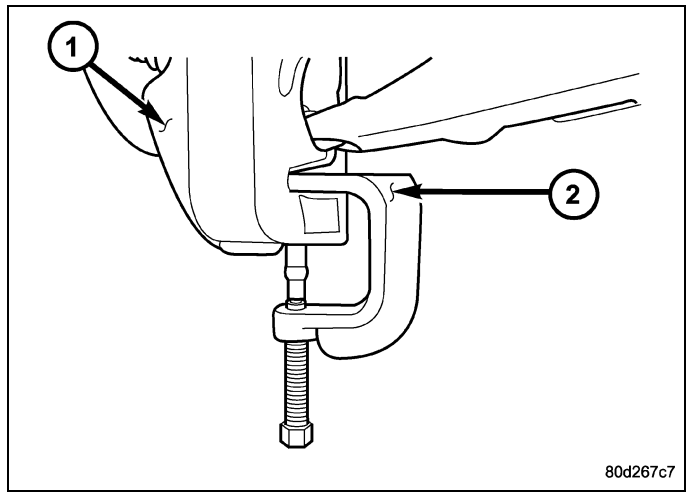

10. Remove the steering knuckle (1) from the vehicle.
11. If required, remove the hub/bearing and dust shield from the knuckle (1).
    a. Remove the three hub/bearing mounting bolts from the steering knuckle (1).
    b. Slide the hub/bearing out of the steering knuckle (1).
    c. Remove the brake dust shield.

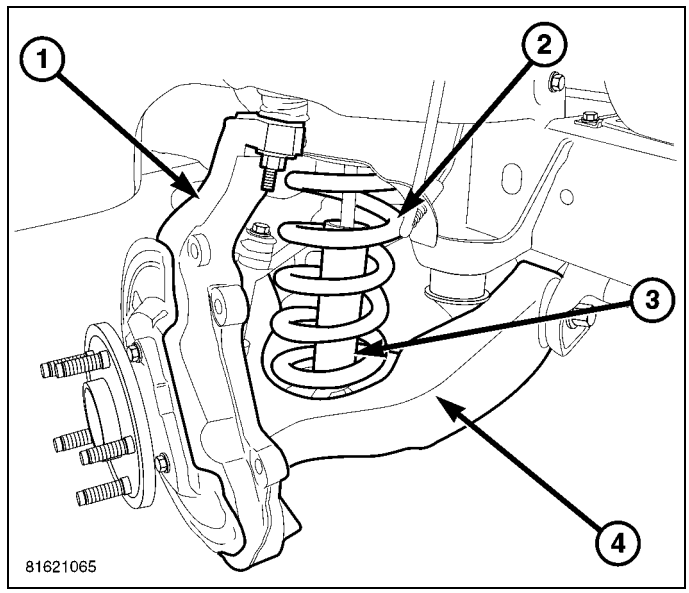

Installation

CAUTION: The ball joint stud tapers must be CLEAN and DRY before installing the knuckle. Clean the stud tapers with mineral spirits to remove dirt and grease.

NOTE: When installing hub/bearing with ABS brakes, position the speed sensor opening towards the front of the vehicle.

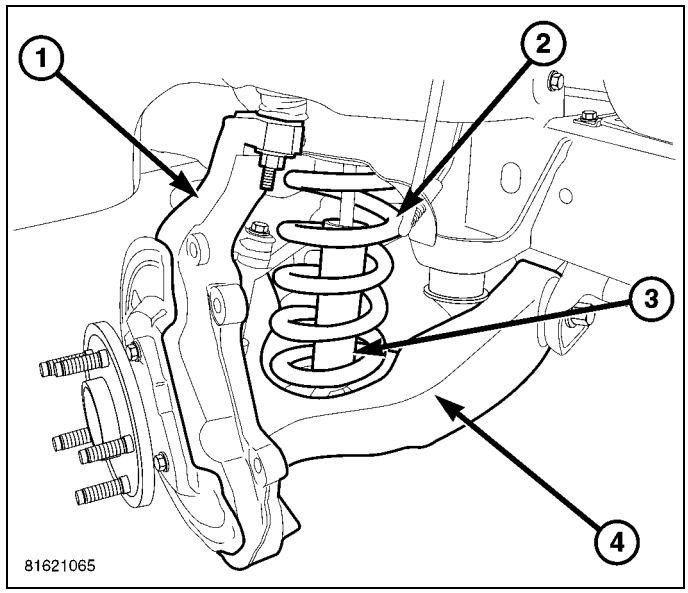

1. Install the brake dust shield and hub/bearing to the steering knuckle (1) and tighten the 3 bolts to specifications (Refer to 02 - Front Suspension/Front - Specifications).
2. Install the knuckle (1) onto the upper and lower ball joints.
3. Install the upper and lower ball joint nuts and tighten to specifications (Refer to 02 - Front Suspension/Front - Specifications).
4. Remove the hydraulic jack from the lower control arm (4).
5. Install the tie rod end and tighten the nut to specifications (Refer to 02 - Front Suspension/Front - Specifications).
6. Install the front halfshaft into the hub/bearing (if equipped).
7. Install the halfshaft nut (if equipped) and tighten to specifications (Refer to 02 - Front Suspension/Front - Specifications).
8. Install the ABS wheel speed sensor (if equipped) (Refer to 05 - Brakes/Electrical/SENSOR, Wheel Speed - Installation) and brake shield, rotor and caliper (Refer to 05 - Brakes/Hydraulic/Mechanical/ROTOR, Brake - Installation).
9. Install the wheel and tire assembly (Refer to 22 - Tires and Wheels/Wheels - Standard Procedure).
10. Remove the support and lower the vehicle.
11. Perform a wheel alignment (Refer to 02 - Front Suspension/Wheel Alignment - Standard Procedure).

LINK, Stabilizer Bar

Removal

4X2

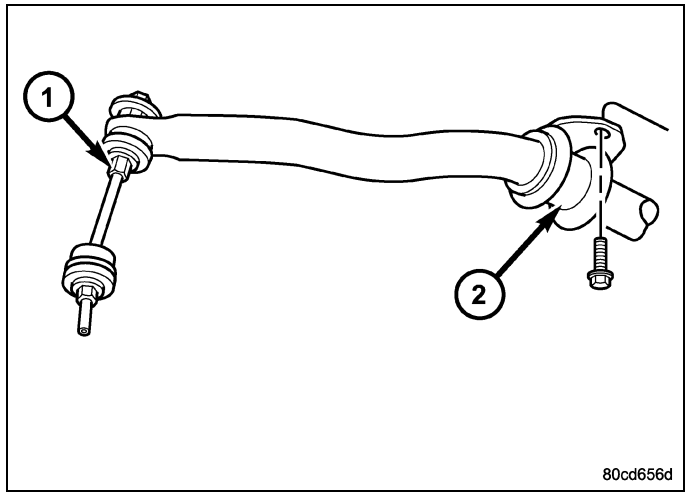

1. Raise and support the vehicle.
2. Remove the lower nut .
3. Remove the upper nut, retainer and grommets .
4. Remove the stabilizer link (1) from the vehicle .

4X4

NOTE: It may be necessary to remove the other stablizer link upper nut (4) in order to remove the link (5) being worked on from the vehicle.

1. Raise and support the vehicle.
2. Remove the lower nut (6).
3. Remove the upper nut, retainers and grommets (4).
4. Remove the stabilizer link (5) from the vehicle.

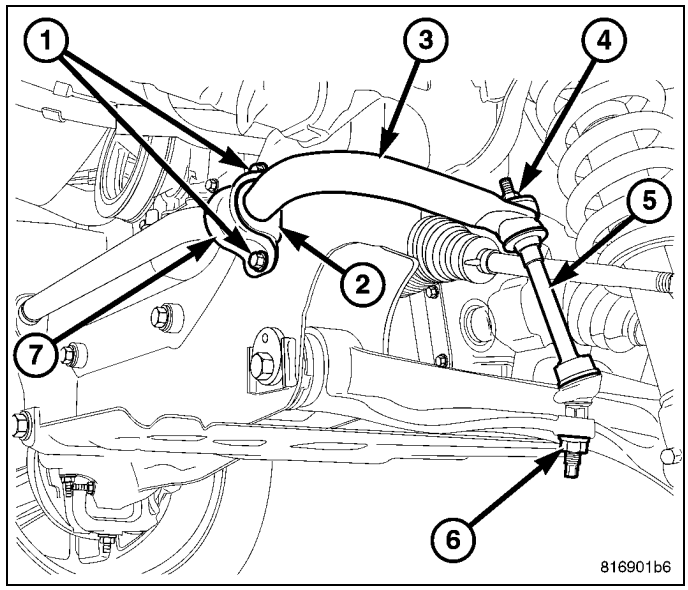

Installation

4X2

1. Install the stabilizer link (1) to the vehicle .
2. Install the lower nut and Tighten to 102 N·m (75 ft. lbs.).
3. Install the retainers, grommets and upper nut and Tighten to 27 N·m (20 ft. lbs.).
4. Remove the support and lower the vehicle.

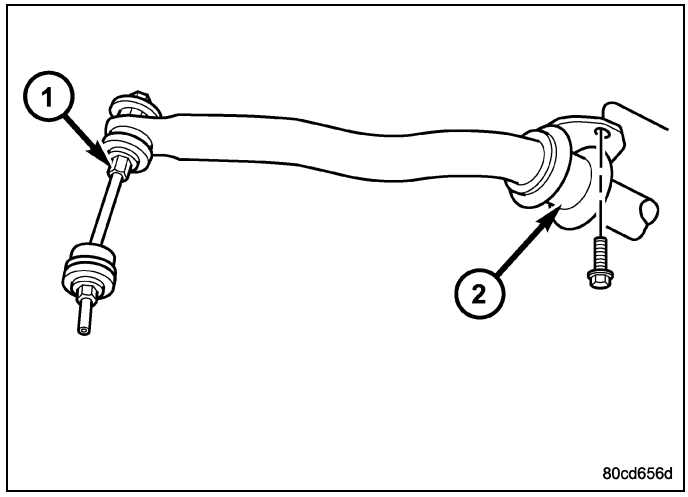

4X4

1. Install the stabilizer link (5) to the vehicle.
2. Install the lower nut (6) and Tighten to 102 N·m (75 ft. lbs.).
3. Install the retainers, grommets and upper nut (4) and Tighten to 27 N·m (20 ft. lbs.).
4. Remove the support and lower the vehicle.

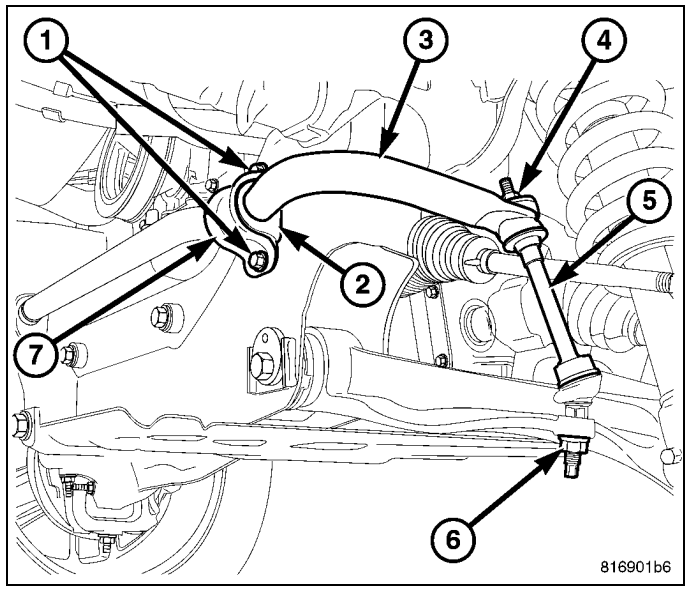

SHOCK ABSORBER, Suspension

Diagnosis and Testing

A knocking or rattling noise from a shock absorber may be caused by movement between mounting bushings and metal brackets or attaching components. These noises can usually be stopped by tightening the attaching nuts. If the noise persists, inspect for damaged and worn bushings, and attaching components. Repair as necessary if any of these conditions exist.

WARNING: The shock absorbers are under high pressure. Do Not heat or attempt to open the shock absorbers.

A squeal noise from the shock absorber may be caused by the hydraulic valving and may be intermittent. This condition is not repairable and the shock absorber must be replaced.
A squeak or creak noise coming from the shock area may be related to any of the suspension components or mounts, but not necessarily the shock.

NOTE: When inspecting the shock absorber, do not clamp the body or the piston rod.

NOTE: Monotube shock absorber compression forces will be much higher than standard shock absorbers.

The shock absorbers are not refillable or adjustable. If a malfunction occurs, the shock absorber must be replaced. To check a shock absorber, grasp the tube and invert the shock so the piston rod touches the ground, then compress the shock four or five times. The action throughout each stroke should be smooth and even, and the piston rod should extend from the shock on its own.

The shock absorber bushings do not require any type of lubrication. Do not attempt to stop bushing noise by lubricating them. Grease and mineral oil-base lubricants will deteriorate the bushing.

Removal

4X2

1. Raise and support vehicle.
2. Support the lower control arm outboard end.

3. Remove the upper shock absorber nut by using Strut Nut Wrench 9362 (1), retainer and grommet (2). If necessary, insert 11/32 socket though Wrench onto hex located on end of shock shaft to prevent shaft from turning.
4. Remove the lower bolts and remove the shock absorber.

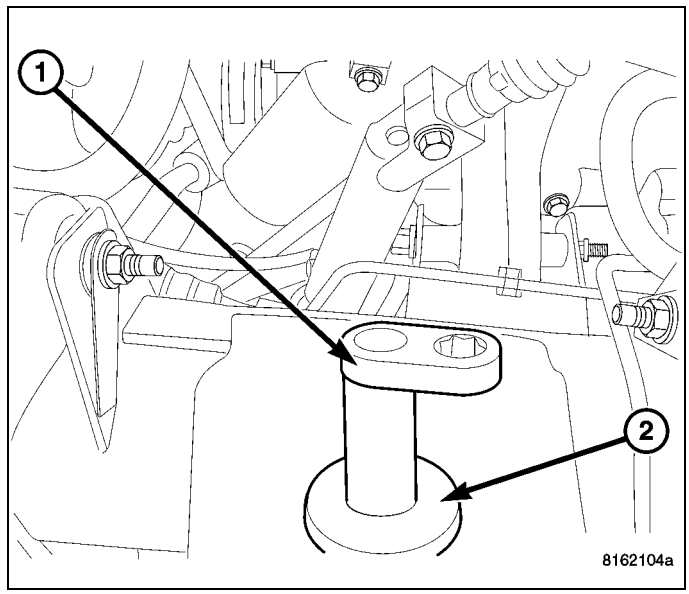

4X4-COIL OVER

1. Raise and support the vehicle, (Refer to 04 - Vehicle Quick Reference/Hoisting - Standard Procedure).
2. Remove the tire and wheel assembly.
3. Support the lower control arm outboard end.
4. Remove the three upper shock nuts (1).

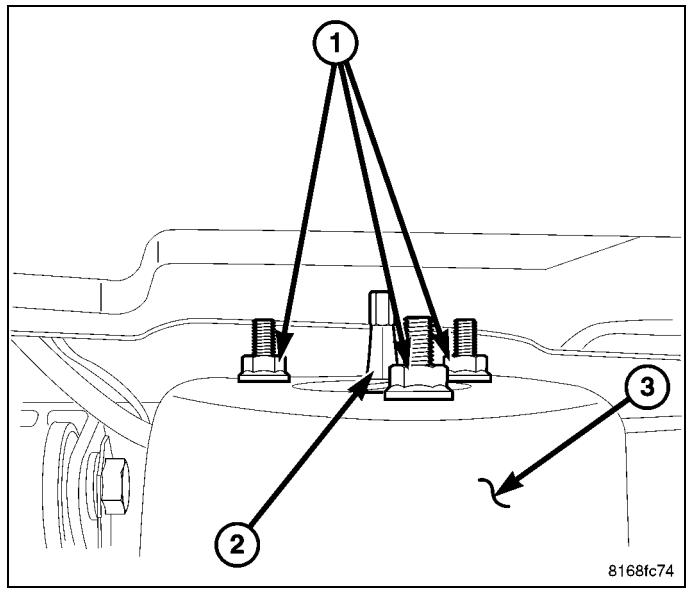

5. Remove the lower shock bolt (6) and nut.

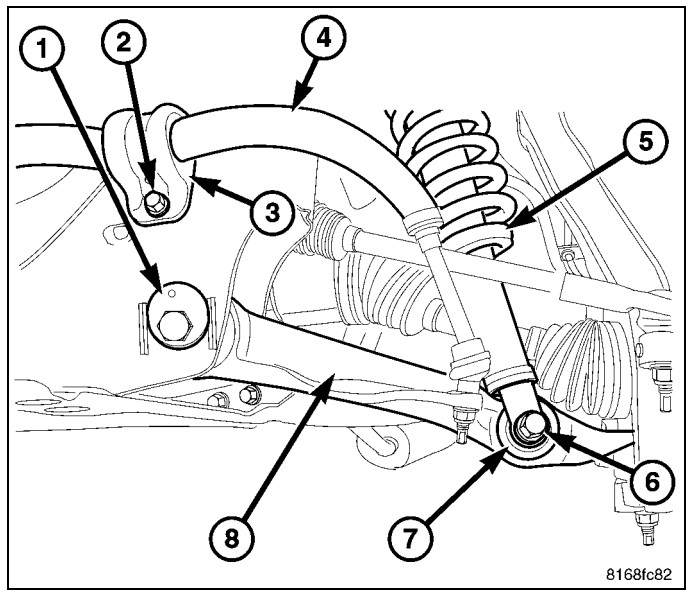

6. Remove the caliper adapter with the caliper (Refer to 05 - Brakes/Hydraulic/Mechanical/ADAPTER, Disc Brake Caliper - Removal).
7. Remove the rotor (Refer to 05 - Brakes/Hydraulic/Mechanical/ROTOR, Brake - Removal).
8. Disconnect the wheel speed sensor wiring from the knuckle and upper control arm.
9. Remove the upper ball joint retaining nut and separate the upper ball joint (4) from the knuckle (6) using Ball Joint Remover 9360 (5).

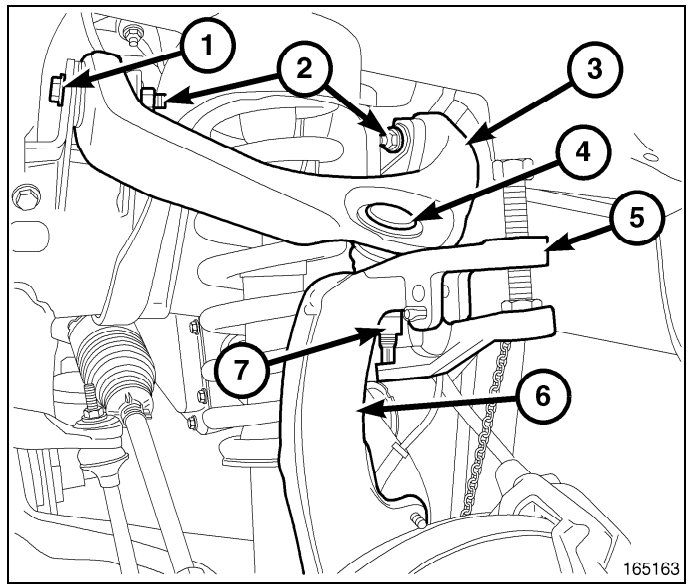

10. Remove the stabilizer link lower nut (2).
11. Remove the axle hub nut.
12. Remove the shock assembly (1).

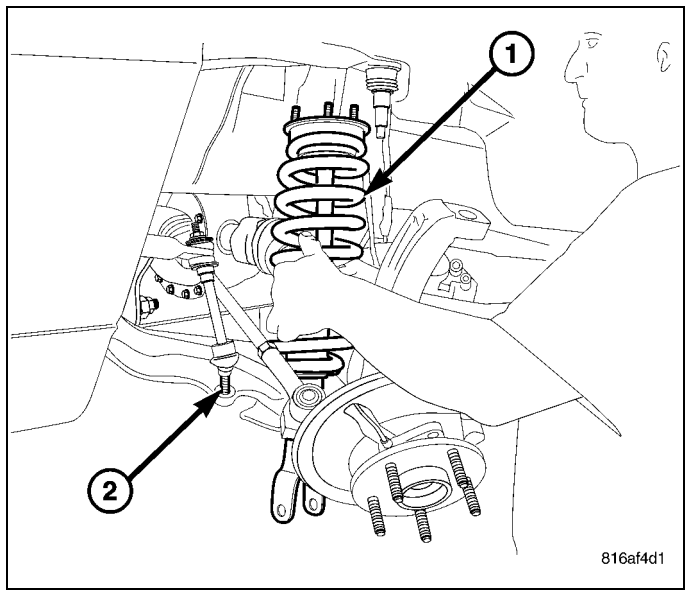

Installation

4X2

NOTE: Upper shock nut must be replaced or use Mopar Lock 'N Seal or Loctite® 242 on existing nut.

1. Install the lower retainer and grommet on the shock absorber stud. Insert the shock absorber through the frame bracket hole.
2. Install the lower bolts and tighten the bolts to specifications (Refer to 02 - Front Suspension/Front - Specifications).
3. Install the upper grommet, retainer (2) and new nut or use Mopar Lock 'N Seal or Loctite® 242 on existing nut, on the shock absorber stud. Using Strut Nut Wrench 9362 (1), tighten nut to specifications (Refer to 02 - Front Suspension/Front - Specifications).
4. Remove the support from the lower control arm outboard end.
5. Remove the support and lower the vehicle.

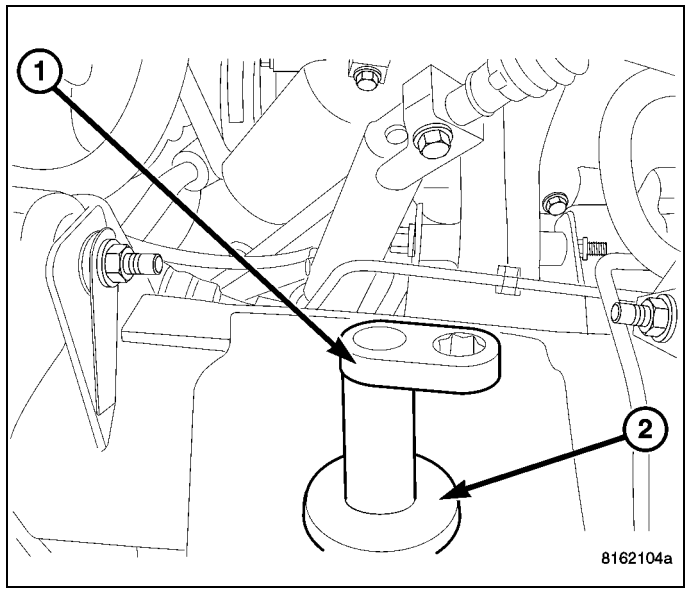

4X4-COIL OVER

NOTE: All suspension components should be tighten with the weight of the vehicle on them (curb height).

1. Install the shock (1) back in place in the vehicle.

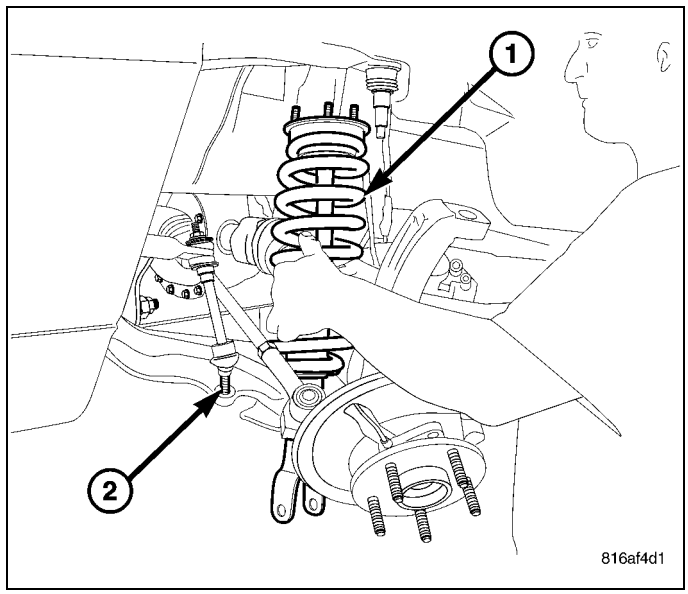

2. Install the upper part of the shock (2) into the frame bracket (3).
3. Install the upper nuts (1) and tighten to specifications (Refer to 02 - Front Suspension/Front - Specifications).

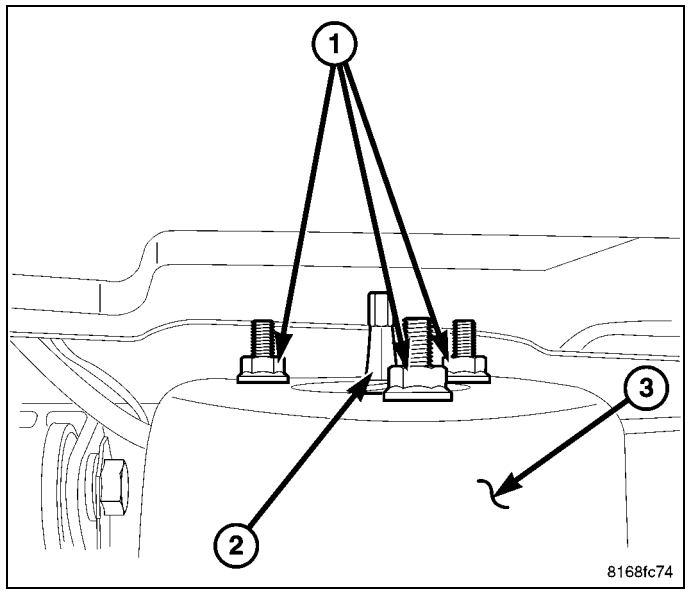

4. Install the lower part of the shock (5) into the lower control arm shock bushing (7).
5. Install and position bolt (6) so head of bolt is facing rearward of vehicle and hand start nut. Tighten the bolt (6) and nut to specifications (Refer to 02 - Front Suspension/Front - Specifications).
6. Install the upper ball joint to the knuckle and install the retaining nut and tighten to specifications (Refer to 02 - Front Suspension/Front - Specifications).
7. Install the axle hub nut and tighten to specifications (Refer to 02 - Front Suspension/Front - Specifications).
8. Install the stabilizer link lower nut and tighten to specifications (Refer to 02 - Front Suspension/Front - Specifications).

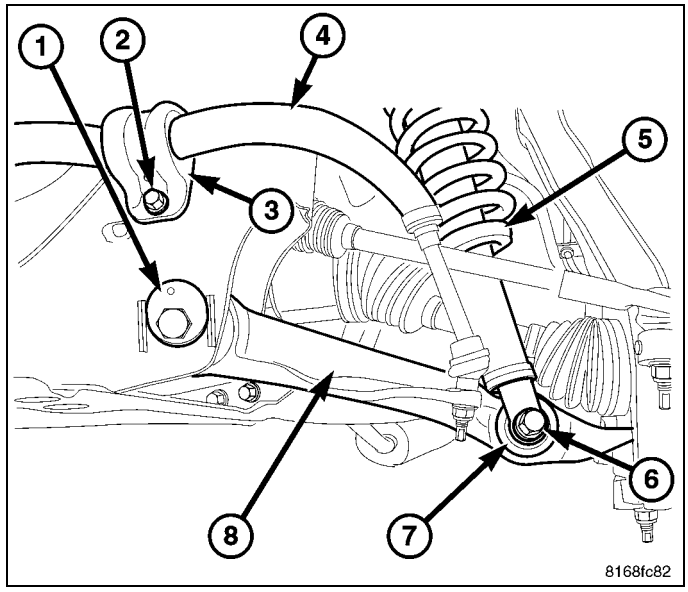

9. Reconnect the wheel speed sensor wiring to the knuckle and upper control arm.
10. Install the rotor (Refer to 05 - Brakes/Hydraulic/Mechanical/ROTOR, Brake - Installation).
11. Install the caliper adapter with the caliper (Refer to 05 - Brakes/Hydraulic/Mechanical/ADAPTER, Disc Brake Caliper - Installation).
12. Remove the support from the lower control arm outboard end.
13. Install the tire and wheel assembly (Refer to 22 - Tires and Wheels/Wheels - Standard Procedure).
14. Remove the support and lower the vehicle.

SPRING, Front Coil

Removal

4X2

1. Raise and support vehicle, (Refer to 04 - Vehicle Quick Reference/Hoisting - Standard Procedure).
2. Remove the front wheel and tire assembly.
3. Support the lower control arm (4) at the outboard side of the lower control arm to support vehicle weight.
4. Remove the shock absorber (5) (Refer to 02 - Front Suspension/Front/SHOCK ABSORBER, Suspension - Removal).

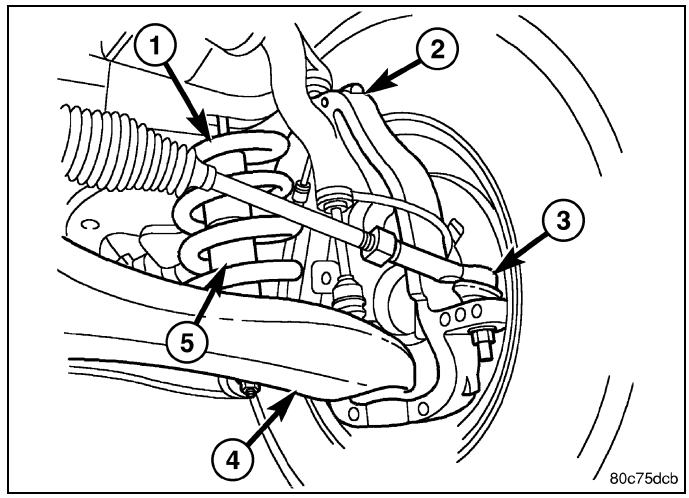

5. Install Front Spring Compressor DD-1278 (3) up through the lower suspension arm, coil spring and shock hole in the frame. The bell-shaped adapter (3) goes against the lower suspension arm. Install the nut on top of the tool at the shock hole.
6. Tighten the spring compressor nut against bell-shaped adapter finger tight then loosen 1/2 turn.

NOTE: This will hold the spring in place until the lower suspension arm is separated from the steering knuckle.

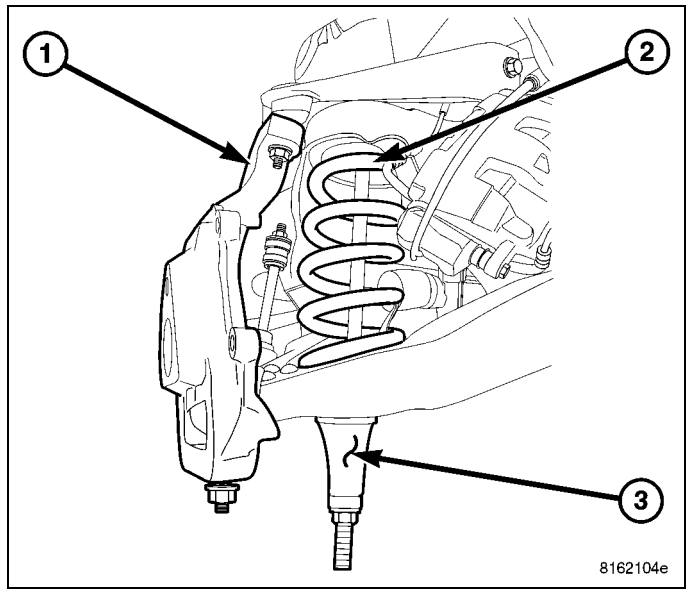

7. Remove the steering knuckle (Refer to 02 - Front Suspension/Front/KNUCKLE, Steering - Removal).
8. Remove the stabilizer link (Refer to 02 - Front Suspension/Front/LINK, Stabilizer Bar - Removal).
9. Remove the lower control arm support.
10. Tighten the spring compressor tool (2) to collapse the coil spring.

NOTE: It may necessary to loosen the control arm pivot bolt to allow downward swing.

11. Loosen the tension on the spring compressor tool (2) slowly allowing the lower suspension arm to pivot downward.
12. Remove the spring compressor tool (2).
13. Remove coil spring (1) and isolator pad from the vehicle.

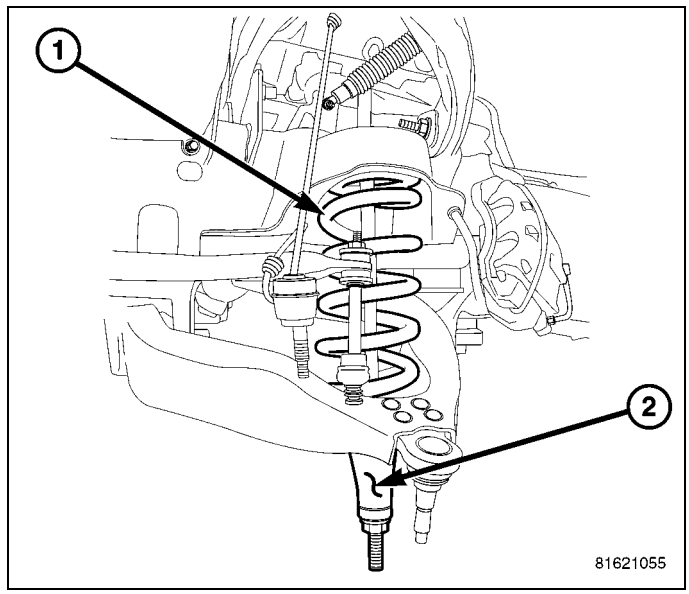

4X4-COIL OVER

1. Remove the shock (1)(Refer to 02 - Front Suspension/Front/SHOCK ABSORBER, Suspension - Removal).

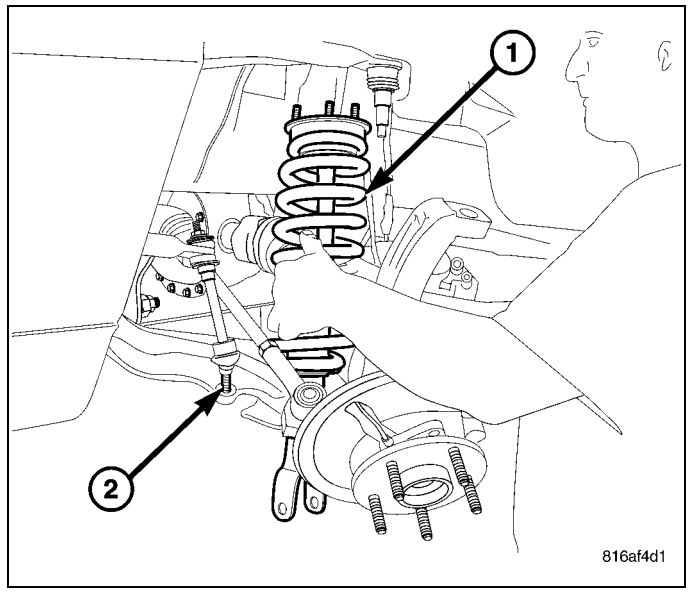

2. Install the shock assembly (3) in the Branick 7200® spring removal/installation tool or equivalent (1).
3. Compress the spring (2).

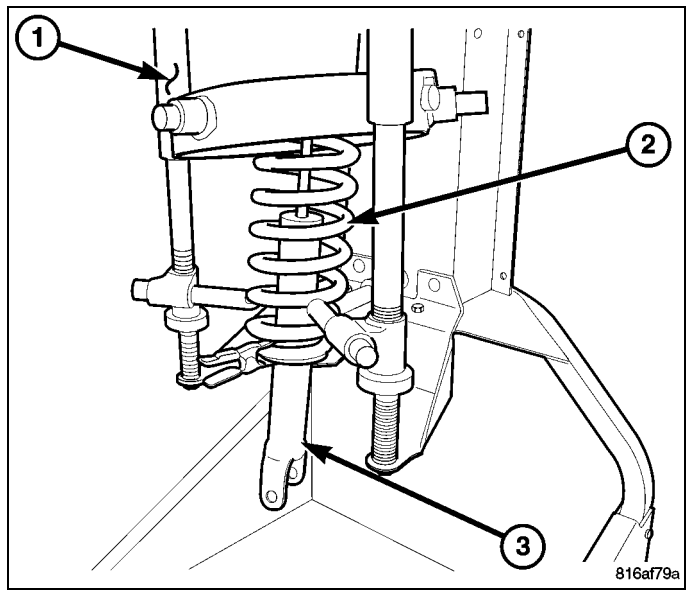

4. Position Strut Nut Wrench 9362 (1), on shock shaft retaining nut. Next, insert 8 mm socket though Wrench onto hex located on end of shock shaft. While holding shock shaft from turning, remove nut from shock shaft using Wrench (1).
5. Remove the upper shock nut.

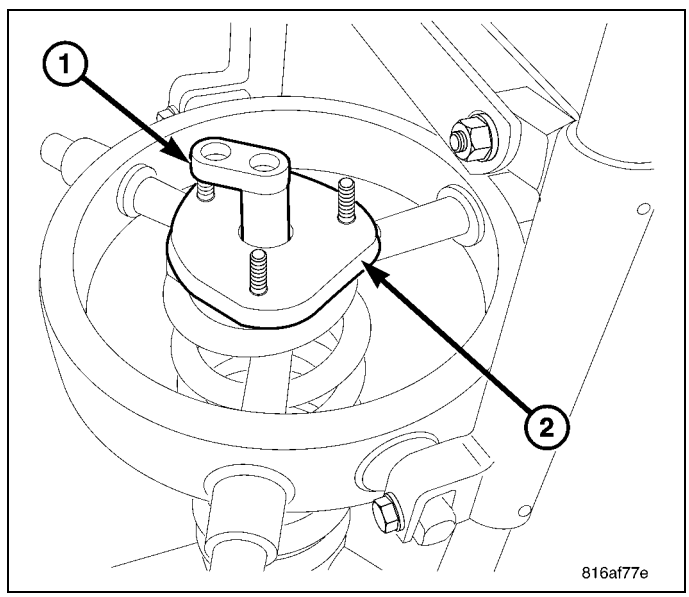

6. Remove the shock upper mounting plate.
7. Remove the dust cover.
8. Remove and inspect the upper spring isolator (2).
9. Remove the shock.

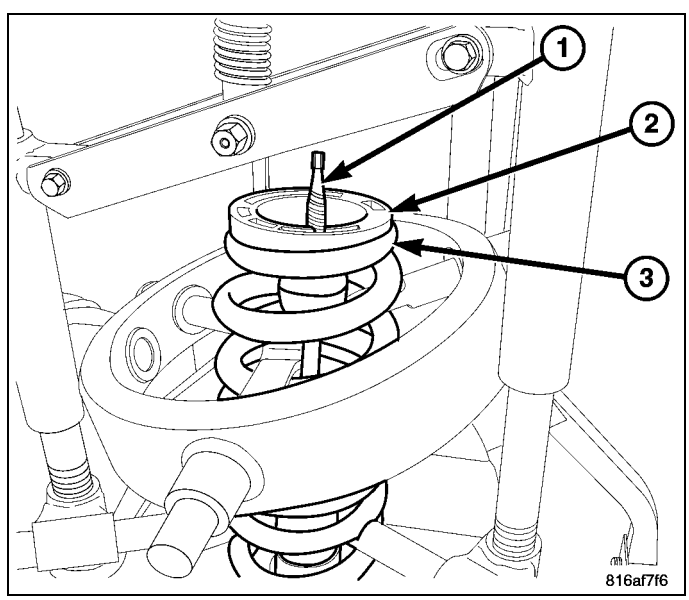

Installation

4X2

1. Tape the isolator pad to the top of the coil spring. Position the spring in the lower suspension arm well. Be sure that the coil spring is seated in the well.
2. Install Front Spring Compressor DD-1278 (2) up through the lower suspension arm, coil spring and shock hole in the frame.
3. Tighten the tool nut to compress the coil spring.

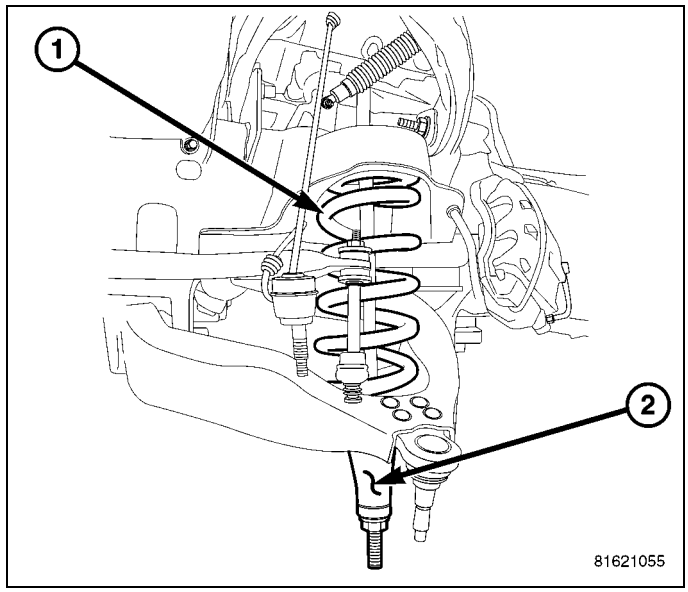

4. Install the steering knuckle (Refer to 02 - Front Suspension/Front/KNUCKLE, Steering - Installation).
5. Install the retaining nut on the upper ball joint and tighten to specifications (Refer to 02 - Front Suspension/Front - Specifications).
6. Remove the spring compressor tool.

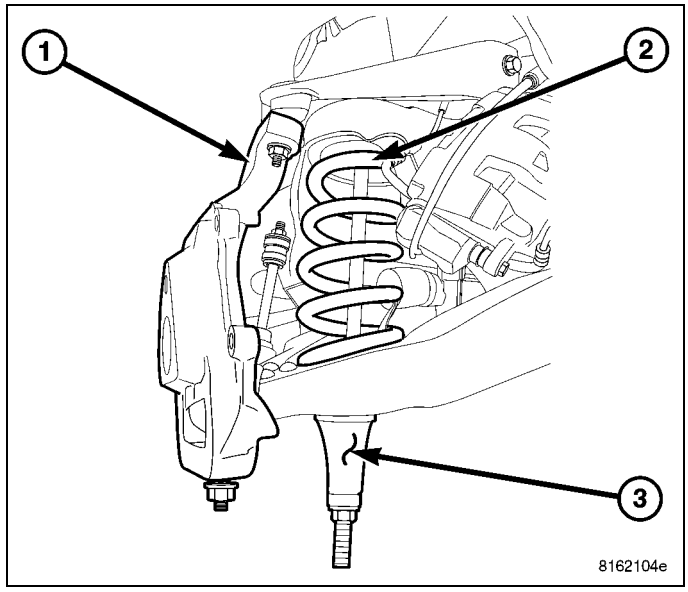

7. Support the lower control arm at the outboard side of the lower control arm to support vehicle weight.
8. Install the shock absorber (Refer to 02 - Front Suspension/Front/SHOCK ABSORBER, Suspension - Installation).
9. Install the stabilizer link (Refer to 02 - Front Suspension/Front/LINK, Stabilizer Bar - Installation).
10. Remove the lower control arm support.
11. Install the wheel and tire assembly (Refer to 22 - Tires and Wheels/Wheels - Standard Procedure).
12. remove the support and lower the vehicle to the floor with vehicle weight. Tighten the front and rear control arm frame pivot bolts if loosened to specifications (Refer to 02 - Front Suspension/Front - Specifications).
13. Perform a wheel alignment (Refer to 02 - Front Suspension/Wheel Alignment - Standard Procedure).

4X4-COIL OVER

1. Position the shock (1) into the coil spring (3).
2. Install the upper isolator (2).

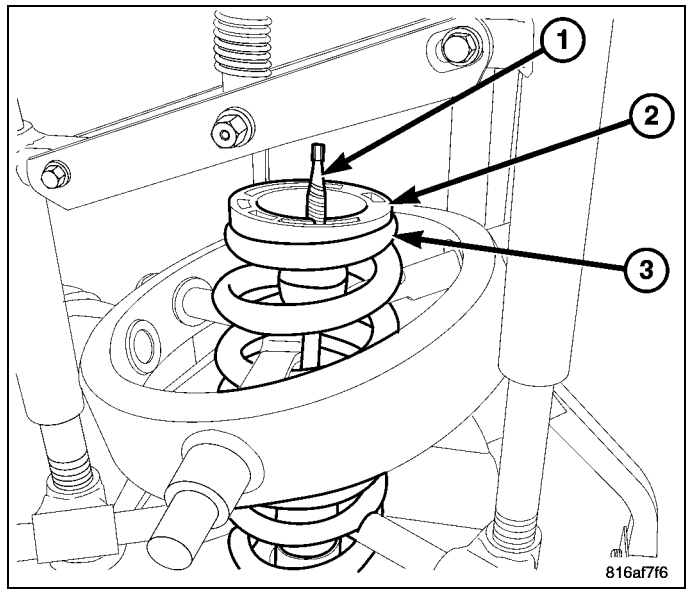

3. Install the dust cover.
4. Install the upper shock mounting plate (2).
5. Install the shock upper mounting nut.
6. Install Strut Nut Wrench 9362 (1) (on end of a torque wrench), on shock shaft retaining nut. Next, insert 8 mm socket though Wrench onto hex located on end of shock shaft. While holding shock shaft from turning, tighten nut to specifications (Refer to 02 - Front Suspension/Front - Specifications).

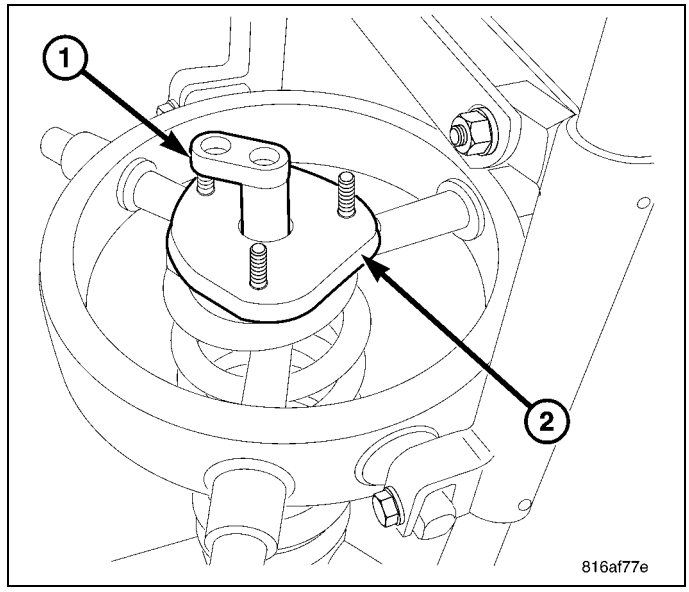

7. Decompress the spring (2).
8. Remove the shock assembly from the spring compressor tool (1).

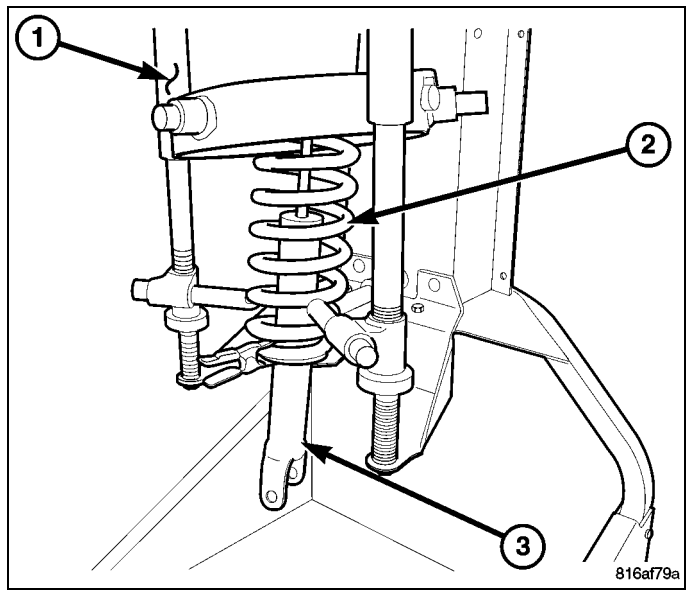

9. Install the shock assembly (1) (Refer to 02 - Front Suspension/Front/SHOCK ABSORBER, Suspension - Installation).

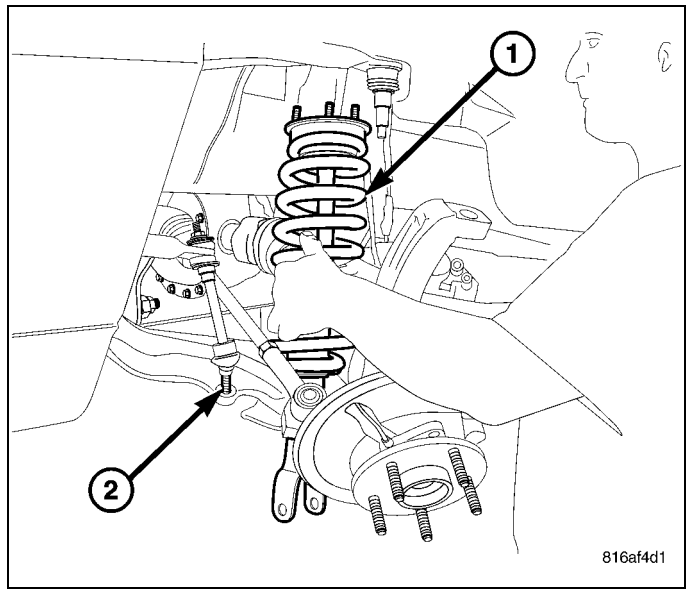

STABILIZER BAR, Front

Description

The stabilizer bar (4) extends across the front underside of the chassis and connects to the frame crossmember. The ends of the bar mount to the stabilizer links (2), The stabilizer links (2) are then connected to the lower control arms (5). All mounting points of the stabilizer bar (4) are isolated by bushings.

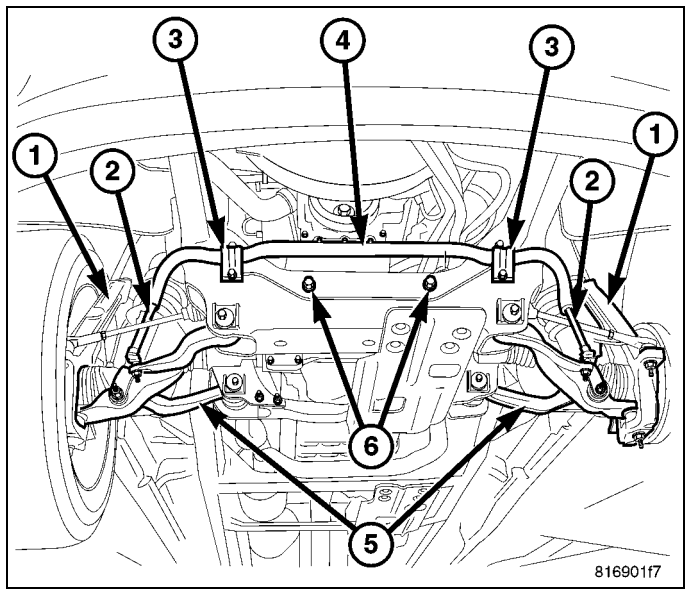

Operation

The stabilizer bar is used to minimize vehicle front sway during turns. The bar helps to maintain a flat attitude to the road surface.

Removal

NOTE: To service the stabilizer bar the vehicle should be on a drive on hoist. The vehicle suspension must be at curb height for stabilizer bar installation.

1. Remove the stabilizer bar link upper nuts and remove the retainers and grommets (4).
2. Remove the stabilizer bar mounting bolts (1) **and discard the mounting bolts**.
3. Remove the retainers (7) from the frame crossmember and remove the bar (3).
4. If necessary, remove the bushings (2) from the stabilizer bar (3), **Do not cut the old bushings off the stabilizer bar use a mixture of soapy water in order to aid in sliding the bushing off**.

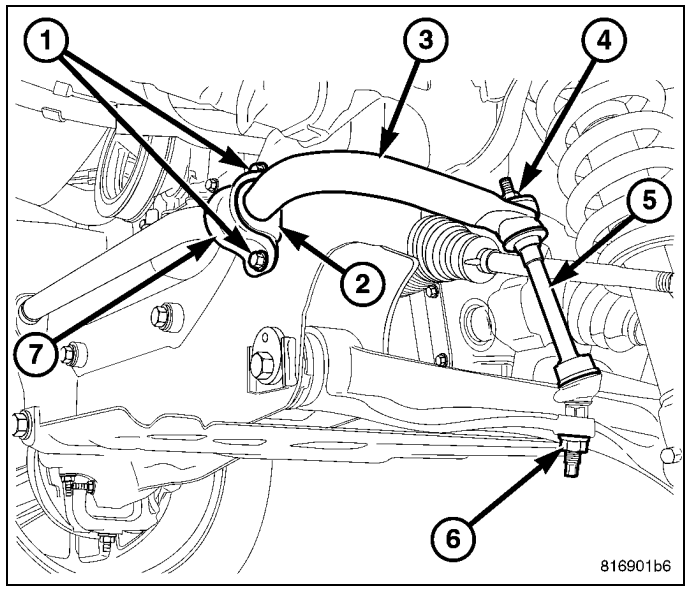

Installation

NOTE: To service the stabilizer bar the vehicle must be on a drive on hoist. The vehicle suspension must be at curb height for stabilizer bar installation.

1. If the bushings were removed, Clean the bar and install the bushings on the stabilizer bar using a mixture of soapy water or equivalent in order to slide the bushing over the bar with ease. **Do not cut the new bushing for installation.**

NOTE: Install new mounting bolts Do not reuse old bolts.

NOTE: Check the alignment of the bar to ensure there is no interference with the either frame rail or chassis component. Spacing should be equal on both sides.

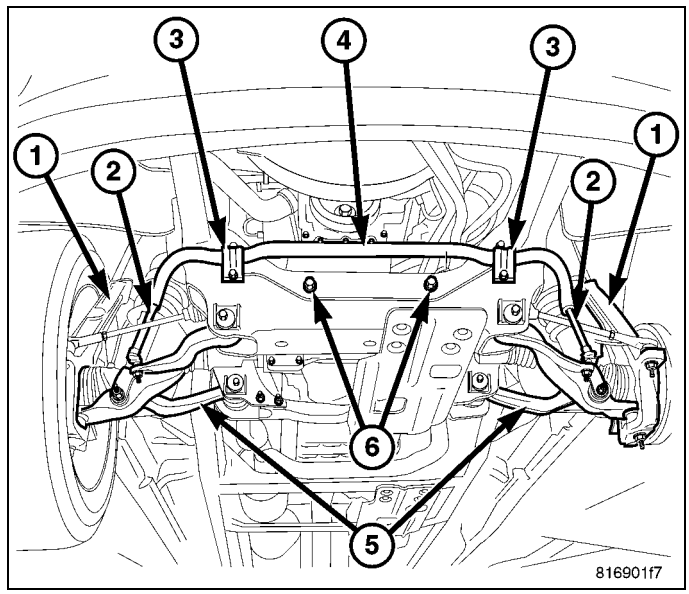

2. Position the stabilizer bar (4) on the frame crossmember brackets and install the bracket (3) bolts finger-tight.
3. Install the stabilizer bar (3) to the stabilizer link (5) and install the grommets and retainers.
4. Install the nuts (4) to the stabilizer link (3) and tighten to specifications (Refer to 02 - Front Suspension/Front - Specifications).
5. Tighten the brackets to the frame to specifications (Refer to 02 - Front Suspension/Front - Specifications).

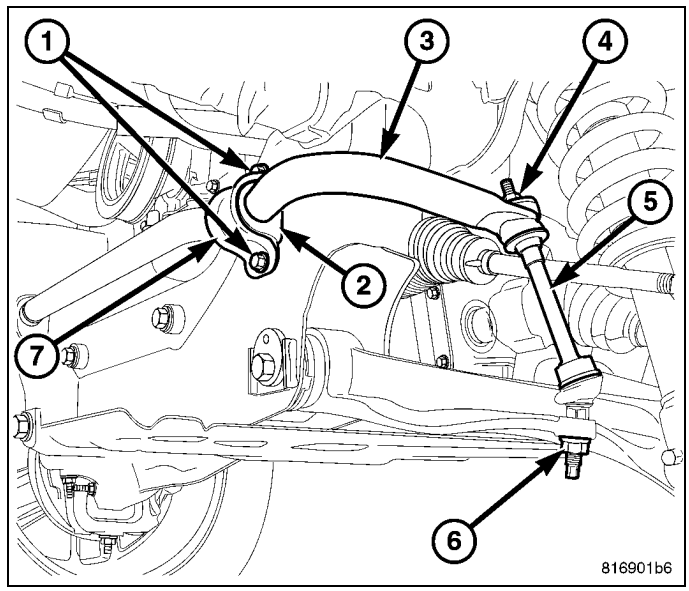

DIFFERENTIAL AND DRIVELINE

TABLE OF CONTENTS

page

DIFFERENTIAL AND DRIVELINE
- **PROPELLER SHAFT 3**
- **HALF SHAFT 35**
- **FRONT AXLE - C205FD 47**
- **REAR AXLE - 9 1/4. . . . . .141**

PROPELLER SHAFT

TABLE OF CONTENTS

page

PROPELLER SHAFT
- DIAGNOSIS AND TESTING 4
- STANDARD PROCEDURE
  - PROPELLER SHAFT ANGLE 6
  - LUBRICATION 9
- SPECIFICATIONS 9
- SPECIAL TOOLS 10
- **BEARING, DRIVE SHAFT CENTER, LIGHT DUTY**
  - REMOVAL 11
  - INSTALLATION 13
  - ADJUSTMENTS 14
- **SHAFT, DRIVE, FRONT LIGHT DUTY**
  - REMOVAL 14
  - INSTALLATION 15

page

- **SHAFT, DRIVE, REAR LIGHT DUTY**
  - REMOVAL 16
  - INSTALLATION 18
- **U-JOINT, DOUBLE CARDAN**
  - DISASSEMBLY 20
  - ASSEMBLY. 22
- **U-JOINT, SINGLE CARDAN**
  - DISASSEMBLY
    - WITH INJECTED RING 26
    - WITH SNAP RINGS 29
  - ASSEMBLY
    - WITH INJECTED RING 30
    - WITH SNAP RINGS 34

Propeller Shaft

Diagnosis and Testing

PROPELLER SHAFT VIBRATION

Out-of-round tires or wheels that are out of balance, will cause a low frequency vibration.

Driveline vibration can also be caused by loose or damaged engine mounts.

Propeller shaft vibration increases with vehicle speed. A vibration that occurs at a specific speed range, is not usually caused by an out of balance propeller shaft. Defective universal joints or an incorrect propeller shaft angle are usually the cause of such a vibration.

DRIVELINE VIBRATION

CONDITION	POSSIBLE CAUSE	CORRECTION
Propeller Shaft Noise	1) Undercoating or other foreign material on shaft.	1) Clean exterior of shaft and wash with solvent.
	2) Loose companion flange bolts.	2) Install new bolts and tighten to proper torque.
	3) Loose or bent U-joint yoke or excessive runout.	3) Install new yoke.
	4) Incorrect driveline angularity.	4) Measure and correct driveline angles.
	5) Rear spring center bolt not in seat.	5) Loosen spring U-bolts and seat center bolt.
	6) Worn U-joint bearings.	6) Install new U-joint.
	7) Propeller shaft damaged or out of balance.	7) Install new propeller shaft.
	8) Broken rear spring.	8) Install new rear spring.
	9) Excessive runout or unbalanced condition.	9) Re-index propeller shaft, test, and evaluate.
	10) Excessive drive pinion gear shaft runout.	10) Re-index propeller shaft and evaluate.
	11) Excessive axle yoke deflection.	11) Inspect and replace yoke if necessary.
	12) Excessive transfer case runout.	12) Inspect and repair as necessary.
Universal Joint Noise	1) Loose companion flange bolts.	1) Install new bolts and tighten to proper torque.
	2) Lack of lubrication.	2) Replace U-joints as necessary.

PROPELLER SHAFT BALANCE

If propeller shaft is suspected of being out of balance, use the following procedure.

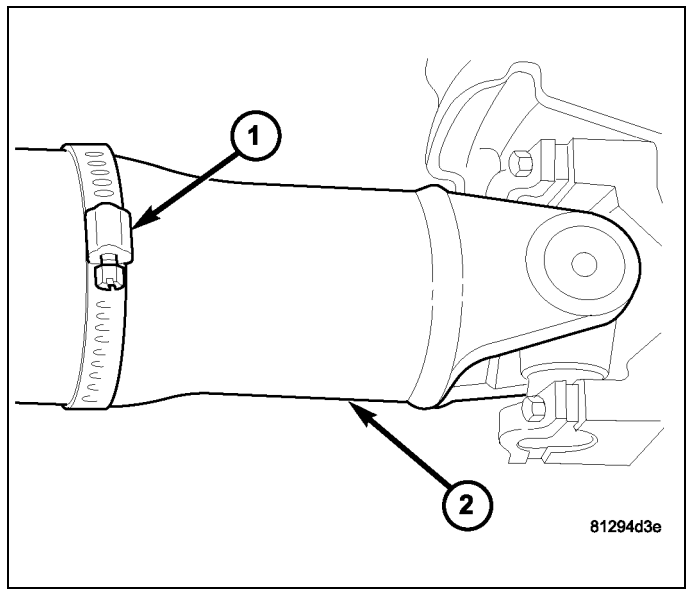

NOTE: Indexing propeller shaft 180 degrees relative to the yoke may eliminate some vibrations.

1. Raise and support vehicle.
2. Clean all foreign material from the propeller shaft and universal joints.
3. Inspect propeller shaft for missing balance weights, broken welds and bent areas. **If propeller shaft is bent, it must be replaced.**
4. Inspect universal joints for wear and properly installed.
5. Check propeller shaft bolt torques.
6. Remove wheels and install lug nuts to retain brake rotors.
7. Mark and number the shaft six inches from the pinion yoke end at four positions 90 degrees apart.
8. Run and accelerate vehicle until vibration occurs. Note the intensity and speed the vibration occurred. Stop the engine.
9. Install a screw clamp at position (1).
10. Start engine and check vibration. If there is little or no change move the clamp to the next positions. Repeat the vibration test.

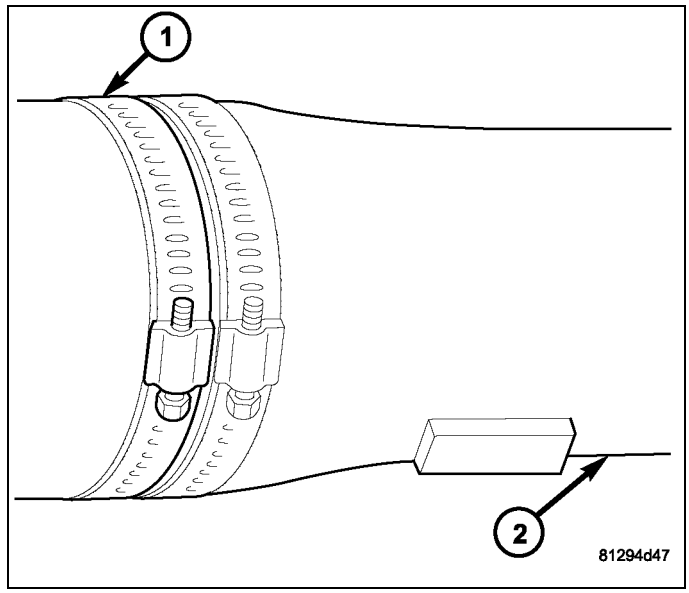

NOTE: If there is no difference in vibration at this positions, the vibration may not be the propeller shaft.

11. If vibration decreased, install a second clamp (1) and repeat the test.

12. If additional clamp causes an additional vibration, separate the clamps 1/2 inch (1) above and below the mark. Repeat the vibration test .
13. Increase distance between the clamp screws (1) (2) and repeat test, until the least amount of vibration is noticed. Bend the slack end of the clamps so screws will not loosen.
14. If vibration remains unacceptable, repeat the procedure to the front end of the propeller shaft.
15. Install wheels and lower vehicle.

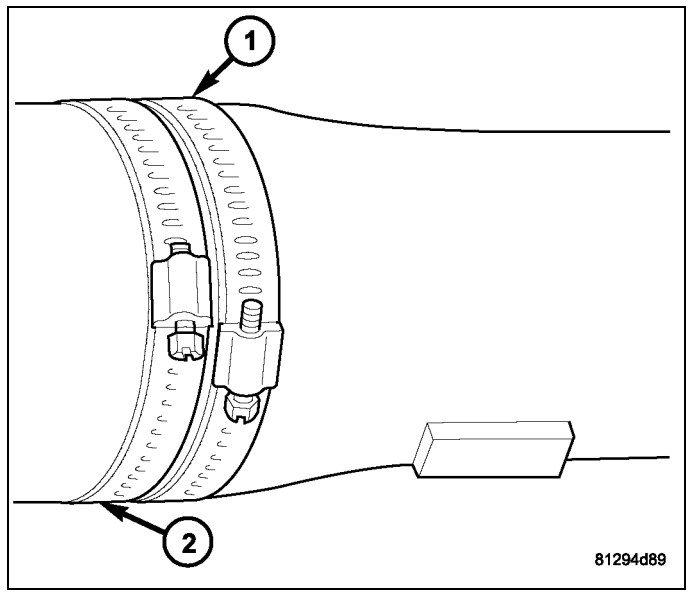

Standard Procedure

PROPELLER SHAFT ANGLE

ONE PIECE PROPELLER SHAFT

This procedure applies to front and rear propeller shafts.

NOTE: To obtain output angle (A) on the front propeller shaft equipped with a C/V joint, place inclinometer on machined surface of the C/V joint.

1. Raise vehicle and support the axles as level as possible, allowing the wheels and propeller shaft to turn.
2. Remove universal joint snap rings if equipped, so inclinometer base sits flat.
3. Rotate shaft until transmission/transfer case output yoke bearing is facing downward.

NOTE: Always take measurements from front to rear and on the same side of the vehicle.

4. Place Inclinometer 7663 on yoke bearing cap or pinion flange ring parallel to the shaft. Center bubble in sight glass and record measurement (A).

This measurement will give you the transmission yoke Output Angle (A).

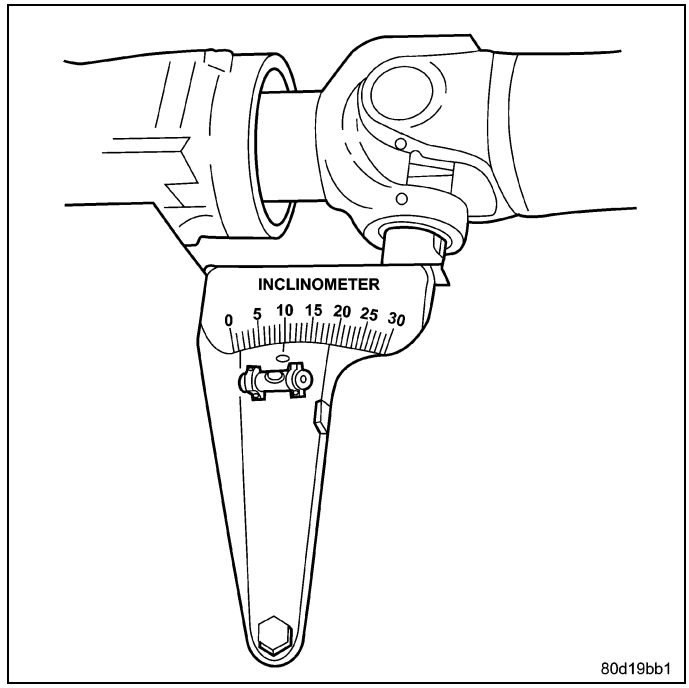

5. Rotate propeller shaft 90 degrees and place Inclinometer on yoke bearing parallel to the shaft. Center bubble in sight glass and record measurement. This measurement can also be taken at the rear end of the shaft.

This measurement will give you the Propeller Shaft Angle (C).

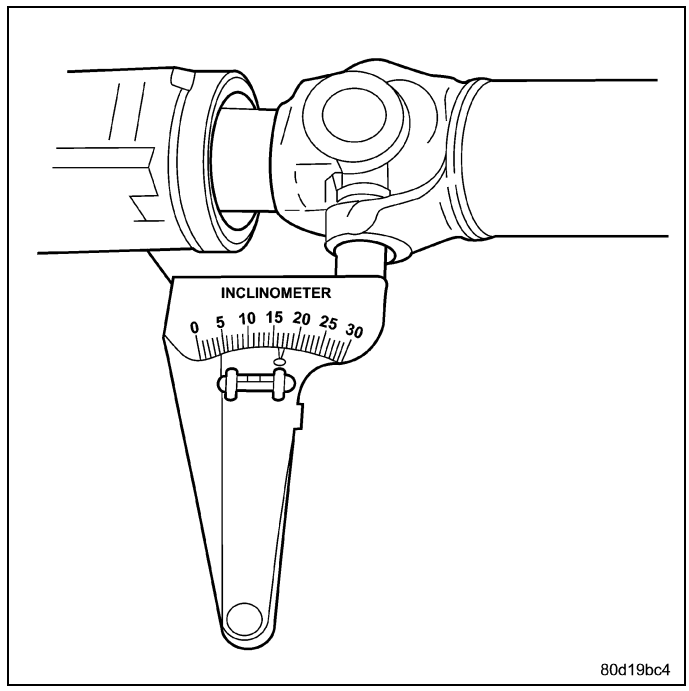

6. Rotate propeller shaft 90 degrees and place inclinometer on companion flange yoke bearing parallel to the shaft. Center bubble in sight glass and record measurement.

This measurement will give you the pinion Companion Flange Input Angle (B).

7. Subtract smaller figure from larger (C minus A) to obtain Transmission/Transfer Case **Output Operating Angle**.
8. Subtract smaller figure from larger (C minus B) to obtain axle **Input Operating Angle**.

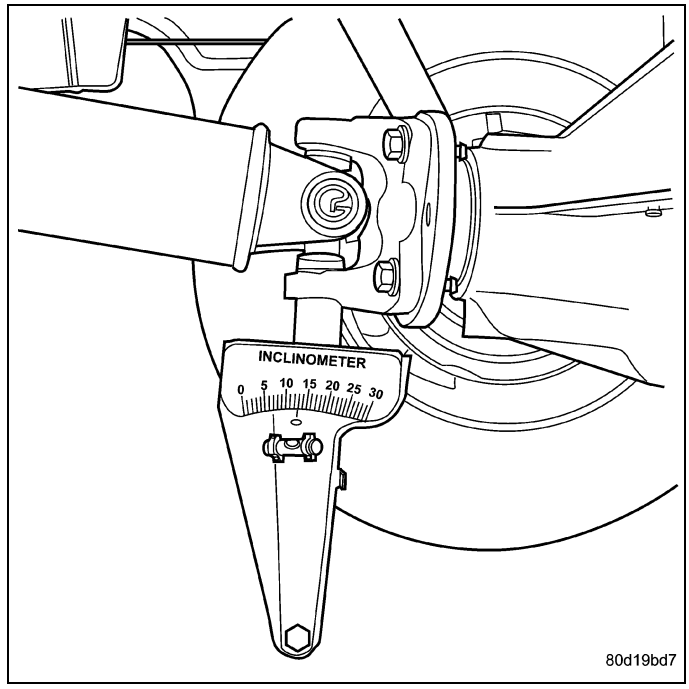

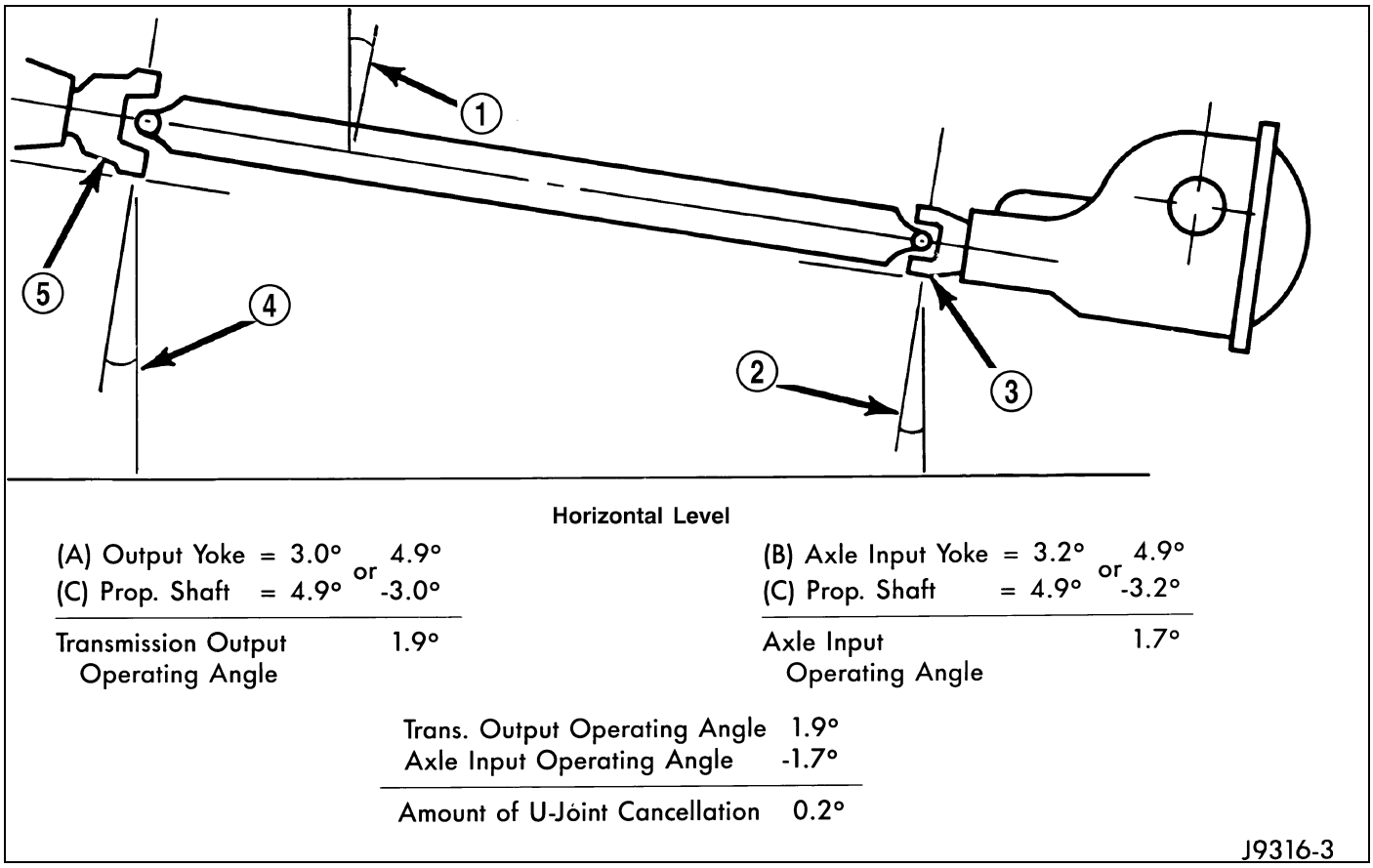

Refer to rules and example for additional information.

RULES

- Good cancellation of U-joint operating angles should be within 1 degree.
- Operating angles should be less than 3 degrees.
- Operating angles less than 10 degrees for double cardan U-joint.
- At least 1/2 of one degree continuous operating propeller shaft angle.

TWO PIECE PROPELLER SHAFT

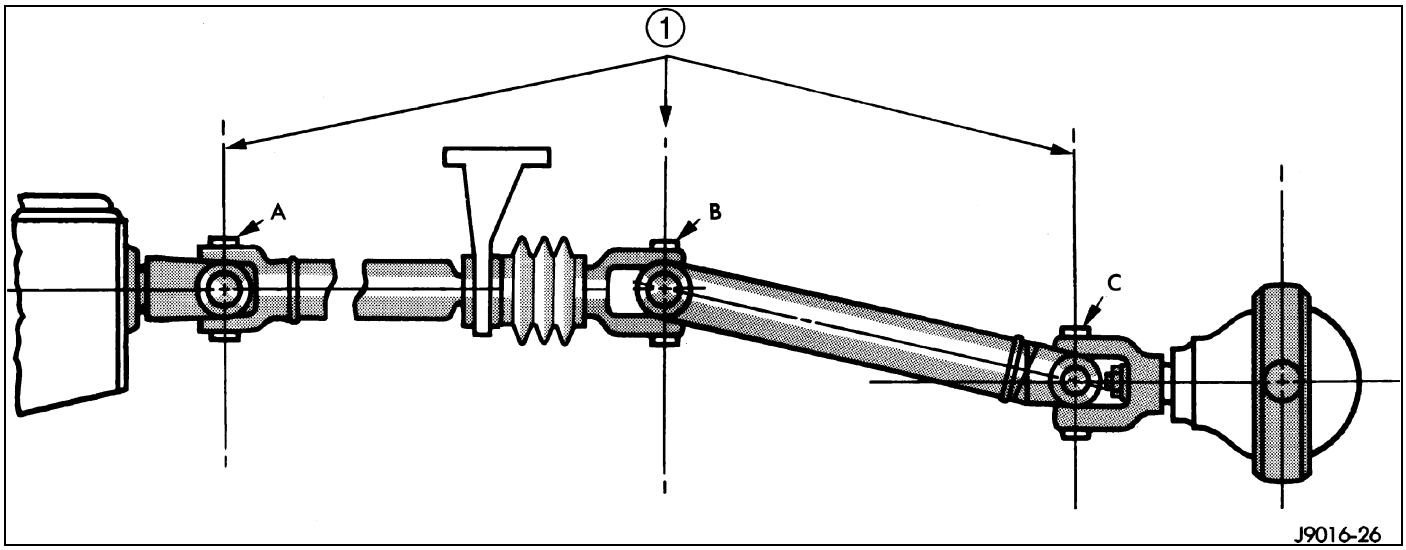

Two piece propeller shaft angles measurement is the same as a one-piece propeller shaft.

LUBRICATION

Vehicles with double cardan universal joint front propeller shaft (1) are equipped with a grease fitting (2). Grease the double cardan universal joint at each oil change.

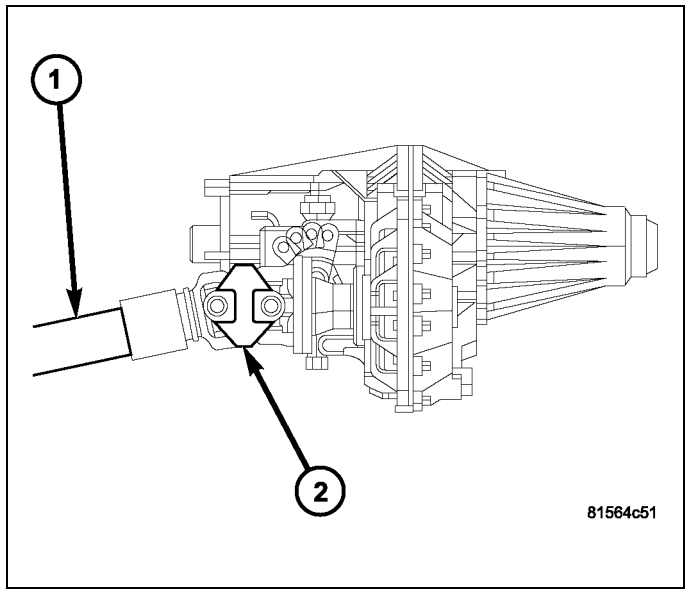

Specifications

DESCRIPTION	N·m	Ft. Lbs.	In. Lbs.
Center Bearing Bolts	54	40	-
Center Bearing Yoke Nut	678	500	-
Transfer Case Flange Bolts	88	65	-
Front Pinion Flange Bolts	115	85	-
Rear Pinion Flange Bolts	115	85	-

Special Tools

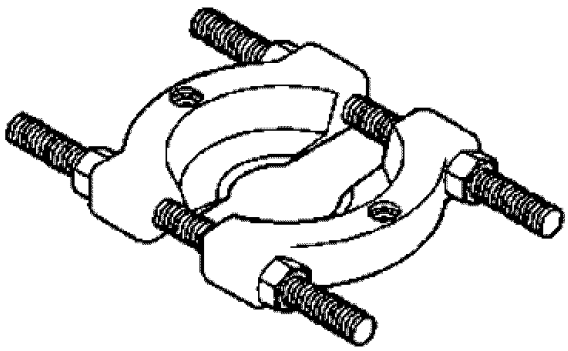

1130 - Splitter, Bearing/Gear

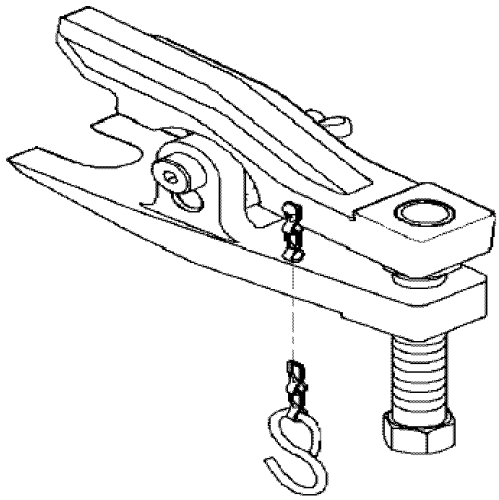

9362 - Wrench, Strut Nut

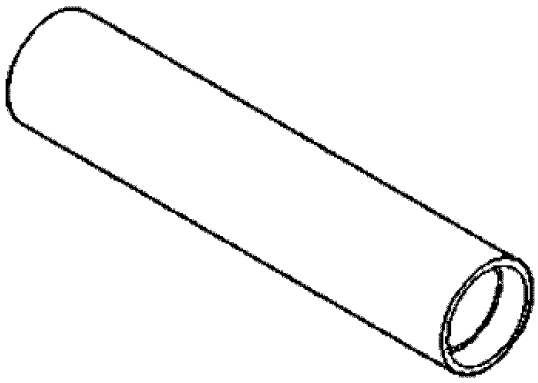

6052 - Installer, Bearing/Seal

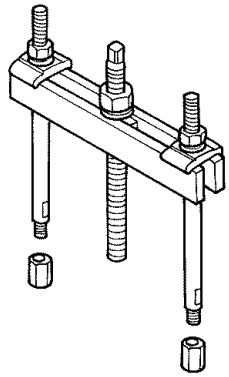

938 - Bridge

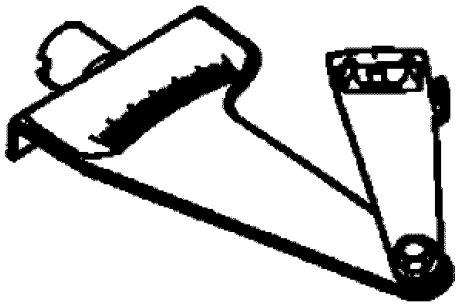

7663 - Inclinometer

BEARING, Drive Shaft Center, Light Duty

Removal

1. Remove rear propeller shaft.
2. Make installation reference marks on the shaft (1) and slip yoke (2).

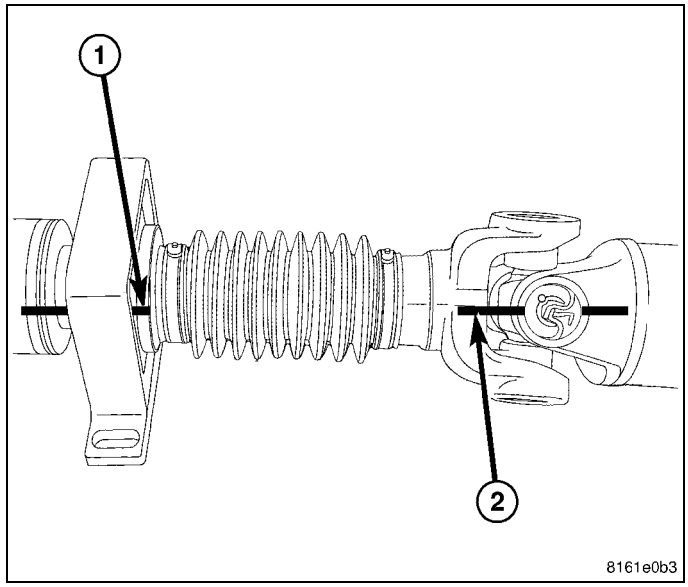

3. Remove slip joint boot (1) clamp (2).

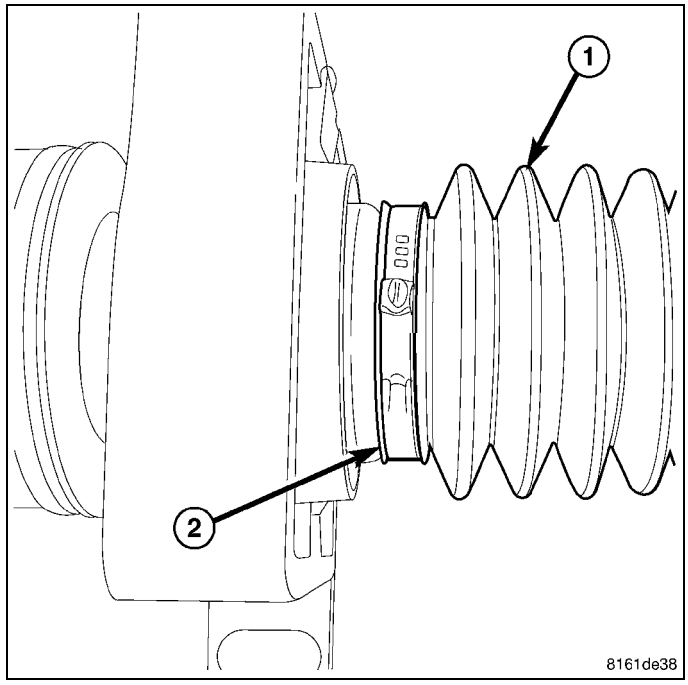

4. Slide boot (1) off boot collar (2) and separate the two shafts.

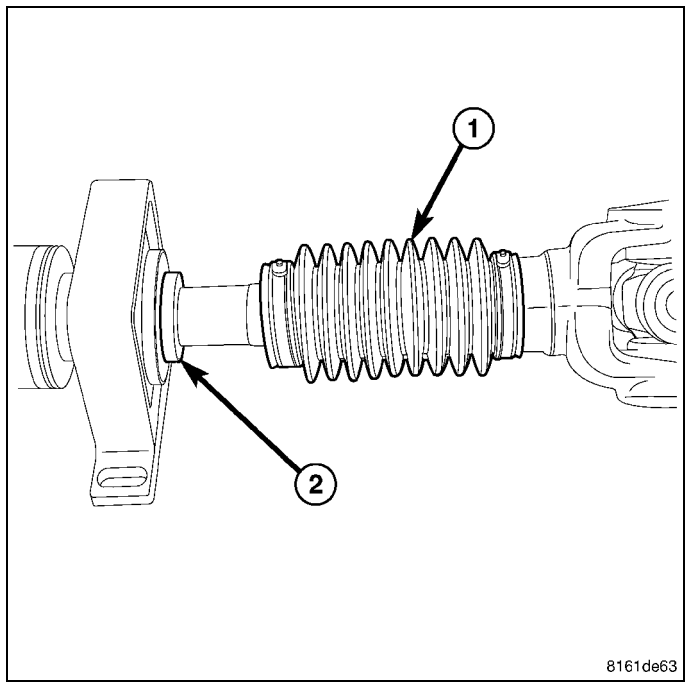

5. Position Bearing Splitter Tool 1130 (2) between slinger and center bearing (1).
6. Install Bridge 938 (3) on the splitter (2) and remove center bearing (1).

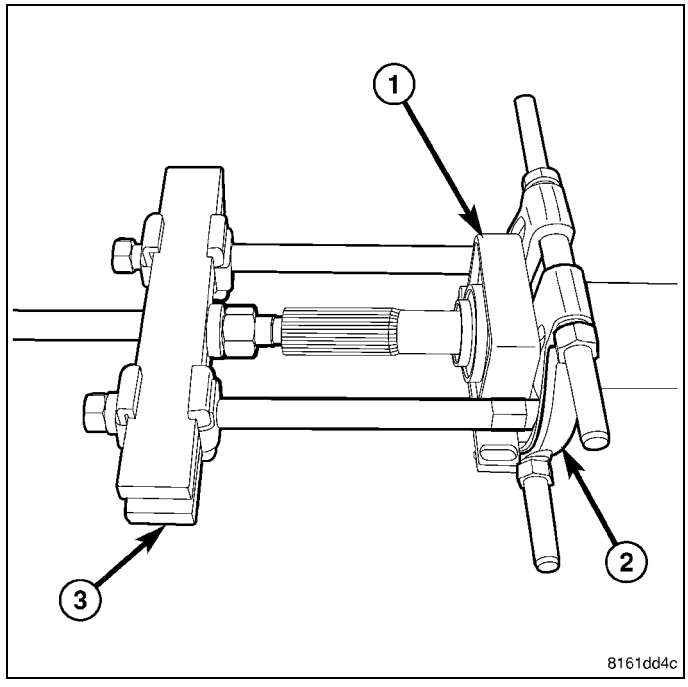

Installation

1. Install new slinger on shaft if removed and drive into position with appropriate installer tool.
2. Install new center bearing (1) and boot collar (2) on shaft.

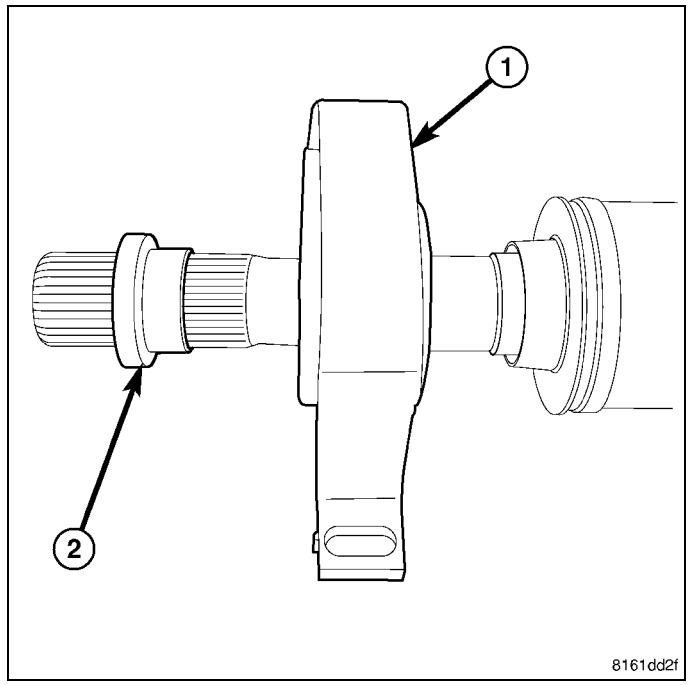

3. Install bearing (1) and boot collar (2) on shaft with Installer 6052 (3).

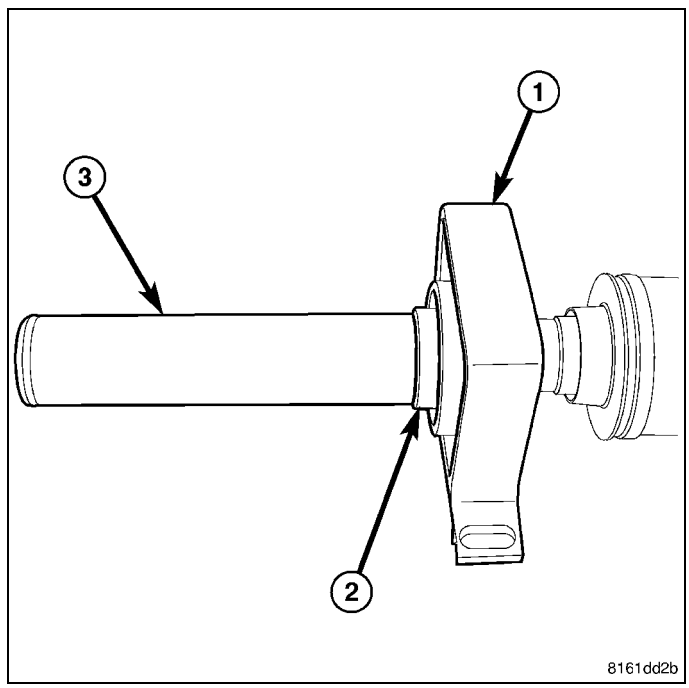

4. Clean shaft splines and apply a coat of multi-purpose grease.
5. Align master splines and slide front and rear half-shafts together.
6. Position slip yoke boot (1) on boot collar and install clamp (2).
7. Install propeller shaft in vehicle.

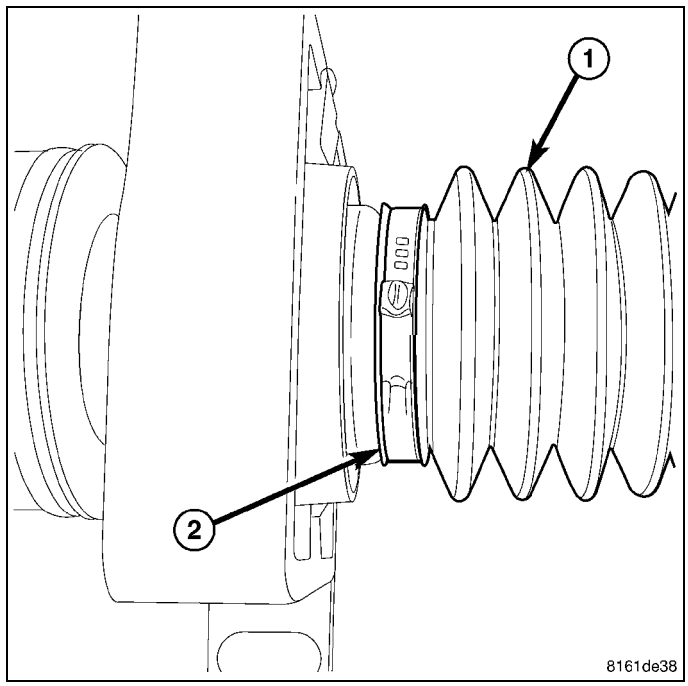

Adjustments

Launch shudder is a vibration that occurs at first acceleration from a stop. Shudder vibration usually peaks at the engines highest torque output. Shudder is a symptom associated with vehicles using a two-piece propeller shaft. To decrease shudder, lower the center bearing in 3.0 mm (0.125 in.) increments. Use shim stock or fabricated plates. **Do not use washers.** Replace the original bolts with the appropriate increased length bolts.

SHAFT, Drive, Front Light Duty

Removal

1. With vehicle in neutral, position vehicle on hoist.
2. Remove exhaust crossover pipe.
3. Mark a line across the axle companion flange (1), propeller shaft (2), flange yoke (3) and transfer case for installation reference.

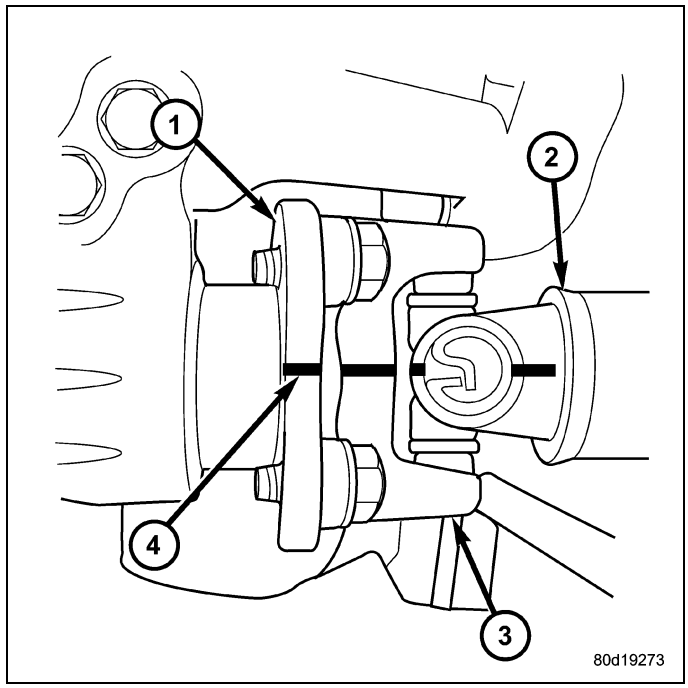

4. Remove axle/transfer case companion flange bolts. Remove dust boot clamp (3) from the C/V jonit (1) end of the shaft if equipped.
5. Remove propeller shaft.

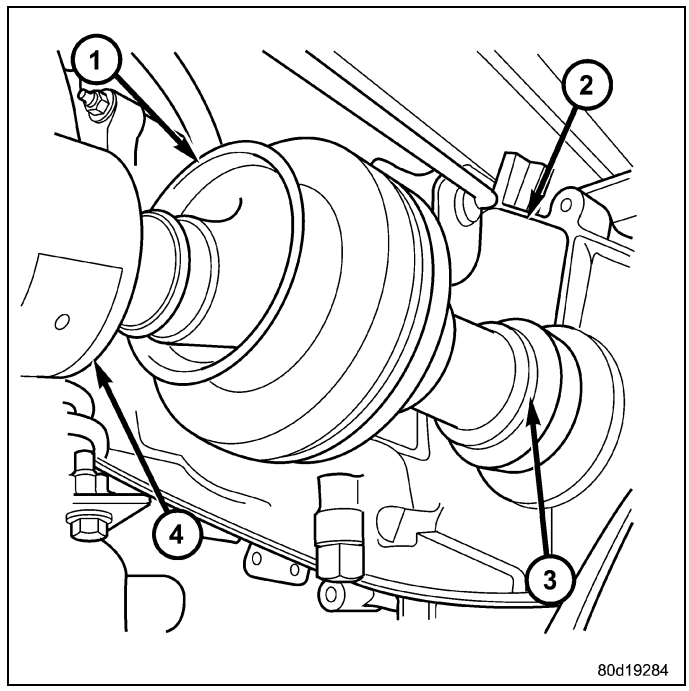

Installation

1. Install propeller shaft with all reference marks (4) aligned.
2. Install with dust boot clamp at transfer case end.
3. Install **new** axle companion flange bolts and tighten to 115 N·m (85 ft. lbs.).

NOTE: Companion flange bolts incorporate a Loctite® patch, new bolts should be used. If bolts are not available, clean bolts and apply Loctite® 242 to the threads.

4. Install skid plate, if equipped.

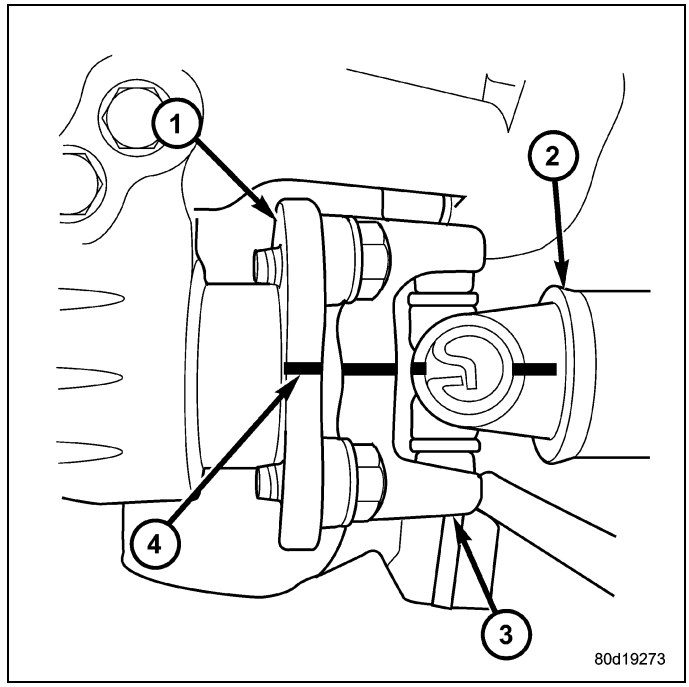

SHAFT, Drive, Rear Light Duty

Removal

1. With vehicle in neutral, position vehicle on hoist.
2. Mark propeller shaft (1) pinion flange (2) and propeller shaft flange (4) with installation reference marks (3).

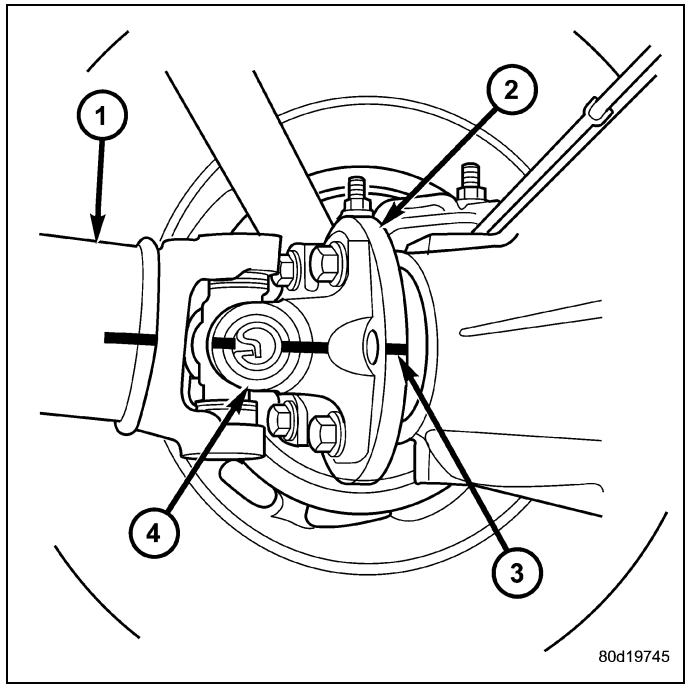

3. If equipped with a center bearing (1) mark an outline of the center bearing (1) on the center bearing bracket for installation reference. Then support propeller shaft and remove mounting bolts (2).

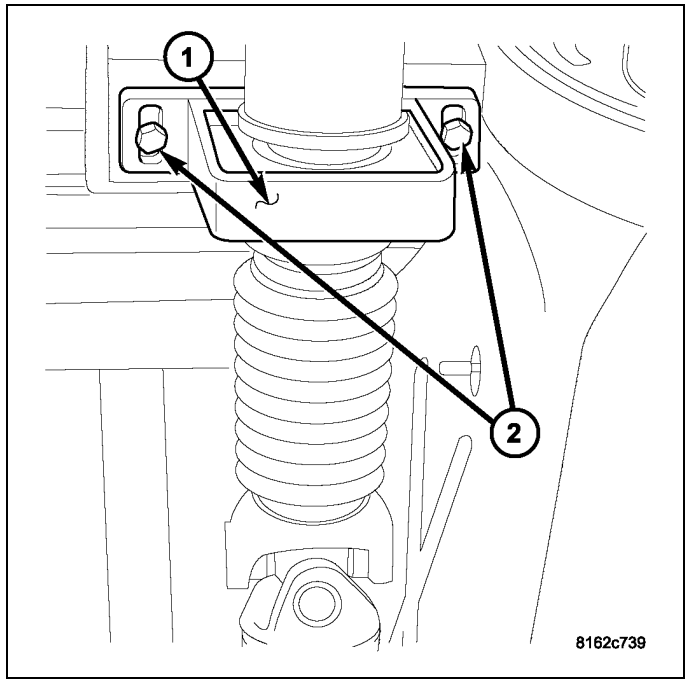

4. Remove pinion flange (1) bolts from propeller shaft (2).

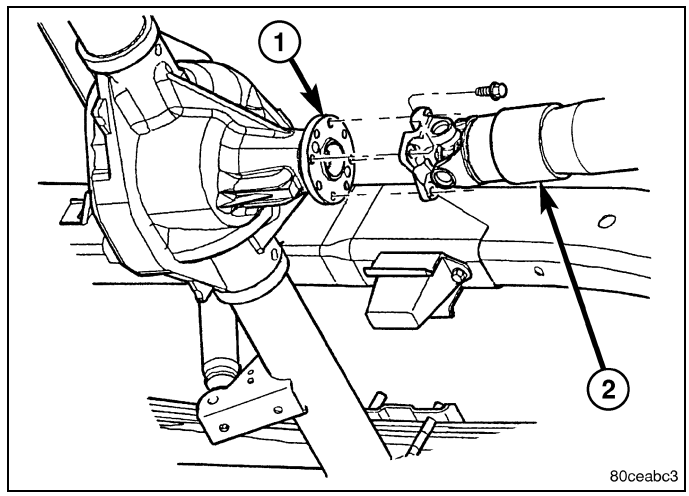

5. Slide propeller shaft back off automatic transmission/ transfer case output shaft, then mark propeller shaft (1) and transmission/transfer case output shaft (2) for installation reference.

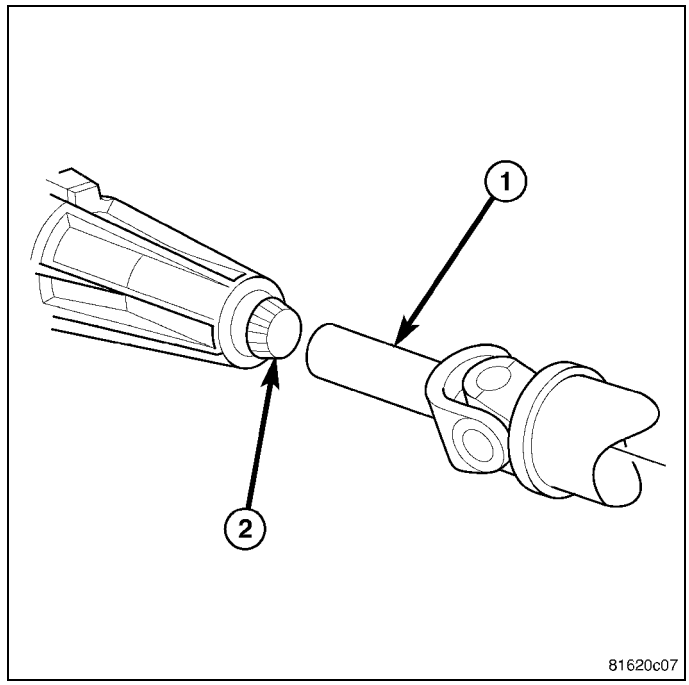

6. Remove propeller shaft from vehicle.

CAUTION: Failure to follow these instructions may result in a driveline vibration.

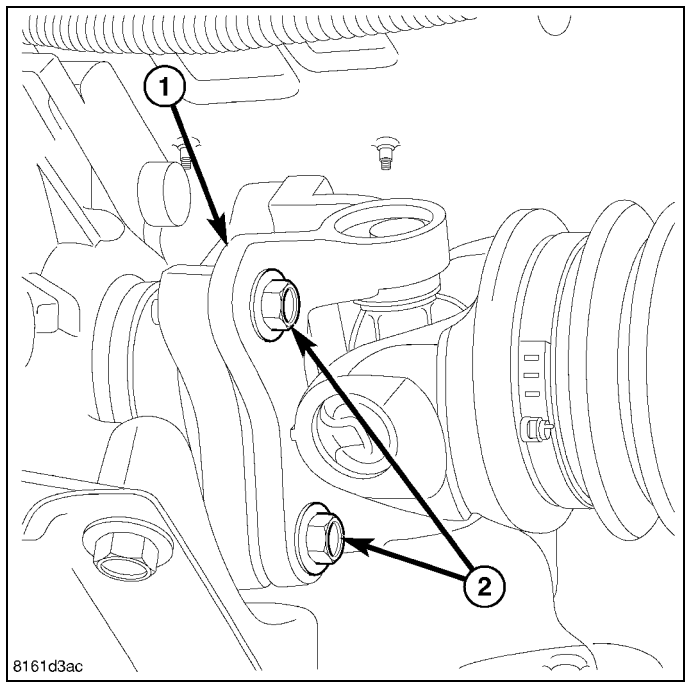

Installation

1. Slide slip yoke (1) onto automatic transmission/transfer case output shaft (2) with reference marks aligned.

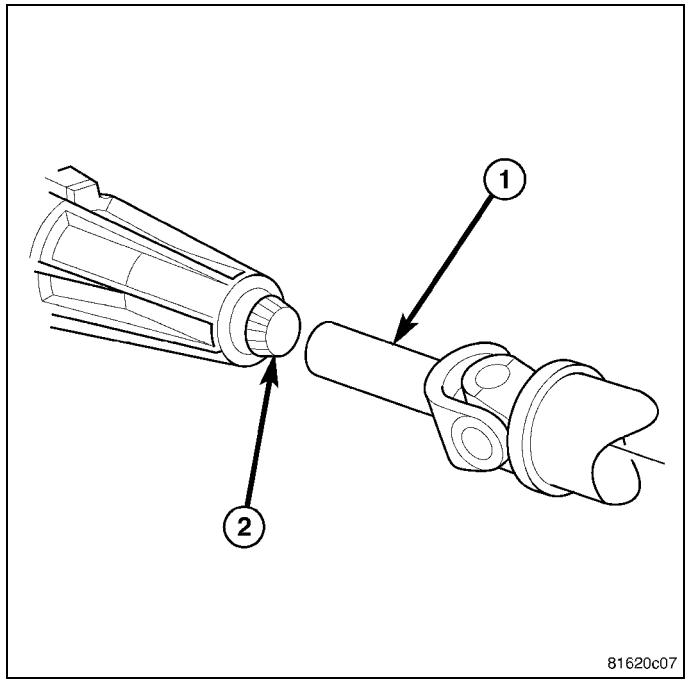

2. If two piece propeller shaft, align center bearing (1) with reference marks on cernter bearing bracket and tighten bolts (2) to 54 N·m (40 ft. lbs.).

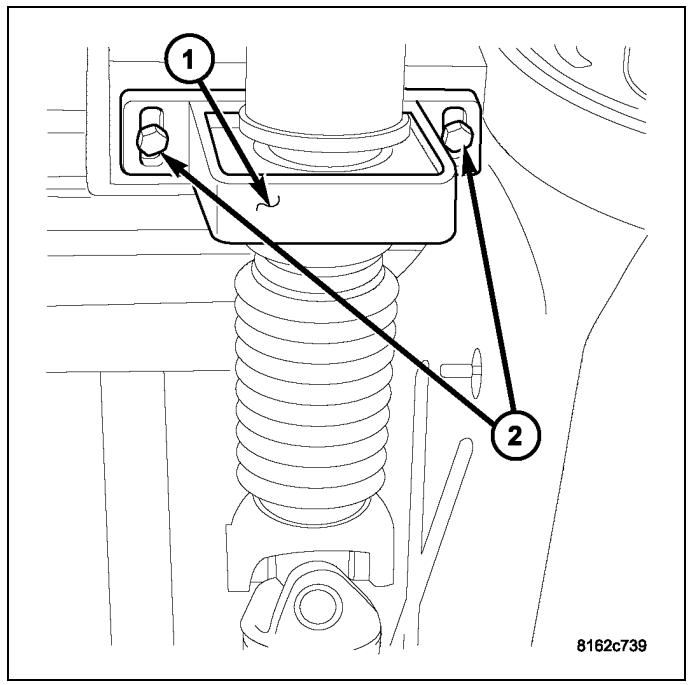

3. Align reference marks on propeller shaft and pinion flange. Install **new** companion flange (1) bolts and tighten to 115 N·m (85 ft. lbs.)

CAUTION: Failure to follow these instruction may result in a driveline vibration.

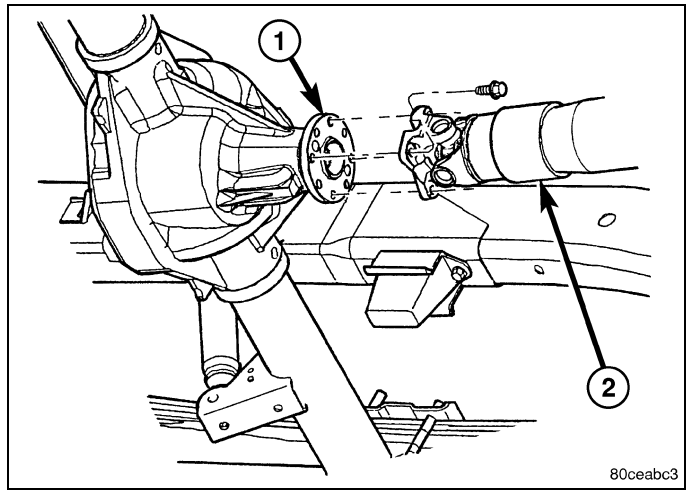

U-JOINT, Double Cardan

Disassembly

1. Remove propeller shaft.
2. Mark propeller shaft, link yoke and flange yoke for assembly reference.
3. Tap outside of the bearing cap assembly with drift to loosen snap rings.
4. Remove all bearing cap snap rings.
5. Remove grease fittings if equipped.
6. Position a socket on the press with an inside diameter large enough to receive the bearing cap under the link yoke.
7. Place another socket with an outside diameter smaller than the bearing cap on the upper bearing cap.

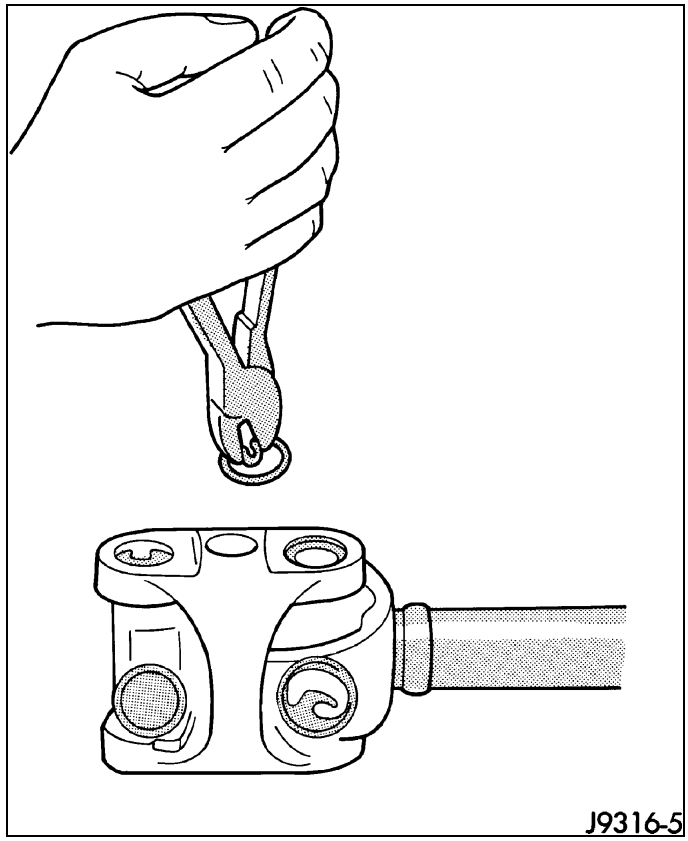

8. Press one bearing cap from outboard side of the link yoke, enough to grasp the cap with vise jaws.

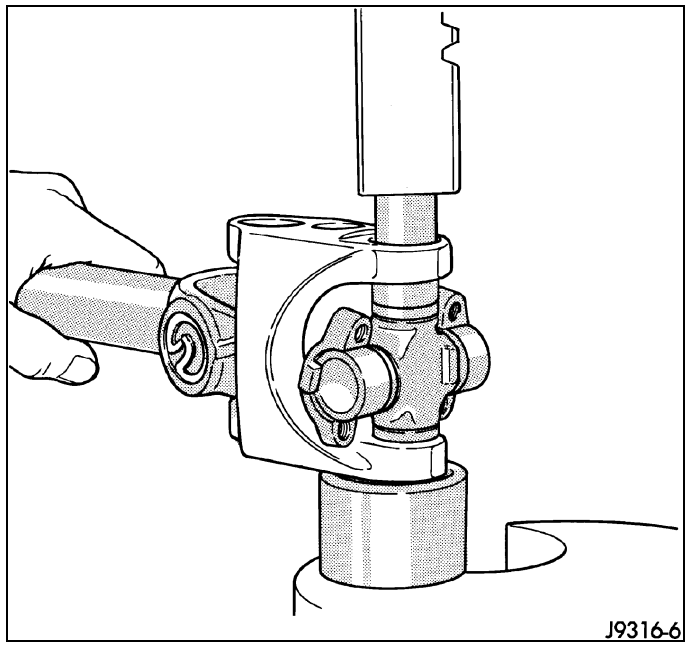

9. Grasp protruding bearing cap with vise jaws and tap link yoke with a mallet to remove bearing cap.
10. Flip assembly and repeat Step #6, Step #7, Step #8 and Step #9 to remove the opposite bearing cap.

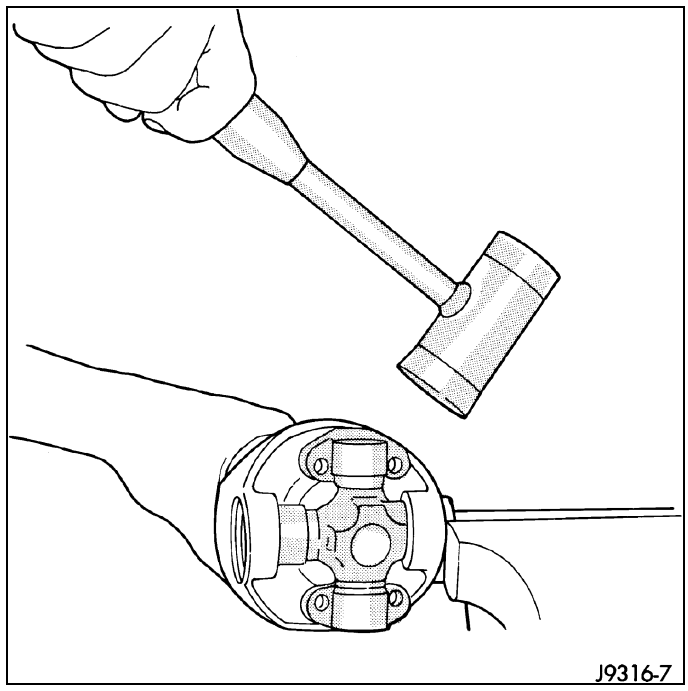
J9316-7

11. Remove cross centering kit assembly and spring.
12. Press remaining bearing caps out the other end of the link yoke.

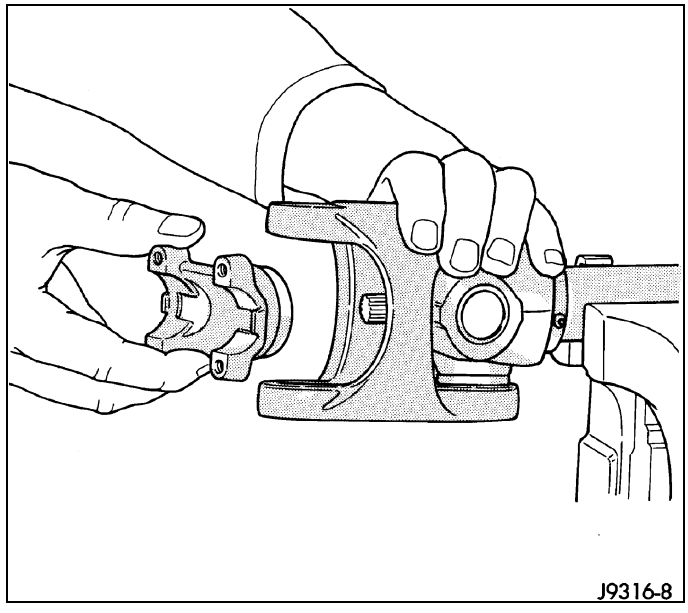
J9316-8

Assembly

CAUTION: All alignment marks on the link yoke and propeller shaft yoke must be aligned during assembled.

1. Apply (EP) N.L.G.I. Grade 1 or 2 grease to inside of yoke bores.
2. Fit cross into the propeller shaft yoke.

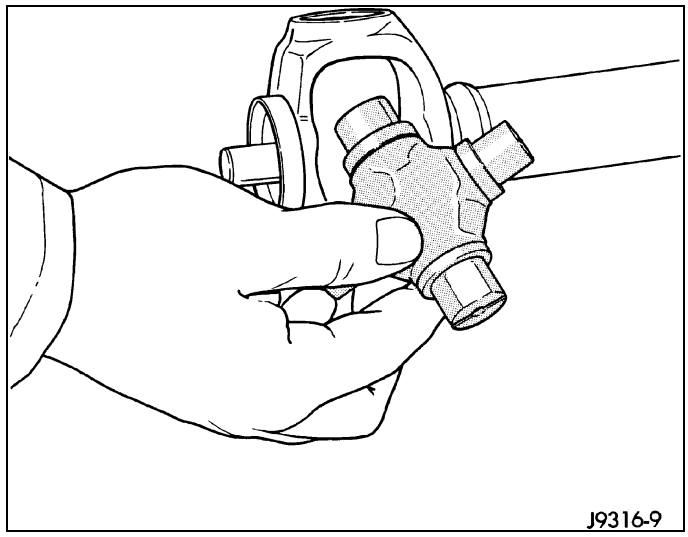

3. Place bearing cap over the trunnion and align cap with the yoke bore. Keep needle bearings upright in the bearing cap.

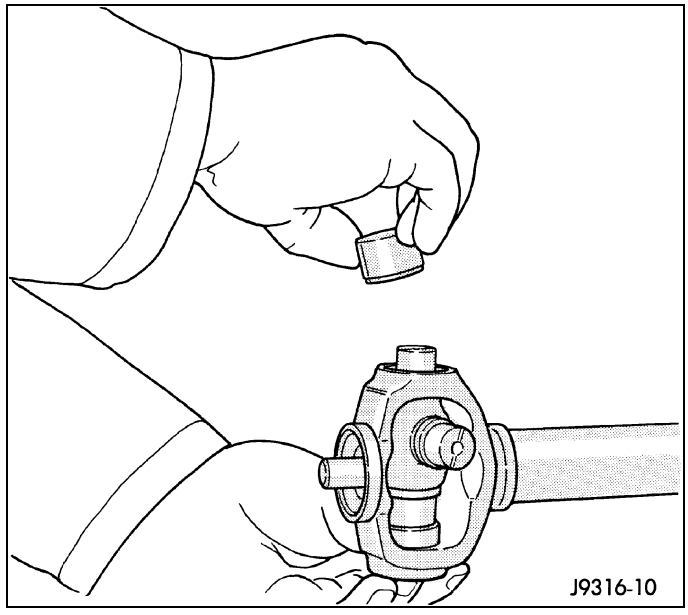

4. Press bearing cap into yoke bore enough to clear snap ring groove and install snap-ring.

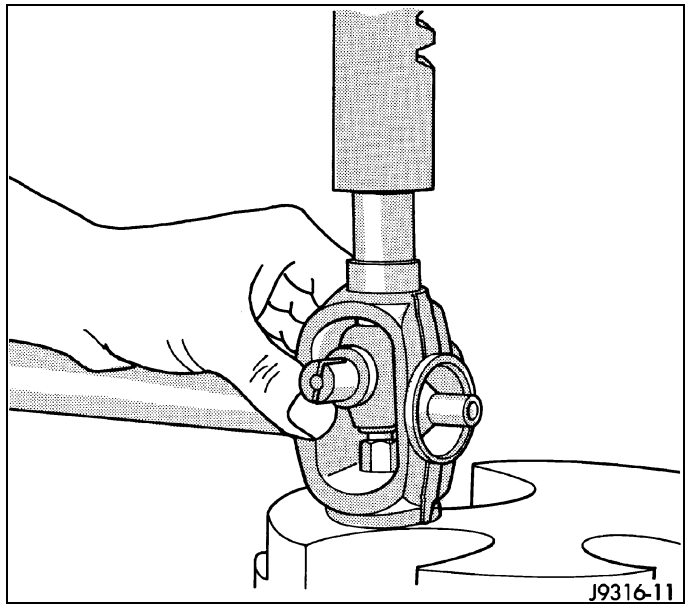

5. Flip propeller shaft yoke and install other bearing cap onto the opposite trunnion and install a snap ring.

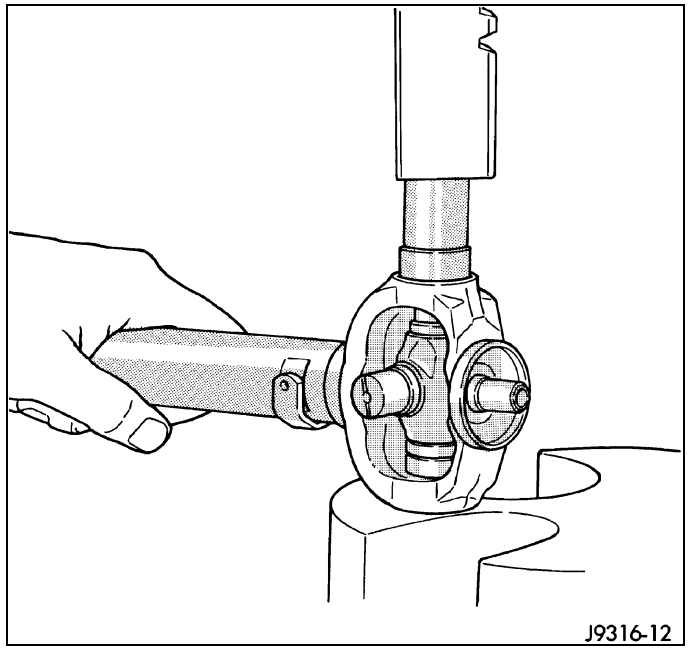

6. Fit link yoke onto remaining trunnions and press both bearing caps into place and install snap rings.

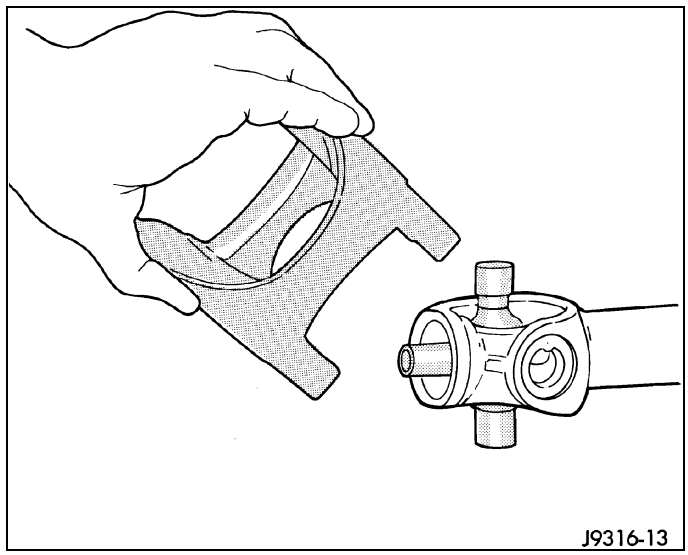

7. Install centering kit assembly inside the link yoke.

NOTE: Verify spring is properly positioned.

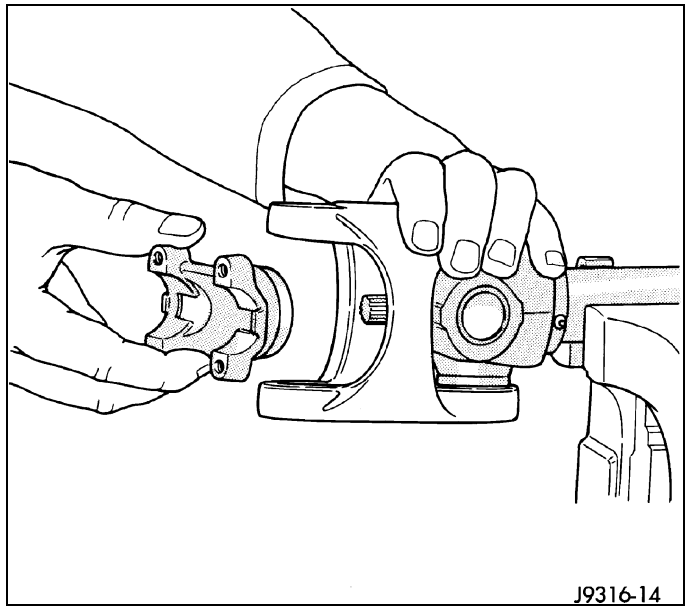

8. Place two bearing caps on opposite trunnions of the remaining cross. Fit open trunnions into the link yoke bores and bearing caps into the centering kit.

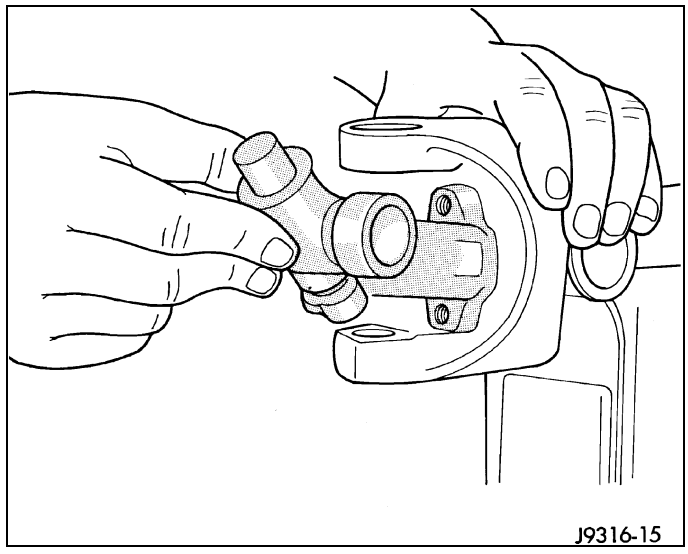

9. Press remaining two bearing caps into place and install snap rings.

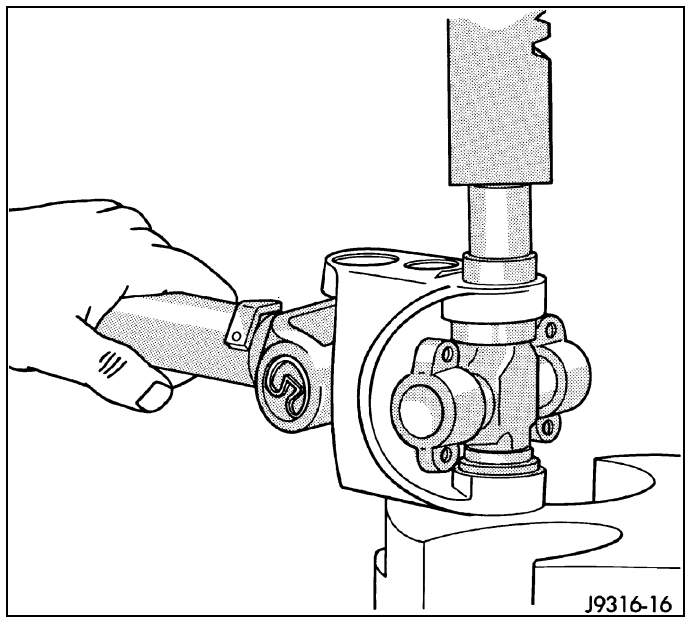

10. Tap snap rings to seat them into the grooves.

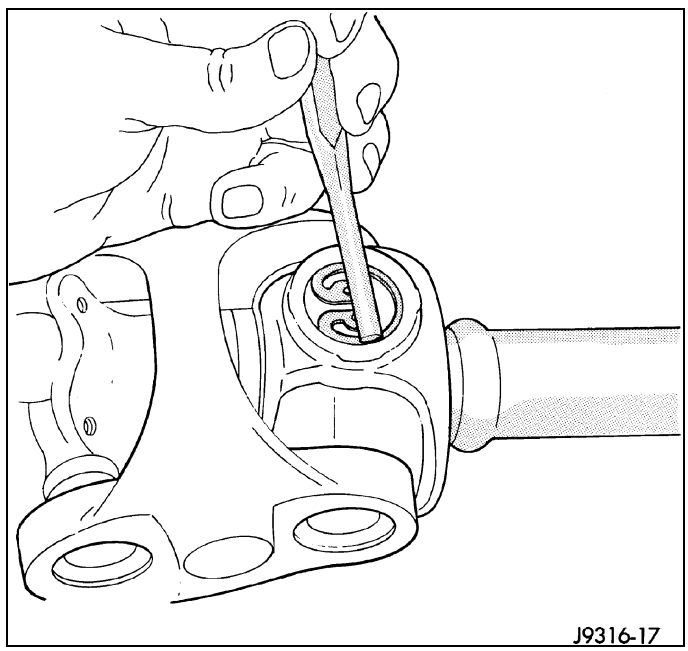

11. Flexing the joint beyond center, the joint should snap over-center in both directions if correctly assembled.
12. Install propeller shaft.

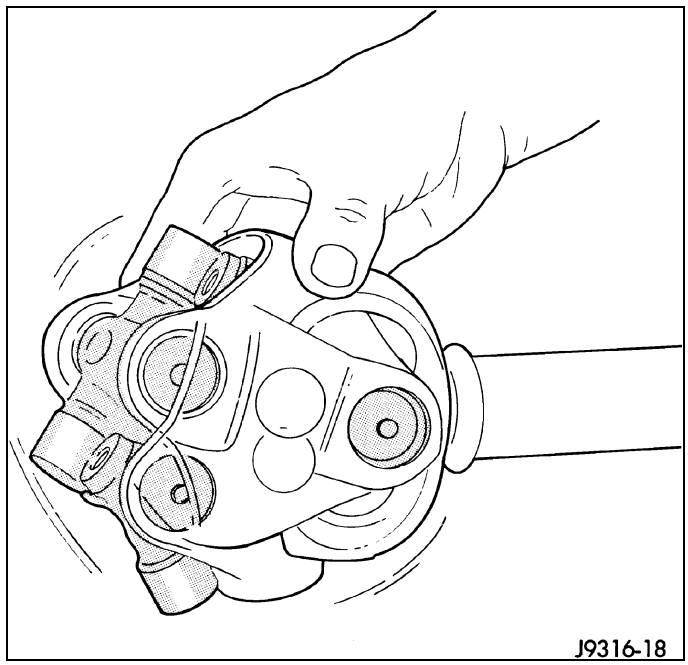

U-JOINT, Single Cardan

Disassembly

WITH INJECTED RING

1. Place shaft yoke in vise.
2. Position U-joint press (1) with receiver (2) on propeller shaft yoke.

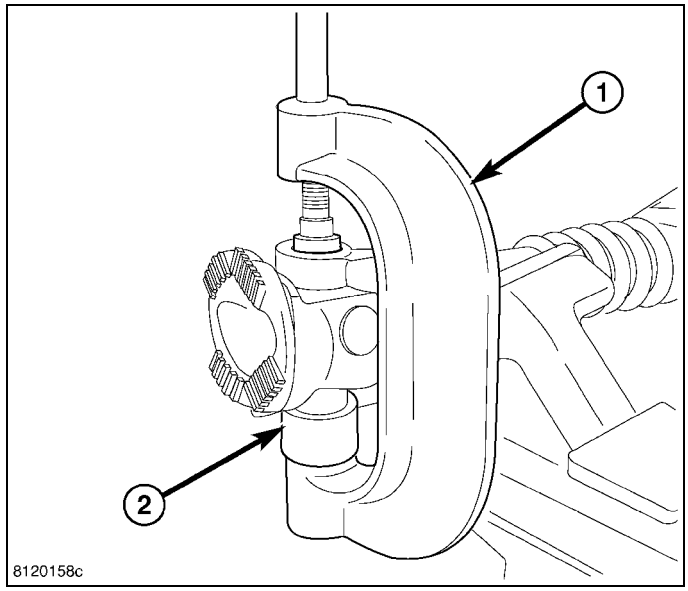

3. Pressed U-joint bearing caps (1) out of shaft yoke (2).
4. Remove lower bearing cap from shaft yoke.

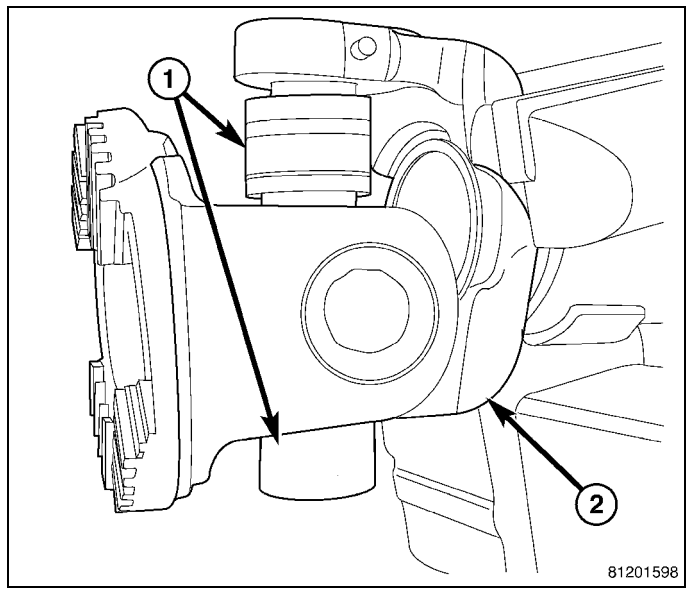

5. Turn shaft over and position press (1) with receiver (2) on shaft yoke.
6. Press remaining U-joint bearing cap out of shaft yoke.

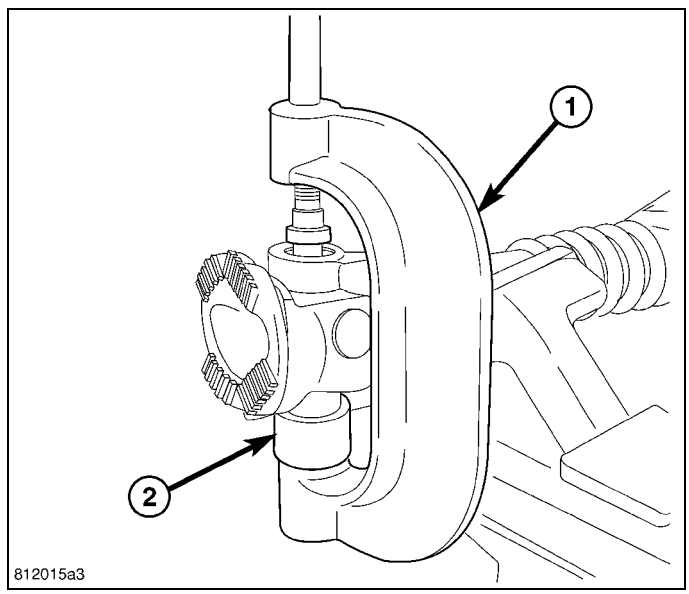

7. Remove flange (1) with U-joint out of shaft yoke (2).

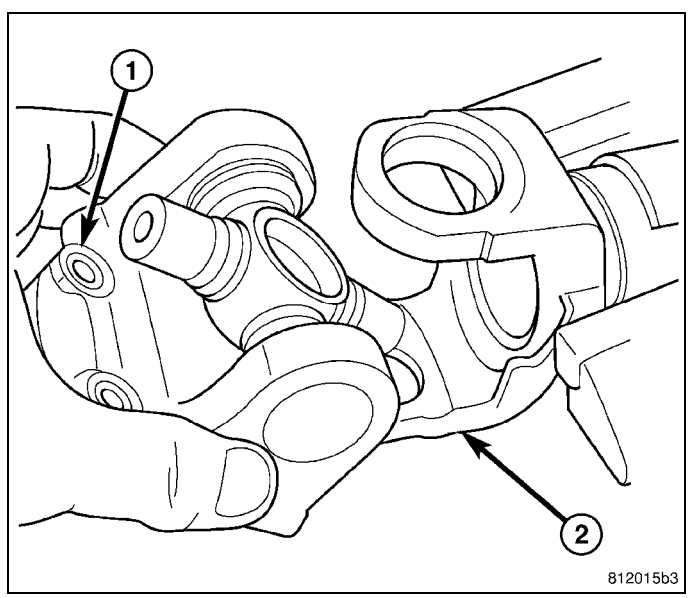

8. Position U-joint press (2) with receiver (1) on flange.

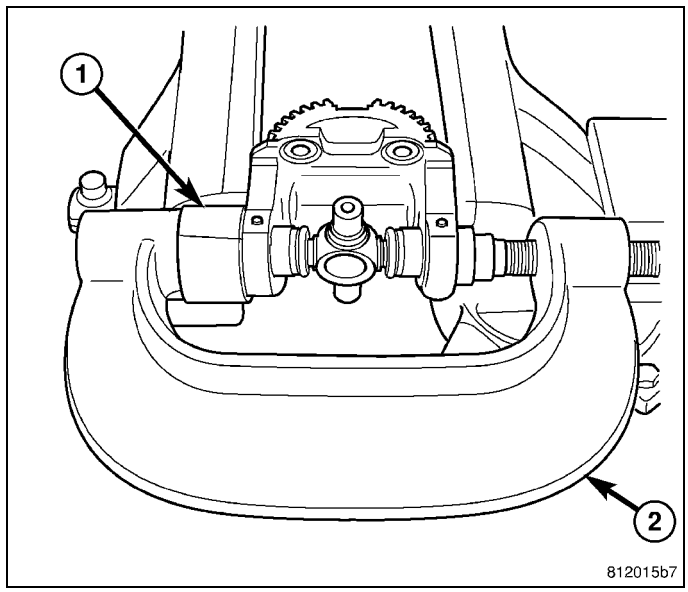

9. Press U-joint bearing caps (1) out of flange (2).
10. Remove bearing cap on the outside of the flange.

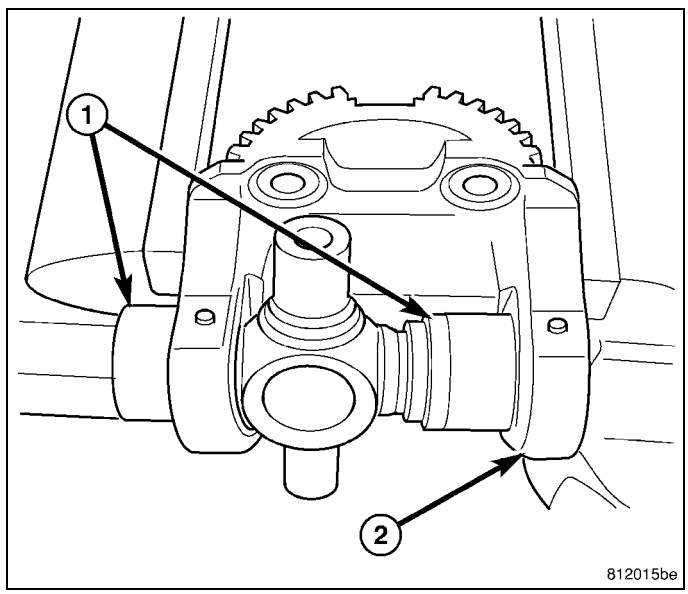

11. Position U-joint press (2) with receiver (1) on flange .
12. Press remaining U-joint bearing cap out of flange.
13. Remove U-joint from flange.

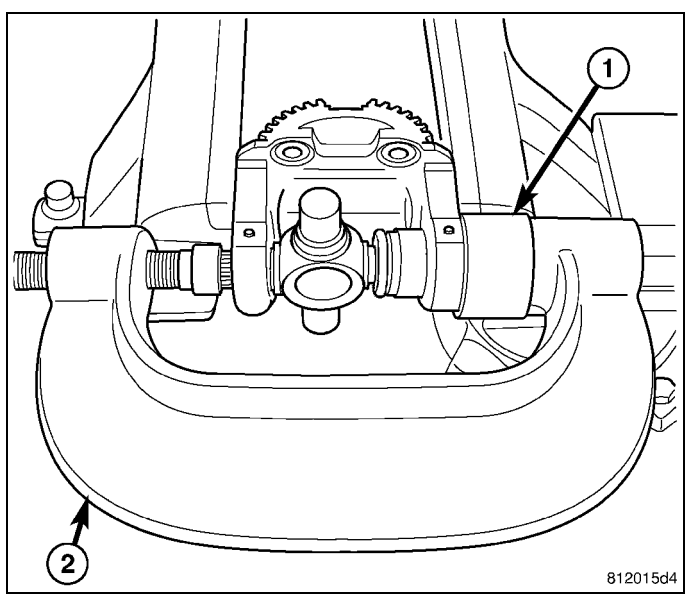

WITH SNAP RINGS

1. Tap outside of bearing cap with a drift to loosen snap ring.
2. Remove snap rings (1) from both sides of yoke.

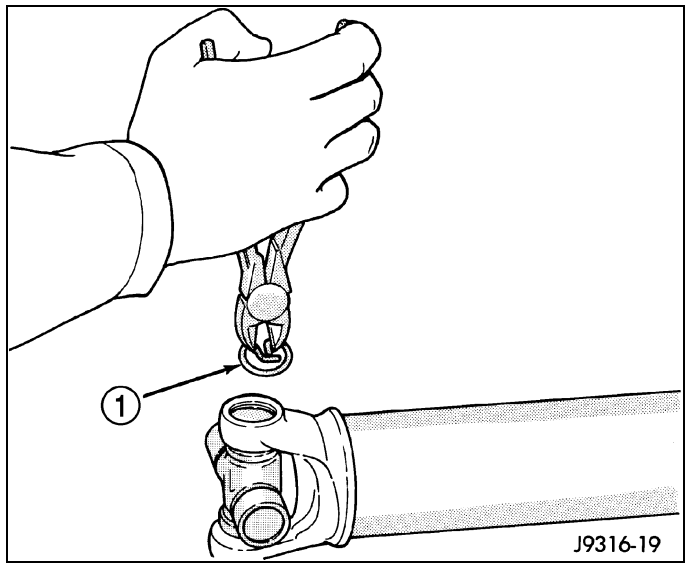

3. Position yoke with the grease fitting if equipped, pointing up.
4. Position a socket (2) with a inside diameter large enough to receive the bearing cap, beneath the yoke on a press.
5. Place another socket with an outside diameter smaller than bearing cap on the upper bearing cap and press (1) the lower cap through the yoke.

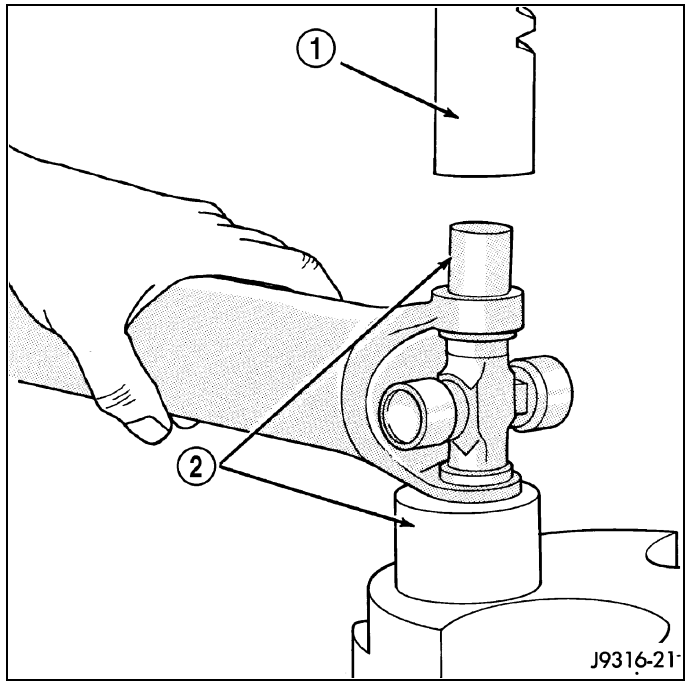

NOTE: If bearing cap will not pull out of the yoke after pressing, tap yoke ear near bearing cap to dislodge the cap.

6. Pull bearing cap of the yoke.
7. Turn yoke over in the press and straighten the cross (1). Press the cross until the remaining bearing cap (2) can be removed.

CAUTION: If cross or bearing cap are not straight during removal, the bearing cap will score the walls of the yoke bore and damage can occur.

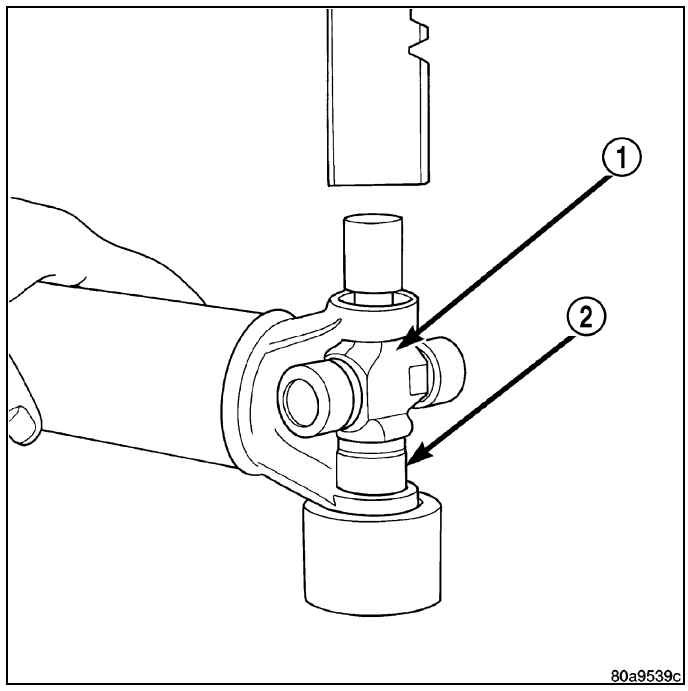

Assembly

WITH INJECTED RING

NOTE: Replacement joint has internal snap rings.

1. Place joint in flange with one bearing cap.
2. Position press (3) with receiver (1) on flange and bearing cap (2).

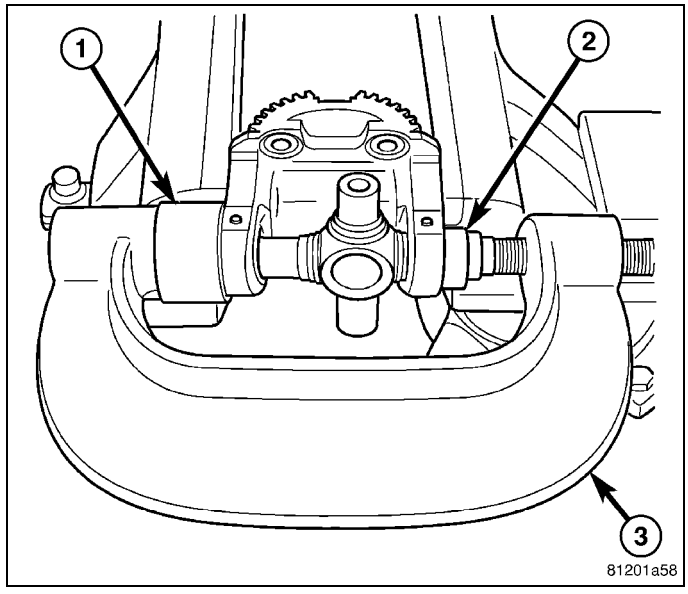

3. Press bearing cap until snap ring groove (1) is through the flange (2).

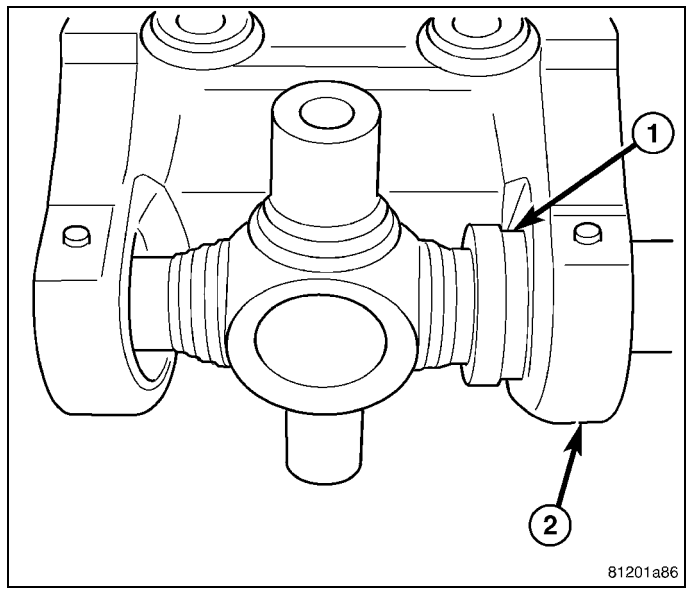

4. Install snap ring (2) on bearing (1).

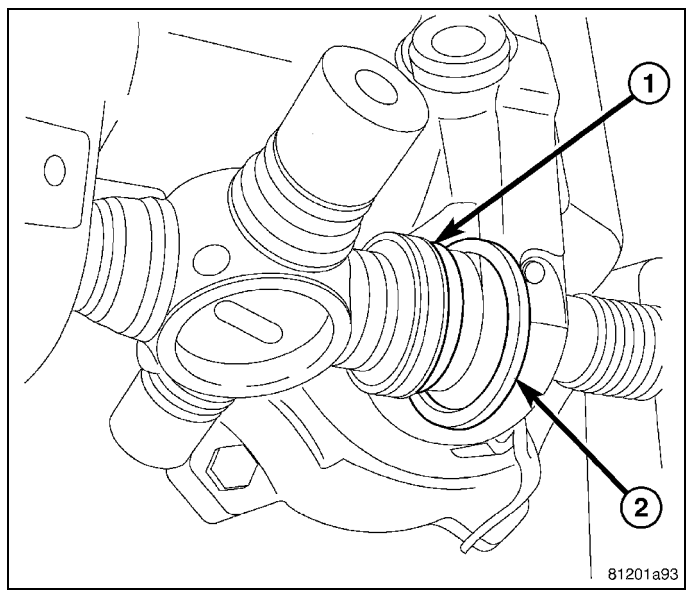

5. Position press (3) with receiver (2) on remaining bearing cap (1) and flange.
6. Press bearing cap until snap ring groove is through the flange.

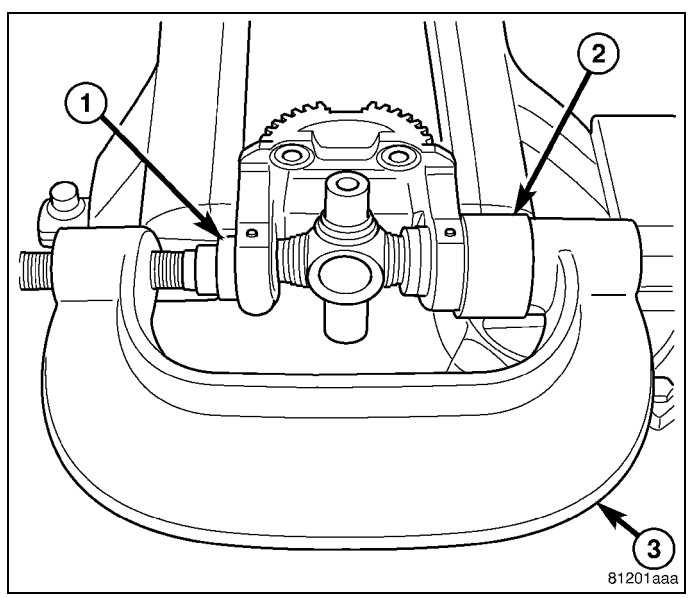

7. Install snap ring (1) on bearing cap (2).

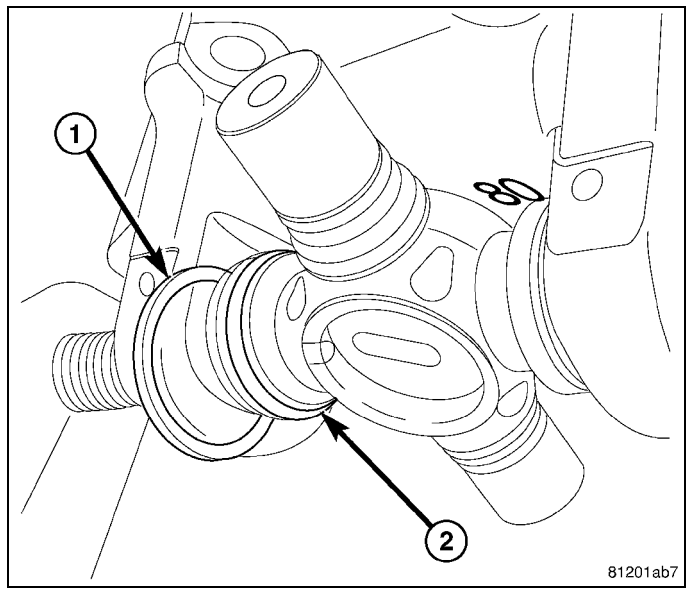

8. Install flange (1) with U-joint in yoke (2).

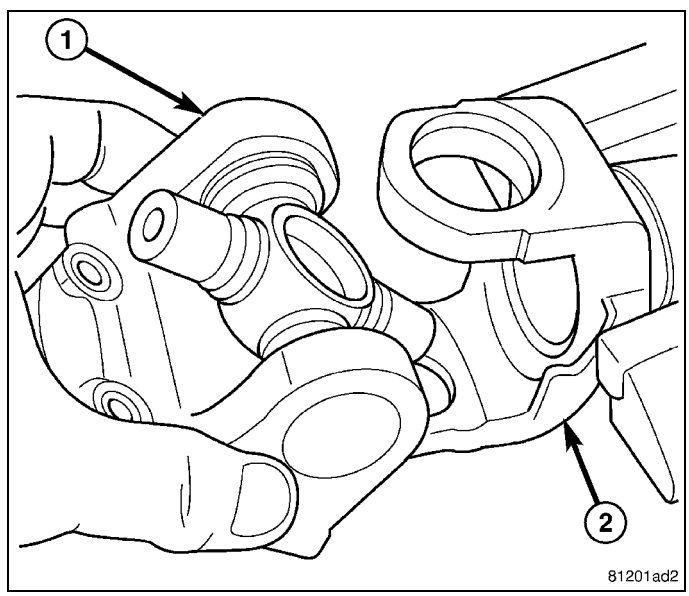

9. Position press (2) with receiver (1) and lower bearing cap (3) on yoke.
10. Press bearing cap until snap ring groove is through the yoke.

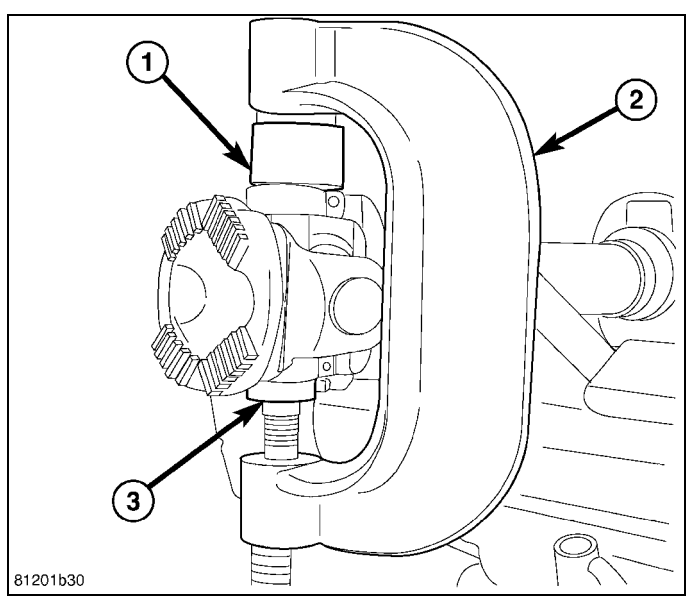

11. Install snap ring (2) on bearing cap (1).

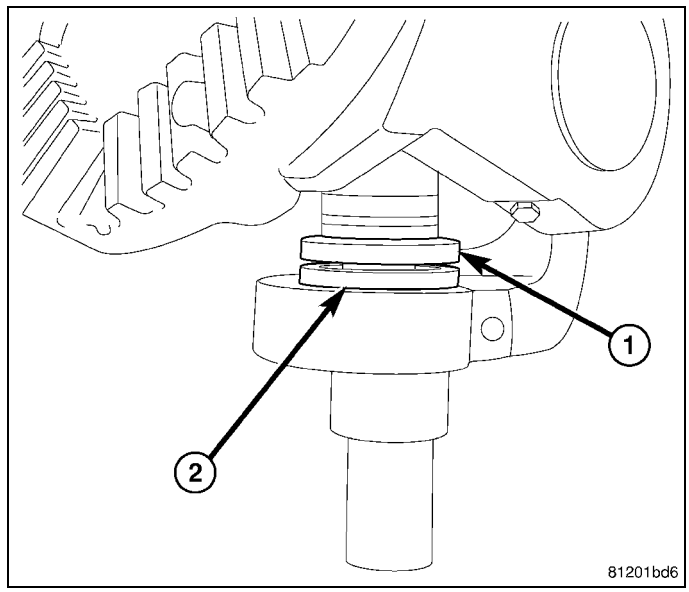

12. Position press (2) with receiver (3) on remaining bearing cap (1) and yoke.
13. Press remaining bearing cap until snap ring groove is through the yoke.

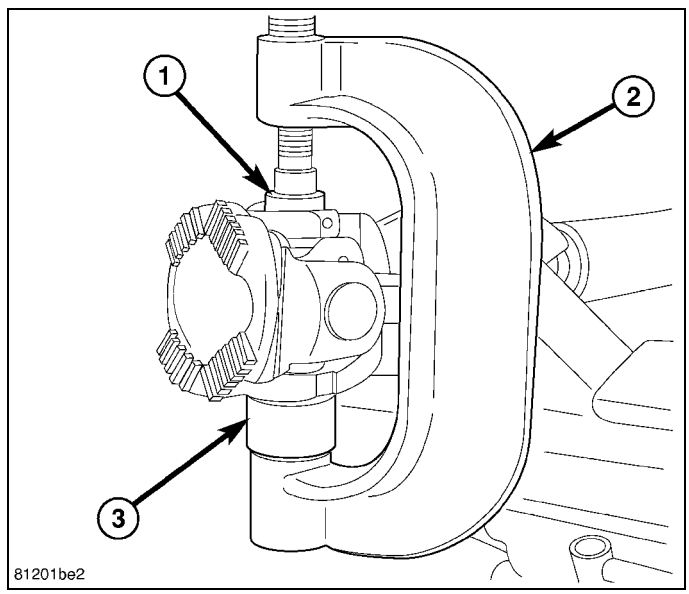

14. Install snap ring (2) on bearing cap (1).

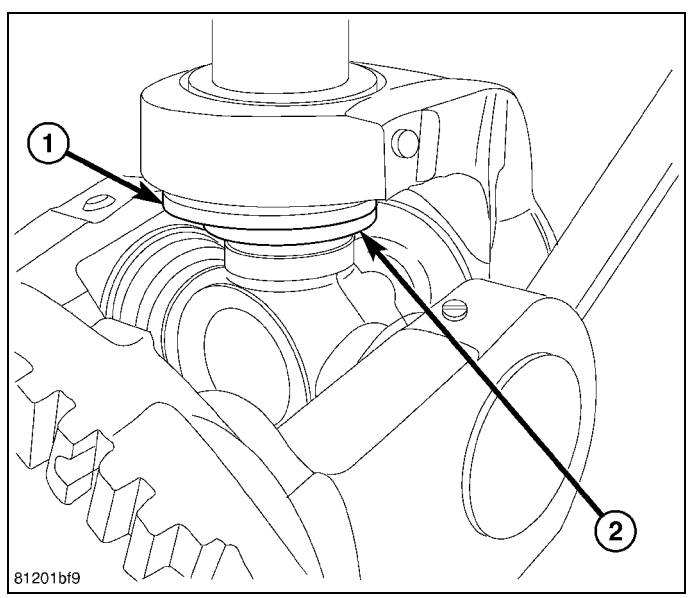

WITH SNAP RINGS

1. Apply (EP) N.L.G.I. Grade 1 or 2 grease to inside of yoke bores.
2. Position cross (1) in yoke (2) with lube fitting pointing up, if equipped.

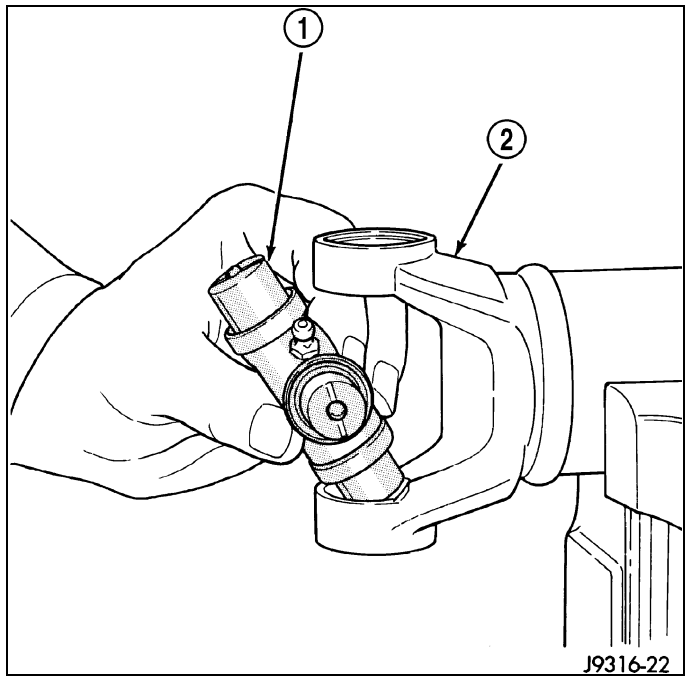

3. Place a bearing cap (1) over the cross end (2) and align cap with yoke bore.
4. Press bearing cap into the yoke bore enough to clear snap ring groove.
5. Repeat Step #3 and Step #4 to install the opposite bearing cap.

NOTE: If joint is stiff or binding, strike the yoke with a soft hammer to seat the needle bearings.

6. Add grease to lube fitting, if equipped.
7. Install propeller shaft.

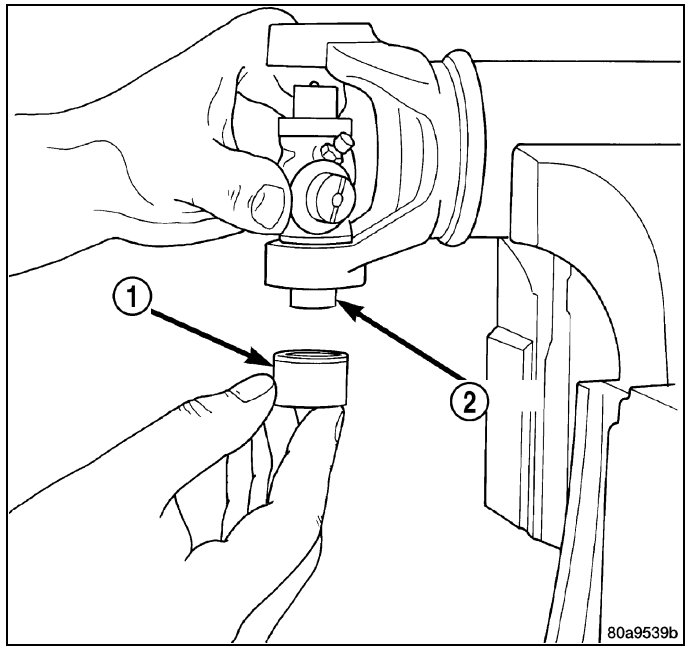

HALF SHAFT

TABLE OF CONTENTS

page

HALF SHAFT
- CAUTION 36
- DIAGNOSIS AND TESTING 36
- REMOVAL 36
- INSTALLATION 38
- SPECIFICATIONS 39
- SPECIAL TOOLS 40

page

JOINT, DRIVE SHAFT, INNER
- REMOVAL 40
- INSTALLATION 41

JOINT, DRIVE SHAFT, OUTER
- REMOVAL 42
- INSTALLATION 44

Half Shaft

Caution

CAUTION: Never grasp half shaft assembly by the boots. This may cause the boot to pucker or crease and reduce the service life of the boot.
Avoid over angulating or stroking the C/V joints when handling the half shaft.

Half shafts exposed to battery acid, transmission fluid, brake fluid, differential fluid or gasoline may cause the boots to deteriorate. Failure to follow these instructions will result in damage.

Diagnosis and Testing

Check inboard and outboard C/V joint for leaking grease. This is a sign of boot or boot clamp damage.

NOISE/VIBRATION IN TURNS

A clicking noise or vibration in turns could be caused by a damaged outer C/V or inner tripod joint seal boot or seal boot clamps. This will result in the loss/contamination of the joint grease, resulting in inadequate lubrication of the joint. Noise could also be caused by another component of the vehicle coming in contact with the half shafts.

CLUNKING NOISE DURING ACCELERATION

This noise may be a damaged or worn C/V joint. A torn boot or loose/missing clamp on the inner/outer joint which has allowed the grease to be lost will damage the C/V joint.

SHUDDER/VIBRATION DURING ACCELERATION

This could be a worn/damaged inner tripod joint or a sticking tripod joint. Improper wheel alignment may also cause a shudder or vibration.

VIBRATION AT HIGHWAY SPEEDS

This problem could be a result of out of balance front tires or tire/wheel runout. Foreign material (mud, etc.) packed on the backside of the wheel(s) will also cause a vibration.

Removal

1. With vehicle in neutral, position vehicle on hoist.
2. Remove half shaft nut (1) from shaft (2).

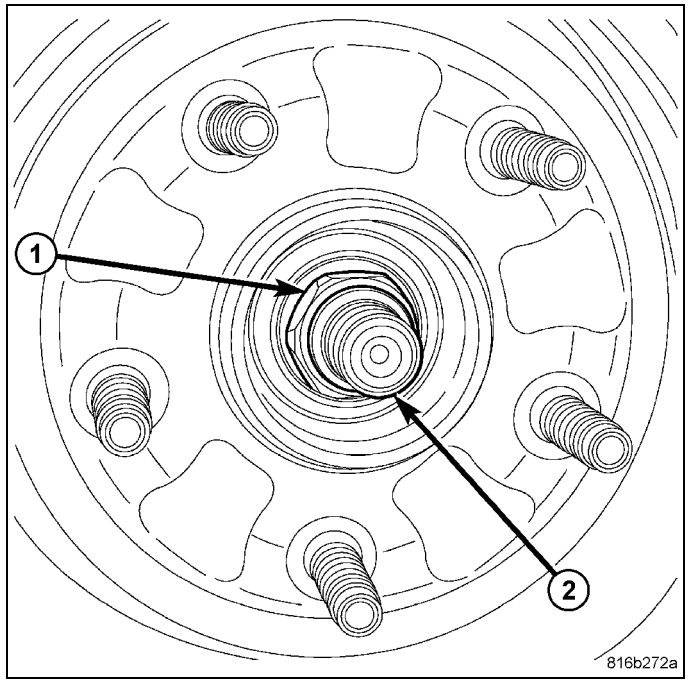

3. Remove brake caliper and rotor.
4. Remove steering knuckle (1).

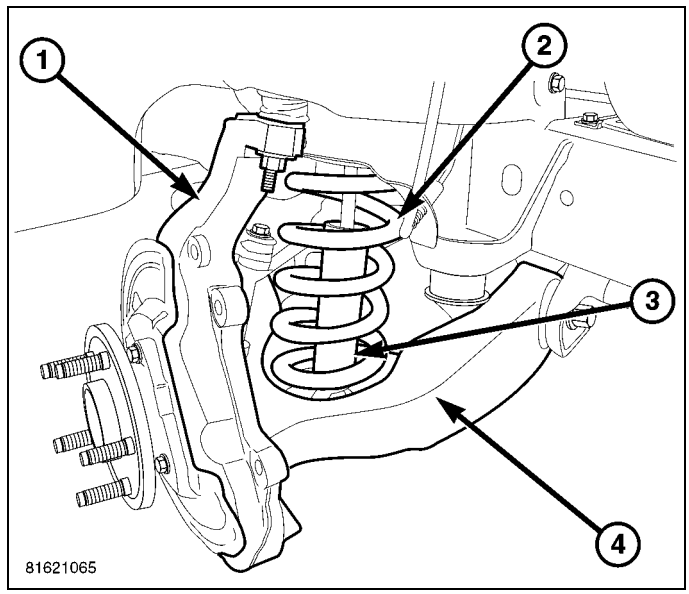

5. Disengage inner C/V joint (1) from axle shaft with two pry bars between the C/V housing and axle housing.
6. Remove half shaft from vehicle.

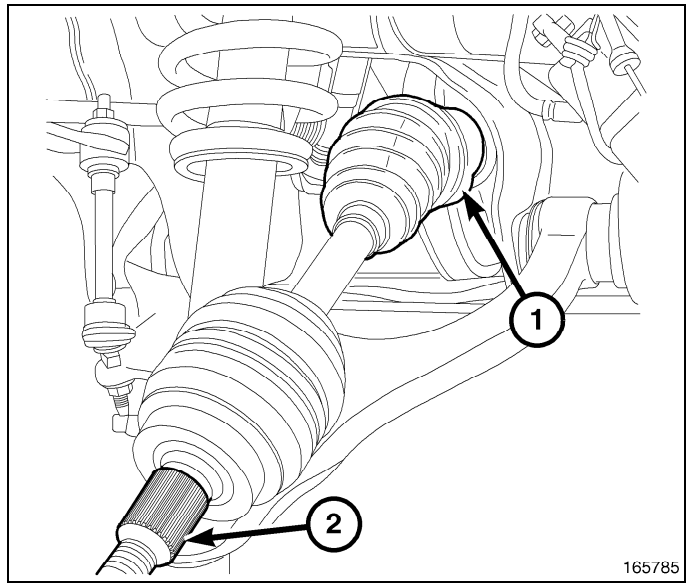

Installation

1. Install half shaft on axle shaft. Push inner C/V (1) firmly to engage axle shaft snap ring into the inner C/V housing.

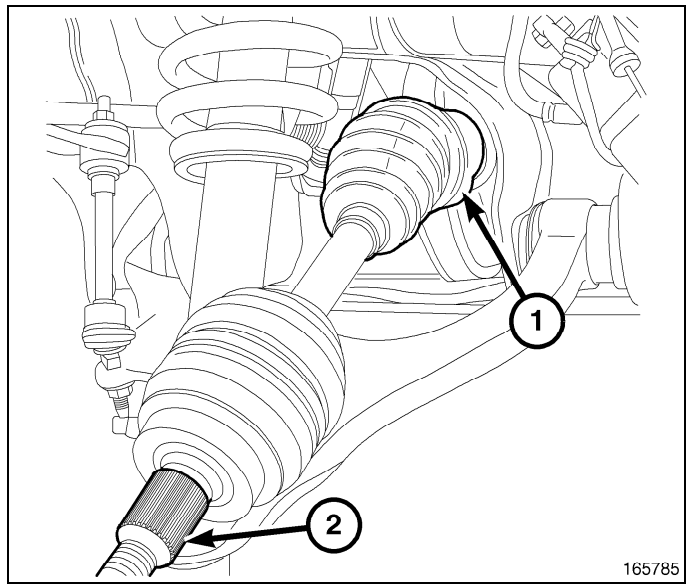

2. Clean hub bearing bore, hub bearing mating surface and half shaft splines.
3. Apply a light coating of grease to the front axle shaft output splines.
4. Install half shaft (2) into the knuckle.

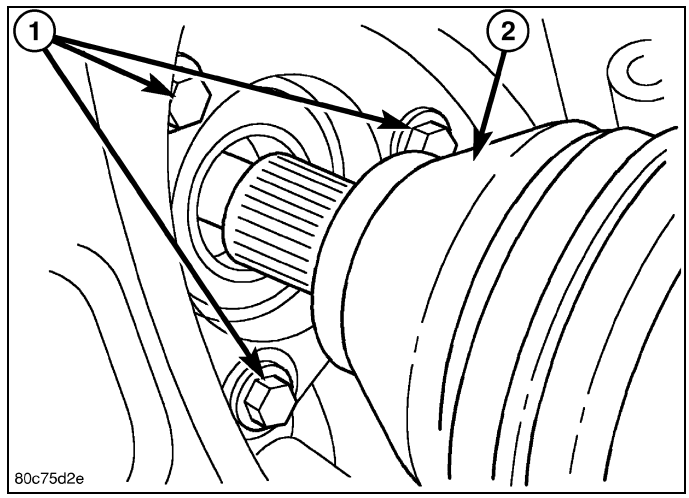

5. Install steering knuckle (1).
6. Install brake rotor and caliper.

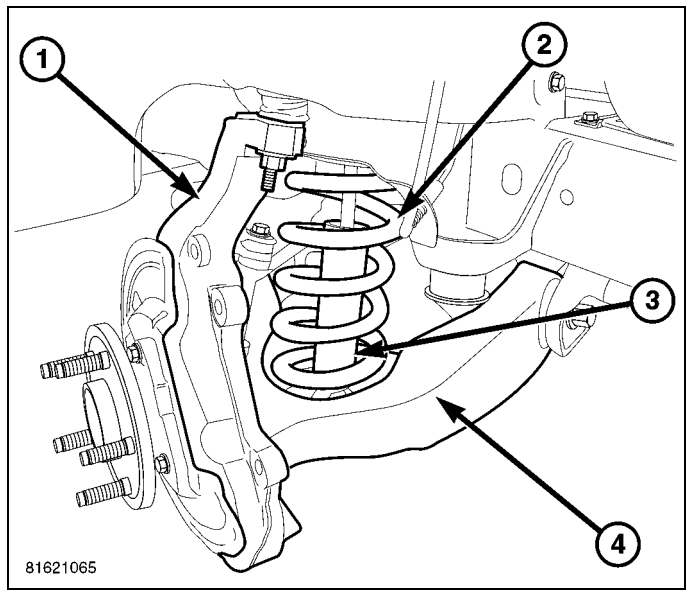

7. Install half shaft hub nut (1) and tighten to 251 N·m (185 ft. lbs.).

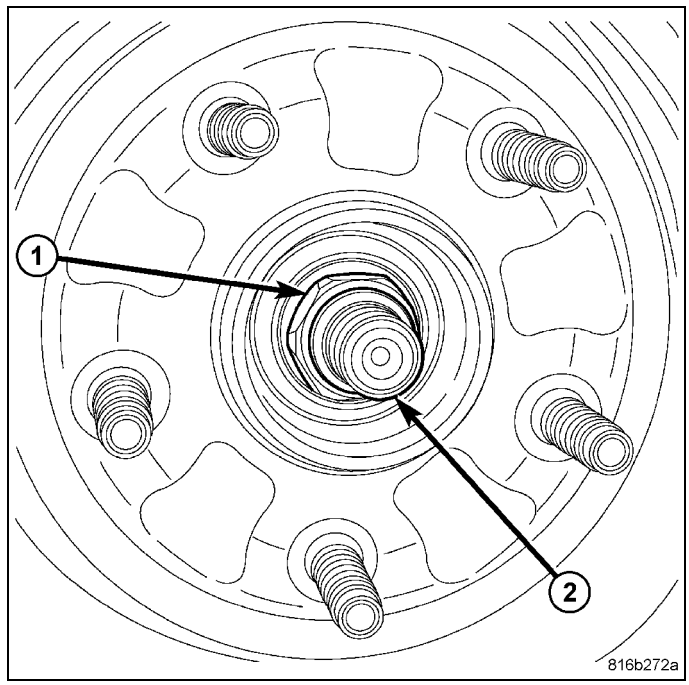

Specifications

DESCRIPTION	N·m	Ft. Lbs.	In. Lbs.
Half Shaft Nut	251	185	-

Special Tools

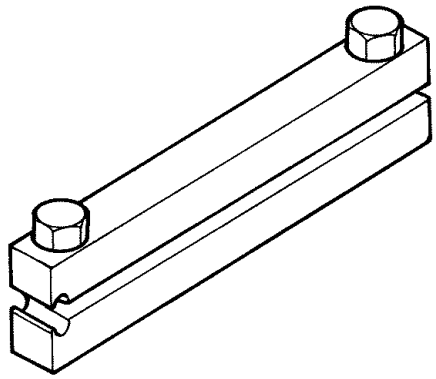

C-4975A - Installer, Axle Clamp

JOINT, Drive Shaft, Inner

Removal

1. Clamp shaft in vise (with soft jaws) and support C/V joint.
2. Remove clamps (2) (4) with a cut-off wheel or grinder.

CAUTION: Do not damage C/V housing or half shaft with cut-off wheel or grinder.

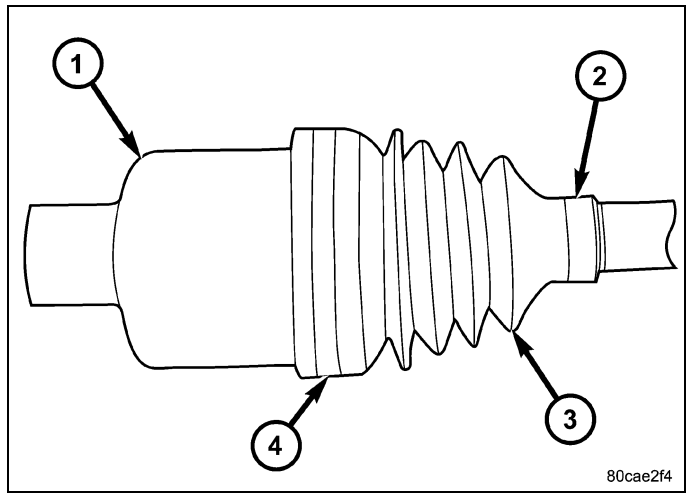

3. Remove housing (2) from the half shaft and slide boot (1) down shaft.
4. Remove housing bushing from the housing.

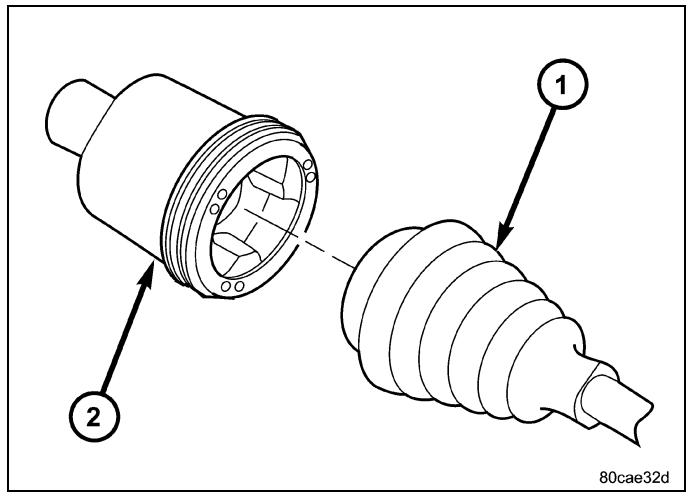

5. Remove tripod (2) snap ring (1).
6. Remove tripod (2) and boot from the half shaft.
7. Clean and inspect C/V components for excessive wear and damage. Replace the tripod as a unit only if necessary.

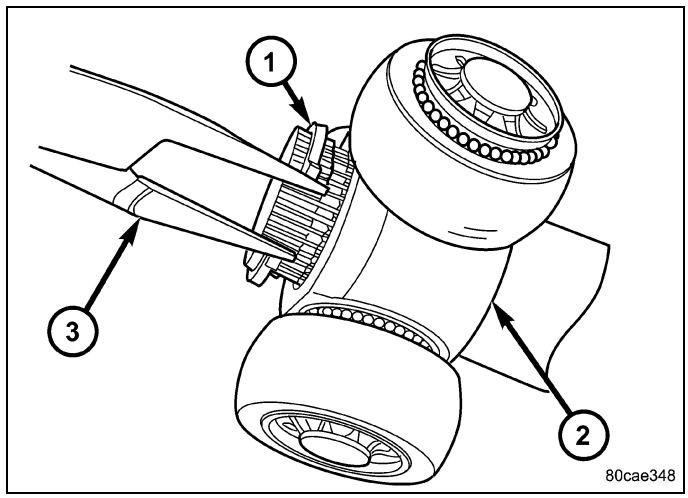

Installation

1. Clean all C/V joint components and shaft.
2. Slide **new** boot (1) down the half shaft.
3. Install tripod (2) and tripod snap ring on the half shaft.
4. Pack grease supplied with the joint/boot into the housing and boot.
5. Coat tripod with supplied grease.

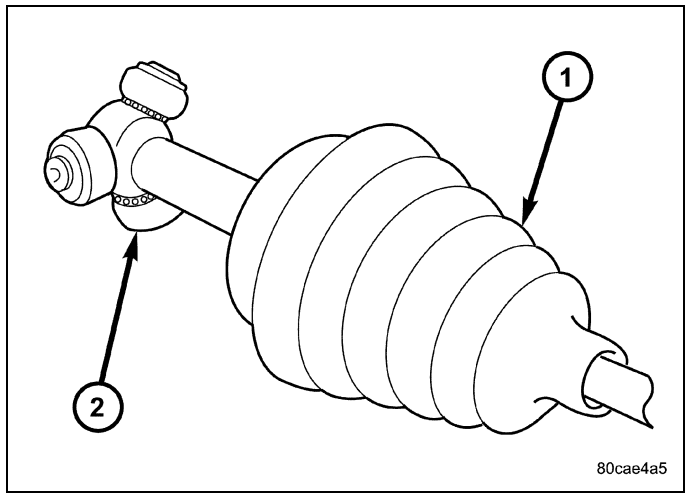

6. Install **new** bushing (1) onto the housing (2).
7. Insert the tripod and shaft in the housing.

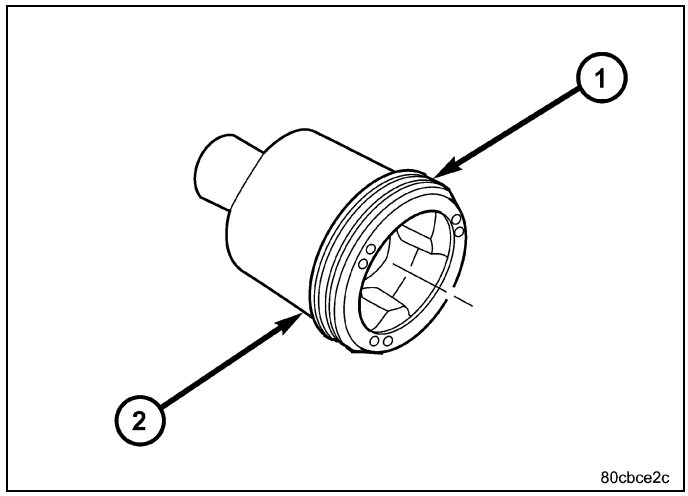

8. Position the boot (2) on the housing (5) and shaft (4) in it's original position.

NOTE: Verify boot is not twisted and remove any excess air.

9. Measure the distance from the end of the housing to the end of the boot on the shaft. This measurement should be 260 mm (10.25 in.).

NOTE: If measurement is not correct, allow more or less air into the boot.

10. Secure both boot clamps (1) (3) with Clamp Installer C-4975A. Place tool on clamp bridge and tighten tool until the jaws of the tool are closed.

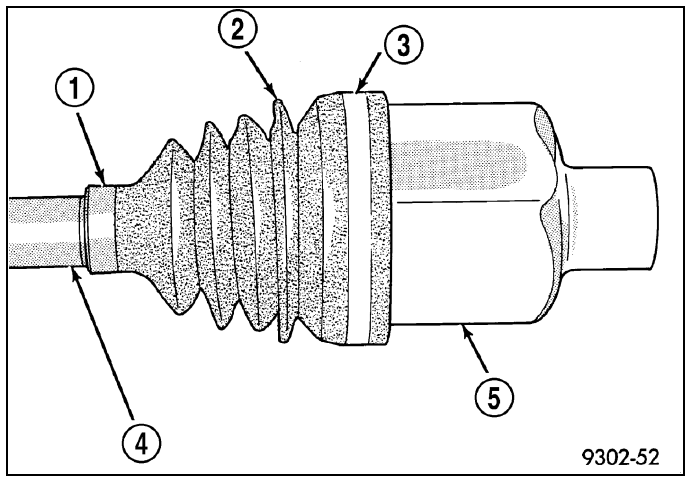

JOINT, Drive Shaft, Outer

Removal

1. Clamp shaft in a vise (with soft jaws) and support C/V joint.

CAUTION: Do not damage C/V housing or half shaft.

2. Remove clamps (2) (4) with a cut-off wheel or grinder.

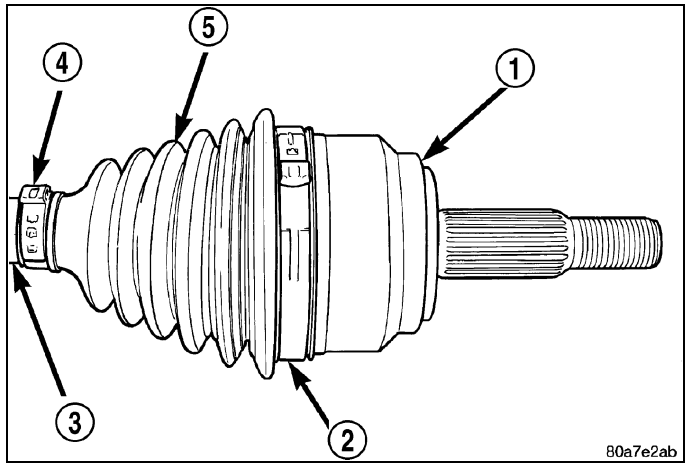

3. Slide the boot down the shaft.
4. Remove lubricant to expose the C/V joint snap ring (1).
5. Spread snap ring (1) and slide the joint off the shaft.
6. Slide boot off the shaft and discard old boot.

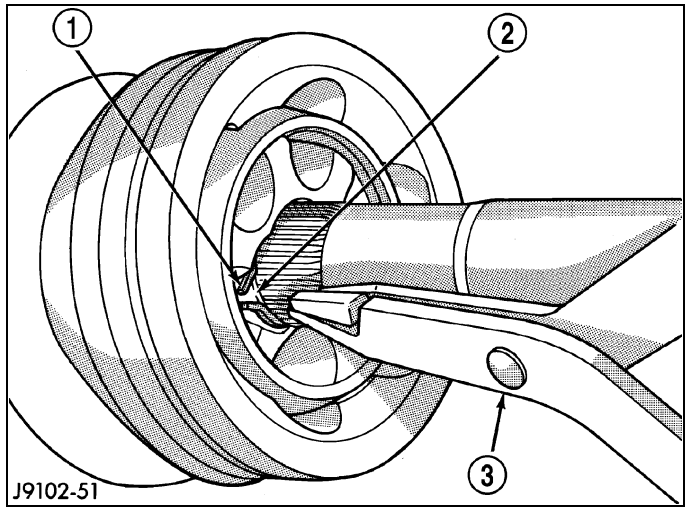

7. Mark alignment marks (1) on the inner race/hub (2), bearing cage (3) and housing with dabs of paint .
8. Clamp C/V joint in a vertical position in a soft jawed vise.

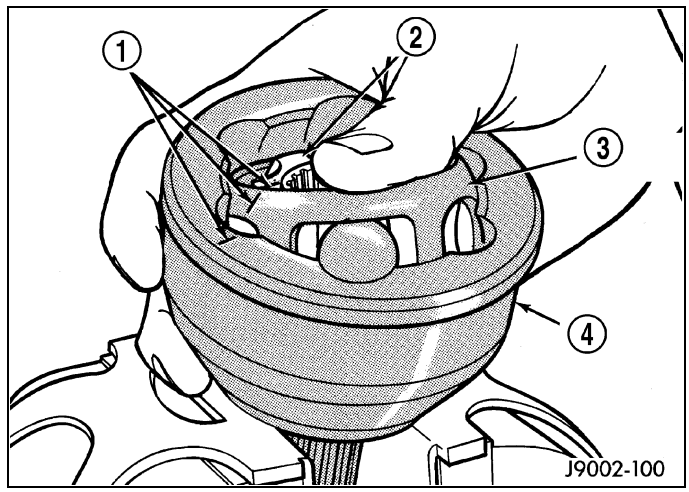

9. Press down one side of the bearing cage (3) to gain access to the ball at the opposite side.

NOTE: If joint is tight, use a hammer and brass drift to loosen the bearing hub. Do not contact the bearing cage with the drift.

10. Remove ball (4) from the bearing cage (3).
11. Repeat step above until all six balls are removed from the bearing cage.

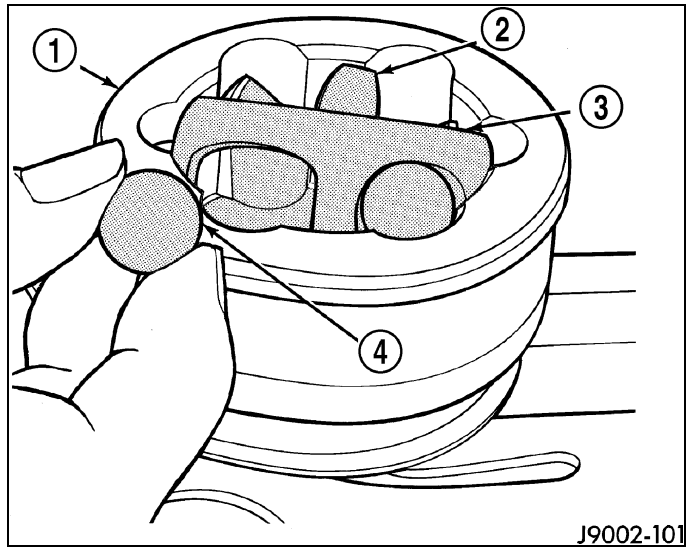

12. Lift cage and inner race (2) upward and out from the housing (1).

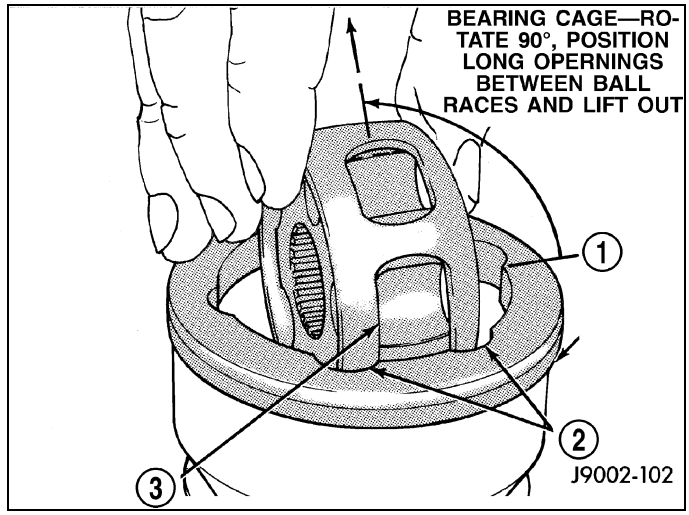

13. Turn inner race 90° in the cage and rotate the inner race/hub out of the cage.

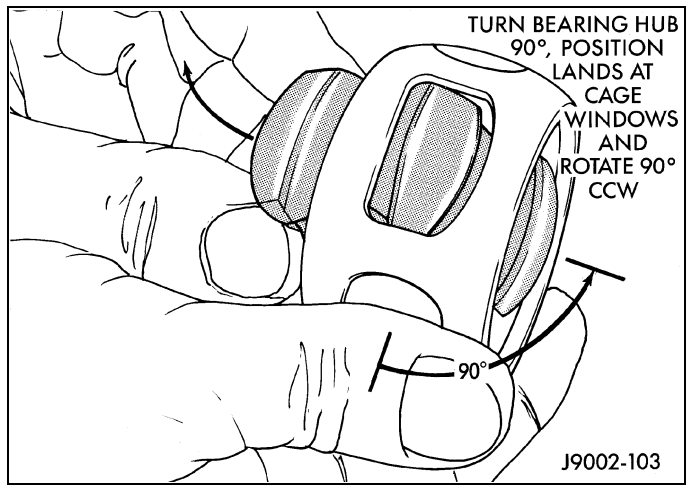

Installation

NOTE: If C/V joint is worn, replace entire C/V joint and boot.

1. Clean all C/V joint components and shaft.
2. Apply a light coat of grease supplied with the joint/boot to the C/V joint components before assembling them.
3. Align the inner race (1) cage (2) and housing according to the alignment reference marks.
4. Insert the inner race (1) into the cage (2) and rotate race into the cage.

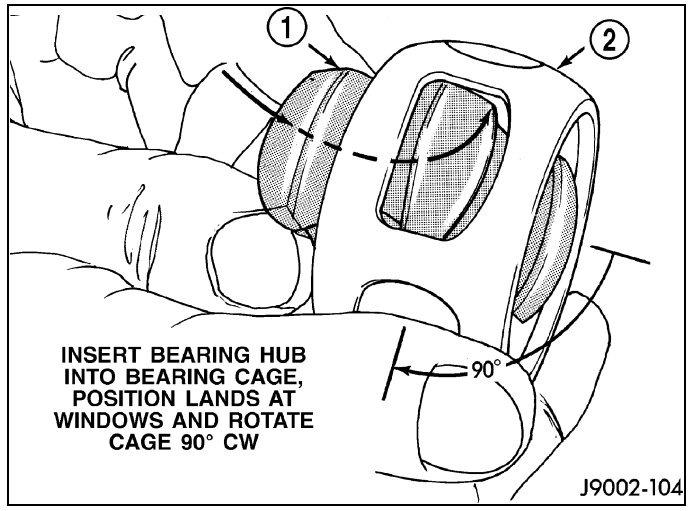

5. Rotate the inner race/hub (2) in the cage.

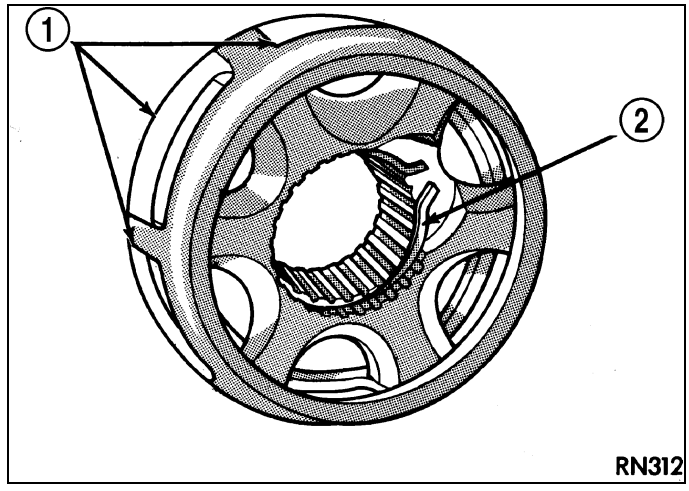

6. Insert cage (2) into the housing. Rotate the cage 90° into the housing (3) so the large bearing hub counterbore is facing outwards.
7. Apply the grease supplied with the joint/boot to the ball races. Spread the grease equally between all the races.

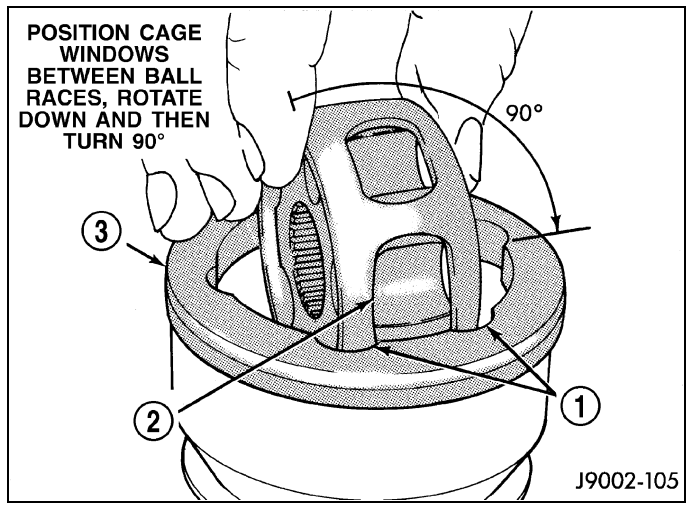

8. Tilt inner race/hub (1) and cage (3) and install the balls(4).
9. Place new clamps onto new boot and slide boot onto the shaft to it's original position.
10. Apply the rest of grease to the C/V joint and boot.

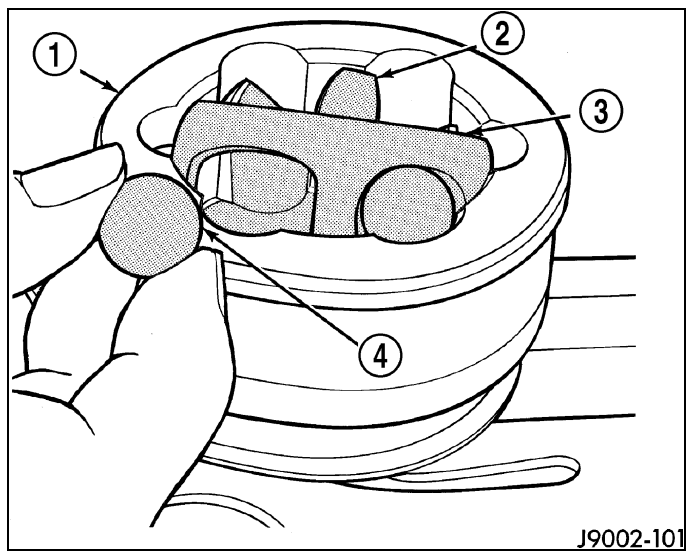

11. Install the joint onto the shaft (2). Push the joint onto the shaft until the snap ring (1) seats in the groove (3).

NOTE: Pull on the joint to verify the span ring has engaged.

12. Position the boot on the joint in it's original position.

NOTE: Verify boot is not twisted and remove any excess air.

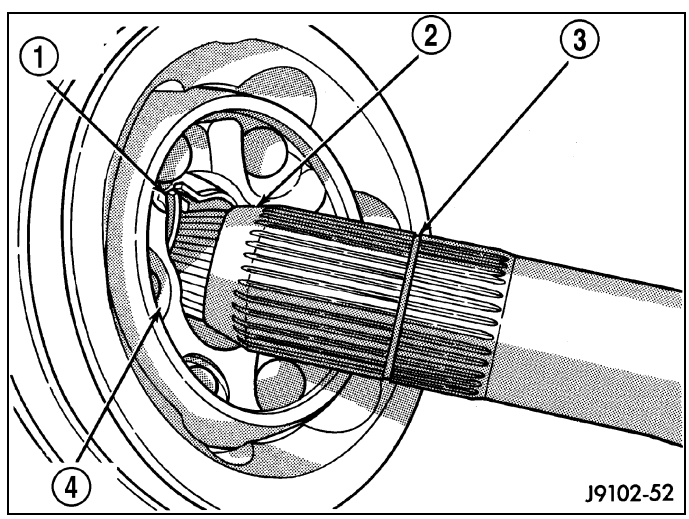

13. Secure both boot (5) clamps (2) (4) with Clamp Installer C-4975A. Place tool on clamp bridge and tighten tool until jaws of the tool are closed.

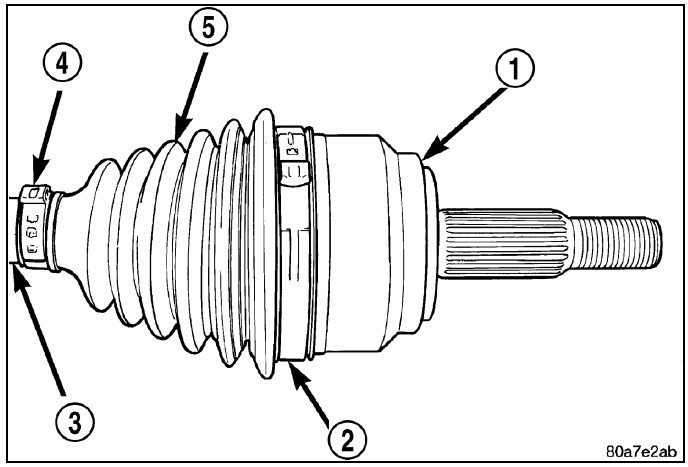

FRONT AXLE - C205FD

TABLE OF CONTENTS

page

FRONT AXLE - C205FD
DIAGNOSIS AND TESTING 48
REMOVAL 52
INSTALLATION 56
ADJUSTMENTS 60
SPECIFICATIONS 70
SPECIAL TOOLS 71
ACTUATOR, AXLE LOCKER
REMOVAL 77
INSTALLATION 78
BEARING, AXLE SHAFT
REMOVAL 80
INSTALLATION 81
BEARING, DIFFERENTIAL SIDE
REMOVAL 82
INSTALLATION 83
CASE ASSEMBLY, DIFFERENTIAL
REMOVAL 83
DISASSEMBLY 85
ASSEMBLY. 87
INSTALLATION 88
COVER, DIFFERENTIAL
REMOVAL 89
INSTALLATION 90
GEAR, RING AND PINION
REMOVAL 90
INSTALLATION 94

page

OUTPUT SHAFT ASSEMBLY, FRONT AXLE
REMOVAL 98
DISASSEMBLY 100
ASSEMBLY. 101
INSTALLATION 103
SEAL, AXLE DRIVE SHAFT, OUTPUT SHAFT
REMOVAL 107
INSTALLATION 108
SEAL, AXLE DRIVE SHAFT
REMOVAL 111
INSTALLATION 112
SEAL, DRIVE PINION
REMOVAL 113
INSTALLATION 114
SHAFT, AXLE
REMOVAL 116
INSTALLATION 117
SHAFT, AXLE INTERMEDIATE
REMOVAL 117
DISASSEMBLY 121
ASSEMBLY. 121
INSTALLATION 122
TUBE, BEARING AXLE
REMOVAL 128
INSTALLATION 133

Front Axle - C205FD

Diagnosis and Testing

FLUID CHECK

Filling a front axle to the bottom of the fill hole will result in an over fill condition. This can cause fluid foaming which will result in inadequate lubrication to the axle components. To check axle fluid, park vehicle on a level surface. Take a piece of wire (or pipe cleaner) and make a 90 degree bend two inches from the end of the wire. Insert the wire into the fill plug hole and use it like a dipstick. Remove the wire and measure from the 90 degree bend to the oil level. Refer to specification for the correct measurement.

GEAR NOISE

Axle gear noise can be caused by insufficient lubricant, incorrect backlash, tooth contact, worn/damaged gears or the carrier housing not having the proper offset and squareness.

Gear noise usually happens at a specific speed range. The noise can also occur during a specific type of driving condition. These conditions are acceleration, deceleration, coast, or constant load.

When road testing, first warm-up the axle fluid by driving the vehicle at least 5 miles and then accelerate the vehicle to the speed range where the noise is the greatest. Shift out-of-gear and coast through the peak-noise range. If the noise stops or changes greatly check for:

- Insufficient lubricant.
- Incorrect ring gear backlash.
- Gear damage.

Differential side gears and pinions can be checked by turning the vehicle. The side gears are loaded during turns. They usually do not cause noise during straight-ahead driving when the gears are unloaded. A worn pinion mate shaft can also cause a snapping or a knocking noise.

BEARING NOISE

The axle shaft, differential and pinion bearings can all produce noise when worn or damaged. Bearing noise can be either a whining, or a growling sound.

Pinion bearings have a constant-pitch noise. This noise changes only with vehicle speed. Pinion bearing noise will be higher pitched because it rotates at a faster rate. Drive the vehicle and load the differential. If bearing noise occurs, the rear pinion bearing is the source of the noise. If the bearing noise is heard during a coast, the front pinion bearing is the source.

Differential bearings usually produce a low pitch noise. Differential bearing noise is similar to pinion bearing noise. The pitch of differential bearing noise is also constant and varies only with vehicle speed.

Axle/Output shaft bearings produce noise and vibration when worn or damaged. The noise generally will be constant with bearings loaded or unloaded. Where axle/output bearing damage is slight, the noise is usually not noticeable at speeds above 30 m.p.h.

Intermediate shaft bearings produce noise when worn or damaged. The noise will changes when the axle is in disconnect. Road test the vehicle and actuate the disconnect. This will load the bearings and change the noise level. Where axle bearing damage is slight, the noise is usually not noticeable at speeds above 30 m.p.h.

LOW SPEED KNOCK

Low speed knock is generally caused by:

- Worn U-joints/CV joint.
- Worn side-gear thrust washers.
- Worn pinion shaft bore.

VIBRATION

Vibration at the rear of the vehicle is usually caused by:

- Damaged drive shaft.
- Missing drive shaft balance weight(s).
- Worn or out of balance wheels.
- Loose wheel lug nuts.

- Worn U-joint(s).
- Loose/broken springs.
- Damaged axle shaft bearing(s).
- Loose pinion gear nut.
- Excessive pinion yoke run out.
- Bent axle shaft(s).

Check for loose or damaged front end components or engine/transmission mounts. These components can contribute to what appears to be a rear end vibration. Do not overlook engine accessories, brackets and drive belts.

All driveline components should be examined before starting any repair.

DRIVELINE SNAP

A snap or clunk noise when the vehicle is shifted into gear (or the clutch engaged) can be caused by:

- High engine idle speed.
- Transmission shift operation.
- Loose engine/transmission/transfer case mounts.
- Worn U-joints/CV joint.
- Loose spring mounts.
- Loose pinion gear nut and yoke.
- Excessive ring gear backlash.
- Excessive side gear to case clearance.

The source of a snap or a clunk noise can be determined with the assistance of a helper. Raise the vehicle on a hoist with the wheels free to rotate. Instruct the helper to shift the transmission into gear and listen for the noise. A mechanics stethoscope is helpful in isolating the source of a noise.

DIAGNOSTIC CHART

Condition	Possible Causes	Correction
Wheel Noise	1. Wheel loose.	1. Tighten loose nuts.
	2. Worn wheel bearing.	2. Replace bearing.
Axle Shaft Noise	1. Misaligned axle tube.	1. Inspect axle tube alignment. Correct as necessary.
	2. Bent or sprung axle shaft.	2. Inspect and correct as necessary.
	3. End-play in pinion bearings.	3. Refer to pinion pre-load information and correct as necessary.
	4. Excessive gear backlash between the ring gear and pinion.	4. Check adjustment of the ring gear and pinion backlash. Correct as necessary.
	5. Improper adjustment of pinion gear bearings.	5. Adjust the pinion bearings pre-load.
	6. Loose pinion yoke nut.	6. Tighten the pinion yoke nut.
	7. Scuffed gear tooth contact surfaces.	7. Inspect and replace as necessary.

DIAGNOSTIC CHART, continued

Condition	Possible Causes	Correction
Axle Shaft Broke	1. Misaligned axle tube.	1. Replace the broken shaft after correcting tube mis-alignment.
	2 Vehicle overloaded.	2. Replace broken shaft and avoid excessive weight on vehicle.
	3. Erratic clutch operation.	3. Replace broken shaft and avoid or correct erratic clutch operation.
	4. Grabbing clutch.	4. Replace broken shaft and inspect and repair clutch as necessary.
Differential Cracked	1. Improper adjustment of the differential bearings.	1. Replace case and inspect gears and bearings for further damage. Set differential bearing pre-load properly.
	2. Excessive ring gear backlash.	2. Replace case and inspect gears and bearings for further damage. Set ring gear backlash properly.
	3. Vehicle overloaded.	3. Replace case and inspect gears and bearings for further damage. Avoid excessive vehicle weight.
	4. Erratic clutch operation.	4. Replace case and inspect gears and bearings for further damage. Avoid erratic use of clutch.
Differential Gears Scored	1. Insufficient lubrication.	1. Replace scored gears. Fill differential with the correct fluid type and quantity.
	2. Improper grade of lubricant.	2. Replace scored gears. Fill differential with the correct fluid type and quantity.
	3. Excessive spinning of one wheel/tire.	3. Replace scored gears. Inspect all gears, pinion bores, and shaft for damage. Service as necessary.
Loss Of Lubricant	1. Lubricant level too high.	1. Drain lubricant to the correct level.
	2. Worn axle shaft seals.	2. Replace seals.
	3. Cracked differential housing.	3. Repair as necessary.
	4. Worn pinion seal.	4. Replace seal.
	5. Worn/scored yoke.	5. Replace yoke and seal.
	6. Axle cover not properly sealed.	6. Remove, clean and seal cover.
Axle Overheating	1. Lubricant level low.	1. Fill differential to correct level.
	2. Improper grade of lubricant.	2. Fill differential with the correct fluid type and quantity.
	3. Bearing pre-loads too high.	3. Adjust bearing pre-loads.
	4. Insufficient ring gear backlash.	4. Adjust ring gear backlash.

DIAGNOSTIC CHART, continued

Condition	Possible Causes	Correction
Gear Teeth Broke	1. Overloading.	1. Replace gears. Examine other gears and bearings for possible damage.
	2. Erratic clutch operation.	2. Replace gears and examine the remaining parts for damage. Avoid erratic clutch operation.
	3. Ice-spotted pavement.	3. Replace gears and examine remaining parts for damage.
	4. Improper adjustments.	4. Replace gears and examine remaining parts for damage. Ensure ring gear backlash is correct.
Axle Noise	1. Insufficient lubricant.	1. Fill differential with the correct fluid type and quantity.
	2. Improper ring gear and pinion adjustment.	2. Check ring gear and pinion contact pattern.
	3. Unmatched ring gear and pinion.	3. Replace gears with a matched ring gear and pinion.
	4. Worn teeth on ring gear and pinion.	4. Replace ring gear and pinion.
	5. Loose pinion bearings.	5. Adjust pinion bearing pre-load.
	6. Loose differential bearings.	6. Adjust differential bearing pre-load.
	7. Ring gear run-out.	7. Measure ring gear run-out. Replace components as necessary.
	8. Loose differential bearing cap bolts.	8. Inspect differential components and replace as necessary. Ensure that the bearing caps are torqued tot he proper specification.
	9. Housing not machined properly.	9. Replace housing.

Removal

1. With vehicle in neutral, position vehicle on hoist.
2. Remove axle half shafts.
3. Mark (4) front propeller shaft (2) and companion flange (1). Remove front propeller shaft (2).

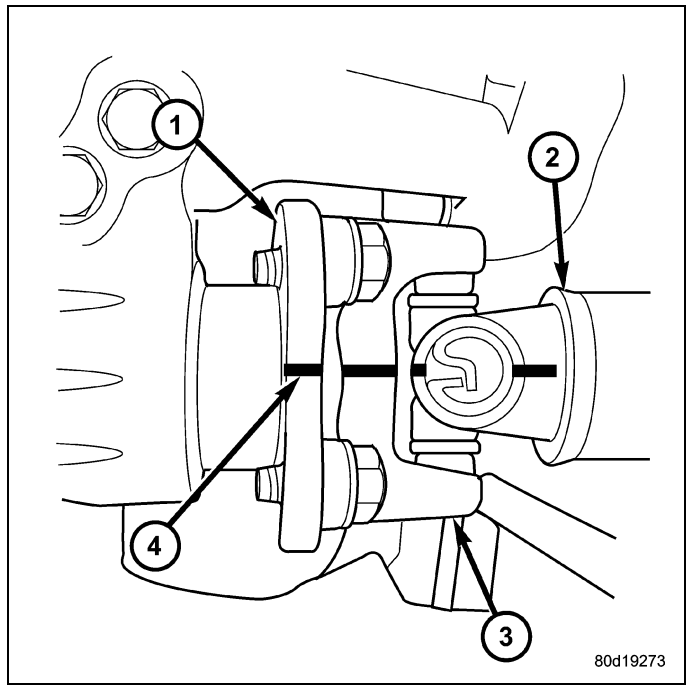

4. Remove skid plate (1) bolts (2) and remove skid plate.

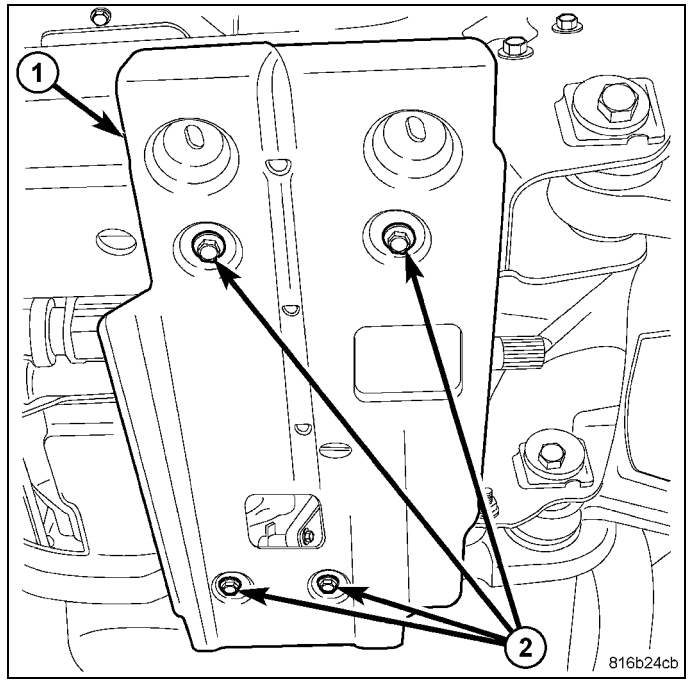

5. Remove suspension crossmember (1) nuts (2) and bolts. Remove crossmember.

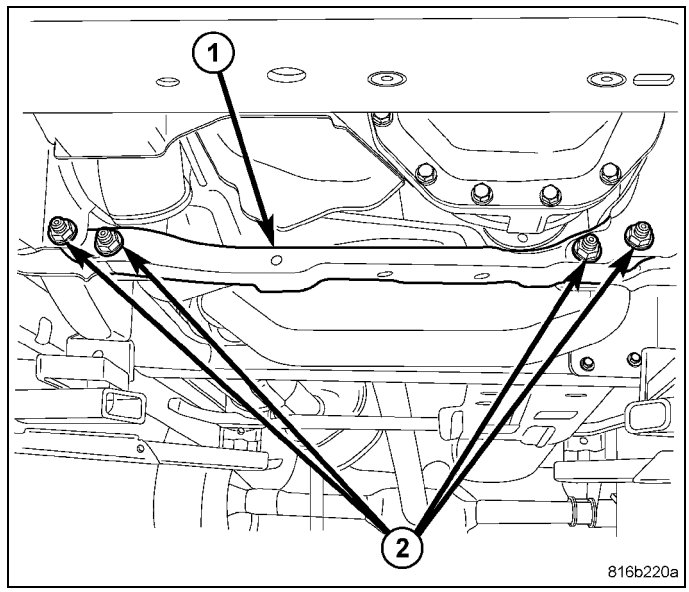

6. Remove disconnect actuator (1) wiring connector (2).

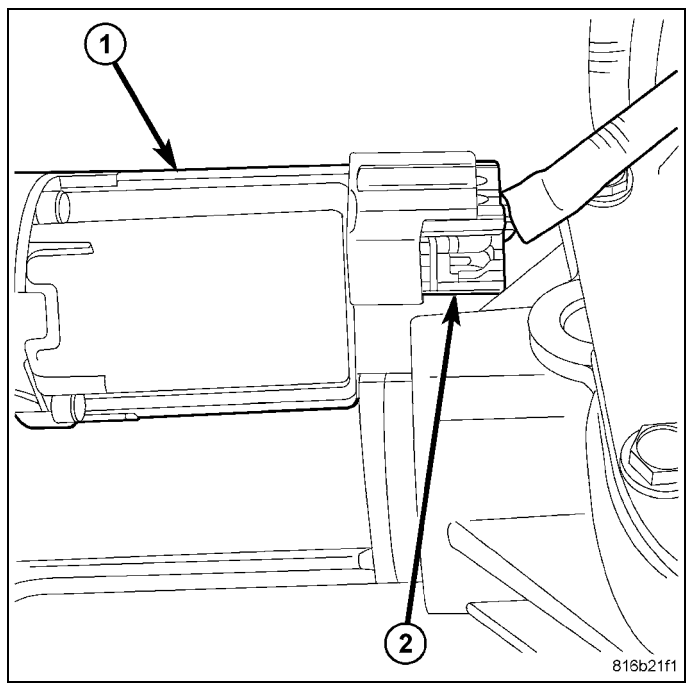

7. Remove vent hose (1) from differential cove tube (2).

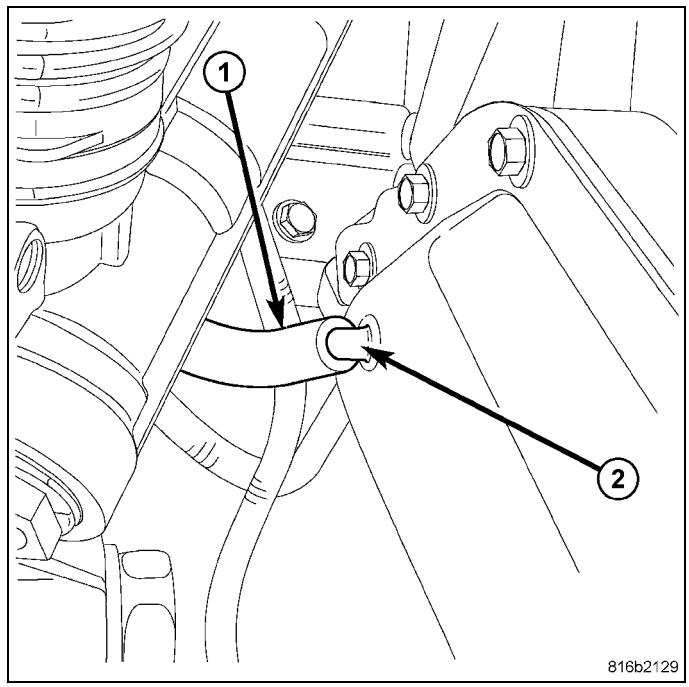

8. Support axle with hydraulic jack.
9. Remove axle housing pinion mounting bolts (1).

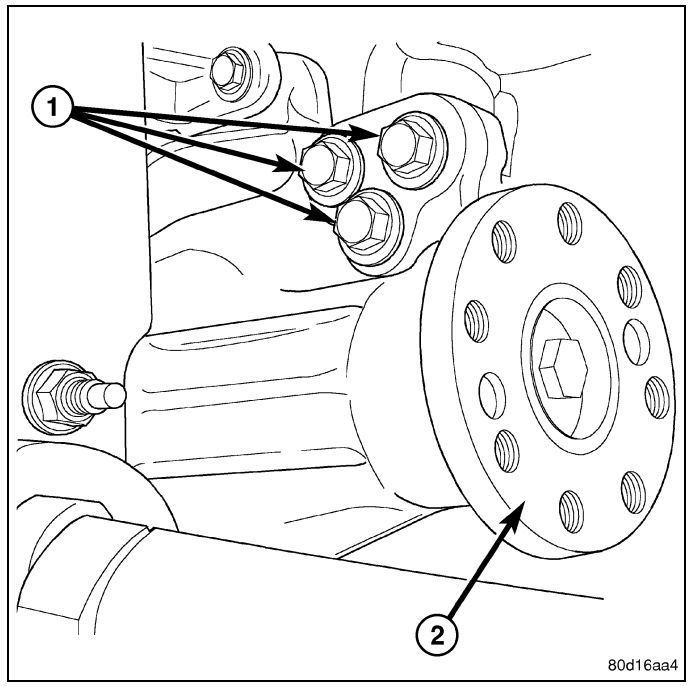

10. Remove axle shaft tube (1) mounting nuts (2) and bolts.

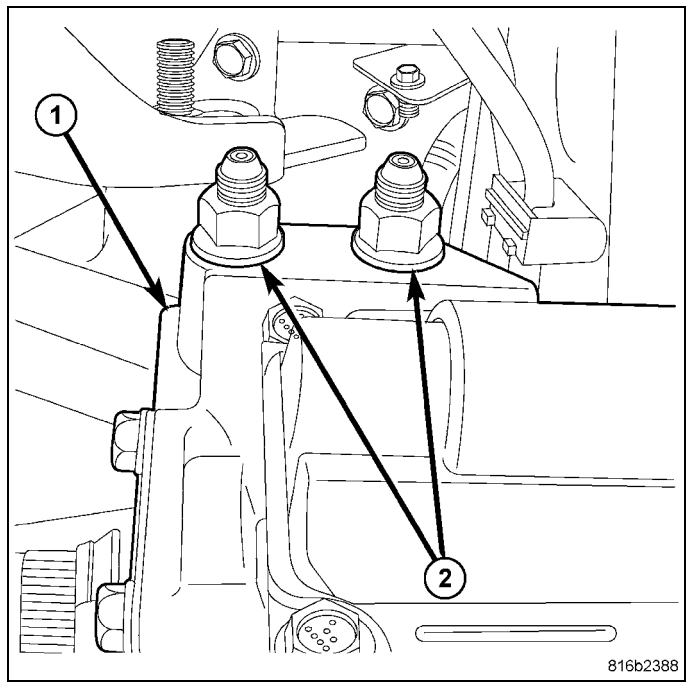

.

11. Remove differential housing to engine mounting (1) nuts (2). Leave bolts in differential housing.
12. Slide axle over with engine mount bolts to clear engine mount. Lower axle from the vehicle.

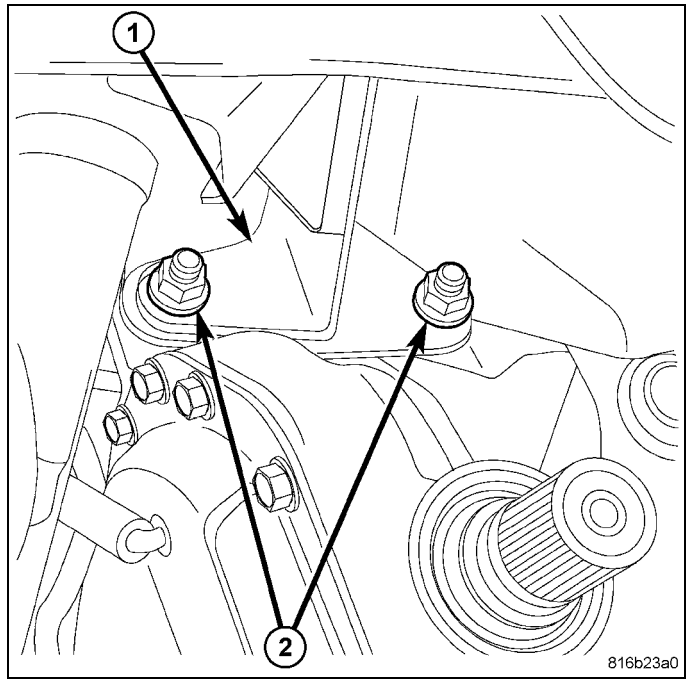

Installation

1. Raise axle and slide axle with engine mounting (1) bolts into engine mount.
2. Install engine mount nuts and tighten to 95 N·m (70 ft. lbs.).

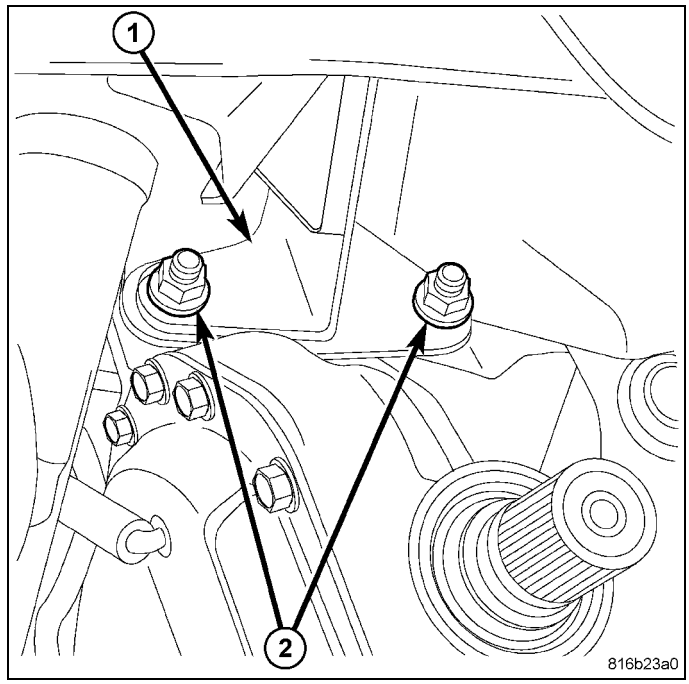

3. Install axle shaft tube (1) mounting bolts and nuts (2). Tighten nuts (2) to 95 N·m (70 ft. lbs.).

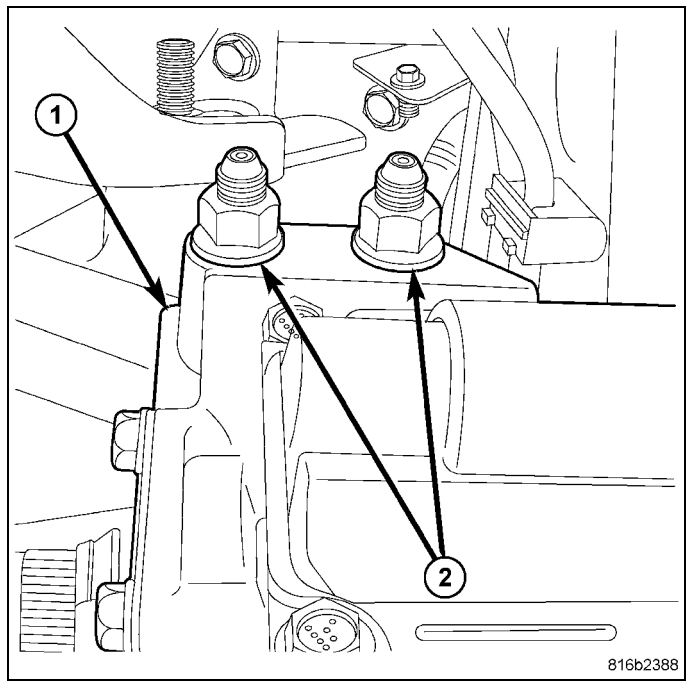

.

4. Install axle housing pinion nose mounting bolts (1) and tighten to 95 N·m (70 ft. lbs.).

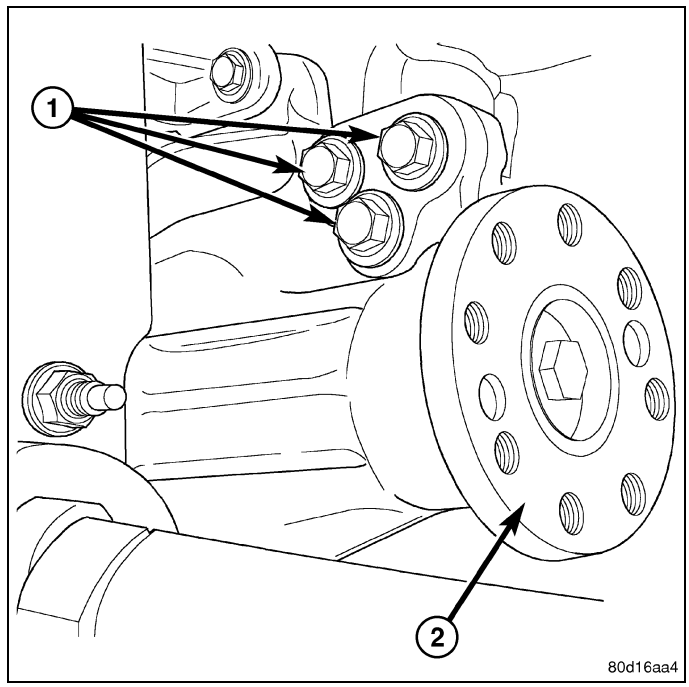

5. Install vent hose (1) on differential cover tube (2).

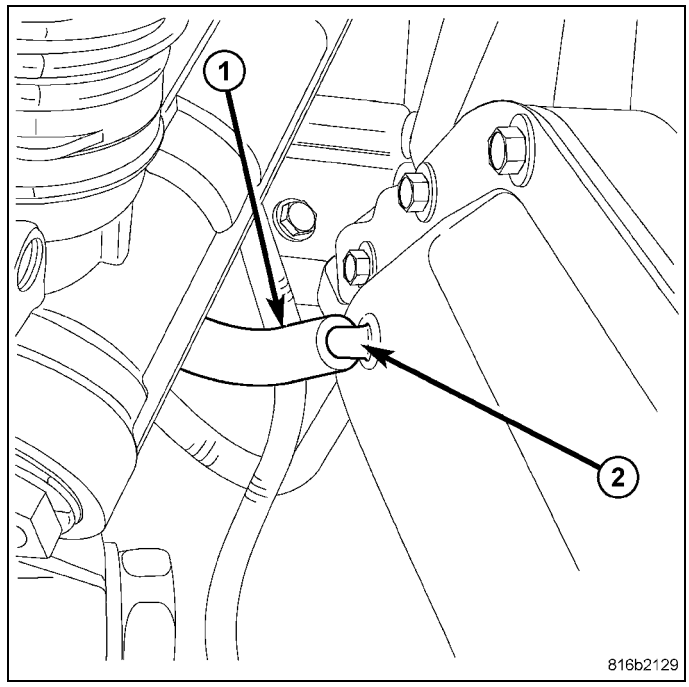

6. Install disconnect actuator (1) wiring connector (2).

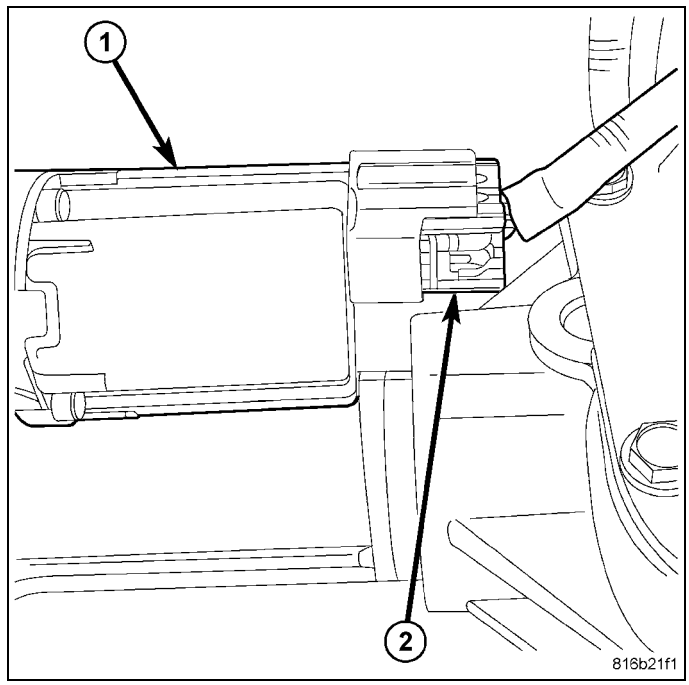

7. Install suspension crossmember (1), bolts and nuts (2).

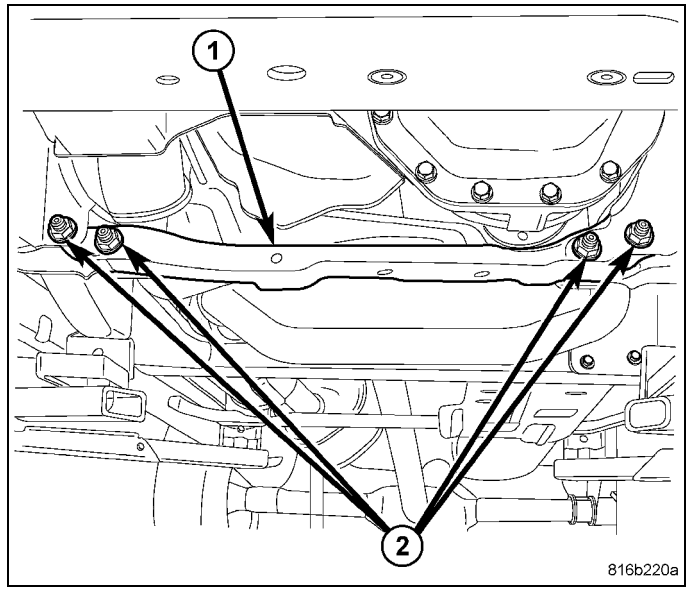

8. Install skid plate (1) and bolts (2).

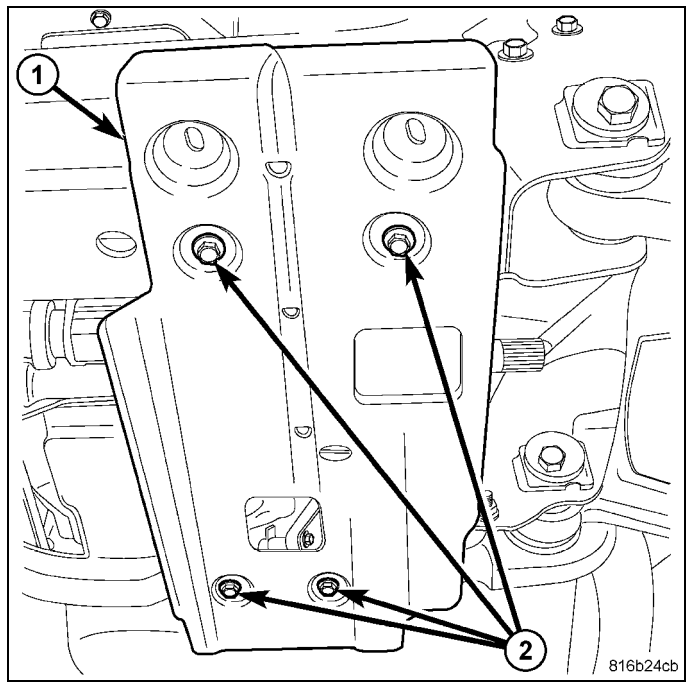

9. Install front propeller shaft (2) with reference marks (4) aligned and tighten bolts to 115 N·m (85 ft. lbs.).
10. Install axle half shafts.

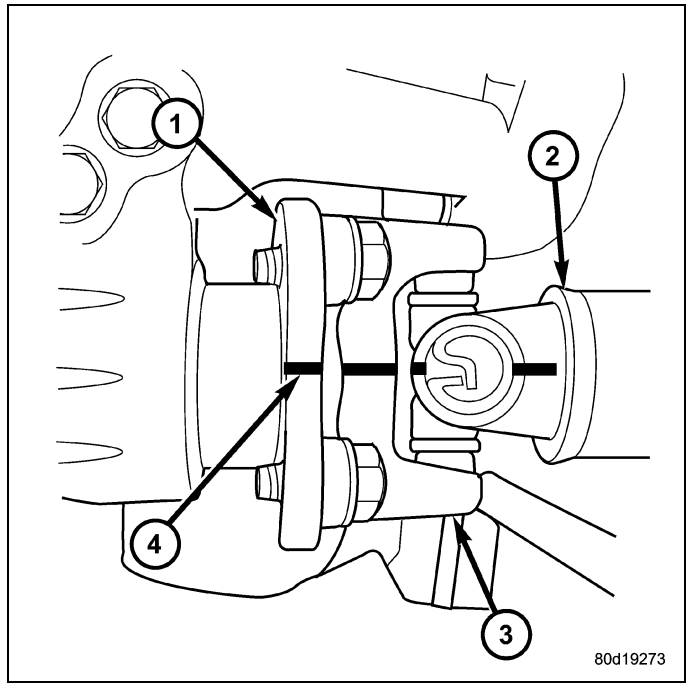

Adjustments

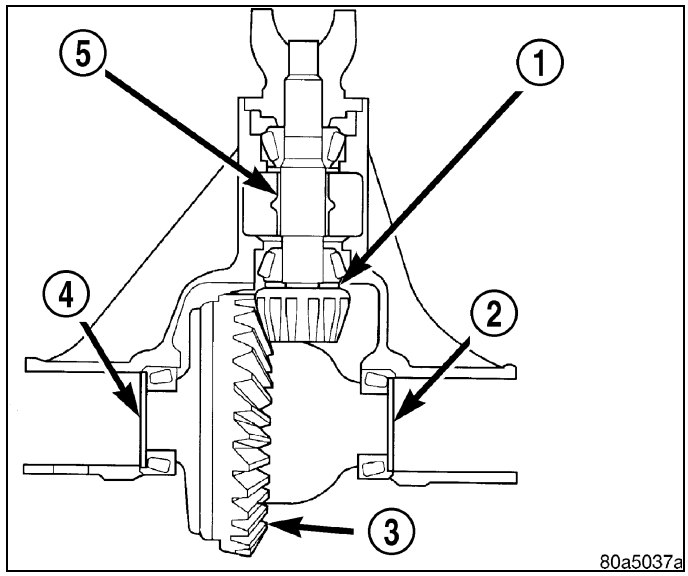

Ring gear (3) and pinion are supplied as a matched sets. Identifying numbers for the ring gear and pinion are painted onto the pinion gear shaft and the side of the ring gear. A plus (+) number, minus (-) number or zero (0) along with the gear set sequence number (01 to 99) is on each gear. This first number is the amount (in thousandths of an inch) the depth varies from the standard depth setting of a pinion marked with a (0). The next two numbers are the sequence number of the gear set. Compensation for pinion depth variance is achieved with select shims (1) located between the rear pinion bearing cone and pinion gear head.

If installing a new gear, note the depth variance number of the original and replacement pinion. Add or subtract this number from the original depth shim/oil slinger to compensate for the difference in the depth variances. The numbers represent thousands of an inch deviation from the standard. If the number is negative, add that value to the required thickness of the depth shims. If the number is positive, subtract that value from the thickness of the depth shim.

Pinion Gear Depth Variance Chart: Note where Old and New Pinion Marking columns intersect. Intersecting figure represents plus or minus the amount needed.

PINION GEAR DEPTH VARIANCE

Original Pinion Gear Depth Variance	New Pinion Gear Depth Variance								
	−4	**−3**	**−2**	**−1**	**0**	**+1**	**+2**	**+3**	**+4**
+4	+0.008	+0.007	+0.006	+0.005	+0.004	+0.003	+0.002	+0.001	0
+3	+0.007	+0.006	+0.005	+0.004	+0.003	+0.002	+0.001	0	−0.001
+2	+0.006	+0.005	+0.004	+0.003	+0.002	+0.001	0	−0.001	−0.002
+1	+0.005	+0.004	+0.003	+0.002	+0.001	0	−0.001	−0.002	−0.003
0	+0.004	+0.003	+0.002	+0.001	0	−0.001	−0.002	−0.003	−0.004
−1	+0.003	+0.002	+0.001	0	−0.001	−0.002	−0.003	−0.004	−0.005
−2	+0.002	+0.001	0	−0.001	−0.002	−0.003	−0.004	−0.005	−0.006
−3	+0.001	0	−0.001	−0.002	−0.003	−0.004	−0.005	−0.006	−0.007
−4	0	−0.001	−0.002	−0.003	−0.004	−0.005	−0.006	−0.007	−0.008

PINION DEPTH MEASUREMENT

Measurements are taken with pinion cups and pinion bearings installed in housing. Take measurements with a Pinion Gauge Set 6775, Gauge Block 8177 (6), Arbor Discs 8541A (8) and Dial Indicator C-3339A (1).

1. Assemble Pinion Height Block 6739 (3), Gauge Block 8177 (6) and rear pinion bearing onto Screw 6741 (5).

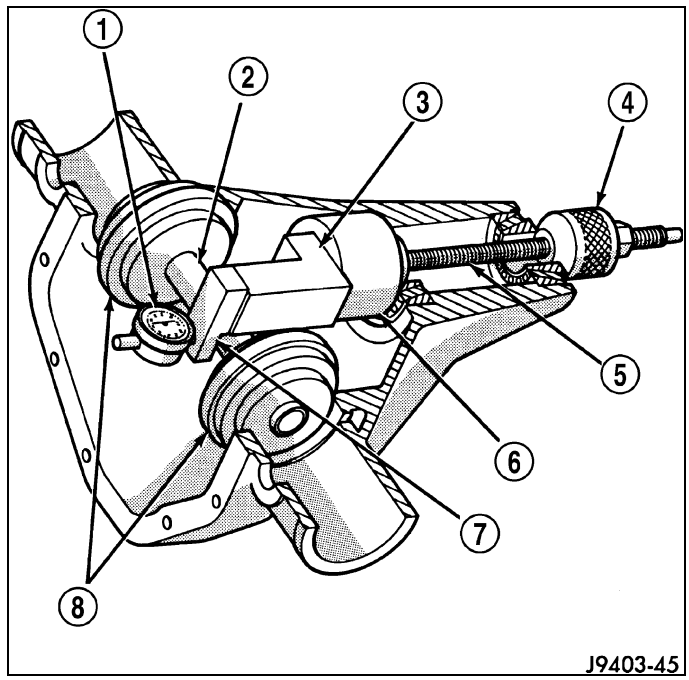

2. Insert assembled height gauge components (1, 2), rear bearing and screw into the housing through the pinion bearing cups.
3. Install front pinion bearing and Cone-Nut 6740 onto the screw. Tighten cone-nut until Torque To Rotate the screw is 2.0 N·m (18 in. lbs.).

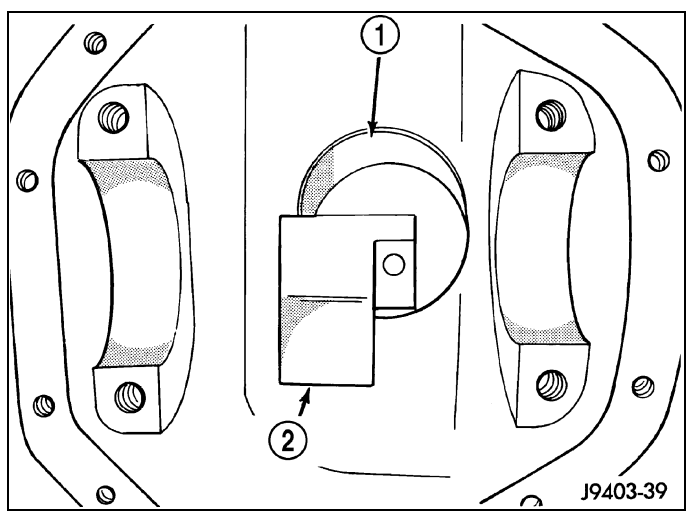

4. Place Arbor Discs 8541A (1) on Arbor D-115-3 (3) in position in the housing side bearing cradles. Install differential bearing caps on arbor discs (1) and tighten cap bolts 61 N·m (45 ft. lbs.).
5. Assemble Dial Indicator C-3339A into Scooter Block D-115-2A and secure set screw.
6. Place Scooter Block/Dial Indicator in position in the housing so dial probe and scooter block are flush against the surface of the pinion height block. Hold scooter block in place and zero the dial indicator. Tighten dial indicator face lock screw.

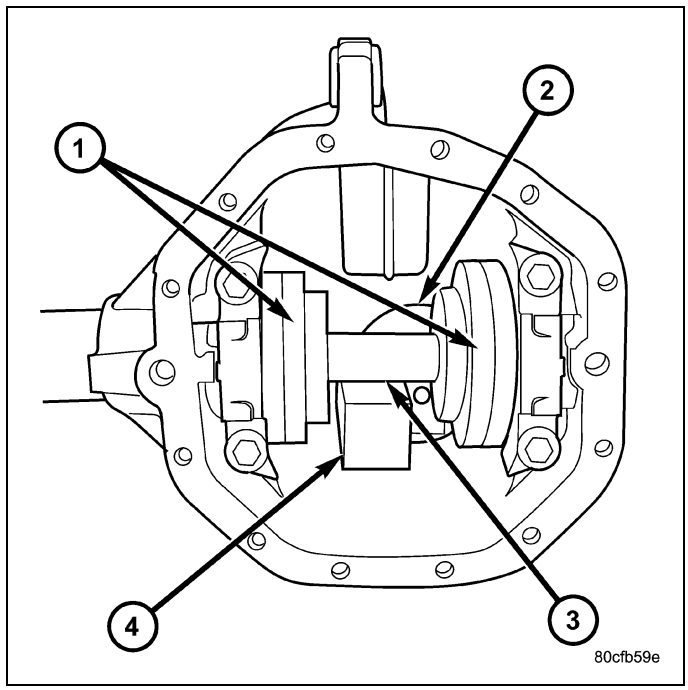

7. Slide the dial indicator (3) probe across the gap between the pinion height block and the arbor bar (1) with the scooter block (2) against the pinion height block. Slide the dial probe to the crest of the arbor bar and record the highest reading.
8. Select a shim/oil slinger equal to the dial indicator reading plus or minus the pinion depth variance number on the pinion gear. If the depth variance is -2, add 0.002 in. to the dial indicator reading. If the depth variance is +2, subtract 0.002 in. from the dial indicator reading.

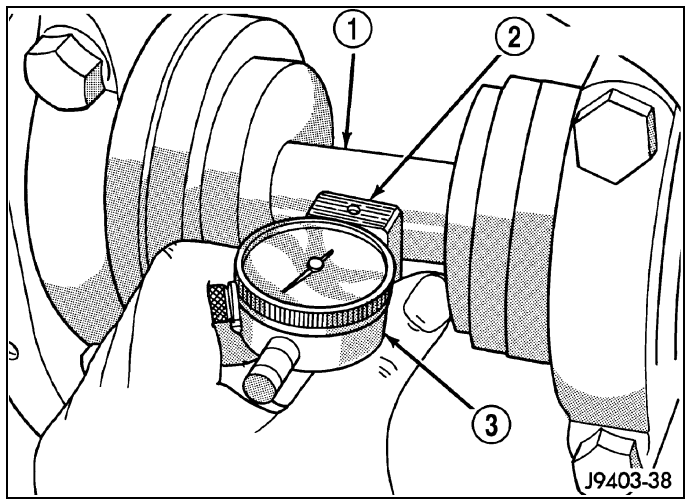

DIFFERENTIAL BEARING PRELOAD

Before measuring differential bearing preload and gear backlash, pinion gear depth must be established and the pinion gear ready for installation. Pinion gear depth is essential to establishing gear backlash and tooth contact patterns.

Differential bearing preload and gear backlash is achieved with selective shims (2) (4) located between the differential bearing cups and differential housing. Shim thickness is determined using Dummy Bearings 8398 and Dummy Shims 8107 in place of the differential side bearings and preload shims.

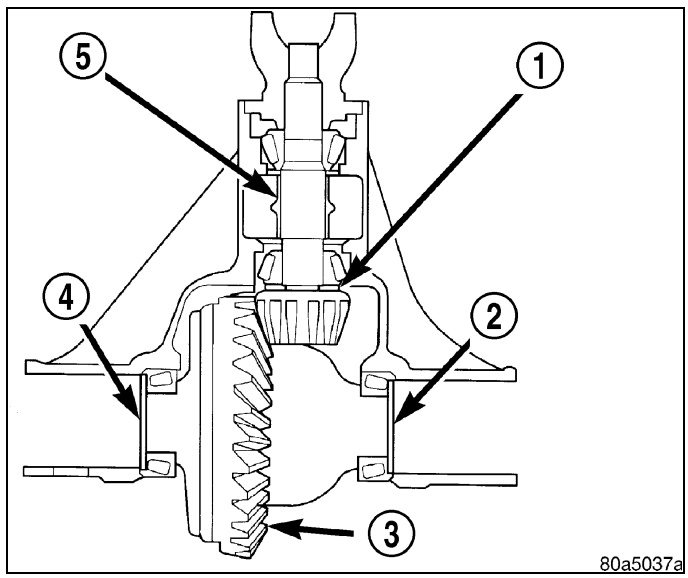

SHIM SELECTION

1. Remove side bearings from differential case.
2. Install Dummy Bearings 8398 (4) on differential case.
3. Install differential case in the housing.
4. Install 3 mm (0.118 in.) thick Dummy Shims 8107 (1) between dummy bearings (4) and differential housing.

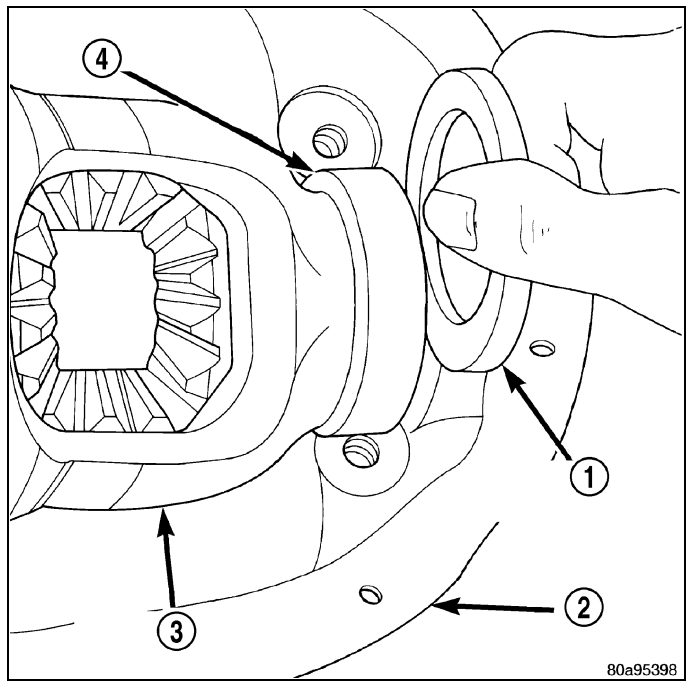

5. Install bearing caps in their correct positions and snug bearing cap bolts.
6. With a dead-blow hammer (1) seat differential dummy bearing to pinion side (3) of the housing.

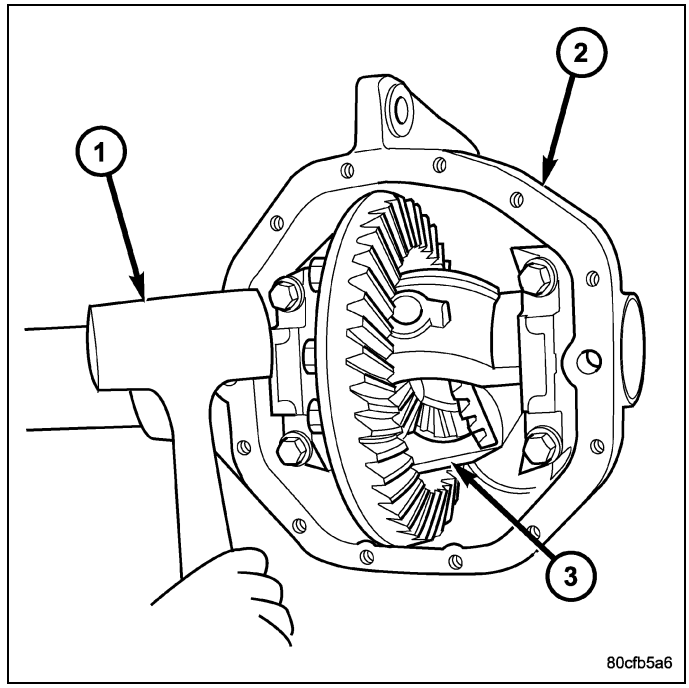

7. With a dead-blow hammer (2) seat differential dummy bearing to ring gear side (3) of the housing.

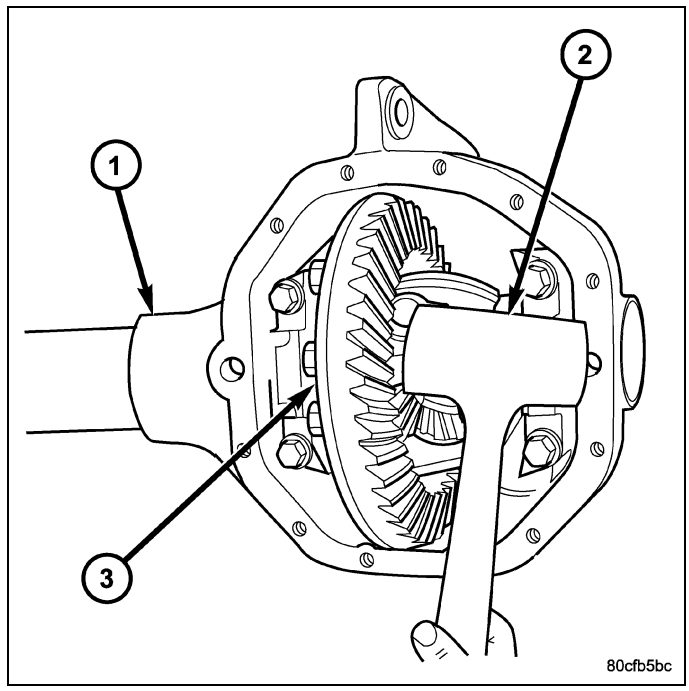

8. Thread Pin C-3288-B (2) into cover bolt hole below ring gear.
9. Attach Dial Indicator C-3339A (3) to post and position dial indicator plunger on a flat surface on a ring gear bolt head.

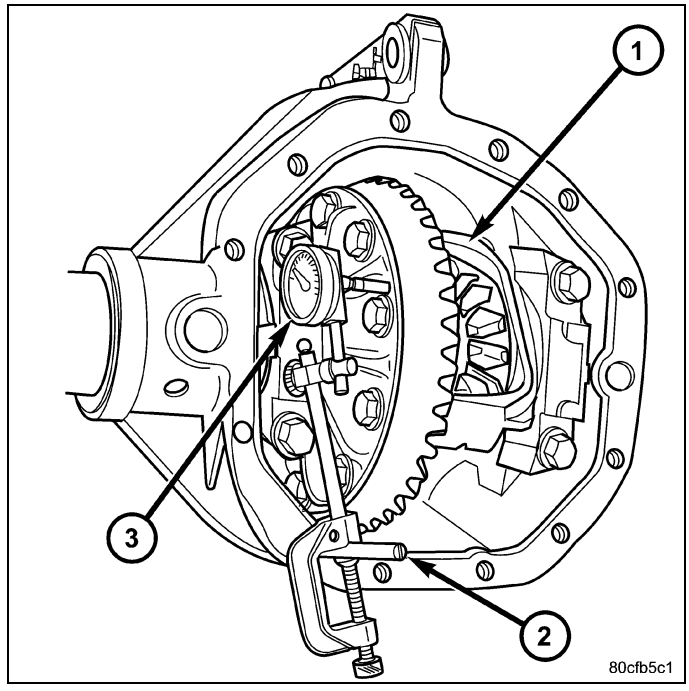

10. Push and hold differential case to pinion gear side (1) of the housing and zero dial indicator (3).

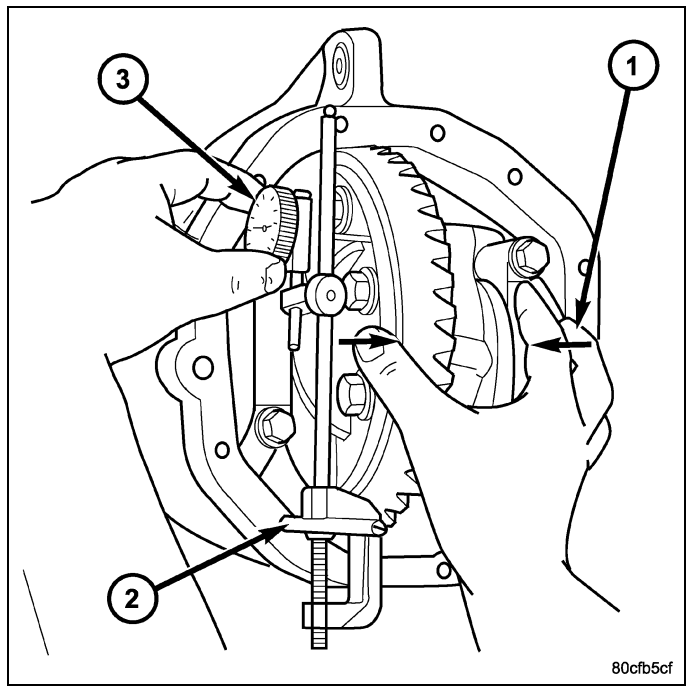

11. Push and hold differential case to the ring gear side (3) and record dial indicator (1) reading.
12. Add dial indicator reading to dummy shim thickness 6 mm (0.236 in), this is total shim thickness necessary to achieve zero differential end play.
13. Add 0.2 mm (0.008 in) to the zero end play total. This is the total shims thickness needed to preload the new differential bearings.

EXAMPLE: Differential Dial Indicator Reading + Dummy Shims 6 mm (0.236 in) + Preload Specification 0.2 mm (0.008 in) = Total Differential Shim

14. Rotate dial indicator out of the way on pilot stud.
15. Remove differential case, dummy bearings and dummy shims from the housing.

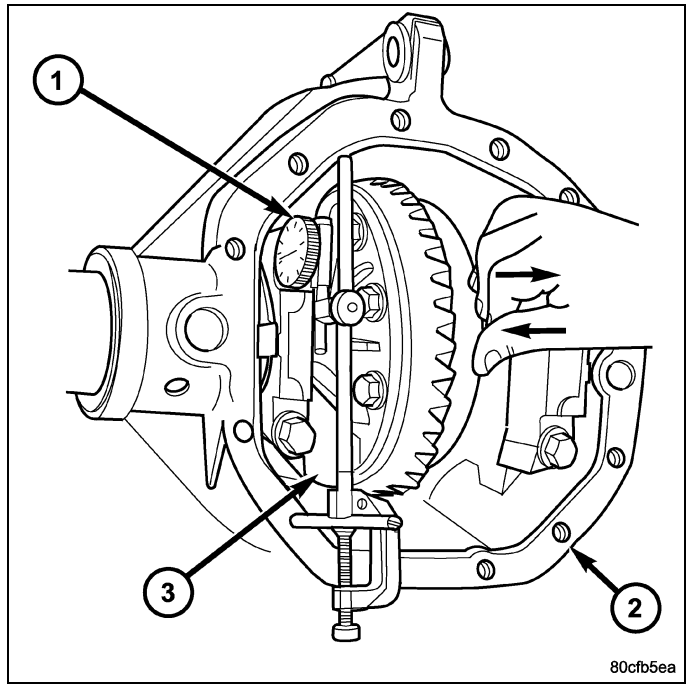

16. Install pinion gear in the housing. Install the pinion flange (1) and establish pinion torque to rotating with an inch pound torque wrench (2).
17. Install differential case and Dummy Bearings 8398 in the housing.
18. Install a single 8107 dummy shim in the ring gear side in the housing. Install bearing caps and tighten bolts snug.

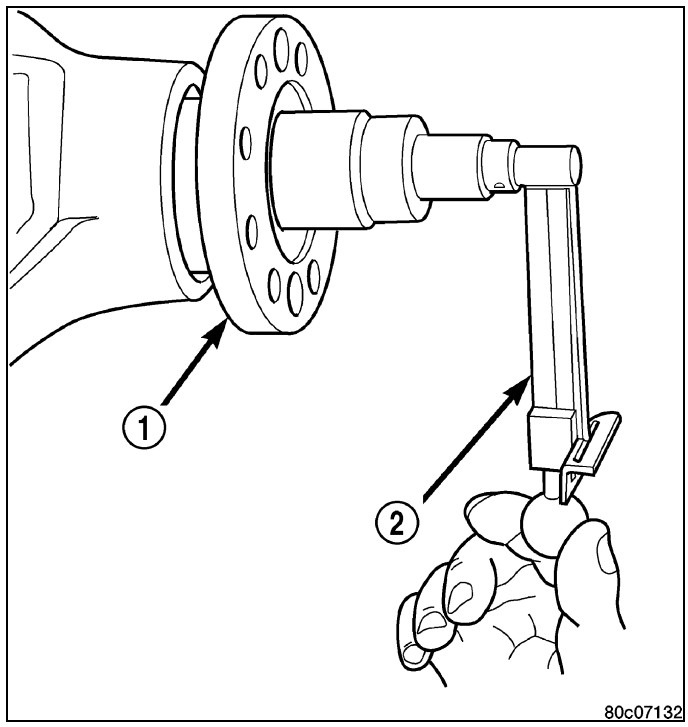

19. Position the dial indicator (3) plunger on a flat surface between the ring gear bolt heads.
20. Push and hold differential case toward pinion gear (1) and zero dial indicator (3).

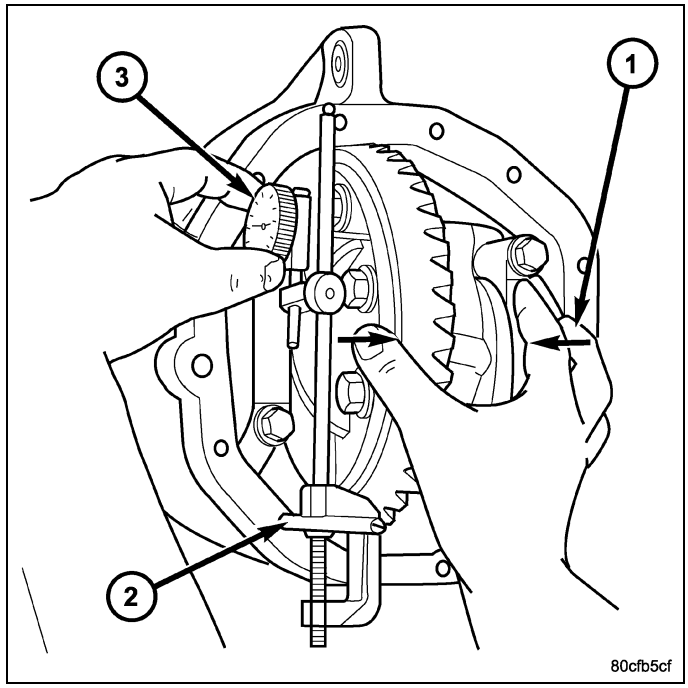

21. Push and hold differential case to ring gear (3) side of the housing and record dial indicator (1) ring gear side reading. Add 3 mm (0.118 in.) one dummy shim thickness to ring gear side reading.
22. Subtract backlash specification 0.05 mm (0.002 in.) from total ring gear side reading for ring gear backlash. This is the shim needed on the ring gear side of the differential.

EXAMPLE : Ring Gear Side Dial Indicator Reading + One Dummy Shim 3 mm (0.118 in.) - Backlash Specification 0.05 mm (0.002 in.) = Ring Gear Side Shim

23. Subtract ring gear side shim from total preload shim. The is the shim needed on the pinion gear side of the housing.

EXAMPLE : Total Differential Shim - Ring Gear Side Shim = Pinion Gear Side Shim

24. Rotate dial indicator out of the way on pilot stud.
25. Remove differential case, dummy bearings and dummy shim from the housing.
26. Install new side bearing cones and cups on differential case.

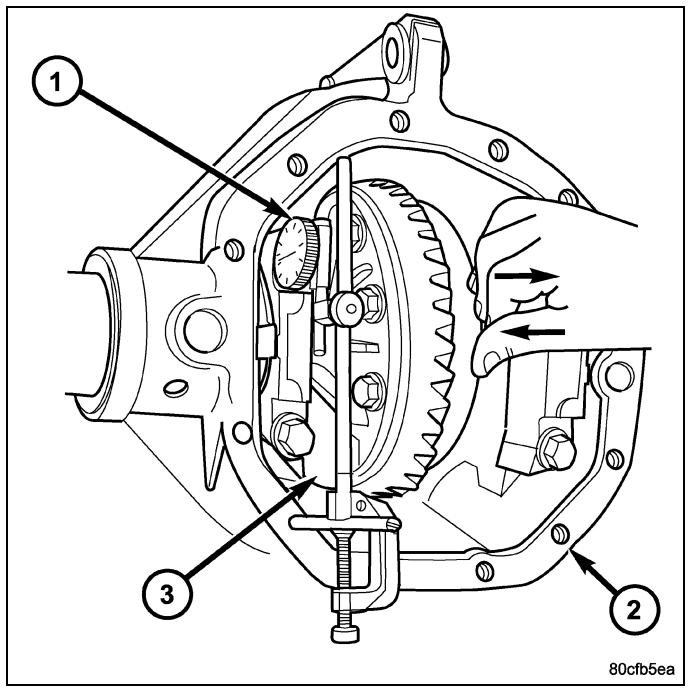

27. Install Spreader W-129-B and Adapter Plates 8142A on the housing and spread open enough to receive differential case.

CAUTION: Never spread over 0.50 mm (0.020 in). Failure to follow these instruction could result in distorting the housing.

28. Place the side bearing shims in the differential housing against the housing shoulder.
29. Install the differential case in the housing.
30. Rotate the differential case several times to seat the side bearings.

GEAR BACKLASH

1. Position the dial indicator (1) plunger against a ring gear tooth (2) .
2. Push and hold ring gear upward while not allowing the pinion gear to rotate.
3. Zero dial indicator face to pointer.

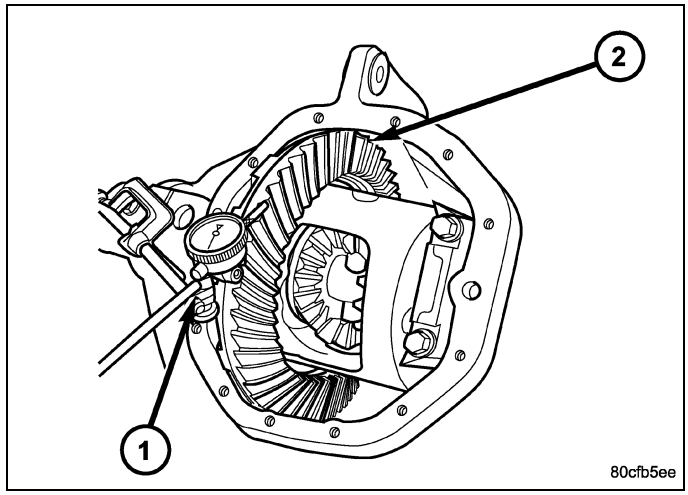

4. Push and hold ring gear downward while not allowing the pinion gear to rotate. Dial indicator reading should be between 0.12 mm (0.005 in.) and 0.20 mm (0.008 in.). If backlash is not within specifications transfer the necessary amount of shim thickness from one side of the differential housing to the other.
5. Verify differential case and ring gear runout by measuring ring to pinion gear backlash at eight locations around the ring gear. Readings should not vary more than 0.05 mm (0.002 in.). If readings vary more than specified, the ring gear or the differential case is defective.

After the proper backlash is achieved, perform the Gear Contact Pattern procedure.

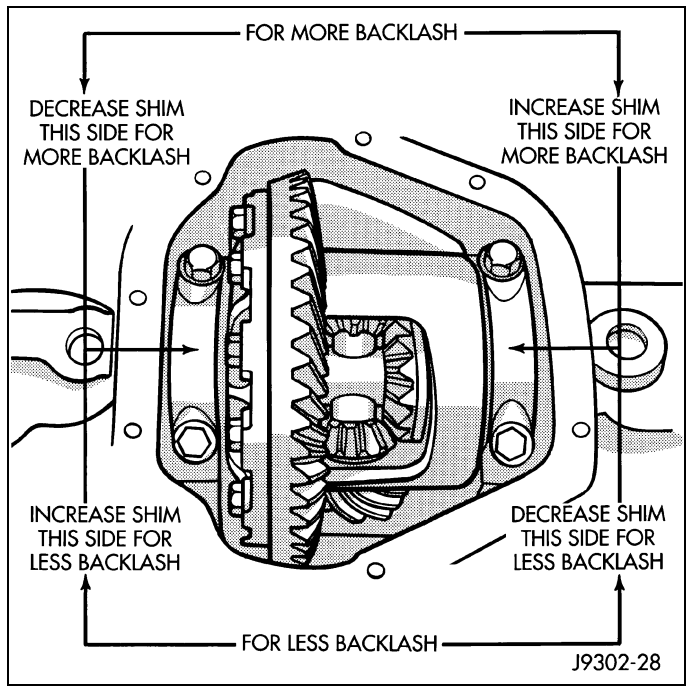

GEAR CONTACT PATTERN

1. Wipe clean each tooth of the ring gear.
2. Apply gear marking compound to all of the ring gear teeth.
3. Verify bearing cap bolts are torque to 61 N·m (45 ft. lbs.).
4. Apply the brakes lightly to create a 14 N·m (10 ft. lbs.) pinion rotating torque.
5. Rotate the pinion/pinion yoke 4 full revolutions in each directions.
6. Read gear tooth contact pattern.

Gear contact pattern correct. Backlash and pinion depth is correct.

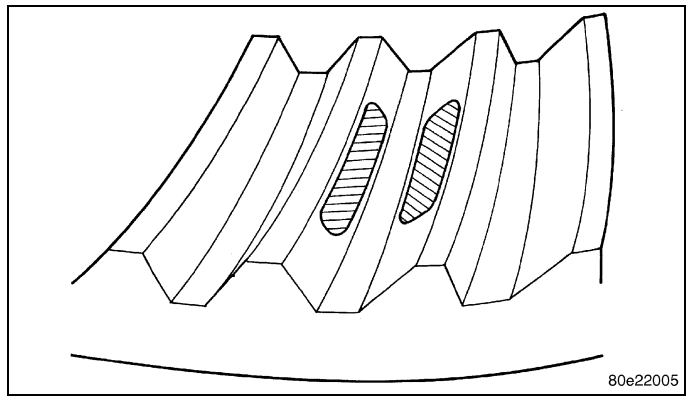

Ring gear too far away from pinion gear coast side toe (1) drive side heel (2). Decrease backlash by moving the ring closer to the pinion gear.

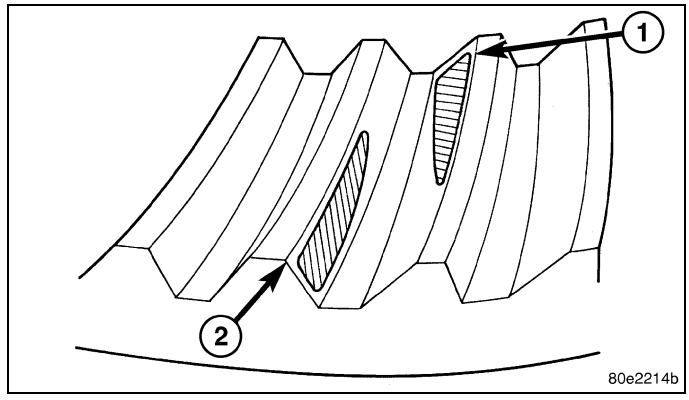

Ring gear too close to pinion gear drive side toe (1) coast side heel (2). Increase backlash, by moving the ring away from the pinion gear.

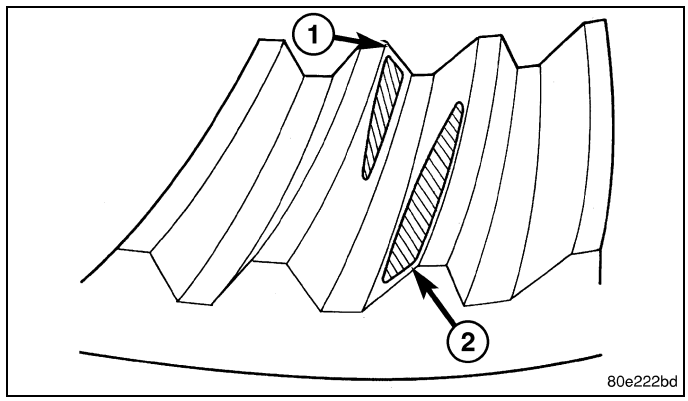

Ring gear too far away from pinion gear drive side heel (1) coast side heel (2). Decrease backlash, by moving the ring closer to the pinion gear.

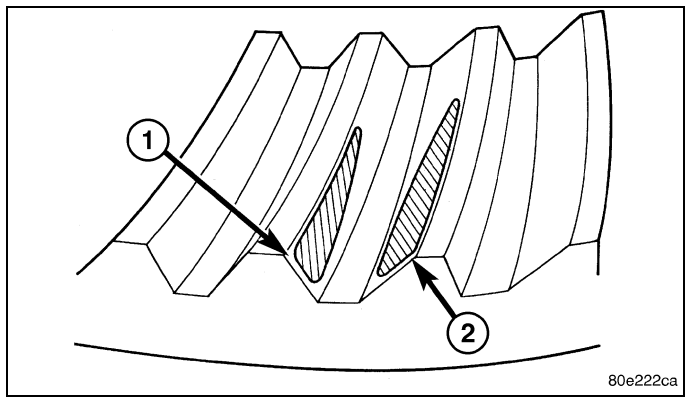

Ring gear too close to pinion gear drive side toe (1) coast side toe (2). Increase backlash, by moving the ring away from the pinion gear.

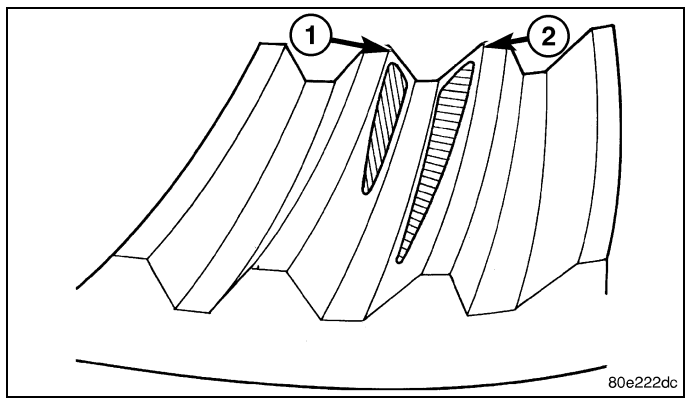

Pinion gear set too low. Increase pinion gear height, by increasing the pinion depth shim thickness.

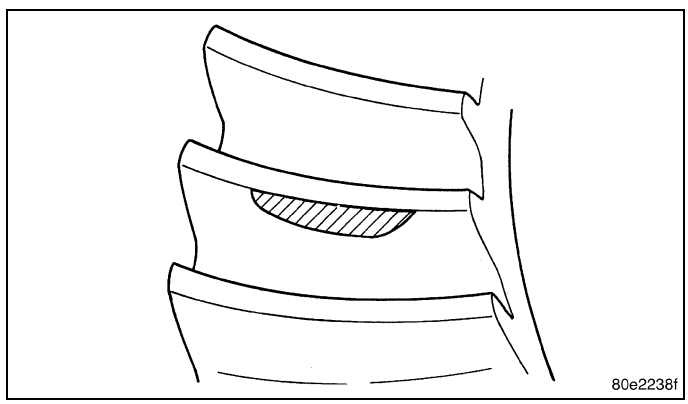

Pinion gear set too high. Decrease pinion depth, by decreasing the pinion depth shim thickness.

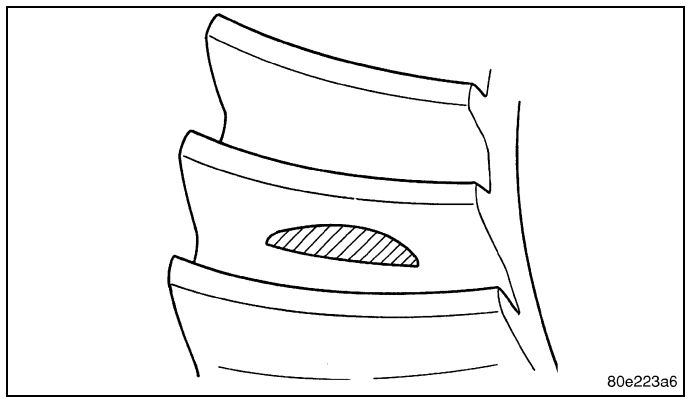

Specifications

AXLE

DESCRIPTION	SPECIFICATION
Axle Ratio	3.21, 3.55, 3.92, 4.10
Differential Case Flange Runout	0.076 mm (0.003 in.)
Differential Side Gear Clearance	0 - 0.15 mm (0 - 0.006 in.)
Ring Gear Diameter	205 mm (8.00 in.)
Ring Gear Backlash	0.12 - 0.20 mm (0.005 - 0.008 in.)
Ring Gear Runout	0.12 mm (0.005 in.)
Pinion Torque To Rotate - New Bearings	2.0 - 2.8 N·m (18 - 25 in. lbs.)
Pinion Torque To Rotate - Original Bearings	1 - 2 N·m (10 - 20 in. lbs.)
Fill Level - From Bottom of Fill Hole	20 mm (3/4 in.) ± 3 mm (1/8 in.)

TORQUE

DESCRIPTION	N·m	Ft. Lbs.	In. Lbs.
Mounting Nuts	95	70	-
Differential Cover Bolts	23	17	-
Bearing Cap Bolts	61	45	-
Ring Gear Bolts	108	80	-
Pinion Nut	271 - 475	200 - 350	-
Electric Actuator	27	20	-
Disconnect Seal	28	21	-

Special Tools

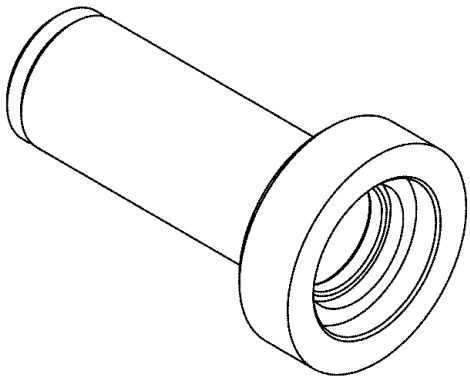

10117 - Installer, Seal

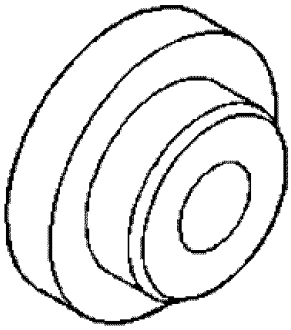

5063 - Installer, Bearing

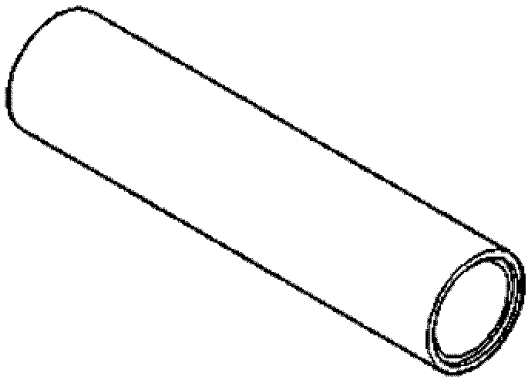

6448A - Installer, Bearing/Gear

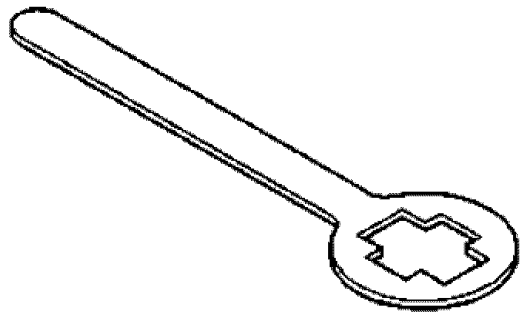

6719A - Holder, Yoke

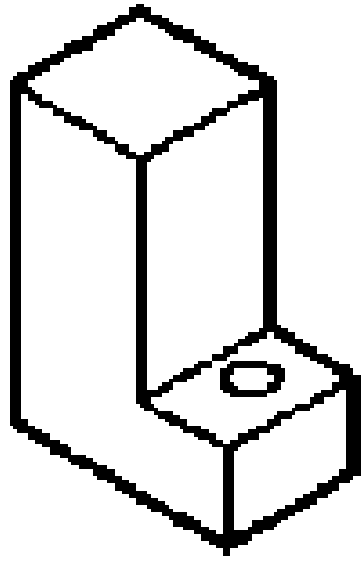

6739 - Block, Height

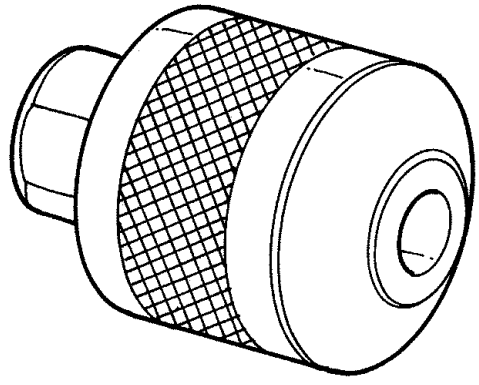

6740 - Cone



6741 - Screw

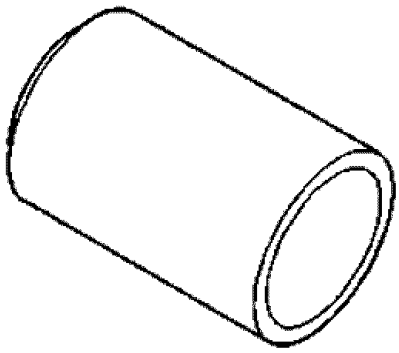

6761 - Installer, Ball Joint

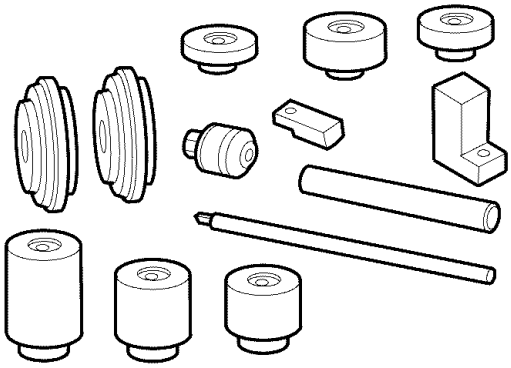

6775 - Kit, Master Pinion Depth

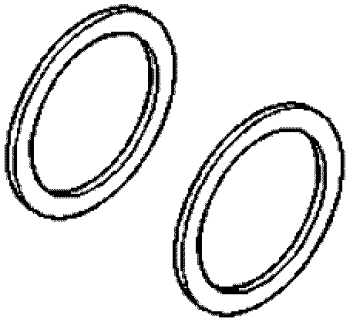

8107 - Shim, Dummy

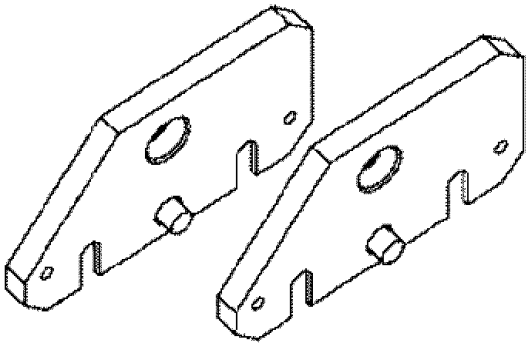

8142A - Adapters, Spreader

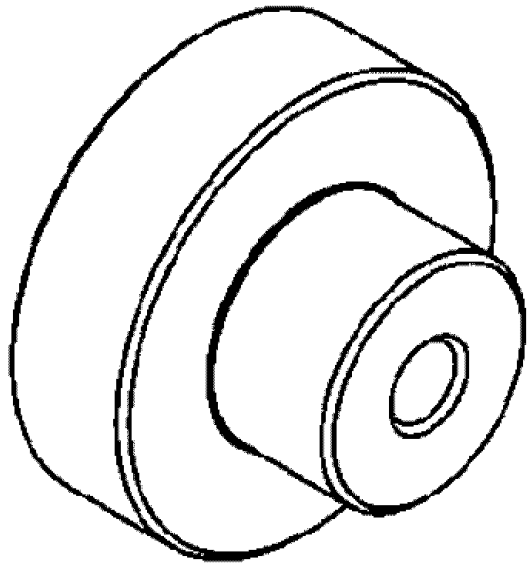

8177 - Gauge, Pinion Height

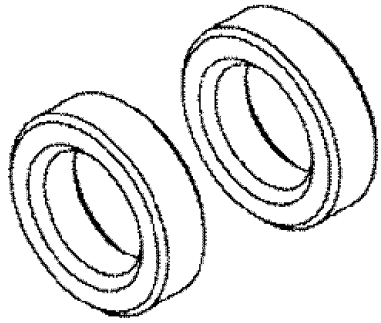

8398 - Set, Dummy Bearing

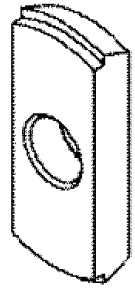

8401 - Remover, Bearing Cup

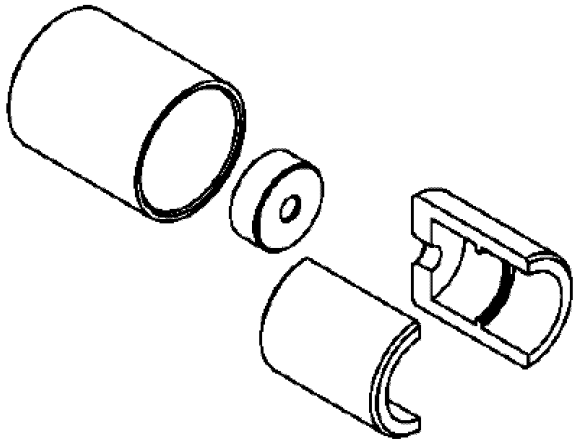

8420-3 - Sleeve, Retaining

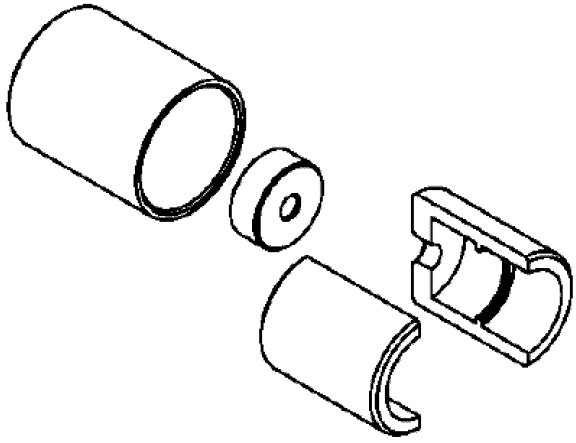

8420B - Remover, Shaft

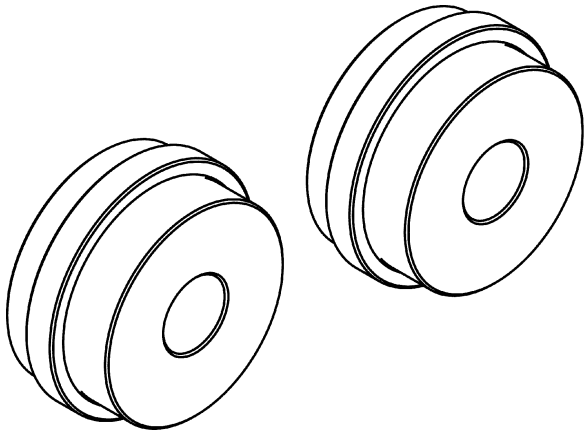

8541A - Set, Arbor Disc

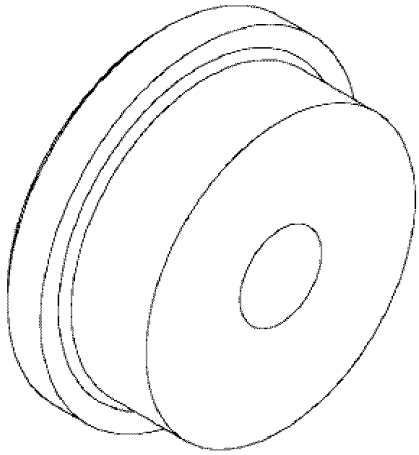

8692 - Installer, Bearing Cup

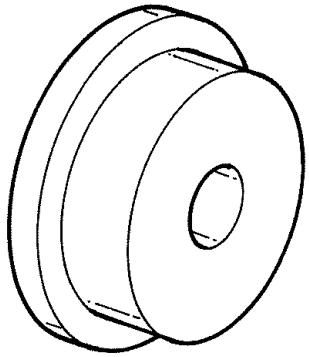

8693 - Installer, Bearing Cup

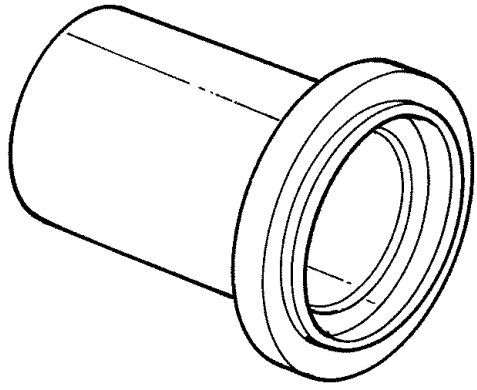

8694 - Installer, Seal

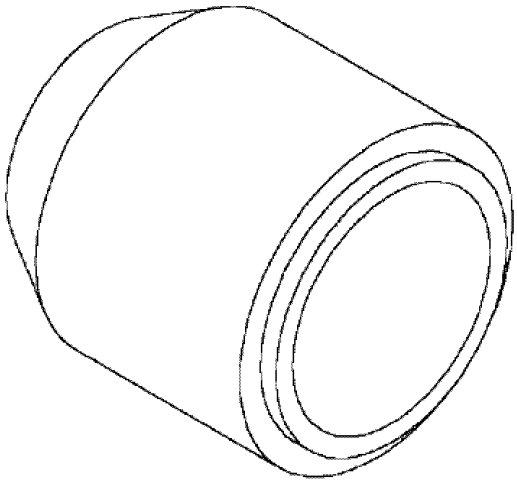

8695 - Installer, Seal

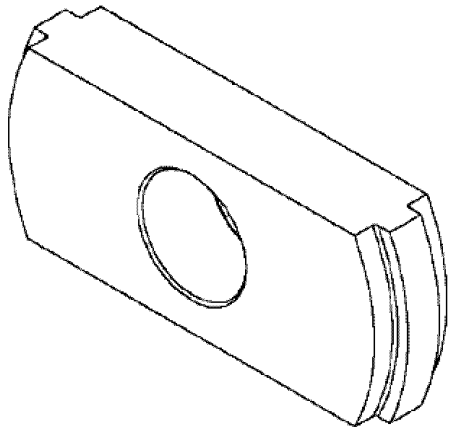

8831 - Remover, Bearing Cup

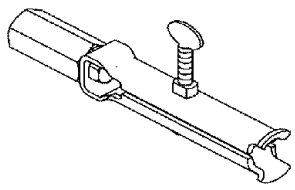

9585 - Remover, Bearing Race

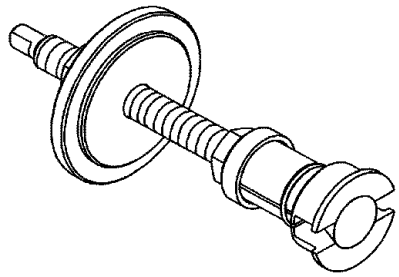

9766 - Remover, Bearing

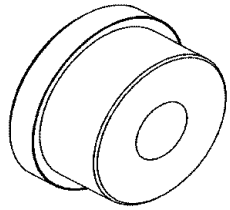

9767 - Installer, Bearing

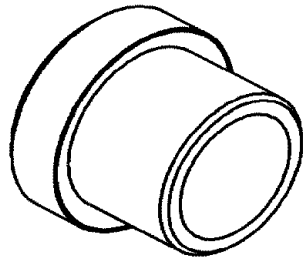

9768 - Remover, Bearing

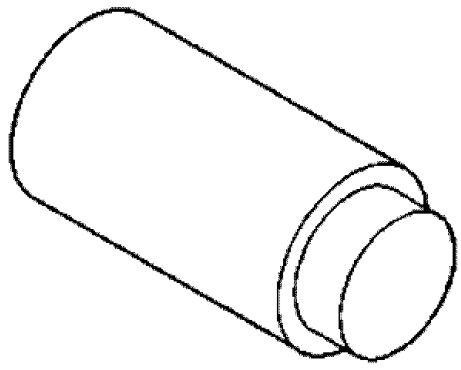

C-293-3 - Adapter, Bearing/Gear

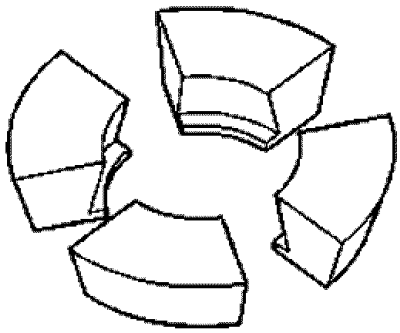

C-293-42 - Block Set, Puller

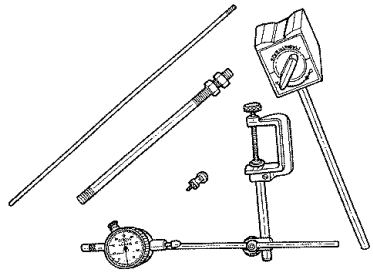

C-3339A - Set, Dial Indicator

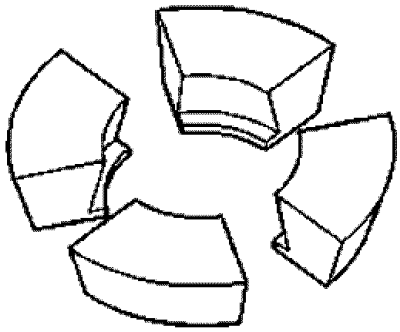

C-293-48 - Block Set, Puller

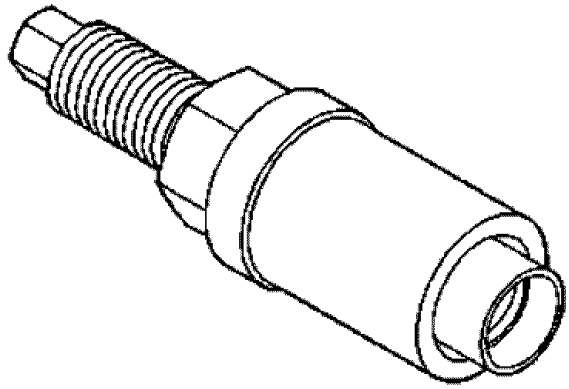

C-3718 - Installer, Flange

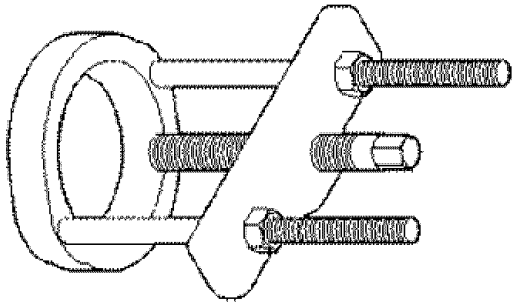

C-293-PA - Puller, Press

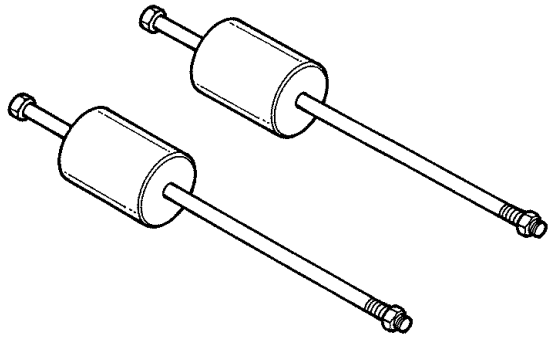

C-3752 - Slide Hammers

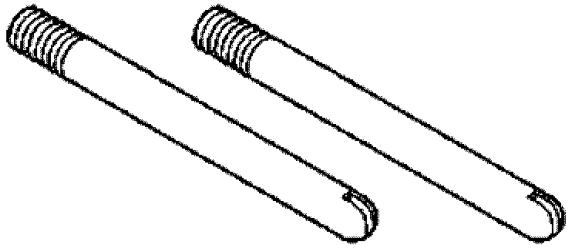

C-3288-B - Set, Alignment Pins

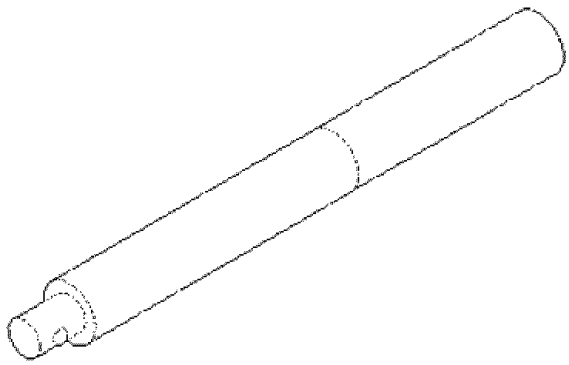

C-4171 - Driver Handle, Universal

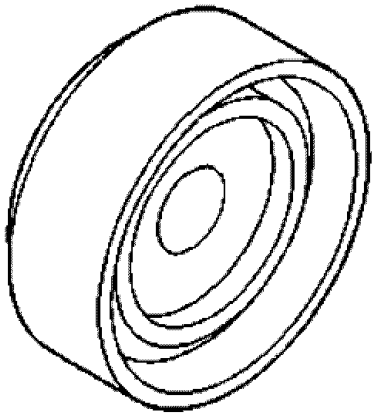

C-4340 - Installer, Bearing

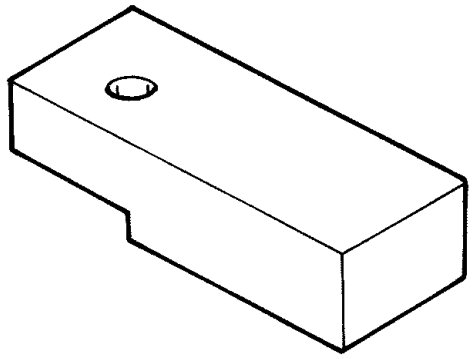

D-115-2A - Block, Scooter

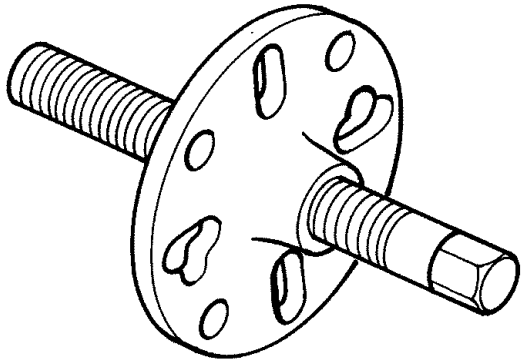

C-452 - Puller, Companion Flange

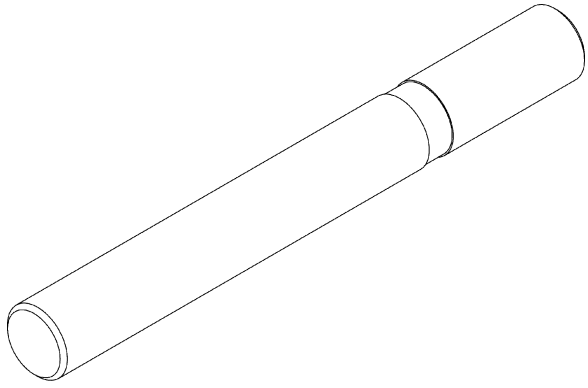

D-115-3 - Arbor

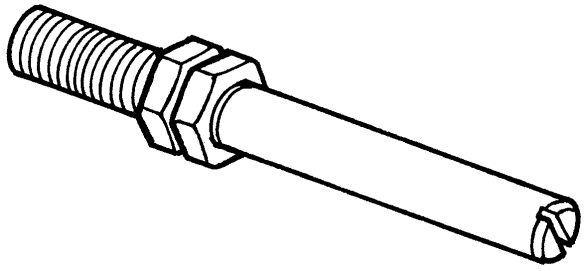

L-4438 - Dial Indicator Post



C-4660-A - Remover, Bearing/Cup

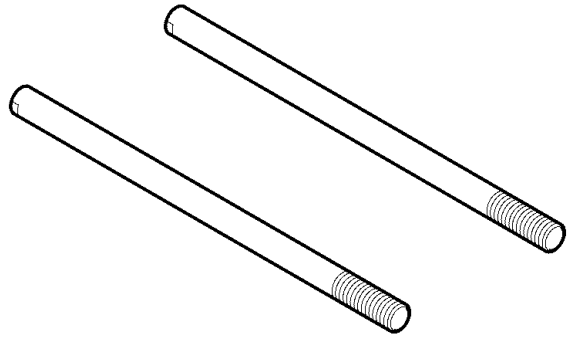

MD998412 - Pins, Guide

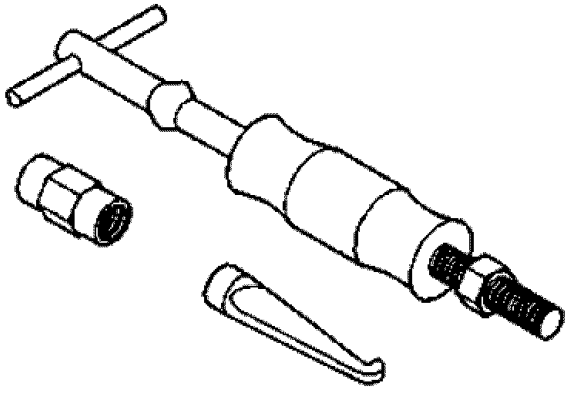

C-637 - Slide Hammer, Universal

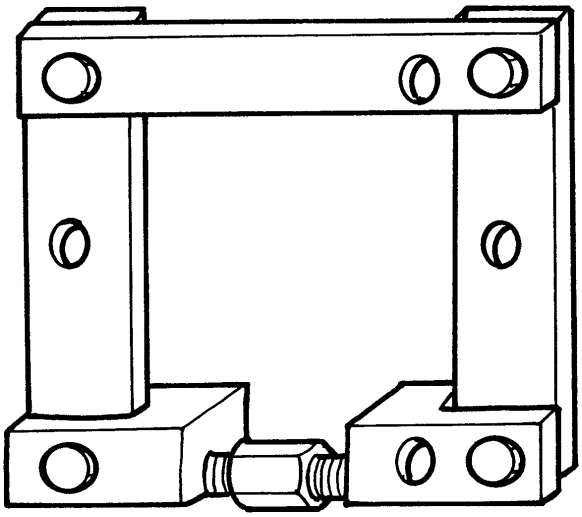

W-129-B - Spreader, Differential

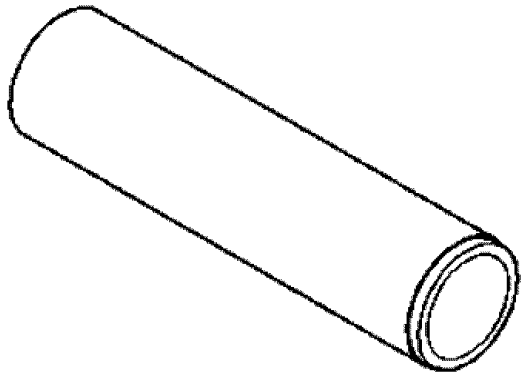

W-262 - Installer, Bearing

ACTUATOR, Axle Locker

Removal

1. Remove actuator wiring connector.
2. Remove actuator (1) bolts (2).

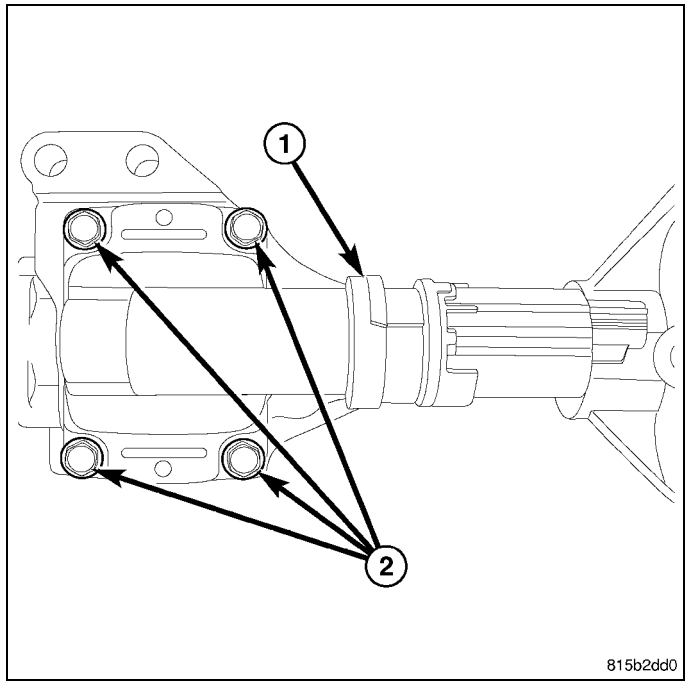

3. Remove actuator (1) from disconnect pocket (2).

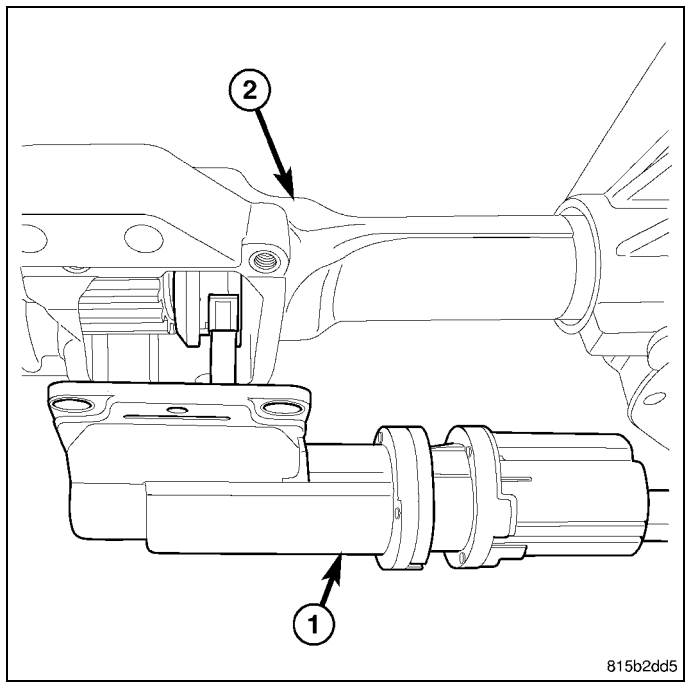

Installation

1. Clean actuator (1) sealing surface and install new gasket (2) if necessary.

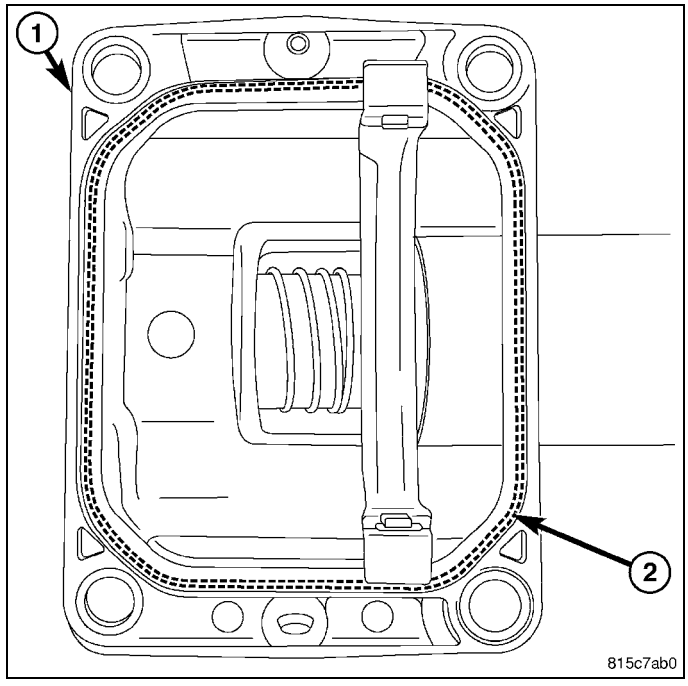

2. Align actuator shift fork (1) with disconnect collar (2) and install actuator on disconnect pocket.

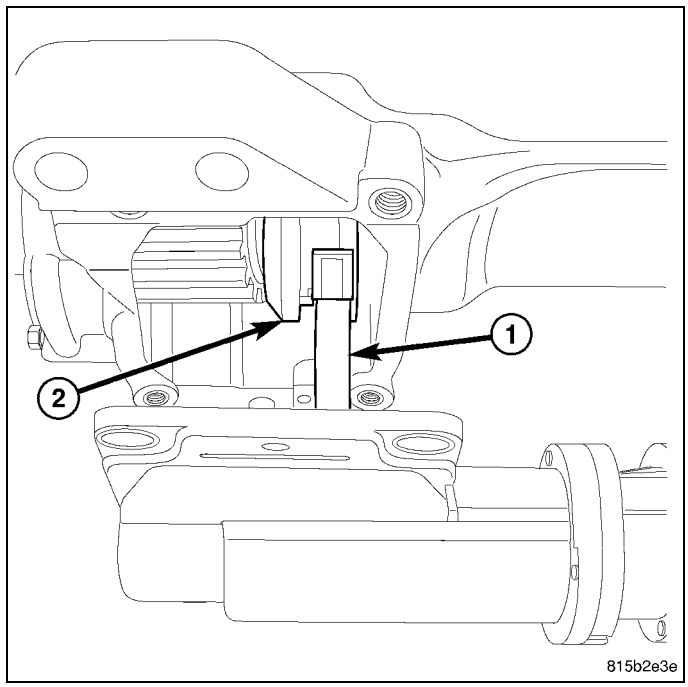

3. Install actuator (1) bolts (2) and tighten to 27 N·m (20 ft. lbs.).
4. Install disconnect actuator wiring connector.
5. Verify differential fluid level and add fluid if necessary.

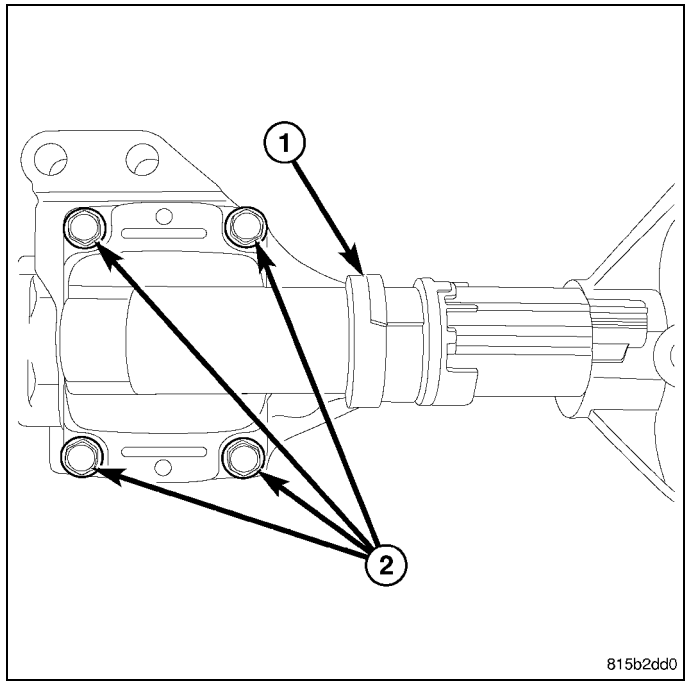

BEARING, Axle Shaft

Removal

1. Remove half shaft from vehicle.
2. Clean axle seal area.
3. Remove O-ring (1) and snap ring (2) from axle shaft (3).

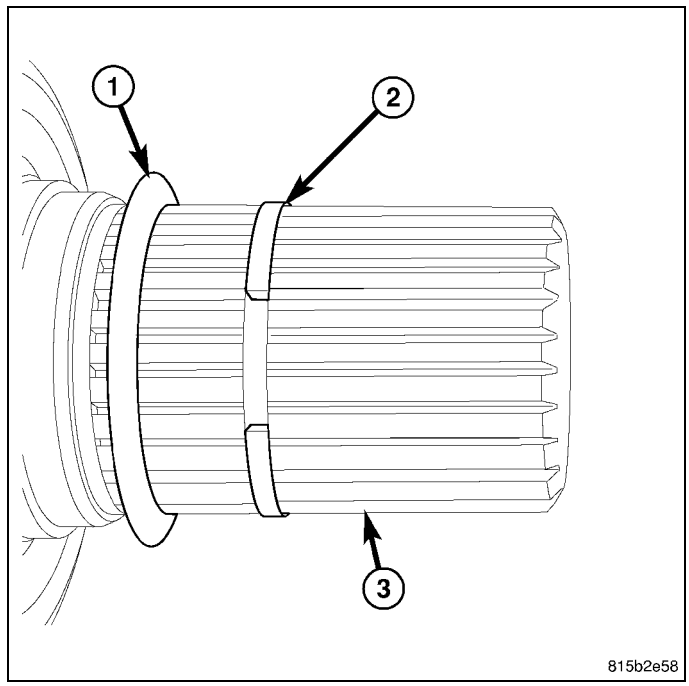

4. Remove axle with Remove 8420B (2) (3) Collar 8420-3 (4) and Slide Hammer C-3752.
5. Remove axle shaft seal with a seal puller.

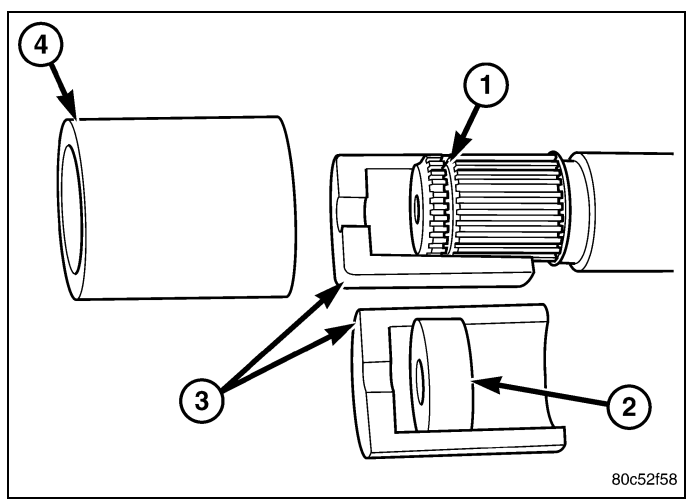

6. Install axle shaft bearing Remover C-4660-A (3) in the bearing (1). Then tighten the nut (2) to spread remover in the bearing.

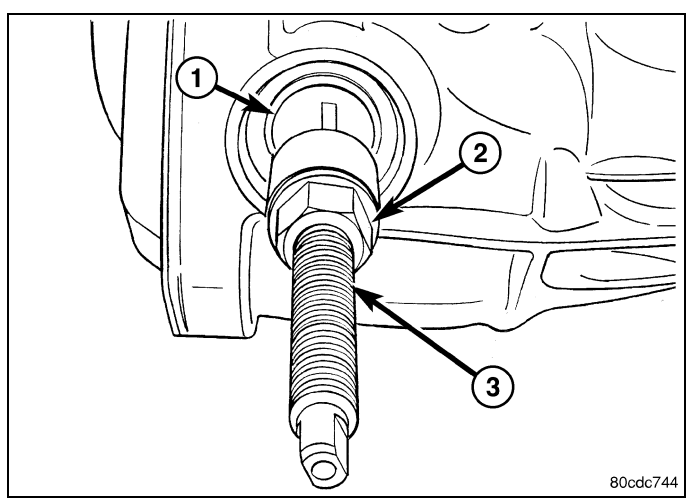

7. Install bearing remove cup (1) bearing (2) and nut (3). Tighten nut (3) to draw the bearing out.

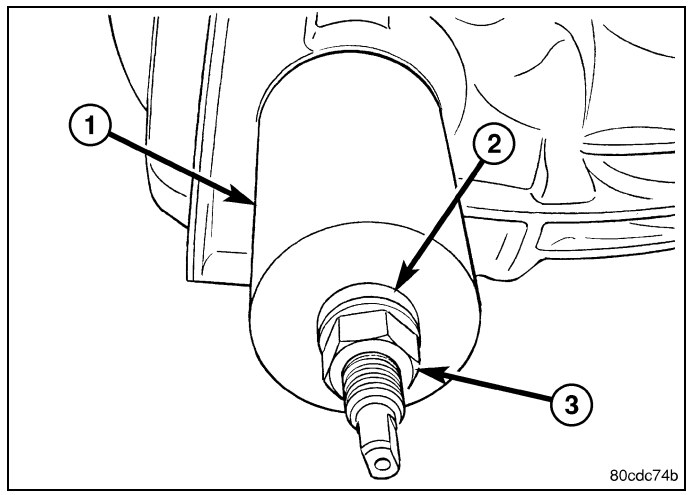

Installation

1. Wipe axle shaft bearing bore clean.
2. Install axle shaft bearing with Installer 5063 (1) and Handle C-4171 (2).

CAUTION: Bearing must be installer with lettering facing outwards. Failure to follow these instructions will damage the bearing.

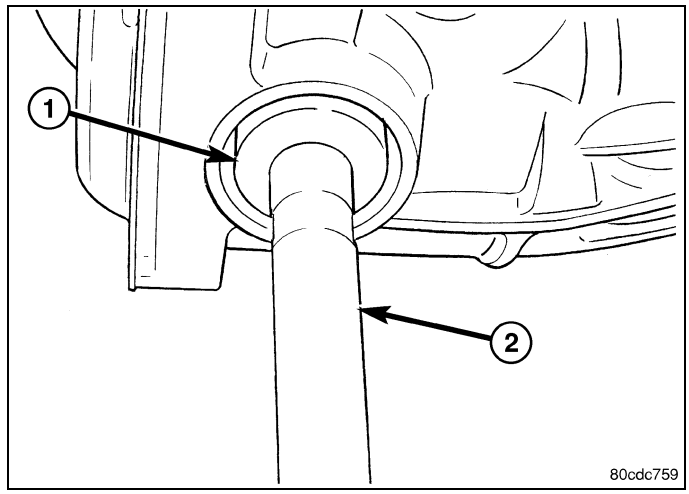

3. Install a **new** axle shaft seal with Installer 8694 (1).
4. Lubricate seal lip with gear lubricant.

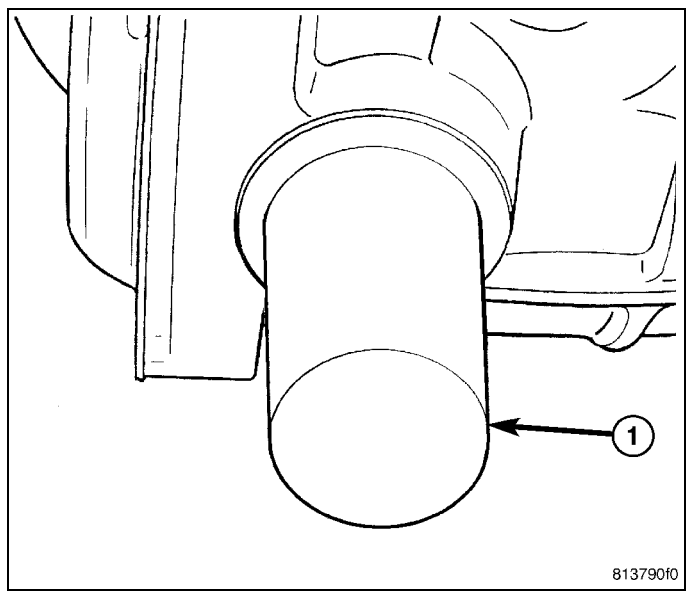

5. Install axle shaft with **new** snap ring and verify axle shaft snap ring is seated in side gear.
6. Install axle shaft (3) O-ring (1) and snap ring (2).
7. Install half shaft.
8. Verify differential fluid level and add fluid if necessary.

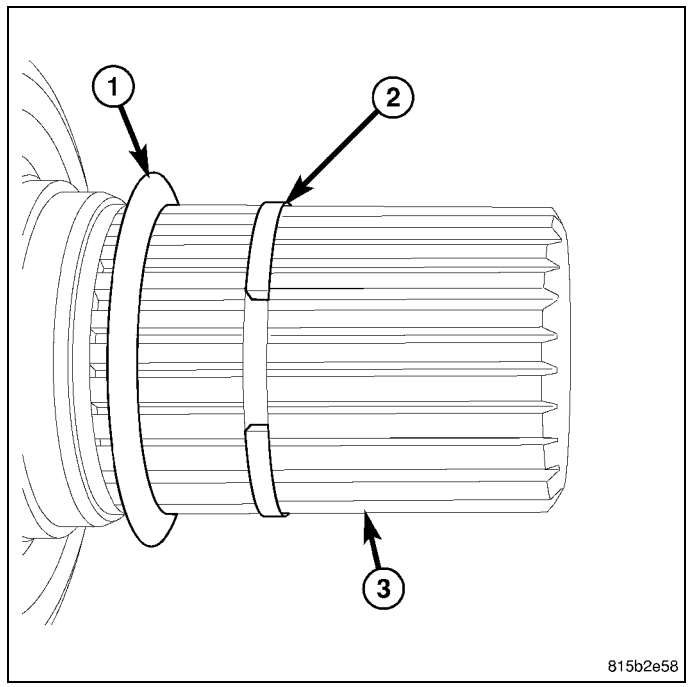

BEARING, Differential Side

Removal

1. Remove differential from housing.
2. Remove bearings (3) from differential case (4) with Puller C-293-PA (1) Adapters C-293-48 (2) and Plug C-293-3 (5).

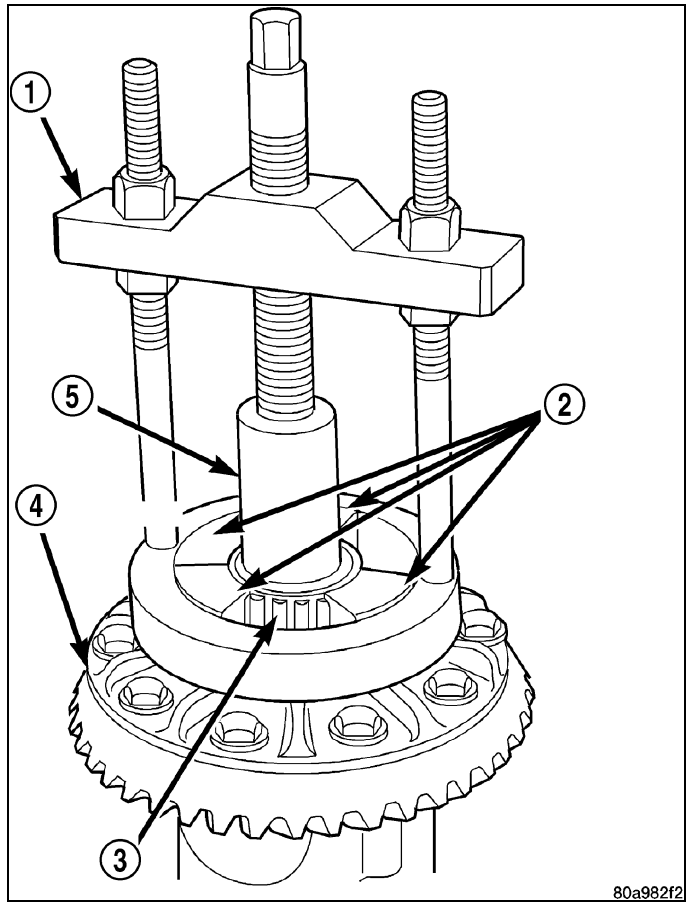

Installation

1. Install differential case bearings (3) with Installer, Bearing C-4340 (4) and Driver Handle, Universal C-4171 (1).
2. Install differential into the housing.

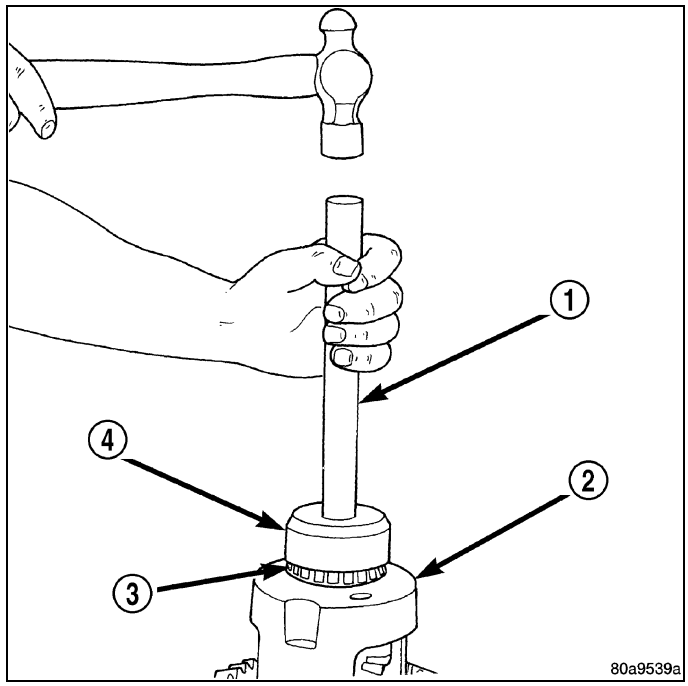

CASE ASSEMBLY, Differential

Removal

1. Remove differential housing cover and drain fluid.
2. Remove axle shafts.
3. Loosen bearing cap bolts.

NOTE: Differential bearing cap reference numbers are stamped on caps and machined flat on the housing. If reference numbers cannot be found, make new marks for later reference.

4. Install Adapter Plates 8142A (1) onto the housing.
5. Install Spreader W-129-B (2) onto the adapter plates (1) and tighten the turnbuckle finger-tight.

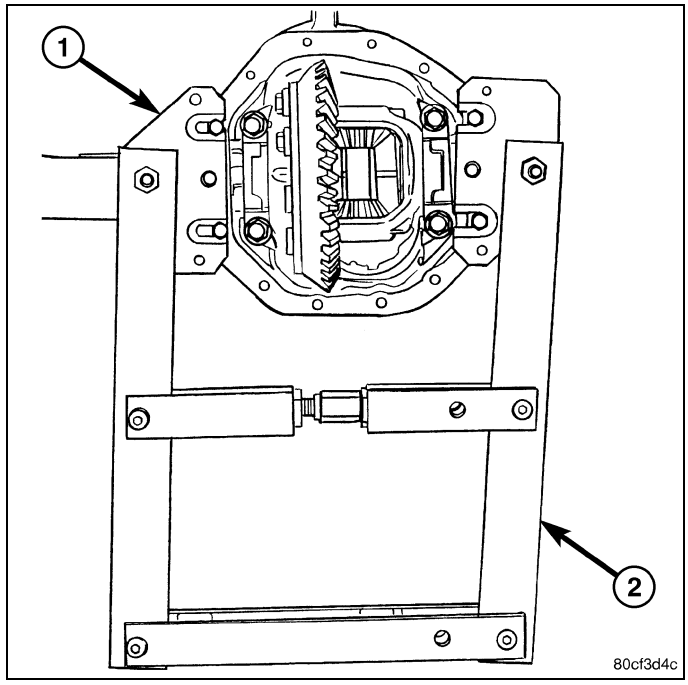

6. Install a Pilot Stud L-4438 at the left side of the differential housing. Attach Dial Indicator C-3339A (1) to pilot stud. Load the indicator plunger against the opposite side of the housing and zero the indicator.
7. Spread housing, while measuring the distance with the dial indicator.

CAUTION: Never spread housing over 0.50 mm (0.020 in). Failure to follow these instructions will damage the housing.

8. Remove dial indicator.
9. While holding the differential case in position, remove bearing cap bolts and caps.

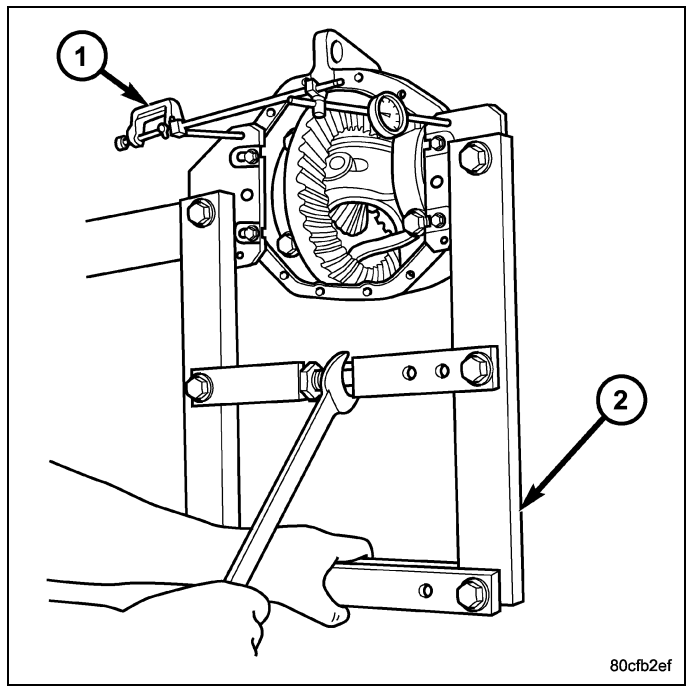

10. Remove differential (2) from the housing (1). Ensure differential bearing cups (3) and shims remain in position on the differential bearings.
11. Tag differential bearing cups and shims to indicate location.
12. Remove spreader from housing.

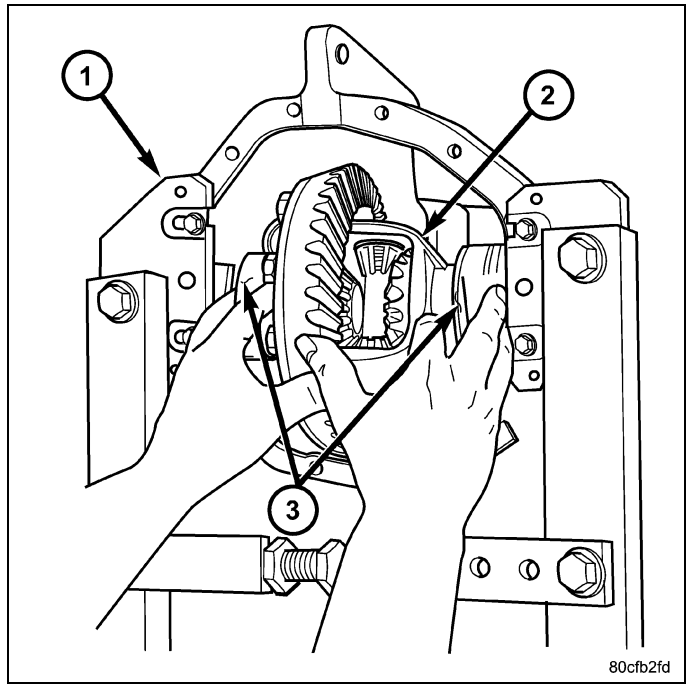

Disassembly

1. Remove pinion mate shaft lock roll pin and remove pinion mate shaft (1) with a punch (2) from pinion gears (3).

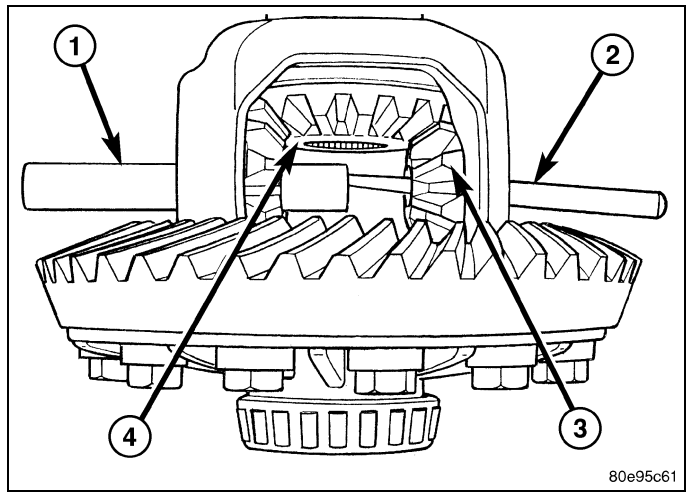

2. Rotate one pinion gear (2) with thrust washer (3) to the differential window (1) and remove gear and thrust washer.

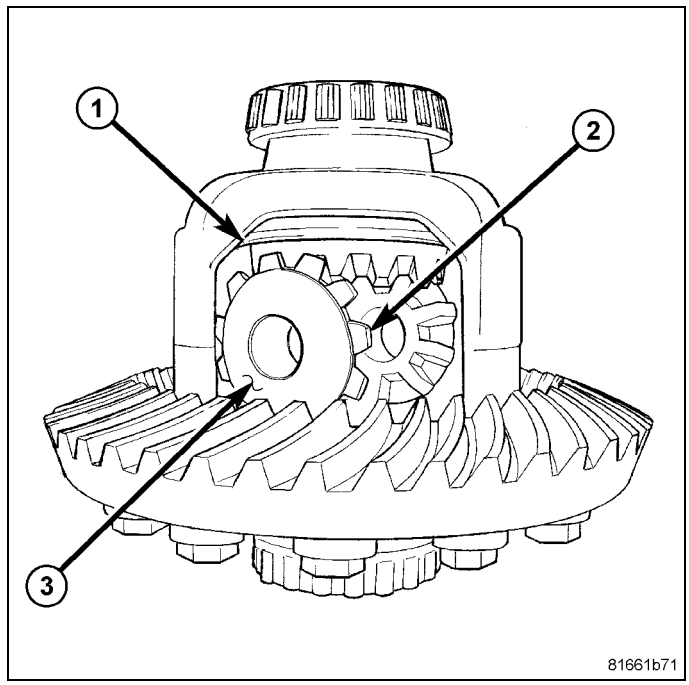

3. Rotate remaining pinion gear (3) with thrust washer (2) to the differential window (1) and remove gear and washer.

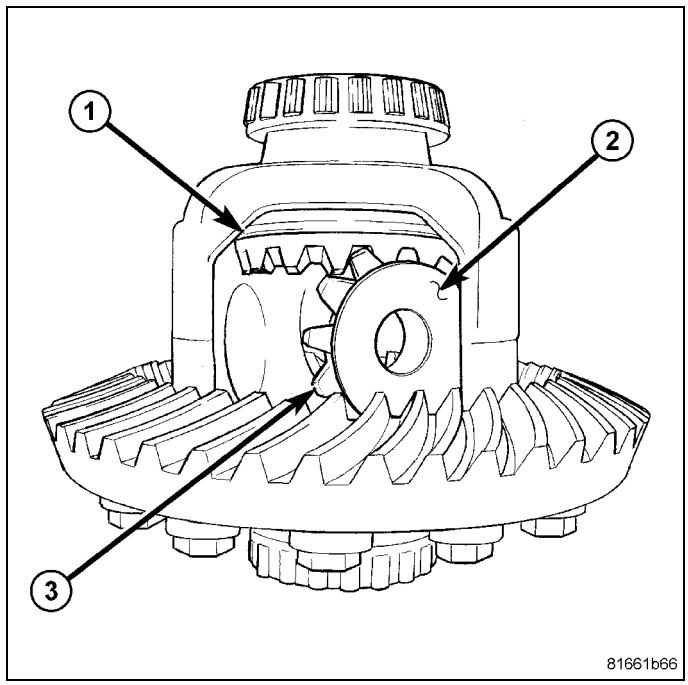

4. Remove differential side gears (1, 2) and thrust washers.

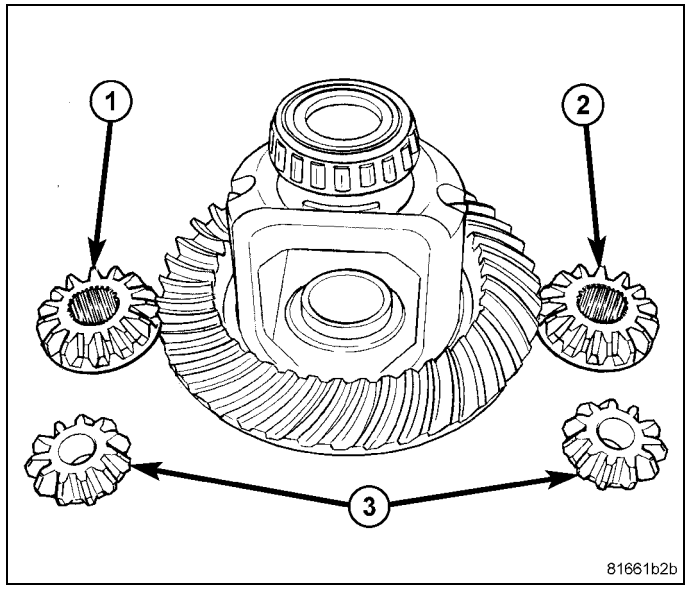

Assembly

NOTE: If same gears and thrust washers are being used, install them into their original locations.

1. Lubricate all differential components with axle lubricant.
2. Install differential side gears (2) and thrust washers through differential window (1).

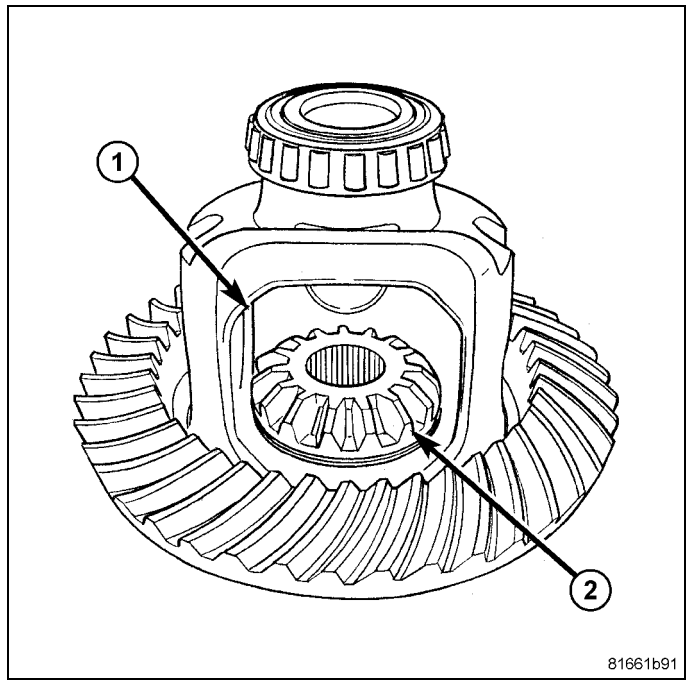

3. Install first pinion gear (3) with thrust washer into differential window (1) and side gears (2). Rotate pinion gear into the case.

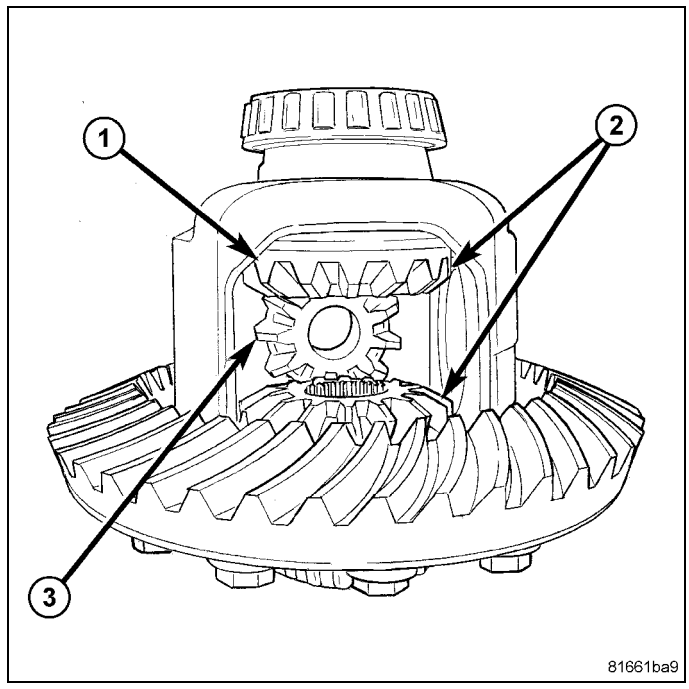

4. Install remaining pinion gear (2) and thrust washer (3). Rotate gears to align hole in the pinion gears with hole in the differential case.
5. Slide pinion shaft into the case and through the pinion gears. Install pinion mate shaft roll pin and stake pin in case.

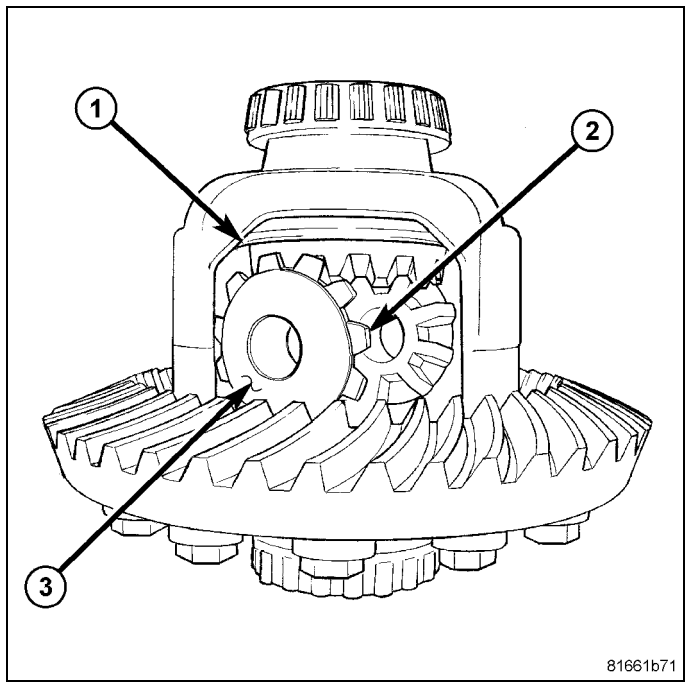

Installation

NOTE: If differential bearings or differential case are replaced, Refer to adjustments for Differential Bearing Preload and Gear Backlash procedures.

1. Install Spreader W-129-B (2) with Adapters 8142A (1) and install the safety hold-down clamps. Tighten spreader turnbuckle finger-tight.
2. Install Stud L-4438 in the left side of the differential housing. Attach Dial Indicator C-3339A to a stud. Load indicator plunger against the opposite side of the housing and zero the indicator.
3. Spread housing, while measuring the distance with the dial indicator.

CAUTION: Never spread housing over 0.50 mm (0.020 in). Failure to follow these instruction will damage the housing.

4. Remove dial indicator.

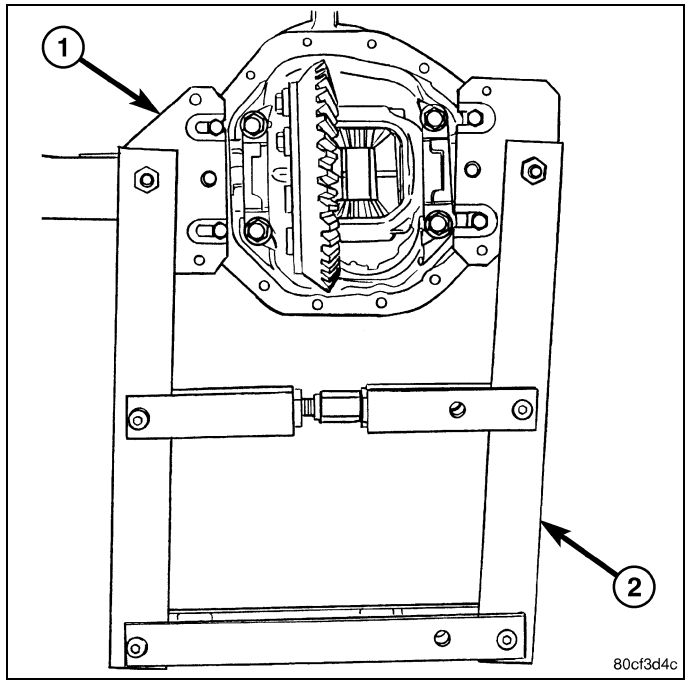

5. Install differential case (2) in the housing (1). Ensure differential bearing cups (3) remain in position on the bearings and the differential preload shims are seated in the housing. Tap differential case to ensure bearings cups are seated in the housing.
6. Install bearing caps to their original locations and loosely install cap bolts.
7. Remove housing spreader.
8. Tighten the bearing cap bolts to 61 N·m (45 ft. lbs.).
9. Install axle shafts.
10. Apply a bead of orange Mopar Axle RTV sealant or equivalent to the housing cover.

CAUTION: If cover is not installed within 3 to 5 minutes, the cover must be cleaned and new RTV applied. Failure to follow these instruction will cause a leak.

11. Install cover and tighten bolts in a criss-cross pattern to 23 N·m (17 ft. lbs.).
12. Fill differential with lubricant.

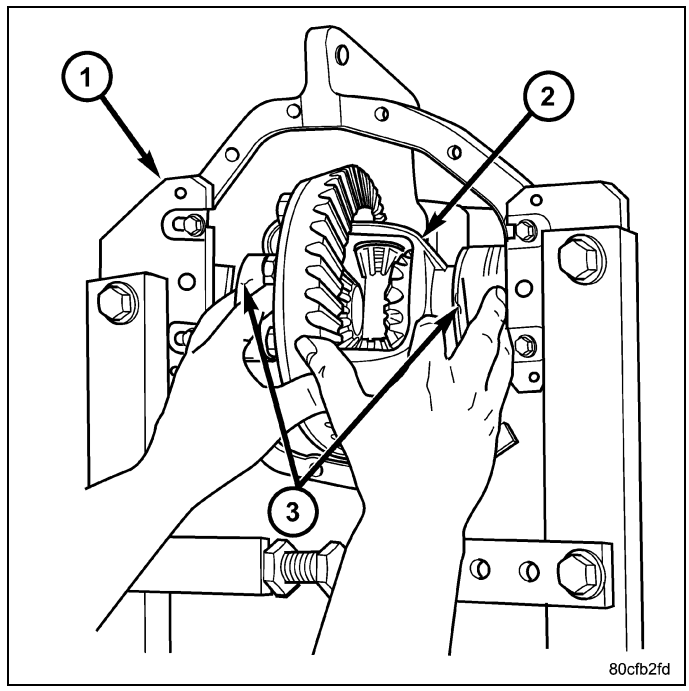

COVER, Differential

Removal

1. With vehicle in neutral, position vehicle on hoist.
2. Remove vent hose.
3. Remove differential cover (1) bolts (2).
4. Remove cover and drain lubricant.

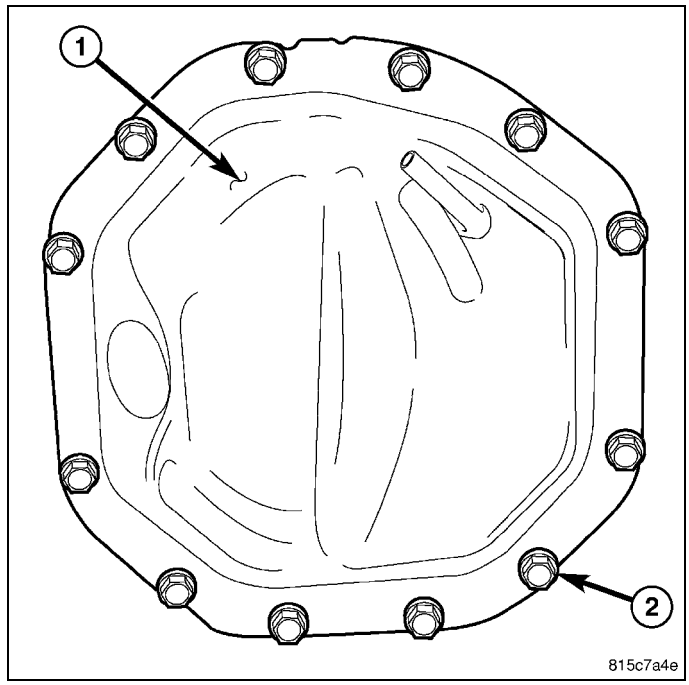

Installation

1. Apply a 4 mm (0.15 in.) bead of Mopar Silicone Rubber Sealant (1) or equivalent to the cover (2).

CAUTION: If housing cover is not installed within 3 to 5 minutes, the cover must be cleaned and new RTV applied. Failure to follow these instructions will result in a leak.

2. Install cover (2) and identification tag. Tighten cover bolts in a criss-cross pattern to 23 N·m (17 ft. lbs.).
3. Fill differential to specifications.
4. Install fill plug.

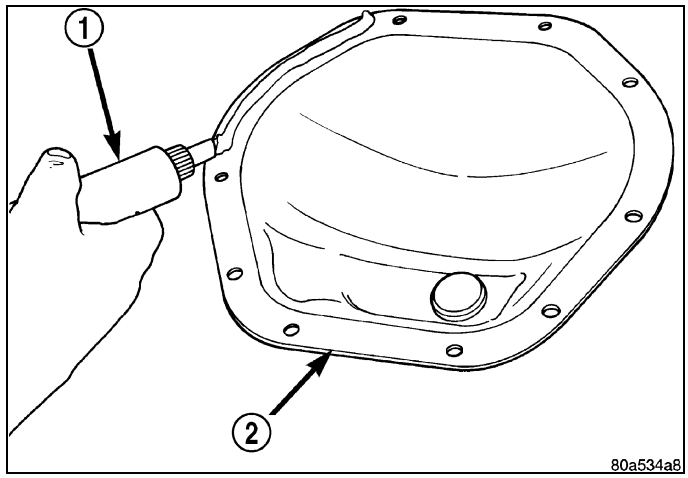

GEAR, Ring and Pinion

Removal

NOTE: The ring gear and pinion are serviced in a matched set. Never replace one without replacing the other.

1. Remove differential from housing.
2. Remove bolts (1) holding ring gear (2) to differential case.
3. Drive ring gear (2) from differential case with a soft hammer.

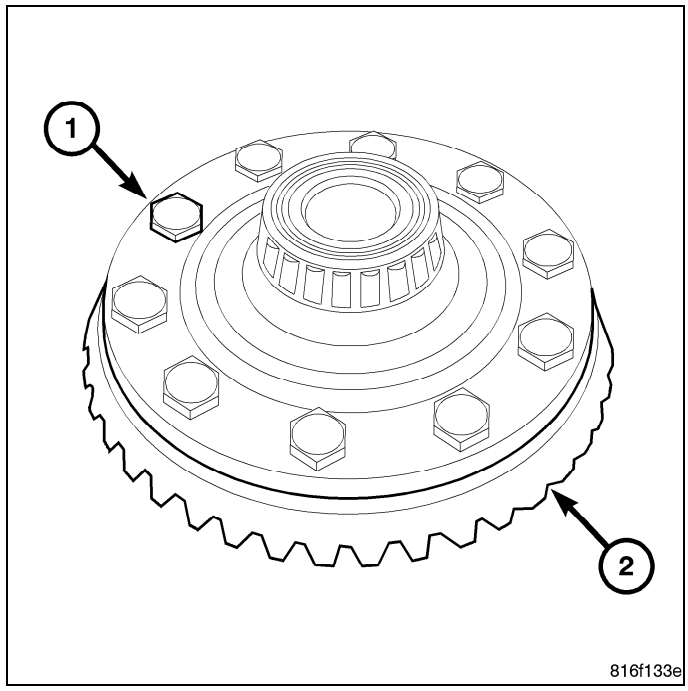

4. Install bolts into two of the threaded holes in the companion flange 180° apart.
5. Position Holder 6719A against the companion flange (1) and install a bolt and washer into one of the remaining threaded holes. Tighten the bolts so that the Holder 6719A is held to the flange. Remove the pinion nut.
6. Remove the companion (10 flange with Remover C-452 (2).

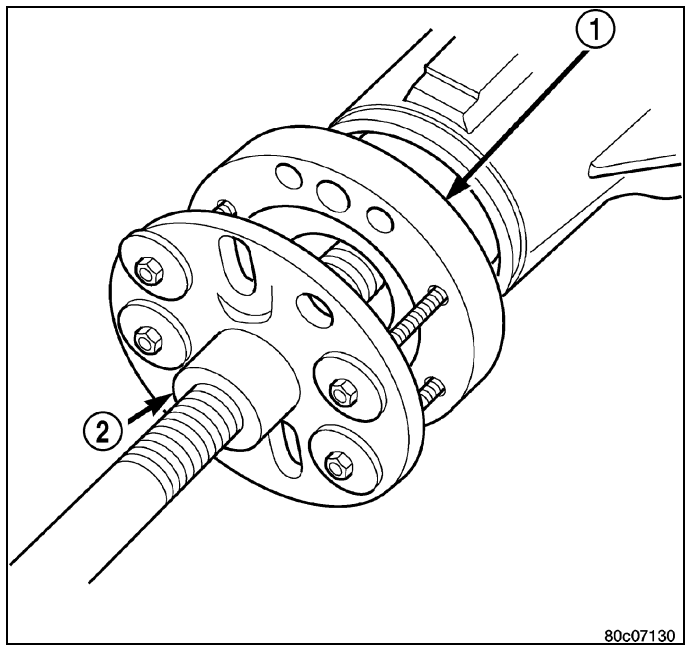

7. Remove pinion from differential housing.
8. Remove pinion seal with a seal puller
9. Remove front pinion bearing.
10. Remove front pinion bearing cup with Remover 8831 (2) and Handle C-4171 (3).

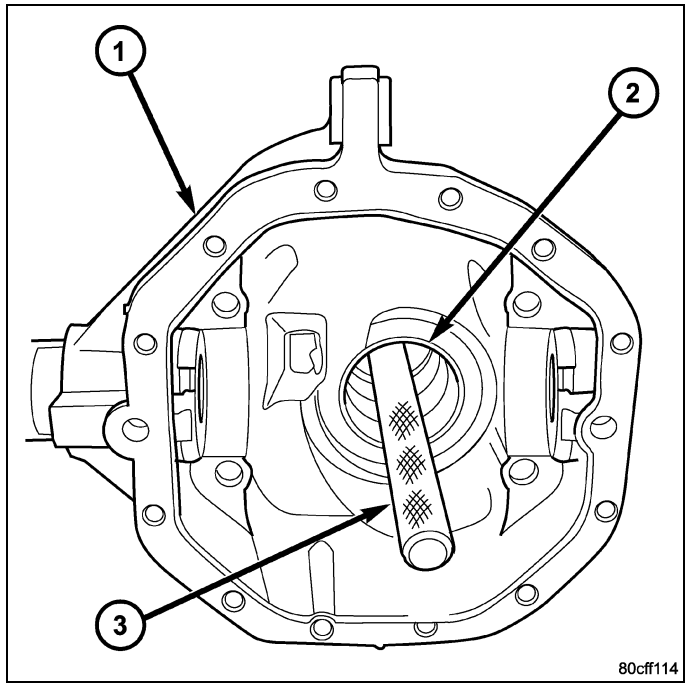

11. Remove rear pinion bearing cup from housing (1) with Remover 8401 (2) and Handle C-4171 (3).

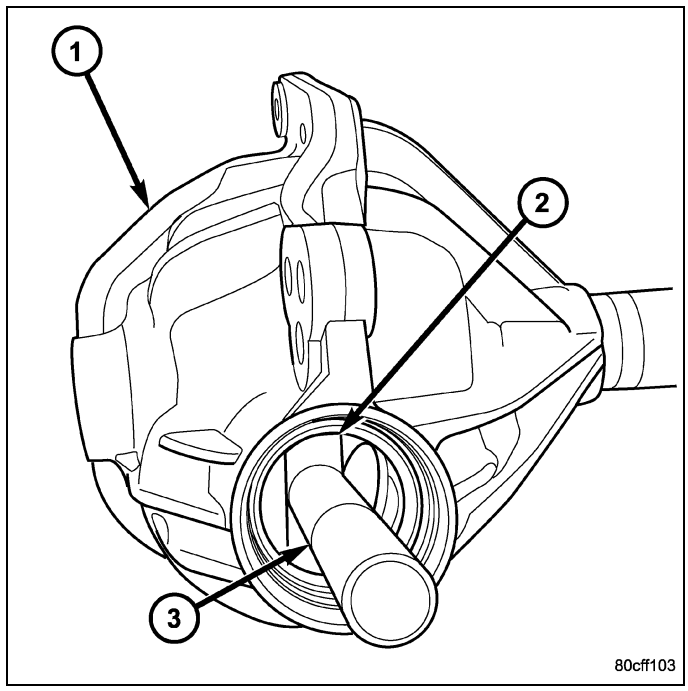

12. Remove collapsible spacer (1) from pinion.

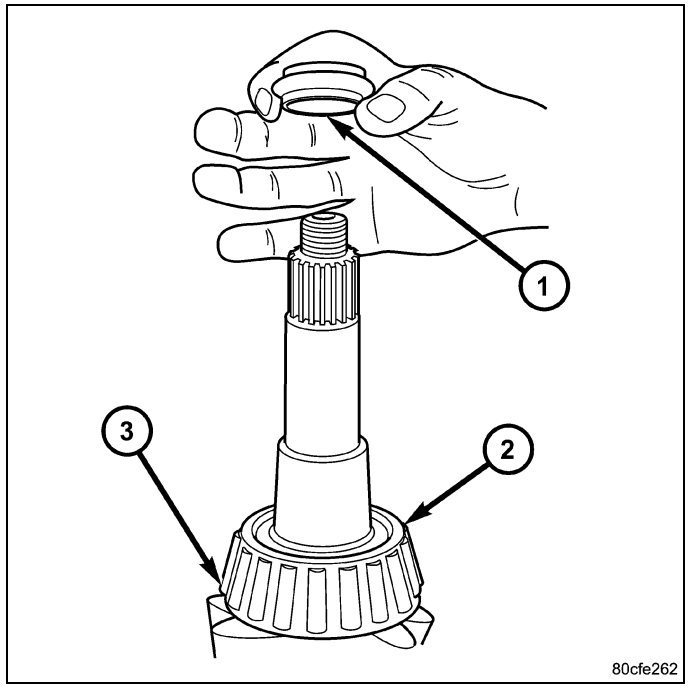

13. Remove rear pinion bearing from pinion shaft (1) with Puller/Press C-293-PA (2) and Adapters C-293-42 (3).

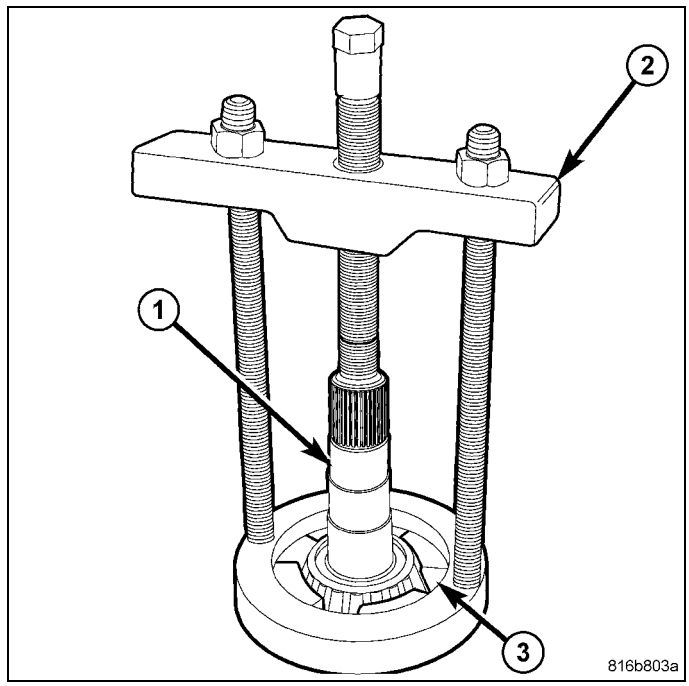

14. Remove depth shims (1) from pinion gear (2) shaft and record thickness of shims.

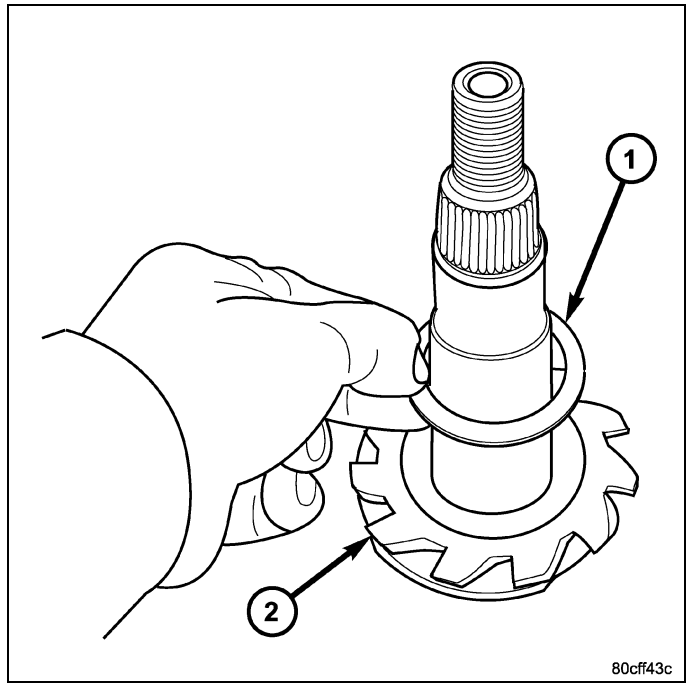

Installation

NOTE: The ring gear and pinion are serviced in a matched set. Never replace one gear without replacing the other matching gear. If ring and pinion gears or bearings are replaced, Refer to Adjustments for Pinion Gear Depth Setting.

1. Install rear pinion bearing cup with Installer 8692 (2) and Handle C-4171 (3).

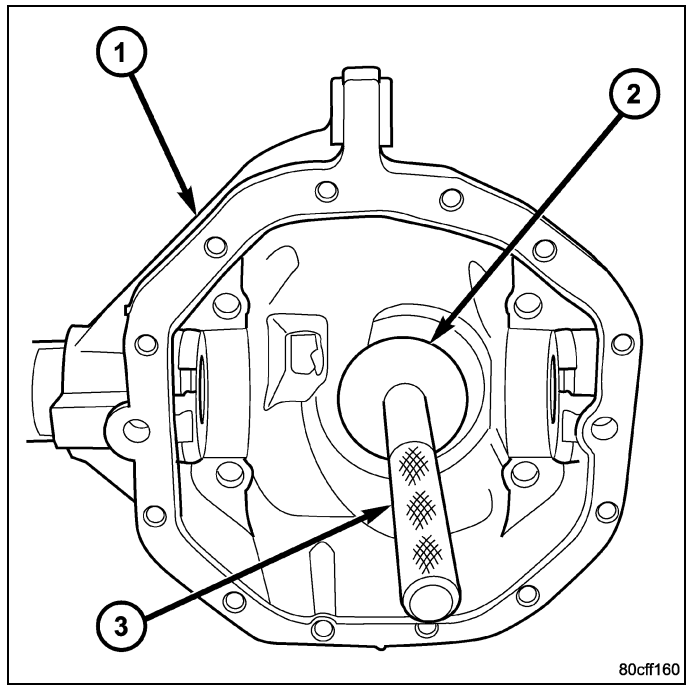

2. Install front pinion bearing cup with Installer 8693 and Handle C-4171.
3. Lubricate front pinion bearing and install bearing in the housing.
4. Apply a light coating of gear lubricant on the lip of pinion seal.
5. Install pinion seal with Installer 8695 (2) and Handle C-4171 (1).

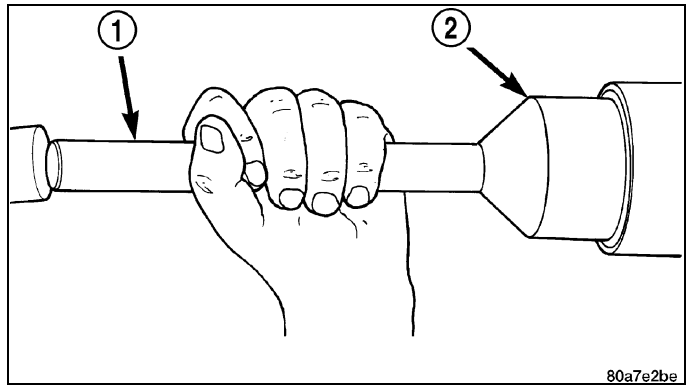

6. Place pinion depth shim (1) on the pinion shaft (2).

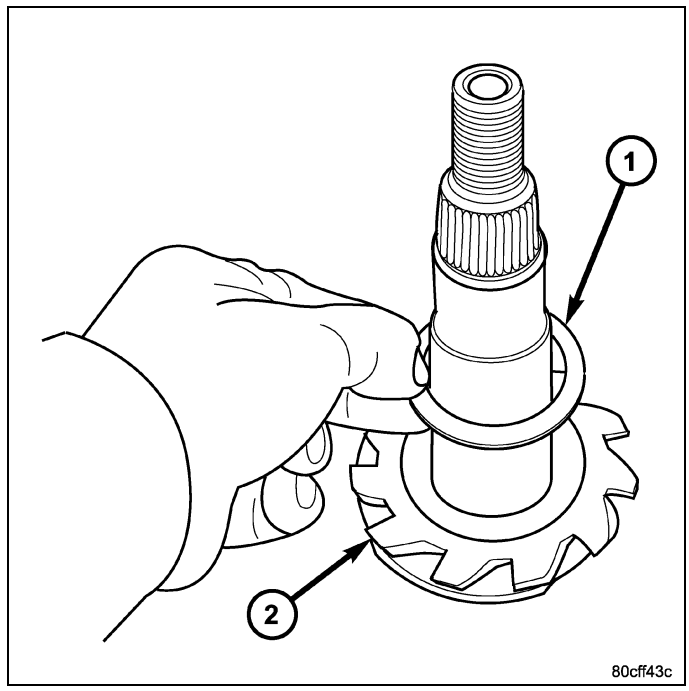

7. Install rear pinion bearing (4) with Installer 6448A (2) and a press (1).

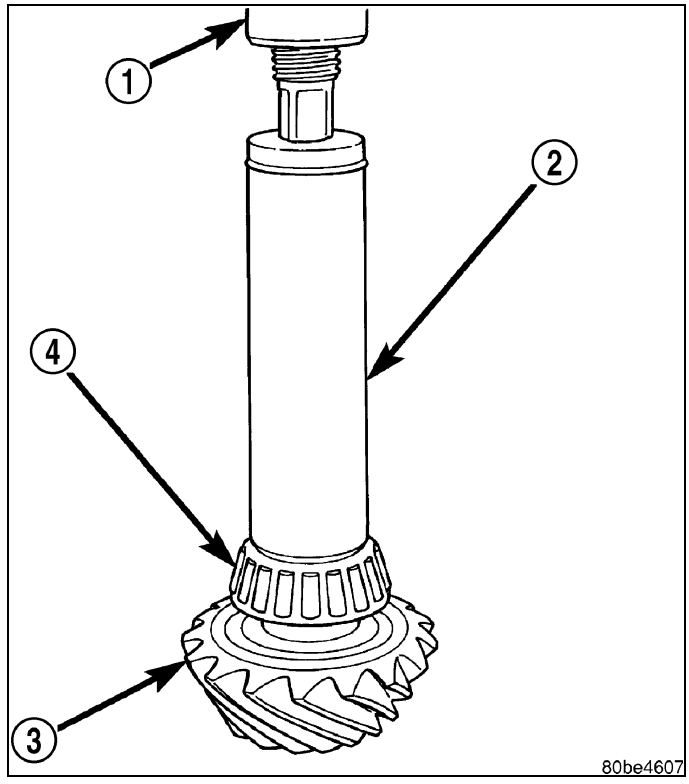

8. Install **new** collapsible spacer (1) onto the pinion shaft.
9. Lubricate rear pinion bearing and install the pinion gear in the housing.

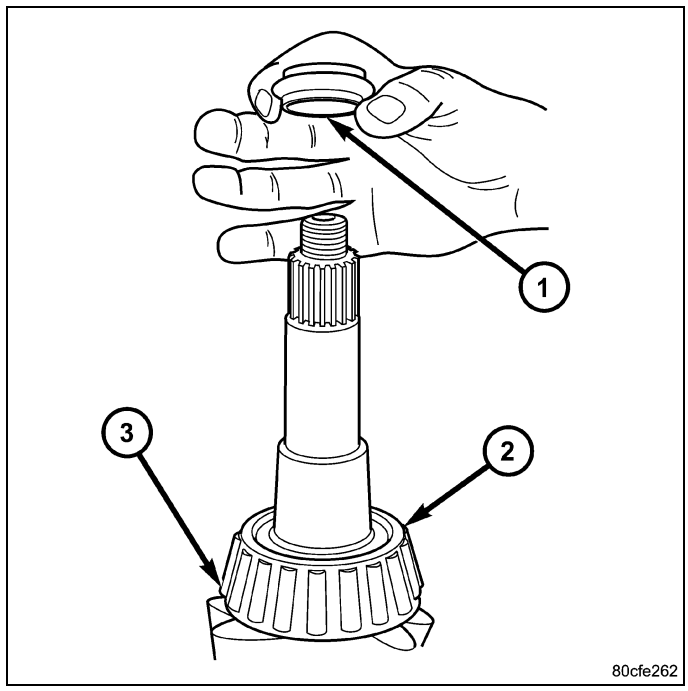

10. Install companion flange with Installer C-3718 and Holder 6719A (2).
11. Install **new** pinion nut and tighten to 271 N·m (200 ft. lbs.).
12. Using Holder 6719A and a torque wrench set at 475 N·m (350 ft. lbs.). Tighten pinion nut until bearing end play is eliminated.

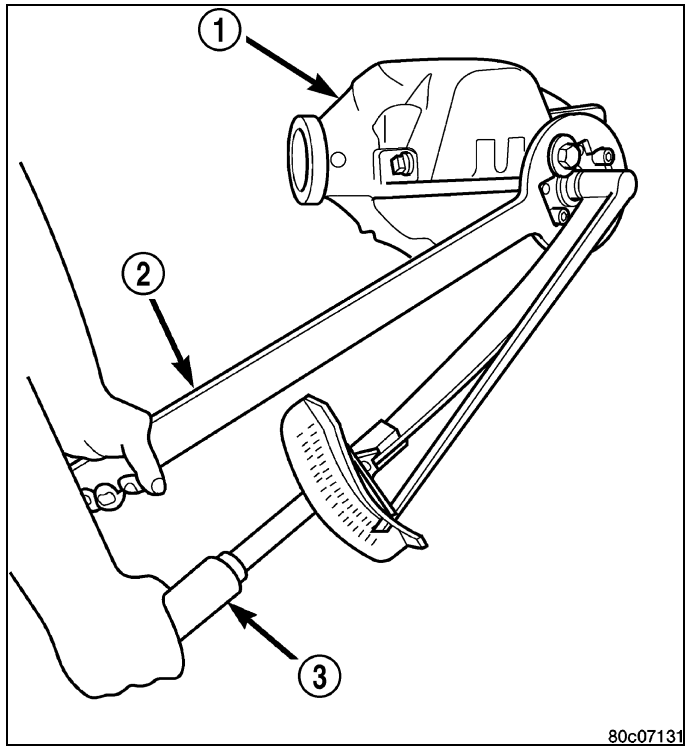

13. Rotate pinion several times to seat pinion bearings.
14. Tighten the pinion nut in 6.8 N·m (5 ft. lbs.) increments until pinion torque to rotate is achieved. Measure torque to rotate frequently to avoid over crushing the collapsible spacer.

Pinion Torque To Rotate is:

- **Original Bearings:** 1 - 2.5 N·m (10 - 20 in. lbs.)
- **New Bearings:** 2.0 - 2.8 N·m (18 - 25 in. lbs.)

CAUTION: Never loosen pinion nut to decrease pinion bearing rotating torque and never exceed specified preload torque. Failure to follow these instructions will result in damage.

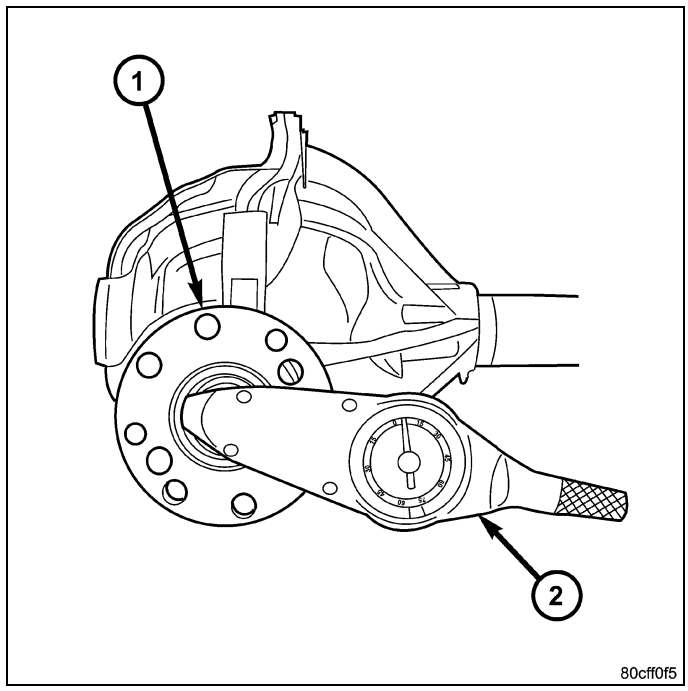

15. Invert start two ring gear bolts (1) to provide ring gear (2) bolt hole alignment.
16. Install **new** ring gear bolts and alternately tighten to 108 N·m (80 ft. lbs.).

CAUTION: Never reuse the ring gear bolts. Failure to follow these instruction will result in damage.

17. Install differential in housing and verify gear mesh, backlash and contact pattern.

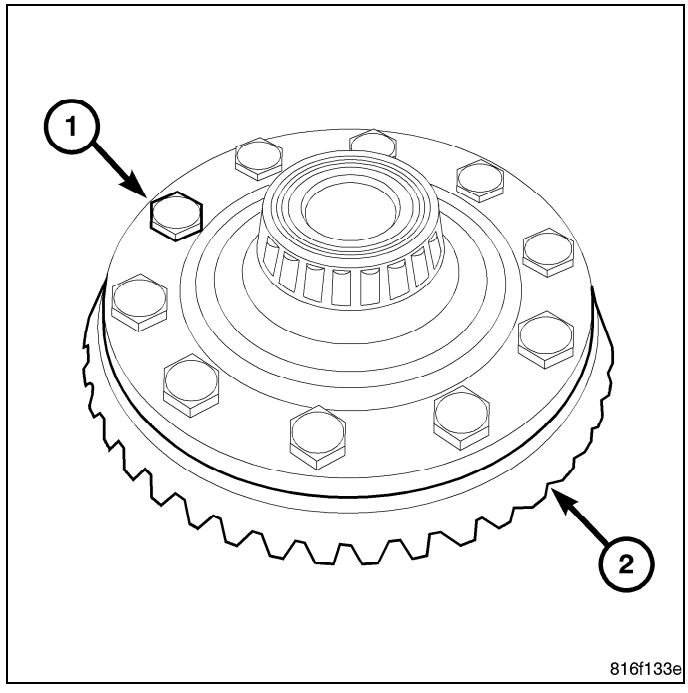

OUTPUT SHAFT ASSEMBLY, Front Axle

Removal

1. Remove half shaft from disconnect side of the axle.
2. Remove O-ring (1) and snap ring (2) from output shaft.

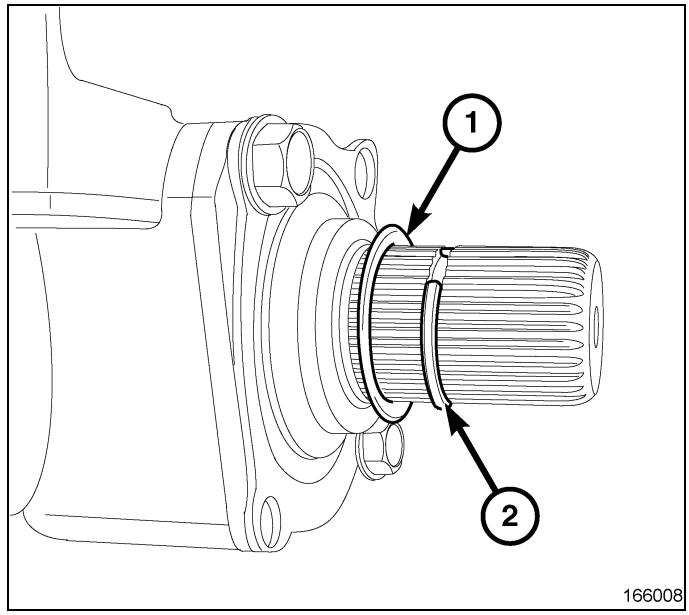

3. Remove disconnect seal (1) bolts (2).

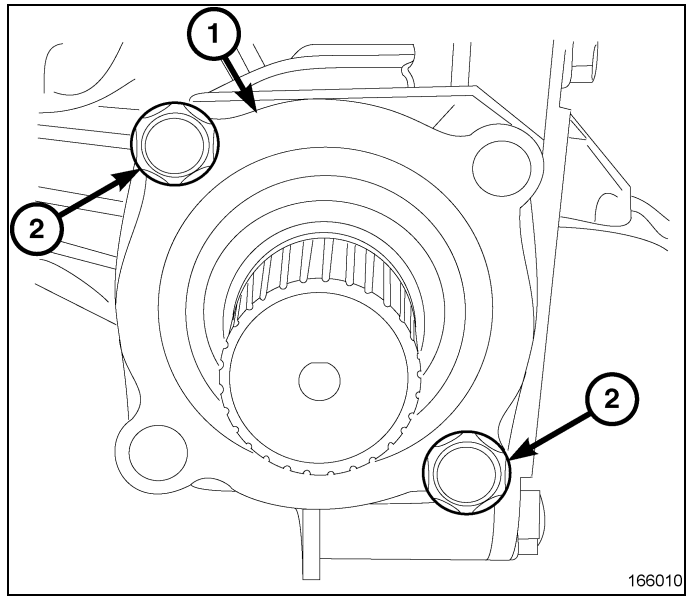

4. Remove output shaft (1) and disconnect seal (2) with Remove 8420B (3) and Slide Hammer C-3752.

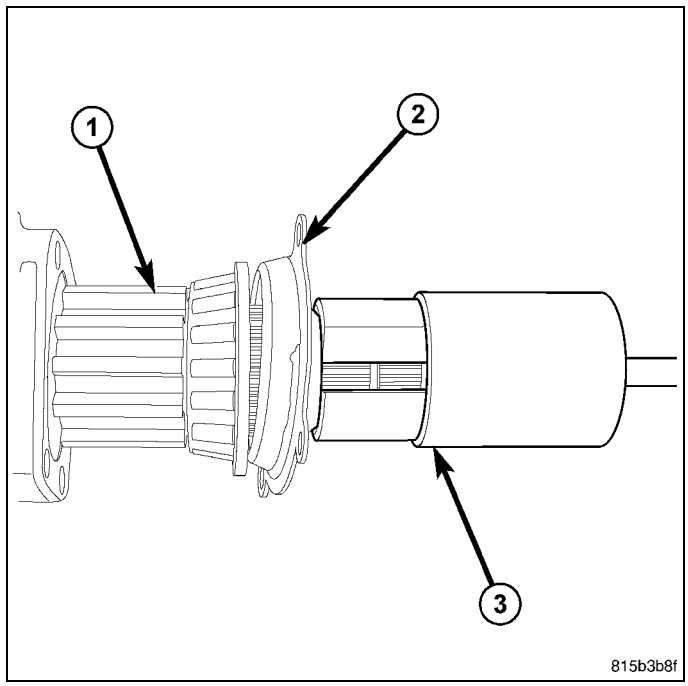

5. Remove disconnect seal (1) from output shaft (2).

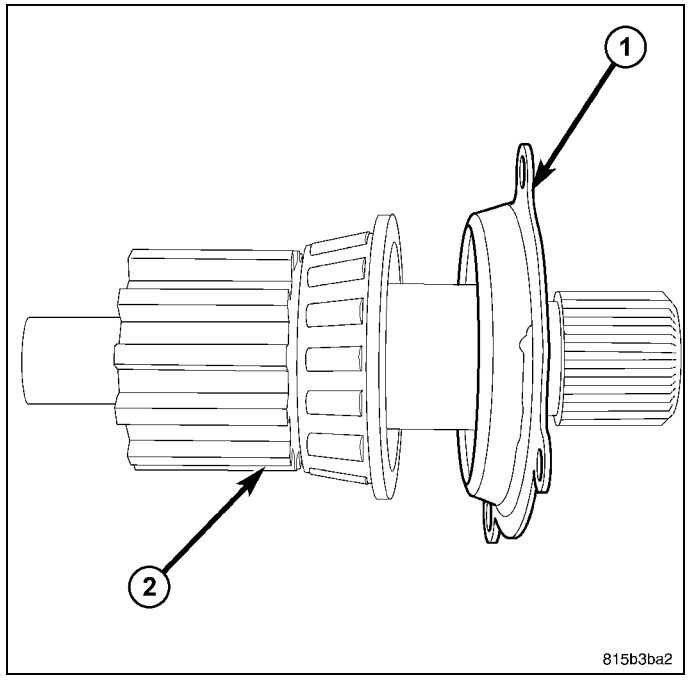

Disassembly

1. Remove output shaft bearing cup (1) from axle tube (2).

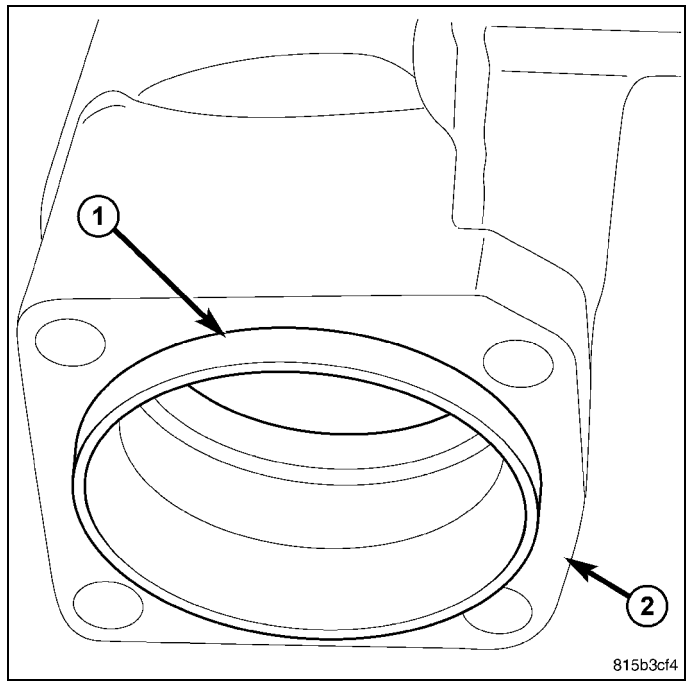

2. Remove snap ring (1) from output shaft (2).

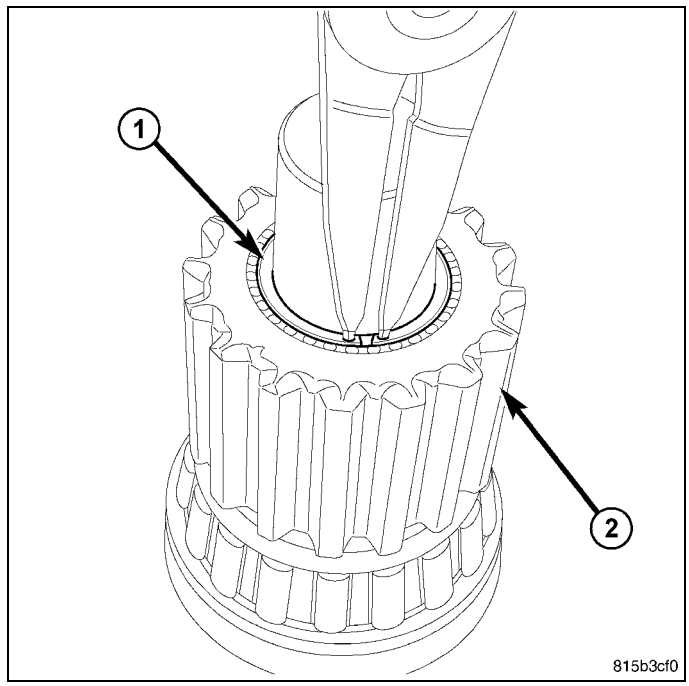

3. Press output shaft (1) out of disconnect spline (2) and bearing (3).

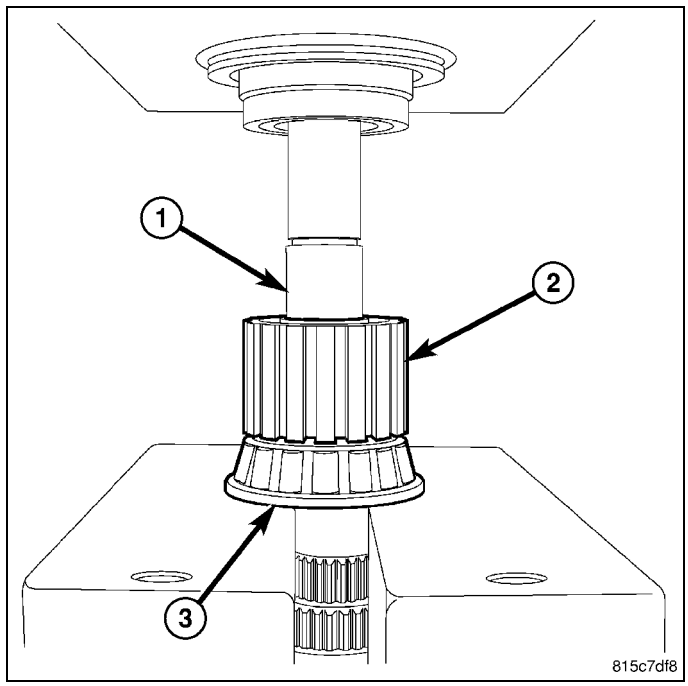

Assembly

1. Press output shaft bearing (1) on output shaft (2) with Installer W-262 (3).

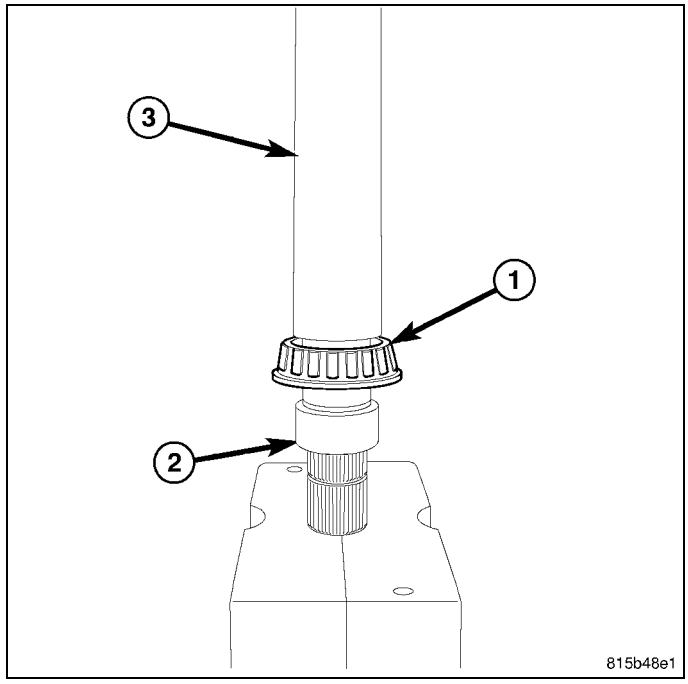

2. Press output shaft disconnect spline (1) on output shaft with Installer W-262 (2).

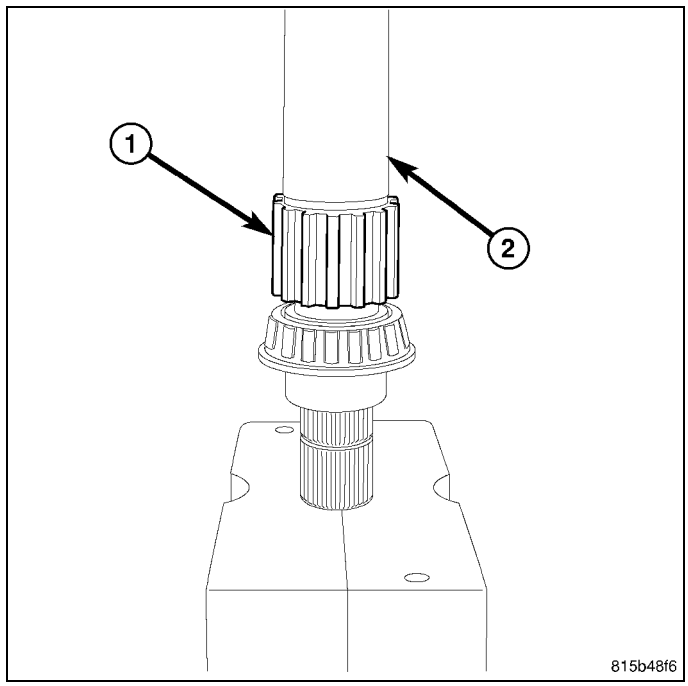

3. Install disconnect spline (2) snap ring (1).

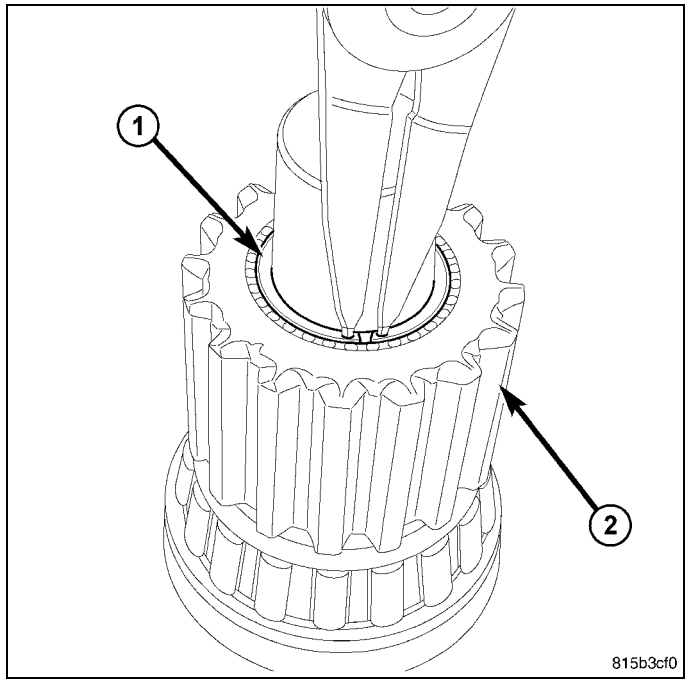

4. Install output shaft bearing cup (1) in disconnect pocket (2).

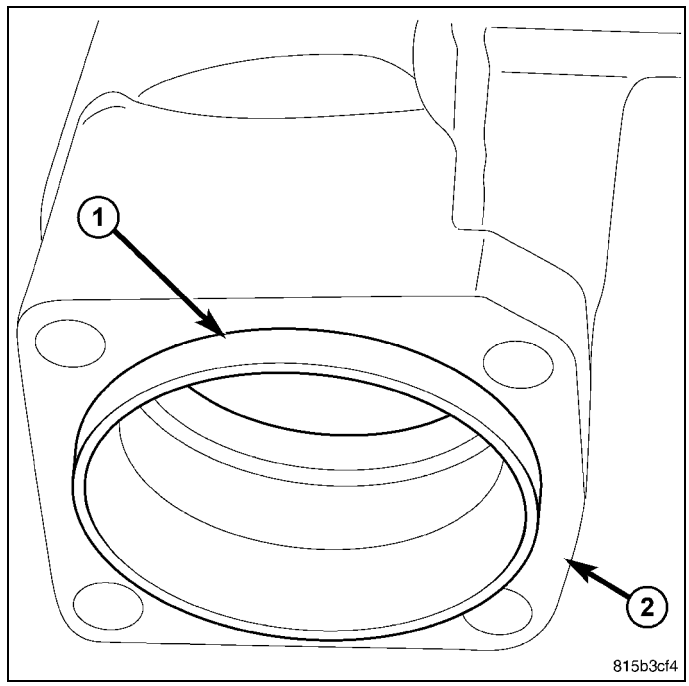

Installation

1. Verify output shaft bearing cup (1) is seated in disconnect pocket (2).

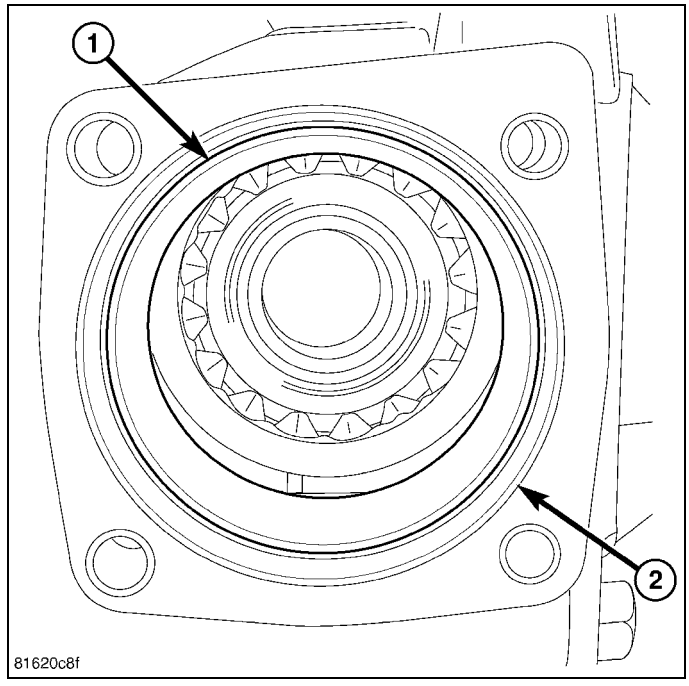

2. Install output shaft (1) in disconnect pocket (2).

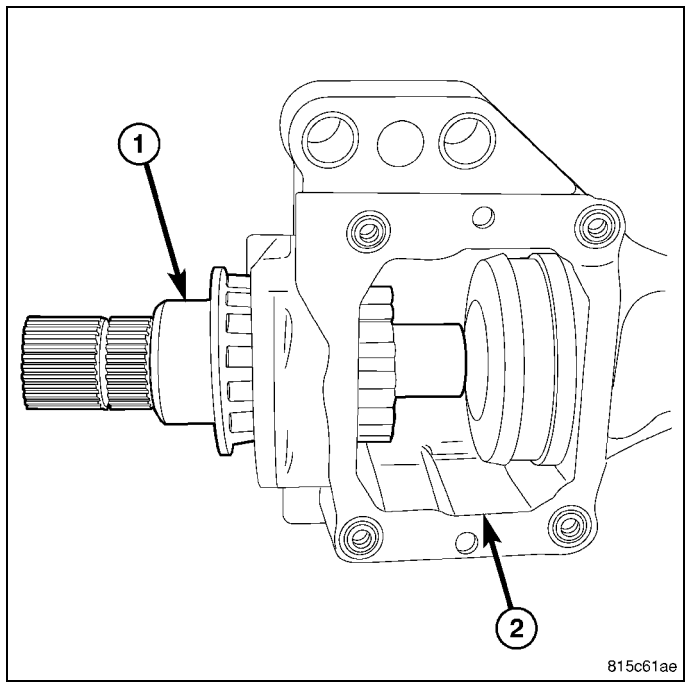

3. Install disconnect seal (1) on output shaft (2).

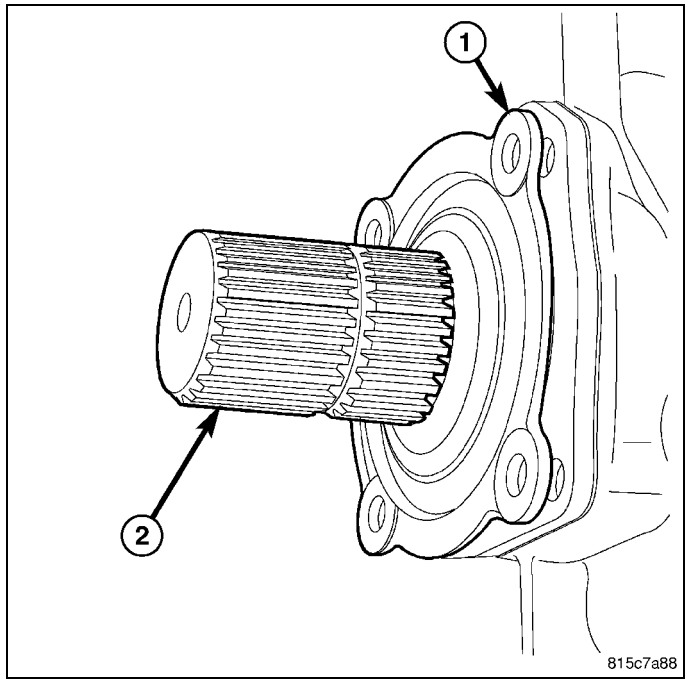

4. Align disconnect seal (1) with bolt holes in disconnect pocket with Pins MD998412 (2).

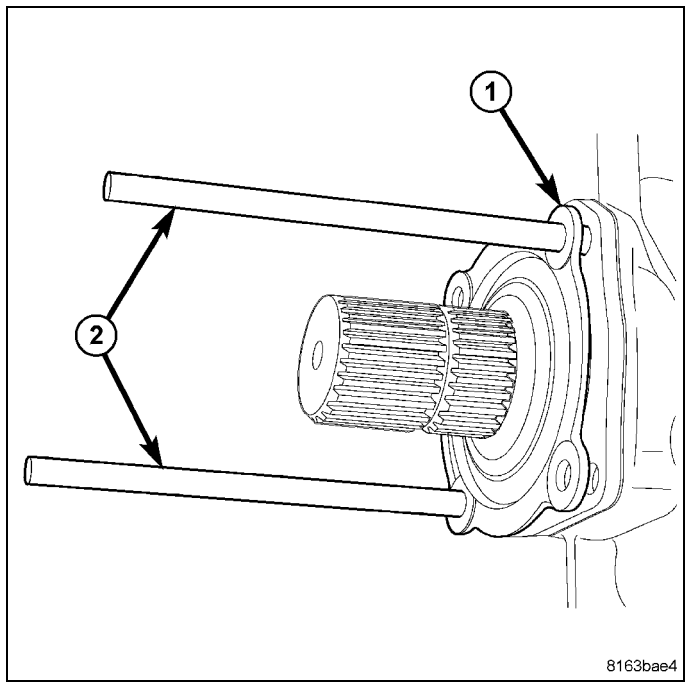

5. Install disconnect seal (1) in disconnect pocket with Installer 6761 (2) and a hammer.

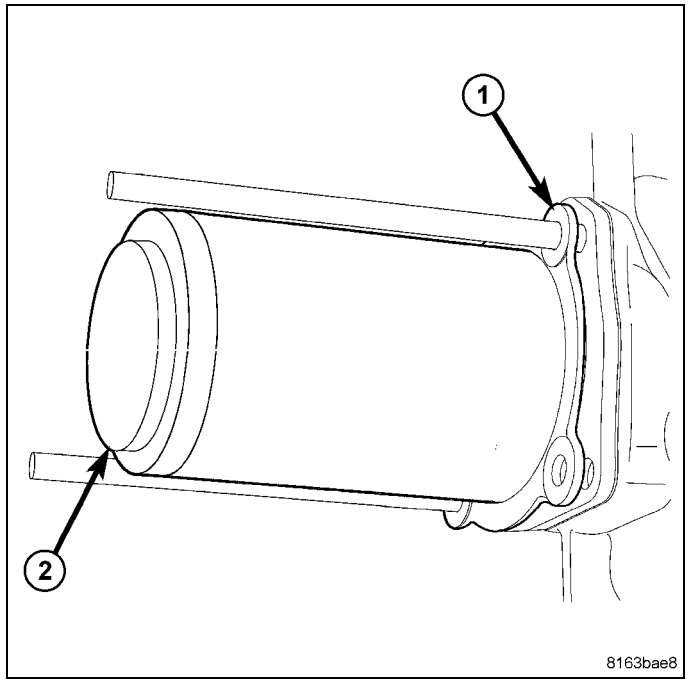

6. Install disconnect seal (1) bolts (2) and tighten to 28 N·m (21 ft. lbs.).

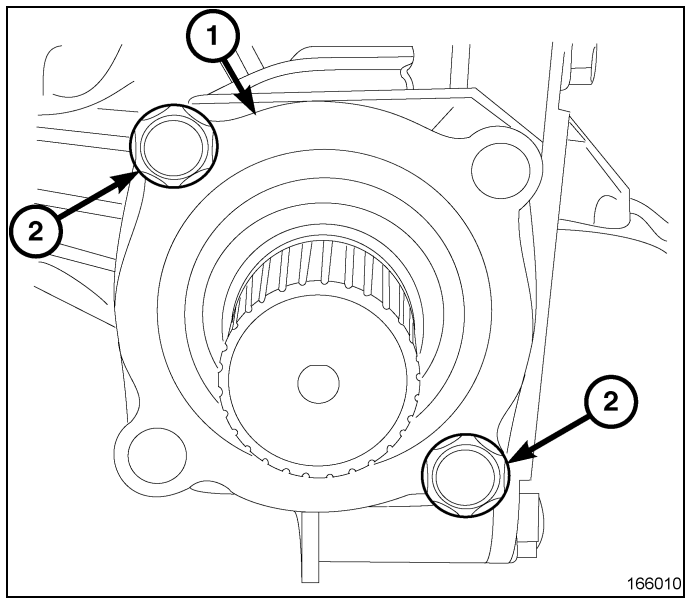

7. Install output shaft O-ring (1) and snap ring (2).
8. Install half shaft.
9. Verify differential fluid level and add fluid if necessary.

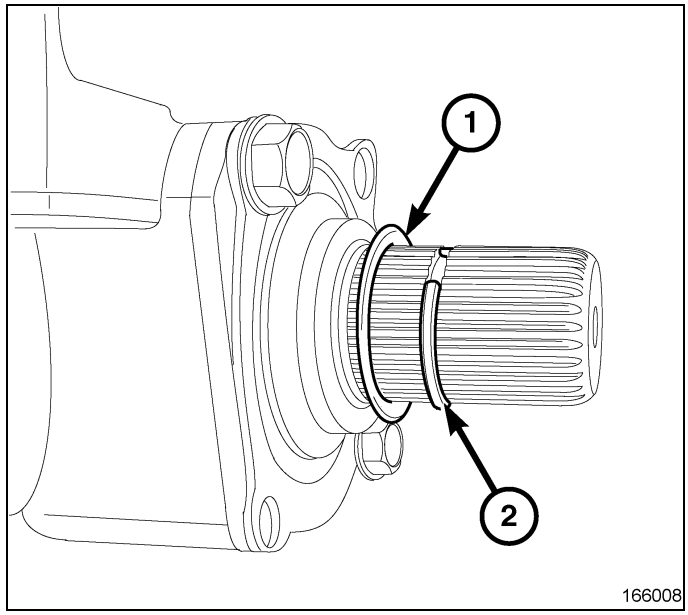

SEAL, Axle Drive Shaft, Output Shaft

Removal

1. Remove half shaft from disconnect side of the axle.
2. Remove O-ring (1) and snap ring (2) from the output shaft.

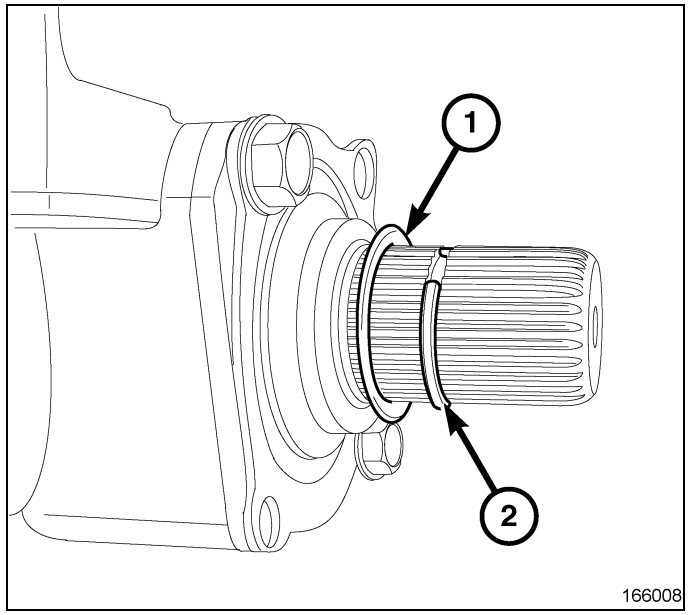

3. Remove disconnect seal (1) bolts (2).

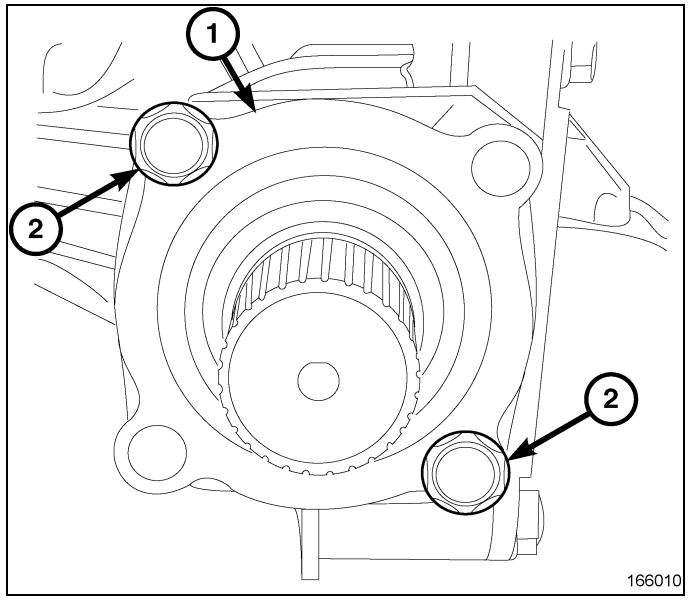

4. Remove output shaft and disconnect seal (1) with Remover 8420B (2) and Slide Hammer C-3752.

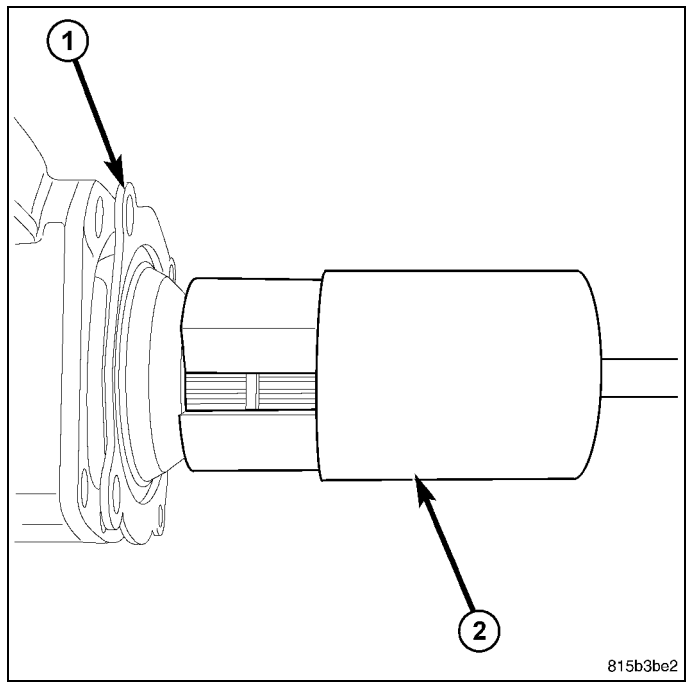

Installation

1. Verify output shaft bearing cup (1) is seated in disconnect pocket (2).

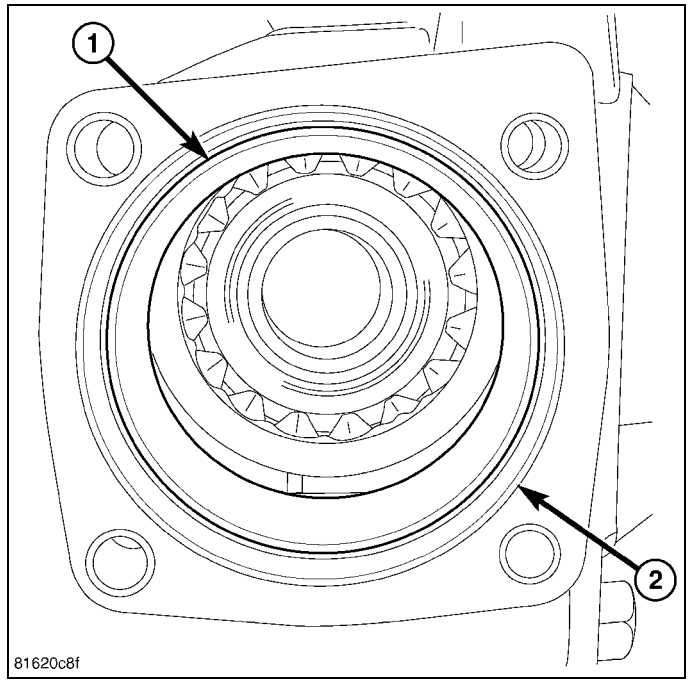

2. Install output shaft (1) in disconnect pocket (2).

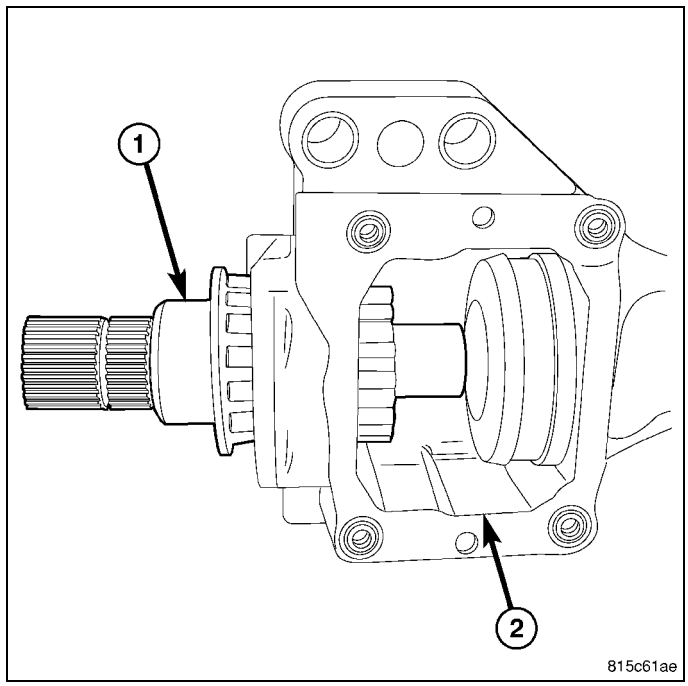

3. Apply Mopar® Thread Sealant with PTFE or Mopar® Axle RTV to the axle tube.
4. Install disconnect seal (1) on output shaft (2).

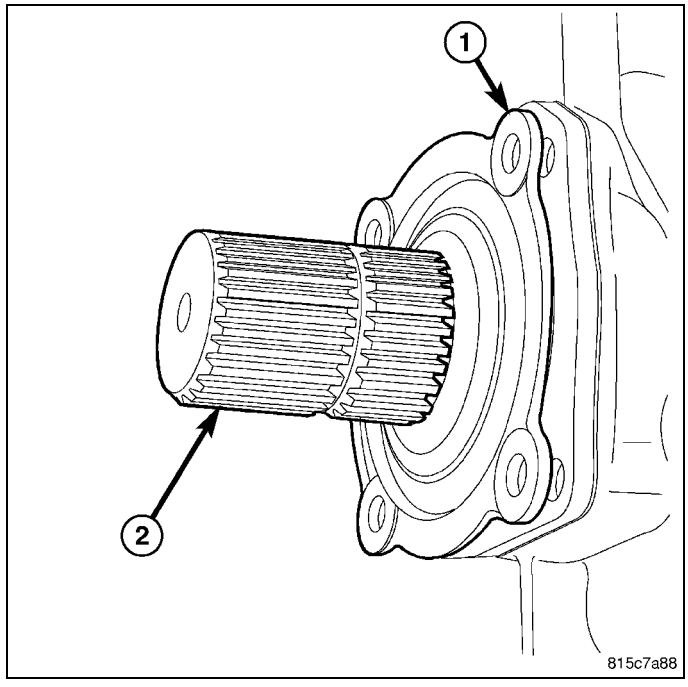

5. Align disconnect seal with bolt holes in disconnect pocket with a single Pin MD998412 (1).

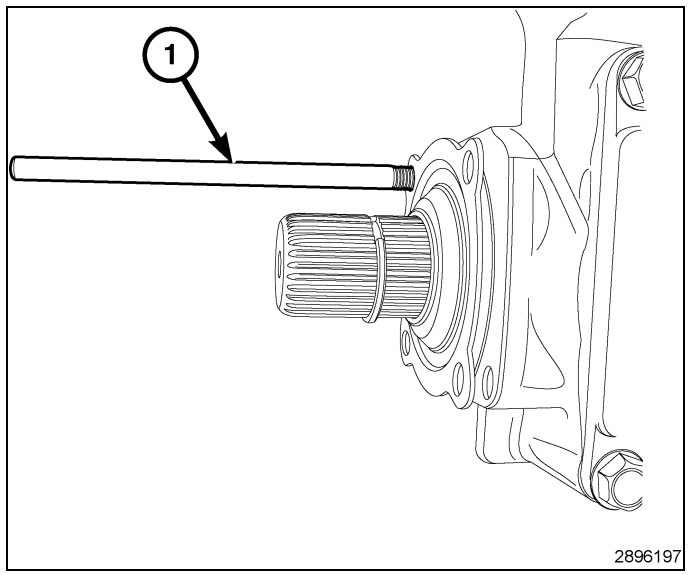

6. Install disconnect seal in disconnect pocket with Installer 10117 (1) and a hammer.

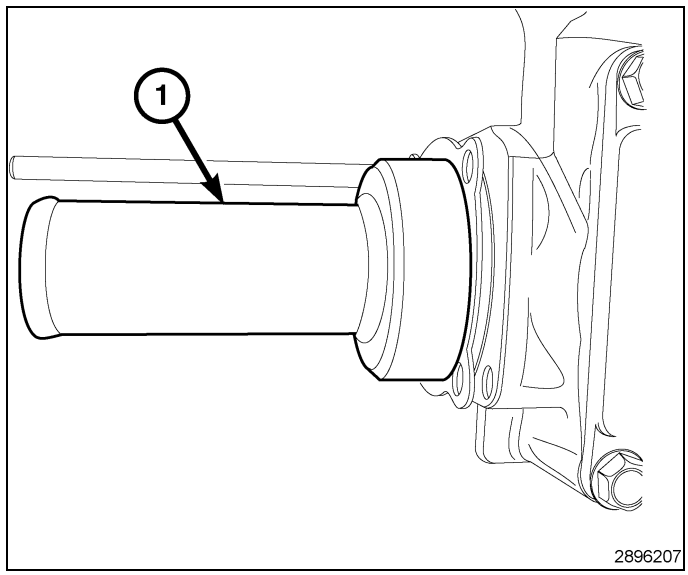

7. Apply Mopar® Thread Sealant with PTFE or Mopar® Axle RTV to the bolt threads.
8. Install disconnect seal (1) bolts (2) and tighten to 28 N·m (21 ft. lbs.).

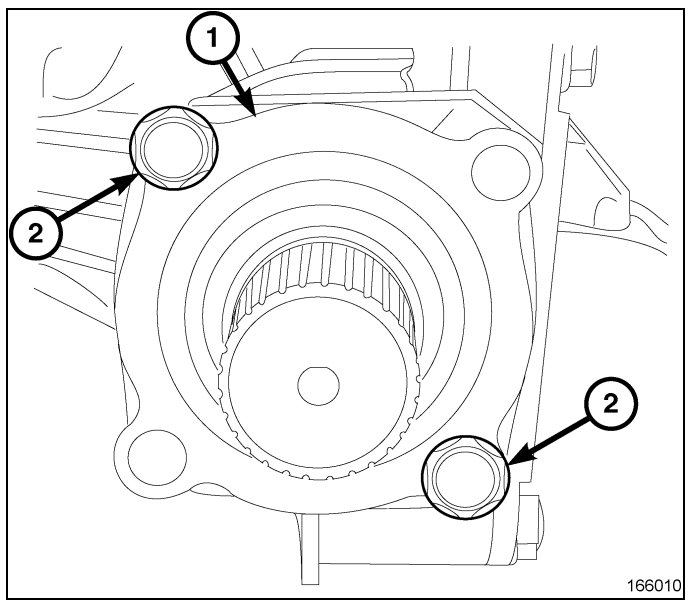

9. Install output shaft O-ring (1) and snap ring (2).
10. Install half shaft.
11. Verify differential fluid level and add fluid if necessary.

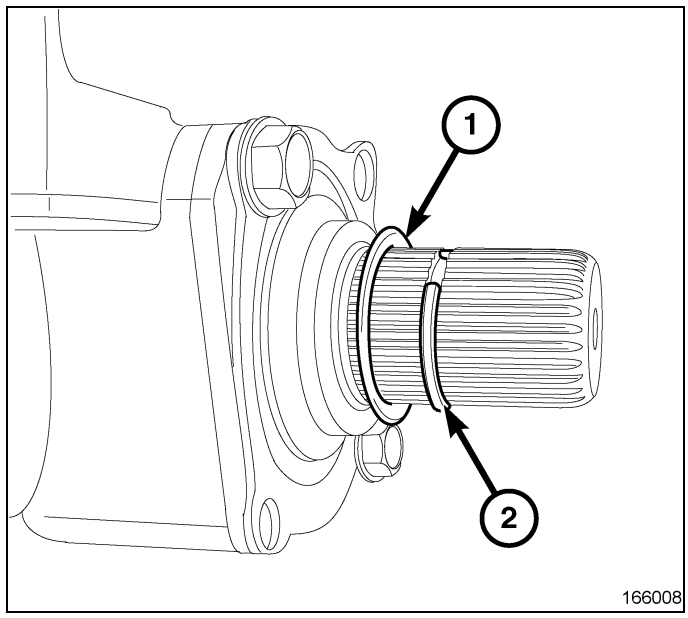

SEAL, Axle Drive Shaft

Removal

1. Remove half shaft from vehicle.
2. Clean axle seal area.
3. Remove O-ring (1) and snap ring (2) from axle shaft (3).

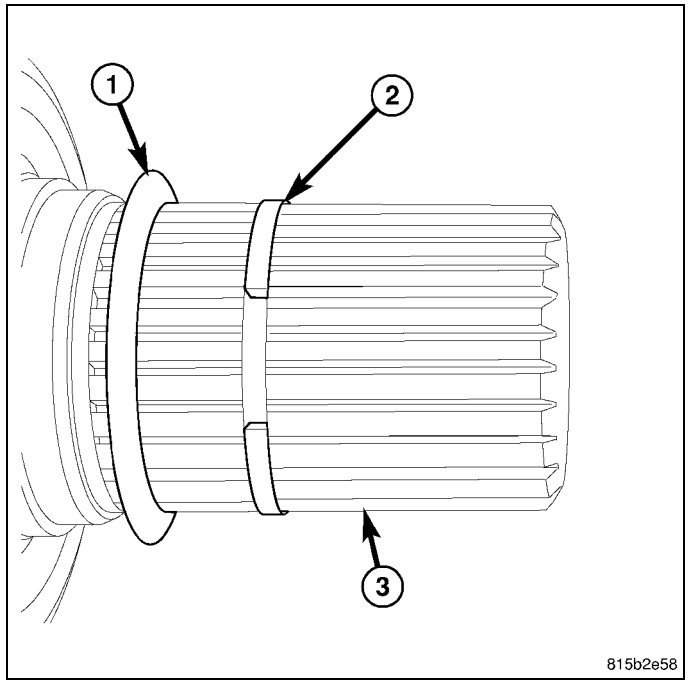

4. Remove axle with Remove 8420B (2,3,4) and Slide Hammer C-3752.
5. Remove axle shaft seal with a seal puller.

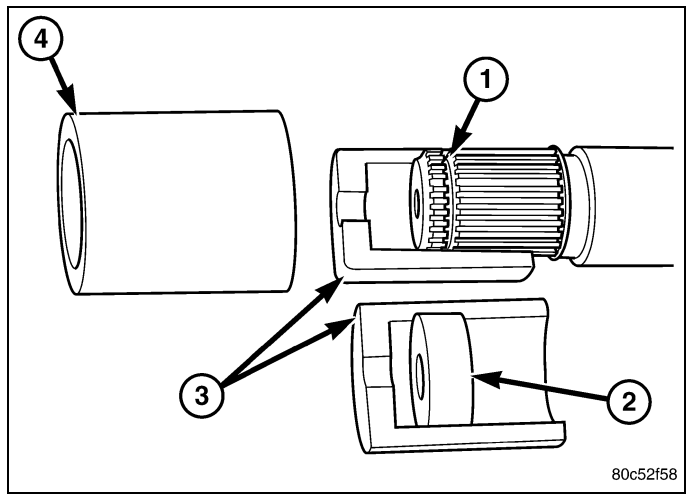

Installation

1. Wipe axle shaft tube bore clean.
2. Install **new** axle shaft seal with Installer 8694 (1).
3. Install axle shaft with **new** snap ring and verify axle shaft snap ring is seated in side gear.

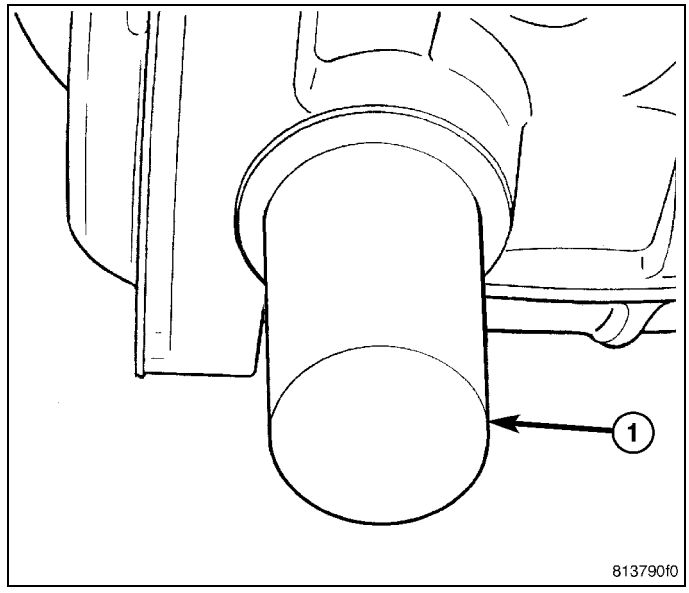

4. Install o-ring (1) and snap ring (2) on axle shaft (3).
5. Install half shaft.
6. Verify differential fluid level and add fluid if necessary.

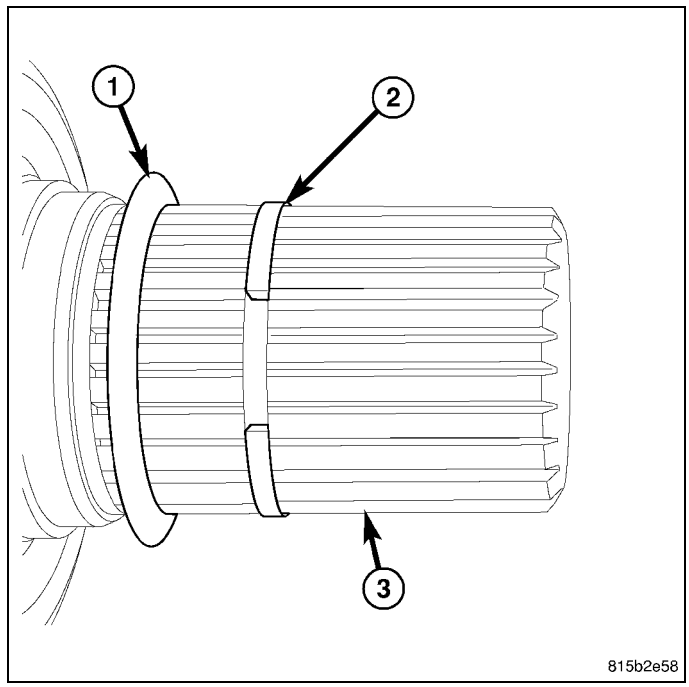

SEAL, Drive Pinion

Removal

1. With axle in 2WD remove front propeller shaft and left half shaft.
2. Rotate pinion gear three or four times and verify pinion rotates smoothly.
3. Record pinion torque to rotate with an inch pound torque wrench (2), for installation reference.
4. Position Holder 6719A against the companion flange (1) and install a four bolts and washers into the threaded holes and tighten the bolts.
5. Remove pinion nut.

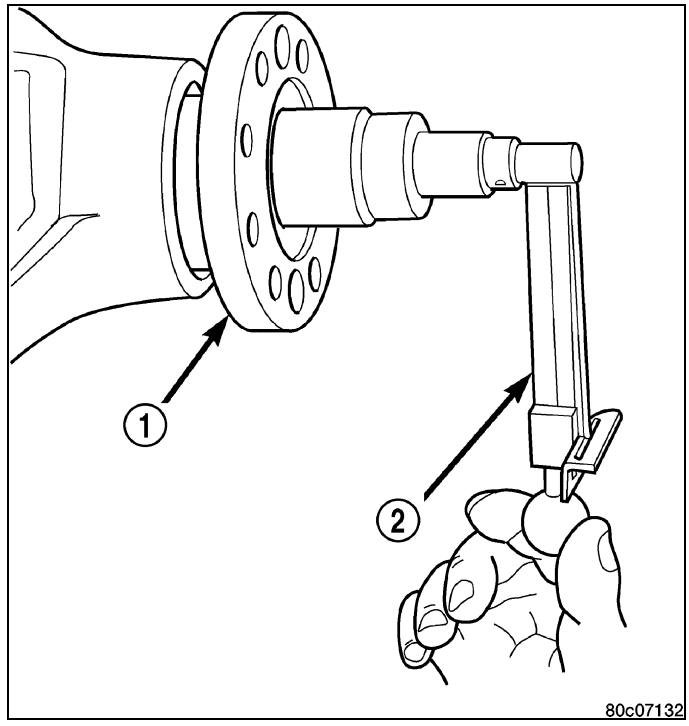

6. Mark a line across the pinion shaft and flange for installation reference.
7. Remove companion flange with (1) Remover C-452 (2).
8. Remove pinion seal with a seal puller.

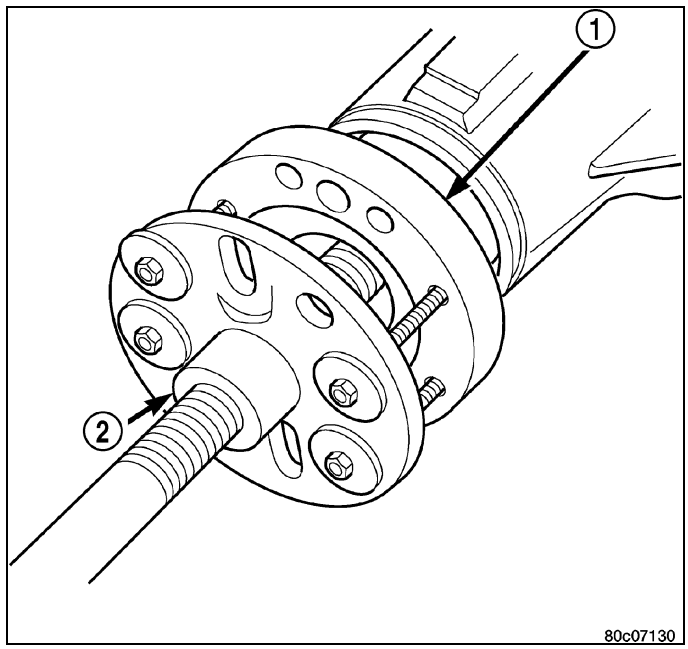

Installation

1. Apply a light coating of gear lubricant on the lip of pinion seal.
2. Install seal with Installer 8695 (2) and Handle C-4171 (1).
3. Install flange on the pinion shaft with the reference marks aligned.
4. Install companion flange onto the pinion with Installer C-3718 and Holder 6719A.

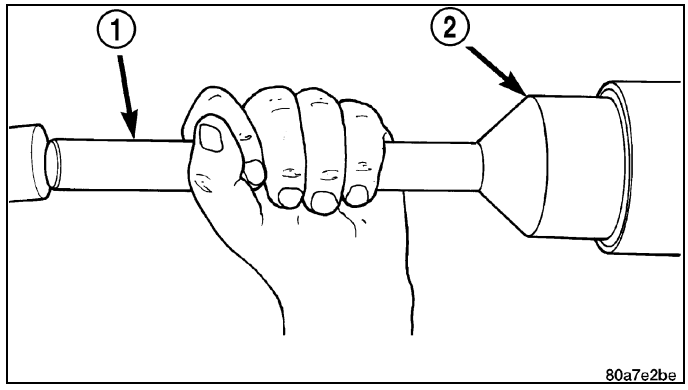

5. Position holder (2) against the companion flange and install four bolts and washers into the threaded holes. Tighten the bolt and washer so that the holder is held to the flange.
6. Install a **new** pinion nut onto the pinion shaft and tighten the pinion nut until there is zero bearing end-play

CAUTION: Do not exceed 271 N·m (200 ft. lbs.) the minimum tightening torque when installing the companion flange at this point. Never loosen pinion nut to decrease pinion bearing rotating torque and never exceed specified preload torque. Failure to follow these instruction will damage the axle.

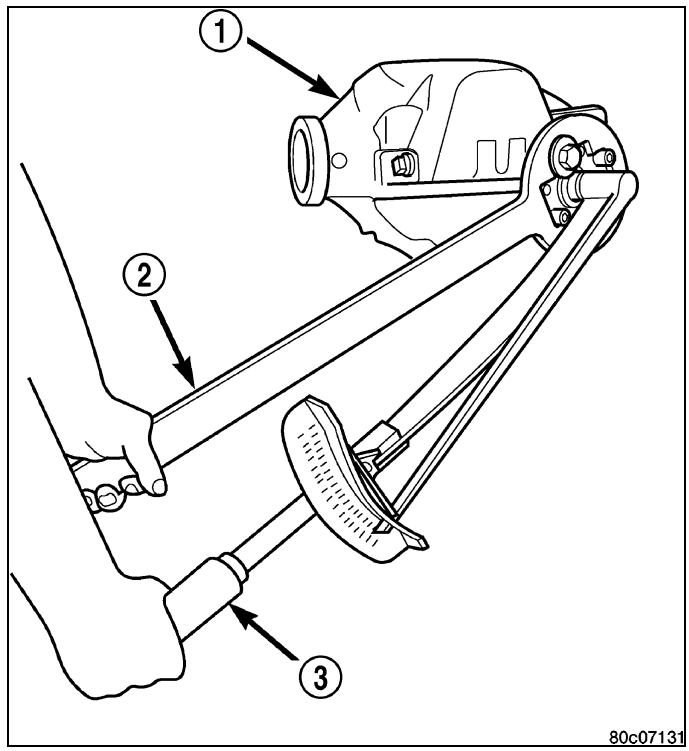

7. Measure pinion Torque To Rotate with an inch pound torque wrench (2). Pinion Torque To Rotate should be equal to recorded reading plus an additional 0.56 N·m (5 in. lbs.).
8. If rotating torque is low, tighten the pinion nut in 6.8 N·m (5 ft. lbs.) increments until pinion Torque To Rotate is achieved.

CAUTION: If maximum tightening torque 475 N·m (350 ft. lbs.) is reached prior to reaching the required rotating torque, the collapsible spacer may have been damaged. Failure to follow these instruction will damage the axle.

9. Install propeller shaft and half shafts.

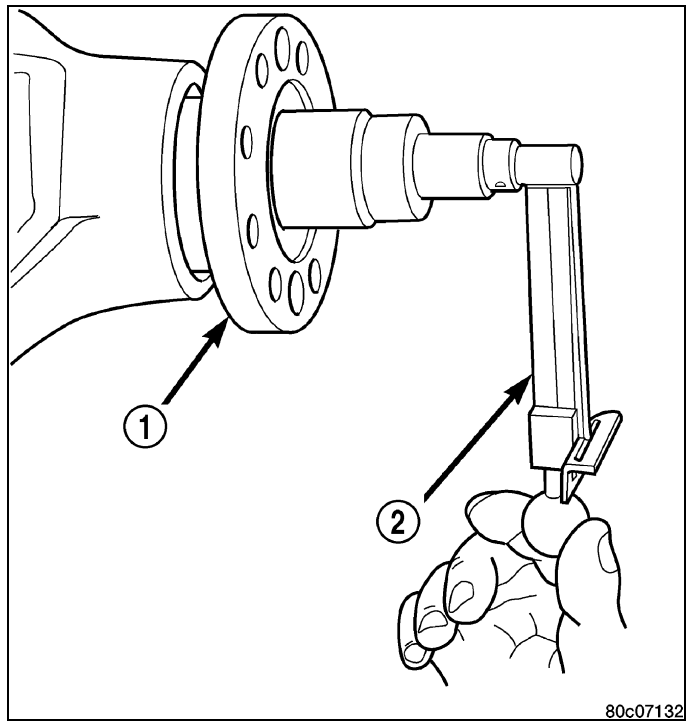

SHAFT, Axle

Removal

1. Remove half shaft from vehicle.
2. Clean axle seal area.
3. Remove O-ring (1) and snap ring (2) from axle shaft (3).

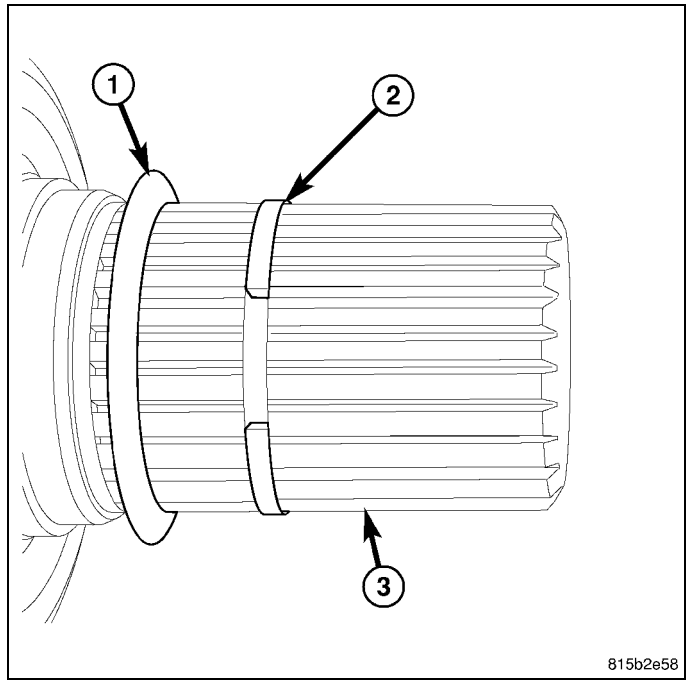

4. Remove axle with Remove 8420B (2,3,4) and Slide Hammer C-3752.

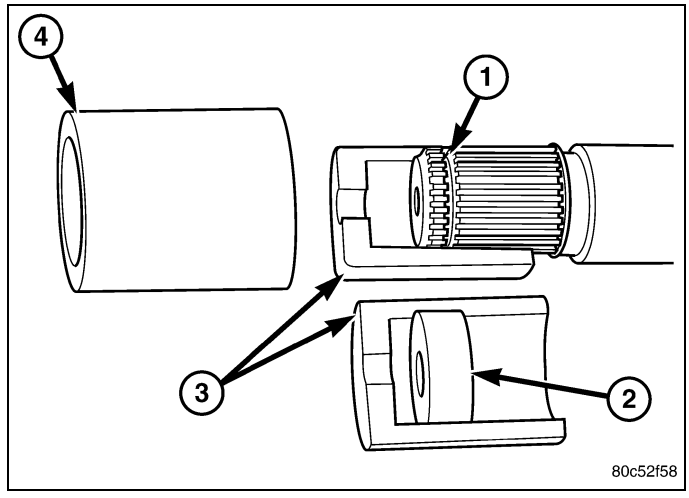

Installation

1. Lubricate bearing bore and seal lip with gear lubricant.
2. Install axle shaft with **new** snap ring and verify axle shaft snap ring is seated in side gear.
3. Install o-ring (1) and snap ring (2) on axle shaft (3).
4. Install half shaft.
5. Verify differential fluid level and add fluid if necessary.

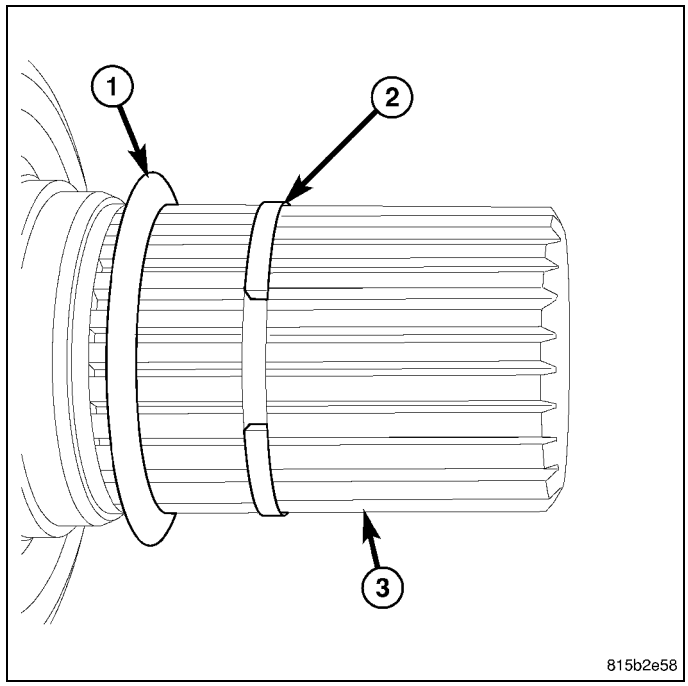

SHAFT, Axle Intermediate

Removal

1. Remove half shaft from disconnect side of the axle.
2. Remove disconnect actuator wiring connector.
3. Remove disconnect actuator (1) bolts (2) and remove actuator.

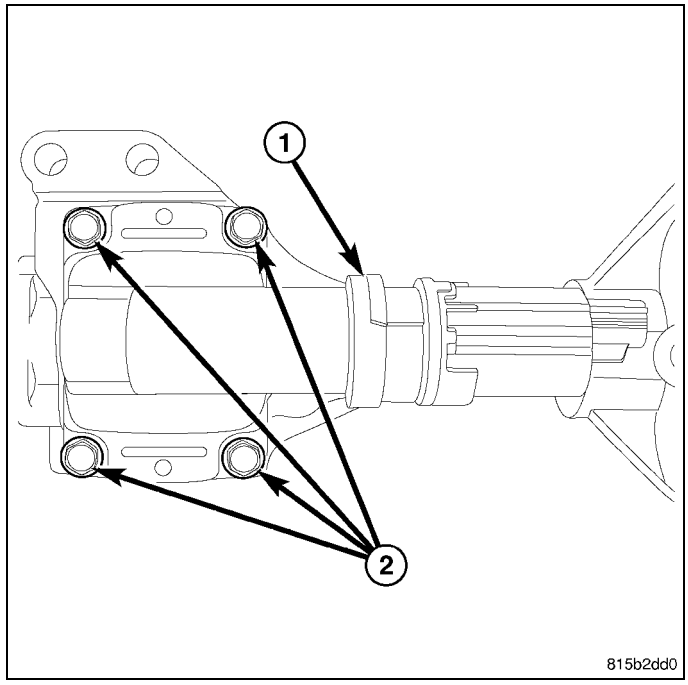

4. Remove O-ring (1) and snap ring (2) from output shaft.

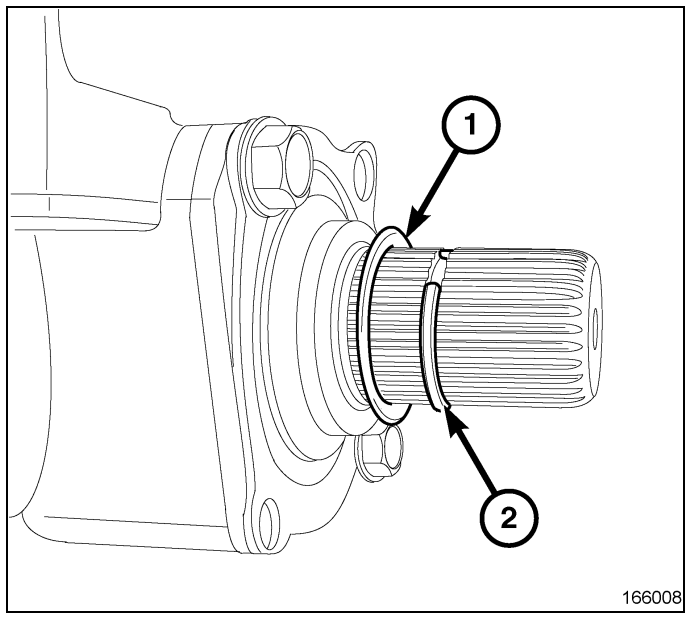

5. Remove disconnect seal (1) bolts (2).

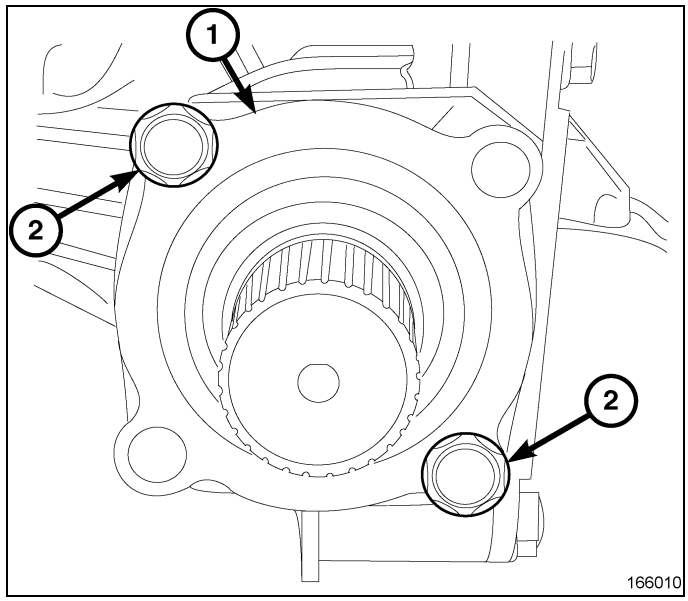

6. Remove output shaft (1) and disconnect seal (2) with Remover 8420B (3) and Slide Hammer C-3752.

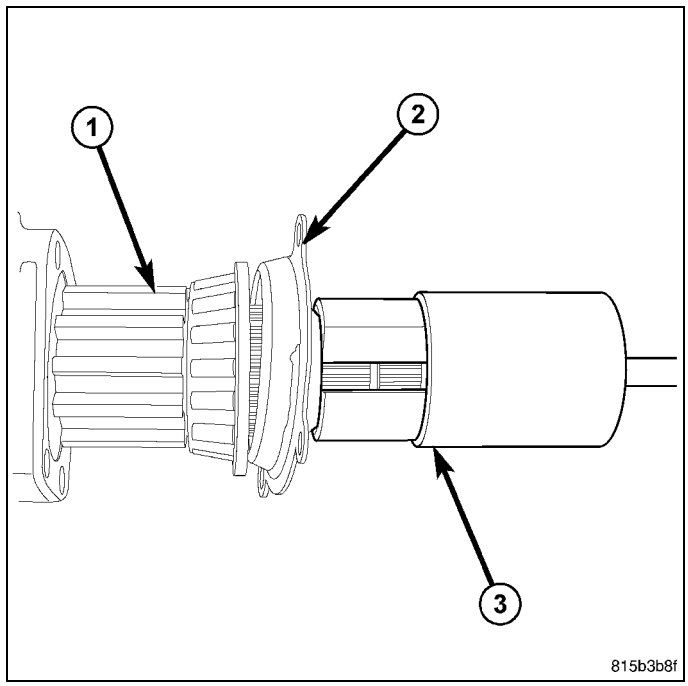

7. Slide disconnect collar (1) from intermediate shaft (2) and remove through disconnect pocket.

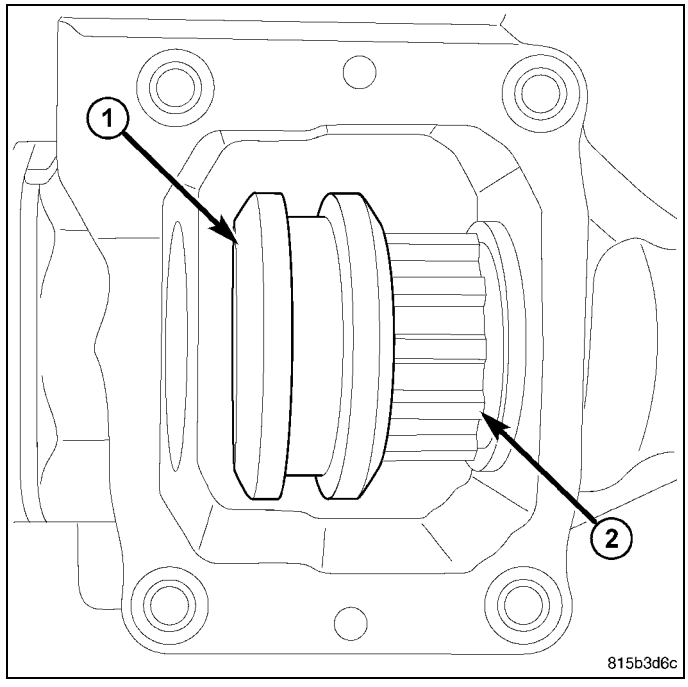

8. Remove differential cover.
9. Drive intermediate shaft (1) out of side gear with a hammer and brass punch (2).

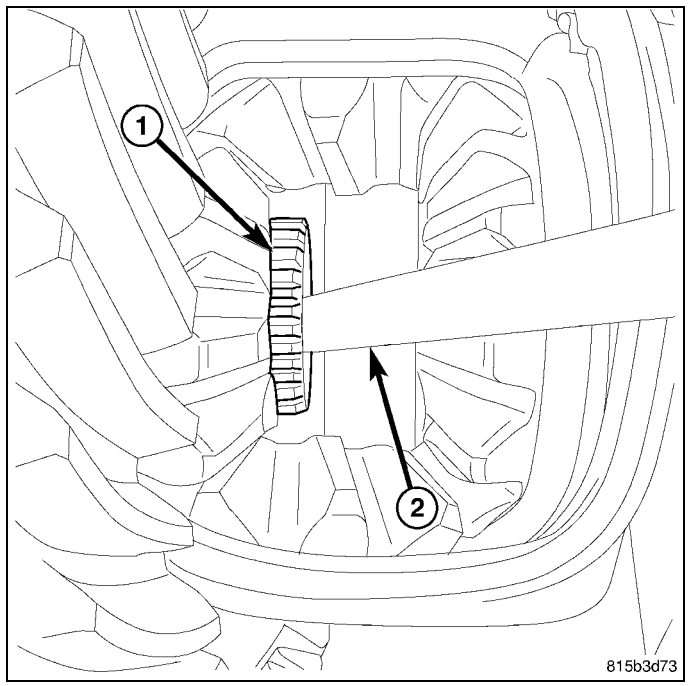

10. Remove intermediate shaft (1) from axle tube (2).

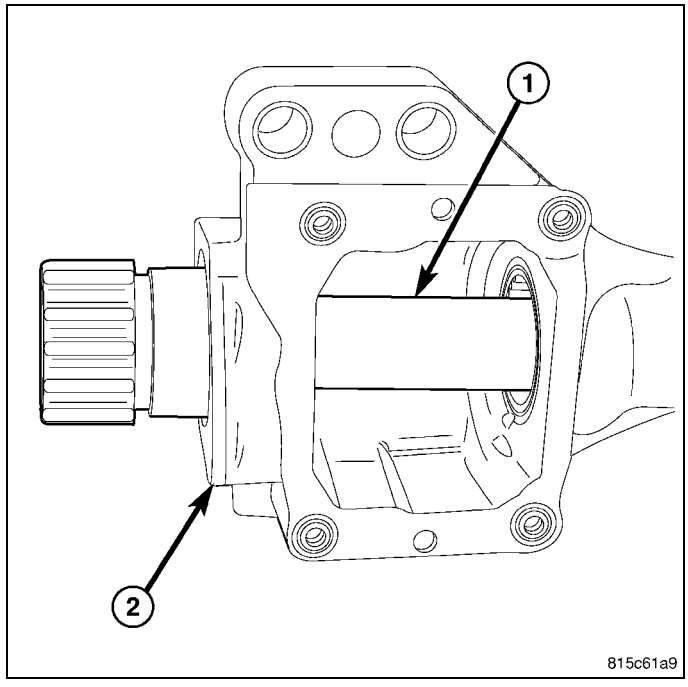

Disassembly

1. Secure intermediate shaft in vise.
2. Remove output shaft bearing from intermediate shaft (2), with Puller 9585 (1) and Slide Hammer C-637.

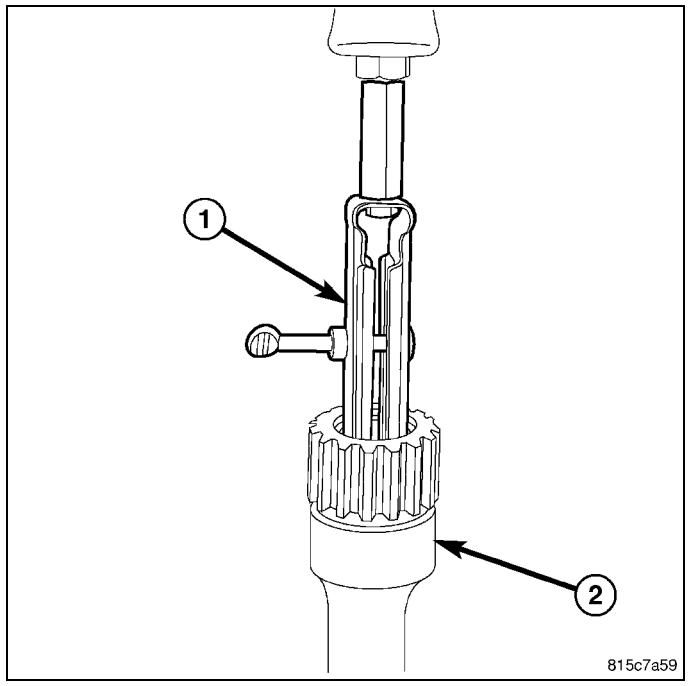

Assembly

1. Install output shaft bearing (1) in intermediate shaft (3) with Installer 9768 (2) and Handle C-4171.

CAUTION: Bearing must be installed with lettering facing outwards. Failure to follow these instructions will damage the bearing.

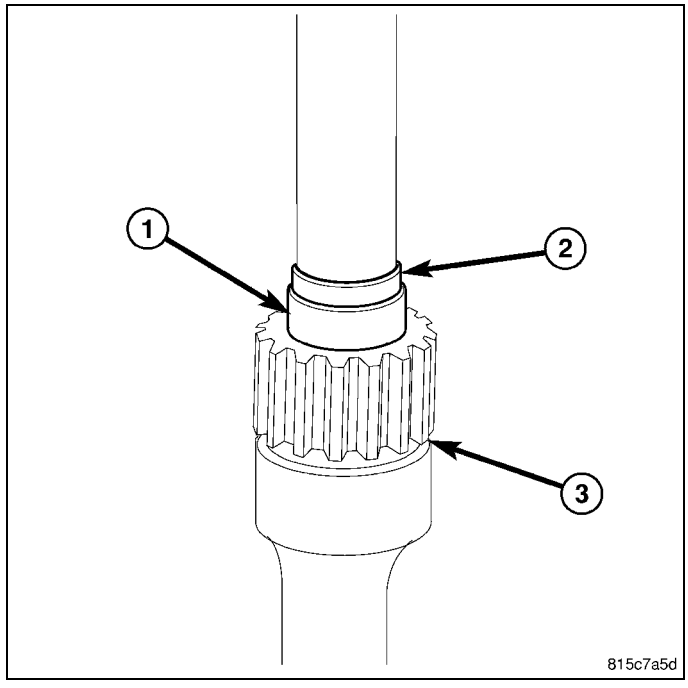

Installation

1. Install **new** intermediate shaft snap ring.
2. Install shaft (1) into axle tube (2) and side gear. Verify intermediate shaft snap ring is seated in side gear.

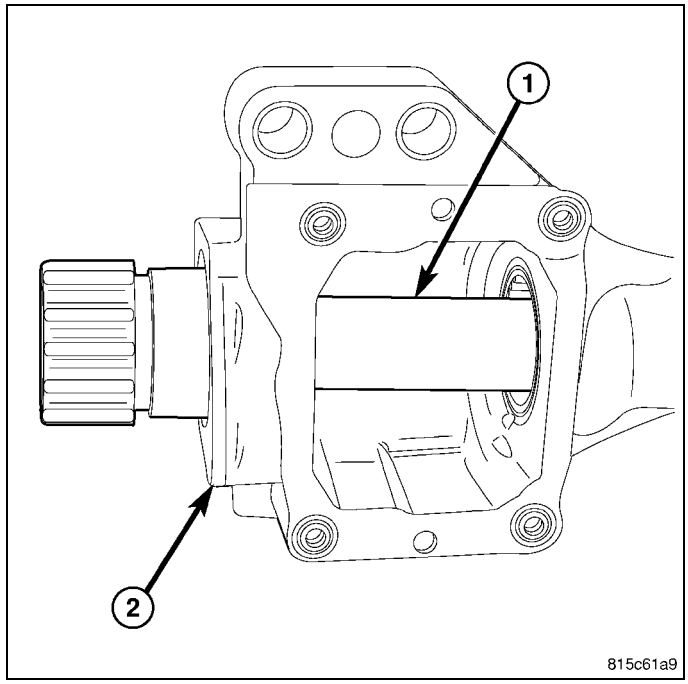

3. Install disconnect collar (1) through disconnect pocket onto intermediate shaft (2).

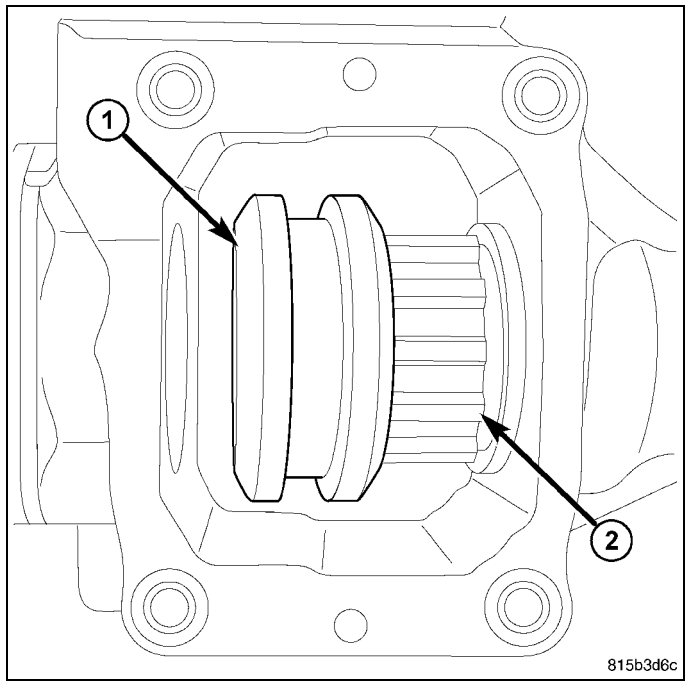

4. Position disconnect collar (1) on intermediate shaft (2), so collar is in 2WD position.

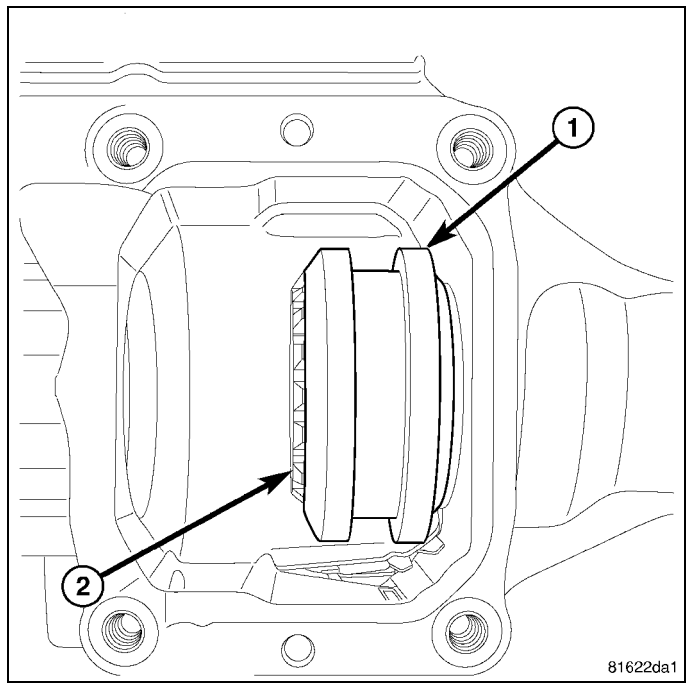

5. Verify output shaft bearing cup (1) is seated in the disconnect pocket (2).

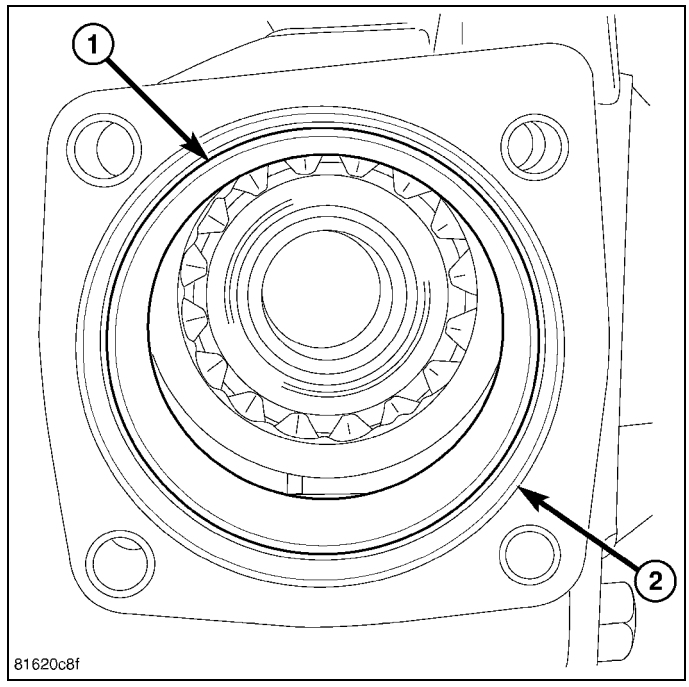

6. Install output shaft (1) with bearing into disconnect pocket (2).

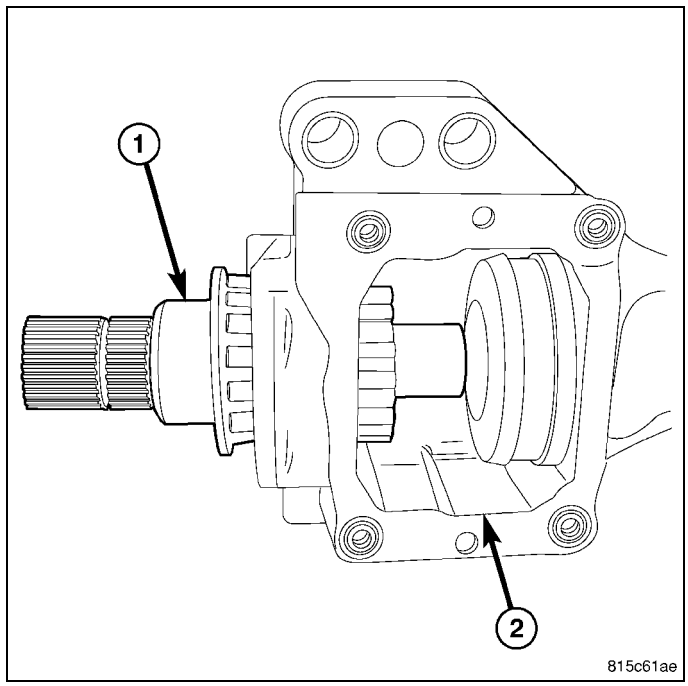

7. Install disconnect seal (1) on output shaft (2).

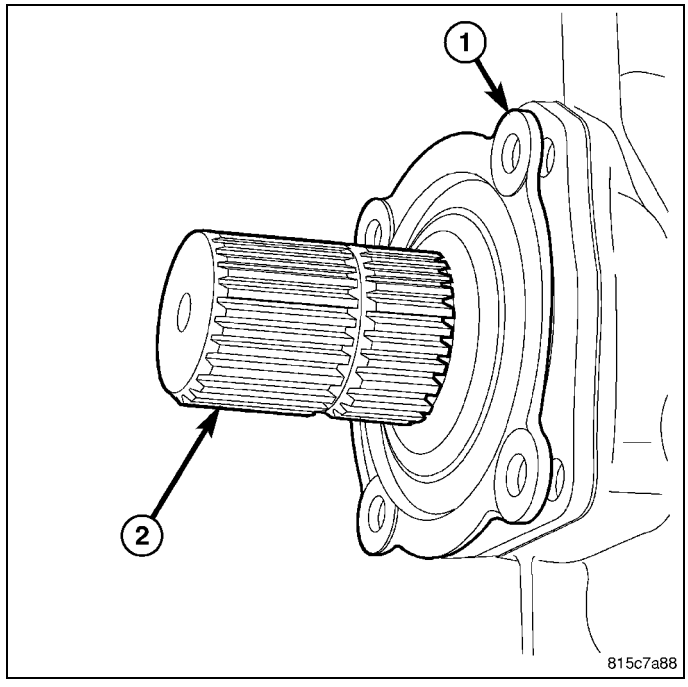

8. Align disconnect seal (1) with bolt holes in disconnect pocket with Pins MD998412 (2).

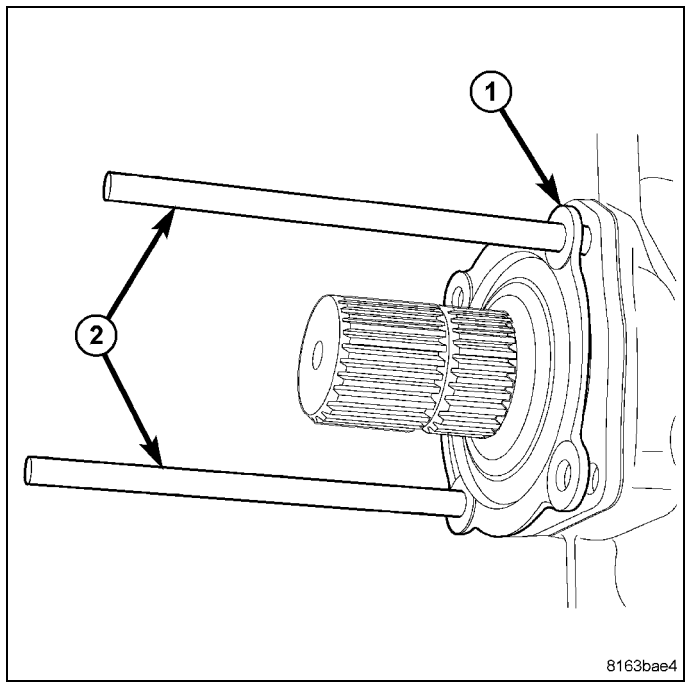

9. Install disconnect seal (1) in disconnect pocket with Installer 6761 (2) and a hammer.

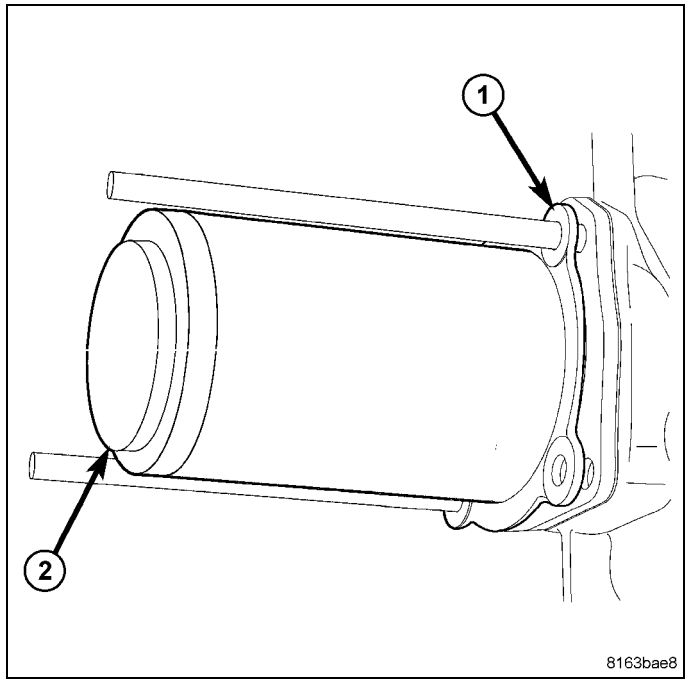

10. Install disconnect seal (1) bolts (2) and tighten to 28 N·m (21 ft. lbs.).

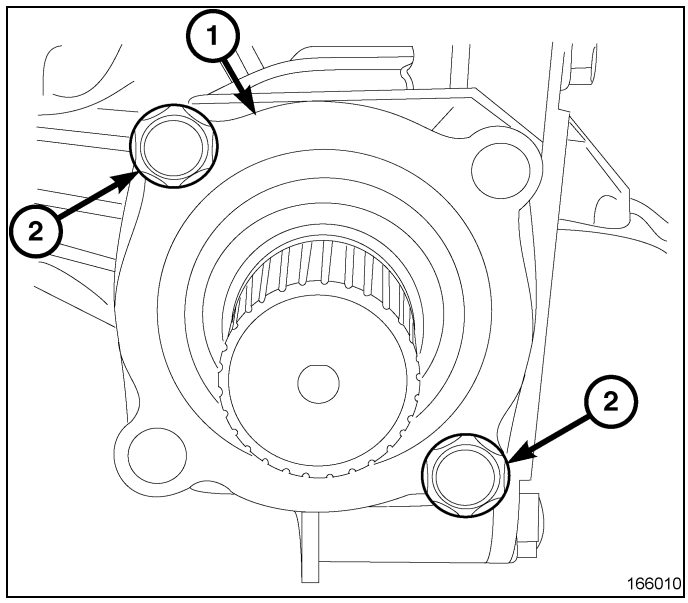

11. Install output shaft O-ring (1) and snap ring (2).

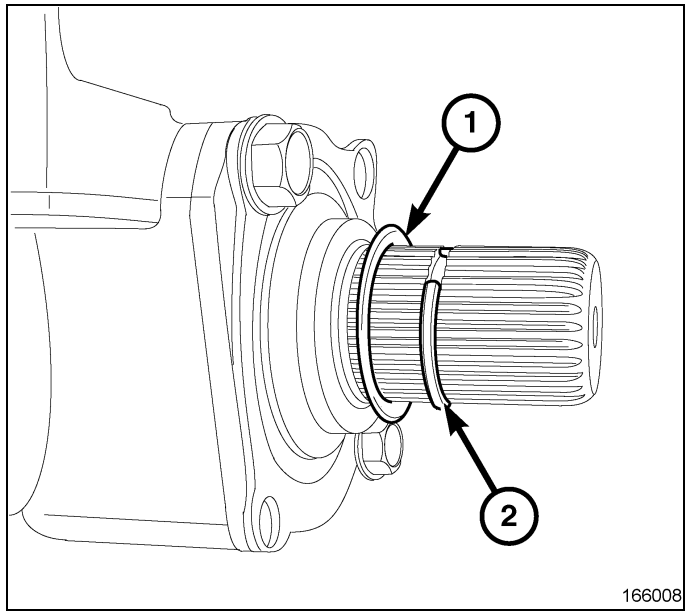

12. Clean actuator (1) sealing surface and install new gasket (2) if necessary.

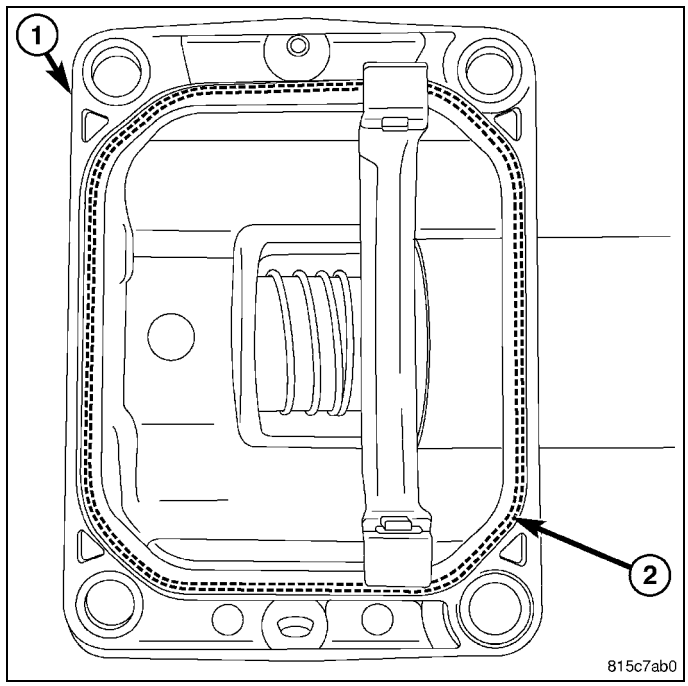

13. Align actuator shift fork (1) with disconnect collar (2) and install actuator on disconnect pocket.

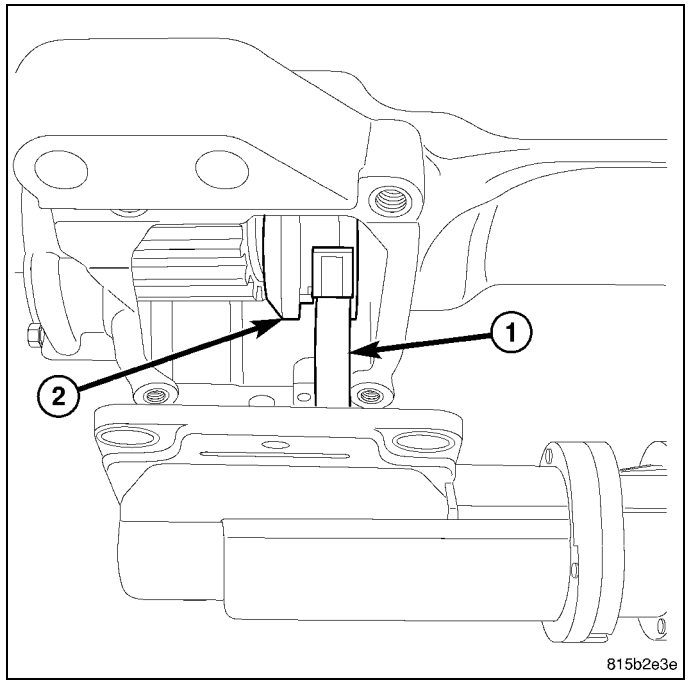

14. Install disconnect actuator (1) bolts (2) and tighten to 27 N·m (20 ft. lbs.).
15. Install disconnect actuator wiring connector.
16. Install differential cover and fill differential to specification.
17. Install half shaft.

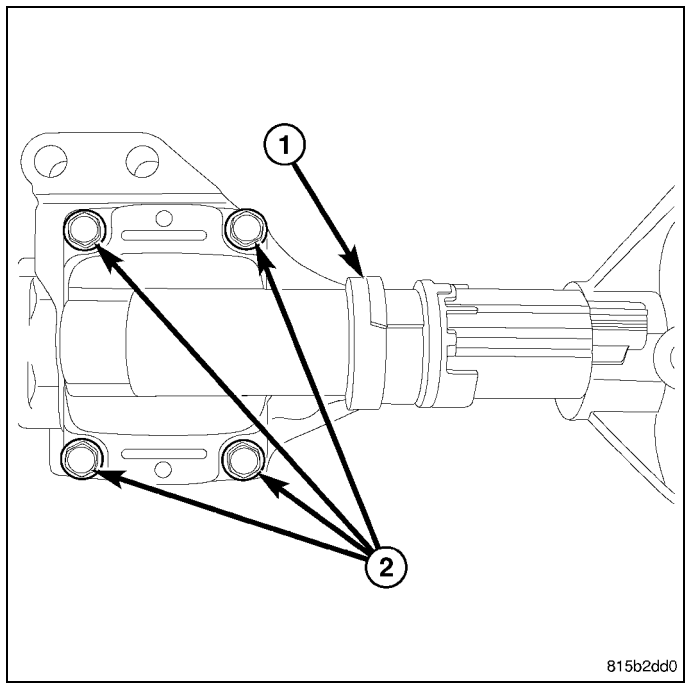

TUBE, Bearing Axle

Removal

1. Remove half shaft from disconnect side of the axle.
2. Remove disconnect actuator wiring connector.
3. Remove disconnect actuator (1) bolts (2) and remove actuator from disconnect pocket.

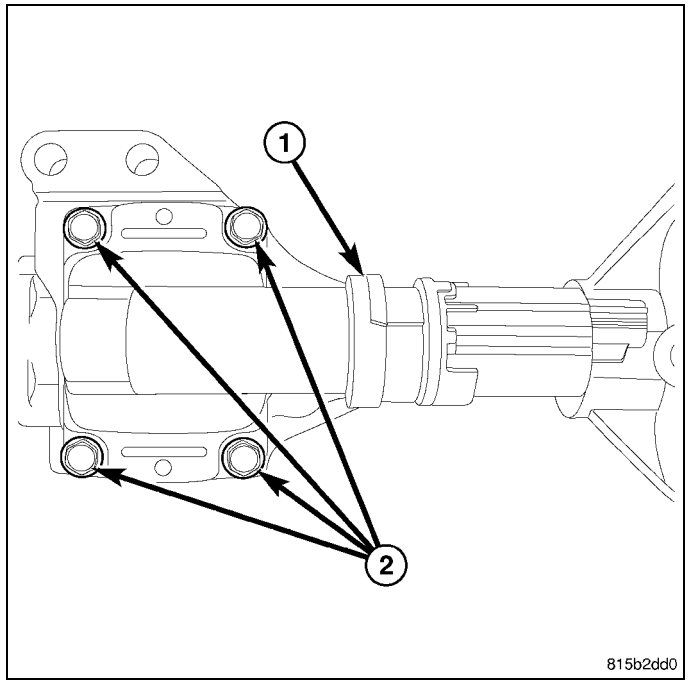

4. Remove O-ring (1) and snap ring (2) from output shaft.

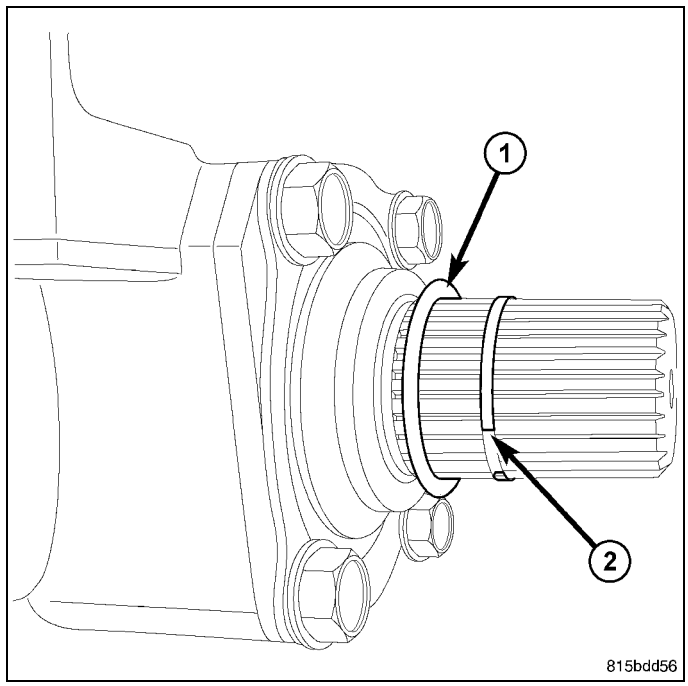

5. Remove disconnect seal (1) bolts (2).

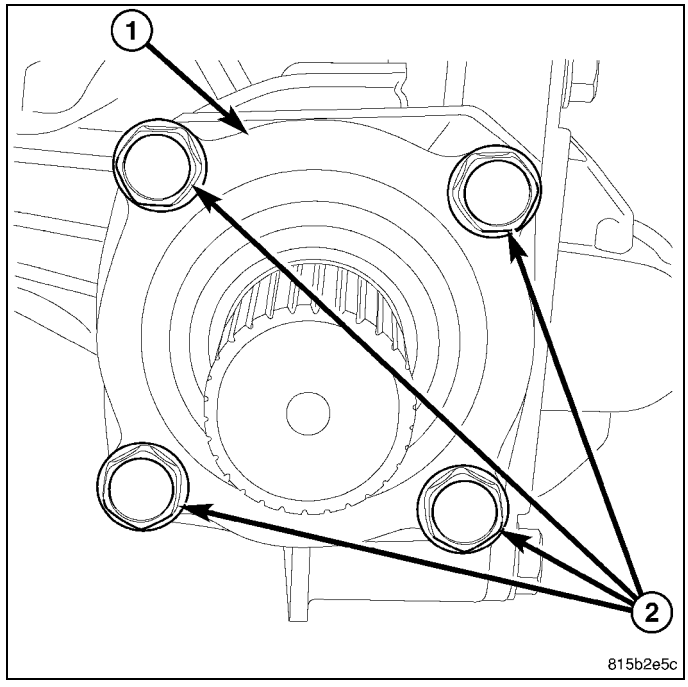

6. Remove output shaft (1) and disconnect seal (2) with Remover 8420B (3) and Slide Hammer C-3752.

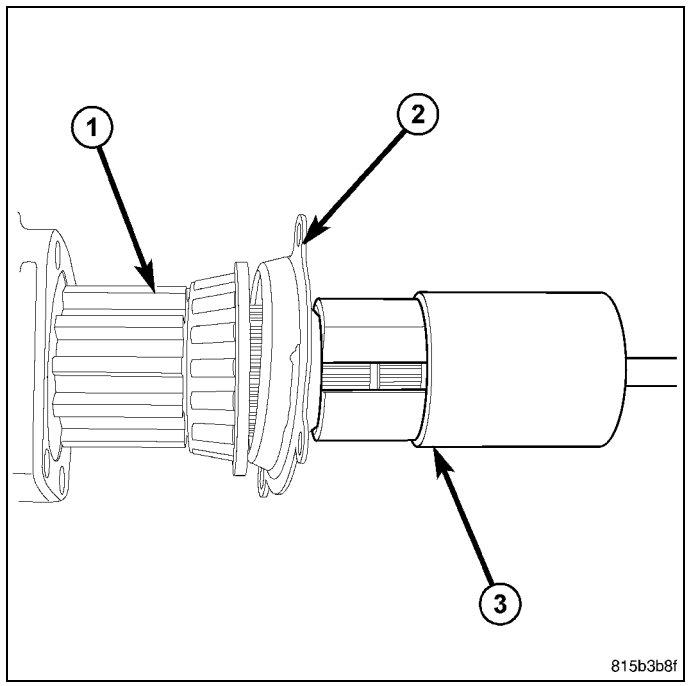

7. Slide disconnect collar (1) from intermediate shaft (2) and remove through disconnect pocket.

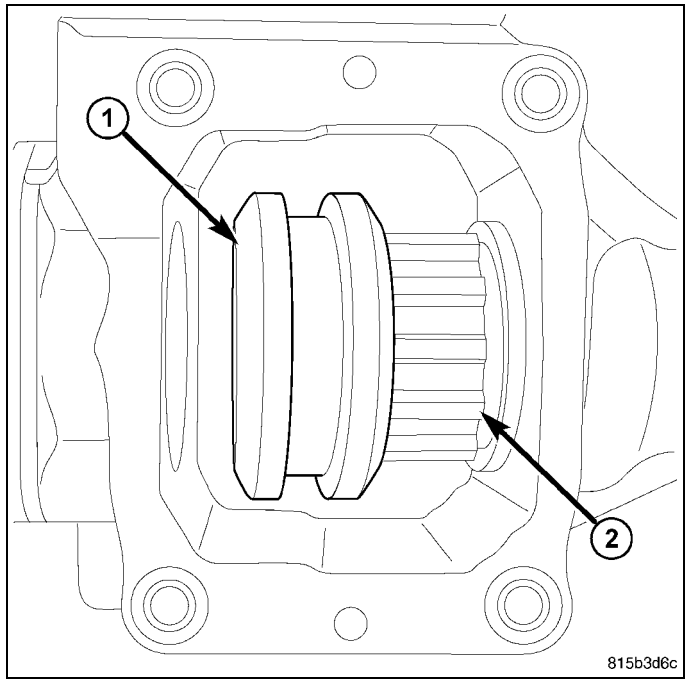

8. Remove differential cover.
9. Drive intermediate shaft (1) out of side gear with a hammer and brass punch (2).

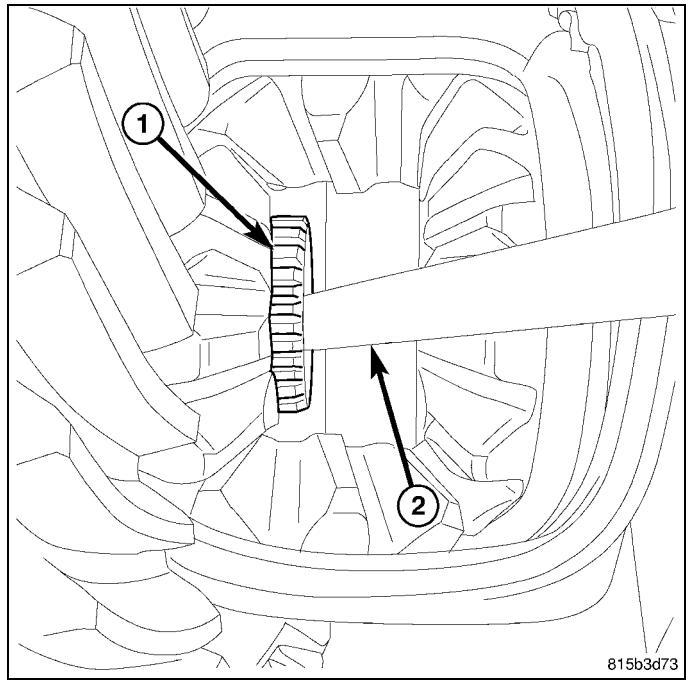

10. Remove intermediate shaft (1) from disconnect pocket (2).

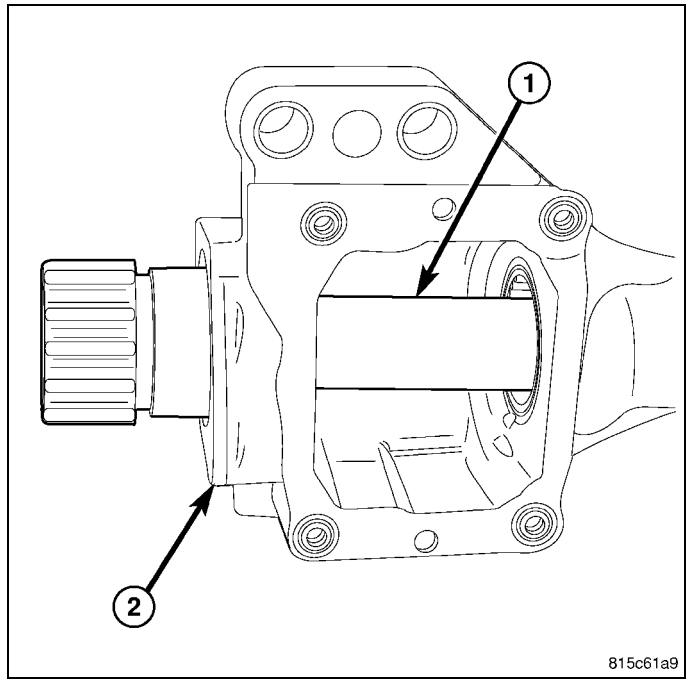

11. Install Puller 9766 (1) in intermediate shaft bearing (2) then tighten nut (3) to expand tool in bearing.

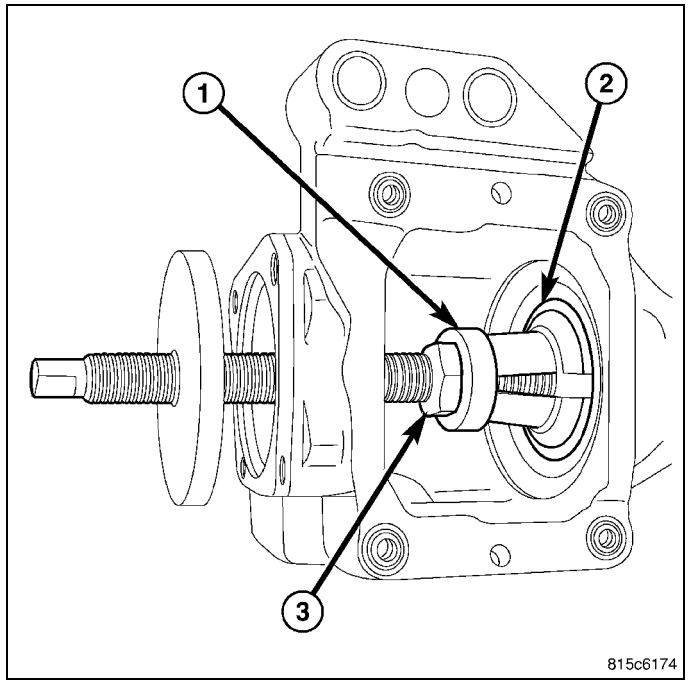

12. Tighten puller (1) nut (2) to remove intermediate shaft bearing from disconnect pocket.

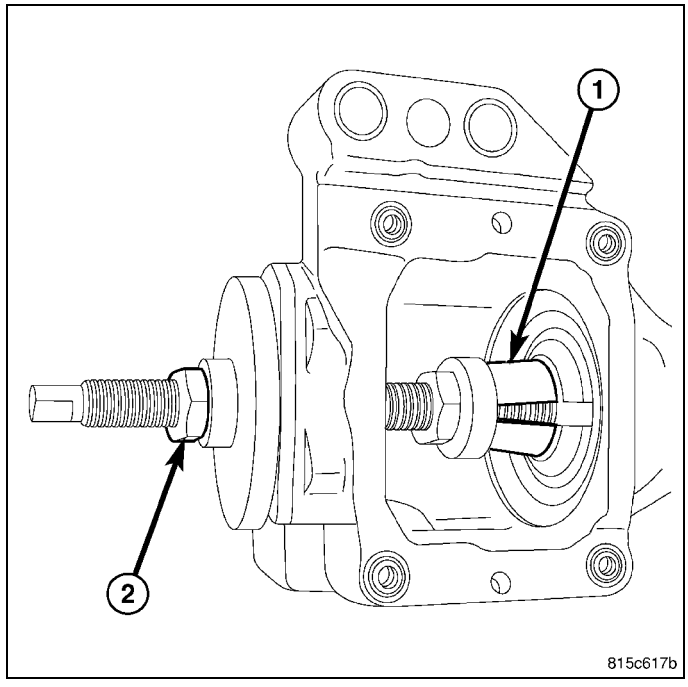

Installation

1. Install intermediate shaft bearing (1) with Installer 9767 (2) and Handle C-4171.

CAUTION: Bearing must be installed with lettering facing outwards. Failure to follow these instructions will damage the bearing.

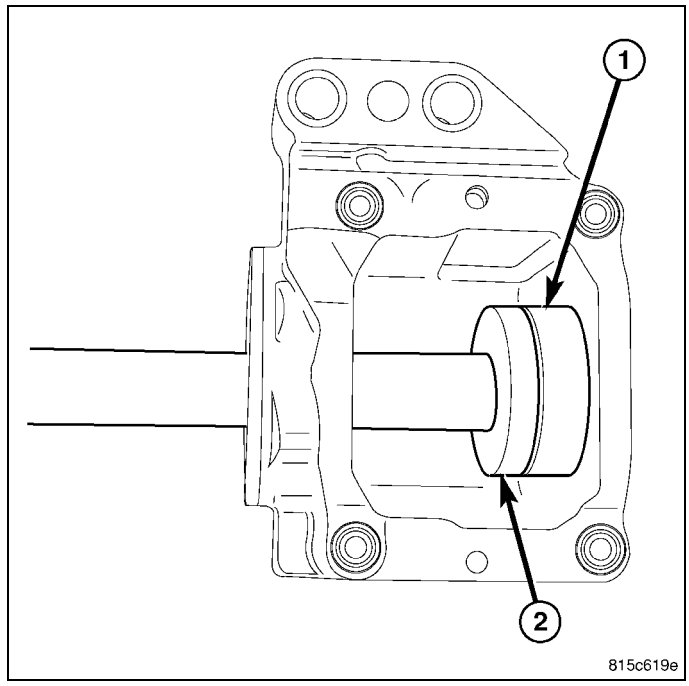

2. Install **new** intermediate shaft snap ring.
3. Install intermediate shaft (1) through disconnect pocket (2) and verify intermediate shaft snap ring is seated in side gear.

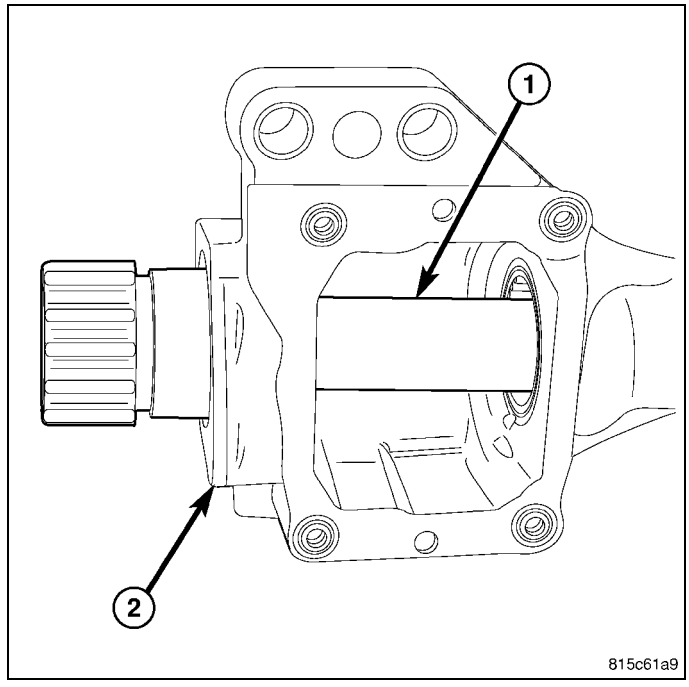

4. Install disconnect collar (1) through disconnect pocket onto intermediate shaft (2).

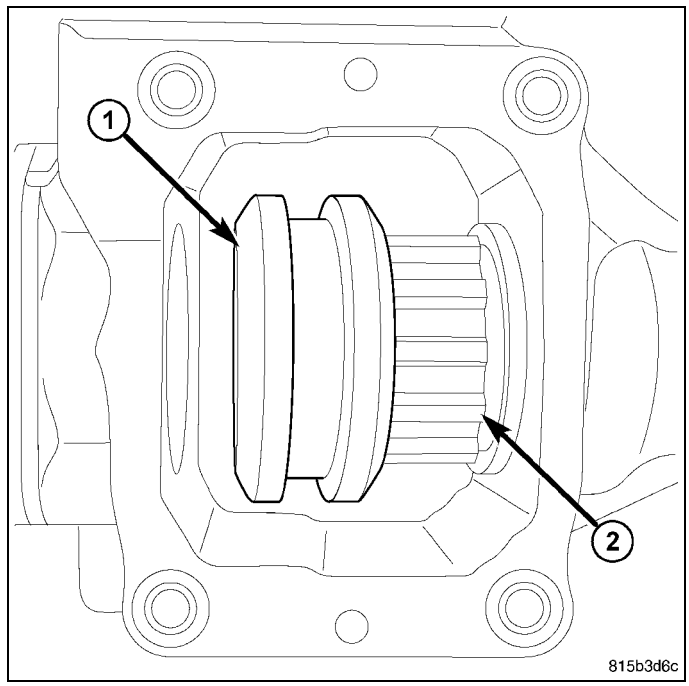

5. Position disconnect collar (1) on intermediate shaft (2) in 2WD position.

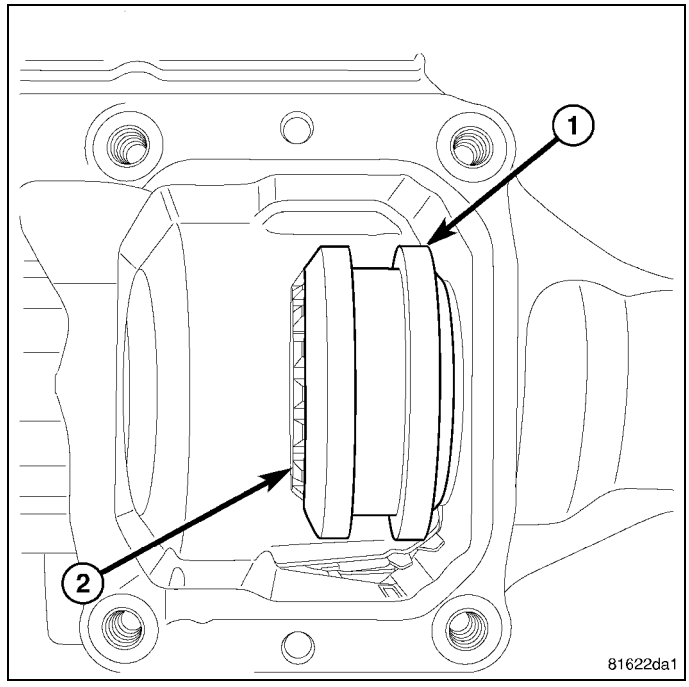

6. Verify output shaft bearing cup (1) is seated in disconnect pocket (2).

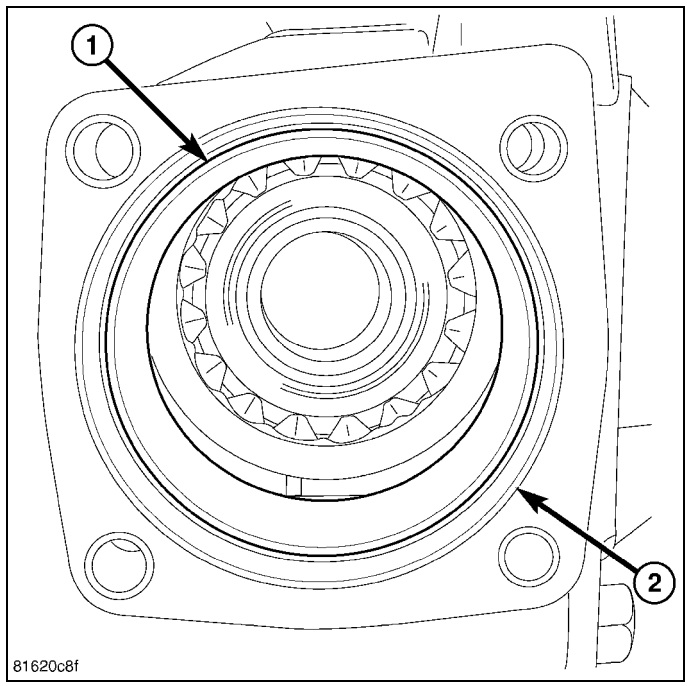

7. Install output shaft (1) in disconnect pocket (2).

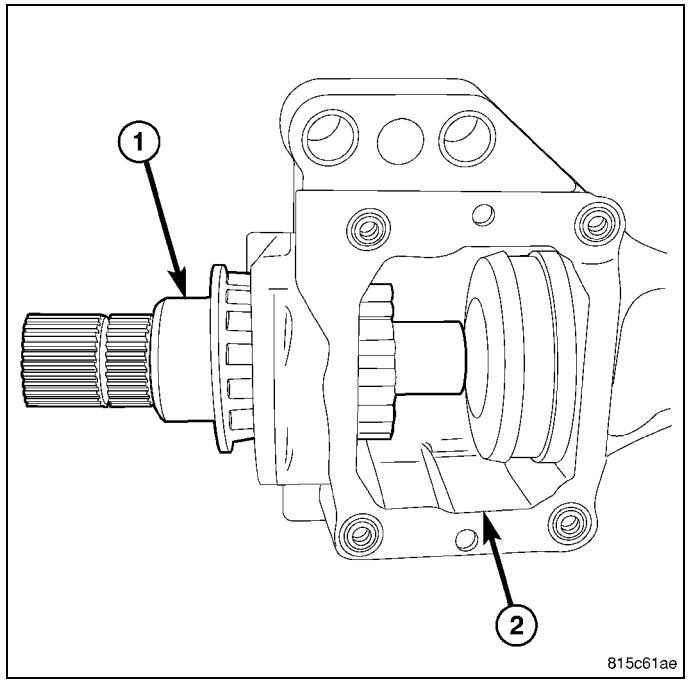

8. Install disconnect seal (1) on output shaft (2).

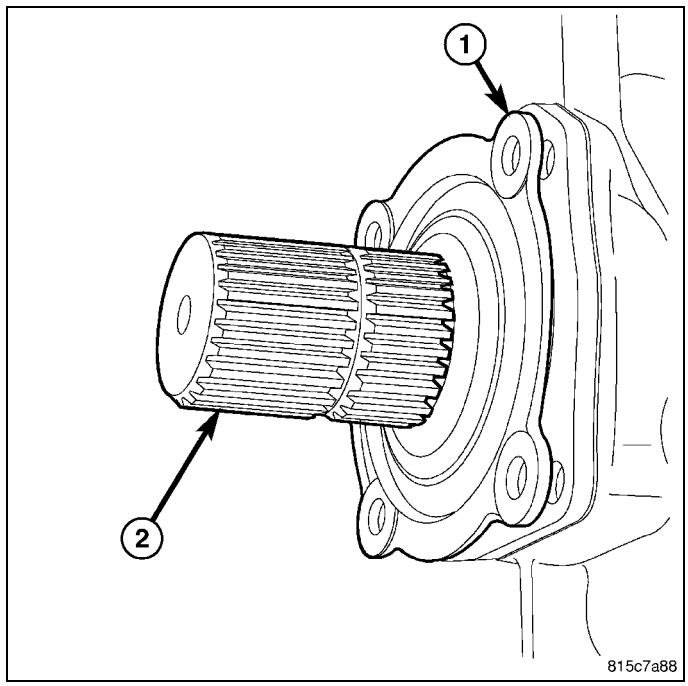

9. Align disconnect seal (1) with bolt holes in disconnect pocket with Pins MD998412 (2).

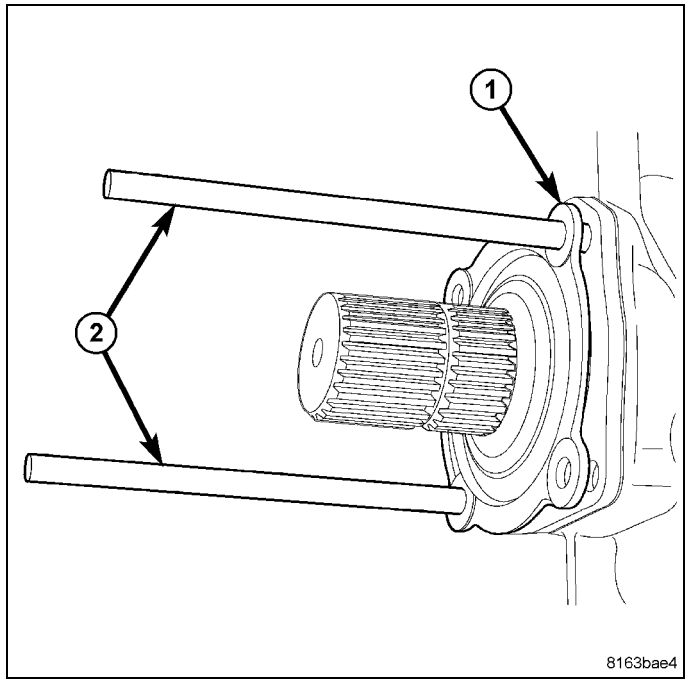

10. Install disconnect seal (1) in disconnect pocket with Installer 6761 (2) and a hammer.

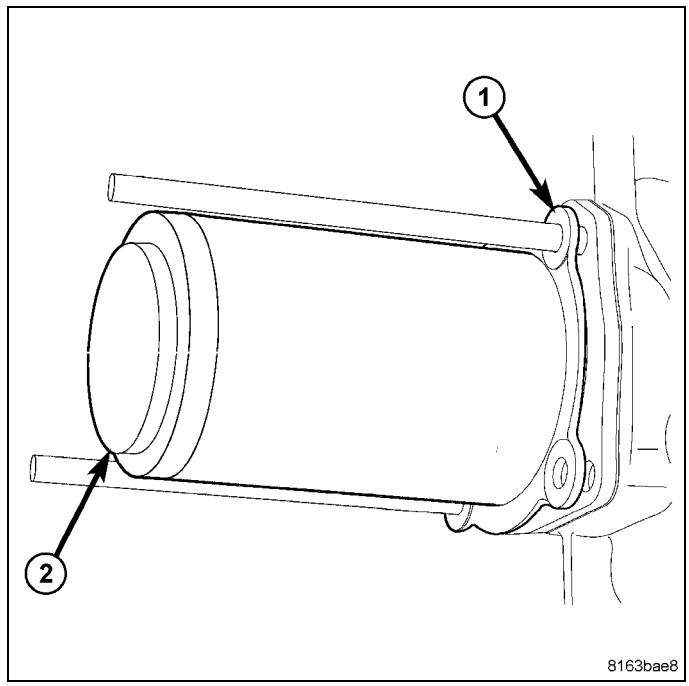

11. Install disconnect seal (1) bolts (2) and tighten to 28 N·m (21 ft. lbs.).

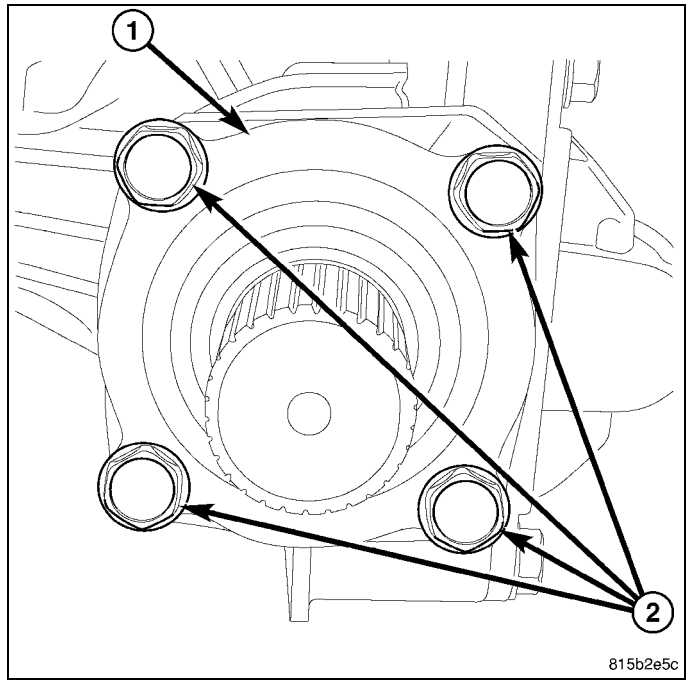

12. Install output shaft O-ring (1) and snap ring (2).

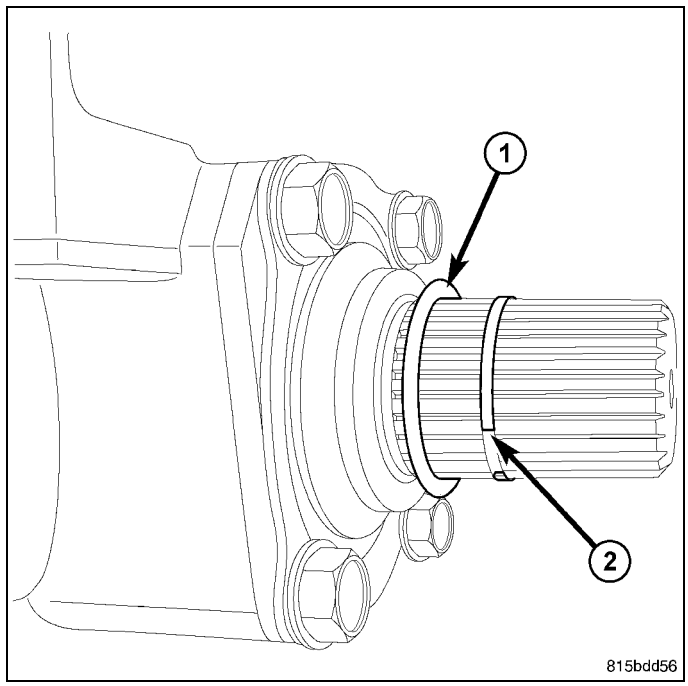

13. Clean actuator (1) sealing surface and install new gasket (2) if necessary.

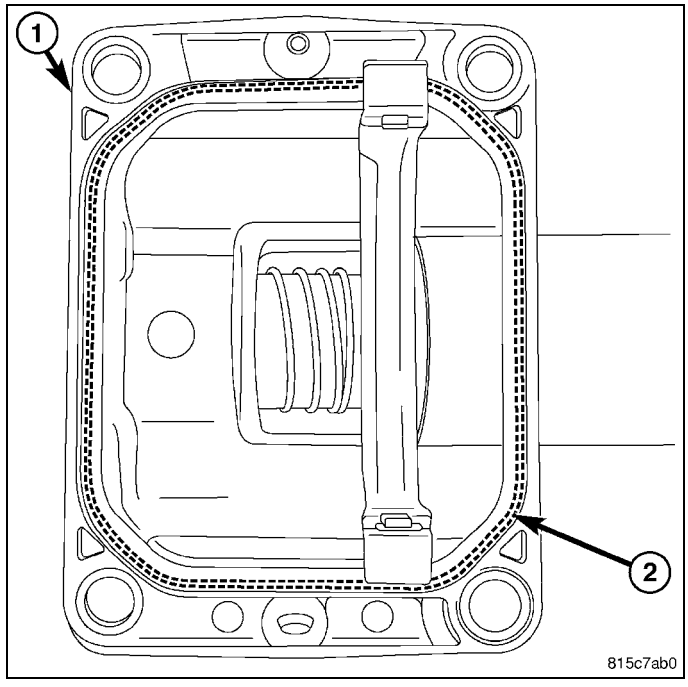

14. Align actuator shift fork (1) with disconnect collar (2) and install actuator on disconnect pocket.

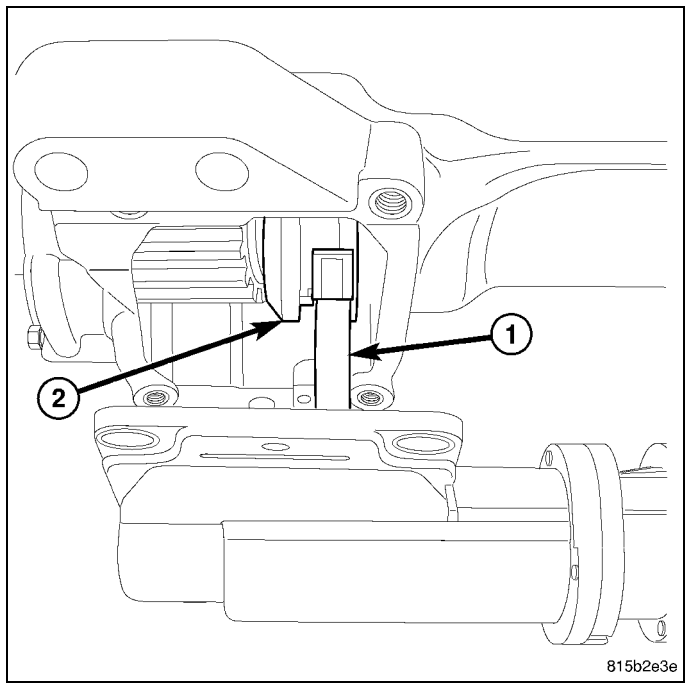

15. Install disconnect actuator (1) bolts (2) and tighten to 27 N·m (20 ft. lbs.).
16. Install disconnect actuator wiring connector.
17. Install differential cover and fill differential to specification.
18. Install half shaft.

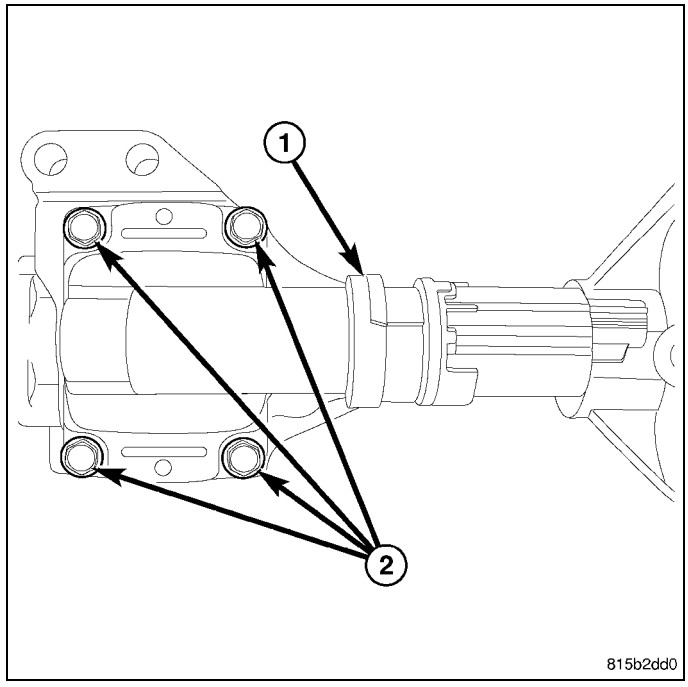

REAR AXLE - 9 1/4

TABLE OF CONTENTS

page

REAR AXLE - 9 1/4
DIAGNOSIS AND TESTING 142
REMOVAL 145
INSTALLATION 150
ADJUSTMENTS 155
SPECIFICATIONS 160
SPECIAL TOOLS 162
BEARING, AXLE SHAFT
REMOVAL 166
INSTALLATION 167
BEARING, DIFFERENTIAL SIDE
REMOVAL 167
INSTALLATION 168
CASE ASSEMBLY, DIFFERENTIAL
REMOVAL 168
DISASSEMBLY 169
ASSEMBLY. 170
INSTALLATION 171

page

CASE ASSEMBLY, DIFFERENTIAL, TRAC-LOK
OPERATION 172
DIAGNOSIS AND TESTING 172
DISASSEMBLY 173
ASSEMBLY. 176
COVER, DIFFERENTIAL
REMOVAL 178
INSTALLATION 178
GEAR, RING AND PINION
REMOVAL 179
INSTALLATION 183
SEAL, AXLE DRIVE SHAFT
REMOVAL 187
INSTALLATION 187
SEAL, DRIVE PINION
REMOVAL 188
INSTALLATION 189
SHAFT, AXLE
REMOVAL 190
INSTALLATION 192

Rear Axle - 9 1/4

Diagnosis and Testing

FLUID CHECK

To check axle fluid, park vehicle on a level surface. Take a piece of wire (or pipe cleaner) and make a 90 degree bend two inches from the end of the wire. Insert the wire into the fill plug hole and use it like a dipstick. Remove the wire and measure from the 90 degree bend to the oil level. Refer to specification for the correct measurement.

GEAR NOISE

Axle gear noise can be caused by insufficient lubricant, incorrect backlash, incorrect pinion depth, tooth profiles, or worn/damaged gears.

Gear noise usually happens at a specific speed range. The noise can also occur during a specific type of driving condition. These conditions are acceleration, deceleration, coast, or constant load.

When road testing, first warm-up the axle fluid by driving the vehicle at least 5 miles and then accelerate the vehicle to the speed range where the noise is the greatest. Shift out-of-gear and coast through the peak-noise range. If the noise stops or changes greatly check for:

- Insufficient lubricant.
- Incorrect ring gear backlash.
- Incorrect pinion shim.
- Gear damage.

Differential side gears and pinions can be checked by turning the vehicle. They usually do not cause noise during straight-ahead driving when the gears are not rotating. The side gears rotate during vehicle turns. A worn pinion shaft can also cause a snapping or a knocking noise.

BEARING NOISE

The axle shaft, differential and pinion bearings can all produce noise when worn or damaged. Bearing noise can be either a whining, or a growling sound.

Pinion bearings have a constant-pitch noise. This noise changes only with vehicle speed. Pinion bearing noise will be higher pitched because it rotates at a faster rate. While driving the vehicle and lightly applying the accelerator, load the differential by lightly applying the brakes. If bearing noise occurs, the rear pinion bearing is the source of the noise. If the bearing noise is heard during a coast, the front pinion bearing is the source.

Differential bearings usually produce a low pitch noise. Differential bearing noise is similar to pinion bearing noise. The pitch of differential bearing noise is also constant and varies only with vehicle speed and usually starts at higher speed.

Axle shaft bearings produce noise and vibration when worn or damaged. The noise generally changes when the bearings are loaded. Road test the vehicle. Turn the vehicle sharply to the left and to the right. This will load the bearings and change the noise level. Where axle bearing damage is slight, the noise is usually not noticeable at speeds above 30 mph.

LOW SPEED KNOCK

Low speed knock is generally caused by:

- Worn U-joint.
- Worn side gear thrust washers.
- Worn pinion shaft bore.

VIBRATION

Vibration at the rear of the vehicle is usually caused by a:

- Damaged drive shaft.
- Missing drive shaft balance weight(s).
- Worn or out-of-balance wheels.
- Loose wheel lug nuts.
- Worn U-joint(s).
- Loose/broken springs.
- Damaged axle shaft bearing(s).

- Loose pinion gear nut.
- Excessive pinion yoke run out.
- Bent axle shaft(s).

Check for loose or damaged front-end components or engine/transmission mounts. These components can contribute to what appears to be a rear end vibration. Do not overlook engine accessories, brackets and drive belts.

NOTE: All driveline components should be examined before starting any repair.

DRIVELINE SNAP

A snap or clunk noise when the vehicle is shifted into gear (or the clutch engaged), can be caused by:

- High engine idle speed.
- Transmission shift operation.
- Loose engine/transmission/transfer case mounts.
- Worn U-joints.
- Loose spring mounts.
- Loose pinion gear nut and companion flange.
- Excessive ring gear backlash.
- Excessive side gear to case clearance.

The source of a snap or a clunk noise can be determined with the assistance of a helper. Raise the vehicle on a hoist with the wheels free to rotate. Instruct the helper to shift the transmission into gear. Listen for the noise, a mechanics stethoscope is helpful in isolating the source of a noise.

DIAGNOSTIC CHART

Condition	Possible Causes	Correction
Wheel Noise	1. Wheel loose.	1. Tighten loose nuts.
	2. Worn wheel bearing.	2. Replace bearing.
Axle Shaft Noise	1. Damaged or worn axle shaft bearings and/or axle shaft journals.	1. Replace axle shaft and/or axle shaft bearings.
	2. Bent or sprung axle shaft.	2. Inspect and correct as necessary.
Axle Shaft Broke	1. Misaligned axle tube.	1. Replace axle assembly.
	2 Vehicle overloaded.	2. Replace broken shaft and avoid excessive weight on vehicle.
	3. Erratic clutch operation.	3. Replace broken shaft and avoid or correct erratic clutch operation.
	4. Grabbing clutch.	4. Replace broken shaft and inspect and repair clutch as necessary.
Differential Cracked	1. Improper adjustment of the differential bearings.	1. Replace case and inspect gears and bearings for further damage. Set differential bearing pre-load properly.
	2. Excessive ring gear backlash.	2. Replace case and inspect gears and bearings for further damage. Set ring gear backlash properly.
	3. Vehicle overloaded.	3. Replace case and inspect gears and bearings for further damage. Avoid excessive vehicle weight.
	4. Erratic clutch operation.	4. Replace case and inspect gears and bearings for further damage. Avoid erratic use of clutch.

DIAGNOSTIC CHART, continued

Condition	Possible Causes	Correction
Differential Gears Scored or Galled	1. Insufficient lubrication.	1. Replace scored gears. Fill differential with the correct fluid type and quantity.
	2. Improper grade of lubricant.	2. Replace all damaged components. Fill differential with the correct fluid type and quantity.
	3. Excessive spinning of one wheel/tire.	3. Replace scored gears or differential assembly as necessary. Inspect all gears, pinion bores, and shaft for damage. Service as necessary.
Loss Of Lubricant	1. Lubricant level too high.	1. Drain lubricant to the correct level.
	2. Worn axle shaft seals.	2. Replace seals.
	3. Cracked differential housing.	3. Repair as necessary.
	4. Worn pinion seal.	4. Replace seal. Verify pinion bearing preload.
	5. Worn/scored companion flange.	5. Replace yoke and seal.
	6. Axle cover not properly sealed.	6. Remove, clean and seal cover.
Axle Overheating	1. Lubricant level low.	1. Fill differential to correct level.
	2. Improper grade of lubricant.	2. Fill differential with the correct fluid type and quantity.
	3. Bearing pre-loads too high.	3. Adjust bearing pre-loads.
	4. Insufficient ring gear backlash.	4. Adjust ring gear backlash.
Gear Teeth Broke	1. Overloading.	1. Replace gears. Examine other gears and bearings for possible damage.
	2. Erratic clutch operation.	2. Replace gears and examine the remaining parts for damage. Avoid erratic clutch operation.
	3. Ice-spotted pavement.	3. Replace gears and examine remaining parts for damage.
	4. Improper adjustments.	4. Replace gears and examine remaining parts for damage. Ensure ring gear backlash is correct.

DIAGNOSTIC CHART, continued

Condition	Possible Causes	Correction
Axle Noise	1. Insufficient lubricant.	1. Fill differential with the correct fluid type and quantity.
	2. Improper ring gear and pinion adjustment.	2. Check ring gear and pinion contact pattern. Adjust backlash or pinion depth.
	3. Unmatched ring gear and pinion.	3. Replace gears with a matched ring gear and pinion.
	4. Worn teeth on ring gear and pinion.	4. Replace ring gear and pinion.
	5. Loose pinion bearings.	5. Replace pinion bearings, collapsible spacer, seal and pinion nut.
	6. Loose differential bearings.	6. Adjust differential bearing pre-load.
	7. Ring gear run-out.	7. Check ring gear and pinion contact pattern for tooth to tooth variation. Replace components as necessary.
	8. Loose differential bearing cap bolts.	8. Inspect differential components and replace as necessary. Ensure that the bearing caps are torqued to the proper specification.
	9. Housing not machined properly.	9. Replace housing.

Removal

1. With vehicle in neutral, position vehicle on hoist. (Refer to 04 - Vehicle Quick Reference/Hoisting - Standard Procedure).
2. Remove the rear wheels.
3. Disconnect the rear wheel speed sensor electrical connector (3).
4. Remove the mounting bolt (1) from the sensor (4).
5. Remove the wheel speed sensor (4) from the brake caliper adapter (2).

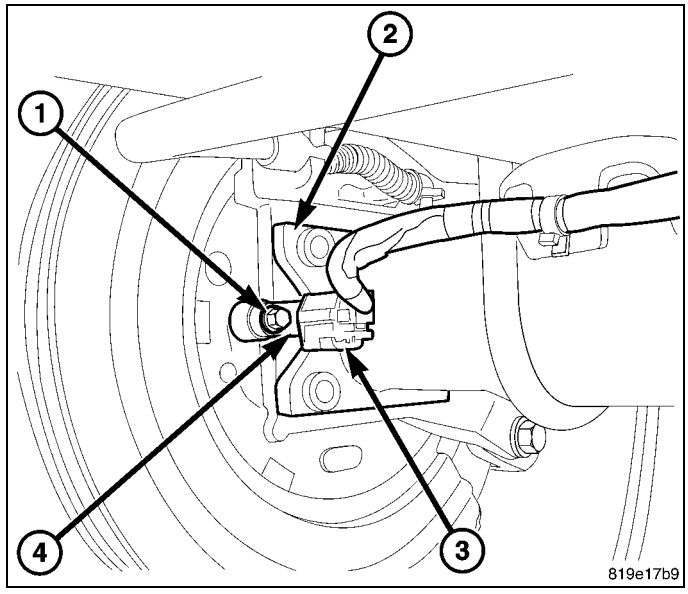

NOTE: Do not allow brake hose to support caliper assembly.

NOTE: Mechanics wire can be used to support the caliper and adapter plate assemblies.

6. Remove the rear caliper adapter plate bolts (1) from both sides and position the calipers (2) aside.

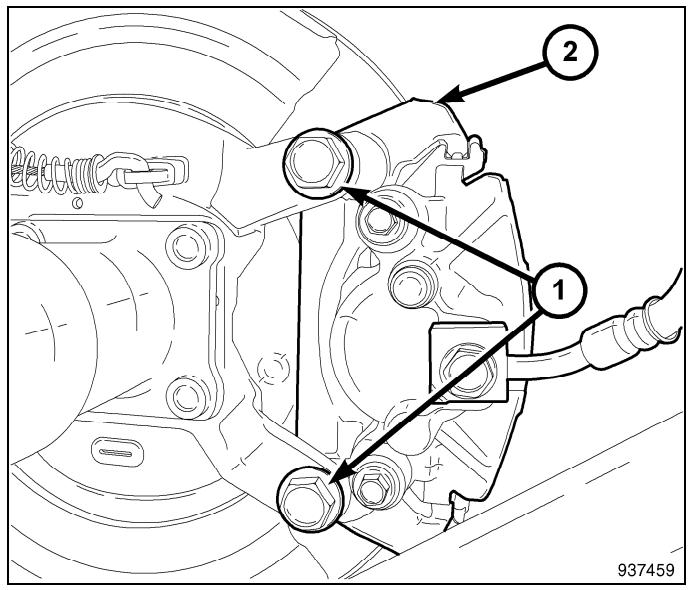

7. Disconnect the axle vent hose (1) from the axle (2).
8. Remove the rear propshaft. (Refer to 03 - Differential and Driveline/Propeller Shaft/SHAFT, Drive - Removal).

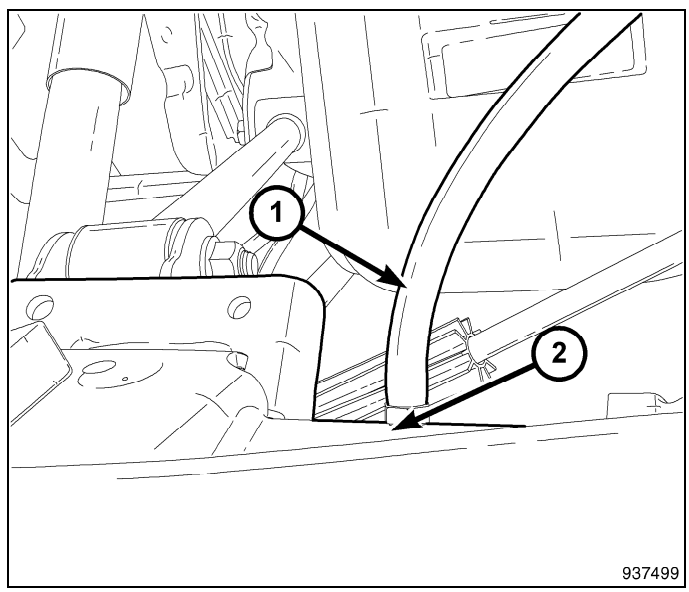

9. Pull the park brake cable spring (1) back.

NOTE: A 13mm line wrench can be used to compress the cable tabs. Insert while spring is pulled back and rotate the wrench to compress the tabs.

10. Compress the cable tabs on each cable end fitting at the brake cable support plate (2).
11. Remove the park brake cable (3) from the brake cable support plate (2).

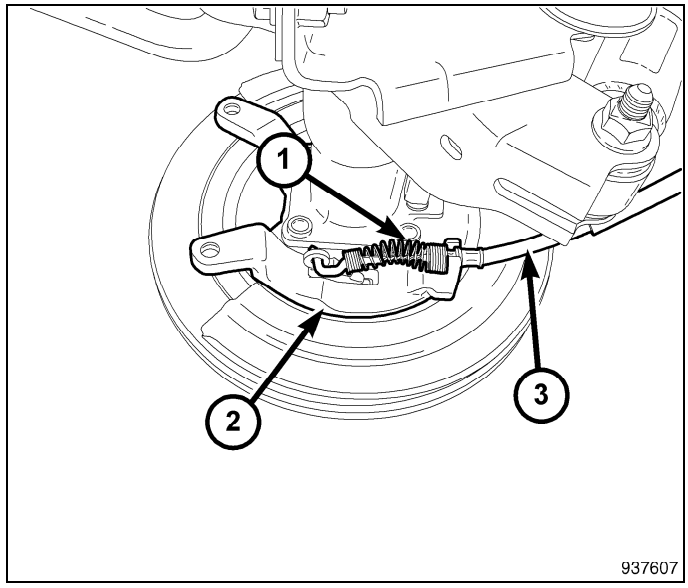

12. Remove the upper park brake cable bolt (1) from the rear axle (2).

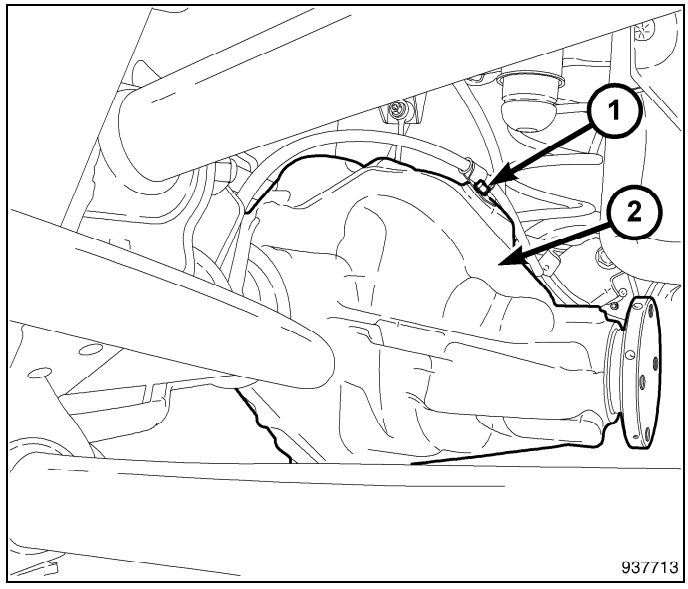

13. Remove the park brake bolt (1) on the upper control arm bracket (2).
14. Position the park brake cable away from the rear axle.

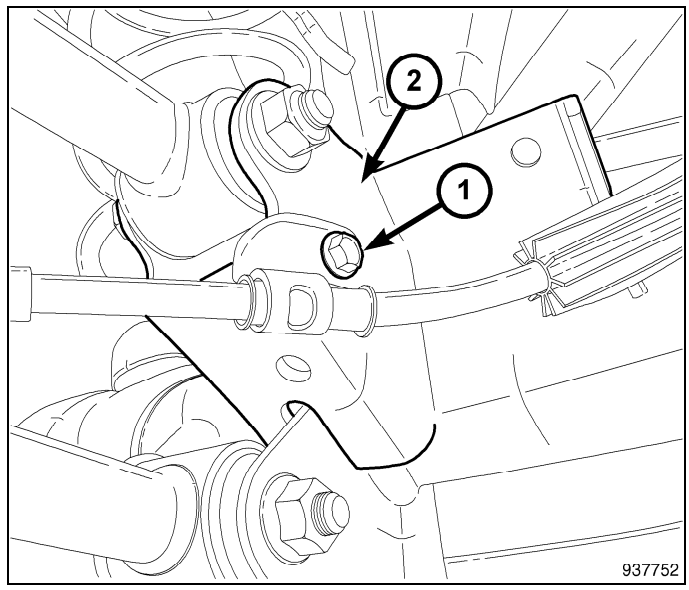

15. Remove the stabilizer bar bolts (1) and position the stabilizer bar (2) aside.
16. Position a lift under the axle and secure the axle to the lift.

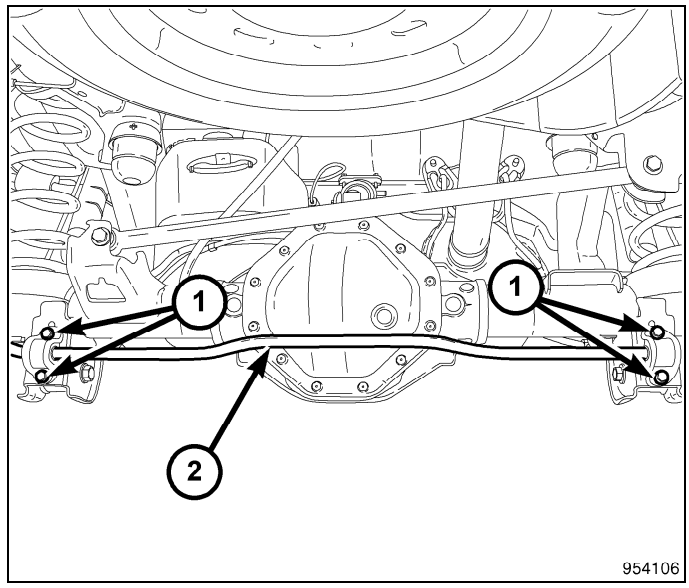

17. Remove both lower shock absorber bolts (1) and position the shock absorbers (2) away from the axle.

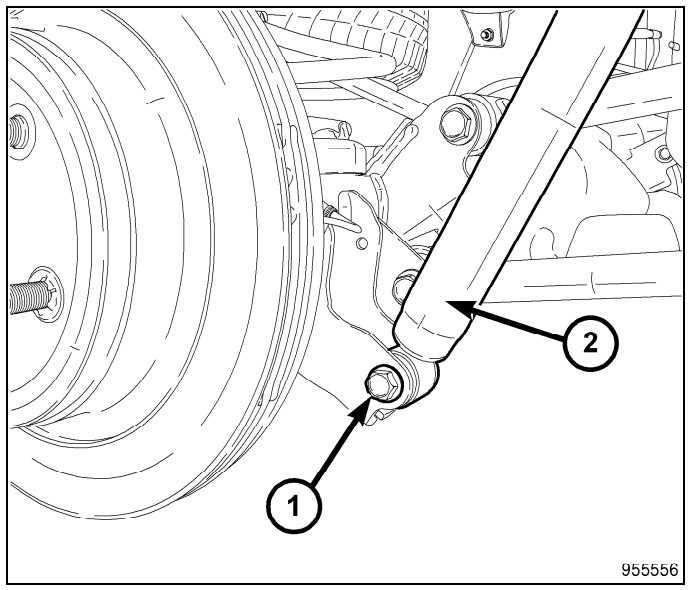

18. Remove the track bar bolt (1) and position the track bar (2) away from the rear axle.

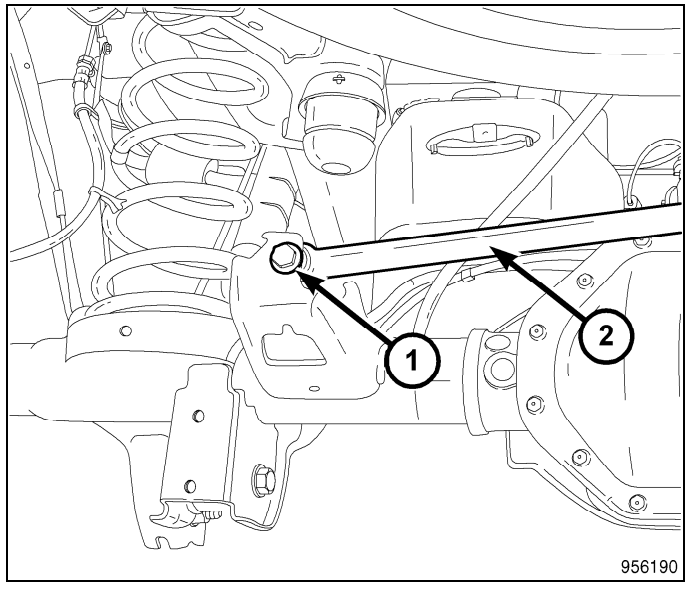

19. Remove both the upper control arm to rear axle bolts (1), discard nut, and position the upper control arms (3) away from the axle.
20. Remove both the lower control arm to rear axle bolts (2) , discard nut, and position the lower control arms (4) away from the axle.
21. Slightly lower the rear axle assembly and remove the rear springs.
22. Remove the rear axle from the vehicle.

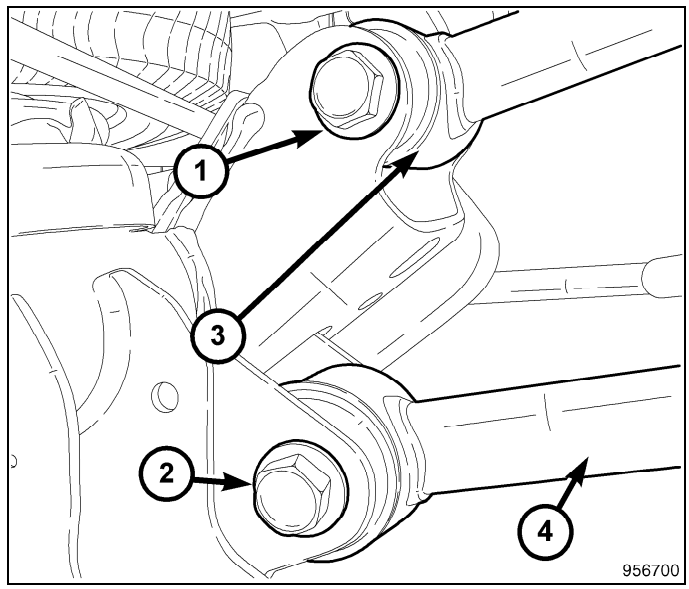

Installation

NOTE: All suspension torques should be made with the full vehicle weight on the ground being supported by the tires.

1. Position the spring (3) and isolator (2) on the axle and align into the spring upper pocket.
2. Carefully raise the rear axle into place.

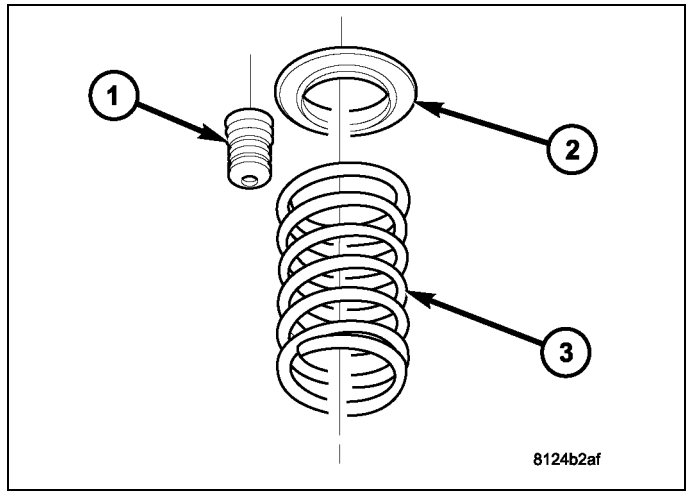

3. Position both the lower control arms (4) into the rear axle brackets and loosly install the bolts (2) with **new** nuts.
4. Position both the upper control arms (3) into the rear axle brackets and loosly install the bolts (1) with **new** nuts.

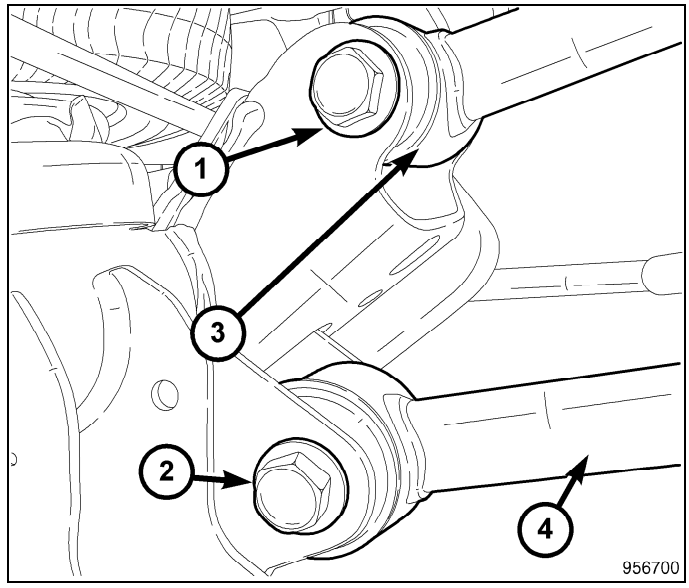

5. Position the rear track bar (2) to the rear axle bracket and loosly install the bolt (1).

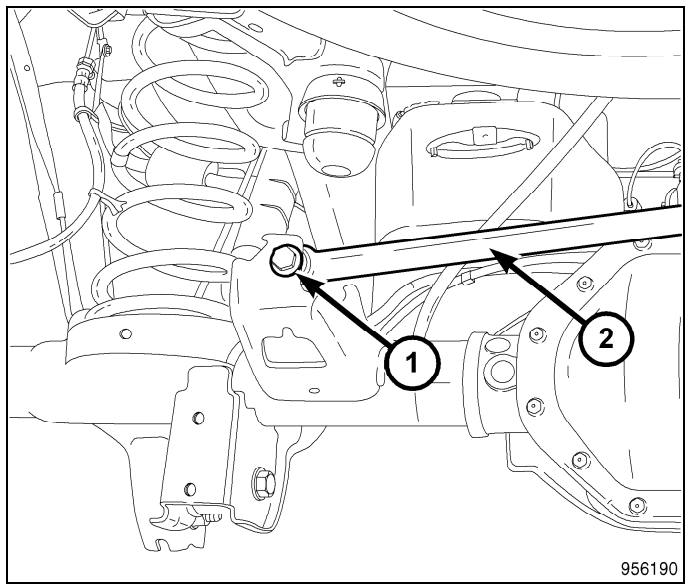

6. Position both the rear shock absorbers (2) to the axle brackets and loosly install the rear shock absorber bolts (1).

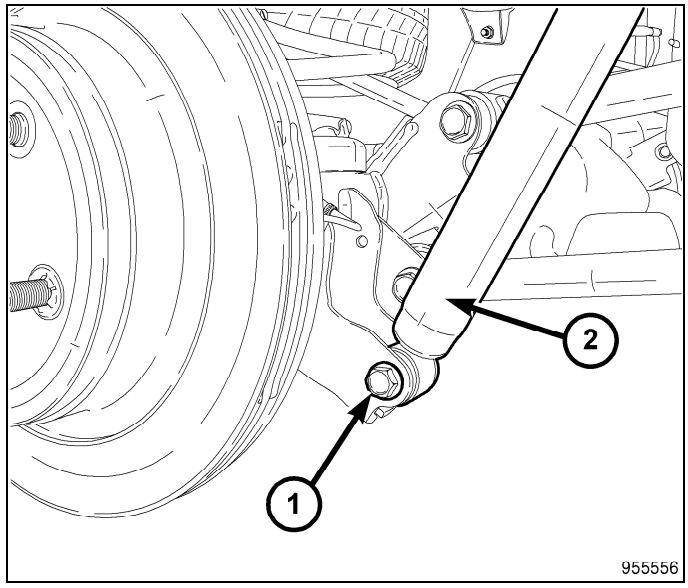

7. Remove the axle lift.

NOTE: The stabilizer bar must be centered with equal spacing on both sides.

8. Position the stabilizer bar (2) to the rear axle and install and tighten the bolts (1) to 65 N·m (48 ft. lbs.).

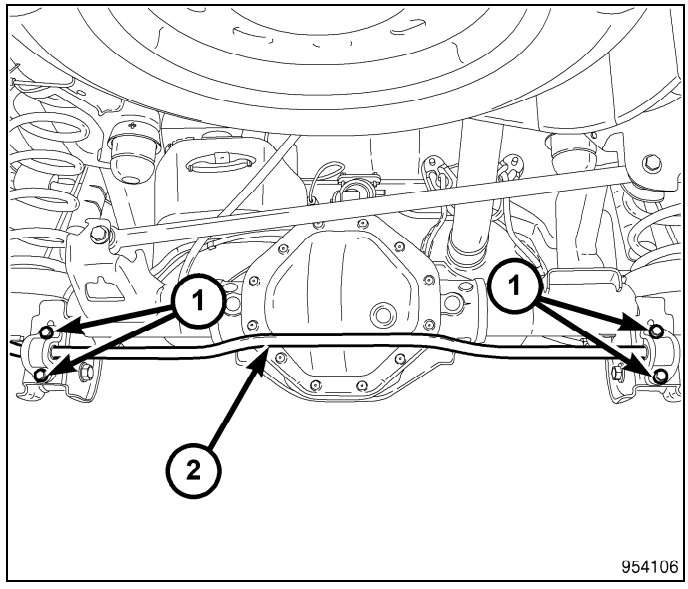

9. Position the park brake cable back to the rear axle.
10. Install the park brake cable bolt (1) on the upper control arm bracket and tighten to 22 N·m (16 ft. lbs.).

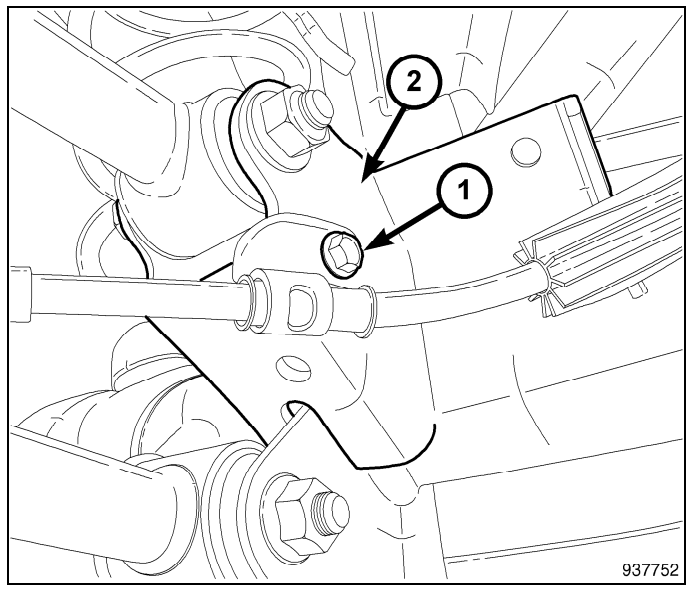

11. Install the upper park brake cable bolt (1) to the rear axle (2) and tighten to 22 N·m (16 ft. lbs.).

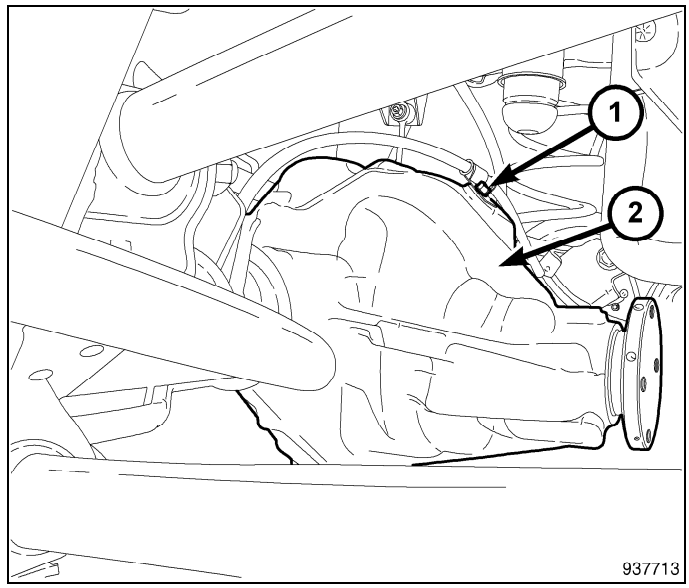

12. Install the rear cable (3) into the tensioner rods behind the rear of the brake assemblies.
13. Pull the park brake cable springs (1) back until the cable end fitting tabs lock into place.

NOTE: Pull on the cable to ensure that it is locked into place.

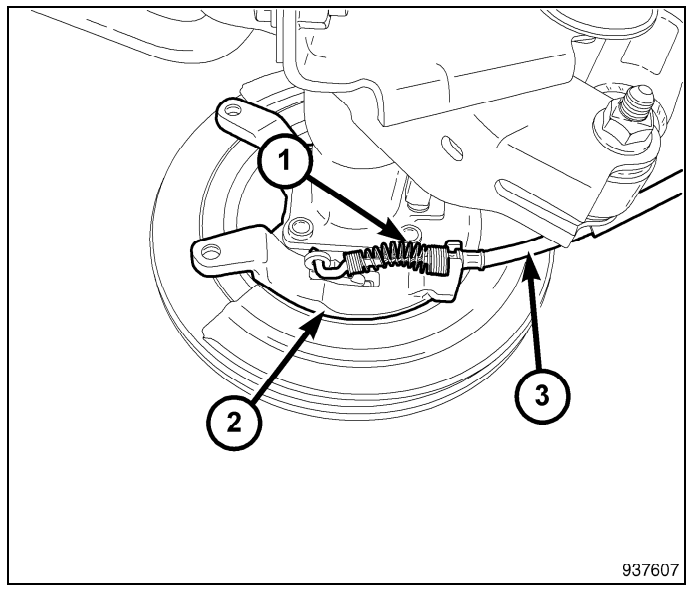

14. Install the rear propshaft. (Refer to 03 - Differential and Driveline/Propeller Shaft/SHAFT, Drive - Installation).
15. Connect the axle vent hose (1) to the axle (2).

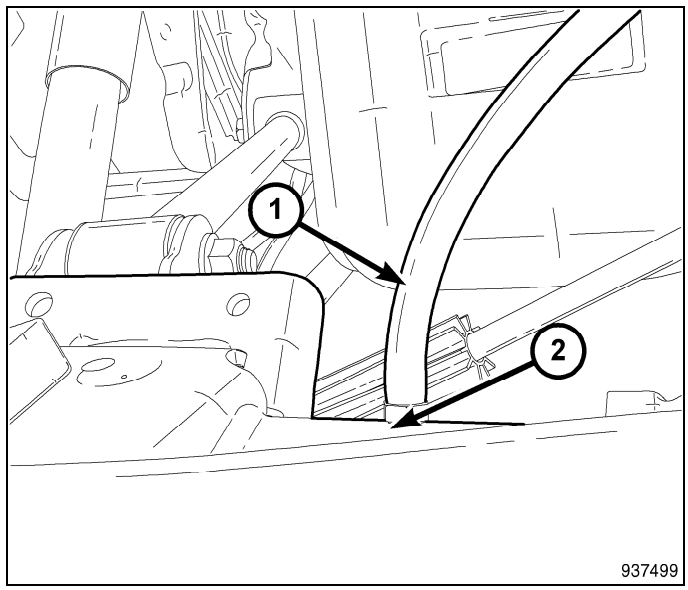

16. Position the calipers (2) back onto the brake rotors and install and tighten the adapter plate bolts (1) to 135 N·m (100 ft.lbs).

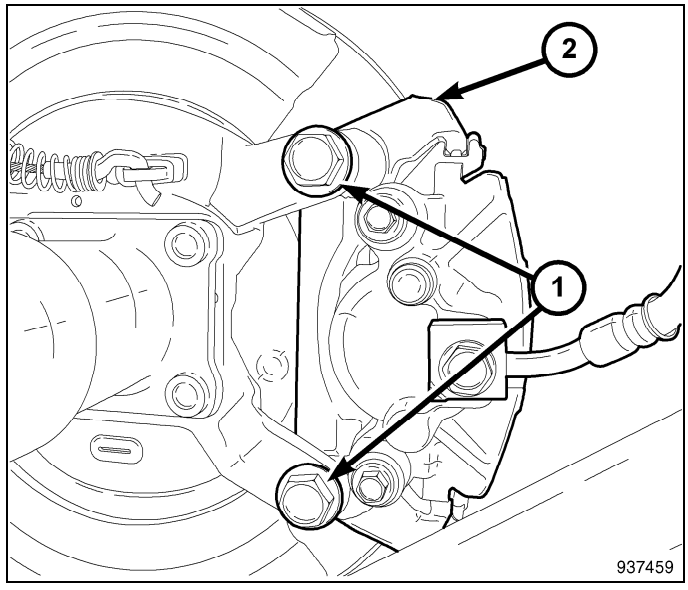

17. Position the rear wheel speed sensors (4) to the brake caliper adapters (2).
18. Install the mounting bolts (1) to the wheel speed sensor (4) and tighten to 24 N·m (18 ft.lbs).
19. Connect the rear wheel speed sensor electrical connectors (3).
20. Install the rear wheels.
21. Lower the vehicle.

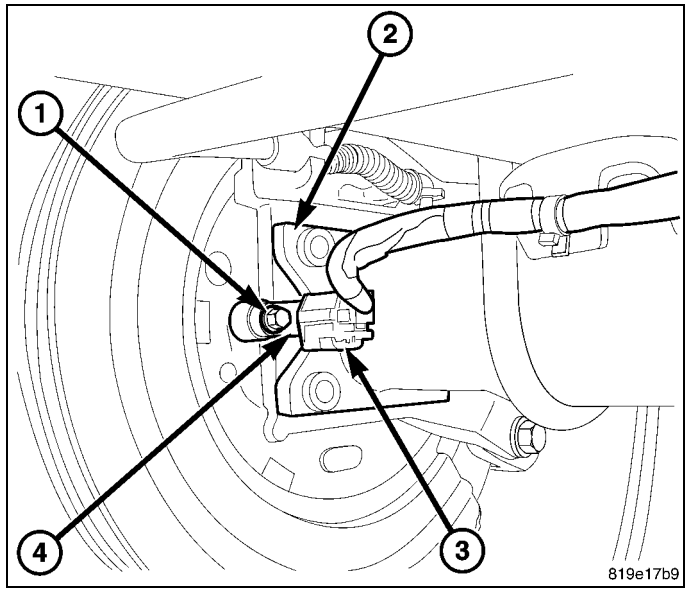

22. Tighten the upper (1) and lower control arm (2) to 300 N·m (221 ft.lbs.).

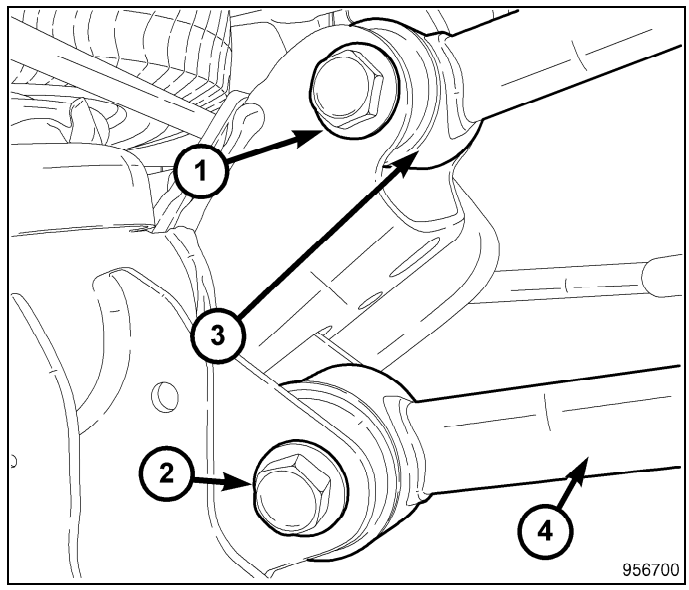

23. Tighten the track bar mounting bolt to 155 N·m (114.5 ft. lbs.).

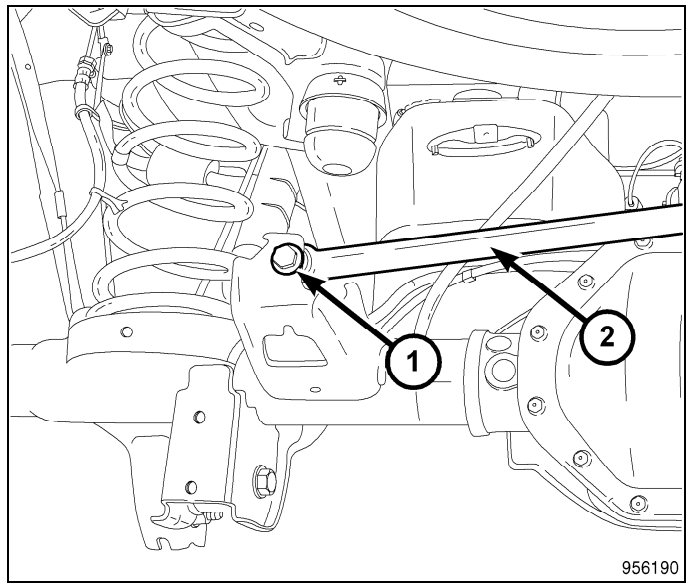

24. Tighten shock bolt (1) to 136 N·m (100.5 ft. lbs.).

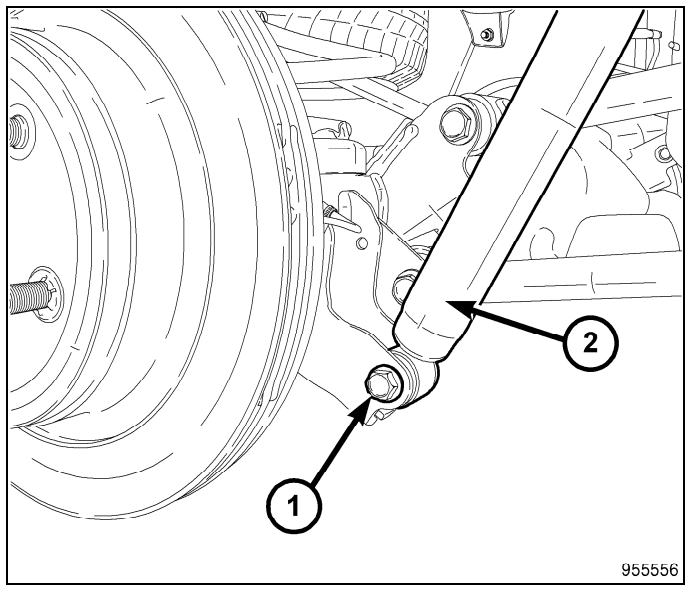

Adjustments

Ring gear and pinion are supplied as matched sets. Identifying numbers for the ring gear and pinion are painted onto the pinion gear shaft and the side of the ring gear. A plus (+) number, minus (-) number or zero (0) along with the gear set sequence number (2) (01 to 99) is on each gear. This first number is the amount (in thousandths of an inch) the depth varies (1) from the standard depth setting of a pinion marked with a (0). The next two numbers are the sequence number of the gear set. The standard depth provides the best teeth contact pattern.

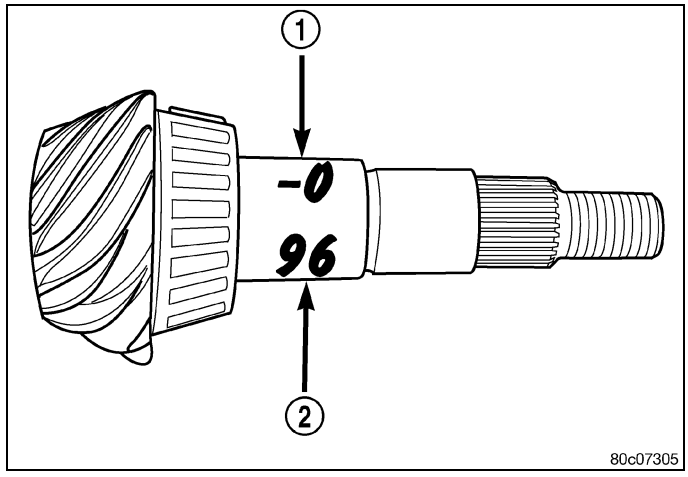

Compensation for pinion gear (5) depth variance is achieved with select shims (4). The shims are placed behind the rear pinion bearing (3).

If installing a new gear, note the depth variance number of the original and replacement pinion. Add or subtract this number from the original depth shim/oil slinger to compensate for the difference in the depth variances. The numbers represent thousands of an inch deviation from the standard. If the number is negative, add that value to the required thickness of the depth shims. If the number is positive, subtract that value from the thickness of the depth shim.

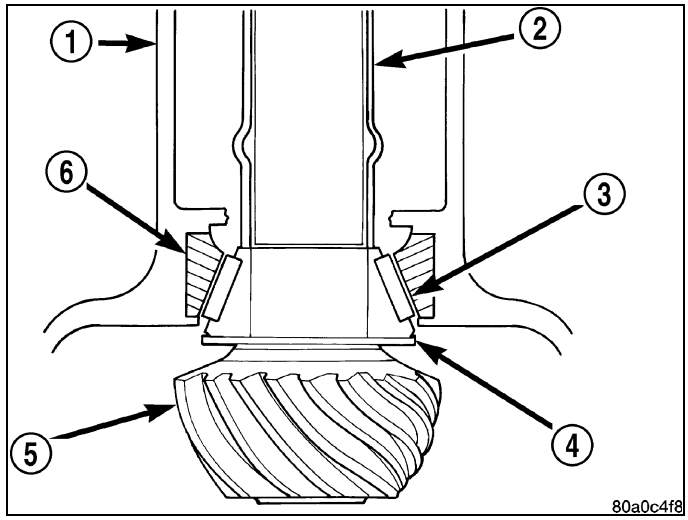

Pinion Gear Depth Variance Chart: Note where Old and New Pinion Marking columns intersect. Intersecting figure represents plus or minus the amount needed.

PINION GEAR DEPTH VARIANCE

Original Pinion Gear Depth Variance	Replacement Pinion Gear Depth Variance								
	−4	−3	−2	−1	0	+1	+2	+3	+4
+4	+0.008	+0.007	+0.006	+0.005	+0.004	+0.003	+0.002	+0.001	0
+3	+0.007	+0.006	+0.005	+0.004	+0.003	+0.002	+0.001	0	−0.001
+2	+0.006	+0.005	+0.004	+0.003	+0.002	+0.001	0	−0.001	−0.002
+1	+0.005	+0.004	+0.003	+0.002	+0.001	0	−0.001	−0.002	−0.003
0	+0.004	+0.003	+0.002	+0.001	0	−0.001	−0.002	−0.003	−0.004
−1	+0.003	+0.002	+0.001	0	−0.001	−0.002	−0.003	−0.004	−0.005
−2	+0.002	+0.001	0	−0.001	−0.002	−0.003	−0.004	−0.005	−0.006
−3	+0.001	0	−0.001	−0.002	−0.003	−0.004	−0.005	−0.006	−0.007
−4	0	−0.001	−0.002	−0.003	−0.004	−0.005	−0.006	−0.007	−0.008

PINION DEPTH MEASUREMENT

Measurements are taken with pinion bearing cups and pinion bearings installed in the housing. Take measurements with Pinion Gauge Set and Dial Indicator C-3339A (1).

1. Assemble Pinion Height Block 6739 (3), Pinion Block 8542 (6) and rear pinion bearing onto Screw 6741 (5).

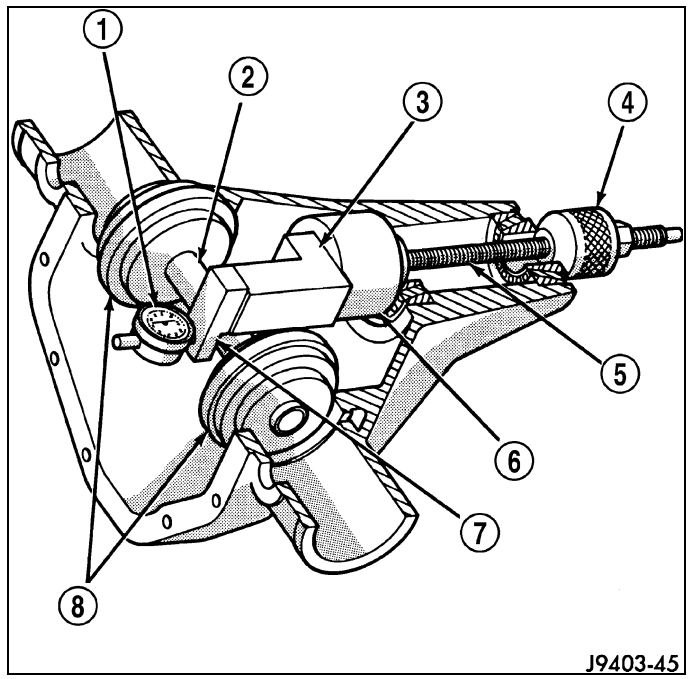

2. Insert pinion block (1), pinion height block (2), rear bearing, and screw into the housing through pinion bearing cups.
3. Install front pinion bearing and Cone-Nut 6740 onto the screw. Tighten cone-nut until Torque To Rotate the screw is 1.7 N·m (15 in. lbs.).

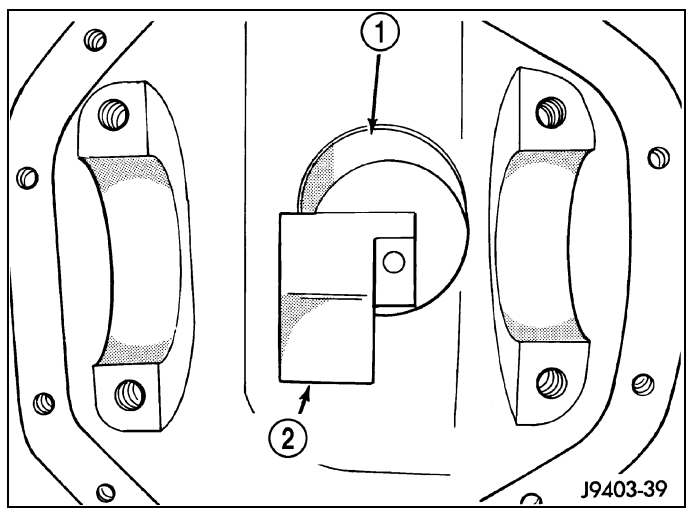

4. Place Arbor Disc 8541A (1) on Arbor D-115-3 (3) in position in the housing side bearing cradles. Install differential bearing caps on arbor discs and tighten cap bolts to 41 N·m (30 ft. lbs.).

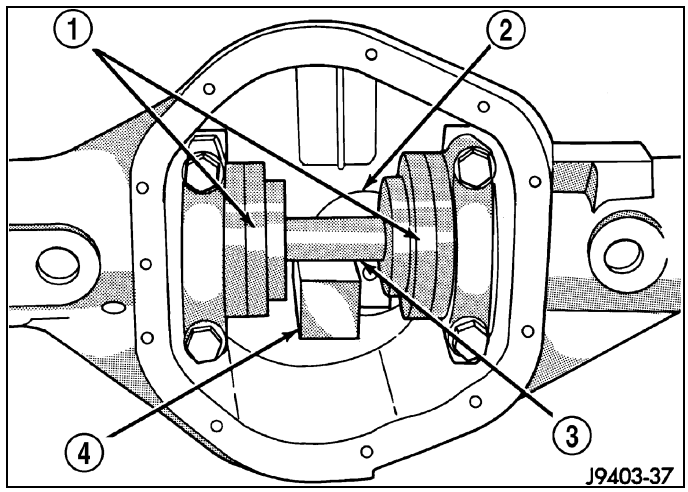

5. Assemble Dial Indicator C-3339A (3) into Scooter Block D-115-2A (2) and secure set screw.
6. Place Scooter Block/Dial Indicator in position in axle housing so dial probe and scooter block are flush against the rearward surface of the pinion height block. Hold scooter block in place and zero the dial indicator. Tighten dial indicator face lock screw.
7. Slide the dial indicator probe across the gap between the pinion height block and the arbor bar (1) with the scooter block against the pinion height block. Continue moving the dial probe to the crest of the arbor bar and record the highest reading.
8. Select a shim equal to the dial indicator reading plus or minus the pinion depth variance number on the pinion gear. If the depth variance is -2, add 0.002 in. to the dial indicator reading. If the depth variance is +2, subtract 0.002 in. from the dial indicator reading.
9. Install pinion gear and establish Pinion Torque To Rotate (PTTR) with and inch pound torque wrench (2).

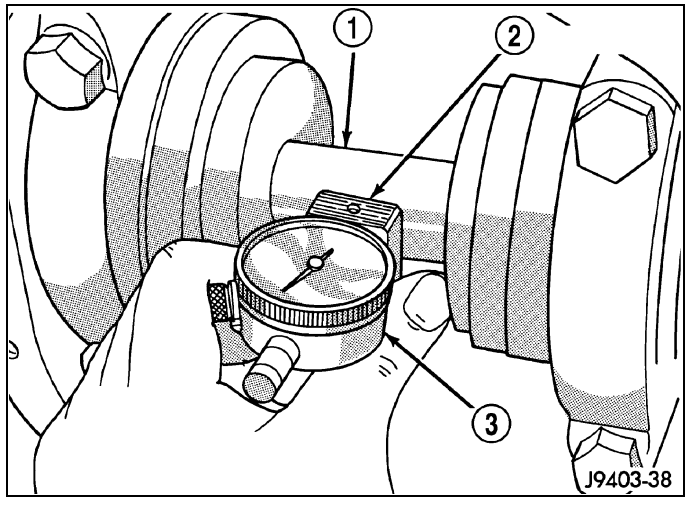

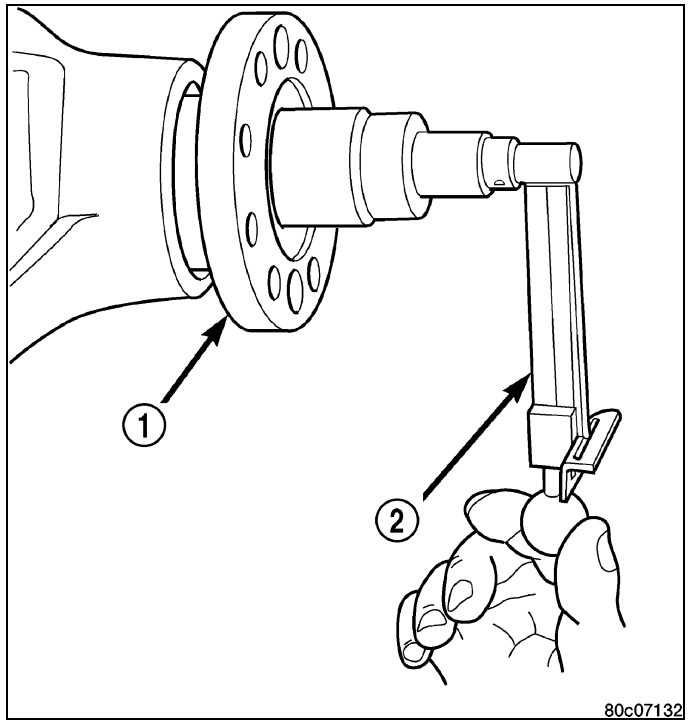

DIFFERENTIAL BEARING PRELOAD AND GEAR BACKLASH

1. Turn each thread adjuster inward with Wrench C-4164 until differential bearing end-play is eliminate and ring gear backlash is approximately 0.25 mm (0.01 in.). Seat bearing cups by rapidly rotating the pinion gear a half turn back and forth several times.
2. Install dial indicator (1) with plunger position against drive side of a ring gear tooth. Measure and record backlash at 4 positions, 90 degrees apart around the ring gear.

   Mark lowest backlash position on the ring gear and make all backlash measurements at this location.

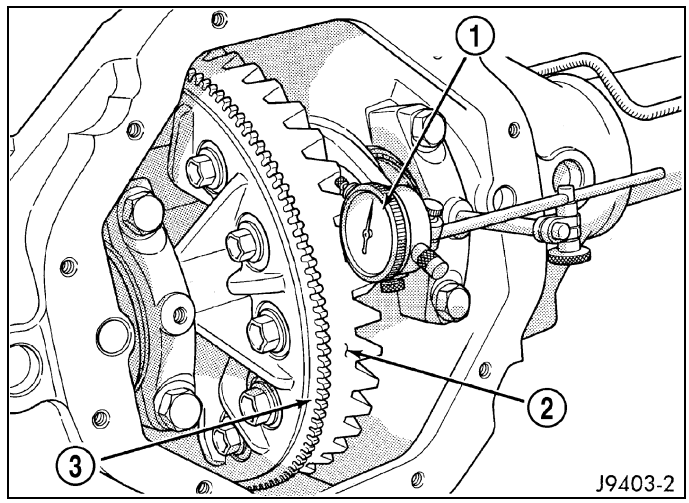

3. Loosen left-side adjuster and tighten right-side threaded adjuster with Wrench C-4164 (3) to obtain a backlash of 0.076 - 0.102 mm (0.003 - 0.004 in.).
4. Tighten both adjusters to 14 N·m (10 ft. lbs.). Seat differential bearing cups by rapidly rotating the pinion gear a half turn back and forth several times.
5. Tighten differential bearing cap bolts 136 N·m (100 ft. lbs.).
6. Tighten right-side threaded adjuster to 102 N·m (75 ft. lbs.). Seat differential bearing cups by rapidly rotating the pinion gear a half turn back and forth several times. Continue this procedure until right-side adjuster torque remains a constant 102 N·m (75 ft. lbs.).
7. Measure the ring gear backlash. Backlash should be 0.12 - 0.20 mm (0.005 - 0.008 in.).

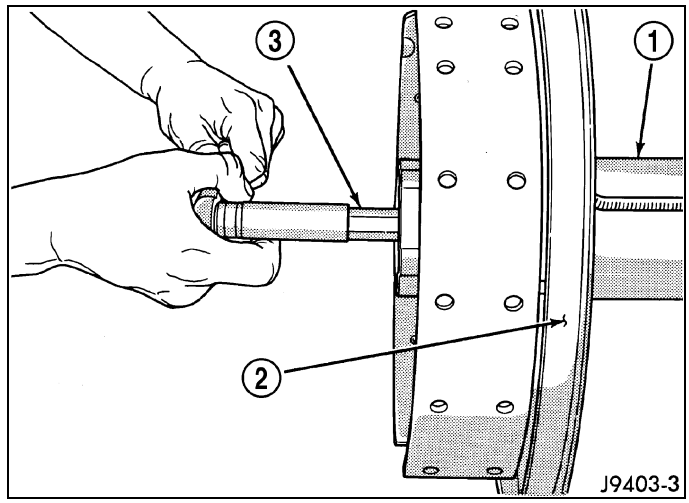

If backlash is less than 0.12 mm (0.005 in.) increase the torque on the right-side threaded adjuster until specified backlash is obtained.

If backlash is more than 0.20 mm (0.008 in.) repeat procedure from the beginning.

8. Tighten left-side threaded adjuster to 102 N·m (75 ft. lbs.). Seat differential bearing cups by rapidly rotating the pinion gear a half turn back and forth several times. Continue this procedure until left-side adjuster torque remains a constant 102 N·m (75 ft. lbs.).
9. Install threaded adjuster locks and tighten the lock screws to 10 N·m (90 in. lbs.).
10. Measure and backlash at 4 positions, 90 degrees apart around the ring gear. Maximum ring gear backlash variation is 0.076 mm (0.003 in.).

GEAR CONTACT PATTERN

1. Wipe clean each tooth of the ring gear.
2. Apply gear marking compound to all of the ring gear teeth.
3. Verify bearing cap bolts are torque to specification.
4. Apply parking brakes lightly to create at 14 N·m (10 ft. lbs.) pinion rotating torque.
5. Rotate the pinion/pinion yoke 4 full revolutions in each directions.
6. Read gear tooth contact pattern.

Gear contact pattern is correct. Backlash and pinion depth is correct.

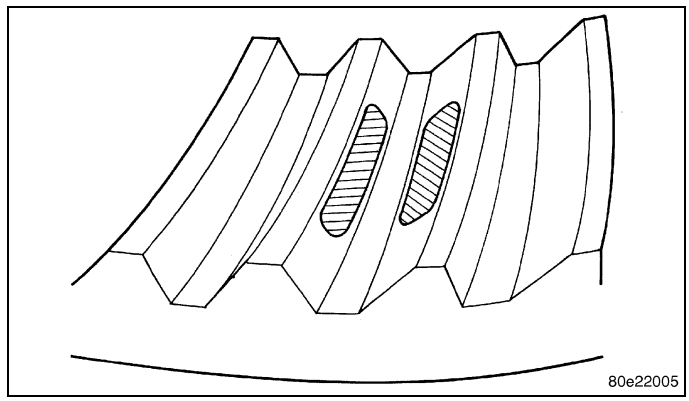

Ring gear too far away from pinion gear, coast side toe (1) and drive side heel (2). Decrease backlash, by moving the ring closer to the pinion gear using the adjusters.

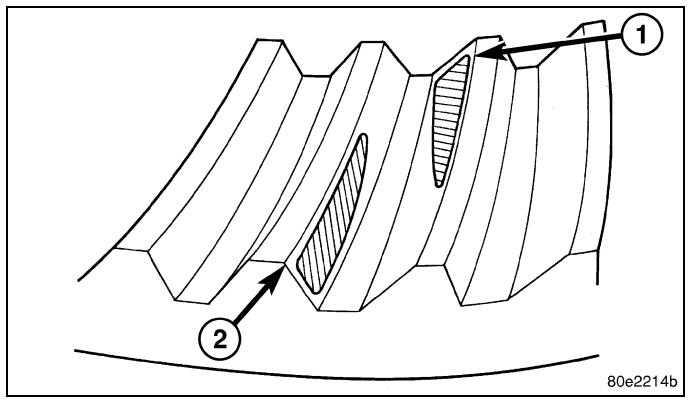

Ring gear too close to pinion gear, drive side toe (1) and coast side heel (2). Increase backlash, by moving the ring away from the pinion gear using the adjusters.

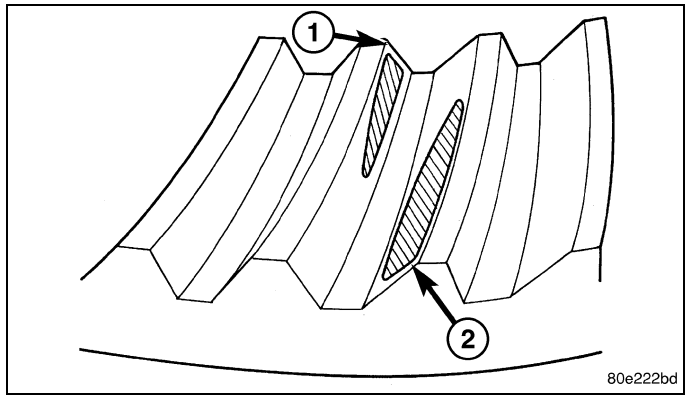

Ring gear too far away from pinion gear, drive side heel (1) and coast side heel (2). Decrease backlash, by moving the ring closer to the pinion gear using the adjusters.

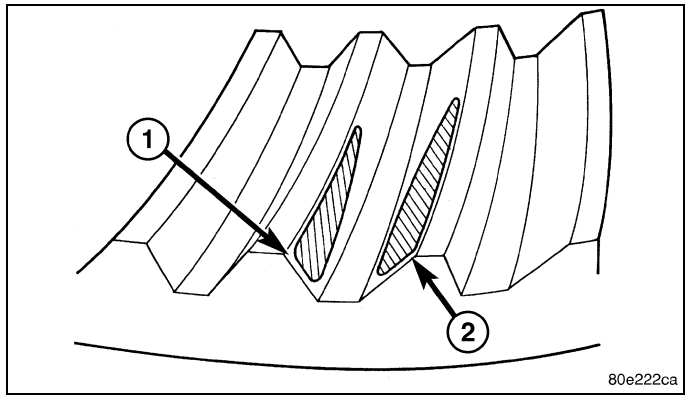

Ring gear too close to pinion gear, drive side toe (1) and coast side toe (2). Increase backlash, by moving the ring away from the pinion gear using the adjusters.

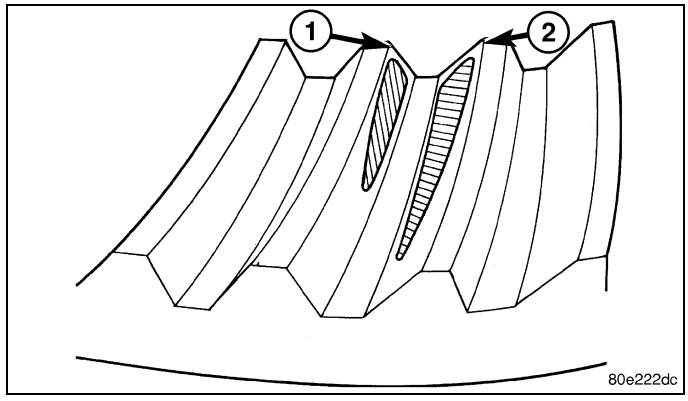

Pinion gear set too low. Increase pinion gear height, by increasing the pinion depth shim thickness.

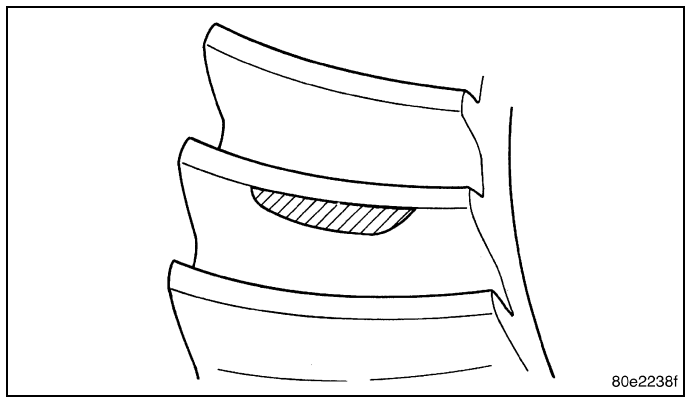

Pinion gear set too high. Decrease pinion depth, by decreasing the pinion depth shim thickness.

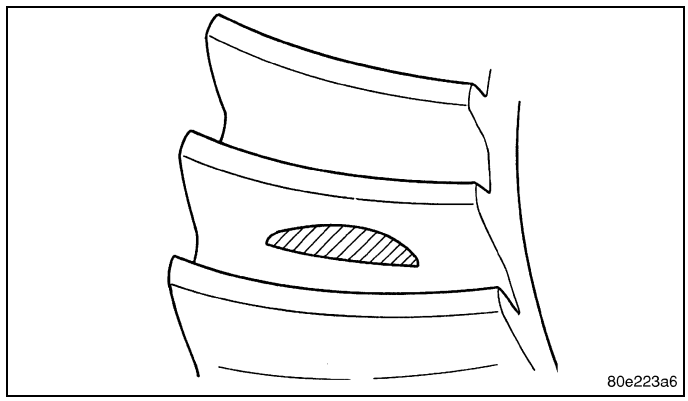

SIDE GEAR CLEARANCE

Visual inspect differential case, pinion mate shaft, axle shaft end button, C-lock, differential pinion gears, differential side gears and washers for damage or excessive wear. Replace damaged components.

1. Assemble differential and install.
2. Install differential pinion mate shaft locking screw to locate the shaft without torque it down.
3. Mount dial indicator base on the axle tube flange.
4. Push axle shaft inward until its end touches differential pinion mate shaft. Set dial indicator plunger on the end of axle shaft flange surface and zero dial indicator.
5. Pull axle shaft out until it stops and record dial indicator end-play reading. Rotate axle shaft about 180 degrees and record dial indicator end-play reading again. Two readings should be within 0.05 mm (0.002 in.).
6. Conduct the same procedure on the axle shaft on the opposite side.

End-play specification should be 0.13 mm - 0.38 mm (0.005 - 0.015 in.). If specification can not be met, shim side gears and/or replace differential case.

Specifications

AXLE

DESCRIPTION	SPECIFICATION
Axle Ratio	3.21, 3.55, 3.92, 4.10
Differential Case Flange Runout	0.076 mm (0.003 in.)
Differential Case Clearance	0.12 mm (0.005 in.)
Ring Gear Diameter	235 mm (9.25 in.)
Ring Gear Backlash	0.12 - 0.20 mm (0.005 - 0.008 in.)
Ring Gear Runout	0.12 mm (0.005 in.)
Pinion Torque To Rotate - New Bearings	1.7 - 4 N·m (15 - 35 in. lbs.)

AXLE, continued

DESCRIPTION	SPECIFICATION
Pinion Torque To Rotate - Original Bearings	1 - 2 N·m (10 - 20 in. lbs.)
Fill Level - From Bottom of Fill Hole	3 mm (1/8 in.) ± 3 mm (1/8 in.)

TORQUE

DESCRIPTION	N·m	Ft. Lbs.	In. Lbs.
Differential Cover Bolts	41	30	-
Bearing Cap Bolts	136	100	-
Ring Gear Bolts	157	115	-
Pinion Nut Minimum	285	210	-
Adjuster Lock Screw	10	7.5	90
Backing Plate Bolts	65	48	-
Pinion Mate Shaft Lock Screw	11	8	-
Axle U-Bolt Nuts	149	110	-

Special Tools

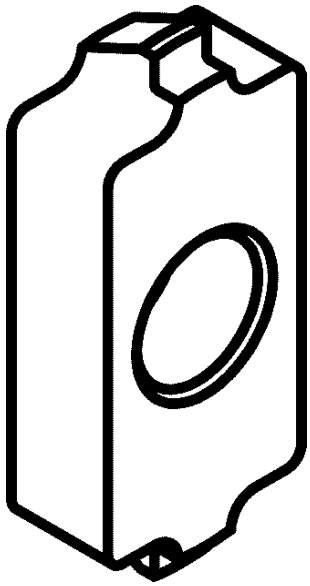

10258 - Remover, Bearing Cup

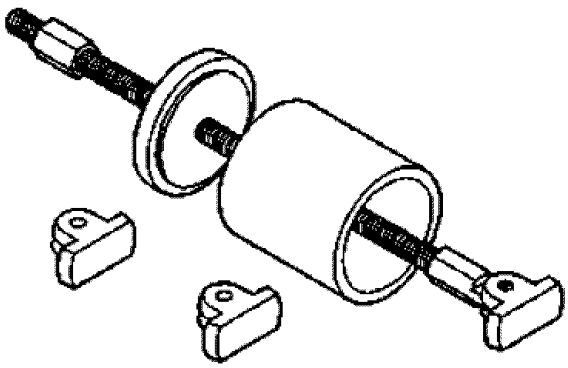

6310 - Remover, Bearing/Seal

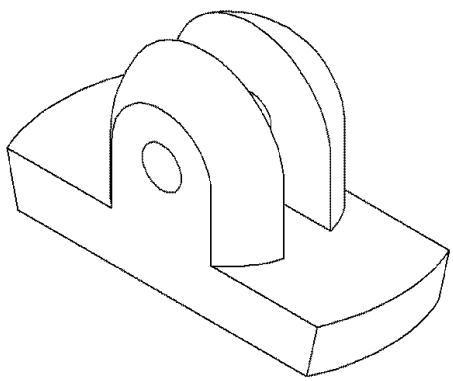

6310-9 - Head

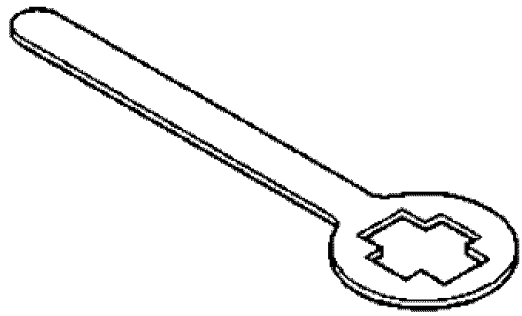

6719A - Holder, Yoke

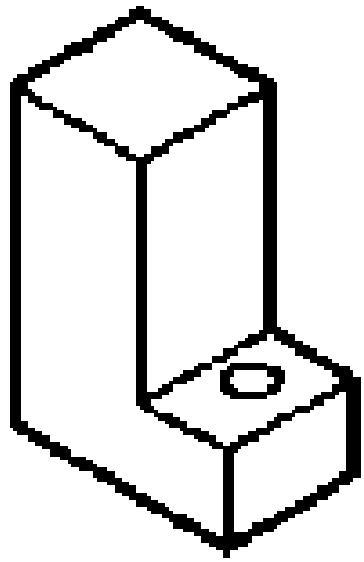

6739 - Block, Height

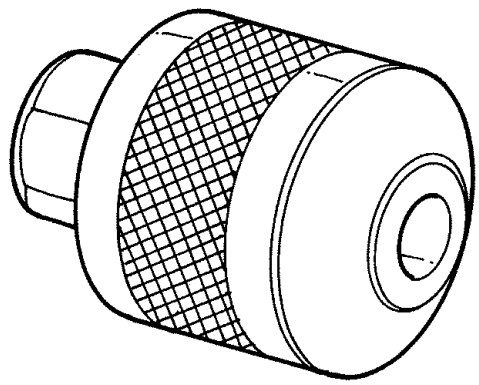

6740 - Cone



6741 - Screw

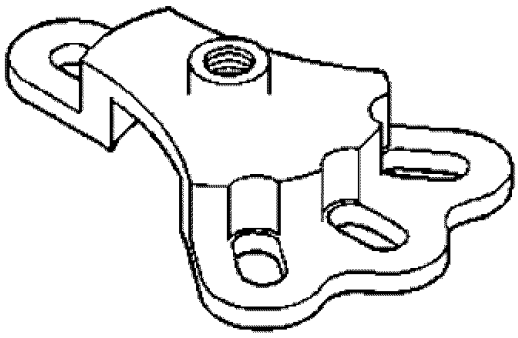

6790 - Tool, Trak Lok Torque

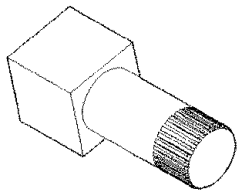

8136 - Fixture Tool

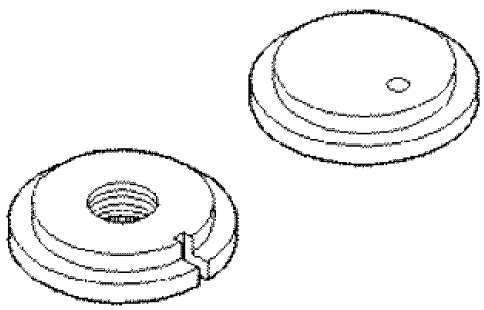

8139 - Trak-Lok Tools

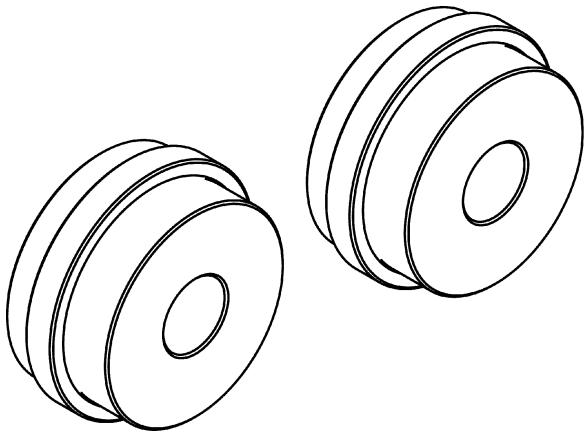

8541A - Set, Arbor Disc

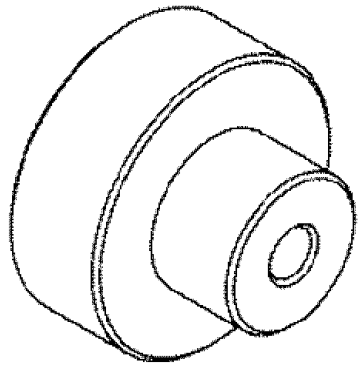

8542 - Gauge, Pinion Height

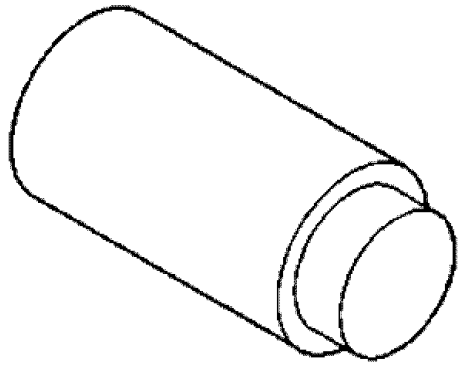

C-293-3 - Adapter, Bearing/Gear

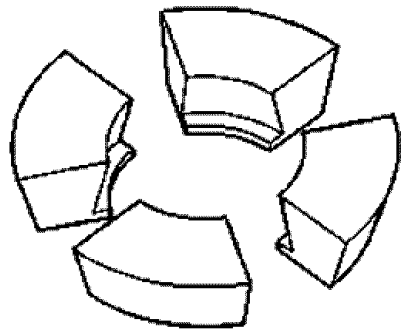

C-293-37 - Block Set, Puller

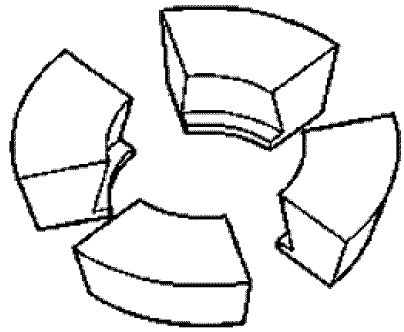

C-293-47 - Block Set, Puller

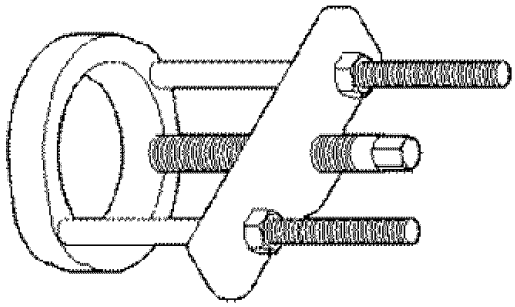

C-293-PA - Puller, Press

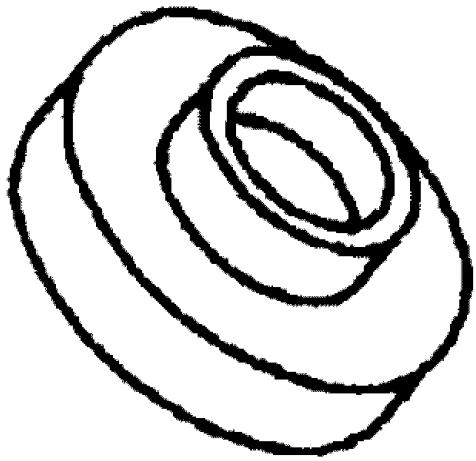

C-4076-B - Installer, Seal

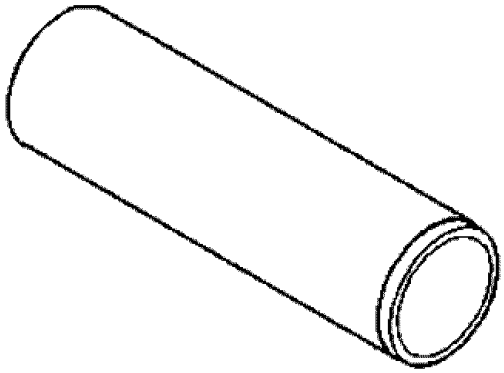

C-3095-A - Installer, Bearing

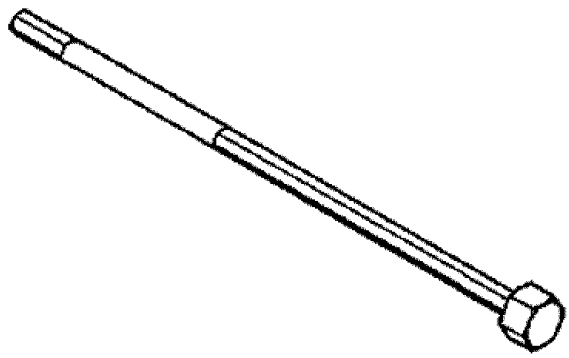

C-4164 - Wrench, Differential Preload

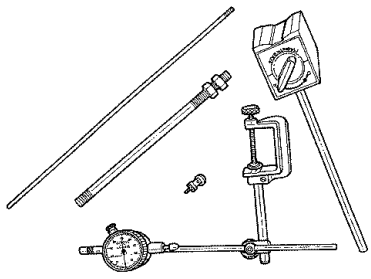

C-3339A - Set, Dial Indicator

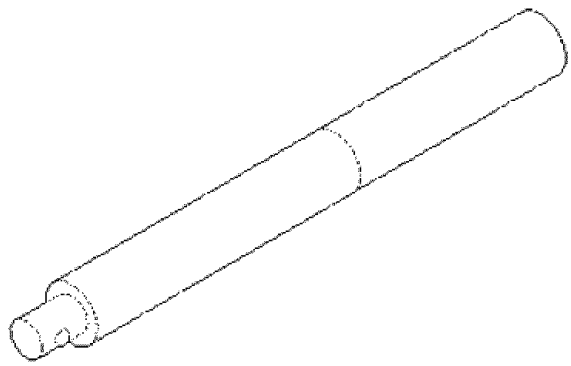

C-4171 - Driver Handle, Universal

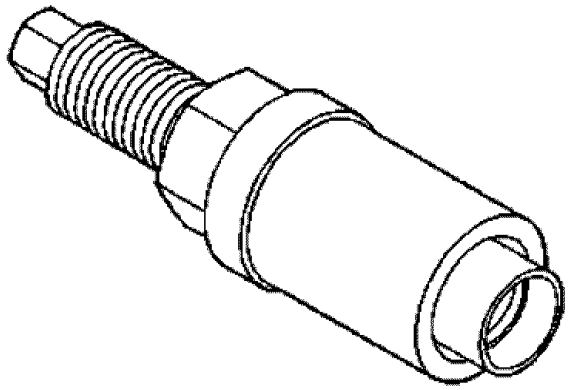

C-3718 - Installer, Flange

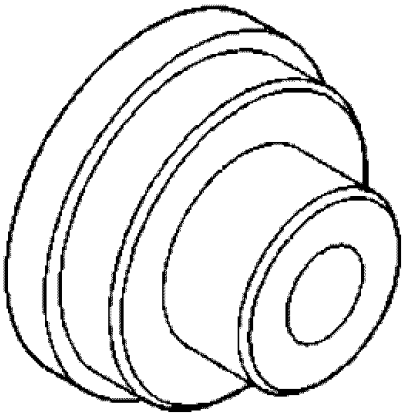

C-4198 - Installer, Axle Bearing

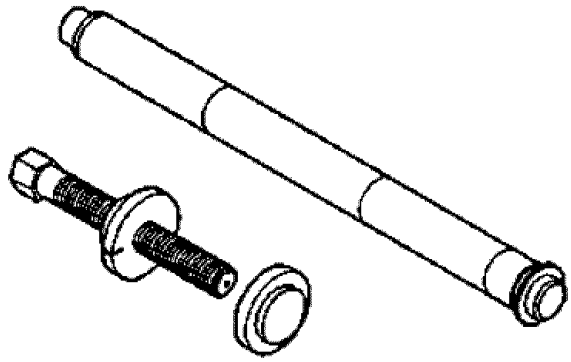

C-4487 - Trak-Lok Axle Tool

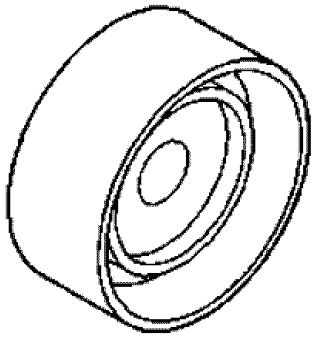

C-4213 - Installer, Bearing

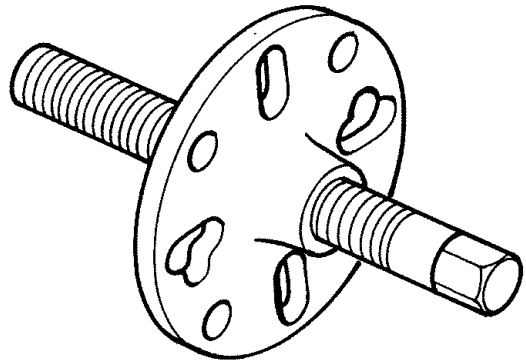

C-452 - Puller, Companion Flange

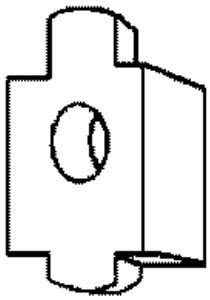

C-4309A - Remover, Bearing Cup

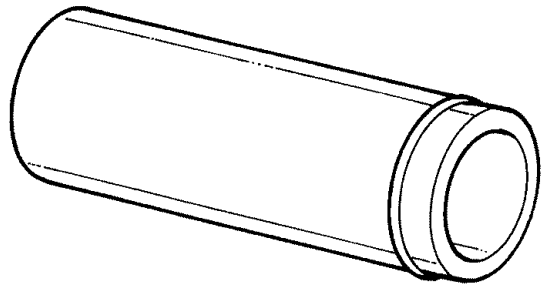

C-4735 - Handle, Driver

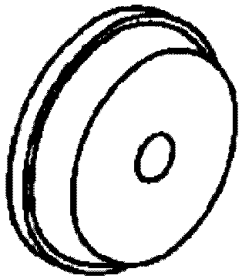

C-4310 - Installer, Bearing

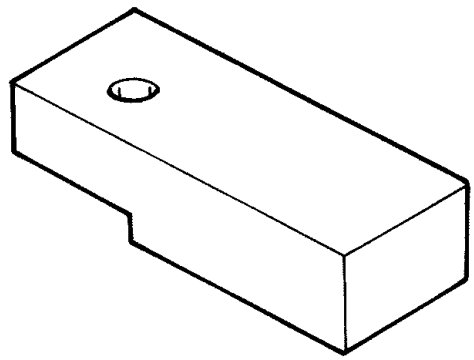

D-115-2A - Block, Scooter

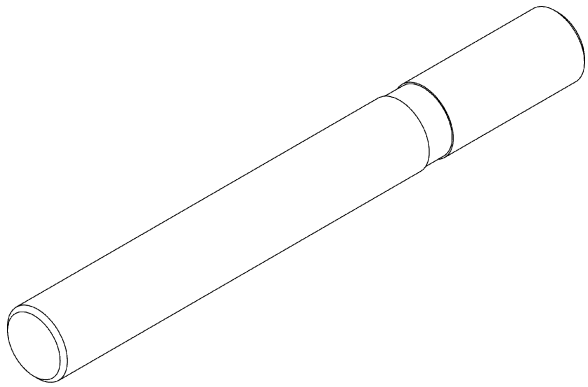

D-115-3 - Arbor

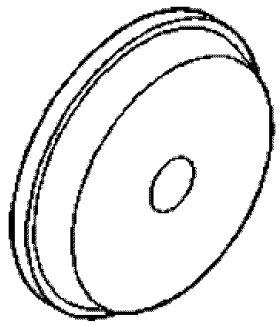

D-129 - Installer, Bearing Cup

BEARING, Axle Shaft

Removal

1. Remove axle shaft.
2. Remove axle shaft seal from axle tube with a small pry bar.

NOTE: The seal and bearing can be removed at the same time with the bearing removal tool.

3. Remove axle shaft bearing with Bearing Remover 6310 (2) (3) (4) (5) and Foot 6310-9 (7).

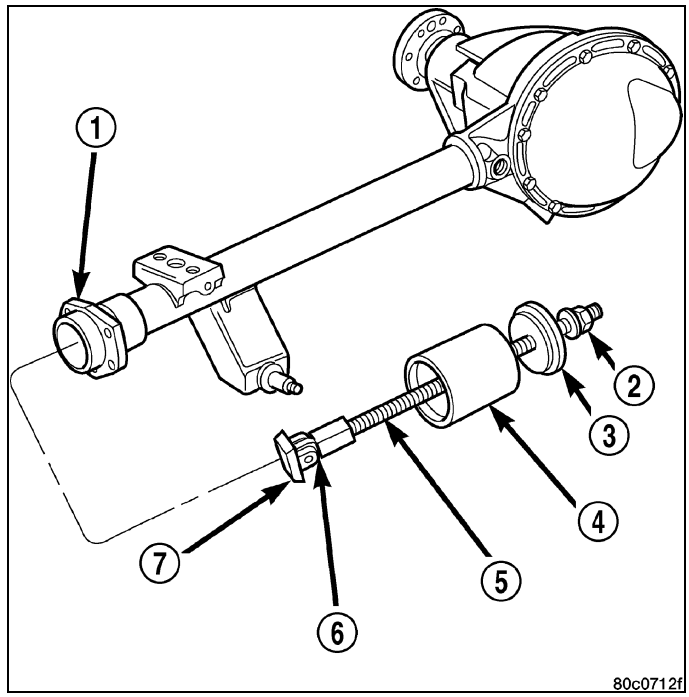

Installation

1. Wipe axle tube bore clean and remove any old sealer or burrs from the tube.
2. Install axle shaft bearing with Installer C-4198 and Handle C-4171. Drive bearing in until tool contacts the axle tube.

NOTE: Bearing is installed with the bearing part number against the installer.

3. Coat lip of the **new** axle seal with axle lubricant and install with Installer C-4076-B and Handle C-4735.
4. Install the axle shaft (1).
5. Install differential cover and fill with gear lubricant to the bottom of the fill plug hole.

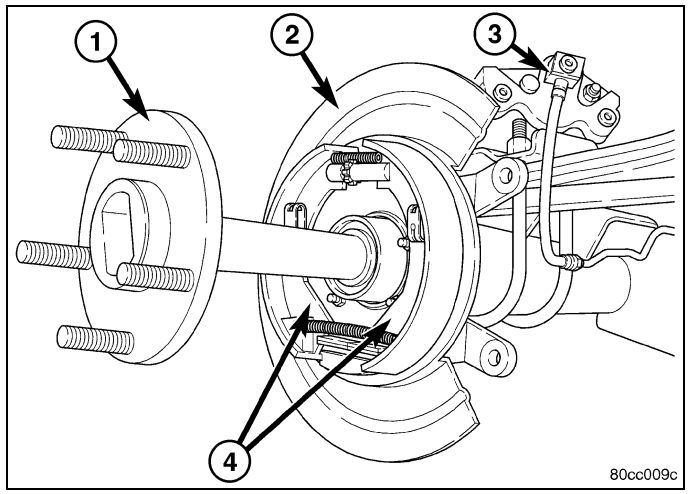

BEARING, Differential Side

Removal

1. Remove differential case from axle housing.
2. Remove differential bearings (3) from the case with Puller, Press C-293-PA (1) and Block Set, Puller C-293-47 (2) and Adapter, Bearing/Gear C-293-3 (5).

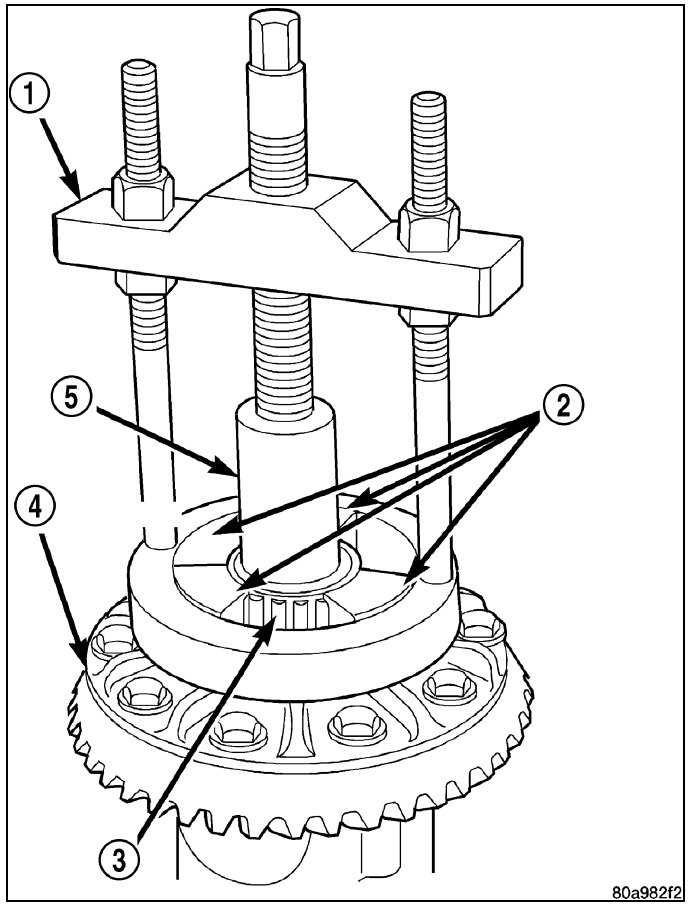

Installation

1. Install differential side bearings (3) with Installer, Bearing C-4213 (4) and Driver Handle, Universal C-4171 (1).
2. Install differential case into housing.

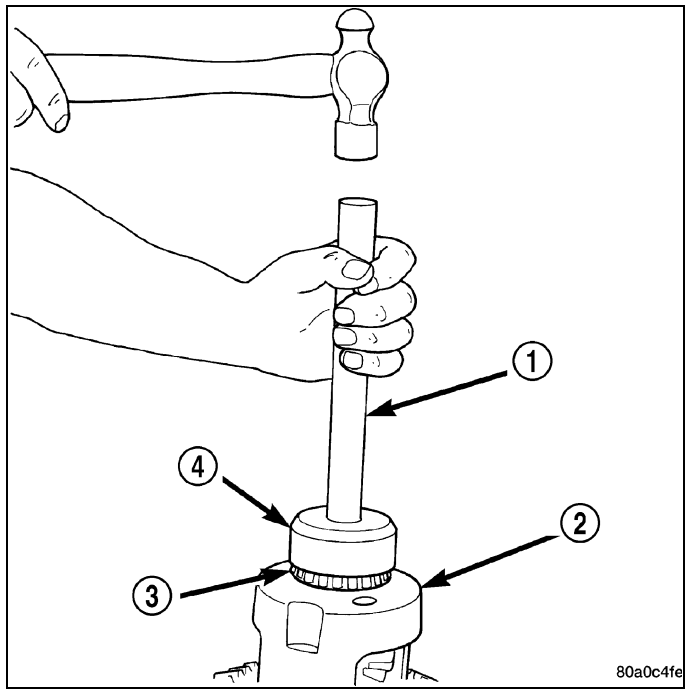

CASE ASSEMBLY, Differential

Removal

1. Remove filler plug from the differential cover.
2. Remove differential cover and drain the lubricant.
3. Clean housing cavity with flushing oil, light engine oil or a lint free cloth.

NOTE: Do not use steam, kerosene or gasoline to clean the housing.

4. Remove axle shafts.
5. Remove RWAL/ABS sensor from housing.

NOTE: Side play resulting from bearing races being loose on case hubs requires replacement of the differential case.

6. Mark differential housing and bearing caps (3) for installation reference.

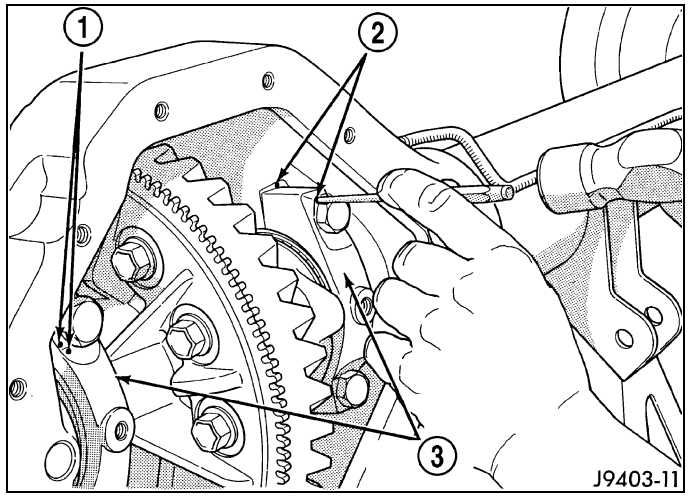

7. Remove bearing threaded adjuster lock from each bearing cap.
8. Loosen differential bearing cap bolts.
9. Loosen differential bearing adjusters through the axle tubes (1) with Wrench C-4164 (3).
10. Hold differential case while removing bearing caps and adjusters.

NOTE: Tag the differential bearing cups and threaded adjusters to indicate their location.

11. Remove differential case.

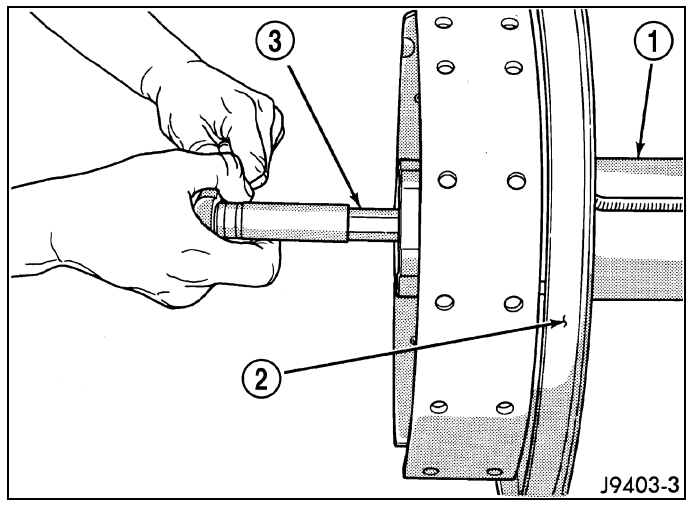

Disassembly

1. Rotate both pinion gears (2) with thrust washer (3) to the differential window (1) and remove both gears and thrust washers.

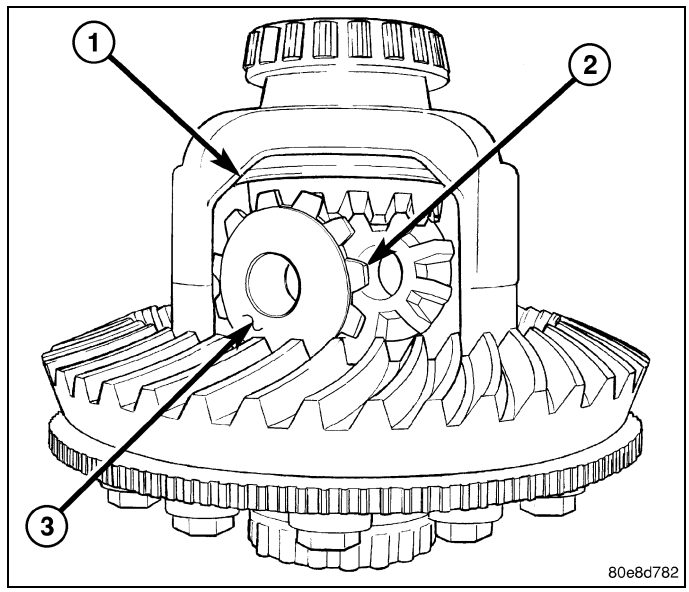

2. Remove differential side gears (1) (2) and thrust washers.

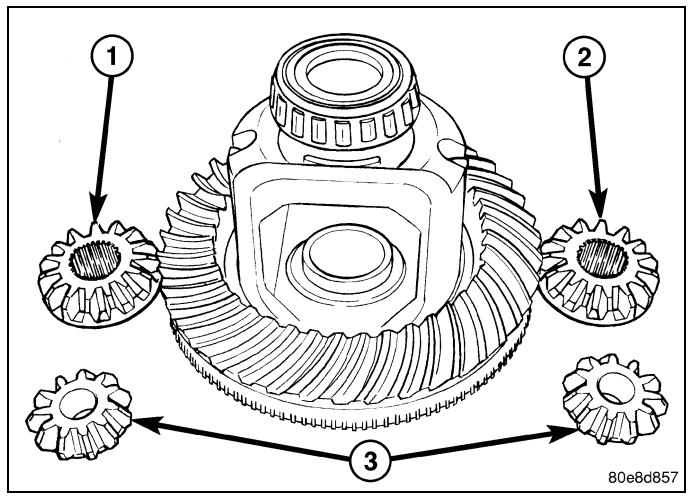

Assembly

NOTE: If same gears and thrust washers are being used, install them into their original locations.

1. Lubricate all differential components with axle lubricant.
2. Install differential side gears (2) and thrust washers through differential window (1).

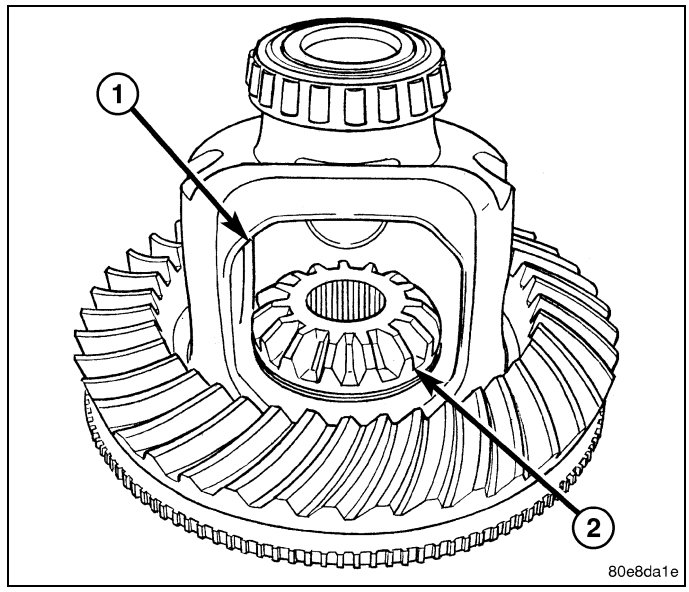

3. Install both pinion gears (3) with thrust washer into differential window (1) and side gears (2). Rotate both pinion gears into the case.

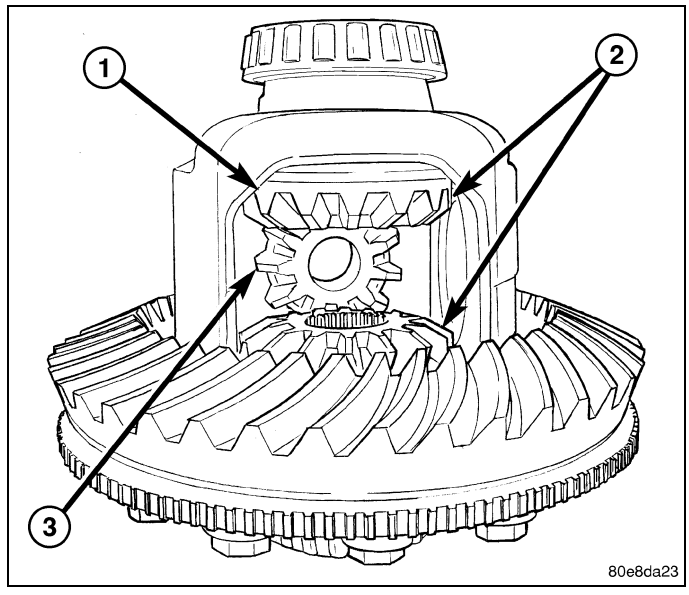

4. Install remaining pinion gear and thrust washer. Rotate gears to align hole in the pinion gears with hole in the differential case.
5. Slide pinion shaft (4) into the case and through the pinion gears (3) to align the gears.

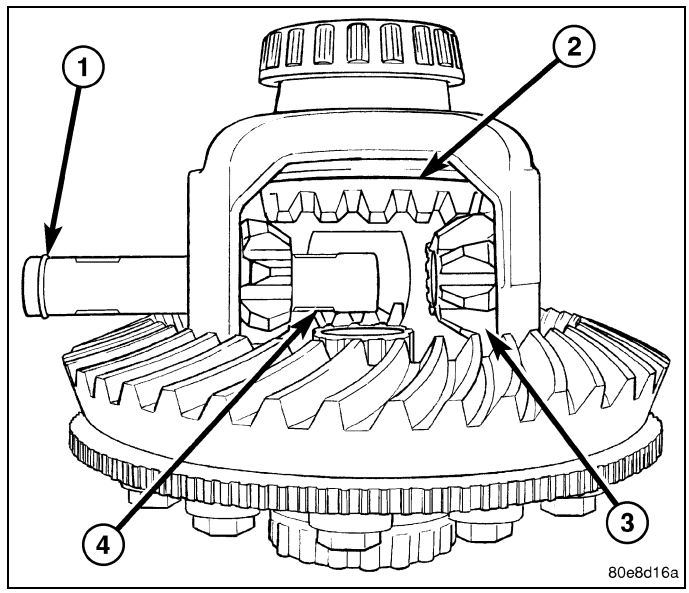

Installation

1. Apply a coating of hypoid gear lubricant to the differential bearings, bearing cups, and threaded adjusters. A dab of grease can be used to keep the adjusters in position.
2. Install differential assembly into the housing.
3. Install differential bearing caps (4) in their original locations .
4. Install bearing cap bolts and tighten the upper bolts to 14 N·m (10 ft. lbs.). Tighten lower bolts finger-tight until the bolt head is seated. Then perform the differential bearing preload and adjustment procedure.

NOTE: Be sure that all bearing cap bolts are tightened to their final torque of 136 N·m (100 ft. lbs.) before proceeding.

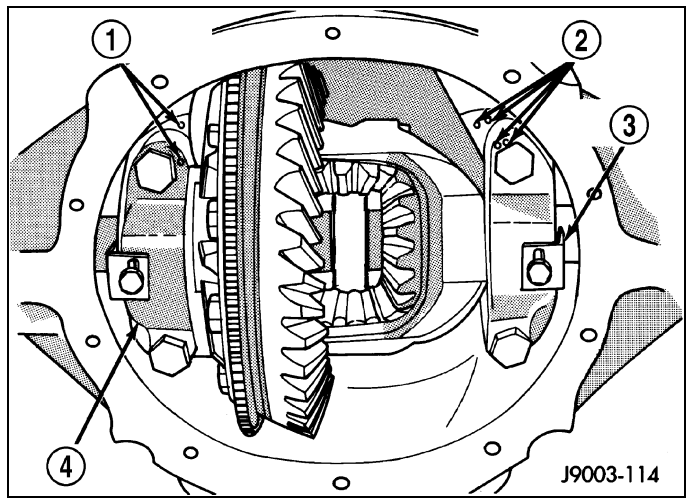

5. Install axle shafts.
6. Apply a bead of orange Mopar™ Axle RTV Sealant (1) or equivalent to the cover (2).

CAUTION: If cover is not installed within 3 to 5 minutes, the cover must be cleaned and new RTV applied. Failure to follow these instruction will result in a leak.

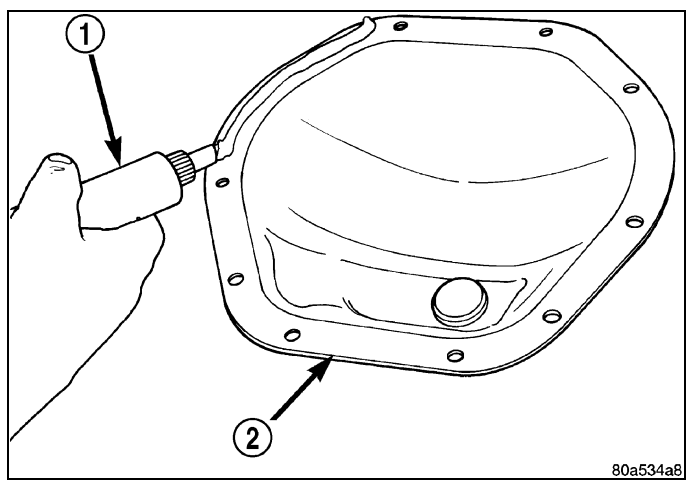

7. Install cover and any identification tag and tighten cover bolts to 41 N·m (30 ft. lbs.).
8. Fill differential with lubricant to specifications.

NOTE: Trac-lok® differential equipped vehicles should be road tested by making 10 to 12 slow figure-eight turns. This maneuver will pump the lubricant through the clutch discs to eliminate a possible chatter noise complaint.

CASE ASSEMBLY, Differential, Trac-Lok

Operation

This differential clutches are engaged by two concurrent forces. The first being the preload force exerted through Belleville spring washers within the clutch packs (6) (8). The second is the separating forces generated by the side gears (7) as torque is applied through the ring gear (2).

This design provides the differential action needed for turning corners and for driving straight ahead during periods of unequal traction. When one wheel looses traction, the clutch packs transfer additional torque to the wheel having the most traction. This differential resist wheel spin on bumpy roads and provide more pulling power when one wheel looses traction. Pulling power is provided continuously until both wheels loose traction. If both wheels slip due to unequal traction, Trac-lok® operation is normal. In extreme cases of differences of traction, the wheel with the least traction may spin.

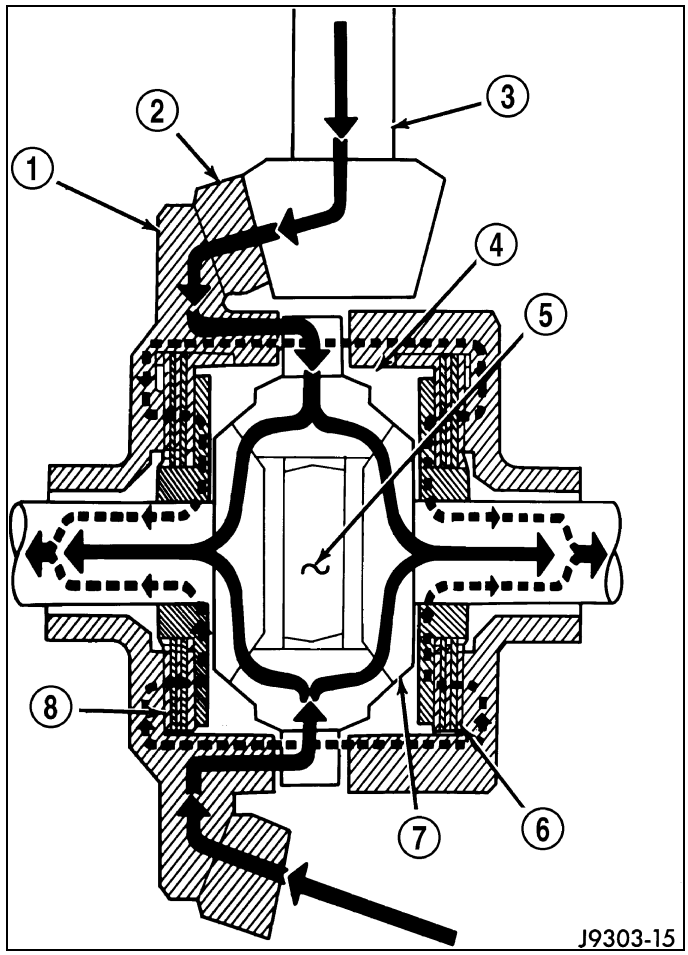

Diagnosis and Testing

A common problem of the Trac-Lok® differential is a chatter noise when turning corners. Before removing the unit for repair, drain, flush and refill the axle with the specified lubricant. Add a container of Mopar Limited Slip Additive after repair service or during a lubricant change.

After changing the lubricant, drive the vehicle and make 10 to 12 slow, figure-eight turns. This maneuver will pump lubricant through the clutches. This will correct the condition in most instances. If the chatter persists, clutch damage could have occurred.

The differential can be tested without removing the differential case by measuring rotating torque. Make sure brakes are not dragging during this measurement.

1. Place blocks in front and rear of both front wheels.
2. Raise one rear wheel until it is completely off the ground.
3. Engine off, transmission in neutral, and parking brake off.
4. Remove wheel and bolt Torque Check Tool 6790 (1) or equivalent tool to studs.

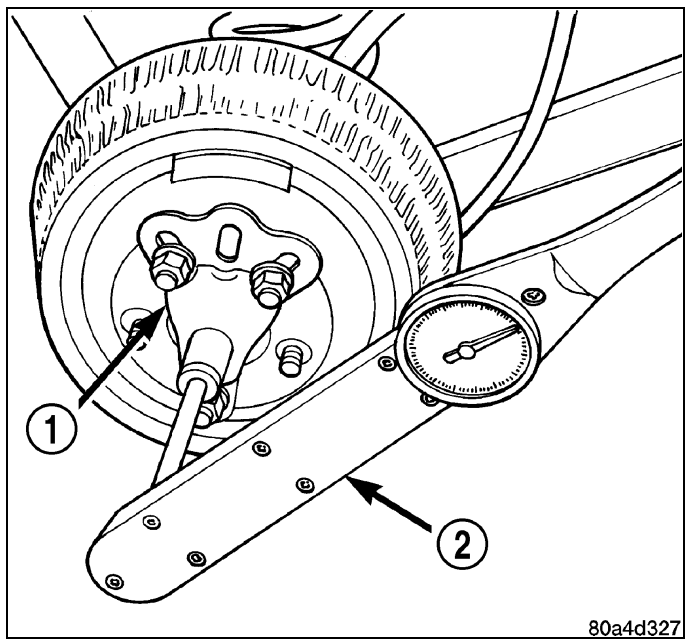

5. Use torque wrench (2) on Torque Check Tool (1) to rotate wheel and read rotating torque.
6. If rotating torque is less than 41 N·m (30 ft. lbs.) or more than 271 N·m (200 ft. lbs.) on either wheel the unit must be replaced.

Disassembly

1. Clamp Holding Fixture 8136 (1) in vise (2) and set differential case (3) on fixture.
2. Remove pinion gear mate shaft screw.
3. Remove pinion gear mate shaft.

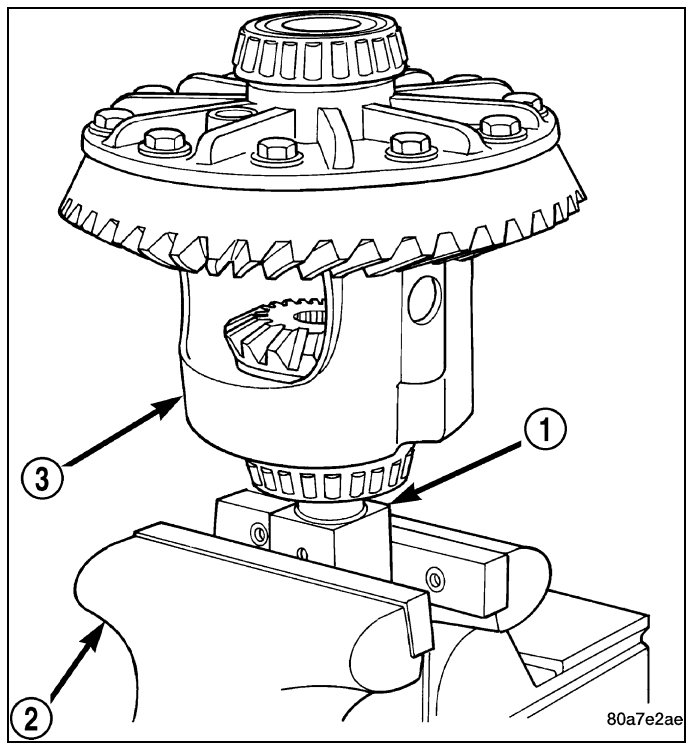

4. Lubricate and install disc (3) that is not threaded from Trac-Lok® Tool Kit 8139 into the lower side gear (1).
5. Install threaded disc from Trac-Lok® Tool Kit 8139 into top side gear. Thread forcing screw from Trac-Lok® Tool Kit C-4487 through top disc until it comes in contact with lower disc.

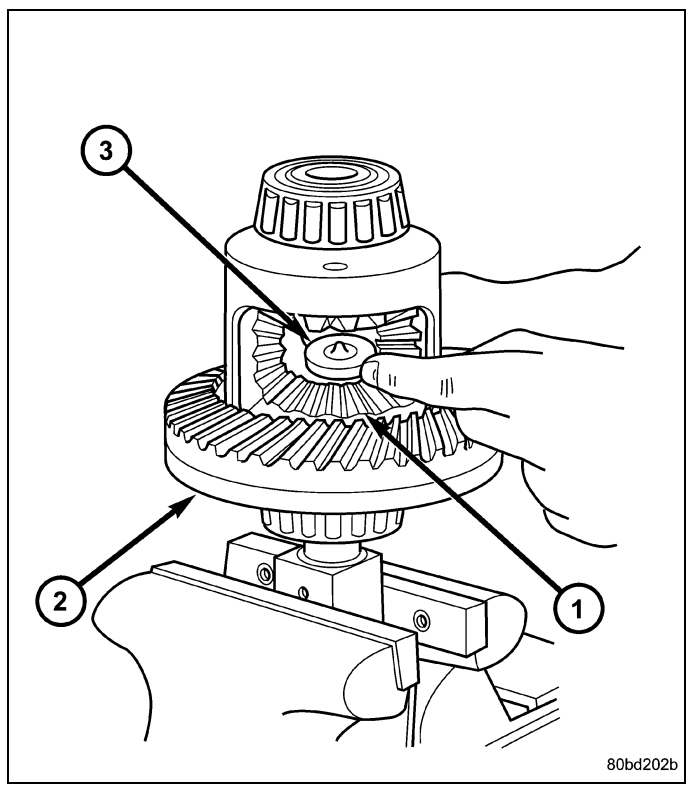

6. Position a screw driver (3) in slot (2) of top disc (6) to prevent disc from turning.

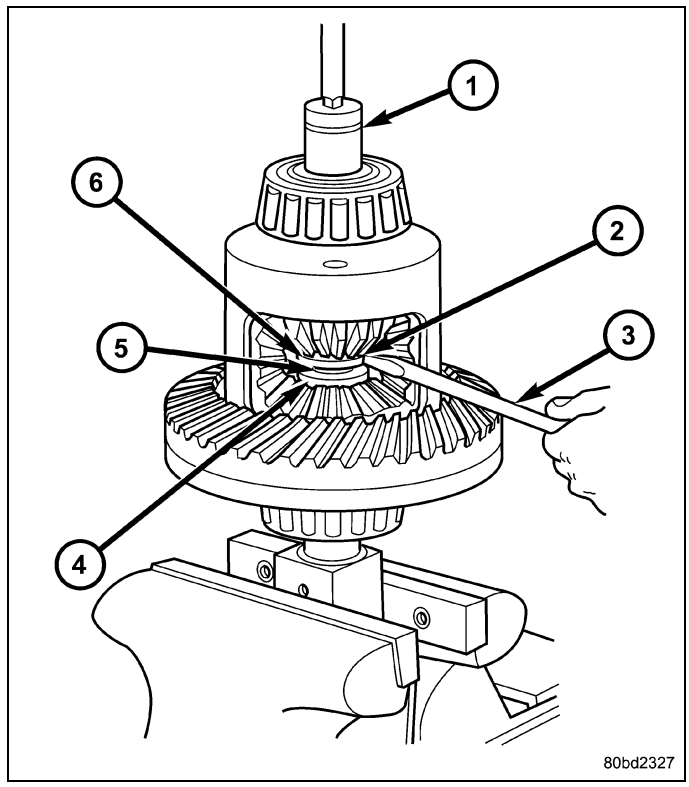

7. Tighten forcing screw (2) with torque wrench (1) to 122 N·m (90 ft. lbs.) maximum to compress Belleville springs in clutch packs.

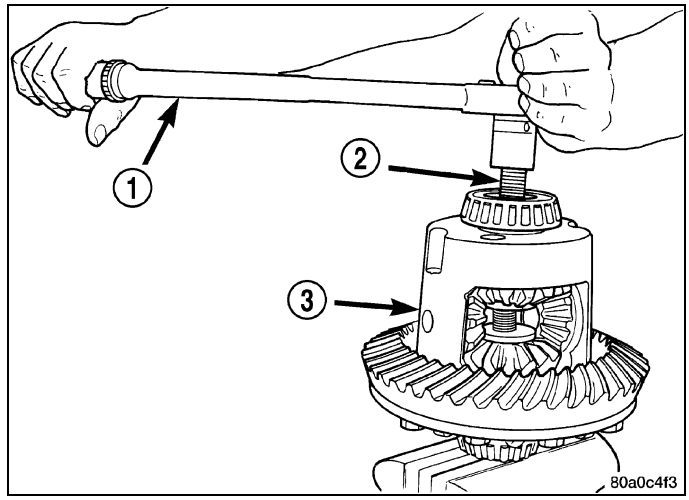

8. With a feeler gauge (2) remove thrust washers (1) from behind the pinion gears.

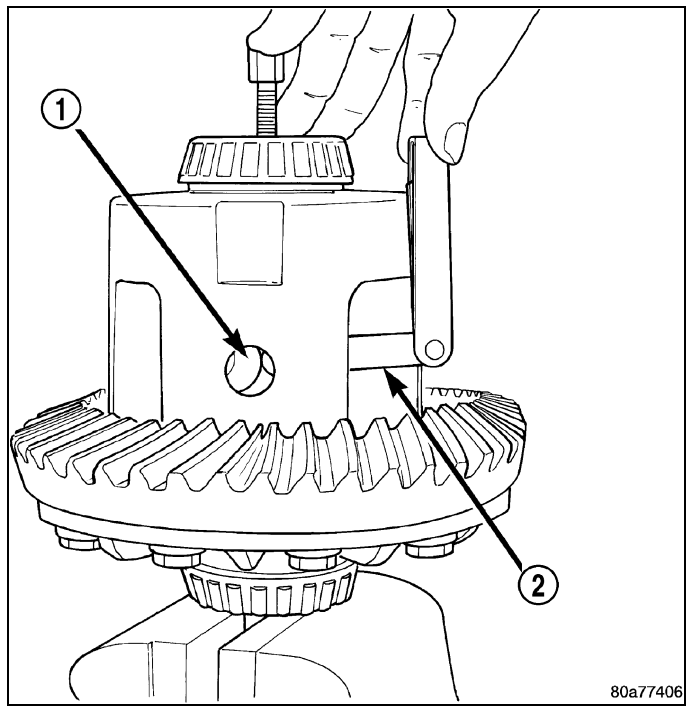

9. Insert turning bar (2) from tool kit into pinion mate shaft hole in the case.
10. Loosen forcing screw in small increments until the clutch pack tension is relieved and differential case can be turned using turning bar.
11. Rotate differential case until the pinion gears can be removed.
12. Remove pinion gears (1) from differential case.
13. Remove forcing screw and discs.

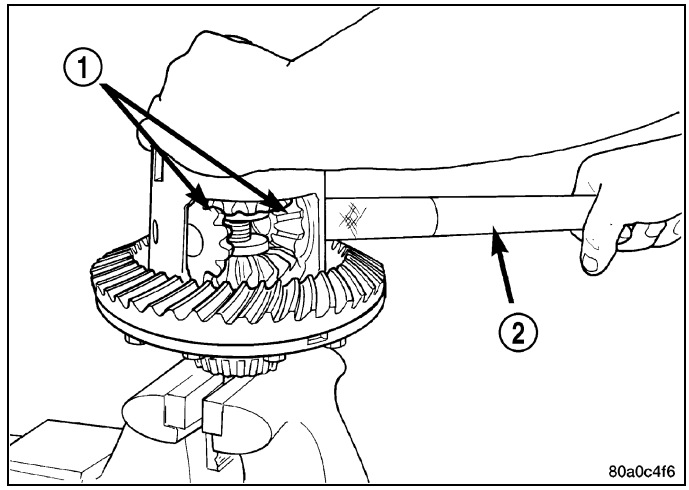

14. Remove top side gears with clutch pack (3) and retainers (2) from differential case (1).

NOTE: Keep plates in correct order during removal.

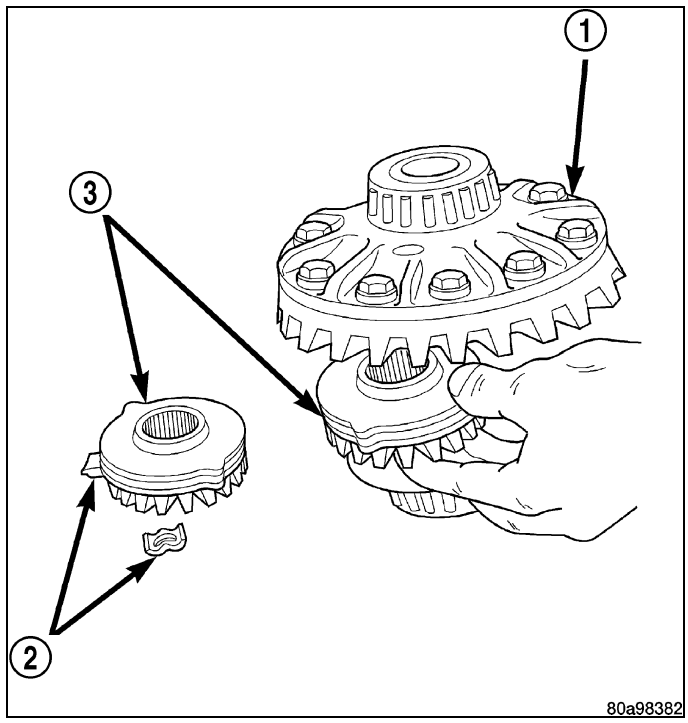

Assembly

Clean all components in cleaning solvent and dry components with compressed air. Inspect clutch pack plates for wear, scoring or damage. Replace both clutch packs if any one component in either pack is damaged. Inspect side gears and pinions. Replace any gear that is worn, cracked, chipped or damaged. Inspect differential case and pinion shaft. Replace if worn or damaged.

1. Lubricate each component with gear lubricant before assembly.
2. Assemble clutch discs (1) into packs and secure disc packs with retaining clips (2,4).

NOTE: New Plates and discs with fiber coating (no grooves or lines) must be presoaked for minimum of 20 minutes in Limited Slip Additive before assembly.

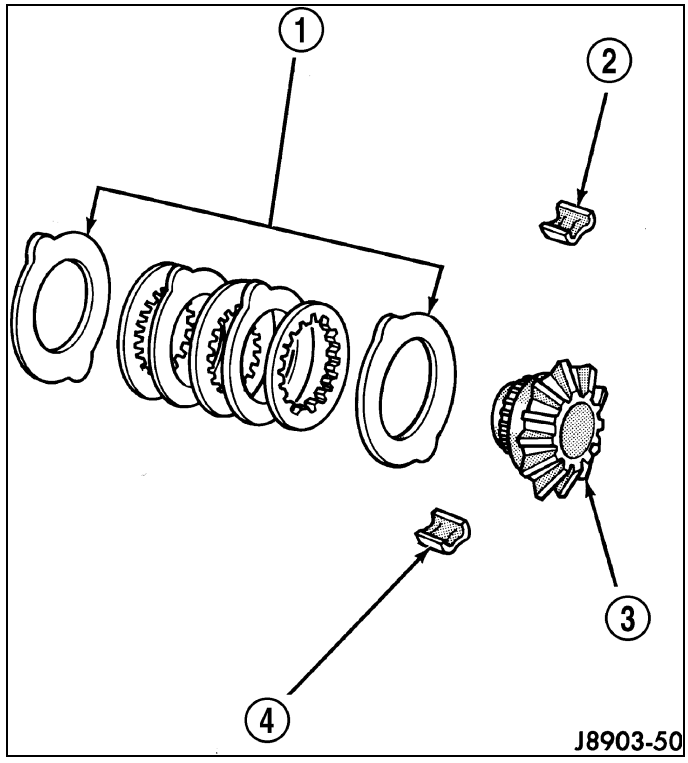

3. Position differential case on the Holding Fixture 8136.
4. Position assembled clutch disc packs on the side gear hubs.
5. Install lower side gears (2) with clutch pack in differential case (1).

CAUTION: Verify clutch pack retaining clips are in position and seated in case pockets.

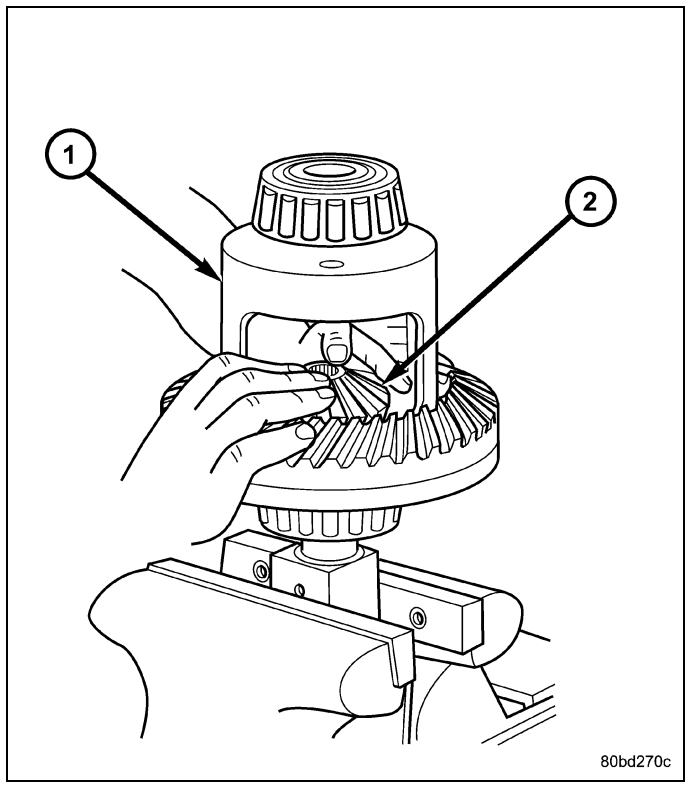

6. Install lubricated disc (3) from Trac-Lok® Tool Kit 8139 in lower side gear.
7. Install upper side gear (1) with clutch disc pack in differential case (2).

CAUTION: Verify clutch pack retaining clips are in position and seated in case pockets.

8. Hold assembly in position and install threaded disc from tool kit into top side gear.
9. Install forcing screw from Trac-Lok® Tool Kit C-4487 and tighten screw to slightly compress clutch disc.

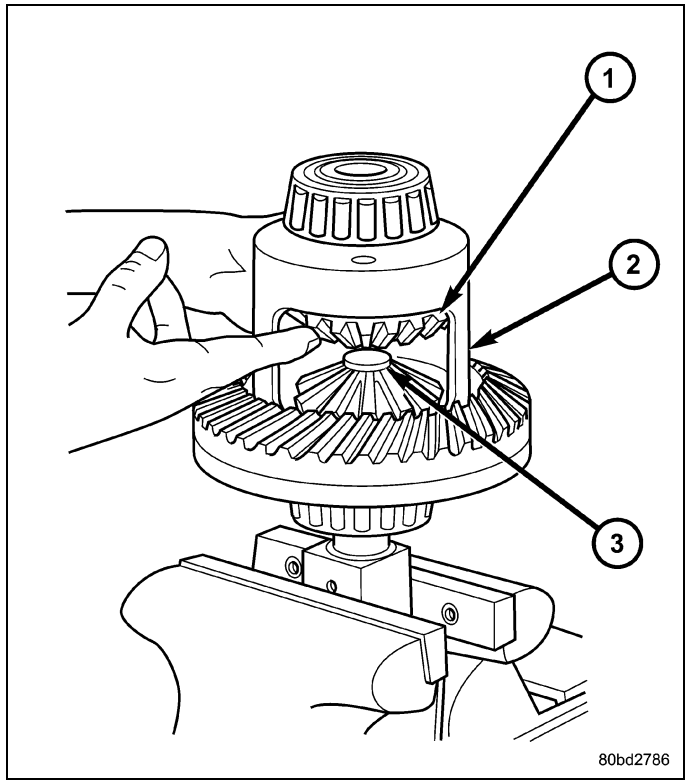

10. Place pinion gears in position in side gears and verify that the pinion mate shaft hole is aligned.
11. Rotate case with turning bar (2) until pinion mate shaft holes in pinion gears (1) align with holes in case.

NOTE: It may be necessary to slightly tighten the forcing screw in order to install the pinion gears.

12. Tighten forcing screw to 122 N·m (90 ft. lbs.) maximum to compress the Belleville springs.
13. Lubricate and install thrust washers behind pinion gears and align washers with a small screw driver. Insert mate shaft into each pinion gear to verify alignment.
14. Remove Forcing Screw, Discs and Threaded Adapter.
15. Install pinion gear mate shaft and align holes in shaft and case.
16. Install pinion mate shaft screw.
17. Lubricate all differential components with hypoid gear lubricant.

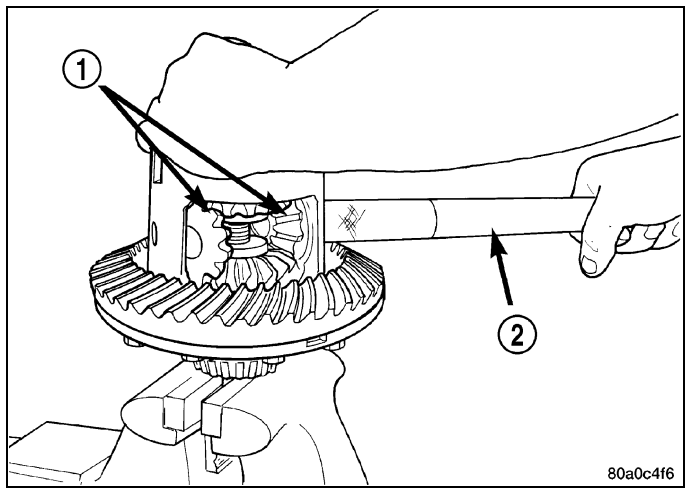

COVER, Differential

Removal

1. With vehicle in neutral, position vehicle on hoist.
2. Remove drain plug.
3. Remove cover bolts.
4. Remove cover and drain lubricant.

Installation

1. Apply a 6.35mm (1/4 in.) bead of Mopar Silicone Rubber Sealant (1) or equivalent to the cover (2).

CAUTION: If housing cover is not installed within 3 to 5 minutes, the cover must be cleaned and new RTV applied. Failure to follow these instructions will result in a leak.

2. Install cover and identification tag. Tighten cover bolts in a criss-cross pattern to 41 N·m (30 ft. lbs.).
3. Fill differential with lubricant to specifications.
4. Install fill plug.

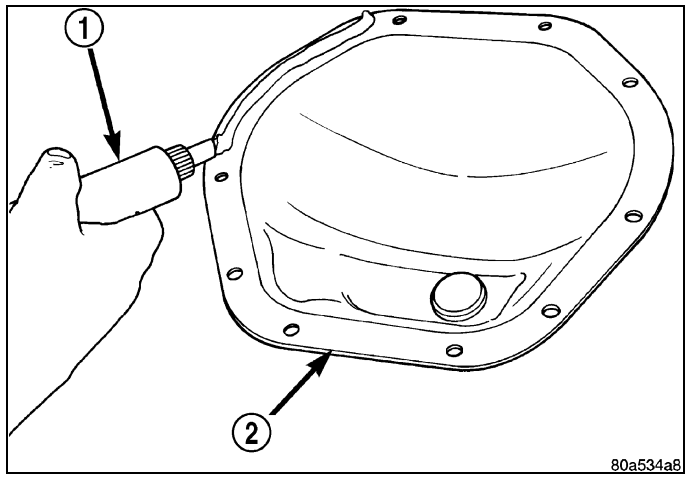

GEAR, Ring and Pinion

Removal

NOTE: The ring gear and pinion are serviced in a matched set. Never replace one gear without replacing the other matching gear.

1. Mark companion flange and propeller shaft for installation reference.
2. Remove propeller shaft.
3. Remove axle shafts.
4. Remove differential from the differential housing.
5. Place differential case (1) in a vise with soft metal jaw protectors.
6. Remove ring gear bolts from the differential case.
7. Drive ring gear (2) off the differential case (1) with a soft hammer (3).

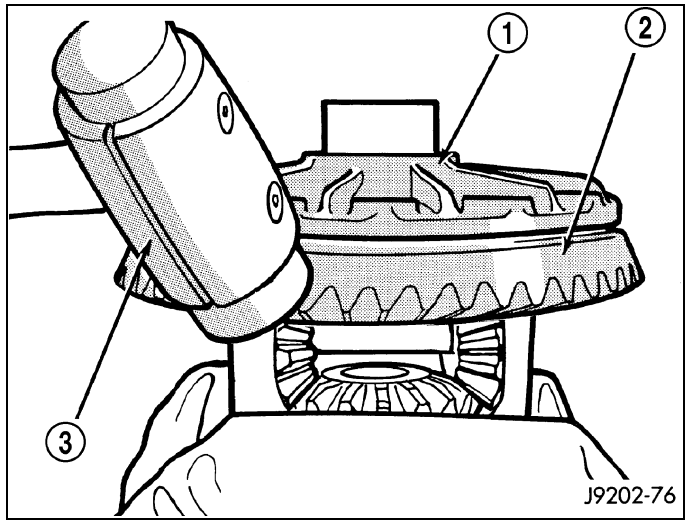

8. Install bolts into two of the threaded holes in the companion flange 180° apart.
9. Position Holder 6719A against the companion flange and install a bolt and washer into one of the remaining threaded holes. Tighten the bolts so the Holder 6719A is held to the flange.
10. Use Holder 6719A to hold companion flange and remove the companion flange nut and washer.
11. Remove companion flange (1) with Puller C-452 (2).

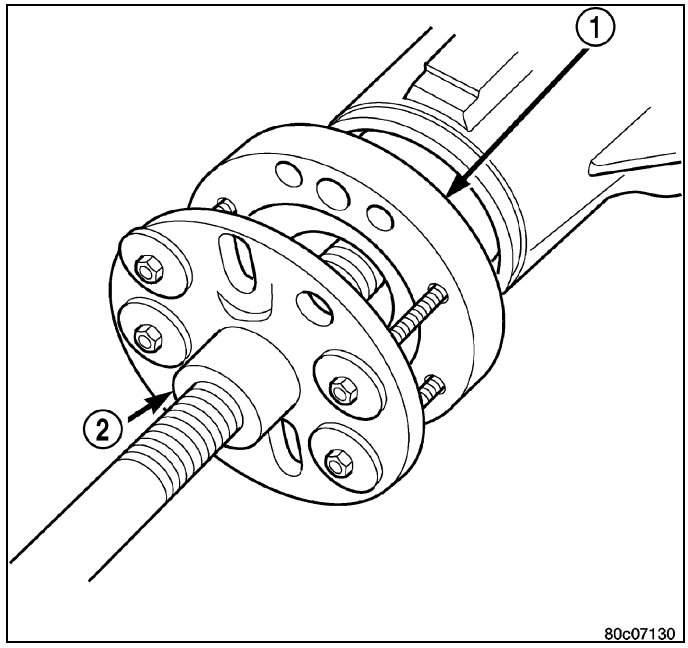

12. Remove pinion gear from the housing with a soft hammer (1).
13. Remove pinion seal with a pry tool or slide-hammer mounted screw.
14. Remove front pinion bearing and oil slinger if equipped.

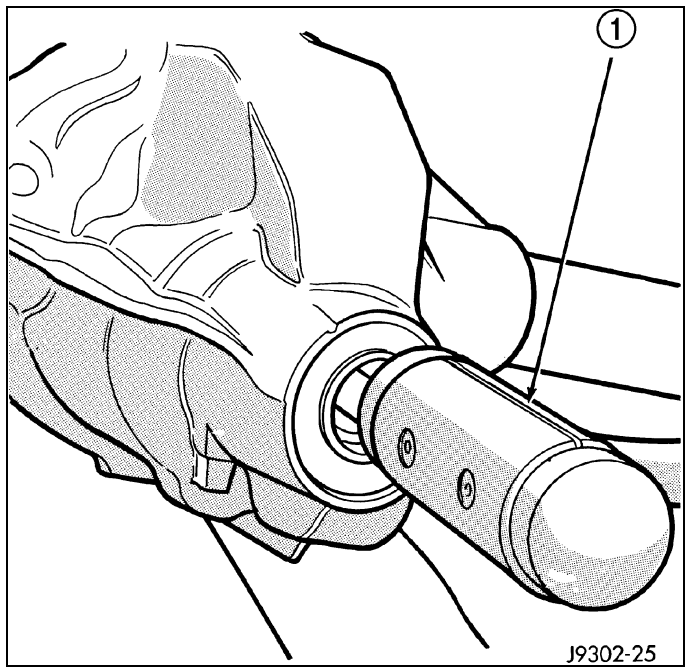

15. Remove front pinion bearing cup with Remover C10258 (1) and Handle C-4171 (2).

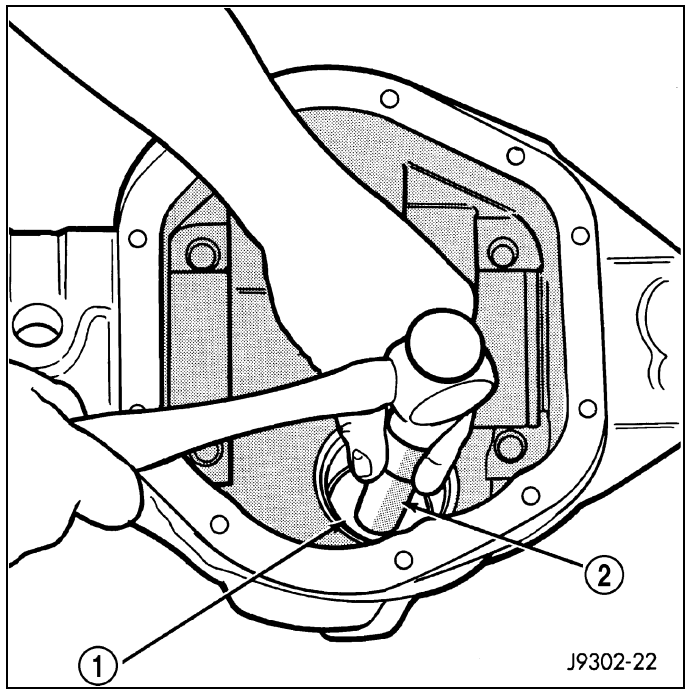

16. Remove rear pinion bearing cup from housing with Remover C-4309A (1) and Handle C-4171 (2).

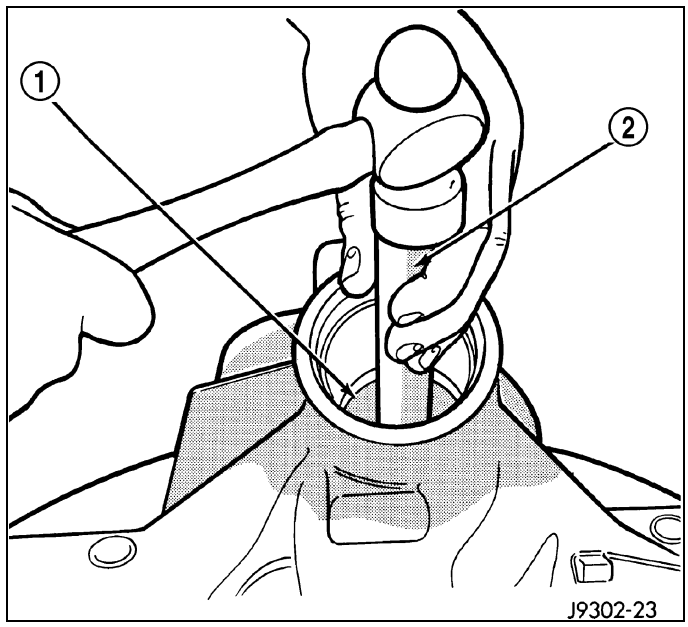

17. Remove collapsible spacer (1) from the pinion shaft.

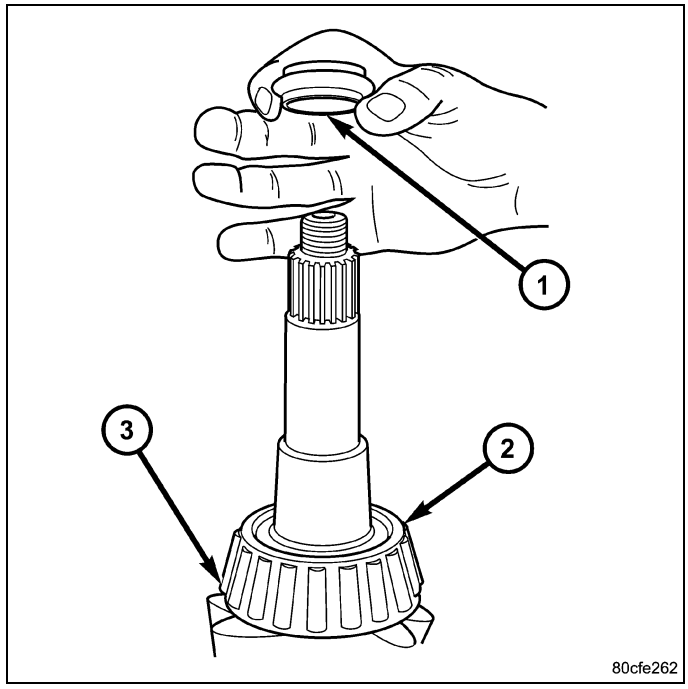

18. Remove rear pinion bearing from the pinion shaft (4) with Puller C-293-PA (1) and Adapters C-293-37 (3).

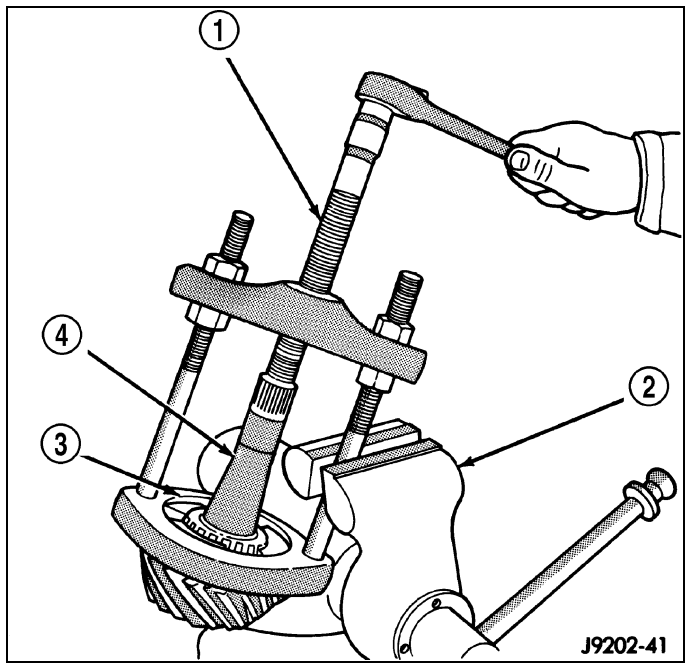

19. Remove pinion depth shim (1) from the pinion shaft (2) and record shim thickness.

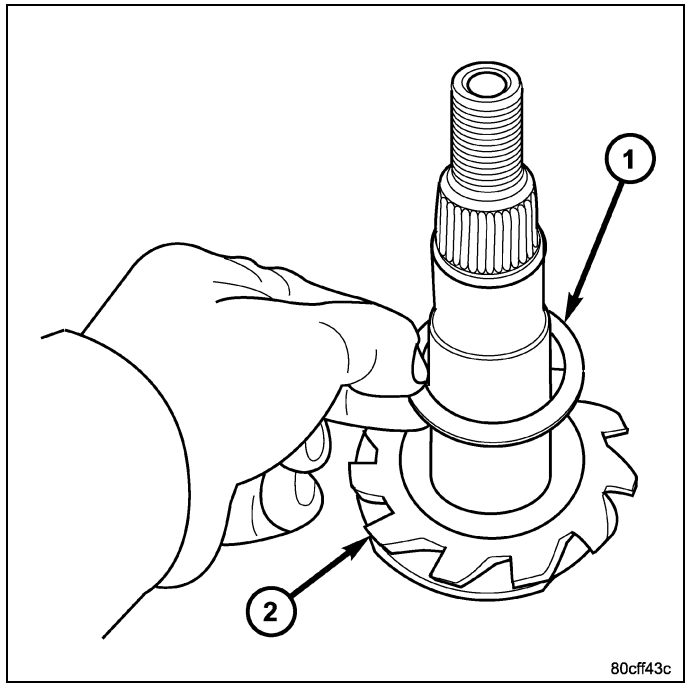

Installation

NOTE: The ring gear and pinion are serviced in a matched set. Do not replace one gear without replacing the other matching gear. If ring and pinion gears or bearings are replaced, Refer to Adjustments for Pinion Gear Depth Setting.

1. Install rear pinion bearing cup with Installer C-4310 (1) and Handle C-4171 (2) and verify cup is seated.

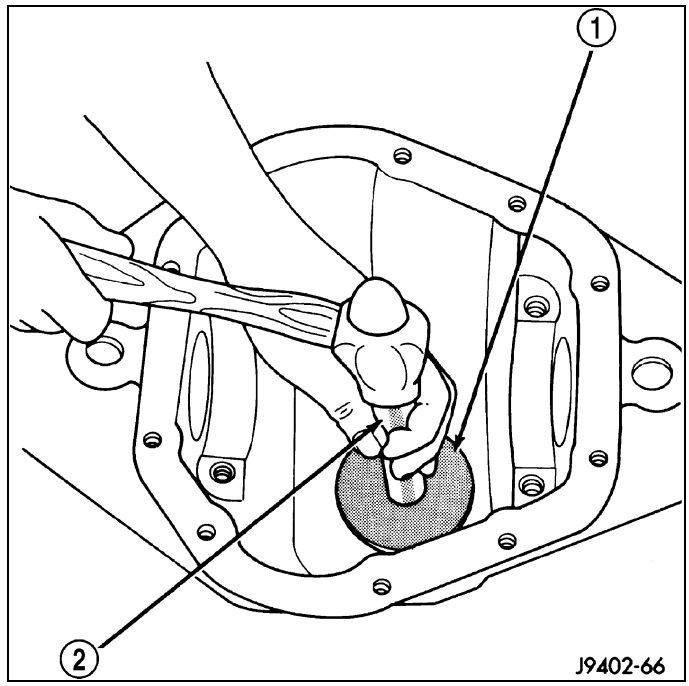

2. Install front pinion bearing cup with Installer D-129 (1) and Handle C-4171 (2) and verify cup is seated.
3. Lubricate and install front pinion bearing into the housing.

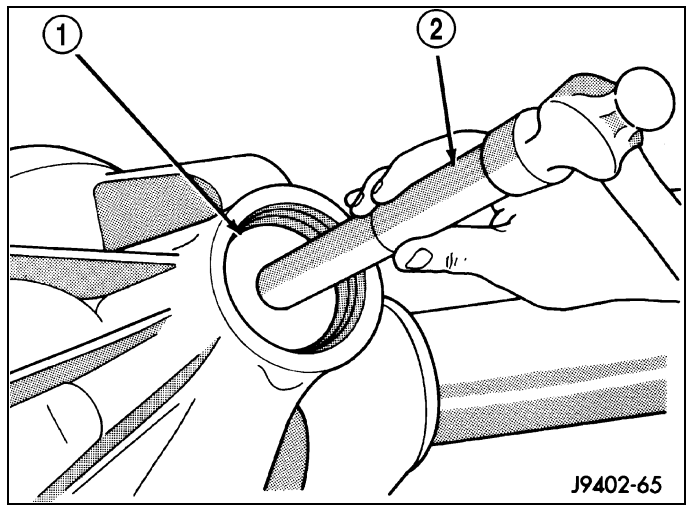

4. Apply a light coating of gear lubricant on the lip of pinion seal. Install seal with Installer C-4076-B (3) and Handle C-4735 (1).

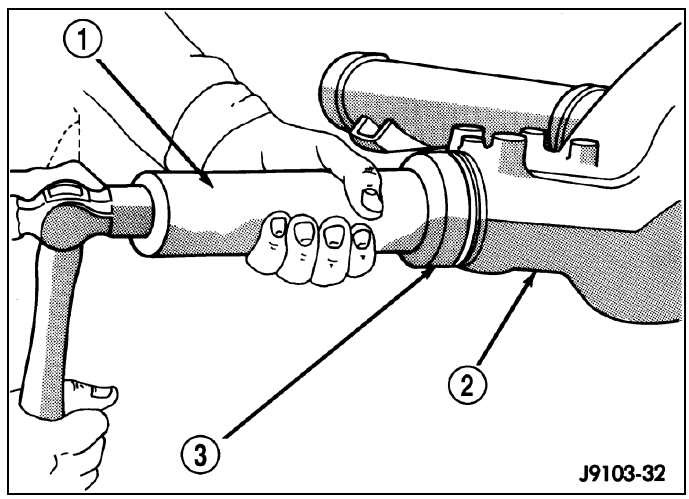

5. Install pinion depth shim (1) on the pinion gear shaft (2).

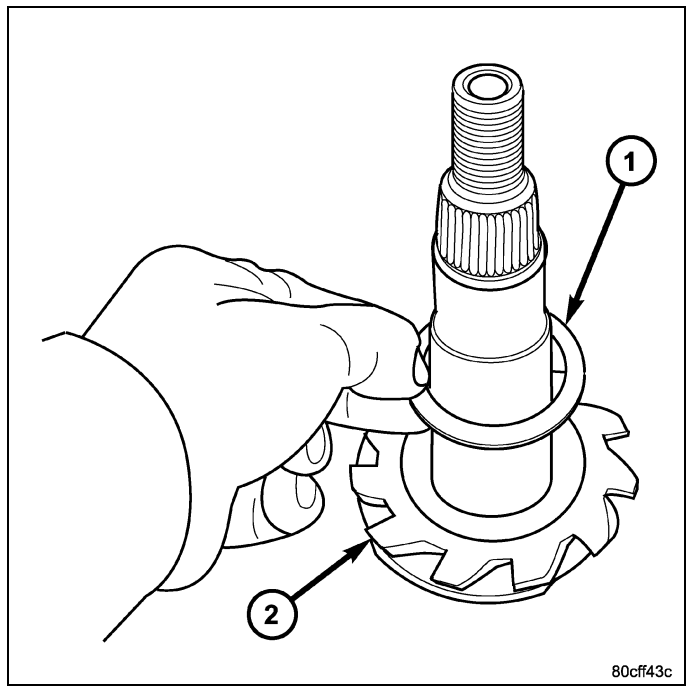

6. Install rear bearing (4) on the pinion (3) with Installer C-3095-A (2) and a press (1).

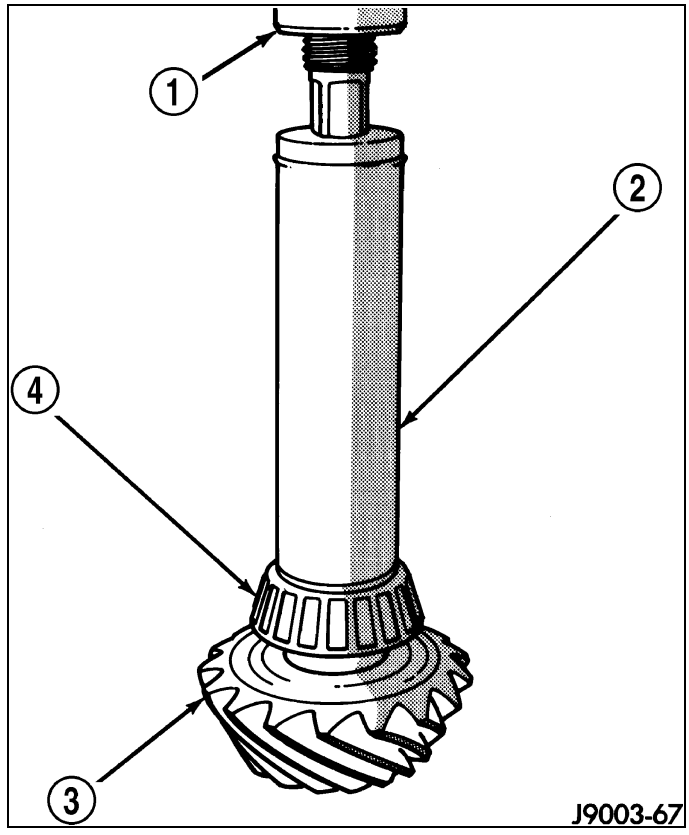

7. Install a **new** collapsible spacer (1) on the pinion shaft.
8. Lubricate rear pinion bearing and install pinion gear into the housing.
9. Install companion flange with Installer C-3718 and Holder 6719A.

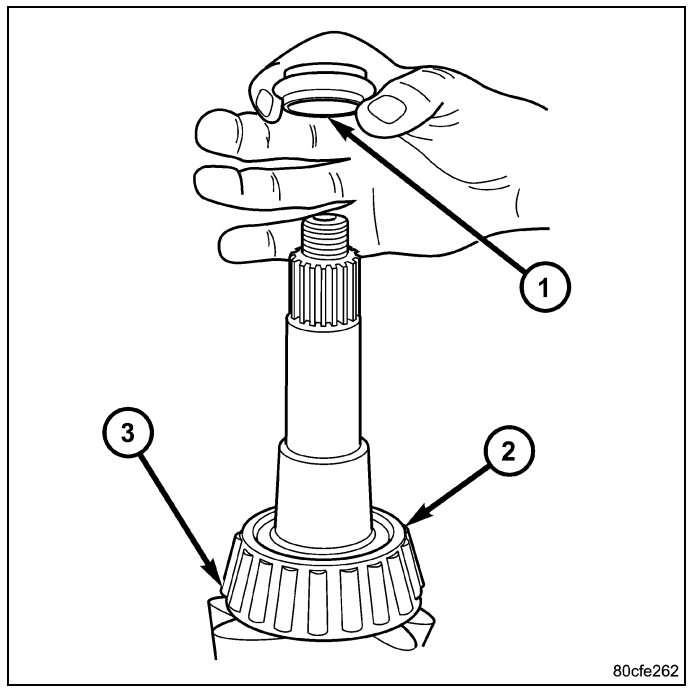

10. Install bolts into two of the threaded holes in the companion flange 180° apart.
11. Position Holder 6719A (2) against the companion flange and install a bolt and washer into one of the remaining threaded holes. Tighten the bolts so the Holder 6719A is held to the flange.
12. Install pinion washer and a **new** pinion nut. The convex side of the washer must face outward.
13. Hold companion flange with Holder 6719A (2) and tighten pinion nut with a torque wrench (3) to 285 N·m (210 ft. lbs.).

NOTE: Do not exceed minimum torque 285 N·m (210 ft. lbs.) at this point.

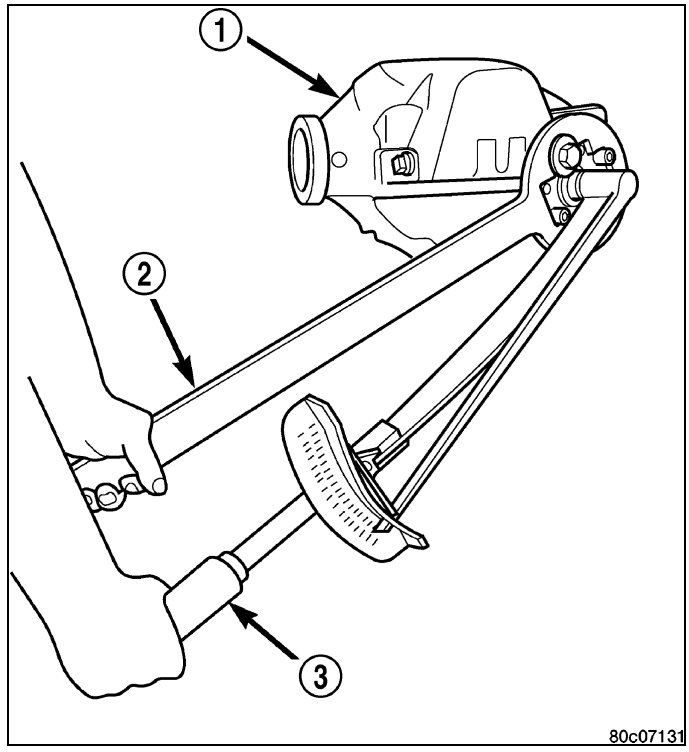

14. Rotate pinion several times to seat pinion bearings.
15. Measure pinion torque to rotate (1) with an inch pound torque wrench (2). Measure pinion rotating torque frequently to avoid over-crushing the collapsible spacer.

Pinion Torque To Rotate is:

- **Original Bearings:** 1 - 2.25 N·m (10 - 20 in. lbs.)
- **New Bearings:** 1.7 - 4 N·m (15 - 35 in. lbs.)

NOTE: If pinion torque to rotate is low, tighten pinion nut in 6.8 N·m (5 ft. lbs.) increments until pinion torque to rotate is achieved.

CAUTION: Never loosen pinion nut to decrease pinion bearing rotating torque. If pinion torque to rotating is exceeded a new collapsible spacer must be installed. Failure to follow these instruction will damage the axle.

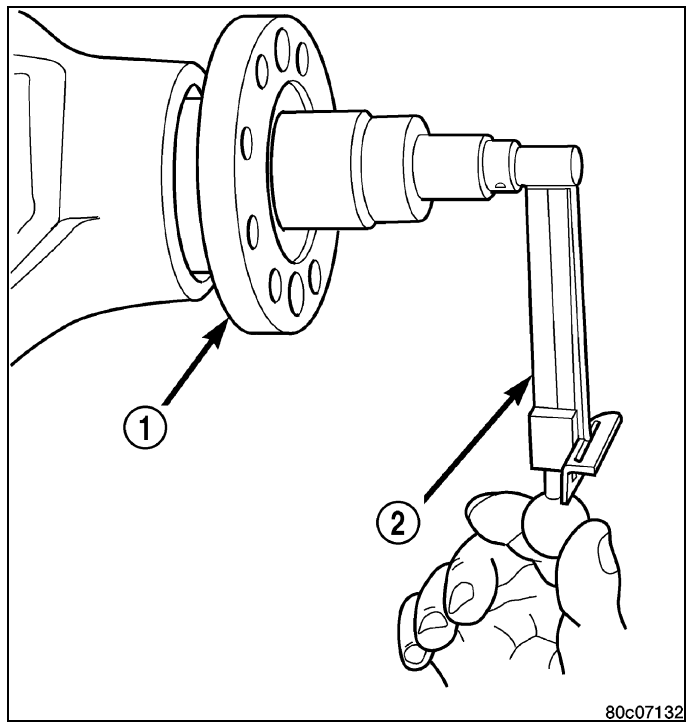

16. Position ring gear (3) on the differential case (4) and start two ring gear bolts (2). This will provide case-to-ring gear bolt hole alignment.
17. Invert the differential case in the vise.
18. Install **new** ring gear bolts and alternately tighten to 156 N·m (115 ft. lbs.).

CAUTION: Never reuse the ring gear bolts. Failure to follow these instruction will result in damage.

19. Install differential in housing and verify gear mesh, backlash and contact pattern.

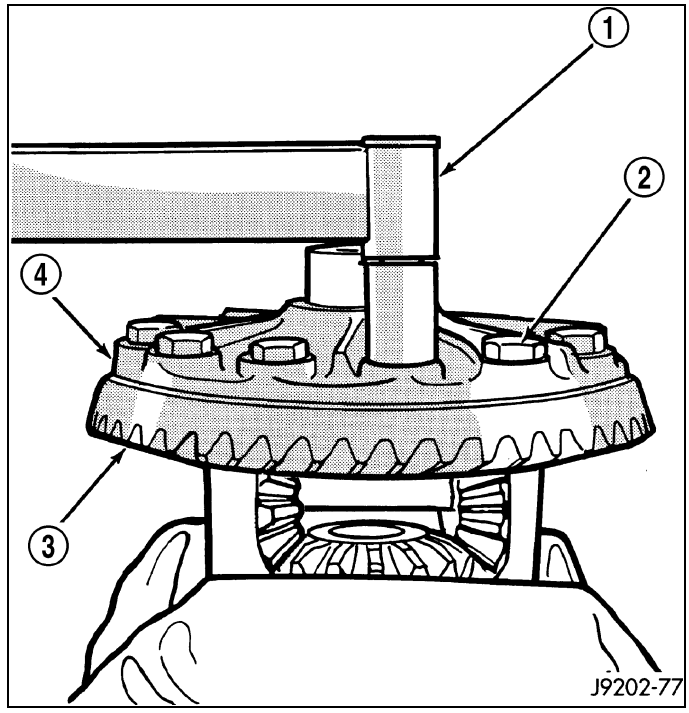

SEAL, Axle Drive Shaft

Removal

1. Remove axle shaft.
2. Remove axle shaft seal (1) from the axle tube with a seal puller.

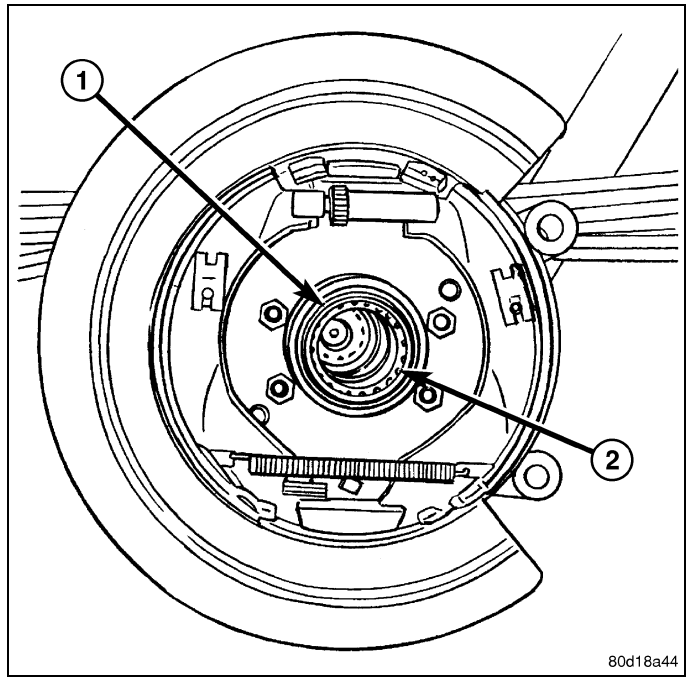

Installation

1. Wipe the axle tube bore clean. Remove any old sealer or burrs from the tube.
2. Coat the lip of the **new** seal with axle lubricant and install a seal with Installer C-4076-B and Handle C-4735.

NOTE: When tool contacts the axle tube, the seal is installed to the correct depth.

3. Install the axle shaft (1).
4. Install differential cover and fill with gear lubricant to the bottom of the fill plug hole.

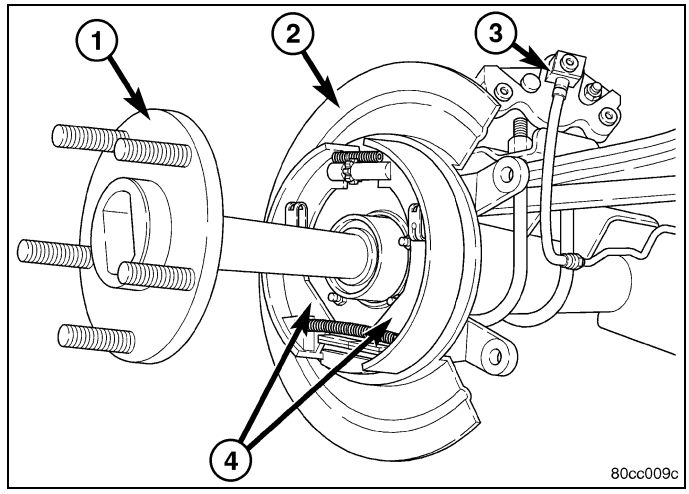

SEAL, Drive Pinion

Removal

1. Mark companion flange and pinion shaft for installation reference.
2. Remove drive shaft from the companion flange.
3. Remove the brake rotors to prevent any drag.
4. Rotate companion flange three or four times.
5. Record pinion torque to rotating (1) with an inch pound torque wrench (2).

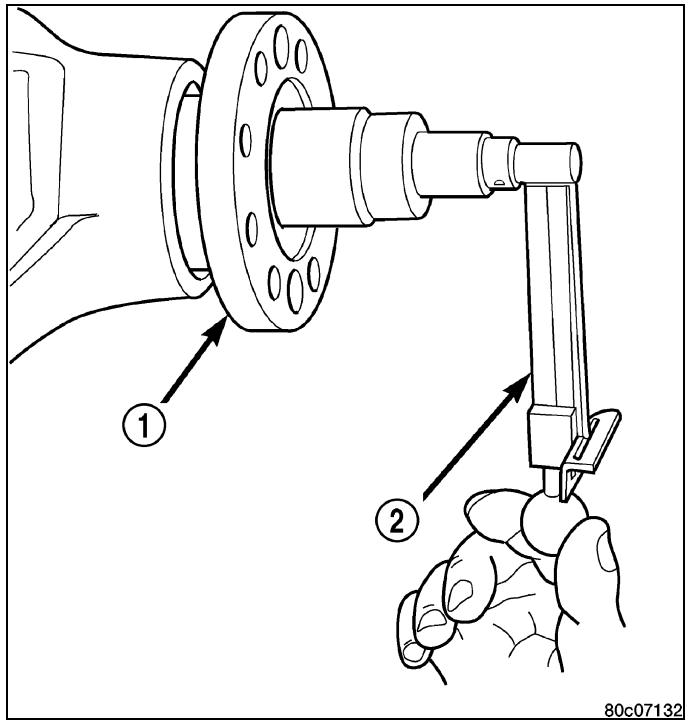

6. Install two bolts into the companion flange threaded holes, 180° apart. Position Holder, Yoke 6719A against the companion flange and install and tighten two bolts and washers into the remaining holes.
7. Hold the companion flange with Holder, Yoke 6719A and remove pinion nut.
8. Mark a line across the pinion shaft and flange for installation reference.
9. Remove companion flange with Puller, Companion Flange C-452 (2).
10. Remove pinion seal with seal puller or slide-hammer mounted screw.

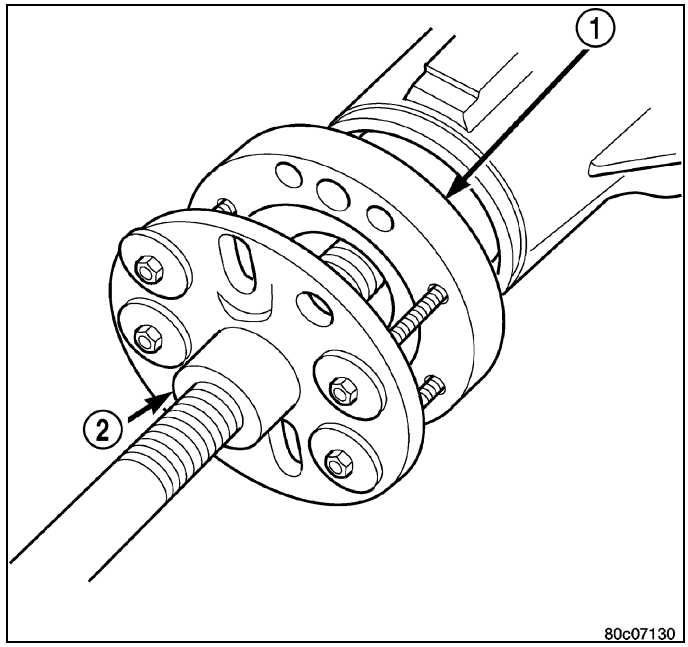

Installation

1. Apply a light coating of gear lubricant on the lip of pinion seal.
2. Install **new** pinion seal (3) with Handle, Driver C-4735 and Installer, Seal C-4076-B (1).

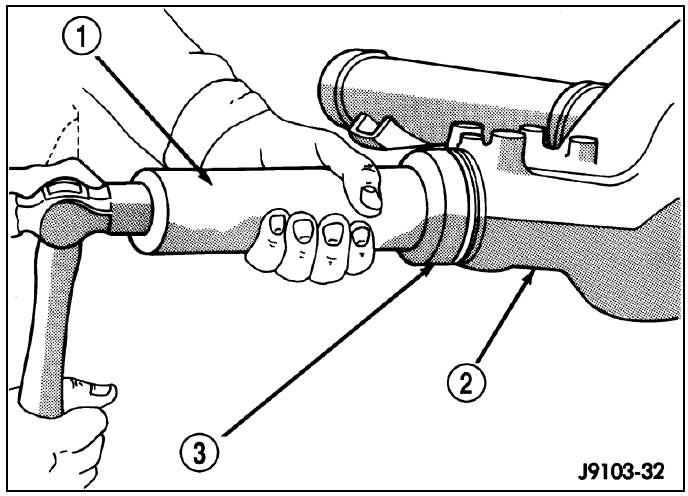

3. Install flange on the pinion shaft with the reference marks aligned.
4. Install two bolts into the threaded holes in the companion flange, 180° apart.
5. Position Holder, Yoke 6719A (2) against the companion flange and install a bolt and washer into one of the remaining threaded holes. Tighten the bolts so holder is held to the flange.
6. Align marks on pinion and companion flange and install on pinion shaft with Installer, Flange C-3718 and Holder, Yoke 6719A.
7. Install a **new** pinion nut. The convex side of the washer must face outward.
8. Hold companion flange with Holder, Yoke 6719A (2) and tighten pinion nut with a torque wrench (3) to 285 N·m (210 ft. lbs.).

NOTE: Do not exceed the minimum torque 285 N·m (210 ft. lbs.) when installing the pinion nut at this point.

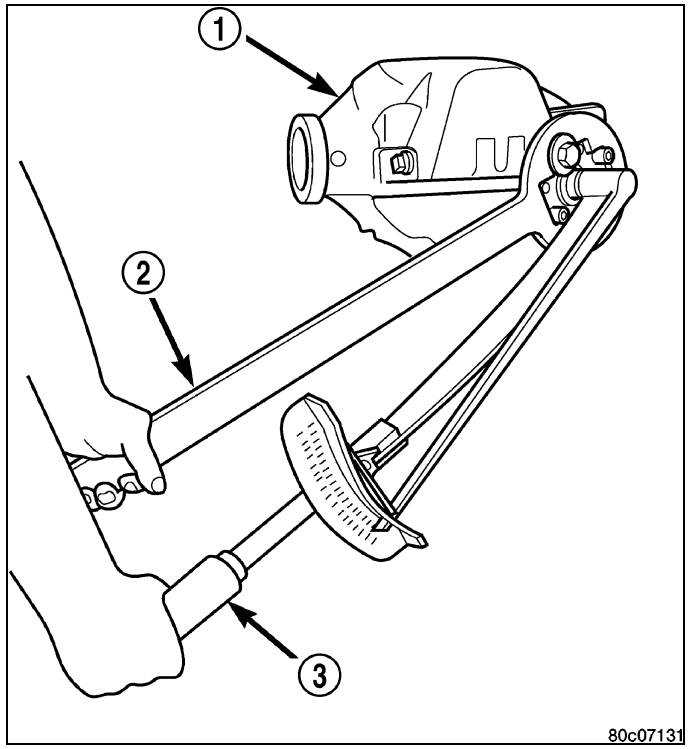

9. Rotate pinion several times to ensure pinion bearings are seated.
10. Measure pinion torque to rotate (1) with an inch pound torque wrench (2). Pinion torque to rotate should be equal to recorded reading plus an additional 0.56 N·m (5 in. lbs.).

If pinion torque to rotate is low, tighten pinion nut in 6.8 N·m (5 ft. lbs.) increments until pinion torque to rotating is achieved.

CAUTION: Never loosen pinion nut to decrease pinion bearing rotating torque. If pinion torque to rotating is exceeded, a new collapsible spacer must be installed. Failure to follow these instructions will result in damage to the axle.

11. Align marks and install drive shaft.
12. Install rear brake rotors components.

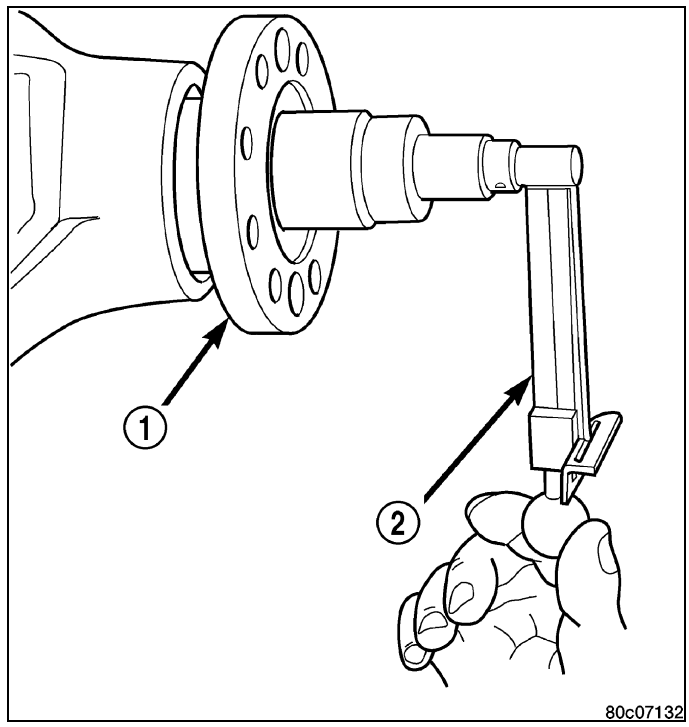

SHAFT, Axle

Removal

1. With vehicle in neutral, position vehicle on hoist.
2. Remove wheel and tire assembly.
3. Remove brake caliper (3), adapter (2) and rotor (1).

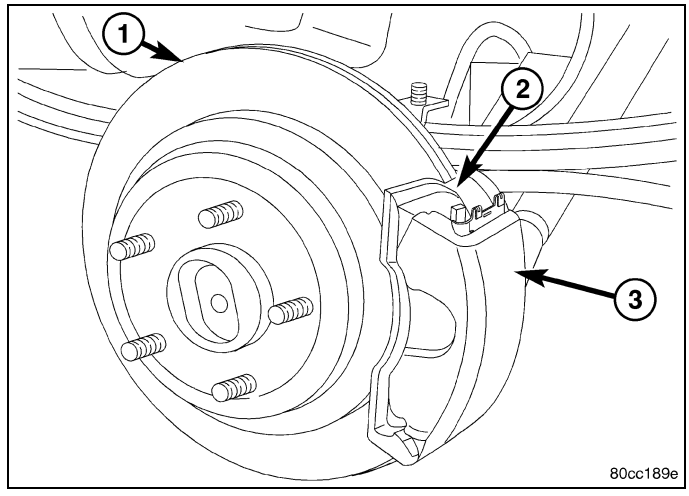

4. Remove differential housing cover and drain lubricant.
5. Rotate differential case so pinion mate shaft lock screw is accessible. Remove lock screw (1) and pinion mate shaft (2) from differential case.

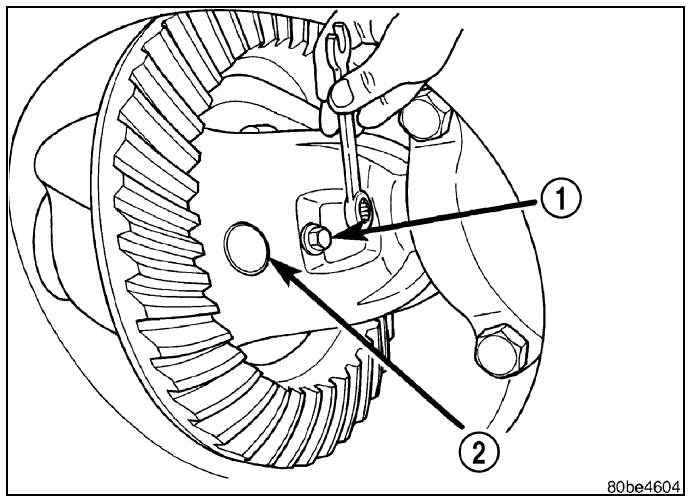

6. Push axle shaft (2) inward and remove C-lock (1) from the axle shaft.

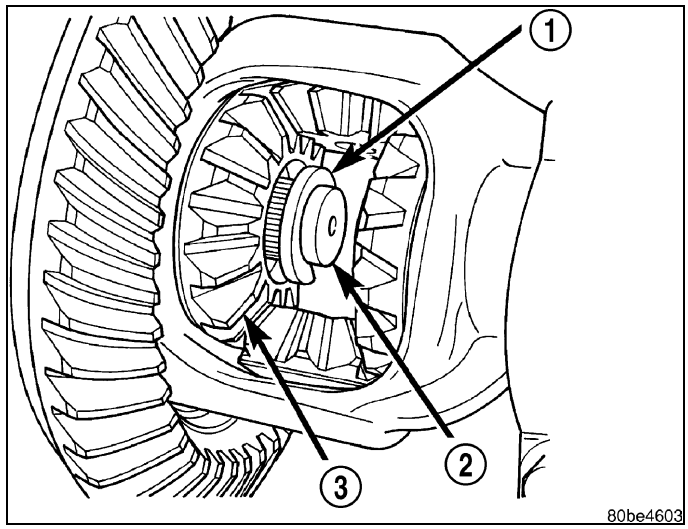

7. Remove axle shaft (1) carefully to prevent damage to the shaft bearing and seal in the axle tube.

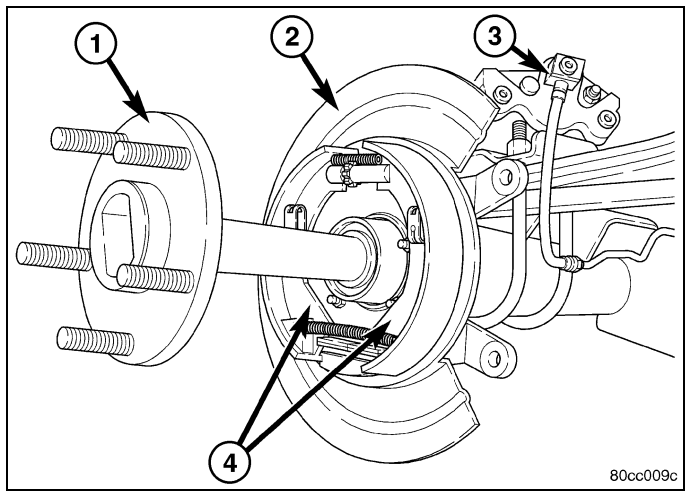

Installation

1. Lubricate bearing bore and seal lip with gear lubricant.
2. Install axle shaft and engage into side gear splines.

NOTE: Use care to prevent shaft splines from damaging axle shaft seal.

3. Insert C-lock (1) in end of axle shaft (2) then push axle shaft outward to seat C-lock in side gear (3).

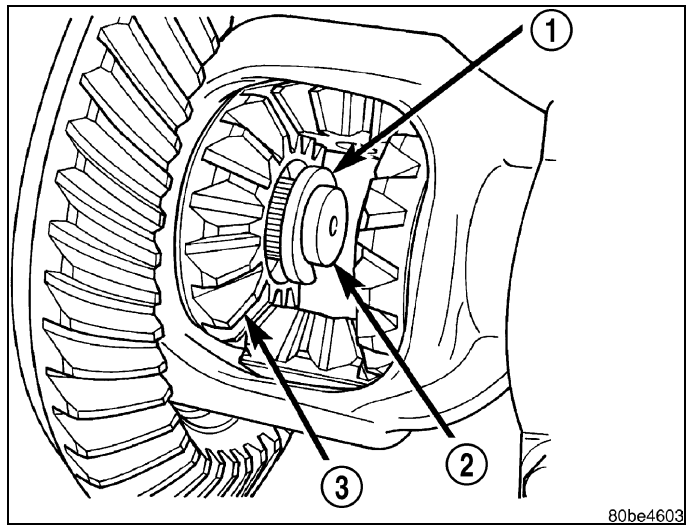

4. Insert pinion shaft into differential case and through thrust washers and differential pinions.
5. Align hole in pinion mate shaft (2) with hole in the differential case and install lock screw (1) with Loctite® on the threads. Tighten lock screw to 11 N·m (8 ft. lbs.).
6. Install differential cover and fill with gear lubricant to the bottom of the fill plug hole.
7. Install brake rotor, caliper adapter and caliper.
8. Install wheel and tire.

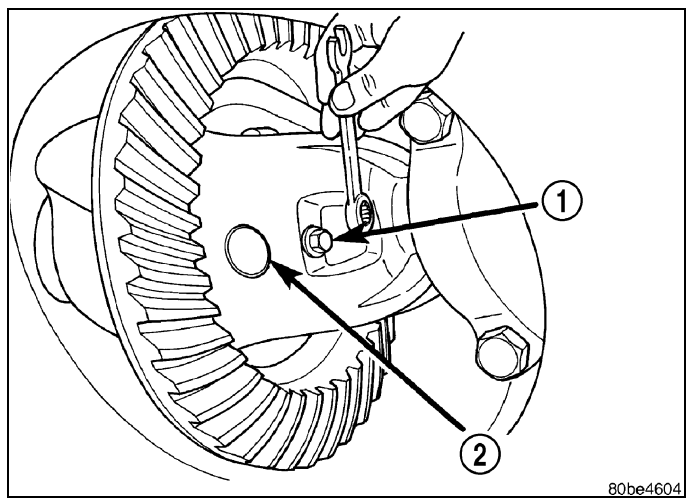

VEHICLE QUICK REFERENCE

TABLE OF CONTENTS

page

VEHICLE QUICK REFERENCE
CAPACITIES AND RECOMMENDED FLUIDS
SPECIFICATIONS 2
DESCRIPTION
A/C REFRIGERANT 6
AUTOMATIC TRANSMISSION FLUID 6
BRAKE FLUID 6
ENGINE COOLANT 6
ENGINE OIL. 7
FLUID TYPES. 9
LUBRICANT RECOMMENDATIONS 9
POWER STEERING FLUID 10
TRANSFER CASE - ALL EXCEPT NV246 . . 10
TRANSFER CASE - NV246 10
OPERATION 10
FUSE LOCATIONS AND TYPES
SPECIFICATIONS 11

page

HOISTING
STANDARD PROCEDURE 13
JUMP STARTING
STANDARD PROCEDURE 15
MAINTENANCE SCHEDULES
INSPECTION. 16
DESCRIPTION. 16
REPLACEMENT BULBS
SPECIFICATIONS
REPLACEMENT BULBS - EXTERIOR 22
REPLACEMENT BULBS - INTERIOR 23
TOWING
SPECIFICATIONS 23
STANDARD PROCEDURE 28

Capacities and Recommended Fluids

Specifications

ENGINE

Description	Type	Part Number	Capacities	
			U.S.	Metric
Cooling System				
♦ Engine Coolant (3.7L and 4.7L Engines)	MOPAR® Antifreeze/Coolant 5 Year/100,000 Mile Formula HOAT (Hybrid Organic Additive Technology)	1 Gallon - 05066386AA	14 Quarts	13 Liters
♦ Engine Coolant (5.7L Engines)	MOPAR® Antifreeze/Coolant 5 Year/100,000 Mile Formula HOAT (Hybrid Organic Additive Technology)	1 Gallon - 05066386AA	16 Quarts	15 Liters
Engine Oil with Filter				
Engine Oil (3.7L Engines)	Use API Certified SAE 5W-20 Engine Oil, meeting the requirements of Chrysler Material Standard MS-6395. Refer to your engine oil filler cap for correct SAE grade.	1 Quart - 04761872AC 5 Quarts - 04761851AD	5 Quarts	4.7 Liters
♦♦ Engine Oil (4.7L Engines)	MOPAR® API Certified SAE 5W-20 engine oil, meeting the requirements of Chrysler Material Standard MS-6395.	1 Quart - 04761872AC 5 Quarts - 04761851AD	6 Quarts	5.7 Liters
♦♦ Engine Oil (5.7L Engines)	MOPAR® API Certified SAE 5W-20 engine oil, meeting the requirements of Chrysler Material Standard MS-6395.	1 Quart - 04761872AC 5 Quarts - 04761851AD	7 Quarts	6.6 Liters
Engine Oil Filter (3.7)	MOPAR® Engine Oil Filter	05184231AA	N/A	N/A
Engine Oil Filter (4.7/5.7L)	MOPAR® Engine Oil Filter	04884899AB	N/A	N/A
Fuel (approximate)				

ENGINE, continued

Description	Type	Part Number	Capacities	
			U.S.	Metric
Fuel Selection (3.7L and 4.7L Engines)	87 Octane Regular Cab Shortbed/Crew Quad Cab Models	N/A	26 Gallons	98 Liters
	87 Octane Regular Cab Longbed/Crew Quad Cab Models (Optional)	N/A	32 Gallons	121 Liters
Fuel Selection (5.7L Engine)	87 Octane Acceptable - 89 Octane Recommended Regular Cab Shortbed/Crew Quad Cab Models	N/A	26 Gallons	98 Liters
	87 Octane Acceptable - 89 Octane Recommended Regular Cab Longbed/Crew Quad Cab Models (Optional)	N/A	32 Gallons	121 Liters
A/C Refrigerant System				
A/C Refrigerant System	R-134a	82300101AB	1.604 Pounds	0.728 Kilograms

♦ System fill capacity includes heater and coolant recovery bottle filled to MAX level.

♦♦ SAE 5W-30 engine oil approved to MB 229.31 or MB 229.51 may be used when SAE 5W-20 engine oil is not available.

CAUTION: Nominal refill capacities are shown. A variation may be observed from vehicle to vehicle due to manufacturing tolerance and refill procedure.

SPARK PLUGS

Description	Type	Part Number	Gap	
			U.S.	Metric
Spark Plugs (3.7L Engine)	NGK® Nickel Spark Plug	56028356AA (ZFR6F-11G)	0.044 in	1.10 mm

SPARK PLUGS, continued

Description	Type	Part Number	Gap	
			U.S.	Metric
Spark Plugs (4.7L Engine)	BOSCH® Nickel Yttrium Spark Plug (intake side)	05149050AB (FR9 TE2)	0.039 in	1.00 mm
	BOSCH® Iridium / Platinum Spark Plug (exhaust side)	05149888AA (FR8 T1332)	0.050 in	1.27 mm
Spark Plugs (5.7L Engine)	NGK® Yttrium Spark Plug	05149177AB (LZFR5C-11G)	0.043 in	01.10 mm

TRANSMISSION

Description	Type	Part Number	Capacities	
			U.S.	Metric
Automatic				
42RLE - Service Fill	MOPAR® ATF+4 Automatic Transmission Fluid	1 Quart - 05013457AA 1 Gallon - 05013458AA	4.0 Quarts	3.8 Liters
♦ 42RLE - Overhaul Fill	MOPAR® ATF+4 Automatic Transmission Fluid	1 Quart - 05013457AA 1 Gallon - 05013458AA	8.8 Quarts	8.3 Liters
45RFE/545RFE - Service Fill	MOPAR® ATF+4 Automatic Transmission Fluid	1 Quart - 05013457AA 1 Gallon - 05013458AA	4X2 - 5.5 Quarts	4X2 - 5.2 Liters
		1 Quart - 05013457AA 1 Gallon - 05013458AA	4X4 -6.5 Quarts	4X4 - 6.2 Liters
♦ 45RFE/545RFE - Overhaul Fill	MOPAR® ATF+4 Automatic Transmission Fluid	1 Quart - 05013457AA 1 Gallon - 05013458AA	14.8–16.9 Quarts	14-16 Liters
♦ Dry fill capacity. Depending on type and size of internal cooler, length and inside diameter of cooler lines, or use of an auxiliary cooler, these figures may vary. Refer to the appropriate service information for the correct procedures.				
CAUTION: Nominal refill capacities are shown. A variation may be observed from vehicle to vehicle due to manufacturing tolerance and refill procedure.				

TRANSFER CASE

Description	Type	Part Number	Capacities	
			U.S.	Metric
♦ NV243	MOPAR® ATF+4 Automatic Transmission Fluid	1 Quart - 05013457AA 1 Gallon - 05013458AA	3.4 Pints	1.6 Liters
♦ NV246	MOPAR® Transfer Case Lubricant	1 Quart - 05179014AA	4.0 Pints	1.9 Liters

♦ Approximate dry fill or fill to bottom edge of fill plug hole.

CAUTION: Nominal refill capacities are shown. A variation may be observed from vehicle to vehicle due to manufacturing tolerance and refill procedure.

CHASSIS

Description	Type	Part Number	Capacities	
			U.S.	Metric
Axles (Front)				
C205FD Front Axle	MOPAR® Synthetic Gear Lubricant SAE 75W-90	1 Quart - 05010320AA	3.4 Pints	1.6 Liters
Axles (Rear)				
♦ 9.25 Rear Axle	MOPAR® Synthetic Gear Lubricant SAE 75W-140	1 Quart - 04874469AA	4.0 Pints	1.9 Liters
Chassis Systems				
♦♦ Brake Master Cylinder	MOPAR® Brake Fluid DOT 3, SAE J1703.	12 oz. Bottle - 04318080AB 32 oz. Bottle - 04318081AB	N/A	N/A
♦♦♦Power Steering Reservoir	MOPAR® Power Steering Fluid +4	1 Quart - 05013457AA	N/A	N/A

♦ Limited-Slip Rear Axles require the addition of 118 ml (4 oz.) MOPAR® Limited Slip Additive.

♦♦ If MOPAR® Brake Fluid DOT 3 is not available, then MOPAR® Brake and Clutch Fluid DOT 4 (04549625AC), is acceptable.

♦♦♦ If MOPAR® Power Steering Fluid +4 is not available, then MOPAR® ATF +4 Automatic Transmission Fluid (05166226AA), is acceptable.

CAUTION: Nominal refill capacities are shown. A variation may be observed from vehicle to vehicle due to manufacturing tolerance and refill procedure.

Description

A/C REFRIGERANT

The refrigerant used in this air conditioning system is a HydroFluoroCarbon (HFC), type R-134a. Unlike R-12, which is a ChloroFluoroCarbon (CFC), R-134a refrigerant does not contain ozone-depleting chlorine. R-134a refrigerant is a nontoxic, nonflammable, clear and colorless liquefied gas.

CAUTION: R-134a refrigerant is not compatible with R-12 refrigerant in an A/C system. Even a small amount of R-12 refrigerant added to an R-134a refrigerant system will cause A/C compressor failure.

The A/C refrigerant system is filled-for-life at the factory and requires no regular maintenance. Although not required at specific intervals, the charge level should be checked if system performance deteriorates or if a noise or leak is suspected (Refer to 24 - Heating and Air Conditioning - Diagnosis and Testing).

AUTOMATIC TRANSMISSION FLUID

AUTOMATIC TRANSMISSION

NOTE: Refer to Service Procedures in this group for fluid level checking procedures.

Mopar® ATF +4, Automatic Transmission Fluid is the recommended fluid for Chrysler automatic transmissions.

Dexron II fluid IS NOT recommended. Clutch chatter can result from the use of improper fluid.

Mopar® ATF +4, Automatic Transmission Fluid when new is red in color. The ATF is dyed red so it can be identified from other fluids used in the vehicle such as engine oil or antifreeze. The red color is not permanent and is not an indicator of fluid condition. As the vehicle is driven, the ATF will begin to look darker in color and may eventually become brown. **This is normal.** ATF+4 also has a unique odor that may change with age. Consequently, odor and color cannot be used to indicate the fluid condition or the need for a fluid change.

FLUID ADDITIVES

Chrysler strongly recommends against the addition of any fluids to the transmission, other than those automatic transmission fluids listed above. Exceptions to this policy are the use of special dyes to aid in detecting fluid leaks.

Various “special” additives and supplements exist that claim to improve shift feel and/or quality. These additives and others also claim to improve converter clutch operation and inhibit overheating, oxidation, varnish, and sludge. These claims have not been supported to the satisfaction of Chrysler and these additives **must not be used.** The use of transmission “sealers” should also be avoided, since they may adversely affect the integrity of transmission seals.

BRAKE FLUID

The brake fluid used in this vehicle must conform to DOT 3 specifications and SAE J1703 standards. No other type of brake fluid is recommended or approved for usage in the vehicle brake system. Use only Mopar brake fluid or an equivalent from a tightly sealed container.

CAUTION: Never use reclaimed brake fluid or fluid from a container which has been left open. An open container of brake fluid will absorb moisture from the air and contaminate the fluid.

CAUTION: Never use any type of a petroleum-based fluid in the brake hydraulic system. Use of such type fluids will result in seal damage of the vehicle brake hydraulic system causing a failure of the vehicle brake system. Petroleum based fluids would be items such as engine oil, transmission fluid, power steering fluid, etc.

ENGINE COOLANT

WARNING: Antifreeze is an ethylene-glycol base coolant and is harmful if swallowed or inhaled. If swallowed, drink two glasses of water and induce vomiting. If inhaled, move to fresh air area. Seek medical attention immediately. Do not store in open or unmarked containers. Wash skin and clothing thoroughly after coming in contact with ethylene-glycol. Keep out of reach of children. Dispose of glycol base coolant properly, contact your dealer or government agency for location of collection center in your area. Do not open a cooling system when the engine is at operating temperature or hot under pressure, personal injury can result. Avoid radiator cooling fan when engine compartment related service is performed, personal injury can result.

CAUTION: Use of Propylene-Glycol based coolants is not recommended, as they provide less freeze protection and less corrosion protection.

The cooling system is designed around the coolant. The coolant must accept heat from engine metal, in the cylinder head area near the exhaust valves and engine block. Then coolant carries the heat to the radiator where the tube/fin radiator can transfer the heat to the air.

The use of aluminum cylinder blocks, cylinder heads, and water pumps requires special corrosion protection. Mopar® Antifreeze/Coolant, 5 Year/100,000 Mile Formula (MS-9769), or the equivalent ethylene-glycol base coolant with organic corrosion inhibitors (called HOAT, for Hybrid Organic Additive Technology) is recommended. This coolant offers the best engine cooling without corrosion when mixed with 50% ethylene-glycol and 50% distilled water to obtain a freeze point of -37°C (-35°F). If it loses color or becomes contaminated, drain, flush, and replace with fresh properly mixed coolant solution.

CAUTION: Mopar® Antifreeze/Coolant, 5 Year/100,000 Mile Formula (MS-9769) may not be mixed with any other type of antifreeze. Mixing of coolants other than specified (non-HOAT or other HOAT) may result in engine damage that may not be covered under the new vehicle warranty, and decreased corrosion protection.

COOLANT PERFORMANCE

The required ethylene-glycol and water mixture depends upon climate and vehicle operating conditions. The coolant performance of various mixtures follows:

Pure Water- Water can absorb more heat than a mixture of water and ethylene-glycol. This is for purpose of heat transfer only. Water also freezes at a higher temperature and allows corrosion.

100 percent Ethylene-Glycol - The corrosion inhibiting additives in ethylene-glycol need the presence of water to dissolve. Without water, additives form deposits in system. These act as insulation causing temperature to rise to as high as 149°C (300°F). This temperature is hot enough to melt plastic. The increased temperature can result in sever engine damage. In addition, 100 percent ethylene-glycol freezes at -22°C (-8°F).

50/50 Ethylene-Glycol and Water - Is the recommended mixture, it provides protection against freezing to -37°C (-34°F). The antifreeze concentration **must always** be a minimum of 44 percent, year-round in all climates. If percentage is lower, engine parts may be eroded by cavitation. Maximum protection against freezing is provided with a 68 percent antifreeze concentration, which prevents freezing down to -67.7°C (-90°F). A higher percentage will freeze at a warmer temperature. Also, a higher percentage of antifreeze can cause the engine to overheat because specific heat of antifreeze is lower than that of water.

CAUTION: Richer antifreeze mixtures cannot be measured with normal field equipment and can cause problems associated with 100 percent ethylene-glycol.

ENGINE OIL

WARNING: New or used engine oil can be irritating to the skin. Avoid prolonged or repeated skin contact with engine oil. Contaminants in used engine oil, caused by internal combustion, can be hazardous to your health. Thoroughly wash exposed skin with soap and water. Do not wash skin with gasoline, diesel fuel, thinner, or solvents, health problems can result. Do not pollute, dispose of used engine oil properly. Contact your dealer or government agency for location of collection center in your area.

Only lubricants bearing designations defined by the following organization should be used.

- Society of Automotive Engineers (SAE)
- American Petroleum Institute (API)
- National Lubricating Grease Institute (NLGI)
- Association des Constructeurs Européens d' Automobiles (European Automobile Manufacturers Association) (ACEA)

API SERVICE GRADE CERTIFIED

Use an engine oil that is API Certified. MOPAR® provides engine oils, that meet or exceed this requirement.

SAE VISCOSITY

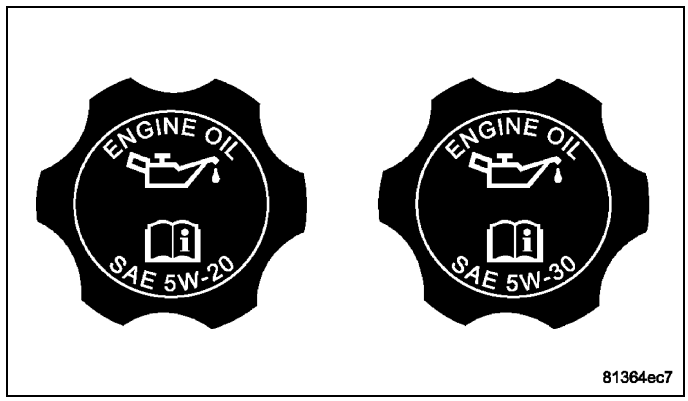

An SAE viscosity grade is used to specify the viscosity of engine oil. Use only engine oils with multiple viscosities such as 5W-20 or 5W-30. These are specified with a dual SAE viscosity grade which indicates the cold-to-hot temperature viscosity range. Select an engine oil that is best suited to your particular temperature range and variation. **For 3.7L/4.7L engines SAE 5W-20 engine oil is recommended for all operating temperatures. For 5.7L engines SAE 5W-20 engine oil is recommended for all operating temperatures.These engine oils improve low temperature starting and vehicle fuel economy. Refer to your engine oil filler cap for the recommended engine oil viscosity for your vehicle. Vehicles with 5.7L engines equipped with Multiple Displacement System (MDS) must use SAE 5W-20 oil. Failure to do so may result in improper operation of the Multiple Displacement System (MDS). Refer to Multi Displacement System under Starting and Operating for details. Refer to the engine oil filler cap for the recommened engine oil viscosity for each vehicle.**

ACEA Categories

For countries that use the ACEA European Oil Categories for Service Fill Oils, use engine oils that meet the requirements of ACEA A1/B1, A2/B2, or A3/B3.

ENERGY CONSERVING OIL

An Energy Conserving type oil is recommended for gasoline engines. The designation of ENERGY CONSERVING is located on the label of an engine oil container.

CONTAINER IDENTIFICATION

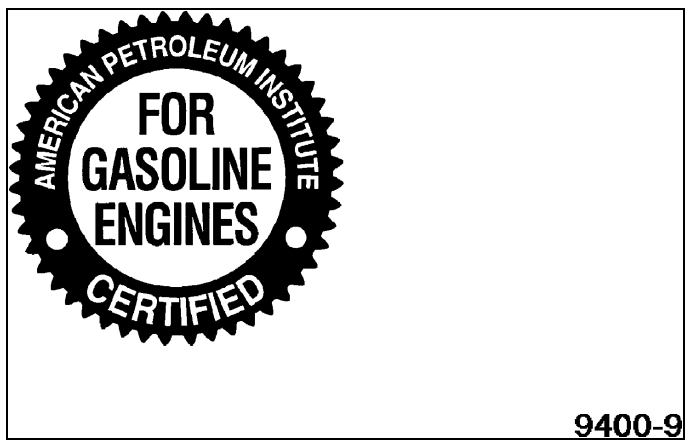

Standard engine oil identification notations have been adopted to aid in the proper selection of engine oil. The identifying notations are located on the front label of engine oil plastic bottles and the top of engine oil cans .

This symbol means that the oil has been certified by the American Petroleum Institute (API). DiamlerChrysler only recommend API Certified engine oils. Use Mopar® engine oil or equivalent.

SYNTHETIC ENGINE OILS

There are a number of engine oils being promoted as either synthetic or semi-synthetic. If you chose to use such a product, use **only** those oils that meet the American Petroleum Institute (API) and SAE viscosity standard. Follow the service schedule that describes your driving type.

ENGINE OIL ADDITIVES/SUPPLEMENTS

The manufacturer **does not recommend** the addition of any engine oil additives/supplements to the specified engine oil. Engine oil additives/supplements should not be used to enhance engine oil performance. Engine oil additives/supplements should not be used to extend engine oil change intervals. No additive is known to be safe for engine durability and can degrade emission components. Additives can contain undesirable materials that harm the long term durability of engines by:

- Doubling the level of phosphorus in the engine oil. The ILSAC (International Lubricant Standard Approval Committee) GF-2 and GF-3 standards require that engine oil contain no more than 0.10% phosphorus to protect the vehicles emissions performance. Addition of engine oil additives/supplements can poison, from the added sulfur and phosphorus, catalysts and hinder efforts to guarantee emissions performance to 80,000 miles.

- Altering the viscosity characteristics of the engine oil so that it no longer meets the requirements of the specified viscosity grade.
- Creating potential for an undesirable additive compatibility interaction in the engine crankcase. Generally it is not desirable to mix additive packages from different suppliers in the crankcase; there have been reports of low temperature engine failures caused by additive package incompatibility with such mixtures.

FLUID TYPES

When service is required, Chrysler Group LLC recommends that only Mopar® brand parts, lubricants and chemicals be used. Mopar® provides the best engineered products for servicing Chrysler Group LLC vehicles.

Only lubricants bearing designations defined by the following organization should be used to service a Chrysler Group LLC vehicle:

- Society of Automotive Engineers (SAE)
- American Petroleum Institute (API)
- National Lubricating Grease Institute (NLGI)
- European Automobile Manufacturers Association (ACEA)

API QUALITY CLASSIFICATION

This symbol on the front of an oil container means that the oil has been certified by the American Petroleum Institute (API) to meet all the lubrication requirements specified by Chrysler Group LLC.

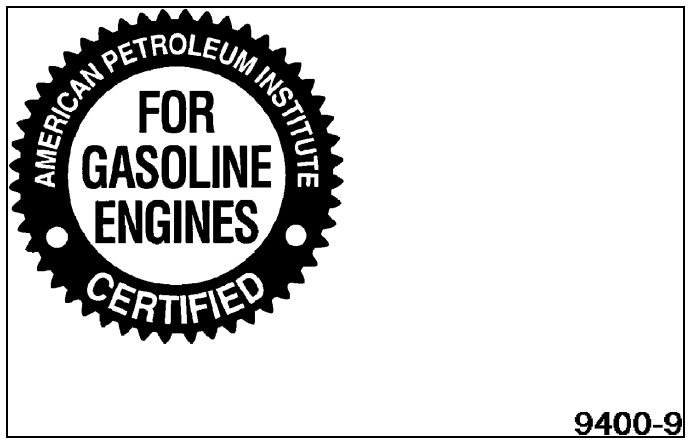

GEAR LUBRICANTS

SAE ratings also apply to multigrade gear lubricants. In addition, API classification defines the lubricant's usage, such as API GL-5 and SAE 75W-90.

LUBRICANT RECOMMENDATIONS

Chassis

Component	Fluid, Lubricant, or Genuine Part
Steering Linkage AND Suspension components (Link Coil Suspension), Prop Shafts AND Yokes, Wheel Bearings	Mopar® Multi-Purpose Lubricant NLGI Grade 2 EP, GC-LB

Body

Component	Fluid, Lubricant, and Genuine Part
Hinges:	
Door AND Hood	Mopar® Engine Oil
Swing Gate	Mopar® Multi-Purpose Lube NLGI Grade 2 EP, GC-LB
Latches: Door, Hood/Safety Catch, Swing Gate	Mopar® Multi-Purpose Lube NLGI Grade 2 EP, GC-LB
Seat Regulator AND Track	Mopar® Multi-Purpose Lube NLGI Grade 2 EP, GC-LB
Lock Cylinders	Mopar® Lock Cylinder Lube

POWER STEERING FLUID

Mopar® ATF +4, Automatic Transmission Fluid is required in the power steering system. Substitute fluids can induce power steering system failure.

Mopar® ATF +4, Automatic Transmission Fluid when new is red in color. The ATF is dyed red so it can be identified from other fluids used in the vehicle such as engine oil or antifreeze. The red color is not permanent and is not an indicator of fluid condition. As the vehicle is driven, the ATF will begin to look darker in color and may eventually become brown. **This is normal.** ATF+4 also has a unique odor that may change with age. Consequently, odor and color cannot be used to indicate the fluid condition or the need for a fluid change.

TRANSFER CASE - ALL EXCEPT NV246

Recommended lubricant for the NV241 GENII, NV271, NV243, NV244 GENII, and NV273 transfer cases is Mopar® ATF +4, Automatic Transmission Fluid.

TRANSFER CASE - NV246

Recommended lubricant for the NV246 transfer case is Mopar® NVG 246 Automatic Transmission Fluid or equivalent.

Recommended lubricant for the NV243 and the MP3022 transfer case is Mopar® ATF +4 Automatic Transmission Fluid or equivalent.

Operation

The automatic transmission fluid is selected based upon several qualities. The fluid must provide a high level of protection for the internal components by providing a lubricating film between adjacent metal components. The fluid must also be thermally stable so that it can maintain a consistent viscosity through a large temperature range. If the viscosity stays constant through the temperature range of operation, transmission operation and shift feel will remain consistent. Transmission fluid must also be a good conductor of heat. The fluid must absorb heat from the internal transmission components and transfer that heat to the transmission case.

Fuse Locations and Types

Specifications

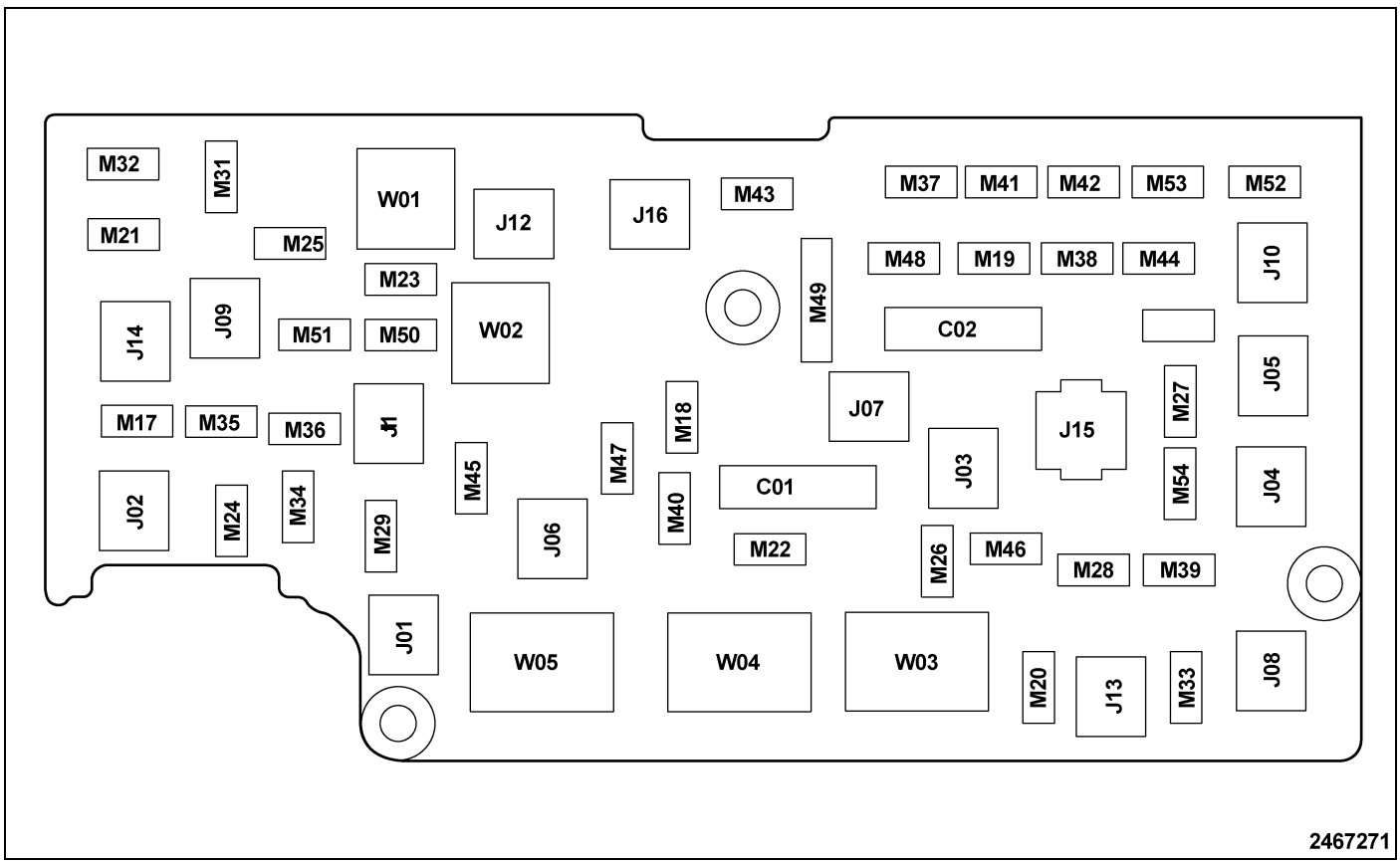

The totally integrated power module (TIPM) is located in the engine compartment near the battery. This center contains cartridge fuses and mini fuses. A description of each fuse and component may be stamped on the inside cover, otherwise the cavity number of each fuse is stamped on the inside cover that corresponds to the following chart.

Underhood Fuses (Totally Integrated Power Module)

Cavity	Cartridge Fuse	Mini Fuse	Description
J01	30 Amp Pink		Bat - Presafe #1
J02	30 Amp Pink		Bat - Trailer Tow Main
J03	25 Amp Natural		Bat - Passenger Door Node
J04	40 Amp Green		Bat - ABS Pump
J05	30 Amp Pink		Bat - ABS Valve
J06	30 Amp Pink		Bat - H/Lamp Wash/MTV/CM 2299/Elec Vacuum Pump
J07	25 Amp Natural		Bat - Driver Door Node
J08	30 Amp Pink		Bat - DTCM/Axle Locks
J09	30 Amp Pink		Bat - Plg/Electric Brake
J10	40 Amp Green		Bat - L/Bar, Off-Road
J11	30 Amp Pink		Bat - Sway/Thatchum/Rear Doors
J12	40 Amp Green		Starter Solenoid
J13	60 Amp Yellow		Bat - Radiator Fan #1/#2/SSR
J14	40 Amp Green		Bat - Folding Seats, PZEV

Cavity	Cartridge Fuse	Mini Fuse	Description
J15	60 Amp Yellow		Bat - IOD-Main
J16	40 Amp Green		Front HVAC Motor
M17		25 Amp Natural	Bat - Sunroof/Skylight
M18		25 Amp Natural	TCM/Trans Range
M19		5 Amp Tan	Ign R/ACC - Sunroof/Window Sw Illum
M20		25 Amp Natural	Frt Wiper
M21		25 Amp Natural	Door Locks
M22		20 Amp Yellow	Fuel Pump
M23		20 Amp Yellow	Bat - Trailer Lighting/Pre-Safe #2
M24		20 Amp Yellow	Bat - Trailer Tow BUX/HGM
M25		10 Amp Red	Bat - J1962 Diag/Mirror
M26		10 Amp Red	Bat - Ign Switch, WIN, PASS
M27		15 Amp Blue	Bat - CHMSL/Brake Switch
M28		10 Amp Red	Bat - TPM/PEM/HVAC Htr Pump
M29		15 Amp Blue	Bat - Folding Mirror
M30		25 Amp Natural	Bat - Inverter
M31		20 Amp Yellow	Bat - Pwr Out #1
M32		20 Amp Yellow	Frt/Rear Washer
M33		15 Amp Blue	Bat - PCM/NGC/EATX
M34		15 Amp Blue	Bat - CCN/Interior Light/SCM/Sw Bank
M35		20 Amp Yellow	Ign R-Frt Seat/Vent
M36		20 Amp Yellow	Ign R-Rear Seat/Steer Wheel
M37		10 Amp Red	Horn #1
M38		20 Amp Yellow	IOD-CCN/Interior Mods
M39		30 Amp Green	IOD-Amp/Radio
M40		25 Amp Natural	Rear Wiper
M41		15 Amp Blue	IOD - SDARS DVD/VES2-3/DVD/HFM/UGDO/ Vanity
M42		10 Amp Red	IOD-HVAC, U/Hood Lamp
M43		10 Amp Red	Horn #2
M44		10 Amp Red	IGN R/S-ORC/OCM
M45		10 Amp Red	IGN R-ORC/Trail Tow (BUX) Sense
M46		20 Amp Yellow	IGN R-Trail Tow (BUX)
M47		10 Amp Red	IGN R-H/Lamp Wash/HVAC/Park Assist/Ir Sns
M48		20 Amp Yellow	IGN R/ACC - Pwr Outlet #2
M49		20 Amp Yellow	IGN R/ACC/Batt-Pwr Outlet #3
M50		25 Amp Natural	ASD #1, #2
M51		20 Amp Yellow	ASD #3
M52		10 Amp Red	IGN R/S-SWAY/TCASE/DTCM/FAD
M53		15 Amp Blue	IGN R/S-MFSW/CCN/SCM/TPM/RR View

Cavity	Cartridge Fuse	Mini Fuse	Description
M54		20 Amp Yellow	IOD - Spare
CB1			25A Circuit Breaker - Bat - Memory Seat
CB2			25A Circuit Breaker - IGN R/ACC-Power Window
W01			Relay - ASD #1, 2, 3
W02			Relay - Starter Solenoid
W03			Relay - Frt Wiper On/Off
W04			Relay - Radiator Fan #1
W05			Relay - Radiator Fan #2

CAUTION:

- **When installing the Integrated Power Module cover, it is important to ensure the cover is properly positioned and fully latched. Failure to do so may allow water to get into the Integrated Power Module, and possibly result in a electrical system failure.**
- **When replacing a blown fuse, it is important to use only a fuse having the correct amperage rating. The use of a fuse with a rating other than indicated may result in a dangerous electrical system overload. If a properly rated fuse continues to blow, it indicates a problem in the circuit that must be corrected.**

Hoisting

Standard Procedure

Refer to the Owner's Manual for emergency vehicle lifting procedures.

WARNING: The hoisting and jack lifting points provided are for a complete vehicle. When a chassis or drivetrain component is removed from a vehicle, the center of gravity is altered making some hoisting conditions unstable. Properly support or secure vehicle to hoisting device when these conditions exist.

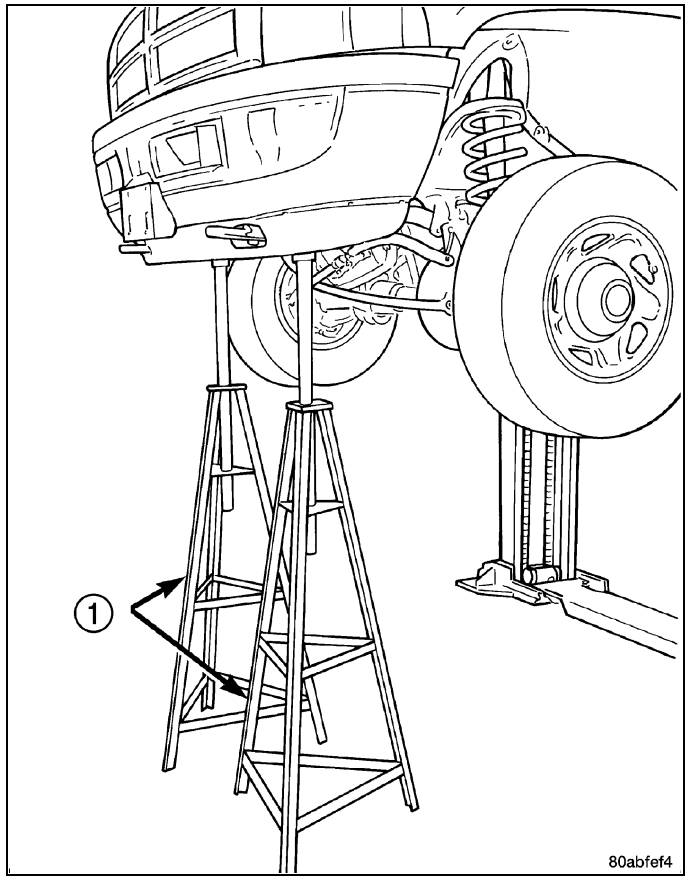

FLOOR JACK

When properly positioned, a floor jack can be used to lift a vehicle. Support the vehicle in the raised position with jack stands at the front and rear ends of the frame rails.

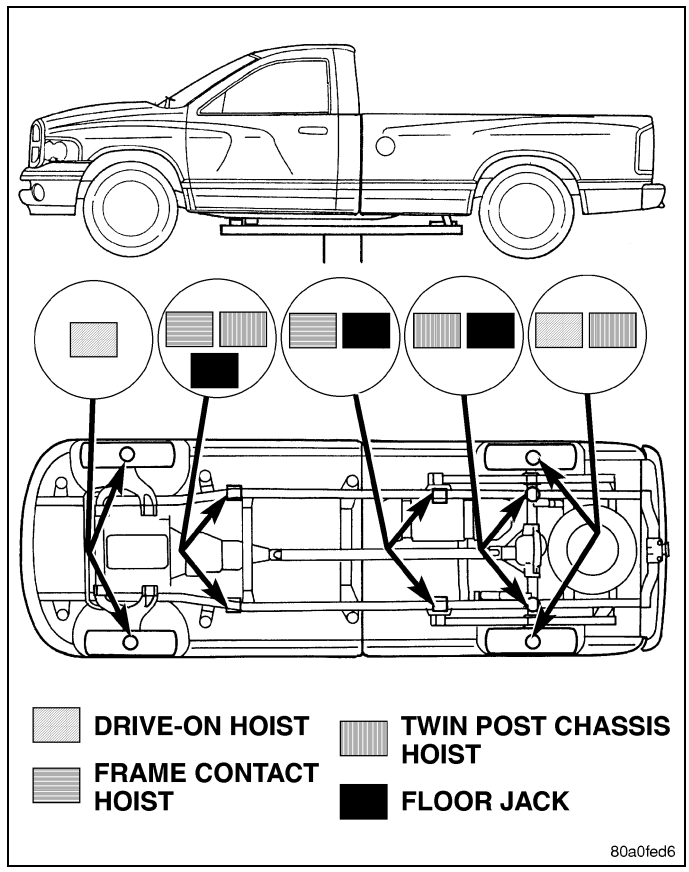

CAUTION: Do not lift vehicle with a floor jack positioned under:

- **An axle tube.**
- **A body side sill.**
- **A steering linkage component.**
- **A drive shaft.**
- **The engine or transmission oil pan.**
- **The fuel tank.**
- **A front suspension arm.**

NOTE: Use the correct rear frame rail lifting locations only.

HOIST

A vehicle can be lifted with:

- A single-post, frame-contact hoist.
- A twin-post, chassis hoist.
- A ramp-type, drive-on hoist.

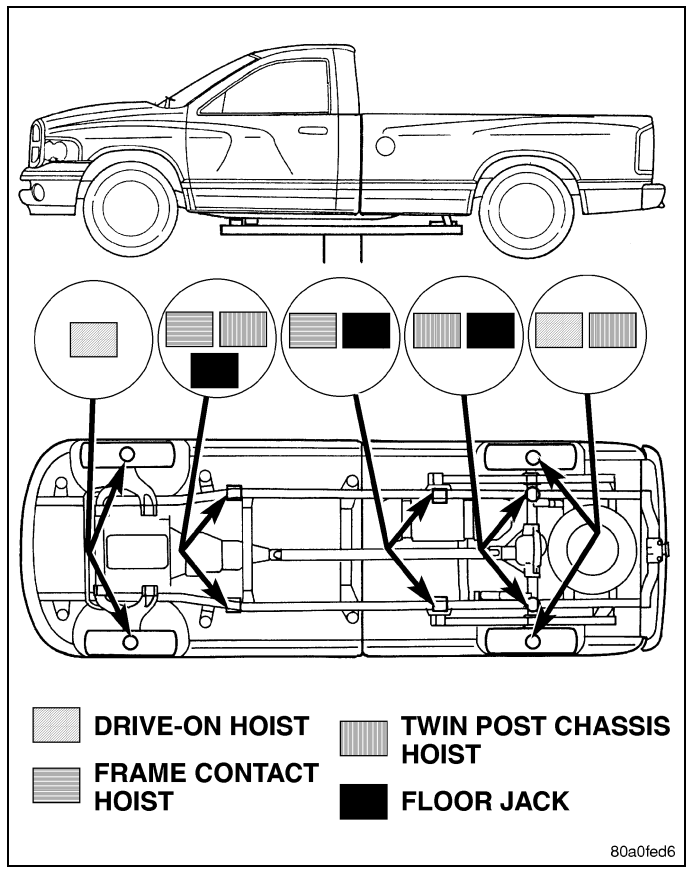

Jump Starting

Standard Procedure

WARNING: review all safety precautions and warnings in the battery system section of the service manual. (Refer to 08 - Electrical/8F - Engine Systems/Battery System/BATTERY - Standard Procedure)

- **Do not jump start a frozen battery, personal injury can result.**
- **If equipped, do not jump start when maintenance free battery indicator dot is yellow or bright color.**
- **Do not jump start a vehicle when the battery fluid is below the top of lead plates.**
- **Do not allow jumper cable clamps to touch each other when connected to a booster source.**
- **Do not use open flame near battery.**
- **Remove metallic jewelry worn on hands or wrists to avoid injury by accidental arcing of battery current.**
- **When using a high output boosting device, do not allow battery voltage to exceed 16 volts. Refer to instructions provided with device being used.**

Failure to follow these instructions may result in personal injury.

CAUTION: When using another vehicle as a booster, do not allow vehicles to touch. Electrical systems can be damaged on either vehicle.

TO JUMP START A DISABLED VEHICLE:

1. Raise hood on disabled vehicle and visually inspect engine compartment for:
   - Battery cable clamp condition, clean if necessary.
   - Frozen battery.
   - Yellow or bright color test indicator, if equipped.
   - Low battery fluid level.
   - Generator drive belt condition and tension.
   - Fuel fumes or leakage, correct if necessary.

CAUTION: If the cause of starting problem on disabled vehicle is severe, damage to booster vehicle charging system can result.

2. When using another vehicle as a booster source, park the booster vehicle within cable reach. Turn off all accessories, set the parking brake, place the automatic transmission in PARK or the manual transmission in NEUTRAL and turn the ignition OFF.
3. On disabled vehicle, place gear selector in park or neutral and set park brake. Turn off all accessories.
4. Connect jumper cables to booster battery. RED clamp to positive terminal (+). BLACK clamp to negative terminal (-). DO NOT allow clamps at opposite end of cables to touch, electrical arc will result. Review all warnings in this procedure.
5. On disabled vehicle, connect RED jumper cable clamp to positive (+) terminal. Connect BLACK jumper cable clamp to engine ground as close to the ground cable attaching point as possible.
6. Start the engine in the vehicle which has the booster battery, let the engine idle a few minutes, then start the engine in the vehicle with the discharged battery.

CAUTION: Do not crank starter motor on disabled vehicle for more than 15 seconds, starter will overheat and could fail.

7. Allow battery in disabled vehicle to charge to at least 12.4 volts (75% charge) before attempting to start engine. If engine does not start within 15 seconds, stop cranking engine and allow starter to cool (15 min.), before cranking again.

DISCONNECT CABLE CLAMPS AS FOLLOWS:

- Disconnect BLACK cable clamp from engine ground on disabled vehicle.
- When using a Booster vehicle, disconnect BLACK cable clamp from battery negative terminal. Disconnect RED cable clamp from battery positive terminal.
- Disconnect RED cable clamp from battery positive terminal on disabled vehicle.

Maintenance Schedules

Inspection

The following steps outline the dealer inspection procedure required every 5 years for vehicles covered under the terms of the Lifetime Powertrain Warranty. Refer to the appropriate warranty information for additional terms and coverages applicable to the Lifetime Powertrain Warranty.

1. Lift the vehicle on a suitable hoist.
2. Check all Powertrain components for leaks or physical damage. Note any concerns.
3. Lower the vehicle and check the level and condition of the engine oil.
4. Connect a diagnostic scan tool and check for any Diagnostic Trouble Codes (DTC).

Description

Oil Change Indicator System

The oil change indicator system reminds you that it is time to take the vehicle in for scheduled maintenance.

On the Electronic Vehicle Information Center (EVIC) equipped vehicles “Oil Change Required” is displayed in the EVIC and a single chime sounds indicating that an oil change is necessary.

On non EVIC equipped vehicles “Change Oil” flashes in the instrument cluster odometer and a single chime sounds indicating that an oil change is necessary.

Based on engine operating conditions the oil change indicator message illuminates. This means that service is required for the vehicle. Have the vehicle serviced as soon as possible, within the next 805 km (500 miles).

NOTE:

- **The oil change indicator message will not monitor the time since the last oil change. Change the vehicle oil if it has been six months since the last oil change even if the oil change indicator message is not illuminated.**
- **Change the engine oil more often if you drive the vehicle off-road for an extended period of time.**
- **Under no circumstances should oil change intervals exceed 10,000 km (6,000 miles) or six months, whichever comes first.**

Oil Change Indicator- Reset

The vehicle is equipped with an engine oil change indicator system. The “Oil Change Required” message flashes in the EVIC display for approximately ten seconds after a single chime has sounded, to indicate the next scheduled oil change interval. The engine oil change indicator system is duty cycle based, which means the engine oil change interval may fluctuate depending upon your personal driving style.

Unless reset, this message continues to display each time you turn the ignition switch to the ON/RUN position. To turn off the message temporarily, press and release the Menu button. To reset the oil change indicator system (after performing the scheduled maintenance) perform the following procedure:

1. Turn the ignition switch to the “ON” position. Do not start the engine.
2. Fully press the accelerator pedal slowly three times within ten seconds.
3. Turn the ignition switch to the “LOCK” position.

NOTE: If the indicator message illuminates when you start the vehicle, the oil change indicator system did not reset. If necessary, repeat this procedure.

At Each Stop for Fuel

- Check the engine oil level about five minutes after a fully warmed engine is shut off. Checking the oil level while the vehicle is on level ground will improve the accuracy of the oil level reading. Add oil only when the level is at or below the ADD or MIN mark.
- Check the windshield washer solvent and add if required.

Once a Month

- Check tire pressure and look for unusual wear or damage.
- Inspect the battery and clean and tighten the terminals as required.
- Check the fluid levels of the coolant reservoir, brake master cylinder, power steering and transmission and add as needed.
- Check all lights and other electrical items for correct operation.

At Each Oil Change

- Change the engine oil filter.
- Inspect the brake hoses and lines.

CAUTION:

- **Failure to perform the required maintenance items may result in damage to the vehicle.**
- **Proper operation of four-wheel drive vehicles depends on tires of equal size, type and circumference on each wheel. Any difference in tire size can cause damage to the transfer case. Tire rotation schedule should be followed to balance tire wear.**

Required Maintenance Intervals

NOTE:

**** Vehicle's built with the 4.7L engine are equipped with sixteen spark plugs. One set is located on the top of the engine under the coils and the second set is located on the side of the engine.**

The spark plugs located under the coils are a standard plug and must be changed every 48,000 miles (80 000 km).

The spark plugs located on the side of the engine are a premium plug and must be changed every 96,000 miles (160 000 km).

Perform Maintenance Every (Where time and mileage are listed, follow the interval that occurs first).			Maintenance Items
Miles	Kilometers	Months	
6000	10000	6	■ Change the engine oil and engine oil filter. ■ Rotate the tires.

Perform Maintenance Every (Where time and mileage are listed, follow the interval that occurs first).			Maintenance Items
Miles	Kilometers	Months	
12000	20000	12	■ Change the engine oil and engine oil filter. ■ Rotate the tires. ■ If using the vehicle for dusty or off-road conditions, inspect the engine air cleaner filter and replace if necessary. ■ Inspect the brake linings, replace if necessary. ■ Inspect the CV joints. Perform the first inspection at 20 000 km (12,000 miles) or 12 months. ■ Inspect the exhaust system. Perform the first inspection at 20 000 km (12,000 miles) or 12 months. ■ Inspect the front suspension, tie rod ends and boot seals for cracks or leaks and all parts for damage, wear, improper looseness or end play; replace if necessary.
18000	30000	18	■ Change the engine oil and engine oil filter. ■ Rotate the tires. ■ Inspect the front and rear axle fluid. Change if using the vehicle for police, taxi, fleet, off-road or frequent trailer towing.
24000	40000	24	■ Change the engine oil and engine oil filter. ■ Rotate the tires. ■ If using the vehicle for dusty or off-road conditions, inspect the engine air cleaner filter and replace if necessary. ■ Inspect the brake linings, replace if necessary. ■ Inspect the CV joints. ■ Inspect the exhaust system. ■ Inspect the front suspension, tie rod ends and boot seals and replace if necessary.
30000	50000	30	■ Change the engine oil and engine oil filter. ■ Rotate the tires. ■ Replace the engine air cleaner filter. ■ **Replace the spark plugs (3.7L and 5.7L engines).** ■ Inspect the transfer case fluid.
36000	60000	36	■ Change the engine oil and engine oil filter. ■ Rotate the tires. ■ If using the vehicle for dusty or off-road conditions, inspect the engine air cleaner filter and replace if necessary. ■ Inspect the brake linings, replace if necessary. ■ Inspect the front and rear axle fluid. Change if using the vehicle for police, taxi, fleet, off-road or frequent trailer towing. ■ Inspect the front suspension, tie rod ends and boot seals for cracks or leaks and all parts for damage, wear, improper looseness or end play; replace if necessary.
42000	70000	42	■ Change the engine oil and engine oil filter. ■ Rotate the tires.

Perform Maintenance Every (Where time and mileage are listed, follow the interval that occurs first).			Maintenance Items
Miles	**Kilometers**	**Months**	
48000	80000	48	■ Change the engine oil and engine oil filter. ■ Rotate the tires. ■ If using your vehicle for any of the following: Dusty or off-road conditions. Inspect the engine air cleaner filter; replace if necessary. ■ **Replace the top row of spark plugs (4.7L Engine). **** ■ Inspect the brake linings; replace if necessary. ■ Inspect the CV joints. ■ Inspect exhaust system. ■ Inspect the front suspension, tie rod ends and boot seals for cracks or leaks and all parts for damage, wear, improper looseness or end play; replace if necessary.
54000	90000	54	■ Change the engine oil and engine oil filter. ■ Rotate the tires. ■ Inspect the front and rear axle fluid. Change if using the vehicle for police, taxi, fleet, off-road or frequent trailer towing.
60000	100000	60	■ Change the engine oil and engine oil filter. ■ Rotate the tires. ■ Replace the engine air cleaner filter. ■ **Replace the ignition cables (3.7L Engine).** ■ **Replace the spark plugs (3.7L and 5.7L Engines).** ■ Inspect the brake linings; replace if necessary. ■ Change the automatic transmission fluid and filter if using your vehicle for any of the following: police, taxi, fleet, or frequent trailer towing. ■ Change the transfer case fluid if using your vehicle for any of the following: police, taxi, fleet, or frequent trailer towing. ■ Flush and replace the engine coolant at 60 months if not done at 102,000 miles (170 000 km). ■ Inspect the front suspension, tie rod ends and boot seals for cracks or leaks and all parts for damage, wear, improper looseness or end play; replace if necessary.
66000	110000	66	■ Change the engine oil and engine oil filter. ■ Rotate the tires.

Perform Maintenance Every (Where time and mileage are listed, follow the interval that occurs first).			Maintenance Items
Miles	Kilometers	Months	
72000	120000	72	■ Change the engine oil and engine oil filter. ■ Rotate the tires. ■ If using the vehicle for dusty or off-road conditions, inspect the engine air cleaner filter and replace if necessary. ■ Inspect the brake linings and replace if necessary. ■ Inspect the CV joints. ■ Inspect the exhaust system. ■ Inspect the front suspension, tie rod ends and boot seals and replace if necessary. ■ Inspect the front and rear axle fluid. Change if using the vehicle for police, taxi, fleet, off-road or frequent trailer towing.
78000	130000	78	■ Change the engine oil and engine oil filter. ■ Rotate the tires.
84000	140000	84	■ Change the engine oil and engine oil filter. ■ Rotate the tires. ■ If using the vehicle for dusty or off-road conditions, inspect the engine air cleaner filter and replace if necessary. ■ Inspect the brake linings and replace if necessary. ■ Inspect the front suspension, tie rod ends and boot seals for cracks or leaks and all parts for damage, wear, improper looseness or end play; replace if necessary.
90000	150000	90	■ Change the engine oil and engine oil filter. ■ Rotate the tires. ■ Replace the engine air cleaner filter. ■ **Replace the spark plugs (3.7L and 5.7L engines).** ■ **Inspect and replace PCV valve if necessary. †** ■ Inspect the transfer case fluid. ■ Inspect the front and rear axle fluid. Change if using the vehicle for police, taxi, fleet, off-road or frequent trailer towing.
96000	160000	96	■ Change the engine oil and engine oil filter. ■ Rotate the tires. ■ If using your vehicle for any of the following: Dusty or off-road conditions. Inspect the engine air cleaner filter; replace if necessary. ■ **Replace the top row of spark plugs (4.7L Engine). **** ■ **Replace the side row of spark plugs (4.7L Engine). **** ■ **Replace the ignition cables (4.7L Engine).** ■ Inspect the brake linings; replace if necessary. ■ Inspect the CV joints. ■ Inspect exhaust system. ■ Inspect the front suspension, tie rod ends and boot seals for cracks or leaks and all parts for damage, wear, improper looseness or end play; replace if necessary.

Perform Maintenance Every (Where time and mileage are listed, follow the interval that occurs first).			Maintenance Items
Miles	Kilometers	Months	
102000	170000	102	■ Change the engine oil and engine oil filter. ■ Rotate the tires. ■ Flush and replace the engine coolant if not done at 60 months.
108000	180000	108	■ Change the engine oil and engine oil filter. ■ Rotate the tires. ■ If using the vehicle for dusty or off-road conditions, inspect the engine air cleaner filter and replace if necessary. ■ Inspect the brake linings and replace if necessary. ■ Inspect the front and rear axle fluid. Change if using the vehicle for police, taxi, fleet, off-road or frequent trailer towing. ■ Inspect the front suspension, tie rod ends and boot seals for cracks or leaks and all parts for damage, wear, improper looseness or end play; replace if necessary.
114000	190000	114	■ Change the engine oil and engine oil filter. ■ Rotate the tires.
120000	200000	120	■ Change the engine oil and engine oil filter. ■ Rotate the tires. ■ Replace the engine air cleaner filter. ■ **Replace the ignition cables (3.7L engine).** ■ **Replace the spark plugs (3.7L and 5.7L engines).** ■ Inspect the brake linings and replace if necessary. ■ Inspect the CV joints. ■ Inspect the exhaust system. ■ Inspect the front suspension, tie rod ends and boot seals and replace if necessary. ■ Change the automatic transmission fluid and filter(s). ■ Change the transfer case fluid if using the vehicle for police, taxi, fleet, or frequent trailer towing. ■ Replace the accessory drive belt(s).
126000	210000	126	■ Change the engine oil and engine oil filter. ■ Rotate the tires. ■ Inspect the front and rear axle fluid. Change if using the vehicle for police, taxi, fleet, off-road or frequent trailer towing.
132000	220000	132	■ Change the engine oil and engine oil filter. ■ Rotate the tires. ■ If using the vehicle for dusty or off-road conditions, inspect the engine air cleaner filter and replace if necessary. ■ Inspect the brake linings and replace if necessary. ■ Inspect the front suspension, tie rod ends and boot seals for cracks or leaks and all parts for damage, wear, improper looseness or end play; replace if necessary.
138000	230000	138	■ Change the engine oil and engine oil filter. ■ Rotate the tires.

Perform Maintenance Every (Where time and mileage are listed, follow the interval that occurs first).			Maintenance Items
Miles	Kilometers	Months	
144000	240000	144	■ Change the engine oil and engine oil filter. ■ Rotate the tires. ■ If using your vehicle for any of the following: Dusty or off-road conditions. Inspect the engine air cleaner filter; replace if necessary. ■ **Replace the top row of spark plugs (4.7L Engine). **** ■ Inspect the brake linings; replace if necessary. ■ Inspect the front and rear axle fluid, change if using your vehicle for police, taxi, fleet, off-road or frequent trailer towing. ■ Inspect the CV joints. ■ Inspect exhaust system. ■ Inspect the front suspension, tie rod ends and boot seals for cracks or leaks and all parts for damage, wear, improper looseness or end play; replace if necessary.
150000	250000	150	■ Change the engine oil and engine oil filter. ■ Rotate the tires. ■ Replace the engine air cleaner filter. ■ **Replace the spark plugs (3.7L and 5.7L engines).** ■ Inspect the transfer case fluid.

† This maintenance is recommended by the manufacturer to the owner, but is not required to maintain emissions warranty.

WARNING:

- **You can be badly injured working on or around a motor vehicle. Do only service work for which you have the knowledge and the right equipment. If you have any doubt about your ability to perform a service job, take your vehicle to a competent mechanic.**
- **Failure to properly inspect and maintain your vehicle could result in a component malfunction and effect vehicle handling and performance. This could cause an accident**

Failure to follow these instructions may result in possible serious or fatal injury.

Replacement Bulbs

Specifications

Replacement Bulbs - Exterior

LIGHT BULBS — EXTERIOR	BULB NUMBER
Back-Up	921
Center High Mounted Stop Lamp	921
Fog Lamp	9145
Dual Headlamp	H13
Quad Headlamp — Low Beam	H11
Quad Headlamp — High Beam	9005
Side Marker (Dual Headlamp)	3157K
Side Marker (Quad Headlamp)	3157NA

LIGHT BULBS — EXTERIOR	BULB NUMBER
Rear License Plate Light	168
Rear Cargo Light	921
Rear Tail/Turn and Stop	3157K

Replacement Bulbs - Interior

LIGHT BULBS — INTERIOR	BULB NUMBER
Overhead Console Lights	TS 212-2
Dome Light	7679

All of the interior bulbs are glass wedge base or glass cartridge types. Aluminum base bulbs are not approved and should not be used for replacement.

Towing

Specifications

In this section you will find safety tips and information on limits to the type of towing you can reasonably do with your vehicle. Before towing a trailer carefully review this information to tow your load as efficiently and safely as possible.

To maintain warranty coverage, follow the requirements and recommendations in this manual concerning vehicles used for trailer towing.

Common Towing Definitions

The following trailer towing related definitions will assist you in understanding the following information:

Gross Vehicle Weight Rating (GVWR)

The GVWR is the total allowable weight of your vehicle. This includes driver, passengers, cargo and tongue weight. The total load must be limited so that you do not exceed the GVWR.

Gross Trailer Weight (GTW)

The gross trailer weight (GTW) is the weight of the trailer plus the weight of all cargo, consumables and equipment (permanent or temporary) loaded in or on the trailer in its "loaded and ready for operation" condition. The recommended way to measure GTW is to put your fully loaded trailer on a vehicle scale. The entire weight of the trailer must be supported by the scale.

Gross Combination Weight Rating (GCWR)

The gross combination weight rating (GCWR) is the total permissible weight of your vehicle and trailer when weighed in combination. (Note that GCWR ratings include a 68 kg (150 lbs) allowance for the presence of a driver).

Gross Axle Weight Rating (GAWR)

The GAWR is the maximum capacity of the front and rear axles. Distribute the load over the front and rear axles evenly. Make sure that you do not exceed either front or rear GAWR.

WARNING: It is important that you do not exceed the maximum front or rear GAWR. A dangerous driving condition can result if either rating is exceeded. You could lose control of the vehicle and have an accident. Failure to follow these instructions may result in possible serious or fatal injury.

Tongue Weight (TW)

The tongue weight is the downward force exerted on the hitch ball by the trailer. In most cases it should not be less than 10% or more than 15% of the trailer load. You must consider this as part of the load on your vehicle.

Frontal Area

The maximum height and maximum width of the front of a trailer.

Trailer Sway Control

The trailer sway control is a telescoping link that can be installed between the hitch receiver and the trailer tongue that typically provides adjustable friction associated with the telescoping motion to dampen any unwanted trailer swaying motions while traveling.

Weight-Carrying Hitch

A weight-carrying hitch supports the trailer tongue weight, just as if it were luggage located at a hitch ball or some other connecting point of the truck. These kind of hitches are the most popular on the market today and they're commonly used to tow small- and medium-sized trailers.

Weight-Distributing Hitch

A weight-distributing system works by applying leverage through spring (load) bars. They are typically used for heavier loads, to distribute trailer tongue weight to the tow vehicle's front axle and the trailer axel(s). When used in accordance with the manufacturers' directions, it provides for a more level ride, offering more consistent steering and brake control thereby enhancing towing safety. The addition of a friction / hy and crosswinds and contributes positively to tow vehicle and tr (load equalizing) hitch are recommended for heavier Tongue and Trailer configuration / loading to comply with gross axle w

WARNING:
An improperly adjusted Weight Distributing Hitch system and could result in an accident.

Weight Distributing Systems may not be compatible with trailer manufacturer or a reputable Recreational Vehicle de instructions may result in possible serious or fatal injury

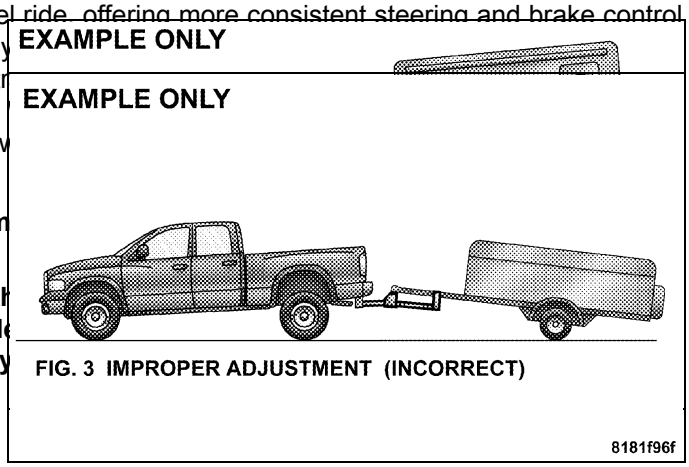

FIG. 3 IMPROPER ADJUSTMENT (INCORRECT)
8181f96f

Fifth-Wheel Hitch

The fifth-wheel hitch is a special high platform with a coupling that mounts over the rear axle of the tow vehicle in the truck bed. It connects a vehicle and fifth-wheel trailer with a coupling king pin.

Gooseneck Hitch

The gooseneck hitch employs a pivoted coupling arm which attaches to a ball mounted in the bed of a pickup truck. The coupling arm connects to the hitch mounted over the rear axle in the truck bed.

Trailer Hitch Classification

The rear bumper is intended to tow trailers up to 2 268 kg (5,000 lbs) without added equipment or alterations to the standard equipment. Your vehicle may be factory equipped for safe towing of trailers weighing over 2 268 kg (5,000 lbs) with the optional Trailer Tow Prep Package. See your dealer for package content.

The following chart provides the industry standard for the maximum trailer weight a given trailer hitch class can tow and should be used to assist you in selecting the correct trailer hitch for your intended towing condition. Refer to “Trailer Towing Weights (Maximum Trailer Weight Ratings)” for the website address that contains the necessary information for your specific drivetrain.

Trailer Hitch Classification	
Class	**Max. GTW (Gross Trailer Wt.)**
Class I - Light Duty	2,000 lbs (907 kg)
Class II - Medium Duty	3,500 lbs (1587 kg)
Class III - Heavy Duty	5,000 lbs (2268 kg)
Class IV - Extra Heavy Duty	10,000 lbs (4540 kg)
Fifth Wheel/Gooseneck	Greater than 10,000 lbs (4540 kg)
Refer to the “Trailer Towing Weights (Maximum Trailer Weight Ratings)” chart for the Maximum Gross Trailer Weight (GTW) towable for your given drivetrain.	

All trailer hitches should be professionally installed on the vehicle.

Trailer Towing Weights (Maximum Trailer Weight Ratings)

NOTE: For additional trailer towing information (maximum trailer weight ratings) refer to the following website addresses:

- **http:// www.dodge.com/towing**.
- **http:// www.dodge.ca** (Canada).

Trailer and Tongue Weight

Always load a trailer with 60% to 65% of the weight in the front of the trailer. This places 10% to 15% of the Gross Trailer Weight (GTW) on the tow hitch of your vehicle. Loads balanced over the wheels or heavier in the rear can cause the trailer to sway **severely** side to side which will cause loss of control of vehicle and trailer. Failure to load trailers heavier in front is the cause of many trailer accidents.

Never exceed the maximum tongue weight stamped on your bumper or trailer hitch.

Consider the following items when computing the weight on the rear axle of the vehicle:

- The tongue weight of the trailer.
- The weight of any other type of cargo or equipment put in or on your vehicle.
- The weight of the driver and all passengers.

NOTE: Remember that everything put into or on the trailer adds to the load on your vehicle. Also, additional factory-installed options, or dealer-installed options, must be considered as part of the total load on your vehicle. Refer to the Tire and Loading Information placard in the Tire Safety Information Section of this manual.

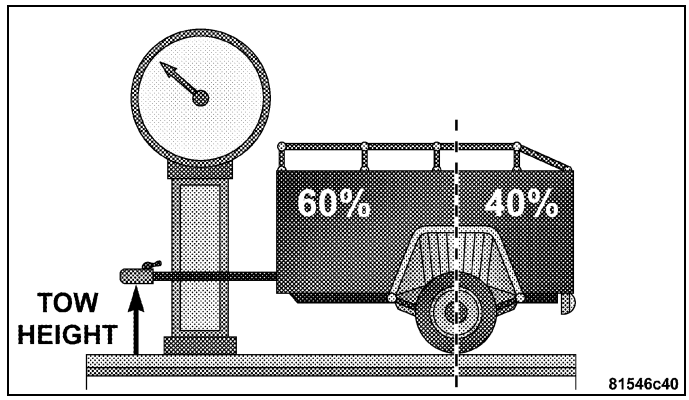

Towing Requirements

To promote proper break-in of your new vehicle drivetrain components the following guidelines are recommended:

CAUTION:

- **Avoid towing a trailer for the first 805 km (500 miles) of vehicle operation. Doing so may damage your vehicle.**
- **During the first 805 km (500 miles) of trailer towing, limit your speed to 80 km/h (50 mph).**

WARNING: Improper towing can lead to an injury accident. Follow these guidelines to make the trailer towing as safe as possible:
Make certain that the load is secured in the trailer and will not shift during travel. When trailering cargo that is not fully secured, dynamic load shifts can occur that may be difficult for the driver to control. Failure to follow these instructions may result in serious or fatal injury.

- When hauling cargo or towing a trailer, do not overload your vehicle or trailer. Overloading can cause a loss of control, poor performance or damage to brakes, axle, engine, transmission, steering, suspension, chassis structure or tires.
- Safety chains must always be used between your vehicle and trailer. Always connect the chains to the frame or hook retainers of the vehicle hitch. Cross the chains under the trailer tongue and allow enough slack for turning corners.
- Vehicles with trailers should not be parked on a grade. When parking, apply the parking brake on the tow vehicle. Put the tow vehicle automatic transmission in P for Park. With a manual transmission, shift the transmission into reverse. And with four-wheel-drive vehicles, make sure the transfer case is not in neutral. Always, block or "chock" the trailer wheels.
- GCWR must not be exceeded.
- **Total weight must be distributed between the tow vehicle and the trailer such that the following four ratings are not exceeded:**
  - GVWR
  - GTW
  - GAWR
  - Tongue weight rating for the trailer hitch utilized (This requirement may limit the ability to always achieve the 10% to 15% range of tongue weight as a percentage of total trailer weight).

Towing Requirements — Tires

- Do not attempt to tow a trailer while using a compact spare tire.
- Proper tire inflation pressures are essential to the safe and satisfactory operation of your vehicle. Refer to the Tires–General Information section of this manual on Tire Pressures for proper tire inflation procedures.
- Also, check the trailer tires for proper tire inflation pressures before trailer usage.
- Check for signs of tire wear or visible tire damage before towing a trailer. Refer to the Tires–General Information section of this manual on Tread Wear Indicators for the proper inspection procedure.
- When replacing tires refer to the Tires–General Information section of this manual on Replacement Tires for proper tire replacement procedures. Replacing tires with a higher load carrying capacity will not increase the vehicle's GVWR and GAWR limits.

Towing Requirements — Trailer Brakes

- Do **not** interconnect the hydraulic brake system or vacuum system of your vehicle with that of the trailer. This could cause inadequate braking and possible personal injury.
- An electronically actuated trailer brake controller is required when towing a trailer with electronically actuated brakes. When towing a trailer equipped with a hydraulic surge actuated brake system, an electronic brake controller is not required.
- Trailer brakes are recommended for trailers over 454 kg (1,000 lbs) and required for trailers in excess of 907 kg (2,000 lbs).

CAUTION: If the trailer weighs more than 454 kg (1,000 lbs) loaded, it should have its own brakes and they should be of adequate capacity. Failure to do this could lead to accelerated brake lining wear, higher brake pedal effort, longer stopping distances and may result in serious or fatal injury.

WARNING: Do not connect trailer brakes to the vehicle's hydraulic brake lines. It can overload the brake system and cause it to fail. You might not have brakes when you need them and could have an accident.
Towing any trailer will increase the stopping distance. When towing you should allow for additional space between the vehicle and the vehicle in front of you. Failure to follow these instructions may result in serious or fatal injury.

Towing Requirements — Trailer Lights AND Wiring

Whenever you pull a trailer, regardless of the trailer size, stop lights and turn signals on the trailer are required for motoring safety.

The Trailer Tow Package may include a 4 and 7 pin wiring harness. Use a factory approved trailer harness and connector.

NOTE: Do not cut or splice wiring into the vehicles wiring harness.

The electrical connections are all complete to the vehicle but you must mate the harness to a trailer connector. Refer to the following illustrations.

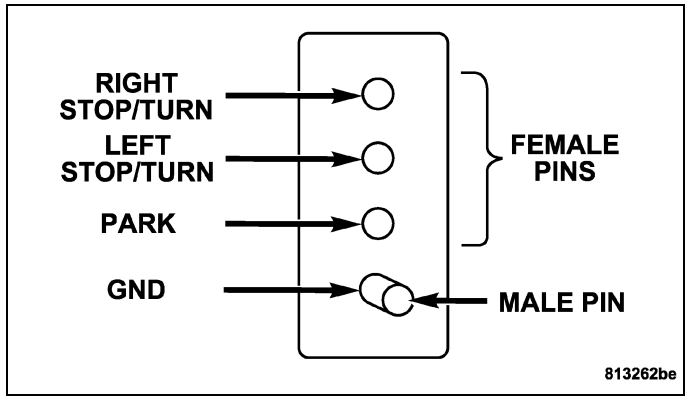

4 - Pin Connector

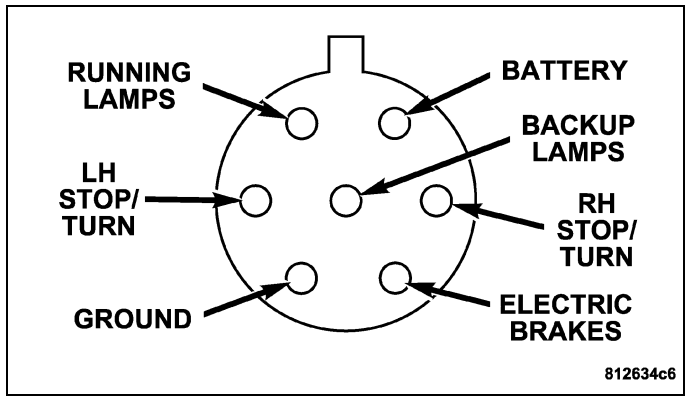

7- Pin Connector

Towing Tips

Before setting out on a trip, practice turning, stopping and backing the trailer in an area away from heavy traffic.

Towing Tips — Automatic Transmission

The “DRIVE” range can be selected when towing. However, if frequent shifting occurs while in this range, select “TOW/HAUL” mode (if equipped) or select a lower gear using the Electronic Range Select (ERS) feature.

NOTE: Using “TOW/HAUL” mode or a lower gear range while operating the vehicle under heavy operating conditions will improve performance and extend transmission life by reducing excessive shifting and heat build up. This action will also provide better engine braking.

The automatic transmission fluid and filter should be changed if you regularly tow a trailer for more than 45 minutes of continuous operation. Refer to the “Maintenance Schedule” in this section for the proper maintenance intervals.

NOTE: Check the automatic transmission fluid level before towing.

Towing Tips — Tow/Haul (If Equipped)

To reduce potential for automatic transmission overheating, turn the “TOW/HAUL” feature ON when driving in hilly areas, or select a lower gear range (using the Electronic Range Select (ERS) feature) on more severe grades.

Towing Tips — Park Assist (If Equipped)

When towing a trailer it may be necessary to disable the Park Assist System. The audible and visual park assist alerts would be incessant whenever the gear selector lever was in the REVERSE position due to the proximity of the trailer to the rear of the vehicle. When the system is disabled, a Park Assist Disabled message will appear in the EVIC display whenever the gear selector is in the REVERSE position.

Towing Tips — Electronic Speed Control (If Equipped)

- Don't use in hilly terrain or with heavy loads.
- When using the speed control, if you experience speed drops greater than 10 mph (16 km/h), disengage until you can get back to cruising speed.
- Use speed control in flat terrain and with light loads to maximize fuel efficiency.

Towing Tips — Cooling System

To reduce potential for engine and transmission overheating, take the following actions:

- City Driving - When stopped for short periods of time, put transmission in neutral and increase engine idle speed.
- Highway Driving - Reduce speed.
- Air Conditioning - Turn off temporarily.

Standard Procedure

A vehicle equipped with SAE approved sling-type towing equipment can be used to tow all vehicles. When towing a 4WD vehicle using a wheel-lift towing device, use tow dollies under the opposite end of the vehicle. A vehicle with flat-bed device can also be used to transport a disabled vehicle.

A wooden crossbeam may be required for proper connection when using the sling-type, front-end towing method.

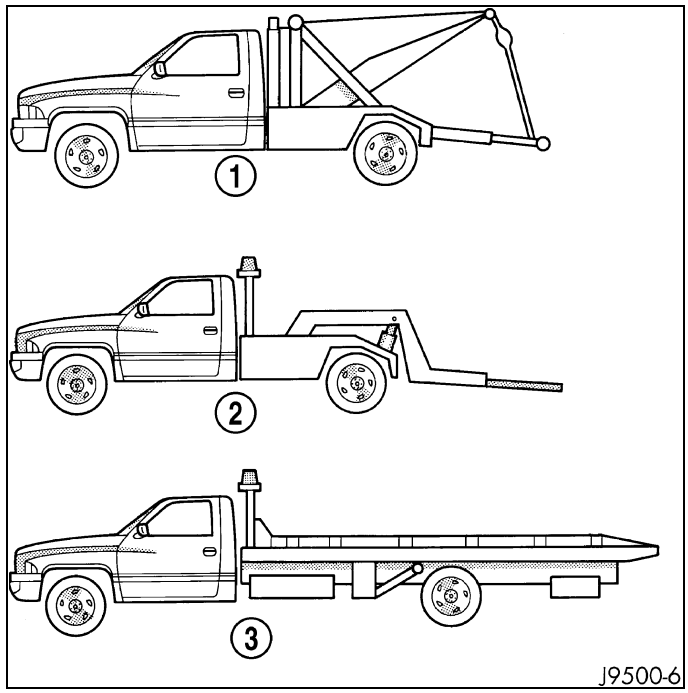

SAFETY PRECAUTIONS

CAUTION: The following safety precautions must be observed when towing a vehicle:

- Secure loose and protruding parts.
- Always use a safety chain system that is independent of the lifting and towing equipment.
- Do not allow towing equipment to contact the disabled vehicle's fuel tank.
- Do not allow anyone under the disabled vehicle while it is lifted by the towing device.
- Do not allow passengers to ride in a vehicle being towed.
- Always observe state and local laws regarding towing regulations.
- Do not tow a vehicle in a manner that could jeopardize the safety of the operator, pedestrians or other motorists.
- Do not attach tow chains, T-hooks, J-hooks, or a tow sling to a bumper, steering linkage, drive shafts or a non-reinforced frame hole.
- Do not tow a heavily loaded vehicle. Damage to the cab, cargo box or frame may result. Use a flatbed device to transport a loaded vehicle.

GROUND CLEARANCE

CAUTION: If vehicle is towed with wheels removed, install lug nuts to retain brake drums or rotors.

A towed vehicle should be raised until lifted wheels are a minimum 100 mm (4 in) from the ground. Be sure there is adequate ground clearance at the opposite end of the vehicle, especially when towing over rough terrain or steep rises in the road. If necessary, remove the wheels from the lifted end of the vehicle and lower the vehicle closer to the ground, to increase the ground clearance at the opposite end of the vehicle. Install lug nuts on wheel attaching studs to retain brake drums or rotors.

RAMP ANGLE

If a vehicle with flat-bed towing equipment is used, the approach ramp angle should not exceed 15 degrees.

TOWING WHEN KEYS ARE NOT AVAILABLE

When the vehicle is locked and keys are not available, use a flat bed hauler. A Wheel-lift or Sling-type device can be used on 4WD vehicles provided **all the wheels are lifted off the ground using tow dollies.**

TWO WHEEL DRIVE TOWING - REAR END LIFTED

CAUTION: Do not use steering column lock to secure steering wheel during towing operation.

2WD vehicles can be towed with the front wheels on the surface for extended distances at speeds not exceeding 48 km/h (30 mph).

1. Attach wheel lift device to rear wheels.
2. Place the transmission in neutral.
3. Raise vehicle to towing position.
4. Attach safety chains. Route chains so not to interfere with tail pipe when vehicle is lifted.
5. Turn the ignition switch to the OFF position to unlock the steering wheel.

CAUTION: Do not use steering column lock to secure steering wheel during towing operation.

6. Secure steering wheel in straight ahead position with a clamp device designed for towing.
7. Place transmission in park.

TWO WHEEL DRIVE TOWING - FRONT END LIFTED

CAUTION: Towing is allowed ONLY if the driveshaft is removed. Towing with the rear wheels on the ground while the driveshaft is connected can result in severe transmission damage which is not covered under the Limited Warranty.

FOUR-WHEEL-DRIVE VEHICLE TOWING

Chrysler Corporation recommends that a vehicle be transported on a flat-bed device. A Wheel-lift or Sling-type device can be used provided **all the wheels are lifted off the ground using tow dollies.**

WARNING: When towing a disabled vehicle and the drive wheels are secured in a wheel lift or tow dollies, ensure the transmission is in the park position (automatic transmission) or a forward drive gear (manual transmission).

CAUTION: Many vehicles are equipped with air dams, spoilers, and/or ground effect panels. To avoid component damage, a wheel-lift towing vehicle or a flat-bed hauling vehicle is recommended.

BRAKES

TABLE OF CONTENTS

page

BRAKES, BASE. 3
BRAKES, ABS. 77

BRAKES, BASE

TABLE OF CONTENTS

page

BRAKES, BASE
- WARNING 4
- DIAGNOSIS AND TESTING 4
- STANDARD PROCEDURE
  - MANUAL BLEEDING 7
  - PRESSURE BLEEDING 7
- SPECIAL TOOLS 8

ELECTRICAL 9

HYDRAULIC/MECHANICAL 15

PARKING BRAKE 63

Brakes, Base

Warning

WARNING: Chrysler LLC does not manufacture any vehicles or replacement parts that contain asbestos. Aftermarket products may or may not contain asbestos. Refer to aftermarket product packaging for product information. Whether the product contains asbestos or not, dust and dirt can accumulate on brake parts during normal use. Follow practices prescribed by appropriate regulations for the handling, processing and disposing of dust and debris.

CAUTION: Never use gasoline, kerosene, alcohol, motor oil, transmission fluid, or any fluid containing mineral oil to clean the system components. These fluids damage rubber cups and seals. Use only fresh brake fluid or Mopar brake cleaner to clean or flush brake system components. These are the only cleaning materials recommended. If system contamination is suspected, check the fluid for dirt, discoloration, or separation into distinct layers. Also check the reservoir cap seal for distortion. Drain and flush the system with new brake fluid if contamination is suspected.

CAUTION: Use Mopar brake fluid, or an equivalent quality fluid meeting SAE/DOT standards J1703 and DOT 3. Brake fluid must be clean and free of contaminants. Use fresh fluid from sealed containers only to ensure proper antilock component operation.

CAUTION: Use Mopar multi-mileage or high temperature grease to lubricate caliper slide surfaces, drum brake pivot pins, and shoe contact points on the backing plates. Use multi-mileage grease or GE 661 or Dow 111 silicone grease on caliper slide pins to ensure proper operation.

Diagnosis and Testing

Base brake components consist of the brake pads, calipers, brake drum in hat rotor in the rear, rotors, brake lines, master cylinder, booster, and parking brake components.

Brake diagnosis involves determining if the problem is related to a mechanical, hydraulic, or vacuum operated component.

The first diagnosis step is the preliminary check.

PRELIMINARY BRAKE CHECK

1. Check condition of tires and wheels. Damaged wheels and worn, damaged, or underinflated tires can cause pull, shudder, vibration, and a condition similar to grab.
2. If complaint was based on noise when braking, check suspension components. Jounce front and rear of vehicle and listen for noise that might be caused by loose, worn or damaged suspension or steering components.
3. Inspect brake fluid level and condition. Note that the brake reservoir fluid level will decrease in proportion to normal lining wear. **Also note that brake fluid tends to darken over time. This is normal and should not be mistaken for contamination.**
   a. If fluid level is abnormally low, look for evidence of leaks at calipers, wheel cylinders, brake lines, and master cylinder.
   b. If fluid appears contaminated, drain out a sample to examine. System will have to be flushed if fluid is separated into layers, or contains a substance other than brake fluid. The system seals and cups will also have to be replaced after flushing. Use clean brake fluid to flush the system.
4. Check parking brake operation. Verify free movement and full release of cables and pedal. Also note if vehicle was being operated with parking brake partially applied.
5. Check brake pedal operation. Verify that pedal does not bind and has adequate free play. If pedal lacks free play, check pedal and power booster for being loose or for bind condition. Do not road test until condition is corrected.
6. Check booster vacuum check valve and hose.
7. If components checked appear OK, road test the vehicle.

ROAD TESTING

1. If complaint involved low brake pedal, pump pedal and note if it comes back up to normal height.
2. Check brake pedal response with transmission in Neutral and engine running. Pedal should remain firm under constant foot pressure.

3. During road test, make normal and firm brake stops in 25-40 mph range. Note faulty brake operation such as low pedal, hard pedal, fade, pedal pulsation, pull, grab, drag, noise, etc.
4. Attempt to stop the vehicle with the parking brake only and note grab, drag, noise, etc.

PEDAL FALLS AWAY

A brake pedal that falls away under steady foot pressure is generally the result of a system leak or fluid contamination. The leak point could be at a brake line, fitting, hose, or caliper/wheel cylinder. If leakage is severe, fluid will be evident at or around the leaking component.

Internal leakage (seal by-pass) in the master cylinder caused by worn or damaged piston cups, may also be the problem cause.

An internal leak in the ABS or RWAL system may also be the problem with no physical evidence.

LOW PEDAL

If a low pedal is experienced, pump the pedal several times. If the pedal comes back up worn linings, rotors, drums, or rear brakes out of adjustment are the most likely causes. The proper course of action is to inspect and replace all worn component and make the proper adjustments.

SPONGY PEDAL

A spongy pedal is most often caused by air in the system. However, thin brake drums or substandard brake lines and hoses can also cause a spongy pedal. The proper course of action is to bleed the system, and replace thin drums and substandard quality brake hoses if suspected.

HARD PEDAL OR HIGH PEDAL EFFORT

A hard pedal or high pedal effort may be due to lining that is water soaked, contaminated, glazed, or badly worn. The power booster or check valve or a vacuum hose could also be faulty.

PEDAL PULSATION

Pedal pulsation is caused by components that are loose, or beyond tolerance limits.

The primary cause of pulsation are disc brake rotors with excessive lateral runout or thickness variation, or out of round brake drums. Other causes are loose wheel bearings or calipers and worn, damaged tires.

NOTE: Some pedal pulsation may be felt during ABS activation.

BRAKE DRAG

Brake drag occurs when the lining is in constant contact with the rotor or drum. Drag can occur at one wheel, all wheels, fronts only, or rears only.

Drag is a product of incomplete brake shoe release. Drag can be minor or severe enough to overheat the linings, rotors and drums.

Minor drag will usually cause slight surface charring of the lining. It can also generate hard spots in rotors and drums from the overheat-cool down process. In most cases, the rotors, drums, wheels and tires are quite warm to the touch after the vehicle is stopped.

Severe drag can char the brake lining all the way through. It can also distort and score rotors and drums to the point of replacement. The wheels, tires and brake components will be extremely hot. In severe cases, the lining may generate smoke as it chars from overheating.

Common causes of brake drag are:

- Seized or improperly adjusted parking brake cables.
- Loose/worn wheel bearing.
- Seized caliper or wheel cylinder piston.
- Caliper binding on corroded bushings or rusted slide surfaces.
- Loose caliper mounting.
- Drum brake shoes binding on worn/damaged support plates.
- Mis-assembled components.
- Long booster output rod.

If brake drag occurs at all wheels, the problem may be related to a blocked master cylinder return port, or faulty power booster (binds-does not release).

BRAKE FADE

Brake fade is usually a product of overheating caused by brake drag. However, brake overheating and resulting fade can also be caused by riding the brake pedal, making repeated high deceleration stops in a short time span, or constant braking on steep mountain roads. Refer to the Brake Drag information in this section for causes.

BRAKE PULL

Front brake pull condition could result from:

- Contaminated lining in one caliper
- Seized caliper piston
- Binding caliper
- Loose caliper
- Rusty caliper slide surfaces
- Improper brake pads
- Damaged rotor
- Front wheel alignment (caster, camber, and toe are possibly out of spec)

A worn, damaged wheel bearing or suspension component are further causes of pull. A damaged front tire (bruised, ply separation) can also cause pull.

A common and frequently misdiagnosed pull condition is where direction of pull changes after a few stops. The cause is a combination of brake drag followed by fade at one of the brake units.

As the dragging brake overheats, efficiency is so reduced that fade occurs. Since the opposite brake unit is still functioning normally, its braking effect is magnified. This causes pull to switch direction in favor of the normally functioning brake unit.

An additional point when diagnosing a change in pull condition concerns brake cool down. Remember that pull will return to the original direction, if the dragging brake unit is allowed to cool down (and is not seriously damaged).

REAR BRAKE GRAB OR PULL

Rear grab or pull is usually caused by improperly adjusted or seized parking brake cables, contaminated lining, bent or binding shoes and support plates, or improperly assembled components. This is particularly true when only one rear wheel is involved. However, when both rear wheels are affected, the master cylinder or proportioning valve could be at fault.

BRAKES DO NOT HOLD AFTER DRIVING THROUGH DEEP WATER PUDDLES

This condition is generally caused by water soaked lining. If the lining is only wet, it can be dried by driving with the brakes very lightly applied for a mile or two. However, if the lining is both soaked and dirt contaminated, cleaning and/or replacement will be necessary.

BRAKE LINING CONTAMINATION

Brake lining contamination is mostly a product of leaking calipers or worn seals, driving through deep water puddles, or lining that has become covered with grease and grit during repair. Contaminated lining should be replaced to avoid further brake problems.

WHEEL AND TIRE PROBLEMS

Some conditions attributed to brake components may actually be caused by a wheel or tire problem.

A damaged wheel can cause shudder, vibration and pull. A worn or damaged tire can also cause pull.

Severely worn tires with very little tread left can produce a grab-like condition as the tire loses and recovers traction. Flat-spotted tires can cause vibration and generate shudder during brake operation. A tire with internal damage such as a severe bruise, cut, or ply separation can cause pull and vibration.

BRAKE NOISES

Some brake noise is common with rear drum brakes and on some disc brakes during the first few stops after a vehicle has been parked overnight or stored. This is primarily due to the formation of trace corrosion (light rust) on metal surfaces. This light corrosion is typically cleared from the metal surfaces after a few brake applications causing the noise to subside.

BRAKE SQUEAK/SQUEAL

Brake squeak or squeal may be due to linings that are wet or contaminated with brake fluid, grease, or oil. Glazed linings and rotors with hard spots can also contribute to squeak. Dirt and foreign material embedded in the brake lining will also cause squeak/squeal.

A very loud squeak or squeal is frequently a sign of severely worn brake lining. If the lining has worn through to the brake pads in spots, metal-to-metal contact occurs. If the condition is allowed to continue, rotors can become so scored that replacement is necessary.

BRAKE CHATTER

Brake chatter is usually caused by loose or worn components, or glazed/burnt lining. Rotors with hard spots can also contribute to chatter. Additional causes of chatter are out-of-tolerance rotors, brake lining not securely attached to the shoes, loose wheel bearings and contaminated brake lining.

THUMP/CLUNK NOISE

Thumping or clunk noises during braking are frequently **not** caused by brake components. In many cases, such noises are caused by loose or damaged steering, suspension, or engine components. However, calipers that bind on the slide surfaces can generate a thump or clunk noise.

Standard Procedure

MANUAL BLEEDING

Use Mopar brake fluid, or an equivalent quality fluid meeting SAE J1703-F and DOT 3 standards only. Use fresh, clean fluid from a sealed container at all times.

1. Remove reservoir filler caps and fill reservoir.
2. If calipers were overhauled, open all caliper bleed screws. Then close each bleed screw as fluid starts to drip from it. Top off master cylinder reservoir once more before proceeding.
3. Attach one end of bleed hose (1) to bleed screw and insert opposite end in glass container (2) partially filled with brake fluid. Be sure end of bleed hose is immersed in fluid.

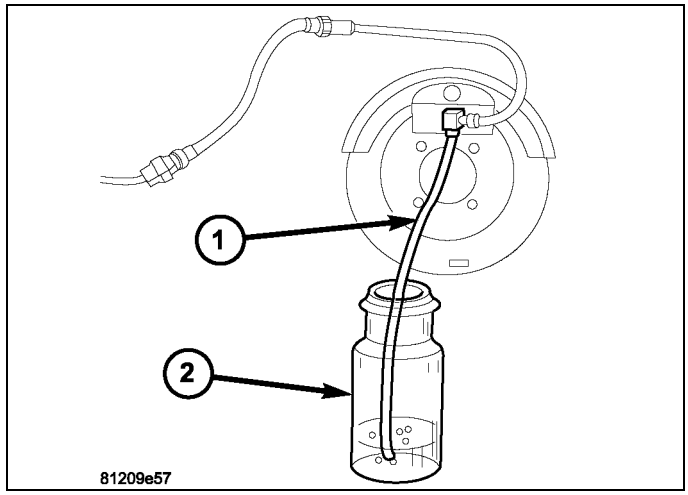

NOTE: Bleed procedure should be in this order (1) Right rear (2) Left rear (3) Right front (4) Left front.

4. Open up bleeder, then have a helper press down the brake pedal. Once the pedal is down, hold the pedal down while closing the bleeder. Repeat bleeding until fluid stream is clear and free of bubbles. Then move to the next wheel.
5. Before moving the vehicle verify the pedal is firm and not mushy.
6. Top off the brake fluid and install the reservoir cap.

PRESSURE BLEEDING

Use Mopar brake fluid, or an equivalent quality fluid meeting SAE J1703-F and DOT 3 standards only. Use fresh, clean fluid from a sealed container at all times.

Follow the manufacturers instructions carefully when using pressure equipment. Do not exceed the tank manufacturers pressure recommendations. Generally, a tank pressure of 15-20 psi is sufficient for bleeding.

Fill the bleeder tank with recommended fluid and purge air from the tank lines before bleeding.

Do not pressure bleed without a proper master cylinder adapter. The wrong adapter can lead to leakage, or drawing air back into the system.

Special Tools

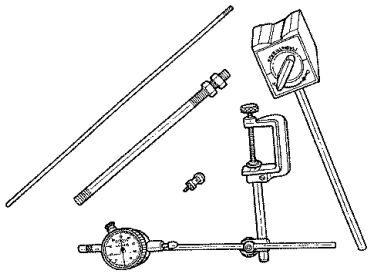

C-3339A - Set, Dial Indicator

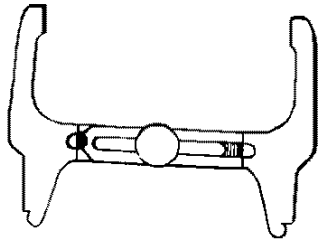

C-3919 - Gauge, Brake Shoes

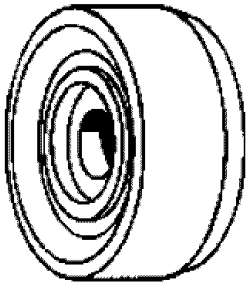

C-3716-A - Installer, Bearing

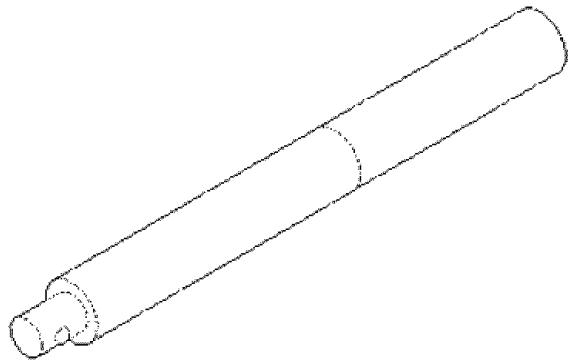

C-4171 - Driver Handle, Universal

ELECTRICAL

TABLE OF CONTENTS

page

ELECTRICAL
MOTOR, ADJUSTABLE PEDALS
DESCRIPTION 10
REMOVAL 10
INSTALLATION 12

page

SWITCH, ADJUSTABLE PEDALS
REMOVAL 14
INSTALLATION 14

Electrical

MOTOR, Adjustable Pedals

Description

The Adjustable Pedals System (APS) is designed to enable the fore and aft repositioning of the brake and accelerator pedals. This results in improved ergonomics in relation to the steering wheel for taller and shorter drivers. Being able to adjust the pedal positions also allows the driver to set steering wheel tilt and seat position to the most comfortable position. The position of the brake and accelerator pedals can be adjusted without compromising safety or comfort in actuating the pedals.

Change of pedal position is accomplished by means of a motor driven screw. Operating the adjustable pedal switch activates the pedal drive motor (5). The pedal drive motor turns a screw that changes the position of the brake and accelerator pedals (6). The pedals can be moved rearward (closer to the driver) or forward (away from driver). The brake pedal is moved on its drive screw to a position where the driver feels most comfortable.

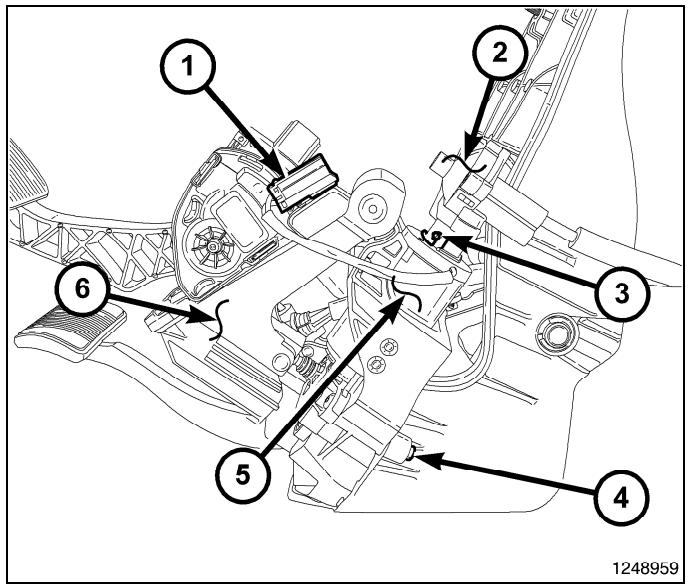

The accelerator pedal (6) is moved at the same time and the same distance as the brake pedal.

Neither the pedal drive motor (5) nor drive mechanism (2) are subject to the mechanical stress of brake or accelerator application.

- SYSTEM FEATURES:
  a. Range of Adjustment: The pedals may be adjusted up to 3 in. (75 mm)
  b. Pedal Adjustment Speed: 0.5 in./sec (12.5 mm/sec)
  c. Pedal Adjustment Inhibitors: Pedal adjustment is inhibited when the vehicle is in reverse or when cruise control is activated.

Removal

NOTE: If equipped with adjustable pedals: When replacing the components both pedal assemblies must be in the fully down position toward the floor for proper adjustment. Pedals can be moved manually by rotating the cable on the component not being replaced. New components come in the correct position until activated.

1. Remove the pedal assembly, (Refer to 05 - Brakes/Hydraulic/Mechanical/PEDAL(S), Brake and/or Accelerator - Removal)

NOTE: The adjustable pedal motor has three locking tabs (3) that prevent easy twisting when removing drive cable from housing.

2. Disconnect the drive cable (2) from the adjustable pedal motor (5) by twisting clockwise and lifting from motor.

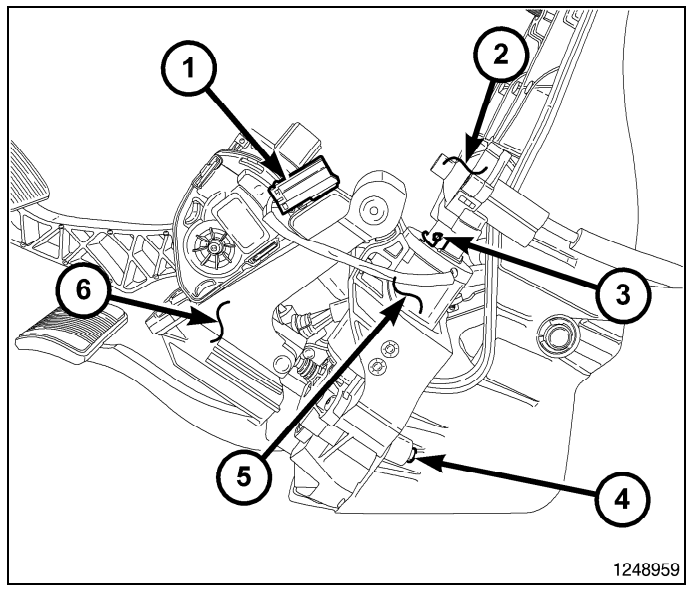

3. Remove the accelerator subassembly bracket mounting nut (3).

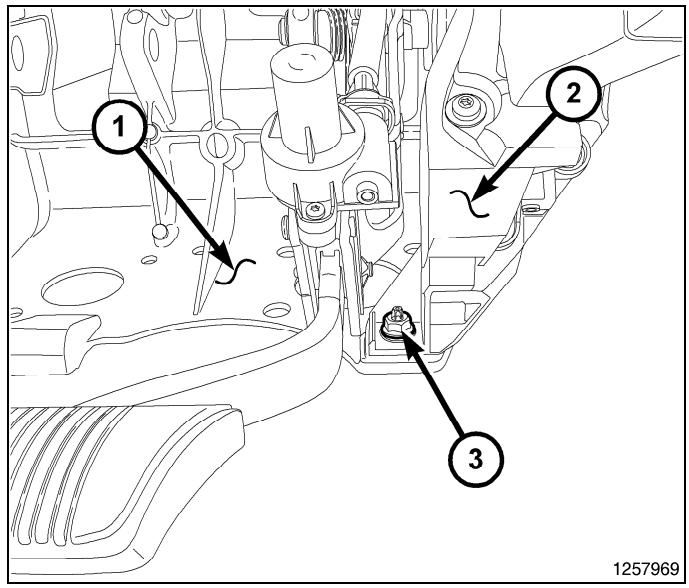

4. Remove the accelerator subassembly mounting screw (4).
5. Remove the accelerator subassembly (6).

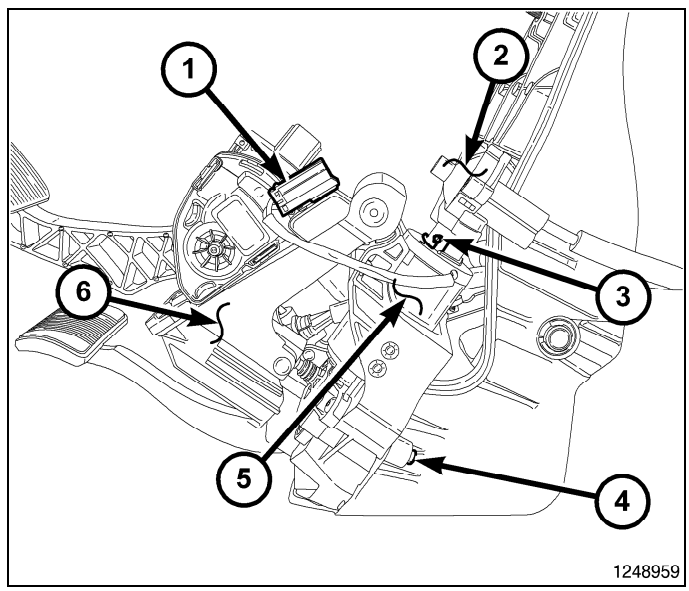

Installation

NOTE: If equipped with adjustable pedals: When replacing the components both pedal assemblies must be in the fully down position toward the floor for proper adjustment. Pedals can be moved manually by rotating the cable on the component not being replaced. New components come in the correct position until activated.

1. Position the accelerator subassembly (6) and install the rear mounting screw (4).

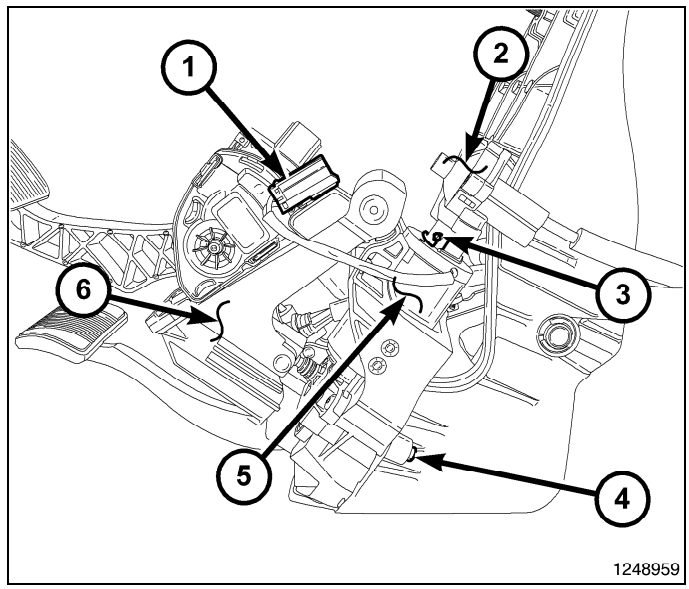

2. Install the accelerator subassembly front mounting nut (3).

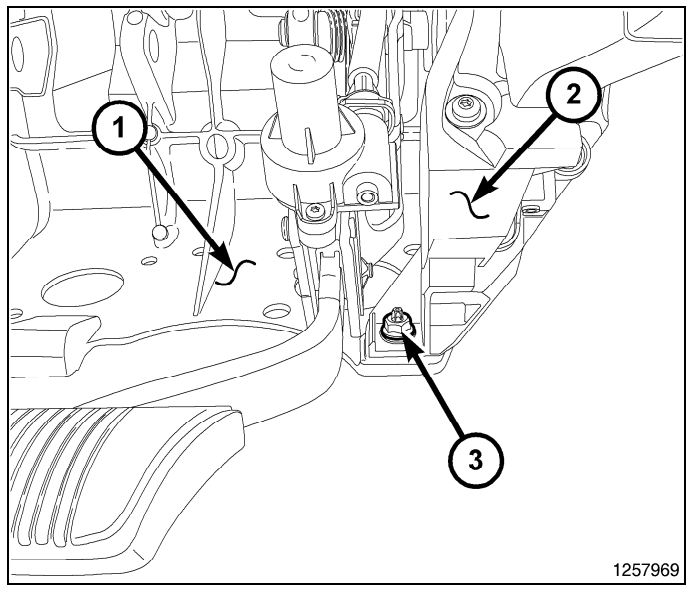

NOTE: Drive cable to motor housing adapter (2) can be turned manually within the motor housing (1) to allow proper alignment for drive cable attachment to motor.

3. Verify the drive cable to motor housing adapter (2) is properly inserted in motor housing (1) before attaching drive cable.

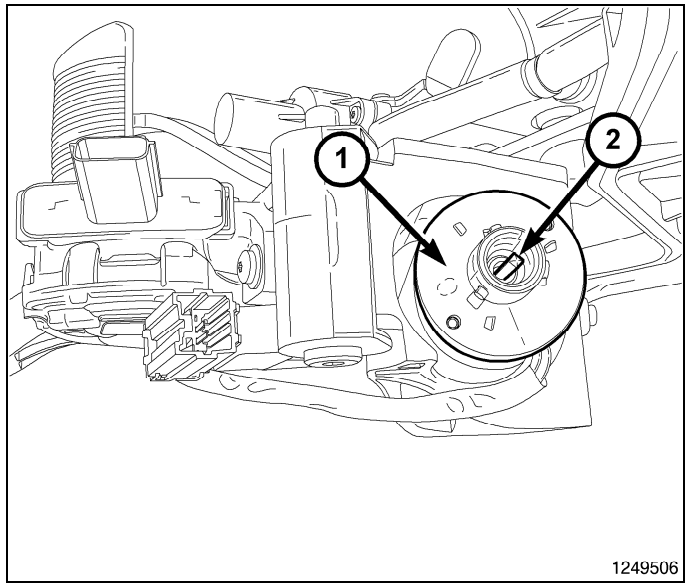

NOTE: A snap sound should be heard when drive cable locks into position.

4. Align drive cable housing to motor tabs/slots (3), and using light hand pressure push drive cable (2) into position on the drive motor (5). Turn counter clockwise to lock into position.
5. Install the pedal assembly, (Refer to 05 - Brakes/Hydraulic/Mechanical/PEDAL(S), Brake and/or Accelerator - Installation)

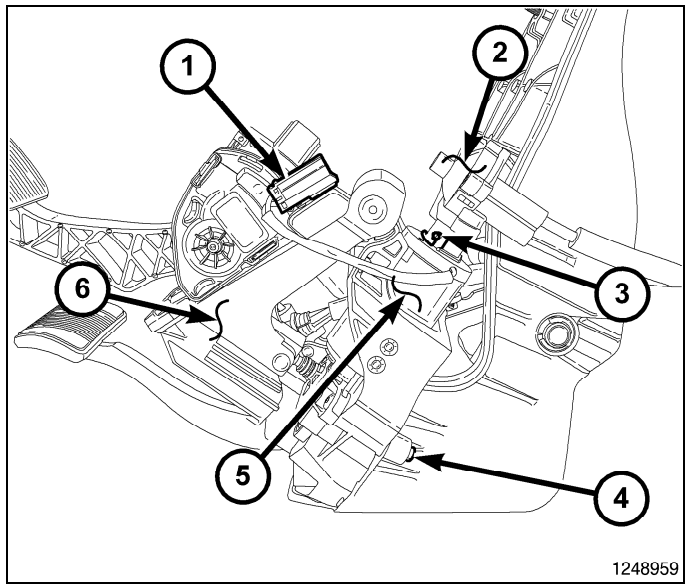

SWITCH, Adjustable Pedals

Removal

1. Remove the lower steering column shroud, (Refer to 19 - Steering/Column/SHROUD, Steering Column - Removal).
2. Disconnect the electrical connector (1) from the adjustable pedal switch (2).
3. Remove the switch (2) from the steering column by releasing the retaining tab (3) and pulling the switch away from the column.

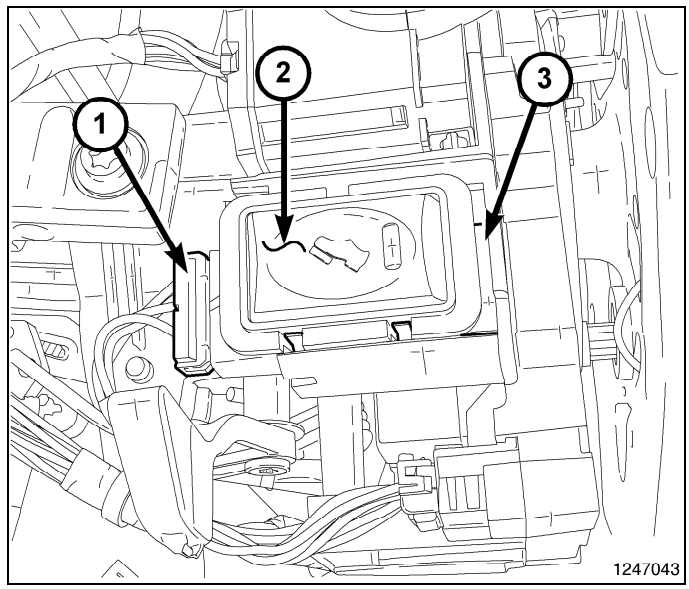

Installation

1. Install the switch (2) to the steering column by pushing the switch inward and seating the retaining clip.
2. Reconnect the electrical connector (1) to the adjustable pedal switch (2).
3. Install the lower steeering column shroud, (Refer to 19 - Steering/Column/SHROUD, Steering Column - Installation).

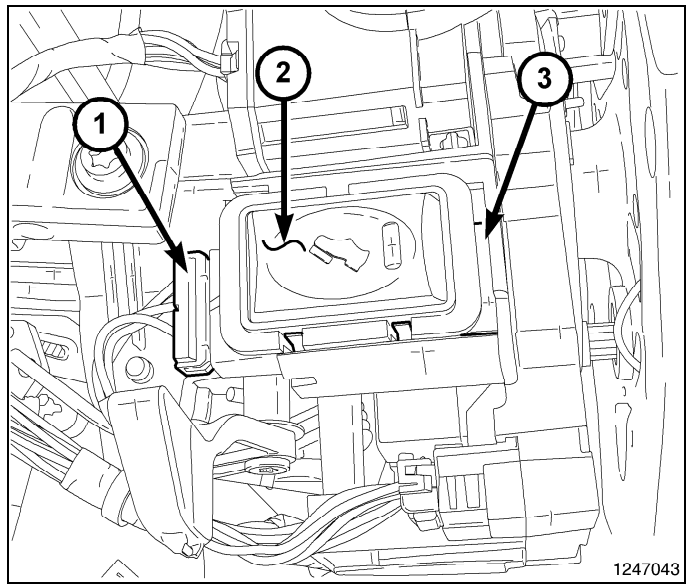

HYDRAULIC/MECHANICAL

TABLE OF CONTENTS

page

HYDRAULIC/MECHANICAL
SPECIFICATIONS
BASE BRAKE . . . 17
TORQUE . . . 17
ADAPTER, DISC BRAKE CALIPER
REMOVAL
FRONT . . . 18
REAR . . . 19
INSTALLATION
FRONT . . . 20
REAR . . . 21
BOOSTER, POWER BRAKE
DESCRIPTION . . . 22
OPERATION . . . 22
DIAGNOSIS AND TESTING . . . 22
REMOVAL . . . 23
INSTALLATION . . . 23
BRACKET, CALIPER MOUNTING
REMOVAL . . . 24
INSTALLATION . . . 24
CALIPER, DISC BRAKE
DESCRIPTION . . . 25
OPERATION . . . 25
REMOVAL
FRONT . . . 26
REAR . . . 28
DISASSEMBLY . . . 28
ASSEMBLY . . . 30
INSTALLATION
FRONT . . . 32
REAR . . . 33
FLUID
DESCRIPTION . . . 33
DIAGNOSIS AND TESTING . . . 34
STANDARD PROCEDURE . . . 34
JUNCTION BLOCK, BRAKE TUBE
REMOVAL
FRONT JUNCTION BLOCK . . . 34
REAR JUNCTION BLOCK . . . 35
INSTALLATION
FRONT JUNCTION BLOCK . . . 36
REAR JUNCTION BLOCK . . . 36

page

MASTER CYLINDER, BRAKE
DESCRIPTION . . . 36
OPERATION . . . 37
DIAGNOSIS AND TESTING . . . 37
STANDARD PROCEDURE . . . 38
REMOVAL . . . 38
INSTALLATION . . . 39
PADS, BRAKE
REMOVAL
FRONT . . . 39
REAR . . . 41
INSPECTION . . . 43
INSTALLATION
FRONT . . . 44
REAR . . . 45
PEDAL(S), BRAKE AND/OR ACCELERATOR
DESCRIPTION . . . 48
OPERATION . . . 48
REMOVAL
BRAKE PEDAL . . . 48
PEDAL ASSEMBLY . . . 49
INSTALLATION
BRAKE PEDAL . . . 49
PEDAL ASSEMBLY . . . 51
PLATE, BRAKE BACKING
REMOVAL . . . 52
INSTALLATION . . . 52
RESERVOIR, BRAKE MASTER CYLINDER
REMOVAL . . . 53
INSTALLATION . . . 53
ROTOR, BRAKE
DIAGNOSIS AND TESTING . . . 53
STANDARD PROCEDURE . . . 54
REMOVAL
FRONT . . . 55
REAR . . . 55
INSTALLATION
FRONT . . . 56
REAR . . . 56
TUBES AND HOSES, BRAKE
STANDARD PROCEDURE
DOUBLE INVERTED FLARING . . . 56
ISO FLARING . . . 57
REMOVAL
FRONT BRAKE HOSE . . . 57
REAR BRAKE HOSE - 1500 SERIES . . . 58

continued..

page

INSTALLATION
FRONT BRAKE HOSE 59
REAR BRAKE HOSE - 1500 SERIES. 60

Hydraulic/Mechanical

Specifications

BASE BRAKE

SPECIFICATIONS

DESCRIPTION	SPECIFICATION
Front Disc Brake Caliper Type	Dual Piston Sliding
Rear Disc Brake Caliper Type	Single Piston Sliding
Front Disc Brake Caliper	2X54 mm (2.12 in.)
Front Disc Brake Rotor	336×28 mm (13.2×1.1 in.)
Front/Rear Disc Brake Rotor Max. Runout	0.050 mm (0.002 in.)
Front/Rear Disc Brake Rotor Max. Thickness Variation	0.015 mm (0.00059 in.)

SPECIFICATIONS, continued

DESCRIPTION	SPECIFICATION
Minimum Front Rotor Thickness	26.4 mm (1.039 in.)
Mininium Rear Rotor Thickness	20.4 mm (.803 in)
Rear Disc Brake Caliper	1x54 mm (2.12 in)
Rear Disc Brake Rotor	350x22 mm (13.77 X .86 in)
Brake Booster Type	Vacuum Dual Diaphragm

TORQUE

DESCRIPTION	N·m	Ft. Lbs.	In. Lbs.
Brake Booster Mounting Nuts	28	21	250
Master Cylinder Mounting Nuts	18	—	160
Reservoir Retaining Screws	8	6	71
Caliper Bleed Screws	19	14	169
Caliper Mounting Pins, Front	32	24	—
Caliper Mounting Pins, Rear	30	22	—
Caliper Adapter Mounting Bolts, Front	176	130	—
Caliper Adapter Mounting Bolts, Rear	163	120	—
Junction Block Bolts, Front	19	14	169
Junction Block Bolts, Rear	24	18	213
Brake Pedal Assembly Bracket Bolts (To I/P)	31	23	—
Support Plate Mounting Bolts/Nuts	102	75	—
Brake Line Fittings, Master Cylinder	19	14	169

DESCRIPTION	N·m	Ft. Lbs.	In. Lbs.
Brake Line Fittings, Junction Block (Both)	19	14	169
Caliper Brake Line Banjo Bolt, Front	27	20	245
Caliper Brake Line Banjo Bolt, Rear	28	20	245
Brake Hose Bolts To Frame, Front	10	7.5	89
Brake Hose Front Fitting	19	14	169
Brake Hose Rear Fitting	19	14	169
Parking Brake Pedal Assembly	25	18	—
Hub/Bearing Bolts	163	120	—

ADAPTER, Disc Brake Caliper

Removal

FRONT

1. Raise and support the vehicle, (Refer to 04 - Vehicle Quick Reference/Hoisting - Standard Procedure).
2. Remove the front wheel and tire assembly.
3. Remove the caliper slide pin bolts (4)(Refer to 05 - Brakes/Hydraulic/Mechanical/CALIPER, Disc Brake - Removal).

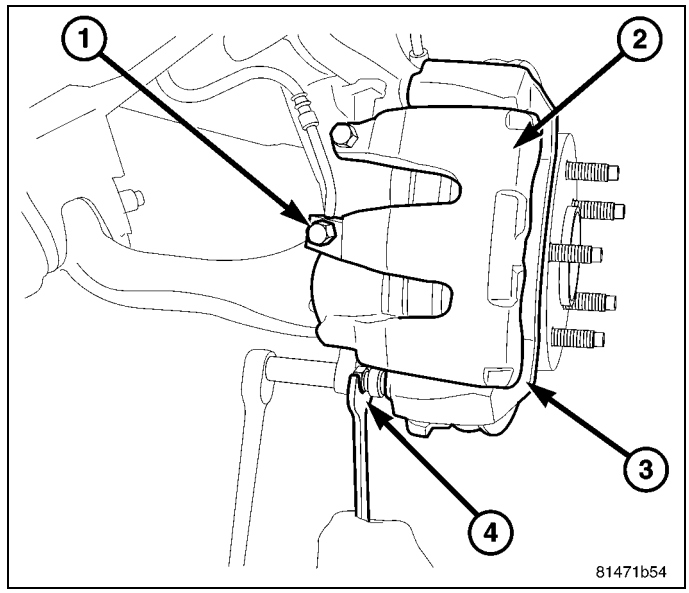

CAUTION: Never allow the disc brake caliper to hang from the brake hose. Damage to the brake hose will result. Provide a suitable support to hang the caliper securely.

4. Remove the disc brake caliper (1) from the adapter (2).

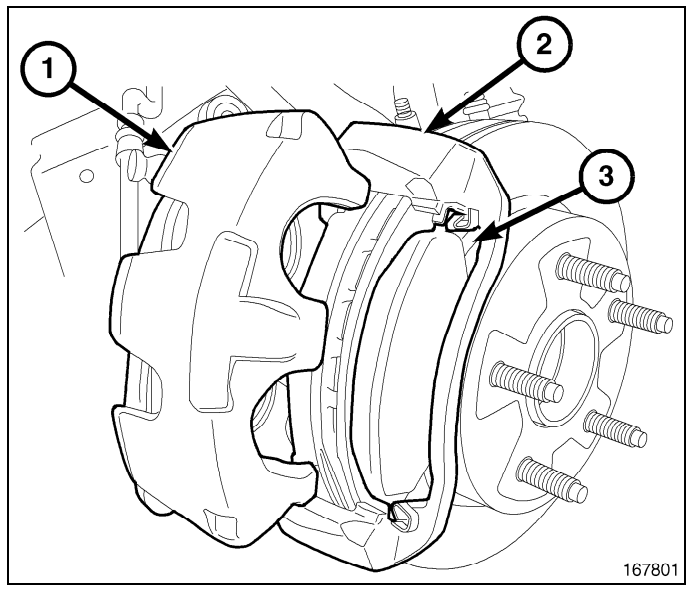

5. Remove the inboard (4) and outboard (2) brake pads..
6. Remove the caliper adapter mounting bolts (5).
7. Remove and transfer any necessary components.

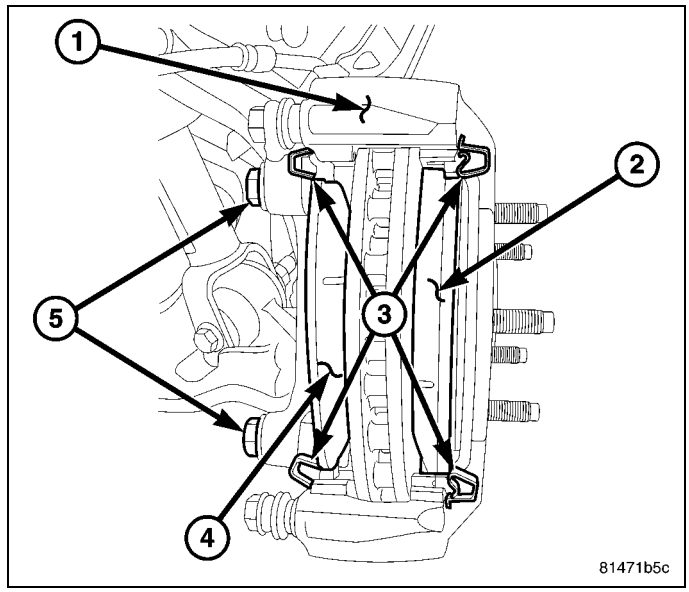

REAR

1. Raise and support the vehicle, (Refer to 04 - Vehicle Quick Reference/Hoisting - Standard Procedure).
2. Remove the wheel and tire assembly.
3. Drain a small amount of fluid from master cylinder brake reservoir with a **clean** suction gun.
4. Bottom the caliper pistons into the caliper by prying the caliper over.
5. Remove the caliper slide bolts.
6. Remove the disc brake caliper from the mount.

CAUTION: Never allow the disc brake caliper to hang from the brake hose. Damage to the brake hose will result. Provide a suitable support to hang the caliper securely.

7. Remove the inboard and outboard brake pads (1).
8. Remove the anti-rattle clips (2).
9. Remove the caliper adapter mounting bolts (4).
10. Remove the caliper adapter.

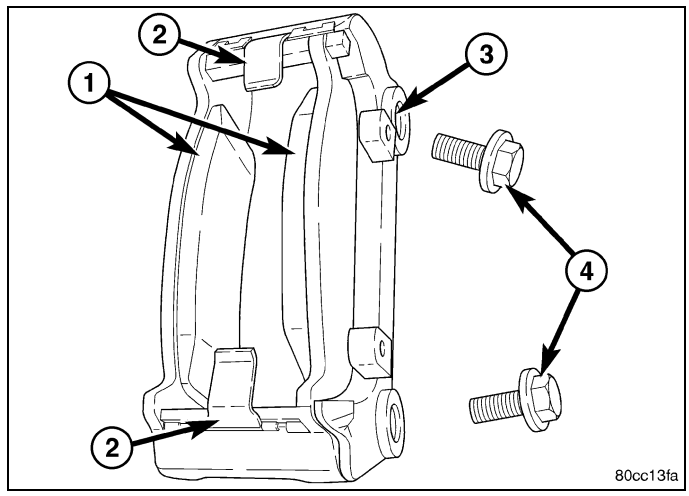

Installation

FRONT

NOTE: Petroleum based grease should not be used on any of the rubber components of the caliper, Use only a Non-Petroleum based grease, such as Dow Corning-807® grease.

NOTE: Clean slide pin bores thoroughly to remove any old grease.

NOTE: Use grease packets included with kit or Dow Corning-807® grease.

1. Thoroughly coat the new slide pins (3) on all working surfaces.
2. Install the boot (2) onto the slide pin (3) and then insert into the adapter (1).
3. Push the pin (3) all the way into the adapter (1) and carefully expel the trapped air by gently pushing on the boot (2) near the slide pin head (3).

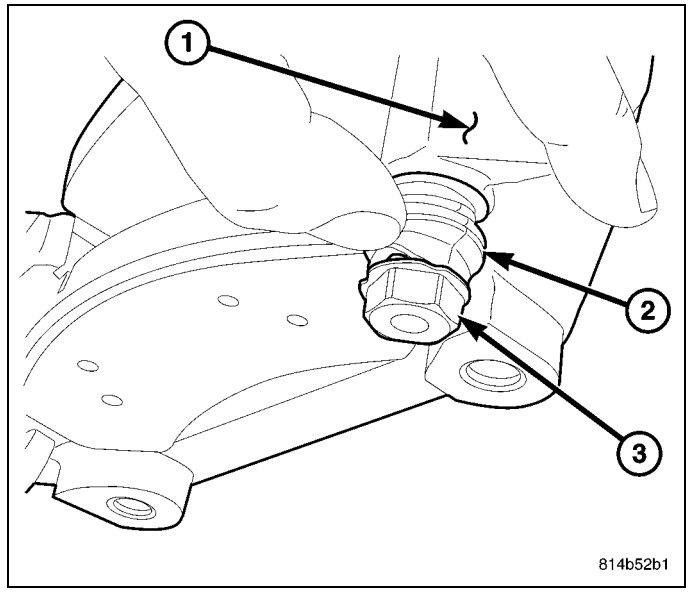

4. Install the caliper adapter mounting bolts (5). Tighten the mounting bolts to 176 N·m (130 ft.lbs).
5. Install the inboard (4) and outboard (2) pads. (Refer to 05 - Brakes/Hydraulic/Mechanical/PADS, Brake - Installation).

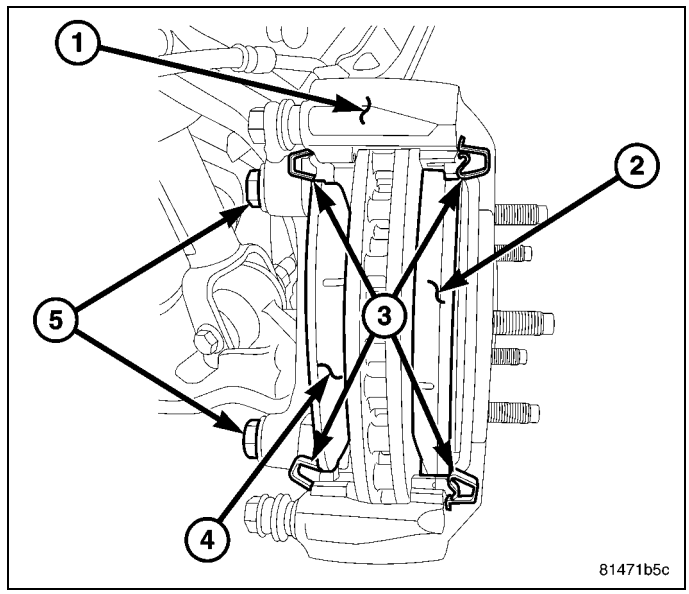

6. Install the caliper (2) and the caliper slide pin bolts (4) (Refer to 05 - Brakes/Hydraulic/Mechanical/CALIPER, Disc Brake - Installation).
7. Install the tire and wheel assembly. (Refer to 22 - Tires and Wheels/Wheels - Standard Procedure).

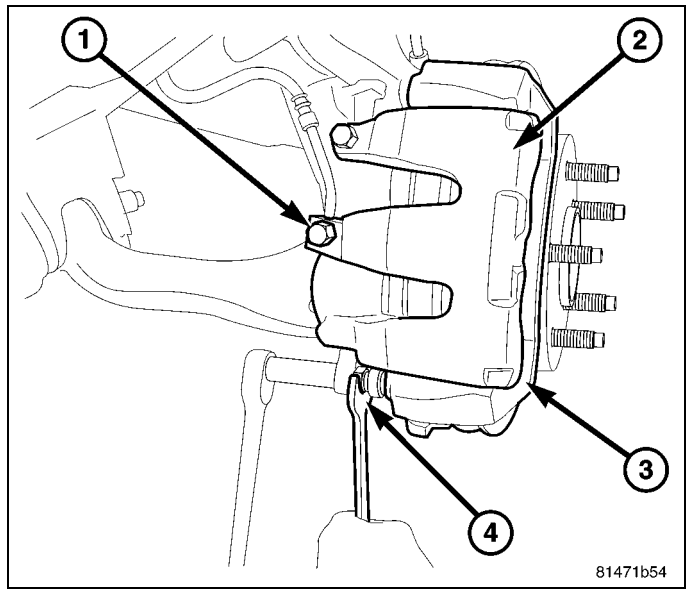

REAR

1. Install the caliper adapter mounting bolts (4). Tighten the mounting bolts to 163 N·m (120 ft.lbs).
2. Install the anti-rattle clips (2).
3. Install the inboard and outboard pads (1).
4. Install the caliper mounting bolts.
5. Install the tire and wheel assembly, (Refer to 22 - Tires and Wheels/Wheels - Standard Procedure).

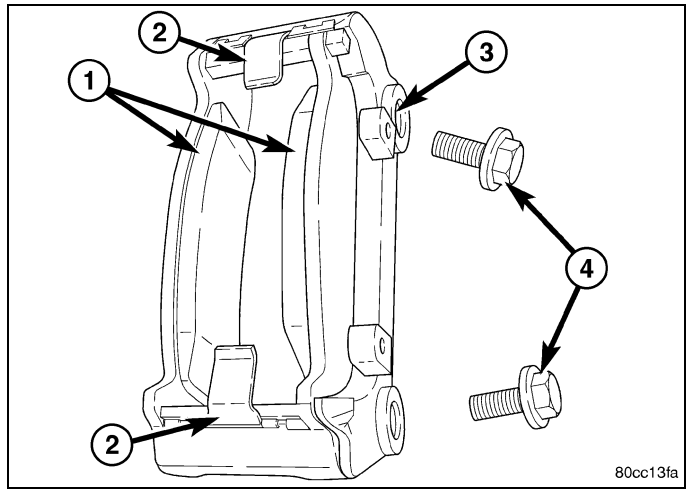

BOOSTER, Power Brake

Description

All models use a tandem diaphragm, power brake booster (3).

NOTE: The power brake booster is not a repairable component. The booster must be replaced as an assembly if diagnosis indicates a malfunction has occurred.

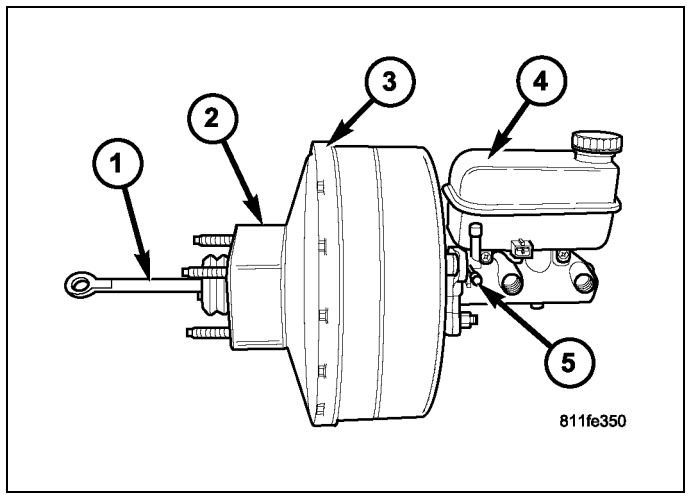

Operation

The booster unit consists of a single housing divided into two by a tandem diaphragm (3). The outer edge of the diaphragm is secured to the housing. A spacer block (2) is located in between the cowl and the booster housing. The booster push rod (1), connects the booster to the brake pedal and master cylinder (4), is attached to the center of the diaphragm. A check valve (5) is used in the booster outlet connected to the engine intake manifold. Power assist is generated by utilizing a combination of vacuum and atmospheric pressure to boost brake assist.

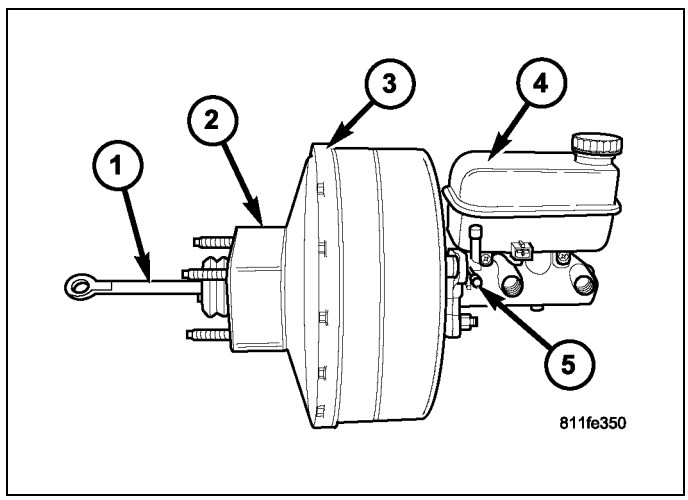

Diagnosis and Testing

1. Start the engine and check the booster vacuum hose connections. A hissing noise indicates a vacuum leak. Correct any vacuum leaks before proceeding.
2. Stop the engine and pump the brake pedal until all vacuum reserve in the booster is depleted.
3. Press and hold the brake pedal under light foot pressure. The pedal should hold firm. If the pedal falls away, there may be an external leak or the master cylinder is faulty (internal leakage).
4. Start the engine and note pedal action. It should fall away slightly under light foot pressure, then hold firm. If no pedal action is discernible, the power booster, vacuum supply or vacuum check valve is faulty, proceed to the POWER BOOSTER VACUUM TEST.
5. If the POWER BOOSTER VACUUM TEST passes, rebuild the booster vacuum reserve as follows: Release the brake pedal. Increase engine speed to 1500 RPM, close the throttle and immediately turn off the ignition to stop the engine.
6. Wait a minimum of 90 seconds and try brake action again. The booster should provide two or more vacuum assisted pedal applications. If the vacuum assist is not provided, the booster is faulty.

POWER BOOSTER VACUUM TEST

1. Connect a vacuum gauge to the booster check valve with a short length of hose and T-fitting.

2. Start and run the engine at curb idle for one minute.
3. Observe the vacuum supply. If the vacuum supply is less that 12 inches HG (406 millibars), repair the vacuum supply.
4. Clamp the hose shut between the intake vacuum source and the check valve.
5. Stop the engine and observe the vacuum gauge.
6. If the vacuum drops more than one inch HG (33 millibars) within 15 seconds, the booster diaphragm or check valve is faulty.

POWER BOOSTER CHECK VALVE TEST

1. Remove the power booster check valve from the power booster.
2. Using a hand operated vacuum pump, apply 15-20 inches HG (508-677 millibars) vacuum at the booster side of the check valve.
3. The vacuum should hold steady. If the gauge on the pump indicates vacuum loss, the check valve is faulty and should be replaced.

Removal

1. Remove master cylinder (Refer to 05 - Brakes/Hydraulic/Mechanical/MASTER CYLINDER, Brake - Removal).
2. Disconnect vacuum line at booster.
3. Remove clip securing booster push rod to brake pedal.

NOTE: Do not reuse the stop lamp switch.

4. Remove the brake lamp switch and discard it (Refer to 08 - Electrical/8L - Lamps and Lighting/Lamps/Lighting - Exterior/SWITCH, Stop Lamp - Removal).
5. Remove the nuts (1) from the booster mounting studs.
6. Remove the booster (2) and gasket from front cowl panel.

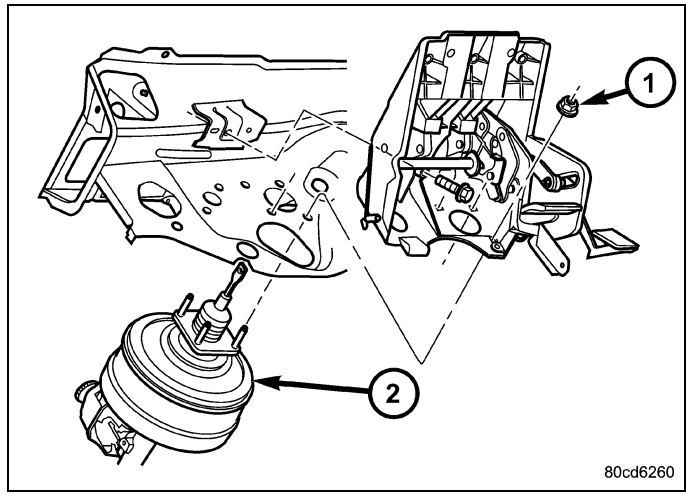

Installation

1. Guide the booster (2) studs into the cowl panel holes and seat the booster on the panel.
2. Install and tighten new booster attaching nuts (1) to 28 N·m (250 in. lbs.).

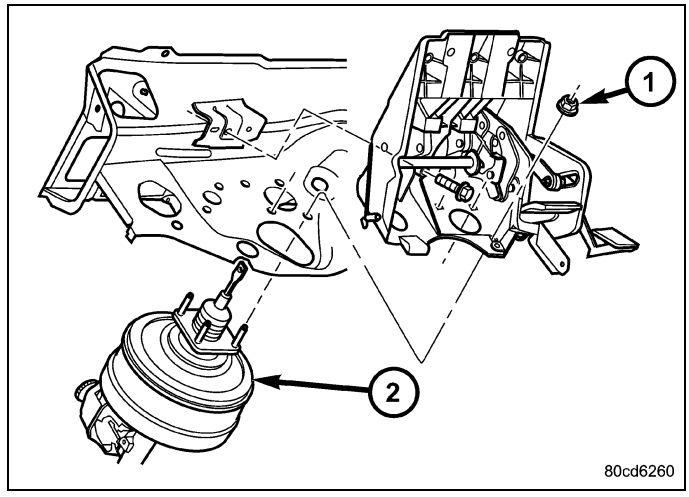

3. Install the booster push rod on brake pedal and install clip.

CAUTION: Do not reuse the original stop lamp switch. Anytime a switch has been removed or its position compromised, a new switch must be installed and adjusted. Do not attempt to readjust the switch.

4. Install a new brake lamp switch. (Refer to 08 - Electrical/8L - Lamps and Lighting/Lamps/Lighting - Exterior/SWITCH, Stop Lamp - Installation).

5. Install the booster check valve if removed and connect the vacuum hose to the check valve.
6. Install the master cylinder. (Refer to 05 - Brakes/Hydraulic/Mechanical/MASTER CYLINDER, Brake - Installation).
7. Fill and bleed the brake system. (Refer to 05 - Brakes - Standard Procedure).

BRACKET, Caliper Mounting

Removal

NOTE: Leaf spring system shown, coil spring system similar.

1. Remove wheel and tire assembly.
2. Remove the disc brake caliper (Refer to 05 - Brakes/Hydraulic/Mechanical/CALIPER, Disc Brake - Removal).
3. Remove the caliper adapter (Refer to 05 - Brakes/Hydraulic/Mechanical/ADAPTER, Disc Brake Caliper - Removal).
4. Remove the rotor (Refer to 05 - Brakes/Hydraulic/Mechanical/ROTOR, Brake - Removal).
5. Remove the axle shaft, refer to Refer to 03 - Differential and Driveline/Rear Axle Removal.
6. Remove the park brake shoes (Refer to 05 - Brakes/Parking Brake/SHOES, Parking Brake - Removal).
7. Remove the parking brake cable from the brake lever.

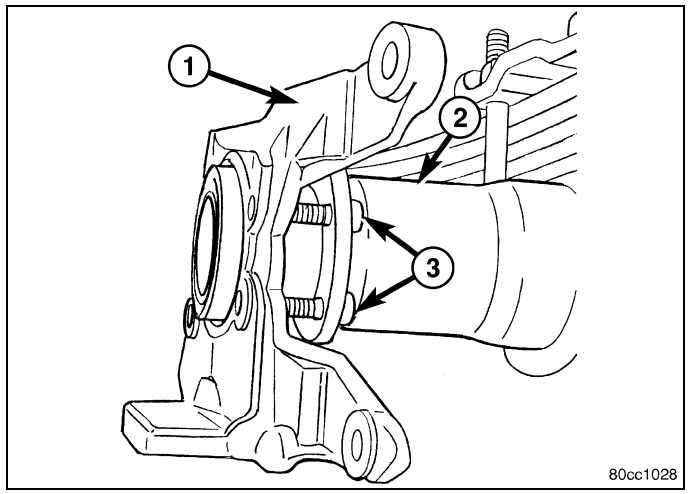

8. Remove the nuts (3) attaching the support plate to the axle and remove the support plate.
9. Remove the caliper adapter mount (1) from the axle housing (2).

Installation

NOTE: Leaf spring system shown, coil spring system similar.

1. Install the caliper adapter mount (1) on the axle housing (2).
2. Install support plate on axle flange. Tighten attaching nuts (3) to 102 N·m (75 ft. lbs.) .

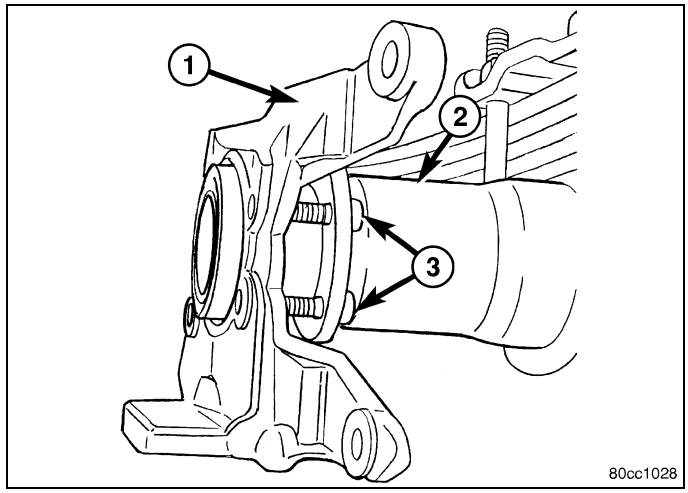

3. Install parking brake cable in the brake lever.
4. Install the park brake shoes (Refer to 05 - Brakes/Parking Brake/SHOES, Parking Brake - Installation).
5. Install axle shaft, refer to 03 - Differential and Driveline/Rear Axle - Installation.
6. Adjust brake shoes to drum with brake gauge (Refer to 05 - Brakes/Parking Brake/SHOES, Parking Brake - Adjustments).
7. Install the rotor (Refer to 05 - Brakes/Hydraulic/Mechanical/ROTOR, Brake - Installation).
8. Install the caliper adapter (Refer to 05 - Brakes/Hydraulic/Mechanical/ADAPTER, Disc Brake Caliper - Installation).
9. Install the caliper (Refer to 05 - Brakes/Hydraulic/Mechanical/CALIPER, Disc Brake - Installation).
10. Install wheel and tire assembly, (Refer to 22 - Tires and Wheels/Wheels - Standard Procedure).

CALIPER, Disc Brake

Description

NOTE: Petroleum based grease should not be used on any of the rubber components of the caliper, Use only Non-Petroleum based grease.

The calipers are a dual piston type. The calipers are free to slide laterally, this allows continuous compensation for lining wear.

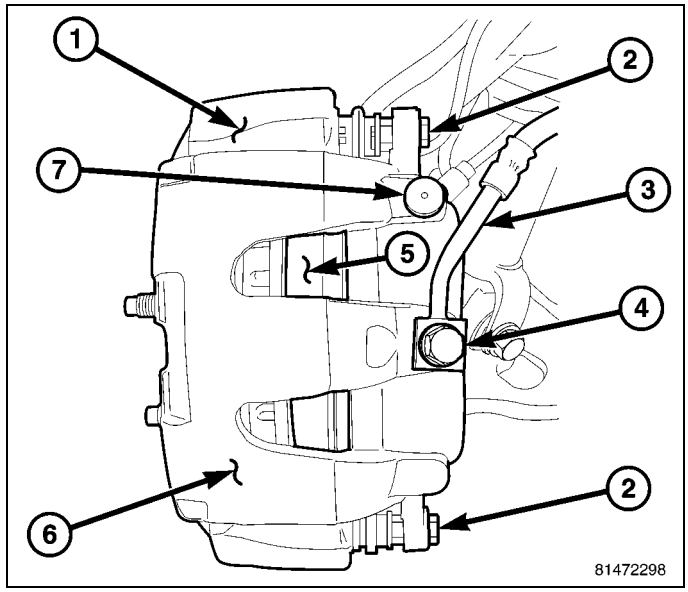

Operation

When the brakes are applied fluid pressure is exerted against the caliper piston (2). The fluid pressure is exerted equally and in all directions. This means pressure exerted against the caliper piston and within the caliper bore will be equal.

Fluid pressure applied to the piston is transmitted directly to the inboard brake pad (5). This forces the pad lining against the inner surface of the disc brake rotor. At the same time, fluid pressure within the piston bore forces the caliper to slide inward on the mounting bolts. This action brings the outboard brake pad lining (6) into contact with the outer surface of the disc brake rotor.

In summary, fluid pressure acting simultaneously on both piston and caliper, produces a strong clamping action. When sufficient force is applied, friction will attempt to stop the rotors from turning and bring the vehicle to a stop.

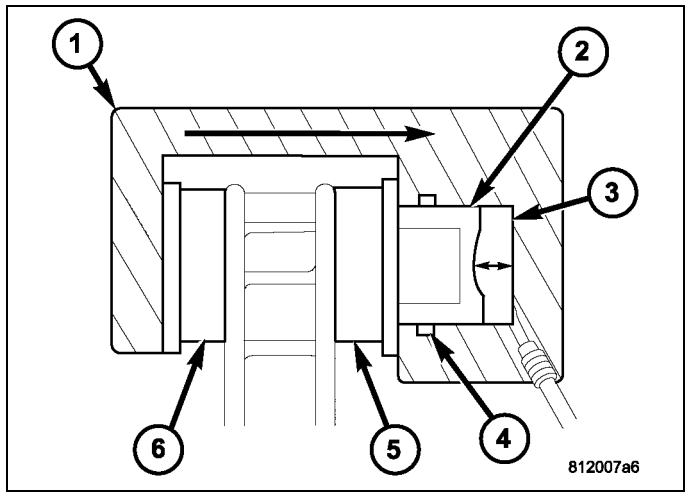

Application and release of the brake pedal generates only a very slight movement of the caliper and piston. Upon release of the pedal, the caliper and piston return to a rest position. The brake pads do not retract an appreciable distance from the rotor. In fact, clearance is usually at, or close to zero. The reasons for this are to keep road debris from getting between the rotor and lining and in wiping the rotor surface clear each revolution.

The caliper piston seal (4) controls the amount of piston (2) extension needed to compensate for normal lining wear.

During brake application, the seal is deflected outward by fluid pressure and piston movement (6). When the brakes (and fluid pressure) are released, the seal relaxes and retracts the piston (3).

The amount of piston retraction is determined by the amount of seal deflection. Generally the amount is just enough to maintain contact between the piston and inboard brake pad.

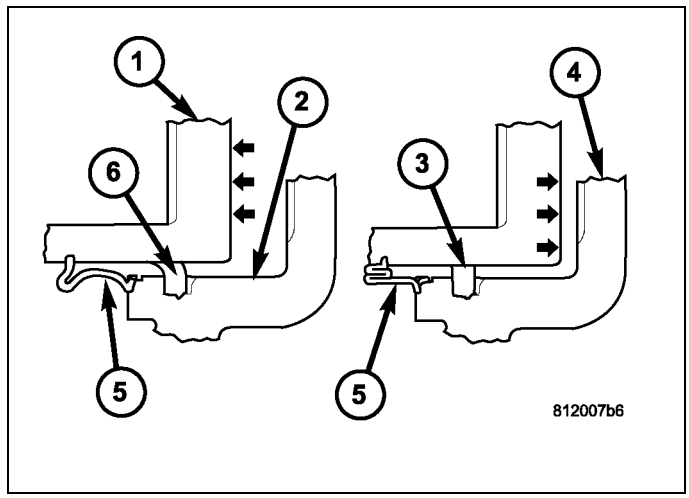

Removal

FRONT

CAUTION: Never allow the disc brake caliper to hang from the brake hose. Damage to the brake hose will result. Provide a suitable support to hang the caliper securely.

1. Install prop rod on the brake pedal to keep pressure on the brake system, Holding pedal in this position will isolate master cylinder from hydraulic brake system and will not allow brake fluid to drain out of brake fluid reservoir while brake lines are open. This will allow you to bleed out the area of repair instead of the entire system.
2. Raise and support the vehicle, (Refer to 04 - Vehicle Quick Reference/Hoisting - Standard Procedure).
3. Remove the tire and wheel assembly.
4. Compress the disc brake caliper (6).
5. Remove the banjo bolt (4) and discard the copper washers.

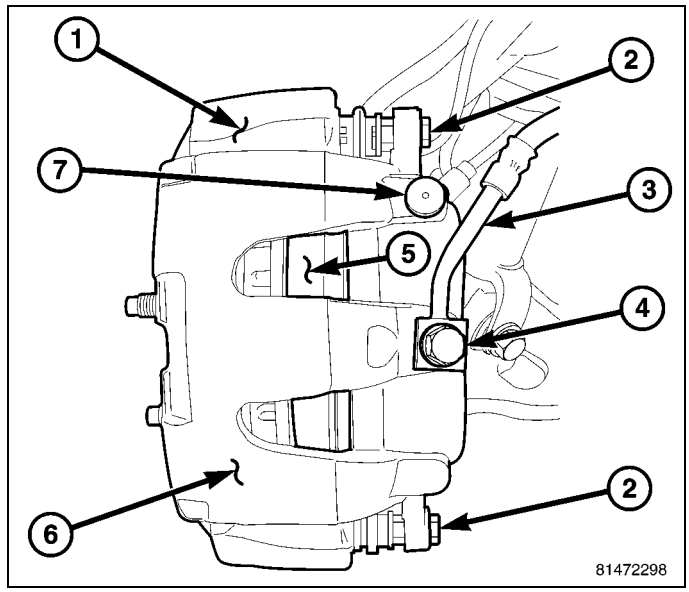

6. Remove the caliper slide pin bolts (2).

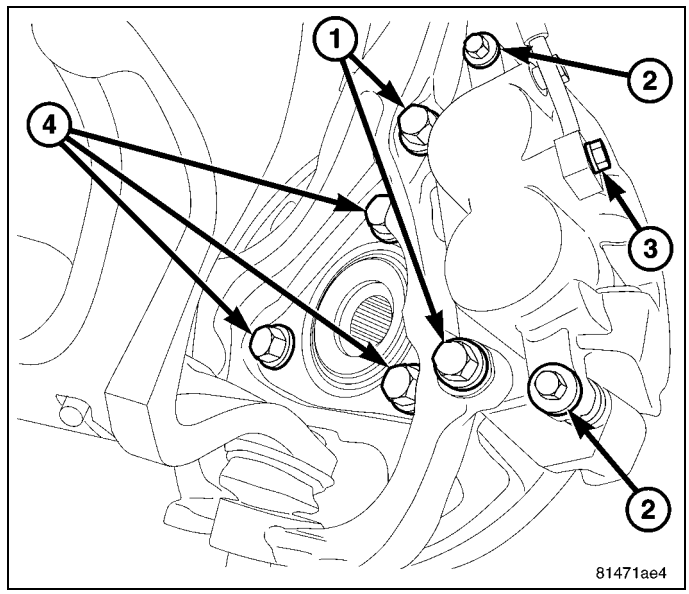

7. Remove the disc brake caliper (1) from the caliper adapter (2).

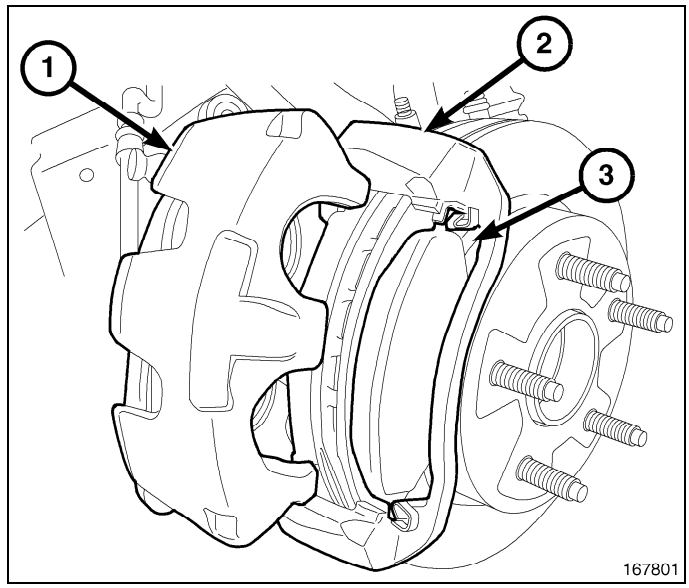

REAR

CAUTION: Never allow the disc brake caliper to hang from the brake hose. Damage to the brake hose will result. Provide a suitable support to hang the caliper securely.

1. Install prop rod on the brake pedal to keep pressure on the brake system, Holding pedal in this position will isolate master cylinder from hydraulic brake system and will not allow brake fluid to drain out of brake fluid reservoir while brake lines are open. This will allow you to bleed out the area of repair instead of the entire system.
2. Raise and support vehicle.
3. Remove the wheel and tire assembly.
4. Drain small amount of fluid from master cylinder brake reservoir with suction gun.
5. Remove the brake hose banjo bolt and discard the copper washers if replacing caliper.
6. Remove the caliper slide bolts (3).
7. Remove the caliper (6) from vehicle.

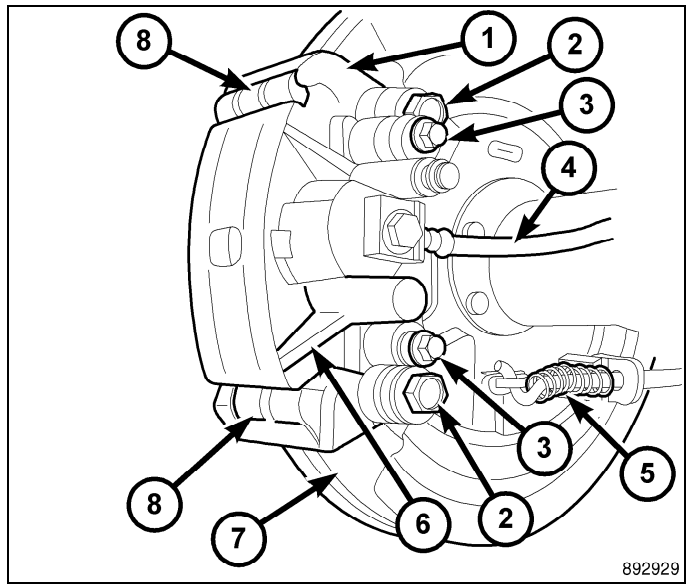

Disassembly

1. Drain the brake fluid from caliper.
2. C-clamp (2) a block of wood (1) over one piston.

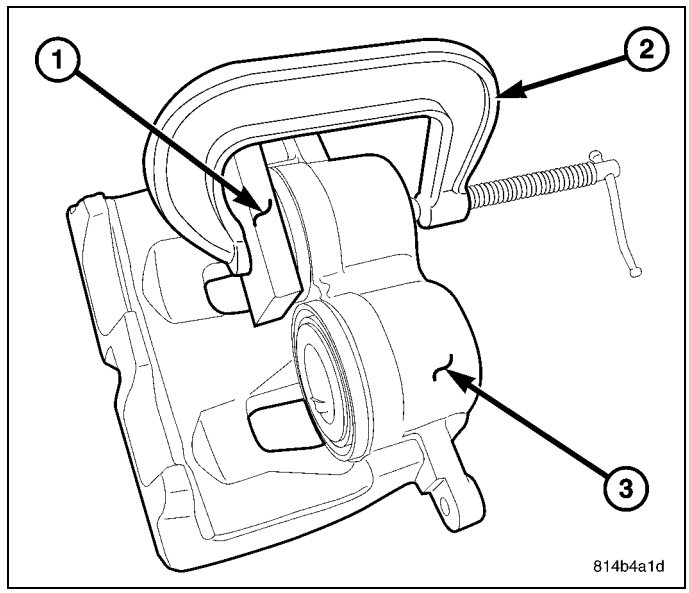

CAUTION: Do not blow the piston out of the bore with sustained air pressure. This could result in a cracked piston.

WARNING: Never attempt to catch the piston as it leaves the bore. This could result in personal injury.

3. Take another piece of wood and pad it with one-inch thickness of shop towels (2). Place this piece in the outboard shoe side of the caliper in front of the other piston. This will cushion and protect caliper piston during removal.
4. To remove the caliper piston direct **short bursts of low pressure air** with a blow gun through the caliper brake hose port. Use only enough air pressure to ease the piston out.
5. Remove the C-clamp and block of wood from the caliper and clamp it over the dust boot of the first piston removed. This will seal the empty piston bore.
6. Move the padded piece of wood in front of the other piston.
7. Remove the second piston using the same procedure with **short bursts of low pressure air**.

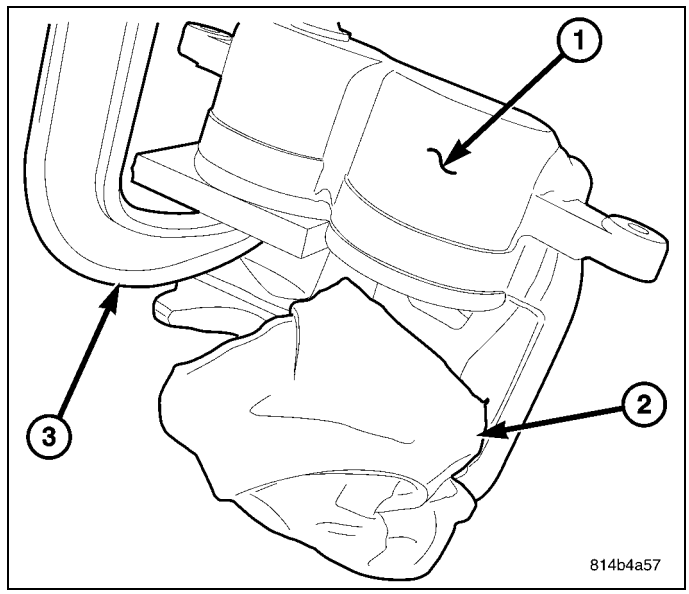

8. Remove piston dust boots (2) by hand.

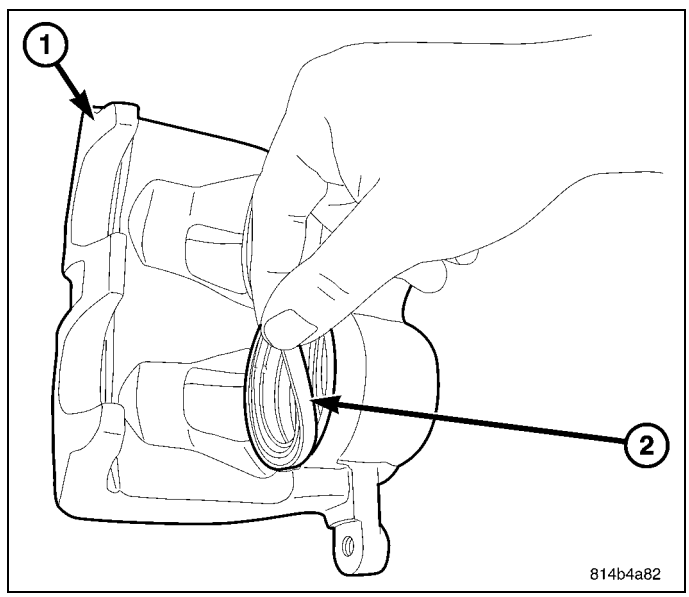

CAUTION: Do not scratch piston bore while removing the seals.

9. Remove the lip seal from the groove (4) with a pick tool (3).

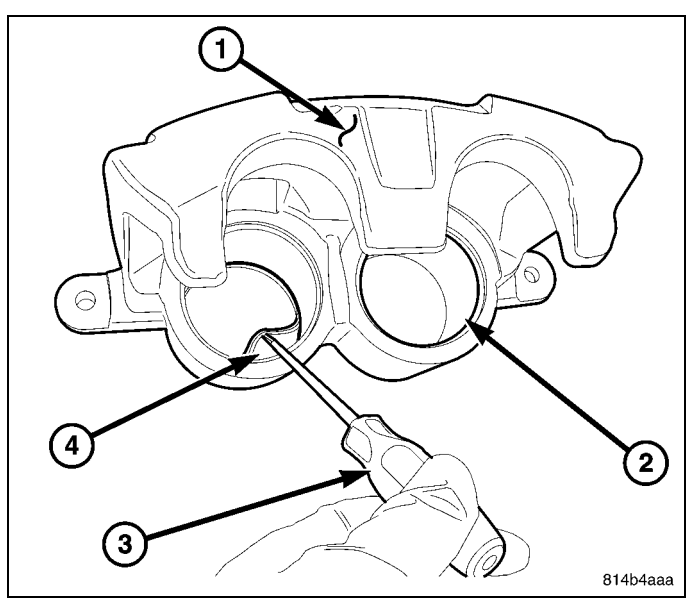

10. Remove piston seals (2) from caliper (1) by hand.

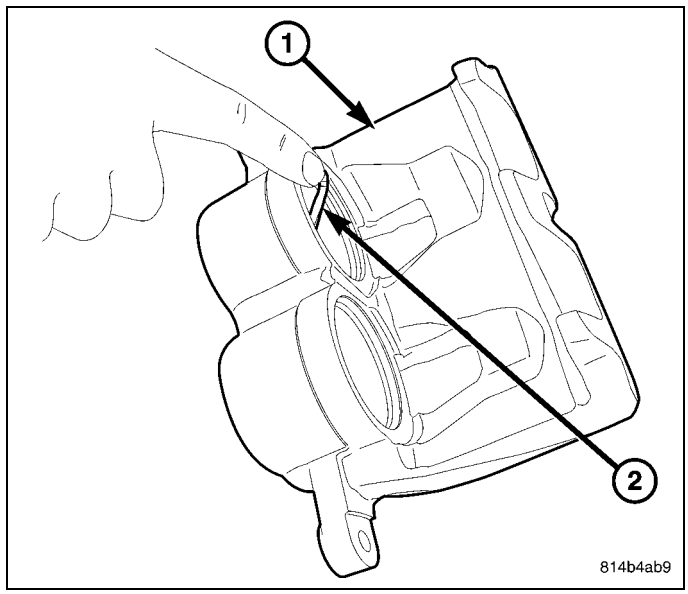

Assembly

CAUTION: Dirt, oil, and solvents can damage caliper seals. Insure assembly area is clean and dry.

1. Lubricate caliper pistons, piston seals and piston bores with clean, fresh brake fluid.

NOTE: Verify seal is fully seated and not twisted.

2. Install new piston seals (2) into caliper bores (1).

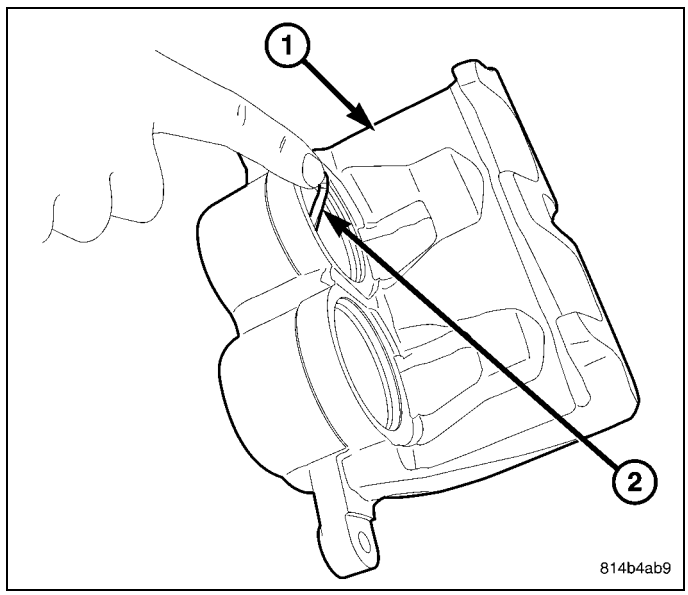

3. Leave boot (1) dry and slip onto end of piston (2).

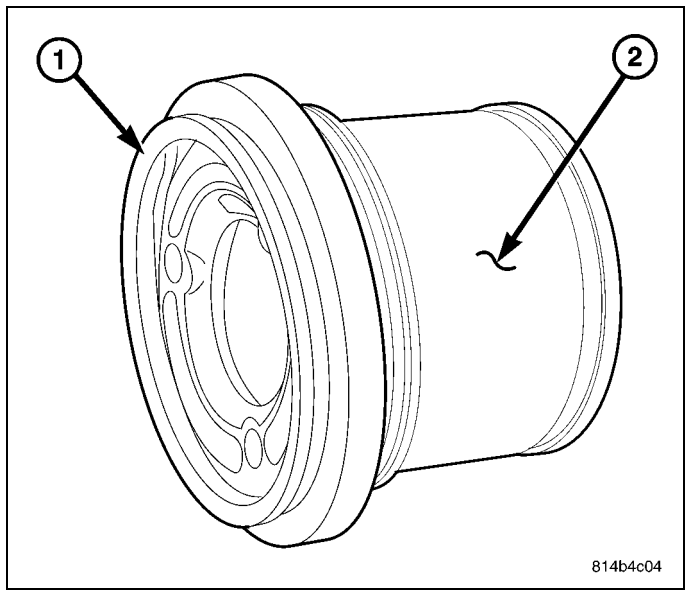

NOTE: The dust boot lip must be inserted before the piston

4. Slightly pull out lip portion of piston boot (3) so it protrudes past the bottom of the piston (2) and work lip into outermost groove on caliper housing (1).
5. Carefully press the lip (3) into the groove with a suitable tool (4) **Avoid using sharp-edged tools** This will ensure that the lip is nested into the groove all around before pushing the piston into the bore.

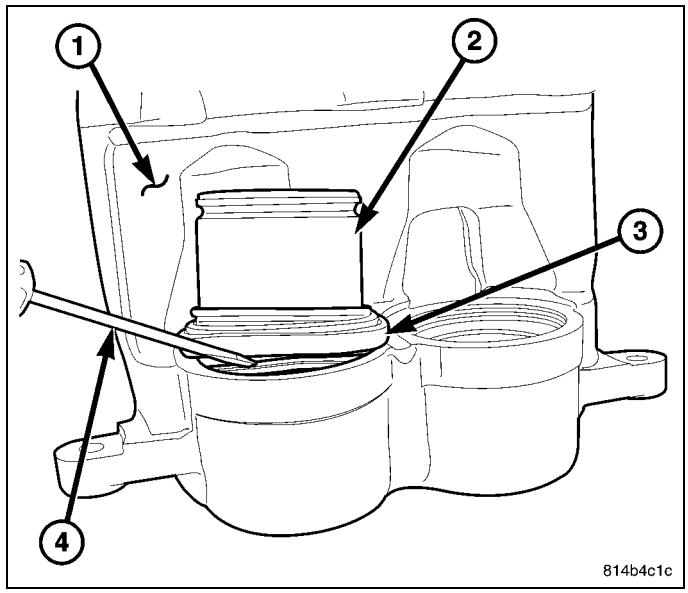

6. Press the piston fully into the bore using Bearing Installer C-3716-A (3) with Universal Driver Handle C-4171 (1).
7. Once the piston is pressed into the bottom of the bore, Check to see that the dust boot bellows are not inflated with air. **If needed, push in between the dust boot and piston to expel any trapped air**.

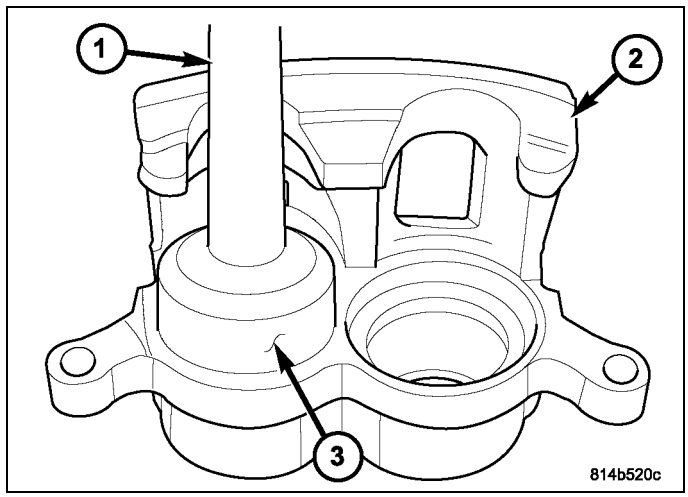

Installation

FRONT

NOTE: Petroleum based grease should not be used on any of the rubber components of the caliper, Use only Non-Petroleum based grease.

NOTE: Clean slide pin bores thoroughly to remove any old grease.

NOTE: Use grease packets included with kit or Dow Corning-807® grease.

1. Thoroughly coat the new slide pins (3) on all working surfaces.
2. Install the boot (2) onto the slide pin (3) and then insert into the adapter (1).
3. Push the pin (3) all the way into the adapter (1) and carefully expel the trapped air by gently pushing on the boot (2) near the slide pin head (3).

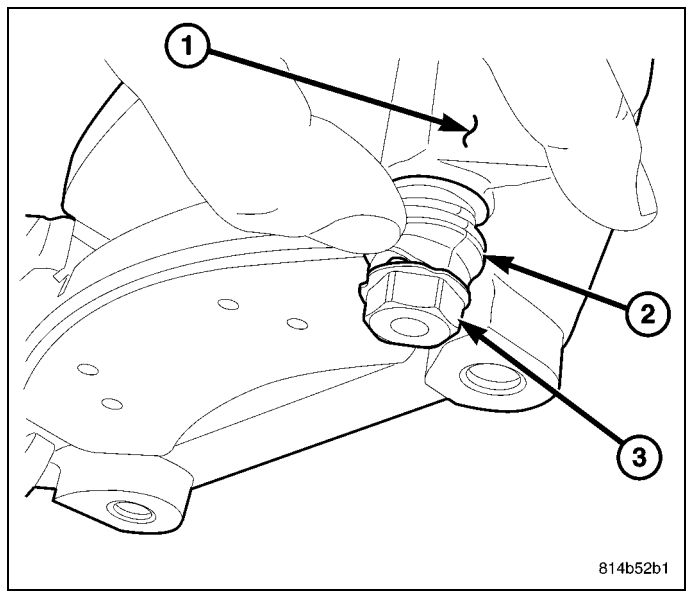

NOTE: Install a new copper washers on the banjo bolt when installing

4. Install the disc brake caliper (1) to the brake caliper adapter (2).

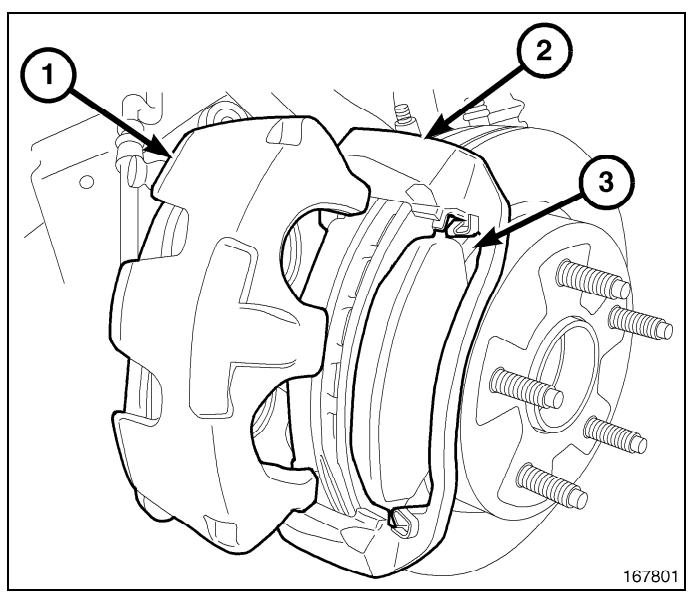

5. Install the banjo bolt (4) with new copper washers to the caliper (6). Tighten to 28 N·m (245 in. lbs.)
6. Install the caliper slide pin bolts (2). Tighten to 32 N·m (24 ft. lbs.)
7. Remove the prop rod from the brake pedal.
8. Bleed the area of repair for the brake system.**If a proper pedal is not felt during bleeding an area of repair then a base bleed system must be performed.**(Refer to 05 - Brakes - Standard Procedure).
9. Install the tire and wheel assembly, (Refer to 22 - Tires and Wheels/Wheels - Standard Procedure).
10. Remove the supports and lower the vehicle.

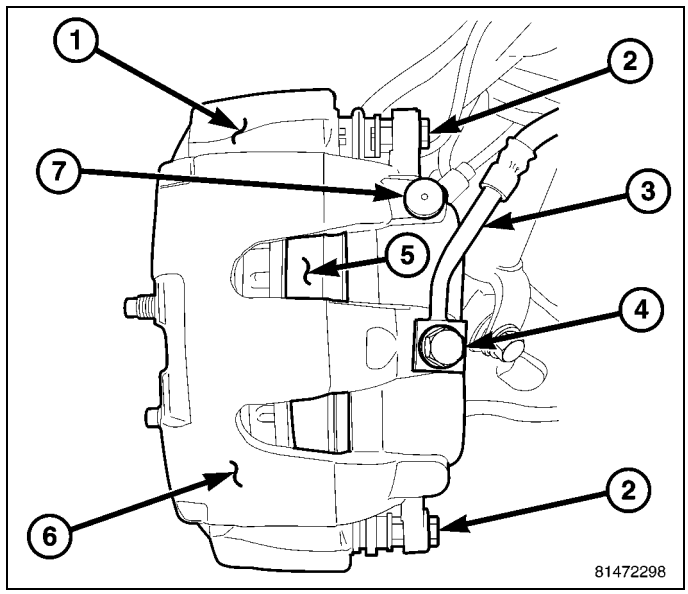

REAR

1. Install caliper (6) to the caliper adapter (1).
2. Coat the caliper mounting slide pin bolts (3) with silicone grease. Then install and tighten the bolts to 30 N·m (22 ft. lbs.).

CAUTION: Verify that the brake hose is not twisted or kinked before tightening the fitting bolt.

3. Install the brake hose banjo bolt if removed.
4. Install the brake hose (4) to the caliper (6) with new copper washers and tighten fitting bolt to 28 N·m (245 in. lbs.).

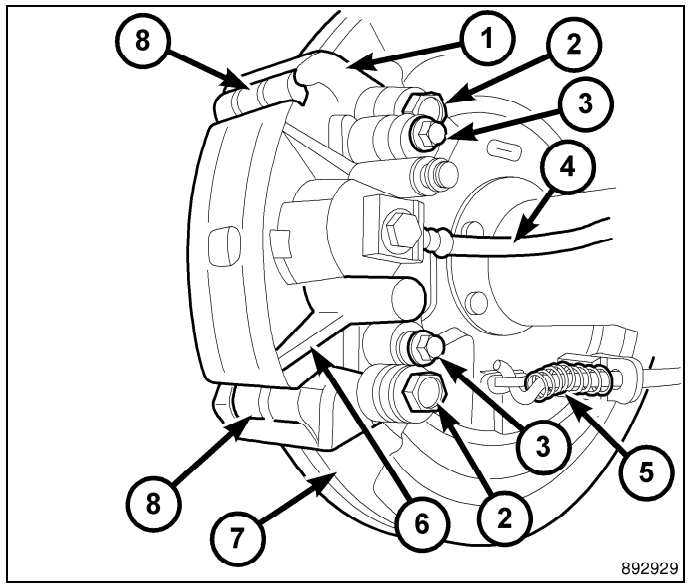

5. Remove the prop rod from the brake pedal.
6. Bleed the area of repair for the brake system. **If a proper pedal is not felt during bleeding an area of repair then a base bleed system must be performed.**(Refer to 05 - Brakes - Standard Procedure).
7. Install the wheel and tire assemblies (Refer to 22 - Tires and Wheels/Wheels - Standard Procedure).
8. Remove the supports and lower the vehicle.
9. Verify a firm pedal before moving the vehicle.

FLUID

Description

The brake fluid used in this vehicle must conform to DOT 3 specifications and SAE J1703 standards. No other type of brake fluid is recommended or approved for usage in the vehicle brake system. Use only Mopar brake fluid or an equivalent from a tightly sealed container.

CAUTION: Never use reclaimed brake fluid or fluid from a container which has been left open. An open container of brake fluid will absorb moisture from the air and contaminate the fluid.

CAUTION: Never use any type of a petroleum-based fluid in the brake hydraulic system. Use of such type fluids will result in seal damage of the vehicle brake hydraulic system causing a failure of the vehicle brake system. Petroleum based fluids would be items such as engine oil, transmission fluid, power steering fluid, etc.

Diagnosis and Testing

Indications of fluid contamination are swollen or deteriorated rubber parts.

Swollen rubber parts indicate the presence of petroleum in the brake fluid.

To test for contamination, put a small amount of drained brake fluid in clear glass jar. If fluid separates into layers, there is mineral oil or other fluid contamination of the brake fluid.

If brake fluid is contaminated, drain and thoroughly flush system. Replace master cylinder, proportioning valve, caliper seals, wheel cylinder seals, Antilock Brakes hydraulic unit and all hydraulic fluid hoses.

Standard Procedure

Always clean the master cylinder reservoir (1) and cap (2) before checking fluid level. If not cleaned, dirt could enter the fluid.

The fluid fill level is indicated on the side of the master cylinder reservoir (1).

The correct fluid level is to the MAX indicator on the side of the reservoir. If necessary, add fluid to the proper level.

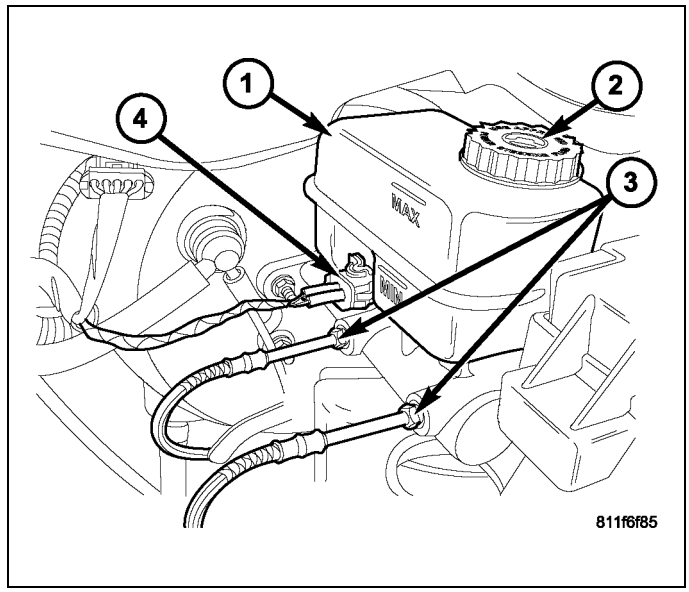

JUNCTION BLOCK, Brake Tube

Removal

FRONT JUNCTION BLOCK

1. Install a prop rod on the brake pedal to keep pressure on the brake system. Holding pedal in this position will isolate the master cylinder from the hydraulic brake system and will not allow brake fluid to drain out of the brake fluid reservoir while the brake lines are open. This will allow you to bleed out the area of repair instead of the entire system.

2. Raise and support the vehicle. (Refer to 04 - Vehicle Quick Reference/Hoisting - Standard Procedure)
3. Remove the eight brake lines (1) from the junction block (2).
4. Remove the junction block mounting bolts (3) and remove the junction block (2) from the frame.

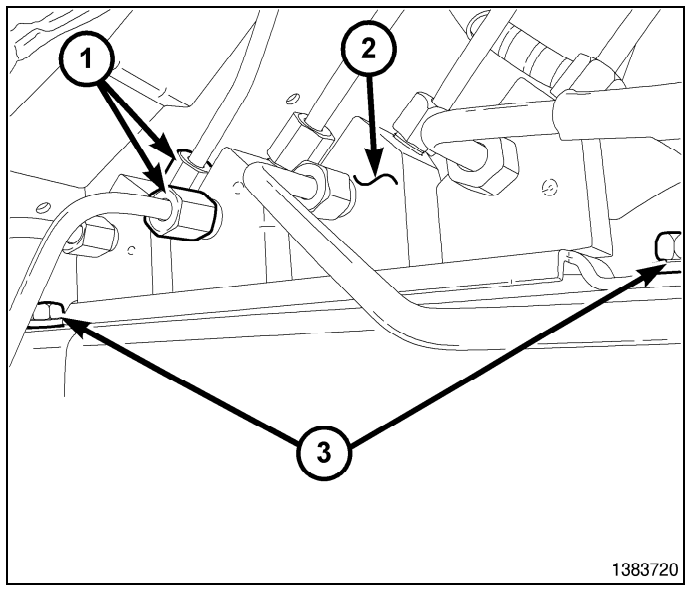

REAR JUNCTION BLOCK

1. Install prop rod on the brake pedal to keep pressure on the brake system. Holding pedal in this position will isolate the master cylinder from the hydraulic brake system and will not allow brake fluid to drain out of the brake fluid reservoir while the brake lines are open. This will allow you to bleed out the area of repair instead of the entire system.
2. Raise and support the vehicle. (Refer to 04 - Vehicle Quick Reference/Hoisting - Standard Procedure)
3. Remove the brake lines (1, 3, 4, 6) from the junction block (2).
4. Remove the junction block mounting bolt (5) and remove the junction block from the frame.

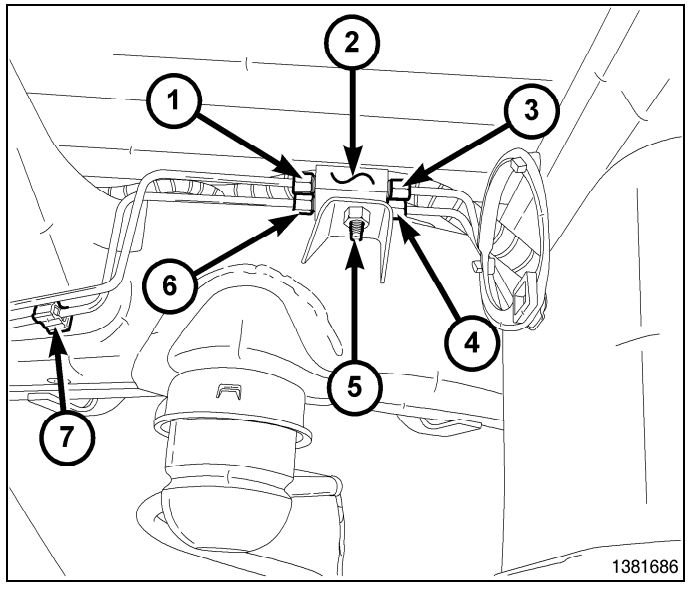

Installation

FRONT JUNCTION BLOCK

1. Position the junction block (2) on the frame.
2. Install the junction block mounting bolts (3) and tighten to 19 N·m (169 in. lbs.).
3. Install the eight brake lines (1) into the junction block (2) and tighten to 19 N·m (169 in. lbs.).
4. Remove the supports and lower the vehicle.
5. Remove the prop rod and bleed the base brake system. (Refer to 05 - Brakes - Standard Procedure).

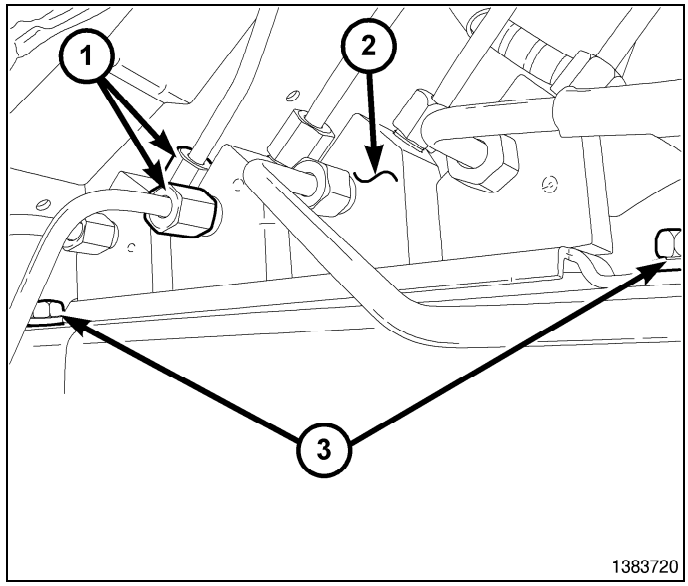

REAR JUNCTION BLOCK

1. Position the junction block (2) on the frame.
2. Install the junction block mounting bolt (5) and tighten to 24 N·m (18 ft. lbs.).
3. Install the brake lines (1, 3, 4, 6) into the junction block (2) and tighten to 19 N·m (169 in. lbs.).
4. Remove the supports and lower the vehicle.
5. Remove the prop rod and bleed the base brake system. (Refer to 05 - Brakes - Standard Procedure).

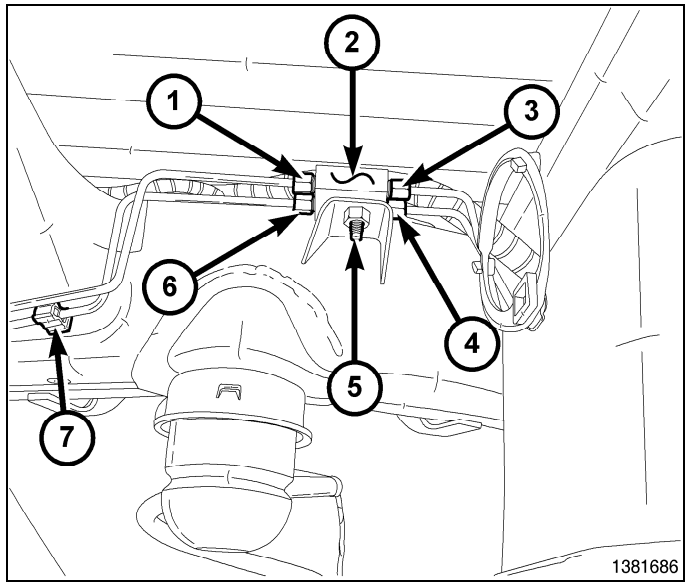

MASTER CYLINDER, Brake

Description

A two-piece master cylinder is used on all models. The cylinder body containing the primary and secondary pistons is made of aluminum. The removable fluid reservoir is made of nylon reinforced with glass fiber. The reservoir stores reserve brake fluid for the hydraulic brake circuits and has a switch for indicating low fluid levels. The reservoir is the only serviceable component.

The fluid compartments of the nylon reservoir are interconnected to permit fluid level equalization. However, the equalization feature does not affect circuit separation in the event of a front or rear brake malfunction. The reservoir compartments will retain enough fluid to operate the functioning hydraulic circuit.

Care must be exercised when removing/installing the master cylinder connecting lines. The threads in the cylinder fluid ports can be damaged if care is not exercised. Start all brake line fittings by hand to avoid cross threading.

The cylinder reservoir can be replaced when necessary. However, the aluminum body section of the master cylinder is not a repairable component.

NOTE: If diagnosis indicates that an internal malfunction has occurred, the aluminum body section must be replaced as an assembly.

Operation

The master cylinder bore contains a primary and secondary piston. The primary piston supplies hydraulic pressure to the front brakes. The secondary piston supplies hydraulic pressure to the rear brakes.

Diagnosis and Testing

1. Start engine and check booster vacuum hose connections. A hissing noise indicates vacuum leak. Correct any vacuum leak before proceeding.
2. Stop engine and shift transmission into Neutral.
3. Pump brake pedal until all vacuum reserve in booster is depleted.
4. Press and hold brake pedal under light foot pressure. The pedal should hold firm, if the pedal falls away master cylinder is faulty (internal leakage).
5. Start engine and note pedal action. It should fall away slightly under light foot pressure then hold firm. If no pedal action is discernible, power booster, vacuum supply, or vacuum check valve is faulty. Proceed to the POWER BOOSTER VACUUM TEST.
6. If the POWER BOOSTER VACUUM TEST passes, rebuild booster vacuum reserve as follows: Release brake pedal. Increase engine speed to 1500 rpm, close the throttle and immediately turn off ignition to stop engine.
7. Wait a minimum of 90 seconds and try brake action again. Booster should provide two or more vacuum assisted pedal applications. If vacuum assist is not provided, booster is faulty.

POWER BOOSTER VACUUM TEST

1. Connect vacuum gauge (6) to booster check valve (4) with short length of hose (3) and T-fitting (2).
2. Start and run engine at curb idle speed for one minute.
3. Observe the vacuum supply. If vacuum supply is not adequate, repair vacuum supply.
4. Clamp (1) hose (7) shut between intake vacuum source (5) and check valve (4).
5. Stop engine and observe vacuum gauge (6).
6. If vacuum drops more than one inch HG (33 millibars) within 15 seconds, booster diaphragm or check valve is faulty.

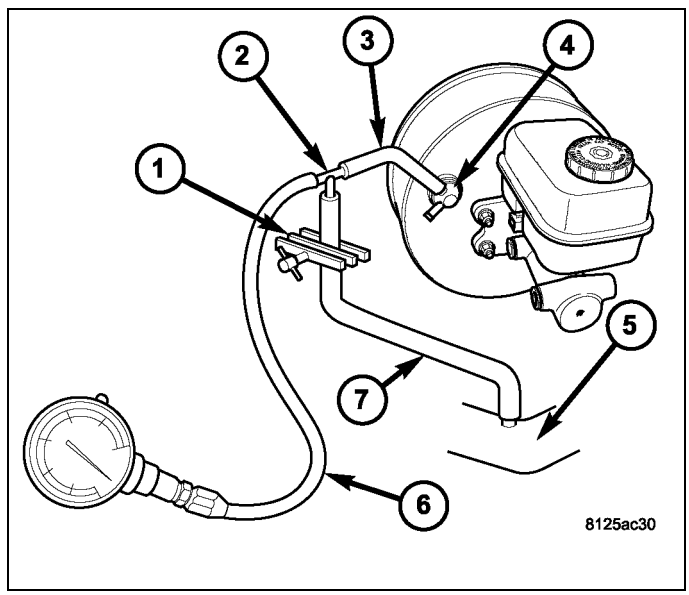

POWER BOOSTER CHECK VALVE TEST

1. Disconnect vacuum hose from check valve (1).
2. Remove check valve (1) and valve seal (2) from booster (3).
3. Use a hand operated vacuum pump for test.
4. Apply 15-20 inches vacuum at large end of check valve.
5. Plug off the small end to prevent vacuum leakage.
6. Vacuum should hold steady. If gauge on pump indicates vacuum loss, check valve is faulty and should be replaced.

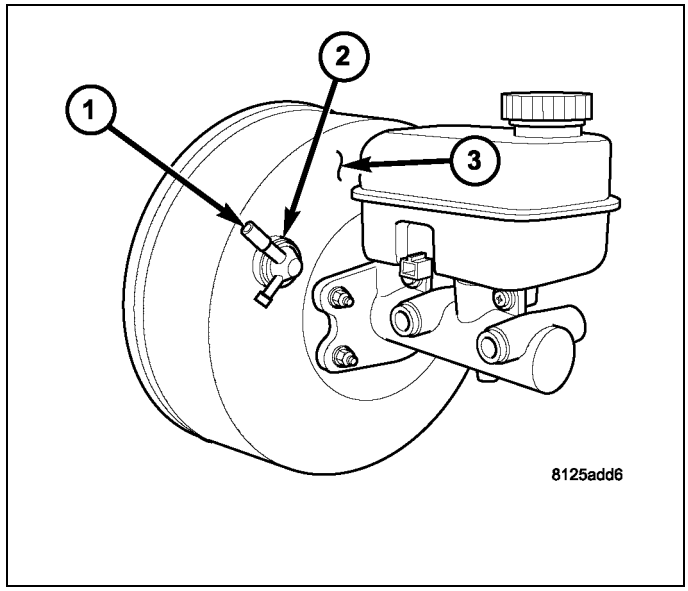

Standard Procedure

A new master cylinder should be bled before installation on the vehicle. Required bleeding tools include bleed tubes and a wood dowel to stroke the pistons. Bleed tubes can be fabricated from brake line.

1. Mount master cylinder in vise.
2. Attach bleed tubes to cylinder outlet ports (1). Then position each tube end into reservoir (2).
3. Fill reservoir with fresh brake fluid.
4. Press cylinder pistons inward with wood dowel. Then release pistons and allow them to return under spring pressure. Continue bleeding operations until air bubbles are no longer visible in fluid.

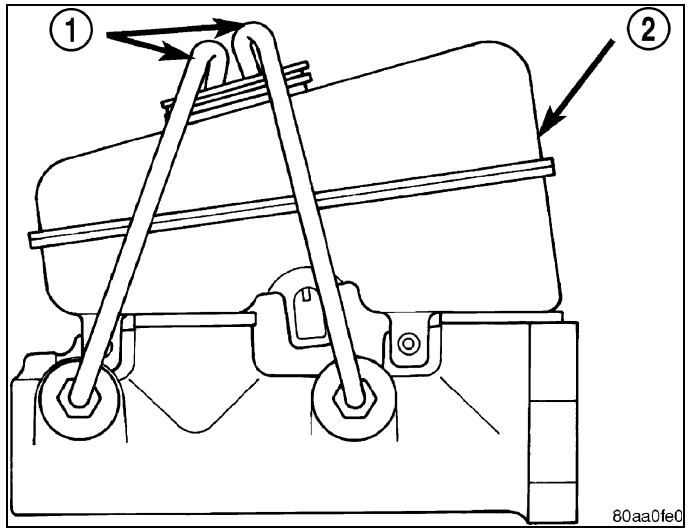

Removal

1. Depress the brake pedal five times to deplete any vacuum that may remain in the booster unit.
2. Siphon and drain the fluid from the reservoir.
3. Disconnect the electrical connector for the low fluid level.
4. Place a towel or rag under the master cylinder outlet port area to protect the vehicle from brake fluid damage.
5. Remove the brake lines (3) from the master cylinder (4).
6. Remove the mounting nuts from the master cylinder (4).

NOTE: Gently ease the master cylinder AND reservoir assembly away from the booster, During removal the master cylinder should be kept as perpendicular to the

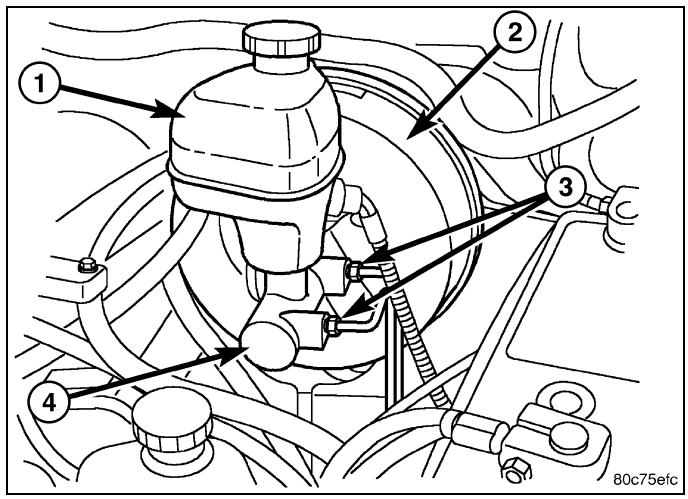

front of the booster as possible to avoid excess interference with the booster output rod and in order not to dislodge the output rod from its seat inside the booster.

7. Remove the master cylinder (4).

Installation

NOTE: If master cylinder is replaced bleed cylinder before installation.

NOTE: Make sure the output rod of the brake booster is in position and retained by a output rod retaining ring, by looking into the boosters master cylinder mounting hole. This position will enable the output rod to enter inside of the master cylinder plunger sleeve during installation. Proper position is obtained when the output rod is centered perpendicular to the master cylinder mounting hole .

NOTE: Prior to installing the master cylinder assembly check that there is a vacuum seal present at the shoulder of the master cylinder flange and it's neck. A square seal must be present to ensure vacuum integrity with the booster.

NOTE: Take precautions to locate the master cylinder plunger over the booster output rod, before installing the master cylinder. If correctly fitted the master cylinder should slide easily onto the booster output rod before the mounting studs are engaged in the flange holes of the master cylinder.

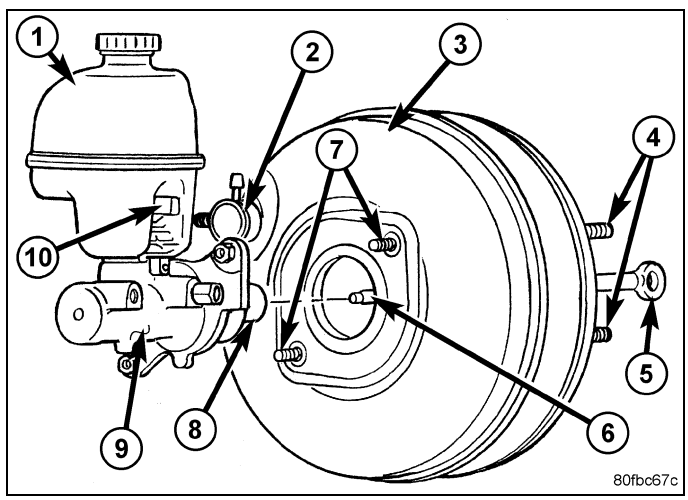

1. Gently install the master cylinder (9) on the booster mounting studs (4).
2. Install new mounting nuts and tighten to 25 N·m (221 in. lbs.)
3. Install the brake lines and tighten to 19 N·m (170 in. lbs.)
4. Reconnect the electrical connector for the low fluid level switch.
5. Fill and bleed the base brake system, (Refer to 05 - Brakes - Standard Procedure).

PADS, Brake

Removal

FRONT

1. Raise and support vehicle, (Refer to 04 - Vehicle Quick Reference/Hoisting - Standard Procedure).
2. Remove the wheel and tire assemblies.
3. Compress the caliper (2).
4. Remove the caliper slide pin bolts (4), (Refer to 05 - Brakes/Hydraulic/Mechanical/CALIPER, Disc Brake - Removal).

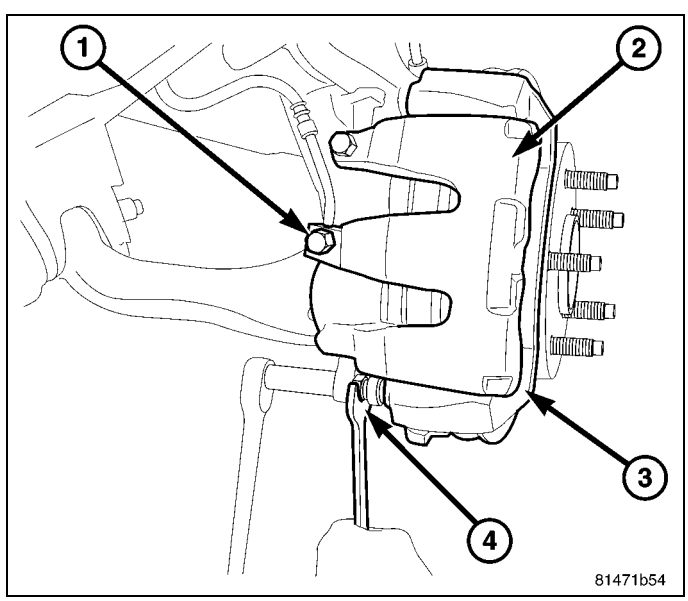

5. Remove the caliper (1) from the caliper adapter (2).

NOTE: Do not allow brake hose to support caliper assembly.

6. Support and hang the caliper.

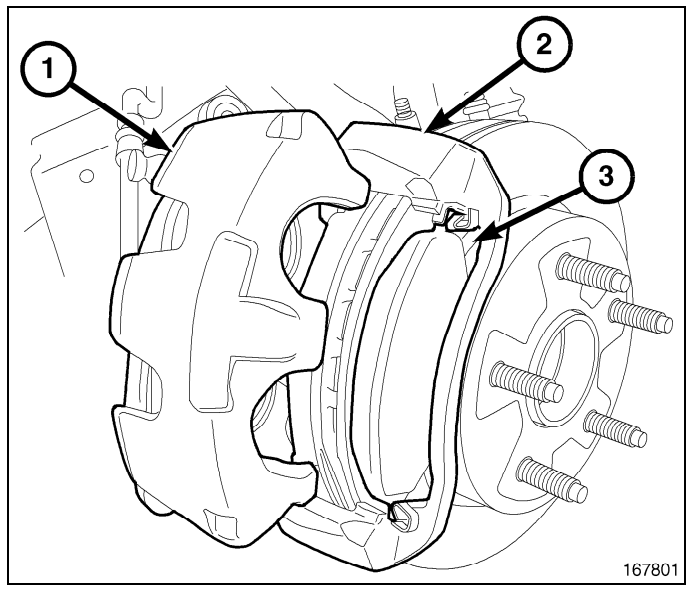

7. Remove the inboard brake pad (4) from the caliper adapter (1).
8. Remove the outboard brake pad (2) from the caliper adapter (1).

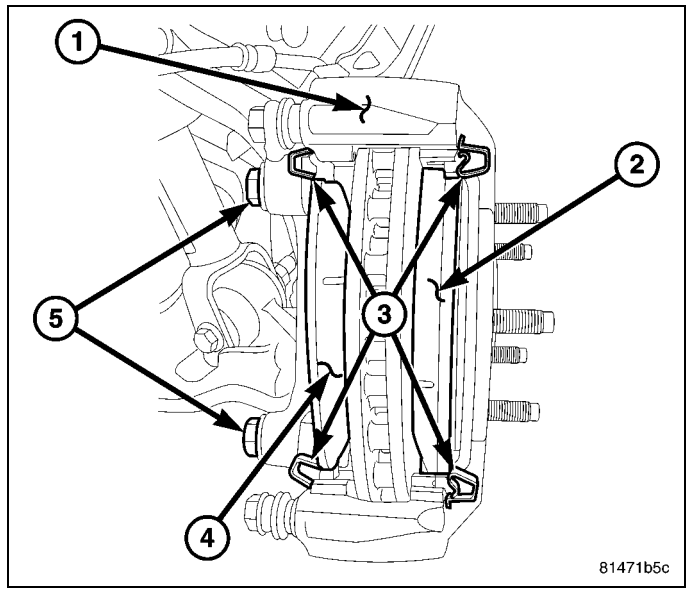

9. Remove the anti-rattle clips (1) from the pad (2).

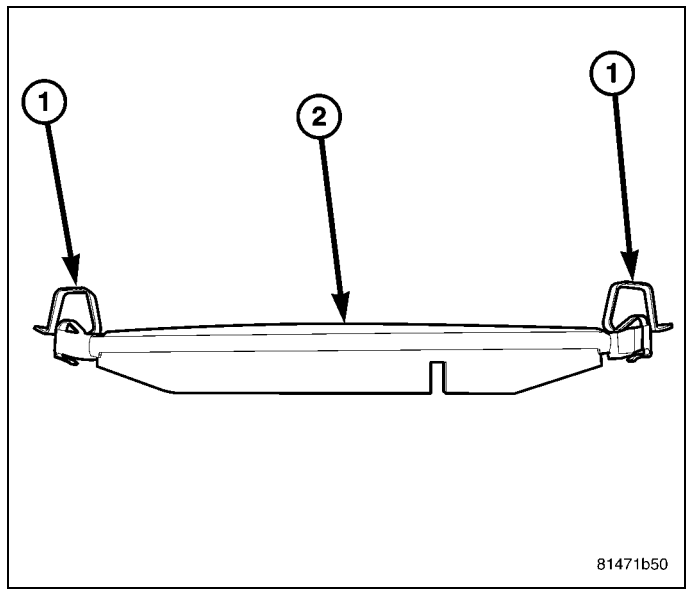

REAR

1. Raise and support the vehicle (Refer to 04 - Vehicle Quick Reference/Hoisting - Standard Procedure).
2. Remove the rear wheel and tire assemblies.
3. Compress the caliper.
4. Remove caliper slide bolts (3).

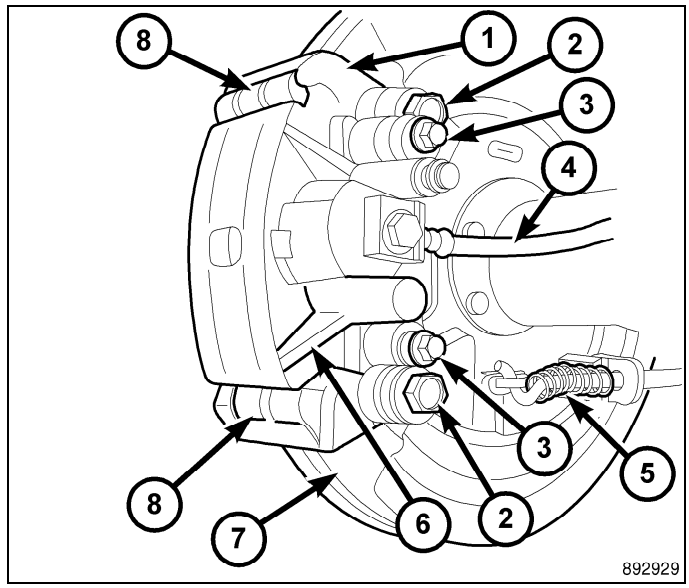

NOTE: Do not allow brake hose to support caliper assembly.

5. Remove the caliper (3), by tilting the top out and off the caliper adapter.

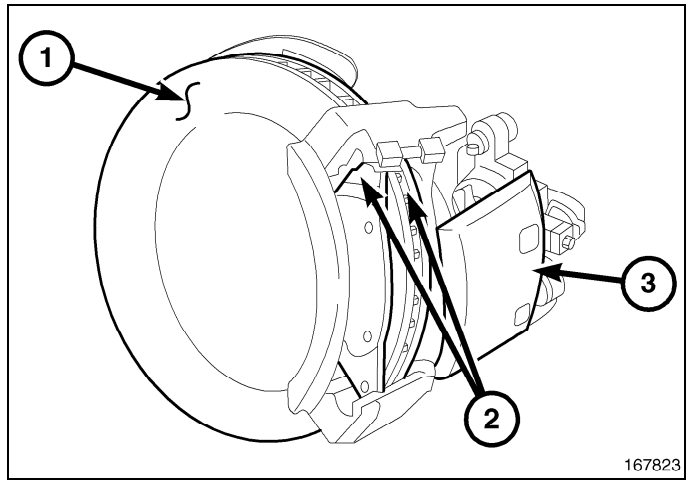

6. Remove inboard brake shoe (1) from the caliper adapter (2).

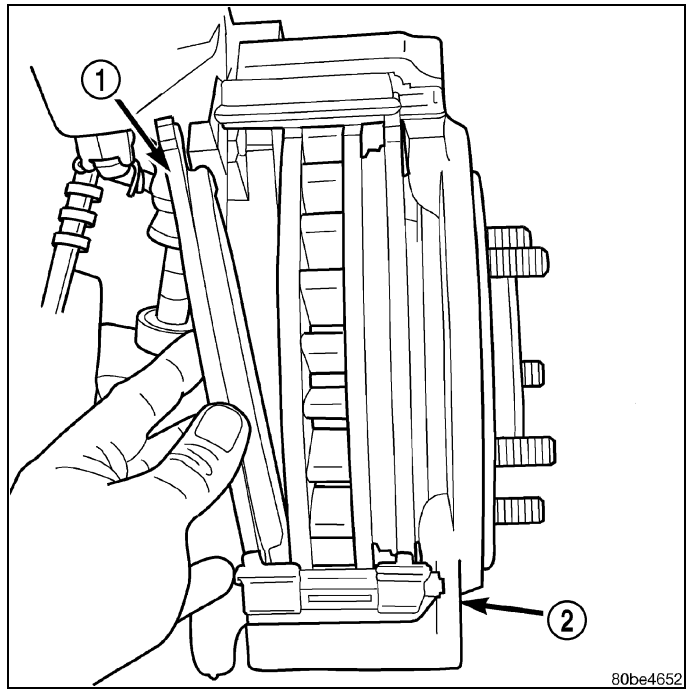

7. Remove outboard brake shoe (1) from caliper adapter (2).

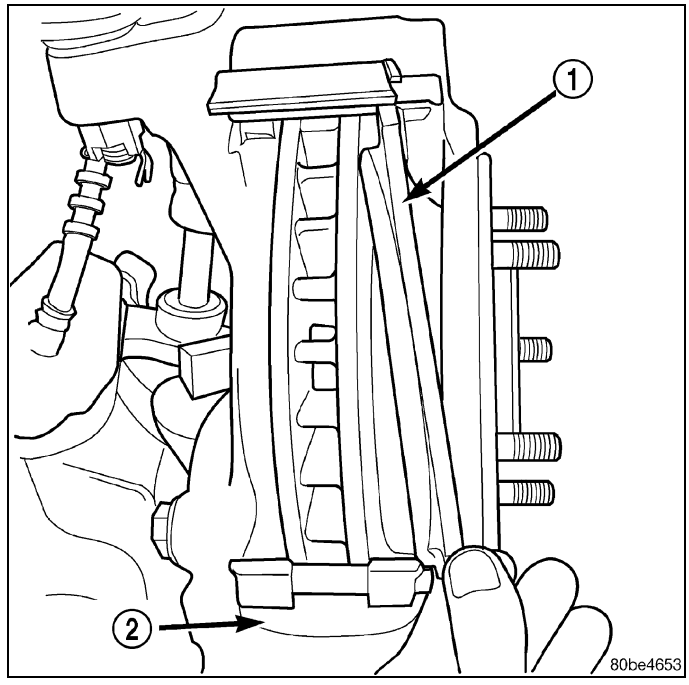

NOTE: Anti-rattle springs are not interchangeable.

8. Remove the top anti-rattle spring (2) from the caliper adapter (1).

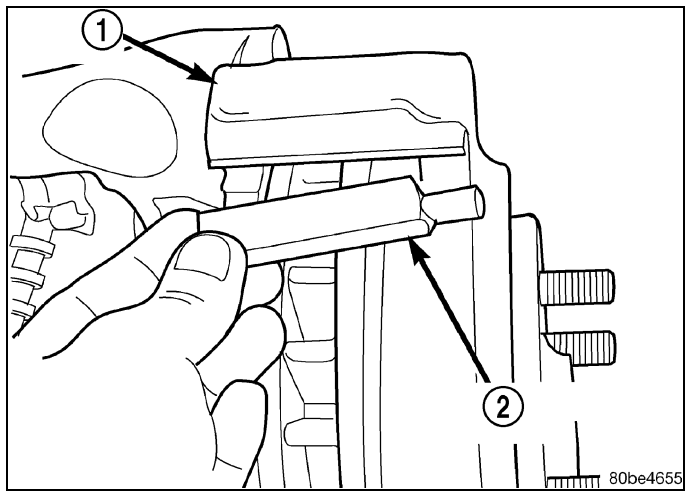

9. Remove the bottom anti-rattle spring (1) from the caliper adapter (2).

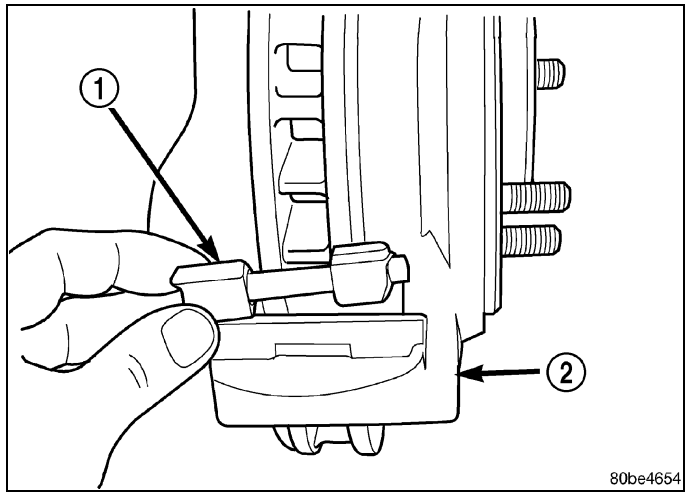

Inspection

Visually inspect brake pads for uneven lining wear. Also inspect for excessive lining deterioration. Check the clearance between the tips of the wear indicators (if equipped) on the pads and the brake rotors.

If a visual inspection does not adequately determine the condition of the lining, a physical check will be necessary. To check the amount of lining wear, remove the disc brake pads from the vehicle.

Measure brake pad minimum thickness (1). Brake pads must be replaced when usable material on a brake pad lining (2) measured at its **thinnest point** measures one millimeter (0.04 inches) or less.

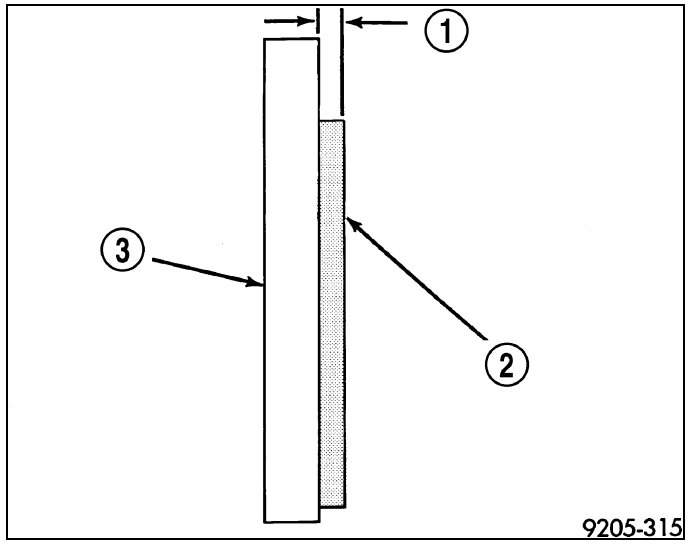

If a brake pad fails inspection, replace **both** disc brake pads (inboard and outboard) at each caliper. It is also necessary to replace the pads on the opposite side of the vehicle as well as the pads failing inspection to maintain proper braking characteristics.

If the brake pad assemblies do not require replacement, be sure to reinstall the brake pads in the original position they were removed from.

NOTE: It is important to inspect both front and rear brake pads during the same inspection.

Installation

FRONT

1. Bottom pistons in caliper bore with C-clamp. Place an old brake shoe between a C-clamp and caliper piston.
2. Clean caliper mounting adapter.
3. Install **new** anti-rattle clips (1) to the brake pads (2).

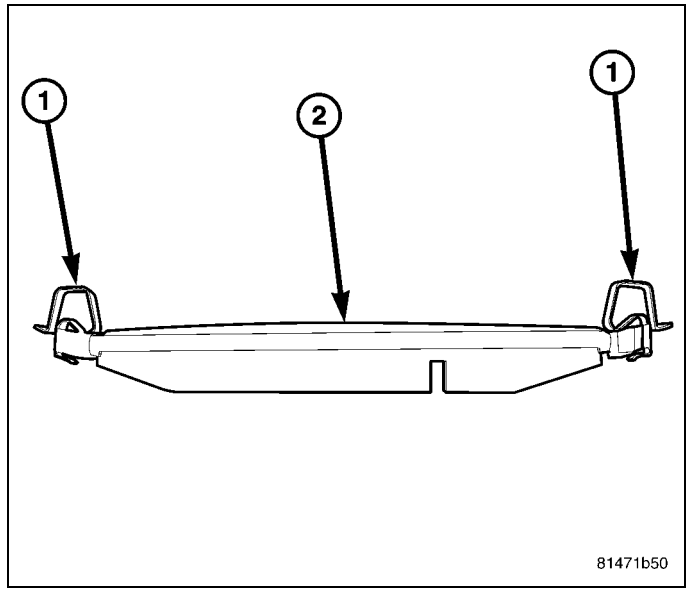

4. Install inboard brake pad (4) in adapter (1).
5. Install outboard brake pad (2) in adapter (1).

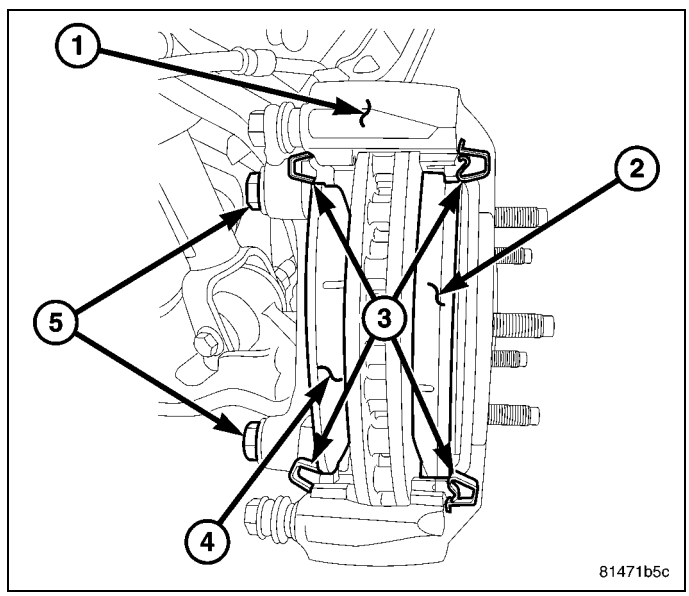

6. Install the caliper (1) over rotor, Then push the caliper onto the adapter (2).

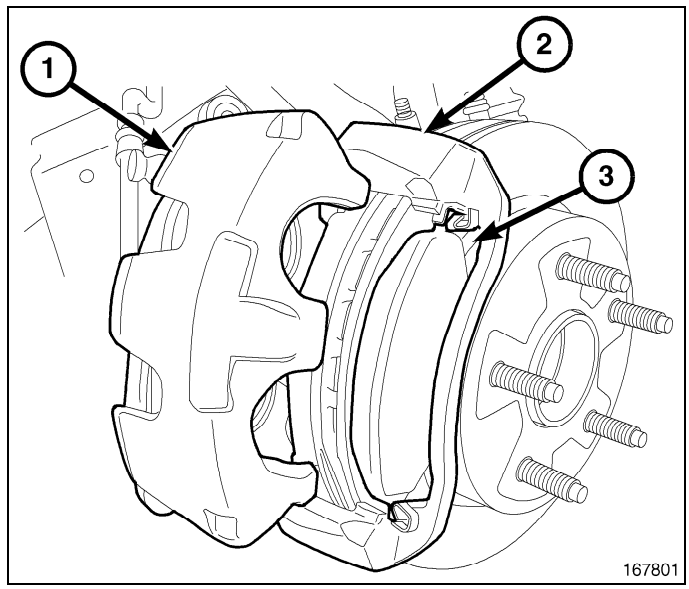

7. Install caliper slide pin bolts (4), (Refer to 05 - Brakes/ Hydraulic/Mechanical/CALIPER, Disc Brake - Installation).
8. Install wheel and tire assemblies and lower vehicle, (Refer to 22 - Tires and Wheels/Wheels - Standard Procedure).
9. Apply brakes several times to seat caliper pistons and brake shoes and obtain firm pedal.
10. Top off master cylinder fluid level.

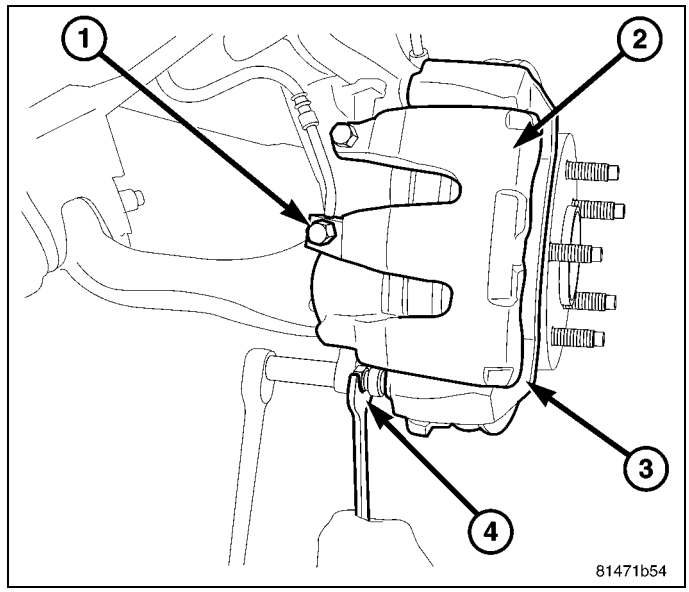

REAR

1. Clean caliper mounting adapter (1) and anti-rattle springs (2).
2. Lubricate anti-rattle springs with Mopar brake grease.

NOTE: Anti-rattle springs are not interchangeable.

3. Install **new** top anti-rattle spring (2).

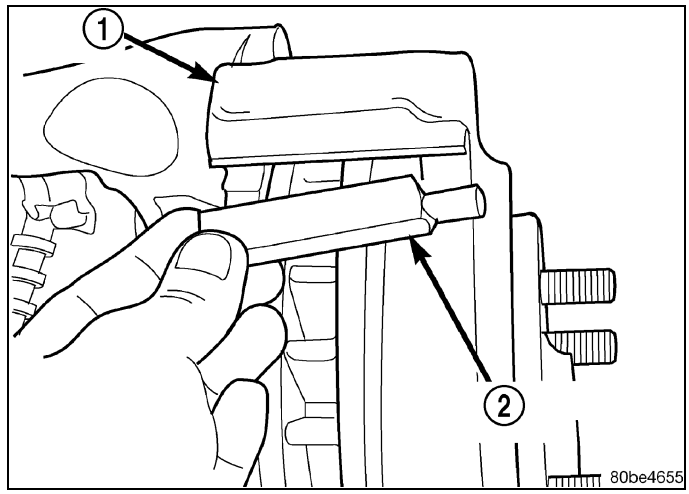

4. Install **new** bottom anti-rattle spring (1).

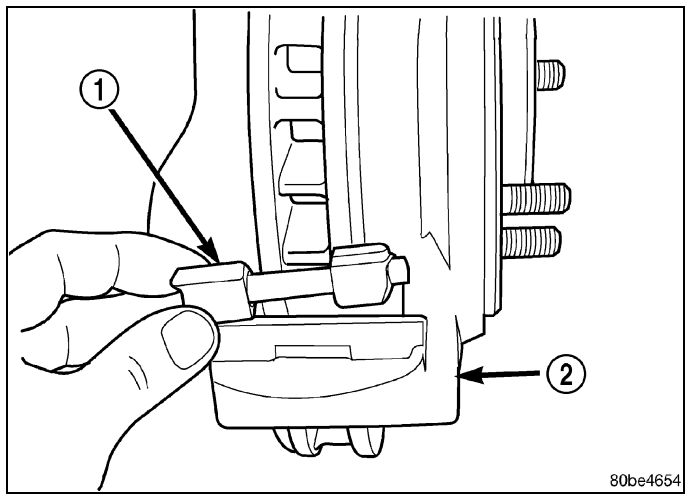

5. Install inboard brake shoe (1) in adapter (2).

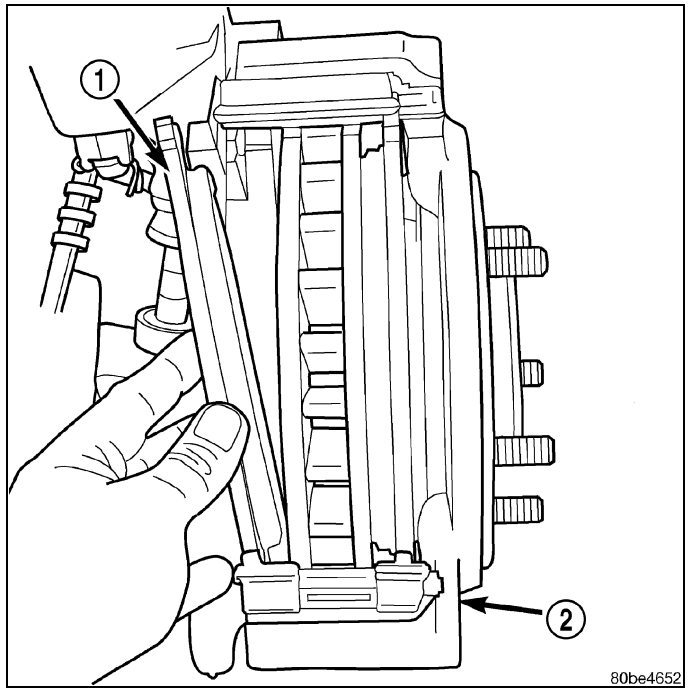

6. Install outboard brake shoe (1) in adapter (2).

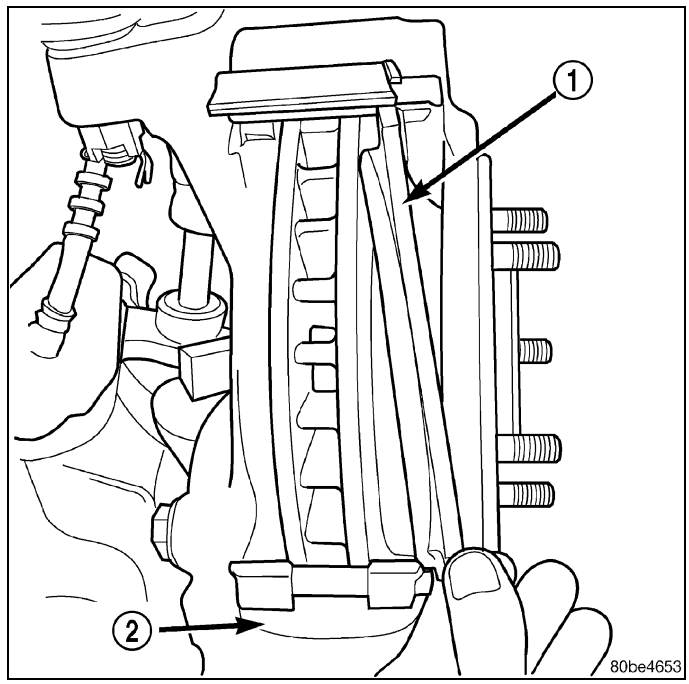

7. Tilt the bottom of the caliper (3) over rotor (1) and under adapter. Then push the top of the caliper down onto the adapter.

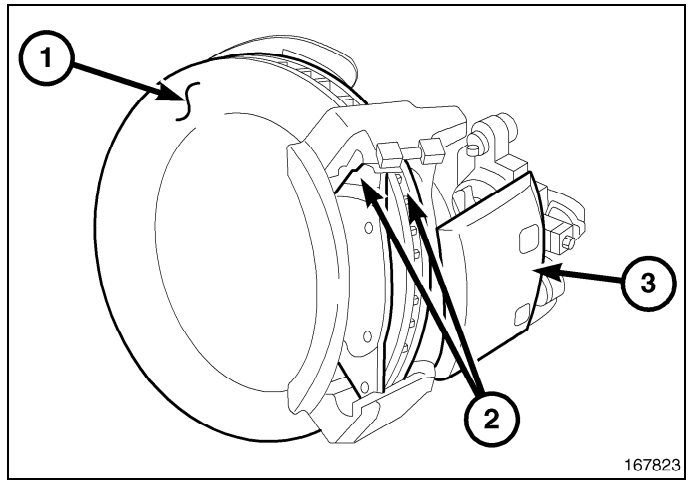

8. Install caliper (6), (Refer to 05 - Brakes/Hydraulic/Mechanical/CALIPER, Disc Brake - Installation).
9. Install wheel and tire assemblies (Refer to 22 - Tires and Wheels - Specifications).
10. Remove the supports and lower the vehicle.
11. Apply brakes several times to seat caliper pistons and brake shoes and obtain firm pedal.
12. Top off master cylinder fluid level.

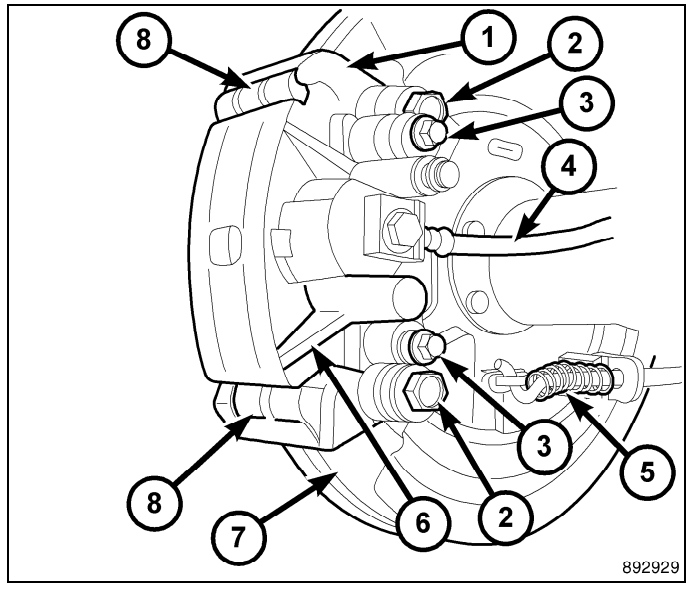

PEDAL(S), Brake and/or Accelerator

Description

A suspended-type brake pedal is used. The pedal is attached to the pedal support bracket (4) with a pivot shaft pin, bushings and 2 e-clips (1, 2). If the bushings become dry a spray lubricant can be used to eliminate noises. The booster push rod is attached to the pedal with e-clips. The pedal (3), bushings/pivot pin (1, 2) and support bracket (4) are serviceable separate from the assembly and the accelerator pedal. If equipped with adjustable pedals the brake pedal is serviced with the adjustable (drive) cable (from the adjustable pedal motor). For brake pedal replacement with or without adjustable pedals, the assembly must be removed from the vehicle. Adjustable pedal components can be serviced as follows:

- Adjustable pedal assembly (including bracket and all subcomponents)
- Brake pedal assembly (including adjustment cable)
- Accelerator pedal (Electronic Throttle Control [ETC])
- Accelerator subassembly (including adjustable pedal motor, ETC, ETC mounting plate and bracket).

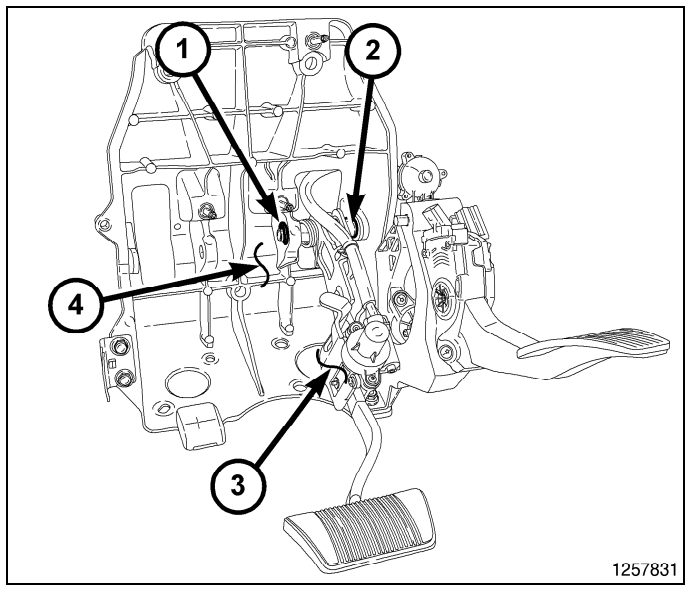

Operation

The brake pedal is attached to the booster push rod. When the pedal is depressed, the primary booster push rod is depressed which moves the booster secondary rod. The booster secondary rod depress the master cylinder piston.

Removal

BRAKE PEDAL

NOTE: If equipped with adjustable pedals: When replacing the components both pedal assemblies must be in the fully down position toward the floor for proper adjustment. Pedals can be moved manually by rotating the cable on the component not being replaced. New components come in the correct position until activated.

1. Remove the pedal assembly, (Refer to 05 - Brakes/Hydraulic/Mechanical/PEDAL(S), Brake and/or Accelerator - Removal)

NOTE: The adjustable pedal motor has three locking tabs (3) that prevent easy twisting when removing drive cable from housing.

2. If equipped with adjustable pedals, disconnect the drive cable (2) from the adjustable pedal motor (5) by twisting clockwise and lifting from motor.

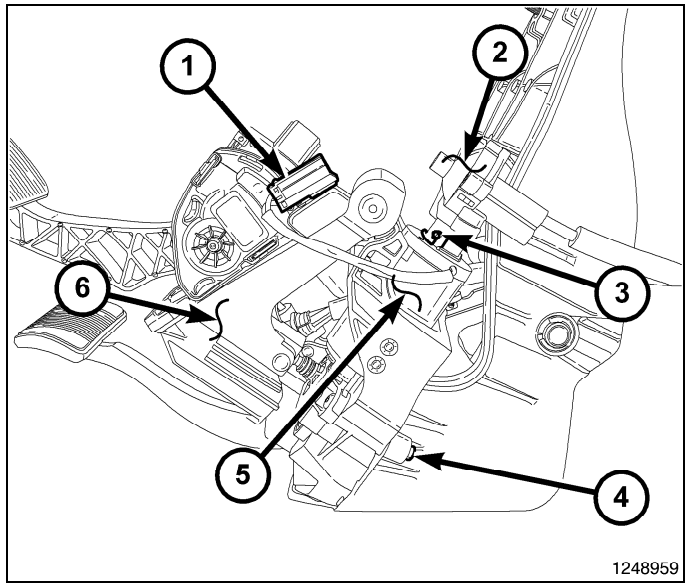

NOTE: Note the spring and bushing positions during removal for proper installation.

3. Remove the e-clip (1) from the brake pedal pivot shaft and slide shaft (2) from the pedal assembly (4).
4. Remove the brake pedal (3) from the pedal assembly (4).

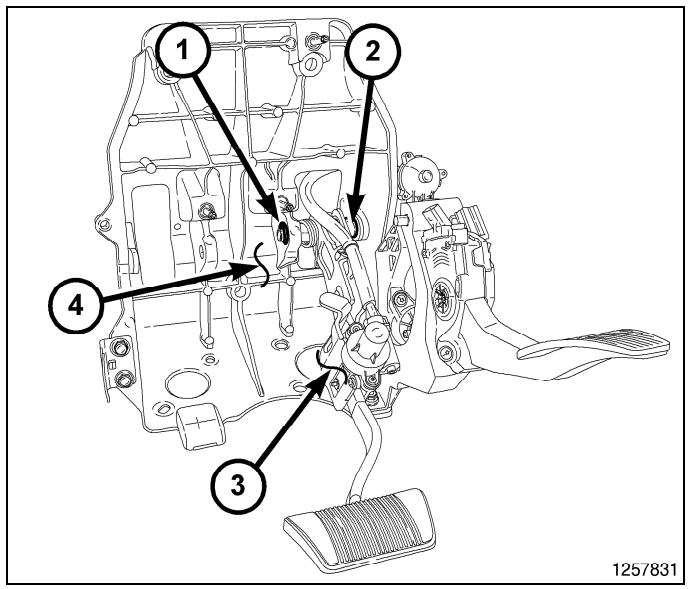

PEDAL ASSEMBLY

NOTE: The brake pedal is serviced as a complete assembly including accelerator pedal and the bracket.

1. Disconnect the negative battery cable.
2. Remove the brake lamp switch and discard it.**Do not reuse the stop lamp switch.** (Refer to 08 - Electrical/8L - Lamps and Lighting/Lamps/Lighting - Exterior/SWITCH, Stop Lamp - Removal).
3. Remove the steering column (Refer to 19 - Steering/Column - Removal).
4. Disconnect the electrical connectors.
5. Remove the brake booster rod to brake pedal retainer clip and discard the clip.
6. Remove the brake booster bolts (5) .
7. Remove the three pedal assembly mounting bolts (to instrument panel) and remove the assembly from the vehicle.

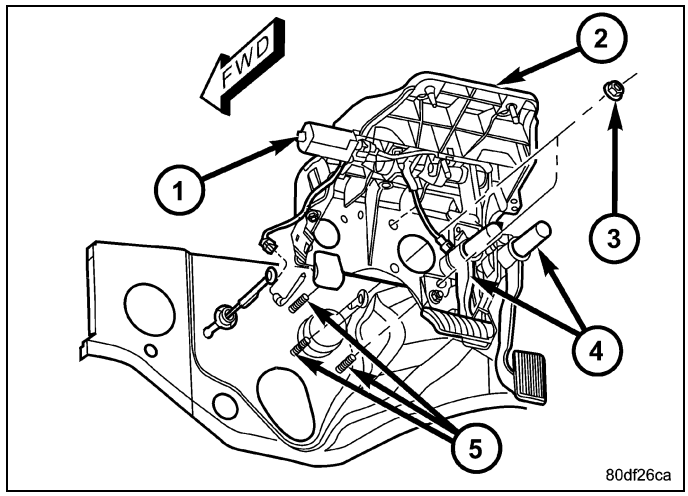

Installation

BRAKE PEDAL

NOTE: The views in this procedure are with adjustable pedals. Without adjustable pedals are similar.

NOTE: If equipped with adjustable pedals: When replacing the components both pedal assemblies must be in the fully down position toward the floor for proper adjustment. Pedals can be moved manually by rotating the cable on the component not being replaced. New components come in the correct position until activated.

NOTE: The spring is only used if equipped with adjustable pedals.

1. Verify the bushings (1) and spring (2) are installed on the brake pedal (6).
2. Install a bushing (4) and e-clip (5) on the brake pedal pivot shaft (3).

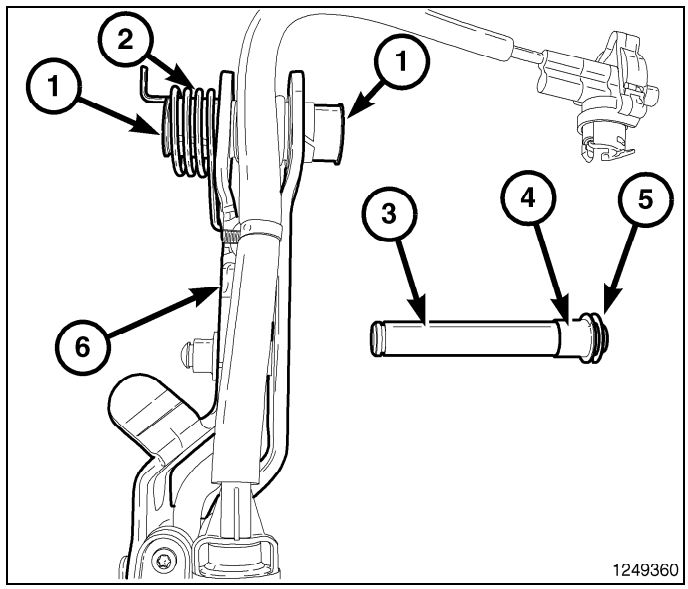

3. Position the brake pedal (3) and slide the pivot shaft (2) through the bracket and brake pedal.

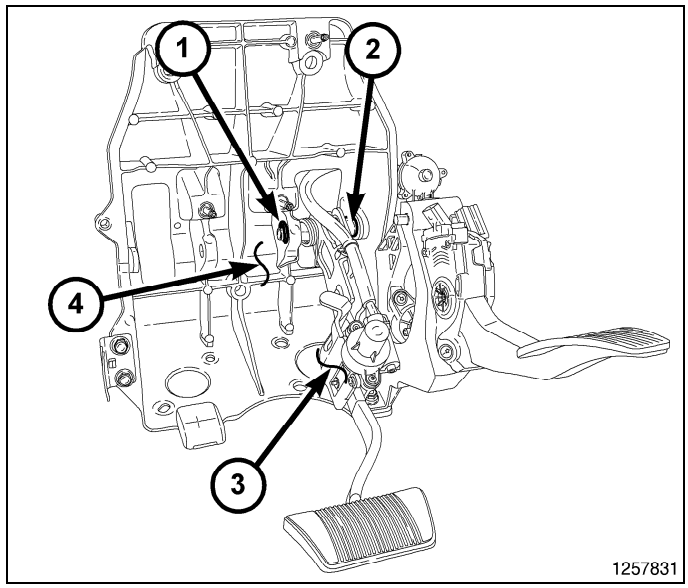

NOTE: If equipped with adjustable pedals, verify the spring is properly positioned.

4. Install the bushing (2) and e-clip (1) to secure the pivot shaft (3).

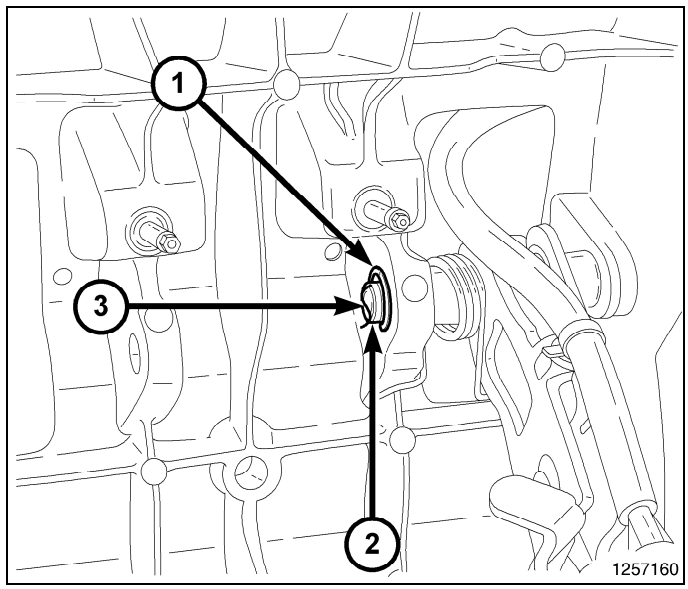

NOTE: Drive cable to motor housing adapter (2) can be turned manually within the motor housing (1) to allow proper alignment for drive cable attachment to motor.

5. If equipped with adjustable pedals, verify the drive cable to motor housing adapter (2) is properly inserted in motor housing (1) before attaching drive cable.

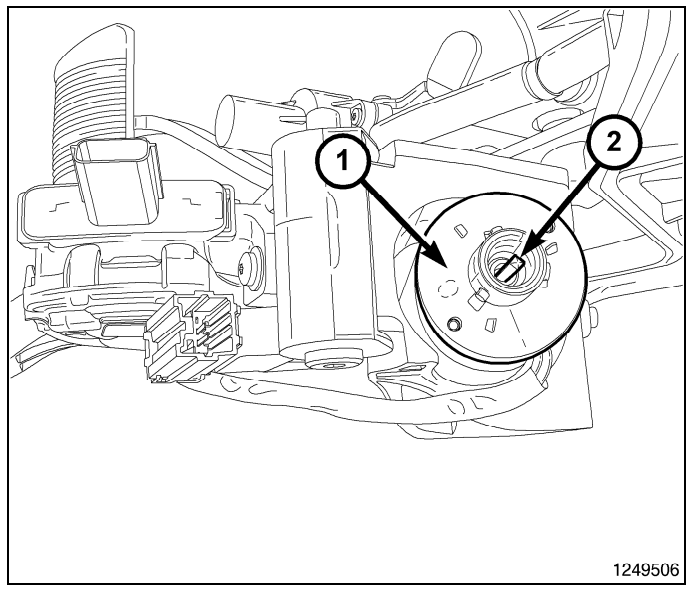

NOTE: A snap sound should be heard when drive cable locks into position.

6. If equipped with adjustable pedals, align drive cable housing to motor tabs/slots (3), and using light hand pressure push drive cable (2) into position on the drive motor (5). Turn counter clockwise to lock into position.
7. Install the pedal assembly (Refer to 05 - Brakes/Hydraulic/Mechanical/PEDAL(S), Brake and/or Accelerator - Installation).

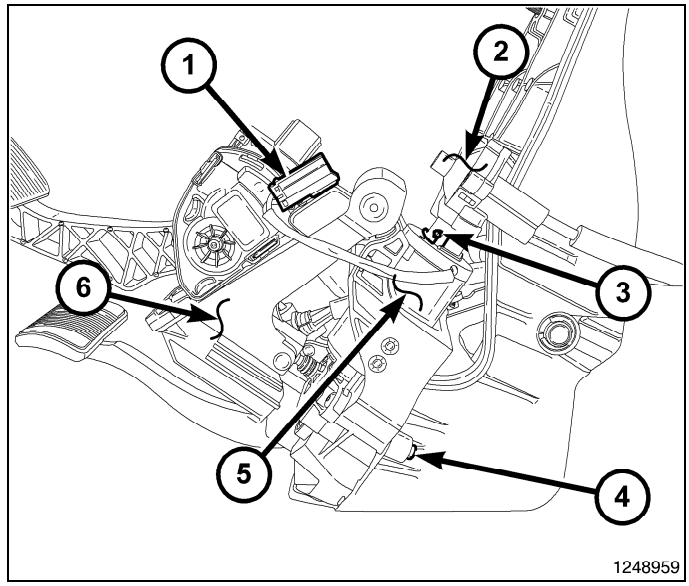

PEDAL ASSEMBLY

NOTE: Ensure that the cables and wiring harness is not pinched.

1. Position the pedal assembly (2) and install the three mounting bolts (to instrument panel). Do not tighten at this time.
2. Install the brake booster mounting bolts (5) and tighten to 28 N·m (20.5 ft. lbs.).
3. Tighten the pedal assembly mounting bolts to 31 N·m (23 ft. lbs.).
4. Install the brake booster rod to the brake pedal and install a new retainer clip.
5. Connect the electrical connectors.
6. Install the steering column (Refer to 19 - Steering/Column - Installation).

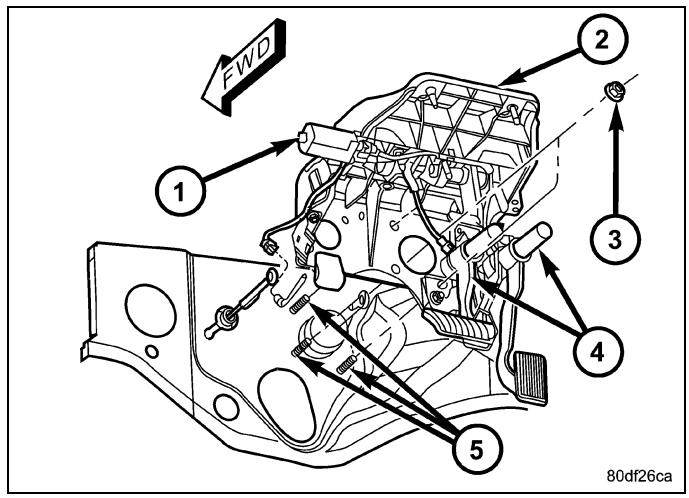

CAUTION: Do not reuse the original stop lamp switch. Anytime a switch has been removed or its position compromised, a new switch must be installed and adjusted. Do not attempt to readjust the switch.

7. Install a new brake lamp switch. (Refer to 08 - Electrical/8L - Lamps and Lighting/Lamps/Lighting - Exterior/SWITCH, Stop Lamp - Installation).
8. Install the steering column opening cover (Refer to 23 - Body/Instrument Panel/COVER, Steering Column Opening - Installation).
9. Reconnect the negative battery cable.

PLATE, Brake Backing

Removal

1. Raise and support the vehicle, (Refer to 04 - Vehicle Quick Reference/Hoisting - Standard Procedure).
2. Remove wheel and tire assembly.
3. Remove the disc brake caliper (Refer to 05 - Brakes/Hydraulic/Mechanical/CALIPER, Disc Brake - Removal).
4. Remove the caliper adapter (Refer to 05 - Brakes/Hydraulic/Mechanical/ADAPTER, Disc Brake Caliper - Removal).
5. Remove the rotor (Refer to 05 - Brakes/Hydraulic/Mechanical/ROTOR, Brake - Removal).
6. Remove the axle shaft, refer to 03 - Differential and Driveline/Rear Axle.
7. Remove the park brake shoes (Refer to 05 - Brakes/Parking Brake/SHOES, Parking Brake - Removal).
8. Remove the parking brake cable from the brake lever.
9. Remove the bolts (2) attaching the support plate (1) to the axle and remove the support plate.

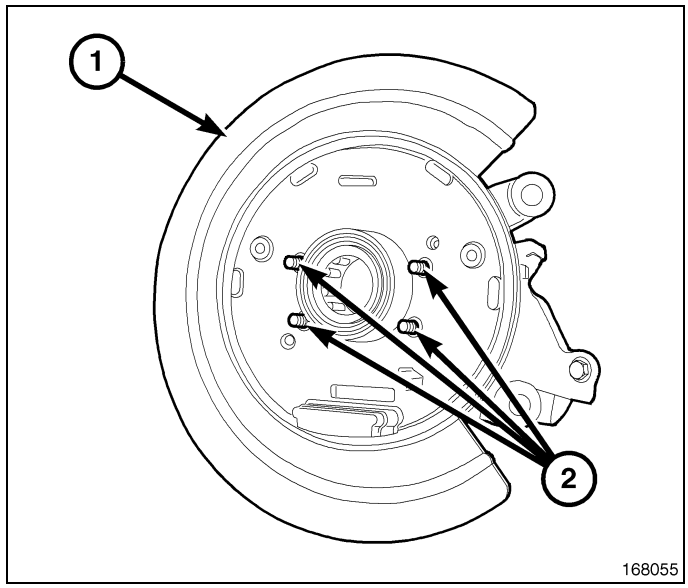

Installation

1. Install support plate (1) on axle flange. Tighten attaching bolts (2) to 68 N·m (50 ft. lbs.).
2. Install parking brake cable in the brake lever.
3. Install the park brake shoes (Refer to 05 - Brakes/Parking Brake/SHOES, Parking Brake - Installation).

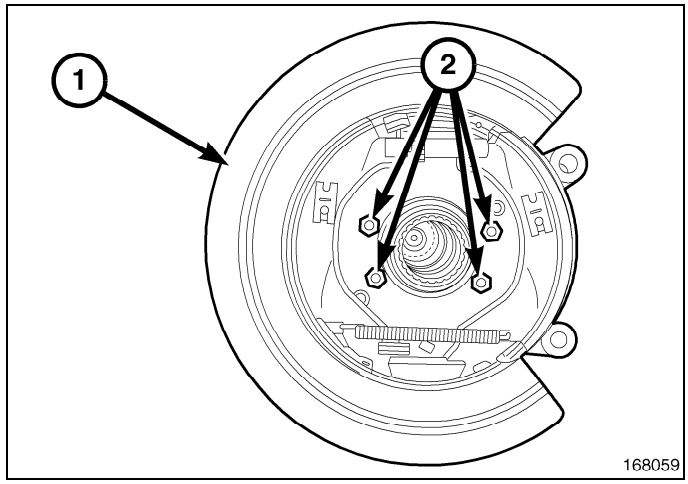

4. Install axle shaft, (Refer to 03 - Differential and Driveline/Rear Axle - 9 1/4/SHAFT, Axle - Installation).

5. Adjust brake shoes to drum with brake gauge (Refer to 05 - Brakes/Parking Brake/SHOES, Parking Brake - Adjustments).
6. Install the rotor (Refer to 05 - Brakes/Hydraulic/Mechanical/ROTOR, Brake - Installation).
7. Install the caliper adapter (Refer to 05 - Brakes/Hydraulic/Mechanical/ADAPTER, Disc Brake Caliper - Installation).
8. Install the caliper (Refer to 05 - Brakes/Hydraulic/Mechanical/CALIPER, Disc Brake - Installation).
9. Install the wheel and tire assembly (Refer to 22 - Tires and Wheels/Wheels - Standard Procedure).

RESERVOIR, Brake Master Cylinder

Removal

1. Install the prop rod on the brake pedal to keep pressure on the brake system.
2. Remove the reservoir cap (1) and siphon fluid into a drain container .
3. Remove the electrical connector from the fluid level switch (3) in the reservoir (2) .
4. Remove the reservoir mounting bolt (5) .
5. Remove the reservoir (2) from the master cylinder (4) by pulling upwards.
6. Remove old grommets from cylinder body .

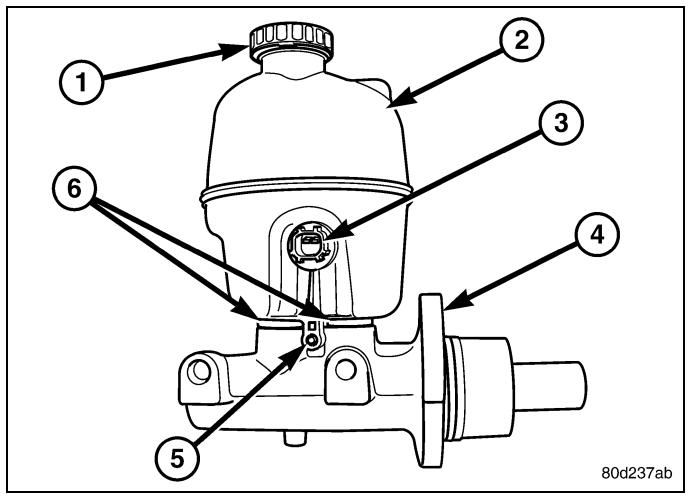

Installation

CAUTION: Do not use any type of tool to install the grommets. Tools may cut, or tear the grommets creating a leak problem after installation. Install the grommets using finger pressure only.

1. Lubricate the new grommets (6) with clean brake fluid and Install new grommets in cylinder body. Use finger pressure to install and seat grommets (6).
2. Start the reservoir (2) in grommets (6). Then rock the reservoir back and forth while pressing downward to seat it into the grommets.
3. Install the mounting bolt (5) for the reservoir (2) to the master cylinder (4).
4. Reconnect the electrical connector to the fluid reservoir level switch (3).
5. Remove the prop rod from the vehicle.
6. Fill and bleed base brake system,(Refer to 05 - Brakes - Standard Procedure).

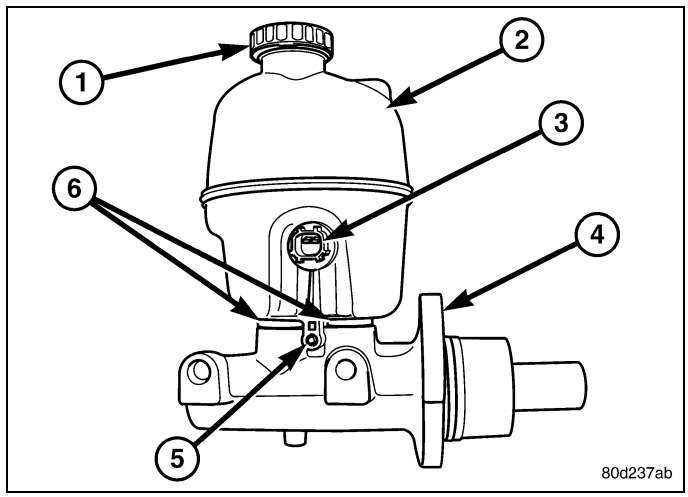

ROTOR, Brake

Diagnosis and Testing

The rotor braking surfaces should not be refinished unless necessary.

Light surface rust and scale can be removed with a lathe equipped with dual sanding discs. The rotor surfaces can be restored by machining with a disc brake lathe if surface scoring and wear are light.

Replace the rotor for the following conditions:

- Severely Scored

- Tapered
- Hard Spots
- Cracked
- Below Minimum Thickness

ROTOR MINIMUM THICKNESS

Measure rotor thickness at the center of the brake shoe contact surface. Replace the rotor if below minimum thickness, or if machining would reduce thickness below the allowable minimum.

Rotor minimum thickness is usually specified on the rotor hub. The specification is either stamped or cast into the hub surface.

ROTOR RUNOUT

Check rotor lateral runout with Dial Indicator Set C-3339A (1). Excessive lateral runout will cause brake pedal pulsation and rapid, uneven wear of the brake shoes. Position the dial indicator plunger approximately 25.4 mm (1 in.) inward from the rotor edge.

NOTE: Be sure wheel bearing has zero end play before checking rotor runout.

Maximum allowable rotor runout is 0.050 mm (0.002 in.).

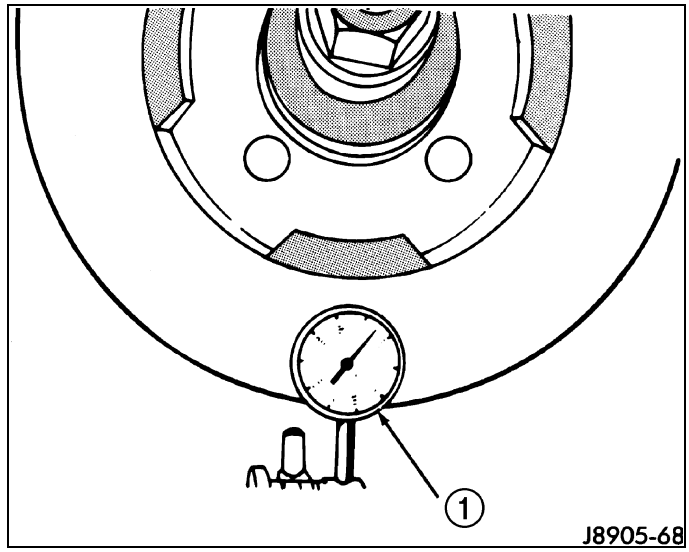

ROTOR THICKNESS VARIATION

Variations in rotor thickness will cause pedal pulsation, noise and shudder.

Measure rotor thickness at 6 to 12 points around the rotor face.

Position the micrometer (1) approximately 25.4 mm (1 in.) from the rotor (2) outer circumference for each measurement.

Thickness should not **vary** by more than 0.015 mm (0.0059 in.) from point-to-point on the rotor. Machine or replace the rotor if necessary.

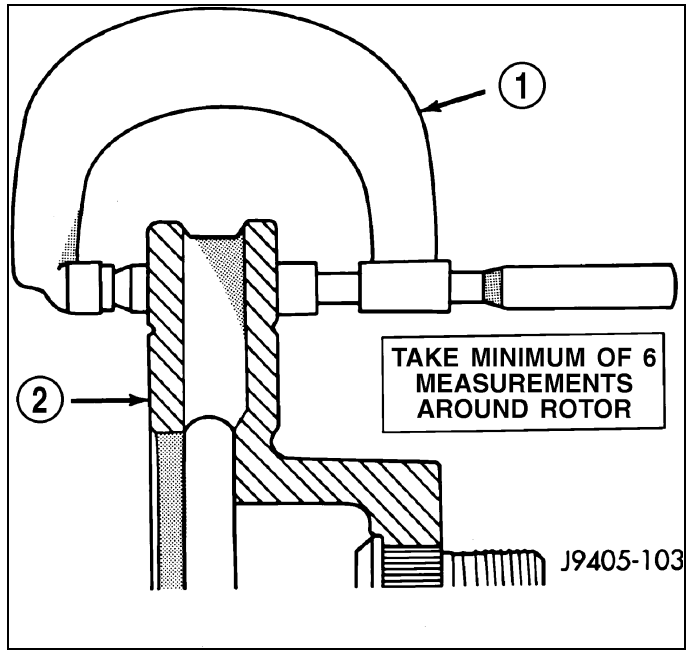

Standard Procedure

NOTE: A hub mounted on-vehicle lathe is highly recommended. This type of lathe trues the rotor to the vehicles hub/bearing.

The disc brake rotor can be machined if scored or worn. The on-vehicle lathe must machine both sides of the rotor simultaneously with dual cutter heads. The rotor mounting surface must be clean before placing on the on-vehicle lathe. Equipment capable of machining only one side at a time may produce a tapered rotor **This type of rotor machining is not recommended**.

NOTE: Proper wheel torque is also critical to help prevent any warping of the disc brake rotor.

CAUTION: Brake rotors that do not meet minimum thickness specifications before or after machining must be replaced.

Removal

FRONT

1. Raise and support the vehicle (Refer to 04 - Vehicle Quick Reference/Hoisting - Standard Procedure).
2. Remove the wheel and tire assembly.

NOTE: Do not allow brake hose to support caliper adapter assembly (1).

3. Remove the two caliper adaptor bolts (5) from the steering knuckle (4), and remove caliper adapter assembly (1).
4. Remove the rotor (2) from the hub/bearing (3).

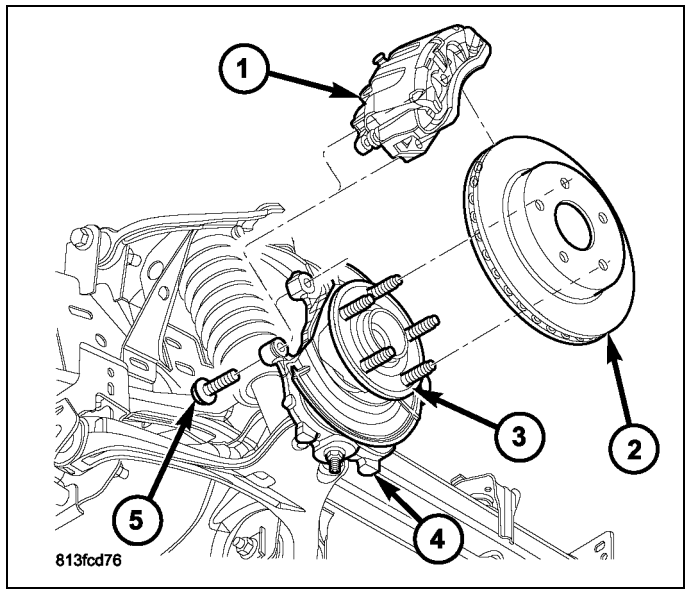

REAR

1. Raise and support the vehicle
2. Remove the tire and wheel assembly.
3. Remove the disc brake caliper (3), (Refer to 05 - Brakes/Hydraulic/Mechanical/CALIPER, Disc Brake - Removal).
4. Remove the caliper adapter (2) bolts.(Refer to 05 - Brakes/Hydraulic/Mechanical/ADAPTER, Disc Brake Caliper - Removal)
5. Remove the retaining clips and rotor assembly (1).

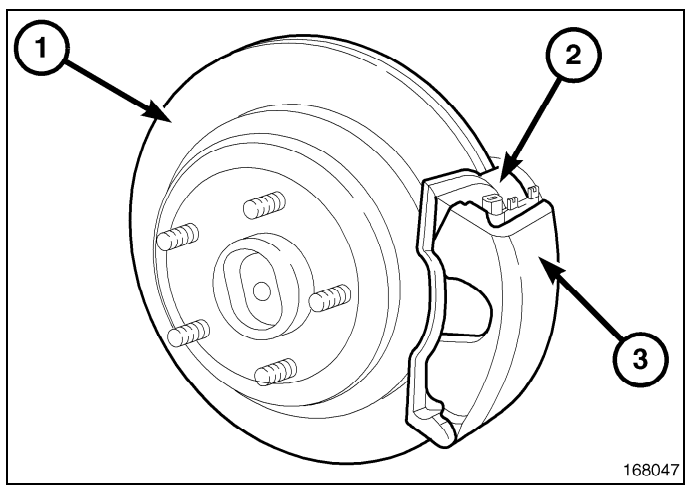

Installation

FRONT

1. Install the rotor (2) onto the hub/bearing (3).
2. Install the caliper adapter assembly (1),(Refer to 05 - Brakes/Hydraulic/Mechanical/CALIPER, Disc Brake - Installation) and tighten adapter bolts (5) to 176 N·m (130 ft.lbs.).
3. Install the wheel and tire assembly, (Refer to 22 - Tires and Wheels/Wheels - Standard Procedure) and lower the vehicle.
4. Apply the brakes several times to seat brake pads. Be sure to obtain firm pedal before moving vehicle.

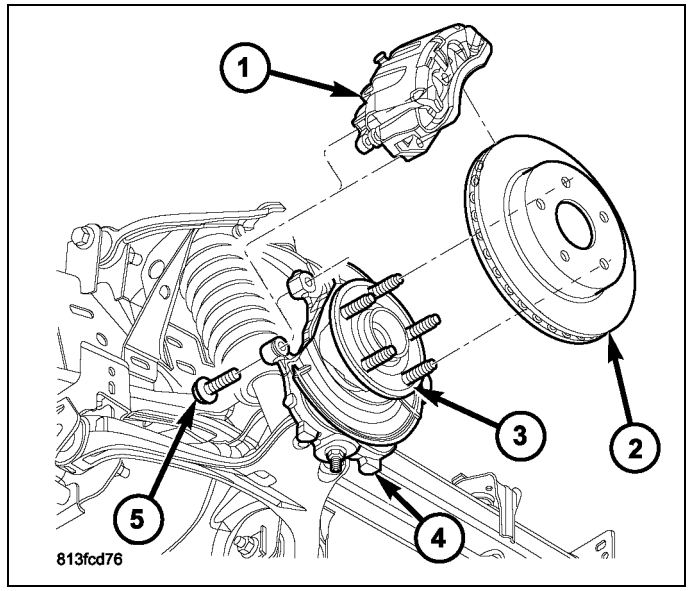

REAR

1. Install the rotor (1) to the axleshaft.
2. Install the caliper adapter (2) (Refer to 05 - Brakes/Hydraulic/Mechanical/ADAPTER, Disc Brake Caliper - Installation).
3. Install the caliper adapter bolts and tighten the mounting bolts to 163 N·m (120 ft.lbs).
4. Install the disc brake caliper (3), (Refer to 05 - Brakes/Hydraulic/Mechanical/CALIPER, Disc Brake - Installation).
5. Install the tire and wheel assembly (Refer to 22 - Tires and Wheels/Wheels - Standard Procedure).
6. Remove the support and lower the vehicle.

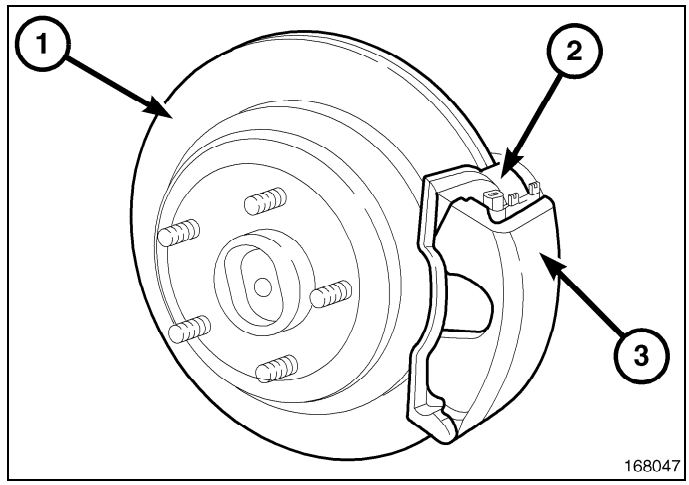

TUBES AND HOSES, Brake

Standard Procedure

DOUBLE INVERTED FLARING

A preformed metal brake tube is recommended and preferred for all repairs. However, double-wall steel tube can be used for emergency repair when factory replacement parts are not readily available.

1. Cut off damaged tube with Tubing Cutter.
2. Ream cut edges of tubing to ensure proper flare.
3. Install replacement tube nut on the tube.
4. Insert tube in flaring tool.
5. Place gauge form over the end of the tube.
6. Push tubing through flaring tool jaws until tube contacts recessed notch in gauge that matches tube diameter.
7. Tighten the tool bar on the tube
8. Insert plug on gauge in the tube. Then swing compression disc over gauge and center tapered flaring screw in recess of compression disc.
9. Tighten tool handle until plug gauge is squarely seated on jaws of flaring tool. This will start the inverted flare.
10. Remove the plug gauge and complete the inverted flare.

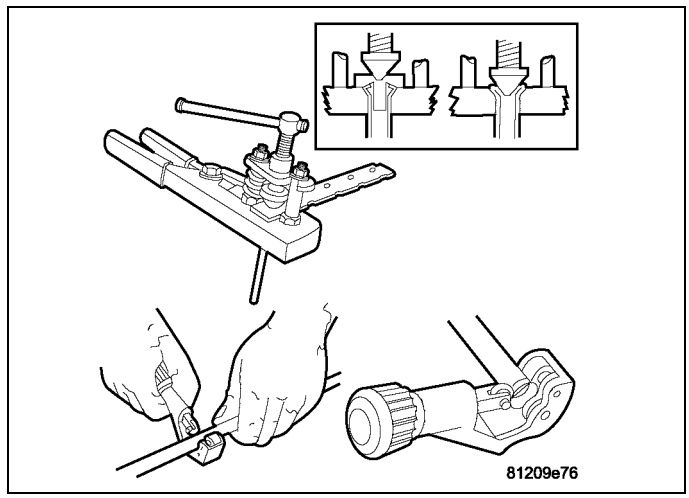

ISO FLARING

A preformed metal brake tube is recommended and preferred for all repairs. However, double-wall steel tube can be used for emergency repair when factory replacement parts are not readily available.

To make a ISO flare use an ISO flaring tool kit.

1. Cut off damaged tube with Tubing Cutter.
2. Remove any burrs from the inside of the tube.
3. Install tube nut on the tube.
4. Position the tube in the flaring tool flush with the top of the tool bar (6). Then tighten the tool bar on the tube.
5. Install the correct size adaptor (1) on the flaring tool yoke screw.
6. Lubricate the adaptor (2).
7. Align the adaptor and yoke screw over the tube.
8. Turn the yoke screw in until the adaptor is squarely seated on the tool bar.

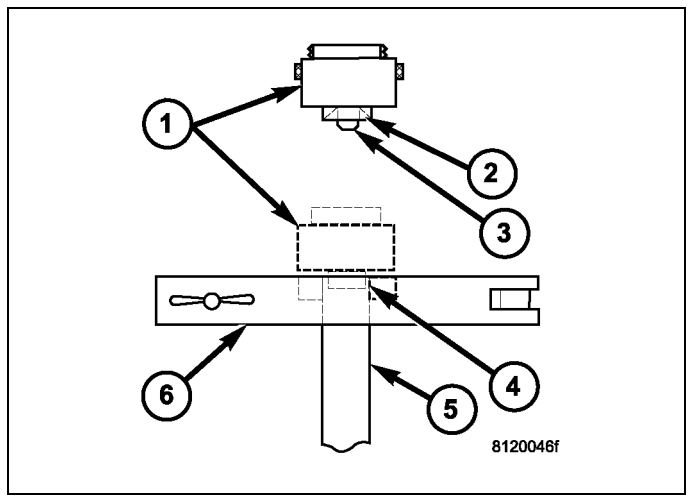

Removal

FRONT BRAKE HOSE

1. Install prop rod on the brake pedal to keep pressure on the brake system, Holding pedal in this position will isolate master cylinder from hydraulic brake system and will not allow brake fluid to drain out of brake fluid reservoir while brake lines are open. This will allow you to bleed out the area of repair instead of the entire system.
2. Raise and support vehicle.
3. Remove the tire and wheel assembly.
4. Remove the brake hose (2) from the brake line located at the frame .
5. Remove the brake hose banjo bolt (3) at the caliper .
6. Remove the mounting bolt securing the brake hose (2) to the frame and remove the wheel speed sensor wire (4) from the brake hose (2) .
7. Remove the hose.

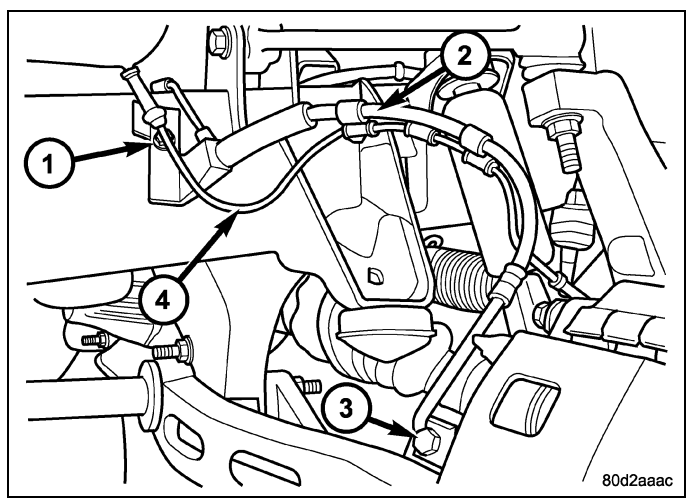

REAR BRAKE HOSE - 1500 SERIES

Left and right side procedures are similar.

1. Install prop rod on the brake pedal to keep pressure on the brake system. Holding pedal in this position will isolate the master cylinder from the hydraulic brake system and will not allow brake fluid to drain out of the brake fluid reservoir while the brake lines are open. This will allow you to bleed out the area of repair instead of the entire system.
2. Raise and support the vehicle. (Refer to 04 - Vehicle Quick Reference/Hoisting - Standard Procedure).
3. Remove the appropriate line connector (1 or 6) from the junction block (2) located on the frame.

NOTE: The right brake line has three push type retainers, and the left brake line has only one push type retainer.

4. Remove the brake line retainer clip(s) (7, left side shown)

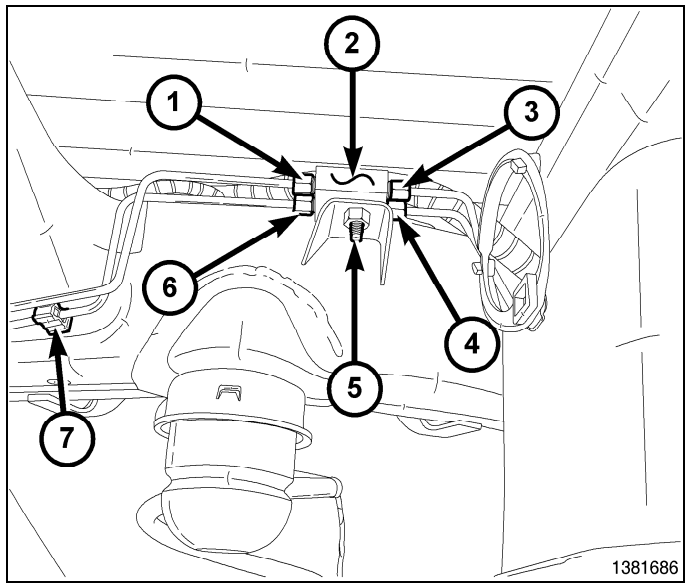

5. Remove the antilock sensor harness (1) from the routing clips (2) on the brake hose.

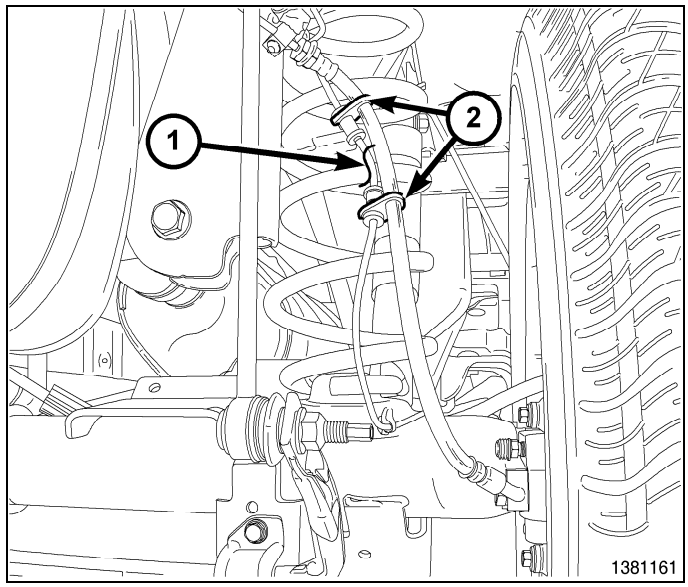

6. Remove the banjo bolt (4) at the caliper.
7. Remove the brake hose retainer clip bolt (1) located at the frame.
8. Remove the brake line.

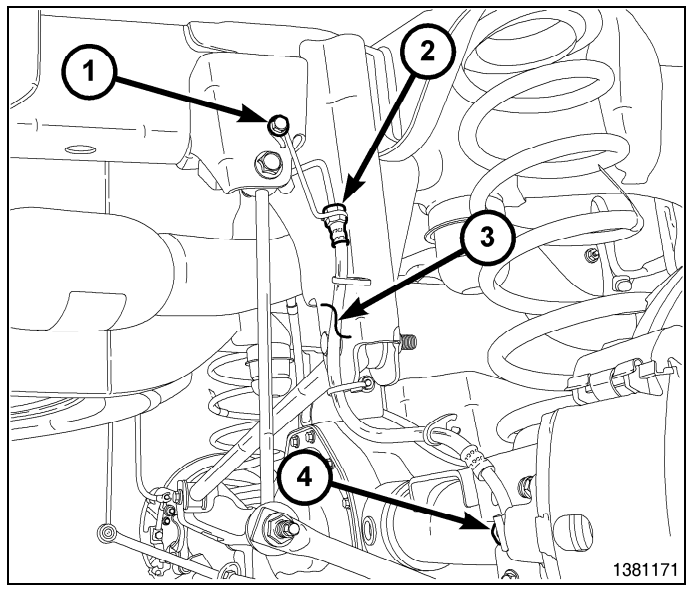

Installation

FRONT BRAKE HOSE

1. Install the hose (3).
2. Install the mounting bolt (1) for the brake hose (3) at the frame .
3. Install the brake hose banjo bolt at the caliper .
4. Reinstall the wheel speed sensor wire (2) to the brake hose .
5. Remove the support and lower the vehicle.
6. Remove the prop rod from the brake pedal.
7. Bleed the area of repair for the brake system, **If a proper pedal is not felt during bleeding an area of repair then a base bleed system must be performed.**(Refer to 05 - Brakes - Standard Procedure).

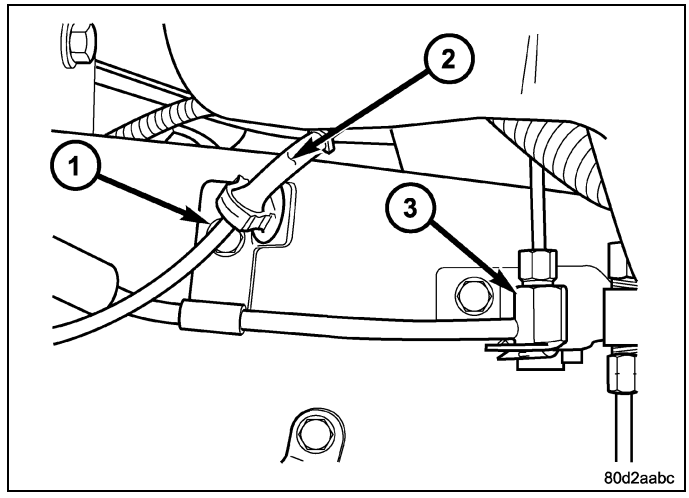

REAR BRAKE HOSE - 1500 SERIES

1. Position the brake line. Install the brake hose retainer clip bolt (1) located at the frame and tighten to 20 N·m (15 ft. lbs.).
2. Install the banjo bolt (4) at the caliper using two new washers and tighten to 28 N·m (21 ft. lbs.).

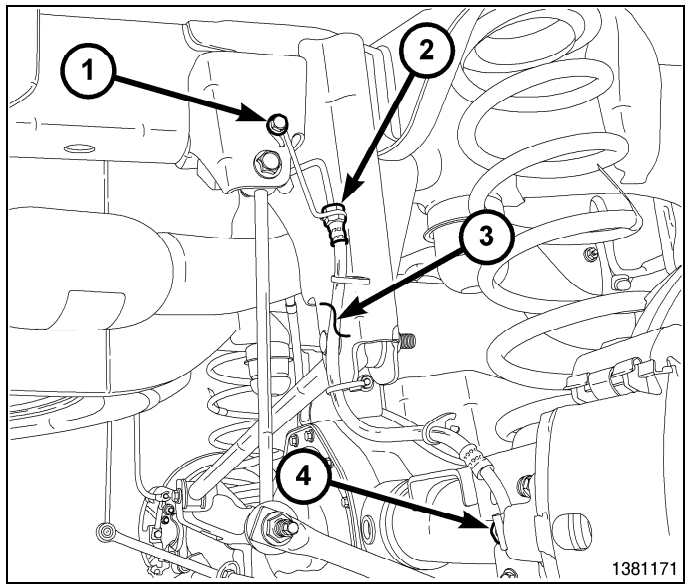

3. Connect the antilock sensor harness (1) to the routing clips (2).

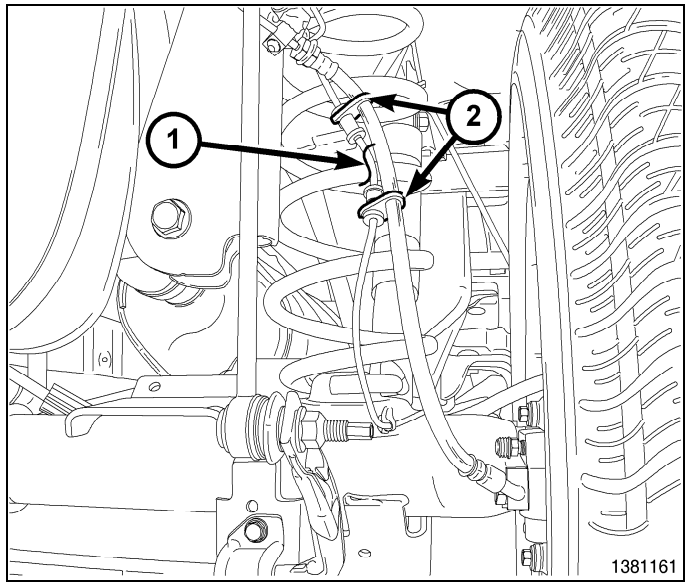

NOTE: The right brake line has three push type retainers, and the left brake line has only one push type retainer.

4. Install the brake line retainer clip(s) (7, left side shown)
5. Install the appropriate line connector (1 or 6) to the junction block (2) located on the frame and tighten to 19 N·m (169 in. lbs.).
6. Remove the supports and lower the vehicle.
7. Remove the prop rod from the brake pedal.
8. Bleed the area of repair for the brake system.**If a proper pedal is not felt during bleeding an area of repair then a base bleed system must be performed.**(Refer to 05 - Brakes - Standard Procedure).

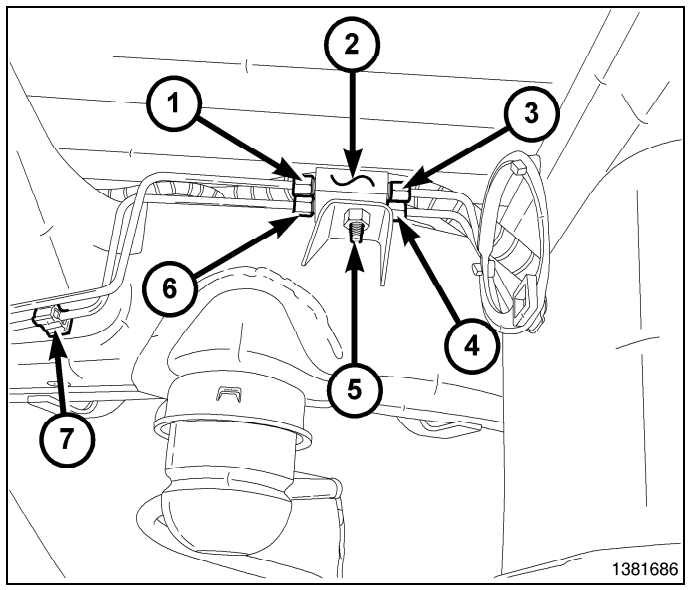

PARKING BRAKE

TABLE OF CONTENTS

page

PARKING BRAKE
- DESCRIPTION 64
- OPERATION 64
- **CABLE, PARKING BRAKE**
  - REMOVAL
    - FRONT PARKING BRAKE CABLE 64
    - REAR PARK BRAKE CABLE 65
    - RIGHT REAR CABLE 66
    - LEFT REAR CABLE 67
  - INSTALLATION
    - FRONT PARKING BRAKE CABLE 68
    - REAR PARK BRAKE CABLE 68
    - RIGHT REAR CABLE 69
    - LEFT REAR CABLE 69
- **HANDLE, PARKING BRAKE RELEASE**
  - REMOVAL 69
  - INSTALLATION 70

page

PEDAL, PARKING BRAKE
- REMOVAL 70
- INSTALLATION 71

SHOES, PARKING BRAKE
- REMOVAL 71
- CLEANING 72
- INSPECTION. 72
- INSTALLATION 73
- ADJUSTMENTS
  - PARKING BRAKE SHOES. 73
  - WITH ADJUSTING TOOL 75

TENSIONER, PARKING BRAKE CABLE
- ADJUSTMENTS 75

Parking Brake

Description

The parking brakes are secured to a support plate (1) and operated by a system of cables and levers attached to a primary and secondary shoe (2) positioned within the drum section of the rotor.

The drum-in-hat design utilizes an independent set of shoes (2) to park the vehicle.

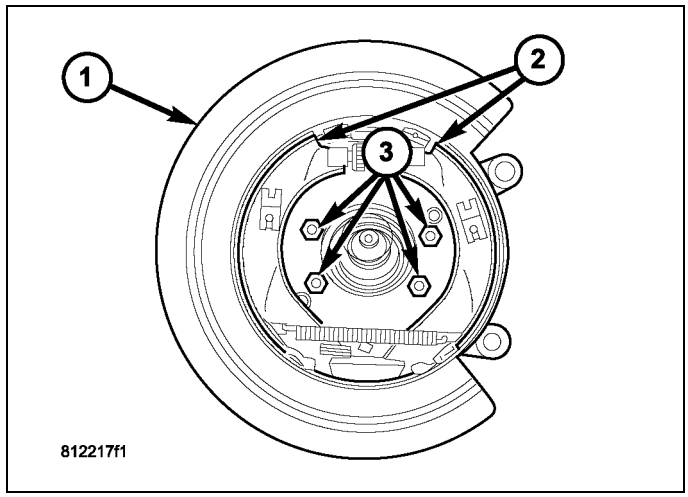

Operation

To apply the parking brake the pedal is depressed. This creates tension in the cable which pulls forward on the park brake lever. The lever pushes the park brake shoes outward and into contact with the drum section of the rotor. The contact of shoe to rotor parks the vehicle.

A torsion locking mechanism is used to hold the pedal in an applied position. Parking brake release is accomplished by the hand release.

A parking brake switch is mounted on the parking brake lever and is actuated by movement of the lever. The switch, which is in circuit with the red warning light in the dash, will illuminate the warning light whenever the parking brake is applied.

Parking brake adjustment is controlled by a cable tensioner mechanism. The cable tensioner, once adjusted at the factory, should not need further adjustment under normal circumstances. Adjustment may be required if a new tensioner, or cables are installed, or disconnected.

CABLE, Parking Brake

Removal

FRONT PARKING BRAKE CABLE

1. Raise and support vehicle.
2. Lockout the parking brake cable (2)

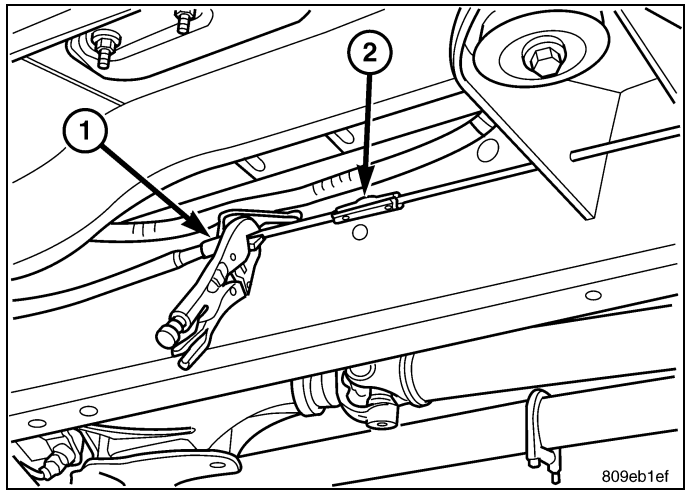

3. Loosen adjusting nut to create slack in front cable.

4. Remove the front cable from the cable connector.
5. Compress cable end fitting at underbody bracket and remove the cable from the bracket.
6. Lower vehicle.
7. Push ball end of cable out of pedal clevis with small screwdriver.
8. Compress cable end fitting at the pedal bracket (1) and remove the cable (2)
9. Remove the left cowl trim and sill plate.
10. Pull up the carpet and remove the cable from the body clip.
11. Pull up on the cable and remove the cable with the body grommet.

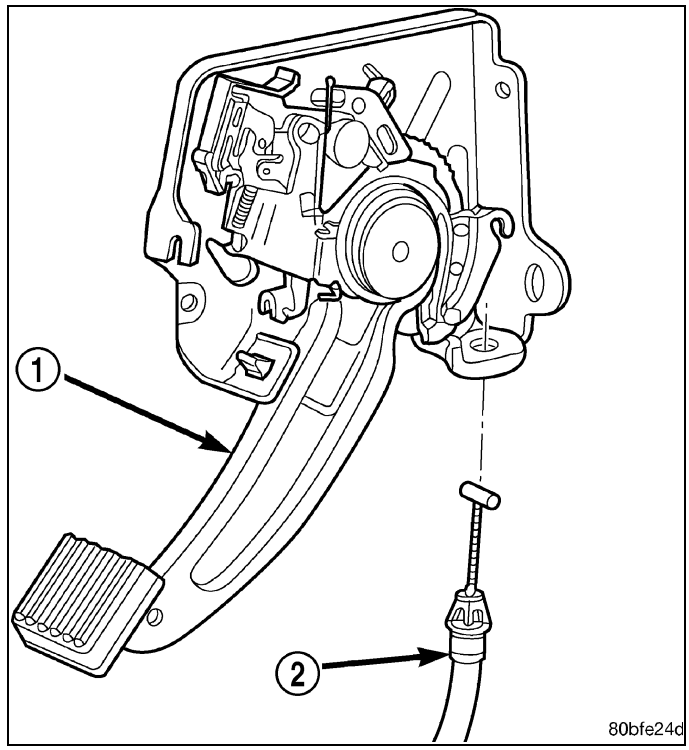

REAR PARK BRAKE CABLE

1. Raise and support the vehicle.
2. Lockout the parking brake cable (2) .

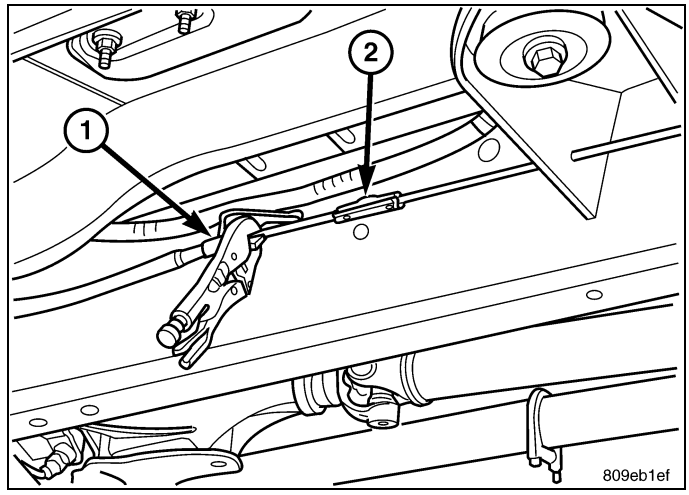

3. Loosen cable adjuster nut.
4. Remove the rear park brake cable from the intermediate park brake cable.
5. Compress tabs on cable end fitting on the rear park brake cable to the frame mount bracket. Then pull the cable through the bracket.
6. Disengage the park brake cable (2) from behind the rotor assembly. .
7. Compress cable tabs on each cable end fitting at the brake cable support plate.
8. Remove the cables from the brake cable support plates.

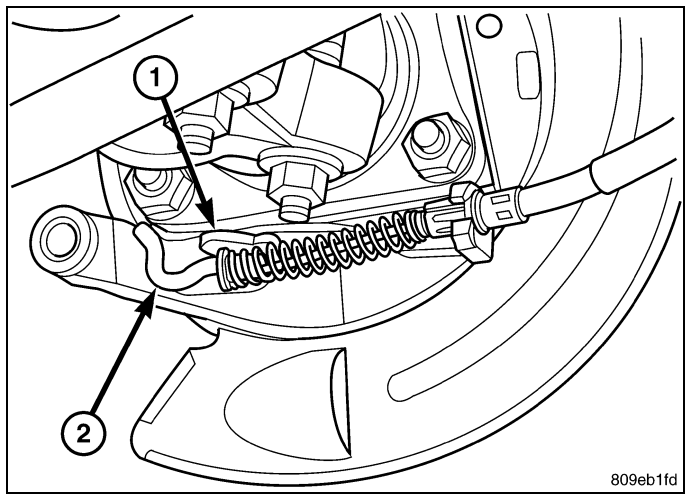

RIGHT REAR CABLE

1. Raise and support the vehicle.
2. Lockout the parking brake cable (2) .
3. Loosen the brake cable at the equalizer and adjuster nut.

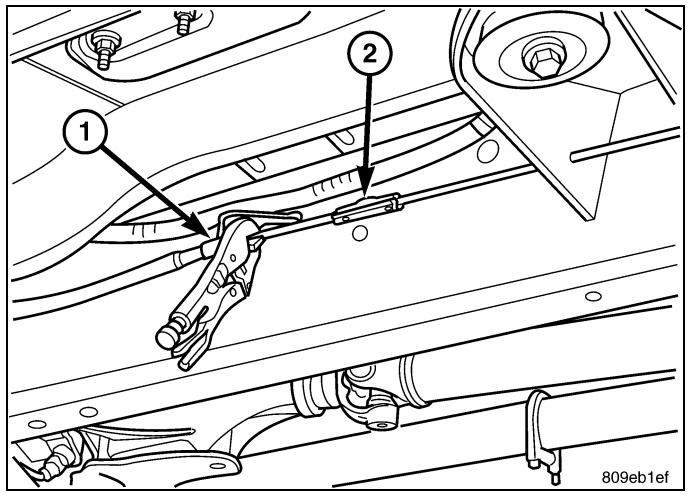

4. Remove the right cable from the front cable.
5. Remove the right cable from the equalizer.
6. Remove the cable from the frame bracket.
7. Remove the cable from the axle bracket.
8. Remove the cable bracket from the shock bracket.
9. Remove the brake cable (4) from the brake lever (3).

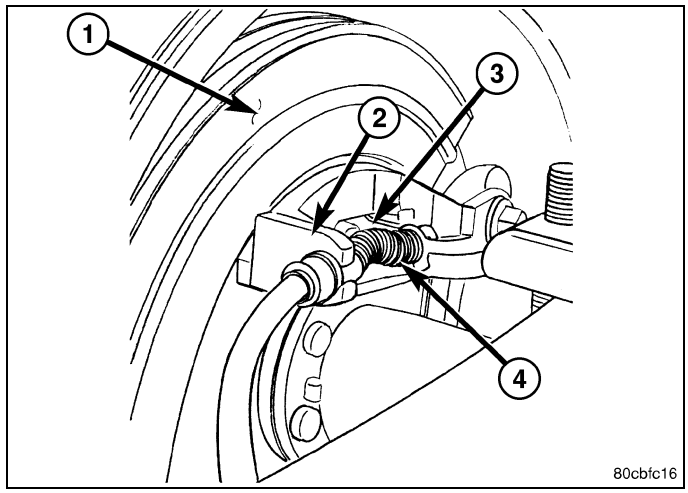

LEFT REAR CABLE

1. Raise and support the vehicle.
2. Lockout the parking brake cable (2) .
3. Loosen the brake cable at the equalizer and adjuster nut.

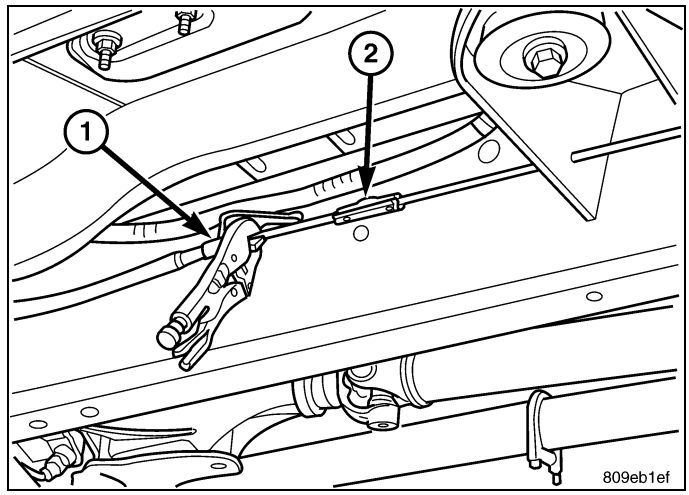

4. Remove the left brake cable from the equalizer.
5. Remove the brake cable (4) from the frame bracket.
6. Remove the brake cable (4) from the brake lever.

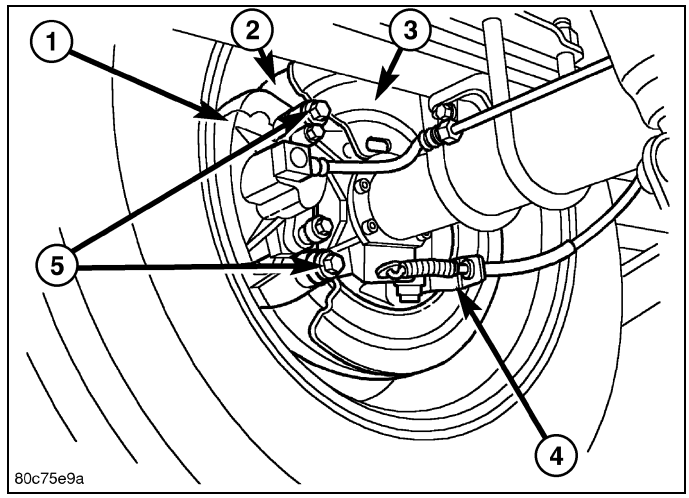

Installation

FRONT PARKING BRAKE CABLE

1. From inside the vehicle, insert the cable end fitting (2) into the hole in the pedal assembly (1).
2. Seat the cable retainer in the pedal assembly (1).
3. Engage the cable ball end in clevis on the pedal assembly.

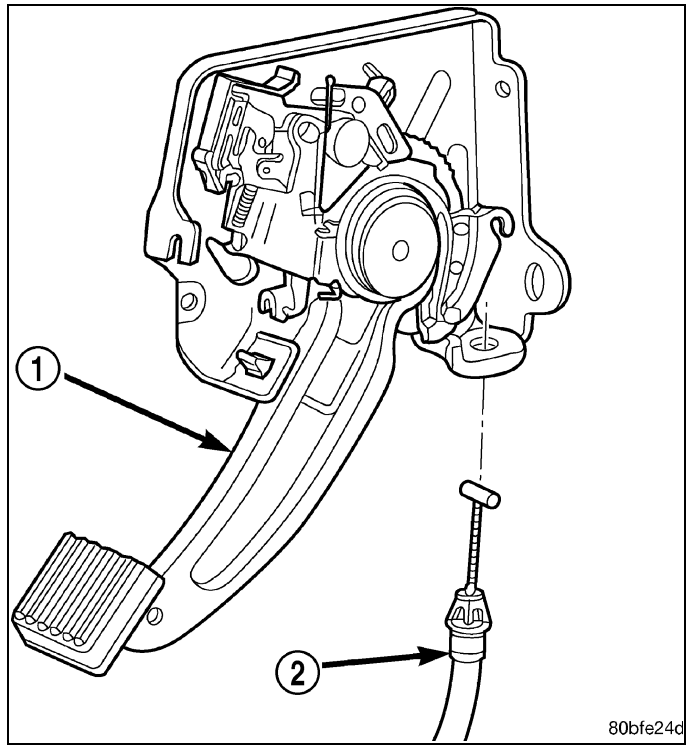

4. Route the cable through the floorpan and install the body grommet.
5. Place the carpet down and install the left cowl trim and sill plate.
6. Raise and support the vehicle.
7. Route the cable through the underbody bracket and seat the cable end fitting in the bracket.
8. Connect the cable to the cable connector.
9. Perform the park brake adjustment procedure, (Refer to 05 - Brakes/Parking Brake/TENSIONER, Parking Brake Cable - Adjustments).
10. Lower the vehicle.

REAR PARK BRAKE CABLE

1. Push each cable end (2) through the brake cable support plate hole until the cable end fitting tabs lock into place.

NOTE: Pull on the cable to ensure it is locked into place.

2. Push the cable through the frame bracket.
3. Lock the left cable end fitting tabs into the frame bracket hole.
4. Install the rear cables into the tensioner rod behind the rear of the brake assembly.

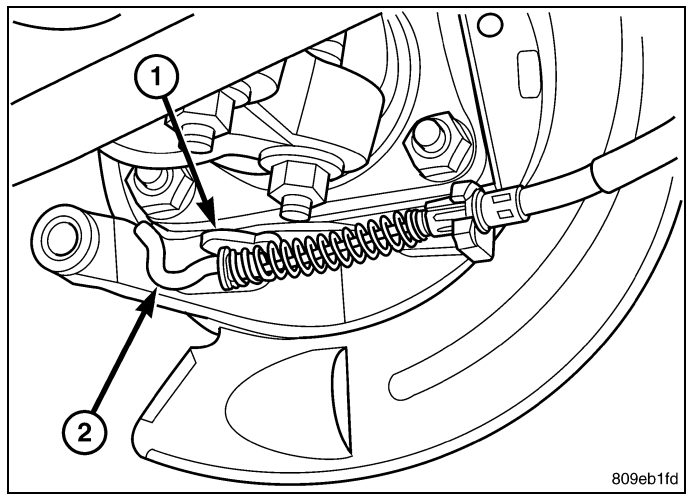

5. Install the cable to the intermediate cable connector.
6. Release and remove the lock out device.
7. Perform the park brake adjustment procedure, (Refer to 05 - Brakes/Parking Brake/TENSIONER, Parking Brake Cable - Adjustments).

8. Remove the supports and lower the vehicle.

RIGHT REAR CABLE

1. Install the brake cable (2) to the brake lever (3).
2. Install the cable bracket to the shock bracket.
3. Install the cable to the axle bracket.
4. Install the cable to the frame bracket.
5. Install the right cable to the equalizer.
6. Install the right cable to the front cable.
7. Adjust the brake cable at the equalizer and using the adjuster nut.

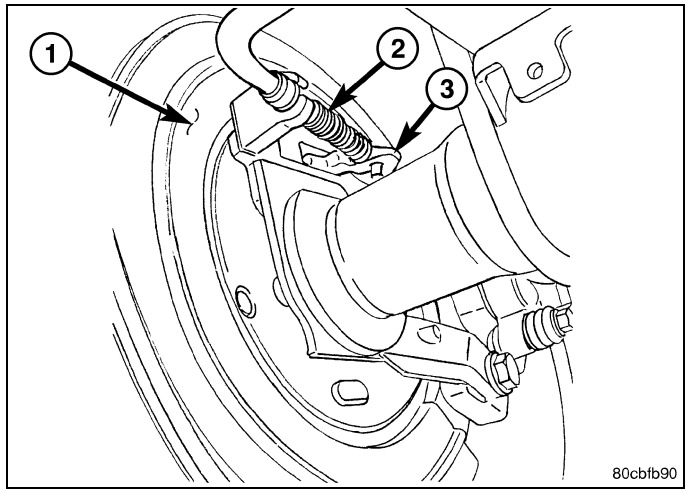

LEFT REAR CABLE

1. Install the brake cable (4) to the brake lever .
2. Install the brake cable to the frame bracket.
3. Install the left brake cable to the equalizer.
4. Adjust the brake cable at the equalizer and adjuster nut.

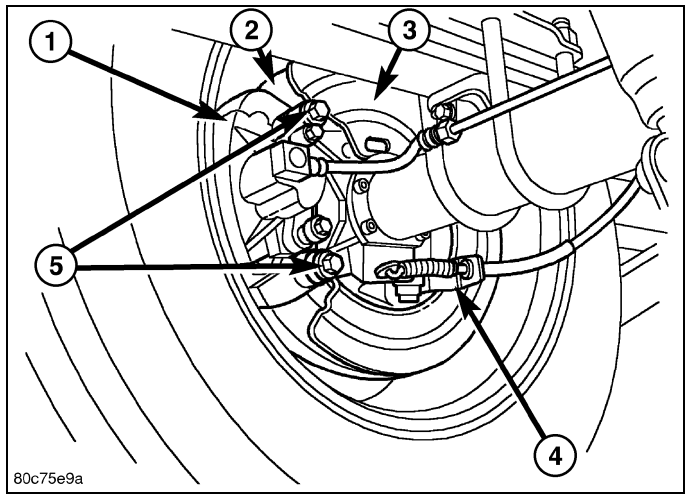

HANDLE, Parking Brake Release

Removal

1. Disconnect and isolate the battery negative cable.
2. Reach under the driver side outboard end of the instrument panel to access and unsnap the plastic retainer clip that secures the park brake release linkage rod to the park brake mechanism on the left cowl side inner panel.
3. Disengage the park brake release linkage rod end from the park brake mechanism.
4. Lift the park brake release handle to access and unsnap the plastic retainer clip that secures the park brake release linkage rod to the lever on the back of the park brake release handle.
5. Lower the park brake release handle and reach under the driver side outboard end of the instrument panel to disengage the park brake release linkage rod end from the lever on the back of the park brake release handle.
6. Lift the park brake release handle to access the handle mounting bracket.

7. Using a trim stick (4) or another suitable wide flat-bladed tool, gently pry each of the park brake release handle (6) mounting bracket latch tabs (5) away from the retaining notches in the instrument panel receptacle .
8. With both of the park brake release handle mounting bracket latches released, slide the handle and bracket assembly down and out of the instrument panel receptacle.

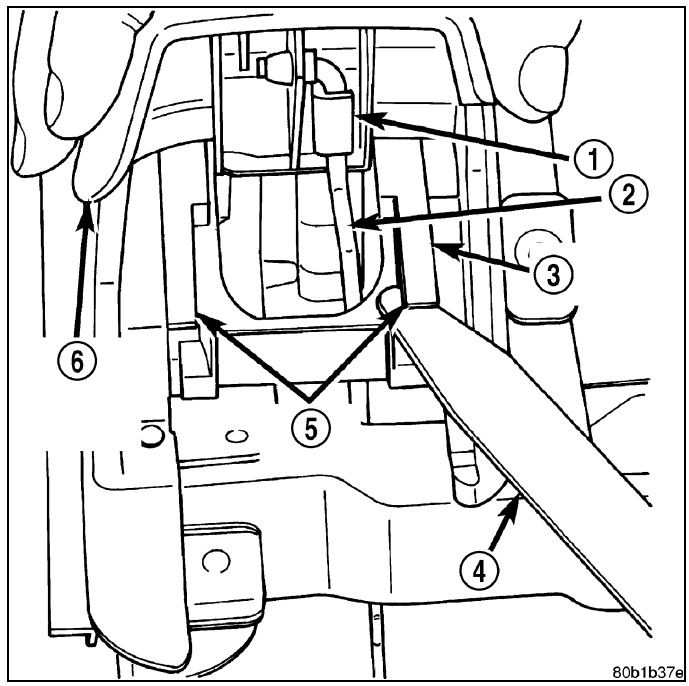

Installation

1. Position the park brake release handle to the instrument panel.
2. Slide the handle and bracket assembly up into the instrument panel receptacle until both of the park brake release handle (6) mounting bracket latches are engaged with the notches in the instrument panel receptacle.
3. Lower the park brake release handle and reach under the driver side outboard end of the instrument panel to engage the park brake release linkage rod end with the lever on the back of the park brake release handle (6).
4. Lift the park brake release handle to access and snap the plastic retainer clip that secures the park brake release linkage rod to the lever on the back of the park brake release handle over the linkage rod.
5. Reach under the driver side outboard end of the instrument panel to access and engage the park brake release linkage rod end to the park brake mechanism.
6. Snap the plastic retainer clip that secures the park brake release linkage rod to the park brake mechanism on the left cowl side inner panel over the linkage rod.
7. Reconnect the battery negative cable.

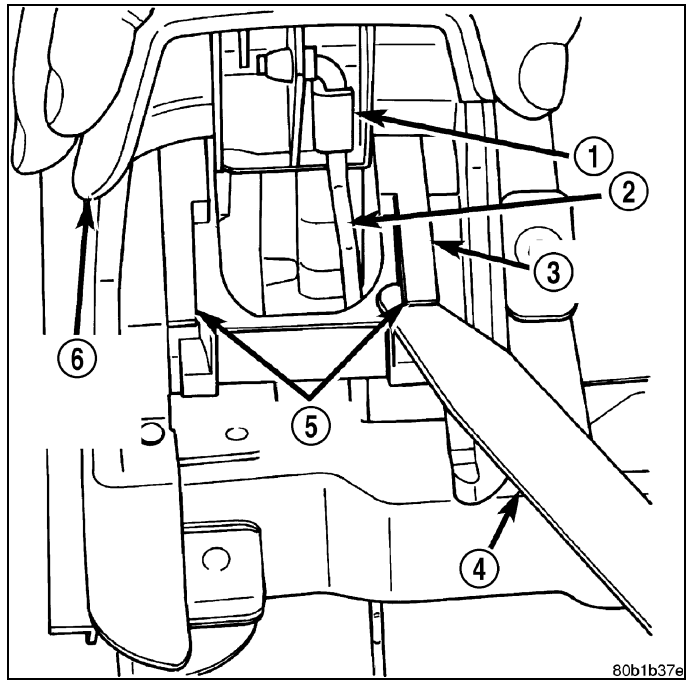

PEDAL, Parking Brake

Removal

1. Release the parking brake.
2. Raise the vehicle.
3. Loosen the cable tensioner nut at the equalizer to create slack in the front cable.
4. Lower the vehicle.

5. Remove the knee bolster, (Refer to 23 - Body/Instrument Panel/COVER, Steering Column Opening - Removal).
6. Disconnect the brake lamp wire from the switch on the pedal assembly (2).
7. Roll the carpet back, loosen the front cable grommet from the floorpan and the cable retainer.
8. Disengage the release rod (1) from the arm on the pedal assembly (2).
9. Remove the bolts/nuts from the pedal assembly (2) and remove the assembly.

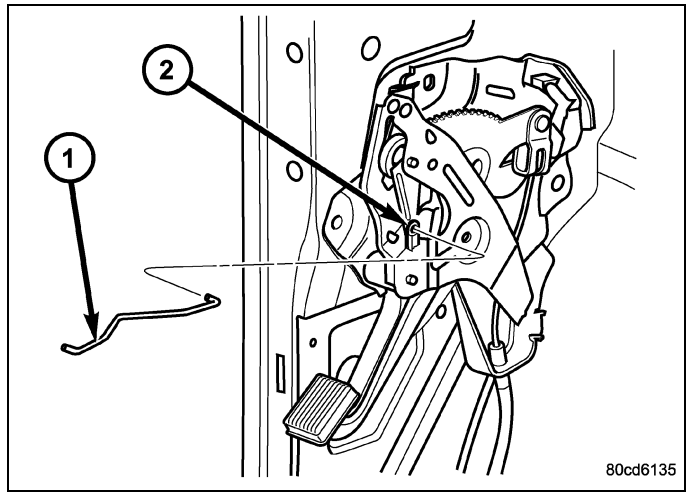

Installation

1. Position the replacement pedal assembly (1) on the dash and cowl.
2. Install the bolts/nuts (2) and tighten to 25 N·m (18 ft. lbs.) .
3. Install the park brake release rod.
4. Connect the front cable to the arm on the pedal assembly (1).
5. Install the front cable grommet into the floorpan and the cable retainer, roll the carpet back.
6. Connect the wires to the brake lamp switch.
7. Install the knee bolster, (Refer to 23 - Body/Instrument Panel/COVER, Steering Column Opening - Installation).
8. Raise the vehicle.

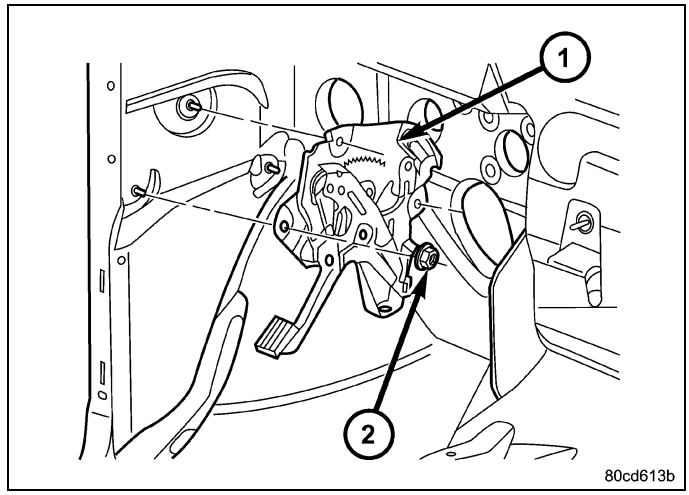

9. Adjust the parking brake cable tensioner (Refer to 05 - Brakes/Parking Brake/TENSIONER, Parking Brake Cable - Adjustments).

SHOES, Parking Brake

Removal

1. Raise and support the vehicle (Refer to 04 - Vehicle Quick Reference/Hoisting - Standard Procedure).
2. Remove the tire and wheel assembly.
3. Remove the disc brake caliper,(Refer to 05 - Brakes/Hydraulic/Mechanical/CALIPER, Disc Brake - Removal).
4. Remove the disc brake rotor, (Refer to 05 - Brakes/Hydraulic/Mechanical/ROTOR, Brake - Removal).
5. Lockout the parking brake cable (2).

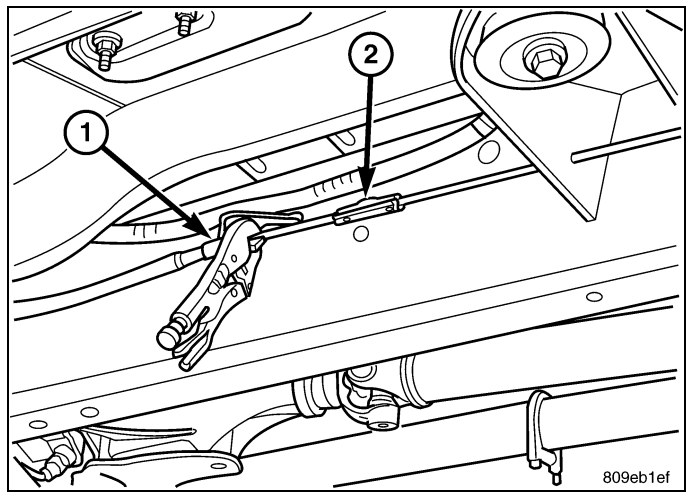

6. Disengage the park brake cable (2) from behind the rotor assembly to allow easier disassembly of the park brake shoes.

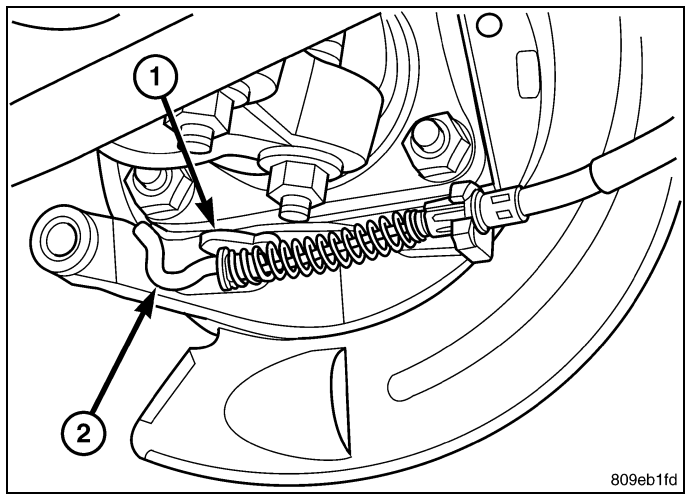

7. Remove the axleshaft (1), refer to 03 - Differential and Driveline/Rear Axle.
8. Disassemble the rear park brake shoes (4).

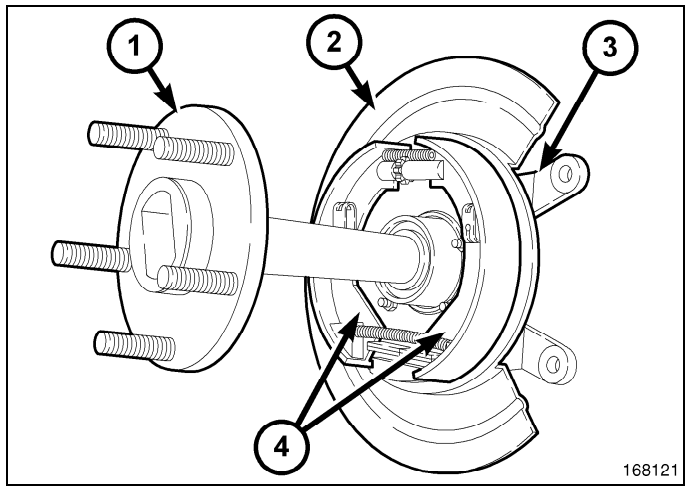

Cleaning

Clean the individual brake components, including the support plate exterior, with a water dampened cloth or with brake cleaner. Do not use any other cleaning agents. Remove light rust and scale from the brake shoe contact pads on the support plate with fine sandpaper.

Inspection

As a general rule, riveted brake shoes (2) should be replaced when worn to within 0.78 mm (1/32 in.) of the rivet heads. Bonded lining should be replaced when worn to a thickness of 1.6 mm (1/16 in.).

Examine the lining contact pattern to determine if the shoes are bent or the drum is tapered. The lining should exhibit contact across its entire width. Shoes (2) exhibiting contact only on one side should be replaced and the drum checked for runout or taper.

Inspect the adjuster screw assembly (5). Replace the assembly if the star wheel or threads are damaged, or the components are severely rusted or corroded.

Discard the brake springs (3) and retainer components (4) if worn, distorted or collapsed. Also replace the springs if a brake drag condition had occurred. Overheating will distort and weaken the springs.

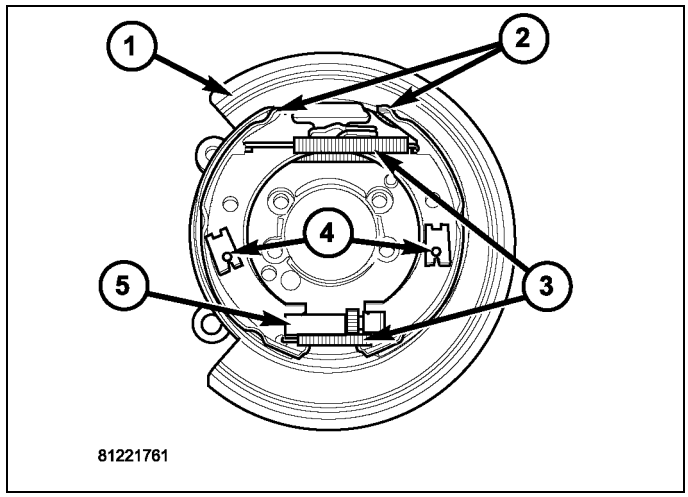

Inspect the brake shoe contact pads on the support plate (1), replace the support plate if any of the pads are worn or rusted through. Also replace the plate (1) if it is bent or distorted.

Installation

NOTE: On a new vehicle or after parking brake lining replacement, it is recommended that the parking brake system be conditioned prior to use. This is done by making one stop from 25 mph on dry pavement or concrete using light to moderate force on the parking brake foot pedal.

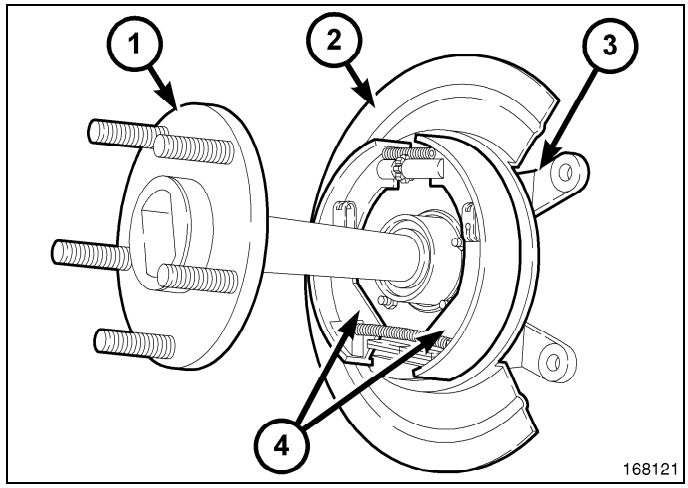

1. Reassemble the rear park brake shoes (4).
2. Install the axle shaft (1), refer to 03 - Differential and Driveline/Rear Axle.
3. Install the park brake cable to the lever behind the support plate.
4. Unlock the park brake cable.
5. Install the disc brake rotor (Refer to 05 - Brakes/Hydraulic/Mechanical/ROTOR, Brake - Installation).
6. Install the disc brake caliper (Refer to 05 - Brakes/Hydraulic/Mechanical/CALIPER, Disc Brake - Installation) .
7. Adjust the rear brake shoes (Refer to 05 - Brakes/Parking Brake/SHOES, Parking Brake - Adjustments).
8. Install the tire and wheel assembly (Refer to 22 - Tires and Wheels/Wheels - Standard Procedure).
9. Remove the support and lower the vehicle.

Adjustments

PARKING BRAKE SHOES

CAUTION: Before adjusting the park brake shoes be sure that the park brake pedal is in the fully released position. If park brake pedal is not in the fully released position, the park brake shoes can not be accurately adjusted.

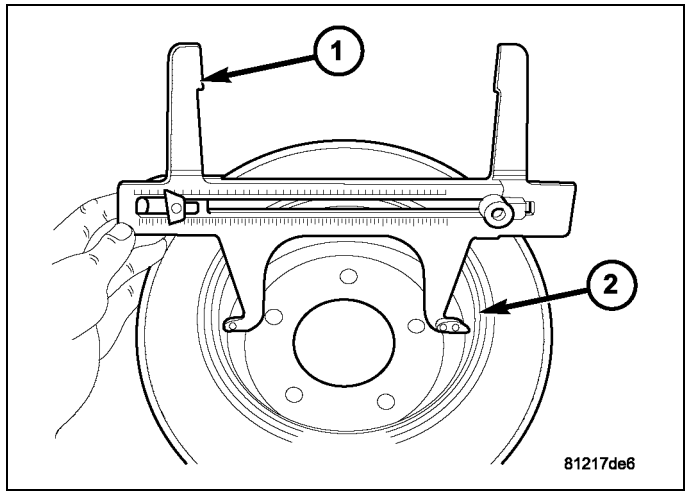

1. Raise and support the vehicle (Refer to 04 - Vehicle Quick Reference/Hoisting - Standard Procedure).
2. Remove tire and wheel.
3. Remove disc brake caliper from caliper adapter (Refer to 05 - Brakes/Hydraulic/Mechanical/CALIPER, Disc Brake - Removal).
4. Remove rotor from the axle shaft (Refer to 05 - Brakes/Hydraulic/Mechanical/ROTOR, Brake - Removal).

NOTE: When measuring the brake drum diameter, the diameter should be measured in the center of the area in which the park brake shoes contact the surface of the brake drum.

5. Using Brake Shoes Gauge C-3919 (1), or equivalent, **accurately** measure the inside diameter of the park brake drum portion (2) of the rotor.

6. Using a ruler (2) that reads in 64th of an inch, accurately read the measurement of the inside diameter of the park brake drum from the special tool (2).

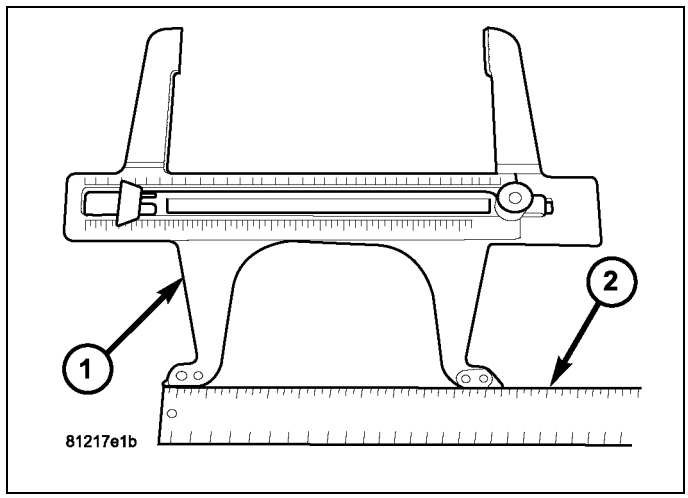

7. Reduce the inside diameter measurement of the brake drum that was taken using Brake Shoes Gauge C-3919 (2) by 1/64 of an inch. Reset Brake Shoes Gauge C-3919 (2) or the equivalent used, so that the outside measurement jaws are set to the reduced measurement.

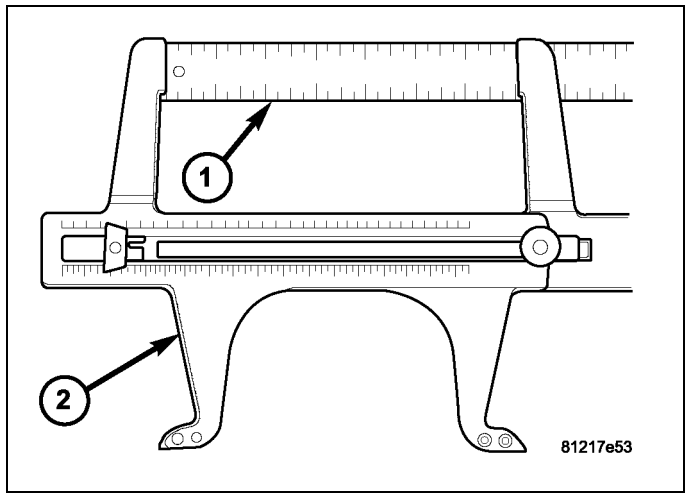

8. Place Brake Shoes Gauge C-3919, or equivalent over the park brake shoes. Brake Shoes Gauge C-3919 must be located diagonally across at the top of one shoe and bottom of opposite shoe (widest point) of the park brake shoes.
9. Using the star wheel adjuster, adjust the park brake shoes until the lining on the park brake shoes just touches the jaws on Brake Shoes Gauge C-3919.
10. Repeat step 8 above and measure shoes in both directions.
11. Install brake rotor on the axle shaft (Refer to 05 - Brakes/Hydraulic/Mechanical/ROTOR, Brake - Installation) .
12. Rotate rotor to verify that the park brake shoes are not dragging on the brake drum. If park brake shoes are dragging, remove rotor and back off star wheel adjuster one notch and recheck for brake shoe drag against drum. Continue with the previous step until brake shoes are not dragging on brake drum.
13. Install disc brake caliper on caliper adapter (Refer to 05 - Brakes/Hydraulic/Mechanical/CALIPER, Disc Brake - Installation).
14. Install wheel and tire (Refer to 22 - Tires and Wheels/Wheels - Standard Procedure).
15. Remove the support and lower the vehicle.
16. Apply and release the park brake pedal one time. This will seat and correctly adjust the park brake cables.

CAUTION: Before moving vehicle, pump brake pedal several times to ensure the vehicle has a firm enough pedal to stop the vehicle.

17. Road test the vehicle to ensure proper function of the vehicle's brake system.

WITH ADJUSTING TOOL

Adjustment can be made with a standard brake gauge or with adjusting tool. Adjustment is performed with the complete brake assembly installed on the backing plate.

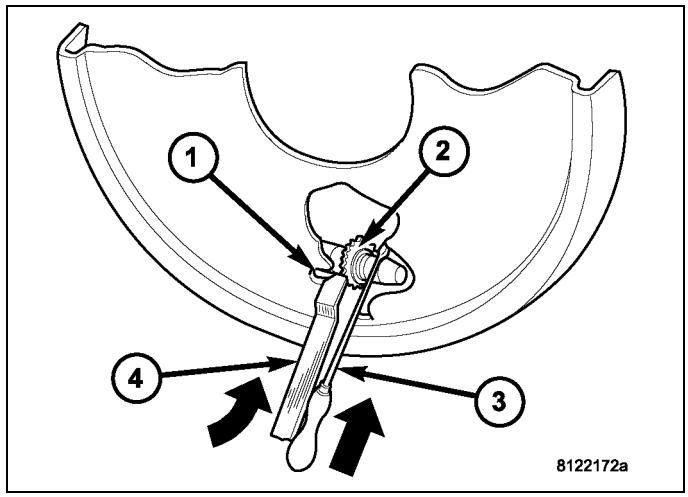

1. Be sure parking brake lever is fully released.
2. Raise vehicle so rear wheels can be rotated freely.
3. Remove plug from each access hole in brake support plates.
4. Loosen parking brake cable adjustment nut until there is slack in front cable.
5. Insert adjusting tool (4) through support plate access hole (1) and engage tool in teeth of adjusting screw star wheel (2).
6. Rotate adjuster screw star wheel (move tool handle upward) until slight drag can be felt when wheel is rotated.
7. Push and hold adjuster lever away from star wheel with thin screwdriver (3).
8. Back off adjuster screw star wheel until brake drag is eliminated.
9. Repeat adjustment at opposite wheel. Be sure adjustment is equal at both wheels.
10. Install support plate access hole plugs.
11. Adjust parking brake cable and lower vehicle.
12. Depress park brake pedal and make sure park brakes hold the vehicle stationary.
13. Release park brake pedal.

TENSIONER, Parking Brake Cable

Adjustments

NOTE: Tensioner adjustment is only necessary when the tensioner, or a cable has been replaced or disconnected for service. When adjustment is necessary, perform adjustment only as described in the following procedure. This is necessary to avoid faulty park brake operation.

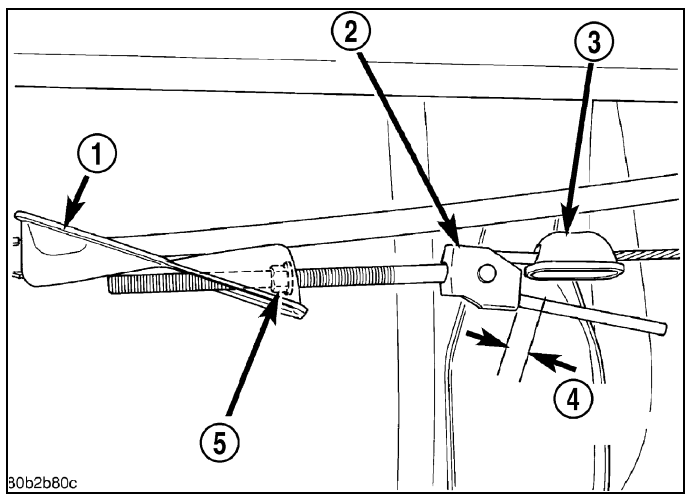

1. Raise the vehicle.
2. Back off the cable tensioner adjusting nut (5) to create slack in the cables.
3. Remove the rear wheel/tire assemblies. Then remove the brake rotors (Refer to 05 - Brakes/Hydraulic/Mechanical/ROTOR, Brake - Removal).
4. Verify the brakes are in good condition and operating properly.
5. Verify the park brake cables operate freely and are not binding, or seized.
6. Check the rear brake shoe adjustment with standard brake gauge (Refer to 05 - Brakes/Parking Brake/SHOES, Parking Brake - Adjustments).
7. Install the rotors (Refer to 05 - Brakes/Hydraulic/Mechanical/ROTOR, Brake - Installation) and verify that the rotors rotate freely without drag.
8. Install the wheel/tire assemblies, (Refer to 22 - Tires and Wheels/Wheels - Standard Procedure).
9. Lower the vehicle enough for access to the park brake foot pedal. Then fully apply the park brakes.

NOTE: Leave park brakes applied until adjustment is complete.

10. Raise the vehicle again.
11. Mark the tensioner rod 6.35 mm (1/4 in.) from edge of the tensioner (2).
12. Tighten the adjusting nut (5) on the tensioner rod until the mark is no longer visible.

CAUTION: Do not loosen, or tighten the tensioner adjusting nut for any reason after completing adjustment.

13. Lower the vehicle until the rear wheels are 15-20 cm (6-8 in.) off the shop floor.
14. Release the park brake foot pedal and verify that rear wheels rotate freely without drag. Then lower the vehicle.

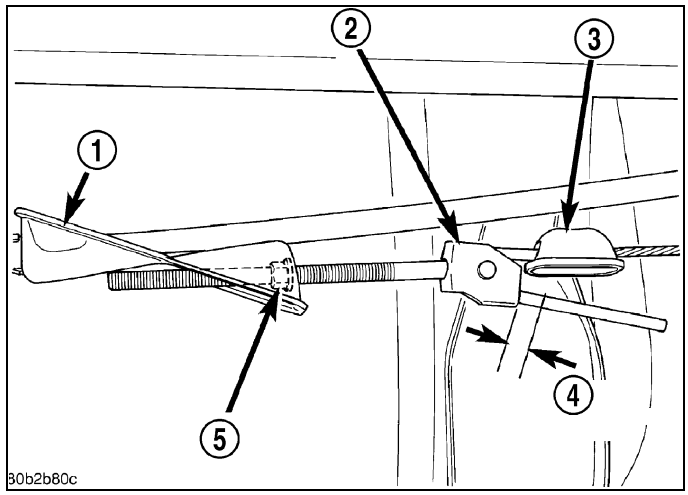

BRAKES, ABS

TABLE OF CONTENTS

page

BRAKES, ABS
DESCRIPTION 78
OPERATION 78
STANDARD PROCEDURE 78
SPECIFICATIONS 79
ELECTRICAL 81
HYDRAULIC/MECHANICAL 87

Brakes, ABS

Description

The antilock brake system (ABS) is an electronically operated, four channel brake control system. The vehicle has Electronic Variable Brake Proportioning (EVBP) designed into the system which eliminates the combination/proportioning valve.

The system is designed to prevent wheel lockup and maintain steering control during braking. Preventing lockup is accomplished by modulating fluid pressure to the wheel brake units.

The hydraulic system is a four channel design. All wheel brakes are controlled individually. The ABS electrical system is separate from other electrical circuits in the vehicle. A specially programmed controller antilock brake unit operates the system components.

ABS system major components include:

- Antilock Brake Module (ABM)
- Hydraulic Control Unit (HCU)
- Wheel Speed Sensors (WSS)
- ABS Warning Light

Operation

Battery voltage is supplied to the ABM. The ABM performs a system initialization procedure at start up. A check of the ABS motor is performed at 15 miles per hour. Initialization consists of a static and dynamic self check of system electrical components.

The static and dynamic checks occurs at ignition start up. During the dynamic check, the ABM briefly cycles solenoids to verify operation. An audible noise may be heard during this self check. This noise should be considered normal. The ABS motor and pump are then checked at a speed of 15 mile per hour.

If an ABS component exhibits a fault during initialization, the ABM illuminates the amber warning light and registers a fault code in the microprocessor memory.

The ABM monitors wheel speed sensor inputs continuously while the vehicle is in motion. However, the ABM will not activate any ABS components as long as sensor inputs indicate normal braking.

During normal braking, the master cylinder, power booster and wheel brake units all function as they would in a vehicle without ABS. The HCU components are not activated.

The purpose of the antilock system is to prevent wheel lockup. Preventing lockup helps maintain vehicle braking action and steering control.

The antilock ABM activates the system whenever sensor signals indicate periods of wheel slip.

The antilock system prevents lockup during a wheel slip condition by modulating fluid apply pressure to the wheel brake units.

Brake fluid apply pressure is modulated according to wheel speed, degree of slip and rate of deceleration. Sensors at each wheel convert wheel speed into electrical signals. These signals are transmitted to the ABM for processing and determination of wheel slip and deceleration rate.

The ABS system has four fluid pressure control channels. Each wheel brakes are controlled separately. A speed sensor input signal indicating a wheel slip condition activates the ABM antilock program.

There are Two solenoid valves (Isolation and Dump valve) which are used in each antilock control channel. The valves are all located within the HCU valve body and work in pairs to either increase, hold, or decrease apply pressure as needed in the individual control channels.

During an ABS stop the ISO valve is energized which acts to prevent further pressure build-up to the calipers. Then the Dump valve dumps off pressure until the wheel unlocks. This will continue until the wheels quit slipping altogether.

Standard Procedure

ABS system bleeding requires conventional bleeding methods plus use of a scan tool. The procedure involves performing a base brake bleeding, followed by use of the scan tool to cycle and bleed the HCU pump and solenoids. A second base brake bleeding procedure is then required to remove any air remaining in the system.

1. Perform base brake bleeding (Refer to 05 - Brakes - Standard Procedure).

2. Connect scan tool to the Data Link Connector.
3. Select ANTILOCK BRAKES, followed by MISCELLANEOUS, then ABS BRAKES. Follow the instructions displayed. When scan tool displays TEST COMPLETE, disconnect scan tool and proceed.
4. Perform base brake bleeding a second time (Refer to 05 - Brakes - Standard Procedure).
5. Top off master cylinder fluid level and verify proper brake operation before moving vehicle.

Specifications

DESCRIPTION	N·m	Ft. Lbs.	In. Lbs.
ABS Assembly Mounting Bolts	15	11	—
ABS Assembly ABM Screws	3.5	—	31
ABS Assembly Brake Line Fittings	19	—	170
Dynamics Sensor	11	—	97
Wheel Speed Sensors, Front Sensor Bolt	21	—	190
Wheel Speed Sensors, Bracket To Knuckle	6.7	—	60
Wheel Speed Sensors, Rear Sensor Stud	22.5	—	200
ABM Mounting Screws	6	—	53

ELECTRICAL

TABLE OF CONTENTS

page

ELECTRICAL
DIAGNOSIS AND TESTING 82
SENSOR, DYNAMICS
DESCRIPTION 82
REMOVAL 82
INSTALLATION 83
SENSOR, WHEEL SPEED, FRONT
DESCRIPTION 83
OPERATION 83
REMOVAL 83
INSTALLATION 84

page

SENSOR, WHEEL SPEED, REAR
REMOVAL 84
INSTALLATION 85
SWITCH, ELECTRONIC STABILITY PROGRAM (ESP)
DESCRIPTION 85
REMOVAL 85
INSTALLATION 86

Electrical

Diagnosis and Testing

Diagnosis of base brake conditions which are mechanical in nature should be performed first. This includes brake noise, lack of power assist, parking brake, or vehicle vibration during normal braking.

The antilock brake system performs several self-tests every time the ignition switch is turned on and the vehicle is driven. The Antilock Brake Module (ABM) monitors the system inputs and outputs circuits to verify the system is operating properly. If the ABM senses a malfunction in the system it will set a DTC into memory and trigger the warning lamp.

NOTE: A scan tool must be used to diagnose the Antilock Brake system.

SENSOR, Dynamics

Description

The yaw rate, lateral acceleration and longitudinal acceleration sensors are housed into one unit known as the dynamics sensor (2). The sensor is used to measure vehicle rotational sensing (how fast the vehicle is turning - yaw), side-to-side (lateral) motion and longitudinal acceleration (forward). The dynamics sensor (2) is located on the floor panel transmission tunnel under the center floor console (or if equipped with a bench seat, under the front center seat section) next to the Occupant Restraint Controller (ORC) (3).

NOTE: If the dynamics sensor is replaced, it must be initialized using the scan tool.

The yaw rate and lateral acceleration sensors cannot be serviced separately. The entire dynamics sensor (2) must be replaced when necessary.

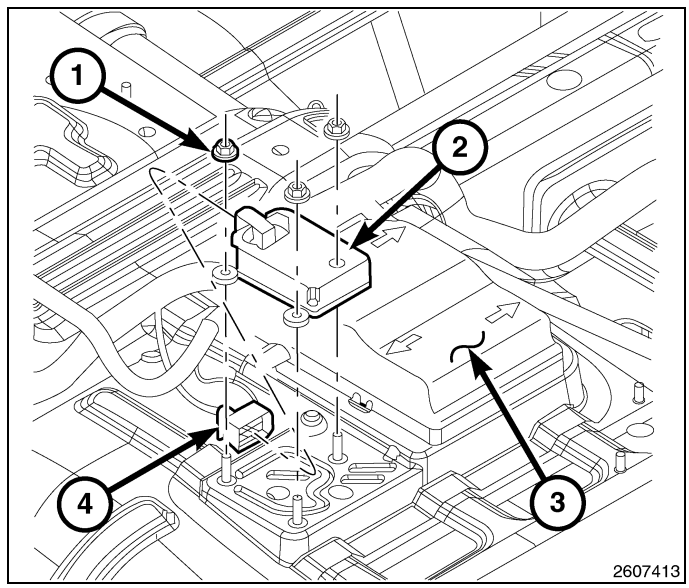

Removal

NOTE: If the dynamics sensor is replaced, it must be initialized using the scan tool.

1. Disconnect and isolate the battery negative cable.
2. If equipped with a center floor console, remove the console (Refer to 23 - Body/Interior/CONSOLE, Floor - Removal).
3. If equipped with a 40/20/40 bench seat, remove the passenger seat (Refer to 23 - Body/Seats/SEAT - Removal).
4. Disconnect the electrical connector (4) for the dynamics sensor (2).
5. Remove the three mounting nuts (1) for the sensor (2).
6. Remove the sensor (2) from the vehicle.

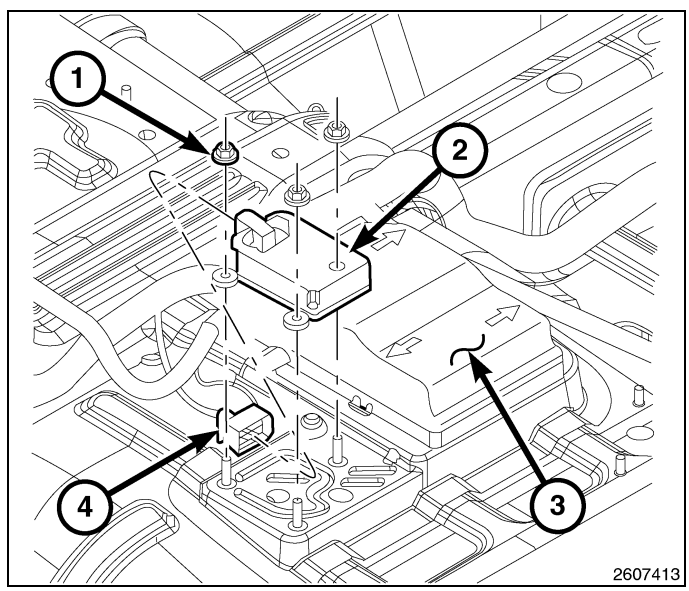

Installation

1. Position the dynamics sensor on the mounting studs.
2. Install the three mounting nuts (1) and tighten to 11 N·m (97 in. lbs.).
3. Connect the electrical connector (4).
4. If equipped with a center floor console, install the console (Refer to 23 - Body/Interior/CONSOLE, Floor - Installation).
5. If equipped with a 40/20/40 bench seat, install the Passenger Seat (Refer to 23 - Body/Seats/SEAT - Installation).
6. Install negative battery cable to the battery.
7. Connect the scan tool and initialize the ABM by performing the ABS Verification Test (Refer to 28 - DTC-Based Diagnostics/MODULE, Antilock Brake (ABS) - Standard Procedure).

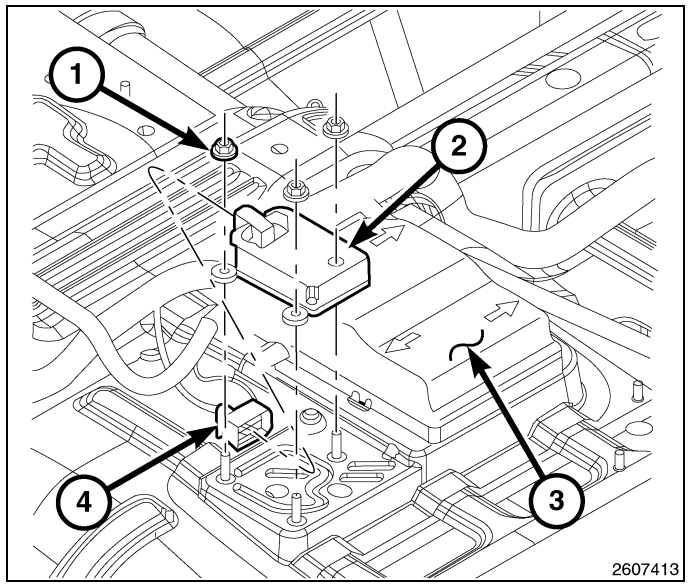

SENSOR, Wheel Speed, Front

Description

The ABS brake system uses four wheel speed sensors. A sensor is mounted to each hub/bearing.

Operation

The sensors convert wheel speed into an electrical signal. This signal and amperage is changed by magnetic induction when the toothed tone wheel passes the wheel speed sensor. This signal is sent to the ABM which measures the voltage and amperage of the digital signal for each wheel to determine wheel speed.

The signal strength is affected by the distance between the sensor and the tone ring. If the "Air Gap" between the sensor and the tone ring/wheel is too large, the signal can drop out at low speed, (below 40 mph) and can cause an ABS activation. No adjustment is available for the air gap.

Removal

1. Remove the front rotor (Refer to 05 - Brakes/Hydraulic/Mechanical/ROTOR, Brake - Removal).
2. Remove the wheel speed sensor mounting bolt (1) from the hub (3).
3. Remove the wheel speed sensor (2) from the hub (3).
4. Remove the wiring from the clips and disconnect the electrical connector.

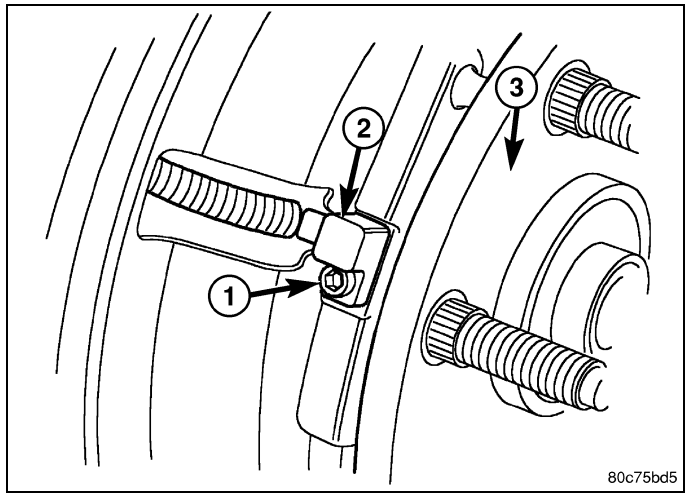

Installation

1. Install the wiring to the clips and Reconnect the electrical connector.
2. Install the wheel speed sensor (2) to the hub (3).
3. Install the wheel speed sensor mounting bolt (1) to the hub (3). Tighten the bolt to 21 N·m (190 in. lbs.).
4. Install the front rotor and brake caliper assembly (Refer to 05 - Brakes/Hydraulic/Mechanical/ROTOR, Brake - Installation).

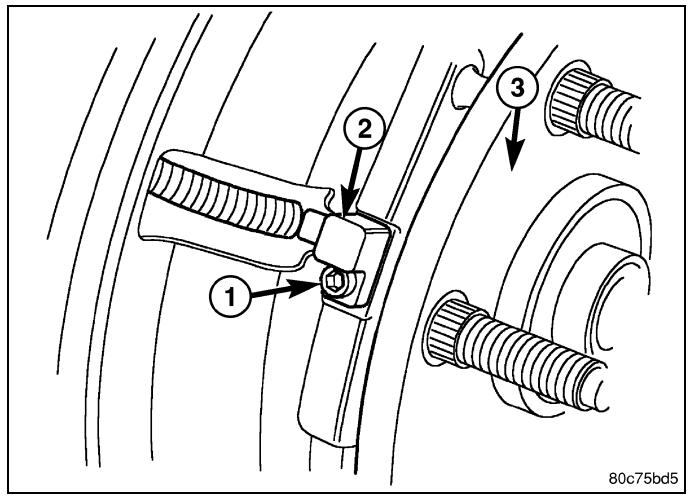

SENSOR, Wheel Speed, Rear

Removal

1. Raise the vehicle on a hoist.
2. Disconnect the wheel speed sensor electrical connector (3).
3. Remove the mounting bolt (1) from the sensor (4).
4. Remove the sensor (4) from the brake caliper adapter (2).

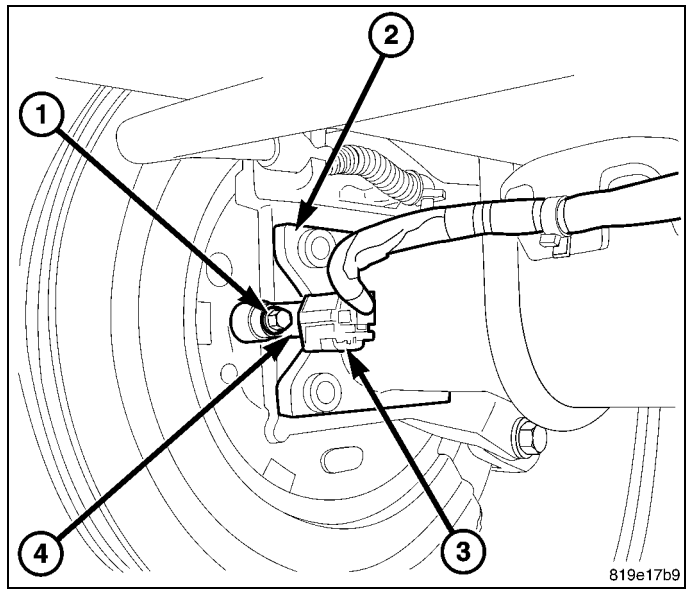

Installation

1. Insert the wheel speed sensor (4) in the brake caliper adapter (2).
2. Install the sensor mounting bolt (1) and tighten to 24 N·m (200 in. lbs.).
3. Reconnect the electrical wiring connector (3) to the sensor (4).
4. Lower the vehicle.

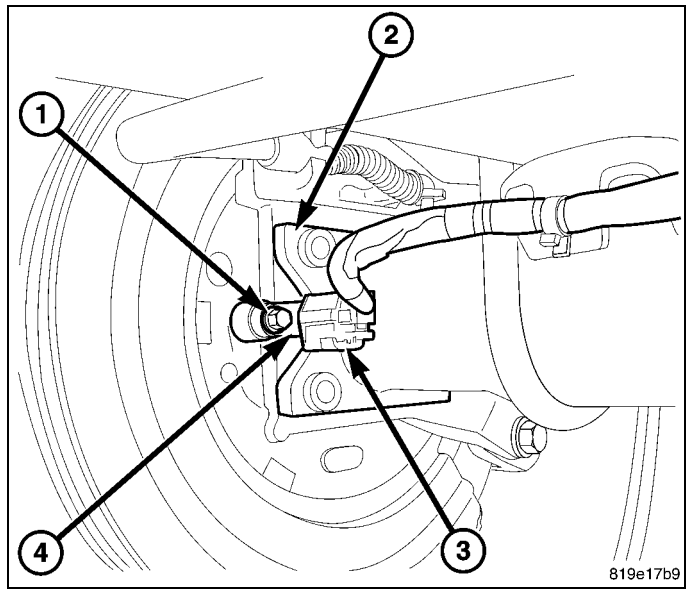

SWITCH, Electronic Stability Program (ESP)

Description

NOTE: The Electronic Stability Control (ESC) may also be referred to as Electronic Stability Program (ESP) depending on the vehicle model year and configuration. Certain components may also reference ESP, ESC, or use the traction control symbol.

The Electronic Stability Control (ESC) switch is located just above the heater and air conditioner controls in the center stack area of the instrument panel.

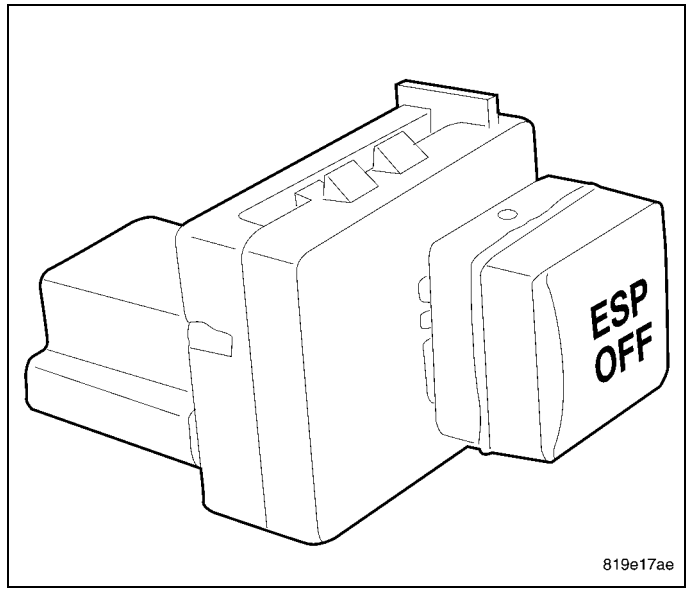

Removal

NOTE: The Electronic Stability Control (ESC) may also be referred to as Electronic Stability Program (ESP) depending on the vehicle model year and configuration. Certain components may also reference ESP, ESC, or use the traction control symbol.

1. Remove the instrument panel center bezel (Refer to 23 - Body/Instrument Panel/BEZEL, Instrument Panel - Removal).
2. Disconnect the Electronic Stability Control (ESC) electrical connector from the radio trim panel.
3. Remove the ESC switch (2) from the switch bank.

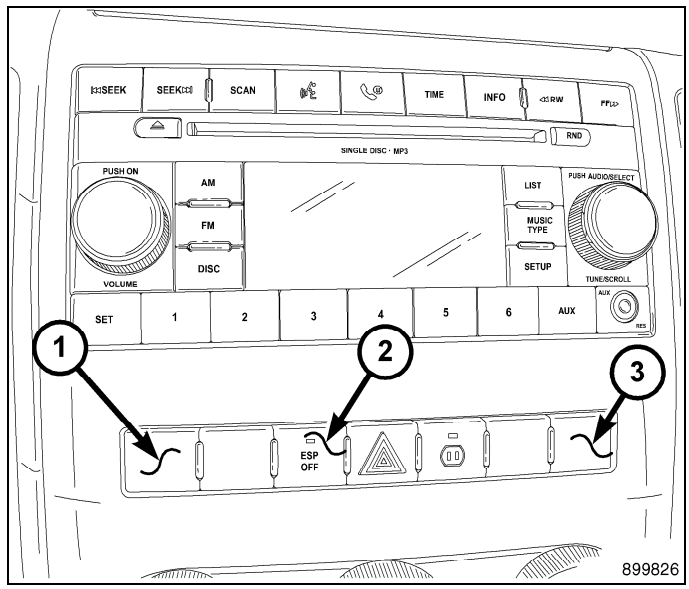

Installation

1. Install the new switch (2) in the switch bank.
2. Reconnect the electrical connector for the switch.
3. Install the instrument panel center bezel (Refer to 23 - Body/Instrument Panel/BEZEL, Instrument Panel - Installation).

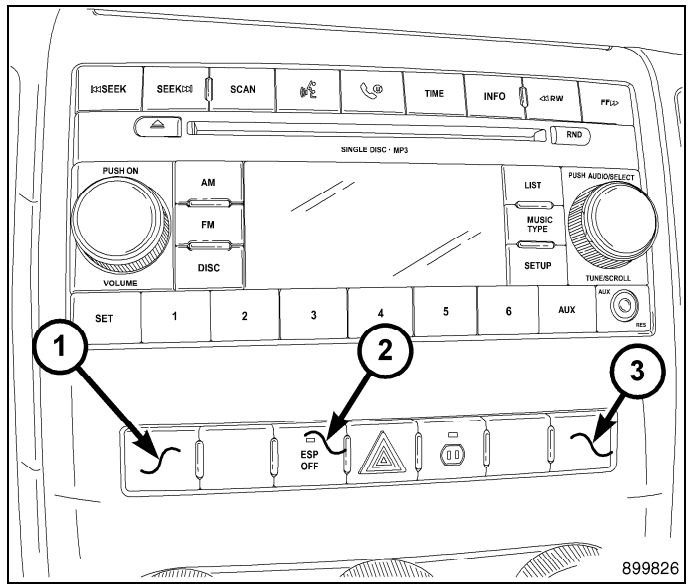

HYDRAULIC/MECHANICAL

TABLE OF CONTENTS

page

HYDRAULIC/MECHANICAL
DESCRIPTION 88
OPERATION 88

page

HYDRAULIC CONTROL UNIT (HCU)
DESCRIPTION 88
OPERATION 88
REMOVAL 89
INSTALLATION 90

Hydraulic/Mechanical

Description

Vehicles equipped with ABS use electronic variable brake proportioning (EVBP) to balance front-to-rear braking. The EVBP is used in place of a rear proportioning valve. The EVBP system uses the ABS system to control the slip of the rear wheels in partial braking range. The braking force of the rear wheels is controlled electronically by using the inlet and outlet valves located in the integrated control unit (ICU).

Operation

EVBP is able to decrease, hold and increase rear brake pressure without activating full ABS control. Upon entry into EVBP the inlet valve for the rear brake circuit is switched on so that the fluid supply from the master cylinder is shut off. In order to decrease the rear brake pressure, the outlet valve for the rear brake circuit is pulsed. This allows fluid to enter the low pressure accumulator (LPA) in the hydraulic control unit (HCU) resulting in a drop in fluid pressure to the rear brakes. In order to increase the rear brake pressure, the outlet valve is switched off and the inlet valve is pulsed. This increases the pressure to the rear brakes.

The EVBP will remain functional during many ABS fault modes. If both the red BRAKE and amber ABS warning indicators are illuminated, the EVBP may not be functioning.

HYDRAULIC CONTROL UNIT (HCU)

Description

The HCU (3) consists of a valve body, pump motor, low pressure accumulators, inlet valves, outlet valves and noise attenuators.

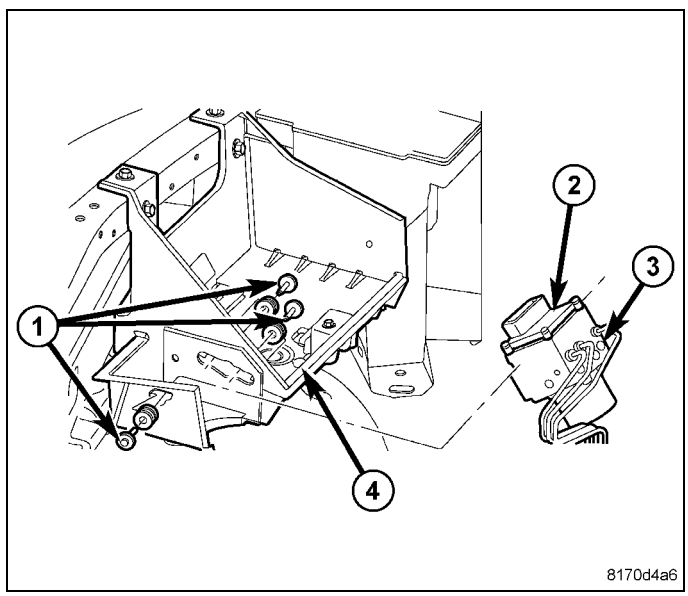

Operation

Accumulators in the valve body store extra fluid released to the system for ABS mode operation. The pump provides the fluid volume needed and is operated by a DC type motor. The motor is controlled by the ABM.

The valves modulate brake pressure during antilock braking and are controlled by the ABM.

During antilock braking, the solenoid valves are opened and closed as needed.

During normal braking, the HCU solenoid valves and pump are not activated. The master cylinder and power booster operate the same as a vehicle without an ABS brake system.

NOTE: The three modes mentioned below do occur but not necessarily in the order listed every time.

During antilock braking, solenoid valve pressure modulation occurs in three stages, pressure increase, pressure hold, and pressure decrease. The valves are all contained in the valve body portion of the HCU.

PRESSURE DECREASE

The outlet valve is opened and the inlet valve is closed during the pressure decrease cycle.

A pressure decrease cycle is initiated when speed sensor signals indicate high wheel slip at one or more wheels. At this point, the ABM closes the inlet then opens the outlet valve, which also opens the return circuit to the accumulators. Fluid pressure is allowed to bleed off (decrease) as needed to prevent wheel lock.

Once the period of high wheel slip has ended, the ABM closes the outlet valve and begins a pressure increase or hold cycle as needed.

PRESSURE HOLD

Both solenoid valves are closed in the pressure hold cycle but only the inlet valve is energized. Fluid apply pressure in the control channel is maintained at a constant rate. The ABM maintains the hold cycle until sensor inputs indicate a pressure change is necessary.

PRESSURE INCREASE

The inlet valve is open and the outlet valve is closed during the pressure increase cycle. The pressure increase cycle is used to reapply the brakes. This cycle controls re-application of fluid apply pressure.

Removal

1. Disconnect the battery cables from the battery.
2. Remove the battery.
3. Disconnect the electrical harness connectors.
4. Remove the brake lines from the HCU (3).
5. Remove HCU/ABM mounting bolts (1) and remove the HCU/ABM (3) from the battery tray (4).

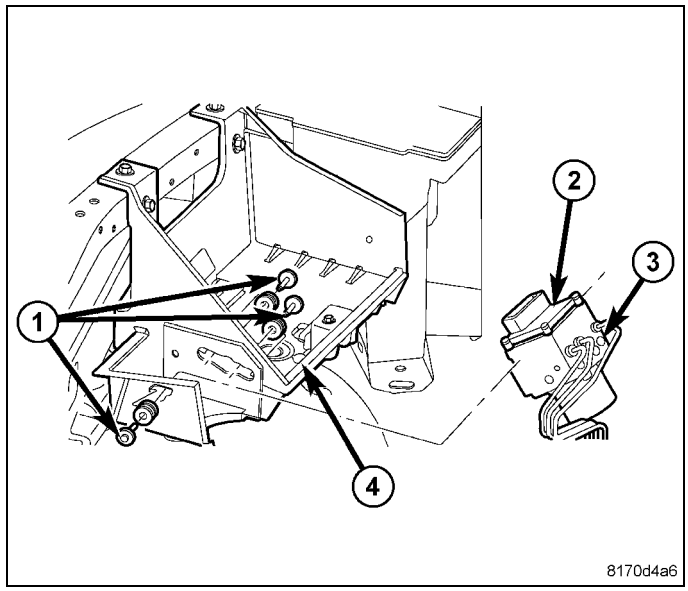

Installation

1. Install HCU/ABM (3) on the mounts to the battery tray (4) and tighten to 15 N·m (11 ft. lbs.).
2. Install the brake lines to the HCU (3) and tighten to 19 N·m (170 in. lbs.).
3. Install the electrical harness connectors to the HCU/ABM (3) and push down on the release to secure the connectors.
4. Install the battery.
5. Install the battery cables to the battery.
6. Bleed ABS brake system (Refer to 05 - Brakes - Standard Procedure).

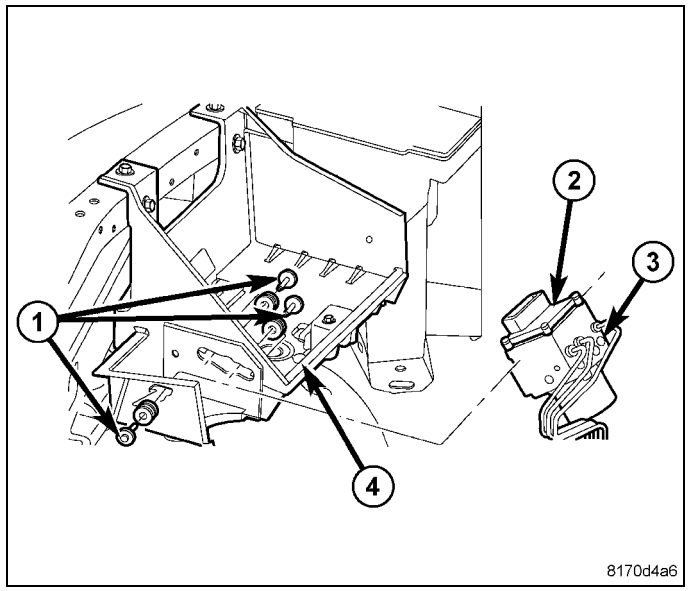

COOLING

TABLE OF CONTENTS

page

COOLING
- DESCRIPTION 2
- OPERATION 4
- DIAGNOSIS AND TESTING
  - PRELIMINARY CHECKS 4
  - LEAK TESTING 8
- STANDARD PROCEDURE
  - CLEANING/REVERSE FLUSHING 10
  - DRAINING 11
  - FILLING 11
- SPECIFICATIONS
  - TORQUE 11
  - FILL VOLUMES 12
- SPECIAL TOOLS 13

ACCESSORY DRIVE 15

ENGINE 25

TRANSMISSION 59

Cooling

Description

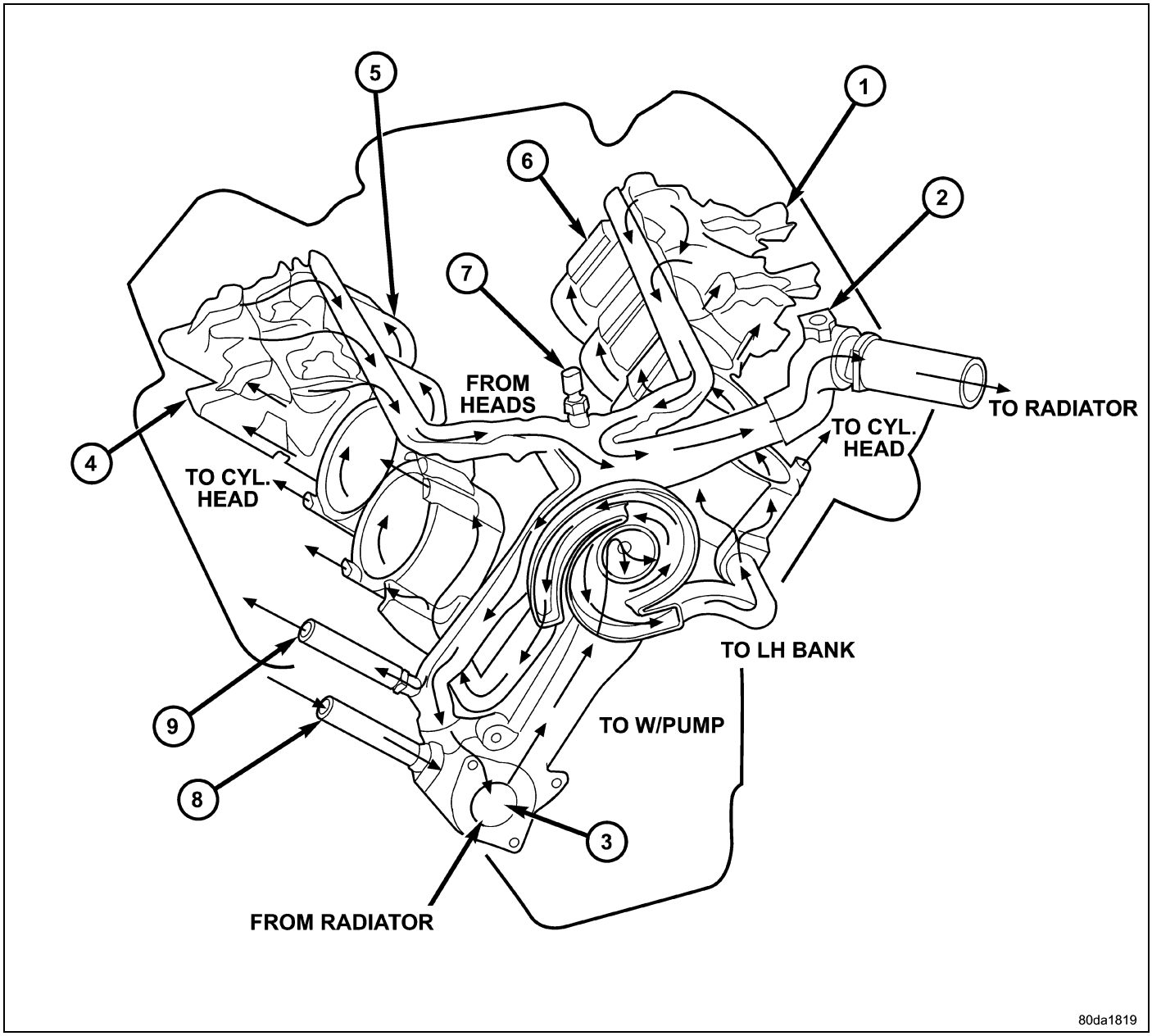

Engine Cooling System Flow - 3.7L/4.7L

1 - LH CYL. HEAD
2 - BLEED
3 - THERMOSTAT LOCATION
4 - RH CYL. HEAD
5 - RH BANK CYL. BLOCK
6 - LH BANK CYL. BLOCK
7 - COOLANT TEMP. SENSOR
8 - FROM HEATER CORE
9 - TO HEATER CORE

The 3.7L/4.7L engine cooling system consists of :

- LH Cylinder Head (1)
- Bleed (2)
- Thermostat location (3)
- RH Cylinder Head (4)
- RH Bank Cyl. Block (5)

- LH Bank Cyl. Block (6)
- Coolant Temp Sensor (7)
- From Heater Core (8)
- To Heater Core (9)

The cooling system regulates engine operating temperature. It allows the engine to reach normal operating temperature as quickly as possible. It also maintains normal operating temperature and prevents overheating.

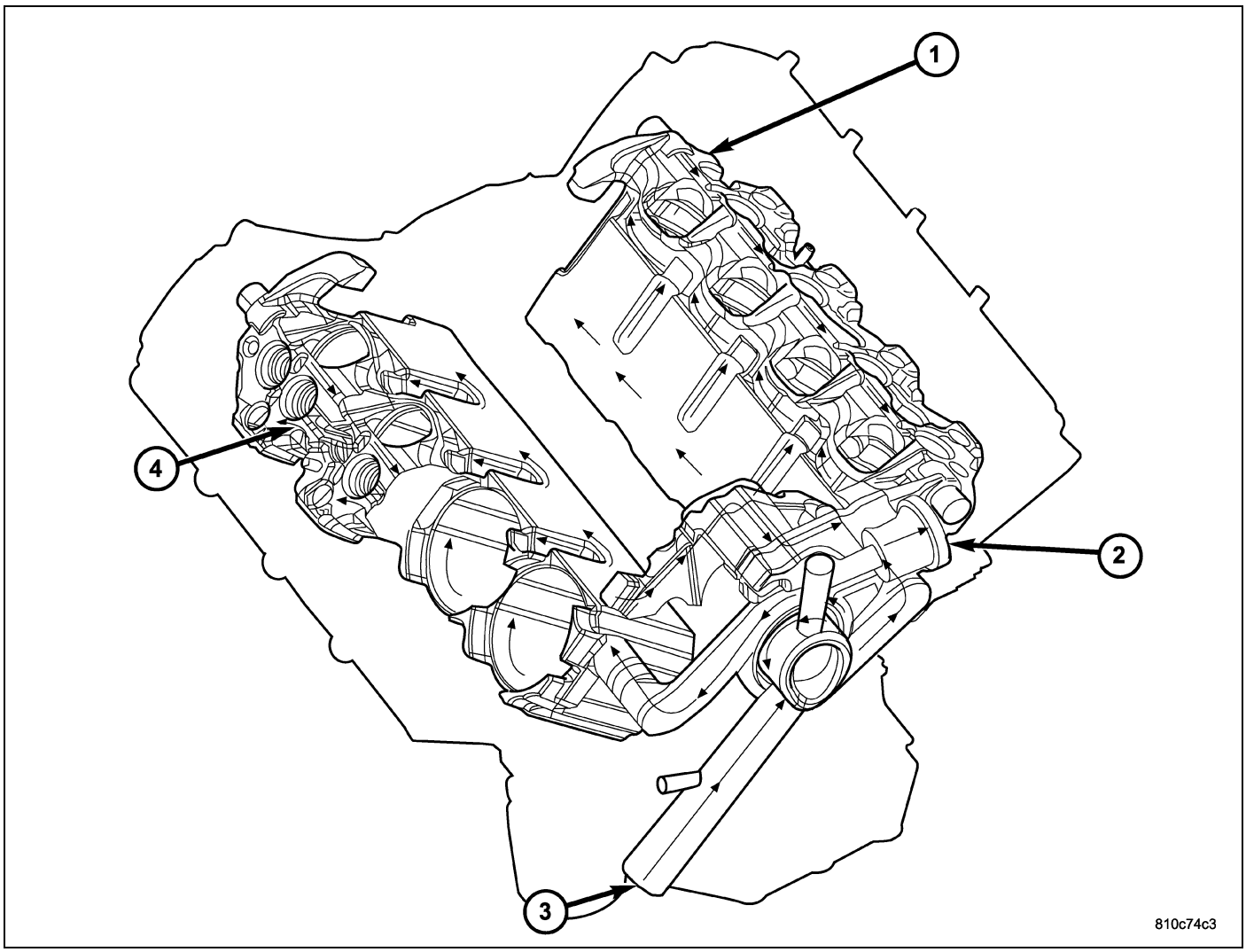

5.7L Engine Coolant System Flow

1 - LH CYLINDER HEAD	3 - FROM RADIATOR
2 - TO RADIATOR	4 - TO RH CYLINDER HEAD

The 5.7L engine cooling system consists of :

- LH Cylinder Head (1)
- To Radiator (2)
- From Radiator (3)
- To RH Cylinder Head (4)

The cooling system provides a means of heating the passenger compartment and cooling the automatic transmission fluid (if equipped). The cooling system is pressurized and uses a centrifugal water pump to circulate coolant through the system. The coolant recovery/reserve system utilizes an ambient overflow bottle.

Operation

The cooling system regulates engine operating temperature. It allows the engine to reach normal operating temperature as quickly as possible. It also maintains normal operating temperature and prevents overheating.

The cooling system also provides a source of hot coolant for heating the passenger compartment and cooling the automatic transmission fluid (if equipped). The cooling system is pressurized and uses a centrifugal water pump to circulate coolant throughout the system.

- When engine is cold the thermostat is closed. The cooling system has no flow through the radiator. The coolant flows through the engine, water pump, and heater.
- When engine is warm the thermostat is full open. One the gas engine coolant flows through the engine, radiator, heater, and water pump.

All engines utilize an ambient overflow bottle for coolant recovery/reserve.

An optional factory installed maximum duty cooling package is available on most models. This package will provide additional cooling capacity for vehicles used under extreme conditions such as trailer towing in high ambient temperatures.

Diagnosis and Testing

PRELIMINARY CHECKS

ENGINE COOLING SYSTEM OVERHEATING

Establish what driving conditions caused the complaint. Abnormal loads on the cooling system such as the following may be the cause:

- Prolonged idle
- Very high ambient temperature
- Slight tail wind at idle
- Slow traffic
- Traffic jams
- High speed or steep grades

Driving techniques that avoid overheating are:

- Idle with A/C off when temperature gauge is at end of normal range.
- Increasing engine speed up to 2000 rpm with transmission in park or neutral for more airflow is recommended.

TRAILER TOWING:

Consult Trailer Towing section of the owners manual. Do not exceed the limits.

RECENT SERVICE OR ACCIDENT REPAIR:

Determine if any recent service has been performed on vehicle that may affect the cooling system. This may be:

- Engine adjustments (incorrect timing)
- Slipping engine accessory drive belt(s)
- Brakes (possibly dragging)
- Changed parts. Incorrect water pump or pump rotating in wrong direction due to belt not correctly routed
- Reconditioned radiator or cooling system refilling (possibly under filled or air trapped in system).
- Service to electrically controlled viscous fan clutch

NOTE: If investigation reveals none of the previous items as a cause for an engine overheating complaint, refer to the COOLING SYSTEM DIAGNOSIS CHART.

These charts are to be used as a quick-reference only.

COOLING SYSTEM DIAGNOSIS CHART

CONDITION	POSSIBLE CAUSES	CORRECTION
TEMPERATURE GAUGE READS LOW **NOTE: Information on dash cluster is displayed based on broadcast data from PCM. DTC will be set for engine sensor circuit issues.**	1. Vehicle is equipped with a heavy duty cooling system.	1. None. System operating normally.
	2. Thermostat stuck open	2. Inspect and test thermostat (Refer to 07 - Cooling/Engine/ THERMOSTAT - Diagnosis and Testing).
	3. Coolant level low.	3. Fill cooling system (Refer to 07 - Cooling - Standard Procedure).
	4. Temperature gauge not functioning correctly.	4. Check cluster (Refer to 08 - Electrical/8J - Instrument Cluster - Diagnosis and Testing).
	5. Engine sensor stuck in range	5. Monitor sensor with scan tool to verify sensor reading changes with increasing temperature.
	6. Engine sensor failed out of range.	6. A DTC will be set.
	7. Electronically Controlled Viscous Fan Drive/mechanical viscous fan not operating properly.	7. Check Electronically Controlled Viscous Fan Drive (Refer to 07 - Cooling/Engine/FAN, Cooling - Diagnosis and Testing).
TEMPERATURE GAUGE READS HIGH. COOLANT MAY OR MAY NOT BE LEAKING FROM SYSTEM **NOTE: Information on dash cluster is displayed based on broadcast data from PCM. DTC will be set for engine sensor circuit issues.**	1. Vehicle overloaded, high ambient (outside) temperatures with A/C turned on, stop and go driving or prolonged operation at idle speeds.	1. Temporary condition, repair not required. Notify customer of vehicle operation instructions located in Owners Manual.

COOLING SYSTEM DIAGNOSIS CHART, continued

CONDITION	POSSIBLE CAUSES	CORRECTION
	2. Temperature gauge not functioning correctly.	2. Check cluster (Refer to 08 - Electrical/8J - Instrument Cluster - Diagnosis and Testing).
	3. Air trapped in cooling system	3. Drain and refill cooling system (Refer to 07 - Cooling - Standard Procedure).
	4. Radiator cap faulty.	4. Replace radiator cap.
	5. Plugged A/C or radiator cooling fins.	5. Clean all debris away from A/C and radiator cooling fins.
	6. Coolant mixture incorrect.	6. Drain cooling system and refill with correct mixture (Refer to 07 - Cooling - Standard Procedure).
	7. Thermostat stuck shut.	7. Inspect and test thermostat (Refer to 07 - Cooling/Engine/ THERMOSTAT - Diagnosis and Testing)
	8. Bug screen or winter front being used.	8. Remove bug screen or winter front.
	9. Electronically controlled viscous fan drive not operating properly.	9. Check viscous fan (Refer to 07 - Cooling/Engine/FAN, Cooling - Diagnosis and Testing).
	10. Cylinder head gasket leaking.	10. Check for leaking head gaskets (Refer to 07 - Cooling - Diagnosis and Testing).
	11. Heater core leaking.	11. Replace heater core (Refer to 24 - Heating and Air Conditioning/Plumbing/CORE, Heater - Removal).
	12. Cooling system hoses leaking.	12. Tighten clamps or Replace hoses.
	13. Brakes dragging.	13. Check brakes (Refer to 05 - Brakes - Diagnosis and Testing).
	14. Accessory drive belt.	14. Inspect and replace as necessary (Refer to 07 - Cooling/Accessory Drive/BELT, Serpentine - Diagnosis and Testing).
	15. Water Pump.	15. Inspect and replace as necessary (Refer to 07 - Cooling/Engine/PUMP, Water - Diagnosis and Testing).
	16. Engine sensor stuck in range.	16. Monitor sensor with scan tool to verify sensor reading changes increase in temperature.
	17. Temperature sensor failed out of range.	17. A DTC will be set.

COOLING SYSTEM DIAGNOSIS CHART, continued

CONDITION	POSSIBLE CAUSES	CORRECTION
TEMPERATURE GAUGE READING INCONSISTENT (ERRATIC, CYCLES OR FLUCTUATES) **NOTE: Information on dash cluster is displayed based on broadcast data from PCM. DTC will be set for engine sensor circuit issues.**	1. Heavy duty cooling system, extreme cold ambient (outside) temperature or heater blower motor in high position.	1. None. System operating normally.
	2. Temperature gauge or sensor defective.	2. Check cluster or engine coolant temp sensor (Refer to 08 - Electrical/8J - Instrument Cluster - Diagnosis and Testing).
	3. Temporary heavy usage or load.	3. None. Normal condition.
	4. Air trapped in cooling system.	4. Fill cooling system (Refer to 07 - Cooling - Standard Procedure).
	5. Water pump.	5. Replace water pump (Refer to 07 - Cooling/Engine/PUMP, Water - Diagnosis and Testing).
	6. Air leak on suction side of water pump.	6. Check for leak (Refer to 07 - Cooling - Diagnosis and Testing).
RADIATOR CAP LEAKING STEAM AND OR COOLANT INTO RESERVOIR BOTTLE. (TEMPERATURE GAUGE MAY READ HIGH)	1. Radiator cap defective.	1. Replace radiator cap.
	2. Radiator neck surface damaged.	2. Replace radiator (Refer to 07 - Cooling/Engine/RADIATOR, Engine Cooling - Installation).
HOSE OR HOSES COLLAPSE WHEN ENGINE IS COOLING.	1. Vacuum created in cooling system on engine cool-down is not being relieved through coolant reservoir/overflow system.	1. Replace radiator cap, check vent hose between radiator and reservoir bottle for blockage also check reservoir bottle vent for blockage.
NOISY FAN	1. Fan blade(s) loose, damaged.	1. Replace fan blade assembly (Refer to 07 - Cooling/Engine/FAN, Cooling - Installation).
	2. Electronically controlled viscous fan drive/mechanical viscous fan.	2. None. Normal condition.
	3. Fan blades striking surrounding objects.	3. Locate contact point and repair as necessary.
	4. Electronically controlled viscous fan drive/mechanical viscous fan bearing concern.	4. Check viscous fan drive (Refer to 07 - Cooling/Engine/FAN, Cooling - Diagnosis and Testing).
	5. Electronically controlled viscous fan/mechanical viscous fan stuck on.	5. Check viscous fan drive (Refer to 07 - Cooling/Engine/FAN, Cooling - Diagnosis and Testing).
	6. Obstructed air flow through radiator.	6. Remove obstruction.

COOLING SYSTEM DIAGNOSIS CHART, continued

CONDITION	POSSIBLE CAUSES	CORRECTION
INADEQUATE AIR CONDITIONER PERFORMANCE (COOLING SYSTEM SUSPECTED)	1. Radiator and/or A/C condenser air flow obstructed.	1. Remove obstruction and/or clean.
	2. Electronically controlled viscous fan drive/ /mechanical viscous fan not working.	2. Check viscous fan drive (Refer to 07 - Cooling/Engine/FAN, Cooling - Diagnosis and Testing).
	3. Air seals around radiator damaged or missing.	3. Inspect air seals, repair or replace as necessary.
INADEQUATE HEATER PERFORMANCE. GAUGE MAY OR MAY NOT READ LOW.	1. Heavy duty cooling system, and cooler ambient temperatures.	1. None. Normal condition.
	2. Obstruction in heater hoses.	2. Remove hoses, remove obstruction.
	3. Electronically controlled viscous fan/ /mechanical viscous fan stuck on.	Check viscous fan drive (Refer to 07 - Cooling/Engine/FAN, Cooling - Diagnosis and Testing).
	4. Water pump damaged.	4. Replace water pump (Refer to 07 - Cooling/Engine/PUMP, Water - Diagnosis and Testing).
HEAT ODOR	1. Damaged or missing exhaust system heat shields.	1. Repair or replace damaged or missing exhaust system heat shields (Refer to 11 - Exhaust System/SHIELD, Heat - Description).
	2. Electronically controlled viscous fan drive//mechanical viscous fan damaged.	2. Check viscous fan drive (Refer to 07 - Cooling/Engine/FAN, Cooling - Diagnosis and Testing).

LEAK TESTING

ULTRAVIOLET LIGHT METHOD

A leak detection additive is available through the parts department that can be added to cooling system. The additive is highly visible under ultraviolet light (black light) (1). Pour one ounce of additive into cooling system. Place heater control unit in HEAT position. Start and operate the engine until the radiator upper hose is warm to the touch. Aim the commercially available black light tool at the components to be checked. If leaks are present, the black light will cause the additive to glow a bright green color.

The black light can be used in conjunction with a pressure tester to determine if any external leaks exist .

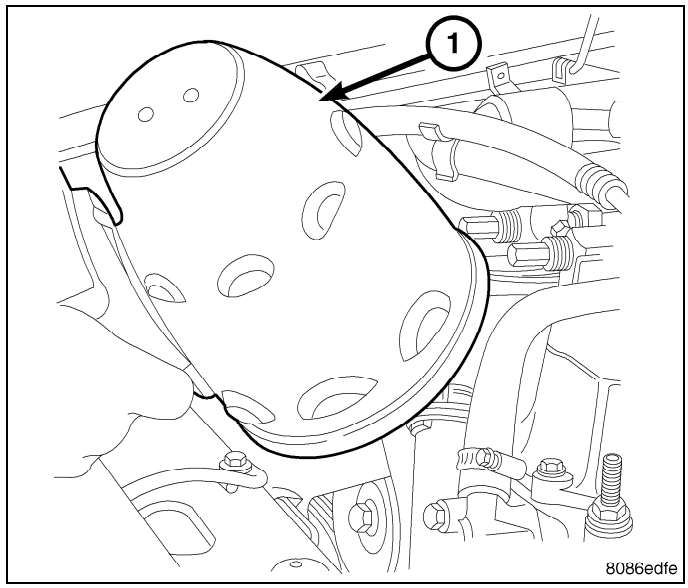

PRESSURE TESTER METHOD

The engine should be at normal operating temperature. Recheck the system cold if the cause of coolant loss is not located during the warm engine examination.

WARNING: Hot, pressurized coolant can cause injury by scalding.

Carefully remove the radiator pressure cap from the filler neck and check the coolant level. Push down on the cap to disengage it from the stop tabs. Wipe the inside of the filler neck and examine the lower inside sealing seat for nicks, cracks, paint, dirt and solder residue. Inspect the radiator-to- reserve/overflow tank hose for internal obstructions. Insert a wire through the hose to be sure it is not obstructed.

Inspect the cams on the outside of the filler neck. If the cams are damaged, seating of the pressure cap valve and tester seal will be affected.

Attach pressure tester (7700 or an equivalent) to radiator filler neck.

Operate the tester pump to apply 103.4 kPa (15 psi) pressure to the system. If the hoses enlarge excessively or bulges while testing, replace as necessary. Observe the gauge pointer and determine the condition of the cooling system according to following criteria:

Holds Steady: If the pointer remains steady for two minutes, serious coolant leaks are not present in system. However, there could be an internal leak that does not appear with normal system test pressure. If it is certain that coolant is being lost and leaks cannot be detected, inspect for interior leakage or perform Internal Leakage Test. Refer to INTERNAL LEAKAGE INSPECTION.

Drops Slowly: Indicates a small leak or seepage is occurring. Examine all of the connections for seepage or slight leakage with a flashlight. Inspect the radiator, hoses, gasket edges and heater. Seal the small leak holes with a Sealer Lubricant (or equivalent). Repair the leak holes and inspect the system again with pressure applied.

Drops Quickly: Indicates that serious leakage is occurring. Examine the system for external leakage. Block side panels are embossed to highlight core plugs. Remove embossed noise panels to inspect and or repair core plugs. If leaks are not visible, inspect for internal leakage.

INTERNAL LEAKAGE INSPECTION

Remove the engine oil pan drain plug and drain a small amount of engine oil. If coolant is present in the pan, it will drain first because it is heavier than oil. An alternative method is to operate engine for a short period to churn the oil. After this is done, remove the engine dipstick and inspect for water globules. Also inspect the transmission dipstick for water globules and transmission fluid cooler for leakage.

WARNING: With radiator pressure tester tool installed on radiator, do not allow pressure to exceed 145 kpa (21 psi). Pressure will build up quickly if a combustion leak is present. To release pressure, rock tester from side to side. When removing tester, do not turn tester more than 1/2 turn if system is under pressure.

Operate the engine without the pressure cap on the radiator until the thermostat opens. Attach a Pressure Tester to the filler neck. If pressure builds up quickly it indicates a combustion leak exists. This is usually the result of a cylinder head gasket leak or crack in engine. Repair as necessary.

If there is not an immediate pressure increase, pump the Pressure Tester. Do this until indicated pressure is within system range of 110 kPa (16 psi). Fluctuation of the gauge pointer indicates compression or combustion leakage into cooling system.

Because the vehicle is equipped with a catalytic converter, **do not** short out cylinders to isolate compression leak.

If the needle on dial of the pressure tester does not fluctuate, race engine a few times to check for an abnormal amount of coolant or steam. This would be emitting from exhaust pipe. Coolant or steam from exhaust pipe may indicate a faulty cylinder head gasket, cracked engine cylinder block or cylinder head.

COMBUSTION LEAKAGE TEST - WITHOUT PRESSURE TESTER

DO NOT WASTE reusable coolant. If the solution is clean, drain the coolant into a clean container for reuse.

WARNING: Do not remove cylinder block drain plugs or loosen radiator draincock with system hot and under pressure. Serious burns from coolant can occur.

Drain sufficient coolant to allow thermostat removal. (Refer to 07 - Cooling/Engine/THERMOSTAT - Removal). Remove accessory drive belt (Refer to 07 - Cooling/Accessory Drive/BELT, Serpentine - Removal).

Add coolant to radiator to bring level to within 6.3 mm (1/4 in) of the top of the thermostat housing.

CAUTION: Avoid overheating. Do not operate engine for an excessive period of time. Open draincock immediately after test to eliminate boil over.

Start engine and accelerate rapidly three times, to approximately 3000 rpm while observing coolant. If internal engine combustion gases are leaking into cooling system, bubbles will appear in coolant. If bubbles do not appear, internal combustion gas leakage is not present.

Standard Procedure

CLEANING/REVERSE FLUSHING

CLEANING

Drain the cooling system and refill with water. Run the engine with the radiator cap installed until the upper radiator hose is hot. Stop the engine and drain the water from system. If the water is dirty, fill the system with water, run the engine and drain the system. Repeat this procedure until the water drains clean.

REVERSE FLUSHING

Reverse flushing of the cooling system is the forcing of water through the cooling system. This is done using air pressure in the opposite direction of normal coolant flow. It is usually only necessary with very dirty systems with evidence of partial plugging.

REVERSE FLUSHING RADIATOR

Disconnect the radiator hoses from the radiator inlet and outlet. Attach a section of the radiator hose to the radiator bottom outlet fitting and insert the flushing gun. Connect a water supply hose and air supply hose to the flushing gun.

CAUTION: Internal radiator pressure must not exceed 138 kPa (20 psi) as damage to radiator may result.

Allow the radiator to fill with water. When the radiator is filled, apply air in short blasts. Allow the radiator to refill between blasts. Continue this reverse flushing until clean water flows out through the rear of the radiator cooling tube passages.

REVERSE FLUSHING ENGINE

Drain the cooling system. Remove the thermostat housing and thermostat. Install the thermostat housing. Disconnect the radiator upper hose from the radiator and attach the flushing gun to the hose. Disconnect the radiator lower hose from the water pump and attach a lead-away hose to the water pump inlet fitting.

CAUTION: On vehicles equipped with a heater water control valve, be sure the heater control valve is closed (heat off). This will prevent coolant flow with scale and other deposits from entering the heater core.

Connect the water supply hose and air supply hose to flushing gun. Allow the engine to fill with water. When the engine is filled, apply air in short blasts, allowing the system to fill between air blasts. Continue until clean water flows through the lead away hose.

Remove the lead away hose, flushing gun, water supply hose and air supply hose. Remove the thermostat housing and install the thermostat. Install the thermostat housing with a replacement gasket. Refer to Thermostat Replacement. Connect the radiator hoses. Refill the cooling system with the correct antifreeze/water mixture (Refer to 04 - Vehicle Quick Reference/Capacities and Recommended Fluids - Description). Refer to Refilling the Cooling System.

CHEMICAL CLEANING

In some instances, use a radiator cleaner (Mopar® Radiator Kleen or equivalent) before flushing. This will soften scale and other deposits and aid flushing operation.

CAUTION: Follow manufacturers instructions when using these products.

DRAINING

WARNING: Do not remove cylinder block drain plugs or loosen radiator draincock with system hot and under pressure. Serious burns from coolant can occur.

DO NOT WASTE reusable coolant. If solution is clean, drain coolant into a clean container for reuse.

1. Attach one end of a hose to the draincock. Put the other end into a clean container.
2. **DO NOT REMOVE THE RADIATOR CAP** when draining the coolant from the reservoir/overflow tank. Open radiator draincock and when the tank is empty, remove the radiator cap and continue draining the cooling system.
3. If draining the entire engine, remove the cylinder block drain plugs (1).

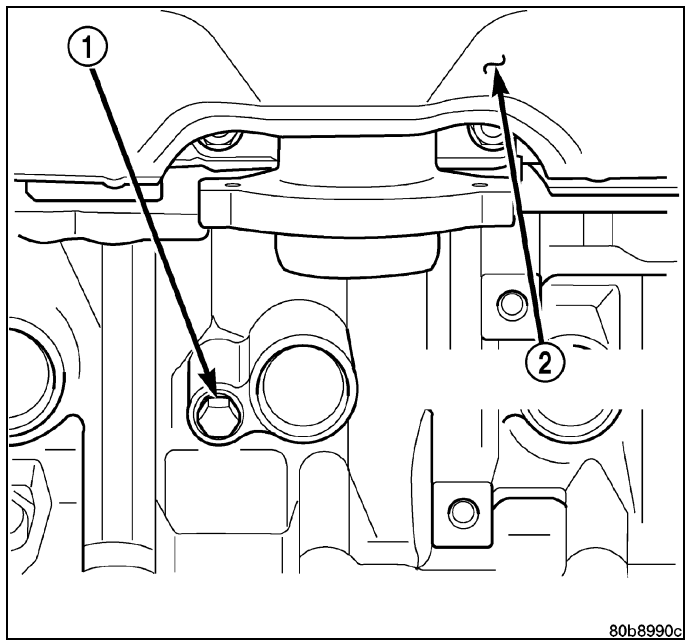

FILLING

The use of aluminum cylinder blocks, cylinder heads and water pumps requires special corrosion protection. In order to maintain the required protection for these components and cooling system performance, only use the appropriate fluid, (Refer to 04 - Vehicle Quick Reference/Capacities and Recommended Fluids - Description) when servicing the vehicle. This coolant offers the best engine cooling without corrosion when mixed with 50% distilled water to obtain a freeze point of -37°C (-35°F). If it loses color or becomes contaminated, drain, flush, and replace with fresh properly mixed coolant solution.

Clean cooling system prior to refilling. (Refer to 07 - Cooling - Standard Procedure).

1. Install cylinder block drain plugs. Coat the threads with Mopar® Thread Sealant with Teflon.
2. Close radiator petcock.
3. Fill cooling system with coolant, (Refer to 04 - Vehicle Quick Reference/Capacities and Recommended Fluids - Description).
4. Fill coolant reserve/overflow tank to MAX mark on bottle.
5. Start and operate engine until thermostat opens (upper radiator hose warm to touch).
6. If necessary, add coolant to the coolant recovery container. This is done to maintain coolant level between the MAX and MIN marks. The level in the coolant recovery container may drop below the MIN mark after three or four warm-up and cool-down cycles.

Specifications

TORQUE

DESCRIPTION	N·m	Ft. Lbs.	In. Lbs.
Bolt - Automatic Belt Tensioner to Block	41	30	-
Bolt - Automatic Belt Tensioner Pulley	61	45	-
Engine Mounted Fan Shroud Brackets (Upper and Lower)	24	18	-
Fan Shroud Ring to Fan Shroud Brackets	12	9	106
Bolt - Block Heater	2	-	18
Bolts - Generator Mounting Bracket Front horizontal mounting bolts	54	40	-

DESCRIPTION	N·m	Ft. Lbs.	In. Lbs.
Rear vertical mounting bolt	40	30	-
Bolts - Fan Shroud to Radiator Mounting	10	7	89
Bolts - Radiator to Support	8	-	71
Bolts - Fan Blade to Viscous Fan Drive	24	18	-
Fan Drive	50	37	-
Bolts - Thermostat Housing	13	10	115
Bolts - Power Steering Oil Cooler	8	-	71
Bolts - Transmission Auxiliary Oil Cooler	6	-	53
Nuts - Transmission Oil Cooler Tube	31	23	-
Bolts - Coolant Recovery Container	10	7	89
Tube Nut - Fan Motor - Pressure Line	47	35	-
Tube Nut - Fan Motor - Return Line	29	21	-
Plug - Bleed	6	-	53
Tube Nuts - Transmission Oil Cooler to Transmission	20	15	-
Bolts - Water Pump - 5.7L	24	18	-
Bolts - Water Pump - 3.7L/4.7L	58	43	-

FILL VOLUMES

DESCRIPTION	SPECIFICATION	
	Metric	US
3.7L Engine	13 L	13.7qts

DESCRIPTION	SPECIFICATION	
4.7L Engine	13 L	13.7qts.
5.7L Engine	15.3 L	16 qts.

Special Tools

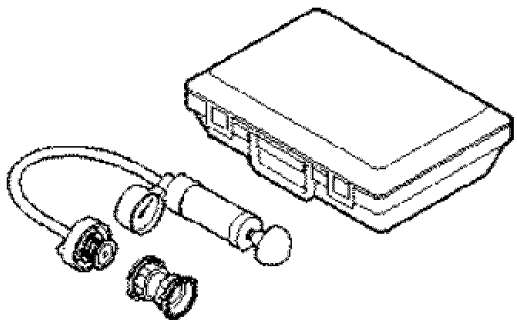

7700 - Tester, Cooling System

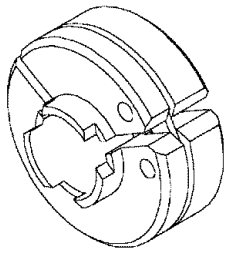

8875A - Disconnect, Transmission Cooler Line

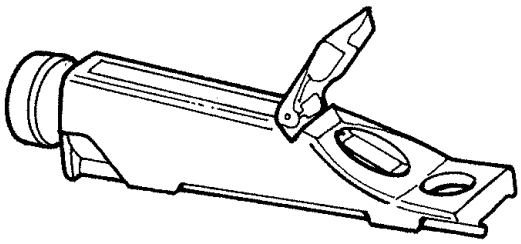

8286 - Refractometer

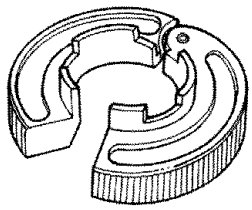

9546 - Disconnect Tool

ACCESSORY DRIVE

TABLE OF CONTENTS

page

ACCESSORY DRIVE
BELT, SERPENTINE
DESCRIPTION 16
DIAGNOSIS AND TESTING 16
REMOVAL
3.7L/4.7L ENGINE 18
5.7L ENGINE 19
CLEANING 19
INSTALLATION
3.7L/4.7L ENGINE 19
5.7L ENGINE 20
PULLEY, IDLER
REMOVAL
5.7L ENGINE 21
3.7L/4.7L ENGINE 21
INSTALLATION
5.7L ENGINE 21
3.7L/4.7L ENGINE 22
TENSIONER, BELT
DESCRIPTION 22
OPERATION 22
REMOVAL
3.7L/4.7L ENGINE 22
5.7L ENGINE 23
INSTALLATION
3.7L/4.7L ENGINE 23
5.7L ENGINE 24

Accessory Drive

BELT, Serpentine

Description

The accessory drive belt is a serpentine type belt. Satisfactory performance of these belts depends on belt condition and proper belt tension.

Diagnosis and Testing

VISUAL DIAGNOSIS

When diagnosing serpentine accessory drive belts, small cracks that run across the ribbed surface of the belt from rib to rib , are considered normal. These are not a reason to replace the belt. However, cracks running along a rib (not across) are **not** normal. Any belt with cracks running along a rib must be replaced . Also replace the belt if it has excessive wear, frayed cords or severe glazing.

Refer to ACCESSORY DRIVE BELT DIAGNOSIS CHART for further belt diagnosis.

NOISE DIAGNOSIS

Noises generated by the accessory drive belt are most noticeable at idle. Before replacing a belt to resolve a noise condition, inspect all of the accessory drive pulleys for alignment, glazing, or excessive end play.

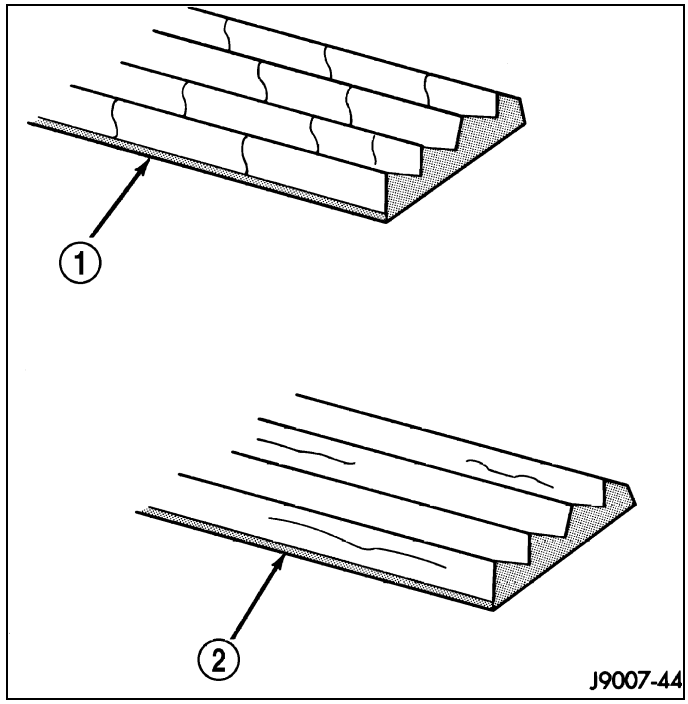

ACCESSORY DRIVE BELT DIAGNOSIS CHART

CONDITION	POSSIBLE CAUSES	CORRECTION
RIB CHUNKING (One or more ribs has separated from belt body)	1. Foreign objects imbedded in pulley grooves. 2. Installation damage.	1. Remove foreign objects from pulley grooves. Replace belt. 2. Replace belt.

ACCESSORY DRIVE BELT DIAGNOSIS CHART, continued

CONDITION	POSSIBLE CAUSES	CORRECTION
RIB OR BELT WEAR	1. Pulley misaligned.	1. Align pulley(s).
	2. Abrasive environment.	2. Clean pulley(s). Replace belt if necessary.
	3. Rusted pulley(s).	3. Clean rust from pulley(s).
	4. Sharp or jagged pulley groove tips.	4. Replace pulley. Inspect belt.
	5. Belt rubber deteriorated.	5. Replace belt.
BELT SLIPS	1. Belt slipping because of insufficient tension.	1. Inspect/Replace tensioner if necessary.
	2. Belt or pulley exposed to substance that has reduced friction (belt dressing, oil, ethylene glycol).	2. Replace belt and clean pulleys.
	3. Driven component bearing failure (seizure).	3. Replace faulty component or bearing.
	4. Belt glazed or hardened from heat and excessive slippage.	4. Replace belt.
LONGITUDAL BELT CRACKING	1. Belt has mistracked from pulley groove.	1. Replace belt.
	2. Pulley groove tip has worn away rubber to tensile member.	2. Replace belt.
"GROOVE JUMPING" (Belt does not maintain correct position on pulley)	1. Incorrect belt tension.	1. Inspect/Replace tensioner if necessary.
	2. Pulley(s) not within design tolerance.	2. Replace pulley(s).
	3. Foreign object(s) in grooves.	3. Remove foreign objects from grooves.
	4. Pulley misalignment.	4. Align component.
	5. Belt cordline is broken.	5. Replace belt.
BELT BROKEN (Note: Identify and correct problem before new belt is installed)	1. Incorrect belt tension.	1. Replace Inspect/Replace tensioner if necessary.
	2. Tensile member damaged during belt installation.	2. Replace belt.
	3. Severe misalignment.	3. Align pulley(s).
	4. Bracket, pulley, or bearing failure.	4. Replace defective component and belt.
NOISE (Objectionable squeal, squeak, or rumble is heard or felt while drive belt is in operation)	1. Incorrect belt tension.	1. Inspect/Replace tensioner if necessary.
	2. Bearing noise.	2. Locate and repair.
	3. Belt misalignment.	3. Align belt/pulley(s).
	4. Belt to pulley mismatch.	4. Install correct belt.
	5. Driven component induced vibration.	5. Locate defective driven component and repair.

ACCESSORY DRIVE BELT DIAGNOSIS CHART, continued

CONDITION	POSSIBLE CAUSES	CORRECTION
TENSION SHEETING FABRIC FAILURE (Woven fabric on outside, circumference of belt has cracked or separated from body of belt)	1. Tension sheeting contacting stationary object. 2. Excessive heat causing woven fabric to age. 3. Tension sheeting splice has fractured.	1. Correct rubbing condition. 2. Replace belt 3. Replace belt.
CORD EDGE FAILURE (Tensile member exposed at edges of belt or separated from belt body)	1. Incorrect belt tension. 2. Belt contacting stationary object. 3. Pulley(s) out of tolerance. 4. Insufficient adhesion between tensile member and rubber matrix.	1. Inspect/Replace tensioner if necessary. 2. Replace belt. 3. Replace pulley. 4. Replace belt.
Does not drive generator.	Internal decoupler failure.	Replace decoupler (Refer to 08 - Electrical/8F - Engine Systems/Charging/DECOUPLER, Generator - Removal)
Noise coming from decoupler	Internal decoupler failure.	Replace decoupler (Refer to 08 - Electrical/8F - Engine Systems/Charging/DECOUPLER, Generator - Removal)

Removal

3.7L/4.7L ENGINE

CAUTION: Do not let tensioner arm snap back to the freearm position, severe damage may occur to the tensioner.

1. Disconnect negative battery cable from battery.
2. Rotate belt tensioner until it contacts it's stop. Remove belt, then slowly rotate the tensioner (7) into the freearm position.

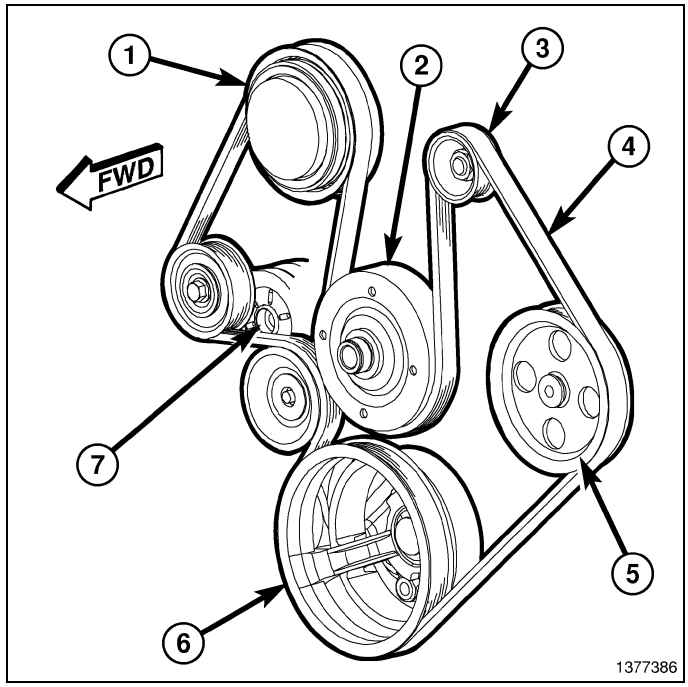

5.7L ENGINE

1. Insert a suitable square drive ratchet into the square hole on belt tensioner arm (7).
2. Release the belt tension by rotating the tensioner (7)**clockwise**. Rotate the belt tensioner (7) until the accessory belt (4) can be removed from pulleys (1,2,3,5,6,8).

CAUTION: Do not let the tensioner arm snap back to the freearm position, severe damage may occur to the tensioner.

3. Remove the accessory belt (4).
4. Gently release the tensioner (7).

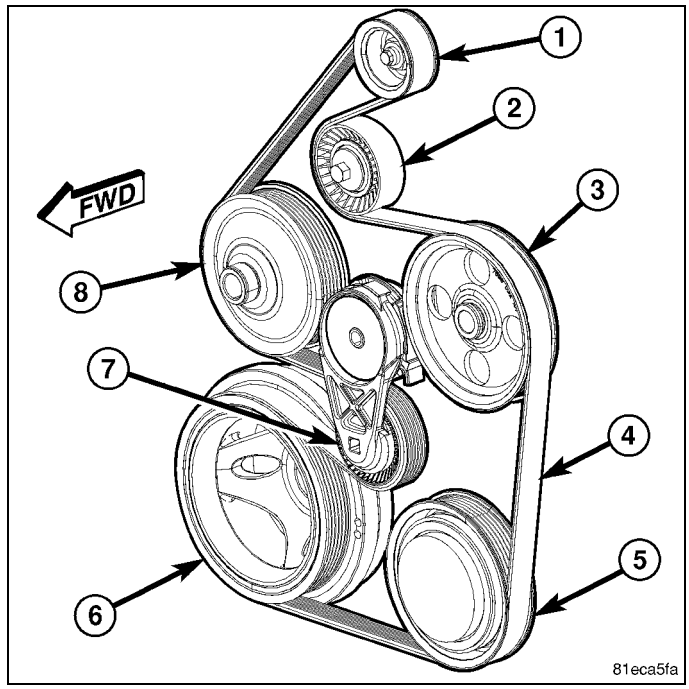

Cleaning

Clean all foreign debris from belt pulley grooves. The belt pulleys must be free of oil, grease and coolants before installing the drive belt.

Installation

3.7L/4.7L ENGINE

1. Check condition of all pulleys.

CAUTION: When installing the serpentine accessory drive belt, the belt MUST be routed correctly. If not, the engine may overheat due to the water pump rotating in the wrong direction.

NOTE: When installing accessory drive belt onto pulleys, make sure that belt is properly routed and all V-grooves make proper contact with pulleys.

2. Position accessory drive belt around all pulleys except the idler pulley.
3. Rotate the tensioner arm until it contacts it's stop position. Route the belt around the idler and slowly release tensioner rotate into accessory drive belt. Make sure the belt is seated onto all pulleys.

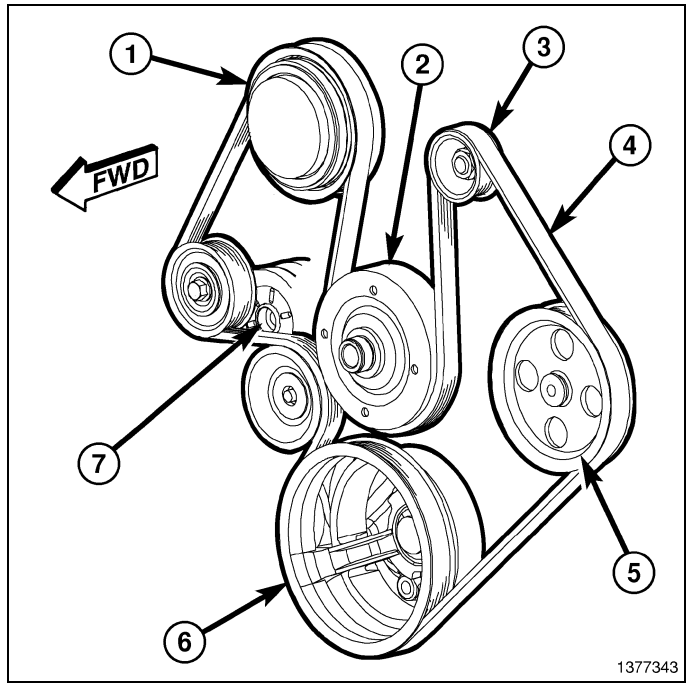

4. 4.7L Engines Only - With the drive belt installed, inspect the belt wear indicator. Gap between the tang and the housing stop (measurement A) must not exceed 24 mm (.94 inches). If the measurement exceeds this specification replace the accessory drive belt.

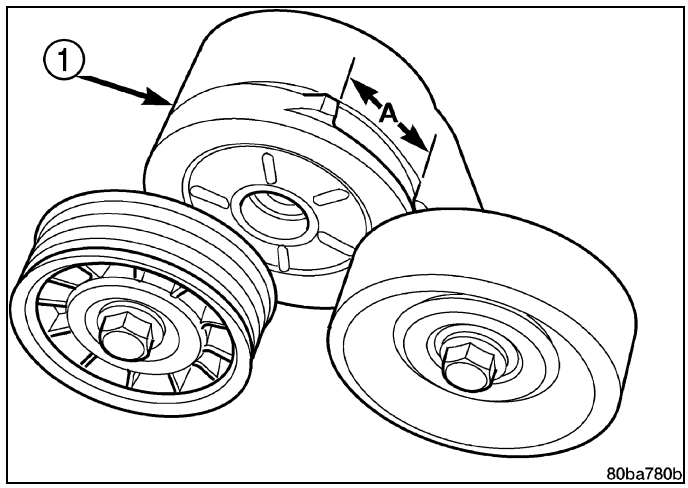

5.7L ENGINE

NOTE: When installing accessory drive belt onto pulleys, make sure that belt is properly routed and all V-grooves make proper contact with pulleys.

1. Position the accessory drive belt (4) over all pulleys (1,2,3,5,6) except for the water pump pulley (8).
2. Rotate the tensioner (7)**clockwise** and slip the belt over the water pump pulley (8).
3. Gently release the tensioner (7).

CAUTION: Do not let the tensioner arm snap back to the freearm position, severe damage may occur to the tensioner.

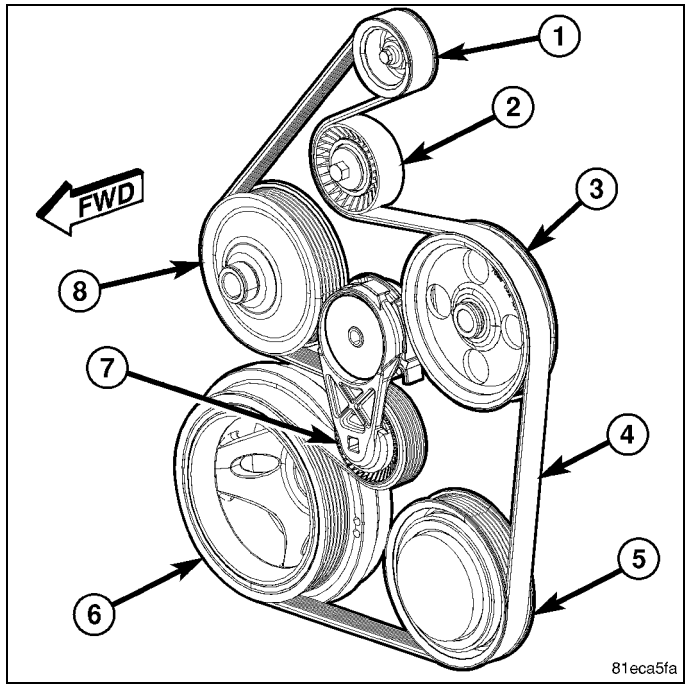

PULLEY, Idler

Removal

5.7L ENGINE

1. Remove the accessory drive belt (4).(Refer to 07 - Cooling/Accessory Drive/TENSIONER, Belt - Removal)
2. Remove the bolt from the idler pulley (2).
3. Remove the idler pulley (2).

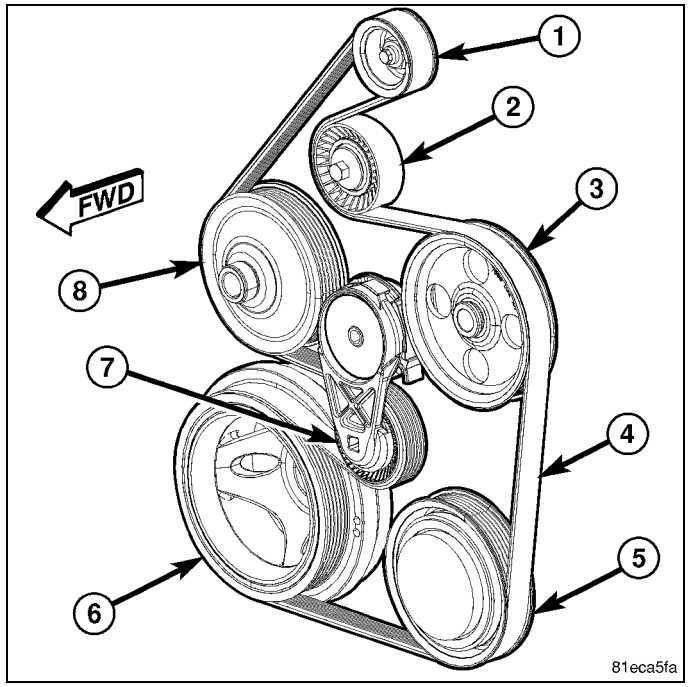

3.7L/4.7L ENGINE

1. The idler pulley is serviced as part of the belt tensioner assembly. For removal steps, (Refer to 07 - Cooling/Accessory Drive/TENSIONER, Belt - Removal)

Installation

5.7L ENGINE

1. Position the idler pulley (2).
2. Install the idler pulley (2) bolt. Tighten the bolt to 54 N·m (40 ft. lbs.).
3. Install the accessory drive belt (4).(Refer to 07 - Cooling/Accessory Drive/BELT, Serpentine - Installation)

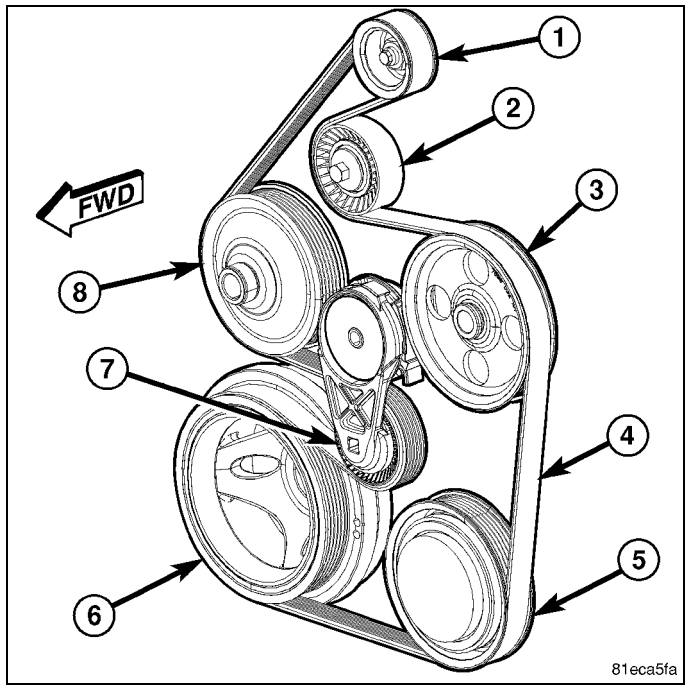

3.7L/4.7L ENGINE

1. The idler pulley is serviced as part of the belt tensioner assembly. For installation steps, (Refer to 07 - Cooling/ Accessory Drive/TENSIONER, Belt - Installation)

TENSIONER, Belt

Description

Correct drive belt tension is required to ensure optimum performance of the belt driven engine accessories. If specified tension is not maintained, belt slippage may cause; engine overheating, lack of power steering assist, loss of air conditioning capacity, reduced generator output rate, and greatly reduced belt life.

It is not necessary to adjust belt tension. All engines are equipped with an automatic belt tensioner. The tensioner maintains correct accessory drive belt tension at all times.

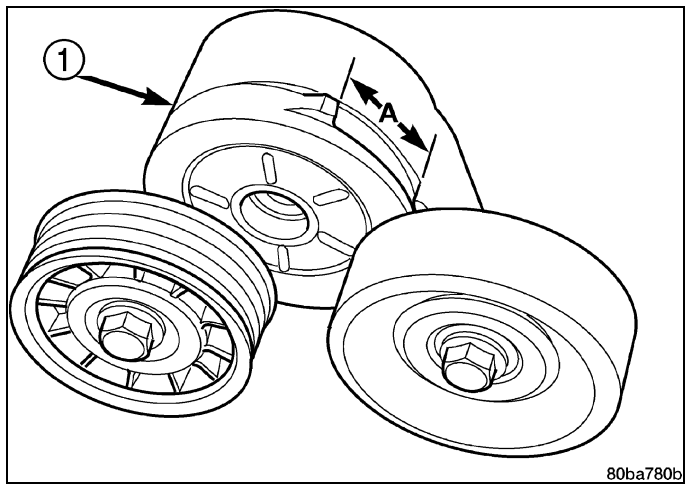

Operation

The automatic accessory drive belt tensioner maintains belt tension by using internal spring pressure, a pivoting arm and pulley to press against the drive belt.

Removal

3.7L/4.7L ENGINE

On 3.7L and 4.7L engines, the accessory drive belt tensioner is equipped with an indexing tang on back of tensioner and an indexing stop on tensioner housing. If a new accessory drive belt is being installed, tang must be within approximately 24 mm (.94 inches) of indexing stop. Belt is considered new if it has been used 15 minutes or less.

1. Remove accessory drive belt (Refer to 07 - Cooling/ Accessory Drive/BELT, Serpentine - Removal).

WARNING: Because of high spring pressure, do not attempt to disassemble automatic tensioner. Unit is serviced as an assembly.

2. Remove tensioner (3) assembly from timing chain cover.

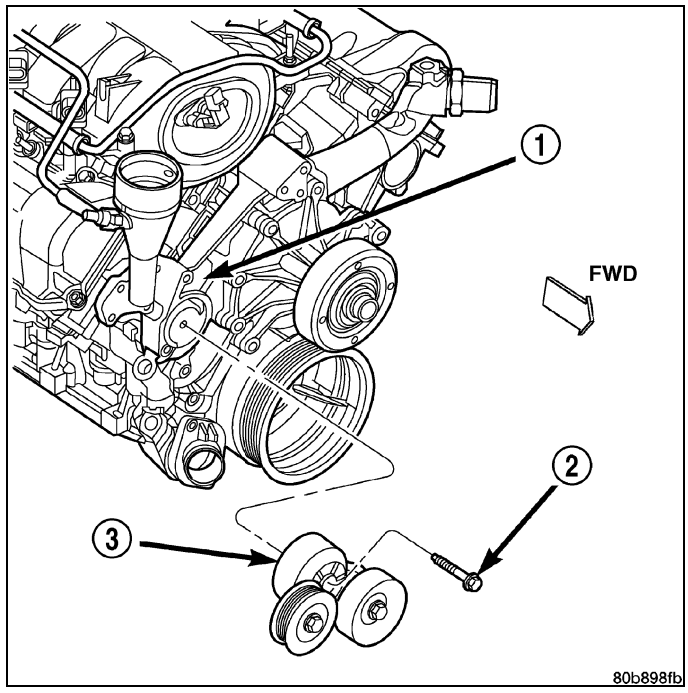

5.7L ENGINE

1. Remove the accessory drive belt (4). (Refer to 07 - Cooling/Accessory Drive/BELT, Serpentine - Removal)
2. Remove the bolt from the belt tensioner assembly (7).
3. Remove the belt tensioner assembly (7).

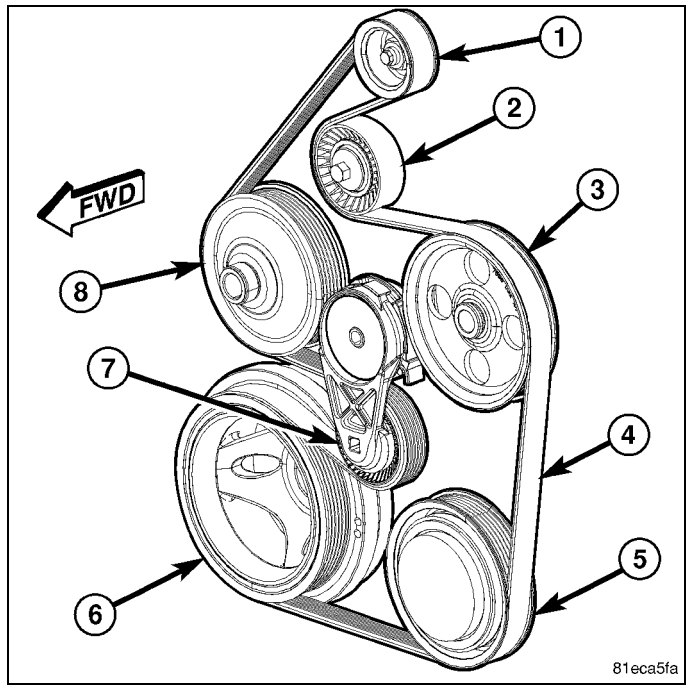

Installation

3.7L/4.7L ENGINE

1. An indexing slot is located on back of tensioner (3). Align this slot to the head of the bolt on the front cover. Install the mounting bolt. Tighten bolt (2) to 41 N·m (30 ft. lbs.).
2. Install accessory drive belt (Refer to 07 - Cooling/Accessory Drive/BELT, Serpentine - Installation).
3. Check tensioner indexing marks.

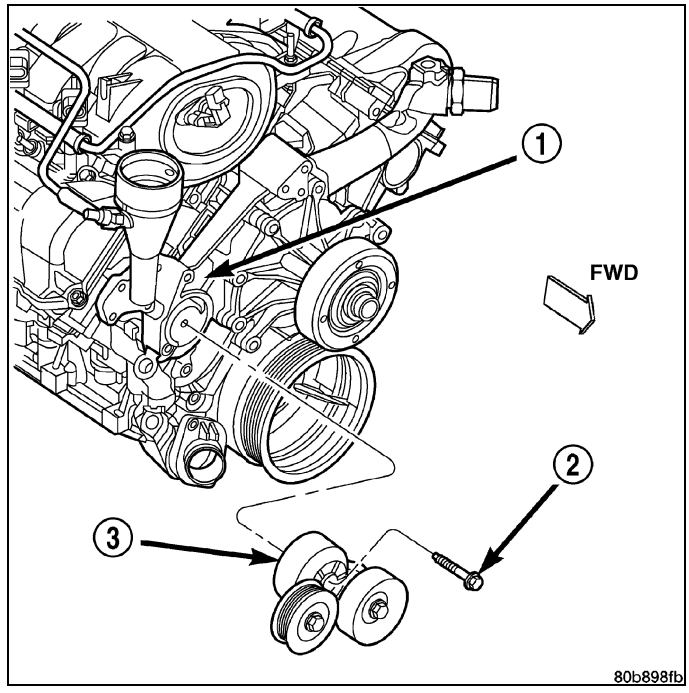

5.7L ENGINE

NOTE: When installing accessory drive belt onto pulleys, make sure that belt is properly routed and all V-grooves make proper contact with pulleys.

1. Position the belt tensioner assembly (7) onto the front of the engine block. Tighten the bolt to 41 N·m (30 ft. lbs.).
2. Install the accessory drive belt (4).(Refer to 07 - Cooling/Accessory Drive/BELT, Serpentine - Installation)

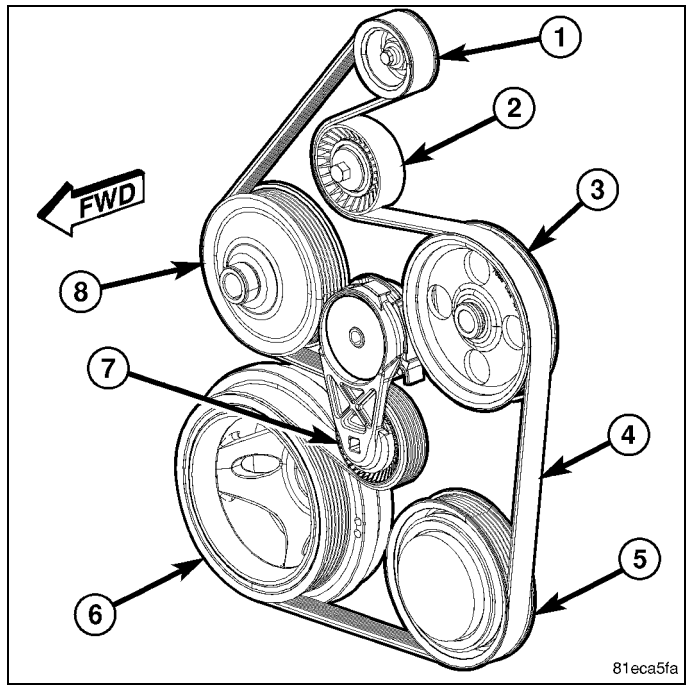

ENGINE

TABLE OF CONTENTS

page

ENGINE
- **BOTTLE, COOLANT RECOVERY**
  - DESCRIPTION . . . 26
  - OPERATION . . . 26
  - REMOVAL . . . 27
  - INSTALLATION . . . 27
- **CAP, RADIATOR**
  - DESCRIPTION . . . 28
  - OPERATION . . . 28
  - DIAGNOSIS AND TESTING
    - RADIATOR CAP-TO-FILLER NECK SEAL . . . 28
    - RADIATOR CAP . . . 29
  - CLEANING . . . 29
  - INSPECTION . . . 29
- **COOLANT**
  - DESCRIPTION . . . 30
  - OPERATION . . . 30
  - DIAGNOSIS AND TESTING . . . 30
- **FAN, COOLING, ELECTRIC**
  - REMOVAL . . . 31
  - INSTALLATION . . . 32
- **FAN, COOLING, VISCOUS**
  - DESCRIPTION . . . 33
  - DIAGNOSIS AND TESTING . . . 33
  - REMOVAL . . . 34
  - CLEANING . . . 35
  - INSPECTION . . . 35
  - INSTALLATION . . . 35
- **HEATER, ENGINE BLOCK**
  - DESCRIPTION . . . 36
  - OPERATION . . . 36
  - DIAGNOSIS AND TESTING . . . 36
  - REMOVAL
    - 3.7L/4.7L ENGINE . . . 37
    - 5.7L ENGINE . . . 37
  - INSTALLATION
    - 3.7L/4.7L ENGINE . . . 38
    - 5.7L ENGINE . . . 38
- **PUMP, WATER**
  - DESCRIPTION
    - WATER PUMP . . . 39
    - WATER PUMP BYPASS . . . 39
  - OPERATION
    - WATER PUMP . . . 40
    - WATER PUMP BYPASS - 3.7L/4.7L . . . 40
  - DIAGNOSIS AND TESTING . . . 40
  - STANDARD PROCEDURE . . . 40
  - REMOVAL
    - 3.7L/4.7L . . . 42
    - 5.7L ENGINE . . . 43
  - CLEANING . . . 43
  - INSPECTION . . . 43
  - INSTALLATION
    - 3.7L/4.7L ENGINE . . . 44
    - 5.7L ENGINE . . . 44
- **RADIATOR, ENGINE COOLING**
  - DESCRIPTION . . . 45
  - OPERATION . . . 45
  - DIAGNOSIS AND TESTING . . . 45
  - REMOVAL . . . 46
  - CLEANING . . . 48
  - INSPECTION . . . 48
  - INSTALLATION . . . 48
- **SENSOR, COOLANT TEMPERATURE**
  - DESCRIPTION . . . 51
  - OPERATION . . . 51
  - REMOVAL
    - 3.7L ENGINE . . . 52
    - 4.7L ENGINE . . . 52
    - 5.7L ENGINE . . . 53
  - INSTALLATION
    - 3.7L ENGINE . . . 53
    - 4.7L ENGINE . . . 54
    - 5.7L ENGINE . . . 54
- **THERMOSTAT**
  - DESCRIPTION . . . 55
  - OPERATION . . . 56
  - DIAGNOSIS AND TESTING . . . 56
  - REMOVAL
    - 3.7L/4.7L ENGINE . . . 56
    - 5.7L ENGINE . . . 56
  - INSTALLATION
    - 3.7L/4.7L ENGINE . . . 57
    - 5.7L ENGINE . . . 57

Engine

BOTTLE, Coolant Recovery

Description

The coolant recovery/overflow bottle (2) is mounted on the front of the radiator support and behind the grille. The coolant recovery/overflow bottle (2) is made of high temperature plastic.

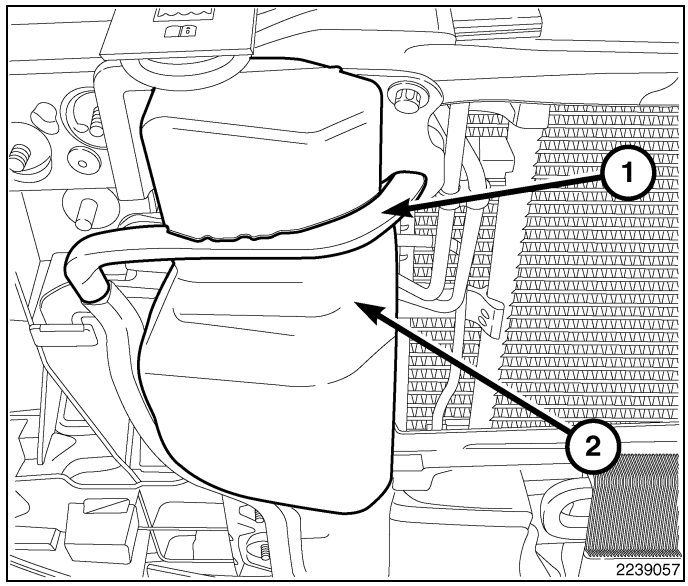

Operation

The coolant recovery/overflow bottle (2) works in conjunction with the radiator pressure cap. It utilizes thermal expansion and contraction of coolant to keep coolant free of trapped air. It provides a volume for expansion and contraction of coolant. It also provides a convenient and safe method for checking coolant level and adjusting level at atmospheric pressure. This is done without removing the radiator pressure cap. The system also provides some reserve coolant to the radiator to cover minor leaks and evaporation or boiling losses.

As the engine cools, a vacuum is formed in the cooling system of both the radiator and engine. Coolant will then be drawn from the coolant recovery/overflow bottle (2) and returned to a proper level in the radiator.

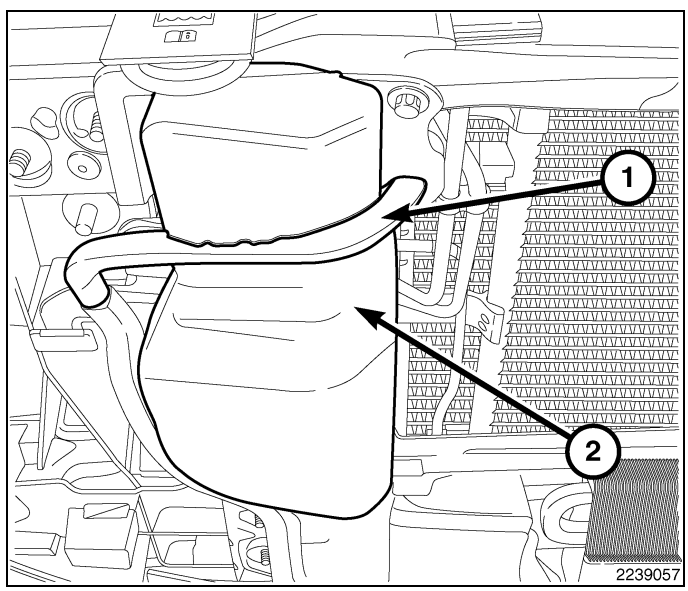

Removal

1. Remove the exterior grille.(Refer to 23 - Body/Exterior/GRILLE - Removal)
2. Partially drain the cooling system using the draincock only.(Refer to 07 - Cooling - Standard Procedure)

NOTE: DO NOT WASTE reusable coolant. If solution is clean, drain coolant into a clean container for reuse.

3. Drain system below the level of the coolant recovery pressure container.
4. Remove the recovery hose (1) from the radiator.
5. Remove the coolant recovery bottle (2) to radiator support mounting bolts.
6. Disengage the coolant recovery bottle (2) mounting pins located on the radiator support side by pulling the assembly straight up.
7. Remove the coolant recovery bottle (1).

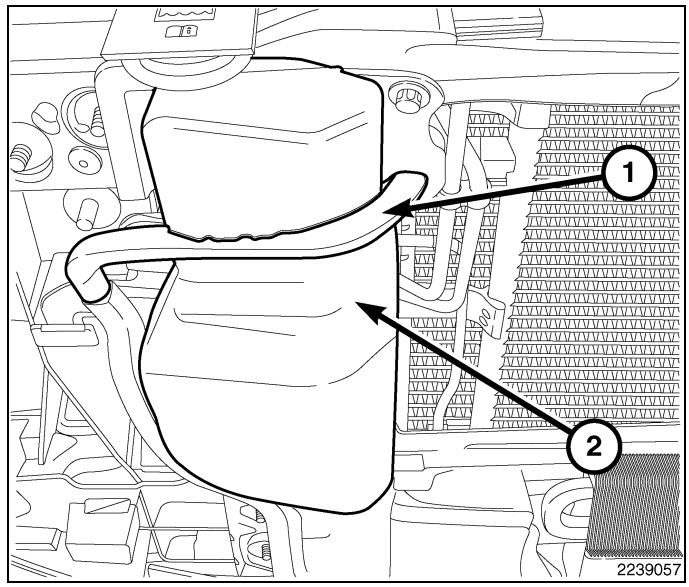

Installation

1. Align the coolant recovery bottle (2) mounting pins into the slots located on the radiator support side and push the coolant recovery bottle (2) into place.

NOTE: Ensure that the mounting pins are properly seated into the radiator support.

2. Install the coolant recovery bottle (2) to radiator support bolts. Tighten the bolts to 10 N·m (89 in. lbs).
3. Connect the recovery hose (1) to the radiator.
4. Install the front grille. (Refer to 23 - Body/Exterior/GRILLE - Installation)
5. Fill the cooling system.(Refer to 07 - Cooling - Standard Procedure)
6. Test the system for leaks.(Refer to 07 - Cooling - Diagnosis and Testing)

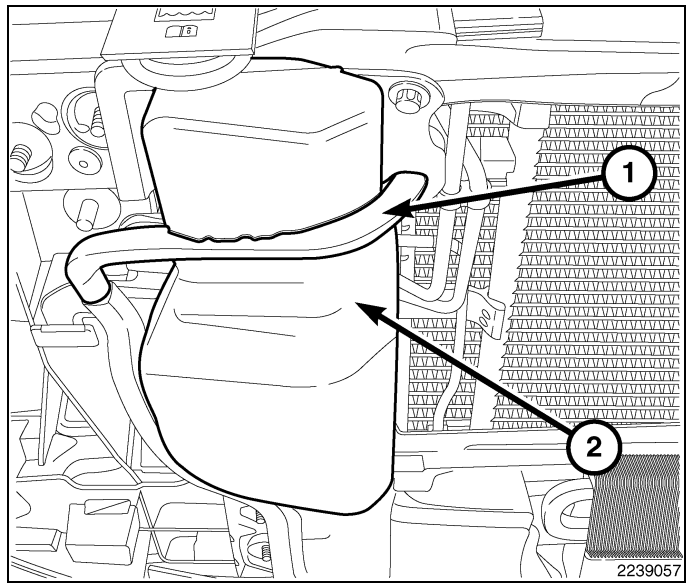

CAP, Radiator

Description

All cooling systems are equipped with a pressure cap. For all engines, the pressure cap is located on top of the radiator outlet tank. The cap releases pressure at some point within a range of 97-to-124 kPa (14-to-18 psi). The pressure relief point (in pounds) is engraved on top of the cap

The cooling system will operate at pressures slightly above atmospheric pressure. This results in a higher coolant boiling point allowing increased radiator cooling capacity. The cap contains a spring-loaded pressure relief valve. This valve opens when system pressure reaches the release range of 97-to-124 kPa (14-to-18 psi).

A rubber gasket seals the radiator filler neck. This is done to maintain vacuum during coolant cool-down and to prevent leakage when system is under pressure.

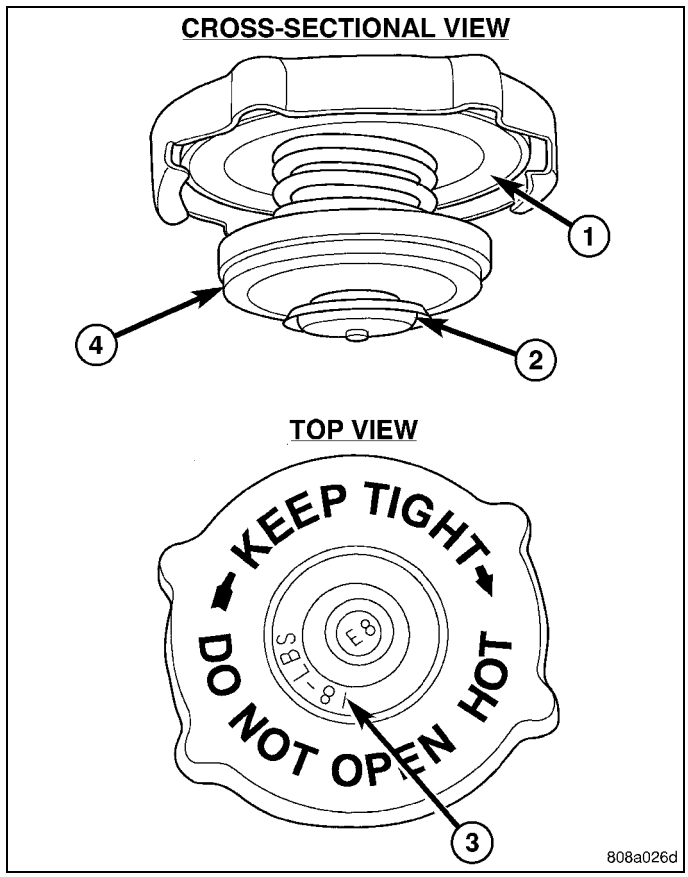

Operation

A vent valve in the center of the cap will remain shut as long as the cooling system is pressurized. As the coolant cools, it contracts and creates a vacuum in the cooling system. This causes the vacuum valve to open and coolant in the reserve/overflow container to be drawn through the recovery hose connecting the filler neck and reserve/overflow container. If the vacuum valve is stuck shut, or the recovery hose is kinked, the radiator hoses will collapse on cool down.

Diagnosis and Testing

RADIATOR CAP-TO-FILLER NECK SEAL

The pressure cap upper gasket (seal) pressure relief can be tested by removing overflow hose from the radiator filler neck tube. Attach the hose of the pressure tester tool 7700 (or equivalent) to the tube. It will be necessary to disconnect hose from its adapter for the filler neck. Pump air into radiator. The pressure cap upper gasket should relieve at 69 to 124kPa (10 to 18 psi) and hold pressure at a minimum of 55 kPa (8 psi).

WARNING: The warning words, ”DO NOT OPEN HOT”, on radiator pressure cap, are a safety precaution. When hot, pressure builds up in cooling system. To prevent scalding or injury, radiator cap should not be removed while system is hot and/or under pressure.

Do not remove the radiator cap at any time **except** for the following purposes:

- Check and adjust antifreeze freeze point.
- Refill the system with new antifreeze.
- Conducting service procedures.
- Checking for vacuum leaks.

WARNING: If vehicle has been run recently, wait at least 15 minutes before removing radiator cap. With a rag, squeeze radiator upper hose to check if system is under pressure. Place a rag over cap and without pushing cap down, rotate it counter-clockwise to first stop. Allow fluid to escape through the coolant reserve/overflow hose into reserve/overflow tank. Squeeze radiator upper hose to determine when pressure has been released. When coolant and steam stop being pushed into tank and system pressure drops, remove radiator cap completely.

RADIATOR CAP

Remove the cap from the radiator. Be sure that the sealing surfaces are clean. Moisten the rubber gasket with water and install the cap on the pressure tester 7700 or an equivalent .

Operate the tester pump to bring the pressure to 104 kPa (15 psi) on the gauge. If the pressure cap fails to hold pressure of at least 97 kPa (14 psi) replace the cap. Refer to the following **CAUTION**.

The pressure cap may test properly while positioned on tool 7700 (or equivalent). It may not hold pressure or vacuum when installed on the radiator. If so, inspect the radiator filler neck and radiator cap's top gasket for damage. Also inspect for dirt or distortion that may prevent the cap from sealing properly.

CAUTION: Radiator pressure testing tools are very sensitive to small air leaks which will not cause cooling system problems. A pressure cap that does not have a history of coolant loss should not be replaced just because it leaks slowly when tested with this tool. Add water to tool. Turn tool upside down and recheck pressure cap to confirm that cap needs replacement.

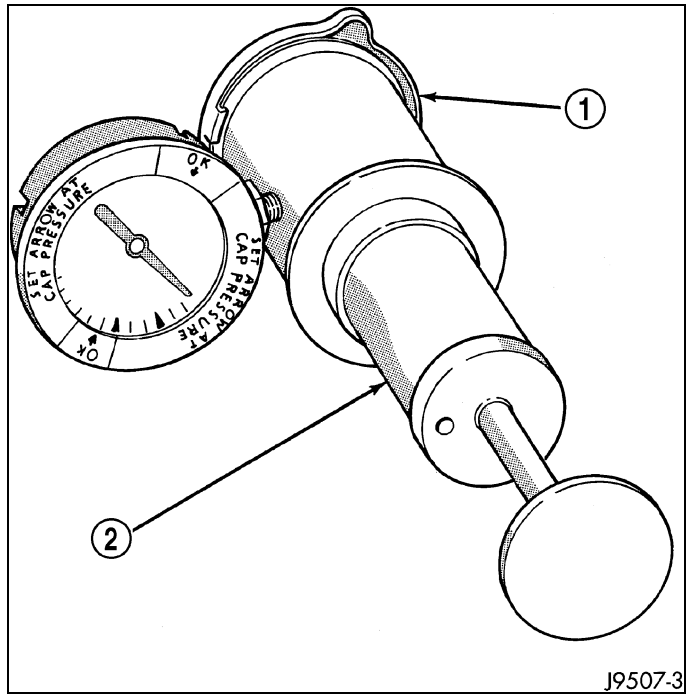

Cleaning

Use only a mild soap and water to clean the radiator cap. Using any type of solvent may cause damage to the seal in the radiator cap.

Inspection

Hold cap at eye level, right side up. The vent valve at bottom of cap should closed. A slight downward pull on the vent valve should open it. If the rubber gasket has swollen and prevents vent valve from opening, replace cap.

Hold cap at eye level, upside down. If any light can be seen between vent valve and rubber gasket, replace cap. A replacement cap must be the type designed for a coolant reserve/overflow system with a completely sealed diaphragm spring and a rubber gasket. This gasket is used to seal to radiator filler neck top surface. Use of proper cap will allow coolant return to radiator.

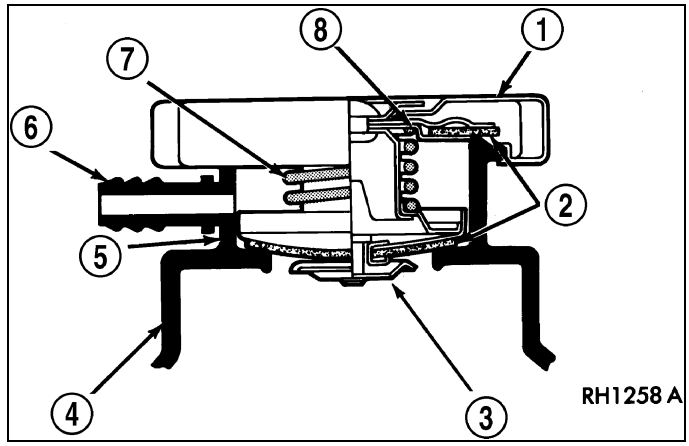

COOLANT

Description

WARNING: Antifreeze is an ethylene-glycol base coolant and is harmful if swallowed or inhaled. If swallowed, drink two glasses of water and induce vomiting. If inhaled, move to fresh air area. Seek medical attention immediately. Do not store in open or unmarked containers. Wash skin and clothing thoroughly after coming in contact with ethylene-glycol. Keep out of reach of children. Dispose of glycol based coolant properly, contact your dealer or government agency for location of collection center in your area. Do not open a cooling system when the engine is at operating temperature or hot under pressure, personal injury can result. Avoid radiator cooling fan when engine compartment related service is performed, personal injury can result.

CAUTION: Use of Propylene-Glycol based coolants is not recommended, as they provide less freeze protection and less corrosion protection.

The cooling system is designed around the coolant. The coolant must accept heat from engine metal, in the cylinder head area near the exhaust valves and engine block. Then coolant carries the heat to the radiator where the tube/fin radiator can transfer the heat to the air.

The use of aluminum cylinder blocks, cylinder heads, and water pumps require special corrosion protection. Mopar® Antifreeze/Coolant, 5 Year/100,000 Mile Formula (MS-9769), or the equivalent ethylene-glycol base coolant with organic corrosion inhibitors (called HOAT, for Hybrid Organic Additive Technology) is recommended. This coolant offers the best engine cooling without corrosion when mixed with 50% ethylene-glycol and 50% distilled water to obtain a freeze point of -37°C (-35°F). If it loses color or becomes contaminated, drain, flush, and replace with fresh properly mixed coolant solution.

CAUTION: Mopar® Antifreeze/Coolant, 5 Year/100,000 Mile Formula (MS-9769) may not be mixed with any other type of antifreeze. Mixing of coolants other than specified (non-HOAT or other HOAT) may result in engine damage that may not be covered under the new vehicle warranty, and decreased corrosion protection.

COOLANT PERFORMANCE

The required ethylene-glycol and water mixture depends upon climate and vehicle operating conditions. The coolant performance of various mixtures follows:

Pure Water- Water can absorb more heat than a mixture of water and ethylene-glycol. This is for purpose of heat transfer only. Water also freezes at a higher temperature and allows corrosion.

100 percent Ethylene-Glycol - The corrosion inhibiting additives in ethylene-glycol need the presence of water to dissolve. Without water, additives form deposits in system. These act as insulation causing temperature to rise to as high as 149°C (300°F). This temperature is hot enough to melt plastic. The increased temperature can result in severe engine damage. In addition, 100 percent ethylene-glycol freezes at -22°C (-8°F).

50/50 Ethylene-Glycol and Water - Is the recommended mixture, it provides protection against freezing to -37°C (-34°F). The antifreeze concentration **must always** be a minimum of 44 percent, year-round in all climates. If percentage is lower, engine parts may be eroded by cavitation. Maximum protection against freezing is provided with a 68 percent antifreeze concentration, which prevents freezing down to -67.7°C (-90°F). A higher percentage will freeze at a warmer temperature. Also, a higher percentage of antifreeze can cause the engine to overheat because specific heat of antifreeze is lower than that of water.

CAUTION: Richer antifreeze mixtures cannot be measured with normal field equipment and can cause problems associated with 100 percent ethylene-glycol.

Operation

Coolant flows through the engine block, cylinder head, absorbing the heat from the engine, then flows to the radiator where the cooling fins in the radiator transfers the heat from the coolant to the atmosphere. During cold weather the ethylene-glycol or propylene-glycol coolant prevents water present in the cooling system from freezing within temperatures indicated by mixture ratio of coolant to water.

Diagnosis and Testing

Check coolant concentration when any additional coolant is added to the system, or after a coolant drain, flush and refill. Use of a hydrometer or Refractometer Tool 8286, refractometer can be used to test coolant concentration.

A hydrometer tests the amount of glycol in a mixture by measuring the specific gravity of the mixture. The higher the concentration of ethylene glycol, the larger the number of balls that will float, and the higher the freeze protection (up to a maximum of 60% by volume glycol).

A Refractometer Tool 8286 tests the amount of glycol in a coolant mixture by measuring the amount a beam of light bends as it passes through the fluid.

Some coolant manufacturers use other types of glycols into their coolant formulations. Propylene glycol is the most common new coolant. However, propylene glycol based coolants do not provide the same freezing protection and corrosion protection and are not recommended.

CAUTION: Do not mix types of coolant - corrosion protection will be severely reduced.

FAN, Cooling, Electric

Removal

1. Disconnect and isolate the negative battery cable.
2. Remove the upper radiator seal push pins (1).
3. Remove the upper radiator seal plastic rivets (2).
4. Remove the upper radiator seal.
5. If equipped, remove the viscous fan assembly from the water pump hub shaft.(Refer to 07 - Cooling/Engine/FAN, Cooling - Removal)

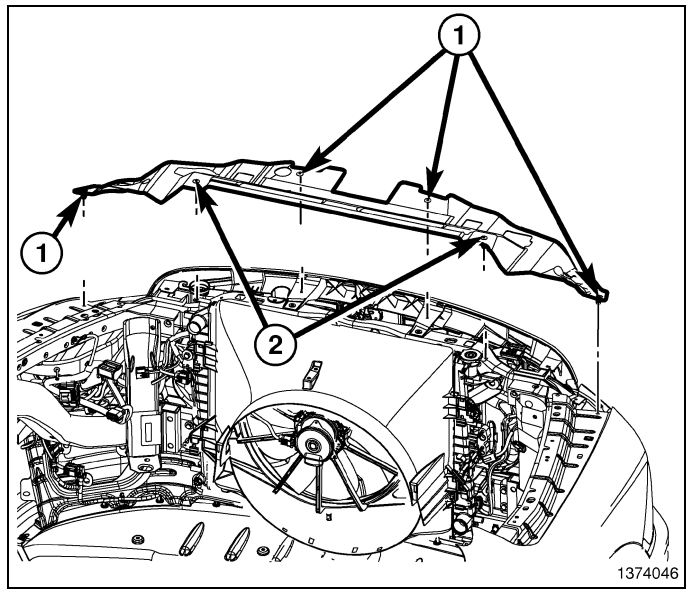

6. Disconnect the radiator fan (3) electrical connector.
7. Remove the fan shroud (1, 2) to radiator mounting bolts (4).
8. Disengage the fan shroud's (1,2) lower retaining clips and position the fan shroud (1, 2) towards the rear of vehicle.
9. Disengage the electric cooling fan (3) to radiator upper retaining clips.
10. Disengage the electric fan (3) to radiator lower retaining clips.
11. Pulling upward remove the viscous fan, radiator fan shroud (1, 2) and the electric cooling fan (3) as an assembly.
12. The lower fan shroud (1) can be removed from the upper fan shroud (2) if needed.
13. If damaged, remove radiator fan resistor from shroud (1, 2).

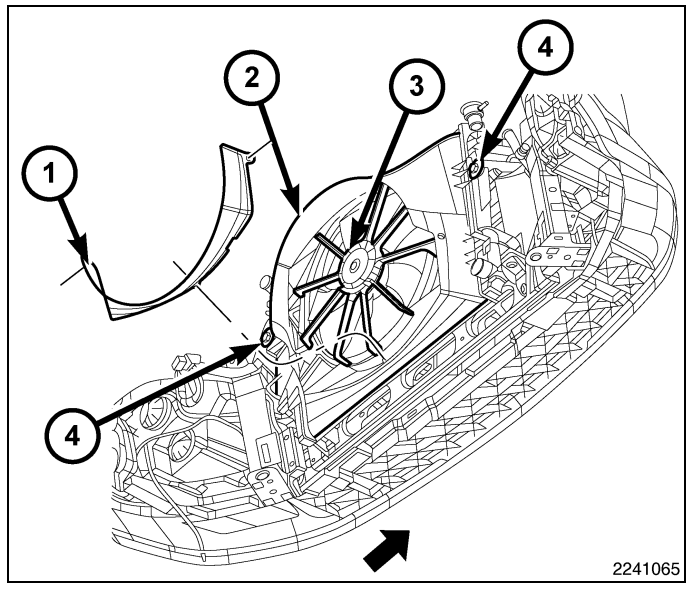

Installation

1. If removed, install the electric cooling fan resistor. Tighten the mounting screw securely.
2. If removed, install the lower fan shroud (1) to the upper fan shroud (2).
3. Position the viscous fan (if equipped), radiator fan shroud (1, 2) and electric cooling fan (3) into the vehicle as an assembly.
4. Install the electric cooling fan (3) by engaging the electric cooling fan's (3) upper and lower retaining clips to the radiator.
5. Install the fan shroud (1, 2) by engaging the fan shroud's (1, 2) lower retaining clips to the radiator/electric cooling fan (3).

NOTE: Make sure all retaining clips lock into place.

6. Install the fan shroud (1, 2) mounting bolts (4). Tighten to 10 N·m (89 in. lbs.).
7. Connect the electric cooling fan (3) electrical connector.
8. If equipped, install the viscous fan assembly. (Refer to 07 - Cooling/Engine/FAN, Cooling - Installation)
9. Position the upper radiator seal.
10. Install the upper radiator seal plastic rivets (2).
11. Install the upper radiator push pins (1).
12. Connect the negative battery cable.

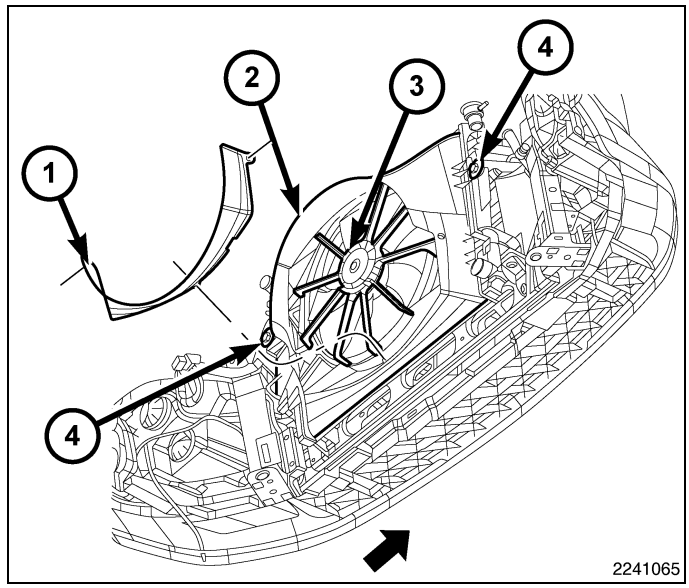

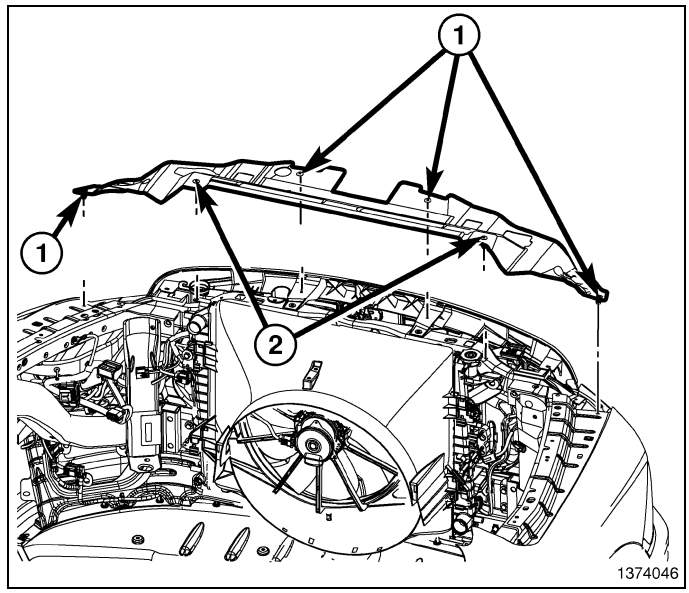

FAN, Cooling, Viscous

Description

A thermostatic bi-metallic spring coil is located on the front face of the viscous fan drive unit. This spring coil reacts to the temperature of the radiator discharge air. It engages the viscous fan drive for higher fan speed if the air temperature from the radiator rises above a certain point. Until additional engine cooling is necessary, the fan will remain at a reduced rpm regardless of engine speed.

Only when sufficient heat is present, will the viscous fan drive engage. This is when the air flowing through the radiator core causes a reaction to the bi-metallic coil. It then increases fan speed to provide the necessary additional engine cooling.

Once the engine has cooled, the radiator discharge temperature will drop. The bi-metallic coil again reacts and the fan speed is reduced to the previous disengaged speed.

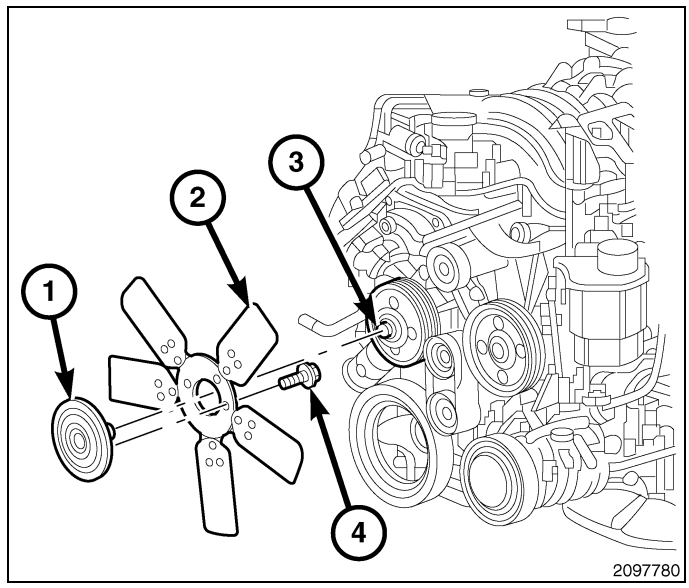

Diagnosis and Testing

NOISE

NOTE: It is normal for fan noise to be louder (roaring) when:

- The underhood temperature is above the engagement point for the viscous drive coupling. This may occur when ambient (outside air temperature) is very high.
- Engine loads and temperatures are high such as when towing a trailer.
- Cool silicone fluid within the fan drive unit is being redistributed back to its normal disengaged (warm) position. This can occur during the first 15 seconds to one minute after engine start-up on a cold engine.

LEAKS

Viscous fan drive operation is not affected by small oil stains near the drive bearing. If leakage appears excessive, replace the fan drive unit.

VISCOUS DRIVE

For the following test, the cooling system must be in good condition. It also will ensure against excessively high coolant temperature.

WARNING: Be sure that there is adequate fan blade clearance before drilling.

1. Drill a 3.18-mm (1/8-in) diameter hole in the top center of the fan shroud.
2. Obtain a dial thermometer with an 8 inch stem (or equivalent). It should have a range of -18°-to-105°C (0°-to-220° F). Insert thermometer through the hole in the shroud. Be sure that there is adequate clearance from the fan blades.
3. Connect a tachometer and an engine ignition timing light. The timing light is to be used as a strobe light.
4. Block the air flow through the radiator. Secure a sheet of plastic in front of the radiator. Use tape at the top to secure the plastic and be sure that the air flow is blocked.
5. Be sure that the air conditioner (if equipped) and blower fan is turned off.

WARNING: Use extreme caution when the engine is operating. Do not stand in a direct line with the fan. Do not put your hands near the pulleys, belts or fan. Do not wear loose clothing.

6. Start the engine and operate at 2400 rpm. Within ten minutes the air temperature (indicated on the dial thermometer) should be up to 88° C (190° F). Fan drive **engagement** should start to occur at/between:

- 3.7L Automatic - 93° C - 99°C (200° F - 210° F)
- 3.7L Manual/4.7L Automatic - 85° - 91° C (185° - 195° F)
- 4.7L Manual - 74° - 79° C (165° - 175° F)

- 5.7L Automatic Standard Cool - 94° C - 99°C (201° F - 211° F)
- 5.7L Manual - 93° C - 100°C (199° F - 212° F)
- 5.7L Heavy Duty Snowplow - 76° C - 83°C (169° F - 181° F)
- Engagement is distinguishable by a definite **increase** in fan flow noise (roaring). The timing light also will indicate an increase in the speed of the fan.

7. When viscous drive engagement is verified, remove the plastic sheet. Fan drive **disengagement** should start to occur at or between:
   - 3.7L Automatic - 76°C - 81°C (168° F - 178° F)
   - 3.7L Manual/4.7L Auto - 67°C - 73°C (153° F - 163° F)
   - 4.7L Manual - 56°C - 62°C (133° F - 143° F)
   - 5.7L Automatic Standard Cool - 69° C - 74°C (156° F - 166° F)
   - 5.7L Manual - 71° C - 76°C (160° F - 170° F)
   - 5.7L Heavy Duty Snowplow - 55° C - 60°C (168° F - 178° F)

   A definite **decrease** of fan flow noise (roaring) should be noticed. If not, replace the defective viscous fan drive unit.

CAUTION: Some engines equipped with serpentine drive belts have reverse rotating fans and viscous fan drives. Installation of the wrong fan or viscous fan drive can result in engine overheating.

CAUTION: If the viscous fan drive is replaced because of mechanical damage, the cooling fan blades should also be inspected. Inspect for fatigue cracks, loose blades, or loose rivets that could have resulted from excessive vibration. Replace fan blade assembly if any of these conditions are found. Also inspect water pump bearing and shaft assembly for any related damage due to a viscous fan drive malfunction.

Removal

1. **Do Not** attempt to remove the fan/viscous fan drive assembly (2) from the vehicle at this time.

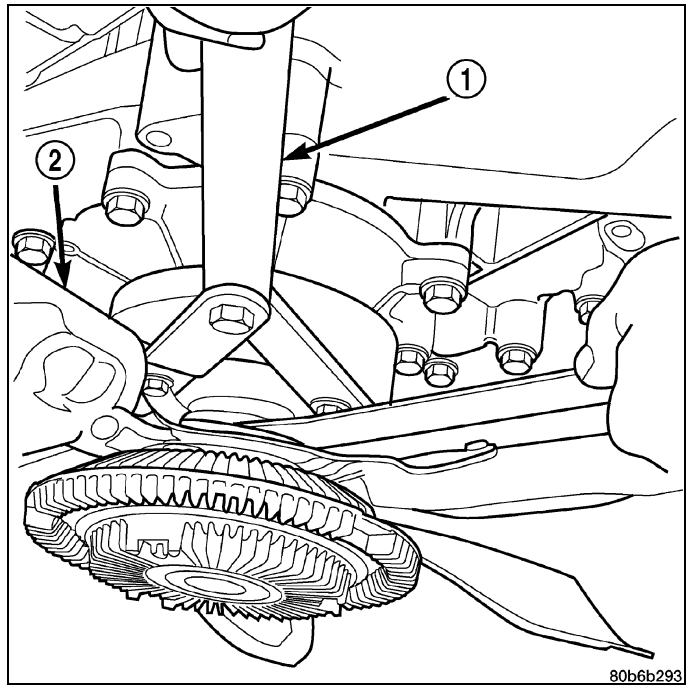

CAUTION: If the viscous fan drive is replaced because of mechanical damage, the cooling fan blades should also be inspected. Inspect for fatigue cracks, loose blades, or loose rivets that could have resulted from excessive vibration. Replace fan blade assembly if any of these conditions are found. Also inspect water pump bearing and shaft assembly for any related damage due to a viscous fan drive malfunction.

2. Disconnect negative battery cable from battery.
3. The thermal viscous fan drive/fan blade assembly (2) is attached (threaded) to the water pump hub shaft. Remove the fan blade/viscous fan drive assembly from the water pump by turning the mounting nut clockwise as viewed from the front. Threads on the viscous fan drive are **LEFT-HAND.** A 36 MM Fan Wrench (1) should be used to prevent pulley from rotating.
4. **Do Not** unbolt the fan blade assembly from viscous fan drive at this time.
5. Remove the fan shroud-to-radiator mounting bolts.
6. Pull the lower shroud mounts out of the radiator tank clips.
7. Remove the fan shroud, electric cooling fan, and fan blade/viscous fan drive assembly (2) as a complete unit from vehicle. (Refer to 07 - Cooling/Engine/FAN, Cooling - Removal)
8. After removing the fan blade/viscous fan drive assembly (2), **do not** place the viscous fan drive in a horizontal position. If stored horizontally, silicone fluid in the viscous fan drive could drain into its bearing assembly and contaminate lubricant.

CAUTION: Do not remove water pump pulley-to-water pump bolts. This pulley is under spring tension.

9. Remove four bolts securing fan blade assembly to viscous fan drive.

CAUTION: Some engines equipped with serpentine drive belts have reverse rotating fans and viscous fan drives. They are marked with the word REVERSE to designate their usage. Installation of the wrong fan or viscous fan drive can result in engine overheating.

Cleaning

Clean the fan blades using a mild soap and water. Do not use an abrasive to clean the blades.

Inspection

WARNING: Do not attempt to bend or straighten fan blades if fan is not within specifications.

CAUTION: If fan blade assembly is replaced because of mechanical damage, water pump and viscous fan drive should also be inspected. These components could have been damaged due to excessive vibration.

Installation

CAUTION: If the viscous fan drive is replaced because of mechanical damage, the cooling fan blades should also be inspected. Inspect for fatigue cracks, loose blades, or loose rivets that could have resulted from excessive vibration. Replace fan blade assembly if any of these conditions are found. Also inspect water pump bearing and shaft assembly for any related damage due to a viscous fan drive malfunction.

NOTE: Viscous Fan Drive Fluid Pump Out Requirement: After installing a new viscous fan drive, bring the engine speed up to approximately 2000 rpm and hold for approximately two minutes. This will ensure proper fluid distribution within the drive.

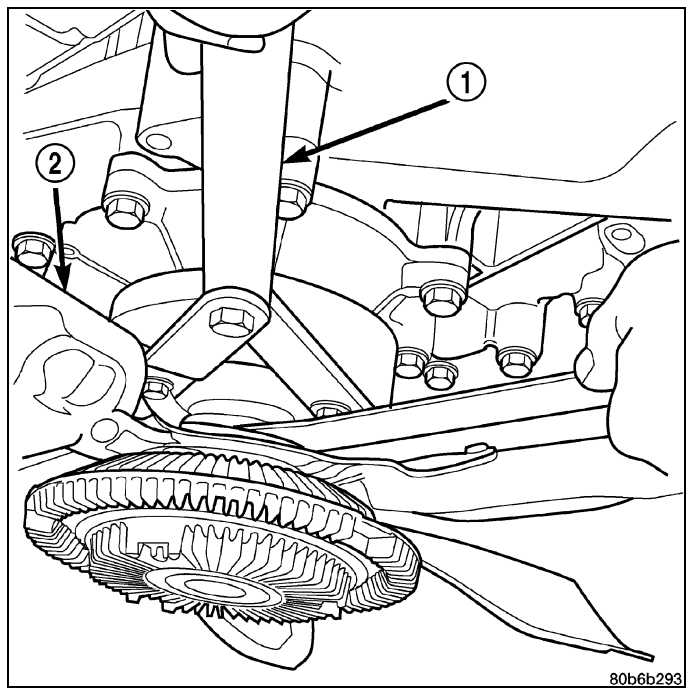

1. Install fan blade assembly (2) to the viscous fan drive. Tighten the bolts to 24 N·m (18 ft. lbs.) torque.
2. Position the fan shroud, electric cooling fan and the fan blade/viscous fan drive assembly (2) to the vehicle as a complete unit.(Refer to 07 - Cooling/Engine/FAN, Cooling - Installation)
3. Install the fan shroud.
4. The thermal viscous fan drive/fan blade assembly is attached (threaded) to the water pump hub shaft. Install the fan blade/viscous fan drive assembly to the water pump by turning the mounting nut counterclockwise as viewed from the front. Threads on the viscous fan drive are **LEFT-HAND.** A 36 MM Fan Wrench (1) should be used to prevent pulley from rotating.Tighten mounting nut to 50 N·m (37 ft. lbs.).
5. Connect the negative battery cable.

HEATER, Engine Block

Description

WARNING: Do not operate engine unless block heater cord has been disconnected from power source and secured in place. The power cord must be secured in its retaining clips and routed away from exhaust manifolds and moving parts.

An optional engine block heater is available with all models. The heater is equipped with a power cord. The cord is attached to an engine compartment component with tie-straps. The heater warms the engine providing easier engine starting and faster warm-up in low temperatures. The heater is mounted in a core hole of the engine cylinder block in place of a freeze plug with the heating element immersed in engine coolant. The 3.7L/4.7L gas powered engines have the block heater located to the rear on the right side of the engine.

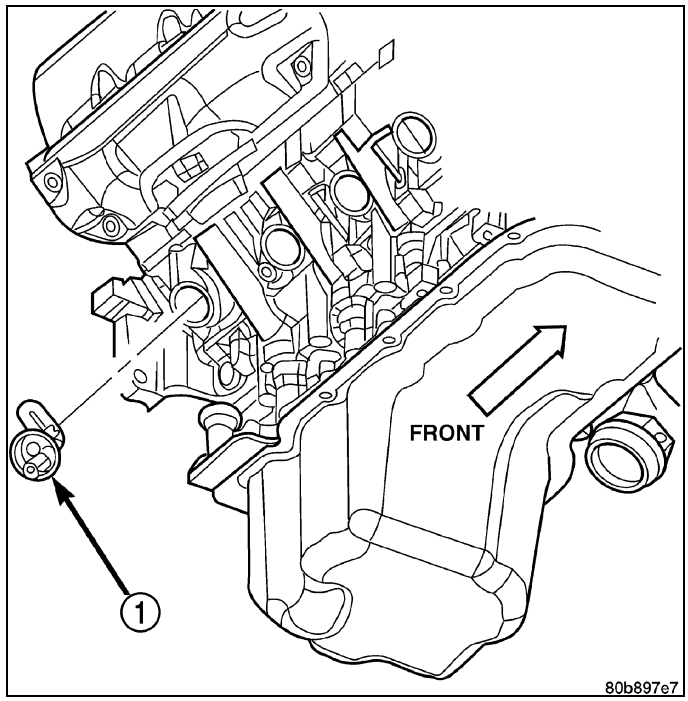

The 5.7L engine has the block heater (1) located on the left side of the engine below the exhaust manifold in the rear of the engine and is not immersed in engine coolant but makes direct contact with the block .

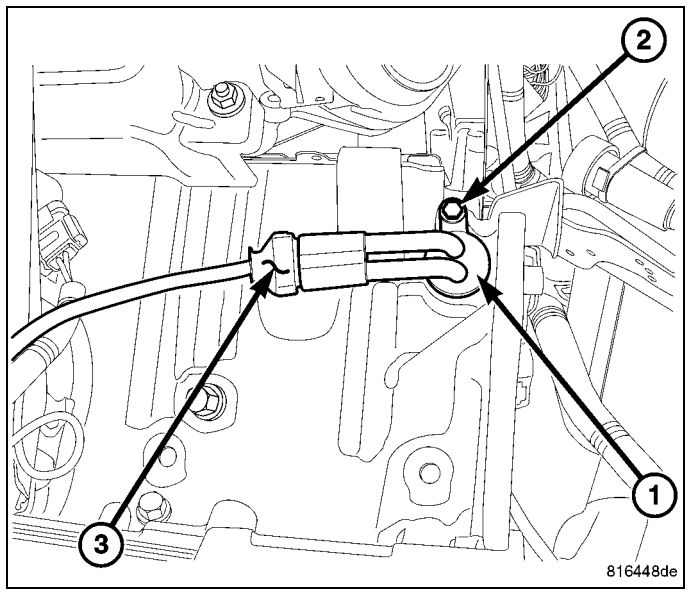

Operation

The heater warms the engine coolant providing easier engine starting and faster warm-up in low temperatures. Connecting the power cord to a grounded 110-120 volt AC electrical outlet with a grounded three wire extension cord provides the electricity needed to heat the element.

Diagnosis and Testing

If the unit does not operate, possible causes can be either the power cord or the heater element. Test the power cord for continuity with a 110-volt voltmeter or 110-volt test light. Test heater element continuity with an ohmmeter or a 12-volt test light.

CAUTION: To prevent damage, the power cord must be secured in its retainer clips and away from any components that may cause abrasion or damage, such as linkages, exhaust components, etc.

Removal

3.7L/4.7L ENGINE

1. Disconnect the battery negative cable.
2. Drain the coolant (Refer to 07 - Cooling - Standard Procedure).
3. Remove the power cord from the heater by unplugging.
4. Loosen (but do not completely remove) the screw at center of block heater.
5. Remove the block heater (1) by carefully prying from side-to-side. Note the direction of the heating element coil (up or down). The element coil must be installed correctly to prevent damage.

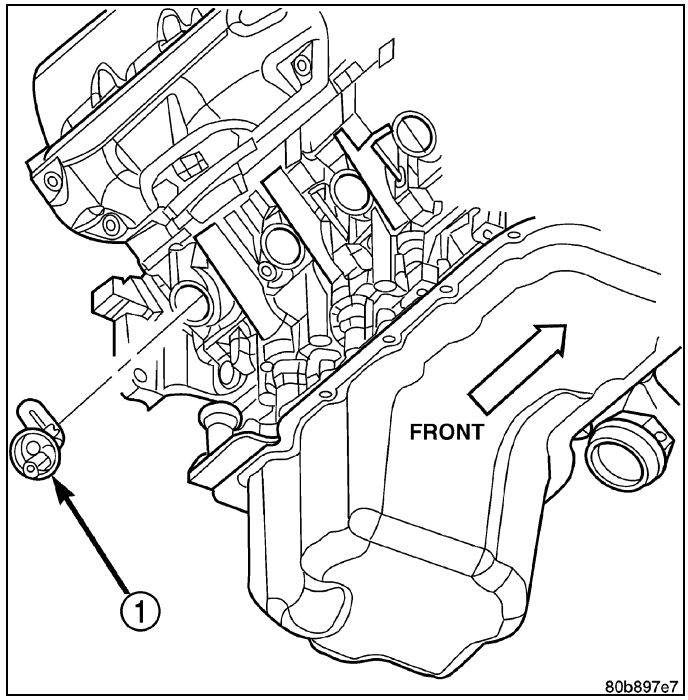

5.7L ENGINE

1. Raise vehicle.
2. Remove power cord from block heater (1).
3. Remove bolt (2) on block heater (1). Remove heater assembly (1).

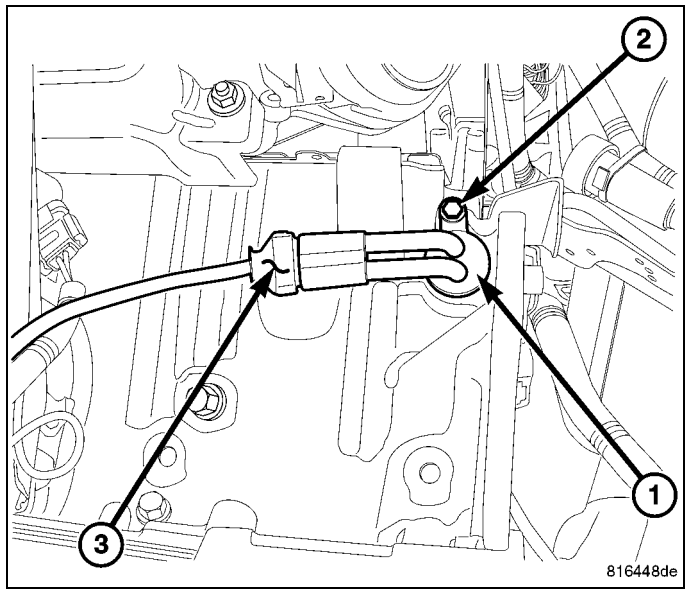

Installation

3.7L/4.7L ENGINE

1. Clean and inspect the block heater hole.
2. Install the new O-ring seal(s) to heater.
3. Insert the block heater (1) into cylinder block and position the element properly.
4. With the heater fully seated, tighten center screw to 2 N·m (17 in. lbs.).
5. Fill the cooling system with the recommended coolant. (Refer to 07 - Cooling - Standard Procedure).
6. Start and warm the engine.
7. Check the block heater for leaks.

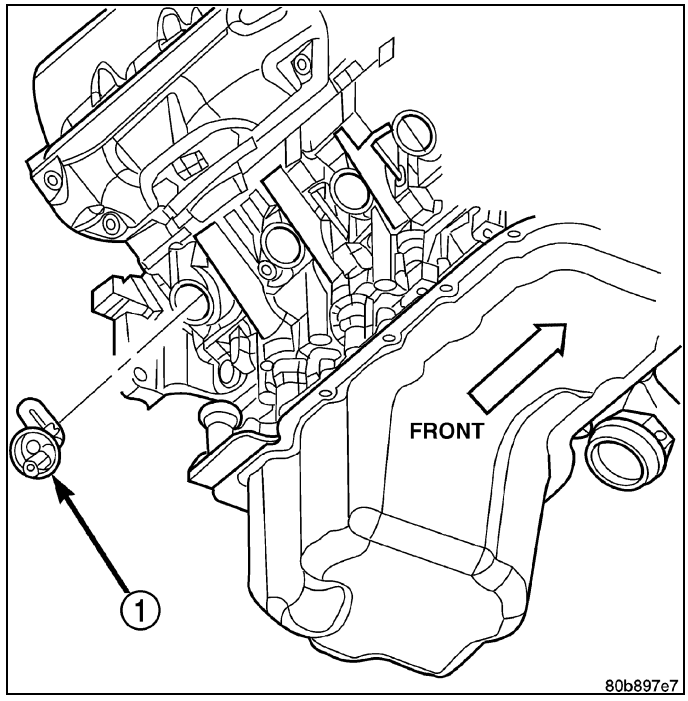

5.7L ENGINE

1. Thoroughly clean cylinder block core hole and block heater seat.
2. Insert block heater assembly (1) into the block.
3. With block heater fully seated, tighten bolt (1) to 2 N·m (17 in. lbs.) torque.

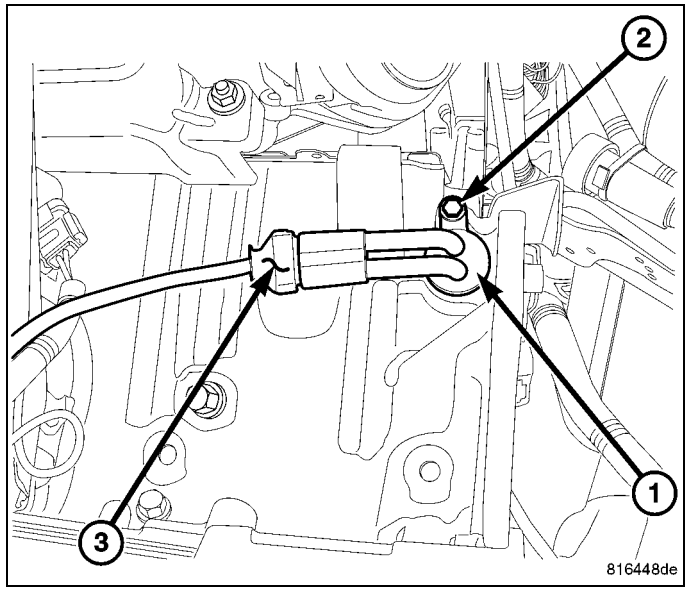

PUMP, Water

Description

WATER PUMP

A centrifugal water pump circulates coolant through the water jackets, passages, intake manifold, radiator core, cooling system hoses and heater core. The pump is driven from the engine crankshaft by a single serpentine drive belt.

The water pump impeller is pressed onto the rear of a shaft that rotates in bearings pressed into the housing. The housing has two small holes to allow seepage to escape. The water pump seals are lubricated by the antifreeze in the coolant mixture. No additional lubrication is necessary.

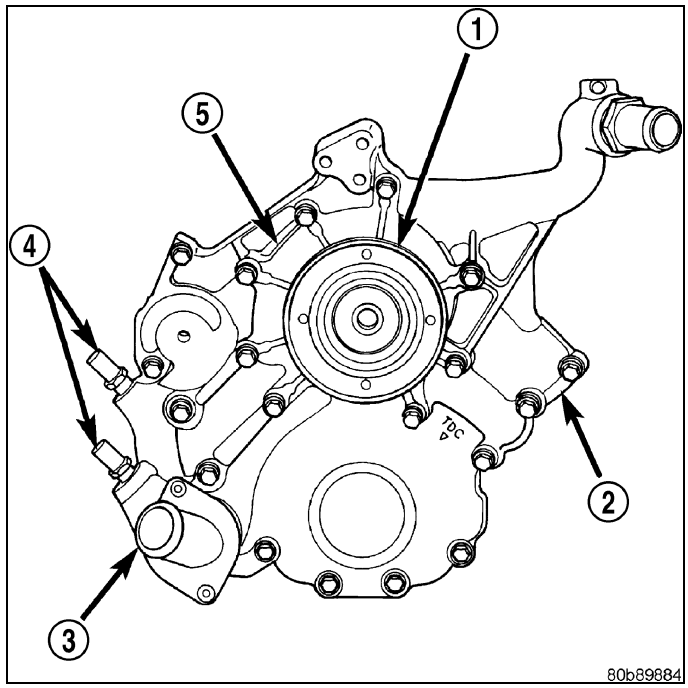

WATER PUMP BYPASS

The 3.7L and 4.7L engine uses an internal water/coolant bypass system. The design uses galleries in the timing chain cover to circulate coolant during engine warm-up preventing the coolant from flowing through the radiator .

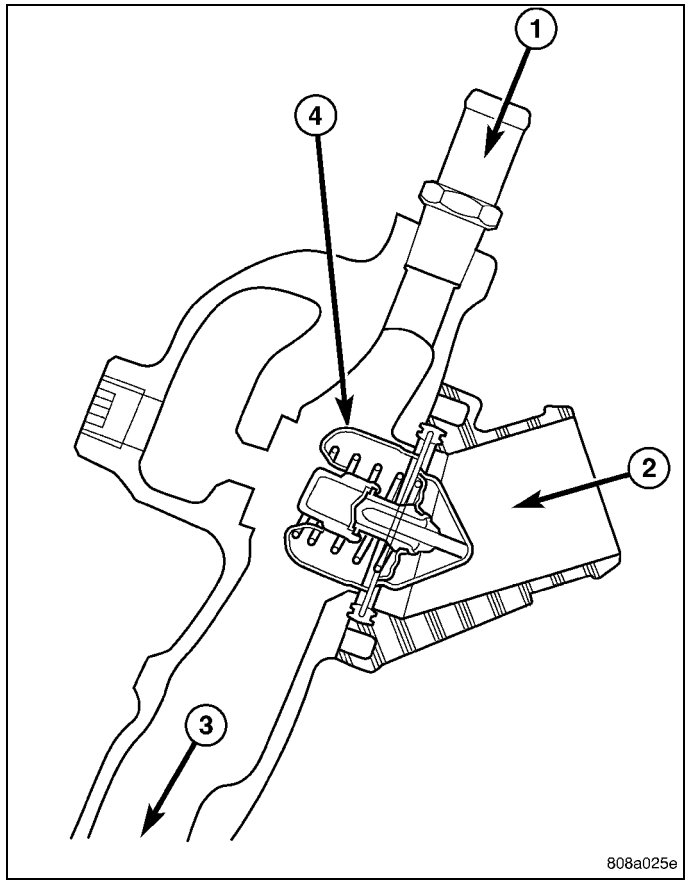

Operation

WATER PUMP

A centrifugal water pump circulates coolant through the water jackets, passages, intake manifold, radiator core, cooling system hoses and heater core, this coolant absorbs the heat generated when the engine is running. The pump is driven by the engine crankshaft via a drive belt.

WATER PUMP BYPASS - 3.7L/4.7L

When the thermostat is in the closed position the bypass gallery is not obstructed allowing 100% flow. When the thermostat is in the open position the pill partially covers the bypass hole, reducing the amount of bypass flow. This design allows the coolant to reach operating temperature quickly when cold, while adding extra cooling during normal temperature operation.

Diagnosis and Testing

A quick test to determine if pump is working is to check if heater warms properly. A defective water pump will not be able to circulate heated coolant through the long heater hose to the heater core.

Standard Procedure

Evacuating or purging air from the cooling system involves the use of a pressurized air operated vacuum generator. The vacuum created allows for a quick and complete coolant refilling while removing any airlocks present in the system components.

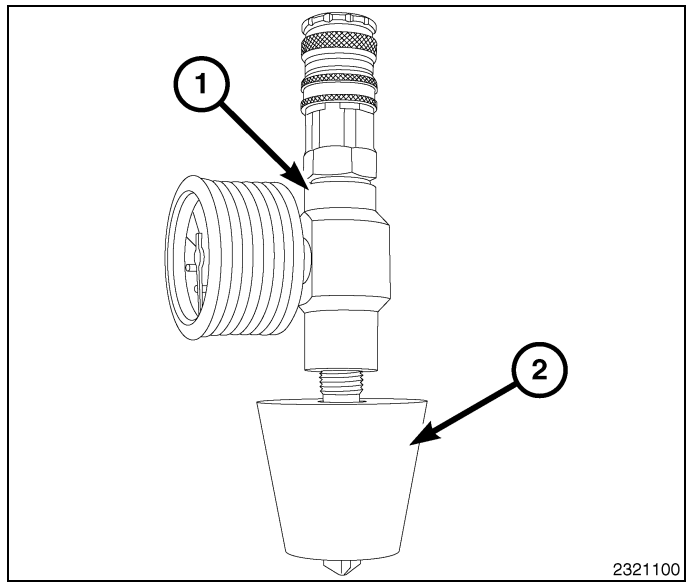

NOTE: To avoid damage to the cooling system, ensure that no component would be susceptible to damage when a vacuum is drawn on the system.

WARNING: ANTIFREEZE IS AN ETHYLENE GLYCOL BASE COOLANT AND IS HARMFUL IF SWALLOWED OR INHALED. IF SWALLOWED, DRINK TWO GLASSES OF WATER AND INDUCE VOMITING. IF INHALED, MOVE TO FRESH AIR AREA. SEEK MEDICAL ATTENTION IMMEDIATELY. DO NOT STORE IN OPEN OR UNMARKED CONTAINERS. WASH SKIN AND CLOTHING THOROUGHLY AFTER COMING IN CONTACT WITH ETHYLENE GLYCOL. KEEP OUT OF REACH OF CHILDREN. DISPOSE OF GLYCOL BASED COOLANT PROPERLY. CONTACT YOUR DEALER OR GOVERNMENT AGENCY FOR LOCATION OF COLLECTION CENTER IN YOUR AREA. DO NOT OPEN A COOLING SYSTEM WHEN THE ENGINE IS AT OPERATING TEMPERATURE OR HOT UNDER PRESSURE; PERSONAL INJURY CAN RESULT. AVOID RADIATOR COOLING FAN WHEN ENGINE COMPARTMENT RELATED SERVICE IS PERFORMED; PERSONAL INJURY CAN RESULT.

WARNING: WEAR APPROPRIATE EYE AND HAND PROTECTION WHEN PERFORMING THIS PROCEDURE.

NOTE: The service area where this procedure is performed should have a minimum shop air requirement of 80 PSI (5.5 bar) and should be equipped with an air dryer system.

NOTE: For best results, the radiator should be empty. The vehicle's heater control should be set to the heat position (ignition may need to be turned to the on position but do not start the motor).

1. Refer to the Chrysler Pentastar Service Equipment (Chrysler PSE) Coolant Refiller #85-15-0650 or equivalent tool's operating manual for specific assembly steps.
2. Choose an appropriate adapter cone that will fit the vehicle's radiator filler neck or reservoir tank.
3. Attach the adapter cone (2) to the vacuum gauge (1).

4. Make sure the vacuum generator/venturi ball valve (3) is closed and attach an airline hose (2) (minimum shop air requirement of 80 PSI/5.5 bar) to the vacuum generator/venturi (1).
5. Position the adaptor cone/vacuum gauge assembly into the radiator filler neck or reservoir tank. Ensure that the adapter cone is sealed properly.

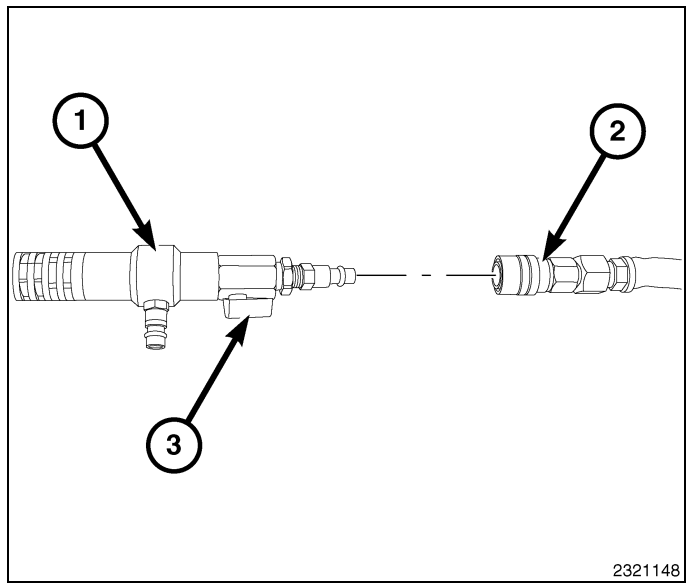

6. Connect the vacuum generator/venturi (2) to the positioned adaptor cone/vacuum gauge assembly (1).
7. Open the vacuum generator/venturi ball valve.

NOTE: Do not bump or move the assembly as it may result in loss of vacuum. Some radiator overflow hoses may need to be clamped off to obtain vacuum.

8. Let the system run until the vacuum gauge shows a good vacuum through the cooling system. Refer to the tool's operating manual for appropriate pressure readings.

NOTE: If a strong vacuum is being created in the system, it is normal to see the radiator hoses to collapse.

9. Close the vacuum generator/venturi ball valve.

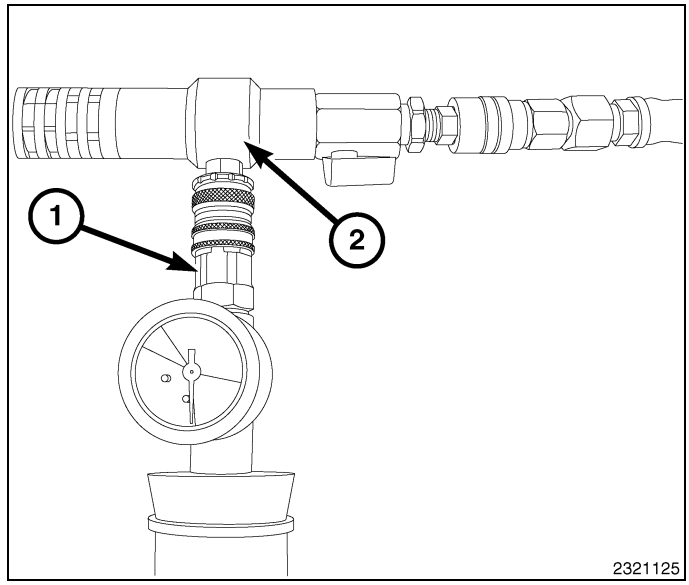

10. Disconnect the vacuum generator/venturi and airline from the adaptor cone/vacuum gauge assembly.
11. Wait approximately 20 seconds, if the pressure readings do not move, the system has no leaks. If the pressure readings move, a leak could be present in the system and the cooling system should be checked for leaks and the procedure should be repeated.
12. Place the tool's suction hose into the coolant's container.

NOTE: Ensure there is a sufficient amount of coolant, mixed to the required strength/protection level available for use. For best results and to assist the refilling procedure, place the coolant container at the same height as the radiator filler neck. Always draw more coolant than required. If the coolant level is too low, it will pull air into the cooling system which could result in airlocks in the system.

13. Connect the tool's suction hose (1) to the adaptor cone/vacuum gauge assembly (2).

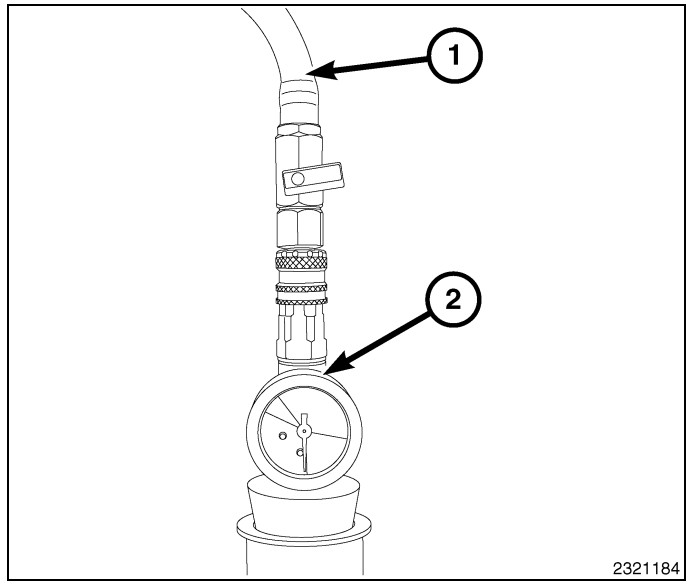

14. Open the suction hose's ball valve to begin refilling the cooling system.
15. When the vacuum gauge reads zero, the system is filled.

NOTE: On some remote pressurized tanks, it is recommended to stop filling when the proper level is reached.

16. Close the suction hose's ball valve and remove the suction hose from the adaptor cone/vacuum gauge assembly.
17. Remove the adaptor cone/vacuum gauge assembly from the radiator filler neck or reservoir tank.
18. With heater control unit in the HEAT position, operate engine with container cap in place.
19. After engine has reached normal operating temperature, shut engine off and allow it to cool. When engine is cooling down, coolant will be drawn into the radiator from the pressure container.

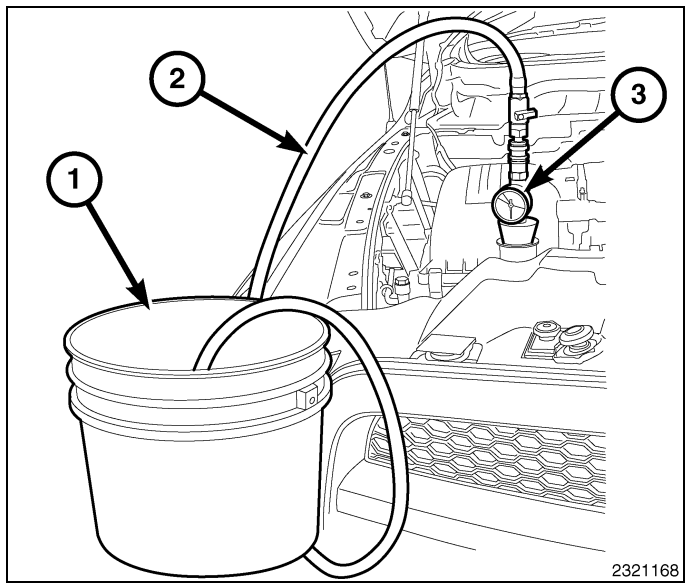

20. Add coolant to the recovery bottle/container as necessary. **Only add coolant to the container when the engine is cold. Coolant level in a warm engine will be higher due to thermal expansion.** Add necessary coolant to raise container level to the COLD MINIMUM mark after each cool down period.
21. Once the appropriate coolant level is achieved, attach the radiator cap or reservoir tank cap.

Removal

3.7L/4.7L

The water pump on 3.7L/4.7L engines is bolted directly to the engine timing chain case cover.

1. Disconnect the negative battery cable.
2. Drain cooling system (Refer to 07 - Cooling - Standard Procedure).
3. Remove fan/viscous fan drive assembly from water pump(Refer to 07 - Cooling/Engine/FAN, Cooling - Removal). Do not attempt to remove fan/viscous fan drive assembly from vehicle at this time.
4. If the water pump is being replaced, do not unbolt the fan blade assembly from the thermal viscous fan drive.
5. Remove the radiator fan (Refer to 07 - Cooling/Engine/FAN, Cooling - Removal) .
6. Remove accessory drive belt (Refer to 07 - Cooling/Accessory Drive/BELT, Serpentine - Removal).
7. Remove the lower radiator hose clamp and remove the lower hose at the water pump.
8. Remove the water pump mounting bolts.

CAUTION: Do not pry on the water pump at the timing chain case/cover. The machined surfaces may be damaged resulting in leaks.

9. Remove the water pump and gasket. Discard gasket.

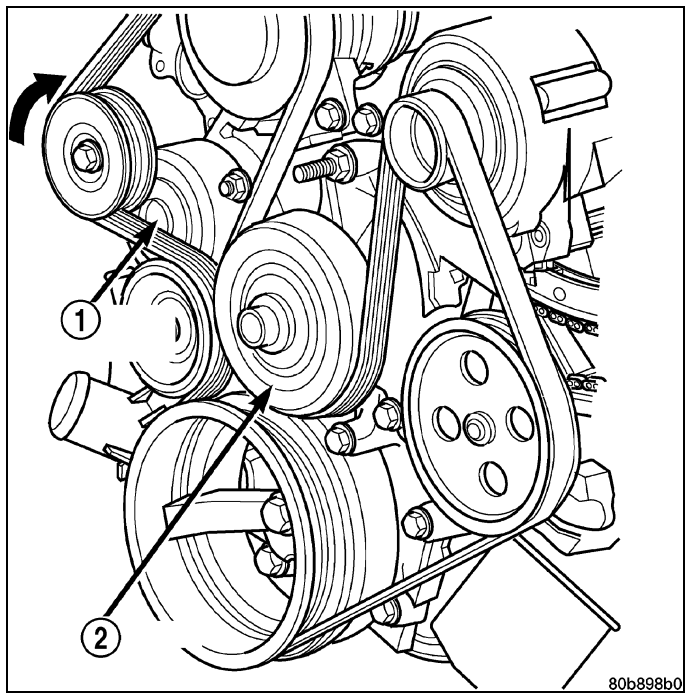

5.7L ENGINE

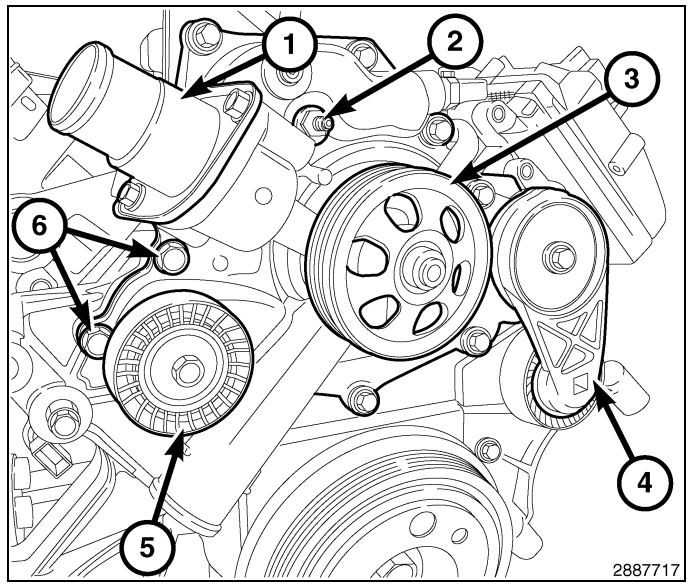

1. Disconnect negative battery cable.
2. Remove the air intake assembly (Refer to 09 - Engine/Air Intake System/BODY, Air Cleaner - Removal).
3. Remove the resonator mounting bracket.
4. Remove cooling fan assembly (Refer to 07 - Cooling/Engine/FAN, Cooling - Removal).
5. Drain coolant into a clean container (Refer to 07 - Cooling - Standard Procedure).
6. Remove the upper radiator hose from the thermostat housing (1) and position aside.
7. Remove serpentine belt (Refer to 07 - Cooling/Accessory Drive/BELT, Serpentine - Removal).
8. Remove idler pulley (5).
9. Remove belt tensioner assembly (4) (Refer to 07 - Cooling/Accessory Drive/TENSIONER, Belt - Removal).
10. Remove lower radiator hose from the water pump and position aside.
11. Remove the upper metal heater tube from the cylinder head.
12. Remove water pump mounting bolts (6) and remove pump (3).

Cleaning

Clean the gasket mating surface. Use caution not to damage the gasket sealing surface.

To ensure proper gasket sealing, surface preparation must be performed, especially with the use of aluminum engine components.

Never use the following to clean gasket surfaces:

- Metal scraper.
- Abrasive pad or paper to clean cylinder block and head.
- High speed power tool with an abrasive pad or a wire brush).
- High speed power tool with 3M Roloc™ Bristle Disc (white or yellow).

Only use the following for cleaning gasket surfaces:

- Solvent or a commercially available gasket remover
- Plastic or wood scraper.

Inspection

Inspect the water pump assembly for cracks in the housing, water leaks from the shaft seal, worn bearing or the impeller rubbing either the pump body or the timing chain case/cover.

Installation

3.7L/4.7L ENGINE

1. Clean the gasket mating surfaces.
2. Using a new gasket, position water pump and install the mounting bolts. Tighten the water pump mounting bolts to 58 N·m (43 ft. lbs.).
3. Spin the water pump to be sure that the pump impeller does not rub against the timing chain case/cover.
4. Connect the radiator lower hose to the water pump.
5. Install accessory drive belt tensioner (Refer to 07 - Cooling/Accessory Drive/TENSIONER, Belt - Installation)
6. Install the drive belt (Refer to 07 - Cooling/Accessory Drive/BELT, Serpentine - Installation).
7. Install the radiator fan (Refer to 07 - Cooling/Engine/FAN, Cooling - Installation) .
8. Evacuate air and refill the cooling system. (Refer to 07 - Cooling/Engine/PUMP, Water - Standard Procedure)
9. Connect the negative battery cable.
10. Check cooling system for leaks.(Refer to 07 - Cooling - Diagnosis and Testing)

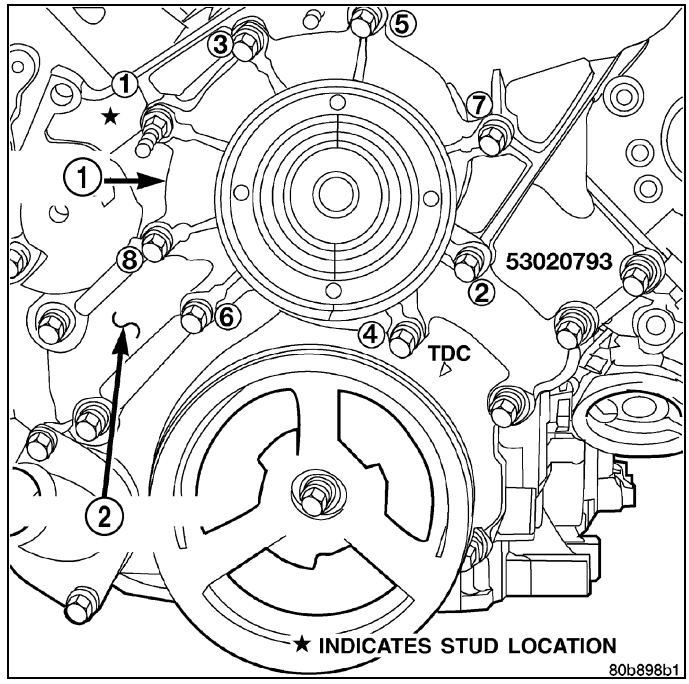

5.7L ENGINE

1. Clean mating surfaces and install water pump (3). Tighten mounting bolts to 24 N·m (18 ft. lbs.).
2. Install upper metal heater tube.
3. Install belt tensioner assembly (4) (Refer to 07 - Cooling/Accessory Drive/TENSIONER, Belt - Installation).
4. Install idler pulley (5).
5. Install the lower radiator hose.
6. Install serpentine belt (Refer to 07 - Cooling/Accessory Drive/BELT, Serpentine - Installation).
7. Install the resonator mounting bracket.
8. Install cooling fan assembly (Refer to 07 - Cooling/Engine/FAN, Cooling - Installation).
9. Install the upper radiator hose to the thermostat housing (1).
10. Install the air intake assembly (Refer to 09 - Engine/Air Intake System/BODY, Air Cleaner - Installation).
11. Connect negative battery cable.
12. Evacuate air and refill cooling system(Refer to 07 - Cooling - Standard Procedure) .
13. Check cooling system for leaks (Refer to 07 - Cooling - Diagnosis and Testing).

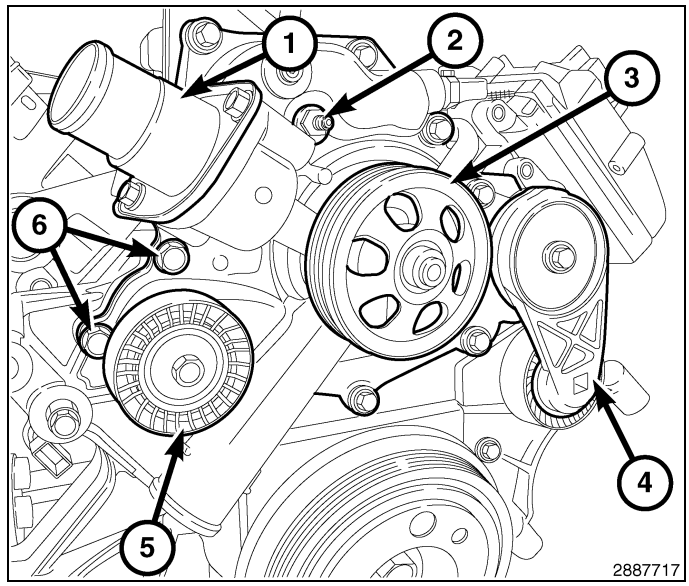

RADIATOR, Engine Cooling

Description

The radiator (1) is a aluminum cross-flow design with horizontal tubes through the radiator core and vertical plastic side tanks.

This radiator (1) does not contain an internal transmission oil cooler.

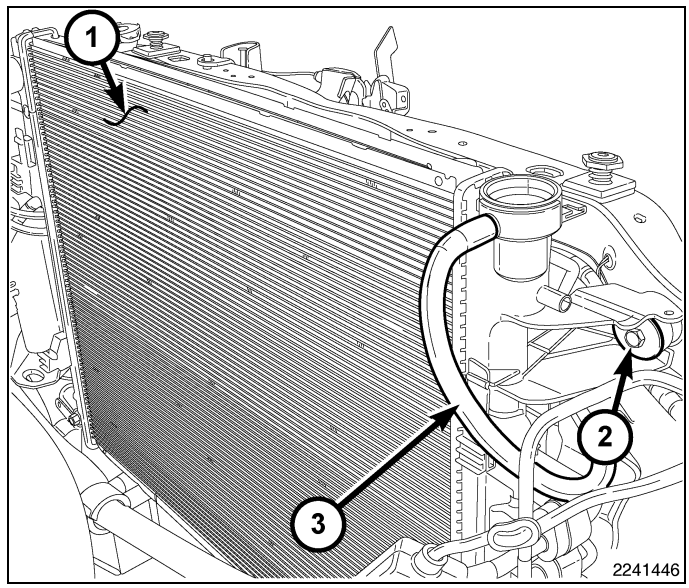

Operation

The radiator supplies sufficient heat transfer using the cooling fins interlaced between the horizontal tubes in the radiator core to cool the engine.

Diagnosis and Testing

Use the following procedure to determine if coolant is flowing through the cooling system.

1. Idle engine until operating temperature is reached. If the upper radiator hose is warm to the touch, the thermostat is opening and coolant is flowing to the radiator.

WARNING: Hot, pressurized coolant can cause injury by scalding. Using a rag to cover the radiator pressure cap, open radiator cap slowly to the first stop. This will allow any built-up pressure to vent to the reserve/ overflow tank. After pressure build-up has been released, remove cap from filler neck.

2. Drain a small amount of coolant from the radiator until the ends of the radiator tubes are visible through the filler neck. Idle the engine at normal operating temperature. If coolant is flowing past the exposed tubes, the coolant is circulating.

Removal

1. Disconnect and isolate the negative battery cable.
2. Raise and secure the vehicle.
3. Drain the cooling system (Refer to 07 - Cooling - Standard Procedure).

WARNING: Do not remove the cylinder block drain plugs or loosen the radiator draincock with the system hot and under pressure. Serious burns from the coolant can occur.

4. Remove the lower radiator clamp and hose.
5. Remove the lower radiator seal.
6. Remove the lower center electric fan to radiator retaining clip.
7. Lower the vehicle.
8. Remove the upper radiator clamp and hose.
9. Remove the upper radiator seal push pins (1).
10. Remove the upper radiator seal plastic rivets (2).
11. Remove the upper radiator seal.

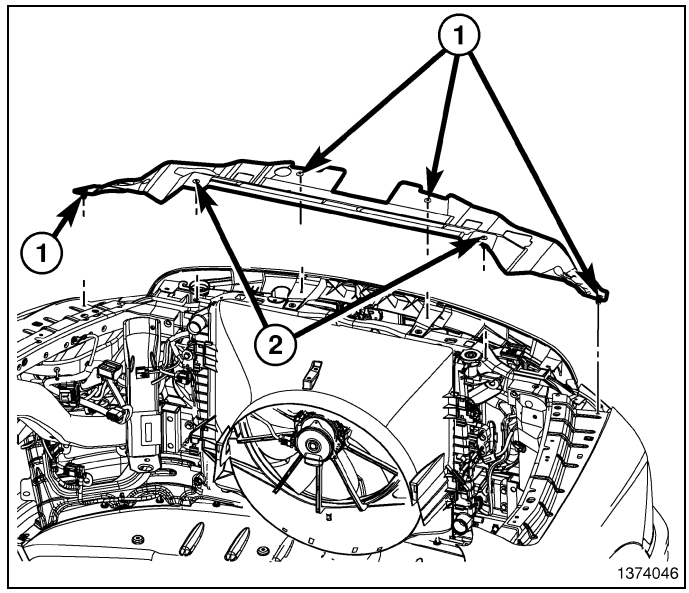

12. If equipped, remove the viscous fan assembly from the water pump hub shaft.(Refer to 07 - Cooling/Engine/FAN, Cooling - Removal)
13. Remove the grille.(Refer to 23 - Body/Exterior/GRILLE - Removal)
14. Remove the bolt from the transmission cooler line (1) to radiator (3) bracket (2).

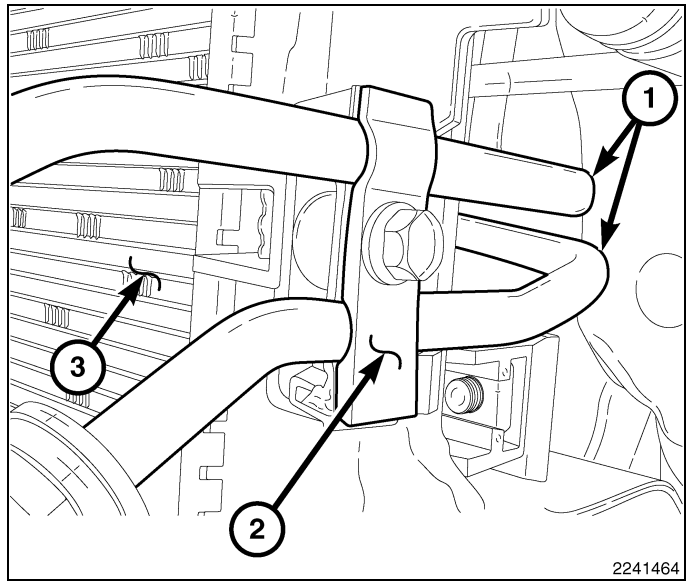

15. Remove the washer reserve tank.(Refer to 08 - Electrical/8R - Wipers/Washers/RESERVOIR, Windshield Washer - Removal)
16. Remove the coolant overflow/recovery bottle. (Refer to 07 - Cooling/Engine/BOTTLE, Coolant Recovery - Removal)
17. Remove the front bolts from the A/C compressor/transmission combination cooler (2).
18. Remove the upper center electric fan to radiator retaining clip.

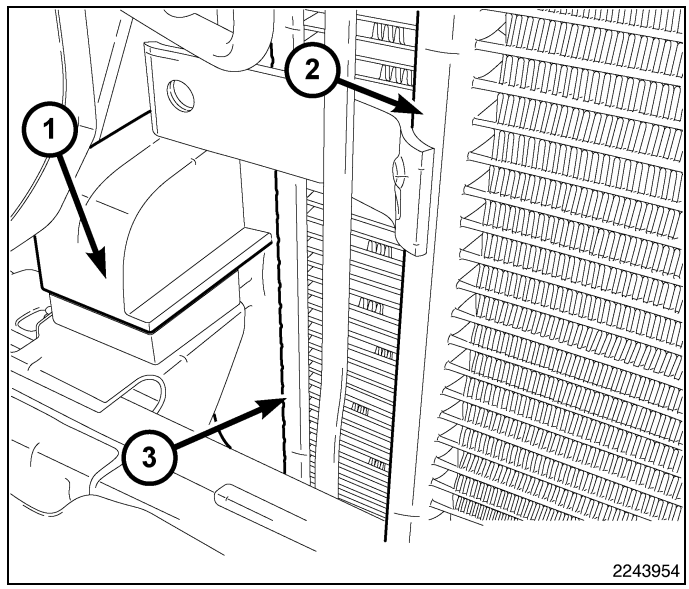

19. Disconnect the transmission cooler lines from the transmission cooler (Refer to 07 - Cooling/Transmission/TUBES AND HOSES, Transmission Oil Cooler - Standard Procedure), then plug the transmission lines and cooler to prevent leakage.
20. Disengage the two A/C compressor/transmission combination cooler mounting brackets (2) from the left side of the radiator (1), **do not disconnect the A/C lines.** After the A/C compressor/transmission combination cooler (3) is disengaged, secure it to the upper radiator support with a strap, cord or equivalent.

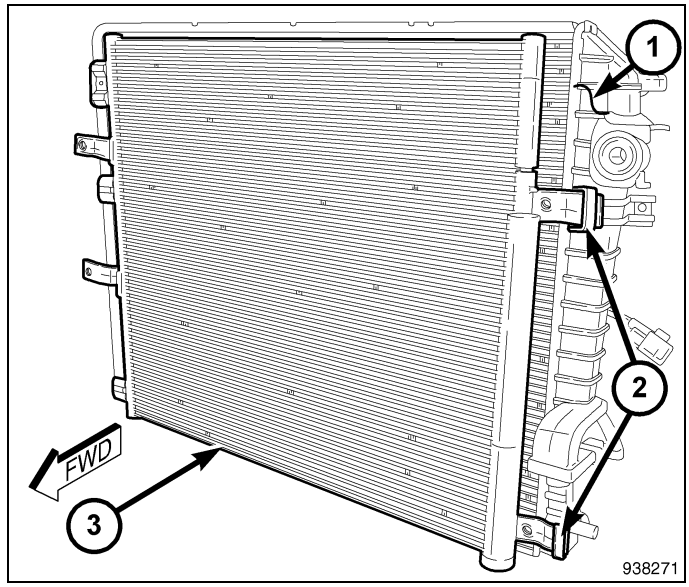

21. Remove the fan shroud mounting bolts (4) and pull up and out of the radiator tank clips. Position the shroud (1, 2) rearward over the fan blades towards engine.
22. Disengage the electric cooling fan (3) to radiator upper retaining clips.
23. Disengage the electric fan (3) to radiator lower retaining clips.
24. Remove the viscous fan, fan shroud (1, 2) and electric cooling fan (3) as an assembly.

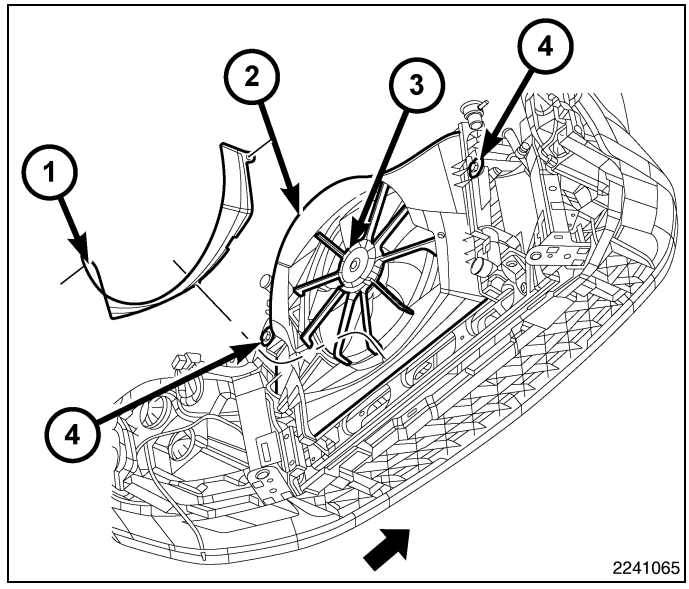

25. Remove the two radiator upper mounting bolts (2).
26. Lift the radiator (1) straight up and out of the engine compartment. Take care not to damage cooling fins or tubes on the radiator and oil coolers when removing.

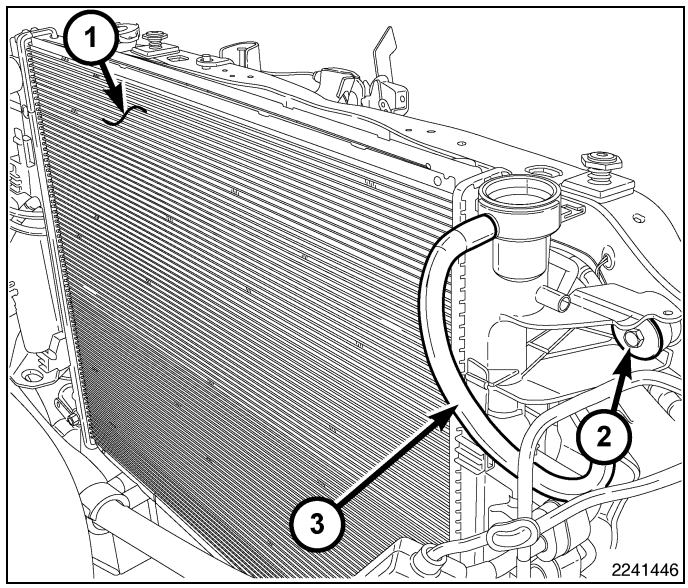

Cleaning

Clean radiator fins are necessary for good heat transfer. The radiator and oil cooler fins should be cleaned when an accumulation of debris has occurred. With the engine cold, apply cold water and compressed air to the back (engine side) of the radiator to flush the radiator and/or oil coolers of debris.

Inspection

Inspect the radiator side tanks for cracks, and broken or missing fittings. Inspect the joint where the tanks seam up to the radiator core for signs of leakage and/or deteriorating seals.

Inspect radiator core for corroded, bent or missing cooling fins. Inspect the core for bent or damaged cooling tubes.

Installation

1. Position the radiator (3) into the engine compartment. Take care not to damage cooling fins or tubes on the radiator and oil coolers when installing.
2. Install the rubber insulators (1) to the lower radiator mounting features (alignment dowel and support bracket at the lower part of the radiator).

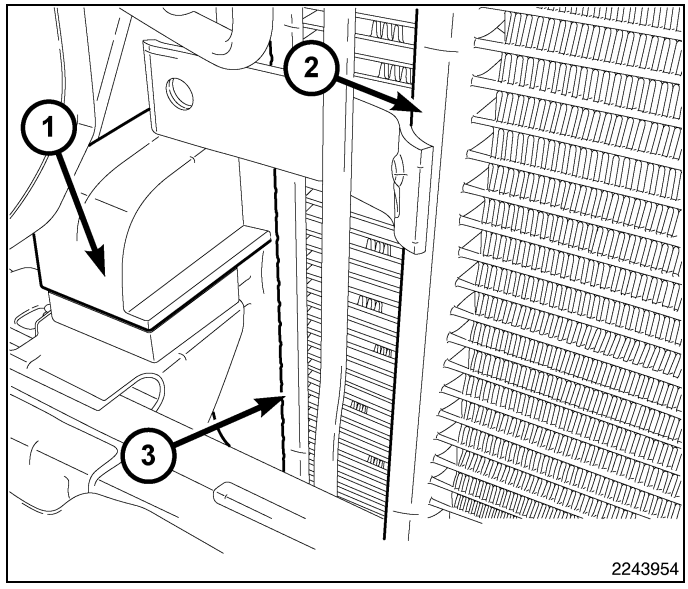

3. Install the two radiator upper mounting bolts (2). Tighten the bolts to 8 N-m (71 in. lbs.).

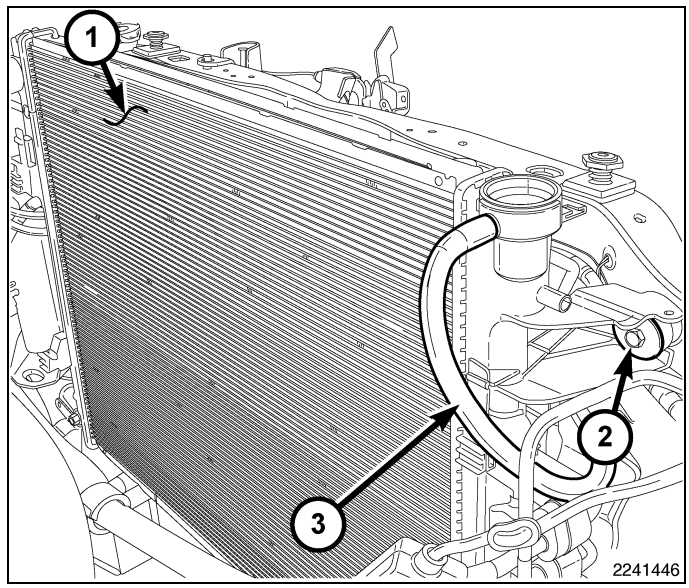

4. Install the electric cooling fan (3). (Refer to 07 - Cooling/Engine/FAN, Cooling - Installation)
5. Install the fan shroud (1, 2) by engaging the fan shroud's (1, 2) lower retaining clips to the radiator/electric cooling fan (3).
6. Install the fan shroud to radiator lower center retaining clip.
7. Install the fan shroud (1, 2) mounting bolts (4). Tighten to 10 N·m (89 in. lbs.).
8. Install the fan shroud to radiator upper center retaining clip.

NOTE: Make sure all retaining clips lock into place.

9. Connect the electric cooling fan (3) electrical connector.

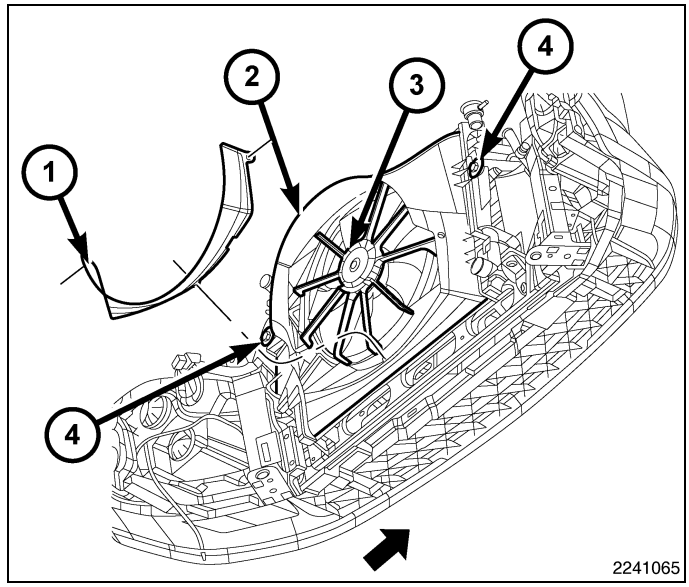

10. Engage the two A/C compressor/transmission combination cooler mounting brackets (2) to the left side of the radiator (1).
11. Connect the transmission cooler lines to the transmission cooler. (Refer to 07 - Cooling/Transmission/COOLER, Transmission Oil - Installation)
12. Install the two bolts that secure the A/C condenser to the right side of the radiator. Tighten the bolts to 2.2 N·m (20 in. lbs.).

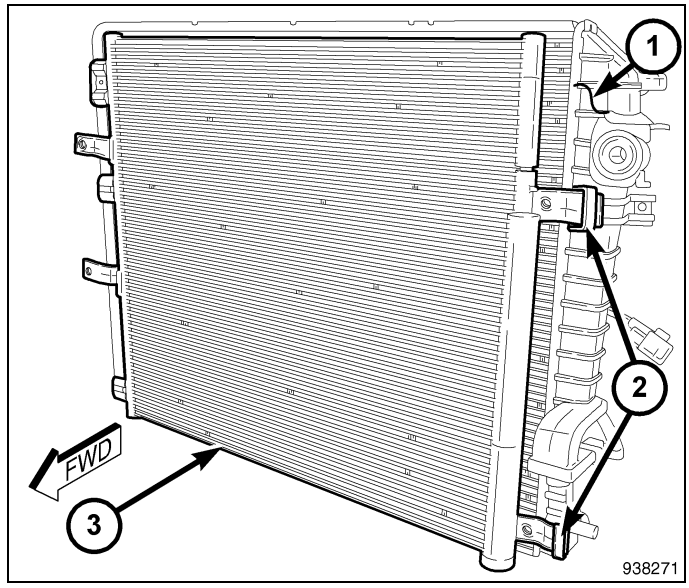

13. Install the bolt securing the transmission cooler line (1) to radiator (3) bracket (2). Tighten the bolt securely.
14. Install the the coolant overflow/recovery bottle.(Refer to 07 - Cooling/Engine/BOTTLE, Coolant Recovery - Installation)
15. Install the windshield washer reserve tank.(Refer to 08 - Electrical/8R - Wipers/Washers/RESERVOIR, Windshield Washer - Installation)
16. Install the front grille.(Refer to 23 - Body/Exterior/GRILLE - Installation)
17. If equipped, install the viscous fan.(Refer to 07 - Cooling/Engine/FAN, Cooling - Installation)
18. Connect the upper radiator hose and install the clamp in it's proper position.

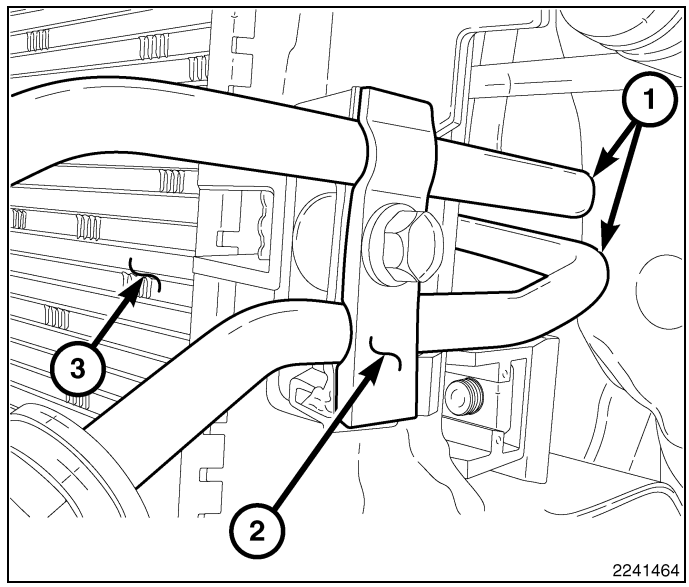

19. Install the upper radiator seal plastic rivets (2).
20. Install the upper radiator seal push pins (1).
21. Raise and secure the vehicle.
22. Install the lower center electric fan to radiator retaining clip.
23. Install the lower radiator clamp and hose.
24. Install the lower radiator seal.
25. Install battery negative cable.
26. Fill cooling system with coolant (Refer to 07 - Cooling - Standard Procedure).
27. Check the system for any leaks.(Refer to 07 - Cooling - Diagnosis and Testing)
28. Operate the engine until it reaches normal operating temperature. Check cooling system fluid levels.

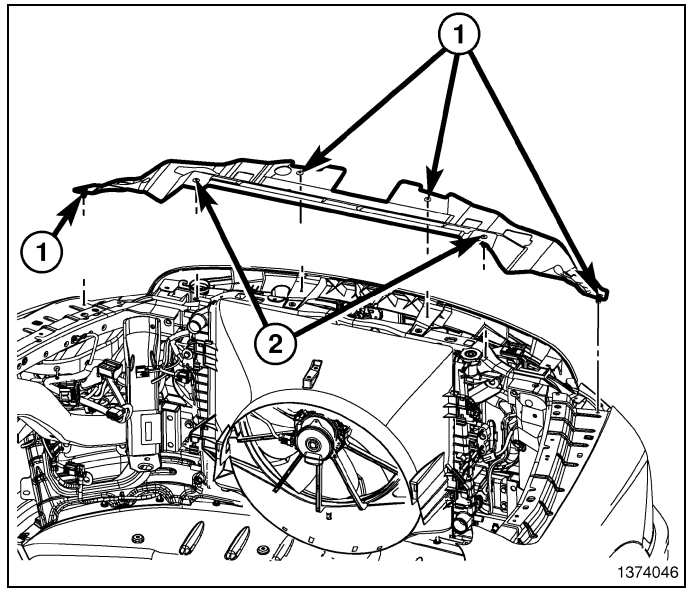

SENSOR, Coolant Temperature

Description

The Engine Coolant Temperature (ECT) sensor (2) is used to sense engine coolant temperature. The ECT sensor protrudes into an engine water jacket.

The ECT sensor is a two-wire Negative Thermal Coefficient (NTC) sensor. Meaning, as engine coolant temperature increases, resistance (voltage) in the sensor decreases. As temperature decreases, resistance (voltage) in the sensor increases.

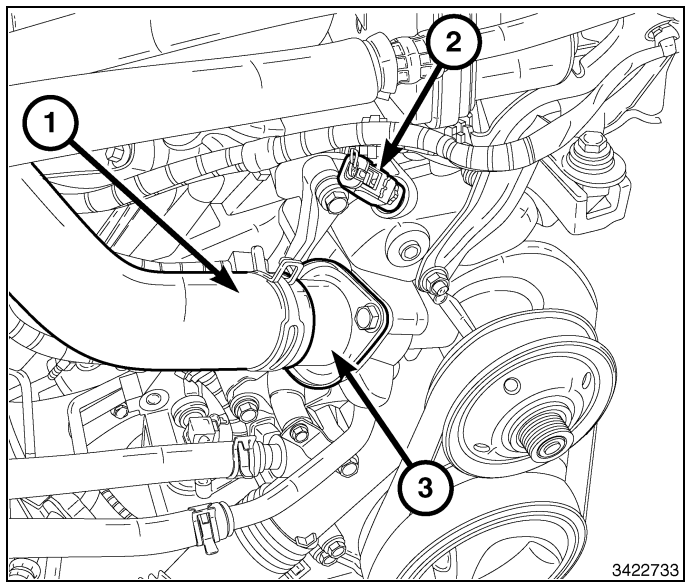

Operation

At key-on, the Powertrain Control Module (PCM) sends out a regulated 5 volt signal to the ECT sensor. The PCM then monitors the signal as it passes through the ECT sensor to the sensor ground (sensor return).

When the engine is cold, the PCM will operate in Open Loop cycle. It will demand slightly richer air-fuel mixtures and higher idle speeds. This is done until normal operating temperatures are reached.

The PCM uses inputs from the ECT sensor for the following calculations:

- for engine coolant temperature gauge operation through CAN Bus communications
- Injector pulse-width
- Spark-advance curves
- ASD relay shut-down times
- Idle Air Control (IAC) motor key-on steps
- Pulse-width prime-shot during cranking
- O2 sensor closed loop times
- Purge solenoid on/off times
- Cooling fan control
- Temperature gauge operation
- A/C cutoff at high coolant temperatures
- EGR solenoid on/off times (if equipped)
- Evaporation System Integrity Monitor (ESIM) operation (if equipped)
- Radiator fan relay on/off times (if equipped)
- Target idle speed

Removal

3.7L ENGINE

WARNING: Hot, pressurized coolant can cause injury by scalding. Cooling system must be partially drained before removing the coolant temperature sensor.

1. Partially drain the cooling system.
2. Disconnect the electrical connector from the ECT sensor (3).
3. Remove the sensor from the intake manifold (4).

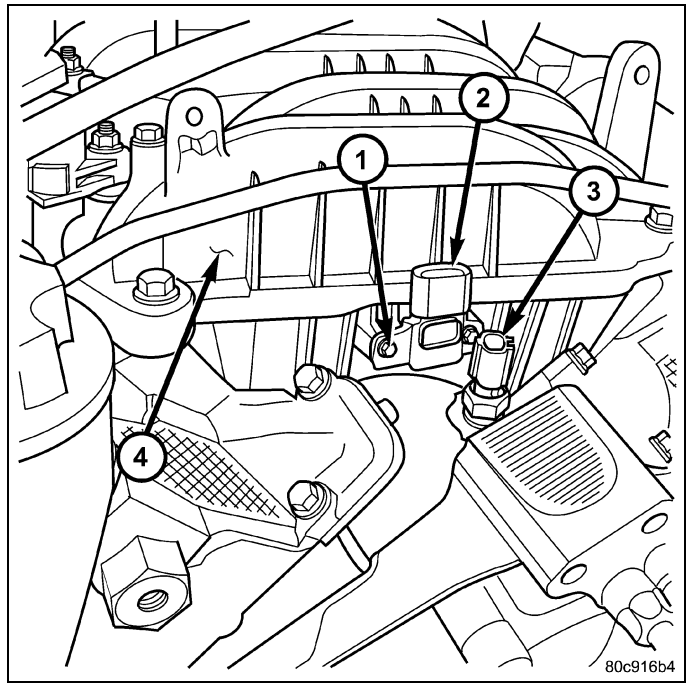

4.7L ENGINE

WARNING: Hot, pressurized coolant can cause injury by scalding. Cooling system must be patially drained before removing the engine coolant temperature (ECT) sensor.

1. Partially drain the cooling system (Refer to 07 - Cooling - Standard Procedure).
2. Disconnect the electrical connector from the ECT sensor (1).
3. Remove the sensor from the intake manifold (4).

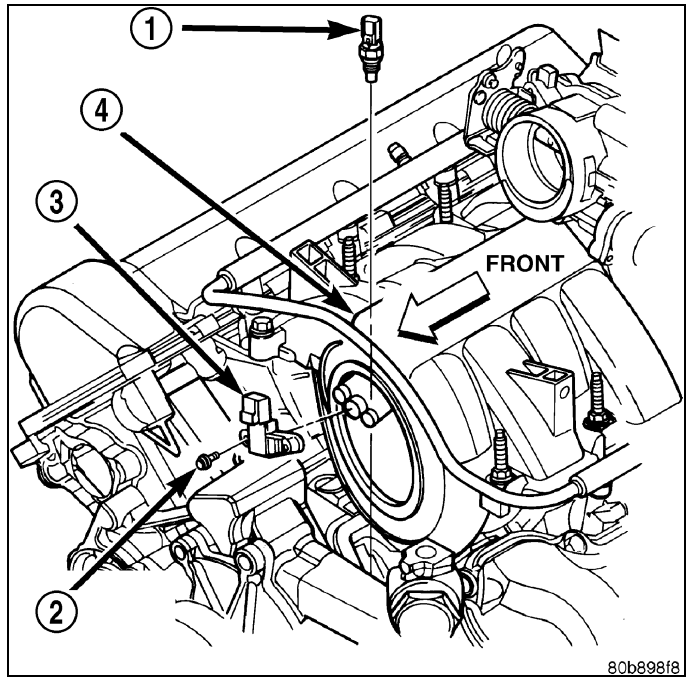

5.7L ENGINE

NOTE: Viscous fan, fan shroud and electric cooling fan removed for clarity.

1. Partially drain the cooling system (Refer to 07 - Cooling - Standard Procedure).

WARNING: Hot, pressurized coolant can cause injury by scalding. Cooling system must be partially drained before removing the engine coolant temperature (ECT) sensor.

2. Disconnect the electrical connector from the engine coolant temperature (ECT) sensor (2).
3. Remove the engine coolant temperature (ECT) sensor (2) from the water pump assembly.

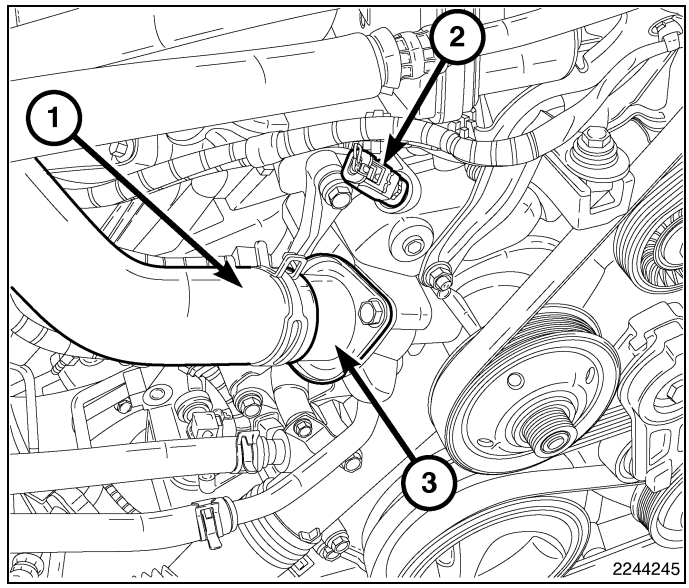

Installation

3.7L ENGINE

1. Apply thread sealant to ECT sensor threads.
2. Install ECT sensor (3) to engine.
3. Tighten sensor to 11 N·m (8 ft. lbs.) torque.
4. Connect electrical connector to ECT sensor (3).
5. Replace any lost engine coolant. (Refer to 07 - Cooling - Standard Procedure).

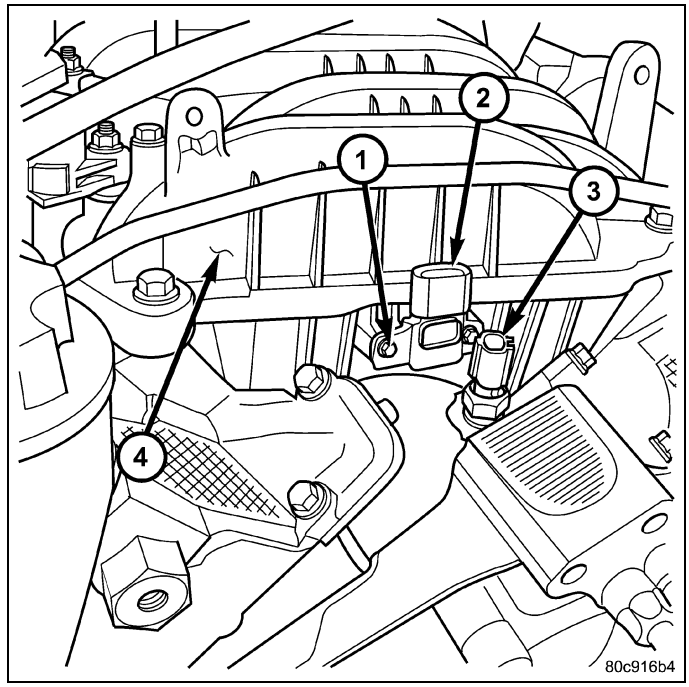

4.7L ENGINE

1. Apply thread sealant to ECT sensor threads.
2. Install ECT sensor (1) to engine.
3. Tighten ECT sensor to 11 N·m (8 ft. lbs.) torque.
4. Connect electrical connector to ECT sensor (1).
5. Replace any lost engine coolant. (Refer to 07 - Cooling - Standard Procedure).

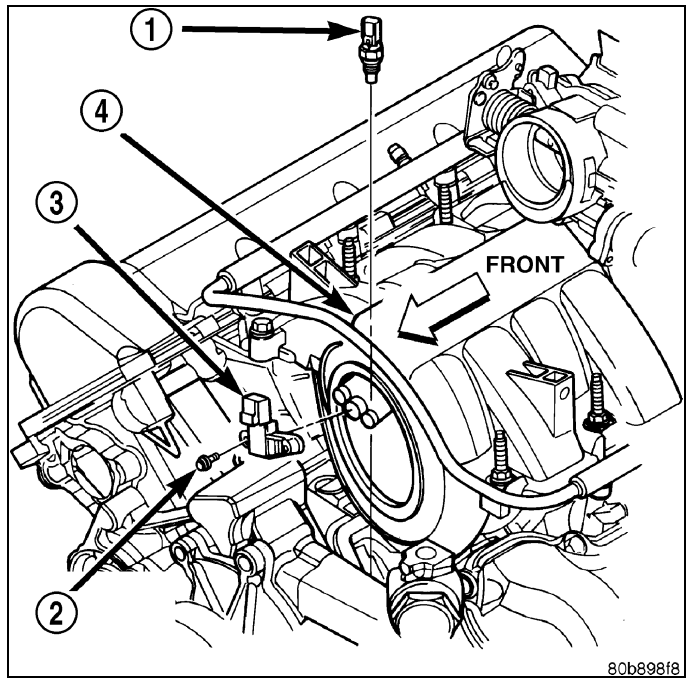

5.7L ENGINE

NOTE: Viscous fan, fan shroud and electric cooling fan removed for clarity.

1. Apply thread sealant to the engine coolant temperature (ECT) sensor (2) threads.
2. Install the ECT sensor (2) into engine.
3. Tighten the ECT sensor (2) to 11 N·m (8 ft. lbs.) torque.
4. Connect the electrical connector to the ECT sensor (2).
5. Fill the cooling system the proper level. (Refer to 07 - Cooling - Standard Procedure)

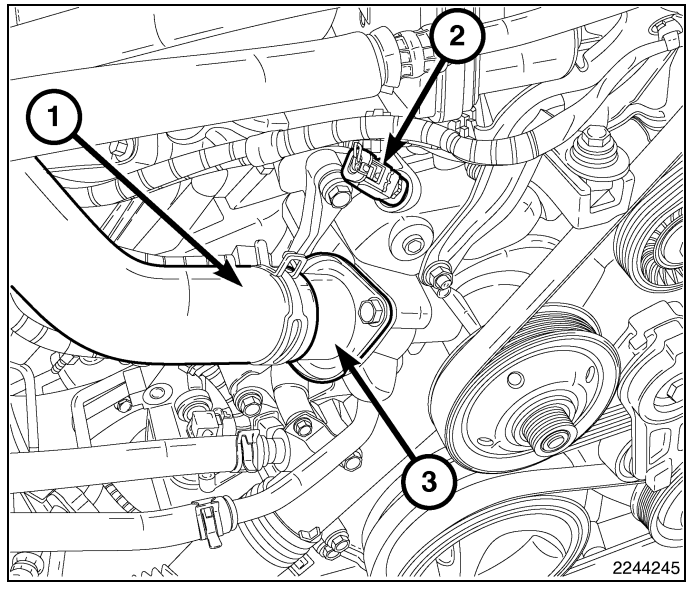

THERMOSTAT

Description

CAUTION: Do not operate the engine without a thermostat, except for servicing or testing.

The 3.7L/4.7L/5.7L engines use a pellet-type thermostat that controls the operating temperature of the engine by controlling the amount of coolant flow to the radiator.On all engines the thermostat is closed below 195°F (90°C). Above this temperature, coolant is allowed to flow to the radiator. This provides quick engine warm up and overall temperature control.

Coolant leakage into the pellet container will cause the thermostat to fail in the open position. Thermostats very rarely stick. Do not attempt to free a thermostat with a prying device.

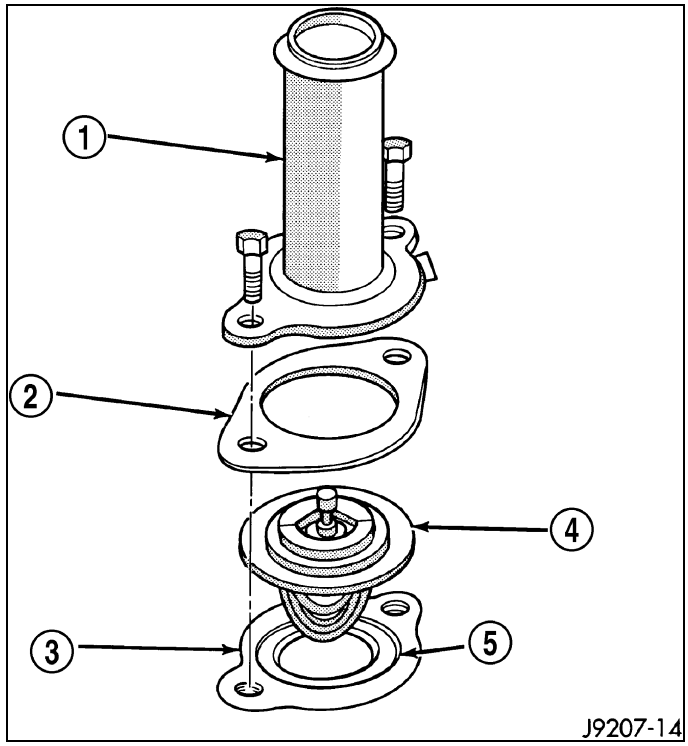

On the 3.7L/4.7L engine the thermostat is designed to block the flow of the coolant bypass journal by 50% instead of completely blocking the flow. This design controls coolant temperature more accurately .

The same thermostat is used for winter and summer seasons. An engine should not be operated without a thermostat, except for servicing or testing. Operating without a thermostat causes other problems. These are: longer engine warm-up time, unreliable warm-up performance, increased exhaust emissions and crankcase condensation. This condensation can result in sludge formation.

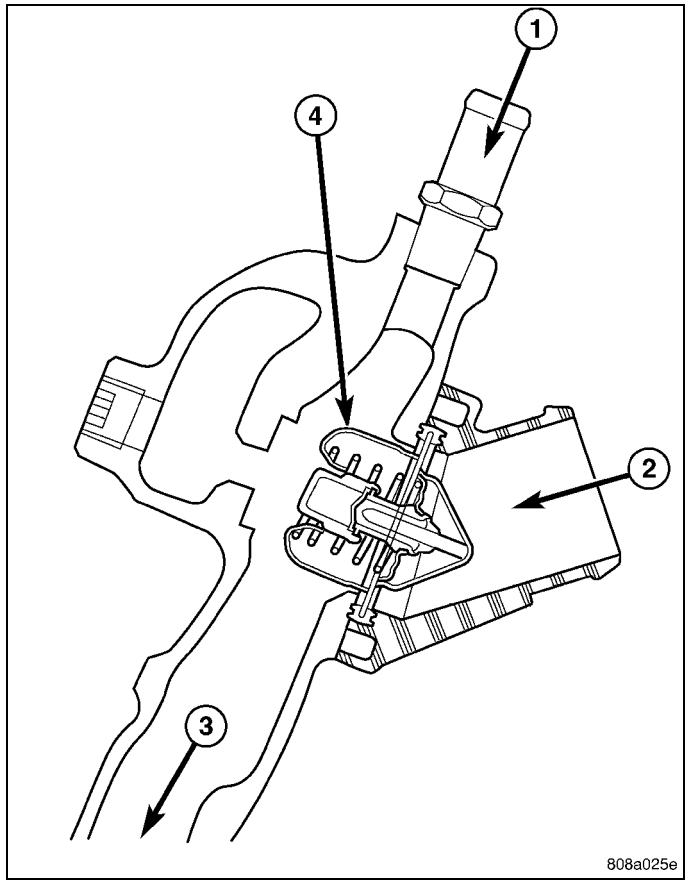

Operation

The wax pellet is located in a sealed container at the spring end of the thermostat. When heated, the pellet expands, overcoming closing spring tension and water pump pressure to force the valve to open.

Diagnosis and Testing

All models are equipped with On-Board Diagnostics for certain cooling system components (Refer to 28 - DTC-Based Diagnostics/MODULE, Powertrain Control (PCM) - Diagnosis and Testing). If the powertrain control module (PCM) detects low engine coolant temperature, it will record a Diagnostic Trouble Code (DTC) in the PCM memory. Do not change a thermostat for lack of heat as indicated by the instrument panel gauge or by poor heater performance unless a DTC is present. Refer to the Diagnosis section of this group for other probable causes.

Removal

3.7L/4.7L ENGINE

WARNING: Do not loosen the radiator draincock with the cooling system hot and pressurized. Serious burns from the coolant can occur.

1. Disconnect the negative battery cable.
2. Drain the cooling system (Refer to 07 - Cooling - Standard Procedure).
3. Raise and support the vehicle.
4. Remove the splash shield.
5. Remove the lower radiator hose clamp and the lower radiator hose at the thermostat housing (1).
6. Remove the thermostat housing mounting bolts, thermostat housing (1) and thermostat (3) .

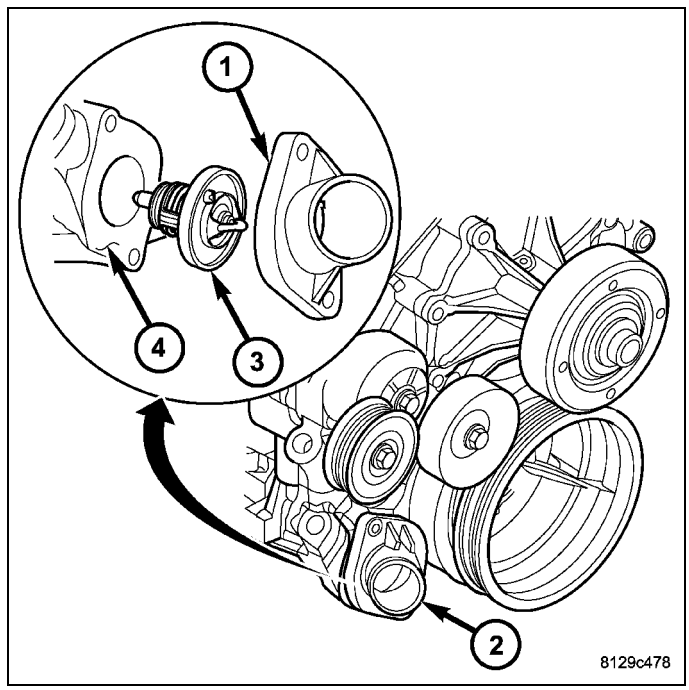

5.7L ENGINE

WARNING: Do not loosen the radiator draincock with the cooling system hot and pressurized. Serious burns from the coolant can occur.

1. Disconnect the negative battery cable.
2. Drain the cooling system. (Refer to 07 - Cooling - Standard Procedure)
3. Remove the radiator hose clamp and radiator hose (1) at the thermostat housing (3).
4. Remove the thermostat housing mounting bolts, thermostat housing (3) and thermostat .

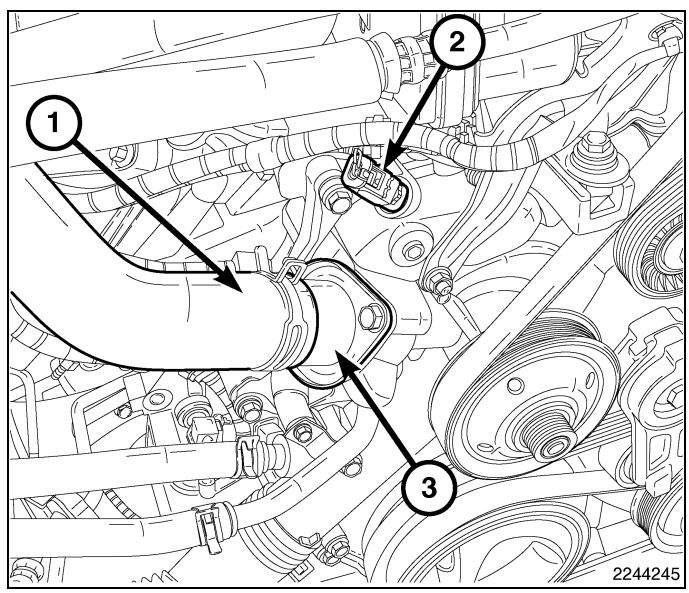

Installation

3.7L/4.7L ENGINE

1. Clean the mating areas of the timing chain cover (4) and the thermostat housing (1).
2. Install the thermostat (3) (spring side down) into the recessed machined groove on the timing chain cover (4).

CAUTION: The housing must be tightened evenly and the thermostat must be centered into the recessed groove in the timimg chain cover. If not, it may result in a cracked housing, damaged timing chain cover threads or coolant leaks.

3. Position the thermostat housing (1) on the timing chain cover (4).
4. Install the housing-to-timing chain cover bolts. Tighten the bolts to 13 N·m (112 in. lbs.).
5. Install the lower radiator hose on the thermostat housing (1).
6. Install the splash shield.
7. Lower the vehicle.
8. Fill the cooling system (Refer to 07 - Cooling - Standard Procedure).
9. Connect negative battery cable.
10. Start and warm the engine. Check for leaks.

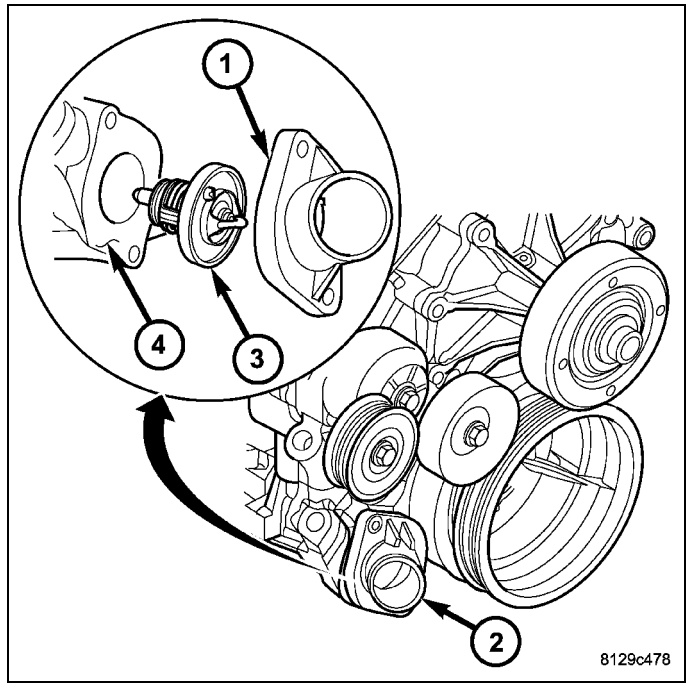

5.7L ENGINE

1. Position the thermostat and thermostat housing (3) onto the water pump.
2. Install the thermostat housing (3) bolts. Tighten the bolts to 13 N·m (10 ft. lbs.).
3. Install the radiator hose (1) onto the thermostat housing (3).
4. Fill the cooling system. (Refer to 07 - Cooling - Standard Procedure).
5. Connect the negative battery cable.
6. Start and warm the engine. Check for leaks.(Refer to 07 - Cooling - Standard Procedure)

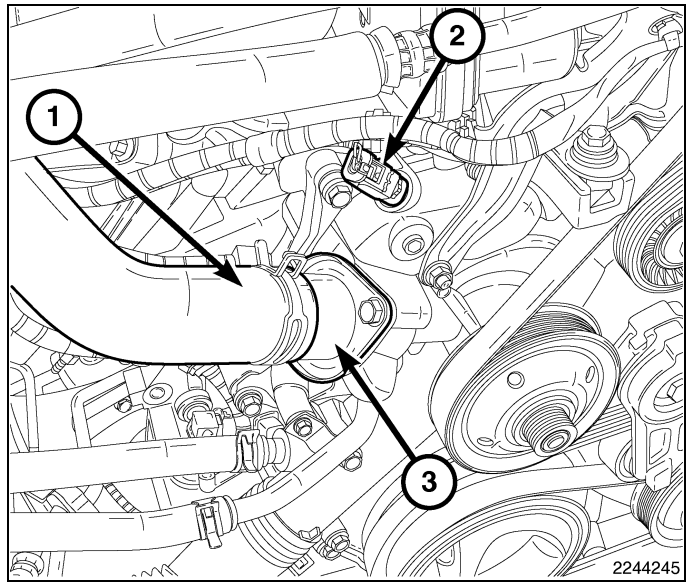

TRANSMISSION

TABLE OF CONTENTS

page

TRANSMISSION
COOLER, TRANSMISSION OIL
DESCRIPTION 60
OPERATION 60
REMOVAL 60
DISASSEMBLY 61
ASSEMBLY 61
INSTALLATION 62

page

TUBES AND HOSES, TRANSMISSION OIL COOLER
STANDARD PROCEDURE 63

Transmission

COOLER, Transmission Oil

Description

An air-to-oil transmission oil cooler is standard on all engine packages. The transmission oil cooler is mounted to the front of the radiator above the power steering cooler.

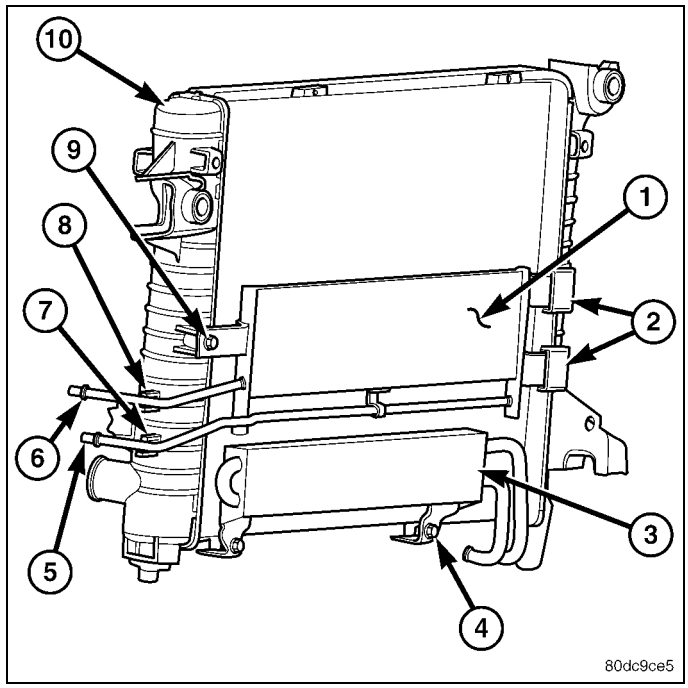

Operation

Transmission oil is routed through the cooler where heat is removed from the transmission oil before returning to the transmission.

Removal

1. Place a drain pan under the oil cooler lines.
2. Disconnect the transmission oil cooler line quick-connect fitting at the cooler outlet, (Refer to 07 - Cooling/ Transmission/TUBES AND HOSES, Transmission Oil Cooler - Standard Procedure). Plug the cooler lines to prevent oil leakage.
3. Unsnap the transmission cooler tubes from the radiator tank clips.
4. Remove the bolt attaching the transmission cooler to the radiator.
5. Remove oil cooler from the vehicle. Take care not to damage the radiator core or transmission cooler tubes.

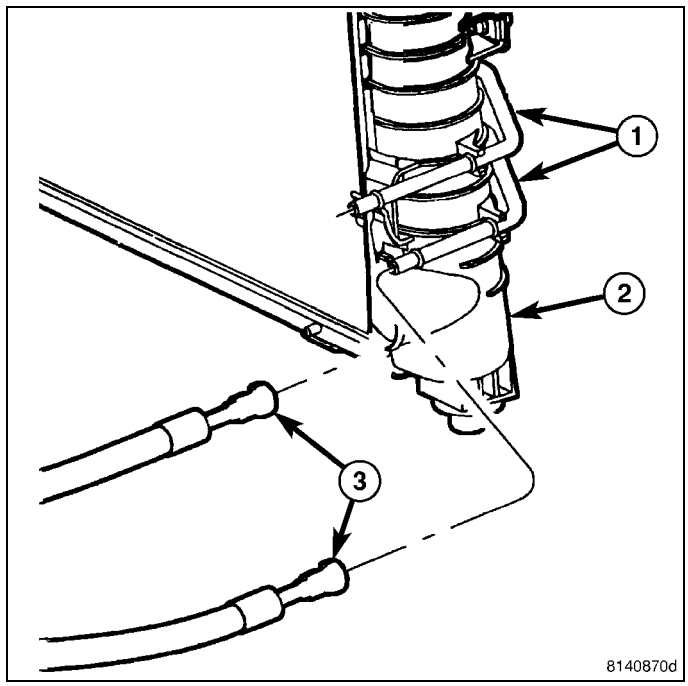

Disassembly

NOTE: The transmission oil cooler uses an internal thermostat to control transmission oil flow through the cooler. This thermostat is servicable.

1. Remove the transmission oil cooler (Refer to 07 - Cooling/Transmission/COOLER, Transmission Oil - Removal).
2. Remove the snap ring (4) retaining the thermostat end plug (3) .
3. Remove the end plug (3), thermostat (5) and spring (2) from transmission oil cooler .

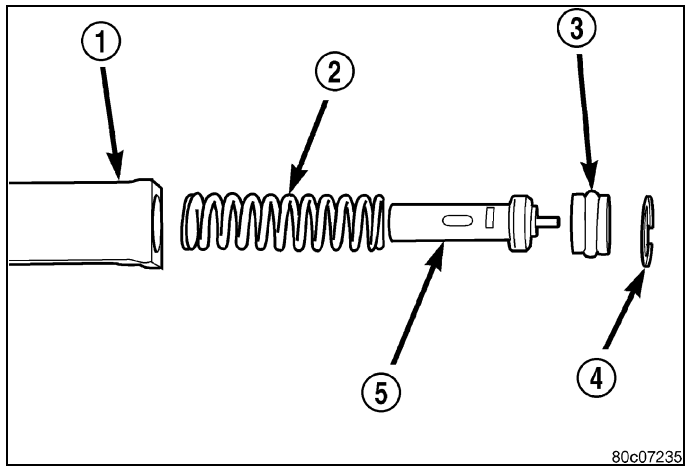

Assembly

1. Throughly clean the thermostat bore on the transmission oil cooler.
2. Install the new spring (2), thermostat (5), end plug (3) and snap ring (4).
3. Install the transmission oil cooler (Refer to 07 - Cooling/Transmission/COOLER, Transmission Oil - Installation).

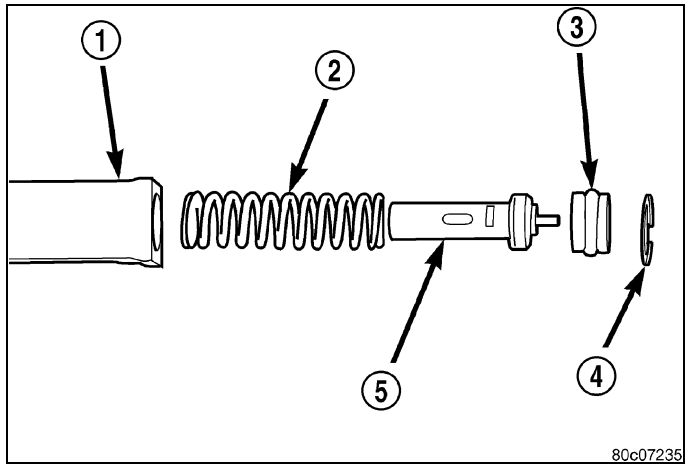

Installation

1. Position the transmission cooler tubes to the front of the radiator by sliding brackets into slots on radiator inlet tank.
2. Snap the transmission cooler tubes into the clips on the side of the radiator tank.
3. Install the transmission cooler attaching bolt. Tighten the bolt to 16 N·m (140 in. lbs.).
4. Inspect the quick connect fittings for debris and install the quick connect fitting on the cooler tube until an audible “click” is heard. Pull on the connection to verify proper installation and install the secondary latches, (Refer to 07 - Cooling/Transmission/TUBES AND HOSES, Transmission Oil Cooler - Standard Procedure).
5. Start the engine and check all fittings for leaks.
6. Check the fluid level in the automatic transmission.

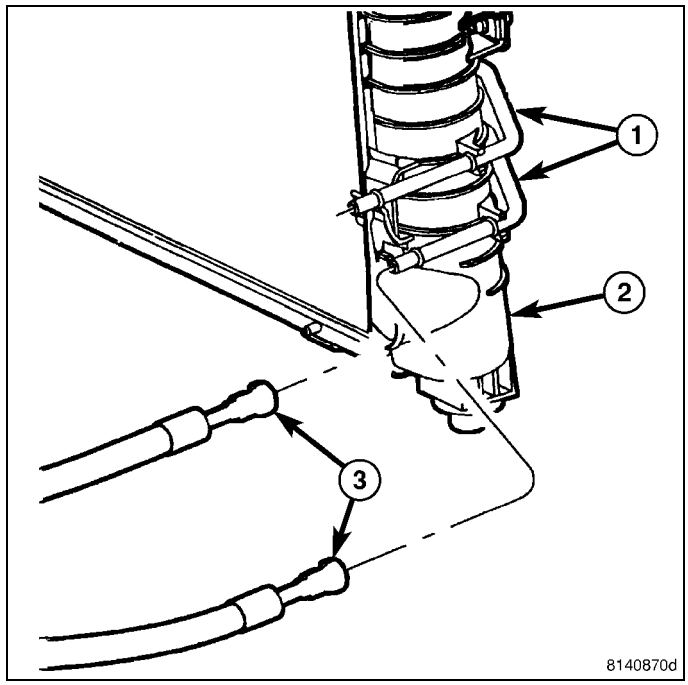

TUBES AND HOSES, Transmission Oil Cooler

Standard Procedure

DISCONNECT

1. Remove dust cap by pulling it straight back off of quick connect fitting
2. Place disconnect Special Tool 8875A onto a ⅜ inch transmission cooler lines or Special Tool 9546 onto a ½ inch transmission cooler lines with the fingers of the tool facing the quick connect fitting.
3. Slide disconnect tool down the transmission line and engage the fingers of the tool into the retaining clip. When properly engaged in the clip, the tool will fit flush against the quick connect fitting.
4. Rotate the disconnect tool 60° to expand the retaining clip.
5. While holding the disconnect tool against the quick connect fitting, pull back on the transmission cooler line to remove.

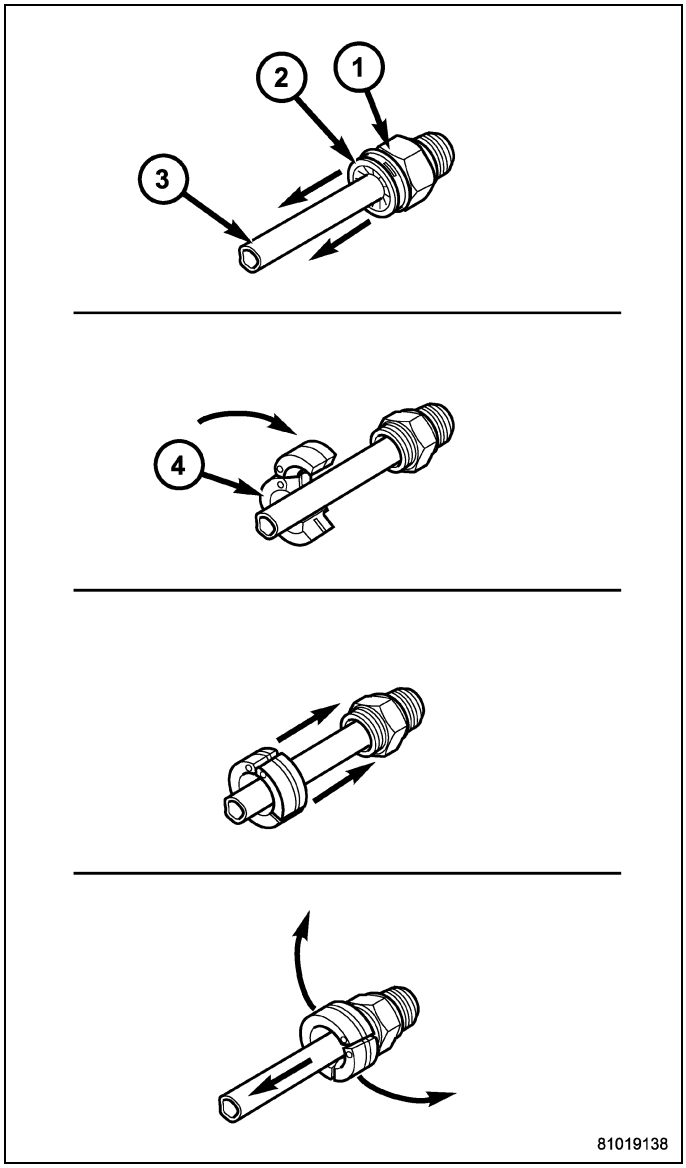

CONNECT

1. Align transmission cooler line with quick connect fitting while pushing straight into the fitting.
2. Push in on transmission cooler line until a “click” is heard or felt.
3. Slide dust cap down the transmission cooler line and snap it over the quick connect fitting until it is fully seated and rotates freely. Dust cap will only snap over quick connect fitting when the transmission cooler line is properly installed.

NOTE: If dust cap will not snap into place, repeat assembly step 2.

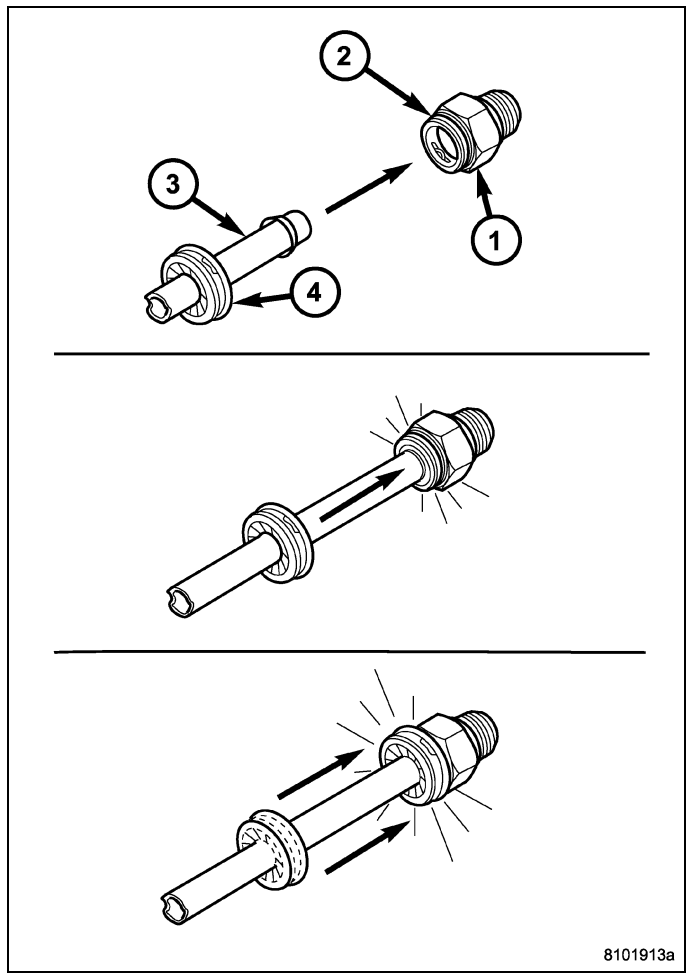

08 - ELECTRICAL

TABLE OF CONTENTS

page

08 - ELECTRICAL
SPECIAL TOOLS 2

08 - Electrical

Special Tools

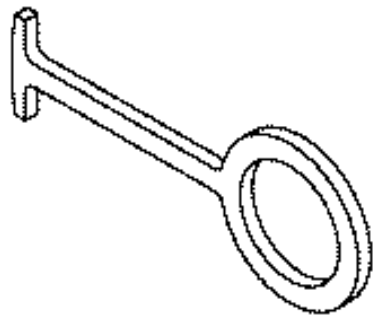

10246 - Remover, Power Outlet

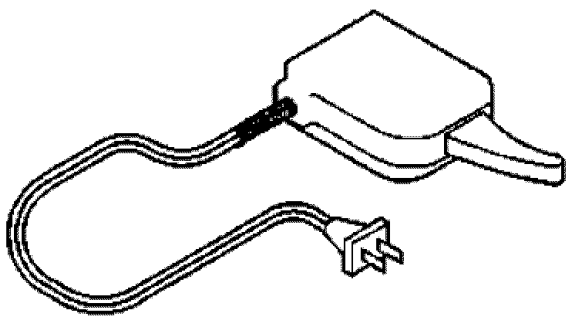

6029 - De Gauser

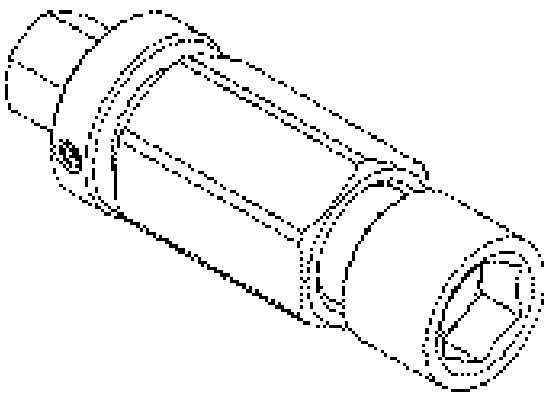

8433A - Remover/Installer, Decoupler

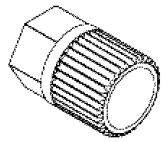

8823 - Remover/Installer, Decoupler

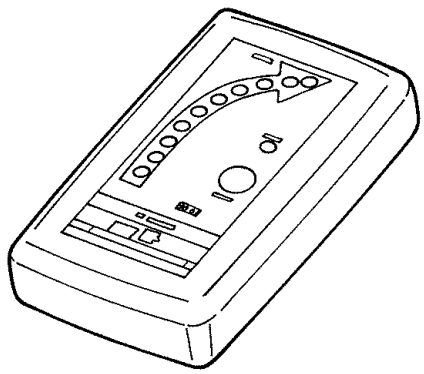

9001 - Rf Detector

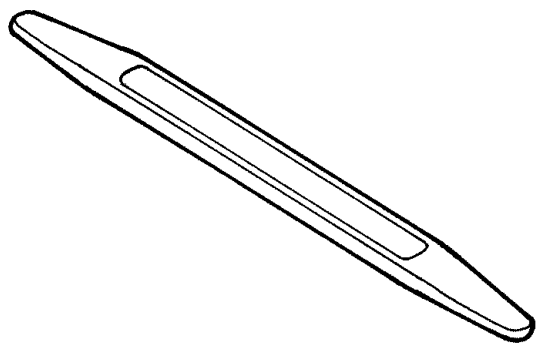

C-4755 - Trim Stick

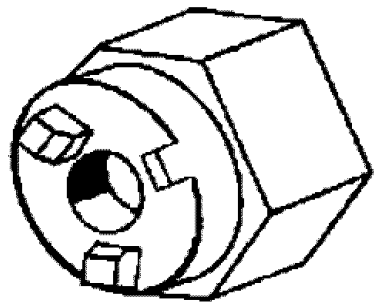

C-4816 - Socket, Antenna
.

AUDIO AND VIDEO

TABLE OF CONTENTS

page

AUDIO AND VIDEO
DESCRIPTION . . . 2
OPERATION . . . 2
DIAGNOSIS AND TESTING
VIDEO . . . 2
AUDIO . . . 4
AMPLIFIER
DESCRIPTION . . . 6
OPERATION . . . 6
REMOVAL . . . 6
INSTALLATION . . . 8
ANTENNA, SATELLITE, AUDIO
DESCRIPTION . . . 9
OPERATION . . . 9
REMOVAL . . . 9
INSTALLATION . . . 10
ANTENNA, SATELLITE, VIDEO
DESCRIPTION . . . 10
OPERATION . . . 10
REMOVAL . . . 10
INSTALLATION . . . 11
BODY AND CABLE, ANTENNA
DESCRIPTION . . . 11
OPERATION . . . 11
DIAGNOSIS AND TESTING . . . 11
REMOVAL . . . 13
INSTALLATION . . . 13
CABLE, ANTENNA, INSTRUMENT PANEL
REMOVAL . . . 14
INSTALLATION . . . 14
CABLE, ANTENNA, SATELLITE
REMOVAL . . . 15
INSTALLATION . . . 17
CAMERA, REAR
DESCRIPTION . . . 18
OPERATION . . . 19
DIAGNOSIS AND TESTING . . . 19
REMOVAL . . . 22
INSTALLATION . . . 23

page

COMPONENTS, RADIO NOISE SUPPRESSION
DESCRIPTION . . . 23
OPERATION . . . 24
REMOVAL . . . 24
INSTALLATION . . . 26
MONITOR, MEDIA SYSTEM
DESCRIPTION . . . 27
OPERATION . . . 27
REMOVAL . . . 27
INSTALLATION . . . 28
RADIO
DESCRIPTION . . . 28
OPERATION . . . 30
STANDARD PROCEDURE . . . 30
REMOVAL . . . 31
INSTALLATION . . . 31
RECEIVER, SATELLITE
REMOVAL . . . 31
INSTALLATION . . . 32
SPEAKER
DESCRIPTION . . . 32
OPERATION . . . 33
DIAGNOSIS AND TESTING . . . 33
REMOVAL . . . 33
INSTALLATION . . . 38
SWITCH, REMOTE RADIO
DESCRIPTION . . . 43
OPERATION . . . 43
DIAGNOSIS AND TESTING . . . 43
REMOVAL . . . 45
INSTALLATION . . . 45

Audio and Video

Description

Several combinations of radio receivers and speaker systems are offered. The audio system uses an ignition switched source of battery current so that the system will only operate when the ignition switch is in the RUN or ACCESSORY positions.

A optional navigation radio (RB4) is available on this vehicle. With this system, the operator has the option of choosing a street address, point of interest, trip itinerary as well as other features.

The audio system includes the following components:

- Antenna (radio, satellite)
- Power amplifier (with premium speaker system only)
- Radio noise suppression components
- Radio receiver
- Remote radio switches (if equipped)
- Satellite receiver (if equipped)
- Speakers

Certain functions and features of the audio system rely upon resources shared with other electronic modules in the vehicle over the Controller Area Network (CAN) bus network. The data bus network allows the sharing of sensor information. For diagnosis of these electronic modules or of the data bus network, the use of a scan tool and the proper Diagnostic Procedures information is recommended.

Operation

The audio system components are designed to provide audio entertainment and information through the reception, tuning and amplification of locally broadcast or satellite, (if equipped) radio signals in both the Amplitude Modulating (AM) and Frequency Modulating (FM) commercial frequency ranges.

The audio system components operate on battery current received through a fuse in the Totally Integrated Power Module (TIPM) on a fused ignition switch output (run-acc) circuit so that the system will only operate when the ignition switch is in the Run or Accessory positions.

The optional navigation radio system receives GPS signals from up to eight satellites to display the position and direction of the vehicle. Map information is supplied through a DVD-ROM. An electronic gyro-sensor and the vehicle's speed sensor enable the system to display the present vehicle position even in locations where GPS signals may be blocked.

When a destination is selected, the navigation system uses information from the map to quickly calculate a route. As the vehicle is driven along the chosen route, the operator is guided with pictorial displays and voice prompts.

On vehicles that are equipped with the optional remote radio switches, the Instrument Cluster receives hard wired resistor multiplexed inputs from the remote radio switches. The programming in the Instrument Cluster allows it to process those inputs and send the proper messages to the radio receiver over the CAN network to control the radio volume up or down, station seek up or down, preset station advance, and mode advance functions.

Diagnosis and Testing

VIDEO

Any diagnosis of the video system should begin with the use of a scan tool. For information on the use of the scan tool, refer to the appropriate Diagnostic Service information.

Refer to the appropriate wiring information.

VIDEO SYSTEM DIAGNOSIS TABLE

CONDITION	POSSIBLE CAUSES	CORRECTION
DVD SCREEN DOES NOT POWER ON AND CAN NOT BE ACCESSED ON THE CAN NETWORK WITH THE SCAN TOOL	1. Power and or CAN circuit maybe open.	1. Check for battery voltage at the VES connector. Repair wiring as necessary.
DVD SCREEN DOES NOT POWER ON AND CAN BE ACCESSED ON THE CAN NETWORK WITH THE SCAN TOOL	1. Screen software issue.	1. Refer to appropriate Service information. Reflash the VES
DVD DOES NOT AUTO PLAY.	1. DVD in the wrong player on two screen system.	1. Insert DVD into the DVD (RD9) player.
	2. DVD damaged	2. Insert known good DVD and test operation.
	3. Foreign material on DVD.	3. Clean DVD and test operation.
	4. Condensation on DVD or optics.	4. Allow temperature of vehicle interior to stabilize and test operation.
	5. Incorrect TIPM settings	5. Update the TIPM with the correct region and options.
RADIO DISPLAYS LIST OF CHANNELS BUT SECOND ROW SAYS UPDATING CHANNELS	1. GCI tables (Channel List) needs to be updated.	1. Mode all screens in to FM radio mode. With the vehicle outside and clear line of site to the sky. Pull IOD fuse for half an hour. Connect the IOD fuse and wait 5 minutes, turn on the radio. Channel listing will update.
UNABLE TO CHANGE MODES	1. TIPM not configured correctly.	1. Update the TIPM with the correct region and options.
REMOTE CONTROL DOES NOT WORK.	1. Batteries may be low or dead.	1. Replace the batteries.
	2. Screen not powered on.	2. With vehicle running close and open the screen to power up the screen.
HEADPHONES DON'T WORK.	1. Batteries may be low or dead.	1. Replace the batteries.
	2. Headphone power is off.	2. Switch the headphone power on.
	3. Headphones on wrong channel.	3. Switch to the other channel on the side of the headphones.
	4. Volume on headphones turned off.	4. Turn up the volume on the headphones.
RADIO DOESN'T SHOW RD9, SAT-V, AUX1 OR AUX2 VIDEO.	1. Video/Audio circuit damaged.	1. Check for loose/broke, pinched, cut or corroded Vehicle Entertainment System (VES) wires. Repair as necessary.
GREEN SCREEN IN SATELLITE VIDEO MODE	1. Defective satellite video module (not the video display).	1. Replace the satellite video module (Refer to 08 - Electrical/8A - Audio and Video/RECEIVER, Satellite - Removal).
BLACK SCREEN.	1. Video circuit damaged.	1. Check for loose/broke, pinched, cut or corroded Vehicle Entertainment System (VES) wires. Repair as necessary.

VIDEO SYSTEM DIAGNOSIS TABLE, continued

CONDITION	POSSIBLE CAUSES	CORRECTION
	2. Screen is on the buss but VES screen doesn't power ON, or have IR transmitter is ON (on second row screen).	2. Refer to appropriate service information to reflash the VES
	3. Defective satellite video module.	3. Replace the satellite video module (Refer to 08 - Electrical/8A - Audio and Video/RECEIVER, Satellite - Removal).
SATELLITE AUDIO HAS NO AUDIO.	1. Audio Issue	1. Refer to audio diagnostic service information (Refer to 08 - Electrical/8A - Audio and Video - Diagnosis and Testing)
SATELLITE VIDEO HAS NO VIDEO.	1. Obstructed line of site to the sky.	1. Take the vehicle outside to a open area and test.
	2. Antenna or antenna cable inoperative.	2. Refer to appropriate Diagnostic Service information.
SDAR HAS NO SIGNAL.	1. Obstructed line of site to the sky.	1. Take the vehicle outside to a open area and test.
	2. Antenna or antenna cable inoperative.	2. Refer to appropriate Diagnostic Service information.
RADIO SHOWS NO TV TAB	1. TIPM configuration incorrect.	1. Refer to appropriate Service information. Reflash the TIPM
	2. Defective radio software	2. Reflash the radio to the latest software level.
SYSTEM NOT ACTIVATED	1. Subscription service has expired.	1. Call Sirius:1-888-539-SIRIUS (7474)

AUDIO

Any diagnosis of the Audio system should begin with the use of a scan tool. For information on the use of the scan tool, refer to the appropriate Diagnostic Service information.

Refer to the appropriate wiring information.

WARNING: Disable the airbag system before attempting any steering wheel, steering column, seat belt tensioner, side airbag or instrument panel component diagnosis or service. Disconnect and isolate the negative battery (ground) cable. Wait two minutes for the airbag system capacitor to discharge before performing further diagnosis or service. This is the only sure way to disable the airbag system. Failure to follow these instructions may result in accidental airbag deployment and possible serious or fatal injury.

AUDIO SYSTEM DIAGNOSIS TABLE

CONDITION	POSSIBLE CAUSES	CORRECTION
NO AUDIO	1. Fuse inoperative.	1. Check radio fuse and Ignition-Off Draw (IOD) fuse in the Totally Integrated Power Module (TIPM). Replace fuses, if required.
	2. Radio/amplifier (if equipped) connector damaged.	2. Check for loose or corroded radio/amplifier connector. Repair, as required.
	3. Wiring damaged.	3. Check for shorted or open wires. Repair wiring as required.

AUDIO SYSTEM DIAGNOSIS TABLE, continued

CONDITION	POSSIBLE CAUSES	CORRECTION
	4. Radio/amplifier (if equipped) ground damaged.	4. Check for continuity between radio chassis and a known good ground. There should be continuity. Repair ground as required.
	5. Radio/amplifier (if equipped) inoperative.	5. Refer to appropriate Diagnostic Service information.
	6. Speakers inoperative.	6. Refer to appropriate Diagnostic Service information.
NO RADIO DISPLAY	1. Fuse inoperative.	1. Check radio fuse and Ignition-Off Draw (IOD) fuse in Totally Integrated Power Module (TIPM). Replace fuses as required.
	2. Radio connector damaged.	2. Check for loose or corroded radio connector. Repair as required.
	3. Wiring damaged.	3. Check for battery voltage at radio connector. Repair wiring as required.
	4. Radio ground damaged.	4. Check for continuity between radio chassis and a known good ground. There should be continuity. Repair ground as required.
	5. Radio inoperative.	5. Refer to appropriate Diagnostic Service information.
CLOCK WILL NOT KEEP SET TIME	1. Fuse inoperative.	1. Check Ignition-Off Draw (IOD) fuse in the Totally Integrated Power Module (TIPM). Replace fuse if required.
	2. Radio connector damaged.	2. Check for loose or corroded radio connector. Repair as required.
	3. Wiring damaged.	3. Check for battery voltage at radio connector. Repair wiring as required.
	4. Radio ground damaged.	4. Check for continuity between radio chassis and a known good ground. There should be continuity. Repair ground as required.
	5. Radio inoperative.	5. Refer to appropriate Diagnostic Service information.
POOR RADIO RECEPTION	1. Antenna inoperative.	1. Test antenna cable
	2. Radio ground damaged.	2. Check for continuity between radio chassis and a known good ground. There should be continuity. Repair ground as required.
	3. Radio noise suppression inoperative or damaged.	3. Repair or replace ground strap as necessary.
	4. Radio inoperative.	4. Refer to appropriate Diagnostic Service information.
	5. Faulty rear window defogger.	5. Verify that the rear defogger grid is functioning properly, repair as necessary .
SOUND DISTORTION (VIBRATION FROM SPEAKER AREA, BUZZING - HUMMING)	1. Door trim panel loose or missing fasteners.	1. Inspect door trim panel and correct as necessary. Replace any missing fasteners.

AUDIO SYSTEM DIAGNOSIS TABLE, continued

CONDITION	POSSIBLE CAUSES	CORRECTION
	2. Water shield loose or misaligned.	2. Inspect water shield and adjust as required.
	3. Items placed in door trim panel map pockets vibrating or moving from side to side.	3. Remove items from door trim panel. Ensure that vibration is no longer present.
NO COMPACT DISC OPERATION	1. CD damaged.	1. Insert known good CD and test operation.
	2. Foreign material on CD.	2. Clean CD and test operation.
	3. Condensation on CD or optics.	3. Allow temperature of vehicle interior to stabilize and test operation.
	4. Radio inoperative.	4. Refer to appropriate Diagnostic Service information.

AMPLIFIER

Description

The optional premium speaker system includes a separate audio power amplifier. The amplifier is an ten-channel unit rated at 506 total output watts. The amplifier is located under the dashboard to the left of the steering column.

Operation

The power amplifier electronically increases the frequency response of the normal audio signal output from the radio amplifier in order to improve the acoustic performance of the speakers. On vehicles equipped with an amplifier, the amplifier section of the radio becomes a pre-amplifier.

The amplifier receives audio signal inputs for speaker channels from the radio, then sends amplified audio outputs through six separate channels with dedicated feed and return circuits to the individual speakers.

Removal

1. Disconnect and isolate the negative battery cable.
2. Remove the steering column cover (Refer to 23 - Body/Instrument Panel/COVER, Steering Column Opening - Removal).
3. Loosen the two amplifier (1) mounting screws (2).

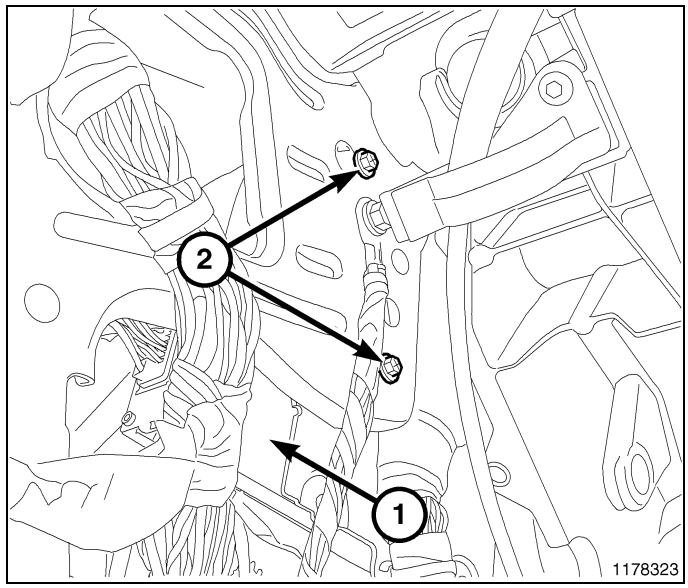

4. Remove the amplifier (2) mounting bracket screw (1).

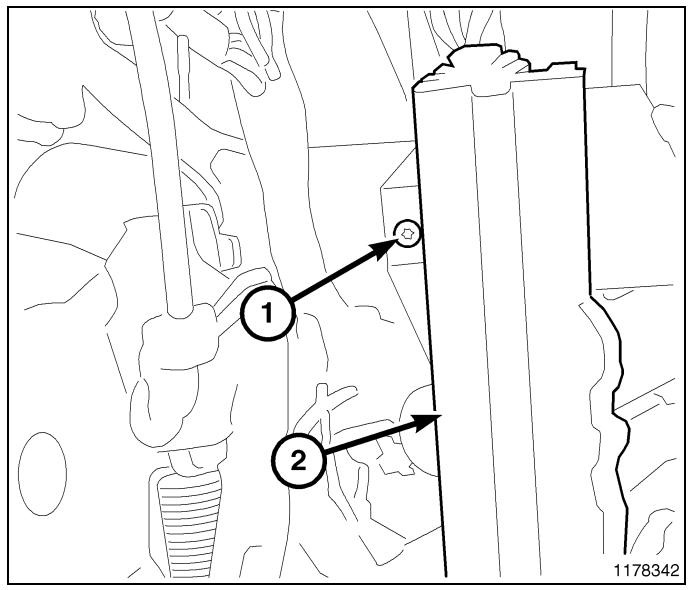

5. Disconnect the two amplifier (1) electrical connectors (2).
6. Pull the amplifier towards the rear of the vehicle to remove.
7. Remove the amplifier mounting bracket from the amplifier.

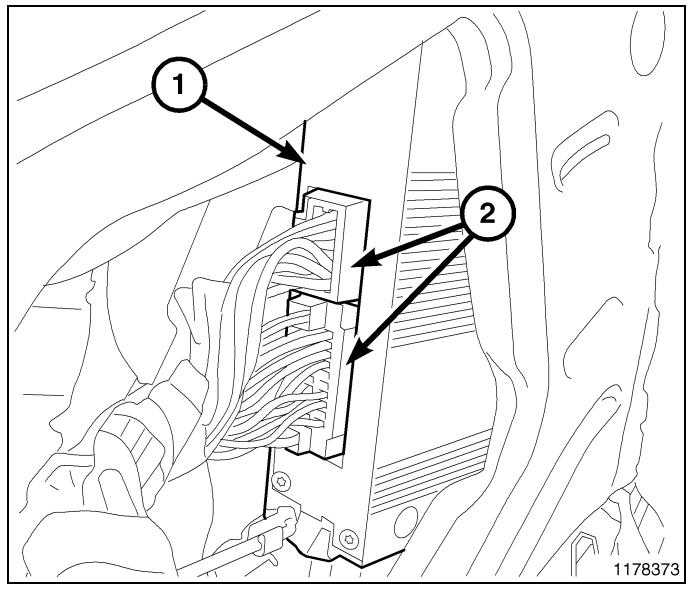

Installation

1. Install the mounting bracket on the amplifier.
2. Install the amplifier into the vehicle.
3. Connect the two amplifier (1) electrical connectors (2).

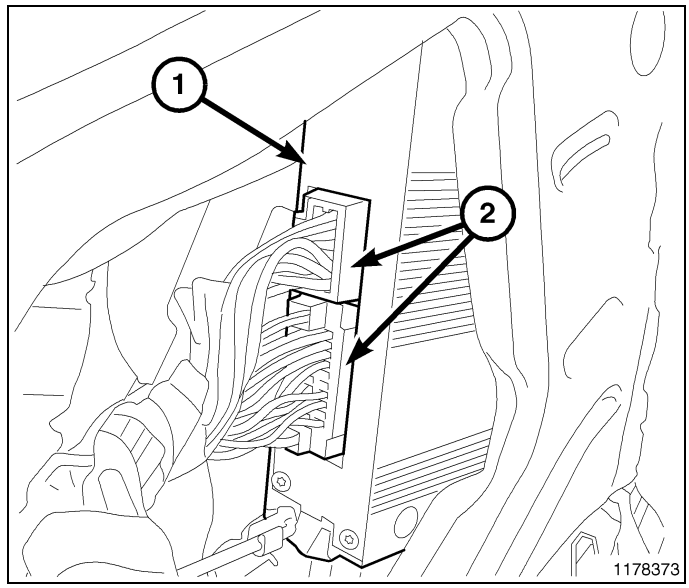

4. Install the amplifier (2) mounting bracket screw (1).

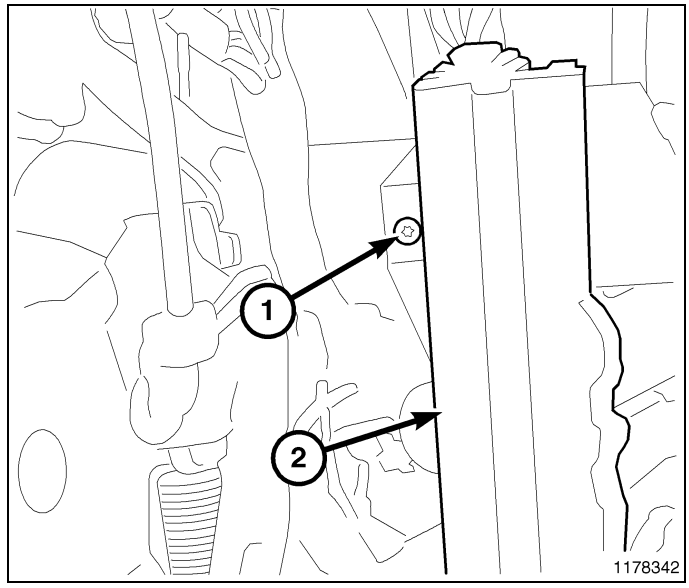

5. Tighten the two screws amplifier mounting screws (2) .
6. Install the steering column cover (Refer to 23 - Body/ Instrument Panel/COVER, Steering Column Opening - Installation).
7. Connect the negative battery cable.

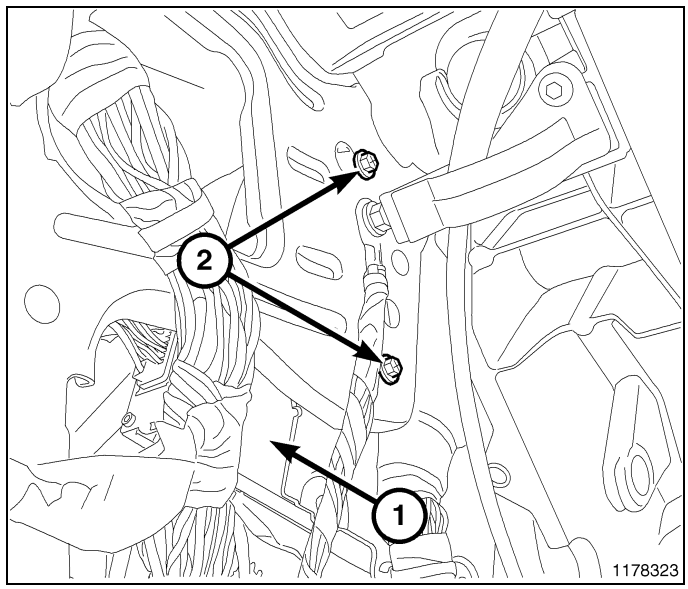

ANTENNA, Satellite, Audio

Description

The satellite radio antenna cable connects the roof mounted antenna to the satellite receiver. It has two connectors at each end and is routed above the headliner, then down the right side of the vehicle floor below the carpet.

Operation

The satellite radio antenna receives signals from orbiting satellites and sends these signals to the satellite receiver module. The satellite radio antenna must have open space in which to operate. Items carried on the roof, parking inside etc. can have an effect on the antenna's ability to receive signals.

Removal

1. Disconnect and isolate the battery negative cable.
2. Lower the rear portion of the headliner as necessary to access underside of antenna (1) (Refer to 23 - Body/ Interior/HEADLINER - Removal).
3. Disconnect the antenna cables.
4. Remove retaining fastener.
5. From inside the vehicle, and using a flat bladed tool, depress one of the retaining tabs on the antenna. Push up the one side of the antenna connector through the roof panel. Depress the other side of the connector and remove the antenna.

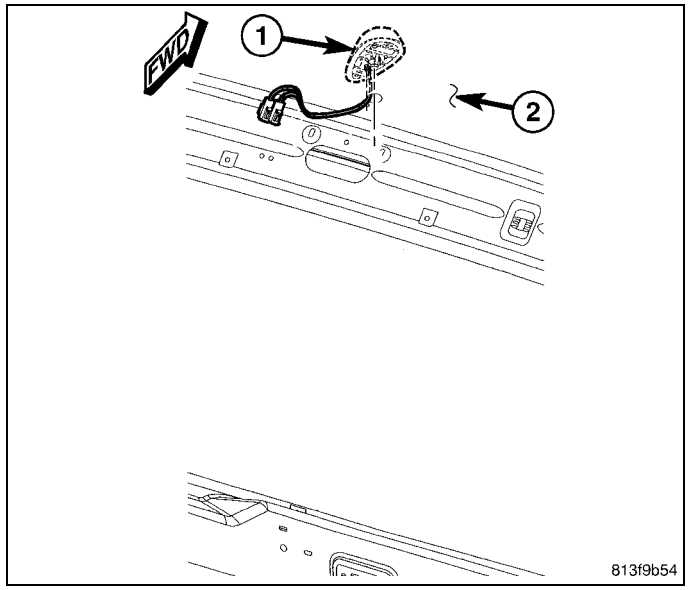

Installation

1. Insert wire harness through hole in roof panel (2). Press antenna (1) into position until both retainers snap into place.
2. Install and tighten mounting fastener.
3. Connect antenna cables.
4. Install headliner (Refer to 23 - Body/Interior/HEADLINER - Installation).
5. Connect battery negative cable.

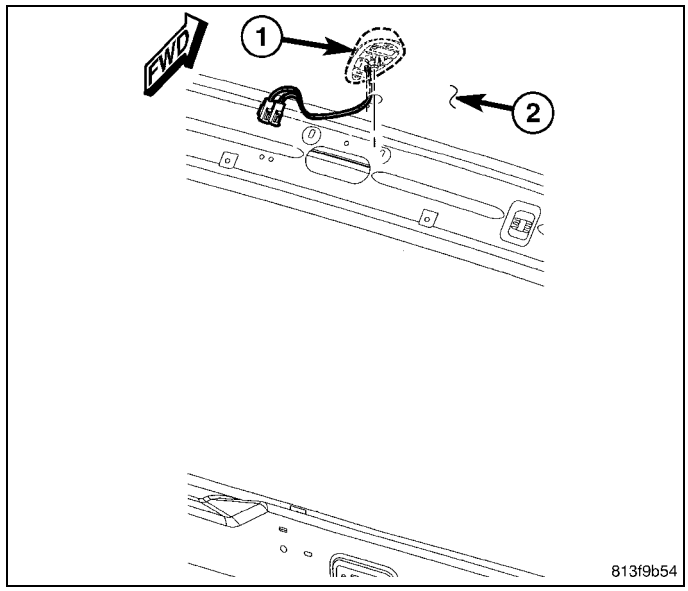

ANTENNA, Satellite, Video

Description

The satellite video antenna cable connects the roof mounted antenna to the satellite receiver. It has two connectors at each end and is routed above the headliner, then down the right side A-pillar to the cowl area.

Operation

The satellite video antenna receives signals from orbiting satellites and sends these signals to the satellite receiver module. The satellite video antenna must have open space in which to operate. Items carried on the roof, parking inside etc. can have an effect on the antenna's ability to receive signals.

Removal

1. Disconnect and isolate the battery negative cable.
2. Lower the rear portion of the headliner as necessary to access underside of antenna (1) (Refer to 23 - Body/Interior/HEADLINER - Removal).
3. Disconnect the antenna cables.
4. Remove retaining fastener.
5. From inside the vehicle, and using a flat bladed tool, depress one of the retaining tabs on the antenna. Push up the one side of the antenna connector through the roof panel. Depress the other side of the connector and remove the antenna.

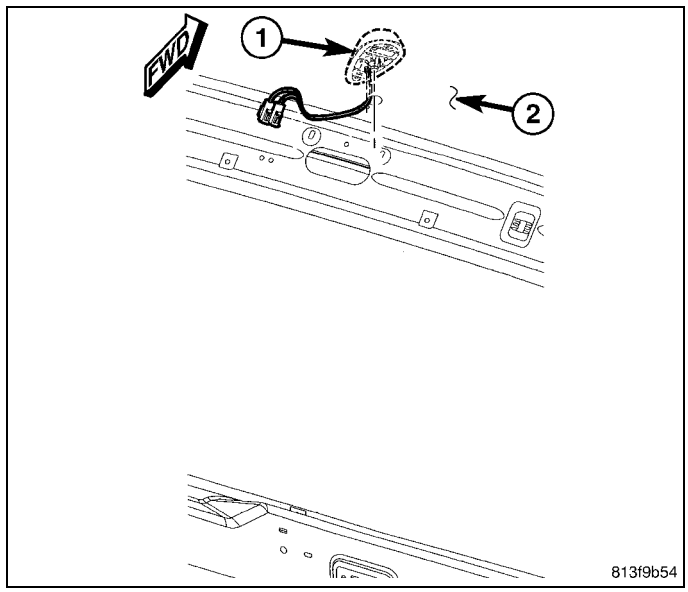

Installation

1. Insert wire harness through hole in roof panel (2). Press antenna (1) into position until both retainers snap into place.
2. Install and tighten mounting fastener.
3. Connect antenna cables.
4. Install headliner (Refer to 23 - Body/Interior/HEADLINER - Installation).
5. Connect battery negative cable.

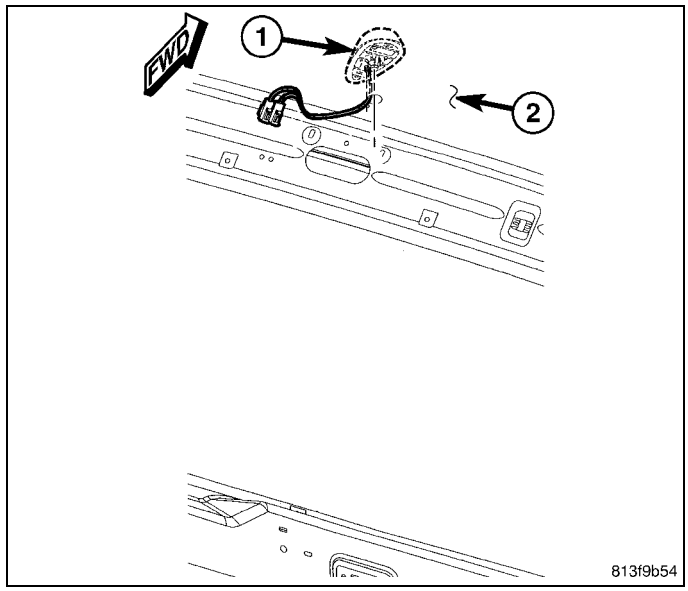

BODY AND CABLE, Antenna

Description

The antenna body and cable is secured below the fender panel by the antenna cap nut through a mounting hole in the right front fender. The primary coaxial antenna cable is then routed beneath the fender sheet metal and through a entry hole in the right cowl side panel into the interior of the vehicle. Inside the vehicle, the primary coaxial cable is connected to a secondary instrument panel antenna coaxial cable with an in-line connector that is located behind the right kick panel. The secondary coaxial cable is then routed behind the instrument panel to the back of the radio.

Operation

The antenna body and cable connects the antenna mast to the radio. The radio antenna is an electromagnetic circuit component used to capture radio frequency signals that are broadcast by local commercial radio stations in both the Amplitude Modulating (AM) and Frequency Modulating (FM) frequency ranges. These electromagnetic radio frequency signals induce small electrical modulations into the antenna as they move past the mast. The antenna body transfers the weak electromagnetic radio waves induced into the rigid antenna mast into the center conductor of the flexible primary antenna coaxial cable. The braided outer shield of the antenna coaxial cable is grounded through both the antenna body and the radio chassis, effectively shielding the radio waves as they are conducted to the radio. The radio then tunes and amplifies the weak radio signals into stronger electrical signals in order to operate the audio system speakers.

Diagnosis and Testing

The following four tests are used to diagnose the antenna with an ohmmeter:

- **Test 1** - Mast to ground test
- **Test 2** - Tip-of-mast to tip-of-conductor test
- **Test 3** - Body ground to battery ground test
- **Test 4** - Body ground to antenna coaxial cable shield test.

WARNING: Disable the airbag system before attempting any steering wheel, steering column, seat belt tensioner, side airbag or instrument panel component diagnosis or service. Disconnect and isolate the negative battery (ground) cable. Wait two minutes for the airbag system capacitor to discharge before performing further diagnosis or service. This is the only sure way to disable the airbag system. Failure to follow these instructions may result in accidental airbag deployment and possible serious or fatal injury.

The ohmmeter test lead connections for each test are shown in the illustration .

NOTE: This model has a two-piece antenna coaxial cable. Tests 2 and 4 must be conducted in two steps to isolate an antenna cable problem. First, test the primary antenna cable (integral to the antenna body and cable)

from the coaxial cable connector behind the right side kick panel to the antenna body. Then, test the secondary antenna cable (instrument panel antenna cable) from the coaxial cable connector behind the right side kick panel to the coaxial cable connector at the radio.

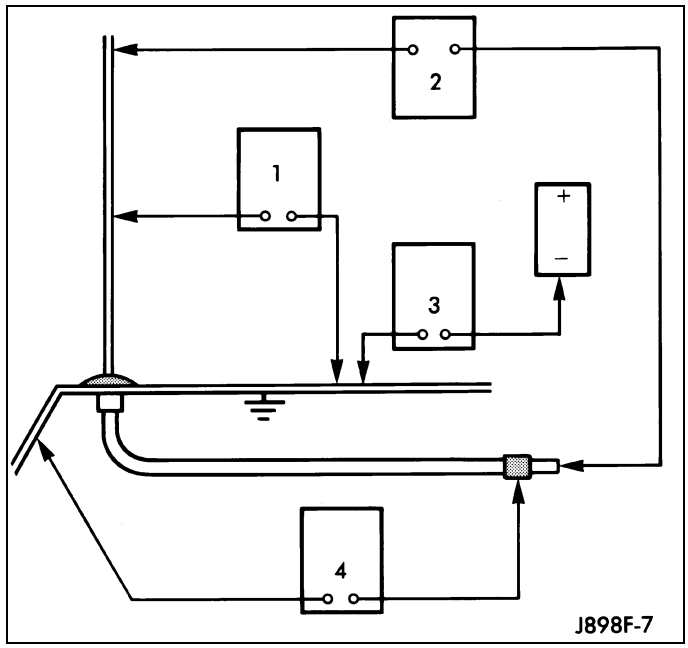

TEST 1

Test 1 determines if the antenna mast is insulated from ground. Proceed as follows:

1. Disconnect and isolate the antenna coaxial cable connector behind the right side kick panel.
2. Touch one ohmmeter test lead to the tip of the antenna mast. Touch the other test lead to known ground. Check the ohmmeter reading for continuity.
3. There should be no continuity. If OK, go to Test 2. If not OK, replace the faulty antenna body and cable.

TEST 2

Test 2 checks the antenna conductor components for an open circuit. This test should be performed first on the entire antenna circuit, from the antenna mast to the center conductor of the coaxial cable connector at the radio. If an open circuit is detected, each of the three antenna conductor components (antenna mast, antenna body and cable, instrument panel antenna cable) should be isolated and tested individually to locate the exact component that is the source of the open circuit. To begin this test, proceed as follows:

1. Disconnect the instrument panel antenna cable coaxial connector from the back of the radio.
2. Touch one ohmmeter test lead to the tip of the antenna mast. Touch the other test lead to the center conductor pin of the instrument panel antenna cable coaxial connector for the radio. Check the ohmmeter reading for continuity.
3. There should be continuity. The ohmmeter should register only a fraction of an ohm resistance. High or infinite resistance indicates a damaged or open antenna conductor. If OK, go to Test 3. If not OK, isolate and test each of the individual antenna conductor components. Replace only the faulty antenna conductor component.

TEST 3

Test 3 checks the condition of the vehicle body ground connection. To begin this test, proceed as follows:

1. This test must be performed with the battery positive cable disconnected from the battery. Disconnect and isolate both battery cables, negative cable first.
2. Reconnect the battery negative cable.
3. Touch one ohmmeter test lead to a good clean ground point on the vehicle fender. Touch the other test lead to the battery negative terminal post. Check the ohmmeter reading for continuity.
4. There should be continuity. The ohmmeter should register less than one ohm resistance. High or infinite resistance indicates a loose, corroded, or damaged connection between the battery negative terminal and the vehicle body. If OK, go to Test 4. If not OK, check the battery negative cable connection to the vehicle body and the radio noise suppression ground strap connections to the engine and the vehicle body for being loose or corroded. Clean or tighten these connections as required.

TEST 4

Test 4 checks the condition of the connection between the antenna coaxial cable shield and the vehicle body ground as follows:

1. Disconnect and isolate the antenna coaxial cable connector behind the right side kick panel.
2. Touch one ohmmeter test lead to a good clean ground point on the vehicle fender. Touch the other test lead to the outer crimp on the antenna coaxial cable connector. Check the ohmmeter reading for continuity.
3. There should be continuity. The ohmmeter should register less than one ohm resistance. High or infinite resistance indicates a loose, corroded, or damaged connection between the antenna body and the vehicle body or between the antenna body and the antenna coaxial cable shield. If not OK, clean the antenna body to fender mating surfaces and tighten the antenna cap nut to specifications.
4. Check the resistance again with an ohmmeter. If the resistance is still more then one ohm, replace the faulty antenna body and cable.

Removal

1. Disconnect and isolate the battery negative cable.
2. Remove the right side kick panel.
3. Disconnect antenna body cable (2) from instrument panel cable.
4. Securely tie a suitable length of cord or twine to the antenna half of the coaxial cable connector. This cord will be used to pull the cable back into position during installation.
5. Remove the antenna mast.
6. Remove the antenna cap nut (1) using an antenna nut wrench (Special Tool C-4816).
7. Remove the antenna adapter (4).
8. With the right door open, pull the antenna body assembly out through the opening between the fender and body.

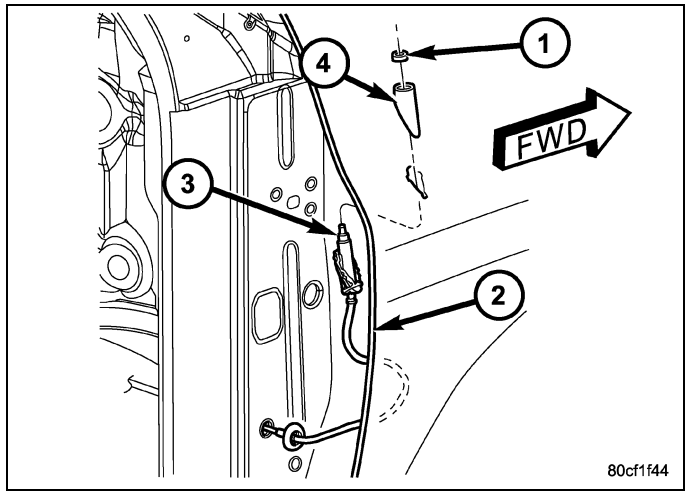

Installation

1. Tie the cord that was used during the removal procedure to the cable being installed.
2. Using the cord, pull the antenna cable through the hole in the door opening and seat grommet into place.
3. Connect the antenna body and cable (2) to the instrument panel cable.
4. Install the right side kick panel.
5. Insert the antenna body through the hole in the fender and install adapter (4).
6. Install and tighten the antenna cap nut (1).
7. Install the antenna mast.
8. Connect the battery negative cable.

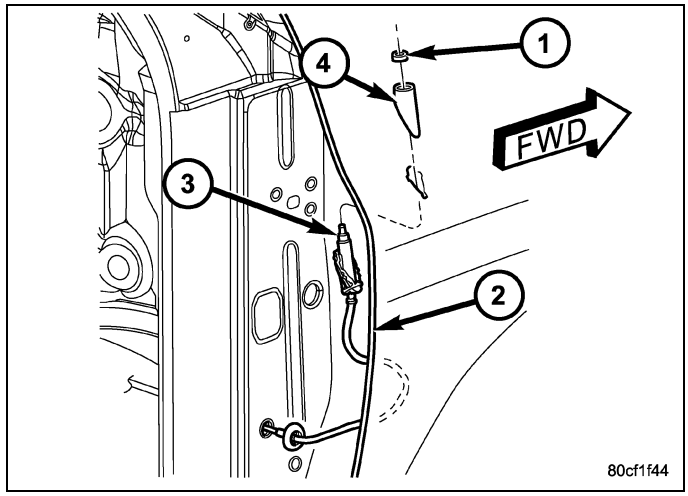

CABLE, Antenna, Instrument Panel

Removal

1. Disconnect and isolate the battery negative cable.
2. Remove the glove box (Refer to 23 - Body/Instrument Panel/GLOVE BOX, Instrument Panel - Removal).
3. Remove the instrument panel center bezel (Refer to 23 - Body/Instrument Panel/BEZEL, Instrument Panel - Removal).
4. Remove the radio (Refer to 08 - Electrical/8A - Audio and Video/RADIO - Removal).

CAUTION: Pulling the antenna cable straight out of the radio without pulling on the locking antenna connector could damage the cable or radio.

5. Disconnect the antenna cable by pulling the locking antenna connector away from the radio.

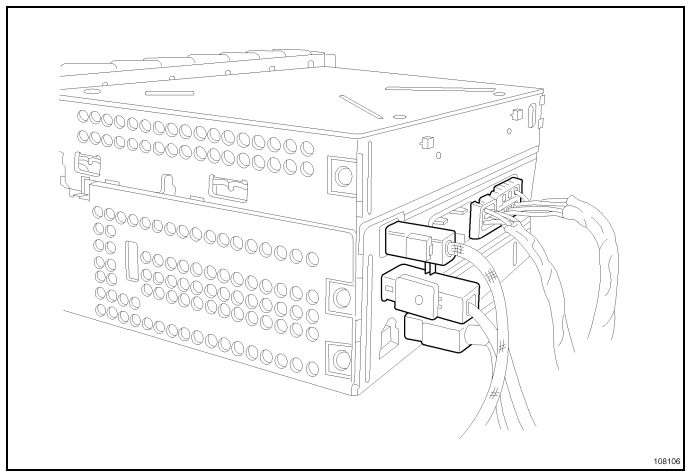

6. Remove antenna cable from instrument panel by pulling on retaining fasteners.

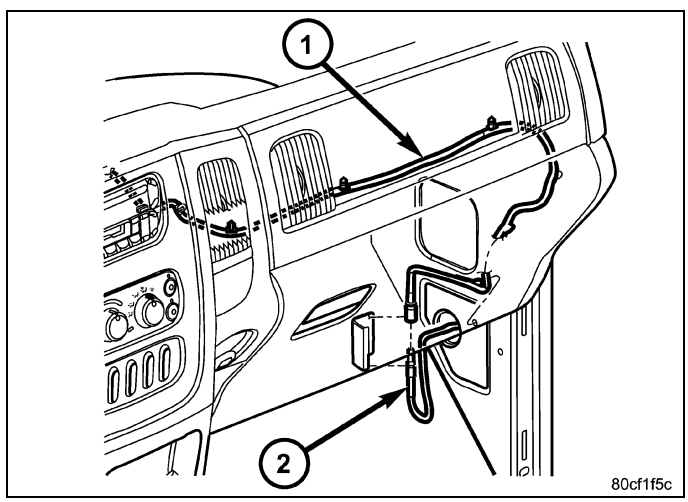

Installation

1. Install antenna cable (1) to instrument panel by pressing retaining fasteners into position.

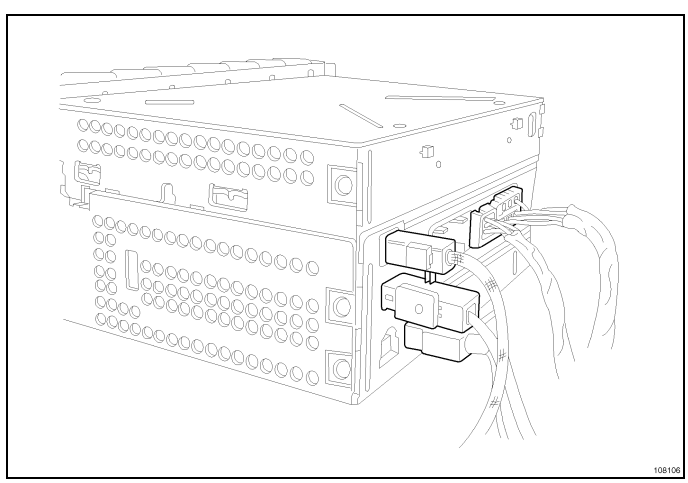

2. Connect instrument panel antenna cable to antenna body and cable (2).
3. Install radio (Refer to 08 - Electrical/8A - Audio and Video/RADIO - Installation).
4. Install the instrument panel center bezel (Refer to 23 - Body/Instrument Panel/BEZEL, Instrument Panel - Installation).
5. Install the glove box (Refer to 23 - Body/Instrument Panel/GLOVE BOX, Instrument Panel - Installation).
6. Connect the battery negative cable.

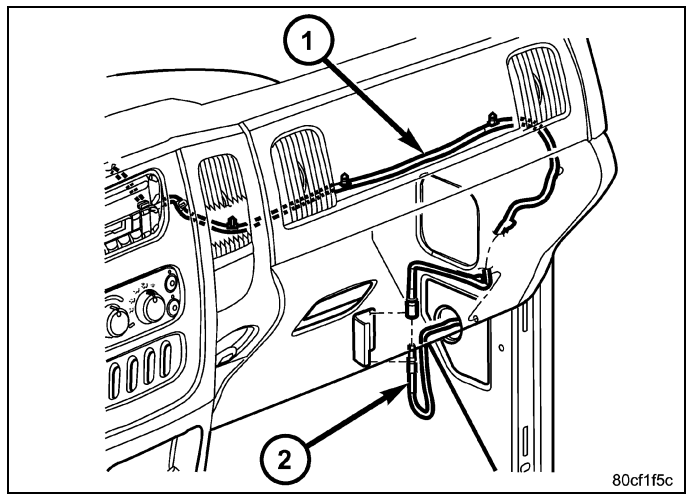

CABLE, Antenna, Satellite

Removal

SATELLITE AUDIO ONLY

1. Disconnect and isolate the battery negative cable.
2. Lower the rear portion of the headliner as necessary to access the underside of the satellite antenna (2) (Refer to 23 - Body/Interior/HEADLINER - Removal).
3. Remove the B-pillar upper trim panel (Refer to 23 - Body/Interior/PANEL, B-Pillar Trim - Removal).
4. Remove the B-pillar lower trim panel (Refer to 23 - Body/Interior/PANEL, B-Pillar Trim - Removal).
5. Move carpet to access cable (1).
6. Disconnect each end of the cable.

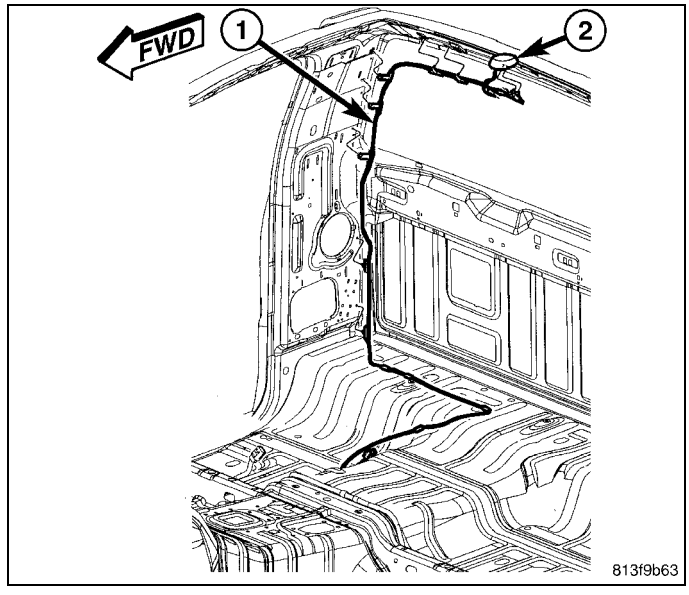

SATELLITE AUDIO/VIDEO

AUDIO CABLE TO MODULE

1. Disconnect and isolate the negative battery cable.
2. Lower the rear portion of the headliner as necessary to gain access to the audio antenna (Refer to 23 - Body/Interior/HEADLINER - Removal).

CAUTION: Pulling the antenna cable straight out of the radio without pulling on the locking antenna connector could damage the cable or radio.

3. Disconnect the antenna cable from the module.
4. Remove the antenna mast by unscrewing the mast from the antenna body.
5. Remove the fastener from the mounting bracket.
6. Remove the antenna bracket.
7. Remove the antenna base from the roof of the vehicle.

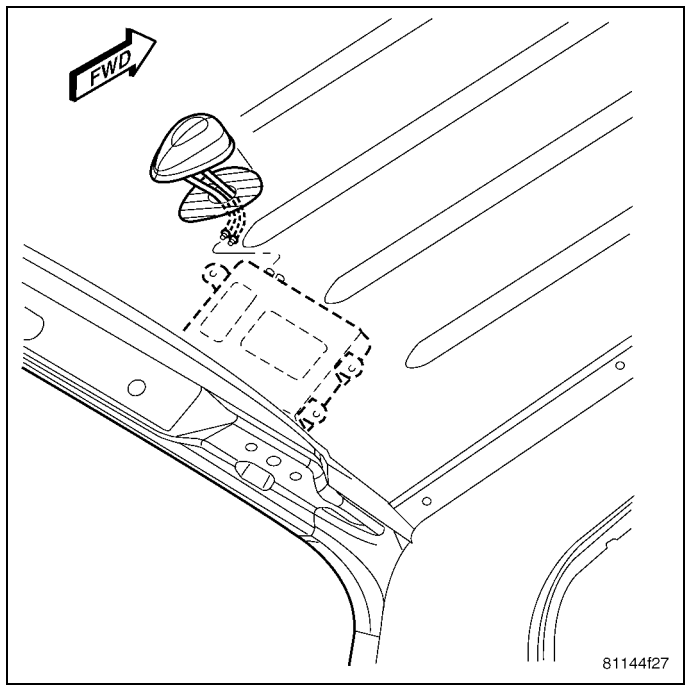

VIDEO CABLE FROM ANTENNA TO MODULE

NOTE: The antenna cables are integrated into the body harnesses. New antenna cables come as a overlay to the body harness.

1. Disconnect and isolate the battery negative cable.
2. Lower the headliner as necessary to gain access to the module. (Refer to 23 - Body/Interior/HEADLINER - Removal).

CAUTION: Pulling the antenna cable straight out of the radio without pulling on the locking antenna connector could damage the cable or radio.

3. Disconnect the antenna cable from the module.

SIGNAL CABLE FROM RADIO TO COWL

NOTE: The antenna cables are integrated into the body harnesses. New antenna cables come as a overlay to the body harness.

1. Disconnect and isolate the battery negative cable.
2. Remove the passenger side scuff plates (Refer to 23 - Body/Interior/PLATE, Scuff - Removal).
3. Remove the passenger side cowl panel (Refer to 23 - Body/Interior/PANEL, Cowl Trim - Removal).
4. Remove the glove box (Refer to 23 - Body/Instrument Panel/GLOVE BOX, Instrument Panel - Removal).
5. Remove the radio (Refer to 08 - Electrical/8A - Audio and Video/RADIO - Removal).

SIGNAL CABLE FROM COWL TO INNER REAR ROOF

NOTE: The antenna cables are integrated into the body harnesses. New antenna cables come as a overlay to the body harness.

1. Disconnect and isolate the battery negative cable.
2. Lower the headliner as necessary to gain access to the video antenna (Refer to 23 - Body/Interior/HEADLINER - Removal).
3. Remove the passenger side scuff plates (Refer to 23 - Body/Interior/PLATE, Scuff - Removal).
4. Remove the passenger side cowl panel (Refer to 23 - Body/Interior/PANEL, Cowl Trim - Removal).
5. Disconnect the antenna cable from the video module.

Installation

SATELLITE AUDIO ONLY

NOTE: The antenna cables are integrated into the body harnesses. New antenna cables come as a overlay to the body harness.

1. Route the new harness over the old harness.
2. Connect each end of the cable (1).
3. Place carpet into position.
4. Install the B-pillar lower trim panel (Refer to 23 - Body/Interior/PANEL, B-Pillar Trim - Installation).
5. Install the B-pillar upper trim panel Remove the C-pillar upper trim panel.
6. Install the headliner (Refer to 23 - Body/Interior/HEADLINER - Installation).
7. Connect the battery negative cable.

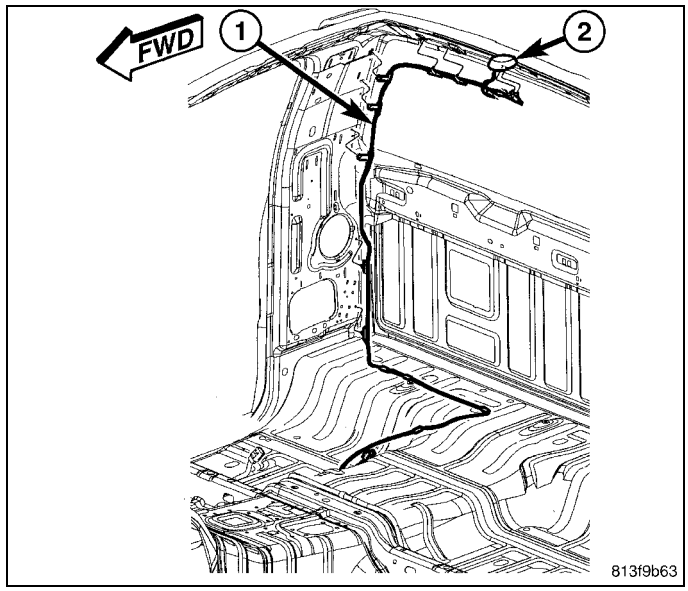

SATELLITE AUDIO/VIDEO

AUDIO CABLE TO MODULE

NOTE: The antenna cables are integrated into the body harnesses. New antenna cables come as a overlay to the body harness.

1. Route the new harness over the old harness.
2. Install the antenna base to the roof of the vehicle.
3. Install the antenna bracket.
4. Install the fastener to the mounting bracket.
5. Install the antenna mast by screwing the mast to the antenna body.
6. Connect the antenna cable to the module.
7. Install the headliner (Refer to 23 - Body/Interior/HEADLINER - Installation).
8. Connect the negative battery cable.

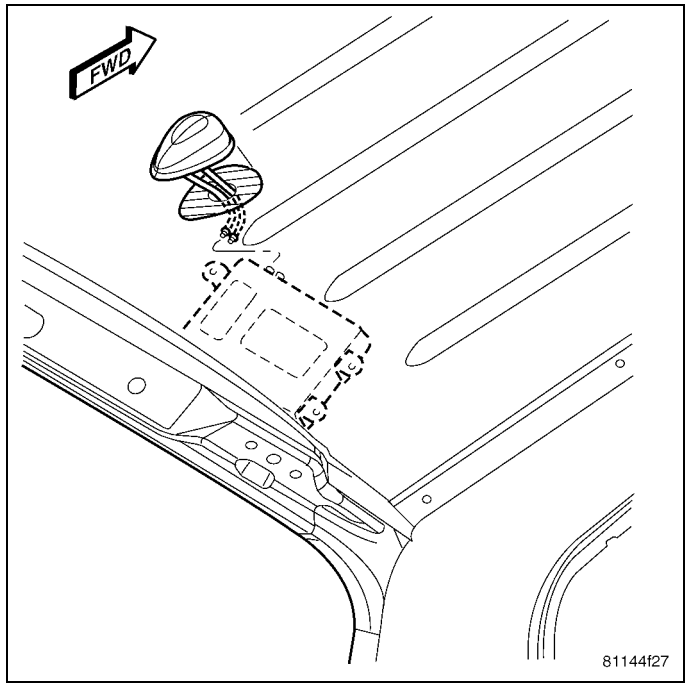

VIDEO CABLE FROM ANTENNA TO MODULE

NOTE: The antenna cables are integrated into the body harnesses. New antenna cables come as a overlay to the body harness.

1. Route the new harness over the old harness.
2. Install the antenna base to the roof of the vehicle.
3. Install the antenna bracket.
4. Install the fastener to the mounting bracket.
5. Install the antenna mast by screwing the mast to the antenna body.
6. Connect the antenna cable from the module.
7. Install the headliner (Refer to 23 - Body/Interior/HEADLINER - Installation).

8. Connect the negative battery cable.

SIGNAL CABLE FROM RADIO TO COWL

NOTE: The antenna cables are integrated into the body harnesses. New antenna cables come as a overlay to the body harness.

1. Route the new harness over the old harness.
2. Install the radio (Refer to 08 - Electrical/8A - Audio and Video/RADIO - Installation).
3. Install the glove box (Refer to 23 - Body/Instrument Panel/GLOVE BOX, Instrument Panel - Installation).
4. Install the passenger side cowl trim panel (Refer to 23 - Body/Interior/PANEL, Cowl Trim - Installation).
5. Install the passenger side scuff plates (Refer to 23 - Body/Interior/PLATE, Scuff - Installation).
6. Connect the negative battery cable.

SIGNAL CABLE FROM COWL TO INNER REAR ROOF

NOTE: The antenna cables are integrated into the body harnesses. New antenna cables come as a overlay to the body harness.

1. Route the new harness over the old harness.
2. Connect the antenna cable from the video module.
3. Install the passenger side cowl trim panel (Refer to 23 - Body/Interior/PANEL, Cowl Trim - Installation).
4. Install the passenger side scuff plates (Refer to 23 - Body/Interior/PLATE, Scuff - Installation).
5. Install the headliner (Refer to 23 - Body/Interior/HEADLINER - Installation).
6. Connect the negative battery cable.

CAMERA, Rear

Description

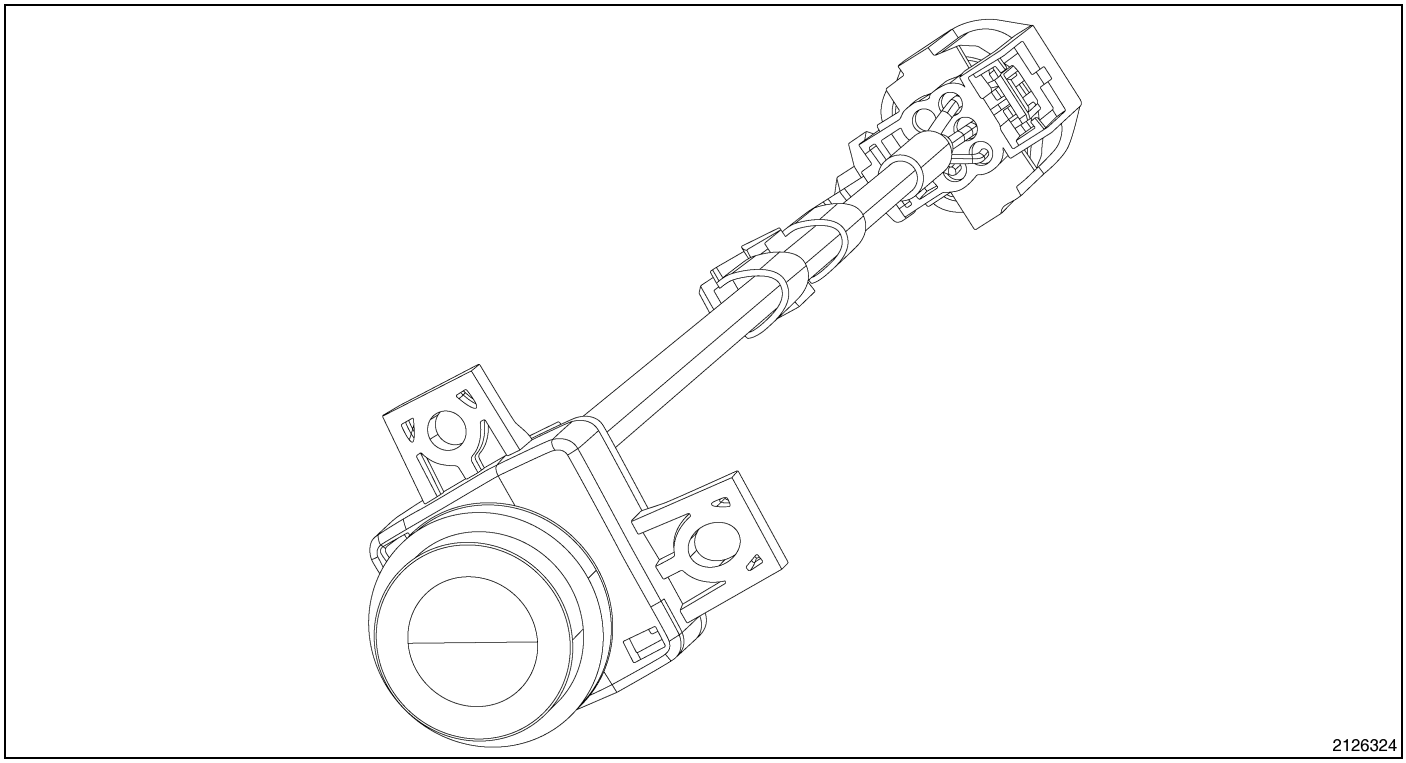

The Rear View Camera (RVC) (4) (also known as ParkView™), is a camera on chip device utilizing Complementary Metal Oxide Semiconductor (CMOS) technology. CMOS technology is used for a wide variety of digital or analog circuits. In this application, it supports the analog image sensor of the RVC. The RVC function is to provide a wide angle video image of the area behind the vehicle, including areas that might not be normally visible from the seated position of the vehicle operator, only while the transaxle gear selector is in the Reverse position. This video image then displays to the vehicle operator within the display screen of the audio system receiver unit near the center of the instrument panel.

The RVC is intended to be an auxiliary viewing aid and is not promoted as an obstacle detection or safety device. It does not remove vehicle operator responsibility to recognize and obey official traffic laws or regulations or to take sensible precautions and care to avoid pedestrians, other vehicle traffic or both fixed and moving obstacles through the habitual use of safe and defensive driving techniques.

The RVC is located within the tailgate handle. The camera lens is visible just to the left of the tailgate release handle, while the body of the camera and the camera connections are concealed within the tailgate.

Hardwired circuitry connects the RVC to the electrical system of the vehicle. These hardwired circuits are integral to several wire harnesses, which routes throughout the vehicle and retained by many different methods. These circuits may be connected to each other and to the vehicle electrical system through the use of a combination of soldered splices, splice block connectors, and many different types of wire harness terminal connectors and insulators. Refer to the appropriate wiring information. The wiring information includes wiring diagrams, proper wire and connector repair procedures, further details on wire harness routing and retention, as well as pin-out and location views for the various wire harness connectors, splices and grounds.

The RVC cannot be adjusted or repaired. If the RVC is damaged or ineffective, it must be replaced.

Operation

The Rear View Camera (RVC) is powered by a battery feed received through the backup lamp switch output circuit from the Totally Integrated Power Module (TIPM) so that is only active when the transaxle is shifted into the REVERSE position. In addition, the radio receiver monitors messages on the Controller Area Network (CAN) data bus to determine the selected transaxle gear and overrides any other display to show the RVC video output, whenever it detects that the transaxle is in REVERSE. A momentary blank video display screen immediately following the gearshift transition into the REVERSE position is considered normal operation. The camera electronics receive a path to ground at all times through a takeout and eyelet terminal of the liftgate wire harness that is secured by a ground screw to the right side of the liftgate inner panel.

The output of the camera is a video signal compatible to the National Television System Committee (NTSC) standard composite video M format, or NTSC-M. The video signal is delivered to the radio video display unit through the entire length of the vehicle by camera signal and the camera return circuits that are arranged as a twisted pair, with an additional grounded foil jacket to protect the video signal from corruption due to stray radiated signals within the vehicle environment. The ground shield is terminated only at the video display (radio) end, not at the camera. Portions of these video signal wires are contained within the liftgate lightbar wire harness, the liftgate wire harness, the body wire harness and a jumper harness located between the radio and the body harness connector below the instrument panel at the right cowl side inner panel.

Diagnosis and Testing

The hardwired circuits of the Rear View Camera (RVC) and those between the RVC and the radio receiver may be diagnosed using conventional diagnostic tools and procedures. Refer to the appropriate wiring information. The wiring information includes wiring diagrams, proper wire and connector repair procedures, details of wire harness routing and retention, connector pin-out information and location views for the various wire harness connectors, splices and grounds.

However, conventional diagnostic methods will not prove conclusive in the diagnosis of the RVC or the radio receiver. The most reliable, efficient and accurate means to diagnose the electronic controls and communication related to radio receiver operation, as well as the retrieval or erasure of a DTC requires the use of a diagnostic scan tool. Refer to the appropriate diagnostic information.

WARNING: To avoid serious or fatal injury on vehicles equipped with airbags, disable the Supplemental Restraint System (SRS) before attempting any steering wheel, steering column, airbag, seat belt tensioner, impact sensor, or instrument panel component diagnosis or service. Disconnect and isolate the battery negative (ground) cable, then wait two minutes for the system capacitor to discharge before performing further diagnosis or service. This is the only sure way to disable the SRS. Failure to take the proper precautions could result in accidental airbag deployment.

NOTE: Be certain to confirm both of the following prior to attempting any further diagnosis or testing of the RVC. Use a diagnostic scan tool to confirm the rear view camera is setup in the vehicle configuration. From the initial start up screen of the diagnostic scan tool, navigate to ECU VIEW, select TIPMCGW CENTRAL GATEWAY, MORE OPTIONS, ECU DETAILS and then CONFIG INFO. Verify that REAR CAMERA PRESET - - - - SET is present. If not, the Sales Code XAC (Park View Rear Back-Up Camera) will have to be added to the vehicle configuration to enable the RVC, in vehicles equipped with a MyGIG multimedia entertainment system (Sales Codes RE1, REN,

REP, RER, REU, REW, REX or REZ), be certain that the RVC is set to ENABLED using the CAMERA SETUP option in the MyGIG system settings.

CONDITION	POSSIBLE CAUSES	CORRECTION
NO VIDEO DISPLAY IN RADIO - DOES NOT DISPLAY **CHECK ENTIRE SURROUNDINGS** MESSAGE BRIEFLY AFTER SHIFTING INTO REVERSE	1. Incorrect radio software.	1. Check to be certain that the radio has the latest software update installed. Install the radio software update if required.
	2. Ineffective radio fuse.	2. Test and replace the radio fuses if required.
	3. Ineffective radio ground circuit.	3. Check for loose or damaged wiring connections at the radio. Test and repair the open radio ground circuit if required.
	4. Ineffective radio feed circuit.	4. Check for loose or damaged wiring connections at the radio. Test and repair the open radio feed circuit if required.
	5. Ineffective radio inputs or outputs.	5. Use a diagnostic scan tool to test the radio inputs and outputs including those received over the CAN data bus. Refer to the appropriate diagnostic information.
	6. Ineffective radio.	6. Use a diagnostic scan tool to test the radio. Refer to the appropriate diagnostic information.
NO CAMERA IMAGE IN RADIO VIDEO DISPLAY AND NO BACKUP LAMPS IN REVERSE	1. Left backup lamp inoperative, right backup lamp okay.	1. Test and repair the open backup lamp switch output circuit between the right and left tail lamps if required.
	2. Both backup lamps inoperative.	2. Test and repair the open backup lamp switch output circuit between the Totally Integrated Power Module (TIPM) and the tail lamps if required.
	3. Ineffective TIPM inputs or outputs.	3. Use a diagnostic scan tool to test the TIPM inputs and outputs. Refer to the appropriate diagnostic information.

CONDITION	POSSIBLE CAUSES	CORRECTION
NO CAMERA IMAGE IN RADIO VIDEO DISPLAY - DOES DISPLAY **CHECK ENTIRE SURROUNDINGS** MESSAGE BRIEFLY AFTER SHIFTING INTO REVERSE AND BACKUP LAMPS DO OPERATE	1. Ineffective camera ground circuit.	1. Check for loose or damaged wiring connections at the camera, liftgate light bar and liftgate. Test and repair the open camera ground circuit if required.
	2. Ineffective camera feed (backup lamp switch output) circuit.	2. Check for loose or damaged wiring connections at the camera, liftgate light bar and upper liftgate opening header. Test and repair the open camera feed (backup lamp switch output) circuit if required.
	3. Ineffective camera shield circuit.	3. Check for loose or damaged wiring connections at the camera, liftgate light bar, upper liftgate opening header, right cowl side inner panel and radio. Test and repair the open or shorted camera shield circuit if required.
	4. Ineffective camera return circuit.	4. Check for loose or damaged wiring connections at the camera, liftgate light bar, upper liftgate opening header, right cowl side inner panel and radio. Test and repair the open or shorted camera feed circuit if required.
	5. Ineffective camera signal circuit.	5. Check for loose or damaged wiring connections at the camera, liftgate light bar, upper liftgate opening header, right cowl side inner panel and radio. Test and repair the open or shorted camera signal circuit if required.
	6. Ineffective camera.	6. Replace the ineffective camera if required.

Removal

1. Disconnect and isolate the negative battery cable.
2. Open the tailgate.
3. Remove the tailgate cover (Refer to 23 - Body/Decklid/Hatch/Liftgate/Tailgate/COVER - Removal).

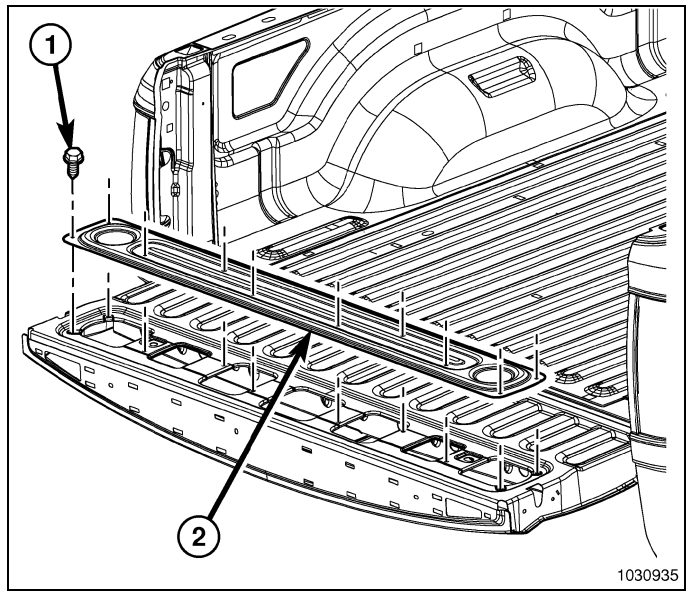

4. Disconnect the rear camera electrical harness.
5. Remove the tailgate release handle (Refer to 23 - Body/Decklid/Hatch/Liftgate/Tailgate/HANDLE, Latch Release - Removal).
6. Remove the rear camera from the tailgate handle.

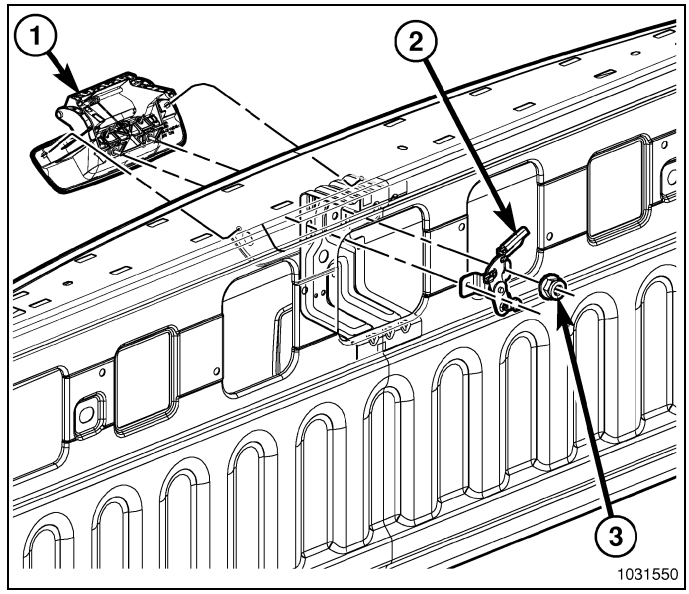

Installation

1. Install the rear camera into the tailgate handle.
2. Install the tailgate release handle (Refer to 23 - Body/Decklid/Hatch/Liftgate/Tailgate/HANDLE, Latch Release - Installation).
3. Connect the rear camera electrical harness.

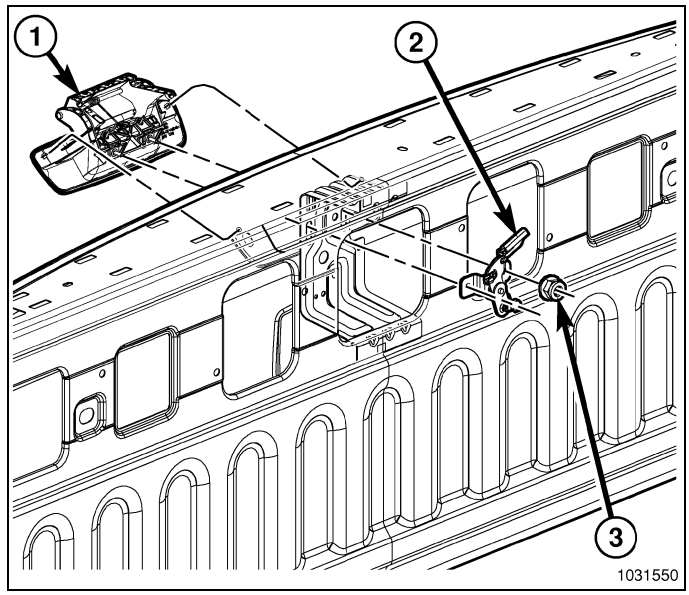

4. Install the tailgate cover (Refer to 23 - Body/Decklid/Hatch/Liftgate/Tailgate/COVER - Installation),
5. Close the tailgate.
6. Connect the negative battery cable.

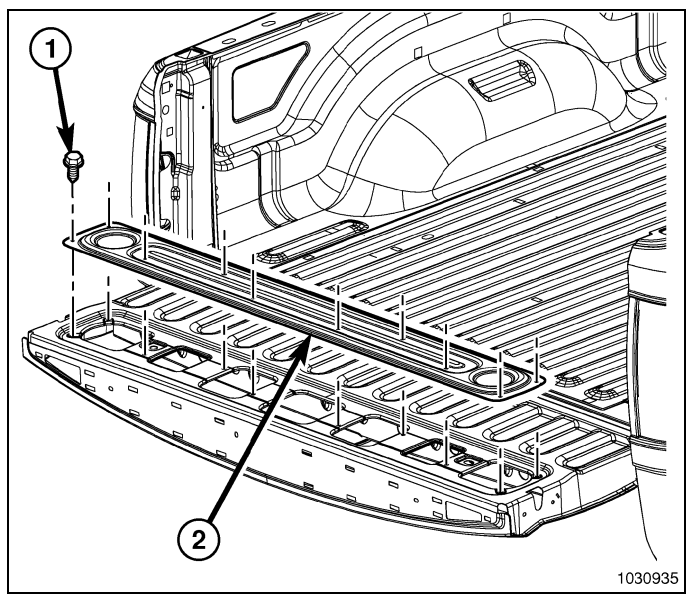

COMPONENTS, Radio Noise Suppression

Description

Radio noise suppression devices are Installed on this vehicle. Radio Frequency Interference (RFI) and ElectroMagnetic Interference (EMI) can be produced by any on-board or external source of electromagnetic energy. These electromagnetic energy sources can radiate electromagnetic signals through the air, or conduct them through the vehicle electrical system.

When the audio system converts RFI or EMI to an audible acoustic wave form, it is referred to as radio noise. This undesirable radio noise is generally manifested in the form of “buzzing,” “hissing,” “popping,” “clicking,” “crackling,” and/or “whirring” sounds. In most cases, RFI and EMI radio noise can be suppressed using a combination of vehicle and component grounding, filtering and shielding techniques. This vehicle is equipped with factory-installed radio noise suppression devices that were designed to minimize exposure to typical sources of RFI and EMI; thereby, minimizing radio noise complaints.

Factory-installed radio noise suppression is accomplished primarily through circuitry or devices that are integral to the factory-installed radios, audio power amplifiers and other on-board electrical components such as generators, wiper

motors, blower motors, and fuel pumps that have been found to be potential sources of RFI or EMI. External radio noise suppression devices that are used on this vehicle to control RFI or EMI, and can be serviced, include the following:

- **Engine-to-body ground strap** - This length of braided ground strap has an eyelet terminal connector crimped to each end. One end is secured to the engine cylinder head(s). The other is secured to the plenum at the exhaust heat shield forward/outer attaching stud.
- **Resistor-type spark plugs** - This type of spark plug has an internal resistor connected in series between the spark plug terminal and the center electrode to help reduce the production of electromagnetic radiation that can result in radio noise.

Operation

There are two common strategies that can be used to suppress Radio Frequency Interference (RFI) and ElectroMagnetic Interference (EMI) radio noise. The first suppression strategy involves preventing the production of RFI and EMI electromagnetic signals at their sources. The second suppression strategy involves preventing the reception of RFI and EMI electromagnetic signals by the audio system components.

The use of braided ground straps in key locations is part of the RFI and EMI prevention strategy. These ground straps ensure adequate ground paths, particularly for high current components such as many of those found in the starting, charging, ignition, engine control and transmission control systems. An insufficient ground path for any of these high current components may result in radio noise caused by induced voltages created as the high current seeks alternative ground paths through components or circuits intended for use by, or in close proximity to the audio system components or circuits.

Preventing the reception of RFI and EMI is accomplished by ensuring that the audio system components are correctly installed in the vehicle. Loose, corroded or improperly soldered wire harness connections, improperly routed wiring and inadequate audio system component grounding can all contribute to the reception of RFI and EMI. A properly grounded antenna body and radio chassis, as well as a shielded antenna coaxial cable with clean and tight connections will each help reduce the potential for reception of RFI and EMI.

Removal

BED TO CAB	BED TO CAB
ENGINE TO HEAT SHIELD - 3.7L ENGINE	ENGINE TO HEAT SHIELD - 3.7L ENGINE
ENGINE TO HEAT SHIELD - 4.7L AND 5.7L ENGINE	ENGINE TO HEAT SHIELD - 4.7L AND 5.7L ENGINE

BED TO CAB

1. Disconnect and isolate the battery negative cable.
2. Remove the attaching bolts and strap.

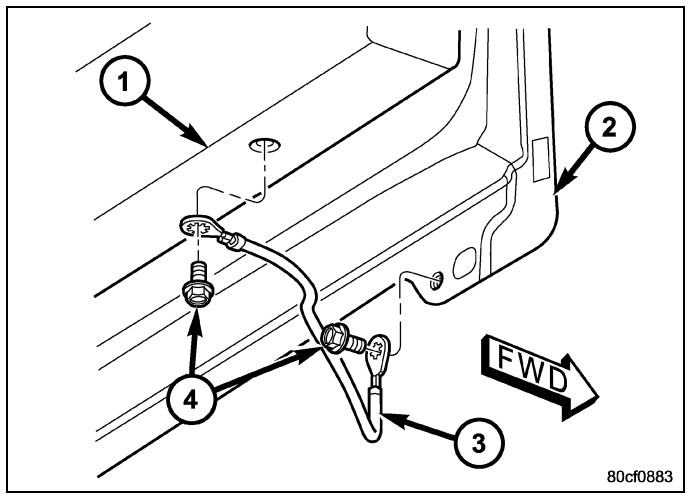

ENGINE TO HEAT SHIELD - 3.7L ENGINE

1. Disconnect and isolate the battery negative cable.
2. Remove the attaching bolts (2) from the cylinder heads.

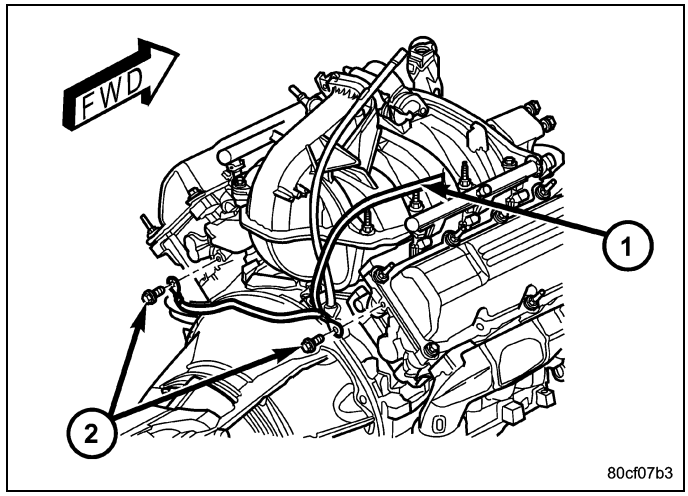

3. Remove nut (3) from heat shield (1) and remove strap (2).

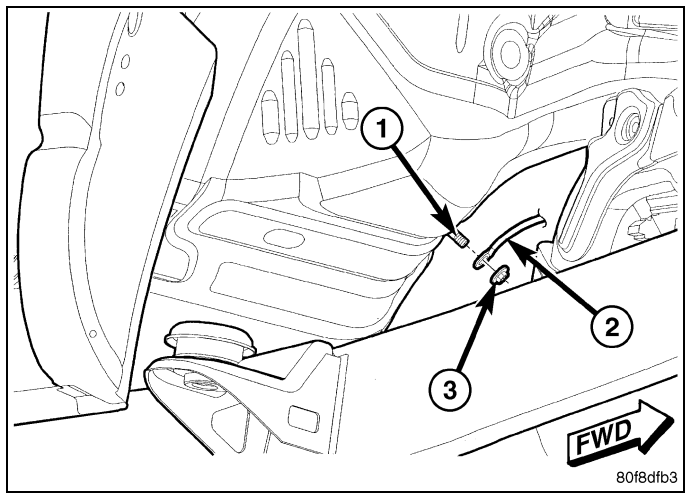

ENGINE TO HEAT SHIELD - 4.7L AND 5.7L ENGINE

1. Disconnect and isolate the battery negative cable.
2. Remove the attaching bolts (2) from the cylinder heads.

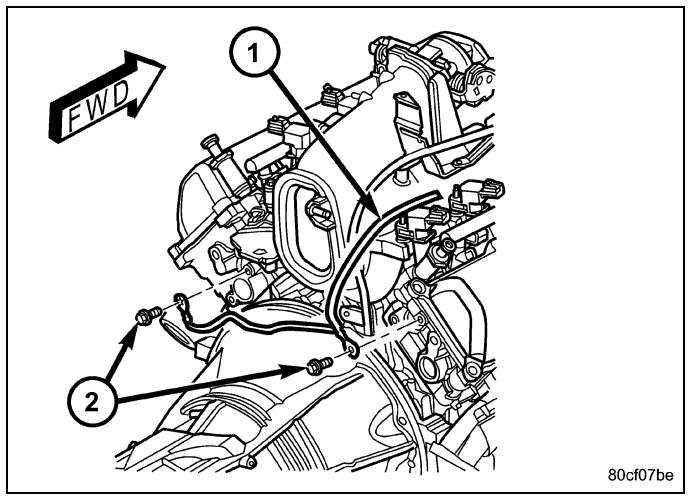

3. Remove nut (3) from heat shield (1) and remove strap (2).

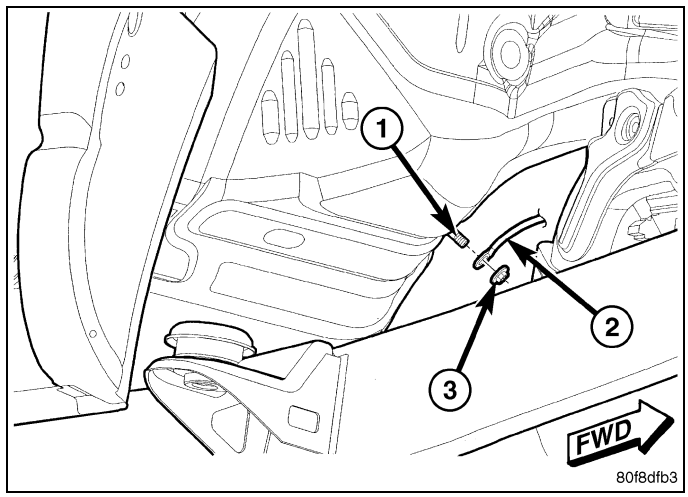

Installation

BED TO CAB	BED TO CAB
ENGINE TO HEAT SHIELD	ENGINE TO HEAT SHIELD

BED TO CAB

1. Install the ground strap (3) and mounting fasteners (4).
2. Tighten mounting fasteners.
3. Connect the battery negative cable.

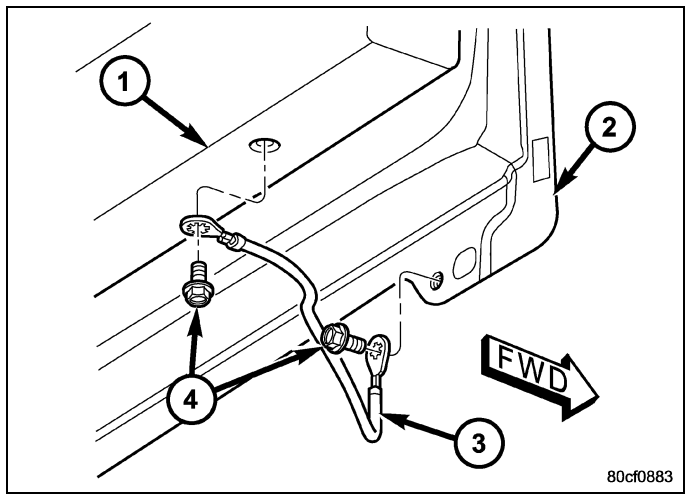

ENGINE TO HEAT SHIELD

1. Install the mounting fastener (3) and ground strap (2) to the heat shield (1).
2. Tighten mounting fastener.

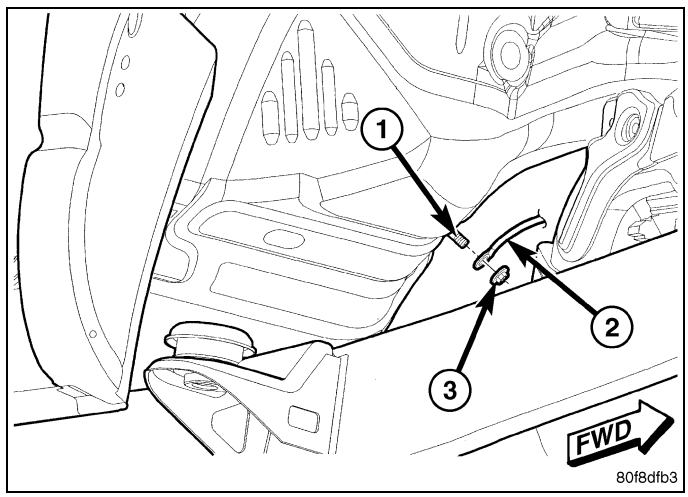

3. Install the retaining bolt and ground strap to the engine cylinder heads.
4. Tighten the retaining bolts.
5. Connect the battery negative cable.

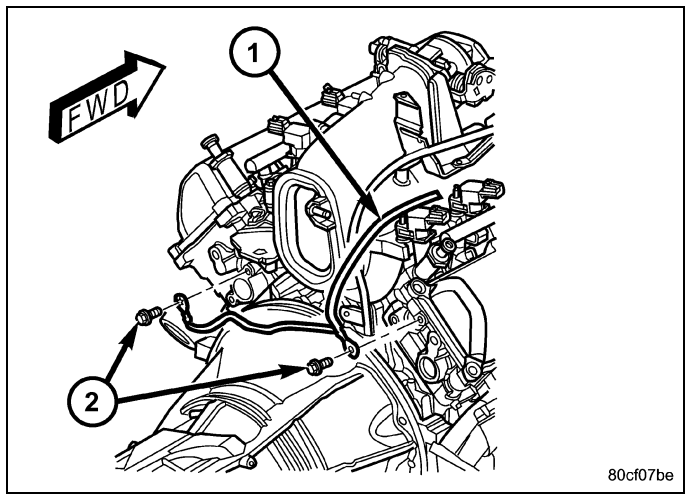

MONITOR, Media System

Description

The video entertainment system, consist of:

- Battery powered remote control
- Two headsets
- Video monitor/DVD Player located on the headliner.

In addition to video DVDs, the system will play audio DVDs, audio CDs, MP3 audio disc, and video CDs. There are plug-in jacks on the monitor/player to show video directly from a video camera, connect video games for display on the screen, and play music directly from a MP3 player.

Operation

A seven inch (diagonal measurement) liquid crystal display (LCD) screen supports both 3 X 4 and 6 X 9 video formats. The hinged screen latches in the closed position and swings down for viewing.

Removal

1. Disconnect and isolate the battery negative cable.
2. Remove the two mounting fasteners.
3. Using a trim stick, press the retaining clip at the rear of the monitor (3). Move the monitor from side to side to release from headliner (2).
4. Disconnect electrical harness connector (1) and remove monitor.

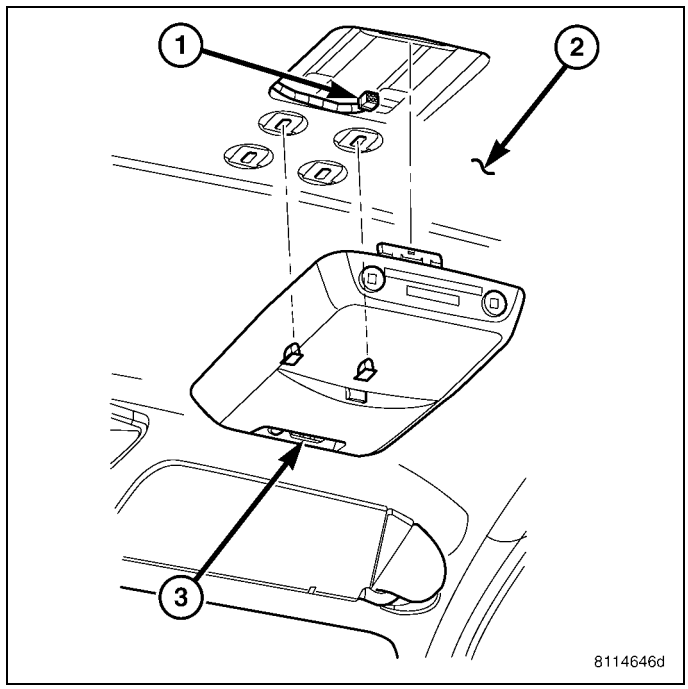

Installation

1. Connect electrical harness connector (1) to monitor (3).
2. Position monitor and press into place.
3. Install and tighten mounting fasteners.
4. Connect battery negative cable.

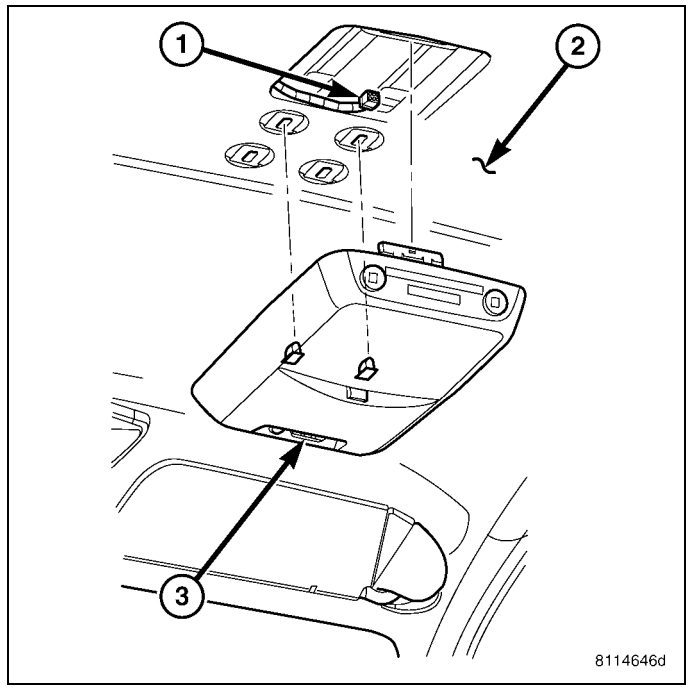

RADIO

Description

Available radio receivers for this vehicle include:
AM/FM/CD/WMA and mini jacks (Sales Code RES).

- Auxiliary input jack for portable MP3 player/iPod playback through vehicle speakers
- Two-line display with text capability
- Voice Recognition System
- Optional integrated Sirius Radio

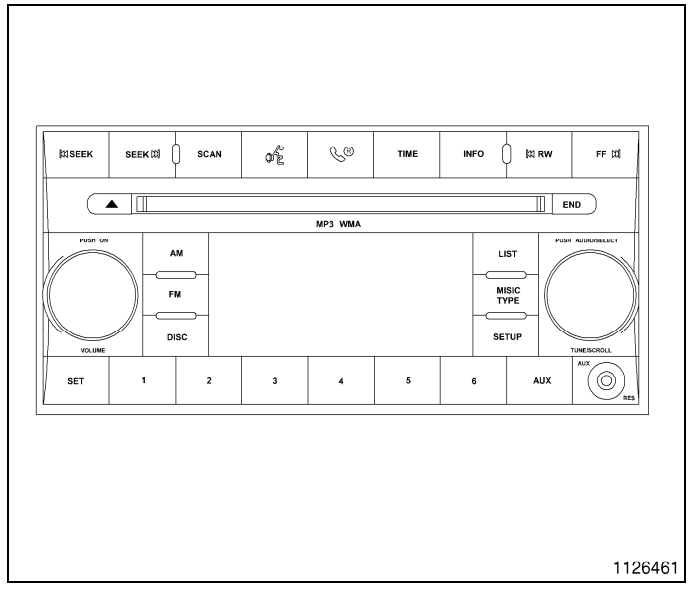

The AM/FM Stereo with a 6-disc CD/DVD changer with MP3/WMA auxiliary jack (Sales Code REQ)

- Automatic slot-in power loading 6-disc internal changer. A changer loaded with MP3 discs provides music for thousands of miles of driving without ever listening to the same track twice.
- Disc selection using the numbered buttons
- Accepts commands from steering wheel audio controls
- DVD Main Menu offers a Preview and Auto Play mode, similar to most in-home DVD players. When Auto Play is selected, the movie or program will begin 10 seconds after the selection is made.

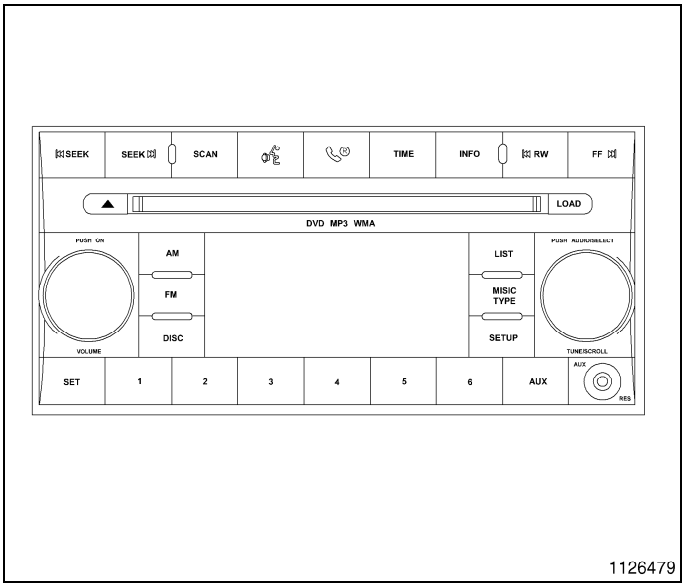

AM/FM/CD/DVD/HDD/MP3 (REN sales code)

- 6.5 in (165 mm) Quarter VGA TFT full color display with a touch-screen panel
- Customizable background photo screen
- The motorized screen flips down to accept a disc for playing or downloading music or data onto the hard disc drive to maintain its compact size
- Touch-screen buttons are menu and mode driven for easy operation
- Backup Camera ready
- A 20-gigabyte hard disc drive for ripping CD audio from the DVD drive onto the hard drive in compressed format, either MP3 or WMA file formats
- Radio capable of recording from AM, FM, SAT, DVD Drive, AUX, phone and microphone
- Universal Serial Bus (USB) on lower right of radio for downloading files onto the hard drive. Software and files cannot be run off the USB port at this time.

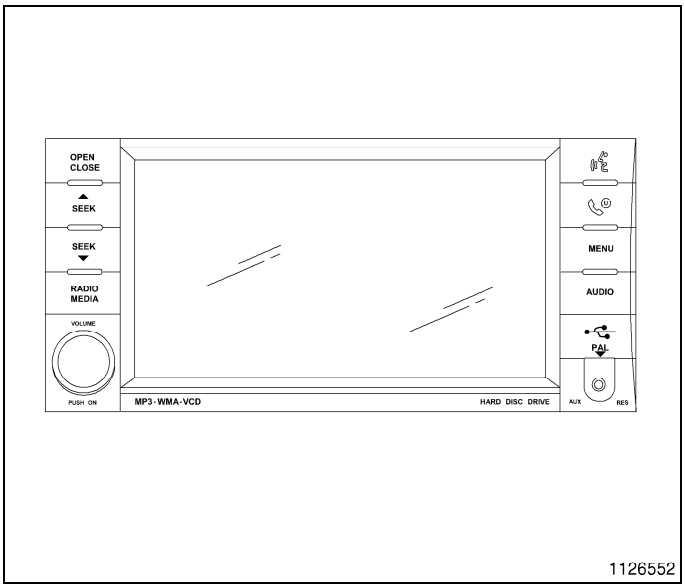

- MUSIC JUKE BOX feature is similar to a virtual disc changer, which allows up to 9 gigabytes of music (about 10 CDs) and pictures to be stored on the hard drive. The organization of the music files is intuitive; songs are organized by CD or album in contrast to MP3 and WMA folder and filename conventions used with downloadable music files off the Internet. The JPEG picture viewer allows the screen to be personalized with a picture as an alternative to the home screen image supplied with the radio.
- Playlists can be created to provide easy access to files, or a file can be accessed in the exact sequence and structure it was recorded onto the hard drive and played back directly from the disc. The user can also choose to repeat folder, random play all songs and repeat a song.
- MEDIA button allows the selection of DVD audio, CD, SDAR, etc. After pressing this button the touch-screen buttons will appear for the appropriate mode.
- Voice memos can be recorded using the microphone integrated into the rearview mirror. The memos can be up to three minutes in length and a pop-up window appears 15 seconds before the recording limit. Up to 64 memos can be stored on the hard disc drive.
- GraceNotes® database installed on the hard disc drive provides song identification, including title, composer, artist and title. An update will be available to the customer every quarter from a website server hosted by the supplier or through the dealership. All quarter updates are downloadable independent of the previous update.
- Displays movies on the screen for entertaining passengers.

The AM/FM Stereo with DVD changer, navigation, SDARS, MP3/WMA auxiliary jack (Sales Code RER)

- 6.5 in (165 mm) Quarter VGA TFT full color display with a touch-screen panel
- Customizable background photo screen
- The motorized screen flips down to accept a disc for playing or downloading music or data onto the hard disc drive to maintain its compact size
- Touch-screen buttons are menu and mode driven for easy operation
- Backup Camera ready
- A 20-gigabyte hard disc drive for ripping CD audio from the DVD drive onto the hard drive in compressed format, either MP3 or WMA file formats
- Universal Serial Bus (USB) on lower right of radio for downloading files onto the hard drive. Software and files cannot be run off the USB port at this time.

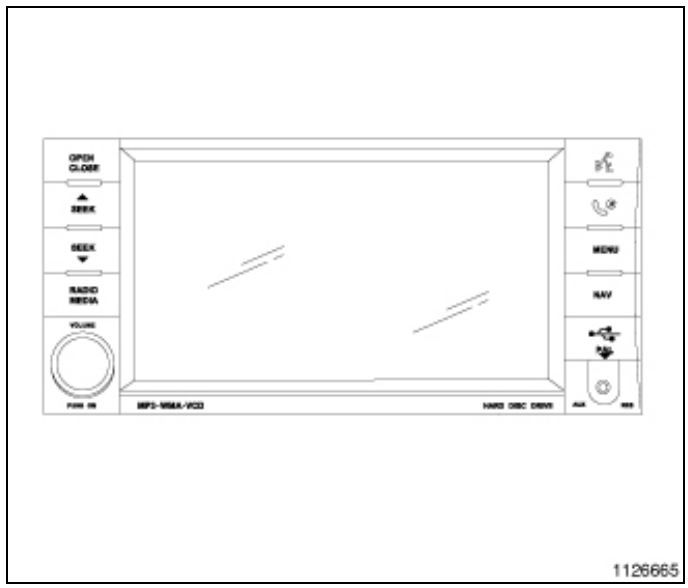

1126665

- MUSIC JUKE BOX feature is similar to a virtual disc changer, which allows up to 9 gigabytes of music (about 10 CDs) and pictures to be stored on the hard drive. The organization of the music files is intuitive; songs are organized by CD or album in contrast to MP3 and WMA folder and filename conventions used with downloadable music files off the Internet. The JPEG picture viewer allows the screen to be personalized with a picture as an alternative to the home screen image supplied with the radio.
- MEDIA button allows the selection of DVD audio, CD, SDAR, etc. After pressing this button the touch-screen buttons will appear for the appropriate mode.
- Voice memos can be recorded using the microphone integrated into the rearview mirror. The memos can be up to three minutes in length and a pop-up window appears 15 seconds before the recording limit. Up to 64 memos can be stored on the hard disc drive.
- GraceNotes® database installed on the hard disc drive provides song identification, including title, composer, artist and title. An update will be available to the customer every quarter from a website server hosted by the supplier or through the dealership. All quarter updates are downloadable independent of the previous update.
- Displays movies on the screen for entertaining passengers.

All factory-installed radio receivers can communicate on the Controller Area Network (CAN) data bus network. All factory-installed receivers include an electronic digital clock function.

Operation

The radio receiver operates on ignition switched battery current that is available only when the ignition switch is in the On or Accessory positions. The electronic digital clock function of the radio operates on fused battery current supplied through the IOD fuse, regardless of the ignition switch position.

NOTE: USB decices (e.g., camera memory USB adaptors, etc.) must comply with the MSD (Mass Storage Device) standard. This USB terminal can provide power to the inserted device. The devices current limitation must be less or equal to 500mA.

Standard Procedure

The radio hard disk drive (HDD) can be backed up to save customer data in the event that a radio replacement is required. This procedure can only be done with all radios with a hard disk drive. All other radios do not have a HDD.

1. Turn the ignition to RUN, engine OFF.
2. Power on the external HDD.
3. Connect the external HDD to the radio using the USB (Universal Serial Bus) cable. The radio display will change to the “Manage My Files” screen.
4. Connect the scan tool and preform the following steps to place the radio into “Dealership Mode”:
   - ECU View
   - Radio
   - Misc. Functions

- Service Mode
- Start
- Next

5. Follow the on screen instructions on the radio to back up the radio HDD.

Removal

NOTE: For REQ radios, turn ignition to RUN and press the SET + SCAN buttons simultaneously to place the radio into transportation mode. The radio will display "Transportation" on the display within 5 seconds. If the radio is inoperative or not REQ, skip this step.

CAUTION: Pulling the antenna cable straight out of the radio without pulling on the locking antenna connector could damage the cable or radio.

1. Pull the radio out far enough to access the back of the radio.
2. Disconnect the AM/FM antenna (2) and electrical connectors (1).
3. If equipped, disconnect the navigation antenna (3).
4. If equipped, disconnect the USB connectors (4).
5. Remove the radio from the instrument panel.

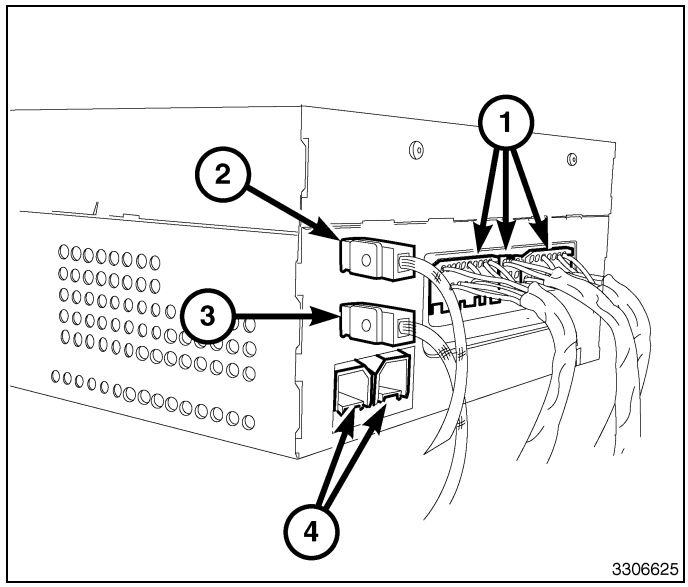

Installation

1. Position the new radio to the instrument panel.
2. Connect the AM/FM antenna (2) and electrical connectors (1).
3. Connect the satellite/navigation antenna (3).
4. If equipped, connect the USB connectors (4).
5. Install the instrument panel center bezel (Refer to 23 - Body/Instrument Panel/BEZEL, Instrument Panel - Installation).
6. Connect the battery negative cable.

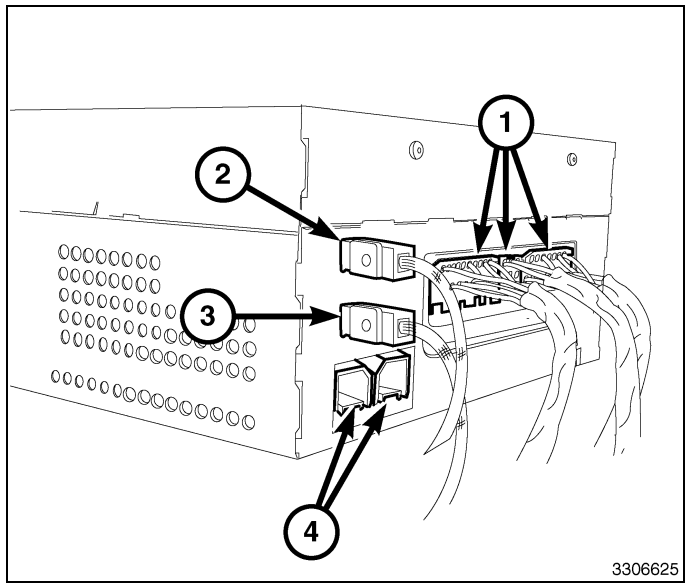

RECEIVER, Satellite

Removal

1. Disconnect and isolate the negative battery cable.
2. Remove the instrument panel center bezel (Refer to 23 - Body/Instrument Panel/BEZEL, Instrument Panel - Removal).

3. Remove the radio (Refer to 08 - Electrical/8A - Audio and Video/RADIO - Removal).
4. Remove the three nuts from the back of the video module bracket.
5. Disconnect the electrical connectors and remove the module.

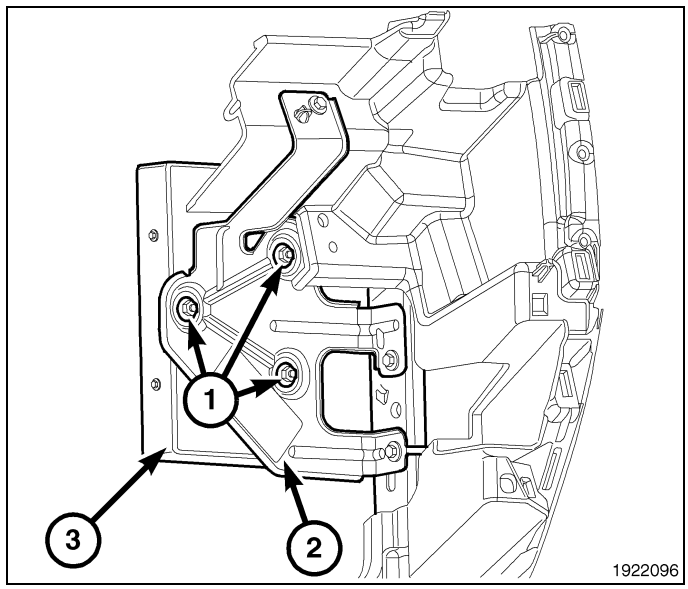

Installation

1. Install the module and connect the electrical connectors.
2. Install the three nuts (1) from the back of the video module bracket.
3. Install the radio (Refer to 08 - Electrical/8A - Audio and Video/RADIO - Installation).
4. Install the instrument panel center bezel (Refer to 23 - Body/Instrument Panel/BEZEL, Instrument Panel - Installation).
5. Connect the negative battery cable.

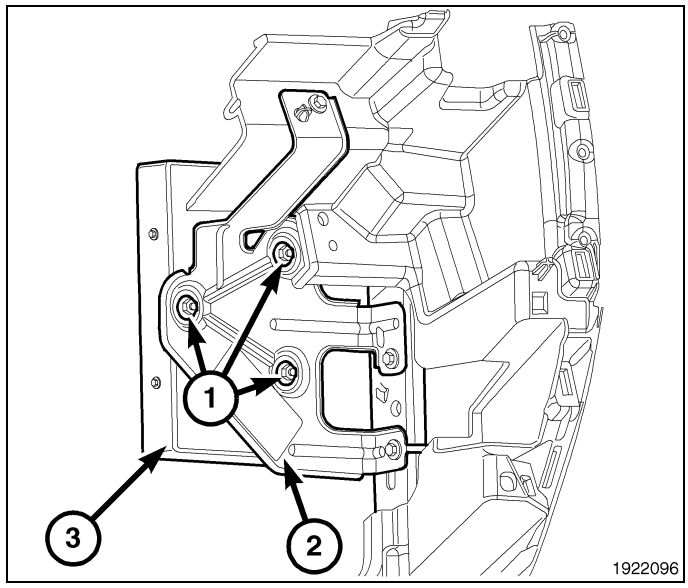

SPEAKER

Description

STANDARD

The standard equipment speaker system includes speakers in four locations. One 15.2 X 22.8 centimeter (6 X 9 inch) full-range speaker is located in each front door. There is also one full-range 13.3 centimeter (5.25 inch) diameter full-range speaker located in each rear door (quad cab) or B-pillar (regular cab).

PREMIUM

The optional premium speaker system features eleven Premium model speakers in seven locations. Each of the standard speakers is replaced with Premium model speakers. One 8.8 centimeter (3.50 inch) diameter speaker is located on each end of the instrument panel top pad. One 6.3 centimeter (2.50 inch) diameter speaker is located in the center of the instrument panel top pad. One 15.2 X 22.8 centimeter (6 X 9 inch) Premium speaker is located in each front door. There is also one coaxial 13.3 centimeter (5.25 inch) diameter Premium full-range speaker located in each rear door (quad cab) or B-pillar (regular cab). The premium speaker system also includes a power amplifier mounted behind the glove box. The total available power of the premium speaker system is 368 watts. If equipped, a 25.4 centimeter (10

inch) subwoofer is located behind the center passenger seat along with a amplifier (rated at 150 watts) located under the center passenger seat. The total available power if equipped with the subwoofer and second power amplifier is 518 watts.

Operation

Two wires connected to each speaker, one feed circuit (+) and one return circuit (–), allow the audio output signal electrical current to flow through the voice coil. For complete circuit diagrams, refer to the appropriate wiring information. The wiring information includes wiring diagrams, proper wire and connector repair procedures, details of wire harness routing and retention, connector pin-out information and location views for the various wire harness connectors, splices and grounds.

Diagnosis and Testing

Any diagnosis of the Audio system should begin with the use of a scan tool. For information on the use of the scan tool, refer to the appropriate Diagnostic Service information.

Refer to the appropriate wiring information.

WARNING: Disable the airbag system before attempting any steering wheel, steering column, seat belt tensioner, side airbag or instrument panel component diagnosis or service. Disconnect and isolate the negative battery (ground) cable. Wait two minutes for the airbag system capacitor to discharge before performing further diagnosis or service. This is the only sure way to disable the airbag system. Failure to follow these instructions may result in accidental airbag deployment and possible serious or fatal injury.

CAUTION: The speaker output of the radio is a "floating ground" system. Do not allow any speaker lead to short to ground, as damage to the radio and/or amplifier may result.

1. If all speakers are inoperative, check the fuses in the Totally Integrated Power Module (TIPM). If OK, go to Step 2. If not OK, repair the shorted circuit or component as required and replace the faulty fuse.
2. Check the amplifier fuse (if equipped) in the TIPM. If OK, go to Step 3. If not OK, repair the shorted circuit or component as required and replace the faulty fuse.
3. Turn the ignition switch to the ON position. Turn the radio receiver ON. Adjust the balance and fader control controls to check the performance of each individual speaker. Note the speaker locations that are not performing correctly. Go to Step 4.
4. Turn the radio receiver OFF. Turn the ignition OFF. Disconnect and isolate the battery negative cable. If vehicle is **not** equipped with an amplifier, remove the radio receiver. If vehicle is equipped with an amplifier, disconnect wire harness connector at output side of amplifier. Go to Step 5.
5. Check both the speaker feed (+) circuit and return (-) circuit cavities for the inoperative speaker at the radio receiver wire harness connector for continuity to ground. There should be no continuity. If OK, go to Step 6. If not OK, repair the shorted speaker feed (+) and/or return (-) circuits(s) to the speaker as required.
6. Disconnect wire harness connector at the inoperative speaker. Check for continuity between the speaker feed (+) circuit cavities of the radio receiver wire harness connector or if equipped, the amplifier wire harness connector and the speaker wire harness connector. Repeat the check between the speaker return (-) circuit cavities of the radio receiver wire harness connector and the speaker wire harness connector. In each case, there should be continuity. If OK, replace the faulty speaker. If not OK, repair the open speaker feed (+) and/or return (-) circuits(s) as required.

Removal

FRONT DOOR SPEAKER	FRONT DOOR SPEAKER
INSTRUMENT PANEL CENTER SPEAKER	INSTRUMENT PANEL CENTER SPEAKER
INSTRUMENT PANEL END SPEAKER	INSTRUMENT PANEL END SPEAKER
REAR CAB SIDE SPEAKER	REAR CAB SIDE SPEAKER
REAR DOOR SPEAKER	REAR DOOR SPEAKER
SUBWOOFER - REGULAR CAB	SUBWOOFER - REGULAR CAB
SUBWOOFER - QUAD CAB	SUBWOOFER - QUAD CAB
HEADLINER - QUAD CAB	HEADLINER MOUNTED SPEAKER - QUAD CAB

FRONT DOOR SPEAKER

1. Disconnect and isolate the battery negative cable.
2. Remove the front door trim panel (Refer to 23 - Body/ Door - Front/PANEL, Door Trim - Removal).
3. Remove speaker mounting fasteners.
4. Disconnect the electrical connector and remove the speaker.

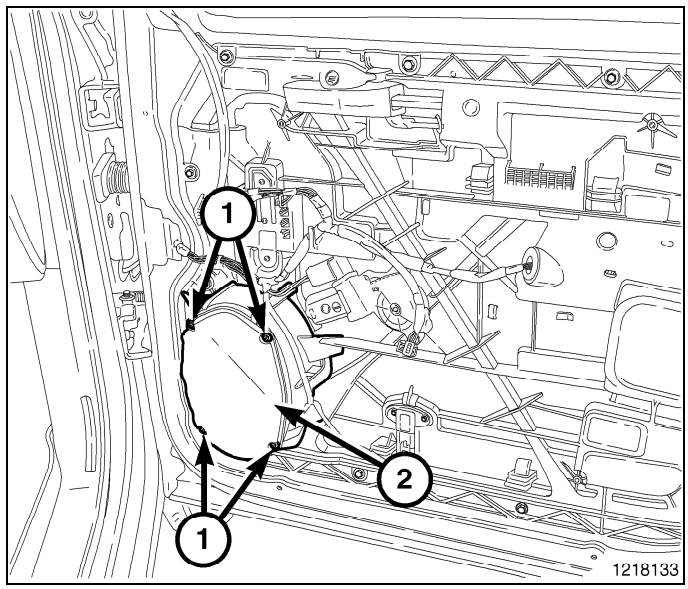

INSTRUMENT PANEL CENTER SPEAKER

1. Disconnect and isolate the battery negative cable.
2. Remove the instrument panel top cover screw covers.
3. Remove the instrument panel top cover screws.
4. Remove the instrument panel top cover.

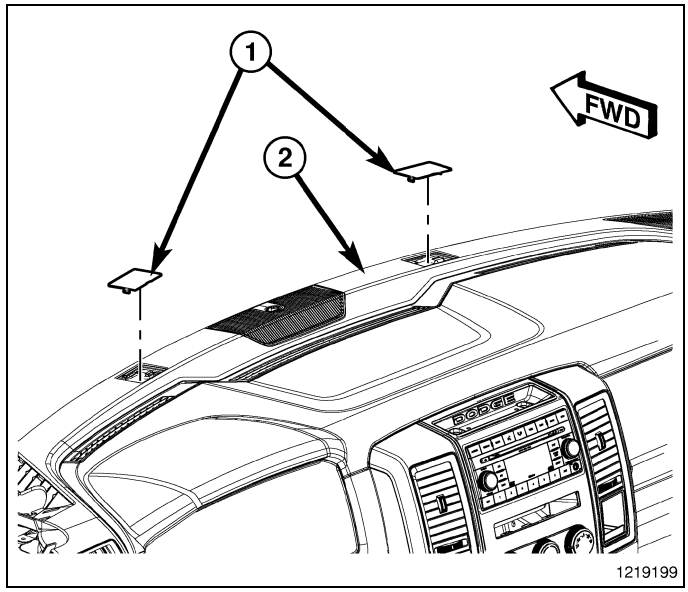

5. Remove the speaker mounting fasteners.
6. Disconnect the electrical connector and remove the speaker.

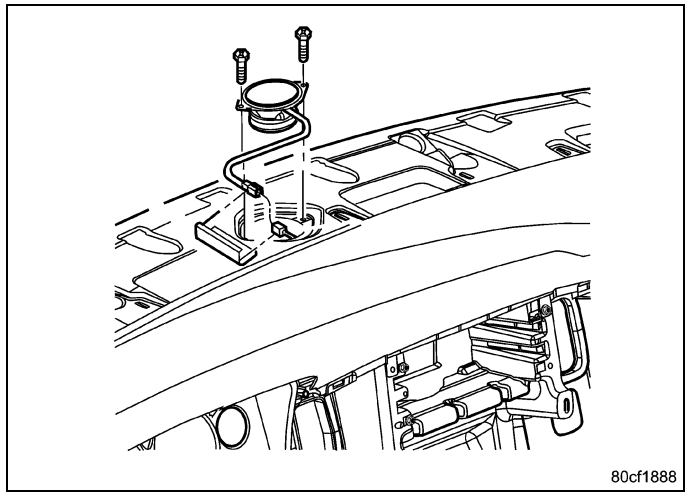

INSTRUMENT PANEL END SPEAKER

1. Disconnect and isolate the battery negative cable.
2. Remove the instrument panel top cover (Refer to 23 - Body/Instrument Panel/COVER, Instrument Panel - Removal).
3. Remove the speaker mounting fasteners.
4. Disconnect the electrical connector and remove the speaker.

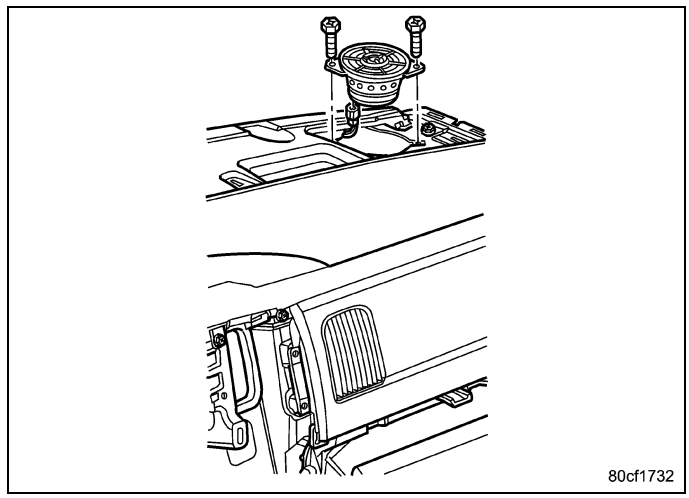

REAR CAB SIDE SPEAKER

1. Disconnect and isolate the battery negative cable.
2. Remove the B-pillar lower trim (Refer to 23 - Body/Interior/PANEL, B-Pillar Trim - Removal).
3. Remove the speaker mounting fasteners.
4. Disconnect the electrical connector and remove the speaker.

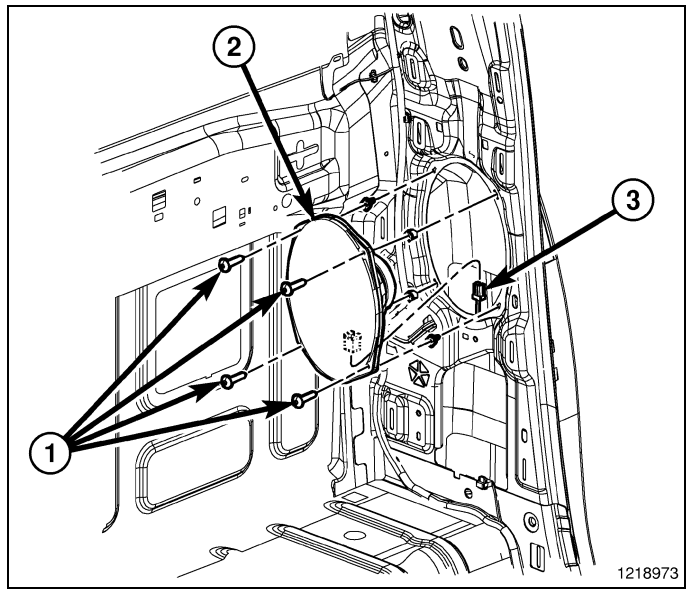

REAR DOOR SPEAKER

1. Disconnect and isolate the battery negative cable.
2. Remove the rear door trim panel (Refer to 23 - Body/Doors - Rear/PANEL, Rear Door Trim - Removal).
3. Remove the speaker mounting fasteners.
4. Disconnect the electrical connector and remove the speaker.

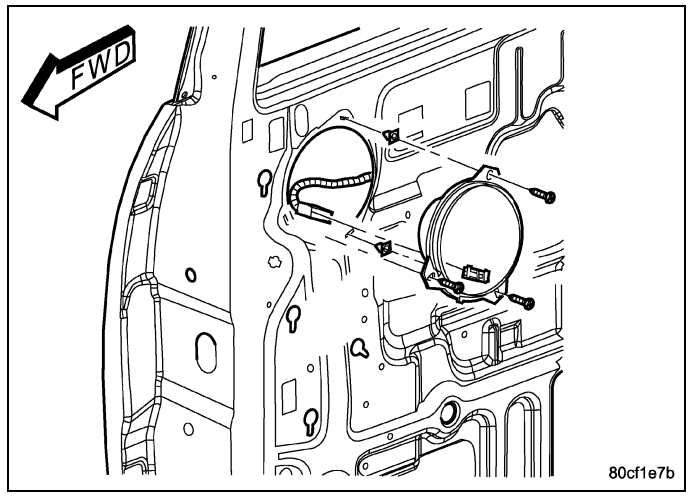

SUBWOOFER - REGULAR CAB

1. Disconnect and isolate the battery negative cable.
2. Remove the mounting fasteners to the subwoofer housing.

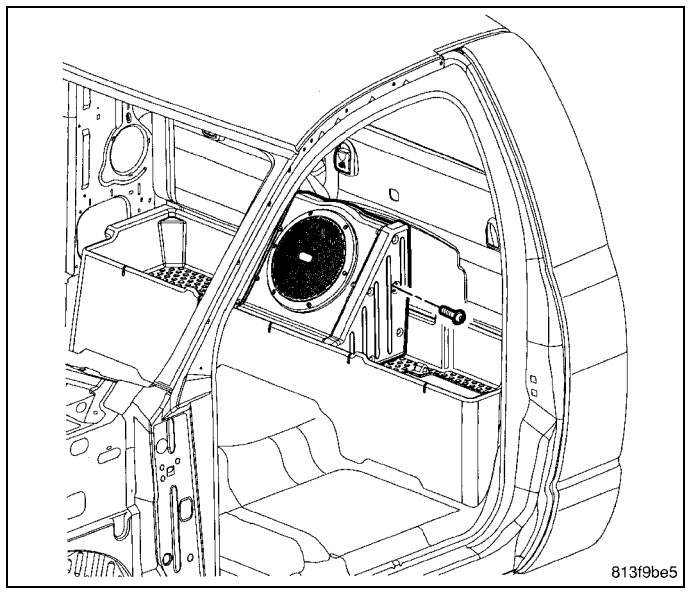

3. Disconnect the electrical connector.

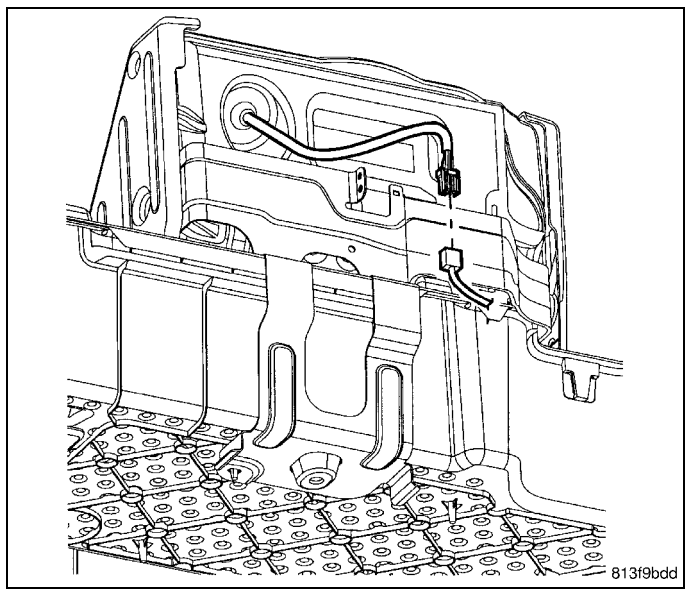

4. Remove subwoofer from vehicle.

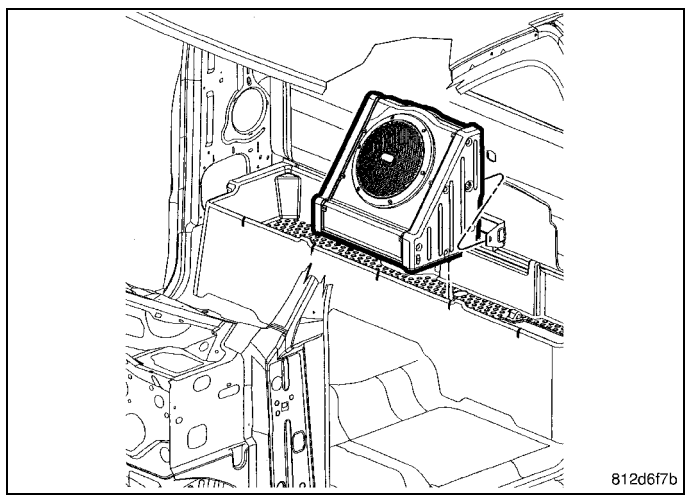

SUBWOOFER - QUAD CAB

1. Disconnect and isolate the battery negative cable.

2. Raise right rear seat to access the subwoofer.
3. Remove the mounting fasteners.
4. Disconnect the electrical connector and remove the subwoofer.

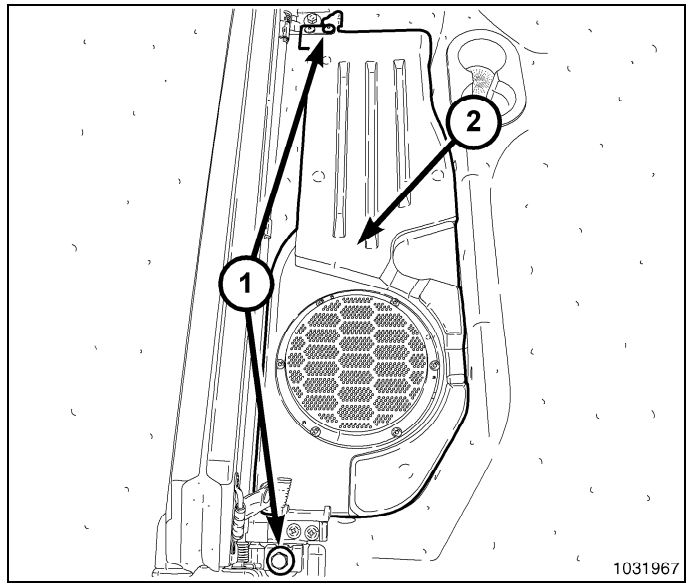

HEADLINER MOUNTED SPEAKER - QUAD CAB

1. Disconnect and isolate the battery negative cable.
2. Using a trim stick, remove the speaker cover (1) from the headliner (2).

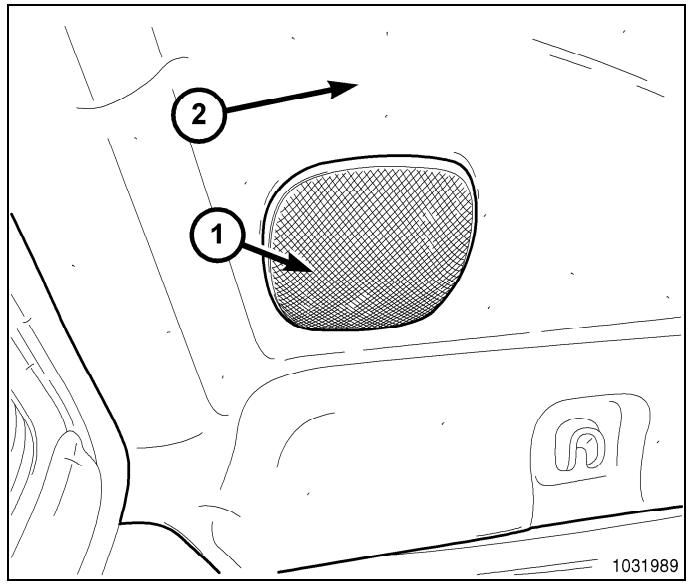

3. Remove the two retainers holding the speaker (1) into the headliner (2).
4. Disconnect the electrical connector and remove the speaker.

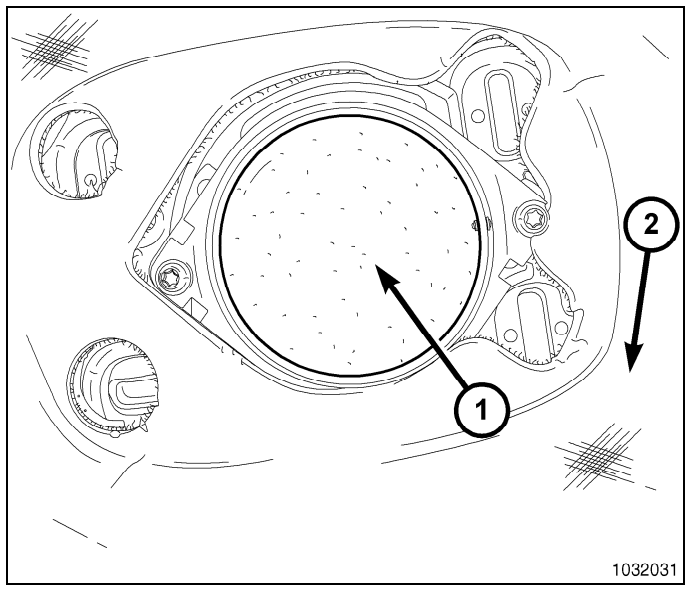

Installation

FRONT DOOR SPEAKER	FRONT DOOR SPEAKER
INSTRUMENT PANEL CENTER SPEAKER	INSTRUMENT PANEL CENTER SPEAKER
INSTRUMENT PANEL END SPEAKER	INSTRUMENT PANEL END SPEAKER
REAR CAB SIDE SPEAKER	REAR CAB SIDE SPEAKER
REAR DOOR SPEAKER	REAR DOOR SPEAKER
SUBWOOFER - REGULAR CAB	SUBWOOFER - REGULAR CAB
SUBWOOFER - QUAD CAB	SUBWOOFER – QUAD CAB
HEADLINER MOUNTED SPEAKER - QUAD CAB	HEADLINER MOUNTED SPEAKER - QUAD CAB

FRONT DOOR SPEAKER

1. Connect the electrical connector and install the speaker.
2. Install and tighten the mounting fasteners.
3. Install the front door trim panel (Refer to 23 - Body/ Door - Front/PANEL, Door Trim - Installation).
4. Connect the battery negative cable.

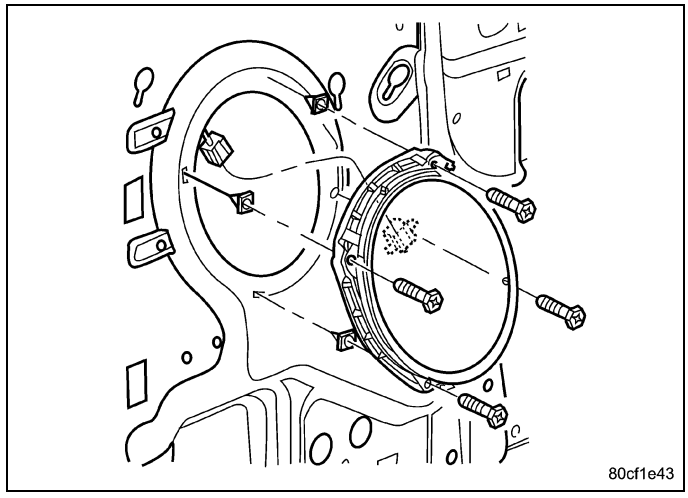

INSTRUMENT PANEL CENTER SPEAKER

1. Connect the electrical harness connector and install the speaker.
2. Install and tighten the mounting fasteners.
3. Install the instrument panel top cover (Refer to 23 - Body/Instrument Panel/COVER, Instrument Panel - Installation).
4. Connect the battery negative cable.

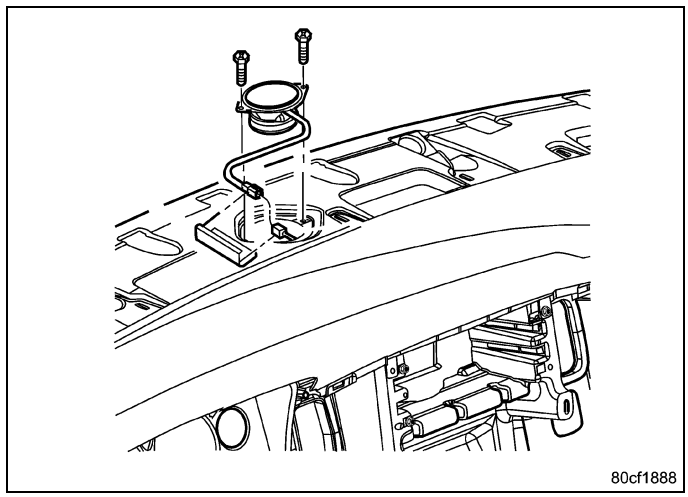

INSTRUMENT PANEL END SPEAKER

1. Connect the electrical connector and install the speaker.
2. Install and tighten the mounting fasteners.
3. Install the instrument panel top cover (Refer to 23 - Body/Instrument Panel/COVER, Instrument Panel - Installation).
4. Connect the battery negative cable.

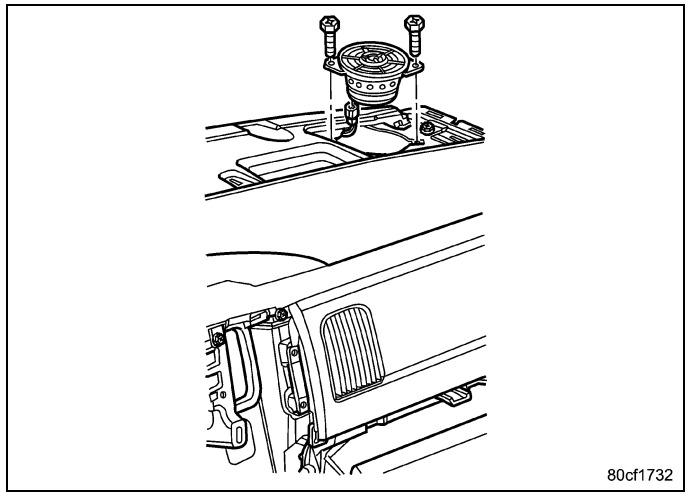

REAR CAB SIDE SPEAKER

1. Connect the electrical connector and install the speaker.
2. Install and tighten the mounting fasteners.
3. Install the B-pillar lower trim (Refer to 23 - Body/Interior/PANEL, B-Pillar Trim - Installation).
4. Connect the battery negative cable.

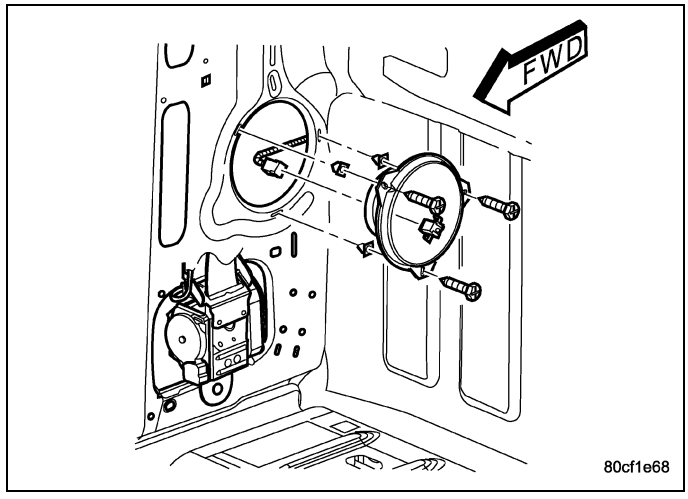

REAR DOOR SPEAKER

1. Connect the electrical connector and install the speaker.
2. Install and tighten the mounting fasteners.
3. Install the rear door trim panel (Refer to 23 - Body/ Doors - Rear/PANEL, Rear Door Trim - Installation).
4. Connect the battery negative cable.

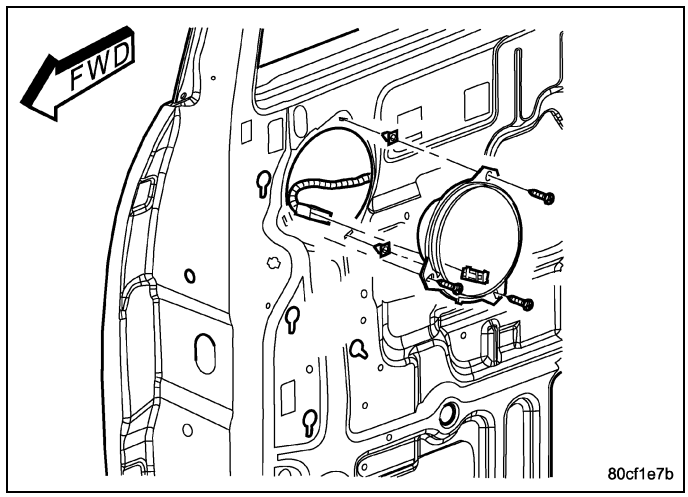

SUBWOOFER - REGULAR CAB

1. Position the subwoofer housing into the vehicle.

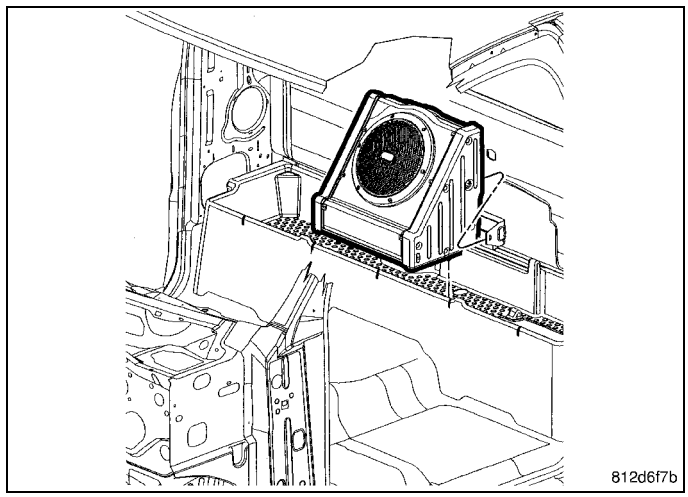

2. Connect the electrical connector.

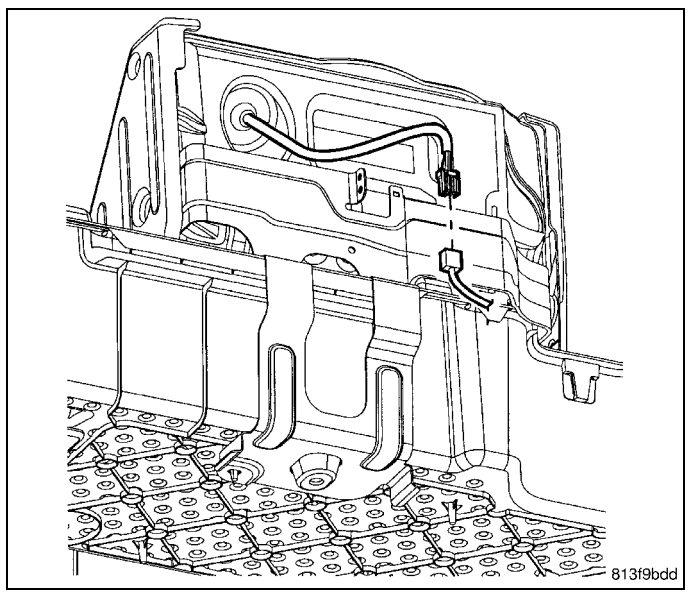

3. Install the mounting fasteners.
4. Connect the battery negative cable.

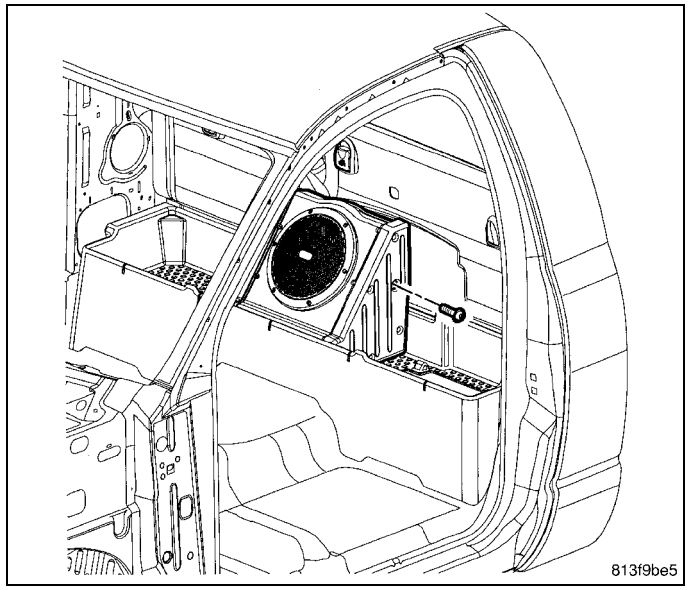

SUBWOOFER – QUAD CAB

1. Position the subwoofer to vehicle.
2. Connect the electrical connector.
3. Install and tighten the mounting fasteners (1).
4. Lower the seat.
5. Connect the battery negative cable.

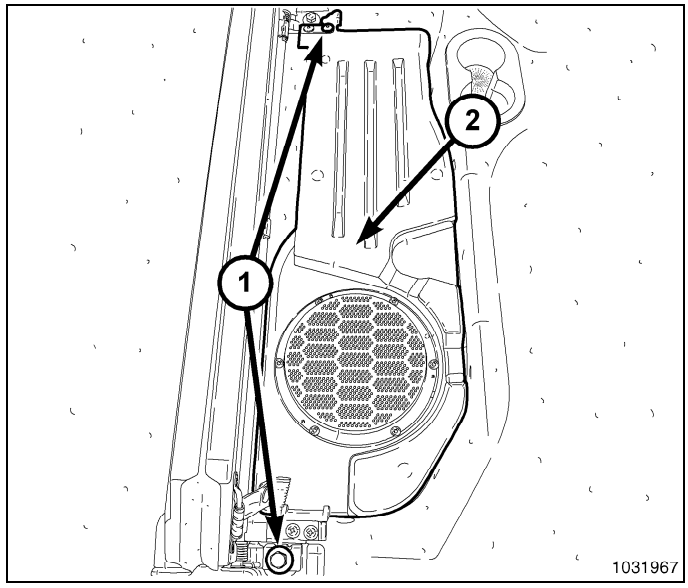

HEADLINER MOUNTED SPEAKER - QUAD CAB

1. Connect the electrical connector and install the speaker (1) into the headliner (2).
2. Connect the battery negative cable.

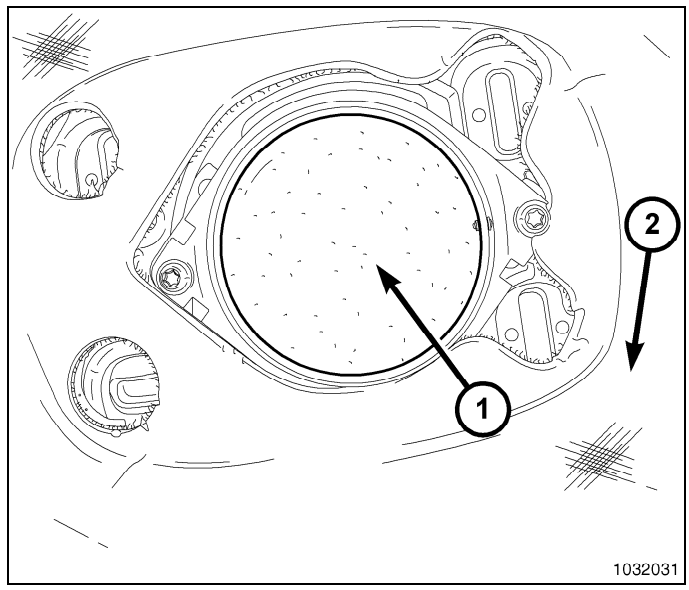

3. Install the speaker cover (1) onto the headliner (2).
4. Connect the battery negative cable.

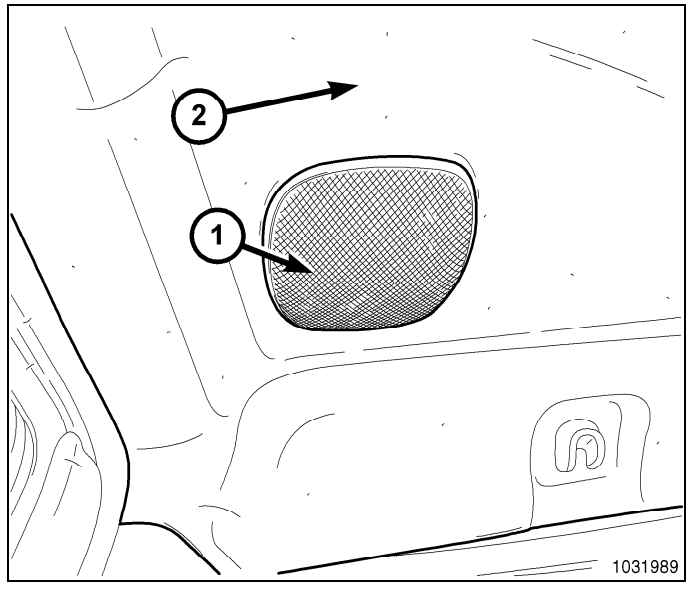

SWITCH, Remote Radio

Description

Two rocker-type switches (if equipped) are mounted on the back (instrument panel side) of the steering wheel spokes. The switch on the left spoke is the seek switch and has seek up, seek down, and preset station advance functions. The switch on the right spoke is the volume control switch and has volume up, and volume down functions. The switch on the right spoke also includes a “mode” control that allows the driver to sequentially select AM radio, FM radio, cassette player, CD player or CD changer (if equipped).

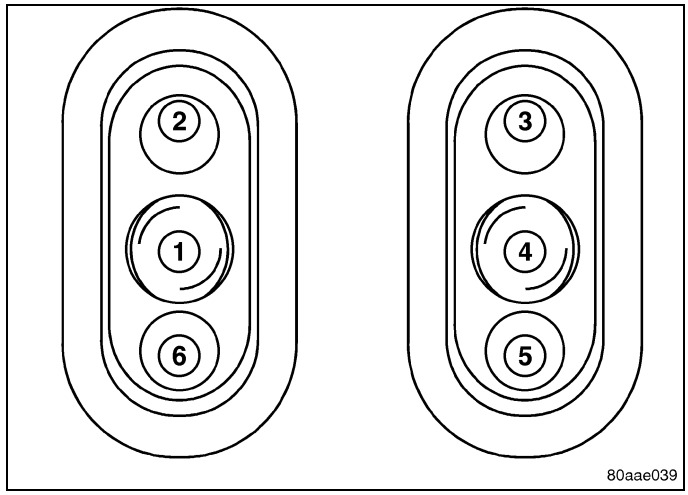

Operation

The six switches in the two remote radio switch units are normally open, resistor multiplexed momentary switches that are hard wired to the Totally Integrated Power Module (TIPM) through the clockspring. The TIPM sends a five volt reference signal to both switch units on one circuit, and senses the status of all of the switches by reading the voltage drop on a second circuit.

When the TIPM senses an input (voltage drop) from any one of the remote radio switches, it sends the proper switch status messages on the Controller Area Network (CAN) data bus network to the radio receiver. The electronic circuitry within the radio receiver is programmed to respond to these remote radio switch status messages by adjusting the radio settings as requested. For diagnosis of the TIPM or the CAN data bus, the use of a scan tool and the proper Diagnostic Procedures information is recommended.

Diagnosis and Testing

Any diagnosis of the Audio system should begin with the use of scan tool. For information on the use of the scan tool, refer to the appropriate Diagnostic Service information.

For complete circuit diagrams, refer to the appropriate wiring information.

WARNING: Disable the airbag system before attempting any steering wheel, steering column, seat belt tensioner, side airbag or instrument panel component diagnosis or service. Disconnect and isolate the negative battery (ground) cable. Wait two minutes for the airbag system capacitor to discharge before performing further diagnosis or service. This is the only sure way to disable the airbag system. Failure to follow these instructions may result in accidental airbag deployment and possible serious or fatal injury.

1. Disconnect and isolate the battery negative cable.
2. Remove the remote radio switch(es) from the steering wheel (Refer to 08 - Electrical/8A - Audio and Video/ SWITCH, Remote Radio - Removal).
3. Use an ohmmeter to check the switch resistances as shown in the Remote Radio Switch Test chart. If the remote radio switch resistances check OK, go to Step #4. If not OK, replace the faulty switch.

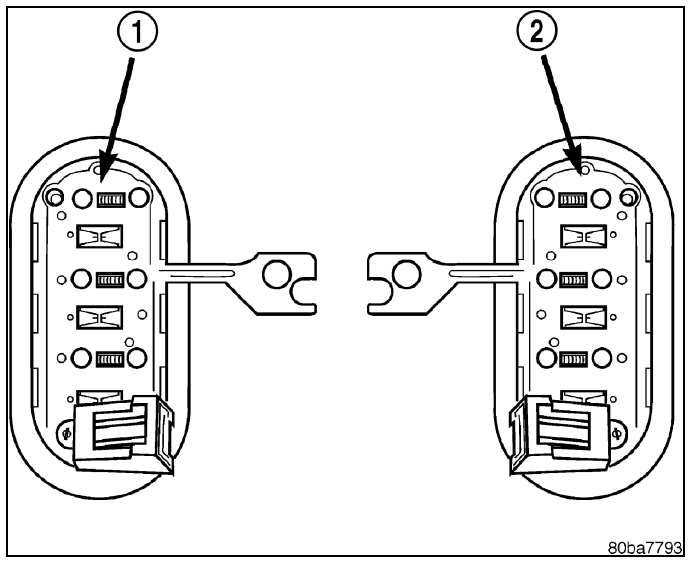

REMOTE RADIO SWITCH TEST

Switch	Switch Position	Minimum Resistance	Nominal Resistance	Maximum Resistance
Right (White)	Volume Up	6.732 ohms	6.8 ohms	6.868 ohms
Right (White)	Volume Down	14.850 ohms	15 ohms	15.151 ohms
Right (White)	Mode Advance	0 ohms	0 ohms	0 ohms
Left (Black)	Seek Up	1.188 ohms	1.2 ohms	1.212 ohms
Left (Black)	Seek Down	3.267 ohms	3.3 ohms	3.333 ohms
Left (Black)	Pre-Set Station Advance	.465 ohms	.47 ohms	.474 ohms

4. Connect the battery negative cable. Turn the ignition switch to the On position. Check for 5 volts at the radio control mux circuit cavities of the steering wheel wire harness connectors for both remote radio switches. If OK, go to Step #5. If not OK, repair the open or shorted radio control mux circuit to the Totally Integrated Power Module (TIPM) as required.
5. Disconnect and isolate the battery negative cable. Disconnect the 22-way instrument panel wire harness connector from the TIPM. Check for continuity between the remote radio switch ground circuit cavities of the steering wheel wire harness connectors for both remote radio switches and a good ground. There should be no continuity. If OK, go to Step #6. If not OK, repair the shorted remote radio switch ground circuit to the TIPM as required.
6. Check for continuity between the remote radio switch ground circuit cavities of the steering wheel wire harness connectors for both remote radio switches and the 22-way instrument panel wire harness connector for the TIPM. There should be continuity. If OK, refer to the proper Diagnostic Procedures manual to test the TIPM and the CAN data bus. If not OK, repair the open remote radio switch ground circuit as required.

Removal

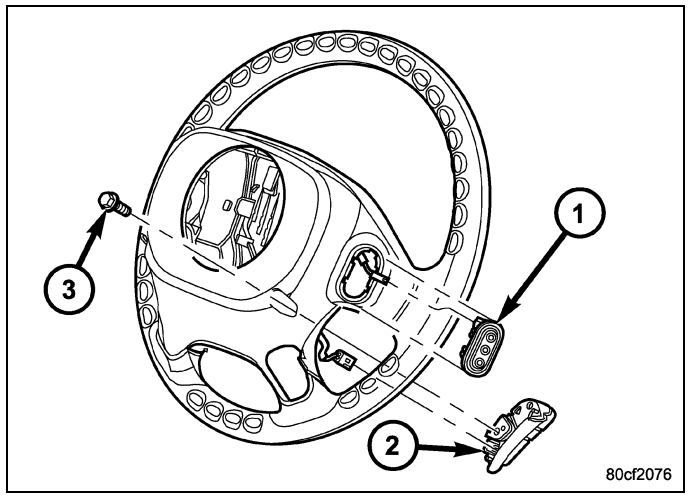

WARNING: Disable the airbag system before attempting any steering wheel, steering column, seat belt tensioner, side airbag or instrument panel component diagnosis or service. Disconnect and isolate the negative battery (ground) cable. Wait two minutes for the airbag system capacitor to discharge before performing further diagnosis or service. This is the only sure way to disable the airbag system. Failure to follow these instructions may result in accidental airbag deployment and possible serious or fatal injury.

1. Disconnect and isolate the battery negative cable.
2. Remove the driver airbag (Refer to 10 - Restraints/AIR BAG, Driver - Removal).
3. Remove the speed control switches (2) (Refer to 08 - Electrical/8P - Speed Control/SWITCH, Speed Control - Removal).
4. Unplug the wire harness connector from the remote radio switch (1).
5. Depress the tabs on each side of each switch and push the switch through the rear steering wheel cover.

Installation

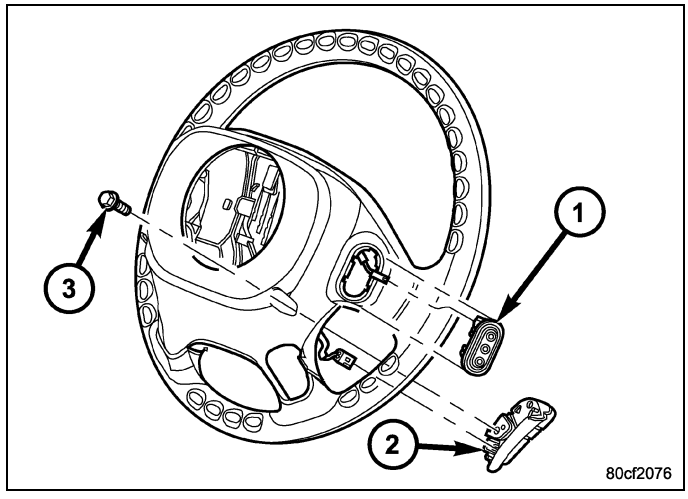

WARNING: Disable the airbag system before attempting any steering wheel, steering column, seat belt tensioner, side airbag or instrument panel component diagnosis or service. Disconnect and isolate the negative battery (ground) cable. Wait two minutes for the airbag system capacitor to discharge before performing further diagnosis or service. This is the only sure way to disable the airbag system. Failure to follow these instructions may result in accidental airbag deployment and possible serious or fatal injury.

1. Install remote radio switch (1) to the steering wheel.
2. Connect the wire harness to the remote radio switch.
3. Install the speed control switches (2) (Refer to 08 - Electrical/8P - Speed Control/SWITCH, Speed Control - Installation).
4. Install the driver airbag (Refer to 10 - Restraints/AIR BAG, Driver - Installation).
5. Connect the battery negative cable.

CHIME/BUZZER

TABLE OF CONTENTS

page

CHIME/BUZZER
- DESCRIPTION
  - CHIME WARNING SYSTEM 2
  - PARK ASSIST SYSTEM 3
- OPERATION
  - CHIME WARNING SYSTEM 4
  - PARK ASSIST SYSTEM 5
- DIAGNOSIS AND TESTING
  - CHIME WARNING SYSTEM 6
  - PARK ASSIST SYSTEM 7
- **DISPLAY, PARK ASSIST**
  - DESCRIPTION 8
  - OPERATION 9
  - REMOVAL 10
  - INSTALLATION 11

page

MODULE, PARK ASSIST
- DESCRIPTION 11
- OPERATION 11
- REMOVAL 12
- INSTALLATION 13

SENSOR, PARK ASSIST
- DESCRIPTION 13
- OPERATION 14
- REMOVAL 15
- INSTALLATION 15

Chime/Buzzer

Description

CHIME WARNING SYSTEM

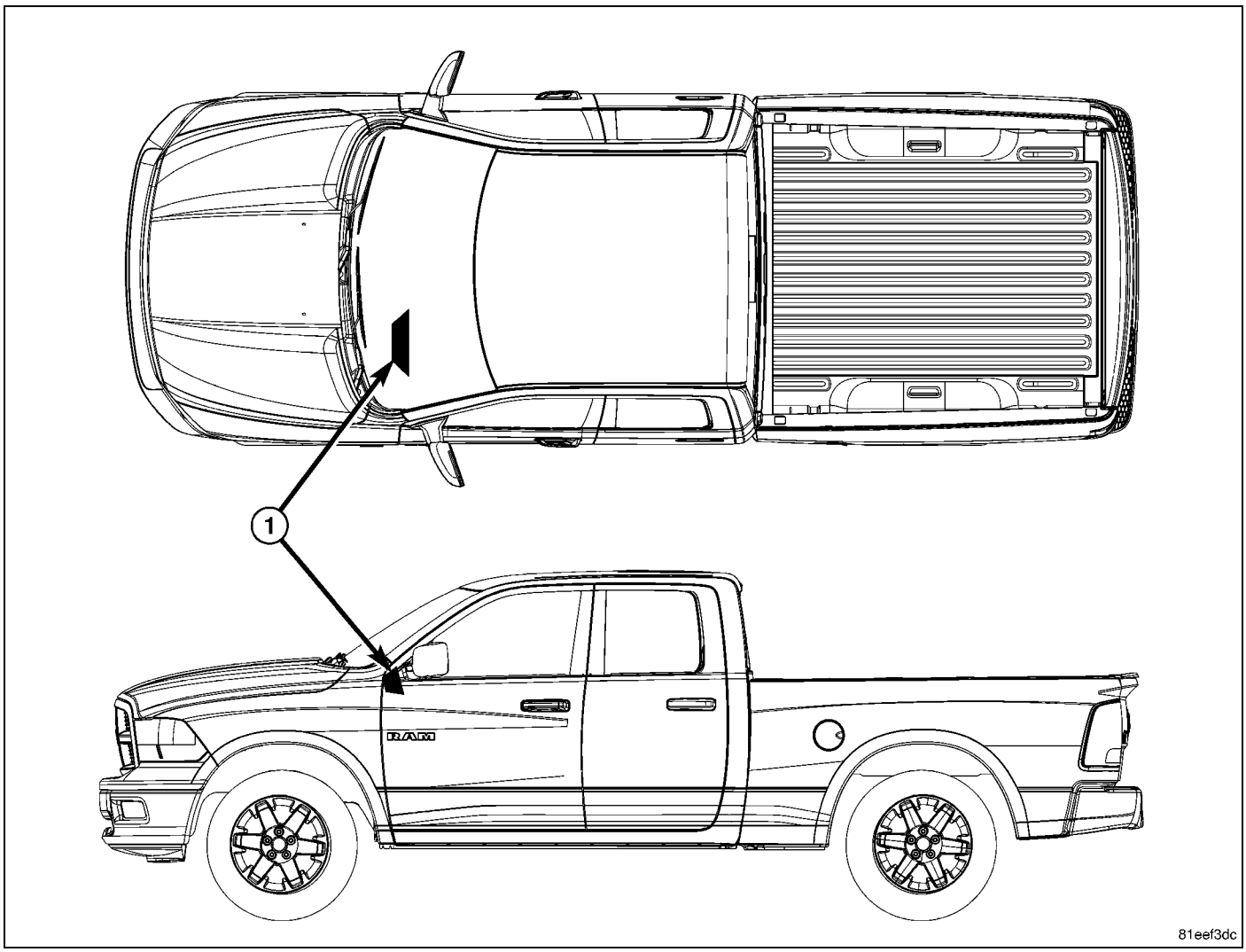

A chime warning system is standard factory-installed equipment. The chime warning system uses an electromechanical transducer attached to the electronic circuit board inside of the instrument cluster (1) to provide audible indications of various vehicle conditions that may require the attention of the vehicle operator or occupants. The instrument cluster also includes the hardware and software necessary to serve as the electronic body control module and is sometimes referred to as the Cab Compartment Node (CCN).

The electromechanical transducer generates beep tones, chime tones and click tones to emulate the sounds associated with conventional turn signal and hazard warning flasher operation. The microprocessor-based instrument cluster utilizes electronic **chime request** messages received from other modules in the vehicle over the Controller Area Network (CAN) data bus along with hardwired inputs to monitor many sensors and switches throughout the vehicle. In response to those inputs, the circuitry and programming of the CCN allow it to control the audible outputs that are produced through its on-board transducer.

The CCN is capable of producing the following audible outputs:

- **Slow Rate Repetitive Click** - Repeated **click** tones that are issued at a slow rate of about 50 clicks per minute.
- **Fast Rate Repetitive Click** - Repeated **click** tones that are issued at a fast rate of more than about 100 clicks per minute.
- **Fixed Duration Beep** - A short, sharp, single tactile **beep** tone.
- **Single Chime Tone** - A single **chime** tone.
- **Slow Rate Repetitive Chime** - Repeated **chime** tones that are issued at a slow rate of about 50 chimes per minute.

- **Fast Rate Repetitive Chime** - Repeated **chime** tones that are issued at a fast rate of about 180 chimes per minute.

Hardwired circuitry connects the CCN and the various chime warning system switch and sensor inputs to their modules and to each other through the electrical system of the vehicle. These hard wired circuits are integral to several wire harnesses, which are routed throughout the vehicle and retained by many different methods. These circuits may be connected to each other, to the vehicle electrical system and to the CCN through the use of a combination of soldered splices, splice block connectors, and many different types of wire harness terminal connectors and insulators. Refer to the appropriate wiring information. The wiring information includes wiring diagrams, proper wire and connector repair procedures, further details on wire harness routing and retention, as well as pin-out and location views for the various wire harness connectors, splices and grounds.

The instrument cluster chime warning system circuits and components cannot be adjusted or repaired. If the CCN circuitry or the on-board transducer are damaged or inoperative, the complete unit must be replaced.

PARK ASSIST SYSTEM

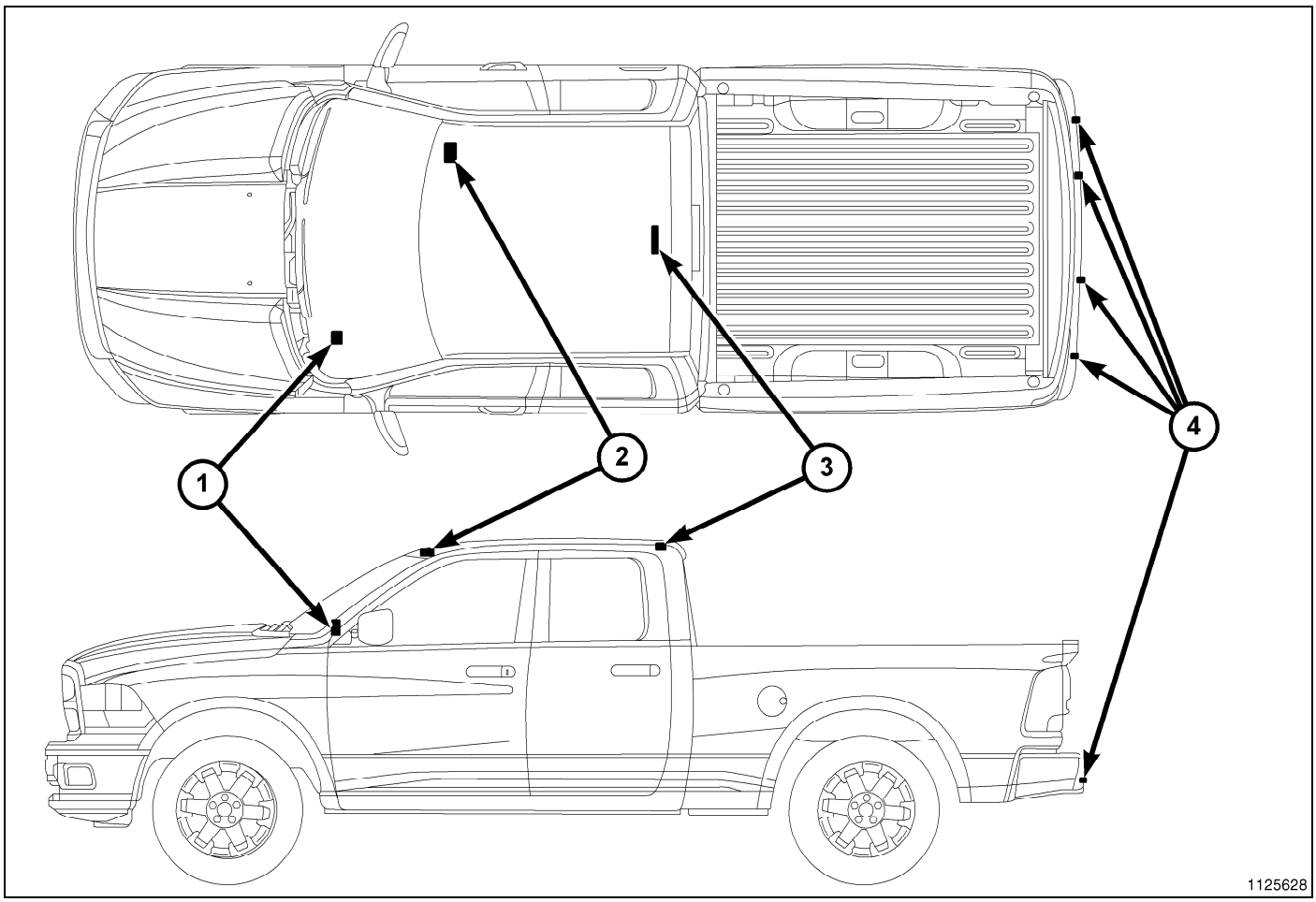

A park assist system is an optional factory-installed electronic parking aid. During parking and other similar vehicle maneuvers this system alerts the vehicle operator to obstacles located in the path immediately behind the vehicle which, due to the surrounding rear vehicle structure, might be otherwise difficult to perceive. When an object is detected, the system uses an electromechanical transducer and Light Emitting Diode (LED) indicators within the park assist display unit to provide the vehicle operator with visual and audible indications of the presence and proximity of such objects.

The park assist system includes the following major components, which are described in further detail elsewhere in this service information:

- **Electronic Vehicle Information Center (1)** - In vehicles equipped with the optional park assist system, the Electronic Vehicle Information Center (EVIC) displays textual warnings and error messages and emits audible warnings related to the current operating status of the park assist system and provides an interface that allows the vehicle operator to manually disable or enable the system using the customer programmable features option.
- **Park Assist Module (2)** - Vehicles equipped with the park assist system include a park assist module which is secured to a mounting bracket by two fasteners and is concealed above the headliner.

- **Park Assist Display (3)** - Vehicles equipped with the park assist system have a park assist display unit mounted in the rear of the headliner just forward of the rear glass. The body of the display is concealed above the headliner where it is secured by a retainer on the back of the headliner substrate. Only the narrow, oval-shaped smoked clear lens of the display is visible on the outer surface of the headliner.
- **Park Assist Sensors (4)** - Vehicles equipped with the park assist system have four ultrasonic park assist sensors that are concealed behind the rear bumper. Each sensor is snapped into an individual molded plastic mounting bracket located at horizontal intervals along the back side of the rear bumper.

Hardwired circuitry connects the various park assist system components to each other through the electrical system of the vehicle. These hardwired circuits are integral to several wire harnesses, which are routed throughout the vehicle and retained by many different methods. These circuits may be connected to each other and to the vehicle electrical system through the use of a combination of soldered splices, splice block connectors, and many different types of wire harness terminal connectors and insulators. Refer to the appropriate wiring information. The wiring information includes wiring diagrams, proper wire and connector repair procedures, further details on wire harness routing and retention, as well as pin-out and location views for the various wire harness connectors, splices and grounds.

The park assist system components cannot be adjusted or repaired. If any of the park assist system components is damaged or ineffective, that component must be replaced.

Operation

CHIME WARNING SYSTEM

The chime warning system operates on battery voltage received through a fuse in the Totally Integrated Power Module (TIPM) on a non-switched fused B(+) circuit so that the system may operate regardless of the ignition switch position. The chime warning system also monitors the ignition switch position so that some chime features are functional only with the ignition switch in the ON position, while others are functional regardless of the ignition switch position.

The chime warning system provides an audible indication to the vehicle operator or occupants under the following conditions:

- **Airbag Indicator Warning** - The instrument cluster, also known as the Cab Compartment Node (CCN) transducer will generate one short chime when the ignition switch is in the ON position, and an electronic message is received over the Controller Area Network (CAN) data bus from the Occupant Restraint Controller (ORC) requesting airbag indicator illumination. This warning will only occur following completion of the airbag indicator bulb test, and will only occur once during any ignition cycle.
- **Door Ajar Warning** - The CCN will generate one short chime when the ignition switch is in the ON position, when the door ajar indicator is illuminated, or when a **DOOR(S) OPEN** textual message is displayed in the odometer Vacuum Fluorescent Display (VFD) unit of the instrument cluster. This warning indicates that a door is, or multiple doors are not closed or completely latched while the vehicle is moving.
- **Electronic Stability Program/Brake Assist System Warning** - The CCN transducer will generate one short chime when the Electronic Stability Program (ESP)/Brake Assist System (BAS) has been manually disabled by the vehicle operator using the ESP/BAS traction control switch on the instrument panel.
- **Electronic Stability Program/Brake Assist System Fault Warning** - The CCN transducer will generate one short chime each time the Electronic Stability Program (ESP)/Brake Assist System (BAS) indicator is illuminated in the instrument cluster. This warning indicates a failure condition has been monitored affecting the operation of the ESP/BAS related components or circuits. This warning will only occur following completion of the ESP/BAS indicator bulb test, and will only occur once during any ignition cycle.
- **Fasten Seat Belt Indicator Warning** - The CCN transducer will generate repetitive chimes at a slow rate to announce that the seat belt switch and the ignition switch indicate that the driver side front seat belt is not fastened with the ignition switch in the ON position. The chime warning system also supports the enhanced seatbelt reminder (beltminder) when this feature is enabled.
- **Head/Park Lamps-On Warning** - The CCN transducer will generate repetitive chimes at a fast rate to indicate that inputs from the driver door ajar switch, the headlamp switch, and the ignition switch indicate that the exterior lamps are turned ON with the driver side front door opened and the ignition switch in the OFF position. The chimes will continue to sound until the exterior lamps are turned OFF, the driver side front door is closed, or the ignition switch is turned to the ON position, whichever occurs first.
- **Key-In-Ignition Warning** - The CCN transducer will generate repetitive chimes at a fast rate to indicate that inputs from the driver side front door ajar switch, the ignition switch and the key-in ignition circuitry of the Wireless Ignition Node (WIN) indicate that the key is in the ignition with the driver side front door open and the ignition switch in the

OFF position. The chimes will continue to sound until the key is removed from the ignition switch, the driver side front door is closed, or the ignition switch is turned to the ON position, whichever occurs first.

- **Low Fuel Indicator Warning** - The CCN transducer will generate one short chime when the low fuel indicator is illuminated in the instrument cluster. This warning indicates that the monitored fuel level in the fuel tank is low. This chime will only occur once during any ignition cycle.
- **Low Wash Indicator Warning** - The CCN transducer will generate one short chime when the low washer fluid indicator is illuminated in the instrument cluster. This chime will only occur once during any ignition cycle.
- **Overspeed Warning** - The CCN transducer will generate one short chime when the vehicle speed is over a pre-programmed speed value. This feature is only enabled on vehicles that have been configured for sale in a Middle East Gulf Coast Country (GCC).
- **Park Brake Reminder** - The CCN transducer will generate one short chime to announce that the hardwired input from the park brake switch and an electronic **vehicle speed** message received over the CAN data bus indicate that the park brake is applied and the vehicle is moving. This chime will repeat each time the input conditions are met.
- **Sentry Key Customer Learn Mode Announcement** - The CCN transducer will generate one short chime to confirm that an electronic **Customer Learn** mode message has been received over the CAN data bus to indicate that the Wireless Ignition Node (WIN) is prepared for programming additional Sentry Key transponders. This chime feature is only active on vehicles sold in a market where Customer Learn programming is an allowed feature.
- **Turn Signal/Hazard Warning Flasher Emulation** - The CCN relay will generate repetitive clicks at a slow rate to emulate an electromechanical flasher when the turn signal or hazard warning system are operating. The relay will generate repetitive clicks at a fast rate to indicate that the right or left turn signals are operating with one or more bulbs ineffective. In either case, the clicks will continue until the turn signal and hazard warning systems are turned OFF.
- **Turn Signal On Warning** - The CCN transducer will generate repetitive chimes at a slow rate to indicate that a turn signal has been active continuously for 1.6 kilometers (1 mile) with the vehicle speed greater than 22 kilometers-per-hour (15 miles-per hour). Vehicles built for markets other than the United States and Canada have a revised distance threshold of 4 kilometers (2.49 miles) for this feature. The chime will continue until the turn signal input becomes inactive or until the electronic **vehicle speed** message indicates that the speed is less than 22 kilometers-per-hour (15 miles-per-hour), whichever occurs first. The hazard warning flashers will not activate this chime feature.
- **Warning Indicator Announcement** - The CCN transducer will generate one short chime each time the Malfunction Indicator Lamp (MIL) lamp or certain other indicators are illuminated by the instrument cluster circuitry. The MIL and certain other indicators may be illuminated when any critical engine or transmission systems are operating outside of their normal parameters. The instrument cluster monitors electronic messages received over the CAN data bus to determine when to illuminate these indicators.

The CCN provides chime service for all available features in the chime warning system, except for the audible warning function provided by the optional park assist system display module. The CCN relies upon its internal programming, numerous hardwired inputs, and electronic message inputs received from other modules over the CAN and the Local Interface Network (LIN) data buses to provide the chime warning system features. The internal programming of the CCN determines the priority of each chime request input that is received, as well as the rate and duration of each chime that is to be generated.

The hardwired circuits between components related to the chime warning system may be diagnosed using conventional diagnostic tools and procedures. Refer to the appropriate wiring information. The wiring information includes wiring diagrams, proper wire and connector repair procedures, details of wire harness routing and retention, connector pin-out information and location views for the various wire harness connectors, splices and grounds.

However, conventional diagnostic methods will not prove conclusive in the diagnosis of the chime warning system or the electronic controls or communication between modules and other devices that provide some features of the chime warning system. The most reliable, efficient, and accurate means to diagnose the chime warning system or the electronic controls and communication related to chime warning system operation requires the use of a diagnostic scan tool. Refer to the appropriate diagnostic information.

PARK ASSIST SYSTEM

The park assist system is active only when the ignition switch is in the ON or START positions, the parking brake is released, the transmission gear selector lever is in either the REVERSE position and the vehicle speed is less than 16 kph (10 mph) or, the DRIVE position and the vehicle speed is less than 14 kph (8 mph) on deceleration, or 18 kph (12 mph) on acceleration. In vehicles equipped with this option, the system is enabled from the factory as a default. Using the manual cut-off switch, the system can be disabled and enabled by the vehicle operator. The manual cut-off switch is located within the instrument panel center bezel lower switch bank.

Reasons for disabling the system include trailer towing, off road use and driving conditions where the tailgate is in the down position. With a trailer attached to the vehicle the audible and visible park assist alerts would be incessant whenever the gear selector lever was in the REVERSE position due to the proximity of the trailer to the rear of the vehicle, as well as operating the vehicle at low speeds with the tailgate in the down position and the gear selector in the DRIVE position. Similarly, operating the vehicle off road may cause the park assist alerts to become distracting due to the proximity of large trees or boulders and the extreme rear approach angles that may be encountered while maneuvering on off road trails or terrain. When the system is disabled, a **PARK ASSIST DISABLED** textual message will appear in the Electronic Vehicle Information Center (EVIC) display, if equipped whenever the gear selector lever is in the REVERSE position.

The microprocessor based park assist module is the central component of the park assist system. It supplies voltage to the park assist sensors and the park assist display, receives and analyzes data from the sensors, calculates and communicates the proper display information to the park assist display, performs system diagnostics, and communicates with other electronic modules in the vehicle or with a diagnostic scan tool over the Controller Area Network (CAN) data bus. The module operates on battery voltage received through a fuse in the Junction Block (JB), and is grounded through a take out and eyelet terminal of the body wire harness that is secured by a screw to the left inner D-pillar.

Four ultrasonic park assist sensors in the rear bumper allow the park assist system to locate and identify the proximity of nearby obstacles. These sensors each generate ultrasonic sound pulses when triggered by the park assist module, then signal the module when an echo of the reflected sound pulses is received. The detection distance range from the rear of the vehicle is about 0.3 meters (11.8 inches) to about 2.0 meters (80 inches), and the detection height range from the ground is about 0.2 meters (7.8 inches) to about 0.8 meters (31 inches). The detection area extends somewhat around both rear sides (corners) of the vehicle.

The park assist display unit provides the vehicle operator with both visible and audible warnings indicating the relative range of a detected object. The display is visible to the vehicle operator over an inboard shoulder when looking rearward while backing the vehicle up, but is not visible in a properly adjusted inside rear view mirror when looking forward. The display contains two sets of eight Light Emitting Diode (LED) indicator units, one set dedicated to each side of the vehicle, and an audible chime tone transducer. The LED units are concealed beneath a smoked oval lens and are not clearly visible when they are not illuminated. When the park assist system is active and no obstacles are detected, the two outermost, amber LED units in the display are illuminated at a reduced intensity to provide visual confirmation that the system is operating.

The display provides a visual indication of a detected object by illuminating one or more LED indicators, amber first followed by red, moving toward the center of the display as the vehicle gets closer to the object. As the vehicle comes to within about 40 centimeters (31 inches) of the object, 1 red LED is illuminated and the display emits a series of short, intermittent, audible beeps. If the audio system is turned ON, the audio output will be muted automatically while the park assist audible warning is being generated. The audible warning changes from intermittent beeps to a continuous tone as the final red indicators are illuminated on 1 or both sides of the display and the vehicle comes to within 30.5 centimeters (12 inches) of a detected object.

When the park assist module monitors a problem in any of the park assist system circuits or components, it stores a fault code or Diagnostic Trouble Code (DTC) in its memory circuit, illuminates all four red LED units in the park assist display, sends an electronic message to the EVIC, and a **SERVICE PARK ASSIST SYSTEM** textual message is displayed in the EVIC display.

The hardwired circuits between components related to the park assist system may be diagnosed using conventional diagnostic tools and procedures. Refer to the appropriate wiring information. The wiring information includes wiring diagrams, proper wire and connector repair procedures, details of wire harness routing and retention, connector pin-out information and location views for the various wire harness connectors, splices and grounds.

However, conventional diagnostic methods will not prove conclusive in the diagnosis of the park assist system or the electronic controls or communication between modules and other devices that provide some features of the park assist system. The most reliable, efficient, and accurate means to diagnose the park assist system or the electronic controls and communication related to park assist system operation requires the use of a diagnostic scan tool. Refer to the appropriate diagnostic information.

Diagnosis and Testing

CHIME WARNING SYSTEM

WARNING: To avoid serious or fatal injury on vehicles equipped with airbags, disable the Supplemental Restraint System (SRS) before attempting any steering wheel, steering column, airbag, seat belt tensioner, impact sensor or instrument panel component diagnosis or service. Disconnect and isolate the battery negative (ground) ca-

ble, then wait two minutes for the system capacitor to discharge before performing further diagnosis or service. This is the only sure way to disable the SRS. Failure to take the proper precautions could result in accidental airbag deployment.

The hard wired circuits between components related to the chime warning system may be diagnosed using conventional diagnostic tools and procedures. Refer to the appropriate wiring information. The wiring information includes wiring diagrams, proper wire and connector repair procedures, details of wire harness routing and retention, connector pin-out information and location views for the various wire harness connectors, splices and grounds.

However, conventional diagnostic methods will not prove conclusive in the diagnosis of the chime warning system or the electronic controls or communication between modules and other devices that provide some features of the chime warning system. The most reliable, efficient, and accurate means to diagnose the chime warning system or the electronic controls and communication related to chime warning system operation requires the use of a diagnostic scan tool. Refer to the appropriate diagnostic information.

PARK ASSIST SYSTEM

WARNING: To avoid serious or fatal injury on vehicles equipped with airbags, disable the Supplemental Restraint System (SRS) before attempting any steering wheel, steering column, airbag, seat belt tensioner, impact sensor, or instrument panel component diagnosis or service. Disconnect and isolate the battery negative (ground) cable, then wait two minutes for the system capacitor to discharge before performing further diagnosis or service. This is the only sure way to disable the SRS. Failure to take the proper precautions could result in accidental airbag deployment.

The following textual messages May appear in the Electronic Vehicle Information Center (EVIC):

1. **SERVICE PARK ASSIST** - If a service park assist textual message appears in the EVIC display, be certain to confirm the following:
   - The parking brake is not applied.
   - The rear bumper is free of ice, snow, mud or other obstructions that will prevent the system from operating properly. The park assist system is self correcting, please verify that the area of the rear bumper where the sensors are located is not blocked by ice, snow, mud or other obstructions. If the area is blocked, remove the blockage, shift the transmission selector lever into reverse and verify the message is no longer present in the EVIC display. The system may also be corrected when the vehicle is driven at a speed greater than 14 kph (8 mph).

NOTE: The presence of jackhammers, large trucks, and other vibrations in the vicinity of the vehicle could impact the performance of the system.

2. **PARK ASSIST DISABLED** - If a park assist disabled textual message appears in the EVIC display, the system may either be manually cut-off or have a hard fault. If the manual cut-off switch is not illuminated further investigation may be needed.

The hard wired circuits between components related to the park assist system may be diagnosed using conventional diagnostic tools and procedures. Refer to the appropriate wiring information. The wiring information includes wiring diagrams, proper wire and connector repair procedures, details of wire harness routing and retention, connector pin-out information and location views for the various wire harness connectors, splices and grounds.

However, conventional diagnostic methods will not prove conclusive in the diagnosis of the park assist system or the electronic controls or communication between modules and other devices that provide some features of the park assist system. The most reliable, efficient, and accurate means to diagnose the park assist system or the electronic controls and communication related to park assist system operation requires the use of a diagnostic scan tool. Refer to the appropriate diagnostic information.

DISPLAY, Park Assist

Description

The park assist display (1) is located in the headliner at the rear of the vehicle, just forward of the rear glass. Only the smoked clear plastic display lens (3) is visible on the headliner. The lens prevents the 4 red Light Emitting Diode (LED) units and 12 amber LED units from being clearly visible unless they are illuminated by the electronic circuitry of the display.

The remainder of the display including the mounting provisions and the electrical connection are concealed above the headliner. A molded plastic housing with an integral connector receptacle (2) at one end contains and protects the electronic circuitry of the display, including an audible tone transducer and an electronic communication chip.

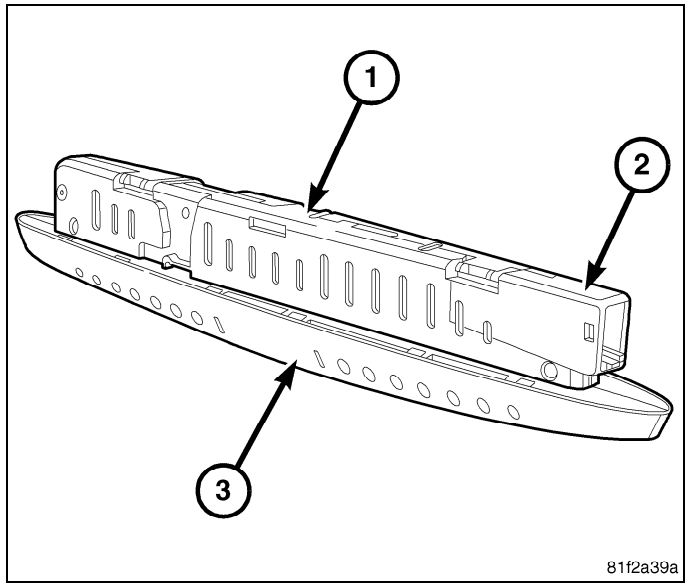

A molded plastic retainer (1) with three integral tabs (2) engages three slots integral to the display housing above the lens. The retainer is installed over the display housing above the headliner substrate to engage and securely lock the display into the opening in the headliner. An arrow and the text **REAR** are molded into an integral installation tab (3) to ensure correct retainer orientation.

The park assist display is serviced only as a complete unit. It cannot be adjusted or repaired. If ineffective or damaged, the entire display unit must be replaced.

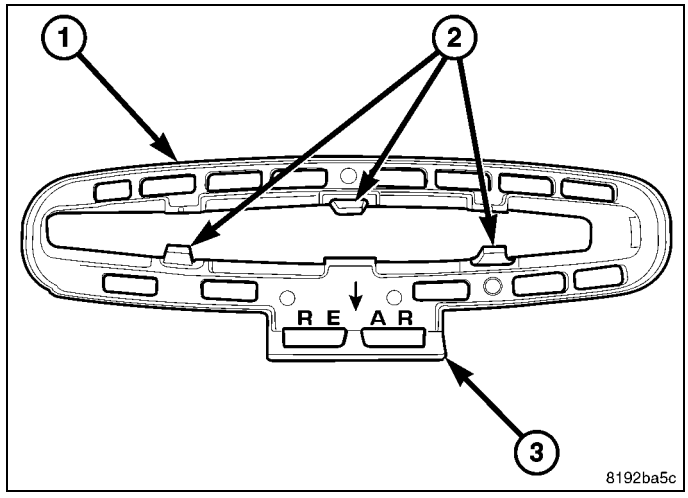

Operation

The park assist display provides the vehicle operator with visual feedback by illuminating amber or red Light Emitting Diode (LED) units individually or in unison, and audible feedback by energizing an audible tone transducer on the display electronic circuit board to emit either an intermittent or a continuous tone. While the park assist system is active, the number, position and color of the illuminated LED units as well as the audible signal frequency indicate the relative position and distance of obstacles detected at the rear of the vehicle.

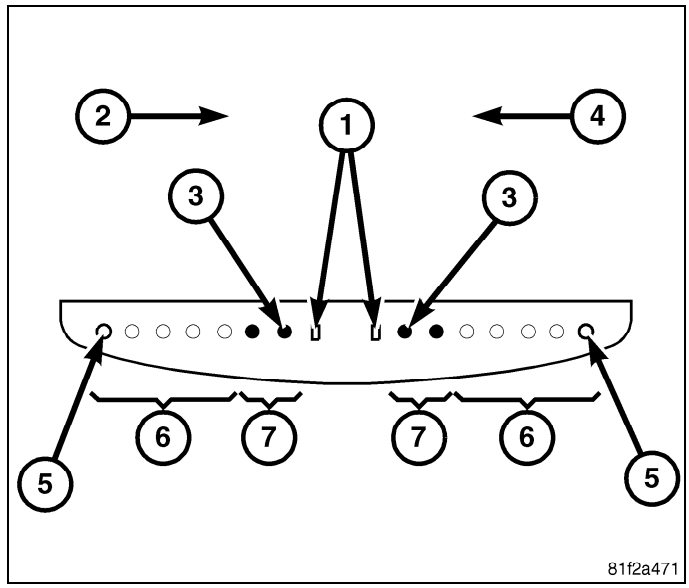

The park assist display receives battery current and ground from and is completely controlled by the park assist module. The display also contains an electronic communication chip that allows bi-directional communication to occur with the park assist module over a dedicated serial bus line. The microprocessor in the park assist module completely controls the display outputs, continually monitors the display status, and will store a Diagnostic Trouble Code (DTC) in memory for any monitored fault it detects in the park assist display. The illumination intensity of the LED units is also controlled by the park assist module based upon internal programming and electronic **panel lamps dimming** messages received over the Controller Area Network (CAN) data bus.

When the ignition switch is turned to the ON position, all 16 of the LED units in the display will illuminate in unison for approximately 1 second as a bulb test. This output will be interrupted if the system is active and senses an obstacle. Following the conclusion of the bulb test, when the system is active but no obstacle is detected, the display will indicate system readiness by illuminating the two inner most amber LED units (1) at a reduced intensity. As an obstacle is detected, the outermost amber LED unit (5) on the side of the vehicle where the obstacle was detected will be illuminated at normal intensity and a single short audible tone (one-half second duration) is sounded. Then additional amber LED units (6) will begin illuminating inward (2 or 4) as the obstacle gets closer until, finally, the two red LED units (7) are illuminated.

When the final red LED unit (3) is illuminated, the obstacle is approximately 40 centimeters (16 inches) from the rear corner of the vehicle or approximately 50 centimeters (19.7 inches) from the rear bumper face and an intermittent audible tone will be generated. The frequency of the audible tone will increase as the obstacle continues to become closer until the tone is continuous when the obstacle is about 15 centimeters (6 inches) from the rear corner of the vehicle or about 30 centimeters (11.8 inches) from the rear bumper face. Whenever a park assist audible tone is being generated, the park assist module sends electronic messages to the radio over the CAN data bus to mute the audio system. The audible tone will be cancelled after about two seconds if the detected distance to the obstacle remains constant. See the Park Assist Display Outputs table for additional details.

The hard wired circuits between components related to the park assist display may be diagnosed using conventional diagnostic tools and procedures. Refer to the appropriate wiring information. The wiring information includes wiring diagrams, proper wire and connector repair procedures, details of wire harness routing and retention, connector pin-out information and location views for the various wire harness connectors, splices and grounds.

However, conventional diagnostic methods will not prove conclusive in the diagnosis of the park assist display or the electronic controls or communication between modules and other devices that provide some features of the park assist system. The most reliable, efficient, and accurate means to diagnose the park assist display or the electronic controls and communication related to park assist display operation requires the use of a diagnostic scan tool. Refer to the appropriate diagnostic information.

PARK ASSIST DISPLAY OUTPUTS				
DISPLAY LED	DETECTION DISTANCE		LED COLOR	AUDIBLE SIGNAL
	REAR CORNERS	REAR CENTER		
STATUS LED		System Active	Amber	No
1st LED		200 cm (78.7 in.)	Amber	Single Tone (One-Half Second Duration)
2nd LED		100 cm (39.3 in.)	Amber	None
3rd LED	70 cm (27.5 in.)	80 cm (31.4 in.)	Amber	None
4th LED	65 cm (25.5 in.)	65 cm (25.5 in.)	Amber	None
5th LED	50 cm (19.6 in.)	50 cm (19.6 in.)	Amber	None
6th LED	40 cm (15.7 in.)	40 cm (15.7 in.)	Red	Intermittent Tone
7th LED	30 cm (11.8 in.)	30 cm (11.8 in.)	Red	Continuous Tone

Removal

1. Disconnect and isolate the negative battery cable.
2. Slide the park assist display (4) to the left side of the vehicle to release from the display retainer (2).
3. Disconnect the wire harness connector from the connector receptacle (3) on the end of the display housing and remove.

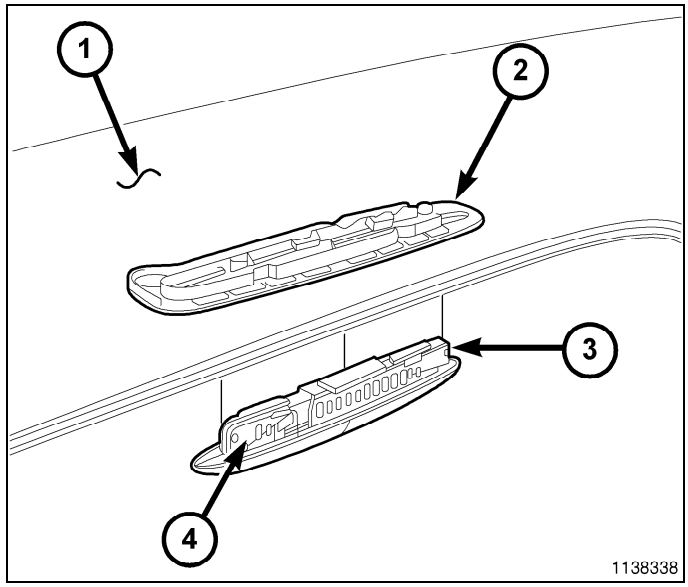

Installation

1. Carefully position the connector receptacle (3) on the left end of the park assist display housing (4) through the left end of the display retainer (2) opening in the lower surface of the headliner (1).
2. Reconnect the wire harness connector to the connector receptacle on the left end of the display housing.
3. Slide the display toward the left side of the vehicle far enough to engage the right end of the display housing into the right end of the display retainer in the headliner.
4. Reconnect the battery negative cable.

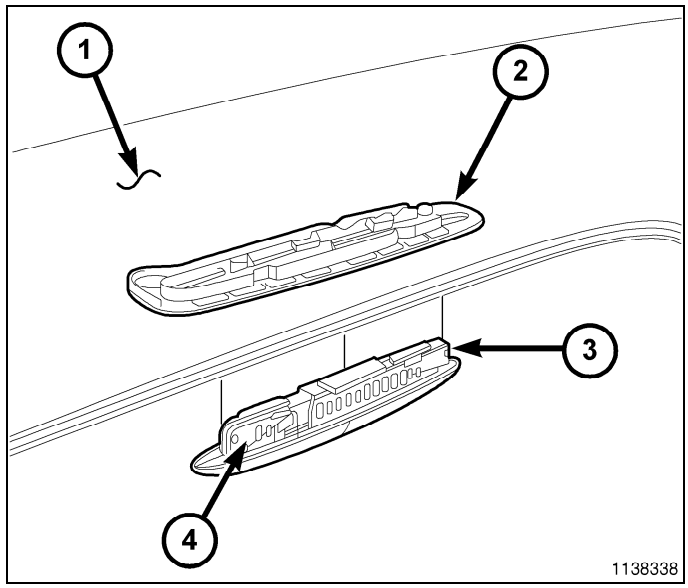

MODULE, Park Assist

Description

The Park Assist Module (1) is secured to a mounting bracket (2) that is bonded to the upper side of the vehicles headliner (3) above the right sun visor and secured by two fasteners (4). Concealed within the molded plastic park assist module housing is a microprocessor and the other electronic circuitry of the module. The module housing is sealed to enclose and protect the internal electronic circuitry. The module software is flash programmable.

Two connector receptacles (5) containing terminal pins are integral to the forward-facing side of the housing. The module is connected to the vehicle electrical system through two dedicated take outs and connectors of the body wire harness.

The park assist module cannot be adjusted or repaired and, if damaged or inoperative, it must be replaced.

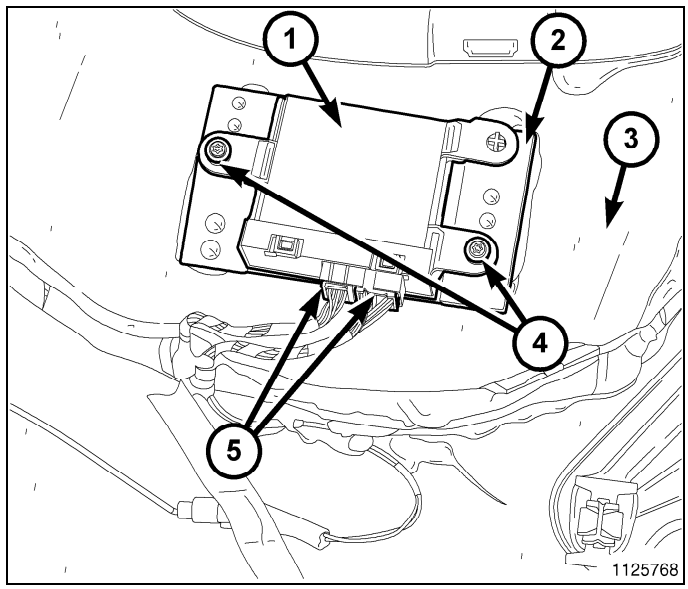

Operation

The microprocessor in the park assist module contains the park assist system logic circuits. The module uses On-Board Diagnostics (OBD) and can communicate with other electronic modules in the vehicle as well as with the diagnostic scan tool using the Controller Area Network (CAN) data bus. This method of communication is also used for park assist system diagnosis and testing through the 16-way data link connector located on the driver side lower edge of the instrument panel.

The module provides voltage to the four park assist sensors located behind the rear bumper and to the park assist display located in the headliner just forward of the rear glass. The module then monitors return inputs from each of the sensors and the display on dedicated hardwired data communication circuits. The sensor inputs allow the module to determine when an obstacle is in the rear path of the vehicle and enables the module to calculate the relative location of the obstacle, and whether the distance to that obstacle is increasing or decreasing.

Pre-programmed decision algorithms and calibrations allow the module microprocessor to determine the appropriate park assist system outputs based upon the inputs received from the park assist sensors and electronic messages received from other modules in the vehicle over the CAN data bus. When the programmed conditions are met the module sends electronic messages to the park assist displays over a dedicated serial bus to obtain the proper park assist system visual and audible outputs. The module also broadcasts electronic messages over the CAN data bus to enable the other electronic features of the park assist system.

The park assist module microprocessor continuously monitors all of the park assist system electrical circuits and components to determine the system readiness. If the module detects a monitored system fault, it sets a Diagnostic Trouble Code (DTC) and sends the appropriate electronic messages to the instrument cluster over the CAN data bus to control operation of certain park assist system audible warnings and textual messages displayed in the Electronic Vehicle Information Center (EVIC).

The park assist module receives battery current on a fused ignition switch output (run-start) circuit through a fuse in the Junction Block (JB). The module receives ground through a ground circuit and take out of the body wire harness. These connections allow the module to be operational whenever the ignition switch is in the START or ON positions.

The hardwired circuits between components related to the park assist module may be diagnosed using conventional diagnostic tools and procedures. Refer to the appropriate wiring information. The wiring information includes wiring diagrams, proper wire and connector repair procedures, details of wire harness routing and retention, connector pin-out information and location views for the various wire harness connectors, splices and grounds.

However, conventional diagnostic methods will not prove conclusive in the diagnosis of the park assist module or the electronic controls or communication between modules and other devices that provide some features of the park assist system. The most reliable, efficient, and accurate means to diagnose the park assist module or the electronic controls and communication related to park assist module operation requires the use of a diagnostic scan tool. Refer to the appropriate diagnostic information.

Removal

1. lower the headliner to access the module (Refer to 23 - Body/Interior/HEADLINER - Removal).
2. Disconnect the two body wire harness connectors (5) from the park assist module connector receptacles.
3. Remove the two fasteners (4) that secure the module to the mounting bracket.
4. Remove the module from behind the headliner.

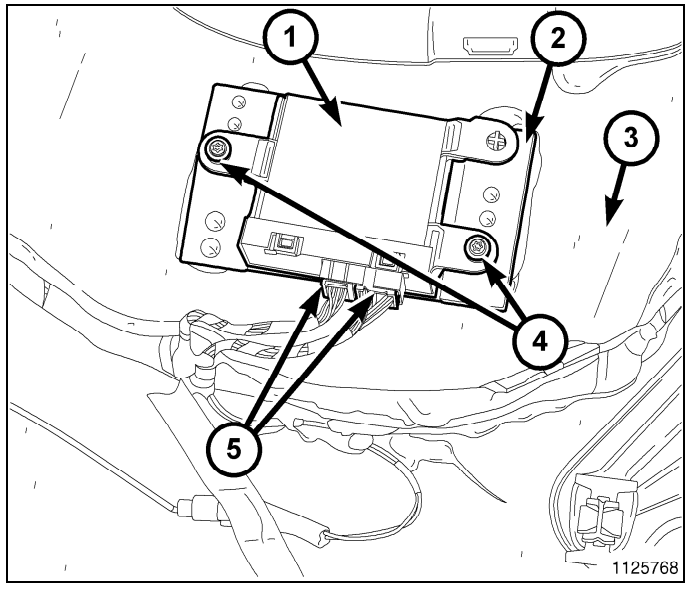

Installation

1. Position the park assist module (1) at the mounting bracket (2) bonded to the back of the headliner (3).
2. Secure the module to the bracket with two fasteners (4).
3. Reconnect the two body wire harness connectors (5) to the module connector receptacles.
4. Reinstall the vehicle headliner (Refer to 23 - Body/Interior/HEADLINER - Installation).
5. Reconnect the battery negative cable.

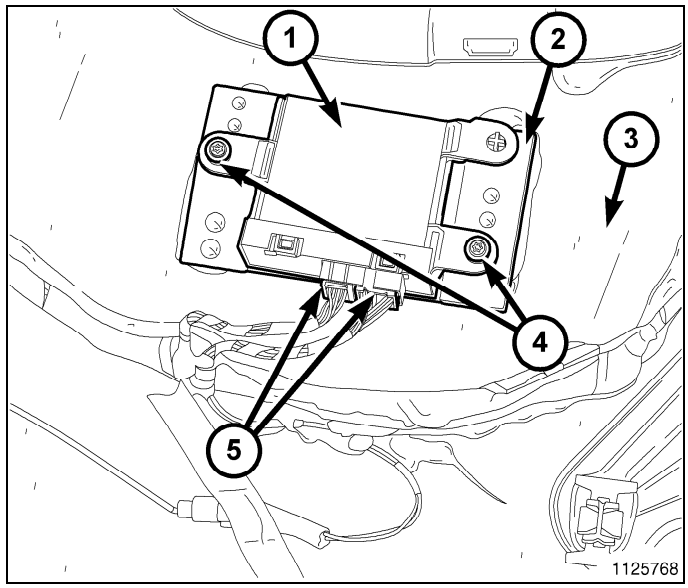

SENSOR, Park Assist

Description

Vehicles equipped with the park assist system have four park assist sensors (1) installed on the rear bumper. Only the membrane (3) of each sensor is visible through a hole in the outer vertical surface of the bumper. The remainder of each sensor including the sensor mounting bracket, the sensor spacer and the sensor wiring connection is concealed behind the bumper. A sensor wire harness behind the bumper connects the sensors to the vehicle electrical system.

Each of the four sensors is identical in construction and is interchangeable. The electronic circuitry and a communication chip for each sensor is enclosed and protected within the molded black plastic sensor housing. The housing includes an integral connector receptacle (4) and two integral latch tabs (2). The sensor membrane extends from the surface of the sensor housing, and is finished to match or contrast with the outer surface of the bumper.

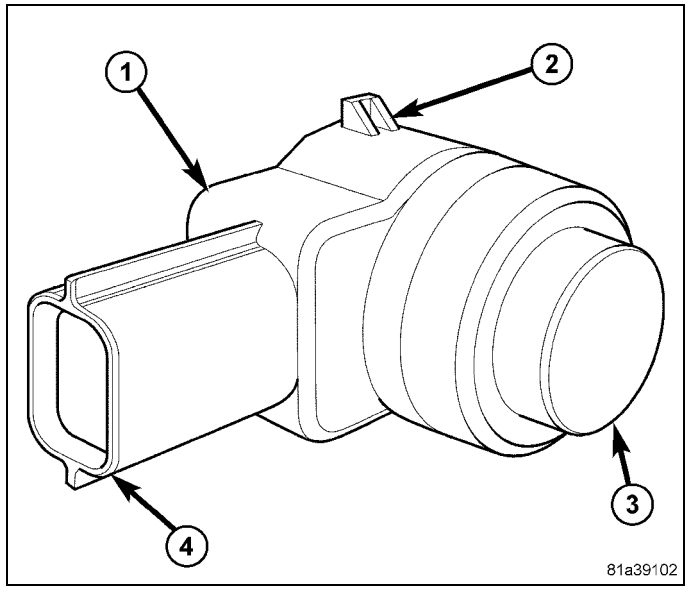

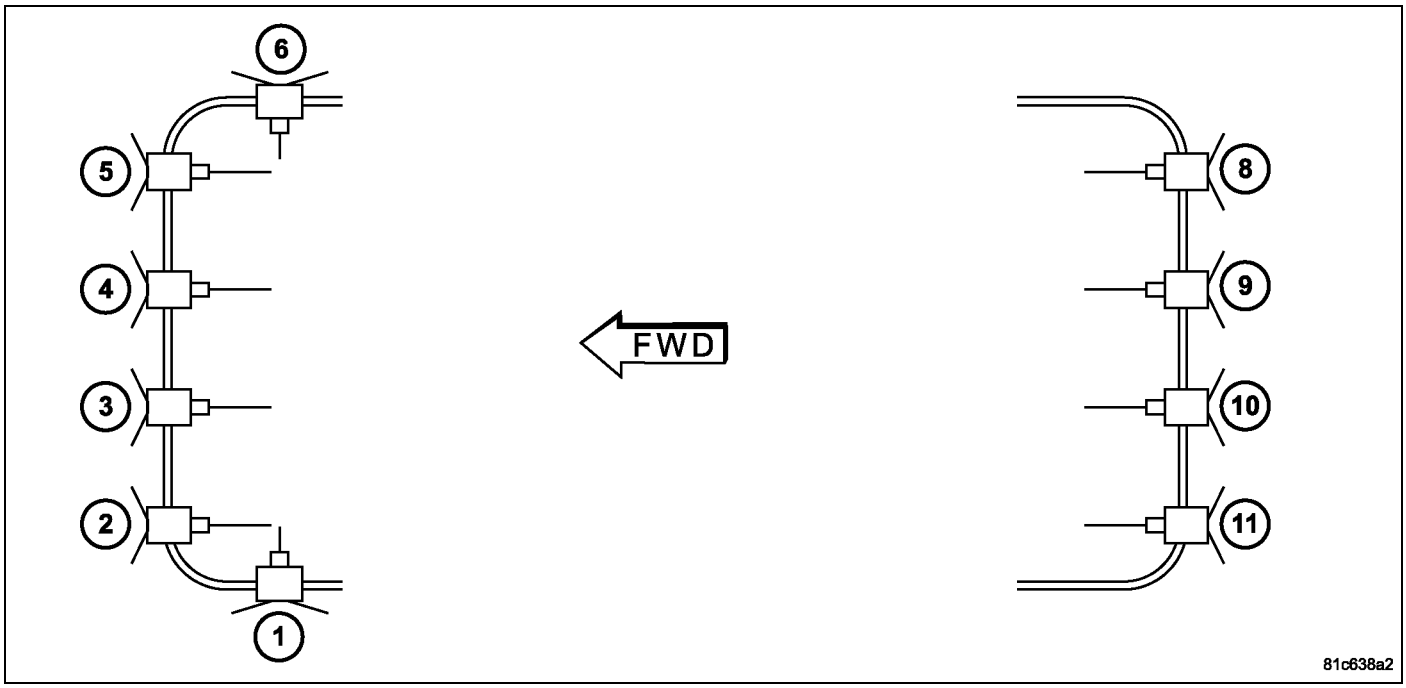

The numbering system for the park assist sensors allows for up to twelve sensors on the vehicle, six front and six rear. The sensors are numbered in a clockwise manner starting at the left front bumper. The left front sensor (if equipped with front park assist) is the number 1 sensor. The numbering continues in a clockwise direction around the vehicle. Since this vehicle uses only four rear sensors, sensor numbers 7 and 12 are omitted, so the left rear sensor is the number 11 sensor.

A resilient O-ring spacer around the circumference of each of the four sensor membranes (2) isolates the membrane from the openings in the fascia (1). Each sensor is snapped into its own dedicated molded plastic mounting bracket.

The park assist sensors cannot be adjusted or repaired. If inoperative or damaged they must be replaced. The sensors and the spacers are each available for individual service replacement.

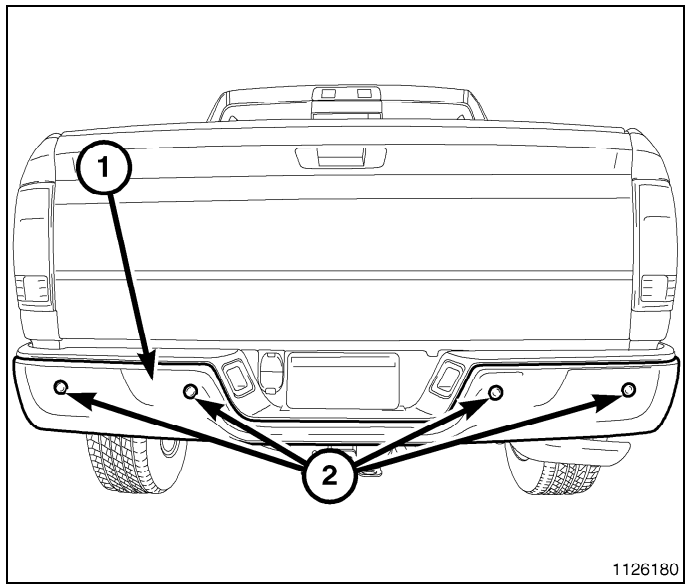

Operation

The park assist sensors are ultrasonic transceivers that are completely controlled by the park assist module. The sensors transmit and receive ultrasonic signals. The sensors each receive battery current and ground in parallel from the module, but are each connected to individual dedicated serial bus communication circuits to the module.

Each sensor membrane is oscillated, then quieted by the module in a pulsing fashion. While the sensor membrane oscillates, it emits an ultrasonic signal. This signal will bounce or echo off of objects in the path of the vehicle. While quieted, each membrane receives the echoes of the ultrasonic signals it and the other sensors have transmitted. The sensors then communicate this echo data over the serial bus lines back to the module. The microprocessor in the module

uses the intervals between the ultrasonic transmission and reception data from the sensors to calculate the distance to any obstacles identified by the ultrasonic echoes.

The hard wired circuits between components related to the park assist sensors may be diagnosed using conventional diagnostic tools and procedures. Refer to the appropriate wiring information. The wiring information includes wiring diagrams, proper wire and connector repair procedures, details of wire harness routing and retention, connector pin-out information and location views for the various wire harness connectors, splices and grounds.

However, conventional diagnostic methods will not prove conclusive in the diagnosis of the park assist sensors or the electronic controls or communication between modules and other devices that provide some features of the park assist system. The most reliable, efficient, and accurate means to diagnose the park assist sensors or the electronic controls and communication related to park assist sensor operation requires the use of a diagnostic scan tool. Refer to the appropriate diagnostic information.

Removal

NOTE: The park assist sensors (3) and the sensor spacers (O-rings) are each available for separate service replacement.

1. Disconnect and isolate the battery negative cable.
2. From the back of the bumper (2), disconnect the wire harness connector (4) from the park assist sensor (3) connector receptacle.
3. Carefully pry the sensor bracket (5) latch features (1) away from the top and bottom latch tabs of the sensor far enough to disengage the sensor from the bracket.
4. Disengage the O-ring spacer from around the circumference of the sensor membrane protrusion.
5. If required, depress the four locking tabs and remove the sensor brackets from the bumper.

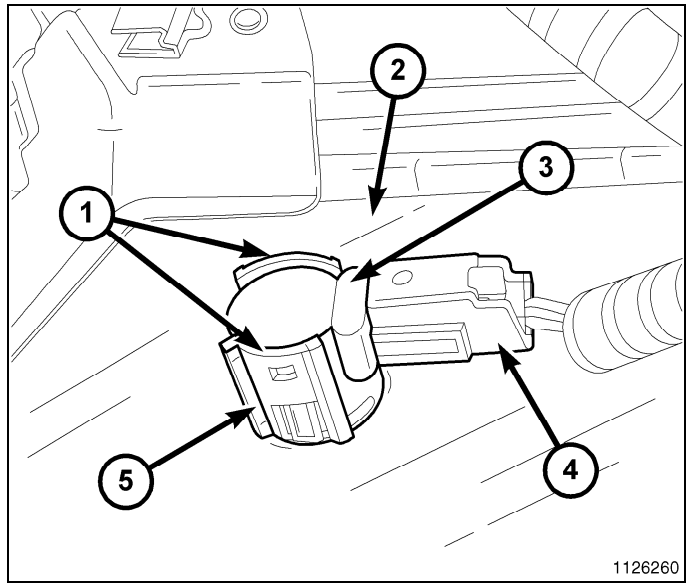

Installation

NOTE: The park assist sensors (3) and the sensor spacers (O-rings) are each available for separate service replacement.

1. If removed, insert the sensor mounting bracket into the opening in the bumper face, until all locking tabs engage.
2. Engage the O-ring spacer around the circumference of the sensor membrane protrusion.

NOTE: Production and all service replacement O-ring spacers are tapered. The wide side (base) of the O-ring should be seated against the sensor housing and the narrow side should be oriented toward the outer surface of the sensor membrane and the rear bumper.

3. Align and insert the sensor (3) into the sensor bracket (5) on the back of the rear bumper (2) until the bracket latch features (1) are fully engaged over the top and bottom latch tabs of the sensor. Be certain that the sensor membrane is flush with the outer surface of the bumper.

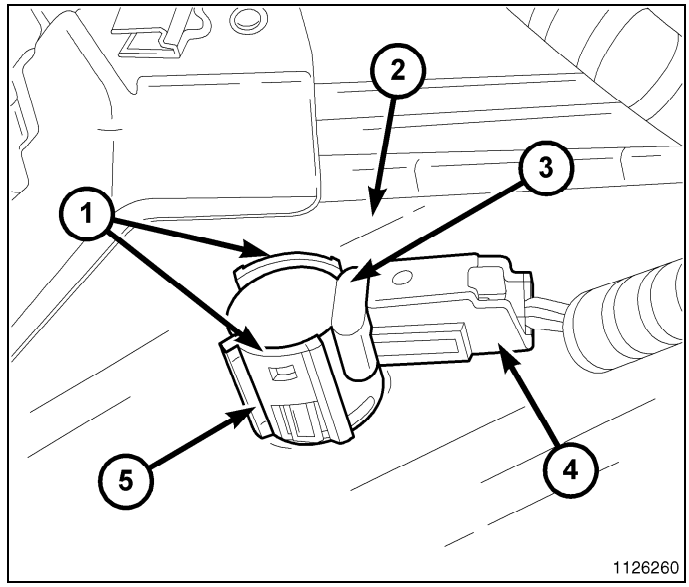

NOTE: Be certain that each sensor membrane is properly centered in the openings of the rear fascia and that the O-ring spacers are not pinched. Improper centering or pinched O-rings can be detrimental to proper park assist sensor operation.

4. From the back of the bumper, reconnect the wire harness connector (4) to the sensor connector receptacle.
5. Reconnect the battery negative cable.

ELECTRONIC CONTROL MODULES

TABLE OF CONTENTS

page

ELECTRONIC CONTROL MODULES
STANDARD PROCEDURE
PCM, WIN, FOBIKS MODULE/ PROGRAMMING ORDER REPLACEMENT GUIDE . . . 2
STANDARD PROCEDURE - MODULE PROGRAMMING . . . 2
COMMUNICATION
DESCRIPTION . . . 4
OPERATION . . . 5
CONNECTOR, DATA LINK
DESCRIPTION . . . 7
OPERATION . . . 7
MODULE, ANTI-LOCK BRAKE SYSTEM
DESCRIPTION . . . 7
OPERATION . . . 7
REMOVAL . . . 8
INSTALLATION . . . 8
MODULE, DOOR
DESCRIPTION . . . 8
OPERATION . . . 9
DIAGNOSIS AND TESTING . . . 9
REMOVAL . . . 10
INSTALLATION . . . 10
MODULE, DRIVETRAIN CONTROL
DESCRIPTION . . . 10
OPERATION . . . 10
REMOVAL . . . 12
INSTALLATION . . . 13
MODULE, HEATED SEAT
DESCRIPTION . . . 13
OPERATION . . . 13
DIAGNOSIS AND TESTING . . . 14
REMOVAL . . . 14
INSTALLATION . . . 15
MODULE, MEMORY
DESCRIPTION . . . 16
OPERATION . . . 16
DIAGNOSIS AND TESTING . . . 17
REMOVAL . . . 18
INSTALLATION . . . 18

page

MODULE, POWERTRAIN CONTROL
DESCRIPTION
POWERTRAIN CONTROL MODULE (PCM) . . . 19
MODES OF OPERATION . . . 19
5 VOLT SUPPLIES . . . 22
IGNITION CIRCUIT SENSE . . . 22
POWER GROUNDS . . . 22
SENSOR RETURN . . . 23
OPERATION
POWERTRAIN CONTROL MODULE (PCM) . . . 23
5 VOLT SUPPLIES . . . 24
IGNITION CIRCUIT SENSE . . . 24
STANDARD PROCEDURE . . . 25
REMOVAL . . . 25
INSTALLATION . . . 25
MODULE, STEERING COLUMN
DESCRIPTION . . . 26
OPERATION . . . 27
DIAGNOSIS AND TESTING . . . 27
MODULE, TRANSMISSION CONTROL
DESCRIPTION . . . 28
OPERATION . . . 28
STANDARD PROCEDURE
TCM QUICK LEARN - RLE AND RFE TRANSMISSIONS . . . 31
DRIVE LEARN - RFE TRANSMISSIONS . . . 32
RECEIVER, WIRELESS IGNITION NODE
DESCRIPTION . . . 34
OPERATION . . . 34
DIAGNOSIS AND TESTING . . . 35
REMOVAL . . . 35
INSTALLATION . . . 36

Electronic Control Modules

Standard Procedure

PCM, WIN, FOBiKs MODULE/PROGRAMMING ORDER REPLACEMENT GUIDE

Match the module row with the condition that applies, after module replacement follow the chart down and program the modules in the chart order.

Module	MODULE REPLACEMENT GUIDE (PCM, WIN, FOBiKs)						
	Condition 1	Condition 2	Condition 3	Condition 4	Condition 5	Condition 6	Condition 7
PCM	Existing	New	Existing	Existing	New	New	New
WCM/WIN (and ELV/ESCL if equipped)	Existing	Existing	New	New	Existing	New	New
FOBiKs	New	Existing	Existing	New	New	Existing	New
PROGRAMMING ORDER	**ASSOCIATED MODULE MISC. FUNCTION**						
1	Program Ignition Keys or Key FOBs	PCM Replaced	WIN Replaced	WIN Replaced	PCM Replaced	Attempt to avoid this situation. If possible, try to execute condition 2 or 3. Otherwise, keys must be replaced also (Condition 7).	Check PCM VIN
2	----	----	Program Ignition Keys or Key FOBs	Program Ignition Keys or Key FOBs	Program Ignition Keys or Key FOBs		WIN Replaced
3	----	----	ELV/ESCL Replaced (if ELV/ESCL equipped)(ignition ON)	ELV/ESCL Replaced (if ELV/ESCL equipped)(ignition ON)	----		Program Ignition Keys or Key FOBs
4	----	----	----	----	----		ELV/ESCL Replaced (if ELV/ESCL equipped)(ignition ON)

STANDARD PROCEDURE - MODULE PROGRAMMING

The Wireless Ignition Node (WIN) controls the Vehicle Theft Security System (VTSS), Remote Keyless Entry (RKE). When a Powertrain Control Module (PCM) is in need of replacement, perform the following steps in order:

NOTE: The PCM and the WIN should never be replaced at the same time. They should be replaced independently of each other.

1. If applicable, first replace the PCM with the original WIN still connected to the vehicle.
2. Using a scan tool program the new PCM. (This will ensure the transfer of the Secret Key data from the original WIN into the new PCM).
3. Replace the WIN, using the scan tool program the new WIN module. This will transfer the Secret Key data from the PCM into the new WIN.
4. With the scan tool reprogram the key FOBIK to the new WIN.
5. Ensure all the customer's keys have been programmed to the new module.

NOTE: If the original keys do not successfully program to the new WIN after the proper procedures are followed correctly, programming new keys will be necessary.

PROGRAMMING THE SECRET KEY TO THE WIN

The secret key is an ID code that is unique to each WIN. This code is programmed and stored in the WIN, the PCM, and each ignition key transponder chip. When the PCM or WIN is replaced, it is necessary to program the Secret Key Code into the new module using a diagnostic scan tool. Follow the programming steps outlined in the diagnostic scan tool for **PCM REPLACED**, **WIN REPLACED**, or **TIPM REPLACED** under **MISCELLANEOUS FUNCTIONS** for the **WIRELESS CONTROL MODULE** menu item as appropriate.

NOTE: Programming the PCM or WIN is done using a diagnostic scan tool and a PIN to enter secure access mode. If three attempts are made to enter secure access mode using an incorrect PIN, secure access mode will be locked out for one hour. To exit this lockout mode, turn the ignition to the RUN position for one hour and then enter the correct PIN. Be certain that all accessories are turned OFF. Also, monitor the battery state and connect a battery charger if necessary.

PCM/WIN PROGRAMMING

When an PCM and the WIN are replaced at the same time, perform the following steps in order:

1. Program the new WIN.
2. Replace all ignition keys and program them to the new WIN.

PROGRAMMING THE WIN

CAUTION: Read all notes and cautions for programming procedures.

1. Connect a battery charger to the vehicle.
2. Connect the scan tool.

NOTE: Have a unique vehicle PIN readily available before running the routine

CAUTION: If the PCM and WIN are replaced at the same time, the PCM MUST be programmed before the WIN.

3. Select “ECU View.”
4. Select “WIN”.
5. Select “Miscellaneous Functions.”
6. Select "WIN Replaced".
7. Enter the PIN when prompted.
8. Cycle ignition key after the successful routine completion.

NOTE: If the PCM and the WIN are replaced at the same time, all vehicle keys will need to be replaced and programmed to the new WIN.

PROGRAMMING IGNITION KEYS TO THE WIN

Each FOBIK has a unique ID code that is assigned at the time the key is manufactured. When a key is programmed into the WIN, the module learns the transponder ID code and the transponder acquires the unique Secret Key ID code from the WIN.

CAUTION: Read all notes and cautions for programming procedures.

1. Connect a battery charger to the vehicle.
2. Connect the scan tool.
3. Have a unique vehicle PIN readily available before running the routine.
4. Ignition key should be in RUN position.
5. Select “ECU View”.
6. Select “WIN Wireless Control”.
7. Select “Miscellaneous Functions.”
8. Select “Program Ignition Keys or Key FOBs”, Start
9. Enter the PIN when prompted.
10. Verify the correct information.
11. Cycle ignition key after the successful routine completion.

NOTE: If the original keys do not successfully program to the new WIN after the proper procedures are followed correctly, programming new keys will be necessary.

NOTE: A maximum of eight keys can be learned by the WIN. Once a key is learned by a WIN, that key has acquired the Secret Key for that WIN and cannot be transferred to any other WIN or vehicle.

PROGRAMMING THE PCM

CAUTION: Read all notes and cautions for programming procedures.

1. Connect a battery charger to the vehicle.
2. Connect the scan tool.
3. Have a unique vehicle PIN readily available before running the routine.
4. Ignition key should be in RUN position.

CAUTION: If the PCM and WIN are replaced at the same time, the PCM MUST be programmed before the WIN.

5. Select “ECU View”.
6. Select “WIN Wireless Control”.
7. Select “Miscellaneous Functions.”
8. Select “PCM Replaced”.
9. Enter the PIN when prompted.
10. Verify the correct information.
11. Cycle ignition key after the successful routine completion.

COMMUNICATION

Description

The primary on-board communication network between microprocessor-based electronic control modules in this vehicle is the Controller Area Network (CAN) data bus system. A data bus network minimizes redundant wiring connections; and, at the same time, reduces wire harness complexity, sensor current loads and controller hardware by allowing each sensing device to be connected to only one module (also referred to as a node). Each node reads, then broadcasts its sensor data over the bus for use by all other nodes requiring that data. Each node ignores the messages on the bus that it cannot use.

The CAN bus is a two-wire multiplex system. Multiplexing is any system that enables the transmission of multiple messages over a single channel or circuit. The CAN bus is used for communication between most vehicle nodes. However, in addition to the CAN bus network, certain nodes may also be equipped with a Local Interface Network (LIN) data bus. The LIN data bus is a single wire low-speed (9.6 Kbps) serial link bus used to provide direct communication between a LIN master module and certain switch or sensor inputs.

There are actually three separate CAN bus systems used in the vehicle. They are designated: the CAN-Interior (also known as CAN Interior High Speed/IHS), the CAN-C and the Diagnostic CAN-C. The CAN-Interior and CAN-C systems provide on-board communication between all nodes in the vehicle. The CAN-C is the faster of the two systems providing near real-time communication (500 Kbps). The CAN-C is used typically for communications between more critical nodes, while the slower (125 Kbps) CAN-Interior system is used for communications between less critical nodes.

The added speed of the CAN data bus is many times faster than previous data bus systems. This added speed facilitates the addition of more electronic control modules or nodes and the incorporation of many new electrical and electronic features in the vehicle.

The Diagnostic CAN-C bus is also capable of 500 Kbps communication, and is sometimes informally referred to as the CAN-D system to differentiate it from the other high speed CAN-C bus. The Diagnostic CAN-C is used exclusively for the transmission of diagnostic information between the Totally Integrated Power Module/Central GateWay (TIPM or TIPMCGW) and a diagnostic scan tool connected to the industry-standard 16-way Data Link Connector (DLC) located beneath the instrument panel on the driver side of the vehicle.

The TIPM is located in the engine compartment near the battery. The central CAN gateway or hub module integral to the TIPM is connected to all three CAN buses. This gateway physically and electrically isolates the CAN buses from each other and coordinates the bi-directional transfer of messages between them.

Operation

The Controller Area Network (CAN) data bus allows all electronic modules or nodes connected to the bus to share information with each other. Regardless of whether a message originates from a module on the lower speed CAN-Interior (also known as CAN Interior High Speed/IHS) bus or on the higher speed CAN-C or CAN-D bus, the message structure and layout is similar, which allows the Totally Integrated Power Module/Central GateWay (TIPM or TIPMCGW) to process and transfer messages between the CAN buses. The TIPM also stores a Diagnostic Trouble Code (DTC) for certain bus network faults.

All modules (also referred to as nodes) transmit and receive messages over one of these buses. Data exchange between nodes is achieved by serial transmission of encoded data messages. Each node can both send and receive serial data simultaneously. Each digital bit of a CAN bus message is carried over the bus as a voltage differential between the two bus circuits which, when strung together, form a message. Each node uses arbitration to sort the message priority if two competing messages are attempting to be broadcast at the same time.

The Cluster (also known as the Cabin Compartment Node/CCN) is the Local Interface Network (LIN) master module in this vehicle and it gathers information from the compass module, the instrument panel switch bank, the Steering Control Module (SCM), and the Heated Seat Module (HSM) through the LIN data bus. There is also LIN bus communication between the individual Tire Pressure Monitor (TPM) transponders and the Wireless Ignition Node (WIN). Both the EMIC and the WIN either act directly upon the information received through the LIN data bus, relay the information to other nodes in the vehicle using electronic messages placed on the CAN bus, or both.

The voltage network used to transmit messages requires biasing and termination. Each module on the CAN bus network provides its own biasing and termination. There are two types of nodes used in the CAN bus network. On the CAN-C or the IHS bus, a dominant node has a 120 ohm termination resistance while a non-dominant (or recessive) node has about a 2500 to 3000 ohm (2.5 to 3.0 kilohm) termination resistance. The dominant nodes on the CAN-C bus are the WIN and the Powertrain Control Module (PCM). The dominant nodes on the IHS bus are the Cluster and the TIPM.

The termination resistance of two dominant nodes is combined in parallel to provide a total of about 60 ohms. This resistance value may vary somewhat by application, depending upon the number of non-dominant nodes on the bus. On the CAN-D bus (or Diagnostic CAN-C) all of the 60 ohm termination resistance is present in the Central GateWay (TIPMCGW).

NOTE: All measurement of termination resistance is done with the vehicle battery disconnected.

The communication protocol being used for the CAN data bus is a non-proprietary, open standard adopted from the Bosch CAN Specification 2.0b. The CAN-C is the faster of the two primary buses in the CAN bus system, providing near real-time communication (500 Kbps).

The CAN bus nodes are connected in parallel to the two-wire bus using a twisted pair, where the wires are wrapped around each other to provide shielding from unwanted electromagnetic induction, thus preventing interference with the relatively low voltage signals being carried through them. The twisted pairs have between 33 and 50 twists per meter (yard). While the CAN bus is operating (active), one of the bus wires will carry a higher voltage and is referred to as the CAN High or CAN bus (+) wire, while the other bus wire will carry a lower voltage and is referred to as the CAN Low or CAN bus (–) wire. Refer to the CAN Bus Voltages table.

CAN Bus Voltages (Normal Operation)

CAN-C Bus Circuits	Sleep	Recessive (Bus Idle)	Dominant (Bus Active)	CAN-L Short to Ground	CAN-H Short to Ground	CAN-L Short to Battery	CAN-H Short to Battery	CAN-H Short to CAN-L
CAN-L (–)	0 V	2.4 - 2.5 V	1.3 - 2.3 V	0 V	0.3 - 0.5V	Battery Voltage	Battery Voltage Less 0.75 V	2.45 V
CAN-H (+)	0 V	2.4 - 2.5 V	2.6 - 3.5 V	0.02 V	0 V	Battery Voltage Less 0.75 V	Battery Voltage	2.45 V
CAN-Interior Bus Circuits	**Key-Off (Bus Asleep)**		**Key-On (Bus Active)**	**CAN-L Short to Ground**	**CAN-H Short to Ground**	**CAN-L Short to Battery**	**CAN-H Short to Battery**	**CAN-H Short to CAN-L**

CAN Bus Voltages (Normal Operation)								
CAN-C Bus Circuits	**Sleep**	**Recessive (Bus Idle)**	**Dominant (Bus Active)**	**CAN-L Short to Ground**	**CAN-H Short to Ground**	**CAN-L Short to Battery**	**CAN-H Short to Battery**	**CAN-H Short to CAN-L**
CAN-L (–)	0.0 V		1.3 - 2.3 V	0 V	0.3 - 0.5 V	Battery Voltage	Battery Voltage Less 0.75 V	2.45 V
CAN-H (+)	0.0 V		2.6 - 3.5 V	0.02 V	0 V	Battery Voltage Less 0.75 V	Battery Voltage	2.45 V
Notes								
All measurements taken between node ground and CAN terminal with a standard DVOM. DVOM will display average network voltage. Total resistance of CAN-C network can also be measured (60 ohms). Total resistance of CAN-Interior network varies, depending upon the number of optional non-dominant nodes on the bus. CAN-Interior total resistance should range between about 60 ohms with the minimal number of nodes, to about 42 ohms with the maximum number of nodes.								

In order to minimize the potential effects of Ignition-OFF Draw (IOD), the CAN-Interior network employs a sleep strategy. However, a network sleep strategy should not be confused with the sleep strategy of the individual nodes on that network, as they may differ. For example: The CAN-C bus network is awake only when the ignition switch is in the ON or START positions; however, the TIPM, which is on the CAN-C bus, may still be awake with the ignition switch in the ACCESSORY or UNLOCK positions. The integrated circuitry of an individual node may be capable of processing certain sensor inputs and outputs without the need to utilize network resources.

The CAN-Interior bus network remains active until all nodes on that network are ready for sleep. This is determined by the network using tokens in a manner similar to polling. When the last node that is active on the network is ready for sleep, and it has already received a token indicating that all other nodes on the bus are ready for sleep, it broadcasts a **bus sleep acknowledgment** message that causes the network to sleep. Once the CAN-Interior bus network is asleep, any node on the bus can awaken it by transmitting a message on the network. The TIPM will keep either the CAN-Interior or the CAN-C bus awake for a timed interval after it receives a diagnostic message for that bus over the Diagnostic CAN-C bus.

In the CAN system, available options are configured into the TIPM at the assembly plant, but additional options can be added in the field using the diagnostic scan tool. The configuration settings are stored in non-volatile memory. The TIPM also has two 64-bit registers, which track each of the **as-built** and **currently responding** nodes on the CAN-Interior and CAN-C buses. The TIPM stores a Diagnostic Trouble Code (DTC) in one of two caches for any detected active or stored faults in the order in which they occur. One cache stores powertrain (P-Code), chassis (C-Code) and body (B-Code) DTCs, while the second cache is dedicated to storing network (U-Code) DTCs.

If there are intermittent or active faults in the CAN network, a diagnostic scan tool connected to the Diagnostic CAN-C bus through the 16-way Data Link Connector (DLC) may only be able to communicate with the TIPM. To aid in CAN network diagnosis, the TIPM will provide CAN-Interior and CAN-C network status information to the scan tool using certain diagnostic signals. In addition, the transceiver in each node on the CAN-C bus will identify a **bus off hardware failure**, while the transceiver in each node on the CAN-Interior bus will identify a **general bus hardware failure**. The transceivers for some CAN-Interior nodes will also identify certain failures for both CAN-Interior bus signal wires.

CONNECTOR, Data Link

Description

The Data Link Connector (DLC) (3) is a 16-way molded plastic connector insulator on a dedicated take out of the instrument panel wire harness. This connector is located at the lower edge of the instrument panel, outboard of the steering column. The connector insulator is retained by integral snap features within a rectangular cutout in the lower instrument panel reinforcement (2), just below the lower edge of the instrument panel steering column opening cover (1).

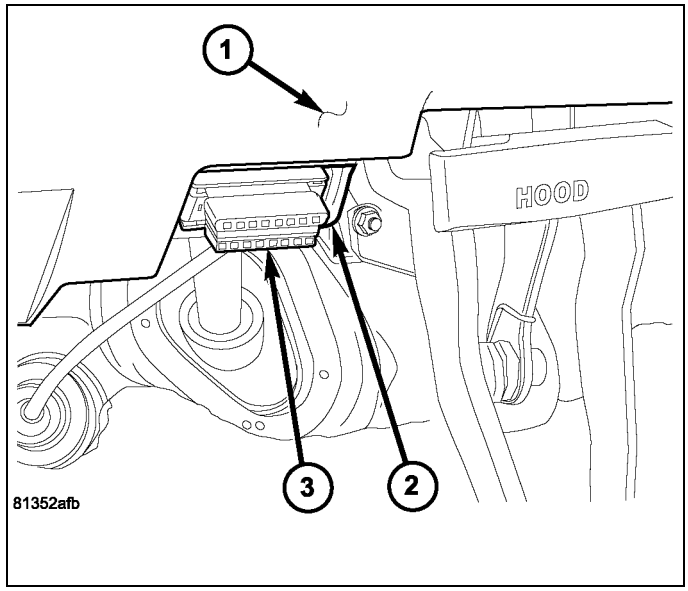

Operation

The Data Link Connector (DLC) is an industry-standard 16-way connector that permits the connection of a diagnostic scan tool to the Controller Area Network (CAN) data bus for interfacing with, configuring, and retrieving Diagnostic Trouble Code (DTC) data from the electronic modules that reside on the data bus network of the vehicle.

MODULE, Anti-Lock Brake System

Description

The Antilock Brake Module (ABM) (2) is mounted to the Hydraulic Control Unit (HCU) (3) and operates the ABS system.

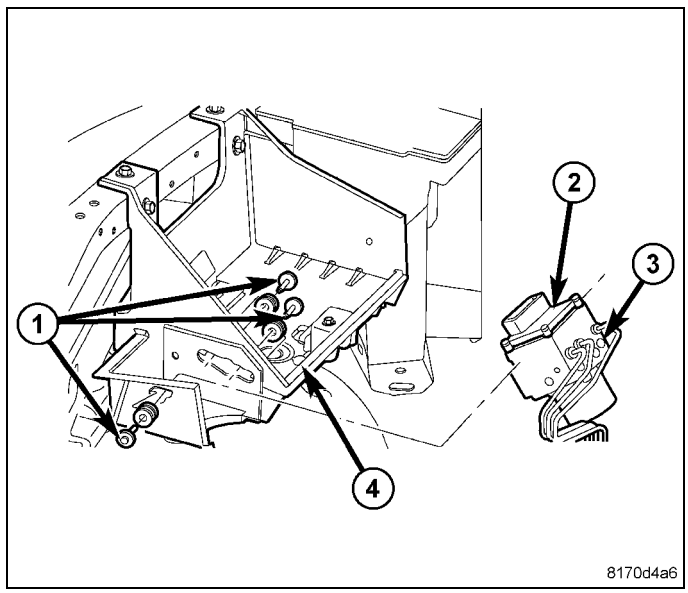

Operation

The ABM voltage source is through the ignition switch in the RUN position. The ABM contains a self check program that illuminates the ABS warning light when a system fault is detected. Faults are stored in a diagnostic program memory

and are accessible with the scan tool. ABS faults remain in memory until cleared, or until after the vehicle is started approximately 50 times. Stored faults are **not** erased if the battery is disconnected.

NOTE: If the ABM is being replaced with a new ABM is must be reprogrammed with the use of a scan tool.

Removal

CAUTION: When removing ABM from HCU, be sure to completely separate the two components (approximately 38 mm (1.5 in.) before removing ABM. Otherwise, damage to the pressure sensor or Pump Motor connection may result requiring HCU replacement. Do not to touch the sensor terminals on the HCU side or the contact pads on the ABM side as this may result in contamination and issues in the future.

1. Remove the negative battery cable from the battery.
2. Pull up on the ABM harness connector release and remove connector.
3. Remove the ABM mounting bolts .
4. Remove the pump connector from the ABM.
5. Remove the ABM from the HCU .

Installation

CAUTION: When removing ABM from HCU, be sure to completely separate the two components (approximately 38 mm (1.5 in.) before removing ABM. Otherwise, damage to the pressure sensor or Pump Motor connection may result requiring HCU replacement. Do not to touch the sensor terminals on the HCU side or the contact pads on the ABM side as this may result in contamination and issues in the future.

NOTE: If the ABM is being replaced with a new ABM is must be reprogrammed with the use of a scan tool.

1. Install ABM to the HCU.
2. Install the pump connector to the ABM.
3. Install mounting bolts. Tighten to 2 N·m (16 in. lbs.).
4. Install the wiring harness connector to the ABM and push down on the release to secure the connector.
5. Install negative battery cable to the battery.
6. Connect the scan tool and initialize the ABM by performing the ABS Verification Test (Refer to 28 - DTC-Based Diagnostics/MODULE, Antilock Brake (ABS) - Standard Procedure).

MODULE, Door

Description

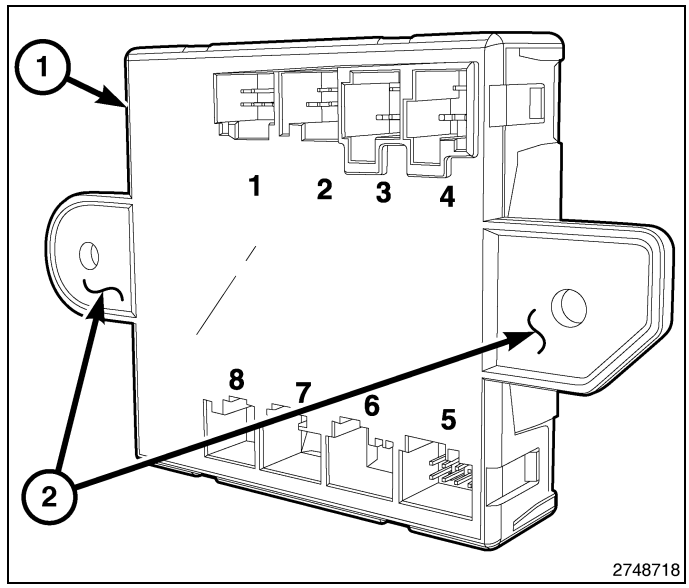

This vehicle is equipped with two electronic front door control modules (1) (also known as a Driver Door Module/DDM, a Passenger Door Module/PDM or Front Door Multiplex/MUX Modules), one each on both the driver and passenger front doors. Each door control module is concealed behind the front door trim panel where it is secured through two integral mounting tabs (2) to the door hardware module carrier by two screws. The front door control modules are located in the upper front corner of the front door hardware carriers, just below the mirror flag area of the front door.

Each door control module contains a microprocessor and is connected to the various switches on that door. In the case of the driver side module, it communicates with some switches over a Local Interface Network (LIN) data bus. Both the driver and passenger side module also receive various hard wired switch inputs and provide numerous hard wired outputs to various devices located on their respective doors. In addition, both front door control modules communicate with each other and with other electronic modules in the vehicle over the Controller Area Network (CAN) Interior High Speed (IHS) data bus system.

Concealed and protected within the molded plastic door control module housing is the printed circuit board and the other electronic circuitry of the module. The front door control modules are connected to the vehicle electrical system through up to eight connector receptacles that are integral to the module housing.

A door control module cannot be adjusted or repaired and, if damaged or ineffective, it must be replaced. The door control module software is flash programmable.

Operation

The microprocessor-based electronic front door control modules (also known as a Driver Door Module/DDM, a Passenger Door Module/PDM or Front Door Multiplex/MUX Modules) contain logic circuits that monitor various hard wired low current, multiplexed inputs from the power window, power lock, power mirror and memory switches on their respective door. They also receive Controller Area Network (CAN) Interior High Speed (IHS) data bus electronic message-based external inputs from the opposing front door control module as well as from other electronic modules in the vehicle. The front door control modules also monitor hard wired power window motor Hall effect sensors and memory mirror position sensor inputs.

In addition, the front door control module on the driver side front door receives electronic message inputs from the driver side front door switch module over the Local Interface Network (LIN) data bus network. The program logic within the front door control module allows the microprocessor to prioritize all of these inputs and determine the tasks it needs to perform. These tasks are then completed either by controlling hard wired outputs to the various motors, actuators or lamps on its own or the rear doors, or by sending electronic message requests over the CAN-IHS bus to the appropriate electronic module in the vehicle.

The front door control modules are powered by a fused B(+) circuit and are grounded at all times so that they can operate regardless of the ignition switch position. Both driver and passenger door control modules provide active and stored Diagnostic Trouble Codes (DTC) through On-Board Diagnostics (OBD) and communicate with a diagnostic scan tool using the CAN data bus.

The hard wired inputs and outputs of the front door control module may be diagnosed using conventional diagnostic tools and procedures. Refer to the appropriate wiring information. However, conventional diagnostic methods will not prove conclusive in the diagnosis of the electronic controls and communication between modules and other devices that provide some features of the power window, power lock, memory, interior lighting or exterior lighting system features the front door control modules provide. The most reliable, efficient and accurate means to diagnose the front door control modules or the electronic controls and communication related to operation of these systems requires the use of a diagnostic scan tool. Refer to the appropriate diagnostic information.

Diagnosis and Testing

Any diagnosis of the door modules should begin with the use of a scan tool and the appropriate Diagnostic information. (Refer to 28 - DTC-Based Diagnostics/MODULE, Driver Door (DDM) - Diagnosis and Testing).

Refer to the appropriate wiring information.

Removal

1. Disconnect and isolate the battery negative cable.
2. Remove the trim panel from the inside of the front door. (Refer to 23 - Body/Door - Front/PANEL, Door Trim - Removal).
3. Disconnect each of the electrical connectors from the connector receptacles of the door control module (1).
4. Remove the two screws that secure the door control module to the front door hardware module carrier.
5. Remove the door control module from the door hardware module carrier.

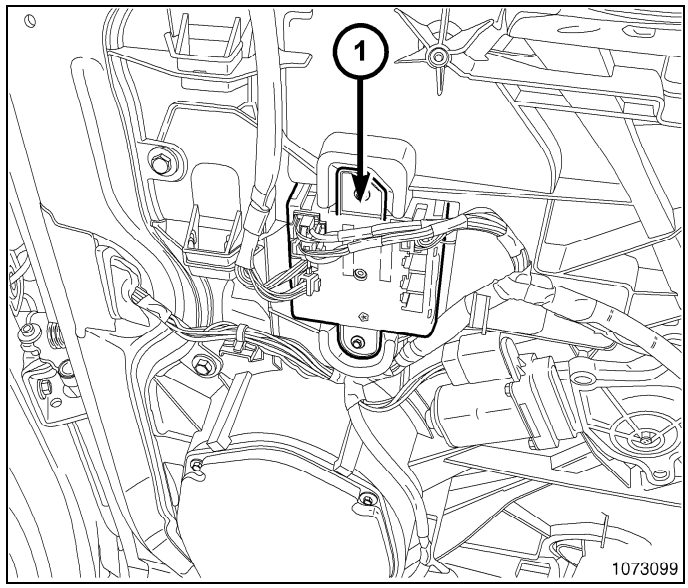

Installation

1. Position the door control module (1) to the front door hardware module carrier.
2. Install and tighten the two screws that secure the door control module to the front door hardware module carrier. Tighten the screws securely.
3. Reconnect each of the electrical connectors to the connector receptacles of the door control module.
4. Reinstall the trim panel to the inside of the front door. (Refer to 23 - Body/Door - Front/PANEL, Door Trim - Installation).
5. Reconnect the battery negative cable.
6. The Clear/Relearn procedure should be performed following service of a door control module so that the module can learn the correct hard stops of the power window regulator. (Refer to 08 - Electrical/8N - Power Systems/Power Windows - Standard Procedure).

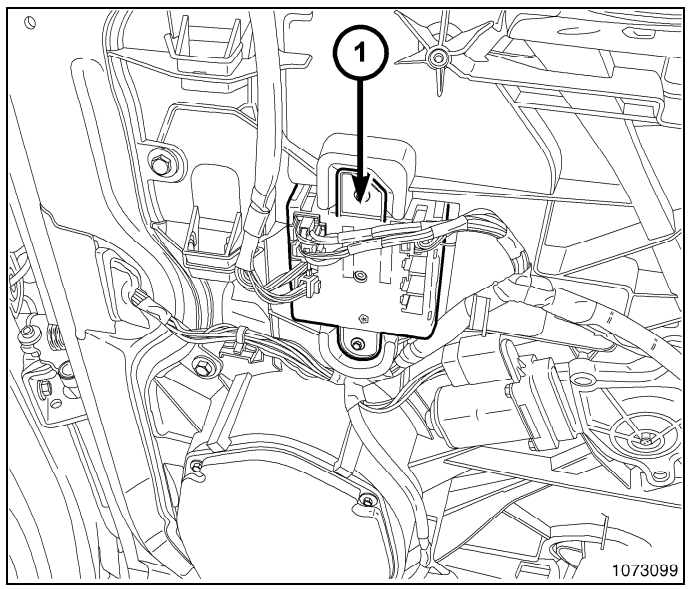

MODULE, Drivetrain Control

Description

The Drivetrain Control Module (DTCM) controls the 4X4 transfer case shift functions via the actuation of a shift motor and utilizing the feedback of a mode sensor assembly. Communication is handled through the CAN bus. The user selectable transfer case modes include the following: 2WD, 4WD AUTO, 4WD LOCK, 4WD LOW, and Neutral (selections vary with the specific transfer case).
The DTCM is located in the passenger footwell, below the HVAC blower.

Operation

During normal operation of an active transfer case the Drive Train Control Module (DTCM) control module learns and remembers the Clutch Engagement Point (Kiss Point), the position in the motor actuator's travel where torque begins to be transferred to the front wheels. The position is read out using the encoder as a 0 to 5 volt signal. This information is

written into the module's EEPROM area at Ignition OFF. Over time the clutch pack wears and the Kiss Point changes in one direction (going from a lower voltage to a higher value).

POWER UP/DOWN

The DTCM will power up with an OFF/ON transition of the hard wired ignition switch input.

The DTCM will power down when the vehicle ignition switch transitions from ON to OFF, or there are no system requirements that dictate the controller to remain active

START-UP DIAGNOSTICS

When the DTCM is activated, the internal circuitry will undergo a diagnostic procedure. The controller will examine all inputs and outputs for short circuits to ground, short circuits to battery and open circuits and will also verify proper CPU and memory operation. If a fault is detected, a message will be sent out over the CAN C bus to the Cluster indicating that service is recommended.

After passing all diagnostic tests, the controller will receive and process inputs and produce the appropriate outputs. Proper monitoring of the controller inputs and outputs performance will continue.

INPUTS/OUTPUTS

The following are inputs to the DTCM:

- Transfer Case Mode Sensor Signal
- 1 Direct Battery Feed
- Ignition RUN Sense
- Sensor Ground
- Module Ground
- CAN C Bus

The following are outputs of the DTCM:

- Transfer Case Motor Brake Control
- 5V Sensor Supply
- Transfer Case Bi-directional Motor Control (A AND B)
- Switched B+ Solenoid Supply
- Transfer Case Motor Brake Control

TRANSFER CASE RANGE SELECT SWITCH INPUT (2WD, 4WD AUTO, 4WD LOCK, and 4WD LOW SELECT SWITCH)

The transfer case range select switch is hardwired directly to the Cluster (CCN). The switch position is read by the CCN and is communicated to the TIPM (Gateway) via the CAN-B bus. The TIPM then rebroadcasts this information onto the CAN-C bus where the DTCM is a receiver.

The Cluster (CCN) will support circuitry which interfaces to the system's Transfer Case Range Select Switch, including a Transfer Case Range Select Switch voltage supply and a Transfer Case Range Select Switch input. The purpose of this circuitry is to determine the mode currently being requested by the operator via the resistance ladder network in the shifter assembly, where the Transfer Case Range Select Switch is packaged.

The NEUTRAL Select Switch Input will provide the operator with the ability to place the Transfer Case in Neutral. The Transfer Case Range Switch input will provide the operator with the ability to place the transfer case in 2WD, 4WD AUTO, 4WD LOCK, and 4WD LOW. The NEUTRAL Select Switch is a momentary pushpin switch; the Transfer Case Range Select Switch is a 4-position rotary contact switch; both of these switches are provided through a resistor network for diagnostic purposes. The input will have an internal 1.0K +/- 1% pull-up resistor to 5V.

As the selected position in the switch varies and/or the NEUTRAL Switch is depressed or not, the resistance between the Cluster (CCN) voltage supply and Transfer Case Range Select Switches input will vary. Hardware, software, and calibrations within the Cluster will be provided that interpret the external resistance between the module's Transfer Case Range Select Switches voltage supply and Transfer Case Range Select Switches inputs as given in the table below:

NOTE: There is no requirement for the DTCM to distinguish between a neutral request from the 4WD AUTO or the 4WD LOW position. Resistances in these ranges will be represented as a Neutral Switch Activation.

TRANSFER CASE MODE SENSOR SIGNAL

The Transfer Case Mode Sensor Signal Input will provide the DTCM feedback about the position of the transfer case. The mode sensor is a linear analog position sensor with a 1.4K +/- 20% potentiometer and a 1 K +/- 20% wiper resistor that converts the motor shaft position into a multiplexed voltage. The mode sensor (on the active transfer case) is an active device where the sensor's current changes as the motor shaft position changes

TRANSFER CASE BI-DIRECTIONAL MOTOR CONTROL (A AND B)

This output will control a Bi-directional DC motor that controls a clutch pack in the Transfer Case that varies the torque transfer between the front and rear axles.

MODES OF OPERATION

Normal Operation

This mode is achieved by the ignition being switched in the RUN position, which powers up the 5V regulator and generates the appropriate RESET for the microprocessor. This mode also includes any required power-up system checks.

Shut Down Mode

This mode is activated when the ignition switch turned to the off position. The DTCM will perform any required Shut Down tasks prior to turning off the 5V regulator.

Limp-In Mode

This mode is entered when the DTCM has detected an error condition that prevents the system from performing its required task. The DTCM operation will vary depending from modified operation to total system shut down based on the failure that has occurred.

Removal

1. Disconnect and isolate the battery negative cable.
2. To gain access to the Drive Train Contol Module (DTCM), position the carpet that is located at the passenger side, away from the dash panel.
3. Remove cover on the DTCM by pulling up on the upper rear tab (1), and rotaing down and away from the module (3).
4. Disconnect the module electrical connectors (2).
5. Using trim stick - C-4755 or equivalent, gently pry back on the retaining tabs on the mounting plate (4) and remove module(3).

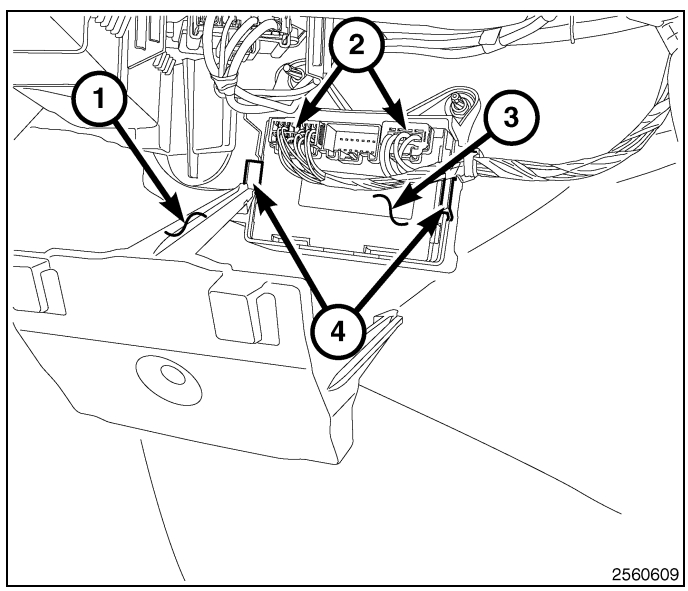

Installation

1. Place the Drive Train Control Module (3) in its location on the mounting plate (4) and firmly snap into place.
2. Connect the electrical connectors (2).
3. Install cover back onto the DTCM by snapping into place.
4. Install carpeting back into its proper location.
5. Connect the battery negative cable.

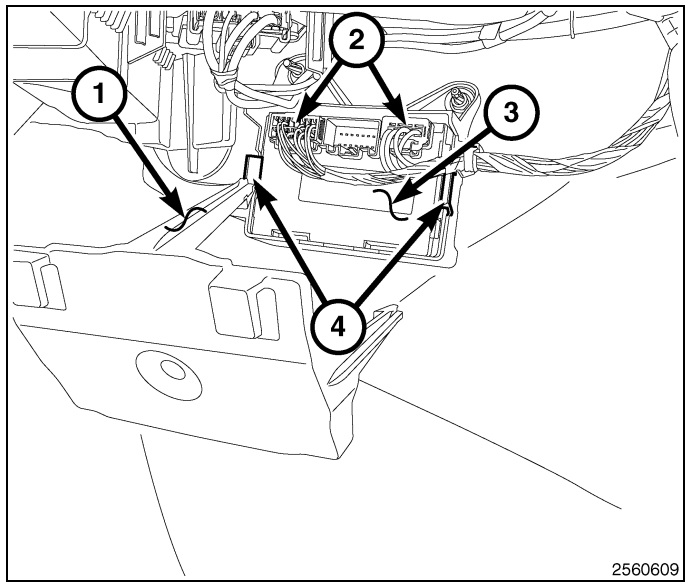

MODULE, Heated Seat

Description

The Heated Seat Module (HSM), also referred to as the Comfort Seat Wheel Module (CSWM) is a time based controller for all the functions of the Vented Seats, Heated Seats and the Heated Steering wheel systems when equipped. The HSM is black in color, rectangular in shape and has a total of five electrical connectors based on the number of components being controlled. The HSM is located in the passanger compartment under the left front seat, and is attached to the seat bottom frame assembly.

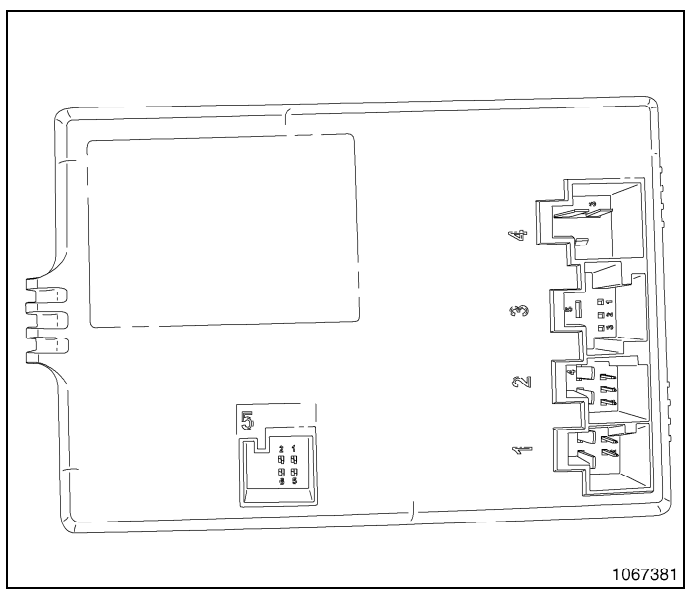

Operation

The Heated Seat Module (HSM) is used to control the functions of the following systems:

- **Vented Seats**- Two vented seats can be controlled by the HSM,(Refer to 08 - Electrical/8G - Heated/Cooled Systems/ Heated/Cooled Accessories - Operation).
- **Heated Seats**- Up to four heated seats can be controlled by the HSM,(Refer to 08 - Electrical/8G - Heated/Cooled Systems/Heated Seats - Operation).
- **Heated Steering Wheel**-(Refer to 08 - Electrical/8G - Heated/Cooled Systems/Heated/Cooled Accessories - Operation).

NOTE: The HSM will configure itself depending on what components are installed on the vehicle. This allows for one module to be used for every component combinations available.

The HSM.will only be on with the engine running. Therefore the heated seats, vented seats, and heated steering wheel will only operate with the engine running. Seat heating and seat venting are independent systems; however, they can not be actuated at the same time. Turning the vented seats on when the heated seat are already on will turn off the heated seats and vice versa. The heated steering wheel on the other hand can be on at the same time as either the heated seats or the cooled seats.

Diagnosis and Testing

The Heated Seat Control Module (HSCM) is capable of detecting vented seat, heated seat, and heated steering wheel faults and will store Diagnostic Trouble Codes (DTC) via the Controlled Area Network. (CAN). A scan tool is necessary to properly diagnose the DTC set by the vented seat, heated seat, or heated steering wheel faults. See the appropriate diagnostic information.

Removal

1. Disconnect the battery negative cable.
2. Disconnect the five heated seat module electrical connectors.

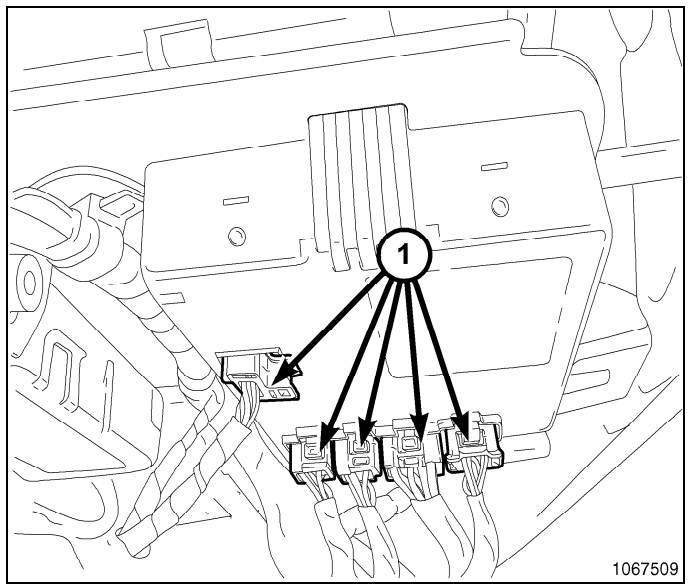

3. Remove the heated seat module (4) from the seat frame (2) by pushing the lock-tab (1) toward the rear of the seat and then slightly lower the front of the module and then pull the module out toward the front of the seat to disengage the alignment tabs (3).

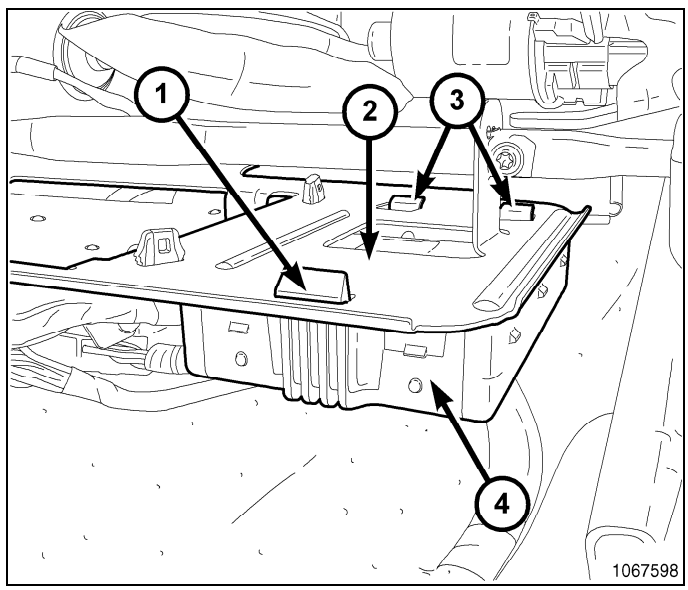

Installation

1. Install the heated seat module (4) to the seat frame (2) by aligning the two tabs (3) at the rear of the module with the slots in the seat frame, then push the module upward until the lock tab (1) locks the module to the seat frame.

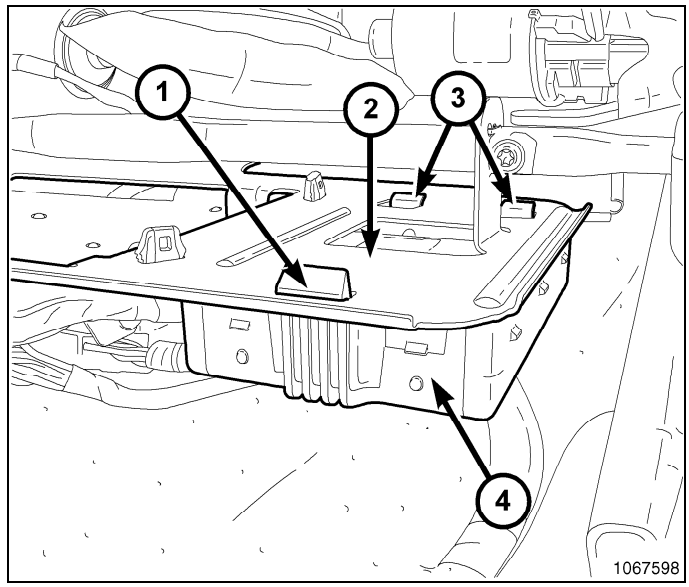

2. Connect the five heated seat module electrical connectors (1).
3. Connect the battery negative cable.

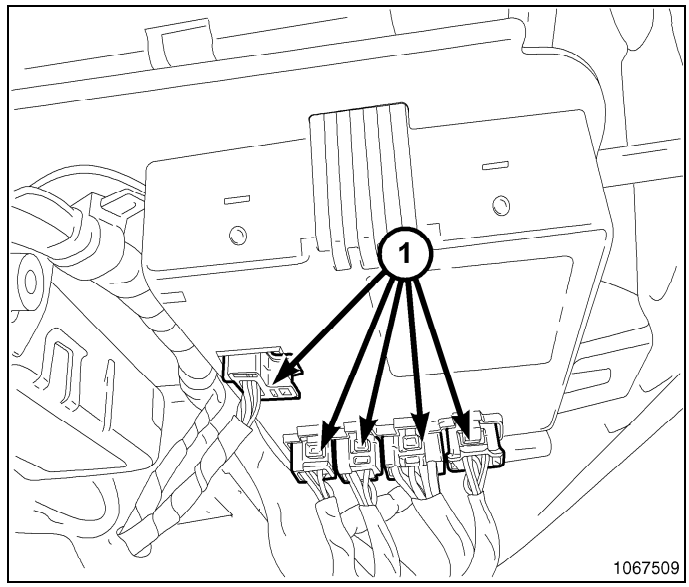

MODULE, Memory

Description

NOTE: The scan tool standardization process must be performed on the Memory Module (1) any time a new module is installed or the existing module is reflashed.

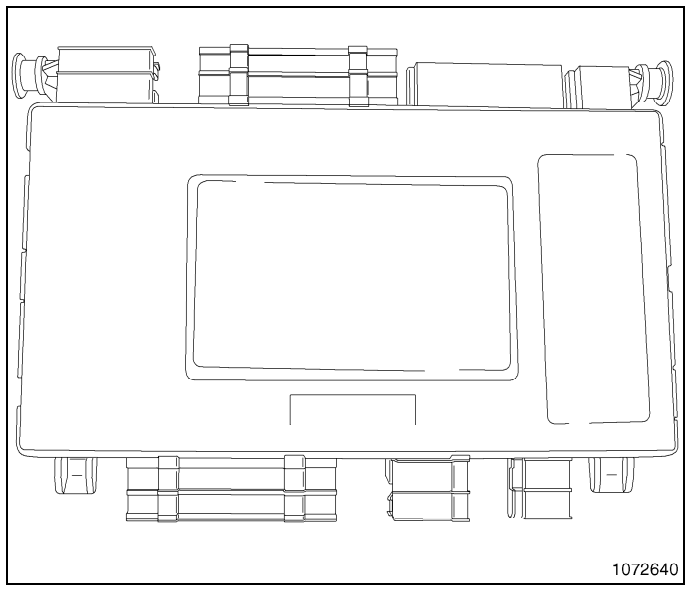

The Memory Seat Module (MSM), also know as Memory Module (MM) (1) is located underneath the driver seat. It is used in conjunction with the other modules in the memory system to recall the driver seat to one of two preset seat positions (horizontal, vertical, and recliner). The switch for the memory seat programming and selection mounts on the side of the driver seat. The memory system is able to store and recall all driver side power seat positions except for lumber, outside mirror positions and power adjustable pedal position. The system can be set for two different drivers. On vehicles with a factory installed radio connected to the Controller Area Network (CAN) data bus network, the memory system is also able to store and recall up to twelve radio station presets (six AM and six FM), also for two drivers. The memory system will also store and recall the last station listened to for each driver, even if it is not one of the twelve preset stations.

The memory system will automatically recall all of these settings when a button of the memory switch is depressed, or when the doors are unlocked using the FOBIK (if the "FOBIK Linked to Memory" feature is enabled). If the vehicle has more than two drivers the FOBIK transmitter recall of memory features can be disabled. This is a customer programmable feature of the Electronic Vehicle Information Center (EVIC).

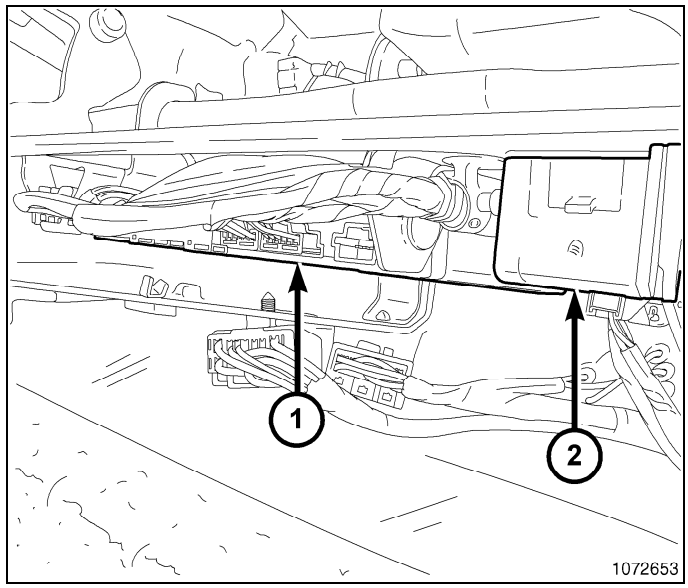

Operation

The Memory Seat Module (MSM), also referred to as Memory Module (MM) receives battery current through a 25 amp Maxi Fuse in the Totally Integrated Power Module (TIPM) so that the memory system remains operational, regardless of the ignition switch position. When the driver memory switch button is pushed, a resistance signal is sent to the MSM via the Controller Area Network (CAN) bus circuit. The MSM is responsible for the 12v battery feed and ground path to the power seat adjuster motor and other memory system components.

The MSM receives memory set/position switch input through the CAN bus circuit. The MSM also receives hard wired input from the hall effect sensors, mounted on each of the driver power seat adjuster motors, the driver side view mirror motor, and adjustable pedals. The programmed software in the module allows it to know where the seat and adjustable pedals are located in its designed travel by a pulse count generated from the hall effect sensors. This way, when the memory switch is depressed the module will power these components until the correct preset location is achieved. The module will prevent the seat memory recall function from being initiated, if the transmission gear selector lever is not in

the Park position, or if the vehicle is moving. These inputs are monitored over the Controller Area Network (CAN) bus circuit by the MSM.

A memory setting is saved by pressing the “set” button, then pressing either the memory “1” or “2” button within 5 seconds of pressing the “set” button.

A memory setting is recalled by pressing either the memory “1” or “2” button, or by pressing the unlock button on a “linked” FOBIK transmitter.

For driver safety, memorized settings can not be recalled if the transmission is in a position other than Park.

The MSM performs the following functions:

- Positions the driver power seat (vertical, horizontal, and recliner positions).
- Positions the power adjustable pedals.
- Sends the memory save or recall (number 1 or number 2) command over the CAN data bus circuit to the other memory system components, radio station pre-sets and power mirror positions.
- Provides for the easy entry/exit feature.

When a memory button is pressed (number 1 or number 2) on the memory switch, it provides resistive signal/input to the MSM. The MSM will then position the memory system components to the preprogramming location/setting. FOBIK Transmitter button is pressed, depending on which transmitter (number 1 or number 2), the WIN/SKIM Receiver sends the recall request and FOBIK number (number 1 or number 2) data message. This FOBIK transmitter function depends on if the MSM is programmed to trigger the recall (linked FOBIKs).

A FOBIK is “linked” to a memory setting by pressing the “set” button and then pressing either the memory “1” or “2” button within 5 seconds of pressing the set button, then by pressing the “lock” button on the selected FOBIK.

The memory system “Easy Entry and /Exit” feature provides the driver with more room to enter or exit the vehicle. When the seat is in a memorized position, it will move rearward 55 millimeters or to the end of its travel, whichever occurs first, when the key is removed from the ignition switch lock cylinder. This is a customer programmable feature in the EVIC. The seat will return to the memory position when the driver turns the vehicle's ignition switch out of the LOCK position.

The memory system “learns” the seat and adjustable pedal motor maximum end positions when the motor reaches the limit of travel in any direction and stalls. Subsequently, movement will stop just short of that position to avoid extra stress on the motors and mechanisms. If the system learned a maximum position as a result of an obstruction, as for instance if a large object was placed on the floor behind the seat, the system can relearn the “true” maximum position through manually operating the power seat after the obstruction is removed.

NOTE: It is normal for the power accessories contained in the memory system to stop at the maximum “learned” position and then continue to the “true” maximum position when the control switch is released and then applied in the same direction a second time.

Certain functions and features of the memory system rely upon resources shared with other electronic modules in the vehicle over the Controller Area Network (CAN) bus. The CAN bus allows the sharing of sensor information. This helps to reduce wire harness complexity, internal controller hardware, and component sensor current loads. At the same time, this system provides increased reliability, enhanced diagnostics, and allows the addition of many new feature capabilities. For diagnosis of these electronic modules or of the CAN bus, the use of a scan tool and the proper diagnostic information are needed.

Diagnosis and Testing

In order to obtain conclusive testing of the memory system, the Controller Area Network (CAN) data bus, and all of the electronic modules that provide inputs to, or receive outputs from the memory system components must be checked. **Any diagnosis of the memory system/module should begin with, the use of a scan tool and the appropriate diagnostic service information.**(Refer to 29 - Non-DTC Diagnostics/Power Doors - Diagnosis and Testing).

Refer to the appropriate wiring information for complete circuit schematic or connector pin-out information.

NOTE: Vehicles equipped with the memory/heated seat option utilize a low voltage cut-off feature. This feature turns off the 12v power to the power seat system anytime vehicle voltage is below 11.7v. Be certain to check the vehicle electrical system for proper voltage anytime the power seat system appears inoperative.

Before any testing of the power seat system is attempted, the battery should be fully-charged.

Removal

1. Disconnect and isolate the battery negative cable.
2. Disconnect the four electrical connectors from the front of the module (1) and the one in the back.
3. Push up on the module (1) to release side tabs.
4. Pull module forward to remove from bracket.

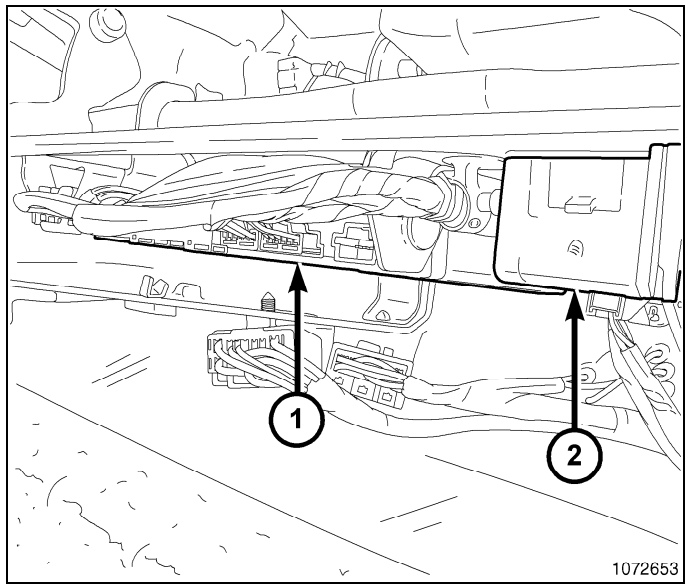

Installation

CAUTION: The Memory Seat Module (MSM) mounting tabs can be damaged during module installation. Use care to properly align tabs to prevent binding that could result in tab breakage.

1. Place the module (1) into position making sure the mounting tabs are properly aligned with the front bracket.
2. Push down on the front of the module (1) snapping the tabs into place in the side brackets.
3. Connect the electrical connectors to the MSM. Four in the front and one in the back.
4. Connect the battery negative cable.
5. Using an appropriate scan tool go to the MSM miscellaneous functions and perform the standardization routine.
6. Verify system and vehicle operation.

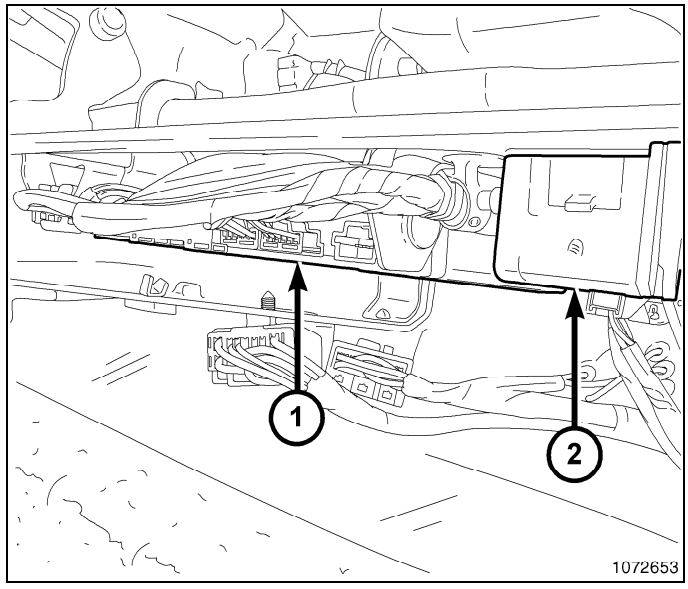

MODULE, Powertrain Control

Description

POWERTRAIN CONTROL MODULE (PCM)

The Powertrain Control Module (PCM) is located in the right-rear section of the engine compartment under the cowl.

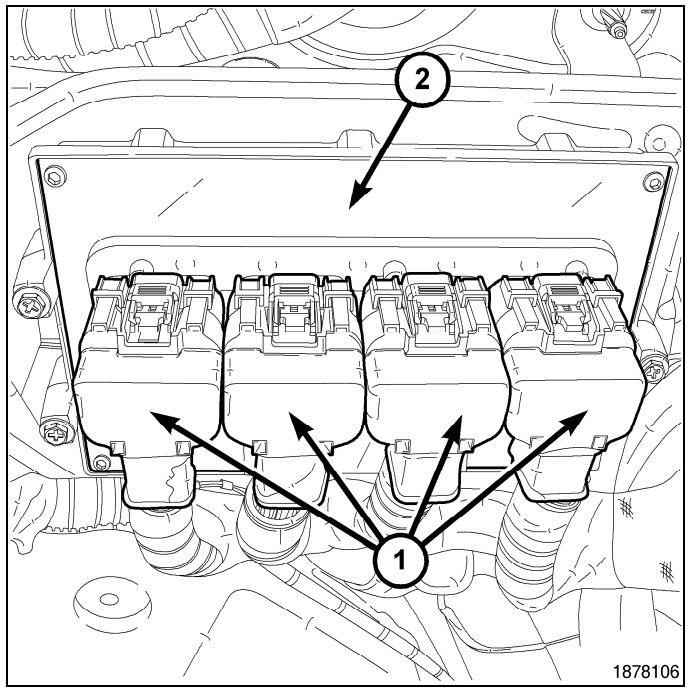

MODES OF OPERATION

As input signals to the Powertrain Control Module (PCM) change, the PCM adjusts its response to the output devices. For example, the PCM must calculate different injector pulse width and ignition timing for idle than it does for wide open throttle (WOT).

The PCM will operate in two different modes: **Open Loop and Closed Loop**.

During Open Loop modes, the PCM receives input signals and responds only according to preset PCM programming. Input from the oxygen (O2S) sensors is not monitored during Open Loop modes.

During Closed Loop modes, the PCM will monitor the oxygen (O2S) sensors input. This input indicates to the PCM whether or not the calculated injector pulse width results in the ideal air-fuel ratio. This ratio is 14.7 parts air-to-1 part fuel. By monitoring the exhaust oxygen content through the O2S sensor, the PCM can fine tune the injector pulse width. This is done to achieve optimum fuel economy combined with low emission engine performance.

The fuel injection system has the following modes of operation:

- Ignition switch ON
- Engine start-up (crank)
- Engine warm-up
- Idle
- Cruise
- Acceleration
- Deceleration
- Wide open throttle (WOT)
- Ignition switch OFF

The ignition switch On, engine start-up (crank), engine warm-up, acceleration, deceleration and wide open throttle modes are Open Loop modes. The idle and cruise modes, (with the engine at operating temperature) are Closed Loop modes.

IGNITION SWITCH (KEY-ON) MODE

This is an Open Loop mode. When the fuel system is activated by the ignition switch, the following actions occur:

- The PCM pre-positions the idle air control (IAC) motor.
- The PCM determines atmospheric air pressure from the MAP sensor input to determine basic fuel strategy.
- The PCM monitors the engine coolant temperature sensor input. The PCM modifies fuel strategy based on this input.
- Intake manifold air temperature sensor input is monitored.
- Throttle position sensor (TPS) is monitored.
- The auto shutdown (ASD) relay is energized by the PCM for approximately three seconds.
- The fuel pump is energized through the fuel pump relay by the PCM. The fuel pump will operate for approximately three seconds unless the engine is operating or the starter motor is engaged.
- The O2S sensor heater element is energized via the ASD or O2S heater relay. The O2S sensor input is not used by the PCM to calibrate air-fuel ratio during this mode of operation.

ENGINE START-UP MODE

This is an Open Loop mode. The following actions occur when the starter motor is engaged.

The PCM receives inputs from:

- Battery voltage
- Engine coolant temperature sensor
- Crankshaft position sensor
- Intake manifold air temperature sensor
- Manifold absolute pressure (MAP) sensor
- Throttle position sensor (TPS)
- Camshaft position sensor signal

The PCM monitors the crankshaft position sensor. If the PCM does not receive a crankshaft position sensor signal within 3 seconds of cranking the engine, it will shut down the fuel injection system.

The fuel pump is activated by the PCM through the fuel pump relay.

Voltage is applied to the fuel injectors with the ASD relay via the PCM. The PCM will then control the injection sequence and injector pulse width by turning the ground circuit to each individual injector on and off.

The PCM determines the proper ignition timing according to input received from the crankshaft position sensor.

ENGINE WARM-UP MODE

This is an Open Loop mode. During engine warm-up, the PCM receives inputs from:

- Battery voltage
- Crankshaft position sensor
- Engine coolant temperature sensor
- Intake manifold air temperature sensor
- Manifold absolute pressure (MAP) sensor
- Throttle position sensor (TPS)
- Camshaft position sensor signal
- Park/neutral switch (gear indicator signal—auto. trans. only)
- Air conditioning select signal (if equipped)
- Air conditioning request signal (if equipped)

Based on these inputs the following occurs:

- Voltage is applied to the fuel injectors with the ASD relay via the PCM. The PCM will then control the injection sequence and injector pulse width by turning the ground circuit to each individual injector on and off.
- The PCM adjusts engine idle speed through the idle air control (IAC) motor and adjusts ignition timing.
- The PCM operates the A/C compressor clutch through the A/C compressor clutch relay. This is done if A/C has been selected by the vehicle operator and specified pressures are met at the high and low–pressure A/C switches. (Refer to 24 - Heating and Air Conditioning - Operation) for additional information.
- When the heating element has reached operating temperature located in the O2S, the PCM will begin monitoring O2 sensor output readings. The system will then leave the warm-up (open loop) mode and go into closed loop operation.

IDLE MODE

When the engine is at operating temperature, this is a Closed Loop mode. At idle speed, the PCM receives inputs from:

- Air conditioning select signal (if equipped)
- Air conditioning request signal (if equipped)
- Battery voltage
- Crankshaft position sensor
- Engine coolant temperature sensor
- Intake manifold air temperature sensor
- Manifold absolute pressure (MAP) sensor
- Throttle position sensor (TPS)
- Camshaft position sensor signal
- Battery voltage
- Park/neutral switch (gear indicator signal—auto. trans. only)
- Oxygen sensors

Based on these inputs, the following occurs:

- Voltage is applied to the fuel injectors with the ASD relay via the PCM. The PCM will then control injection sequence and injector pulse width by turning the ground circuit to each individual injector on and off.
- The PCM monitors the O2S sensor input and adjusts air-fuel ratio by varying injector pulse width. It also adjusts engine idle speed through the idle air control (IAC) motor.
- The PCM adjusts ignition timing by increasing and decreasing spark advance.
- The PCM operates the A/C compressor clutch through the A/C compressor clutch relay. This is done if A/C has been selected by the vehicle operator and specified pressures are met at the high and low–pressure A/C switches. (Refer to 24 - Heating and Air Conditioning - Operation) for additional information.

CRUISE MODE

When the engine is at operating temperature, this is a Closed Loop mode. At cruising speed, the PCM receives inputs from:

- Air conditioning select signal (if equipped)
- Air conditioning request signal (if equipped)
- Battery voltage
- Engine coolant temperature sensor
- Crankshaft position sensor
- Intake manifold air temperature sensor
- Manifold absolute pressure (MAP) sensor
- Throttle position sensor (TPS)
- Camshaft position sensor signal
- Park/neutral switch (gear indicator signal—auto. trans. only)
- Oxygen (O2S) sensors

Based on these inputs, the following occurs:

- Voltage is applied to the fuel injectors with the ASD relay via the PCM. The PCM will then adjust the injector pulse width by turning the ground circuit to each individual injector on and off.
- The PCM monitors the O2S sensor input and adjusts air-fuel ratio. It also adjusts engine idle speed through the idle air control (IAC) motor.
- The PCM adjusts ignition timing by turning the ground path to the coil(s) on and off.
- The PCM operates the A/C compressor clutch through the clutch relay. This happens if A/C has been selected by the vehicle operator and requested by the A/C thermostat.

ACCELERATION MODE

This is an Open Loop mode. The PCM recognizes an abrupt increase in throttle position or MAP pressure as a demand for increased engine output and vehicle acceleration. The PCM increases injector pulse width in response to increased throttle opening.

DECELERATION MODE

When the engine is at operating temperature, this is an Open Loop mode. During hard deceleration, the PCM receives the following inputs.

- Air conditioning select signal (if equipped)
- Air conditioning request signal (if equipped)
- Battery voltage
- Engine coolant temperature sensor
- Crankshaft position sensor
- Intake manifold air temperature sensor
- Manifold absolute pressure (MAP) sensor
- Throttle position sensor (TPS)
- Camshaft position sensor signal
- Park/neutral switch (gear indicator signal—auto. trans. only)
- Vehicle speed

If the vehicle is under hard deceleration with the proper rpm and closed throttle conditions, the PCM will ignore the oxygen sensor input signal. The PCM will enter a fuel cut-off strategy in which it will not supply a ground to the injectors. If a hard deceleration does not exist, the PCM will determine the proper injector pulse width and continue injection.

Based on the above inputs, the PCM will adjust engine idle speed through the idle air control (IAC) motor.

The PCM adjusts ignition timing by turning the ground path to the coil on and off.

WIDE OPEN THROTTLE MODE

This is an Open Loop mode. During wide open throttle operation, the PCM receives the following inputs.

- Battery voltage
- Crankshaft position sensor
- Engine coolant temperature sensor
- Intake manifold air temperature sensor
- Manifold absolute pressure (MAP) sensor
- Throttle position sensor (TPS)
- Camshaft position sensor signal

During wide open throttle conditions, the following occurs:

- Voltage is applied to the fuel injectors with the ASD relay via the PCM. The PCM will then control the injection sequence and injector pulse width by turning the ground circuit to each individual injector on and off. The PCM ignores the oxygen sensor input signal and provides a predetermined amount of additional fuel. This is done by adjusting injector pulse width.
- The PCM adjusts ignition timing by turning the ground path to the coil(s) on and off.

IGNITION SWITCH OFF MODE

When ignition switch is turned to OFF position, the PCM stops operating the injectors, ignition coil, ASD relay and fuel pump relay.

5 VOLT SUPPLIES

Two different Powertrain Control Module (PCM) five volt supply circuits are used; primary and secondary.

IGNITION CIRCUIT SENSE

This circuit ties the ignition switch to the Powertrain Control Module (PCM).

POWER GROUNDS

The Powertrain Control Module (PCM) has 2 main grounds. Both of these grounds are referred to as power grounds. All of the high-current, noisy, electrical devices are connected to these grounds as well as all of the sensor returns. The sensor return comes into the sensor return circuit, passes through noise suppression, and is then connected to the power ground.

The power ground is used to control ground circuits for the following PCM loads:

- Generator field winding
- Fuel injectors
- Ignition coil(s)
- Certain relays/solenoids

- Certain sensors

SENSOR RETURN

The Sensor Return circuits are internal to the Powertrain Control Module (PCM).

Sensor Return provides a low–noise ground reference for all engine control system sensors. Refer to Power Grounds for more information.

Operation

POWERTRAIN CONTROL MODULE (PCM)

The PCM operates the fuel system. The PCM is a pre-programmed, triple microprocessor digital computer. It regulates ignition timing, air-fuel ratio, emission control devices, charging system, certain transmission features, speed control, air conditioning compressor clutch engagement and idle speed. The PCM can adapt its programming to meet changing operating conditions.

The PCM receives input signals from various switches and sensors. Based on these inputs, the PCM regulates various engine and vehicle operations through different system components. These components are referred to as Powertrain Control Module (PCM) Outputs. The sensors and switches that provide inputs to the PCM are considered Powertrain Control Module (PCM) Inputs.

The PCM adjusts ignition timing based upon inputs it receives from sensors that react to: engine rpm, manifold absolute pressure, engine coolant temperature, throttle position, transmission gear selection (automatic transmission), vehicle speed, power steering pump pressure, and the brake switch.

The PCM adjusts idle speed based on inputs it receives from sensors that react to: throttle position, vehicle speed, transmission gear selection, engine coolant temperature and from inputs it receives from the air conditioning clutch switch and brake switch.

Based on inputs that it receives, the PCM adjusts ignition coil dwell. The PCM also adjusts the generator charge rate through control of the generator field and provides speed control operation.

NOTE: PCM Inputs:

- ABS module (if equipped)
- A/C request (if equipped with factory A/C)
- A/C select (if equipped with factory A/C)
- A/C pressure transducer
- Auto shutdown (ASD) sense
- Battery temperature sensor
- Battery voltage
- Brake switch
- CAN C BUS (+) circuits
- CAN C BUS (-) circuits
- Camshaft position sensor signal
- Crankshaft position sensor
- Data link connection for a scan tool
- EATX module (if equipped)
- Engine coolant temperature sensor
- Fuel level
- Generator (battery voltage) output
- Ignition circuit sense (ignition switch in on/off/crank/run position)
- Intake manifold air temperature sensor
- Knock sensors (2 on 3.7L engine)
- Leak detection pump (switch) sense (if equipped)
- Manifold absolute pressure (MAP) sensor
- Oil pressure
- Oxygen sensors
- Park/neutral switch (auto. trans. only)

- Power ground
- Power steering pressure switch (if equipped)
- Sensor return
- Signal ground
- Speed control multiplexed single wire input
- Throttle position sensor
- Transfer case switch (4WD range position)
- Vehicle speed signal

NOTE: PCM Outputs:

- A/C clutch relay
- Auto shutdown (ASD) relay
- CAN C BUS (+/-) circuits for: speedometer, voltmeter, fuel gauge, oil pressure gauge/lamp, engine temp. gauge and speed control warn. lamp
- Data link connection for diagnostic scan tool
- EGR valve control solenoid (if equipped)
- EVAP canister purge solenoid
- Five volt sensor supply (primary)
- Five volt sensor supply (secondary)
- Fuel injectors
- Fuel pump relay
- Generator field driver (-)
- Generator field driver (+)
- Idle air control (IAC) motor
- Ignition coil(s)
- Leak detection pump (if equipped)
- Malfunction indicator lamp (Check engine lamp).
- Oxygen sensor heater relays
- Oxygen sensors (pulse width modulated)
- Radiator cooling fan relay (pulse width modulated)
- Speed control vacuum solenoid
- Speed control vent solenoid
- Tachometer (if equipped).
- Transmission convertor clutch circuit.

5 VOLT SUPPLIES

Primary 5–volt supply:

- supplies the required 5 volt power source to the Crankshaft Position (CKP) sensor.
- supplies the required 5 volt power source to the Camshaft Position (CMP) sensor.
- supplies a reference voltage for the Manifold Absolute Pressure (MAP) sensor.
- supplies a reference voltage for the Throttle Position Sensor (TPS) sensor.

Secondary 5–volt supply:

- supplies the required 5 volt power source to the oil pressure sensor.
- supplies the required 5 volt power source for the Vehicle Speed Sensor (VSS) (if equipped).
- supplies the 5 volt power source to the transmission pressure sensor (certain automatic transmissions).

IGNITION CIRCUIT SENSE

The ignition circuit sense input tells the PCM the ignition switch has energized the ignition circuit.

Battery voltage is also supplied to the PCM through the ignition switch when the ignition is in the RUN or START position. This is referred to as the "ignition sense" circuit and is used to "wake up" the PCM. Voltage on the ignition input can be as low as 6 volts and the PCM will still function. Voltage is supplied to this circuit to power the PCM's 8-volt regulator and to allow the PCM to perform fuel, ignition and emissions control functions.

Standard Procedure

(Refer to 28 - DTC-Based Diagnostics/MODULE, Powertrain Control (PCM) - Standard Procedure) and perform the PCM/TCM PROGRAMMING procedure.

Removal

CAUTION: Certain ABS systems rely on having the Powertrain Control Module (PCM) broadcast the Vehicle Identification Number (VIN) over the bus network. To prevent problems of DTCs and other items related to the VIN broadcast, it is recommend that you disconnect the ABS CAB (controller) temporarily when replacing the PCM. Once the PCM is replaced, write the VIN to the PCM using a scan tool. This is done from the engine main menu. Arrow over to the second page to "1. Miscellaneous". Select "Check VIN" from the choices. Make sure it has the correct VIN entered before continuing. When the VIN is complete, turn off the ignition key and reconnect the ABS module connector. This will prevent the setting of DTCs and other items associated with the lack of a VIN detected when you turn the key ON after replacing the PCM.

CAUTION: Use the scan tool to reprogram the new PCM with the vehicles original identification number (VIN) and the vehicles original mileage. If this step is not done, a Diagnostic Trouble Code (DTC) may be set.

The PCM (2) is located in the engine compartment attached to the passenger side dash panel.

To avoid possible voltage spike damage to the PCM, ignition key must be off, and negative battery cable must be disconnected before unplugging PCM connectors.

1. Disconnect and isolator the negative battery cable.
2. Carefully unplug the four 38–way connectors from the PCM (1) .
3. Remove the four PCM mounting bolts and remove the PCM (2) from vehicle.

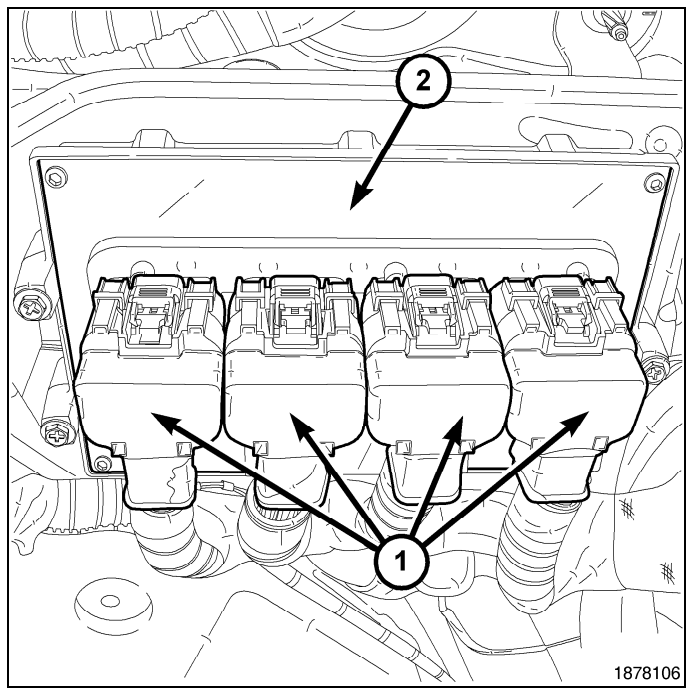

Installation

CAUTION: Certain ABS systems rely on having the Powertrain Control Module (PCM) broadcast the Vehicle Identification Number (VIN) over the bus network. To prevent problems of DTCs and other items related to the VIN broadcast, it is recommend that you disconnect the ABS CAB (controller) temporarily when replacing the PCM. Once the PCM is replaced, write the VIN to the PCM using a scan tool. This is done from the engine main menu. Arrow over to the second page to "1. Miscellaneous". Select "Check VIN" from the choices. Make sure it has the correct VIN entered before continuing. When the VIN is complete, turn off the ignition key and reconnect the ABS module connector. This will prevent the setting of DTCs and other items associated with the lack of a VIN detected when you turn the key ON after replacing the PCM.

CAUTION: Use the scan tool to reprogram the new PCM with the vehicles original identification number (VIN) and the vehicles original mileage. If this step is not done, a Diagnostic Trouble Code (DTC) may be set.

1. Install the PCM (2) and 4 mounting bolts to vehicle.
2. Check pin connectors in the PCM and the three 32–way connectors (four 38–way connectors if equipped with NGC) for corrosion or damage. Also, the pin heights in connectors should all be same. Repair as necessary before installing connectors.
3. Install the three 32–way connectors (four 38–way connectors if equipped with NGC).
4. **The 5.7L V-8 engine is equipped with a fully electronic accelerator pedal position sensor. If equipped with a 5.7L, also perform the following 3 steps:**
   a. Connect the negative battery cable.
   b. Turn the ignition switch ON, but do not crank the engine.
   c. Leave the ignition switch ON for a minimum of 10 seconds. This will allow the PCM to learn the electrical parameters.
   d. The scan tool may also be used to learn electrical parameters. Go to the Miscellaneous menu, and then select ETC Learn.

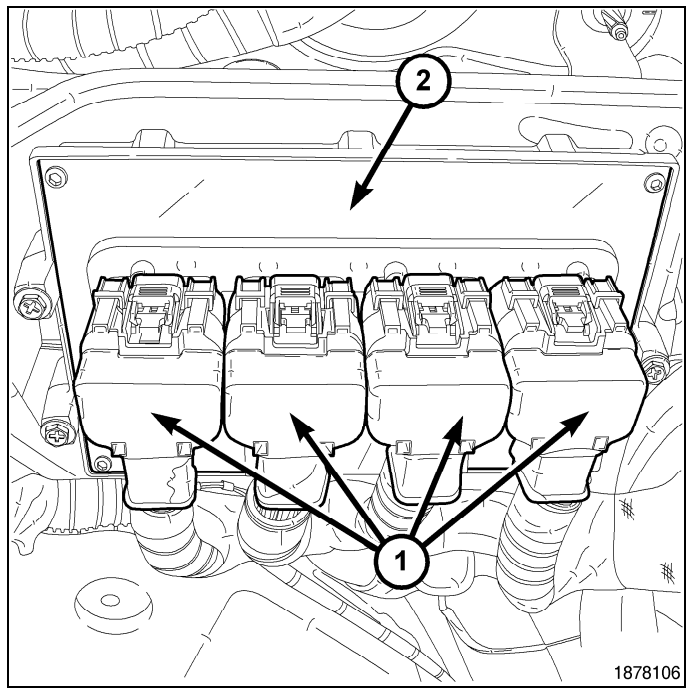

5. If the previous step is not performed, a Diagnostic Trouble Code (DTC) will be set.
6. If necessary, use a scan tool to erase any Diagnostic Trouble Codes (DTC's) from PCM. Also use the scan tool to reprogram new PCM with vehicles original Vehicle Identification Number (VIN) and original vehicle mileage.

MODULE, Steering Column

Description

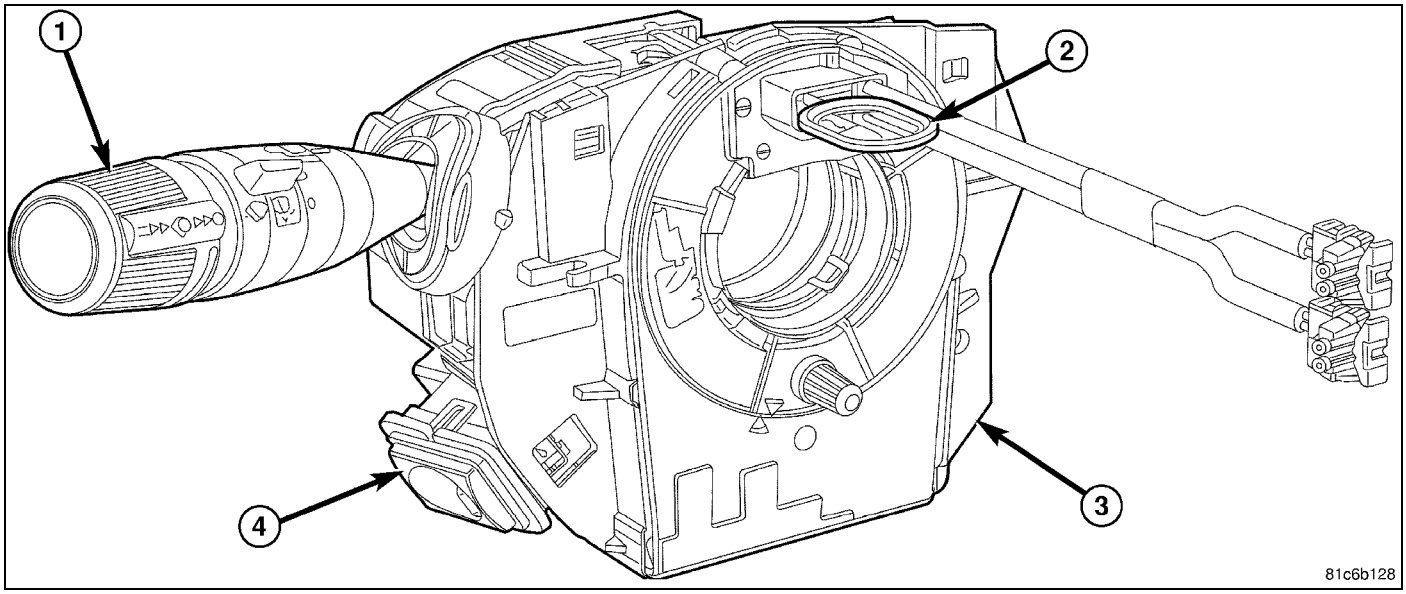

This vehicle is equipped with a Steering Control Module (SCM), which is an electronic circuit board with a microprocessor that is internal to the multi-function switch (1) housing. The SCM is a Local Interface Network (LIN) slave and communicates over a dedicated LIN bus circuit with the ElectroMechanical Instrument Cluster (EMIC) (also known as the Cab Compartment Node/CCN), which is the LIN master and also provides a gateway to the Controller Area Network (CAN) data bus.

The multi-function switch is located on the left side of the steering column, just below the steering wheel. The multi-function switch provides the primary controls for the front wiper and washer systems, the turn signals and for headlamp beam selection. The only visible component of the switch is the control stalk, which includes a control knob that extends

through the shrouds on the left side of the steering column. The remainder of the switch including its mounting provisions, its electrical connection and a turn signal cancel actuator are concealed beneath the shrouds.

The switch housing and controls are constructed of molded black plastic. A single integral latch feature and slide tabs on the switch housing engage channels and a striker that are integral to the left side of the mounting bracket that is integral to the clockspring (3) to secure the switch to the steering column. Each of the switches within the multi-function switch is internally connected to the SCM. A single connector receptacle integral to the back of the switch housing connects the SCM to the vehicle electrical system through a dedicated takeout and connector of the instrument panel wire harness.

The SCM cannot be adjusted or repaired, and is not flash update capable. If ineffective or damaged the entire multi-function switch must be replaced. (Refer to 08 - Electrical/8L - Lamps and Lighting/Lamps/Lighting - Exterior/SWITCH, Multifunction - Removal). The clockspring (with the multi-function switch mounting bracket) and the multi-function switch (with the SCM) are each available for separate service replacement.

Operation

The microprocessor-based Steering Control Module (SCM) utilizes integrated circuitry to monitor hard wired analog and multiplexed inputs from the individual switches within the multi-function switch. In response to those inputs, the internal circuitry of the SCM allows it to transmit electronic message outputs to the ElectroMechanical Instrument Cluster (EMIC) (also known as the Cab Compartment Node/CCN) over the Local Interface Network (LIN) data bus.

In response to those LIN messages the internal circuitry and programming of the EMIC, which is also the LIN master module in the vehicle, allow it to control and integrate many electronic functions and features of the vehicle through both hard wired outputs and the transmission of electronic message outputs to other electronic modules in the vehicle over the Controller Area Network (CAN) data bus. (Refer to 08 - Electrical/8E - Electronic Control Modules/COMMUNICATION - Description).

The SCM is connected to both a fused B(+) circuit and a fused ignition switch output (run-start) circuit. It receives a path to ground at all times. These connections allow it to remain functional regardless of the ignition switch position. Any input to the SCM that controls a vehicle system function that does not require that the ignition switch be in the ON position such as flashing the high beam headlamps, prompts the SCM to wake up and transmit on the LIN data bus.

The hard wired circuits between components related to the SCM may be diagnosed using conventional diagnostic tools and procedures. Refer to the appropriate wiring information. The wiring information includes wiring diagrams, proper wire and connector repair procedures, details of wire harness routing and retention, connector pin-out information and location views for the various wire harness connectors, splices and grounds.

However, conventional diagnostic methods will not prove conclusive in the diagnosis of the SCM or the electronic controls or communication between modules and other devices that provide some features of the SCM. The most reliable, efficient, and accurate means to diagnose the SCM or the electronic controls and communication related to SCM operation requires the use of a diagnostic scan tool. Refer to the appropriate diagnostic information.

Diagnosis and Testing

WARNING: To avoid serious or fatal injury on vehicles equipped with airbags, disable the Supplemental Restraint System (SRS) before attempting any steering wheel, steering column, airbag, seat belt tensioner, impact sensor or instrument panel component diagnosis or service. Disconnect and isolate the battery negative (ground) cable, then wait two minutes for the system capacitor to discharge before performing further diagnosis or service. This is the only sure way to disable the SRS. Failure to take the proper precautions could result in accidental airbag deployment.

The hard wired circuits between components related to the Steering Control Module (SCM) may be diagnosed using conventional diagnostic tools and procedures. Refer to the appropriate wiring information. The wiring information includes wiring diagrams, proper wire and connector repair procedures, details of wire harness routing and retention, connector pin-out information and location views for the various wire harness connectors, splices and grounds.

However, conventional diagnostic methods will not prove conclusive in the diagnosis of the SCM or the electronic controls or communication between modules and other devices that provide some features of the SCM. The most reliable, efficient, and accurate means to diagnose the SCM or the electronic controls and communication related to SCM operation requires the use of a diagnostic scan tool. Refer to the appropriate diagnostic information.

MODULE, Transmission Control

Description

On gasoline vehicles the Transmission Control Module (TCM) (2) may be sub-module within the Powertrain Control Module (PCM) (3).

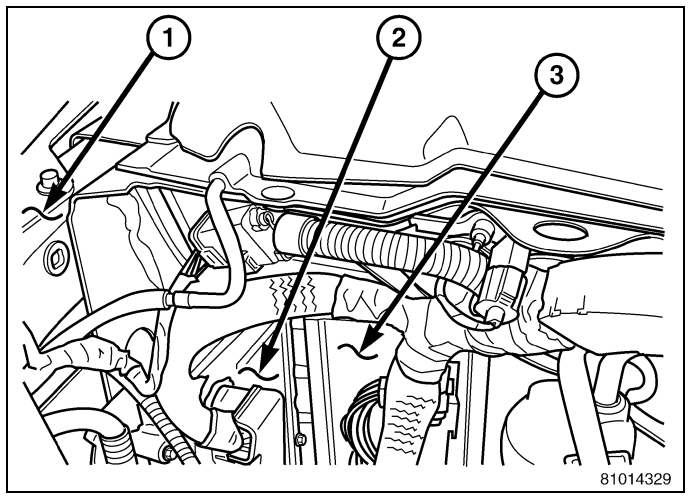

Operation

RLE and RFE TRANSMISSIONS

The Transmission Control Module (TCM) controls all electronic operations of the transmission. The TCM receives information regarding vehicle operation from both direct and indirect inputs, and selects the operational mode of the transmission. Direct inputs are hard wired to, and used specifically by the TCM. Indirect inputs are shared with the TCM via the vehicle communication bus.

Some examples of **direct inputs** to the TCM are:

- Battery (B+) voltage
- Ignition “ON” voltage
- Transmission Control Relay (Switched B+) (if equipped)
- Throttle Position Sensor
- Crankshaft Position Sensor
- Transmission Range Sensor
- Pressure Switches
- Transmission Temperature Sensor
- Input Shaft Speed Sensor
- Output Shaft Speed Sensor
- Line Pressure Sensor

Some examples of **indirect inputs** to the TCM are:

- Target Idle
- Torque Reduction Confirmation
- Engine Coolant Temperature
- Ambient/Battery Temperature
- Scan Tool Communication

Based on the information received from these various inputs, the TCM determines the appropriate shift schedule and shift points, depending on the present operating conditions and driver demand. This is possible through the control of various direct and indirect outputs.

Some examples of TCM **direct outputs** are:

- Transmission Control Relay
- Solenoids
- Torque Reduction Request

Some examples of TCM **indirect outputs** are:

- Transmission Temperature (to PCM)
- PRNDL Position (to cluster/CCN)

In addition to monitoring inputs and controlling outputs, the TCM has other important responsibilities and functions:

- Storing and maintaining Clutch Volume Indexes (CVI)
- Storing and selecting appropriate Shift Schedules
- System self-diagnostics
- Diagnostic capabilities (with scan tool)

NOTE: If the TCM has been replaced, the "Quick Learn Procedure" must be performed. (Refer to 08 - Electrical/8E - Electronic Control Modules/MODULE, Transmission Control - Standard Procedure)

BATTERY FEED

A fused, direct battery feed to the TCM is used for continuous power. This battery voltage is necessary to retain memory in the TCM. When the battery (B+) is disconnected, this memory is lost. When the battery (B+) is restored, this memory loss is detected by the TCM and a Diagnostic Trouble Code (DTC) is set.

CLUTCH VOLUME INDEXES (CVI)

An important function of the TCM is to monitor Clutch Volume Indexes (CVI). CVIs represent the volume of fluid needed to compress a clutch pack.

The TCM monitors gear ratio changes by monitoring the Input and Output Speed Sensors. The Input, or Turbine Speed Sensor sends an electrical signal to the TCM that represents input shaft rpm. The Output Speed Sensor provides the TCM with output shaft speed information.

By comparing the two inputs, the TCM can determine transmission gear position. This is important to the CVI calculation because the TCM determines CVIs by monitoring how long it takes for a gear change to occur .

Gear ratios can be determined by using the Scan Tool and reading the Input/Output Speed Sensor values in the "Monitors" display. Gear ratio can be obtained by dividing the Input Speed Sensor value by the Output Speed Sensor value.

For example, if the input shaft is rotating at 1000 rpm and the output shaft is rotating at 500 rpm, then the TCM can determine that the gear ratio is 2:1. In direct drive (3rd gear), the gear ratio changes to 1:1. The gear ratio changes as clutches are applied and released. By monitoring the length of time it takes for the gear ratio to change following a shift request, the TCM can determine the volume of fluid used to apply or release a friction element.

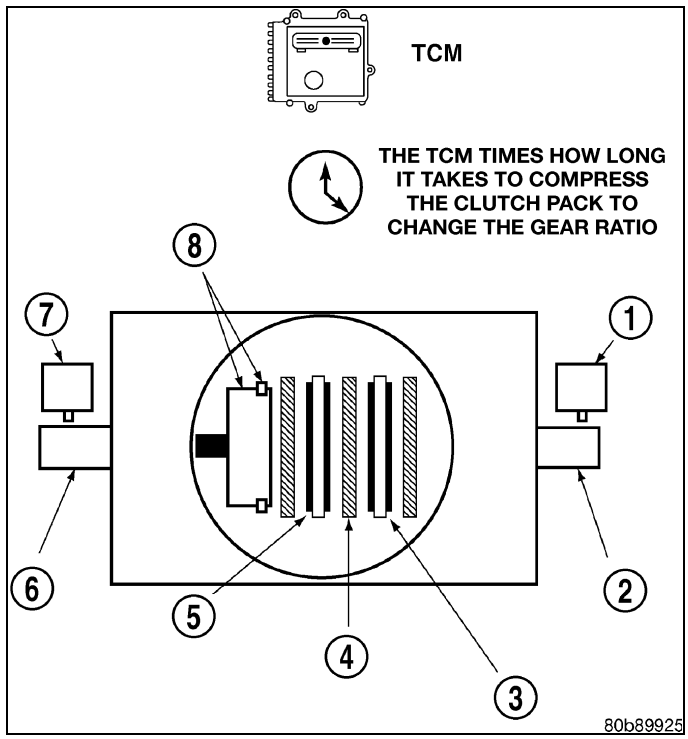

1 - OUTPUT SPEED SENSOR
2 - OUTPUT SHAFT
3 - CLUTCH PACK
4 - SEPARATOR PLATE
5 - FRICTION DISCS
6 - INPUT SHAFT
7 - INPUT SPEED SENSOR
8 - PISTON AND SEAL

The volume of transmission fluid needed to apply the friction elements are continuously updated for adaptive controls. As friction material wears, the volume of fluid need to apply the element increases.

Certain mechanical problems within the input clutch assembly can cause inadequate or out-of-range element volumes. Also, defective Input/Output Speed Sensors and wiring can cause these conditions. The following charts identifies the appropriate clutch volumes and when they are monitored/updated:

42RLE

CLUTCH VOLUMES				
Clutch	When Updated			Proper Clutch Volume
	Shift Sequence	Oil Temperature	Throttle Angle	
L/R	2-1 or 3-1 coast downshift	> 21° C (70° F)	< 5°	35 to 83
2/4	1-2 shift	> 43° C (110° F)	5 - 54°	20 to 77
OD	2-3 shift			48 to 150
UD	4-3 or 4-2 shift		> 5°	24 to 70

545RFE

CLUTCH VOLUMES		
Clutch	When Updated	Proper Clutch Volume
L/R	2-1 or 3-1 downshift	45 to 134
2C	3-2 kickdown shift	25 to 85
2C Alternate	4-4 prime upshift	25 to 85
OD	2-3 upshift	30 to 100
4C	3-4 upshift	30 to 85
4C Alternate	2-2 prime upshift	30 to 85
UD	4-3 kickdown shift	30 to 100

SHIFT SCHEDULES

As mentioned earlier, the TCM has programming that allows it to select a variety of shift schedules. Shift schedule selection is dependent on the following:

- Shift lever position
- Throttle position
- Engine load
- Fluid temperature
- Software level

As driving conditions change, the TCM appropriately adjusts the shift schedule. Refer to the following chart to determine the appropriate operation expected, depending on driving conditions.

Schedule	Condition	Expected Operation
Extreme Cold	Oil temperature below -27° C (16° F)	-Park, Reverse, Neutral and 1st and 3rd gear only in D position, 2nd gear only in Manual 2 or L -No EMCC

Schedule	Condition	Expected Operation
Super Cold	Oil temperature between -24° C (-12° F) and -12° C (10° F)	- Delayed 2-3 upshift - Delayed 3-4 upshift - Early 4-3 coastdown shift - High speed 4-2, 3-2, 2-1 kickdown shifts are prevented -Shifts at high throttle openings willl be early. - No EMCC
Cold	Oil temperature between -12° C (10° F) and 2° C (36° F)	-Shift schedule is the same as Super Cold except that the 2-3 upshifts are not delayed.
Warm	Oil temperature between 4° C (40° F) and 27° C (80° F)	- Normal operation (upshift, kickdowns, and coastdowns) - No EMCC
Hot	Oil temperature between 27° C (80° F) and 115° C (240° F)	- Normal operation (upshift, kickdowns, and coastdowns) - Normal EMCC operation
Overheat	Oil temperature above 115° C (240° F) or engine coolant temperature above 118° C (244° F)	- Delayed 2-3 upshift - Delayed 3-4 upshift - 3rd gear FEMCC from 30-48 mph - 3rd gear PEMCC above 35 mph - Above 25 mph the torque converter will not unlock unless the throttle is closed or if a wide open throttle 2nd PEMCC to 1 kickdown is made

Standard Procedure

TCM QUICK LEARN - RLE AND RFE TRANSMISSIONS

The quick learn procedure requires the use of the scan tool. For scan tool step by step instructions, reference the ECM/PCM/TCM Programming document, Quick Learn section, in section 28.

This program allows the electronic transmission system to recalibrate itself. This will provide the proper transmission operation. The quick learn procedure should be performed if any of the following procedures are performed:

- Transmission Assembly Replacement.
- Transmission Control Module Replacement.
- Engine Control Module Replacement or Reprogramming.
- Solenoid Pack Replacement.
- Clutch Plate and/or Seal Replacement.
- Valve Body Replacement or Recondition.

To perform the Quick Learn Procedure, the following conditions must be met:

- The brakes must be applied.
- The engine speed must be above 500 rpm.
- The throttle angle (TPS) must be less than 3 degrees.
- The shift lever position must stay in PARK until prompted to shift to overdrive.
- The shift lever position must stay in overdrive after the Shift to Overdrive prompt until the scan tool indicates the procedure is complete.
- The calculated oil temperature must be above 60° and below 200°.

DRIVE LEARN - RFE TRANSMISSIONS

When a transmission is repaired and a Quick Learn procedure has been performed on the Transmission Control Module (TCM), the following Drive Learn procedure can be performed to fine tune any shifts which are particularly objectionable.

NOTE: It is not necessary to perform the complete Drive Learn procedure every time the TCM is Quick Learned. Perform only the portions which target the objectionable shift.

LEARN A SMOOTH 1ST NEUTRAL TO DRIVE SHIFT

Perform this procedure only if the complaint is for a delayed or harsh shift the first time the transmission is put into gear after the vehicle is allowed to set with the engine not running for at least 10 minutes. Use the following steps to have the TCM learn the 1st N-D UD CVI.

NOTE: The transmission oil temperature must be between 80 - 110°F (27 - 43°C).

1. Start the engine only when the engine and ignition have been off for at least ten (10) minutes.
2. With the vehicle at a stop and the service brake applied, record the 1st N-D UD CVI while performing a Neutral to Drive shift. The 1st N-D UD CVI accounts for air entrapment in the UD clutch that may occur after the engine has been off for a period of time.
3. Repeat Step #1 and Step #2 until the recorded 1st N-D UD CVI value stabilizes.

NOTE: It is important that this procedure be performed when the transmission temperature is between 80 - 110°F (27 - 43°C). If this procedure takes too long to complete fully for the allowed transmission oil temperature, the vehicle may be returned to the customer with an explanation that the shift will improve daily during normal vehicle usage. The TCM also learns at higher oil temperatures, but these values (line pressure correction values) are not available for viewing on the scan tool.

LEARN A SMOOTH NEUTRAL TO DRIVE GARAGE SHIFT

Perform this procedure if the complaint is for a delayed or harsh shift when the transmission is put into gear after the vehicle has had its first shift. Use the following steps to have the TCM learn the Norm N-D UD CVI.

NOTE: The transmission oil temperature must be between 80 - 110°F (27 - 43°C) to learn the UD CVI. Additional learning occurs at temperatures as low as 0°F and as high as 200°F. This procedure may be performed at any temperature that experiences poor shift quality. Although the UD CVI may not change, shift quality should improve.

1. Start the vehicle engine and shift to drive.
2. Move the vehicle forward to a speed of at least 16 km/h (10 MPH) and come to a stop. This ensures no air is present in the UD hydraulic circuit.
3. Perform repeated N-D shifts at a stop while pausing in Neutral for at least 2-3 seconds and monitor Norm N-D UD CVI volume until the value stabilizes. The value will change during the N-D shift. This is normal since the UD value is different for the N-D shift then the normal value shown which is used for 4-3 coastdown and kickdowns. Perform repeated shifts in this temperature range until the Norm N-D UD CVI value stabilizes and the N-D shifts become smooth.

LEARN THE 1ST 2-3 SHIFT AFTER A RESTART OR SHIFT TO REVERSE

Use the following steps to have the TCM learn the 1st 2-3 shift OD CVI.

NOTE: The transmission oil temperature must be above 80°F (27°C).

1. With the vehicle engine running, select reverse gear for over 2 seconds.
2. Shift the transmission to Drive and accelerate the vehicle from a stop at a steady 15 degree throttle opening and perform a 2-3 shift while noting the 1st 2-3 OD CVI.
3. Repeat Step #1 and Step #2 until the 1st 2-3 upshift becomes smooth and the 1st 2-3 OD CVI stabilizes.

LEARN A SMOOTH 2-3 AND 3-4 UPSHIFT

NOTE: The transmission oil temperature must be above 110°F (43°C).

Use the following steps to have the TCM learn the OD and 4C CVI's.

1. Accelerate the vehicle from a stop at a steady 15 degree throttle opening and perform multiple 1-2, 2-3, and 3-4 upshifts. The 2nd 2-3 shift following a restart or shift to reverse will be shown during the shift as a value between the 1st 2-3 OD CVI and the normal OD CVI. Updates to the normal OD CVI will occur after the 2nd shift into 3rd gear, following a restart or shift to reverse.

2. Repeat Step #1 until the 2-3 and 3-4 shifts become smooth and the OD and 4C CVI become stable.

LEARN A SMOOTH 4-3 COASTDOWN AND PART THROTTLE 4-3 KICKDOWN

NOTE: The transmission oil temperature must be above 110°F (43°C).

Use the following steps to have the TCM learn the UD shift volume.

1. At a vehicle speed between 64-97 km/h (40-60 MPH), perform repeated 4-3 kickdown shifts.
2. Repeat Step #1 until the UD volume becomes somewhat stable and the shift becomes smooth.

LEARN A SMOOTH 1-2 UPSHIFT AND 3-2 KICKDOWN

Use the following steps to have the TCM learn the 2C shift volume.

NOTE: The transmission oil temperature must be above 110°F (43°C).

1. With a vehicle speed below 48 km/h (30 MPH) and the transmission in 3rd gear, perform multiple 3-2 kickdowns.
2. Repeat Step #1 until the 3-2 kickdowns become smooth and the 2C CVI becomes stable.

LEARN A SMOOTH MANUAL 2-1 PULLDOWN SHIFT AS WELL AS A NEUTRAL TO REVERSE SHIFT

NOTE: The transmission oil temperature must be above 110°F (43°C).

Use the following steps to have the TCM learn the LR volume.

1. With the vehicle speed around 40-48 km/h (25-30 MPH) in Manual 2nd, perform manual pulldowns to Low or 1st gear at closed throttle.
2. Repeat Step #1 until the LR CVI becomes stable and the manual 2-1 becomes smooth.

LEARN A SMOOTH NEUTRAL TO REVERSE SHIFT

NOTE: The transmission oil temperature must be above 110°F (43°C).

1. With the vehicle at a stop, perform Neutral to Reverse shifts until the shift is smooth. An unlearned Neutral to Reverse shift may be harsh or exhibit a double bump.
2. If any of the shifts are still not smooth after the clutch volume stabilizes, an internal transmission problem may be present.

LEARN A SMOOTH 4-5 UPSHIFT

NOTE: The transmission oil temperature must be above 110°F (43°C).

Use the following steps to have the TCM learn the Alt 2C CVI.

1. Accelerate the vehicle through 88 km/h (55mph) at a steady 10-15 degree throttle opening and perform multiple 4-5 upshifts.
2. Repeat Step #1 until the 4-5 shift become smooth and theAlt 2C CVI become stable. There is a separate 2C volume used and learned for 4-5 shifts, 2CA. It is independent of the 2C CVI learned on 3-2 kickdowns.

RECEIVER, Wireless Ignition Node

Description

This vehicle is equipped with a Wireless Ignition Node (WIN). The WIN and the FOB with Integrated Key (FOBIK) are the primary components of the keyless ignition system. The only visible component of the WIN is the ignition switch located on the face of the instrument panel just to the inboard side of the steering column.

The WIN housing is constructed of molded black plastic and it includes four integral mounting bosses, which are secured to the instrument panel structure with screws. Two connector receptacles are integral to the back of the switch housing. One connects the WIN to the vehicle electrical system through a dedicated takeout and connector of the instrument panel wire harness. The other is a dedicated connector for the coaxial cable input from the optional remote start system external antenna module.

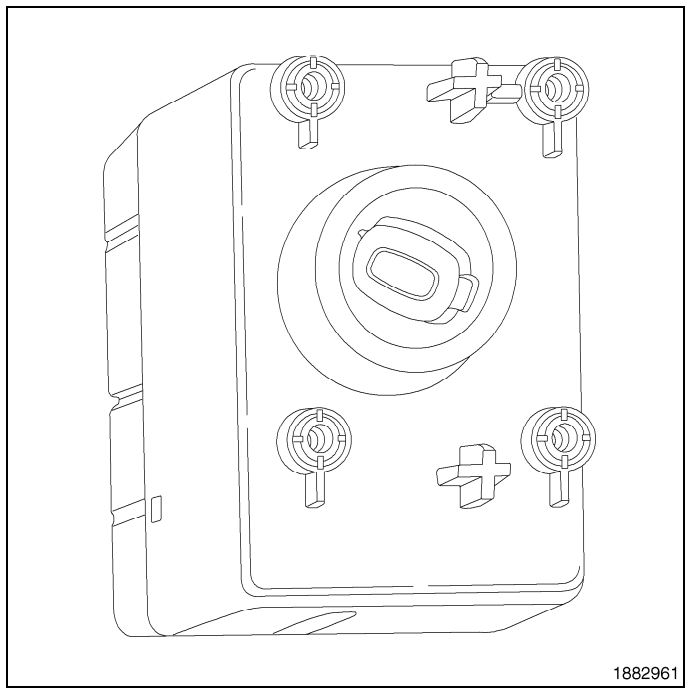

The WIN is an integrated electronic receiver that replaces the ignition switch. The WIN communicates with other electronic modules in the vehicle over the Controller Area Network (CAN) data bus.

The WIN interfaces with the Remote Keyless Entry (RKE) FOBIK and the Tire Pressure Monitor (TPM) sensors (if equipped) using Radio Frequency (RF) communication. It also communicates with the TPM trigger transponders (if equipped) and steering column lock module (if equipped) using a Local Interface Network (LIN) data bus connection.

The WIN provides a switched 12-volt source through an isolated switch for the steering column lock module required for certain export market vehicles. It also contains a key removal inhibit solenoid, an electronic Brake Transmission Shift Interlock (BTSI) solenoid, a key-in warning contact and it serves as the real time vehicle clock by transmitting the clock information to other electronic modules over the CAN data bus.

The WIN cannot be adjusted or repaired, but is flash update capable. If ineffective or damaged, the entire WIN must be replaced. When replacing the WIN, you must also replace the steering column lock module (if equipped).

Operation

Following are brief descriptions of the systems that the WIN controls.

IGNITION SWITCH

The Wireless Ignition Node (WIN) incorporates an integral ignition switch that consists of four rotary positions with three detent positions and one spring-loaded position. The one extreme clockwise position is a spring-loaded momentary contact **"START"** position. When released from the **"START"** position, the switch will automatically return to the detent **"ON"** position. The other position includes a detent **"ACCESSORY"** position and a detent **"LOCK"** position.

The WIN reads the position of the ignition switch and transmits the data via the CAN data bus. These positions include **"LOCK"** with ignition key-out, **"LOCK"** with ignition key-in, **"ACCESSORY,""RUN,"** and **"START."**

SENTRY KEY IMMOBILIZER SYSTEM (SKIS)

Upon failure of proper Sentry Key Immobilizer (SKIS) communication to the Powertrain Control Module, (PCM), the PCM will not allow the vehicle to crank. The engine will not re-crank on the key cycle that the failure occurred, a full key down sequence must be performed for the engine to crank again. (Refer to 08 - Electrical/8Q - Vehicle Theft Security - Operation).

REMOTE KEYLESS ENTRY (RKE)

The Remote Keyless Entry (RKE), transmitter uses Radio Frequency (RF) signals to communicate with the WIN, and the WIN relays the RKE requests to other modules in the vehicle over the CAN data bus. (Refer to 08 - Electrical/8N - Power Systems/Power Locks - Operation)

TIRE PRESSURE MONITORING (TPM)

The Tire Pressure Monitoring (TPM) system uses radio and sensor technology to monitor tire air pressure levels. (Refer to 22 - Tires and Wheels/Tire Pressure Monitoring - Operation).

REMOTE START WITH/EXTENDED RANGE ANTENNA

Further information concerning the Remote Start System can be located in group 8, Starting System. (Refer to 08 - Electrical/8F - Engine Systems/Starting - Operation)

BRAKE TRANSMISSION SHIFTER INTERLOCK (BTSI)

The Brake Transmission Shifter/Ignition Interlock (BTSI) is controlled by the WIN. The BTSI prevents the transmission gear shifter from being moved out of PARK without a driver in place. For more information view the Brake Transmission Shift Interlock Mechanism for the related transmission.

PARK SHIFT INTERLOCK

The key removal inhibit solenoid internal to the WIN prevents the FOB with Integrated KEY (FOBIK) from being rotated in the ignition switch to the LOCK position for all vehicles with an automatic transmission unless the transmission shift lever is in the PARK position. The WIN module monitors a hard wired input from a switch integral to the automatic transmission shifter module to control this feature. The key removal inhibit solenoid is electronically disabled internally by the WIN on vehicles with a manual transmission.

Diagnosis and Testing

For more information (Refer to 08 - Electrical/8N - Power Systems/Power Locks/TRANSMITTER, Integrated Key FOB - Diagnosis and Testing).

Removal

1. Disconnect and isolate the battery negative cable.
2. Remove the steering column cover opening (Refer to 23 - Body/Instrument Panel/COVER, Steering Column Opening - Removal).
3. Remove the four Wireless Ignition Node (WIN) retainers (1).
4. Disconnect the WIN electrical connector.
5. If equipped, remove the WIN antenna connector.
6. Remove the WIN from the instrument panel opening.

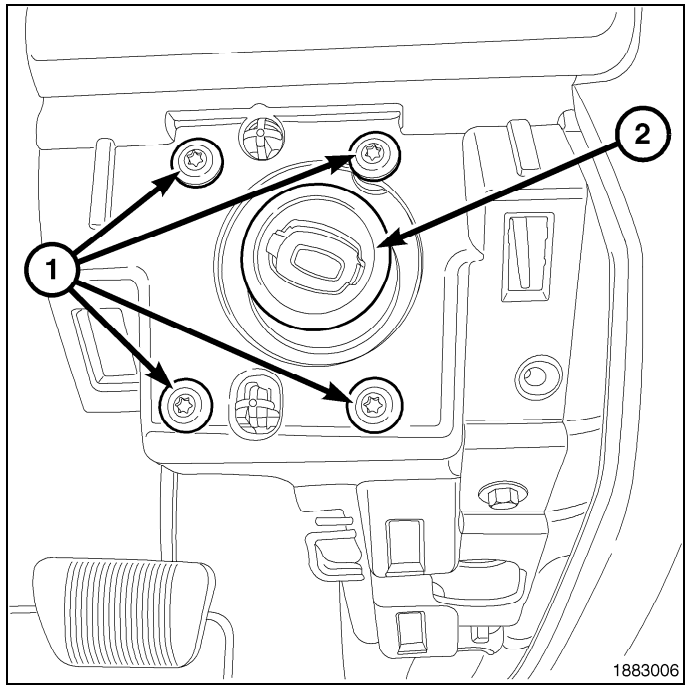

Installation

1. Connect the WIN electrical connector.
2. If equipped, connect the antenna connector to the WIN.
3. Install the WIN (2) into the to instrument panel.
4. Install the steering column cover opening (Refer to 23 - Body/Instrument Panel/COVER, Steering Column Opening - Installation).
5. Connect the negative battery cable.
6. Program the WIN following the Module/Programming Order Replacement Guide and Module Programming procedures (Refer to 08 - Electrical/8E - Electronic Control Modules - Standard Procedure).

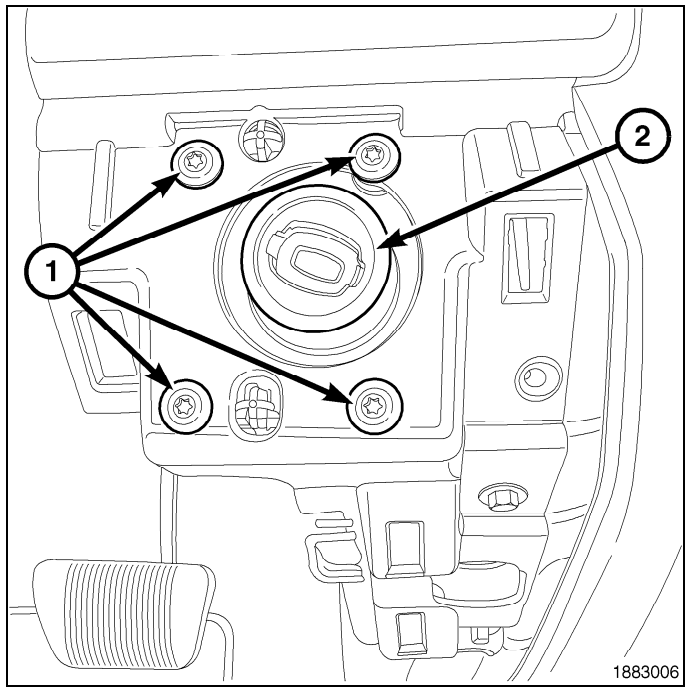

BATTERY SYSTEM

TABLE OF CONTENTS

page

BATTERY SYSTEM
- DESCRIPTION . . . 2
- OPERATION . . . 2
- DIAGNOSIS AND TESTING . . . 2
- CLEANING . . . 4
- INSPECTION . . . 6
- SPECIFICATIONS . . . 6

BATTERY
- DESCRIPTION . . . 7
- OPERATION . . . 8
- DIAGNOSIS AND TESTING . . . 8
- STANDARD PROCEDURE
  - BATTERY CHARGING . . . 8
  - USING MICRO 420 BATTERY TESTER . . . 10
  - OPEN-CIRCUIT VOLTAGE TEST . . . 11
  - IGNITION-OFF DRAW TEST . . . 12
- REMOVAL . . . 13
- INSTALLATION . . . 14

page

CABLES, BATTERY
- DESCRIPTION . . . 15
- OPERATION . . . 15
- DIAGNOSIS AND TESTING . . . 15
- REMOVAL . . . 17
- INSTALLATION . . . 19

RETAINER, BATTERY
- REMOVAL . . . 21
- INSTALLATION . . . 22

TRAY, BATTERY
- DESCRIPTION . . . 22
- REMOVAL . . . 23
- INSTALLATION . . . 24

Battery System

Description

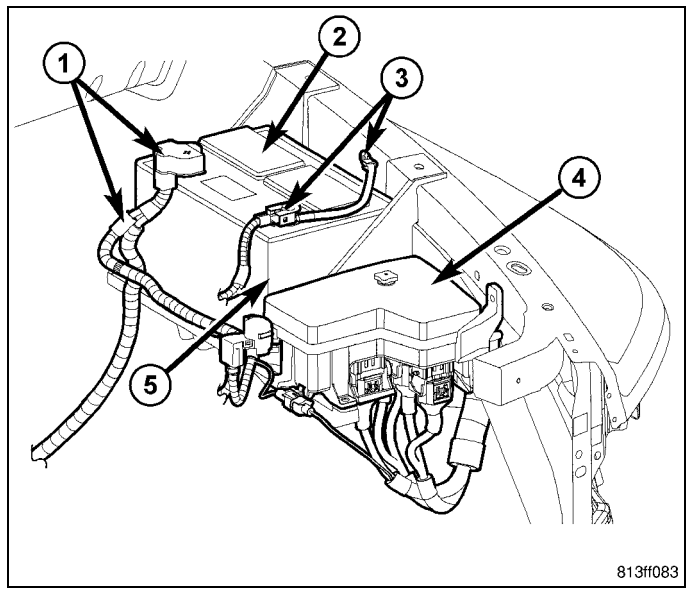

Vehicles with a gasoline engine are equipped with a single 12-volt battery. All of the components of the battery system are located within the engine compartment. The battery system for this vehicle, covers the following related components:

- **Battery (2)** - The storage battery provides a reliable means of storing a renewable source of electrical energy within the vehicle.
- **Positive Battery cable (1)** - The positive battery cable connects the battery positive terminal post to the vehicle electrical system, starter and alternator.
- **Negative Battery Cable (3)** - The negative battery cable connects the battery negative terminal post to the vehicle electrical system through body, chassis and engine grounding points.
- **Battery Thermal Guard (5)** - A thermal guard wraps around the battery case to enclose the sides of the battery. The thermal guard consists of a heavy black plastic outer skin and two lighter plies of plastic that have been formed into a sheet with hundreds of small air pockets entrapped between them.
- **Battery Holddown** - The battery holddown hardware secures the battery in the battery tray in the engine compartment.
- **Battery Tray** - The battery tray provides a secure mounting location in the vehicle for the battery and an anchor point for the battery holddown hardware.

For battery system maintenance schedules, (Refer to 04 - Vehicle Quick Reference/Maintenance Schedules - Description). For the proper battery jump starting procedure, (Refer to 04 - Vehicle Quick Reference/Jump Starting - Standard Procedure). The battery must be fully-charged before any battery system diagnosis or testing procedures can be performed.

Operation

The battery system is designed to provide a safe, efficient, reliable and mobile means of delivering and storing electrical energy. This electrical energy is required to operate the engine starting system, as well as many of the other vehicle accessory systems for limited durations while the engine and/or the charging system are not operating. The battery system is also designed to provide a reserve of electrical energy to supplement the charging system for short durations while the engine is running and the electrical current demands of the vehicle exceed the output of the charging system. In addition to delivering, and storing electrical energy for the vehicle, the battery system serves as a capacitor and voltage stabilizer for the vehicle electrical system. It absorbs most abnormal or transient voltages caused by the switching of any of the electrical components or circuits in the vehicle.

Diagnosis and Testing

The battery, starting, and charging systems in the vehicle operate with one another and must be tested as a complete system. In order for the engine to start and the battery to maintain its charge properly, all of the components that are used in these systems must perform within specifications. It is important that the battery, starting, and charging systems be thoroughly tested and inspected any time a battery needs to be charged or replaced. The cause of abnormal battery discharge, overcharging or early battery failure must be diagnosed and corrected before a battery is replaced and before a vehicle is returned to service. The service information for these systems has been separated within this service manual to make it easier to locate the specific information you are seeking. However, when attempting to diagnose any of these systems, it is important that you keep their interdependency in mind.

The diagnostic procedures used for the battery, starting, and charging systems include the most basic conventional diagnostic methods, to the more sophisticated On-Board Diagnostics (OBD) built into the Powertrain Control Module (PCM). Use of an induction-type milliampere ammeter, a volt/ohmmeter, a battery charger, a carbon pile rheostat (load tester) and a 12-volt test lamp may be required. All OBD-sensed systems are monitored by the PCM. Each monitored

circuit is assigned a Diagnostic Trouble Code (DTC). The PCM will store a DTC in electronic memory for any inoperative system it detects. (Refer to 08 - Electrical/8F - Engine Systems/Charging - Diagnosis and Testing) for the proper charging system on-board diagnostic test procedures.

MICRO 420 BATTERY TESTER

The Micro 420 automotive battery system tester is designed to help diagnose the cause of a defective battery. (Refer to 08 - Electrical/8F - Engine Systems/Battery System/BATTERY - Standard Procedure) for directions on using the Micro 420 battery tester.

BATTERY SYSTEM DIAGNOSIS		
CONDITION	**POSSIBLE CAUSES**	**CORRECTION**
THE BATTERY SEEMS WEAK OR DEAD WHEN ATTEMPTING TO START THE ENGINE.	1. The electrical system ignition-off draw is excessive.	1. (Refer to 08 - Electrical/8F - Engine Systems/Battery System/BATTERY - Standard Procedure) for the proper test procedures. Repair the excessive ignition-off draw, as required.
	2. The charging system is inoperative.	2. Determine if the charging system is performing to specifications. Repair the inoperative charging system, as required.
	3. The battery is discharged.	3. Determine the battery state-of-charge using the Micro 420 battery tester, (Refer to 08 - Electrical/8F - Engine Systems/Battery System/BATTERY - Standard Procedure). Charge the inoperative battery as required.
	4. The battery terminal connections are loose or corroded.	4. (Refer to 08 - Electrical/8F - Engine Systems/Battery System - Cleaning). Clean and tighten the battery terminal connections, as required.
	5. The battery has an incorrect size or rating for this vehicle.	5. (Refer to 08 - Electrical/8F - Engine Systems/Battery System - Specifications) for the proper size and rating. Replace an incorrect battery, as required.
	6. The battery is inoperative.	6. Determine the battery cranking capacity using the Micro 420 battery tester, (Refer to 08 - Electrical/8F - Engine Systems/Battery System/BATTERY - Standard Procedure). Replace the inoperative battery, as required.
	7. The starting system is inoperative.	7. Determine if the starting system is performing to specifications. Repair the inoperative starting system, as required.
	8. The battery is physically damaged.	8. Inspect the battery for loose terminal posts or a cracked and leaking case. Replace the damaged battery, as required.

BATTERY SYSTEM DIAGNOSIS		
CONDITION	**POSSIBLE CAUSES**	**CORRECTION**
THE BATTERY STATE OF CHARGE CANNOT BE MAINTAINED.	1. The battery has an incorrect size or rating for this vehicle.	1. (Refer to 08 - Electrical/8F - Engine Systems/Battery System - Specifications) for the proper size and rating. Replace an incorrect battery, as required.
	2. The battery terminal connections are loose or corroded.	2. (Refer to 08 - Electrical/8F - Engine Systems/Battery System - Cleaning). Clean and tighten the battery terminal connections, as required.
	3. The electrical system ignition-off draw is excessive.	3. (Refer to 08 - Electrical/8F - Engine Systems/Battery System/BATTERY - Standard Procedure) for the proper test procedures. Repair the inoperative electrical system, as required.
	4. The battery is inoperative.	4. Test the battery using the Micro 420 battery tester,(Refer to 08 - Electrical/8F - Engine Systems/Battery System/BATTERY - Standard Procedure). Replace the inoperative battery, as required.
	5. The starting system is inoperative.	5. Determine if the starting system is performing to specifications. Repair the inoperative starting system, as required.
	6. The charging system is inoperative.	6. Determine if the charging system is performing to specifications. Repair the inoperative charging system, as required.
	7. Electrical loads exceed the output of the charging system.	7. Inspect the vehicle for aftermarket electrical equipment which might cause excessive electrical loads.
	8. Slow driving or prolonged idling with high-amperage draw systems in use.	8. Advise the vehicle operator, as required.
THE BATTERY WILL NOT ACCEPT A CHARGE.	1. The battery is inoperative.	1. Test the battery using the Micro 420 battery tester,(Refer to 08 - Electrical/8F - Engine Systems/Battery System/BATTERY - Standard Procedure). Replace the inoperative battery, as required.

Cleaning

The following information details the recommended cleaning procedures for the battery and related components. In addition to the maintenance schedules, (Refer to 04 - Vehicle Quick Reference/Maintenance Schedules - Description), it is recommended that these procedures be performed any time the battery or related components must be removed for vehicle service.

1. Clean the battery cable terminal clamps (2) of all corrosion. Remove any corrosion using a wire brush or a post and terminal cleaning tool (1), and a sodium bicarbonate (baking soda) and warm water cleaning solution.
2. Clean the battery tray and battery holddown hardware of all corrosion. Remove any corrosion using a wire brush and a sodium bicarbonate (baking soda) and warm water cleaning solution. Paint any exposed bare metal.

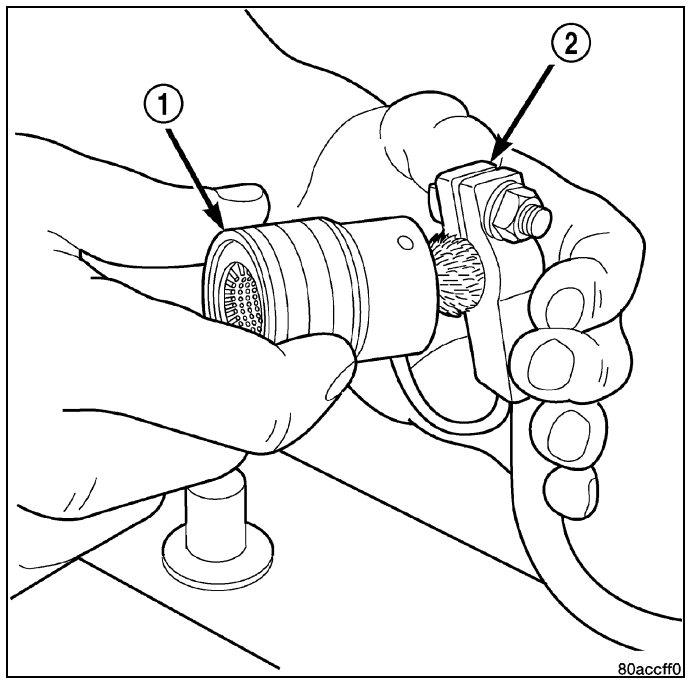

3. If the removed battery is to be reinstalled, clean the outside of the battery case (3) and the top cover with a sodium bicarbonate (baking soda) and warm water cleaning solution (2) using a stiff bristle parts cleaning brush (1) to remove any acid film. Rinse the battery with clean water. Ensure that the cleaning solution does not enter the battery cells through the vent holes. If the battery is being replaced, (Refer to 08 - Electrical/8F - Engine Systems/Battery System - Specifications) for the factory-installed battery specifications. Confirm that the replacement battery is the correct size and has the correct ratings for the vehicle.
4. Clean the battery thermal guard with a sodium bicarbonate (baking soda) and warm water cleaning solution using a stiff bristle parts cleaning brush to remove any acid film.

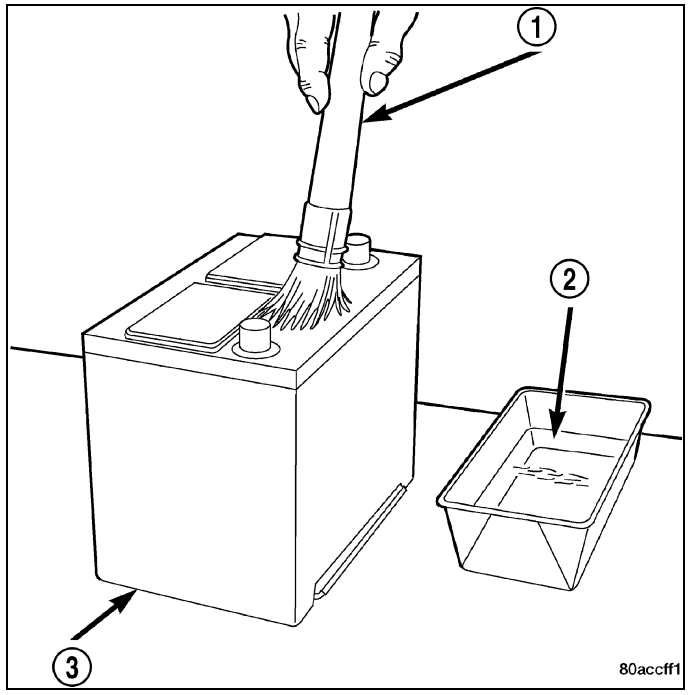

5. Clean any corrosion from the battery terminal posts with a wire brush or a post and terminal cleaner (1), and a sodium bicarbonate (baking soda) and warm water cleaning solution.

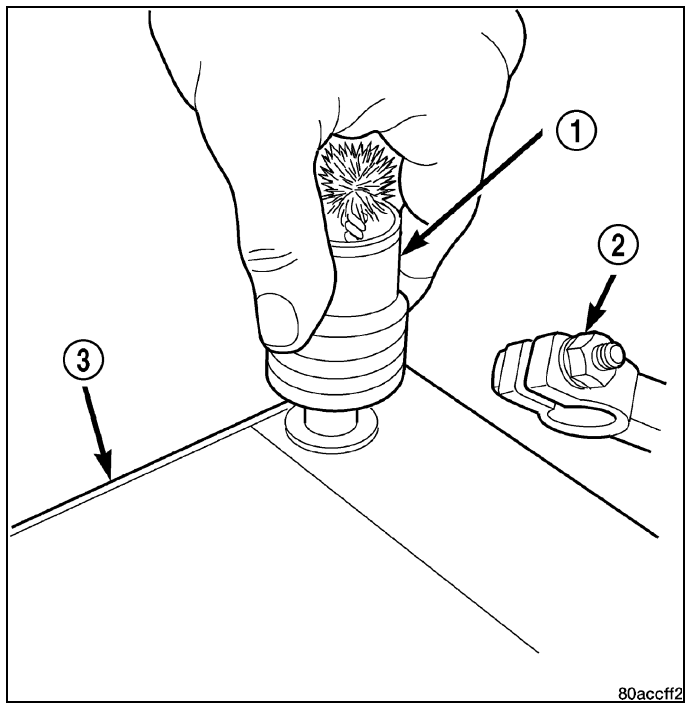

Inspection

The following information details the recommended inspection procedures for the battery and related components. In addition to the maintenance schedules, (Refer to 04 - Vehicle Quick Reference/Maintenance Schedules - Description), it is recommended that these procedures be performed any time the battery or related components must be removed for vehicle service.

1. Inspect the battery cable terminal clamps for damage. Replace any battery cable that has a damaged or deformed terminal clamp.
2. Inspect the battery tray and battery holddown hardware for damage. Replace any damaged parts.
3. Slide the thermal guard off of the battery case (if equipped). Inspect the battery case for cracks or other damage that could result in electrolyte leaks. Also, check the battery terminal posts for looseness. Batteries with damaged cases or loose terminal posts must be replaced.
4. Inspect the battery thermal guard (if equipped) for tears, cracks, deformation or other damage. Replace any battery thermal guard that has been damaged.
5. Inspect the battery built-in test indicator sight glass (if equipped) for an indication of the battery condition, (Refer to 08 - Electrical/8F - Engine Systems/Battery System/BATTERY - Standard Procedure) for the proper battery built-in indicator test procedures. If the battery is discharged, charge as required, (Refer to 08 - Electrical/8F - Engine Systems/Battery System/BATTERY - Standard Procedure) for the proper battery charging procedures.

Specifications

The battery Group Size number, the Cold Cranking Amperage (CCA) rating, and the Reserve Capacity (RC) rating or Ampere-Hours (AH) rating can be found on the original equipment battery label. Be certain that a replacement battery has the correct Group Size number, as well as CCA, and RC or AH ratings that equal or exceed the original equipment specification for the vehicle being serviced. Battery sizes and ratings are discussed in more detail below.

- **Group Size** - The outside dimensions and terminal placement of the battery conform to standards established by the Battery Council International (BCI). Each battery is assigned a BCI Group Size number to help identify a correctly-sized replacement.
- **Cold Cranking Amperage** - The Cold Cranking Amperage (CCA) rating specifies how much current (in amperes) the battery can deliver for thirty seconds at -18° C (0° F). Terminal voltage must not fall below 7.2 volts during or after the thirty second discharge period. The CCA required is generally higher as engine displacement increases, depending also upon the starter current draw requirements.
- **Reserve Capacity** - The Reserve Capacity (RC) rating specifies the time (in minutes) it takes for battery terminal voltage to fall below 10.5 volts, at a discharge rate of 25 amperes. RC is determined with the battery fully-charged at

26.7° C (80° F). This rating estimates how long the battery might last after a charging system failure, under minimum electrical load.

- **Ampere-Hours** - The Ampere-Hours (AH) rating specifies the current (in amperes) that a battery can deliver steadily for twenty hours, with the voltage in the battery not falling below 10.5 volts. This rating is also sometimes identified as the twenty-hour discharge rating.
- **Load Test Amperage** - The Load Test Amperage rating specifies the current (in amperes) that a battery should be tested at with the battery load test equipment. This value should always be 50 percent of the CCA. For example: if the CCA for this battery is 600 amps, the Load Test Amperage is 50 percent of that or 300 amps.

BATTERY CLASSIFICATIONS AND RATINGS				
BCI Group Size Classification	**Cold Cranking Amperage**	**Reserve Capacity**	**Ampere - Hours**	**Load Test Amperage**
65	600	120 Minutes	66	300
65	750	150 Minutes	75	375
65	600	120 Minutes	66	300
65	750	150 Minutes	75	375
65	700	130 Minutes	70	350
65	700	130 Minutes	70	350
65	700	130 Minutes	70	350

BATTERY

Description

This vehicle is equipped with a large capacity, low-maintenance storage battery (11).

- Positive Post (1)
- Vent (2)
- Cell Cap (3)
- Vent (4)
- Cell Cap (5)
- Vent (6)
- Negative Post (7)
- Indicator Eye (8) if equipped
- Electrolyte Level (9)
- Plate Groups (10)
- Maintenance Free Battery assembly (11)

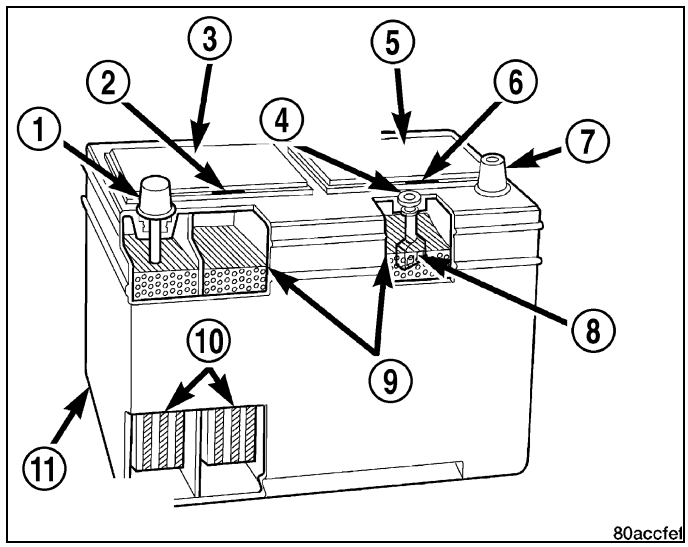

This battery is designed to provide a safe, efficient and reliable means of storing electrical energy in a chemical form. This means of energy storage allows the battery to produce the electrical energy required to operate the engine starting system, as well as to operate many of the other vehicle accessory systems for limited durations while the engine and/or the charging system are not operating. The battery is made up of six individual cells that are connected in series. Each cell contains positively charged plate groups that are connected with lead straps to the positive terminal post, and negatively charged plate groups that are connected with lead straps to the negative terminal post. Each plate consists of a stiff mesh framework or grid coated with lead dioxide (positive plate) or sponge lead (negative plate). Insulators or plate separators made of a non-conductive material are inserted between the positive and negative plates to prevent them from contacting or shorting against one another. These dissimilar metal plates are submerged in a sulfuric acid and water solution called an electrolyte.

The battery Group Size number, the Cold Cranking Amperage (CCA) rating, and the Reserve Capacity (RC) rating or Ampere-Hours (AH) rating can be found on the original equipment battery label. Be certain that a replacement battery has the correct Group Size number, as well as CCA, and RC or AH ratings that equal or exceed the original equipment

specification for the vehicle being serviced. (Refer to 08 - Electrical/8F - Engine Systems/Battery System - Specifications) for the proper factory-installed battery specifications.

Operation

The battery is designed to store electrical energy in a chemical form. When an electrical load is applied to the terminals of the battery, an electrochemical reaction occurs. This reaction causes the battery to discharge electrical current from its terminals. As the battery discharges, a gradual chemical change takes place within each cell. The sulfuric acid in the electrolyte combines with the plate materials, causing both plates to slowly change to lead sulfate. At the same time, oxygen from the positive plate material combines with hydrogen from the sulfuric acid, causing the electrolyte to become mainly water. The chemical changes within the battery are caused by the movement of excess or free electrons between the positive and negative plate groups. This movement of electrons produces a flow of electrical current through the load device attached to the battery terminals.

As the plate materials become more similar chemically, and the electrolyte becomes less acid, the voltage potential of each cell is reduced. However, by charging the battery with a voltage higher than that of the battery itself, the battery discharging process is reversed. Charging the battery gradually changes the sulfated lead plates back into sponge lead and lead dioxide, and the water back into sulfuric acid. This action restores the difference in the electron charges deposited on the plates, and the voltage potential of the battery cells. For a battery to remain useful, it must be able to produce high-amperage current over an extended period. A battery must also be able to accept a charge, so that its voltage potential may be restored.

The battery is vented to release excess hydrogen gas that is created when the battery is being charged or discharged. However, even with these vents, hydrogen gas can collect in or around the battery. If hydrogen gas is exposed to flame or sparks, it may ignite. If the electrolyte level is low, the battery may arc internally and explode. If the battery cell caps cannot be removed, the battery must be replaced if the electrolyte level becomes low.

Diagnosis and Testing

The battery must be completely charged and the terminals should be properly cleaned and inspected before diagnostic procedures are performed. (Refer to 08 - Electrical/8F - Engine Systems/Battery System - Cleaning) and (Refer to 08 - Electrical/8F - Engine Systems/Battery System - Inspection) for the proper battery cleaning and inspection procedures. (Refer to 08 - Electrical/8F - Engine Systems/Battery System/BATTERY - Standard Procedure) for the proper battery charging procedures.

MICRO 420 BATTERY TESTER

The Micro 420 automotive battery tester is designed to help diagnose the cause of an inoperative battery. (Refer to 08 - Electrical/8F - Engine Systems/Battery System/BATTERY - Standard Procedure) for instructions on the use of the Micro 420 battery tester.

WARNING: If the battery shows signs of freezing, leaking or loose posts, do not test, assist-boost, or charge. The battery may arc internally and explode. Personal injury and/or vehicle damage may result.

WARNING: Explosive hydrogen gas forms in and around the battery. Do not smoke, use flame, or create sparks near the battery. Personal injury and/or vehicle damage may result.

WARNING: The battery contains sulfuric acid, which is poisonous and caustic. Avoid contact with the skin, eyes, or clothing. In the event of contact, flush with water and call a physician immediately. Keep out of the reach of children.

A battery that will not accept a charge is inoperative, and must be replaced. Further testing is not required. A fully-charged battery must be load tested to determine its cranking capacity. A battery that is fully-charged, but does not pass the load test, is inoperative and must be replaced.

NOTE: Completely discharged batteries may take several hours to accept a charge. (Refer to 08 - Electrical/8F - Engine Systems/Battery System/BATTERY - Standard Procedure) for the proper battery charging procedures.

Standard Procedure

BATTERY CHARGING

Battery charging is the means by which the battery can be restored to its full voltage potential. A battery is fully-charged when:

- Micro 420 electrical system tester indicates battery is OK.

- All of the battery cells are gassing freely during battery charging.
- Open-circuit voltage of the battery is 12.4 volts or above.

WARNING: Never exceed twenty amperes when charging a cold (-1° c [30° f] or lower) battery. The battery may arc internally and explode. Personal injury and/or vehicle damage may result.

WARNING: If the battery shows signs of freezing, leaking, loose posts, do not test, assist-boost, or charge. The battery may arc internally and explode. Personal injury and/or vehicle damage may result.

WARNING: Explosive hydrogen gas forms in and around the battery. Do not smoke, use flame, or create sparks near the battery. Personal injury and/or vehicle damage may result.

WARNING: The battery contains sulfuric acid, which is poisonous and caustic. Avoid contact with the skin, eyes, or clothing. In the event of contact, flush with water and call a physician immediately. Keep out of the reach of children.

WARNING: If the battery is equipped with removable cell caps, be certain that each of the cell caps is in place and tight before the battery is returned to service. Personal injury and/or vehicle damage may result from loose or missing cell caps.

CAUTION: Always disconnect and isolate the battery negative cable before charging a battery. Do not exceed sixteen volts while charging a battery. Damage to the vehicle electrical system components may result.

CAUTION: Battery electrolyte will bubble inside the battery case during normal battery charging. Electrolyte boiling or being discharged from the battery vents indicates a battery overcharging condition. Immediately reduce the charging rate or turn off the charger to evaluate the battery condition. Damage to the battery may result from overcharging.

CAUTION: The battery should not be hot to the touch. If the battery feels hot to the touch, turn off the charger and let the battery cool before continuing the charging operation. Damage to the battery may result.

Some battery chargers are equipped with polarity-sensing circuitry. This circuitry protects the battery charger and the battery from being damaged if they are improperly connected. If the battery state-of-charge is too low for the polarity-sensing circuitry to detect, the battery charger will not operate. This makes it appear that the battery will not accept charging current. See the instructions provided by the manufacturer of the battery charger for details on how to bypass the polarity-sensing circuitry.

After the battery has been charged to 12.4 volts or greater, perform a load test to determine the battery cranking capacity. (Refer to 08 - Electrical/8F - Engine Systems/Battery System/BATTERY - Standard Procedure) for the proper battery load test procedures. If the battery will endure a load test, return the battery to service. If the battery will not endure a load test, it is inoperative and must be replaced.

Clean and inspect the battery hold downs, tray, terminals, posts, and top before completing battery service. (Refer to 08 - Electrical/8F - Engine Systems/Battery System - Cleaning) and (Refer to 08 - Electrical/8F - Engine Systems/Battery System - Inspection) for the proper battery system cleaning and inspection procedures.

CHARGING A COMPLETELY DISCHARGED BATTERY

The following procedure should be used to recharge a completely discharged battery. Unless this procedure is properly followed, a good battery may be needlessly replaced.

1. Measure the voltage at the battery posts with a voltmeter, accurate to 1/10 (0.10) volt. If the reading is below ten volts, the battery charging current will be low. It could take some time before the battery accepts a current greater than a few milliamperes. Such low current may not be detectable on the ammeters built into many battery chargers.
2. Disconnect and isolate the battery negative cable. Connect the battery charger leads. Some battery chargers are equipped with polarity-sensing circuitry. This circuitry protects the battery charger and the battery from being damaged if they are improperly connected. If the battery state-of-charge is too low for the polarity-sensing circuitry to detect, the battery charger will not operate. This makes it appear that the battery will not accept charging current. See the instructions provided by the manufacturer of the battery charger for details on how to bypass the polarity-sensing circuitry.
3. Battery chargers vary in the amount of voltage and current they provide. The amount of time required for a battery to accept measurable charging current at various voltages is shown in the Charge Rate Table. If the charging current is still not measurable at the end of the charging time, the battery is inoperative and must be replaced. If the charging current is measurable during the charging time, the battery may be good and the charging should be completed in the normal manner.

CHARGE RATE TABLE	
Voltage	**Hours**
16.0 volts maximum	up to 4 hours
14.0 to 15.9 volts	up to 8 hours
13.9 volts or less	up to 16 hours

CHARGING TIME REQUIRED

The time required to charge a battery will vary, depending upon the following factors:

- **Battery Capacity** - A completely discharged heavy-duty battery requires twice the charging time of a small capacity battery.
- **Temperature** - A longer time will be needed to charge a battery at -18° C (0° F) than at 27° C (80° F). When a fast battery charger is connected to a cold battery, the current accepted by the battery will be very low at first. As the battery warms, it will accept a higher charging current rate (amperage).
- **Charger Capacity** - A battery charger that supplies only five amperes will require a longer charging time. A battery charger that supplies twenty amperes or more will require a shorter charging time.
- **State-Of-Charge** - A completely discharged battery requires more charging time than a partially discharged battery. Electrolyte is nearly pure water in a completely discharged battery. At first, the charging current (amperage) will be low. As the battery charges, the specific gravity of the electrolyte will gradually rise.

The Battery Charging Time Table gives an indication of the time required to charge a typical battery at room temperature based upon the battery state-of-charge and the charger capacity.

BATTERY CHARGING TIME TABLE			
Charging Amperage	**5 Amps**	**10 Amps**	**20 Amps**
Open Circuit Voltage	**Hours Charging @ 21° C (70° F)**		
12.25 to 12.49	6 hours	3 hours	1.5 hours
12.00 to 12.24	10 hours	5 hours	2.5 hours
10.00 to 11.99	14 hours	7 hours	3.5 hours
Below 10.00	18 hours	9 hours	4.5 hours

USING MICRO 420 BATTERY TESTER

Always use the Micro 420 Instruction Manual that was supplied with the tester as a reference. If the Instruction Manual is not available the following procedure can be used:

WARNING: Always wear appropriate eye protection and use extreme caution when working with batteries.

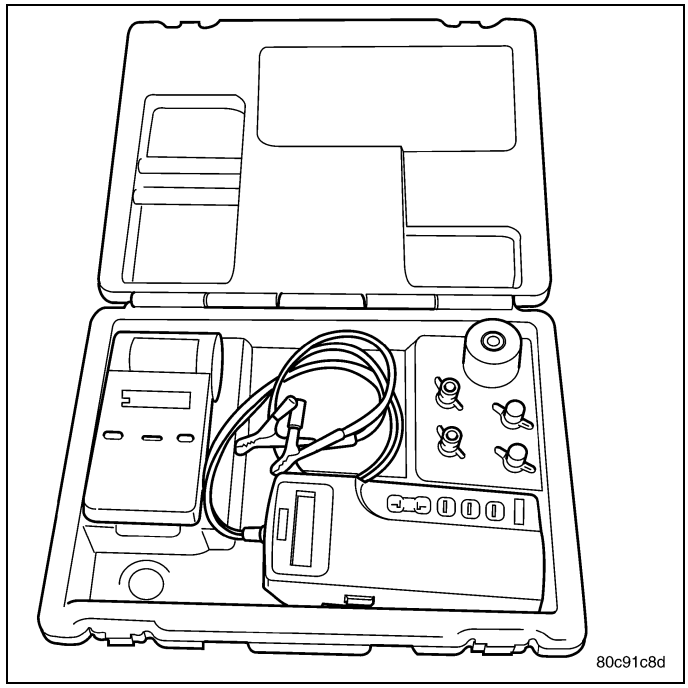

BATTERY TESTING

1. If testing the battery OUT-OF-VEHICLE, clean the battery terminals with a wire brush before testing, (Refer to 08 - Electrical/8F - Engine Systems/Battery System - Cleaning).
2. If testing the battery IN-THE-VEHICLE, make certain all of the vehicle accessory loads are OFF, including the ignition. **The preferred test position is at the battery terminals**. If the battery is not accessible, you may test using both the positive and negative jumper posts. Select TESTING AT JUMPER POST when connecting to that location.
3. Connect the tester to the battery or jumper posts, the red clamp to positive (+) and the black clamp to negative (–).

NOTE: Multiple batteries connected in parallel must have the ground cable disconnected to perform a battery test. Failure to disconnect may result in false battery test readings.

4. Using the ARROW key select **in** or **out** of vehicle testing and press ENTER to make a selection.
5. If not selected, choose the Cold Cranking Amp (CCA) battery rating. Or select the appropriate battery rating for your area (see menu). The tester will then run its self programmed test of the battery and display the results. Refer to the test result table noted below.

CAUTION: If REPLACE BATTERY is the result of the test, this may mean a poor connection between the vehicle's cables and battery exists. After disconnecting the vehicle's battery cables from the battery, retest the battery using the OUT-OF-VEHICLE test before replacing.

6. While viewing the battery test result, press the CODE button and the tester will prompt you for the last 4 digits of the VIN. Use the UP/DOWN arrow buttons to scroll to the correct character; then press ENTER to select and move to the next digit. Then press the ENTER button to view the SERVICE CODE. Pressing the CODE button a second time will return you to the test results.

BATTERY TEST RESULTS	
GOOD BATTERY	Return to service
GOOD - RECHARGE	Fully charge battery and return to service
CHARGE AND RETEST	Fully charge battery and retest battery
REPLACE BATTERY	Replace the battery and retest complete system
BAD-CELL REPLACE	Replace the battery and retest complete system

NOTE: The SERVICE CODE is required on every warranty claim submitted for battery replacement.

OPEN-CIRCUIT VOLTAGE TEST

A battery open-circuit voltage (no load) test will show the approximate state-of-charge of a battery. This test can be used in place of the hydrometer test when a hydrometer is not available, or for maintenance-free batteries with non-removable cell caps.

Before proceeding with this test, completely charge the battery (Refer to 08 - Electrical/8F - Engine Systems/Battery System/BATTERY - Standard Procedure).

1. Before measuring the open-circuit voltage, the surface charge must be removed from the battery. Turn on the headlamps for fifteen seconds, then allow up to five minutes for the battery voltage to stabilize.
2. Disconnect and isolate both battery cables, negative cable first.
3. Using a voltmeter connected to the battery posts measure the open-circuit voltage.

See the Open-Circuit Voltage Table. This voltage reading will indicate the battery state-of-charge, but will not reveal its cranking capacity. If a battery has an open-circuit voltage reading of 12.4 volts or greater, it may be load tested to reveal its cranking capacity (Refer to 08 - Electrical/8F - Engine Systems/Battery System/BATTERY - Standard Procedure).

OPEN CIRCUIT VOLTAGE TABLE	
Open Circuit Voltage	**Charge Percentage**
11.7 volts or less	0%
12.0 volts	25%
12.2 volts	50%

OPEN CIRCUIT VOLTAGE TABLE	
Open Circuit Voltage	**Charge Percentage**
12.4 volts	75%
12.6 volts or more	100%

IGNITION-OFF DRAW TEST

The term Ignition-Off Draw (IOD) identifies a normal condition where power is being drained from the battery with the ignition switch in the Off position. A normal vehicle electrical system will draw from five to thirty-five milliamperes (0.005 to 0.035 ampere) with the ignition switch in the Off position, and all non-ignition controlled circuits in proper working order. Up to thirty-five milliamperes are needed to enable the memory functions for the Powertrain Control Module (PCM), digital clock, electronically tuned radio, and other modules which may vary with the vehicle equipment.

A vehicle that has not been operated for approximately twenty days, may discharge the battery to an inadequate level. When a vehicle will not be used for twenty days or more (stored), remove the IOD fuse from the Totally Integrated Power Module (TIPM). This will reduce battery discharging.

Excessive IOD can be caused by:

- Electrical items left on.
- Inoperative or improperly adjusted switches.
- Inoperative or shorted electronic modules and components.
- An internally shorted generator.
- Intermittent shorts in the wiring.

If the IOD is over thirty-five milliamperes, the problem must be found and corrected before replacing a battery. In most cases, the battery can be charged and returned to service after the excessive IOD condition has been corrected.

1. Verify that all electrical accessories are off. Turn off all lamps, remove the ignition key, and close all doors. If the vehicle is equipped with an illuminated entry system or an electronically tuned radio, allow the electronic timer function of these systems to automatically shut off (time out). This may take up to ten minutes. See the Electronic Module Ignition-Off Draw Table for more information.

ELECTRONIC MODULE IGNITION-OFF DRAW (IOD) TABLE			
Module	**Time Out? (If Yes, Interval And Wake-Up Input)**	**IOD**	**IOD After Time Out**
Radio	No	1 to 3 milliamperes	N/A
Audio Power Amplifier	No	up to 1 milliampere	N/A
Powertrain Control Module (PCM)	No	0.95 milliampere	N/A
Cab Compartment Node (CCN)	No	0.44 milliampere	N/A

2. Determine that the underhood lamp is operating properly, then disconnect the lamp wire harness connector or remove the lamp bulb.
3. Turn off all electrical accessories.
4. Disconnect the battery negative cable.

WARNING: Do not open any doors, or turn on any electrical accessories. Failure to do so can result in possible serious or fatal injury.

CAUTION: Do not open any doors, or turn on any electrical accessories with the lowest milliampere scale selected, or the multi-meter may be damaged.

5. Connect a 10 amp fused jumper wire between the negative battery cable and the negative battery post.
6. Turn the ignition key ON and then OFF and wait 10 minutes for all systems to enter sleep mode.

NOTE: Do not break the connection between the 10 amp fused jumper wire and the battery. If the connection between the battery negative terminal post and the negative cable terminal clamp is lost during any part of the IOD test, the electronic timer function will be activated and all of the tests will have to be repeated.

7. Set an electronic digital multi-meter to its highest amperage scale. Connect the multi-meter to the battery negative cable terminal clamp and the battery negative terminal post, but not on the jumper connection.
8. Remove the 10 amp jumper wire without breaking the digital multi-meter connection.
9. The multi-meter leads must be securely clamped to the battery negative cable terminal clamp and the battery negative terminal post, but not the 10 amp jumper wire.
10. The high-amperage IOD reading on the multi-meter should be very low or nonexistent, depending upon the electrical equipment in the vehicle. If the amperage reading remains high, remove and replace each fuse or circuit breaker in the TIPM, one at a time until the amperage reading becomes very low, or nonexistent. Refer to the appropriate wiring information for complete TIPM, circuit breaker, and circuit identification. This will isolate each circuit and identify the circuit that is the source of the high-amperage IOD. If the amperage reading remains high after removing and replacing each fuse, disconnect the wire harness from the generator. If the amperage reading now becomes very low or nonexistent, diagnose and repair the Charging System as necessary. After the high-amperage IOD has been corrected, switch the multi-meter to progressively lower amperage scales and, if necessary, repeat the fuse and circuit breaker remove-and-replace process to identify and correct all sources of excessive IOD. It is now safe to select the lowest milliampere scale of the multi-meter to check the low-amperage IOD.
11. Observe the multi-meter reading. The low-amperage IOD should not exceed thirty-five milliamperes (0.035 ampere). If the current draw exceeds thirty-five milliamperes, isolate each circuit using the fuse and circuit breaker remove-and-replace process in Step #10. The multi-meter reading will drop to within the acceptable limit when the source of the excessive current draw is disconnected. Repair this circuit as required; whether a wiring short, incorrect switch adjustment, or an inoperative component is the cause.

Removal

1. Turn the ignition switch to the Off position. Be certain that all electrical accessories are turned off.
2. Loosen the battery negative cable terminal clamp pinch-bolt hex nut.
3. Disconnect the battery negative cable terminal clamp from the battery negative terminal post. If necessary, use a battery terminal puller (2) to remove the terminal clamp from the battery post.
4. Loosen the battery positive cable terminal clamp pinch-bolt hex nut.
5. Disconnect the battery positive cable terminal clamp from the battery positive terminal post. If necessary, use a battery terminal puller (2) to remove the terminal clamp from the battery post.

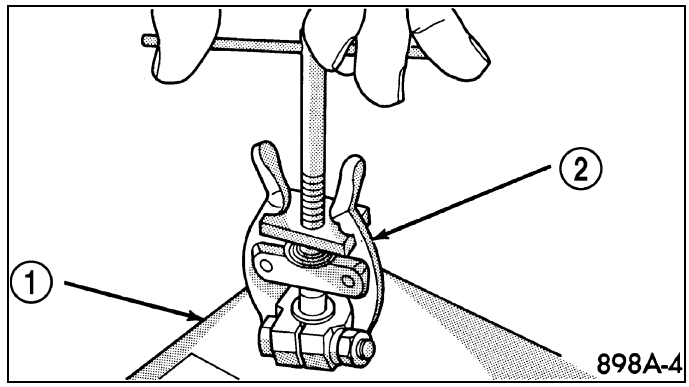

6. Remove the battery hold down retaining bolt (6) and battery hold down (5).

WARNING: Wear a suitable pair of rubber gloves (not the household type) when removing a battery by hand. Safety glasses should also be worn. If the battery is cracked or leaking, the electrolyte can burn the skin and eyes.

7. Remove the battery (2) from the battery tray.

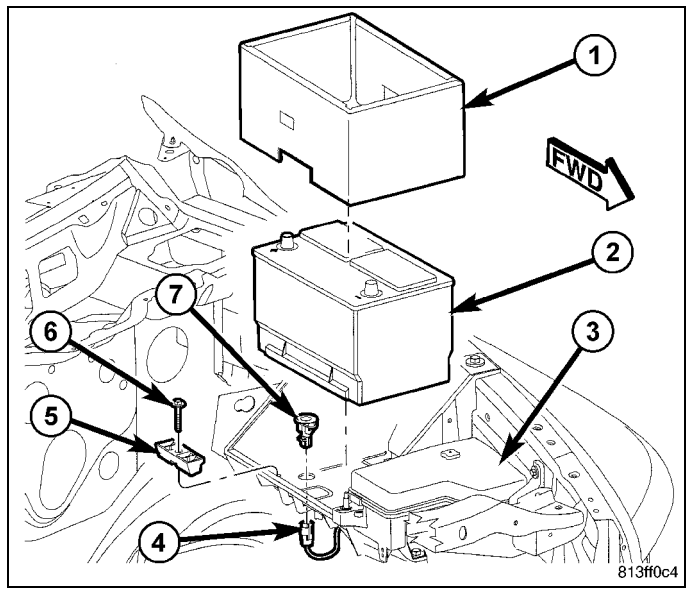

Installation

1. Clean and inspect the battery (2), (Refer to 08 - Electrical/8F - Engine Systems/Battery System - Cleaning) and (Refer to 08 - Electrical/8F - Engine Systems/Battery System - Inspection) for the proper procedures.

CAUTION: Be certain that the battery cable terminal clamps are connected to the correct battery terminal posts. Reversed battery polarity may damage electrical components of the vehicle.

2. Position the battery into the battery tray. Ensure that the battery positive and negative terminal posts are correctly positioned. The battery cable terminal clamps must reach the correct battery terminal post without stretching the cables.
3. Position the battery hold down (5) and install the retaining bolt (6).
4. Clean the battery cable terminal clamps and the battery terminal posts, (Refer to 08 - Electrical/8F - Engine Systems/Battery System - Cleaning) for the proper procedures.

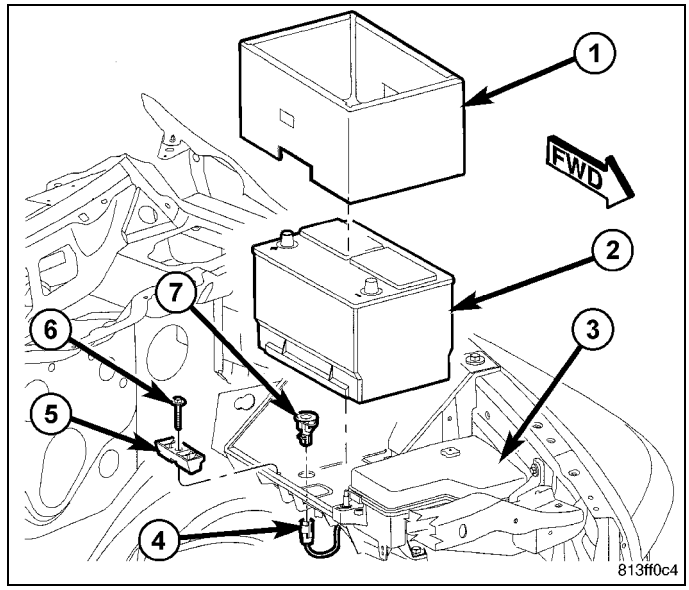

5. Reconnect the battery positive cable terminal clamp to the battery positive terminal post. Tighten the terminal clamp pinch-bolt hex nut to 4 N·m (35 in. lbs.).
6. Reconnect the battery negative cable terminal clamp to the battery negative terminal post. Tighten the terminal clamp pinch-bolt hex nut to 4 N·m (35 in. lbs.).
7. Apply a thin coating of petroleum jelly or chassis grease to the exposed surfaces of the battery cable terminal clamps and the battery terminal posts.
8. Obtain an appropriate scan tool and check the PCM for any stored battery disconnect trouble codes. Clear codes if required.

CABLES, Battery

Description

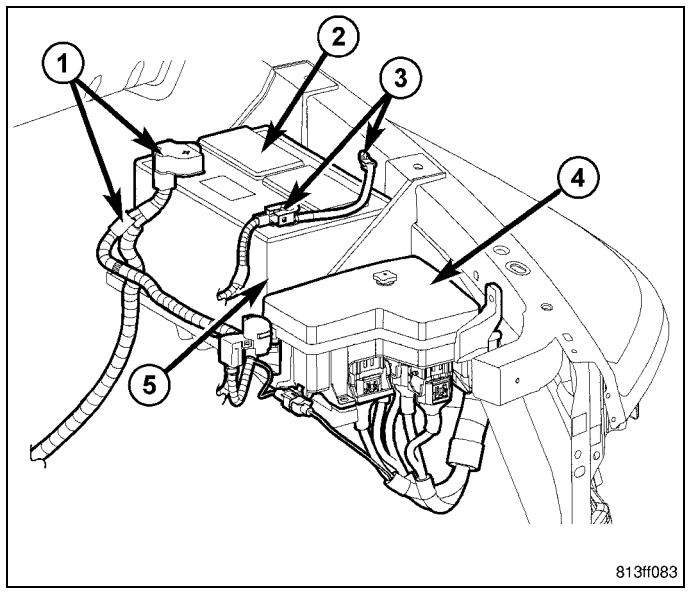

The battery cables (1) and (3) are large gauge, stranded copper wires sheathed within a heavy plastic or synthetic rubber insulating jacket. The wire used in the battery cables combines excellent flexibility and reliability with high electrical current carrying capacity. The battery cables feature a stamped brass clamping type female battery terminal crimped onto one end of the battery cable wire and then solder-dipped. A square headed pinch-bolt and hex nut are installed at the open end of the female battery terminal clamp. Large eyelet type terminals are crimped onto the opposite end of the battery cable wire and then solder-dipped. The battery positive cable wires (1) have a red insulating jacket to provide visual identification and feature a larger female battery terminal clamp to allow connection to the larger battery positive terminal post. The battery negative cable wires (3) have a black insulating jacket and a smaller female battery terminal clamp.

The battery cables cannot be repaired and, if damaged or inoperative they must be replaced. Both the battery positive and negative cables are available for service replacement. **Refer to the appropriate wiring information for the location of the proper battery cable wire harness diagrams.** The wiring information also includes proper wire and connector repair procedures, further details on wire harness routing and retention, as well as pin-out and location views for the various wire harness connectors, splices and grounds.

Operation

The battery cables connect the battery terminal posts to the vehicle electrical system. These cables also provide a path back to the battery for electrical current generated by the charging system for restoring the voltage potential of the battery. The female battery terminal clamps on the ends of the battery cable wires provide a strong and reliable connection of the battery cable to the battery terminal posts. The terminal pinch bolts allow the female terminal clamps to be tightened around the male terminal posts on the top of the battery. The eyelet terminals secured to the opposite ends of the battery cable wires provide secure and reliable connection of the battery cables to the vehicle electrical system.

Diagnosis and Testing

A voltage drop test will determine if there is excessive resistance in the battery cable terminal connections or the battery cables. If excessive resistance is found in the battery cable connections, the connection point should be disassembled, cleaned of all corrosion or foreign material, then reassembled. Following reassembly, check the voltage drop for the battery cable connection and the battery cable again to confirm repair.

When performing the voltage drop test, it is important to remember that the voltage drop is giving an indication of the resistance between the two points at which the voltmeter probes are attached. **EXAMPLE:** When testing the resistance of the battery positive cable, touch the voltmeter leads to the battery positive cable terminal clamp and to the battery positive cable eyelet terminal at the starter solenoid B(+) terminal stud. If you probe the battery positive terminal post and the battery positive cable eyelet terminal at the starter solenoid B(+) terminal stud, you are reading the combined voltage drop in the battery positive cable terminal clamp-to-terminal post connection and the battery positive cable.

VOLTAGE DROP TEST

The following operation will require a voltmeter accurate to 1/10 (0.10) volt. Before performing this test, be certain that the following procedures are accomplished:

- The battery is fully-charged and tested, (Refer to 08 - Electrical/8F - Engine Systems/Battery System/BATTERY - Standard Procedure).
- Fully engage the parking brake.

- If the vehicle is equipped with an automatic transmission, place the gearshift selector lever in the Park position. If the vehicle is equipped with a manual transmission, place the gearshift selector lever in the Neutral position and block the clutch pedal in the fully depressed position.
- Verify that all lamps and accessories are turned off.

1. Connect the positive lead of the voltmeter (1) to the battery negative terminal post. Connect the negative lead of the voltmeter to the battery negative cable terminal clamp. Rotate and hold the ignition switch in the Start position. Observe the voltmeter. If voltage is detected, correct the poor connection between the battery negative cable terminal clamp and the battery negative terminal post.

NOTE: If the vehicle is equipped with two 12v batteries, step #1 must be performed twice, once for each battery.

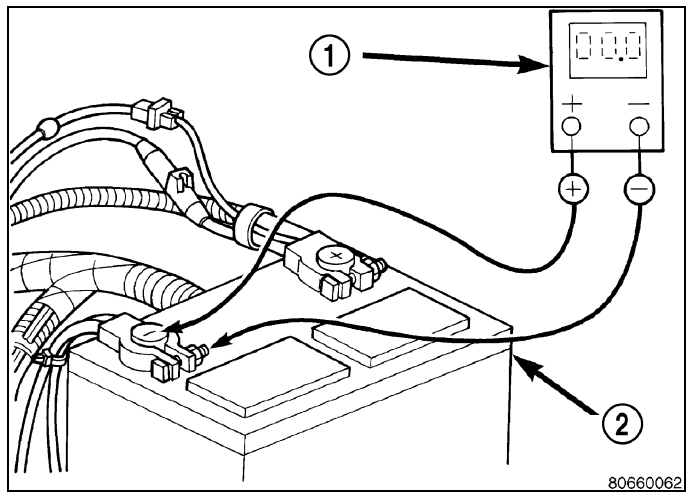

2. Connect the positive lead of the voltmeter (1) to the battery positive terminal post. Connect the negative lead of the voltmeter to the battery positive cable terminal clamp. Rotate and hold the ignition switch in the Start position. Observe the voltmeter. If voltage is detected, correct the poor connection between the battery positive cable terminal clamp and the battery positive terminal post.

NOTE: If the vehicle is equipped with two 12v batteries, step #2 must be performed twice, once for each battery.

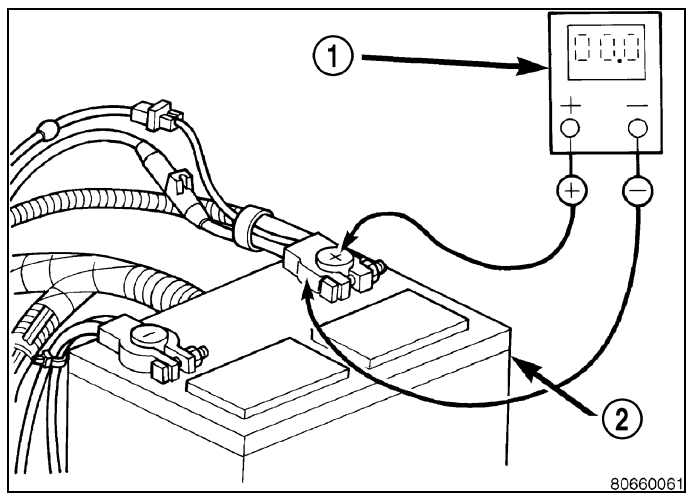

3. Connect the voltmeter (2) to measure between the battery positive cable terminal clamp (1) and the starter solenoid (3) B(+) terminal stud. Rotate and hold the ignition switch in the Start position. Observe the voltmeter. If the reading is above 0.2 volt, clean and tighten the battery positive cable eyelet terminal connection at the starter solenoid B(+) terminal stud. Repeat the test. If the reading is still above 0.2 volt, replace the faulty battery positive cable.

NOTE: If the vehicle is equipped with two 12v batteries, step #3 must be performed twice, once for each battery.

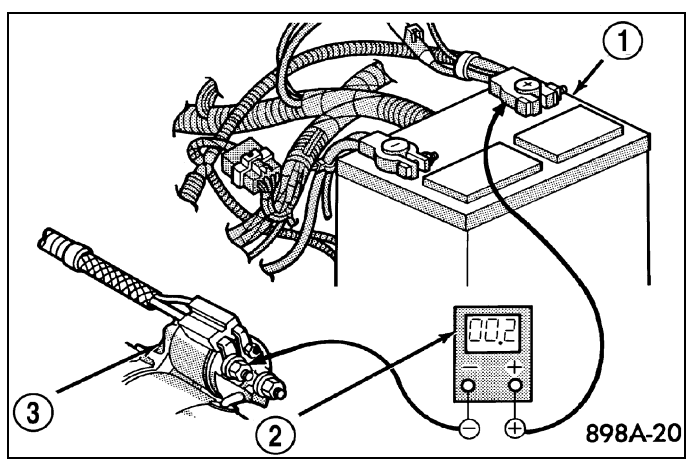

4. Connect the voltmeter (1) to measure between the battery (2) negative cable terminal clamp and a good clean ground on the engine block (3). Rotate and hold the ignition switch in the Start position. Observe the voltmeter. If the reading is above 0.2 volt, clean and tighten the battery negative cable eyelet terminal connection to the engine block. Repeat the test. If the reading is still above 0.2 volt, replace the faulty battery negative cable.

NOTE: If the vehicle is equipped with two 12v batteries, step #4 must be performed twice, once for each battery.

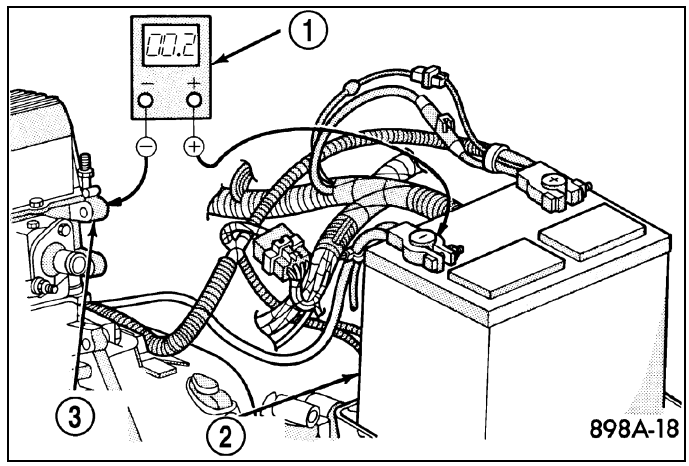

Removal

NEGATIVE

1. Turn the ignition switch to the Off position. Be certain that all electrical accessories are turned off.
2. Disconnect and isolate the battery negative cable terminal clamp (3).
3. Remove the bolt (4) securing the negative cable to the left front fender.

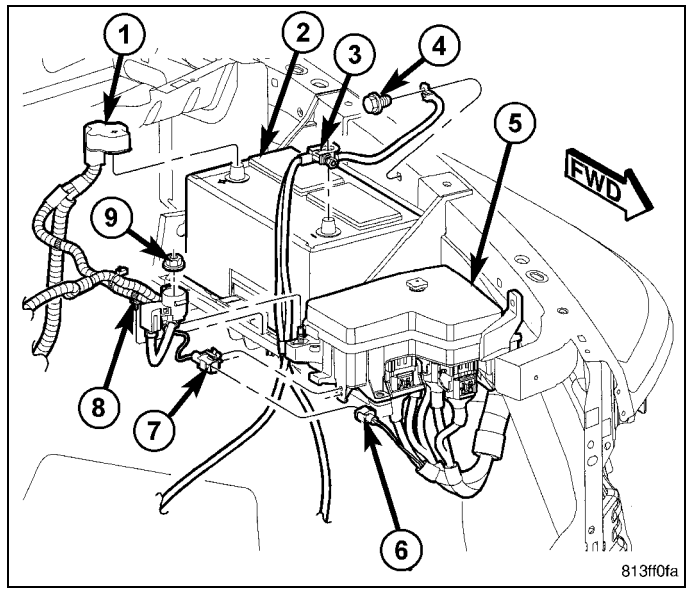

4. One at a time, trace the battery cable retaining push-pins (3) , fasteners and routing clips until the cable is free from the vehicle.
5. Remove the bolt (4) securing the negative cable to the engine.
6. Remove the bolt (6) securing the negative cable to the left frame rail.
7. Remove the battery negative cable from the vehicle.

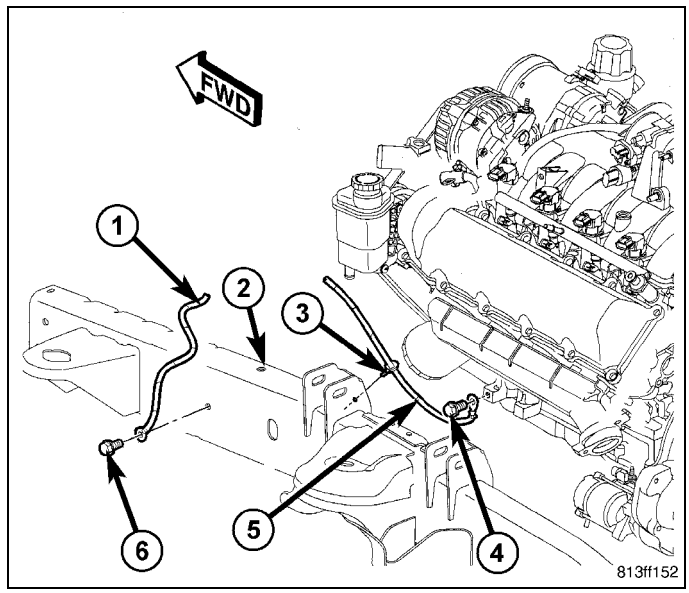

POSITIVE

1. Turn the ignition switch to the Off position. Be certain that all electrical accessories are turned off.
2. Disconnect and isolate the battery negative cable terminal clamp (3).
3. Disconnect the battery positive cable terminal clamp (1).
4. Remove the nut (9) securing the cable to the Totally Integrated Power Module (TIPM) (5).
5. Disconnect the wire harness connector (6) at the TIPM.
6. Disconnect the wire harness connector (7) pushpin from the TIPM housing.
7. Disconnect the battery cable retaining pushpin (8) securing the cable to the battery tray.

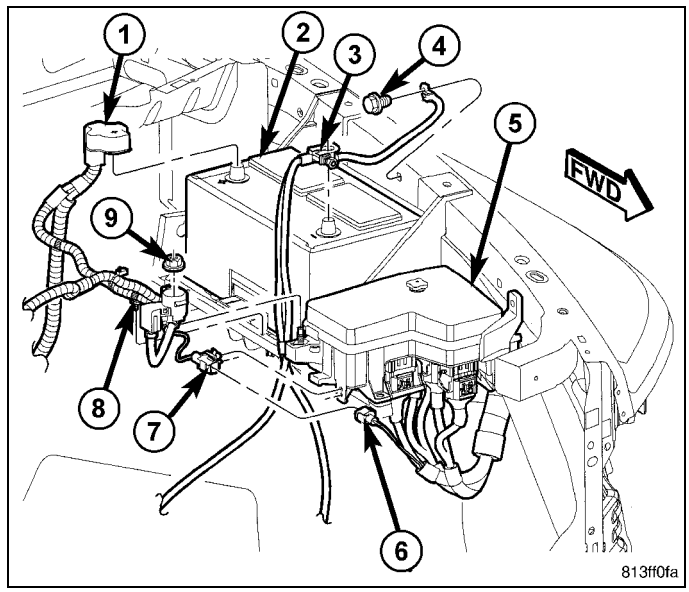

8. Raise the vehicle on a hoist, (Refer to 04 - Vehicle Quick Reference/Hoisting - Standard Procedure).
9. Disconnect the battery cable retaining pushpins (1) securing the cable to the left frame rail.

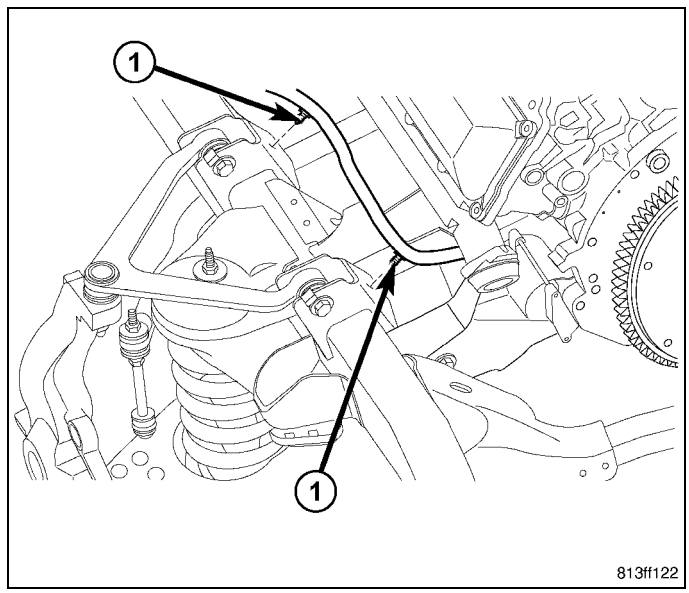

10. Remove the nut (5) securing the cable to the starter solenoid (6).
11. Lower the vehicle.
12. Lift the terminal cap (4) and remove the nut (3) securing the cable (1) to the alternator (2).
13. Disconnect any remaining pushpins securing the cable to the vehicle.
14. Remove the battery positive cable from the vehicle.

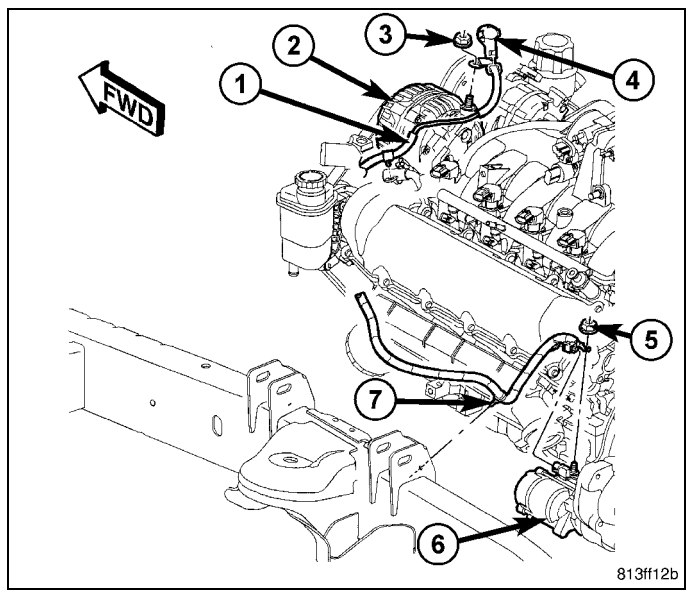

Installation

NEGATIVE

1. Position the battery negative cable (5) in the vehicle.
2. One at a time, install the battery cable retaining push-pins (3) , fasteners and routing clips until the cable is secure in the vehicle.
3. Install the bolt (6) securing the negative cable (1) to the left frame rail.
4. Install the bolt (4) securing the negative cable (5) to the engine.

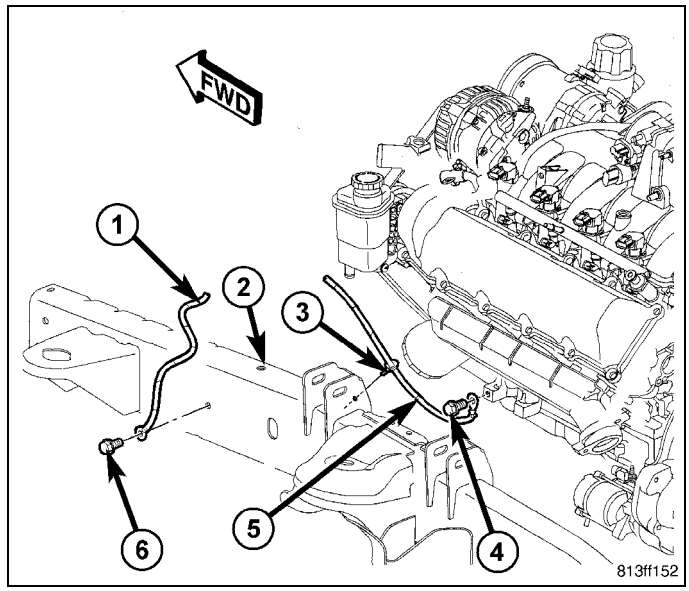

5. Install the bolt (4) securing the negative cable (3) to the left front fender.
6. Connect the battery negative cable terminal clamp (3).
7. Check the vehicle for normal operation.

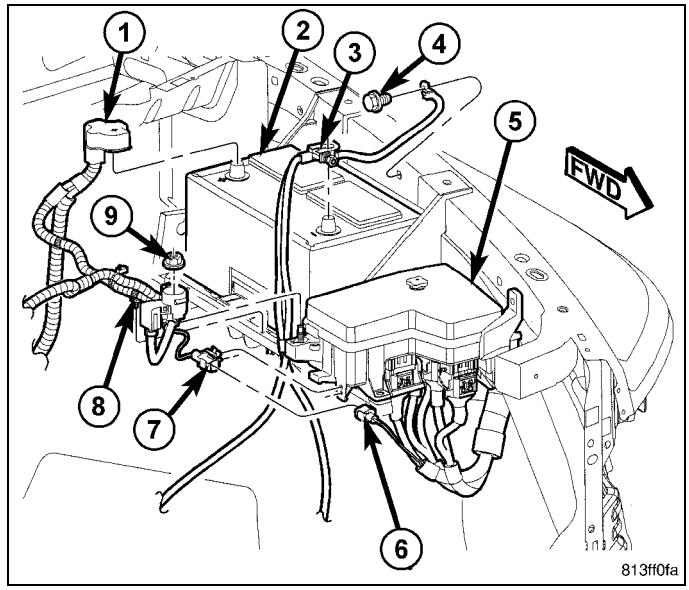

POSITIVE

1. Position the battery positive cable (1) in the vehicle.

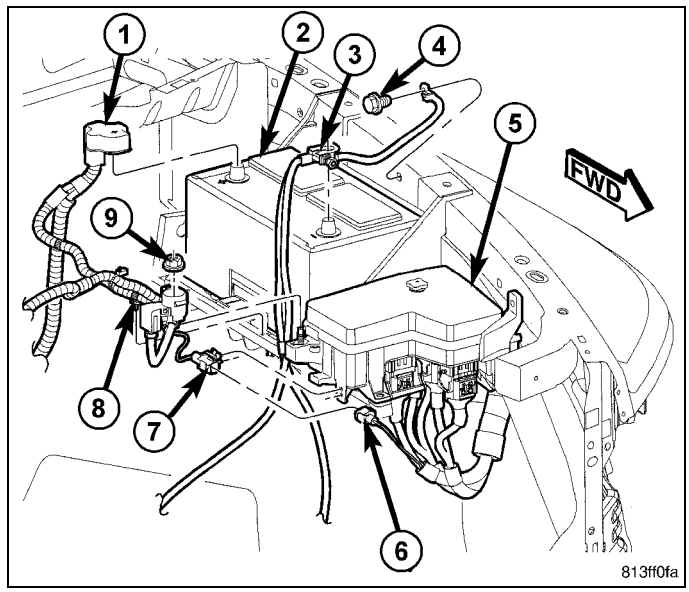

2. Install the nut (3) securing the cable (1) to the alternator (2).
3. Secure the terminal cap (4) to the alternator stud.
4. Install the cable (1) pushpin into the bracket to the left of the alternator.
5. Raise the vehicle on a hoist, (Refer to 04 - Vehicle Quick Reference/Hoisting - Standard Procedure).
6. Install the nut (5) securing the cable to the starter solenoid (6).

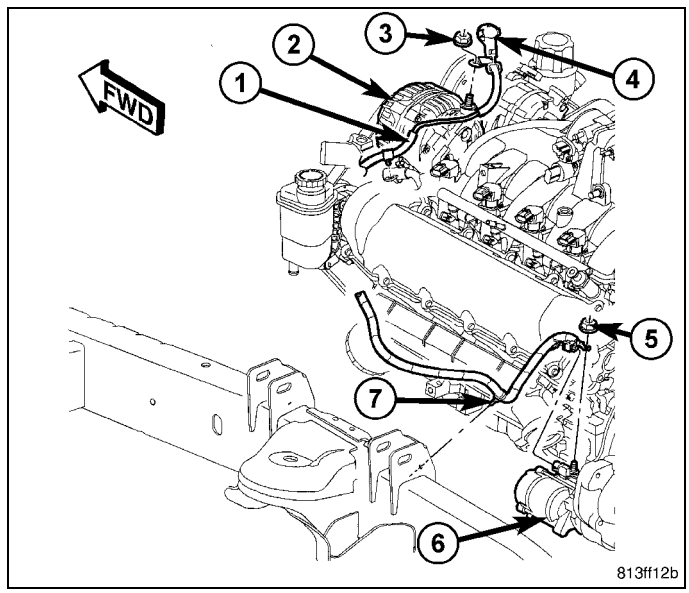

7. Connect the battery cable retaining pushpins (1) securing the cable to the left frame rail.
8. Lower the vehicle.

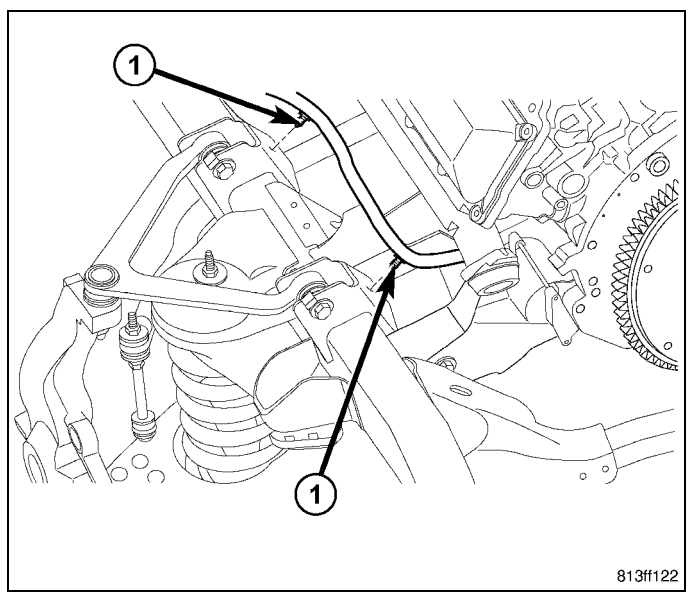

9. Install the battery cable retaining pushpin (8) securing the cable to the battery tray.
10. Install the wire harness connector (7) pushpin into the Totally Integrated Power Module (TIPM) (5) housing.
11. Connect the wire harness connector (6) at the TIPM.
12. Install the nut (9) securing the cable to the TIPM.
13. Connect the battery positive cable terminal clamp (1).
14. Connect the battery negative cable terminal clamp (3).
15. Check the vehicle for normal operation.

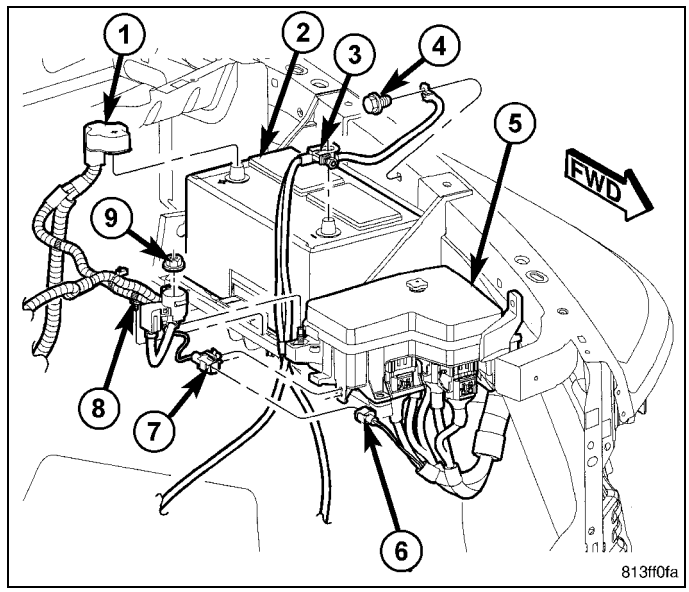

RETAINER, Battery

Removal

CAUTION: Never operate a vehicle without a battery hold down device properly installed. Damage to the vehicle, components and battery could result.

1. Verify that the ignition switch and all accessories are OFF.
2. Disconnect and isolate the battery negative cable.
3. Remove the bolt (6) from the battery hold down bracket (5) and remove the bracket from the vehicle.

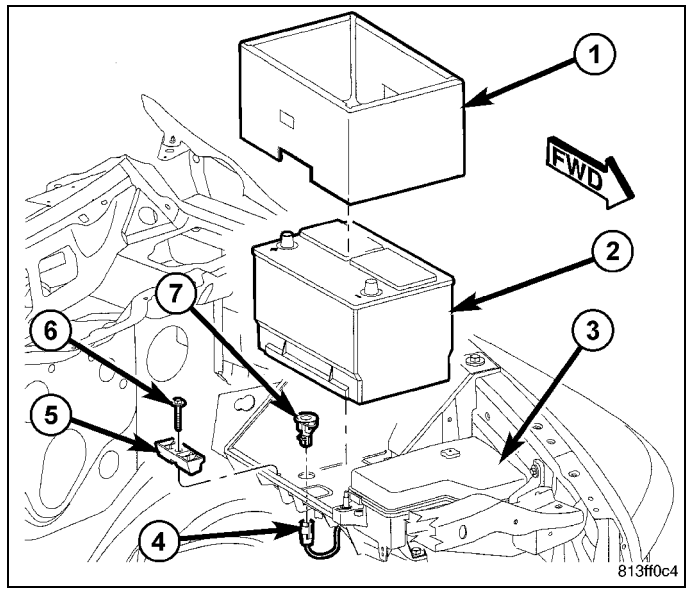

Installation

1. Clean and inspect the battery hold down bracket (5) and bolt (6) (Refer to 08 - Electrical/8F - Engine Systems/Battery System - Cleaning).
2. Position the battery hold down bracket in the battery tray.

CAUTION: Be certain that the hold down bracket is properly positioned in the battery tray before tightening the hold down bolt or damage to the battery and tray may result.

3. Install and tighten the battery hold down retaining bolt.

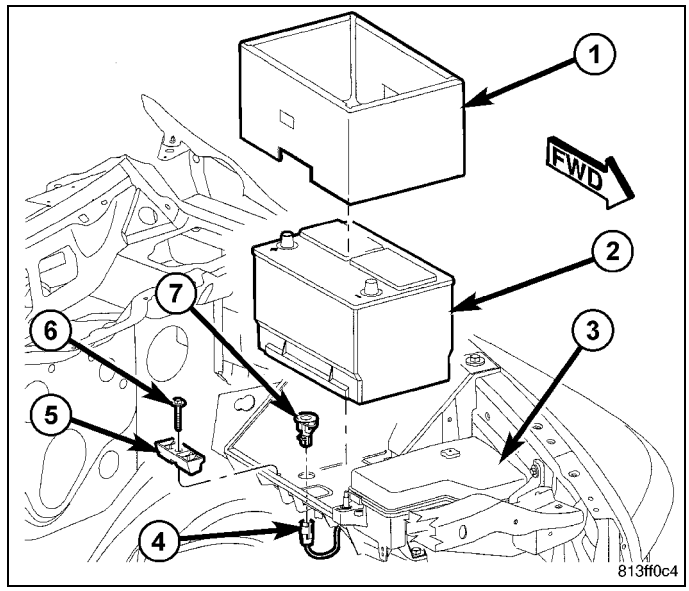

TRAY, Battery

Description

The molded plastic battery tray (1) is located in the left front corner of the engine compartment. On this vehicle, the battery tray also provides an anchor point for the anti-lock brake controller (3), cruise control servo (if equipped) and the integrated power module (4). The battery hold down hardware is contained within the battery tray. A hole in the bottom of the battery tray (2) is fitted with a battery temperature sensor. (Refer to 08 - Electrical/8F - Engine Systems/Charging - Diagnosis and Testing) for additional information on the battery temperature sensor.

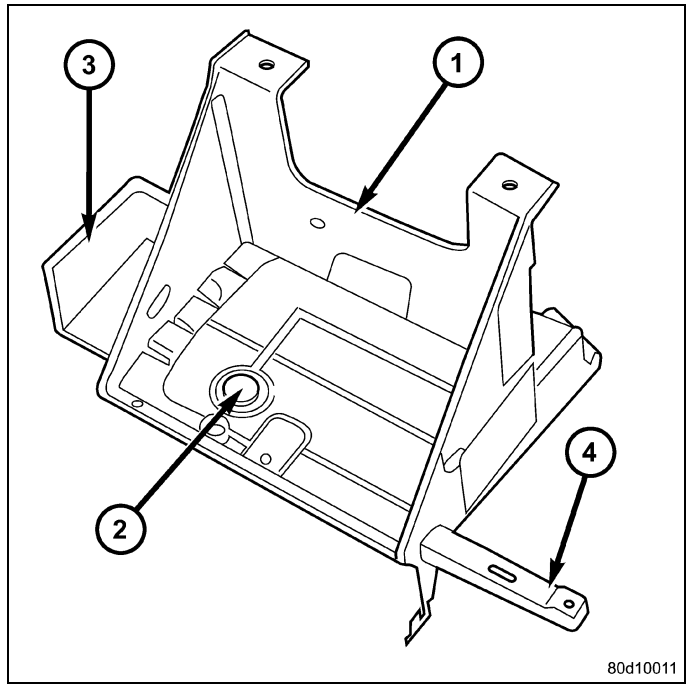

Removal

1. Remove the battery (3) from the battery tray (Refer to 08 - Electrical/8F - Engine Systems/Battery System/ BATTERY - Removal).
2. Remove the Totally Integrated Power Module (TIPM) (5)(Refer to 08 - Electrical/8W - Wiring/Power Distribution/MODULE, Totally Integrated Power (TIPM) - Removal).
3. Disconnect the wire harness retainers from the battery tray assembly.
4. Disconnect the purge solenoid (6) from its mounting bracket.
5. Remove the anti-lock brake controller (if equipped) retaining bolts and support the brake controller with mechanics wire. It is not necessary to completely remove the anti-lock brake control unit.
6. Remove the left front wheelhouse splash shield(Refer to 23 - Body/Exterior/SHIELD, Splash - Removal).

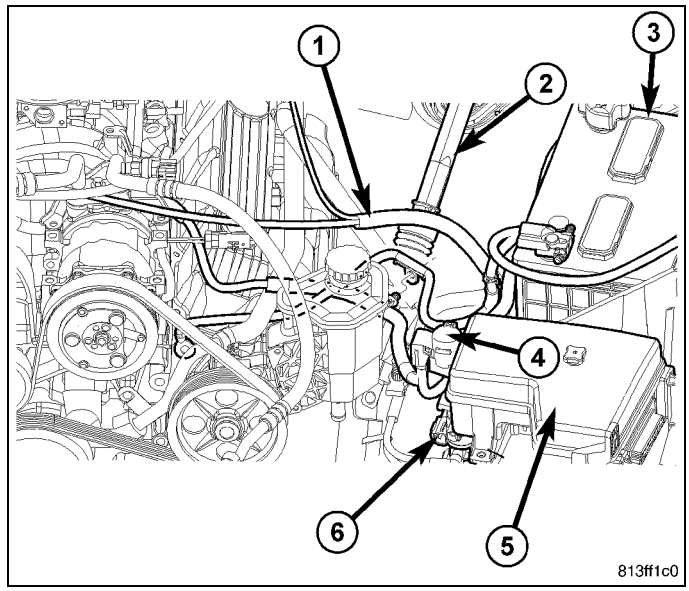

7. Mark the location of the cruise servo (3) (if equipped) and remove the retaining screws. Position the servo out of the way.
8. Disconnect the left front fender ground wire.
9. Remove the remaining battery tray retaining bolts (2).
10. Remove the battery tray from the vehicle.

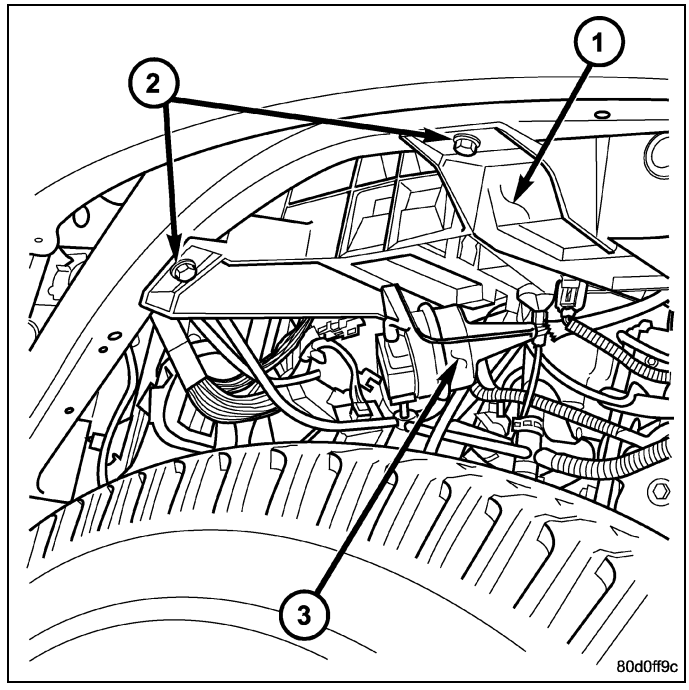

Installation

1. Position the battery tray assembly (1) and install the retaining bolts (2).
2. Connect the left front fender ground wire.
3. Install the cruise servo (3) (if equipped) and retaining screws.
4. Install the left front wheelhouse splash shield (Refer to 23 - Body/Exterior/SHIELD, Splash - Installation).

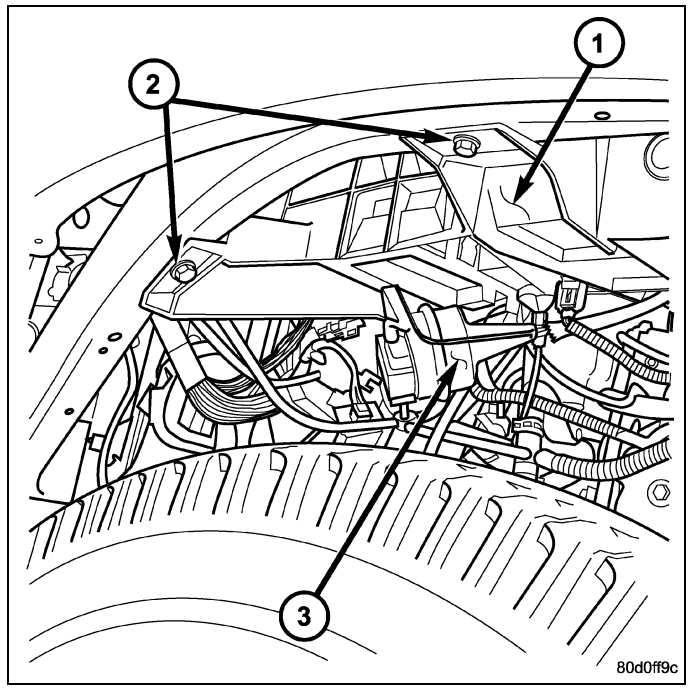

5. Install the anti-lock brake controller (if equipped).
6. Install the purge solenoid (6) on its mounting bracket.
7. Connect the wire harness retainers on the battery tray assembly.
8. Install the Totally Integrated Power Module (TIPM) (5) (Refer to 08 - Electrical/8W - Wiring/Power Distribution/MODULE, Totally Integrated Power (TIPM) - Installation).
9. Install the battery (3) (Refer to 08 - Electrical/8F - Engine Systems/Battery System/BATTERY - Installation).

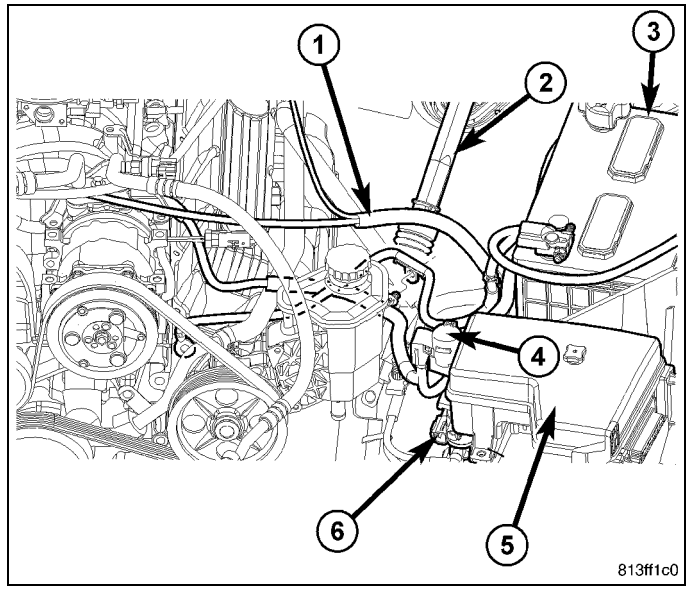

CHARGING

TABLE OF CONTENTS

page

CHARGING
- DESCRIPTION . . . 26
- OPERATION . . . 26
- DIAGNOSIS AND TESTING . . . 26
- SPECIFICATIONS
  - GENERATOR RATINGS . . . 27
  - TORQUE - GENERATOR / CHARGING SYSTEM . . . 27

DECOUPLER, GENERATOR
- DESCRIPTION . . . 28
- OPERATION . . . 28
- DIAGNOSIS AND TESTING . . . 28
- REMOVAL . . . 28
- INSTALLATION . . . 34

page

GENERATOR
- DESCRIPTION . . . 35
- OPERATION . . . 35
- REMOVAL
  - 3.7L / 4.7L . . . 36
  - 5.7L . . . 37
- INSTALLATION
  - 3.7L / 4.7L . . . 38
  - 5.7L . . . 38

REGULATOR, VOLTAGE
- DESCRIPTION . . . 39
- OPERATION . . . 39

Charging

Description

The charging system consists of:

- Generator
- Electronic Voltage Regulator (EVR) circuitry within the Powertrain Control Module (PCM).
- Ignition switch
- Battery (refer to 8, Battery for information)
- Battery temperature sensor
- Check Gauges Lamp (if equipped)
- Voltmeter (refer to 8, Instrument Panel and Gauges for information)
- Wiring harness and connections (refer to 8, Wiring Diagrams for information)

Operation

The charging system is turned on and off with the Powertrain Control Module (PCM) and ignition switch with engine running. The field circuit will not be energized until engine is running and ignition switch on. This voltage is connected through the PCM and supplied to one of the generator field terminals (Gen. Source B+) at the back of the generator. The generator is internally grounded. The generator regulates the field using pin-1 of the field connector (high side driver).

The generator is driven by the engine through a serpentine belt and pulley, or a decoupler pulley arrangement.

The PCM receives a voltage input from the generator (5) and also a battery voltage input (7) from the Totally Integrated Power Module (TIPM), it then compares the voltages to the desired voltage programed in the Electronic Voltage Regulator (EVR) software, and, if there is a difference it sends a signal to the generator EVR circuit to increase or decrease output. It uses a Pulse Width Modulation (PWM) to send signals to the generator circuitry to control the amount of output from the generator. The amount of DC current produced by the generator is controlled by the EVR circuitry contained within the generator.

All vehicles are equipped with On-Board Diagnostics (OBD). All OBD-sensed systems, including EVR circuitry, are monitored by the PCM. Each monitored circuit is assigned a Diagnostic Trouble Code (DTC). The PCM will store a DTC in electronic memory for certain failures it detects.

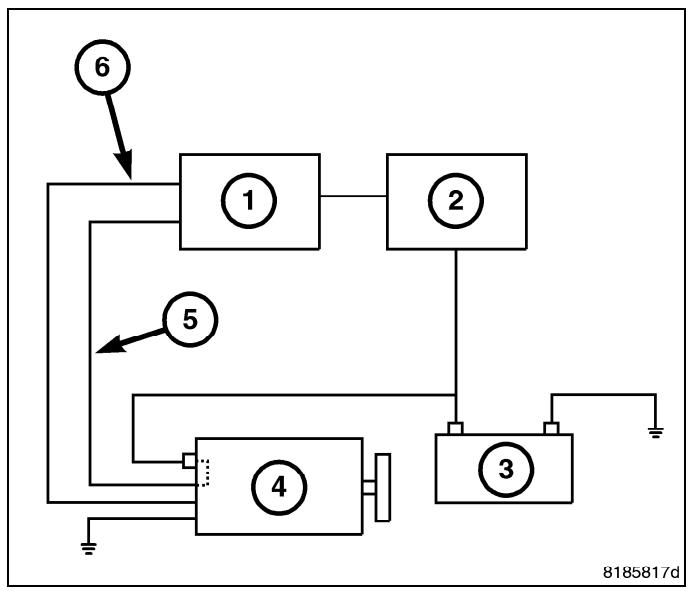

1 - PCM
2 - TIPM
3 - Battery
4 - Generator
5 - Feed Back Circuit B+
6 - Control Circuit
7 - Battery Sense

The Check Gauges Lamp (if equipped) monitors: **charging system voltage,** engine coolant temperature and engine oil pressure. If an extreme condition is indicated, the lamp will be illuminated. This is done as reminder to check the three gauges. The lamp is located on the instrument panel.

Voltage is monitored at the B+ terminal stud to insure it is connected. If the B+ cable is loose, the PCM will shut down generator field. Because of this new feature, pin-2 of the field connector is internally connected to the B+ terminal.

Diagnosis and Testing

The following procedures may be used to diagnose the charging system if:

- the check gauges lamp (if equipped) is illuminated with the engine running
- the voltmeter (if equipped) does not register properly
- an undercharged or overcharged battery condition occurs.

Remember that an undercharged battery is often caused by:

- accessories being left on with the engine not running
- a faulty or improperly adjusted switch that allows a lamp to stay on (Refer to 08 - Electrical/8F - Engine Systems/Battery System/BATTERY - Standard Procedure) for Ignition-Off Draw Test.

INSPECTION

The PCM (Powertrain Control Module) monitors the critical input and output circuits of the charging system, making sure they are operational. A Diagnostic Trouble Code (DTC) is assigned to each input and output circuit monitored by the On-Board Diagnostic (OBD) system. Some charging system circuits are checked continuously, and some are checked only under certain conditions.

Refer to Diagnostic Trouble Codes in; Powertrain Control Module for more DTC information.

To perform a complete test of the charging system, use a diagnostic scan tool. Perform the following inspections before attaching the scan tool.

1. Inspect the battery condition (Refer to 08 - Electrical/8F - Engine Systems/Battery System - Inspection).
2. Inspect the condition of battery cable terminals, battery posts, connections at engine block, starter solenoid and relay. They should be clean and tight. Repair as required.
3. Inspect all fuses in both the fuseblock and the Power Distribution Center (PDC) for tightness in receptacles. They should be properly installed and tight. Repair or replace as required.
4. Inspect the generator mounting bolts for tightness. Replace or tighten the bolts if required (Refer to 08 - Electrical/8F - Engine Systems/Charging - Specifications) for torque specifications.
5. Inspect the generator drive belt condition and tension. Tighten or replace the belt as required. Refer to Belt Tension Specifications in 7, Cooling System.
6. Inspect the automatic belt tensioner (if equipped).
7. Inspect the generator electrical connections at generator field, battery output, and ground terminal (if equipped). Also check the generator ground wire connection at the engine (if equipped). They should all be clean and tight. Repair as required.

Specifications

GENERATOR RATINGS

TYPE	RATED SAE AMPS	ENGINES
DENSO	160	3.7L / 4.7L / 5.7L

TORQUE - GENERATOR / CHARGING SYSTEM

DESCRIPTION	N·m	Ft. Lbs.	In. Lbs.
Generator Mounting Bolts - 5.7L	41	30	-
Generator Support Bracket Bolt/Nuts - 5.7L	41	30	-
Generator Vertical Mounting Bolt - 3.7L / 4.7L Engines	55	40	-
Generator (long) Horizontal Mounting Bolt - 3.7L / 4.7L Engines	55	40	-
Generator (short) Horizontal Mounting Bolt - 3.7L / 4.7L Engines	74	55	-
Generator B+ Output Cable Terminal Nut	14	10	125

DECOUPLER, Generator

Description

The generator decoupler is used only with certain engines. The decoupler is used in place of the standard generator drive pulley.

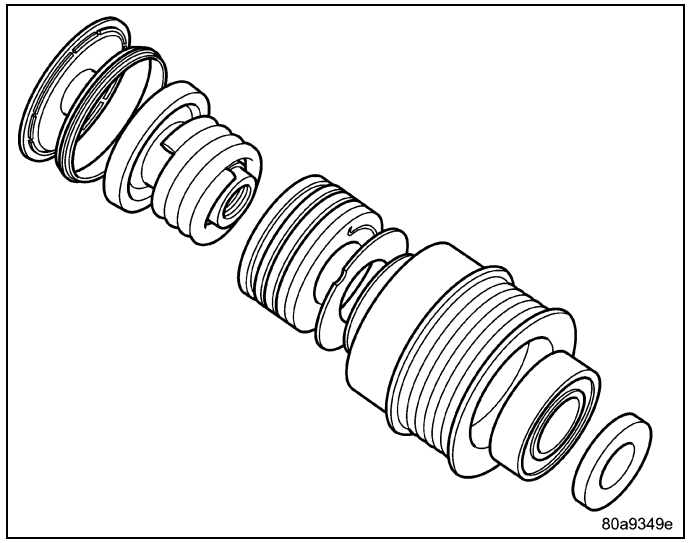

Operation

The generator decoupler is used only with certain engines. The decoupler is a one-way clutch designed to help reduce belt tension fluctuation, vibration, reduce fatigue loads, improve belt life, reduce hubloads on components, and reduce noise. Dry operation is used (no grease or lubricants). The decoupler is not temperature sensitive and also has a low sensitivity to electrical load. The decoupler is a non-serviceable item and is to be replaced as an assembly.

Diagnosis and Testing

CONDITION	POSSIBLE CAUSES	CORRECTION
Does not drive generator (generator not charging)	Internal failure	Replace decoupler
Noise coming from decoupler	Internal failure	Replace decoupler

Removal

The generator decoupler is used only with certain engines.

Two different type generator decoupler pulleys are used. One can be identified by the machined splines (3) .

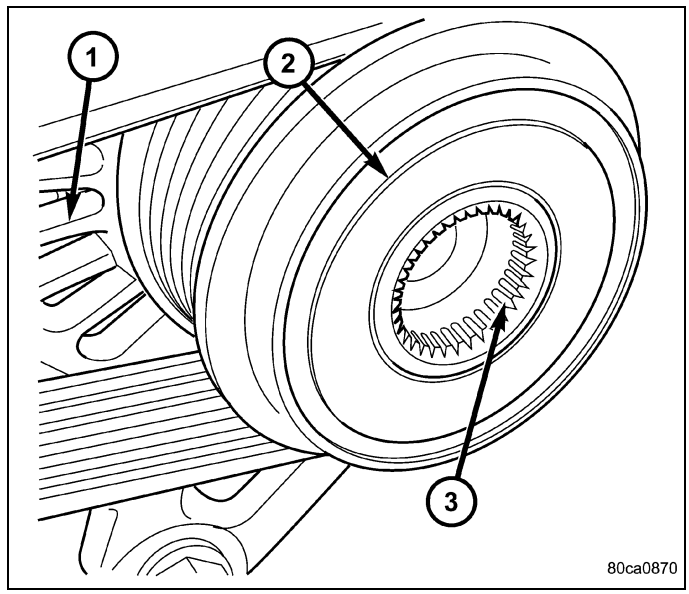

The other decoupler is equipped with a hex opening (2) and will not use splines.

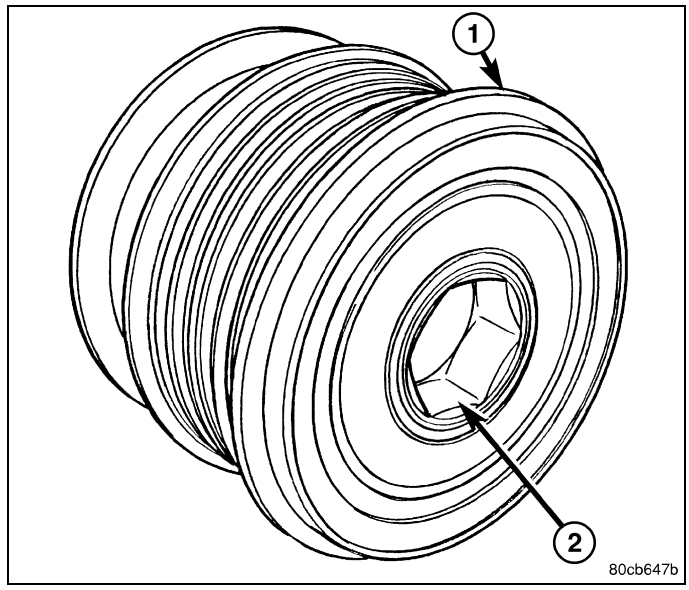

Different special tools are required to service each different decoupler. Refer to following procedure.

INA Decoupler

1. Disconnect the negative battery cable.
2. Remove the generator and accessory drive belt (Refer to 08 - Electrical/8F - Engine Systems/Charging/GENERATOR - Removal).

3. Position the Special Tool 8823 (VM.1048) (2) into the decoupler (1) .

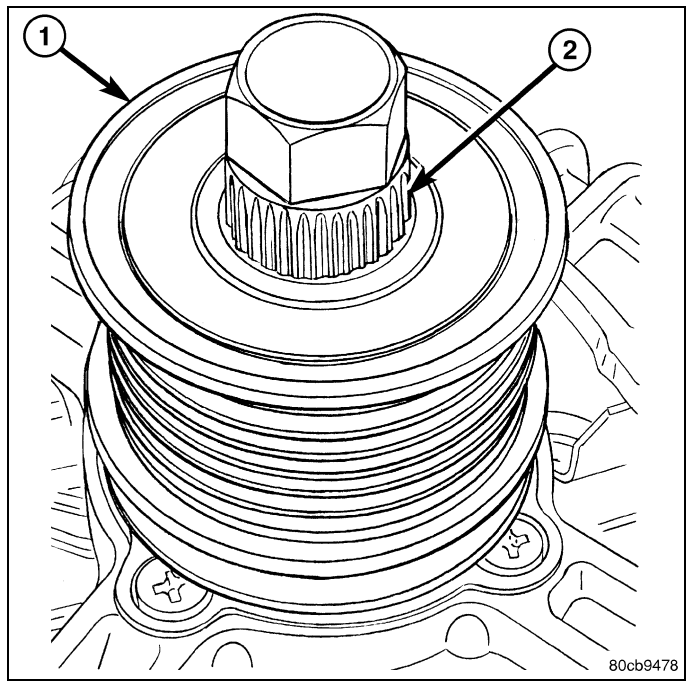

4. Determine if the end of generator shaft is hex shaped (2) .

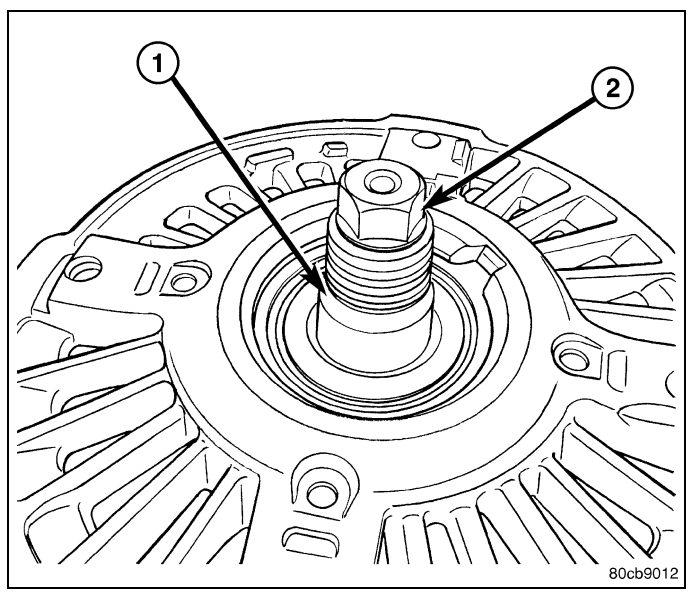

5. ...or is splined (2) .

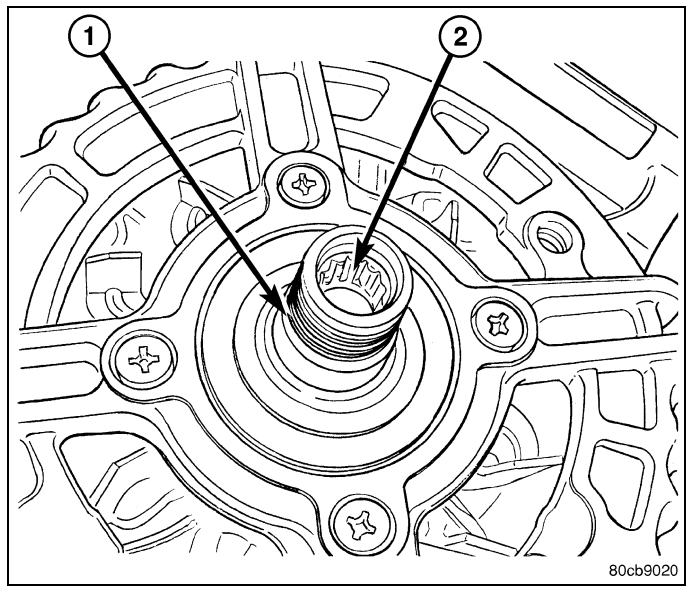

6. If the hex is used, insert a 10MM deep socket (1) into tool 8823 (VM.1048) .

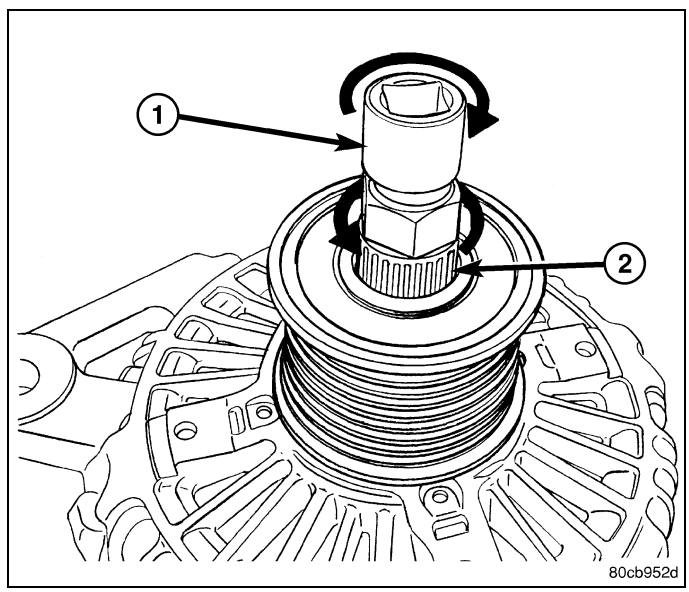

7. If splined, insert a 5/16” 6-point hex driver (1), or a 10MM 12-point triple square driver into tool 8823 (VM.1048) .

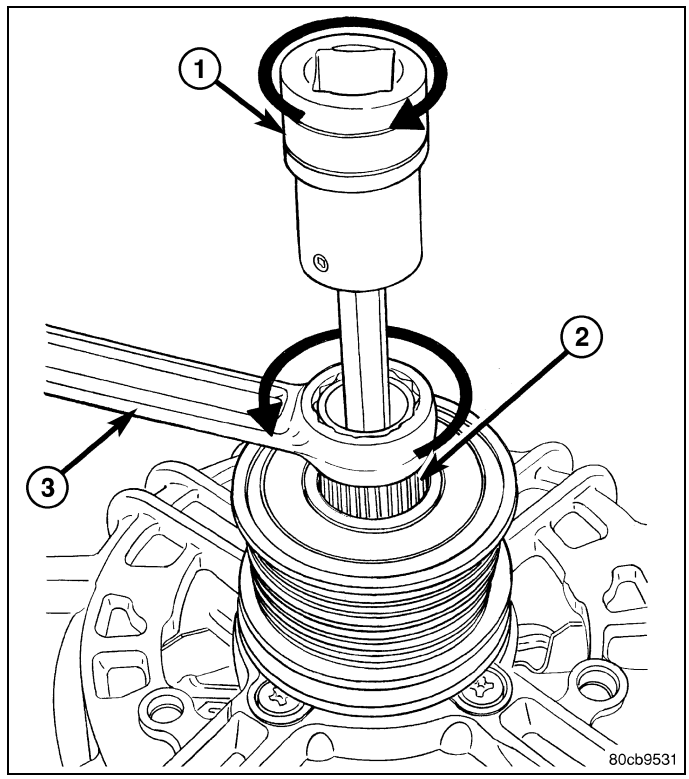

8. The generator shaft uses conventional right-hand threads to attach the decoupler. To break the decoupler loose from generator threads, rotate the end of tool (1) clockwise or..,

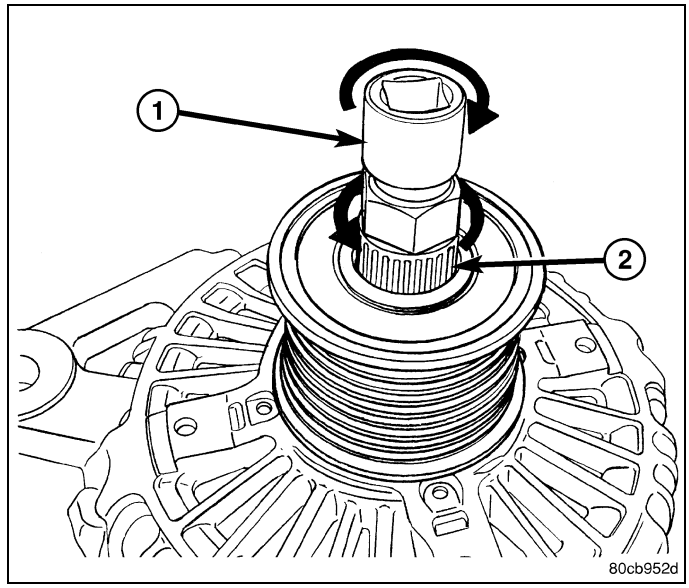

9. Rotate the end of tool (1) clockwise .
10. After breaking it loose with the tool, unthread decoupler by hand from the generator.

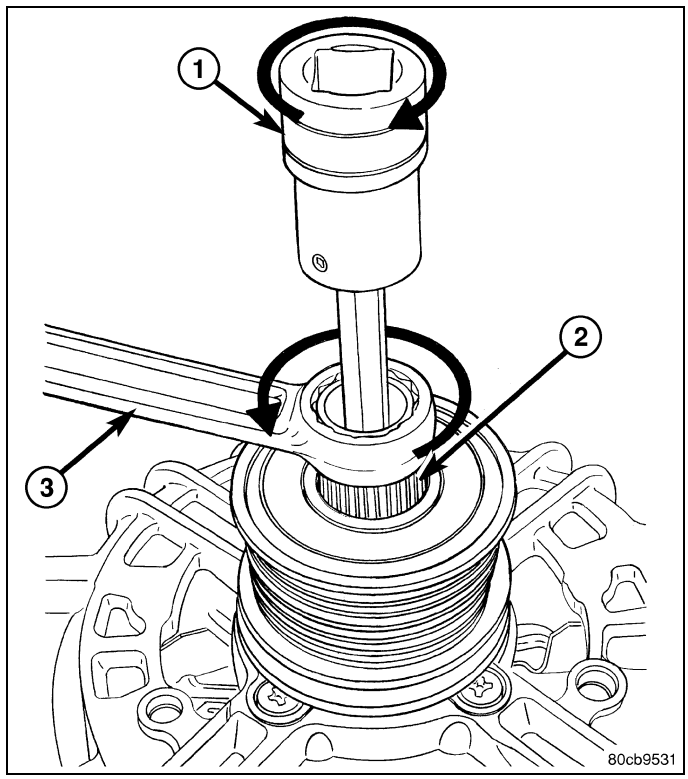

Litens Decoupler

1. Disconnect the negative battery cable.
2. Remove the generator and accessory drive belt (Refer to 08 - Electrical/8F - Engine Systems/Charging/GENERATOR - Removal).
3. Position the Special Tool 8433AA into the decoupler. Align to the hex end of the generator shaft.

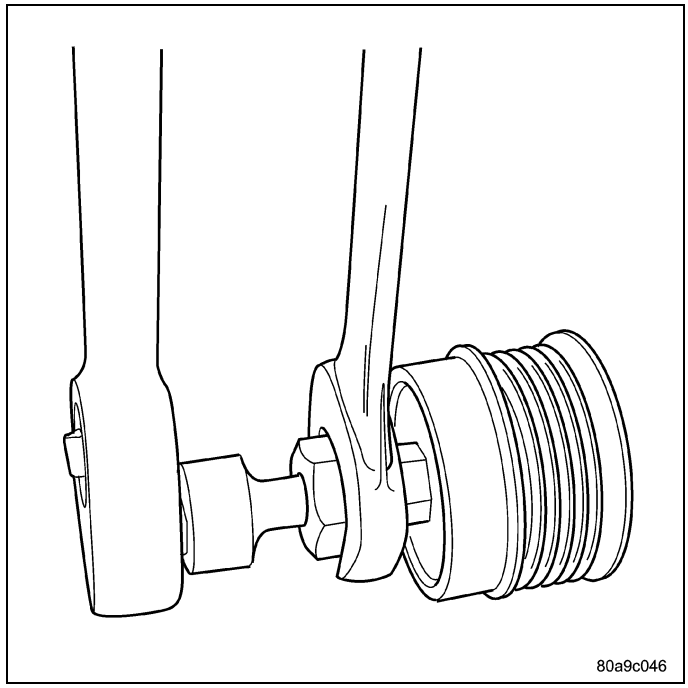

4. The generator shaft uses conventional right-hand threads to attach the decoupler. To break the decoupler loose from generator threads, rotate the end of tool clockwise .
5. After breaking loose the decoupler with the tool, unthread the decoupler by hand from the generator.

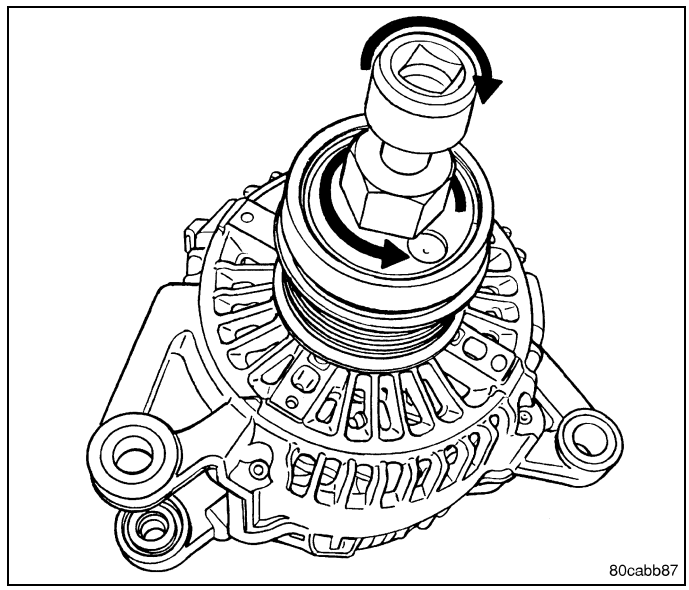

Installation

INA Decoupler

1. Thread the decoupler pulley onto the generator shaft by hand (right-hand threads).
2. Position the Special Tool 8823 (VM.1048) into the decoupler.
3. Determine if the end of generator shaft is hex shaped or is splined. If hex is used, insert a 10MM deep socket (1) into the tool 8823 (VM.1048) or....

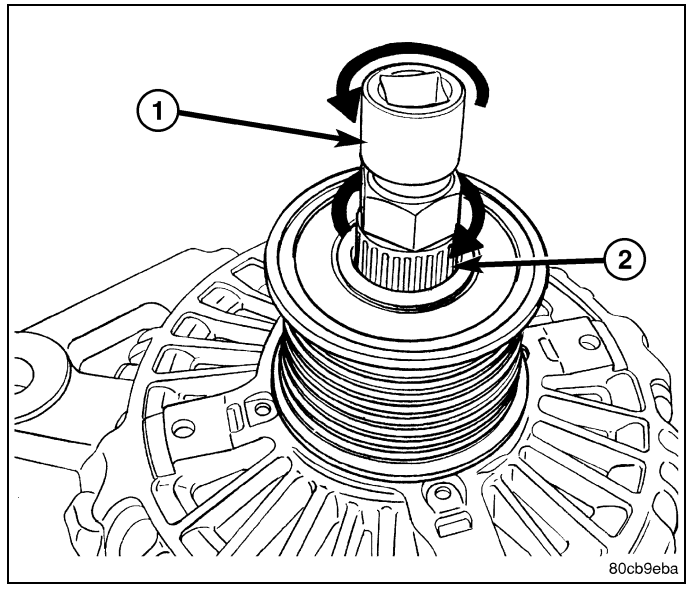

4. ...if splined, insert a 5/16” 6-point hex driver (1), or a 10MM 12-point triple square driver into tool 8823 (VM.1048) .
5. **Do not use an adjustable, ratcheting “click type” torque wrench. Most “click type” wrenches will only allow torque to be applied in a clockwise rotation. Use a dial-type or beam-type wrench.** Tighten in the counterclockwise rotation and tighten to 110 N·m (81 ft. lbs.).
6. Install the accessory drive belt and generator (Refer to 08 - Electrical/8F - Engine Systems/Charging/GENERATOR - Installation).
7. Connect the negative battery cable.

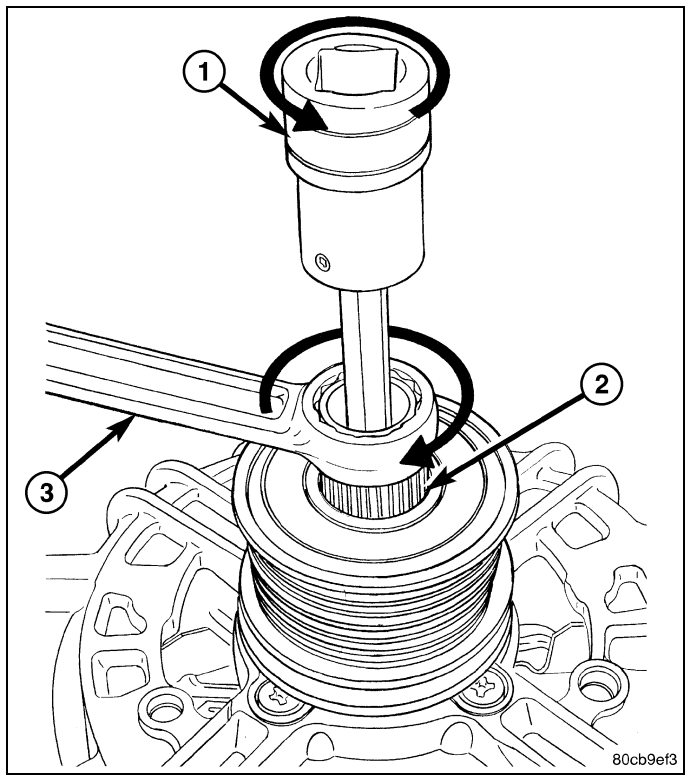

Litens Decoupler

1. Thread the decoupler pulley onto the generator shaft by hand (right-hand threads).
2. Position the Special Tool 8433A into decoupler. Align the tool to hex end of the generator shaft.
3. **Do not use an adjustable, ratcheting “click type” torque wrench. Most “click type” wrenches will only allow torque to be applied in a clockwise rotation. Use a dial-type or beam-type wrench.** Tighten in the counterclockwise rotation and tighten to 110 N·m (81 ft. lbs.).
4. Install the accessory drive belt, and generator (Refer to 08 - Electrical/8F - Engine Systems/Charging/GENERATOR - Installation).
5. Connect the negative battery cable.

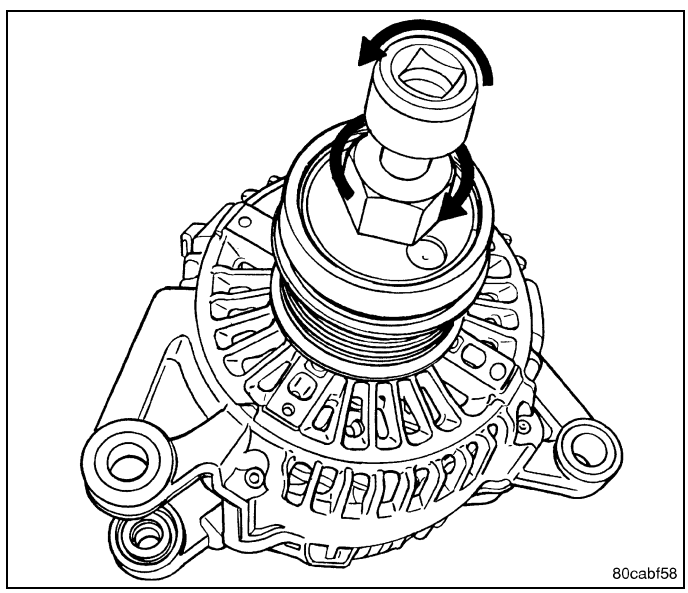

GENERATOR

Description

The generator is belt-driven by the engine using a serpentine type drive belt. It is serviced only as a complete assembly. If the generator fails for any reason, the entire assembly must be replaced.

Operation

As the energized rotor begins to rotate within the generator, the spinning magnetic field induces a current into the windings of the stator coil. Once the generator begins producing sufficient current, it also provides the current needed to energize the rotor.

The stator winding connections deliver the induced alternating current to 3 or 6 positive and 3 or 6 negative diodes for rectification. From the diodes, rectified direct current is delivered to the vehicle electrical system through the generator battery terminal.

Although the generators appear the same externally, different generators with different output ratings are used on this vehicle. Be certain that the replacement generator has the same output rating and part number as the original unit. Refer to Generator Ratings in the Specifications section at the back of this group for amperage ratings and part numbers.

Noise emitting from the generator may be caused by: worn, loose or defective bearings; a loose or defective drive pulley; incorrect, worn, damaged or misadjusted fan drive belt; loose mounting bolts; a misaligned drive pulley or a defective stator or diode.

Removal

3.7L / 4.7L

WARNING: Disconnect the negative cable from the battery before removing the battery output wire (B+ wire) from the generator. Failure to do so can result in injury or damage to the electrical system.

1. Disconnect the negative battery cable.
2. Remove the generator drive belt (Refer to 07 - Cooling/Accessory Drive/BELT, Serpentine - Removal).
3. Unsnap the plastic insulator cap from the B+ output terminal (3) .
4. Remove the B+ terminal mounting nut at the rear of generator (2) . Disconnect the terminal from the generator.
5. Disconnect the field wire connector at the rear of the generator (4) by pushing on the connector tab.

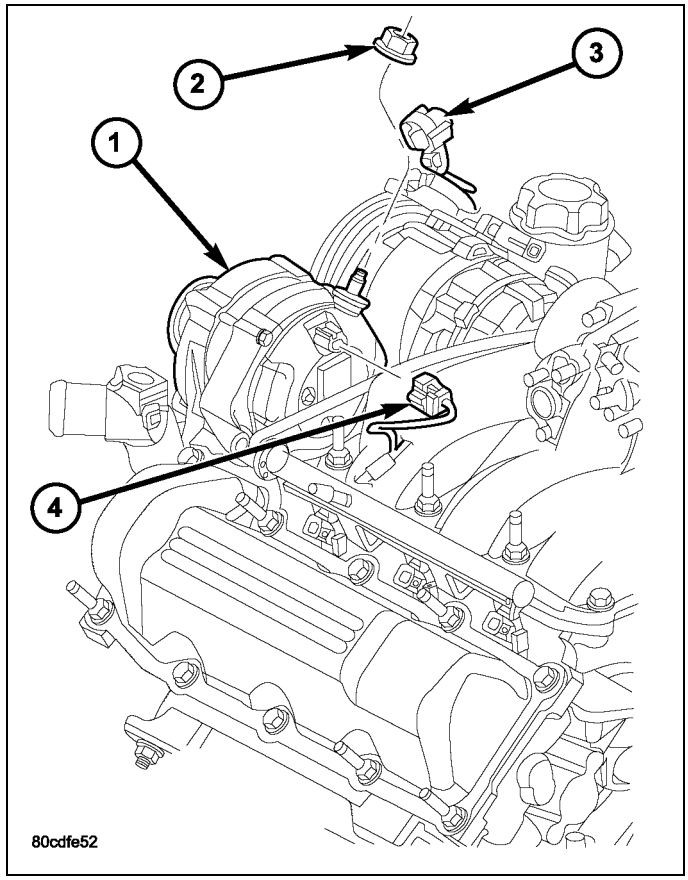

6. Remove the one rear vertical generator mounting bolt (2) .
7. Remove the two front horizontal generator mounting bolts (1) .
8. Remove the generator from vehicle.

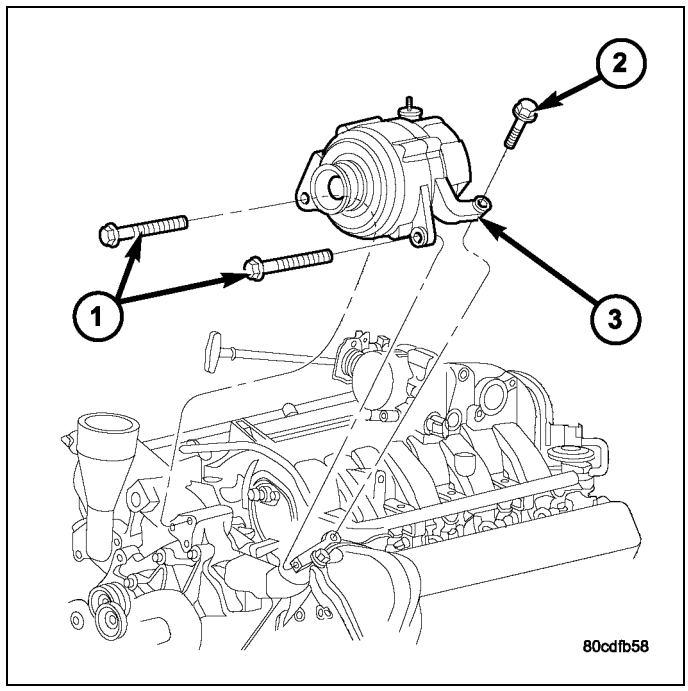

5.7L

WARNING: Disconnect the negative cable from the battery before removing the battery output wire (B+ wire) from the generator. Failure to do so can result in injury or damage to the electrical system.

1. Disconnect the negative battery cable.
2. Remove the generator drive belt (Refer to 07 - Cooling/Accessory Drive/BELT, Serpentine - Removal).
3. Unsnap the plastic insulator cap from the B+ output terminal.
4. Remove the B+ terminal mounting nut at the rear of the generator. Disconnect the terminal from the generator.
5. Disconnect the field wire connector at the rear of generator by pushing on the connector tab.
6. Remove the generator support bracket nuts (3) and bolt (4) and remove the support bracket.

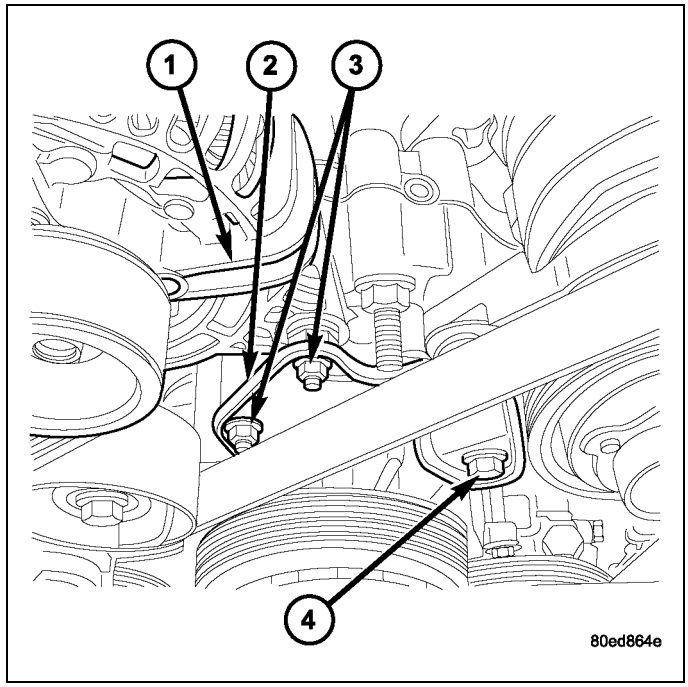

7. Remove the two generator mounting bolts (1) and (3) .
8. Remove the generator from the vehicle.

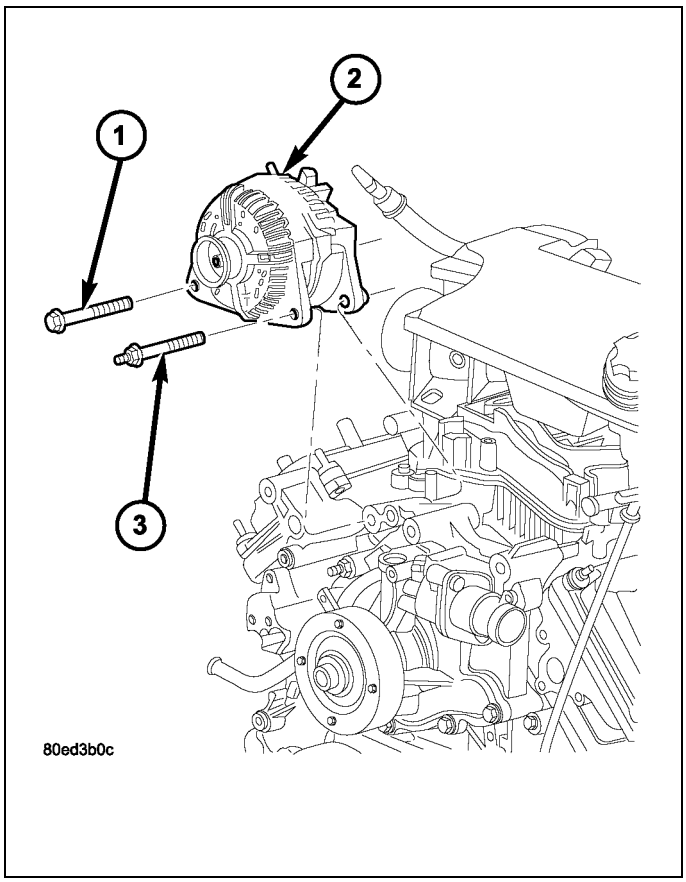

Installation

3.7L / 4.7L

1. Position the generator to the engine and install the two horizontal bolts and the one vertical bolt. Tighten all three bolts to 55 N·m (40 ft. lbs.).
2. Snap the field wire connector into the rear of the generator.
3. Install the B+ terminal eyelet to the generator output stud. Tighten to 12 N·m (8.8 ft. lbs.).

CAUTION: Never force a belt over a pulley rim using a screwdriver. The synthetic fiber of the belt can be damaged.

CAUTION: When installing a serpentine accessory drive belt, the belt must be routed correctly. The water pump may be rotating in the wrong direction if the belt is installed incorrectly, causing the engine to overheat. Refer to belt routing label in engine compartment, or Refer to the Belt Schematics in 7, Cooling System.

4. Install the accessory drive belt (Refer to 07 - Cooling/Accessory Drive/BELT, Serpentine - Installation).
5. Connect the negative battery cable.

5.7L

1. Position the generator to the engine and install the two mounting bolts. Tighten to 41 N·m (30 ft. lbs.).
2. Position the support bracket to the front of the generator and install the bolt and nuts. Tighten to 41 N·m (30 ft. lbs.).
3. Snap the field wire connector into the rear of the generator.
4. Install the B+ terminal eyelet to the generator output stud. Tighten mounting nut to 12 N·m (8.8 ft. lbs.).

CAUTION: Never force a belt over a pulley rim using a screwdriver. The synthetic fiber of the belt can be damaged.

CAUTION: When installing a serpentine accessory drive belt, the belt must be routed correctly. The water pump may be rotating in the wrong direction if the belt is installed incorrectly, causing the engine to overheat. Refer to belt routing label in engine compartment, or Refer to the Belt Schematics in 7, Cooling System.

5. Install the generator drive belt (Refer to 07 - Cooling/Accessory Drive/BELT, Serpentine - Installation).
6. Connect the negative battery cable.

REGULATOR, Voltage

Description

The Electronic Voltage Regulator (EVR) is not a separate component. It is actually a voltage regulating circuit located within the PCM (Powertrain Control Module). The EVR is not serviced separately. If replacement is necessary, the PCM must be replaced.

Operation

The amount of direct current produced by the generator is controlled by EVR circuitry contained within the PCM. This circuitry is connected in series with the generators second rotor field terminal and its ground.

Voltage is regulated by cycling the battery positive path to control the strength of the rotor magnetic field. The EVR circuitry monitors system line voltage (B+) and battery temperature (refer to Battery Temperature Sensor for more information). It then determines a target charging voltage. If sensed battery voltage is 0.5 volts or lower than the target voltage, the PCM grounds the field winding until sensed battery voltage is 0.5 volts above target voltage. A circuit in the PCM cycles the battery positive (high side) of the generator field up to 400 times per second (400Hz), but has the capability to ground the field control wire 100% of the time (full field) to achieve the target voltage. If the charging rate cannot be monitored (limp-in), a duty cycle of 25% is used by the PCM in order to have some generator output (Refer to 08 - Electrical/8F - Engine Systems/Charging - Operation) for additional information.

STARTING

TABLE OF CONTENTS

page

STARTING
- DESCRIPTION
  - STARTING SYSTEM 42
  - REMOTE STARTING SYSTEM. 42
- OPERATION
  - STARTING SYSTEM 42
  - REMOTE STARTING SYSTEM. 43
- DIAGNOSIS AND TESTING
  - REMOTE START SYSTEM 44
  - STARTING SYSTEM 44
- SPECIFICATIONS
  - STARTING SYSTEM 48
  - TORQUE 48

ANTENNA, REMOTE START
- DESCRIPTION. 49
- REMOVAL 50
- INSTALLATION 52

page

RELAY, STARTER
- DESCRIPTION. 53

STARTER
- DIAGNOSIS AND TESTING 53
- REMOVAL
  - 3.7L / 4.7L 54
  - 5.7L 56
- INSTALLATION
  - 3.7L / 4.7L 56
  - 5.7L 57

TIP START
- DESCRIPTION. 57
- OPERATION 57

Starting

Description

STARTING SYSTEM

The starting system consists of:

- Starter relay
- Starter motor (including an integral starter solenoid)

Other components to be considered as part of starting system are:

- Battery
- Battery cables
- Ignition switch and key lock cylinder
- Clutch pedal position switch (manual transmission)
- Park/neutral position switch (automatic transmission)
- Wire harnesses and connections
- TIP start function

The Battery, Starting, and Charging systems operate in conjunction with one another, and must be tested as a complete system. For correct operation of starting/charging systems, all components used in these 3 systems must perform within specifications. When attempting to diagnose any of these systems, it is important that you keep their interdependency in mind.

The diagnostic procedures used in each of these groups include the most basic conventional diagnostic methods, to the more sophisticated On-Board Diagnostics (OBD) built into the Powertrain Control Module (PCM). Use of an induction-type milliampere ammeter, volt/ohmmeter, battery charger, carbon pile rheostat (load tester), and 12-volt test lamp may be required.

Certain starting system components are monitored by the PCM and may produce a Diagnostic Trouble Code (DTC).

REMOTE STARTING SYSTEM

The Remote Starting System allows the vehicle to be started up to 300 feet (91 meters) away from the vehicle using the remote keyless entry key fob which is part of your ignition key. In order to remote start your vehicle, the hood, liftgate, and all of the doors must be closed. To remotely start your vehicle, press the “Remote Start” button twice within 5 seconds. To indicate that the vehicle is about to start, the parking lights will flash and the horn will sound briefly. Once the vehicle has started, the engine will run for 15 minutes. To cancel remote start, press the “Remote Start” button once. To enter the vehicle while the engine is running during a remote start, you must first unlock the vehicle using the “Unlock” button on the key fob. After the vehicle is unlocked, you have 60 seconds to enter the vehicle, insert the key into the ignition, and move it to the RUN position. Otherwise, the engine will cancel remote start and automatically turn off. Remote start will also cancel if any of the following occur:

- If the engine stalls or RPM exceeds 2500.
- Any engine warning lamps come on.
- The hood is opened.
- The hazard switch is pressed.
- The transmission is moved out of P (Park).
- The brake pedal is pressed.

The vehicle can be started remotely up to a maximum of two times. The vehicle is also allowed a maximum of one failed start. This can occur when the remote start sequence was initiated but cancelled before the engine begins to crank or the engine stopped cranking without starting. After either of these conditions, or if the Vehicle Theft Alarm is alarming, or if the PANIC button was pressed, the vehicle must be reset by inserting a valid key into the ignition and moving it to the RUN position, then back to LOCK.

Operation

STARTING SYSTEM

The starting system components form two separate circuits. A high-amperage feed circuit that feeds the starter motor between 150 and 350 amperes and a low-amperage control circuit that operates on less than 20 amperes. The high-amperage feed circuit components include the battery, the battery cables, the contact disc portion of the starter solenoid,

and the starter motor. The low-amperage control circuit components include the ignition switch, the clutch pedal position switch (manual transmission), the park/neutral position switch (automatic transmission), the starter relay, the electromagnetic windings of the starter solenoid, and the connecting wire harness components.

If the vehicle is equipped with a manual transmission, it has a clutch pedal position switch installed in series between the ignition switch and the coil battery terminal of the starter relay. This normally open switch prevents the starter relay from being energized when the ignition switch is turned to the Start position, unless the clutch pedal is depressed. This feature prevents starter motor operation while the clutch disc and the flywheel are engaged. The starter relay coil ground terminal is always grounded on vehicles with a manual transmission.

If the vehicle is equipped with an automatic transmission, battery voltage is supplied through the low-amperage control circuit to the coil battery terminal of the starter relay when the ignition switch is turned to the Start position. The park/neutral position switch is installed in series between the starter relay coil ground terminal and ground. This normally open switch prevents the starter relay from being energized and the starter motor from operating unless the automatic transmission gear selector is in the Neutral or Park positions.

When the starter relay coil is energized, the normally open relay contacts close. The relay contacts connect the relay common feed terminal to the relay normally open terminal. The closed relay contacts energize the starter solenoid coil windings.

The energized solenoid pull-in coil pulls in the solenoid plunger. The solenoid plunger pulls the shift lever in the starter motor. This engages the starter overrunning clutch and pinion gear with the starter ring gear.

As the solenoid plunger reaches the end of its travel, the solenoid contact disc completes the high-amperage starter feed circuit and energizes the solenoid plunger hold-in coil. Current now flows between the solenoid battery terminal and the starter motor, energizing the starter.

Once the engine starts, the overrunning clutch protects the starter motor from damage by allowing the starter pinion gear to spin faster than the pinion shaft. When the ignition switch is released to the On position, the starter relay coil is de-energized. This causes the relay contacts to open. When the relay contacts open, the starter solenoid plunger hold-in coil is de-energized.

When the solenoid plunger hold-in coil is de-energized, the solenoid plunger return spring returns the plunger to its relaxed position. This causes the contact disc to open the starter feed circuit, and the shift lever to disengage the overrunning clutch and pinion gear from the starter ring gear.

REMOTE STARTING SYSTEM

The remote starting system will allow the vehicle to be started from distances of up to approximately 300 feet away from the vehicle. It operates using the remote keyless entry key fob which is part of your ignition key.

In order to remote start your vehicle, the hood and all the doors must be closed.

To remote start your vehicle, press the REMOTE START button on the key fob twice within three seconds. To indicate that the vehicle is about to start, the parking lights will flash and the horn will sound briefly.

Once the vehicle has started, the engine will run for 15 minutes. To cancel remote start, press the REMOTE START button once.

The parking lamps will remain illuminated to indicate that the vehicle has remote started and the engine is running. The lamps will turn off when the ignition is turned to RUN or the remote start is cancelled.

To enter the vehicle while the engine is running during a remote start, you must first unlock the vehicle using the UNLOCK button on the key fob. After the vehicle is unlocked, you have 60 seconds to enter the vehicle, insert the key in the Ignition and move it to the RUN position, otherwise the engine will cancel remote start and automatically turn off.

Remote start will also cancel if any of the following occur:

- If the engine stalls or RPM exceeds 2500
- Any engine warning lamps come on
- The hood is opened
- The hazard switch is pressed
- The transmission is moved out of park
- The brake pedal is pressed.

The vehicle can be started remotely up to a maximum of two times. The vehicle is also allowed a maximum of one failed start. This is where the remote start sequence was initiated but the engine stopped cranking without starting. After either of these conditions, or if the Vehicle Theft Alarm is alarming, or if the PANIC button was pressed, the vehicle must be reset by inserting a valid key into the ignition and moving it to the RUN position, then back to LOCK.

Diagnosis and Testing

REMOTE START SYSTEM

Before attempting to diagnose a problem with the remote starting system, first be sure the starter motor and starter solenoid are working properly. The starter should operate with the use of the standard ignition key in the ignition switch. Any starter or solenoid problems must be repaired first.

Also be sure the engine will easily start and run with the use of the standard ignition key in the ignition switch. Any engine running, idling or driveability problems must be repaired first.

Also note that the remote start system will automatically be cancelled if any of the following occur:

- IF THE ENGINE STALLS OR RPM EXCEEDS 2500
- NORMAL TIME OUT RUN MODE (15 MINUTES)
- CUSTOMER MOVES IGNITION INTO RUN/START
- ANY VEHICLE DOOR AJAR
- TRUNK/LIFTGATE AJAR
- HOOD AJAR
- START COUNTER REACHED
- LOW RPM SHUTDOWN
- KEY IN IGNITION
- BRAKE PRESSED
- THE HAZARD SWITCH IS PRESSED
- NOT IN PARK OR NEUTRAL
- VEHICLE SPEED HIGH
- VTA ALARM TRIGGERED
- PANIC MODE ACTIVATED
- BATTERY VOLTAGE HIGH
- BATTERY VOLTAGE LOW
- LOSS OF BATTERY VOLTAGE
- MIL ON
- LOW OIL PRESSURE
- COOLANT TEMPERATURE HIGH
- CRANK NO START
- RKE OFF MESSAGE
- VEHICLE NOT CONFIGURED
- HOOD SWITCH NOT INSTALLED OR INOPERATIVE
- NO AUTOMATIC TRANSMISSION
- INVALID KEY
- IGNITION SNA
- IGNITION NOT IN LOCK
- VEHICLE IN SHIPPING MODE
- VEHICLE NOT PROGRAMMED

If all of the previous items checked OK, and the remote starting system will not operate (Refer to 29 - Non-DTC Diagnostics/Starting - Diagnosis and Testing).

STARTING SYSTEM

The battery, starting, and charging systems operate in conjunction with one another, and must be tested as a complete system. For correct starting/charging system operation, all of the components involved in these three systems must perform within specifications.

STARTING SYSTEM DIAGNOSIS

CONDITION	POSSIBLE CAUSE	CORRECTION
STARTER FAILS TO OPERATE	1. Battery discharged or inoperative	1. Charge and test battery (Refer to 08 - Electrical/8F - Engine Systems/Battery System - Diagnosis and Testing). Replace battery, if required.
	2. Starter motor or solenoid inoperative	2. Test the starter motor and solenoid (Refer to 08 - Electrical/8F - Engine Systems/Starting/STARTER - Diagnosis and Testing). Replace starter motor, if required.
	3. Starter relay inoperative	3. See Wiring Information. Test and replace the starter relay, if required
	4. Clutch pedal position switch inoperative (if equipped with manual transmission)	4. See Clutch Pedal Position Switch. Test and adjust or replace switch, if required.
	5. Park/Neutral position switch inoperative (if equipped with automatic transmission)	5. See Park/Neutral Position Switch. Test and adjust or replace switch, if required.
	6. Ignition switch inoperative	6. Test the Ignition Switch and Key Lock Cylinder. Replace ignition switch if required.
	7. Starting circuit wiring inoperative	7. See Wiring Information. Test and repair starter feed and/or control circuits, if required.
STARTER ENGAGES, BUT FAILS TO TURN ENGINE	1. Battery discharged or inoperative	1. Charge and test battery (Refer to 08 - Electrical/8F - Engine Systems/Battery System - Diagnosis and Testing). Replace battery if required.
	2. Starter motor or solenoid inoperative	2. Test the starter motor and solenoid (Refer to 08 - Electrical/8F - Engine Systems/Starting/STARTER - Diagnosis and Testing). Replace starter motor if required.
	3. Starting circuit wiring inoperative	3. See Wiring Information. Test and repair starter feed and/or control circuits, if required.
	4. Engine seized	4. See 9 - Engine. Test and repair engine as required.
STARTER ENGAGES, BUT THEN DISENGAGES BEFORE ENGINE STARTS	1. Starter motor or solenoid inoperative	1. Test the starter motor and solenoid (Refer to 08 - Electrical/8F - Engine Systems/Starting/STARTER - Diagnosis and Testing). Replace starter motor, if required.
	2. Starter ring gear damaged	2. Remove starter motor and inspect starter ring gear (Refer to 08 - Electrical/8F - Engine Systems/Starting/STARTER - Removal). Replace starter ring gear, if required.
STARTER DOES NOT DISENGAGE	1. Starter motor incorrectly installed or solenoid inoperative	1. Inspect and test the starter motor and solenoid (Refer to 08 - Electrical/8F - Engine Systems/Starting/STARTER - Diagnosis and Testing). Replace starter motor, if required.
	2. Starter relay inoperative	2. See Wiring Information. Test and replace the starter relay, if required.
	3. Ignition switch inoperative	3. Test the Ignition Switch and Key Lock Cylinder. Replace ignition switch, if required.

STARTING SYSTEM TESTING

COLD CRANKING TEST

NOTE: See Wiring Information for complete starter wiring circuit diagrams.

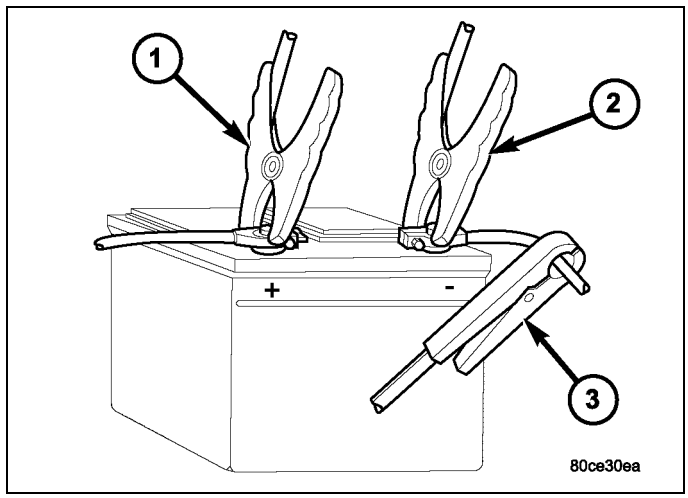

1. Fully charge and load-test the battery (Refer to 08 - Electrical/8F - Engine Systems/Battery System - Diagnosis and Testing).
2. Connect volt-ampere tester leads (1 and 2 to the battery terminals. Connect volt-ampere tester lead (3) around the positive battery cable. See instructions provided by manufacturer of volt-ampere tester being used.
3. Place transmission in Park or Neutral with the parking brake set (depending on transmission application).
4. If equipped with manual transmission, block clutch pedal in fully depressed position.
5. Verify that all lamps and accessories are turned off.
6. To prevent a gasoline engine from starting, remove Automatic ShutDown (ASD) relay. To prevent a diesel engine from starting, remove Fuel Pump Relay. See Wiring Information for relay locations.

WARNING: Attempt to start engine a few times before proceeding with following step.

NOTE: A cold engine will increase starter current (amperage) draw reading, and reduce battery voltage reading.

7. Rotate and hold ignition switch in Start position. Note cranking voltage and current (amperage) draw readings shown on volt-ampere tester.
   a. If voltage reads below 9.6 volts, see starter motor diagnosis and testing (Refer to 08 - Electrical/8F - Engine Systems/Starting/STARTER - Diagnosis and Testing). If starter motor is OK, see 9 - Engine for further diagnosis and testing of the engine. If starter motor is not OK, replace the starter motor (Refer to 08 - Electrical/8F - Engine Systems/Starting/STARTER - Removal).
   b. See Feed Circuit Test if voltage reads above 9.6 volts and current (amperage) draw reads below specifications.
   c. See Feed Circuit Test if voltage reads 12.5 volts or greater and starter motor does not turn or turns very slowly.

FEED CIRCUIT TEST

NOTE: See Wiring Information for complete starter wiring circuit diagrams.

The starter feed circuit test (voltage drop method) will determine if there is excessive resistance in high-amperage feed circuit.

When performing these tests, it is important to remember that voltage drop is giving an indication of resistance between two points at which voltmeter probes are attached.

Example: When testing resistance of positive battery cable, touch voltmeter leads to positive battery cable clamp and cable connector at starter solenoid. If you probe positive battery terminal post and cable connector at starter solenoid, you are reading combined voltage drop in positive battery cable clamp-to-terminal post connection and positive battery cable.

The following procedure requires a voltmeter accurate to 1/10 (0.10) volt. Before proceeding, be certain that the following are accomplished:

- Fully charge and load-test the battery (Refer to 08 - Electrical/8F - Engine Systems/Battery System - Diagnosis and Testing).
- Place transmission in Park or Neutral with the parking brake set (depending on transmission application).
- If equipped with manual transmission, block clutch pedal in fully depressed position.
- Verify that all lamps and accessories are turned off.
- To prevent a gasoline engine from starting, remove Automatic ShutDown (ASD) relay. See Wiring Information for relay locations.

1. Connect positive lead of voltmeter (1) to negative battery cable terminal post. Connect negative lead of voltmeter to negative battery cable clamp. Rotate and hold ignition switch in Start position. Observe voltmeter. If voltage is detected, correct poor contact between cable clamp and terminal post.

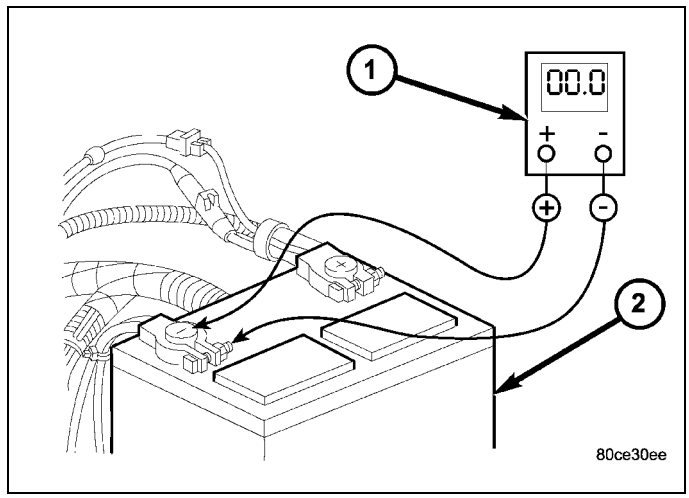

2. Connect positive lead of voltmeter to positive battery terminal post. Connect negative lead of voltmeter to battery positive cable clamp. Rotate and hold ignition switch in Start position. Observe voltmeter. If voltage is detected, correct poor contact between cable clamp and terminal post.

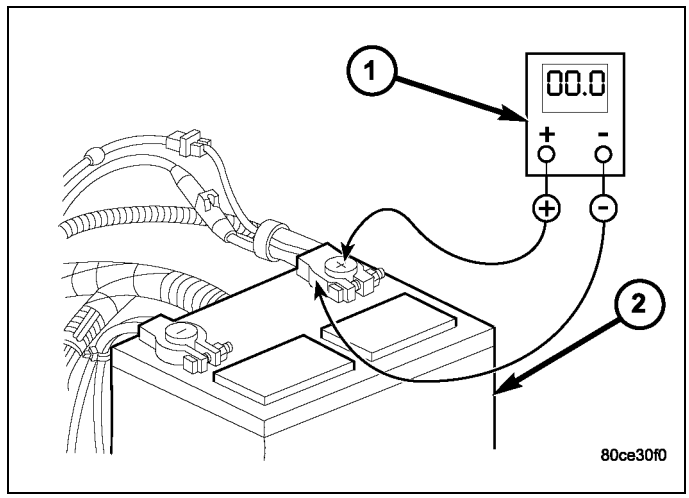

3. Connect voltmeter (2) to measure between positive terminal post on battery (1) and the battery terminal stud on the starter solenoid (3). Rotate and hold ignition switch in Start position. Observe voltmeter. If reading is above 0.2 volt, clean and tighten battery cable connection at solenoid and repeat test. If reading is still above 0.2 volt, replace the positive battery cable.

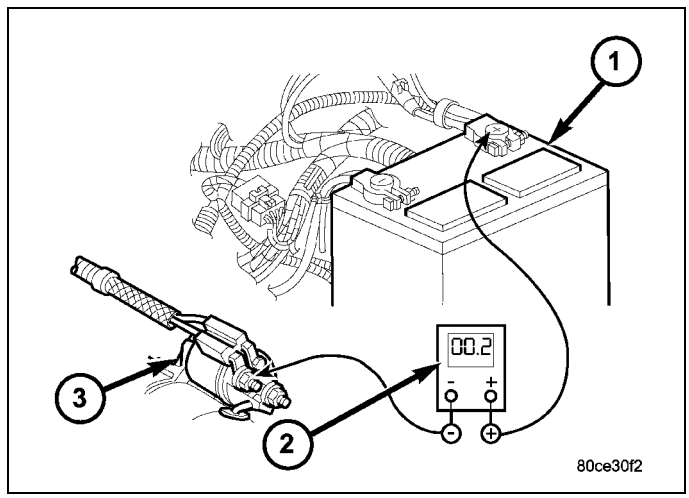

4. Connect voltmeter (1) to measure between negative terminal post on battery (2) and a good clean ground on engine block (3). Rotate and hold ignition switch in Start position. Observe voltmeter. If reading is above 0.2 volt, clean and tighten negative battery cable attachment on engine block and repeat test. If reading is still above 0.2 volt, replace the negative battery cable.

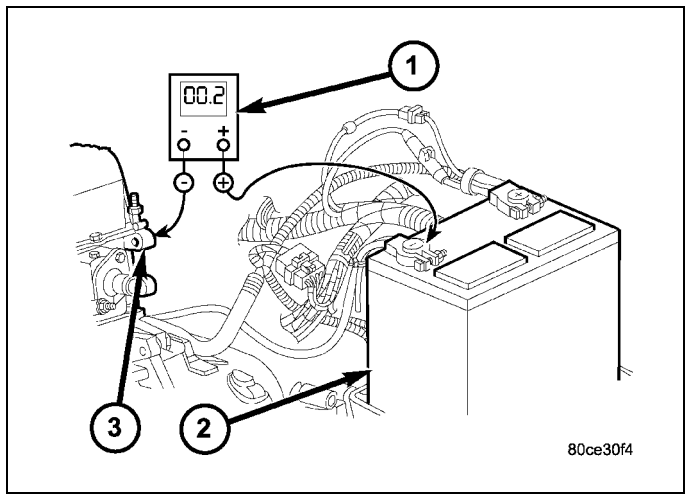

NOTE: Certain diesel equipped models use dual batteries. If equipped with dual battery system, this procedure must be performed twice, once for each battery.

5. Connect positive lead of voltmeter (3) to starter housing (1). Connect negative lead of voltmeter to negative terminal post on battery (2). Rotate and hold ignition switch in Start position. Observe voltmeter. If reading is above 0.2 volt, correct poor starter to engine block ground contact.
6. If equipped with dual battery system (certain diesel equipped models), connect positive lead of voltmeter to positive battery cable clamp on battery located on left side of vehicle. Connect negative lead of voltmeter to positive battery terminal post on battery located on right side of vehicle. Rotate and hold ignition switch in Start position. Observe voltmeter. If reading is above 0.2 volt, clean and tighten battery cables at both batteries and repeat test. If reading is still above 0.2 volt, replace positive battery cable.

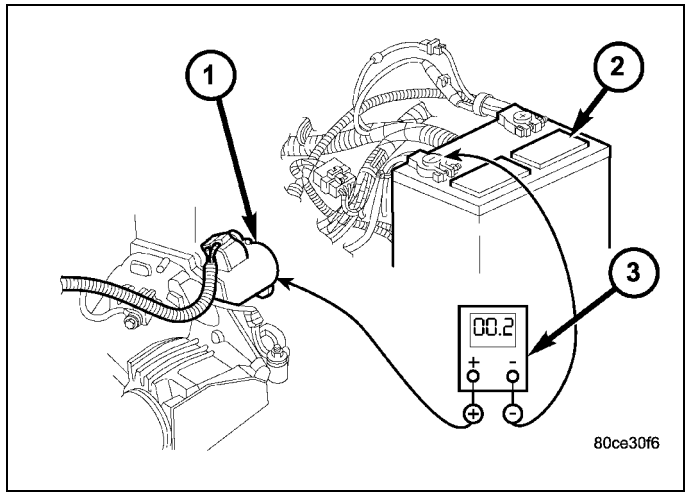

7. If resistance tests detect no feed circuit problems, inspect and test the starter motor and solenoid (Refer to 08 - Electrical/8F - Engine Systems/Starting/STARTER - Diagnosis and Testing).

Specifications

STARTING SYSTEM

Starter Motor		
Engine Application	3.7L / 4.7L Gas Powered	5.7L Gas Powered
Power Rating	1.2 Kilowatt	1.4 Kilowatt / 1.9 Horsepower
* Cranking Amperage Draw Test	100 - 200 Amperes	125 - 250 Amperes
* Test at operating temperature. Cold engine, tight (new) engine, or heavy oil will increase starter amperage draw.		

TORQUE

DESCRIPTION	N·m	Ft. Lbs.	In. Lbs.
Battery Cable Eyelet Nut at Solenoid	14	10	124

DESCRIPTION	N·m	Ft. Lbs.	In. Lbs.
Starter Mounting Bolts - Gas Engines	68	50	-
Starter Mounting Nut - Gas Engines	68	50	-

ANTENNA, Remote Start

Description

The Remote Start Antenna Module Assembly consists of an electrical connection (1) to the Wireless Ignition Node, a length of coax cable (2), two mounting clips (3) and (4), and a antenna (5).

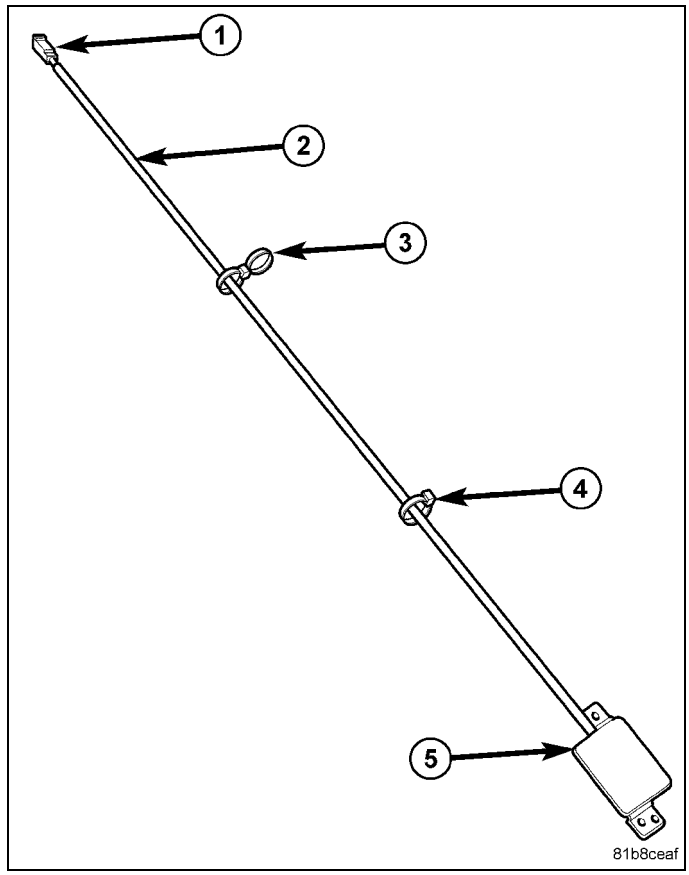

Removal

1. Disconnect the negative battery cable.
2. Gain access to the Wireless Ignition Node (WIN) (Refer to 08 - Electrical/8E - Electronic Control Modules/ RECEIVER, Wireless Ignition Node - Removal).
3. Disconnect the antenna from the WIN module.

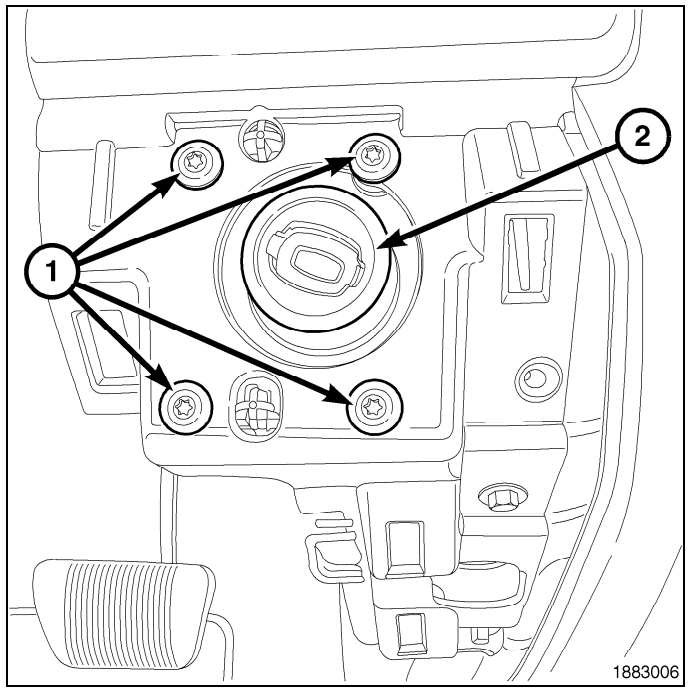

4. Remove the glove box (Refer to 23 - Body/Instrument Panel/GLOVE BOX, Instrument Panel - Removal).

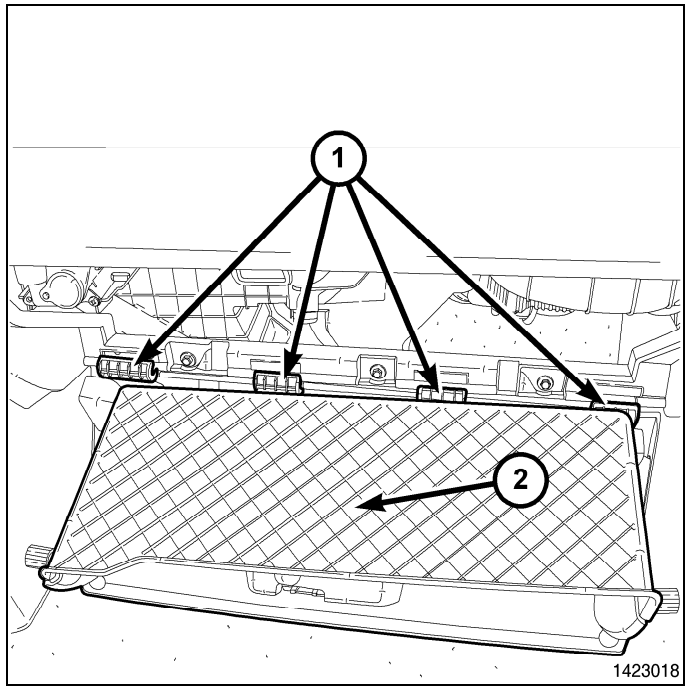

5. Remove the instrument panel storage bin (Refer to 23 - Body/Instrument Panel/BIN, Instrument Panel - Removal).
6. Remove the radio (Refer to 08 - Electrical/8A - Audio and Video/RADIO - Removal).

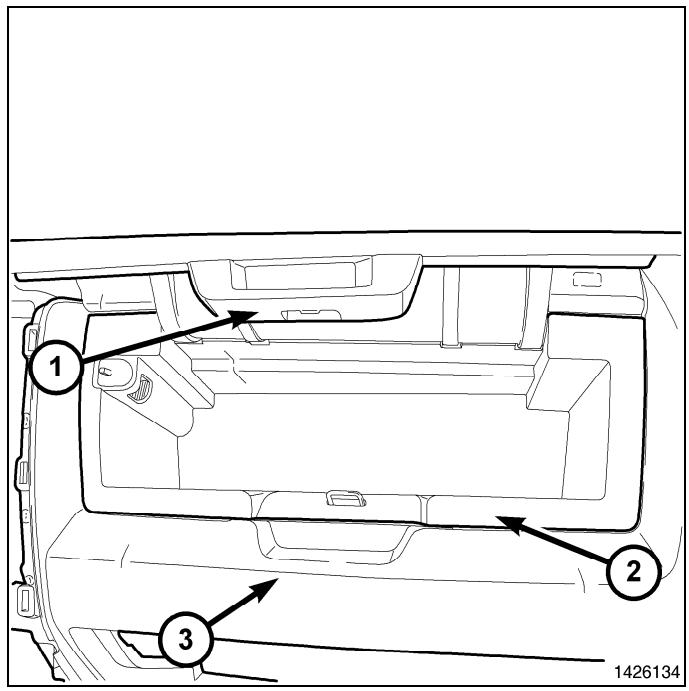

NOTE: The WIN antenna is located behind the left side of the storage bin.

7. Unclip the antenna from the base.
8. Remove any push pin and pull antenna out of the vehicle.

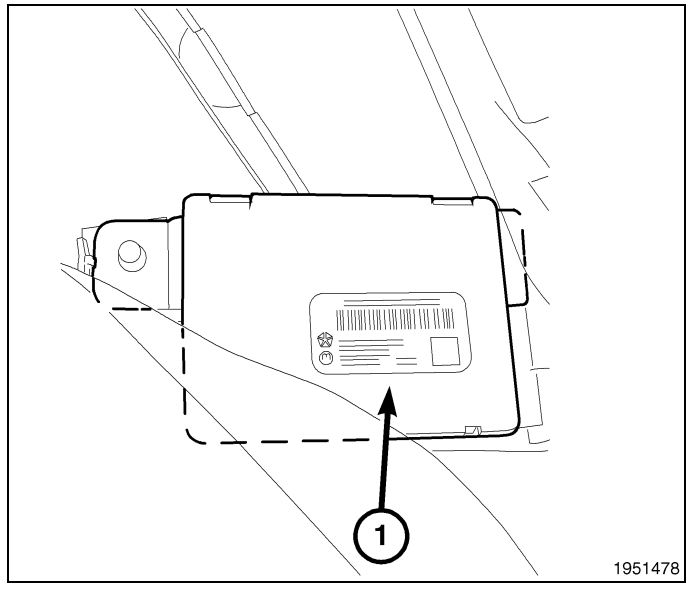

Installation

NOTE: The WIN antenna is located behind the left side of the storage bin.

1. Route the antenna wire behind the radio toward the drives side of the vehicle.
2. Insert the right side of the Wireless Ignition Node (WIN) antenna module first, then push firmly on the right side to engage holding clip.

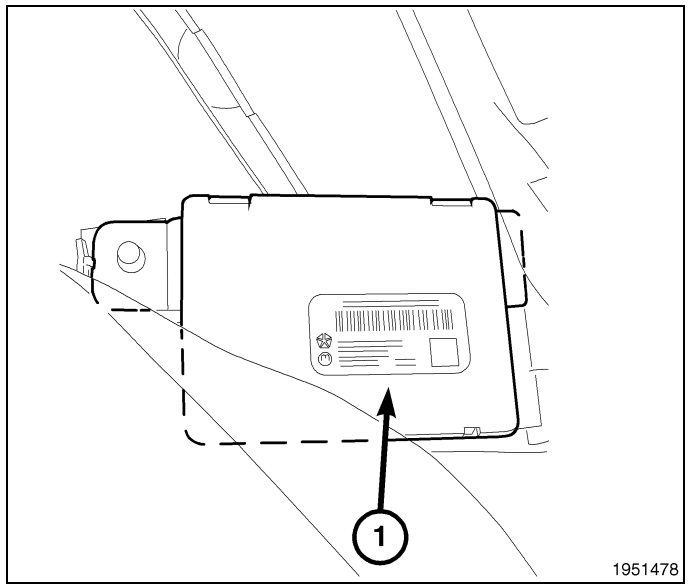

NOTE: The WIN antenna is located behind the left side of the storage bin.

3. Install the instrument panel storage bin (Refer to 23 - Body/Instrument Panel/BIN, Instrument Panel - Installation).

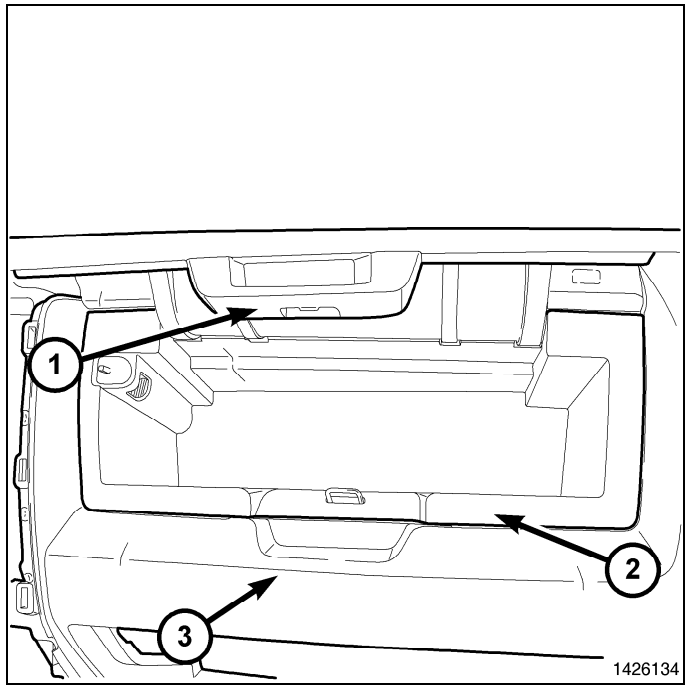

4. Install the glove box (Refer to 23 - Body/Instrument Panel/GLOVE BOX, Instrument Panel - Installation).
5. Install the radio (Refer to 08 - Electrical/8A - Audio and Video/RADIO - Installation).

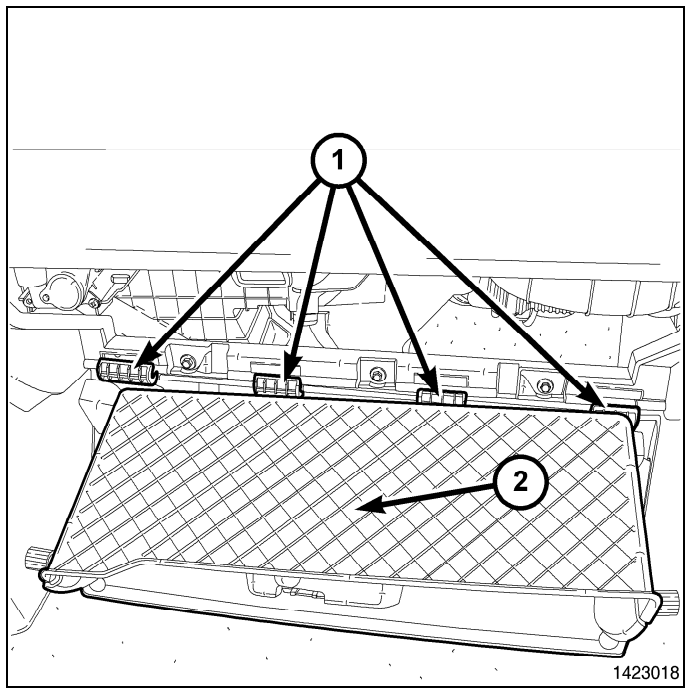

6. Connect the antenna to the WIN module.
7. Install the Wireless Ignition Node (WIN) (Refer to 08 - Electrical/8E - Electronic Control Modules/RECEIVER, Wireless Ignition Node - Installation).
8. Disconnect the negative battery cable.

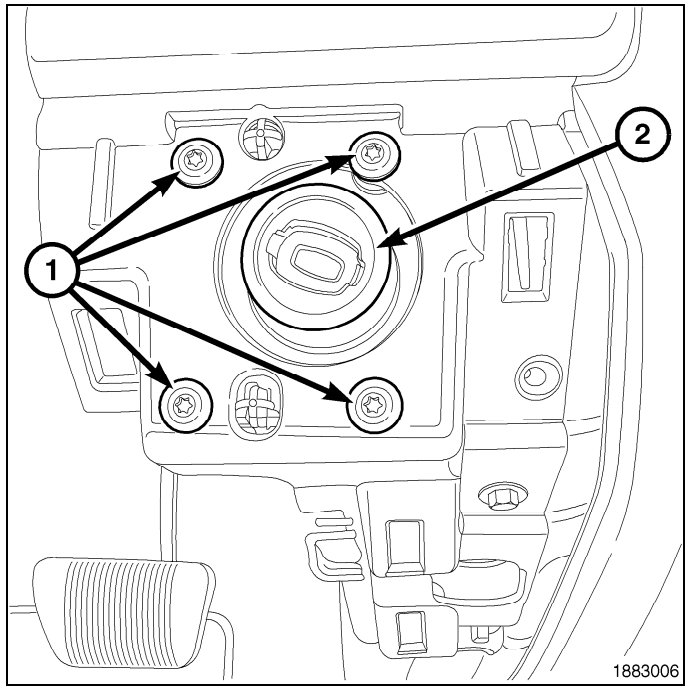

RELAY, Starter

Description

The starter relay is located within the Totally Integrated Power Module (TIPM) and is not serviceable.

STARTER

Diagnosis and Testing

NOTE: This test can only be performed with starter motor removed from vehicle.

Correct starter motor operation can be confirmed by performing the following free running bench test. Refer to Specifications for starter motor specifications.

1. Remove starter motor from vehicle. Refer to Starter Motor Removal and Installation.
2. Mount starter motor securely in a soft-jawed bench vise. The vise jaws should be clamped on the mounting flange of starter motor. Never clamp on starter motor by field frame.
3. Connect a suitable volt-ampere tester and a 12-volt battery to starter motor in series, and set ammeter to 100 ampere scale. See instructions provided by manufacturer of volt-ampere tester being used.
4. Install jumper wire from solenoid terminal to solenoid battery terminal. The starter motor should operate. If starter motor fails to operate, replace faulty starter motor assembly.
5. Adjust carbon pile load of tester to obtain free running test voltage. Refer to Specifications for starter motor free running test voltage specifications.
6. Note reading on ammeter and compare reading to free running test maximum amperage draw. Refer to Specifications for starter motor free running test maximum amperage draw specifications.
7. If ammeter reading exceeds maximum amperage draw specification, replace faulty starter motor assembly.

STARTER SOLENOID

NOTE: Certain vehicles with certain engines may require starter motor removal for the following test.

1. If necessary, remove starter motor from vehicle. Refer to Starter Motor Removal and Installation.
2. Disconnect solenoid connector wiring from starter motor.
3. Check for continuity between solenoid terminal (2) and solenoid case (3). There should be continuity. If not OK, replace faulty starter motor assembly.

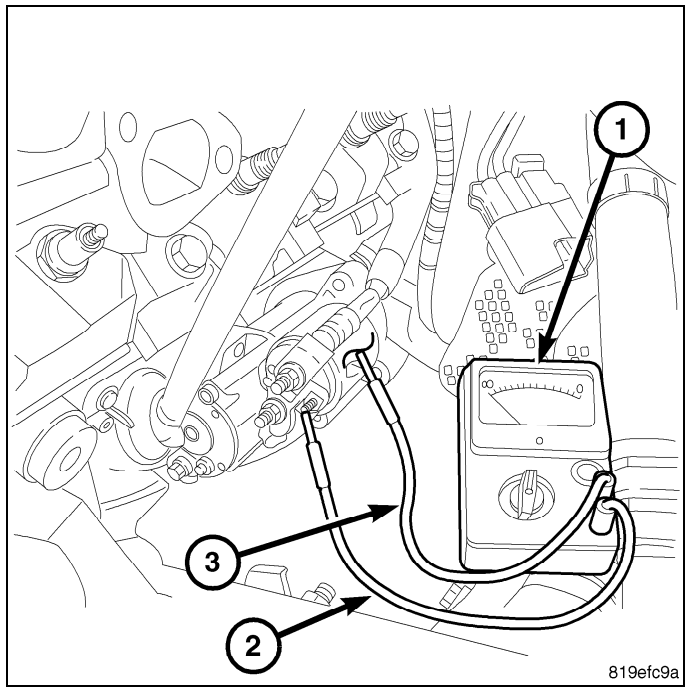

Removal

3.7L / 4.7L

1. Disconnect and isolate the negative battery cable.
2. Raise and support the vehicle.
3. Note: If equipped with 4WD and certain transmissions, a support bracket is used between front axle and side of transmission. Remove two support bracket bolts at the transmission. Pry the support bracket slightly to gain access to the lower starter mounting bolt.

4. Remove the one bolt and one nut if equipped with a manual transmission .

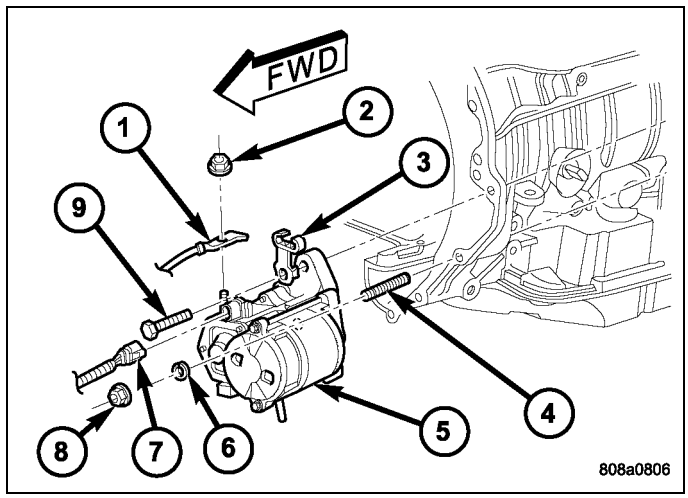

5. Remove the two bolts if equipped with an automatic transmission .

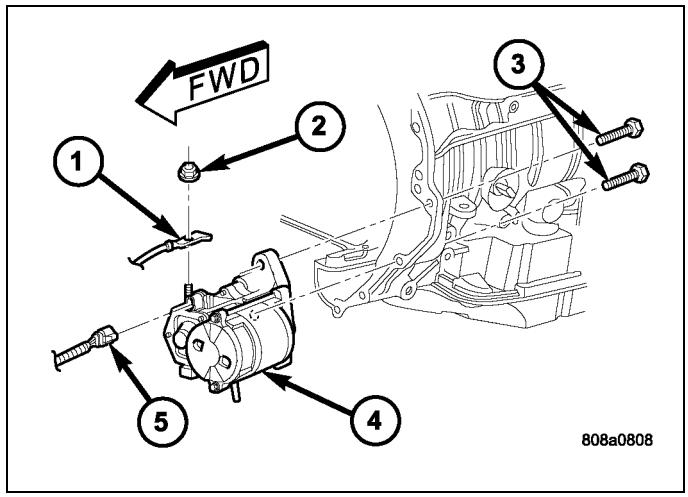

6. Move the starter motor towards the front of vehicle far enough for the nose of the starter pinion housing to clear the housing. Always support the starter motor during this process, do not let the starter motor hang from the wire harness.
7. Tilt the nose downwards and lower the starter motor far enough to access and remove the nut that secures the battery positive cable connector eyelet to the solenoid battery terminal stud. Do not let the starter motor hang from the wire harness.
8. Remove the battery positive cable connector eyelet from the solenoid battery terminal stud.
9. Disconnect the battery positive cable connector from the solenoid terminal connector receptacle.
10. Remove the starter motor.

5.7L

1. Disconnect and isolate the negative battery cable.
2. Raise and support the vehicle.
3. Note: If equipped with 4WD and certain transmissions, a support bracket is used between front axle and side of transmission. Remove 2 support bracket bolts at transmission. Pry support bracket slightly to gain access to lower starter mounting bolt.
4. Remove the two mounting bolts (2).
5. Move the starter motor towards front of vehicle far enough for the nose of the starter pinion housing to clear the housing. Always support the starter motor during this process, do not let the starter motor hang from wire harness.
6. Tilt nose the downwards and lower starter motor far enough to access and remove the nut that secures the battery positive cable wire harness connector to the solenoid battery terminal stud . Do not let the starter motor hang from the wire harness.
7. Remove the battery positive cable wire harness connector eyelet (3) from the solenoid battery terminal stud.
8. Disconnect the battery positive cable wire harness connector from the solenoid terminal connector receptacle.
9. Remove the starter motor.

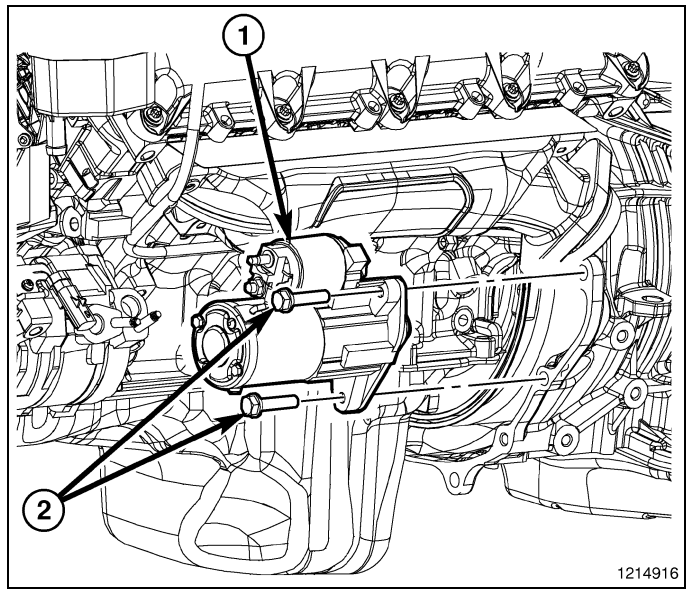

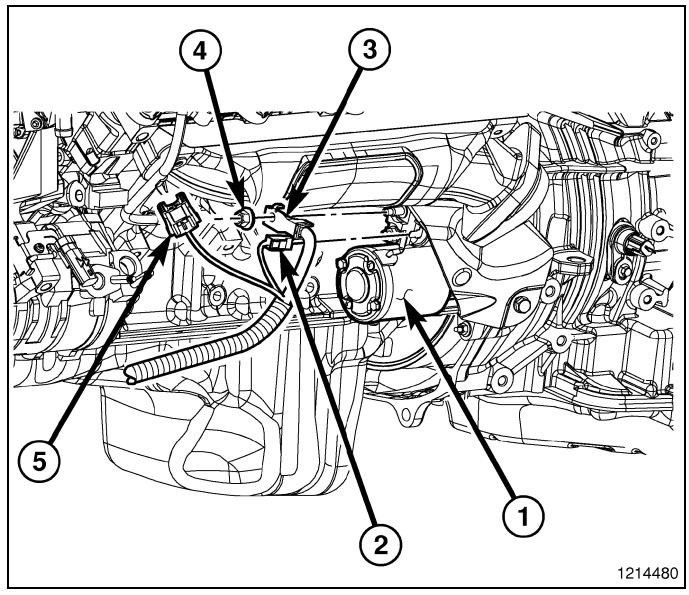

Installation

3.7L / 4.7L

1. Connect the solenoid wire to the starter motor (snaps on).
2. Position the battery cable to the solenoid stud. Install and tighten the battery cable eyelet nut to 13 N·m (10 ft. lbs.). Do not allow the starter motor to hang from the wire harness.
3. Position the starter motor to the transmission.
4. If equipped with a automatic transmission, slide the cooler tube bracket into position.
5. Install and tighten both bolts (auto. trans.), or one nut and one bolt (man. trans.) to 50 ft. lbs. (68 N·m).
6. Lower the vehicle.
7. Connect the negative battery cable.

5.7L

1. Connect the solenoid wire to starter motor (snaps on).
2. Position the battery cable to the solenoid stud. Install and tighten the battery cable eyelet nut to 13 N·m (10 ft. lbs.). Do not allow the starter motor to hang from the wire harness.

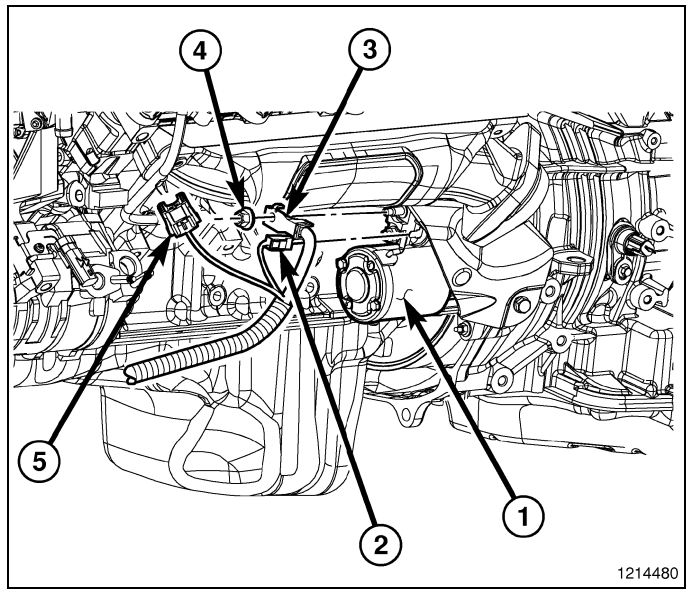

3. Position the starter motor to engine.
4. If equipped with automatic transmission, slide the cooler tube bracket into position.
5. Install and tighten both mounting bolts. Tighten to 68 N·m (50 ft. lbs.).
6. Lower the vehicle.
7. Connect the negative battery cable.

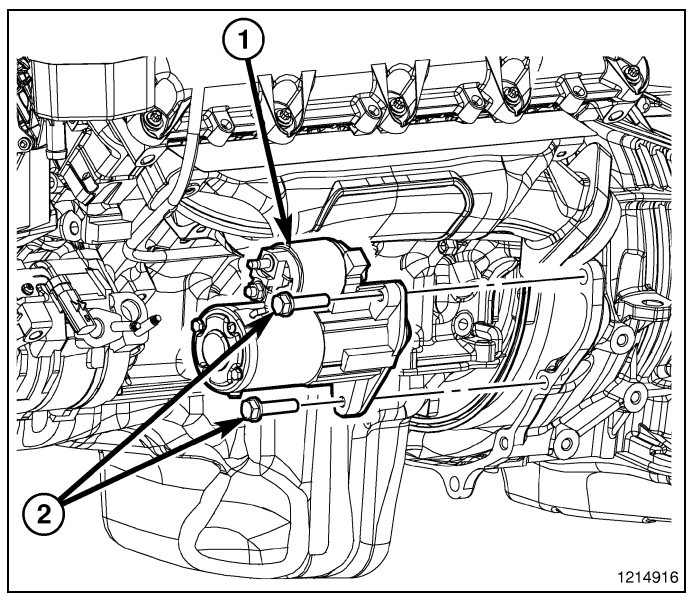

TIP START

Description

TIP Start system prevents double starts and preserves battery, ignition and gear life

Operation

Do not press the accelerator. Use the Fob with Integrated Key to briefly turn the ignition switch to the START position and release it as soon as the starter engages. The starter motor will continue to run, and it will disengage automatically when the engine is running. If the engine fails to start, the starter will disengage automatically in 10 seconds. If this occurs, turn the ignition switch to the LOCK position, wait 10 to 15 seconds, then repeat the normal starting procedure.

HEATED GLASS

TABLE OF CONTENTS

page

HEATED GLASS
- DESCRIPTION 2
- OPERATION 2
- DIAGNOSIS AND TESTING 3

GRID, DEFOGGER, REAR
- STANDARD PROCEDURE 3

page

SWITCH, DEFOGGER, REAR
- DESCRIPTION 4
- OPERATION 5

Heated Glass

Description

CAUTION: Grid lines can be damaged or scraped off with sharp instruments. Care should be taken when cleaning or removing foreign materials, decals or stickers from the rear glass. Normal glass cleaning solvents or hot water used with soft toweling is recommended.

The optional rear window defogger system, also known as electric backlight (EBL), consists of two vertical bus bars (1) linked by a series of grid lines (2) fired onto the inside surface of the rear window (3).

The EBL system is turned on or off by a switch located in the A/C-heater control at the center of the instrument panel.

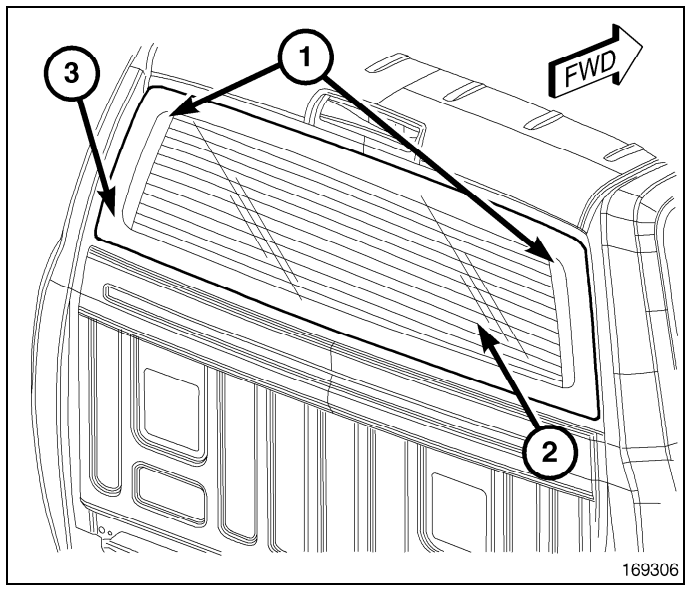

Operation

NOTE: ATC control shown. MTC control similar.

When equipped, the electric backlight (EBL) system is controlled by a momentary switch (2) located in the A/C-heater control (1) in the instrument panel. When the rear window defogger switch is pressed to ON with the ignition switch in RUN, the switch sends a request signal over the CAN Bus to the totally integrated power module (TIPM) to energize the internal EBL high side driver. When energized, the EBL high side driver provides battery current to the rear window defogger grid lines and/or the heated side view mirrors, as equipped. The grid lines heat the glass to help clear the rear window and side mirror surfaces of fog or frost.

An amber indicator (3) in the rear window defogger switch will illuminate to indicate when the EBL system is turned on.

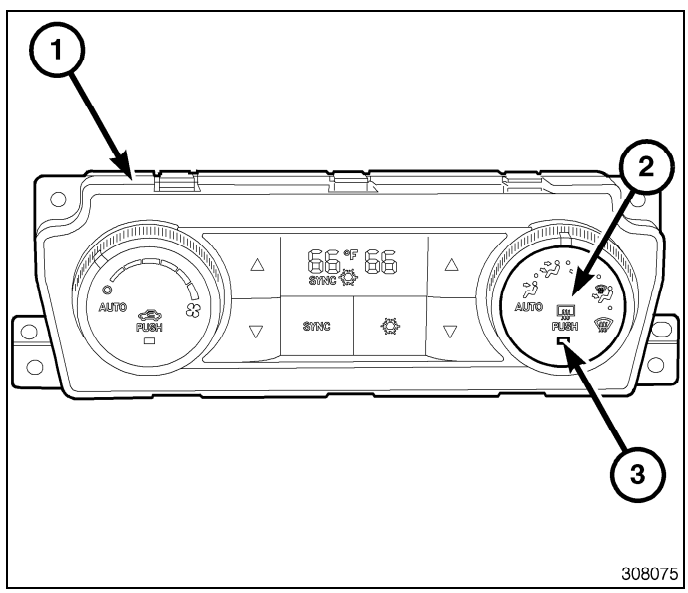

NOTE: The EBL system turns off automatically after 15 minutes of initial operation. Each following activation cycle of the EBL system will last 10 minutes.

The EBL system will automatically turn off after an initial programmed time interval of about 15 minutes, as long as the ignition switch is in RUN. After the initial time interval has expired, if the rear window defogger switch is pressed to ON again during the same ignition cycle, the EBL system will automatically turn off after about 10 minutes. The EBL system will also turn off if the ignition switch is turned to any position other than RUN or by manually pressing the rear window defogger switch a second time.

Repair of the rear window defogger grid lines, bus bars, terminals or pigtail wires can be accomplished using the Mopar® Rear Window Defogger Repair Kit (Part Number 04549275) or equivalent (Refer to 08 - Electrical/8G - Heated/Cooled Systems/Heated Glass/GRID, Defogger - Standard Procedure).

The EBL control system is diagnosed using a scan tool (Refer to 28 - DTC-Based Diagnostics/HVAC - Diagnosis and Testing).

Diagnosis and Testing

NOTE: Illumination of the defogger switch indicator lamp does not necessarily mean that electrical current is reaching the rear window glass and/or the outside rear view mirror heating grids.

NOTE: See Wiring Information for circuit descriptions and diagrams of the rear window defogger (EBL) and heated mirror systems,

Operation of the Electrical Back Light (EBL) and heated mirror systems can be confirmed by the following:

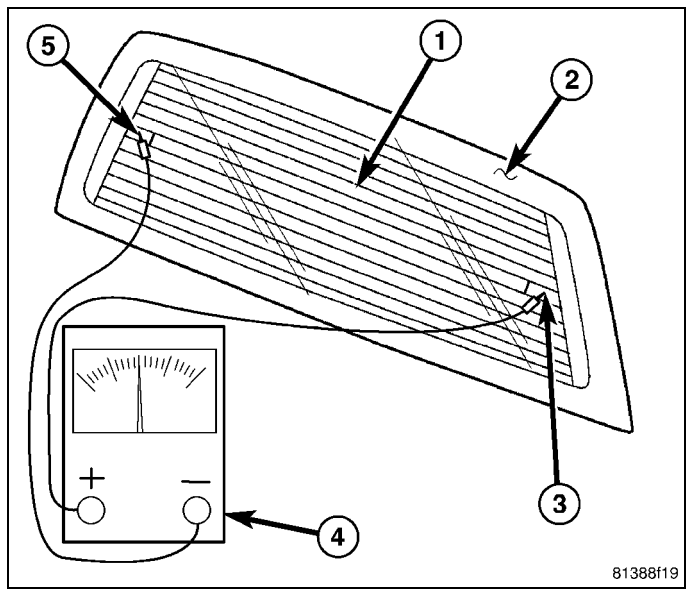

1. Use a scan tool and check for Diagnostic Trouble Codes (DTCs) related to the A/C-heater control and the Totally Integrated Power Module (TIPM). If no DTCs are found, go to Step #2. If any DTCs are found, repair as required, then proceed to Step #2.
2. Turn the ignition switch to RUN. Set the rear window defogger switch to ON. Rear window defogger operation can be checked by feeling the rear window glass, or the heated outside rear view mirror glass. A distinct difference in temperature between the grid lines (1) and the adjacent clear glass (2) or the heated mirror glass should be detected within 3 to 4 minutes of operation.
3. If a rear window glass temperature difference is not detected, use a 12-volt DC voltmeter (4) and contact the rear glass heating grid power feed terminal A (3) with the positive lead, and the ground terminal B (5) with the negative lead. The voltmeter should read battery voltage. If the voltmeter does not read battery voltage, check the following:

- Confirm the ignition switch is in RUN.
- Confirm the rear window defogger switch is ON.
- Confirm the EBL feed wire is connected to the heating grid positive terminal and that there is continuity between the TIPM and the heating grid.
- Confirm the EBL ground wire is connected to the heating grid negative terminal and that there is continuity to ground.
- When diagnosing a heated mirror concern, check the heated mirror circuit fuse located in the TIPM. The fuse must be tight in the receptacle and all electrical connections must be secure.

4. If broken defogger grid lines or bus bars are suspected, use a 12-volt DC voltmeter and contact the rear glass heating grid ground terminal B with the negative lead and each rear glass heating grid line at its mid-point with the positive lead. The voltmeter should read approximately 6 volts at each grid line mid-point. If the voltmeter does not read approximately 6 volts, repair the open grid line(s) or bus bar(s) (Refer to 08 - Electrical/8G - Heated/Cooled Systems/Heated Glass/GRID, Defogger - Standard Procedure).
5. If the operation of the EBL system and/or the heated mirror system has been verified but the defogger LED indicator does not illuminate, replace the A/C-heater control (Refer to 24 - Heating and Air Conditioning/Controls/CONTROL, A/C and Heater - Removal).

GRID, Defogger, Rear

Standard Procedure

WARNING: Materials contained in the Repair Kit (Part Number 04549275) may cause skin or eye irritation. The kit contains epoxy resin and amine type hardener, which are harmful if swallowed. Avoid contact with the skin and eyes. For skin contact, wash the affected areas with soap and water. For contact with the eyes, flush with plenty of water. Do not take internally. If taken internally, induce vomiting and call a physician immediately. Use with adequate ventilation. Do not use near fire or flame. Contains flammable solvents. Keep out of the reach of children. Failure to follow these instructions may result in serious or fatal injury.

Repair of the rear glass heating grid lines, bus bars, terminals or pigtail wires can be accomplished using the Mopar® Rear Window Defogger Repair Kit (Part Number 04549275) or equivalent.

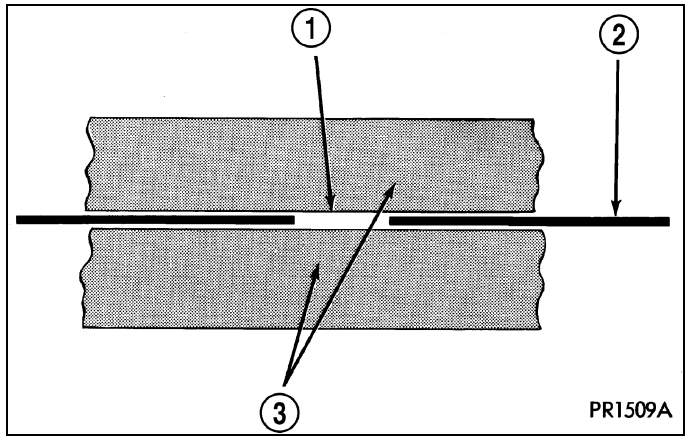

1. Mask the repair area with masking tape (3) so that the conductive epoxy can be applied neatly. Extend the epoxy application onto the grid line (2) or the bus bar on each side of the break (1).
2. Follow the instructions in the repair kit for preparing the damaged area.
3. Remove the package separator clamp and mix the two conductive epoxy components thoroughly within the packaging. Fold the package in half and cut the center corner to dispense the epoxy.
4. Apply the epoxy through the slit in the masking tape or template. Overlap both ends of the break by at least 19 millimeters (0.75 inch).
5. For a terminal or pigtail wire replacement, mask the adjacent areas so the epoxy can be extended onto the adjacent grid line as well as the bus bar. Apply a thin layer of epoxy to the area where the terminal or pigtail wire was fastened and onto the adjacent grid line.
6. Apply a thin layer of conductive epoxy to the terminal or bare wire end of the pigtail and place it in the proper location on the bus bar. To prevent the terminal or pigtail wire from moving while the epoxy is curing, it must be wedged or clamped.
7. Carefully remove the masking tape or template.

CAUTION: Do not allow the glass surface to exceed 204° C (400° F) when using a heat gun, or the glass may fracture.

8. Allow the epoxy to cure 24 hours at room temperature or carefully use a heat gun for 15 minutes. When using a heat gun, hold it approximately 25.4 centimeters (10 inches) from the repair and do not allow the glass surface to exceed 204° C (400° F).
9. After the conductive epoxy is properly cured, remove the wedge or clamp from the terminal or pigtail wire.
10. Connect the wire harness leads to the grid terminals or pigtail wires and verify EBL operation.

SWITCH, Defogger, Rear

Description

The switch for the rear window defogger (Electric Back Light) (EBL) system (2) is integrated into the A/C-heater control (1), located in the center of the instrument panel. When the rear window defogger switch is pressed to ON, a request signal is sent on the CAN Bus to the Totally Integrated Power Module (TIPM) to operate the EBL system.

When the high side driver in the TIPM is energized, current is directed to the rear defogger grid lines and to the heated side view mirrors, as equipped. An amber indicator (3) illuminates in the switch to indicate when the EBL system is turned on. The grid lines heat the glass to help clear the surface of fog or frost.

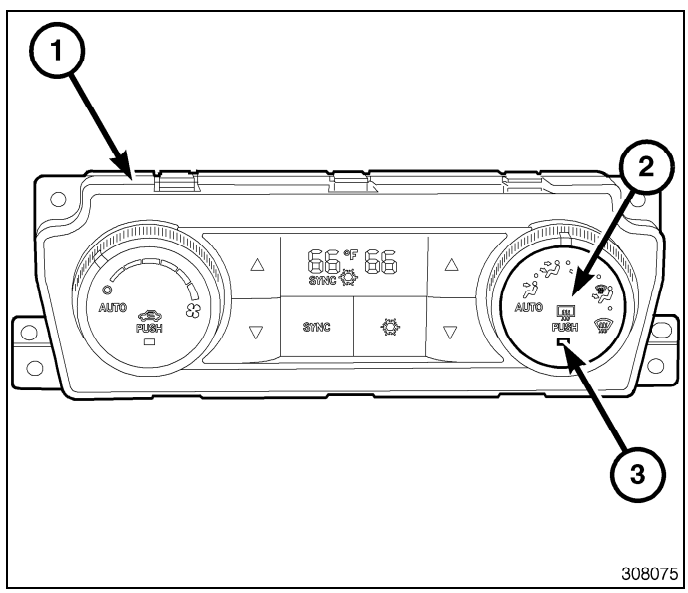

Operation

An amber indicator will illuminate when the rear window defogger switch is activated. When activated, the switch sends a request signal to the to the Totally Integrated Power Module (TIPM) to energize the internal EBL high side driver to provide battery current to the rear window defogger grid lines and to the heated side view mirrors, as equipped.

NOTE: The EBL system turns off automatically after 15 minutes of initial operation. Each following activation cycle of the EBL system will last 10 minutes.

The EBL system will be automatically turned off after an initial programmed time interval of about 15 minutes, as long as the ignition switch is in RUN. After the initial time interval has expired, if the rear window defogger switch is pressed to ON again during the same ignition cycle, the EBL system will automatically turn off after about 10 minutes. The EBL system will automatically shut off if the ignition switch is turned to any position other than RUN, or it can be turned off manually by pressing the rear window defogger switch a second time.

The rear window defogger switch is diagnosed using a scan tool (Refer to 28 - DTC-Based Diagnostics/HVAC - Diagnosis and Testing).

The rear window defogger switch and the rear window defogger indicator cannot be repaired and the A/C-heater control must be replaced if inoperative or damaged (Refer to 24 - Heating and Air Conditioning/Controls/CONTROL, A/C and Heater - Removal).

HEATED MIRRORS

TABLE OF CONTENTS

page

HEATED MIRRORS
DESCRIPTION 8
OPERATION 8

Heated Mirrors

Description

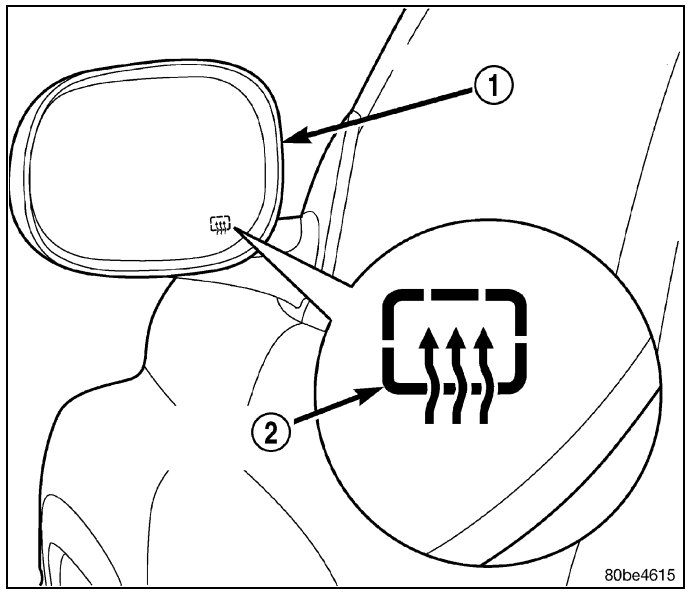

Electrically heated outside rear view mirrors (1) are optional on some models. Vehicles with this option can be visually identified by the International Control and Display Symbol icon for rear window defogger (2), which appears on the lower inboard corner of each outside rear view mirror glass.

The heated mirror system operates in concert with the rear window defogger (EBL) system and is controlled by the rear window defogger switch located on the A/C-heater control in the instrument panel. An amber indicator lamp in the rear window defogger switch will illuminate to indicate when the system is ON.

The heated mirror system will automatically turn off after an initial programmed time interval of about 15 minutes, as long as the ignition switch is in RUN. After the initial time interval has expired, if the rear window defogger switch is pressed to ON again during the same ignition cycle, the heated mirror system will automatically turn off after about 10 minutes. The heated mirror system will also turn off if the ignition switch is turned to any position other than RUN or by manually pressing the rear window defogger switch a second time.

Circuit protection for the heated mirror system is provided by a fuse located in the totally integrated power module (TIPM).

Operation

When equipped, the heated mirror system is activated when the rear window defogger (EBL) system is turned on (Refer to 08 - Electrical/8G - Heated/Cooled Systems/Heated Glass - Operation). When the heated mirror system is activated, an electric heater grid located behind the glass of each of the outside rear view mirror becomes energized and produces heat to help clear the mirror of ice, snow, or fog.

If the outside mirror heating grids are both inoperative, (Refer to 08 - Electrical/8G - Heated/Cooled Systems/Heated Glass - Diagnosis and Testing) in this group. If only one of the outside mirror heating grid is inoperative, (Refer to 08 - Electrical/8N - Power Systems/Power Mirrors - Diagnosis and Testing).

The heating grid behind each outside mirror glass cannot be repaired and the mirror glass must be replaced if inoperative or damaged (Refer to 23 - Body/Exterior/MIRROR, Outside Rearview - Removal).

HEATED SEATS

TABLE OF CONTENTS

page

HEATED SEATS
- DESCRIPTION 10
- OPERATION 10
- DIAGNOSIS AND TESTING 11
- **PAD, HEATER**
  - DESCRIPTION 11
  - OPERATION 11
  - DIAGNOSIS AND TESTING 12
  - REMOVAL 12
  - INSTALLATION 12
- **SWITCH, HEATED SEAT**
  - DESCRIPTION
    - REAR 14
    - FRONT 14
  - OPERATION
    - REAR 14
    - FRONT 15
  - REMOVAL
    - REAR 15
    - FRONT 16
  - INSTALLATION
    - REAR 17
    - FRONT 18

Heated Seats

Description

WARNING: The front passenger seat assembly contains critical components that affect the front passenger airbag deployment. Correctly functioning front passenger seat components are critical for the Occupant Classification System (OCS) to properly classify the front passenger and calculate the proper airbag deployment. Unapproved modifications or service procedures to the front passenger seat assembly, its related components, or trim cover may inadvertently change the airbag deployment in case of a frontal crash. This could result in death or serious injury to the front seat passenger if the vehicle is involved in an accident. The following requirements must be strictly adhered to:

- **Do not modify the front passenger seat assembly or components in any way.**
- **Do not modify the front seat center console or center position seat in any way.**
- **Do not use prior or future model year seat trim covers not designated for the specific model being repaired. Always use the correct seat trim cover specified for the vehicle.**
- **Do not replace the seat trim cover with an aftermarket trim cover.**
- **Do not add a secondary trim cover other than those approved by Chrysler/Mopar.**
- **At no time should any Supplemental Restraint System (SRS) component or SRS related component or fastener be modified or replaced with any part except those which are approved by Chrysler/Mopar.**

Vehicles with the heated seat option can be visually identified by the two heated seat switches located in the center stack of the instrument panel, and the two heated seat switches located at the rear of the floor center console. The heated seat system allows the seat passenger to select from two different levels of electrical seat heating (HI/LO). The heated seat system for this vehicle includes the following major components:

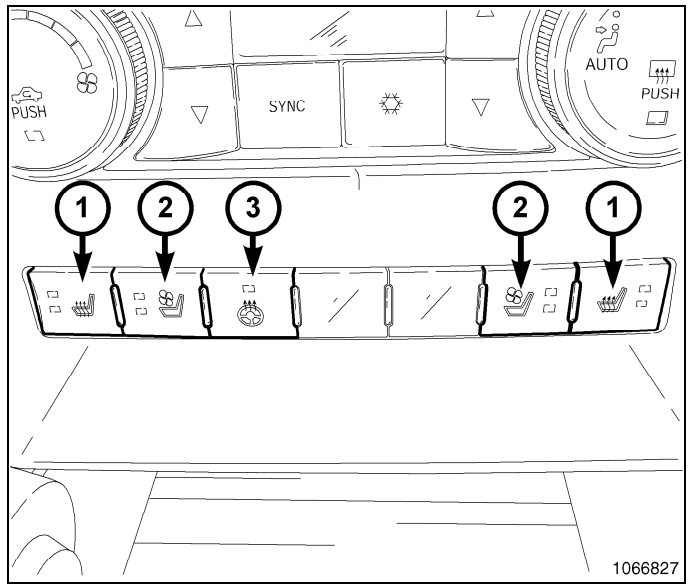

- **Heated Seat Switches** - Up to four heated seat switches are used per vehicle, including two Light-Emitting Diode (LED) indicator lamps for heat level indication. Two switches for the front seats and two switches for the rear seats if equipped with rear heated seats. The front heated seat switches are mounted in the switchbank located on the instrument panel center bezel under the HVAC controls. If equipped the rear heated seat switches are located on the back side of the floor center console.
- **Heated Seat Elements** - Up to eight heated seat elements are used per vehicle, two for each seat. The elements are integral to the individual seat and seat back cushions..
- **Heated Seat Control Module (HSCM)**- One module located under the drivers front seat. The HSCM controls the functions of all the heated seats and if equipped the heated steering wheel and vented seats.

Operation

The heated seat system operates on battery current received through a fuse in the Totally Integrated Power Module (TIPM). Fused ignition switch output (run) circuits are used, so that the heated seat system will only operate when the ignition switch is in the On position. The heated seat system will turn Off automatically whenever the ignition switch is turned to any position except On.

A Heated Seat Control Module (HSCM) is used to control the heated seat system. The HSCM responds to heated seat switch input and ignition switch status inputs by controlling the 12v output to the seat heating elements through integral solid-state relays.

When any of the heated seat switches are depressed the heating elements for the selected seat are energized. Light Emitting Diodes (LEDS) on the switch indicate the level of heat in use: Two LEDs are illuminated for high, one for low, and none for off. Pressing the switch once will select high-level heating. Pressing the switch a second time will select low-level heating. Pressing the switch a third time will shut the heating elements off.

The HSCM energizes an integral solid-state relay, which supplies battery current to the heating elements. When high-temperature heating is selected, the heaters provide a boosted heat level during the first four minutes of operation after heating is activated. The heat output then drops to the normal high-temperature level. If high-level heating is selected, the control system will automatically switch to the low level after two hours of continuous operation. At that time, the number of illuminated LEDs changes from two to one, indicating the change. Operation on the low setting will continue indefinitely until the switch/module button is pushed to turn the system off.

The system will automatically turn off the heating elements if it detects an OPEN or LOW short in the heating element circuit.

Diagnosis and Testing

NOTE: Vehicles equipped with the heated seat option utilize a low voltage cut-off feature. This feature turns off power to the heated seat system anytime vehicle voltage is below 11.7 volts or above 15.5 volts. Be certain to check the vehicle electrical system for proper voltage anytime the heated seat system appears inoperative.

NOTE: If a Diagnostic Trouble Code (DTC) can not be verified, it is a good indication that an INTERMITTENT fault condition may be present. To help find an intermittent problem, sit in the seat in question and move around the heating elements within the seat while testing continuity. also wiggle the heated seat wire harness and electrical connectors while testing continuity.

NOTE: For complete circuit diagrams, see Wiring Information. Wiring Information includes wiring diagrams, connector pin-out and location views, details of wire harness routing and retention, splice and ground locations and proper wire and connector repair procedures.

Before testing any individual components in the heated seat system, check the following:

- Check to see if the concern is isolated to only one seat. Operate the other heated seat.
- Check the ignition fuse in the Totally integrated Power Module (TIPM). Repair as necessary.
- Using a scan tool, check for any Diagnostic Trouble Codes (DTCs) related to the Heated Seat Module (HSM), If any DTCs are found, repair as necessary (Refer to 28 - DTC-Based Diagnostics/MODULE, Heated Seat (HSM) - Diagnosis and Testing).
- Check the vehicles battery open-circuit voltage and charging system performance. If the vehicle's electrical system is defective or weak it may not be suppling sufficient energy to operate the heated seat system.
- If there are no DTCs and the front heated seat system functions properly, but a heated seat switch indicator does not illuminate, the switch pod assembly in the instrument panel must be replaced (Refer to 08 - Electrical/8G - Heated/ Cooled Systems/Heated Seats/SWITCH, Heated Seat - Removal).
- If there are no DTCs and the rear heated seat system functions properly, but one or both of the indicator lamps in a rear heated seat switch do not illuminate, check the rear heated switch circuits and repair as necessary. See Wiring information. If the wiring is OK, replace the inoperative second row heated seat switch (Refer to 08 - Electrical/8G - Heated/Cooled Systems/Heated Seats/SWITCH, Heated Seat - Removal).

PAD, Heater

Description

Vehicles equipped with the optional heated seat system have up to four heated seats with two heated seat elements, located in each seat. One heating element is used for each seat cushion and another for each seat back.

Each of the heated seat elements consists of multiple heating circuits operating in parallel throughout the element. The heated seat elements are captured between the seat trim cover and the seat cushion assembly. If a malfunction occurs in one or more of the individual circuits, the others will continue to provide heat.

The heated seat elements cannot be repaired. If found to be damaged or inoperative, a new heating element assembly must be installed.

Operation

One end of the heated seat element is connected to ground at all times through a splice under the seat. Battery current is directed to the other end of the heated seat element by the Heated Seat Control Module (HSCM). The heated seat switch/module will energize the heated seat element when the heated seat switch/module button is depressed in the Low or High position.

As electrical current passes through the heated seat element, the resistance of the wire used in the element disperses some of the electrical current in the form of heat. The heat produced by the heated seat element then radiates through the underside of the seat cushion and seat back trim covers, warming the seat cover and its occupant.

Diagnosis and Testing

Refer to the appropriate wiring information for complete circuit schematic or connector pin-out information.

The wire harness connectors (2AND3) for the heating elements are located under the seat (1).

NOTE: When checking heated seat elements for continuity, be certain to move the heating element being checked. Moving the element, such as sitting in the seat will eliminate the possibility of an intermittent open in the element which would only be evident if the element was in a certain position. Failure to check the element in various positions could result in an incomplete test.

1. Locate and disconnect the seat electrical connector.
2. Check the resistance between the circuit leading in and out of the suspect heated seat element. The resistance should be between 3.8 - 4.8 ohms for a seat cushion element and 4.3 - 5.4 ohms for a seat back element. If OK, (Refer to 08 - Electrical/8G - Heated/ Cooled Systems/Heated Seats - Diagnosis and Testing). If not OK, replace the inoperative heated seat element.

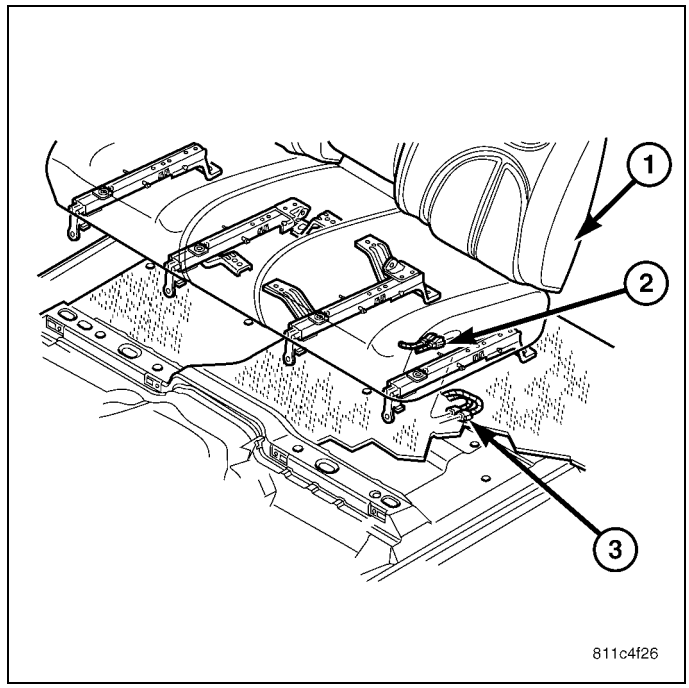

Removal

NOTE: The factory installed heating elements (3) can be removed from the seat or seat back cushions by carefully peeling the element off along the adhesive lines.

NOTE: Some vehicles come equipped with vented and heated seats front seats. The front seat elements of these vehicles have a one piece vented/heated pad assembly.

NOTE: On vehicles quipped with vented seats, the vented/heated pad will have to be routed through the seat cushion prior to removing the element.

1. Disconnect and isolate the negative battery cable.
2. Remove the appropriate seat cushion or seat back cover.
3. Disconnect the inoperative heated seat cushion or seat back element electrical connectors (2).
4. Remove the heated seat element from the foam pad by peeling the element away from the cushion. Be careful not to remove excessive foam in the process.

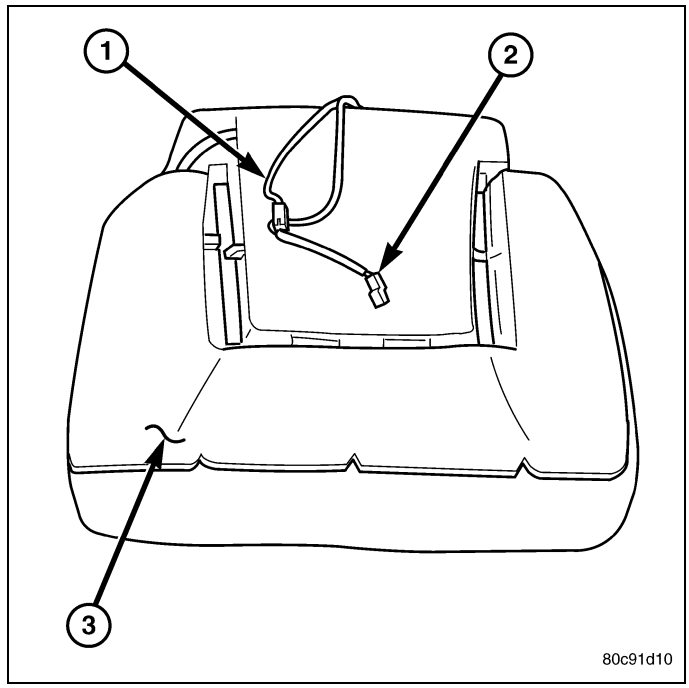

Installation

CAUTION: During the installation of the replacement heating element, be careful not to fold or crease the element assembly. Folds or creases will cause premature failure.

NOTE: Some model vehicles come equipped with both heated and vented seats front seats.

NOTE: On vehicles equipped with vented seats, the vented seat pad will have to be routed through the seat cushion prior to installation of the seat cushion

1. Peel off the adhesive backing from the replacement heater element (2) and stick on foam pad directly where the original heater element was positioned (1). There will be adhesive marks on the cushion outlining the factory installed location.

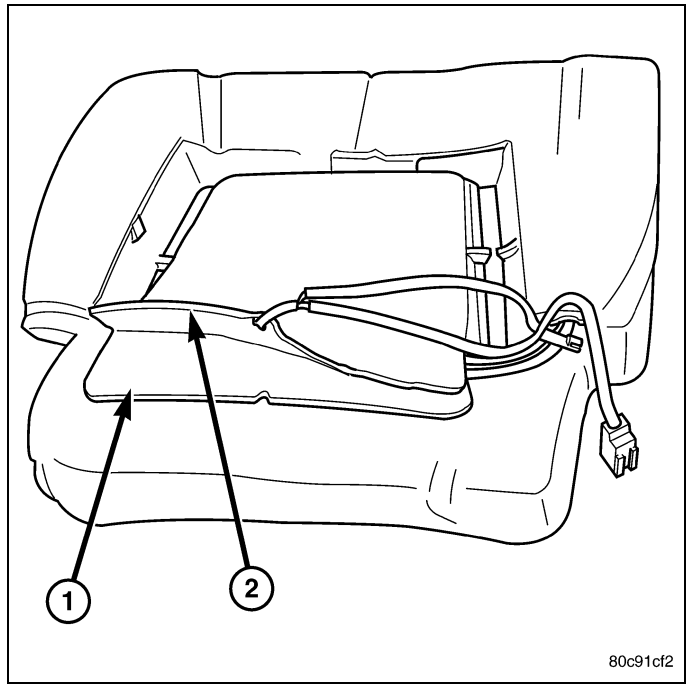

NOTE: Make certain the seat wire harness is correctly routed through the seat and seat back. The excess wire between the cushion and back elements should be securely tucked between the rear of the cushion foam and the rear seat cover flap.

2. Connect the heater element electrical connectors (3 and 4).
3. Reconnect the negative battery cable.
4. Verify heated seat system operation.
5. Install the appropriate seat cushion or seat back cover.

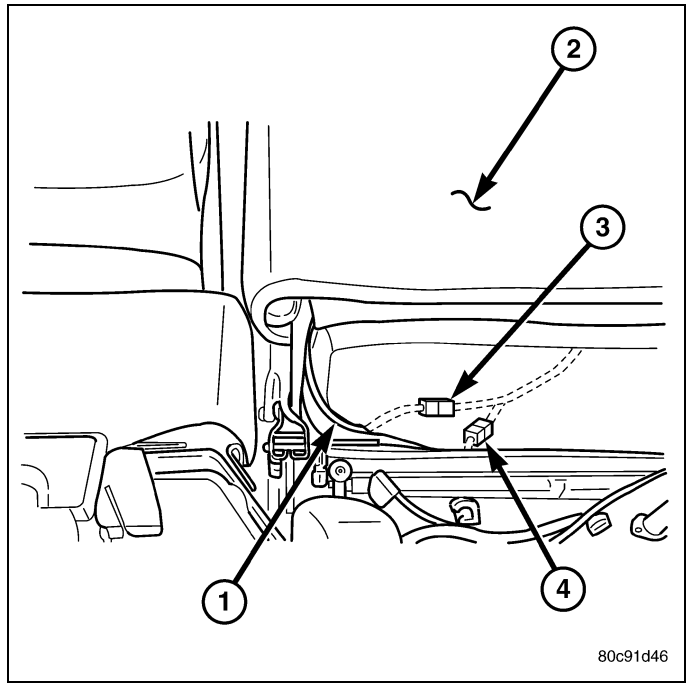

SWITCH, Heated Seat

Description

REAR

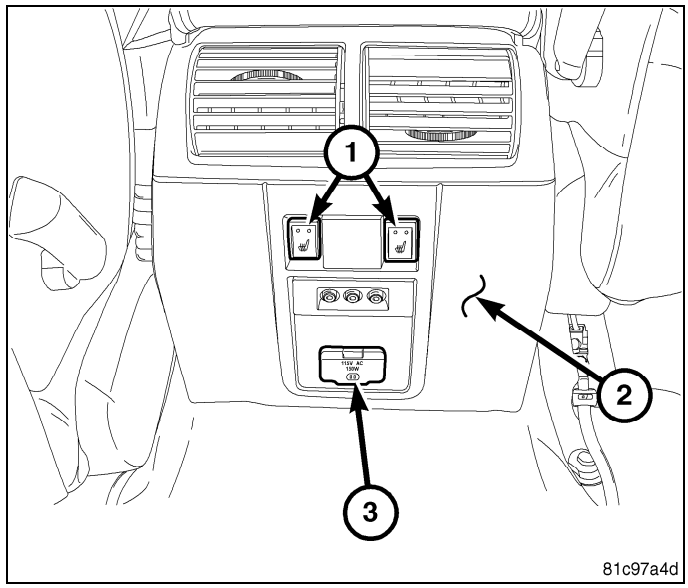

The heated seat switches (1) for the 2nd row seats are located in the rear center floor console (2). These switches allow the 2nd row seat passengers to select from two different levels of electrical seat heating (HI/LO). Amber Light Emitting Diodes (LEDS) in the top portion of each switch indicate the level of heat in use: Two LEDs are illuminated for high, one for low, and none for off. Pressing the switch once will select high-level heating. Pressing the switch a second time will select low-level heating. Pressing the switch a third time will shut the heating elements off. The 2nd row heated seat switches are available individually for service. If the switches are inoperative or damaged in any way they should be replaced, (Refer to 08 - Electrical/8G - Heated/Cooled Systems/Heated Seats/SWITCH, Heated Seat - Removal).

The two momentary, push button-type heated seat switches provide a hardwired resistance signal to the Instrument Cluster (also known as the Cab Compartment Node/CCN). The instrument cluster then sends a message via the Controller Area Network (CAN) data bus network to the heated seat module, signaling the module to energize the heating element for the selected seat. Light Emitting Diodes (LED) in each switch indicate the level of heat in use. The switch LEDs are controlled by the instrument cluster.

The two LED indicator lamps and the incandescent bulb in each heated seat switch cannot be repaired. If the indicator lamps or back lighting bulb are inoperative or damaged, the individual heated seat switch must be replaced.

FRONT

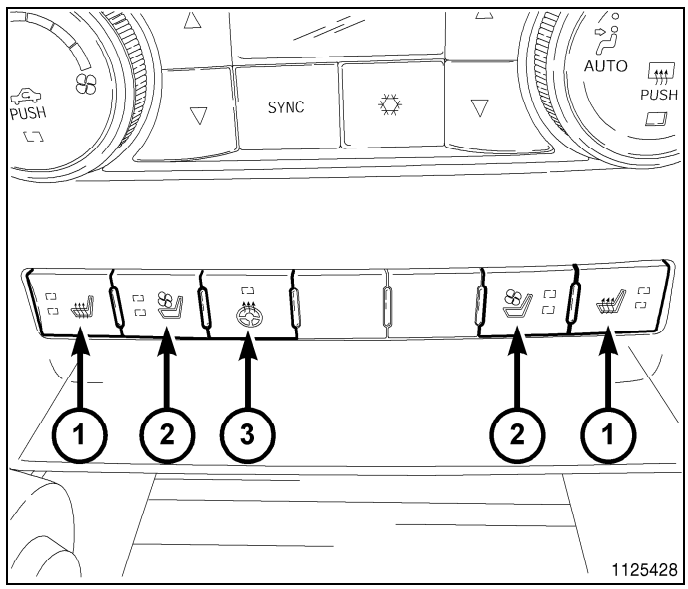

The Heated Seat Switches(1) are momentary contact push button switches mounted in the instrument panel center bezel that operate the heated seat system. Each heated seat switch has two Light-Emitting Diode (LED) indicator lamps, which indicate the selected level (Low or High) of the seat heater. Pressing the switch initiates heat. Heat remains on until switched off or until the ignition is turned off. If switched off by the ignition, a switch must be pressed to restart heating.

The LED indicator lamps in each heated seat switch cannot be repaired. If the LED lamps are faulty or damaged, or the switch is inoperative or damaged the switchbank assembly must be replaced.(Refer to 08 - Electrical/8G - Heated/Cooled Systems/Heated Seats/SWITCH, Heated Seat - Removal) for the switchbank replacement procedure.

Operation

REAR

The heated seat switches for the 2nd row seats are located in the rear center floor console. Amber Light Emitting Diodes (LEDS) in the top portion of each switch indicate the level of heat in use: Two LEDs are illuminated for high, one for low,

and none for off. Pressing the switch once will select high-level heating. Pressing the switch a second time will select low-level heating. Pressing the switch a third time will shut the heating elements off.

When either of the 2nd row heated seat switches are depressed a hardwired resistance signal is sent to the Instrument Cluster(also known as the Cab Compartment Node/CCN). The instrument cluster then sends a message via the Controller Area Network (CAN) data bus network to the heated seat module, signaling the module to energize the heating element for the selected seat. Light Emitting Diodes (LED) in each switch indicate the level of heat in use. The switch LEDs are controlled by the instrument cluster.

FRONT

A Heated Seat Control Module (HSCM) is used to control the heated seat system. The HSCM responds to heated seat switch input and ignition switch status inputs by controlling the 12v output to the seat heating elements through integral solid-state relays.

When any of the heated seat switches are depressed the heating elements for the selected seat are energized. Light Emitting Diodes (LEDS) on the switch indicate the level of heat in use: Two LEDs are illuminated for high, one for low, and none for off. Pressing the switch once will select high-level heating. Pressing the switch a second time will select low-level heating. Pressing the switch a third time will shut the heating elements off.

The HSCM energizes an integral solid-state relay, which supplies battery current to the heating elements. When high-temperature heating is selected, the heaters provide a boosted heat level during the first four minutes of operation after heating is activated. The heat output then drops to the normal high-temperature level. If high-level heating is selected, the control system will automatically switch to the low level after two hours of continuous operation. At that time, the number of illuminated LEDs changes from two to one, indicating the change. Operation on the low setting will continue indefinitely until the switch/module button is pushed to turn the system off.

The system will automatically turn off the heating elements if it detects an OPEN or LOW short in the heating element circuit.

Removal

REAR

1. Disconnect and isolate the battery negative cable.
2. Using a trim stick (special tool # C-4755) or equivalent, gently pry the upper edge of the floor console rear trim panel (1) to release the retaining clips at all of the locations around the floor console rear trim panel (3).
3. Lift up and rearward to release the panel lower tabs (2) from the floor console.

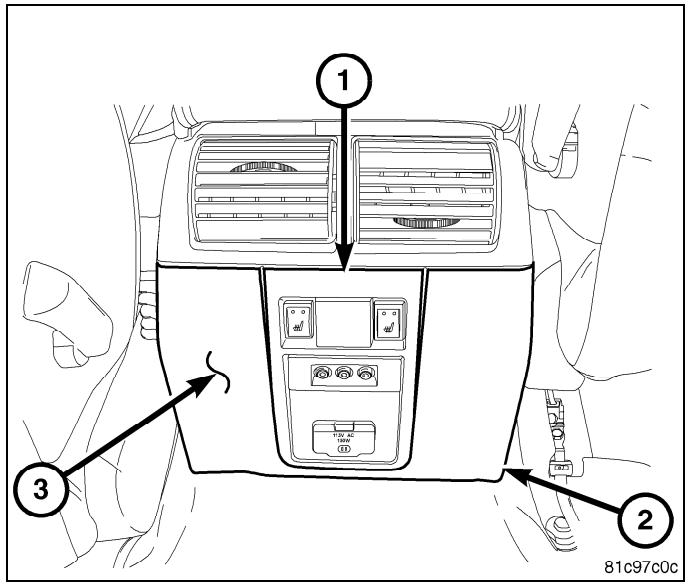

4. If equipped, disconnect the 2nd row heated seat switches (1), 115 Volt power outlet (3) and the auxiliary audio jacks (2) electrical connectors from the floor console rear trim panel.
5. Using a trim stick (special tool # C-4755) or equivalent, gently pry the 2nd row heated seat switch assembly out of the trim panel.

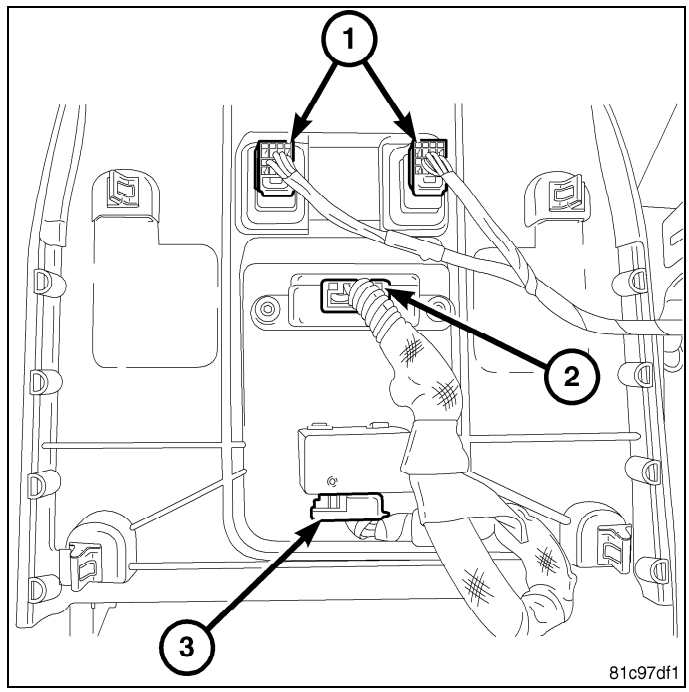

FRONT

1. Disconnect and isolate the battery negative cable.
2. Remove the instrument panel center bezel, (Refer to 23 - Body/Instrument Panel/BEZEL, Instrument Panel - Removal).
3. Disconnect the lower switch pod electrical connector.
4. Remove the lower switch pod fastners(2) from the center bezel.
5. Remove the switch pod from the center bezel.

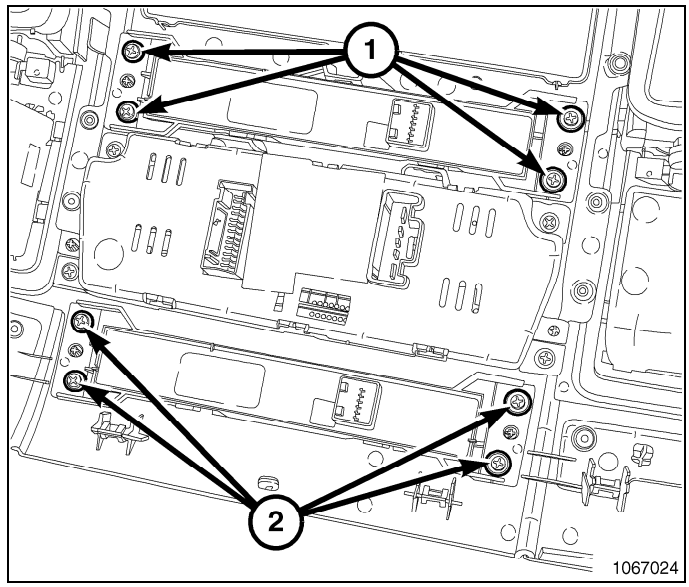

Installation

REAR

1. Install the 2nd row heated seat switch assembly into the floor console rear trim panel. Push the switch firmly into the trim panel until the retaining tabs are fully seated.
2. If equipped, connect the 2nd row heated seat switches (1), 115 Volt power outlet (3) and the auxiliary audio jacks (2) electrical connectors to the floor console rear trim panel.

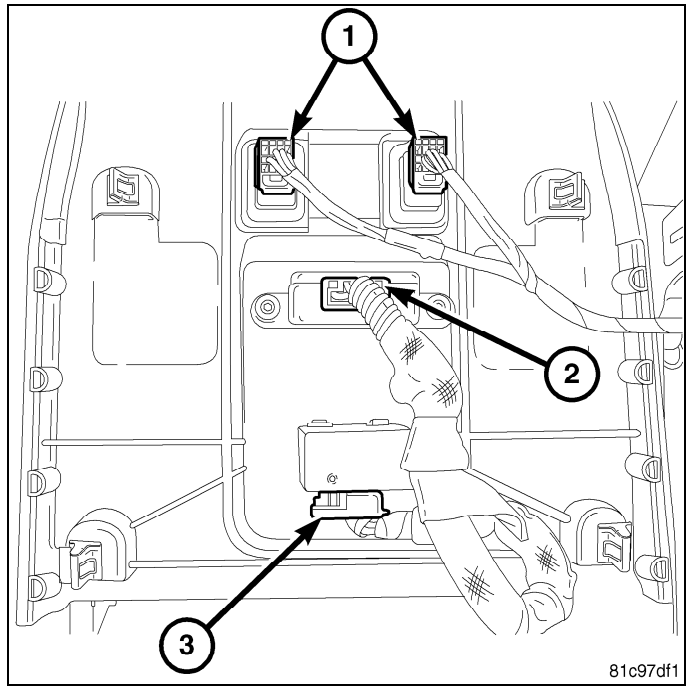

3. Align the trim panel (3) to the console and insert the bottom tabs into the mounting slots.
4. Tilt the upper edge of the trim panel (1) forward and apply hand pressure to seat all retaining clips.
5. Connect the battery negative cable.
6. Verify 2nd row heated seat system operation.

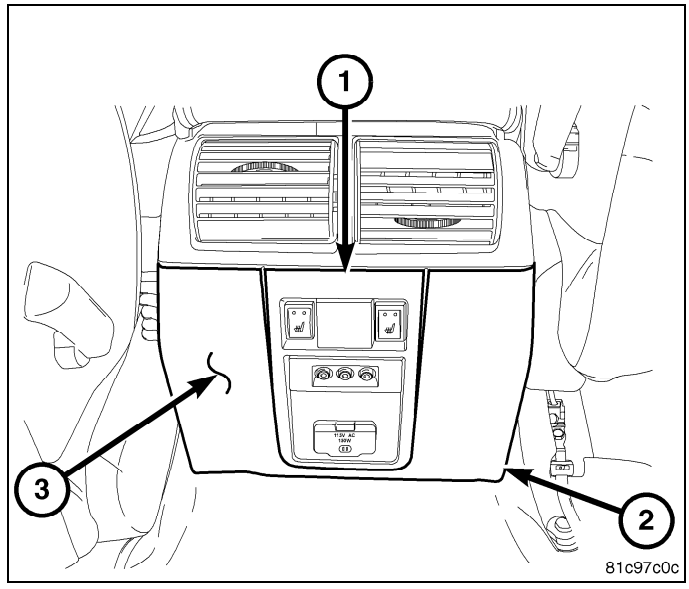

FRONT

1. Align the switch pod to the instrument panel center bezel.
2. Install the lower swith pod fastners(2) to the center bezel.
3. Connect the switch pod electrical connector.
4. Install the instrument panel center bezel, (Refer to 23 - Body/Instrument Panel/BEZEL, Instrument Panel - Installation).
5. Connect the battery negative cable.

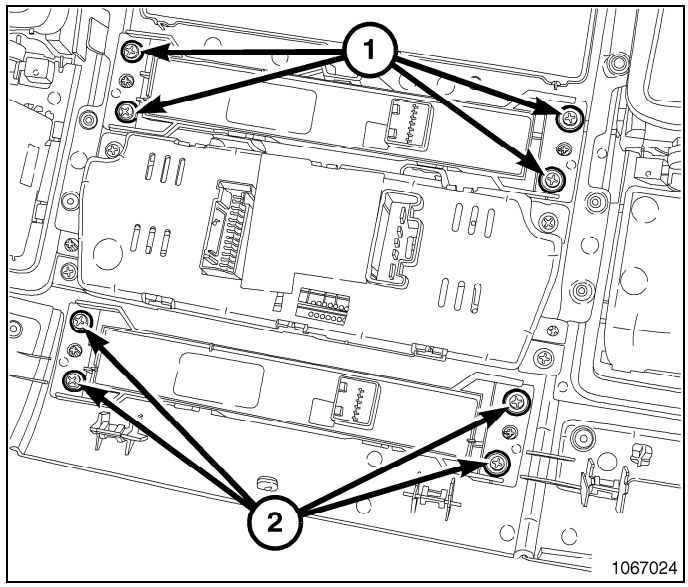

HEATED/COOLED ACCESSORIES

TABLE OF CONTENTS

page

HEATED/COOLED ACCESSORIES
DESCRIPTION
VENTED SEATS . . . 20
HEATED STEERING WHEEL . . . 20
OPERATION
VENTED SEATS . . . 20
HEATED STEERING WHEEL . . . 20
DIAGNOSIS AND TESTING
VENTED SEATS . . . 21
HEATED STEERING WHEEL . . . 21
MOTOR, VENTED SEAT
DESCRIPTION . . . 21
OPERATION . . . 21
REMOVAL . . . 21
INSTALLATION . . . 22
PAD, VENTED SEAT
DESCRIPTION . . . 23
OPERATION . . . 24
REMOVAL . . . 24
INSTALLATION . . . 25

page

SWITCH, HEATED STEERING WHEEL
DESCRIPTION . . . 27
OPERATION . . . 27
REMOVAL . . . 27
INSTALLATION . . . 28
SWITCH, VENTED SEAT
DESCRIPTION . . . 28
OPERATION . . . 28
REMOVAL . . . 29
INSTALLATION . . . 29
WHEEL, HEATED STEERING
DESCRIPTION . . . 29
OPERATION . . . 29
REMOVAL . . . 30
INSTALLATION . . . 30

Heated/Cooled Accessories

Description

VENTED SEATS

The vented seat system is designed to enchance the thermal comfort of the seat occupant by ventilating the seat to occupant interface. A vehicle with vented seats can easily be identified by the vented seat switches located on the instrument panel center bezel, just below the HVAC controls.

The vented seat system consist of the following major components:

- **Vented Seat Pads -** (Refer to 08 - Electrical/8G - Heated/Cooled Systems/Heated/Cooled Accessories/PAD, Vented Seat - Description) for more information.
- **Vented Seat Switches -**(Refer to 08 - Electrical/8G - Heated/Cooled Systems/Heated/Cooled Accessories/SWITCH, Vented Seat - Description) for more information.
- **Vented Seat Motors -**(Refer to 08 - Electrical/8G - Heated/Cooled Systems/Heated/Cooled Accessories/MOTOR, Vented Seat - Description) for more information.
- **Heated Seat Module**(Refer to 08 - Electrical/8E - Electronic Control Modules/MODULE, Heated Seat - Description) for more information.

HEATED STEERING WHEEL

The heated steering wheel system is designed to enhance the thermal comfort of the driver by heating the steering wheel.

The heated steering wheel system consists of the following major components

- **Heated Steering Wheel -** (Refer to 08 - Electrical/8G - Heated/Cooled Systems/Heated/Cooled Accessories/WHEEL, Heated Steering - Description) for more information.
- **Heated Steering Wheel Switch -**(Refer to 08 - Electrical/8G - Heated/Cooled Systems/Heated/Cooled Accessories/SWITCH, Heated Steering Wheel - Description) for more information.
- **Heated Seat Module (HSM) -**(Refer to 08 - Electrical/8E - Electronic Control Modules/MODULE, Heated Seat - Description) for more information.

Operation

VENTED SEATS

The Vented Seat assembly is located internally to the front seats and are intended to enhance the thermal comfort of the seat occupant by ventilating seat to occupant interface. Occupant comfort is achieved by pulling air from the seat surface to the back and underside under side of the seat.

The vented seats are controlled by the heated seat module (HSM)(also know as the Comfort Seat Wheel Module or CSWM) which provides variable analog voltages driving the 12V vented seat motors in the seats. The vented seats have 2 selectable speeds with a hidden intermediate speed for the fans. For seat venting, each press of the vented seat switch will cause the vented seat to change venting modes. From OFF to HI, from HI to LO and from LO to OFF. The HSM shall turn on the vented seats only with the engine running. Both vented seats operate seperately from each other, and will not operate at the same time as the heated seats.

HEATED STEERING WHEEL

The heated steering wheel has two selectable settings, ON and OFF. The heated steering wheel only operates with the vehicle's ignition is in the RUN position, and will always stay in the OFF setting unless the heated seat switch is pressed. Once the switch is pressed the Light Emitting Diode (LED) on the face of the switch will illuminate, indicating that the heating element in the steering wheel is operating. Pressing the switch while the heated steering wheel is on, will turn the heating steering wheel and the switch LED off.

Normal heating of the steering wheel will last a minimum of 52 minutes, unless the switch is pressed or a system fault has been set. Heating of the element is controlled by the Heated Seat Module (HSM), also know as the Comfort Seat Wheel Module (CSWM), and a temperature sensor integrated into the steering wheel heating element. The integrated temperature sensor relays the temperature of the steering wheel to the HSM, and adjusts the heat of the steering wheel heater accordingly.

The Heated steering wheel will automatically shut off if the heating element reaches a temperature greater than 50 degrees Celsius (122 degrees Farenheit).

Diagnosis and Testing

VENTED SEATS

Diagnosis of the vented seat system requires the use of a scan tool. If a fault is present in the vented seat system a DTC will be set and the vented seat switch will illuminate for 2 seconds and then go out. For further diagnosis see the appropiate diagnostic information.

HEATED STEERING WHEEL

In the event that there is a fault in the heated steering wheel system, a DTC will be set and the heated steering wheel will not operate when the heated steering wheel switch has been pressed, until the fault has been repaired. Visual indication of a fault in the system is the Light Emitting Diode (LED) on the heated steering wheel switch will illuminate for two seconds and then shut off. If a fault is present further diagnosis of the heated steering wheel system will be necessary and will require the use of a scan tool. See the appropriate diagnostic information.

MOTOR, Vented Seat

Description

The vented seat motor assemblies are black with a metal support bracket and are mounted inside of the seat assemblies. The motors can be easily be seen once the seat cushions and covers have been removed.

The vented seat motors are located within the front seat assemblies. There are two vented seat motors per seat on vehicles equipped with the vented seat option. One vented seat motors is mounted to the seat back frame and the second motor is mounted to the seat bottom frame. Each motor is secured by 4 retaining clips and have a vented seat pad that attaches to it for seat ventilation.

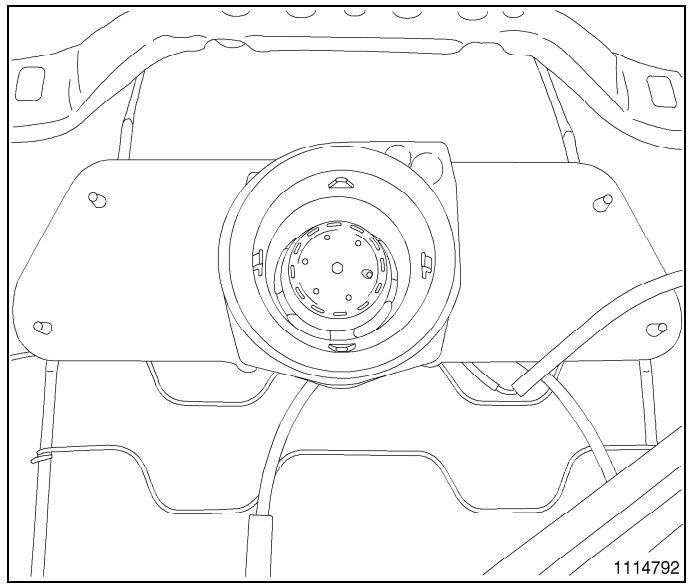

Operation

The vented seat motors will only operate with the engine running and will not operate at the same time as the heated seats are operating. The vented seat motors are controlled by the Heated Seat Module (HSM) (also know as the Comfort Seat Wheel Module or CSWM). The HSM provides the vented seat motors with variable analog voltages giving the motors 2 selectable speeds. These speeds are selected by the driver and/or front passanger by pressing the vented seat switches. Switching the vented seats on while the heated seats are already operating will disable the heating of the seat and start the venting of the seat. Both front vented seats work independently from each other, meaning that the driver and front passenger can choose there own settings for seat venting.

Removal

NOTE: Seat back shown. Seat bottom similar.

1. Disconnect the negative battery cable.
2. Remove the seat cushion or seat back cover.
3. Disconnect the vented seat motor electrical connector (3) and remove the electrical harness pin-type retainer (2) from the seat frame (1).

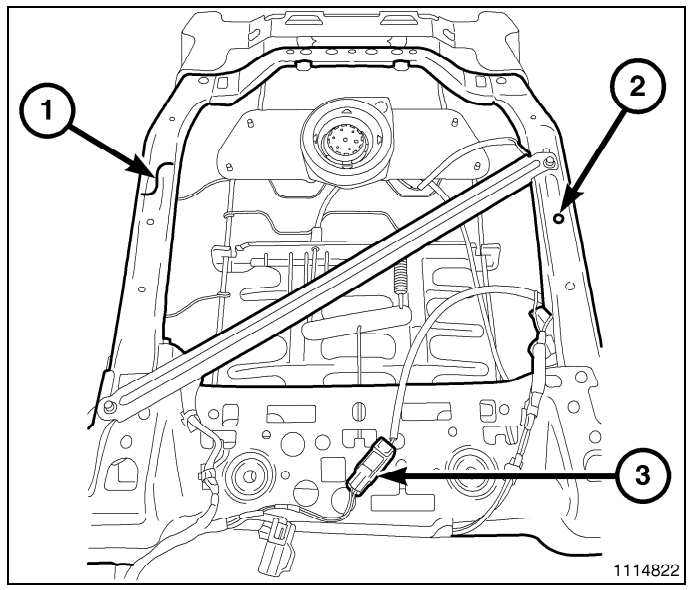

4. Remove the vented motor assembly by releasing the 4 retaining clips (1) from the seat assembly.

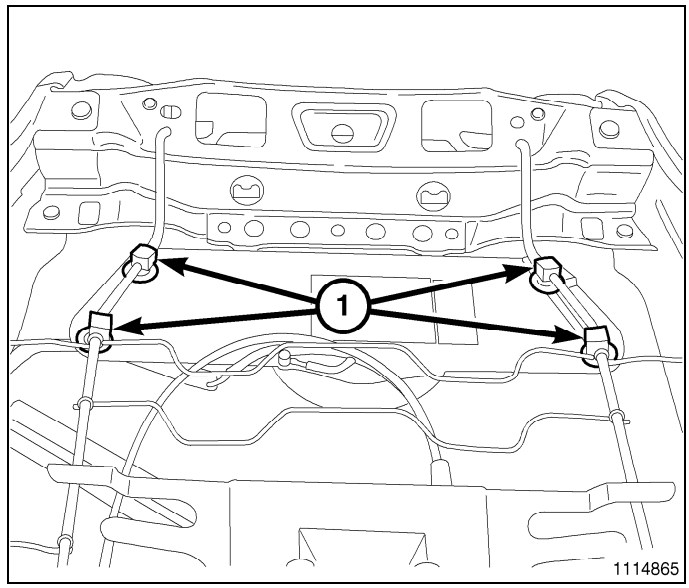

Installation

NOTE: Seat back shown. Seat bottom similar.

1. Install the vented motor assembly by securing the 4 retaining clips (1) to the seat assembly.

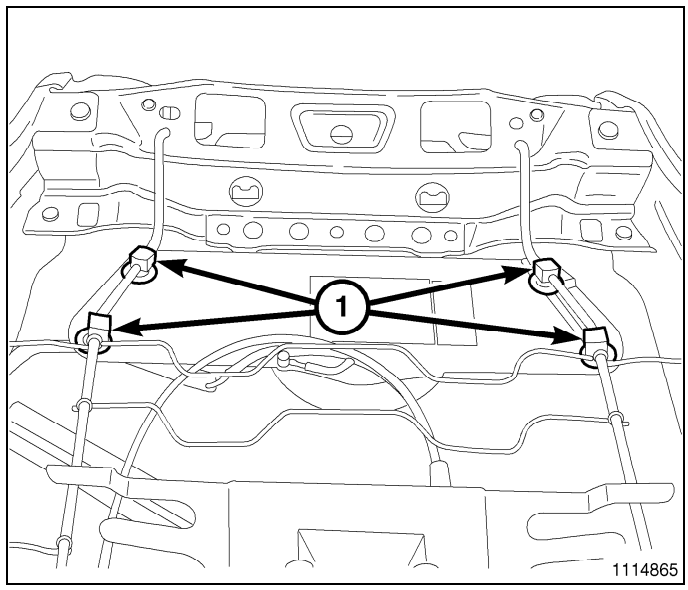

2. Connect the vented seat motor electrical connector (3) and install the electrical harness pin-type retainer (2) to the seat frame (1).
3. Install the seat cushion or seat back cover.
4. Reconnect the negative battery cable.
5. Verify vented seat system operation.

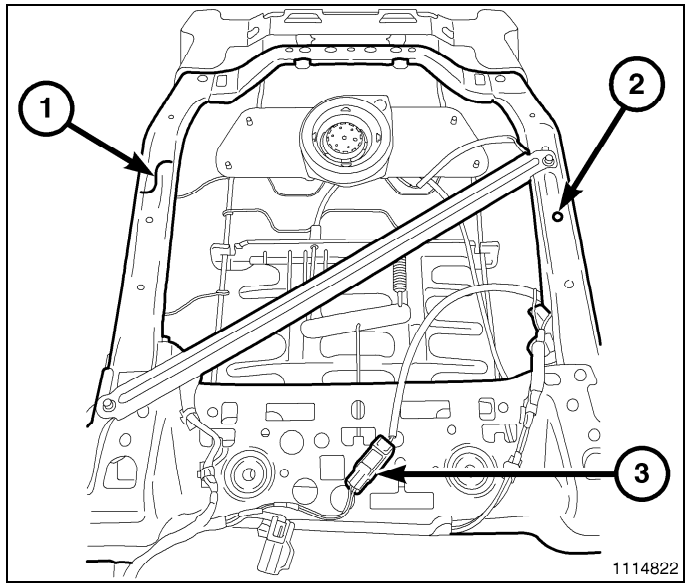

PAD, Vented Seat

Description

The vented seat pads and heated seat pads are a one piece assembly on vehicles equipped with vented seats. The vented pads are located between the seat bottom and seat back covers and cushions. The vented seat pads are adhered to the seat bottom and seat back foam cushions, and have a flange that is routed through an opening in the seat back and seat bottom cushions. The vented seat pad flange attaches the vented pad to the vented seat motor, for seat ventilation.

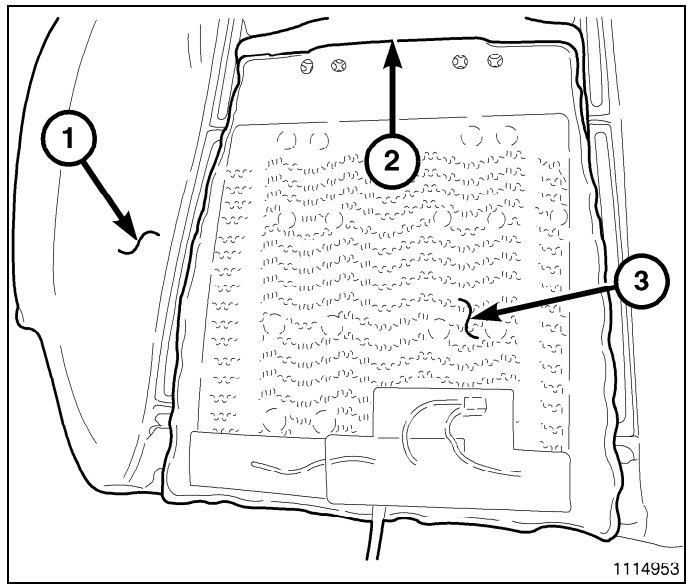

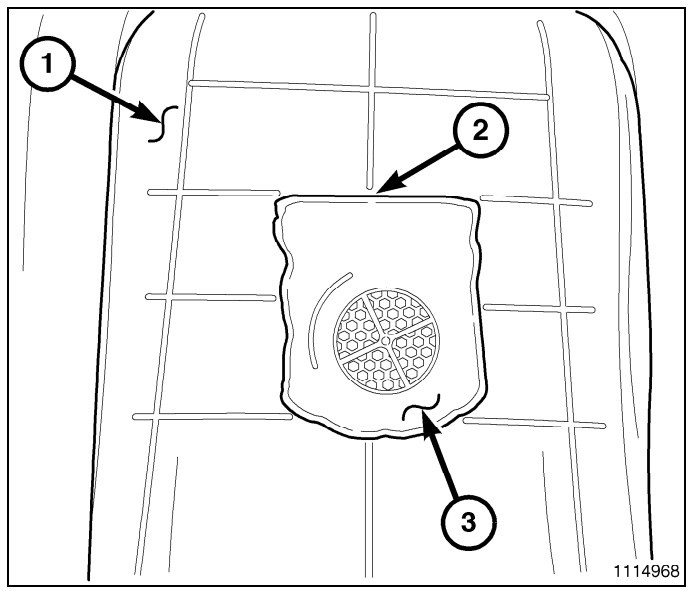

Operation

The vented seat pads provide a path for the air to be pulled away from the seat bottom and seat back surfaces for seat ventilation.

Removal

NOTE: Seat back shown. Seat bottom similar.

1. Disconnect and isolate the negative battery cable.
2. Remove the seat cushion or seat back cover.
3. Disconnect the heated seat electrical connector.
4. Carefully guide the vented seat pad flange (3) through the opening (2) in the seat foam (1).

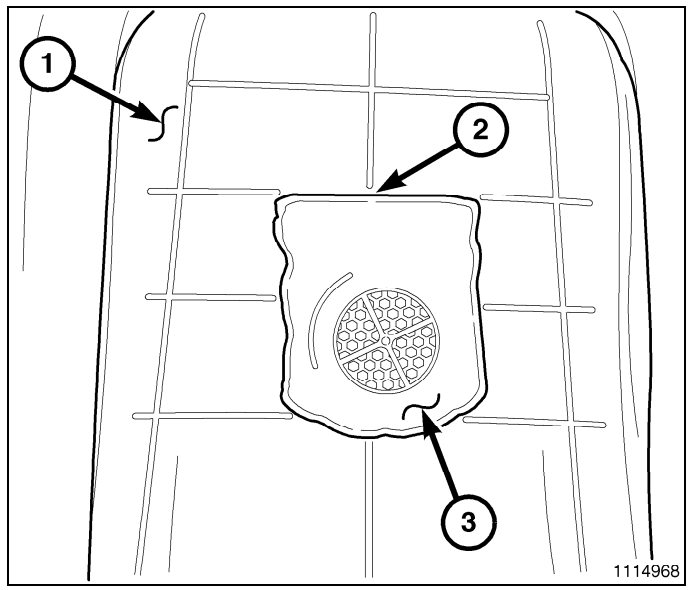

5. Remove the vented seat pad (3) by peeling the pad away from the cushion (1). Be careful not to remove excessive foam from the cushion.

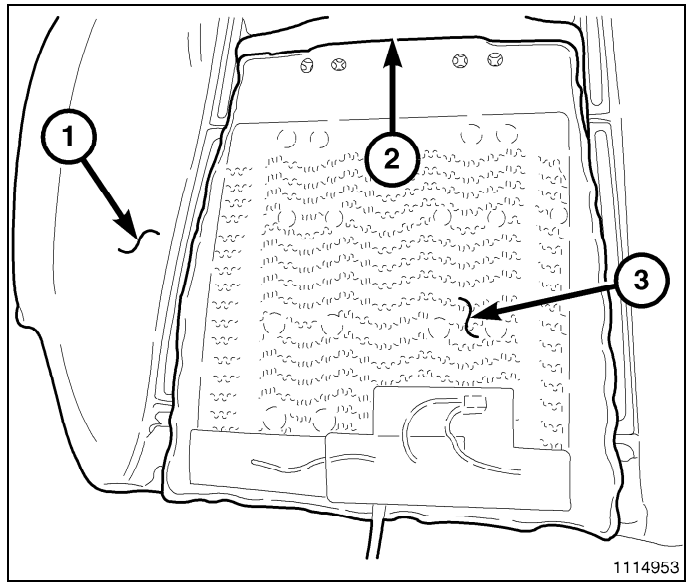

Installation

NOTE: Seat back shown. Seat bottom similar.

1. Install the replacement vented/heated seat pad (3) to the seat cushion (1) by placing it directly where the original pad was removed from.

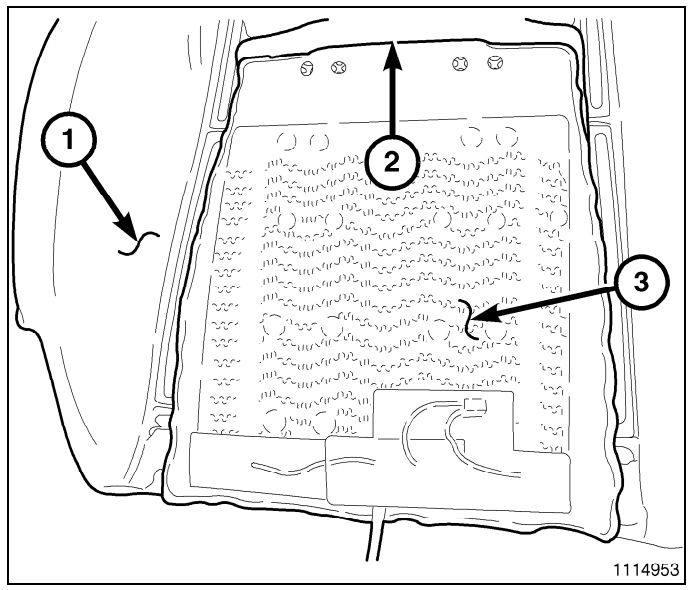

2. Carefully guide the vented seat pad flange (3) through the opening (2) in the seat back or seat bottom foam.
3. Connect the heated seat electrical connector.
4. Install the seat cushion or seat back cover.
5. Reconnect the negative battery cable.
6. Verify vented seat system operation.

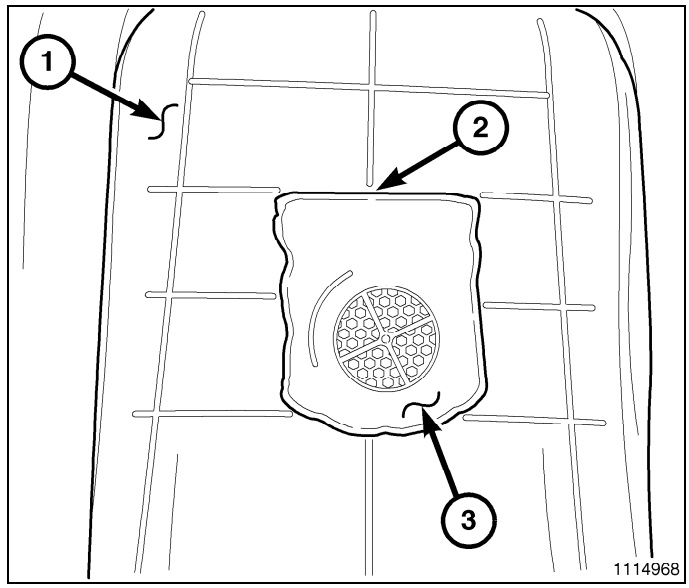

SWITCH, Heated Steering Wheel

Description

The heated steering wheel switch (3) is a momentary contact push button switch mounted in the instrument panel center bezel that operates the heated steering wheel system. The heated steering wheel switch has one Light-Emitting Diode (LED) indicator lamps, which indicate when the heated steering wheel is on or off.

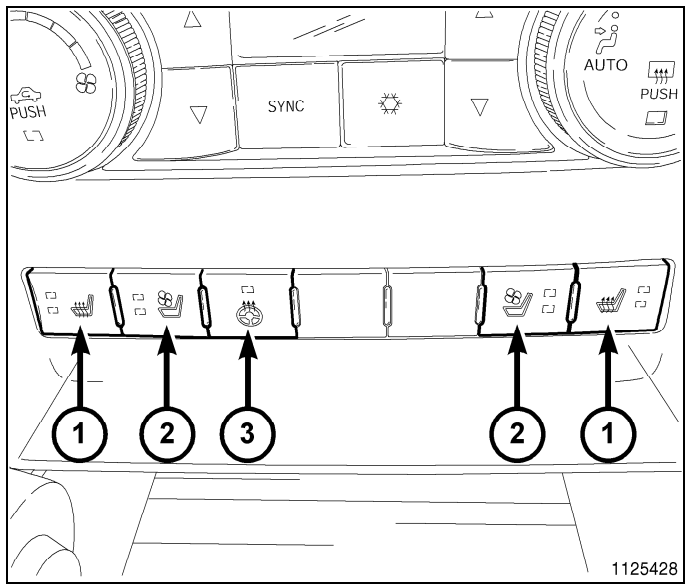

Operation

The heated steering wheel switch allows the driver to turn on and off the heated steering wheel. The heated steering wheel will remain off until the driver presses the switch. Once the switch is pressed the Light Emitting Diode (LED) on the face of the switch will illuminate, indicating that the heating element in the steering wheel is operating. Pressing the switch while the heated steering wheel is on, will turn the heating steering wheel and the LED on the switch off.

The heated steering wheel switch also functions as a visual indicator for a fault with the heated steering wheel system. When the heated seat switch is pressed and a fault is present in the heated steering wheel system the LED on the switch will illuminate for 2 seconds, and then immediately turn off.

Removal

1. Disconnect and isolate the battery negative cable.
2. Remove the instrument panel center bezel, (Refer to 23 - Body/Instrument Panel/BEZEL, Instrument Panel - Removal).
3. Disconnect the lower switch pod electrical connector.
4. Remove the lower switch pod fasteners (2) from the center bezel.
5. Remove the switch pod from the center bezel.

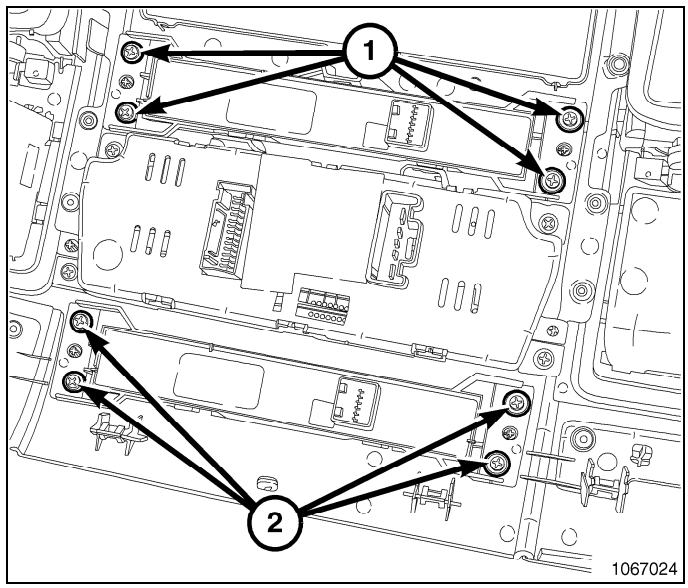

Installation

1. Align the switch pod to the instrument panel center bezel.
2. Install the lower switch pod fasteners (2) to the center bezel.
3. Connect the switch pod electrical connector.
4. Install the instrument panel center bezel, (Refer to 23 - Body/Instrument Panel/BEZEL, Instrument Panel - Installation).
5. Connect the battery negative cable.

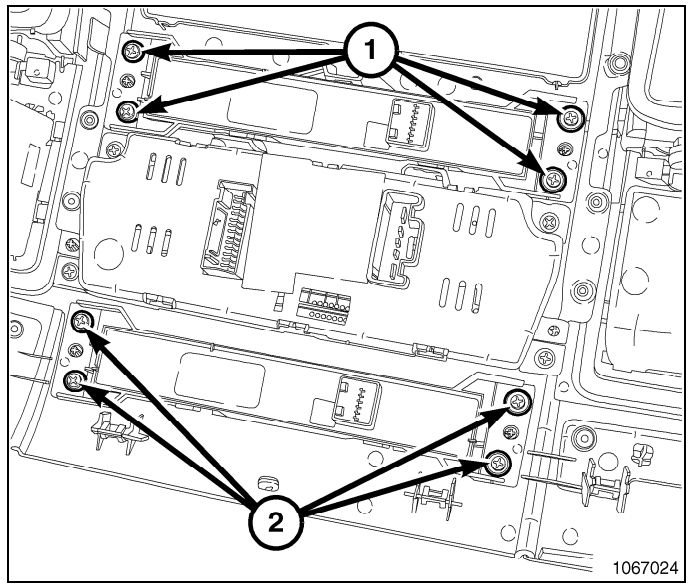

SWITCH, Vented Seat

Description

The Vented Seat Switches(2) are momentary contact push button switches mounted in the instrument panel center bezel that operate the vented seat system. Each vented seat switch has two Light-Emitting Diode (LED) indicator lamps, which indicate the selected level (Low or High) of the vented seats..

The LED indicator lamps in each vented seat switch cannot be repaired. If the LED lamps are faulty or damaged, or the switch is inoperative or damaged the switch pod assembly must be replaced.(Refer to 08 - Electrical/8G - Heated/Cooled Systems/Heated/Cooled Accessories/SWITCH, Vented Seat - Removal) for the switch pod replacement procedure.

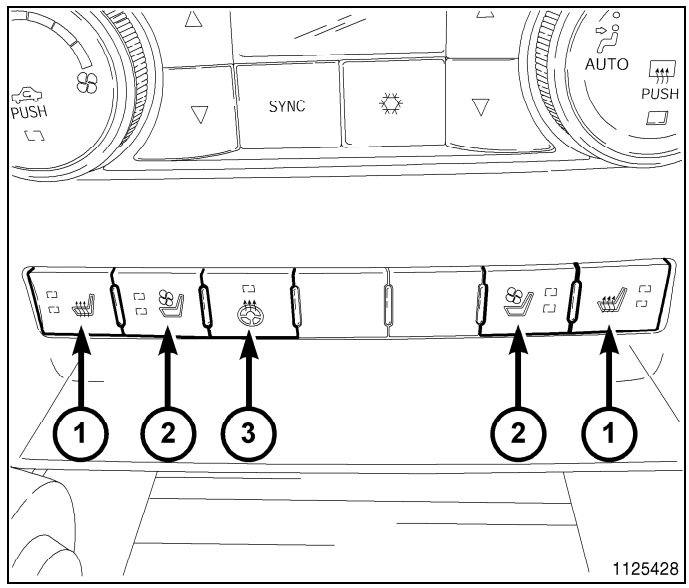

Operation

The vented seat switches are a momentary push button type switch used to control the vented seat settings. There are 3 settings for the vented seats, OFF, HI, and LO. The vented seats start in the OFF setting, where none of the LEDs on the switch are illuminated. Pressing the switch once will change the setting from the OFF setting to the HI setting, and will illuminate both LEDs on the switch. Pressing the vented seat switch again will change the setting from the HI setting to the LO setting and only one LED on the switch will be lit. Pressing the switch once again will change the setting from the LO setting to the OFF setting again.

If the switch LED illuminates and shuts off again after only 2 seconds of being lit, a fault with the vented seat system is present and diagnosis of the vented seat system will be necessay.(Refer to 08 - Electrical/8G - Heated/Cooled Systems/Heated/Cooled Accessories - Diagnosis and Testing)

Removal

1. Disconnect and isolate the battery negative cable.
2. Remove the instrument panel center bezel, (Refer to 23 - Body/Instrument Panel/BEZEL, Instrument Panel - Removal).
3. Disconnect the lower switch pod electrical connector.
4. Remove the lower switch pod fastners(2) from the center bezel.
5. Remove the switch pod from the center bezel.

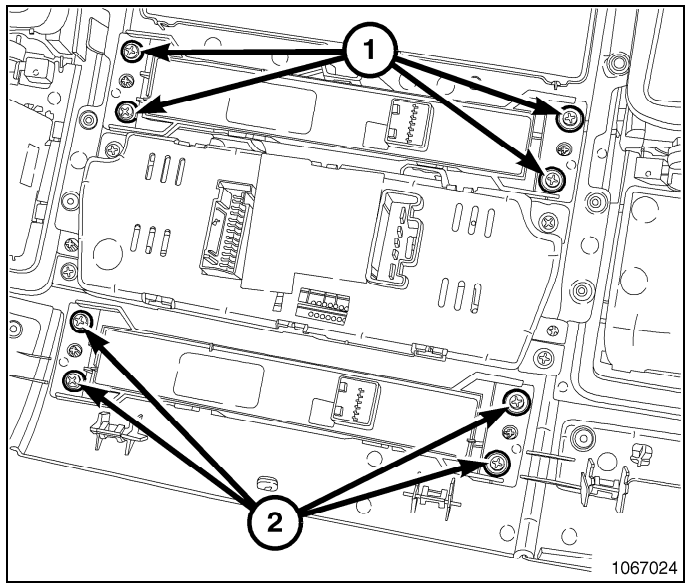

Installation

1. Align the switch pod to the instrument panel center bezel.
2. Install the lower swith pod fastners(2) to the center bezel.
3. Connect the switch pod electrical connector.
4. Install the instrument panel center bezel, (Refer to 23 - Body/Instrument Panel/BEZEL, Instrument Panel - Installation).
5. Connect the battery negative cable.

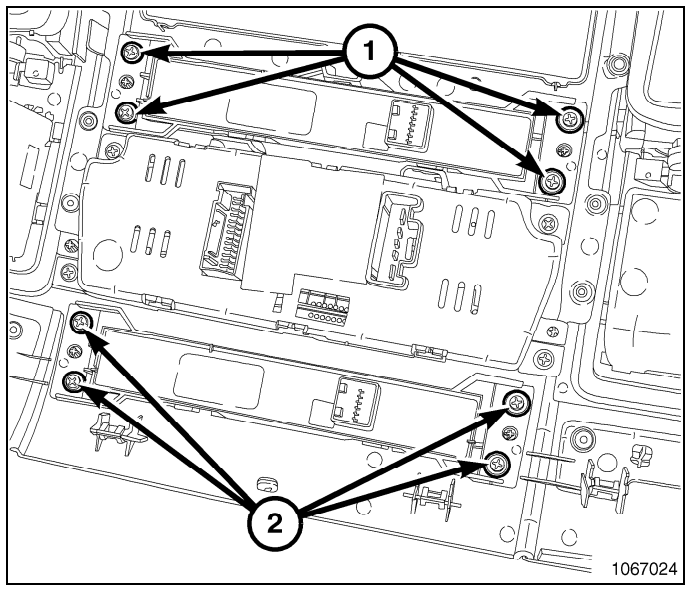

WHEEL, Heated Steering

Description

The heated steering wheel is an option only available on vehicles that have at least 2 heated seats. To easily verify if the vehicle has the heated steering wheel option look for the heated steering wheel switch located on the switch pod of the instrument panel center bezel directly under the HVAC controls. The heating element is made of copper wire and is located within the steering wheel, sandwiched between the leather and the substrate material of the steering wheel. The heating element is not serviced separately from the steering wheel.

Operation

The heated steering wheel has two selectable settings, ON and OFF. The heated steering wheel only operates with the vehicle's ignition is in the RUN position, and will always stay in the OFF setting unless the heated seat switch is pressed. Once the switch is pressed the Light Emitting Diode (LED) on the face of the switch will illuminate, indicating that the

heating element in the steering wheel is operating. Pressing the switch while the heated steering wheel is on, will turn the heating steering wheel and the LED on the switch off.

Normal heating of the steering wheel will last a minimum of 52 minutes, unless the switch is pressed or a system fault has been set. Heating of the element is controlled by the Heated Seat Module (HSM), also know as the Comfort Seat Wheel Module (CSWM), and a temperature sensor integrated into the steering wheel heating element. The integrated temperature sensor relays the temperature of the steering wheel to the HSM, and adjusts the internal heat setting accordingly.

The Heated steering wheel will automatically shut off if the heating element reaches a temperature greater than 50 degrees Celsius (122 degrees Fahrenheit).

Removal

NOTE: The steering wheel heating element is not serviced separately from the steering wheel, and the steering wheel assembly must be replaced. For heated steering wheel replacement,(Refer to 19 - Steering/Column/WHEEL, Steering - Removal)and(Refer to 19 - Steering/Column/WHEEL, Steering - Installation).

Installation

NOTE: The steering wheel heating element is not serviced separately from the steering wheel, and the steering wheel assembly must be replaced. For heated steering wheel replacement, (Refer to 19 - Steering/Column/WHEEL, Steering - Removal) and (Refer to 19 - Steering/Column/WHEEL, Steering - Installation).

HORN

TABLE OF CONTENTS

page

HORN
- DESCRIPTION 2
- OPERATION 2
- DIAGNOSIS AND TESTING 2

HORN
- REMOVAL 3
- INSTALLATION 3

page

SWITCH, HORN
- REMOVAL 3
- INSTALLATION 5

Horn

Description

This vehicle comes equipped with either a single or a dual-note horn system that features one or two electromagnetic horn units. The horn system includes the following major components:

- **Horn(s)** - The horn(s) are located on the upper radiator cross member at the front of the engine compartment, below the upper splash shield. The splash shield must be removed to gain access to the horns for removal.
- **Horn Fuse(s)** - The horn fuse(s) are located in the Totally Integrated Power Module (TIPM).
- **Horn Switch** - The horn switch consists of four individual buttons that are mounted to the steering wheel armature beneath the driver airbag unit. The four button style switches are only serviced as a unit.

On vehicles with an optional Electronic Vehicle Information Center (EVIC), the horn switch shares the same circuit as the right EVIC switch. This switch is also a LIN bus slave, sharing a LIN input circuit to the CCN (LIN master) with the Steering Control Module (SCM), which is also a LIN bus slave. The right EVIC switch also shares an IOD feed and a ground feed in common with the SCM.
Vehicles with an optional EVIC and steering wheel mounted switches (except LX) have a unique horn switch electrical architecture. For more information on the EVIC (Refer to 08 - Electrical/8M - Message Systems/Message Center/CENTER, Electronic Vehicle Information - Description).

Operation

The horn system operates on battery current received through a fuse in the Totally Integrated Power Module (TIPM). The horn system circuit is designed so that the system will remain operational, regardless of the ignition switch position.

Diagnosis and Testing

The most reliable, efficient, and accurate means to diagnose the horn system requires the use of a scan tool and the proper Diagnostic Procedures information.

Refer to the appropriate wiring information.

In most cases, any problem involving continually sounding horns can be quickly alleviated by removing the horn fuse from the Totally Integrated Power Module (TIPM).

WARNING: Disable the airbag system before attempting any steering wheel, steering column, seat belt tensioner, side airbag or instrument panel component diagnosis or service. Disconnect and isolate the negative battery (ground) cable. Wait two minutes for the airbag system capacitor to discharge before performing further diagnosis or service. This is the only sure way to disable the airbag system. Failure to follow these instructions may result in accidental airbag deployment and possible serious or fatal injury.

HORN

Removal

1. Disconnect and isolate the battery negative cable.
2. Remove the front upper splash shield.
3. Disconnect the wire harness connectors (1) from the horns (3).
4. Remove mounting bolt securing the horn bracket (2) and remove horns.

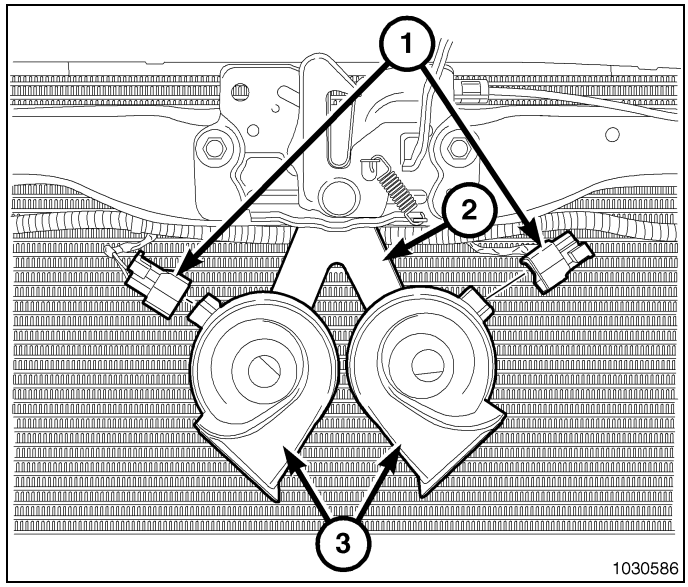

Installation

1. Position horns (3) and mounting bracket (2), install and tighten mounting bolt.
2. Connect wire harness connectors (1).
3. Install the front upper splash shield.
4. Connect battery negative cable.

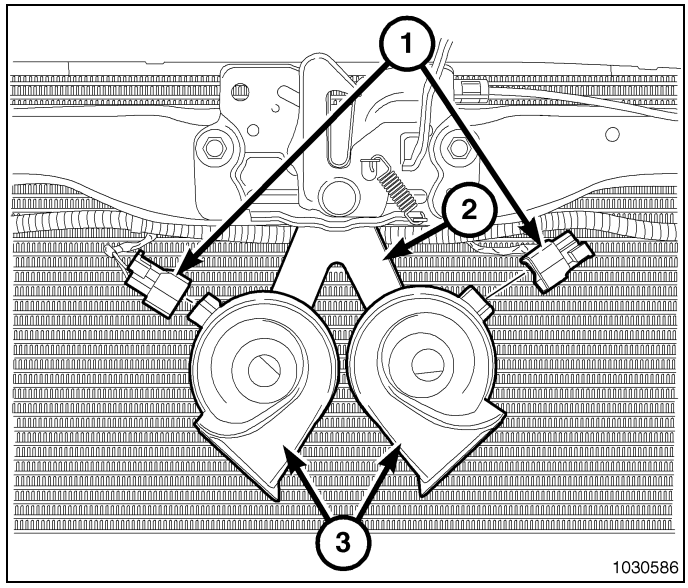

SWITCH, Horn

Removal

WARNING:
On vehicles equipped with an airbag, refer to restraint systems for warnings and cautions before servicing the horn switch.

1. Disconnect and isolate the battery negative cable.
2. Remove the steering wheel assembly (2), (Refer to 19 - Steering/Column/WHEEL, Steering - Removal).

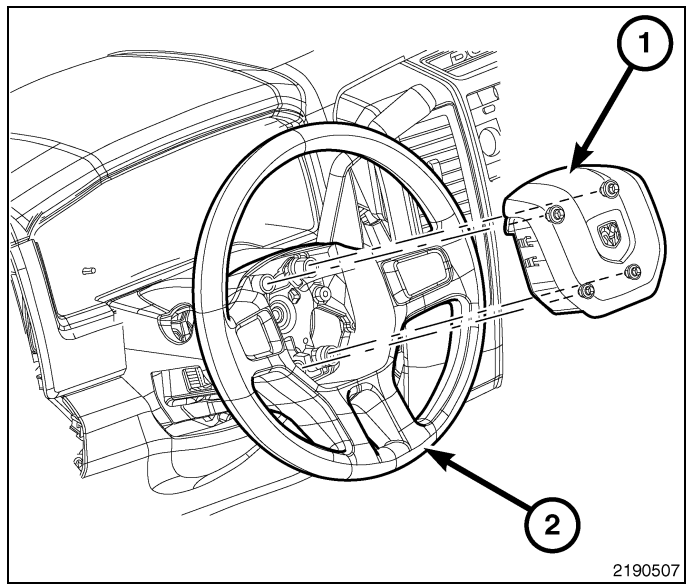

3. Remove the two fasteners (2) and remove the steering wheel back cover (3).
4. Squeeze the tabs on each horn switch and remove the switches from the steering wheel armature.
5. Disconnect the electrical connector and remove the switch assemblies.

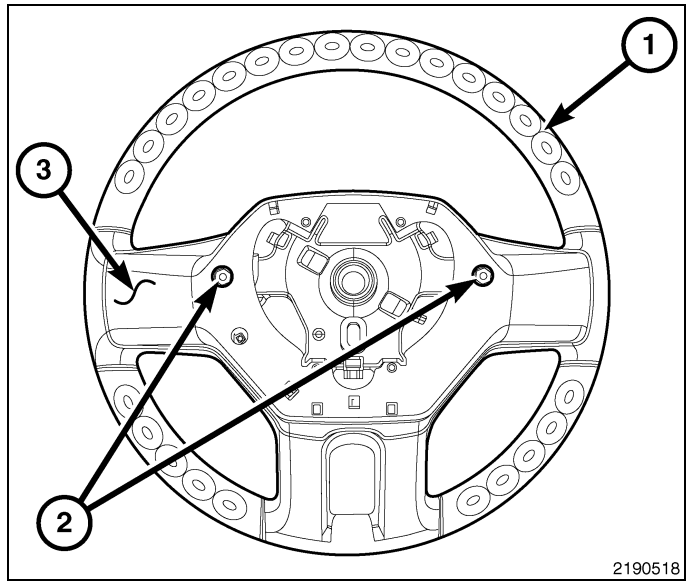

Installation

1. Install the four horn button switches and connect the electrical connector.
2. Install the steering wheel back cover (3) and the two fasteners (2).

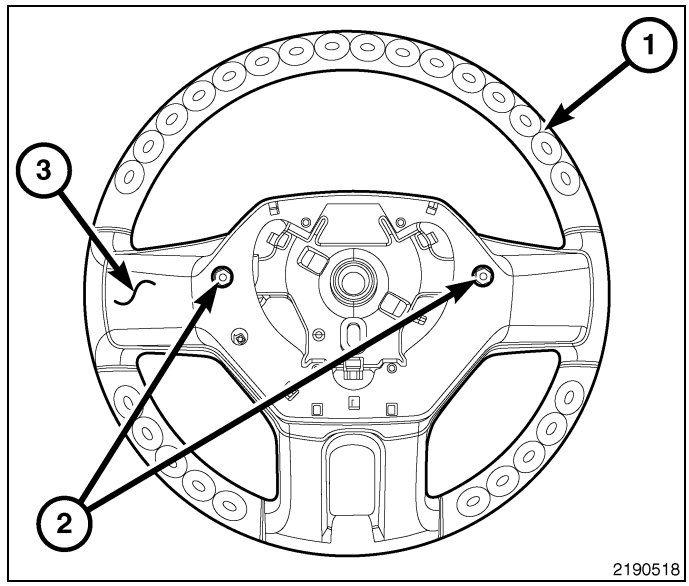

3. Install the steering wheel assembly (2), (Refer to 19 - Steering/Column/WHEEL, Steering - Installation).
4. Connect the battery negative cable.

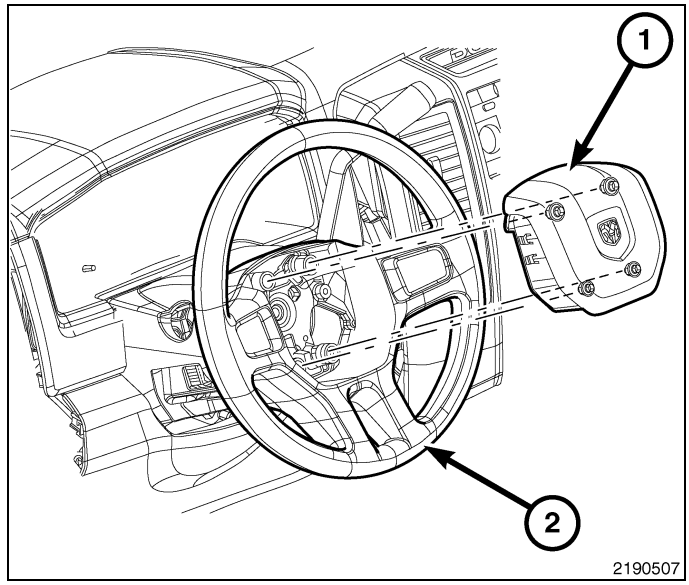

IGNITION CONTROL

TABLE OF CONTENTS

page

IGNITION CONTROL
- DESCRIPTION . . . 2
- SPECIFICATIONS
  - TORQUE . . . 2
  - ENGINE FIRING ORDER - 3.7L . . . 3
  - ENGINE FIRING ORDER - 4.7L . . . 4
  - SPARK PLUGS . . . 4
  - ENGINE FIRING ORDER - 5.7L . . . 5
  - IGNITION COIL RESISTANCE - 3.7L . . . 5
  - IGNITION COIL RESISTANCE - 4.7L . . . 5
  - IGNITION COIL RESISTANCE - 5.7L . . . 5
  - IGNITION TIMING . . . 5

CAPACITOR, IGNITION
- DESCRIPTION . . . 6
- OPERATION . . . 6
- REMOVAL . . . 6
- INSTALLATION . . . 7

COIL, IGNITION
- REMOVAL
  - 3.7L . . . 7
  - 4.7L . . . 8
  - 5.7L . . . 10
- INSTALLATION
  - 3.7L . . . 11
  - 4.7L . . . 12
  - 5.7L . . . 13

SENSOR, CAMSHAFT POSITION
- DESCRIPTION
  - 3.7L AND 4.7L . . . 14
  - 5.7L . . . 15
- OPERATION
  - 3.7L . . . 15
  - 4.7L . . . 16
  - 5.7L . . . 16

page

- REMOVAL
  - 3.7L . . . 17
  - 4.7L . . . 17
  - 5.7L . . . 18
- INSTALLATION
  - 3.7L . . . 19
  - 4.7L . . . 19
  - 5.7L . . . 20

SENSOR, KNOCK
- DESCRIPTION . . . 20
- OPERATION . . . 20
- REMOVAL
  - 3.7L . . . 21
  - 4.7L . . . 21
  - 5.7L . . . 22
- INSTALLATION
  - 3.7L . . . 23
  - 4.7L . . . 23
  - 5.7L . . . 24

SPARK PLUG
- REMOVAL
  - 3.7L . . . 25
  - 4.7L . . . 25
  - 5.7L . . . 26
- INSTALLATION
  - 3.7L . . . 26
  - 4.7L . . . 27
  - 5.7L . . . 28

SWITCH, IGNITION
- DESCRIPTION . . . 29

Ignition Control

Description

The ignition system is controlled by the Powertrain Control Module (PCM) on all engines.

This engine shares an ignition coil (2) and an ignition cable (1) between the two cylinders. The three coils fit into machined holes in the cylinder head for cylinders 1, 3, and 5. Rubber boots seal the secondary terminal ends of the coils to the top of the spark plugs. The spring is used for a mechanical contact between the coil and the top of the spark plug. These rubber boots and springs are a permanent part of the coil and are not serviced separately. An O-ring is used to seal the coil at the opening into the cylinder head. A separate electrical connector is used for each coil.

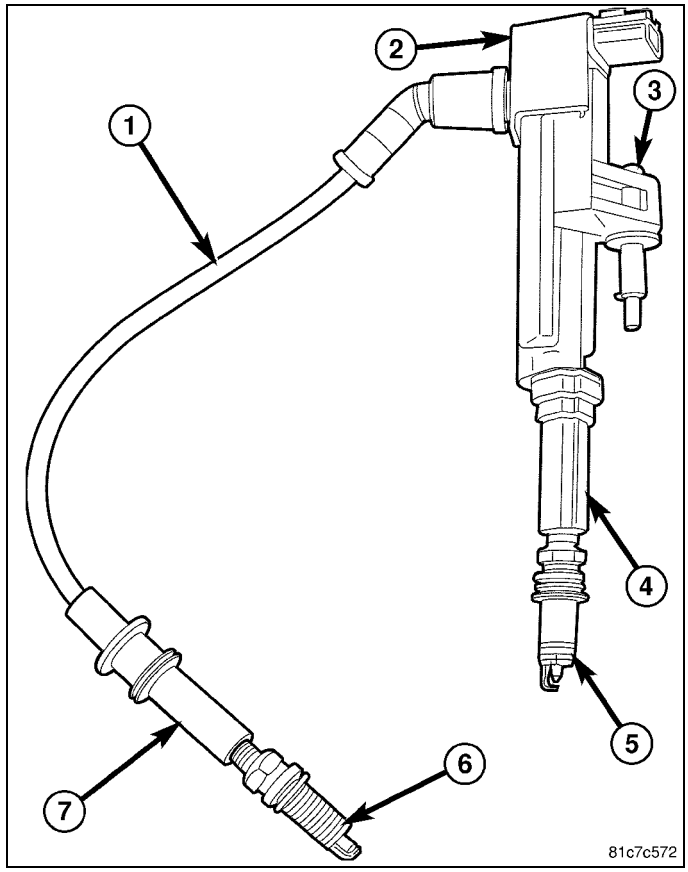

The 3.7L engine uses a distributorless waste spark system. In a wasted spark system, the spark plugs fire in pairs even though one is on its compression stroke and one is on its exhaust stroke. The extra spark on the exhaust stroke has no effect and is thus "wasted". This design halves the number of components in a typical ignition system

Two knock sensors (one for each cylinder bank) are used to help control spark knock.

The Auto Shutdown (ASD) relay provides battery voltage to each ignition coil.

The ignition system consists of:

- 6 Spark Plugs
- 3 Separate Ignition Coils
- 3 Separate Ignition Cables
- 2 Knock Sensors
- Powertrain Control Module (PCM)
- Also to be considered part of the ignition system are certain inputs from the Crankshaft Position, Camshaft Position, 2 knock and MAP Sensors

Specifications

TORQUE

DESCRIPTION	N·m	Ft. Lbs.	In. Lbs.
Camshaft Position Sensor - 3.7L, 4.7L AND 5.7L Gas Engines	12	-	106
Crankshaft Position Sensor - 3.7L AND 4.7L	28	21	205
Crankshaft Position Sensor - 5.7L	12	9	105
Ignition Coil Mounting - 3.7L	8	-	70
Ignition Coil Mounting - 4.7L ***	12	-	106
Ignition Coil Mounting - 5.7L	7	-	62

DESCRIPTION	N·m	Ft. Lbs.	In. Lbs.
* Knock Sensor - 3.7L, 4.7L , 5.7L	20	15 +/- 2	176
Spark Plugs - All 4.7L (Upper or lower row) (New plugs/gaskets)	27 +/- 3	20	-
Spark Plugs - All 4.7L (Upper or lower row) (Used plugs/gaskets)	22 +/- 3	16	-
** Spark Plugs - 5.7L	18 (± 3)	13 (± 2)	-
* Do not apply any sealant, thread-locker or adhesive to bolts. Poor sensor performance may result.			
** Torque critical tapered design. Do not exceed 15 ft. lbs.			
*** This same bolt is also used to mount the intake manifold.			

ENGINE FIRING ORDER - 3.7L

1 - 6 - 5 - 4 - 3 - 2

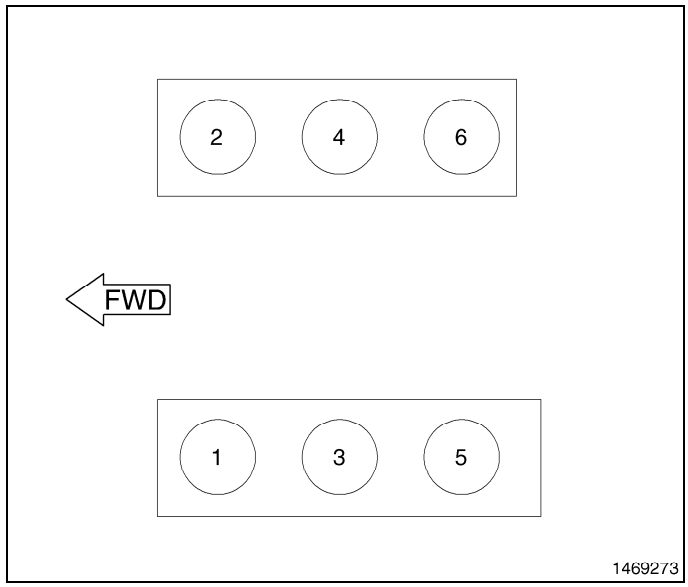

ENGINE FIRING ORDER - 4.7L

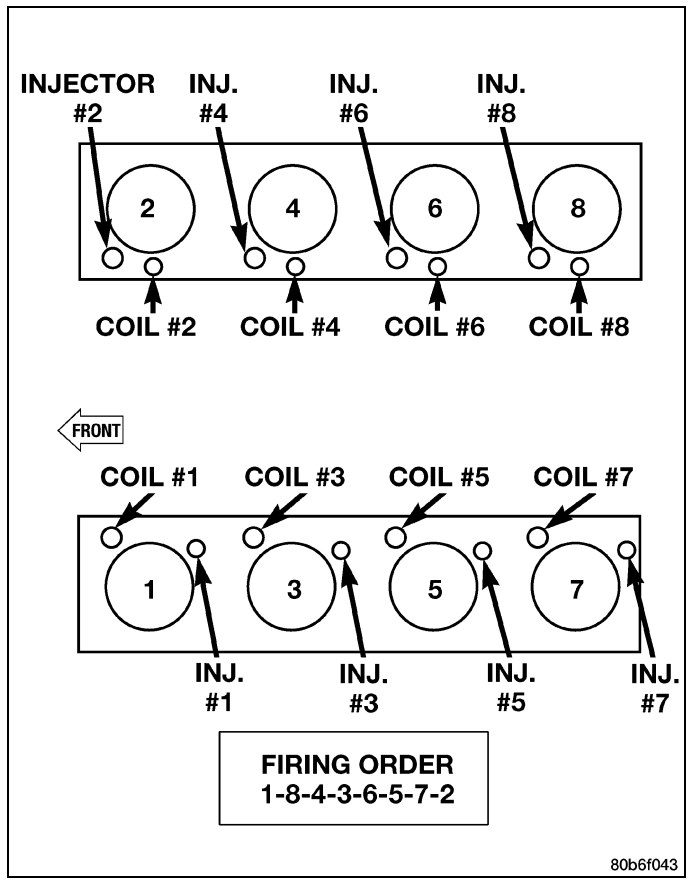

SPARK PLUGS

ENGINE	PLUG TYPE	ELECTRODE GAP
3.7L	ZFR6F - 11G (NGK)	1.1mm (0.043 in.)
4.7L (intake/upper row)	FR8TE2	1.0 mm (.040 in.)
4.7L (exhaust/lower row)	FR8T1332 (iridium tip)	1.2mm (0.50 in.)
5.7L	REC14MCC4	1.0 mm (.040 in.)

ENGINE FIRING ORDER - 5.7L

The firing order for the 5.7L is 1-8-4-3-6-5-7-2.

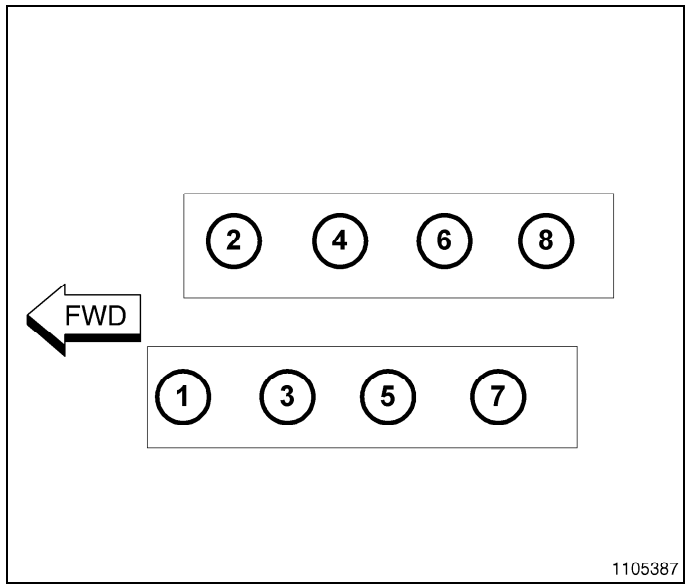

IGNITION COIL RESISTANCE - 3.7L

PRIMARY RESISTANCE 21-27°C (70-80°F)	SECONDARY RESISTANCE 21-27°C (70-80°F)
0.6 - 0.9 Ohms	6,000 - 9,000 Ohms

IGNITION COIL RESISTANCE - 4.7L

PRIMARY RESISTANCE 21-27°C (70-80°F)	SECONDARY RESISTANCE 21-27°C (70-80°F)
0.6 - 0.9 Ohms	6,000 - 9,000 Ohms

IGNITION COIL RESISTANCE - 5.7L

PRIMARY RESISTANCE @ 21-27°C (70-80°F)
0.558 - 0.682 Ohms (Plus or Minus 10% @ 70-80° F)

IGNITION TIMING

Ignition timing is not adjustable on any engine.

CAPACITOR, Ignition

Description

One coil capacitor (1) is used. It is located in the right-rear section of the engine compartment.

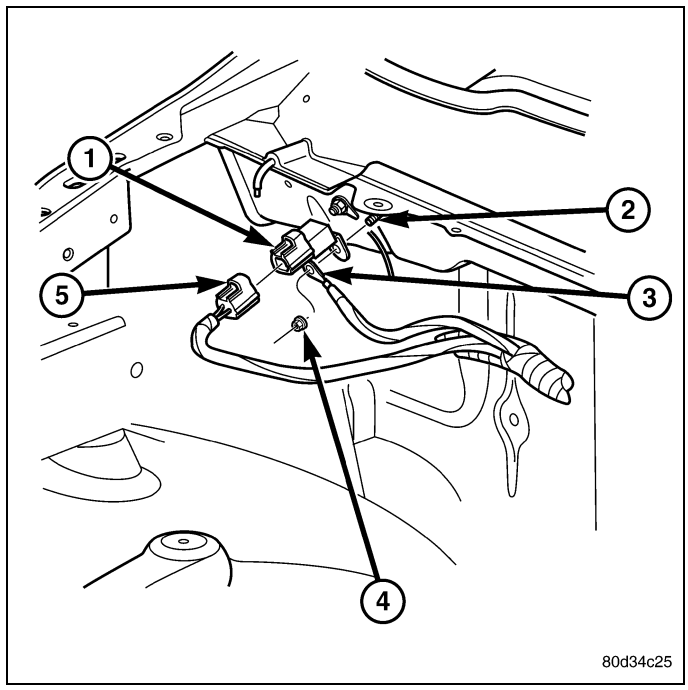

Operation

The coil capacitor(s) help dampen the amount of conducted electrical noise to the camshaft position sensor, crankshaft position sensor, and throttle position sensor. This noise is generated on the 12V supply wire to the ignition coils and fuel injectors.

Removal

The coil capacitor is located in the right-rear section of the engine compartment. It is attached with a mounting stud and nut.

1. Disconnect electrical connector (5) at capacitor.
2. Remove mounting nut and remove ground strap.
3. Remove capacitor (1).

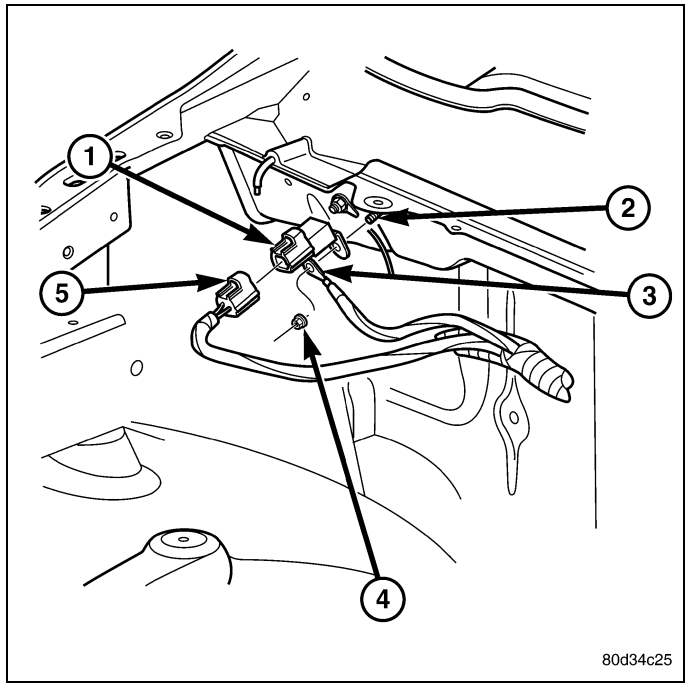

Installation

1. Position capacitor (1) to mounting stud (2).
2. Position ground strap (3) to mounting stud (2).
3. Tighten nut (4) to 7 N·m (60 in. lbs.) torque.
4. Connect electrical connector (5) to coil capacitor.

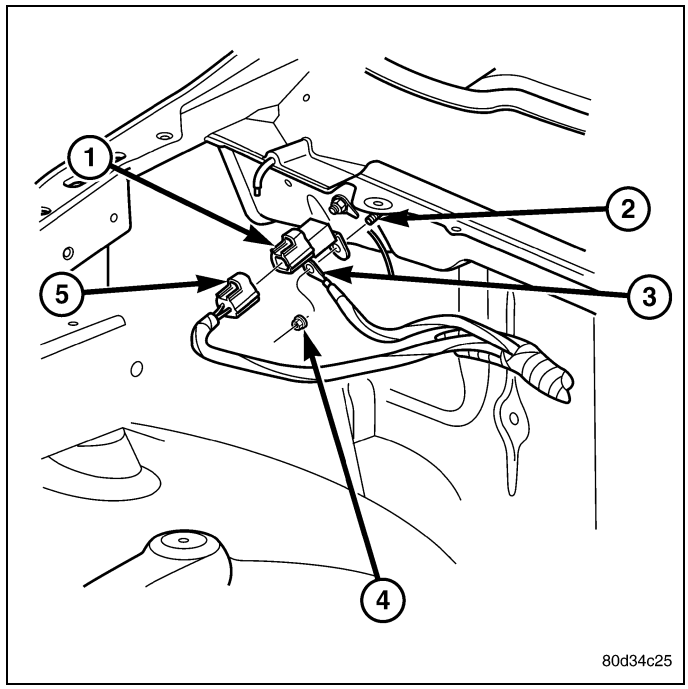

COIL, Ignition

Removal

3.7L

NOTE: An ignition coil (2) with a spark plug wire (1) attatched is used for two cylinders. The three coils fits into machined holes in the cylinder head for cylinders 1, 3, and 5. A mounting stud/nut secures each coil to the top of the intake manifold . The bottom of the coil is equipped with a rubber boot (4) to seal the spark plug (5) to the coil. Inside each rubber boot is a spring. The spring is used for a mechanical contact between the coil and the top of the spark plug. These rubber boots and springs are a permanent part of the coil and are not serviced separately. An O-ring is used to seal the coil at the opening into the cylinder head.

1. Depending on which coil is being removed, the throttle body air intake tube or intake box may need to be removed to gain access to coil.
2. Disconnect electrical connector from coil by pushing downward on release lock on top of connector and pull connector from coil.
3. Disconnect spark plug wire from coil (1).
4. Clean area at base of coil with compressed air before removal.

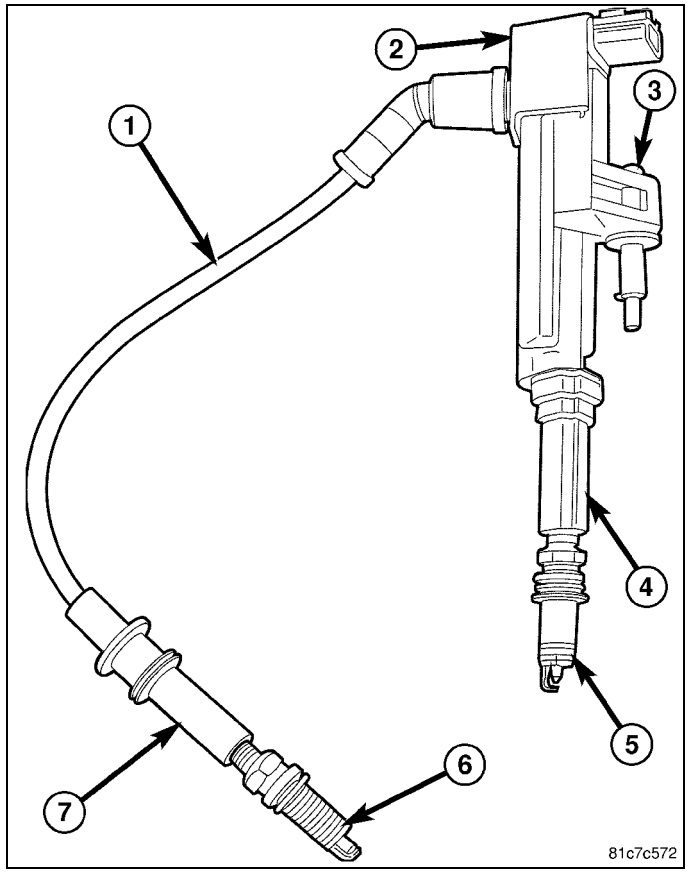

5. Remove coil mounting bolt.
6. Carefully pull up coil (1) from cylinder head opening with a slight twisting action.
7. Remove coil from vehicle.

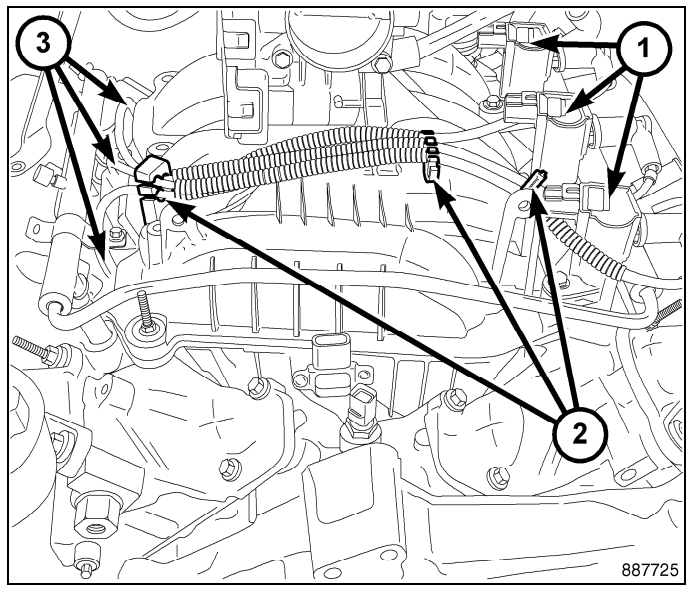

4.7L

An individual ignition coil (1) is used for each pair of spark plugs. Each coil attaches directly to the top of the eight **upper** bank of spark plugs. Secondary cables (3) connect each coil to the eight **lower** bank of spark plugs. The coils themselves fit into machined holes in the cylinder head. Each coil also has its own individual electrical connector (2).

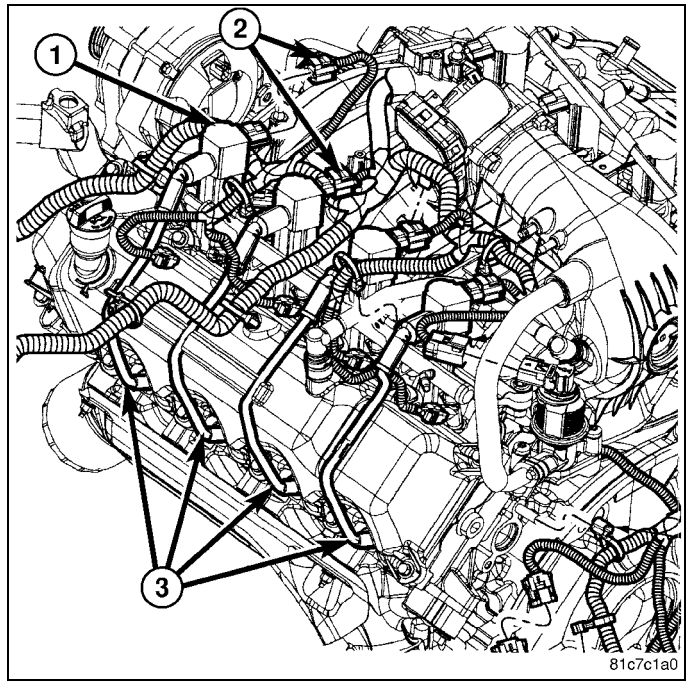

NOTE: The bolt used to mount the ignition coil assembly is the same bolt used to mount the intake manifold. If replacing either one or all eight coils, check and re-torque all eight bolts.

A mounting bolt (3) secures each coil assembly to the top of the intake manifold. The bottom of the coil assembly is equipped with a rubber boot (4) to seal the spark plug (5) to the coil. Inside each rubber boot is a spring. The spring is used for a mechanical contact between the coil and the top of the upper bank of spark plugs. These rubber boots and springs are a permanent part of the coil assembly and are not serviced separately. The rubber boot (4) is also used to seal the coil at the opening into the cylinder head.

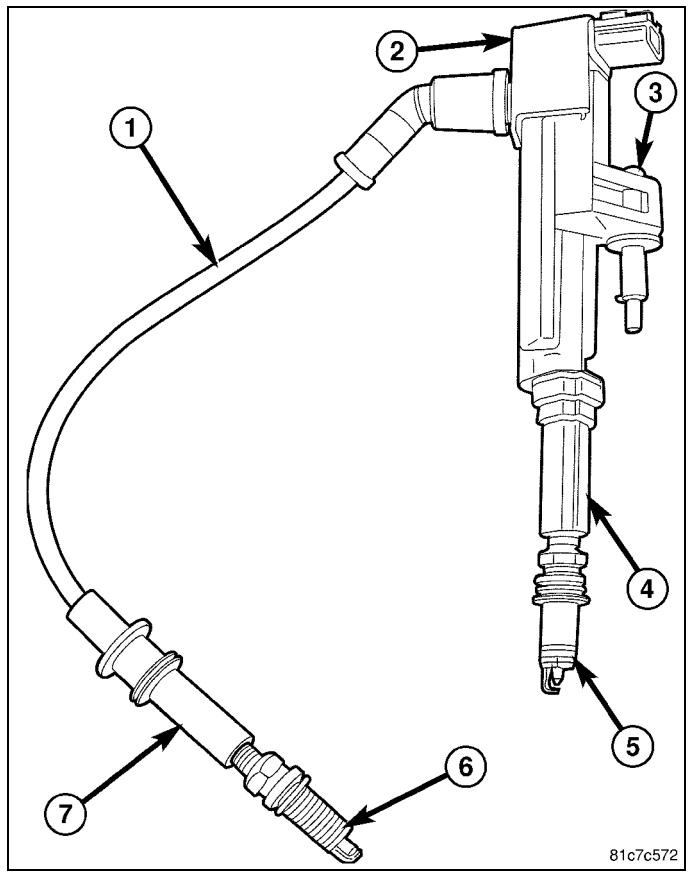

1. Depending on which coil assembly is being removed, the throttle body air intake tube or intake box may need to be removed, to gain access to the coil.
2. Disconnect the electrical connector (2) from the coil assembly by pushing downward on the release lock on the top of the connector and pull connector from the coil.
3. Disconnect the secondary cable (3) at the coil assembly.

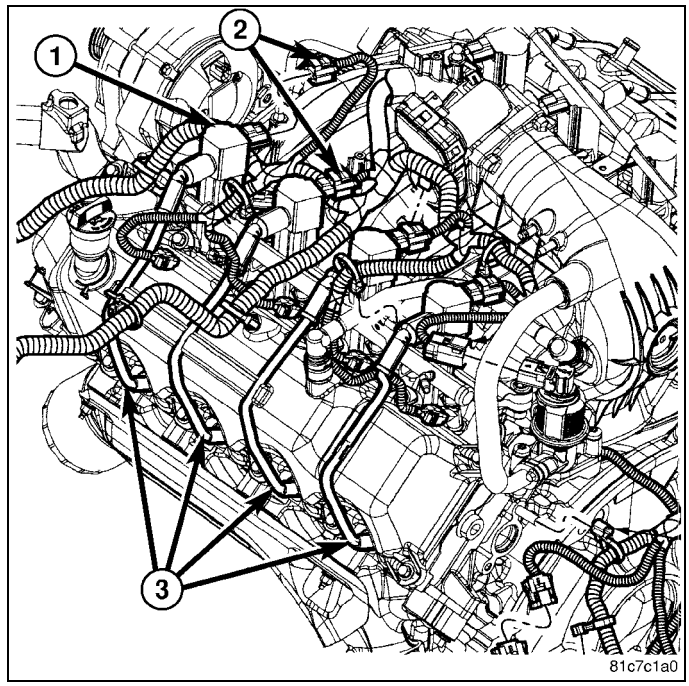

4. Clean the area at the base of the coil assembly with compressed air before removal.
5. Remove the coil assembly mounting bolt (3).
6. Carefully pull up the coil assembly (2) from the cylinder head opening with a slight twisting action. This helps to disengage the rubber boot (4) from the spark plug (5).
7. Remove the coil assembly from the engine.

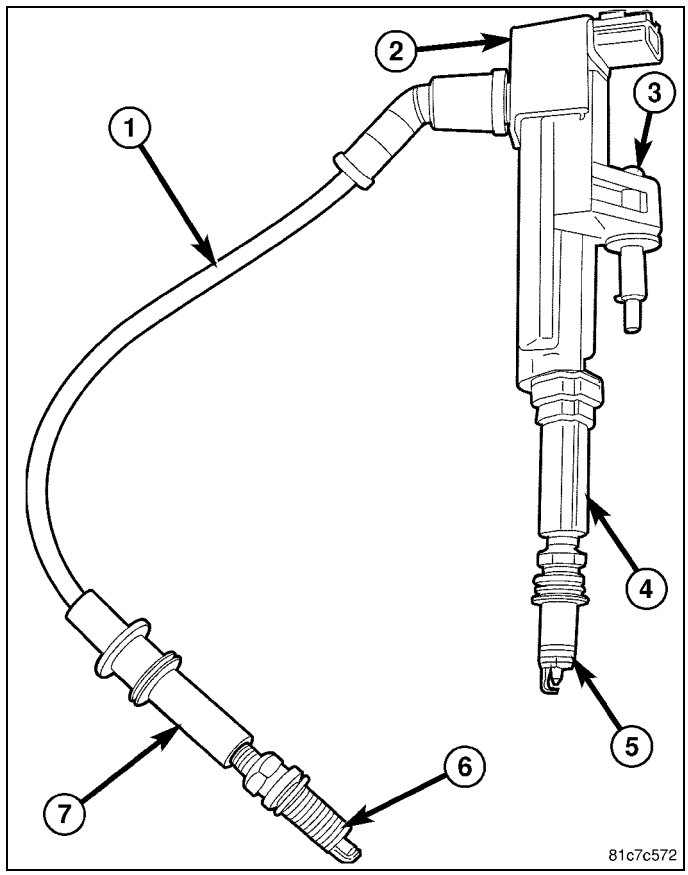

5.7L

1. Disconnect the electrical connector (1) from coil (3).
2. Clean area at base of coil with compressed air before removal.
3. Remove two mounting bolts (2) (note that mounting bolts are retained to coil).

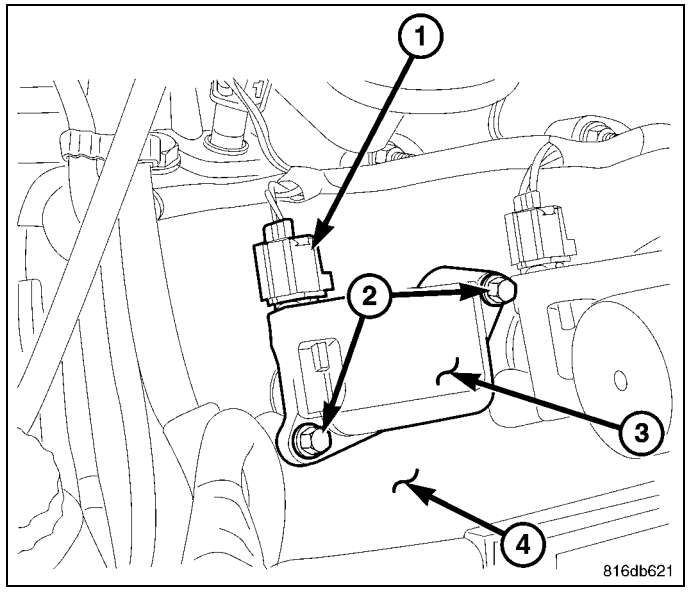

4. Carefully pull up coil (1) from valve cover.
5. Remove coil (1) from vehicle.

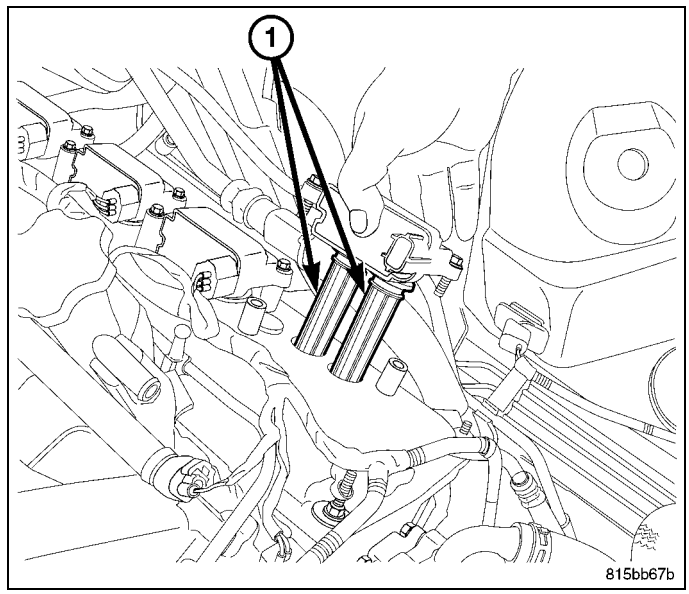

Installation

3.7L

1. Using compressed air, blow out any dirt or contaminants from around top of spark plug.
2. Check the condition of the coil rubber boot (4). To aid in coil installation, apply silicone based grease such as Mopar® Dielectric Grease # J8126688 into the spark plug end of the rubber boot (4) and to the top of the spark plug (5).

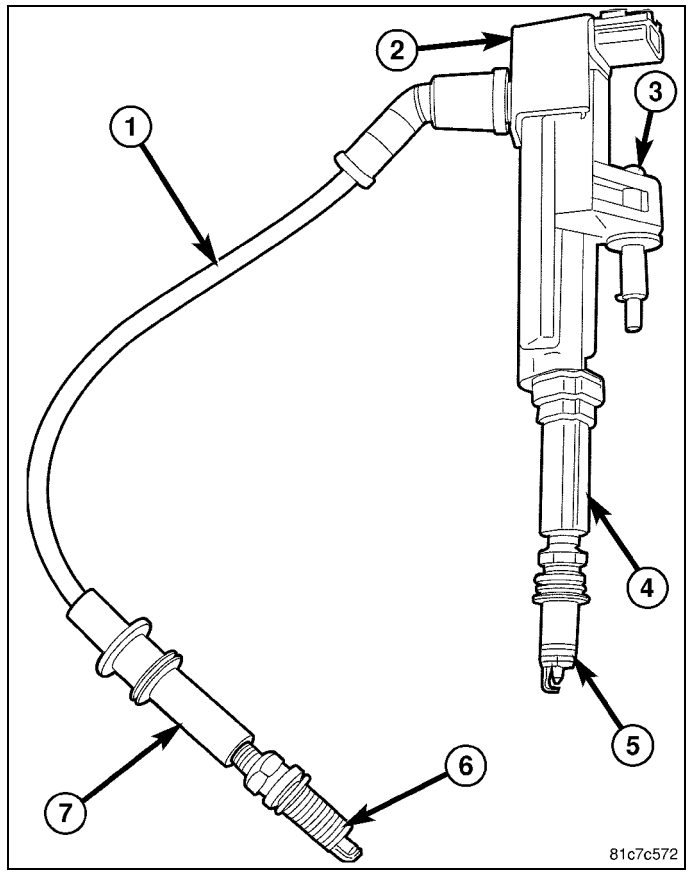

3. Position the ignition coil assembly (1) into the cylinder head opening. Using a twisting action, push the ignition coil assembly onto the spark plug.
4. Install coil mounting bolt. Tighten to 8 N·m (70 in.lbs).
5. Connect the electrical connector to the ignition coil assembly (1) by snapping into position.
6. Install the spark plug wires (3).
7. If necessary, install the throttle body air intake tube, or intake air box.

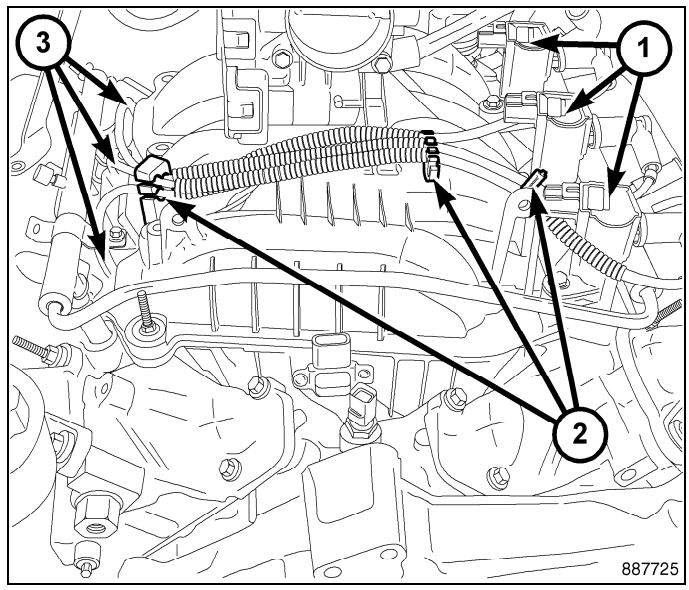

4.7L

1. Using compressed air, blow out any dirt or contaminants from around the top of the spark plug.
2. Check the condition of the coil rubber boot (4). To aid in coil installation, apply silicone based grease such as Mopar® Dielectric Grease # J8126688 into the spark plug end of the rubber boot (4) and to the top of the spark plug (5).
3. Position the ignition coil assembly into the cylinder head opening. Using a twisting action, push the ignition coil assembly onto the spark plug.

NOTE: Note: The bolt used to mount the ignition coil assembly is also the same bolt used to mount the intake manifold. If replacing either one or all eight coils, check and re-torque all eight bolts.

4. Tighten the coil assembly mounting bolt (3) to 12 N.m (9 ft. lbs.).

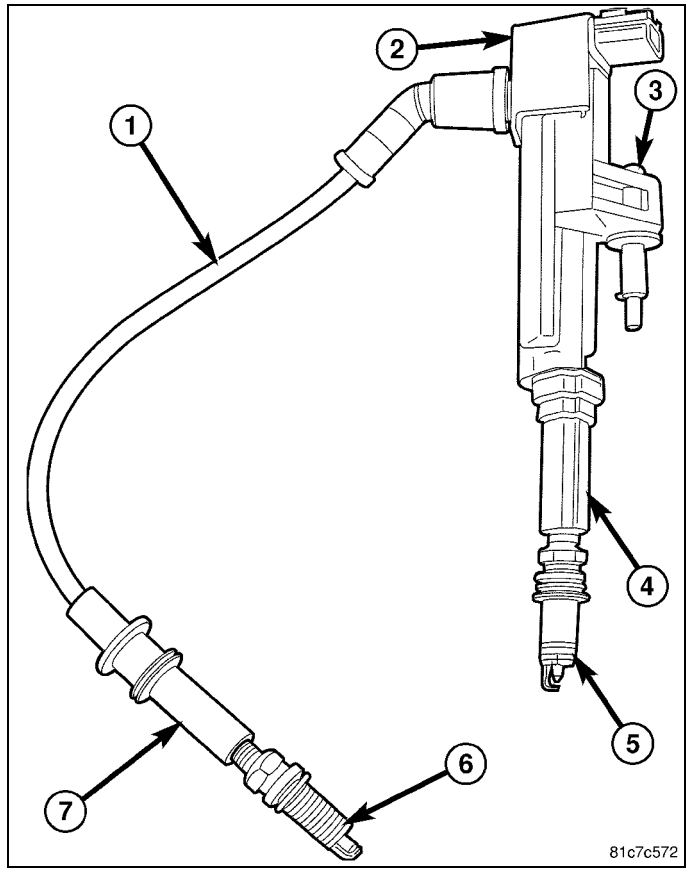

5. Connect the electrical connector (2) to the coil assembly by snapping into position.
6. Connect the secondary cable (3) to the coil assembly (1).
7. If necessary, install the throttle body air intake tube or intake air box to the top of the engine.

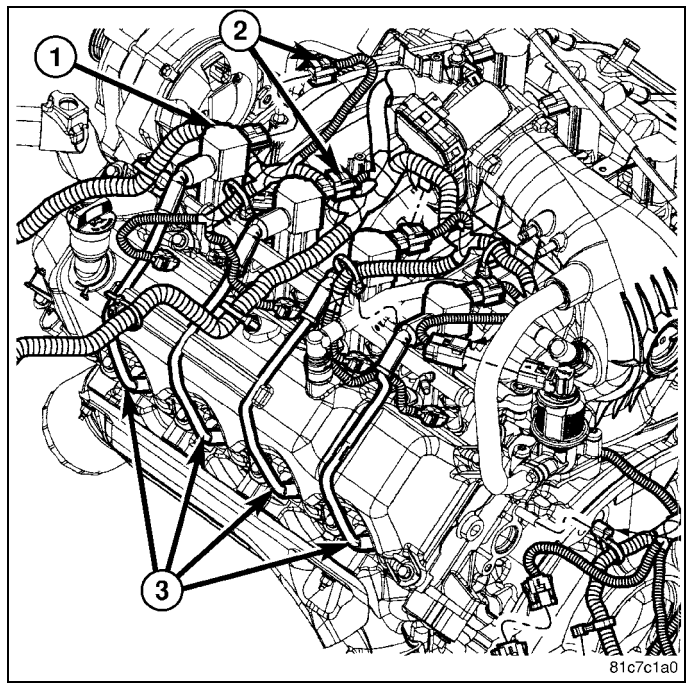

5.7L

1. Using compressed air, blow out any dirt or contaminants from around top of spark plug.

NOTE: Use dielectric grease on each of the spark plug boots before installing the coil.

2. Position ignition coil (1) into valve cover and push onto spark plugs.

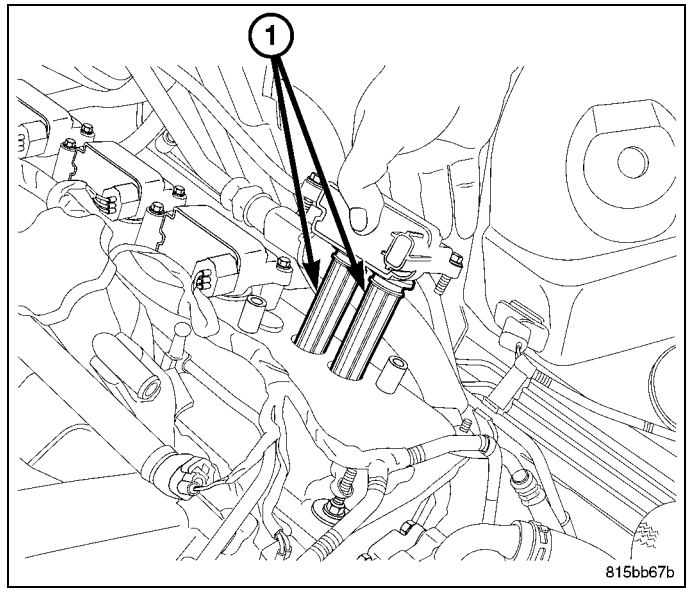

3. Install 2 coil mounting bolts (2). Tighten to 7N·m (62 in.lbs.).
4. Connect electrical connector (1) to coil by snapping into position.

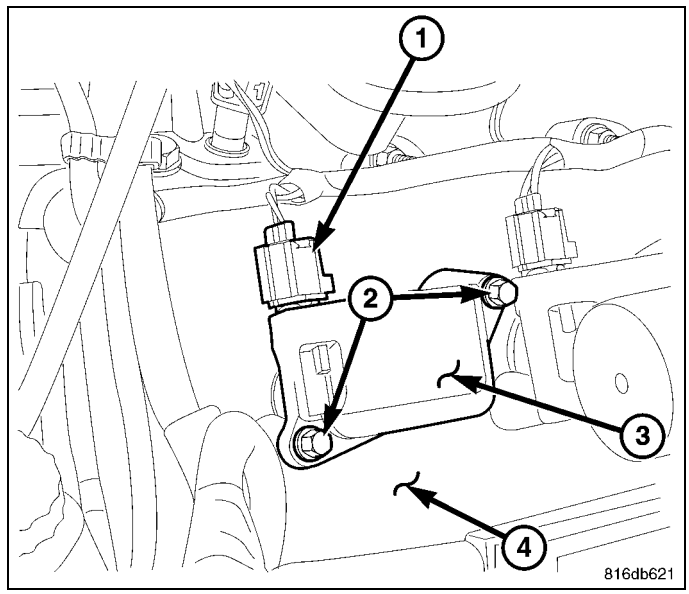

SENSOR, Camshaft Position

Description

3.7L AND 4.7L

The Camshaft Position Sensor (CMP) (3) is bolted to the right-front side of the right cylinder head (2).

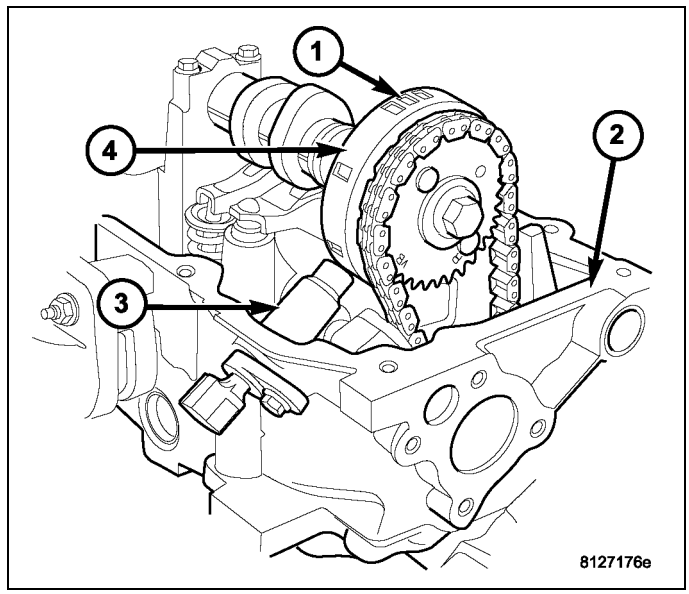

5.7L

The Camshaft Position Sensor (CMP) (2) is located below the generator on the timing chain / case cover (1) on the right/front side of engine.

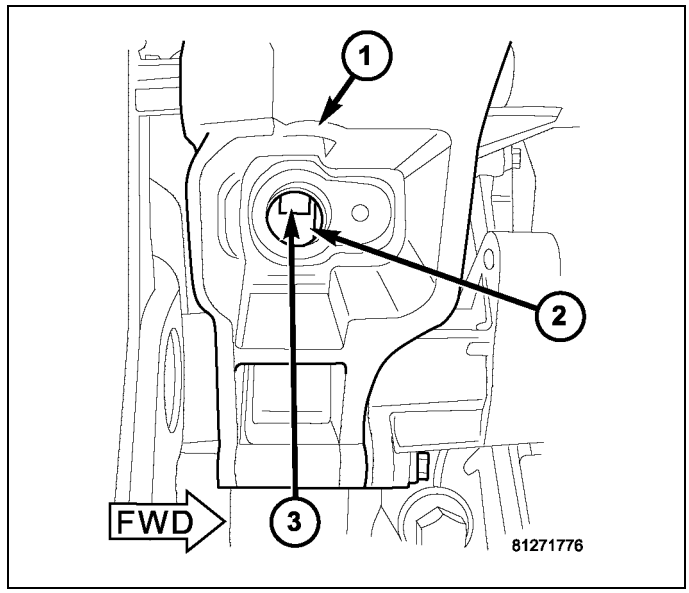

Operation

3.7L

The Camshaft Position Sensor (CMP) sensor on the 3.7L (3) contains a hall effect device referred to as a sync signal generator. A rotating target wheel (tonewheel) (4) for the CMP is located at the front of the camshaft for the right cylinder head (2). This sync signal generator detects notches (1) located on a tonewheel. As the tonewheel rotates, the notches pass through the sync signal generator. The signal from the CMP sensor is used in conjunction with the Crankshaft Position Sensor (CKP) to differentiate between fuel injection and spark events. It is also used to synchronize the fuel injectors with their respective cylinders.

When the leading edge of the tonewheel notch enters the tip of the CMP, the interruption of magnetic field causes the voltage to switch high, resulting in a sync signal of approximately 5 volts.

When the trailing edge of the tonewheel notch leaves the tip of the CMP, the change of the magnetic field causes the sync signal voltage to switch low to 0 volts.

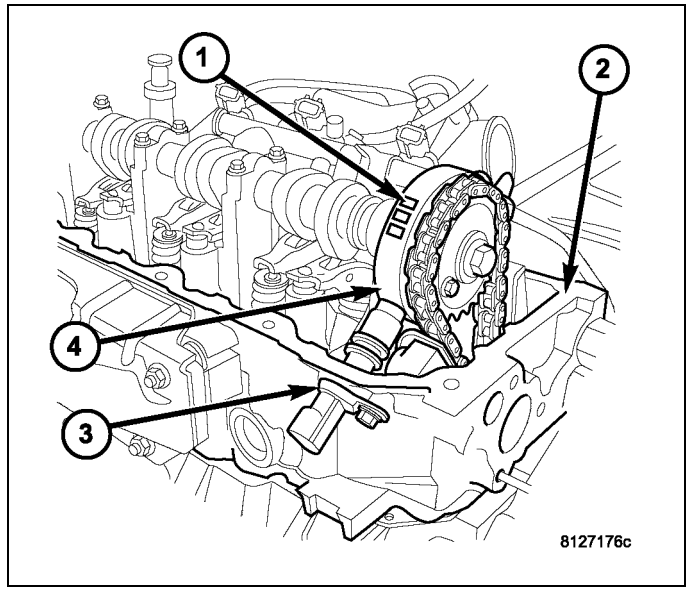

4.7L

The CMP sensor engine contains a hall effect device called a sync signal generator to generate a fuel sync signal. This sync signal generator detects notches located on a tonewheel. The tonewheel (4) is located at the front of the camshaft for the right cylinder head (2). As the tonewheel rotates, the notches (1) pass through the sync signal generator. The pattern of the notches (viewed counter-clockwise from front of engine) is: 1 notch, 2 notches, 3 notches, 3 notches, 2 notches, 1 notch, 3 notches and 1 notch. The signal from the CMP sensor is used in conjunction with the crankshaft position sensor to differentiate between fuel injection and spark events. It is also used to synchronize the fuel injectors with their respective cylinders.

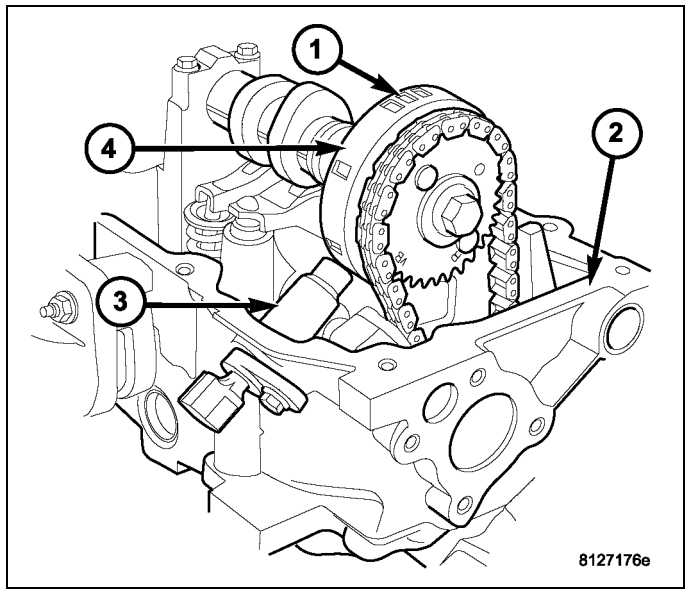

5.7L

The CMP sensor is used in conjunction with the crankshaft position sensor to differentiate between fuel injection and spark events. It is also used to synchronize the fuel injectors with their respective cylinders. The sensor generates electrical pulses. These pulses (signals) are sent to the Powertrain Control Module (PCM). The PCM will then determine crankshaft position from both the camshaft position sensor and crankshaft position sensor.

The tonewheel is located at the front of the camshaft (2). As the tonewheel rotates, notches (3) pass through the sync signal generator.

When the cam gear is rotating, the sensor will detect the notches. Input voltage from the sensor to the PCM will then switch from a low (approximately 0.3 volts) to a high (approximately 5 volts). When the sensor detects a notch has passed, the input voltage switches back low to approximately 0.3 volts.

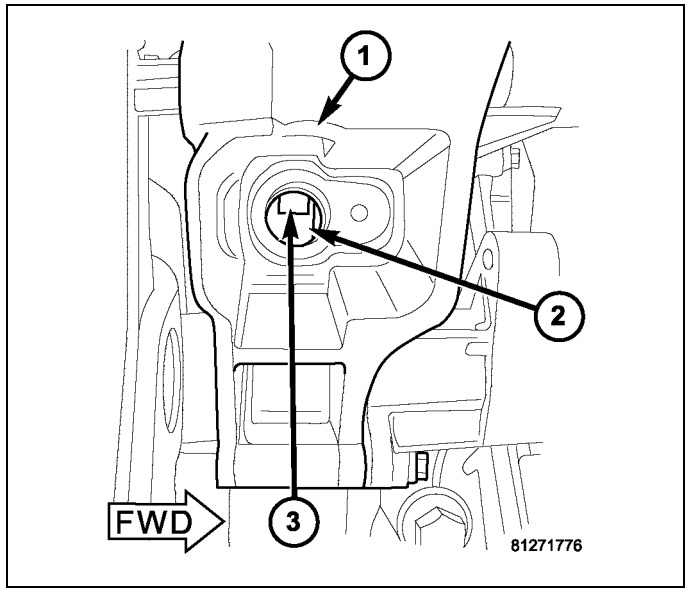

Removal

3.7L

The Camshaft Position Sensor (CMP) (3) is bolted to the front/top of the right cylinder head (1).

1. Disconnect electrical connector at CMP sensor.
2. Remove sensor mounting bolt (2).
3. Carefully twist sensor from cylinder head.
4. Check condition of sensor O-ring.

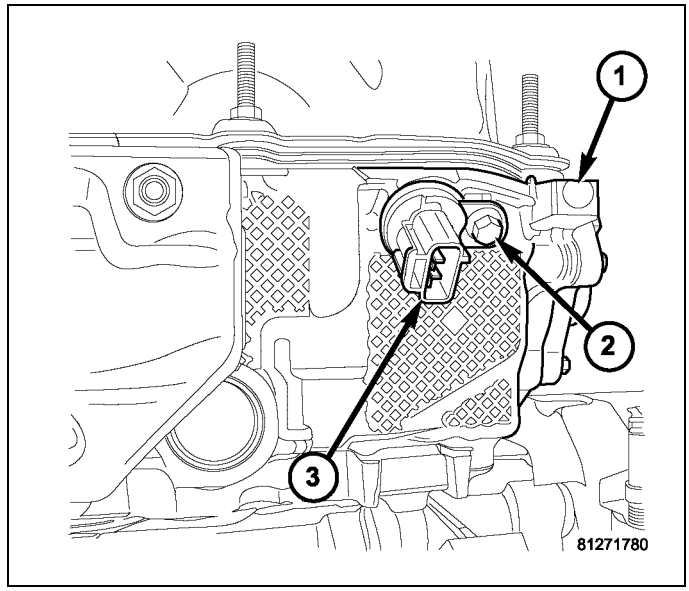

4.7L

The Camshaft Position Sensor (CMP) (2) is bolted to the front/top of the right cylinder head (1).

1. Raise and support vehicle.
2. Disconnect electrical connector (4) at CMP sensor.
3. Remove sensor mounting bolt (3).
4. Carefully twist sensor from cylinder head.
5. Check condition of sensor O-ring.

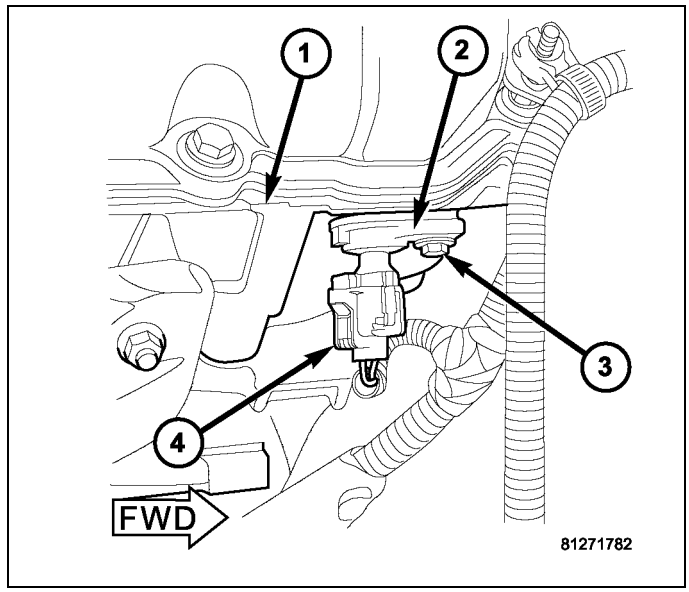

5.7L

The Camshaft Position Sensor (CMP) (3) is located on right side of timing gear/chain cover below generator (1).

1. Disconnect electrical connector (3) at CMP sensor.

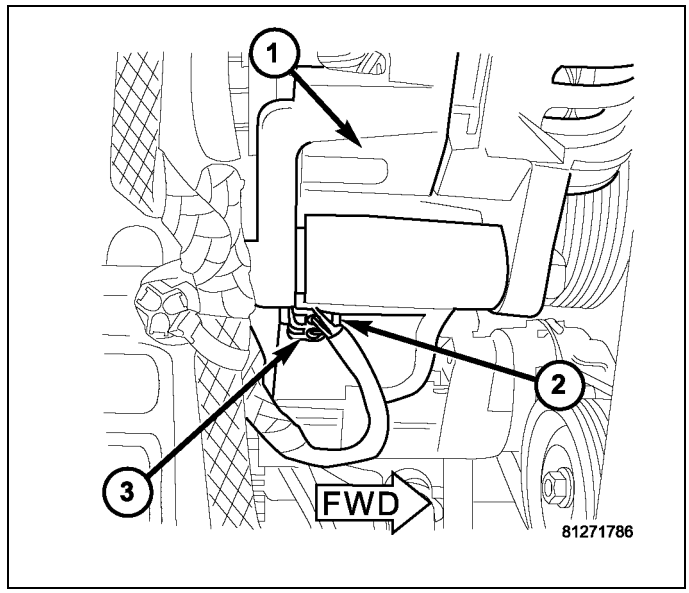

2. Remove sensor mounting bolt (3).
3. Carefully twist sensor (2) from timing gear/chain cover.
4. Check condition of sensor O-ring.

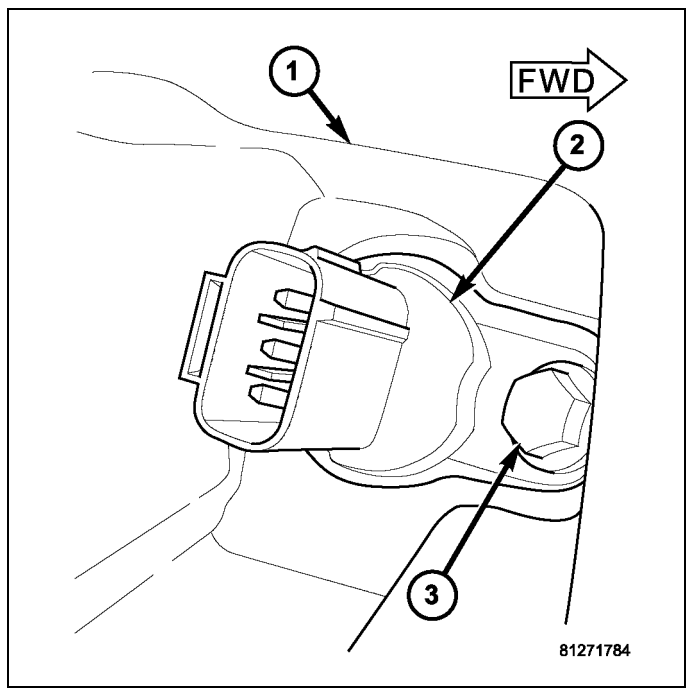

Installation

3.7L

1. Clean out machined hole in cylinder head.
2. Apply a small amount of engine oil to sensor O-ring.
3. Install sensor (3) into cylinder head (1) with a slight rocking and twisting action.

CAUTION: Before tightening sensor mounting bolt, be sure sensor is completely flush to cylinder head. If sensor is not flush, damage to sensor mounting tang may result.

4. Install mounting bolt (2) and tighten to 12 N·m (106 in. lbs.).
5. Connect electrical connector to sensor.

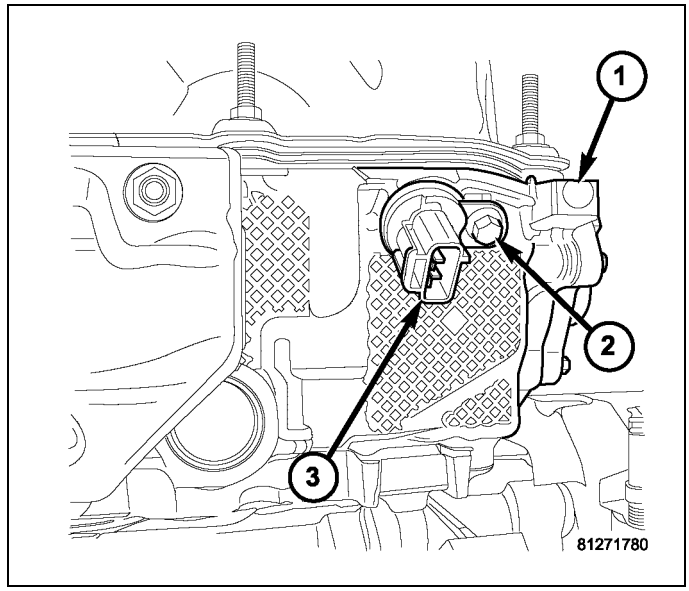

4.7L

1. Clean out machined hole in cylinder head.
2. Apply a small amount of engine oil to sensor O-ring.
3. Install sensor (2) into cylinder head (1) with a slight rocking action. Do not twist sensor into position as damage to O-ring may result.

CAUTION: Before tightening sensor mounting bolt, be sure sensor is completely flush to cylinder head. If sensor is not flush, damage to sensor mounting tang may result.

4. Install mounting bolt (3) and tighten to 12 N·m (106 in.lbs.).
5. Connect electrical connector to sensor.

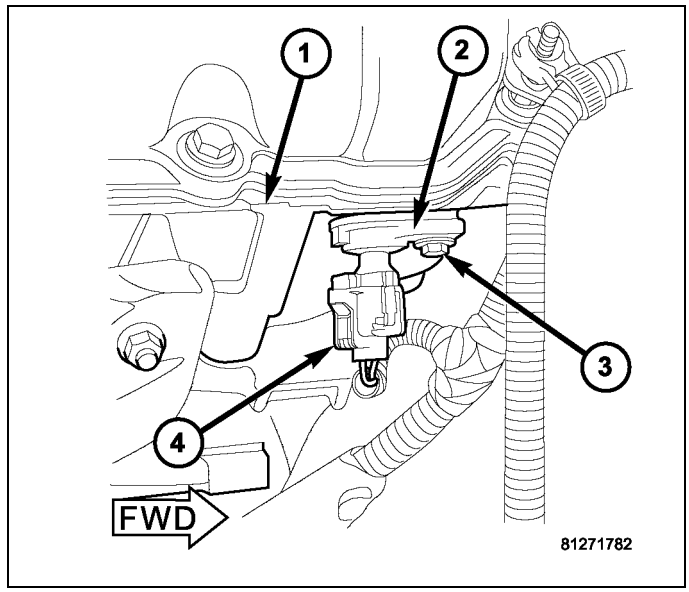

5.7L

1. Clean out machined hole in timing gear/chain cover.
2. Install sensor (2) into timing gear/chain cover with a slight rocking action. Do not twist sensor into position as damage to O-ring may result.

CAUTION: Before tightening the CMP sensor retaining bolt, be sure the sensor is completely flush to the timing cover. If the sensor is not flush, damage to the sensor mounting tang may result.

3. Install mounting bolt (3) and tighten to 12 N·m (106 in.lbs.).
4. Connect electrical connector to sensor.

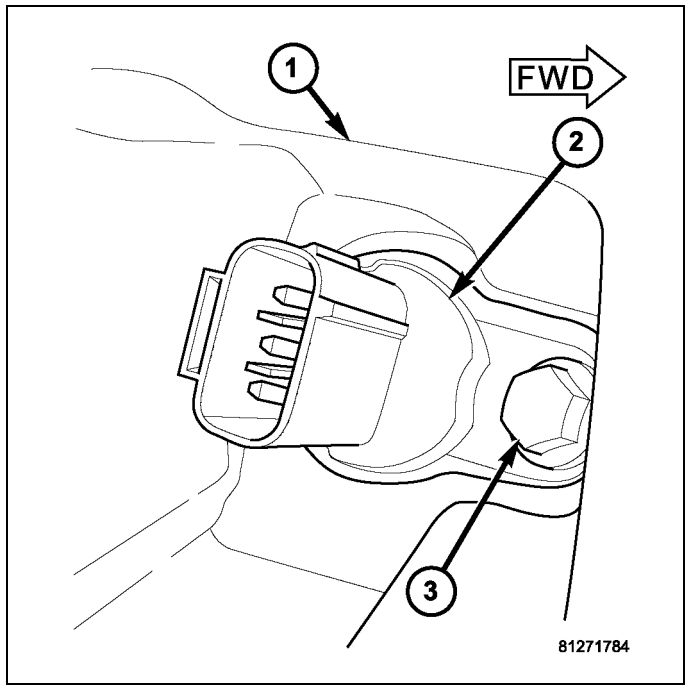

SENSOR, Knock

Description

Two knock sensors are bolted into the cylinder block under the intake manifold **3.7L** .

The knock sensor is bolted to the cylinder block under the intake manifold**4.7L**.

Two knock sensors are also used with the **5.7L**. These are bolted into each side of the cylinder block (outside) under the exhaust manifold.

Operation

When the knock sensor detects a knock in one of the cylinders on the corresponding bank, it sends an input signal to the Powertrain Control Module (PCM). In response, the PCM retards ignition timing for all cylinders by a scheduled amount.

Knock sensors contain a piezoelectric chrystal which constantly vibrates and sends an input voltage (signal) to the PCM while the engine operates. As the intensity of the crystal's vibration increases, the knock sensor output voltage also increases.

The voltage signal produced by the knock sensor increases with the amplitude of vibration. The PCM receives the knock sensor voltage signal as an input. If the signal rises above a predetermined level, the PCM will store that value in memory and retard ignition timing to reduce engine knock. If the knock sensor voltage exceeds a preset value, the PCM retards ignition timing for all cylinders. It is not a selective cylinder retard.

The PCM ignores knock sensor input during engine idle conditions. Once the engine speed exceeds a specified value, knock retard is allowed.

Knock retard uses its own short term and long term memory program.

Long term memory stores previous detonation information in its battery-backed RAM. The maximum authority that long term memory has over timing retard can be calibrated.

Short term memory is allowed to retard timing up to a preset amount under all operating conditions (as long as rpm is above the minimum rpm) except at Wide Open Throttle (WOT). The PCM, using short term memory, can respond quickly to retard timing when engine knock is detected. Short term memory is lost any time the ignition key is turned off.

NOTE: Over or under tightening the sensor mounting bolts will affect knock sensor performance, possibly causing improper spark control. Always use the specified torque when installing the knock sensors.

Removal

3.7L

The two knock sensors (1) are bolted into the cylinder block under the intake manifold. The two sensors share a common wiring harness using one electrical connector (3). Because of this, they must be replaced as a pair.

NOTE: The left sensor is identified by an identification tag (LEFT) (2). It is also identified by a larger bolt head. The Powertrain Control Module (PCM) must have and know the correct sensor left/right positions. Do not mix the sensor locations.

1. Remove intake manifold (Refer to 09 - Engine/Manifolds/MANIFOLD, Intake - Installation).
2. Disconnect knock sensor dual pigtail harness from engine wiring harness. This connection is made near rear of engine.
3. Remove both sensor mounting bolts. Note foam strip on bolt threads. This foam is used only to retain the bolts to sensors for plant assembly. It is not used as a sealant. Do not apply any adhesive, sealant or thread locking compound to these bolts.
4. Remove sensors from engine.

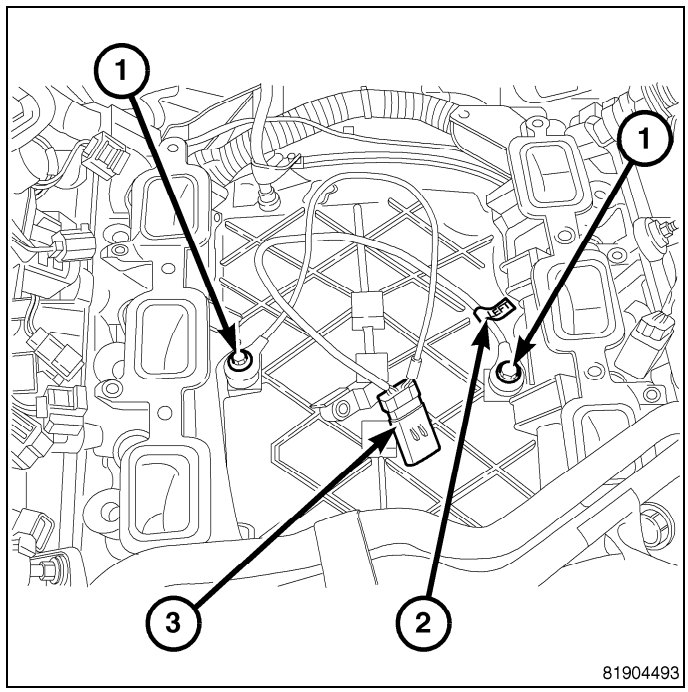

4.7L

1. Remove the intake manifold (Refer to 09 - Engine/Manifolds/MANIFOLD, Intake - Removal)
2. Remove the knock sensor retaining bolt and remove the knock sensor (1).

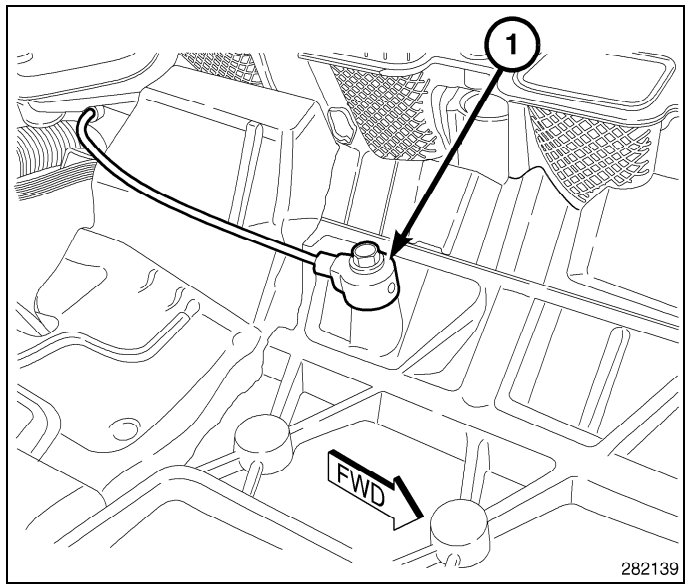

3. Disconnect the knock sensor electrical connector (1) from the engine harness located at the back of engine by pressing on the connector lock tab (2) .
4. Thoroughly clean the knock sensor mounting hole.

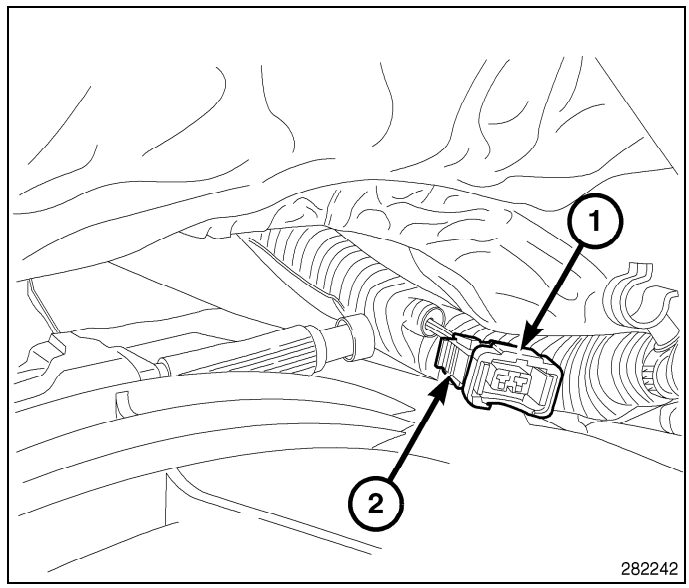

5.7L

Two knock sensors (1) are used. Each sensor is bolted to the outside of the cylinder block below the exhaust manifold(s) (3).

1. Raise and support the vehicle.
2. Disconnect the knock sensor electrical connector(s) (5).
3. Remove the knock sensor retaining bolt(s) (2).

NOTE: Note the foam strip on bolt threads. This foam strip is used only to retain the bolts to the sensors for plant assembly. It is not used as a sealant. Do not apply any adhesive, sealant or thread locking compound to these bolts.

4. Remove the knock sensor(s) (1) from the cylinder block.

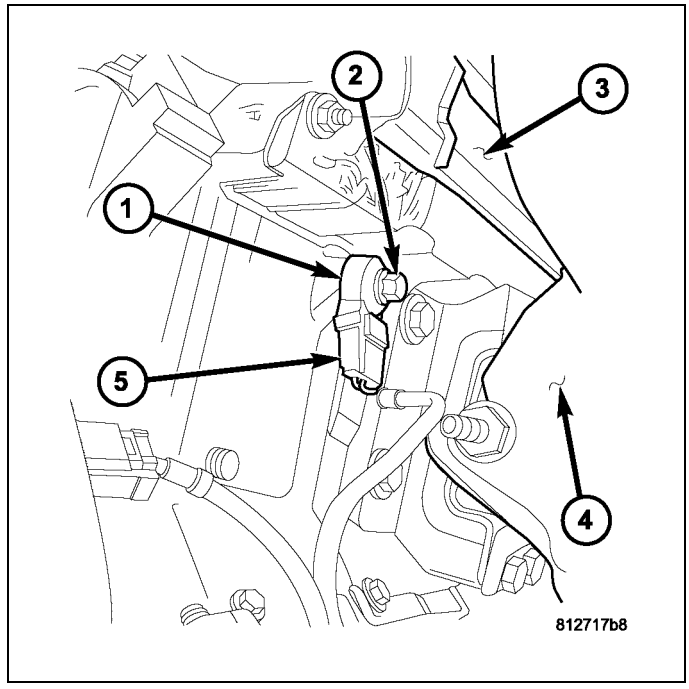

Installation

3.7L

NOTE: The left sensor is identified by an identification tag (LEFT) (2). It is also identified by a larger bolt head. The Powertrain Control Module (PCM) must have and know the correct sensor left/right positions. Do not mix the sensor locations.

1. Thoroughly clean knock sensor mounting holes.
2. Install sensors (1) into cylinder block.

NOTE: Over or under tightening the sensor mounting bolts will affect knock sensor performance, possibly causing improper spark control. Always use the specified torque when installing the knock sensors. The torque for the knock senor bolt is relatively light for an 8 mm bolt.

NOTE: Note foam strip on bolt threads. This foam is used only to retain the bolts to sensors for plant assembly. It is not used as a sealant. Do not apply any adhesive, sealant or thread locking compound to these bolts.

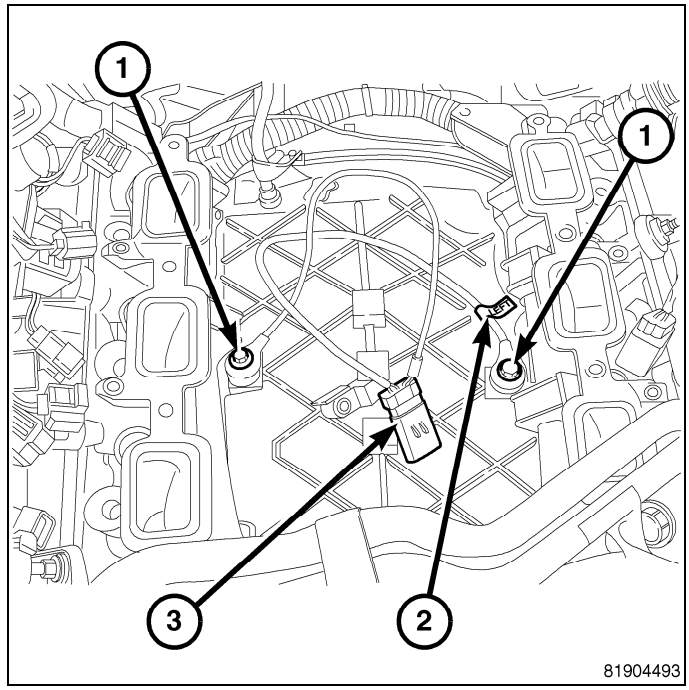

3. Install and tighten mounting bolts. Tighten to 15 +/- 2 ft.lbs. (20 N·m) (176 in.lbs).
4. Connect knock sensor wiring harness to engine harness at rear of intake manifold.
5. Install intake manifold (Refer to 09 - Engine/Manifolds/MANIFOLD, Intake - Installation).

4.7L

1. Thoroughly clean the knock sensor mounting hole.
2. Position the knock sensor (1) in place.

NOTE: Over or under tightening the sensor mounting bolts will affect knock sensor performance, possibly causing improper spark control. Always use the specified torque when installing the knock sensors.

NOTE: Note the foam strip on the bolt threads. This foam is used only to retain the bolts to the sensors for plant assembly. It is not used as a sealant. Do not apply any adhesive, sealant or thread locking compound to these bolts.

3. Tighten the knock sensor retaining bolt to 20 N·m (15 ft. lbs.).

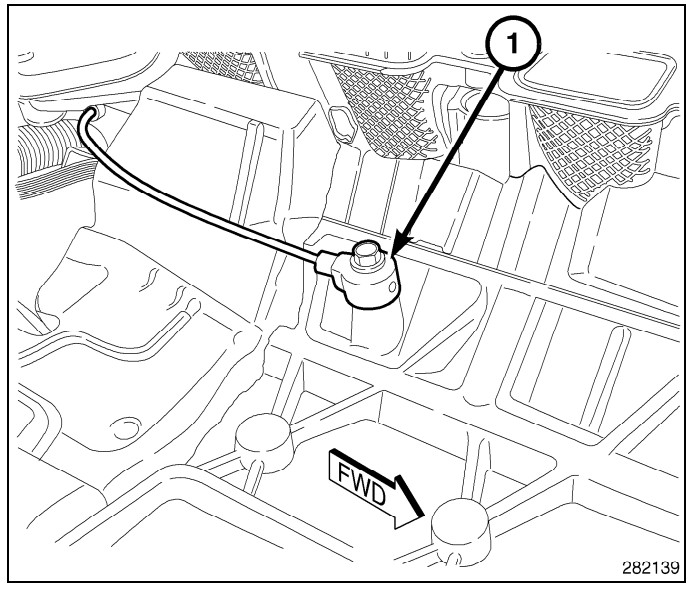

4. Connect the knock sensor electrical connector (1) to the engine harness located at the back of the engine.
5. Install the intake manifold (Refer to 09 - Engine/Manifolds/MANIFOLD, Intake - Installation)

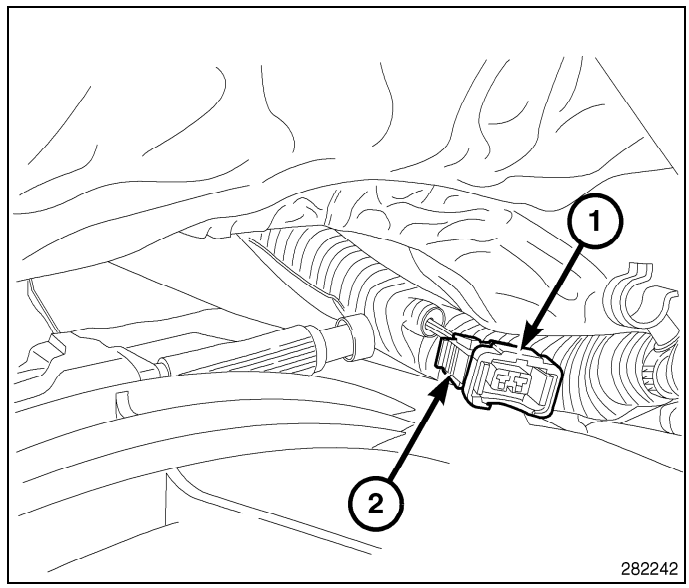

5.7L

1. Thoroughly clean the knock sensor(s) mounting hole.
2. Install the knock sensor(s) (1) into the cylinder block.

NOTE: Over or under tightening the sensor mounting bolts will affect knock sensors performance, possibly causing improper spark control. Always use the specified torque when installing the knock sensors. The torque for the knock sensor bolt is relatively light for an 8 mm bolt (2).

NOTE: Note foam strip on bolt threads. This foam is used only to retain the bolts to sensors for plant assembly. It is not used as a sealant. Do not apply any adhesive, sealant or thread locking compound to these bolts.

3. Position the knock sensor(s) (1), install the retaining bolt(s) (2) and tighten to 20 N·m (15 ft. lbs.).
4. Install the electrical connector(s) (5).

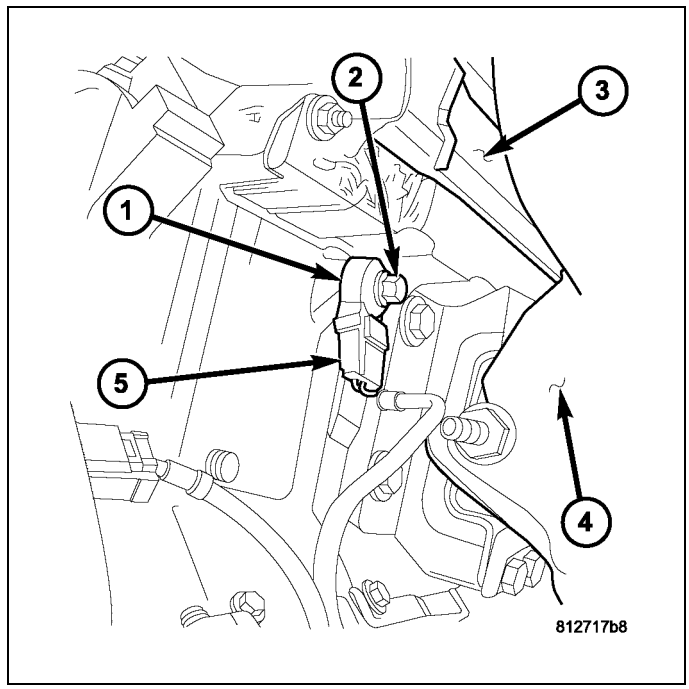

SPARK PLUG

Removal

3.7L

1. Remove the necessary air filter tubing and air intake components at the top of the engine at the throttle body.

NOTE: The three spark plugs located on the left bank of the engine are under three individual ignition coils (1). Each individual ignition coil must be removed to gain access to each spark plug located on the left bank of the engine.

2. Prior to removing the ignition coil, spray compressed air around the coil base at the cylinder head.
3. Remove the ignition coil (1) (Refer to 08 - Electrical/8I - Ignition Control/COIL, Ignition - Removal) check the condition of ignition coil O-ring and replace as necessary.
4. Prior to removing the spark plug, spray compressed air into the cylinder head opening. This will help prevent foreign material from entering combustion chamber.

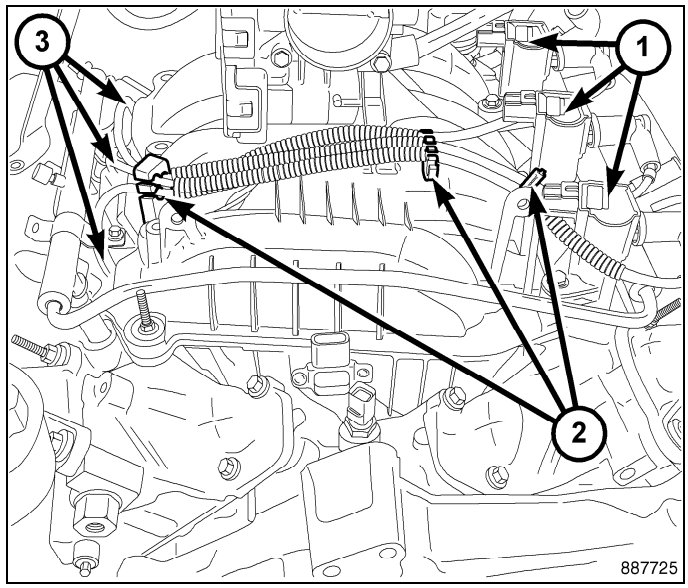

5. Remove the spark plug from the cylinder head using a quality thin wall socket with a rubber or foam insert.
6. Inspect the spark plug condition.

4.7L

CAUTION: This engine uses TWO DIFFERENT types of spark plugs. A total of 16 plugs are used. The plugs are mounted in two rows (banks). The upper row (5) is used on the intake valve side of the cylinder head. The lower row (6) is used on the exhaust valve side of the cylinder head. The upper row (5) uses Bosch Nickel Yttrium plugs. The lower row (6) uses Bosch Iridium plugs. DO NOT INTERCHANGE THESE PLUGS.

1. Remove necessary air filter tubing and air intake components at top of engine and at throttle body.

NOTE: To remove the upper row of spark plugs (5), each individual ignition coil (2) must be removed first.

2. Remove the ignition coil(s) (Refer to 08 - Electrical/8I - Ignition Control/COIL, Ignition - Removal)
3. Prior to removing the spark plug(s), spray compressed air into cylinder head opening. This will help prevent foreign material from entering combustion chamber.

CAUTION: Due to tight clearances between UPPER row of plugs (5) and cylinder head, a conventional deep, thick-wall spark plug socket will not fit. Use a deep, THIN-WALL 5/8" spark plug socket for plug removal and installation.

CAUTION: Do not attempt to clean any of the spark plugs. Replace only.

4. Remove the spark plug(s) and inspect their condition.

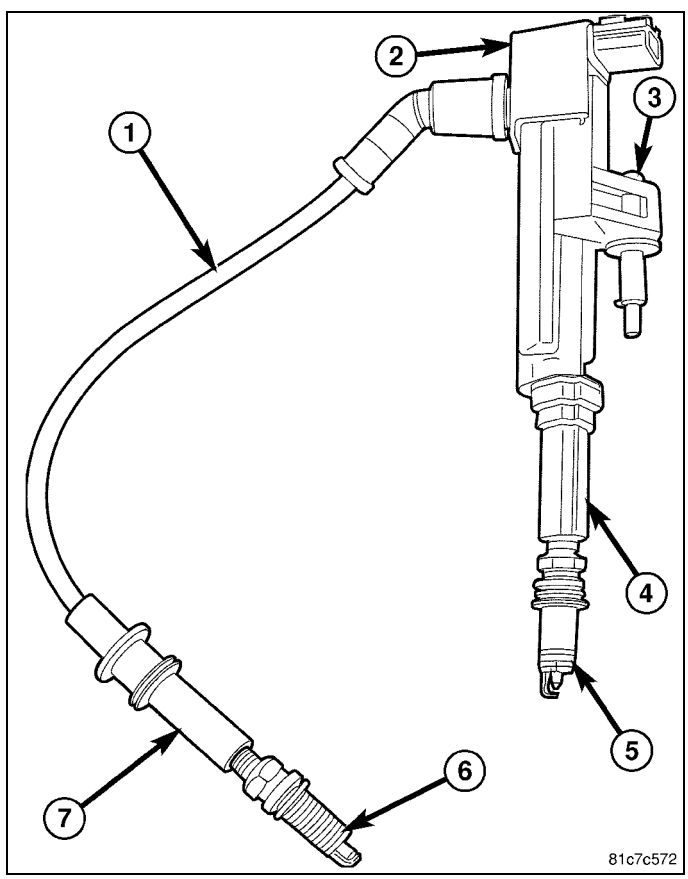

5.7L

1. Remove all nthe necessary air filter tubing and air intake components at the top of the engine and at the throttle body (Refer to 09 - Engine/Air Intake System/ BODY, Air Cleaner - Removal)
2. Prior to removing the ignition coil, spray compressed air around the base of the ignition coil at the cylinder head.
3. Remove the ignition coil (1) (Refer to 08 - Electrical/8I - Ignition Control/COIL, Ignition - Removal)
4. Prior to removing the spark plug, spray compressed air into the cylinder head opening.
5. Remove the spark plug from the cylinder head using a quality thin wall socket with a rubber or foam insert.
6. Inspect the spark plug condition.

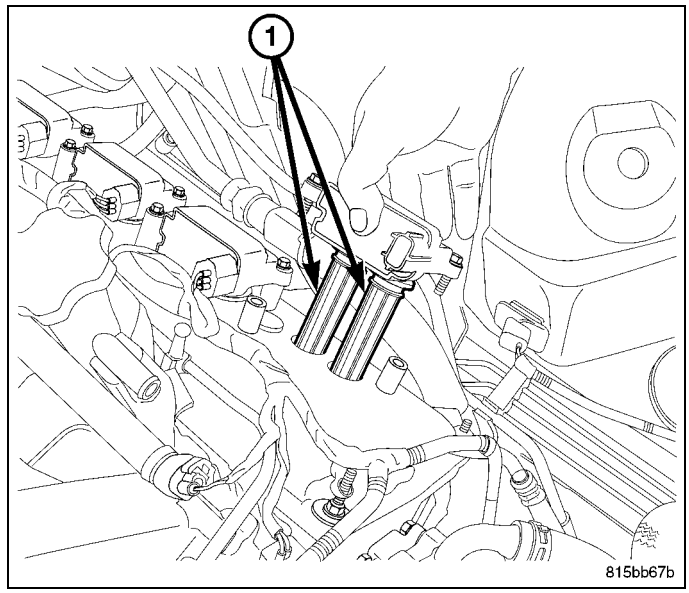

Installation

3.7L

1. Check and adjust the spark plug gap with a gap gauging tool (1) (Refer to 08 - Electrical/8I - Ignition Control - Specifications)

CAUTION: Special care should be taken when installing spark plugs into the cylinder head spark plug wells. Be sure the plugs do not drop into the plug wells as electrodes can be damaged.

2. Start the spark plug into the cylinder head by hand to avoid cross threading.
3. Tighten the spark plugs to 27 N·m (20 ft. lbs.).

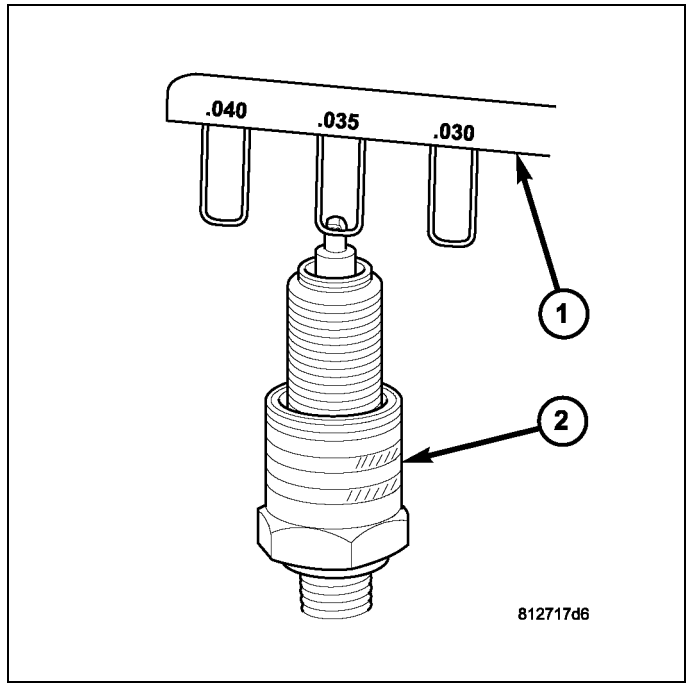

4. Before installing the ignition coil (1), check the condition of the coil O-ring and replace as necessary. Apply silicone based grease such as Mopar® Dielectric Grease into the spark plug end of the rubber boot, coil O-rings and to the top of spark plugs.
5. Install the ignition coil (1) (Refer to 08 - Electrical/8I - Ignition Control/COIL, Ignition - Installation)
6. Install all the necessary air filter tubing and air intake components at the top of the engine and at the throttle body.

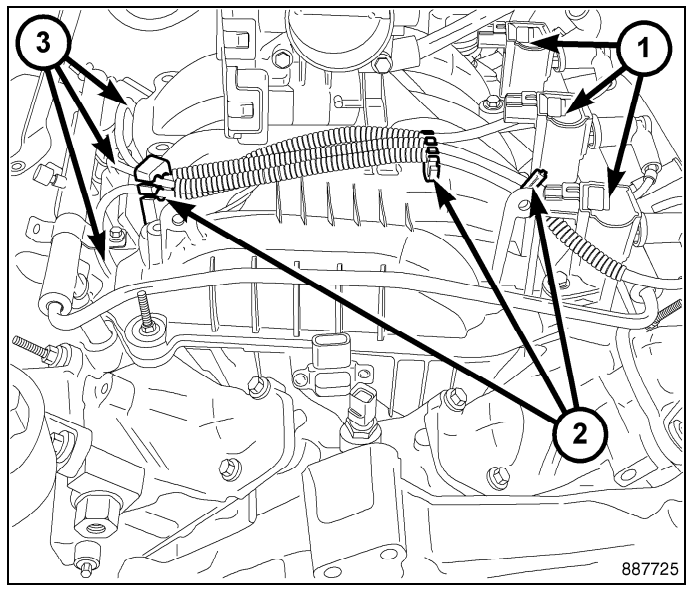

4.7L

CAUTION: This engine uses TWO DIFFERENT types of spark plugs. A total of 16 plugs are used. The plugs are mounted in two rows (banks). The upper row (5) is used on the intake valve side of the cylinder head. The lower row (6) is used on the exhaust valve side of the cylinder head. The upper row (5) uses Bosch Nickel Yttrium plugs. The lower row (6) uses Bosch Iridium plugs. DO NOT INTERCHANGE THESE PLUGS.

CAUTION: Never use a motorized wire wheel brush to clean spark plugs. Metallic deposits will remain on spark plug insulator and will cause plug misfire.

CAUTION: Do not attempt to clean any of the spark plugs. Replace only.

1. To aid in coil installation, apply silicone based grease such as Mopar® Dielectric Grease into spark plug end of rubber boots (4) and (7). Also apply this grease to the tops of spark plugs (5) and (6).

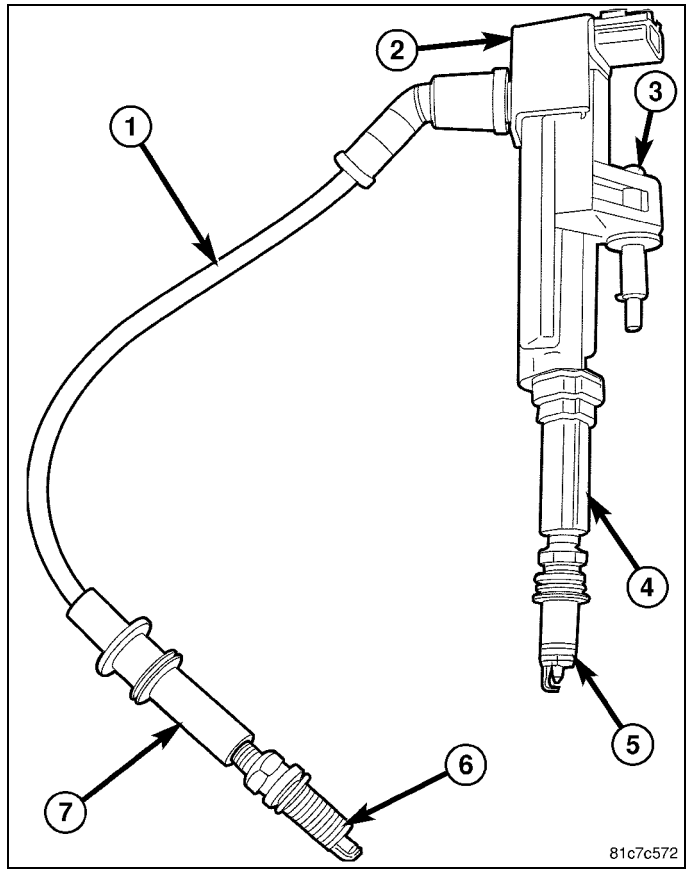

NOTE: Two different spark plug gaps are used.

2. Check and adjust spark plug gap(s) with a plug gap gauging tool (1)(Refer to 08 - Electrical/8I - Ignition Control - Specifications).

NOTE: Do not drop spark plugs into the plug wells as electrode damage can occur.

3. Using special care install spark plug(s) into the cylinder head by hand to avoid cross threading.

NOTE: Always tighten spark plugs to the specified torque. Certain engines use torque sensitive spark plugs. Over tightening can cause distortion resulting in a change to the spark plug gap, or a cracked porcelain insulator.

CAUTION: Due to tight clearances between upper row of plugs (5) and cylinder head, a conventional deep, thick-wall spark plug socket will not fit. Use a deep, THIN-WALL 5/8" spark plug socket for plug removal and installation.

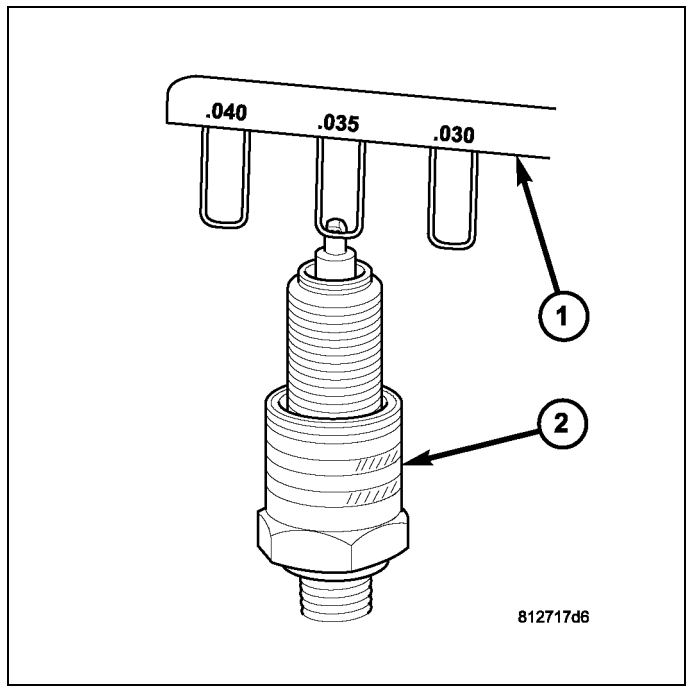

4. Tighten spark plug(s) to the specified torque (Refer to 08 - Electrical/8I - Ignition Control - Specifications).
5. Install ignition coil(s) (Refer to 08 - Electrical/8I - Ignition Control/COIL, Ignition - Installation).
6. Install necessary air filter tubing and air intake components to top of engine and to throttle body.

5.7L

CAUTION: Never use a motorized wire wheel brush to clean spark plugs. Metallic deposits will remain on spark plug insulator and will cause plug misfire.

CAUTION: Do not attempt to clean any of the spark plugs. Replace only.

1. Check and adjust the spark plug gap with a gap gauging tool (1) (Refer to 08 - Electrical/8I - Ignition Control - Specifications).

CAUTION: Special care should be taken when installing spark plugs into the cylinder head spark plug wells. Be sure the plugs do not drop into the plug wells as electrodes can be damaged.

2. Start the spark plug into the cylinder head by hand to avoid cross threading.

NOTE: Always tighten spark plugs to the specified torque. Certain engines use torque sensitive spark plugs. Over tightening can cause distortion resulting in a change in the spark plug gap, or a cracked porcelain insulator.

NOTE: Spark plugs have a torque critical tapered design. Do not exceed 20 N·m (15 ft. lbs.).

3. Tighten the spark plugs to 18 N·m (13 ft. lbs.).

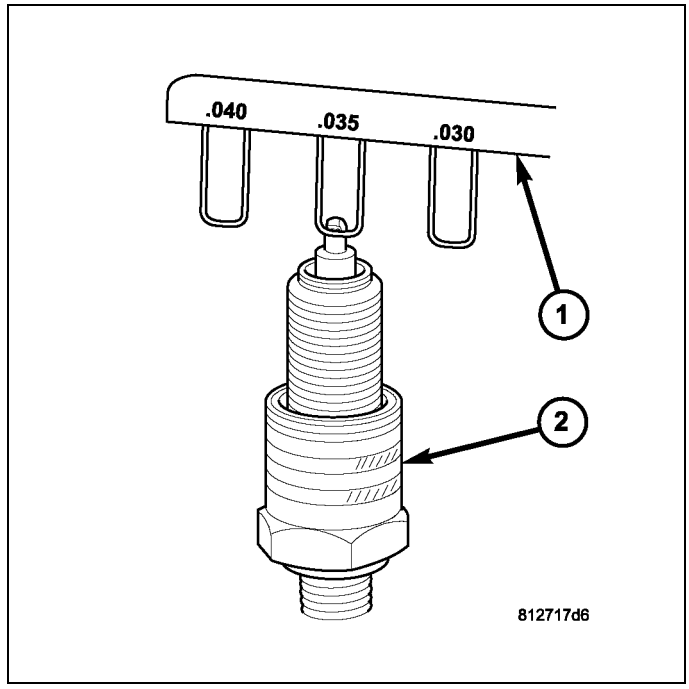

4. To aid in coil installation, apply silicone based grease such as Mopar® Dielectric Grease into spark plug end of ignition coil rubber boots. Also apply this grease to the tops of spark plugs.
5. Install the ignition coil(s) (1) (Refer to 08 - Electrical/8I - Ignition Control/COIL, Ignition - Installation)
6. Install all necessary air filter tubing and air intake components to top of engine and to throttle body (Refer to 09 - Engine/Air Intake System/BODY, Air Cleaner - Installation)

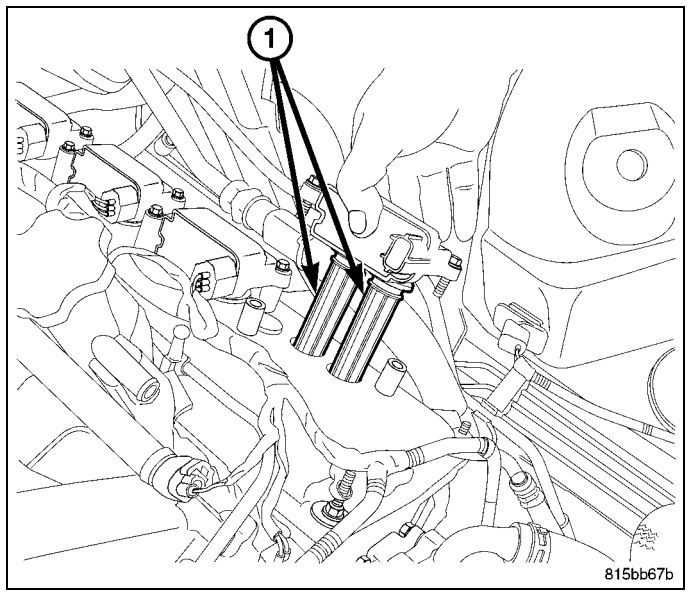

SWITCH, Ignition

Description

This vehicle is equipped with a Wireless Ignition Node (WIN). The WIN, along with the FOB with Integrated Key (FOBIK) are the primary components of the keyless ignition system. The only visible component of the WIN is the ignition switch located on the face of the instrument panel just to the inboard side of the steering column. The remainder of the WIN including its mounting provisions and electrical connections are concealed within the instrument panel.

In addition to replacing a conventional keyed ignition switch, the WIN is an integrated electronic receiver that serves as the base station in the vehicle. It communicates with other electronic modules in the vehicle over the Controller Area Network (CAN) data bus.

The WIN interfaces with the Remote Keyless Entry (RKE) FOBIK and the Tire Pressure Monitor (TPM) sensors (if equipped) using Radio Frequency (RF) communication, with the Sentry Key Immobilizer System (SKIS) transponder within the FOBIK using Low Frequency (LF) RF communication.

The WIN cannot be adjusted or repaired, but is flash update capable. If ineffective or damaged the entire WIN must be replaced (Refer to 08 - Electrical/8E - Electronic Control Modules/RECEIVER, Wireless Ignition Node - Removal).

INSTRUMENT CLUSTER

TABLE OF CONTENTS

page

INSTRUMENT CLUSTER
DESCRIPTION . . . 3
OPERATION . . . 8
DIAGNOSIS AND TESTING . . . 11
REMOVAL . . . 12
DISASSEMBLY . . . 13
ASSEMBLY . . . 13
INSTALLATION . . . 14
GAUGE, ENGINE TEMPERATURE
DESCRIPTION . . . 15
OPERATION . . . 15
GAUGE, FUEL
DESCRIPTION . . . 16
OPERATION . . . 16
GAUGE, OIL PRESSURE
DESCRIPTION . . . 17
OPERATION . . . 18
GAUGE, VOLTAGE
DESCRIPTION . . . 18
OPERATION . . . 19
INDICATOR, ABS
DESCRIPTION . . . 19
OPERATION . . . 20
INDICATOR, AIR BAG
DESCRIPTION . . . 20
OPERATION . . . 20
INDICATOR, BRAKE\PARKING BRAKE
DESCRIPTION . . . 21
OPERATION . . . 21
DIAGNOSIS AND TESTING . . . 22
INDICATOR, CARGO LAMP
DESCRIPTION . . . 22
OPERATION . . . 23
INDICATOR, CHARGING
DESCRIPTION . . . 23
OPERATION . . . 23
INDICATOR, CHECK GAUGES
DESCRIPTION . . . 24
OPERATION . . . 24
INDICATOR, CRUISE
DESCRIPTION . . . 25
OPERATION . . . 25
INDICATOR, DOOR AJAR WARNING
DESCRIPTION . . . 26
OPERATION . . . 26

page

INDICATOR, ESP, WITH BAS
DESCRIPTION . . . 26
OPERATION . . . 26
INDICATOR, ETC
DESCRIPTION . . . 27
OPERATION . . . 27
INDICATOR, FOG LAMP
DESCRIPTION . . . 28
OPERATION . . . 28
INDICATOR, FUEL SAVER
DESCRIPTION . . . 29
OPERATION . . . 29
INDICATOR, GAS CAP
DESCRIPTION . . . 29
OPERATION . . . 29
INDICATOR, HIGH BEAM
DESCRIPTION . . . 30
OPERATION . . . 30
INDICATOR, LOW FUEL
DESCRIPTION . . . 31
OPERATION . . . 31
INDICATOR, LOW OIL PRESSURE
DESCRIPTION . . . 32
OPERATION . . . 32
INDICATOR, LOW TIRE PRESSURE
DESCRIPTION . . . 32
OPERATION . . . 32
INDICATOR, MALFUNCTION
DESCRIPTION . . . 33
OPERATION . . . 33
INDICATOR, NO BUS
DESCRIPTION . . . 34
OPERATION . . . 34
INDICATOR, NO FUSE
DESCRIPTION . . . 35
OPERATION . . . 35
INDICATOR, OIL CHANGE
DESCRIPTION . . . 35
OPERATION . . . 35
INDICATOR, SEATBELT WARNING
DESCRIPTION . . . 36
OPERATION . . . 36
STANDARD PROCEDURE . . . 37
INDICATOR, SECURITY SYSTEM
DESCRIPTION . . . 37
OPERATION . . . 37

continued..

page

INDICATOR, SERVICE 4WD
DESCRIPTION . . . 38
OPERATION . . . 39
INDICATOR, SHIFT (TRANSFER CASE)
DESCRIPTION
4WD AUTO INDICATOR . . . 39
4WD INDICATOR . . . 39
4 LOW INDICATOR . . . 40
OPERATION
4WD AUTO INDICATOR . . . 40
4WD INDICATOR . . . 40
4 LOW INDICATOR . . . 41
INDICATOR, TOW/HAUL
DESCRIPTION . . . 41
OPERATION . . . 42
INDICATOR, TRACTION CONTROL
DESCRIPTION . . . 42
OPERATION . . . 42
INDICATOR, TRANSMISSION RANGE
DESCRIPTION . . . 43
OPERATION . . . 43
INDICATOR, TRANSMISSION TEMPERATURE
DESCRIPTION . . . 44
OPERATION . . . 44

page

INDICATOR, WASHER FLUID
DESCRIPTION . . . 45
OPERATION . . . 45
INDICATORS, TURN SIGNAL
DESCRIPTION . . . 46
OPERATION . . . 46
ODOMETER
DESCRIPTION . . . 47
OPERATION . . . 47
POD, SWITCH
DESCRIPTION . . . 48
OPERATION . . . 48
REMOVAL . . . 49
INSTALLATION . . . 50
SPEEDOMETER
DESCRIPTION . . . 50
OPERATION . . . 50
TACHOMETER
DESCRIPTION . . . 51
OPERATION . . . 51

Instrument Cluster

Description

The instrument cluster (2) is located in the instrument panel (1) above the steering column opening and includes the hardware and software necessary to serve as the electronic body control module also known as the Cab Compartment Node (CCN). The remainder of the instrument cluster, including the mounts and the electrical connections, are concealed within the instrument panel behind the cluster bezel. Besides analog gauges and indicators, the CCN module incorporates a single unit for displaying odometer/trip odometer information, engine hours, several warning or reminder indications and certain diagnostic information. The instrument cluster for this vehicle also.

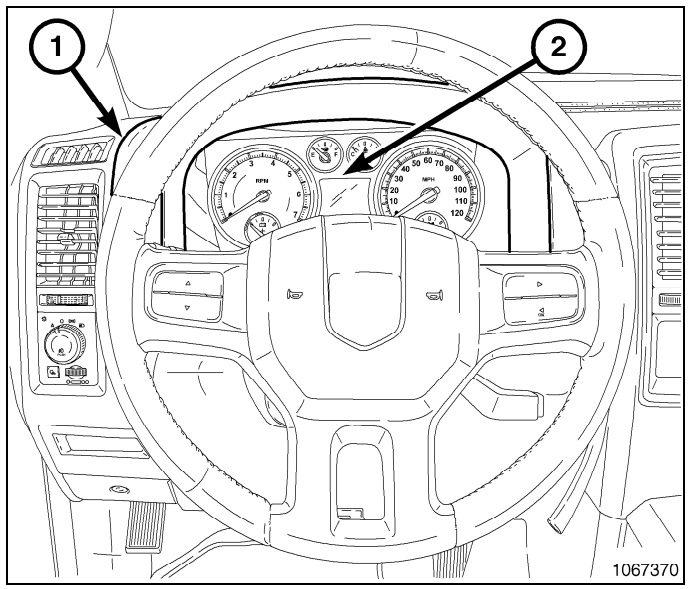

The instrument cluster gauges and indicators are visible through a dedicated opening in the cluster bezel on the instrument panel and are protected by a clear plastic cluster lens that is integral to a cluster lens and hood unit (2). Just behind the cluster lens is the cluster hood. The cluster hood serves as a visor and shields the face of the cluster from ambient light and reflections to reduce glare. A black plastic odometer/trip odometer switch button protrudes through dedicated holes in the cluster lens, located near the lower edge of the cluster just to the left of the speedometer. The molded plastic lens and hood unit has three integral mounting tabs, one each on the lower outboard corners and one on the upper center of the unit. These mounting tabs are used to secure the CCN to the molded plastic instrument panel cluster carrier with three screws.

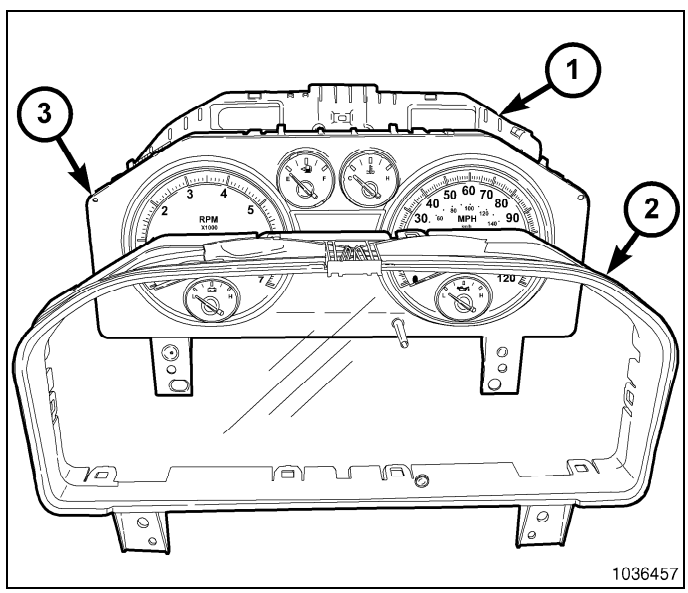

The rear of the cluster housing and the CCN electronic circuitry are protected by a molded plastic rear cover (1), which is secured to the cluster housing with molded plastic clips, while eight similar clips around the outside perimeter of the rear cover secure it to the cluster lens and hood unit. The rear cover includes clearance holes for the cluster connector receptacles. The connector receptacles on the back of the cluster electronic circuit board connect the CCN to the vehicle electrical system through three take outs with connectors from the instrument panel wire harness.

Sandwiched between the rear cover and the lens and hood unit is the cluster housing (3). The molded plastic cluster housing serves as the carrier for the cluster circuit board and circuitry, the cluster connector receptacles, the gauges, a Light Emitting Diode (LED) for each cluster indicator, an audible tone transducer, the cluster overlay, the gauge pointers, the odometer/trip odometer switch.

The cluster overlay is a laminated plastic unit. The dark, visible, outer surface of the overlay is marked with all of the gauge dial faces and graduations, but this layer is also translucent. The darkness of this outer layer prevents the cluster from appearing cluttered or busy by concealing the cluster indicators that are not illuminated, while the translucence of this layer allows those indicators and icons that are illuminated to be readily visible. The underlying layer of the overlay is opaque and allows light from the LED for each of the various indicators and the LED general illumination behind it to be visible through the outer layer of the overlay only through predetermined stencil-like cutouts. A rectangular opening

in the overlay between the Tachometer and the Speedometer through which the Liquid Crystal Display (LCD) unit can be viewed.

Several versions of the CCN module are offered on this vehicle. These versions accommodate all of the variations of optional equipment and regulatory requirements for the various markets in which the vehicle will be offered. The microprocessor-based CCN utilizes integrated circuitry and information carried on the Controller Area Network (CAN) data bus along with several hardwired analog and multiplexed inputs to monitor sensors and switches throughout the vehicle. In response to those inputs, the internal circuitry and programming of the CCN allow it to control and integrate many electronic functions and features of the vehicle through both hardwired outputs and the transmission of electronic message outputs to other electronic modules in the vehicle over the CAN data bus. (Refer to 08 - Electrical/8E - Electronic Control Modules/COMMUNICATION - Description).

Besides typical instrument cluster gauge and indicator support, the electronic functions and features that the CCN supports or controls include the following:

- **Audible Warnings** - The CCN electronic circuit board is equipped with an audible tone transducer and programming that allows it to provide various audible alerts to the vehicle operator, including chime tones and beep tones and, emulates the sound of a conventional turn signal or hazard warning flasher. (Refer to 08 - Electrical/8B - Chime/Buzzer - Description).
- **Brake Lamp Control** - The CCN provides electronic **brake lamp request** messages to the Totally Integrated Power Module (TIPM) located in the engine compartment near the battery for brake lamp control, excluding control of the Center High Mounted Stop Lamp (CHMSL), which remains controlled by a direct hardwired output of the brake lamp switch.
- **Cargo Lamp Control** - The CCN provides direct control of cargo lamp operation with a load shedding (battery saver) feature which will automatically turn OFF the cargo lamp if it remains ON after a timed interval.
- **Compass Mini Trip Computer Support** - The CCN provides support for the optional Compass Mini Trip Computer (CMTC) by calculating average fuel economy, distance to empty and outside temperature values and storing trip odometer and elapsed ignition-ON time data. The CCN receives data and reset requests from the CMTC and transmits the appropriate information for the CMTC to display using electronic messaging.
- **Electronic Transfer Case Interface** - On vehicles equipped with an electronic four-wheel drive transfer case, the CCN monitors a hardwired multiplex input from the transfer case mode switch and then provides the appropriate electronic data bus messages to the TIPM for transfer case control. After the transfer case shift is completed, the TIPM provides an electronic message back to the CCN and the CCN responds by activating the appropriate 4WD indicators within the cluster or in the transfer case switch.
- **Electronic Vehicle Information Center Support** - The CCN provides support for the optional Electronic Vehicle Information Center (EVIC) and the Compass Mini Trip Computer (CMTC) by calculating average fuel economy, distance to empty and outside temperature values and storing trip odometer and elapsed ignition-ON time data.
- **Enhanced Accident Response Support** - The CCN monitors an input from the Occupant Restraint Controller (ORC) and, following an airbag deployment. The CCN monitors an input from the Powertrain Control Module (PCM) to automatically turn ON the interior lighting after an airbag deployment event, 10 seconds after the vehicle speed is zero. The interior lighting remains illuminated until the ignition switch is turned to the OFF position, at which time the interior lighting returns to normal operation and control. These Enhanced Accident Response System (EARS) features are each dependent upon a functional vehicle electrical system following the vehicle impact event.
- **Exterior Lighting Control** - The CCN provides electronic **head lamp** and **park lamp request** messages to the TIPM for the appropriate exterior lamp control of standard head and park lamps, as well as optional front fog lamps. This includes support for headlamp beam selection and the optical horn feature, also known as flash-to-pass.
- **Exterior Lighting Fail-Safe** - In the absence of a headlamp switch input, the CCN will turn ON the cluster general illumination lamps and provide electronic **headlamp low beam** and **park lamp request** messages to the TIPM for default exterior lamp operation. The TIPM will also provide default park lamp and headlamp low beam operation and the CCN will turn ON the cluster general illumination lighting at full intensity if there is a failure of the electronic data bus communication between the CCN and the TIPM.
- **Fuel Level Data Support** - The CCN provides a current source for and receives a Bus message input from the fuel level sending unit located on the fuel pump module in the fuel tank. The CCN uses this input to calculate the proper fuel gauge needle position and low fuel indicator operation. Based upon this input, the CCN also calculates fuel level, average fuel economy and distance to empty data, then uses electronic messaging to transmit this data over the CAN data bus for use by other electronic modules in the vehicle.
- **Heated Seat Control** - The CCN monitors inputs from the ignition switch and electronic **engine speed** messages from the Powertrain Control Module (PCM) to control a high side driver output to the heated seat switch Light Emitting Diode (LED) indicators. This input allows the heated seat switches to wake up the heated seat module if the switch

is actuated. The CCN will de-energize the heated seat switch LED indicators, which deactivates the heated seat system, if the ignition switch is turned to any position except ON or START, or if the **engine speed** message indicates zero. (Refer to 08 - Electrical/8G - Heated/Cooled Systems/Heated Seats - Description).

- **Horn Control** - The CCN monitors an input from the horn switch and provides electronic **horn request** messages to the TIPM for horn control.
- **Instrument Panel Synchronization** - The CCN monitors hardwired multiplexed inputs from the headlamp switch on the instrument panel, then transmits electronic **panel lamp dimming level** messages which allows all other electronic modules on the CAN data bus to coordinate their illumination intensity with that of the CCN. This includes a PARADE mode (also known as funeral mode) that allows all VFD units in the vehicle to be illuminated at full (daytime) intensity while driving during daylight hours with the exterior lamps turned ON.
- **Interior Lamp Load Shedding** - The CCN provides a battery saver feature which will automatically turn OFF all interior lamps and the cargo lamps if they remain ON after a timed interval of about five minutes.
- **Interior Lighting Control** - The CCN monitors inputs from the interior lighting switch, the door ajar switches, the cargo lamp switch, the reading lamp switches, and the Wireless Ignition Node (WIN) to provide courtesy lamp control. This includes support for timed illuminated entry with theater-style fade-to-OFF and courtesy illumination DEFEAT features.
- **Panel Lamps Dimming Control** - The CCN monitors hardwired multiplexed inputs from the headlamp switch on the instrument panel, then provides a hardwired 12-volt Pulse-Width Modulated (PWM) output that synchronizes the dimming level of all panel lamps dimmer controlled lamps with that of the cluster illumination lamps.
- **Remote Keyless Entry** - The CCN supports the optional Remote Keyless Entry (RKE) system features, including support for the RKE LOCK, UNLOCK (with optional driver-door-only unlock, and unlock-all-doors), PANIC, audible chirp, optical chirp, illuminated entry modes, an RKE programming mode, as well as optional Vehicle Theft Security System (VTSS) arming (when the proper VTSS arming conditions are met) and disarming.
- **Remote Radio Switch Interface** - The CCN monitors inputs from the optional remote radio switches and then provides the appropriate electronic data bus messages to the radio to select the radio or optional hands-free cellular system operating mode, volume control, preset station scan and station seek features.
- **Turn Signal and Hazard Warning Lamp Control** - The CCN monitors hard wired multiplexed inputs from the multi-function switch on the steering column, then provides electronic **turn** and **hazard lamp request** messages to the TIPM for turn and hazard lamp control. The CCN also provides an audible click at one of two rates to emulate normal and bulb out turn or hazard flasher operation based upon electronic **lamp outage** messages from the TIPM, and provides an audible turn signal ON chime warning if a turn is signalled continuously for more than about 1.6 kilometers (one mile) and the vehicle speed remains greater than about 24 kilometers-per-hour (15 miles-per-hour).
- **Vehicle Theft Security System Control** - The CCN monitors inputs from the door ajar switches, the ignition switch, and the WIN, then provides electronic **horn** and **lighting request** messages to the TIPM for the appropriate VTSS alarm output features.
- **Wiper and Washer System Control** - The CCN monitors LIN Bus inputs from the wiper and washer switches in the multi-function switch on the steering column, then provides electronic **wiper** and **washer request** messages to the TIPM for the appropriate wiper and washer system features. (Refer to 08 - Electrical/8R - Wipers/Washers - Description).

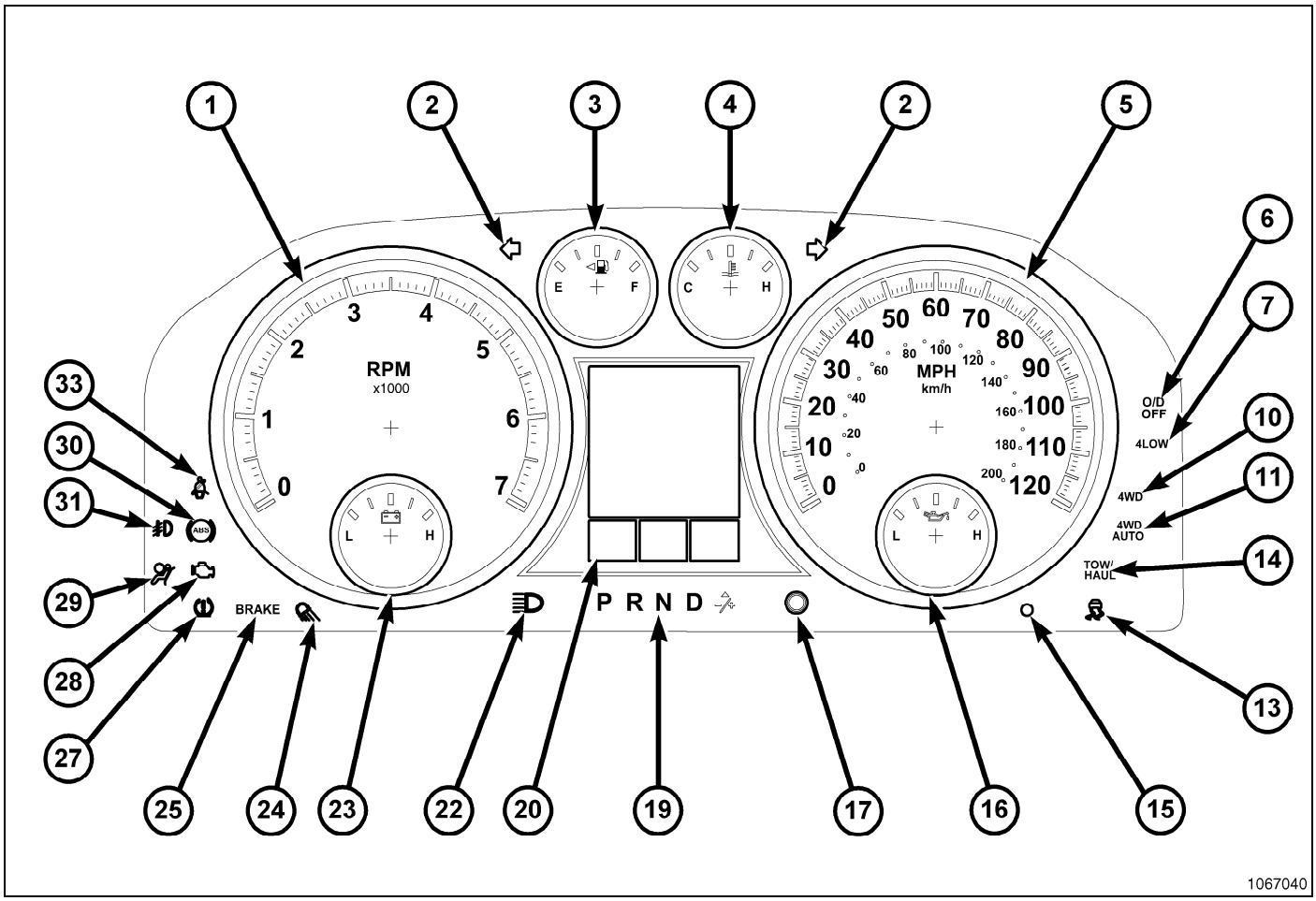
1
2
3
4
2
5
6
7
10
11
14
13
15
16
17
19
20
22
23
24
25
27
28
29
31
30
33
RPM
x1000
MPH
km/h
E
F
C
H
L
H
O/D OFF
4LOW
4WD
4WD AUTO
TOW/ HAUL
BRAKE
P R N D
1067040

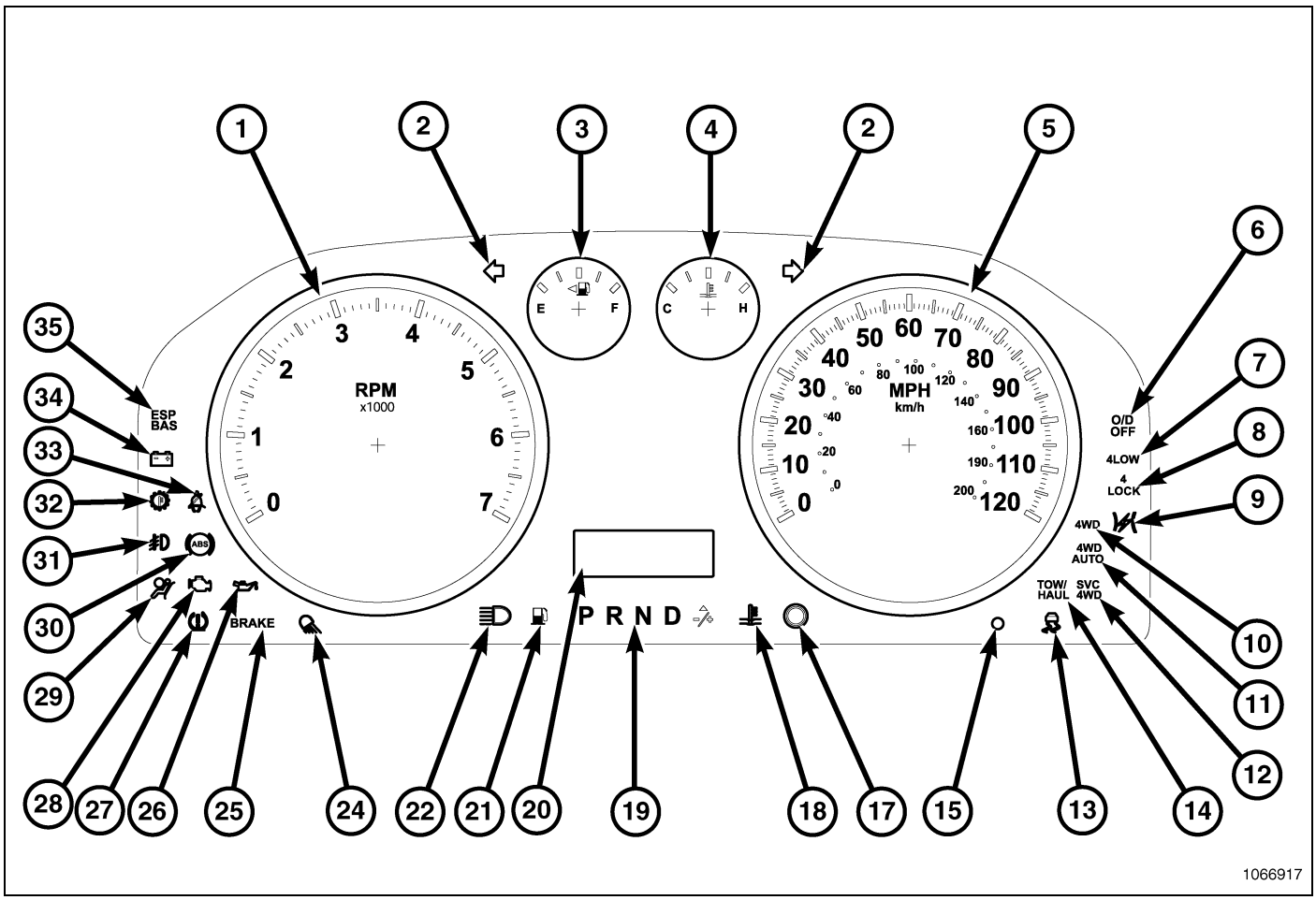

The CCN houses either 4 or 6 analog gauges and has provisions for up to 27 indicators. Some of the CCN indicators are automatically configured when the CCN is connected to the vehicle electrical system for compatibility with certain optional equipment or equipment required for regulatory purposes in certain markets. While each CCN may have provisions for indicators to support every available option, the configurable indicators will not be functional in a vehicle that does not have the equipment that an indicator supports.

The CCN includes the following analog gauges:

- **Engine Temperature Gauge (4)**
- **Fuel Gauge (3)**
- **Oil Pressure Gauge (16)** - except ST models.
- **Speedometer (5)**
- **Tachometer (1)**
- **Voltage Gauge (23)** - except ST models.

The CCN includes the following LCD unit:

- **Odometer/Trip Odometer/LCD/EVIC Display (20)**

The CCN includes provisions for the following indicators:

- **Airbag Indicator (29)**
- **Antilock Brake System (ABS) Indicator (30)**
- **Brake Indicator (25)**
- **Cargo Lamp Indicator (24)**
- **Change Oil Indicator (20)** - on domestic market vehicles only, a textual message in LCD or in EVIC if so equipped.
- **Charging Indicator (34)** - ST models only.
- **Cruise Indicator (20)** - LCD. Also in Electronic Vehicle Information Center (EVIC) if so equipped.
- **Door Ajar Indicator (20)** - LCD. Also in Electronic Vehicle Information Center (EVIC) if so equipped.

- **Electronic Stability Program (ESP)/Brake Assist System (BAS) Indicator (35)** - Also in Electronic Vehicle Information Center (EVIC) if so equipped.
- **Fog Lamp Indicator (31)**
- **Four-Wheel Drive (4WD) Indicator (10)**
- **Four-Wheel Drive Auto (4WD Auto) Indicator (11)**
- **Four-Wheel Drive Low (4 LOW) Indicator (7)**
- **Four-Wheel Drive Low (4 LOCK) Indicator (8)**
- **Gas Cap Indicator (20)** - LCD Also in Electronic Vehicle Information Center (EVIC) if so equipped.
- **High Beam Indicator (22)**
- **Low Fuel Indicator (21)** - Also in Electronic Vehicle Information Center (EVIC) if so equipped.
- **Low Oil Pressure Indicator (26)** - Also in Electronic Vehicle Information Center (EVIC) if so equipped.
- **Malfunction Indicator Lamp (MIL) (28)**
- **No Bus Indicator (20)** - LCD. Also in.Electronic Vehicle Information Center (EVIC) if so equipped.
- **No Fuse Indicator (20)** - LCD. Also in.Electronic Vehicle Information Center (EVIC) if so equipped.
- **Seat Belt Indicator (33)**
- **Security Indicator (15)**
- **Service Four-Wheel Drive (Serv 4WD) Indicator (12)** - Also in Electronic Vehicle Information Center (EVIC) if so equipped.
- **Tire Pressure Monitor (TPM) Indicator (27)**
- **Tow/Haul Indicator (14)**
- **Traction Control Indicator (13)**
- **Transmission Overtemp Indicator (32)** - Also in Electronic Vehicle Information Center (EVIC) if so equipped.
- **Transmission Range Indicator (19)**
- **Electronic Throttle Control (9)** Also in.Electronic Vehicle Information Center (EVIC) if so equipped.
- **Turn Signal (Right and Left) Indicators (2)**

Each indicator in the CCN, except those located within the LCD unit, is illuminated by a dedicated LED that is soldered onto the CCN electronic circuit board. Cluster illumination is accomplished by dimmable LED back lighting, which illuminates each of the gauges for visibility when the exterior lighting is turned ON. The LED units are not available for service replacement and, if damaged or ineffective, the entire CCN must be replaced.

Hard wired circuitry connects the CCN to the electrical system of the vehicle. These hard wired circuits are integral to several wire harnesses, which are routed throughout the vehicle and retained by many different methods. These circuits may be connected to each other, to the vehicle electrical system and to the CCN through the use of a combination of soldered splices, splice block connectors, and many different types of wire harness terminal connectors and insulators. Refer to the appropriate wiring information. The wiring information includes wiring diagrams, proper wire and connector repair procedures, further details on wire harness routing and retention, as well as pin-out and location views for the various wire harness connectors, splices and grounds.

The CCN module for this vehicle is serviced only as a complete unit. The CCN module cannot be adjusted or repaired. If a gauge, an LED indicator, the LCD unit, the electronic circuit board, the circuit board hardware, the cluster overlay, or the CCN housing are damaged or ineffective, the entire CCN module must be replaced. The cluster lens, hood and mask unit are available for separate service replacement.

Operation

The instrument cluster includes the hardware and software necessary to serve as the electronic body control module and is sometimes referred to as the Cab Compartment Node or (CCN). The following information deals primarily with the instrument cluster functions of this unit. Additional details of the electronic body control functions of this unit may be found within the service information for the system or component that the CCN controls. For example: Additional details of the audible warning functions of the CCN are found within the Chime/Buzzer service information.

The CCN is designed to allow the vehicle operator to monitor the conditions of many of the vehicle components and operating systems. The gauges and indicators in the CCN provide valuable information about the various standard and optional powertrains, fuel and emissions systems, cooling systems, lighting systems, safety systems and many other convenience items. The CCN is installed in the instrument panel so that all of these monitors can be easily viewed by the vehicle operator when driving, while still allowing relative ease of access for service.

The microprocessor-based CCN hardware and software uses various inputs to control the gauges and indicators visible on the face of the cluster. Some of these inputs are hard wired, but most are in the form of electronic messages that are transmitted by other electronic modules over the Controller Area Network (CAN) data bus. (Refer to 08 - Electrical/8E - Electronic Control Modules/COMMUNICATION - Operation).

The CCN microprocessor smooths the input data using algorithms to provide gauge readings that are accurate, stable and responsive to operating conditions. These algorithms are designed to provide gauge readings during normal operation that are consistent with customer expectations. However, when abnormal conditions exist such as high coolant temperature, the algorithm can drive the gauge pointer to an extreme position and the microprocessor can sound a chime through the on-board audible tone transducer to provide distinct visual and audible indications of a problem to the vehicle operator. The CCN may also produce audible warnings for other electronic modules in the vehicle based upon electronic **tone request** messages received over the CAN data bus. Each audible warning is intended to provide the vehicle operator with an audible alert to supplement a visual indication.

The CCN circuitry operates on battery current received through a fused B(+) fuse on a non-switched fused B(+) circuit, and on battery current received through a fused ignition switch output (run-start) fuse on a fused ignition switch output (run-start) circuit. This arrangement allows the CCN to provide some features regardless of the ignition switch position, while other features will operate only with the ignition switch in the ON or START positions. The CCN circuitry is grounded through a ground circuit and take out of the instrument panel wire harness with an eyelet terminal connector that is secured by a ground screw to a ground location on the instrument panel structural support.

The CCN also has a self-diagnostic actuator test capability, which will test each of the CAN bus message-controlled functions of the cluster by lighting the appropriate indicators, positioning the gauge needles at several predetermined calibration points across the gauge faces, and illuminating all segments of the odometer/trip odometer/gear selector indicator Liquid Crystal Display (LCD) Display (VFD) unit. (Refer to 08 - Electrical/8J - Instrument Cluster - Diagnosis and Testing).

GAUGES

All gauges receive battery current through the CCN circuitry only when the ignition switch is in the ON or START positions. With the ignition switch in the OFF position battery current is not supplied to any gauges, and the CCN circuitry is programmed to move all of the gauge needles back to the low end of their respective scales. Therefore, the gauges do not accurately indicate any vehicle condition unless the ignition switch is in the ON or START positions.

All of the CCN gauges are driven by stepper motors. Multiple toothed electromagnets around a central gear-shaped piece of iron are located within each gauge. The electromagnets are energized by the CCN circuitry in response to messages received over the CAN data bus. To make the motor shaft turn, one electromagnet is given power, which makes the gears teeth magnetically attract to the electromagnets. As the second electromagnet is turned on the first is turned off and the gear rotates to align to the energized magnet, and the process is repeated. Each of those slight rotations is called at "step", this allows the motor to be turned to precise angles. The gauge needle moves as the magnets align to the changing magnetic fields created around it by the electromagnets.

The gauges are diagnosed using the CCN self-diagnostic actuator test. (Refer to 08 - Electrical/8J - Instrument Cluster - Diagnosis and Testing). Proper testing of the CAN data bus and the electronic data bus message inputs to the CCN that control each gauge require the use of a diagnostic scan tool. Refer to the appropriate diagnostic information. Specific operation details for each gauge may be found elsewhere in this service information.

LIQUID CRYSTAL DISPLAY

The Liquid Crystal Display (LCD) unit is attached to the CCN electronic circuit board. With the ignition switch in the OFF or ACCESSORY positions, the odometer display is activated when the driver door is opened (Rental Car mode) and is deactivated when the driver door is closed. Otherwise, the display unit is active when the ignition switch is in the ON or START positions, and inactive when the ignition switch is in the OFF or ACCESSORY positions.

The illumination intensity of the LCD unit is controlled by the CCN circuitry based upon an input from the headlamp switch and a dimming level input received from the panel dimmer switch. The CCN synchronizes the illumination intensity of other LCD units with that of the unit in the CCN by sending electronic **dimming level** messages to other electronic modules in the vehicle over the CAN data bus.

The CCN LCD unit has several display capabilities including odometer, trip odometer, engine hours, gear selector indication (PRNDL) for vehicles with an automatic transmission, several warning or reminder indications, and various diagnostic information when certain fault conditions exist. An odometer/trip odometer switch on the CCN circuit board is used to control some of the display modes. This switch is actuated manually by depressing the odometer/trip odometer switch button that extends through the lower edge of the cluster lens, just left of the tachometer. Actuating this switch momentarily with the ignition switch in the ON position will toggle the LCD between the odometer and trip odometer

modes. Depressing the switch button for about two seconds while the LCD is in the trip odometer mode will reset the trip odometer value to zero.

While in the odometer mode with the ignition switch in the ON position and the engine not running, depressing the odometer/trip odometer switch for about six seconds will display the engine hours information on vehicle not equipped with an EVIC. Holding this switch depressed while turning the ignition switch from the OFF position to the ON position will initiate the CCN self-diagnostic actuator test. (Refer to 08 - Electrical/8J - Instrument Cluster - Diagnosis and Testing) for additional details on this cluster function. The CCN microprocessor remembers which display mode is active when the ignition switch is turned to the OFF position, and returns the VFD display to that mode when the ignition switch is turned ON again.

The VFD unit is diagnosed using the CCN self-diagnostic actuator test. (Refer to 08 - Electrical/8J - Instrument Cluster - Diagnosis and Testing). Proper testing of the CAN data bus and the electronic data bus message inputs to the CCN that control some of the VFD functions requires the use of a diagnostic scan tool. Refer to the appropriate diagnostic information. Specific operation details for the odometer, the trip odometer, the gear selector indicator and the various warning and reminder indicator functions of the VFD unit may be found elsewhere in this service information.

INDICATORS

Indicators are located in various positions within the CCN and are all connected to the CCN electronic circuit board. The door ajar indicator, high beam indicator, and turn signal indicators operate based upon CAN data bus messages. The cargo lamp indicator operates based upon hardwired inputs to the CCN. The brake indicator is controlled by CAN data bus messages from the Controller Antilock Brake (CAB) as well as by hardwired park brake switch inputs to the CCN. The seatbelt indicator is controlled by the CCN programming, CAN data bus messages from the Occupant Restraint Controller (ORC), and a hardwired seat belt switch input to the CCN. The Malfunction Indicator Lamp (MIL) is normally controlled by CAN data bus messages from the Powertrain Control Module (PCM); however, if the CCN loses CAN data bus communication, the CCN circuitry will automatically turn the MIL ON until CAN data bus communication is restored. The CCN uses CAN data bus messages from the Totally Integrated Power Module (TIPM), the ORC, the CAB, and the Wireless Ignition Node (WIN) to control all of the remaining indicators.

The various CCN indicators are grounded through the CCN circuitry and have a switched battery feed. All indicators are completely controlled by the CCN microprocessor based upon various hard wired and electronic message inputs. The cruise, four-wheel drive, four-wheel drive auto, four-wheel drive low, overdrive OFF and tow/haul indicators and those located within the LCD unit are dimmable. All other indicators are illuminated at a fixed intensity, which is not affected by the selected illumination intensity of the CCN general illumination lamps. The illumination intensity of the dimmable indicators is synchronized with that of the CCN general illumination lamps.

In addition, certain indicators in this instrument cluster are automatically or self-configured. This feature allows the configurable indicators to be enabled by the CCN circuitry for compatibility with certain optional equipment. The CCN defaults for the ABS indicator and airbag indicator are enabled, and these configuration settings must be programmatically disabled in the CCN using a diagnostic scan tool for vehicles that do not have this equipment. The automatically or self-configured indicators remain latent in each CCN at all times and will be active only when the CCN receives the appropriate CAN bus message inputs for that optional system or equipment.

The hard wired indicator inputs may be diagnosed using conventional diagnostic tools and procedures. However, the CCN circuitry and CAN bus message controlled indicators are diagnosed using the CCN self-diagnostic actuator test. (Refer to 08 - Electrical/8J - Instrument Cluster - Diagnosis and Testing). Proper testing of the CAN data bus and the electronic data bus message inputs to the CCN that control an indicator requires the use of a diagnostic scan tool. Refer to the appropriate diagnostic information. Specific details of the operation for each indicator may be found elsewhere in this service information.

CLUSTER ILLUMINATION

The CCN has several illumination lamps that are illuminated whenever the exterior lighting is turned ON. The illumination intensity of these lamps is adjusted when the interior lighting thumbwheel on the headlamp switch is rotated (down to dim, up to brighten) to one of the available minor detent positions. The CCN monitors a resistor multiplexed input from the headlamp switch on a dimmer input circuit. In response to that input, the CCN electronic circuitry converts a fused 12-volt input it receives on a hardwired panel lamps dimmer switch signal circuit into a 12-volt Pulse Width Modulated (PWM) output.

The CCN uses this PWM output to control the illumination intensity of the cluster illumination lamps and the LCD unit on the CCN circuit board, then provides a synchronized PWM output on various hard wired fused panel lamps dimmer switch signal circuits to control and synchronize the illumination intensity of other incandescent illumination lamps in the vehicle. The CCN also transmits electronic **dimming level** messages over the CAN data bus to other electronic modules in the vehicle to control and synchronize the illumination intensity of their LCD units to that of the CCN LCD unit.

In addition, the thumbwheel on the headlamp switch has a PARADE mode position to provide a PARADE (or funeral) mode. The CCN monitors the request for this mode from the headlamp switch, then transmits an electronic **dimming level** message to illuminate all LCD units in the vehicle at full (daytime) intensity for easier visibility when driving in daylight with the exterior lighting turned ON.

The hard wired headlamp switch and panel lamps dimmer inputs to and outputs from the CCN may be diagnosed using conventional diagnostic tools and procedures. However, proper testing of the PWM processing of the CCN and the electronic **dimming level** messages sent by the CCN over the CAN data bus requires the use of a diagnostic scan tool. Refer to the appropriate diagnostic information.

Diagnosis and Testing

WARNING: To avoid serious or fatal injury on vehicles equipped with airbags, disable the Supplemental Restraint System (SRS) before attempting any steering wheel, steering column, airbag, seat belt tensioner, impact sensor or instrument panel component diagnosis or service. Disconnect and isolate the battery negative (ground) cable, then wait two minutes for the system capacitor to discharge before performing further diagnosis or service. This is the only sure way to disable the SRS. Failure to take the proper precautions could result in accidental airbag deployment.

If all of the instrument cluster gauges and indicators are inoperative, be certain to check the instrument cluster fused B(+) fuse and the instrument cluster fused B(+) and ground circuits for shorts or opens. Refer to the appropriate wiring information. The wiring information includes wiring diagrams, proper wire and connector repair procedures, details of wire harness routing and retention, connector pin-out information and location views for the various wire harness connectors, splices and grounds.

If an individual hardwired gauge or indicator is inoperative, refer to the diagnosis and testing service information for that specific gauge or indicator. If an individual Controller Area Network (CAN) data bus message-controlled gauge or indicator is inoperative, perform the Self Test as follows:

CAUTION: Instrument clusters used in this vehicle automatically configure themselves for compatibility with the features and optional equipment in the vehicle in which they are initially installed. The instrument cluster is programmed to do this by embedding the Vehicle Identification Number (VIN) and other information critical to proper cluster operation into electronic memory. This embedded information is learned through electronic messages received from other electronic modules in the vehicle over the Controller Area Network (CAN) data bus, and through certain hard wired inputs received when the cluster is connected to the vehicle electrically. Once configured, the instrument cluster memory may be irreparably damaged and certain irreversible configuration errors may occur if the cluster is connected electrically to another vehicle; or, if an electronic module from another vehicle is connected that provides data to the instrument cluster (including odometer values) that conflicts with that which was previously learned and stored. Therefore, the practice of exchanging (swapping) instrument clusters and other electronic modules in this vehicle with those removed from another vehicle must always be avoided. Failure to observe this caution may result in instrument cluster damage, which is not reimbursable under the terms of the product warranty. Service replacement instrument clusters are provided with the correct VIN, and the certified odometer and engine hours values embedded into cluster memory, but will otherwise be automatically configured for compatibility with the features and optional equipment in the vehicle in which they are initially installed.

NOTE: Certain indicators in this instrument cluster are automatically configured. This feature allows those indicators to be activated or deactivated for compatibility with certain optional equipment. If the problem being diagnosed involves improper illumination of the cruise indicator, the electronic throttle control indicator, the fog lamp indicator, any of the four-wheel drive indicators, the overdrive OFF indicator, the tow/haul indicator, the transmission overtemp indicator, the security indicator or the gear selector indicator, disconnect and isolate the battery negative cable. After about five minutes, reconnect the battery negative cable and turn the ignition switch to the ON position. The instrument cluster should automatically relearn the equipment in the vehicle and properly configure the configurable indicators accordingly.

SELF TEST

The instrument cluster self test will put the instrument cluster into its self-diagnostic mode. In this mode the instrument cluster can perform a self-diagnostic test that will confirm that the instrument cluster circuitry, the gauges, and the indicators are capable of operating as designed. During the self test the instrument cluster circuitry will position each of the gauge needles at various calibration points, illuminate all of the segments or portions in the Liquid Crystal Display (LCD) unit, and turn all of the indicators ON and OFF again.

Successful completion of the self test will confirm that the instrument cluster is operational. However, there may still be a problem with the CAN data bus, the Powertrain Control Module (PCM), the Totally Integrated Power Module (TIPM), the Transmission Control Module (TCM), the Occupant Restraint Controller (ORC), the Controller Anti-lock Brake (CAB), the Wireless Ignition Node (WIN) or the hardwired inputs to one of these electronic control modules. Use a diagnostic scan tool to diagnose these components. Refer to the appropriate diagnostic information.

1. Begin the test with the ignition switch in the OFF position.
2. Depress the odometer/trip odometer switch button.
3. While still holding the odometer/trip odometer switch button depressed, turn the ignition switch to the ON position, but do not start the engine.
4. Release the odometer/trip odometer switch button.
5. The instrument cluster will simultaneously begin to illuminate all of the operational segments in the LCD unit and perform a bulb check of each operational Light Emitting Diode (LED) indicator. The LCD segments and LED indicators remain illuminated as each gauge needle is swept to several calibration points and back. If a VFD segment or an LED indicator fails to illuminate, or if a gauge needle fails to sweep through the calibration points and back during this test, the instrument cluster must be replaced.
6. The self test is now completed. The instrument cluster will automatically exit the self-diagnostic mode and return to normal operation at the completion of the test. The self test will be aborted if the ignition switch is turned to the OFF position, or if a vehicle speed message indicating that the vehicle is moving is received from the PCM over the CAN data bus during the test.
7. Go back to Step #1 to repeat the test, if necessary.

Removal

WARNING: To avoid serious or fatal injury on vehicles equipped with airbags, disable the Supplemental Restraint System (SRS) before attempting any steering wheel, steering column, airbag, seat belt tensioner, impact sensor or instrument panel component diagnosis or service. Disconnect and isolate the battery negative (ground) cable, then wait two minutes for the system capacitor to discharge before performing further diagnosis or service. This is the only sure way to disable the SRS. Failure to take the proper precautions could result in accidental airbag deployment.

1. Disconnect and isolate the battery negative cable.
2. Remove the cluster bezel from the instrument panel. (Refer to 23 - Body/Instrument Panel/BEZEL, Instrument Cluster - Removal).
3. Remove the two screws (2) that secure the instrument cluster (1) to the instrument panel structural support (3).

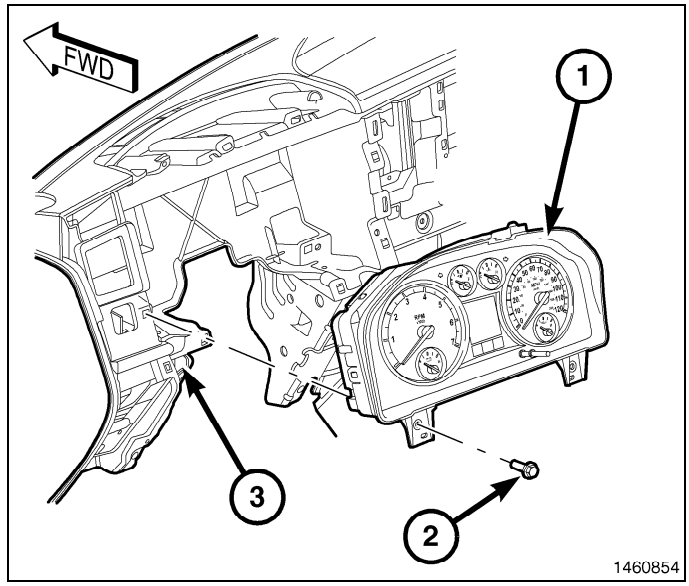

4. Pull the instrument cluster rearward far enough to access and disconnect the three instrument panel wire harness connectors (2) from the connector receptacles (1) on the back of the cluster housing.
5. Remove the instrument cluster from the instrument panel.

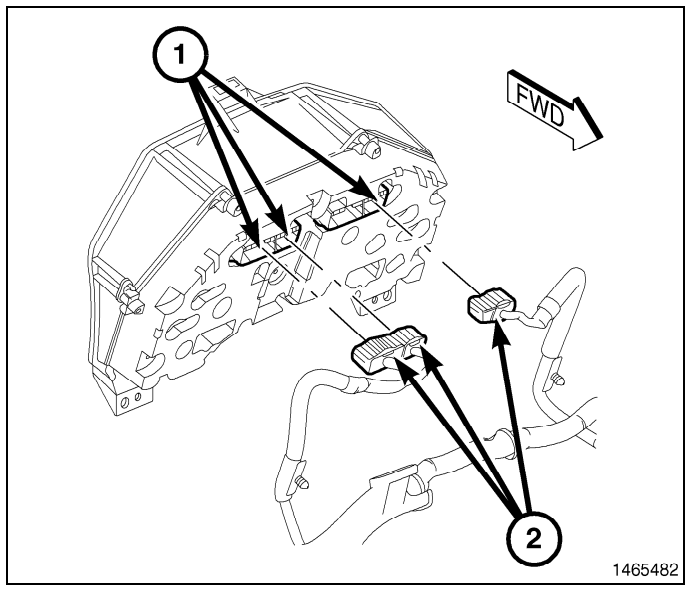

Disassembly

WARNING: To avoid serious or fatal injury on vehicles equipped with airbags, disable the Supplemental Restraint System (SRS) before attempting any steering wheel, steering column, airbag, seat belt tensioner, impact sensor or instrument panel component diagnosis or service. Disconnect and isolate the battery negative (ground) cable, then wait two minutes for the system capacitor to discharge before performing further diagnosis or service. This is the only sure way to disable the SRS. Failure to take the proper precautions could result in accidental airbag deployment.

NOTE: The instrument cluster mask and lens unit can be serviced separately.

1. Disconnect and isolate the negative battery cable.
2. Remove the instrument cluster (1) from the instrument panel (Refer to 08 - Electrical/8J - Instrument Cluster - Removal).
3. Working around the perimeter of the instrument cluster (3), release the clips that secure the instrument cluster mask and lens unit (2) to the housing and remove the lens.

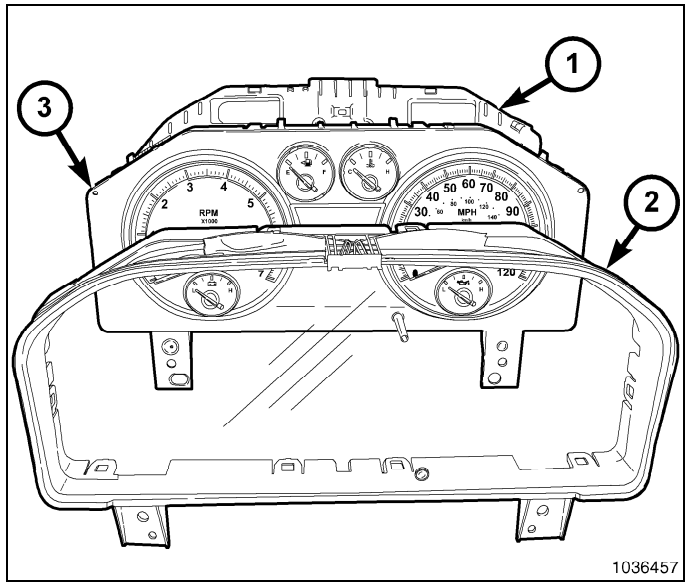

Assembly

WARNING: To avoid serious or fatal injury on vehicles equipped with airbags, disable the Supplemental Restraint System (SRS) before attempting any steering wheel, steering column, airbag, seat belt tensioner, impact sensor or instrument panel component diagnosis or service. Disconnect and isolate the battery negative (ground) cable, then wait two minutes for the system capacitor to discharge before performing further diagnosis or service. This is the only sure way to disable the SRS. Failure to take the proper precautions could result in accidental airbag deployment.

NOTE: The instrument cluster mask and lens unit can be serviced separately.

1. Position the cluster lens and mask unit (2) over the face of the instrument cluster. Be certain that the odometer/trip odometer switch push button is inserted through the clearance hole in the mask and lens unit.
2. Working around the perimeter of the instrument cluster (3), apply even pressure to the lens until each of the retaining clips is fully engaged to the housing.
3. Reinstall the instrument cluster (Refer to 08 - Electrical/8J - Instrument Cluster - Installation).
4. Reconnect the negative battery cable.

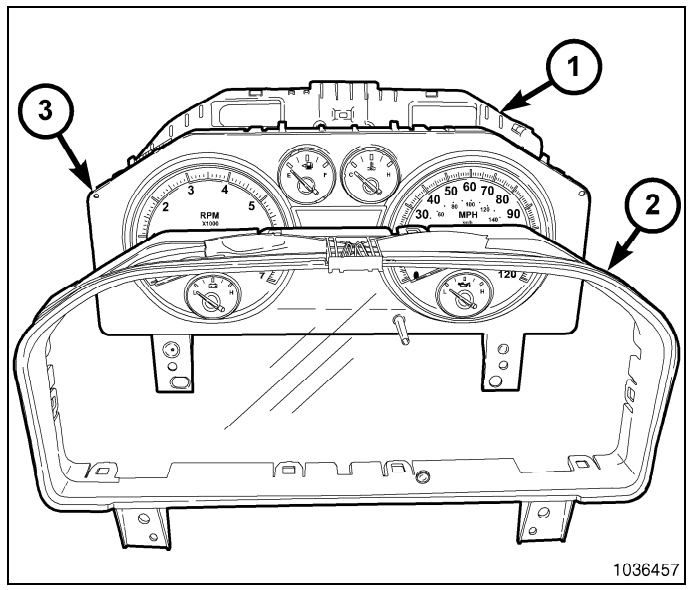

Installation

WARNING: To avoid serious or fatal injury on vehicles equipped with airbags, disable the Supplemental Restraint System (SRS) before attempting any steering wheel, steering column, airbag, seat belt tensioner, impact sensor or instrument panel component diagnosis or service. Disconnect and isolate the battery negative (ground) cable, then wait two minutes for the system capacitor to discharge before performing further diagnosis or service. This is the only sure way to disable the SRS. Failure to take the proper precautions could result in accidental airbag deployment.

1. Position the instrument cluster close enough to the instrument panel to reconnect the three instrument panel wire harness connectors (2) to the connector receptacles (1) on the back of the cluster housing.

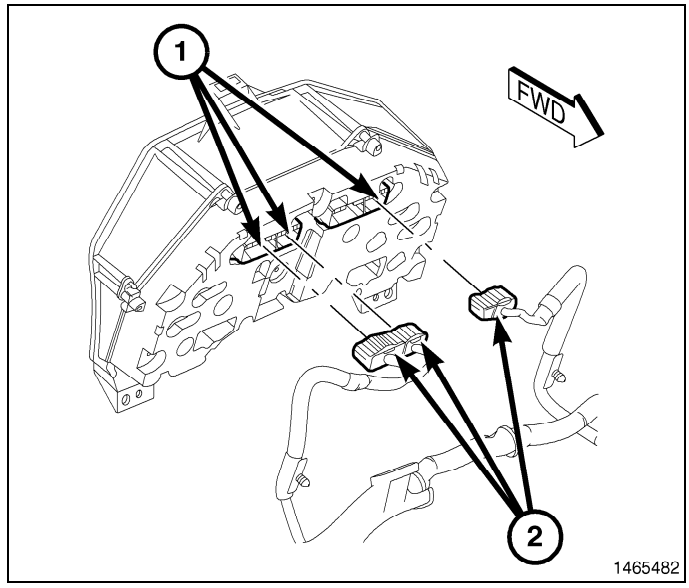

2. Position the instrument cluster (1) into the instrument panel (3).
3. Install and tighten the two screws (2) that secure the instrument cluster to the instrument panel structural support. Tighten the screws to 4 N·m (31 in. lbs.).
4. Reinstall the cluster bezel onto the instrument panel. (Refer to 23 - Body/Instrument Panel/BEZEL, Instrument Cluster - Installation).
5. Reconnect the battery negative cable.

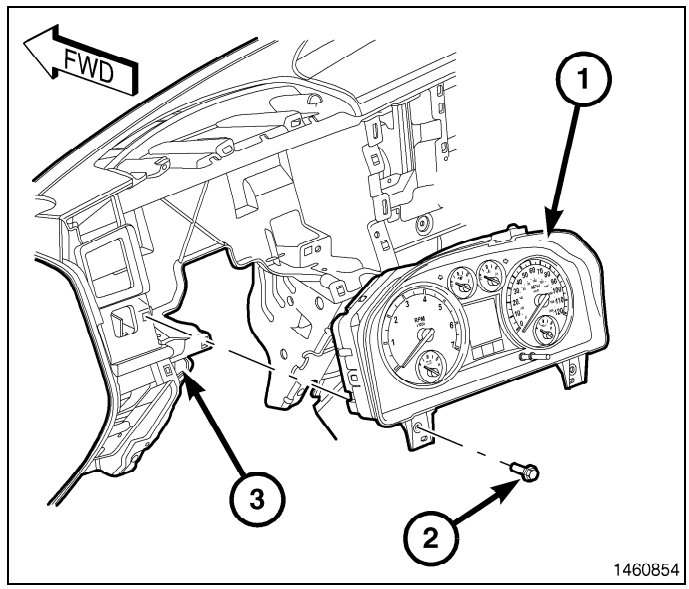

NOTE: Certain indicators in this instrument cluster are automatically configured. This feature allows those indicators to be activated or deactivated for compatibility with certain optional equipment. If a problem is noted that involves improper illumination of the cruise indicator, the electronic throttle control indicator, the fog lamp indicator, any of the four-wheel drive indicators, the overdrive OFF indicator, the tow/haul indicator, the transmission overtemp indicator, the security indicator or the gear selector indicator, disconnect and isolate the battery negative cable. After about five minutes, reconnect the battery negative cable and turn the ignition switch to the ON position. The instrument cluster should automatically relearn the equipment in the vehicle and properly configure the configurable indicators accordingly.

GAUGE, Engine Temperature

Description

An engine coolant temperature gauge is standard equipment on all instrument clusters. The engine coolant temperature gauge is located in the upper right center quadrant of the instrument cluster, next to the fuel gauge. The gauge consists of a movable gauge needle or pointer controlled by the instrument cluster circuitry and a fixed 90 degree scale on the cluster overlay that reads left-to-right from **C** (or Cold) to **H** (or Hot) for gasoline engines. An International Control and Display Symbol icon for **Engine Coolant Temperature** is located on the cluster overlay, directly below the left end of the gauge scale.

The engine coolant temperature gauge graphics are white against a black field except for a single red graduation at the high end of the gauge scale making them clearly visible within the instrument cluster in daylight. When illuminated from behind by the panel lamps dimmer controlled cluster illumination lighting with the exterior lamps turned ON, the white gauge graphics appear amber on the low line and white on the high line, while the red graphics still appear red. The gauge needle has internal optical illumination. Gauge illumination is provided by Light Emitting Diode (LED) units located on the instrument cluster electronic circuit board.

The engine coolant temperature gauge is serviced as a unit with the instrument cluster.

Operation

The engine coolant temperature gauge gives an indication to the vehicle operator of the engine coolant temperature. This gauge is controlled by the instrument cluster circuit board based upon cluster programming and electronic messages received by the cluster from the Powertrain Control Module (PCM) over the Controller Area Network (CAN) data bus.

The engine coolant temperature gauge is an air core magnetic unit that receives battery current on the instrument cluster electronic circuit board through the fused ignition switch output (run-start) circuit whenever the ignition switch is in the ON or START positions. The cluster is programmed to move the gauge needle back to the low end of the scale after the ignition switch is turned to the OFF position. The instrument cluster circuitry controls the gauge needle position and provides the following features:

- **Engine Temperature Message** - Each time the cluster receives an electronic engine temperature message from the PCM indicating the temperature is between the low end of normal [about 54 °C (130 °F) and the high end of normal [about 122 °C (252 °F), the gauge needle is moved to the actual relative temperature position on the gauge scale.
- **Engine Temperature Low Message** - Each time the cluster receives an electronic engine temperature message from the PCM indicating the temperature is below the low end of normal [about 54 °C (130 °F), the gauge needle is held at the graduation on the far left end of the gauge scale. The gauge needle remains at the low end of the gauge scale

until the cluster receives a message from the PCM indicating the temperature is above about 54 °C (130 °F), or until the ignition switch is turned to the OFF position, whichever occurs first.

- **Engine Temperature High Message** - Each time the cluster receives three consecutive electronic engine temperature messages from the PCM indicating the temperature is above about 122 °C (252 °F), the gauge needle is moved to the red increment or zone at the far right end of gauge scale, the check gauges indicator is illuminated, and a single chime tone is sounded. The gauge needle remains at the high end of the gauge scale and the check gauges indicator remains illuminated until the cluster receives a message from the PCM indicating that the temperature is below about 122 °C (252 °F), or until the ignition switch is turned to the OFF position, whichever occurs first. The chime tone feature will only repeat during the same ignition cycle if the check gauges indicator is cycled OFF and then ON again by the appropriate messages from the PCM.
- **Communication Error** - If the cluster fails to receive an **engine temperature** message, it will hold the gauge needle at the last indication for about 10 seconds or until the ignition switch is turned to the OFF position, whichever occurs first. After 10 seconds, the cluster will move the gauge needle to the low end of the gauge scale.
- **Self Test** - Each time the cluster is put through the self test, the engine coolant temperature gauge needle will be swept to several calibration points on the gauge scale in a prescribed sequence in order to confirm the functionality of the gauge and the cluster control circuitry.

The PCM continually monitors the engine coolant temperature sensor to determine the engine operating temperature. The PCM then sends the proper messages to the instrument cluster, also known as the Cab Compartment Node (CCN). For further diagnosis of the engine coolant temperature gauge or the instrument cluster circuitry that controls the gauge, (Refer to 08 - Electrical/8J - Instrument Cluster - Diagnosis and Testing). If the instrument cluster turns ON the check gauges indicator due to a high engine temperature gauge reading, it may indicate that the engine or the engine cooling system requires service.

For proper diagnosis of the engine coolant temperature sensor, the PCM, the CCN, the CAN data bus or the electronic communication related to engine coolant temperature gauge operation a diagnostic scan tool is required. Refer to the appropriate diagnostic information.

GAUGE, Fuel

Description

A fuel gauge is standard equipment on all instrument clusters. This gauge is located in the upper center quadrant of the instrument cluster, left of the temperature gauge. This gauge consists of a movable gauge needle or pointer controlled by the instrument cluster circuitry and a fixed 90 degree scale on the cluster overlay that reads left-to-right from **E** (or Empty) to **F** (or Full).

An arrowhead pointed to the left side of the vehicle is imprinted on the gauge face. The arrowhead is located below the gauge scale, but above the hub of the gauge needle, next to the **Fuel** icon on the gauge to provide the driver with a reminder as to the location of the fuel filler access.

The fuel gauge graphics are white against a black field except for a single red graduation at the low end of the gauge scale making them clearly visible within the instrument cluster in daylight. When illuminated from behind by the panel lamps dimmer controlled cluster general illumination lighting with the exterior lamps turned ON, the gauge graphics appear amber for low line models and white for high line models while the red graphics still appear red. The gauge needle has internal optical illumination. Gauge illumination is provided by an Light Emitting Diode (LED) located on the instrument cluster electronic circuit board.

The fuel gauge is serviced as a unit with the instrument cluster.

Operation

The fuel gauge gives an indication to the vehicle operator of the level of fuel in the fuel tank. This gauge is controlled by the instrument cluster circuit board based upon cluster programming and a bus message received by the cluster. This bus message is based upon a hard-wired input received by the Total Integrated Power Module (TIPM) from the fuel level sending unit on the fuel pump module, located in the fuel tank.

The fuel gauge is a stepper motor design unit that receives battery current on the instrument cluster electronic circuit board through the fused ignition switch output (run-start) circuit whenever the ignition switch is in the ON or START positions. The cluster is programmed to move the gauge needle back to the low end of the scale after the ignition switch is turned to the OFF position. The CCN electronic circuitry controls the gauge needle position and provides the following features:

- **Fuel Level Sending Unit Input** - The TIPM provides a constant current source to the fuel level sending unit and monitors a return input on a fuel level sense circuit. The resistance through the fuel level sending unit increases as the fuel level falls and decreases as the fuel level rises causing changes in the fuel level sense input voltage. The TIPM sends the fuel level voltage to the cluster over the Controller Area Network (CAN) bus. The cluster programming applies an algorithm to calculate the proper fuel gauge needle position based upon the fuel level bus input, then moves the gauge needle to the proper relative position on the gauge scale. This algorithm is used to dampen gauge needle movement against the negative effect that fuel sloshing within the fuel tank can have on accurate inputs from the fuel tank sending unit to the cluster.
- **Less Than 10 Percent Tank Full Input** - Each time the fuel level sense input to the cluster indicates the fuel tank is about 10 percent full or less for 10 consecutive seconds and the vehicle speed is zero, or for 60 consecutive seconds and the vehicle speed is greater than zero, the gauge needle is moved to about the one-sixteenth graduation on the gauge scale, the low fuel indicator is illuminated, and a single chime tone is sounded. The low fuel indicator remains illuminated until the fuel level sense input is greater than about 15 percent full for 10 consecutive seconds and the vehicle speed is zero, or for 60 consecutive seconds and the vehicle speed is greater than zero, or until the ignition switch is turned to the OFF position, whichever occurs first. The chime tone feature will only repeat during the same ignition cycle if the low fuel indicator is cycled OFF and then ON again by the appropriate inputs from the fuel level sending unit.
- **Less Than Empty Stop Input** - Each time the cluster receives a fuel level sense input that indicates the fuel level in the fuel tank is less than the EMPTY gauge needle stop position, the gauge needle is moved to the low end of the gauge scale and the low fuel indicator is illuminated immediately. This input would indicate that the fuel level sense input to the cluster is a short circuit.
- **More Than Full Stop Input** - Each time the cluster receives a fuel level sense input that indicates the fuel level in the fuel tank is more than the FULL gauge needle stop position, the gauge needle is moved to the low end of the gauge scale and the low fuel indicator is illuminated immediately. This input would indicate that the fuel level sense input to the cluster is an open circuit.
- **Self Test** - Each time the cluster is put through the self test, the fuel gauge needle will be swept to several calibration points on the gauge scale in a prescribed sequence in order to confirm the functionality of the gauge and the cluster control circuitry.

The instrument cluster, also known as the Cab Compartment Node (CCN) continually monitors the fuel tank sending unit to determine the level of fuel in the fuel tank. The CCN then sends the proper electronic fuel level message to other electronic modules in the vehicle over the Controller Area Network (CAN) data bus. For further diagnosis of the fuel gauge or the instrument cluster circuitry that controls the gauge, (Refer to 08 - Electrical/8J - Instrument Cluster - Diagnosis and Testing).

For proper diagnosis of the fuel tank sending unit, the CCN, the CAN data bus or the electronic communication related to fuel gauge operation or fuel level data processing a diagnostic scan tool is required. Refer to the appropriate diagnostic information.

GAUGE, Oil Pressure

Description

An oil pressure gauge is standard equipment on all high line instrument clusters with a gasoline engine. This gauge is located in the lower center quadrant of the speedometer. This gauge consists of a movable gauge needle or pointer controlled by the instrument cluster circuitry and a fixed 90 degree scale on the cluster overlay that reads left-to-right from **L** (or Low) to **H** (or High).

An International Control and Display Symbol icon for **Engine Oil** is located on the cluster overlay, in the lower left quadrant of the instrument cluster, left of the tachometer. The oil pressure gauge graphics are white against a black field except for a single red graduation at the low end of the gauge scale making them clearly visible within the instrument cluster in daylight. When illuminated from behind by the panel lamps dimmer controlled cluster general illumination lighting with the exterior lamps turned ON, the white graphics appear white and the red graphics still appear red. The gauge needle has internal optical illumination. Gauge illumination is provided by Light Emitting Diode (LED) units located on the instrument cluster electronic circuit board.

The oil pressure gauge is serviced as a unit with the instrument cluster.

Operation

The oil pressure gauge gives an indication to the vehicle operator of the engine oil pressure. This gauge is controlled by the instrument cluster circuit board based upon cluster programming and electronic messages received by the cluster from the Powertrain Control Module (PCM) over the Controller Area Network (CAN) data bus.

The oil pressure gauge is an air core magnetic unit that receives battery current on the instrument cluster electronic circuit board through the fused ignition switch output (run-start) circuit whenever the ignition switch is in the ON or START positions. The cluster is programmed to move the gauge needle back to the low end of the scale after the ignition switch is turned to the OFF position. The instrument cluster circuitry controls the gauge needle position and provides the following features:

- **Engine Oil Pressure Message** - The instrument cluster circuitry restricts the oil pressure gauge needle operation in order to provide readings that are consistent with customer expectations. Each time the cluster receives an electronic engine oil pressure message from the PCM indicating the pressure is above about 41 kPa (6 psi) the cluster holds the gauge needle at a point near the middle increment within the normal range on the gauge scale.
- **Engine Oil Pressure Low Message** - Each time the cluster receives three consecutive electronic engine oil pressure messages from the PCM indicating the pressure is below about 41 kPa (6 psi), the gauge needle is moved to the red graduation at the far left end of the gauge scale, the check gauges indicator is illuminated, and a single chime tone is generated. The gauge needle remains at the left end of the gauge scale and the check gauges indicator remains illuminated until the cluster receives a message from the PCM indicating that the pressure is above about 41 kPa (6 psi), or until the ignition switch is turned to the OFF position, whichever occurs first. The cluster will only turn ON the check gauges indicator in response to a low pressure message if the engine speed is greater than zero.
- **Communication Error** - If the cluster fails to receive an engine oil pressure message, it will hold the gauge needle at the last indication for about 10 seconds, or until the ignition switch is turned to the OFF position, whichever occurs first. After 10 seconds, the cluster will move the gauge needle to the low end of the gauge scale.
- **Self Test** - Each time the cluster is put through the self test, the oil pressure gauge needle will be swept to several calibration points on the gauge scale in a prescribed sequence in order to confirm the functionality of the gauge and the cluster control circuitry.

The PCM continually monitors the engine oil pressure sensor to determine the engine oil pressure. The PCM then sends the proper messages to the instrument cluster, also known as the Cab Compartment Node (CCN). For further diagnosis of the oil pressure gauge or the instrument cluster circuitry that controls the gauge, (Refer to 08 - Electrical/8J - Instrument Cluster - Diagnosis and Testing). If the instrument cluster turns ON the check gauges indicator due to a low oil pressure gauge reading, it may indicate that the engine or the engine oiling system requires service.

For proper diagnosis of the engine oil pressure sensor, the PCM, the CCN, the CAN data bus or the electronic communication related to oil pressure gauge operation a diagnostic scan tool is required. Refer to the appropriate diagnostic information.

GAUGE, Voltage

Description

A voltage gauge is standard equipment on all high line instrument clusters. This gauge is located in the lower portion of the tachometer below the gauge needle. This gauge consists of a movable gauge needle or pointer controlled by the instrument cluster circuitry and a fixed 90 degree scale on the cluster overlay that reads left-to-right from **L** (or Low) to **H** (or High) and an International Control and Display Symbol icon for **Battery Charging Condition** is located within the gauge itself directly below the gauge scale. On low line models the symbol is near the left edge of the instrument cluster, on the cluster overlay next to the tachometer.

The voltage gauge graphics are white against a black field except for a single red graduation at each end of the gauge scale making them clearly visible within the instrument cluster in daylight. When illuminated from behind by the panel lamps dimmer controlled cluster general illumination lighting with the exterior lamps turned ON, the white graphics appear white and the red graphics still appear red. The gauge needle has internal optical illumination. Gauge illumination is provided by a Light Emitting Diode (LED) located on the instrument cluster electronic circuit board.

The voltage gauge is only serviced as a unit with the instrument cluster.

Operation

The voltage gauge gives an indication to the vehicle operator of the electrical system voltage. This gauge is controlled by the instrument cluster circuit board based upon cluster programming and electronic messages received by the cluster from the Powertrain Control Module (PCM) over the Controller Area Network (CAN) data bus.

The voltage gauge is an air core magnetic unit that receives battery current on the instrument cluster electronic circuit board through the fused ignition switch output (run-start) circuit whenever the ignition switch is in the ON or START positions. The cluster is programmed to move the gauge needle back to the left end of the scale after the ignition switch is turned to the OFF position. The instrument cluster circuitry controls the gauge needle position and provides the following features:

- **System Voltage Message** - Each time the cluster receives an electronic system voltage message from the PCM indicating the voltage is between about 9.5 volts and about 15 volts, the gauge needle is moved to the relative voltage position on the gauge scale.
- **System Voltage Low (Charge Fail) Message** - Each time the cluster receives three consecutive electronic system voltage messages from the PCM indicating the voltage is less than about 9 volts (charge fail condition) or that the battery temperature sensor input is an open circuit, the gauge needle is moved to the graduation on the far left end of the gauge scale and the check gauges indicator is illuminated. The gauge needle remains at the far left end of the gauge scale and the check gauges indicator remains illuminated until the cluster receives a single message from the PCM indicating the voltage is greater than about 9.5 volts (but less than about 15.5 volts), or until the ignition switch is turned to the OFF position, whichever occurs first.
- **System Voltage High Message** - Each time the cluster receives 3 consecutive electronic system voltage messages from the PCM indicating the voltage is greater than about 15.5 volts, the gauge needle is moved to the graduation on the far right end of the gauge scale and the check gauges indicator is illuminated. The gauge needle remains at the right end of the gauge scale and the check gauges indicator remains illuminated until the cluster receives a message from the PCM indicating the voltage is less than about 15.0 volts (but greater than about 9.5 volts), or until the ignition switch is turned to the OFF position, whichever occurs first.
- **Communication Error** - If the cluster fails to receive a **system voltage** message, it will hold the gauge needle at the last indication for about three seconds, or until the ignition switch is turned to the OFF position, whichever occurs first. After three seconds, the cluster will move the gauge needle to the far left end of the gauge scale.
- **Self Test** - Each time the cluster is put through the self test, the voltage gauge needle will be swept to several calibration points on the gauge scale in a prescribed sequence in order to confirm the functionality of the gauge and the cluster control circuitry.

The PCM continually monitors the system voltage to control the generator output. The PCM then sends the proper system voltage message to the instrument cluster, also known as the Cab Compartment Node (CCN). For further diagnosis of the voltage gauge or the instrument cluster circuitry that controls the gauge, (Refer to 08 - Electrical/8J - Instrument Cluster - Diagnosis and Testing). If the instrument cluster turns ON the check gauges indicator due to a charge fail or voltage high condition, it may indicate that the charging system requires service.

For proper diagnosis of the charging system, the PCM, the CCN, the CAN data bus or the electronic communication related to voltage gauge operation a diagnostic scan tool is required. (Refer to 08 - Electrical/8F - Engine Systems/ Charging - Diagnosis and Testing).

INDICATOR, ABS

Description

An Antilock Brake System (ABS) indicator is standard equipment on all instrument clusters. However, the instrument cluster can be programmed to disable this indicator on vehicles that are not equipped with the ABS or Rear Wheel Anti-Lock (RWAL) brake systems, which are not available in some markets. This indicator is located near the lower edge of the instrument cluster, left of the tachometer.

The ABS indicator consists of a stencil-like cutout of the International Control and Display Symbol icon for **Failure of Anti-lock Braking System** in the opaque layer of the instrument cluster overlay. The dark outer layer of the overlay prevents the indicator from being clearly visible when it is not illuminated. An amber Light Emitting Diode (LED) behind the cutout in the opaque layer of the overlay causes the indicator to appear in amber through the translucent outer layer of the overlay when it is illuminated from behind by the LED, which is soldered onto the instrument cluster electronic circuit board.

The ABS indicator is serviced as a unit with the instrument cluster.

Operation

The ABS indicator gives an indication to the vehicle operator when the ABS system, or a circuit or component of the system is ineffective. This indicator is controlled by a transistor on the instrument cluster circuit board based upon cluster programming and electronic messages received by the cluster from the Antilock Brake Module (ABM) over the Controller Area Network (CAN) data bus.

The ABS indicator Light Emitting Diode (LED) is completely controlled by the instrument cluster logic circuit, and that logic will only allow this indicator to operate when the instrument cluster receives a battery current input on the fused ignition switch output (run-start) circuit. Therefore, the LED will always be OFF when the ignition switch is in any position except ON or START. The LED only illuminates when it is provided a path to ground by the instrument cluster transistor. The instrument cluster will turn ON the ABS indicator for the following reasons:

- **Bulb Test** - Each time the ignition switch is turned to the ON position the ABS indicator is illuminated for about four seconds as a bulb test. The entire bulb test is a function of the ABM.
- **ABS Indicator Lamp-On Message** - Each time the cluster receives an electronic ABS indicator lamp-ON message from the ABM, the ABS indicator will be illuminated. The indicator remains illuminated until the cluster receives a lamp-OFF message from the ABM, or until the ignition switch is turned to the OFF position, whichever occurs first.
- **Communication Error** - If the cluster receives no lamp-ON or lamp-OFF messages from the CAB for five consecutive message cycles, the ABS indicator is illuminated. The indicator remains illuminated until the cluster receives a valid message from the ABM, or until the ignition switch is turned to the OFF position, whichever occurs first.
- **Self Test** - Each time the instrument cluster is put through the self test, the ABS indicator will be turned ON, then OFF again during the bulb check portion of the test to confirm the functionality of the LED and the cluster control circuitry.
- **ABS Diagnostic Test** - The ABS indicator is blinked ON and OFF by lamp-ON and lamp-OFF messages from the ABM during the performance of the ABS diagnostic tests.

The Antilock Brake Module (ABM) continually monitors the ABS circuits and sensors to decide whether the system is in good operating condition. The ABM then sends the proper lamp-ON or lamp-OFF message to the instrument cluster, also known as the Cab Compartment Node (CCN). If the ABM sends a lamp-ON message after the bulb test, it indicates that the ABM has detected a system malfunction or that the ABS system has become ineffective. The ABM will store a Diagnostic Trouble Code (DTC) for any malfunction it detects. Each time the ABS indicator fails to light due to an open or short in the cluster ABS indicator circuit, the cluster sends a message notifying the ABM of the condition, then the instrument cluster and the ABM will each store a DTC.

For proper diagnosis of the antilock brake system, the ABM, the CCN, the CAN data bus or the electronic communication related to ABS indicator operation a diagnostic scan tool is required. Perform the appropriate diagnostic procedures as needed.

INDICATOR, Air Bag

Description

An airbag indicator is standard equipment on all instrument clusters. However, the instrument cluster can be programmed to disable this indicator on vehicles that are not equipped with the airbag system, which is not available in some markets. This indicator is located near the lower edge of the instrument cluster, left of the tachometer.

The airbag indicator consists of a stencil-like cutout of the International Control and Display Symbol icon for **Airbag** in the opaque layer of the instrument cluster overlay. The dark outer layer of the overlay prevents the indicator from being clearly visible when it is not illuminated. A red Light Emitting Diode (LED) behind the cutout in the opaque layer of the overlay causes the indicator to appear in red through the translucent outer layer of the overlay when it is illuminated from behind by the LED, which is soldered onto the instrument cluster electronic circuit board.

The airbag indicator is serviced as a unit with the instrument cluster.

Operation

The airbag indicator gives an indication to the vehicle operator when the airbag system, or a circuit or component of the system is ineffective. The airbag indicator is controlled by a transistor on the instrument cluster circuit board based upon cluster programming and electronic messages received by the cluster from the Occupant Restraint Controller (ORC) over the Controller Area Network (CAN) data bus.

The airbag indicator Light Emitting Diode (LED) is completely controlled by the instrument cluster logic circuit, and that logic will only allow this indicator to operate when the instrument cluster receives a battery current input on the fused

ignition switch output (run-start) circuit. Therefore, the LED will always be OFF when the ignition switch is in any position except ON or START. The LED only illuminates when it is provided a path to ground by the instrument cluster transistor. The instrument cluster will turn ON the airbag indicator for the following reasons:

- **Bulb Test** - Each time the ignition switch is turned to the ON position the airbag indicator is illuminated for about six to eight seconds. The entire bulb test is a function of the ORC.
- **Airbag Indicator Lamp-On Message** - Each time the cluster receives an electronic airbag indicator lamp-ON message from the ORC, the airbag indicator will be illuminated. The indicator remains illuminated for about twelve seconds or until the cluster receives a lamp-OFF message from the ORC, whichever is longer. This indicator will also be extinguished when the ignition switch is turned to the OFF position.
- **Communication Error** - If the cluster receives no lamp-ON or lamp-OFF messages from the ORC for 10 consecutive message cycles, the airbag indicator is illuminated. The indicator remains illuminated until the cluster receives a single lamp-OFF message from the ORC.
- **Self Test** - Each time the cluster is put through the self test, the airbag indicator will be turned ON, then OFF again during the bulb check portion of the test to confirm the functionality of the LED and the cluster control circuitry. The actuator test illumination of the airbag indicator is a function of the instrument cluster.

The ORC continually monitors the airbag system circuits and sensors to decide whether the system is in good operating condition. The ORC then sends the proper lamp-ON or lamp-OFF message to the instrument cluster, also known as the Cab Compartment Node (CCN). If the ORC sends a lamp-ON message after the bulb test, it indicates that the ORC has detected a system malfunction or that the airbags and seat belt tensioners may not deploy when required, or may deploy when not required. The ORC will store a Diagnostic Trouble Code (DTC) for any malfunction it detects. Each time the airbag indicator fails to illuminate due to an open or short in the cluster airbag indicator circuit, the cluster sends a message notifying the ORC of the condition, the instrument cluster and the ORC will each store a DTC, and the cluster will flash the seatbelt indicator ON and OFF as a backup to notify the vehicle operator.

For proper diagnosis of the airbag system, the ORC, the CCN, the CAN data bus or the electronic communication related to airbag indicator operation a diagnostic scan tool is required. Refer to the appropriate diagnostic information.

INDICATOR, Brake\Parking Brake

Description

A brake indicator is standard equipment on all instrument clusters. This indicator is located near the lower edge of the instrument cluster, left of the tachometer.

The brake indicator consists of a stencil-like cutout of the word **BRAKE** for US market and the International Control and Display Symbol icon for **Brake Failure** for Canada, Mexico and some export, in the opaque layer of the instrument cluster overlay. The dark outer layer of the overlay prevents the indicator from being clearly visible when it is not illuminated. A red Light Emitting Diode (LED) behind the cutout in the opaque layer of the overlay causes the indicator to appear in red through the translucent outer layer of the overlay when it is illuminated from behind by the LED, which is soldered onto the instrument cluster electronic circuit board.

The brake indicator is serviced as a unit with the instrument cluster.

Operation

The brake indicator gives an indication to the vehicle operator when the parking brake is applied, when there are certain brake hydraulic system malfunctions as indicated by a low brake hydraulic fluid level condition, or when the brake fluid level switch is disconnected. The brake indicator can also give an indication when certain faults are detected in the Antilock Brake System (ABS). This indicator is controlled by a transistor on the instrument cluster circuit board based upon cluster programming, electronic messages received by the cluster from the Controller Antilock Brake (CAB) over the Controller Area Network (CAN) data bus, and a hard wired input from the park brake switch.

The brake indicator Light Emitting Diode (LED) is completely controlled by the instrument cluster logic circuit, and that logic will only allow this indicator to operate when the instrument cluster receives a battery current input on the fused ignition switch output (run-start) circuit. Therefore, the LED will always be OFF when the ignition switch is in any position except ON or START. The LED only illuminates when it is provided a path to ground by the instrument cluster transistor. The instrument cluster will turn ON the brake indicator for the following reasons:

- **Bulb Test** - Each time the ignition switch is turned to the ON position the brake indicator is illuminated for about four seconds as a bulb test. The entire bulb test is a function of the CAB.

- **Brake Indicator Lamp-On Message** - Each time the cluster receives an electronic brake indicator lamp-ON message from the CAB, the brake indicator will be illuminated. The CAB may also send lamp-ON messages as feedback during ABS diagnostic procedures. The indicator remains illuminated until the cluster receives a lamp-OFF message from the CAB, or until the ignition switch is turned to the OFF position, whichever occurs first.
- **Park Brake Switch Input** - Each time the cluster detects ground on the park brake switch sense circuit (park brake switch closed = park brake applied or not fully released) while the ignition switch is in the ON position, the brake indicator flashes ON and OFF. The indicator continues to flash until the park brake switch sense input to the cluster is an open circuit (park brake switch open = park brake fully released), or until the ignition switch is turned to the OFF position, whichever occurs first.
- **Self Test** - Each time the instrument cluster is put through the self test, the brake indicator will be turned ON, then OFF again during the bulb check portion of the test to confirm the functionality of the LED and the cluster control circuitry.

The park brake switch on the park brake pedal mechanism provides a hard wired ground input to the instrument cluster circuitry through the park brake switch sense circuit whenever the park brake is applied or not fully released. The CAB continually monitors the ABS system circuits and sensors, including the brake fluid level switch on the brake master cylinder reservoir, to decide whether the system is in good operating condition. The CAB then sends the proper lamp-ON or lamp-OFF message to the instrument cluster, also known as the Cab Compartment Node (CCN). If the CAB sends a lamp-ON message after the bulb test, it indicates that the CAB has detected a brake hydraulic system malfunction or that the ABS system has become ineffective. The CAB will store a Diagnostic Trouble Code (DTC) for any malfunction it detects.

For further diagnosis of the brake indicator or the instrument cluster circuitry that controls the LED, (Refer to 08 - Electrical/8J - Instrument Cluster - Diagnosis and Testing). The hardwired park brake switch input to the instrument cluster may be diagnosed using conventional diagnostic tools and procedures. Refer to the appropriate wiring information. For proper diagnosis of the brake fluid level switch, the ABS, the CAB, the CCN, the CAN data bus or the electronic communication related to brake indicator operation a diagnostic scan tool is required. Refer to the appropriate diagnostic information.

Diagnosis and Testing

WARNING: To avoid serious or fatal injury on vehicles equipped with airbags, disable the Supplemental Restraint System (SRS) before attempting any steering wheel, steering column, airbag, seat belt tensioner, impact sensor or instrument panel component diagnosis or service. Disconnect and isolate the battery negative (ground) cable, then wait two minutes for the system capacitor to discharge before performing further diagnosis or service. This is the only sure way to disable the SRS. Failure to take the proper precautions could result in accidental airbag deployment.

The hard wired park brake switch input to the instrument cluster, also known as the Cab Compartment Node (CCN) may be diagnosed using conventional diagnostic tools and procedures. Refer to the appropriate wiring information. The wiring information includes wiring diagrams, proper wire and connector repair procedures, details of wire harness routing and retention, connector pin-out information and location views for the various wire harness connectors, splices and grounds.

However, conventional diagnostic methods may not prove conclusive in the diagnosis of the CCN, the Antilock Brake Module (ABM), the Controller Area Network (CAN) data bus, or the electronic message inputs also used by the CCN to provide brake indicator operation. The most reliable, efficient, and accurate means to diagnose the CCN, the ABM, the CAN data bus or the electronic communication related to brake indicator operation requires the use of a diagnostic scan tool. Perform the appropriate diagnostic procedures as needed.

INDICATOR, Cargo Lamp

Description

A cargo lamp indicator is standard equipment on all instrument clusters. The cargo lamp indicator is located in the lower portion of the tachometer dial face in the instrument cluster overlay.

The cargo lamp indicator consists of a stencil-like cutout of the International Control and Display Symbol icon for **Working Light** in the opaque layer of the instrument cluster overlay. The dark outer layer of the overlay prevents the indicator from being clearly visible when it is not illuminated. An amber Light Emitting Diode (LED) behind the cutout in the opaque layer of the overlay causes the indicator to appear in amber through the translucent outer layer of the overlay when it is illuminated from behind by the LED, which is soldered onto the instrument cluster electronic circuit board.

The cargo lamp indicator is serviced as a unit with the instrument cluster.

Operation

The cargo lamp indicator gives an indication to the vehicle operator when the exterior cargo lamp is illuminated. This indicator is controlled by a transistor on the instrument cluster circuit board based upon cluster programming, a hardwired multiplex input received by the cluster from the cargo lamp switch on the headlamp dimmer switch mux circuit.

The cargo lamp indicator Light Emitting Diode (LED) is completely controlled by the instrument cluster logic circuit and is only on when the cargo lamp is on. The cargo lamp indicator also remains active when the key is out of the ignition. The LED only illuminates when it is provided a path to ground by the instrument cluster transistor. The instrument cluster will turn ON the cargo lamp indicator for the following reasons:

- **Cargo Lamp-On Input** - Each time the cluster detects a cargo lamp-ON input from the headlamp switch on the headlamp dimmer switch mux circuit, the cargo lamp and the cargo lamp indicator will be illuminated. The cargo lamp and indicator remain illuminated until the cluster receives a cargo lamp-OFF input from the headlamp switch, until the cluster has completed an exterior lamps load shed (about fifteen minutes).
- **Self Test** - Each time the cluster is put through the self test, the cargo lamp indicator will be turned ON, then OFF again during the bulb check portion of the test to confirm the functionality of the LED and the cluster control circuitry.

The instrument cluster, also known as the Cab Compartment Node (CCN) continually monitors the headlamp dimmer switch circuit to determine the proper interior lamps features and panel lamps illumination levels to provide. The CCN then energizes and de-energizes a low side driver circuit to control the exterior cargo lamp. Each time the CCN energizes the cargo lamp driver and the ignition switch is in the ON or START positions, the CCN also turns ON the cargo lamp indicator. For further diagnosis of the cargo lamp indicator or the instrument cluster circuitry that controls the indicator, (Refer to 08 - Electrical/8J - Instrument Cluster - Diagnosis and Testing).

The hardwired headlamp switch input and circuit related to cargo lamp indicator operation may be diagnosed using conventional diagnostic tools and procedures. Refer to the appropriate wiring information.

INDICATOR, Charging

Description

A charging indicator is standard equipment only in the four-gauge instrument clusters of all ST vehicles with a gasoline engine. The charging indicator is located on the left side of the instrument cluster, to the left of the tachometer.

The charging indicator consists of a stencil-like cutout of the International Control and Display Symbol icon for **Battery Charging Condition** in the opaque layer of the instrument cluster overlay. The dark outer layer of the overlay prevents the indicator from being clearly visible when it is not illuminated. A red Light Emitting Diode (LED) behind the cutout in the opaque layer of the overlay causes the indicator to appear in red through the translucent outer layer of the overlay when it is illuminated from behind by the LED, which is soldered onto the instrument cluster electronic circuit board.

The charging indicator is serviced as a unit with the instrument cluster.

Operation

The charging indicator gives an indication to the vehicle operator when the electrical system voltage is too low or too high. This indicator is controlled by the Cab Compartment Node (CCN) based upon cluster programming and electronic messages received over the Controller Area Network (CAN) data bus. These electronic messages are received from the Powertrain Control Module (PCM) on vehicles equipped with a gasoline engine or, a 6.7L diesel engine. On vehicles equipped with a 5.9L diesel engine, the CCN receives these messages from the Engine Control Module (ECM).

The charging indicator Light Emitting Diode (LED) is completely controlled by the CCN logic circuit, and that logic will only allow this indicator to operate when the instrument cluster receives a battery current input on the fused ignition switch output (run-start) circuit. Therefore, the LED will always be OFF when the ignition switch is in any position except ON or START. The LED only illuminates when it is provided a path to ground by a transistor on the CCN circuit board. The charging indicator will be turned ON for the following reasons:

- **Bulb Test** - Each time the ignition switch is turned to the ON position the charging indicator is illuminated by the CCN for about two seconds as a bulb test.
- **Voltage Low Message** - Each time the CCN receives an electronic **system voltage** message from the PCM or ECM indicating the voltage is low (less than about 11.5 volts is a charge fail condition), the charging indicator will be illuminated. The indicator remains illuminated until the cluster receives a message from the PCM indicating the voltage

is normal (greater than about 12.0 volts, but less than 16.0 volts), or until the ignition switch is turned to the OFF position, whichever occurs first.

- **Voltage High Message** - Each time the CCN receives an electronic **system voltage** message from the PCM or ECM indicating the voltage is high (greater than about 16.0 volts), the charging indicator will be illuminated. The indicator remains illuminated until the CCN receives a message from the PCM or ECM indicating the voltage is normal (less than about 15.5 volts, but greater than 11.5 volts), or until the ignition switch is turned to the OFF position, whichever occurs first.
- **Self Test** - Each time the cluster is put through the self test, the charging indicator will be turned ON, then OFF again during the bulb check portion of the test to confirm the functionality of the LED and the cluster control circuitry.

The PCM or ECM continually monitors the electrical system voltage to control the generator output. The PCM or ECM then sends the proper messages to the CCN. If the charging indicator is turned ON due to a charge fail or voltage high condition, it may indicate that the charging system requires service. For further diagnosis of the charging indicator or the CCN circuitry that controls the indicator, (Refer to 08 - Electrical/8J - Instrument Cluster - Diagnosis and Testing).

For proper diagnosis of the charging system, the PCM, the ECM, the CCN, the CAN data bus or the electronic communication related to charging indicator operation a diagnostic scan tool is required. Refer to the appropriate diagnostic information.

INDICATOR, Check Gauges

Description

A check gauges indicator is standard equipment on all instrument clusters except for ST vehicles with a gasoline engine. The check gauges indicator is located on the left side of the instrument cluster, to the left of the tachometer on the high line vehicles only.

The check gauges indicator consists of a stencil-like cutout of the ISO symbol for **CHECK GAGES** in the opaque layer of the instrument cluster overlay. The dark outer layer of the overlay prevents the indicator from being clearly visible when it is not illuminated. A red Light Emitting Diode (LED) behind the cutout in the opaque layer of the overlay causes the indicator to appear in red through the translucent outer layer of the overlay when it is illuminated from behind by the LED, which is soldered onto the instrument cluster electronic circuit board.

The check gauges indicator is serviced as a unit with the instrument cluster.

Operation

The check gauges indicator gives an indication to the vehicle operator when certain instrument cluster gauge readings reflect a condition requiring immediate attention. This indicator is controlled by a transistor on the instrument cluster circuit board based upon cluster programming and electronic messages received by the cluster from the Powertrain Control Module (PCM) over the Controller Area Network (CAN) data bus.

The check gauges indicator Light Emitting Diode (LED) is completely controlled by the instrument cluster logic circuit, and that logic will only allow this indicator to operate when the instrument cluster receives a battery current input on the fused ignition switch output (run-start) circuit. Therefore, the LED will always be OFF when the ignition switch is in any position except ON or START. The LED only illuminates when it is provided a path to ground by the instrument cluster transistor. The instrument cluster will turn ON the check gauges indicator for the following reasons:

- **Bulb Test** - Each time the ignition switch is turned to the ON position the check gauges indicator is illuminated for about two seconds as a bulb test.
- **Engine Temperature High Message** - Each time the cluster receives three consecutive electronic messages from the PCM indicating the engine coolant temperature is high, the check gauges indicator will be illuminated and a single chime is sounded. The indicator remains illuminated until the cluster receives a message from the PCM indicating that the engine coolant temperature is not high, or until the ignition switch is turned to the OFF position, whichever occurs first.
- **Engine Oil Pressure Low Message** - Each time the cluster receives three consecutive electronic messages from the PCM indicating the engine oil pressure is low, the check gauges indicator will be illuminated and a single chime is sounded. The indicator remains illuminated until the cluster receives a message from the PCM indicating that the engine oil pressure is not low, or until the ignition switch is turned to the OFF position, whichever occurs first. The cluster will only turn the indicator ON in response to an engine oil pressure low message if the engine speed is greater than zero.

- **System Voltage Low (Charge Fail) Message** - Each time the cluster receives three consecutive electronic messages from the PCM indicating the electrical system voltage is low (charge fail condition) or that the battery temperature sensor input is an open circuit, the check gauges indicator will be illuminated and a single chime is sounded. The indicator remains illuminated until the cluster receives a single message from the PCM indicating the electrical system voltage is not low, or until the ignition switch is turned to the OFF position, whichever occurs first.
- **System Voltage High Message** - Each time the cluster receives three consecutive electronic messages from the PCM indicating the electrical system voltage is high, the check gauges indicator will be illuminated and a single chime is sounded. The indicator remains illuminated until the cluster receives a single message from the PCM indicating the electrical system voltage is not high, or until the ignition switch is turned to the OFF position, whichever occurs first.
- **Actuator Test** - Each time the cluster is put through the actuator test, the check gauges indicator will be turned ON, then OFF again during the bulb check portion of the test to confirm the functionality of the LED and the cluster control circuitry.

The PCM continually monitors the engine temperature, oil pressure and electrical system voltage, then sends the proper messages to the instrument cluster, also known as the Cab Compartment Node (CCN). For further diagnosis of the check gauges indicator or the instrument cluster circuitry that controls the LED, (Refer to 08 - Electrical/8J - Instrument Cluster - Diagnosis and Testing).

For proper diagnosis of the PCM, the CCN, the CAN data bus or the electronic communication related to check gauges indicator operation a diagnostic scan tool is required. Refer to the appropriate diagnostic information.

INDICATOR, Cruise

Description

A cruise indicator is standard equipment on all instrument clusters. However, on vehicles not equipped with the optional speed control system, this indicator is electronically disabled. The cruise indicator is located in the odometer display on the low line vehicles and in the lower right corner of the Liquid Crystal Display (LCD).

The cruise indicator consists of a stencil-like ISO symbol for cruise in the opaque layer of the instrument cluster odometer display. The dark outer layer of the overlay prevents the indicator from being clearly visible when it is not illuminated. A green Light Emitting Diode (LED) behind the cutout in the opaque layer of the overlay causes the indicator to appear in green through the translucent outer layer of the overlay when it is illuminated from behind by the LED, which is soldered onto the instrument cluster electronic circuit board.

When the exterior lighting is turned ON the illumination intensity of the cruise indicator is dimmable, which is adjusted along with the cluster general illumination lighting using the panel lamps dimmer thumbwheel on the headlamp switch.

The cruise indicator is serviced as a unit with the instrument cluster.

Operation

The cruise indicator gives an indication to the vehicle operator when the speed control system is ON, regardless of whether the speed control is engaged. This indicator is controlled by a transistor on the instrument cluster circuit board based upon cluster programming and electronic messages received by the cluster from the Powertrain Control Module (PCM) over the Controller Area Network (CAN) data bus.

The cruise indicator Light Emitting Diode (LED) is completely controlled by the instrument cluster logic circuit, and that logic will only allow this indicator to operate when the instrument cluster receives a battery current input on the fused ignition switch output (run-start) circuit. Therefore, the LED will always be OFF when the ignition switch is in any position except ON or START. The LED only illuminates when it is provided a path to ground by the instrument cluster transistor. The instrument cluster will turn ON the cruise indicator for the following reasons:

- **Cruise Indicator Lamp-On Message** - Each time the cluster receives an electronic cruise indicator lamp-ON message from the PCM indicating the speed control system is ON, the cruise indicator is illuminated. The indicator remains illuminated until the cluster receives a lamp-OFF message from the PCM or until the ignition switch is turned to the OFF position, whichever occurs first.
- **Self Test** - Each time the cluster is put through the self test, the cruise indicator will be turned ON, then OFF again during the bulb check portion of the test to confirm the functionality of the LED and the cluster control circuitry.

The PCM continually monitors the speed control switches to determine the proper outputs to the speed control servo. The PCM then sends the proper lamp-ON or lamp-OFF message to the instrument cluster, also known as the Cab Compartment Node (CCN). For further diagnosis of the cruise indicator or the instrument cluster circuitry that controls the LED, (Refer to 08 - Electrical/8J - Instrument Cluster - Diagnosis and Testing).

For proper diagnosis of the speed control system, the PCM, the CCN, the CAN data bus or the electronic communication related to cruise indicator operation a diagnostic scan tool is required. Refer to the appropriate diagnostic information.

INDICATOR, Door Ajar Warning

Description

A door ajar indicator is standard equipment on all instrument clusters. This indicator appears within the odometer display unit. The door ajar indicator consists of a graphical icon which appears in place of the odometer information in the odometer display.

The display unit is soldered onto the cluster electronic circuit board. The door ajar textual message appears in the same color and at the same lighting level as the odometer information when it is illuminated by the instrument cluster electronic circuit board.

The door ajar indicator is serviced as a unit with the instrument cluster.

Operation

The door ajar indicator gives an indication to the vehicle operator that one or more of the passenger compartment doors may be open or not completely latched. This indicator is controlled by the instrument cluster logic circuit based upon cluster programming and hard wired inputs received by the cluster from the door ajar switches located in each door latch unit.

The door ajar indicator function of the display is completely controlled by the instrument cluster logic circuit, and that logic will only allow this indicator to operate when the instrument cluster receives a battery current input on the fused ignition switch output (run-start) circuit. Therefore, the door ajar indicator will always be OFF when the ignition switch is in any position except ON or START. The instrument cluster will turn ON the door ajar indicator for the following reasons:

- **Door Ajar Switch Input** - Each time the cluster receives a door ajar indication from the Total Integrated Power Module (TPIM) sense circuits (door ajar switch closed = door is open or not completely latched) the door ajar indicator will be illuminated. The indicator remains illuminated until all of the door ajar switch sense inputs to the cluster are an open circuit (door ajar switch open = door fully closed), until the cluster has completed an interior lamps load shed (about five minutes), or until the ignition switch is turned to the OFF position, whichever occurs first.

The instrument cluster, also known as the Cab Compartment Node (CCN) continually monitors the door ajar switches to determine the status of the doors. For further diagnosis of the door ajar indicator or the instrument cluster circuitry that controls the indicator, (Refer to 08 - Electrical/8J - Instrument Cluster - Diagnosis and Testing).

The hardwired door ajar switches and circuits related to door ajar indicator operation may be diagnosed using conventional diagnostic tools and procedures. Refer to the appropriate wiring information.

INDICATOR, ESP, with BAS

Description

On vehicles equipped with Electronic Stability Program/Brake Assist System (ESP/BAS), an indicator is located in the left quadrant of the instrument cluster. This indicator is located left of the tachometer dial face in the instrument cluster overlay or in the Liquid Crystal Display (LCD) on high line models. However, on vehicles not equipped with the optional ESP/BAS, this indicator is electronically disabled.

The ESP/BAS indicator consists of a stencil-like cutout of the text **ESP BAS** in the opaque layer of the instrument cluster overlay. The dark outer layer of the overlay prevents the indicator from being clearly visible when it is not illuminated. An amber Light Emitting Diode (LED) behind the cutout in the opaque layer of the overlay causes the indicator to appear in amber through the translucent outer layer of the overlay when it is illuminated from behind by the LED, which is soldered onto the instrument cluster electronic circuit board.

The ESP/BAS indicator is serviced as a unit with the instrument cluster.

Operation

The ESP/BAS indicator gives an indication to the vehicle operator when a problem has been detected in the Electronic Stability Program (ESP)/Brake Assist System (BAS). On low line models the indicator is controlled by a transistor on the instrument cluster circuit board based upon cluster programming and electronic messages received by the cluster from

the Controller Antilock Brake (CAB), and the Totally Integrated Power Module (TIPM) over the Controller Area Network (CAN) data bus.

The ESP/BAS indicator Light Emitting Diode (LED) is completely controlled by the instrument cluster logic circuit, and that logic will only allow this indicator to operate when the instrument cluster receives a battery current input on the fused ignition switch output (run-start) circuit. Therefore, the LED will always be OFF when the ignition switch is in any position except ON or START. The LED only illuminates when it is provided a path to ground by the instrument cluster transistor. The instrument cluster will turn ON the ESP/BAS indicator for the following reasons:

- **Bulb Test** - Each time the ignition switch is turned to the ON position the ESP/BAS indicator is illuminated for about four seconds as a bulb test.
- **ESP/BAS Indicator Lamp-On Message** - Each time the cluster receives an electronic **ESP/BAS indicator lamp-ON** message from the CAB or the TIPM, the ESP/BAS indicator will be illuminated. The indicator remains illuminated until the cluster receives a lamp-OFF message from the CAB or TIPM, or until the ignition switch is turned to the OFF position, whichever occurs first.
- **Self Test** - Each time the cluster is put through the self test, the ESP/BAS indicator will be turned ON, then OFF again during the bulb check portion of the test to confirm the functionality of the LED and the cluster control circuitry.

The CAB and TIPM continually monitor the ESP/BAS system circuits and sensors to decide whether the system is in good operating condition and the proper outputs to the components of the system. The CAB or TIPM then sends the proper lamp-ON or lamp-OFF message to the instrument cluster, also known as the Cab Compartment Node (CCN).

For proper diagnosis of the ESP/BAS system, the CAB, the TIPM, the CCN, the CAN data bus or the electronic communication related to ESP/BAS indicator operation a diagnostic scan tool is required. Refer to the appropriate diagnostic information.

INDICATOR, ETC

Description

An Electronic Throttle Control (ETC) indicator is standard equipment on all instrument clusters. However, on vehicles not equipped with the optional 5.7 liter gasoline engine, this indicator is electronically disabled. This indicator is located right of the speedometer dial face in the instrument cluster overlay on low line models and in the lower left corner of the Liquid Crystal Display (LCD) on high line models.

The ETC indicator consists of a stencil-like cutout of the International Control and Display Symbol icon for **Electronic Throttle Control** in the opaque layer of the instrument cluster overlay. The dark outer layer of the overlay prevents the indicator from being clearly visible when it is not illuminated. A red Light Emitting Diode (LED) behind the cutout in the opaque layer of the overlay causes the indicator to appear in red through the translucent outer layer of the overlay when it is illuminated from behind by the LED, which is soldered onto the instrument cluster electronic circuit board.

The ETC indicator is serviced as a unit with the instrument cluster.

Operation

The Electronic Throttle Control (ETC) indicator gives an indication to the vehicle operator when the ETC system, or a circuit or component of the system is ineffective. The ETC indicator is controlled by a transistor on the instrument cluster circuit board based upon cluster programming and electronic messages received by the cluster from the Powertrain Control Module (PCM) over the Controller Area Network (CAN) data bus.

The ETC indicator Light Emitting Diode (LED) is completely controlled by the instrument cluster logic circuit, and that logic will only allow this indicator to operate when the instrument cluster receives a battery current input on the fused ignition switch output (run-start) circuit. Therefore, the LED will always be OFF when the ignition switch is in any position except ON or START. The LED only illuminates when it is provided a path to ground by the instrument cluster transistor. The instrument cluster will turn ON the ETC indicator for the following reasons:

- **Bulb Test** - Each time the ignition switch is turned to the ON position the ETC indicator is illuminated for about six seconds. The entire bulb test is a function of the PCM.
- **ETC Indicator Lamp-On Message** - Each time the cluster receives an electronic ETC indicator lamp-ON message from the PCM, the ETC indicator will be illuminated. The indicator can be flashed ON and OFF, or illuminated solid, as dictated by the PCM message. The indicator remains illuminated solid or continues to flash for about 12 seconds or until the cluster receives a lamp-OFF message from the PCM, whichever is longer. If the indicator is illuminated solid with the engine running the vehicle will usually remain drivable. If the indicator is flashing with the engine running the

vehicle may require towing. A flashing indicator means the ETC system requires immediate service. The indicator will be extinguished when the ignition switch is turned to the OFF position.

- **Communication Error** - If the cluster receives no lamp-ON or lamp-OFF messages from the PCM for three consecutive seconds, the ETC indicator is illuminated. The indicator remains illuminated until the cluster receives a single lamp-OFF message from the PCM.
- **Self Test** - Each time the cluster is put through the self test, the ETC indicator will be turned ON, then OFF again during the bulb check portion of the test to confirm the functionality of the LED and the cluster control circuitry. The actuator test illumination of the ETC indicator is a function of the PCM.

The PCM continually monitors the ETC system circuits and sensors to decide whether the system is in good operating condition. The PCM then sends the proper lamp-ON or lamp-OFF message to the instrument cluster, also known as the Cab Compartment Node (CCN). If the PCM sends a lamp-ON message after the bulb test, it indicates that the PCM has detected an ETC system malfunction or that the ETC system is ineffective. The PCM will store a Diagnostic Trouble Code (DTC) for any malfunction it detects. Each time the ETC indicator fails to illuminate due to an open or short in the cluster ETC indicator circuit, the cluster sends a message notifying the PCM of the condition, then the CCN and the PCM will each store a DTC.

For proper diagnosis of the ETC system, the PCM, the CCN, the CAN data bus or the electronic communication related to ETC indicator operation a diagnostic scan tool is required. Refer to the appropriate diagnostic information.

INDICATOR, Fog Lamp

Description

A fog lamp indicator is standard equipment on all instrument clusters. However, on vehicles not equipped with optional fog lamps, this indicator is electronically disabled. This indicator is located within the odometer/trip odometer Liquid Crystal Display (LCD) unit.

The fog lamp indicator consists of the International Control and Display Symbol icon for **Front Fog Light** in the lower left corner of the display unit. The LCD unit is soldered onto the instrument cluster electronic circuit board, and is visible through a window with a smoked clear lens located on the lower edge of the speedometer gauge dial face of the cluster overlay. The dark lens over the LCD prevents the icon from being clearly visible when it is not illuminated. The fog lamp indicator icon appears in a blue-green color and at the same lighting level as the odometer information when it is illuminated by the instrument cluster electronic circuit board.

During daylight hours (exterior lamps are OFF) the LCD unit is illuminated at full brightness for clear visibility. At night (exterior lamps are ON), the LCD unit lighting level is adjusted with the other cluster illumination lamps using the panel lamps dimmer function of the interior lighting thumbwheel on the headlamp switch. However, a PARADE mode position of the thumbwheel allows the LCD unit to be illuminated at full brightness if the exterior lamps are turned ON during daylight hours.

The fog lamp indicator is serviced as a unit with the LCD unit in the instrument cluster.

Operation

The fog lamp indicator gives an indication to the vehicle operator whenever the optional fog lamps are illuminated. This indicator is controlled by the instrument cluster circuit board based upon cluster programming and electronic messages received by the cluster from the Totally Integrated Power Module (TIPM) over the Controller Area Network (CAN) data bus.

The fog lamp indicator is completely controlled by the instrument cluster logic circuit, and that logic will only allow this indicator to operate when the instrument cluster receives a battery current input on the fused ignition switch output (run-start) circuit. Therefore, the indicator will always be OFF when the ignition switch is in any position except ON or START. The indicator only illuminates when it is energized by the instrument cluster logic circuit. The instrument cluster will turn ON the fog lamp indicator for the following reasons:

- **Fog Indicator Lamp-On Message** - Each time the cluster receives an electronic **fog indicator lamp-ON** message from the TIPM indicating the fog lamp circuit is energized, the fog lamp indicator will be illuminated. The indicator remains illuminated until the cluster receives a lamp-OFF message from the TIPM, until the ignition switch is turned to the OFF position or until the exterior lamp load shedding (battery saver) timed interval expires, whichever occurs first.
- **Self Test** - Each time the cluster is put through the self test, the fog lamp indicator will be turned ON, then OFF again during the VFD portion of the test to confirm the functionality of the VFD and the cluster control circuitry.

The TIPM continually monitors electronic **exterior lighting switch status** messages from the instrument cluster, also known as the Cab Compartment Node (CCN) to determine the appropriate outputs to the fog lamps. The TIPM activates or deactivates the fog lamp circuit then sends the proper lamp-ON or lamp-OFF message back to the CCN. For further diagnosis of the fog lamp indicator or the instrument cluster circuitry that controls the indicator, (Refer to 08 - Electrical/8J - Instrument Cluster - Diagnosis and Testing).

For proper diagnosis of the fog lamp system, the TIPM, the CCN, the CAN data bus or the electronic communication related to fog lamp indicator operation a diagnostic scan tool is required. Refer to the appropriate diagnostic information.

INDICATOR, Fuel Saver

Description

The Fuel Saver- ECOnomizer (ECO) indicator for this vehicle is standard equipment on all instrument clusters equipped with and Electronic Vehicle Information Center (EVIC). The fuel saver ECO indicator is a customer programmable feature that when ON will display next to the compass display within the EVIC. The fuel saver indicator will only appear when the Multi Displacement System (MDS), if equipped allows the engine to operate on 4 cylinders, or when the vehicle is being driven in a fuel efficient manner.

This feature allows the vehicle operator to monitor when they are driving in a fuel efficient manner, and it can be used to modify driving habits in order to increase fuel economy.

Operation

The ECO message will display next to the compass reading in the EVIC display. The message will appear whenever Multiple Displacement System (MDS), if equipped allows the engine to operate on four cylinders, or if the vehicle is driven in a fuel efficient manner, when the feature is turned ON using the customer programmable feature within the EVIC display menu. This feature allows the vehicle operator to monitor when they are driving in a fuel efficient manner, and it can be used to modify driving habits in order to increase fuel economy.

INDICATOR, Gas Cap

Description

A gas cap indicator is standard equipment on all instrument clusters. The gas cap indication appears within the display. The gas cap indicator consists of a graphic display which appears in place of the odometer/trip odometer information in the display.

The odometer Liquid Crystal Display (LCD) is soldered onto the cluster electronic circuit board, and is visible through a window with a smoked clear lens located on the lower edge of the cluster overlay. The dark lens over the LCD prevents it from being clearly visible when it is not illuminated. The gas cap icon appears in the same color and at the same lighting level as the odometer/trip odometer information when it is illuminated by the instrument cluster electronic circuit board.

The gas cap indicator is only serviced as a unit with the instrument cluster.

Operation

The gas cap indicator gives an indication to the vehicle operator when there is a gross leak detected in the on-board fuel vapor recovery system. This indicator is controlled by the instrument cluster logic circuit based upon cluster programming and electronic messages received over the Controller Area Network (CAN) data bus from the Powertrain Control Module (PCM).

The gas cap indicator function is completely controlled by the instrument cluster logic circuit, and that logic will only allow this indicator to operate when the instrument cluster receives a battery current input on the fused ignition switch output (run-start) circuit. Therefore, the Liquid Crystal Display (LCD) gas cap indication will always be OFF when the ignition switch is in any position except ON or START. The instrument cluster will turn ON the gas cap indicator for the following reasons:

- **Gas Cap Indicator Lamp-On Message** - Each time the cluster receives an electronic **gas cap indicator lamp-ON** message from the PCM indicating there is a gross leak in the vapor recovery system, the gas cap indicator will be illuminated. If the ignition switch is in the ON position and the vehicle is not moving when the message is received, the LCD will repeatedly and sequentially cycle the gas cap indication in two second intervals with the odometer/trip odometer information and any other active textual warnings. If the vehicle is moving, or once the cluster of a non-

moving vehicle receives an electronic vehicle speed message from the PCM indicating a speed greater than zero, the warning sequence will consist of three complete display cycles with an audible single chime tone accompanying each cycle, then revert to only the visual gas cap indication and odometer/trip odometer display cycling until the cluster receives a message indicating there is no gross leak in the vapor recovery system, or until the ignition switch is turned to the OFF position, whichever occurs first. The LCD can be reverted to the odometer display and any currently displayed textual messages suspended by momentarily depressing and releasing the odometer/trip odometer reset switch button on the front of the cluster.

The PCM continually monitors the on board vapor recovery system to determine whether there are air leaks in the system. The PCM then sends the proper electronic messages to the instrument cluster, also known as the Cab Compartment Node (CCN). If the CCN turns ON the gas cap indicator due to a monitored gross leak in the vapor recovery system, it may indicate that the gas cap has been removed or is improperly installed.

For proper diagnosis of the on board vapor recovery system, the PCM, the CCN, the CAN data bus or the electronic communication related to gas cap indicator operation a diagnostic scan tool is required. Refer to the appropriate diagnostic information.

INDICATOR, High Beam

Description

A high beam indicator is standard equipment on all instrument clusters. This indicator is located near the lower edge of the instrument cluster, left of the PRNDL.

The high beam indicator consists of a stencil-like cutout of the International Control and Display Symbol icon for **High Beam** in the opaque layer of the instrument cluster overlay. The dark outer layer of the overlay prevents the indicator from being clearly visible when it is not illuminated. A blue Light Emitting Diode (LED) behind the cutout in the opaque layer of the overlay causes the indicator to appear in blue through the translucent outer layer of the overlay when it is illuminated from behind by the LED, which is soldered onto the instrument cluster electronic circuit board.

The high beam indicator is serviced as a unit with the instrument cluster.

Operation

The high beam indicator gives an indication to the vehicle operator whenever the headlamp high beams are illuminated. This indicator is controlled by a transistor on the instrument cluster circuit board based upon cluster programming and a hard wired multiplex input received by the cluster from the headlamp beam select switch circuitry of the multi-function switch on the washer/beam select switch mux circuit.

The high beam indicator Light Emitting Diode (LED) is completely controlled by the instrument cluster logic circuit, and that logic will allow this indicator to operate whenever the instrument cluster receives a battery current input on the fused B(+) circuit. Therefore, the LED can be illuminated regardless of the ignition switch position. The LED only illuminates when it is provided a path to ground by the instrument cluster transistor. The instrument cluster will turn ON the high beam indicator for the following reasons:

- **High Beam Headlamps-On Input** - Each time the cluster detects a high beam headlamps-ON input from the headlamp beam select switch circuitry of the multi-function switch on the washer/beam select switch mux circuit, the headlamp high beams and the high beam indicator will be illuminated. The indicator remains illuminated until the cluster receives a high beam headlamps-OFF input from the multi-function switch, or until the exterior lamp load shedding (battery saver) timed interval expires, whichever occurs first.
- **Self Test** - Each time the cluster is put through the self test, the high beam indicator will be turned ON, then OFF again during the bulb check portion of the test to confirm the functionality of the LED and the cluster control circuitry.

The instrument cluster, also known as the Cab Compartment Node (CCN) continually monitors the headlamp switch and the multi-function switch to determine the proper headlamp low beam and high beam control. The CCN then sends the proper electronic **low beam** and **high beam lamp-ON** and **lamp-OFF** messages to the Totally Integrated Power Module (TIPM) over the Controller Area Network (CAN) data bus and controls the high beam indicator operation accordingly. For further diagnosis of the high beam indicator or the instrument cluster circuitry that controls the indicator, (Refer to 08 - Electrical/8J - Instrument Cluster - Diagnosis and Testing).

The hardwired headlamp switch and multi-function switch inputs and circuits related to high beam indicator operation may be diagnosed using conventional diagnostic tools and procedures. Refer to the appropriate wiring information. For proper diagnosis of the TIPM, the CCN, the CAN data bus or the electronic communication related to high beam indicator operation a diagnostic scan tool is required. Refer to the appropriate diagnostic information.

INDICATOR, Low Fuel

Description

A low fuel indicator is standard equipment on all instrument clusters. This indicator is located at the lower edge of the instrument cluster, to the left of the PRNDL.

The low fuel indicator consists of a stencil-like cutout of the International Control and Display Symbol icon for **Fuel** in the opaque layer of the instrument cluster overlay. The dark outer layer of the overlay prevents the indicator from being clearly visible when it is not illuminated. An amber Light Emitting Diode (LED) behind the cutout in the opaque layer of the overlay causes the indicator to appear in amber through the translucent outer layer of the overlay when it is illuminated from behind by the LED, which is soldered onto the instrument cluster electronic circuit board. On high line vehicles the indicator is located within the Liquid Crystal Display (LCD).

The low fuel indicator is only serviced as a unit with the instrument cluster.

Operation

The low fuel indicator gives an indication to the vehicle operator when the level of fuel in the fuel tank becomes low. This indicator is controlled by a transistor on the instrument cluster circuit board based upon cluster programming and a hardwired input received by the cluster from the fuel level sending unit on the fuel pump module in the fuel tank.

The low fuel indicator Light Emitting Diode (LED) is completely controlled by the instrument cluster logic circuit, and that logic will only allow this indicator to operate when the instrument cluster receives a battery current input on the fused ignition switch output (run-start) circuit. Therefore, the LED will always be OFF when the ignition switch is in any position except ON or START. The LED only illuminates when it is provided a path to ground by the instrument cluster transistor. The instrument cluster will turn ON the low fuel indicator for the following reasons:

- **Bulb Test** - Each time the ignition switch is turned to the ON position the low fuel indicator is illuminated for about two seconds as a bulb test.
- **Less Than 15 Percent Tank Full Input** - The cluster provides a constant current source to the fuel level sending unit and monitors a return input on a fuel level sense circuit. The resistance through the fuel level sending unit increases as the fuel level falls and decreases as the fuel level rises causing changes in the sense input voltage. Each time the fuel level sense input to the cluster indicates the fuel tank is about 10 percent full or less for 10 consecutive seconds and the vehicle speed is zero, or for 60 consecutive seconds and the vehicle speed is greater than zero, the fuel gauge needle is moved to about the one-sixteenth graduation on the gauge scale, the low fuel indicator is illuminated, and a single chime tone is sounded. The low fuel indicator remains illuminated until the fuel level sense input indicates that the fuel tank is greater than about 15 percent full for 10 consecutive seconds and the vehicle speed is zero, or for 60 consecutive seconds and the vehicle speed is greater than zero, or until the ignition switch is turned to the OFF position, whichever occurs first. The chime tone feature will only repeat during the same ignition cycle if the low fuel indicator is cycled OFF and then ON again by the appropriate inputs from the fuel level sending unit.
- **Less Than Empty Stop Input** - Each time the cluster receives a fuel level sense input that indicates the fuel level in the fuel tank is less than the **E** (or Empty) gauge needle stop position, the gauge needle is moved to the low end of the gauge scale and the low fuel indicator is illuminated immediately. This input would indicate that the fuel level sense input to the cluster is a short circuit.
- **More Than Full Stop Input** - Each time the cluster receives a fuel level sense input that indicates the fuel level in the fuel tank is more than the **F** (or Full) gauge needle stop position, the gauge needle is moved to the low end of the gauge scale and the low fuel indicator is illuminated immediately. This input would indicate that the fuel level sense input to the cluster is an open circuit.
- **Self Test** - Each time the cluster is put through the self test, the low fuel indicator will be turned ON, then OFF again during the bulb check portion of the test to confirm the functionality of the LED and the cluster control circuitry.

The instrument cluster, also known as the Cab Compartment Node (CCN) continually monitors the fuel tank sending unit to determine the level of fuel in the fuel tank. The CCN then sends the proper electronic **fuel level** message to other electronic modules in the vehicle over the Controller Area Network (CAN) data bus. For further diagnosis of the low fuel indicator or the instrument cluster circuitry that controls the LED, (Refer to 08 - Electrical/8J - Instrument Cluster - Diagnosis and Testing).

For proper diagnosis of the fuel tank sending unit, the CCN, the CAN data bus or the electronic communication related to low fuel indicator operation or fuel level data processing a diagnostic scan tool is required. Refer to the appropriate diagnostic information.

INDICATOR, Low Oil Pressure

Description

A low oil pressure indicator is standard equipment only in the four-gauge low line instrument clusters. This indicator is located on the left side of the instrument cluster, to the left of the tachometer.

The low oil pressure indicator consists of a stencil-like cutout of the International Control and Display Symbol icon for **Engine Oil** in the opaque layer of the instrument cluster overlay. The dark outer layer of the overlay prevents the indicator from being clearly visible when it is not illuminated. A red Light Emitting Diode (LED) behind the cutout in the opaque layer of the overlay causes the icon to appear in red through the translucent outer layer of the overlay when it is illuminated from behind by the LED, which is soldered onto the instrument cluster electronic circuit board.

The low oil pressure indicator is serviced as a unit with the instrument cluster.

Operation

The low oil pressure indicator gives an indication to the vehicle operator when the engine oil pressure reading reflects a condition requiring immediate attention. This indicator is controlled by a transistor on the instrument cluster circuit board based upon cluster programming and electronic messages received by the cluster from the Powertrain Control Module (PCM) over the Controller Area Network (CAN) data bus.

The low oil pressure indicator Light Emitting Diode (LED) is completely controlled by the instrument cluster logic circuit, and that logic will only allow this indicator to operate when the instrument cluster receives a battery current input on the fused ignition switch output (run-start) circuit. Therefore, the LED will always be OFF when the ignition switch is in any position except ON or START. The LED only illuminates when it is provided a path to ground by the instrument cluster transistor. The instrument cluster will turn ON the low oil pressure indicator for the following reasons:

- **Engine Oil Pressure Low Message** - Each time the cluster receives an electronic **engine oil pressure** message from the PCM indicating the pressure is about 6.9 kPa (1 psi) or lower, the low oil pressure indicator will be illuminated. The indicator remains illuminated until the cluster receives a message from the PCM indicating that the pressure is above about 6.9 kPa (1 psi), or until the ignition switch is turned to the OFF position, whichever occurs first. The cluster will only turn the indicator ON in response to low engine oil pressure if the engine speed is greater than zero.
- **Self Test** - Each time the cluster is put through the self test, the low oil pressure indicator will be turned ON, then OFF again during the bulb check portion of the test to confirm the functionality of the LED and the cluster control circuitry.

The PCM continually monitors the engine oil pressure sensor to determine the engine oil pressure. The PCM then sends the proper messages to the instrument cluster, also known as the Cab Compartment Node (CCN). For further diagnosis of the low oil pressure indicator or the instrument cluster circuitry that controls the LED, (Refer to 08 - Electrical/8J - Instrument Cluster - Diagnosis and Testing).

For proper diagnosis of the engine oil pressure sensor, the PCM, the CCN, the CAN data bus or the electronic communication related to low oil pressure indicator operation a diagnostic scan tool is required. Refer to the appropriate diagnostic information.

INDICATOR, Low Tire Pressure

Description

A Tire Pressure Monitor (TPM) indicator is standard equipment on all instrument clusters. However, on vehicles not equipped with the optional TPM, this indicator is electronically disabled. This indicator is located in the lower left quadrant of the instrument cluster, next to the tachometer.

The TPM indicator consists of a stencil-like cutout of an icon that represents a cross-section of a tire with a centered exclamation point in the opaque layer of the instrument cluster overlay. The dark outer layer of the overlay prevents the indicator from being clearly visible when it is not illuminated. An amber Light Emitting Diode (LED) behind the cutout in the opaque layer of the overlay causes the indicator to appear in amber through the translucent outer layer of the overlay when it is illuminated from behind by the LED, which is soldered onto the instrument cluster electronic circuit board.

The TPM indicator is only serviced as a unit with the instrument cluster.

Operation

The Tire Pressure Monitor (TPM) indicator gives an indication to the vehicle operator of the status of the TPM system. This indicator is controlled by a transistor on the instrument cluster circuit board based upon cluster programming and

electronic messages received by the cluster from the Wireless Ignition Node (WIN) over the Controller Area Network (CAN) data bus.

The TPM indicator Light Emitting Diode (LED) is completely controlled by the instrument cluster logic circuit, and that logic will only allow this indicator to operate when the instrument cluster receives a battery current input on the fused ignition switch output (run-start) circuit. Therefore, the LED will always be OFF when the ignition switch is in any position except ON or START. The LED only illuminates when it is provide a path to ground by the instrument cluster transistor. The instrument cluster will turn ON the TPM indicator for the following reasons:

- **Bulb Test** - Each time the ignition switch is turned to the ON position, the WIN sends an electronic TPM indicator lamp-ON message to the cluster to illuminate the TPM indicator for about three seconds as a bulb test.
- **TPM Indicator Lamp-On Message** - Each time the cluster receives an electronic TPM indicator lamp-ON message from the WIN, the TPM indicator will be illuminated. The indicator can be flashed ON and OFF, or illuminated solid, as dictated by the WIN message. The indicator remains illuminated until the cluster receives a lamp-OFF message from the WIN or until the ignition switch is turned to the OFF position, whichever occurs first.
- **Communication Error** - If the cluster receives no TPM lamp-ON or lamp-OFF messages from the WIN for six consecutive seconds, the TPM indicator is illuminated by the instrument cluster. The indicator remains controlled and illuminated by the cluster until a valid lamp-ON or lamp-OFF message is received from the WIN.
- **Self Test** - Each time the cluster is put through the actuator test, the TPM indicator will be turned ON, then OFF again during the bulb check portion of the test to confirm the functionality of the LED and the cluster control circuitry.

The WIN performs a self-test each time the ignition switch is turned to the ON position to decide whether the TPM system is in good operating condition and whether the tire inflation pressures are too high or too low. The WIN then sends the proper lamp-ON or lamp-OFF message to the instrument cluster, also known as the Cab Compartment Node (CCN). If the instrument cluster turns ON the TPM indicator after the bulb test, it indicates that the inflation pressure of a tire is too low or that a malfunction has occurred and the TPM system is ineffective.

For proper diagnosis of the TPM system, the WIN, the CCN, the CAN data bus or the electronic communication related to TPM indicator operation a diagnostic scan tool is required. Refer to the appropriate diagnostic information.

INDICATOR, Malfunction

Description

A Malfunction Indicator Lamp (MIL) is standard equipment on all instrument clusters. This indicator is located near the lower edge of the instrument cluster, left of the tachometer.

The MIL consists of a stencil-like cutout of the International Control and Display Symbol icon for **Engine** in the opaque layer of the instrument cluster overlay. The dark outer layer of the overlay prevents the indicator from being clearly visible when it is not illuminated. An amber Light Emitting Diode (LED) behind the cutout in the opaque layer of the overlay causes the indicator to appear in amber through the translucent outer layer of the overlay when it is illuminated from behind by the LED, which is soldered onto the instrument cluster electronic circuit board.

The MIL is serviced as a unit with the instrument cluster.

Operation

The Malfunction Indicator Lamp (MIL) gives an indication to the vehicle operator when the Powertrain Control Module (PCM) has recorded a Diagnostic Trouble Code (DTC) for an On-Board Diagnostics II (OBDII) emissions-related circuit or component malfunction. The MIL is controlled by a transistor on the instrument cluster circuit board based upon cluster programming and electronic messages received by the cluster from the PCM over the Controller Area Network (CAN) data bus.

The MIL Light Emitting Diode (LED) is completely controlled by the instrument cluster logic circuit, and that logic will only allow this indicator to operate when the instrument cluster receives a battery current input on the fused ignition switch output (run-start) circuit. Therefore, the LED will always be OFF when the ignition switch is in any position except ON or START. The LED only illuminates when it is provided a path to ground by the instrument cluster transistor. The instrument cluster will turn ON the MIL for the following reasons:

- **Bulb Test** - Each time the ignition switch is turned to the ON position the indicator is illuminated for about two seconds as a bulb test. The entire bulb test is a function of the PCM.
- **MIL Lamp-On Message** - Each time the cluster receives an electronic **MIL lamp-ON** message from the PCM, the indicator will be illuminated. The indicator can be flashed ON and OFF, or illuminated solid, as dictated by the PCM. For some DTCs, if a problem does not recur, the PCM will send a lamp-OFF message automatically. Other DTCs may

require that a fault be repaired and the PCM be reset before a lamp-OFF message will be sent. For more information on the PCM and the DTC set and reset parameters, refer to Group 25 - EMISSIONS.

- **Communication Error** - If the cluster receives no lamp-ON or lamp-OFF messages from the PCM for about 10 seconds, the MIL is illuminated by the instrument cluster to indicate a loss of bus communication. The indicator remains controlled and illuminated by the cluster until a valid message is received from the PCM.
- **Self Test** - Each time the cluster is put through the self test, the MIL indicator will be turned ON during the bulb check portion of the test to confirm the functionality of the LED and the cluster control circuitry.

The PCM continually monitors the fuel and emissions system circuits and sensors to decide whether the system is in good operating condition. The PCM then sends the proper lamp-ON or lamp-OFF message to the instrument cluster, also known as the Cab Compartment Node (CCN). For further diagnosis of the MIL or the instrument cluster circuitry that controls the LED, (Refer to 08 - Electrical/8J - Instrument Cluster - Diagnosis and Testing). If the CCN turns ON the MIL after the bulb test, it may indicate that a malfunction has occurred and that the fuel and emissions systems may require service.

For proper diagnosis of the fuel and emissions systems, the PCM, the CCN, the CAN data bus or the electronic communication related to MIL operation a diagnostic scan tool is required. Refer to the appropriate diagnostic information.

INDICATOR, No BUS

Description

A no-bus indicator is standard equipment on all instrument clusters. The no-bus indication appears within the fixed segment odometer Liquid Crystal Display (LCD) unit. The odometer no-bus indicator consists of a textual **No-BUS** message that appears in place of the odometer/trip odometer information.

The odometer LCD is soldered onto the cluster electronic circuit board and is visible through a window with a smoked clear lens located at the base of the cluster overlay right gauge dial face, (Dodge) or the tachometer dial face (Chrysler). The dark lens over the LCD prevents it from being clearly visible when not illuminated. The no-bus textual message appears in the same blue-green color and at the same lighting level as the other information displayed in the odometer LCD unit when illuminated by the instrument cluster electronic circuit board.

During daylight hours, (exterior lamps are off) the odometer LCD unit illuminates at full brightness for clear visibility. At night (exterior lamps are on), the LCD lighting level adjusts with the other cluster illumination lamps using the panel lamps dimmer thumbwheel of the headlamp switch on the instrument panel. However, a **Parade** mode position of the thumbwheel allows the LCD unit to illuminate at full brightness if the exterior lamps are turned on during daylight hours.

The no-bus indicator is serviced as a unit with the odometer LCD unit in the instrument cluster.

Operation

The no-bus indicator gives an indication to the vehicle operator when the electronic communication data bus is ineffective. This indicator is controlled by the instrument cluster logic circuit based upon cluster programming and electronic messages not being received over the Controller Area Network (CAN) data bus from the Front Control Module (FCM).

The no-bus indicator function of the odometer Liquid Crystal Display (LCD) unit is completely controlled by the instrument cluster logic circuit. This logic only allows the indicator to operate when the instrument cluster receives a battery current input on the fused ignition switch output (run-start) circuit. Therefore, the odometer LCD no-bus indicator is always off when the ignition switch is in any position except ON or START. The instrument cluster turns ON the no bus indicator for the following reasons:

- **No Electronic Communication Messages** - Each time the ignition switch is turned to the ON position and the cluster does not receive electronic communication messages over the CAN data bus, the no-bus indicator illuminates. The indicator remains illuminated until CAN bus communication is restored or until the ignition switch turns to the OFF position, whichever occurs first.

The instrument cluster, also known as the Cab Compartment Node (CCN) continually monitors the CAN data bus to determine the status of many sensors and systems throughout the vehicle. If bus communication is interrupted, the CCN cannot provide accurate displays and outputs.

Use a diagnostic scan tool is required for proper diagnosis of the no-bus indicator, the CCN, the CAN data bus or the electronic communication related to no-bus indicator operation. Refer to the appropriate diagnostic information.

INDICATOR, No Fuse

Description

A no fuse indicator is standard equipment on all instrument clusters. The no fuse indication appears within the odometer Liquid Crystal Display (LCD) unit. The no fuse indicator consists of a textual **NoFUSE** message which appears in place of the odometer information in the odometer display.

The odometer LCD is soldered onto the cluster electronic circuit board, and is visible through a window with a smoked clear lens located on the lower edge of the speedometer gauge dial face of the cluster overlay. The dark lens over the LCD prevents it from being clearly visible when it is not illuminated. The no fuse textual message appears in the same blue-green color and at the same lighting level as the odometer information when it is illuminated by the instrument cluster electronic circuit board.

The no fuse indicator is serviced as a unit with the LCD in the instrument cluster.

Operation

The no fuse indicator gives an indication to the vehicle operator when the Ignition Off Draw (IOD) fuse is ineffective or is not installed. This indicator is controlled by the instrument cluster logic circuit based upon cluster programming and electronic messages received over the Controller Area Network (CAN) data bus from the Totally Integrated Power Module (TIPM).

The no fuse indicator function of the odometer Liquid Crystal Display (LCD) unit is completely controlled by the instrument cluster logic circuit, and that logic will only allow this indicator to operate when the instrument cluster receives a battery current input on the fused ignition switch output (run-start) circuit. Therefore, the odometer LCD no fuse indication will always be OFF when the ignition switch is in any position except ON or START. The instrument cluster will turn ON the no fuse indicator for the following reasons:

- **No Fuse Indicator Lamp-On Message** - Each time the ignition switch is turned to the ON position and the cluster receives an electronic no fuse indicator lamp-ON message from the TIPM indicating that the IOD fuse is missing or ineffective, the no fuse indicator will be illuminated. The indicator remains illuminated for about three seconds, until the IOD fuse is installed, until the trip odometer reset switch button is depressed or until the ignition switch is turned to the OFF position, whichever occurs first.

The TIPM continually monitors the IOD circuit to determine the status of the IOD fuse, then sends the proper lamp-ON or lamp-OFF message to the instrument cluster, also known as the Cab Compartment Node (CCN) over the CAN data bus.

For proper diagnosis of the no fuse indicator, the TIPM, the CCN, the CAN data bus or the electronic communication related to no fuse indicator operation a diagnostic scan tool is required. Refer to the appropriate diagnostic information.

INDICATOR, Oil Change

Description

A change oil indicator is standard equipment on all instrument clusters. However, on vehicles manufactured for export markets, this indicator is electronically disabled. The change oil indication appears within the odometer Liquid Crystal Display (LCD) unit. The change oil indicator consists of cycling textual **CHANGE** and **OIL** messages which appear in place of the odometer information in the odometer display.

The odometer display is soldered onto the cluster electronic circuit board between the speedometer and the tachometer. The change oil textual messages appear in the same color and at the same lighting level as the odometer information when they are illuminated by the instrument cluster electronic circuit board.

The change oil indicator is serviced as a unit with the instrument cluster.

Operation

The change oil indicator gives an indication to the vehicle operator when a duty-cycle algorithm contained within the software of the Powertrain Control Module (PCM) determines that a recommended oil change interval has been attained. This indicator is controlled by the instrument cluster logic circuit based upon cluster programming and electronic messages received over the Controller Area Network (CAN) data bus from the PCM.

The change oil indicator function of the odometer display unit is completely controlled by the instrument cluster logic circuit, and that logic will only allow this indicator to operate when the instrument cluster receives a battery current input

on the fused ignition switch output (run-start) circuit. Therefore, the odometer VFD change oil indication will always be OFF when the ignition switch is in any position except ON or START. The instrument cluster will turn ON the change oil indicator for the following reasons:

- **Change Oil Indicator Lamp-On Message** - Each time the ignition switch is turned to the ON position and the cluster receives an electronic change oil indicator lamp-ON message from the PCM indicating that a duty-cycle based recommended oil change interval has been attained, the change oil indicator will be illuminated for about three seconds, until the trip odometer reset switch button is depressed, or until the ignition switch is turned to the OFF position, whichever occurs first.
- **Change Oil Indicator Reset Procedure** - Once an engine oil change has been completed, the PCM duty cycle counters can be reset using the following procedure. Turn the ignition switch to the ON position, but DO NOT start the engine. Slowly depress and release the accelerator pedal fully three times within ten seconds. Turn the ignition switch to the OFF position. If the change oil indicator illuminates the next time the engine is started, repeat this procedure.

The PCM continually monitors numerous sensor inputs to determine the duty-cycles to which the engine is being subjected. A pre-programmed algorithm within the PCM then determines when to send the proper lamp-ON or lamp-OFF message to the instrument cluster, also known as the Cab Compartment Node (CCN).

For proper diagnosis of the change oil indicator, the PCM, the CCN, the CAN data bus or the electronic communication related to change oil indicator operation a diagnostic scan tool is required. Refer to the appropriate diagnostic information.

INDICATOR, Seatbelt Warning

Description

A seatbelt indicator is standard equipment on all instrument clusters. The seatbelt indicator is located near the left edge of the instrument cluster, next to the tachometer.

The seatbelt indicator consists of a stencil-like cutout of the International Control and Display Symbol icon for **Seat Belt** in the opaque layer of the instrument cluster overlay. The dark outer layer of the overlay prevents the indicator from being clearly visible when it is not illuminated. A red Light Emitting Diode (LED) behind the cutout in the opaque layer of the overlay causes the indicator to appear in red through the translucent outer layer of the overlay when it is illuminated from behind by the LED, which is soldered onto the instrument cluster electronic circuit board.

The seatbelt indicator is only serviced as a unit with the instrument cluster.

Operation

The seatbelt indicator gives an indication to the vehicle operator of the status of the driver side front seatbelt. This indicator is controlled by a transistor on the instrument cluster circuit board based upon cluster programming and a hard wired input from the seatbelt switch in the driver side front seatbelt buckle through the seat belt indicator driver circuit.

The seatbelt indicator also includes a programmable enhanced seatbelt reminder or BELTMINDER feature that is enabled when the vehicle is shipped from the factory. This BELTMINDER feature can be disabled and enabled by the customer using a specific programming event sequence, or by the dealer using a diagnostic scan tool.

The seatbelt indicator Light Emitting Diode (LED) is completely controlled by the instrument cluster logic circuit, and that logic will only allow this indicator to operate when the instrument cluster receives a battery current input on the fused ignition switch output (run-start) circuit. Therefore, the LED will always be OFF when the ignition switch is in any position except ON or START. The LED only illuminates when it is provided a path to ground by the instrument cluster transistor. The instrument cluster will turn ON the seatbelt indicator for the following reasons:

- **Seatbelt Reminder Function** - Each time the cluster receives a battery current input on the fused ignition switch output (run-start) circuit, the indicator will be illuminated as a seatbelt reminder for about six seconds, or until the ignition switch is turned to the OFF position, whichever occurs first. This reminder function will occur regardless of the status of the seatbelt switch input to the cluster.
- **Driver Side Front Seatbelt Not Buckled - Beltminder Active** - Following the seatbelt reminder function, each time the cluster detects an open circuit on the seat belt indicator driver circuit (seatbelt switch open = seatbelt unbuckled) with the ignition switch in the START or ON positions, the indicator will be illuminated. In addition, if the driver side front seat belt remains unbuckled about 60 seconds after the conclusion of the seatbelt reminder function with the vehicle speed greater than about 8 kilometers-per-hour (5 miles-per-hour), the seatbelt indicator will begin to cycle between flashing ON and OFF for 3 seconds, then lighting solid for 2 seconds. The seatbelt indicator will continue to cycle between flashing and solid illumination for 13 complete cycles, until the seat belt indicator driver input to the

cluster is closed to ground (seatbelt switch closed = seatbelt buckled), or until the ignition switch is turned to the OFF position, whichever occurs first.

- **Driver Side Front Seatbelt Not Buckled - Beltminder Inactive** - Following the seatbelt reminder function, each time the cluster detects an open circuit on the seat belt indicator driver circuit (seatbelt switch open = seatbelt unbuckled) with the ignition switch in the START or ON positions, the indicator will be illuminated. The seatbelt indicator remains illuminated until the seat belt indicator driver input to the cluster is closed to ground (seatbelt switch closed = seatbelt buckled), or until the ignition switch is turned to the OFF position, whichever occurs first.
- **Airbag Indicator Backup** - If the instrument cluster detects a fault in the airbag indicator circuit it will send an electronic message indicating the fault to the Occupant Restraint Controller (ORC), then flash the seatbelt indicator ON and OFF. The cluster will continue to flash the indicator until the airbag indicator circuit fault is resolved, or until the ignition switch is turned to the OFF position, whichever occurs first.
- **Self Test** - Each time the cluster is put through the self test, the seatbelt indicator will be turned ON, then OFF again during the bulb check portion of the test to confirm the functionality of the LED and the cluster control circuitry.

The seatbelt switch is connected in series between ground and the seat belt indicator driver input to the instrument cluster, also known as the Cab Compartment Node (CCN). The hardwired seatbelt switch input to the CCN may be diagnosed using conventional diagnostic tools and procedures. Refer to the appropriate wiring information.

Standard Procedure

The seatbelt indicator also includes a programmable enhanced seatbelt reminder or BELTMINDER feature that is enabled when the vehicle is shipped from the factory. This beltminder feature provides extended and modified visual seatbelt indicator and audible chime warning responses to an unbuckled driver side front seat belt. The BELTMINDER feature may be disabled or enabled by the customer using the programming sequence that follows, or by the dealer using a diagnostic scan tool.

CUSTOMER PROGRAMMING SEQUENCE

NOTE: The following sequence of events must occur within 60 seconds of the ignition switch being placed in the ON position in order for the programming to be completed successfully.

1. With all doors closed and the ignition switch in any position except ON or START, buckle the driver side front seat belt.
2. Turn the ignition switch to the ON position and wait for the seatbelt indicator reminder function to conclude (about six seconds).
3. Unbuckle and buckle the driver side front seat belt slowly three or more times, giving the indicator time to cycle on and off, ending with the belt buckled.
4. Turn the ignition switch to any position except ON or START to toggle the BELTMINDER feature from its current setting (from active to inactive, or from inactive to active). A single chime tone will provide an audible confirmation that the programming sequence has been successfully completed.

INDICATOR, Security System

Description

A security indicator is standard equipment on all instrument clusters. However, on vehicles not equipped with the optional Vehicle Theft Security System (VTSS), this indicator is electronically disabled. This indicator is located in the lower right quadrant of the instrument cluster, below the speedometer.

The security indicator consists of a small round cutout in the opaque layer of the instrument cluster overlay. The dark outer layer of the overlay prevents the indicator from being clearly visible when it is not illuminated. A red Light Emitting Diode (LED) behind the cutout in the opaque layer of the overlay causes the indicator to appear in red through the translucent outer layer of the overlay when it is illuminated from behind by the LED, which is soldered onto the instrument cluster electronic circuit board.

The security indicator is only serviced as a unit with the instrument cluster.

Operation

The security indicator gives an indication to the vehicle operator when the Vehicle Theft Security System (VTSS) is arming or is armed. On vehicles equipped with the Sentry Key Immobilizer System (SKIS), the security indicator also gives an indication to the vehicle operator of the status of the SKIS. This indicator is controlled by a transistor on the

instrument cluster circuit board based upon cluster programming, hard wired inputs to the cluster from the various security system components, and electronic messages received by the cluster from the Wireless Ignition Node (WIN) via the Totally Integrated Power Module (TPIM) over the Controller Area Network (CAN) data bus.

The security indicator Light Emitting Diode (LED) is completely controlled by the instrument cluster logic circuit, and that logic will allow this indicator to operate whenever the instrument cluster receives a battery current input on the fused B(+) circuit. Therefore, the LED can be illuminated regardless of the ignition switch position. The LED only illuminates when it is provided a path to ground by the instrument cluster transistor. Depending upon the programmed condition the indicator can be illuminated solid, flashed at a slow rate (0.5 Hertz, 12.5 percent duty cycle), or flashed at a fast rate (1 Hertz, 50 percent duty cycle). The instrument cluster will turn ON the security indicator for the following reasons:

- **Bulb Test** - Each time the ignition switch is turned to the ON position the security indicator illuminates for about two seconds as a bulb test. The entire bulb test is a function of the WIN.
- **VTSS Indication** - During the 16 second VTSS arming function, the cluster will flash the security indicator ON and OFF repeatedly at a steady, fast rate to indicate that the VTSS is in the process of arming. Following successful VTSS arming, the cluster flashes the security indicator ON and OFF continuously at a slower rate to indicate that the VTSS is armed. The security indicator continues flashing at the slower rate until the VTSS is disarmed or triggered. If the VTSS has alarmed and rearmed, the cluster will flash the security indicator at a steady, slow rate for about 30 seconds after the VTSS is disarmed.
- **SKIS Indicator Lamp-On Message** - Each time the cluster receives an electronic SKIS indicator lamp-ON message from the WIN, the security indicator will be illuminated. The indicator can be flashed ON and OFF, or illuminated solid, as dictated by the WIN message. The indicator remains illuminated solid or continues to flash until the cluster receives a lamp-OFF message from the WIN, or until the ignition switch is turned to the OFF position, whichever occurs first. For more information on the SKIS and the security indicator control parameters, (Refer to 08 - Electrical/8Q - Vehicle Theft Security - Operation).
- **Communication Error** - If the cluster receives no lamp-ON or lamp-OFF messages from the WIN for 10 consecutive message cycles, the security indicator is illuminated by the instrument cluster. The indicator remains controlled and illuminated by the cluster until a valid lamp-ON or lamp-OFF message is received from the WIN.
- **Self Test** - Each time the instrument cluster is put through the self test, the security indicator will be turned ON, then OFF again during the bulb check portion of the test to confirm the functionality of the LED and the cluster control circuitry.

The instrument cluster circuitry controls the security indicator whenever the ignition switch is in the OFF position and the VTSS is arming, armed, or alarming. Whenever the ignition switch is in the ON or START positions, the WIN performs a self-test to decide whether the SKIS is in good operating condition and whether a valid key is present in the ignition lock cylinder. The WIN then sends the proper lamp-ON or lamp-OFF message to the instrument cluster, also known as the Cab Compartment Node (CCN). If the cluster flashes the security indicator upon ignition ON, or turns ON the security indicator solid after the bulb test, it indicates that a SKIS malfunction has occurred or that the SKIS is ineffective.

For proper diagnosis of the VTSS, the SKIS, the WIN, the CCN, the CAN data bus or the electronic communication related to security indicator operation a diagnostic scan tool is required. Refer to the appropriate diagnostic information.

INDICATOR, Service 4WD

Description

A service 4WD indicator is standard equipment on all instrument clusters. However, on vehicles not equipped with the optional four-wheel drive system and electronically shifted transfer case, this indicator is electronically disabled. This indicator is located in the lower right quadrant of the instrument cluster on low line models, just right of the speedometer in the instrument cluster overlay, and in the bottom middle portion of the Liquid Crystal Display (LCD) on high line models.

The service 4WD indicator consists of a stencil-like cutout of the text **SVC 4WD** in the opaque layer of the instrument cluster overlay. The dark outer layer of the overlay prevents the indicator from being clearly visible when it is not illuminated. An amber Light Emitting Diode (LED) behind the cutout in the opaque layer of the overlay causes the indicator to appear in amber through the translucent outer layer of the overlay when it is illuminated from behind by the LED, which is soldered onto the instrument cluster electronic circuit board.

The service 4WD indicator is only serviced as a unit with the instrument cluster.

Operation

The service 4WD indicator gives an indication to the vehicle operator when the Totally Integrated Power Module (TIPM) has recorded a Diagnostic Trouble Code (DTC) for an electronic transfer case circuit or component malfunction. This indicator is controlled by a transistor on the instrument cluster circuit board based upon cluster programming and electronic messages received by the cluster from the TIPM over the Controller Area Network (CAN) data bus.

The service 4WD indicator Light Emitting Diode (LED) is completely controlled by the instrument cluster logic circuit, and that logic will only allow this indicator to operate when the instrument cluster receives a battery current input on the fused ignition switch output (run-start) circuit. Therefore, the LED will always be OFF when the ignition switch is in any position except ON or START. The LED only illuminates when it is provided a path to ground by the instrument cluster transistor. The instrument cluster will turn ON the service 4WD indicator for the following reasons:

- **Bulb Test** - Each time the ignition switch is turned to the ON position the service 4WD indicator is illuminated for about two seconds as a bulb test.
- **Service 4WD Indicator Lamp-On Message** - Each time the cluster receives an electronic service 4WD indicator lamp-ON message from the TIPM, the service 4WD indicator will be illuminated. The indicator remains illuminated until the cluster receives a lamp-OFF message from the TIPM, or until the ignition switch is turned to the OFF position, whichever occurs first.
- **Communication Error** - If the cluster receives no lamp-ON or lamp-OFF messages from the TIPM for 10 seconds the service 4WD indicator is illuminated by the cluster to indicate a loss of TIPM communication. The indicator remains controlled and illuminated by the cluster until a valid message is received from the TIPM.
- **Self Test** - Each time the cluster is put through the self test, the service 4WD indicator will be turned ON, then OFF again during the bulb check portion of the test to confirm the functionality of the LED and the cluster control circuitry.

The TIPM continually monitors the electronic transfer case control circuits and transfer case shift motor/mode sensor assembly to determine the condition of the system. The TIPM then sends the proper lamp-ON or lamp-OFF message to the instrument cluster, also known as the Cab Compartment Node (CCN). For further diagnosis of the service 4WD indicator or the instrument cluster circuitry that controls the LED, (Refer to 08 - Electrical/8J - Instrument Cluster - Diagnosis and Testing).

For proper diagnosis of the TIPM, the CCN, the CAN data bus or the electronic communication related to service 4WD indicator operation a diagnostic scan tool is required. Refer to the appropriate diagnostic information.

INDICATOR, Shift (Transfer Case)

Description

4WD AUTO INDICATOR

A 4WD auto indicator is standard equipment on all instrument clusters. However, on vehicles not equipped with the optional four-wheel drive system and electronically shifted transfer case, this indicator is electronically disabled. The 4WD auto indicator is located on the right side of the instrument cluster, to the right of the speedometer.

The 4WD auto indicator consists of a stencil-like cutout of the text **4WD AUTO** in the opaque layer of the instrument cluster overlay. The dark outer layer of the overlay prevents the indicator from being clearly visible when it is not illuminated. A green Light Emitting Diode (LED) behind the cutout in the opaque layer of the overlay causes the indicator to appear in amber through the translucent outer layer of the overlay when it is illuminated from behind by the LED, which is soldered onto the instrument cluster electronic circuit board.

When the exterior lighting is turned ON, the illumination intensity of the 4WD auto indicator is dimmable, which is adjusted along with the cluster general illumination lighting using the panel lamps dimmer thumbwheel on the headlamp switch.

The 4WD auto indicator is serviced as a unit with the instrument cluster.

4WD INDICATOR

A 4WD indicator is standard equipment on all instrument clusters. However, on vehicles not equipped with an optional four-wheel drive system, this indicator is electronically disabled. The 4WD indicator is located on the right side of the instrument cluster, to the right of the speedometer.

The 4WD indicator consists of a stencil-like cutout of the text **4WD** in the opaque layer of the instrument cluster overlay. The dark outer layer of the overlay prevents the indicator from being clearly visible when it is not illuminated. An amber Light Emitting Diode (LED) behind the cutout in the opaque layer of the overlay causes the indicator to appear in amber

through the translucent outer layer of the overlay when it is illuminated from behind by the LED, which is soldered onto the instrument cluster electronic circuit board.

When the exterior lighting is turned ON, the illumination intensity of the 4WD indicator is dimmable, which is adjusted along with the cluster general illumination lighting using the panel lamps dimmer thumbwheel on the headlamp switch.

The 4WD indicator is serviced as a unit with the instrument cluster.

4 LOW INDICATOR

A 4 low indicator is standard equipment on all instrument clusters. However, on vehicles not equipped with the optional four-wheel drive system and electronically shifted transfer case, this indicator is electronically disabled. The 4 low indicator is located on the right side of the instrument cluster, to the right of the speedometer.

The 4 low indicator consists of a stencil-like cutout of the text **4 LOW** in the opaque layer of the instrument cluster overlay. The dark outer layer of the overlay prevents the indicator from being clearly visible when it is not illuminated. An amber Light Emitting Diode (LED) behind the cutout in the opaque layer of the overlay causes the indicator to appear in amber through the translucent outer layer of the overlay when it is illuminated from behind by the LED, which is soldered onto the instrument cluster electronic circuit board.

When the exterior lighting is turned ON, the illumination intensity of the 4 low indicator is dimmable, which is adjusted along with the cluster general illumination lighting using the panel lamps dimmer thumbwheel on the headlamp switch.

The 4 low indicator is serviced as a unit with the instrument cluster.

Operation

4WD AUTO INDICATOR

The 4WD auto indicator gives an indication to the vehicle operator when the electronic transfer case has been shifted into the 4WD auto mode. This indicator is controlled by a transistor on the instrument cluster circuit board based upon cluster programming and electronic messages received by the cluster from the Totally Integrated Power Module (TIPM) over the Controller Area Network (CAN) data bus.

The 4WD auto indicator Light Emitting Diode (LED) is completely controlled by the instrument cluster logic circuit, and that logic will only allow this indicator to operate when the instrument cluster receives a battery current input on the fused ignition switch output (run-start) circuit. Therefore, the LED will always be OFF when the ignition switch is in any position except ON or START. The LED only illuminates when it is provided a path to ground by the instrument cluster transistor. The instrument cluster will turn ON the 4WD auto indicator for the following reasons:

- **4WD Auto Indicator Lamp-On Message** - Each time the cluster receives an electronic 4WD auto indicator lamp-ON message from the TIPM, the indicator will be illuminated. The indicator remains illuminated until the cluster receives a lamp-OFF message from the TIPM, or until the ignition switch is turned to the OFF position, whichever occurs first.
- **Self Test** - Each time the cluster is put through the self test, the 4WD auto indicator will be turned ON, then OFF again during the bulb check portion of the test to confirm the functionality of the LED and the cluster control circuitry.

The TIPM continually monitors the electronic transfer case through the transfer case shift motor/mode sensor assembly to determine when the 4WD auto mode is engaged. The TIPM then sends the proper lamp-ON or lamp-OFF message to the instrument cluster, also known as the Cab Compartment Node (CCN). For further diagnosis of the 4WD auto indicator or the instrument cluster circuitry that controls the LED, (Refer to 08 - Electrical/8J - Instrument Cluster - Diagnosis and Testing).

For proper diagnosis of the transfer case shift motor/mode sensor, the TIPM, the CCN, the CAN data bus or the electronic communication related to 4WD auto indicator operation a diagnostic scan tool is required. Refer to the appropriate diagnostic information.

4WD INDICATOR

The 4WD indicator gives an indication to the vehicle operator when the transfer case has been shifted into a 4WD mode. This indicator is controlled by a transistor on the instrument cluster circuit board based upon cluster programming and electronic messages received by the cluster from the Totally Integrated Power Module (TIPM) over the Controller Area Network (CAN) data bus.

The 4WD indicator Light Emitting Diode (LED) is completely controlled by the instrument cluster logic circuit, and that logic will only allow this indicator to operate when the instrument cluster receives a battery current input on the fused ignition switch output (run-start) circuit. Therefore, the LED will always be OFF when the ignition switch is in any position except ON or START. The LED only illuminates when it is provided a path to ground by the instrument cluster transistor. The instrument cluster will turn ON the 4WD indicator for the following reasons:

- **4WD Indicator Lamp-On Message** - Each time the cluster receives an electronic 4WD indicator lamp-ON message from the TIPM, the indicator will be illuminated. The indicator remains illuminated until the cluster receives a lamp-OFF message from the TIPM, or until the ignition switch is turned to the OFF position, whichever occurs first.
- **Self Test** - Each time the cluster is put through the self test, the 4WD indicator will be turned ON, then OFF again during the bulb check portion of the test to confirm the functionality of the LED and the cluster control circuitry.

The TIPM continually monitors the electronic transfer case through the transfer case shift motor/mode sensor assembly or the manual transfer case through the transfer case switch to determine when the 4WD mode is engaged. The TIPM then sends the proper lamp-ON or lamp-OFF message to the instrument cluster, also known as the Cab Compartment Node (CCN). For further diagnosis of the 4WD indicator or the instrument cluster circuitry that controls the LED, (Refer to 08 - Electrical/8J - Instrument Cluster - Diagnosis and Testing).

For proper diagnosis of the transfer case shift motor/mode sensor, the transfer case switch, the TIPM, the CCN, the CAN data bus or the electronic communication related to 4WD indicator operation a diagnostic scan tool is required. Refer to the appropriate diagnostic information.

4 LOW INDICATOR

The 4 low indicator gives an indication to the vehicle operator when the electronic transfer case has been shifted into the 4WD low mode. This indicator is controlled by a transistor on the instrument cluster circuit board based upon cluster programming and electronic messages received by the cluster from the Totally Integrated Power Module (TIPM) over the Controller Area Network (CAN) data bus.

The 4 low indicator Light Emitting Diode (LED) is completely controlled by the instrument cluster logic circuit, and that logic will only allow this indicator to operate when the instrument cluster receives a battery current input on the fused ignition switch output (run-start) circuit. Therefore, the LED will always be OFF when the ignition switch is in any position except ON or START. The LED only illuminates when it is provided a path to ground by the instrument cluster transistor. The instrument cluster will turn ON the 4 low indicator for the following reasons:

- **4 Low Indicator Lamp-On Message** - Each time the cluster receives an electronic 4 low indicator lamp-ON message from the TIPM, the indicator will be illuminated. The indicator remains illuminated until the cluster receives a lamp-OFF message from the TIPM, or until the ignition switch is turned to the OFF position, whichever occurs first.
- **Self Test** - Each time the cluster is put through the self test, the 4 low indicator will be turned ON, then OFF again during the LED portion of the test to confirm the functionality of the LED and the cluster control circuitry.

The TIPM continually monitors the electronic transfer case through the transfer case shift motor/mode sensor assembly to determine when the 4WD low mode is engaged. The TIPM then sends the proper lamp-ON or lamp-OFF message to the instrument cluster, also known as the Cab Compartment Node (CCN). For further diagnosis of the 4 low indicator or the instrument cluster circuitry that controls the LED, (Refer to 08 - Electrical/8J - Instrument Cluster - Diagnosis and Testing).

For proper diagnosis of the transfer case shift motor/mode sensor, the TIPM, the CCN, the CAN data bus or the electronic communication related to 4 low indicator operation a diagnostic scan tool is required. Refer to the appropriate diagnostic information.

INDICATOR, Tow/Haul

Description

A tow/haul indicator is standard equipment on all instrument clusters. However, on vehicles not equipped with an optional overdrive automatic transmission, this indicator is electronically disabled. This indicator is located on the right side of the instrument cluster, to the right and below the speedometer.

The tow/haul indicator consists of a stencil-like cutout of the text **TOW/HAUL** in the opaque layer of the instrument cluster overlay. The dark outer layer of the overlay prevents the indicator from being clearly visible when it is not illuminated. An amber Light Emitting Diode (LED) behind the cutout in the opaque layer of the overlay causes the indicator to appear in amber through the translucent outer layer of the overlay when it is illuminated from behind by the LED, which is soldered onto the instrument cluster electronic circuit board.

When the exterior lighting is turned ON, the illumination intensity of the tow/haul indicator is dimmable, which is adjusted along with the cluster general illumination lighting using the panel lamps dimmer thumbwheel on the headlamp switch.

The tow/haul indicator is serviced only as a unit with the instrument cluster.

Operation

The tow/haul indicator gives an indication to the vehicle operator when the tow/haul function of the tow/haul switch has been selected, revising the shift schedule of the electronically controlled automatic transmission. This indicator is controlled by a transistor on the instrument cluster circuit board based upon cluster programming and electronic messages received by the cluster from the Powertrain Control Module (PCM) over the Controller Area Network (CAN) data bus.

The tow/haul indicator Light Emitting Diode (LED) is completely controlled by the instrument cluster logic circuit, and that logic will only allow this indicator to operate when the instrument cluster receives a battery current input on the fused ignition switch output (run-start) circuit. Therefore, the LED will always be OFF when the ignition switch is in any position except ON or START. The LED only illuminates when it is provided a path to ground by the instrument cluster transistor. The instrument cluster will turn ON the tow/haul indicator for the following reasons:

- **Tow/Haul Indicator Lamp-On Message** - Each time the cluster receives an electronic tow/haul indicator lamp-ON message from the PCM indicating that the tow/haul shift schedule has been selected, the indicator will be illuminated. The indicator remains illuminated until the cluster receives a lamp-OFF message from the PCM, or until the ignition switch is turned to the OFF position, whichever occurs first.
- **Self Test** - Each time the cluster is put through the self test, the tow/haul indicator will be turned ON, then OFF again during the bulb check portion of the test to confirm the functionality of the LED and the cluster control circuitry.

The PCM continually monitors the tow/haul switch to determine the proper outputs to the automatic transmission. The PCM then sends the proper lamp-ON or lamp-OFF message to the instrument cluster, also known as the Cab Compartment Node (CCN). For further diagnosis of the tow/haul indicator or the instrument cluster circuitry that controls the indicator, (Refer to 08 - Electrical/8J - Instrument Cluster - Diagnosis and Testing).

For proper diagnosis of the transmission control system, the PCM, the CCN, the CAN data bus or the electronic communication related to tow/haul indicator operation a diagnostic scan tool is required. Refer to the appropriate diagnostic information.

INDICATOR, Traction Control

Description

An Electronic Stability Program/Brake Assist System (ESP/BAS)/Traction Control System (TCS) traction control indicator is only found in the instrument clusters for vehicles equipped with a gasoline engine. However, on vehicles not equipped with the optional ESP/BAS/TCS, this indicator is electronically disabled. This indicator is located in the lower right quadrant if the instrument cluster, next to the speedometer.

The traction control indicator consists of a stencil-like cutout of the International Control and Display Symbol icon for **Stability - Anti-Spin** in the opaque layer of the instrument cluster overlay. The dark outer layer of the overlay prevents the indicator from being clearly visible when it is not illuminated. An amber Light Emitting Diode (LED) behind the cutout in the opaque layer of the overlay causes the indicator to appear in amber through the translucent outer layer of the overlay when it is illuminated from behind by the LED, which is soldered onto the instrument cluster electronic circuit board.

The traction control indicator is serviced as a unit with the instrument cluster.

Operation

The traction control indicator gives an indication to the vehicle operator when the Electronic Stability Program (ESP)/Brake Assist System (BAS)/Traction Control System (TCS) has been activated. This indicator is controlled by a transistor on the instrument cluster circuit board based upon cluster programming and electronic messages received by the cluster from the Controller Antilock Brake (CAB) over the Controller Area Network (CAN) data bus.

The traction control indicator is completely controlled by the instrument cluster logic circuit, and that logic will only allow this indicator to operate when the instrument cluster receives a battery current input on the fused ignition switch output (run-start) circuit. Therefore, the indicator will always be OFF when the ignition switch is in any position except ON or START. The indicator only illuminates when it is provided a path to ground by the instrument cluster transistor. The instrument cluster will turn ON the traction control indicator for the following reasons:

- **Bulb Test** - Each time the ignition switch is turned to the ON position the traction control indicator is illuminated for about four seconds as a bulb test. The entire bulb test is a function of the CAB.
- **Traction Control Indicator Lamp-On Message** - Each time the cluster receives an electronic traction control indicator lamp-ON message from the CAB indicating that the ESP/BAS/TCS has been activated, the traction control

indicator will be illuminated. The indicator remains illuminated until the cluster receives a lamp-OFF message from the CAB, or until the ignition switch is turned to the OFF position, whichever occurs first.

- **Self Test** - Each time the cluster is put through the self test, the traction control indicator will be turned ON, then OFF again during the bulb check portion of the test to confirm the functionality of the LED and the cluster control circuitry.

The CAB continually monitors the status of the inputs to the ESP/BAS/TCS systems to determine the proper outputs to the components of the Antilock Brake System (ABS). The CAB then sends the proper lamp-ON or lamp-OFF message to the instrument cluster, also known as the Cab Compartment Node (CCN). For further diagnosis of the traction control indicator or the instrument cluster circuitry that controls the indicator, (Refer to 08 - Electrical/8J - Instrument Cluster - Diagnosis and Testing).

For proper diagnosis of the ESP/BAS/TCS, the CAB, the CCN, the CAN data bus or the electronic communication related to traction control indicator operation a diagnostic scan tool is required. Refer to the appropriate diagnostic information.

INDICATOR, Transmission Range

Description

An electronic automatic transmission gear selector indicator is standard factory-installed equipment on this vehicle. However, on vehicles not equipped with an optional automatic transmission, this indicator is electronically disabled. The gear selector indicator information is displayed in an electronic, Liquid Crystal Display (LCD) unit. This LCD unit is soldered onto the cluster electronic circuit board and is visible through a window with a smoked clear lens located on the lower edge of the cluster overlay. The dark lens over the LCD prevents the indicator from being clearly visible when it is not illuminated.

The gear selector indicator displays the following characters from left to right: **P**, **R**, **N**, **D**, **+/-**. Each character appears in an amber color for low line models and white for high line models, and at the same lighting level as the odometer information. Respectively, these characters represent the PARK, REVERSE, NEUTRAL, DRIVE positions and manual shift positions of the transmission gear selector lever. The indicator illuminates the character that represents the currently selected lever position, red for reverse and green for all others. If the vehicle equipped with the auto stick feature the **+/-** has an arrowhead pointer directing the driver to look up to the LCD display where the gear selected is being displayed.

During daylight hours (exterior lamps are OFF) the gear selector indicator is illuminated at full brightness for clear visibility. At night (exterior lamps are ON), the indicator lighting level is adjusted with the other cluster general illumination lamps using the panel lamps dimmer thumbwheel on the headlamp switch. However, a PARADE mode position of the panel lamps dimmer thumbwheel allows the indicator to be illuminated at full brightness if the exterior lamps are turned ON during daylight hours.

The gear selector indicator is serviced as a unit with the VFD unit in the instrument cluster.

Operation

The electronic gear selector indicator gives an indication to the vehicle operator of the transmission gear that has been selected with the automatic transmission gear selector lever. This indicator is controlled by the instrument cluster circuit board based upon cluster programming. The cluster circuitry automatically configures itself for the proper transmission type based upon the hard wired transmission range sensor mux circuit input to the cluster.

The gear selector indicator information is displayed by the odometer/trip odometer Vacuum Fluorescent Display (VFD) unit soldered onto the instrument cluster electronic circuit board, and the VFD will not display the gear selector indicator information after the ignition switch is turned to the OFF position. Each time the cluster is disconnected from battery current for more than about five minutes, it must configure itself for the automatic transmission type that is in the vehicle once it is reconnected to battery current. The instrument cluster circuitry configures the gear selector indicator based upon the following inputs from the transmission range sensor:

- **Open Circuit** - If the cluster is configured for an automatic transmission and the transmission range sensor mux circuit is open, the cluster circuitry controls the gear selector indicator display based upon an electronic selected gear message received from the Transmission Control Module (TCM) over the Controller Area Network (CAN) data bus. If the Transmission Range Sensor (TRS) mux circuit is open and no electronic selected gear messages are received from the TCM within two seconds, the instrument cluster circuitry will not display any gear selector position until the condition is resolved or until the ignition switch is turned to the OFF position, whichever occurs first.
- **Resolved Circuit** - If the transmission range sensor mux circuit is resolved, the cluster circuitry controls the gear selector indicator display based upon the resistance value of the hard wired input from the TRS. If the cluster is configured for an automatic transmission with a TRS input and detects a short to ground or an open in the TRS mux

input, the instrument cluster circuitry will not display any gear selector position in the VFD. The VFD display for the short-to-ground and open circuit conditions will continue until the condition is resolved or until the ignition switch is turned to the OFF position, whichever occurs first.

- **Self Test** - Each time the cluster is put through the self test, the odometer/trip odometer VFD will display all of its characters at once, then step through each character segment individually during the VFD portion of the test to confirm the functionality of the VFD and the cluster control circuitry.

On vehicles with a TCM, the TCM continually monitors the TRS, then sends the proper message to the instrument cluster, also known as the Cab Compartment Node (CCN). On vehicles without a TCM, the CCN continually monitors the hard wired TRS multiplexed input. For further diagnosis of the gear selector indicator or the instrument cluster circuitry that controls this function, (Refer to 08 - Electrical/8J - Instrument Cluster - Diagnosis and Testing). For further diagnosis of the TRS on vehicles without a TCM, refer to the transmission range sensor service information in 21 - TRANSMISSION/ TRANSAXLE/AUTOMATIC for the appropriate transmission.

On vehicles with a TCM, for proper diagnosis of the TRS, the TCM, the CCN, the CAN data bus or the electronic communication related to gear selector indicator operation a diagnostic scan tool is required. Refer to the appropriate diagnostic information.

INDICATOR, Transmission Temperature

Description

A transmission over-temperature indicator is standard equipment on all instrument clusters. However, on vehicles not equipped with an optional automatic transmission, this indicator is electronically disabled. This indicator is located in the lower left quadrant of the instrument cluster, next to the tachometer. On high line models the indicator is located in the lower portion of the Liquid Crystal Display (LCD)

The transmission over-temperature indicator consists of a stencil-like cutout of the International Control and Display Symbol icon for **Transmission Temperature** in the opaque layer of the instrument cluster overlay. The dark outer layer of the overlay prevents the indicator from being clearly visible when it is not illuminated. A red Light Emitting Diode (LED) behind the cutout in the opaque layer of the overlay causes the indicator to appear in red through the translucent outer layer of the overlay when it is illuminated from behind by the LED, which is soldered onto the instrument cluster electronic circuit board.

The transmission over-temperature indicator is only serviced as a unit with the instrument cluster.

Operation

The transmission over-temperature indicator gives an indication to the vehicle operator when the transmission fluid temperature is excessive, which may lead to accelerated transmission component wear or failure. This indicator is controlled by a transistor on the instrument cluster circuit board based upon cluster programming and electronic messages received over the Controller Area Network (CAN) data bus from the Powertrain Control Module (PCM).

The transmission over-temperature indicator Light Emitting Diode (LED) is completely controlled by the instrument cluster logic circuit, and that logic will only allow this indicator to operate when the instrument cluster receives a battery current input on the fused ignition switch output (run-start) circuit. Therefore, the LED will always be OFF when the ignition switch is in any position except ON or START. The LED only illuminates when it is provided a path to ground by the instrument cluster transistor. The instrument cluster will turn ON the transmission over-temperature indicator for the following reasons:

- **Bulb Test** - Each time the ignition switch is turned to the ON position the transmission over-temperature indicator is illuminated for about two seconds as a bulb test.
- **Trans Over-Temp Indicator Lamp-On Message** - Each time the cluster receives an electronic trans over-temp indicator lamp-ON message from the PCM indicating that the transmission fluid temperature is 135 °C (275 °F) or higher, the indicator will be illuminated and a single chime tone is sounded. The indicator remains illuminated until the cluster receives a lamp-OFF message from the PCM, or until the ignition switch is turned to the OFF position, whichever occurs first. The chime tone feature will only repeat during the same ignition cycle if the indicator is cycled OFF and then ON again by the appropriate lamp-ON and lamp-OFF messages from the PCM.
- **Self Test** - Each time the cluster is put through the self test, the transmission over-temperature indicator will be turned ON, then OFF again during the bulb check portion of the test to confirm the functionality of the LED and the cluster control circuitry.

The PCM continually monitors the transmission temperature sensor to determine the transmission operating condition. The PCM then sends the proper lamp-ON or lamp-OFF message to the instrument cluster, also known as the Cab Compartment Node (CCN). If the instrument cluster illuminates the transmission over-temperature indicator due to a high transmission oil temperature condition, it may indicate that the transmission or the transmission cooling system are being overloaded, or that they require service. For further diagnosis of the transmission over-temperature indicator or the instrument cluster circuitry that controls the LED, (Refer to 08 - Electrical/8J - Instrument Cluster - Diagnosis and Testing).

For proper diagnosis of the transmission temperature sensor, the PCM, the CCN, the CAN data bus or the electronic communication related to transmission over-temperature indicator operation a diagnostic scan tool is required. Refer to the appropriate diagnostic information.

INDICATOR, Washer Fluid

Description

A washer fluid indicator is standard equipment on all instrument clusters. This indicator is located within the odometer/trip odometer Liquid Crystal Display (LCD) unit. However, on vehicles equipped with the optional Electronic Vehicle Information Center (EVIC) the indicator is displayed within the lower portion of the EVIC display. The washer fluid indicator consists of the text **LoWASH**, which appears in place of the odometer/trip odometer information in the odometer LCD unit.

The odometer LCD is soldered onto the cluster electronic circuit board and is visible through a window with a smoked clear lens located on the lower edge of the speedometer gauge dial face of the cluster overlay. The dark lens over the LCD prevents it from being clearly visible when it is not illuminated. The washer fluid indicator appears in the same blue-green color and at the same lighting level as the odometer/trip odometer information when it is illuminated by the instrument cluster electronic circuit board.

The washer fluid indicator is only serviced as a unit with the instrument cluster.

Operation

The washer fluid indicator gives an indication to the vehicle operator that the fluid level in the washer reservoir is low. This indicator is controlled by the instrument cluster logic circuit based upon cluster programming and electronic messages received by the cluster from the Totally Integrated Power Module (TIPM) over the Controller Area Network (CAN) data bus.

The washer fluid indicator function of the Liquid Crystal Display (LCD) is completely controlled by the instrument cluster logic circuit, and that logic will only allow this indicator to operate when the instrument cluster receives a battery current input on the fused ignition switch output (run-start) circuit. Therefore, the LCD washer fluid indication will always be OFF when the ignition switch is in any position except ON or START. The instrument cluster will turn ON the washer fluid indicator for the following reasons:

- **Washer Fluid Indicator Lamp-On Message** - Each time the cluster receives an electronic washer fluid indicator lamp-ON message from the TIPM indicating that a low washer condition has been detected for 60 consecutive seconds, the washer fluid indicator is illuminated and a single chime tone is sounded. The indicator remains illuminated until the cluster receives lamp-OFF messages for 60 consecutive seconds from the TIPM, or until the ignition switch is turned to the OFF position, whichever occurs first. The chime tone feature will only repeat during the same ignition cycle if the washer fluid indicator is cycled OFF and then ON again by the appropriate lamp-ON and lamp-OFF messages from the TIPM.

The TIPM continually monitors the washer fluid level switch in the washer reservoir to determine the level of the washer fluid. The TIPM then sends the proper lamp-ON or lamp-OFF message to the instrument cluster, also known as the Cab Compartment Node (CCN). For further diagnosis of the washer fluid indicator or the instrument cluster circuitry that controls the indicator, (Refer to 08 - Electrical/8J - Instrument Cluster - Diagnosis and Testing).

For proper diagnosis of the washer fluid level switch, the TIPM, the CCN, the CAN data bus or the electronic communication related to washer fluid indicator operation a diagnostic scan tool is required. Perform the appropriate diagnostic procedures as needed.

INDICATORS, Turn Signal

Description

Two turn signal indicators, one right and one left, are standard equipment on all instrument clusters. The turn signal indicators are located near the upper edge of the instrument cluster, the left indicator to the left of the fuel gauge and the right indicator to the right of the temperature gauge.

Each turn signal indicator consists of a stencil-like cutout of the International Control and Display Symbol icon for **Turn Warning** in the opaque layer of the instrument cluster overlay. The dark outer layer of the overlay prevents these indicators from being clearly visible when they are not illuminated. A green Light Emitting Diode (LED) behind each cutout in the opaque layer of the overlay causes each indicator to appear in green through the translucent outer layer of the overlay when it is illuminated from behind by the LED, which is soldered onto the instrument cluster electronic circuit board.

The turn signal indicators are serviced as a unit with the instrument cluster.

Operation

The turn signal indicators give an indication to the vehicle operator that the turn signal (left or right indicator flashing) or hazard warning (both left and right indicators flashing) have been selected and are operating. These indicators are controlled by transistors on the instrument cluster electronic circuit board based upon cluster programming, a hard wired multiplex input received by the cluster from the turn signal and hazard warning switch circuitry of the multi-function switch on the turn/hazard switch mux circuit, and electronic messages received from the Totally Integrated Power Module (TIPM) over the Controller Area Network (CAN) data bus.

Each turn signal indicator Light Emitting Diode (LED) is completely controlled by the instrument cluster logic circuit, and that logic will allow this indicator to operate whenever the instrument cluster receives a battery current input on the fused B(+) circuit. Therefore, each LED can be illuminated regardless of the ignition switch position. The LED only illuminates when it is provided a path to ground by the instrument cluster transistor. The instrument cluster will turn ON the turn signal indicators for the following reasons:

- **Turn Signal-On Input** - Each time the cluster detects a turn signal-ON input from the turn signal switch circuitry of the multi-function switch on the turn/hazard switch mux circuit, it sends the appropriate electronic turn signal switch status messages to the TIPM over the CAN data bus. The TIPM responds to these messages by controlling a battery voltage output and the flash rate for either the right or left turn signal lamps. The TIPM also sends the appropriate electronic messages back to the cluster to control the flash rate of the turn signal indicators, as well as to control the click rate of an electromechanical relay soldered onto the cluster electronic circuit board that emulates the sound emitted by a conventional turn signal flasher. The turn signal indicators continue to flash ON and OFF until the cluster receives a turn signal-OFF input from the multi-function switch, or until the ignition switch is turned to the OFF position, whichever occurs first.
- **Hazard Warning-On Input** - Each time the cluster detects a hazard warning-ON input from the hazard warning switch circuitry of the multi-function switch on the turn/hazard switch mux circuit, it sends the appropriate electronic hazard switch status messages to the TIPM over the CAN data bus. The TIPM responds to these messages by controlling a battery voltage output and the flash rate for each of the right and left turn signal lamps. The TIPM also sends the appropriate electronic messages back to the cluster to control the flash rate of the turn signal indicators, as well as to control the click rate of an electromechanical relay soldered onto the cluster electronic circuit board that emulates the sound emitted by a conventional hazard warning flasher. The turn signal indicators continue to flash ON and OFF until the cluster receives a hazard warning-OFF input from the multi-function switch.
- **Lamp Out Mode** - If the TIPM detects an ineffective turn signal lamp or circuit, it increases the flash rate for the remaining operative turn signals and sends an electronic message to the instrument cluster. The instrument cluster then increases the flash rate of the turn signal indicators and the click rate of the electromechanical relay to provide an indication of the problem to the vehicle operator.
- **Self Test** - Each time the cluster is put through the self test, the turn signal indicators will be turned ON, then OFF again during the bulb check portion of the test to confirm the functionality of each LED and the cluster control circuitry.

The instrument cluster, also known as the Cab Compartment Node (CCN) continually monitors the multi-function switch and electronic messages from the TIPM to determine the proper turn signal and hazard warning indicator operation. For further diagnosis of the turn signal indicators or the instrument cluster circuitry that controls the indicators, (Refer to 08 - Electrical/8J - Instrument Cluster - Diagnosis and Testing).

For proper diagnosis of the turn signal and hazard warning system, the multi-function switch, the TIPM, the CCN, the CAN data bus or the electronic communication related to turn signal indicator operation a diagnostic scan tool is required. Perform the appropriate diagnostic procedures as needed.

ODOMETER

Description

An odometer and trip odometer are standard factory-installed equipment in all instrument clusters. The odometer, trip odometer, and engine hours information are displayed in a common electronic, blue-green Liquid Crystal Display (LCD) unit. This LCD unit is soldered onto the cluster electronic circuit board and is visible through a window with a smoked lens located on the lower edge of the speedometer gauge dial face of the cluster overlay. The dark lens over the LCD prevents the indicator from being clearly visible when it is not illuminated.

The odometer, trip odometer, and engine hours information are not displayed simultaneously. The trip odometer reset switch on the instrument cluster circuit board toggles the display between odometer and trip odometer modes by depressing the odometer/trip odometer switch button that extends through the lower edge of the cluster lens, just left of the tachometer. When the trip odometer information is displayed, the word **TRIP** is also illuminated in the lower right corner of the LCD in a blue-green color and at the same lighting level as the trip odometer information. The engine hours information replaces the selected odometer or trip odometer information whenever the ignition switch is in the ON position and the engine is not running.

The odometer, trip odometer, and engine hours information is stored in the instrument cluster memory. This information can be increased when the proper inputs are provided to the instrument cluster, but the information cannot be decreased. The odometer can display values up to 999,999 kilometers (999,999 miles). The odometer latches at these values, and will not roll over to zero. The trip odometer can display values up to 999.9 kilometers (999.9 miles) before it rolls over to zero. Engine hours are displayed in the format, **hr 9999**. The cluster will accumulate values up to 65,000 hours before the display rolls over to zero. The engine hours are displayed within the LCD odometer display on low line models and in the Electronic Vehicle Information Center (EVIC) display on high line models.

The odometer display does not have a decimal point and will not show values less than a full unit (kilometer or mile), while the trip odometer display does have a decimal point and will show tenths of a unit (kilometer or mile). The unit of measure (kilometers or miles) for the odometer and trip odometer display is not shown in the LCD. The unit of measure for the instrument cluster odometer/trip odometer is selected at the time that it is manufactured, and cannot be changed. The odometer also has a RENTAL CAR mode, which will illuminate the odometer information in the LCD whenever the driver side front door is opened with the ignition switch in the OFF or ACCESSORY positions.

During daylight hours (exterior lamps are OFF) the odometer LCD is illuminated at full brightness for clear visibility. At night (exterior lamps are ON), the LCD lighting level is adjusted with the other cluster general illumination lamps using the panel lamps dimmer thumbwheel on the headlamp switch. However, a PARADE mode position of the panel lamps dimmer thumbwheel allows the LCD to be illuminated at full brightness if the exterior lamps are turned ON during daylight hours.

The odometer/trip odometer LCD, the trip odometer switch, and the trip odometer switch button are serviced as a unit with the instrument cluster.

Operation

The odometer and trip odometer give an indication to the vehicle operator of the distance the vehicle has traveled. The engine hours give an indication of the cumulative engine-ON time. This indicator is controlled by the instrument cluster circuitry based upon cluster programming and electronic messages received by the cluster from the Powertrain Control Module (PCM) over the Controller Area Network (CAN) data bus.

The odometer, trip odometer and engine hours information are displayed by the instrument cluster Liquid Crystal Display (LCD). The LCD will display the odometer information whenever the driver side front door is opened with the ignition switch in the OFF or ACCESSORY positions, and will display the last previously selected odometer or trip odometer information when the ignition switch is turned to the ON or START positions. The instrument cluster circuitry controls the LCD and provides the following features:

- **Odometer/Trip Odometer Display Toggling** - Actuating the trip odometer reset switch button momentarily with the LCD illuminated will toggle the display between the odometer and trip odometer information. Each time the LCD is illuminated with the ignition switch in the ON or START positions, the display will automatically return to the last mode previously selected (odometer or trip odometer).

- **Engine Hours Display Toggling** - When the trip odometer reset switch button is pressed and held for longer than about six seconds with the ignition switch in the ON position and the engine speed message from the PCM is zero, the trip odometer information will be momentarily displayed, then the engine hours information will be displayed. The LCD must be displaying the odometer information when the trip odometer reset switch button is pressed in order to toggle to the engine hours display. The engine hours will remain displayed for about 30 seconds, until the engine speed message is greater than zero, or until the ignition switch is turned to the OFF position, whichever occurs first.
- **Trip Odometer Reset** - When the trip odometer reset switch button is pressed and held for longer than about two seconds with the ignition switch in the ON or START position, the trip odometer will be reset to **0.0** kilometers (miles). The LCD must be displaying the trip odometer information in order for the trip odometer information to be reset.
- **Communication Error** - If the cluster fails to receive an electronic distance message during normal operation, it will hold and display the last data received until the ignition switch is turned to the OFF position. If the cluster does not receive a distance message within one second after the ignition switch is turned to the ON position, it will display the last distance value stored in the cluster memory. If the cluster is unable to display distance information due to an error internal to the cluster, the LCD will display an **Error** message in the odometer LCD on low line models and in the Electronic Vehicle Information Center (EVIC) on high line models.
- **Self Test** - Each time the cluster is put through the self test, the odometer LCD will display all of its segments simultaneously, then step through each character segment individually during the LCD portion of the test to confirm the functionality of the LCD and the cluster control circuitry.

The PCM continually monitors the vehicle speed pulse information received from the Vehicle Speed Sensor (VSS) or the Controller Anti-lock Brake (CAB) and engine speed pulse information received from the crankshaft position sensor, then sends the proper messages to the instrument cluster, also known as the Cab Compartment Node (CCN). For further diagnosis of the odometer/trip odometer or the instrument cluster circuitry that controls these functions, (Refer to 08 - Electrical/8J - Instrument Cluster - Diagnosis and Testing).

For proper diagnosis of the VSS, the crankshaft position sensor, the CAB, the PCM, the CCN, the CAN data bus or the electronic communication related to odometer/trip odometer operation a diagnostic scan tool is required. Refer to the appropriate diagnostic information.

POD, Switch

Description

The Instrument Panel Switch Pod includes push button controls for the Hazard Flashers, the Electronic Stability Program (ESP) Off switch, the Tow/Haul transmission control switch, the Park Assist off switch and the 115 volt power outlet off switch. The switch pod is a single unit with one wire connector and two mounting tabs and cannot be taken apart or serviced. If one or more of the switches, or illumination is inoperative, the entire pod must be replaced.

The Instrument Panel Switch Pod (4) is located in the instrument panel center bezel (1) just below the radio (2), and above the A/C control head (3).

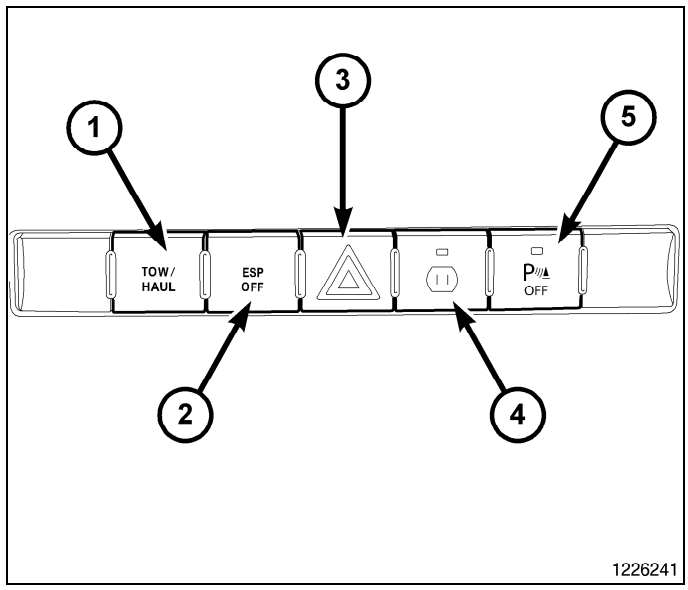

Operation

HAZARD WARNING SWITCH

A latching push-button hazard-warning switch is placed in the instrument panel switch pod. This is an ergonomic place for the switch where it can be conveniently reached.

ELECTRONIC STABILITY PROGRAM (ESP) OFF SWITCH

A momentary contact, push-button ESP switch is placed in the instrument panel switch pod. For more information on the ESP system and ESP off switch(Refer to 05 - Brakes - Description) and (Refer to 05 - Brakes - Operation).

TOW/HAUL SWITCH

A momentary contact Tow/Haul switch is placed in the instrument panel switch pod. For more information on the Tow/Haul switch function and transmission shifting characteristics in the Tow/Haul mode(Refer to 21 - Transmission and Transfer Case/Automatic - 545RFE/SWITCH, Overdrive Lockout - Operation).

PARK ASSIST OFF SWITCH

A momentary contact Park Assist off switch is placed in the instrument panel switch pod. For more information on the Park Assist system and other components within the system(Refer to 08 - Electrical/8B - Chime/Buzzer - Description) and (Refer to 08 - Electrical/8B - Chime/Buzzer - Operation)

115 VOLT POWER POINT OFF SWITCH

A momentary contact Power point off switch is placed in the instrument panel switch pod. For more information on the power outlet system and power outlet off switch(Refer to 08 - Electrical/8W - Wiring/Power Distribution/OUTLET, Power - Description) and (Refer to 08 - Electrical/8W - Wiring/Power Distribution/OUTLET, Power - Operation).

Removal

1. Disconnect and isolate the negative battery cable.
2. Remove the instrument panel center bezel, (Refer to 23 - Body/Instrument Panel/BEZEL, Instrument Panel - Removal).
3. Disconnect the lower switch pod electrical connector.
4. Remove the upper switch pod fasteners (1) from the center bezel.
5. Separate the switch pod from the center bezel.

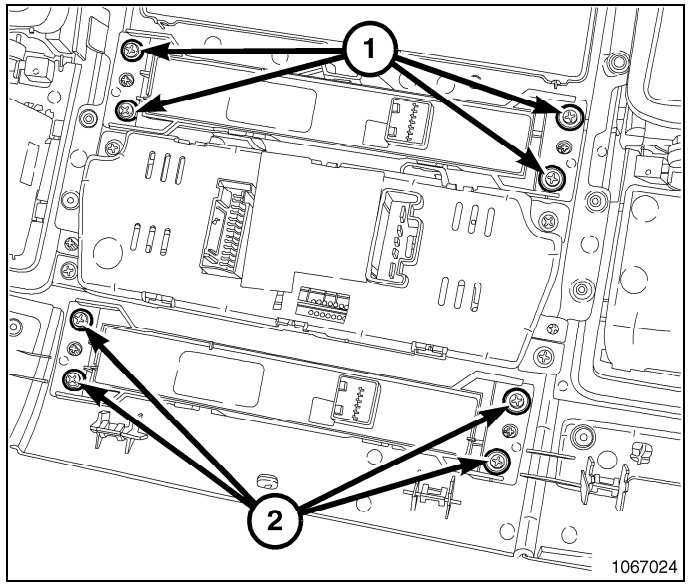

Installation

1. Align the switch pod to the instrument panel center bezel.
2. Install the upper switch pod fasteners (1) to the center bezel.
3. Connect the switch pod electrical connector.
4. Install the instrument panel center bezel, (Refer to 23 - Body/Instrument Panel/BEZEL, Instrument Panel - Installation).
5. Connect the negative battery cable.

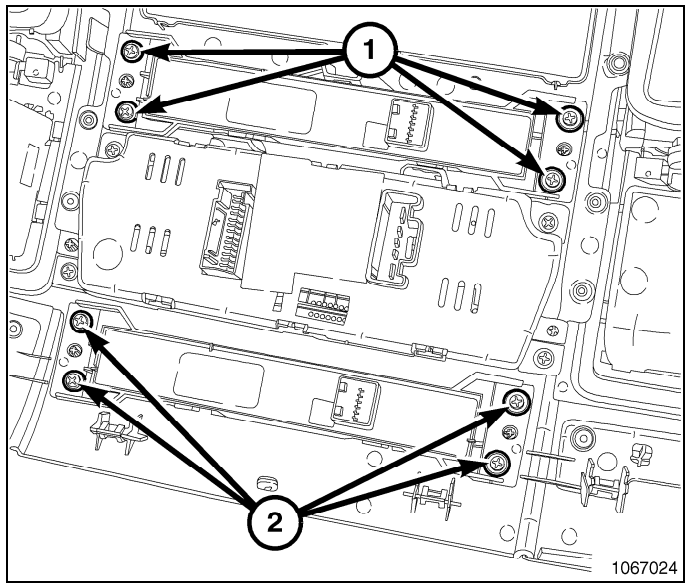

SPEEDOMETER

Description

A speedometer is standard equipment on all instrument clusters. The speedometer is located next to the tachometer, just to the right of center in the instrument cluster. The speedometer consists of a movable gauge needle or pointer controlled by the instrument cluster circuitry and a fixed 210 degree primary scale on the gauge dial face.

The speedometer reads left-to-right either from **0** to **110** mph, or from **0** to **200** km/h, depending upon the market for which the vehicle is manufactured. Each version also has a secondary inner scale on the gauge dial face that provides the equivalent opposite units from the primary scale. Text appearing on the cluster overlay just below the hub of the speedometer needle abbreviates the unit of measure for the primary scale (either **mph** or **km/h**), followed by the unit of measure for the secondary scale.

The speedometer graphics are white (primary scale) and gray (secondary scale) against a black field making them clearly visible within the instrument cluster in daylight. When illuminated from behind by the panel lamps dimmer controlled cluster general illumination lighting with the exterior lamps turned ON, the primary scale graphics appear white and the secondary scale graphics appear light gray. The gauge needle has internal optical illumination. Gauge illumination is provided by Light Emitting Diode (LED) units located on the instrument cluster electronic circuit board.

The speedometer is serviced only as a unit with the instrument cluster.

Operation

The speedometer gives an indication to the vehicle operator of the vehicle road speed. This gauge is controlled by the instrument cluster circuit board based upon cluster programming and electronic messages received by the cluster from the Powertrain Control Module (PCM) over the Controller Area Network (CAN) data bus.

The speedometer is a stepper motor design unit that receives battery current on the instrument cluster electronic circuit board through the fused ignition switch output (run-start) circuit whenever the ignition switch is in the ON or START positions. The cluster is programmed to move the gauge needle back to the low end of the scale after the ignition switch is turned to the OFF position. The instrument cluster circuitry controls the gauge needle position and provides the following features:

- **Vehicle Speed Message** - Each time the cluster receives an electronic vehicle speed message from the PCM it will calculate the correct vehicle speed reading and position the gauge needle at that relative speed position on the gauge scale. The cluster will receive a new message and reposition the gauge pointer accordingly about every 88 milliseconds. The gauge needle will continually be positioned at the relative vehicle speed position on the gauge scale until the vehicle stops moving, or until the ignition switch is turned to the OFF position, whichever occurs first.

- **Communication Error** - If the cluster fails to receive a speed message, it will hold the gauge needle at the last indication for about three seconds, or until the ignition switch is turned to the OFF position, whichever occurs first. After three seconds, the gauge needle will return to the left end of the gauge scale.
- **Self Test** - Each time the cluster is put through the self test, the speedometer needle will be swept to several calibration points on the gauge scale in a prescribed sequence in order to confirm the functionality of the gauge and the cluster control circuitry.

The PCM continually monitors the Vehicle Speed Sensor (VSS) or electronic wheel speed messages from the Controller Anti-lock Brake (CAB) to determine the vehicle road speed. The PCM then sends the proper vehicle speed messages to the instrument cluster, also known as the Cab Compartment Node (CCN). For further diagnosis of the speedometer or the instrument cluster circuitry that controls the gauge, (Refer to 08 - Electrical/8J - Instrument Cluster - Diagnosis and Testing).

For proper diagnosis of the VSS, the CAB, the PCM, the CCN, the CAN data bus or the electronic communication related to speedometer operation a diagnostic scan tool is required. Refer to the appropriate diagnostic information.

TACHOMETER

Description

A tachometer is standard equipment on all instrument clusters. The tachometer is located to the left of the speedometer, just to the left of center in the instrument cluster. The tachometer consists of a movable gauge needle or pointer controlled by the instrument cluster circuitry and a fixed 210 degree scale on the gauge dial face. The tachometer reads left-to-right from **0** to **7**. The text **RPM X 1000** is imprinted on the cluster overlay directly below the hub of the tachometer needle. This text identifies that each number on the tachometer scale is to be multiplied by 1000 rpm.

The tachometer graphics are white against a black field making them clearly visible within the instrument cluster in daylight. When illuminated from behind by the panel lamps dimmer controlled cluster general illumination lighting with the exterior lamps turned ON, the scale graphics appear white and the red graphics still appear red. The gauge needle has internal optical illumination. Gauge illumination is provided by a Light Emitting Diode (LED) unit located on the instrument cluster electronic circuit board.

The tachometer is serviced only as a unit with the instrument cluster.

Operation

The tachometer gives an indication to the vehicle operator of the engine speed. This gauge is controlled by the instrument cluster circuit board based upon cluster programming and electronic messages received by the cluster from the Powertrain Control Module (PCM) over the Controller Area Network (CAN) data bus.

The tachometer is an air core magnetic unit that receives battery current on the instrument cluster electronic circuit board through the fused ignition switch output (run-start) circuit whenever the ignition switch is in the ON or START positions. The cluster is programmed to move the gauge needle back to the low end of the scale after the ignition switch is turned to the OFF position. The instrument cluster circuitry controls the gauge needle position and provides the following features:

- **Engine Speed Message** - Each time the cluster receives an electronic **engine speed** message from the PCM it will calculate the correct engine speed reading and position the gauge needle at that relative speed position on the gauge scale. The cluster will receive a new message and reposition the gauge pointer accordingly about every 88 milliseconds. The gauge needle will continually be repositioned at the relative engine speed position on the gauge scale until the engine stops running, or until the ignition switch is turned to the OFF position, whichever occurs first.
- **Communication Error** - If the cluster fails to receive a speed message, it will hold the gauge needle at the last indication for about three seconds, or until the ignition switch is turned to the OFF position, whichever occurs first. After three seconds, the gauge needle will return to the left end of the gauge scale.
- **Self Test** - Each time the cluster is put through the self test, the tachometer needle will be swept to several calibration points on the gauge scale in a prescribed sequence in order to confirm the functionality of the gauge and the cluster control circuitry.

On vehicles with a gasoline engine, the PCM continually monitors the crankshaft position sensor to determine the engine speed. The PCM then sends the proper **engine speed** messages to the instrument cluster, also known as the Cab Compartment Node (CCN). For further diagnosis of the tachometer or the instrument cluster circuitry that controls the gauge, (Refer to 08 - Electrical/8J - Instrument Cluster - Diagnosis and Testing).

For proper diagnosis of the crankshaft position sensor, the engine speed sensor, the PCM, the CCN, the CAN data bus or the electronic communication related to tachometer operation a diagnostic scan tool is required. Refer to the appropriate diagnostic information.

LAMPS/LIGHTING - EXTERIOR

TABLE OF CONTENTS

page

LAMPS/LIGHTING - EXTERIOR
DESCRIPTION . . . 3
OPERATION . . . 5
WARNING . . . 8
DIAGNOSIS AND TESTING . . . 8
STANDARD PROCEDURE . . . 15
SPECIFICATIONS . . . 18
CAM, TURN SIGNAL CANCEL
DESCRIPTION . . . 19
OPERATION . . . 19
CONNECTOR, TRAILER TOW
REMOVAL . . . 19
INSTALLATION . . . 20
LAMP, CENTER HIGH MOUNTED STOP
REMOVAL
BULB . . . 21
LAMP . . . 21
INSTALLATION
BULB . . . 22
LAMP . . . 22
LAMP, FOG
REMOVAL
BULB . . . 23
LAMP . . . 23
INSTALLATION
BULB . . . 25
LAMP . . . 26
LAMP, LICENSE PLATE
REMOVAL
BULB . . . 27
LAMP . . . 28
INSTALLATION
BULB . . . 28
LAMP . . . 29
LAMP, MIRROR
REMOVAL . . . 30
INSTALLATION . . . 30
LAMP, TAIL STOP TURN
REMOVAL
BULB . . . 32
LAMP . . . 32
INSTALLATION
BULB . . . 32
LAMP . . . 33

page

LAMP, UNDERHOOD
REMOVAL
BULB . . . 34
LAMP . . . 35
INSTALLATION
BULB . . . 35
LAMP . . . 36
RELAY, STOP LAMP INHIBIT
DESCRIPTION . . . 37
OPERATION . . . 37
SWITCH, BACKUP LAMP
DESCRIPTION . . . 38
OPERATION . . . 38
SWITCH, HAZARD WARNING
DESCRIPTION . . . 39
OPERATION . . . 39
DIAGNOSIS AND TESTING . . . 40
SWITCH, HEADLAMP
DESCRIPTION . . . 40
OPERATION . . . 40
DIAGNOSIS AND TESTING . . . 41
REMOVAL . . . 43
INSTALLATION . . . 43
SWITCH, MULTIFUNCTION
DESCRIPTION . . . 44
OPERATION . . . 45
REMOVAL . . . 46
INSTALLATION . . . 47
SWITCH, PARKING BRAKE
DESCRIPTION . . . 48
OPERATION . . . 48
DIAGNOSIS AND TESTING . . . 49
REMOVAL . . . 49
INSTALLATION . . . 50
SWITCH, STOP LAMP
DESCRIPTION . . . 50
OPERATION . . . 51
DIAGNOSIS AND TESTING . . . 52
REMOVAL . . . 53
INSTALLATION . . . 54
ADJUSTMENTS . . . 56
UNIT, FRONT LAMP
STANDARD PROCEDURE . . . 56

continued..

page

REMOVAL
BULB - HEADLAMP 56
BULB - PARK/TURN SIGNAL/SIDE MARKER 58
LAMP 59
INSTALLATION
BULB - HEADLAMP 61
BULB - PARK/TURN SIGNAL/SIDE MARKER 62
LAMP 64

page

WIRING, TRAILER TOW
DESCRIPTION 66
OPERATION 67

Lamps/Lighting - Exterior

Description

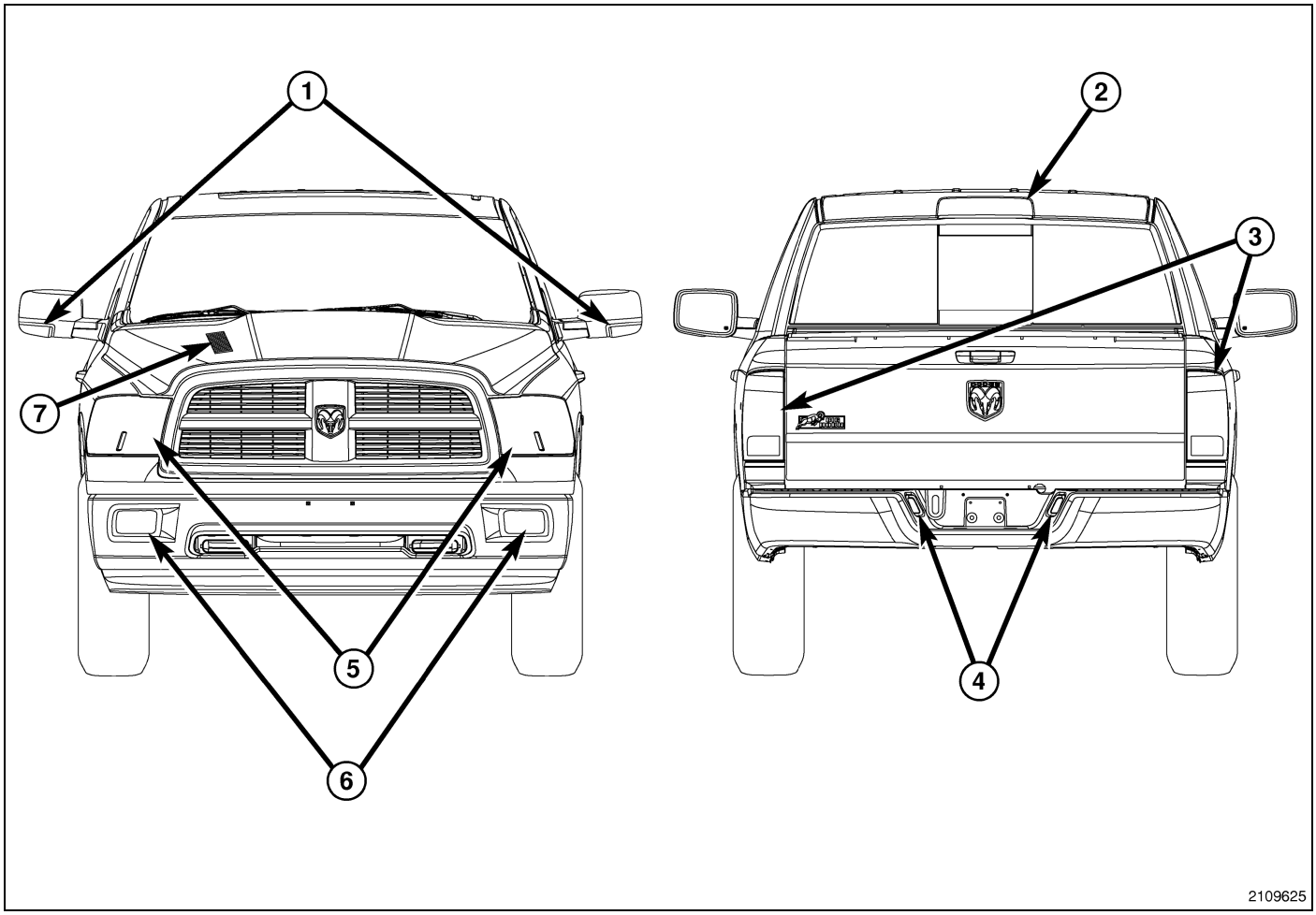

The exterior lighting system for this vehicle includes the following exterior lamp units:

- **Center High Mounted Stop Lamp (2)** - A standard equipment Center High Mounted Stop Lamp (CHMSL) is centered on the cab roof header panel just above the glass opening at the rear of the cab. On vehicles so equipped, this CHMSL also incorporates two integral cargo lamps, one located at each outboard side of the CHMSL.
- **Front Fog Lamps (6)** - Vehicles equipped with this option have a fog lamp unit mounted near each outboard end of the front bumper support, behind the lower portion of the front fascia.
- **Front Lamp Units (5)** - Standard equipment dual headlamps include a front lamp unit with a single, dual-filament headlamp bulb mounted to the front of each front fender panel on either side of the grille opening. Optional quad headlamps replace both of the standard equipment front lamp units with those that each contain two, single-filament headlamp bulbs.
- **License Plate Lamps (4)** - A standard equipment rear license plate lamp unit is mounted to each outboard vertical surface of the license plate tub formation in the center of the rear bumper.
- **Outside Mirror Lamps (1)** - Vehicles equipped with this option have a lamp unit integral to the lower forward facing surface of each outside rear view mirror.
- **Rear Lamp Units (3)** - A standard equipment rear lamp unit is mounted to the rear of each quarter panel on either side of the tailgate opening.
- **Underhood Lamp (7)** - Vehicles equipped with this option have a single underhood lamp unit with an integral automatic mechanical (non-mercury) switch. The lamp and switch unit is mounted to the underside of the inner hood reinforcement above the right side of the engine compartment.

These exterior lighting lamp units and their controls are combined to provide the following exterior lighting features:

- **Automatic Headlamps** - Vehicles with the automatic headlamps option are equipped with a unique headlamp switch that includes an **A** (Automatic) position and have a sun load sensor located on the top of the instrument panel to

sense ambient light levels. When the **A** position of the headlamp switch is selected while the engine is running, the headlamps are turned ON and OFF automatically as ambient light levels dictate.

- **Backup Lamps** - The backup (or reverse) lamps include a bulb, reflector and lens that are integral to each rear lamp unit.
- **Brake Lamps** - The brake (or stop) lamps include a bulb, reflector and lens that are integral to each rear lamp unit, and the CHMSL bulb and lens.
- **Daytime Running Lamps** - Vehicles manufactured for sale in Canada illuminate the high beam headlamp bulb in each front lamp unit at a reduced intensity to serve as the Daytime Running Lamps (DRL).
- **Exterior Lamp Fail-Safe Operation** - The ElectroMechanical Instrument Cluster (EMIC) (also known as the Cab Compartment Node/CCN) and the Totally Integrated Power Module (TIPM) provide a fail-safe feature which will automatically turn ON the low beam headlamps and all park lamps when the ignition switch is in the ON position and there is no detected input from the headlamp switch, or when there is no communication over the Controller Area Network (CAN) data bus.
- **Exterior Lamp Load Shedding** - The TIPM provides a battery saver feature which will automatically turn OFF all exterior lamps that remain ON with the ignition switch in the LOCK position after a timed interval of about eight minutes.
- **Front Fog Lamps** - The optional front fog lamps include the bulb, reflector and lens of each adjustable front fog lamp unit.
- **Hazard Warning Lamps** - The hazard warning lamps include the bulbs, reflectors and lenses of each lamp in the right and left, front and rear turn signal circuits.
- **Headlamp Delay** - On vehicles equipped with automatic headlamps, the low or high beam headlamps remain illuminated for 90 seconds after the ignition switch has been turned to the OFF position. If the vehicle is equipped with the optional Electronic Vehicle Information Center (EVIC), the delay interval is customer-programmable for 0, 30, 60 or 90 seconds.
- **Headlamps** - Standard dual headlamps include a single, dual-filament halogen bulb, an adjustable reflector and a clear lens integral to each front lamp unit. Optional quad headlamps include two single-filament halogen bulbs, an adjustable reflector and a clear lens integral to each front lamp unit.
- **Optical Horn** - Also known as flash-to-pass, the beam selection function of the multi-function switch control stalk has a momentary intermediate position that allows the headlamp high beams to be flashed momentarily, without changing the headlamp beam selection.
- **Park Lamps** - The park lamps include the park and side marker bulbs, reflectors and lenses integral to each front and rear lamp unit as well as the bulbs and lenses of the rear license plate lamps.
- **Puddle Lamps** - Vehicles equipped with the optional outside mirror lamps have dedicated clear Light-Emitting Diode (LED) units integral to each mirror lamp unit that are activated by the door modules based upon door ajar switch inputs to illuminate the area outside below each front door whenever a door is opened.
- **Turn Signal Lamps** - The turn signal lamps include the turn signal bulbs, reflectors and lenses that are integral to the right and left front and rear lamp units. On vehicles equipped with the optional outside mirror lamps there are several dedicated amber LED units integral to each mirror lamp unit that are also activated by the turn signal circuits for the same side of the vehicle.

Other components of the exterior lighting system for this vehicle include:

- **Backup Lamp Switch** - A plunger-type backup lamp switch is installed through the transmission housing of vehicles equipped with a manual transmission and is actuated by the shifter mechanism within the transmission when REVERSE gear is selected. On vehicles with an automatic transmission, a Transmission Range Sensor (TRS) performs the backup lamp switch function.
- **Brake Lamp Switch** - A plunger-type brake lamp switch is located on the steering column support bracket under the instrument panel and is actuated by the brake pedal arm when the brake pedal is depressed.
- **Clockspring** - The clockspring includes an integral turn signal cancel cam, which provides automatic turn signal cancellation as the steering wheel is rotated back to its centered position following a vehicle turning maneuver. The clockspring is located near the top of the steering column, directly beneath the steering wheel. (Refer to 10 - Restraints/CLOCKSPRING - Description).
- **Hazard Switch** - A latching push button-actuated hazard switch is integral to the upper instrument panel switch pod located just below the radio and above the air conditioning and heater controls in the center stack area of the instrument panel.
- **Headlamp Switch** - A headlamp switch is located on the left side of the instrument panel, below the left instrument panel vent outboard of the steering column. The headlamp switch includes a rotary knob to turn the park lamps and headlamps ON or OFF and, if the vehicle is so equipped, a push button switch for selecting the cargo lamps. The

rotary knob is pushed inward for selecting the optional front fog lamps on vehicles so equipped. The headlamp switch also features a horizontal thumbwheel for selecting the panel lamps dimming level, a PARADE mode to illuminate all Vacuum Fluorescent Display (VFD) units at full brightness for visibility when driving in daylight with the exterior lighting turned ON, and for interior lighting control.

- **Instrument Cluster** - The ElectroMechanical Instrument Cluster (EMIC) is also known as the Cab Compartment Node (CCN) in this vehicle. The EMIC/CCN is located in the instrument panel above the steering column opening, directly in front of the driver. (Refer to 08 - Electrical/8J - Instrument Cluster - Description).
- **Multi-Function Switch** - The multi-function switch is located on the steering column, just below the steering wheel. A control stalk that extends from the left side of the switch is used to select the turn signal lamps (right or left) and to select the headlamp beam (low, high or optical horn).
- **Park Brake Switch** - A park brake switch is located on the park brake pedal mechanism on the cowl side inner panel below the instrument panel, to the left of the steering column.
- **Stop Lamp Inhibit Relay** - A stop lamp inhibit relay (also known as a brake lamp activation relay or trailer tow damping relay) is located in a connector on the left front fender hydroform load beam within the engine compartment.
- **Totally Integrated Power Module** - The Totally Integrated Power Module (TIPM) is located in the engine compartment, near the battery. (Refer to 08 - Electrical/8W - Wiring/Power Distribution - Description).
- **Trailer Tow Wiring** - Vehicles with a factory-installed trailer towing package have a trailer tow wire harness with a combination 4-way and heavy duty 7-way trailer tow connector installed in the rear bumper near the trailer hitch receiver. This package also includes an electric trailer brake wiring provision that terminates at a connector located on top of the large body harness connection bracket under the instrument panel to the left of the steering column. An electric trailer brake pigtail harness and an instruction card are available through MOPAR® to ease installation of most aftermarket electric trailer brake controllers.
- **Upper Instrument Panel Switch Pod** - A latching push button-actuated hazard switch is integral to the upper instrument panel switch bank located just below the radio and above the air conditioning and heater controls in the center stack area of the instrument panel. (Refer to 08 - Electrical/8J - Instrument Cluster/POD, Switch - Description)

Hard wired circuitry connects the exterior lighting system components to the electrical system of the vehicle. These hard wired circuits are integral to several wire harnesses, which are routed throughout the vehicle and retained by many different methods. These circuits may be connected to each other, to the vehicle electrical system and to the exterior lighting components through the use of a combination of soldered splices, splice block connectors, and many different types of wire harness terminal connectors and insulators. Refer to the appropriate wiring information. The wiring information includes wiring diagrams, proper wire and connector repair procedures, further details on wire harness routing and retention, as well as pin-out and location views for the various wire harness connectors, splices and grounds.

Operation

Following are paragraphs that briefly describe the operation of each of the major exterior lighting systems. The lamps and the hard wired circuits between components related to the exterior lighting system may be diagnosed using conventional diagnostic tools and procedures. Refer to the appropriate wiring information. The wiring information includes wiring diagrams, proper wire and connector repair procedures, details of wire harness routing and retention, connector pin-out information and location views for the various wire harness connectors, splices and grounds.

However, conventional diagnostic methods will not prove conclusive in the diagnosis of the exterior lighting system or the electronic controls or communication between modules and other devices that provide some features of the exterior lighting system. The most reliable, efficient, and accurate means to diagnose the exterior lighting system or the electronic controls and communication related to exterior lighting system operation requires the use of a diagnostic scan tool. Refer to the appropriate diagnostic information.

AUTOMATIC HEADLAMPS

The optional automatic headlamp system includes the headlamp switch on the instrument panel, the ElectroMechanical Instrument Cluster (EMIC) (also known as the Cab Compartment Node/CCN), the Totally Integrated Power Module (TIPM), the ignition switch (also known as the Wireless Ignition Node/WIN), the A/C - heater control unit and the sun load sensor on the top of the instrument panel.

The TIPM energizes the sun load sensor to provide an ambient light level input to the A/C - heater control whenever the electronic **ignition switch status** messages received from the WIN over the Controller Area Network (CAN) data bus indicate the ignition ON position is selected. The A/C - heater control responds to the sun sensor input by sending the appropriate electronic **light level** messages back to the TIPM over the CAN data bus. When the **A** (Automatic) position is selected with the headlamp switch, the EMIC responds to this input by sending an electronic **lighting request** message to the TIPM over the CAN data bus.

With the engine running, the TIPM responds to these messages by automatically controlling a pulse width modulated voltage output to the selected headlamp bulb filaments through the right and left low or high beam driver circuits to illuminate the headlamps. The TIPM also remembers which beams (low or high) were selected when the headlamps were last turned OFF, and energizes those beams and lamps again the next time it turns the headlamps ON.

BACKUP LAMPS

The backup (or reverse) lamps have a path to ground at all times through a takeout and eyelet terminal of the body wire harness that is secured by a ground screw the body sheet metal or the frame. On vehicles with a manual transmission, the backup lamp switch provides a hard wired input to the TIPM, and the TIPM provides battery voltage to the backup lamps on the backup lamp feed circuit whenever the electronic **ignition switch status** messages received from the WIN over the CAN data bus indicate the ignition ON position is selected and the backup lamp switch input indicates the REVERSE position is selected with the transmission shift linkage.

On vehicles with an automatic transmission, the Powertrain Control Module (PCM) continually monitors a hard wired multiplex input from the Transmission Range Sensor (TRS), then sends the proper electronic **transmission gear selector status** messages to other electronic modules over the CAN data bus. Whenever the electronic **ignition switch status** messages indicate the ignition ON position is selected and the TIPM receives an electronic message indicating the status of the transmission gear selector is REVERSE, it provides a battery voltage output to the backup lamps on the backup lamp feed circuit.

BRAKE LAMPS

The brake (or stop) lamps each have a path to ground at all times through a takeout and eyelet terminal of the body wire harness that is secured by a ground screw to the body sheet metal or the frame. The Center High Mounted Stop Lamp (CHMSL) has a path to ground at all times through a different takeout and eyelet terminal of the body wire harness that is secured by a ground screw to the left cowl side inner panel within the passenger compartment. The TIPM and the CHMSL receive battery voltage on the brake lamp switch feed circuit when the brake lamp switch is closed by the brake pedal arm. The brake lamps are then controlled by the TIPM through High Side Drivers (HSD) on the left and right rear turn driver circuits. A stop lamp inhibit relay (also known as a brake lamp activation relay or trailer tow damping relay) is used by the Controller Antilock Brake (CAB) to mitigate undesirable brake lamp operation when the CAB activates various brake hydraulic circuits as part of its Traction Control System (TCS) and Trailer Sway Control (TSC) functions. The brake lamp function of the trailer tow wiring is also controlled by an output from the TIPM based upon a hard wired input from the brake lamp switch.

DAYTIME RUNNING LAMPS

Vehicles manufactured for sale in Canada illuminate the high beam filament of both headlamps at a reduced intensity when the engine is running, the parking brake is released and the exterior lamps are turned OFF. The TIPM must be programmed appropriately for this feature to be enabled. Once enabled, anytime the TIPM receives electronic messages over the CAN data bus from the PCM indicating the engine is running and from the EMIC indicating the status of the headlamp switch exterior lighting input is OFF and that the parking brake is released, the TIPM provides a pulse width modulated voltage output to the proper headlamp bulb filaments through the right and left high beam feed circuits to produce illumination at a reduced intensity.

FRONT FOG LAMPS

Vehicles equipped with optional front fog lamps include a front fog lamp switch integral to the headlamp switch on the instrument panel. The front fog lamps have a path to ground at all times through their connection to the Front End Module (FEM) wire harness. The FEM wire harness has takeouts with eyelet terminals that are secured by ground screws to the left inner fender support within the engine compartment. The EMIC monitors a hard wired multiplex input from the headlamp switch to determine whether the fog lamps are selected, then sends electronic **fog lamp switch request** messages to the TIPM over the CAN data bus.

When the TIPM receives a **fog lamp switch request** message it then controls front fog lamp operation by providing a battery voltage output to the fog lamps through the right and left front fog lamp control circuits. The TIPM also sends the appropriate electronic message back to the EMIC to illuminate or extinguish the front fog lamp indicator. The TIPM will automatically de-energize the front fog lamps any time the headlamp high beams are selected.

The TIPM also provides a battery saver (load shedding) feature for the front fog lamps, which will turn these lamps OFF if they are left ON for more than about eight minutes after the electronic **ignition switch status** messages from the WIN transition to LOCK, if there is a charging system failure or if the electrical system voltage falls below about 11.75 volts for more than about 30 seconds.

Each front fog lamp includes an integral adjustment thumbwheel to be used for static aiming of the fog lamp beams.

HAZARD WARNING LAMPS

The hazard warning system includes the EMIC, the TIPM and the hazard switch in the upper switch pod located in the center stack area of the instrument panel, below the radio and above the air conditioner and heater controls. The hazard switch provides a hard wired input to the TIPM. When the TIPM receives an input from the hazard switch it controls hazard warning system operation and flash rate by controlling battery voltage outputs through high side drivers on the front and rear, right and left turn signal feed circuits.

The TIPM also sends the appropriate electronic messages back to the EMIC over the CAN data bus to control the illumination and flash rate of the right and left turn signal indicators, as well as to control the click rate of an electromechanical relay soldered onto the EMIC electronic circuit board that emulates the sound emitted by a conventional hazard warning flasher.

HEADLAMPS

The headlamp system includes the SCM, the EMIC, the TIPM, the headlamp switch on the instrument panel and the multi-function switch on the steering column. The headlamp bulbs have a path to ground at all times through their connection to the FEM wire harness. The FEM wire harness has takeouts with eyelet terminals that are secured by ground screws to the left inner fender support within the engine compartment. The TIPM will store a Diagnostic Trouble Code (DTC) for any shorts or opens in the headlamp circuits.

The EMIC monitors a hard wired multiplex input from the headlamp switch to determine the status of the headlamp switch. The SCM monitors a hard wired multiplex input to determine the status of the multi-function switch and whether the headlamp high or low beams are selected. The SCM then sends the appropriate electronic **headlamp beam select switch status** messages to the EMIC over the Local Interface Network (LIN) data bus. The EMIC then sends the appropriate electronic **headlamp request** and **headlamp beam request** messages to the TIPM over the CAN data bus. The TIPM responds to these messages by providing a Pulse Width Modulated (PWM) voltage output to the headlamps through high side drivers on the right and left low and high beam feed circuits to illuminate the selected headlamp filaments. The TIPM also sends the appropriate electronic messages to the EMIC to control the illumination of the high beam indicator.

When the optical horn feature is selected, the low beams will shut OFF about 200 milliseconds after the high beams are activated. The TIPM also remembers which beams (LOW or HIGH) were selected when the headlamps were last turned OFF, and energizes those beams again the next time the headlamps are turned ON. The TIPM provides a battery saver (load shedding) feature for the headlamps, which will turn these lamps OFF if they are left ON for more than about eight minutes after the electronic **ignition switch status** messages from the WIN transition to LOCK.

The SCM and the EMIC each provide a fail-safe feature for the headlamps, which will cause the TIPM to turn the low beam headlamps ON automatically if there is no input available from the headlamp switch or the multi-function switch. The TIPM also provides a fail-safe feature for the headlamps that will turn the headlamps ON automatically whenever a loss of CAN bus communication is detected while the electronic **ignition switch status** messages from the WIN indicate the ignition ON position is selected.

Each headlamp includes an integral reflector adjustment screw to be used for static aiming of the headlamps.

HEADLAMP DELAY

The headlamp delay feature includes the headlamp switch, the EMIC, the WIN and the TIPM. On vehicles equipped with an optional Electronic Vehicle Information Center (EVIC), this feature has customer programmable delay intervals of 0 seconds (disabled), 30 seconds, 60 seconds and 90 seconds. If the headlamp switch remains in the headlamp ON position until the electronic **ignition switch status** messages from the WIN indicate the ignition OFF position is selected, then the headlamps will remain illuminated until after the selected delay interval has elapsed. The park lamps will not stay ON during the headlamp delay interval. The default delay interval is 90 seconds, but can be reprogrammed by the customer using the customer programmable features function of the EVIC, if the vehicle is so equipped.

PARK LAMPS

The park lamps system includes the EMIC, the TIPM and the headlamp switch on the instrument panel. The front park lamp and side marker lamp bulbs each have a path to ground at all times through their connection to the FEM wire harness. The FEM wire harness has takeouts with eyelet terminals that are secured by ground screws to the left inner fender support within the engine compartment. The rear park lamp, side marker lamp and license plate lamp bulbs have a path to ground at all times through a takeout and eyelet terminal of the body wire harness that is secured by a ground screw to the body sheet metal or the frame.

The EMIC monitors a hard wired multiplex input from the headlamp switch, then sends the appropriate electronic **headlamp switch status** messages to the TIPM over the CAN data bus. The TIPM responds to these messages by providing

a battery voltage output to the appropriate lamp bulbs through high side drivers on the front and rear, right and left park lamp feed circuits.

The TIPM provides a battery saver (load shedding) feature for the park lamps, which will turn these lamps OFF if they are left ON for more than about eight minutes after the electronic **ignition switch status** messages from the WIN indicate the ignition LOCK position is selected. The EMIC provides a fail-safe feature for the park lamps, which will send an electronic message to the TIPM to turn these lamps ON automatically if it detects no input from the headlamp switch. The TIPM also provides a fail-safe feature for the park lamps that will turn the headlamps and park lamps ON automatically whenever a loss of CAN bus communication is detected when the electronic **ignition switch status** messages from the WIN indicate the ignition ON position is selected.

TRAILER TOW WIRING

In addition to the trailer tow wiring provisions, the TIPM in all vehicles includes dedicated trailer tow battery, trailer tow park lamp, and both right and left trailer tow stop/turn feed output circuits. When the TIPM receives the appropriate inputs for normal park, turn signal, hazard warning or brake lamp operation, it responds by providing battery voltage through the appropriate trailer tow wiring feed circuits to synchronize the illumination and flash rate of the trailer park, brake and turn signal lamps with those of the tow vehicle.

TURN SIGNAL LAMPS

The turn signal lamps system includes the multi-function switch on the steering column, the SCM, the EMIC and the TIPM. The front turn signal lamp bulbs each have a path to ground at all times through their connection to the FEM wire harness. The FEM wire harness has takeouts with eyelet terminals that are secured by ground screws to the left inner fender support within the engine compartment. The rear turn signal lamp bulbs have a path to ground at all times through a takeout and eyelet terminal of the body wire harness that is secured by a ground screw to the body sheet metal or the frame. On vehicles with the optional outside rear view mirror lamp modules, the lamp modules receive a path to ground from their respective driver or passenger door module.

The SCM monitors a hard wired multiplex input from the multi-function switch to determine the status of the turn signal switch, then sends the appropriate electronic **turn signal switch status** messages to the EMIC over the LIN data bus. Then the EMIC relays an electronic **turn signal request** message to the TIPM over the CAN data bus. The TIPM responds to these messages by controlling a battery voltage output and the flash rate for either the right or left turn signal lamps through high side drivers on the appropriate front and rear, right or left turn signal feed circuits. The TIPM also sends the appropriate electronic messages back to the EMIC to control the illumination and flash rate of the right or left turn signal indicators, as well as to control the click rate of an electromechanical relay soldered onto the EMIC electronic circuit board that emulates the sound emitted by a conventional turn signal flasher. On vehicles with the optional outside rear view mirror lamp modules, the EMIC also sends the appropriate electronic messages over the LIN bus to the driver and passenger door modules to control the illumination and flash rate of those lamps.

The EMIC also provides a **turn signal ON warning** that will generate repetitive chimes to indicate that a turn signal has been active continuously for 1.6 kilometers (1 mile) with the vehicle speed greater than 22 kilometers-per-hour (15 miles-per-hour). Vehicles built for markets other than the United States and Canada have a revised distance threshold of 4 kilometers (2.49 miles) for this feature. The chime will continue until the turn signal input becomes inactive or until the vehicle speed message indicates that the speed is less than 22 kilometers-per-hour (15 miles-per-hour), whichever occurs first.

Warning

WARNING: To avoid serious or fatal injury eye protection should be used when servicing any glass components.

CAUTION: Do not contaminate the glass of halogen bulbs with fingerprints or allow contact with other possibly oily surfaces. Reduced bulb life will result.

CAUTION: Do not use bulbs with higher candle power than indicated in the Bulb Application table. (Refer to 08 - Electrical/8L - Lamps and Lighting/Lamps/Lighting - Interior - Specifications). In addition, do not use fuses, circuit breakers or relays having greater amperage value than indicated on the fuse panel or in the Owner's Manual. Damage to lamps, lenses, wiring and other related electrical components can result.

Diagnosis and Testing

WARNING: To avoid serious or fatal injury on vehicles equipped with airbags, disable the Supplemental Restraint System (SRS) before attempting any steering wheel, steering column, airbag, seat belt tensioner, impact sensor or instrument panel component diagnosis or service. Disconnect and isolate the battery negative (ground) ca-

ble, then wait two minutes for the system capacitor to discharge before performing further diagnosis or service. This is the only sure way to disable the SRS. Failure to take the proper precautions could result in accidental airbag deployment.

NOTE: When diagnosing the exterior lighting circuits, remember that high generator output can burn out bulbs rapidly and repeatedly; and, that dim or flickering bulbs can be caused by low generator output or poor battery condition. If one of these symptoms is a problem on the vehicle, be certain to diagnose the battery and charging system, then repair as necessary.

NOTE: A good ground is necessary for proper lighting operation. If a lighting problem is being diagnosed that involves multiple symptoms, systems, or components, the problem can often be traced to a loose, corroded, or open ground.

The lamps and the hard wired circuits between components related to the exterior lighting system may be diagnosed using conventional diagnostic tools and procedures. Refer to the appropriate wiring information. The wiring information includes wiring diagrams, proper wire and connector repair procedures, details of wire harness routing and retention, connector pin-out information and location views for the various wire harness connectors, splices and grounds.

However, conventional diagnostic methods will not prove conclusive in the diagnosis of the electronic controls or communication between modules and other devices that provide some features of the exterior lighting system. The most reliable, efficient, and accurate means to diagnose the exterior lighting system or the electronic controls and communication related to exterior lighting system operation requires the use of a diagnostic scan tool. Refer to the appropriate diagnostic information.

BACKUP LAMPS

CONDITION	POSSIBLE CAUSES	CORRECTION
BACKUP LAMP DOES NOT ILLUMINATE	1. Ineffective or missing bulb.	1. Test and replace backup lamp bulb if required.
	2. Ineffective ground circuit.	2. Test and repair open backup lamp ground circuit if required.
	3. Ineffective feed circuit.	3. Test and repair open backup lamp feed circuit if required.
	4. Ineffective switch.	4. Test and replace backup lamp switch (manual transmission) or transmission range sensor (automatic transmission) if required.
	5. Ineffective TIPM inputs or outputs.	5. Use a diagnostic scan tool to test the TIPM inputs and outputs. Refer to the appropriate diagnostic information.
BACKUP LAMP DOES NOT EXTINGUISH	1. Ineffective feed circuit.	1. Test and repair shorted backup lamp feed circuit if required.
	2. Ineffective switch.	2. Test and replace backup lamp switch (manual transmission) or transmission range sensor (automatic transmission) if required.
	3. Ineffective TIPM inputs or outputs.	3. Use a diagnostic scan tool to test the TIPM inputs and outputs. Refer to the appropriate diagnostic information.

BRAKE LAMPS

CONDITION	POSSIBLE CAUSES	CORRECTION
BRAKE LAMP DOES NOT ILLUMINATE	1. Ineffective or missing bulb.	1. Test and replace brake lamp bulb if required.
	2. Ineffective ground circuit.	2. Test and repair open brake lamp ground circuit if required.
	3. Ineffective fuse.	3. Test and replace the fuse in the TIPM if required.
	4. Ineffective feed circuit.	4. Test and repair open brake lamp switch output circuit or stop lamp output circuit if required.
	5. Ineffective switch.	5. Test and replace brake lamp switch if required.
	6. Ineffective TIPM inputs or outputs.	6. Use a diagnostic scan tool to test the TIPM inputs and outputs. Refer to the appropriate diagnostic information.
	7. Ineffective stop lamp inhibit relay.	7. test and replace stop lamp inhibit relay if required.
BRAKE LAMP DOES NOT EXTINGUISH	1. Ineffective feed circuit.	1. Test and repair shorted brake lamp switch output circuit or stop lamp output circuit if required.
	2. Improperly adjusted switch.	2. Adjust the brake lamp switch if required.
	3. Ineffective switch.	3. Test and replace brake lamp switch if required.
	4. Ineffective TIPM inputs or outputs.	4. Use a diagnostic scan tool to test the TIPM inputs and outputs. Refer to the appropriate diagnostic information.

DAYTIME RUNNING LAMPS

NOTE: Before performing the following tests, determine whether the headlamp low and high beams operate. If the headlamp low and high beams are also ineffective, diagnose and repair that problem before attempting to repair the Daytime Running Lamps.

CONDITION	POSSIBLE CAUSES	CORRECTION
DAYTIME RUNNING LAMPS WILL NOT ILLUMINATE	1. Incorrect TIPM programming.	1. Use a diagnostic scan tool to check and configure TIPM if required.
	2. Automatic transmission in PARK position.	2. Place the transmission gear selector lever in any position except PARK.
	3. Parking brake applied.	3. Release the parking brake.
	4. Engine not running.	4. Start the engine.
	5. Ineffective TIPM inputs or outputs.	5. Use a diagnostic scan tool to test the TIPM inputs and outputs. Refer to the appropriate diagnostic information.

FRONT FOG LAMPS

NOTE: The front fog lamps are designed to operate ONLY while the headlamp low beams are illuminated. If the headlamp low beams do not illuminate, diagnose and repair that problem before attempting to repair the front fog lamp system. Refer to the appropriate diagnostic information.

CONDITION	POSSIBLE CAUSES	CORRECTION
FRONT FOG LAMP DOES NOT ILLUMINATE	1. Ineffective or missing bulb.	1. Test and replace front fog lamp bulb if required.
	2. Ineffective ground circuit.	2. Test and repair open front fog lamp ground circuit if required.
	3. Ineffective feed circuit.	3. Test and repair open front fog lamp feed circuit if required.
	4. Ineffective switch.	4. Test and replace headlamp switch if required.
	5. Ineffective EMIC (CCN) inputs or outputs.	5. Use a diagnostic scan tool to test the EMIC (CCN) inputs and outputs. Refer to the appropriate diagnostic information.
	6. Ineffective TIPM inputs or outputs.	6. Use a diagnostic scan tool to test the TIPM inputs and outputs. Refer to the appropriate diagnostic information.
FRONT FOG LAMP DOES NOT EXTINGUISH	1. Ineffective feed circuit.	1. Test and repair shorted front fog lamp feed circuit if required.
	2. Ineffective switch.	2. Test and replace headlamp switch if required.
	3. Ineffective EMIC (CCN) inputs or outputs.	3. Use a diagnostic scan tool to test the EMIC (CCN) inputs and outputs. Refer to the appropriate diagnostic information.
	4. Ineffective TIPM inputs or outputs.	4. Use a diagnostic scan tool to test the TIPM inputs and outputs. Refer to the appropriate diagnostic information.

HAZARD WARNING LAMPS

NOTE: The hazard switch is integral to the upper instrument panel switch pod, which provides a hard wired output to the TIPM. Before performing any of the following tests, confirm whether the left and right turn signals operate satisfactorily. Then determine whether the other functions of the upper instrument panel switch pod are operational. If the turn signals are ineffective or operate improperly, or if the other instrument panel switch pod functions are ineffective, diagnose and repair those problems before attempting to repair the hazard warning lamps system.

CONDITION	POSSIBLE CAUSES	CORRECTION
HAZARD WARNING LAMPS DO NOT FLASH	1. Ineffective upper instrument panel switch pod.	1. Test and replace upper instrument panel switch pod if required.
	2. Ineffective TIPM inputs or outputs.	2. Use a diagnostic scan tool to test the TIPM inputs and outputs. Refer to the appropriate diagnostic information.
HAZARD WARNING LAMPS DO NOT STOP FLASHING	1. Ineffective upper instrument panel switch pod.	1. Test and replace upper instrument panel switch pod if required.
	2. Ineffective TIPM inputs or outputs.	2. Use a diagnostic scan tool to test the TIPM inputs and outputs. Refer to the appropriate diagnostic information.

HEADLAMPS

NOTE: As part of the exterior lighting fail-safe feature, upon ignition ON all exterior park lamps and the headlamp low beams will illuminate regardless of the headlamp switch position if the EMIC (CCN) cannot detect an input from the headlamp switch, or if there is a loss of data bus communication. Diagnose and repair those problems before attempting to repair the headlamp system. The TIPM will store a Diagnostic Trouble Code (DTC) for an

open or shorted headlamp circuit. In addition, for automatic headlamps the air conditioning - heater control must be able to receive the hard wired input from the sun sensor on the top of the instrument panel and must be able to communicate with the TIPM over the CAN data bus. Refer to the appropriate diagnostic information.

CONDITION	POSSIBLE CAUSES	CORRECTION
HEADLAMP DOES NOT ILLUMINATE	1. Ineffective or missing bulb.	1. Test and replace headlamp bulb if required.
	2. Ineffective ground circuit.	2. Test and repair open headlamp ground circuit if required.
	3. Ineffective feed circuit.	3. Test and repair open headlamp low beam or high beam feed circuit if required.
	4. Ineffective switch.	4. Test and replace headlamp switch if required.
	5. Ineffective EMIC (CCN) inputs or outputs.	5. Use a diagnostic scan tool to test the EMIC (CCN) inputs and outputs. Refer to the appropriate diagnostic information.
	6. Ineffective TIPM inputs or outputs.	6. Use a diagnostic scan tool to test the TIPM inputs and outputs. Refer to the appropriate diagnostic information.
HEADLAMP DOES NOT EXTINGUISH	1. Ineffective feed circuit.	1. Test and repair shorted headlamp low beam or high beam feed circuit if required.
	2 Ineffective switch.	2. Test and replace headlamp switch if required.
	3. Ineffective EMIC (CCN) inputs or outputs.	3. Use a diagnostic scan tool to test the EMIC (CCN) inputs and outputs. Refer to the appropriate diagnostic information.
	4. Ineffective TIPM inputs or outputs.	4. Use a diagnostic scan tool to test the TIPM inputs and outputs. Refer to the appropriate diagnostic information.
HEADLAMPS ILLUMINATE WITH IGNITION ON AND HEADLAMP SWITCH OFF (FAIL-SAFE OPERATION)	1. Ineffective circuits between headlamp switch and EMIC (CCN).	1. Test and repair open headlamp switch mux and return circuits if required.
	2. Ineffective switch.	2. Test and replace headlamp switch if required.
	3. Loss of data bus communication.	3. Use a diagnostic scan tool to test the data bus. Refer to the appropriate diagnostic information.
	4. Ineffective EMIC (CCN) inputs or outputs.	4. Use a diagnostic scan tool to test the EMIC (CCN) inputs and outputs. Refer to the appropriate diagnostic information.

CONDITION	POSSIBLE CAUSES	CORRECTION
HEADLAMPS WILL NOT SWITCH FROM HIGH TO LOW BEAMS, OR FROM LOW TO HIGH BEAMS	1. Ineffective LIN bus circuits between multi-function switch (SCM) and EMIC (CCN).	1. Test and repair open LIN bus circuits if required.
	2. Ineffective multi-function switch (SCM).	2. Use a diagnostic scan tool to test the EMIC (CCN) inputs and outputs. Refer to the appropriate diagnostic information.
AUTO HEADLAMPS INEFFECTIVE	1. Incorrect TIPM configuration.	1. Use a diagnostic scan tool to check and correct the TIPM configuration settings if required. Refer to the appropriate diagnostic information.
	2. Ineffective circuits between sun load sensor and air conditioner - heater control.	2. Test and repair sun sensor and sun sensor return circuits if required.
	3. Ineffective sun load sensor.	3. Test and replace sun load sensor if required.
	4. Ineffective TIPM inputs or outputs.	5. Use a diagnostic scan tool to test the TIPM inputs and outputs. Refer to the appropriate diagnostic information.

PARK LAMPS

NOTE: As part of the exterior lighting fail-safe feature, upon ignition ON all exterior park lamps and the headlamp low beams will illuminate regardless of the headlamp switch position if the instrument cluster cannot detect an input from the headlamp switch, or if there is a loss of data bus communication between the EMIC (CCN) and the TIPM. Diagnose and repair those problems before attempting to repair the Park Lamps.

CONDITION	POSSIBLE CAUSES	CORRECTION
PARK LAMP DOES NOT ILLUMINATE	1. Ineffective or missing fuse.	1. Test and replace park lamp fuse if required.
	2. Ineffective or missing bulb.	2. Test and replace park lamp bulb if required.
	3. Ineffective ground circuit.	3. Test and repair open park lamp ground circuit if required.
	4. Ineffective feed circuit.	4. Test and repair open park lamp feed circuit if required.
	5. Ineffective switch.	5. Test and replace headlamp switch if required.
	6. Ineffective EMIC (CCN) inputs or outputs.	6. Use a diagnostic scan tool to test the EMIC (CCN) inputs and outputs. Refer to the appropriate diagnostic information.
	7. Ineffective TIPM inputs or outputs.	7. Use a diagnostic scan tool to test the TIPM inputs and outputs. Refer to the appropriate diagnostic information.

CONDITION	POSSIBLE CAUSES	CORRECTION
PARK LAMP DOES NOT EXTINGUISH	1. Ineffective feed circuit.	1. Test and repair shorted park lamp feed circuit if required.
	2. Ineffective switch.	2. Test and replace headlamp switch if required.
	3. Ineffective EMIC (CCN) inputs or outputs.	3. Use a diagnostic scan tool to test the EMIC (CCN) inputs and outputs. Refer to the appropriate diagnostic information.
	4. Ineffective TIPM inputs or outputs.	4. Use a diagnostic scan tool to test the TIPM inputs and outputs. Refer to the appropriate diagnostic information.

TURN SIGNAL LAMPS

NOTE: The turn signal switch is integral to the multi-function switch/SCM, which communicates with the EMIC/CCN over the LIN data bus. Before performing any of the following tests, determine whether the other functions of the multi-function switch/SCM are operational. If the other multi-function switch/SCM functions are ineffective, diagnose and repair that problem before attempting to repair the Turn Signal Lamps.

CONDITION	POSSIBLE CAUSES	CORRECTION
ONE TURN SIGNAL LAMP DOES NOT ILLUMINATE	1. Ineffective or missing bulb.	1. Test and replace turn signal bulb if required.
	2. Ineffective ground circuit.	2. Test and repair open ground circuit if required.
	3. Ineffective feed circuit.	3. Test and repair open right or left turn signal feed circuit if required.
	4. Ineffective TIPM inputs or outputs.	4. Use a diagnostic scan tool to test the TIPM inputs and outputs. Refer to the appropriate diagnostic information.
ALL RIGHT SIDE OR ALL LEFT SIDE TURN SIGNAL LAMPS (OR BOTH SIDES) DO NOT FLASH	1. Ineffective feed circuit.	1. Test and repair open right or left turn signal feed circuit if required.
	2. Ineffective EMIC (CCN) inputs or outputs.	2. Use a diagnostic scan tool to test the EMIC (CCN) inputs and outputs. Refer to the appropriate diagnostic information.
	3. Ineffective TIPM inputs or outputs.	3. Use a diagnostic scan tool to test the TIPM inputs and outputs. Refer to the appropriate diagnostic information.
ALL RIGHT SIDE OR ALL LEFT SIDE TURN SIGNALS FLASH TOO RAPIDLY (MORE THAN 100 FLASHES PER MINUTE)	1. Ineffective or missing bulb.	1. Test and replace turn signal bulb if required.
	2. Ineffective ground circuit.	2. Test and repair open ground circuit if required.
	3. Ineffective feed circuit.	3. Test and repair open right or left turn signal feed circuit if required.
TURN SIGNALS DO NOT AUTOMATICALLY CANCEL	1. Ineffective cancel cam.	1. Inspect and replace the turn signal cancel cam (clockspring) if required.
	2. Ineffective cancel actuator.	2. Inspect and replace the turn signal cancel actuator (multi-function switch/SCM) if required.

Standard Procedure

VEHICLE PREPARATION FOR LAMP ALIGNMENT

1. Check for and correct any burnt out bulbs.
2. Repair or replace any ineffective, worn or damaged body or suspension components that could hinder proper lamp alignment.
3. Verify proper tire inflation pressures.
4. Remove any accumulations of mud, snow or ice from the vehicle underbody and clean the front lamp lenses.
5. Verify that there is no load in the vehicle (cargo or passengers), except for the driver.
6. The fuel tank should be FULL. Add 2.94 kilograms (6.5 pounds) of weight over the fuel tank for each estimated gallon of missing fuel.
7. Verify correct vehicle suspension height.

LAMP ALIGNMENT SCREEN PREPARATION

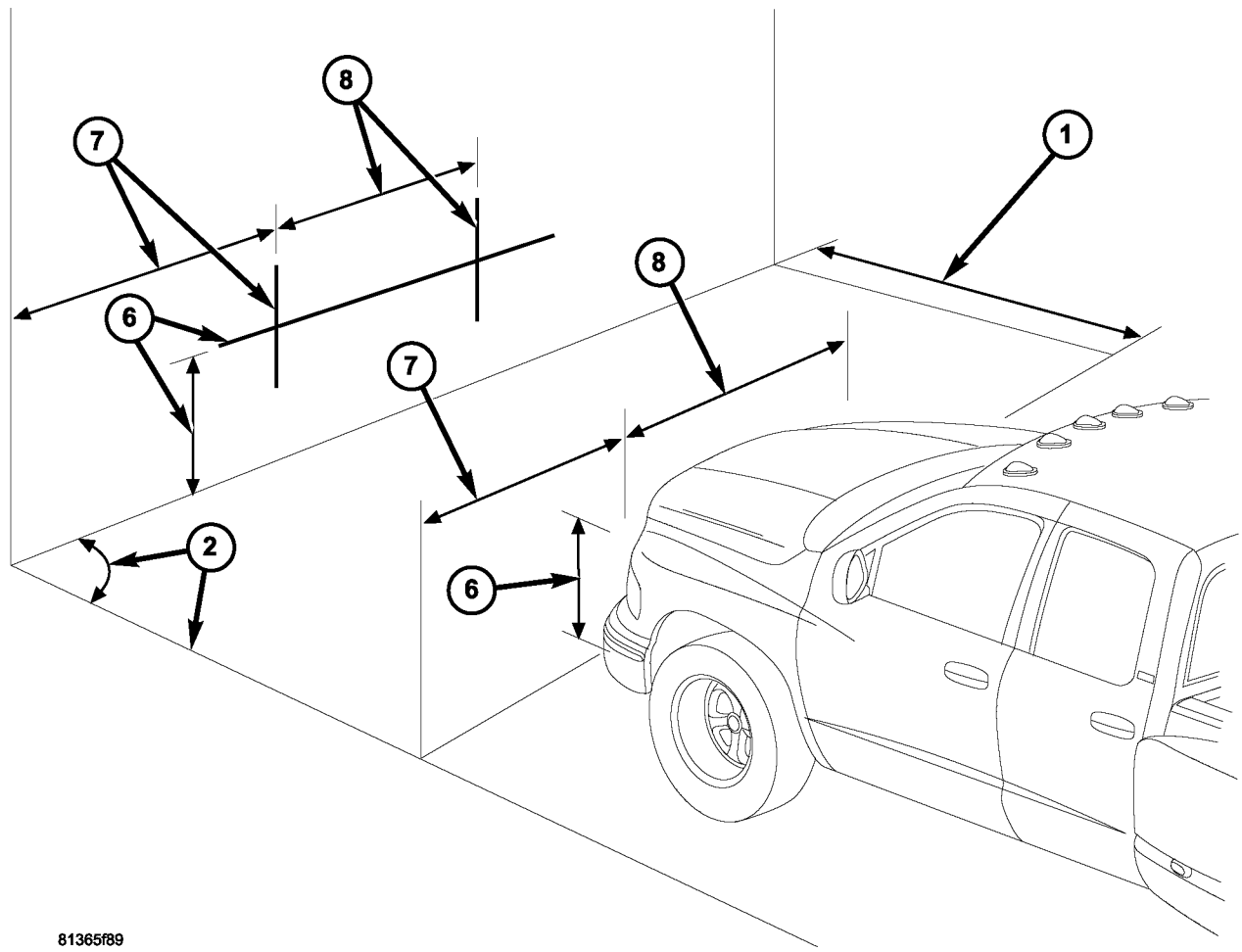

The procedure that follows will prepare a suitable front lamp alignment screen.

1. Tape a line on a level floor 7.62 meters (25 feet) away from and parallel to the flat wall that will be used as the lamp alignment screen. The level floor will be used as the horizontal zero reference.
2. An adjacent wall or floor member that is perpendicular to the alignment screen can be used as the vertical zero reference. If there is no adjacent wall or floor member that is perpendicular to the screen, tape a second line on the

floor perpendicular to both the alignment screen and the first line, and outboard of either side of where the vehicle will be positioned. This will be used as the vertical zero reference.

3. Position the vehicle so that the side of the vehicle is parallel to the vertical zero reference, and so that the front of the lamp lenses are in the vertical plane of the parallel line taped on the floor 7.62 meters (25 feet) away from the screen.
4. Rock the vehicle side-to-side three times to allow the suspension to stabilize.
5. Jounce the front suspension three times by pushing downward on the front bumper and releasing.
6. Measure the distance between the optical center of one of the lamps being aimed (head or fog) and the floor (horizontal zero reference). Transfer this measurement to the alignment screen with a piece of tape placed horizontally to the floor. This line will be used as the lamp horizontal reference.
7. Measure the distance between the vertical zero reference and the optical center of the nearest lamp being aimed (head or fog). Transfer this measurement to the alignment screen with a piece of tape placed vertically across the appropriate (head or fog) lamp horizontal reference. This is the centerline reference for the first lamp.
8. Measure the distance on center between the first and the second lamp being aimed. Transfer this measurement to the alignment screen with a second piece of tape placed vertically across the appropriate (head or fog) lamp horizontal reference. This is the centerline reference for the second lamp.

HEADLAMP ALIGNMENT

NOTE: Due to the linear nature of the headlamp cutoff, a properly aimed low beam headlamp will project the top edge of the high intensity pattern 2.5 centimeters (1 inch) below the headlamp horizontal reference line on the alignment screen. No horizontal (right/left) adjustment is required for this headlamp beam pattern. The high beam pattern will be correct when the low beams are properly aimed.

1. The vertical adjustment screw for each headlamp is accessible through a hole located in a raised rectangular formation (2), with a raised arrow pointing to it. These features are stamped into the sheet metal of each front fender (1) ledge near the front of the vehicle.

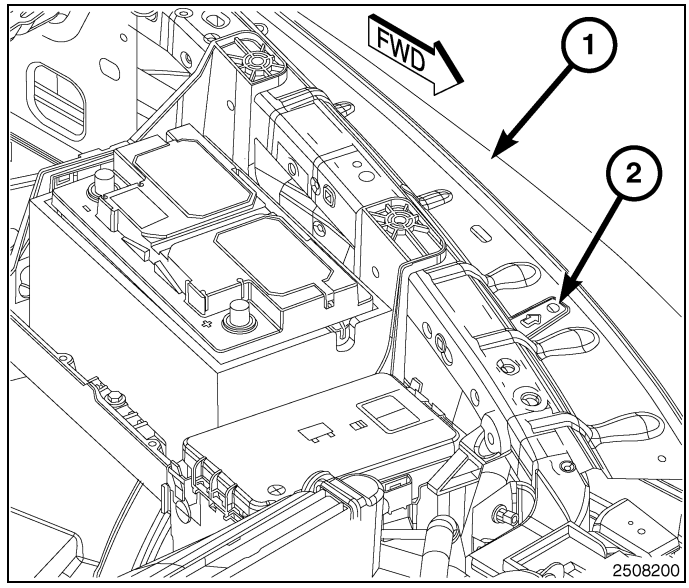

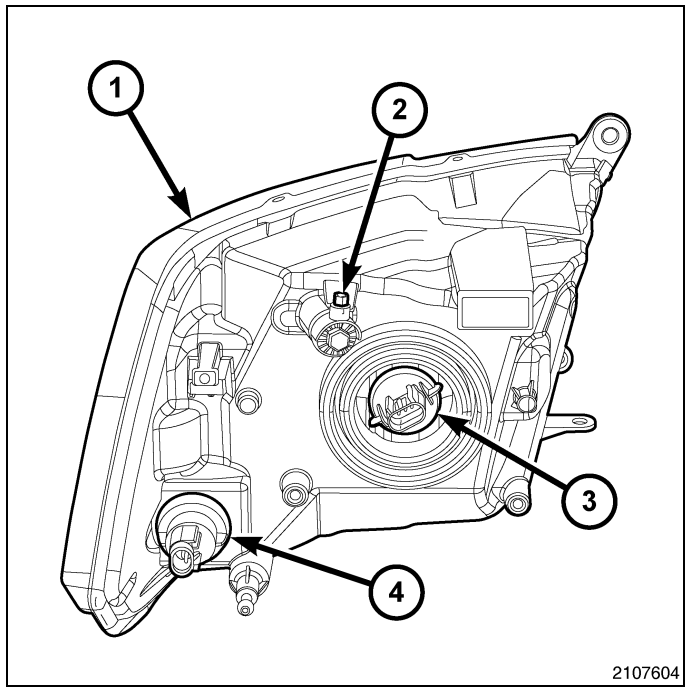

Dual Headlamps

2. Turn the headlamps ON and select the LOW beams.
3. Rotate the headlamp vertical adjustment screw (2) on the back of each front lamp unit (1) to adjust the beam height as required.

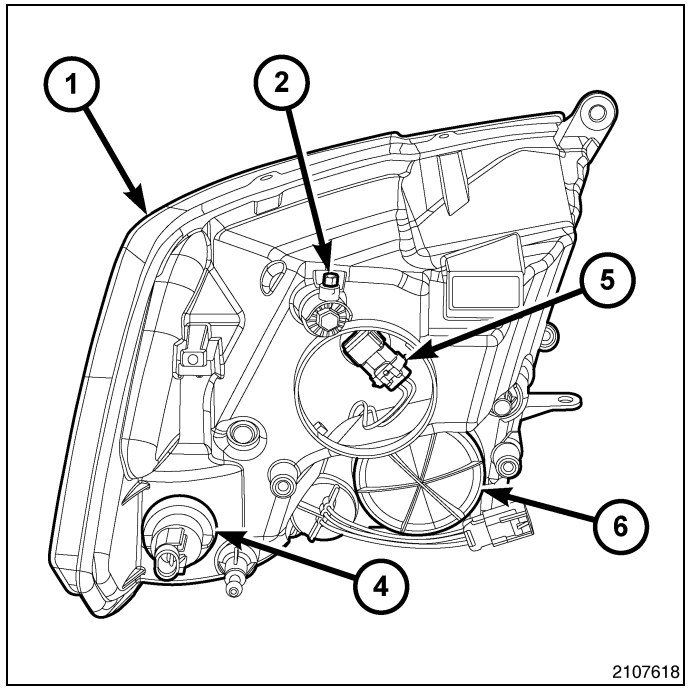

Quad Headlamps

FOG LAMP ALIGNMENT

NOTE: A properly aimed front fog lamp will project a pattern on the alignment screen 10 centimeters (4 inches) below the fog lamp centerline and straight ahead of the lamp.

1. Turn the fog lamps ON.
2. Rotate the thumbwheel screw (1) located behind the bumper on the back of each fog lamp unit to adjust the beam height as required.

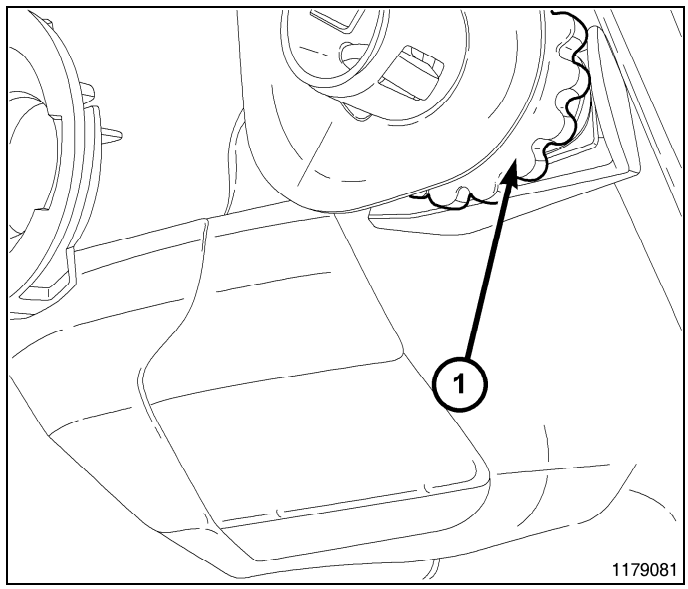

Specifications

BULB APPLICATION TABLE

LAMP	BULB
BACKUP	921 (W16W)
BRAKE	3157K
CARGO	921 (W16W)
CENTER HIGH MOUNTED STOP	921 (W16W)
FOG	9145 (H10)
FRONT PARK	3157K (DUAL HEADLAMP / 3157NA (QUAD HEADLAMP)
FRONT SIDE MARKER	3157K (DUAL HEADLAMP / 3157NA (QUAD HEADLAMP)
FRONT TURN SIGNAL	3157K (DUAL HEADLAMP / 3157NA (QUAD HEADLAMP)
HEADLAMP (DUAL HEADLAMP)	9008 (H13)
HEADLAMP (QUAD HEADLAMP)	H11 LOW BEAM / 9005 HIGH BEAM
LICENSE	194
REAR PARK	3157K
REAR SIDE MARKER	3157K
REAR TAIL	3157K
REAR TURN SIGNAL	3157K
UNDERHOOD	561

TORQUE SPECIFICATIONS

DESCRIPTION	N·m	Ft. Lbs.	In. Lbs.
CHMSL Mounting Screws	2.5	-	24

TORQUE SPECIFICATIONS, continued

DESCRIPTION	N·m	Ft. Lbs.	In. Lbs.
Fog Lamp Bracket Mounting Screws	8	-	71
Rear Lamp Unit Mounting Screws	2.5	-	21
Park Brake Switch Mounting Screw	2.5	-	24
Front Lamp Unit Mounting Screws	7	-	65

CAM, Turn Signal Cancel

Description

The turn signal cancel cam is concealed within the clockspring case on the steering column. The turn signal cancel cam consists of integral eccentrics on the outer circumference of the molded plastic clockspring rotor. The clockspring mechanism provides turn signal cancellation as well as a constant electrical connection between the horn switch, driver airbag, speed control switches, and remote radio switches on the steering wheel and the instrument panel wire harness on the steering column. The housing of the clockspring is secured to the steering column and remains stationary. The rotor of the clockspring, including the turn signal cancel cam lobes rotate with the steering wheel.

The turn signal cancel cam is serviced as a unit with the clockspring and cannot be repaired. If ineffective or damaged, the entire clockspring unit must be replaced. (Refer to 10 - Restraints/CLOCKSPRING - Removal).

Operation

When the multi-function switch control stalk is moved to a latched turn signal ON position, a turn signal cancel actuator is extended from the inside surface of the switch housing through a small rectangular opening on the left side of the clockspring case toward the turn signal cancel cam. As the steering wheel is rotated to complete the turn, one of the cam eccentrics will contact the actuator, automatically cancelling the turn signal event and releasing the latched multi-function switch control stalk to the neutral or OFF position.

CONNECTOR, Trailer Tow

Removal

1. Disconnect and isolate the battery negative cable.
2. Reach behind the center of the rear bumper (2) to access and disconnect the connector (1) of the body wire harness from the combined 4-way and 7-way trailer tow connector (3).

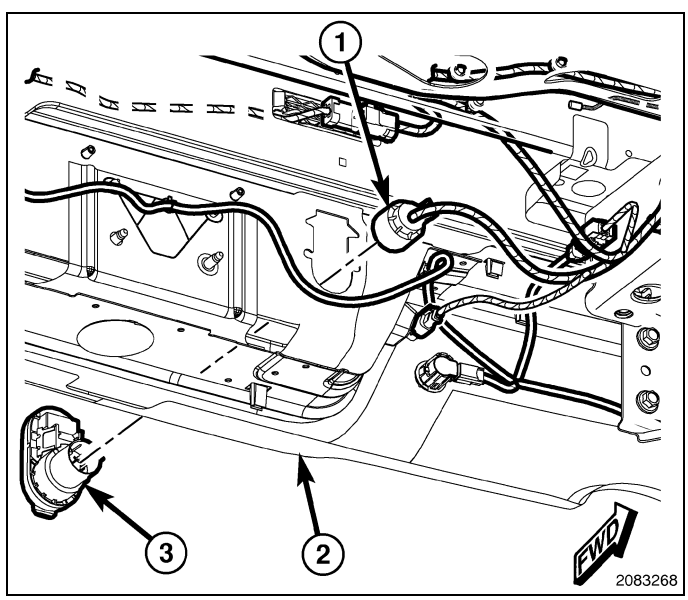

3. Reach behind the center of the rear bumper to compress each of the two spring clips (1) on the trailer tow connector housing (3) far enough to push the housing out through the face of the bumper.
4. Remove the trailer tow connector from the face of the rear bumper.

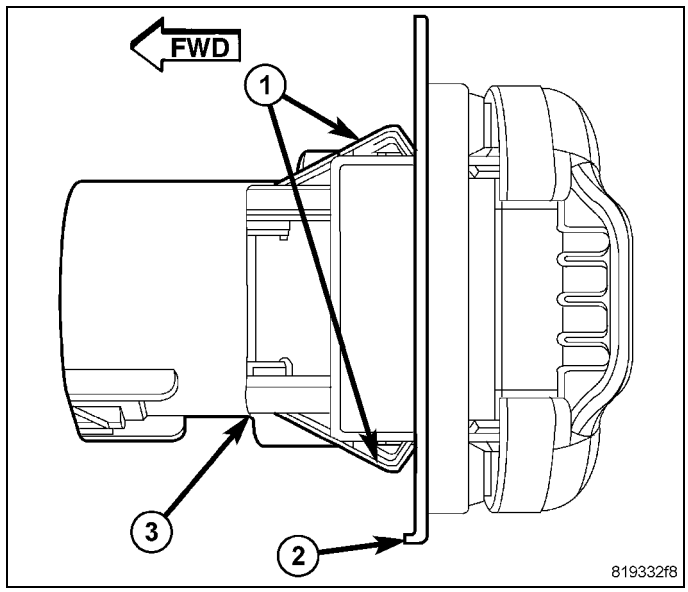

Installation

1. Insert the trailer tow connector (3) into the mounting hole of the rear bumper with the 7-pin connector oriented toward the bottom of the bumper.
2. Using hand pressure, press the connector firmly and evenly into the bumper until both spring clips (1) on the connector housing snap into place on the back side of the bumper (2).

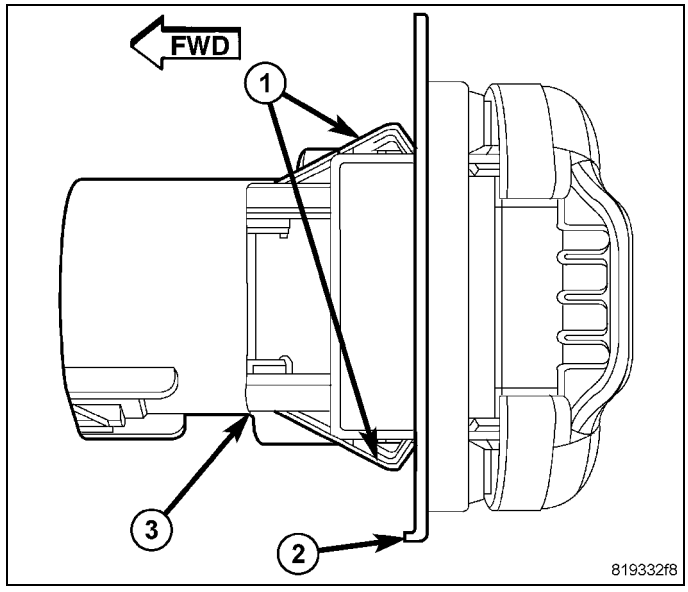

3. Reach behind the bumper (2) to access and reconnect the connector (1) of the body wire harness to the connector receptacle on the back of the trailer tow connector housing (3).
4. Reconnect the battery negative cable.

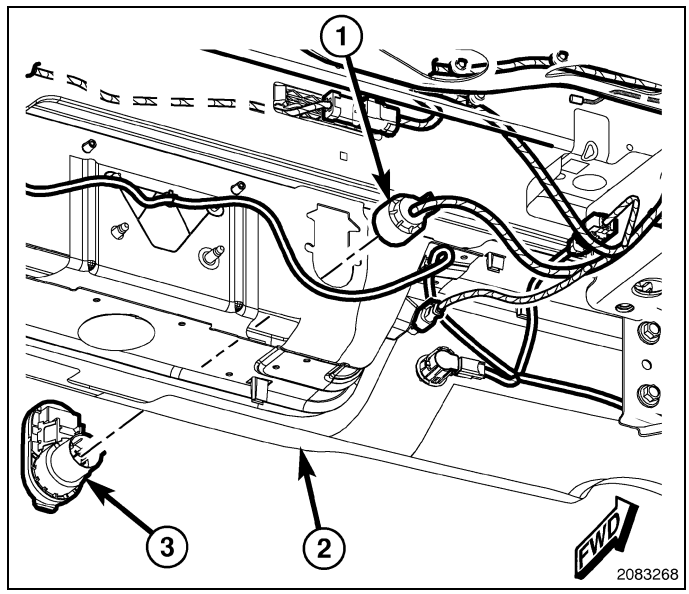

LAMP, Center High Mounted Stop

Removal

BULB

NOTE: The Center High Mounted Stop Lamp (CHMSL) may house up to three bulbs. The center bulb is the CHMSL bulb and illuminates through a red lens, while on vehicles so equipped the two outboard bulbs are for the cargo lamps and illuminate through clear lenses. The bulb types and service procedures are identical for all three of these bulbs.

1. Disconnect and isolate the battery negative cable.
2. Remove the two screws that secure the CHMSL to the rear cab roof header panel.
3. Pull the CHMSL lens and housing (1) away from the header panel far enough to access the lamp wiring and bulb sockets (3) on the back of the lamp.
4. Firmly grasp the center socket on the back of the lamp housing and rotate it counterclockwise about 30 degrees to unlock it.
5. Pull the socket and bulb straight out from the keyed opening in the housing.
6. Pull the base of the bulb (2) straight out of the socket.

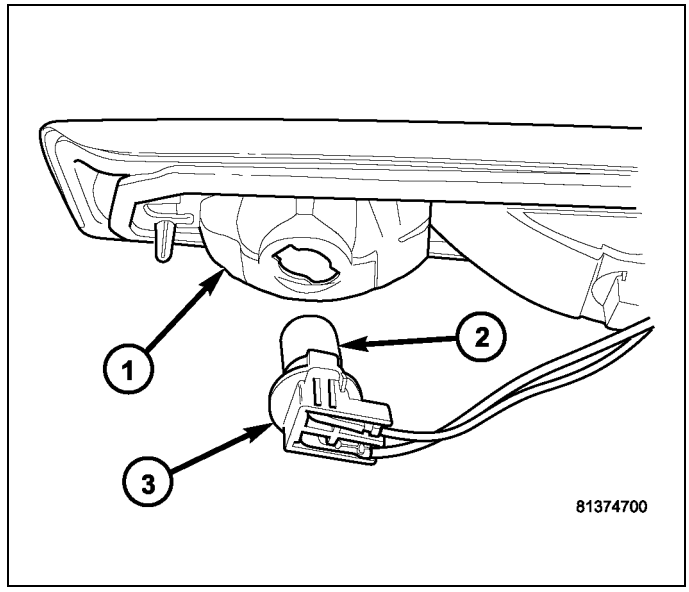

LAMP

NOTE: The Center High Mounted Stop Lamp (CHMSL) for this vehicle may incorporate two integral cargo lamps. The center bulb is the CHMSL bulb and illuminates through a red lens, while the two outboard bulbs are for the cargo lamps and illuminate through clear lenses.

1. Disconnect and isolate the battery negative cable.
2. Remove the two screws (1) that secure the Center High Mounted Stop Lamp (CHMSL) (3) to the rear roof header panel.
3. Pull the CHMSL away from the opening in the roof header far enough to access and disconnect the headliner wire harness connector (4) from the pigtail connector on the back of the lamp housing.
4. Remove the CHMSL from the roof header.

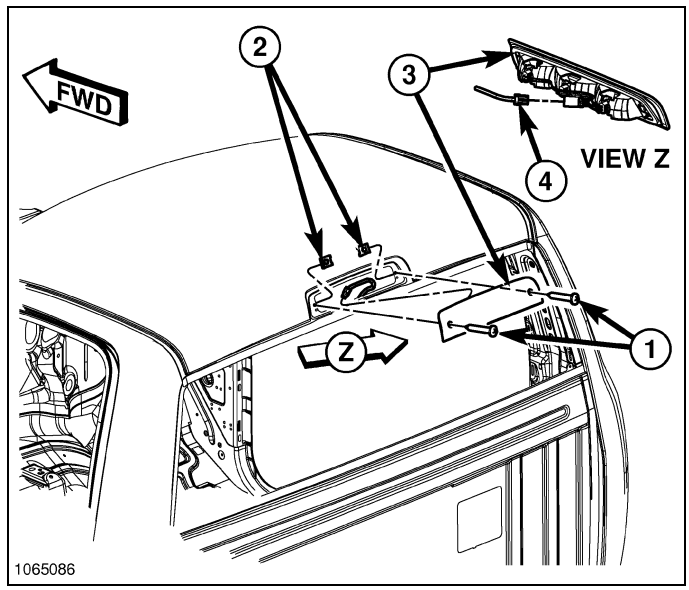

Installation

BULB

CAUTION: Always use the correct bulb size and type for replacement. An incorrect bulb size or type may overheat and cause damage to the lamp, the socket or the lamp wiring.

NOTE: The Center High Mounted Stop Lamp (CHMSL) may house up to three bulbs. The center bulb is the CHMSL bulb and illuminates through a red lens, while on vehicles so equipped the two outboard bulbs are for the cargo lamps and illuminate through clear lenses. The bulb types and service procedures are identical for all three of these bulbs.

1. Align the base of the CHMSL bulb (2) with the socket (3).
2. Push the bulb straight into the socket until the base is firmly seated.
3. Align the socket and bulb with the keyed opening on the back of CHMSL housing (1).
4. Insert the socket and bulb into the housing until the socket is firmly seated.
5. Rotate the socket clockwise about 30 degrees to lock it into place.
6. Position the CHMSL into the opening in the rear cab roof header panel.
7. Install and tighten the two screws that secure the CHMSL to the rear roof header inner panel. Install the screw on the right side of the lamp first, followed by the screw on the left side of the lamp. Tighten the screws to 2.5 N·m (24 in. lbs.).
8. Reconnect the battery negative cable.

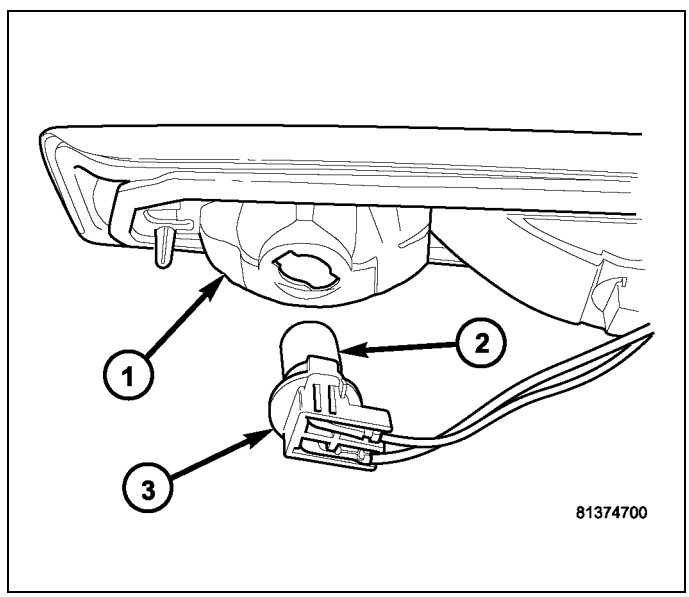

LAMP

NOTE: The Center High Mounted Stop Lamp (CHMSL) for this vehicle may incorporate two integral cargo lamps. The center bulb is the CHMSL bulb and illuminates through a red lens, while the two outboard bulbs are for the cargo lamps and illuminate through clear lenses.

1. Check to be certain that the two U-nuts (2) are in good condition and properly positioned on the rear roof header panel.
2. Position the Center High Mounted Stop Lamp (CHMSL) (3) near the rear roof header panel opening.
3. Reconnect the headliner wire harness connector (4) to the pigtail connector on the back of the CHMSL housing.
4. Install and tighten the two screws (1) that secure the CHMSL to the rear roof header inner panel. Install the screw on the right side of the lamp first, followed by the screw on the left side of the lamp. Tighten the screws to 2.5 N·m (24 in. lbs.).
5. Reconnect the battery negative cable.

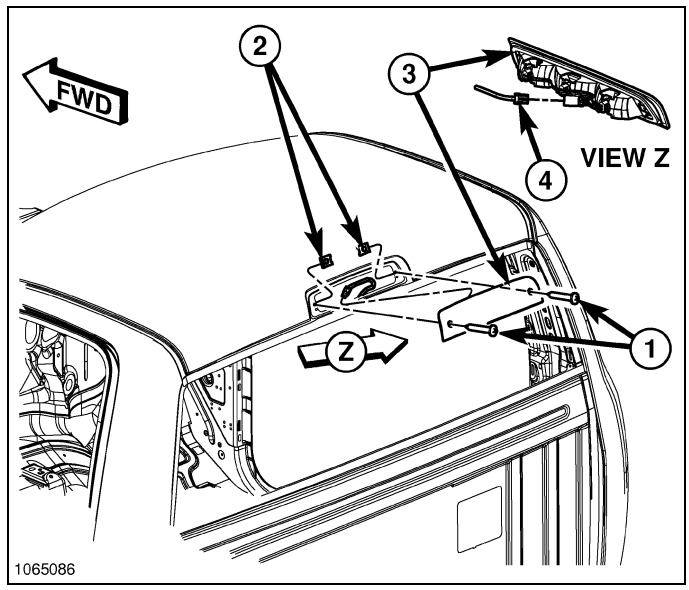

LAMP, Fog

Removal

BULB

CAUTION: Do not contaminate the bulb glass by touching it with your fingers or by allowing it to contact other oily surfaces. Shortened bulb life will result.

1. Disconnect and isolate the battery negative cable.
2. Reach under and behind the front bumper or fascia to access the back of the fog lamp housing (1) on the back of the bumper or fascia.
3. Disconnect the fog lamp jumper wire harness connector (3) from the fog lamp bulb (2) connector receptacle.
4. Firmly grasp the bulb on the back of the housing and rotate it counterclockwise about 30 degrees to unlock it.
5. Pull the bulb straight out from the keyed opening in the housing.

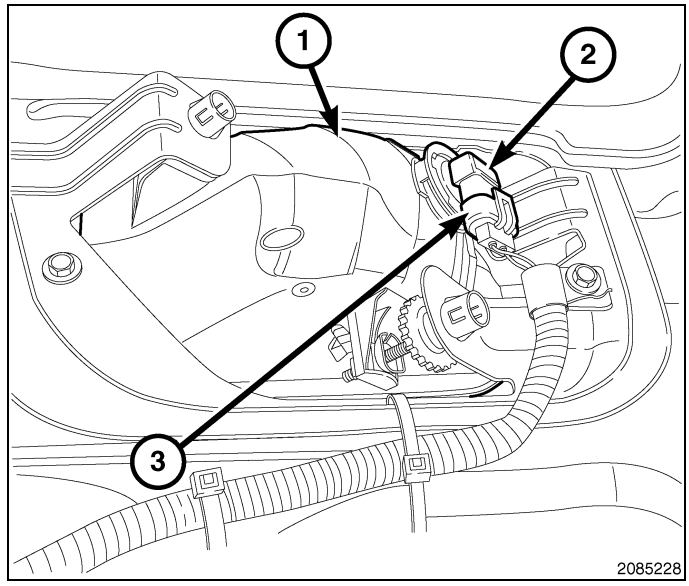

LAMP

EXCEPT SPORT

NOTE: The fog lamps are secured within one of two mounting brackets. One bracket is secured to the bumper or fascia with two mounting screws and the other by three mounting screws. Other than the number of mounting screws, the two lamps are identical.

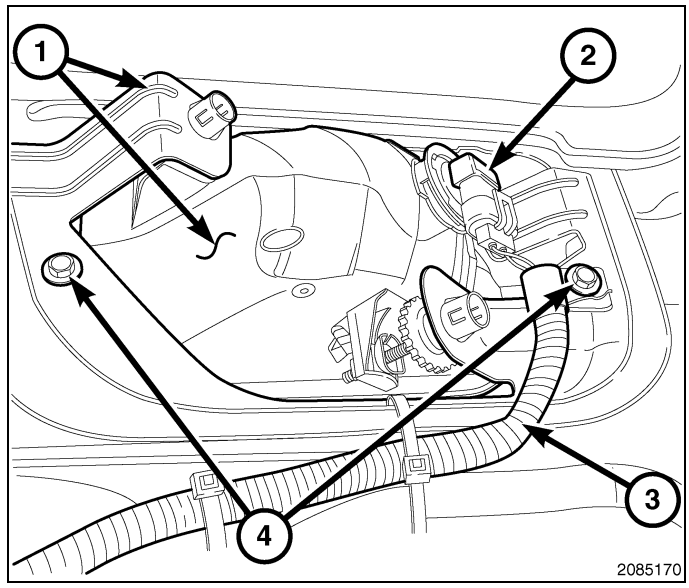

Two Mounting Screws

NOTE: The front fog lamp, the fog lamp mounting bracket and the fog lamp adjuster are serviced only as a complete unit. Only the fog lamp bulb is available for separate service replacement.

1. Disconnect and isolate the battery negative cable.
2. Raise and support the vehicle.
3. Reach under and behind the front bumper to access and disconnect the fog lamp jumper wire harness (3) connector from the fog lamp bulb (2) connector receptacle.
4. Remove the two or three screws (4) that secure the fog lamp and mounting bracket (1) to the back of the front bumper.
5. Remove the fog lamp and mounting bracket from the back of the front bumper as a unit.

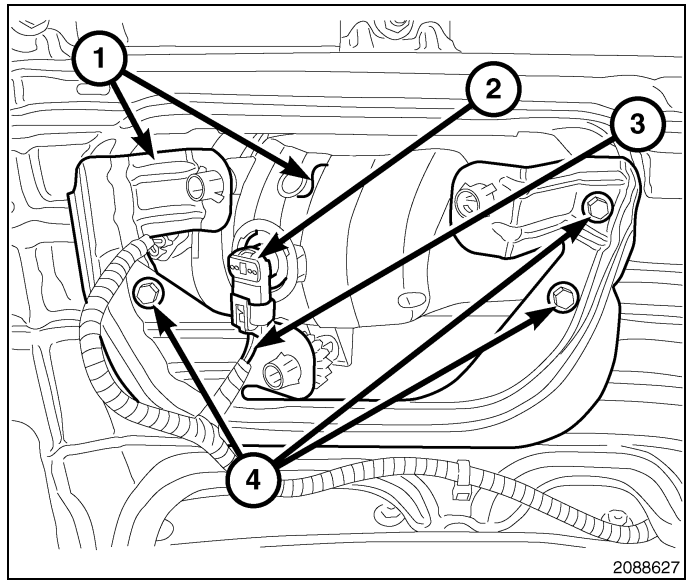

Three Mounting Screws

SPORT

NOTE: The front fog lamp, the fog lamp mounting bracket and the fog lamp adjuster are serviced only as a complete unit. Only the fog lamp bulb is available for separate service replacement. On Sport models the fog lamp mounting bracket is not used. The mounting bracket of the service replacement fog lamp is removed from the fog lamp and discarded, then the fog lamp is mounted directly to the front energy absorber.

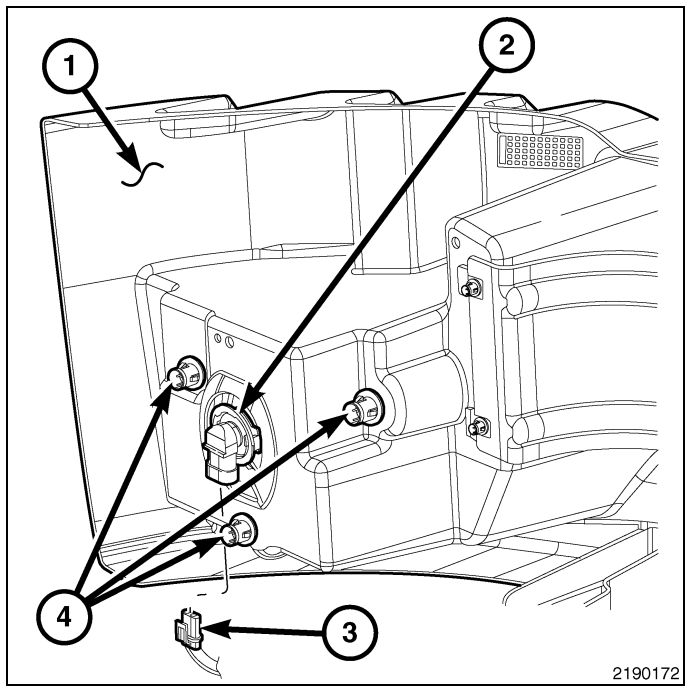

1. Disconnect and isolate the battery negative cable.
2. Raise and support the vehicle.
3. Remove the front fascia from the face of the front energy absorber (1). (Refer to 13 - Frame and Bumpers/ Bumpers/FASCIA, Front - Removal).
4. Reach under and behind the front energy absorber to access and disconnect the fog lamp jumper wire harness connector (3) from the fog lamp (2) bulb connector receptacle.
5. Slide a 15 millimeter socket over each of the retainer grommets (4) one at a time to compress the legs of the grommets far enough to push them out through the face of the front energy absorber.
6. Remove the fog lamp and retainers as a unit from the fog lamp receptacle on the face of the front energy absorber.

Installation

BULB

CAUTION: Always use the correct bulb size and type for replacement. An incorrect bulb size or type may overheat and cause damage to the lamp, the socket or the lamp wiring.

CAUTION: Do not contaminate the bulb glass by touching it with your fingers or by allowing it to contact other oily surfaces. Shortened bulb life will result.

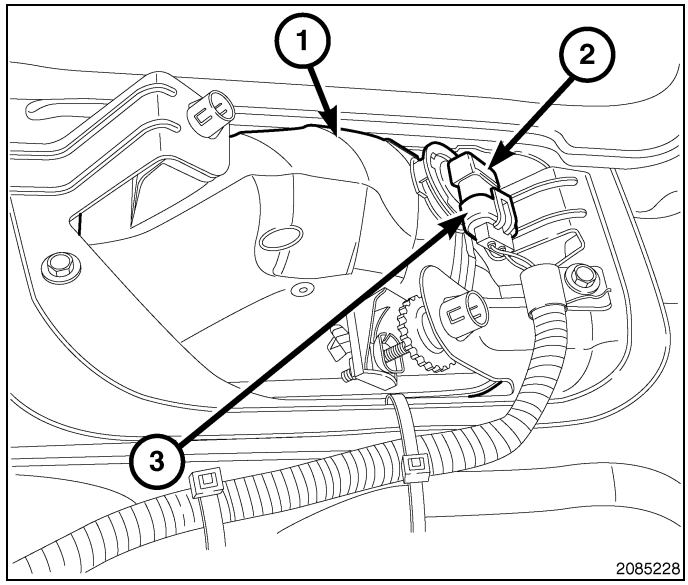

1. Align the fog lamp bulb (2) with the keyed opening on the back of the fog lamp housing (1).
2. Insert the bulb into the housing until it is firmly seated.
3. Rotate the bulb clockwise about 30 degrees to lock it into place. The bulb connector receptacle should be pointed straight downward.
4. Reconnect the fog lamp jumper wire harness connector (3) to the fog lamp bulb connector receptacle.
5. Reconnect the battery negative cable.

LAMP

EXCEPT SPORT

NOTE: The fog lamps are secured within one of two mounting brackets. One bracket is secured to the bumper or fascia with two mounting screws and the other by three mounting screws. Other than the number of mounting screws, the two lamps are identical.

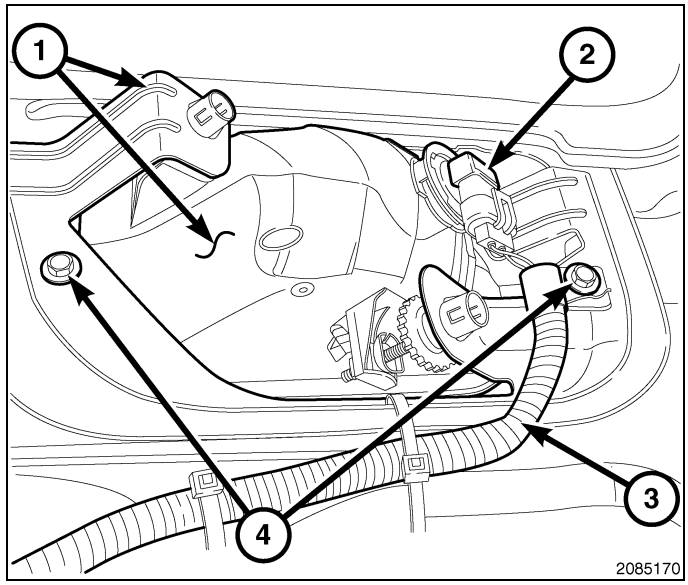

Two Mounting Screws

NOTE: The front fog lamp, the fog lamp mounting bracket and the fog lamp adjuster are serviced only as a complete unit. Only the fog lamp bulb is available for separate service replacement.

1. Position the fog lamp and mounting bracket (1) to the back of the front bumper as a unit.
2. Install and tighten the two or three screws (4) that secure the fog lamp and mounting bracket to the back of the front bumper. Tighten the screws to 8 N·m (71 in. lbs.).
3. Reconnect the fog lamp jumper wire harness (3) connector to the fog lamp bulb (2) connector receptacle.
4. Lower the vehicle.
5. Reconnect the battery negative cable.
6. Confirm proper fog lamp alignment. (Refer to 08 - Electrical/8L - Lamps and Lighting/Lamps/Lighting - Exterior - Standard Procedure).

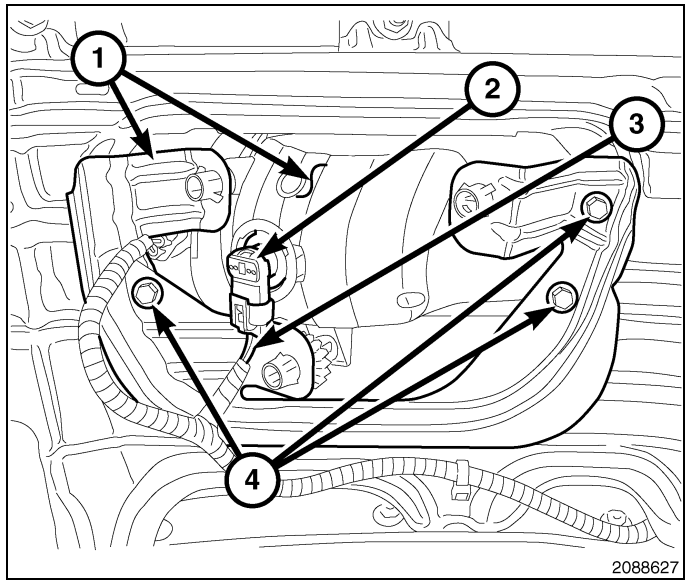

Three Mounting Screws

SPORT

NOTE: The front fog lamp, the fog lamp mounting bracket and the fog lamp adjuster are serviced only as a complete unit. Only the fog lamp bulb is available for separate service replacement. On Sport models the fog lamp mounting bracket is not used. The mounting bracket of the service replacement fog lamp is removed from the fog lamp and discarded, then the fog lamp is mounted directly to the front energy absorber.

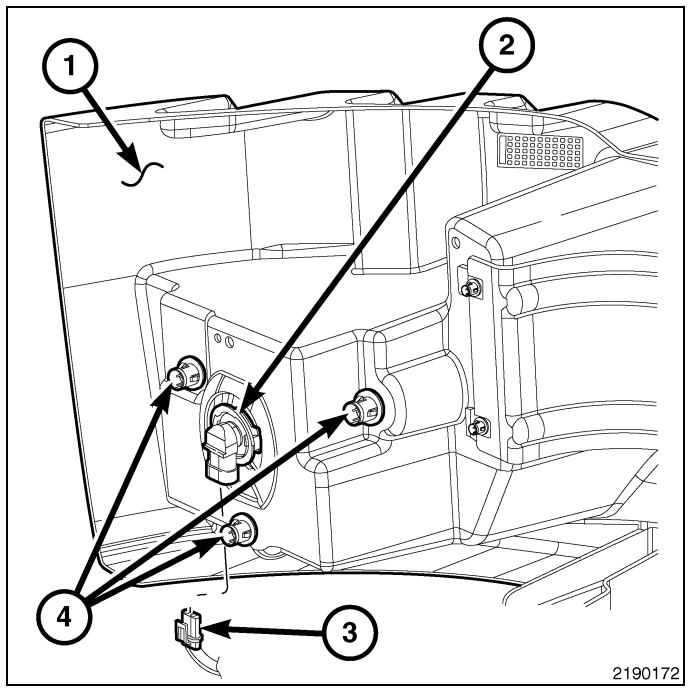

1. Position the fog lamp (2) and retainer grommets (4) as a unit to the fog lamp seat on the face of the front energy absorber (1).
2. Align the three fog lamp retainer grommets with the mounting holes in the fog lamp seat of the front energy absorber.
3. Using hand pressure, press firmly and evenly on the fog lamp lens until the legs of all three grommet retainers snap into place on the back side of the front energy absorber.
4. Reconnect the fog lamp jumper wire harness connector (3) to the fog lamp bulb connector receptacle.
5. Lower the vehicle.
6. Reinstall the front fascia over the face of the front energy absorber. (Refer to 13 - Frame and Bumpers/Bumpers/FASCIA, Front - Installation).
7. Reconnect the battery negative cable.
8. Confirm proper fog lamp alignment. (Refer to 08 - Electrical/8L - Lamps and Lighting/Lamps/Lighting - Exterior - Standard Procedure).

LAMP, License Plate

Removal

BULB

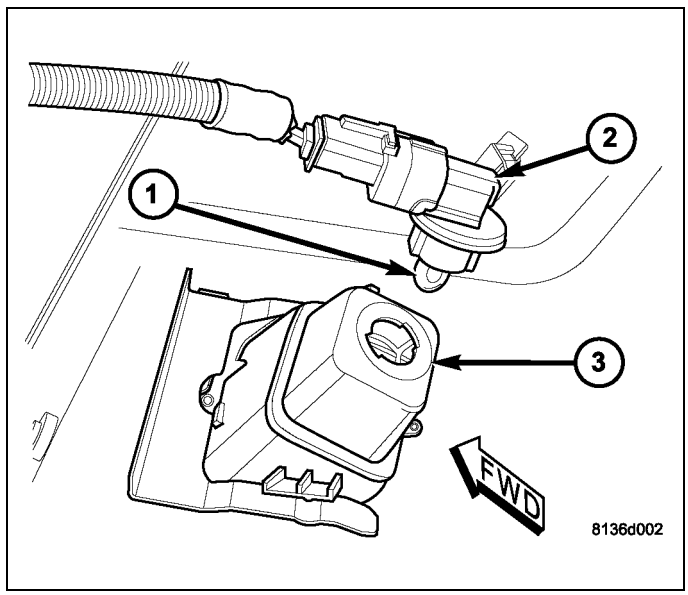

1. Disconnect and isolate the battery negative cable.
2. Reach under the rear bumper near the center to access the back of either of the two license plate lamp housings (3).
3. Firmly grasp the socket (2) on the back of the housing and rotate it counterclockwise about 30 degrees to unlock it.
4. Pull the socket and bulb (1) straight out from the keyed opening in the housing.
5. Pull the base of the bulb straight out of the socket.

LAMP

1. Disconnect and isolate the battery negative cable.
2. Reach under and behind the rear bumper or fascia (1) near the center to access the back of either of the two license plate lamp housings (4).
3. Disconnect the wire harness connector (2) from the license plate bulb socket (3).

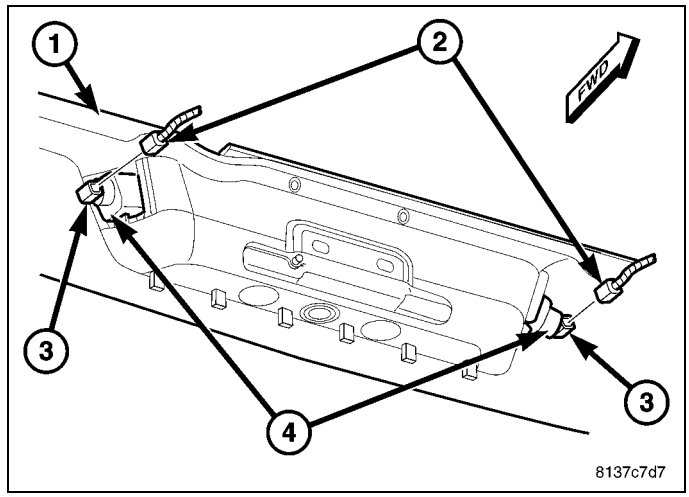

4. Remove the stamped metal retaining clip (2) that secures the license plate lamp housing (3) from the back of the rear bumper or fascia (1).
5. Push the license plate lamp unit out through the mounting hole to the outer face of the rear bumper or fascia.

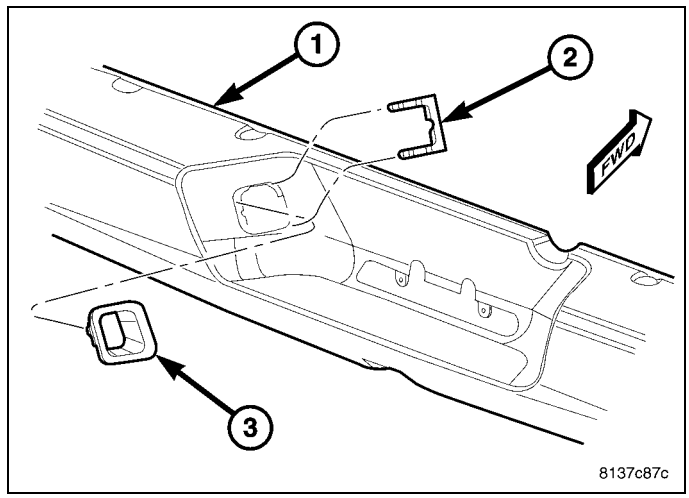

Installation

BULB

CAUTION: Always use the correct bulb size and type for replacement. An incorrect bulb size or type may overheat and cause damage to the lamp, the socket or the lamp wiring.

1. Align the base of the bulb (1) with the license plate lamp socket (2).
2. Push the bulb straight into the socket until the base is firmly seated.
3. Align the socket and bulb with the keyed opening on the back of the license plate lamp housing (3).
4. Insert the socket and bulb into the housing until the socket is firmly seated.
5. Rotate the socket clockwise about 30 degrees to lock it into place.
6. Reconnect the battery negative cable.

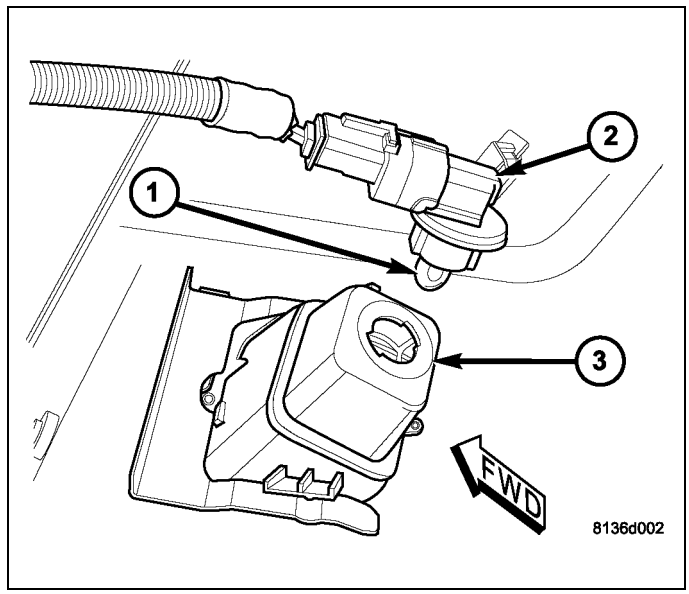

LAMP

1. Position the license plate lamp unit (3) through the mounting hole from the outer face of the rear bumper or fascia (1).
2. Reach under and behind the rear bumper or fascia (1) near the center to install the stamped metal retaining clip (2) that secures the license plate lamp housing to the back of the rear bumper or fascia.

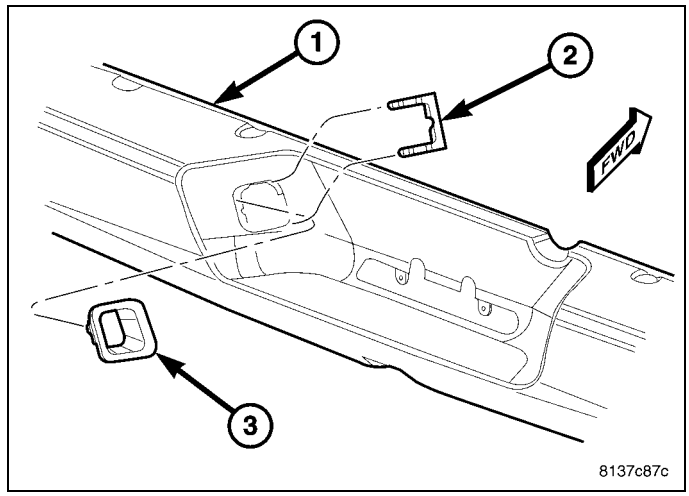

3. Reconnect the wire harness connector (2) to the license plate bulb socket (3).
4. Reconnect the battery negative cable.

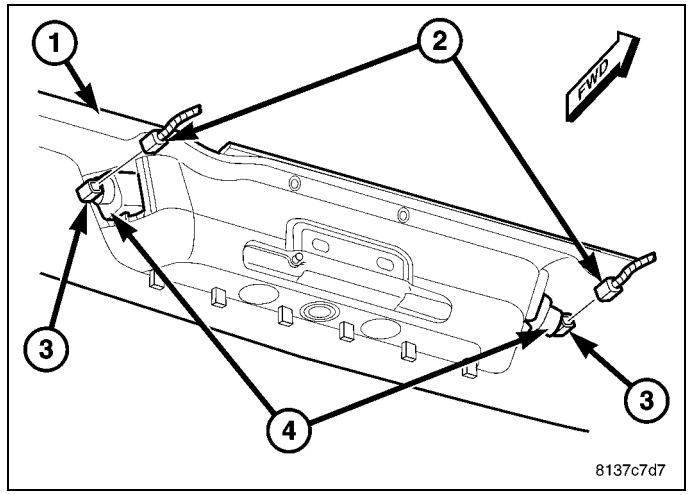

LAMP, Mirror

Removal

NOTE: The Light Emitting Diode (LED) units and printed circuit board for these lamps are serviced only as a unit with the lamp and lens assembly. If any part of these lamps is damaged or ineffective, the entire lamp assembly must be replaced.

1. Disconnect and isolate the battery negative cable.
2. Remove the mirror glass and case from the mirror housing (1). (Refer to 23 - Body/Exterior/MIRROR, Outside Rearview - Removal).
3. Remove the three screws (2) that secure the front cover of the mirror to the mirror housing.
4. Locate the latch tab (4) on the lamp housing (3) within the lower, outboard side of the mirror housing.

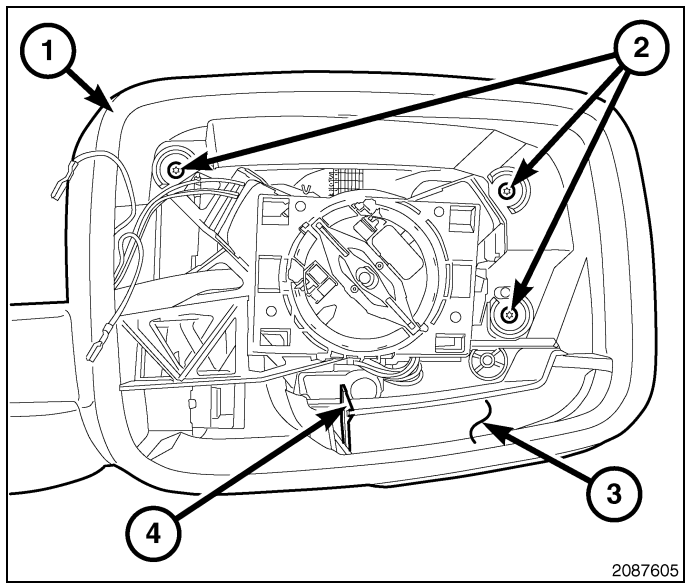

5. Using a trim stick or another suitable wide flat-bladed tool, pry gently and evenly at the parting line on the outboard side of the mirror between the mirror housing (1) and the front cover to separate them far enough to disengage the lamp rear flange (5) from the lower rim of the mirror housing.
6. It may be necessary on some vehicles to gently pry between the forward flange of the lamp housing and the mirror front cover to release the strip of adhesive-backed foam weather seal (4) affixed to the forward flange of the lamp from the inside edge of the mirror front cover.
7. Reach inside the lamp housing and depress the latch on the lamp housing toward the vehicle to disengage and lower the lamp assembly from between the mirror housing and the front cover.
8. Pull the lamp assembly away from the mirror housing far enough to access and disconnect the mirror wire harness connector (3) from the lamp connector receptacle and remove the lamp.

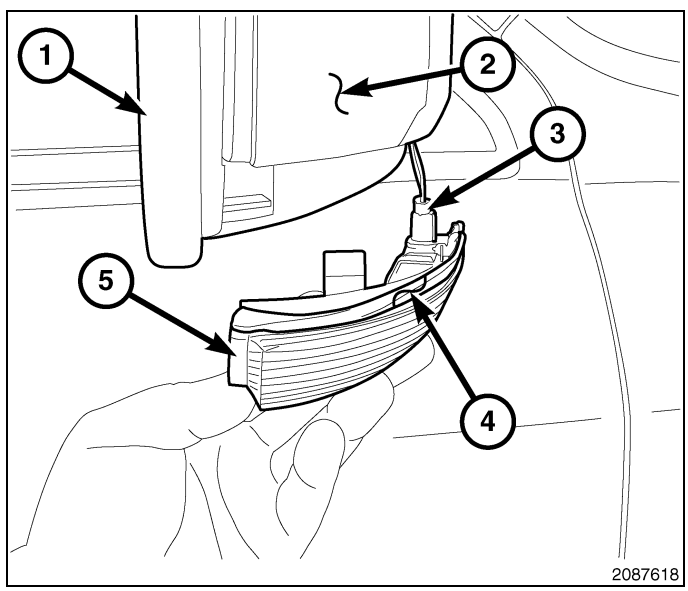

Installation

NOTE: The Light Emitting Diode (LED) units and printed circuit board for these lamps are serviced only as a unit with the lamp and lens assembly. If any part of these lamps is damaged or ineffective, the entire lamp assembly must be replaced.

1. Position the lamp assembly close enough to the bottom of the mirror housing (1) to access and reconnect the mirror wire harness connector (3) to the lamp connector receptacle.
2. Position the lamp assembly to the bottom of the mirror housing with the forward flange (4) engaged behind the mirror front cover (2) and the rear flange (5) engaged in the lower rim of the mirror housing.

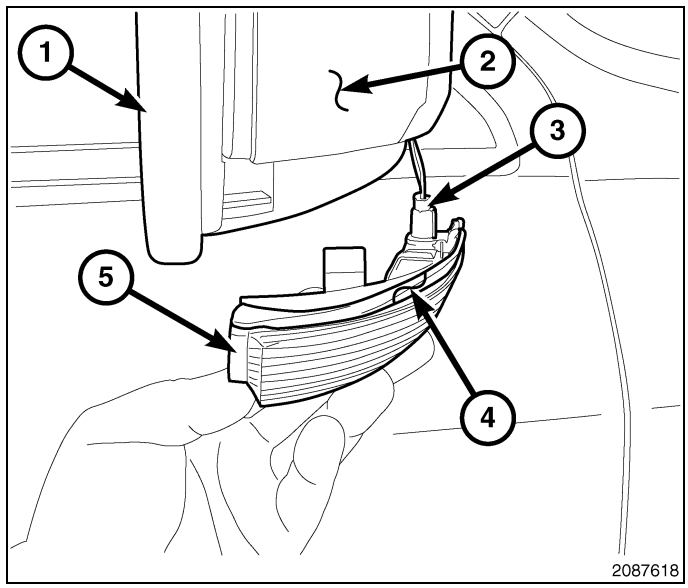

3. Using hand pressure, push the lamp assembly upward into the mirror housing (1) far enough to engage the latch tab (4) on the lamp housing (3) with the slot in the lower, outboard side of the mirror housing.
4. Position the front cover to the mirror housing.
5. Install and tighten the three screws (2) that secure the front cover to the mirror housing. Tighten the screws securely.
6. Reinstall the mirror glass and case into the mirror housing. (Refer to 23 - Body/Exterior/MIRROR, Outside Rearview - Installation).

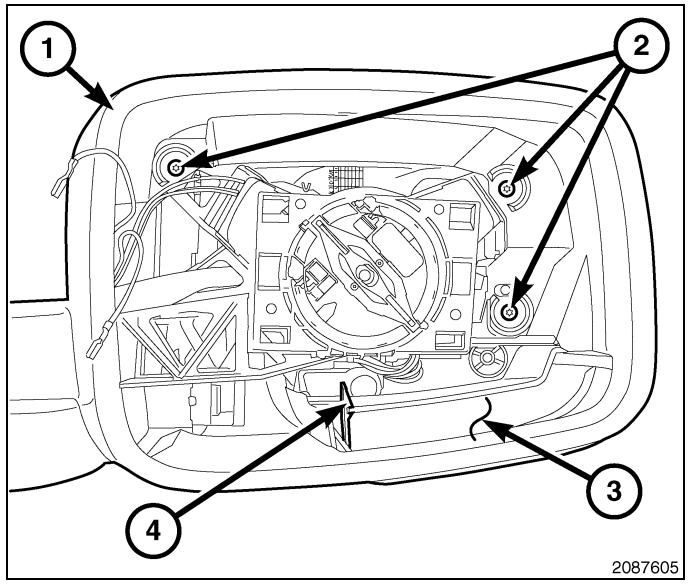

LAMP, Tail Stop Turn

Removal

BULB

NOTE: The rear lamp unit contains two bulbs: park/stop/turn signal/side marker and backup. The service procedures for each bulb are the same, only the bulb sizes and types may differ.

1. Disconnect and isolate the battery negative cable.
2. Remove the rear lamp unit (1) from the end of the box side panel. (Refer to 08 - Electrical/8L - Lamps and Lighting/Lamps/Lighting - Exterior/LAMP, Tail Stop Turn - Removal).
3. Disconnect the chassis wire harness connector (3) from the park/stop/turn signal/side marker bulb socket (2) on the back, or the backup (4) bulb socket on the bottom of the lamp housing.
4. Firmly grasp the socket on the lamp housing and rotate it counterclockwise about 30 degrees to unlock it.
5. Pull the socket and bulb straight out from the keyed opening in the housing.
6. Pull the base of the bulb straight out of the socket.

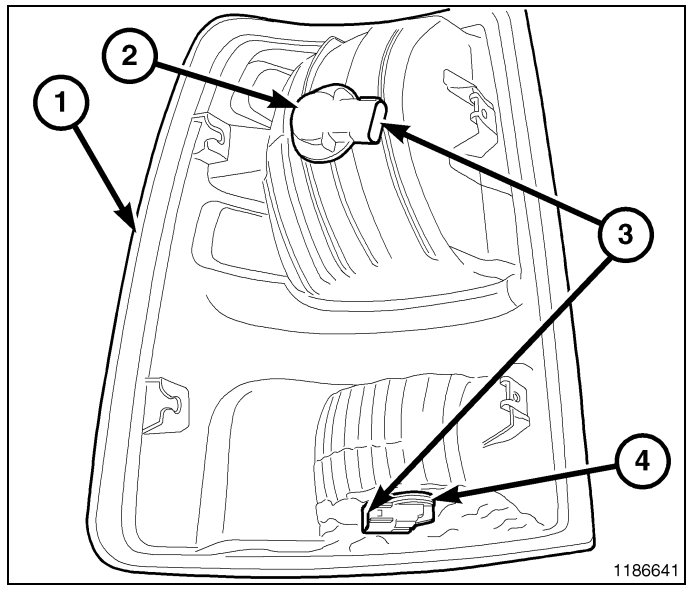

LAMP

1. Disconnect and isolate the battery negative cable.
2. Lower the tailgate to access and remove the two screws (1) that secure the rear lamp unit (5) to the side jamb of the tailgate opening.
3. Pull the outboard side of the rear lamp unit rearward far enough to unsnap the two receptacles on the outboard side of the lamp housing from the two plastic snap post retainers (3) in the outer box side panel.
4. Pull the lamp away from the vehicle far enough to access and disconnect the two wire harness connectors (2 and 4) from the two bulb sockets on the back and bottom of the lamp housing.
5. Remove the lamp from the lamp opening of the outer box side panel.

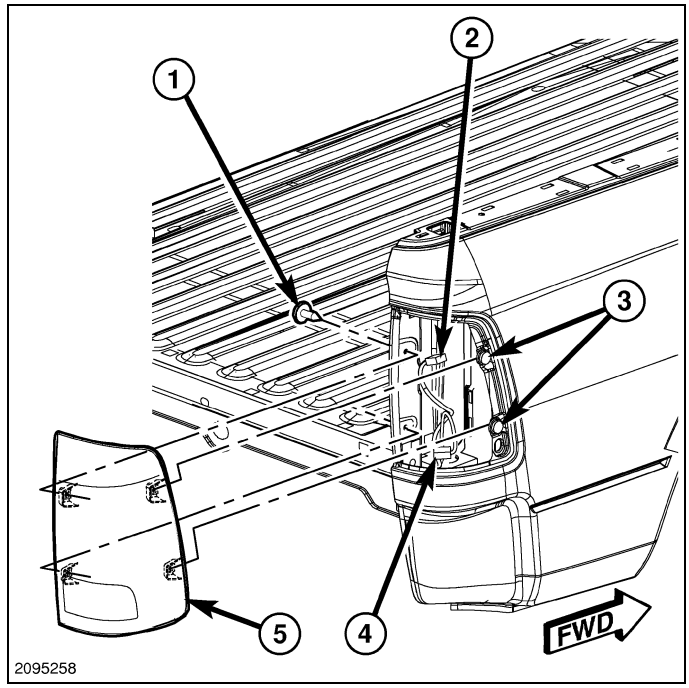

Installation

BULB

CAUTION: Always use the correct bulb size and type for replacement. An incorrect bulb size or type may overheat and cause damage to the lamp, the socket or the lamp wiring.

NOTE: The rear lamp unit contains two bulbs: park/stop/turn signal/side marker and backup. The service procedures for each bulb are the same, only the bulb sizes and types may differ.

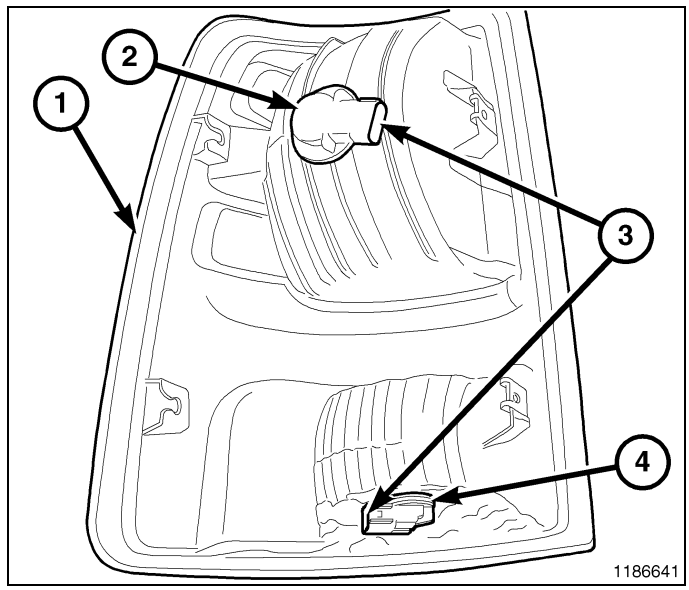

1. Align the base of the bulb with the park/stop/turn signal/side marker (2) or the backup (4) bulb socket.
2. Push the bulb straight into the socket until the base is firmly seated.
3. Align the socket and bulb with the keyed opening on the back or bottom of the rear lamp unit housing (1).
4. Insert the socket and bulb into the housing until the socket is firmly seated.
5. Rotate the socket clockwise about 30 degrees to lock it into place.
6. Reconnect the chassis wire harness connector (3) to the bulb socket.
7. Reinstall the rear lamp unit onto the end of the box side panel. (Refer to 08 - Electrical/8L - Lamps and Lighting/Lamps/Lighting - Exterior/LAMP, Tail Stop Turn - Installation).
8. Reconnect the battery negative cable.

LAMP

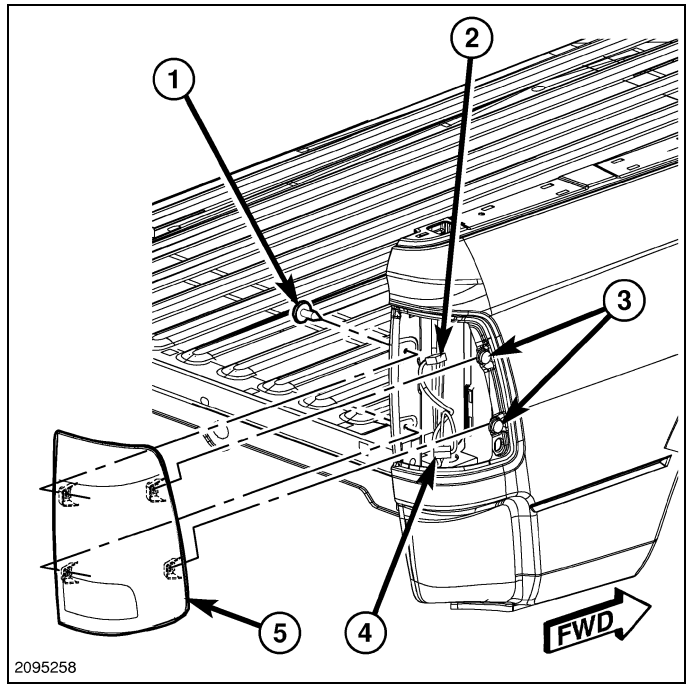

1. Check to be certain that the two plastic snap post retainers (3) are in good condition and properly installed in the outer box side panel. If a retainer is removed, it must be replaced with a new retainer.
2. Check to be certain that the two U-nuts are in good condition and properly installed on the inboard side of the rear lamp unit housing.
3. Position the rear lamp unit (5) to the lamp opening of the outer box side panel.
4. Reconnect the two wire harness connectors (2 and 4) to the two bulb sockets on the back and bottom of the lamp housing.
5. Align the two receptacles on the outboard side of the rear lamp housing with the two plastic snap post retainers in the outer box side panel.
6. Using hand pressure, push firmly and evenly on the outboard side of the lamp until both receptacles are fully engaged over the snap post retainers.
7. Starting with the upper screw first, install and tighten the two screws (1) that secure the rear lamp unit to the side jamb of the tailgate opening. Tighten the screws to 2.5 N·m (21 in. lbs.).
8. Reconnect the battery negative cable.

LAMP, Underhood

Removal

BULB

1. Disconnect and isolate the battery negative cable.
2. Insert a small flat bladed tool in the access slot between the underhood lamp housing (1) and the lamp lens (2).
3. Gently pry the lens until it unsnaps from the lamp housing.

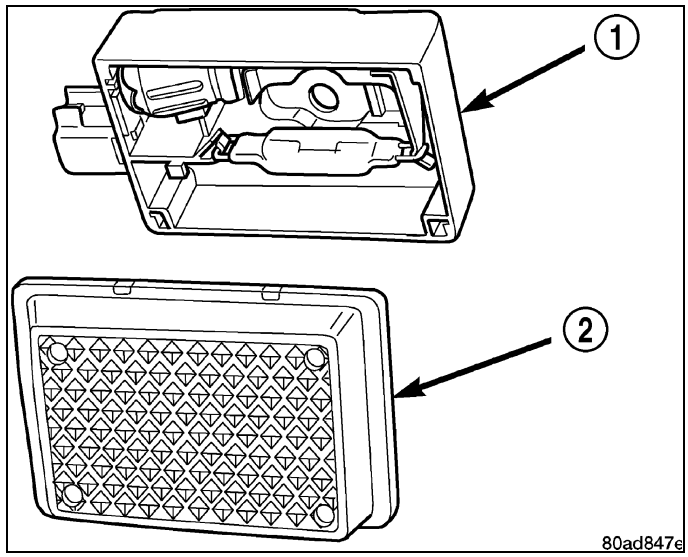

4. Depress the bulb holder (2) inward far enough to disengage the terminal loops (3) of the bulb (1) and remove the bulb from the lamp housing (4).

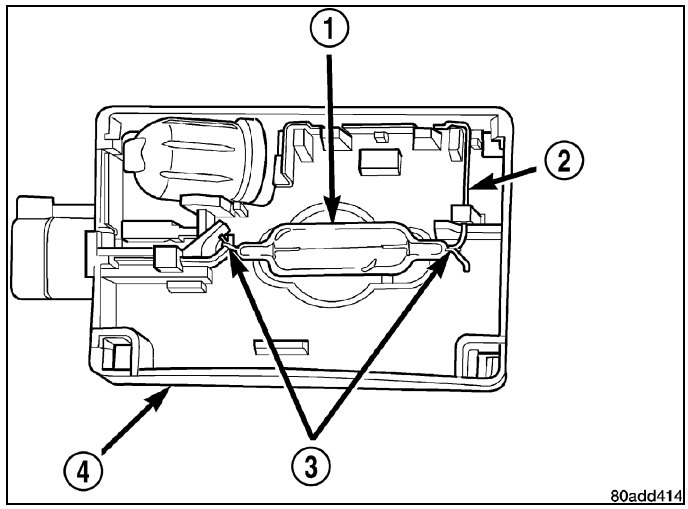

LAMP

1. Disconnect and isolate the battery negative cable.
2. From the underside of the hood, remove the push-in retainers that secure the hood silencer pad to the inner hood (1) reinforcement as necessary to access the underhood lamp connection to the underhood lamp jumper wire harness (2).
3. Disconnect the underhood jumper wire harness connector from the underhood lamp (3) connector receptacle.
4. Remove the bulb from the underhood lamp. (Refer to 08 - Electrical/8L - Lamps and Lighting/Lamps/Lighting - Exterior/LAMP, Underhood - Removal).
5. Remove the blind rivet (4) that secures the underhood lamp mounting bracket to the inner hood reinforcement (1).
6. Remove the underhood lamp and bracket from the inner hood reinforcement as a unit.

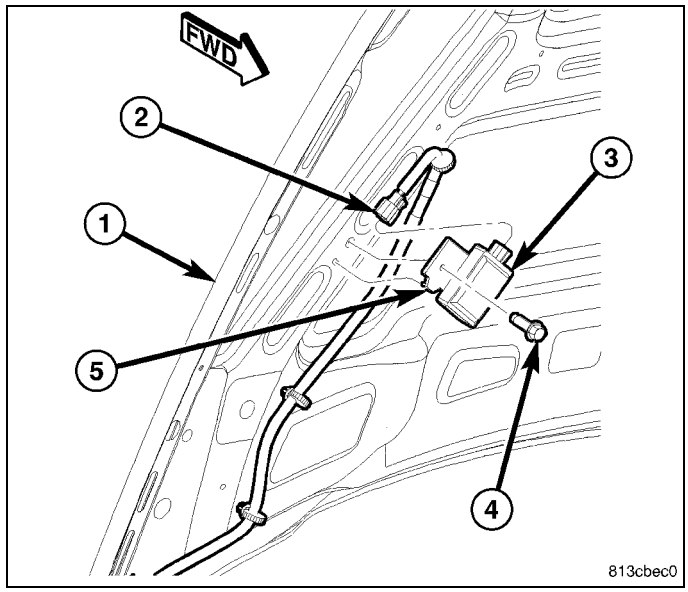

Installation

BULB

CAUTION: Always use the correct bulb size and type for replacement. An incorrect bulb size or type may overheat and cause damage to the lamp, the socket or the lamp wiring.

1. Engage one of the terminal loops (3) of the bulb (1) over the bulb holder closest to the connector receptacle of the underhood lamp housing (4).
2. Depress the other bulb holder (2) inward far enough to engage the remaining bulb terminal loop.

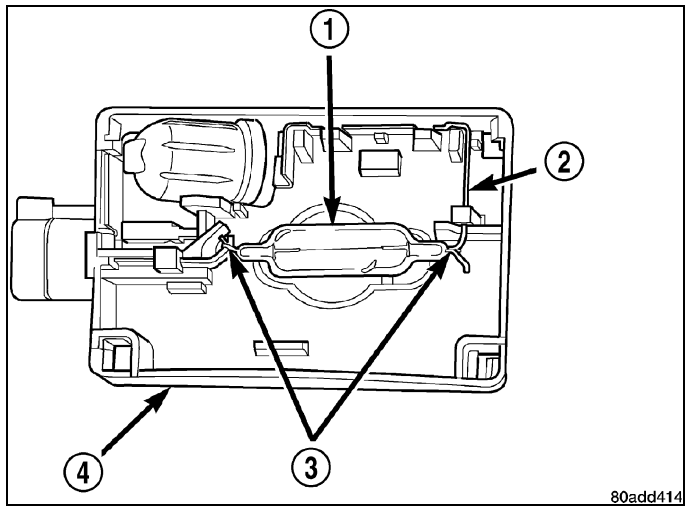

3. Position the lens (2) over the lamp housing and use hand pressure to press the lens firmly and evenly onto the housing until it snaps into place.
4. Reconnect the battery negative cable.

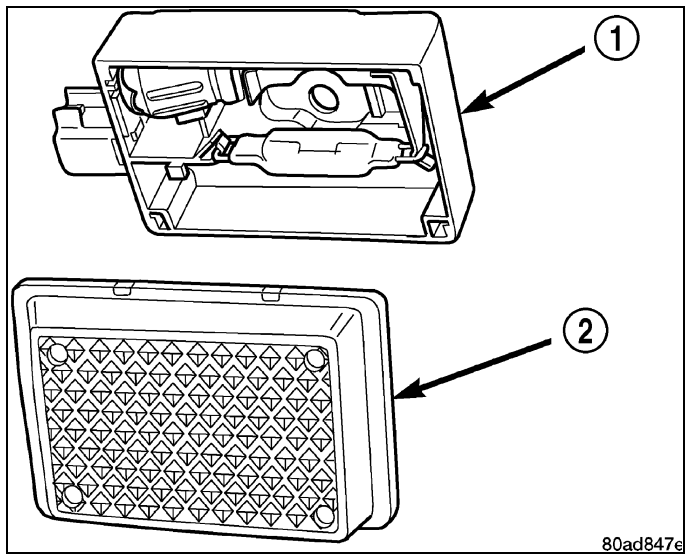

LAMP

1. Position the underhood lamp and bracket (3) to the inner hood (1) reinforcement as a unit. Be certain that the locating tab (5) on the bracket is engaged into the locating hole in the inner hood reinforcement.
2. Install a new blind rivet to secure the underhood lamp mounting bracket to the inner hood reinforcement.
3. Reinstall the bulb into the underhood lamp. (Refer to 08 - Electrical/8L - Lamps and Lighting/Lamps/Lighting - Exterior/LAMP, Underhood - Installation).
4. Reconnect the underhood jumper wire harness connector (2) to the underhood lamp connector receptacle.
5. Reinstall the removed push-in retainers that secure the hood silencer pad to the inner hood reinforcement.
6. Reconnect the battery negative cable.

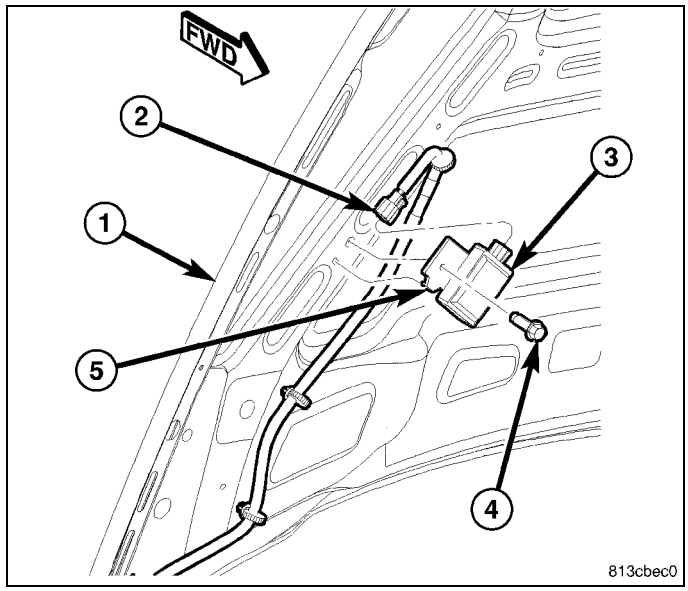

RELAY, Stop Lamp Inhibit

Description

A stop lamp inhibit relay (also known as the brake lamp activation relay or trailer tow damping relay) is part of the Electronic Stability Program (ESP)/Traction Control System (TCS)/Brake Assist System (BAS)/Trailer Sway Control (TCS) package on this vehicle. The stop lamp inhibit relay is a conventional International Standards Organization (ISO) relay. Relays conforming to the ISO specifications have common physical dimensions, current capacities, terminal patterns (2), and terminal functions. The relay is contained within a small, square, molded plastic housing (1) and is connected to all of the required inputs and outputs through five integral male spade-type terminals that extend from the relay base plate.

The stop lamp inhibit relay is located in a connector on the underside of the left front fender hydroform load beam in the engine compartment.

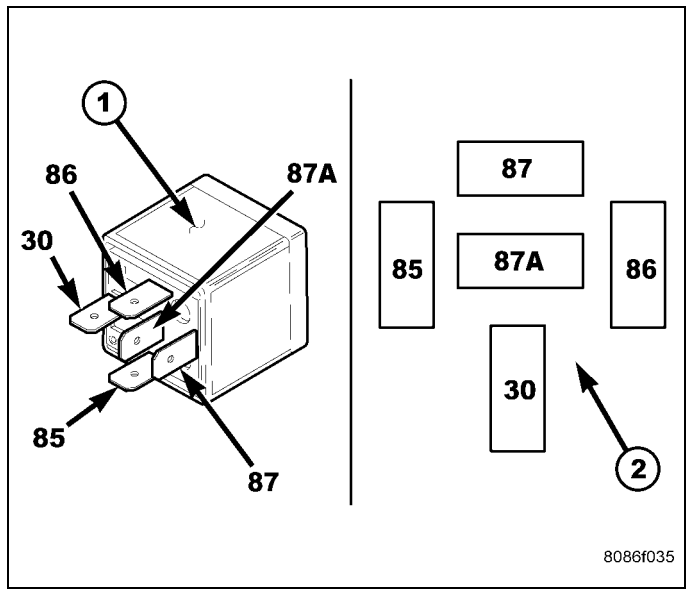

The stop lamp inhibit relay cannot be adjusted or repaired and, if ineffective or damaged, the unit must be replaced.

Operation

The stop lamp inhibit relay (also known as a brake lamp activation relay or trailer tow damping relay) is used by the Controller Antilock Brake (CAB) to mitigate undesirable brake lamp operation when the CAB activates various brake hydraulic circuits as part of its Traction Control System (TCS) and Trailer Sway Control (TSC) functions. This relay is an electromechanical switch that uses a low current input from the Controller Antilock Brake (CAB) to interrupt a high current output from the brake lamp switch to the brake lamps. Within the relay is an electromagnetic coil, a movable contact and two fixed contact points. A resistor is connected in parallel with the coil, and helps to dissipate voltage spikes and electromagnetic interference that can be generated as the field of the relay coil collapses.

The movable common supply contact point is held against the fixed normally closed contact point by spring pressure. When the relay coil is energized, an electromagnetic field is produced by the coil windings. This field draws the movable contact away from the normally closed contact, and holds it against the normally open contact. When the relay coil is de-energized, spring pressure returns the movable contact back against the normally closed contact.

The inputs and outputs of the stop lamp inhibit relay include:

- **Common Supply Terminal (30)** - The common feed terminal is connected to a fused B(+) circuit at all times.
- **Coil Ground Terminal (85)** - The coil ground terminal is connected to a control output of the CAB through a stop lamp inhibit relay control circuit. The CAB controls brake lamp operation by controlling a ground path through this circuit.
- **Coil Battery Terminal (86)** - The coil battery terminal is connected to a fused ignition switch output (run-start) circuit at all times.
- **Normally Open Terminal (87)** - The normally open terminal is connected to the brake lamps through a brake lamp switch output circuit and will provide battery voltage whenever the relay is energized.
- **Normally Closed Terminal (87A)** - The normally closed terminal is not connected to any circuit in this application, but will have battery voltage present whenever the relay is not energized.

The stop lamp inhibit relay as well as the hard wired inputs and outputs of the relay may be diagnosed using conventional diagnostic tools and procedures. Refer to the appropriate wiring information.

SWITCH, Backup Lamp

Description

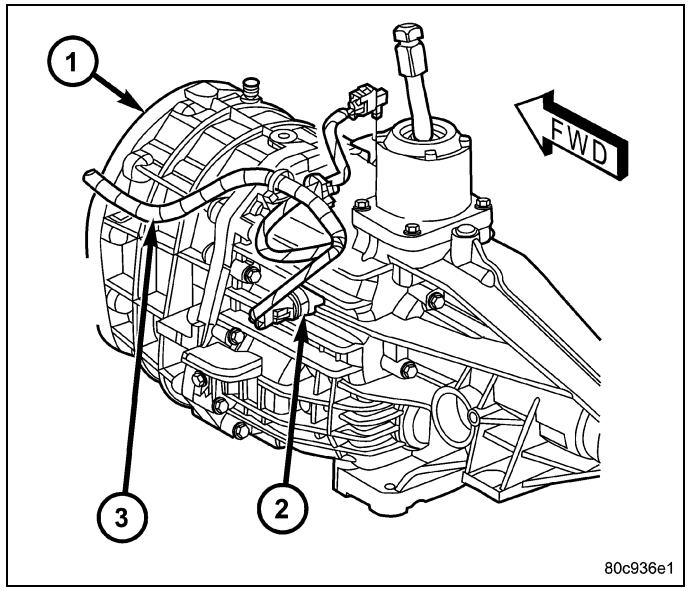

Vehicles equipped with a manual transmission have a normally open, spring-loaded plunger type backup lamp switch (2). Vehicles with an optional electronic automatic transmission have a Transmission Range Sensor (TRS) that is used to perform several functions, including that of the backup lamp switch.

The backup lamp switch is located in a hole on the side of the manual transmission housing. The switch has a spring-loaded plunger on the end of the switch inserted into the transmission. An integral connector receptacle at the end of the switch opposite the plunger connects the switch to the vehicle electrical system through a take out and connector of the engine wire harness. When installed, only the switch connector is visible on the outside of the transmission housing.

The TRS may be a separate component, or it may be an integral part of an electronic automatic transmission solenoid pack or of a transmission gear selector module. The specific TRS details vary by the model of the transmission installed in the vehicle. The TRS is described in further detail elsewhere in this service information. Refer to the service and diagnostic information for the automatic transmission type installed in the vehicle.

The backup lamp switch cannot be adjusted or repaired and, if ineffective or damaged, the entire switch unit must be replaced.

Operation

The backup lamp switch controls a ground signal input to the Totally Integrated Power Module (TIPM) through the backup lamp switch signal circuit. Based upon the state of this input, the TIPM uses a high side driver to control the flow of battery voltage to the backup lamp bulbs through an output on the backup lamp feed circuit.

The switch plunger is mechanically actuated by the gearshift mechanism within the transmission, which will depress the switch plunger and close the switch contacts whenever the REVERSE gear has been selected. The switch has a path to ground at all times, while the TIPM is programmed to provide an output to the backup lamps whenever the ignition switch is in the ON position.

The backup lamp switch as well as the hard wired inputs and outputs of the switch may be diagnosed using conventional diagnostic tools and procedures. Refer to the appropriate wiring information.

SWITCH, Hazard Warning

Description

The hazard switch (2) is integral to the upper instrument panel switch pod (1), which is secured to the instrument panel center bezel just below the radio and above the heater and air conditioner controls. A red, stencil-like International Control and Display Symbol icon for **Hazard Warning** identifies the hazard switch button. The remainder of the hazard switch circuitry is concealed within the instrument panel switch pod.

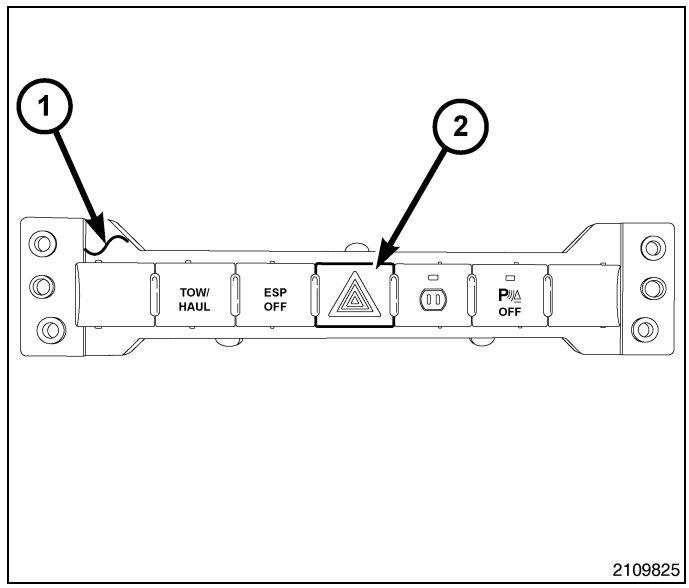

The hazard switch button has panel lamps dimmer controlled illumination for night visibility. The switch button unlatches to a slightly raised position when the hazard warning system is activated and the icon on the switch button will illuminate at an increased intensity while the turn signals and turn signal indicators are flashing. The switch button latches to a lowered position flush with the other push buttons in the switch pod when the hazard warning is deactivated.

All of the circuitry and components of the hazard switch are contained within a molded black plastic instrument panel switch pod housing. A single connector receptacle is integral to the back of the switch pod housing. The switch is connected to the vehicle electrical system through a dedicated take out and connector of the instrument panel wire harness.

The hazard switch cannot be adjusted or repaired and, if ineffective or damaged, the entire upper instrument panel switch pod unit must be replaced. (Refer to 08 - Electrical/8J - Instrument Cluster/POD, Switch - Removal).

Operation

The hazard switch features a push-push type latching push button. The hazard switch receives a clean ground on one terminal through a takeout of the instrument panel wire harness with an eyelet terminal secured by a screw to the instrument panel support structure. Whenever the hazard switch is in its latched and lowered position, the hazard warning system is selected and the upper instrument panel switch pod circuitry sends a hard wired output to the Totally Integrated Power Module (TIPM).

When the TIPM receives a hazard switch input on the hazard switch sense circuit it controls hazard warning system operation and flash rate by controlling battery voltage outputs through high side drivers on the right and left, front and rear turn signal driver circuits. The TIPM also sends the appropriate electronic messages to the ElectroMechanical Instrument Cluster (EMIC) (also known as the Cab Compartment Node/CCN) to control the illumination and flash rate of the right and left turn signal indicators, as well as to control the click rate of an electromechanical relay soldered onto the EMIC electronic circuit board that emulates the sound emitted by a conventional hazard warning flasher. The EMIC sends messages to the switch pod over the Local Interface Network (LIN) data bus to control the illumination of the hazard switch push button.

The hazard switch as well as the hard wired inputs and outputs of the switch may be diagnosed using conventional diagnostic tools and procedures. Refer to the appropriate wiring information. However, conventional diagnostic methods will not prove conclusive in the diagnosis of the electronic controls and communication between other modules and devices that provide some features of the hazard warning system. The most reliable, efficient, and accurate means to diagnose the hazard switch or the electronic controls and communication related to hazard warning system operation requires the use of a diagnostic scan tool. Refer to the appropriate diagnostic information.

Diagnosis and Testing

WARNING: To avoid serious or fatal injury on vehicles equipped with airbags, disable the Supplemental Restraint System (SRS) before attempting any steering wheel, steering column, airbag, seat belt tensioner, impact sensor or instrument panel component diagnosis or service. Disconnect and isolate the battery negative (ground) cable, then wait two minutes for the system capacitor to discharge before performing further diagnosis or service. This is the only sure way to disable the SRS. Failure to take the proper precautions could result in accidental airbag deployment.

The hazard switch as well as the hard wired inputs and outputs of the upper instrument panel switch pod may be diagnosed using conventional diagnostic tools and procedures. Refer to the appropriate wiring information.

1. Remove the center bezel and the upper switch pod from the instrument panel as a unit. (Refer to 23 - Body/Instrument Panel/BEZEL, Instrument Panel - Removal).
2. Using a multi-meter, test the continuity between the ground terminal and the hazard switch sense terminal of the switch. There should be continuity when the hazard switch push button is in its latched (lowered) position, and no continuity when the push button is in its unlatched (raised) position.
3. If the switch fails either of the continuity tests, replace the ineffective upper instrument panel switch pod as required.

SWITCH, Headlamp

Description

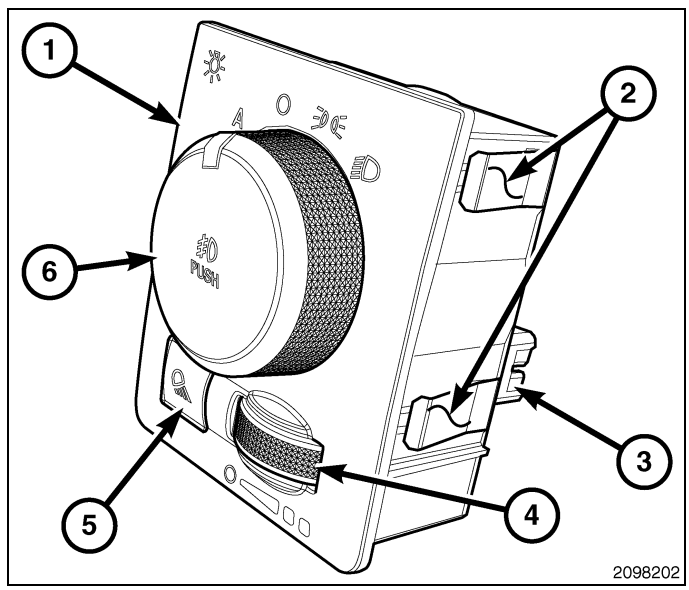

The headlamp switch (1) is located on the instrument panel, in a mounting hole below the left instrument panel vent to the left of the steering column. Two different switches are used. The standard switch features a four-position rotary knob (6) for exterior lighting control, a thumbwheel (4) for panel lamps dimming and interior lighting control, and a momentary push button (5) for cargo lamp control. An optional switch has a momentary PUSH function added to the rotary knob for front fog lamp control.

Each of these switches is constructed of molded plastic. The rotary knob is molded plastic and knurled around its circumference to ease operator control. The thumbwheel is also plastic and knurled. On vehicles with optional fog lamps the rotary knob also has the text **PUSH** and an International Control and Display Symbol icon for **Front Fog Light** applied to it. The cargo lamp push button is plastic with a smooth finish and the International Control and Display Symbol icon for **Work Light** applied to it. The switch face plate is also labeled with graphics and icons to clearly identify the many functions of the rotary knob and thumbwheel.

The switch housing is secured within the mounting hole of the left instrument panel vent bezel by four spring steel retention clips (2), two on each side. The back of the switch housing has an integral connector receptacle (3) containing terminal pins that connect the switch to the vehicle electrical system through a dedicated take out and connector of the instrument panel wire harness. Two panel dimmer controlled Light Emitting Diode (LED) units soldered to the circuit board within the switch provide back lighting for visibility at night, but are not serviceable.

The headlamp switch cannot be repaired and, if ineffective or damaged, it must be replaced.

Operation

The headlamp switch uses two resistor multiplexed outputs and one conventional output to control the many functions and features it provides. The switch receives a clean ground from the ElectroMechanical Instrument Cluster (EMIC) (also known as the Cab Compartment Node/CCN) on a headlamp switch MUX return circuit. It then provides outputs to the EMIC on a headlamp/fog lamp switch signal circuit to control exterior lighting functions, on a panel lamps dimmer signal circuit to control panel dimmer and interior lighting functions, and on a cargo lamp switch signal circuit to control the cargo lamps.

The switch illumination circuit receives a path to ground at all times through the left instrument panel ground circuit. The illumination level is controlled by a Pulse-Width Modulated (PWM) output received from the EMIC on a panel lamps driver circuit. The EMIC controls this output based upon the panel lamps dimmer signal circuit input from the headlamp switch.

The headlamp switch operates as follows:

- **Cargo Lamps Control** - The cargo lamp push button on the headlamp switch is depressed to activate or deactivate the cargo lamps. The headlamp switch provides an output to the EMIC, and the EMIC responds by providing the appropriate cargo lighting control outputs through its cargo lamp driver circuit.
- **Front Fog Lamps Control** - For vehicles so equipped, the rotary knob on the headlamp switch is depressed to activate or deactivate the optional front fog lamps. The headlamp switch provides the appropriate resistor multiplexed output to the EMIC over the headlamp/fog lamp switch signal circuit, and the EMIC reads and responds to this input by sending electronic **fog lamp switch status** messages to the Totally Integrated Power Module (TIPM) over the Controller Area Network (CAN) data bus. The TIPM responds by energizing or de-energizing the right and left front fog lamp control circuits through internal High Side Drivers (HSD) and by sending an electronic confirmation message back to the EMIC, which controls the front fog lamp indicator as appropriate.
- **Exterior Lighting Control** - The rotary knob on the headlamp switch is rotated to a detent position to activate or deactivate the exterior lighting. The headlamp switch provides the appropriate resistor multiplexed output to the EMIC over the headlamp/fog lamp switch signal circuit, and the EMIC reads and responds to this input by sending electronic **exterior lighting switch status** messages to the TIPM over the CAN data bus. The TIPM responds by energizing or de-energizing the right and left park lamp feed circuits and the right and left high or low beam driver circuits through internal HSDs and by sending an electronic confirmation message back to the EMIC, which controls the high beam indicator as appropriate. The TIPM also remembers which headlamp beams were last selected with the multi-function switch, and energizes those beams by default the next time the headlamps are turned ON. If the vehicle is equipped with optional automatic headlamps and the **A** (Automatic) position is selected, the TIPM also monitors an electronic **ambient light level** message received over the CAN data bus from the A/C-heater control module based upon a hard wired input from the sun sensor to turn the exterior lighting ON and OFF automatically while the ignition switch is in the ON position.
- **Interior Lighting Control** - The thumbwheel on the headlamp switch is rotated to the dome DEFEAT, dome ON, PARADE mode, or one of the six panel dimmer detent positions to control the interior courtesy/dome and panel lamps. The headlamp switch provides the appropriate resistor multiplexed output to the EMIC over the panel lamps dimmer signal circuit. The EMIC reads and responds to this input by providing the appropriate control outputs through internal HSDs over the courtesy lamps, panel lamps and reading lamps driver circuits, and by sending appropriate electronic **dimming level** messages to other electronic modules over the CAN data bus.

The headlamp switch as well as the hard wired inputs and outputs of the switch may be diagnosed using conventional diagnostic tools and procedures. Refer to the appropriate wiring information.

Diagnosis and Testing

WARNING: To avoid serious or fatal injury on vehicles equipped with airbags, disable the Supplemental Restraint System (SRS) before attempting any steering wheel, steering column, airbag, seat belt tensioner, impact sensor or instrument panel component diagnosis or service. Disconnect and isolate the battery negative (ground) cable, then wait two minutes for the system capacitor to discharge before performing further diagnosis or service. This is the only sure way to disable the SRS. Failure to take the proper precautions could result in accidental airbag deployment.

1. Remove the headlamp switch from the instrument panel. (Refer to 08 - Electrical/8L - Lamps and Lighting/Lamps/Lighting - Exterior/SWITCH, Headlamp - Removal).
2. Disconnect the instrument panel wire harness connector from the back of the headlamp switch.
3. Using an ohmmeter, test the resistance or continuity between the terminals of the switch as shown in the Headlamp Switch Tests table.

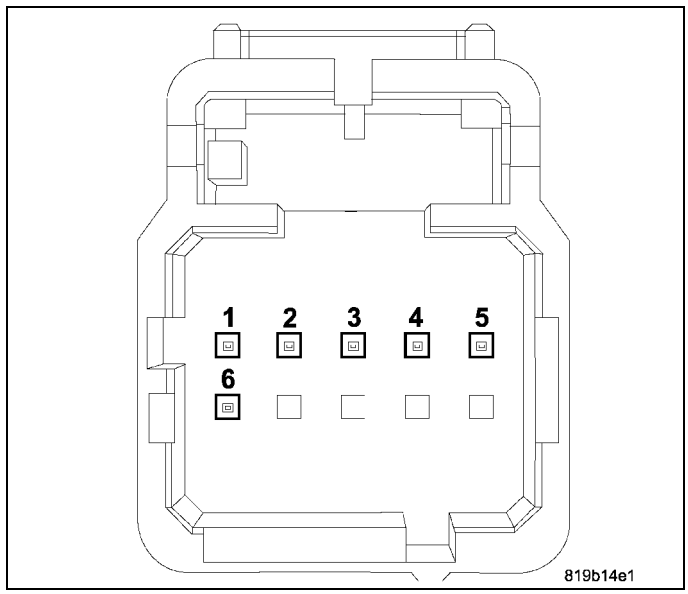

HEADLAMP SWITCH TESTS	
SWITCH POSITION (PINS)	***RESISTANCE RANGE (OHMS)**
AUTO (1 and 3)	4028.0 - 4457.0
OFF (1 and 3)	1938.0 - 2147.0
PARK (1 and 3)	1073.5 - 1191.5
HEADLAMP (1 and 3)	627.0 - 698.0
FOG LAMP - AUTO (1 and 3)	266.8 - 299.9
FOG LAMP - OFF (1 and 3)	249.0 - 280.2
FOG LAMP - PARK (1 and 3)	225.6 - 254.4
FOG LAMP - HEADLAMP (1 and 3)	196.3 - 221.9
DOME DEFEAT (2 and 3)	14121.2 - 15612.7
PANEL DIMMER 1 (2 and 3)	5476.26 - 6057.7
PANEL DIMMER 2 (2 and 3)	2911.2 - 3222.7
PANEL DIMMER 3 (2 and 3)	1771.2 - 1962.7
PANEL DIMMER 4 (2 and 3)	1125.2 - 1248.7
PANEL DIMMER 5 (2 and 3)	726.2 - 807.7
PANEL DIMMER 6 (2 and 3)	469.7 - 524.2
PARADE MODE	296.4 - 332.6
DOME ON (2 and 3)	166.2 - 188.7
CARGO (3 and 6)	MOMENTARY CONTINUITY
SWITCH ILLUMINATION (4 and 5)	LEDs - SET MULTIMETER TO DIODE MODE - CONNECT PIN 4 TO PLUS (+), CONNECT PIN 5 TO MINUS (-) - LEDs SHOULD BARELY GLOW
*All resistance values are plus or minus 5%.	

4. If the switch fails any of the tests, replace the ineffective headlamp switch as required.

Removal

WARNING: To avoid serious or fatal injury on vehicles equipped with airbags, disable the Supplemental Restraint System (SRS) before attempting any steering wheel, steering column, airbag, seat belt tensioner, impact sensor or instrument panel component diagnosis or service. Disconnect and isolate the battery negative (ground) cable, then wait two minutes for the system capacitor to discharge before performing further diagnosis or service. This is the only sure way to disable the SRS. Failure to take the proper precautions could result in accidental airbag deployment.

1. Disconnect and isolate the battery negative cable.
2. Using a trim stick or another suitable wide flat-bladed tool, gently and evenly pry around the perimeter of the headlamp switch (1) face plate toward the rear of the vehicle. Once the retention force of the four metal spring clips (two on each side) on the switch housing has been overcome, the switch will come out from the mounting hole in the lower end of the left instrument panel vent bezel (2).
3. Pull the switch out of the mounting hole far enough to access and disconnect the instrument panel wire harness connector (3) from the connector receptacle on the back of the switch housing.
4. Remove the headlamp switch from the instrument panel.

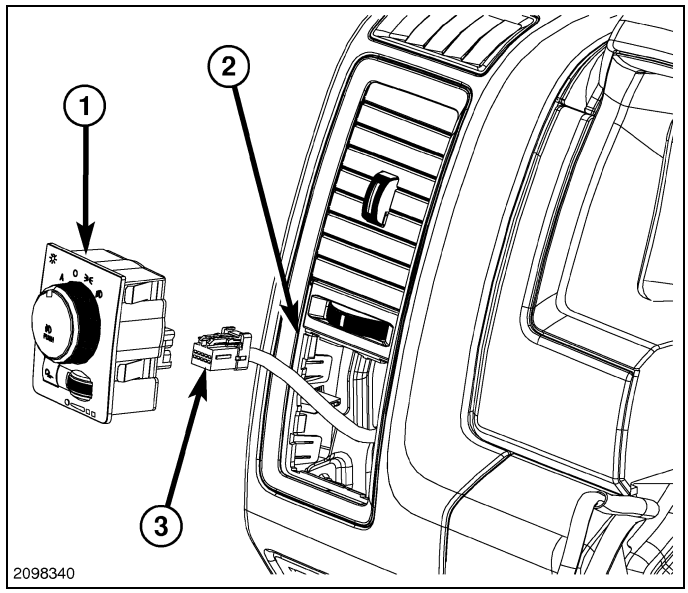

Installation

WARNING: To avoid serious or fatal injury on vehicles equipped with airbags, disable the Supplemental Restraint System (SRS) before attempting any steering wheel, steering column, airbag, seat belt tensioner, impact sensor or instrument panel component diagnosis or service. Disconnect and isolate the battery negative (ground) cable, then wait two minutes for the system capacitor to discharge before performing further diagnosis or service. This is the only sure way to disable the SRS. Failure to take the proper precautions could result in accidental airbag deployment.

1. Position the headlamp switch (1) close enough to the switch mounting hole in the lower end of the left instrument panel vent bezel (2) to reconnect the instrument panel wire harness connector (3) to the connector receptacle on the back of the switch housing.
2. Position the switch in the center of the switch mounting hole of the bezel.
3. Using hand pressure, press the switch firmly and evenly into the mounting hole until it is fully seated. An indication that the switch is fully seated will be a light audible click as each of the four metal spring clips (two on each side) spring into place behind the bezel mounting hole.
4. Reconnect the battery negative cable.

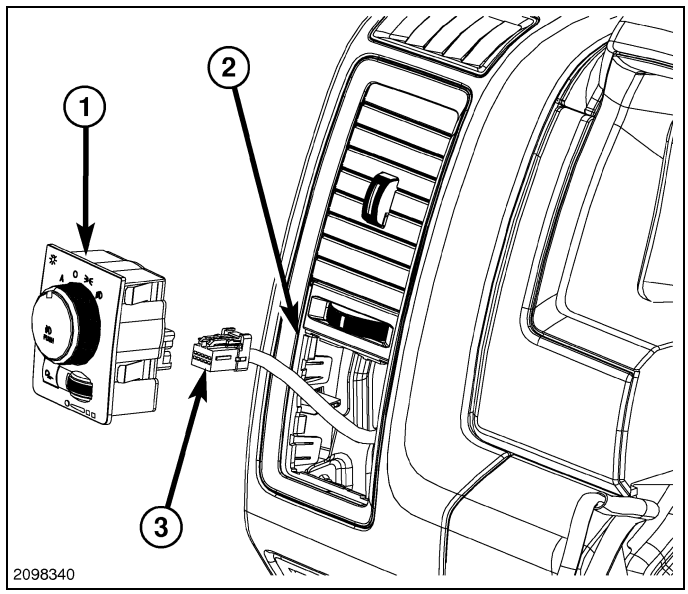

SWITCH, Multifunction

Description

The multi-function switch is located on the left side of the steering column, just below the steering wheel. This switch provides the primary controls for the wiper and washer systems, the turn signals and headlamp beam selection. The only visible components of the switch are the control stalk (2) and control knob (1) that extend through the steering column shrouds on the left side of the column. The remainder of the switch including its mounting provisions, its electrical connection, and the turn signal cancel actuator are concealed beneath the shrouds.

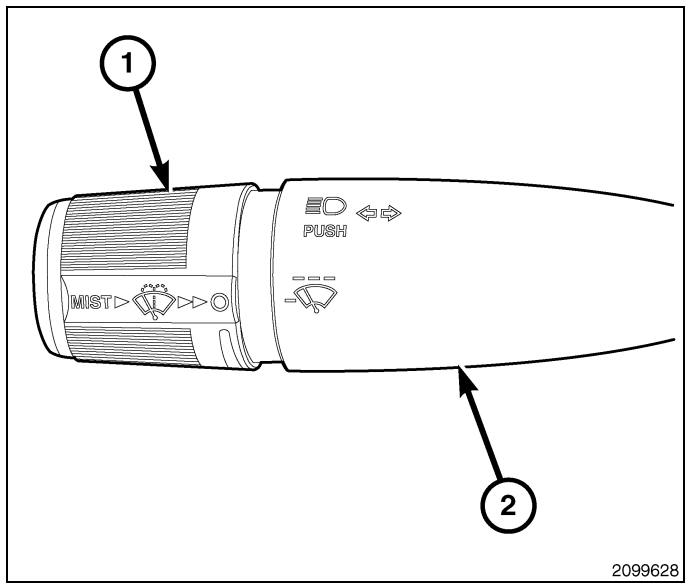

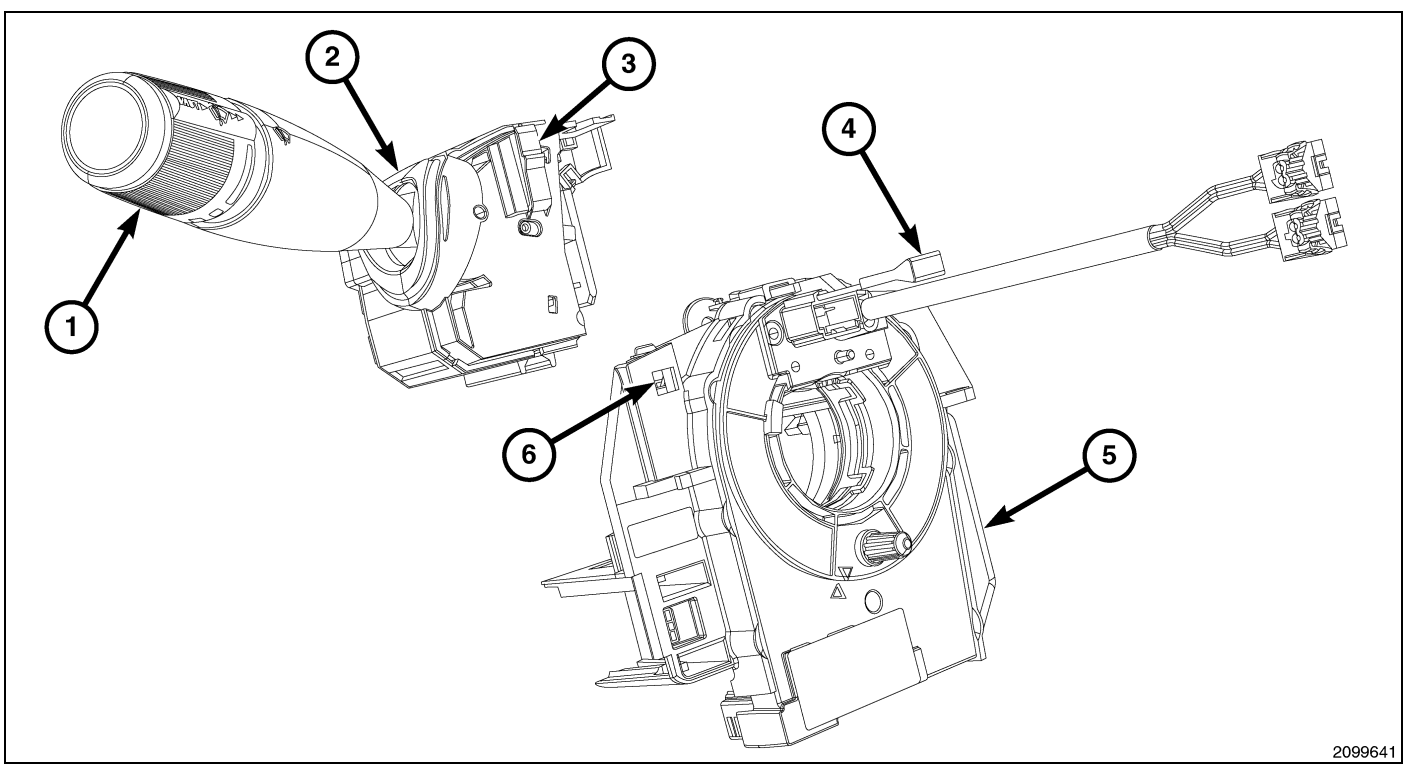

The switch housing (2) and controls (1) are constructed of molded black plastic. Each of the switch controls has white International Control and Display Symbol graphics applied to it, which clearly identify its many functions. A single integral latch feature (3) and slide tabs on the switch housing engage channels and a striker that are integral to the left side of the mounting bracket that is integral to the clockspring (5) to secure the switch to the steering column.

The Steering Control Module (SCM) is an electronic circuit board and microprocessor internal to the multi-function switch housing. The switch outputs are internally connected directly to the SCM. An integral connector receptacle on the back of the switch housing connects the switch through the SCM to the vehicle electrical system through a dedicated take out and connector of the instrument panel wire harness.

The multi-function switch provides the vehicle operator with a control interface for the following functions:

- **Headlamp Beam Selection** - The multi-function switch control stalk provides detent switching for selection of the headlamp HIGH or LOW beams.
- **Headlamp Optical Horn** - The multi-function switch control stalk includes momentary switching of the headlamp high beam circuits to provide an optical horn feature (sometimes referred to as flash-to-pass), which allows the vehicle operator to momentarily flash the headlamp high beams as an optical signalling device.
- **Turn Signal Control** - The multi-function switch control stalk provides both momentary non-detent (lane change) switching or detent switching with automatic cancellation for both the left and right turn signals.
- **Washer Control** - The multi-function switch control knob provides a momentary WASH position for washer system operation.
- **Wiper Control** - The multi-function switch control knob provides detent switching for two continuous wipe switch positions, LOW speed or HIGH speed and an intermittent wipe mode with five DELAY interval positions. The control knob also has a momentary MIST or pulse wipe feature switch position.

The multi-function switch cannot be adjusted or repaired. If any function of the switch is ineffective, or if the switch is damaged, the entire switch unit must be replaced. The clockspring with the multi-function switch mounting bracket, Steering Angle Sensor/SAS and the heated steering wheel contact (if equipped), the multi-function switch (with the internal SCM) and the optional adjustable pedal switch (7) are each available for separate service replacement.

Operation

The multi-function switch uses resistor multiplexing to control the many functions and features it provides using a minimal number of hard wired circuits. The switch receives clean grounds from the Steering Control Module (SCM) internal to the switch housing, then provides resistor multiplexed return outputs to the SCM to indicate the selected switch positions. The SCM then sends electronic **switch status** messages over a Local Interface Network (LIN) data bus to the ElectroMechanical Instrument Cluster (EMIC) (also known as the Cab Compartment Node/CCN), and the EMIC relays electronic **switch request** messages over the Controller Area Network (CAN) data bus to other electronic modules in the vehicle.

If the SCM detects no inputs from the multi-function switch, it transmits an electronic **Signal Not Available (SNA)** status message over the LIN data bus. The SNA status signals the EMIC to request other electronic modules to implement a fail-safe or default mode of operation. For the exterior lighting system, the multi-function switch fail-safe mode automatically selects LOW beams when the headlamps are turned ON. For the wiper system, the multi-function switch fail-safe mode will maintain the last selected wiper system operation for the remainder of the current ignition cycle, after which the wiper system will default to OFF.

Some of the hard wired input and output circuits for the multi-function switch and SCM unit may be diagnosed using conventional diagnostic tools and procedures. Refer to the appropriate wiring information. However, the most reliable, efficient and accurate means to diagnose this component requires the use of a diagnostic scan tool. Refer to the appropriate diagnostic information.

Following are descriptions of how the multi-function switch is operated to control the functions and features it provides:

- **Headlamp Beam Selection** - The headlamp high beams are selected when the multi-function switch control stalk is pushed forward to the high beam selection detent position. The low beams are selected when the control stalk is pulled rearward to the low beam selection detent position. The SCM reads the resistor multiplexed input from the multi-function switch and sends an electronic **beam select switch status** message over the LIN data bus to the EMIC, which relays an electronic **beam select switch request** message over the CAN data bus to other electronic modules in the vehicle.
- **Headlamp Optical Horn** - The headlamp optical horn is selected each time the multi-function switch control stalk is pulled fully rearward to a momentary position. The headlamp HIGH beams will remain illuminated for as long as the control stalk is held in this momentary position and the LOW beams will be restored when the control stalk is released. The SCM reads the resistor multiplexed input from the multi-function switch and sends an electronic **beam select switch status** message over the LIN data bus to the EMIC, which relays an electronic **beam select switch request** message over the CAN data bus to other electronic modules in the vehicle.
- **Turn Signal Control** - The turn signals are requested when the multi-function switch control stalk is moved downward (LEFT signal) or upward (RIGHT signal). The control stalk has a detent position in each direction that provides turn signals with automatic cancellation, and an intermediate, momentary position in each direction that automatically provides three turn signal blinks as a LANE CHANGE feature when the control stalk is tapped or will energize the turn signals for as long as the control stalk is held in the momentary position. When the control stalk is moved to a detent turn signal switch position, a cancel actuator extends from the multi-function switch housing through an opening in the side of the clockspring case toward the center of the steering column. A turn signal cancel cam that is integral to the

clockspring rotor rotates with the steering wheel and the cam lobes contact the cancel actuator when it is extended from the multi-function switch. When the steering wheel is rotated during a turning maneuver, one of the turn signal cancel cam lobes will contact the turn signal cancel actuator. The cancel actuator latches against the cancel cam rotation in the direction opposite that which is signaled. If the LEFT turn signal detent is selected, the lobes of the cancel cam will ratchet past the cancel actuator when the steering wheel is rotated to the left, but will unlatch the cancel actuator as the steering wheel rotates to the right and returns to center, which will cancel the turn signal event and release the control stalk from the detent so it returns to the neutral OFF position. The SCM reads the resistor multiplexed input from the multi-function switch and sends an electronic **turn signal switch status** message over the LIN data bus to the EMIC, which relays an electronic **turn signal switch request** message over the CAN data bus to other electronic modules in the vehicle.

- **Washer Control** - The control knob on the end of the multi-function switch control stalk is depressed toward the steering column to the momentary second detent position to activate the washer pump/motor in the WASH mode. The washer pump/motor will continue to operate for as long as the control knob is held in this position. The SCM reads the resistor multiplexed input from the multi-function switch and sends an electronic **washer switch status** message over the LIN data bus to the EMIC, which relays an electronic **washer switch request** message over the CAN data bus to other electronic modules in the vehicle.
- **Wiper Control** - The control knob on the end of the multi-function switch control stalk is rotated to one of the two continuous wiper detents, to one of five intermittent wiper detents, or to the OFF position to select the WIPER mode. The SCM reads the input from the multi-function switch and sends electronic **wiper switch status** messages over the LIN data bus to the EMIC, which relays an electronic **wiper switch request** message over the CAN data bus to other electronic modules in the vehicle.
- **Wiper Mist Mode** - The control knob on the end of the multi-function switch control stalk is depressed toward the steering column to the momentary first detent position to activate the wiper MIST mode. The wiper motor will continue to operate, one complete cycle at a time, for as long as the control knob is held in this position. The SCM reads the resistor multiplexed input from the multi-function switch and sends an electronic **wiper switch status** message over the LIN data bus to the EMIC, which relays an electronic **wiper switch request** message over the CAN data bus to other electronic modules in the vehicle.

Removal

WARNING: To avoid serious or fatal injury on vehicles equipped with airbags, disable the Supplemental Restraint System (SRS) before attempting any steering wheel, steering column, airbag, seat belt tensioner, impact sensor or instrument panel component diagnosis or service. Disconnect and isolate the battery negative (ground) cable, then wait two minutes for the system capacitor to discharge before performing further diagnosis or service. This is the only sure way to disable the SRS. Failure to take the proper precautions could result in accidental airbag deployment.

1. Disconnect and isolate battery negative cable.
2. Remove the upper and lower shrouds from the steering column. (Refer to 19 - Steering/Column/SHROUD, Steering Column - Removal).
3. Disconnect the instrument panel wire harness connector (1) from the connector receptacle on the back of the multi-function switch housing.

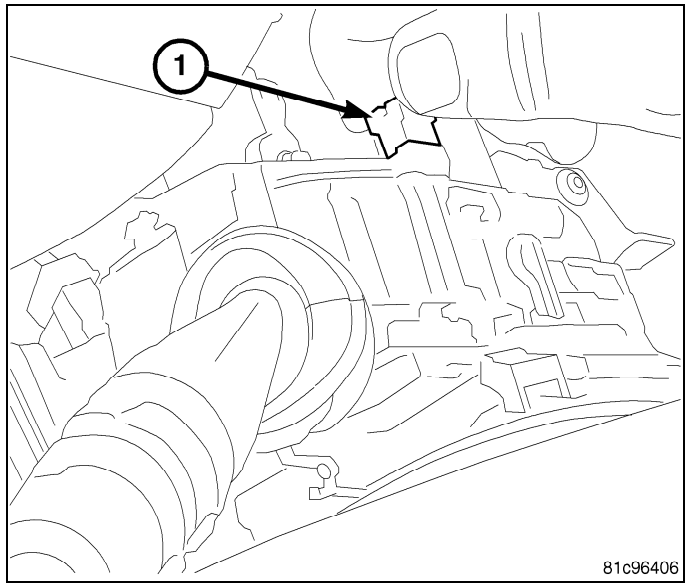

4. Working through the access window (2) of the mounting bracket (3) integral to the left side of the clockspring, depress the tab (4) of the latch feature integral to the multi-function switch (1) housing far enough to disengage the latch.
5. While holding the latch disengaged, slide the switch upward and out of the receptacle in the mounting bracket.

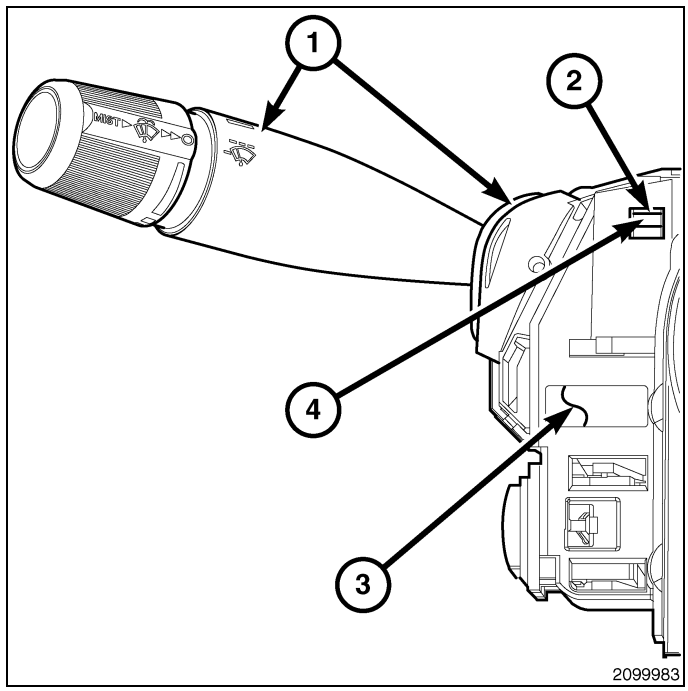

Installation

WARNING: To avoid serious or fatal injury on vehicles equipped with airbags, disable the Supplemental Restraint System (SRS) before attempting any steering wheel, steering column, airbag, seat belt tensioner, impact sensor or instrument panel component diagnosis or service. Disconnect and isolate the battery negative (ground) cable, then wait two minutes for the system capacitor to discharge before performing further diagnosis or service. This is the only sure way to disable the SRS. Failure to take the proper precautions could result in accidental airbag deployment.

1. Position the multi-function switch (1) housing over the receptacle in the mounting bracket (3) integral to the left side of the clockspring.
2. Slide the switch downward into the mounting bracket receptacle until it is fully seated and the tab (4) of the latch feature integral to the switch housing engages the access window (2) of the bracket.

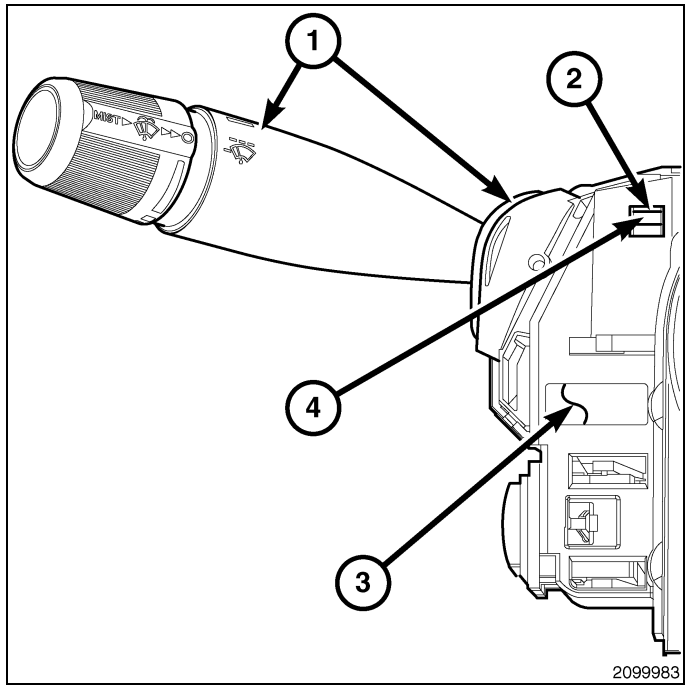

3. Reconnect the instrument panel wire harness connector (1) to the connector receptacle on the back of the multi-function switch housing.
4. Reinstall the upper and lower shrouds onto the steering column. (Refer to 19 - Steering/Column/SHROUD, Steering Column - Installation).
5. Reconnect the battery negative cable.

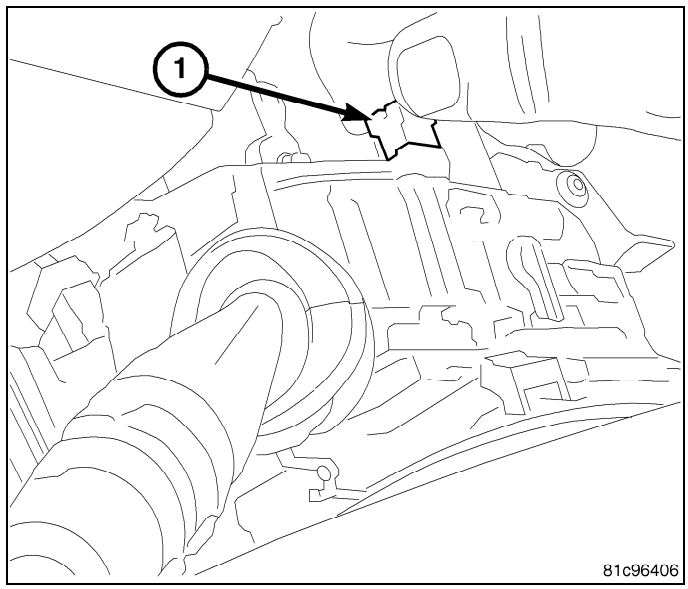

SWITCH, Parking Brake

Description

The park brake switch (1) is located on the park brake lever mechanism on the left cowl side inner panel below the instrument panel, outboard of the steering column. This switch includes a spade-type output terminal (3) that connects the switch to the vehicle electrical system through a dedicated take out and connector of the body wire harness. The output terminal is integral to the stationary contact within a molded plastic insulator.

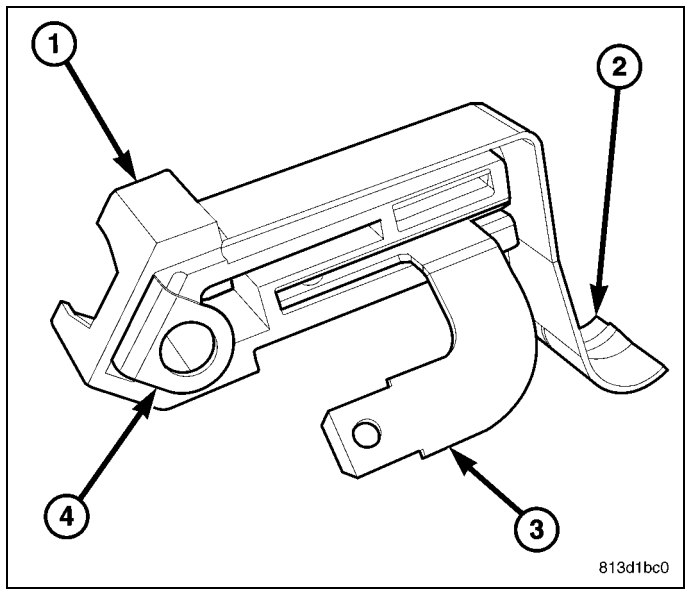

A locating tab on the insulator engages a slot in the park brake lever mechanism for positive switch location. External to the insulator is a movable leaf contact with an integral grounding lug (4) on one end and an integral actuating lever and follower (2) on the opposite end. The switch is secured to and grounded by a single screw to the park brake lever mechanism.

The park brake switch cannot be adjusted or repaired and, if ineffective or damaged, it must be replaced.

Operation

The park brake switch is a normally closed, mechanically actuated leaf contact switch that is operated by the park brake lever mechanism. The switch is grounded through its mounting to the park brake lever mechanism and provides a ground input to the ElectroMechanical Instrument Cluster (EMIC) (also known as the Cab Compartment Node/CCN) on a park brake switch sense circuit whenever the park brake is applied, and opens this circuit whenever the park brake is released. The park brake switch sense input to the EMIC is used as a logic input by the EMIC for control of the brake indicator and may also be used as a logic input for other electronic features in the vehicle.

The park brake switch as well as the hard wired inputs and outputs of the switch may be diagnosed using conventional diagnostic tools and procedures. Refer to the appropriate wiring information.

Diagnosis and Testing

WARNING: To avoid serious or fatal injury on vehicles equipped with airbags, disable the Supplemental Restraint System (SRS) before attempting any steering wheel, steering column, airbag, seat belt tensioner, impact sensor or instrument panel component diagnosis or service. Disconnect and isolate the battery negative (ground) cable, then wait two minutes for the system capacitor to discharge before performing further diagnosis or service. This is the only sure way to disable the SRS. Failure to take the proper precautions could result in accidental airbag deployment.

NOTE: If the brake indicator stays ON with the ignition switch in the ON position and the park brake released, or comes ON while driving, the brake system must be diagnosed and repaired prior to performing the following tests. (Refer to 05 - Brakes - Diagnosis and Testing). If no brake system problem is found, the following procedures will help to locate a shorted or open park brake switch sense circuit, or an ineffective park brake switch.

INDICATOR ILLUMINATES DURING BULB TEST, BUT DOES NOT WHEN PARK BRAKE APPLIED

1. Disconnect and isolate the battery negative cable. Disconnect the body wire harness connector for the park brake switch from the switch terminal. Apply the parking brake. Check for continuity between the park brake switch terminal and a good ground. There should be continuity. If OK, go to Step #2. If not OK, replace the ineffective park brake switch.
2. Disconnect the instrument panel wire harness connector (Connector C2) for the instrument cluster from the cluster connector receptacle. Check for continuity between the park brake switch sense circuit cavities of the body wire harness connector for the park brake switch and the instrument panel wire harness connector for the instrument cluster. There should be continuity. If not OK, repair the open park brake switch sense circuit between the park brake switch and the instrument cluster as required.

INDICATOR REMAINS ILLUMINATED - BRAKE SYSTEM CHECKS OKAY

1. Disconnect and isolate the battery negative cable. Disconnect the body wire harness connector for the park brake switch from the switch terminal. Check for continuity between the terminal of the park brake switch and a good ground. There should be no continuity with the park brake released, and continuity with the park brake applied. If OK, go to Step #2. If not OK, replace the ineffective park brake switch.
2. Disconnect the instrument panel wire harness connector (Connector C2) for the instrument cluster from the cluster connector receptacle. Check for continuity between the park brake switch sense circuit cavity of the body wire harness connector for the park brake switch and a good ground. There should be no continuity. If not OK, repair the shorted park brake switch sense circuit between the park brake switch and the instrument cluster as required.

Removal

WARNING: To avoid serious or fatal injury on vehicles equipped with airbags, disable the Supplemental Restraint System (SRS) before attempting any steering wheel, steering column, airbag, seat belt tensioner, impact sensor or instrument panel component diagnosis or service. Disconnect and isolate the battery negative (ground) cable, then wait two minutes for the system capacitor to discharge before performing further diagnosis or service. This is the only sure way to disable the SRS. Failure to take the proper precautions could result in accidental airbag deployment.

1. Disconnect and isolate the battery negative cable.
2. Apply the parking brake.
3. Reach under the left end of the instrument panel to access and disconnect the body wire harness connector (2) from the terminal of the park brake switch (4) located on the park brake lever mechanism (1) on the left cowl side inner panel.
4. Remove the screw (3) that secures the park brake switch to the park brake lever mechanism.
5. Remove the switch from the park brake lever mechanism.

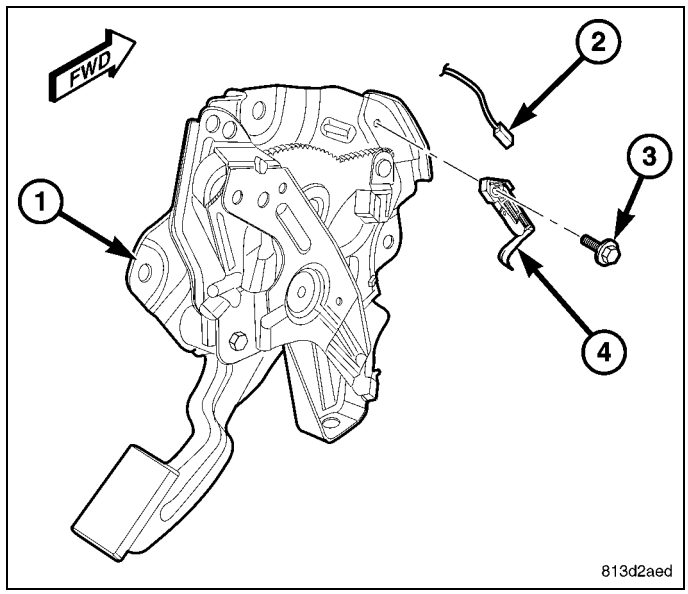

Installation

WARNING: To avoid serious or fatal injury on vehicles equipped with airbags, disable the Supplemental Restraint System (SRS) before attempting any steering wheel, steering column, airbag, seat belt tensioner, impact sensor or instrument panel component diagnosis or service. Disconnect and isolate the battery negative (ground) cable, then wait two minutes for the system capacitor to discharge before performing further diagnosis or service. This is the only sure way to disable the SRS. Failure to take the proper precautions could result in accidental airbag deployment.

1. Reach under the left end of the instrument panel to position the park brake switch (4) onto the park brake lever mechanism (1) on the left cowl side inner panel. Be certain to engage the locating pin on the back of the switch insulator into the locating slot in the lever mechanism bracket.
2. Install and tighten the screw (3) that secures the park brake switch to the park brake lever mechanism. Tighten the screw to 2.5 N·m (24 in. lbs.).
3. Reconnect the body wire harness connector (2) to the terminal of the park brake switch.
4. Reconnect the battery negative cable.
5. Turn the ignition switch to the ON position and check for proper brake indicator operation with the parking brake applied, then release the parking brake and check that the brake indicator extinguishes.

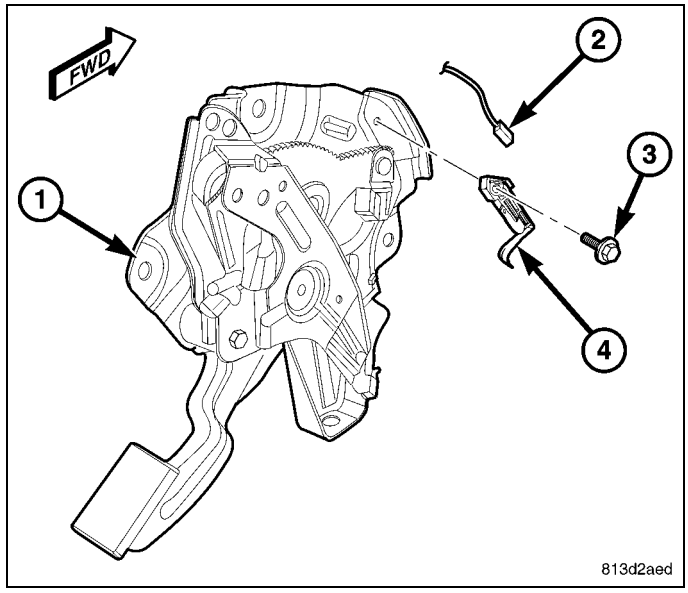

SWITCH, Stop Lamp

Description

Two unique brake lamp switches are used in this vehicle, depending upon whether the vehicle was built during early or late production. These switches are not interchangeable and both are illustrated and described in the paragraphs that follow.

EARLY PRODUCTION

This brake (or stop) lamp switch (2) is a three circuit, spring-loaded plunger actuated switch that is secured to the steering column support bracket under the instrument panel on the driver side of the vehicle. The molded plastic switch housing has an integral connector receptacle (1) containing six terminal pins and featuring a Connector Position Assurance (CPA) lock. The switch is connected to the vehicle electrical system through a dedicated take out of the instrument panel wire harness.

The switch plunger (3) extends through a mounting collar (4) on one end of the switch housing. The plunger has a one time telescoping self-adjustment feature that is activated after the switch is installed by moving an adjustment release lever (5) on the opposite end of the switch housing clockwise, until it locks into a position that is horizontal and parallel to the connector receptacle.

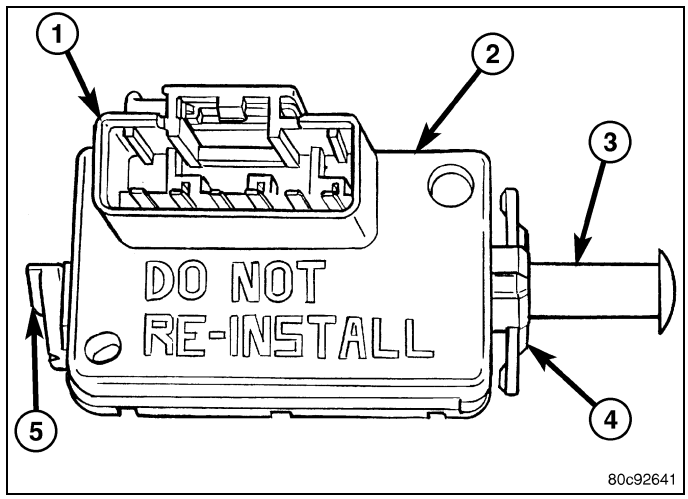

This brake lamp switch cannot be readjusted or repaired. If the switch is damaged, ineffective, or removed from its mounting position for any reason, it must be replaced with a new unit.

LATE PRODUCTION

This brake lamp switch (1) is a three circuit, spring-loaded plunger actuated switch that is secured to the steering column support bracket under the instrument panel on the driver side of the vehicle. The molded plastic switch housing has an integral connector receptacle (4) containing six terminal pins. The switch is connected to the vehicle electrical system through a dedicated take out of the instrument panel wire harness.

The switch plunger (3) extends through a mounting collar (2) on one end of the switch housing. The plunger has a telescoping self-adjustment feature that is activated after the switch is installed by the brake pedal moving upward to its normal at-rest position. The telescoping plunger can be pulled outward from the switch housing to repeat the self-adjustment procedure if necessary.

This brake lamp switch cannot be repaired. If the switch is damaged or ineffective it must be replaced with a new unit.

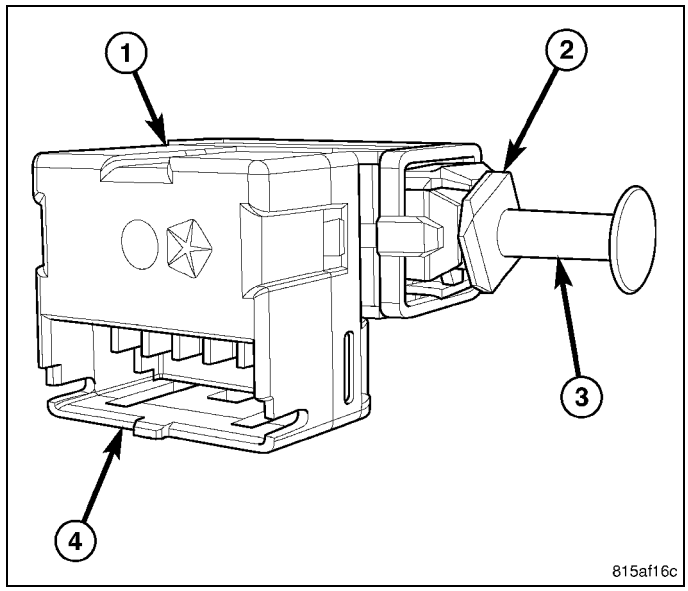

Operation

Both the early and late production brake (or stop) lamp switches control three independent circuits. These circuits are described as follows:

- **Brake Lamp Switch Circuit** - A normally open brake lamp switch circuit receives a battery voltage input, and supplies this battery voltage to the Center High Mounted Stop Lamp (CHMSL) and the Totally Integrated Power Module (TIPM) on a brake lamp switch output circuit only when the brake pedal is depressed (brake lamp switch plunger released).
- **Brake Lamp Switch Signal Circuit** - A normally closed brake lamp switch signal circuit receives a direct path to ground, and supplies this ground input to the Powertrain Control Module (PCM) on a brake signal 1 circuit only when the brake pedal is released (brake lamp switch plunger is depressed).
- **Speed Control Circuit** - A normally closed speed control circuit receives a battery voltage input from the Totally Integrated Power Module (TIPM) on an ignition run/start control output circuit, and supplies this battery voltage to the PCM on a brake signal 2 circuit only when the brake pedal is released (brake lamp switch plunger is depressed).

The PCM sends electronic **brake lamp switch status** messages to other electronic modules in the vehicle over the Controller Area Network (CAN) data bus for use as an additional logic input for controlling many other vehicle functions and features.

The brake lamp switch as well as the hard wired inputs and outputs of the switch may be diagnosed using conventional diagnostic tools and procedures. Refer to the appropriate wiring information. However, conventional diagnostic methods will not prove conclusive in the diagnosis of the electronic controls and communication that provide some features related to brake lamp switch operation. The most reliable, efficient and accurate means to diagnose the electronic controls and communication related to brake lamp switch operation requires the use of a diagnostic scan tool. Refer to the appropriate diagnostic information.

Diagnosis and Testing

WARNING: To avoid serious or fatal injury on vehicles equipped with airbags, disable the Supplemental Restraint System (SRS) before attempting any steering wheel, steering column, airbag, seat belt tensioner, impact sensor or instrument panel component diagnosis or service. Disconnect and isolate the battery negative (ground) cable, then wait two minutes for the system capacitor to discharge before performing further diagnosis or service. This is the only sure way to disable the SRS. Failure to take the proper precautions could result in accidental airbag deployment.

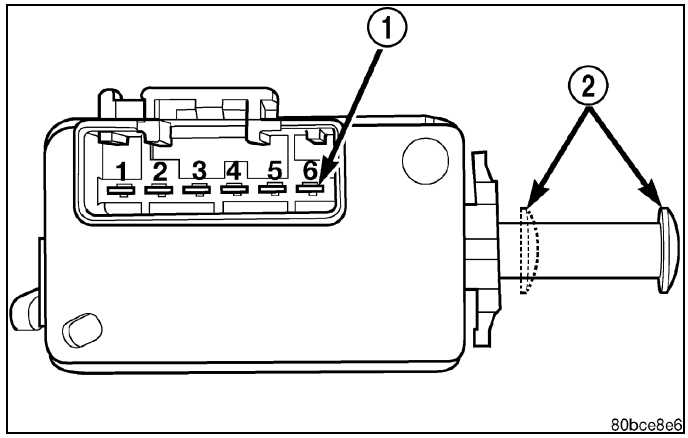

Early Production

1. Disconnect and isolate the battery negative cable.

CAUTION: Do not remove the Early Production-type brake lamp switch from the mounting bracket. The self-adjusting plunger of this switch is a one time only feature. If the switch is removed from the mounting bracket, it MUST be replaced with a new switch.

2. Disconnect the instrument panel wire harness connector from the brake lamp switch.
3. Using an ohmmeter, perform the continuity tests at the terminal pins (1) in the brake lamp switch connector receptacle as shown in the Brake Lamp Switch Tests table.

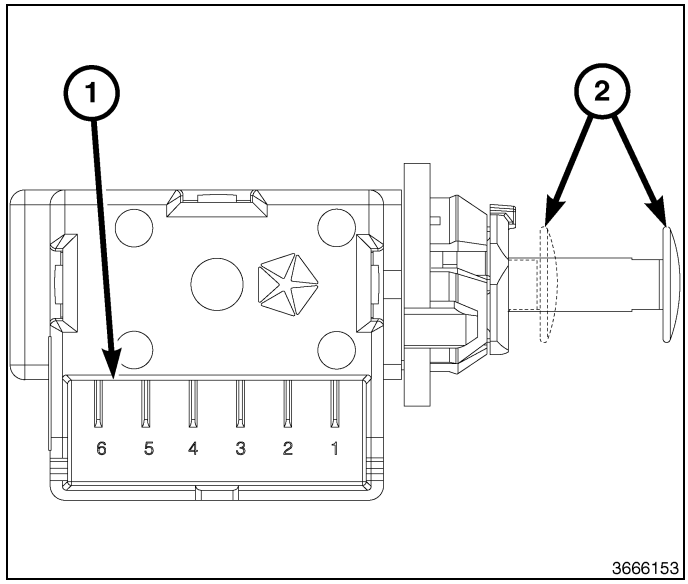

Late Production

BRAKE LAMP SWITCH TESTS	
PLUNGER POSITION (2)	**CONTINUITY BETWEEN**
Released (Extended)	Pins 1 and 2
Compressed (Depressed)	Pins 3 and 4, 5 and 6

4. If the switch fails any of the continuity tests, replace the ineffective brake lamp switch as required.

Removal

Two unique brake lamp switches are used in this vehicle, depending upon whether the vehicle was built during early or late production. These switches are not interchangeable. Both switches are illustrated and described elsewhere in this service information to assist in positive identification. (Refer to 08 - Electrical/8L - Lamps and Lighting/Lamps/Lighting - Exterior/SWITCH, Stop Lamp - Description).

EARLY PRODUCTION

WARNING: To avoid serious or fatal injury on vehicles equipped with airbags, disable the Supplemental Restraint System (SRS) before attempting any steering wheel, steering column, airbag, seat belt tensioner, impact sensor or instrument panel component diagnosis or service. Disconnect and isolate the battery negative (ground) cable, then wait two minutes for the system capacitor to discharge before performing further diagnosis or service. This is the only sure way to disable the SRS. Failure to take the proper precautions could result in accidental airbag deployment.

1. Disconnect and isolate the battery negative cable.
2. Locate the brake lamp switch (2) in the mounting bracket (1) near the lower steering column support bracket.
3. Disconnect the wire harness connector (3) from the brake lamp switch.
4. Rotate the brake lamp switch housing clockwise about 30 degrees to align the tabs on the switch locking collar with the keyed hole in the switch mounting bracket.
5. Pull the switch straight back from the keyed hole to remove it from the bracket.

CAUTION: The brake lamp switch self-adjusting switch plunger is a one time only feature. If the switch is removed from the mounting bracket, it MUST be replaced with a new switch.

6. Discard the removed brake lamp switch.

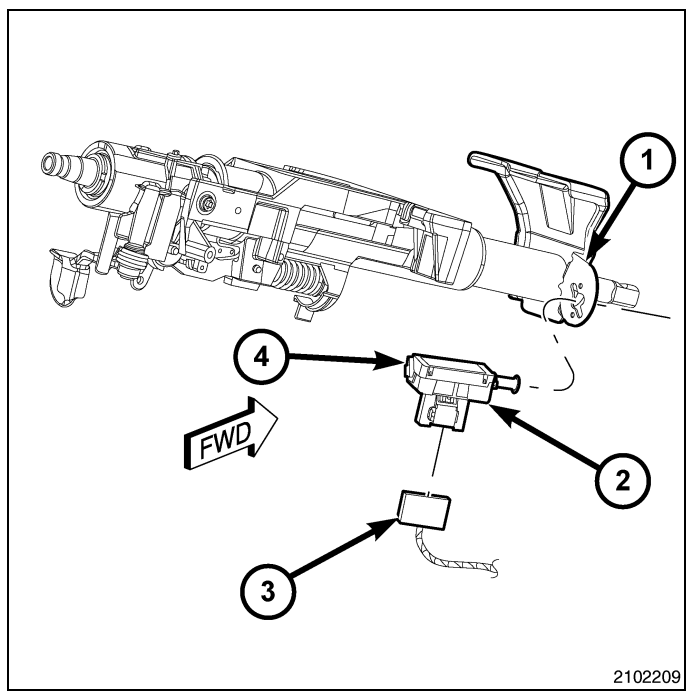

LATE PRODUCTION

WARNING: To avoid serious or fatal injury on vehicles equipped with airbags, disable the Supplemental Restraint System (SRS) before attempting any steering wheel, steering column, airbag, seat belt tensioner, impact sensor or instrument panel component diagnosis or service. Disconnect and isolate the battery negative (ground) cable, then wait two minutes for the system capacitor to discharge before performing further diagnosis or service. This is the only sure way to disable the SRS. Failure to take the proper precautions could result in accidental airbag deployment.

1. Disconnect and isolate the battery negative cable.
2. Locate the brake lamp switch (2) in the mounting bracket (3) on the lower steering column (1) support bracket.
3. Depress and hold the brake pedal in the depressed position.
4. Disconnect the instrument panel wire harness connector from the brake lamp switch.
5. Rotate the brake lamp switch housing clockwise about 30 degrees to align the switch locking collar with the keyed square hole in the switch mounting bracket.
6. Pull the switch straight back from the keyed hole to remove it from the bracket.
7. Release the brake pedal.

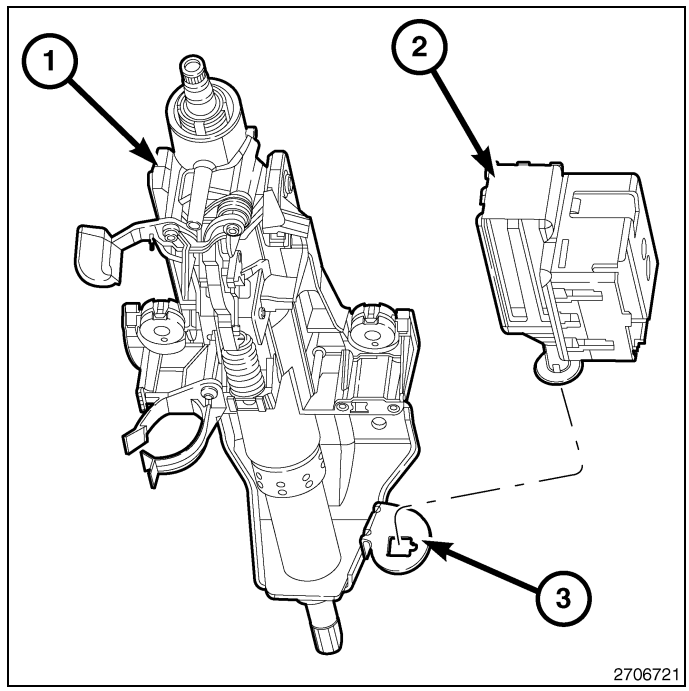

Installation

Two unique brake lamp switches are used in this vehicle, depending upon whether the vehicle was built during early or late production. These switches are not interchangeable. Both switches are illustrated and described elsewhere in this service information to assist in positive identification. (Refer to 08 - Electrical/8L - Lamps and Lighting/Lamps/Lighting - Exterior/SWITCH, Stop Lamp - Description).

EARLY PRODUCTION

WARNING: To avoid serious or fatal injury on vehicles equipped with airbags, disable the Supplemental Restraint System (SRS) before attempting any steering wheel, steering column, airbag, seat belt tensioner, impact sensor or instrument panel component diagnosis or service. Disconnect and isolate the battery negative (ground) cable, then wait two minutes for the system capacitor to discharge before performing further diagnosis or service. This is the only sure way to disable the SRS. Failure to take the proper precautions could result in accidental airbag deployment.

CAUTION: The brake lamp switch self-adjusting switch plunger is a one time only feature. If the switch is removed from the mounting bracket, it MUST be replaced with a new switch.

1. Depress and hold the brake pedal in the depressed position.
2. Align the tabs on the brake lamp switch (2) locking collar with the keyed hole in the switch mounting bracket (1) near the lower steering column support bracket.
3. Insert the tabs on the brake lamp switch locking collar through the keyed hole in the switch mounting bracket until the switch housing is firmly seated against the bracket.
4. Rotate the switch housing counterclockwise about 30 degrees to engage the tabs on the locking collar with the switch mounting bracket.

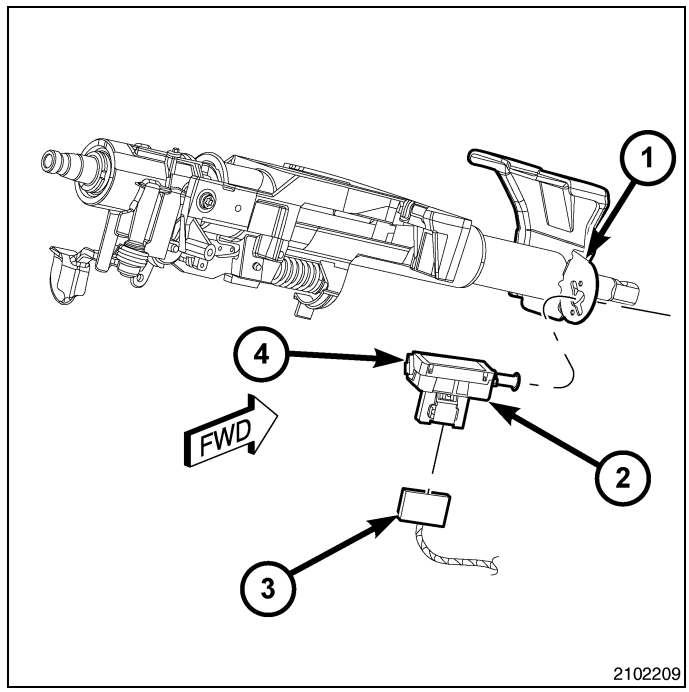

CAUTION: Release, but do not pull up on the brake pedal before the switch plunger adjustment has been completed.

5. Release the brake pedal, but do not pull it upward.
6. Rotate the plunger adjustment release lever (4) clockwise until it locks into place. The lever should be parallel to the brake lamp switch connector receptacle. This action will set the switch plunger length to a final adjustment position and cannot be undone. If not performed properly the first time, a new brake lamp switch **must** be installed.
7. Reconnect the wire harness connector (3) to the brake lamp switch.
8. Reconnect the battery negative cable.

LATE PRODUCTION

WARNING: To avoid serious or fatal injury on vehicles equipped with airbags, disable the Supplemental Restraint System (SRS) before attempting any steering wheel, steering column, airbag, seat belt tensioner, impact sensor or instrument panel component diagnosis or service. Disconnect and isolate the battery negative (ground) cable, then wait two minutes for the system capacitor to discharge before performing further diagnosis or service. This is the only sure way to disable the SRS. Failure to take the proper precautions could result in accidental airbag deployment.

1. Be certain that the brake lamp switch (2) plunger is pulled all the way out of the switch housing to its fully extended position.
2. Depress and hold the brake pedal in the depressed position.
3. Align the keyed locking collar on the brake lamp switch with the keyed square hole in the switch mounting bracket (3) on the lower steering column (1) support bracket.
4. Insert the brake lamp switch locking collar through the keyed hole in the switch mounting bracket until the switch housing is firmly seated against the bracket.
5. Rotate the switch housing clockwise about 30 degrees to engage the locking collar with the switch mounting bracket.
6. Release the brake pedal. The pedal will set the plunger to the correct position as the pedal pushes the plunger into the switch housing. The switch plunger will make a light audible ratcheting noise as it self-adjusts.
7. Reconnect the instrument panel wire harness connector to the brake lamp switch.
8. Reconnect the battery negative cable.

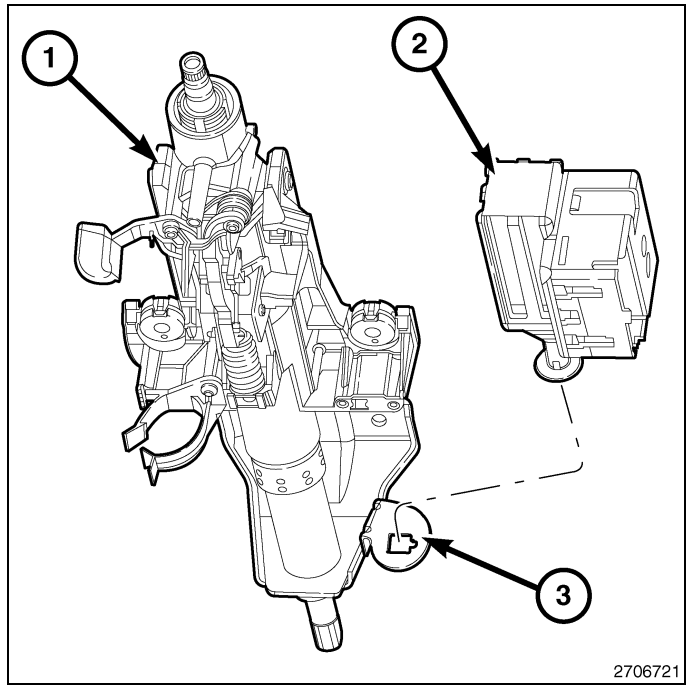

Adjustments

Two unique brake lamp switches are used in this vehicle, depending upon whether the vehicle was built during early or late production. These switches are not interchangeable and, only the late production type switch can be readjusted following initial installation using this adjustment procedure. If the early production type switch requires readjustment for any reason, it **must** be replaced with a new switch. Both switches are illustrated and described elsewhere in this service information to assist in positive identification. (Refer to 08 - Electrical/8L - Lamps and Lighting/Lamps/Lighting - Exterior/SWITCH, Stop Lamp - Description).

WARNING: To avoid serious or fatal injury on vehicles equipped with airbags, disable the Supplemental Restraint System (SRS) before attempting any steering wheel, steering column, airbag, seat belt tensioner, impact sensor or instrument panel component diagnosis or service. Disconnect and isolate the battery negative (ground) cable, then wait two minutes for the system capacitor to discharge before performing further diagnosis or service. This is the only sure way to disable the SRS. Failure to take the proper precautions could result in accidental airbag deployment.

1. Disconnect and isolate the battery negative cable.
2. Depress and hold the brake pedal in the depressed position.
3. Pull the brake lamp switch plunger all the way out of the switch housing to its fully extended position.
4. Release the brake pedal. The pedal will set the plunger to the correct position as the pedal pushes the plunger into the switch housing. The switch plunger will make a light audible ratcheting noise as it self-adjusts.
5. Reconnect the battery negative cable.

UNIT, Front Lamp

Standard Procedure

Some occasional moisture accumulation inside a vented front lamp unit is normal and appears as a fogging on the inside of the lamp lens, similar to the fog that sometimes appears on the inside of a windshield. This condition is caused by rapidly changing temperature and humidity levels between the air internal and external to the lamp, and will usually dissipate once the temperature and humidity conditions have been allowed to stabilize. Accelerated removal of such moisture may be accomplished by activating the headlamps on HIGH beam for about 15 minutes.

However, water droplets larger than 1 millimeter (0.039 inch) in size accumulated on the inside of the lamp lens, water droplets visible on most internal lamp surfaces or large quantities of water within the lamp indicates a problem with the lamp sealing that has allowed excessive amounts of water to enter the lamp. Once such excessive moisture has entered the lamp, it will always be present and will never disappear. A lamp with permanent internal moisture should be replaced.

Removal

BULB - HEADLAMP

DUAL HEADLAMPS

CAUTION: Do not contaminate the bulb glass by touching it with your fingers or by allowing it to contact other oily surfaces. Shortened bulb life will result.

1. Remove the front lamp unit (1) from the vehicle. (Refer to 08 - Electrical/8L - Lamps and Lighting/Lamps/Lighting - Exterior/UNIT, Front Lamp - Removal).
2. Firmly grasp the headlamp bulb (3) in the reflector through the opening on the back of the front lamp unit housing and rotate it counterclockwise about 30 degrees to unlock it.
3. Pull the bulb straight out from the keyed opening in the reflector.

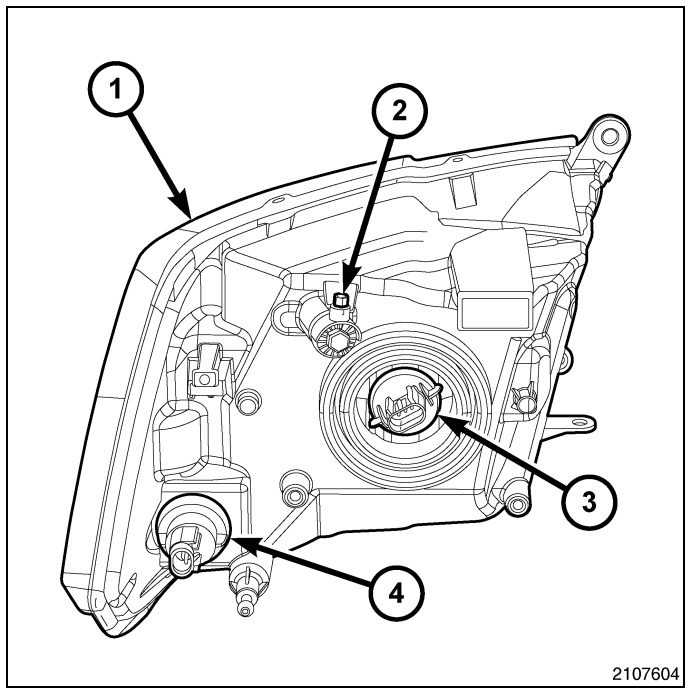

Dual Headlamps

QUAD HEADLAMPS

CAUTION: Do not contaminate the bulb glass by touching it with your fingers or by allowing it to contact other oily surfaces. Shortened bulb life will result.

NOTE: There are access covers (6) installed over both headlamp bulb access holes in the quad front lamp unit housing. The illustration shows the cover for the low beam bulb removed for reference; however, both covers MUST be reinstalled prior to returning the vehicle to service.

1. Remove the front lamp unit (1) from the vehicle. (Refer to 08 - Electrical/8L - Lamps and Lighting/Lamps/Lighting - Exterior/UNIT, Front Lamp - Removal).
2. Rotate the appropriate low beam (upper) or high beam (lower) access cover (6) on the back of the front lamp unit housing counterclockwise to unlock and remove it.
3. Firmly grasp the appropriate headlamp bulb (5) in the reflector through the opening on the back of the front lamp unit housing and rotate it counterclockwise about 30 degrees to unlock it.
4. Pull the bulb straight out from the keyed opening in the reflector far enough to access and disconnect the front lamp unit pigtail wire harness connector from the bulb connector receptacle.
5. Remove the headlamp bulb from the lamp.

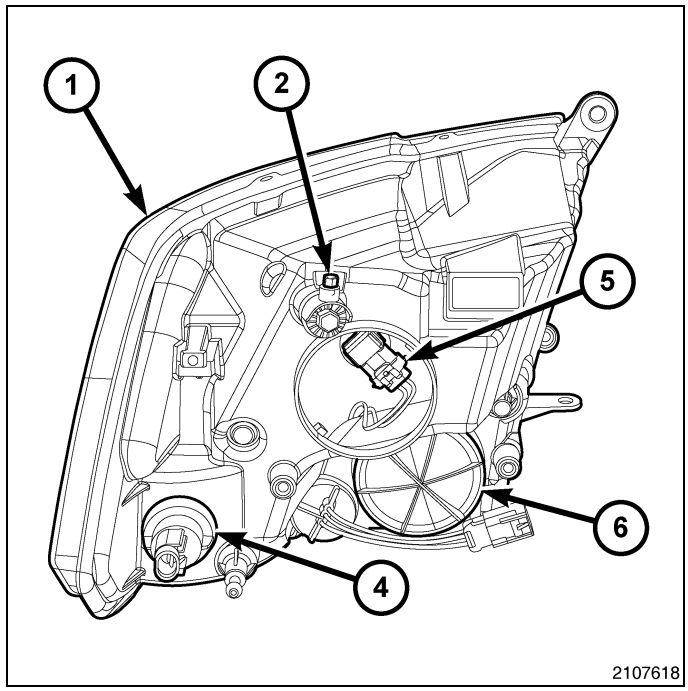

Quad Headlamps

BULB - PARK/TURN SIGNAL/SIDE MARKER

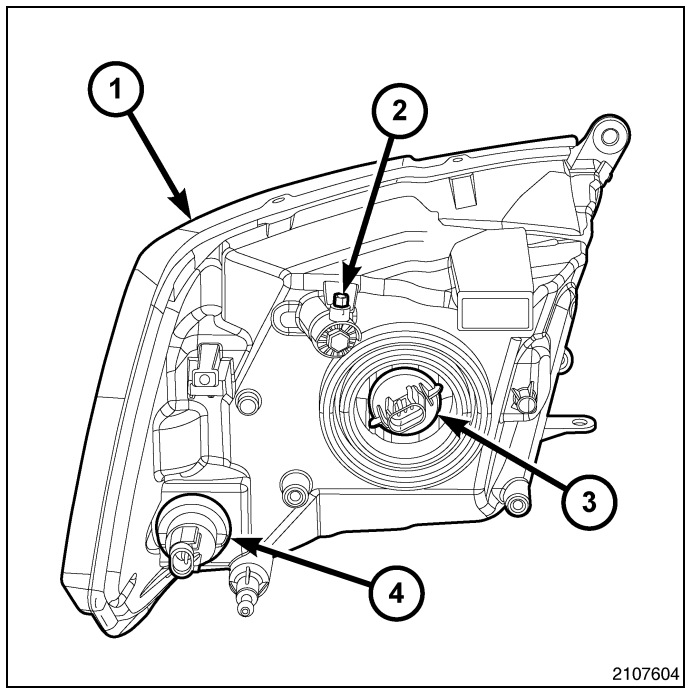

Dual Headlamps

1. Remove the front lamp unit (1) from the vehicle. (Refer to 08 - Electrical/8L - Lamps and Lighting/Lamps/Lighting - Exterior/UNIT, Front Lamp - Removal).
2. Firmly grasp the park/turn signal/side marker bulb socket (4) on the back of the front lamp unit housing and rotate it counterclockwise about 30 degrees to unlock it.
3. Pull the socket and bulb straight out from the keyed opening in the housing.

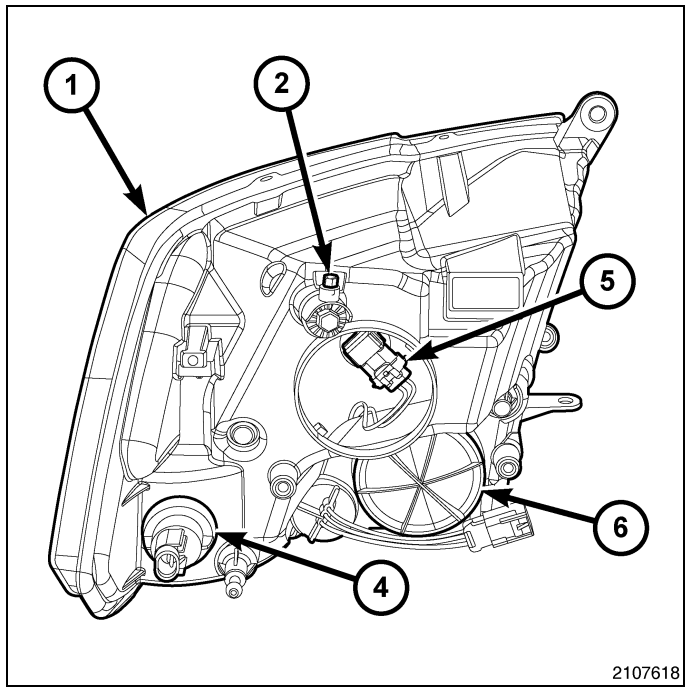

Quad Headlamps

4. Pull the base of the bulb (2) straight out of the socket (1).

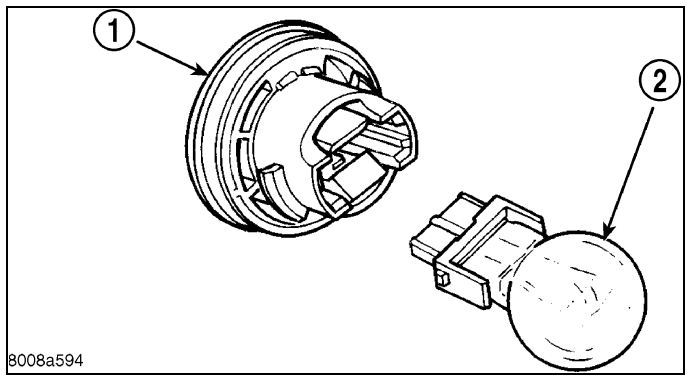

LAMP

1. Disconnect and isolate the battery negative cable.
2. Remove the four plastic push-in fasteners (1) that secure the upper radiator seal to the grille support and both fender ledges.
3. Remove the two plastic push-pin rivets (2) that secure the upper radiator seal to the radiator.
4. Remove the upper radiator seal from the vehicle.

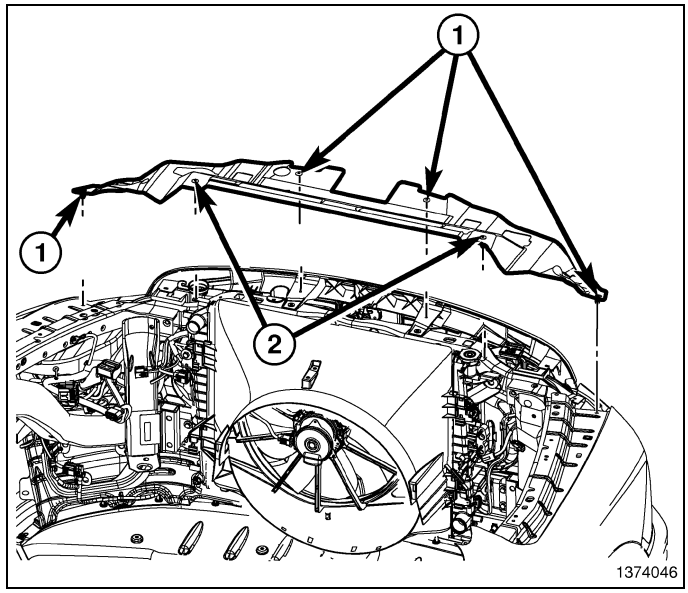

NOTE: It is not necessary to remove the grille from the front of the vehicle to service the front lamp units. The illustration shows the grille removed only to assist in clearly identifying the locations of the front lamp unit mounting provisions.

5. Remove the screw (1) that secures the upper mounting tab of the front lamp unit (2) to the Front End Module (FEM) carrier (also known as the radiator closure) (4).
6. Using a socket with a magnetic insert or with a small piece of butyl tape inserted, reach down between the grille and the FEM carrier to access, remove and retrieve the screw (3) that secures the lower mounting tab of the front lamp unit.

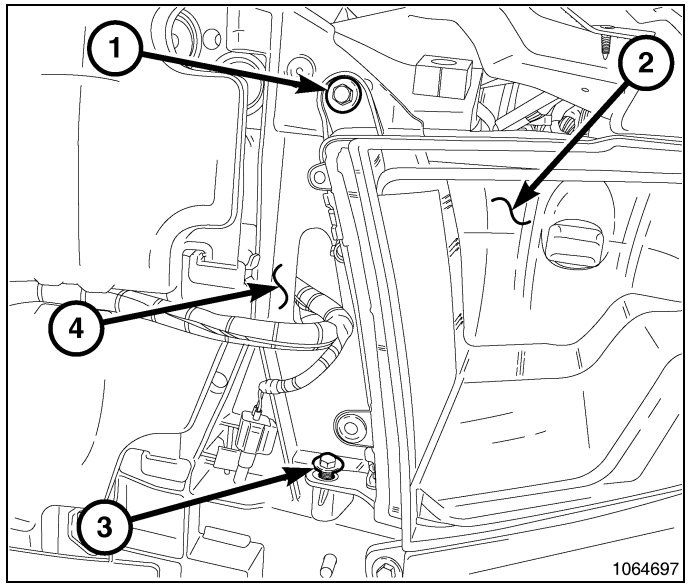

7. Remove the fastener that secures the tab at the bottom of the access panel (2) to the front of the front wheel house splash shield (1).

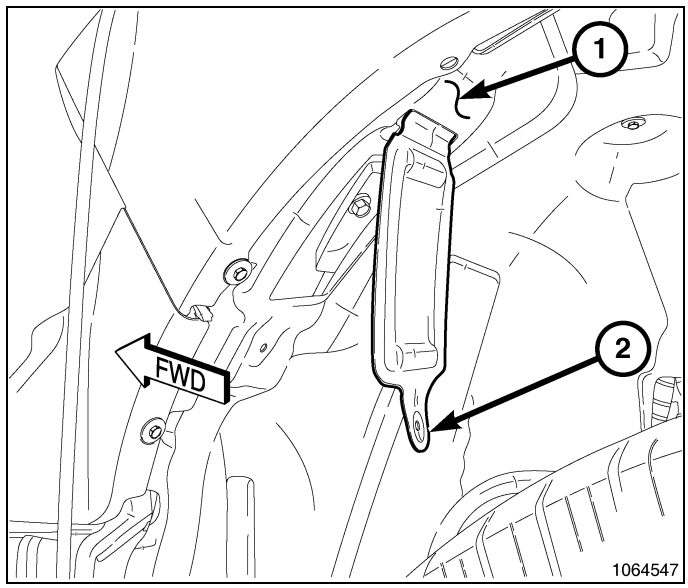

NOTE: The illustration shows the back of right front lamp unit and slide lock with the slide lock in the locked position.

8. Reach through the access opening (1) of the wheel house splash shield and lift the slide lock (3) upward far enough to disengage it from the lock post (2) integral to the back of the front lamp unit housing (4).

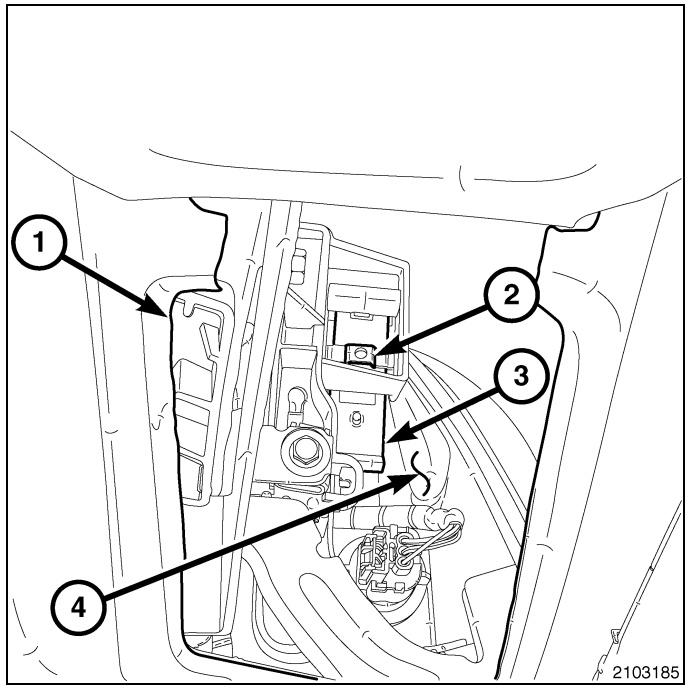

9. From the front of the vehicle, grasp the outboard edge of the front lamp unit firmly and pull it straight forward to disengage the ball stud (1) from the plastic grommet in the FEM carrier.
10. Pull the lamp away from the front of the vehicle far enough to access and disconnect the two wire harness connections from the park/turn signal bulb socket (4) and either the headlamp bulb (2) on vehicles with dual headlamps, or from the headlamp pigtail wire harness on vehicles with quad headlamps (not shown).
11. Remove the front lamp unit from the vehicle.

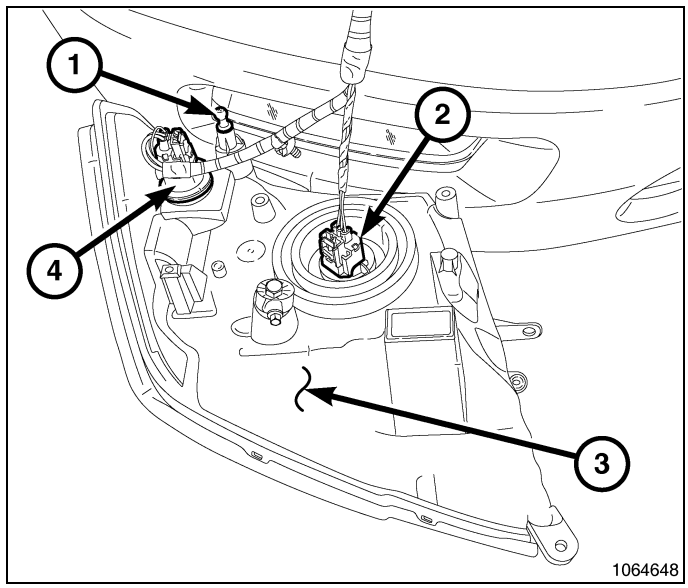

Installation

BULB - HEADLAMP

DUAL HEADLAMPS

CAUTION: Always use the correct bulb size and type for replacement. An incorrect bulb size or type may overheat and cause damage to the lamp, the socket or the lamp wiring.

CAUTION: Do not contaminate the bulb glass by touching it with your fingers or by allowing it to contact other oily surfaces. Shortened bulb life will result.

1. Align the headlamp bulb (3) with the keyed opening in the front lamp unit (1) reflector through the opening on the back of the lamp housing.
2. Insert the bulb into the keyed opening in the reflector until it is firmly seated.
3. Rotate the bulb clockwise about 30 degrees to lock it into place.
4. Reinstall the front lamp unit onto the vehicle. (Refer to 08 - Electrical/8L - Lamps and Lighting/Lamps/Lighting - Exterior/UNIT, Front Lamp - Installation).

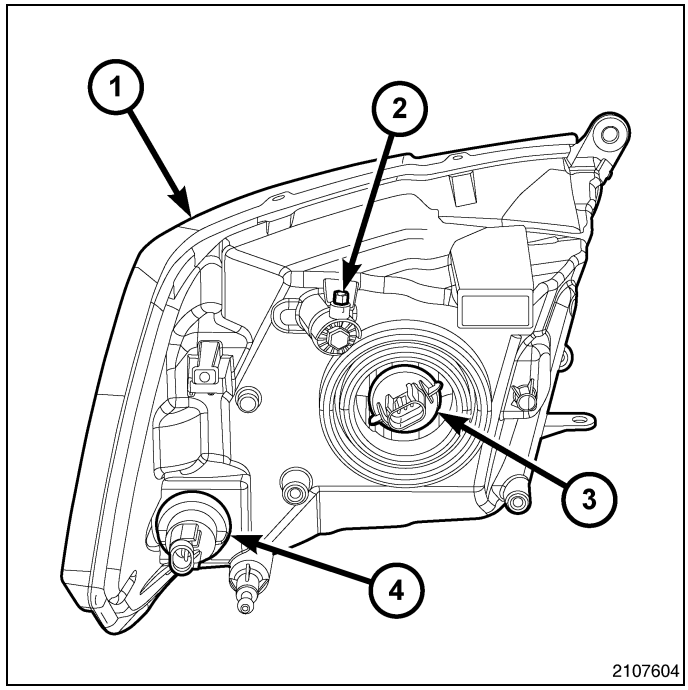

Dual Headlamps

QUAD HEADLAMPS

CAUTION: Always use the correct bulb size and type for replacement. An incorrect bulb size or type may overheat and cause damage to the lamp, the socket or the lamp wiring.

CAUTION: Do not contaminate the bulb glass by touching it with your fingers or by allowing it to contact other oily surfaces. Shortened bulb life will result.

NOTE: There are access covers (6) installed over both headlamp bulb access holes in the quad front lamp unit housing. The illustration shows the cover for the low beam bulb removed for reference; however, both covers MUST be reinstalled prior to returning the vehicle to service.

1. Position the headlamp bulb (5) close enough to the appropriate low beam (upper) or high beam (lower) opening of the front lamp unit housing (1) to access and reconnect the front lamp unit pigtail wire harness connector to the bulb connector receptacle.
2. Align the headlamp bulb with the appropriate low beam (upper) or high beam (lower) keyed opening in the front lamp unit reflector.
3. Insert the bulb into the reflector until it is firmly seated.
4. Rotate the bulb clockwise about 30 degrees to lock it into place.
5. Align the access cover (6) with the appropriate low beam (upper) or high beam (lower) opening in the front lamp unit housing.
6. Insert the access cover into the housing until it is firmly seated.
7. Rotate the access cover clockwise to lock it into place.
8. Reinstall the front lamp unit onto the vehicle. (Refer to 08 - Electrical/8L - Lamps and Lighting/Lamps/Lighting - Exterior/UNIT, Front Lamp - Installation).

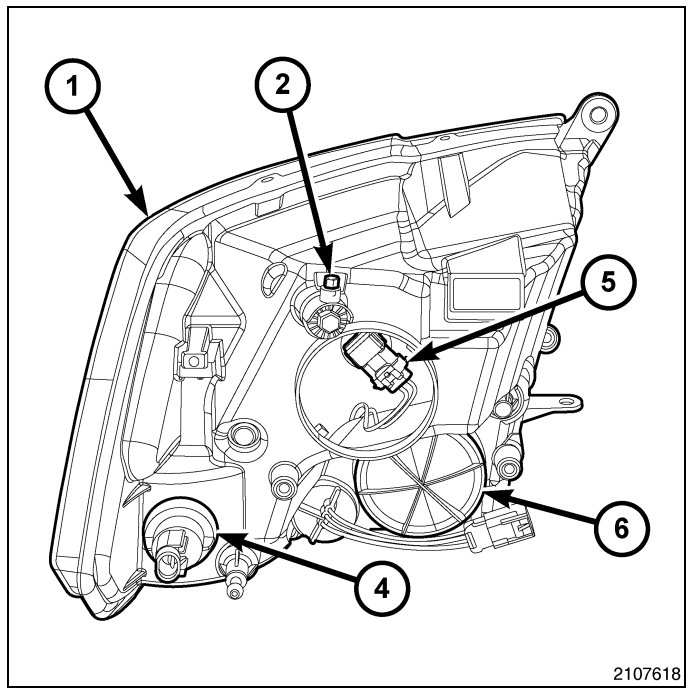

Quad Headlamps

BULB - PARK/TURN SIGNAL/SIDE MARKER

CAUTION: Always use the correct bulb size and type for replacement. An incorrect bulb size or type may overheat and cause damage to the lamp, the socket or the lamp wiring.

1. Align the base of the bulb (2) with the park/turn signal bulb socket (1).
2. Push the bulb straight into the socket until the base is firmly seated.

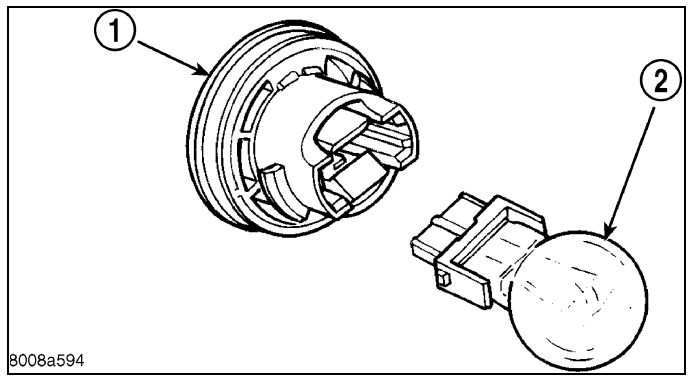

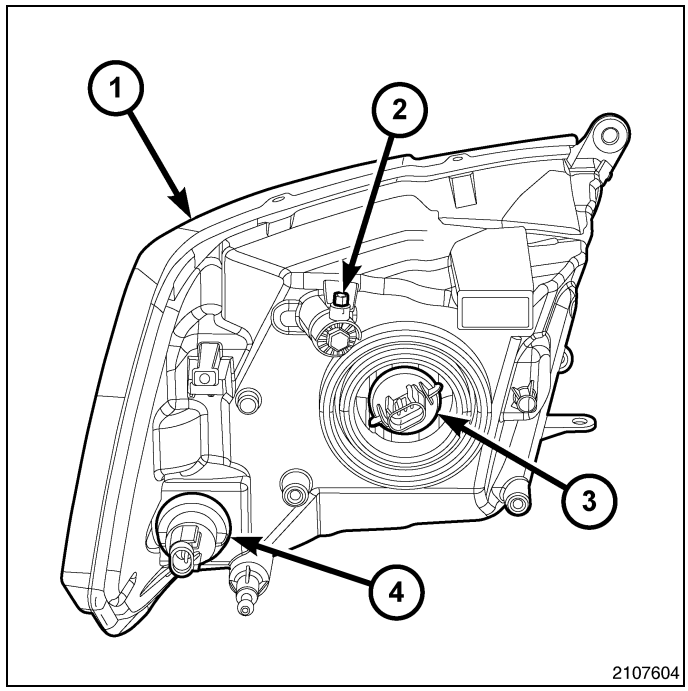

Dual Headlamps

3. Align the socket and bulb (4) with the keyed opening on the back of the front lamp unit housing (1).
4. Insert the socket and bulb into the housing until the socket is firmly seated.
5. Rotate the socket clockwise about 30 degrees to lock it into place.
6. Reinstall the front lamp unit onto the vehicle. (Refer to 08 - Electrical/8L - Lamps and Lighting/Lamps/Lighting - Exterior/UNIT, Front Lamp - Installation).

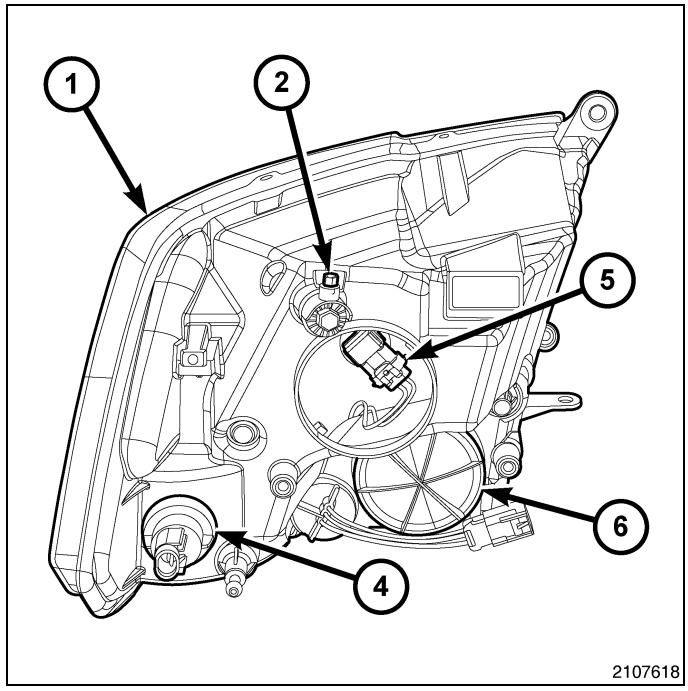

Quad Headlamps

LAMP

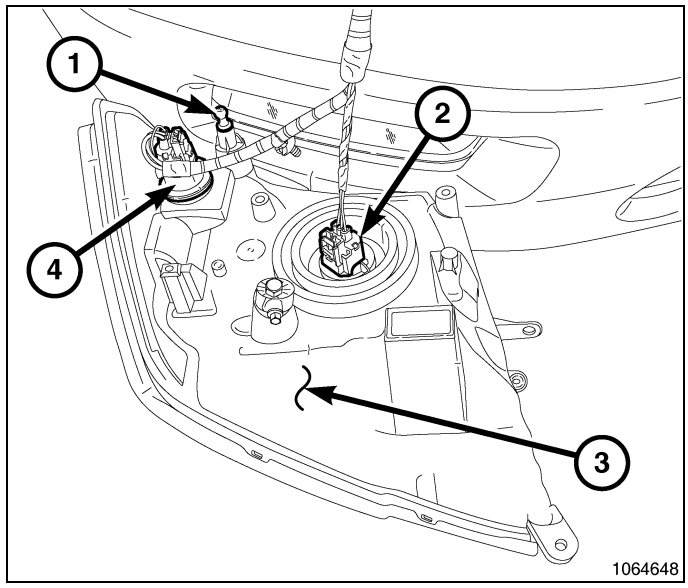

1. Check to be certain that the plastic grommet that receives the ball stud (1) on the lower outboard corner of the front lamp unit housing (3) is in good condition and properly installed in the Front End Module (FEM) carrier (also known as the radiator closure panel) and that the slide lock is in the unlocked (fully upward) position.
2. Position the lamp close enough to the front of the vehicle to access and reconnect the two wire harness connections to the park/turn signal bulb socket (4) and either the headlamp bulb (2) on vehicles with dual headlamps, or to the headlamp pigtail wire harness on vehicles with quad headlamps (not shown).
3. Rearrange the wire harnesses as necessary to prevent them from becoming pinched between the back of the lamp housing and the FEM carrier.
4. Insert the mounting tabs on the inboard side of the lamp between the outboard edge of the grille and the FEM carrier.
5. Position the outboard side of the lamp to the fender and the FEM carrier.
6. Using hand pressure, push the outboard side of the lamp firmly and evenly rearward until the ball stud on the back of the lower outboard corner of the lamp snaps into the plastic grommet in the FEM carrier.

NOTE: The illustration shows the back of right front lamp unit and slide lock with the slide lock in the locked position.

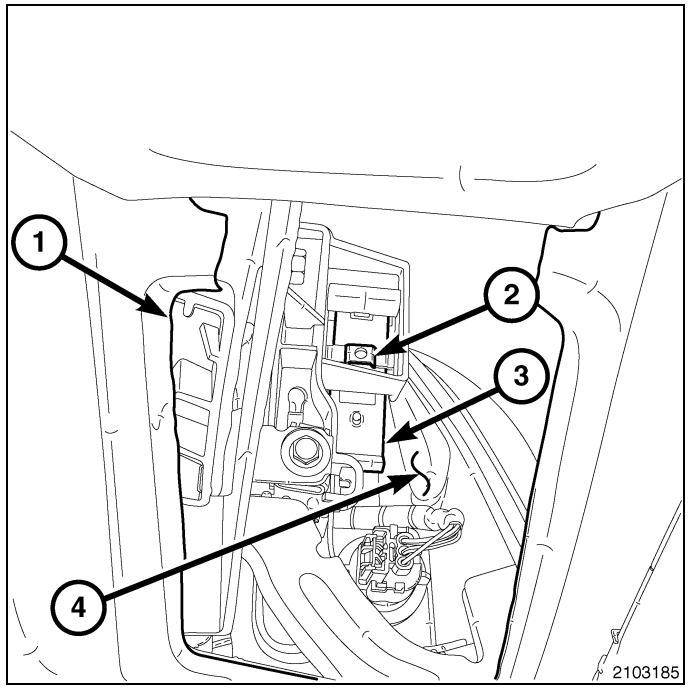

7. Reach through the access opening (1) of the wheel house splash shield and pull the slide lock (3) downward far enough to fully engage it over the lock post (2) integral to the back of the front lamp unit housing (4).

8. Position the access panel (2) to the front of the front wheel house splash shield (1) and reinstall the fastener to secure the tab at the bottom of the panel.

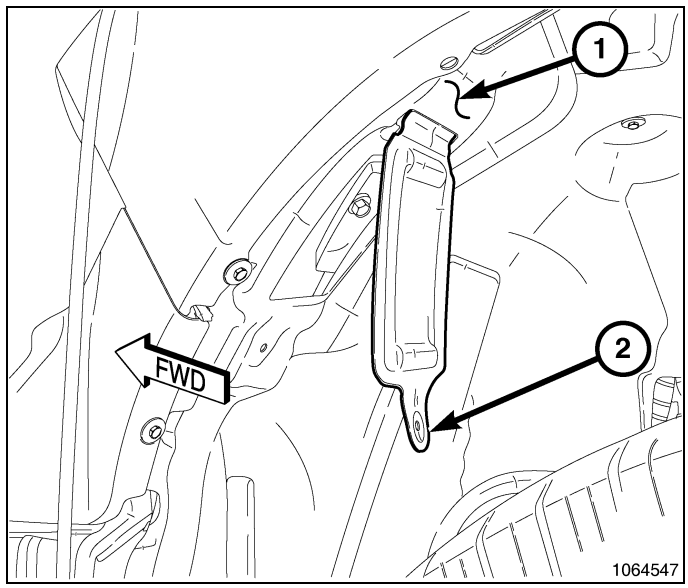

NOTE: It is not necessary to remove the grille from the front of the vehicle to service the front lamp units. The illustration shows the grille removed only to assist in clearly identifying the locations of the front lamp unit mounting provisions.

9. Using a socket with a magnetic insert or with a small piece of butyl tape inserted, reach down between the grille and the FEM carrier (4) to position and loosely install the screw (3) that secures the lower mounting tab of the front lamp unit to the FEM carrier.
10. Loosely install the screw (1) that secures the upper mounting tab of the front lamp unit (2).
11. Align the gaps between the lamp and the grille as well as between the lamp and the fender, then tighten the two screws that secure the inboard side of the lamp. Tighten the screws to 7 N·m (65 in. lbs.).

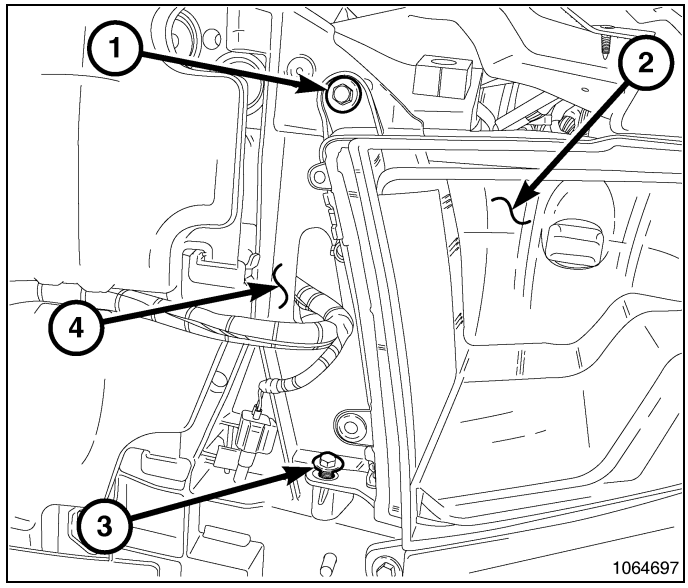

12. Check to be certain the fender bumper (3) is in good condition and properly installed on the forward edge of the fender ledge (2) between the fender (1) and the top of the front lamp unit (4) housing.

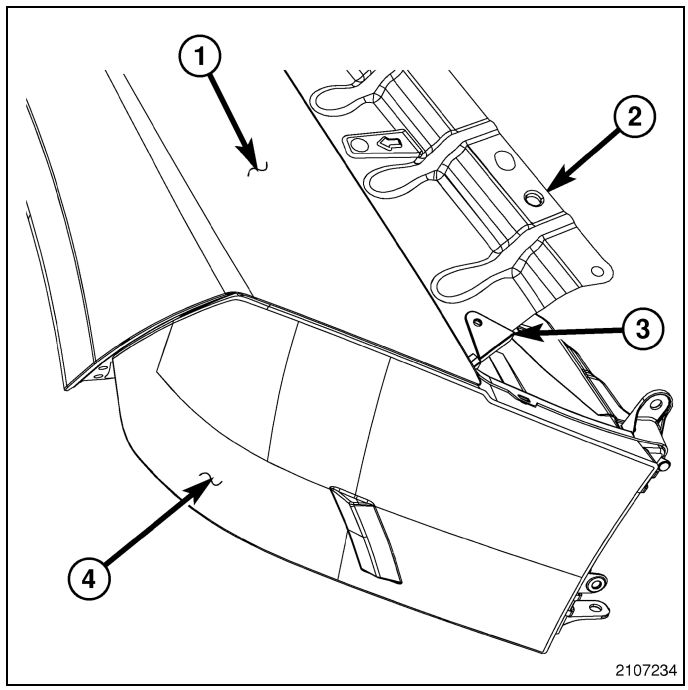

13. Position the upper radiator seal over the cooling module in the vehicle.
14. Reinstall the two plastic push-in fasteners (1) that secure the upper radiator seal to the grille support.
15. Reinstall the two plastic push-pin rivets (2) that secure the upper radiator seal to the radiator.
16. Reinstall the two plastic push-in fasteners that secure the upper radiator seal and the fender bumpers to both fender ledges.
17. Reconnect the battery negative cable.
18. Confirm proper headlamp alignment. (Refer to 08 - Electrical/8L - Lamps and Lighting/Lamps/Lighting - Exterior - Standard Procedure).

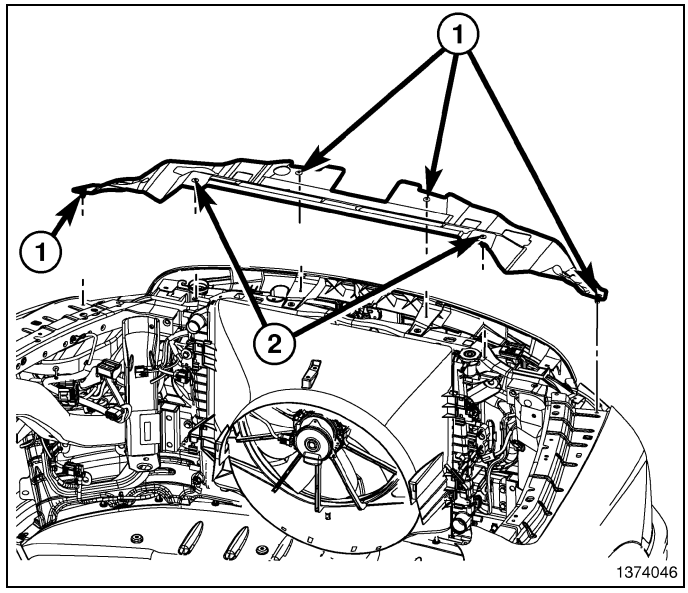

WIRING, Trailer Tow

Description

Vehicles equipped with a factory-installed trailer tow package include an electric trailer brake wiring provision that terminates at a four pin connector located near the top of the large body harness connector bracket under the instrument panel to the left of the steering column. An Electric Brake Kit is available from MOPAR® that includes a trailer brake pigtail harness that mates to the connector and an instruction card for ease of connecting an aftermarket electric trailer brake controller.

Refer to the appropriate wiring information. The wiring information includes wiring diagrams, proper wire and connector repair procedures, further details on wire harness routing and retention, as well as pin-out and location views for the various wire harness connectors, splices and grounds.

Operation

If an aftermarket electric trailer brake controller is used, the electric brake kit available through MOPAR® includes a pigtail wire harness and instruction card to make installation easier. The connection (4-way connector) for the harness is located under the instrument panel to the left of the steering column near the top of the large body harness connector bracket. Refer to the appropriate wiring information.

The battery line of this pigtail harness may be used to charge the trailer battery. However, a battery isolation unit is not supplied and the trailer battery may discharge the vehicle battery when the engine is not running. The battery line is protected by a fuse or a circuit breaker. Refer to the owner's manual in the vehicle glove box for type, location, and ampere rating of this circuit protection device.

The trailer tow wiring circuits and connections may be diagnosed using conventional diagnostic tools and procedures. Refer to the appropriate wiring information.

LAMPS/LIGHTING - INTERIOR

TABLE OF CONTENTS

page

LAMPS/LIGHTING - INTERIOR
DESCRIPTION 70
OPERATION 71
WARNING 72
DIAGNOSIS AND TESTING 72
SPECIFICATIONS 74
LAMP, BEZEL, CENTER
REMOVAL
BULB. 75
LAMP 75
INSTALLATION
BULB. 76
LAMP 76
LAMP, CARGO
REMOVAL 77
INSTALLATION 77
LAMP, DOME
REMOVAL
BULB. 78
LAMP 78
INSTALLATION
BULB. 79
LAMP 79
LAMP, GLOVE BOX
REMOVAL
BULB. 80
LAMP/SWITCH 80

page

INSTALLATION
BULB. 81
LAMP/SWITCH 81
LAMP, READING
REMOVAL 82
INSTALLATION 83
LAMP, STORAGE BOX
DESCRIPTION. 84
OPERATION 85
REMOVAL
BULB. 85
BUTTON. 86
LAMP 86
SWITCH 87
INSTALLATION
BULB. 87
BUTTON. 88
LAMP 88
SWITCH 89
LAMP, VANITY
REMOVAL 89
INSTALLATION 90
SWITCH, DOOR AJAR
DESCRIPTION. 91
OPERATION 91

Lamps/Lighting - Interior

Description

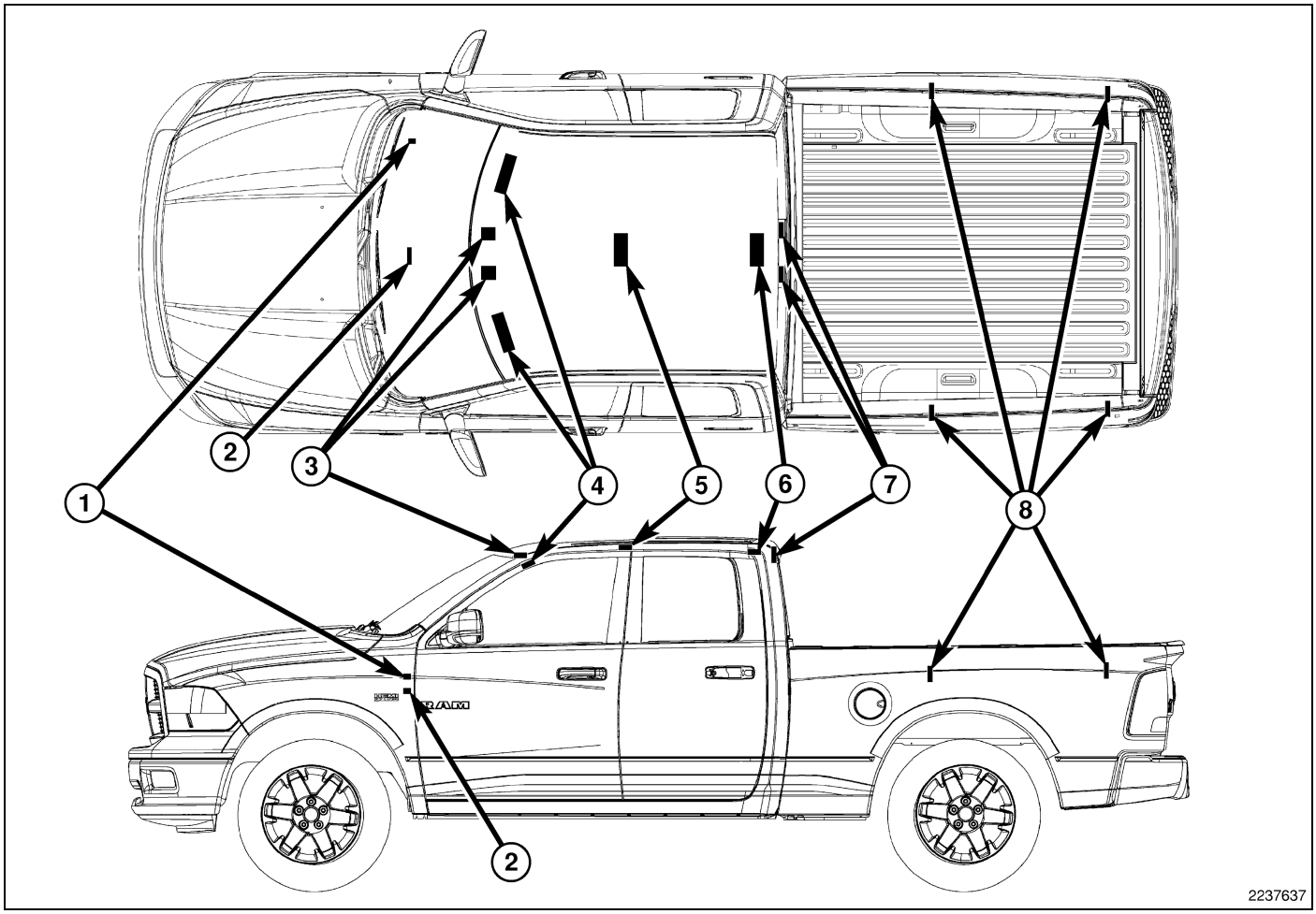

The interior lighting system for this vehicle includes incandescent lighting on several separate circuits. The lamps in the interior lighting system include:

- **Cargo Lamps (7)** - The standard equipment cargo lamps are integral to the Center High Mounted Stop Lamp (CHMSL) located on the roof rear header above the rear glass on the back of the cab. One cargo lamp bulb is behind a clear lens on each outboard side of the center red lens of the CHMSL. The cargo lamps are manually activated or deactivated by depressing the momentary cargo lamps push button of the headlamp switch on the instrument panel to illuminate the cargo area of the pickup box. The cargo lamps will also be activated for approximately 30 seconds when the Remote Keyless Entry (RKE) transmitter UNLOCK button is depressed, as part of the Illuminated Entry feature.
- **Center Bezel Lamp (2)** - An optional center bezel lamp with a replaceable bulb is located on the underside of an opening in the instrument panel center bezel to illuminate the center console forward storage bin and is supplied voltage by the park lamp circuit to illuminate whenever the exterior lighting is turned ON.
- **Front Dome or Dome/Reading Lamp (Standard Cab Except With Overhead Console) (6)** - On standard cab the dome lamp is centered front to rear in the headliner. The standard (base) dome lamp has a single bulb and is switched by the door ajar switches or the interior lighting thumbwheel of the headlamp switch. The optional dome/reading lamp is mounted in the same location but includes an integral switch that is actuated by depressing the lamp lens.
- **Front Dome or Dome/Reading Lamp (Quad or Crew Cab Except With Overhead Console) (3)** - On quad cab or crew cab the front dome lamp is centered front to rear in the headliner. The standard (base) dome lamp has a single bulb and is switched by the door ajar switches or the interior lighting thumbwheel of the headlamp switch. The optional dome/reading lamp is mounted in the same location but also includes an integral switch that is actuated by depressing the lamp lens.
- **Front Dome/Reading Lamps (With Overhead Console) (5)** - In vehicles equipped with an optional overhead console there are two dome/reading lamps that are integral to the overhead console, which is centered in the headliner near the windshield header. The overhead console lamps are switched by the door ajar switches or the interior light-

ing thumbwheel of the headlamp switch, but also have switches that are individually actuated by depressing their respective lamp lenses.

- **Glove Box Lamp (1)** - An optional glove box lamp with an integral switch is located at the upper left corner of the instrument panel upper glove box bin and illuminates whenever the upper glove box door is opened.
- **Rear Dome or Dome/Reading Lamp (Quad or Crew Cab Only) (6)** - The rear dome lamp on quad cab and crew cab includes a single bulb and is switched by the door ajar switches or the interior lighting thumbwheel of the headlamp switch. This lamp is centered in the headliner near the back of the cab. The optional dome/reading lamp is mounted in the same location but includes an integral switch that is actuated by depressing the lamp lens.
- **Storage Bin Lamps (8)** - In vehicles equipped with the optional Rambox storage bins there are two lamps located in each storage bin that are controlled by a plunger-type switch that is automatically activated to turn the lamps ON when the storage bin cover is opened, and turn them OFF again when the storage bin cover is closed. Each storage bin also has a push button switch at the rear of the bin that allows the lamps to be manually toggled ON and OFF while the storage bin cover is open.
- **Vanity Lamps (4)** - An optional single intensity vanity lamp is located on one side of a covered mirror on both the right and left sun visors, and is controlled by an integral vanity mirror cover-actuated switch.

Most controls on the instrument panel and elsewhere in the interior of the vehicle are illuminated by the panel lamps dimmer circuit for night visibility. All have miniature incandescent bulbs, Light-Emitting Diode (LED) units or a combination of the two lighting types that are soldered to internal circuit boards and are not serviceable.

Other components of the interior lighting system for this vehicle include:

- **Door Ajar Switches** - A door ajar switch is integral to the door latch mechanism of each front and rear door.
- **Headlamp Switch** - A headlamp switch is located on the left side of the instrument panel, below and outboard of the steering column. The headlamp switch includes a horizontal thumbwheel for selecting the panel lamps dimming level and for interior lighting control. A PARADE position of the thumbwheel illuminates all display units at full brightness for visibility when driving in daylight with the exterior lighting turned ON. There are also detent positions to turn ON all interior courtesy lighting, and a DEFEAT position that overrides door ajar switch control of interior lighting. (Refer to 08 - Electrical/8L - Lamps and Lighting/Lamps/Lighting - Exterior/SWITCH, Headlamp - Description).
- **Instrument Cluster** - The ElectroMechanical Instrument Cluster (EMIC) is also known as the Cab Compartment Node (CCN) in this vehicle. The EMIC/CCN is located in the instrument panel above the steering column opening, directly in front of the driver. (Refer to 08 - Electrical/8J - Instrument Cluster - Description).
- **Totally Integrated Power Module** - The Totally Integrated Power Module (TIPM) is located in the engine compartment, near the battery. (Refer to 08 - Electrical/8W - Wiring/Power Distribution - Description).

Hard wired circuitry connects the interior lighting system components to the electrical system of the vehicle. These hard wired circuits are integral to several wire harnesses, which are routed throughout the vehicle and retained by many different methods. These circuits may be connected to each other, to the vehicle electrical system and to the interior lighting components through the use of a combination of soldered splices, splice block connectors, and many different types of wire harness terminal connectors and insulators. Refer to the appropriate wiring information. The wiring information includes wiring diagrams, proper wire and connector repair procedures, further details on wire harness routing and retention, as well as pin-out and location views for the various wire harness connectors, splices and grounds.

Operation

The lamps of the interior lighting system can be divided into general classifications based upon the circuit that controls their operation: The courtesy lamp circuit, the reading lamps circuit and the panel lamps dimmer circuit. The optional center bezel lamp is actually controlled by a park lamps output of the Totally Integrated Power Module (TIPM), which energizes this circuit at a fixed intensity whenever the exterior lighting is illuminated. The optional Rambox storage bin lamps are controlled by a fused B(+) output that also originates from the TIPM. Following are paragraphs that briefly describe the operation of the courtesy lamps, reading lamps and panel lamps dimmer interior lighting circuits.

The lamps and the hard wired circuits between components related to the interior lighting system may be diagnosed using conventional diagnostic tools and procedures. Refer to the appropriate wiring information. The wiring information includes wiring diagrams, proper wire and connector repair procedures, details of wire harness routing and retention, connector pin-out information and location views for the various wire harness connectors, splices and grounds.

However, conventional diagnostic methods will not prove conclusive in the diagnosis of the interior lighting system or the electronic controls or communication between modules and other devices that provide some features of the interior lighting system. The most reliable, efficient, and accurate means to diagnose the interior lighting system or the electronic controls and communication related to interior lighting system operation requires the use of a diagnostic scan tool. Refer to the appropriate diagnostic information.

COURTESY LAMP CIRCUIT

Depending upon the selected vehicle options, the courtesy lamp circuit may include the dome and dome/reading lamps located in the headliner near the windshield as well as between the front and rear seating, the cargo lamps located near the center of the rear roof header, the glove box lamp in the upper glove box bin in the instrument panel, and the vanity lamps located in the sun visors. The lamps in the courtesy lamp circuit are provided with a path to ground at all times. The ElectroMechanical Instrument Cluster (EMIC) (also known as the Cab Compartment Node/CCN) controls the output of battery voltage for the courtesy lamps in this circuit based upon hard wired inputs from the headlamp switch and electronic message inputs from the ignition switch (also known as the Wireless Ignition Node/WIN) and the TIPM.

After all of the ajar switch inputs to the TIPM transition to open and the EMIC receives the appropriate electronic **door ajar switch status** messages from the TIPM over the Controller Area Network (CAN) data bus, the EMIC will keep the courtesy lamps illuminated for about 30 seconds, then fade the lamps to OFF (theater dimming) over about 3 seconds. The EMIC also provides courtesy lamp operation based upon a resistor multiplexed input from the interior lighting thumbwheel on the headlamp switch, and provides an Illuminated Entry feature in response to certain electronic **ignition switch status** message inputs received from the WIN and the Occupant Restraint Controller (ORC) over the CAN data bus. A resistor multiplexed courtesy lamp DEFEAT input from the interior lighting thumbwheel of the headlamp switch will cause the EMIC to override normal courtesy lamp operation.

The EMIC provides a battery saver (load shedding) feature for all courtesy lamps, which will automatically turn these lamps OFF if they are left ON for more than about 10 minutes after the electronic **ignition switch status** message transitions to OFF, or about 15 minutes in the case of the cargo lamps.

READING LAMP CIRCUIT

For those lamps on the courtesy lamp circuit with independent switching such as the standard or optional map/reading lamps, the optional vanity lamps and the glove box lamp, the EMIC also provides a battery voltage output to those switches through a separate reading lamp circuit. The EMIC provides a battery saver (load shedding) feature for the reading lamp circuit as well as the courtesy lamp circuit, which will automatically turn these lamps OFF if they are left ON for more than about 10 minutes after the electronic **ignition switch status** message transitions to OFF.

PANEL LAMPS DIMMER CIRCUIT

The panel lamps dimmer circuit actually includes several circuits. These circuits control the back lighting illumination and dimming level of the headlamp switch, the heater-air conditioner controls, the instrument panel switch pods, the four-wheel drive selector switch and the automatic transmission gear selector bezel lamp. All lamps in the panel lamps dimmer circuits are provided a path to ground at all times through a hard wired ground circuit. These lamps are illuminated by a 12-volt Pulse Width Modulated (PWM) output of the EMIC through several panel lamps dimmer circuits.

This shared PWM output synchronizes the selected illumination intensity level of all the lamps in the panel lamps dimmer circuits. The EMIC uses hard wired inputs from the rotary exterior lighting control knob and interior lighting thumbwheel of the headlamp switch to determine when the exterior lighting is turned ON and the dimming level selection. Then the EMIC provides the appropriate PWM outputs through the panel lamps dimmer circuits as well as electronic **dimming level** messages over the CAN data bus to other electronic modules in the vehicle.

The EMIC, the instrument panel switch pods and the radio use the electronic **dimming level** messages to control the illumination intensity of their own back lighting, controls and display units. In addition, when the interior lighting thumbwheel of the headlamp switch is moved to the PARADE (or funeral) mode detent position, all of the electronic display units are illuminated at their full intensity levels for increased visibility when the vehicle is driven during daylight hours with the exterior lighting turned ON. The PARADE mode has no effect on the illumination intensity of incandescent panel lamps.

Warning

WARNING: To avoid serious or fatal injury eye protection should be used when servicing any glass components.

CAUTION: Do not use bulbs with higher candle power than indicated in the Bulb Application table (Refer to 08 - Electrical/8L - Lamps and Lighting/Lamps/Lighting - Interior - Specifications). In addition, do not use fuses, circuit breakers or relays having greater amperage value than indicated on the fuse panel or in the Owner's Manual. Damage to lamps, lenses, wiring and other related electrical components can result.

Diagnosis and Testing

WARNING: To avoid serious or fatal injury on vehicles equipped with airbags, disable the Supplemental Restraint System (SRS) before attempting any steering wheel, steering column, airbag, seat belt tensioner, impact sensor

or instrument panel component diagnosis or service. Disconnect and isolate the battery negative (ground) cable, then wait two minutes for the system capacitor to discharge before performing further diagnosis or service. This is the only sure way to disable the SRS. Failure to take the proper precautions could result in accidental airbag deployment.

NOTE: When diagnosing the interior lighting circuits, remember that high generator output can burn out bulbs rapidly and repeatedly; and, that dim or flickering bulbs can be caused by low generator output or poor battery condition. If one of these symptoms is a problem on the vehicle, be certain to diagnose the battery and charging system, then repair as necessary.

NOTE: A good ground is necessary for proper lighting operation. If a lighting problem is being diagnosed that involves multiple symptoms, systems, or components, the problem can often be traced to a loose, corroded, or open ground.

The hard wired circuits between components related to the operation of the interior lighting system may be diagnosed using conventional diagnostic tools and procedures. Refer to the appropriate wiring information. The wiring information includes wiring diagrams, proper wire and connector repair procedures, details of wire harness routing and retention, connector pin-out information and location views for the various wire harness connectors, splices and grounds.

However, conventional diagnostic methods will not prove conclusive in the diagnosis of the interior lighting system or the electronic controls or communication between modules and other devices that provide some features of the interior lighting system. The most reliable, efficient, and accurate means to diagnose the interior lighting system or the electronic controls and communication related to interior lighting system operation requires the use of a diagnostic scan tool. Refer to the appropriate diagnostic information.

COURTESY AND READING LAMP CIRCUITS

CONDITION	POSSIBLE CAUSES	CORRECTION
A SINGLE LAMP IN THE COURTESY LAMP CIRCUIT DOES NOT ILLUMINATE	1. Ineffective or missing bulb.	1. Test and replace the courtesy lamp bulb if required.
	2. Ineffective lamp switch.	2. Test and replace a dome lamp switch, dome/reading lamp switch, glove box lamp switch or vanity lamp switch if required.
	3. Ineffective ground circuit.	3. Test and repair the open ground circuit if required.
	4. Ineffective feed circuit.	4. Test and repair the open feed circuit if required.
ALL LAMPS IN THE COURTESY LAMP CIRCUIT DO NOT ILLUMINATE	1. Courtesy DEFEAT feature turned ON.	1. Turn courtesy DEFEAT feature OFF.
	2. Ineffective ground circuit.	2. Test and repair the open ground circuit if required.
	3. Ineffective or missing fuse.	3. Test and replace the fuse if required.
	4. Ineffective courtesy lamp control circuit.	4. Test and repair the courtesy lamp control circuit if required.
	5. Ineffective headlamp switch.	5. Test and replace the headlamp switch if required.
	6. Ineffective ElectroMechanical Instrument Cluster (EMIC) inputs or outputs.	6. Use a diagnostic scan tool to test the EMIC inputs and outputs. Refer to the appropriate diagnostic information.
	7. Ineffective Totally Integrated Power Module (TIPM) inputs or outputs.	7. Use a diagnostic scan tool to test the TIPM inputs and outputs. Refer to the appropriate diagnostic information.
A SINGLE LAMP IN THE COURTESY LAMP CIRCUIT DOES NOT EXTINGUISH	1. Ineffective lamp switch.	1. Test and replace a dome lamp switch, dome/reading lamp switch, glove box lamp switch or vanity lamp switch if required.

CONDITION	POSSIBLE CAUSES	CORRECTION
ALL LAMPS IN THE COURTESY LAMP CIRCUIT DO NOT EXTINGUISH	1. Ineffective ajar switch.	1. Test and replace a door ajar switch if required.
	2. Ineffective ajar switch sense circuit.	2. Test and repair the shorted ajar switch sense circuit if required.
	3. Ineffective EMIC inputs or outputs.	3. Use a diagnostic scan tool to test the EMIC inputs and outputs. Refer to the appropriate diagnostic information.
	4. Ineffective TIPM inputs or outputs.	4. Use a diagnostic scan tool to test the TIPM inputs and outputs. Refer to the appropriate diagnostic information.

PANEL LAMPS DIMMER CIRCUIT

NOTE: As part of the exterior lighting failsafe feature, upon ignition ON all of the panel lamps dimmer circuit lamps will illuminate at full intensity and the exterior park lamps and headlamp low beams will illuminate regardless of the headlamp switch position if the instrument cluster cannot detect an input from the headlamp switch, or if there is a loss of data bus communication.

CONDITION	POSSIBLE CAUSES	CORRECTION
A SINGLE LAMP DOES NOT ILLUMINATE	1. Ineffective or missing bulb.	1. Test and replace the lamp bulb if required.
	2. Ineffective ground circuit.	2. Test and repair the open lamp ground circuit if required.
	3. Ineffective feed circuit.	3. Test and repair the open lamp feed circuit if required.
A SINGLE LAMP DOES NOT EXTINGUISH	1. Ineffective feed circuit.	1. Test and repair the shorted lamp feed circuit if required.
ALL LAMPS DO NOT ILLUMINATE	1. Ineffective headlamp switch.	1. Test and replace the headlamp switch if required.
	2. Ineffective ElectroMechanical Instrument Cluster (EMIC) inputs or outputs.	2. Use a diagnostic scan tool to test the EMIC inputs and outputs. Refer to the appropriate diagnostic information.
ALL LAMPS ILLUMINATE AT FULL INTENSITY AT IGNITION ON	1. Loss of data bus communication.	1. Use a diagnostic scan tool to test the data bus. Refer to the appropriate diagnostic information.

Specifications

COURTESY LAMPS

BULB APPLICATION TABLE

LAMP	BULB
CARGO LAMP	912
DOME LAMP (NON-SWITCHED OR SWITCHED)	578
FRONT DOME/READING WITH OVERHEAD CONSOLE	212-2
GLOVE BOX LAMP	194
RAMBOX STORAGE BIN LAMP	194
VANITY LAMP	37

TORQUE SPECIFICATIONS

DESCRIPTION	N·m	Ft. Lbs.	In. Lbs.
CHMSL Mounting Screws	2	-	20

LAMP, Bezel, Center

Removal

BULB

WARNING: To avoid serious or fatal injury on vehicles equipped with airbags, disable the Supplemental Restraint System (SRS) before attempting any steering wheel, steering column, airbag, seat belt tensioner, impact sensor or instrument panel component diagnosis or service. Disconnect and isolate the battery negative (ground) cable, then wait two minutes for the system capacitor to discharge before performing further diagnosis or service. This is the only sure way to disable the SRS. Failure to take the proper precautions could result in accidental airbag deployment.

1. Disconnect and isolate the battery negative cable.
2. Remove the center bezel lamp unit (4) from the instrument panel center bezel. (Refer to 08 - Electrical/8L - Lamps and Lighting/Lamps/Lighting - Interior/LAMP, Bezel - Removal).
3. Depress the latch tab (2) and slide the hood (1) off of the end of the lamp housing.
4. Pull the base of the bulb (3) straight out of the bulb holder within the lamp housing.

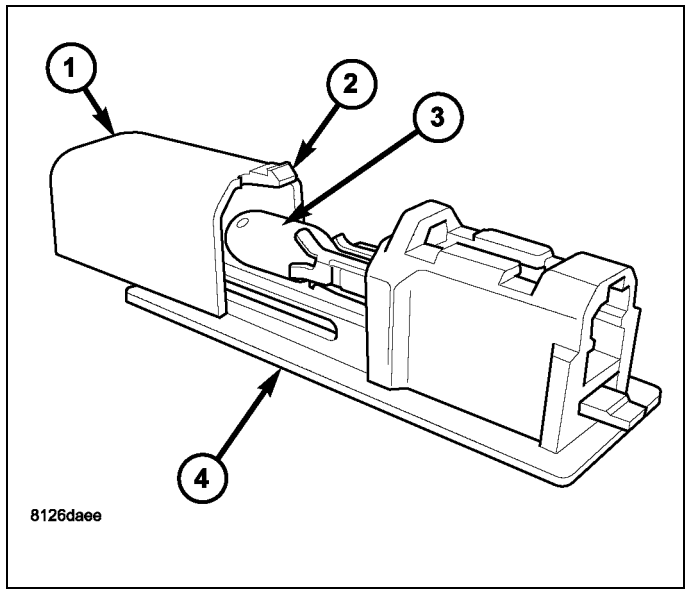

LAMP

WARNING: To avoid serious or fatal injury on vehicles equipped with airbags, disable the Supplemental Restraint System (SRS) before attempting any steering wheel, steering column, airbag, seat belt tensioner, impact sensor or instrument panel component diagnosis or service. Disconnect and isolate the battery negative (ground) cable, then wait two minutes for the system capacitor to discharge before performing further diagnosis or service. This is the only sure way to disable the SRS. Failure to take the proper precautions could result in accidental airbag deployment.

1. Disconnect and isolate the battery negative cable.
2. The center bezel lamp unit (3) is located on the instrument panel center bezel (4), in the roof of the bezel opening located over the center floor console forward storage bin. Reach into the bin and use a small thin-bladed screwdriver to depress the tab of the lamp latch feature on the end of the lamp housing nearest the lens.
3. Pull the lamp down and toward the right to disengage the fixed lamp retainer from the mounting hole of the center bezel.
4. Disconnect the instrument panel wire harness (1) connector (2) from the lamp connector receptacle.
5. Remove the lamp unit from the center bezel.

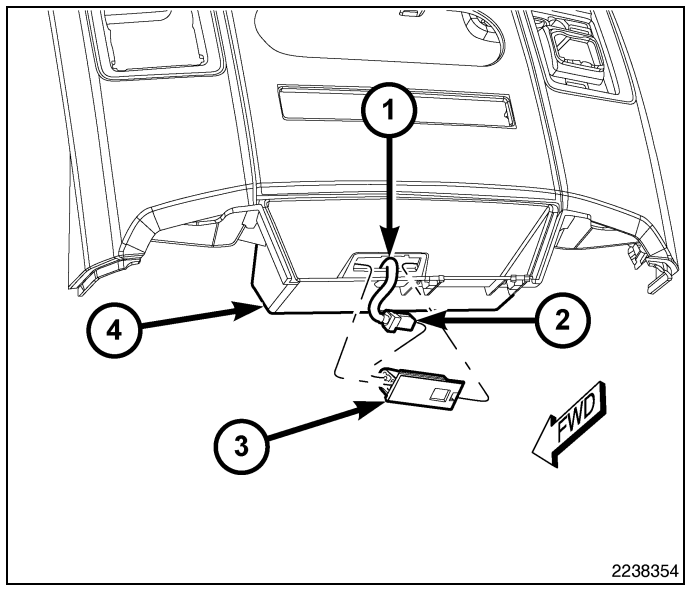

Installation

BULB

WARNING: To avoid serious or fatal injury on vehicles equipped with airbags, disable the Supplemental Restraint System (SRS) before attempting any steering wheel, steering column, airbag, seat belt tensioner, impact sensor or instrument panel component diagnosis or service. Disconnect and isolate the battery negative (ground) cable, then wait two minutes for the system capacitor to discharge before performing further diagnosis or service. This is the only sure way to disable the SRS. Failure to take the proper precautions could result in accidental airbag deployment.

CAUTION: Always use the correct bulb size and type for replacement. An incorrect bulb size or type may overheat and cause damage to the lamp, the socket or the lamp wiring.

1. Align the base of the center bezel lamp bulb (3) with the bulb holder within the lamp housing (4).
2. Push the bulb straight into the bulb holder until the base is firmly seated.
3. Slide the hood (1) over the end of the lamp housing until the latch tab (2) snaps into place.
4. Reinstall the lamp unit into the instrument panel center bezel. (Refer to 08 - Electrical/8L - Lamps and Lighting/Lamps/Lighting - Interior/LAMP, Bezel - Installation).
5. Reconnect the battery negative cable.

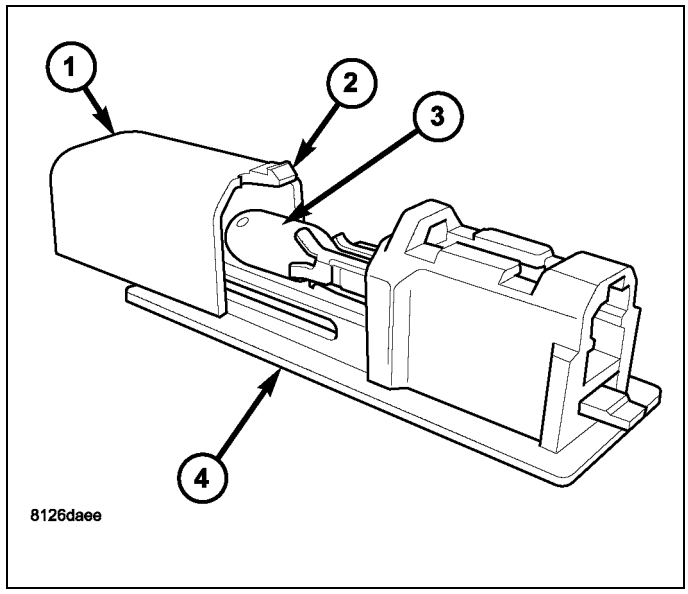

LAMP

WARNING: To avoid serious or fatal injury on vehicles equipped with airbags, disable the Supplemental Restraint System (SRS) before attempting any steering wheel, steering column, airbag, seat belt tensioner, impact sensor or instrument panel component diagnosis or service. Disconnect and isolate the battery negative (ground) cable, then wait two minutes for the system capacitor to discharge before performing further diagnosis or service.

This is the only sure way to disable the SRS. Failure to take the proper precautions could result in accidental airbag deployment.

1. Position the center bezel lamp unit (3) through the lower opening of the instrument panel center bezel (4) over the center floor console forward storage bin.
2. Reconnect the instrument panel wire harness (1) connector (2) to the lamp connector receptacle.
3. Engage the fixed lamp retainer with the left edge of the mounting hole in the roof of the center bezel opening.
4. Push the right end of the lamp upward until the lamp latch feature on the end of the lamp housing nearest the lens snaps into the mounting hole.
5. Reconnect the battery negative cable.

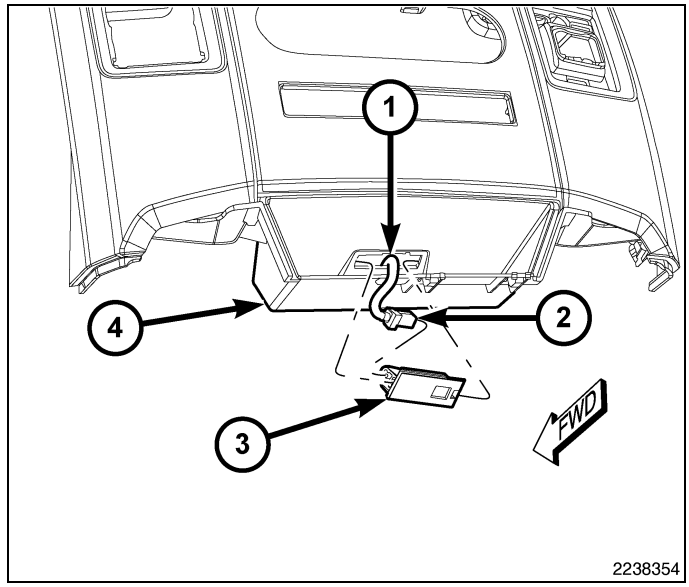

LAMP, Cargo

Removal

NOTE: The Center High Mounted Stop Lamp (CHMSL) may house up to three bulbs. The center bulb is the CHMSL bulb and illuminates through a red lens, while on vehicles so equipped the two outboard bulbs are for the cargo lamps and illuminate through clear lenses. The bulb types and service procedures are identical for all three of these bulbs.

1. Disconnect and isolate the battery negative cable.
2. Remove the two screws that secure the CHMSL to the rear cab roof header panel.
3. Pull the CHMSL lens and housing (1) away from the header panel far enough to access the lamp wiring and bulb sockets on the back of the lamp.
4. Firmly grasp either outboard socket (3) on the back of the lamp housing and rotate it counterclockwise about 30 degrees to unlock it.
5. Pull the socket and bulb straight out from the keyed opening in the housing.
6. Pull the base of the bulb (2) straight out of the socket.

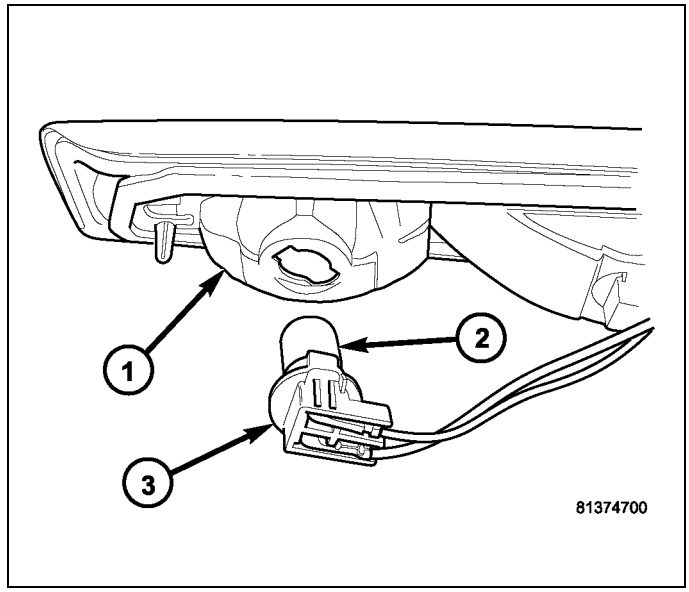

Installation

CAUTION: Always use the correct bulb size and type for replacement. An incorrect bulb size or type may overheat and cause damage to the lamp, the socket or the lamp wiring.

NOTE: The Center High Mounted Stop Lamp (CHMSL) may house up to three bulbs. The center bulb is the CHMSL bulb and illuminates through a red lens, while on vehicles so equipped the two outboard bulbs are for the cargo lamps and illuminate through clear lenses. The bulb types and service procedures are identical for all three of these bulbs.

1. Align the base of the bulb (2) with the socket (3).
2. Push the bulb straight into the socket until the base is firmly seated.
3. Align the socket and bulb with either keyed outboard opening on the back of CHMSL housing (1).
4. Insert the socket and bulb into the housing until the socket is firmly seated.
5. Rotate the socket clockwise about 30 degrees to lock it into place.
6. Position the CHMSL into the opening in the rear cab roof header panel.
7. Install and tighten the two screws (passenger side first) that secure the CHMSL to the header panel. Tighten the screws to 2 N·m (20 in. lbs.).
8. Reconnect the battery negative cable.

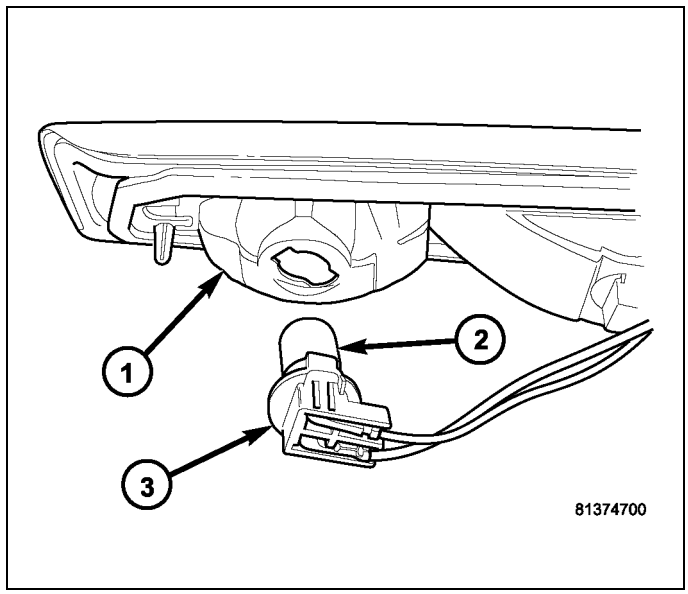

LAMP, Dome

Removal

BULB

NOTE: There are two types of single lamp dome lamps available in this vehicle: one with a switch that is activated by depressing the lamp lens, and one without a switch. The bulb types and service procedures are identical for both of these lamps.

1. Disconnect and isolate the battery negative cable.
2. Insert the tip of a small flat-bladed screwdriver into the notch on one side of the dome lamp between the lens (4) and the lamp housing (1).
3. Gently pry the notched edge of the lens downward until it unsnaps from the housing.
4. Swing the notched end of the lens downward far enough to access the bulb (3).
5. Carefully unsnap the bulb from the two bulb holders within the dome lamp housing.

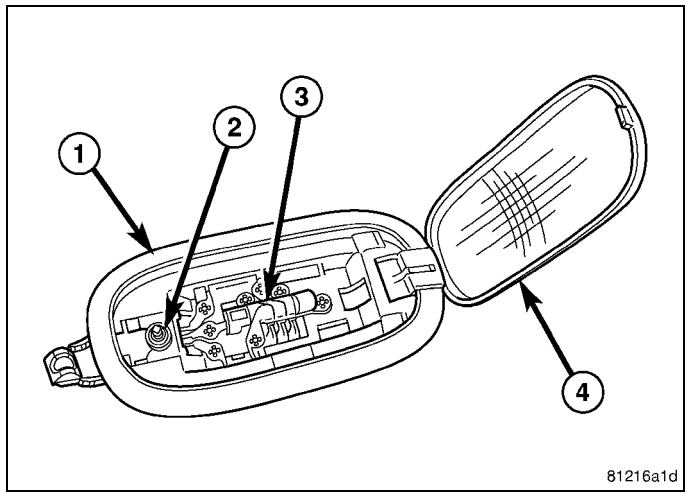

LAMP

NOTE: There are two types of single lamp dome lamps available in this vehicle: one with a switch that is activated by depressing the lamp lens, and one without a switch. The bulb types and service procedures are identical for both of these lamps.

1. Disconnect and isolate the battery negative cable.
2. Insert the tip of a small flat bladed screwdriver into the notch (5) between the lens (2) and the housing (1) on one side of the dome lamp unit.
3. Gently pry the end of the lens outward until it unsnaps from the housing.
4. Swing the lens outward until it is perpendicular to the housing.
5. Pull the lens hinge/retainer end (3) of the housing outward slightly from the headliner, then slide the exposed end of the housing away from the mounting hole far enough to disengage the fixed retainer (4) on the notched end from the headliner.
6. Pull the lamp away from the headliner mounting hole far enough to access and disconnect the wire harness connector from the back of the lamp.
7. Remove the lamp from the vehicle.

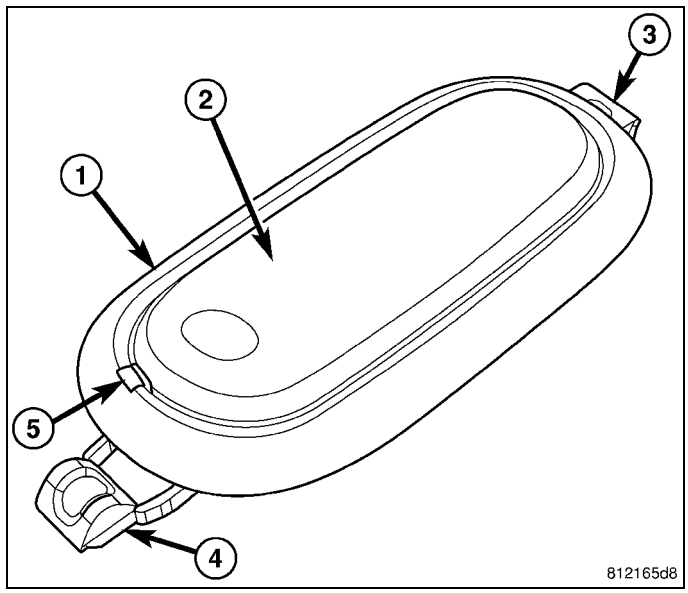

Installation

BULB

CAUTION: Always use the correct bulb size and type for replacement. An incorrect bulb size or type may overheat and cause damage to the lamp, the socket or the lamp wiring.

NOTE: There are two types of single lamp dome lamps available in this vehicle: one with a switch that is activated by depressing the lamp lens, and one without a switch. The bulb types and service procedures are identical for both of these lamps.

1. Align the ends of the bulb (3) with the two bulb holders within the dome lamp housing (1).
2. Carefully press the bulb firmly and evenly into the bulb holders until it snaps into place.
3. Swing the notched end of the lens (4) up into position against the housing, then press upward on the lens firmly and evenly until it snaps into the housing.
4. Reconnect the battery negative cable.

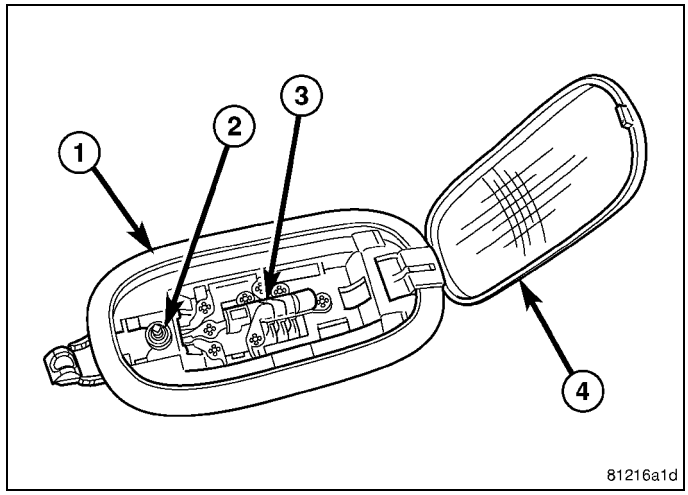

LAMP

NOTE: There are two types of single lamp dome lamps available in this vehicle: one with a switch that is activated by depressing the lamp lens, and one without a switch. The bulb types and service procedures are identical for both of these lamps.

1. Position the dome lamp unit (1) to the mounting hole in the headliner.
2. Reconnect the wire harness connector to the connector on the back of the lamp.
3. Insert the fixed retainer on the notched end (4) of the lamp housing up into one side of the mounting hole in the headliner.
4. Slide the notched end of the housing into the mounting hole far enough to engage the lens hinge/retainer (3) into the opposite side of the hole in the headliner.
5. Gently and evenly press the lens hinge/retainer end of the lamp into the mounting hole until the bezel of the lamp housing is flush with the headliner.
6. Swing the notched end of the lamp lens (2) into position against the lamp housing, then press on the lens firmly and evenly until it snaps into the housing.
7. Reconnect the battery negative cable.

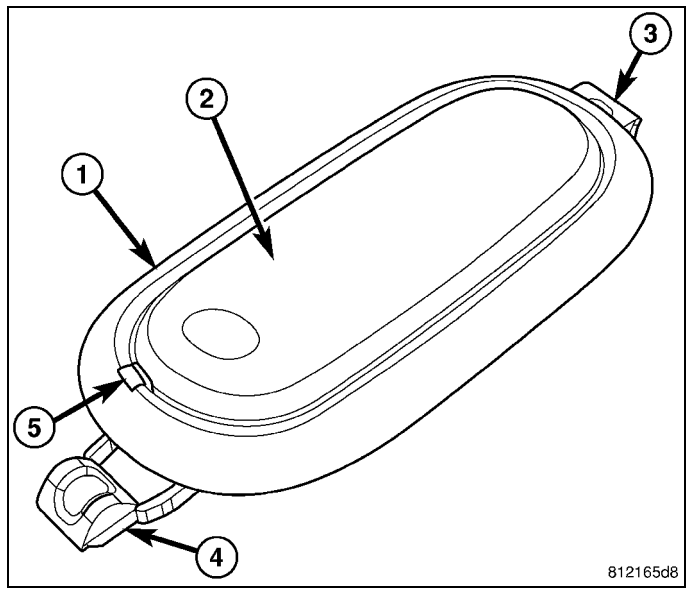

LAMP, Glove Box

Removal

BULB

WARNING: To avoid serious or fatal injury on vehicles equipped with airbags, disable the Supplemental Restraint System (SRS) before attempting any steering wheel, steering column, airbag, seat belt tensioner, impact sensor or instrument panel component diagnosis or service. Disconnect and isolate the battery negative (ground) cable, then wait two minutes for the system capacitor to discharge before performing further diagnosis or service. This is the only sure way to disable the SRS. Failure to take the proper precautions could result in accidental airbag deployment.

1. Disconnect and isolate the battery negative cable.
2. Open the upper glove box door.
3. Reach through the window (3) in the upper glove box bin (1) to access the bulb located in the bulb holder integral to the glove box lamp and switch unit (2).
4. Pull the base of the bulb straight out of the bulb holder and through the bin window.

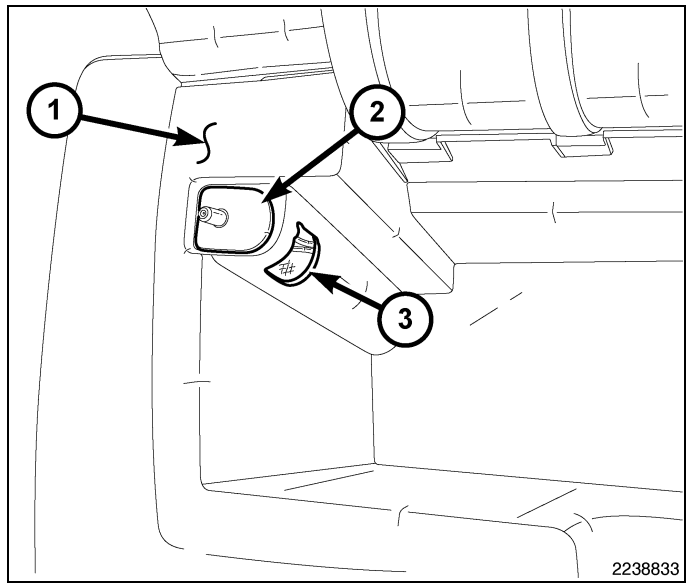

LAMP/SWITCH

WARNING: To avoid serious or fatal injury on vehicles equipped with airbags, disable the Supplemental Restraint System (SRS) before attempting any steering wheel, steering column, airbag, seat belt tensioner, impact sensor or instrument panel component diagnosis or service. Disconnect and isolate the battery negative (ground) cable, then wait two minutes for the system capacitor to discharge before performing further diagnosis or service. This is the only sure way to disable the SRS. Failure to take the proper precautions could result in accidental airbag deployment.

1. Disconnect and isolate the battery negative cable.
2. Open the upper glove box door.
3. Reach through the window (2) in the upper glove box bin (1) forward of the glove box lamp and switch unit (4) to access and depress one of the retaining latches (5) on the top or the bottom of the switch housing.
4. While holding the retaining latch depressed, push the glove box lamp and switch unit out through the mounting hole in the face of the bin.
5. Disconnect the instrument panel wire harness connector (3) from the glove box lamp and switch connector receptacle.
6. Remove the lamp and switch unit from the upper glove box bin.

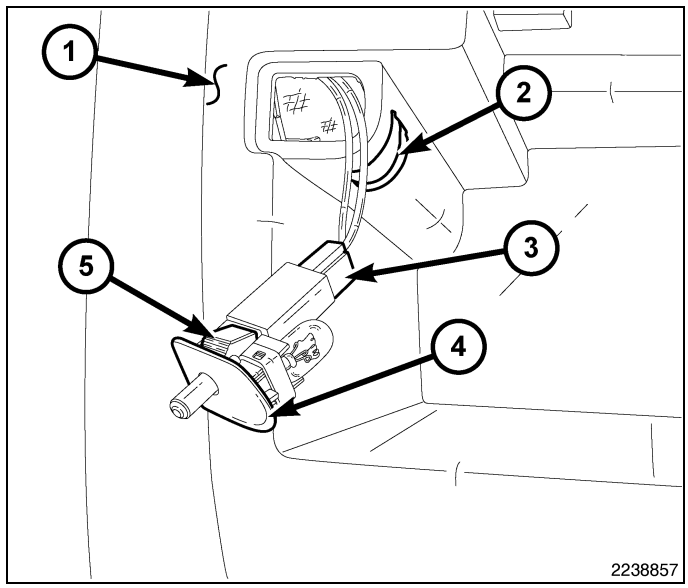

Installation

BULB

WARNING: To avoid serious or fatal injury on vehicles equipped with airbags, disable the Supplemental Restraint System (SRS) before attempting any steering wheel, steering column, airbag, seat belt tensioner, impact sensor or instrument panel component diagnosis or service. Disconnect and isolate the battery negative (ground) cable, then wait two minutes for the system capacitor to discharge before performing further diagnosis or service. This is the only sure way to disable the SRS. Failure to take the proper precautions could result in accidental airbag deployment.

CAUTION: Always use the correct bulb size and type for replacement. An incorrect bulb size or type may overheat and cause damage to the lamp, the socket or the lamp wiring.

1. Position the bulb through the window (3) in the upper glove box bin (1) and align the base of the bulb with the bulb holder integral to the glove box lamp and switch unit (2).
2. Push the bulb straight into the bulb holder until the base is firmly seated.
3. Close the upper glove box door.
4. Reconnect the battery negative cable.

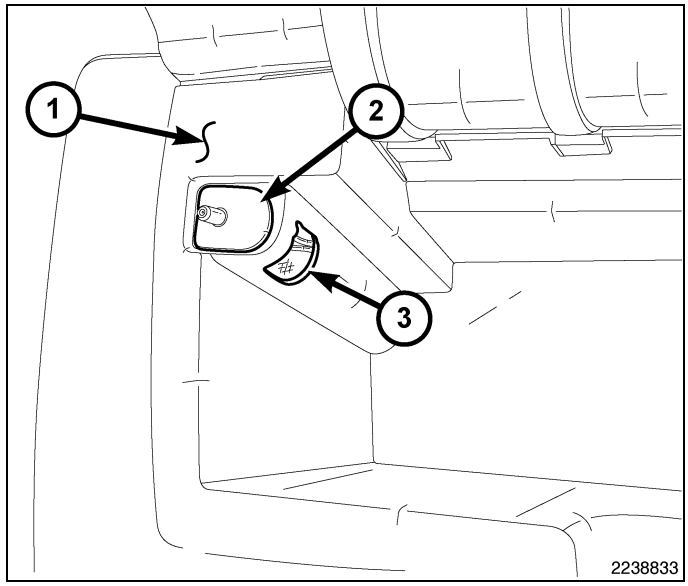

LAMP/SWITCH

WARNING: To avoid serious or fatal injury on vehicles equipped with airbags, disable the Supplemental Restraint System (SRS) before attempting any steering wheel, steering column, airbag, seat belt tensioner, impact sensor or instrument panel component diagnosis or service. Disconnect and isolate the battery negative (ground) cable, then wait two minutes for the system capacitor to discharge before performing further diagnosis or service. This is the only sure way to disable the SRS. Failure to take the proper precautions could result in accidental airbag deployment.

1. Position the glove box lamp and switch unit (4) into the upper glove box bin (1).
2. Reconnect the instrument panel wire harness connector (3) to the switch connector receptacle.
3. Feed the wire harness back through the switch mounting hole of the upper glove box bin.
4. Align the lamp and switch unit with the mounting hole in the bin.
5. Using hand pressure, push the lamp and switch unit firmly and evenly into the mounting hole until it is fully seated and both retaining latches (5) are engaged.
6. Close the upper glove box door.
7. Reconnect the battery negative cable.

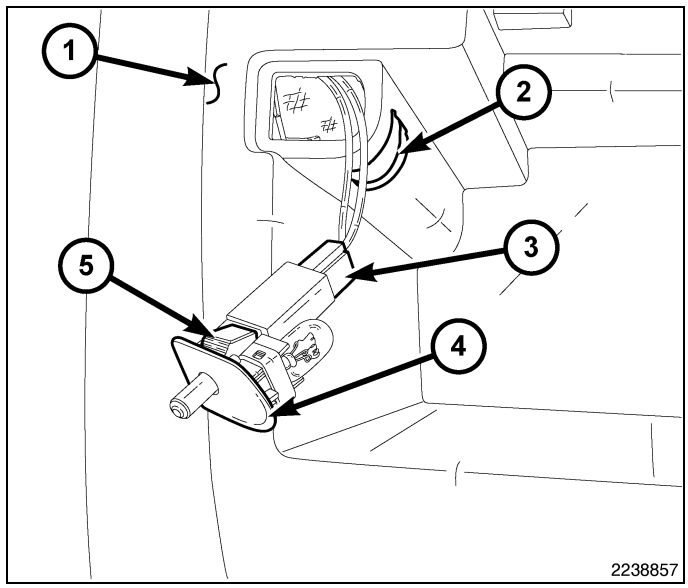

LAMP, Reading

Removal

NOTE: On vehicles equipped with an optional overhead console the standard front dome lamp is replaced by two combination dome and reading lamps that are integral to the console housing. Each of these lamps is controlled by the door ajar switches on the courtesy lamp circuit, but also are independently controlled by a switch that is activated by depressing the lamp lens. The bulb types and service procedures are identical for both of these lamps.

NOTE: The overhead console reading lamp switches and bulb holders are serviced as a unit with the overhead console wire harness.

1. Disconnect and isolate the battery negative cable.
2. Using a small thin-bladed screwdriver, gently pry near the front of the lamp lens between each side and the overhead console housing (1) to unsnap the pivot tabs (3) on the lens from the pivots in the lamp housing.
3. With the lens disengaged from both pivots, pull the lens forward far enough to disengage the switch tab (2) on the rear edge of the lens from the slot in the rear of the overhead console lamp housing.
4. Remove the lens from the housing.

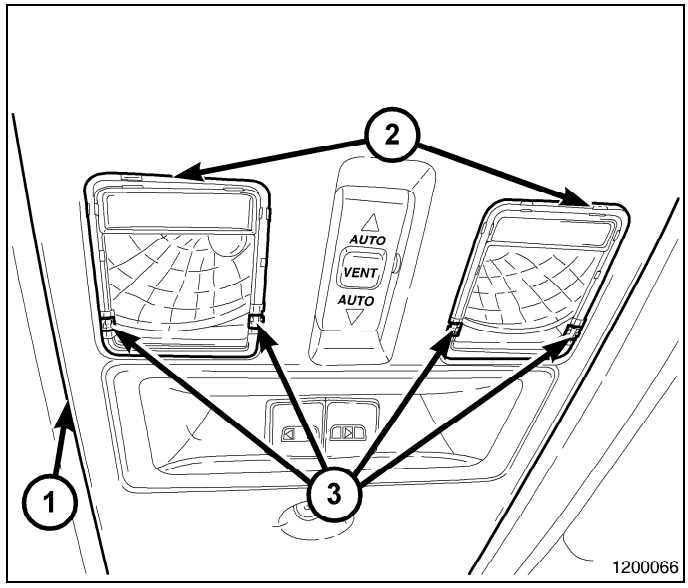

5. Firmly grasp the bulb (1) and pull it straight out of the socket.

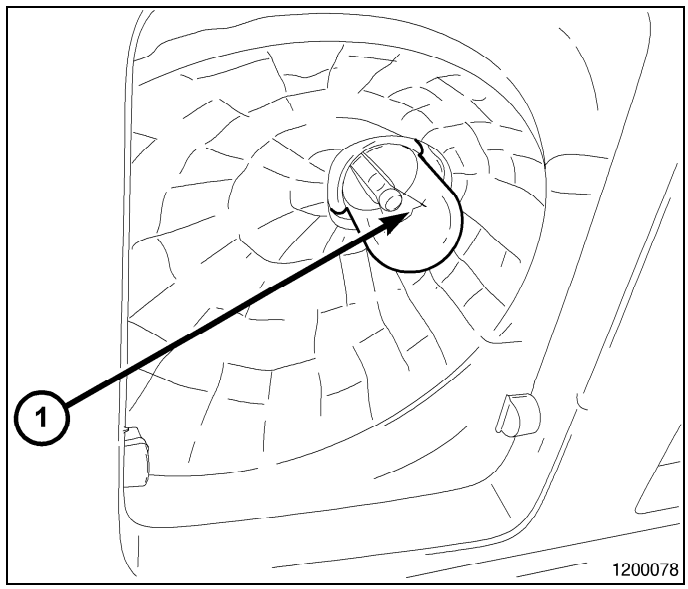

Installation

CAUTION: Always use the correct bulb size and type for replacement. An incorrect bulb size or type may overheat and cause damage to the lamp, the socket or the lamp wiring.

NOTE: On vehicles equipped with an optional overhead console the standard front dome lamp is replaced by two combination dome and reading lamps that are integral to the console housing. Each of these lamps is controlled by the door ajar switches on the courtesy lamp circuit, but also are independently controlled by a switch that is activated by depressing the lamp lens. The bulb types and service procedures are identical for both of these lamps.

NOTE: The overhead console reading lamp switches and bulb holders are serviced as a unit with the overhead console wire harness.

1. Align the base of the overhead console reading lamp bulb (1) with the socket.
2. Push the bulb straight into the socket until the base is firmly seated.

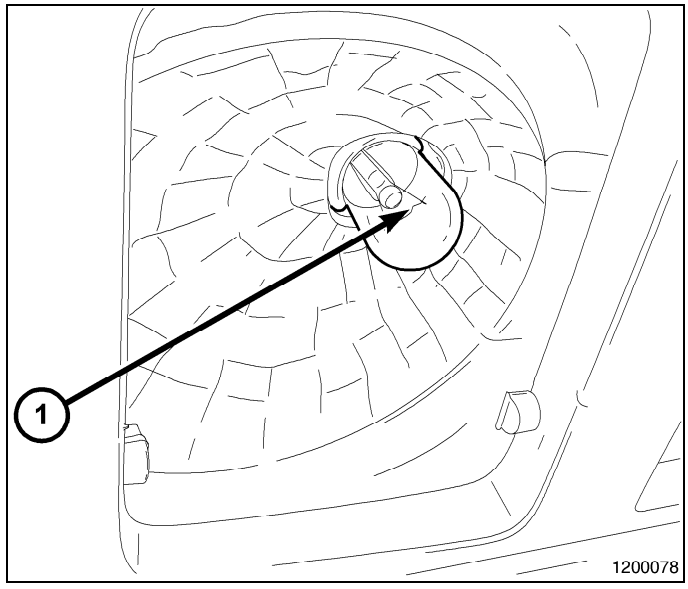

3. Position the lens switch tab (2) into the slot in the rear of the overhead console (1) lamp housing opening.
4. Align the pivot tabs (3) on each side of the lens with the pivots within the overhead console lamp housing.
5. Press firmly and evenly on the lens over both pivot locations until both pivot tabs snap back onto the pivots within the housing.
6. Reconnect the battery negative cable.

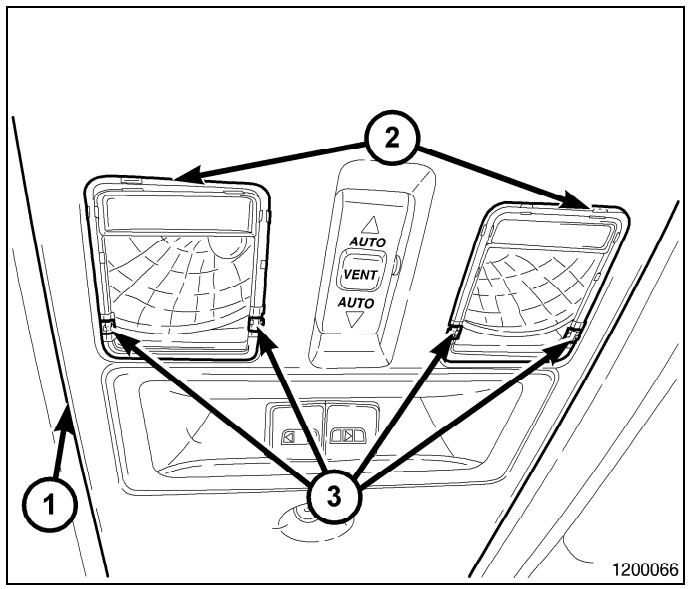

LAMP, Storage Box

Description

Two RamBox storage bins (1), one located in each bed rail of the pickup box, are an integral part of the RamBox storage and organization option for this vehicle. Each storage bin has integral interior lighting features that include the following components:

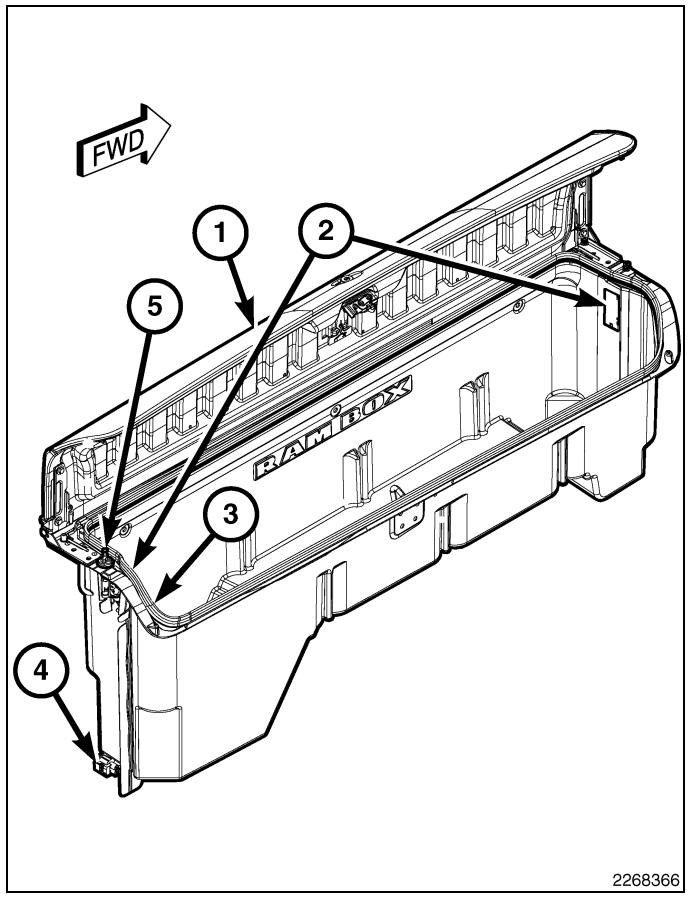

- **Ajar Switch (5)** - A normally closed, single pole, spring-loaded, plunger-type ajar switch located in the rear flange of each bin is automatically actuated by the bin lid. This is the same self-adjusting switch used to monitor the hood for the Vehicle Theft Security System (VTSS) on vehicles manufactured for certain export markets where it is required, and can be distinguished from the switch used for the optional remote start system by a color-coded retainer ring around the switch plunger. The VTSS and RamBox switches have a dark brown retainer ring, while the remote start switch has a white retainer ring.
- **Lamps (2)** - Each storage bin has two interior lamps, one in each end panel of the bin. Each of these lamps includes a sealed, non-removable lens and has an integral interlocking tab mounting feature on one end and an integral latch feature at the opposite end that are used to secure the lamps in the mounting holes in the end panels of each bin. The lamps are illuminated with an incandescent bulb that can be accessed for service from the inside of the bin.
- **On/Off Switch (3)** - The interior lighting of each bin can be manually controlled using a push-button ON/OFF toggle switch with a plunger sealed beneath a rubber button or boot located in the rear end panel of each bin.
- **Wire Harness** - A wire harness concealed on the outside of each bin connects each of the lamps and switches to each other. A connector (4) on the underside of the bin near the base of the rear end panel connects each bin wire harness to the vehicle electrical system through a take out and connector of the body wire harness.

The storage bin lamps, their incandescent bulbs, the ajar switch and the rubber button (or boot) for the manual ON/OFF switch are each available for individual service replacement. The manual ON/OFF switch is serviced only as a unit with the storage bin wire harness. If the ON/OFF switch is damaged or ineffective, the entire storage bin wire harness must be replaced.

Operation

The storage bin lamps have a path to ground at all times through a takeout and eyelet terminal of the body wire harness that is secured to the body sheet metal. The ajar switch for each bin receives battery current at all times through a fuse in the Totally Integrated Power Module (TIPM). These connections allow the storage bin lighting to be operational regardless of the ignition switch or interior lighting switch positions. The storage bin lighting is turned ON automatically to illuminate the interior of the storage bin each time the lid of the storage bin is opened, and is turned OFF automatically each time the storage bin lid is closed. The underside of the storage bin lid actuates the plunger-type ajar switch.

The ajar switch also enables the manual ON/OFF toggle switch. When the storage bin lid is opened, the toggle switch button or boot can be depressed once to turn the storage bin lighting OFF, and can be depressed a second time to turn the storage bin lighting ON. Regardless of the manual ON/OFF toggle switch selection, the lighting will be OFF when the storage bin lid is closed.

The components and circuits of the RamBox storage bin lighting may be diagnosed using conventional diagnostic tools and procedures. Refer to the appropriate wiring information.

Removal

BULB

1. Remove the lamp (3) from the mounting hole in the end panel of the storage bin. (Refer to 08 - Electrical/8L - Lamps and Lighting/Lamps/Lighting - Interior/LAMP, Storage Box - Removal).
2. Pull the lamp into the storage bin far enough to access the lamp wiring (1) and bulb socket (2) on the top of the lamp housing.
3. Firmly grasp the socket and rotate it counterclockwise about 30 degrees to unlock it.
4. Pull the socket and bulb straight out from the keyed opening in the lamp housing.
5. Pull the base of the bulb straight out of the socket.

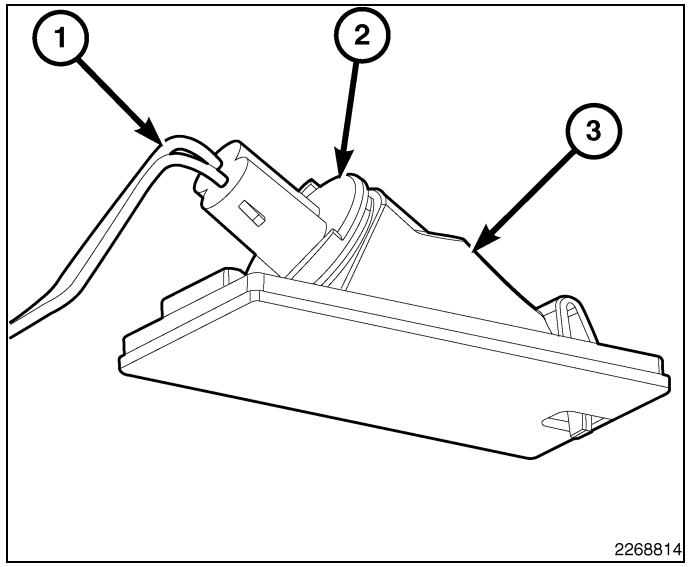

BUTTON

NOTE: The ON/OFF switch button (or boot) can be serviced without removing the storage bin from the vehicle. However, the button also secures the switch to the bin end panel. Any time the button is removed from the switch, the switch can be easily pushed out of its mounting hole, which may require the storage bin be removed from the vehicle to access the switch and reposition it into the mounting hole. Once the switch button has been loosened or removed, a short piece of mechanic's wire wrapped once around the base of the threaded switch sleeve can help to ensure the switch remains properly positioned in the mounting hole until the switch button can be reinstalled.

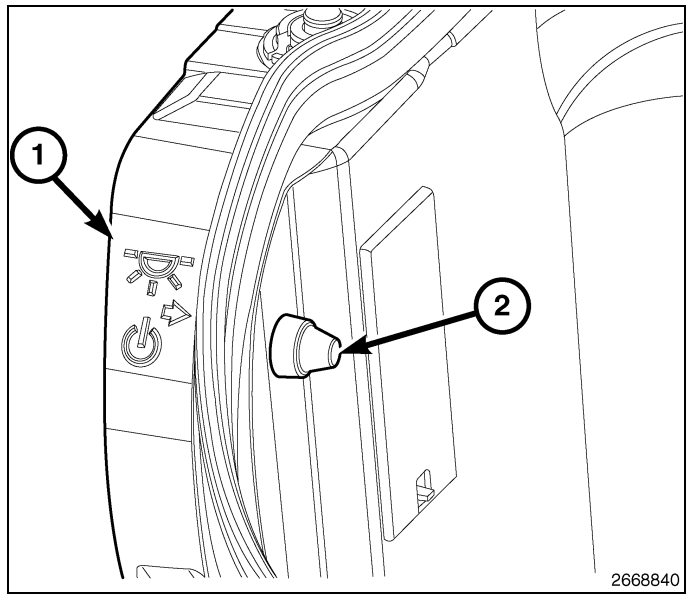

1. Firmly grasp the outer circumference of the ON/OFF switch button (2) as close to the storage bin end panel (1) as possible.
2. Rotate the button counterclockwise to unscrew it from the threaded switch sleeve.
3. Remove the button from the switch.

LAMP

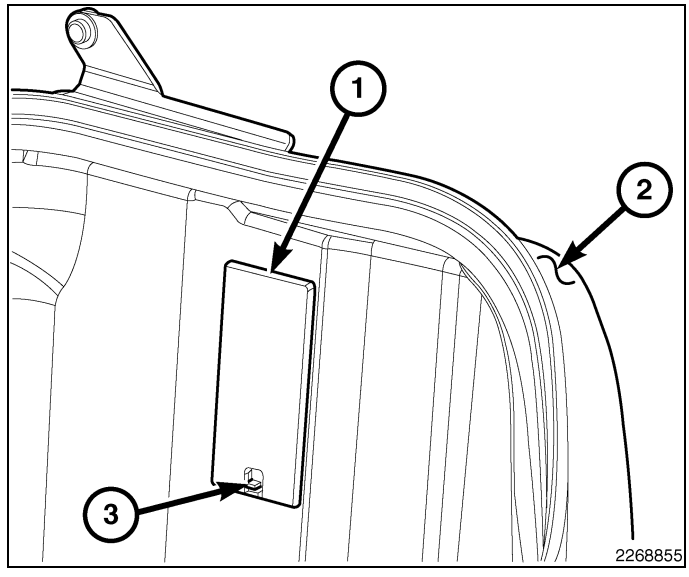

1. Disconnect and isolate the battery negative cable.
2. Open the storage bin lid to locate the lamp (1) on the front or rear end panel (2) of the bin.
3. Lift the lamp latch tab (3) upward while pulling the bottom of the lamp away from the bin end panel.
4. Pull the bottom of the lamp out of the mounting hole in the bin far enough to pull it downward to disengage the lamp interlocking tab mounting feature from the upper edge of the mounting hole.
5. Pull the lamp out of the mounting hole far enough to access the lamp wiring and bulb socket on the top of the lamp housing.
6. Firmly grasp the socket and rotate it counterclockwise about 30 degrees to unlock it.
7. Pull the socket and bulb straight out from the keyed opening in the lamp housing.
8. Remove the lamp from the storage bin.

SWITCH

1. Disconnect and isolate the battery negative cable.
2. Remove the storage bin from the vehicle. (Refer to 23 - Body/Exterior/BOX, Pickup - Removal).
3. Disconnect the storage bin wire harness connector (3) from the ajar switch (4) connector receptacle.
4. From the top of the rear storage bin ledge (2), squeeze the two ajar switch latch tabs (1) together and pull the switch upward out of the mounting hole.
5. Remove the ajar switch from the storage bin.

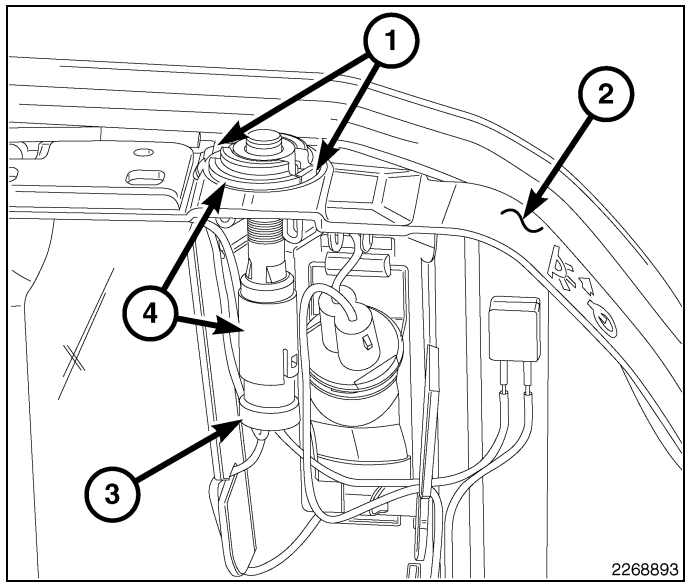

Installation

BULB

CAUTION: Always use the correct bulb size and type for replacement. An incorrect bulb size or type may overheat and cause damage to the lamp, the socket or the lamp wiring.

1. Align the base of the storage bin lamp bulb with the socket (2).
2. Push the bulb straight into the socket until the base is firmly seated.
3. Align the socket and bulb with the keyed opening on the top of the storage bin lamp housing (3).
4. Insert the bulb and socket into the housing until the socket is firmly seated.
5. Rotate the socket clockwise about 30 degrees to lock it into place.
6. Reinstall the lamp into the mounting hole in the end panel of the storage bin. (Refer to 08 - Electrical/8L - Lamps and Lighting/Lamps/Lighting - Interior/LAMP, Storage Box - Installation).

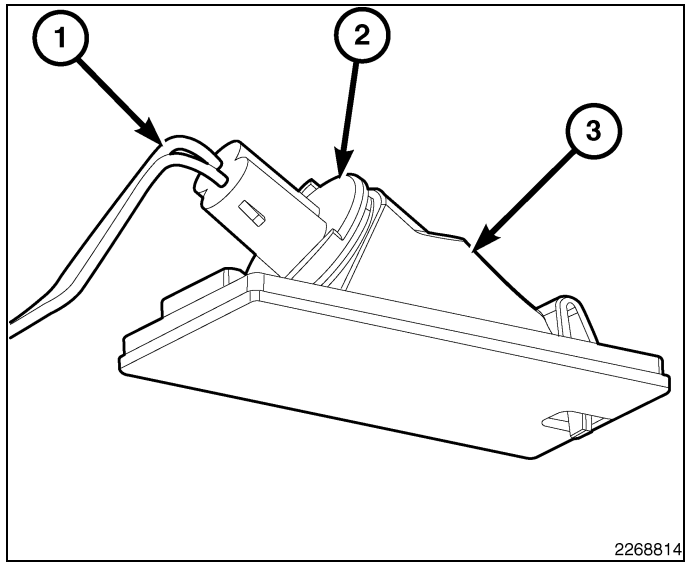

BUTTON

NOTE: The ON/OFF switch button (or boot) can be serviced without removing the storage bin from the vehicle. However, the button also secures the switch to the bin end panel. Any time the button is removed from the switch, the switch can be easily pushed out of its mounting hole, which may require the storage bin be removed from the vehicle to access the switch and reposition it into the mounting hole. Once the switch button has been loosened or removed, a short piece of mechanic's wire wrapped once around the base of the threaded switch sleeve can help to ensure the switch remains properly positioned in the mounting hole until the switch button can be reinstalled.

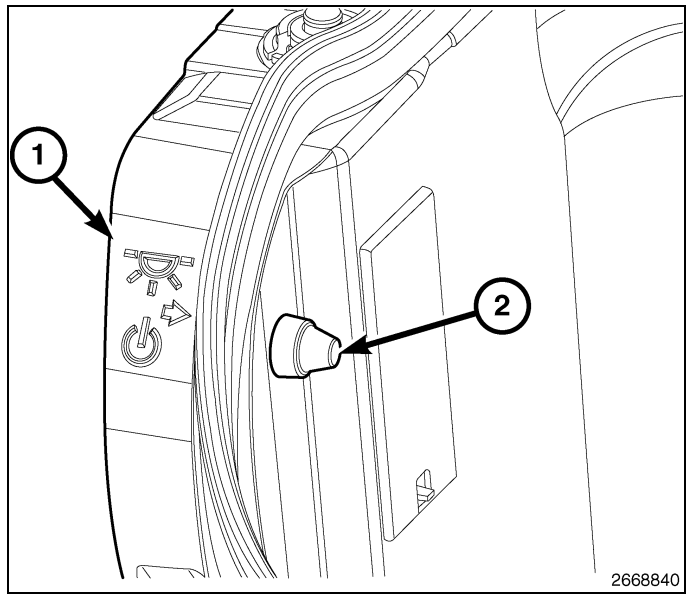

1. Position the button (2) over the threaded sleeve of the ON/OFF switch button on the storage bin end panel (1).
2. Rotate the button clockwise to screw it onto the threaded switch sleeve.
3. Tighten the button securely.

LAMP

1. Position the lamp (1) into the storage bin (2).
2. Align the socket and bulb with the keyed opening on the top of the lamp housing.
3. Insert the bulb and socket into the housing until the socket is firmly seated.
4. Rotate the socket clockwise about 30 degrees to lock it into place.
5. Engage the lamp interlocking tab mounting feature at the top of the lamp housing with the upper edge of the mounting hole in the storage bin end panel.
6. Lift the lamp upward while pushing the bottom of the lamp firmly and evenly into the mounting hole until the lamp latch feature (3) snaps into place.
7. Reconnect the battery negative cable.

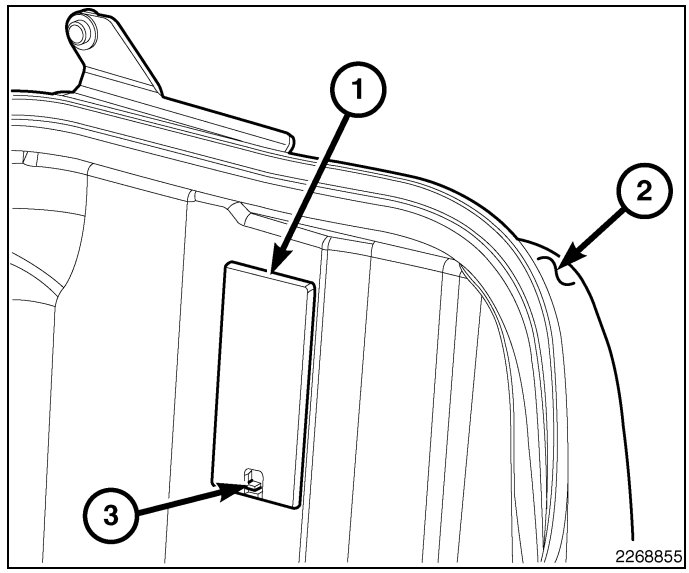

SWITCH

1. Position the ajar switch (4) to the mounting hole in the rear storage bin ledge (2).
2. Insert the switch into the mounting hole until the two integral switch latch tabs (1) lock it into place.
3. Reconnect the storage bin wire harness connector (3) to the switch connector receptacle.
4. Reinstall the storage bin into the vehicle. (Refer to 23 - Body/Exterior/BOX, Pickup - Installation).
5. Reconnect the battery negative cable.

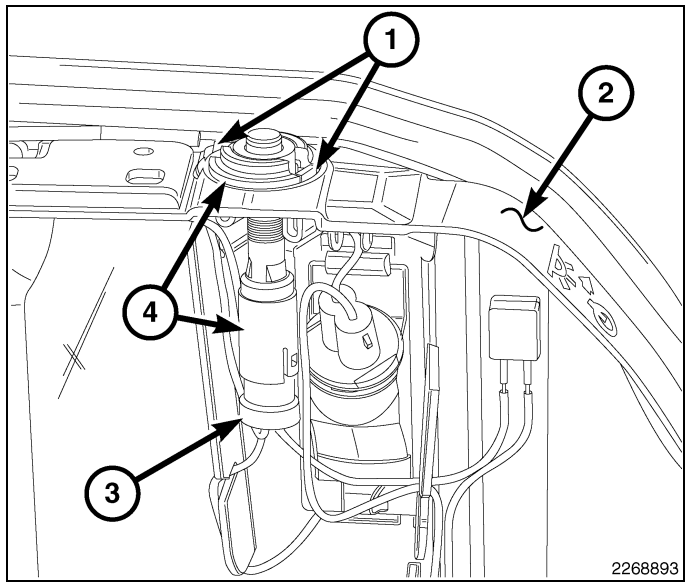

LAMP, Vanity

Removal

NOTE: Vehicles equipped with optional vanity lamps have a mirror with a single lamp that is integral to each sun visor. Each lamp is independently controlled by an integral switch that is automatically actuated by the mirror cover. The bulb types and service procedures are identical for each of these lamps.

1. Disconnect and isolate the battery negative cable.
2. Insert a small flat-bladed screwdriver on either side near the top or the bottom between the vanity lamp lens (2) and the lamp housing of the sun visor (1).
3. Carefully pry the lens outward until it unsnaps from the lamp housing.

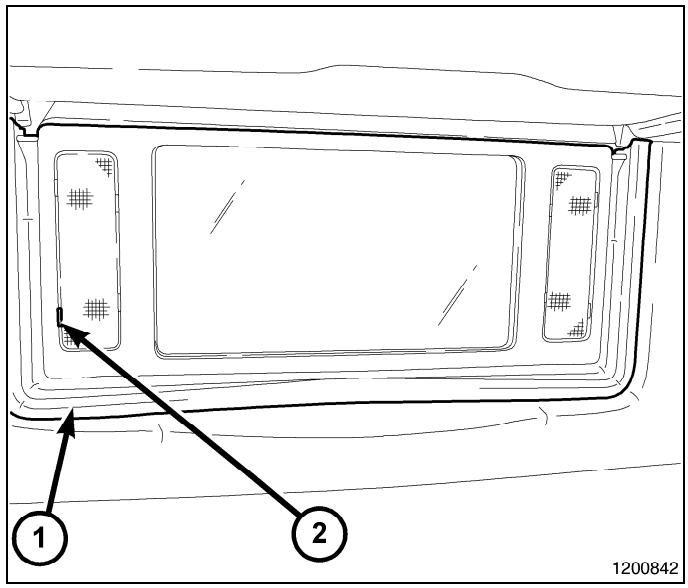

4. Using small needle-nose pliers, carefully grasp the bulb (2) and pull the base out of the lamp socket.

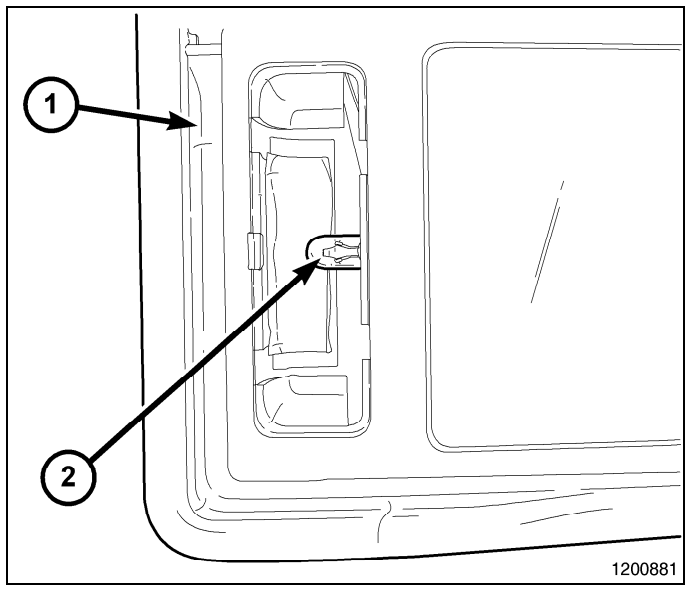

Installation

CAUTION: Always use the correct bulb size and type for replacement. An incorrect bulb size or type may overheat and cause damage to the lamp, the socket or the lamp wiring.

NOTE: Vehicles equipped with optional vanity lamps have a mirror with a single lamp that is integral to each sun visor. Each lamp is independently controlled by an integral switch that is automatically actuated by the mirror cover. The bulb types and service procedures are identical for each of these lamps.

1. Using small needle-nose pliers, carefully grasp the vanity lamp bulb (2) and align the base of the bulb with the socket in the lamp housing of the sun visor (1).
2. Push the bulb straight into the socket until the base is fully seated.

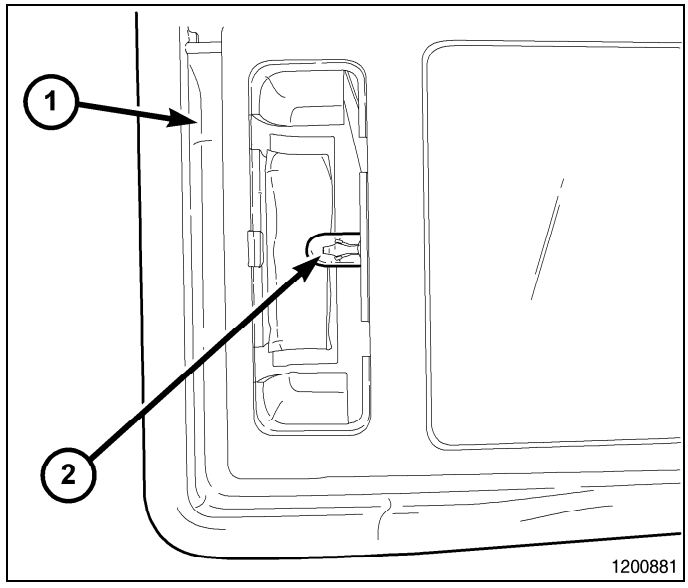

3. Insert one tab on the top or the bottom of the lens (2) into the appropriate slot at the top or bottom of the lamp housing.
4. Flex the lens far enough to engage the loose tab into its slot in the lamp housing.
5. Reconnect the battery negative cable.

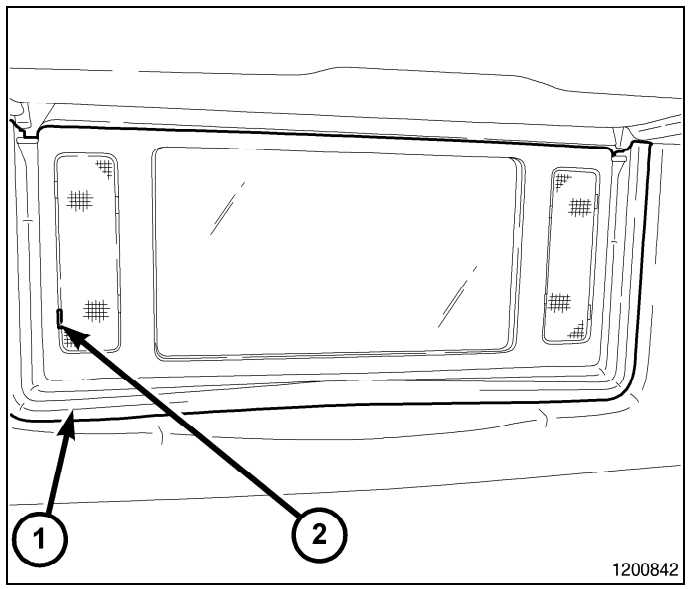

SWITCH, Door Ajar

Description

This vehicle has up to four door ajar switches, one for each door. Each switch is concealed within and integral to its respective door latch unit. The switches are momentary leaf contact-type units that are actuated by the mechanisms internal to the door latch. A short pigtail wire and connector on each door latch connects the door ajar switch to the vehicle electrical system through its respective door wire harness.

The door ajar switches cannot be adjusted or repaired and, if ineffective or damaged, the door latch unit must be replaced. (Refer to 23 - Body/Door - Front/LATCH, Door - Removal) or (Refer to 23 - Body/Doors - Rear/LATCH, Door - Removal).

Operation

The door ajar switches are actuated by the mechanisms internal to the door latch. When a door is closed and properly latched, its door ajar switch is an open circuit. When a door is open or only partially latched, the door ajar switch is a closed circuit. The door ajar switches are hard wired in series between a body ground and the Totally Integrated Power Module (TIPM).

The TIPM reads the hard wired door ajar switch inputs through internal pull-ups, then uses these inputs to control many electronic functions and features of the vehicle. The TIPM also sends the proper electronic **door ajar switch status** messages to other electronic modules in the vehicle over the Controller Area Network (CAN) data bus.

The door ajar switches as well as the hard wired inputs and outputs of the switches may be diagnosed using conventional diagnostic tools and procedures. Refer to the appropriate wiring information. However, conventional diagnostic methods will not prove conclusive in the diagnosis of the electronic controls or communication between modules related to door ajar switch operation. The most reliable, efficient and accurate means to diagnose the door ajar switches requires the use of a diagnostic scan tool. Refer to the appropriate diagnostic information.

MESSAGE CENTER

TABLE OF CONTENTS

page

MESSAGE CENTER
CENTER, ELECTRONIC VEHICLE INFORMATION
DESCRIPTION 2
OPERATION 2
DIAGNOSIS AND TESTING 5
STANDARD PROCEDURE
MANUAL COMPASS CALIBRATION 5
COMPASS DEMAGNETIZING 6
COMPASS VARIANCE ADJUSTMENT 8
RESET OIL CHANGE INDICATOR 9
RESET PERFORM SERVICE INDICATOR. . . 9

page

SENSOR, AMBIENT TEMPERATURE
DESCRIPTION 10
OPERATION 10
DIAGNOSIS AND TESTING 10
REMOVAL 11
INSTALLATION 11

Message Center

CENTER, Electronic Vehicle Information

Description

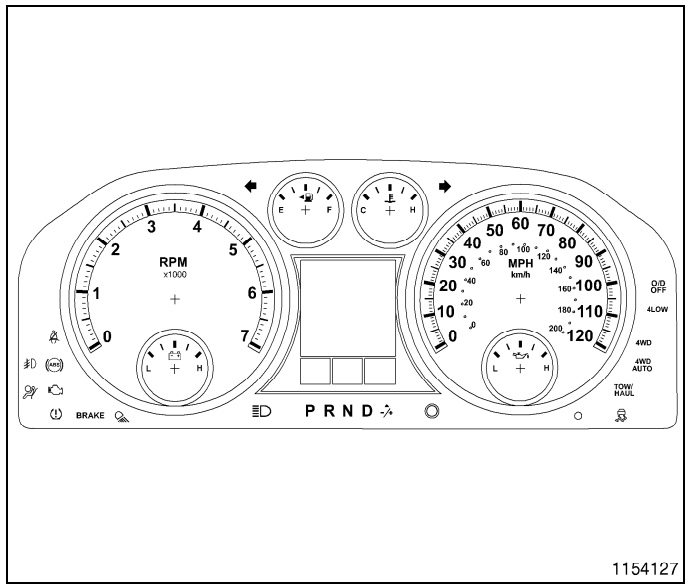

The Electronic Vehicle Information Center (EVIC) features a driver-interactive display. The display is located in the upper part of the instrument cluster between the speedometer and tachometer. This system conveniently allows the driver to select a variety of useful information by pressing the switches mounted on the steering wheel. The EVIC displays information related to the following:

- Audio mode display
- Compass display
- Fuel saver indicator, Economizer (ECO) display
- Navigation system screens — If Equipped
- Outside temperature display
- System Status
- Trip computer functions
- Tire Pressure Monitor System — If Equipped
- Personal Settings (customer programmable features)
- U-Connect™ hands-free communication system displays — If Equipped
- Vehicle information warning message displays

The EVIC system is comprised of several different components. Those components are:

- Instrument Cluster
- Steering Wheel Switches
- Ambient Temperature Sensor
- Electronic Overhead Module
- Controller Area Network (CAN) Data Bus
- Local Interface Network (LIN) Data Bus

The EVIC display is part of the Instrument Cluster assembly and is not serviced as a separate component. If the display is inoperative the complete Instrument Cluster assembly must be replaced, (Refer to 08 - Electrical/8J - Instrument Cluster - Removal). If the steering wheel switches are inoperative and require replacement, (Refer to 08 - Electrical/8A - Audio and Video/SWITCH, Remote Radio - Removal) for the appropriate procedure. If the compass position sensor (Electronic Overhead Module) is inoperative and requires replacement, (Refer to 08 - Electrical/8M - Message Systems/Overhead Console - Removal) for the appropriate procedure.

Operation

The Electronic Vehicle Information Center (EVIC) uses both non-switched and ignition switched sources of battery current so that some of its features remain operational at any time, while others may only operate with the ignition switch in the On position. When the ignition switch is turned to the On position, the EVIC display will return to the last function being displayed before the ignition was turned to the Off position.

The EVIC system is comprised of several different components that communicate over the Controller Area Network (CAN) and Local Interface Network (LIN) Data Buses. If the system is inoperative a scan tool and the appropriate diagnostic information must be used to diagnose the system.

The steering wheel switches are used to operate the different functions of the EVIC system. Pressing and releasing the SELECT button (1) will change the mode displayed between Trip Functions, Navigation (If Equipped), System Status, Personal Settings, and Telephone (If Equipped). Pressing and releasing the BACK button (2) will return the system to the previous mode displayed.

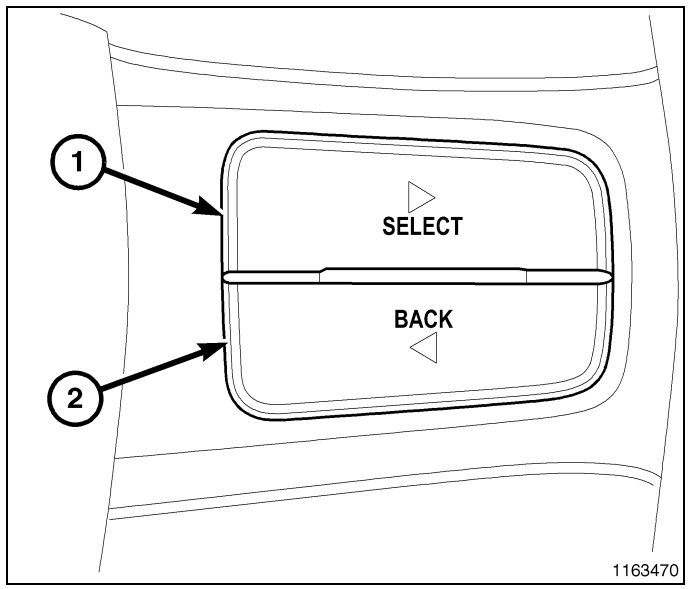

The SCROLL buttons (3) are used to scroll through Trip Functions, Navigation (If Equipped), System Status Messages, and Personal Settings (Customer Programmable Features). Pressing and releasing the SELECT button (1) accepts a selected choice.

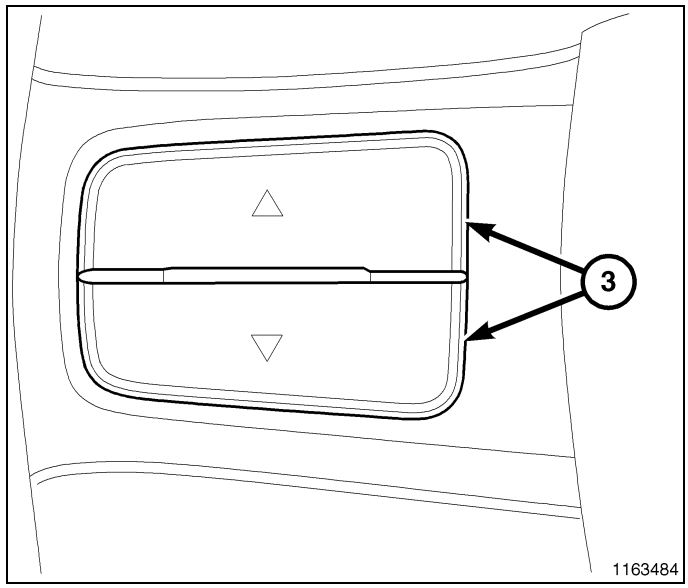

EVIC DISPLAY MODES

SYSTEM STATUS MODE

Displays warnings and user interaction messages. Initial warnings will be displayed full-screen for three seconds, then override the odometer and show text warnings on the bottom line of the display. Critical text warnings will be displayed until the failure is corrected. Non-critical text warnings will be displayed for 60 seconds. The driver can scroll to view multiple messages by using the SCROLL buttons.

When the appropriate conditions exist, the EVIC displays the following messages:

- Turn Signal On (with a continuous warning chime)
- Left Front Turn Signal Lamp Out
- Left Rear Turn Signal Lamp Out
- Right Front Turn Signal Lamp Out
- Right Rear Turn Signal Lamp Out
- RKE Battery Low (with a single chime)
- Memory 1/2 Profile Set
- Memory 1/2 Profile Recall
- Memory System Disabled – Vehicle Not In Park (with a single chime)

- Memory System Disabled – Seat Belt Buckled (with a single chime)
- Personal Settings Not Available – Vehicle Not in Park
- Left/Right Front Door Ajar (one or more, with a single chime if speed is above 1 mph)
- Left/Right Rear Door Ajar (one or more, with a single chime if speed is above 1 mph)
- Door (S) Ajar (with a single chime if vehicle is in motion)
- Low Washer Fluid (with a single chime)
- Adjustable Pedals Disabled – Cruise Engaged
- Adjustable Pedals Disabled – Vehicle In Reverse
- Channel 1, 2, OR 3 Transmit
- Channel 1, 2, OR 3 Training
- Channel 1, 2, OR 3 Trained
- Clearing Channels
- Channels Cleared
- Channels Defaulted
- Did Not Train
- Left Front Tire Low Pressure
- Left Rear Tire Low Pressure
- Right Front Tire Low Pressure
- Right Rear Tire Low Pressure
- Check Tire Pressure Monitoring (TPM) System
- Service Park Assist System

TRIP MODE

Provides a choice of units displayed in English or metric. The following information can be displayed at the top of the screen:

- Average Miles Per Gallon (MPG)
- Distance to empty (DTE)
- Trip A odometer
- Trip B odometer
- Elapsed time

The EVIC trip computer features several functions that can be reset. Pressing and releasing the SELECT button once, will clear the function currently being displayed. Reset will only occur if a chosen function is currently being displayed. To reset all functions, press and release the SELECT button a second time within 3 seconds of resetting the currently displayed function (>Reset ALL will be displayed during this 3 second window).

The odometer is displayed at the bottom of the screen. If warnings exist, they will replace the odometer in the display. The driver can scroll to view information in the EVIC by using the SCROLL buttons.

COMPASS, TEMPERATURE

Compass heading and outside temperature are displayed at the top of the screen. Eight-point compass headings are displayed (N, S, E, W, NE, NW, SE, SW) and up to 15 compass variance settings can be set and recalled. Outside temperature is displayed in °C (degrees Celsius) or °F (degrees Fahrenheit).

NAVIGATION MODE - IF EQUIPPED

When the Navigation System is On, the steering wheel buttons can be used to select the Map or Menu display on the Navigation Unit. When the Menu display is active, the SCROLL buttons can be used to scroll through the list, the SELECT button can be used to select an item, and the BACK button can be used to return to the previous menu. When the Map display is active, pressing the SELECT button will change the Navigation Unit Display to the Menu.

If Turn by Turn Navigation is enabled through Personal Settings, the Navigation System will provide turn by turn directions to the programmed destination in the EVIC display. The name of the approaching road is displayed at the top of the screen, followed by an arrow to show the direction of the turn and the remaining distance to the turn counted down.

PERSONAL SETTINGS MODE (CUSTOMER PROGRAMMABLE FEATURES)

Allows the driver to set and recall features when the transmission is in Park by pressing and releasing the SELECT and then the SCROLL buttons until Personal Settings is displayed in the EVIC. The following personal settings can be set and recalled:

- Fuel Saver indicator, Economizer (ECO), On or Off
- Language: English, Spanish or French
- Display units in English or Metric
- Lock doors automatically at 15 mph (24 Kmh), On or Off
- Unlock door automatically on exit, On or Off
- Remote Keyless Entry unlock driver door on first press or unlock all doors on first press
- Recall Memory with Remote Keyless Entry Unlock, On or Off
- Sound horn with Remote Keyless Entry Lock, On or Off
- Delay turning headlamps off for 0, 30, 60 or 90 seconds
- Headlamps on with wipers, On or Off
- Rain Sensing Intermittent Wipers, On or Off
- Automatically move seat back on exit, On or Off
- Tilt mirrors down and in when transmission is shifted to Reverse, On or Off
- Delay Power off to accessories until exit off, 45-seconds maximum, 5-minute maximum, 10-minute maximum or 60-minute maximum
- Turn headlamps on with Remote Keyless Entry Lock, On or Off
- Turn headlamps on with Remote Keyless Entry Unlock, Off or 30 seconds
- Park Assist System, On or Off
- Confirmation of Voice Commands, On or Off
- Turn-by-Turn Navigation, On or Off

Diagnosis and Testing

The Electronic Vehicle Information Center (EVIC) relies upon electronic message inputs received over the Controller Area Network (CAN) data bus from other electronic modules in the vehicle. The EVIC will not function properly if the bus messages from any of these modules are not received. If no EVIC data is displayed, check the CAN data bus communications as well as other instrument cluster (also known as the Cab Compartment Node/CCN) functions.

The use of a diagnostic scan tool and the proper diagnostic procedures is required for further testing of the EVIC and the CAN data bus. Refer to the appropriate wiring information for complete circuit schematics and connector pin-out information.

Standard Procedure

MANUAL COMPASS CALIBRATION

CAUTION: Do not place any external magnets, such as magnetic roof mount antennas, in the vicinity of the overhead console. Do not use magnetic tools when servicing the overhead console.

NOTE: Whenever the compass is calibrated manually, the variance number must also be checked. (Refer to 08 - Electrical/8M - Message Systems/Message Center/CENTER, Electronic Vehicle Information - Standard Procedure) for the appropriate procedure.

The electronic compass unit features a self-calibrating design, which simplifies the calibration procedure. This feature automatically updates the compass calibration while the vehicle is being driven. This allows the compass unit to compensate for small changes in the residual magnetism that the vehicle may acquire during normal use. If the compass readings appear to be erratic or the Electronic Vehicle Information Center (EVIC) displays “CAL”, perform the following manual calibration procedure. Also, any time EVIC service replacement components are installed, they must be calibrated using this procedure. Do not attempt to calibrate the compass near large metal objects such as other vehicles, large buildings, or bridges; or, near overhead or underground power lines.

Calibrate the compass manually as follows:

1. With the vehicle in park, start the engine and press the **SCROLL** push buttons (3) until “Calibrate Compass” is displayed in the EVIC.

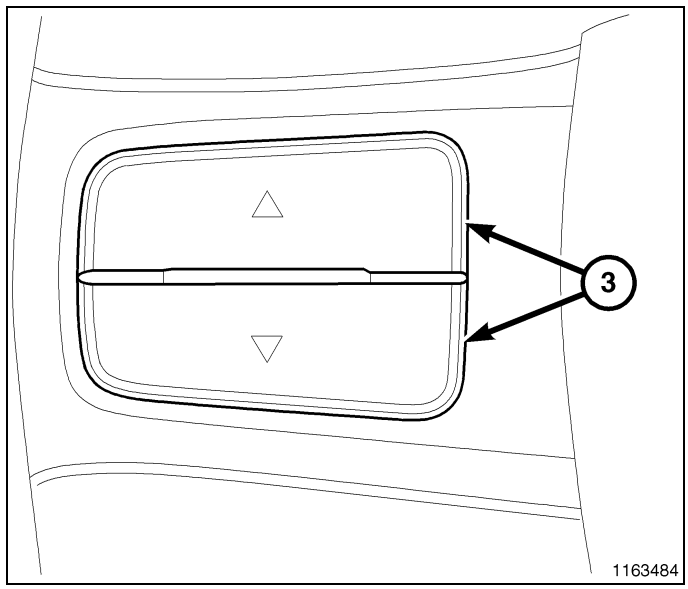

2. Press the **SELECT** push button (1) to enter the calibration mode.
3. Slowly drive the vehicle on a level surface, away from large metal objects and power lines, through three **complete** circles not exceeding 8 km/h (5 mph). The “CAL” message will disappear from the display to indicate that the compass is now calibrated.

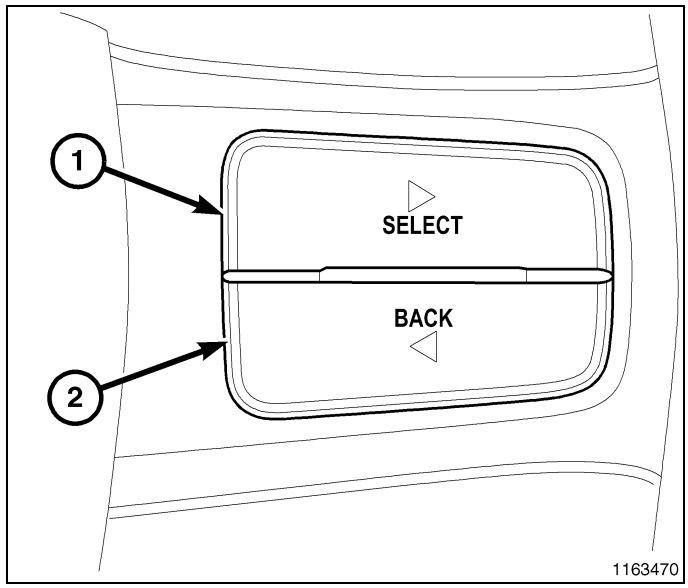

NOTE: A blank compass display indicates that vehicle degaussing (demagnetizing) may be necessary.

NOTE: If the “CAL” message remains in the display, either there is excessive magnetism near the compass, or the EVIC is inoperative. Attempt the calibration procedure at least one more time before performing EVIC diagnosis.

NOTE: If the wrong direction is still indicated in the compass display, the area selected for calibration may be too close to a strong magnetic field. Repeat the manual calibration procedure in another location.

COMPASS DEMAGNETIZING

A degaussing tool (Special Tool 6029) is used to demagnetize, or degauss, the overhead console forward mounting screw and the roof panel above the overhead console. Equivalent units must be rated as continuous duty for 110/115 volts and 60 Hz. They must also have a field strength of over 350 gauss at 7 millimeters (0.25 inch) beyond the tip of the probe.

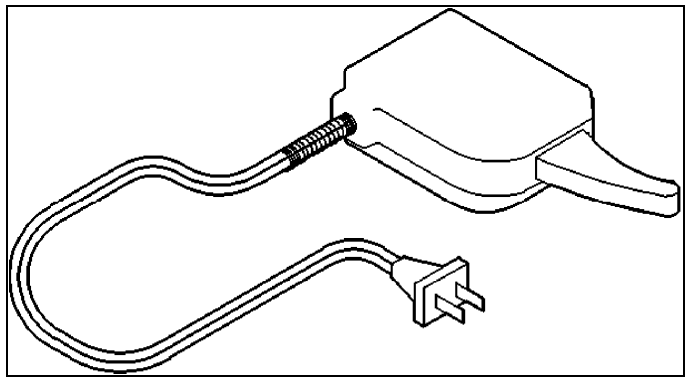

To demagnetize the roof panel and the overhead console forward mounting screw, proceed as follows:

1. Be certain that the ignition switch is in the Off position, before you begin the demagnetizing procedure.
2. Connect the degaussing tool to an electrical outlet, while keeping the tool at least 61 centimeters (2 feet) away from the compass unit.
3. Slowly approach the head of the overhead console forward mounting screw with the degaussing tool connected.
4. Contact the head of the screw with the plastic coated tip of the degaussing tool for about two seconds.

5. With the degaussing tool still energized, slowly back it away from the screw. When the tip of the tool is at least 61 centimeters (2 feet) from the screw head, disconnect the tool.

To demagnetize the roof panel proceed as follows:

6. Place a piece of paper approximately 22 by 28 centimeters (8.5 by 11 inches), oriented on the vehicle lengthwise from front to rear, on the center line of the roof at the windshield header. The purpose of the paper is to protect the roof panel from scratches, and to define the area to be demagnetized.
7. Connect the degaussing tool to an electrical outlet, while keeping the tool at least 61 centimeters (2 feet) away from the compass unit.
8. Slowly approach the center line of the roof panel at the windshield header, with the degaussing tool connected.
9. Contact the roof panel with the plastic coated tip of the degaussing tool. Be sure that the template is in place to avoid scratching the roof panel. Using a slow, back-and-forth sweeping motion, and allowing 13 millimeters (0.50 inch) between passes, move the tool at least 11 centimeters (4 inches) to each side of the roof center line, and 28 centimeters (11 inches) back from the windshield header.
10. With the degaussing tool still energized, slowly back it away from the roof panel. When the tip of the tool is at least 61 centimeters (2 feet) from the roof panel, disconnect the tool.
11. Calibrate the compass and adjust the compass variance, (Refer to 08 - Electrical/8M - Message Systems/Message Center/CENTER, Electronic Vehicle Information - Standard Procedure).

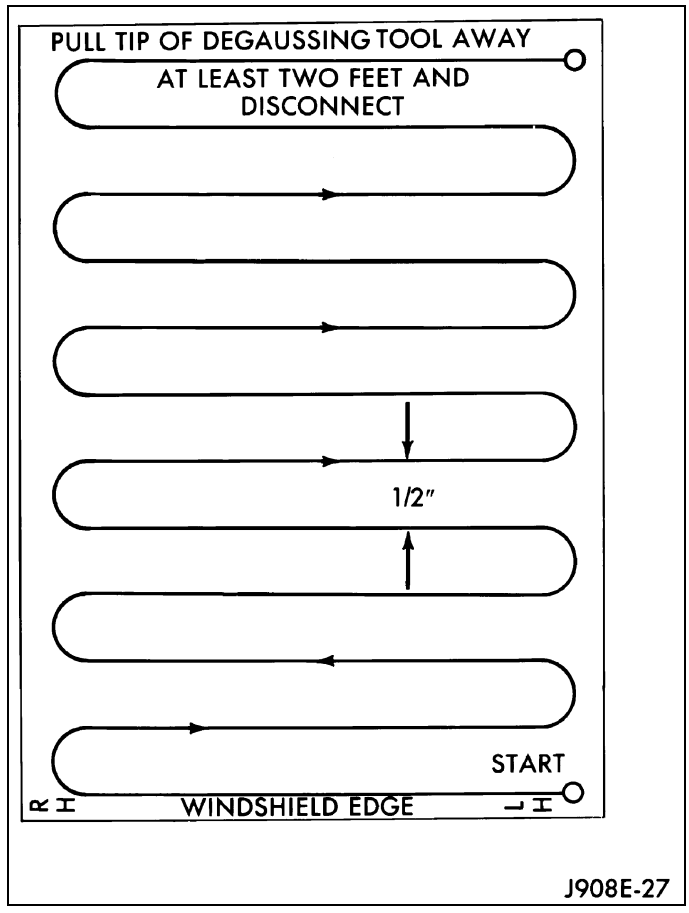

COMPASS VARIANCE ADJUSTMENT

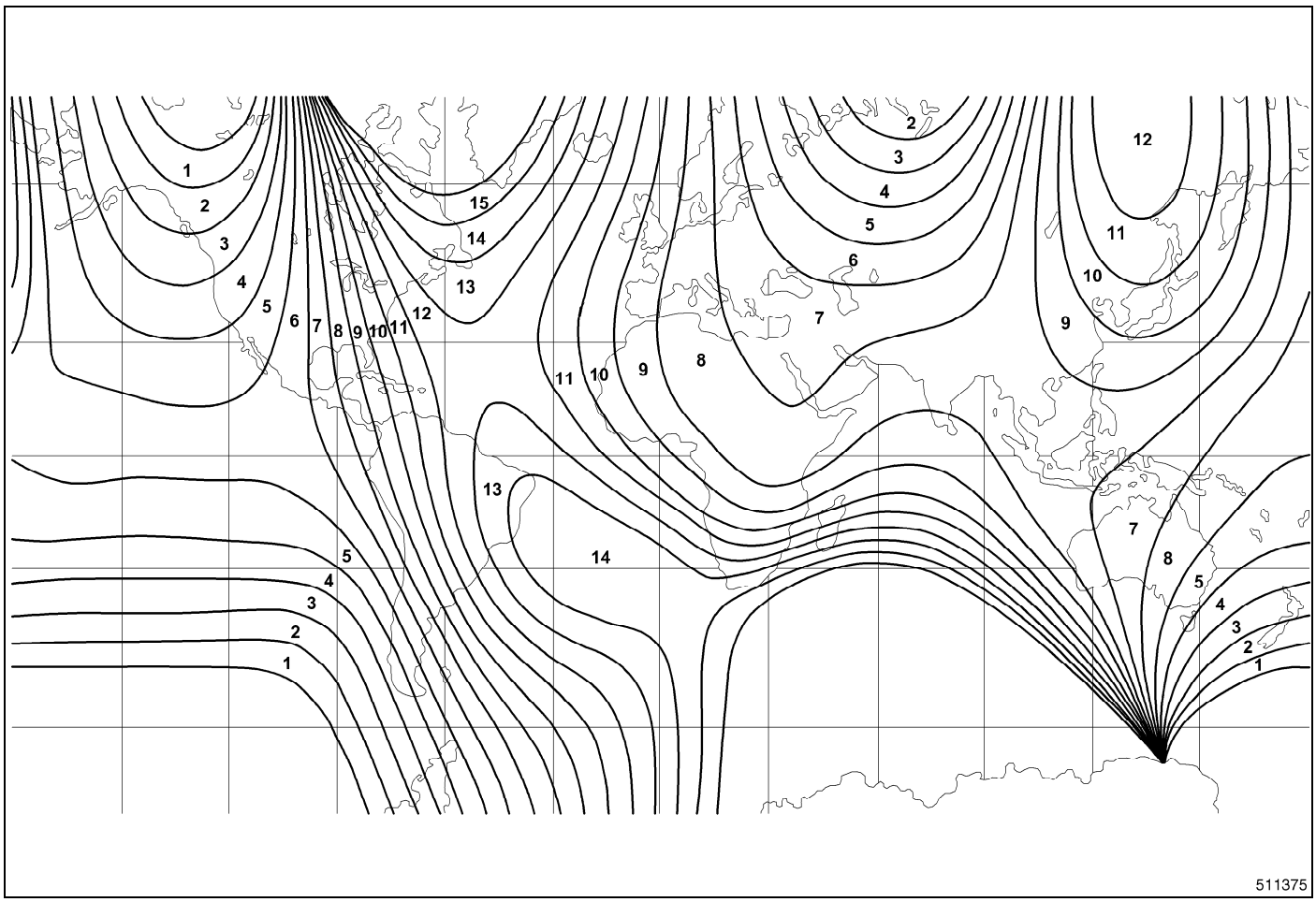

Compass variance, also known as magnetic declination, is the difference in angle between magnetic north and true geographic north. In some geographic locations, the difference between magnetic and geographic north is great enough to cause the compass to give false readings. If this problem occurs, the compass variance must be set.

NOTE: If the vehicle is taken on long trips into a new variance zone the compass function may be effected. Compass variance may need to be adjusted to the new zone number to function properly.

NOTE: The default for the compass variance from the factory is 8.

To set the compass variance:

1. Using the Variance Settings Map, find your geographic location and note the zone number.
2. Turn the ignition switch to the On/Run position.
3. Press and release the **SCROLL** push buttons (3) until “System setup” displayed in the Electronic Vehicle Information Center (EVIC) display is selected.

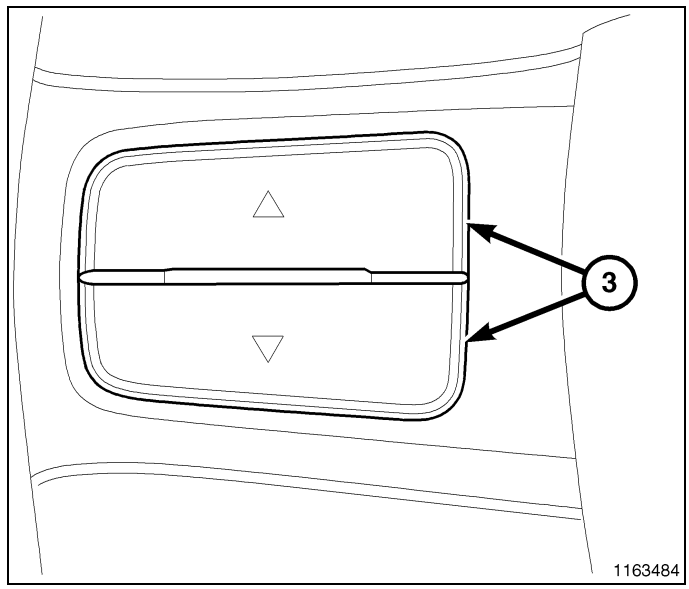

4. Press and release the **SELECT** push button (1) to enter "System setup" .
5. Press and release the **SCROLL** push buttons until “Compass Variance” displayed in the EVIC is selected.
6. Press and release the **SELECT** push button to enter the "Compass Variance" adjustment mode.
7. Press and release the **SELECT** push button repeatedly to toggle through the zone numbers (1-15), until the zone number for your geographic location appears in the EVIC display.
8. Press and release the **BACK** push button (2) to enter the displayed zone number into the compass unit memory.
9. Confirm that the correct directions are now indicated by the compass.

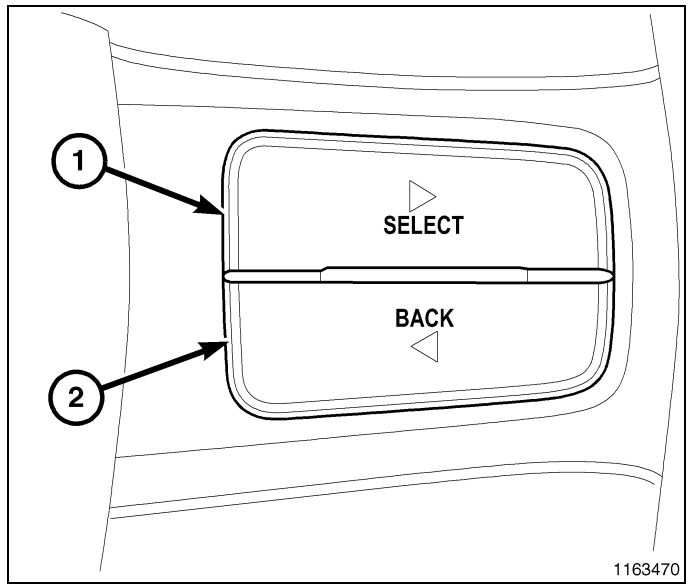

RESET OIL CHANGE INDICATOR

After performing the needed maintenance, reset the **Oil Change Required** indicator using the following procedure:

1. Turn the ignition switch to the ON position, but do not start the engine.
2. Fully depress and release the accelerator pedal slowly three times within 10 seconds.
3. Turn the ignition switch to the OFF/LOCK position.

NOTE: If the Oil Change Required indicator message illuminates when you start the engine, the indicator did not reset. If necessary, repeat this procedure.

RESET PERFORM SERVICE INDICATOR

The **Perform Service** message will display on the Electronic Vehicle Information Center (EVIC) each time you turn the ignition switch to the ON/RUN position to indicate that emission system scheduled maintenance is required. After performing the scheduled maintenance, reset the **Perform Service** indicator using the following procedure:

1. Turn the ignition switch to the ON position, but do not start the engine.
2. Depress and release the brake pedal two times.
3. Fully depress and release the accelerator pedal slowly two times within 10 seconds.
4. Turn the ignition switch to the OFF/LOCK position.

NOTE: If the indicator message illuminates when you start the engine, the Perform Service indicator did not reset. If necessary, repeat this procedure.

SENSOR, Ambient Temperature

Description

The ambient temperature sensor is a variable resistor mounted to the lower left side of the Front End Module (FEM), behind the radiator grille and in front of the engine compartment.

The ambient temperature sensor cannot be adjusted or repaired and, if inoperative or damaged, it must be replaced.

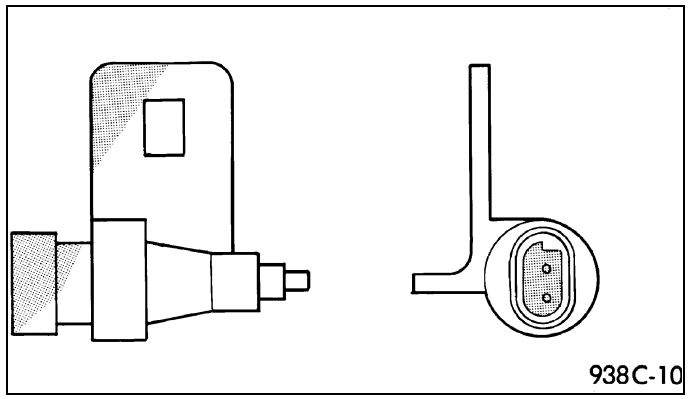

Operation

The ambient temperature sensor is a variable resistor that operates on a five-volt reference signal sent by the Totally Integrated Power Module (TIPM). The resistance in the sensor changes as temperature changes, changing the temperature sensor signal circuit voltage to the TIPM. Based upon the resistance in the sensor, the TIPM senses a specific voltage on the temperature sensor signal circuit. The TIPM then translates the voltage into a temperature reading that it sent over the Controller Area Network (CAN) data bus circuit to other modules utilizing temperature information.

Diagnosis and Testing

The temperature function is supported by the ambient temperature sensor, a wiring circuit, and the Totally Integrated Power Module (TIPM). When the sensor is exposed to temperatures above 60° C (140° F), or if the sensor circuit is shorted, 60° C (130/140° F) will appear in the display in place of the temperature. When the sensor is exposed to temperatures below - 40° C (- 40° F) or if the sensor circuit is open, - - ° C (- - ° F) will be displayed on Electronic Vehicle Information Center (EVIC) equipped vehicles.

NOTE: The system displays the last known temperature when starting the vehicle and may take some time/mileage to update to an accurate current reading, up to 5 minutes at a maintained speed above 40 mph (64.3 kph). Customers with very short commutes may not get an updated reading before the vehicle is turned off, or if the ignition does not remain in the OFF position for more than 255 minutes (4hrs. 15min.). This strategy was intended to eliminate wildly fluctuating readings and may cause some customer confusion leading to unnecessary diagnostics/parts replacements.

SENSOR TEST

The most reliable, efficient and accurate means to diagnose the ambient temperature circuit requires the use of a scan tool.

1. Turn the ignition switch to the Off position. Disconnect the ambient temperature sensor harness connector.
2. Measure the resistance of the ambient temperature sensor. At - 40° C (- 40° F), the sensor resistance is 336 kilohms. At 55° C (130° F), the sensor resistance is 2.488 kilohms. The sensor resistance should read between these two values. If not OK, replace the inoperative ambient temperature sensor. If OK, perform further diagnosis of the Ambient Temperature System (Refer to 28 - DTC-Based Diagnostics/MODULE, Totally Integrated Power (TIPM) - Diagnosis and Testing) as applicable.

The ambient temperature sensor circuit can be diagnosed using the following Temperature Sensor Test. If the temperature sensor and circuit are confirmed to be OK, but the temperature display is inoperative or incorrect (Refer to 28 - DTC-Based Diagnostics/MODULE, Totally Integrated Power (TIPM) - Diagnosis and Testing) as applicable.

SENSOR CIRCUIT TEST

NOTE: Refer to Wiring Information for complete circuit schematic and connector pin-out information.

1. Turn the ignition switch to the Off position. Disconnect and isolate the negative battery cable. Disconnect the wire harness connectors from the ambient temperature sensor and the TIPM.
2. Connect a jumper wire between the two terminals in the body half of the ambient temperature sensor harness connector.
3. Check for continuity between the sensor return circuit and the ambient temperature sensor signal circuit cavities of the TIPM harness connector. There should be continuity. If OK, go to Step #4. If not OK, repair the open sensor return circuit or ambient temperature sensor signal circuit to the ambient temperature sensor as required.
4. Check for continuity between the ambient temperature sensor signal circuit cavity of the TIPM harness connector and a good ground. There should be no continuity. If OK, test the EVIC operation (Refer to 08 - Electrical/8M - Message Systems/Message Center/CENTER, Electronic Vehicle Information - Diagnosis and Testing). If not OK, repair the shorted ambient temperature sensor signal circuit as required.

Removal

1. Open the hood.
2. Disconnect and isolate the negative battery cable.
3. Remove the grille(Refer to 23 - Body/Exterior/GRILLE - Removal).
4. Disconnect the sensor electrical connector (1) and remove sensor (2) from vehicle.

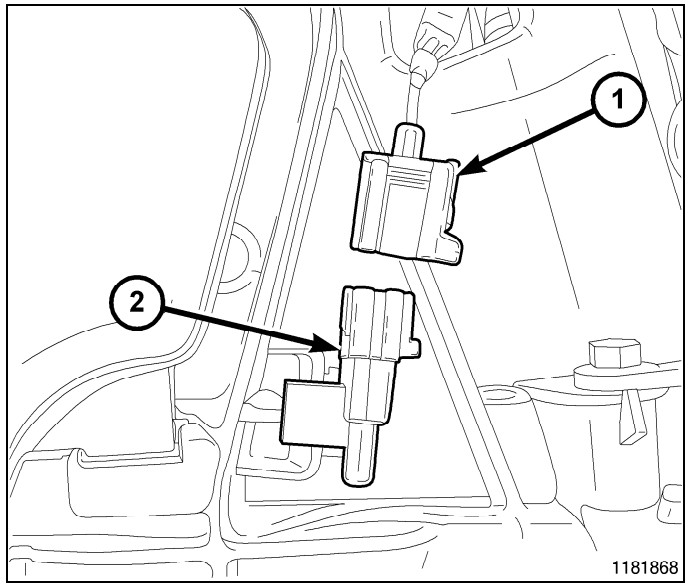

Installation

1. Install the ambient temperature sensor (2) and connect the sensor electrical connector (1).
2. Install the grille (Refer to 23 - Body/Exterior/GRILLE - Installation).
3. Connect the negative battery cable.
4. Close the hood.

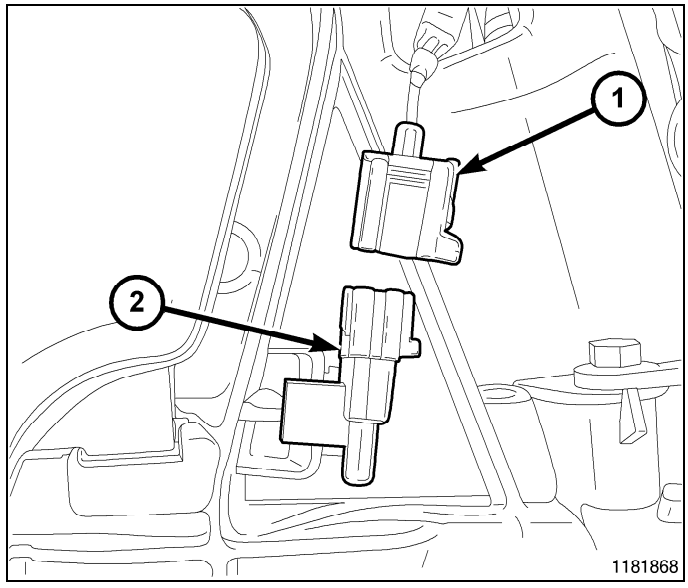

OVERHEAD CONSOLE

TABLE OF CONTENTS

page

OVERHEAD CONSOLE
DESCRIPTION 14
REMOVAL 15
INSTALLATION 16

Overhead Console

Description

A front overhead console is standard factory-installed equipment on this model. All overhead consoles are equipped with two reading and courtesy lamps (2). On vehicles equipped with a power sunroof, the overhead console will contain a three button switch (1) directly between the two reading and courtesy lamps. The front overhead console will contain a two button switch (5) on vehicles equipped with rear power sliding glass, and a three button HomeLink® transceiver switch (4) - if equipped. On vehicles equipped with automatic climate control an infrared temperature sensor is located between the two switch banks.

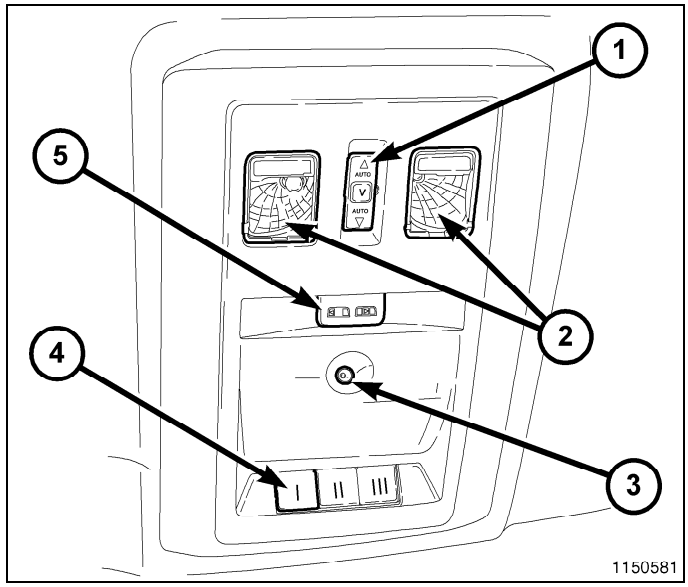

NOTE: The overhead console reading lamp switches, bulb holders and wiring harness are serviced only as a unit and are not available individually for service.

An overhead console (1) is available on this vehicle and includes the following components:

- Front map/reading lamps (2)
- HomeLink® transceiver (3) - if equipped
- Compass module - if equipped
- Power sunroof switch - if equipped
- Power sliding glass switch - if equipped

The overhead console is mounted with two snap clips into a molded plastic retainer bracket located above the headliner to provide secure overhead console attachment. The compass module is accessed by removing the overhead console from the bracket and pulling it away from the headliner. The individual components of the compass module are not serviced separately and if damaged or inoperative, must be replaced as a unit.

For additional information on the EVIC module and system, (Refer to 08 - Electrical/8M - Message Systems/Message Center/CENTER, Electronic Vehicle Information - Description).

Removal

1. Disconnect and isolate the battery negative cable.
2. Using your fingertips, grasp the sides of the overhead console and pull straight down evenly to disengage the four snap clips.

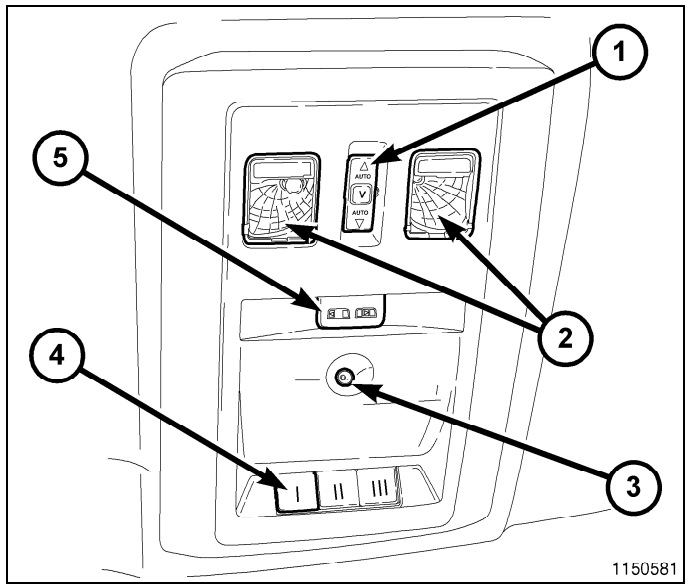

3. Lower the overhead console from the headliner far enough to access the wire harness connectors.
4. Disconnect the reading lamp wire harness connector (1).
5. Disconnect the sunroof switch wire harness connector, if equipped.
6. Disconnect the inferred temperature sensor wire harness connector (4), if equipped.
7. Disconnect the power sliding glass wire harness connector (2), if equipped.
8. Disconnect the Homelink® transceiver wire harness connector (3), if equipped.
9. Remove the overhead console from the vehicle.

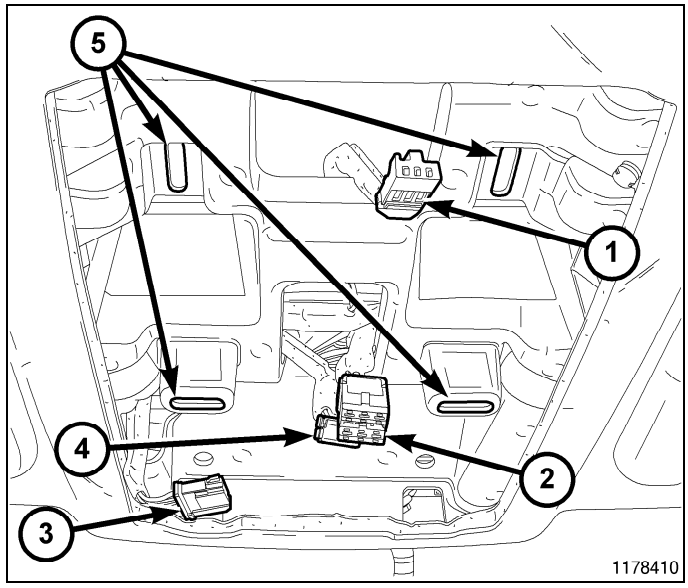

Installation

1. Position the overhead console near the mounting location on the headliner and connect the wire harness connectors.
2. Connect the reading lamp wire harness connector (1).
3. If equipped, connect the sunroof switch wire harness connector.
4. If equipped, connect the inferred temperature sensor wire harness connector (4).
5. If equipped, connect the power sliding glass wire harness connector (2).
6. If equipped, connect the Homelink® transceiver wire harness connector (3).
7. Align the snap clips on the overhead console housing with their receptacles (5) in the overhead console bracket.
8. Push upward firmly and evenly on the sides of the overhead console housing over the snap clip locations until the snap clips are fully engaged with the receptacles in the overhead console bracket.
9. Reconnect the battery negative cable.

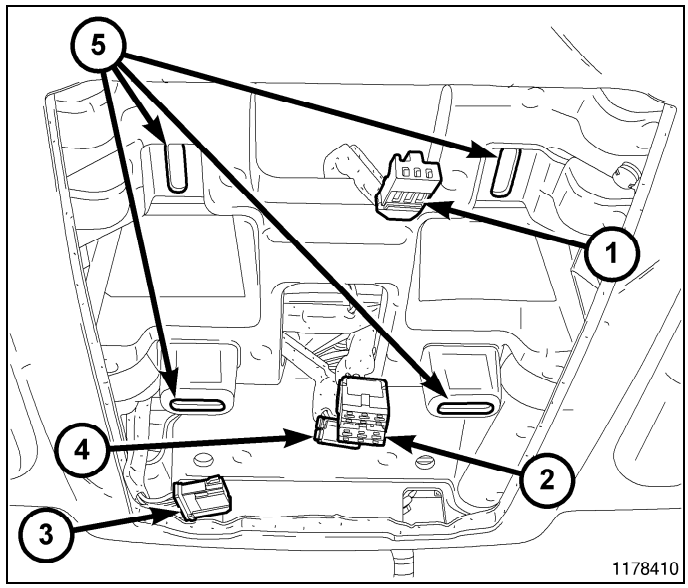

UNIVERSAL TRANSMITTER

TABLE OF CONTENTS

page

UNIVERSAL TRANSMITTER
- DESCRIPTION 18
- OPERATION 18
- DIAGNOSIS AND TESTING 19

page

STANDARD PROCEDURE
- PROGRAMMING UNIVERSAL TRANSMITTER CODES 19
- ERASING UNIVERSAL TRANSMITTER CODES 20
- REPROGRAMMING UNIVERSAL TRANSMITTER CODES 20

Universal Transmitter

Description

NOTE: The Compass Mini-Trip Computer (CMTC) and Electronic Vehicle Information Center (EVIC) modules are sometimes referred to as Electronic Overhead Modules (EOM) for the purposes of scan tool and diagnostic information naming. Please treat the CMTC, EVIC and EOM as one and the same when diagnosing the vehicle.

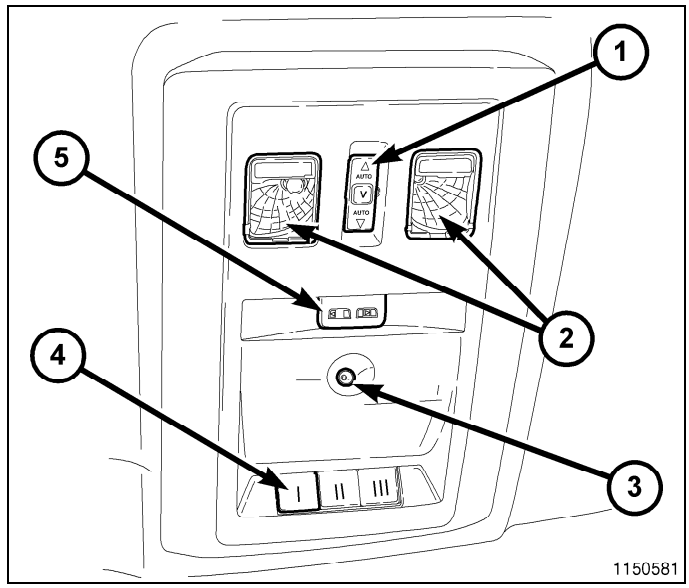

The HomeLink® transceiver is integral to the Electronic Overhead Module (EOM). The only visible component of the HomeLink® transceiver are the three push buttons (4). The buttons are marked with one, two or three dots, respectively, for identification of each channel.

Each of the three HomeLink® transceiver push buttons controls an independent radio transmitter channel. Each of these three channels can be trained to transmit a different radio frequency signal for the remote operation of garage door openers, motorized gate openers, home or office lighting, security systems or just about any other device that can be equipped with a radio receiver in the 286 to 399 Megahertz (MHz) frequency range for remote operation. The HomeLink® transceiver is capable of operating systems using either rolling code or non-rolling code technology.

The HomeLink® transceiver cannot be repaired, and is available for service only as part of the EOM. This unit includes the electronics and push button switches for the HomeLink® transceiver, the electronics for the Remote Compass Module (RCM) and the plastic module case.

Operation

The HomeLink® transceiver receives battery feed through the Ignition Off Draw (IOD) fuse circuit of the vehicle. It operates on a non-switched source of battery current so the unit will remain functional, regardless of the ignition switch position. It can learn and store three separate transmitter radio frequency codes to operate garage door openers, security gates and security lighting. The Electronic Vehicle Information Center (EVIC) display provides visual feedback to the driver, showing which transmitter button is pressed. The system will not send operating signals if the vehicle theft security alarm is armed. This prevents a perpetrator from breaking into a vehicle parked outside a home and using the HomeLink® transceiver system to enter the home.

Diagnosis and Testing

If the universal transmitter is inoperative, but the Electronic Vehicle Information Center (EVIC) Vacuum-Fluorescent Display (VFD) is operating normally, (Refer to 08 - Electrical/8M - Message Systems/Universal Transmitter - Standard Procedure) for instructions on training the universal transmitter. Retrain the universal transmitter with a known good hand held transmitter as instructed and test the universal transmitter operation again. If the unit is still inoperative, test it with the Radio Frequency Detector special tool 9001 as described below:

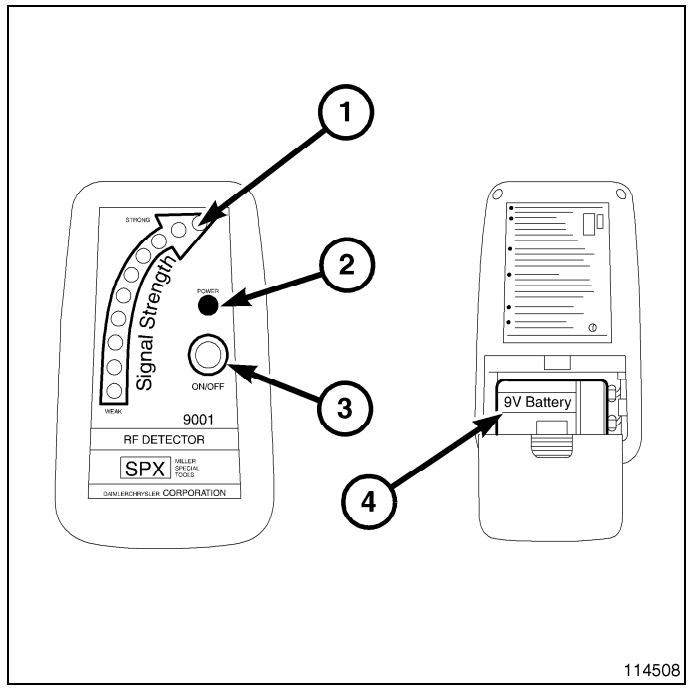

1. Turn ON the Radio Frequency (RF) Detector. A **chirp** will sound and the green power Light Emitting Diode (LED) indicator will illuminate. If the green LED does not illuminate, replace the battery in the RF Detector.
2. Hold the RF Detector within 2.5 centimeters (1 inch) of the trained universal transmitter and press any of the transmitter buttons.
3. The red signal detection LED units will illuminate and the tool will **beep** if a radio signal is detected. Repeat this test for each button. If any button is inoperative, replace the ineffective Electronic Overhead Module (EOM) module.

For complete circuit diagrams, refer to the appropriate wiring information. The wiring information includes wiring diagrams, proper wire and connector repair procedures, details of wire harness routing and retention, connector pin-out information and location views for the various wire harness connectors, splices and grounds.

Standard Procedure

PROGRAMMING UNIVERSAL TRANSMITTER CODES

WARNING: Vehicle exhaust contains carbon monoxide, a dangerous gas. Do not run the engine while training the universal transmitter. Failure to follow these instructions may result in possible serious or fatal injury.

WARNING: Your motorized door or gate may open and close while you are training the universal transmitter if the vehicle is in range of the motorized device. Do not train the universal transmitter if people or pets are in the path of the door or gate. A moving door or gate can cause serious injury or death to people and pets or damage to objects.

NOTE: When programming a garage door opener, it is advised to park outside the garage. It is also recommended that a new battery be placed in the hand held transmitter of the device being programmed to the universal transmitter for quicker training and accurate transmission of the radio frequency signal.

NOTE: If programing the universal transmitter is unsuccessful using the following procedure, refer to the Owner's Manual for the current customer assistance phone number.

WITH ELECTRONIC VEHICLE INFORMATION CENTER

1. Press and hold the two outer universal transmitter buttons. The Electronic Vehicle Information Center (EVIC) will display **CLEARING CHANNELS**. Do not release the buttons until **CHANNELS CLEARED** is displayed in the EVIC (after about 20 seconds). **Do not** hold the buttons for longer than 30 seconds. **Do not** repeat this step to program a second or third hand held transmitter to the remaining two universal transmitter buttons. The universal transmitter is now in the train (or learning) mode.
2. Position the end of your hand held transmitter 3 - 8 cm (1 - 3 inches) away from the universal transmitter buttons while keeping the EVIC display in view.
3. Simultaneously press and hold both the universal transmitter button that you want to train and the hand held transmitter button. **Do not release the buttons until Step 4 has been completed.** The EVIC will display, **CHANNEL X TRAINING**. Once the universal transmitter is programmed the EVIC will display, **CHANNEL X TRAINED**. The **X** refers to the number of the channel currently being trained (1, 2 or 3).

NOTE: Some gate operators and garage door openers may require you to replace this Programming Step 3 with the procedures noted in the GATE OPERATOR/CANADIAN PROGRAMMING section.

4. Once **CHANNEL X TRAINED** is displayed in the EVIC, release both buttons. Programming is now complete. When the universal transmitter button is subsequently pressed, **CHANNEL X TRANSMIT** is displayed in the EVIC and your device should be activated (garage door should open).

NOTE: To program the remaining two buttons, begin with Step 2. Do not repeat Step 1. If the EVIC display shows CHANNEL X TRANSMIT (where X is channel 1, 2 or 3) but your device does not activate, the device may be equipped with a rolling code system. Continue with Steps 5 - 7 to complete the programming of a rolling code equipped device (most commonly a garage door opener).

5. At the garage door opener receiver (motor-head unit) in the garage, locate the **learn** or **smart** button. This can usually be found where the hanging antenna wire is attached to the motor-head unit.
6. Firmly press and release the **learn** or **smart** button. (The name and color of the button may vary by manufacturer.)
7. Return to the vehicle and firmly press, hold for two seconds, then release the programmed universal transmitter button. Repeat the press, hold, then release sequence a second time. Depending upon the brand of the garage door opener (or other rolling code equipped device), repeat this sequence a third time to complete the programming. The universal transmitter should now activate your rolling code equipped device.

NOTE: To program the remaining two universal transmitter buttons, begin with Step 2. Do not repeat Step 1.

GATE OPERATOR/CANADIAN PROGRAMMING

Canadian radio-frequency laws require transmitter signals to time-out (or quit) after several seconds of transmission, which may not be long enough for the universal transmitter to pick up the signal during programming. Similar to this Canadian law, some U.S. gate operators are designed to time-out in the same manner.

If you live in Canada or you are having difficulties programming a gate operator by using the Programming procedures (regardless of where you live), replace Step 3 in either of the above procedures with the following:

NOTE: When programming a garage door opener or gate operator, it is advised to unplug the device or move the vehicle out of range during the cycling process to prevent possible overheating of the device motor.

3. Continue to press and hold the universal transmitter button while you press and release every two seconds (cycle) your hand held transmitter button until the frequency signal has successfully been accepted. The EVIC will display, **CHANNEL X TRAINING** and then, **CHANNEL X TRAINED**. Proceed with Step 4 to complete.

ERASING UNIVERSAL TRANSMITTER CODES

NOTE: Individual channels cannot be erased. Erasing any universal transmitter code will erase ALL programmed codes.

WITH ELECTRONIC VEHICLE INFORMATION CENTER

To erase prior code programming from all three buttons (individual buttons cannot be erased but can be reprogrammed), press and hold the two outer universal transmitter buttons. The Electronic Vehicle Information Center (EVIC) will display **CLEARING CHANNELS**. Do not release the buttons until **CHANNELS CLEARED** is displayed in the EVIC (after about 20 seconds). **Do not** hold the buttons for longer than 30 seconds. The universal transmitter is now in the train (or learning) mode and can be programmed at any time. (Refer to 08 - Electrical/8M - Message Systems/Universal Transmitter - Standard Procedure).

REPROGRAMMING UNIVERSAL TRANSMITTER CODES

WARNING: Vehicle exhaust contains carbon monoxide, a dangerous gas. Do not run the engine while training the universal transmitter. Failure to follow these instructions may result in possible serious or fatal injury.

WARNING: Your motorized door or gate may open and close while you are training the universal transmitter if the vehicle is in range of the motorized device. Do not train the universal transmitter if people or pets are in the path of the door or gate. A moving door or gate can cause serious injury or death to people and pets or damage to objects.

NOTE: When programming a garage door opener, it is advised to park outside the garage. It is also recommended that a new battery be placed in the hand held transmitter of the device being programmed to the universal transmitter for quicker training and accurate transmission of the radio frequency signal.

NOTE: If programing the universal transmitter is unsuccessful using the following procedure, refer to the Owner's Manual for the current customer assistance phone number.

WITH ELECTRONIC VEHICLE INFORMATION CENTER

1. Press and hold the two outer universal transmitter buttons. The Electronic Vehicle Information Center (EVIC) will display **CLEARING CHANNELS**. Do not release the buttons until **CHANNELS CLEARED** is displayed in the EVIC (after about 20 seconds). **Do not** hold the buttons for longer than 30 seconds. **Do not** repeat this step to program a second or third hand held transmitter to the remaining two universal transmitter buttons. The universal transmitter is now in the train (or learning) mode.
2. Position the end of your hand held transmitter 3 - 8 cm (1 - 3 inches) away from the universal transmitter buttons while keeping the EVIC display in view.
3. Simultaneously press and hold both the universal transmitter button that you want to train and the hand held transmitter button. **Do not release the buttons until Step 4 has been completed.** The EVIC will display, **CHANNEL X TRAINING**. Once the universal transmitter is programmed the EVIC will display, **CHANNEL X TRAINED**. The **X** refers to the number of the channel currently being trained (1, 2 or 3).

NOTE: Some gate operators and garage door openers may require you to replace this Programming Step 3 with the procedures noted in the GATE OPERATOR/CANADIAN PROGRAMMING section.

4. Once **CHANNEL X TRAINED** is displayed in the EVIC, release both buttons. Programming is now complete. When the universal transmitter button is subsequently pressed, **CHANNEL X TRANSMIT** is displayed in the EVIC and your device should be activated (garage door should open).

NOTE: To program the remaining two buttons, begin with Step 2. Do not repeat Step 1. If the EVIC display shows CHANNEL X TRANSMIT (where X is channel 1, 2 or 3) but your device does not activate, the device may be equipped with a rolling code system. Continue with Steps 5 - 7 to complete the programming of a rolling code equipped device (most commonly a garage door opener).

5. At the garage door opener receiver (motor-head unit) in the garage, locate the **learn** or **smart** button. This can usually be found where the hanging antenna wire is attached to the motor-head unit.
6. Firmly press and release the **learn** or **smart** button. (The name and color of the button may vary by manufacturer.)
7. Return to the vehicle and firmly press, hold for two seconds, then release the programmed universal transmitter button. Repeat the press, hold, then release sequence a second time. Depending upon the brand of the garage door opener (or other rolling code equipped device), repeat this sequence a third time to complete the programming. The universal transmitter should now activate your rolling code equipped device.

NOTE: To program the remaining two universal transmitter buttons, begin with Step 2. Do not repeat Step 1.

GATE OPERATOR/CANADIAN PROGRAMMING

Canadian radio-frequency laws require transmitter signals to time-out (or quit) after several seconds of transmission, which may not be long enough for the universal transmitter to pick up the signal during programming. Similar to this Canadian law, some U.S. gate operators are designed to time-out in the same manner.

If you live in Canada or you are having difficulties programming a gate operator by using the Programming procedures (regardless of where you live), replace Step 3 in either of the above procedures with the following:

NOTE: When programming a garage door opener or gate operator, it is advised to unplug the device or move the vehicle out of range during the cycling process to prevent possible overheating of the device motor.

3. Continue to press and hold the universal transmitter button while you press and release every two seconds (cycle) your hand held transmitter button until the frequency signal has successfully been accepted. The EVIC will display, **CHANNEL X TRAINING** and then, **CHANNEL X TRAINED**. Proceed with Step 4 to complete.

POWER LOCKS

TABLE OF CONTENTS

page

POWER LOCKS
- DESCRIPTION . . . 2
- OPERATION . . . 3
- DIAGNOSIS AND TESTING . . . 3

MOTOR, DOOR LOCK
- DESCRIPTION . . . 4
- OPERATION . . . 4

SWITCH, LOCK, WITH WINDOW SWITCHES
- DESCRIPTION . . . 4
- OPERATION . . . 5
- REMOVAL . . . 6
- INSTALLATION . . . 6

page

TRANSMITTER, INTEGRATED KEY FOB
- DIAGNOSIS AND TESTING
  - FOBIK TRAPPED IN WIN . . . 7
  - REMOTE KEYLESS ENTRY TRANSMITTER . . . 8
- STANDARD PROCEDURE
  - FOBIK TRANSMITTER BATTERY REPLACEMENT . . . 8
  - FOBIK PROGRAMING . . . 10
- SPECIFICATIONS . . . 10

Power Locks

Description

POWER LOCKS

The power lock system allows all of the doors to be locked or unlocked electrically by operating a switch on either front door trim panel. When an actuation input signal from the door lock switch, WIN or FOBIK signal is received, the door modules turns on the output drivers a provides a voltage level to the door lock motor for a specified time to lock/unlock the door. Their are two door modules, the Driver Door Module (DDM) and Passenger Door Module (PDM). The door modules have an unswitched battery feed from the TIPM, so the locks can be actuated in any ignition switch position.

The door modules locks the doors automatically when the vehicle is driven beyond the speed of 25.7 km/h (15 mph), all doors are closed and the accelerator pedal is depressed. The rolling door lock feature can be disabled if desired.

This vehicle also offers several customer programmable features, which allows the selection of several optional electronic features to suit individual preferences.

The power lock system for this vehicle can also be operated remotely using the FOBIK.

Certain functions and features of the power lock system rely upon resources shared with other electronic modules in the vehicle over the CAN data bus network. For proper diagnosis of these electronic modules or of the CAN data bus network, the use of a scan tool and the appropriate diagnostic information are required.

AUTOMATIC DOOR LOCKS

When enabled, this feature will lock all of the door locks if all of the doors are closed and the vehicle speed goes above 25.7 km/h (15 mph). If a door unlock has occurred, then the door modules will perform another auto lock, if the doors did not electrically unlock, another auto lock will not occur.

DOOR LOCK INHIBIT

When the FOBIK is in the ignition (in any switch position) and either front door is opened, the door lock switches LOCK functions are disabled. The UN-LOCK functions are still functional. This protects against locking the vehicle with the FOBIK still in the ignition. The FOBIK will still lock the doors. After the FOBIK is removed from the ignition or the doors are closed, the power door locks will operate normally.

REMOTE KEYLESS ENTRY

A Radio Frequency (RF) type Remote Keyless Entry (RKE) system is an available factory-installed option on this model. The RKE system allows the use of a remote battery-powered radio transmitter to signal the Wireless Ignition Node (WIN) to actuate the power lock system. The WIN operates on non-switched battery current through a fuse in the Totally Integrated Power Module (TIPM), so that the system remains operational, regardless of the ignition switch position.

The FOBIK transmitters are also equipped with a Panic button. If the Panic button on the FOBIK transmitter is depressed, the horn will sound and the exterior lights will flash on the vehicle for about three minutes, or until the Panic button is depressed a second time. A vehicle speed of about 25.7 km/h (15 mph) will also cancel the panic event.

The RKE system can also perform other functions on this vehicle. If the vehicle is equipped with the optional Vehicle Theft Security System (VTSS), the FOBIK transmitter will arm the VTSS when the Lock button is depressed, and disarm the VTSS when the Unlock button is depressed.

The RKE system includes two transmitters when the vehicle is shipped from the factory, but the system can retain the vehicle access codes of up to a total of eight transmitters. The transmitter codes are retained in the WIN memory, even if the battery is disconnected. If an FOBIK transmitter is faulty or lost, new transmitter vehicle access codes can be programmed into the system using a scan tool, (Refer to 08 - Electrical/8E - Electronic Control Modules - Standard Procedure).

This vehicle also offers several customer programmable features, which allows the selection of several optional electronic features to suit individual preferences. Customer programmable feature options affecting the RKE system include:

- **Automatic Door Lock** - Customer programmable feature that allows the TIPM to perform an automatic door lock if the vehicle speed is above 25.7 km/h (15 miles-per-hour).
- **Automatic Door Unlock On Exit** - Customer programmable feature that allows the TIPM to perform an automatic door unlock if the vehicle speed is 0, vehicle in park and driver door is opened.
- **Flash Lights with Lock and Unlock** - Allows the option of having the park lamps flash as an optical verification that the RKE system received a valid Lock request or Unlock request from the FOBIK transmitter, or having no optical verification.

- **Programming Additional Transmitters** - Allows up to a total of eight transmitter vehicle access codes to be stored.
- **Remote Unlock Sequence** - Allows the option of having only the driver side front door unlock when the FOBIK transmitter Unlock button is depressed the first time. The remaining doors unlock when the button is depressed a second time within 5 seconds of the first unlock press. Another option is having all doors unlock upon the first depression of the FOBIK transmitter Unlock button.
- **Sound Horn on Lock** - Allows the option of having the horn sound a short chirp as an audible verification that the RKE system received a valid Lock request from the FOBIK transmitter, or having no audible verification.

Certain functions and features of the RKE system rely upon resources shared with other electronic modules in the vehicle over CAN data bus network. For diagnosis of these electronic modules or of the CAN data bus network, the use of a scan tool and the appropriate diagnostic information are required.

Operation

POWER LOCKS

The power lock system allows all of the doors to be locked or unlocked electrically by operating a switch on either front door trim panel. When an actuation input signal from the door lock switch, WIN or FOBIK signal is received, the door modules turns on the output drivers a provides a voltage level to the door lock motor for a specified time to lock/unlock the door. Their are two door modules, the Driver Door Module (DDM) and Passenger Door Module (PDM). The door modules have an unswitched battery feed from the TIPM, so the locks can be actuated in any ignition switch position.

REMOTE KEYLESS ENTRY

The FOBIK transmitter uses radio frequency signals to communicate with the WIN. The WIN is on the CAN bus. When the operator presses a button on the transmitter, it sends a specific request to the WIN. In turn, the WIN sends the appropriate request over the CAN bus to the following:

- **Totally Integrated Power Module (TIPM)** - to activate the park lamps, the headlamps and the horn for the horn chirp.
- **Door Control Modules** - to activate the door locks and windows.

After pressing the lock button on the FOBIK transmitter, all of the door locks will lock, the illuminated entry will turn off (if all doors are closed) and the vehicle theft security system (if equipped) will arm.

Pressing the unlock button one time will unlock the driver door, or all doors based on the customer programmable feature enabled, the illuminated entry will turn on the courtesy lamps and the vehicle theft security system (if equipped) will disarm. Pressing the unlock button a second time, the remaining door locks will unlock.

If the vehicle is equipped with the memory system, the memory message will identify which transmitter sent the signal.

ROLLING CODE

The rolling code feature changes part of the transmitter message each time that it is used. The transmitter message and the receiver message increment together. Under certain conditions with a rolling code system, such as pressing a button on the FOBIK transmitter over 255 times outside of receiver range or replacing the battery, the receiver and transmitter can fall out of synchronization. To re-synchronize, press and release the UNLOCK button on the FOBIK transmitter repeatedly (it may take up to eight cycles) while listening carefully for the power door locks in the vehicle to cycle, indicating that resynchronization has occurred.
The lock function works from the FOBIK transmitter even in an out of synchronization condition, therefore it could be verified by pressing the LOCK button on the FOBIK.

Diagnosis and Testing

The most reliable, efficient, and accurate means to diagnose the power lock system requires the use of a scan tool and the proper Diagnostic Procedures information.

Refer to the appropriate wiring information.

Following are tests that will help to diagnose the hard wired components and circuits of the power lock system. However, these tests may not prove conclusive in the diagnosis of this system. In order to obtain conclusive testing of the power lock system, the CAN data bus network and all of the electronic modules that provide inputs to, or receive outputs from the power lock system components must be checked.

PRELIMINARY DIAGNOSIS

As a preliminary diagnosis for the power lock system, note the system operation while you actuate both the Lock and Unlock functions with the power lock switches and with the Remote Keyless Entry FOBIK transmitter. Then, proceed as follows:

- If the entire power lock system fails to function with either the power lock switches or the FOBIK, check the fused B(+) fuse in the Totally Integrated Power Module (TIPM).
- If the power lock system functions with both power lock switches, but not with the FOBIK, proceed to diagnosis of the Remote Keyless Entry (RKE) system. (Refer to 08 - Electrical/8N - Power Systems/Power Locks/TRANSMITTER, Integrated Key FOB - Diagnosis and Testing) or (Refer to 28 - DTC-Based Diagnostics/NODE, Wireless Ignition (WIN) - Diagnosis and Testing).
- If the power lock system functions with the FOBIK, but not with one or both power lock switches, proceed to diagnosis of the door lock switches. (Refer to 29 - Non-DTC Diagnostics/Power Doors - Diagnosis and Testing).
- If the driver side power lock switch operates only the driver side front door power lock motor, but all other power lock motors operate with the passenger side power lock switch or the FOBIK, use a scan tool and the appropriate diagnostic information to diagnose the CAN data bus.

MOTOR, Door Lock

Description

The lock mechanisms are actuated by a reversible electric motor mounted within each door. The power lock motors are integral to the door latch units. The power lock motors cannot be adjusted or repaired and, if faulty or damaged, the door latch unit must be replaced.

For replacement of the front door latch (Refer to 23 - Body/Door - Front/LATCH, Door - Removal).

For replacement of the rear door latch (Refer to 23 - Body/Doors - Rear/LATCH, Door - Removal).

Operation

The door lock motors are controlled by the Totally Integrated Power Module (TIPM). A positive and negative battery connection to the two motor terminals will cause the motor to move in one direction. Reversing the current will cause the motor to move in the opposite direction.

SWITCH, Lock, with Window Switches

Description

A window/lock switch is used on all models equipped with power locks, power windows, and power mirrors. The window/lock switch houses the following switches:

- **Power Lock Switch** - A two-way, momentary, resistor multiplexed switch to control the power lock system.
- **Power Mirror Selector Switch** - Two separate push button switches selects the right or left power mirror for adjustment, or turns the power mirror system Off.
- **Power Mirror Adjustment Switches** - Four momentary, arrowhead shaped, directional switches allow the driver to adjust the selected power mirror in the Up, Down, Right, or Left directions.
- **Power Window Lockout Switch** - A two-way, latching, push-button switch allows the vehicle operator to lock out the power window switches on each passenger door so that the passenger door power windows may be operated only from the master switches.
- **Power Window Switches** - A two-way, momentary power window switch for the driver side front door. This switch also has a second detent in the Down and up (when equipped) direction and internal circuitry to provide an Auto-Up/Down feature for the driver side front door power window. The four door gets auto-up/down, while the two door just gets the auto-down feature. In addition to the power window switch for its own door, there are individual master switches for each passenger door power window.

The window/lock switch also incorporates several green Light-Emitting Diodes (LEDs) that illuminate the power lock and power window switch paddles, and the power mirror switch directional buttons to improve switch visibility.

Operation

The window/lock switch combines a power lock switch, a driver power window switch with an Auto-down/up feature, master switches for each passenger door power window, a power window lockout switch, a power mirror selector switch, and four power mirror adjustment switches in a single unit.

Power Lock Switch

The power lock switch circuitry is connected in series between ground and the driver door switch mux input of the instrument cluster. Each power lock switch position (Lock, Unlock, and Neutral) provides a different resistance value to the instrument cluster input, which allows the instrument cluster to sense the switch position. Based upon the power lock switch input, the instrument cluster controls the battery and ground feed outputs to the individual power lock motors to lock or unlock the door latches. The Light-Emitting Diode (LED) in the power lock switch is connected to battery current through the power window circuit breaker in the Totally Integrated Power Module (TIPM) on a fused ignition switch output (run-acc) circuit. The switch will be illuminated whenever the ignition switch is in the On or Accessory positions.

Power Window Switches

The power window switch circuitry is connected to battery current through a circuit breaker in the Totally Integrated Power Module (TIPM) on a fused ignition switch output (run-acc) circuit so that the power windows will operate whenever the ignition switch is in the On or Accessory positions. Each two-way, momentary master passenger power window switch provides battery current and ground to the individual power window switches on each passenger door so that the power window switch controls the battery current and ground feeds to its respective power window motor. The switch for the driver side front door power window is labeled “Auto” and includes an auto-up/down feature. The four door gets both auto-up/down, the two door gets auto-down only feature. When this switch is pressed/depressed to a second momentary detent position and released, the driver door power window is automatically operated through an internal circuit and relay to its fully lowered or closed positions. The Auto-up/down event is cancelled if the switch paddle is depressed a second time in either the Up or Down direction. When the two position window lockout switch is depressed and latched in the lockout position, the battery current feed to each of the individual passenger power window switches is interrupted so that the passenger door power windows can only be operated from the master switches. The window lockout switch also controls the battery current feed for the LED in each passenger power window switch so that the switch will not be illuminated when it is locked out.

Power Mirror Switches

The power mirror switch circuitry is connected to battery current through a fuse in the TIPM on a fused B(+) circuit so that the power mirrors remain operational regardless of the ignition switch position. A monetary two push button selector switch one to select the right mirror, and one to select the left mirror. After the right or left mirror is selected, one of four directional buttons is depressed to move the selected mirror Up, Down, Right or Left. The power mirror switch circuitry controls the battery current and ground feeds to each of the four (two in each mirror head) power mirror motors. The Light-Emitting Diode (LED) in the power mirror switch is connected to battery current through the power window circuit breaker in the TIPM on a fused ignition switch output (run-acc) circuit so that the switch directional buttons will be illuminated whenever the ignition switch is in the On or Accessory positions.

Removal

1. Disconnect and isolate the battery negative cable.
2. Using a trim stick, gently pry the switch from the door trim panel.
3. Disconnect electrical connectors.
4. Remove switch from trim panel.



Installation

1. Connect electrical connectors.
2. Push the switch into place.
3. Connect battery negative cable.



TRANSMITTER, Integrated Key FOB

Diagnosis and Testing

FOBIK TRAPPED IN WIN

The Fob with Integrated Key (FOBIK) cannot be rotated to the LOCK position, allowing it to be removed from the ignition switch also referred to as the Wireless Ignition Node/WIN. The automatic transmission or transaxle is shifted mechanically through a cable from the gearshift lever mechanism to the transmission or transaxle valve body. A gated park switch is physically located on and integral to the gearshift lever mechanism and is hard wired directly to the WIN. The gated park switch is a simple plunger-like actuated open or closed contact switch that could be considered redundant to the Transmission Range Sensor (TRS) except that it monitors the position selected with the gearshift lever, while the TRS monitors the position or gear of the transmission or transaxle that is actually engaged. A damaged or improperly adjusted gearshift cable could result in a different gear being engaged than that which is selected. The WIN uses the gated park switch input to control an internal key lock solenoid, which controls whether the FOBIK can be rotated to the LOCK position. When the gearshift lever is not in the PARK position, the gated park switch is a closed circuit, the key lock solenoid is energized and the FOBIK cannot be rotated to the LOCK position for removal.

CONDITION	POSSIBLE CAUSES	CORRECTION
CANNOT TURN FOBIK TO LOCK POSITION	1. Damaged, binding or improperly adjusted gearshift cable.	1. Inspect and replace or adjust gearshift cable, if required.
	2. Damaged or binding gearshift lever mechanism.	2. Inspect and replace or adjust gearshift lever mechanism.
	3. No gated park switch input to WIN.	3. Use a diagnostic scan tool with software release version 8.05 or greater to read and confirm no gated park switch input to the WIN. Refer to the appropriate CONDITION that follows.
	4. Key lock solenoid (WIN) unresponsive to gated park switch input.	4. Use a diagnostic scan tool with software release version 8.05 or greater to read and confirm gated park switch input to the WIN. Refer to the appropriate CONDITION that follows.
NO GATED PARK SWITCH INPUT	1. Open TRS park signal circuit.	1. Repair the open TRS park signal circuit between the gated park switch (gearshift lever mechanism) and the WIN, if required
	2. Damaged or ineffective gated park switch.	2. Replace the damaged or ineffective gated park switch (gearshift lever mechanism), if required.
KEY LOCK SOLENOID UNRESPONSIVE TO GATED PARK SWITCH INPUT	1. Damaged or ineffective key lock solenoid.	1. Replace the damaged or ineffective key lock solenoid (WIN), if required.

REMOTE KEYLESS ENTRY TRANSMITTER

Using special tool 9001, first test to ensure that the transmitter is functioning. Typical testing distance is 2.5 centimeters (1 inch) for Asian transmitters and 30.5 centimeters (12 inches) for all others. To test, position the transmitter as shown. Press any transmitter button, then test each button individually. The tool will beep if a radio signal strength that lights five or more LED's is detected. Repeat this test three times. If transmitter fails any of the test(Refer to 08 - Electrical/8N - Power Systems/Power Locks - Diagnosis and Testing) .

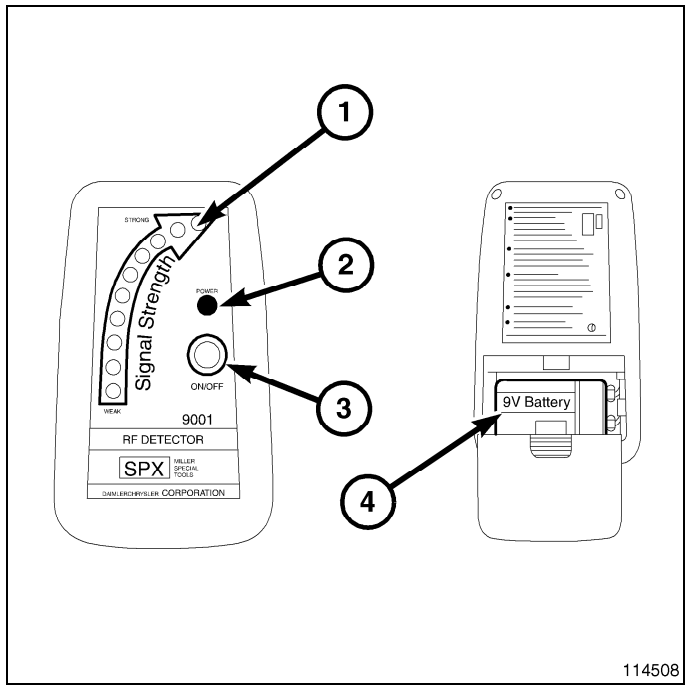

Standard Procedure

FOBIK TRANSMITTER BATTERY REPLACEMENT

FOBIK WITH BATTERY COVER

NOTE: Do not disturb the metal terminal near the battery. Avoid touching the new battery. Skin oils may cause battery deterioration. If battery are touched, clean with rubbing alcohol.

To replace the FOBIK transmitter battery:

1. Using a small flat bladed tool, carefully remove the battery cover on the back of the FOBIK.

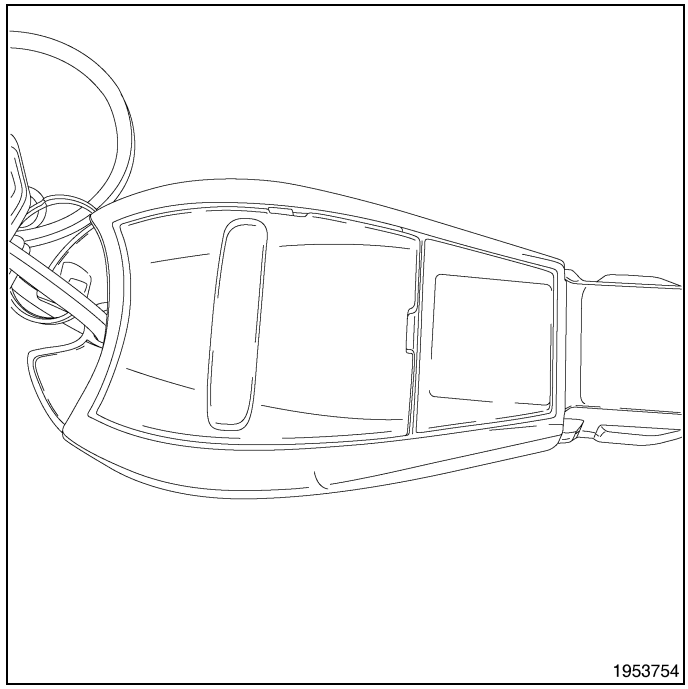

2. Remove the battery one at a time by slightly lifting up and sliding out from the FOBIK .
3. Replace the battery with the same type of battery cell.
4. Install the battery with the positive terminal up.
5. Install battery cover and snap into place.
6. Test FOBIK operation.

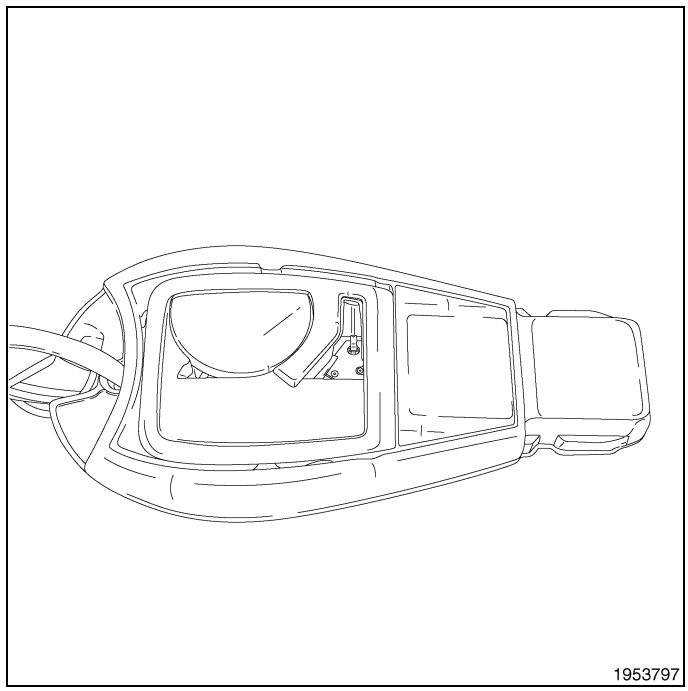
1953797

FOBIK WITHOUT BATTERY COVER

NOTE: Do not disturb the metal terminal near the battery. Avoid touching the new battery. Skin oils may cause battery deterioration. If battery are touched, clean with rubbing alcohol.

This design is a clam shell design whereby both halves are split apart.

1. Remove the valet/spare key from the FOBIK if present.
2. Using a trim stick C-4755 or equivalent, carefully separate the top half from the bottom half.

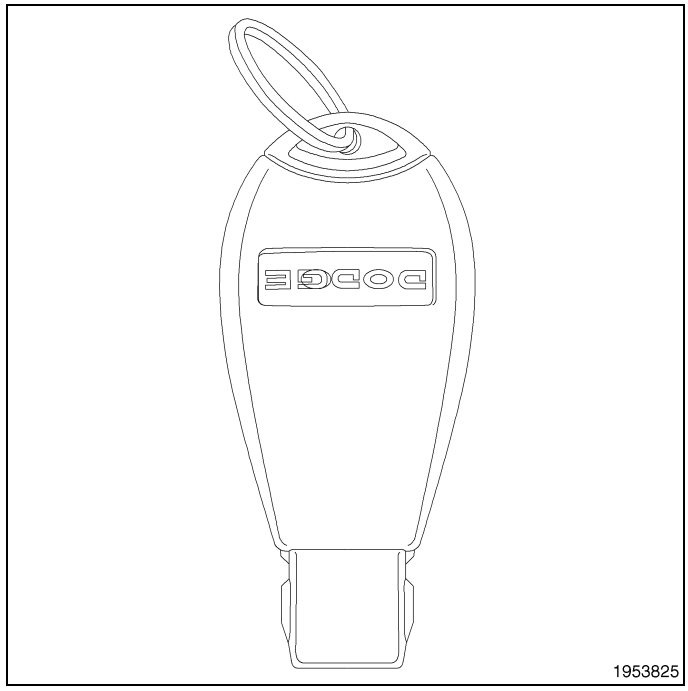

1953825

3. Lift up on the battery to remove.
4. Replace battery with the same type of cell.
5. Install new battery negative side up.
6. Snap the top and bottom halves together.
7. Test FOBIK operation.

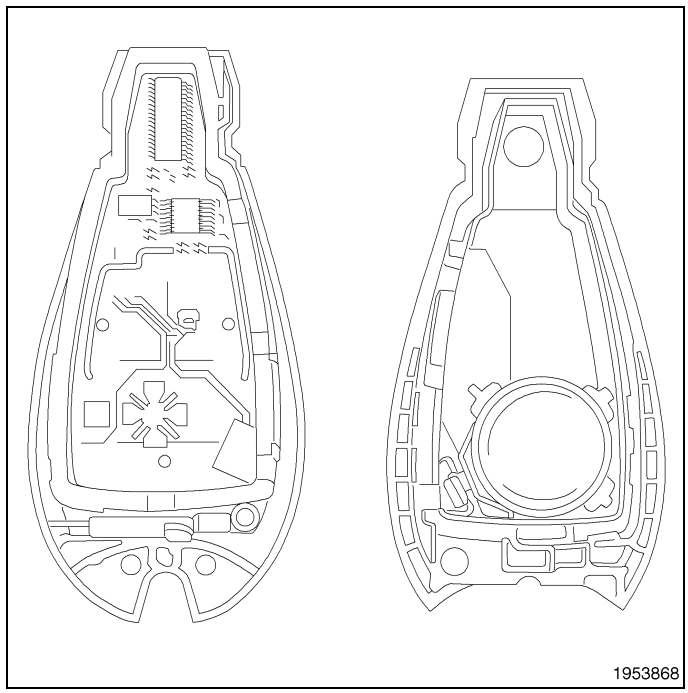

FOBIK PROGRAMING

Make sure instructions are followed in order, (Refer to 08 - Electrical/8E - Electronic Control Modules - Standard Procedure).

Specifications

BATTERY

The transmitter has two 3 volt batteries, which can be removed and replaced without special tools. Insert a dime in the side slot of the transmitter case and twist. The halves should separate and the batteries are stacked on top of each other. The batteries are available at local retail stores. Recommended batteries are Duracell DL 2016 or equivalent. Typical battery life is about two years.

CAUTION: Do not handle the batteries any more than necessary. Hands must be clean and dry.

RANGE

Normal Remote Keyless Entry (RKE) transmitter operation range for vehicles manufactured for domestic markets is up to 20 meters (66 feet) away from the vehicle. On vehicles manufactured for export markets, normal RKE transmitter range is up to 10 meters (33 feet) away from the vehicle. If a domestic market vehicle is equipped with the optional factory-installed Remote Start System, the normal transmitter range is increased to up to 91 meters (300 feet). Please note that the actual RKE transmitter range values may be better or worse than specified above, depending upon many possible variables in the environment at the specific time and location that any RKE transmission is attempted.

POWER MIRRORS

TABLE OF CONTENTS

page

POWER MIRRORS
DESCRIPTION 12
OPERATION 12
DIAGNOSIS AND TESTING 12
MIRROR, AUTOMATIC DAY AND NIGHT
DESCRIPTION 12
OPERATION 12
DIAGNOSIS AND TESTING 13

page

SWITCH, MIRROR
INSTALLATION 13
DIAGNOSIS AND TESTING 13
REMOVAL 14

Power Mirrors

Description

AUTOMATIC DAY/NIGHT MIRROR

The automatic day/night mirror system is able to automatically change the reflectance of the inside rear view mirror in order to reduce the glare of headlamps approaching the vehicle from the rear. The automatic day/night rear view mirror receives battery current through a fuse in the Totally Integrated Power Module (TIPM) only when the ignition switch is in the On position.

OUTSIDE REAR VIEW MIRROR

The power operated outside rear view mirrors allow the driver to adjust both outside mirrors electrically from the driver side front seat position by operating a switch on the driver side front door trim panel. The power mirrors receive a non-switched battery feed through a fuse in the Totally Integrated Power Module (TIPM) so that the system will remain operational, regardless of the ignition switch position.

Operation

AUTOMATIC DAY/NIGHT MIRROR

A switch located on the bottom of the automatic day/night mirror housing allows the vehicle operator to select whether the automatic dimming feature is operational. When the automatic day/night mirror is turned on, the mirror switch is lighted by an integral Light-Emitting Diode (LED). The mirror will automatically disable its self-dimming feature whenever the vehicle is being driven in reverse.

OUTSIDE REAR VIEW MIRROR

The mirror switch has a push button selector switch for the driver and passenger side mirror operation, with a four directional arrow push button switch. When the mirror switch is press, it sends a signal to the driver door module (DMM), which controls the motors for the mirror.

The heated mirrors include an electric heating grid behind the mirror glass in each outside mirror, which can clear the mirror glass of ice, snow, or fog. (Refer to 08 - Electrical/8G - Heated/Cooled Systems/Heated Mirrors - Description) for more information.

Diagnosis and Testing

Any diagnosis of the Power Mirror system should begin with the use of scan tool. (Refer to 28 - DTC-Based Diagnostics/MODULE, Driver Door (DDM) - Diagnosis and Testing).

For complete circuit diagrams, refer to the appropriate wiring information.

MIRROR, Automatic Day and Night

Description

The automatic day/night mirror uses a thin layer of electrochromic material between two pieces of conductive glass to make up the face of the mirror. When the mirror switch is in the On position, two photocell sensors are used by the mirror circuitry to monitor external light levels and adjust the reflectance of the mirror.

Operation

The ambient photocell sensor is located on the forward-facing (windshield side) of the rear view mirror housing, and detects the ambient light levels outside of the vehicle. The headlamp photocell sensor is located inside the rear view mirror housing behind the mirror glass and faces rearward, to detect the level of the light being received at the rear window side of the mirror. When the circuitry of the automatic day/night mirror detects that the difference between the two light levels is too great (the light level received at the rear of the mirror is much higher than that at the front of the mirror), it begins to darken the mirror.

The automatic day/night mirror circuitry also monitors the transmission using an input from the backup lamp circuit. The mirror circuitry is programmed to automatically disable its self-dimming feature whenever it senses that the transmission backup lamp circuit is energized.

The automatic day/night mirror is a completely self-contained unit and cannot be repaired. If faulty or damaged, the entire mirror assembly must be replaced.

Diagnosis and Testing

For complete circuit diagrams, refer to the appropriate wiring information.

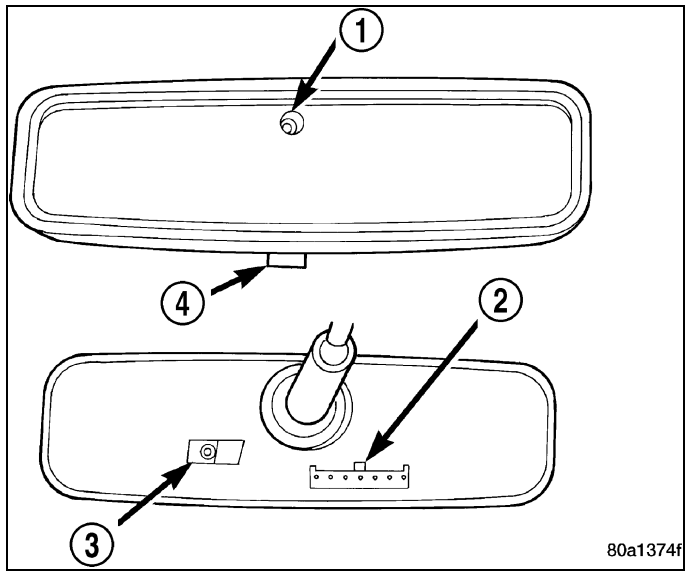

1. Check the fuse in the Totally Integrated Power Module (TIPM). If OK, go to Step #2. If not OK, repair the shorted circuit or component as required and replace the faulty fuse.
2. Turn the ignition switch to the On position. Check for battery voltage at the fuse in the TIPM. If OK, go to Step #3. If not OK, repair the open circuit to the ignition switch as required.
3. Turn the ignition switch to the Off position. Disconnect and isolate the battery negative cable. Unplug the wire harness connector from the automatic day/night mirror. Connect the battery negative cable. Turn the ignition switch to the On position. Check for battery voltage at the fused ignition switch output (run/start) circuit cavity of the automatic day/night mirror wire harness connector. If OK, go to Step #4. If not OK, repair the open circuit to the TIPM as required.
4. Turn the ignition switch to the Off position. Disconnect and isolate the battery negative cable. Check for continuity between the ground circuit cavity of the automatic day/night mirror wire harness connector and a good ground. There should be continuity. If OK, go to Step #5. If not OK, repair the circuit to ground as required.
5. Connect the battery negative cable. Turn the ignition switch to the On position. Set the parking brake. Place the transmission gear selector lever in the Reverse position. Check for battery voltage at the backup lamp switch output circuit cavity of the automatic day/night mirror wire harness connector. If OK, go to Step #6. If not OK, repair the open circuit as required.
6. Turn the ignition switch to the Off position. Disconnect the battery negative cable. Plug in the automatic day/night mirror wire harness connector. Connect the battery negative cable. Turn the ignition switch to the On position. Place the transmission gear selector lever in the Neutral position. Place the mirror switch in the On (the LED in the mirror switch is lighted) position. Cover the forward facing ambient photocell sensor to keep out any ambient light.

NOTE: The ambient photocell sensor must be covered completely, so that no light reaches the sensor. Use a finger pressed tightly against the sensor, or cover the sensor completely with electrical tape.

7. Shine a light into the rearward facing headlamp photocell sensor. The mirror glass should darken. If OK, go to Step #8. If not OK, replace the faulty automatic day/night mirror unit.
8. With the mirror glass darkened, place the transmission gear selector lever in the Reverse position. The mirror should return to its normal reflectance. If not OK, replace the faulty automatic day/night mirror unit.

SWITCH, Mirror

Installation

The power mirror switch is included with the window/lock switch. (Refer to 08 - Electrical/8N - Power Systems/Power Locks/SWITCH, Lock - Installation).

Diagnosis and Testing

The power mirror switch is included with the window/lock switch. (Refer to 08 - Electrical/8N - Power Systems/Power Mirrors - Diagnosis and Testing).

Removal

The power mirror switch is included with the window/lock switch. (Refer to 08 - Electrical/8N - Power Systems/Power Locks/SWITCH, Lock - Removal).

POWER SEATS

TABLE OF CONTENTS

page

POWER SEATS
- DESCRIPTION . . . 16
- OPERATION . . . 18
- DIAGNOSIS AND TESTING
  - MEMORY SEAT SYSTEM . . . 19
  - POWER SEAT ADJUSTER . . . 19
- STANDARD PROCEDURE . . . 19

MOTOR, LUMBAR
- REMOVAL . . . 20
- INSTALLATION . . . 21

MOTOR, SEAT ADJUSTER
- REMOVAL . . . 21
- INSTALLATION . . . 23

RECLINER
- REMOVAL . . . 24
- INSTALLATION . . . 24

page

SWITCH, LUMBAR CONTROL
- DESCRIPTION . . . 25
- OPERATION . . . 25
- DIAGNOSIS AND TESTING . . . 25
- REMOVAL . . . 26
- INSTALLATION . . . 28

SWITCH, MEMORY
- DESCRIPTION . . . 30
- OPERATION . . . 30
- REMOVAL . . . 30
- INSTALLATION . . . 32

SWITCH, SEAT, POWER
- DESCRIPTION . . . 34
- OPERATION . . . 34
- DIAGNOSIS AND TESTING . . . 34
- REMOVAL . . . 36
- INSTALLATION . . . 37

Power Seats

Description

POWER SEAT SYSTEM

The power seat system allows the driver and front seat passenger to electrically adjust their seating positions using the power seat switches located on the outboard seat cushion side shield of each front seat.

A driver side ten-way power seat includes a six-way adjustable seat cushion track, a two-way power seat back and two-way power lumbar. The driver power seat can be adjusted up, down, front up, front down, forward, rearward, recliner forward, and recliner rearward. A passenger side four-way power seat includes a two-way adjustable seat cushion track and a two-way power seat back. The passenger power front seat can be adjusted forward, rearward, recliner forward and recliner rearward. The power seat system is also available with the heated seat option and memory seat option that automatically positions the power seat for two different drivers (Refer to 08 - Electrical/8G - Heated/Cooled Systems/Heated Seats - Description) and Memory Seat System..

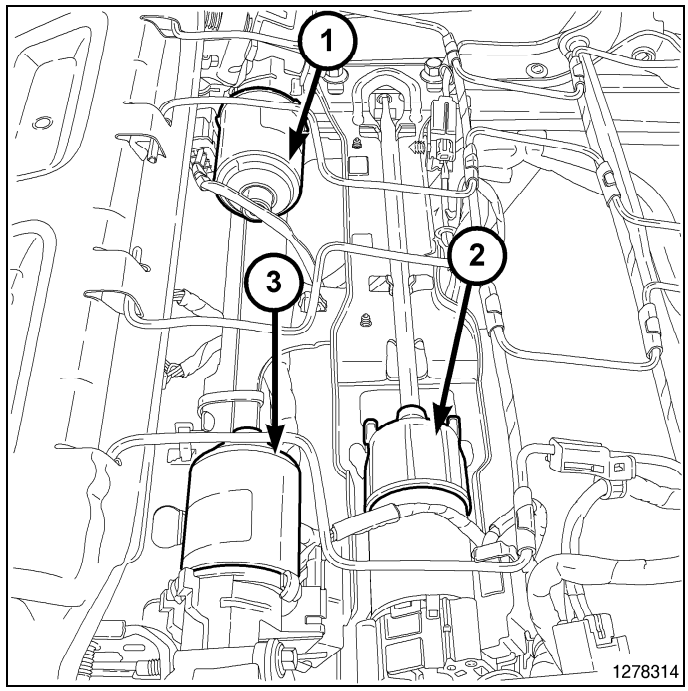

The driver power seat adjuster fore/aft contains a reversible motor (2) that are connected to worm-drive gearboxe that move the seat adjuster through a combination of screw-type drive units. On vehicles equipped with non-memory power seats, each motor contains a self-resetting circuit breaker to protect it from overload. On vehicles equipped with memory power seats the motor overload protection is a function of the Memory Seat Module (MSM). Consecutive or frequent resetting of the circuit breakers may damaged the motors. There are no motors on the passenger upper power seat adjuster.

The power seat system for this vehicle includes the following major components:

The **Front Tilt Motor** (1). Located on the left front of the seat bottom.

The **Rear Tilt Motor** (3). Located on the right front of the seat bottom.

The **Power Seat Adjuster Motor** (2) (driver and passenger seat). Located on the left rear of the seat bottom. The reversible motor is connected to a worm-drive gearbox that moves the seat adjuster through a screw-type drive unit. On vehicles equipped with non-memory power seats, the motor will contain a self-resetting circuit breaker to protect it from overload. On vehicles equipped with memory power seats, the motor overload protection is a function of the Memory Seat Module (MSM). Consecutive or frequent resetting of the circuit breakers may damaged the motors. The motor is part of the lower power seat track unit and must be replaced as an assembly.

NOTE: The power seat recliner motor cannot be repaired. If the unit is inoperative or damaged, the seat back frame must be replaced, (Refer to 08 - Electrical/8N - Power Systems/Power Seats/RECLINER - Removal).

Power Lumbar Motor (1). Located on the inboard side of the seat back with a black wire cable.

Power Seat Recliner Motor (2). Located on the inboard side of the seat back. The power seat recliner replaces the manual seat recliner. The power seat option includes an electrically operated power seat back recliner mechanism. The power seat recliner switch is integral to the power seat switch assembly, but is actuated with a separate switch knob.

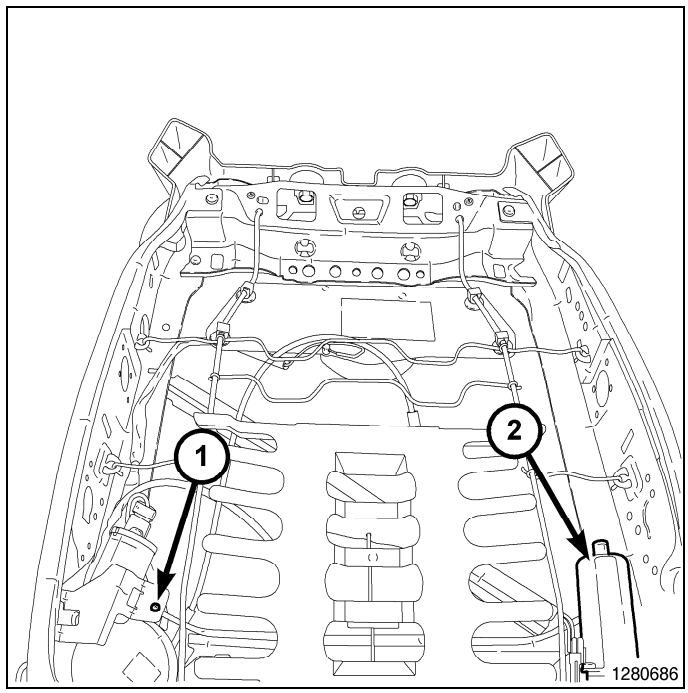

NOTE: Left front power seat switch shown. Right front power seat switch doesn't include lumbar and memory.

Power Seat Switch (1). Located on the outboard side of the seat cushion. Vehicles may be equipped with driver only, or driver and passenger power seat switches. One seat switch is used for each front seat. The power seat switches are paddle-type levers. Movement of the seat cushions and backs mimics the action of the switch paddles. The driver power seat switch type (memory or non-memory) can be identified by the color of the switch electrical connector receptacle. Memory switches have a light gray connector receptacle and non-memory have a black receptacle. for additional information.

Power Lumbar Switch (3). When equipped, this switch is located at the bottom rear of the seat switch panel.

Memory Seat Switch (2) (driver seat only). When equipped, this switch is located at the upper rear of the seat switch panel. Refer to Memory Seat System for more information.

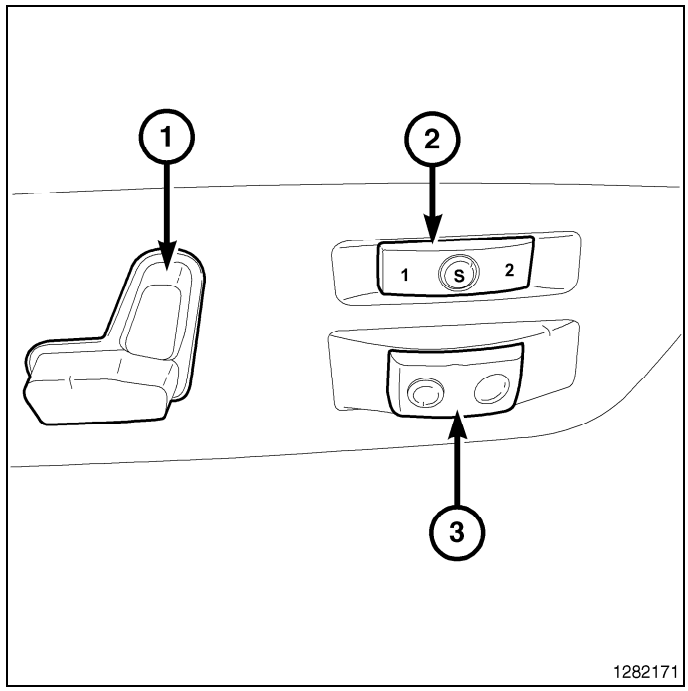

MEMORY SEAT SYSTEM

An electronic memory seat system is available on certain models. The memory system is able to store and recall all driver side power seat positions, and the drivers side view mirror positions. The system can be set for two different drivers. On vehicles with a factory installed radio connected to the Controller Area Network (CAN) data bus network, the memory system is also able to store and recall up to twenty radio station presets (ten AM and ten FM), also for two drivers. The memory system also will store and recall the last station listened to for each driver, even if it is not one of the twenty preset stations.

The memory system will automatically recall all of these settings when a button of the memory switch is depressed, or when the doors are unlocked using the FOBIK transmitter (if enabled). If the vehicle has more than two drivers the FOBIK transmitter recall of memory features can be disabled. This is a customer programmable feature of the EVIC.

The memory system also has a easy exit feature that will move the driver seat rearward 55 millimeters or to the end of its travel, whichever occurs first, when the key is removed from the ignition switch lock cylinder. This is a customer programmable feature of the overhead console.

The memory system includes the following components:

- **Memory Selector Switch** - located in the driver seat trim panel.
- **Driver Door Module (DMM)** - located in the driver door, behind the trim panel.
- **Passenger Door Module (PDM)** - located in the passenger door, behind the trim panel.
- **Hall Effect Sensors - Drivers Mirror** - The hall effect sensor is permanently installed on the drivers side view mirror motor. This hall effect sensor is used to provide a reference signal to the memory heated seat mirror module, letting the module know the exact position of the mirror.
- **Wireless Integration Node (WIN)** - located at ignition key cylinder.
- **FOBIK Transmitter** - located with ignition key.
- **Memory Seat Module (MSM)** - located underneath the driver seat, also controls the Adjustable Pedals and Mirrors.
- **Hall Effect Sensors - Seat Track** - These hall effect sensors are permanently installed in each of the power seat track motors. They are used to provide a reference signal to the memory heated seat mirror module, letting the module know the exact position of the seat cushion and recliner.
- **Radio** - located in the instrument panel center stack.
- **Automatic Temperature Control (ATC)** - located in the instrument panel center stack.

Certain functions and features of the memory system rely upon resources shared with other electronic modules in the vehicle over the Controller Area Network (CAN) bus. The CAN bus allows the sharing of sensor information. This helps to reduce wire harness complexity, internal controller hardware, and component sensor current loads. At the same time, this system provides increased reliability, enhanced diagnostics, and allows the addition of many new feature capabilities. For diagnosis of these electronic modules or of the CAN bus, the use of a scan tool and the proper diagnostic information are needed.

Operation

POWER SEAT SYSTEM

The power seat system receives battery current through a 50 amp fuse in the Totally Integrated Power Module (TIPM) so that the power seats remain operational, regardless of the ignition switch position.

When a power seat switch is actuated, a battery feed and a ground path are applied through the power seat switch contacts to the appropriate motor or motors. The motor and drive unit operate to move the seat in the selected direction until the switch is released, or until the travel limit of the power seat track is reached. When the switch is moved in the opposite direction, the battery feed and ground path to the motor is reversed through the switch contacts. This causes the motor to run in the opposite direction.

MEMORY SEAT SYSTEM

The Memory Seat Module (MSM) receives battery current through a 50 amp fuse in the Totally Integrated Power Module (TIPM) so that the power seats remain operational, regardless of the ignition switch position. When the driver memory seat switch control knob is actuated, a resistance signal is sent to the MSM via the Controller Area Network (CAN) bus circuit. The MSM is responsible for the 12v battery feed and ground path to the power seat adjuster motor. The adjuster motor operates to move the power seat adjuster mechanism through its drive unit in the selected direction until the switch is released, or until the travel limit of the adjuster is reached.

The MSM receives memory set/position switch input through the CAN bus circuit. The MSM also receives hard wired input from the hall effect sensors, mounted on each of the driver power seat adjuster motors and the driver side view mirror motor. The programmed software in the module allows it to know where the seat/mirror is located in its designed travel by a pulse count generated from the hall effect sensors. This way, when the memory switch is depressed the module will power the seat adjuster/mirror motors until the correct preset location is achieved. The module will prevent the seat memory recall function from being initiated, if the transmission gear selector lever is not in the Park position, or if the vehicle is moving. These inputs are monitored over the Controller Area Network (CAN) bus circuit by the MSM.

A memory setting is saved by pressing the “set” button, then pressing either the memory “1” or “2” button within 5 seconds of pressing the “set” button.

A memory setting is recalled by pressing either the memory “1” or “2” button, or by pressing the unlock button on a “linked” FOBIK.

For driver safety, memorized settings can not be recalled if the transmission is in a position other than Park or the seat belt is latched.

Diagnosis and Testing

MEMORY SEAT SYSTEM

In order to obtain conclusive testing of the power seats with and without the memory system option, the Controller Area Network (CAN) bus, and all of the electronic modules that provide inputs to, or receive outputs from the memory system components must be checked. Use a scan tool and the proper diagnostic information to accurately diagnose the power seat/memory seat systems.

NOTE: Vehicles equipped with the memory/heated seat option utilize a low voltage cut-off feature. This feature turns off the 12v power to the power seat system anytime vehicle voltage is below 11.0v. Be certain to check the vehicle electrical system for proper voltage anytime the power seat system appears inoperative.

Before any testing of the power seat system is attempted, the battery should be fully-charged.

POWER SEAT ADJUSTER

Operate the power seat switch and move the seat in all directions. The seat should move in each of the selected directions.

If the power seat adjuster fails to operate in more than one direction, proceed as follows:

1. Inspect the power seat adjuster motors to ensure the electrical connectors are fully seated to the motors. If OK, go to Step #2. If not OK, connect the electrical connector to the fully seated position.
2. Check the power seat fuse in the power distribution center. If OK, go to Step #3. If not OK, replace the inoperative fuse.
3. Remove the power seat switch from the seat cushion side panel. Check for battery voltage at the fused B(+) circuit cavity of the power seat switch wire harness connector. If OK, go to Step #4. If not OK, repair the open circuit to the power distribution center as required.
4. Check for continuity between the ground circuit cavity of the power seat switch wire harness connector and a good ground. There should be continuity. If OK, go to Step #5. If not OK, repair the open circuit to ground as required.
5. (Refer to 08 - Electrical/8N - Power Systems/Power Seats/SWITCH, Seat - Diagnosis and Testing). If the switch tests OK, check the wire harness between the power seat switch and the motor. If the circuits check OK, replace the faulty power seat adjuster assembly. If the circuits are not OK, repair the wire harness as required.

Standard Procedure

NOTE: The module will abort a recall if the transmission is moved out of park or if any seat movement is activated whether manually or by memory recall. The module will also abort a recall if any movement of the adjustable pedals is detected.

MEMORY SYSTEM PROGRAMMING

The Memory Seat Module (MSM) interfaces with the Remote Keyless Entry (RKE) system/ WIN via the Controller Area Network (CAN) bus. The proper procedure of setting and recalling a memory position using the RKE is as follows:

1. Press and release memory switch 1 or 2 to recall memory position 1 or 2.
2. Adjust the seat, recliner, adjustable pedal position, set radio station presets, set HVAC temperature preset, and the side view mirrors to the desired position.
3. Press momentarily and release memory switch S.
4. Within five seconds, press momentarily and release memory switch 1 or 2.
5. To link the FOBIK transmitter, the FOBIK must be removed from the ignition swith: within ten seconds, press and release the “LOCK” button on one of the RKE transmitters

To program the second driver's position, repeat the above procedure using memory switch 2. The second RKE transmitter can be programmed in the same fashion as indicated in Step #5.

To recall either of the programmed positions momentarily press and release either memory selector switch 1 or 2. If using FOBIK, just press and release the “UNLOCK” button on the proper transmitter for either position 1 or 2.

A recall is possible any time the vehicle transmission is in PARK and the seatbelt is unbuckled. This condition is monitored by the MSM.

TO DISABLE A RKE TRANSMITTER LINKED TO MEMORY

1. Turn the ignition switch to the OFF position and remove the key.
2. Press and release the memory SET button located on the driver's seat.
3. Within 10 seconds, press and release the UNLOCK button on the RKE transmitter.

To disable another RKE transmitter linked to either memory position, repeat Steps 1-3 for each RKE transmitter.

NOTE: The capability to link RKE transmitters to memory is enabled when delivered from the factory. The capability to link RKE transmitters to memory can be disabled (or later re-enabled) by an authorized dealer. For vehicles equipped with the electronics vehicle information center (EVIC) under setup features.

MOTOR, Lumbar

Removal

NOTE: The lumbar motor (1) is serviced as part of the seat back frame. Do not attempt to transfer the motor as the service part will come equipped with a new motor installed.

1. Remove the seat back frame assembly (Refer to 23 - Body/Seats/SEAT BACK - Removal).
2. Remove any parts that will need to be installed on new seat back frame assembly. (1)

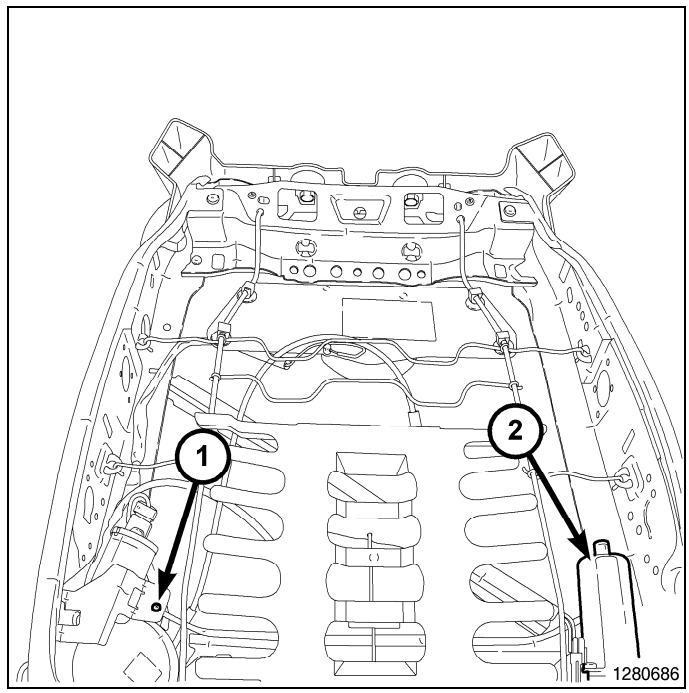

Installation

1. Install parts from old seat back assembly as necessary. (1)
2. Install the seat back (Refer to 23 - Body/Seats/SEAT BACK - Installation).

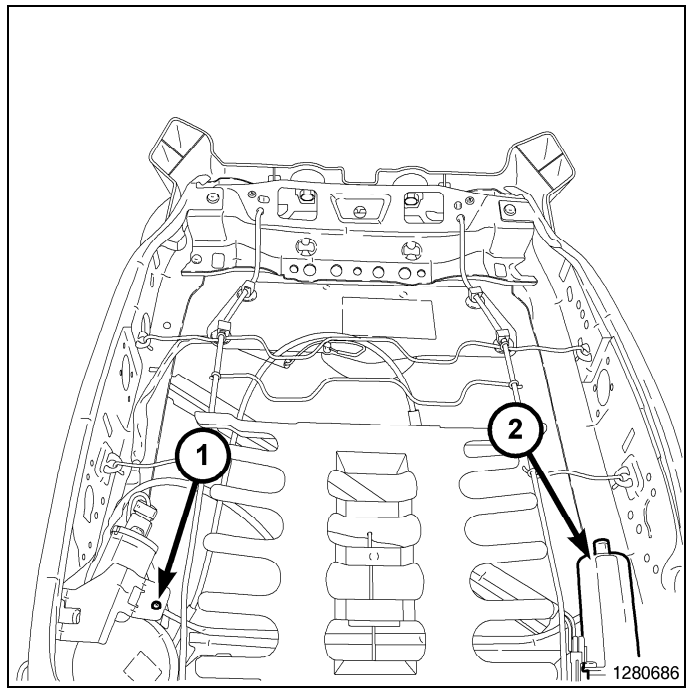

MOTOR, Seat Adjuster

Removal

WARNING: A seat structure that has seen significant load may have the locking mechanism activated and may exhibit the following symptoms:

- **Locking pawl (2) loose**
- **Locking pawl (2) engaged into the seat frame sidemember (1)**
- **Height adjuster only works on outboard side**
- **Broken or missing shear pin (3)**

If any of above symptoms exist, replace the height adjuster assembly. Do not attempt any repairs. Failure to follow these instructions may result in possible serious or fatal injury.

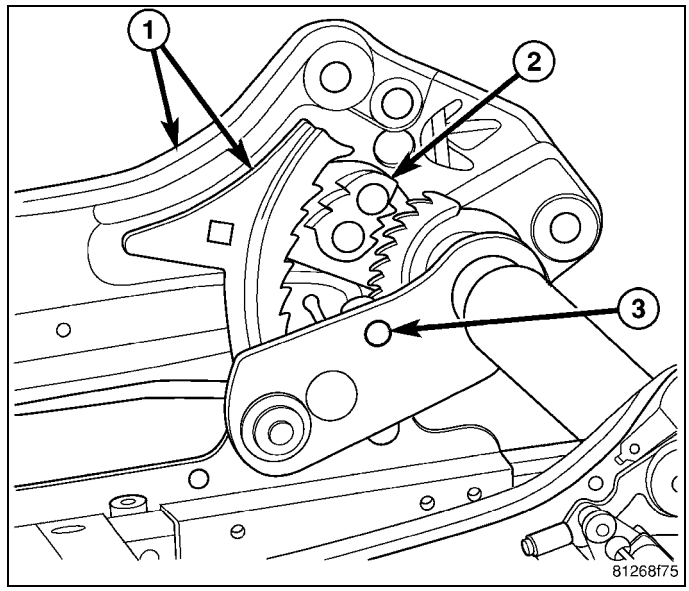

FRONT TILT MOTOR

1. Disconnect and isolate the negative battery cable.
2. Remove the affected seat (Refer to 23 - Body/Seats/ SEAT - Removal).
3. Remove the affected seat cushion cover, cushion and pan.
4. Disconnect the electrical connector from the front tilt motor (1).
5. Remove the screws retaining the front tilt motor to the seat adjuster.
6. Remove the front tilt motor from the seat adjuster.

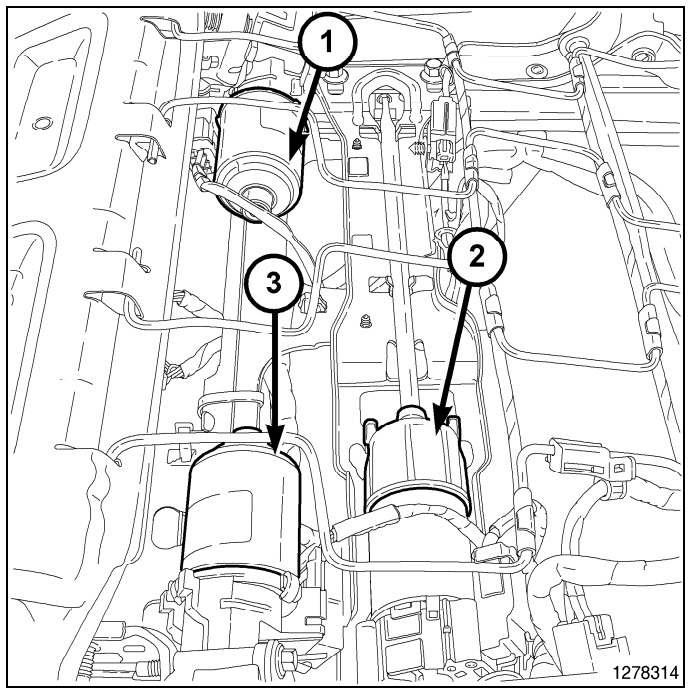

REAR TILT MOTOR

1. Disconnect and isolate the negative battery cable.
2. Remove the affected seat (Refer to 23 - Body/Seats/ SEAT - Removal).
3. Remove the affected seat cushion cover, cushion and pan.
4. Disconnect the electrical connector from the rear tilt motor (3).
5. Remove the screws retaining the rear tilt motor to the seat adjuster.
6. Remove the screw and washer from the motor shaft.
7. Remove the rear tilt motor from the seat adjuster.

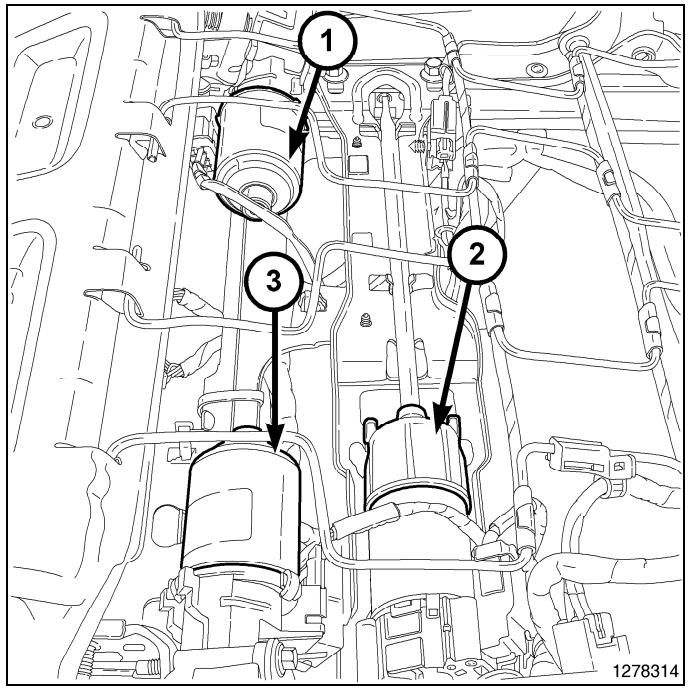

Installation

FRONT TILT MOTOR

1. Position the front tilt motor (1) to the seat adjuster and install the screws. Tighten the screws to 5 N·m (44 in. lbs.).
2. Connect the electrical connector.
3. Install the seat cushion cover, cushion and pan.
4. Clip the wire harness to the pan.
5. Install the seat assembly (Refer to 23 - Body/Seats/ SEAT - Installation).
6. Reconnect the negative battery cable.

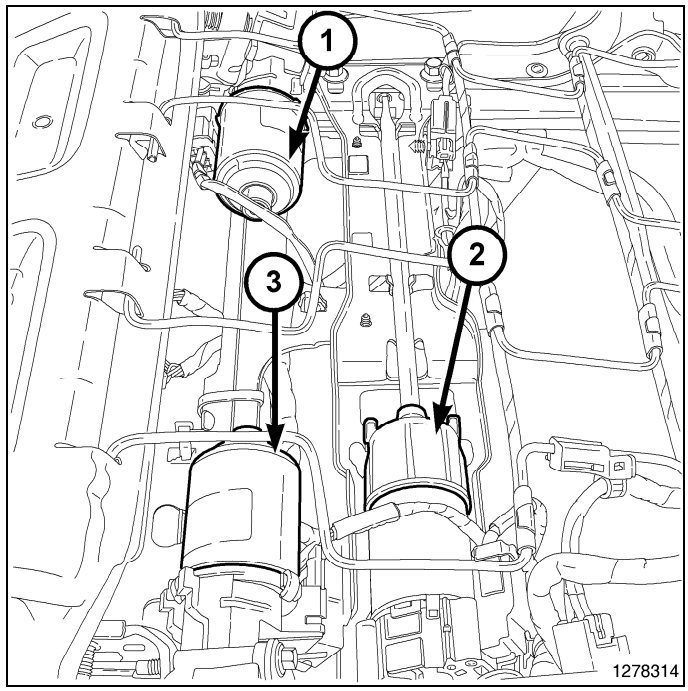

REAR TILT MOTOR

1. Position the rear tilt motor (3) to the seat adjuster and install the screws. Tighten the screws to 5 N·m (44 in. lbs.).
2. Connect the electrical connector.
3. Install the seat cushion cover, cushion and pan.
4. Clip the wire harness to the pan.
5. Install the seat assembly (Refer to 23 - Body/Seats/ SEAT - Installation).
6. Reconnect the negative battery cable.

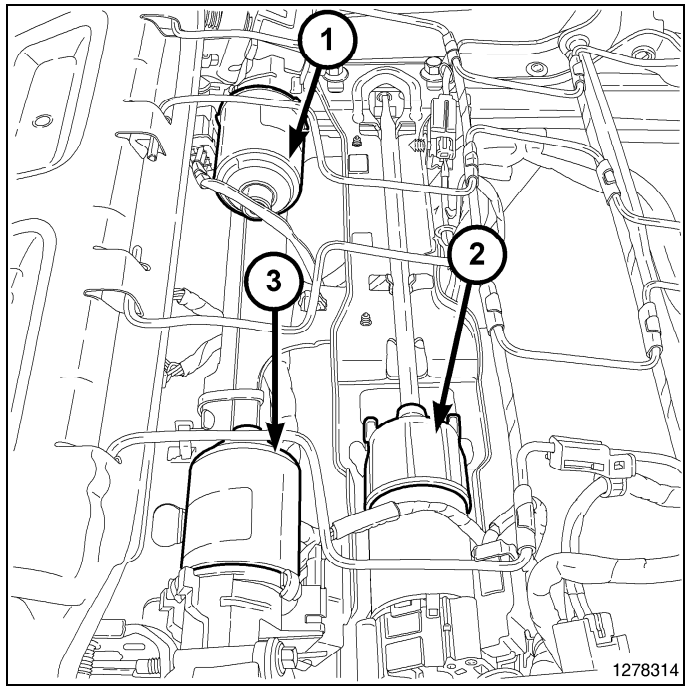

RECLINER

Removal

NOTE: The recliner motor is serviced as part of the seat back frame. Do not attempt to transfer the motor as the service part will come equipped with a new motor installed.

1. Remove the seat back frame assembly (Refer to 23 - Body/Seats/SEAT BACK - Removal).
2. Remove any parts that will need to be installed on new seat back frame assembly. (2)

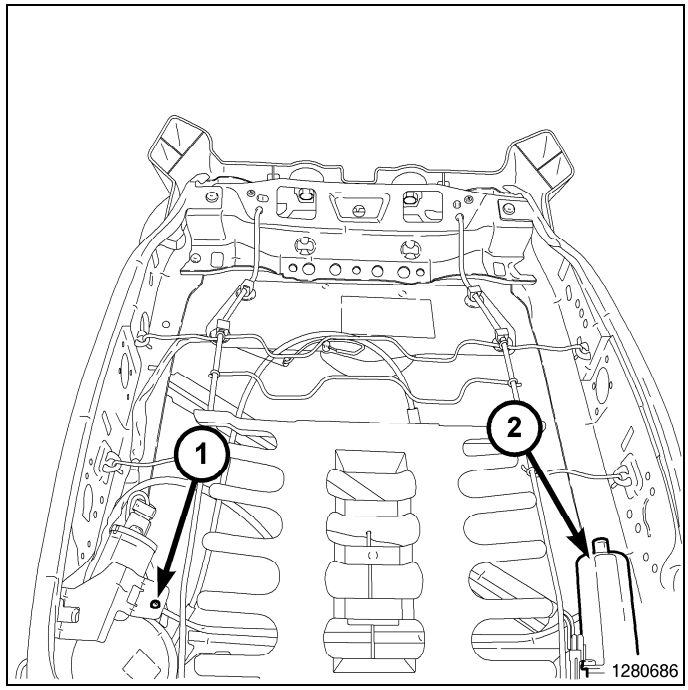

Installation

1. Install parts from old seat back assembly as necessary. (2)
2. Install the seat back (Refer to 23 - Body/Seats/SEAT BACK - Installation).

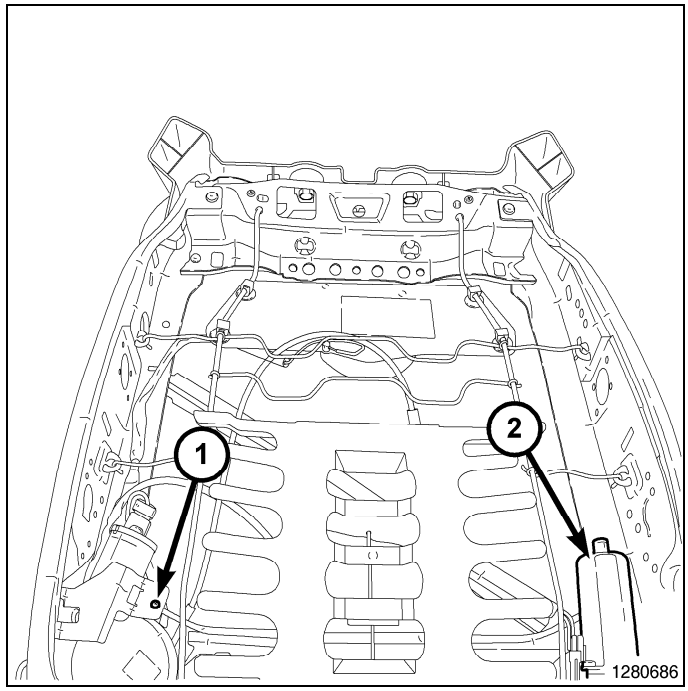

SWITCH, Lumbar Control

Description

The power lumbar support can be adjusted inward and outward for added driver comfort using the lumbar control switch (1), located on the outboard seat cushion side trim panel.

CAUTION: The electrical connector for the lumbar control switch must be disconnected prior to removing the power seat switch bezel from the seat cushion side trim panel. Failure to follow these instructions can result in damage to the lumbar control switch.

The lumbar control switch has a wire lead and electrical connector (2) attached to it. The electrical connector must be disconnected, prior to removing the seat switch bezel from the seat cushion side trim panel.

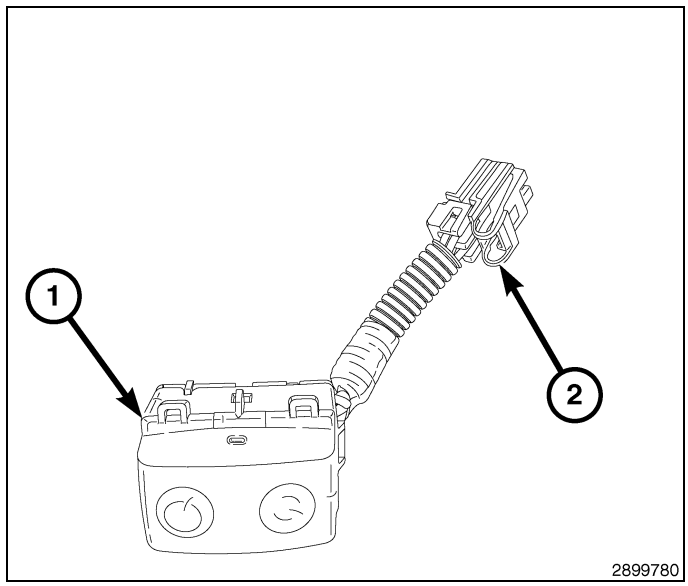

Operation

When the lumbar control switch is actuated, a battery feed and a ground path are applied through the switch contacts to the power lumbar support adjuster motor. The lumbar support adjuster motor operates the lumbar support adjuster mechanism through its drive unit in the selected direction until the switch is released, or until the travel limit of the adjuster is reached. When the switch is moved in the opposite direction, the battery feed and ground path to the motor are reversed through the switch contacts. This causes the power lumbar support adjuster motor to run in the opposite direction.

On vehicles equipped with the memory seat system, the driver memory seat switch provides a resistive signal/input to the Memory Seat Module (MSM). The MSM is responsible for the 12 volt battery feed and ground path to the power lumbar support adjuster motor.

The lumbar control switch should NOT be held applied in any direction after the adjuster has reached its travel limit. The power lumbar support adjuster motor contains a self-resetting circuit breaker to protect it from overload. However, consecutive or frequent resetting of the circuit breaker may result in motor damage.

The lumbar control switch cannot be adjusted or repaired and must be replaced if damaged or inoperative.

Diagnosis and Testing

NOTE: For complete circuit diagrams, see Wiring Information. Wiring Information includes wiring diagrams, connector pin-out and location views, details of wire harness routing and retention, splice and ground locations and proper wire and connector repair procedures.

1. Disconnect and isolate the battery negative cable.
2. Remove the lumbar control switch from the seat (Refer to 08 - Electrical/8N - Power Systems/Power Seats/SWITCH, Lumbar Control - Removal).
3. Use an ohmmeter to test the continuity of the lumbar control switch using the following table. If not OK, replace the inoperative lumbar control switch. If switch tests OK, check for an open or short in the power lumbar support circuit wiring. If no open or short is found, replace the seat back (Refer to 23 - Body/Seats/SEAT BACK - Removal).

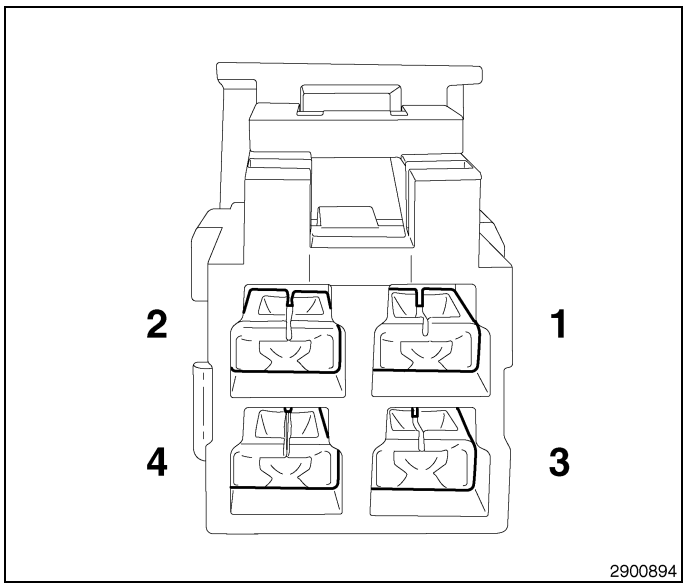

LUMBAR CONTROL SWITCH CONTINUITY

SWITCH POSITION	CONTINUITY BETWEEN
OFF	2-3, 2-4, 3-4
IN	1-2, 3-4
OUT	1-4, 2-3

Removal

WARNING: To avoid serious or fatal injury on vehicles equipped with airbags, disable the Supplemental Restraint System (SRS) before attempting any steering wheel, steering column, airbag, seat belt tensioner, impact sensor or instrument panel component diagnosis or service. Disconnect and isolate the battery negative (ground) cable, then wait two minutes for the system capacitor to discharge before performing further diagnosis or service. This is the only sure way to disable the SRS. Failure to take the proper precautions could result in accidental airbag deployment.

NOTE: Take the proper precautions to protect the face of the seat switch bezel from cosmetic damage while performing this procedure.

NOTE: Driver side shown. Passenger side similar.

1. Disconnect and isolate the negative battery cable.

CAUTION: Disconnect the lumbar control switch electrical connector beneath the seat, prior to removing the power seat switch bezel from the seat. Failure to follow these instructions can result in damage to the lumbar control switch.

2. From the back of the seat, reach under the seat being serviced and disconnect the lumbar control switch electrical connector (1) from the seat wire harness (2).

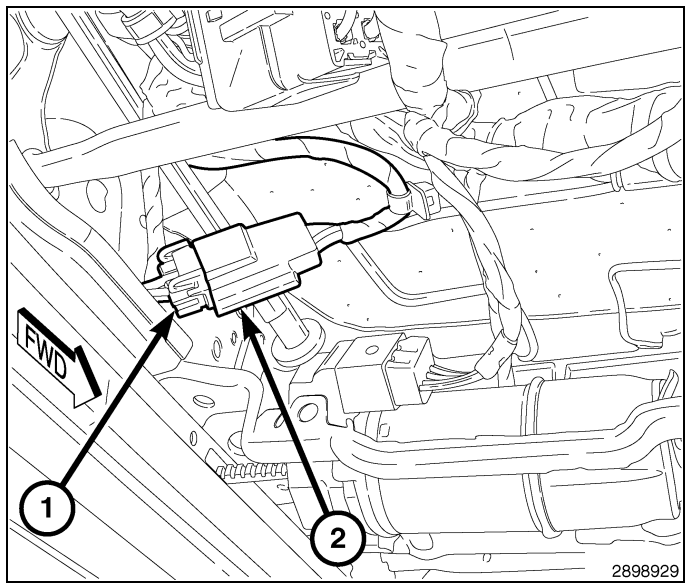

CAUTION: The seat switch bezel is attached to the seat cushion side trim panel by a total of eight retaining tabs. Always disengage the retaining tabs starting at the rear of the bezel. Always disengage the front retaining tab last. Failure to follow these instructions can result in damage to the seat switch bezel or the seat cushion side trim panel.

3. Using Trim Stick C-4755 or equivalent (1), carefully disengage seven of the eight retaining tabs (2) that secure the seat switch bezel (3) to the seat cushion side trim panel (4). Start at the rear of the switch bezel and work forward. There is one tab at the rear of the bezel, four on top and two on the bottom.
4. Slide the power seat switch bezel rearward to disengage the eighth retaining tab (5), located at the front of the switch bezel.

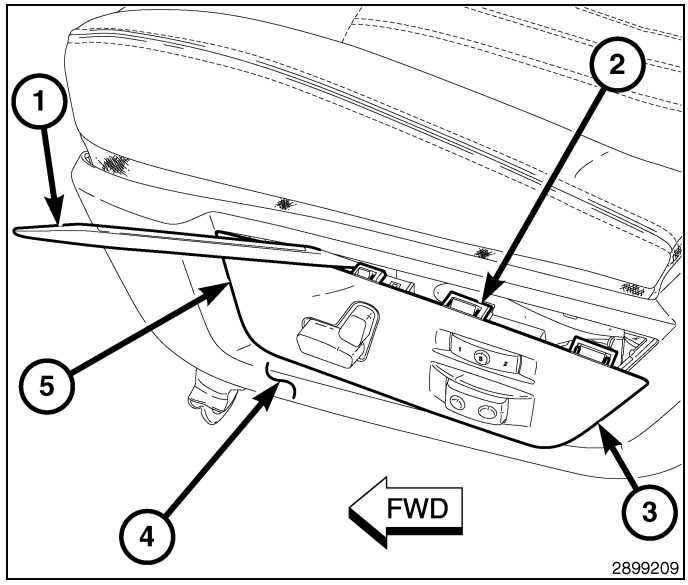

5. Disconnect the electrical connectors (1 and 3).
6. Place the seat switch bezel (2) on a suitable workbench.

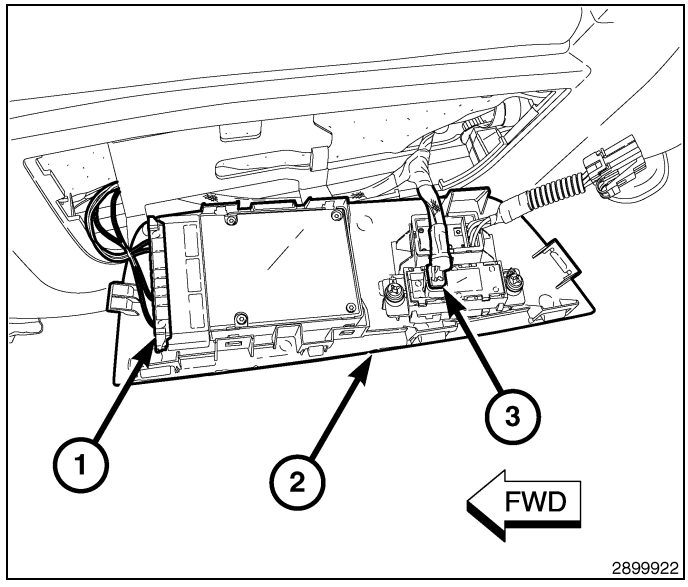

7. Using a small flat bladed tool, carefully disengage the two retaining tabs (2 and 4) that secure the lumbar control switch (1) to the seat switch bezel (3) and remove the switch.

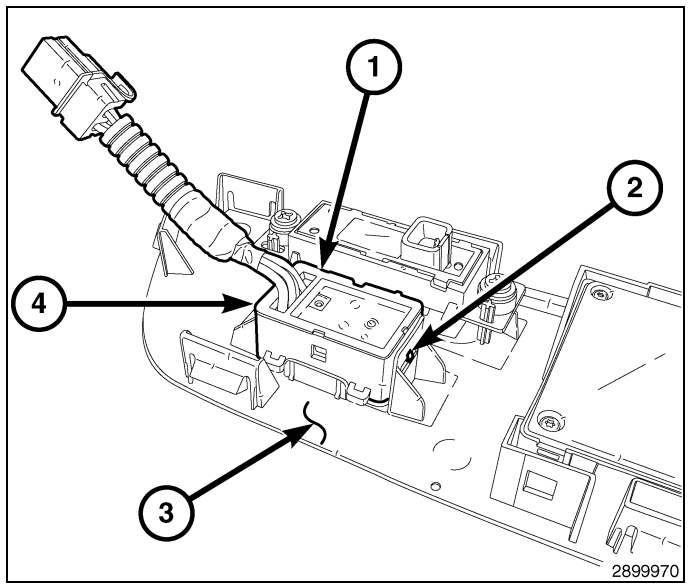

Installation

NOTE: Take the proper precautions to protect the face of the seat switch bezel from cosmetic damage while performing this procedure.

NOTE: Driver side shown. Passenger side similar.

1. Position the lumbar control switch (1) to the seat switch bezel (3).
2. Align the tab on the lumbar control switch with the slot in the seat switch bezel and engage the two retaining tabs (2 and 4) that secure the switch to the bezel. Make sure the tabs are fully engaged.

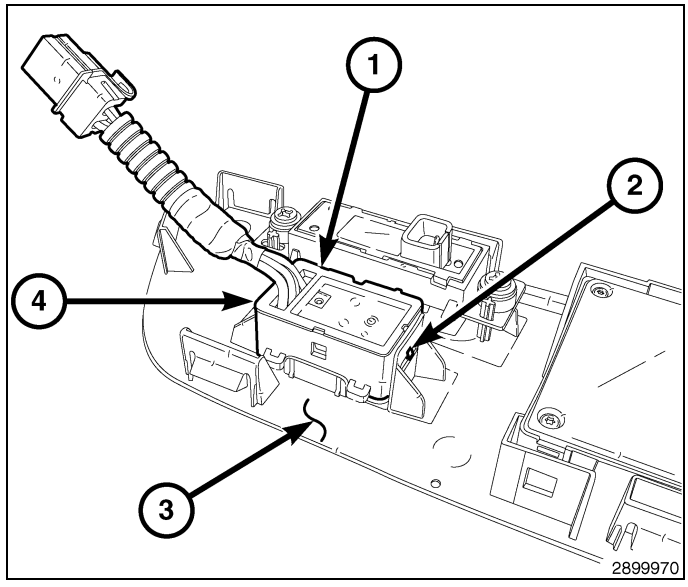

3. Position the seat switch bezel (2) to the seat and connect the electrical connectors (1 and 3).

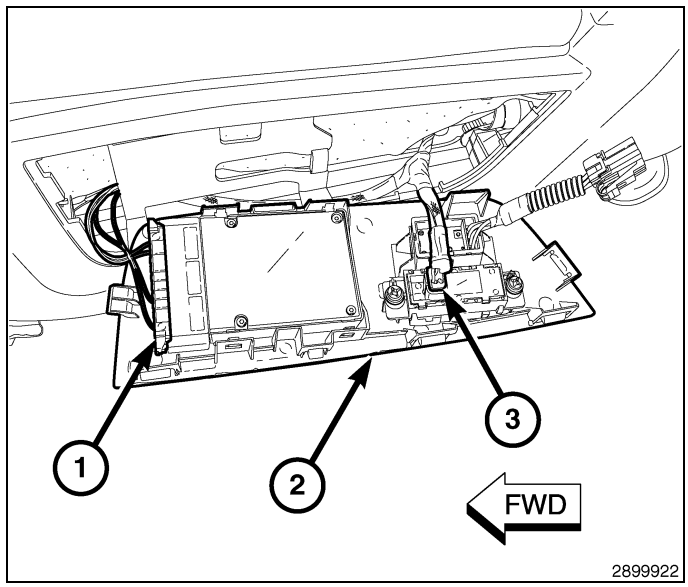

4. Engage the retaining tab (4) at the front of the seat switch bezel (2) to the seat cushion side trim panel (3).
5. Carefully engage the remaining seven retaining tabs (1) that secure the seat switch bezel to the seat cushion side trim panel. Start at the front of the switch bezel and work rearward. Make sure all eight retaining tabs are fully engaged.

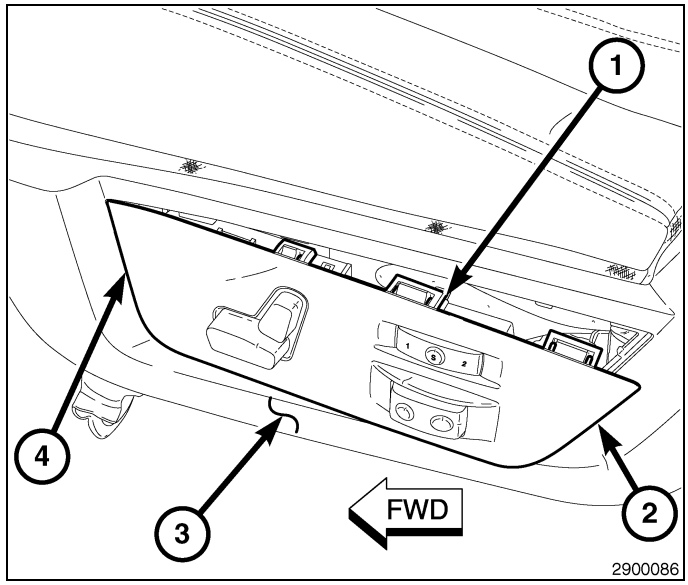

6. Connect the lumbar control switch electrical connector (1) to the seat wire harness (2).
7. Reconnect the negative battery cable.
8. Verify proper power seat operation.

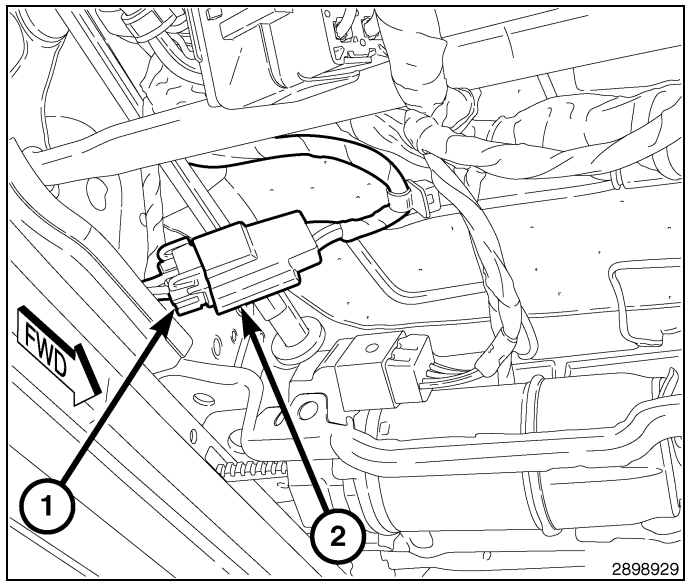

SWITCH, Memory

Description

The driver seating position can be automatically adjusted for two different driver preference settings using the memory seat switch (1), located on the outboard seat cushion side trim panel, when equipped with memory seat system. The memory seat system is able to store and recall all driver power seat positions (fore/aft, up/down, tilt and recline), driver side power rear view mirror position and up to twelve radio station presets (six AM and six FM), along with the last radio station listened to for each driver, even if it is not one of the twelve preset stations, on vehicles with a factory installed radio connected to the Controller Area Network (CAN) data bus network.

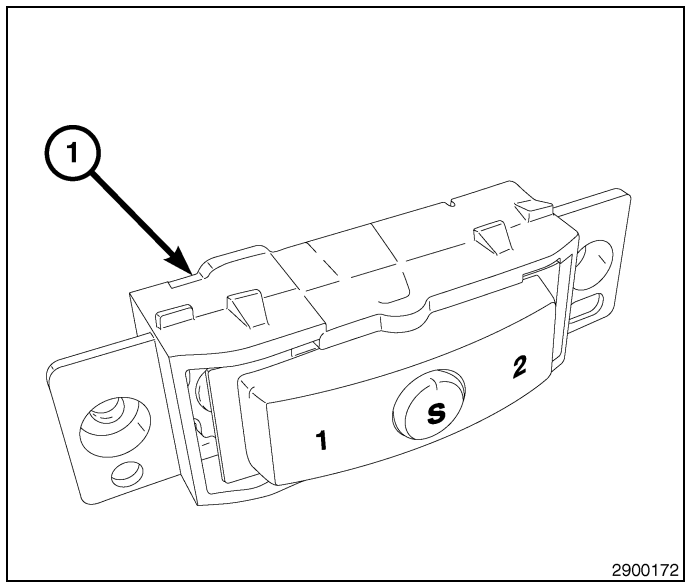

Operation

When one of the two buttons of the memory seat switch is pressed, the Memory Seat Module (MSM) receives the memory set/position switch input over the Controller Area Network (CAN) bus. The MSM also receives hard wired input from the hall effect sensors, mounted on each of the driver power seat adjuster motors and driver side power rear view mirror motors. The programmed software in the MSM allows it to know where the seat and mirror are located in there designed travel by a pulse count generated from the hall effect sensors. This way, when a memory seat switch button is pressed, the MSM will power the seat adjuster motors and mirror adjuster motors until the correct preset locations are achieved. The MSM will prevent the seat memory recall function from being initiated whenever the transmission gear selector lever is not in the Park position, or if the vehicle is moving. These inputs are monitored over the CAN bus by the MSM.

The memory seat switch is diagnosed using a scan tool (Refer to 28 - DTC Based Diagnostics/MODULE, Memory Seat (MSMD) - Diagnosis and Testing).

The memory seat switch cannot be adjusted or repaired and must be replaced if damaged or inoperative.

Removal

WARNING: To avoid serious or fatal injury on vehicles equipped with airbags, disable the Supplemental Restraint System (SRS) before attempting any steering wheel, steering column, airbag, seat belt tensioner, impact sensor or instrument panel component diagnosis or service. Disconnect and isolate the battery negative (ground) cable, then wait two minutes for the system capacitor to discharge before performing further diagnosis or service. This is the only sure way to disable the SRS. Failure to take the proper precautions could result in accidental airbag deployment.

NOTE: Take the proper precautions to protect the face of the seat switch bezel from cosmetic damage while performing this procedure.

NOTE: Driver side shown. Passenger side similar.

1. Disconnect and isolate the negative battery cable.

CAUTION: Disconnect the lumbar control switch electrical connector beneath the seat, prior to removing the power seat switch bezel from the seat. Failure to follow these instructions can result in damage to the lumbar control switch.

2. From the back of the seat, reach under the seat being serviced and disconnect the lumbar control switch electrical connector (1) from the seat wire harness (2).

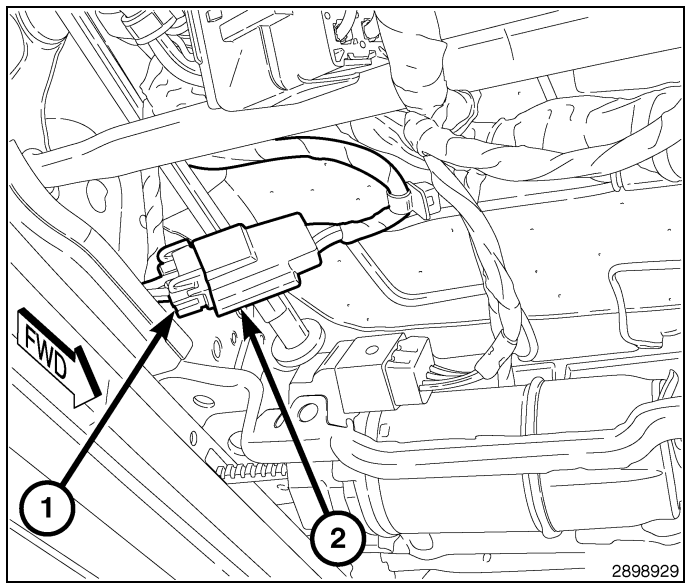

CAUTION: The seat switch bezel is attached to the seat cushion side trim panel by a total of eight retaining tabs. Always disengage the retaining tabs starting at the rear of the bezel. Always disengage the front retaining tab last. Failure to follow these instructions can result in damage to the seat switch bezel or the seat cushion side trim panel.

3. Using Trim Stick C-4755 or equivalent (1), carefully disengage seven of the eight retaining tabs (2) that secure the seat switch bezel (3) to the seat cushion side trim panel (4). Start at the rear of the switch bezel and work forward. There is one tab at the rear of the bezel, four on top and two on the bottom.
4. Slide the power seat switch bezel rearward to disengage the eighth retaining tab (5), located at the front of the switch bezel.

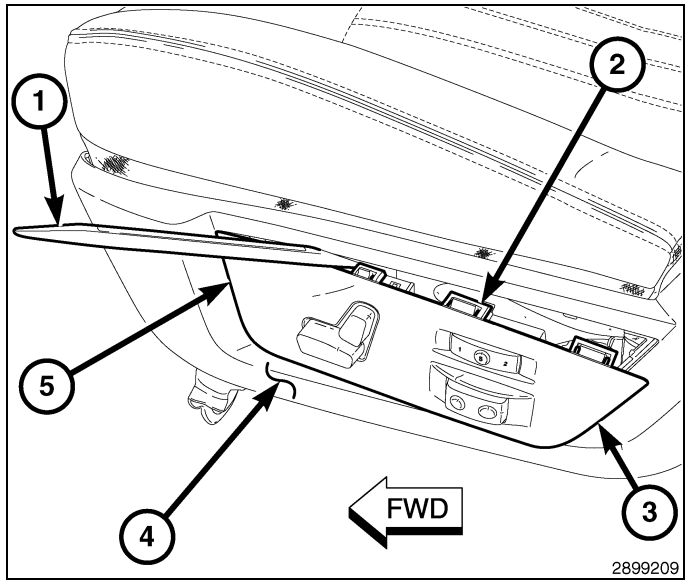

5. Disconnect the electrical connectors (1 and 3).
6. Place the seat switch bezel (2) on a suitable workbench.

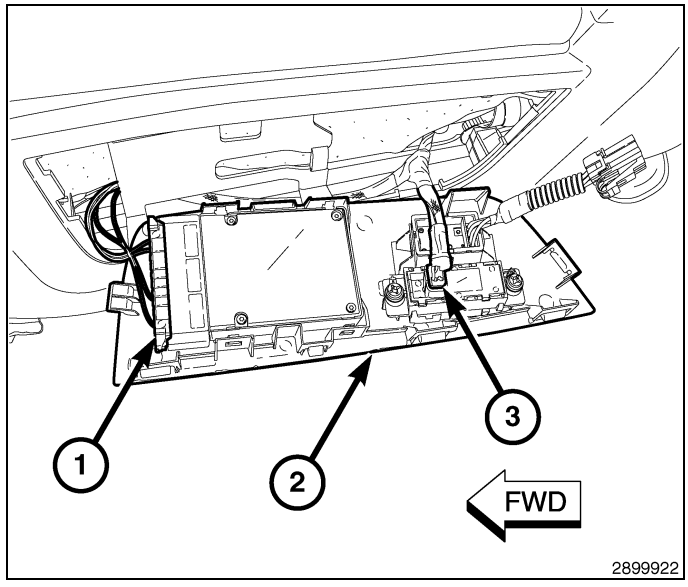

7. Remove the two screws (1 and 3) that secure the memory seat switch (2) to the seat switch bezel (3) and remove the switch.

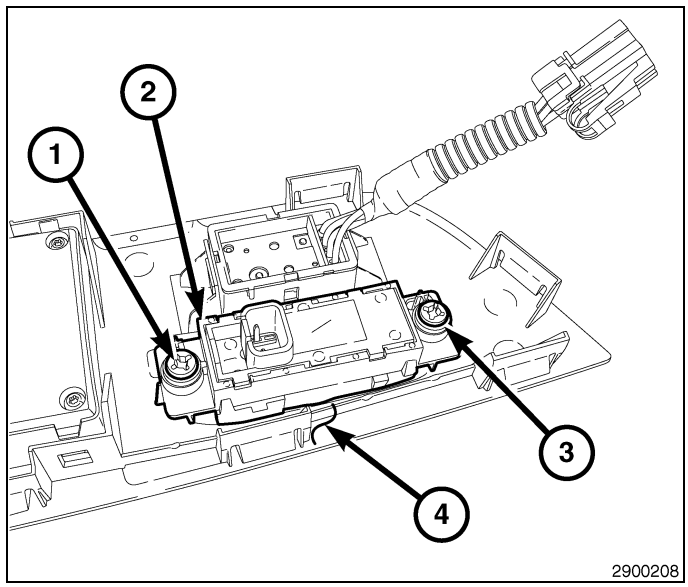

Installation

NOTE: Take the proper precautions to protect the face of the seat switch bezel from cosmetic damage while performing this procedure.

NOTE: Driver side shown. Passenger side similar.

1. Position the memory seat switch (2) to the seat switch bezel (4).
2. Install the two screws (1 and 3) that secure the memory seat switch to the seat switch bezel. Tighten the screws securely.

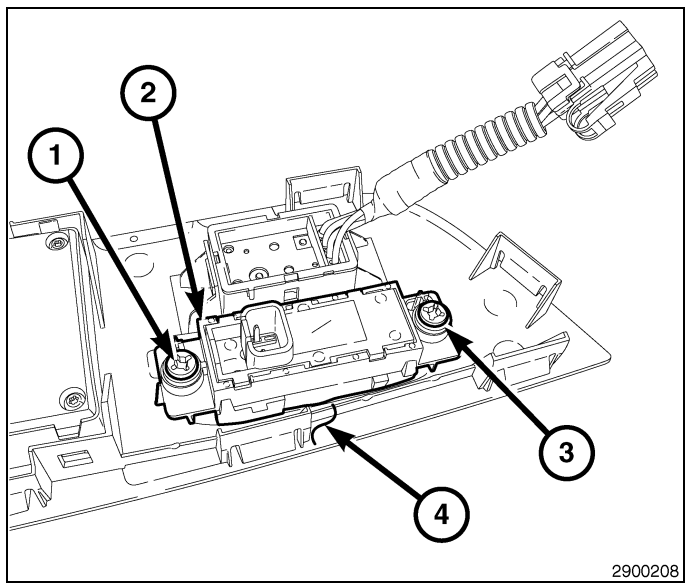

3. Position the seat switch bezel (2) to the seat and connect the electrical connectors (1 and 3).

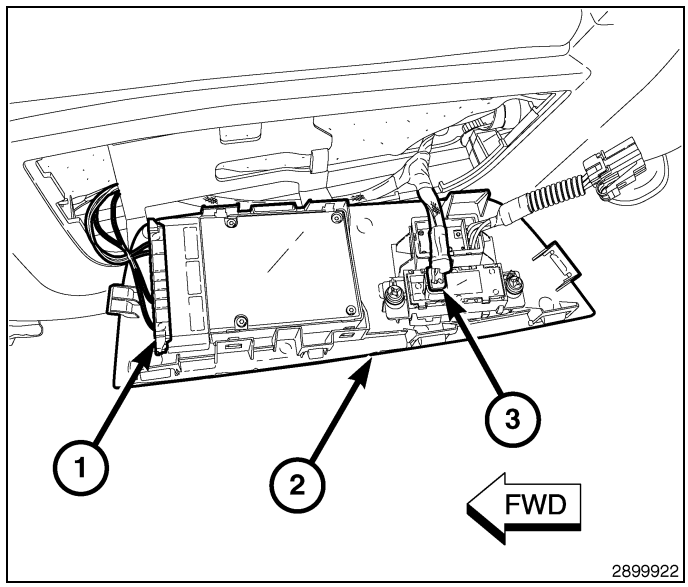

4. Engage the retaining tab (4) at the front of the seat switch bezel (2) to the seat cushion side trim panel (3).
5. Carefully engage the remaining seven retaining tabs (1) that secure the seat switch bezel to the seat cushion side trim panel. Start at the front of the switch bezel and work rearward. Make sure all eight retaining tabs are fully engaged.

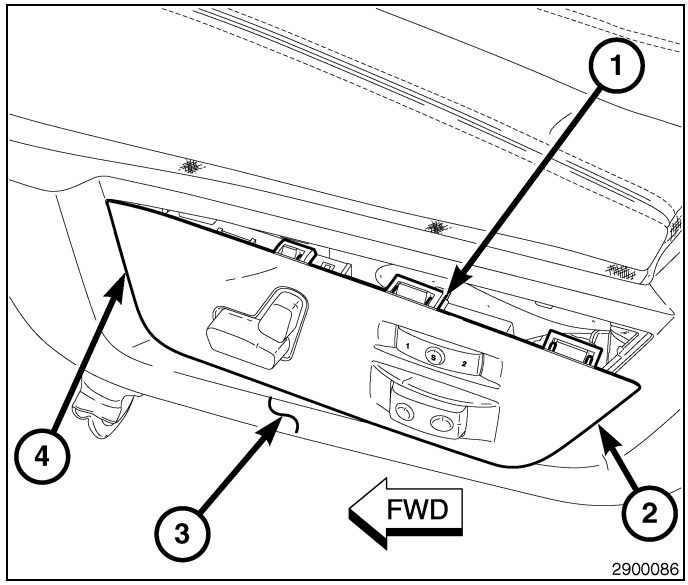

6. Connect the lumbar control switch electrical connector (1) to the seat wire harness (2).
7. Reconnect the negative battery cable.
8. Verify proper power seat operation.

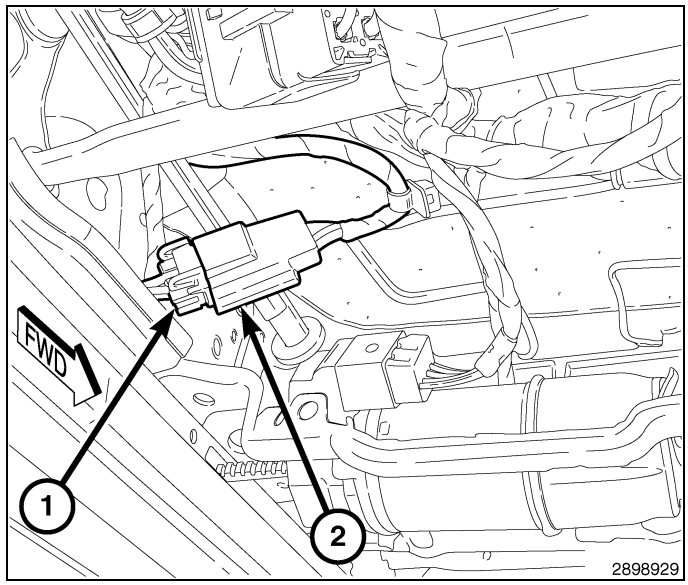

SWITCH, Seat, Power

Description

NOTE: Driver power seat switch shown.

The standard power driver seat and available power front passenger seat can be adjusted using the power seat switches located on the outboard seat cushion side shield. The driver power seat can be adjusted in ten different ways and the passenger power seat can be adjusted in four different ways.

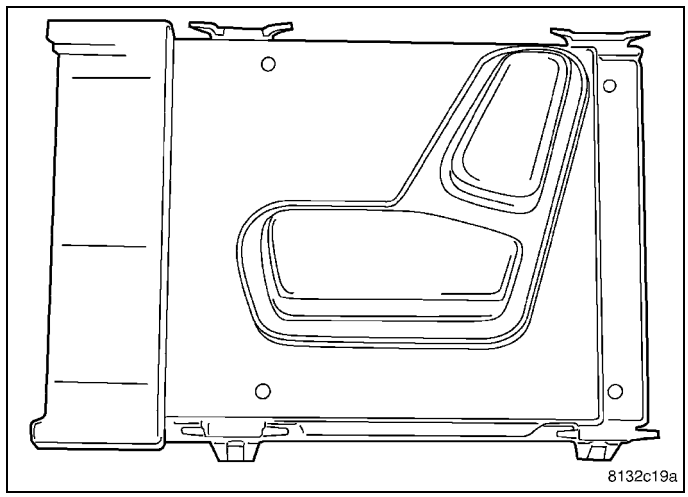

Operation

When a power seat switch is actuated, a battery feed and a ground path are applied through the switch contacts to the selected power seat adjuster or recliner adjuster motor. The selected seat adjuster motor operates to move the seat or recliner through its drive unit in the selected direction until the switch is released, or until the travel limit of the adjuster is reached. When the switch is moved in the opposite direction, the battery feed and ground path to the motor are reversed through the switch contacts. This causes the seat adjuster motor to run in the opposite direction.

On vehicles equipped with the memory seat system, the driver memory seat switch provides a resistive signal/input to the Memory Seat Module (MSM). The MSM is responsible for the 12 volt battery feed and ground path to the power seat adjuster motors.

No power seat switch should be held applied in any direction after the adjuster has reached its travel limit. The power seat adjuster motors each contain a self-resetting circuit breaker to protect them from overload. However, consecutive or frequent resetting of the circuit breaker may result in motor damage.

The individual switches in the power seat switch cannot be adjusted or repaired. If a switch is damaged or inoperative, the entire power seat switch must be replaced.

Diagnosis and Testing

DRIVER SEAT WITHOUT MEMORY SEAT SYSTEM

1. Disconnect and isolate the battery negative cable.
2. Remove the power seat switch from the seat (Refer to 08 - Electrical/8N - Power Systems/Power Seats/ SWITCH, Seat - Removal).
3. Use an ohmmeter to test the continuity of the power seat switch using the following table. If not OK, replace the inoperative power seat switch. If switch tests OK, check for an open or short in the power seat circuit wiring. If no open or short is found, replace the power adjuster motor(s) as required.

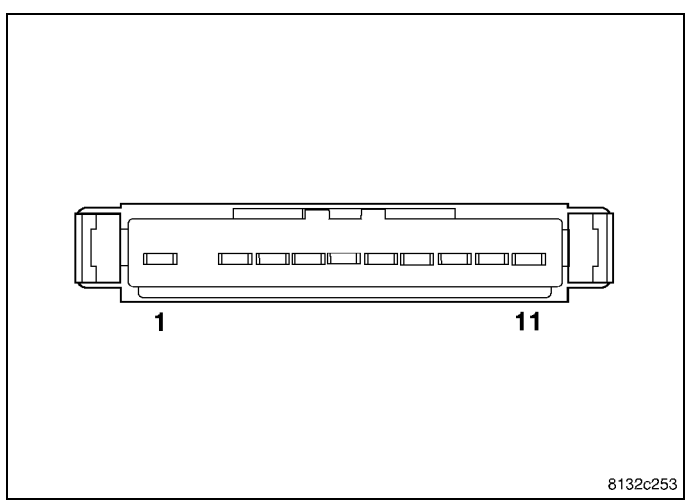

DRIVER SEAT SWITCH CONTINUITY - WITHOUT MEMORY

SWITCH POSITION	CONTINUITY BETWEEN
OFF	7-1, 7-3, 7-4, 7-5, 7-8, 7-9, 7-10, 7-11
RECLINER UP	6-3, 7-1, 7-4, 7-5, 7-8, 7-9, 7-10, 7-11
RECLINER DOWN	6-1, 7-3, 7-4, 7-5, 7-8, 7-9, 7-10, 7-11
HORIZONTAL FORWARD	6-8, 7-1, 7-3, 7-4, 7-5, 7-9, 7-10, 7-11
HORIZONTAL REARWARD	6-4, 7-1, 7-3, 7-5, 7-8, 7-9, 7-10, 7-11
FRONT TILT DOWN	6-5, 7-1, 7-3, 7-4, 7-8, 7-9, 7-10, 7-11
FRONT TILT UP	6-9, 7-1, 7-3, 7-4, 7-5, 7-8, 7-10, 7-11
REAR TILT DOWN	6-10, 7-1, 7-3, 7-4, 7-5, 7-8, 7-9, 7-11
REAR TILT UP	6-11, 7-1, 7-3, 7-4, 7-5, 7-8, 7-9, 7-10

DRIVER SEAT WITH MEMORY SEAT SYSTEM

1. Disconnect and isolate the battery negative cable.
2. Remove the power seat switch from the seat (Refer to 08 - Electrical/8N - Power Systems/Power Seats/ SWITCH, Seat - Removal).
3. Use an ohmmeter to test the continuity of the power seat switch using the following table. If not OK, replace the inoperative power seat switch. If switch tests OK, check for an open or short in the power seat circuit wiring. If no open or short is found, replace the power adjuster motor(s) as required.

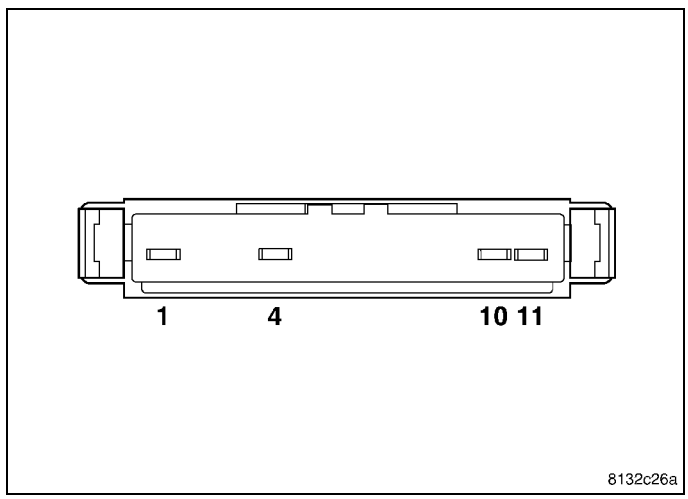

DRIVER SEAT SWITCH CONTINUITY - WITH MEMORY

SWITCH POSITION	CONTINUITY BETWEEN	RESISTANCE VALUE
OFF	10-4	OPEN
OFF	10-11	OPEN
OFF	1-4	47 OHMS
OFF	1-11	47 OHMS
REAR TILT UP	10-11	169 OHMS
REAR TILT DOWN	10-11	76 OHMS
HORIZONTAL FORWARD	10-11	43 OHMS
HORIZONTAL REARWARD	10-11	10 OHMS
RECLINER UP	10-4	43 OHMS
RECLINER DOWN	10-4	10 OHMS
FRONT TILT UP	10-4	169 OHMS
FRONT TILT DOWN	10-4	76 OHMS
ALL RESISTANCE VALUES ARE ± FIVE PERCENT		

PASSENGER SEAT

1. Disconnect and isolate the negative battery cable.
2. Remove the power seat switch from the seat (Refer to 08 - Electrical/8N - Power Systems/Power Seats/ SWITCH, Seat - Removal).
3. Use an ohmmeter to test the continuity of the power seat switch using the following tables. If not OK, replace the inoperative power seat switch. If switch tests OK, check for an open or short in the power seat circuit wiring. If no open or short is found, replace the power adjuster motor(s) as required.

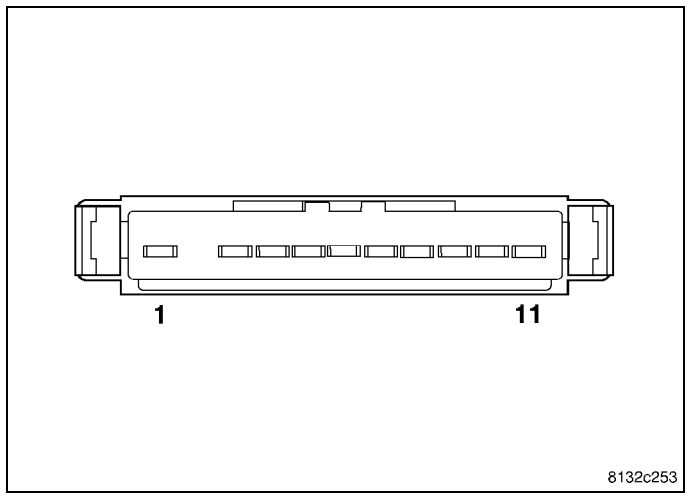

PASSENGER SEAT SWITCH CONTINUITY

SWITCH POSITION	CONTINUITY BETWEEN
OFF	7-1, 7-3, 7-4, 7-8
RECLINER UP	6-3, 7-1, 7-4, 7-8
RECLINER DOWN	6-1, 7-3, 7-4, 7-8
HORIZONTAL FORWARD	6-8, 7-1, 7-3, 7-4
HORIZONTAL REARWARD	6-4, 7-1, 7-3, 7-8

Removal

WARNING: To avoid serious or fatal injury on vehicles equipped with airbags, disable the Supplemental Restraint System (SRS) before attempting any steering wheel, steering column, airbag, seat belt tensioner, impact sensor or instrument panel component diagnosis or service. Disconnect and isolate the battery negative (ground) cable, then wait two minutes for the system capacitor to discharge before performing further diagnosis or service. This is the only sure way to disable the SRS. Failure to take the proper precautions could result in accidental airbag deployment.

NOTE: Driver side shown. Passenger side similar.

1. Disconnect and isolate the negative battery cable.

CAUTION: Disconnect the lumbar control switch electrical connector beneath the seat, prior to removing the power seat switch bezel from the seat. Failure to follow these instructions can result in damage to the lumbar control switch.

2. From the back of the seat, reach under the seat being serviced and disconnect the lumbar control switch electrical connector (1) from the seat wire harness (2).

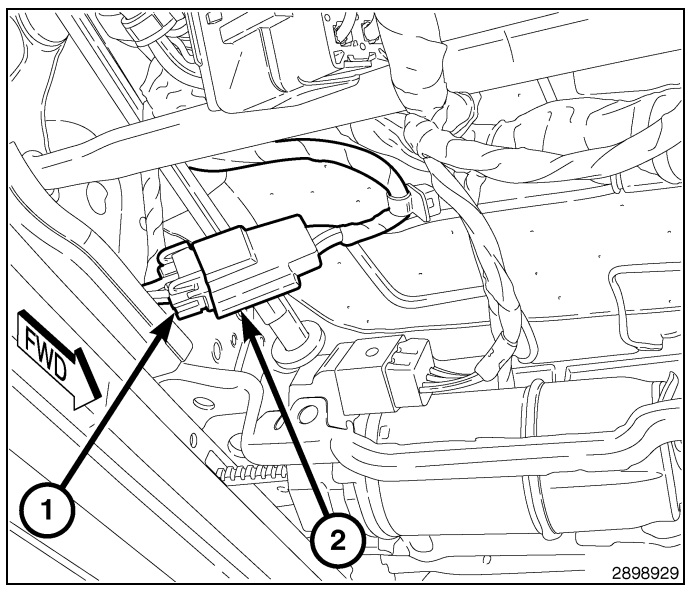

CAUTION: The seat switch bezel is attached to the seat cushion side trim panel by a total of eight retaining tabs. Always disengage the retaining tabs starting at the rear of the bezel. Always disengage the front retaining tab last. Failure to follow these instructions can result in damage to the seat switch bezel or the seat cushion side trim panel.

3. Using Trim Stick C-4755 or equivalent (1), carefully disengage seven of the eight retaining tabs (2) that secure the seat switch bezel (3) to the seat cushion side trim panel (4). Start at the rear of the switch bezel and work forward. There is one tab at the rear of the bezel, four on top and two on the bottom.
4. Slide the power seat switch bezel rearward to disengage the eighth retaining tab (5), located at the front of the switch bezel.

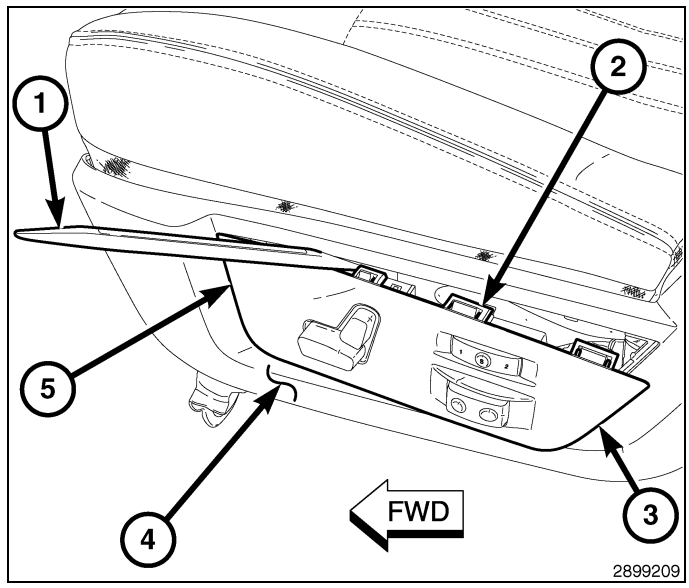

5. Position the power seat switch bezel (4) to gain access to the back of the power seat switch (3).
6. Using a small flat bladed tool, carefully disengage the four retaining tabs (2) that secure the power seat switch to the power seat switch bezel.
7. Disconnect the electrical connector (1) from the power seat switch and remove the switch.

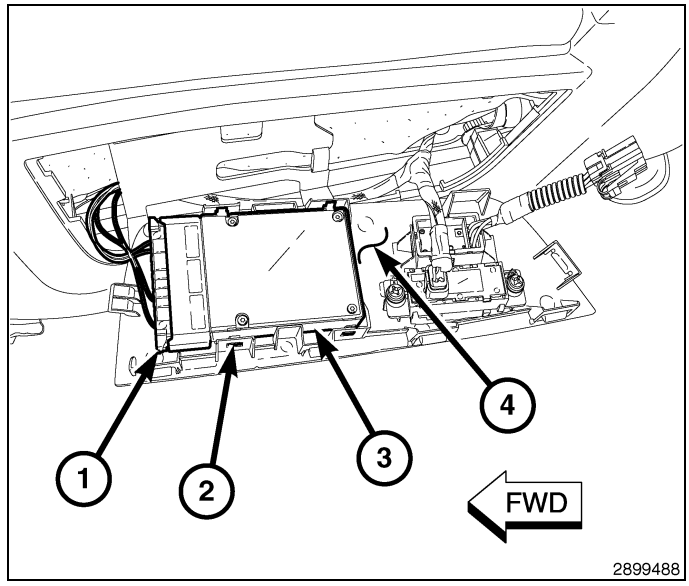

Installation

NOTE: Driver side shown. Passenger side similar.

1. Connect the electrical connector (1) to the power seat switch (3). Make sure the connector is fully engaged to the switch.
2. Position the power seat switch to the seat switch bezel (4).
3. Engage the four retaining tabs (2) that secure the power seat switch to the bezel. Make sure the tabs are fully engaged.

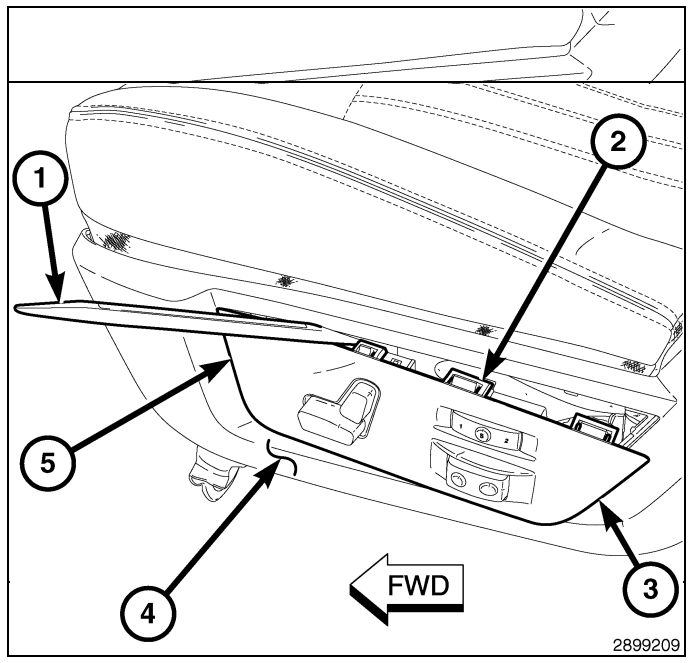

4. Engage the retaining tab (4) at the front of the seat switch bezel (2) to the seat cushion side trim panel (3).
5. Carefully engage the remaining seven retaining tabs (1) that secure the seat switch bezel to the seat cushion side trim panel. Start at the front of the switch bezel and work rearward. Make sure all eight retaining tabs are fully engaged.

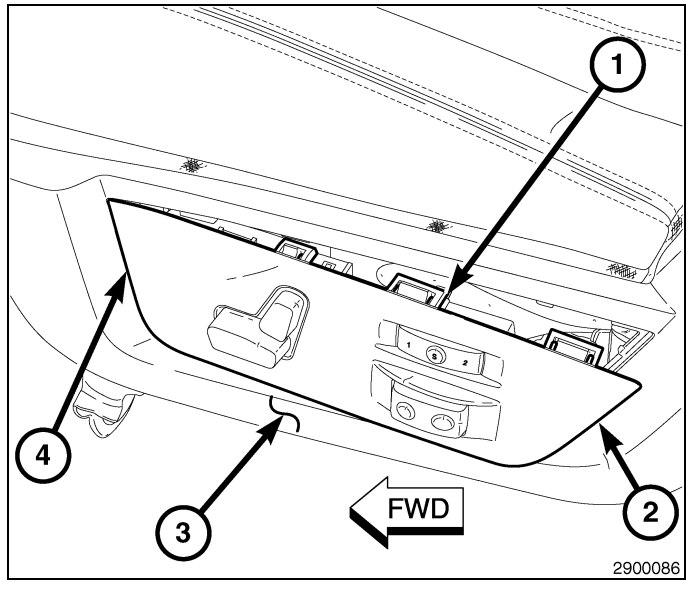

6. Connect the lumbar control switch electrical connector (1) to the seat wire harness (2).
7. Reconnect the negative battery cable.
8. Verify proper power seat operation.

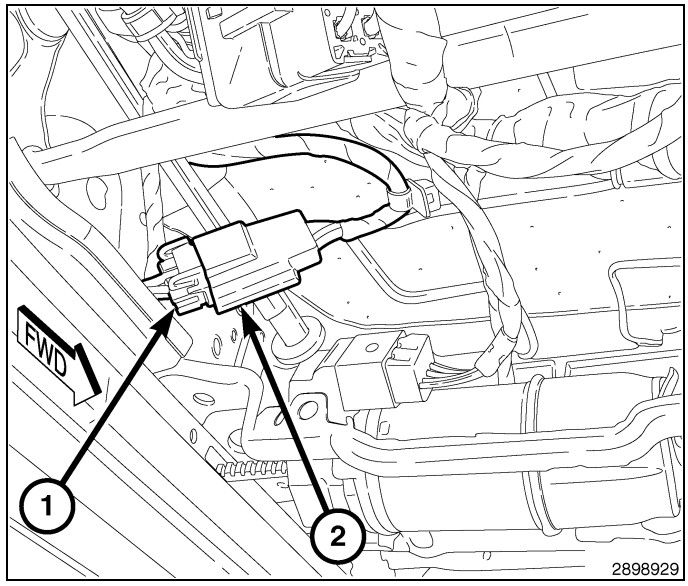

POWER TOP, SUNROOF

TABLE OF CONTENTS

page

POWER TOP, SUNROOF
- DESCRIPTION 42
- OPERATION 43
- DIAGNOSIS AND TESTING 43

MOTOR, SUNROOF
- DIAGNOSIS AND TESTING 46
- STANDARD PROCEDURE
  - SUNROOF POSITION CALIBRATION 46
  - MOTOR/MODULE INITIALIZATION 46
- REMOVAL 47
- INSTALLATION 47

page

SWITCH, SUNROOF
- DESCRIPTION 48
- OPERATION 48
- DIAGNOSIS AND TESTING 49

Power Top, Sunroof

Description

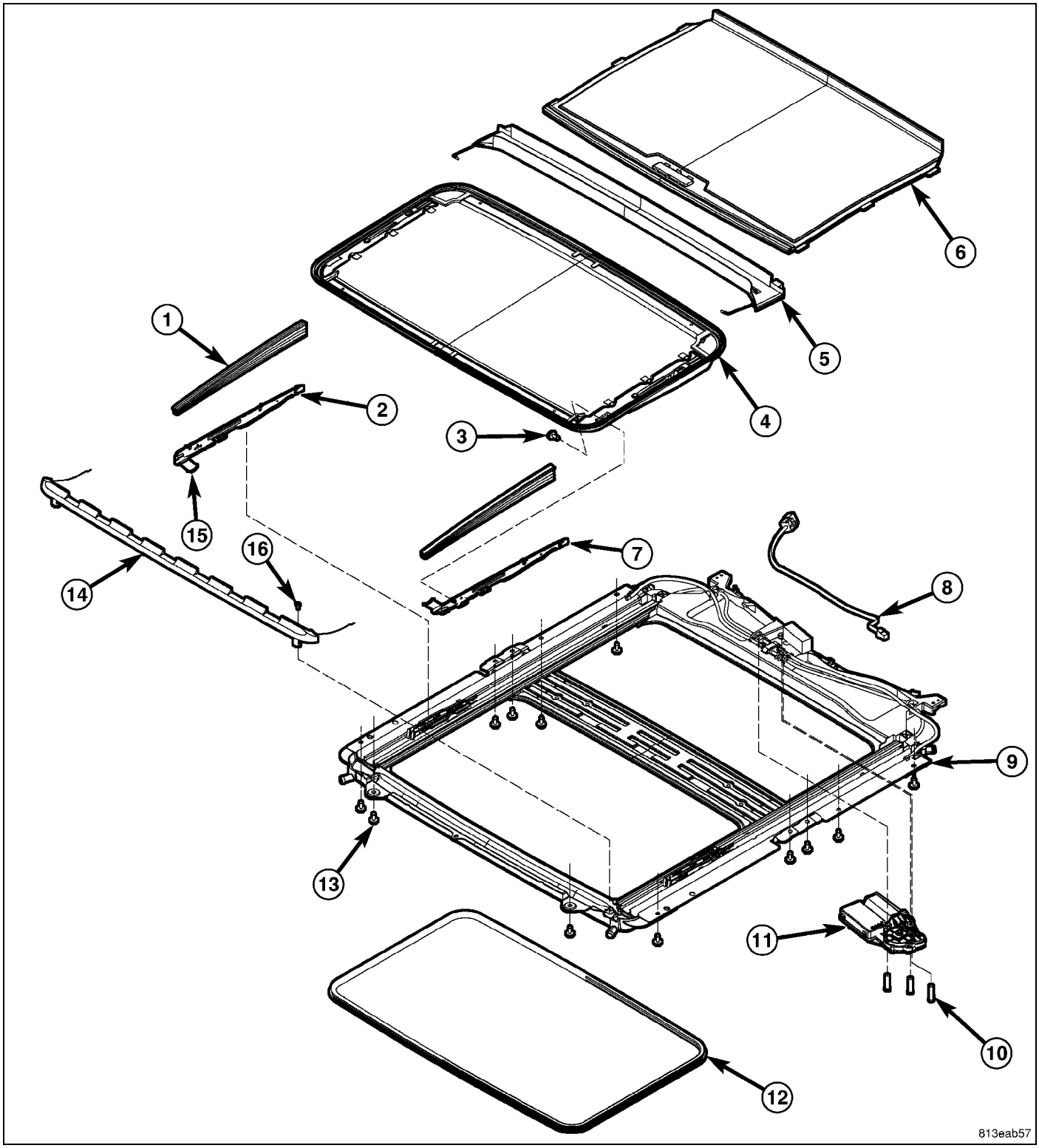

EXPLODED VIEW

The power sunroof system allows the sunroof to be opened, closed or placed in the vent position electrically by actuating a switch in the overhead console. The sunroof system receives battery feed through a fuse in the Totally Integrated Power Module (TIPM). The sunroof will operate normally with the key in the “RUN” or “ACCESSORY” position.

The sunroof glass panel tilts upward at the rear for ventilation and slides rearward under the roof when open. The panel seals flush with the roof in the closed position to eliminate wind noise. The sunroof includes a manual-sliding sunshade to cover the deep-tinted glass panel.

In addition to the standard power sunroof operation, this vehicle offers several additional features. There is an express (one-touch) opening and closing feature as well as Excessive Force Limitation (EFL). The EFL function detects obstacles trapped between the glass and the vehicle roof during a closing motion. Upon sensing an obstacle the EFL function will reverse direction of the glass to allow removal of the obstacle.

The main components of the power sunroof system are:

- The motor/module assembly
- The power sunroof glass and frame assembly
- The power sunroof switch
- The manual-sliding sunshade

Operation

This vehicle has a vent, tilt and slide power sunroof system with express (one-touch) open and closing feature. The sunroof system receives constant battery feed through a fuse in the Totally Integrated Power Module (TIPM). The sunroof will operate normally with the key in the “RUN” or “ACCESSORY” position. If the sunroof is moving when the key is turned to the START position (crank engine), all motions will stop. The sunroof will also stop a requested motion if the key is turned “OFF”.

A combination push-button and rocker switch module mounted in the overhead console controls sunroof operation. The sunroof switch is a rocker design with a push button in the center of the two halves of the rocker. Pressing the rocker towards the front of the car commands the sunroof closed. Pressing the rocker towards the rear of the car commands the sunroof open. Pressing the center push button commands the sunroof up into the vent position (Rear of sunroof glass raises above the vehicle roof with glass still covering the sunroof opening). All switch commands operate with the glass starting in any position.

An electronic control system, integral to the motor/module assembly, provides the express open and close functions. During express opening, the sunroof glass panel will first open to the “Comfort Stop” position. A second press of the “OPEN” button on the rocker switch will move the glass panel to the full open position. Pressing the "close" end of the rocker switch moves the sunroof glass panel to the full closed position. During express closing, anytime an obstacle is detected in the way of the glass, the motor will stop and reverse travel to avoid pinching an occupant's finger, ice in the track, etc. This function is called Excessive Force Limitation (EFL). There are two methods of overriding the EFL function.

1. When three EFL events occur without the glass being allowed to fully close, the next close attempt will only move while the close switch is continuously actuated. This allows the sunroof to be forced closed if multiple close attempts fail.
2. If the sunroof close switch is continuously actuated during an EFL event, through the reversal, and during a two second wait time, then continuing to hold the close switch will cause the roof to move towards close with the EFL protection disabled. This allows the sunroof to be forced closed if it is known that a reversal will occur. This secondary EFL override may be necessary when known debris (ice blockage for example) is preventing the glass panel from closing.

While in EFL override, the closing motion will cease if the sunroof switch is released at any time.

Diagnosis and Testing

Any diagnosis of the power sunroof system should begin with the use of a scan tool and the proper Diagnostic Procedures Information. The scan tool can provide confirmation that the Controller Area Network (CAN) Data Bus is functional, that all of the electronic modules are sending and receiving the proper messages on the CAN Data Bus, and that the power sunroof motor is being sent the proper hard wired output by the sunroof switch.

Check the condition of the circuit protection and inspect all wiring connector pins for proper engagement and continuity. For complete circuit diagrams, refer to the appropriate wiring information. The wiring information includes wiring diagrams, proper wire and connector repair procedures, details of wire harness routing and retention, connector pin-out information and location views for the various wire harness connectors, splices and grounds.

Refer to the appropriate diagnostic information.

NOTE: If there is no sunroof movement when the "OPEN" or "CLOSED" button are pushed but the sunroof operates when the "VENT" button is pushed and held the sunroof motor/module is out of calibration. Complete the sunroof position calibration procedure prior to performing any sunroof diagnostics, (Refer to 08 - Electrical/8N - Power Systems/Power Top/MOTOR, Sunroof - Standard Procedure).

Refer to SUNROOF DIAGNOSIS CHART for possible causes. Before beginning sunroof diagnostics verify that all other power accessories are in proper operating condition. If not, a common electrical problem may exist.

SUNROOF DIAGNOSIS CHART

SYMPTOM	POSSIBLE CAUSE	CORRECTION
Sunroof completely inoperative.	Inoperative control switch.	Perform sunroof switch diagnostics, (Refer to 08 - Electrical/8N - Power Systems/Power Top/SWITCH, Sunroof - Diagnosis and Testing).
	Inoperative circuit ground between sunroof motor/module and body harness.	Inspect ground connections and wiring. Repair as necessary.
	Inoperative power circuit between sunroof motor/module, control switch, and body harness.	Check the condition of the circuit protection and inspect all wiring. Repair as necessary.
	Inoperative sunroof motor/module.	Replace the sunroof motor/module, (Refer to 08 - Electrical/8N - Power Systems/Power Top/MOTOR, Sunroof - Removal).
Audible whine when switch is depressed, sunroof does not operate.	Inoperative sunroof motor/module.	Replace the sunroof motor/module,(Refer to 08 - Electrical/8N - Power Systems/Power Top/MOTOR, Sunroof - Removal) .
	Binding cable.	Repair or replace binding cable as necessary.
Audible clicking or ratcheting when switch is pressed, sunroof does not operate.	Broken or worn drive cable.	Repair or replace binding cable as necessary.
	Worn drive motor gear.	Replace the sunroof motor/module, (Refer to 08 - Electrical/8N - Power Systems/Power Top/MOTOR, Sunroof - Removal).
	Sunroof glass panel out of adjustment.	Perform sunroof glass panel adjustment procedure, (Refer to 23 - Body/Sunroof/GLASS, Sunroof - Adjustments).

SUNROOF DIAGNOSIS CHART, continued

SYMPTOM	POSSIBLE CAUSE	CORRECTION
Sunroof vents and opens, but does not close.	Broken or disengaged trough guide.	Repair trough guide as necessary.
	Binding cable.	Repair or replace binding cable as necessary.
	Inoperative sunroof "CLOSE" circuit.	Check the condition of the circuit, connections and wiring. Repair as necessary.
	Inoperative control switch.	Perform sunroof switch diagnostics, (Refer to 08 - Electrical/8N - Power Systems/Power Top/SWITCH, Sunroof - Diagnosis and Testing).
	Inoperative sunroof motor/module.	Replace the sunroof motor/module, (Refer to 08 - Electrical/8N - Power Systems/Power Top/MOTOR, Sunroof - Removal).
Sunroof vents and closes, but does not open.	Binding cable or mechanism.	Repair or replace binding cable as necessary.
	Inoperative sunroof "OPEN" circuit.	Check the condition of the circuit, connections and wiring. Repair as necessary.
	Inoperative control switch.	Perform sunroof switch diagnostics, (Refer to 08 - Electrical/8N - Power Systems/Power Top/SWITCH, Sunroof - Diagnosis and Testing).
	Inoperative sunroof motor/module.	Replace the sunroof motor/module, (Refer to 08 - Electrical/8N - Power Systems/Power Top/MOTOR, Sunroof - Removal).
Sunroof does not vent	Binding cable or mechanism.	Repair or replace binding cable as necessary.
	Inoperative sunroof "VENT" circuit.	Check the condition of the circuit, connections and wiring. Repair as necessary.
	Inoperative control switch.	Perform sunroof switch diagnostics, (Refer to 08 - Electrical/8N - Power Systems/Power Top/MOTOR, Sunroof - Removal).
	Inoperative sunroof motor/module.	Replace the sunroof motor/module, (Refer to 08 - Electrical/8N - Power Systems/Power Top/SWITCH, Sunroof - Diagnosis and Testing).
Glass movement not consistent or glass does not operate smoothly	Sunroof glass panel out of adjustment.	Perform sunroof glass panel adjustment procedure, (Refer to 23 - Body/Sunroof/GLASS, Sunroof - Adjustments).

MOTOR, Sunroof

Diagnosis and Testing

Any diagnosis of the power sunroof system should begin with the use of a scan tool and the proper Diagnostic Procedures Information. The scan tool can provide confirmation that the Controller Area Network (CAN) Data Bus is functional, that all of the electronic modules are sending and receiving the proper messages on the CAN Data Bus, and that the power sunroof motor is being sent the proper hard wired output by the sunroof switch.

Refer to the appropriate diagnostic information.

NOTE: If there is no sunroof movement when the "OPEN" or "CLOSED" button are pushed but the sunroof operates when the "VENT" button is pushed and held the sunroof motor/module is out of calibration. Complete the sunroof position calibration procedure prior to performing any sunroof diagnostics, (Refer to 08 - Electrical/8N - Power Systems/Power Top/MOTOR, Sunroof - Standard Procedure).

The wire harness connectors for the sunroof motor/module are located above the vehicle headliner. Removal of the headliner may be necessary for access to the connector and proper diagnosis of the motor/module, (Refer to 23 - Body/Interior/HEADLINER - Removal). **For complete circuit diagrams, refer to the appropriate wiring information.** The wiring information includes wiring diagrams, proper wire and connector repair procedures, details of wire harness routing and retention, connector pin-out information and location views for the various wire harness connectors, splices and grounds.

1. Verify that all other power accessories are in proper operating condition. If not, a common electrical problem may exist.
2. Disconnect the sunroof motor/module connector directly at the motor/module (not at the headliner in-line connector). Connect a test light between the harness connector pin 6 and a known good B+ circuit. The test light should illuminate brightly. If OK, go to Step #3. If not OK repair the ground circuit as necessary.
3. Connect a test light between the harness connector pin 8 and a known good ground. The test light should illuminate brightly. If OK, go to Step #4. If not OK repair the B+ circuit as necessary.
4. Using an ohmmeter check the sunroof switch feed circuit for continuity between the sunroof motor/module and sunroof switch. Continuity should be present. If OK replace the inoperative motor/module, (Refer to 08 - Electrical/8N - Power Systems/Power Top/MOTOR, Sunroof - Removal). If not OK repair the sunroof switch feed circuit as necessary.

Standard Procedure

SUNROOF POSITION CALIBRATION

Press the power sunroof switch (Open, Closed, and Vent). If no movement occurs when either the open switch or closed switch is pressed, but the system does move when the vent button is pressed and held, the system is not calibrated. Perform the following procedure to position calibrate the power sunroof system.

1. Turn the ignition to the RUN position.
2. Press the vent button on the power sunroof switch and hold until the sunroof glass panel has moved to the full vent position and the motor movement has stopped for at least 1 second.
3. Press the close switch on the power sunroof switch and hold for a moment (at least 100ms) and release. The sunroof glass panel should continue travel to the full close position. If the sunroof glass panel does not return to the full close position, (Refer to 08 - Electrical/8N - Power Systems/Power Top - Diagnosis and Testing)for full system diagnosis.
4. Verify proper system operation.

MOTOR/MODULE INITIALIZATION

NOTE: Verify the battery is in good condition prior to performing this procedure. Do not leave the vehicle on a battery charger while performing this procedure. If the voltage at the sunroof motor/module drops below 11 volts or exceeds 15 volts at anytime while this procedure is being performed, the motor/module initialization procedure will not be properly completed.

1. Turn the ignition to the RUN position.
2. Press the vent button on the power sunroof switch and hold until the sunroof glass panel has moved to the full vent position and the motor movement has stopped for at least 1 second.

3. Press the close position on the power sunroof switch and release. The sunroof glass panel should continue travel to the full closed position. **This will be considered the first sunroof closed position in a series of four sunroof closes.**
4. Press the vent button on the power sunroof switch and release. The sunroof glass panel should move to the full vent position. After the sunroof motor/module has stopped, press the close position on the power sunroof switch and release. The sunroof glass panel should continue travel to the full closed position. **This will be considered the second sunroof closed position in a series of four sunroof closes.**
5. Continue to move the sunroof glass to the "vent" then "closed" positions two more times so that the sunroof glass has moved to the closed position a total of four times starting with the first sunroof close in step 3.
6. Press the open position on the power sunroof switch and release. The sunroof glass panel should continue travel to the full open position.
7. Press the close position on the power sunroof switch and release. The sunroof glass panel should continue travel to the full closed position. **This will be considered the first sunroof closed position in a series of five sunroof closes.**
8. Press the open position on the power sunroof switch and release. The sunroof glass panel should move to the full open position. After the sunroof motor/module has stopped, press the close position on the power sunroof switch and release. The sunroof glass panel should continue travel to the full closed position. **Continue to move the sunroof glass to the "open" then "closed" position four more times so that the sunroof glass has moved to the closed position a total of five times starting with the first sunroof close in step 7.**

Verify proper EFL calibration by placing a standard pencil at the front of the sunroof and then moving the sunroof to the full closed position. The sunroof should reverse direction upon contact without damage to the pencil.

Removal

WARNING: Do not attempt to move or reposition the sunroof glass panel or drive cables with the sunroof motor and module unit removed. Damage to the vehicle, to the sunroof or personal injuries may result.

WARNING: The sunroof must first be calibrated and the Motor/Module Initialization Procedure must be completed any time a sunroof motor/module is replaced with a new component. Failure to perform this procedure could result in vehicle damage and/or personal injury. (Refer to 08 - Electrical/8N - Power Systems/Power Top/MOTOR, Sunroof - Standard Procedure) for the appropriate procedure.

1. Disconnect the battery negative cable.
2. Remove the vehicle headliner, (Refer to 23 - Body/Interior/HEADLINER - Removal).
3. Remove the power sunroof motor/module electrical connector (2).
4. Remove the retaining screws (3) and remove the motor/module (1) from the vehicle.

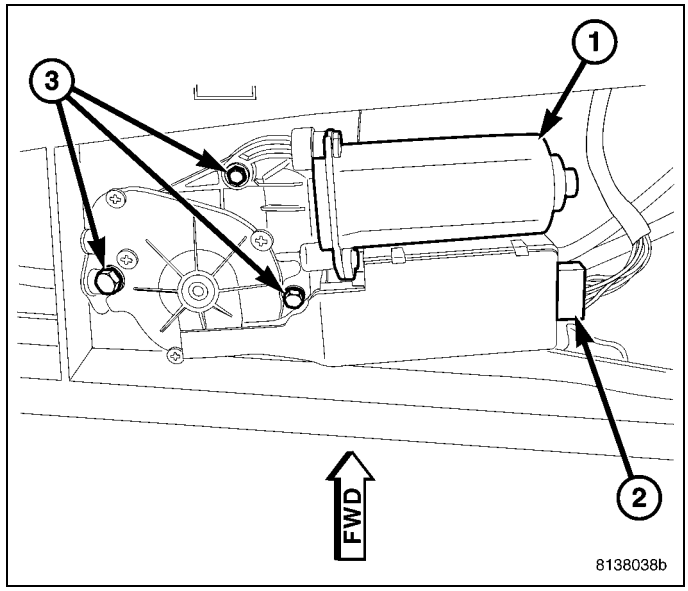

Installation

WARNING: Do not attempt to move or reposition the sunroof glass panel or drive cables with the sunroof motor and module unit removed. Damage to the vehicle, to the sunroof or personal injuries may result.

WARNING: The sunroof must first be calibrated and the Motor/Module Initialization Procedure must be completed any time a sunroof motor/module is replaced with a new component. Failure to perform this procedure could result in vehicle damage and/or personal injury. (Refer to 08 - Electrical/8N - Power Systems/Power Top/MOTOR, Sunroof - Standard Procedure) for the appropriate procedure.

1. Position the power sunroof motor/module (1) in the vehicle.
2. Install the motor/module retaining screws (3). Tighten the screws to 4 N·m (35 in. lbs.).
3. Connect the motor/module electrical connector (2).
4. Partially install the vehicle headliner and connect all remaining sunroof electrical connectors, (Refer to 23 - Body/Interior/HEADLINER - Installation).
5. Connect the battery negative cable.
6. Perform the sunroof position calibration (Refer to 08 - Electrical/8N - Power Systems/Power Top/MOTOR, Sunroof - Standard Procedure).
7. Perform the Motor/Module Initialization Procedure (Refer to 08 - Electrical/8N - Power Systems/Power Top/MOTOR, Sunroof - Standard Procedure).
8. Complete the vehicle headliner installation, (Refer to 23 - Body/Interior/HEADLINER - Installation).
9. Verify proper operation of the power sunroof system.

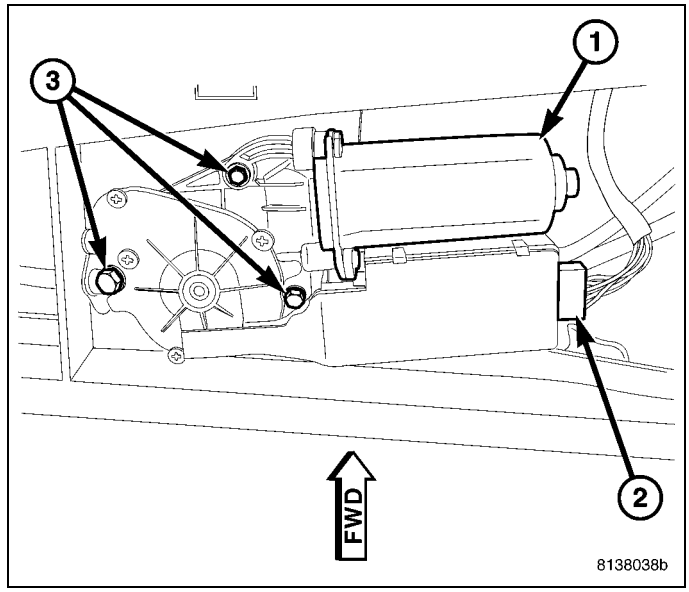

SWITCH, Sunroof

Description

The power sunroof switch (1) is a combination push-button and rocker switch module mounted in the overhead console. The sunroof switch is a direct contact unit that is directly wired to the sunroof motor/module assembly. The sunroof switch performs the following functions:

- Power sunroof open (back of switch pushed)
- Power sunroof closed (front of switch pushed)
- Power sunroof vent (switch center button pushed)

The power sunroof switch is part of the overhead console assembly and cannot be replaced separately. If the switch is damaged or inoperative the overhead console must be replaced, (Refer to 08 - Electrical/8M - Message Systems/Overhead Console - Removal).

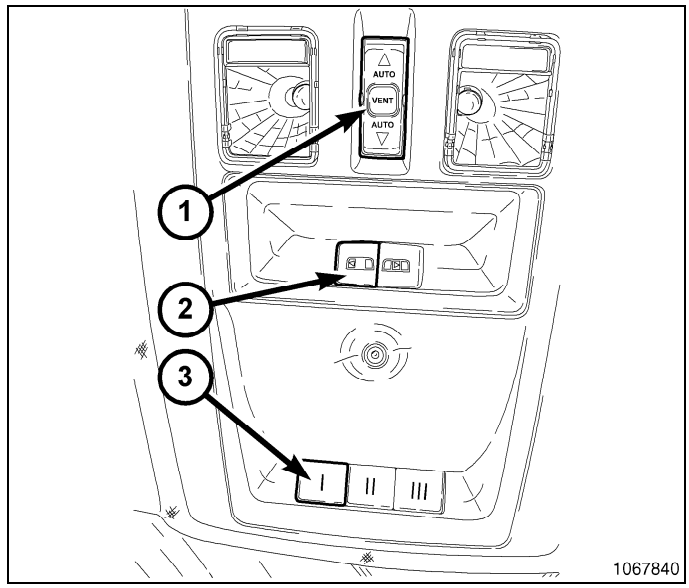

Operation

The power sunroof switch is hard wired to the sunroof motor/module assembly. The switch receives battery current from the motor/module when the ignition switch is in the RUN and ACCESSORY positions. When one of the switch positions is pressed it sends battery current back to the motor/module, signaling it to move the power sunroof to the appropriate position. The motor/module will perform one of the following functions:

- Power sunroof open (back of switch pushed)
- Power sunroof closed (front of switch pushed)
- Power sunroof vent (switch center button pushed)

Diagnosis and Testing

For complete circuit diagrams, refer to the appropriate wiring information. The wiring information includes wiring diagrams, proper wire and connector repair procedures, details of wire harness routing and retention, connector pin-out information and location views for the various wire harness connectors, splices and grounds. If completing the appropriate diagnostic information results in the sunroof switch being inoperative, perform the following test prior to switch replacement.

1. Disconnect and isolate the battery negative cable.
2. Remove the overhead console, (Refer to 08 - Electrical/8M - Message Systems/Overhead Console - Removal).
3. Disconnect the power sunroof switch wire harness connector.
4. Using an ohmmeter, test the continuity of the power sunroof switch in each switch position. Refer to the POWER SUNROOF SWITCH CONTINUITY TABLE. If OK, inspect the wiring harness and connectors for damage. Use a scan tool and the proper Diagnostic Procedures Information to complete diagnosis of the power sunroof system. If not OK, replace the overhead console.

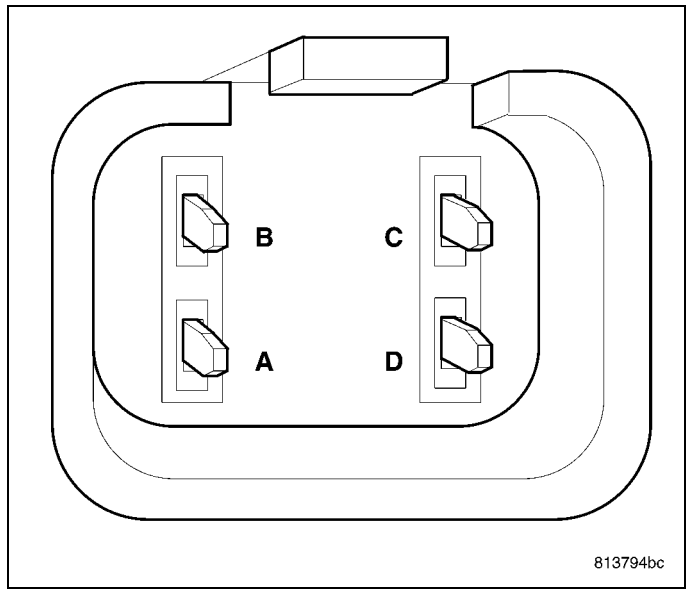

POWER SUNROOF SWITCH CONTINUITY TABLE

SWITCH POSITION	CONTINUITY BETWEEN PINS
OFF	NO CONTINUITY
SUNROOF OPEN	B AND D
SUNROOF CLOSED	B AND C
SUNROOF VENT	B AND A

POWER WINDOWS

TABLE OF CONTENTS

page

POWER WINDOWS
DESCRIPTION 52
OPERATION 52
DIAGNOSIS AND TESTING 52
STANDARD PROCEDURE 53
MOTOR, WINDOW REGULATOR
REMOVAL 54
INSTALLATION 54

page

MOTOR, WINDOW REGULATOR, REAR SLIDING WINDOW
REMOVAL 54
INSTALLATION 56
SWITCH, POWER WINDOW
DIAGNOSIS AND TESTING 56
REMOVAL 57
INSTALLATION 57

Power Windows

Description

The power window system allows each of the door windows to be raised and lowered electrically by actuating a switch on each door panel. A master switch on the drivers door allows the driver to raise or lower each of the passenger door windows and to lock out the individual switches on the passenger doors from operation. The power window system receives battery feed through a fuse in the Totally Integrated Power Module (TIPM) to the door modules. Their are two door modules, the Driver Door Module (DDM) and the Passenger Door Module (PDM). This is only powered when the ignition switch is in the RUN or ACCESSORY position.

If equipped, the windows have the option of auto up/down. If equipped, the four door gets auto-up/down feature, while the two door just gets the auto-down feature.

The window motors are replaced with the window regulator assembly. If the window motors require replacement, the window regulator must be replaced. For the front door (Refer to 08 - Electrical/8N - Power Systems/Power Windows/ MOTOR, Window Regulator - Removal).

Operation

POWER WINDOWS

The door control modules, (Driver Door Module (DDM) and Passenger Door Module (PDM)) opens or closes the windows when a actuation input signal from the window switch is received from the door trim panel. When the power window lockout switch is in the Lock position, the passenger doors windows switches are disabled. This is only powered when the ignition switch is in the RUN or ACCESSORY position.

If equipped, the windows have the option of auto up/down. If equipped, the four door gets auto-up/down feature, while the two door just gets the auto-down feature.

WINDOW MOTOR

Window motors use permanent type magnets. The B+ and ground applied at the motor terminal pins will cause the motor to rotate in one direction. Reversing current through the motor terminals will cause the motor to rotate in the opposite direction.

EXPRESS DOWN WINDOW FEATURE

This feature allows you to remotely lower both front door windows at the same time. To use this feature, press and release the UNLOCK button on the RKE transmitter and then immediately press and hold the UNLOCK button until the windows lower to the desired level or until they lower completely.

Diagnosis and Testing

POWER WINDOW MOTOR TEST

If the power window motor is receiving proper current and ground and does not operate, proceed with motor test.

1. Remove front door trim panel as necessary to gain access to power window motor wire connector (Refer to 23 - Body/Door - Front/PANEL, Door Trim - Removal).
2. Disconnect power window motor wire connector from door harness.
3. Using two jumper wires, connect one to a battery (+) source and the other to a good ground (-).
4. Connect the Negative (-) jumper probe to one of the motor connector terminals.
5. Momentarily touch the Positive (+) jumper probe to the other motor connector terminal.

When positive probe is connected the motor should rotate in one direction to either move window up or down. If window is all the way up or down the motor will grunt and the inner door panel will flex when actuated in that one direction.

6. Reverse jumper probes at the motor connector terminals and window should now move in opposite direction. If window does not move or grunt, replace the motor.

If window moved completely up or down, reverse the jumper probes and cycle window to the opposite position to verify full operation.

If motor grunts and does not move, verify that regulator is not binding.

Standard Procedure

NOTE: The battery must be fully charged or the vehicle running for proper calibration of the front door module.

NOTE: The following procedure must be performed anytime the power window system has been serviced in either front door or, there is a possible concern with a door module calibration.

Express-up / Express-down possible concerns.

- Glass will not lower all the way down flush to the belt-line.
- Glass will not raise fully; wind noise / water leak.
- Glass will not raise automatically (Expess-up) after lifting the switch to the second detent and releasing.

To clear/denormalize the door module memory, perform the following procedure:

CLEAR/DENORMALIZE

1. Check and repair any door module Diagnostic Trouble Code (DTC)(s) before proceeding.
2. Using a scan tool, under the miscellaneous functions menu select (Denormalize Window/Reset ECU), and follow the directions to clear/denormalize the door module memory.

To relearn/normalize the door module memory, perform the following procedure:

RELEARN/NORMALIZE

NOTE: The battery must be fully charged or the vehicle running before proceeding.

1. If needed, place the vehicle battery on charge or have the engine running.
2. To relearn/normalize the door module, start by raising the door glass to the full-up position by pulling up on the window switch to its second detent and hold the switch until the door glass is fully closed. Continue to hold the window switch up for two seconds after the door glass is full closed.
3. Lower the door glass to the full-down position by pushing down (depress) the window switch to its second detent and hold the switch until the door glass is fully open. Continue to hold the window switch down for two seconds after the door glass is fully open.
4. Check the operation of the express-up and express-down features.
5. If the express up does not work, repeat the procedure starting at step #2, waiting for three seconds after the window stops.
6. Check that the door glass reverses when in the express-up mode by holding a pen in the path of the glass.
7. Recheck and repair any door module DTC's as needed

MOTOR, Window Regulator

Removal

1. Disconnect and isolate the negative battery cable.
2. Remove door trim panel (Refer to 23 - Body/Door - Front/PANEL, Door Trim - Removal).
3. Remove fasteners from motor/regulator.
4. Disconnect electrical connector.
5. Remove motor/regulator from carrier plate.

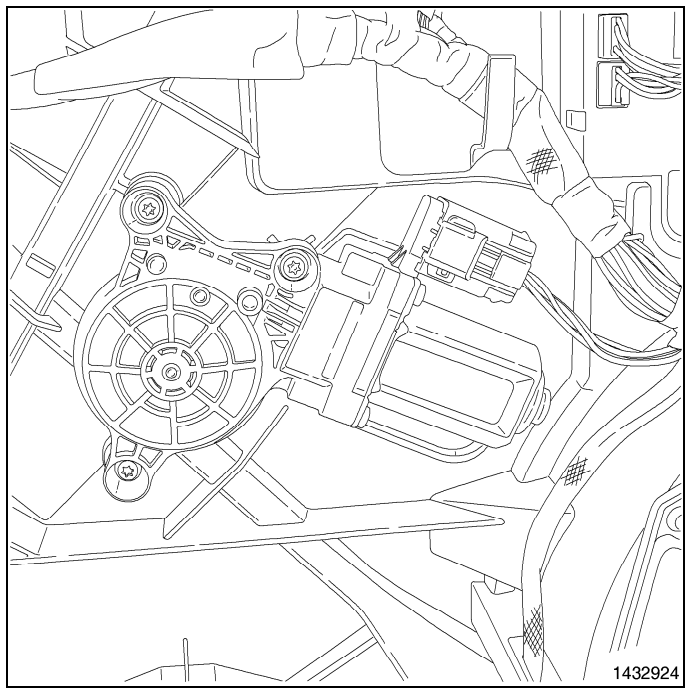

Installation

1. Connect electrical connector.
2. Place motor/regulator into place and install fasteners.
3. Install door trim panel (Refer to 23 - Body/Door - Front/PANEL, Door Trim - Installation).

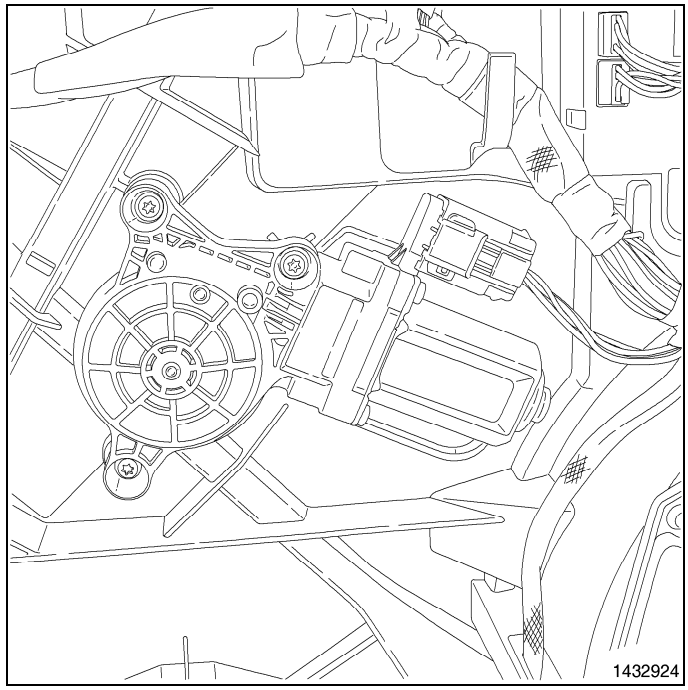

4. Connect the negative battery cable.

MOTOR, Window Regulator, Rear Sliding Window

Removal

1. Disconnect and isolate the battery negative cable.

2. Remove the rear seats (Refer to 23 - Body/Seats/SEAT - Removal).
3. Remove the rear cab back panel (Refer to 23 - Body/Interior/PANEL, Cab Back Trim - Removal).
4. Remove the 2 mounting bolts (1).
5. Disconnect the electrical connector to the power motor.

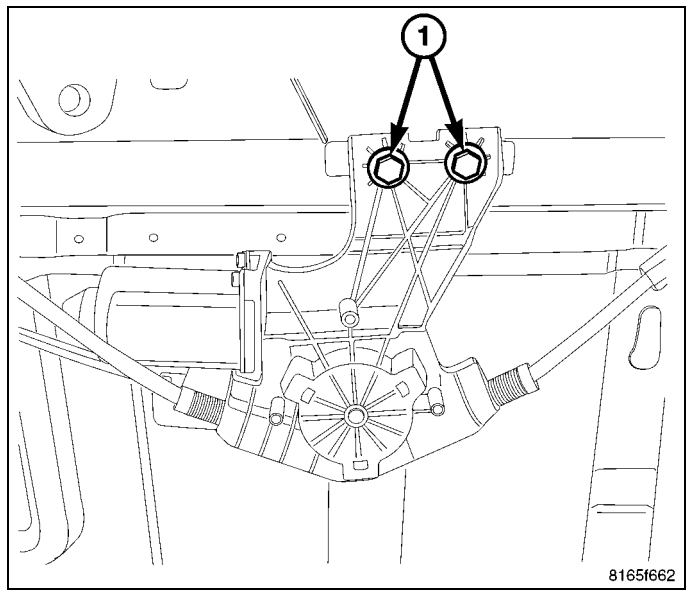

6. Rotate the assembly and remove the 3 screws (1) that attach the motor to the regulator.

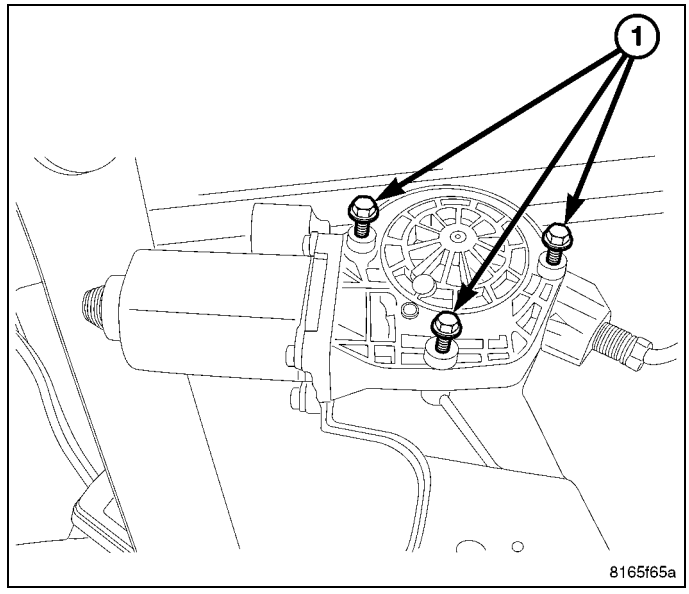

Installation

1. Install the power motor to the regulator with the 3 screws (1).
2. Connect the electrical connector to the power motor.

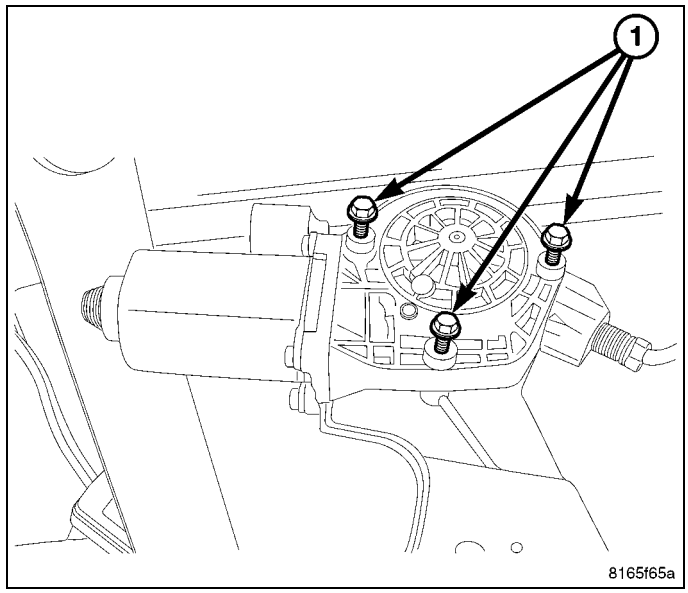

3. Install the 2 mounting bolts (1).

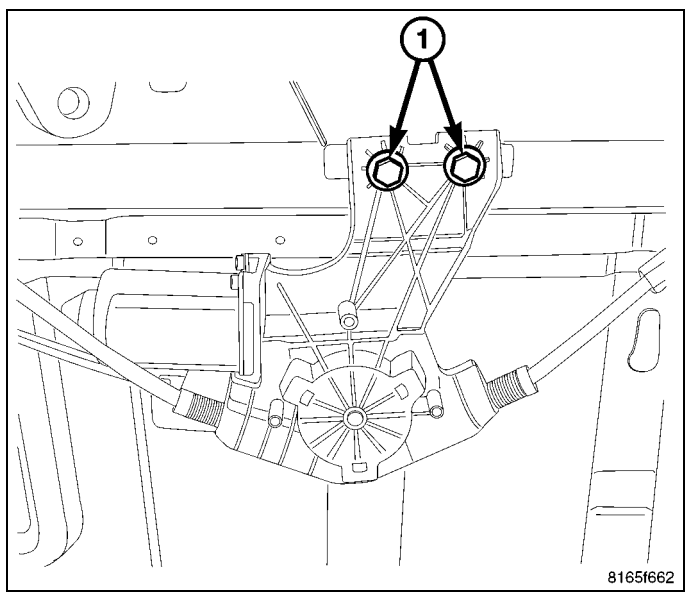

4. Install the rear cab back panel (Refer to 23 - Body/Interior/PANEL, Cab Back Trim - Installation).
5. Install the rear seats (Refer to 23 - Body/Seats/SEAT - Installation).
6. Connect the battery negative cable.

SWITCH, Power Window

Diagnosis and Testing

The Light-Emitting Diode (LED) illumination lamps for all of the power window and lock switch and bezel unit switch paddles receive battery current through the power window circuit breaker in the junction block. If all of the LEDs are inoperative in both the power window and lock switch units and the power windows are inoperative, (Refer to 08 - Electrical/8N - Power Systems/Power Windows - Diagnosis and Testing). If the power windows operate, but any or all of the LEDs are inoperative, the power window and lock switch units with the inoperative LED(s) is faulty and must be replaced. For complete circuit diagrams, refer to the appropriate wiring information.

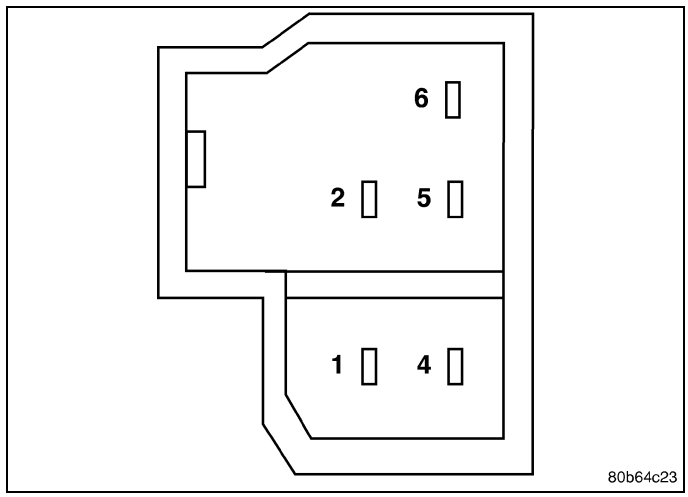

1. Check the fuse in the Totally Integrated Power Module (TIPM) and the circuit breaker located near the park brake pedal. If OK, go to Step #2. If not OK, replace the faulty fuse or circuit breaker.
2. Turn the ignition switch to the On position. Check for battery voltage at the fuse in the Totally Integrated Power Module (TIPM). If OK, turn the ignition switch to the Off position and go to Step #3. If not OK, check circuit breaker and repair the circuit to the ignition switch as required.
3. Disconnect and isolate the battery negative cable. Remove the power window switch unit from the door trim panel (passenger doors). The drivers door switch is included with the window/lock switch(Refer to 08 - Electrical/8N - Power Systems/Power Windows/SWITCH, Power Window - Removal) for service procedures. Unplug the wire harness connector from the switch unit.
4. Test the power window switch continuity. See the Power Window Switch Continuity charts to determine if the continuity is correct in the Off, Up and Down switch positions . If OK, (Refer to 08 - Electrical/8N - Power Systems/Power Windows - Diagnosis and Testing). If not OK, replace the faulty switch.

POWER WINDOW SWITCH CONTINUITY CHART

SWITCH POSITION	CONTINUITY BETWEEN
NEUTRAL	PIN 2 AND 5, PIN 4 AND 1
UP (FRONT PASSENGER)	PIN 6 AND 5
UP (REAR PASSENGER)	PIN 6 AND 1
DOWN (FRONT PASSENGER)	PIN 6 AND 1
DOWN (REAR PASSENGER)	PIN 6 AND 5

Removal

The power window switch is included with the power mirror/lock switch. (Refer to 08 - Electrical/8N - Power Systems/Power Locks/SWITCH, Lock - Removal).

Installation

The power window switch is included with the power mirror/lock switch.(Refer to 08 - Electrical/8N - Power Systems/Power Locks/SWITCH, Lock - Installation).

SPEED CONTROL

TABLE OF CONTENTS

page

SPEED CONTROL
SPECIFICATIONS 2
SWITCH, SPEED CONTROL
REMOVAL 2
INSTALLATION 3

Speed Control

Specifications

DESCRIPTION	N·m	Ft. Lbs.	In. Lbs.
Speed Control Switch Mounting Screws	1.7	-	15

SWITCH, Speed Control

Removal

The speed control switch is mounted in the steering wheel and wired through the clock spring device under the airbag module.

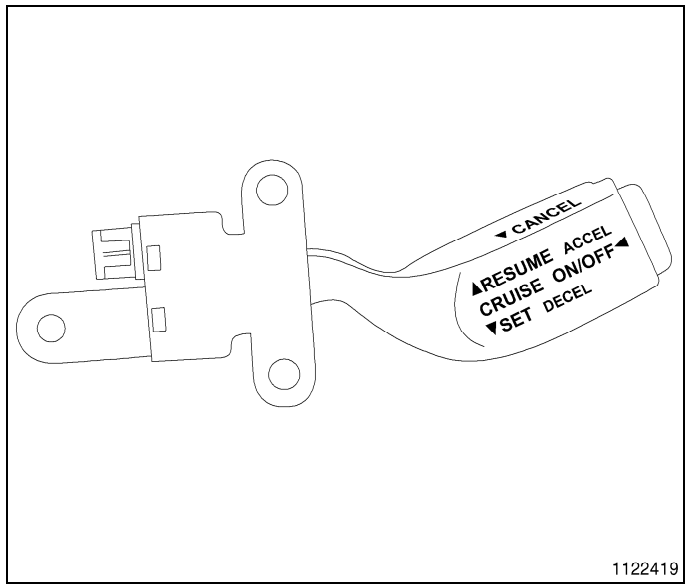

1. Remove the steering column shrouds.
2. Remove air bag, (Refer to 10 - Restraints/AIR BAG, Driver - Removal)
3. Disconnect the speed control switch electical connector (2).
4. Remove the fastner (1) at the front side of the speed control switch (3).

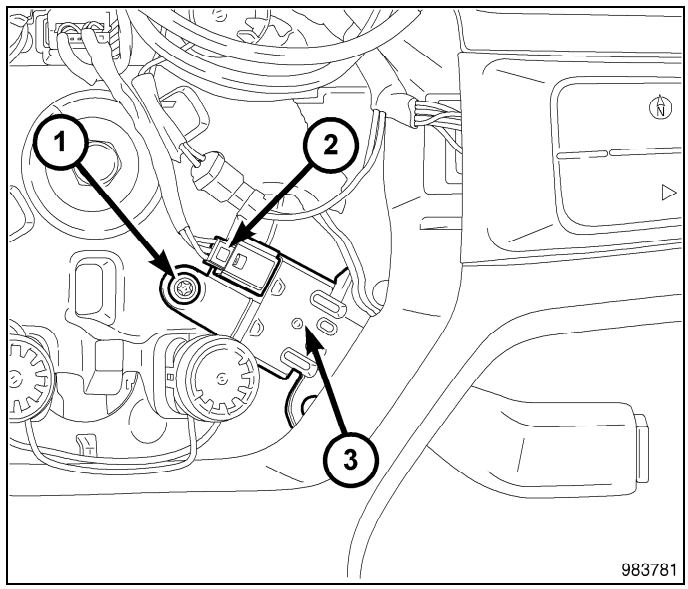

5. Remove fastner (1) from the back side of the speed control switch through the access hole (2) on the back of the steering wheel.
6. Remove the speed control switch.

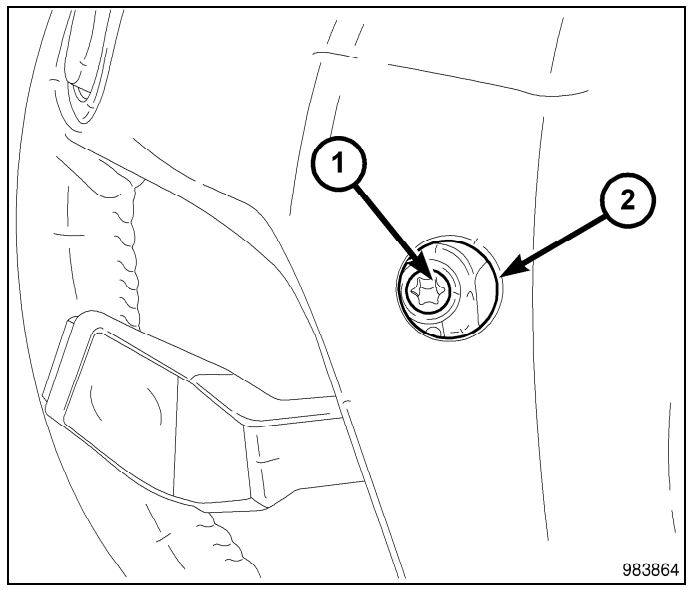

Installation

The speed control switch is mounted in the steering wheel and wired through the clock spring device under the airbag module.

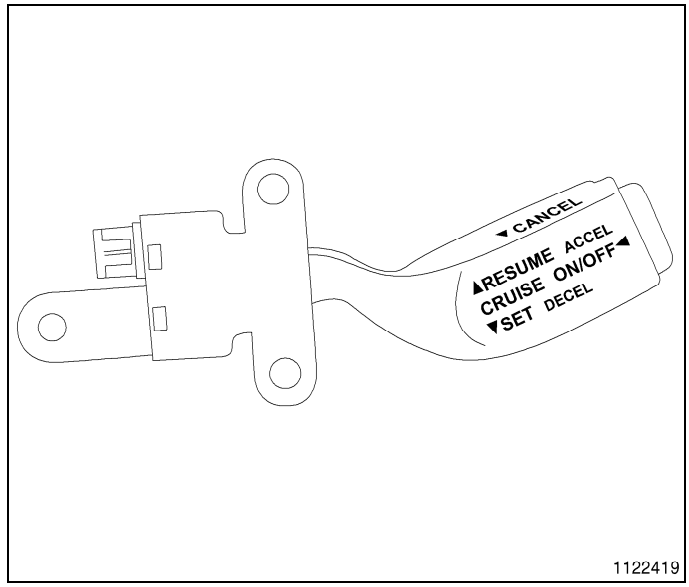

1. Install the speed control switch.
2. Install the fastner (1) from the back side of the speed control switch through the access hole (2) on the back of the steering wheel, and tighten to 1.6 N·m (15 in. lbs.)

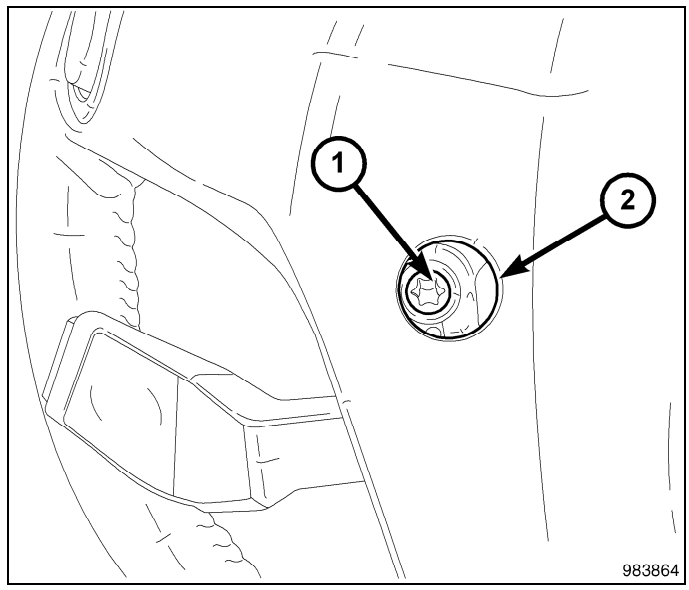

3. Install the fastner (1) at the front side of the speed control switch and tighten to (1) to 1.6 N·m (15 in. lbs.).
4. Install drivers airbag (Refer to 10 - Restraints/AIR BAG, Driver - Installation).
5. Install the steering column shrouds.

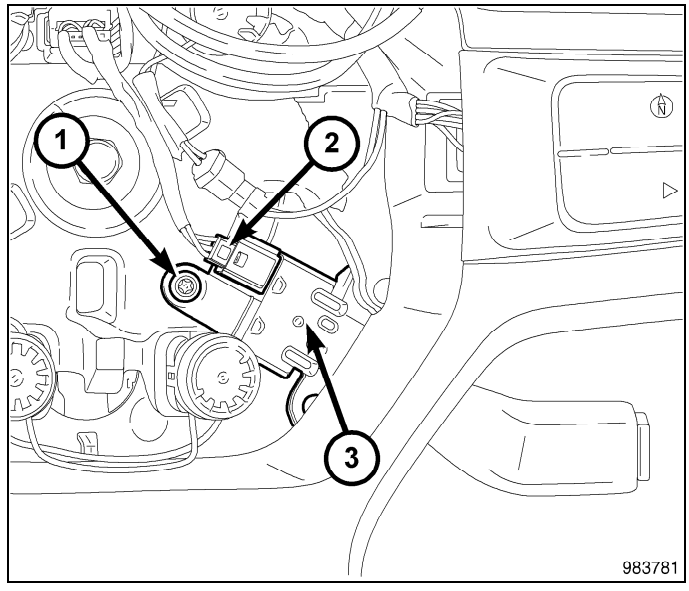

VEHICLE THEFT SECURITY

TABLE OF CONTENTS

page

VEHICLE THEFT SECURITY
- DESCRIPTION
  - SENTRY KEY IMMOBILIZER SYSTEM 2
  - VEHICLE THEFT SECURITY SYSTEM 2
- OPERATION
  - IMMOBILIZER SYSTEM 3
  - VEHICLE THEFT SECURITY SYSTEM 3
- DIAGNOSIS AND TESTING
  - SENTRY KEY IMMOBILIZER SYSTEM 5
  - VEHICLE THEFT SECURITY SYSTEM 6
- STANDARD PROCEDURE
  - SKIS INITIALIZATION 6
  - SENTRY KEY TRANSPONDER PROGRAMMING 6
- SPECIFICATIONS 7

page

KEY, TRANSPONDER
- DESCRIPTION 8
- OPERATION 8

SWITCH, HOOD AJAR
- DESCRIPTION 8
- OPERATION 9
- REMOVAL
  - BRACKET 10
  - STRIKER 11
  - SWITCH 11
- INSTALLATION
  - BRACKET 12
  - STRIKER 12
  - SWITCH 13

Vehicle Theft Security

Description

SENTRY KEY IMMOBILIZER SYSTEM

The Sentry Key Immobilizer Systerm (SKIS) provides passive vehicle protection by preventing the engine from operating unless a valid electronically encoded key is detected in the ignition lock cylinder. The SKIS used in combination with the export premium version of the VTSS adds a steering shaft lock feature that provides passive protection by preventing the vehicle from being steered unless a valid electronically encoded key is detected in the ignition lock cylinder.

The SKIS includes the following major components, which are described in further detail elsewhere in this service information:

- **Powertrain Control Module (1)** - The Powertrain Control Module (PCM) is located in the engine compartment(Refer to 08 - Electrical/8E - Electronic Control Modules/MODULE, Powertrain Control - Description).
- **Security Indicator** - A security indicator is integral to the ElectroMechanical Instrument Cluster (EMIC) (also known as the Cab Compartment Node/CCN). (Refer to 08 - Electrical/8J - Instrument Cluster - Description).
- **Sentry Key Remote Entry Module/Wireless Ignition Node(WIN)** - The WIN located on the right side of the steering column concealed beneath the instrument panel.
- **Sentry Key Transponder (3)** - The Sentry Key transponder is contained within the Remote Keyless Entry (RKE) transmitter on the ignition key.

VEHICLE THEFT SECURITY SYSTEM

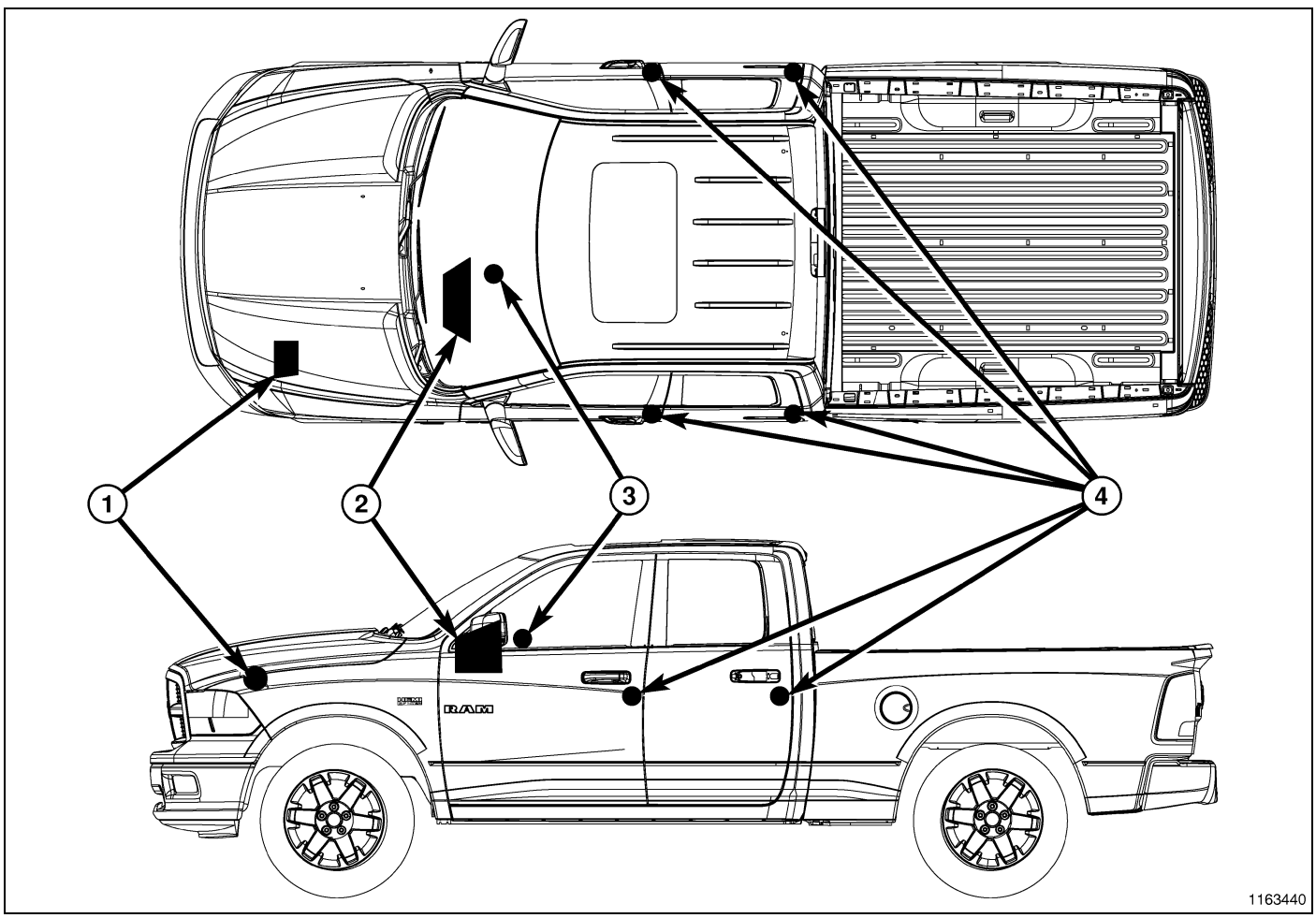

The Vehicle Theft Security System (VTSS) is designed to provide perimeter protection against unauthorized use or tampering by monitoring the vehicle door ajar circuits, the power lock and unlock circuits, and the ignition switch circuit. If unauthorized use or tampering is detected, the system responds by pulsing the horn for up to about 3 minutes and flashing the hazard warning lamps for up to about 18 minutes.

The VTSS includes the following major components, which are described in further detail elsewhere in this service information:

- **Door Ajar Switches (4)** - A door ajar switch is integral to the door latch mechanism of each front door, as well as the rear doors on quad cab and mega cab vehicles. (Refer to 08 - Electrical/8L - Lamps and Lighting/Lamps/Lighting - Interior/SWITCH, Door Ajar - Description).
- **ElectroMechanical Instrument Cluster (2)** - The ElectroMechanical Instrument Cluster (EMIC) is also known as the Cab Compartment Node (CCN) in this vehicle. The EMIC/CCN is located in the instrument panel above the steering column opening, directly in front of the driver. The EMIC provides the VTA system logic and security indicator control. (Refer to 08 - Electrical/8J - Instrument Cluster - Description).
- **Ignition Switch (3)** - The ignition switch is located on the steering column in the passenger compartment.
- **Security Indicator** - The security indicator is integral to the ElectroMechanical Instrument Cluster (EMIC) (also known as the Cab Compartment Node/CCN). (Refer to 08 - Electrical/8J - Instrument Cluster - Description).
- **Totally Integrated Power Module (1)** - The Totally Integrated Power Module (TIPM) is located in the engine compartment, near the battery. (Refer to 08 - Electrical/8W - Wiring/Power Distribution - Description).

Hard wired circuitry connects the VTSS components to the electrical system of the vehicle. These hard wired circuits are integral to several wire harnesses, which are routed throughout the vehicle and retained by many different methods. These circuits may be connected to each other, to the vehicle electrical system and to the VTSS components through the use of a combination of soldered splices, splice block connectors, and many different types of wire harness terminal connectors and insulators. Refer to the appropriate wiring information. The wiring information includes wiring diagrams, proper wire and connector repair procedures, further details on wire harness routing and retention, as well as pin-out and location views for the various wire harness connectors, splices and grounds.

Operation

IMMOBILIZER SYSTEM

The Immobilizer System is designed to provide passive protection against unauthorized vehicle use by disabling the engine after about two seconds of running, whenever any method other than a valid Sentry Key is used to start the vehicle. The Immobilizer System is considered a passive protection system because it is always active when the ignition system is energized and does not require any customer intervention. The Immobilizer System uses Radio Frequency (RF) communication to obtain confirmation that the key in the ignition switch is a valid key for operating the vehicle. The Immobilizer System hardware and software also uses electronic messages to communicate with other electronic modules in the vehicle over the Controller Area Network (CAN) data bus. (Refer to 08 - Electrical/8E - Electronic Control Modules/COMMUNICATION - Operation).

Pre-programmed Sentry Key transponders are provided with the vehicle from the factory. Each Wireless Ignition Node (WIN) will recognize a maximum of eight Sentry Keys. If the customer would like additional keys other than those provided with the vehicle, they may be purchased from any authorized dealer. These additional keys must be programmed to the WIN in the vehicle in order for the system to recognize them as valid keys. This can be done by the dealer using a diagnostic scan tool or, if Customer Learn programming is an available Immobilizer System feature in the market where the vehicle was purchased, the customer can program the additional keys, as long as at least two valid Sentry Keys are already available. (Refer to 08 - Electrical/8E - Electronic Control Modules - Standard Procedure).

The hard wired circuits between components related to the Immobilizer System may be diagnosed using conventional diagnostic tools and procedures. Refer to the appropriate wiring information. The wiring information includes wiring diagrams, proper wire and connector repair procedures, details of wire harness routing and retention, connector pin-out information and location views for the various wire harness connectors, splices and grounds.

However, conventional diagnostic methods will not prove conclusive in the diagnosis of the Immobilizer System or the electronic controls or communication between other modules and devices that provide some features of the Immobilizer System. The most reliable, efficient, and accurate means to diagnose the Immobilizer System or the electronic controls and communication related to Immobilizer System operation requires the use of a diagnostic scan tool. Refer to the appropriate diagnostic information.

VEHICLE THEFT SECURITY SYSTEM

The ElectroMechanical Instrument Cluster (EMIC) (also known as the Cab Compartment Node/CCN) is used on this vehicle to control and integrate many of the functions and features included in the Vehicle Theft Security System (VTSS). In the VTSS, the EMIC receives inputs indicating the status of the door ajar switches and the ignition switch. The EMIC will process the information from all of these inputs, internally controls the security indicator as appropriate, and sends electronic messages to the Totally Integrated Power Module (TIPM) over the Controller Area Network (CAN) data bus.

The TIPM internally controls the output to the hazard warning lamps and sends a control output to energize or de-energize the horn relay as appropriate.

The hard wired circuits between components related to the VTSS may be diagnosed using conventional diagnostic tools and procedures. Refer to the appropriate wiring information. The wiring information includes wiring diagrams, proper wire and connector repair procedures, details of wire harness routing and retention, connector pin-out information and location views for the various wire harness connectors, splices and grounds.

However, conventional diagnostic methods will not prove conclusive in the diagnosis of the VTSS or the electronic controls or communication between modules and devices that provide some features of the VTSS. The most reliable, efficient, and accurate means to diagnose the VTSS or the electronic controls and communication related to VTSS operation requires the use of a diagnostic scan tool. See the **Vehicle Theft Security System** menu item on the scan tool. Refer to the appropriate diagnostic information.

Following are paragraphs describing the operation of each of the VTSS features. See the owner's manual in the vehicle glove box for more information on the features, use and operation of the VTSS.

ENABLING

The EMIC must have the VTSS function electronically enabled in order for the VTSS to perform as designed. The logic in the EMIC keeps its VTSS function dormant until it is enabled using a diagnostic scan tool. The VTSS function of the EMIC is enabled on vehicles equipped with the VTSS option at the factory, but a service replacement EMIC must be VTSS-enabled by the dealer using a diagnostic scan tool. Refer to the appropriate diagnostic information.

ARMING

Passive arming of the VTSS occurs when the vehicle is exited with the key removed from the ignition switch, the headlamps are turned OFF, and the doors are LOCKED while they are open using the power lock switch. Active arming occurs when the LOCK button on the Remote Keyless Entry (RKE) transmitter is depressed to lock the vehicle. For active arming to occur, the doors must be closed and the ignition switch must be in the OFF position when the RKE transmitter LOCK button is depressed. The power lock switch will not function if the key is in the ignition switch or the headlamps are turned ON with the driver side front door open.

Pre-arming of the VTSS is initiated when a door is open when the vehicle is locked using a power door lock switch or when the RKE transmitter LOCK button is depressed. Pre-arming will not occur if the key is in the ignition switch or the headlamps are turned ON with the driver side front door open. When the VTSS is pre-armed, the arming sequence is delayed until all of the doors have been closed. The VTSS will remain in pre-armed mode until after all doors have been closed, or until the interior lighting load shed threshold is surpassed (about eight minutes).

Once the VTSS begins the passive or active arming sequence, the security indicator in the instrument cluster will flash rapidly for about 16 seconds. This indicates that VTSS arming is in progress. If the ignition switch is turned to the ON position, a door is opened, a door is unlocked by any means, or the RKE PANIC button is depressed during the 16 second arming process, the security indicator will stop flashing and the arming process will abort. Once the 16 second arming sequence is successfully completed, the security indicator will flash at a slower rate, indicating that the VTSS is armed.

DISARMING

Since this vehicle is not equipped with lock cylinder switches, passive disarming of the VTSS is only possible if the vehicle is equipped with the optional Sentry Key Immobilizer System (SKIS). On vehicles with SKIS, turning the ignition switch to the ON position using a valid SKIS key will passively disarm VTSS. Active disarming of the VTSS occurs when the vehicle is unlocked by depressing the UNLOCK button of the RKE transmitter. Once the alarm has been activated, either disarming method will also deactivate the alarm. Depressing the PANIC button on the RKE transmitter will **not** disarm the VTSS.

POWER-UP MODE

When the armed VTSS senses that the battery has been disconnected and reconnected, it enters the power-up mode. In the power-up mode the alarm system remains armed following a battery failure or disconnect. If the VTSS was armed prior to a battery disconnect or failure, the technician or vehicle operator will have to actively or passively disarm the alarm system after the battery is reconnected. The power-up mode will also apply if the battery goes dead while the system is armed, and battery jump-starting is attempted. The VTSS will be armed until the technician or vehicle operator has actively or passively disarmed the alarm system. If the VTSS is in the disarmed mode prior to a battery disconnect or failure, it will remain disarmed after the battery is reconnected or replaced, or if jump-starting is attempted.

TAMPER ALERT

The VTSS tamper alert feature will pulse the horn 3 times upon VTSS disarming, if the alarm was triggered and has since timed-out (about 18 minutes), or if the battery has been disconnected and reconnected. This feature alerts the vehicle operator that the VTSS alarm was activated while the vehicle was unattended.

Diagnosis and Testing

SENTRY KEY IMMOBILIZER SYSTEM

WARNING: To avoid serious or fatal injury on vehicles equipped with airbags, disable the Supplemental Restraint System (SRS) before attempting any steering wheel, steering column, airbag, seat belt tensioner, impact sensor or instrument panel component diagnosis or service. Disconnect and isolate the battery negative (ground) cable, then wait two minutes for the system capacitor to discharge before performing further diagnosis or service. This is the only sure way to disable the SRS. Failure to take the proper precautions could result in accidental airbag deployment.

The hard wired circuits between components related to the Sentry Key Immobilizer System (SKIS) may be diagnosed using conventional diagnostic tools and procedures. Refer to the appropriate wiring information. The wiring information includes wiring diagrams, proper wire and connector repair procedures, details of wire harness routing and retention, connector pin-out information and location views for the various wire harness connectors, splices and grounds.

However, conventional diagnostic methods will not prove conclusive in the diagnosis of the SKIS or the electronic controls or communication between other modules and devices that provide some features of the SKIS. The most reliable, efficient, and accurate means to diagnose the SKIS or the electronic controls and communication related to SKIS operation requires the use of a diagnostic scan tool. Refer to the appropriate diagnostic information.

CONDITION	POSSIBLE CAUSES	CORRECTION
SECURITY INDICATOR FAILS TO LIGHT DURING BULB TEST	1. Ineffective Light-Emitting Diode (LED).	1. Use a diagnostic scan tool to perform the instrument cluster actuator test. Refer to the appropriate diagnostic information.
	2. Ineffective fuse.	2. Check the WIN fused B(+) fuse and the fused ignition switch output (run-start) fuse in the Junction Block (JB). Replace the fuses, if required.
	3. Ineffective ground circuit.	3. Test and repair the open ground circuit at the connector for the WIN, if required.
	4. Ineffective battery feed circuit.	4. Test and repair the open battery feed circuit at the connector for the WIN, if required.
	5. Ineffective ignition feed circuit.	5. Test and repair the open ignition feed circuit at the connector for the WIN, if required.
SECURITY INDICATOR FLASHES FOLLOWING BULB TEST	1. Invalid key in ignition switch lock cylinder.	1. Replace the key with a known valid key.
	2. Key-related fault.	2. Use a diagnostic scan tool and the appropriate diagnostic information for further diagnosis.
SECURITY INDICATOR LIGHTS SOLID FOLLOWING BULB TEST	1. SKIS system malfunction/fault detected.	1. Use a diagnostic scan tool and the appropriate diagnostic information for further diagnosis.
	2. SKIS system ineffective.	2. Use a diagnostic scan tool and the appropriate diagnostic information for further diagnosis.

VEHICLE THEFT SECURITY SYSTEM

WARNING: To avoid serious or fatal injury on vehicles equipped with airbags, disable the Supplemental Restraint System (SRS) before attempting any steering wheel, steering column, airbag, seat belt tensioner, impact sensor or instrument panel component diagnosis or service. Disconnect and isolate the battery negative (ground) cable, then wait two minutes for the system capacitor to discharge before performing further diagnosis or service. This is the only sure way to disable the SRS. Failure to take the proper precautions could result in accidental airbag deployment.

The hard wired circuits between components related to the Vehicle Theft Security System (VTSS) may be diagnosed using conventional diagnostic tools and procedures. Refer to the appropriate wiring information. The wiring information includes wiring diagrams, proper wire and connector repair procedures, details of wire harness routing and retention, connector pin-out information and location views for the various wire harness connectors, splices and grounds.

However, conventional diagnostic methods will not prove conclusive in the diagnosis of the VTSS or the electronic controls or communication between other modules and devices that provide some features of the VSS. The most reliable, efficient, and accurate means to diagnose the VTSS or the electronic controls and communication related to VTSS operation requires the use of a diagnostic scan tool. See the **Vehicle Theft Security System** menu item on the scan tool. Refer to the appropriate diagnostic information.

Standard Procedure

SKIS INITIALIZATION

The Sentry Key Immobilizer System (SKIS) must be initialized following a Wireless Ignition Node (WIN) replacement. SKIS initialization requires the use of a diagnostic scan tool. Initialization will also require that you have access to the unique four-digit PIN code that was assigned to the original WIN. The PIN code **must** be used to enter the Secured Access Mode in the WIN. This PIN number may be obtained from the vehicle owner, from the original vehicle invoice, or from the Chrysler Customer Center. (Refer to 08 - Electrical/8E - Electronic Control Modules - Standard Procedure).

NOTE: If a Powertrain Control Module (PCM) is replaced on a vehicle equipped with the Sentry Key Immobilizer System (SKIS), the unique Secret Key data must be transferred from the Wireless Ignition Node (WIN) to the new PCM using the appropriate programming procedure. This procedure also requires the use of a diagnostic scan tool and the unique four-digit PIN code to enter the Secured Access Mode in the WIN. Refer to the appropriate diagnostic information for the proper PCM replacement procedures.

SENTRY KEY TRANSPONDER PROGRAMMING

All Sentry Keys included with the vehicle are pre-programmed to work with the Sentry Key Immobilizer System (SKIS) when it is shipped from the factory. The Wireless Ignition Node (WIN) may be programmed to recognize up to a total of eight Sentry Keys. When programming a blank Sentry Key transponder, the key must first be cut to match the ignition switch lock cylinder in the vehicle for which it will be used. Once the additional or new key has been cut, the WIN must be programmed to recognize it as a valid key. There are two possible methods to program the WIN to recognize a new or additional valid key, the Secured Access Method and the Customer Learn Method. Following are the details of these two programming methods.

SECURED ACCESS METHOD

The Secured Access method applies to all vehicles. This method requires the use of a diagnostic scan tool. This method will also require that you have access to the unique four-digit PIN code that was assigned to the original WIN. The PIN code **must** be used to enter the Secured Access Mode in the WIN. This PIN number may be obtained from the vehicle owner, from the original vehicle invoice, or from the Chrysler Customer Center.(Refer to 08 - Electrical/8E - Electronic Control Modules - Standard Procedure).

CUSTOMER LEARN METHOD

NOTE: The Customer Learn feature is only available on domestic vehicles, or those vehicles which have a U.S. country code designator. This programming method also requires access to at least two valid Sentry Keys. If two valid Sentry Keys are not available, or if the vehicle does not have a U.S. country code designator, the Secured Access Method MUST be used to program new or additional valid keys to the WIN.

The Customer Learn programming method procedures are as follows:

1. Obtain the blank Sentry Key(s) that are to be programmed as valid keys for the vehicle. Cut the blank key(s) to match the ignition switch lock cylinder mechanical key codes.
2. Insert one of the two valid Sentry Keys into the ignition switch and turn the ignition switch to the ON position.

3. After the ignition switch has been in the ON position for longer than 3 seconds, but no more than 15 seconds, cycle the ignition switch back to the OFF position. Replace the first valid Sentry Key in the ignition switch lock cylinder with the second valid Sentry Key and turn the ignition switch back to the ON position. The second valid Sentry Key must be inserted in the lock cylinder within 15 seconds of removing the first valid key.
4. About 10 seconds after the completion of Step #3, the security indicator in the instrument cluster will start to flash to indicate that the system has entered the Customer Learn programming mode.
5. Within 60 seconds of entering the Customer Learn programming mode, turn the ignition switch to the OFF position, replace the valid Sentry Key with a blank Sentry Key transponder, and turn the ignition switch back to the ON position.
6. About 10 seconds after the completion of Step #5, the security indicator will stop flashing, stay ON solid for 3 seconds, then turn OFF to indicate that the blank Sentry Key has been successfully programmed. The SKIS will immediately exit the Customer Learn programming mode. After the ignition is cycled the vehicle may be started using the newly programmed valid Sentry Key.

Each of these steps must be repeated and completed in their entirety for each additional Sentry Key that is to be programmed. If the above steps are not completed in the given sequence, or within the allotted time, the WIN will exit the Customer Learn programming mode and the programming will be unsuccessful. The WIN will also automatically exit the Customer Learn programming mode if it sees a non-blank Sentry Key transponder when it should see a blank, if it has already programmed eight (8) valid Sentry Keys, or if the ignition switch is turned to the OFF position for more than about 50 seconds.

NOTE: If an attempt is made to start the vehicle while in the Customer Learn mode (security indicator flashing), the SKIS will respond as though the vehicle were being started with an invalid key. In other words, the engine will stall after about two seconds of operation. No faults will be set.

NOTE: Once a Sentry Key has been programmed as a valid key to a vehicle, it cannot be programmed as a valid key for use on any other vehicle.

Specifications

TORQUE SPECIFICATIONS

DESCRIPTION	N·m	Ft. Lbs.	In. Lbs.
Hood Ajar Switch Mounting Bracket Screws	8	-	71
Wireless Ignition Node Mounting Screw	2	-	20
Steering Column Shroud Mounting Screws	2	-	20
Tilt Steering Column Actuator Knob Mounting Screw	2	-	20

KEY, Transponder

Description

The Sentry Key Immobilizer System (SKIS) has a transponder chip included on the circuit board beneath the cover of each FOB with Integrated Key (FOBIK) (1) included with the vehicle. The FOBIK includes an integral mechanical valet key which is stored within the bottom of the FOBIK housing until it is released using the latch button (2). The valet key is cut to match the mechanical coding of the door and glove box lock cylinders. Each new replacement FOBIK must be programmed for operation of the Remote Keyless Entry (RKE) system and has a unique transponder identification code that is permanently programmed into it by the manufacturer. This identification code must be programmed into the Wireless Ignition Node (WIN) to be recognized by the SKIS as a valid key.

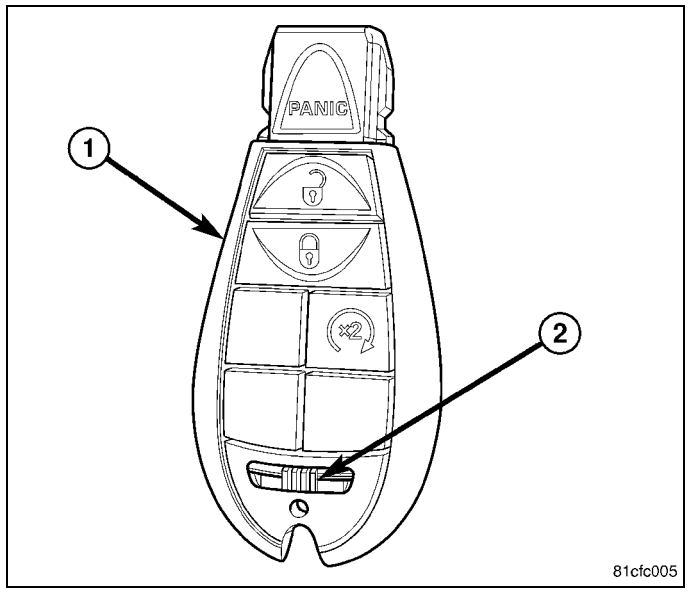

The FOBIK transponder cannot be adjusted or repaired. If ineffective or damaged, the entire FOBIK and RKE transmitter unit must be replaced.

Operation

When the ignition switch is turned to the ON position, the Wireless Ignition Node (WIN) communicates through its antenna with the Sentry Key transponder within the FOB with Integrated Key (FOBIK) using a Low Frequency (LF) signal. The Sentry Key transponder chip is within the range of the WIN transceiver antenna ring when it is inserted into the ignition switch.

The WIN determines whether a valid FOBIK is present in the ignition switch based upon the signal from the transponder. If a valid FOBIK is detected, that fact is communicated by the WIN to the Powertrain Control Module (PCM) over the Controller Area Network (CAN) data bus, and the PCM allows the engine to start. If the PCM receives an **invalid key** message, or receives no message from the WIN over the CAN data bus, the engine will be disabled. The Electro-Mechanical Instrument Cluster (EMIC) (also known as the Cab Compartment Node/CCN) will also respond to the **invalid key** message on the CAN data bus by flashing the security indicator ON and OFF.

Each Sentry Key FOBIK has a unique transponder identification code permanently programmed into it by the manufacturer. Likewise, the WIN has a unique Secret Key code programmed into it by the manufacturer. When a Sentry Key FOBIK is programmed into the memory of the WIN, the WIN stores the transponder identification code from the Sentry Key FOBIK and the Sentry Key FOBIK learns the Secret Key code from the WIN. Once the Sentry Key FOBIK learns the Secret Key code of the WIN, it is permanently stored in the memory of the transponder. Therefore, once a FOBIK has been programmed to a particular vehicle, it cannot be used on any other vehicle. (Refer to 08 - Electrical/8E - Electronic Control Modules - Standard Procedure).

The Sentry Key Immobilizer System (SKIS) performs a self-test each time the ignition switch is turned to the ON position, and will store key-related fault information in the form of a Diagnostic Trouble Code (DTC) in WIN memory if a Sentry Key FOBIK transponder problem is detected. The Sentry Key FOBIK transponder chip can be diagnosed, and any stored DTC can be retrieved using a diagnostic scan tool. Refer to the appropriate diagnostic information.

SWITCH, Hood Ajar

Description

There are two types of hood ajar switches used on this vehicle. One type is a standalone switch that is serviceable. The second type is integrated into the hood latch assembly and is not serviceable separately from the hood latch. The standalone hood ajar switches are a normally closed, single pole, spring-loaded plunger actuated switch and the hood latch mounted hood ajar switch is a normally open single pole, spring-loaded plunger actuated switch. Only one type

of switch is used per vehicle. Both types of hood ajar switches function with both the Vehicle Theft Alarm (VTA) system the optional remote starter system.

On the standalone switch the molded plastic switch body (5) has an integral molded connector receptacle (1) on the lower end containing two terminal pins. The switch is connected to the vehicle electrical system through a dedicated take out of the headlamp and dash wire harness. Two integral latches (2) lock the switch into a keyed mounting hole in the switch mounting bracket. The mounting bracket is secured to the upper radiator crossmember. A molded plastic striker secured to the underside of the hood panel inner reinforcement actuates the switch plunger as the hood panel is closed. The switch plunger (3) extends through a mounting collar (4) and a sleeve-like retainer ring on the upper end of the switch body. The retainer ring has a one time, self-adjustment feature that is activated after the switch is installed by closing the hood. The retainer ring is also color-coded to aid in identifying the switch application. A dark brown retainer ring identifies the underhood security switch application, while a white retainer ring identifies the remote starter system application.

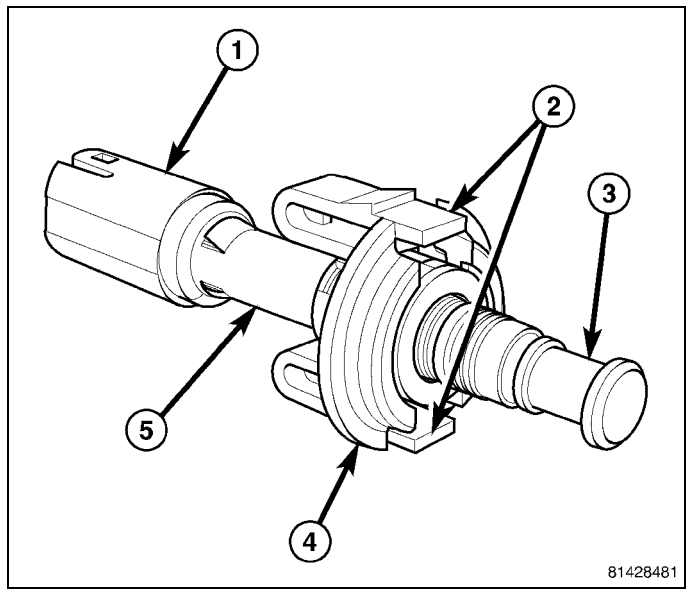

Once a standalone hood ajar switch is installed it cannot be readjusted or repaired. If the switch is damaged, ineffective, or requires readjustment, it must be replaced with a new unit. The hood ajar switch striker is not intended for reuse. If the striker is removed from the hood inner reinforcement for any reason, it must be replaced with a new unit.

The hood latch mounted hood ajar switches are similar to the standalone hood ajar switches in the fact that they can not be adjusted or repaired. If damaged or inoperable this type of switch must be replaced but it is not serviceable separately from the hood latch and the hood latch assembly must be replaced.

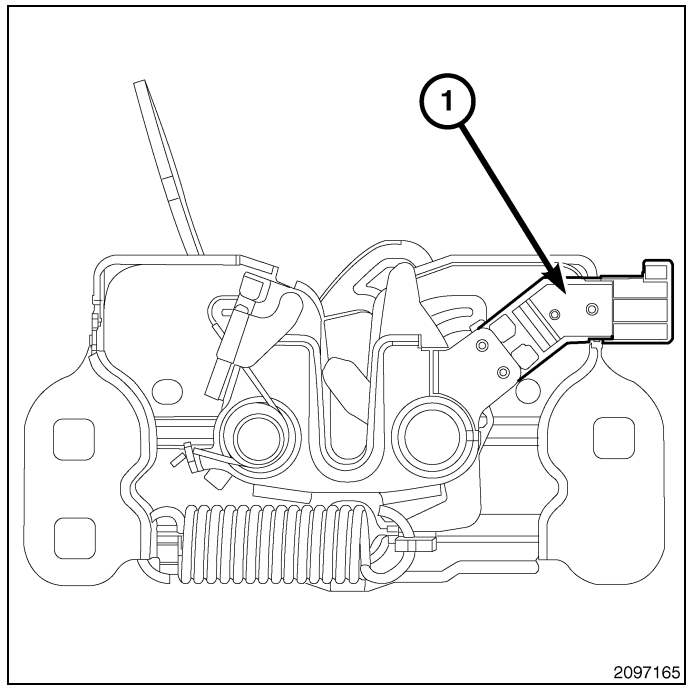

Operation

The standalone swich is a normally closed switch that is held open as the spring-loaded switch plunger is depressed by the striker on the inner hood panel. When the hood is opened, the spring-loaded switch plunger extends from the switch body and the switch contacts are closed.

The hood latch mounted switch is a normally open switch that is held open by the spring loaded plunger when the hood is fully latched. When the hood is opened the latch lever depresses the spring loaded plunger into the switch body and the switch contacts are closed.

The hood latch mounted switch has no adjustment but the standalone switch has a self-adjustment feature that includes an integral stop on the shaft of the plunger and a ribbed, ratcheting sleeve-like retainer ring at the top of the switch

body from which the plunger extends. With the switch mounting collar secured in its mounting bracket, the plunger is depressed by the striker on the hood inner reinforcement as the hood is closed. As the plunger is depressed, the plunger stop contacts the top of the retainer ring and it is driven downward, ratcheting through the switch mounting collar until the hood is fully closed and latched. The ribs on the retainer ring are engaged within the mounting collar to maintain this adjusted position.

The hood ajar switches as well as the hard wired circuits between the switches and the TIPM may be diagnosed using conventional diagnostic tools and procedures. Refer to the appropriate wiring information. However, conventional diagnostic methods will not prove conclusive in the diagnosis of the electronic controls or communication between modules and other devices related to hood ajar switch operation that provide some features of the export vehicle theft or domestic remote starter systems. The most reliable, efficient, and accurate means to diagnose the electronic controls and communication related to hood ajar switch operation requires the use of a diagnostic scan tool. Refer to the appropriate diagnostic information.

Removal

BRACKET

1. Remove the hood ajar switch (4) from the mounting bracket (3). (Refer to 08 - Electrical/8Q - Vehicle Theft Security/SWITCH, Hood Ajar - Removal).
2. Remove the fastner (2) that secure the hood ajar switch bracket (3) to the upper radiator cross member (1).
3. Remove the hood ajar switch mounting bracket from upper radiator cross member.

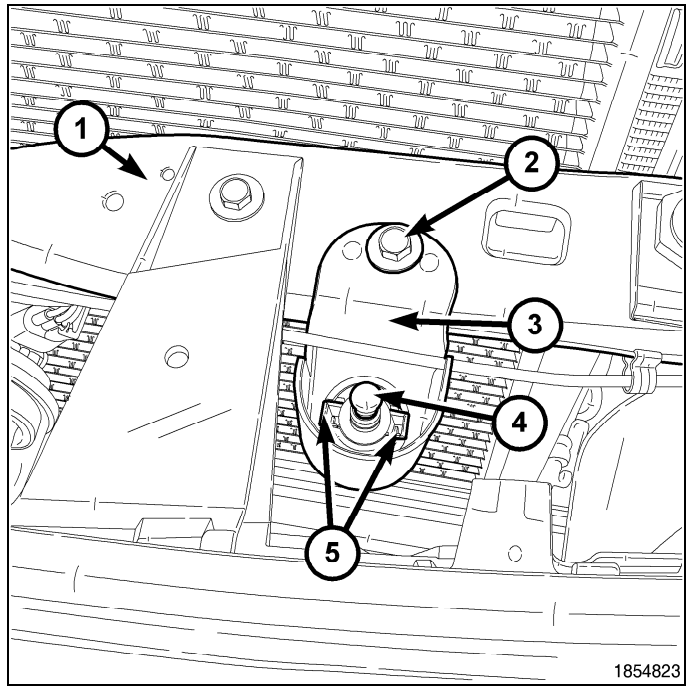

STRIKER

1. Unlatch and open the hood.
2. Release the three lock tabs (2) on the hood striker (3) and pull the striker away from the inner hood panel (1) to remove the striker from the vehicle.

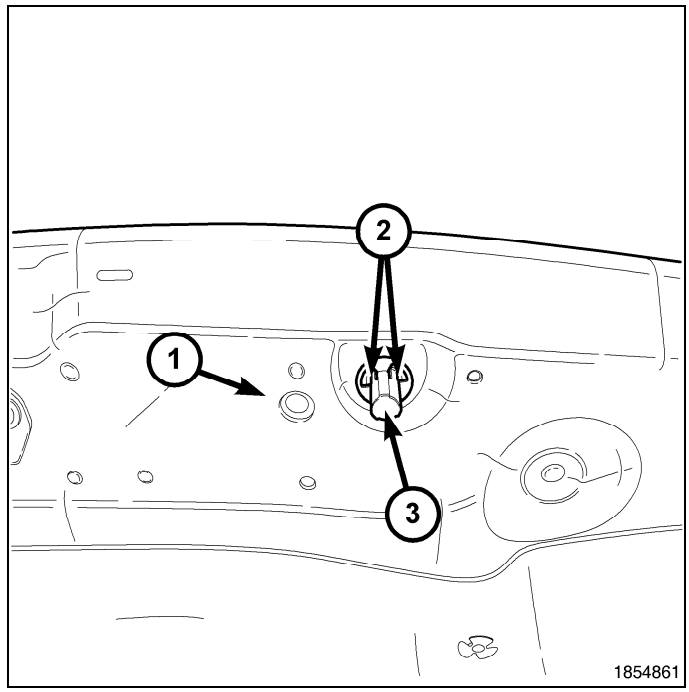

SWITCH

NOTE: Some vehicles are equipped with the hood ajar switch integrated into the hood latch assembly. This type of hood ajar switch is not serviced seperately and the hood latch assembly must be replaced.(Refer to 23 - Body/Hood/LATCH, Hood - Removal)

1. Unlatch and open the hood.
2. Disconnect and isolate the battery negative cable.
3. Remove the push pin retainers and upper radiator seal.
4. From the top of the mounting bracket (3) on the upper radiator cross member (1) , squeeze the two hood ajar switch latch tabs (5) together and pull the switch (4) upward.
5. Pull the hood ajar switch up through the hole in the mounting bracket far enough to access and disconnect the jumper wire harness connector from the switch connector receptacle.
6. Remove the hood ajar switch from the mounting bracket.

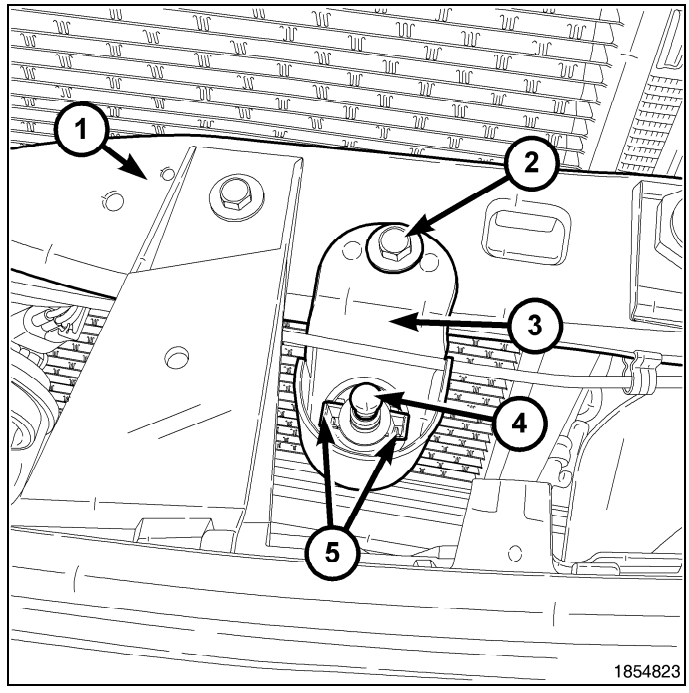

Installation

BRACKET

1. Position the hood ajar switch mounting bracket (3) onto the upper radiator cross member (1)
2. Install and tighten the fastner (2) that secure the mounting bracket to the upper radiator cross member, tighten the bolt to 5.5 N·m (4 ft lbs.).
3. Reinstall the hood ajar switch (2) into the mounting bracket. (Refer to 08 - Electrical/8Q - Vehicle Theft Security/SWITCH, Hood Ajar - Installation).

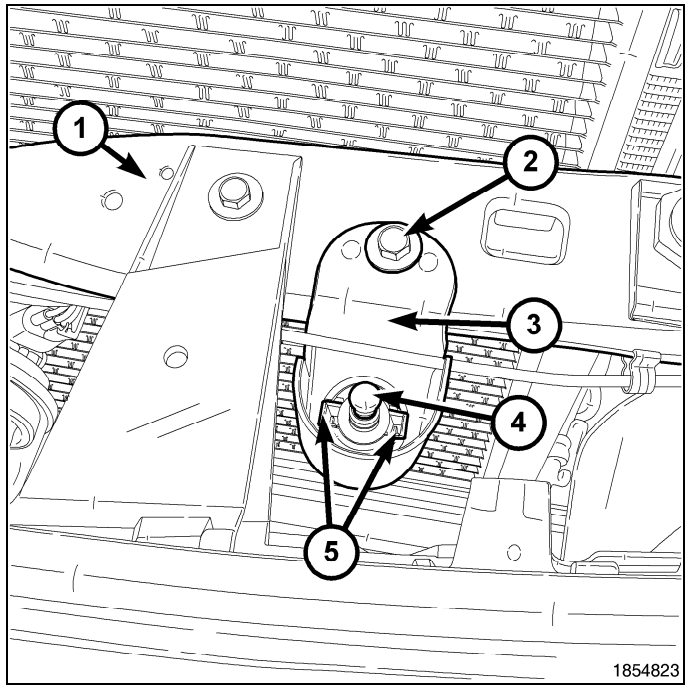

STRIKER

1. Position the hood ajar switch striker (3) over the mounting hole in the inner hood panel (1) over the hood ajar switch.
2. Using hand pressure, press the hood ajar switch striker (3) upward into the mounting hole in the inner hood panel (1) until all three integral lock tabs (2) are fully engaged.
3. Close and latch the hood.

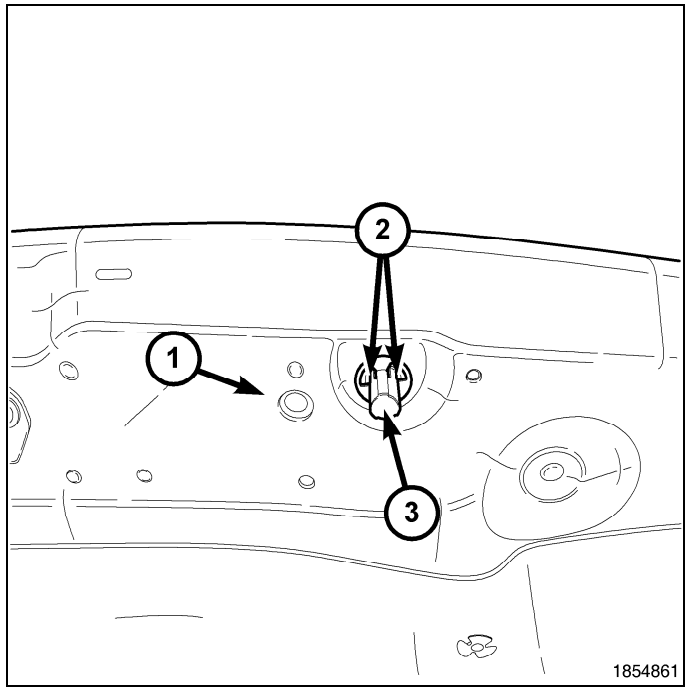

SWITCH

NOTE: Some vehicles are equipped with the hood ajar switch integrated into the hood latch assembly. This type of hood ajar switch is not serviced seperately and the hood latch assembly must be replaced.(Refer to 23 - Body/Hood/LATCH, Hood - Installation)

1. Position the hood ajar switch (4) near the mounting bracket (3) on the upper radiator cross member (1).
2. Route the jumper wire harness connector through the switch mounting bracket and reconnect it to the switch.
3. From the top of the mounting bracket, press the switch downward into the mounting hole until the integral switch latch tabs lock it into place.
4. Insall the upper radiator seal and push pin retainers.
5. Reconnect the battery negative cable.
6. Close and latch the hood.

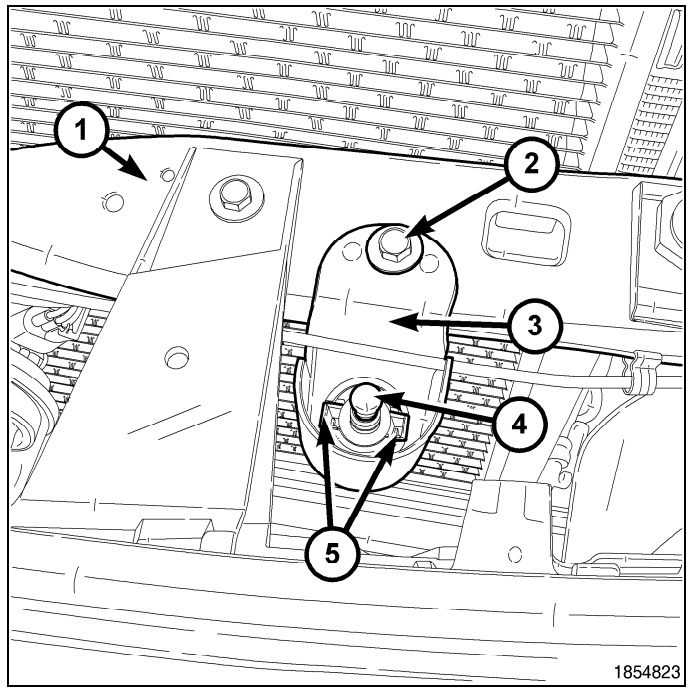

WIPERS/WASHERS

TABLE OF CONTENTS

page

WIPERS/WASHERS
DESCRIPTION . . . 2
OPERATION . . . 3
DIAGNOSIS AND TESTING . . . 5
CLEANING . . . 6
INSPECTION . . . 7
SPECIFICATIONS . . . 8
ARM, WIPER
DESCRIPTION . . . 8
OPERATION . . . 9
REMOVAL . . . 9
INSTALLATION . . . 9
BLADE, WIPER
DESCRIPTION . . . 10
OPERATION . . . 10
REMOVAL . . . 11
INSTALLATION . . . 11
HOSES AND TUBES, WASHER
DESCRIPTION . . . 12
OPERATION . . . 12
LINKAGE, WIPER ARM
DESCRIPTION . . . 13
OPERATION . . . 13
REMOVAL . . . 14
INSTALLATION . . . 15

page

MOTOR, WIPER
REMOVAL . . . 15
INSTALLATION . . . 16
NOZZLE, WASHER
DESCRIPTION . . . 17
OPERATION . . . 17
REMOVAL . . . 18
INSTALLATION . . . 19
PUMP, WINDSHIELD WASHER
DESCRIPTION . . . 20
OPERATION . . . 20
REMOVAL . . . 21
INSTALLATION . . . 21
RESERVOIR, WINDSHIELD WASHER
DESCRIPTION . . . 22
OPERATION . . . 22
REMOVAL . . . 23
INSTALLATION . . . 24
SWITCH, WASHER FLUID LEVEL
DESCRIPTION . . . 25
OPERATION . . . 25
REMOVAL . . . 26
INSTALLATION . . . 26

Wipers/Washers

Description

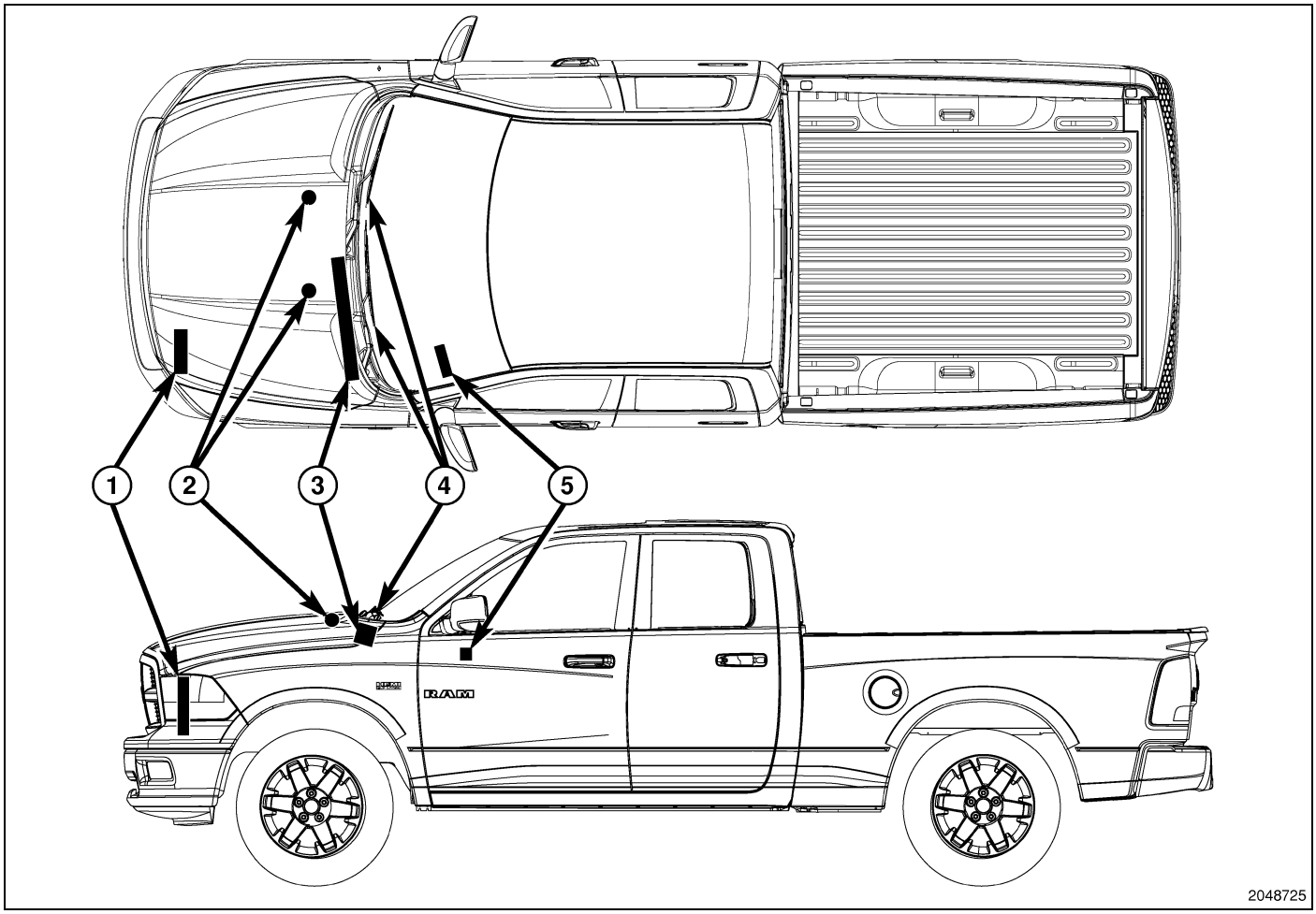

An electrically operated intermittent wiper and washer system is standard factory-installed safety equipment on this vehicle. The wiper and washer system includes the following major components, which are described in further detail elsewhere in this service information:

- **ElectroMechanical Instrument Cluster** - The ElectroMechanical Instrument Cluster (EMIC) (also known as the Cab Compartment Node/CCN) is located on the instrument panel above the steering column opening, directly in front of the driver. (Refer to 08 - Electrical/8J - Instrument Cluster - Description).
- **Multi-Function Switch (5)** - The multi-function switch is secured to a bracket integral to the clockspring housing on the top of the steering column, just below the steering wheel. The Steering Control Module (SCM) is internal to the multi-function switch housing. Only the control stalk that extends from the left side of the steering column is visible, while the remainder of the switch housing containing the SCM is concealed beneath the steering column shrouds. The switch control stalk has a control knob on the end that is dedicated to providing all of the driver controls for the wiper and washer systems. (Refer to 08 - Electrical/8L - Lamps and Lighting/Lamps/Lighting - Exterior/SWITCH, Multifunction - Description).
- **Steering Control Module** - The Steering Control Module (SCM) is internal to the multi-function switch housing, which is secured to a bracket integral to the left side of the clockspring housing on the top of the steering column just below the steering wheel. Only the switch control stalk extending from the left side of the steering column is visible, while the remainder of the switch housing containing the SCM is concealed beneath the steering column shrouds.
- **Totally Integrated Power Module** - The Totally Integrated Power Module (TIPM) is located in the engine compartment, near the battery. (Refer to 08 - Electrical/8W - Wiring/Power Distribution/MODULE, Totally Integrated Power (TIPM) - Description).
- **Washer Fluid Level Switch** - The washer fluid level switch is located in a dedicated hole on the lower, rearward facing surface of the washer reservoir on the front of the Front End Module (FEM) carrier (also known as the radiator closure) just to the left of the cooling module.

- **Washer Nozzle (2)** - Two fluidic washer nozzles with integral check valves are secured by latch features to dedicated openings in the hood panel near the base of the windshield.
- **Washer Plumbing** - The plumbing for the washer system consists of rubber hoses and molded plastic fittings. The reservoir hose is routed from the washer pump near the base of the reservoir through a trough integral to the reservoir to the outboard side of the reservoir, then throught the FEM carrier (also known as the radiator closure) to the engine compartment where it is joined to the engine compartment hose. The engine compartment hose is routed along the left side of the engine compartment from the FEM to the cowl along with the left headlamp and dash wire harness through a molded plastic trough. The engine compartment hose is joined to the hood hose near the left hood hinge. The hood hose is routed between the underside of the inner hood panel reinforcement and the hood silencer pad to the washer nozzles.
- **Washer Pump/Motor** - The electric washer pump/motor unit is located in a dedicated hole in a sump area on the lower, forward facing surface of the washer reservoir on the front of the FEM carrier (also known as the radiator closure), to the left of the cooling module.
- **Washer Reservoir (1)** - The washer reservoir is located on the front of the FEM carrier (also known as the radiator closure), to the left of the cooling module. The clearly identified washer reservoir filler cap is accessed from the left front corner of the engine compartment.
- **Wiper Arms and Blades (4)** - The two unique right and left wiper arms are secured with nuts to the threaded ends of the two wiper pivot shafts, which extend through the cowl plenum cover/grille panel located near the base of the windshield. The two equal length wiper blades are each secured to their wiper arm with an integral latch, and are parked on the glass near the bottom of the windshield when the wiper system is not in operation.
- **Wiper Linkage Module (3)** - The wiper pivot shafts are the only visible components of the wiper linkage module. The remainder of the module is concealed within the cowl plenum area beneath the cowl plenum cover/grille panel. The wiper linkage module includes the wiper linkage module bracket, three rubber-isolated wiper linkage module mounts, the wiper motor, the wiper motor crank arm, the two wiper drive links, and the two wiper pivots.

Hard wired circuitry connects the wiper and washer system components to the electrical system of the vehicle. These hard wired circuits are integral to several wire harnesses, which are routed throughout the vehicle and retained by many different methods. These circuits may be connected to each other, to the vehicle electrical system and to the wiper and washer system components through the use of a combination of soldered splices, splice block connectors, and many different types of wire harness terminal connectors and insulators. Refer to the appropriate wiring information. The wiring information includes wiring diagrams, proper wire and connector repair procedures, further details on wire harness routing and retention, as well as pin-out and location views for the various wire harness connectors, splices and grounds.

Operation

The wiper and washer system is designed to provide the vehicle operator with a convenient, safe, and reliable means of maintaining visibility through the windshield glass. The various components of this system are designed to convert electrical energy produced by the vehicle electrical system into the mechanical action of the wiper blades to wipe the outside surface of the glass, as well as into the hydraulic action of the washer system to apply washer fluid stored in an on-board reservoir to the area of the glass to be wiped. When combined, these components provide the means to effectively maintain clear visibility for the vehicle operator by removing excess accumulations of rain, snow, bugs, mud, or other minor debris from the outside windshield glass surface that might be encountered while driving the vehicle under numerous types of inclement operating conditions.

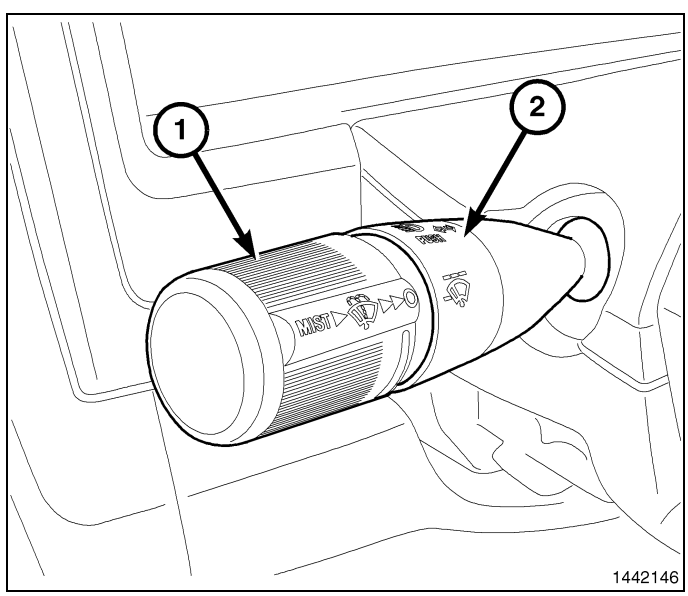

The vehicle operator initiates all wiper and washer system functions with the control knob (1) on the end of the control stalk (2) of the multi-function switch that extends from the left side of the steering column, just below the steering wheel. Rotating the control knob on the end of the control stalk, selects the OFF, DELAY, LOW, or HIGH wiper system operating

modes. In the DELAY mode, the control knob also allows the vehicle operator to select from one of five intermittent wipe delay intervals.

Depressing the control knob towards the steering column to the first detent actuates a momentary switch and selects the MIST mode, which cycles the wiper blades for as long as the switch is held closed then completes the current cycle and parks the blades at the base of the windshield after the switch is released. Depressing the control knob to the second detent actuates the momentary washer system switch, which selects the WASH or WIPE-AFTER-WASH modes depending upon when and how long the switch is held closed.

The multi-function switch provides hard wired analog and resistor multiplexed inputs to the Steering Control Module (SCM) internal to the multi-function switch housing for all of the wiper and washer system functions. The SCM then sends electronic **wiper** and **washer switch** status messages to the ElectroMechanical Instrument Cluster (EMIC) (also known as the Cab Compartment Node/CCN) over a Local Interface Network (LIN) data bus. The EMIC responds to the SCM inputs by sending electronic **wiper** and **washer system** request messages to the Totally Integrated Power Module (TIPM) over the Controller Area Network (CAN) data bus requesting the appropriate wiper and washer system operating modes.

Wiper and washer system operation are completely controlled by the SCM, EMIC and TIPM logic circuits, and that logic will only allow these systems to operate when the ignition switch is in the ACCESSORY or ON positions. The TIPM uses intelligent, high current, self-protected high side switches to control wiper system operation by energizing or de-energizing the wiper motor low and high speed brushes. The TIPM uses a high side driver to control the operation of the washer pump/motor unit. The multi-function switch circuitry receives battery current and a clean ground output from the SCM, then provides analog and resistor multiplexed inputs to the SCM to indicate the selected wiper and washer system mode.

The hard wired circuits and components of the wiper and washer system may be diagnosed using conventional diagnostic tools and procedures. Refer to the appropriate wiring information. However, conventional diagnostic methods will not prove conclusive in the diagnosis of the wiper and washer system or the electronic controls or communication between other modules and devices that provide some features of the wiper and washer system. The most reliable, efficient, and accurate means to diagnose the wiper and washer system or the electronic controls and communication related to wiper and washer system operation requires the use of a diagnostic scan tool. Refer to the appropriate diagnostic information.

OPERATING MODES

Following are paragraphs that briefly describe the operation of each of the wiper and washer system operating modes.

CONTINUOUS WIPE MODE

When the LOW position of the control knob on the control stalk of the multi-function switch is selected the SCM sends an electronic **wiper switch low** status message to the EMIC over the LIN data bus, the EMIC relays an electronic **wiper switch low** request message to the TIPM over the CAN data bus, then the TIPM directs battery current to the low speed brush of the wiper motor, causing the wipers to cycle at low speed.

When the HIGH position of the control knob is selected the SCM sends an electronic **wiper switch high** status message to the EMIC, the EMIC relays an electronic **wiper switch high** request message to the TIPM, then the TIPM directs battery current to the high speed brush of the wiper motor, causing the wipers to cycle at high speed.

When the OFF position of the multi-function switch control knob is selected, the SCM sends an electronic **wiper switch off** status message to the EMIC, the EMIC relays an electronic **wiper switch off** request message to the TIPM, then one of two events will occur. The event that occurs depends upon the position of the wiper blades on the windshield at the moment the OFF position is selected.

If the wiper blades are in the down position on the windshield when the OFF position is selected, the park switch that is integral to the wiper motor is closed to ground, which provides a hard wired park switch sense input to the TIPM. The TIPM then de-energizes the wiper motor and the wiper motor ceases to operate. If the wiper blades are not in the down position on the windshield at the moment the OFF position is selected, the park switch is an open circuit and the TIPM continues running the wiper motor at low speed until the wiper blades are in the down position on the windshield and the park switch input to the TIPM is again closed to ground.

INTERMITTENT WIPE MODE

When the control knob on the control stalk of the multi-function switch is moved to one of the five DELAY interval positions the SCM sends an electronic **wiper switch delay interval** status message to the EMIC, the EMIC relays an electronic **wiper switch delay interval** request message to the TIPM, then the TIPM electronic intermittent wipe logic circuit responds by calculating the correct length of time between wiper sweeps based upon the selected delay interval input.

The TIPM monitors the changing state of the wiper motor park switch through a hard wired park switch sense input. This input allows the TIPM to determine the proper intervals at which to energize and de-energize the wiper motor low speed brush to operate the wiper motor intermittently for one low speed cycle at a time.

The TIPM logic is also programmed to provide vehicle speed sensitivity to the selected intermittent wipe delay intervals. In order to provide this feature the TIPM monitors electronic **vehicle speed** messages from the Controller Antilock Brake (CAB) or the Powertrain Control Module (PCM) and doubles the selected delay interval whenever the vehicle speed is about 16 kilometers-per-hour (10 miles-per-hour) or less.

MIST WIPE MODE

When the control knob on the control stalk of the multi-function switch is depressed to the momentary MIST position, the SCM sends an electronic **wiper mist mode** status message to the EMIC, the EMIC relays an electronic **wiper mist mode** request message to the TIPM, then the TIPM energizes the low speed brush of the wiper motor for as long as the switch is held closed, then de-energizes the motor when the state of the switch changes to open, parking the wiper blades near the base of the windshield. The TIPM can operate the wiper motor in this mode for only one low speed cycle at a time, or for an indefinite number of sequential low speed cycles, depending upon how long the switch is held closed.

WASH MODE

When the control knob on the control stalk of the multi-function switch is depressed to the momentary WASH position for more than about one-half second with the wiper system operating, the SCM sends an electronic **washer switch** status message to the EMIC, the EMIC relays an electronic **washer switch** request message to the TIPM, then the TIPM directs battery current and ground to the washer pump/motor unit. This will cause the washer pump/motor unit to be energized for as long as the switch is held closed (up to approximately 10 seconds) and to be de-energized when the control knob is released.

When the control knob is depressed to the momentary WASH position while the wiper system is operating in one of the DELAY interval positions, the washer pump/motor operation is the same. However, the TIPM also overrides the selected delay interval and operates the wiper motor in a continuous low speed mode for as long as the control knob is held depressed, then reverts to the selected delay interval several wipe cycles after the control knob is released. If the WASH switch is held closed for more than approximately 10 seconds, the TIPM will suspend washer pump/motor operation until the knob is released for about 2 seconds, then cycled back to the WASH position.

WIPE-AFTER-WASH MODE

When the control knob on the control stalk of the multi-function switch is depressed to the momentary WASH position for more than about one-half second while the wiper system is not operating, the SCM sends an electronic **washer switch** status message to the EMIC, the EMIC relays an electronic **washer switch** request message to the TIPM, and the TIPM directs battery current and ground to the washer pump/motor unit and energizes the wiper motor in a continuous low speed mode for as long as the switch is held closed (up to approximately 10 seconds). When the control knob is released, the TIPM de-energizes the washer pump/motor immediately, but allows the wiper motor to operate for several additional wipe cycles before it de-energizes the wiper motor and parks the wiper blades near the base of the windshield.

If the control knob is held depressed for more than about 10 seconds, the TIPM will suspend washer pump/motor operation until the knob is released for about 2 seconds and then cycled back to the WASH position; however, the wipers will continue to operate for as long as the WASH switch is held closed. The TIPM monitors the changing state of the wiper motor park switch through a hard wired wiper park switch sense circuit input. This input allows the TIPM to count the number of wipe cycles that occur after the WASH switch is released, and to determine the proper interval at which to de-energize the wiper low speed brush to complete the WIPE-AFTER-WASH mode cycle.

Diagnosis and Testing

WARNING: To avoid serious or fatal injury on vehicles equipped with airbags, disable the Supplemental Restraint System (SRS) before attempting any steering wheel, steering column, airbag, seat belt tensioner, impact sensor or instrument panel component diagnosis or service. Disconnect and isolate the battery negative (ground) cable, then wait two minutes for the system capacitor to discharge before performing further diagnosis or service. This is the only sure way to disable the SRS. Failure to take the proper precautions could result in accidental airbag deployment.

If the wiper motor operates, but the wipers do not move on the windshield, replace the ineffective wiper linkage module. If the washer pump/motor operates, but no washer fluid is dispensed on the glass; or, if the wipers operate, but chatter, lift, or do not clear the glass, clean and inspect the wiper and washer system components as required. (Refer to 08 - Electrical/8R - Wipers/Washers - Cleaning) and (Refer to 08 - Electrical/8R - Wipers/Washers - Inspection).

The hard wired wiper and washer system circuits and components may be diagnosed and tested using conventional diagnostic tools and procedures. Refer to the appropriate wiring information. The wiring information includes wiring diagrams, proper wire and connector repair procedures, details of wire harness routing and retention, connector pin-out information and location views for the various wire harness connectors, splices and grounds.

However, conventional diagnostic methods will not prove conclusive in the diagnosis of the wiper and washer system or the electronic controls or communication between other modules and devices that provide some features of the wiper and washer system. The most reliable, efficient, and accurate means to diagnose the wiper and washer system or the electronic controls and communication related to wiper and washer system operation requires the use of a diagnostic scan tool. Refer to the appropriate diagnostic information.

NOTE: The wiper and washer switches are integral to the multi-function switch/Steering Control Module (SCM), which communicates with the ElectroMechanical Instrument Cluster (EMIC)/Cab Compartment Node (CCN) over the Local Interface Network (LIN) data bus. Before performing any of the following tests, determine whether the other functions of the multi-function switch/SCM are operational. If other multi-function switch/SCM functions are ineffective, diagnose and repair that problem before attempting to repair the Wiper and Washer System.

CONDITION	POSSIBLE CAUSES	CORRECTION
WIPER MOTOR DOES NOT OPERATE IN ANY SWITCH POSITION	1. Ineffective motor ground circuit.	1. Test and repair open wiper motor ground circuit if required.
	2. Ineffective motor feed circuits.	2. Test and repair low speed and high speed feed circuits between TIPM and wiper motor if required.
	3. Ineffective EMIC (CCN) inputs or outputs.	3. Use a diagnostic scan tool to test the EMIC (CCN) inputs and outputs. Refer to the appropriate diagnostic information.
	4. Ineffective TIPM inputs or outputs.	4. Use a diagnostic scan tool to test the TIPM inputs and outputs. Refer to the appropriate diagnostic information.
	5. Ineffective wiper motor.	5. Test and replace open or shorted wiper motor as required.
WIPER MOTOR OPERATES SLOWLY IN ALL SWITCH POSITIONS	1. Ineffective wiper motor.	1. Check amperage draw with linkage disconnected from wiper motor output shaft. Correct draw should be about 6 amperes. If incorrect, refer to the appropriate Possible Cause that follows:
	2. Amperage draw too low.	2. Test and repair shorted low and high speed feed circuits if required.
	3. Amperage draw too high.	3. With linkage disconnected from wiper motor output shaft, check linkage and pivots for binding. If binding is detected, repair or replace wiper linkage module if required. If no linkage binding detected, replace the wiper motor if required.
WIPERS RUN AT HIGH SPEED WITH SWITCH LOW SPEED SELECTED OR AT LOW SPEED WITH SWITCH HIGH SPEED SELECTED	1. Ineffective motor feed circuit wiring.	1. Test and repair low speed and high speed feed circuits between TIPM and wiper motor if required.

Cleaning

WIPER SYSTEM

CAUTION: Protect the rubber squeegees of the wiper blades from any petroleum-based cleaners, solvents, or contaminants. These products can rapidly deteriorate the rubber squeegees.

The squeegees of wiper blades exposed to the elements for a long time tend to lose their wiping effectiveness. Periodic cleaning of the squeegees is suggested to remove any deposits of salt or road film. The wiper blades, arms, and windshield glass should only be cleaned using a sponge or soft cloth and windshield washer fluid, a mild detergent, or a non-abrasive cleaner. If the wiper blades continue to leave streaks, smears, hazing, or beading on the glass after thorough cleaning of the squeegees and the glass, the entire wiper blade assembly must be replaced.

WASHER SYSTEM

CAUTION: Never introduce petroleum-based cleaners, solvents, or contaminants into the washer system. These products can rapidly deteriorate the rubber seals and hoses of the washer system, as well as the rubber squeegees of the wiper blades.

CAUTION: Never use compressed air to flush the washer system plumbing. Compressed air pressures are too great for the washer system plumbing components and will result in further system damage. Never use sharp instruments to clear a plugged washer nozzle or damage to the nozzle orifice and improper nozzle spray patterns will result.

If the washer system is contaminated with foreign material, drain the washer reservoir by removing the washer pump/motor from the reservoir. Clean foreign material from the inside of the washer pump inlet filter screen and the washer reservoir using clean washer fluid, a mild detergent, or a non-abrasive cleaner. Flush foreign material from the washer system plumbing by first disconnecting the washer hoses from the washer nozzles, then running the washer pump/motor to run clean washer fluid or water through the system. Plugged or restricted washer nozzles should be carefully back-flushed using compressed air. If the washer nozzle obstruction cannot be cleared, replace the washer nozzle.

Inspection

WIPER SYSTEM

The wiper blades and wiper arms should be inspected periodically, not just when wiper performance problems are experienced. This inspection should include the following points:

1. Carefully inspect the wiper blades for any indications of worn or uneven edges (1), foreign material deposits (2), hardening or cracking (3), deformation or fatigue (4), or splitting (5). Inspect the wiper blade support components and the wiper arms for damage (6) or corrosion. If the wiper arms and blades are contaminated with any foreign material, clean them and the glass as required. (Refer to 08 - Electrical/8R - Wipers/Washers - Cleaning). If a wiper blade or arm is damaged, or if corrosion is evident, replace the affected wiper arm or blade with a new unit. Do not attempt to repair a wiper arm or blade that is damaged or corroded.
2. Carefully lift the wiper blade off of the glass. Note the action of the wiper arm hinge. The wiper arm should pivot freely at the hinge, but with no lateral looseness evident. If there is any binding evident in the wiper arm hinge, or there is evident lateral play in the wiper arm hinge, replace the wiper arm.

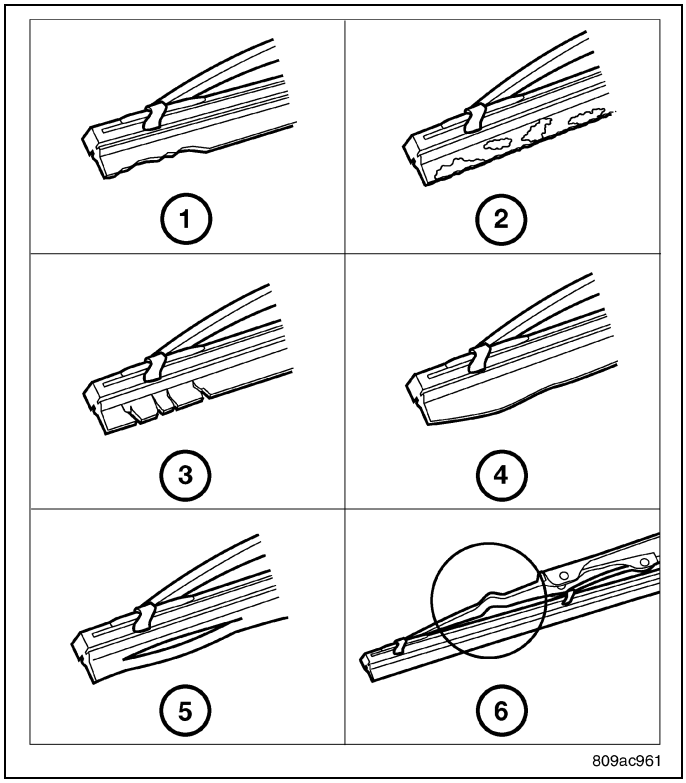

CAUTION: Do not allow the wiper arm to spring back against the glass without the wiper blade in place or the glass may be damaged.

3. Once proper hinge action of the wiper arm is confirmed, check the hinge for proper spring tension. Remove the wiper blade from the wiper arm. Either place a small postal scale between the blade end of the wiper arm and the glass, or carefully lift the blade end of the arm away from the glass using a small fish scale. On vehicles with unequal wiper arm lengths, be certain that measurements are taken at a point an equal distance from their wiper arm hinge pins. Compare the scale readings between the right and left wiper arms. Replace a wiper arm if it has comparatively lower spring tension, as evidenced by a lower scale reading.

4. After cleaning and inspecting the wiper components and the glass, if the wiper blade still fails to clear the glass without smearing, streaking, chattering, hazing, or beading, replace the wiper blade.

WASHER SYSTEM

The washer system components should be inspected periodically, not just when washer performance problems are experienced. This inspection should include the following points:

1. Check for ice or other foreign material in the washer reservoir. If contaminated, clean and flush the washer system. (Refer to 08 - Electrical/8R - Wipers/Washers - Cleaning).
2. Inspect the washer plumbing for pinched, leaking, deteriorated, or incorrectly routed hoses and damaged or disconnected hose fittings. Replace damaged or deteriorated hoses and hose fittings. Leaking washer hoses can sometimes be repaired by cutting the hose at the leak and splicing it back together using an in-line connector fitting. Similarly, sections of deteriorated hose can be cut out and replaced by splicing in new sections of hose using in-line connector fittings. Whenever routing a washer hose or a wire harness containing a washer hose, it must be routed away from hot, sharp, or moving parts. Also, sharp bends that might pinch the washer hose must be avoided.

Specifications

TORQUE SPECIFICATIONS

DESCRIPTION	N·m	Ft. Lbs.	In. Lbs.
Wiper Arm Mounting Nut	24	18	-
Wiper Linkage Module Mounting Screws	8	-	75
Wiper Motor Crank Arm Nut	28	21	-
Wiper Motor Mounting Screws	12.5	-	110

ARM, Wiper

Description

The wiper arms are the rigid members located between the wiper pivots that protrude from the cowl plenum cover/grille panel near the base of the windshield and the wiper blades on the windshield glass. These wiper arms feature an over-center hinge that allows easy access to the windshield glass for cleaning.

The wiper arm has a die cast metal pivot end (4) with a large tapered mounting hole (5) at one end. A molded black plastic cap fits over the wiper arm retaining nut to conceal the nut and the mounting hole following wiper arm installation.

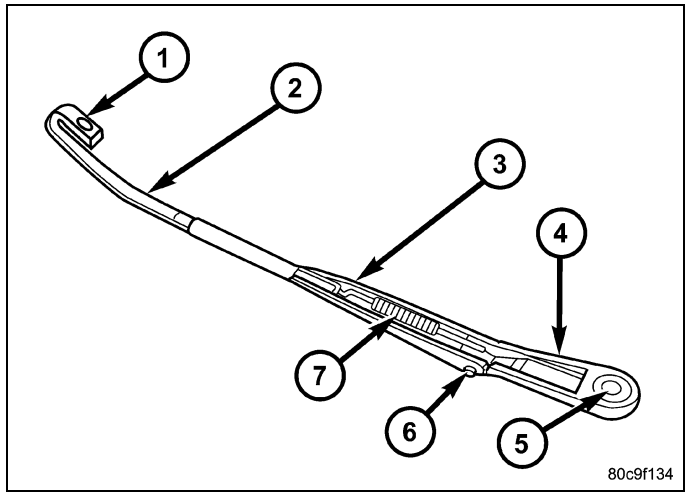

The wide end of a tapered, stamped steel channel (3) hinges on and is secured with a hinge pin (6) to the blade end of the wiper arm pivot end. One end of a long, rigid, stamped steel strap (2), with a small hole near its pivot end, is riveted and crimped within the narrow end of the stamped steel channel. The tip of the wiper blade end of this strap is bent back under itself to form a small hook (1). Concealed within the stamped steel channel is a long tension spring (7) which is engaged with a wire hook on the underside of the die cast pivot end and is hooked through a small hole in the steel strap. The entire wiper arm has a satin black finish applied to all of its visible surfaces.

The right and left wiper arms are unique and are not interchangeable. A wiper arm cannot be adjusted or repaired. If damaged or ineffective, the entire wiper arm unit must be replaced.

Operation

The wiper arms are designed to mechanically transmit the motion from the wiper pivots to the wiper blades. The wiper arm must be properly indexed to the wiper pivot in order to maintain the proper wiper blade travel on the glass. The tapered mounting hole in the wiper arm pivot end interlocks with the serrations on the tapered outer circumference of the wiper pivot shaft, allowing positive engagement and finite adjustment of this connection.

The mounting nuts lock the wiper arms to the threaded studs of the wiper pivot shafts. The spring-loaded wiper arm hinge controls the down-force applied through the tip of the wiper arm to the wiper blade on the glass. The hook formation on the tip of the wiper arm provides a cradle for securing and latching the wiper blade pivot block to the wiper arm.

Removal

1. Lift the wiper arm (3) to its over-center position to hold the wiper blade off of the glass and relieve the spring tension on the wiper arm to pivot shaft connection.
2. Carefully pry the plastic nut cap (1) off of the nut (2) on the pivot end of the wiper arm.
3. Remove the nut that secures the wiper arm to the wiper pivot shaft.

CAUTION: The use of a battery terminal puller when removing the wiper arm is NOT recommended as this may damage the wiper arm.

4. Use a slight rocking action to disengage the wiper arm pivot end from the pivot shaft and remove the wiper arm.

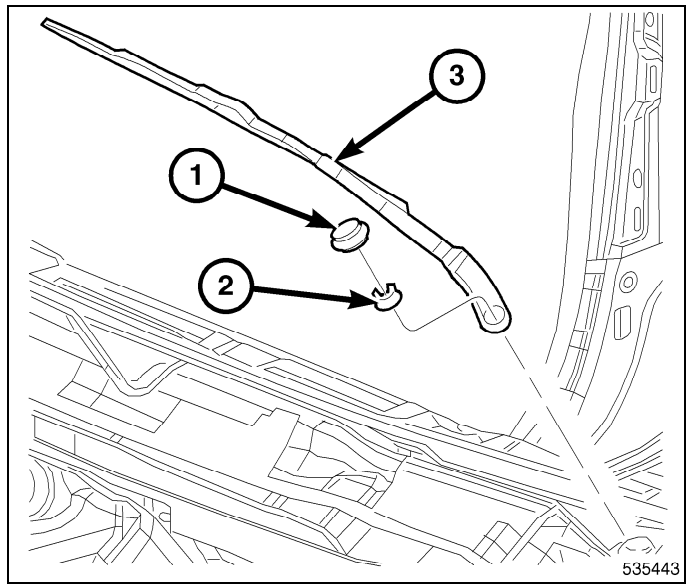

Installation

NOTE: Be certain that the wiper motor is in the park position before attempting to install the wiper arms. Turn the ignition switch to the ON position and move the multi-function switch control knob to turn the wiper motor ON, then turn it back to the OFF position. Wait until the wiper pivot shafts stop moving, then turn the ignition switch back to the OFF position. The wiper motor is now in the park position.

NOTE: The right and left wiper arms are not interchangeable. The right wiper arm is slightly longer than the left. Be certain that each wiper arm is installed on the proper wiper pivot.

1. The wiper arms (3) must be indexed to the pivot shafts with the wiper motor in the park position to be properly installed. Loosely position the wiper arm pivot end onto the wiper pivot shaft so that the wiper blade is aligned with the wiper alignment line, which is a horizontal **T** mark located just above the upper margin of the lower windshield blackout area.
2. Once the wiper blade is aligned, hold the pivot end of the arm over the pivot shaft while lifting the wiper blade away from the windshield slightly to relieve the spring tension on the pivot end. Now push the pivot end of the wiper arm down firmly and evenly over the pivot shaft until it is fully engaged.
3. Install and tighten the nut (2) that secures the wiper arm to the pivot shaft. Tighten the nut to 24 N·m (18 ft. lbs.).
4. Wet the windshield glass, then operate the wipers. Turn the wiper switch to the OFF position, then check for correct wiper blade alignment and readjust as required.

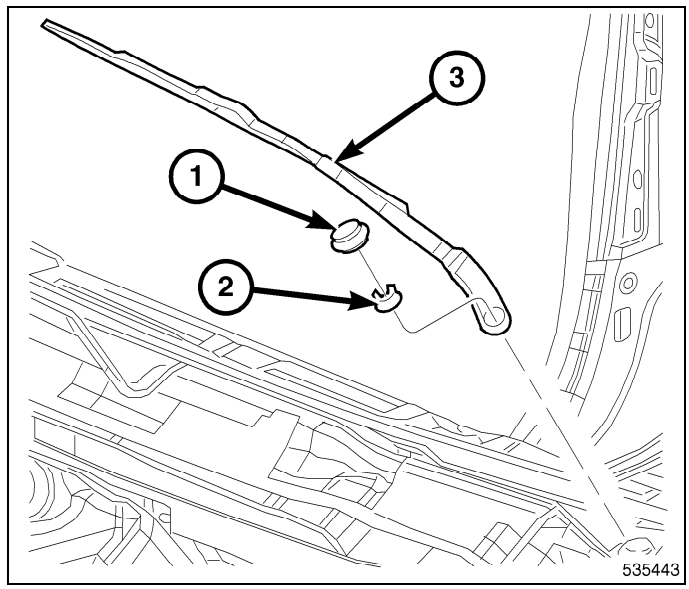

5. Reinstall the plastic nut cap (1) onto the wiper arm mounting nut.

BLADE, Wiper

Description

Each wiper blade is secured by an integral latching pivot block (3) to the hook formation on the tip of each wiper arm, and rests on the glass near the base of the windshield when the wipers are not in operation. The wiper blade consists of the following components:

- **Superstructure (1)** - The superstructure includes several stamped steel bridges and links with claw formations (6) that grip the wiper blade element. Also included in this unit is the latching, molded plastic pivot block that secures the superstructure to the wiper arm. All of the metal components of the wiper blade have a satin black finish applied.

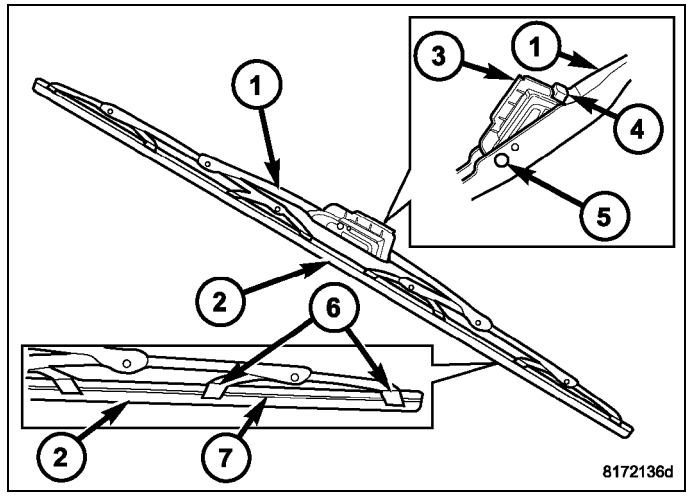

- **Element (2)** - The wiper element or squeegee is the resilient rubber member of the wiper blade that contacts the glass.
- **Flexor (7)** - The flexor is a rigid metal component running along the length of each side of the wiper element where it is gripped by the claws of the superstructure.

The right and left wiper blades are 56.50 centimeters (22.24 inches) long, and are interchangeable. They have non-replaceable rubber elements (squeegees). The wiper blades cannot be adjusted or repaired. If ineffective, worn, or damaged the entire wiper blade unit must be replaced.

Operation

The wiper blades are moved back and forth across the glass by the wiper arms when the wipers are being operated. The wiper blade superstructure is the flexible frame that grips the wiper blade element and evenly distributes the force of the spring-loaded wiper arm along the length of the element. The combination of the wiper arm force and the flexibility of the superstructure makes the element conform to and maintain proper contact with the glass, even as the blade is moved over the varied curvature that may be encountered across the glass surface.

The wiper element flexor provides the claws of the blade superstructure with a rigid, yet flexible component on the element which can be gripped. The rubber element is designed to be stiff enough to maintain an even cleaning edge as it is drawn across the glass, yet resilient enough to conform to the glass surface and flip from one cleaning edge to the other each time the wiper blade changes directions.

Removal

CAUTION: Do not allow the wiper arm to spring back against the glass without the wiper blade in place or the glass may be damaged.

NOTE: The notched end of the wiper element flexor should always be oriented towards the end of the wiper blade that is nearest to the wiper pivot.

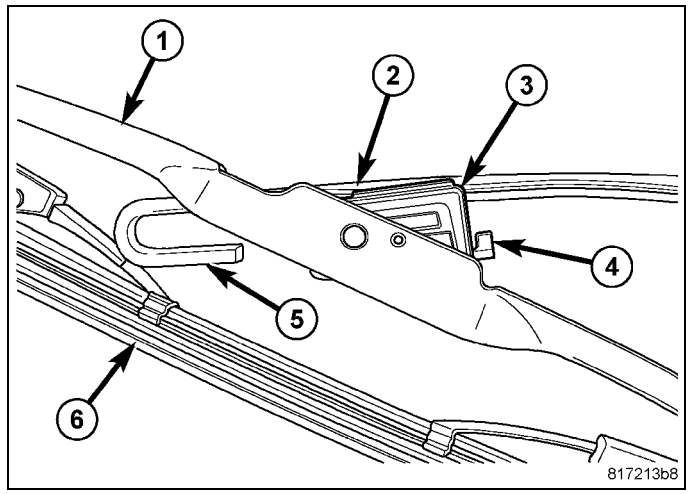

1. Lift the wiper arm (2) to raise the wiper blade and element (6) off of the glass, until the wiper arm hinge is in its over-center position.
2. To remove the blade from the arm, depress the latch release tab (4) on the pivot block (3) under the tip of the arm downward (toward the wiper element and away from the wiper arm) and slide the blade away from the tip towards the pivot end of the arm far enough to disengage the pivot block from the hook formation (5) on the end of the arm.
3. Extract the hook formation on the tip of the wiper arm through the opening in the wiper blade superstructure (1) just ahead of the pivot block.
4. Gently lower the tip of the wiper arm onto the glass.

Installation

CAUTION: Do not allow the wiper arm to spring back against the glass without the wiper blade in place or the glass may be damaged.

NOTE: The notched end of the wiper element flexor should always be oriented towards the end of the wiper blade that is nearest to the wiper pivot.

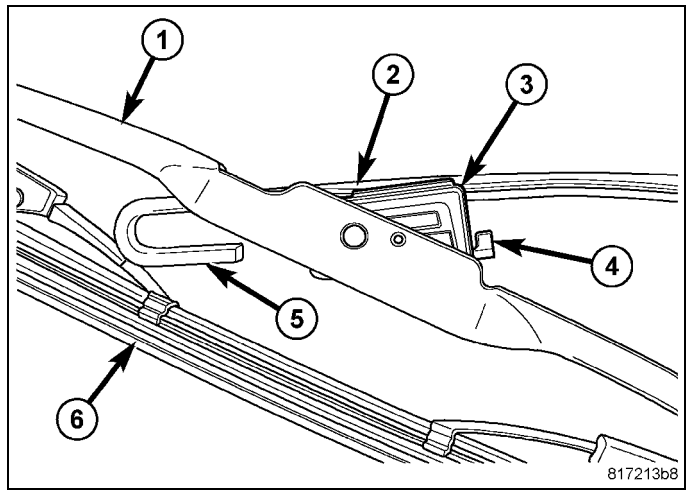

1. Lift the wiper arm (2) off of the windshield glass, until the wiper arm hinge is in its over-center position.
2. Position the wiper blade near the hook formation (5) on the tip of the arm with the notched end of the wiper element flexor oriented towards the end of the wiper arm that is nearest to the wiper pivot.
3. Insert the hook formation on the tip of the arm through the opening in the blade superstructure (1) ahead of the pivot block (3) far enough to engage the pivot block into the hook.
4. Slide the pivot block up into the hook formation on the tip of the wiper arm until the latch release tab (4) snaps into its locked position. Latch engagement will be accompanied by an audible click.
5. Gently lower the wiper blade and element (6) onto the glass.

HOSES AND TUBES, Washer

Description

The washer plumbing consists of a small diameter rubber reservoir washer hose that is routed from the barbed outlet nipple of the electric washer pump/motor unit on the washer reservoir through a trough molded into the front of the reservoir above the washer pump to the outboard side of the reservoir, then through the Front End Module (FEM) carrier (also known as the radiator closure) to the engine compartment to the left side of the cooling module.

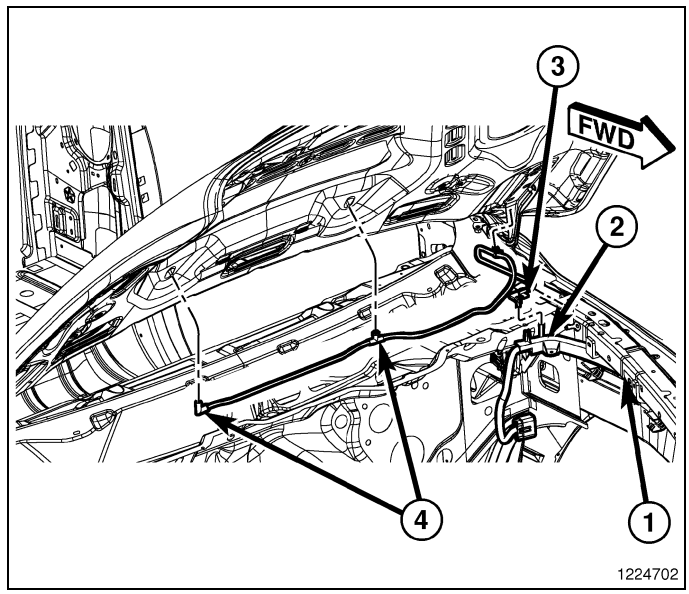

In the left front corner of the engine compartment, the washer reservoir hose is connected to the engine compartment washer hose. The engine compartment washer hose is contained within the left headlamp and dash wire harness (2), which is routed through the engine compartment along the top of the left front fender wheel house (1) to the dash panel. This hose is connected to the washer reservoir washer hose at one end and to the hood mounted washer tube at the other end with molded plastic in-line fittings.

The hood mounted washer hose (3) is routed from the engine compartment to the underside of the hood panel inner reinforcement near the left hood hinge. The hood washer hose is then routed between the hood reinforcement and the hood silencer pad to the left washer nozzle (4), then from the left washer nozzle to the right washer nozzle.

Washer hose is available for service only as roll stock, which must then be cut to length. The molded plastic washer hose fittings cannot be repaired. If these fittings are ineffective or damaged, they must be replaced.

Operation

Washer fluid in the washer reservoir is pressurized and fed by the washer pump/motor unit through the washer system plumbing and fittings to the two washer nozzles. Whenever routing the washer hose or a wire harness containing a washer hose, it must be routed away from hot, sharp, or moving parts; and, sharp bends that might pinch the hose must be avoided.

LINKAGE, Wiper Arm

Description

The wiper linkage module is secured by a rubber insulated mounting tab and two screws through two rubber grommet-type insulators to the cowl plenum panel. The module is concealed beneath the molded plastic cowl plenum cover/grille panel between the base of the windshield and the rear edge of the hood panel. The ends of the pivot shafts that protrude through openings in the cowl plenum cover/grille panel to drive the wiper arms and blades are the only visible components of the wiper linkage module. The wiper linkage module consists of the following major components:

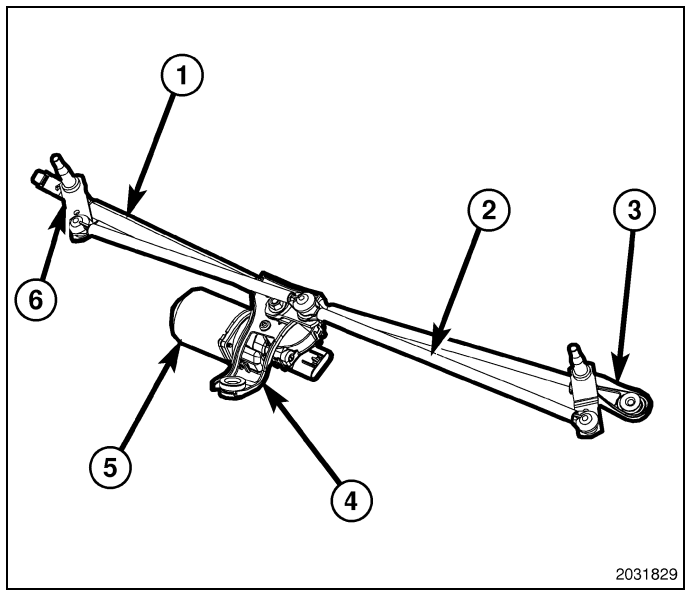

- **Bracket** - The wiper linkage module bracket consists of two long tubular steel main members (1) that are each crimped at their outboard ends to a die cast pivot bracket (3) to which the two wiper pivots are secured. A die cast center motor bracket (4) is secured by crimps at the inboard ends of the tubular main members to provide both a mounting point for the wiper motor and a center support for mounting the wiper linkage module to the cowl plenum panel.
- **Crank Arm** - The wiper motor crank arm is a stamped steel unit with a hole on the driven end that is secured to the finely splined wiper motor output shaft with a nut, and has a long ball stud secured to the drive end to accept the wiper linkage.
- **Linkage** - Two tubular steel drive links (2) connect the wiper motor crank arm to the wiper pivot lever arms. The right side drive link has a plastic socket-type bushing on each end. The left side drive link has a plastic socket-type bushing on one end, and a plastic sleeve-type bushing on the other end. The socket-type bushing on one end of each drive link is snap-fit over the ball stud on the lever arm of its respective pivot. The left side drive link sleeve-type bushing end is then fit over the motor crank arm ball stud, and the other socket-type bushing of the right side drive link is snap-fit over the exposed end of the wiper motor crank arm ball stud.
- **Motor** - The wiper motor (5) features a transmission housing from which the wiper motor output shaft exits, and has three mounting bosses with internal threads to which the motor is mounted to the center wiper linkage module bracket with screws. A nut secures the wiper motor crank arm to the motor output shaft. The two-speed permanent magnet wiper motor features an integral transmission, an internal park switch, and an internal automatic resetting circuit breaker. A short pigtail wire and connector connect the wiper motor to the vehicle electrical system through a dedicated take out and connector of the left headlamp and dash wire harness.
- **Pivots** - The two wiper pivots (6) are secured within the die cast pivot brackets on the outboard ends of the wiper linkage module main members. The lever arms that extend from the center of the pivot shafts each have a ball stud on their end. The upper end of each pivot shaft where the wiper arms will be fastened each has a finely splined and tapered driver with a threaded stud extending from the top. The lower ends of the pivot shafts are installed through permanently lubricated bushings in the pivot brackets.

The wiper linkage module cannot be adjusted or repaired. The wiper motor is available for separate service replacement. If any other component of the linkage module is ineffective or damaged, the entire wiper linkage module unit must be replaced.

Operation

The wiper linkage module operation is controlled by the battery current inputs received by the wiper motor from the Totally Integrated Power Module (TIPM). The wiper motor speed is controlled by current flow to either the low speed or the high speed set of brushes.

The park switch is a single pole, single throw, momentary switch within the wiper motor that is mechanically actuated by the wiper motor transmission components. The park switch alternately opens and closes the wiper park switch sense circuit to ground, depending upon the position of the wipers on the glass. This feature allows the motor to complete its current wipe cycle after the wiper system has been turned OFF, and to park the wiper blades in the lowest portion of the wipe pattern. The automatic resetting circuit breaker protects the motor from overloads.

The wiper motor crank arm, the two wiper linkage members, and the two driven wiper pivots mechanically convert the rotary output of the wiper motor to the back and forth wiping motion of the wiper arms and blades on the glass.

The hard wired inputs and outputs of the wiper motor may be diagnosed using conventional diagnostic tools and procedures. Refer to the appropriate wiring information. However, conventional diagnostic methods will not prove conclusive in the diagnosis of the electronic controls or communication between other modules and devices that provide some features of the wiper motor. The most reliable, efficient, and accurate means to diagnose the wiper motor or the electronic controls and communication related to wiper motor operation requires the use of a diagnostic scan tool. Refer to the appropriate diagnostic information.

Removal

NOTE: The wiper linkage module includes the wiper motor. The wiper motor is also available for separate service replacement and can be removed from the wiper linkage module without removing the module from the vehicle. (Refer to 08 - Electrical/8R - Wipers/Washers/MOTOR, Wiper - Removal).

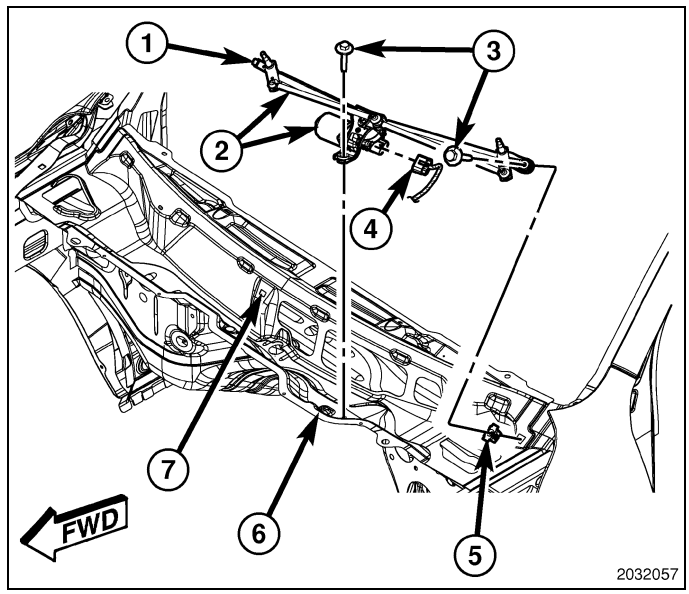

1. Unlatch and open the hood.
2. Remove both wiper arms from the wiper pivots. (Refer to 08 - Electrical/8R - Wipers/Washers/ARM, Wiper - Removal).
3. Disconnect and isolate the battery negative cable.
4. Remove the cowl plenum cover/grille panel from over the cowl plenum (6). (Refer to 23 - Body/Exterior/COVER, Cowl Panel - Removal).
5. Disconnect the left headlamp and dash wire harness connector (4) from the wiper motor pigtail wire connector.
6. Remove the two screws (3) that secure the wiper linkage module (2) to the top of the cowl plenum panel.
7. Lift the left end of the wiper linkage module upward out of the cowl plenum far enough to disengage the rubber insulated tab (1) on the end of the right pivot bracket from the slot (7) in the cowl plenum.
8. Remove the wiper linkage module from the cowl plenum panel as a unit.

Installation

NOTE: The wiper linkage module includes the wiper motor. The wiper motor is also available for separate service replacement and can be removed from the wiper linkage module without removing the module from the vehicle. (Refer to 08 - Electrical/8R - Wipers/Washers/MOTOR, Wiper - Removal).

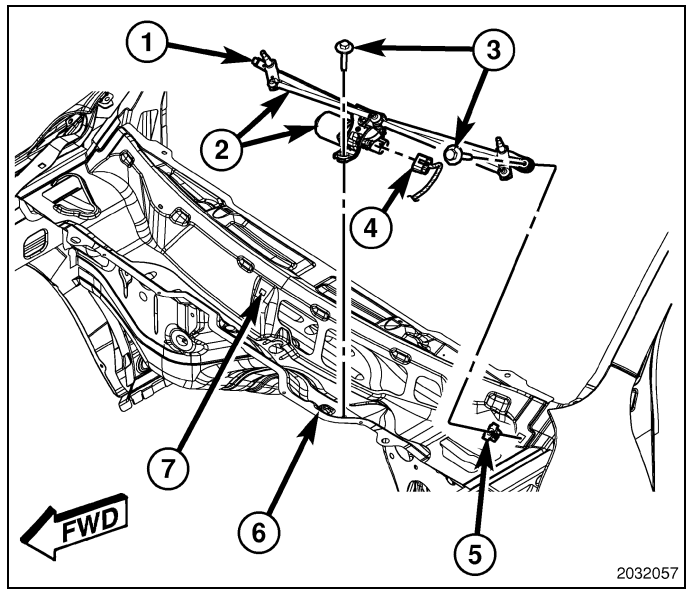

1. Be certain that the spring nut (5) that secures the left end of the wiper linkage module is in position in the cowl plenum (6) and is in good condition.
2. Position the wiper linkage module (2) into the cowl plenum as a unit.
3. Lift the left end of the wiper linkage module upward out of the cowl plenum far enough to engage the rubber insulated tab (1) on the outboard end of the right pivot bracket into the slot (7) in the cowl plenum.
4. Lower the left end of the wiper linkage module into the cowl plenum and align it to the two mounting points.
5. Install the two screws (3) that secure the wiper linkage module to the top of the cowl plenum panel. Tighten the screw on the left (driver) side pivot bracket, followed by the screw on the center (motor) bracket. Tighten the screws to 8 N·m (75 in. lbs.).
6. Reconnect the left headlamp and dash wire harness connector (4) to the wiper motor pigtail wire connector.
7. Reinstall the cowl plenum cover/grille panel over the cowl plenum. (Refer to 23 - Body/Exterior/COVER, Cowl Panel - Installation).
8. Reconnect the battery negative cable.
9. Reinstall both wiper arms onto the wiper pivots. (Refer to 08 - Electrical/8R - Wipers/Washers/ARM, Wiper - Installation).
10. Close and latch the hood.

MOTOR, Wiper

Removal

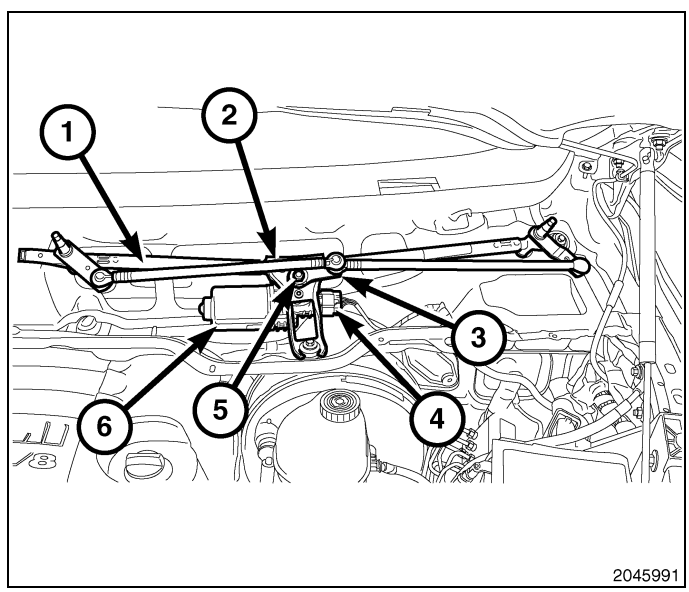

1. Unlatch and open the hood.
2. Remove both wiper arms from the wiper pivots. (Refer to 08 - Electrical/8R - Wipers/Washers/ARM, Wiper - Removal).
3. Disconnect and isolate the battery negative cable.
4. Remove the cowl plenum cover/grille panel from over the cowl plenum. (Refer to 23 - Body/Exterior/COVER, Cowl Panel - Removal).
5. Disconnect the left headlamp and dash wire harness connector (4) from the wiper motor (6) pigtail wire connector.
6. Remove the nut (5) that secures the crank arm (3) to the wiper motor output shaft.

7. Remove the three screws (1) that secure the wiper motor to the center bracket of the wiper linkage module.
8. Remove the wiper motor from under the wiper linkage module bracket and out of the cowl plenum.

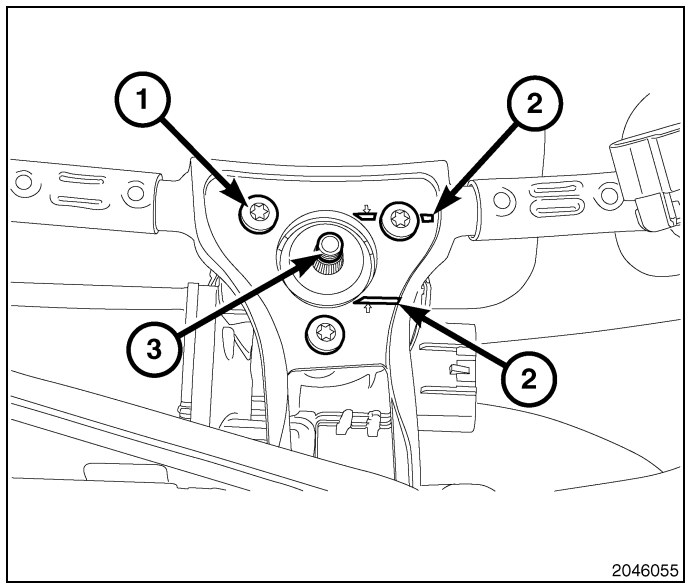

Installation

1. Position the wiper motor beneath the wiper linkage module in the cowl plenum.
2. Align the mounting bosses of the wiper motor to the mounting holes of the wiper linkage module center (motor) bracket.
3. Install and tighten the three screws (1) that secure the wiper motor to the center bracket of the wiper linkage module. Tighten the screws to 12.5 N·m (110 in. lbs.).
4. Reconnect the left headlamp and dash wire harness connector to the wiper motor pigtail wire connector.
5. Reconnect the battery negative cable.

NOTE: Be certain that the wiper motor is in the park position before attempting to reinstall the crank arm to the motor output shaft.

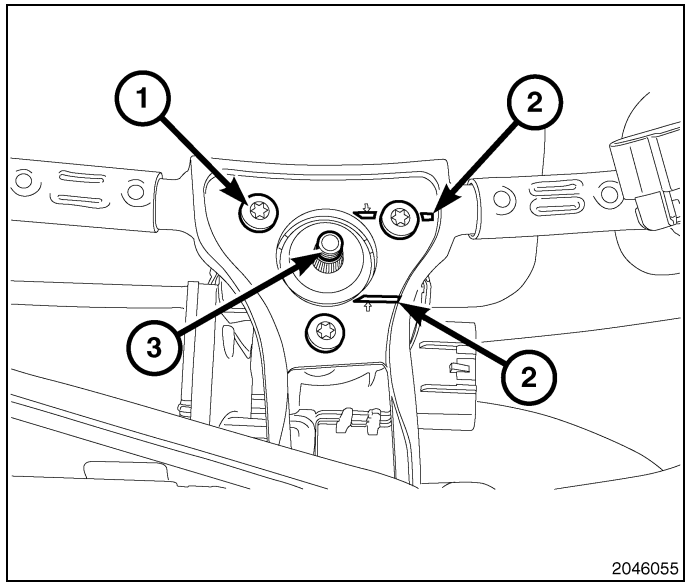

6. Turn the ignition switch to the ON position and move the multi-function switch control knob to turn the wiper motor ON. Turn the switch back to the OFF position. Wait until the wiper motor output shaft stops moving, then turn the ignition switch back to the OFF position. The wiper motor is now in the park position.
7. Position the crank arm onto the wiper motor output shaft (3) so that the crank arm is oriented between the two alignment marks (2) on the wiper linkage module center bracket, then press the crank arm down firmly over the output shaft.

8. Install and tighten the nut (5) that secures the crank arm to the wiper motor (6) output shaft. Tighten the nut to 28 N·m (21 ft. lbs.).
9. Reinstall the cowl plenum cover/grille panel over the cowl plenum. (Refer to 23 - Body/Exterior/COVER, Cowl Panel - Installation).
10. Reinstall both wiper arms onto the wiper pivots. (Refer to 08 - Electrical/8R - Wipers/Washers/ARM, Wiper - Installation).
11. Close and latch the hood.

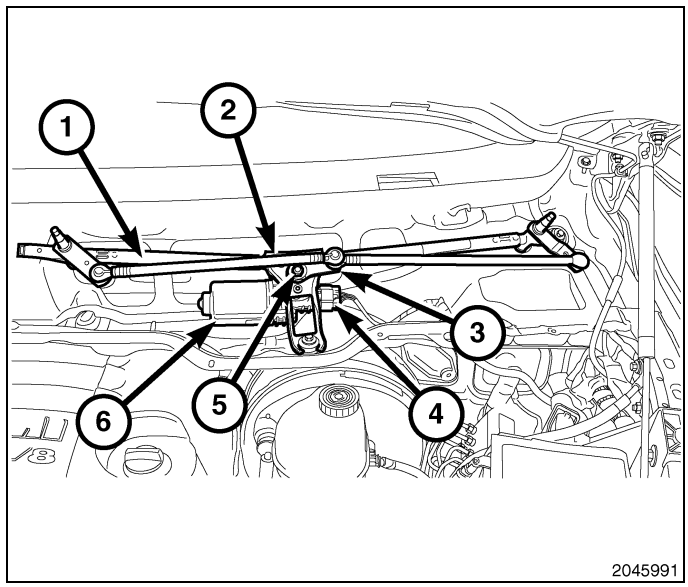

NOZZLE, Washer

Description

The fluidic washer nozzles are constructed of molded plastic and include an integral check valve. Each nozzle has two integral latches (3) that secure them in dedicated holes in the hood panel near the base of the windshield. The domed upper surface (2) of the washer nozzle is visible on the outside of the hood panel, and the dual nozzle orifices (1) are oriented towards the windshield glass.

An integral diaphragm type check valve is contained within the body of each nozzle. The washer plumbing fittings (4) for the washer nozzles extend below the hood panel and are accessible from the engine compartment.

The washer nozzles cannot be adjusted or repaired and, if ineffective or damaged, they must be replaced.

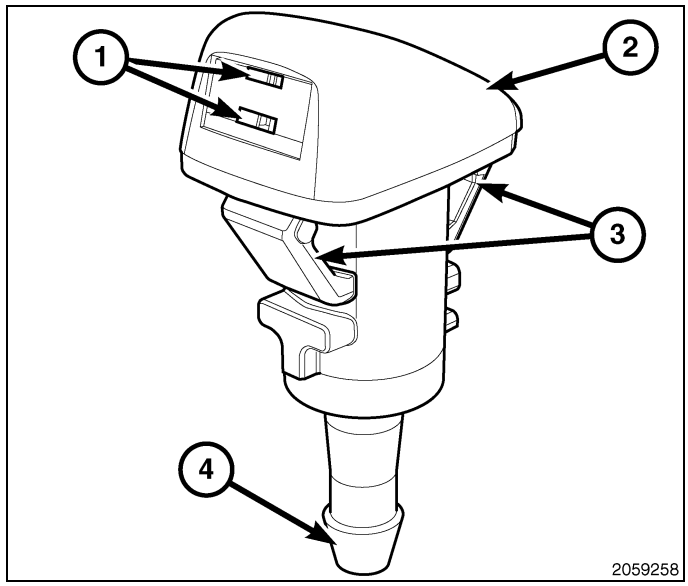

Operation

The two washer nozzles are designed to dispense washer fluid into the wiper pattern area on the outside of the windshield glass. Pressurized washer fluid is fed to each nozzle from the washer reservoir by the washer pump/motor unit through a single hose, which is attached to a barbed nipple on each washer nozzle below the inner hood panel. A fluidic matrix within the washer nozzle causes the pressurized washer fluid to be emitted from the two nozzle orifices as oscillating streams to more effectively cover a larger area of the glass to be cleaned.

The integral check valve in each nozzle prevents washer fluid from draining out of the washer supply hoses back to the washer reservoir. This drain-back would result in a lengthy delay after the washer switch is actuated until washer fluid was dispensed through the nozzles, because the washer pump would have to refill the washer plumbing from the reservoir to the nozzles. Such a drain-back condition could also result in water, dirt, or other outside contaminants being siphoned into the washer system through the washer nozzle orifice. This water could subsequently freeze and plug or damage the nozzle, while other contaminants could interfere with proper nozzle operation and cause improper nozzle spray patterns. In addition, the check valve prevents washer fluid from siphoning through the washer nozzles after the washer pump stops operating.

When the washer pump pressurizes and pumps washer fluid from the reservoir through the washer plumbing, the fluid pressure unseats a diaphragm from over a sump well within the nozzle by overriding the spring pressure applied to it by a piston. With the diaphragm unseated, washer fluid is allowed to flow toward the nozzle orifice. When the washer pump stops operating, the spring pressure on the piston seats the diaphragm over the sump well in the nozzle and fluid flow in either direction within the washer plumbing is prevented.

Removal

1. From the underside of the hood, remove the push-in retainers that secure the rear edge of the hood silencer pad to the inner hood reinforcement as necessary to access the washer nozzle hose connections (4).
2. From the underside of the hood, disconnect the washer nozzle hose from the barbed nipple of the washer nozzle.

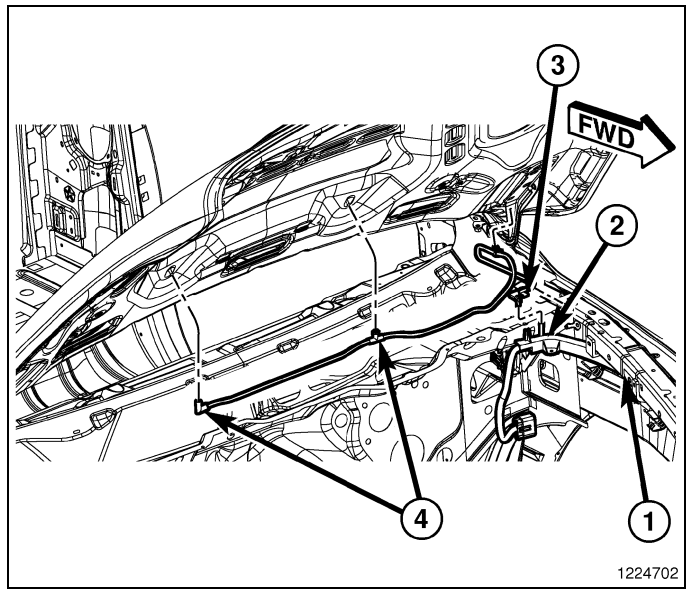

3. From the underside of the hood, release the integral latch features of the washer nozzle (1) and push the nozzle out through the mounting hole toward the top side of the hood.
4. Remove the washer nozzle from the top of the hood panel.

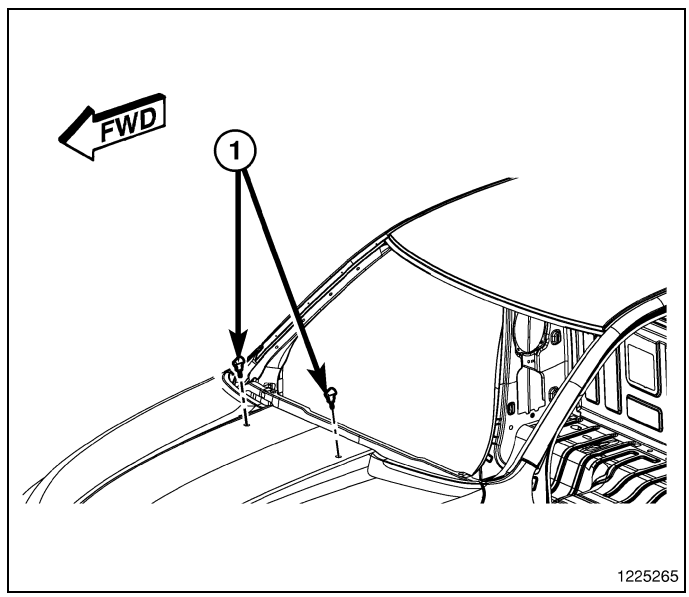

Installation

1. From the top of the hood, position the washer nozzle (1) to the mounting hole on the outside of the hood panel.
2. Align the anti-rotation tabs of the nozzle with the anti-rotation notches in the mounting hole.
3. Using hand pressure, push firmly and evenly on the top of the washer nozzle until the integral latch features lock into place on the underside of the hood.

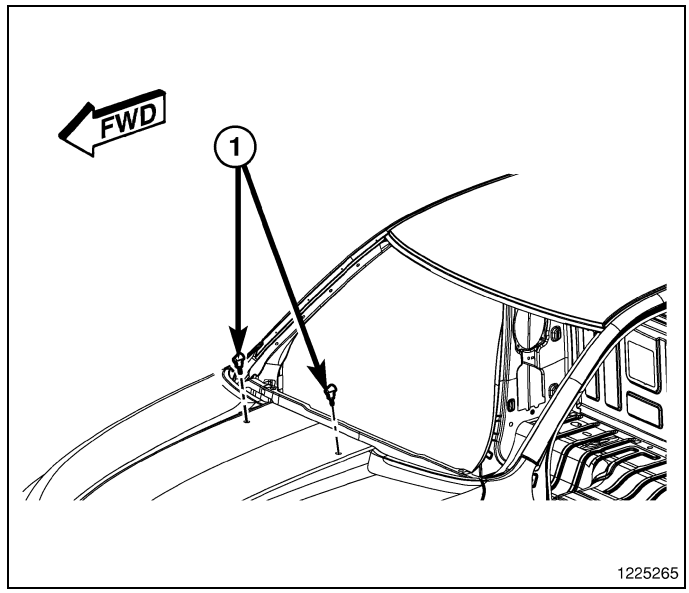

4. From the underside of the hood, reconnect the washer hose fitting (4) to the barbed nipple of the washer nozzle.
5. Reinstall the washer nozzle hose into its routing clips as necessary on the underside of the hood.
6. Reinstall the push-in retainers that secure the rear edge of the hood silencer pad to the inner hood reinforcement.

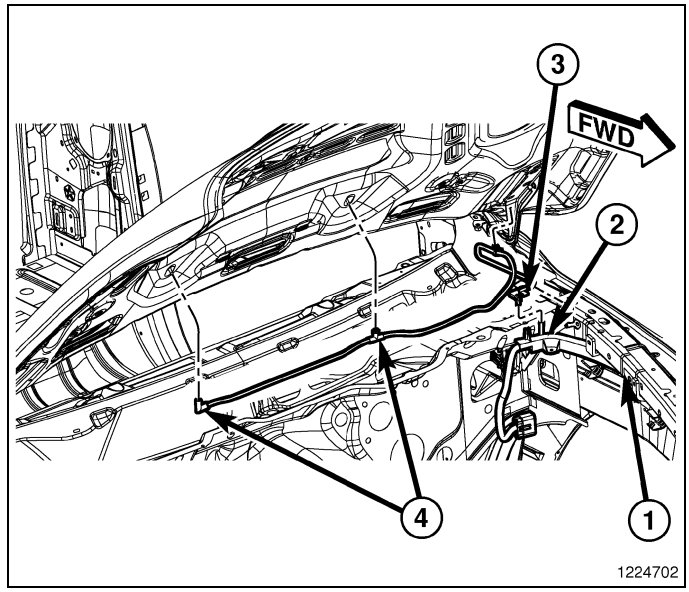

PUMP, Windshield Washer

Description

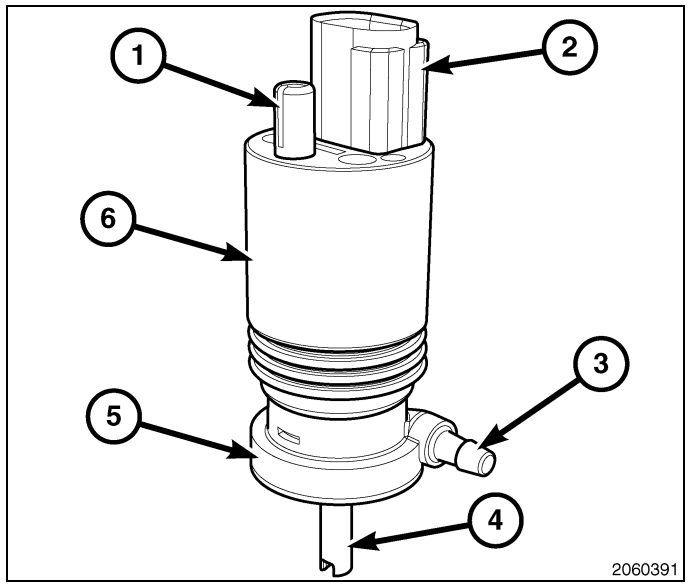

The washer pump/motor unit is located on the top of a sump area on the forward facing side of the washer reservoir on the front of the Front End Module (FEM) carrier (also known as the radiator closure), to the left of the cooling module. A small permanently lubricated and sealed electric motor (6) is coupled to the rotor-type washer pump (5).

An inlet nipple (4) on the bottom of the pump housing passes through a rubber grommet seal/filter screen installed in a dedicated mounting hole in the sump area near the base of the washer reservoir. When the pump is installed in the reservoir, a barbed outlet nipple (3) on the pump housing connects the unit to the reservoir washer hose, which is engaged in an integral trough molded into the reservoir unit.

The washer pump/motor unit is retained on the reservoir by the interference fit between the pump inlet nipple and the grommet seal, which is a light press fit. The top of the washer pump/motor unit is also secured to the washer reservoir by a light snap fit into a receptacle molded into the reservoir that allows for mounting of the washer pump without the use of additional fasteners. An integral connector receptacle (2) on the top of the motor housing connects the unit to the vehicle electrical system through a dedicated take out and connector of the FEM wire harness.

Service replacement washer pumps may also include a snap post (1) at the top of the pump motor housing, but this feature is not used in this application. The washer pump/motor unit cannot be repaired. If ineffective or damaged, the entire washer pump/motor unit must be replaced.

Operation

The washer pump/motor unit features a small Direct Current (DC) electric motor. The motor is connected to the vehicle electrical system through a single take out and two-cavity connector of the Front End Module (FEM) wire harness. The motor is grounded at all times through another take out of the FEM wire harness with a single eyelet terminal connector that is secured by a screw to the left front fender upper hydroform support in the engine compartment.

The Totally Integrated Power Module (TIPM) controls the washer pump/motor control circuit through a high side driver based upon electronic **washer request** messages received over the Controller Area Network (CAN) data bus from the ElectroMechanical Instrument Cluster (EMIC) (also known as the Cab Compartment Node/CCN). The EMIC receives electronic **washer switch status** messages over a Local Interface Network (LIN) bus connection from the Steering Control Module (SCM) within the multi-function switch housing. The SCM monitors hard wired analog and multiplex inputs from the washer switch circuitry contained within the multi-function switch to determine the proper electronic messages to send.

Washer fluid is drawn through the pump inlet nipple from the washer reservoir to the inlet port of the washer pump housing. A filter screen integral to the pump grommet seal prevents most debris from entering the pump housing. When the pump motor is energized, the motor spins the rotor within the washer pump. The spinning pump rotor pressurizes the washer fluid and forces it through the pump outlet nipple, the washer plumbing, and the washer nozzles onto the windshield glass.

The washer pump/motor unit and the hard wired circuits connected to the unit may be diagnosed using conventional diagnostic tools and procedures. Refer to the appropriate wiring information. However, conventional diagnostic methods will not prove conclusive in the diagnosis of the electronic controls or communication between other modules and devices that provide many features of the wiper and washer system. The most reliable, efficient, and accurate means to diagnose the washer pump/motor unit or the electronic controls and communication related to washer pump/motor unit operation requires the use of a diagnostic scan tool. Refer to the appropriate diagnostic information.

Removal

NOTE: The washer pump/motor unit can be removed from the washer reservoir without removing the reservoir from the vehicle.

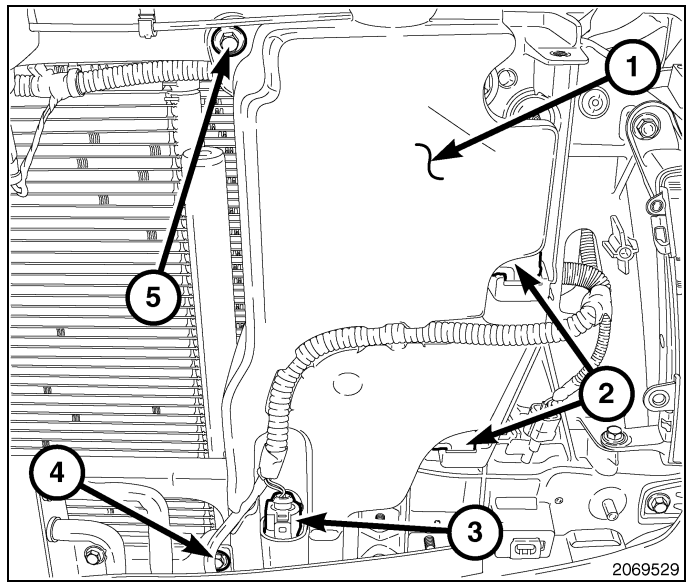

1. Disconnect and isolate the battery negative cable.
2. Siphon the washer fluid from the washer reservoir (1) into a clean container for reuse.
3. Remove the grille from the front of the vehicle. (Refer to 23 - Body/Exterior/GRILLE - Removal).
4. Disconnect the Front End Module (FEM) wire harness connector (3) from the washer pump/motor unit connector receptacle on the top of the motor housing.
5. Pull lightly outward on the top of the washer pump/motor housing, away from the washer reservoir to disengage the top of the motor from the receptacle in the reservoir.
6. Pull the washer pump/motor unit straight up and out of the washer reservoir far enough to disengage the inlet nipple on the base of the pump housing from the rubber grommet seal/filter screen in the reservoir.
7. Raise the washer pump/motor unit far enough to access and disconnect the washer hose (4) from the barbed pump outlet nipple.
8. Remove the washer pump/motor unit from the front of the washer reservoir.
9. Remove the rubber grommet seal/filter screen from the washer pump mounting hole in the reservoir and discard.

Installation

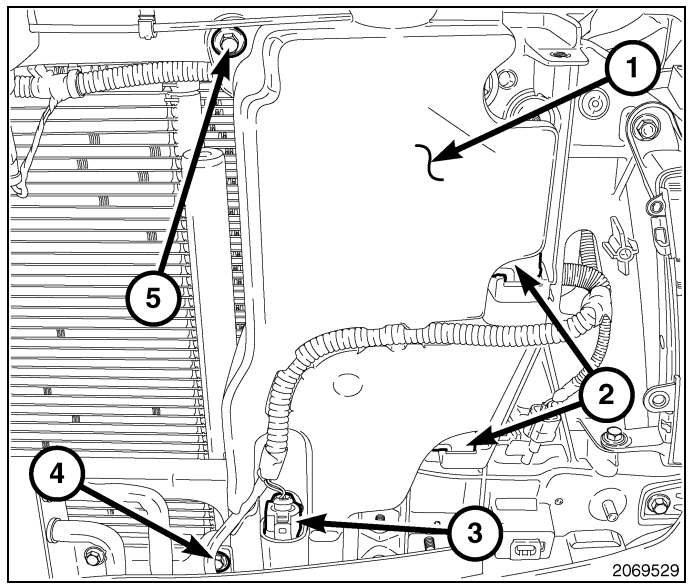

1. Install a new rubber grommet seal/filter screen into the washer pump mounting hole in the washer reservoir (1). Always use a new rubber grommet seal/filter screen on the reservoir.
2. Reconnect the reservoir washer hose (4) to the barbed pump outlet nipple of the washer pump/motor unit.
3. Position the inlet nipple on the base of the pump housing of the washer pump/motor unit to the rubber grommet seal/filter screen in the reservoir.
4. Using hand pressure, press firmly and evenly downward on the top of washer pump/motor unit until the inlet nipple is fully seated in the rubber grommet seal/filter screen in the pump mounting hole of the reservoir.
5. Align the top of the washer pump/motor unit housing with the receptacle in the washer reservoir.
6. Using hand pressure, press firmly and evenly on the top of washer pump/motor unit until the housing snaps into the receptacle.
7. Reconnect the Front End Module (FEM) wire harness connector (3) to the washer pump/motor unit connector receptacle at the top of the motor housing.
8. Reinstall the grille onto the front of the vehicle. (Refer to 23 - Body/Exterior/GRILLE - Installation).
9. Refill the washer reservoir with the washer fluid drained from the reservoir during the removal procedure.
10. Reconnect the battery negative cable.

RESERVOIR, Windshield Washer

Description

The molded plastic washer fluid reservoir (1) is mounted on the front of the Front End Module (FEM) carrier (also known as the radiator closure), just to the left of the cooling module. The filler neck for the reservoir extends upward just past the upper radiator closure member and through the upper radiator seal. This reservoir is constructed of opaque black plastic, which does not allow the fluid level to be inspected without removing the reservoir filler cap (2).

The bright yellow plastic filler cap with a rubber seal and an International Control and Display Symbol icon for **Windshield Washer** molded into it snaps over the open end of the washer reservoir filler neck. The cap hinges on and is secured to an integral molded hook formation on the top of the reservoir just to the left of the filler neck when it is removed for inspecting or adjusting the fluid level in the reservoir.

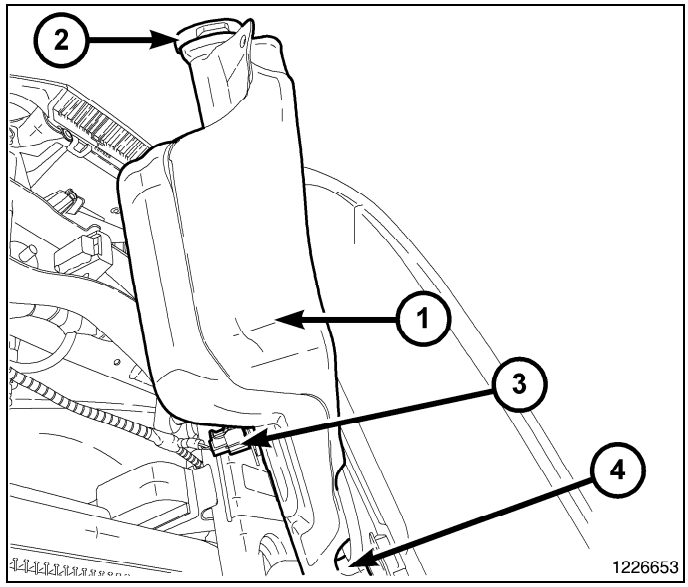

The washer reservoir is secured through an integral mounting bracket at the top and bottom on the inboard side by two screws to the upper and lower members of the radiator closure. Two integral tabs on the outboard side of the reservoir engage through two slotted loops integral to the FEM carrier just inboard of the front lamp unit.

There is a dedicated mounting hole in the top of the sump area at the front of the reservoir with a receptacle provided for the mounting of the washer/pump motor unit (4) without the use of fasteners. A separate dedicated mounting hole is provided in the rearward facing side of the reservoir for the washer fluid level switch (3). An integral molded routing trough for the washer hose and washer pump/motor unit wiring routes the hose and wiring bundle from the washer pump to the outboard side of the reservoir.

A washer reservoir cannot be repaired and, if ineffective or damaged, the unit must be replaced. The washer pump/motor unit, the washer fluid level switch, their rubber grommet seals, as well as the reservoir filler cap are each available for individual service replacement.

Operation

The washer fluid reservoir provides a secure, on-vehicle storage location for a large reserve of washer fluid for operation of the washer system. The washer reservoir filler cap provides a clearly marked and readily accessible point at which to add washer fluid to the reservoir.

The washer/pump motor unit is located in a sump area near the bottom of the reservoir to be certain that washer fluid will be available to the pump as the fluid level in the reservoir becomes depleted. The washer fluid level switch is mounted far enough above the washer pump inlet nipple in the sump area of the reservoir so that there will be adequate warning to the vehicle operator that the washer fluid level is low, well before the washer system will no longer operate.

Removal

1. Disconnect and isolate the battery negative cable.
2. Siphon the washer fluid from the washer reservoir (1) into a clean container for reuse.
3. Remove the grille from the front of the vehicle. (Refer to 23 - Body/Exterior/GRILLE - Removal).
4. Remove the two screws (5) that secure the inboard washer reservoir mounting brackets at the top and bottom members of the Front End Module (FEM) carrier (also known as the radiator closure), just to the left of the cooling module.
5. Pull the washer reservoir upward far enough to disengage the two mounting tabs (2) on the outboard side of the reservoir from the two slotted loops integral to the FEM carrier.
6. Disconnect the FEM wire harness connector (3) from the washer pump/motor unit connector receptacle on the top of the motor housing.
7. Disconnect the reservoir washer hose (4) from the barbed pump outlet nipple of the washer pump/motor unit.

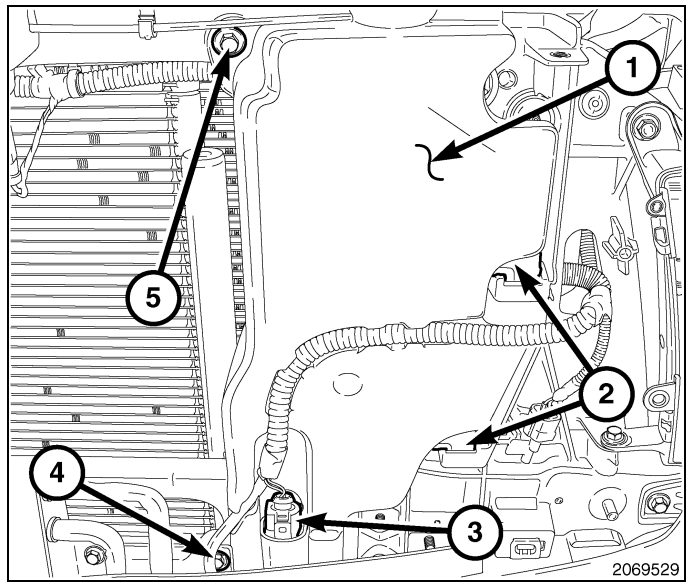

8. Disengage the reservoir washer hose and FEM wiring bundle from the routing trough integral to the front of the reservoir.
9. Rotate the outboard side of the washer reservoir (3) away from the FEM carrier far enough to access and disconnect the FEM wire harness connector (1) from the washer fluid level switch connector receptacle (2) on the back of the reservoir.
10. Remove the washer reservoir from the left side of the FEM carrier.

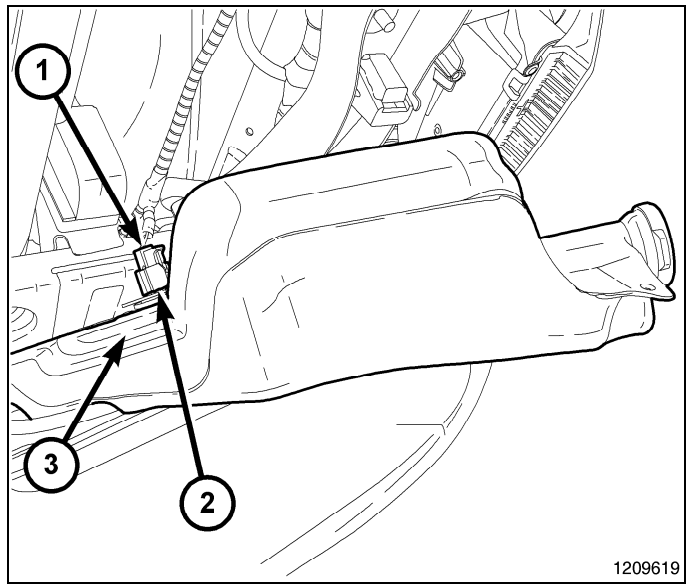

Installation

1. Position the washer reservoir (3) to the left side of the Front End Module (FEM) carrier (also known as the radiator closure).
2. Rotate the outboard side of the washer reservoir away from the FEM carrier far enough to access and re-connect the FEM wire harness connector (1) to the washer fluid level switch connector receptacle (2) on the back of the reservoir.

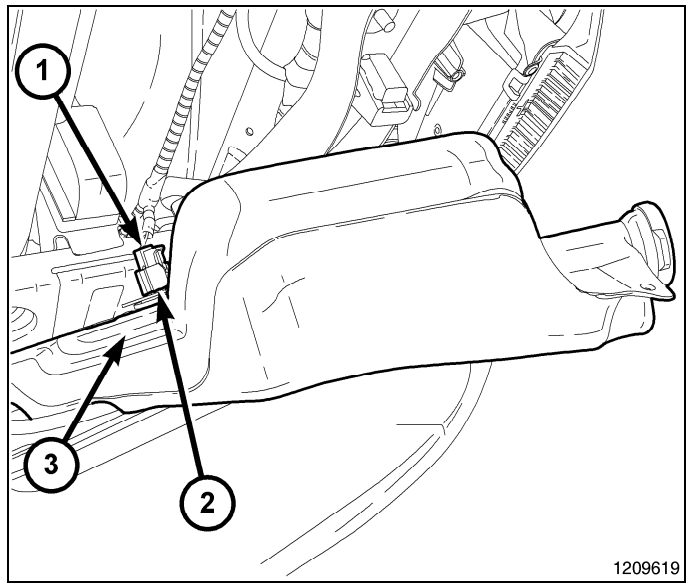

3. Engage the reservoir washer hose (4) and FEM wiring bundle into the routing trough integral to the front of the reservoir (1).
4. Reconnect the reservoir washer hose to the barbed pump outlet nipple of the washer pump/motor unit.
5. Reconnect the FEM wire harness connector (3) to the washer pump/motor unit connector receptacle on the top of the motor housing.
6. Align and insert the two mounting tabs (2) on the outboard side of the reservoir into the two slotted loops integral to the FEM carrier.
7. Install and tighten the two screws (5) that secure the inboard washer reservoir mounting brackets at the top and bottom members of the FEM carrier, just to the left of the cooling module. Tighten the screws securely.
8. Reinstall the grille onto the front of the vehicle. (Refer to 23 - Body/Exterior/GRILLE - Installation).
9. Refill the washer reservoir with the washer fluid drained from the reservoir during the removal procedure.
10. Reconnect the battery negative cable.

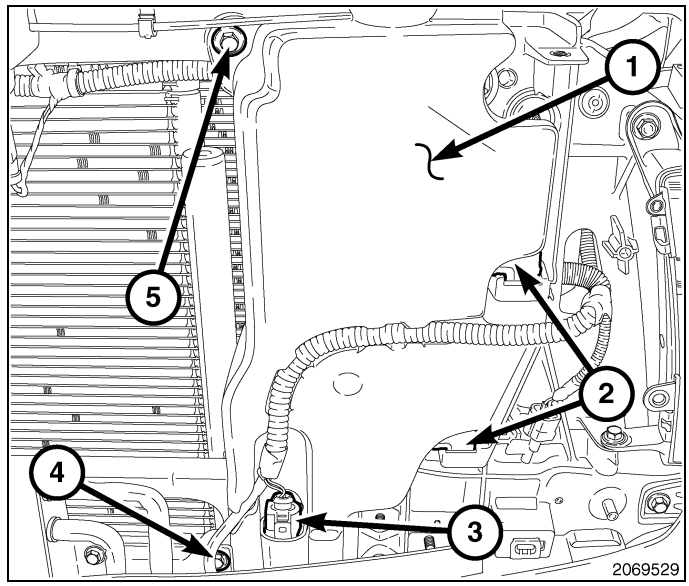

SWITCH, Washer Fluid Level

Description

The washer fluid level switch (3) is a two-pin conductivity sensor with no moving parts mounted on the rearward facing side of the washer reservoir on the front of the Front End Module (FEM) carrier (also known as the radiator closure), just to the left of the cooling module. Only the molded plastic switch mounting flange and the integral connector receptacle (4) are visible when the switch is installed in the reservoir.

A short nipple formation (1) extends from the inner surface of the switch mounting flange, and a barb on the nipple is pressed through a rubber grommet seal installed in the mounting hole of the reservoir. Two over-molded pins or electrodes (2) extend from the back of the nipple formation. The switch is connected to the vehicle electrical system through a dedicated take out and connector of the FEM wire harness.

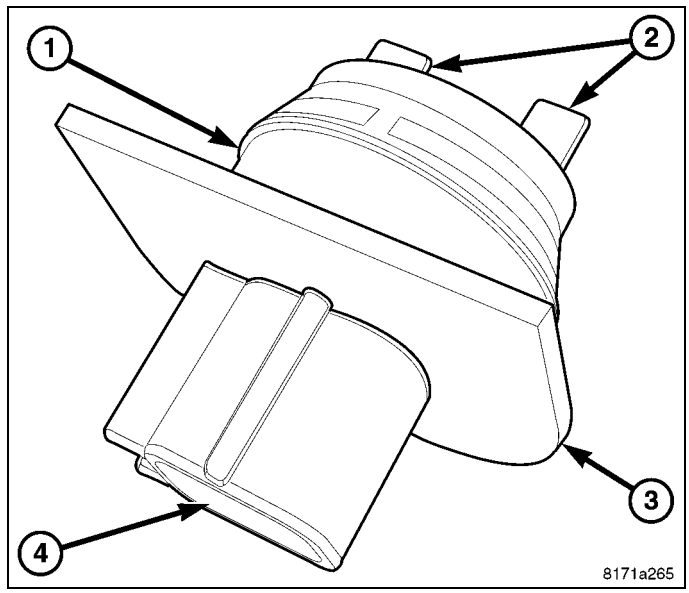

The washer fluid level switch cannot be adjusted or repaired. If ineffective or damaged, the switch must be replaced.

Operation

The washer fluid level switch uses fluid conductivity to monitor the level of the washer fluid in the washer reservoir. Electricity is conducted between the two switch pins or electrodes only when they are immersed in the washer fluid, which closes the switch circuit. When the fluid level in the washer reservoir falls below the pins, electrical current cannot be conducted and the switch becomes an open circuit, which signals a low fluid condition.

In order to prevent an electrical charge from accumulating in the electrical leads of the switch, the switch receives current that is pulsed from the Totally Integrated Power Module (TIPM) located in the engine compartment near the battery. The TIPM monitors the switch return signal and is programmed to respond to three consecutive open switch readings by sending an electronic **washer fluid indicator lamp-ON request** message to the ElectroMechanical Instrument Cluster (EMIC) (also known as the Cab Compartment Node/CCN) over the Controller Area Network (CAN) data bus. The EMIC responds to this message by illuminating the washer fluid indicator and by sounding an audible chime tone warning.

The washer fluid level switch is connected to the vehicle electrical system through a dedicated take out and connector of the Front End Module (FEM) wire harness. The switch is connected in series between a sensor return circuit and the washer fluid switch sense input to the TIPM.

The washer fluid level switch and the hard wired circuits between the switch and the TIPM may be diagnosed using conventional diagnostic tools and procedures. Refer to the appropriate wiring information. However, conventional diagnostic methods will not prove conclusive in the diagnosis of the washer fluid level indicator or the electronic controls or communication between other modules and devices that provide some features of the washer system. The most reliable, efficient, and accurate means to diagnose the washer fluid level indicator or the electronic controls and communication related to washer fluid level switch operation requires the use of a diagnostic scan tool. Refer to the appropriate diagnostic information.

Removal

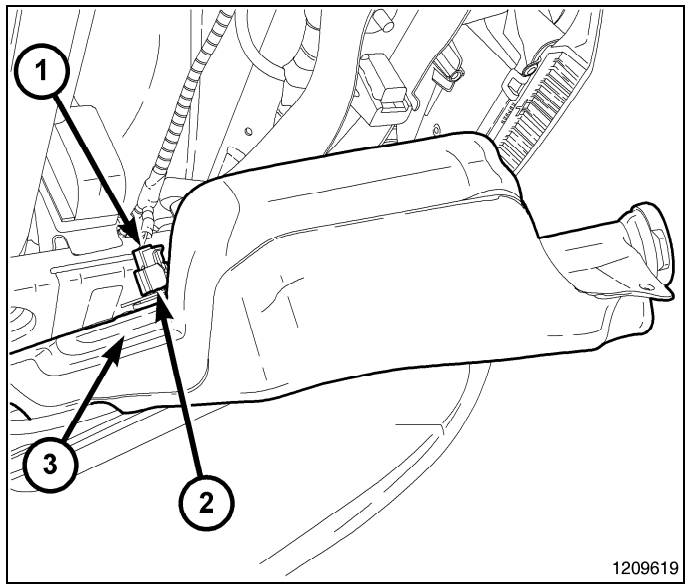

1. Disconnect and isolate the battery negative cable.
2. Remove the windshield washer reservoir (3) from the Front End Module (FEM) carrier (also known as the radiator closure), but it is not necessary to disconnect the wiring or washer hose from the washer pump/motor unit. (Refer to 08 - Electrical/8R - Wipers/Washers/RESERVOIR, Windshield Washer - Removal).
3. Rotate the outboard side of the washer reservoir away from the FEM carrier far enough to access and disconnect the FEM wire harness connector (1) from the washer fluid level switch connector receptacle (2) on the back of the reservoir.
4. Using a trim stick or another suitable wide flat-bladed tool, gently pry the barbed nipple of the washer fluid level switch out of the rubber grommet seal in the washer reservoir. Care must be taken not to damage the reservoir.
5. Remove the switch from the washer reservoir.
6. Remove the rubber grommet seal from the switch mounting hole in the washer reservoir and discard.

Installation

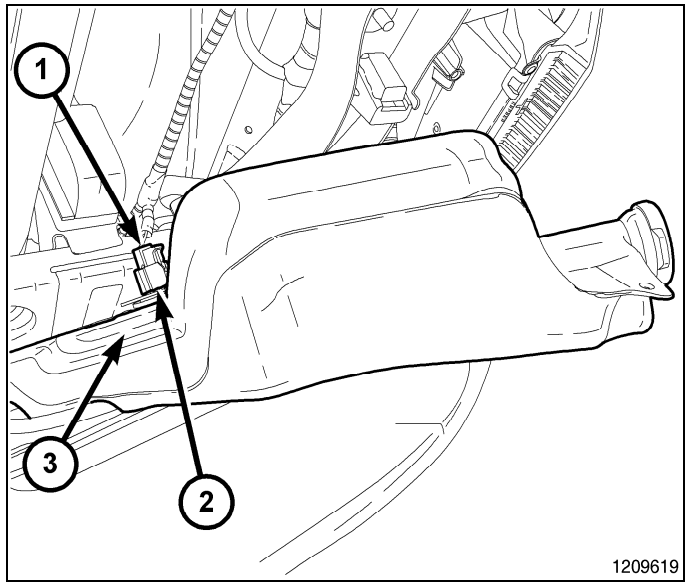

1. Install a new rubber grommet seal into the washer fluid level switch mounting hole of the washer reservoir (3). Always use a new rubber grommet seal on the reservoir.
2. Insert the nipple formation of the switch (2) through the rubber grommet seal in the reservoir.
3. Using hand pressure, press firmly and evenly on the switch mounting flange until the barbed nipple is fully seated in the rubber grommet seal in the reservoir. The flat edge of the switch mounting flange should be pointed upward.
4. Reconnect the Front End Module (FEM) wire harness connector (1) to the switch connector receptacle.
5. Reinstall the washer reservoir onto the FEM carrier (also known as the radiator closure). (Refer to 08 - Electrical/8R - Wipers/Washers/RESERVOIR, Windshield Washer - Installation).

NAVIGATION/TELECOMMUNICATION

TABLE OF CONTENTS

page

NAVIGATION/TELECOMMUNICATION
- DESCRIPTION 2
- OPERATION 2
- DIAGNOSIS AND TESTING 2

ANTENNA, NAVIGATION
- REMOVAL 4
- INSTALLATION 5

page

MODULE, HANDS FREE (HFM)
- REMOVAL 5
- INSTALLATION 6

Navigation/Telecommunication

Description

NAVIGATION

A optional navigation radio (RB4) is available on this vehicle. The navigation system allows the user to input addresses, points of interest or way points to plan a route to the desired location. The system will provide audible and visual prompts that will direct the user along the desired route. Any variances in the route will cause the navigation system to automatically recalculate the route. The Electronic Vehicle Information Center (EVIC) displays turn-by-turn directions to a programmed destination when Turn by Turn Navigation is enabled through Personal Settings. When enabled, the EVIC displays the name of the approaching road at the top of the screen, followed by an arrow to indicate the direction to turn the vehicle, and a count down to indicate the distance to the turn.

TELECOMMUNICATIONS

The hands-free cellular system on this vehicle uses Bluetooth™ technology to provide wireless communication between the operator's compatible cellular telephone and the vehicle's on-board receiver.

The system uses voice recognition technology to control operation. The incoming voice is broadcast through the vehicle's radio speakers, automatically overriding any other audio signals on the front speakers when the hands-free system is in use. A microphone in the rearview mirror picks up vehicle occupant's voices. If a call is in progress when the ignition is switched off, the hands-free system will continue to operate for up to 45 seconds as part of the Accessory Relay Delay function. Thereafter, the call can continue on the hand-held telephone.

The system will communicate with a telephone that is anywhere within the vehicle. However, covering the hand held phone or the hands-free phone module with a metal object may block the signal. The system will recognize up to seven telephones, each of which is given a spoken identification by the user during the setup process. The system includes Spanish and French voice recognition in addition to English.

Two buttons on the rearview mirror, identified with ISO icons, control the system: A "phone" button turns the system on and off; a "voice recognition" (or voice command) button prompts the hands-free system to listen for a voice command.

Operation

Navigation

The optional navigation radio system receives GPS signals from up to eight satellites to display the position and direction of the vehicle. Map information is supplied through a DVD-ROM. An electronic gyro-sensor and the vehicle's speed sensor enable the system to display the present vehicle position even in locations where GPS signals may be blocked.

When a destination is selected, the navigation system uses information from the map to quickly calculate a route. As the vehicle is driven along the chosen route, the operator is guided with pictorial displays and voice prompts.

TELECOMMUNICATION

Two buttons on the rearview mirror, identified with ISO icons, control the system: A "phone" button turns the system on and off; a "voice recognition" (or voice command) button prompts the hands-free system to listen for a voice command. The system includes the following features:

- Phone book - Stores telephone numbers for later recall by name or other verbal identification, called a voice tag, and memory location.
- Four memory locations - Home, Work, Cellular and Pager. A maximum of 32 unique names or voice tags may be stored at the same time, with a different number in each of the four memory locations.
- Voice tag dialing - Dials the number associated with a voice tag and memory location.
- Digit dialing - Dials the telephone number by recognizing the names of the digits as they are spoken.
- Receiving calls - A voice prompt notifies the user of an incoming call. A voice response accepts or rejects the call without manual intervention.
- Privacy Mode - Switches the call to the handheld telephone and the hands-free system and back again using the “voice recognition” (or “voice command”) button and a voice command, if desired.

Diagnosis and Testing

Any diagnosis of the Telecommunication system should begin with the use of scan tool. For information on the use of the scan tool, refer to the appropriate Diagnostic Service information.

For complete circuit diagrams, refer to the appropriate wiring information.

WARNING: On vehicles equipped with airbags, refer to electrical, restraints before attempting any steering wheel, steering column, or instrument panel component diagnosis or service. Failure to take the proper precautions could result in accidental airbag deployment and possible personal injury.

TELECOMMUNICATION SYSTEM DIAGNOSIS

CONDITION	POSSIBLE CAUSE	CORRECTION
PHONE NOT AVAILABLE	1. Bluetooth phone not paired to the system.	1. Ensure that phone(s) are paired to the system.
	2. Bluetooth phone not present or turned OFF.	2. Make sure paired phone is present, turned ON and that the Bluetooth option is enabled on the phone.
	3. Bluetooth phone has low battery.	3. At low battery levels, some phones will turn off Bluetooth functionality. Ensure cellular phone is charged to an adequate level.
PHONE PAIRING FAILED	1. Phone does not support Hands Free Profile	1. The Telecommunication system requires the cellular phone to be Bluetooth™ enabled, as well as supporting the Hands Free Profile. The customer will have to upgrade their phone to one supporting Hands Free Profile. A list of suggested phones is available at: http://www.chrysler.com/uconnect.
	2. Phone not Bluetooth enabled.	2. The Telecommunication system requires the cellular phone to be Bluetooth™ enabled. A list of suggested phones is available at: http://www.chrysler.com/uconnect.
	3. PIN entered on the phone is not the same as PIN spoken to the system.	3. The PIN spoken to the system must be the same PIN entered into the phone.
	4. Phone has reached maximum number of allowed devices paired.	4. Remove one of the previously paired devices from it's list.
POOR VOICE RECOGNITION	1. Microphone failure	1. Using a scan tool, check for microphone fault codes.
	2. Customer not waiting for the beep before speaking.	2. Ensure customer is waiting for the system "beep" prior to beginning the speech to be recognized.
	3. Customer not speaking in a smooth normal manner.	3. Verify that the customer is attempting to use the system with a smooth consistent voice. The system is designed to accept normal speech spoken at a normal tone, some people tend to speak to a computer loud and slow, which results in reduced performance.
	4. Rear view mirror not properly attached to mounting.	4. Mirror must be firmly mounted to the mounting location. Ensure that mirror is tightened to the specified torque.
	5. High levels of noise in vehicle compartment	5. System performance is increased when noise conditions in the vehicle are lowered. Ideal conditions include windows closed.
	6. Object interfering with microphone input	6. Verify that there is no object, hanging from the mirror, that could be obstructing the microphone.
	7. User not saying "send" after a pager dialing request	7. User must say "send" at the end of a Pager Dialing request.
	8. Other passengers talking while customer is attempting to use the system	8. Although designed for primary use by the driver, the microphone will pick up passengers in any seat of the vehicle. System performance is increased in low noise environments.

TELECOMMUNICATION SYSTEM DIAGNOSIS, continued

CONDITION	POSSIBLE CAUSE	CORRECTION
PHONEBOOK NAMES NOT RECOGNIZED CONSISTENTLY	1. Phonebook names recorded in high noise conditions	1. For increased system performance, it is recommended that the phone book entries are recorded in a low noise environment. That is, vehicle in park, with windows up.
	2. Phonebook name(s) short	2. For increased performance it is recommended that the user use both first and last name as a phonebook entry. Example: "Daniel Johnson" as opposed to "Dan".
	3. Phonebook names recorded by another user	3. It is recommended that each user of the system record their own phonebook entries. This will increase the recognition performance.
	4. Similar names in phonebook	4. For increased system performance it is recommended that the user do not enter similar sounding names in the phonebook.
	5. Object interfering with microphone input	5. Object interfering with microphone input.
POOR PHONE AUDIO QUALITY.	1. Microphone failure	1. Use a scan tool, and check for Microphone faults.
	2. Rear view mirror not properly fixed to mounting button	2. Mirror must be firmly mounted to the mounting location. Tighten mirror to the specified torque.
	3. System being used in high noise conditions	3. System performance is increased when noise conditions in the vehicle are lowered. Ideal conditions include windows closed.
NO PHONE AUDIO	1. Phone setting cause phone audio to be routed to handset.	1. Route audio to "Hands free" device.

ANTENNA, Navigation

Removal

1. Disconnect and isolate the battery negative cable.
2. Remove the instrument panel center bezel (Refer to 23 - Body/Instrument Panel/BEZEL, Instrument Panel - Removal).
3. Remove the radio (Refer to 08 - Electrical/8A - Audio and Video/RADIO - Removal).
4. Unclip the antenna from the antenna mounting bracket.

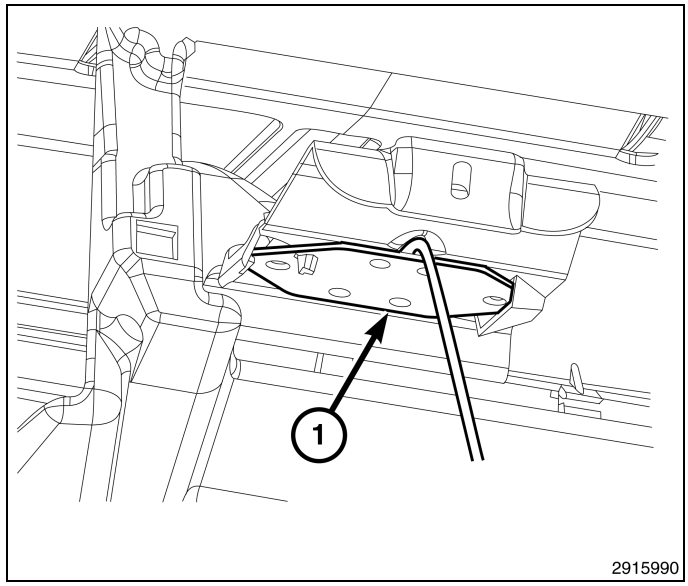

Installation

1. Clip the antenna (1) into the mounting bracket.
2. Install the radio (Refer to 08 - Electrical/8A - Audio and Video/RADIO - Installation).
3. Install the instrument panel center bezel (Refer to 23 - Body/Instrument Panel/BEZEL, Instrument Panel - Installation).
4. Connect battery negative cable.

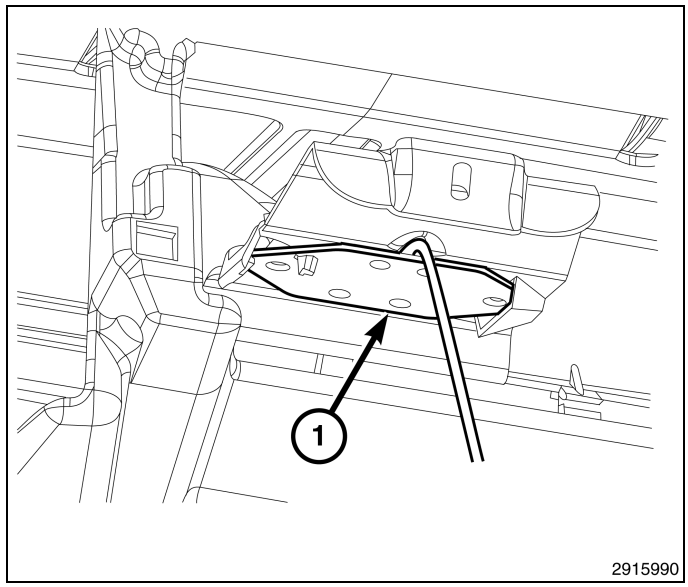

MODULE, Hands Free (HFM)

Removal

1. Disconnect and isolate the battery negative cable.
2. Remove the glove box (Refer to 23 - Body/Instrument Panel/GLOVE BOX, Instrument Panel - Removal).
3. Remove the instrument panel right side end cap.
4. Remove the two mounting fasteners (1).

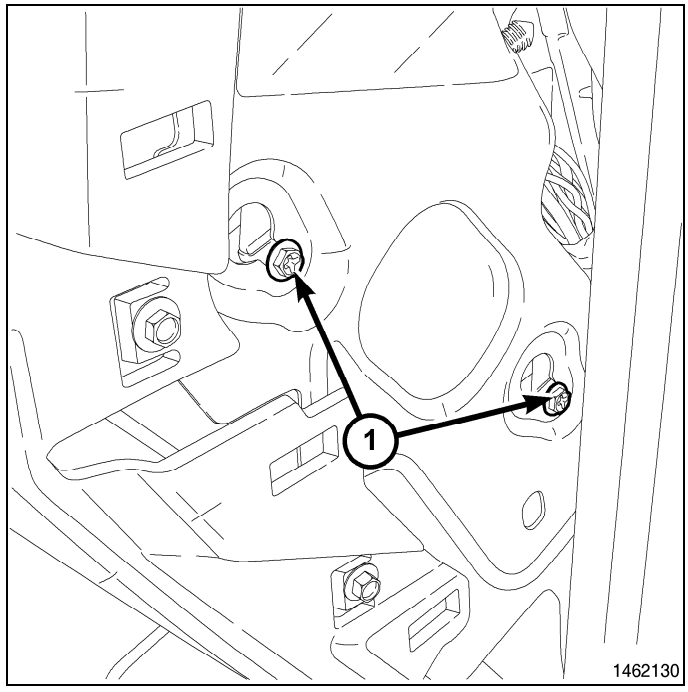

5. Disconnect the electrical harness connector and remove module.

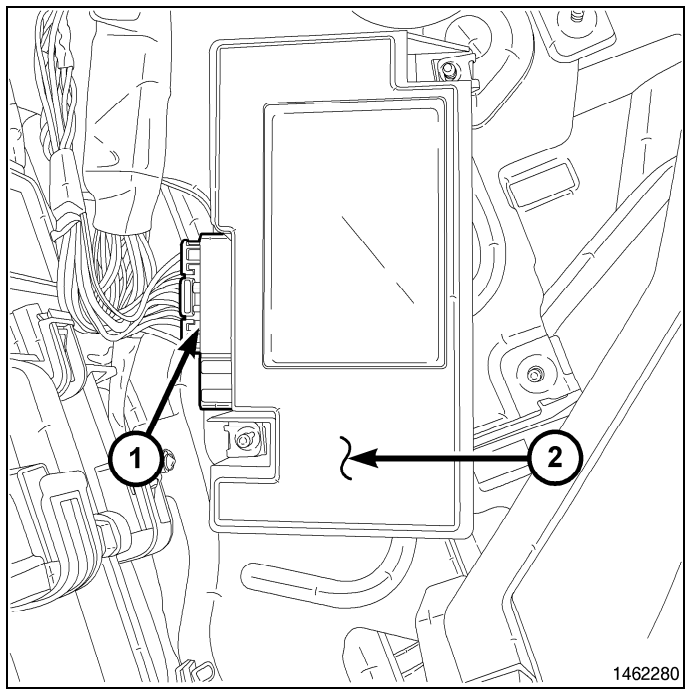

Installation

1. Connect the Hands Free Module (HFM) electrical connector and position the module into place.

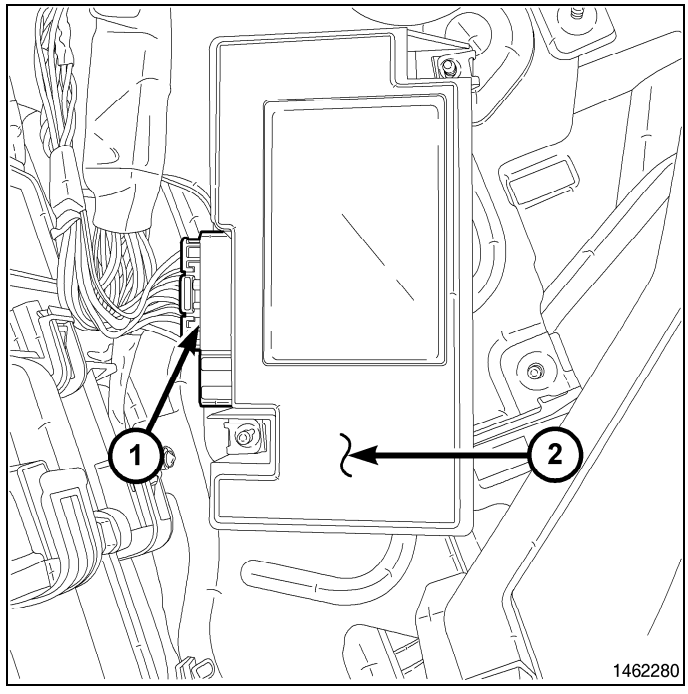

2. Install and tighten the mounting fasteners.
3. Install the instrument panel right side end cap.
4. Install the glove box (Refer to 23 - Body/Instrument Panel/GLOVE BOX, Instrument Panel - Installation).
5. Connect the battery negative cable.

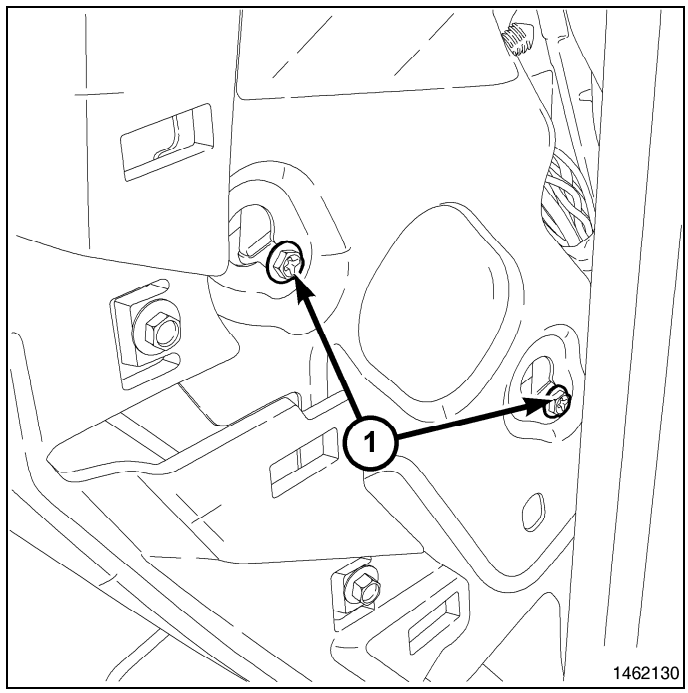

POWER DISTRIBUTION

TABLE OF CONTENTS

page

POWER DISTRIBUTION
- DESCRIPTION . . . 2
- OPERATION . . . 2

FUSE, IOD
- DESCRIPTION . . . 2
- OPERATION . . . 2

MODULE, POWER INVERTER
- DESCRIPTION . . . 3
- OPERATION . . . 3
- DIAGNOSIS AND TESTING . . . 3
- REMOVAL . . . 4
- INSTALLATION . . . 6

MODULE, TOTALLY INTEGRATED POWER (TIPM)
- DESCRIPTION . . . 7
- OPERATION . . . 7
- REMOVAL . . . 8
- INSTALLATION . . . 9

page

OUTLET, POWER, 12 V
- DESCRIPTION . . . 10
- OPERATION . . . 10
- DIAGNOSIS AND TESTING . . . 11
- REMOVAL . . . 11
- INSTALLATION . . . 12

OUTLET, POWER, 115 V
- DESCRIPTION . . . 13
- OPERATION . . . 13
- DIAGNOSIS AND TESTING . . . 13
- REMOVAL . . . 14
- INSTALLATION . . . 14

OUTLET, POWER, CONSOLE
- DESCRIPTION . . . 14
- OPERATION . . . 14
- DIAGNOSIS AND TESTING . . . 14
- REMOVAL . . . 15
- INSTALLATION . . . 15

Power Distribution

Description

The power distribution system for this vehicle consists of the following components:

- Totally Integrated Power Module (TIPM)
- Cigar Lighter Outlets

The power distribution system also incorporates various types of circuit control and protection devices, including:

- Automatic resetting circuit breakers
- Blade-type fuses
- Cartridge fuses
- Relays

For complete circuit diagrams, refer to the appropriate wiring information. The wiring information includes wiring diagrams, proper wire and connector repair procedures, details of wire harness routing and retention, connector pin-out information and location views for the various wire harness connectors, splices and grounds.

For specific fuse location and types, (Refer to 04 - Vehicle Quick Reference/Fuse Locations and Types - Specifications).

Operation

The power distribution system for this vehicle is designed to provide safe, reliable, and centralized distribution points for the electrical current required to operate all of the many standard and optional factory-installed electrical and electronic powertrain, chassis, safety, security, comfort and convenience systems. At the same time, the power distribution system was designed to provide ready access to these electrical distribution points for the technician to use when conducting diagnosis and repair of inoperative circuits. The power distribution system can also prove useful for the sourcing of additional electrical circuits that may be required to provide the electrical current needed to operate many accessories that the vehicle owner may choose to have installed.

FUSE, IOD

Description

All vehicles are equipped with an Ignition-Off Draw (IOD) fuse that is disconnected within the Totally Integrated Power Module (TIPM) when the vehicle is shipped from the factory. Dealer personnel are to reconnect the IOD fuse in the TIPM as part of the new vehicle preparation procedures and then disconnect it again until new vehicle delivery to the customer.

A laser printed fuse layout map is integral to the TIPM cover to ensure proper fuse identification. The IOD fuse is a 60 amp cartridge fuses - FMX series fuse. The fuse is secured within a white molded plastic fuse holder and puller unit that serves both as a tool for disconnecting and reconnecting the fuse in the TIPM cavity, and as a fuse holder that conveniently stores the fuse in the same cavity after it has been disconnected.

CIRCUITS INCLUDED WITH IOD FUSE

- A/C and Heater Control
- Amplifier
- Cluster (CCN)
- Compass
- Hands Free Module (HFM)
- Multifunction Switch
- Radio
- Satellite Video Module
- Underhood Lamp
- Video Screen Module

Operation

The term Ignition-Off Draw (IOD) identifies a normal condition where power is being drained from the battery with the ignition switch in the Off position. The IOD fuse feeds the memory and sleep mode functions for some of the electronic modules in the vehicle as well as various other accessories that require battery current when the ignition switch is in

the Off position. The only reason the IOD fuse is disconnected is to reduce the normal IOD of the vehicle electrical system during new vehicle transportation and pre-delivery storage to reduce battery depletion, while still allowing vehicle operation so that the vehicle can be loaded, unloaded and moved as needed by both vehicle transportation company and dealer personnel.

The IOD fuse is disconnected from Totally Integrated Power Module (TIPM) fuse cavity # J15 when the vehicle is shipped from the assembly plant. Dealer personnel must reconnect the IOD fuse when the vehicle is being prepared for delivery in order to restore full electrical system operation. Once the vehicle is prepared for delivery, the IOD function of this fuse becomes transparent and the fuse that has been assigned the IOD designation becomes only another Fused B(+) circuit fuse.

The IOD fuse can be used by the vehicle owner as a convenient means of reducing battery depletion when a vehicle is to be stored for periods not to exceed about thirty days. However, it must be remembered that disconnecting the IOD fuse will not eliminate IOD, but only reduce this normal condition. If a vehicle will be stored for more than about thirty days, the battery negative cable should be disconnected to eliminate normal IOD; and, the battery should be tested and recharged at regular intervals during the vehicle storage period to prevent the battery from becoming discharged or damaged.

MODULE, Power Inverter

Description

The inverter module is located under the front passenger seat it provides a total of 400 watts of power. The A/C outlet is mounted in the right hand side of the instrument panel center and in the back of the center floor console. The inverter module provides A/C power for user accessories. The inverter converts the 12 Volt DC from the battery system to a 115 Volt AC output.

Operation

The AC power outlet receives 12 volts from the Totally Integrated Power Module (TIPM) and passes it as an enable signal to the inverter module. The inverter module also receives 12 volts via the TIPM and inverts this to a 115 volt AC output. The enable signal received from the power outlet enables the inverter to convert the received voltage and pass it to the power outlet to power external devices.

Diagnosis and Testing

For complete circuit diagrams, refer to the appropriate wiring information.

WARNING: Disable the airbag system before attempting any steering wheel, steering column, seat belt tensioner, side airbag or instrument panel component diagnosis or service. Disconnect and isolate the negative battery (ground) cable. Wait two minutes for the airbag system capacitor to discharge before performing further diagnosis or service. This is the only sure way to disable the airbag system. Failure to follow these instructions may result in accidental airbag deployment and possible serious or fatal injury.

115 VOLT POWER OUTLET DIAGNOSIS

CONDITION	POSSIBLE CAUSES	CORRECTION
NO POWER AT THE 115 VOLT POWER OUTLET	1. Fuse inoperative.	1. Check Totally Integrated Power Module (TIPM) fuse number 29. Replace fuse, if required.
	2. Power outlet connector damaged.	2. Check for loose or corroded power outlet connector. Repair, if required.
	3. Inverter module connector damaged.	3. Check for loose or corroded inverter module connector. Repair, if required.
	4. Wiring damaged.	4. Check for shorted or open wires. Repair wiring, if required.
	5. Inverter module ground damaged.	5. Check for continuity between the inverter module and a known good ground. There should be continuity. Repair ground, if required.
	6. Power outlet inoperative.	6. Replace the power outlet.
	7. Inverter module inoperative.	7. Replace the inverter module.
	8. Power outlet switch inoperative.	6. Replace the accessory switch bank.

Removal

1. Disconnect and isolate the negative battery cable.
2. Release the seat cushion j-channel (1) from the seat frame to gain access to the power inverter module (2).

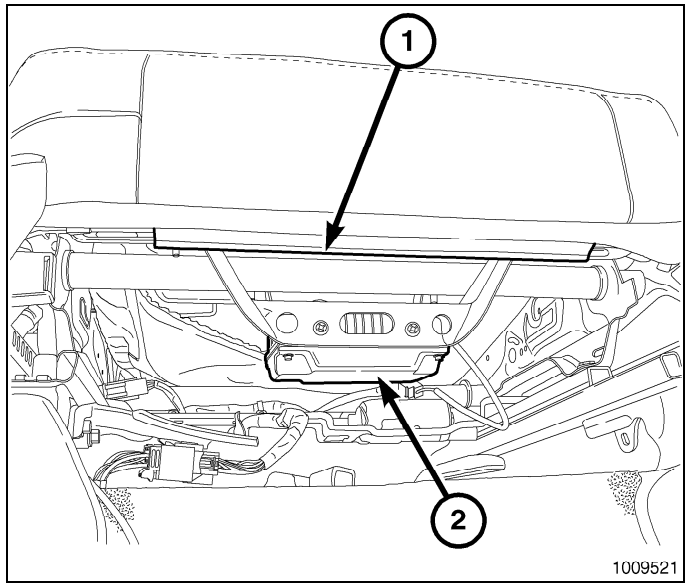

3. Lift up on the seat cushion and remove the four power inverter mounting bracket retainers.
4. Disconnect the power inverter electrical connector and remove the power inverter assembly from the vehicle.

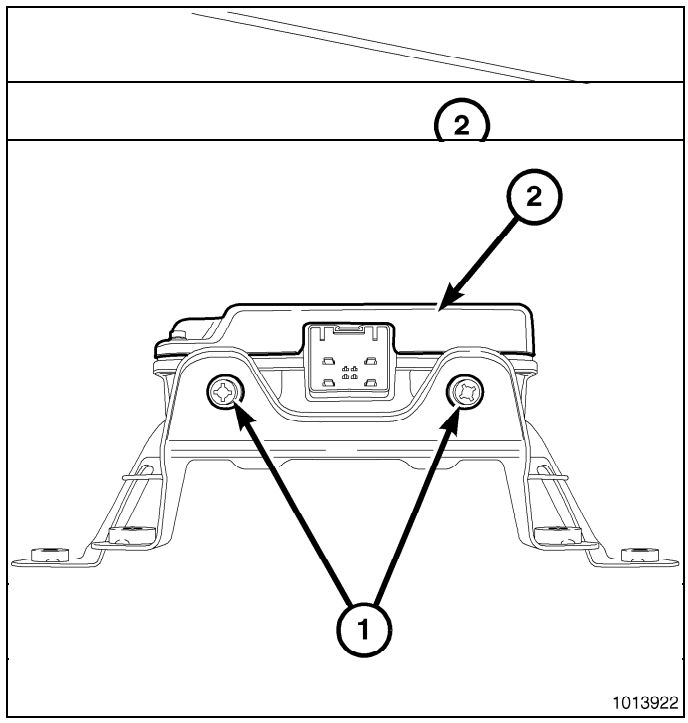

5. Remove the four screws holding the power inverter to the mounting bracket.
6. Remove the power inverter.

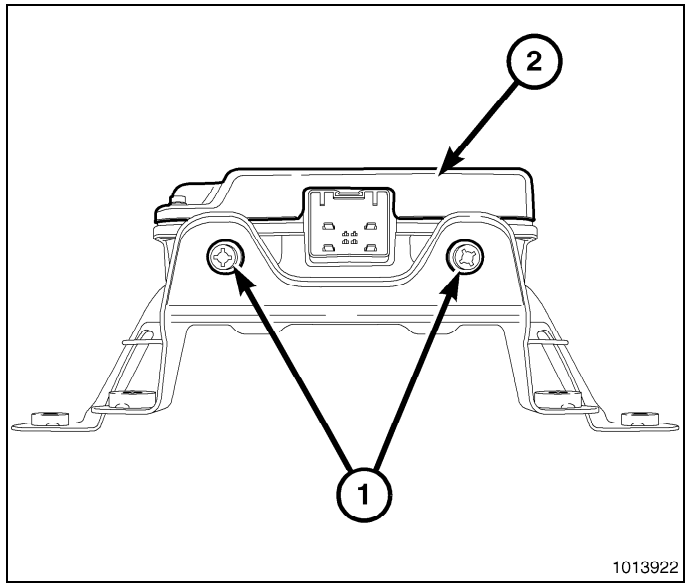

Installation

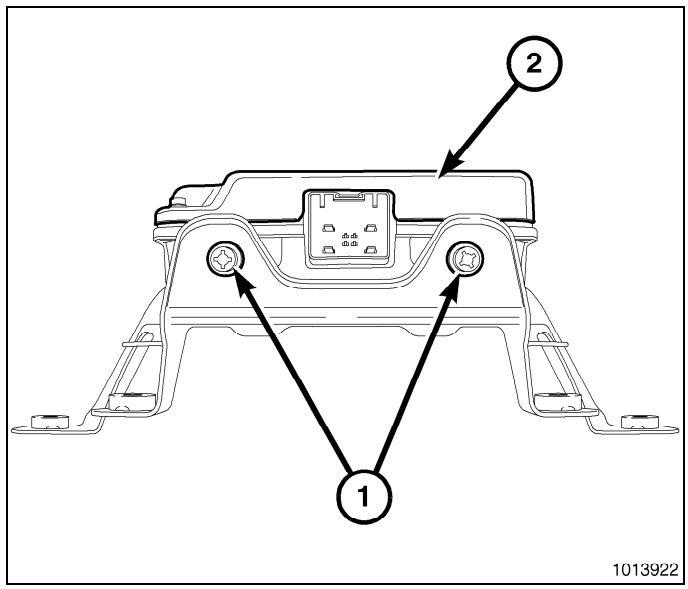

1. Install the power inverter into the mounting bracket.
2. Install the four screws holding the power inverter to the mounting bracket.

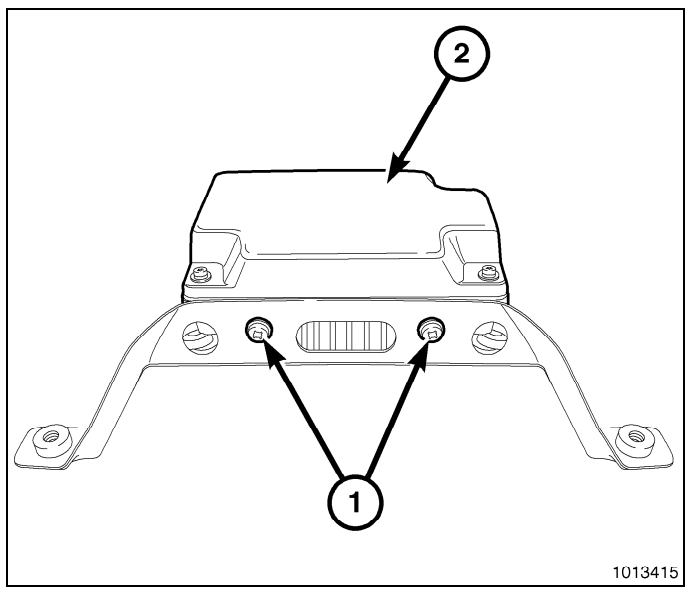

3. Install the power inverter assembly, lift up the front seat cushion to gain access to the retainer holes (1).

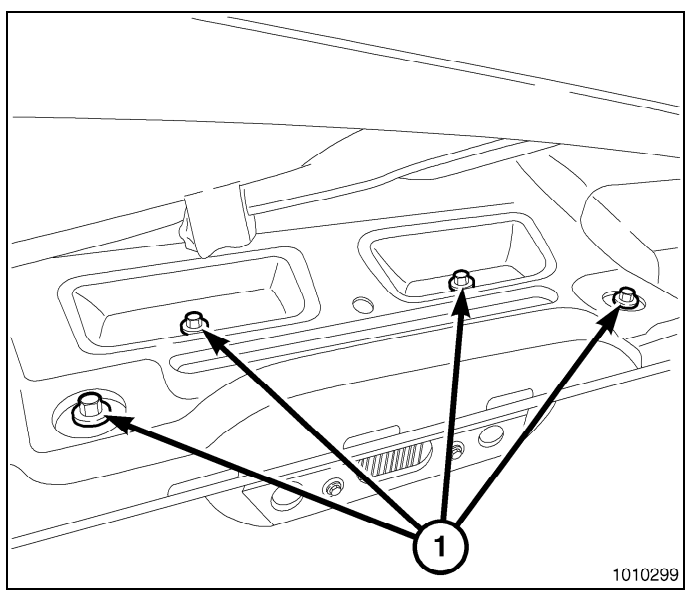

4. Install the seat cushion j-channel to the seat frame.
5. Connect the negative battery cable.

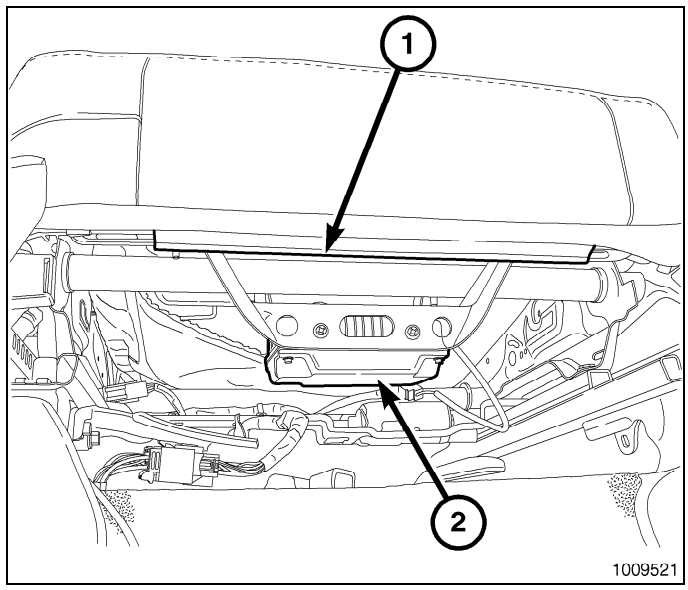

MODULE, Totally Integrated Power (TIPM)

Description

The Totally Integrated Power Module (TIPM) is a combination unit that performs the functions of the Power Distribution Center (PDC) and the Front Control Module. The TIPM is a printed circuit board based module that contains fuses, internal relays and a microprocessor that performs the functions previously executed by the FCM. The TIPM is located in the engine compartment, next to the battery and connects directly to the B+ cable via a stud located on top of the unit. The ground connection is via electrical connectors. The TIPM provides the primary means of voltage distribution and protection for the entire vehicle.

The molded plastic TIPM housing includes a base and cover. The TIPM cover is easily opened or removed for service and has a fuse and relay layout map integral to the inside surface of the cover. The TIPM housing base and cover are secured in place via mounting tabs. The mounting tabs secure the TIPM to the TIPM mounting bracket.

Operation

All of the current from the battery and the generator output enters the Totally Integrated Power Module (TIPM) via a stud on the top of the module. The TIPM cover is removed to access the fuses or relays. Internal connections of all of the power distribution center circuits are accomplished by a combination of bus bars and a printed circuit board.

For complete circuit diagrams, refer to the appropriate wiring information. The wiring information includes wiring diagrams, proper wire and connector repair procedures, details of wire harness routing and retention, connector pin-out information and location views for the various wire harness connectors, splices, and grounds.

Removal

1. Disconnect and isolate the battery negative cable.
2. Remove the B+ terminal nut (1) from the Totally Integrated Power Module (3) (TIPM) B+ terminal. Remove the B+ cable (2) from the TIPM.
3. Using a suitable flat blade tool, disengage the TIPM upper retaining tabs from the battery tray bracket (3).

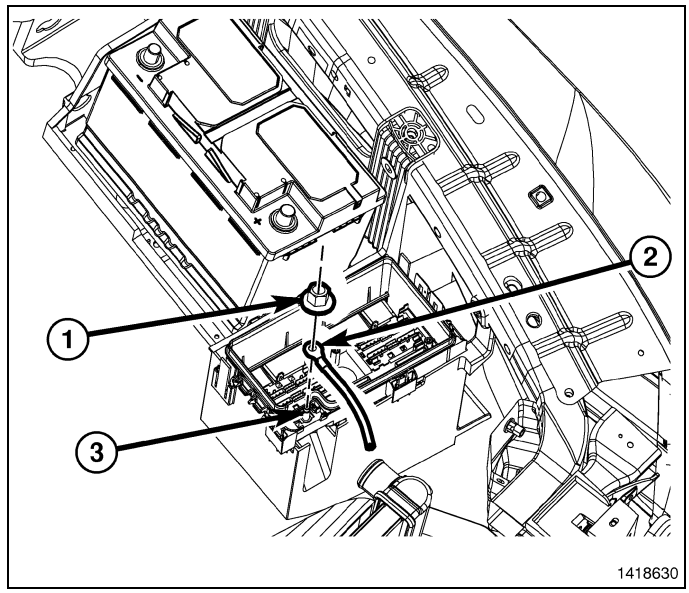

4. Grasp the TIPM (1) and rotate the assembly up to free it from its mounting bracket (3). Position the assembly upside down to access the electrical connectors located on the bottom of the unit.

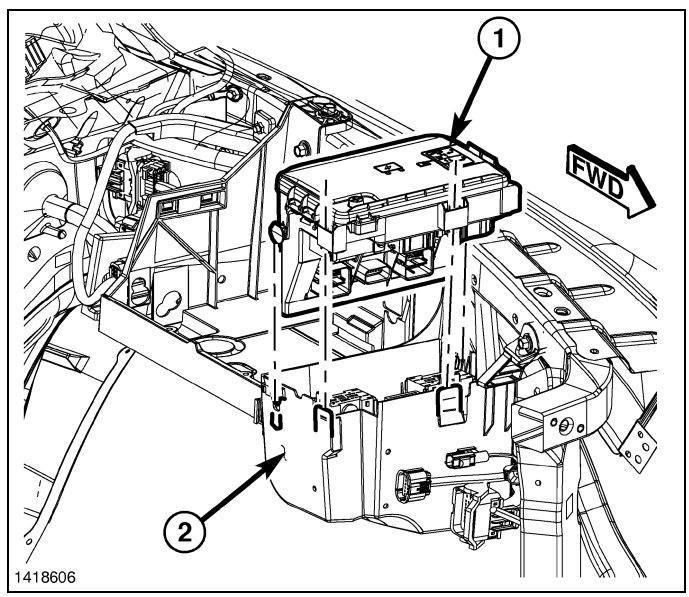

5. Disconnect the electrical connectors (2) by depressing the locking tab and rotating the connector arm outboard, until the connector is free from the TIPM assembly (1). Be certain to pull the connectors straight off.
6. Remove the TIPM (1) from the vehicle.

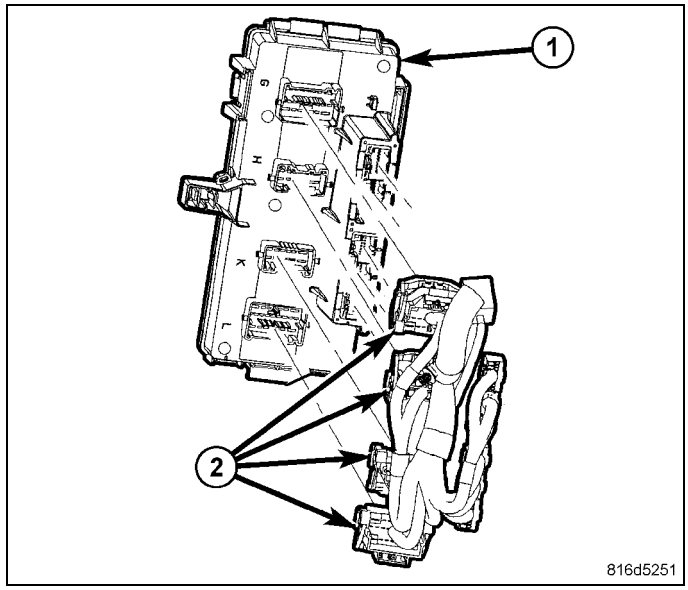

Installation

1. Position the Totally Integrated Power Module (1) (TIPM) into the vehicle.

NOTE: Totally Integrated power module electrical connectors are color coded to ease location reference.

2. Connect the electrical connectors (2) by pushing straight on and rotating the connector arm inboard, until the connector is firmly locked in place on the TIPM assembly (1).

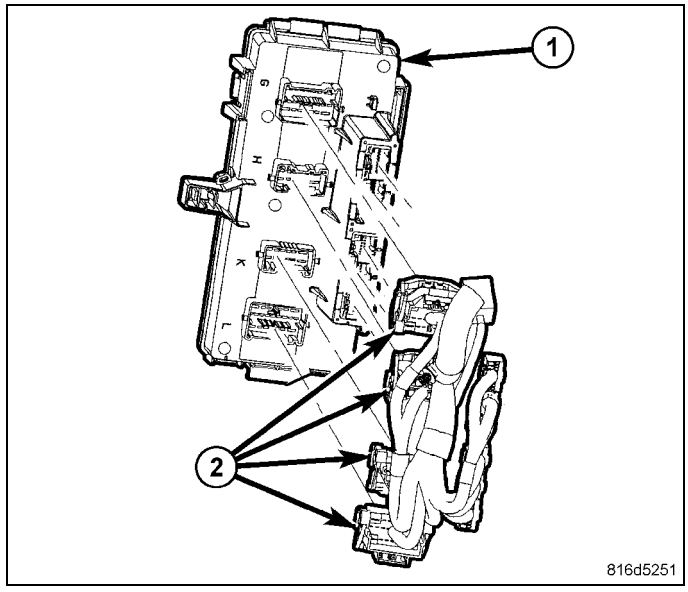

3. Turn the TIPM so that the connector side is facing down. Install the assembly onto the TIPM battery tray bracket making sure to line up the lower retaining tab with the retaining slot in the tray .
4. Push the TIPM (1) downward to lock the upper retaining clips into the bracket (3).

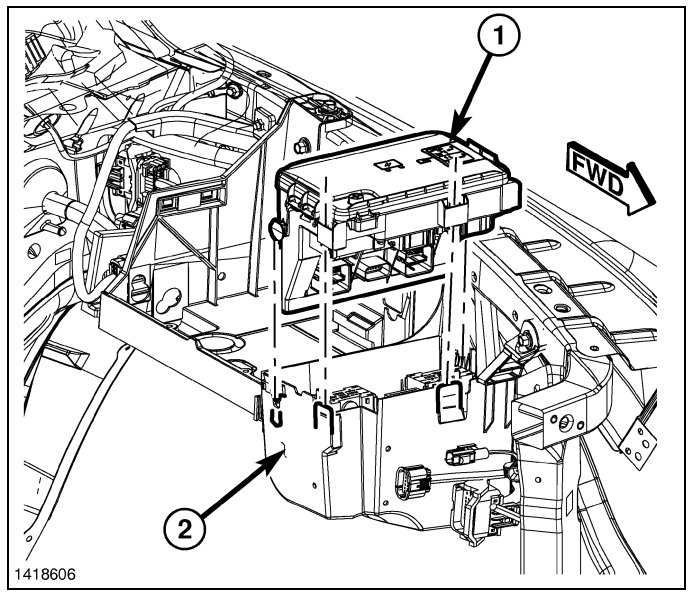

5. Install the B+ terminal cable (2) and nut (1) on the B+ terminal of the TIPM (3).
6. Connect the battery negative cable.

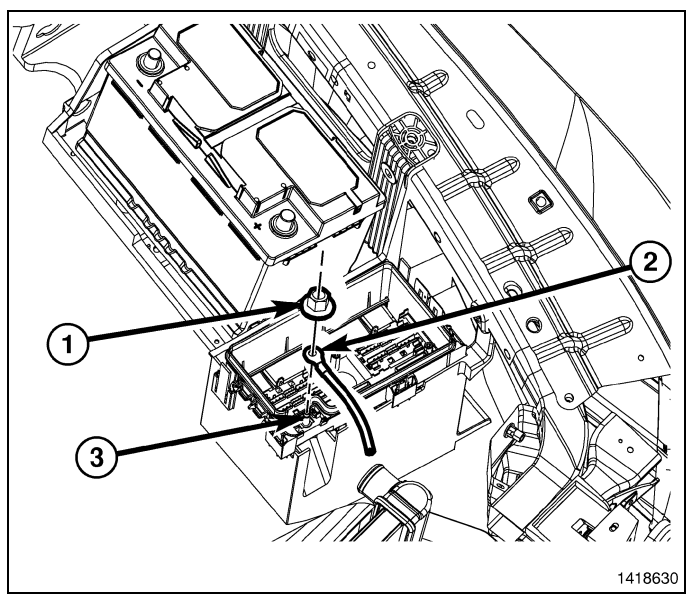

OUTLET, Power, 12 V

Description

A cigar lighter outlet is installed to the left of the center stack area in the lower instrument panel. The cigar lighter outlet is secured by a snap fit within the bezel.

The cigar lighter outlet, plastic cap and the knob and heating element unit are available for service replacement. These components cannot be repaired and, if inoperative or damaged, they must be replaced.

Operation

The cigar lighter consists of two major components: a knob and heating element unit, and the cigar lighter base or outlet shell. The receptacle shell is connected to ground, and an insulated contact in the bottom of the shell is connected to battery current. The cigar lighter receives battery voltage from a fuse in the Integrated Power Module (IPM) when the ignition switch is in the Accessory or Run positions.

The cigar lighter knob and heating element are encased within a spring-loaded housing, which also features a sliding protective heat shield. When the knob and heating element are inserted in the outlet shell, the heating element resistor coil is grounded through its housing to the outlet shell. If the cigar lighter knob is pushed inward, the heat shield slides up

toward the knob exposing the heating element, and the heating element extends from the housing toward the insulated contact in the bottom of the outlet shell.

Two small spring-clip retainers are located on either side of the insulated contact inside the bottom of the outlet shell. These clips engage and hold the heating element against the insulated contact long enough for the resistor coil to heat up. When the heating element is engaged with the contact, battery current can flow through the resistor coil to ground, causing the resistor coil to heat.

When the resistor coil becomes sufficiently heated, excess heat radiates from the heating element causing the spring-clips to expand. Once the spring-clips expand far enough to release the heating element, the spring-loaded housing forces the knob and heating element to pop back outward to their relaxed position. When the cigar lighter knob and element are pulled out of the outlet shell, the protective heat shield slides downward on the housing so that the heating element is recessed and shielded around its circumference for safety.

Diagnosis and Testing

For complete circuit diagrams, refer to the appropriate wiring information. The wiring information includes wiring diagrams, proper wire and connector repair procedures, details of wire harness routing and retention, connector pin-out information and location views for the various wire harness connectors, splices and grounds.

1. Check the fused B(+) fuse in the Integrated Power Module (IPM). If OK, go to Step #2. If not OK, repair the shorted circuit or component as required and replace the inoperative fuse.
2. Turn the ignition switch to the Run position. Check for battery voltage at the fused B(+) fuse in the IPM. If OK, go to Step #3. If not OK, repair the open or short as required.
3. Remove the cigar lighter knob and element from the cigar lighter outlet shell. Check for continuity between the inside circumference of the cigar lighter outlet shell and a good ground. there should be continuity. If OK, go to Step #4. If not OK, go to Step #5.
4. Turn the ignition switch to the Run position. Check for battery voltage at the insulated contact located at the back of the cigar lighter outlet shell. If OK, replace the inoperative cigar lighter knob and element. If not OK, go to Step #5.
5. Turn the ignition switch to the Off position. Disconnect and isolate the battery negative cable. Check for continuity between the ground circuit cavity of the cigar lighter wire harness connector and a good ground. There should be continuity. If OK, go to Step #6. If not OK, repair the open ground circuit to ground as required.
6. Connect the battery negative cable. Turn the ignition switch to the Accessory or Run positions. Check for battery voltage at the fused B(+) circuit cavity of the cigar lighter wire harness connector. If OK, replace the inoperative cigar lighter outlet. If not OK, repair the open fused B(+) circuit to the IPM fuse as required.

Removal

1. Disconnect and isolate the battery negative cable.
2. Look inside and note position of the retaining bosses (2).
3. Insert the Remover, Power Outlet 10246(1) into the retaining bosses (2) of the power outlet.
4. Pull out the base through the mounting ring by gently rocking the tool.

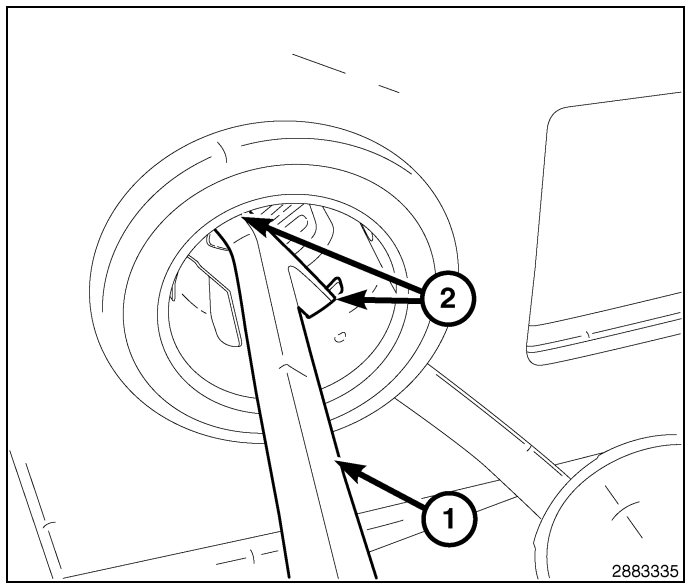

5. Disconnect the harness (1) from the power outlet (2).
6. Set the base aside and remove the base mount ring.

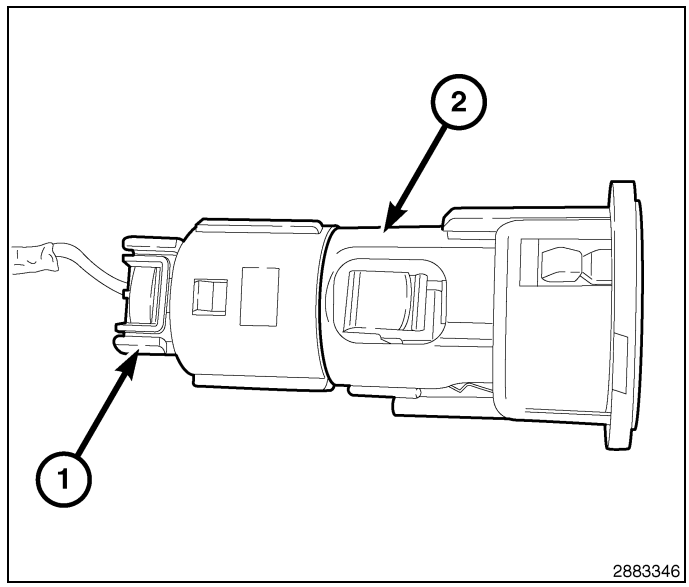

Installation

1. Connect the wire connector (1) to the power outlet receptacle (2).
2. Install the power outlet mount into the panel.
3. Align the splines on the outside of the power outlet receptacle base connector receptacle with the grooves on the inside of the mount.
4. Press firmly on the power outlet receptacle base until the retaining bosses of the mount are fully engaged in their receptacles.
5. Connect the battery negative cable.

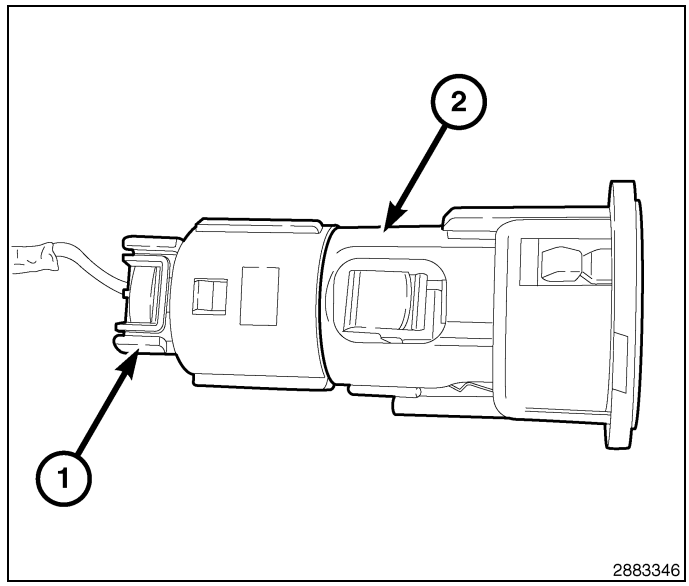

OUTLET, Power, 115 V

Description

The 115 Volt AC outlet (3) is mounted in the rear of the center floor console (2). The vehicle is able to supply 115 Volt AC power through the use of a inverter module. The inverter module is located under the right rear seat cushion. The inverter converts the 12 Volt DC from the vehicle battery system to a 115 Volt AC output.

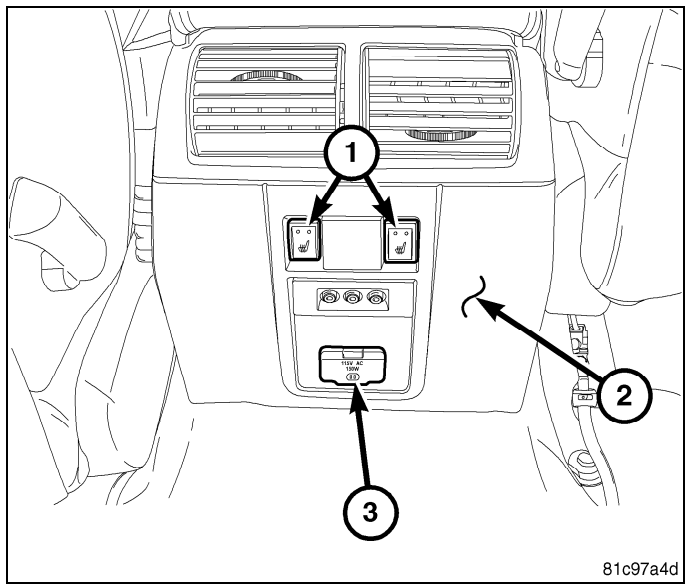

The inverter module provides A/C power for user accessories when the 115 Volt AC outlet switch (4) in the instrument panel center stack is in the “ON” position. The outlet switch is part of the instrument panel upper switch pod assembly and is not available for service as an individual part. If the switch is damaged or inoperative the complete upper switch pod assembly must be replaced, (Refer to 08 - Electrical/8J - Instrument Cluster/POD, Switch - Removal) for the appropriate procedure.

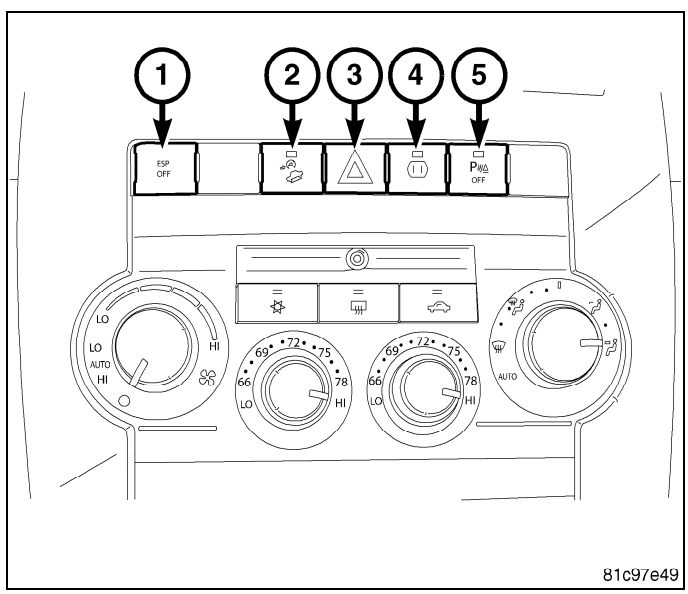

Operation

The 115 volt AC power outlet switch receives 12 volts from the Totally Integrated Power Module (TIPM) and passes it as an enable signal to the inverter module. The inverter module also receives 12 volts via the TIPM and inverts this to a 115 volt AC output. The enable signal received from the power outlet switch enables the inverter to convert the received voltage and pass it to the power outlet to power external devices.

Diagnosis and Testing

WARNING: Be sure to utilize the proper safety gloves rated at least at a 00 rating when working on any high voltage system. Failure to do so may result in serious or fatal injury.

Proper use and care of rubber insulating gloves and sleeves are essential to user safety. Do not wear rings, watches, jewelry and sharp objects on your hands or arms, they will cause damage to the rubber gloves and sleeves.

NOTE: Before attempting any repair on a inverter circuits, check for Diagnostic Trouble Codes with the scan tool.

NOTE: B (+) range must be with 11.5 V DC to 16 V DC for inverter operation.

For complete circuit diagrams, refer to the appropriate wiring information. The wiring information includes wiring diagrams, proper wire and connector repair procedures, details of wire harness routing and retention, connector pin-out information and location views for the various wire harness connectors, splices and grounds.

1. Check the fused B (+) fuse in the Integrated Power Module (TIPM). If OK, go to Step #2. If not OK, repair the shorted circuit or component as required and replace the inoperative fuse.
2. Remove the instrument panel center bezel (Refer to 23 - Body/Instrument Panel/BEZEL, Instrument Panel - Removal), disconnect the connector from the back of the 115 V power outlet. Turn the ignition switch to the RUN position and press the inverter ON switch. Switch the multi-meter from D/C to A/C and check for 115 V at pin 1 and pin 4 in the harness connector. If OK, go to Step #3. If not OK, repair the open or short as required.
3. Replace the 115 V power outlet (Refer to 08 - Electrical/8W - Wiring/Power Distribution/OUTLET, Power - Removal).

Removal

1. Disconnect and isolate the negative battery cable.
2. Remove the instrument panel center bezel (Refer to 23 - Body/Instrument Panel/BEZEL, Instrument Panel - Removal).
3. Using a trim stick C-4755 or equivalent, release the 115 V power outlet from the retaining clips and remove from the instrument panel center bezel.

Installation

1. Install the 115 V power outlet into the instrument panel center bezel.
2. Install the instrument panel center bezel (Refer to 23 - Body/Instrument Panel/BEZEL, Instrument Panel - Installation).
3. Connect the battery negative cable.

OUTLET, Power, Console

Description

Two power outlets are utilized on this model. One in the instrument panel center lower bezel and the other in the center console. The power outlet bases are secured by a snap fit within the instrument panel or trim panel. A plastic protective cap snaps into the power outlet base when the power outlet is not being used, and hangs from the power outlet base mount by an integral bail strap while the power outlet is in use.

The power outlet receptacle unit and the accessory power outlet protective cap are available for service. The power outlet receptacle cannot be repaired and, if faulty or damaged, it must be replaced.

Operation

The power outlet base or receptacle shell is connected to ground, and an insulated contact in the bottom of the shell is connected to battery current. The power outlet receives battery voltage from a fuse in the integrated power module at all times.

While the power outlet is very similar to a cigar lighter base unit, it does not include the two small spring-clip retainers inside the bottom of the receptacle shell that are used to secure the cigar lighter heating element to the insulated contact.

Diagnosis and Testing

For complete circuit diagrams, refer to the appropriate wiring information. The wiring information includes wiring diagrams, proper wire and connector repair procedures, details of wire harness routing and retention, connector pin-out information and location views for the various wire harness connectors, splices and grounds.

1. Check the fused B(+) fuse in the Integrated Power Module (IPM). If OK, go to Step #2. If not OK, repair the shorted circuit or component as required and replace the inoperative fuse.

2. Turn the ignition switch to the Run position. Check for battery voltage at the fused B(+) fuse in the IPM. If OK, go to Step #3. If not OK, repair the open or short as required.
3. Remove the cigar lighter knob and element from the cigar lighter outlet shell. Check for continuity between the inside circumference of the cigar lighter outlet shell and a good ground. there should be continuity. If OK, go to Step #4. If not OK, go to Step #5.
4. Turn the ignition switch to the Run position. Check for battery voltage at the insulated contact located at the back of the cigar lighter outlet shell. If OK, replace the inoperative cigar lighter knob and element. If not OK, go to Step #5.
5. Turn the ignition switch to the Off position. Disconnect and isolate the battery negative cable. Check for continuity between the ground circuit cavity of the cigar lighter wire harness connector and a good ground. There should be continuity. If OK, go to Step #6. If not OK, repair the open ground circuit to ground as required.
6. Connect the battery negative cable. Turn the ignition switch to the Accessory or Run positions. Check for battery voltage at the fused B(+) circuit cavity of the cigar lighter wire harness connector. If OK, replace the inoperative cigar lighter outlet. If not OK, repair the open fused B(+) circuit to the IPM fuse as required.

Removal

1. Disconnect and isolate the battery negative cable.
2. Pull the cigar lighter knob and element (1) out of the cigar lighter receptacle base (6), or unsnap the protective cap from the power outlet receptacle base (6).
3. Look inside the cigar lighter or power outlet receptacle base and note the position of the rectangular retaining bosses (3) of the mount that secures the receptacle base to the panel (4).
4. Insert a pair of external snap ring pliers (5) into the cigar lighter or power outlet receptacle base and engage the tips of the pliers with the retaining bosses of the mount.
5. Squeeze the pliers to disengage the mount retaining bosses from the receptacle base and, using a gentle rocking motion, pull the pliers and the receptacle base out of the mount.
6. Pull the receptacle base away from the instrument panel far enough to access the instrument panel wire harness connector (2).

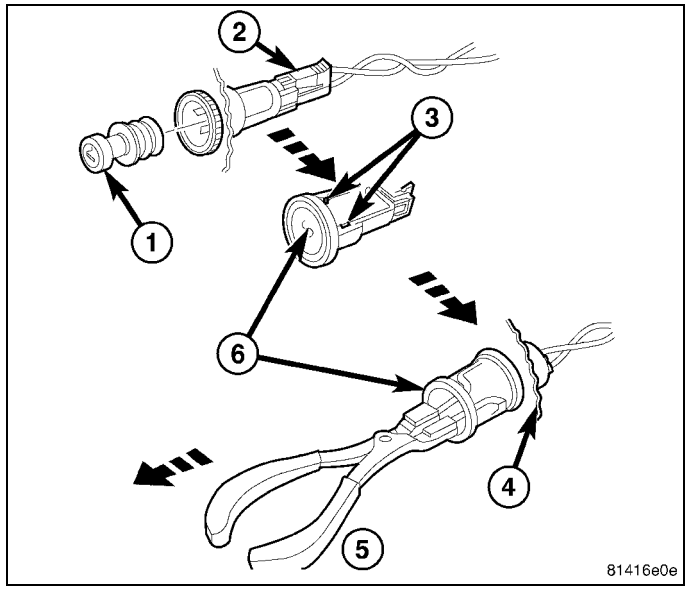

7. Disconnect the instrument panel wire harness connector (2) from the cigar lighter or power outlet receptacle base (6).
8. Remove the cigar lighter or power outlet mount from the instrument panel.

Installation

1. Connect the instrument panel wire harness connector to the cigar lighter or power outlet receptacle base connector receptacle.
2. Install the cigar lighter or power outlet mount into the instrument panel.
3. Align the splines on the outside of the cigar lighter or power outlet receptacle base connector receptacle with the grooves on the inside of the mount.
4. Press firmly on the cigar lighter or power outlet receptacle base until the retaining bosses of the mount are fully engaged in their receptacles.
5. Install the cigar lighter knob and element into the cigar lighter receptacle base, or the protective cap into the power outlet receptacle base.
6. Connect the battery negative cable.

ENGINE

TABLE OF CONTENTS

page

ENGINE, 3.7L 3
ENGINE, 4.7L 145
ENGINE, 5.7L 291

ENGINE, 3.7L

TABLE OF CONTENTS

page

ENGINE, 3.7L
- DESCRIPTION 4
- DIAGNOSIS AND TESTING
  - INTRODUCTION 5
  - ENGINE DIAGNOSIS - PERFORMANCE 5
  - MECHANICAL 7
  - LUBRICATION 8
  - CYLINDER COMPRESSION PRESSURE LEAKAGE 9
  - CYLINDER COMBUSTION PRESSURE LEAKAGE 9
- STANDARD PROCEDURE
  - DUST COVERS AND CAPS 11
  - REPAIR DAMAGED OR WORN THREADS . . . 11
  - FORM-IN-PLACE GASKETS AND SEALERS . . 11
  - ENGINE GASKET SURFACE PREPARATION 13
- REMOVAL 13
- INSTALLATION 17
- SPECIFICATIONS
  - 3.7L ENGINE 20
  - TORQUE 25
- SPECIAL TOOLS 27

AIR INTAKE SYSTEM 33
CYLINDER HEAD, LEFT 37
CYLINDER HEAD, RIGHT 53
ENGINE BLOCK 69
ENGINE MOUNTING 97
LUBRICATION 103
MANIFOLDS 119
VALVE TIMING 129

Engine, 3.7L

Description

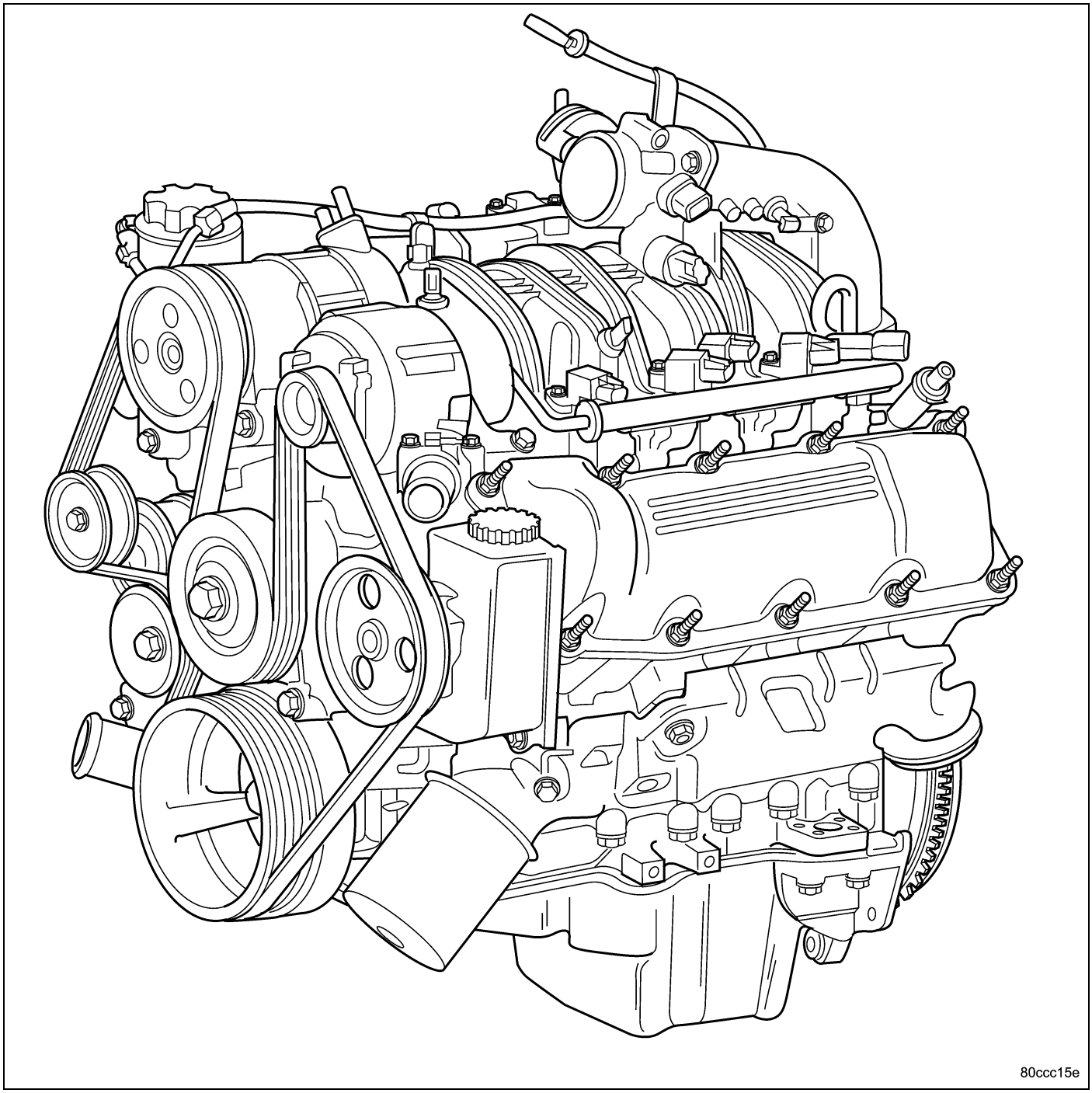

The 3.7 liter (226 CID) six-cylinder engine is an 90° single overhead camshaft engine. The cast iron cylinder block is made up of two different components; the first component is the cylinder bore and upper block, the second component is the bedplate that comprises the lower portion of the cylinder block and houses the lower half of the crankshaft main bearings. The cylinders are numbered from front to rear with the left bank being numbered 1,3, and 5 and the right bank being numbered 2,4, and 6. The firing order is 1–6–5–4–3–2. The engine serial number is located at the right front side of the engine block.

Diagnosis and Testing

INTRODUCTION

Engine diagnosis is helpful in determining the causes of malfunctions not detected and remedied by routine maintenance.

These malfunctions may be classified as either performance (e.g., engine idles rough and stalls) or mechanical (e.g., a strange noise).

Refer to 9 - ENGINE - DIAGNOSIS AND TESTING - PERFORMANCE and Refer to 9 - ENGINE - DIAGNOSIS AND TESTING - MECHANICAL for possible causes and corrections of malfunctions.

Additional tests and diagnostic procedures may be necessary for specific engine malfunctions that can not be isolated with the Service Diagnosis charts. Information concerning additional tests and diagnosis is provided within the following diagnosis:

- Cylinder Compression Pressure Test.
- Cylinder Combustion Pressure Leakage Test.
- Engine Cylinder Head Gasket Failure Diagnosis.
- Intake Manifold Leakage Diagnosis.

ENGINE DIAGNOSIS - PERFORMANCE

CONDITION	POSSIBLE CAUSE	CORRECTION
ENGINE WILL NOT START	1. Weak battery	1. Charge or replace as necessary.
	2. Corroded or loose battery connections.	2. Clean and tighten battery connections. Apply a coat of light mineral grease to the terminals.
	3. Faulty starter.	3. (Refer to 08 - Electrical/8F - Engine Systems/Starting - Diagnosis and Testing).
	4. Faulty coil or control unit.	4. (Refer to 08 - Electrical/8I - Ignition Control/COIL, Ignition - Removal).
	5. Incorrect spark plug gap.	5. Correct as necessary.
	6. Incorrect right bank cam timing.	6. Refer to engine timing in this section.
	7. Dirt or water in fuel system.	7. Clean system and replace fuel filter.
	8. Faulty fuel pump, relay or wiring.	8. Repair or replace as necessary.
	9. Faulty cam or crank sensor	9. Refer to Ignition system.
ENGINE STALLS OR ROUGH IDLE	1. Vacuum leak.	1. Inspect intake manifold and vacuum hoses, repair or replace as necessary.
	2. Faulty crank position sensor	2. Replace crank position sensor.
	3. Faulty coil.	3. (Refer to 08 - Electrical/8I - Ignition Control/COIL, Ignition - Removal).
	4. Incorrect cam timing.	4. (Refer to 09 - Engine/Valve Timing - Standard Procedure).

CONDITION	POSSIBLE CAUSE	CORRECTION
ENGINE LOSS OF POWER	1. Dirty or incorrectly gapped spark plugs.	1. Correct as necessary.
	2. Dirt or water in fuel system.	2. Clean system and replace fuel filter.
	3. Faulty fuel pump.	3. (Refer to 14 - Fuel System/Fuel Delivery - Specifications).
	4. Blown cylinder head gasket.	4. Replace cylinder head gasket.
	5. Low compression.	5. (Refer to 09 - Engine - Diagnosis and Testing), repair as necessary.
	6. Burned, warped or pitted valves.	6. Replace as necessary.
	7. Plugged or restricted exhaust system.	7. Inspect and replace as necessary.
	8. Faulty coil.	8. (Refer to 08 - Electrical/8I - Ignition Control/COIL, Ignition - Removal).
	9. Incorrect cam timing.	9. Refer to Engine Timing in this section.
ENGINE MISSES ON ACCELERATION	1. Spark plugs dirty or incorrectly gapped.	1. Correct as necessary.
	2. Dirt in fuel system.	2. Clean fuel system.
	3. Burned, warped or pitted valves.	3. Replace as necessary.
	4. Faulty coil.	4. (Refer to 08 - Electrical/8I - Ignition Control/COIL, Ignition - Removal).
ENGINE MISSES AT HIGH SPEED	1. Spark plugs dirty or incorrectly gapped.	1. Correct as necessary.
	2. Faulty coil.	2. (Refer to 08 - Electrical/8I - Ignition Control/COIL, Ignition - Removal).
	3. Dirt or water in fuel system.	3. Clean system and replace fuel filter.

MECHANICAL

CONDITION	POSSIBLE CAUSES	CORRECTIONS
NOISY VALVES	1. High or low oil level in crankcase.	1. (Refer to 04 - Vehicle Quick Reference/Capacities and Recommended Fluids - Specifications).
	2. Thin or diluted oil.	2. Change oil and filter.
	3. Low oil pressure.	3. Check oil pump, if OK, check rod and main bearings for excessive wear.
	4. Dirt in lash adjusters.	4. Replace as necessary.
	5. Worn rocker arms.	5. Replace as necessary.
	6. Worn lash adjusters	6. Replace as necessary.
	7. Worn valve guides.	7. Inspect the valve guides for wear, cracks or looseness. If either condition exists, replace the cylinder head (Refer to 09 - Engine/Cylinder Head - Removal)(Refer to 09 - Engine/Cylinder Head - Removal).
	8. Excessive runout of valve seats on valve faces.	8. (Refer to 09 - Engine/Cylinder Head/VALVES, Intake and Exhaust - Standard Procedure).
CONNECTING ROD NOISE	1. Insufficient oil supply.	1. (Refer to 04 - Vehicle Quick Reference/Capacities and Recommended Fluids - Specifications).
	2. Low oil pressure.	2. Check oil pump, if OK, check rod and main bearings for excessive wear.
	3. Thin or diluted oil.	3. Change oil and filter.
	4. Excessive bearing clearance.	4. Replace as necessary.
	5. Connecting rod journal out-of-round.	5. Service or replace crankshaft.
	6. Misaligned connecting rods.	6. Replace bent connecting rods.
MAIN BEARING NOISE	1. Insufficient oil supply.	1. (Refer to 04 - Vehicle Quick Reference/Capacities and Recommended Fluids - Specifications).
	2. Low oil pressure.	2. Check oil pump, if OK, check rod and main bearings for excessive wear.
	3. Thin or diluted oil.	3. Change oil and filter.
	4. Excessive bearing clearance.	4. Replace as necessary.
	5. Excessive end play.	5. Check thrust washers for wear.
	6. Crankshaft journal out-of round.	6. Service or replace crankshaft.
	7. Loose flywheel or torque converter.	7. Tighten to correct torque

LUBRICATION

CONDITION	POSSIBLE CAUSES	CORRECTION
OIL LEAKS	1. Gaskets and O-Rings. Misaligned or damaged.	1. Replace as necessary.
	2. Loose fasteners, broken or porous metal parts.	2. Tighten fasteners, repair or replace metal parts.
	3. Crankshaft rear seal	3. Replace as necessary (Refer to 09 - Engine/Engine Block/SEAL, Crankshaft Oil - Removal).
	4. Crankshaft seal flange. Scratched, nicked or grooved.	4. Polish or replace crankshaft.
	5. Oil pan flange cracked.	5. Replace oil pan (Refer to 09 - Engine/Lubrication/PAN, Oil - Removal).
	6. Timing chain cover seal, damaged or misaligned.	6. Replace seal (Refer to 09 - Engine/Engine Block/SEAL, Crankshaft Oil - Removal).
	7. Scratched or damaged vibration damper hub.	7. Polish or replace damper (Refer to 09 - Engine/Engine Block/DAMPER, Vibration - Removal).
OIL PRESSURE DROP	1. Low oil level.	1. Check and correct oil level (Refer to 09 - Engine/Lubrication/OIL - Standard Procedure).
	2. Faulty oil pressure sending unit.	2. Replace sending unit (Refer to 09 - Engine/Lubrication/SWITCH, Oil Pressure - Removal).
	3. Low oil pressure.	3. Check oil pump and bearing clearance (Refer to 09 - Engine/Lubrication/PUMP, Engine Oil - Inspection).
	4. Clogged oil filter.	4. Replace oil filter (Refer to 09 - Engine/Lubrication/FILTER, Engine Oil - Removal).
	5. Worn oil pump.	5. Replace oil pump (Refer to 09 - Engine/Lubrication/PUMP, Engine Oil - Removal).
	6. Thin or diluted oil.	6. Change oil and filter (Refer to 09 - Engine/Lubrication/FILTER, Engine Oil - Removal).
	7. Excessive bearing clearance.	7. Replace as necessary (Refer to 09 - Engine/Engine Block/ROD, Piston and Connecting - Standard Procedure).
	8. Oil pump relief valve stuck.	8. Replace oil pump (Refer to 09 - Engine/Lubrication/PUMP, Engine Oil - Removal).
	9. Oil pick up tube loose, damaged or clogged.	9. Replace as necessary (Refer to 09 - Engine/Lubrication/PAN, Oil - Removal).

CONDITION	POSSIBLE CAUSES	CORRECTION
OIL PUMPING AT RINGS; SPARK PLUGS FOULING	1. Worn or damaged rings.	1. Hone cylinder bores and replace rings (Refer to 09 - Engine/Engine Block/RING(S), Piston - Standard Procedure).
	2. Carbon in oil ring slots.	2. Replace rings (Refer to 09 - Engine/Engine Block/RING(S), Piston - Standard Procedure).
	3. Incorrect ring size installed.	3. Replace rings (Refer to 09 - Engine/Engine Block/RING(S), Piston - Standard Procedure).
	4. Worn valve guides.	4. Inspect the valve guides for wear, cracks or looseness. If either condition exist, replace the cylinder head (left) (Refer to 09 - Engine/Cylinder Head - Removal) (right) (Refer to 09 - Engine/Cylinder Head - Removal).
	5. Leaking valve guide seals.	5. Replace valve guide seals **(Left Cylinder Head)** (Refer to 09 - Engine/Cylinder Head/VALVES, Intake and Exhaust - Removal) **(Right Cylinder Head)** (Refer to 09 - Engine/Cylinder Head/VALVES, Intake and Exhaust - Removal).

CYLINDER COMPRESSION PRESSURE LEAKAGE

NOTE: The results of a cylinder compression pressure test can be utilized to diagnose several engine malfunctions.

NOTE: Ensure the battery is completely charged and the engine starter motor is in good operating condition. Otherwise the indicated compression pressures may not be valid for diagnosis purposes.

1. Clean the spark plug recesses with compressed air.
2. Remove the spark plugs and record the cylinder number of each spark plug for future reference.
3. Inspect the spark plug electrodes for abnormal firing indicators such as fouled, hot, oily, etc.
4. Disable the fuel system (Refer to 14 - Fuel System/Fuel Delivery - Standard Procedure) and preform the fuel system pressure release procedure.
5. Insert a compression pressure gauge and rotate the engine with the engine starter motor for three revolutions.
6. Record the compression pressure on the 3rd revolution. Continue the test for the remaining cylinders.

NOTE: The recommended compression pressures are to be used only as a guide to diagnosing engine problems. An engine should not be disassembled to determine the cause of low compression unless some malfunction is present.

7. Compression should not be less than 689 kPa (100 psi) and not vary more than 25 percent from cylinder to cylinder.
8. If one or more cylinders have abnormally low compression pressures, repeat the compression test.

NOTE: If the same cylinder or cylinders repeat an abnormally low reading on the second compression test, it could indicate the existence of a problem in the cylinder in question.

9. If one or more cylinders continue to have abnormally low compression pressures, perform the cylinder combustion pressure leakage test (Refer to 09 - Engine - Diagnosis and Testing)

CYLINDER COMBUSTION PRESSURE LEAKAGE

The combustion pressure leakage test provides an accurate means for determining engine condition.

Combustion pressure leakage testing will detect:

- Exhaust and intake valve leaks (improper seating).
- Leaks between adjacent cylinders or into water jacket.
- Any causes for combustion/compression pressure loss.

1. Check the coolant level and fill as required. DO NOT install the radiator cap.
2. Start and operate the engine until it attains normal operating temperature, then turn the engine OFF.
3. Remove the spark plugs.
4. Remove the oil filler cap.
5. Remove the air cleaner hose.
6. Calibrate the tester according to the manufacturer's instructions. The shop air source for testing should maintain 483 kPa (70 psi) minimum, 1,379 kPa (200 psi) maximum and 552 kPa (80 psi) recommended.
7. Perform the test procedures on each cylinder according to the tester manufacturer's instructions. Set piston of cylinder to be tested at TDC compression,While testing, listen for pressurized air escaping through the throttle body, tailpipe and oil filler cap opening. Check for bubbles in the radiator coolant.

All gauge pressure indications should be equal, with no more than 25% leakage.

FOR EXAMPLE: At 552 kPa (80 psi) input pressure, a minimum of 414 kPa (60 psi) should be maintained in the cylinder.

Refer to CYLINDER COMBUSTION PRESSURE LEAKAGE DIAGNOSIS CHART.

CYLINDER COMBUSTION PRESSURE LEAKAGE DIAGNOSIS CHART

CONDITION	POSSIBLE CAUSE	CORRECTION
AIR ESCAPES THROUGH THROTTLE BODY	Intake valve bent, burnt, or not seated properly	Inspect valve and valve seat. Reface or replace, as necessary. Inspect valve springs. Replace as necessary.
AIR ESCAPES THROUGH TAILPIPE	Exhaust valve bent, burnt, or not seated properly	Inspect valve and valve seat. Reface or replace, as necessary. Inspect valve springs. Replace as necessary.
AIR ESCAPES THROUGH RADIATOR	Head gasket leaking or cracked cylinder head or block	Remove cylinder head and inspect. Replace defective part
MORE THAN 50% LEAKAGE FROM ADJACENT CYLINDERS	Head gasket leaking or crack in cylinder head or block between adjacent cylinders	Remove cylinder head and inspect. Replace gasket, head, or block as necessary
MORE THAN 25% LEAKAGE AND AIR ESCAPES THROUGH OIL FILLER CAP OPENING ONLY	Stuck or broken piston rings; cracked piston; worn rings and/or cylinder wall	Inspect for broken rings or piston. Measure ring gap and cylinder diameter, taper and out-of-round. Replace defective part as necessary

Standard Procedure

DUST COVERS AND CAPS

Due to the high amounts of failures cased by dust, dirt, moisture and other foreign debris being introduced to the engine during service. Covers or caps are needed to reduce the possible damage that can be caused or created.

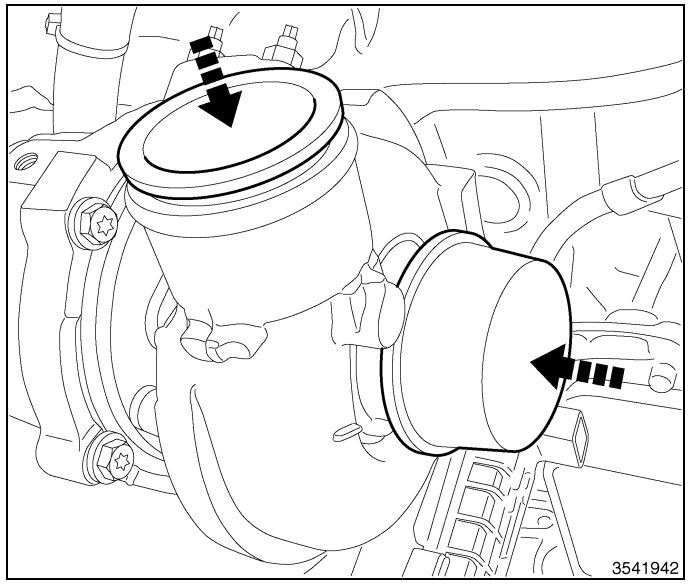

Covers over openings will reduce any possibilities for foreign materials to enter the engine systems. Using miller tool Set, Universal Protective Cap 10368, Select the appropriated cover needed to the procedure.

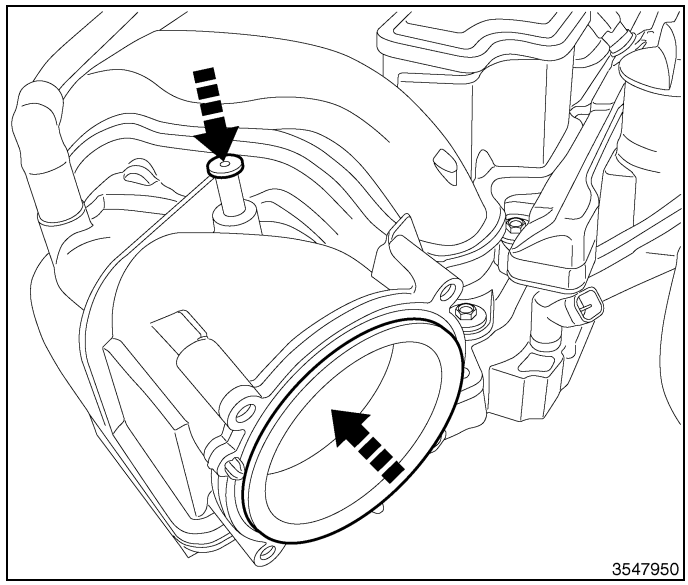

REPAIR DAMAGED OR WORN THREADS

CAUTION: Be sure that the tapped holes maintain the original center line.

Damaged or worn threads can be repaired. Essentially, this repair consists of:

- Drilling out worn or damaged threads.
- Tapping the hole with a special Heli-Coil Tap, or equivalent.
- Installing an insert into the tapped hole to bring the hole back to its original thread size.

FORM-IN-PLACE GASKETS AND SEALERS

There are numerous places where form-in-place gaskets are used on the engine. Care must be taken when applying form-in-place gaskets to assure obtaining the desired results. **Do not use form-in-place gasket material unless specified.** Bead size, continuity, and location are of great importance. Too thin a bead can result in leakage while too much can result in spill-over which can break off and obstruct fluid feed lines. A continuous bead of the proper width is essential to obtain a leak-free gasket.

There are numerous types of form-in-place gasket materials that are used in the engine area. Mopar® Engine RTV GEN II, Mopar® ATF-RTV, and Mopar® Gasket Maker gasket materials, each have different properties and can not be used in place of the other.

MOPAR® ENGINE RTV GEN II

Mopar® Engine RTV GEN II is used to seal components exposed to engine oil. This material is a specially designed black silicone rubber RTV that retains adhesion and sealing properties when exposed to engine oil. Moisture in the air causes the material to cure. This material is available in three ounce tubes and has a shelf life of one year. After one year this material will not properly cure. Always inspect the package for the expiration date before use.

MOPAR® ATF RTV

Mopar® ATF RTV is a specifically designed black silicone rubber RTV that retains adhesion and sealing properties to seal components exposed to automatic transmission fluid, engine coolants, and moisture. This material is available in three ounce tubes and has a shelf life of one year. After one year this material will not properly cure. Always inspect the package for the expiration date before use.

MOPAR® GASKET MAKER

Mopar® Gasket Maker is an anaerobic type gasket material. The material cures in the absence of air when squeezed between two metallic surfaces. It will not cure if left in the uncovered tube. The anaerobic material is for use between two machined surfaces. Do not use on flexible metal flanges.

MOPAR® GASKET SEALANT

Mopar® Gasket Sealant is a slow drying, permanently soft sealer. This material is recommended for sealing threaded fittings and gaskets against leakage of oil and coolant. Can be used on threaded and machined parts under all temperatures. This material is used on engines with multi-layer steel (MLS) cylinder head gaskets. This material also will prevent corrosion. Mopar® Gasket Sealant is available in a 13 oz. aerosol can or 4oz./16 oz. can w/applicator.

FORM-IN-PLACE GASKET AND SEALER APPLICATION

Assembling parts using a form-in-place gasket requires care but it's easier than using precut gaskets.

Mopar® Gasket Maker material should be applied sparingly 1 mm (0.040 in.) diameter or less of sealant to one gasket surface. Be certain the material surrounds each mounting hole. Excess material can easily be wiped off. Components should be torqued in place within 15 minutes. The use of a locating dowel is recommended during assembly to prevent smearing material off the location.

Mopar® Engine RTV GEN II or ATF RTV gasket material should be applied in a continuous bead approximately 3 mm (0.120 in.) in diameter. All mounting holes must be circled. For corner sealing, a 3.17 or 6.35 mm (1/8 or 1/4 in.) drop is placed in the center of the gasket contact area. Uncured sealant may be removed with a shop towel. Components should be torqued in place while the sealant is still wet to the touch (within 10 minutes). The usage of a locating dowel is recommended during assembly to prevent smearing material off the location.

Mopar® Gasket Sealant in an aerosol can should be applied using a thin, even coat sprayed completely over both surfaces to be joined, and both sides of a gasket. Then proceed with assembly. Material in a can w/applicator can be brushed on evenly over the sealing surfaces. Material in an aerosol can should be used on engines with multi-layer steel gaskets.

ENGINE GASKET SURFACE PREPARATION

To ensure engine gasket sealing, proper surface preparation must be performed, especially with the use of aluminum engine components and multi-layer steel cylinder head gaskets.

Never use the following to clean gasket surfaces:

- Metal scraper (3).
- Abrasive pad (1) or paper to clean cylinder block and head.
- High speed power tool (1) with an abrasive pad or a wire brush.

NOTE: Multi-Layer Steel (MLS) head gaskets require a scratch free sealing surface.

Only use the following for cleaning gasket surfaces:

- Solvent or a commercially available gasket remover
- Plastic or wood scraper.
- Drill motor with 3M Roloc™ Bristle Disc (white or yellow).

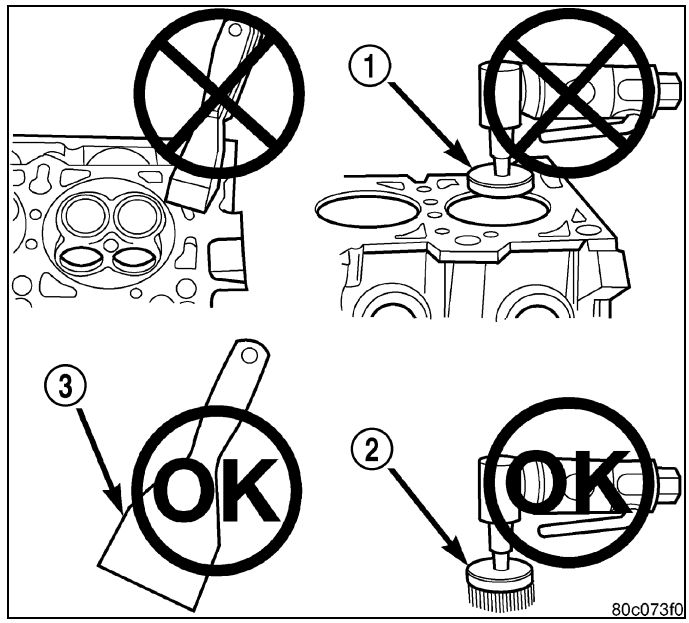

CAUTION: Excessive pressure or high RPM (beyond the recommended speed), can damage the sealing surfaces. The mild (white, 120 grit) bristle disc is recommended. If necessary, the medium (yellow, 80 grit) bristle disc may be used on cast iron surfaces with care.

Removal

1. Disconnect the battery negative cable.
2. Remove air cleaner assembly.
3. Remove radiator core support bracket.
4. Remove fan shroud with viscous fan assembly.
5. Remove drive belt.
6. Remove A/C compressor (2) and secure away from engine.

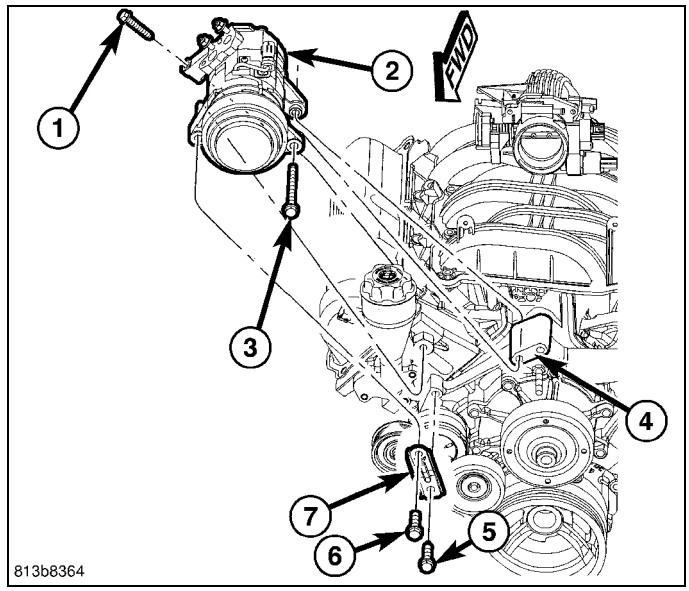

7. Remove generator (3) and secure away from engine.

NOTE: Do NOT remove the phenolic pulley from the P/S pump. It is not required for P/S pump removal.

8. Remove power steering pump with lines attached and secure away from engine.
9. Drain cooling system.
10. Disconnect the heater hoses from the engine.
11. Disconnect heater hoses from heater core and remove hose assembly.
12. Disconnect throttle and speed control cables.
13. Remove upper radiator hose from engine.
14. Remove lower radiator hose from engine.
15. Remove radiator/cooling module assembly.
16. Disconnect the engine to body ground straps at the left side of cowl.

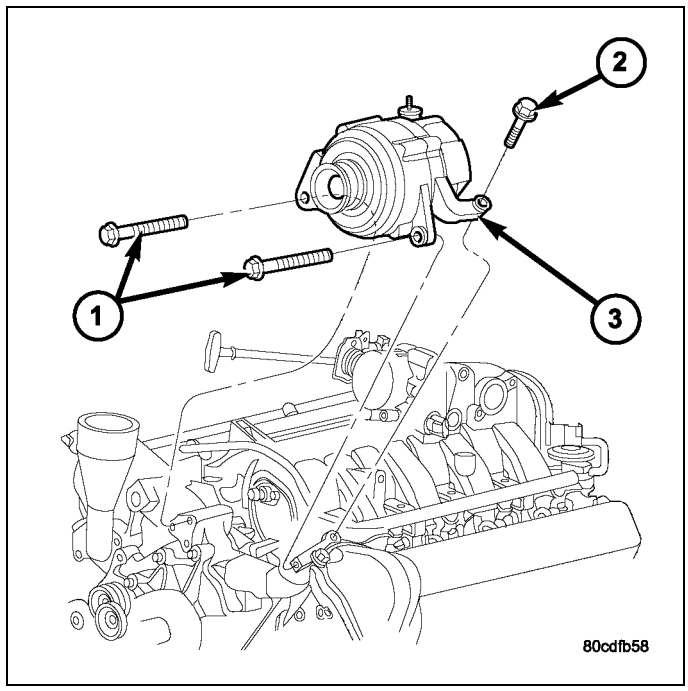

17. Disconnect the engine wiring harness at the following points :

- Intake air temperature (IAT) sensor (4)
- Fuel Injectors
- Throttle Position (TPS) Switch (2)
- Idle Air Control (IAC) Motor (3)
- Engine Oil Pressure Switch
- Engine Coolant Temperature (ECT) Sensor
- Manifold Absolute Pressure MAP) Sensor
- Camshaft Position (CMP) Sensor
- Coil Over Plugs
- Crankshaft Position Sensor

18. Remove coil over plugs.

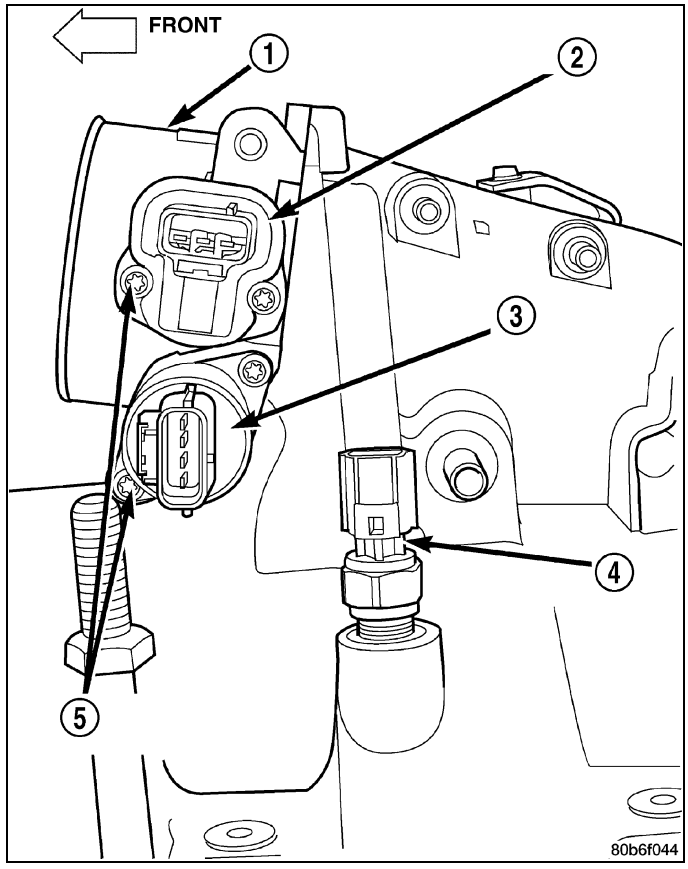

19. Release fuel rail pressure.
20. Remove fuel rail and secure away from engine.

NOTE: It is not necessary to release the quick connect fitting from the fuel supply line for engine removal.

21. Remove the PCV hose.
22. Remove the breather hoses.
23. Remove the vacuum hose for the power brake booster.
24. Disconnect knock sensors.
25. Remove engine oil dipstick tube.
26. Remove intake manifold .

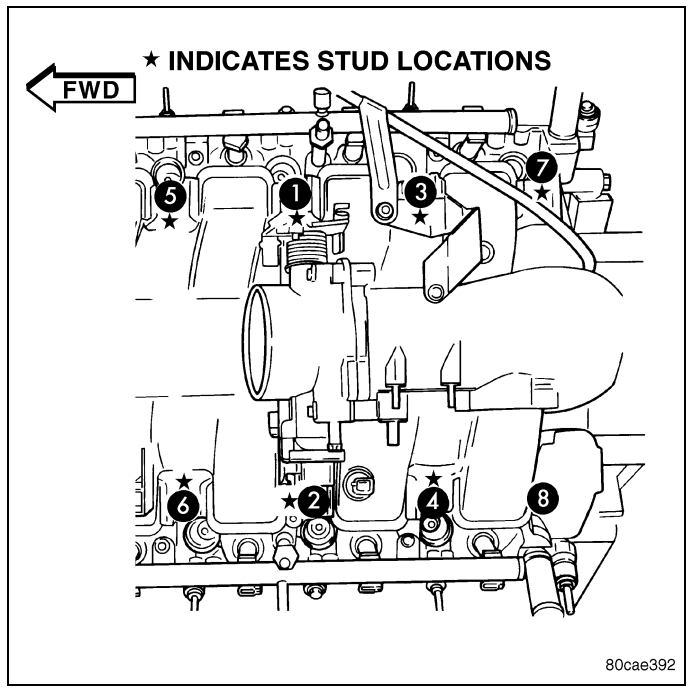

27. Install engine lifting fixture, special tool # 8427, using original fasteners from the removed intake manifold, and fuel rail. Torque to factory specifications.

NOTE: Recheck bolt torque for engine lift plate before removing engine.

28. Secure the left and right engine wiring harnesses away from engine.
29. Raise vehicle.
30. Disconnect oxygen sensor wiring.
31. Disconnect crankshaft position sensor.
32. Disconnect the engine block heater power cable, if equip
33. Disconnect the front propshaft at the front differential and secure out of way.

NOTE: It is necessary to disconnect the front propshaft for access to the starter and left side exhaust flange.

34. Remove the starter (4).

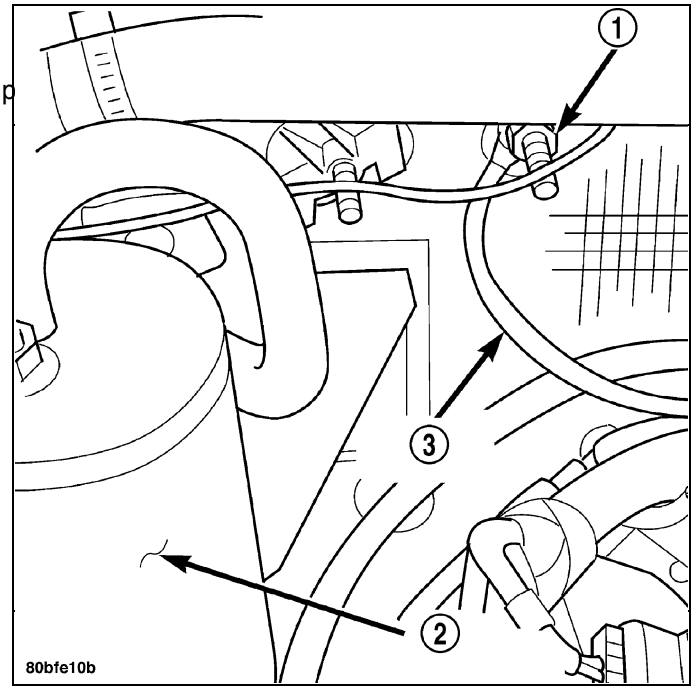

35. Remove the ground straps from the left (2) and right (3) side of the block.
36. Disconnect the right and left exhaust pipes at the manifolds and from the crossover, and remove from the vehicle.

NOTE: The exhaust clamps at the manifolds cannot be reused. New clamps must be used or leaks may occur.

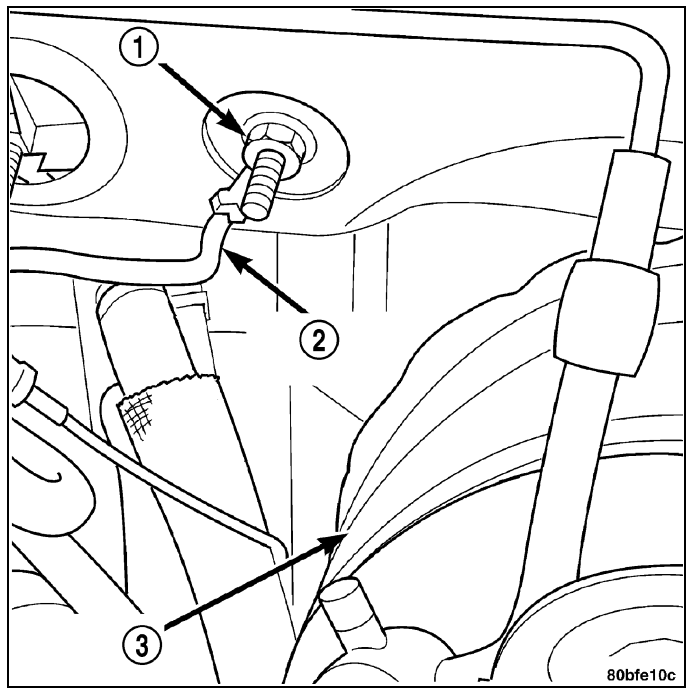

37. Remove the structural cover .
38. Remove torque convertor bolts, and mark location for reassembly.
39. Remove transmission bellhousing to engine bolts.
40. Remove left and right engine mount thru bolts.
41. Lower the vehicle.
42. Support the transmission with a suitable jack.
43. Connect a suitable engine hoist to the engine lift plate.
44. Remove engine from vehicle.

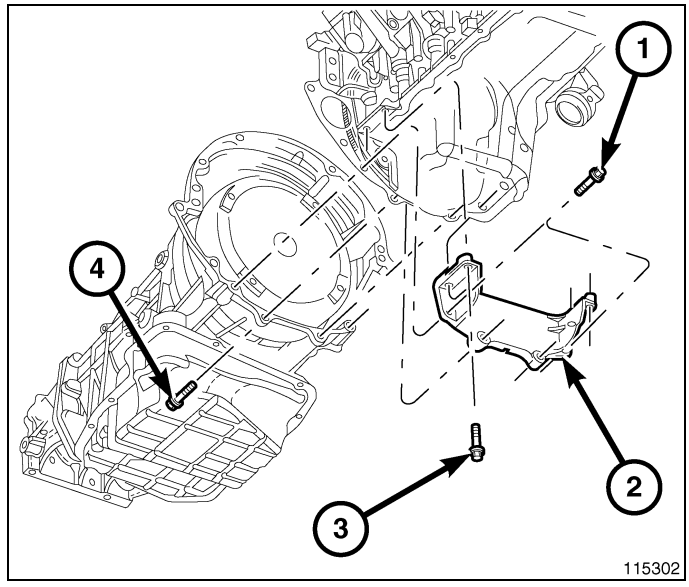

Installation

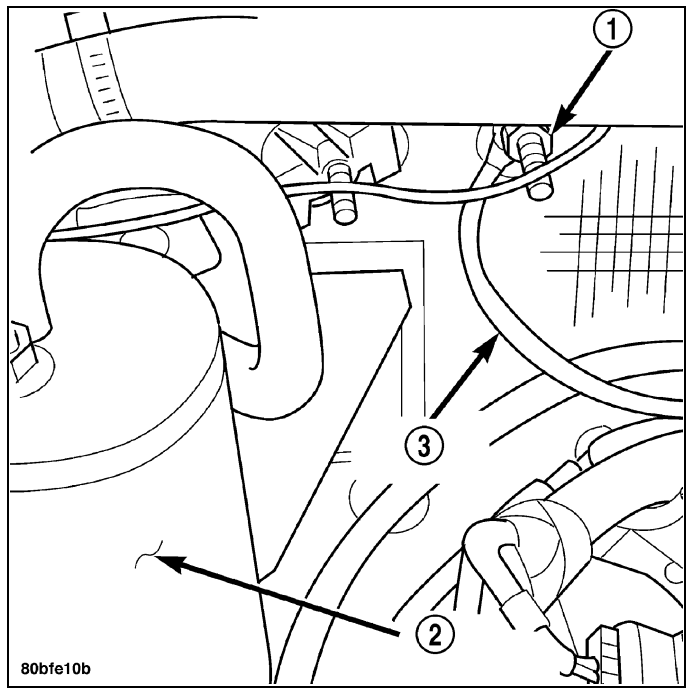

1. Position the engine in the vehicle.
2. Install both left and right side engine mounts onto engine.
3. Raise the vehicle.
4. Install the transmission bellhousing to engine mounting bolts. Tighten the bolts to 41 N·m (30ft. lbs.).
5. Tighten the engine mount thru bolts.
6. Install the torque convertor bolts.
7. Connect the ground straps on the left (2) and right (3)side of the engine.

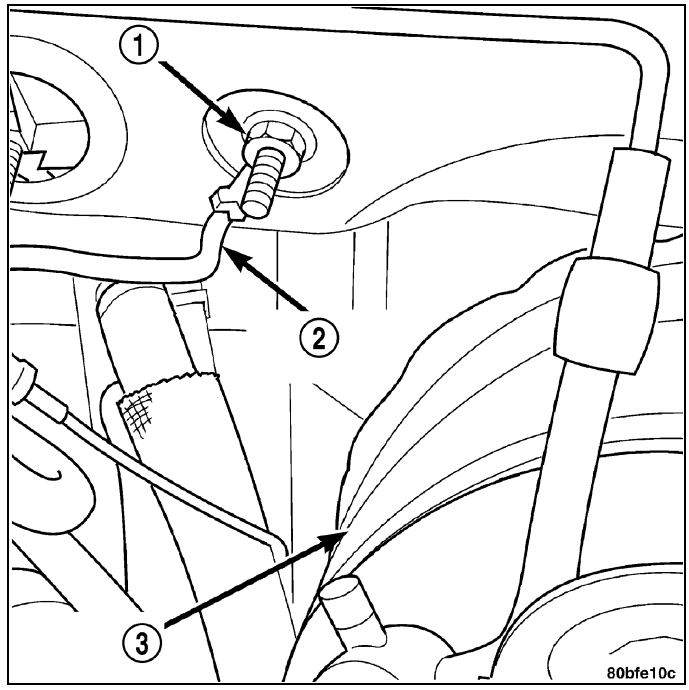

8. Install the starter (4).
9. Connect the crankshaft position sensor.
10. Install the engine block heater power cable, if equipped.

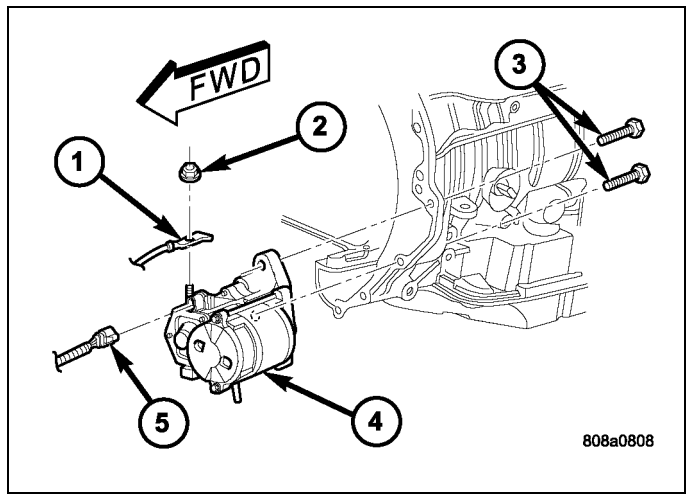

CAUTION: The structural cover requires a specific torque sequence. Failure to follow this sequence may cause severe damage to the cover.

11. Install the structural cover .

NOTE: New clamps must be used on exhaust manifold flanges. Failure to use new clamps may result in exhaust leaks.

12. Install the left and right exhaust pipes.
13. Connect the left and right oxygen sensors.
14. Lower vehicle.
15. Remove the engine lift plate.
16. Connect the knock sensors.
17. Connect the engine to body ground straps at the left side of the cowl.

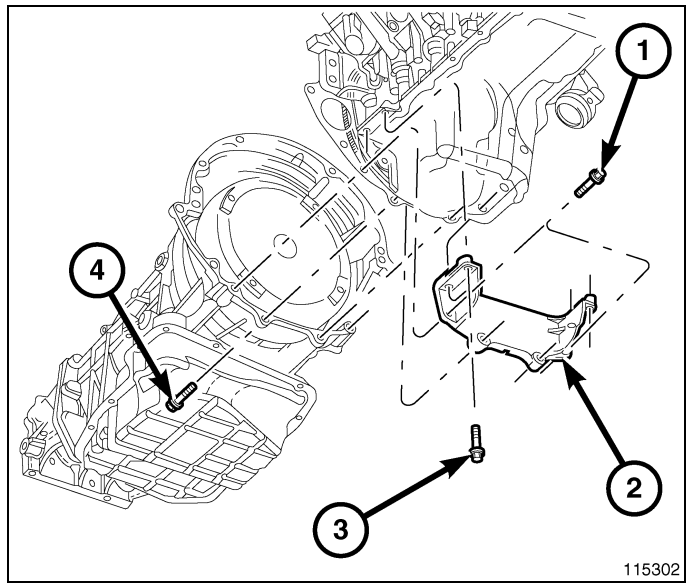

18. Install the intake manifold .
19. Install the engine oil dipstick tube.
20. Install the power brake booster vacuum hose.
21. Install the breather hoses.
22. Install the PCV hose.
23. Install the fuel rail.
24. Install the coil over plugs.

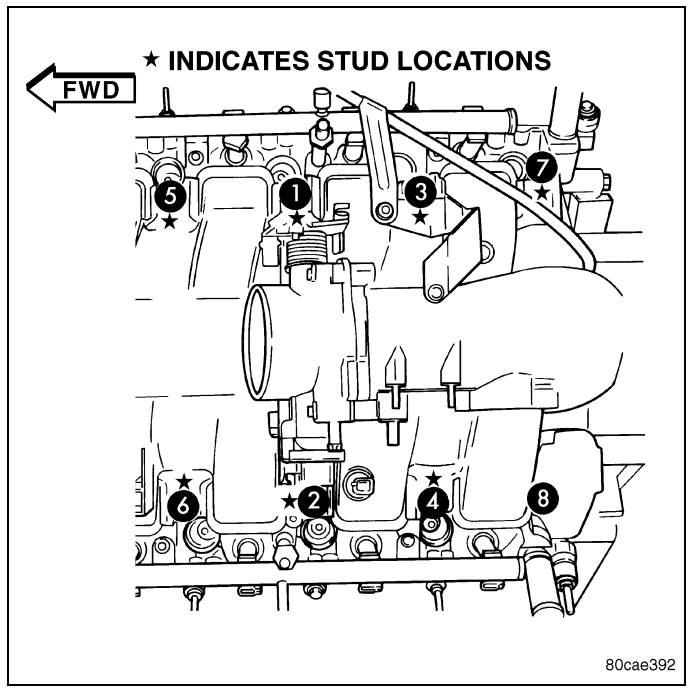

25. Connect the engine wiring harness at the following points :
- Intake air temperature (IAT) sensor (4)
- Fuel Injectors
- Throttle Position (TPS) Switch (2)
- Idle Air Control (IAC) Motor (3)
- Engine Oil Pressure Switch
- Engine Coolant Temperature (ECT) Sensor
- Manifold Absolute Pressure MAP) Sensor
- Camshaft Position (CMP) Sensor
- Coil Over Plugs
- Crankshaft Position Sensor

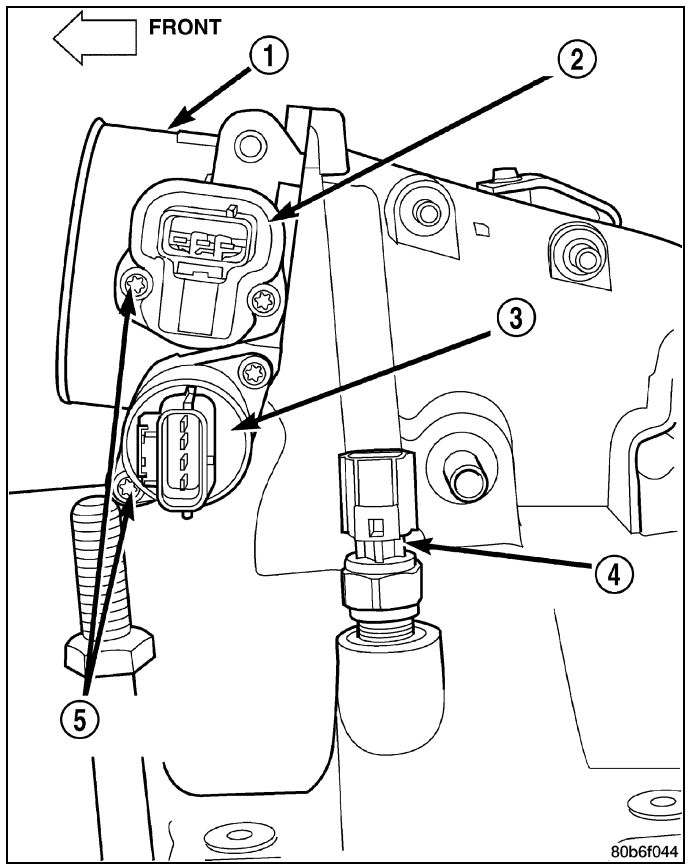

26. Reinstall the radiator/cooling module assembly.
27. Connect lower radiator hose.
28. Connect upper radiator hose.
29. Connect throttle and speed control cables.
30. Install the heater hose assembly.
31. Install coolant recovery bottle.
32. Install the power steering pump.
33. Install the generator (3).

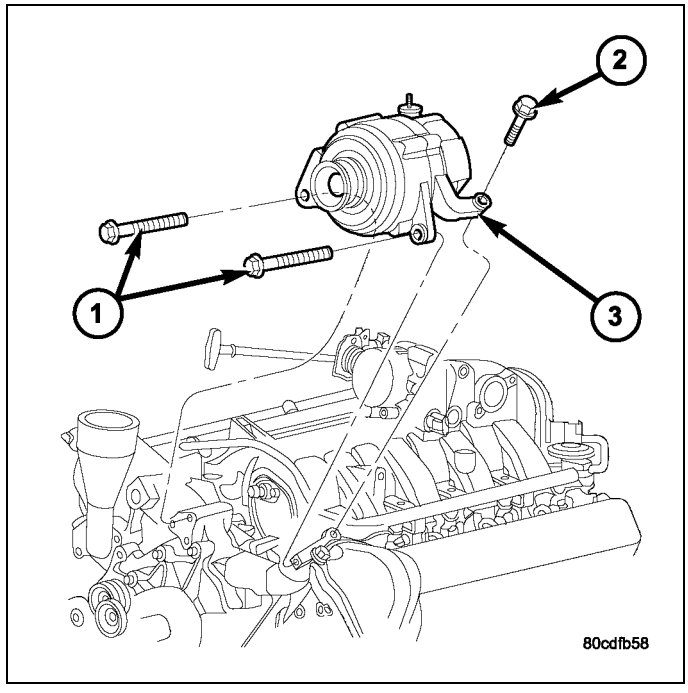

34. Install the A/C compressor (2).
35. Install the drive belt.
36. Install the fan shroud with the viscous fan assembly.
37. Install the radiator core support bracket.
38. Install the air cleaner assembly.
39. Refill the engine cooling system.
40. Recharge the air conditioning.
41. Check and fill engine oil.
42. Connect the battery negative cable.
43. Start the engine and check for leaks.

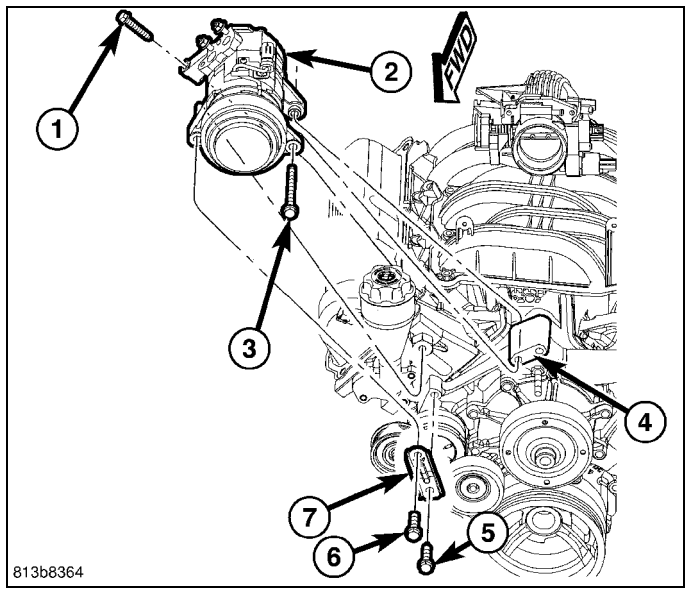

Specifications

3.7L ENGINE

GENERAL SPECIFICATIONS

DESCRIPTION	SPECIFICATION	
Type	90° SOHC V6 12 Valve	
Number of Cylinders	6	
Firing Order	1-6-5-4-3-2	
Lead Cylinder	No. 1 Left Bank	
Compression Ratio	9.6:1	
Max. Variation Between Cylinders	25%	
	Metric	**Standard**
Displacement	3.7 Liters	226 Cubic Inches
Bore	93.0 mm	3.66 in.
Stroke	90.8 mm	3.40 in.
Horsepower	211 @ 5200 RPM	
Torque	236 ft.lbs .@ 4000 RPM	
Compression Pressure	1172-1551 kPa	170-225 psi

CYLINDER BLOCK

DESCRIPTION	SPECIFICATION	
	Metric	**Standard**
Bore Diameter	93.013 ± 0.0075 mm	3.6619 ± 0.0003 in.
Out of Round (MAX)	0.076 mm	0.003 in.
Taper (MAX)	0.051 mm	0.002 in.

PISTONS

DESCRIPTION	SPECIFICATION	
	Metric	Standard
Diameter	92.975 mm	3.6605 in.
Weight	365.0 grams	12.87 oz
Ring Groove Diameter		
No. 1	85.37 - 83.13 mm	3.282 - 3.273 in
No. 2	82.833 - 83.033 mm	3.261 - 3.310 in.
No. 3	83.88 - 84.08 mm	3.302 - 3.310 in.

PISTON PINS

DESCRIPTION	SPECIFICATION	
	Metric	Standard
Clearance In Piston	0.006 - 0.015 mm	0.0002 - 0.0005 in.
Diameter	24.017 - 24.020 mm	0.9455 - 0.9456 in.

PISTON RINGS

DESCRIPTION	SPECIFICATION	
	Metric	Standard
Ring Gap		
Top Compression Ring	0.20 - 0.36 mm	0.0079 - 0.0142 in.
Second Compression Ring	0.37 - 0.63 mm	0.0146 - 0.0249 in.
Oil Control (Steel Rails)	0.25 - 0.76 mm	0.0099 - 0.30 in.
Side Clearance		
Top Compression Ring	0.051 - 0.094 mm	0.0020 - 0.0037 in.
Second Compression Ring	0.040 - 0.080 mm	0.0016 - 0.0031 in.
Oil Ring (Steel Ring)	0.019 - 0.229 mm	0.0007 - 0.0091 in.
Ring Width		
Top Compression Ring	1.472 - 1.490 mm	0.057 - 0.058 in.
Second Compression Ring	1.472 - 1.490 mm	0.057 - 0.058 in.
Oil Ring (Steel Rails)	0.445 - 0.470 mm	0.017 - 0.018 in.

CONNECTING RODS

DESCRIPTION	SPECIFICATION	
	Metric	Standard
Bearing Clearance	0.006 - 0.044 mm	0.0002 - 0.0017 in.
Side Clearance	0.10 - 0.35 mm	0.004 - 0.0138 in.
Piston Pin Clearance	0.015 - 0.028 mm	0.0006 - 0.0011 in.

CONNECTING RODS, continued

DESCRIPTION	SPECIFICATION	
Bearing Bore Out of Round (MAX)	0.004 mm	0.0002 in.
Total Weight (Less Bearing)	612 grams	21.588 ounces

CRANKSHAFT

DESCRIPTION	SPECIFICATION	
	Metric	**Standard**
Main Bearing Journal Diameter	63.488 - 63.512 mm	2.4996 - 2.5005 in.
Bearing Clearance	0.002 - 0.046 mm	0.00008 - 0.0018 in.
Out of Round (MAX)	0.005 mm	0.0002 in.
Taper (MAX)	0.006 mm	0.0004 in.
End Play	0.052 - 0.282 mm	0.0021 - 0.0112 in.
End Play (MAX)	0.282 mm	0.0112 in.
Connecting Rod Journal Diameter	57.908 - 57.892 mm	2.2798 - 2.2792 in.
Bearing Clearance	0.006 - 0.044	0.0002 - 0.0011 in.
Out of Round (MAX)	0.005 mm	0.0002 in.
Taper (MAX)	0.006 mm	0.0002 in.

CAMSHAFT

DESCRIPTION	SPECIFICATION	
	Metric	**Standard**
Bore Diameter	26.02 - 26.04 mm	1.0245 - 1.0252 in.
Bearing Journal Diameter	25.975 - 25.995 mm	1.0227 - 1.0235 in.
Bearing Clearance	0.025 - 0.065 mm	0.001 - 0.0026 in.
Bearing Clearance (MAX)	0.065 mm	0.0026 in.
End Play	0.075 -0 .200 mm	0.003 - 0.0079 in.
End Play (MAX)	0.200 mm	0.0079 in.

VALVE TIMING

DESCRIPTION	SPECIFICATION
Intake	
Opens (BTDC)	5.6°
Closes (ATDC)	240.1°
Duration	245.7°
Exhaust	
Opens (BTDC)	241.5°
Closes (ATDC)	20.1°

VALVE TIMING, continued

DESCRIPTION	SPECIFICATION
Duration	261.6°
Valve Overlap	25.7°

VALVES

DESCRIPTION	SPECIFICATION	
	Metric	Standard
Face Angle	45° - 45.5°	
Head Diameter		
Intake	48.52 - 48.78 mm	1.9103 - 1.9205 in.
Exhaust	36.87 - 37.13 mm	1.4516 - 1.4618 in.
Length (Overall)		
Intake	113.45 - 114.21 mm	4.4666 - 4.4965 in.
Exhaust	114.92 - 115.68 mm	4.5244 - 4.5543 in.
Stem Diameter		
Intake	6.931 - 6.957 mm	0.2729 - 0.2739 in.
Exhaust	6.902 - 6.928 mm	0.2717 - 0.2728 in.
Stem-to-Guide Clearance		
Intake	0.018 - 0.069 mm	0.0008 - 0.0028 in.
Exhaust	0.047 - 0.098 mm	0.0019 - 0.0039 in.
Max. Allowable Stem-to-Guide Clearance (Rocking Method)		
Intake	0.069 mm	0.0028 in.
Exhaust	0.098 mm	0.0039 in.
Valve Lift (Zero Lash)		
Intake	12.00 mm	0.472 in.
Exhaust	12.00 mm	0.472 in.

VALVE SPRING

DESCRIPTION	SPECIFICATION	
	Metric	Standard
Free Length (Approx)		
Intake	48.18 mm	1.896 in.
Exhaust - w/damper	49.2 mm	1.973 in.
Spring Force (Valve Closed)		
Intake	332.0 - 368.0 N @ 40.12 mm	74.63 - 82.72 lbs. @ 1.5795 in.
Exhaust - (without damper)	356 - 394 N @ 39.12 mm	80.031 - 88.57 lbs. @ 1.54 in.
Spring Force (Valve Open)		

VALVE SPRING, continued

DESCRIPTION	SPECIFICATION	
Intake	948.0 - 1038.0 N @ 28.12 mm	213.2 - 233.8 lbs. @ 1.107 in.
Exhaust - without damper	874 - 956 N @ 27.12 mm	196.5 - 214.9 lbs. @ 1.067 in.
Number of Coils		
Intake	7.30	
Exhaust	7.15	
Wire Diameter		
Intake	4.77 × 3.80 mm	0.1878 × 0.1496 in.
Exhaust	4.66 × 3.72 mm	0.1843 × .1464 in.
Installed Height (Spring Seat to Bottom of Retainer)		
Nominal		
Intake	40.12 mm	1.579 in.
Exhaust - w/damper	40.12 mm	1.579 in.

CYLINDER HEAD

DESCRIPTION	SPECIFICATION	
	Metric	**Standard**
Gasket Thickness (Compressed)	0.7 mm	(0.0276 in.)
Valve Seat Angle	44.5° - 45.0°	
Valve Seat Runout (MAX)	0.051 mm	0.002 in.
Valve Seat Width		
Intake	1.75 - 2.36 mm	0.0698 - 0.0928 in.
Exhaust	1.71 - 2.32 mm	0.0673 - 0.0911 in.
Guide Bore Diameter (Std.)	6.975 - 7.00 mm	0.2747 - 0.2756 in.
Cylinder Head Warpage (Flatness)	0.0508 mm	0.002 in.

OIL PUMP

DESCRIPTION	SPECIFICATION	
	Metric	**Standard**
Clearance Over Rotors/End Face (MAX)	0.095 mm	0.0038 in.
Cover Out - of -Flat (MAX)	0.025 mm	0.001 in.
Inner and Outer Rotor Thickness	12.02 mm	0.4731 in.
Outer Rotor to pocket (Diametral) clearance (MAX)	.235 mm	0.0093 in.
Outer Rotor Diameter (MIN)	85.925 mm	0.400 in.
Tip Clearance Between Rotors (MAX)	0.150 mm	0.006 in.

OIL PRESSURE

SPECIFICATION	SPECIFICATION	
	Metric	Standard
At Curb Idle Speed (MIN)*	25 kPa	4 psi
@ 3000 rpm	170 - 758 kPa	25 - 110 psi
*** CAUTION: If pressure is zero at curb idle, DO NOT run engine at 3000 rpm.**		

TORQUE

DESCRIPTION	N·m	Ft. Lbs.	In. Lbs.
BOLT - CAMSHAFT			
Non - Oiled Sprocket Bolt	122	90	-
Bearing Cap Bolts	11		100
Bolt - Counterbalance shaft retaining	28	-	250
Bolts - Timing Chain Cover	58	43	-
Bolts - Connecting Rod Cap	27	20	-
	Plus 90° Turn		
Bolts - Bed Plate	Refer to Procedure		
Bolt - Crankshaft Damper	175	130	-
BOLTS - CYLINDER HEAD			
M11 Bolts	Refer to Procedure		
M8 Bolts	Refer to Procedure		
Bolts - Cylinder Head Cover	12	-	105
Bolts - Exhaust Manifold	25	18	-
Nuts- Exhaust Manifold Heat Shield	8	-	72
	Then loosen 45°		
Bolts - Flexplate	95	70	-
Bolts - Engine Mount Bracket to Block	61	45	-
Bolts - Rear Mount to Transmission	46	34	-
BOLTS - GENERATOR MOUNTING			
M10 Bolts	54	40	-
M8 Bolts	28	-	250
Bolts - Intake Manifold	12	-	105
	Refer to Procedure for Tightening Sequence		
Bolts - Oil Pan	15	-	130
Plug - Oil Pan-Drain	34	25	-
Bolts - Oil Pump	28	-	250
Bolts - Oil Pump Cover	12	-	105
Bolt and Nut - Oil Pickup Tube	28	-	250

DESCRIPTION	N·m	Ft. Lbs.	In. Lbs.
Bolt - Oil Dipstick Tube to Engine Block	15	-	130
Bolts - Oil Fill Tube	12	-	105
Bolts - Timing Chain Guide	28	-	250
Timing Chain Tensioner Arm	28	-	250
Bolts - Hydraulic Tensioner	28	-	250
Bolts - Timing Chain Primary Tensioner	28	-	250
Bolt - Timing Drive Idler Sprocket	34	25	-
Bolts - Thermostat Housing	12	-	105
Bolts - Water Pump	58	43	-

Special Tools

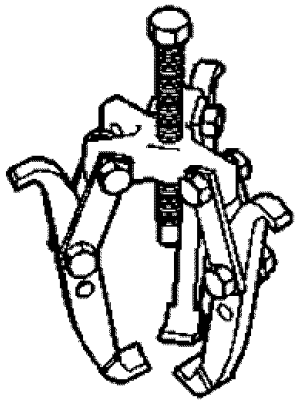

1023 - Puller

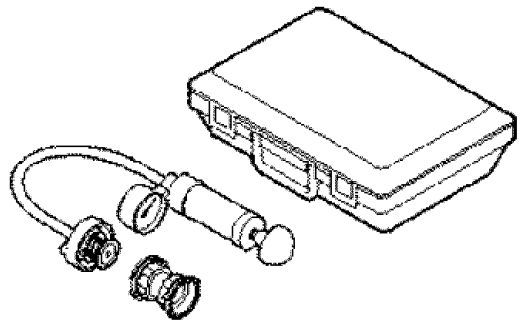

7700 - Tester, Cooling System

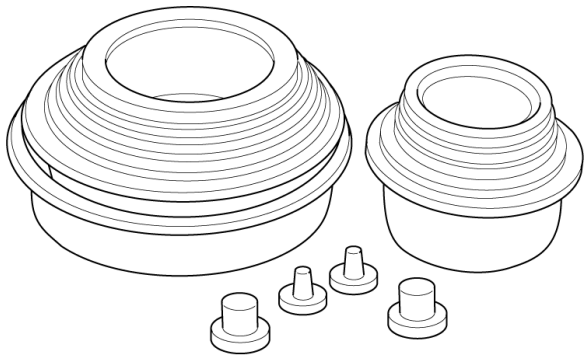

10368 - Set, Universal Protective Cap

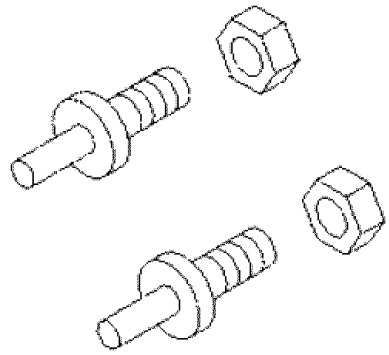

8346 - Pins, Adapter

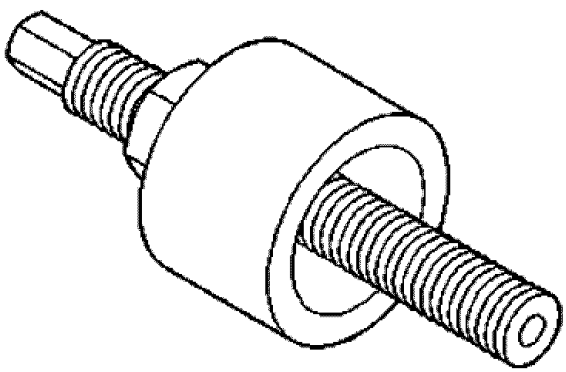

6871 - Installer, A/C Hub

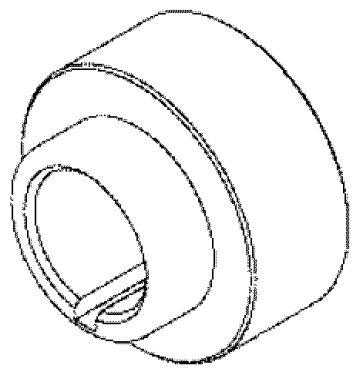

8348 - Installer, Seal

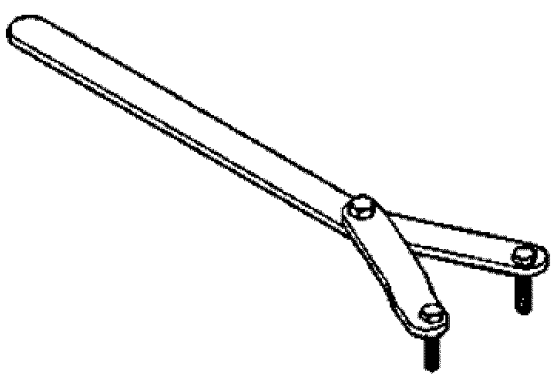

6958 - Wrench, Spanner

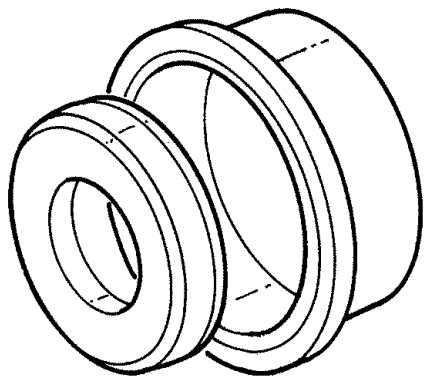

8349 - Installer, Crankshaft Rear Seal

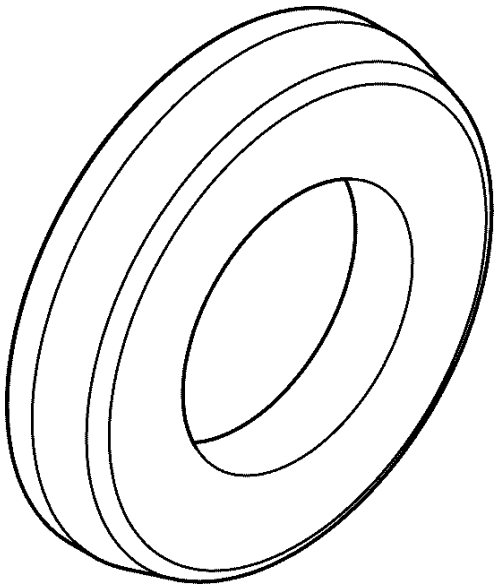

8349-2 - Guide Crank Seal

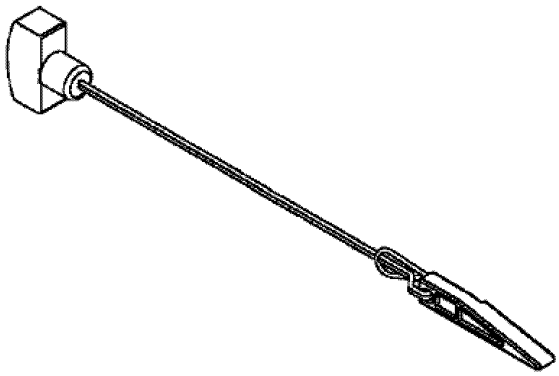

8379 - Locking Tool, Wedge

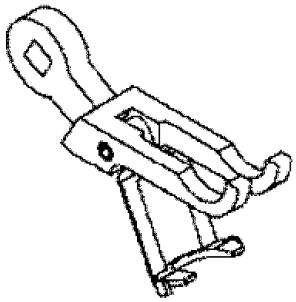

8387 - Compressor, Valve Spring

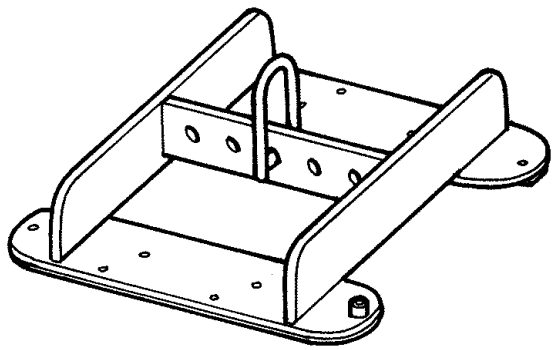

8427 - Fixture, Engine Lifting

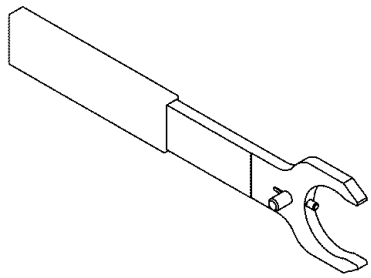

8428A - Holder, Camshaft

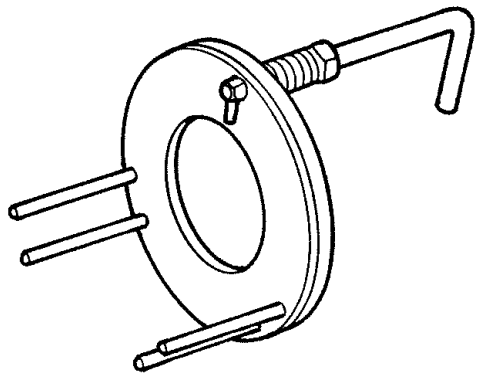

8429 - Holder, Secondary Camshaft Chain

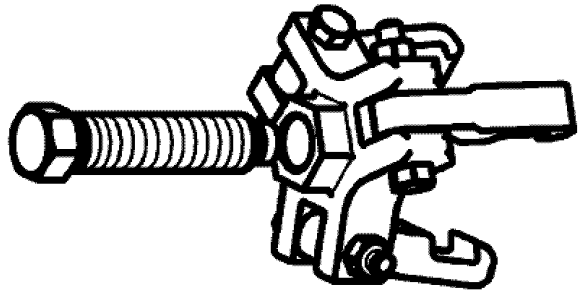

8454 - 3-Jaw Puller

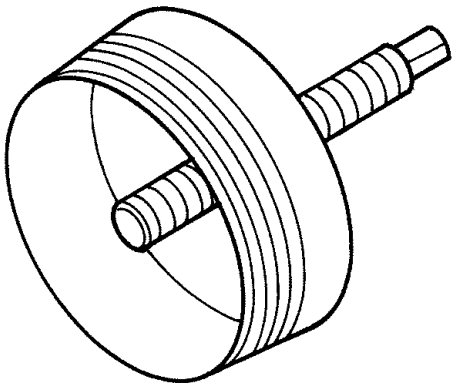

8506 - Remover, Seal

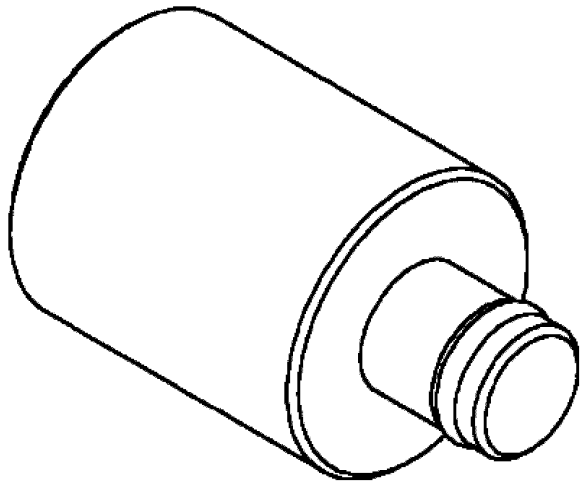

8513A - Insert, Crankshaft

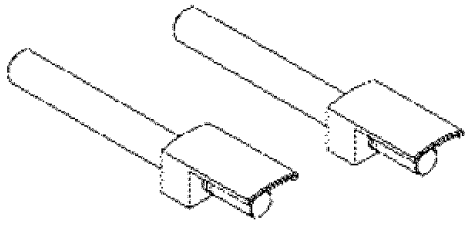

8507 - Guides, Connecting Rod

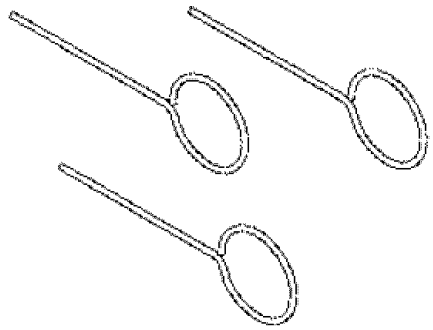

8514 - Pins, Tensioner

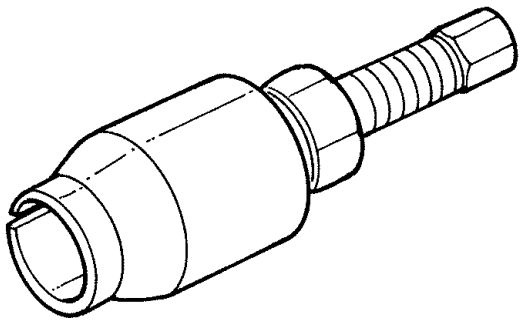

8511 - Remover, Seal

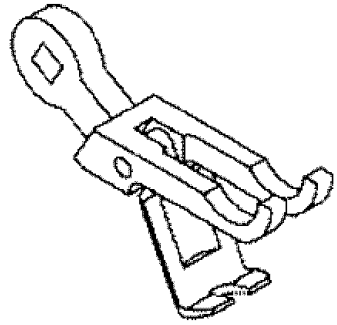

8516A - Remover/Installer

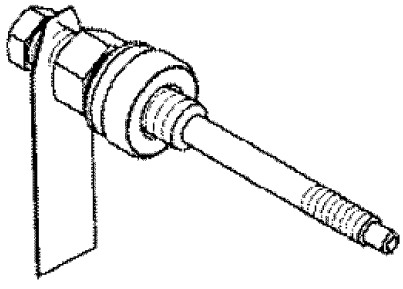

8512A - Installer, Damper

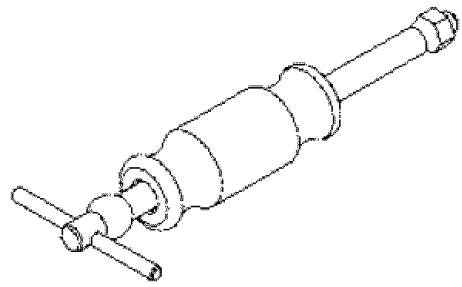

8517 - Remover

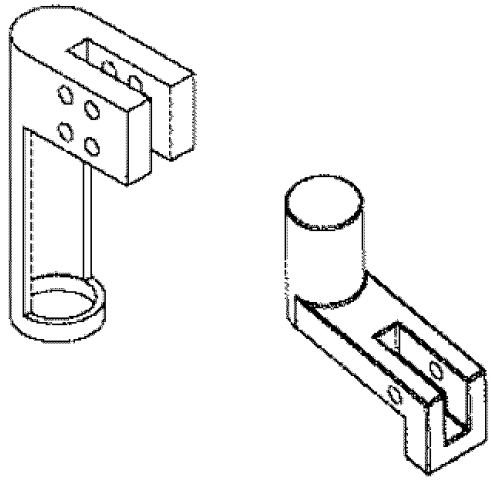

8519 - Adapters, Valve Spring

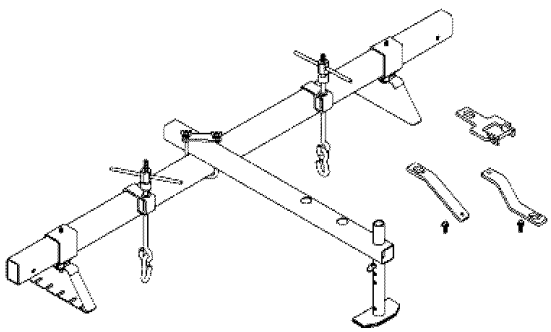

8534B - Support Fixture, Engine

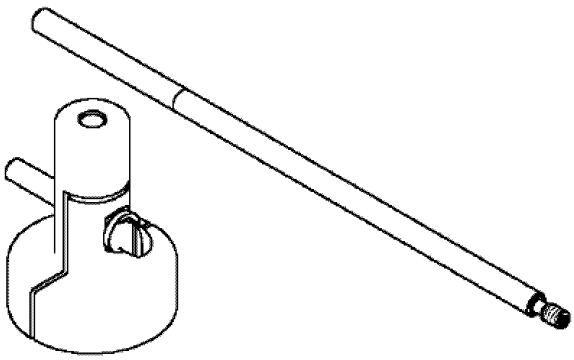

8641 - Remover/Installer

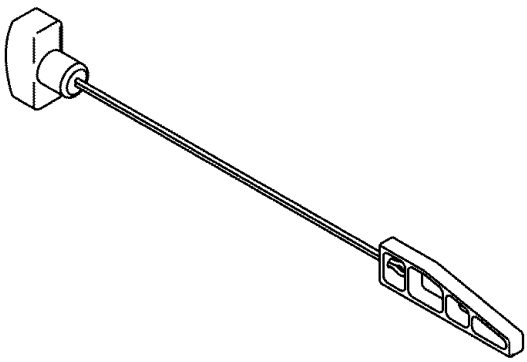

9867 - Wedge, Locking

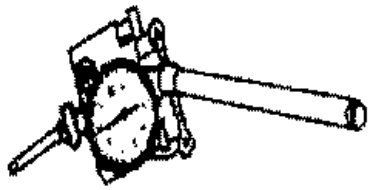

C-119 - Cylinder Indicator

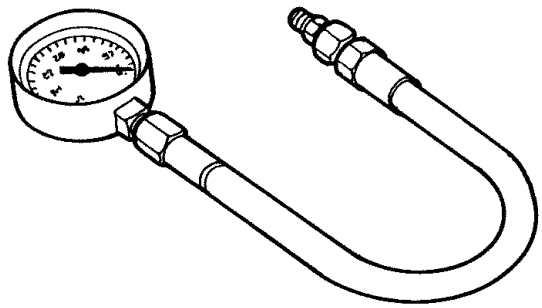

C-3292A - Gauge, Pressure

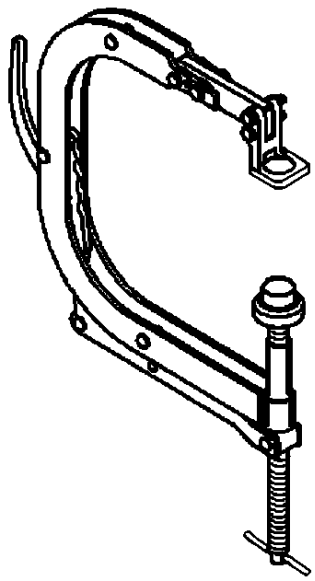

C-3422-D - Compressor, Valve Spring



C-3501 - Hone W/Oil, AMMCO Cylinder

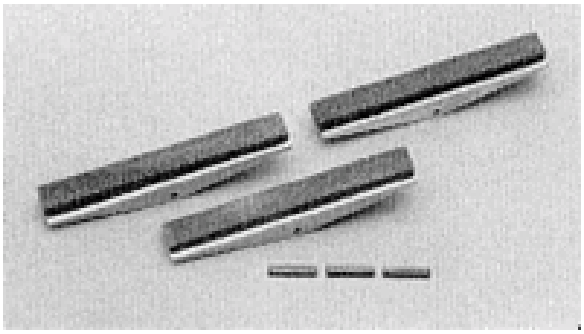

C-3501-3810 - Stones, 220 Grit Honing



C-3501-3880 - Oil, Honing



C-3685-A - Bloc-Chek Kit

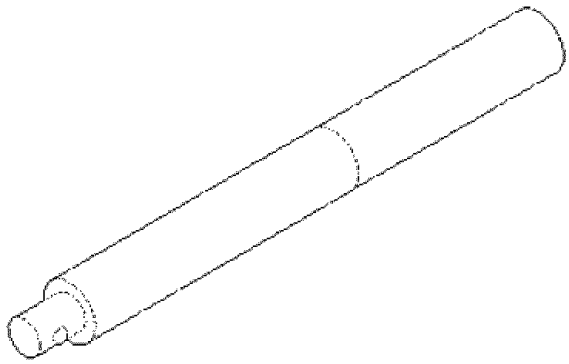

C-4171 - Driver Handle, Universal



C-823 - Hone, Cylinder

AIR INTAKE SYSTEM

TABLE OF CONTENTS

page

AIR INTAKE SYSTEM
AIR CLEANER
REMOVAL 34
INSTALLATION 34

page

BODY, AIR CLEANER
REMOVAL 35
INSTALLATION 36

Air Intake System

AIR CLEANER

Removal

1. Loosen clamp (1) and disconnect air duct (2) at air cleaner cover (3).
2. Pry over 4 spring clips (5) from housing cover (3).
3. Release housing cover (3) from locating tabs on housing and remove cover.
4. Remove air cleaner element (filter) from housing.
5. Clean inside of housing before replacing element.

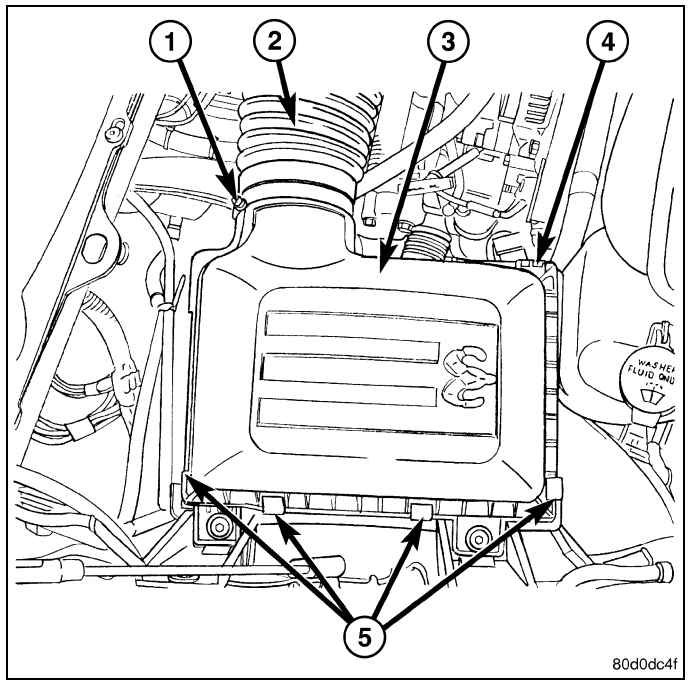

Installation

1. Install filter element into housing.
2. Position housing cover (3) into housing locating tabs.
3. Pry up 4 spring clips (5) and lock cover to housing.
4. Install air duct (2) to air cleaner cover (3) and tighten hose clamp (1) to 3 N·m (30 in. lbs.).

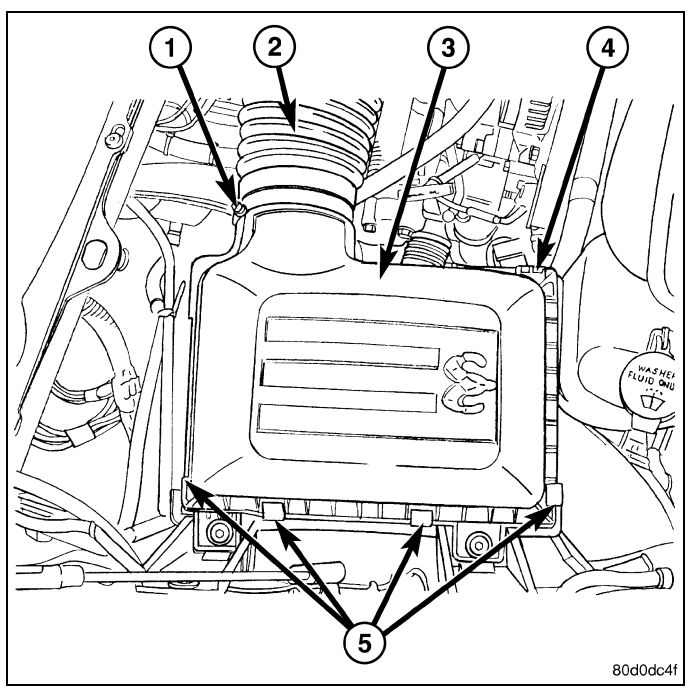

BODY, Air Cleaner

Removal

1. Loosen clamp (1) and disconnect air duct (2) at air cleaner cover (3).

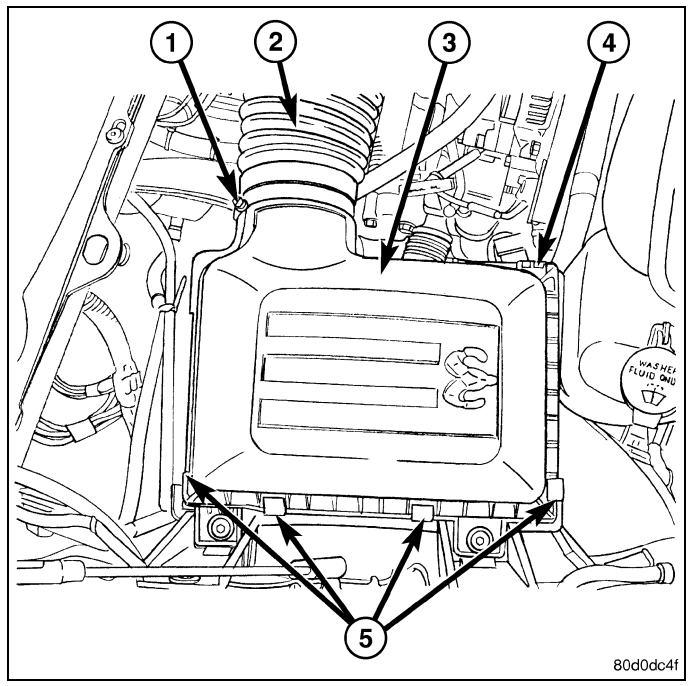

2. Lift entire housing (1) assembly from 4 locating pins (2).

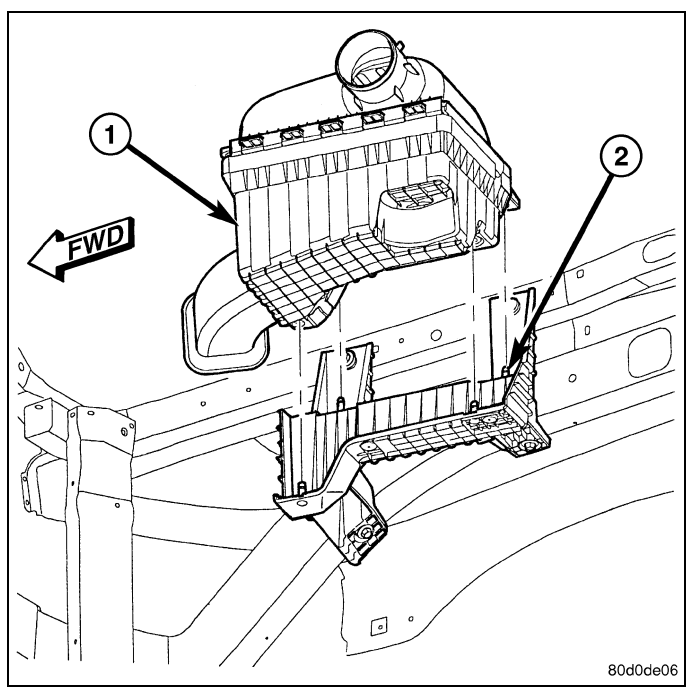

Installation

1. Position housing assembly (1) into 4 locating pins (2).

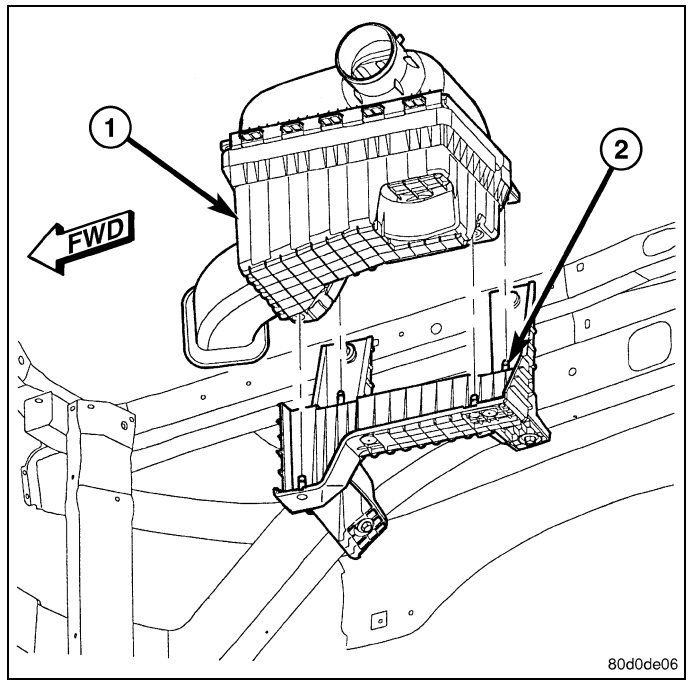

2. Connect air duct (2) at air cleaner cover (3) and tighten clamp (1).

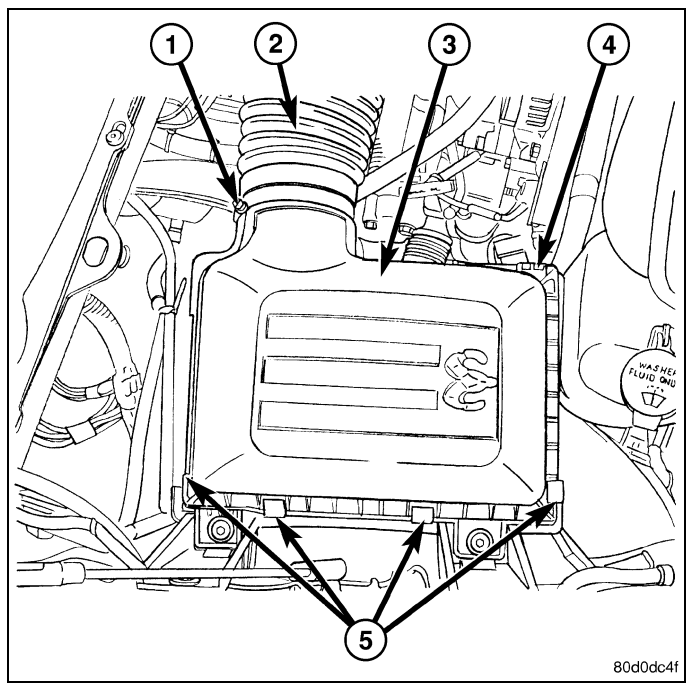

CYLINDER HEAD, LEFT

TABLE OF CONTENTS

page

CYLINDER HEAD, LEFT
DIAGNOSIS AND TESTING 38
REMOVAL 38
INSTALLATION 41
CAMSHAFT, ENGINE
DESCRIPTION 43
REMOVAL 43
INSTALLATION 44
COVER(S), CYLINDER HEAD
DESCRIPTION 46
REMOVAL 46
INSTALLATION 47
ROCKER ARM, VALVE
DESCRIPTION 47
REMOVAL 47
INSTALLATION 48

page

SEAL(S), VALVE GUIDE
DESCRIPTION 48
REMOVAL 48
INSTALLATION 48
SPRING(S), VALVE
DESCRIPTION 48
REMOVAL 48
INSTALLATION 49
VALVES, INTAKE AND EXHAUST
DESCRIPTION 49
STANDARD PROCEDURE 50
REMOVAL 50
INSTALLATION 51

Cylinder Head, Left

Diagnosis and Testing

A cylinder head gasket leak can be located between adjacent cylinders or between a cylinder and the adjacent water jacket.

Possible indications of the cylinder head gasket leaking between adjacent cylinders are:

- Loss of engine power
- Engine misfiring
- Poor fuel economy

Possible indications of the cylinder head gasket leaking between a cylinder and an adjacent water jacket are:

- Engine overheating
- Loss of coolant
- Excessive steam (white smoke) emitting from exhaust
- Coolant foaming

CYLINDER-TO-CYLINDER LEAKAGE TEST

To determine if an engine cylinder head gasket is leaking between adjacent cylinders, follow the procedures in Cylinder Compression Pressure Test (Refer to 09 - Engine - Diagnosis and Testing). An engine cylinder head gasket leaking between adjacent cylinders will result in approximately a 50 - 70% reduction in compression pressure.

CYLINDER-TO-WATER JACKET LEAKAGE TEST

WARNING: USE EXTREME CAUTION WHEN THE ENGINE IS OPERATING WITH COOLANT PRESSURE CAP REMOVED.

VISUAL TEST METHOD

With the engine cool, remove the coolant pressure cap. Start the engine and allow it to warm up until thermostat opens.

If a large combustion/compression pressure leak exists, bubbles will be visible in the coolant.

COOLING SYSTEM TESTER METHOD

WARNING: WITH COOLING SYSTEM TESTER IN PLACE, PRESSURE WILL BUILD UP FAST. EXCESSIVE PRESSURE BUILT UP, BY CONTINUOUS ENGINE OPERATION, MUST BE RELEASED TO A SAFE PRESSURE POINT. NEVER PERMIT PRESSURE TO EXCEED 138 kPa (20 psi).

Install Cooling System Tester 7700 or equivalent to pressure cap neck. Start the engine and observe the tester's pressure gauge. If gauge pulsates with every power stroke of a cylinder a combustion pressure leak is evident.

CHEMICAL TEST METHOD

Combustion leaks into the cooling system can also be checked by using Bloc-Chek Kit C-3685-A or equivalent. Perform test following the procedures supplied with the tool kit.

Removal

1. Disconnect the negative battery cable.
2. Raise and support the vehicle.
3. Disconnect the exhaust pipe at the left side exhaust manifold.
4. Drain the engine coolant (Refer to 07 - Cooling - Standard Procedure)
5. Lower the vehicle.
6. Remove the intake manifold (Refer to 09 - Engine/Manifolds/MANIFOLD, Intake - Removal)
7. Remove the master cylinder and booster assembly (Refer to 05 - Brakes/Hydraulic/Mechanical/BOOSTER, Power Brake - Removal)
8. Remove the cylinder head cover (Refer to 09 - Engine/Cylinder Head/COVER(S), Cylinder Head - Removal)

9. Remove the fan shroud and fan blade assembly (Refer to 07 - Cooling/Engine/FAN, Cooling - Removal)
10. Remove accessory drive belt (Refer to 07 - Cooling/Accessory Drive/BELT, Serpentine - Removal)
11. Remove the power steering pump and set aside.
12. Rotate the crankshaft until the damper timing mark is aligned with TDC indicator mark (2).

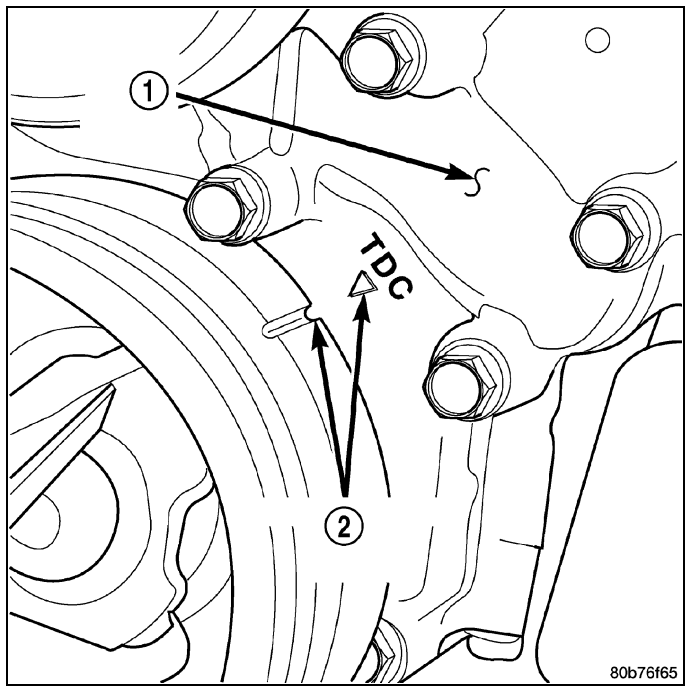

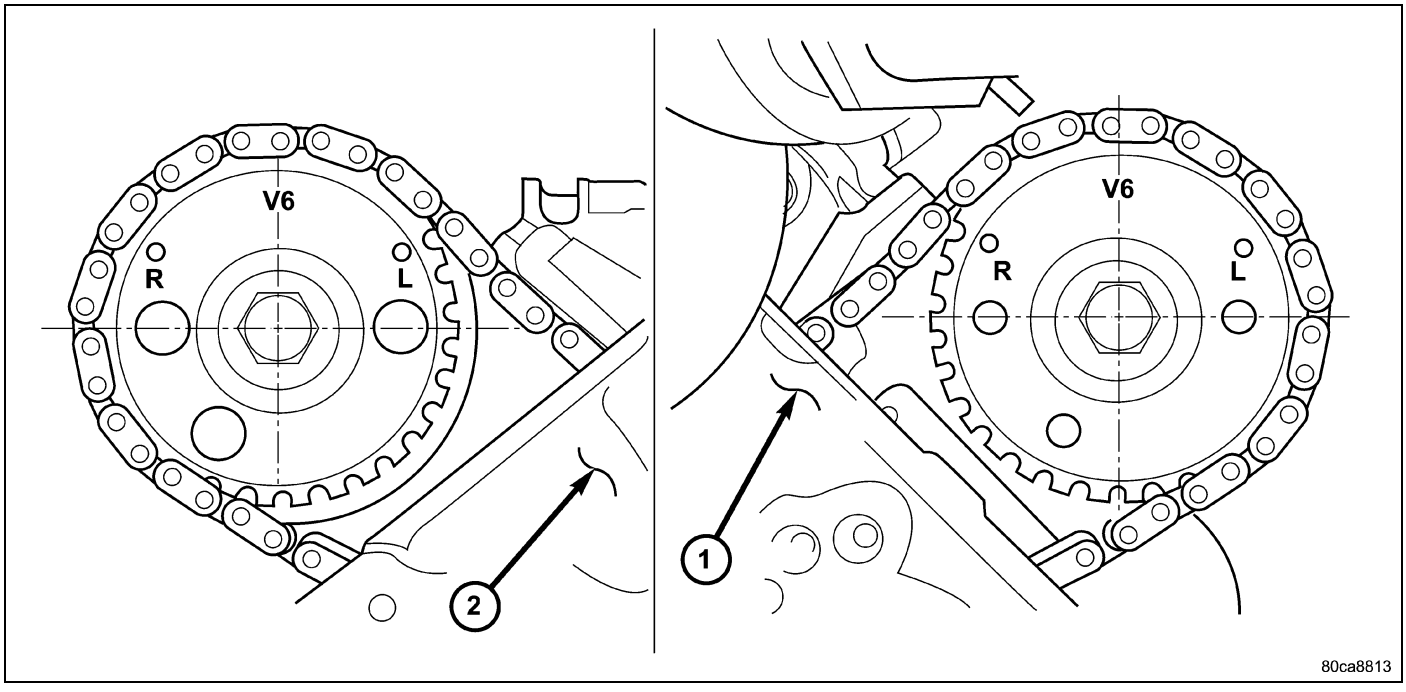

13. Verify the V6 mark on the camshaft sprocket is at the 12 o'clock position. Rotate the crankshaft one turn if necessary.
14. Remove the crankshaft damper (Refer to 09 - Engine/Engine Block/DAMPER, Vibration - Removal)
15. Remove the timing chain cover (Refer to 09 - Engine/Valve Timing/COVER(S), Engine Timing - Removal)

16. Lock the secondary timing chains to the idler sprocket using special tool 8429 timing chain holding fixture.

NOTE: Mark the secondary timing chain prior to removal to aid in installation.

17. Mark the secondary timing chain, one link on each side of the V6 mark on the camshaft drive gear.
18. Remove the left side secondary chain tensioner (Refer to 09 - Engine/Valve Timing/CHAIN and SPROCKETS, Timing - Removal)

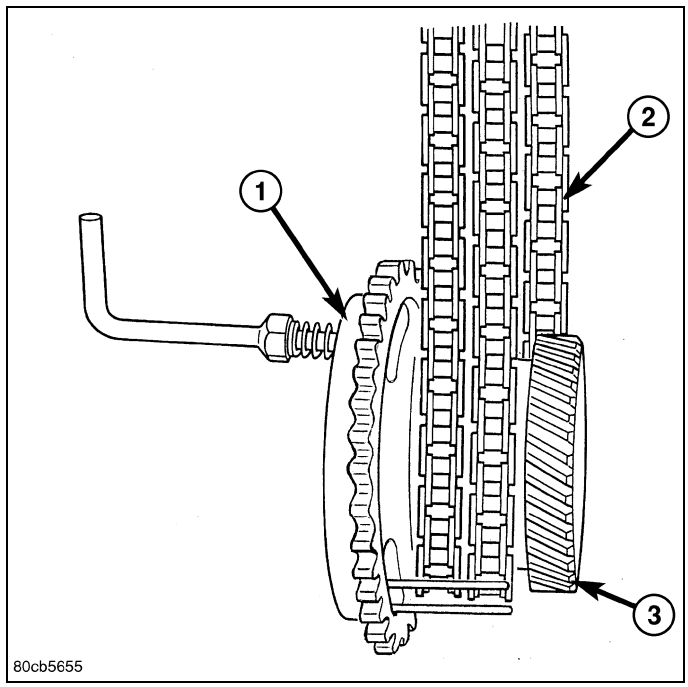

19. Remove the cylinder head access plug (2).
20. Remove the left side secondary chain guide (Refer to 09 - Engine/Valve Timing/CHAIN and SPROCKETS, Timing - Removal)
21. Remove the retaining bolt and the camshaft drive gear.

CAUTION: Do not allow the engine to rotate. Severe damage to the valve train can occur.

CAUTION: Do not overlook the four smaller bolts at the front of the cylinder head. Do not attempt to remove the cylinder head without removing these four bolts.

NOTE: The cylinder head is attached to the cylinder block with twelve bolts.

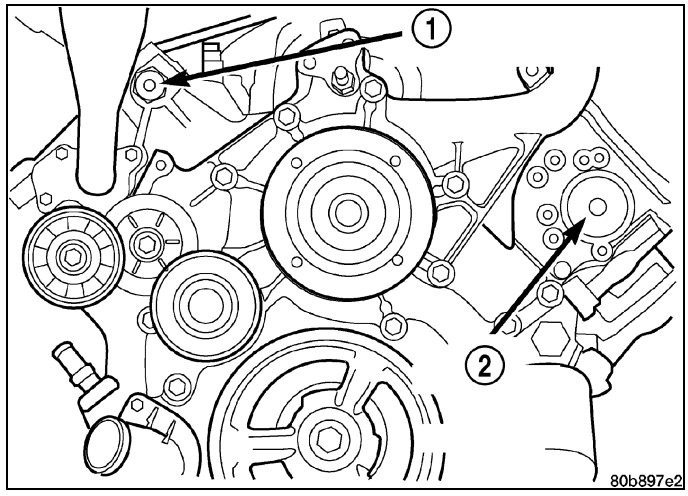

22. Remove the cylinder head retaining bolts.
23. Remove the cylinder head and gasket. Discard the gasket.

CAUTION: Do not lay the cylinder head on its gasket sealing surface, due to the design of the cylinder head gasket any distortion to the cylinder head sealing surface may prevent the gasket from properly sealing resulting in leaks.

Installation

NOTE: The cylinder head bolts are tightened using a torque plus angle procedure. The bolts must be examined BEFORE reuse. If the threads are necked down (2) the bolts should be replaced.

Necking can be checked by holding a straight edge against the threads. If all the threads do not contact the scale, the bolt should be replaced .

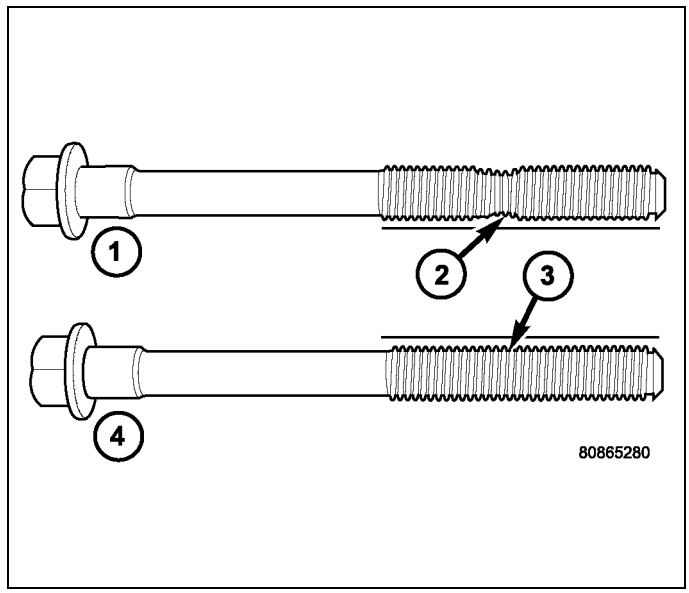

CAUTION: When cleaning cylinder head and cylinder block surfaces, DO NOT use a metal scraper (1) because the surfaces could be cut or ground. Use only a wooden or plastic scraper.

1. Clean the cylinder head and cylinder block mating surfaces .

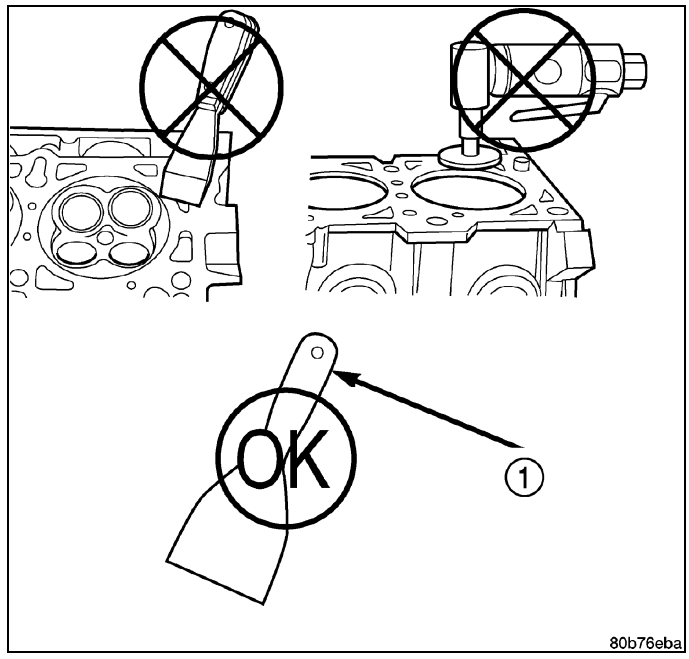

2. Position the new cylinder head gasket on the locating dowels.

CAUTION: When installing cylinder head, use care not damage the tensioner arm or the guide arm.

3. Position the cylinder head onto the cylinder block. Make sure the cylinder head seats fully over the locating dowels.

NOTE: The four smaller cylinder head mounting bolts require sealant to be added to them before installing. Failure to do so may cause leaks.

4. Lubricate the cylinder head bolt threads with clean engine oil and install the eight M11 bolts.
5. Coat the four M8 cylinder head bolts with **Mopar® Lock and Seal Adhesive** then install the bolts.

NOTE: The cylinder head bolts are tightened using an angle torque procedure, however, the bolts are not a torque-to-yield design.

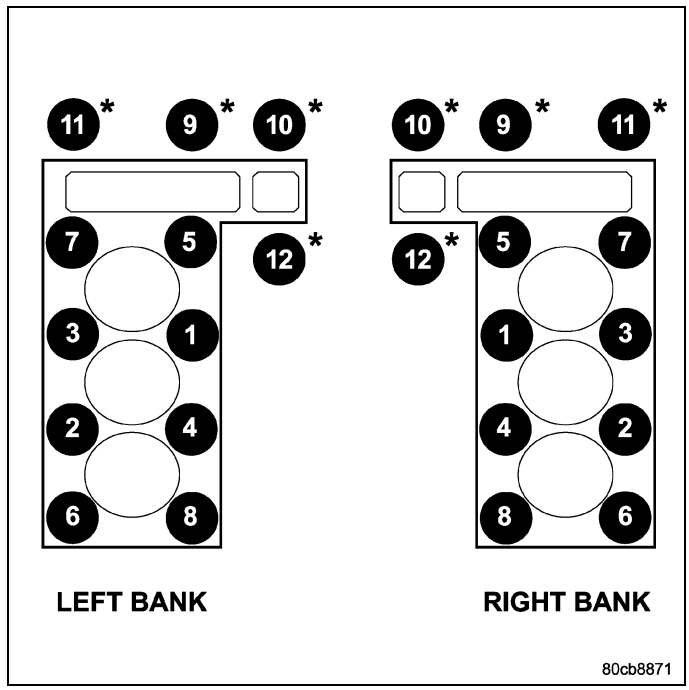

6. Tighten the bolts in sequence using the following steps and torque values :

- Step 1: Tighten bolts 1-8, 27 N·m (20 ft. lbs.).
- Step 2: Verify that bolts 1-8, all reached 27 N·m (20 ft. lbs.), by repeating step 1 without loosening the bolts.
- Tighten bolts 9 thru 12 to 14 N·m (10 ft. lbs.).
- Step 3: Tighten bolts 1-8, 90 degrees.
- Step 4: Tighten bolts 1-8, 90 degrees, again. Tighten bolts 9-12, 26 N·m (19 ft. lbs.)

7. Position the secondary chain onto the camshaft drive gear, making sure one marked chain link is on either side of the V6 mark on the gear then using Special Tool 8428A Camshaft Wrench, position the gear onto the camshaft.

CAUTION: Remove excess oil from camshaft sprocket retaining bolt before reinstalling bolt. Failure to do so may cause over-torqueing of bolt resulting in bolt failure.

8. Install the camshaft drive gear retaining bolt.
9. Install the left side secondary chain guide(Refer to 09 - Engine/Valve Timing/CHAIN and SPROCKETS, Timing - Installation).
10. Install the cylinder head access plug.
11. Re-set and install the left side secondary chain tensioner(Refer to 09 - Engine/Valve Timing/CHAIN and SPROCKETS, Timing - Installation).
12. Remove Special Tool 8429.
13. Install the timing chain cover(Refer to 09 - Engine/Valve Timing/COVER(S), Engine Timing - Installation) - INSTALLATION).
14. Install the crankshaft damper(Refer to 09 - Engine/Engine Block/DAMPER, Vibration - Installation). Tighten damper bolt 175 N·m (130 Ft. Lbs.).
15. Install the power steering pump.
16. Install the fan blade assembly and fan shroud(Refer to 07 - Cooling/Engine/FAN, Cooling - Installation).
17. Install the cylinder head cover(Refer to 09 - Engine/Cylinder Head/COVER(S), Cylinder Head - Installation) - INSTALLATION).
18. Install the master cylinder and booster assembly(Refer to 05 - Brakes/Hydraulic/Mechanical/BOOSTER, Power Brake - Installation).
19. Install the intake manifold(Refer to 09 - Engine/Manifolds/MANIFOLD, Intake - Installation).
20. Refill the cooling system(Refer to 07 - Cooling - Standard Procedure).
21. Raise the vehicle.
22. Install the exhaust pipe onto the left exhaust manifold.
23. Lower the vehicle.
24. Connect the negative cable to the battery.

25. Start the engine and check for leaks.

CAMSHAFT, Engine

Description

The camshafts consist of powdered metal steel lobes which are sinter-bonded to a steel tube. Four bearing journals are machined into the camshaft. Camshaft end play is controlled by two thrust walls that border the nose piece journal.

Removal

CAUTION: When the timing chain is removed and the cylinder heads are still installed, Do not forcefully rotate the camshafts or crankshaft independently of each other. Severe valve and/or piston damage can occur.

CAUTION: When removing the cam sprocket, timing chains or camshaft, Failure to use the Wedge Locking Tool 8379 **will result in hydraulic tensioner ratchet over extension, requiring timing chain cover removal to reset the tensioner ratchet.**

1. Remove cylinder head cover (Refer to 09 - Engine/Cylinder Head/COVER(S), Cylinder Head - Removal).
2. Set engine cylinder #1 to TDC, camshaft sprocket V6 marks at the 12 o'clock position.
3. Mark one link on the secondary timing chain on both sides of the V6 mark on the camshaft sprocket to aid in installation.

CAUTION: Do not hold or pry on the camshaft target wheel (Located on the right side camshaft sprocket) for any reason, Severe damage will occur to the target wheel resulting in a vehicle no start condition.

4. Loosen but **DO NOT** remove the camshaft sprocket retaining bolt. Leave the bolt snug against the sprocket.

NOTE: The timing chain tensioners must be secured prior to removing the camshaft sprockets. Failure to secure tensioners will allow the tensioners to extend, requiring timing chain cover removal in order to reset tensioners.

CAUTION: Do not force Locking Wedge 9867 **past the narrowest point between the chain strands. Damage to the tensioners may occur.**

5. Position the Wedge Locking Tool 8379 (1) between the timing chain strands, tap the tool to securely wedge the timing chain against the tensioner arm and guide.

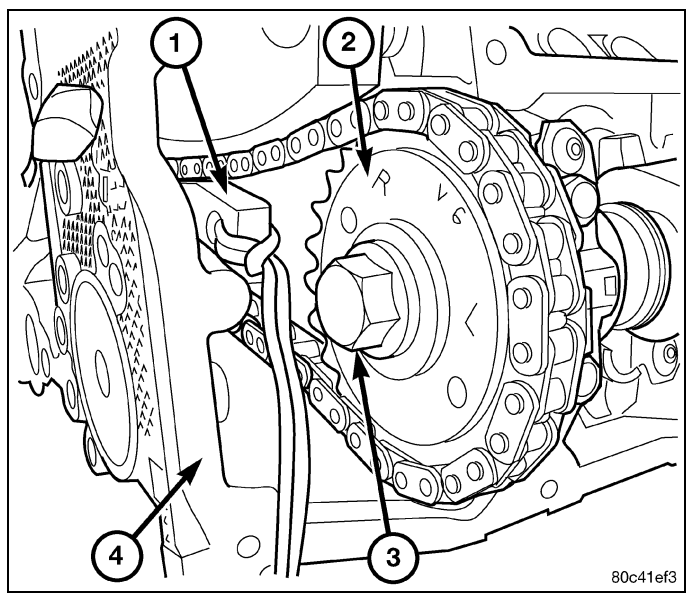

6. Hold the camshaft with the Camshaft Holder 8428A, while removing the camshaft sprocket bolt and sprocket.
7. Using the Camshaft Holder 8428A, gently allow the camshaft to rotate 5° clockwise until the camshaft is in the neutral position (no valve load).
8. Starting at the outside working inward, loosen the camshaft bearing cap retaining bolts 1/2 turn at a time. Repeat until all load is off the bearing caps.

CAUTION: DO NOT STAMP OR STRIKE THE CAMSHAFT BEARING CAPS. SEVERE DAMAGE WILL OCCUR TO THE BEARING CAPS.

NOTE: When the camshaft is removed the rocker arms may slide downward, mark the rocker arms before removing camshaft.

9. Remove the camshaft bearing caps and the camshaft.

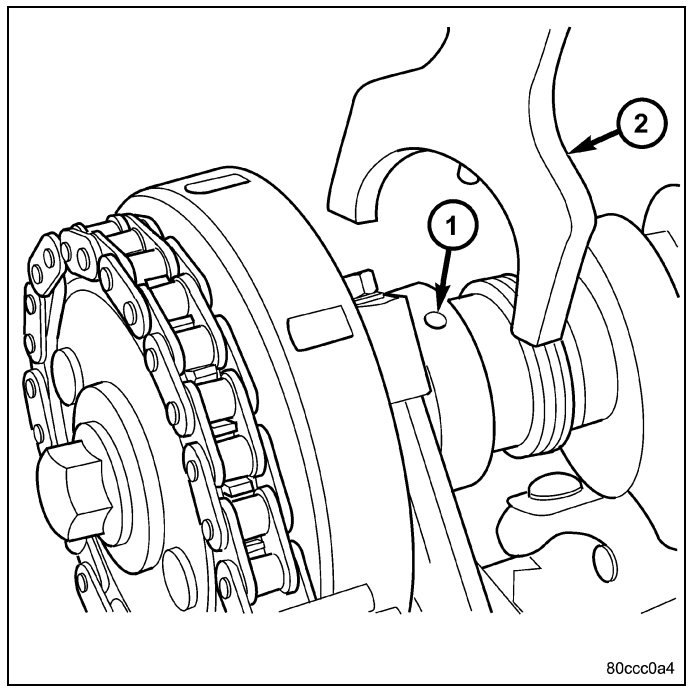

Installation

1. Lubricate camshaft journals with clean engine oil.

NOTE: Position the left side camshaft so that the camshaft sprocket dowel is near the 1 o'clock position, This will place the camshaft at the neutral position easing the installation of the camshaft bearing caps.

2. Position the camshaft into the cylinder head.
3. Install the camshaft bearing caps, hand tighten the retaining bolts.

NOTE: Caps should be installed so that the stamped numbers on the caps are in numerical order, (1 through 4) from the front to the rear of the engine. All caps should be installed so that the stamped arrows on the caps point toward the front of the engine.

4. Working in 1/2 turn increments, tighten the bearing cap retaining bolts in the sequence shown.
5. Tighten the camshaft bearing cap retaining bolts to 11 N·m (100 in. lbs.) .

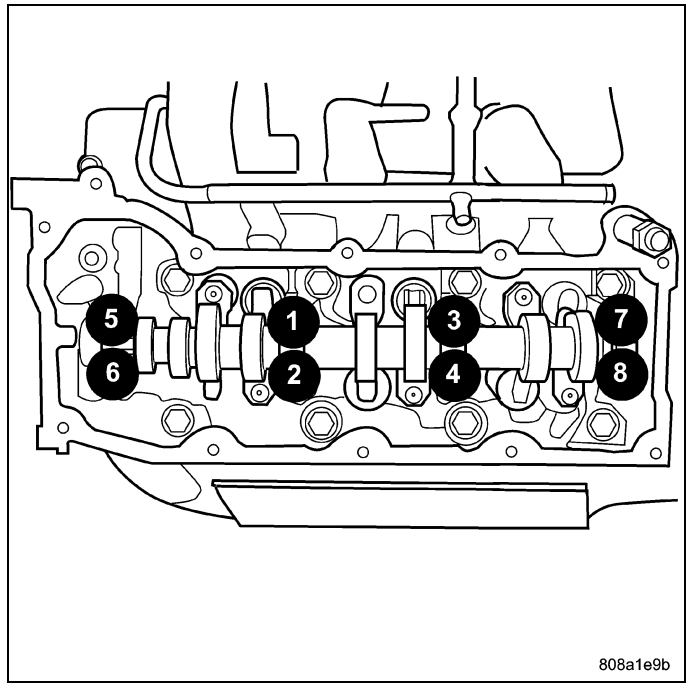

6. Position the camshaft drive gear into the timing chain aligning the V6 mark between the two marked chain links (Two links marked during removal).

7. Using the Camshaft Holder 8428A (2), rotate the camshaft until the camshaft sprocket dowel is aligned with the slot in the camshaft sprocket. Install the sprocket onto the camshaft.

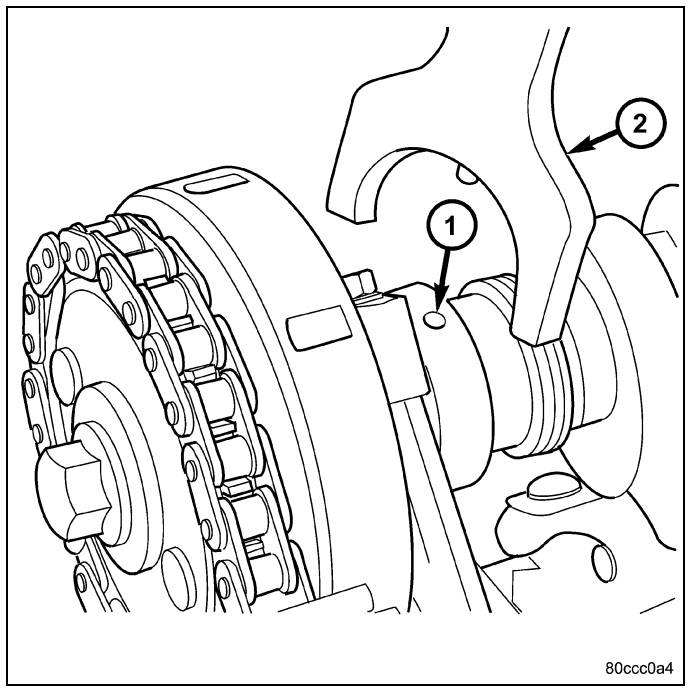

CAUTION: Remove excess oil from the camshaft sprocket retaining bolt, failure to do so can cause bolt over-torque resulting in bolt failure.

8. Remove excess oil from bolt, then install the camshaft sprocket retaining bolt and hand tighten.
9. Remove Wedge Locking Tool 8379.
10. Using the Spanner Wrench 6958 (4) with adapter pins 8346, tighten the camshaft sprocket retaining bolt to 122 N·m (90 ft. lbs.).

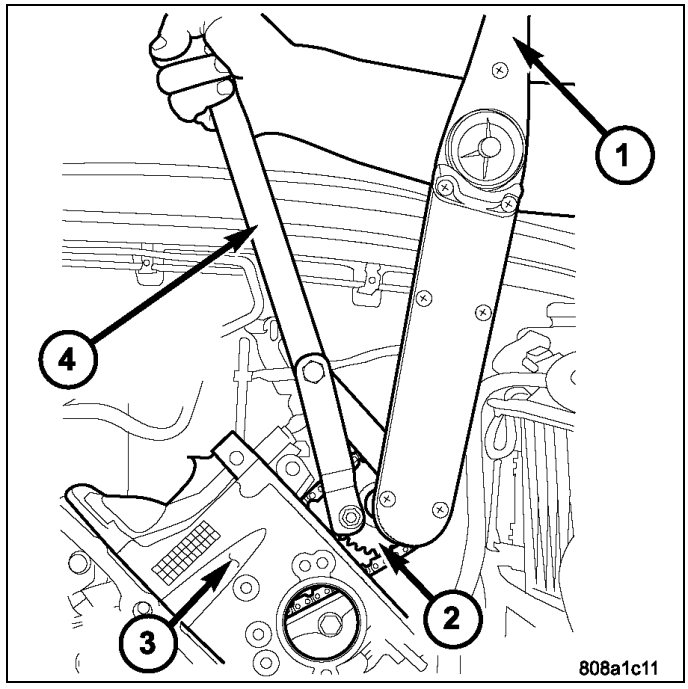

11. Install the cylinder head cover(Refer to 09 - Engine/Cylinder Head/COVER(S), Cylinder Head - Installation) - INSTALLATION).

COVER(S), Cylinder Head

Description

The cylinder head covers (1,2) are made of glass re-enforced thermoset plastic, and are not interchangable from side-to-side.

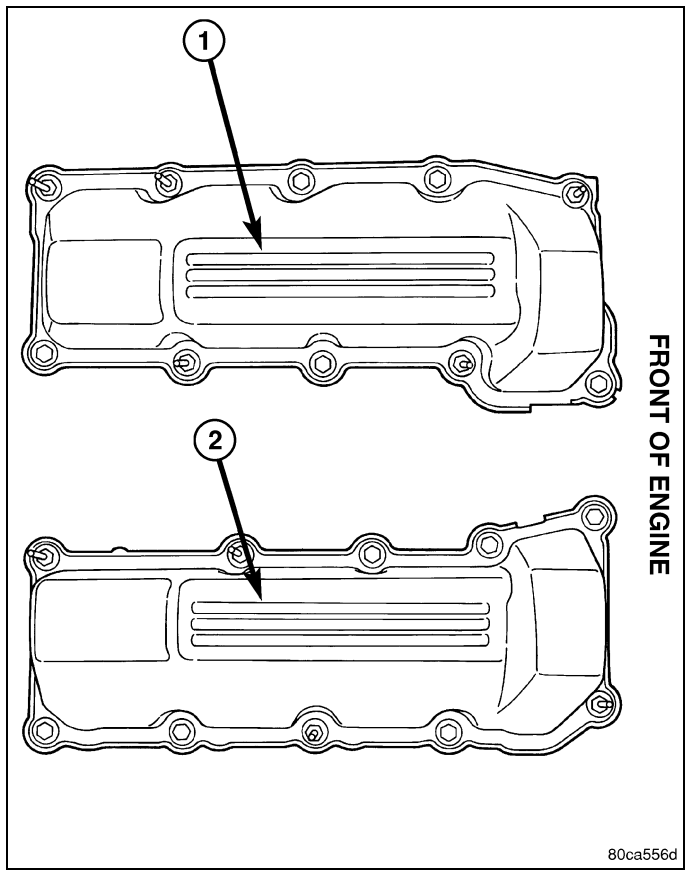

Removal

1. Disconnect negative cable from battery.
2. Remove the resonator assemble and air inlet hose.
3. Disconnect injector connectors and un-clip the injector harness.
4. Route injector harness in front of cylinder head cover.
5. Disconnect the left side breather tube and remove the breather tube.
6. Remove the cylinder head cover mounting bolts (1).
7. Remove cylinder head cover (1) and gasket .

NOTE: The gasket may be used again, providing no cuts, tears, or deformation has occurred.

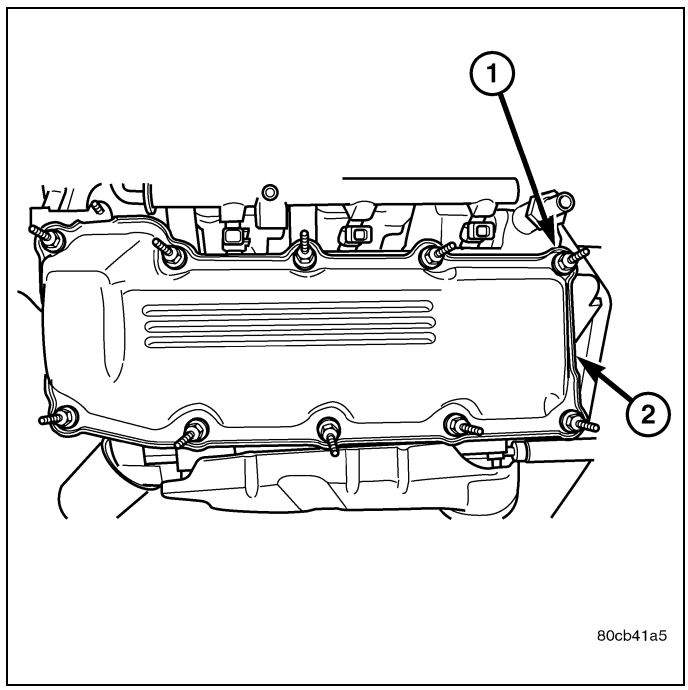

Installation

CAUTION: Do not use harsh cleaners to clean the cylinder head covers. Severe damage to covers may occur.

NOTE: The gasket may be used again, provided no cuts, tears, or deformation has occurred.

1. Clean cylinder head cover and both sealing surfaces. Inspect and replace gasket as necessary.
2. Install cylinder head cover (2).
3. Tighten cylinder head cover bolts (1) and double ended studs to 12 N·m (105 in. lbs.).
4. Install left side breather and connect breather tube.
5. Connect injector electrical connectors and injector harness retaining clips.
6. Install the resonator and air inlet hose.
7. Connect negative cable to battery.

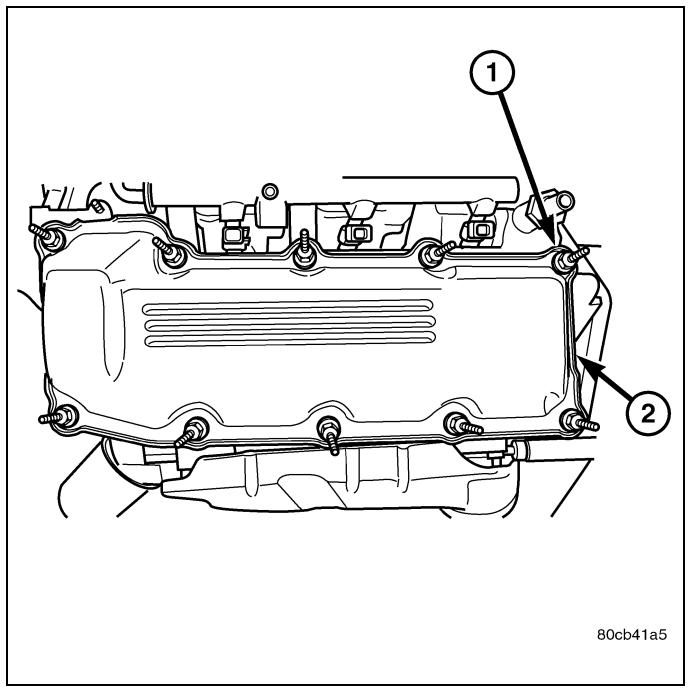

ROCKER ARM, Valve

Description

The rocker arms are steel stampings with an integral roller bearing. The rocker arms incorporate a 2.8 mm (0.5 inch) oil jet hole in the lash adjuster socket for roller and camshaft lubrication.

Removal

NOTE: Disconnect the battery negative cable to prevent accidental starter engagement.

1. Remove the cylinder head cover (Refer to 09 - Engine/ Cylinder Head/COVER(S), Cylinder Head - Removal) - REMOVAL).
2. For rocker arm removal on cylinder No. 4, Rotate the crankshaft until cylinder No. 1 is at BDC intake stroke.
3. For rocker arm removal on cylinder No. 1, Rotate the crankshaft until cylinder No. 1 is at BDC combustion stroke.
4. For rocker arm removal on cylinders No. 3 and No. 5, Rotate the crankshaft until cylinder No. 1 is at TDC exhaust stroke.
5. For rocker arm removal on cylinders No. 2 and No. 6, Rotate the crankshaft until cylinder No. 1 is at TDC ignition stroke.
6. Using the Rocker Arm Remover/Installer 8516A (2) , press downward on the valve spring, remove rocker arm.

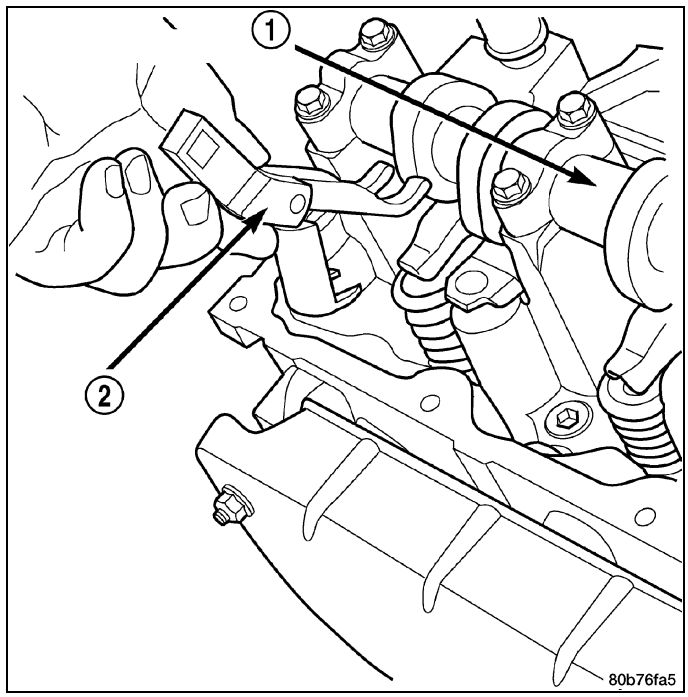

Installation

CAUTION: Make sure the rocker arms are installed with the concave pocket over the lash adjusters. Failure to do so may cause severe damage to the rocker arms and/or lash adjusters.

NOTE: Coat the rocker arms with clean engine oil prior to installation.

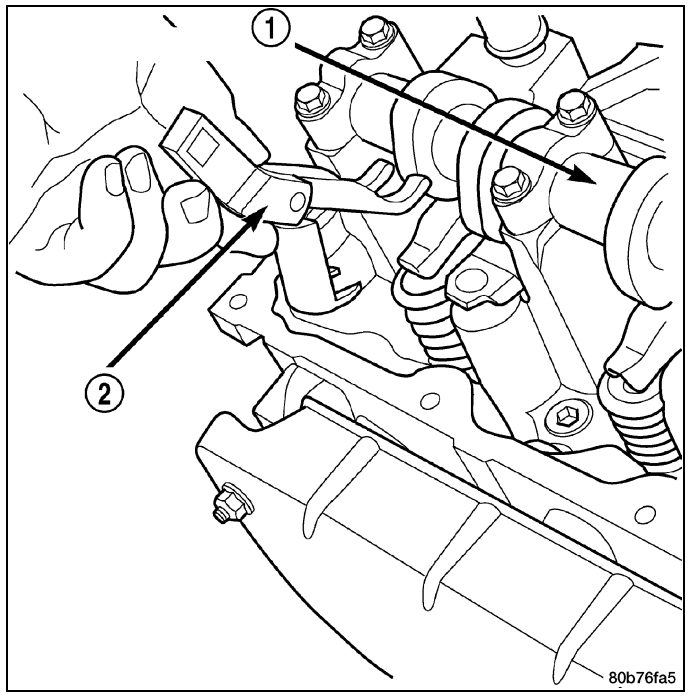

1. For rocker arm installation on cylinders No. 4, Rotate the crankshaft until cylinder No. 1 is at BDC intake stroke.
2. For rocker arm installation on cylinder No. 1, Rotate the crankshaft until cylinder No. 1 is at BDC combustion stroke.
3. For rocker arm installation on cylinders No. 3 and No. 5, Rotate the crankshaft until cylinder No. 1 is at TDC exhaust stroke.
4. For rocker arm installation on cylinders No. 2 and No. 6, Rotate the crankshaft until cylinder No. 1 is at TDC ignition stroke.
5. Using the Rocker Arm Remover/Installer 8516A (2) press downward on the valve spring, install rocker arm .
6. Install the cylinder head cover (Refer to 09 - Engine/Cylinder Head/COVER(S), Cylinder Head - Installation) - INSTALLATION).

SEAL(S), Valve Guide

Description

The valve guide seals are made of rubber and incorporate an integral steel valve spring seat. The integral garter spring maintains consistent lubrication control to the valve stems.

Removal

The valve stem seal is integral with the valve spring seat, for removal (Refer to 09 - Engine/Cylinder Head/SPRING(S), Valve - Removal)

Installation

The valve stem seal is integral with the valve spring seat, for installation (Refer to 09 - Engine/Cylinder Head/SPRING(S), Valve - Installation)

SPRING(S), Valve

Description

The valve springs are made from high strength chrome silicon steel. The springs are NOT common for intake and exhaust applications. The exhaust spring has an external damper. The valve spring seat is integral with the valve stem seal, which is a positive type seal to control lubrication.

Removal

1. Remove the cylinder head cover(Refer to 09 - Engine/Cylinder Head/COVER(S), Cylinder Head - Removal) - REMOVAL).
2. Using the Valve Spring Remover/Installer 8516A, remove the rocker arms and the hydraulic lash adjusters.
3. Remove the spark plug for the cylinder the valve spring and seal are to be removed from.
4. Apply shop air to the cylinder to hold the valves in place when the spring is removed.

NOTE: All six valve springs and seals are removed in the same manner; this procedure only covers one valve seal and valve spring.

5. Using the Valve Spring Compressor 8387, compress the valve spring.

NOTE: It may be necessary to tap the top of the valve spring to loosen the spring retainers locks enough to be removed.

6. Remove the two spring retainer lock halves.

NOTE: the valve spring is under tension use care when releasing the valve spring compressor.

7. Remove the valve spring compressor.

NOTE: The valve springs are NOT common between intake and exhaust.

8. Remove the spring retainer, and the spring.

NOTE: The valve stem seals are common between intake and exhaust.

9. Remove the valve stem seal.

Installation

NOTE: All six valve springs and seals are removed in the same manner; this procedure only covers one valve seal and valve spring.

1. Apply shop air to the cylinder to hold the valves in place while the spring is installed.

NOTE: The valve stem seals are common between intake and exhaust.

2. Install the valve stem seal.

NOTE: The valve springs are NOT common between intake and exhaust.

3. Install the spring retainer, and the spring.
4. Using the Valve Spring Compressor 8387, compress the valve spring.
5. Install the two spring retainer lock halves.

NOTE: the valve spring is under tension use care when releasing the valve spring compressor.

6. Remove the valve spring compressor.
7. Disconnect the shop air to the cylinder.
8. Install the spark plug for the cylinder the valve spring and seal was installed on.
9. Using Valve Spring Remover/Installer 8516A, install the rocker arms and the hydraulic lash adjusters.
10. Install the cylinder head cover(Refer to 09 - Engine/Cylinder Head/COVER(S), Cylinder Head - Installation) - INSTALLATION).

VALVES, Intake and Exhaust

Description

The valves are made of heat resistant steel and have chrome plated stems to prevent scuffing. Each valve is actuated by a roller rocker arm which pivots on a stationary lash adjuster. All valves use three bead lock keepers to retain the springs and promote valve rotation.

Standard Procedure

NOTE: Valve seats that are worn or burned can be reworked, provided that correct angle and seat width are maintained. Otherwise the cylinder head must be replaced.

NOTE: When refacing valves (4) and valve seats, it is important that the correct size valve guide pilot be used for reseating stones. A true and complete surface must be obtained.

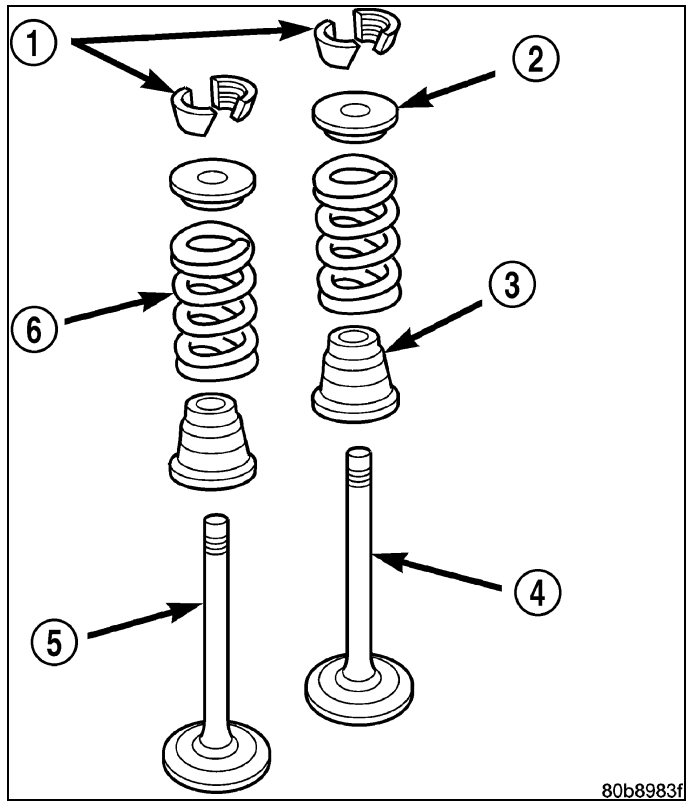

1. Using a suitable dial indicator measure the center of the valve seat. Total run out must not exceed 0.051 mm (0.002 in).
2. Apply a small amount of Prussian blue to the valve seat, insert the valve into the cylinder head, while applying light pressure on the valve rotate the valve. Remove the valve and examine the valve face. If the blue is transferred below the top edge of the valve face, lower the valve seat using a 15 degree stone. If the blue is transferred to the bottom edge of the valve face, raise the valve seat using a 65 degree stone.
3. When the seat is properly positioned the width of the intake seat must be 1.75 - 2.36 mm (0.0689 - 0.0928 in.) and the exhaust seat must be 1.71 - 2.32 mm (0.0673 - 0.0911 in.).
4. Check the valve spring (6) installed height after refacing the valve and seat. The installed height for both intake and exhaust valve springs must not exceed 40.74 mm (1.6039 in.)
5. The valve seat and valve face must maintain a face angle of 44.5 - 45 ° angle .

Removal

NOTE: The cylinder head(s) must be removed in order to perform this procedure.

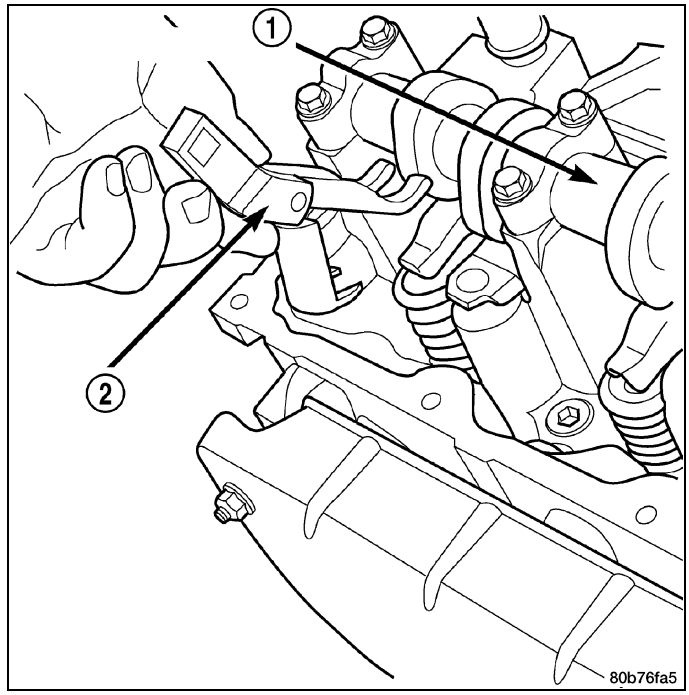

1. Remove and isolate the negative battery cable.
2. Remove the cylinder head covers (Refer to 09 - Engine/Cylinder Head/COVER(S), Cylinder Head - Removal)
3. Remove the rocker arms and lash adjusters (Refer to 09 - Engine/Cylinder Head/ROCKER ARM, Valve - Removal)
4. Remove the camshaft bearing caps and the camshaft (Refer to 09 - Engine/Cylinder Head/CAMSHAFT, Engine - Removal)
5. Remove the cylinder head(s) (Refer to 09 - Engine/Cylinder Head - Removal)

NOTE: All valve springs and valves are removed in the same manner; this procedure only covers one valve and valve spring.

6. Using Valve Spring Compressor C-3422-D and Adapter 8519, compress the valve spring.

NOTE: It may be necessary to tap the top of the valve spring to loosen the spring retainers locks enough to be removed.

7. Remove the two spring retainer lock halves.

NOTE: The valve spring is under tension, use care when releasing the valve spring compressor.

8. Remove the valve spring compressor.
9. Remove the spring retainer, and the spring.

NOTE: Check for sharp edges on the keeper grooves. Remove any burrs from the valve stem before removing the valve from the cylinder head.

10. Remove the valve from the cylinder head.

NOTE: The valve stem seals are common between intake and exhaust.

11. Remove the valve stem seal. Mark the valve for proper installation.

TESTING VALVE SPRINGS

NOTE: Whenever the valves are removed from the cylinder head it is recommended that the valve springs be inspected and tested for reuse.

Inspect the valve springs for physical signs of wear or damage. Using a suitable valve spring tester (1), test the following;

- Specified Spring Height
- Specified Spring Force (Valve Open)
- Specified Spring Force (Valve Closed)

Replace any springs that do not meet specifications (Refer to 09 - Engine - Specifications)

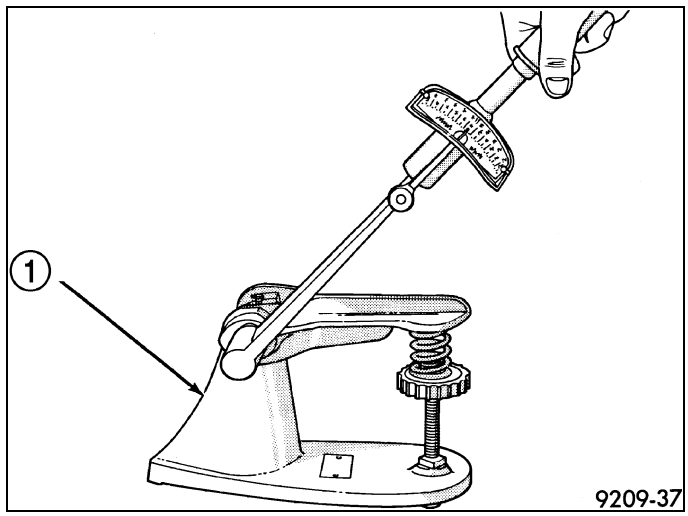

Installation

1. coat the valve stem with clean engine oil and insert it into the cylinder head.
2. Install the valve stem seal. make sure the seal is fully seated and that the garter spring at the top of the seal is intact.
3. Install the spring and the spring retainer.
4. Using the valve spring compressor, compress the spring and install the two valve spring retainer halves.
5. Release the valve spring compressor and make sure the two spring retainer halves and the spring retainer are fully seated .

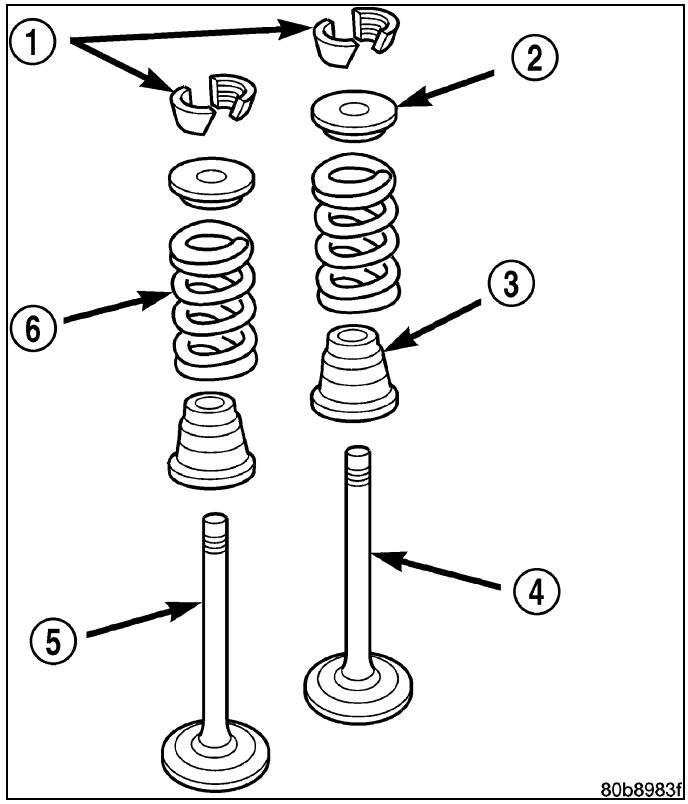

6. Lubricate the camshaft journal with clean engine oil then Position the camshaft (with the sprocket dowel on the left camshaft at 11 o'clock and the right camshaft at 12 o'clock), then position the camshaft bearing caps.
7. Install the camshaft bearing cap retaining bolts. Tighten the bolts 9-13 N·m (100 in. lbs.) in 1/2 turn increments in the sequence shown .
8. Position the hydraulic lash adjusters and rocker arms(Refer to 09 - Engine/Cylinder Head/ROCKER ARM, Valve - Installation).

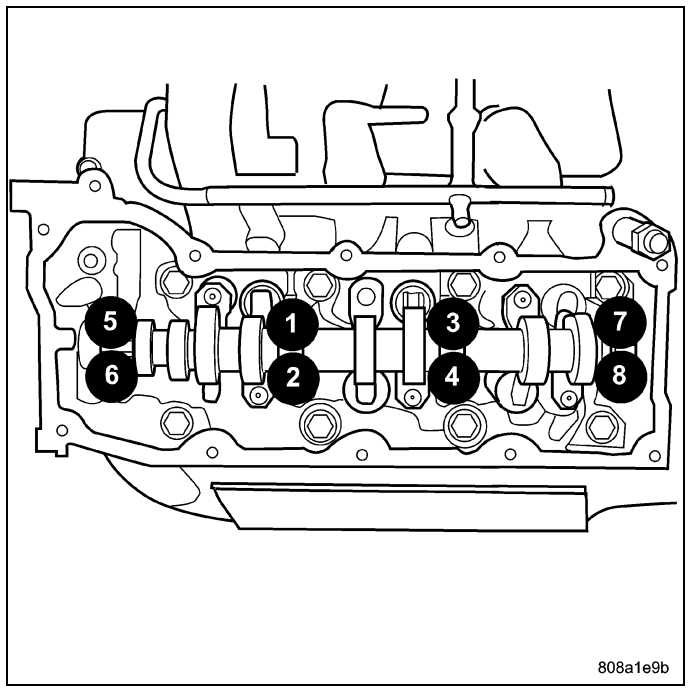

CYLINDER HEAD, RIGHT

TABLE OF CONTENTS

page

CYLINDER HEAD, RIGHT
- DIAGNOSIS AND TESTING 54
- REMOVAL 54
- INSTALLATION 57

CAMSHAFT, ENGINE
- DESCRIPTION 59
- REMOVAL 60
- INSTALLATION 62

COVER(S), CYLINDER HEAD
- REMOVAL 64
- INSTALLATION 64

page

ROCKER ARM, VALVE
- DESCRIPTION 65
- REMOVAL 65
- INSTALLATION 65

SEAL(S), VALVE GUIDE
- DESCRIPTION 66
- REMOVAL 66
- INSTALLATION 66

SPRING(S), VALVE
- DESCRIPTION 66
- REMOVAL 66
- INSTALLATION 66

Cylinder Head, Right

Diagnosis and Testing

A tappet-like noise may be produced from several items. Check the following items.

1. Engine oil level too high or too low. This may cause aerated oil to enter the adjusters and cause them to be spongy.
2. Insufficient running time after rebuilding cylinder head. Low speed running up to 1 hour may be required.
3. Turn engine off and let set for a few minutes before restarting. Repeat this several times after engine has reached normal operating temperature.
4. Low oil pressure.
5. The oil restrictor in cylinder head gasket or the oil passage to the cylinder head is plugged with debris.
6. Air ingested into oil due to broken or cracked oil pump pick up.
7. Worn valve guides.
8. Rocker arm ears contacting valve spring retainer.
9. Rocker arm loose, adjuster stuck or at maximum extension and still leaves lash in the system.
10. Oil leak or excessive cam bore wear in cylinder head.
11. Faulty lash adjuster.

a. Check lash adjusters for sponginess while installed in cylinder head and cam on camshaft at base circle. Depress part of rocker arm over adjuster. Normal adjusters should feel firm when pressed quickly. When pressed very slowly, lash adjusters should collapse.

b. Remove suspected lash adjusters, and replace.

c. Before installation, make sure adjusters are full of oil. This can be verified by little plunger travel when lash adjuster is depressed quickly.

Removal

1. Disconnect battery negative cable.
2. Raise the vehicle on a hoist.
3. Disconnect the exhaust pipe at the right side exhaust manifold.
4. Drain the engine coolant(Refer to 07 - Cooling - Standard Procedure)
5. Lower the vehicle.
6. Remove the intake manifold. (Refer to 09 - Engine/Manifolds/MANIFOLD, Intake - Removal)
7. Remove the cylinder head cover(Refer to 09 - Engine/Cylinder Head/COVER(S), Cylinder Head - Removal).
8. Remove the fan shroud(Refer to 07 - Cooling/Engine/FAN, Cooling - Removal)
9. Remove oil fill housing from cylinder head.
10. Remove accessory drive belt(Refer to 07 - Cooling/Accessory Drive/BELT, Serpentine - Removal).
11. Rotate the crankshaft until the damper timing mark is aligned with TDC indicator mark. (2).

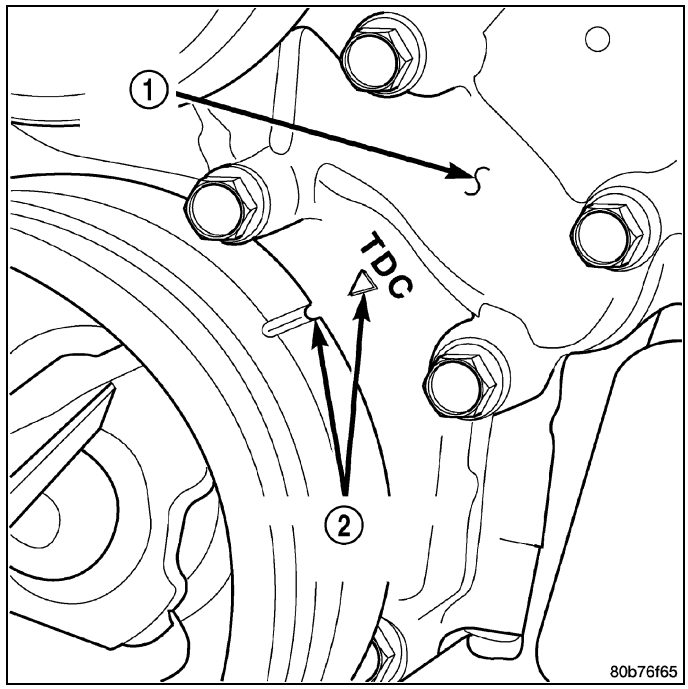

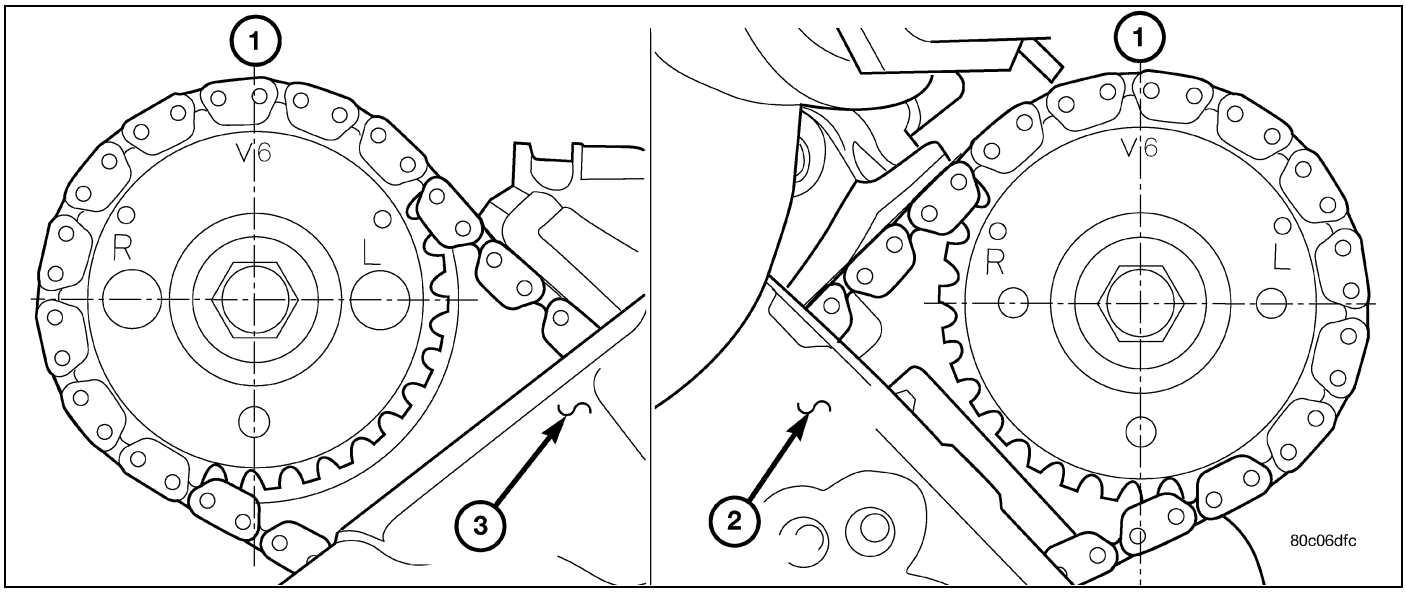

12. Verify the V6 mark on the camshaft sprocket is at the 12 o'clock position . Rotate the crankshaft one turn if necessary.
13. Remove the crankshaft damper. (Refer to 09 - Engine/Engine Block/DAMPER, Vibration - Removal)
14. Remove the timing chain cover. (Refer to 09 - Engine/Valve Timing/COVER(S), Engine Timing - Removal).
15. Lock the secondary timing chains to the idler sprocket using the Secondary Camshaft Chain Holder 8429 (1).

NOTE: Mark the secondary timing chain prior to removal to aid in installation.

16. Mark the secondary timing chain, one link on each side of the V6 mark on the camshaft drive gear.
17. Remove the right side secondary chain tensioner. (Refer to 09 - Engine/Valve Timing/CHAIN and SPROCKETS, Timing - Removal).

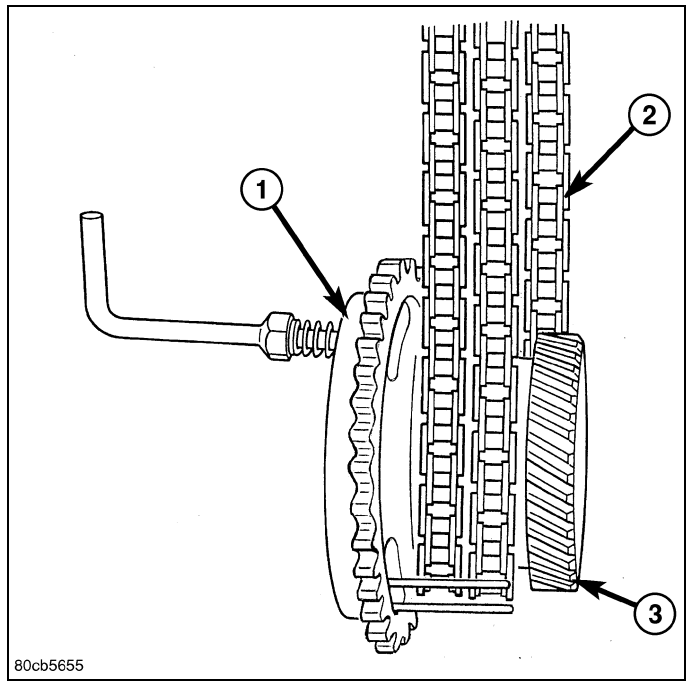

18. Remove the cylinder head access plug (1,2).
19. Remove the right side secondary chain guide. (Refer to 09 - Engine/Valve Timing/CHAIN and SPROCKETS, Timing - Removal).

CAUTION: The nut on the right side camshaft sprocket should not be removed for any reason, as the sprocket and camshaft sensor target wheel is serviced as an assembly. If the nut was removed, tighten nut to 5 N·m (44 in. lbs.).

20. Remove the retaining bolt and the camshaft drive gear.

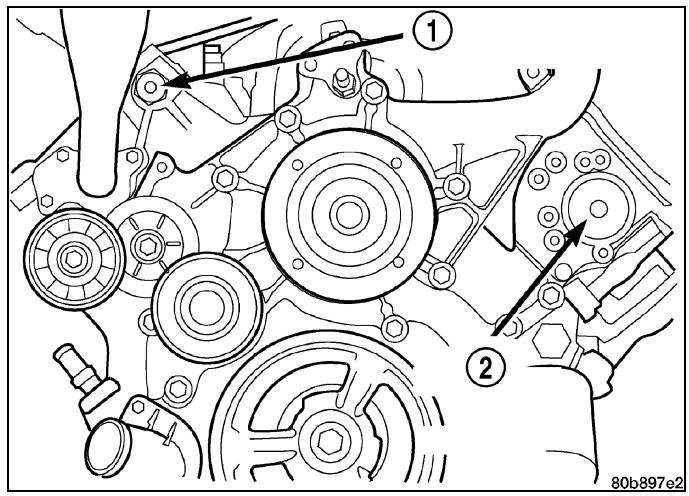

CAUTION: Do not allow the engine to rotate. severe damage to the valve train can occur.

CAUTION: Do not overlook the four smaller bolts at the front of the cylinder head. Do not attempt to remove the cylinder head without removing these four bolts.

CAUTION: Do not hold or pry on the camshaft target wheel for any reason. A damaged target wheel can result in a vehicle no start condition.

NOTE: The cylinder head is attached to the cylinder block with twelve bolts.

21. Remove the cylinder head retaining bolts .
22. Remove the cylinder head and gasket. Discard the gasket.

CAUTION: Do not lay the cylinder head on its gasket sealing surface, do to the design of the cylinder head gasket any distortion to the cylinder head sealing surface may prevent the gasket from properly sealing resulting in leaks.

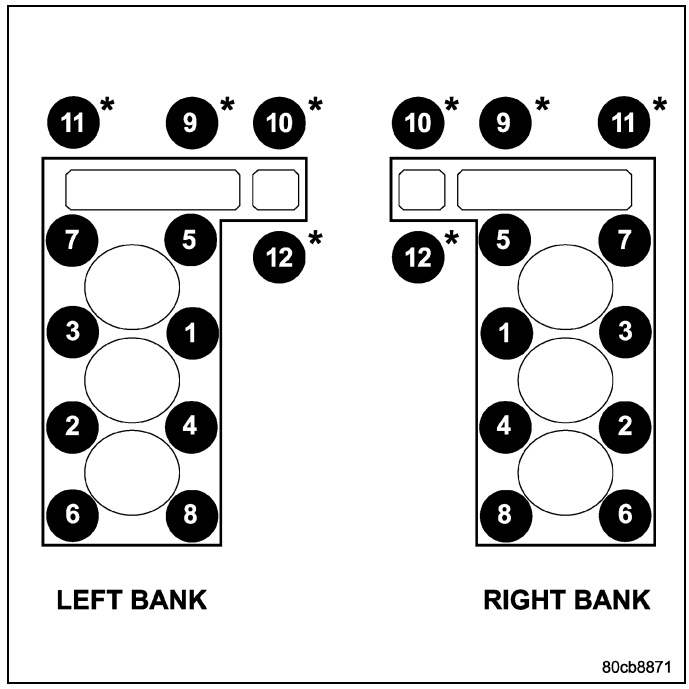

Installation

NOTE: The cylinder head bolts are tightened using a torque plus angle procedure. The bolts must be examined BEFORE reuse. If the threads are necked down (2) the bolts should be replaced.

Necking can be checked by holding a straight edge against the threads. If all the threads do not contact the scale, the bolt should be replaced .

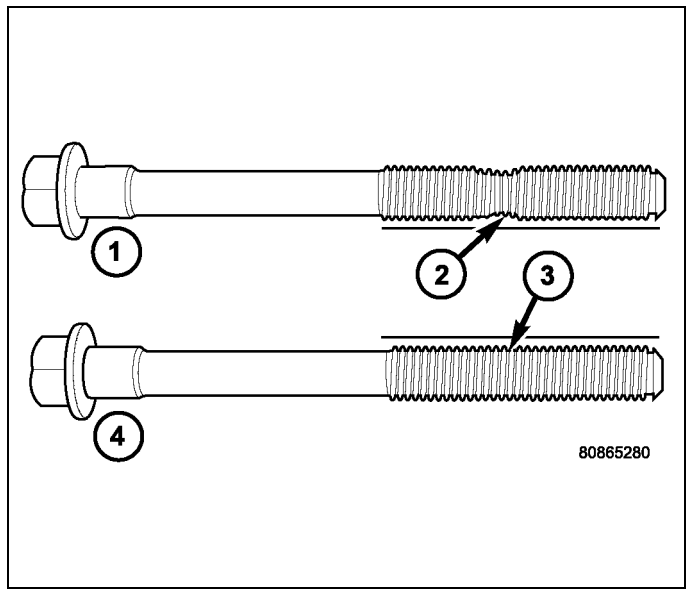

CAUTION: When cleaning cylinder head and cylinder block surfaces, DO NOT use a metal scraper (1), high speed scotch brite (2) or rolock tool (3) because the surfaces could be cut or ground. Use only a wooden or plastic scraper (4).

1. Clean the cylinder head and cylinder block mating surfaces .

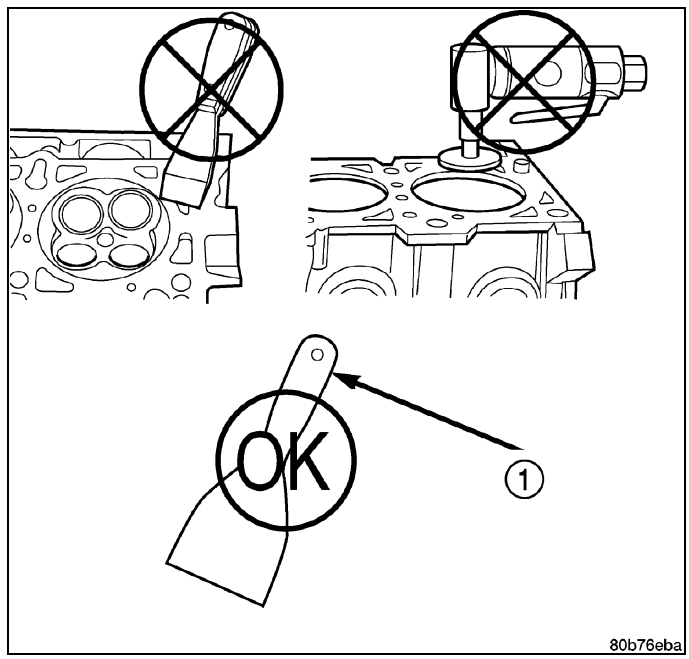

2. Position the new cylinder head gasket on the locating dowels.

CAUTION: When installing cylinder head, use care not damage the tensioner arm or the guide arm.

3. Position the cylinder head onto the cylinder block. Make sure the cylinder head seats fully over the locating dowels.

NOTE: The four M8 cylinder head mounting bolts (1) require sealant to be added to them before installing. Failure to do so may cause leaks.

4. Lubricate the cylinder head bolt threads with clean engine oil and install the eight M10 bolts.
5. Coat the four M8 cylinder head bolts with **Mopar Lock and Seal Adhesive** then install the bolts.

NOTE: The cylinder head bolts are tightened using an angle torque procedure, however, the bolts are not a torque-to-yield design.

6. Tighten the bolts in sequence using the following steps and torque values :

- Step 1: Tighten bolts 1-8, 27 N·m (20 ft. lbs.).
- Step 2: Verify that bolts 1-8, all reached 27 N·m (20 ft. lbs. bolts 9 thru 12 to 14 N·m (10 ft. lbs.).
- Step 3: Tighten bolts 1-8, 90 ° .
- Step 4: Tighten bolts 1-8, 90 °, again. Tighten bolts 9-12,

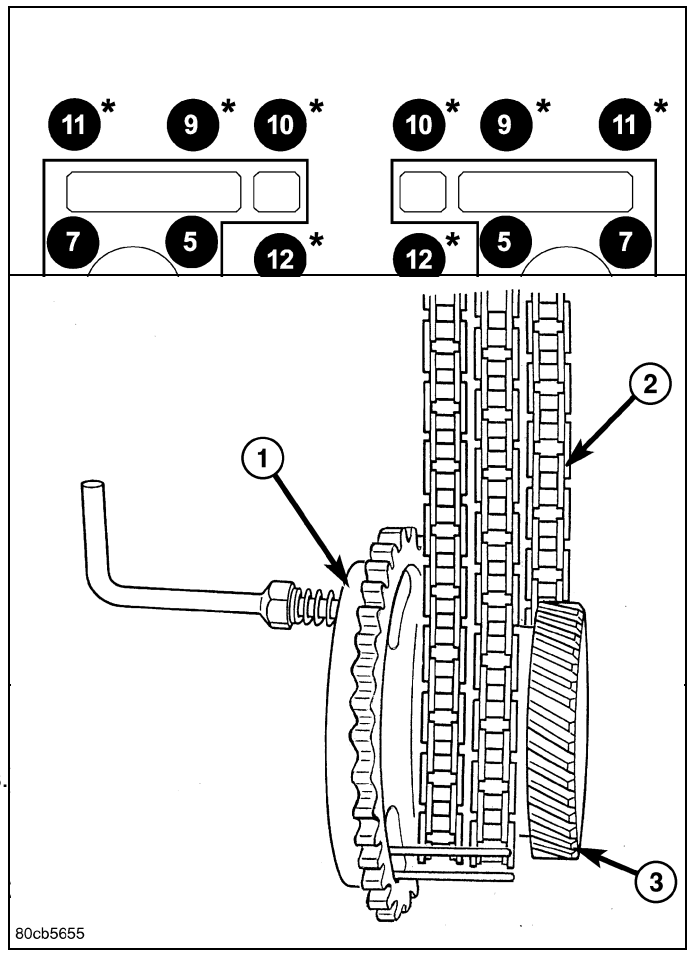

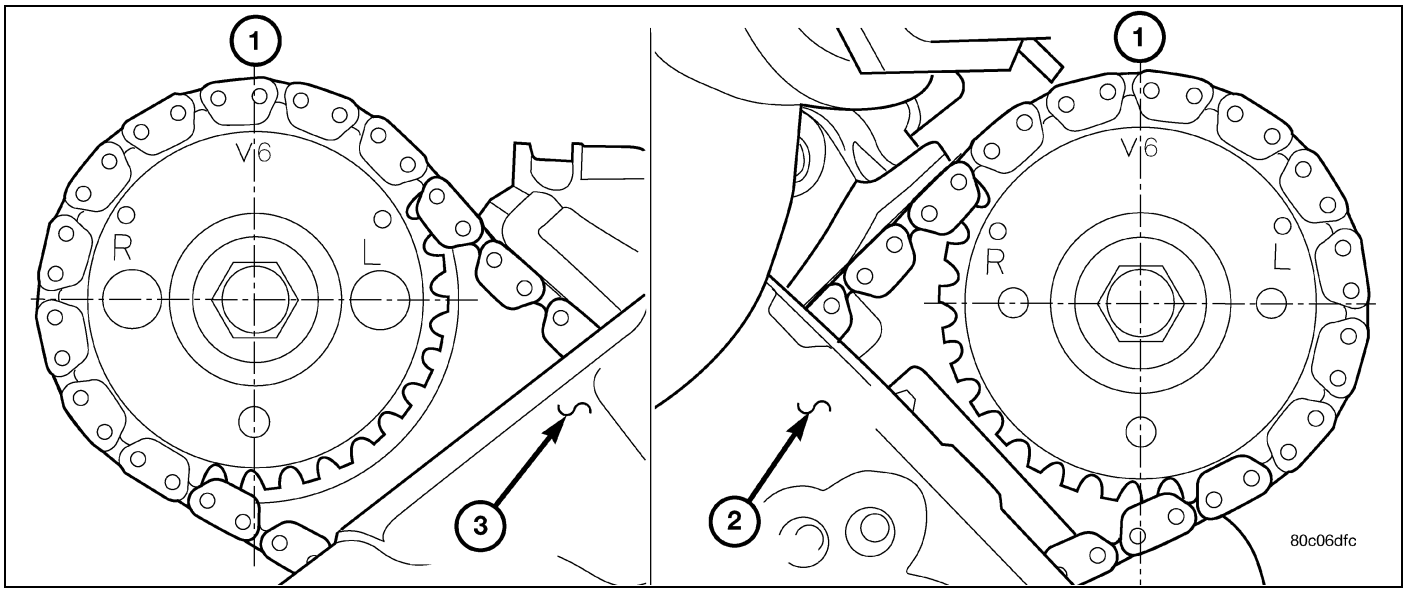

7. Position the secondary chain (2) onto the camshaft drive gear, making sure one marked chain link is on either side of the V6 mark (1) on the gear then using Special Tool 8428A Camshaft Wrench, position the gear onto the camshaft.

CAUTION: Remove excess oil from camshaft sprocket retaining bolt before reinstalling bolt. Failure to do so may cause over-torquing of bolt resulting in bolt failure.

8. Install the camshaft drive gear retaining bolt.
9. Install the right side secondary chain guide (Refer to 09 - Engine/Valve Timing/CHAIN and SPROCKETS, Timing - Installation).

10. Install the cylinder head access plug (1,2).
11. Re-set and install the right side secondary chain tensioner (Refer to 09 - Engine/Valve Timing/CHAIN and SPROCKETS, Timing - Installation).

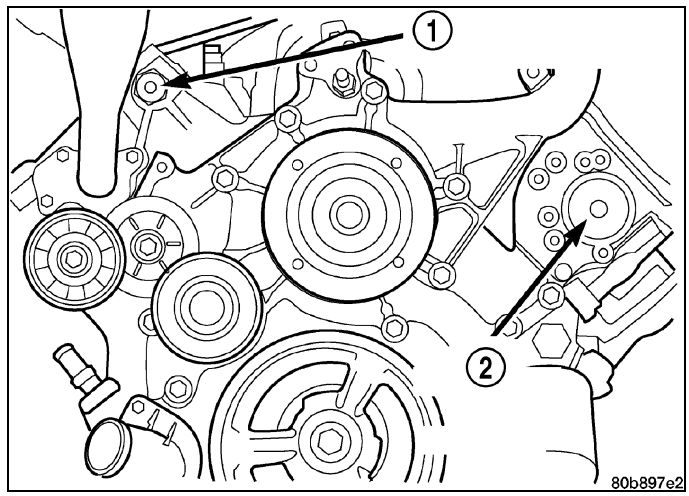

12. Remove Special Tool 8429 (1).
13. Install the timing chain cover(Refer to 09 - Engine/Valve Timing/COVER(S), Engine Timing - Removal) - REMOVAL).
14. Install the crankshaft damper(Refer to 09 - Engine/Engine Block/DAMPER, Vibration - Installation). Tighten damper bolt 175 N·m (130 Ft. Lbs.).
15. Install accessory drive belt(Refer to 07 - Cooling/Accessory Drive/BELT, Serpentine - Installation).
16. Install the fan shroud(Refer to 07 - Cooling/Engine/FAN, Cooling - Installation).
17. Install the cylinder head cover(Refer to 09 - Engine/Cylinder Head/COVER(S), Cylinder Head - Installation) - INSTALLATION).
18. Install the intake manifold(Refer to 09 - Engine/Manifolds/MANIFOLD, Intake - Installation).
19. Install oil fill housing onto cylinder head.
20. Refill the cooling system(Refer to 07 - Cooling - Standard Procedure).
21. Raise the vehicle.
22. Install the exhaust pipe onto the right exhaust manifold.
23. Lower the vehicle.
24. Reconnect battery negative cable.
25. Start the engine and check for leaks.

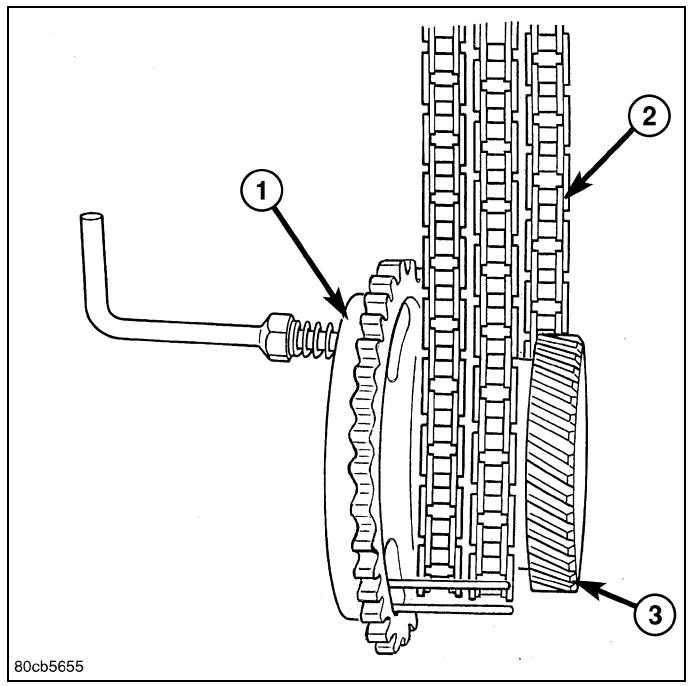

CAMSHAFT, Engine

Description

The camshafts consist of powdered metal steel lobes which are sinter-bonded to a steel tube. Four bearing journals are machined into the camshaft. Camshaft end play is controlled by two thrust walls that border the nose piece journal.

Removal

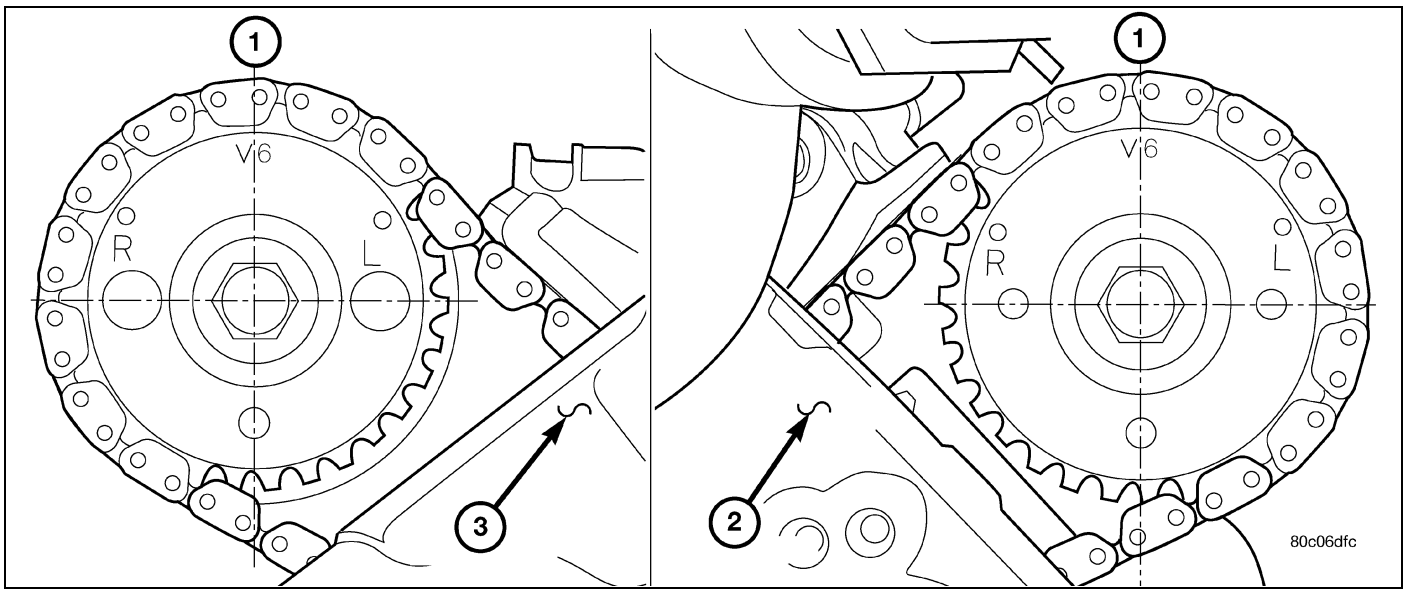

CAUTION: When the timing chain is removed and the cylinder heads are still installed, Do not forcefully rotate the camshafts or crankshaft independently of each other. Severe valve and/or piston damage can occur.

CAUTION: When removing the cam sprocket, timing chains or camshaft, Failure to use Wedge Locking Tool 8379 **will result in hydraulic tensioner ratchet over extension, Requiring timing chain cover removal to re-set the tensioner ratchet.**

1. Remove the cylinder head cover(Refer to 09 - Engine/Cylinder Head/COVER(S), Cylinder Head - Removal) - REMOVAL).
2. Set engine to TDC cylinder No. 1, camshaft sprocket V6 marks at the 12 o'clock position (1).
3. Mark one link on the secondary timing chain on both sides of the V6 mark on the camshaft sprocket to aid in installation.

CAUTION: Do not hold or pry on the camshaft target wheel for any reason, severe damage will occur to the target wheel resulting in a vehicle no start condition.

4. Loosen but **DO NOT** remove the camshaft sprocket retaining bolt . Leave bolt snug against sprocket.

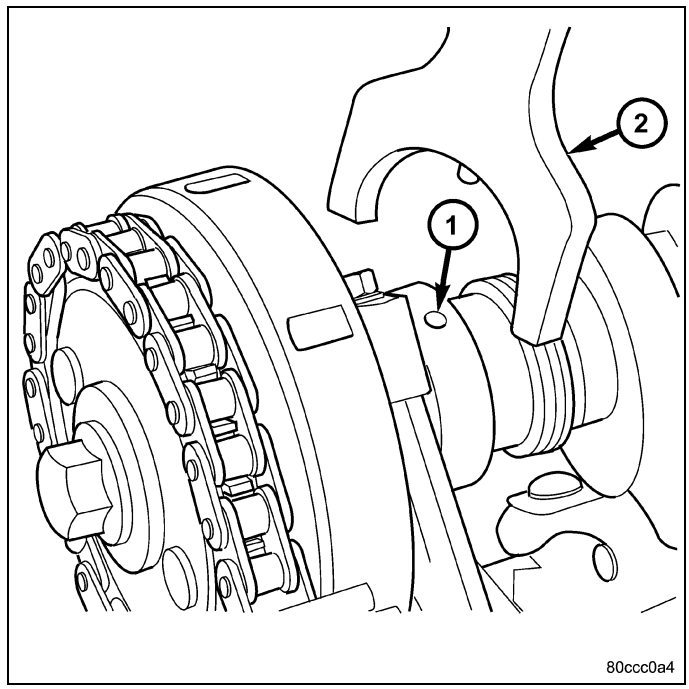

NOTE: The timing chain tensioners must be secured prior to removing the camshaft sprockets. Failure to secure tensioners will allow the tensioners to extend, requiring timing chain cover removal in order to reset tensioners.

CAUTION: Do not force Locking Wedge 9867 **past the narrowest point between the chain strands. Damage to the tensioners may occur.**

5. Position the Wedge Locking Tool 8379 (1) between the timing chain strands. Tap the tool to securely wedge the timing chain against the tensioner arm and guide.

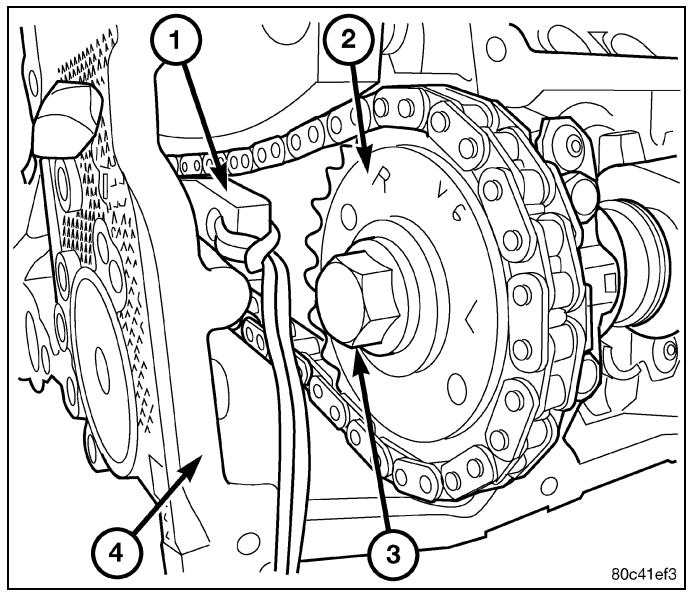

6. Remove the camshaft position sensor.
7. Hold the camshaft with Camshaft Holder 8428A (2), while removing the camshaft sprocket bolt and sprocket.

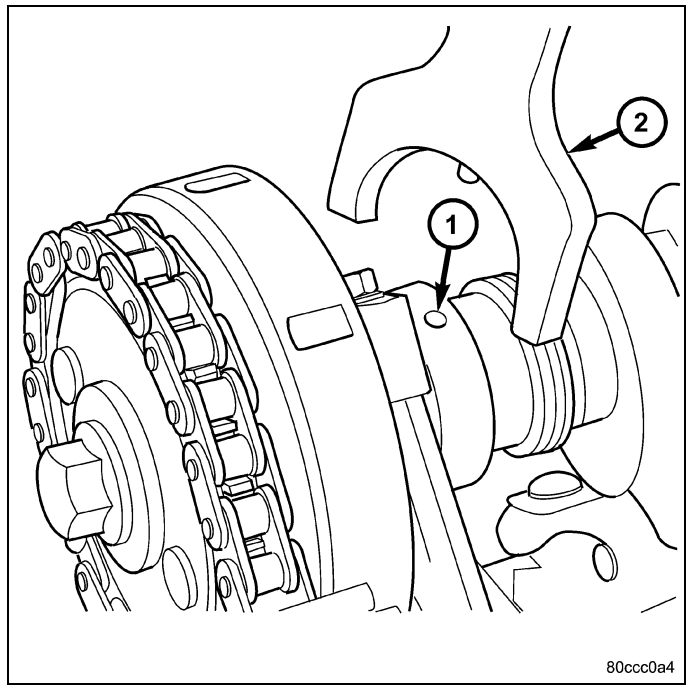

8. Starting at the outside working inward, loosen the camshaft bearing cap retaining bolts 1/2 turn at a time. Repeat until all load is off the bearing caps.

CAUTION: DO NOT STAMP OR STRIKE THE CAMSHAFT BEARING CAPS. SEVERE DAMAGE WILL OCCUR TO THE BEARING CAPS.

NOTE: When the camshaft is removed the rocker arms may slide downward, mark the rocker arms before removing camshaft.

9. Remove the camshaft bearing caps and the camshaft.

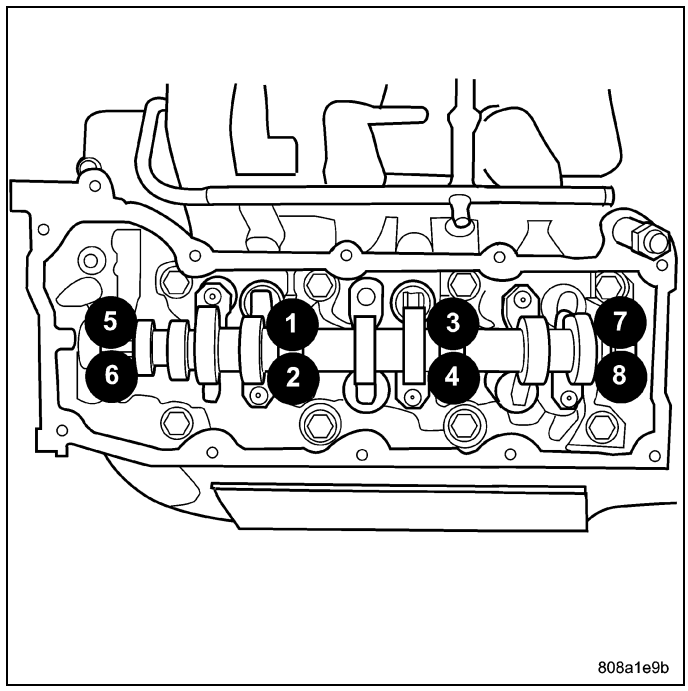

Installation

1. Lubricate camshaft journals with clean engine oil.

NOTE: Position the right side camshaft so that the camshaft sprocket dowel is near the 10 o'clock position, This will place the camshaft at the neutral position easing the installation of the camshaft bearing caps.

2. Position the camshaft into the cylinder head.
3. Install the camshaft bearing caps, hand tighten the retaining bolts.

NOTE: Caps should be installed so that the stamped numbers on the caps are in numerical order, (1 through 4) from the front to the rear of the engine. All caps should be installed so that the stamped arrows on the caps point toward the front of the engine.

4. Working in 1/2 turn increments, tighten the bearing cap retaining bolts starting with the middle cap working outward.
5. Tighten the camshaft bearing cap retaining bolts to 11 N·m (100 in. lbs.) .

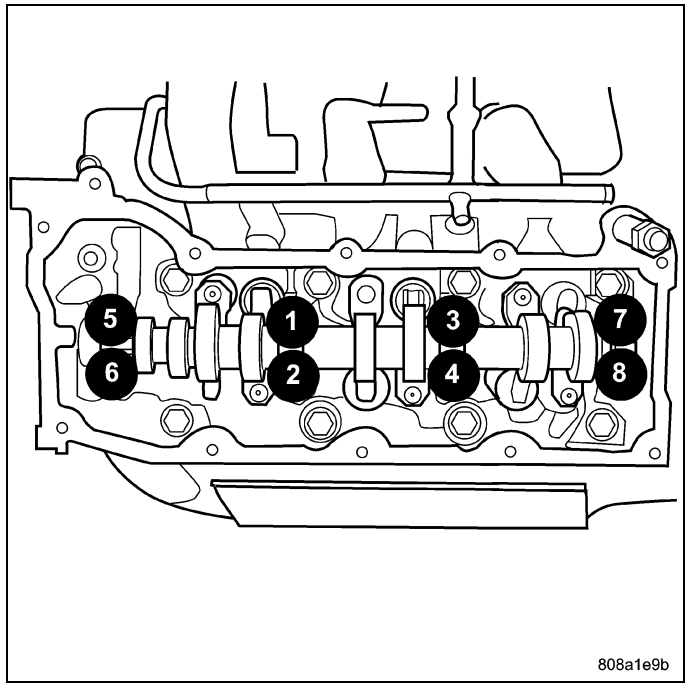

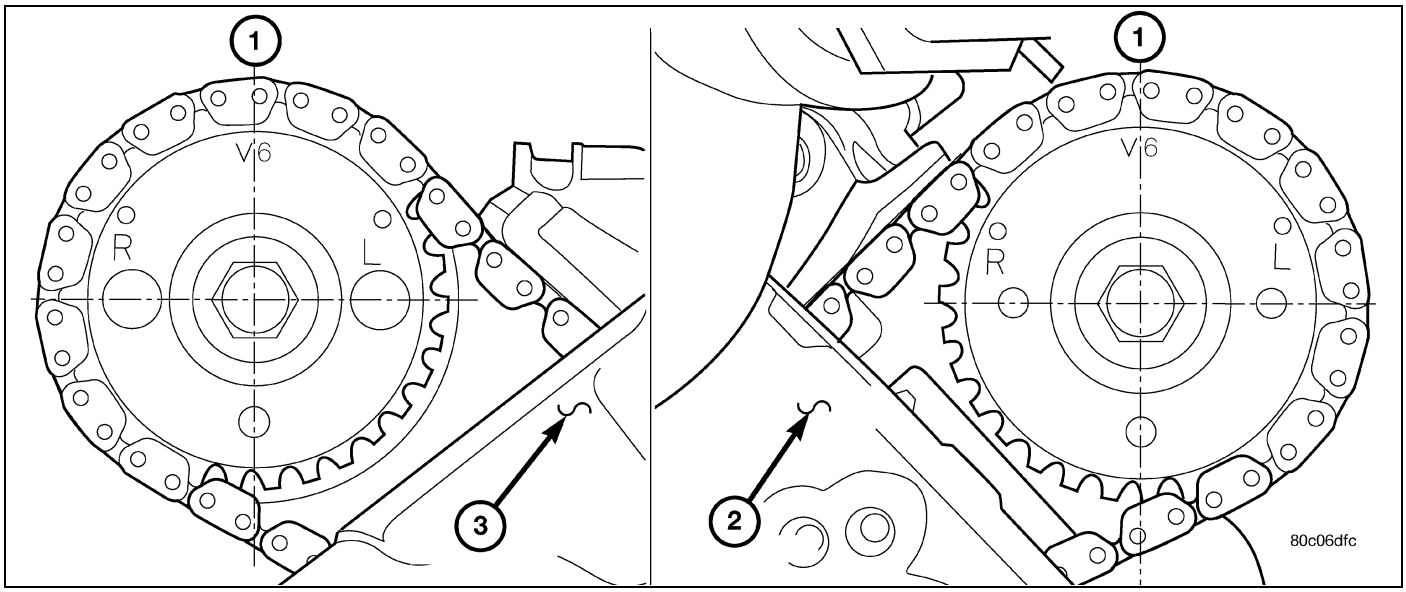

6. Position the camshaft drive gear into the timing chain aligning the V6 mark between the two marked chain links (Two links marked during removal) .
7. Using the Camshaft Holder 8428A (2), rotate the camshaft until the camshaft sprocket dowel is aligned with the slot in the camshaft sprocket . Install the sprocket onto the camshaft.

CAUTION: Remove excess oil from the camshaft sprocket retaining bolt, failure to do so can cause bolt over-torque resulting in bolt failure.

8. Remove excess oil from camshaft sprocket bolt, then install the camshaft sprocket retaining bolt and hand tighten.

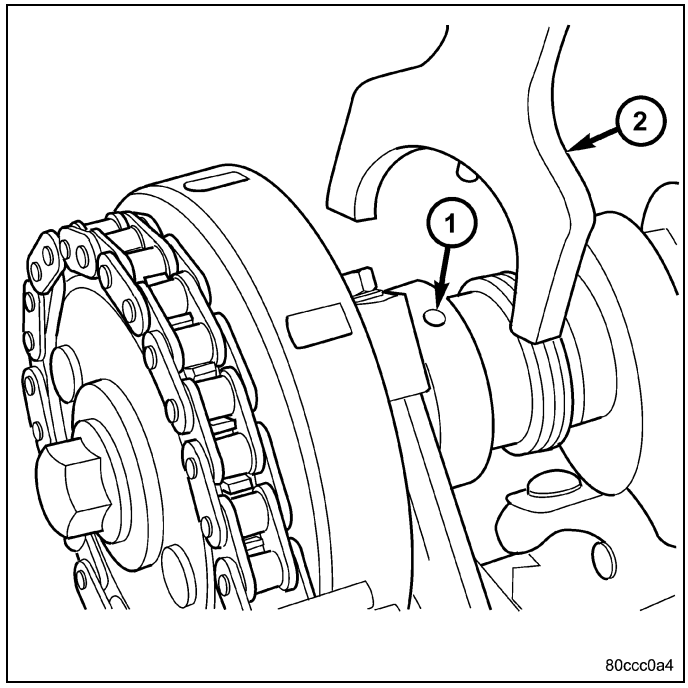

9. Remove timing chain wedge special tool 8379 (1).
10. Using Spanner Wrench 6958 with adapter pins 8346, tighten the camshaft sprocket retaining bolt to 122 N·m (90 ft. lbs.)
11. Install the camshaft position sensor.
12. Install the cylinder head cover(Refer to 09 - Engine/ Cylinder Head/COVER(S), Cylinder Head - Installation) - INSTALLATION).

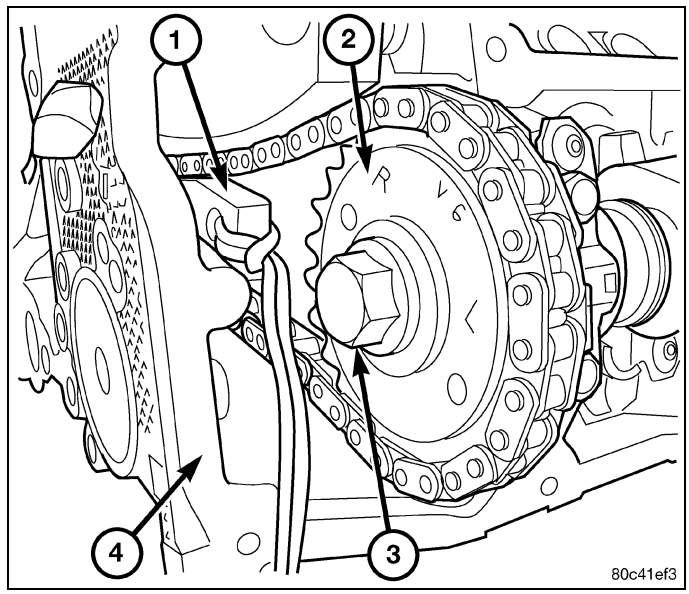

COVER(S), Cylinder Head

Removal

1. Disconnect battery negative cable.
2. Remove air cleaner assembly, resonator assembly and air inlet hose.
3. Drain cooling system, below the level of the heater hoses(Refer to 07 - Cooling - Standard Procedure).
4. Remove accessory drive belt(Refer to 07 - Cooling/Accessory Drive/BELT, Serpentine - Removal).
5. Remove air conditioning compressor retaining bolts and move compressor to the left.
6. Remove heater hoses.
7. Disconnect injector and ignition coil connectors.
8. Disconnect and remove positive crankcase ventilation (PCV) hose.
9. Remove oil fill tube.
10. Un-clip injector and ignition coil harness and move away from cylinder head cover.
11. Remove right rear breather tube and filter assembly.
12. Remove cylinder head cover retaining bolts.
13. Remove cylinder head cover.

Installation

CAUTION: Do not use harsh cleaners to clean the cylinder head covers. Severe damage to covers may occur.

NOTE: The gasket may be used again, provided no cuts, tears, or deformation has occurred.

1. Clean cylinder head cover and both sealing surfaces. Inspect and replace gasket as necessary.
2. Tighten cylinder head cover bolts and double ended studs to 12 N·m (105 in. lbs).
3. Install right rear breather tube and filter assembly.
4. Connect injector, ignition coil electrical connectors and harness retaining clips.
5. Install the oil fill tube.
6. Install PCV hose.
7. Install heater hoses.
8. Install air conditioning compressor retaining bolts.
9. Install accessory drive belt(Refer to 07 - Cooling/Accessory Drive/BELT, Serpentine - Installation).
10. Fill Cooling system(Refer to 07 - Cooling - Standard Procedure).
11. Install air cleaner assembly, resonator assembly and air inlet hose.
12. Connect battery negative cable.

ROCKER ARM, Valve

Description

The rocker arms are steel stampings with an integral roller bearing. The rocker arms incorporate a 0.5 mm oil jet hole in the lash adjuster socket for roller and camshaft lubrication.

Removal

NOTE: Disconnect the battery negative cable to prevent accidental starter engagement.

1. Remove the cylinder head cover (Refer to 09 - Engine/Cylinder Head/COVER(S), Cylinder Head - Removal) - REMOVAL).
2. For rocker arm removal on cylinder No. 4, Rotate the crankshaft until cylinder No. 1 is at BDC intake stroke.
3. For rocker arm removal on cylinder No. 1, Rotate the crankshaft until cylinder No. 1 is at BDC combustion stroke.
4. For rocker arm removal on cylinders No. 3 and No. 5, Rotate the crankshaft until cylinder No. 1 is at TDC exhaust stroke.
5. For rocker arm removal on cylinders No. 2 and No. 6, Rotate the crankshaft until cylinder No. 1 is at TDC ignition stroke.
6. Using the Rocker Arm Remover/Installer 8516A (2) , press downward on the valve spring, remove rocker arm.

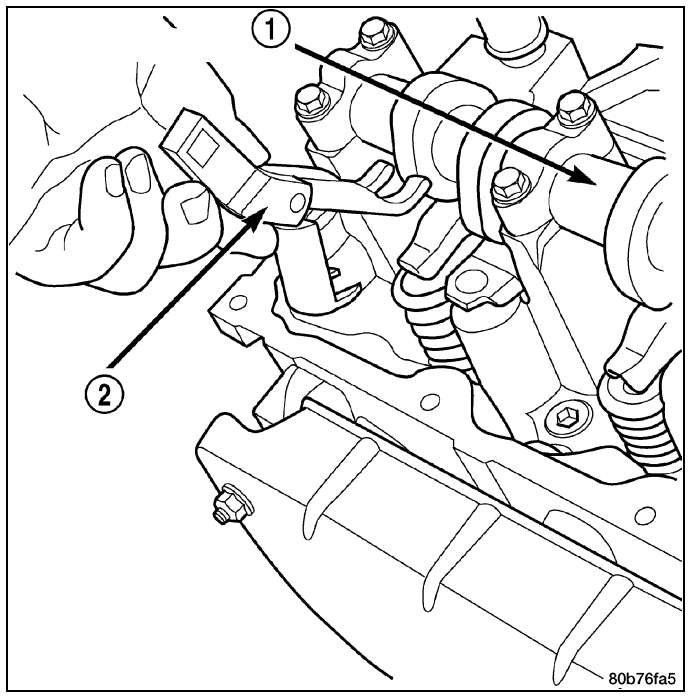

Installation

CAUTION: Make sure the rocker arms are installed with the concave pocket over the lash adjusters. Failure to do so may cause severe damage to the rocker arms and/or lash adjusters.

NOTE: Coat the rocker arms with clean engine oil prior to installation.

1. For rocker arm installation on cylinders No. 4, Rotate the crankshaft until cylinder No. 1 is at BDC intake stroke.
2. For rocker arm installation on cylinder No. 1, Rotate the crankshaft until cylinder No. 1 is at BDC combustion stroke.
3. For rocker arm installation on cylinders No. 3 and No. 5, Rotate the crankshaft until cylinder No. 1 is at TDC exhaust stroke.
4. For rocker arm installation on cylinders No. 2 and No. 6, Rotate the crankshaft until cylinder No. 1 is at TDC ignition stroke.
5. Using the Rocker Arm Remover/Installer 8516A (2) press downward on the valve spring, install rocker arm .

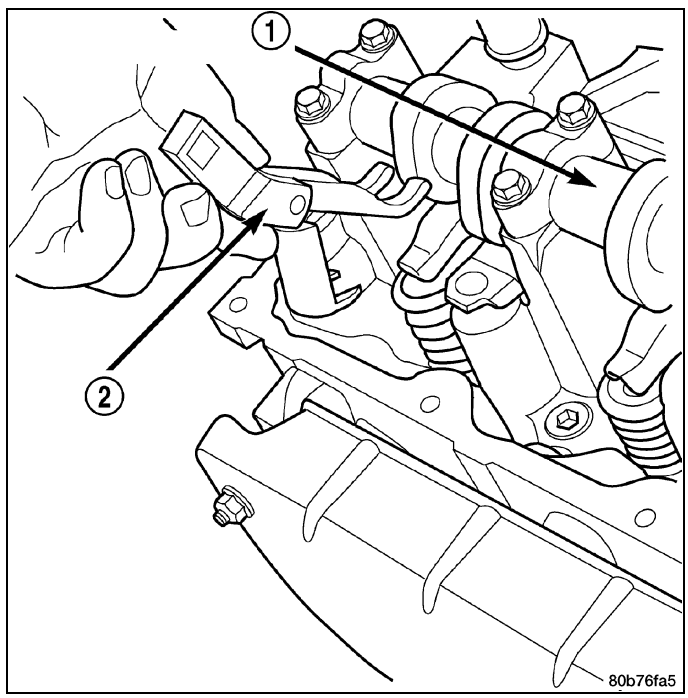

6. Install the cylinder head cover (Refer to 09 - Engine/Cylinder Head/COVER(S), Cylinder Head - Installation) - INSTALLATION).

SEAL(S), Valve Guide

Description

The valve guide seals are made of rubber and incorporate an integral steel valve spring seat. The integral garter spring maintains consistent lubrication control to the valve stems.

Removal

The valve stem seal is integral with the valve spring seat, for removal (Refer to 09 - Engine/Cylinder Head/SPRING(S), Valve - Removal)

Installation

The valve stem seal is integral with the valve spring seat, for installation (Refer to 09 - Engine/Cylinder Head/SPRING(S), Valve - Installation)

SPRING(S), Valve

Description

The valve springs are made from high strength chrome silicon steel. There are different springs for intake and exhaust applications. The exhaust spring has an external damper. The valve spring seat is integral with the valve stem seal, which is a positive type seal to control lubrication.

Removal

1. Remove the cylinder head cover(Refer to 09 - Engine/Cylinder Head/COVER(S), Cylinder Head - Removal) - REMOVAL).
2. Using the Valve Spring Remover/Installer 8516A, remove the rocker arms and the hydraulic lash adjusters.
3. Remove the spark plug for the cylinder the valve spring and seal are to be removed from.
4. Apply shop air to the cylinder to hold the valves in place when the spring is removed.

NOTE: All six valve springs and seals are removed in the same manner; this procedure only covers one valve seal and valve spring.

5. Using the Valve Spring Compressor 8387, compress the valve spring.

NOTE: It may be necessary to tap the top of the valve spring to loosen the spring retainers locks enough to be removed.

6. Remove the two spring retainer lock halves.

NOTE: the valve spring is under tension use care when releasing the valve spring compressor.

7. Remove the valve spring compressor.

NOTE: The valve springs are NOT common between intake and exhaust.

8. Remove the spring retainer, and the spring.
9. Remove the valve stem seal.

NOTE: The valve stem seals are common between intake and exhaust.

Installation

NOTE: All six valve springs and seals are removed in the same manner; this procedure only covers one valve seal and valve spring.

1. Apply shop air to the cylinder to hold the valves in place while the spring is installed.

NOTE: The valve stem seals are common between intake and exhaust.

2. Install the valve stem seal.

NOTE: The valve springs are NOT common between intake and exhaust.

3. Install the spring retainer, and the spring.

4. Using Valve Spring Compressor 8387, compress the valve spring.
5. Install the two spring retainer lock halves.

NOTE: the valve spring is under tension use care when releasing the valve spring compressor.

6. Remove the valve spring compressor.
7. Disconnect the shop air to the cylinder.
8. Install the spark plug for the cylinder the valve spring and seal was installed on.
9. Using the Valve Spring Remover/Installer Special Tool 8516A, install the rocker arms and the hydraulic lash adjusters.
10. Install the cylinder head cover(Refer to 09 - Engine/Cylinder Head/COVER(S), Cylinder Head - Installation) - INSTALLATION).

ENGINE BLOCK

TABLE OF CONTENTS

page

ENGINE BLOCK
- DESCRIPTION . . . 70
- STANDARD PROCEDURE . . . 70
- CLEANING . . . 70
- INSPECTION . . . 71

BEARING(S), CRANKSHAFT, MAIN
- STANDARD PROCEDURE . . . 72

COVER, STRUCTURAL DUST
- DESCRIPTION . . . 73
- OPERATION . . . 73
- REMOVAL . . . 74
- INSTALLATION . . . 74

CRANKSHAFT
- DESCRIPTION . . . 75
- REMOVAL . . . 75
- INSPECTION . . . 76
- INSTALLATION . . . 77

DAMPER, VIBRATION
- REMOVAL . . . 79
- INSTALLATION . . . 81

FLEXPLATE
- REMOVAL . . . 82
- INSTALLATION . . . 82

page

MODULE, BALANCE SHAFT
- REMOVAL . . . 83
- INSTALLATION . . . 84

RING(S), PISTON
- STANDARD PROCEDURE . . . 85

ROD, PISTON AND CONNECTING
- DESCRIPTION . . . 87
- STANDARD PROCEDURE
  - CONNECTING ROD BEARING FITTING . . . 88
  - PISTON FITTING . . . 90
- REMOVAL . . . 91
- CLEANING . . . 91
- INSPECTION . . . 92
- INSTALLATION . . . 92

SEAL, CRANKSHAFT OIL, FRONT
- REMOVAL . . . 93
- INSTALLATION . . . 94

SEAL, CRANKSHAFT OIL, REAR
- DIAGNOSIS AND TESTING . . . 94
- REMOVAL . . . 95
- INSTALLATION . . . 96

Engine Block

Description

The cylinder block is made of cast iron. The block is a closed deck design with the left bank forward. To provide high rigidity and improved NVH an enhanced compacted graphite bedplate is bolted to the block. The block design allows coolant flow between the cylinders bores, and an internal coolant bypass to a single poppet inlet thermostat is included in the cast aluminum front cover.

Standard Procedure

Before honing, stuff plenty of clean shop towels under the bores and over the crankshaft to keep abrasive materials from entering the crankshaft area.

1. Used carefully, the Cylinder Bore Sizing Hone C-823, equipped with 220 grit stones, is the best tool for this job. In addition to deglazing, it will reduce taper and out-of-round, as well as removing light scuffing, scoring and scratches. Usually, a few strokes will clean up a bore and maintain the required limits.

CAUTION: DO NOT use rigid type hones to remove cylinder wall glaze.

2. Deglazing of the cylinder walls may be done if the cylinder bore is straight and round. Use a cylinder surfacing hone, Honing Tool C-3501, equipped with 280 grit stones (C-3501-3810). about 20-60 strokes, depending on the bore condition, will be sufficient to provide a satisfactory surface. Using honing oil C-3501-3880, or a light honing oil, available from major oil distributors.

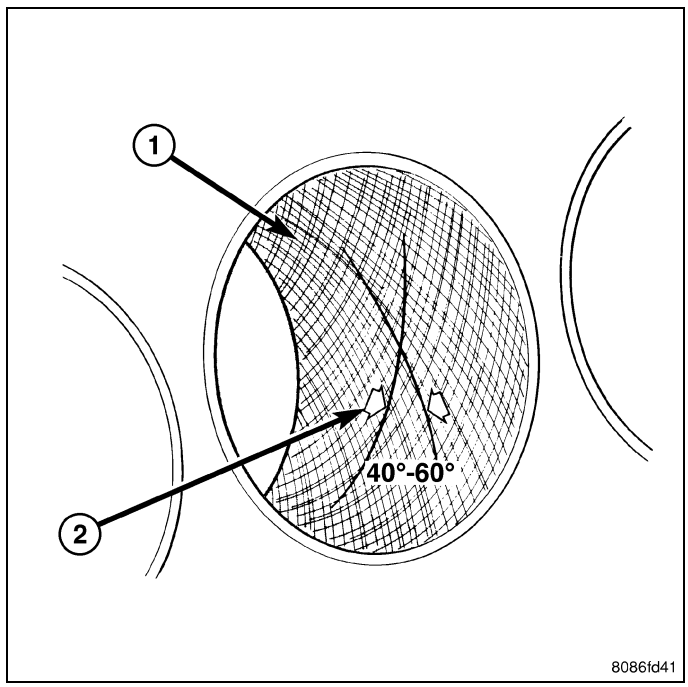

CAUTION: DO NOT use engine or transmission oil, mineral spirits, or kerosene.

3. Honing should be done by moving the hone up and down fast enough to get a crosshatch pattern (1). The hone marks should INTERSECT at 50° to 60° for proper seating of rings (2).
4. A controlled hone motor speed between 200 and 300 RPM is necessary to obtain the proper crosshatch angle. The number of up and down strokes per minute can be regulated to get the desired 50° to 60° angle. Faster up and down strokes increase the crosshatch angle.
5. After honing, it is necessary that the block be cleaned to remove all traces of abrasive. Use a brush to wash parts with a solution of hot water and detergent. Dry parts thoroughly. Use a clean, white, lint-free cloth to check that the bore is clean. Oil the bores after cleaning to prevent rusting.

Cleaning

Thoroughly clean the oil pan and engine block gasket surfaces.

Use compressed air to clean out:

- The galley at the oil filter adaptor hole.
- The front and rear oil galley holes.
- The feed holes for the crankshaft main bearings.

Once the block has been completely cleaned, apply Loctite PST pipe sealant with Teflon 592 to the threads of the front and rear oil galley plugs. Tighten the 1/4 inch NPT plugs to 20 N·m (177 in. lbs.) torque. Tighten the 3/8 inch NPT plugs to 27 N·m (240 in. lbs.) torque.

Inspection

1. Wipe the main bearing inserts (1,2) clean.
2. Inspect the inserts for abnormal wear patterns, scoring, grooving, fatigue, pitting and for metal or other foreign material imbedded in the lining.
3. Inspect the back of the inserts for fractures, scrapes or irregular wear patterns.
4. Inspect the insert locking tabs for damage.
5. Inspect the crankshaft thrust washers for scoring, scratches, wear or blueing.
6. Replace any bearing that shows abnormal wear.
7. Inspect the main bearing bores for signs of scoring, nicks and burrs.
8. If the cylinder block main bearing bores show damage, replace the engine block.

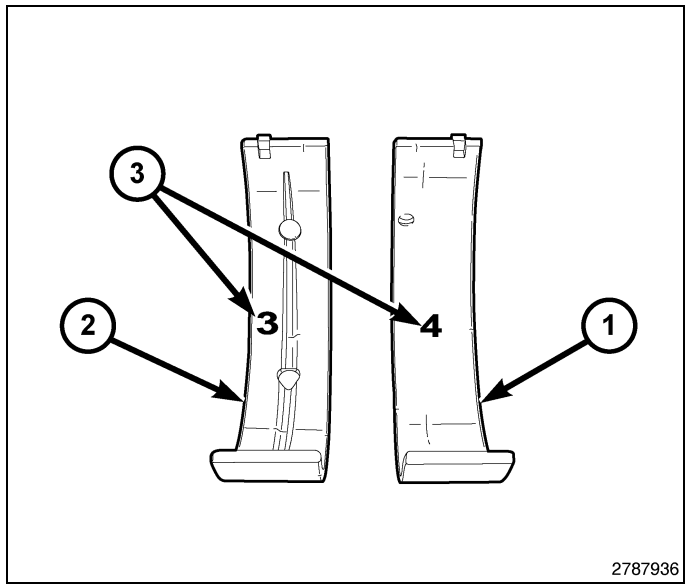

9. Use Cylinder Indicator C-119 (2) to correctly measure the inside diameter of the cylinder bore (3). A cylinder bore gauge capable of reading in 0.003 mm (0.0001 in.) Increments is required. If a bore gauge is not available, do not use an inside micrometer.
10. Measure the inside diameter of the cylinder bore at three levels below the top of the bore (4). Start at the top of the bore, perpendicular (across or at 90°) to the axis of the crankshaft at point A (1).
11. Repeat the measurement near the middle of the bore then repeat the measurement near the bottom of the bore.
12. Determine the taper by subtracting the smaller diameter from the larger diameter.
13. Rotate the measuring device 90° to point B (1) and repeat the three measurements. Verify that the maximum taper is within specifications.
14. Determine out-of-roundness by comparing the difference between each measurement.
15. If the cylinder bore taper does not exceed 0.025 mm (0.001 inch) and out-of-roundness does not exceed 0.015 mm (0.0006 inch) then the cylinder bore can be honed. If the cylinder bore taper or out- of-round condition exceeds the maximum limits, replace the cylinder block.

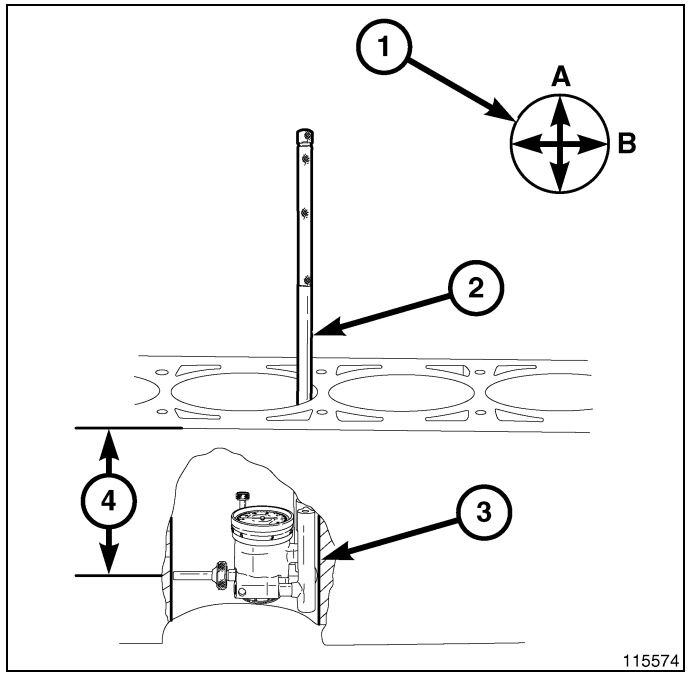

NOTE: A slight amount of taper always exists in the cylinder bore after the engine has been in use for a period of time.

BEARING(S), Crankshaft, Main

Standard Procedure

SELECT FIT IDENTIFICATION

The main bearings are “select fit” to achieve proper oil clearances. For main bearing selection, the crankshaft position sensor target wheel (2) has grade identification marks stamped into it. These marks are read from left to right, corresponding with journal number 1, 2, 3, 4. The crankshaft position sensor target wheel is mounted to the number 6 counter weight (1) on the crankshaft.

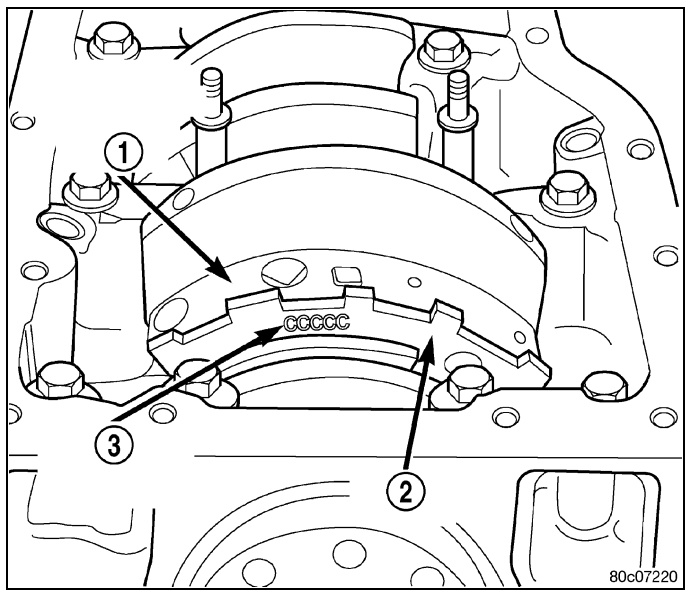

INSPECTION

Wipe the inserts clean and inspect for abnormal wear patterns and for metal or other foreign material imbedded in the lining. Normal main bearing insert wear patterns are illustrated.

Inspect the back of the inserts for fractures, scrapings or irregular wear patterns.

Inspect the upper insert locking tabs for damage.

Replace all damaged or worn bearing inserts.

MAIN BEARING JOURNAL DIAMETER (CRANKSHAFT REMOVED)

Remove the crankshaft from the cylinder block(Refer to 09 - Engine/Engine Block/CRANKSHAFT - Removal).

Clean the oil off the main bearing journal.

Determine the maximum diameter of the journal with a micrometer. Measure at two locations 90° apart at each end of the journal.

The maximum allowable taper is 0.008mm (0.0004 inch.) and maximum out of round is 0.005mm (0.002 inch). Compare the measured diameter with the journal diameter specification (Main Bearing Fitting Chart). Select inserts required to obtain the specified bearing-to-journal clearance.

Install the crankshaft into the cylinder block(Refer to 09 - Engine/Engine Block/CRANKSHAFT - Inspection).

Check crankshaft end play.

CRANKSHAFT MAIN BEARING SELECTION

CRANKSHAFT MARKING	JOURNAL SIZE	
	Metric	Standard
"R" Size	63.488 - 63.496 mm	2.4995 - 2.4998 in.
"S" Size	63.496 - 63.500 mm	2.4998 - 2.4999 in.
"T" Size	63.500 - 63.504 mm	2.4999 - 2.501 in.
"U" Size	63.504 - 63.512 mm	2.5001 - 2.5004 in.

BEARING SIZE		
Bearing Code	Size	Application
Upper Bearing		
A	.2.443 - 2.447 mm (.0961 - .0963 in.)	Use with crankshaft size "R"
B	2.439 - 2.443 mm (0.960 - .0961 in.)	Use with crankshaft "S, T"
C	2.435 - 2.439 mm (.0958 - .0960 in.)	Use with crankshaft "U"
Lower Bearing Main "1" and "4"		
"1"	2.441 - 2.447 mm (.0961 -.0963 in.)	Use with crankshaft "R, S"
"2"	2.435 - 2.441 mm (.0958 - .0962 in.)	Use with crankshaft "T, U"
Lower Main Bearing "2" and "3"		
"3"	2.429 - 2.435 mm (.0956 - .0958 in.)	Use with crankshaft "R, S"
"4"	2.423 - 2.429 mm (.0953 - .0956 in.)	Use with crankshaft "T, U"
Bearing Clearances		
Main "1, 4"		
Crankshaft "R"	.004 - .034 mm (.00015 - .0013 in.)	
Crankshaft "S"	.004 - .030 mm (.00015 - .0011 in.)	
Crankshaft "T"	.006 - .032 mm (.0002 - .0012 in.)	
Crankshaft "U"	.002 - .032 mm (.00007 - .0012 in.)	
Main "2, 3"		
Crankshaft "R"	.016 - .046 mm (.0006 - .0018 in.)	
Crankshaft "S"	.016 - .042 mm (.00062 - .016 in.)	
Crankshaft "T"	.018 - .044 mm (.0007 - .0017 in.)	
Crankshaft "U"	.014 - .044 mm (.0005 - .0017 in.)	

1. Service main bearings are available in four grades. The chart identifies the four service grades available.

COVER, Structural Dust

Description

The structural dust cover is made of die cast aluminum and joins the lower half of the transmission bell housing to the engine bedplate.

Operation

The structural cover provides additional powertrain stiffness and reduces noise and vibration.

Removal

1. Raise vehicle on hoist.
2. Remove the left hand exhaust pipe from exhaust manifold.
3. Loosen the right hand exhaust manifold-to-exhaust pipe retaining bolts.
4. Remove the eight bolts (1,2,3) retaining structural cover in the sequence shown.
5. Pivot the exhaust pipe downward and remove the structural cover.

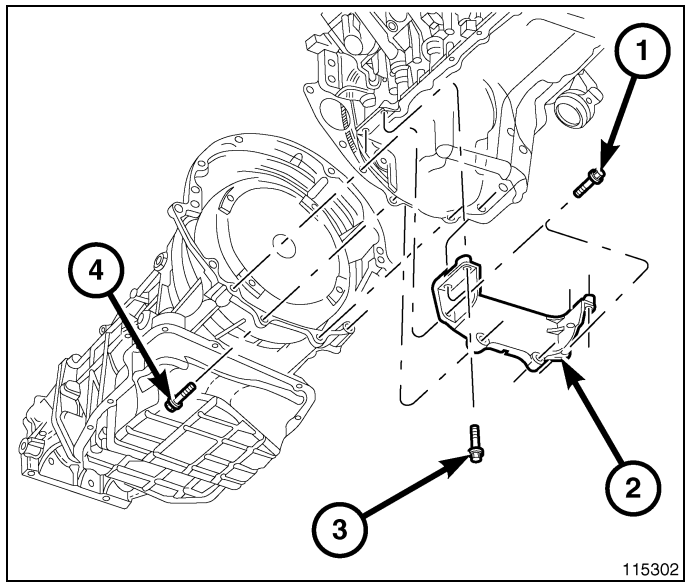

Installation

CAUTION: The structural dust cover must be installed as described in the following steps. Failure to do so may cause severe damage to the cover.

1. Position the structural cover in the vehicle.
2. Install all four bolts (1,2,3)retaining the cover-to-engine . DO NOT tighten the bolts at this time.
3. Install the four cover-to-transmission bolts (1,2,3). Do NOT tighten at this time.

CAUTION: The structural dust cover must be held tightly against both the engine and the transmission bell housing during the tightening sequence. Failure to do so may cause severe damage to the cover.

4. Starting with the two rear cover-to-engine bolts, tighten bolts (1) to 54 N·m (40 ft. lbs.), then tighten bolts (2) and (3) to 54 N·m (40 ft. lbs.) in the sequence shown.
5. Install the exhaust pipe on left hand exhaust manifold.
6. Tighten exhaust manifold-to-exhaust pipe retaining bolts to 20–26 N·m (15–20 ft. lbs.).

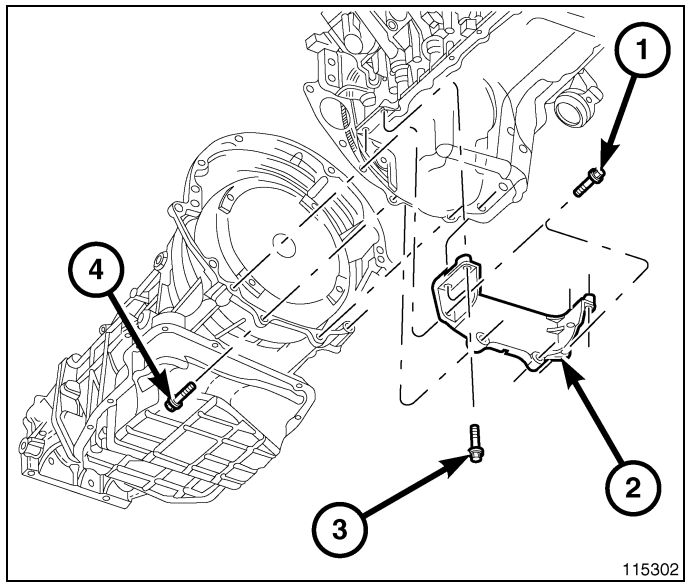

CRANKSHAFT

Description

The crankshaft (1) is constructed of nodular cast iron. The crankshaft is a three throw split pin design with six counterweights for balancing purposes. The crankshaft is supported by four select fit main bearings with the No. 2 serving as the thrust washer location. The main journals of the crankshaft are cross drilled to improve rod bearing lubrication. The No. 6 counterweight has provisions for crankshaft position sensor target wheel (2) mounting. The select fit main bearing markings are located on the rear side of the target wheel. The crankshaft oil seals are one piece design. The front oil seal is retained in the timing chain cover, and the rear seal is pressed in to a bore formed by the cylinder block and the bedplate assembly.

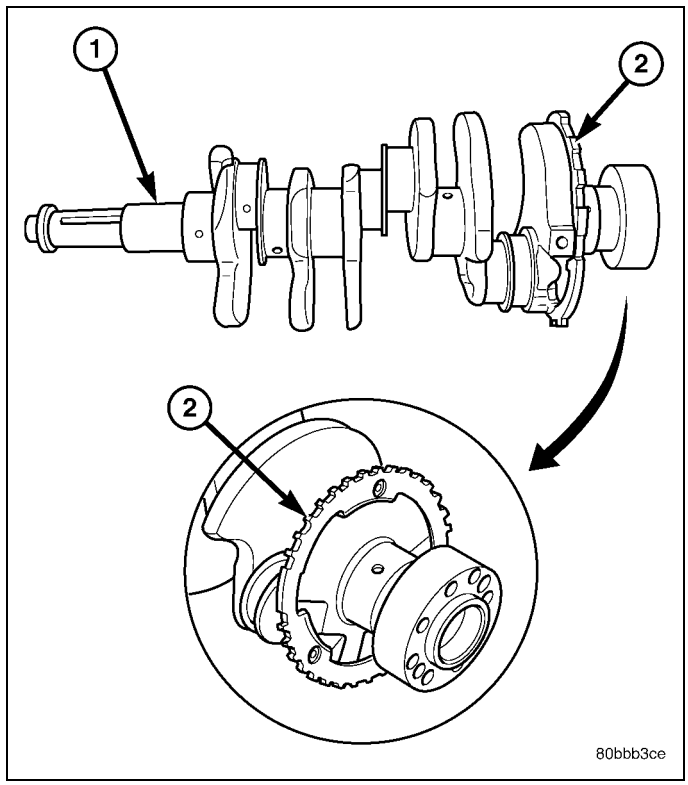

Removal

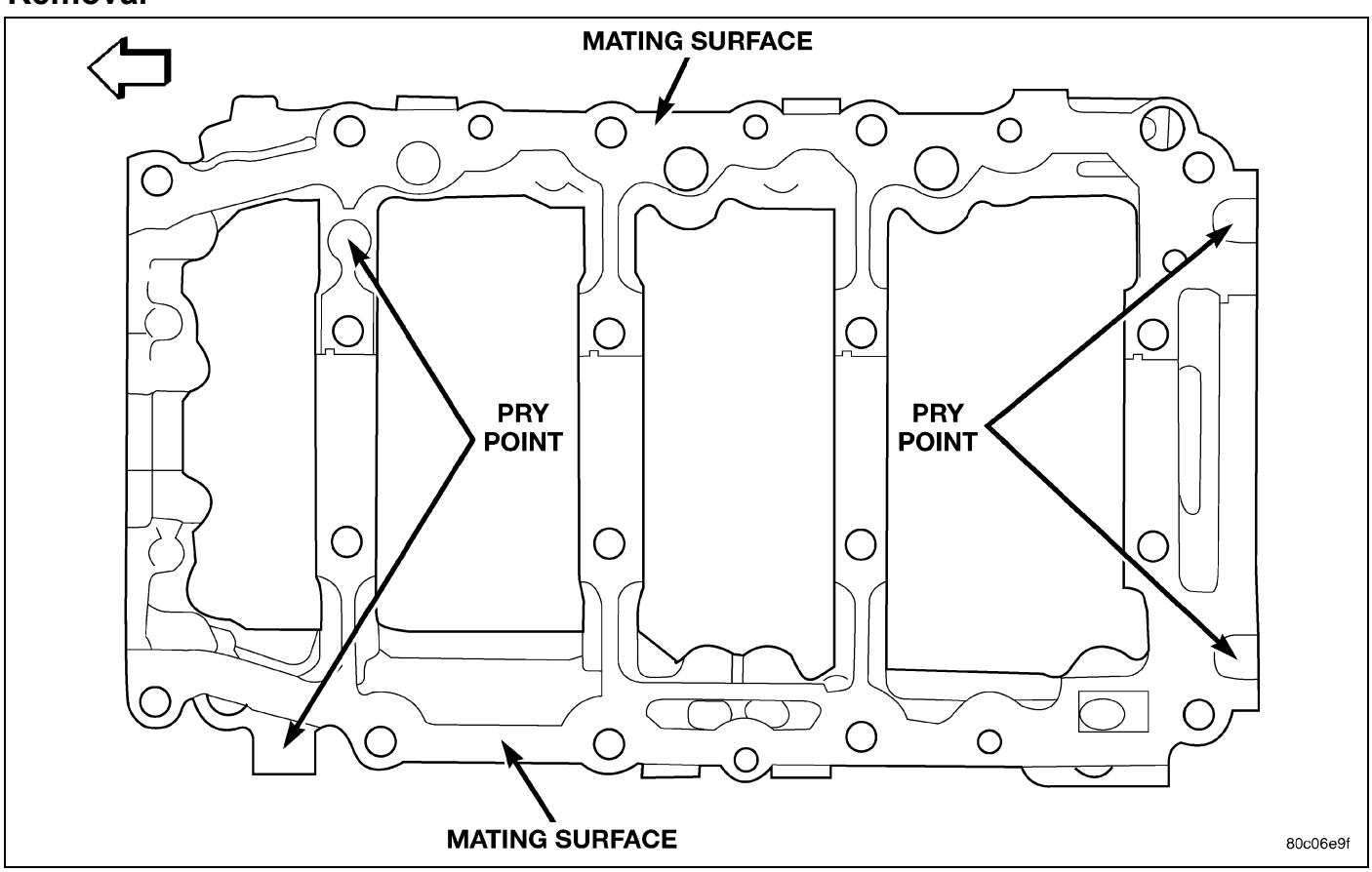

NOTE: To remove the crankshaft from the engine, the engine must be removed from the vehicle.

1. Remove the engine(Refer to 09 - Engine - Removal).
2. Remove the engine oil pump(Refer to 09 - Engine/Lubrication/PUMP, Engine Oil - Removal).

CAUTION: DO NOT pry on the oil pan gasket when removing the oil pan, The oil pan gasket is mounted to the cylinder block in three locations and will remain attached to block when removing oil pan. Gasket can not be removed with oil pan.

3. Remove the bedplate mounting bolts. Note the location of the two stud bolts for installation.
4. Remove the connecting rods from the crankshaft.

CAUTION: The bedplate to cylinder block mating surface is a critical sealing surface. Do not pry on or damage this surface in anyway.

NOTE: The bedplate contains the lower main bearing halves. Use care when handling bedplate as not to drop or damage bearing halves. Installing main bearing halves in the wrong position will cause severe damage to the crankshaft.

NOTE: The bedplate has pry points cast into it. Use these points only. The pry points are shown below.

5. Carefully pry on the pry points to loosen the bedplate then remove the bedplate .

CAUTION: When removing the crankshaft, use care not to damage bearing surfaces on the crankshaft.

6. Remove the crankshaft.
7. Remove the crankshaft tone wheel.

Inspection

NOTE: Thoroughly inspect the connecting rod bearing bores and main bearing bores for scoring, blueing or severe scratches. Further disassembly may be required.

If connecting rod bearing bores show damage, the cylinder heads must be removed to service the piston and rod assemblies. If the bedplate or the cylinder block main bearing bores show damage the engine must be replaced.

1. If required, remove the main bearing halves from the cylinder block and bedplate.
2. Thoroughly clean the bedplate to cylinder block sealing surfaces and main bearing bores. Remove all oil and sealant residue.
3. Inspect the bedplate main bearing bores for cracks, scoring or severe blueing. If either condition exists the engine must be replaced.
4. Inspect the crankshaft thrust washers for scoring, scratches, wear or blueing. If either condition exist replace the thrust washers.
5. Inspect the oil pan gasket/windage tray for splits, tears or cracks in the gasket sealing surfaces. Replace gasket as necessary.

Installation

CAUTION: Main bearings are select fit. Refer to Crankshaft Main Bearings in this section for proper bearing selections.

CAUTION: When installing the crankshaft, use care not to damage bearing surfaces on the crankshaft.

NOTE: Apply sealant to the tone wheel retaining screws prior to installation.

1. Lubricate upper main bearing halves with clean engine oil.
2. Install the crankshaft tone wheel. Tighten the mounting screws to 15 N·m (11 ft. lbs.)
3. Position crankshaft in cylinder block.
4. Install the thrust washers (1).

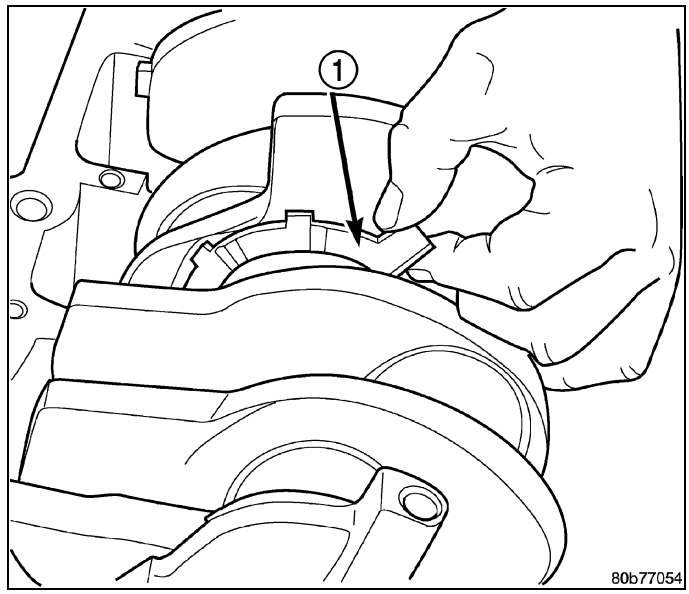

CAUTION: The bedplate to cylinder block mating surface must be coated with Mopar® Engine RTV sealant prior to installation. Failure to do so will cause severe oil leaks.

NOTE: Make sure that the bedplate and cylinder block sealing surfaces are clean and free of oil or other contaminants. Contaminants on the sealing surfaces may cause main bearing distortion and/or oil leaks.

5. Apply a 2.5mm (0.100 inch) bead of Mopar® Engine RTV sealant to the cylinder block-to-bedplate mating surface (2,3) as shown.

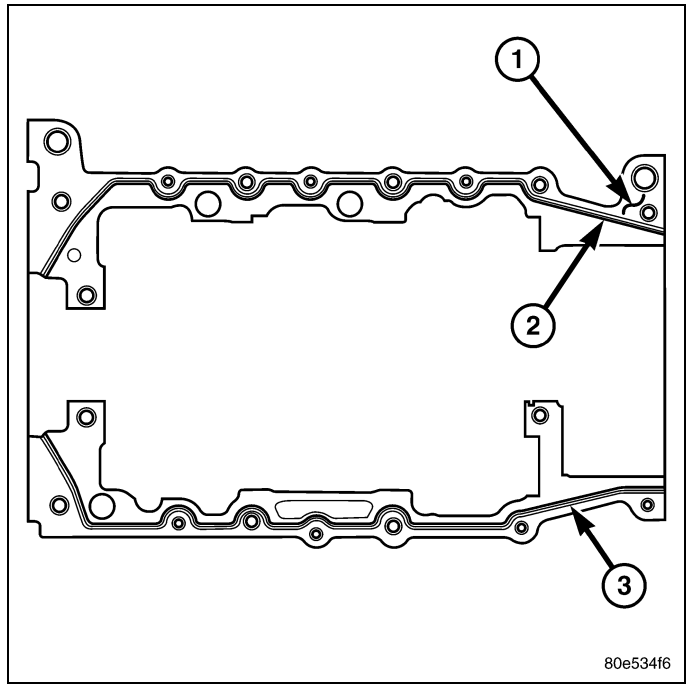

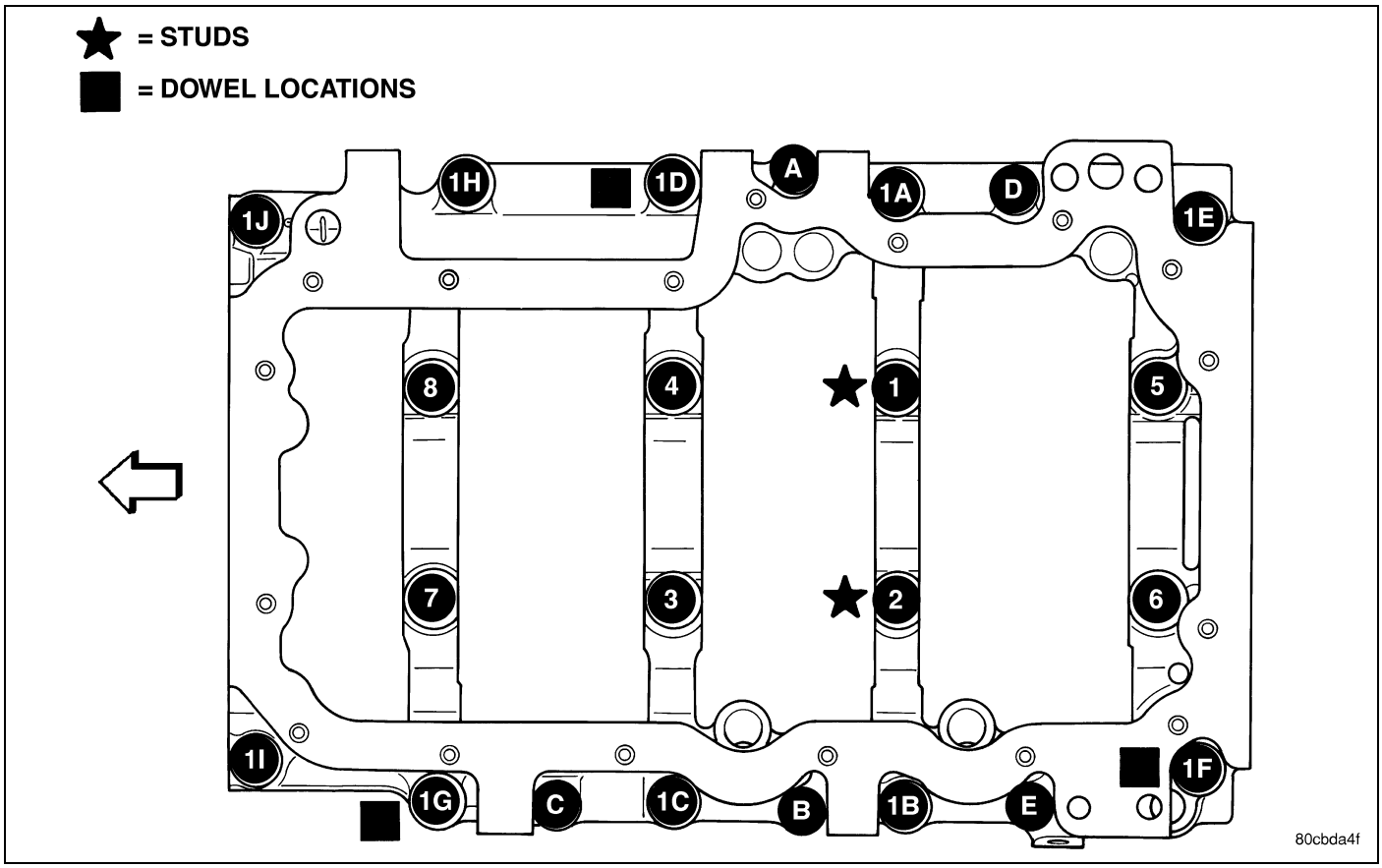

6. Coat the crankshaft main bearing journals with clean engine oil and position the bedplate onto the cylinder block.

NOTE: Lubricate the bedplate retaining bolts with clean engine oil prior to installation.

7. Install the bedplate retaining bolts, making sure to place the stud bolts in the correct location, Tighten the bolts in the sequence shown.

- Hand tighten bolts **1D,1G and 1F** until the bedplate contacts the block.
- Tighten bolts **1A - 1J** to 54 N·m (40 ft. lbs.)
- Tighten bolts **1 - 8** to 7 N·m (5 ft. lbs.)
- Turn bolts **1 - 8** an additional 90°.
- Tighten bolts **A - E** 27 N·m (20 ft. lbs.).

8. Measure crankshaft end play.
9. Install the connecting rods and measure side clearance(Refer to 09 - Engine/Engine Block/ROD, Piston and Connecting - Standard Procedure).
10. Install oil pump(Refer to 09 - Engine/Lubrication/PUMP, Engine Oil - Installation).
11. Install the engine(Refer to 09 - Engine - Installation).

DAMPER, Vibration

Removal

1. Disconnect and isolate the negative battery cable (1).

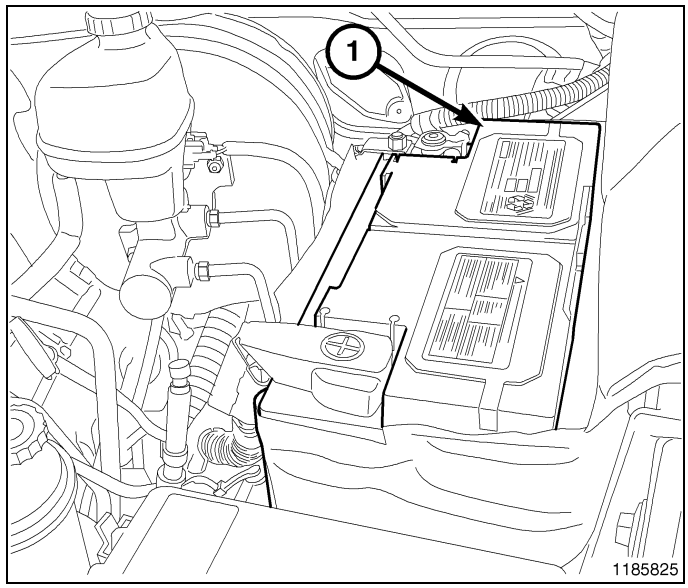

CAUTION: Do not let the tensioner arm snap back to the freearm position, severe damage may occur to the tensioner.

2. Rotate the belt tensioner (6) until it contacts its stop and remove the belt (3), then slowly rotate the tensioner (6) into the freearm position.
3. Raise and support the vehicle.

WARNING: Do not remove the radiator pressure cap, cylinder block drain plugs or loosen the radiator draincock with the system hot and under pressure. Serious burns from coolant can occur.

4. Drain the cooling system (Refer to 07 - Cooling - Standard Procedure).
5. Lower the vehicle.
6. Remove the upper radiator hose.

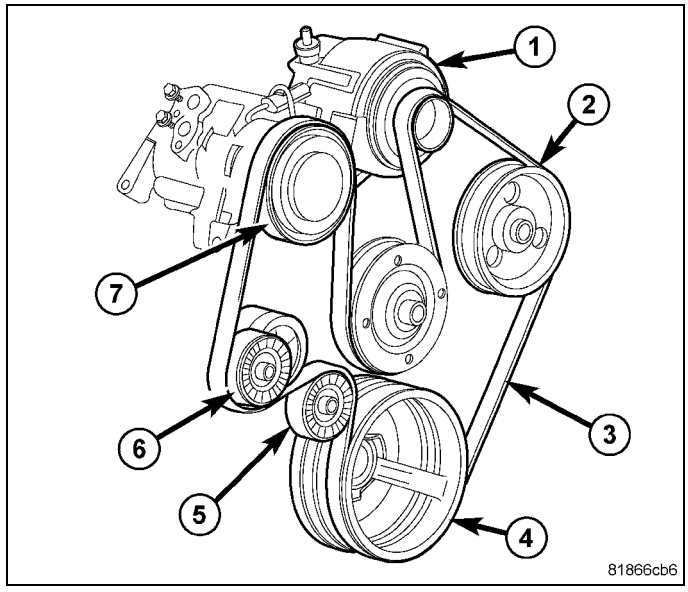

NOTE: The thermal viscous fan drive/fan blade assembly is attached (threaded) to the water pump hub shaft.

NOTE: The transmission cooler line snaps onto the lower right hand corner of the fan shroud.

CAUTION: After removing fan blade/viscous fan drive assembly, do not place viscous fan drive in horizontal position. If stored horizontally, silicone fluid in the viscous fan drive could drain into the bearing assembly and contaminate the bearing lubricant.

7. Remove the fan shroud and fan blade/viscous fan drive assembly as a complete unit from the vehicle (Refer to 07 - Cooling/Engine/FAN, Cooling - Removal).

8. Remove the vibration damper (1) retaining bolt (2).

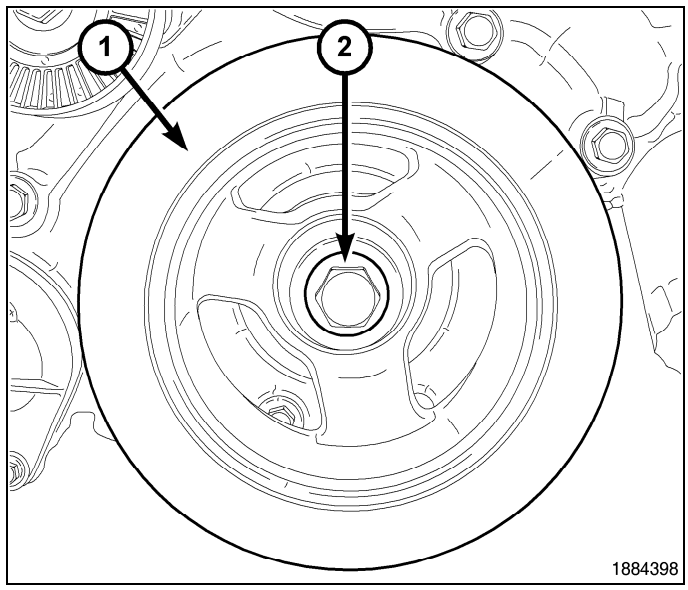

9. Using the crankshaft insert 8513A (1) and the three jaw puller 8454 (2) remove the crankshaft damper.

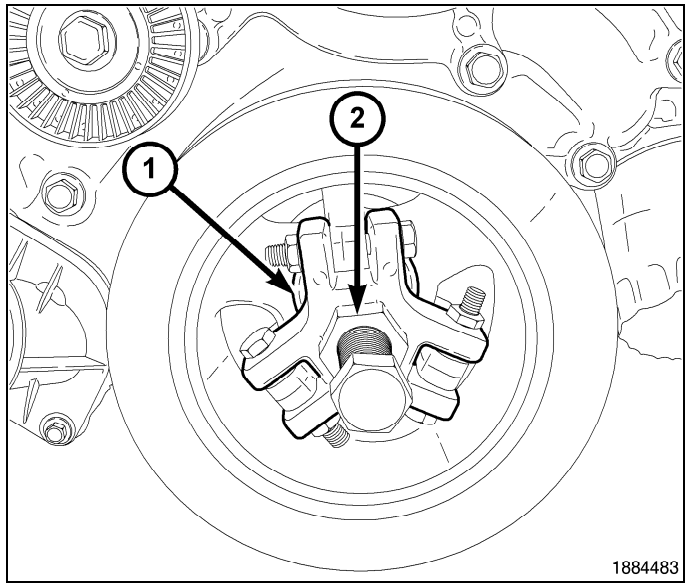

Installation

CAUTION: To prevent severe damage to the crankshaft, damper, and damper installer 8512A**, thoroughly clean the damper bore and the crankshaft nose before installing damper.**

1. Position the damper onto the crankshaft.
2. Assemble the damper installer 8512A (2) and the A/C hub installer cup 6871 (1).

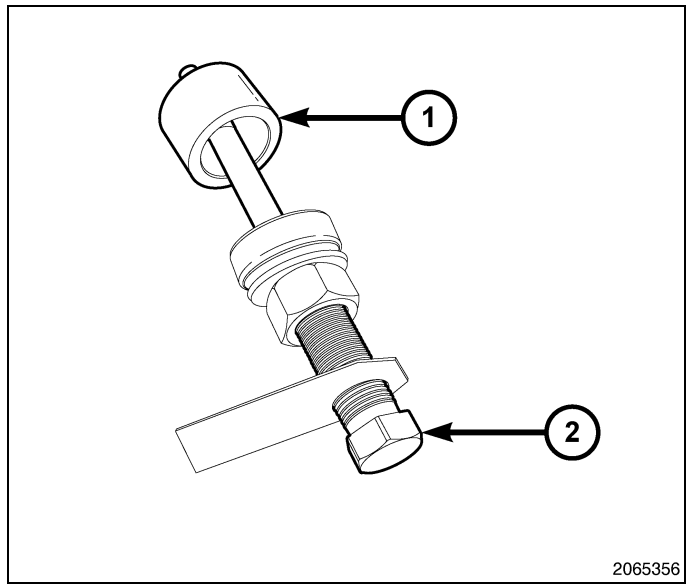

3. Using the damper installer 8512A (2) and the A/C hub installer cup 6871 (1), press the damper onto the crankshaft.
4. Coat the vibration damper bolt threads with Mopar ® Nickel Anti-Seize or equivalent, install and tighten the bolt to 175 N·m (130 ft. lbs.).
5. Install the cooling fan assembly (Refer to 07 - Cooling/ Engine/FAN, Cooling - Installation)
6. Install the radiator upper shroud and tighten fasteners to 11 N·m (95 in. lbs.).
7. Install the radiator upper hose.
8. Install the accessory drive belt (Refer to 07 - Cooling/ Accessory Drive/BELT, Serpentine - Installation)
9. Refill the cooling system (Refer to 07 - Cooling - Standard Procedure)
10. Connect the negative battery cable.

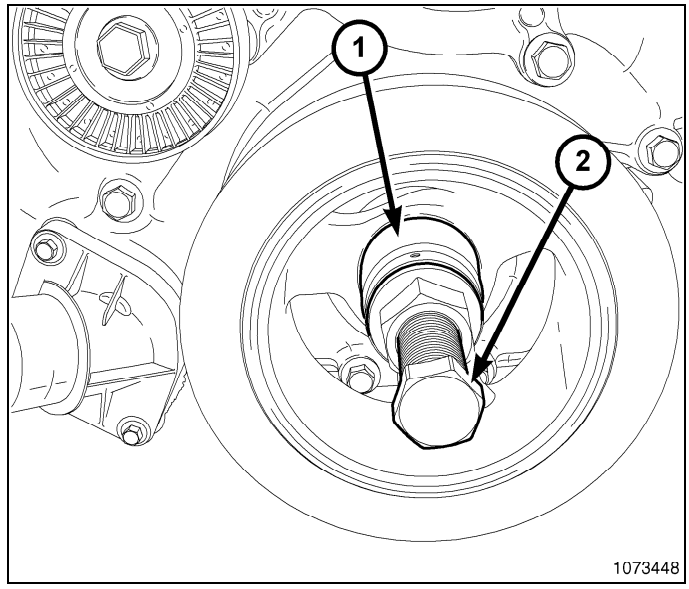

FLEXPLATE

Removal

1. Remove the transmission. (Refer to 21 - Transmission and Transfer Case/Automatic - 545RFE - Removal).
2. Remove the bolts and flexplate (1).

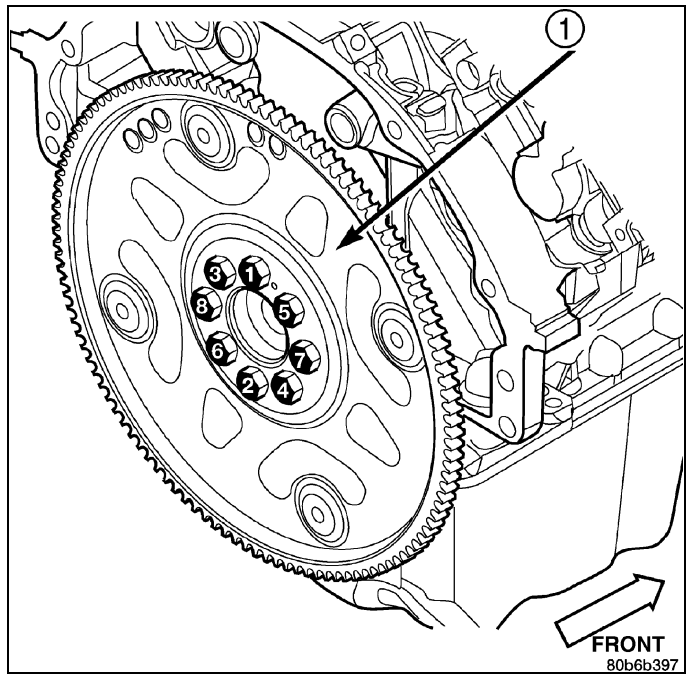

Installation

1. Position the flexplate onto the crankshaft and install the bolts hand tight.
2. Tighten the flexplate (1) retaining bolts to 95 N·m (70 ft. lbs.) in the sequence shown .
3. Install the transmission.

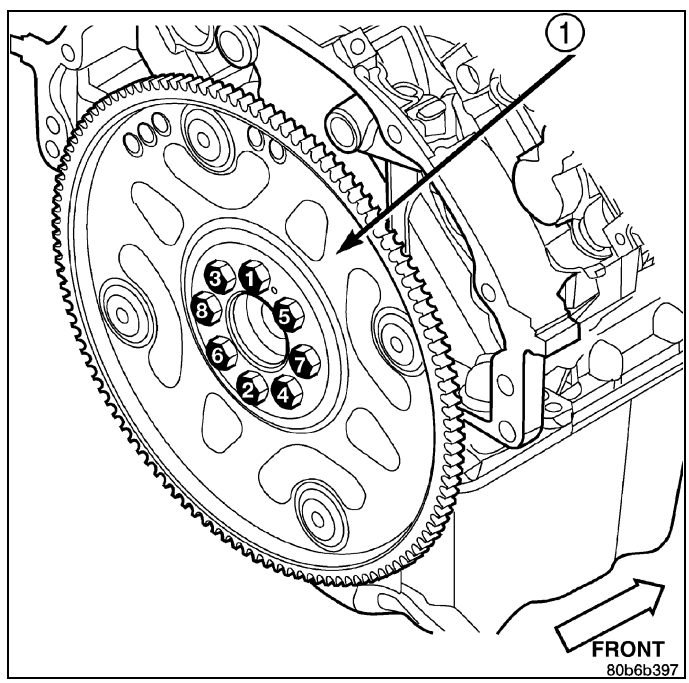

MODULE, Balance Shaft

Removal

1. Remove the primary and secondary timing chains (Refer to 09 - Engine/Valve Timing/CHAIN and SPROCKETS, Timing - Removal).

NOTE: The balance shaft and gear are serviced as an assembly. Do not attempt to remove the gear from the balance shaft.

Remove the retaining bolt (4) from the counterbalance shaft thrust plate (2).

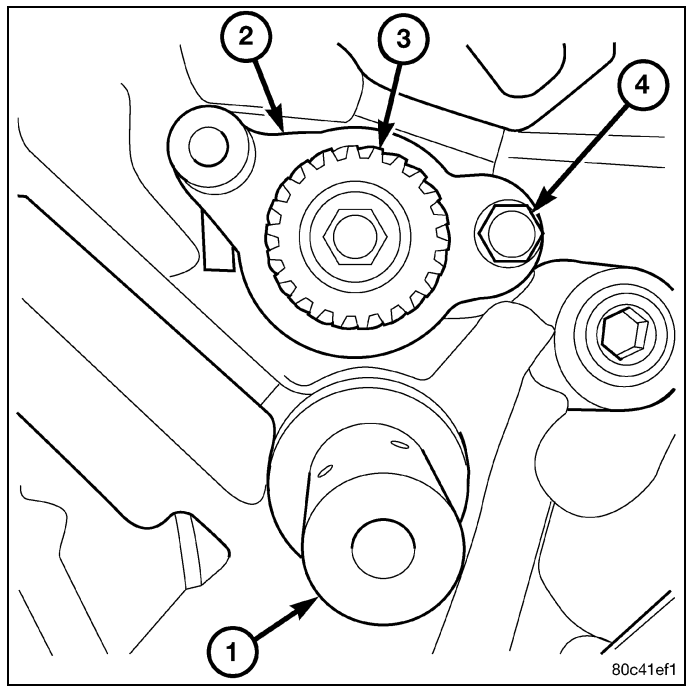

2. Using the Counterbalance Shaft Remover/Installer 8641 (1), remove the counterbalance shaft from the engine.

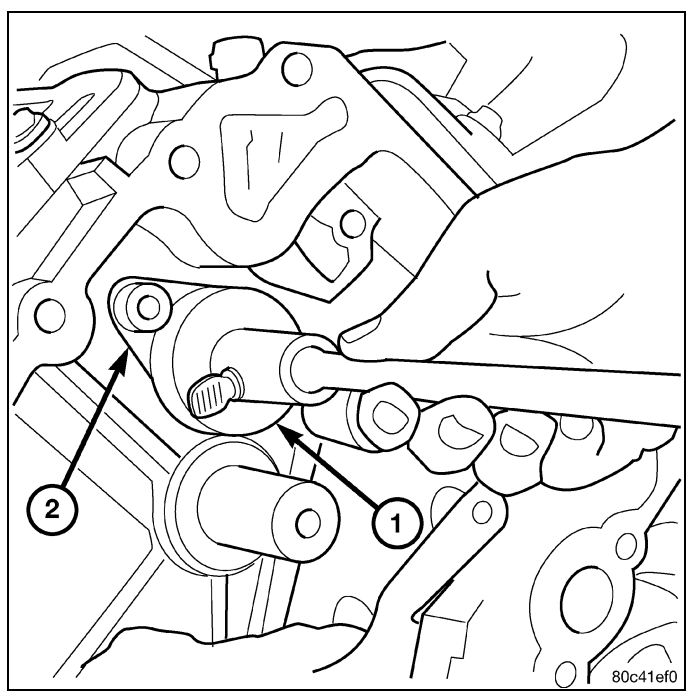

Installation

NOTE: The balance shaft and gear are serviced as an assembly. Do not attempt to remove the gear from the balance shaft.

1. Coat counterbalance shaft bearing journals with clean engine oil.

NOTE: The balance shaft is heavy, and care should be used when installing shaft, so bearings are not damaged.

2. Using the Counterbalance Shaft Remover/Installer 8641 (1), carefully install counterbalance shaft into engine .

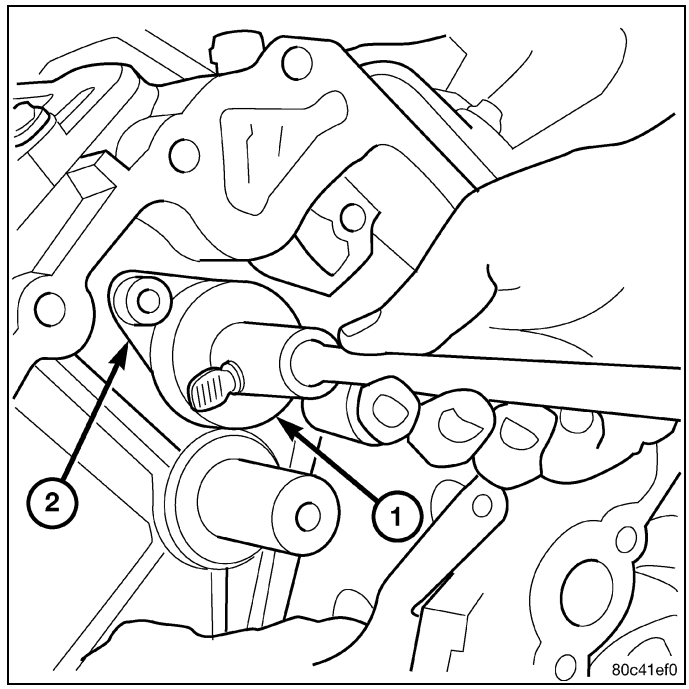

3. Install Counterbalance shaft thrust plate retaining bolt (4) finger tight.Do not tighten bolt at this time.
4. Position the right side of the thrust plate with the right chain guide bolt, install bolt finger tight.
5. Tighten the thrust plate retaining bolt (4) to 28 N·m (250 in. lbs.)
6. Remove the chain guide bolt so that guide can be installed.

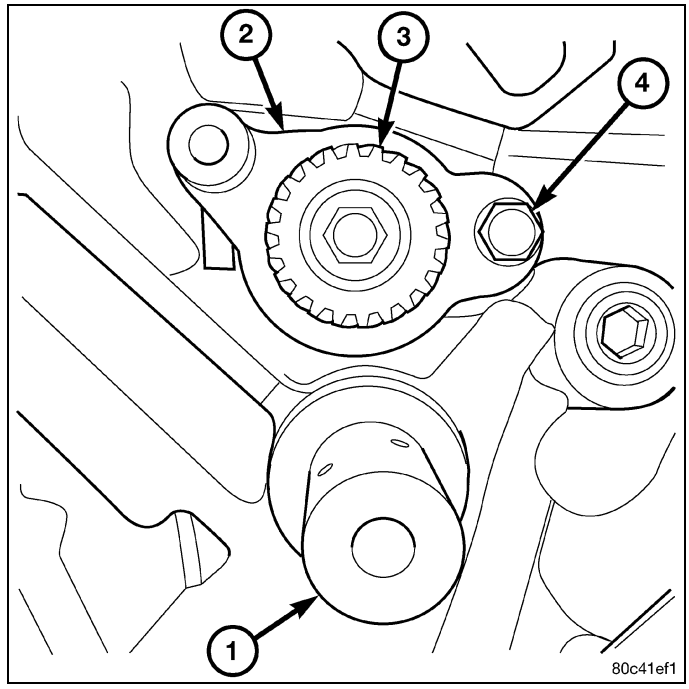

RING(S), Piston

Standard Procedure

Before reinstalling used rings or installing new rings, the ring clearances must be checked.

1. Wipe the cylinder bore clean.
2. Insert the ring in the cylinder bore.

NOTE: The ring gap measurement must be made with the ring positioned at least 12mm (0.50 inch.) from bottom of cylinder bore.

3. Using a piston, to ensure that the ring is squared in the cylinder bore, slide the ring downward into the cylinder.
4. Using a feeler gauge (1) check the ring end gap. Replace any rings not within specification.

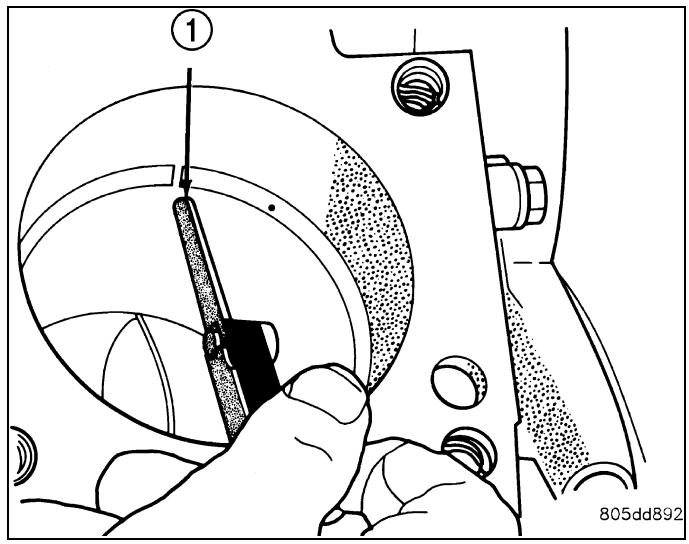

PISTON RING SIDE CLEARANCE

NOTE: Make sure the piston ring grooves are clean and free of nicks and burrs.

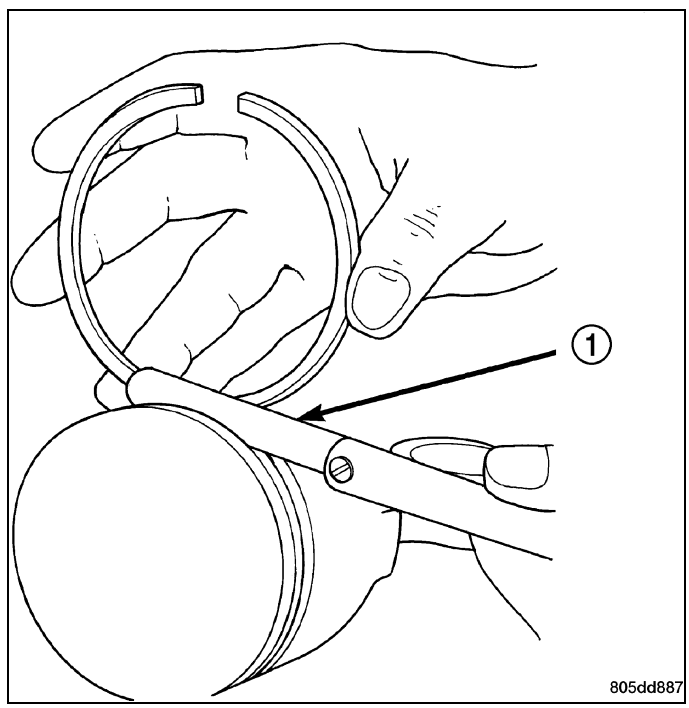

5. Measure the ring side clearance as shown make sure the feeler gauge (1) fits snugly between the ring land and the ring. Replace any ring not within specification.
6. Rotate the ring around the piston, the ring must rotate in the groove with out binding.

PISTON RING SPECIFICATION CHART

Ring Position	Groove Clearance	Maximum Clearance
Upper Ring	0.051 - 0.094 mm (0.0020 - 0.0037 in.)	0.11 mm (0.004 in.)
Intermediate Ring	0.04 - 0.08 mm (0.0016 - 0.0031 in.)	0.10 mm (0.004 in.)

PISTON RING SPECIFICATION CHART, continued

Ring Position	Groove Clearance	Maximum Clearance
Oil Control Ring (Steel Rails)	0.019 - 0.229 mm (0.0007-.0090 in.)	0.25 mm (0.010 in.)

Ring Position	Ring Gap	Wear Limit
Upper Ring	0.20 - 0.36 mm (0.0079 - 0.0142 in.)	0.43 mm (0.0017 in.)
Intermediate Ring	0.37 - 0.63 mm (0.0146 - 0.0249 in.)	0.74 mm (0.029 in.)
Oil Control Ring (Steel Rail)	0.025 - 0.76 mm (0.0099 - 0.03 in.)	1.55 mm (0.061 in.)

7. The No. 1 and No. 2 piston rings have a different cross section. Ensure No. 2 ring is installed with manufacturers I.D. mark (Dot) facing up, towards top of the piston.

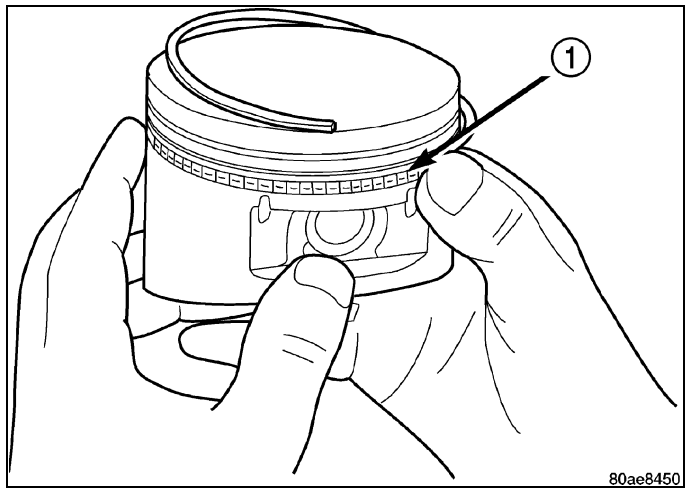

NOTE: Piston rings are installed in the following order:

- **Oil ring expander.**
- **Upper oil ring side rail.**
- **Lower oil ring side rail.**
- **No. 2 Intermediate piston ring.**
- **No. 1 Upper piston ring.**

8. Install the oil ring expander.
9. Install upper side rail (1) by placing one end between the piston ring groove and the expander ring. Hold end firmly and press down the portion to be installed until side rail is in position. Repeat this step for the lower side rail.
10. Install No. 2 intermediate piston ring using a piston ring installer.
11. Install No. 1 upper piston ring using a piston ring installer.

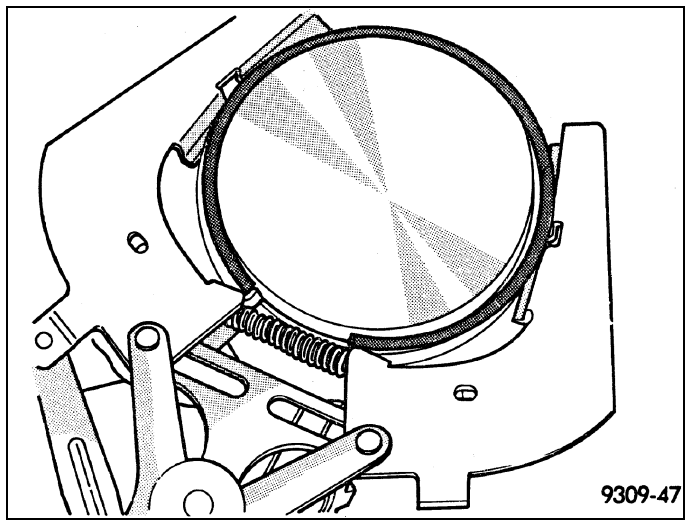

12. Position piston ring end gaps as shown. It is important that expander ring gap (5) is at least 45° from the side rail gaps, but not on the piston pin center or on the thrust direction.

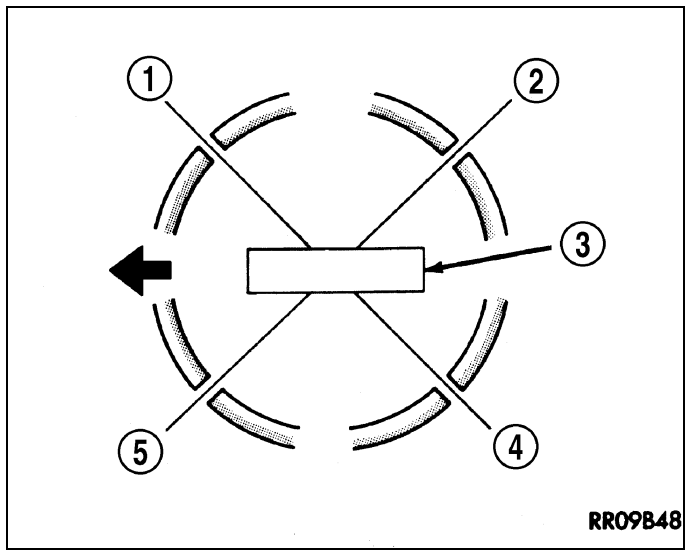

ROD, Piston and Connecting

Description

CAUTION: Do not use a metal stamp to mark connecting rods as damage may result, instead use ink or a scratch awl.

The pistons (2) are made of a high strength aluminum alloy. The connecting rods (1) are made of forged powdered metal, with a “fractured cap” design. A full floating piston pin is used to attach the piston to the connecting rod.

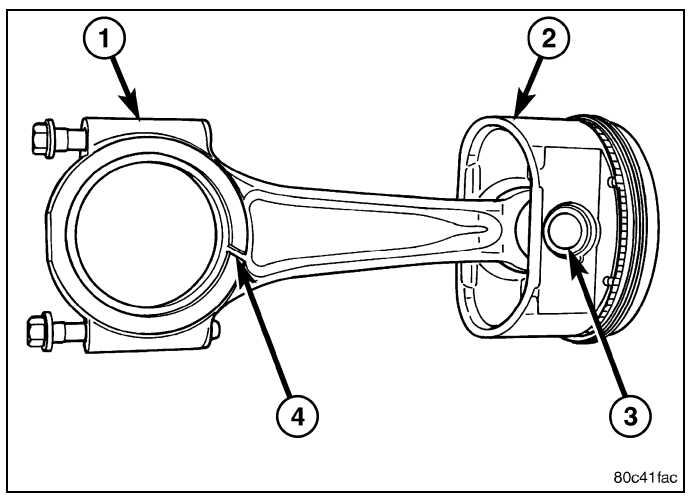

Standard Procedure

CONNECTING ROD BEARING FITTING

Inspect the connecting rod bearings for scoring. Check the bearings for normal wear patterns, scoring, grooving, fatigue and pitting. Replace any bearing that shows abnormal wear.

Inspect the connecting rod journals for signs of scoring, nicks and burrs.

Misaligned or bent connecting rods can cause abnormal wear on pistons, piston rings, cylinder walls, connecting rod bearings and crankshaft connecting rod journals. If wear patterns or damage to any of these components indicate the probability of a misaligned connecting rod, inspect it for correct rod alignment. Replace misaligned, bent or twisted connecting rods.

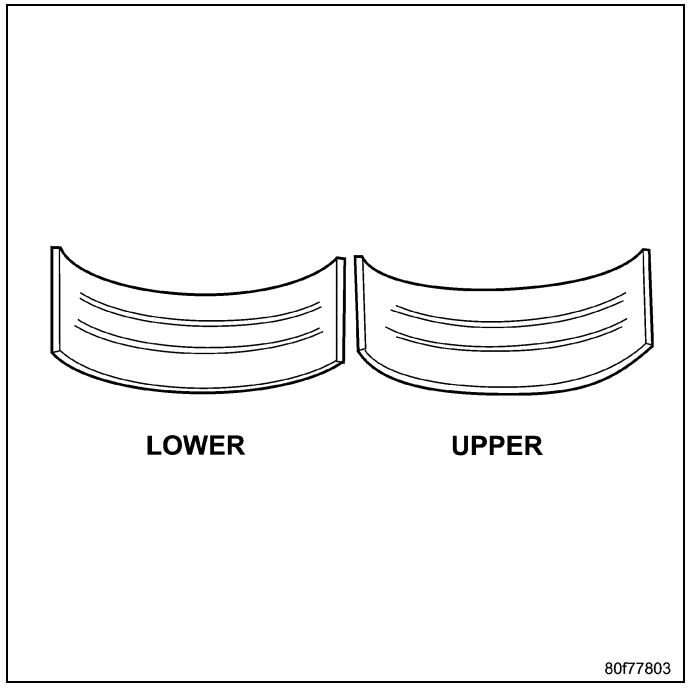

1. Wipe the oil from the connecting rod journal.
2. Lubricate the upper bearing insert and position in connecting rod. **Center bearing insert (2) in connecting rod (1)**

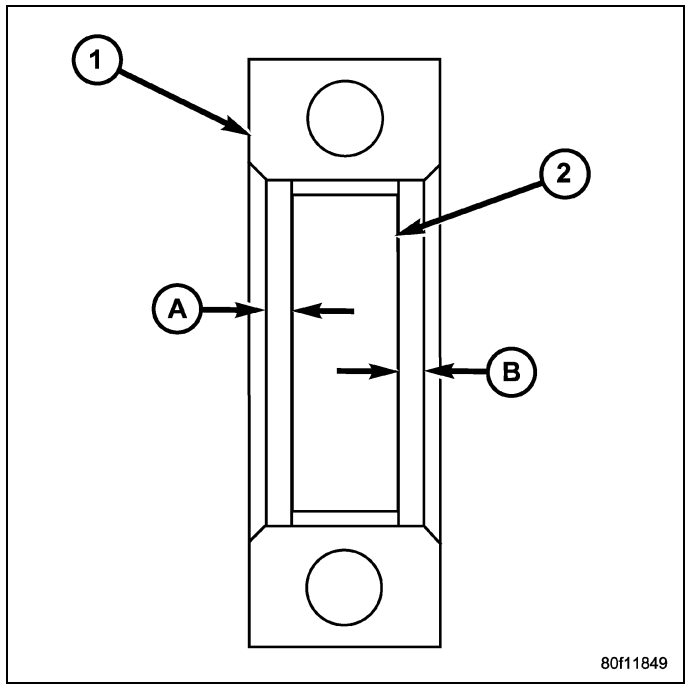

3. Use piston ring compressor (3) and Connecting Rod Guides 8507 to install the rod and piston assemblies. The oil slinger slots in the rods must face front of the engine. The “F”'s near the piston wrist pin bore (1) should point to the front of the engine.

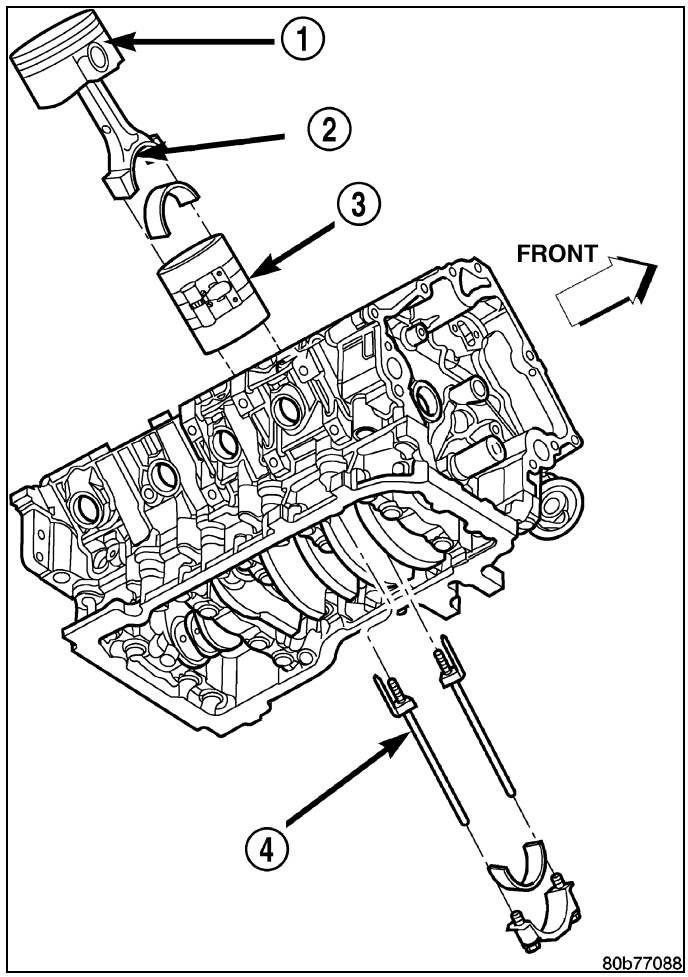

4. Install the lower bearing insert in the bearing cap. **Center bearing insert in connecting rod.**. The lower insert must be dry. Place strip of Plastigage across full width of the lower insert at the center of bearing cap. Plastigage must not crumble in use. If brittle, obtain fresh stock.
5. Install bearing cap and connecting rod on the journal and tighten bolts to 27 N·m (20 ft. lbs.) plus a 90° turn. DO NOT rotate crankshaft. Plastigage will smear, resulting in inaccurate indication.
6. Remove the bearing cap and determine amount of bearing-to-journal clearance by measuring the width of compressed Plastigage (2). Refer to Engine Specifications for the proper clearance. **Plastigage should indicate the same clearance across the entire width of the insert. If the clearance varies, it may be caused by either a tapered journal, bent connecting rod or foreign material trapped between the insert and cap or rod.**
7. If the correct clearance is indicated, replacement of the bearing inserts is not necessary. Remove the Plastigage from crankshaft journal and bearing insert. Proceed with installation.

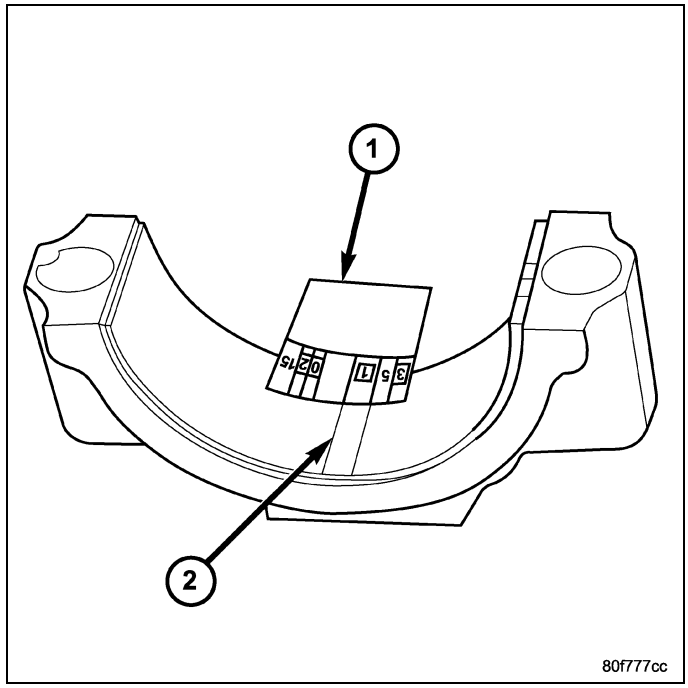

Bearing Mark	SIZE		USED WITH JOURNAL SIZE	
0.025 OS	0.025 mm	0.001 in.	57.883 - 57.867 mm	2.2788 - 2.2783 in.

Bearing Mark	SIZE		USED WITH JOURNAL SIZE	
STD	STANDARD	STANDARD	57.908 - 57.892 mm	2.2798 - 2.2792 in.
0.250 US	0.250 mm	0.010 in.	57.658 - 57.646 mm	2.2700 - 2.2695 in.

8. If bearing-to-journal clearance exceeds the specification, determin which services bearing set to use the bearing sizes are as follows:

CAUTION: Connecting Rod Bolts are Torque to Yield Bolts and Must Not Be Reused. Always replace the Rod Bolts whenever they are loosened or removed.

9. Repeat the Plastigage measurement to verify your bearing selection prior to final assembly.
10. Once you have selected the proper insert, install the insert and cap. Tighten the connecting rod bolts to 27 N·m (20 ft. lbs.) plus a 90° turn.

Slide snug-fitting feeler gauge between the connecting rod and crankshaft journal flange. Refer to Engine Specifications for the proper clearance. Replace the connecting rod if the side clearance is not within specification.

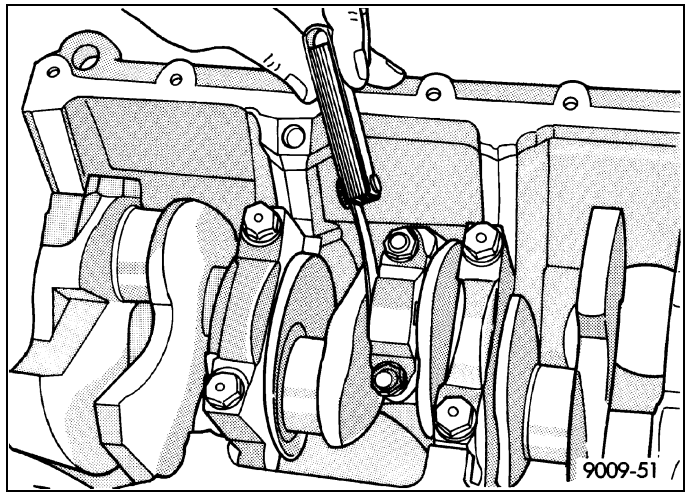

PISTON FITTING

1. To correctly select the proper size piston, a cylinder bore gauge (2), capable of reading in 0.003 mm (.0001 in.) INCREMENTS is required. If a bore gauge is not available, do not use an inside micrometer.
2. Measure the inside diameter of the cylinder bore (3) at a point 38.0 mm (1.5 inches) below top of bore. Start perpendicular (across or at 90 degrees) to the axis of the crankshaft at point A and then take an additional bore reading 90 degrees to that at point B.

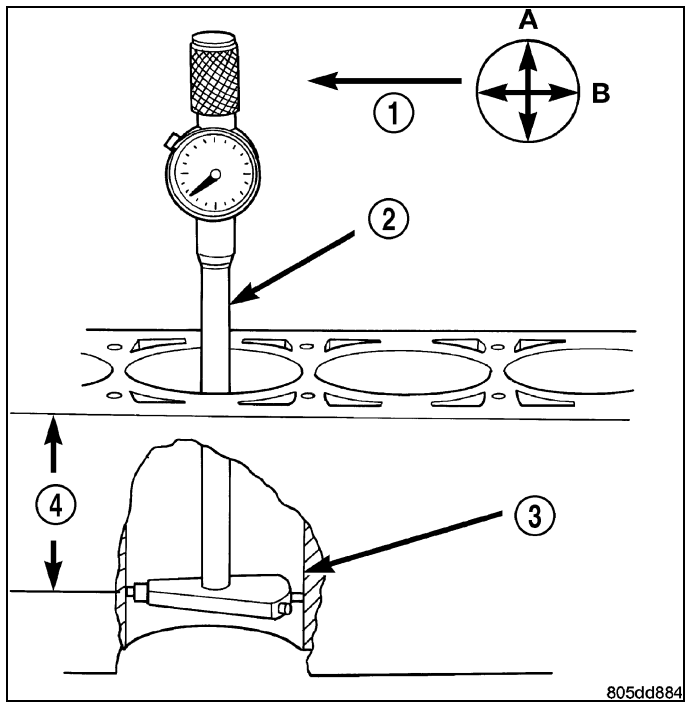

3. The coated pistons (1,2) will be serviced with the piston pin and connecting rod pre-assembled.
4. The coating material is applied to the piston after the final piston machining process. Measuring the outside diameter of a coated piston (1,2) will not provide accurate results. Therefore measuring the inside diameter of the cylinder bore with a dial Bore Gauge is **MANDATORY**. To correctly select the proper size piston, a cylinder bore gauge capable of reading in 0.003 mm (.0001 in.) increments is required.
5. Piston installation into the cylinder bore requires slightly more pressure than that required for non-coated pistons. The bonded coating on the piston will give the appearance of a line-to-line fit with the cylinder bore.

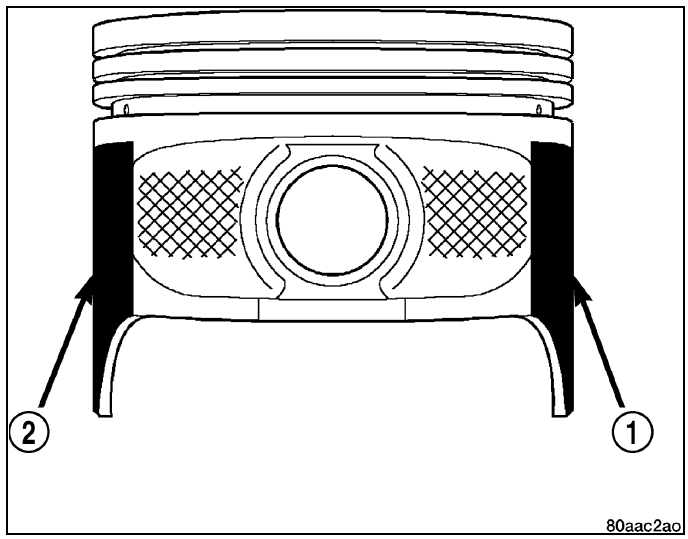

Removal

1. Disconnect negative cable from battery.
2. Remove the following components:

- Oil pan and gasket/windage tray (Refer to 09 - Engine/Lubrication/PAN, Oil - Removal).
- Cylinder head covers (Refer to 09 - Engine/Cylinder Head/COVER(S), Cylinder Head - Removal) - REMOVAL) and (Refer to 09 - Engine/Cylinder Head/COVER(S), Cylinder Head - Removal) - REMOVAL).
- Timing chain cover (Refer to 09 - Engine/Valve Timing/COVER(S), Engine Timing - Removal) - REMOVAL).
- Cylinder head(s) (Refer to 09 - Engine/Cylinder Head - Removal) and (Refer to 09 - Engine/Cylinder Head - Removal).

3. If necessary, remove top ridge of cylinder bores with a reliable ridge reamer before removing pistons from cylinder block. **Be sure to keep tops of pistons covered during this operation.** Pistons and connecting rods must be removed from top of cylinder block. When removing piston and connecting rod assemblies from the engine, rotate crankshaft so the each connecting rod is centered in cylinder bore.

CAUTION: DO NOT use a number stamp or a punch to mark connecting rods or caps, as damage to connecting rods could occur

NOTE: Connecting rods and bearing caps are not interchangeable and should be marked before removing to ensure correct reassembly.

4. Mark connecting rod and bearing cap positions using a permanent ink marker or scribe tool .

CAUTION: Care must be taken not to damage the fractured rod and cap joint face surfaces, as engine damage may occur.

5. Remove connecting rod cap. Install the Connecting Rod Guides 8507 into the connecting rod being removed. Remove piston from cylinder bore. Repeat this procedure for each piston being removed.

CAUTION: Care must be taken not to nick crankshaft journals, as engine damage may occur.

6. Immediately after piston and connecting rod removal, install bearing cap on the mating connecting rod to prevent damage to the fractured cap and rod surfaces.

Cleaning

CAUTION: DO NOT use a wire wheel or other abrasive cleaning devise to clean the pistons or connecting rods. The pistons have a Moly coating, this coating must not be damaged.

1. Using a suitable cleaning solvent clean the pistons in warm water and towel dry.
2. Use a wood or plastic scraper to clean the ring land grooves.

CAUTION: Do not remove the piston pin from the piston and connecting rod assembly.

Inspection

Check the connecting rod journal for excessive wear, taper and scoring (Refer to 09 - Engine/Engine Block/BEARING(S), Connecting Rod - Standard Procedure).

Check the connecting rod for signs of twist or bending.

Check the piston for taper and elliptical shape before it is fitted into the cylinder bore (Refer to 09 - Engine/Engine Block/ROD, Piston and Connecting - Standard Procedure).

Check the piston for scoring, or scraping marks in the piston skirts. Check the ring lands for cracks and/or deterioration.

Installation

1. Before installing piston and connecting rod assemblies into the bore, install the piston rings.
2. Immerse the piston head and rings in clean engine oil. Position a ring compressor (3) over the piston and rings. Tighten ring compressor. **Ensure position of rings do not change during this operation.**
3. Position bearing onto connecting rod. Ensure that hole in bearing shell aligns with hole in connecting rod. Lubricate bearing surface with clean engine oil.
4. Install Special Tool 8507 Connecting Rod Guides (4) into connecting rod bolt threads.

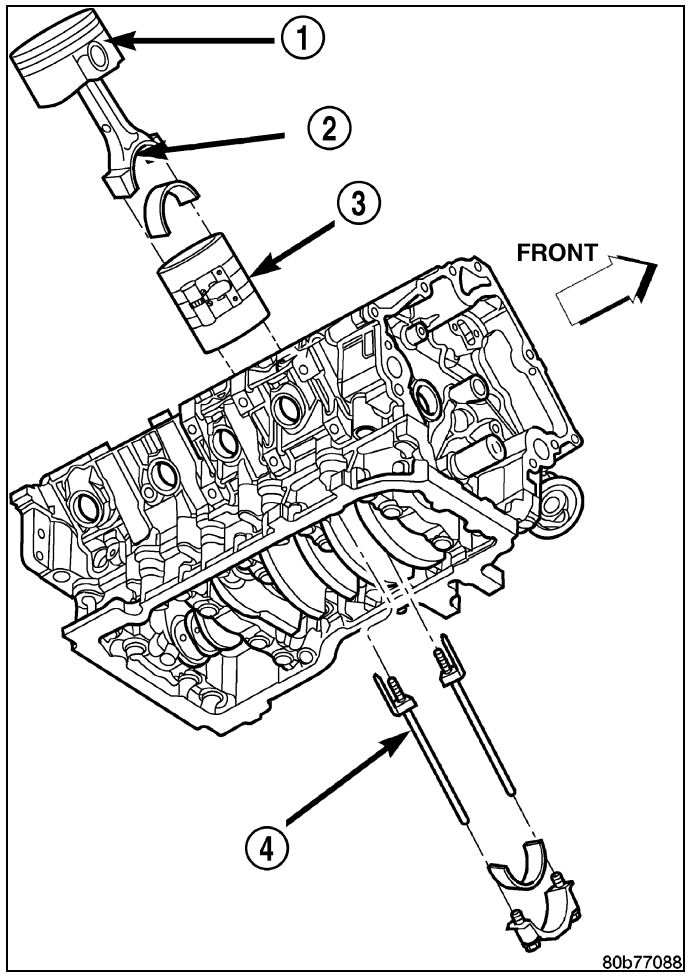

5. The pistons are marked on the piston pin bore surface with an raised “F” indicating installation position (1). This mark must be pointing toward the front of engine on both cylinder banks. The connecting rod oil slinger slot faces the front of the engine .
6. Wipe cylinder bore clean and lubricate with engine oil.
7. Rotate crankshaft until connecting rod journal is on the center of cylinder bore. Insert rod and piston into cylinder bore and carefully position connecting rod guides over crankshaft journal.
8. Tap piston down in cylinder bore using a hammer handle. While at the same time, guide connecting rod into position on rod journal.

CAUTION: Connecting Rod Bolts are Torque to Yield Bolts and Must Not Be Reused. Always replace the Rod Bolts whenever they are loosened or removed.

9. Lubricate rod bolts and bearing surfaces with engine oil. Install connecting rod cap and bearing. Tighten bolts to 27 N·m (20 ft. lbs.) plus 90°.
10. Install the following components:

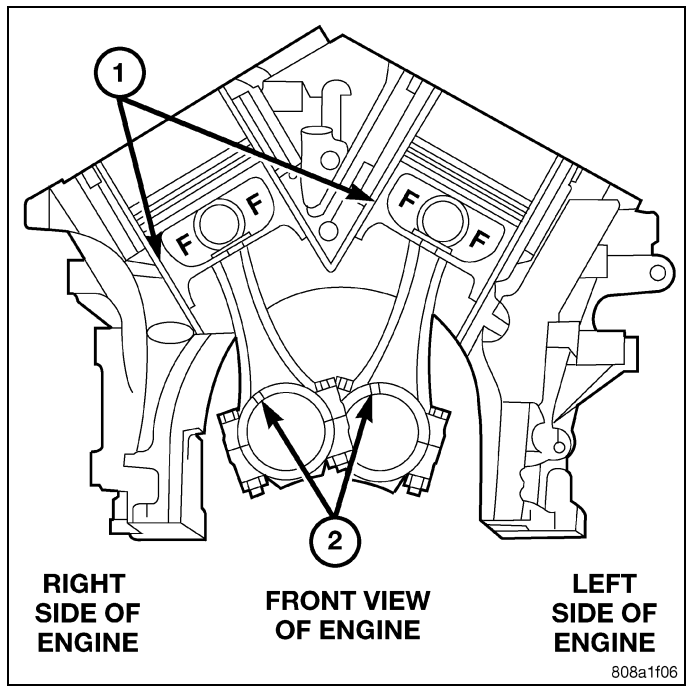

- Cylinder head(s). (Refer to 09 - Engine/Cylinder Head - Installation).
- Timing chain and cover. (Refer to 09 - Engine/Valve Timing/COVER(S), Engine Timing - Installation) - INSTALLATION).
- Cylinder head covers (Refer to 09 - Engine/Cylinder Head/COVER(S), Cylinder Head - Installation) - INSTALLATION).
- Oil pan and gasket/windage tray. (Refer to 09 - Engine/Lubrication/PAN, Oil - Installation).

11. Fill crankcase with proper engine oil to correct level.
12. Connect negative cable to battery.

SEAL, Crankshaft Oil, Front

Removal

1. Disconnect negative cable from battery.
2. Remove accessory drive belt (Refer to 07 - Cooling/Accessory Drive/BELT, Serpentine - Removal).
3. Remove A/C compressor mounting fasteners and set compressor aside.
4. Drain cooling system (Refer to 07 - Cooling - Standard Procedure).
5. Remove upper radiator hose.
6. Disconnect electrical connector for fan mounted inside radiator shroud.
7. Remove radiator shroud attaching fasteners.

NOTE: Transmission cooler line snaps into shroud lower right hand corner.

8. Remove radiator cooling fan and shroud (Refer to 07 - Cooling/Engine/FAN, Cooling - Removal).
9. Remove crankshaft damper bolt.
10. Remove damper using Crankshaft Insert 8513A (1) and 1023 Three Jaw Puller (2).

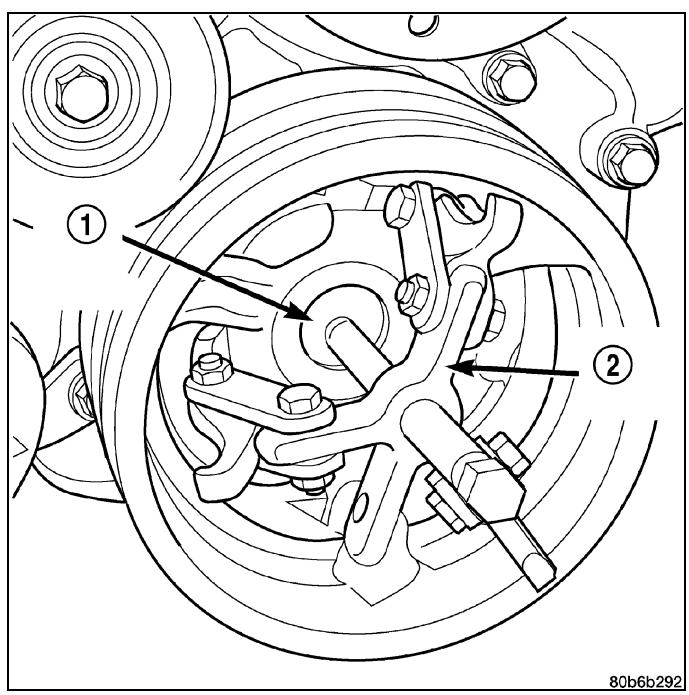

11. Using Crankshaft Front Seal Remover 8511 (1), remove crankshaft front seal.

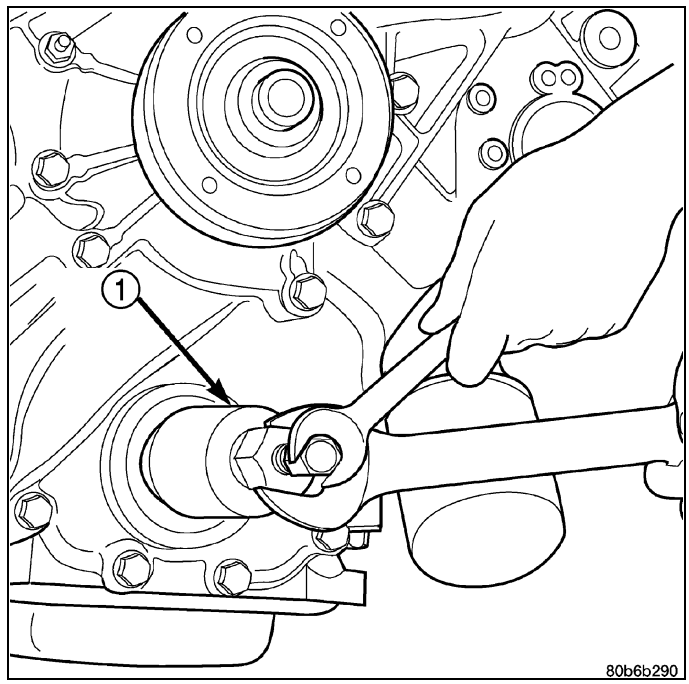

Installation

CAUTION: To prevent severe damage to the Crankshaft, Damper or Special Tool 8512A**, thoroughly clean the damper bore and the crankshaft nose before installing Damper.**

1. Using Seal Installer 8348 and Damper Installer 8512A (2,3), install crankshaft front seal.
2. Install vibration damper (Refer to 09 - Engine/Engine Block/DAMPER, Vibration - Installation).
3. Install radiator cooling fan and shroud (Refer to 07 - Cooling/Engine/FAN, Cooling - Installation).
4. Install upper radiator hose.
5. Install A/C compressor and tighten fasteners to 54 N·m (40 ft. lbs.).
6. Install accessory drive belt refer (Refer to 07 - Cooling/Accessory Drive/BELT, Serpentine - Installation).
7. Refill cooling system (Refer to 07 - Cooling - Standard Procedure).
8. Connect negative cable to battery.

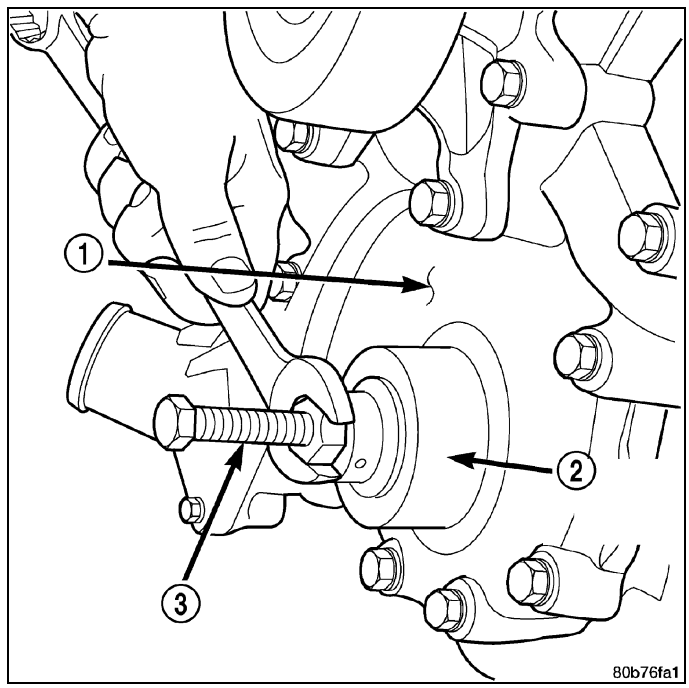

SEAL, Crankshaft Oil, Rear

Diagnosis and Testing

Since it is sometimes difficult to determine the source of an oil leak in the rear seal area of the engine, a more involved inspection is necessary. The following steps should be followed to help pinpoint the source of the leak.

If the leakage occurs at the crankshaft rear oil seal area:

1. Disconnect the battery.
2. Raise the vehicle.

3. Remove torque converter or clutch housing cover and inspect rear of block for evidence of oil. Use a black light to check for the oil leak:
   a. Circular spray pattern generally indicates seal leakage or crankshaft damage.
   b. Where leakage tends to run straight down, possible causes are a porous block, oil galley pipe plugs, oil filter runoff, and main bearing cap to cylinder block mating surfaces. See Engine, for proper repair procedures of these items.
4. If no leaks are detected, pressurized the crankcase as outlined in the section, Inspection (Engine oil Leaks in general)

CAUTION: Do not exceed 20.6 kPa (3 psi).

5. If the leak is not detected, very slowly turn the crankshaft and watch for leakage. If a leak is detected between the crankshaft and seal while slowly turning the crankshaft, it is possible the crankshaft seal surface is damaged. The seal area on the crankshaft could have minor nicks or scratches that can be polished out with emery cloth.

CAUTION: Use extreme caution when crankshaft polishing is necessary to remove minor nicks or scratches. The crankshaft seal flange is specially machined to complement the function of the rear oil seal.

6. For bubbles that remain steady with shaft rotation, no further inspection can be done until disassembled. (Refer to 09 - Engine - Diagnosis and Testing), under the Oil Leak row, for components inspections on possible causes and corrections.
7. After the oil leak root cause and appropriate corrective action have been identified, (Refer to 09 - Engine/Engine Block/SEAL, Crankshaft Oil - Removal).

Removal

NOTE: This procedure can be performed in vehicle.

1. If being performed in vehicle, remove the transmission.
2. Remove the flexplate (Refer to 09 - Engine/Engine Block/FLEXPLATE - Removal).

NOTE: The crankshaft oil seal CAN NOT be reused after removal.

NOTE: The crankshaft rear oil seal remover 8506 **must be installed deeply into the seal. Continue to tighten the removal tool into the seal until the tool can not be turned farther. Failure to install tool correctly the first time will cause tool to pull free of seal without removing seal from engine.**

3. Using Seal Remover 8506 (2), remove the crankshaft rear oil seal (1).

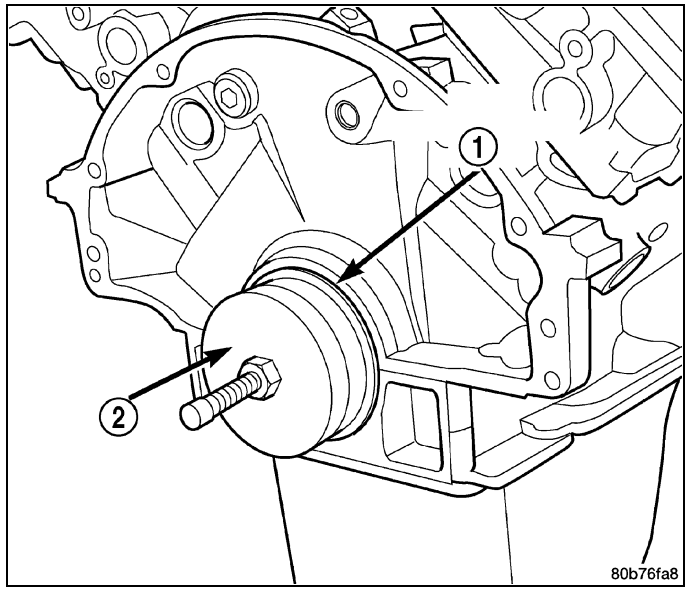

Installation

1. Lubricate the crankshaft flange with engine oil.
2. Position the magnetic seal guide 8349-2 onto the crankshaft rear face. Then position the crankshaft rear oil seal (1) onto the guide (2).

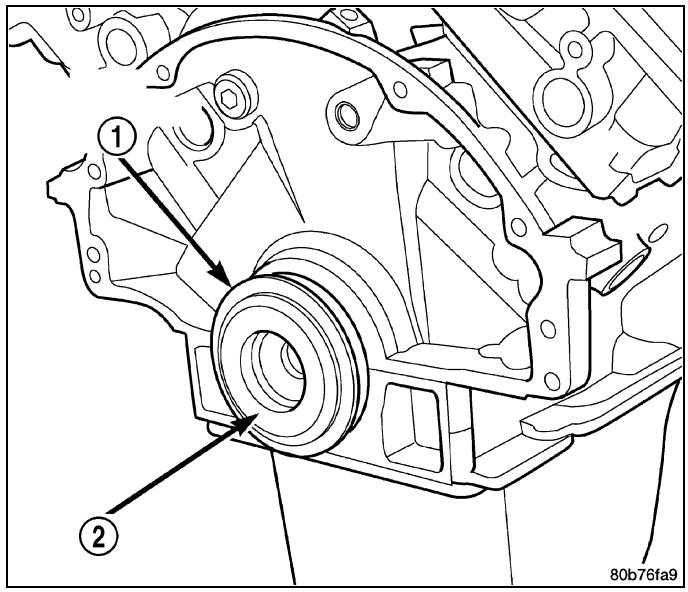

3. Using Crankshaft Rear Oil Seal Installer 8349 (2) and Driver Handle C-4171 (3), with a hammer, tap the seal (1) into place. Continue to tap on the driver handle until the seal installer seats against the cylinder block crankshaft bore.
4. Install the flexplate.
5. Install the transmission.

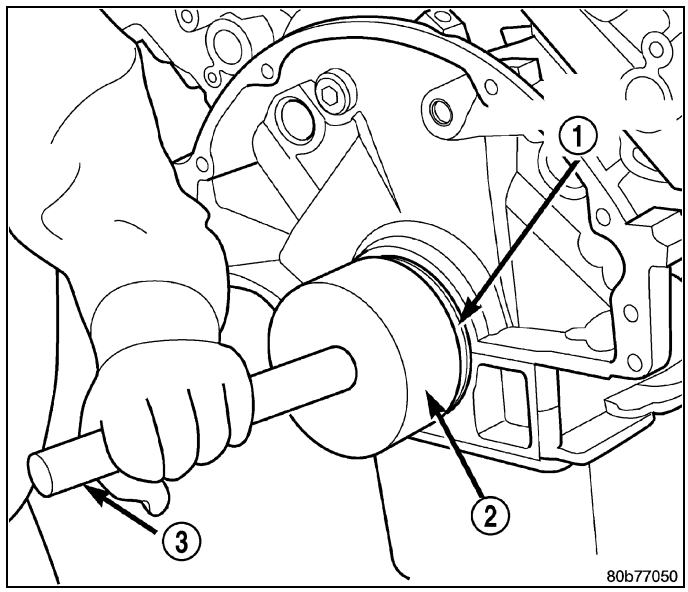

ENGINE MOUNTING

TABLE OF CONTENTS

page

ENGINE MOUNTING
INSULATOR, ENGINE MOUNT, REAR
REMOVAL 98
INSTALLATION 98

page

INSULATOR, ENGINE MOUNT, FRONT
REMOVAL 98
INSTALLATION 100

Engine Mounting

INSULATOR, Engine Mount, Rear

Removal

1. Raise the vehicle on a hoist.
2. Using a suitable jack, support transmission.
3. Remove the nuts from the transmission mount (1).
4. Remove the two bolts that attach the transmission mount to the engine bracket.
5. Raise the transmission enough to remove the mount from the crossmember (2).
6. Remove the mount (1).

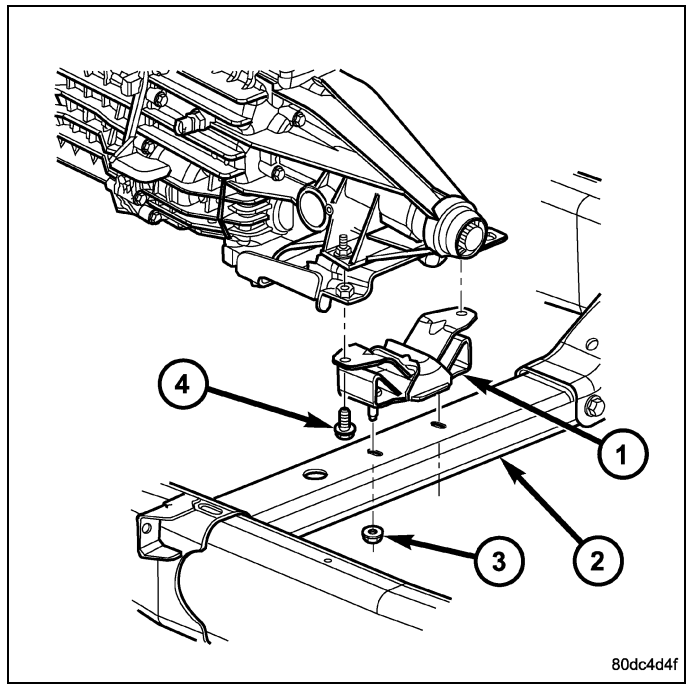

Installation

NOTE: Threadlocking compound must be applied to the bolts before installation.

1. Install the two bolts that attach the transmission mount to the transmission bracket.
2. Torque the bolts to 61N·m (45 ft.lbs.) torque.
3. Lower the transmission so the transmission mount rests on the crossmember, and the studs of the transmission mount are aligned in the slots in the crossmember.
4. Install the nuts onto the transmission mount studs through the crossmember access slot.
5. Torque the nuts to 54N·m (40 ft. lbs.).

INSULATOR, Engine Mount, Front

Removal

2WD

1. Disconnect the negative cable from the battery.

CAUTION: Remove the viscous fan before raising engine. Failure to do so may cause damage to the fan blade, fan clutch and fan shroud.

2. Remove the cooling fan.
3. Raise the vehicle.
4. Remove the engine oil filter.
5. Remove the oil drain trough.
6. Support the engine with a suitable jack and a block of wood across the full width of the engine oil pan.
7. Support the front axle with a suitable jack.
8. Remove the (4) bolts that attach the engine mounts to the front axle.
9. Remove the (3) bolts that attach the front axle to the left engine bracket.

10. Lower the front axle.
11. Remove the through bolts
12. Raise the engine far enough to be able to remove the left and right engine mounts.
13. Remove the (8) mount to engine attaching bolts
14. Remove the engine mounts.

4WD

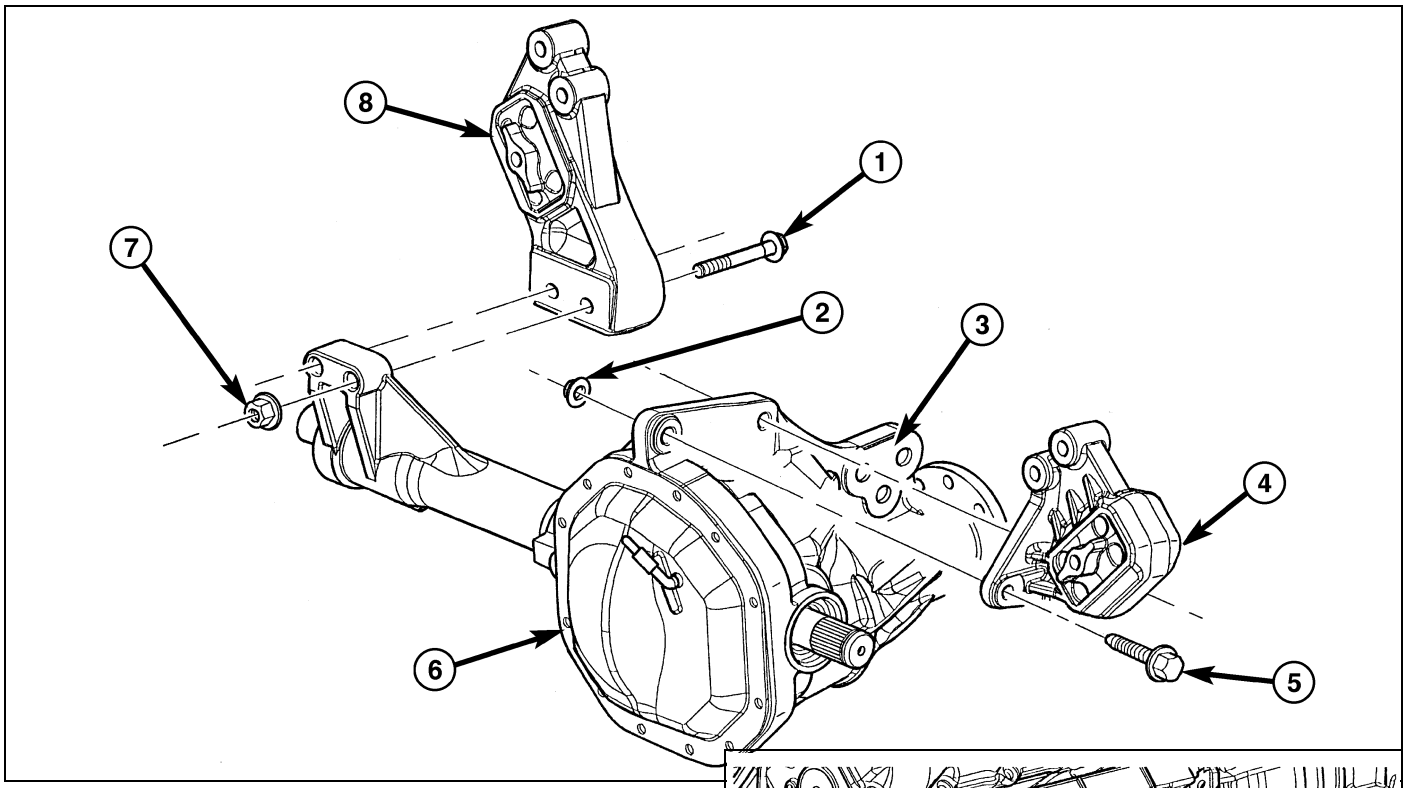

1. Disconnect the negative cable from the battery.

CAUTION: Remove the viscous fan before raising engine
fan clutch and fan shroud.

2. Remove the cooling fan.
3. Raise the vehicle.
4. Remove the skid plate.
5. Remove the front crossmember.
6. Remove the engine oil filter.
7. Remove the oil drain trough.
8. Support the engine with a suitable jack and a block of wo
9. Support the front axle with a suitable jack.
10. Remove the 4 bolts that attach the engine mounts to the
11. Remove the 3 bolts that attach the front axle to the left e
12. Lower the front axle.
13. Remove the 6 through bolts
14. Raise the engine far enough to be able to remove the lef
15. Remove the mounts.

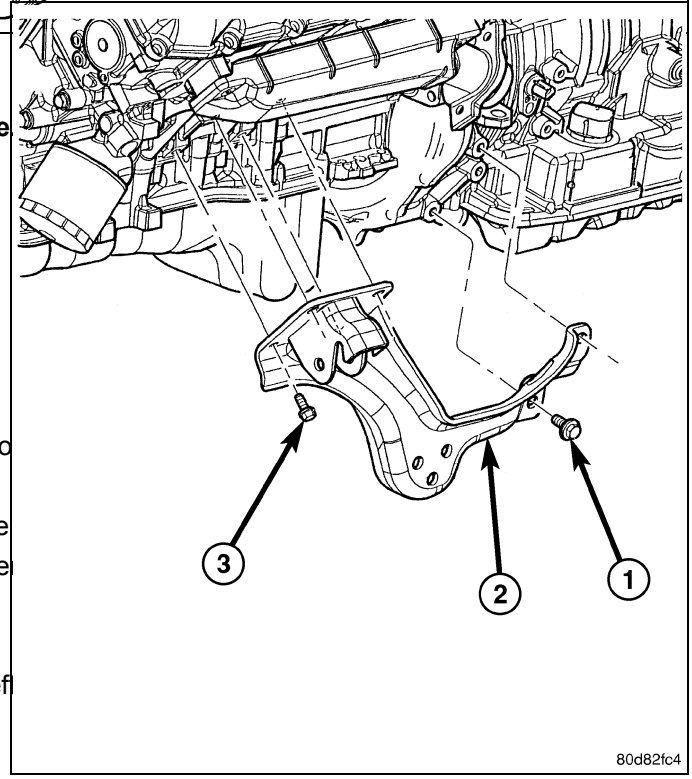

16. Remove the engine mount brackets (2).

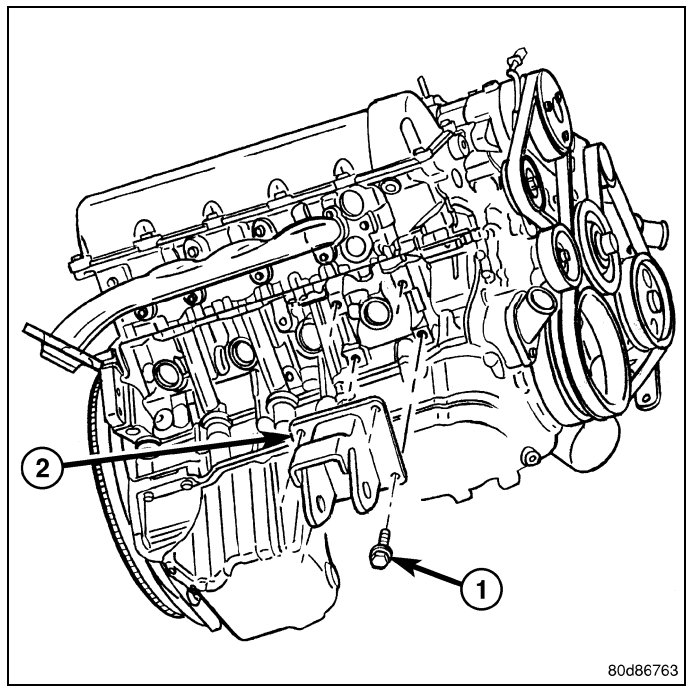

Installation

2WD

NOTE: For mount to engine block and left engine bracket to front axle bolts, apply Mopar® Lock and Seal Adhesive, Medium Strength Threadlocker.

1. Install the right and left side engine mounts to the engine block with (8) bolts. Torque bolts to 54 N·m (40 ft. lbs.).
2. Insert the (2) through bolts into the right and left side engine mounts and loose assemble the two nuts onto the through bolts.
3. Lower the engine until the through bolts rest onto the slots in the frame brackets.
4. Tighten the through bolt nuts to 94 N·m (70 ft. lbs.).
5. Install the oil drain trough .
6. Install the engine oil filter.
7. Lower the vehicle.
8. Install the cooling fan.
9. Reconnect the negative battery cable.

4WD

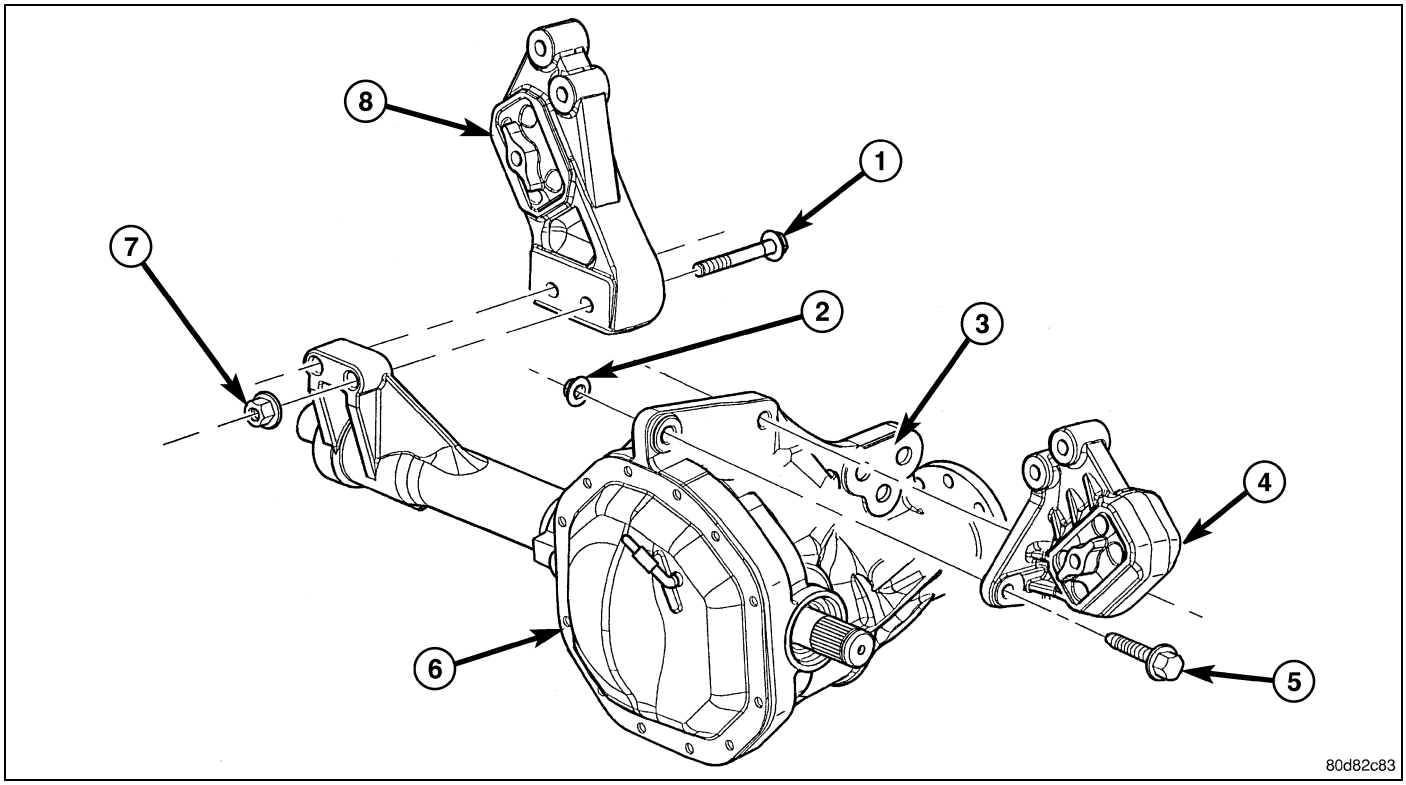

NOTE: For mount to engine block and left engine bracket to front axle bolts, apply Mopar® Lock and Seal Adhesive, Medium Strength Threadlocker.

1. Install the right and left side engine mounts (4, 8)to the front axle. Torque nuts to 94 N·m (70 ft. lbs.).
2. Raise the front axle into the frame and install the left and right side through bolts. Torque nuts to 94 N·m (70 ft. lbs.).
3. Insert the two upper through bolts into the right and left side engine mounts and loose assemble the two nuts onto the through bolts.
4. Lower the engine until the left and right side engine brackets rest on the through bolts, and the lower engine bracket through holes align with the engine mounts, and the left engine bracket holes align with the front axle slots.
5. Loose assemble the 3 bolts that attach the front axle to the left engine bracket.
6. Loose assemble the lower through bolts.
7. Torque the nuts for the 4 through bolts to 101 N·m (75 ft. lbs.).
8. Torque the 3 bolts that attach the front axle to the left engine bracket to 101 N·m (75 ft. lbs.).
9. Install the oil drain trough.
10. Install the engine oil filter.
11. Install the front crossmember.
12. Install the skid plate.
13. Lower the vehicle.
14. Install the cooling fan.
15. Reconnect the negative battery cable.

LUBRICATION

TABLE OF CONTENTS

page

LUBRICATION
- DESCRIPTION 104
- OPERATION 104
- DIAGNOSIS AND TESTING
  - ENGINE OIL LEAK 106
  - CHECKING ENGINE OIL PRESSURE 107
  - DIAGNOSIS AND TESTING - REAR SEAL AREA LEAKS 107
- **FILTER, ENGINE OIL**
  - REMOVAL 108
  - INSTALLATION 108
- **OIL**
  - STANDARD PROCEDURE 109
- **PAN, OIL**
  - DESCRIPTION 110
  - REMOVAL 110
  - CLEANING 111
  - INSPECTION 112
  - INSTALLATION 112

page

PUMP, ENGINE OIL
- REMOVAL 113
- DISASSEMBLY 113
- INSPECTION 113
- ASSEMBLY 115
- INSTALLATION 115

SWITCH, OIL PRESSURE
- DESCRIPTION 116
- OPERATION 116
- REMOVAL 116
- INSTALLATION 117

Lubrication

Description

The lubrication system is a full flow filtration pressure feed type.

Operation

Engine Lubrication Flow Chart - Block: Table 1

FROM	TO
Oil Pickup Tube	Oil Pump
Oil Pump	Oil Filter
Oil Filter	Block Main Oil Gallery
Block Main Oil Gallery	1. Crankshaft Main Journal 2. Left Cylinder Head* 3. Right Cylinder Head* 4. Counterbalance Shaft Rear Journal
Crankshaft Main Journals	Crankshaft Rod Journals
Crankshaft Number One Main Journal	1. Front Timing Chain Idler Shaft 2. Counterbalance Shaft - Front Journal 3. Both Secondary Chain Tensioners
Left Cylinder Head	Refer to Engine Lubrication Flow Chart - Cylinder Heads: Table 2
Right Cylinder Head	Refer to Engine Lubrication Flow Chart - Cylinder Heads: Table 2
* The cylinder head gaskets have an oil restricter to control oil flow to the cylinder heads	

Engine Lubrication Flow Chart - Cylinder Heads: Table 2

FROM	TO
Cylinder Head Oil Port (in bolt hole)	Diagonal Cross Drilling to Main Oil Gallery
Main Oil Gallery (drilled through head from rear to front)	1. Base of Camshaft Towers 2. Lash Adjuster Towers
Base of Camshaft Towers	Vertical Drilling Through Tower to Camshaft Bearings**
Lash Adjuster Towers	Diagonal Drillings to Hydraulic Lash Adjuster Pockets
** The number three camshaft bearing journal feeds oil into the hollow camshaft tubes. Oil is routed to the intake lobes, which have oil passages drilled into them to lubricate the rocker arms.	

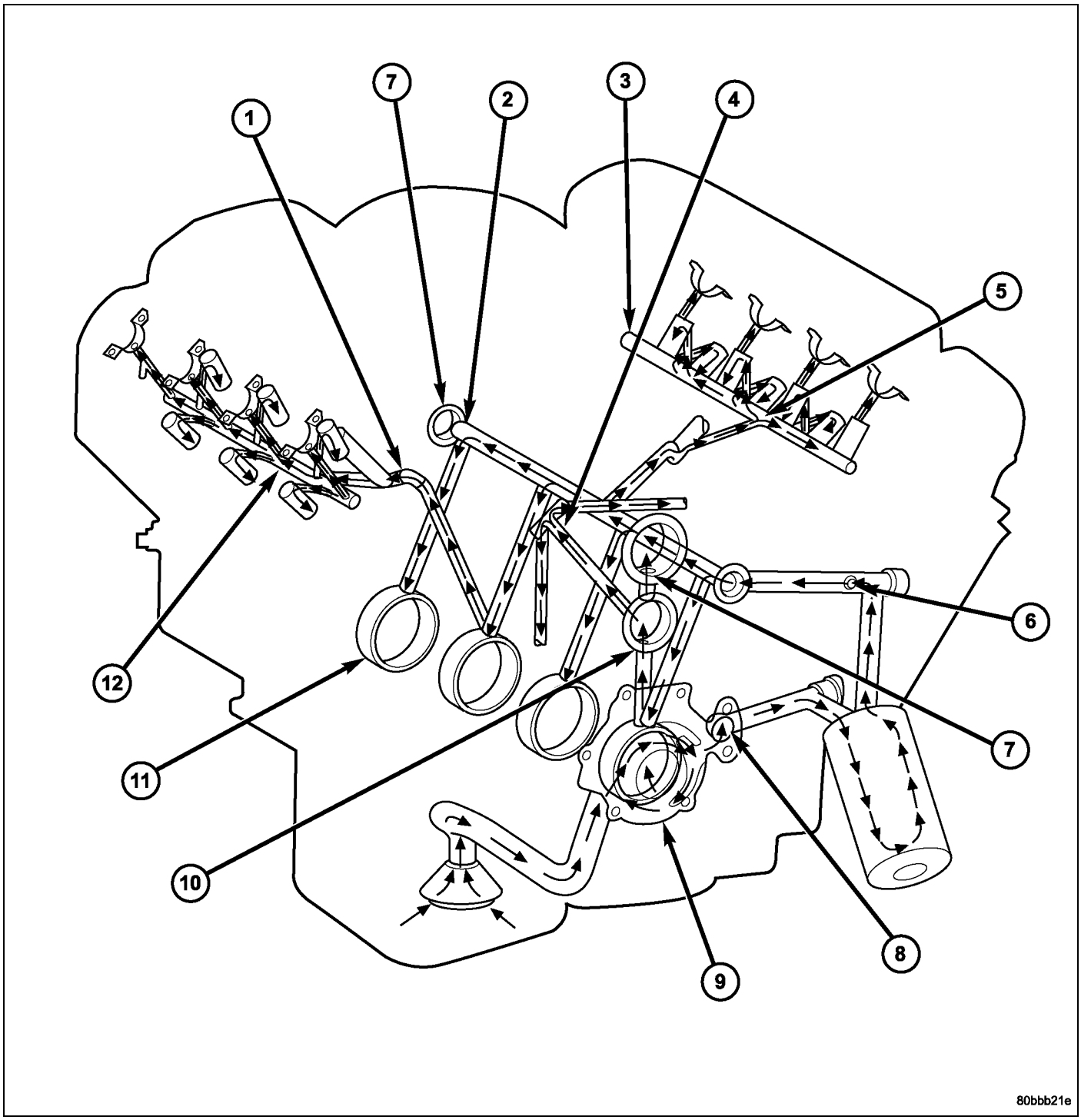

Oil from the oil pan is pumped by a gerotor type oil pump (9) directly mounted to the crankshaft nose. Oil pressure is controlled by a relief valve mounted inside the oil pump housing.

The camshaft exhaust valve lobes and rocker arms are lubricated through a small hole in the rocker arm; oil flows through the lash adjuster then through the rocker arm and onto the camshaft lobe. Due to the orientation of the rocker arm, the camshaft intake lobes are not lubed in the same manner as the exhaust lobes. The intake lobes are lubed through internal passages in the camshaft. Oil flows through a bore in the No. 3 camshaft bearing bore, and as the camshaft turns, a hole in the camshaft aligns with the hole in the camshaft bore allowing engine oil to enter the camshaft tube . The oil then exits through 1.6mm (0.063 in.) holes drilled into the intake lobes, lubricating the lobes and the rocker arms.

Diagnosis and Testing

ENGINE OIL LEAK

Begin with a thorough visual inspection of the engine, particularly at the area of the suspected leak. If an oil leak source is not readily identifiable, the following steps should be followed:

1. Do not clean or degrease the engine at this time because some solvents may cause rubber to swell, temporarily stopping the leak.
2. Add an oil soluble dye (use as recommended by manufacturer). Start the engine and let idle for approximately 15 minutes. Check the oil dipstick to make sure the dye is thoroughly mixed as indicated with a bright yellow color under a black light.
3. Using a black light, inspect the entire engine for fluorescent dye, particularly at the suspected area of oil leak. If the oil leak is found and identified, repair per service manual instructions.
4. If dye is not observed, drive the vehicle at various speeds for approximately 24 km (15 miles), and repeat inspection.

   If the oil leak source is not positively identified at this time, proceed with the air leak detection test method.

Air Leak Detection Test Method

1. Disconnect the breather cap to air cleaner hose at the breather cap end. Cap or plug breather cap nipple.
2. Remove the PCV valve from the cylinder head cover. Cap or plug the PCV valve grommet.
3. Attach an air hose with pressure gauge and regulator to the dipstick tube.

CAUTION: Do not subject the engine assembly to more than 20.6 kPa (3 PSI) of test pressure.

4. Gradually apply air pressure from 1 psi to 2.5 psi maximum while applying soapy water at the suspected source. Adjust the regulator to the suitable test pressure that provide the best bubbles which will pinpoint the leak source. If the oil leak is detected and identified, repair per service manual procedures.
5. If the leakage occurs at the rear oil seal area, refer to the section, Inspection for Rear Seal Area Leak.
6. If no leaks are detected, turn off the air supply and remove the air hose and all plugs and caps. Install the PCV valve and breather cap hose.
7. Clean the oil off the suspect oil leak area using a suitable solvent. Drive the vehicle at various speeds approximately 24 km (15 miles). Inspect the engine for signs of an oil leak by using a black light.

INSPECTION FOR REAR SEAL AREA LEAKS

Since it is sometimes difficult to determine the source of an oil leak in the rear seal area of the engine, a more involved inspection is necessary. The following steps should be followed to help pinpoint the source of the leak.

If the leakage occurs at the crankshaft rear oil seal area:

1. Disconnect the battery.
2. Raise the vehicle.
3. Remove torque converter or clutch housing cover and inspect rear of block for evidence of oil. Use a black light to check for the oil leak:
   a. Circular spray pattern generally indicates seal leakage or crankshaft damage.
   b. Where leakage tends to run straight down, possible causes are a porous block, oil galley pipe plugs, oil filter runoff, and main bearing cap to cylinder block mating surfaces.
4. If no leaks are detected, pressurize the crankcase as outlined in the, Inspection (Engine oil Leaks in general)

CAUTION: Do not exceed 20.6 kPa (3 psi).

5. If the leak is not detected, very slowly turn the crankshaft and watch for leakage. If a leak is detected between the crankshaft and seal while slowly turning the crankshaft, it is possible the crankshaft seal surface is damaged. The seal area on the crankshaft could have minor nicks or scratches that can be polished out with emery cloth.

CAUTION: Use extreme caution when crankshaft polishing is necessary to remove minor nicks and scratches. The crankshaft seal flange is especially machined to complement the function of the rear oil seal.

6. For bubbles that remain steady with shaft rotation, no further inspection can be done until disassembled.

CHECKING ENGINE OIL PRESSURE

1. Remove oil pressure sending unit (2) and install gauge assembly C-3292A.
2. Run engine until thermostat opens.
3. Oil Pressure:

- Curb Idle - 25 kPa (4 psi) minimum
- 3000 rpm - 170 - 758 kPa (25 - 110 psi)

4. If oil pressure is 0 at idle, shut off engine. Check for a clogged oil pick-up screen or a pressure relief valve stuck open.

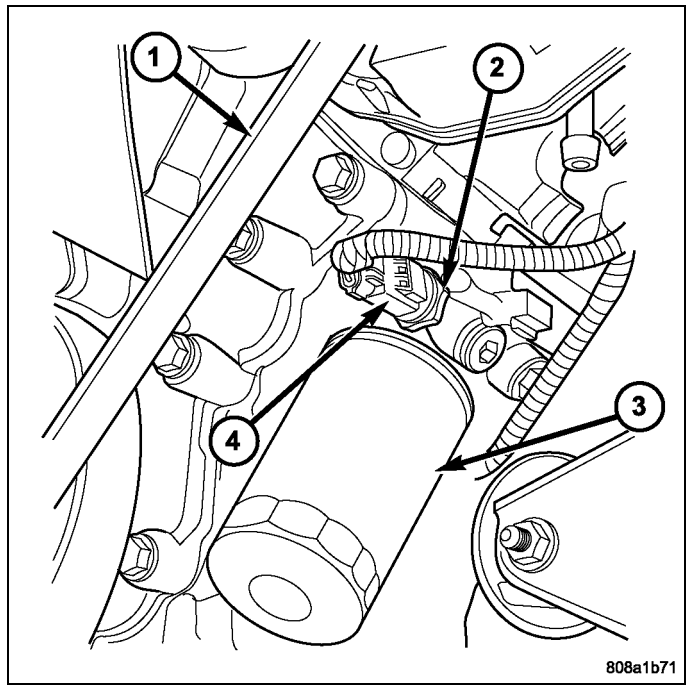

DIAGNOSIS AND TESTING - REAR SEAL AREA LEAKS

Since it is sometimes difficult to determine the source of an oil leak in the rear seal area of the engine, a more involved inspection is necessary. The following steps should be followed to help pinpoint the source of the leak.

If the leakage occurs at the crankshaft rear oil seal area:

1. Disconnect the battery.
2. Raise the vehicle.
3. Remove torque converter or clutch housing cover and inspect rear of block for evidence of oil. Use a black light to check for the oil leak:
   a. Circular spray pattern generally indicates seal leakage or crankshaft damage.
   b. Where leakage tends to run straight down, possible causes are a porous block, oil galley pipe plugs, oil filter runoff, and main bearing cap to cylinder block mating surfaces. See Engine, for proper repair procedures of these items.
4. If no leaks are detected, pressurized the crankcase as outlined in the section, Inspection (Engine oil Leaks in general)

CAUTION: Do not exceed 20.6 kPa (3 psi).

5. If the leak is not detected, very slowly turn the crankshaft and watch for leakage. If a leak is detected between the crankshaft and seal while slowly turning the crankshaft, it is possible the crankshaft seal surface is damaged. The seal area on the crankshaft could have minor nicks or scratches that can be polished out with emery cloth.

CAUTION: Use extreme caution when crankshaft polishing is necessary to remove minor nicks or scratches. The crankshaft seal flange is specially machined to complement the function of the rear oil seal.

6. For bubbles that remain steady with shaft rotation, no further inspection can be done until disassembled. (Refer to 09 - Engine - Diagnosis and Testing), under the Oil Leak row, for components inspections on possible causes and corrections.
7. After the oil leak root cause and appropriate corrective action have been identified, (Refer to 09 - Engine/Engine Block/SEAL, Crankshaft Oil - Removal).

FILTER, Engine Oil

Removal

All engines are equipped with a high quality full-flow, disposable type oil filter (1). Chrysler Corporation recommends a Mopar® or equivalent oil filter be used.

1. Position a drain pan under the oil filter.
2. Using a suitable oil filter wrench loosen filter.
3. Rotate the oil filter counterclockwise to remove it from the cylinder block oil filter boss.
4. When filter separates from cylinder block oil filter boss, tip gasket end upward to minimize oil spill. Remove filter from vehicle.

NOTE: Make sure filter gasket was removed with filter.

5. With a wiping cloth, clean the gasket sealing surface of oil and grime.

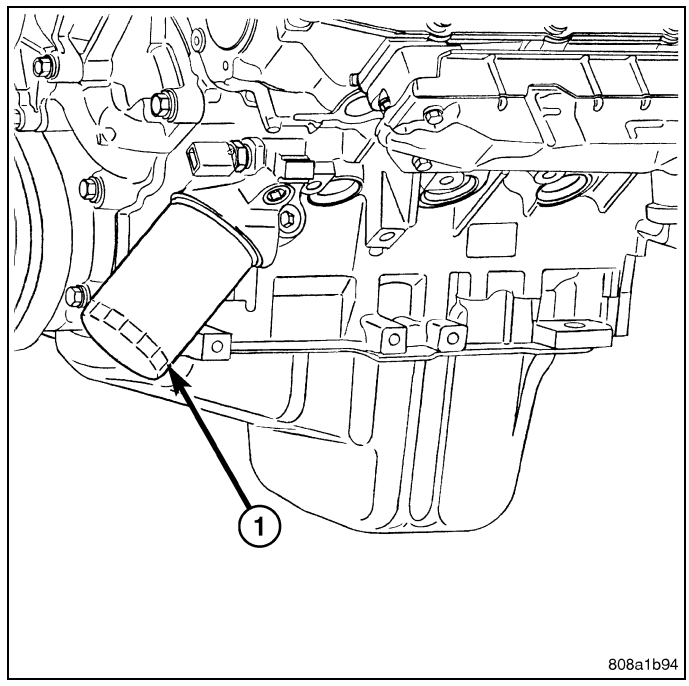

Installation

1. Lightly lubricate oil filter gasket (2) with engine oil.
2. Thread filter (3) onto adapter nipple. When gasket makes contact with sealing surface, hand tighten filter one full turn, do not over tighten.
3. Add oil, verify crankcase oil level and start engine. Inspect for oil leaks.

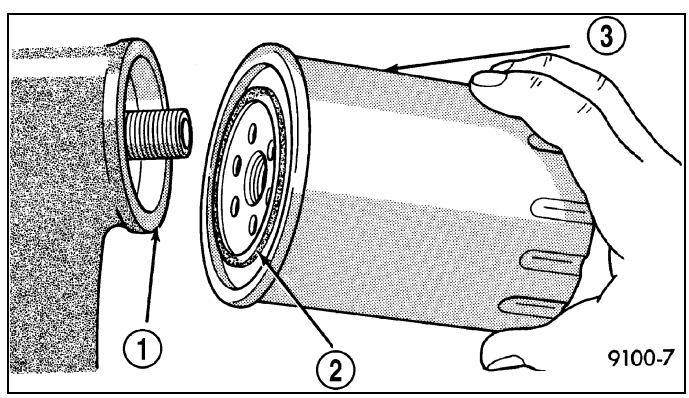

OIL

Standard Procedure

The engine oil level indicator (1) is located at the right rear of the engine on the 3.7L/4.7L engines.

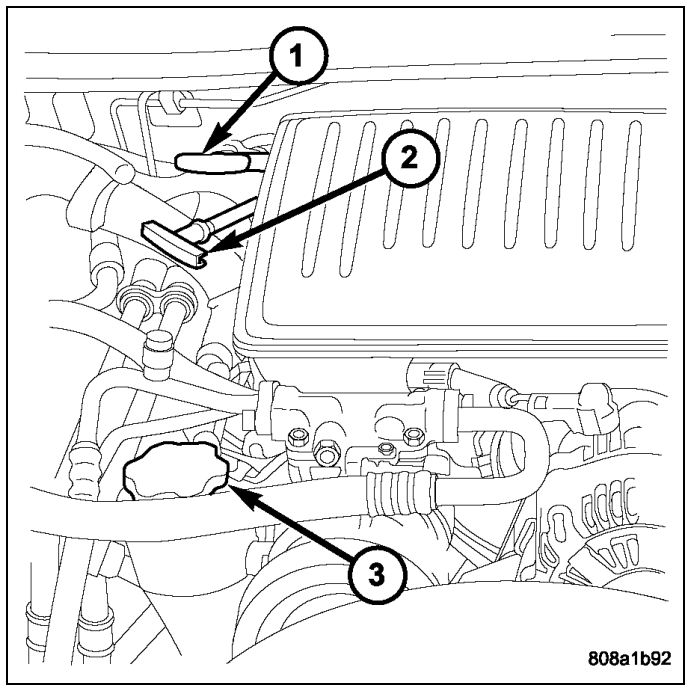

CRANKCASE OIL LEVEL INSPECTION

CAUTION: Do not overfill crankcase with engine oil, pressure loss or oil foaming can result.

Inspect engine oil level approximately every 800 kilometers (500 miles). Unless the engine has exhibited loss of oil pressure, run the engine for about five minutes before checking oil level. Checking engine oil level on a cold engine is not accurate.

To ensure proper lubrication of an engine, the engine oil must be maintained at an acceptable level. The acceptable levels are indicated between the ADD and SAFE marks on the engine oil dipstick.

1. Position vehicle on level surface.
2. With engine OFF, allow approximately ten minutes for oil to settle to bottom of crankcase, remove engine oil dipstick.
3. Wipe dipstick clean.
4. Install dipstick and verify it is seated in the tube.
5. Remove dipstick, with handle held above the tip, take oil level reading.
6. Add oil only if level is below the ADD mark on dipstick.

ENGINE OIL CHANGE

Change engine oil at mileage and time intervals described in Maintenance Schedules.

Run engine until achieving normal operating temperature.

1. Position the vehicle on a level surface and turn engine off.
2. Hoist and support vehicle on safety stands.
3. Remove oil fill cap.
4. Place a suitable drain pan under crankcase drain.
5. Remove drain plug from crankcase and allow oil to drain into pan. Inspect drain plug threads for stretching or other damage. Replace drain plug if damaged.
6. Install drain plug in crankcase.
7. Lower vehicle and fill crankcase with specified type and amount of engine oil described in this section.
8. Install oil fill cap.
9. Start engine and inspect for leaks.
10. Stop engine and inspect oil level.

NOTE:

Care should be exercised when disposing used engine oil after it has been drained from a vehicle engine. Refer to the WARNING at beginning of this section.

PAN, Oil

Description

The engine oil pan (1) is made of laminated steel and has a single plane sealing surface. The sandwich style oil pan gasket has an integrated windage tray (2) and steel carrier. The sealing area of the gasket is molded with rubber and is designed to be reused as long as the gasket is not cut, torn or ripped.

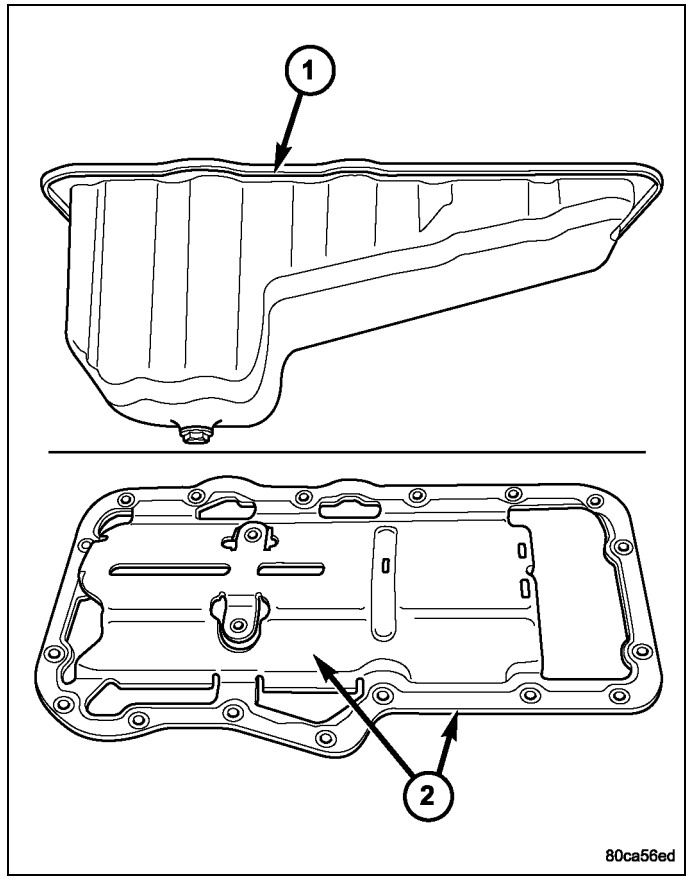

Removal

1. Disconnect the negative battery cable.
2. Install engine support fixture special tool 8534B. **Do not raise engine at this time.**
3. Loosen both left and right side engine mount through bolts. Do not remove bolts.
4. Remove the structural dust cover, if equipped.
5. Drain engine oil.
6. Disconnect transmission fluid cooler lines at radiator, transmission fittings and clips.

NOTE: When disconnecting the transmission oil cooler lines, it is necessary to replace the line clip that is located on the oil pan stud. The retention force of the clip is severely degraded upon removal.

7. Remove the front crossmember(Refer to 13 - Frame and Bumpers/Frame/CROSSMEMBER - Removal) .

CAUTION: Only raise the engine enough to provide clearance for oil pan removal. Check for proper clearance at fan shroud to fan and cowl to intake manifold.

8. Raise engine using special tool 8534B to provide clearance to remove oil pan.
9. Remove the oil pan mounting bolts (1 -17) and oil pan.

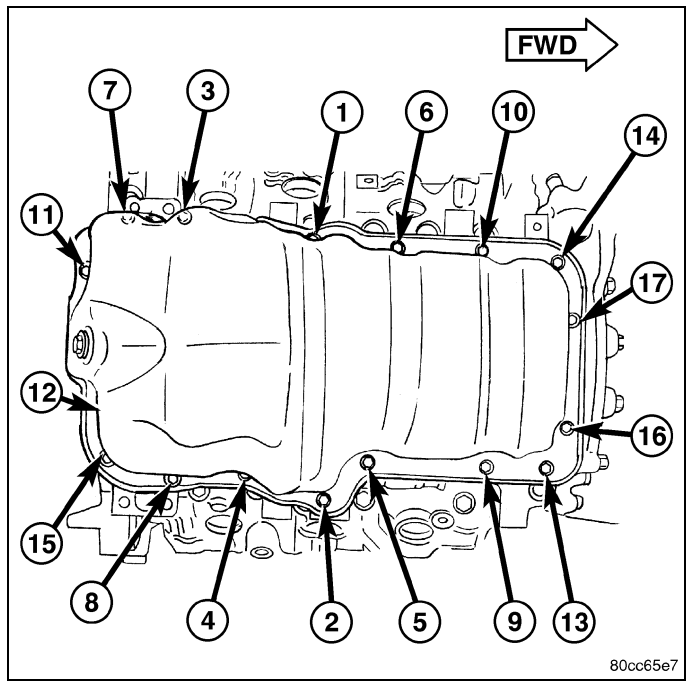

NOTE: Do not pry on oil pan (1) or oil pan gasket (2). Gasket is integral to engine windage tray and does not come out with oil pan.

10. Unbolt oil pump pickup tube and remove tube.
11. Inspect the integral windage tray and gasket (2) and replace as needed.

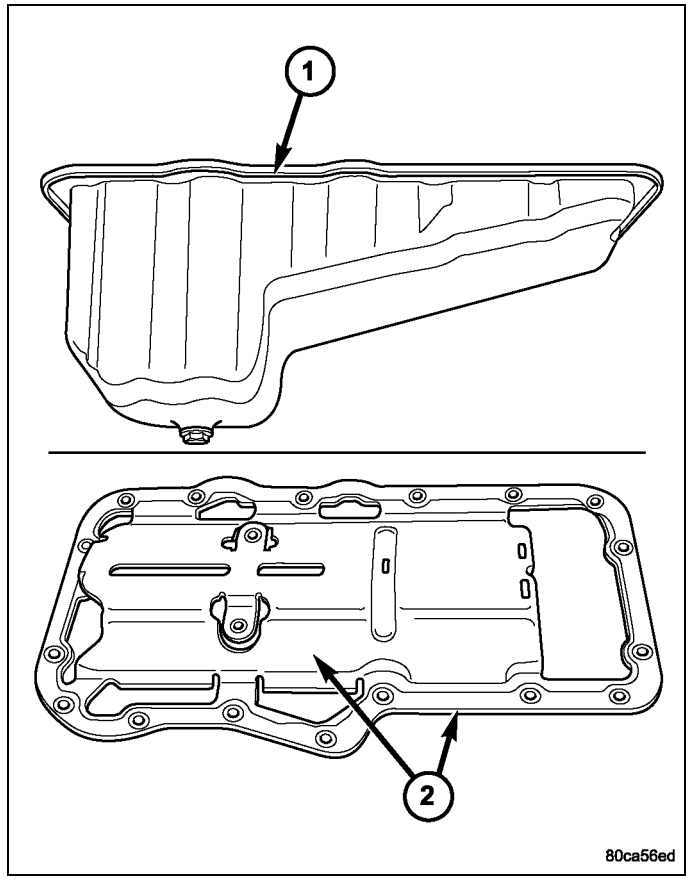

Cleaning

1. Clean oil pan in solvent and wipe dry with a clean cloth.
2. Clean the oil pan gasket surface. **DO NOT** use a grinder wheel or other abrasive tool to clean sealing surface.
3. Clean oil screen and tube thoroughly in clean solvent.

Inspection

1. Inspect oil drain plug and plug hole for stripped or damaged threads. Repair as necessary.
2. Inspect the oil pan mounting flange for bends or distortion. Straighten flange, if necessary.

Installation

1. Clean the oil pan gasket mating surface of the bedplate and oil pan .
2. Inspect integrated oil pan gasket (2), and replace as necessary.
3. Position the integrated oil pan gasket/windage tray assembly (2).
4. Install the oil pickup tube to the engine. Tighten nuts to 28 N·m (20 ft. lbs.).

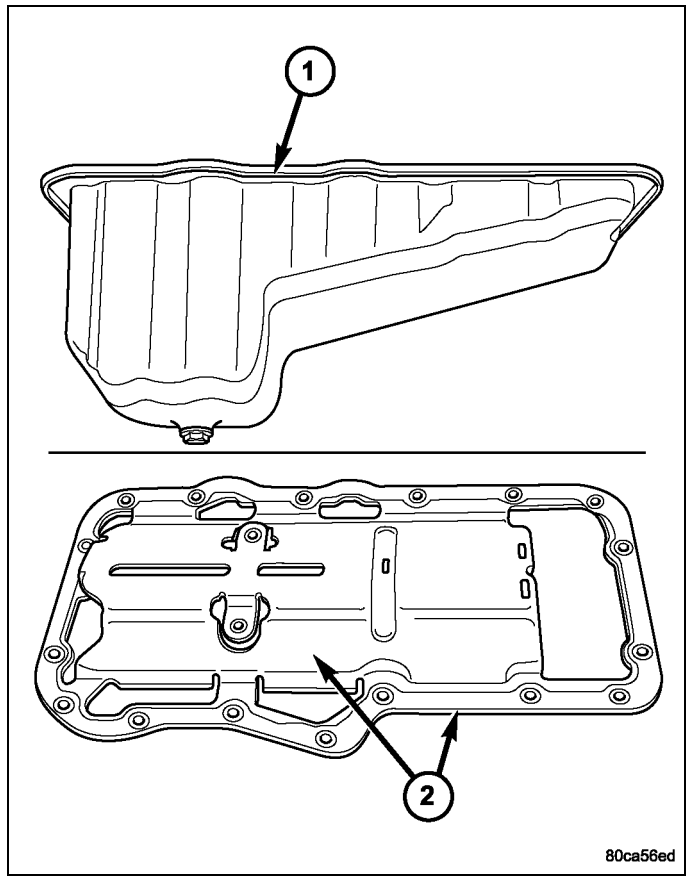

5. If removed, install stud at position No. 9.
6. Position the oil pan and install the mounting bolts and nut (1-17). Tighten the mounting bolts and nut to 15 N·m (11 ft. lbs.) in the sequence shown .
7. Lower the engine into mounts using special tool 8534B.
8. Install both the left and right side engine mount through bolts. Tighten the nuts to 68 N·m (50 ft. lbs.).
9. Remove special tool 8534B.
10. Connect cooler lines to radiator, transmission and clips.

NOTE: When connecting the transmission oil cooler lines, it is necessary to replace the line clip that is located on the oil pan stud. The retention force of the clip is severely degraded upon removal.

11. Install structural dust cover, if equipped.
12. Install the front crossmember(Refer to 13 - Frame and Bumpers/Frame/CROSSMEMBER - Installation).
13. Fill engine oil.
14. Reconnect the negative battery cable.
15. Start engine and check for leaks.

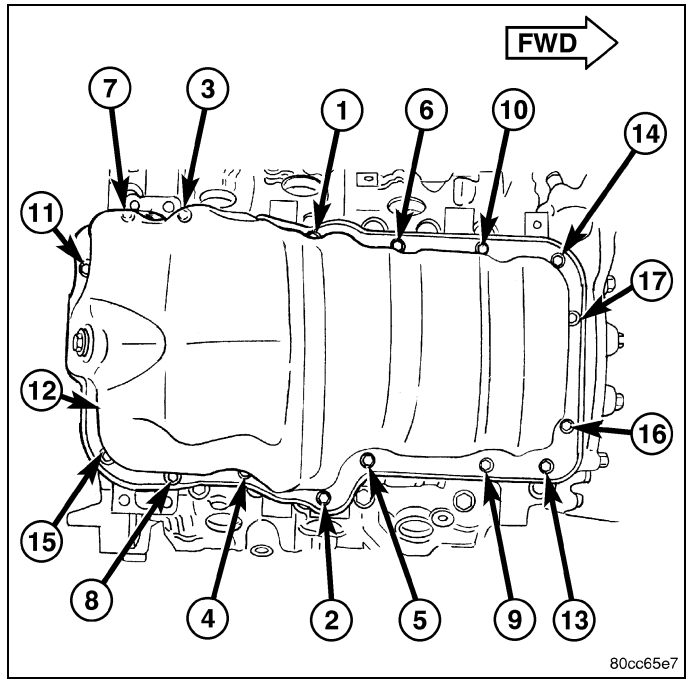

PUMP, Engine Oil

Removal

1. Remove the oil pan and pick-up tube (Refer to 09 - Engine/Lubrication/PAN, Oil - Removal).
2. Remove the timing chain cover (Refer to 09 - Engine/Valve Timing/COVER(S), Engine Timing - Removal) - REMOVAL).
3. Remove the timing chains and tensioners (Refer to 09 - Engine/Valve Timing/CHAIN and SPROCKETS, Timing - Removal).
4. Remove the four bolts, primary timing chain tensioner and the oil pump.

Disassembly

1. Remove oil pump cover screws and lift off cover plate.
2. Remove pump inner and outer rotors.

NOTE: Once the oil pressure relief valve, cup plug, and pin are removed, the pump assembly must be replaced.

3. If it is necessary to remove the pressure relief valve, drive the roll pin from pump housing and remove cup plug, spring and valve.

Inspection

CAUTION: The oil pump pressure relief valve and spring should not be removed from the oil pump. If these components are disassembled and or removed from the pump the entire oil pump assembly must be replaced.

1. Clean all parts thoroughly. Mating surface of the oil pump housing should be smooth. If the pump cover is scratched or grooved the oil pump assembly should be replaced.
2. Lay a straight edge across the pump cover surface (3). If a 0.025 mm (0.001 in.) feeler gauge (2) can be inserted between the cover and the straight edge the oil pump assembly should be replaced.

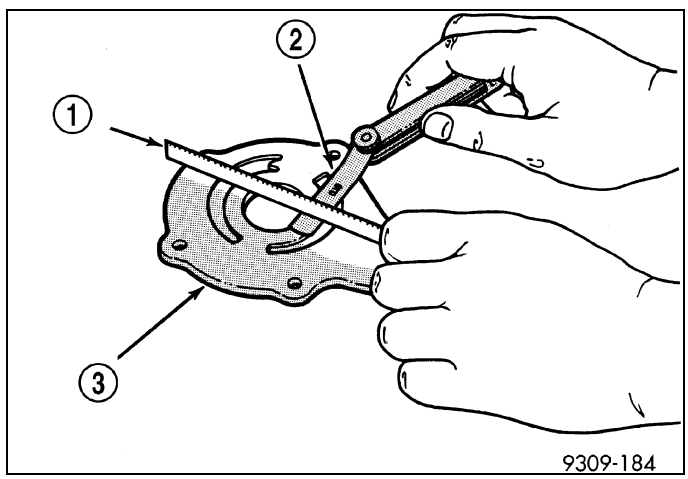

3. Measure the thickness of the outer rotor. If the outer rotor thickness measures at 12.005 mm (0.472 in.) or less the oil pump assembly must be replaced.
4. Measure the diameter of the outer rotor. If the outer rotor diameter measures at 85.925 mm (3.382 in.) or less the oil pump assembly must be replaced.

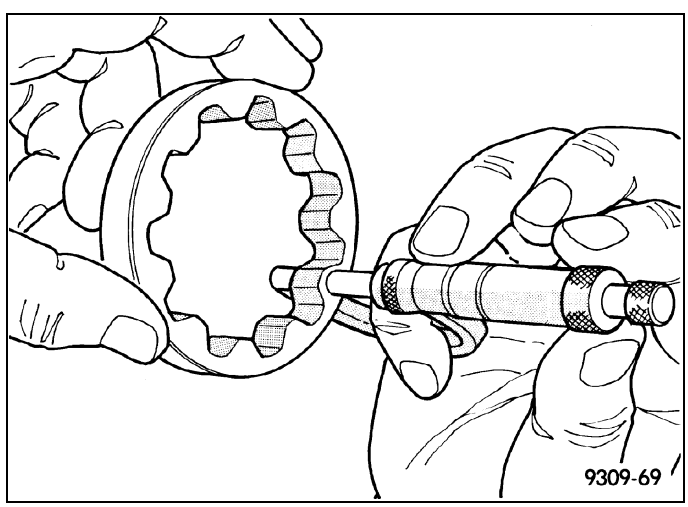

5. Measure the thickness of the inner rotor. If the inner rotor thickness measures at 12.005 mm (0.472 in.) or less then the oil pump assembly must be replaced.

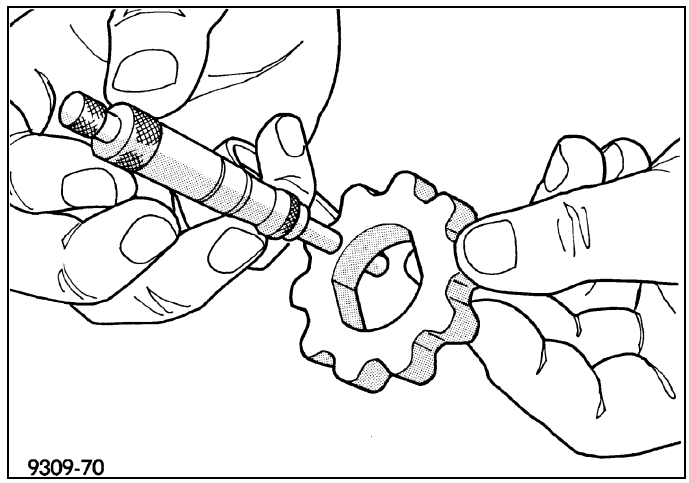

6. Slide outer rotor (2) into the body of the oil pump. Press the outer rotor to one side of the oil pump body and measure clearance between the outer rotor and the body. If the measurement is 0.235mm (0.009 in.) or more the oil pump assembly must be replaced.

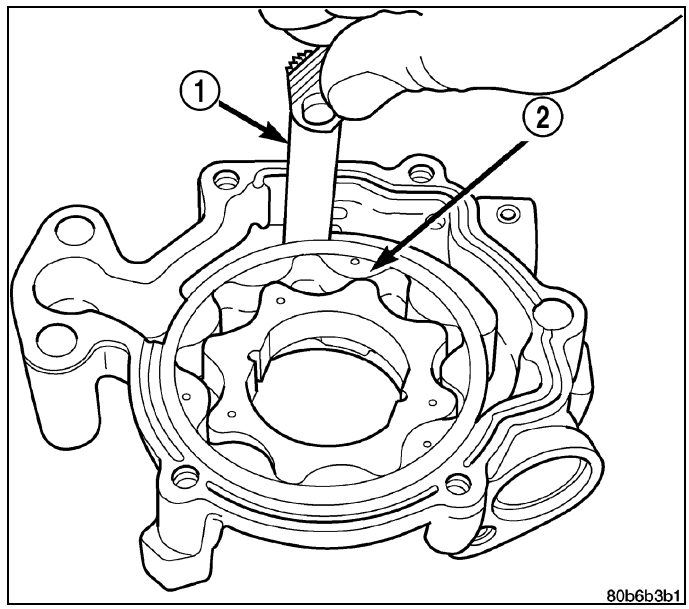

7. Install the inner rotor into the oil pump body. Measure the clearance between the inner (3) and outer (1) rotors. If the clearance between the rotors is .150 mm (0.006 in.) or more the oil pump assembly must be replaced.

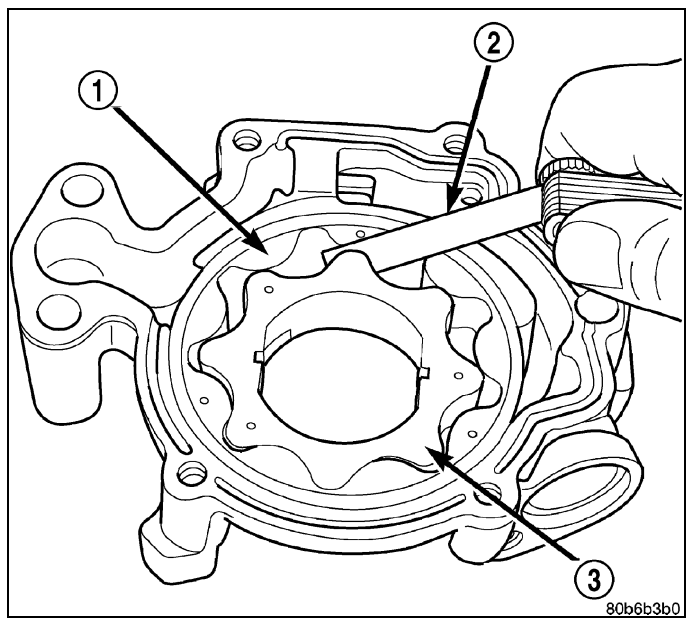

8. Place a straight edge (1) across the body of the oil pump (between the bolt holes), if a feeler gauge (2) of .095 mm (0.0038 in.) or greater can be inserted between the straightedge and the rotors, the pump must be replaced .

NOTE: The 3.7L/4.7L Oil pump is released as an assembly. There are no Chrysler part numbers for Sub-Assembly components. In the event the oil pump is not functioning or out of specification it must be replaced as an assembly.

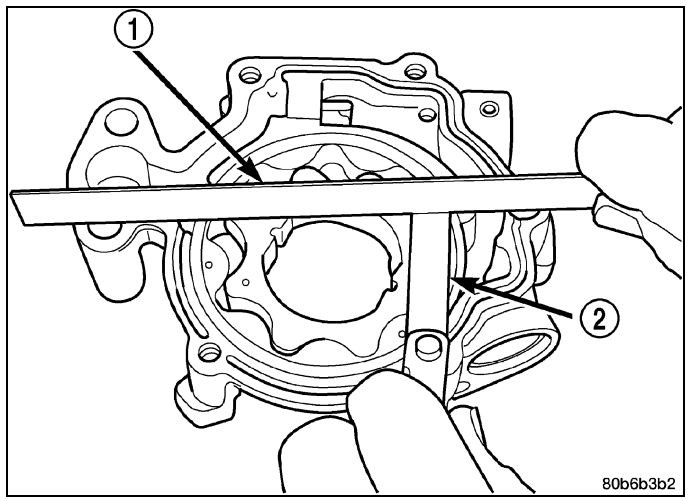

Assembly

1. Wash all parts in a suitable solvent and inspect carefully for damage or wear.
2. Install inner and outer rotors
3. Install oil pump cover plate and install cover bolts and tighten them to 12 N·m (105 in. lbs.).
4. Prime oil pump before installation by filling rotor cavity with engine oil.
5. If oil pressure is low and pump is within specifications, inspect for worn engine bearings or other causes for oil pressure loss.

Installation

1. Position the oil pump onto the crankshaft and install one oil pump retaining bolt.
2. Position the primary timing chain tensioner and install three retaining bolts.
3. Tighten the oil pump and primary timing chain tensioner retaining bolts to 28 N·m (250 in. lbs.) in the sequence shown.
4. Install the secondary timing chain tensioners and timing chains(Refer to 09 - Engine/Valve Timing/CHAIN and SPROCKETS, Timing - Installation) .

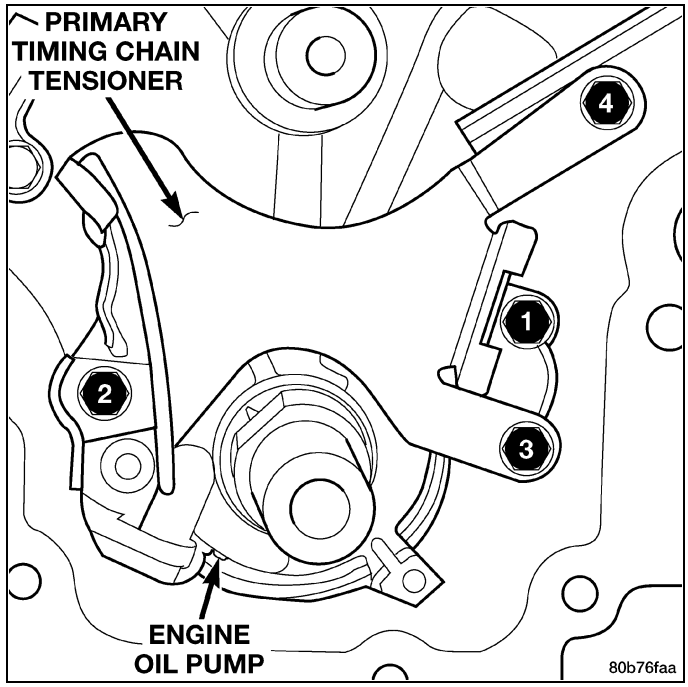

5. Install the timing chain cover (Refer to 09 - Engine/ Valve Timing/COVER(S), Engine Timing - Installation) - INSTALLATION).
6. Install the pick-up tube and oil pan (Refer to 09 - Engine/Lubrication/PAN, Oil - Installation).

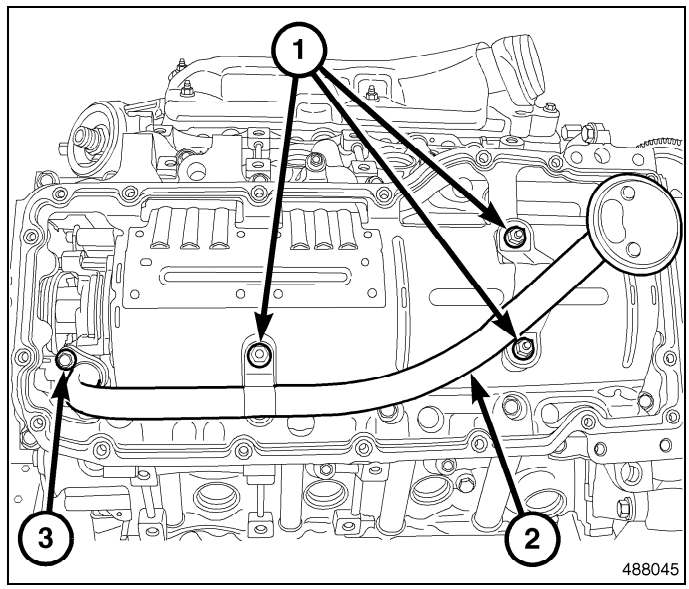

SWITCH, Oil Pressure

Description

The oil pressure switch is a pressure sensitive switch that is activated by the engine's oil pressure (in the main oil gallery). The switch is a two terminal device (one terminal is provided to the wiring harness and the other terminal is the switch's metal housing that screws into the engine block).

Operation

The oil pressure switch is normally “Closed.” The switch changes from a "Closed" circuit to an "Open" circuit, on increasing pressure of 7 psig. The oil pressure switch changes from an "Open" circuit to a "Closed" circuit, on decreasing pressure, between 2 psig and 4 psig.

Removal

1. Disconnect the negative cable from the battery.
2. Raise vehicle on hoist.
3. Remove front splash shield.
4. Disconnect oil pressure sender wire (4).
5. Remove the pressure sender (2).

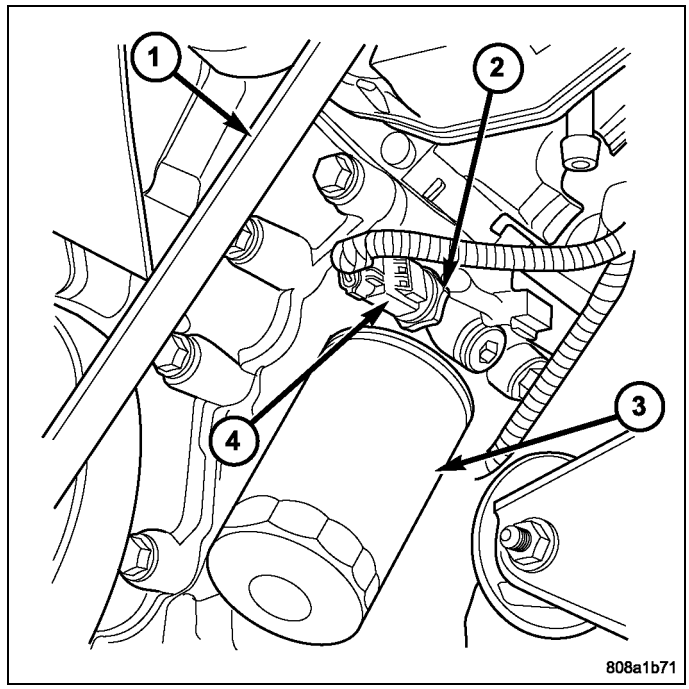

Installation

1. Install oil pressure sender (2).
2. Connect oil pressure sender wire (4).
3. Install front splash shield.
4. Lower vehicle.
5. Connect the negative battery cable.

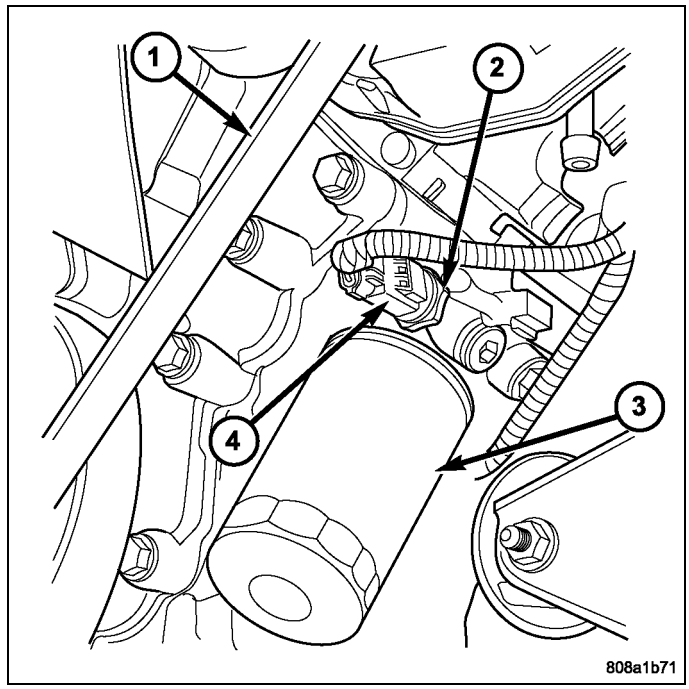

MANIFOLDS

TABLE OF CONTENTS

page

MANIFOLDS
MANIFOLD, EXHAUST
DESCRIPTION 120
REMOVAL 121
INSTALLATION 121

page

MANIFOLD, INTAKE
DESCRIPTION 122
DIAGNOSIS AND TESTING 123
REMOVAL 123
INSTALLATION 126

Manifolds

MANIFOLD, Exhaust

Description

The exhaust manifolds (1,2) are log style with a patented flow enhancing design to maximize performance. The exhaust manifolds are made of high silicon molybdenum cast iron. A perforated core graphite exhaust manifold gasket is used to improve sealing to the cylinder head.

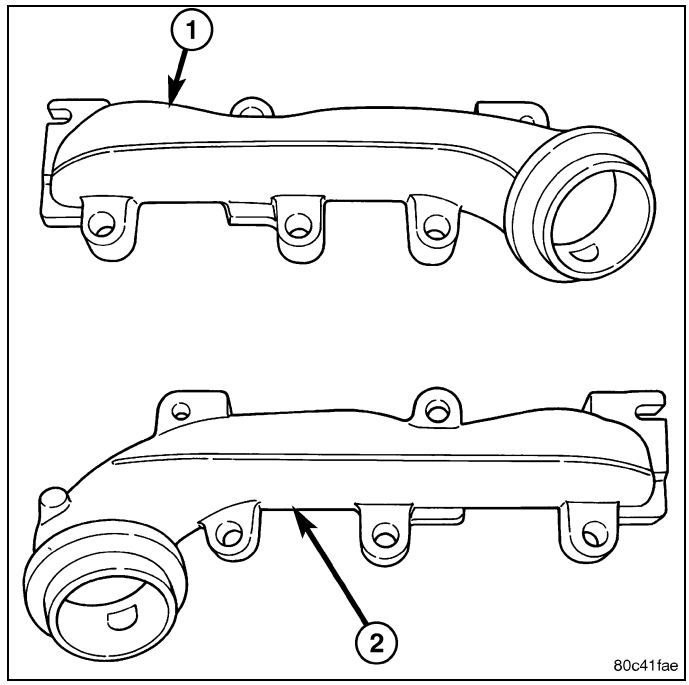

The exhaust manifolds are covered by a three layer laminated heat shield (3) for thermal protection and noise reduction. The heat shields are fastened with a torque prevailing nut that is backed off slightly to allow for the thermal expansion of the exhaust manifold.

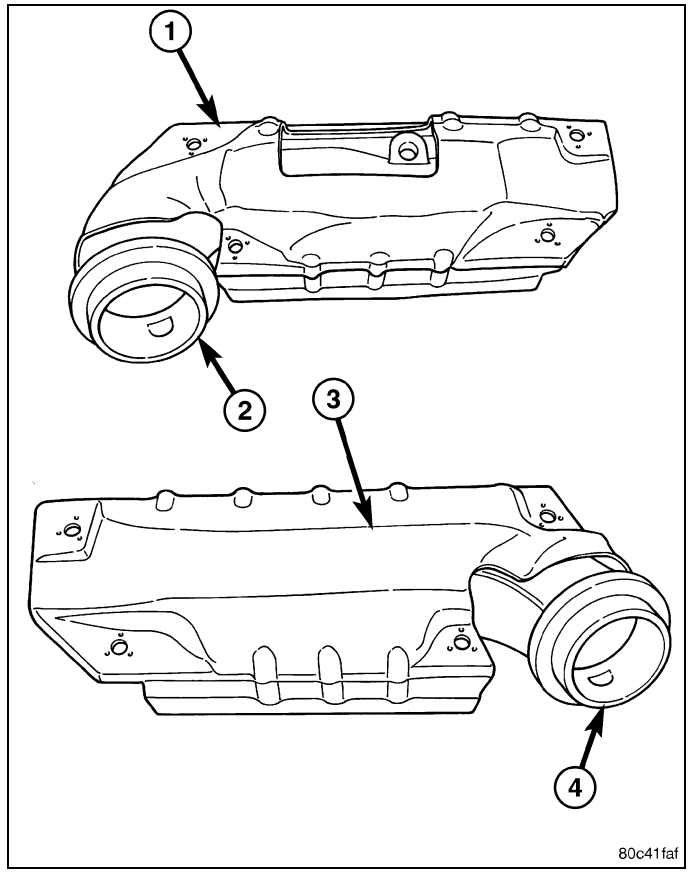

Removal

RIGHT EXHAUST MANIFOLD

1. Disconnect the negative cable from the battery.
2. Raise and support the vehicle.
3. Remove the bolts and nuts attaching the exhaust pipe to the engine exhaust manifold.
4. Lower the vehicle.
5. Remove the exhaust heat shield (1).
6. Remove bolts, nuts and washers attaching manifold to cylinder head.
7. Remove manifold and gasket from the cylinder head.

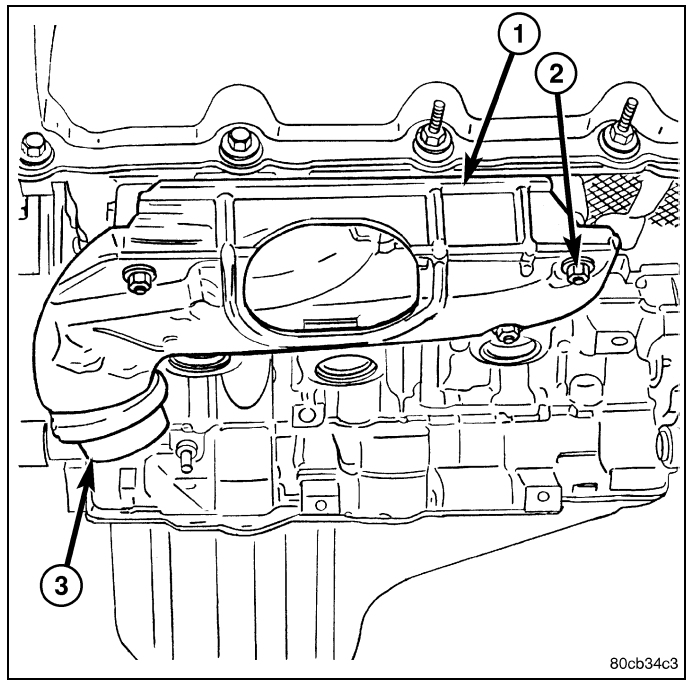

LEFT EXHAUST MANIFOLD

1. Disconnect the negative cable from the battery.
2. Raise and support the vehicle.
3. Remove the bolts and nuts attaching the exhaust pipe to the engine exhaust manifold.
4. Lower the vehicle.
5. Remove the exhaust heat shields (1).
6. Remove bolts, nuts and washers attaching manifold to cylinder head.
7. Remove manifold and gasket from the cylinder head.

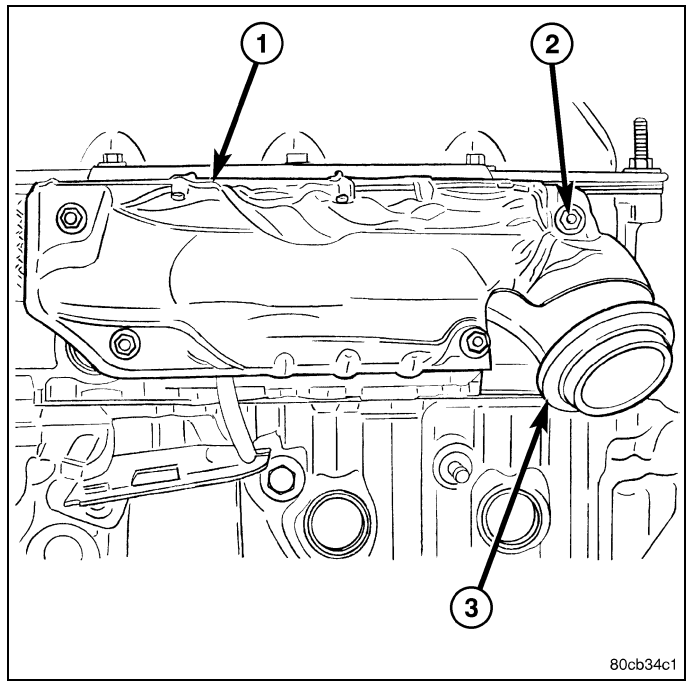

Installation

RIGHT EXHAUST MANIFOLD

CAUTION: If the studs came out with the nuts when removing the engine exhaust manifold, install new studs. Apply sealer on the coarse thread ends. Water leaks may develop at the studs if this precaution is not taken.

1. Position the engine exhaust manifold and gasket on the two studs located on the cylinder head. Install conical washers and nuts on these studs .
2. Install remaining conical washers. Starting at the center arm and working outward, tighten the bolts and nuts to 25 N·m (18 ft. lbs.)

3. Install the exhaust heat shields.
4. Raise and support the vehicle.

CAUTION: Over tightening heat shield fasteners, may cause shield to distort and/or crack.

5. Assemble exhaust pipe to manifold and secure with bolts, nuts and retainers. Tighten the bolts and nuts to 34 N·m (25 ft. lbs.)

LEFT EXHAUST MANIFOLD

CAUTION: If the studs came out with the nuts when removing the engine exhaust manifold, install new studs. Apply sealer on the coarse thread ends. Water leaks may develop at the studs if this precaution is not taken.

1. Position the engine exhaust manifold and gasket on the two studs located on the cylinder head. Install conical washers and nuts on these studs .
2. Install remaining conical washers. Starting at the center arm and working outward, tighten the bolts and nuts to 25 N·m (18 ft. lbs.)
3. Install the exhaust heat shields.
4. Raise and support the vehicle.

CAUTION: Over tightening heat shield fasteners, may cause shield to distort and/or crack.

5. Assemble exhaust pipe to manifold and secure with bolts, nuts and retainers. Tighten the bolts and nuts to 34 N·m (25 ft. lbs.)

MANIFOLD, Intake

Description

The intake manifold is made of a composite material and features 300 mm (11.811 in.) long runners which maximizes low end torque.

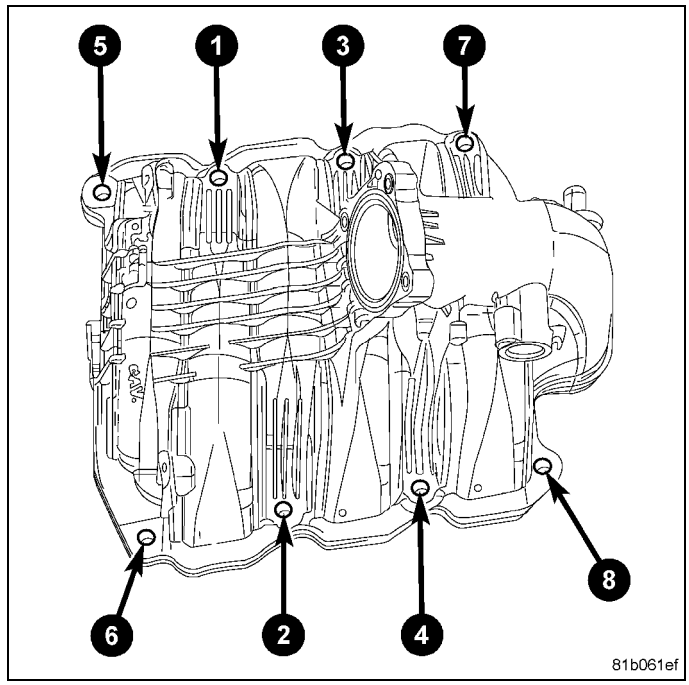

The intake manifold uses single plane sealing which consist of six individual press in place port gaskets (2) to prevent leaks. The throttle body attaches directly to the intake manifold.

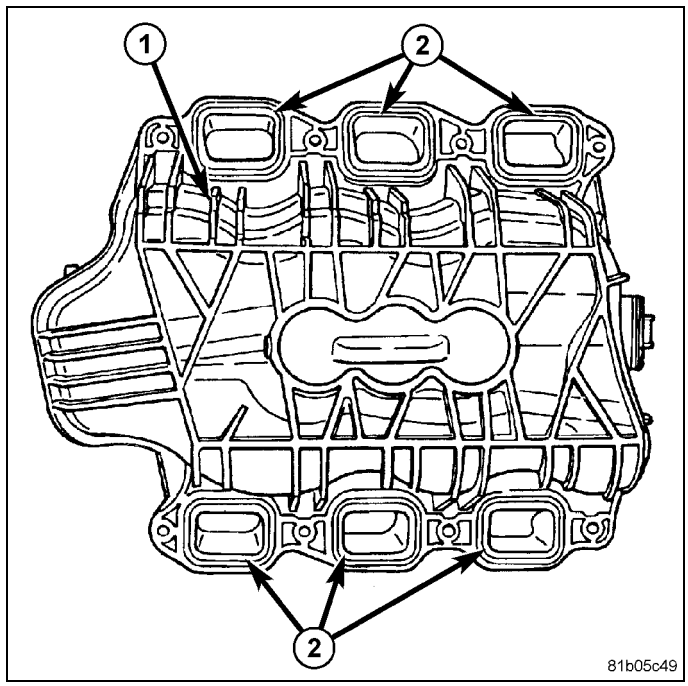

Diagnosis and Testing

An intake manifold air leak is characterized by lower than normal manifold vacuum. Also, one or more cylinders may not be functioning.

WARNING: Use extreme caution when the engine is operating. Do not stand in a direct line with the fan. Do not put your hands near the pulleys, belts or the fan. Do not wear loose clothing.

1. Start the engine.
2. Spray a small stream of water (spray bottle) at the suspected leak area.
3. If engine RPM'S change, the area of the suspected leak has been found.
4. Repair as required.

Removal

1. Bleed the fuel system. (Refer to 14 - Fuel System/ Fuel Delivery - Standard Procedure)
2. Disconnect the negative cable from battery.
3. Remove the resonator assembly and air inlet hose.
4. Drain the cooling system (Refer to 07 - Cooling - Standard Procedure).
5. If equipped with the heater return and supply cross over lines. Remove the lines and position aside.
6. Disconnect the electronic throttle control (ETC) connector (3).

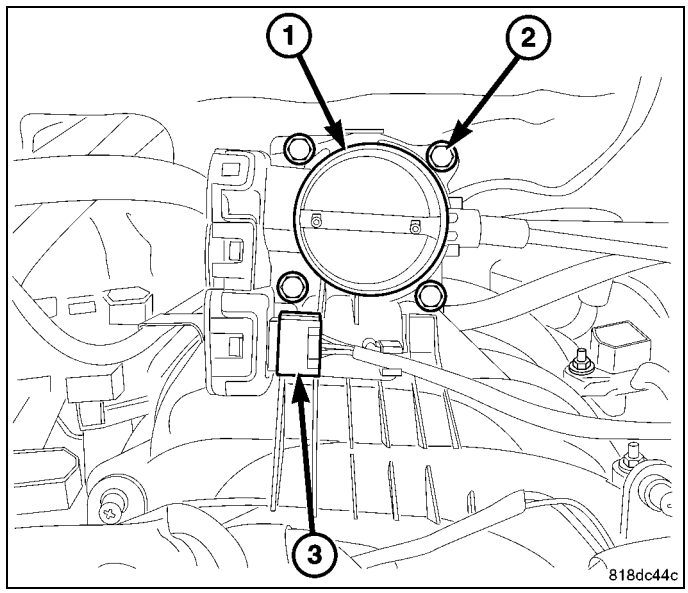

7. Disconnect electrical connectors for the following components:
- Coolant Temperature Sensor
- Manifold Absolute Pressure (MAP) Sensor (2)

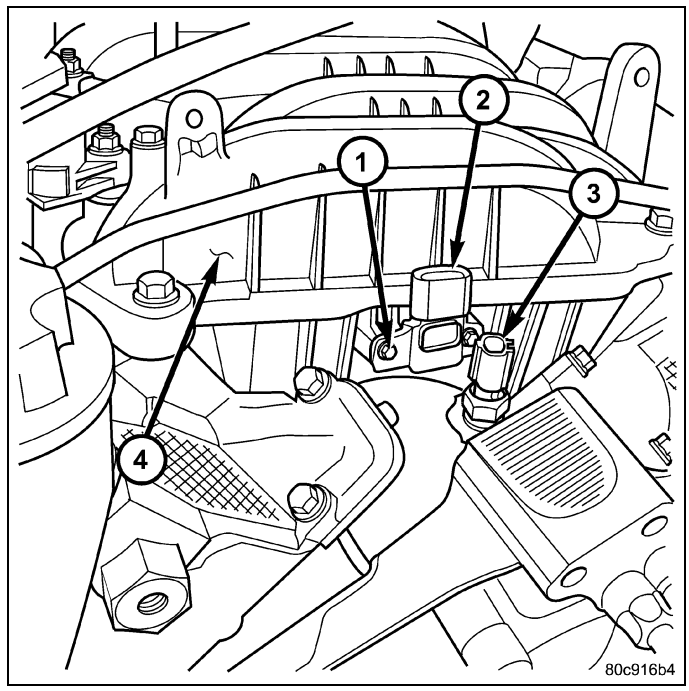

8. Disconnect vapor purge hose, brake booster hose, and positive crankcase ventilation (PCV) hose.
9. Disconnect and remove ignition coil towers.
10. Remove the top oil dipstick tube retaining bolt.
11. Remove the EGR tube (1) (Refer to 25 - Emissions Control/Exhaust Gas Recirculation/VALVE, Exhaust Gas Recirculation (EGR) - Removal).
12. Remove fuel rail (Refer to 14 - Fuel System/Fuel Delivery/RAIL, Fuel - Removal).

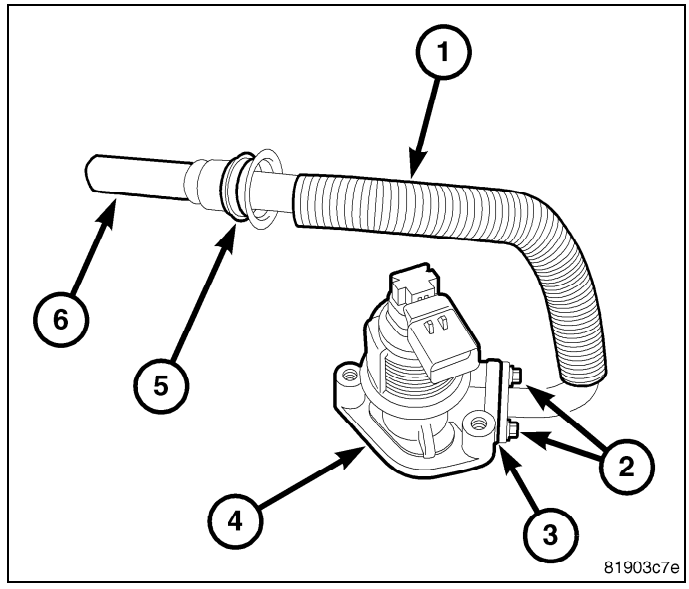

13. Remove throttle body assembly (1).

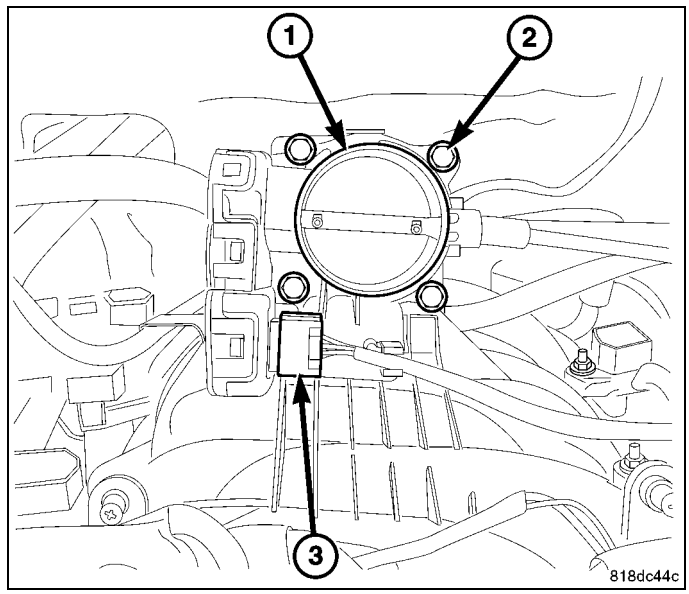

14. Remove the intake manifold retaining fasteners in reverse order of tightening sequence.
15. Remove the intake manifold.

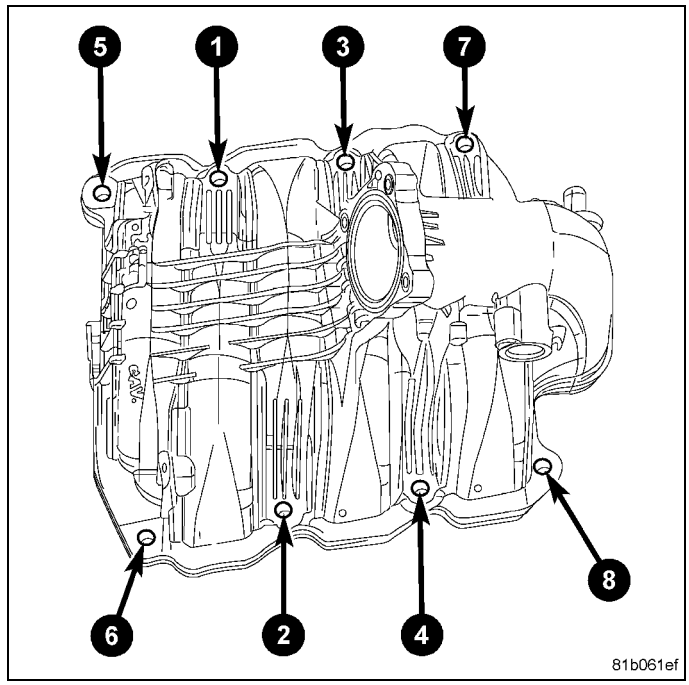

Installation

1. Install the intake manifold seals.
2. Install the intake manifold.
3. Install the intake manifold retaining bolts and tighten in sequence shown to 12 N·m (105 in. lbs.).

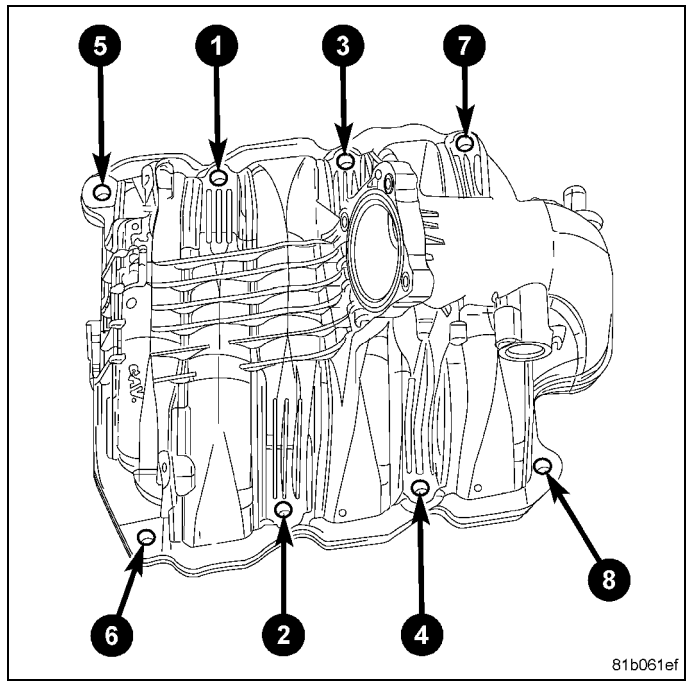

CAUTION: Proper torque of the throttle body is critical to normal operation. If the throttle body is overtorqued, damage to the throttle body can occur resulting in throttle plate malfunction.

4. Install the throttle body-to-intake manifold O-ring.
5. Install the throttle body (1) to intake manifold.
6. Install the four mounting bolts (2). Tighten bolts to 7 N·m (60 in. lbs.).
7. Install electrical connector (3).

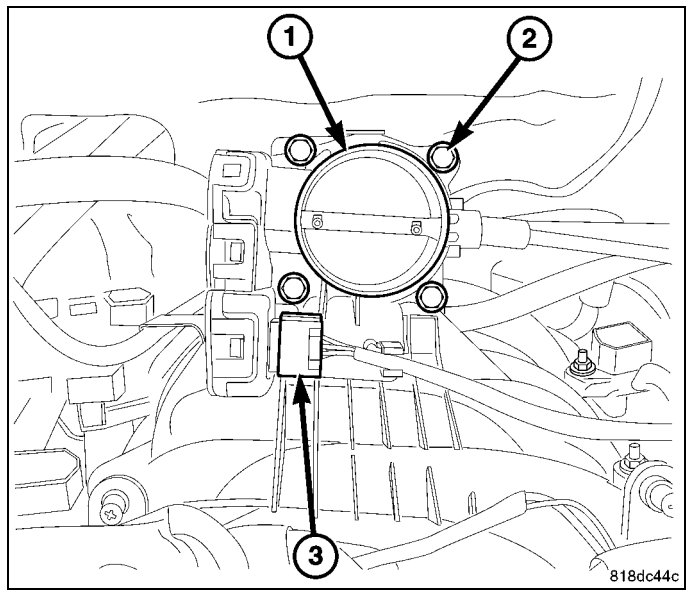

8. Install the fuel rail.
9. Install the EGR tube (1) (Refer to 25 - Emissions Control/Exhaust Gas Recirculation/VALVE, Exhaust Gas Recirculation (EGR) - Installation)
10. Install ignition coil towers.

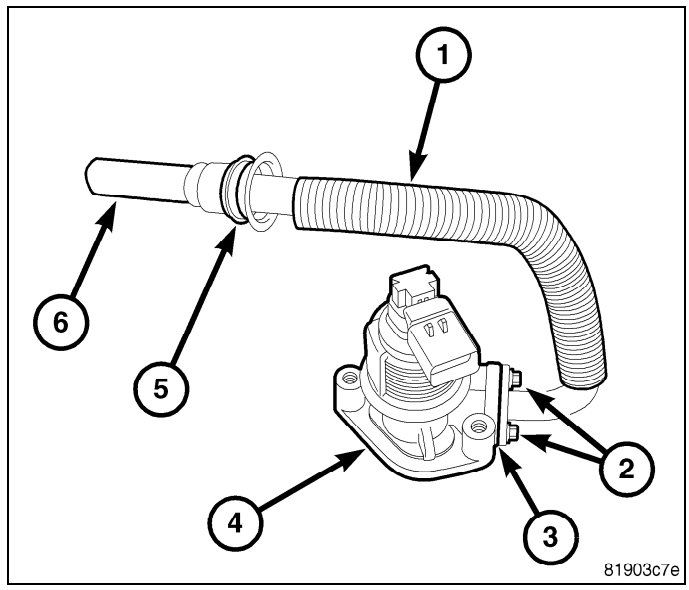

11. Connect electrical connectors for the following components:

- Manifold Absolute Pressure (MAP) Sensor (2)
- Coolant Temperature (CTS) Sensor
- Ignition coil towers

12. Install top oil dipstick tube retaining bolt.
13. Connect Vapor purge hose, Brake booster hose, Positive crankcase ventilation (PCV) hose.
14. If equipped, install the heater return and supply cross over lines.
15. Fill the cooling system.
16. Install the resonator assembly and air inlet hose.
17. Connect the negative cable to battery.
18. Using the scan tool, perform the ETC Relearn function.

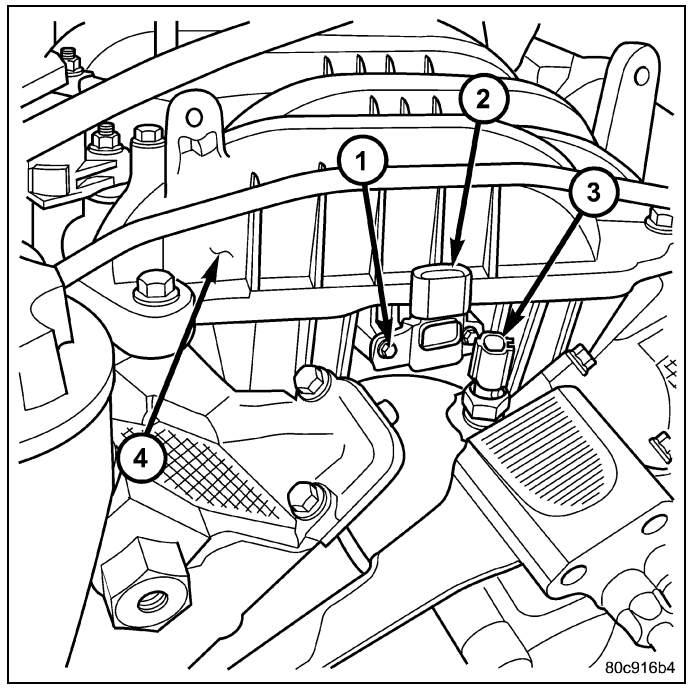

VALVE TIMING

TABLE OF CONTENTS

page

VALVE TIMING
- DESCRIPTION 130
- OPERATION 130
- STANDARD PROCEDURE
  - MEASURING TIMING CHAIN WEAR 131
  - TIMING VERIFICATION 131
- **CHAIN AND SPROCKETS, TIMING**
  - REMOVAL 135
  - INSPECTION 137
  - INSTALLATION 138

page

COVER(S), ENGINE TIMING
- REMOVAL 141
- INSTALLATION 142

SHAFT, IDLER
- REMOVAL 143
- INSTALLATION 143

Valve Timing

Description

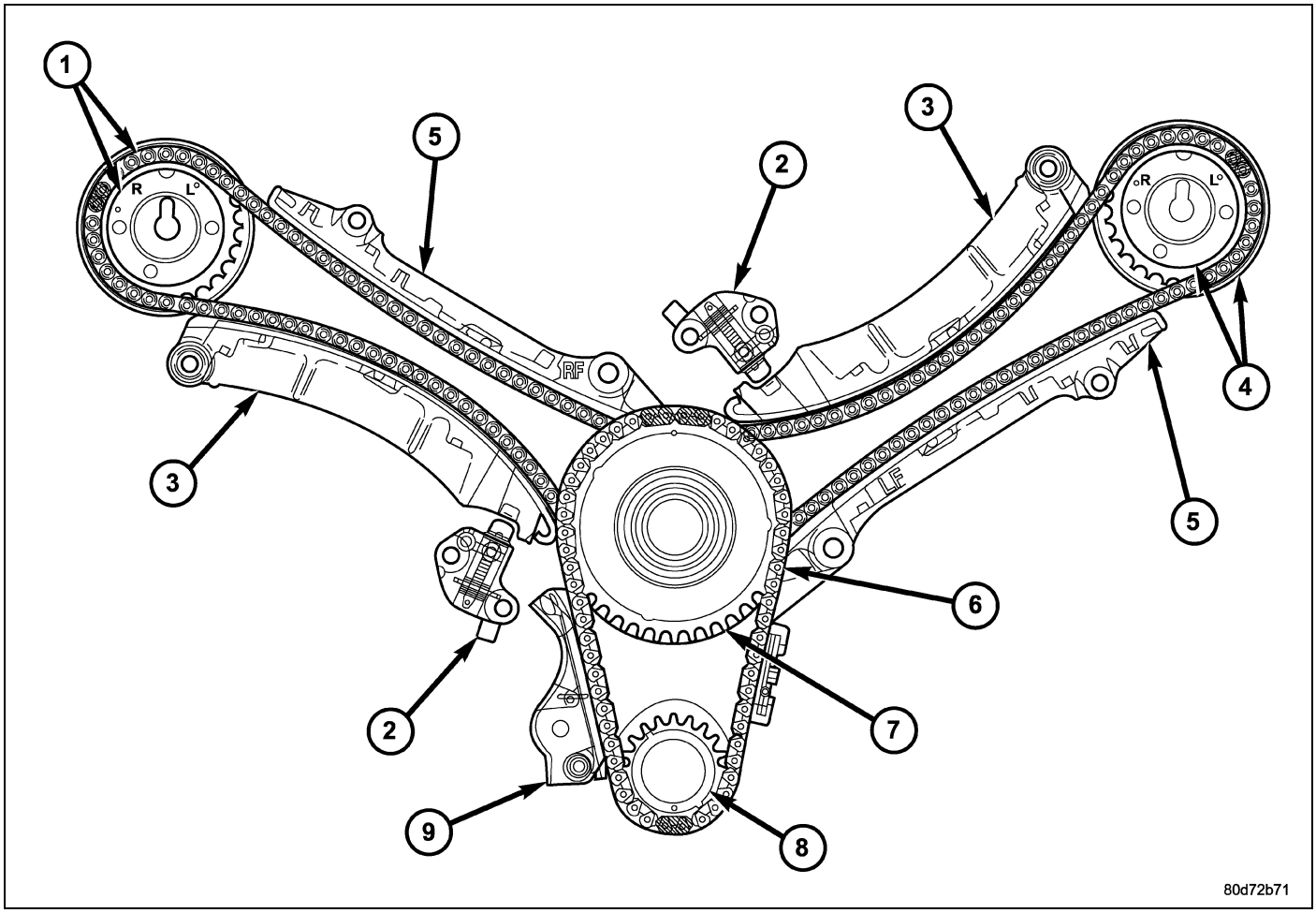

The timing drive system has been designed to provide quiet performance and reliability to support a **non-free wheeling** engine. Specifically the intake valves are non-free wheeling and can be easily damaged with forceful engine rotation if camshaft-to-crankshaft timing is incorrect. The timing drive system consists of a primary chain (6), two secondary timing chain drives (1,4) and a counterbalance shaft drive.

Operation

The primary timing chain is a single inverted tooth chain type. The primary chain drives the large 50 tooth idler sprocket directly from a 25 tooth crankshaft sprocket. Primary chain motion is controlled by a pivoting leaf spring tensioner arm and a fixed guide. The arm and the guide both use nylon plastic wear faces for low friction and long wear. The primary chain receives oil splash lubrication from the secondary chain drive and designed oil pump leakage. The idler sprocket assembly connects the primary chain drive, secondary chain drives, and the counterbalance shaft. The idler sprocket assembly consists of two integral 26 tooth sprockets a 50 tooth sprocket and a helical gear that is press-fit to the assembly. The spline joint for the 50 tooth sprocket is a non serviceable press fit anti rattle type. The idler sprocket assembly spins on a stationary idler shaft. The idler shaft is a light press-fit into the cylinder block. A large washer on the idler shaft bolt and the rear flange of the idler shaft are used to control sprocket thrust movement. Pressurized oil is routed through the center of the idler shaft to provide lubrication for the two bushings used in the idler sprocket assembly.

There are two secondary drive chains, both are roller type, one to drive the camshaft in each SOHC cylinder head. There are no shaft speed changes in the secondary chain drive system. Each secondary chain drives a 26 tooth cam sprocket directly from the 26 tooth sprocket on the idler sprocket assembly. A fixed chain guide and a hydraulic oil damped tensioner are used to maintain tension in each secondary chain system. The hydraulic tensioners for the secondary chain systems are fed pressurized oil from oil reservoir pockets in the block. Each tensioner incorporates a controlled leak path through a device known as a vent disc located in the nose of the piston to manage chain loads. Each tensioner also has a mechanical ratchet system that limits chain slack if the tensioner piston bleeds down after engine shut down.

The tensioner arms and guides also utilize nylon wear faces for low friction and long wear. The secondary timing chains receive lubrication from a small orifice in the tensioners. This orifice is protected from clogging by a fine mesh screen which is located on the back of the hydraulic tensioners.

Standard Procedure

MEASURING TIMING CHAIN WEAR

NOTE: This procedure must be performed with the timing chain cover removed.

1. Remove the timing chain cover (Refer to 09 - Engine/Valve Timing/CHAIN and SPROCKETS, Timing - Removal).
2. To determine if the secondary timing chains are worn, rotate the engine clockwise until maximum tensioner piston (2) extension is obtained. Measure the distance between the secondary timing chain tensioner housing and the step ledge on the piston. The measurement at point (A) must be less than 15mm (.5906 inches).
3. If the measurement exceeds the specification the secondary timing chains are worn and require replacement (Refer to 09 - Engine/Valve Timing/CHAIN and SPROCKETS, Timing - Removal).

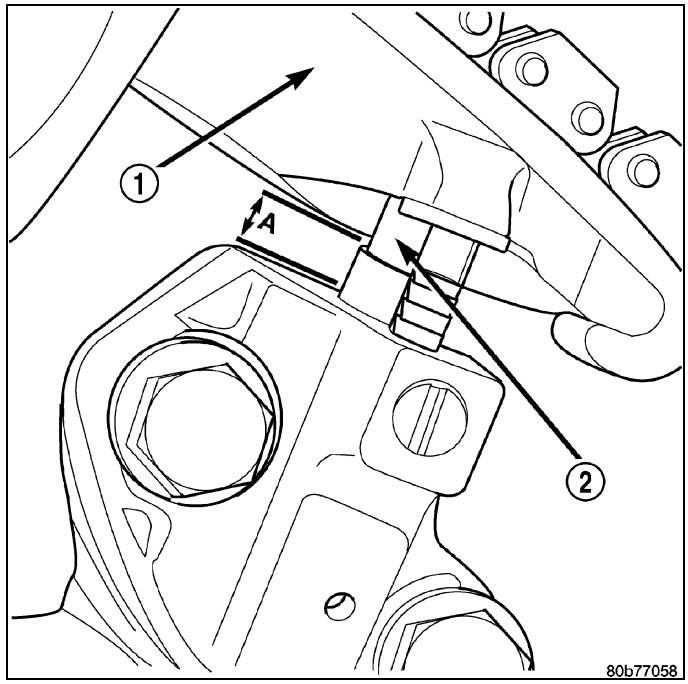

TIMING VERIFICATION

CAUTION: The 3.7L is a non free-wheeling design engine. Therefore, correct engine timing is critical.

NOTE: Components referred to as left hand or right hand are as viewed from the drivers position inside the vehicle.

NOTE: The blue link plates on the chains and the dots on the camshaft drive sprockets may not line up during the timing verification procedure. The blue link plates are lined up with the sprocket dots only when re-timing the complete timing drive. Once the timing drive is rotated blue link-to-dot alignment is no longer valid.

Engine base timing can be verified by the following procedure:

1. Remove the cylinder head covers (See cylinder head cover section).
2. Using a mirror, locate the TDC arrow on the front cover. Rotate the crankshaft until the mark on the crankshaft damper (2) is aligned with the TDC arrow on the front cover (2). The engine is now at TDC.

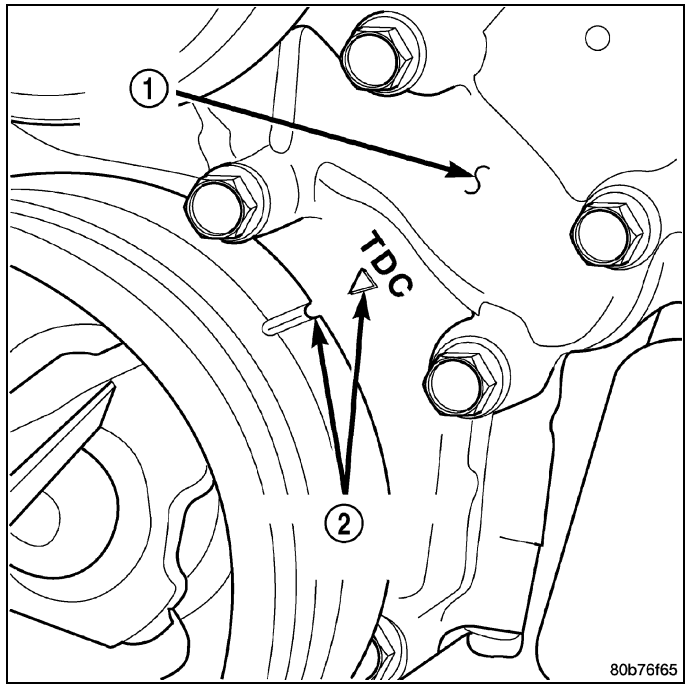

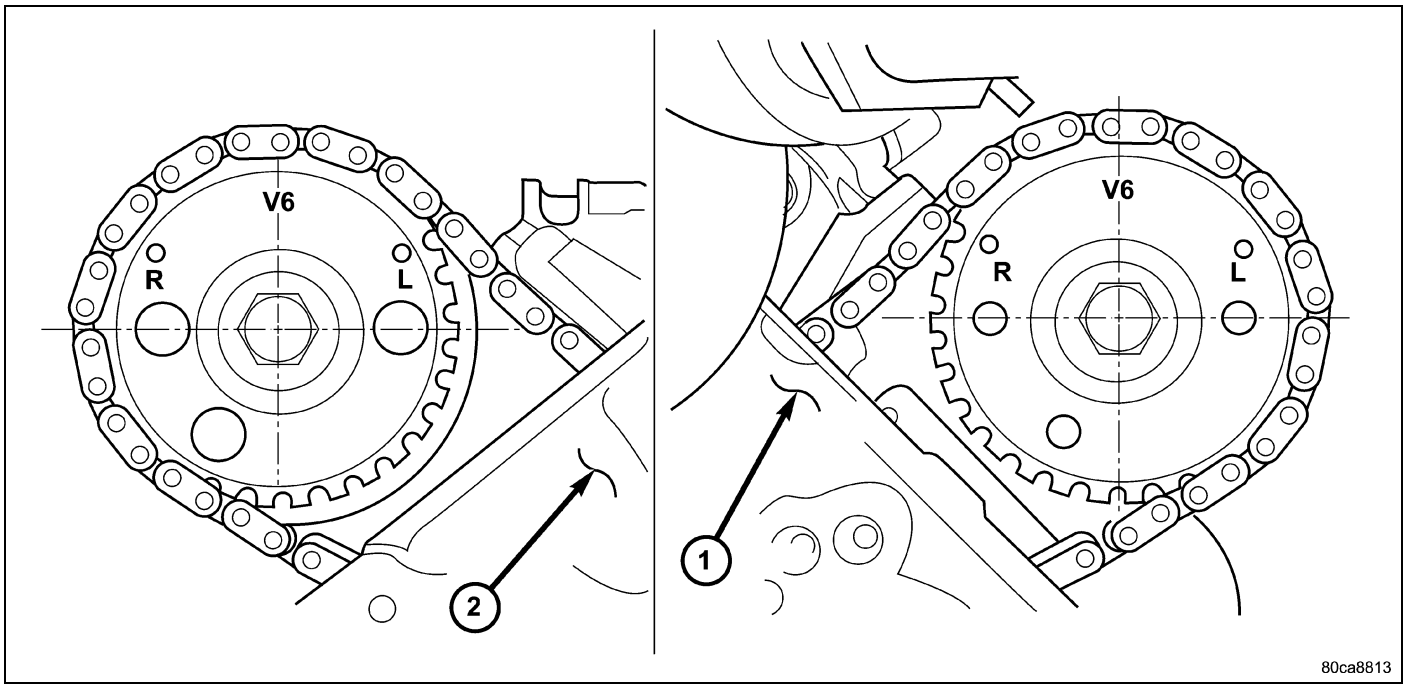

3. Note the location of the V6 mark stamped into the camshaft drive gears (1,2). If the V6 mark on each camshaft drive gear is at the twelve o'clock position, the engine is at TDC on the exhaust stroke. If the V6 mark on each gear is at the six o'clock position, the engine is at TDC on the compression stroke.
4. If both of the camshaft drive gears are off in the same or opposite directions, the primary chain or both secondary chains are at fault. See Timing Chain and Sprockets procedure in this section.
5. If only one of the camshaft drive gears is off and the other is correct, the problem is confined to one secondary chain. See Single camshaft timing, in this procedure.
6. If both camshaft drive gear V6 marks are at the twelve o'clock or the six o'clock position the engine base timing is correct. Reinstall the cylinder head covers.

COUNTER BALANCE SHAFT TIMING

1. Ensure that the engine is at TDC with both camshaft sprocket V6 marks in the 12 o'clock position.
2. Look down the left cylinder head chain cavity. The timing dot (2) on the counter balance shaft drive gear should be in the 6 o'clock position.

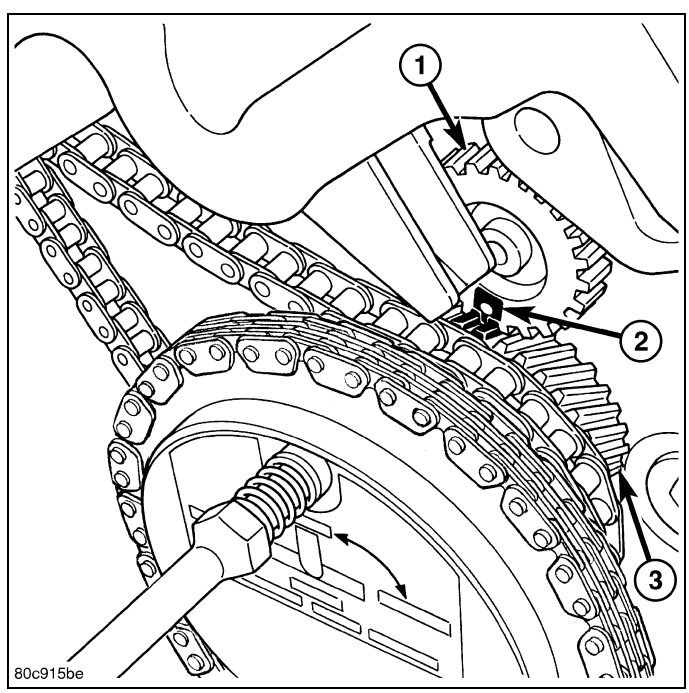

TIMING - SINGLE CAMSHAFT

NOTE: To adjust the timing on one camshaft, preform the following procedure.

1. Using the Wedge Locking Tool 8379 (2), stabilize the secondary chain drive. For reference purposes, mark the chain-to-sprocket position.

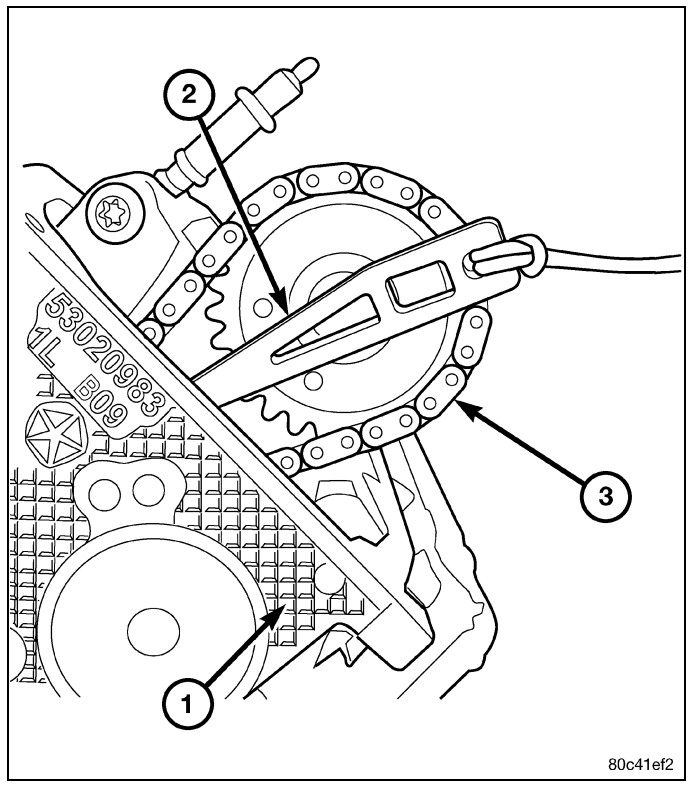

2. Remove the camshaft drive gear retaining bolt (3).
3. Carefully remove the camshaft drive gear from the camshaft.

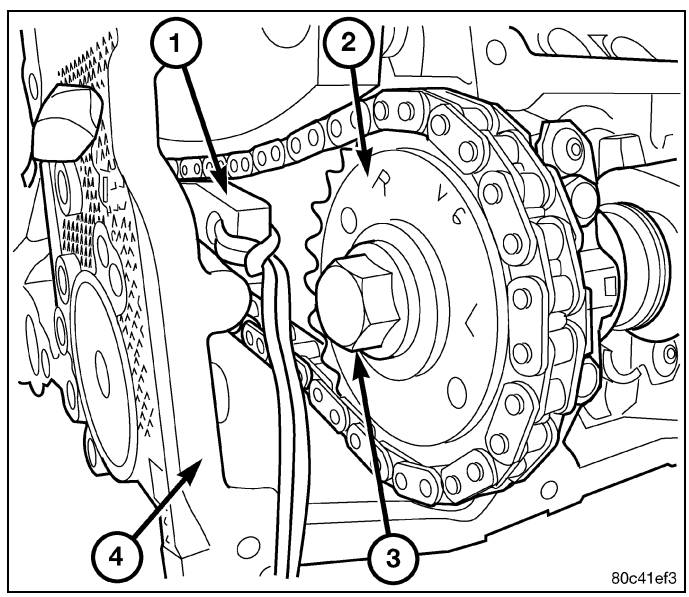

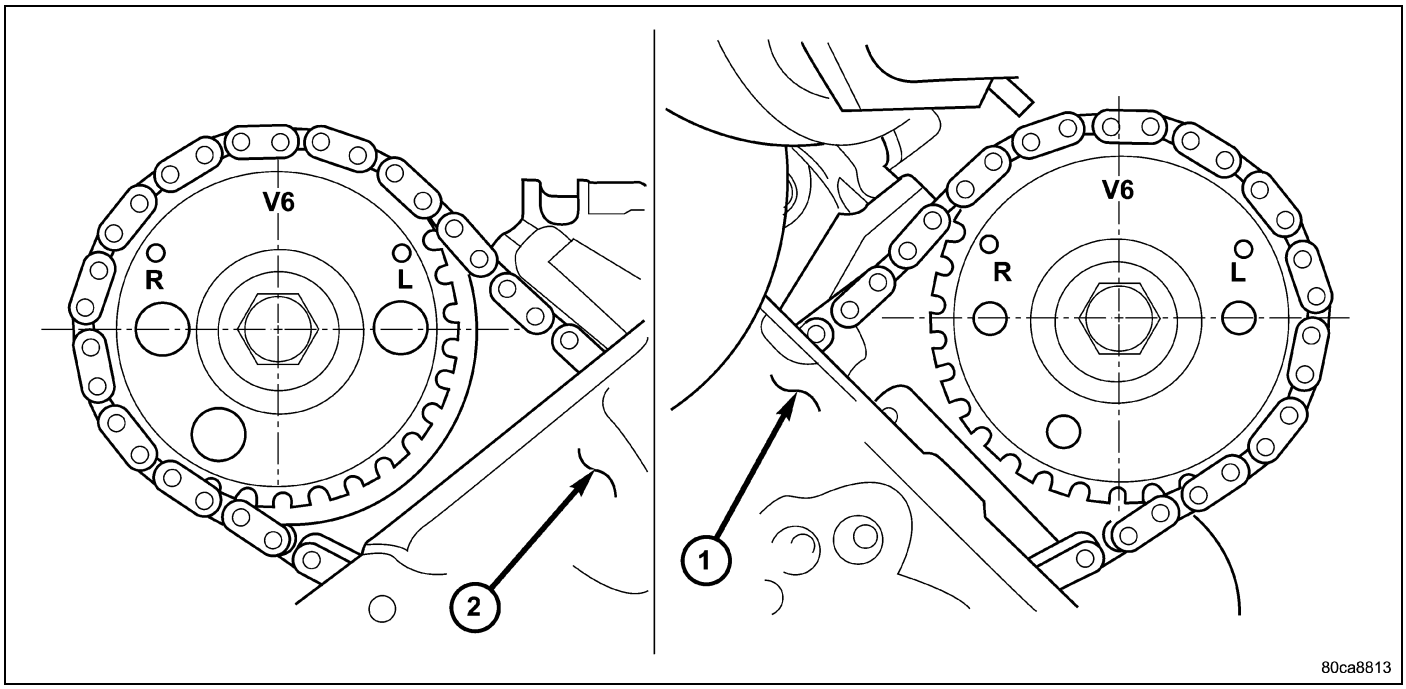

4. Re-index the camshaft drive gear in the chain until the V6 mark is at the same position as the V6 mark on the opposite camshaft drive gear (1,2).
5. Using the Camshaft Holder 8428A, rotate the camshaft until the alignment dowel on the camshaft is aligned with the slot in the camshaft drive gear.

CAUTION: Remove excess oil from camshaft sprocket retaining bolt before reinstalling bolt. Failure to do so may cause over-torqueing of bolt resulting in bolt failure.

6. Position the camshaft drive gear onto the camshaft, remove oil from bolt then install the retaining bolt. Using Special Tools, Spanner Wrench 6958 with Adapter Pins 8346 and a suitable torque wrench, tighten the retaining bolt to 122 N·m (90 ft. lbs.)
7. Remove the Wedge Locking Tool 8379.
8. Rotate the crankshaft two full revolutions, then verify that the camshaft drive gear V6 marks are in fact aligned.
9. Install the cylinder head covers(Refer to 09 - Engine/Cylinder Head/COVER(S), Cylinder Head - Installation).

CHAIN and SPROCKETS, Timing

Removal

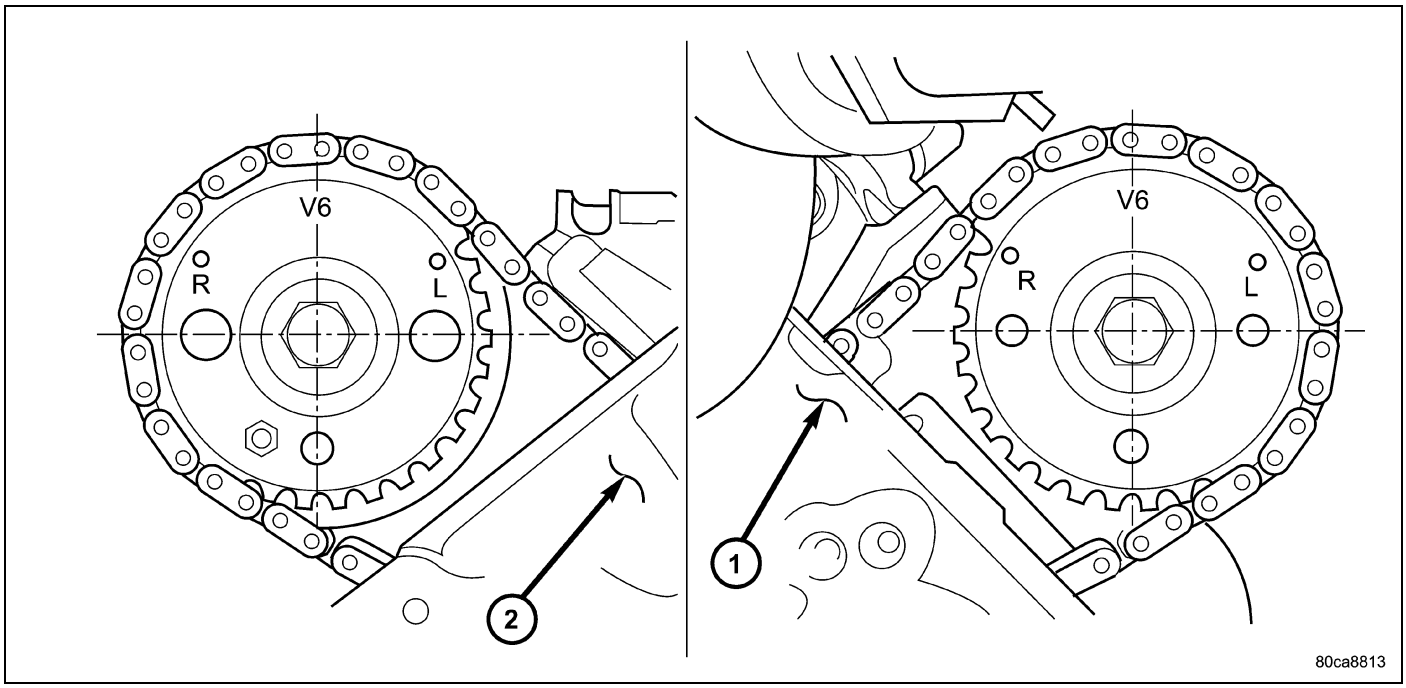

1. Disconnect the negative battery cable.
2. Drain the cooling system (Refer to 07 - Cooling - Standard Procedure).
3. Remove right and left cylinder head covers (Refer to 09 - Engine/Cylinder Head/COVER(S), Cylinder Head - Removal) - REMOVAL).
4. Remove the radiator fan shroud (Refer to 07 - Cooling/Engine/FAN, Cooling - Removal).
5. Rotate engine until the timing mark on crankshaft damper (2) aligns with TDC mark on timing chain cover (2) and the camshaft sprocket “V6” marks are at the 12 o'clock position (No. 1 TDC exhaust stroke).

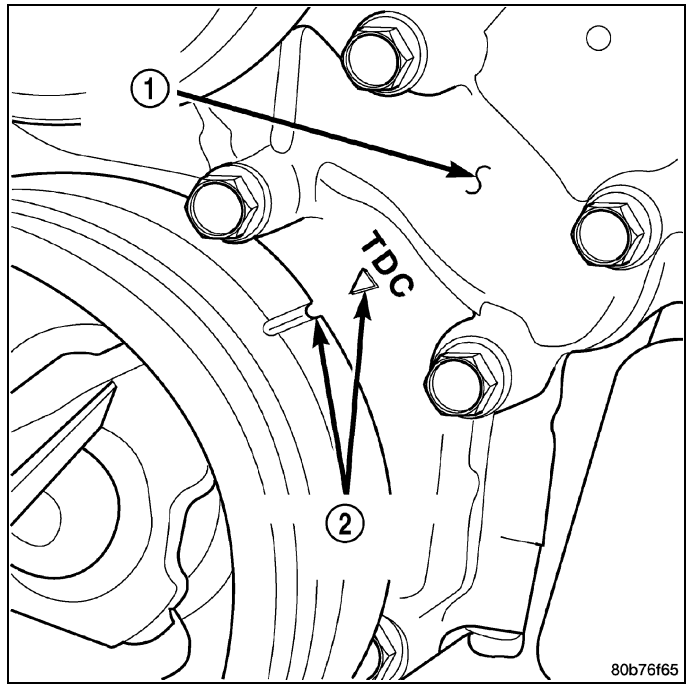

6. Remove the power steering pump (Refer to 19 - Steering/Pump - Removal).
7. Remove the access plugs from the left (2) and right (1) cylinder heads for access to the chain guide fasteners.
8. Remove the oil fill housing to gain access to the right side tensioner arm fastener.
9. Remove crankshaft damper (Refer to 09 - Engine/Engine Block/DAMPER, Vibration - Removal) and the timing chain cover (Refer to 09 - Engine/Valve Timing/COVER(S), Engine Timing - Removal) - REMOVAL).

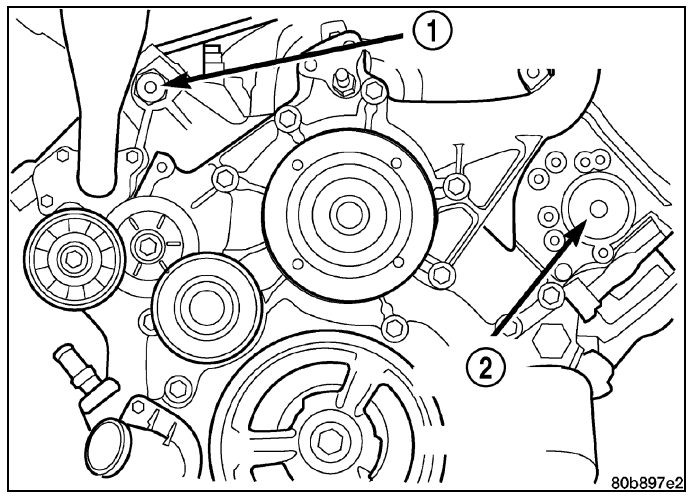

10. Collapse and pin primary chain tensioner (1).

CAUTION: Plate behind left secondary chain tensioner could fall into oil pan. Therefore, cover pan opening.

11. Remove secondary chain tensioners.

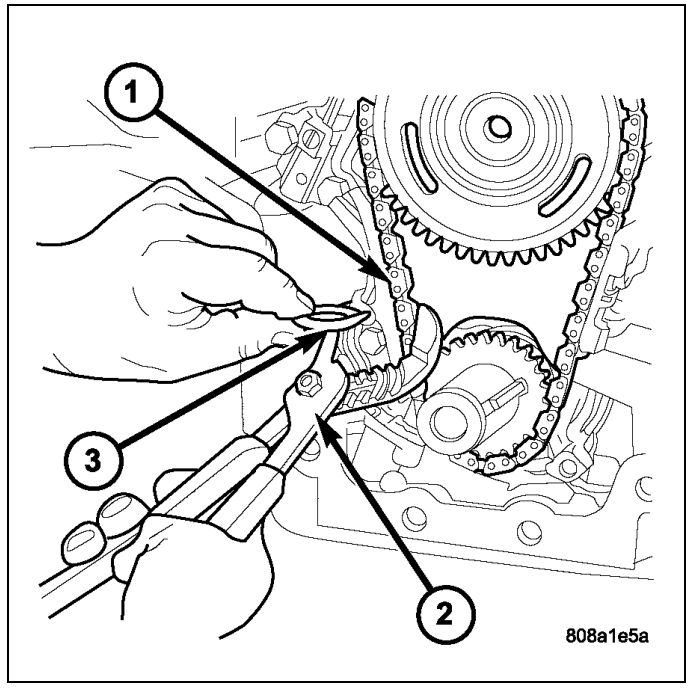

12. Remove camshaft position sensor bolt (3) and remove sensor (2).

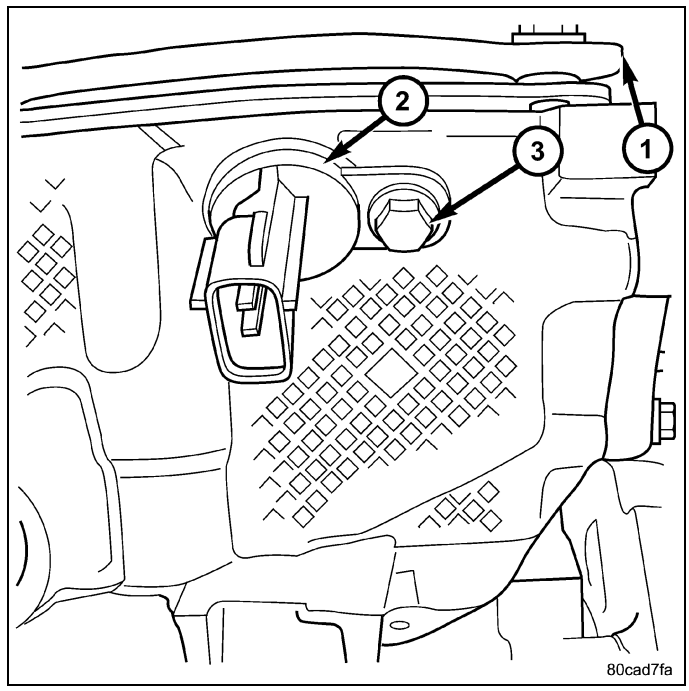

CAUTION: Care should be taken not to damage the camshaft target wheel. Do not hold the target wheel while loosening or tightening the camshaft sprocket. Do not place the target wheel near a magnetic source of any kind. A damaged or magnetized target wheel could cause a vehicle no start condition.

CAUTION: Do not forcefully rotate the camshafts or crankshaft independently of each other. Damaging intake valve to piston contact will occur. Ensure the negative battery cable is disconnected and isolated to guard against accidental starter engagement.

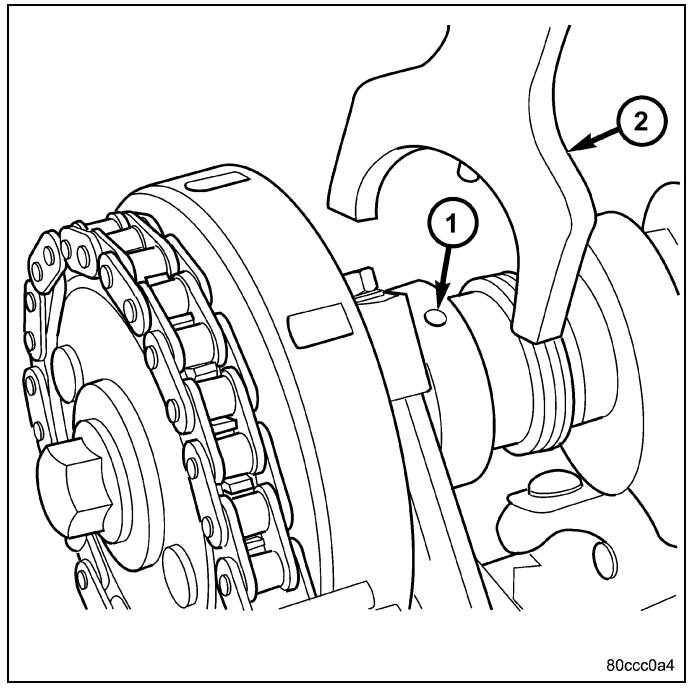

13. Remove left and right camshaft sprocket bolts.
14. While holding the left camshaft steel tube with Camshaft Holder 8428A (2), remove the left camshaft sprocket. Slowly rotate the camshaft approximately 15 degrees clockwise to a neutral position.
15. While holding the right camshaft steel tube with Camshaft Holder 8428A (2), remove the left camshaft sprocket. Slowly rotate the camshaft approximately 45 degrees counterclockwise to a neutral position.
16. Remove idler sprocket assembly bolt.
17. Slide the idler sprocket assembly and crank sprocket forward simultaneously to remove the primary and secondary chains.
18. Remove both pivoting tensioner arms and chain guides.
19. Remove primary chain tensioner.

Inspection

Inspect the following components:

- Sprockets for excessive tooth wear. Some tooth markings are normal and not a cause for sprocket replacement.
- Idler sprocket assembly bushing and shaft for excessive wear.
- Idler sprocket assembly spline joint. The joint should be tight with no backlash or axial movement.
- Chain guides and tensioner arms. Replace these parts if grooving in plastic face is more than 1 mm (0.039 in.) deep. If plastic face is severely grooved or melted, the tensioner lube jet may be clogged. The tensioner should be replaced.

- Secondary chain tensioner piston and ratcheting device. Inspect for evidence of heavy contact between tensioner piston and tensioner arm. If this condition exist the tensioner tensioner arm and chain should be replaced.
- Primary chain tensioner plastic faces. Replace as required.

Installation

1. Using a vise, lightly compress the secondary chain tensioner piston (5) until the piston step is flush with the tensioner body. Using a pin or suitable tool, release ratchet pawl by pulling pawl back against spring force through access hole on side of tensioner. While continuing to hold pawl back, Push ratchet device to approximately 2 mm from the tensioner body. Install Tensioner pin 8514 (3) into hole on front of tensioner. Slowly open vise (1) to transfer piston spring force to lock pin.
2. Position primary chain tensioner over oil pump and insert bolts into lower two holes on tensioner bracket. Tighten bolts to 28 N·m (250 in. lbs.).

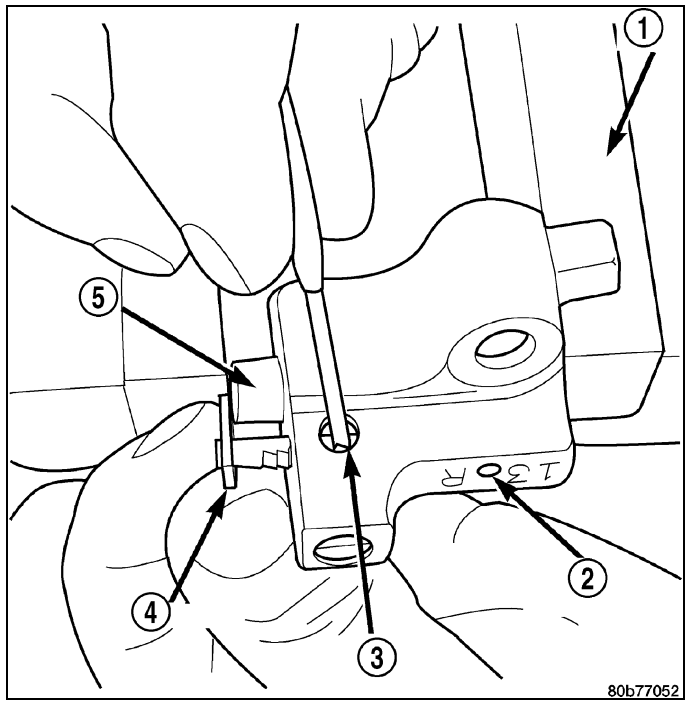

3. Install right side chain tensioner arm. Install Torx® bolt. Tighten Torx® bolt to 28 N·m (250 in. lbs.).

CAUTION: The silver bolts retain the guides to the cylinder heads and the black bolts retain the guides to the engine block.

4. Install the left side chain guide. Tighten the bolts to 28 N·m (250 in. lbs.).
5. Install left side chain tensioner arm, and Torx® bolt. Tighten Torx® bolt to 28 N·m (250 in. lbs.).
6. Install the right side chain guide. Tighten the bolts to 28 N·m (250 in. lbs.).
7. Install both secondary chains onto the idler sprocket. Align two plated links on the secondary chains to be visible through the two lower openings on the idler sprocket (4 o'clock and 8 o'clock). Once the secondary timing chains are installed, position the Secondary Camshaft Chain Holder 8429 (1) to hold chains in place for installation.

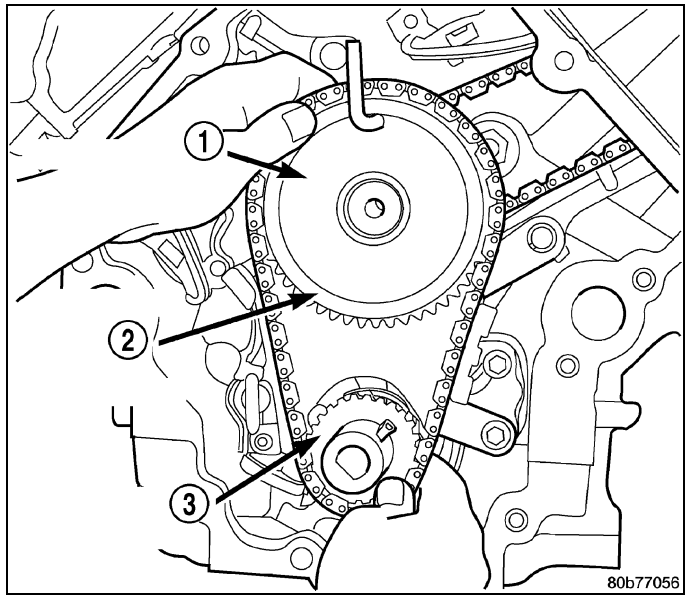

8. Align primary chain double plated links with the timing mark at 12 o'clock on the idler sprocket. Align the primary chain single plated link with the timing mark at 6 o'clock on the crankshaft sprocket.
9. Lubricate idler shaft and bushings with clean engine oil.

NOTE: The idler sprocket must be timed to the counterbalance shaft drive gear before the idler sprocket is fully seated.

10. Install all chains, crankshaft sprocket, and idler sprocket as an assembly. After guiding both secondary chains through the block and cylinder head openings, affix chains with a elastic strap or equivalent. This will maintain tension on chains to aid in installation. Align the timing mark (2) on the idler sprocket gear (3) to the timing mark on the counterbalance shaft drive gear (1), then seat idler sprocket fully. Before installing idler sprocket bolt, lubricate washer with oil, and tighten idler sprocket assembly retaining bolt to 34 N·m (25 ft. lbs.).

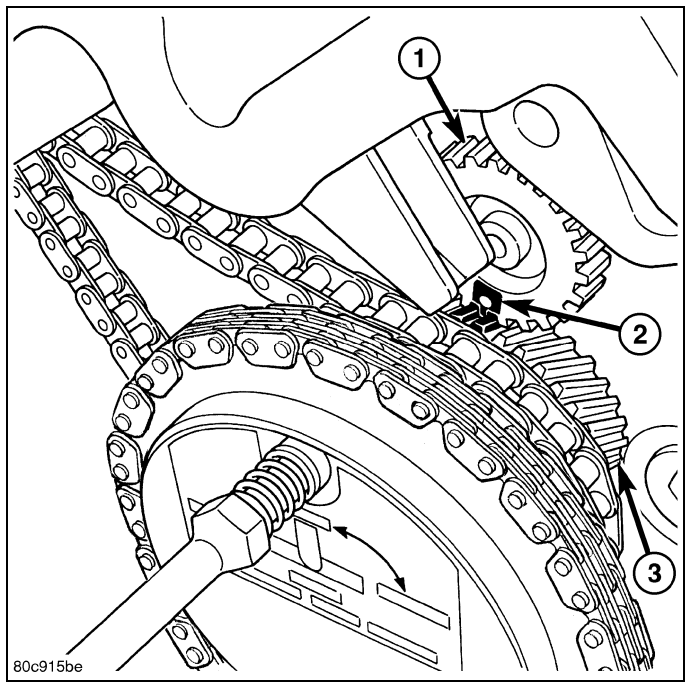

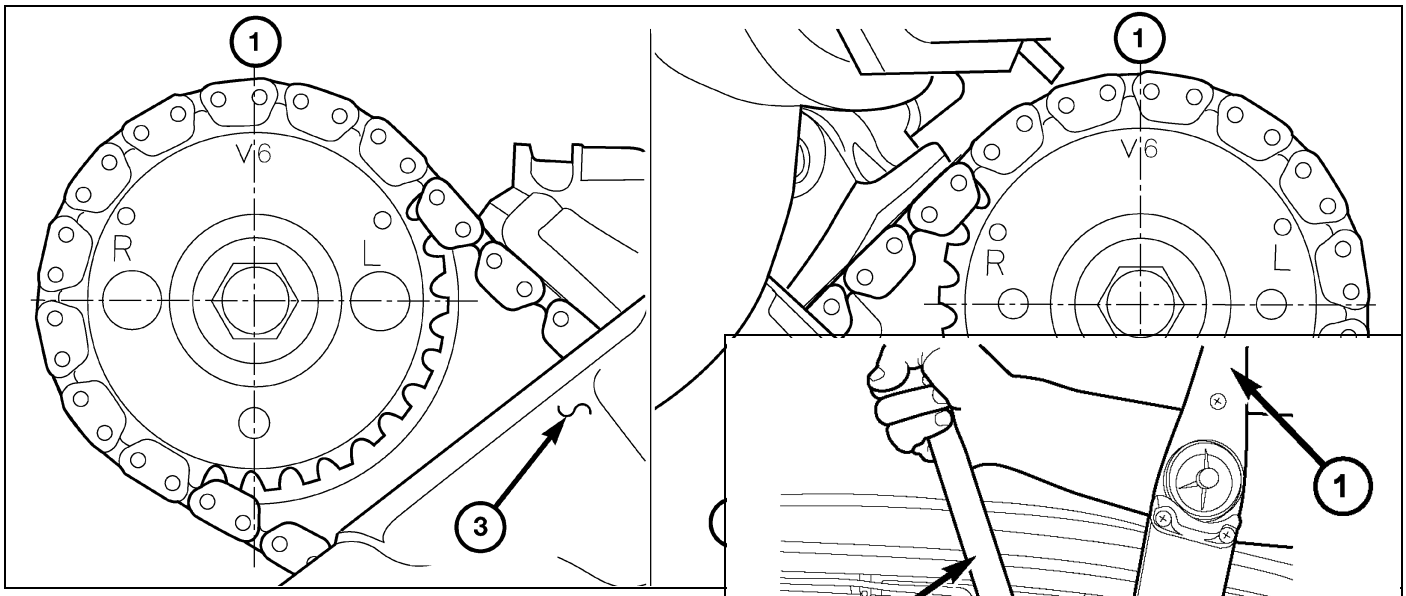

NOTE: It will be necessary to slightly rotate camshafts fo

11. Align left camshaft sprocket “L” dot to plated link on chai
12. Align right camshaft sprocket “R” dot to plated link on ch

CAUTION: Remove excess oil from the camshaft sprocke resulting in bolt failure.

13. Remove Secondary Camshaft Chain Holder 8429, then from bolts, then Install sprocket bolts, but do not tighten
14. Verify that all plated links are aligned with the marks on al at the 12 o'clock position.

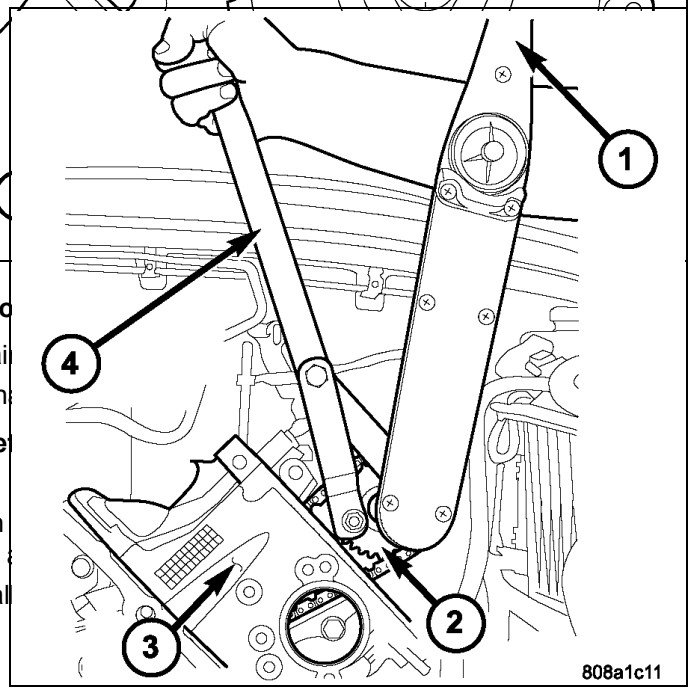

CAUTION: Ensure the plate between the left secondary chain tensioner and block is correctly installed.

15. Install both secondary chain tensioners. Tighten bolts to 28 N·m (250 in. lbs.).

NOTE: Left and right secondary chain tensioners are not common.

16. Remove all 3 locking pins from tensioners.

CAUTION: After pulling locking pins out of each tensioner, DO NOT manually extend the tensioner(s) ratchet. Doing so will over tension the chains, resulting in noise and/or high timing chain loads.

17. Using Spanner Wrench 6958 with Adaptor Pins 8346, (4) tighten left and right camshaft sprocket bolts to 122 N·m (90 ft. lbs.).
18. Rotate engine two full revolutions. Verify timing marks are at the follow locations:

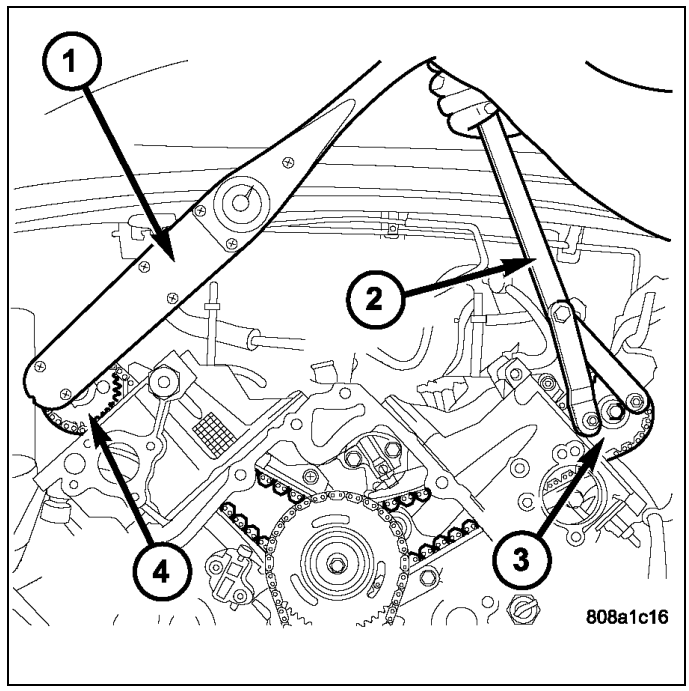

- primary chain idler sprocket dot is at 12 o'clock
- primary chain crankshaft sprocket dot is at 6 o'clock
- secondary chain camshaft sprockets “V6” marks are at 12 o'clock
- counterbalancer shaft drive gear dot is aligned to the idler sprocket gear dot

19. Lubricate all three chains with engine oil.
20. After installing all chains, it is recommended that the idler gear end play be checked. The end play must be within 0.10 - 0.25 mm (0.004 - 0.010 in.). If not within specification, the idler gear must be replaced.
21. Install timing chain cover (Refer to 09 - Engine/Valve Timing/CHAIN and SPROCKETS, Timing - Installation).
22. Install th crankshaft damper
23. Install cylinder head covers(Refer to 09 - Engine/Cylinder Head/COVER(S), Cylinder Head - Installation) - INSTALLATION).

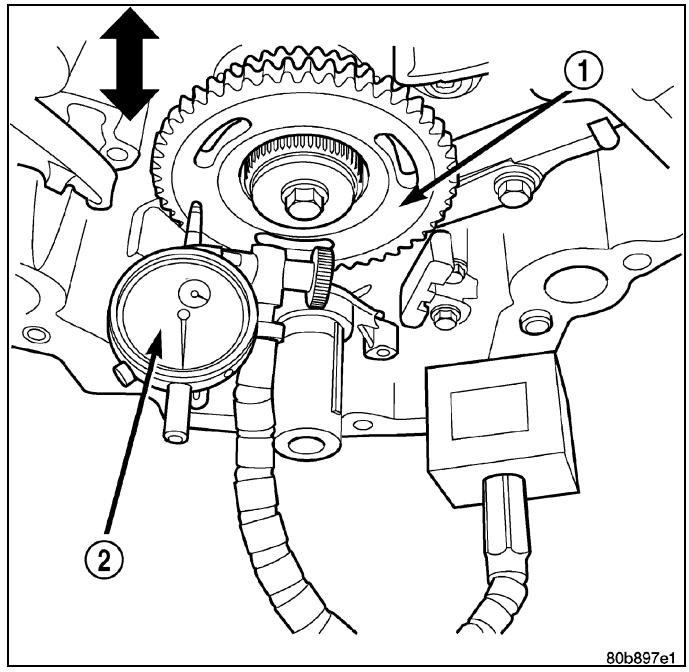

NOTE: Before installing threaded plug in right cylinder head, the plug must be coated with sealant to prevent leaks.

24. Coat the large threaded access plug with **Mopar® Thread Sealant with Teflon**, then install into the right cylinder head (1) and tighten to 81 N·m (60 ft. lbs.).
25. Install the oil fill housing.
26. Install access plug in left cylinder head (2).
27. Install power steering pump(Refer to 19 - Steering/Pump - Installation)
28. Fill cooling system(Refer to 07 - Cooling - Standard Procedure)
29. Connect negative cable to battery.

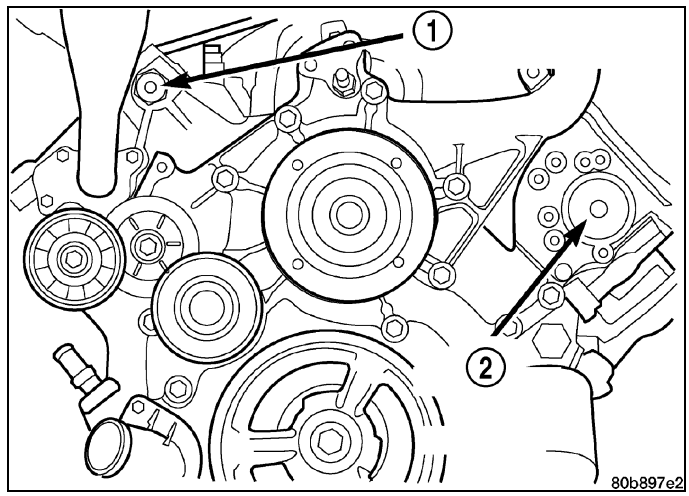

COVER(S), Engine Timing

Removal

1. Disconnect the battery negative cable.
2. Drain cooling system (Refer to 07 - Cooling - Standard Procedure).
3. Remove electric cooling fan and fan shroud assembly.
4. Remove fan and fan drive assembly.
5. Disconnect both heater hoses at timing cover.
6. Disconnect lower radiator hose at engine.
7. Remove accessory drive belt tensioner assembly (1).

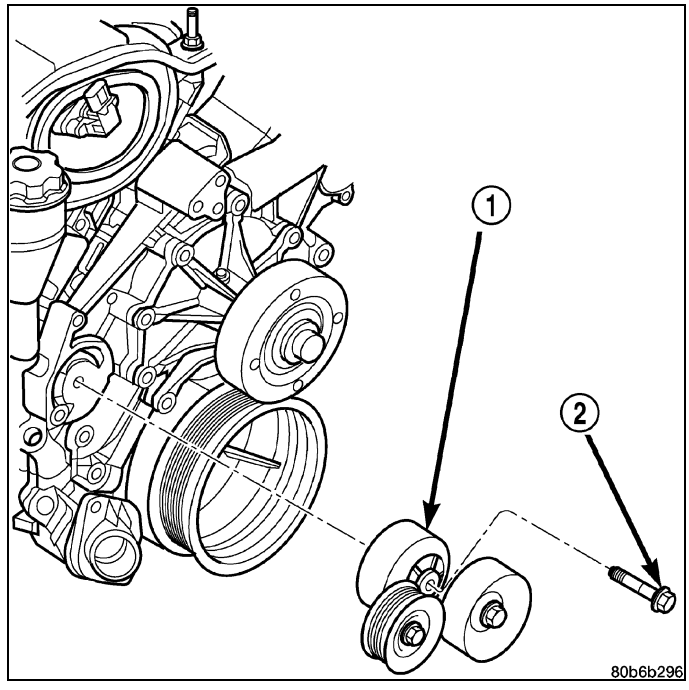

8. Remove crankshaft damper (Refer to 09 - Engine/Engine Block/DAMPER, Vibration - Removal).
9. Remove the generator (Refer to 08 - Electrical/8F - Engine Systems/Charging/GENERATOR - Removal).
10. Remove A/C compressor (Refer to 24 - Heating and Air Conditioning/Plumbing/COMPRESSOR, A/C - Removal).

CAUTION: The 3.7L engine uses an anerobic sealer instead of a gasket to seal the front cover to the engine block, from the factory. For service, Mopar® Grey Engine RTV sealant must be substituted.

NOTE: It is not necessary to remove the water pump for timing cover removal.

11. Remove the bolts holding the timing cover to engine block .
12. Remove the timing cover.

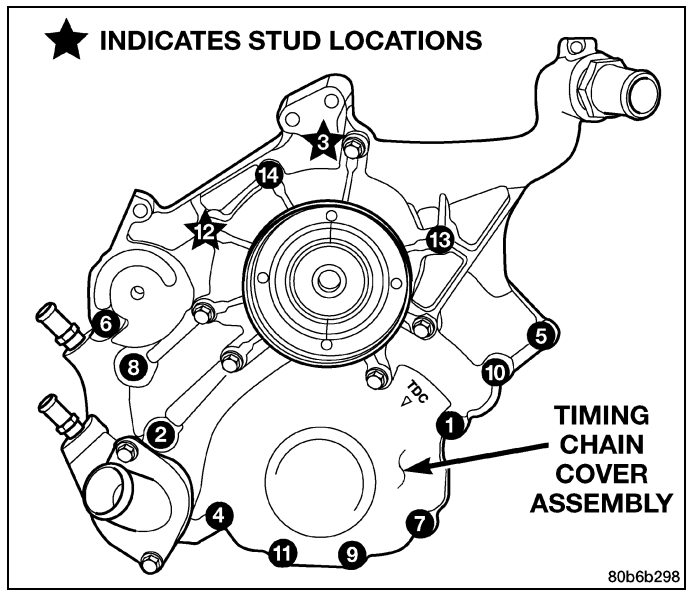

Installation

CAUTION: Do not use oil based liquids to clean timing cover or block surfaces. Use only rubbing alcohol, along with plastic or wooden scrapers. Use no wire brushes or abrasive wheels or metal scrapers, or damage to surfaces could result.

1. Clean timing chain cover and block surface using rubbing alcohol.

CAUTION: The 3.7L uses a special anerobic sealer instead of a gasket to seal the timing cover to the engine block, from the factory. For service repairs, Mopar® Engine Grey RTV must be used as a substitute.

2. Inspect the water passage o-rings for any damage, and replace as necessary.
3. Apply Mopar® Grey Engine RTV sealer (3) to front cover (1) following the path provided using a 3 to 4mm thick bead (3).

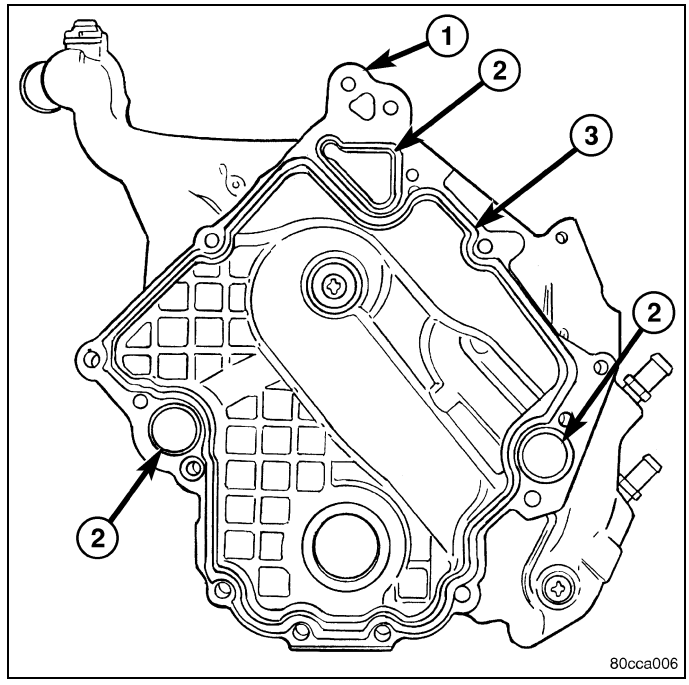

4. Install cover. Tighten fasteners in sequence as shown in to 58 N·m (43 ft. lbs.) .
5. Install crankshaft damper (Refer to 09 - Engine/Engine Block/DAMPER, Vibration - Installation).
6. Install the A/C compressor (Refer to 24 - Heating and Air Conditioning/Plumbing/COMPRESSOR, A/C - Installation).
7. Install the generator (Refer to 08 - Electrical/8F - Engine Systems/Charging/GENERATOR - Installation).
8. Install accessory drive belt tensioner assembly (Refer to 07 - Cooling/Accessory Drive/TENSIONER, Belt - Installation).
9. Install radiator upper and lower hoses.
10. Install both heater hoses.
11. Install electric fan shroud and viscous fan drive assembly.
12. Fill cooling system (Refer to 07 - Cooling - Standard Procedure).
13. Connect the battery negative cable.

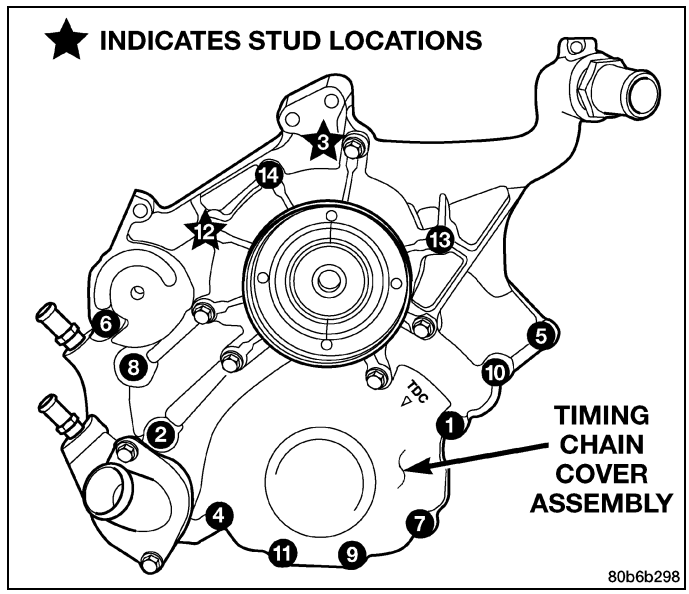

SHAFT, Idler

Removal

1. Remove the primary and secondary timing chains and sprockets(Refer to 09 - Engine/Valve Timing/CHAIN and SPROCKETS, Timing - Removal).

NOTE: To remove the idler shaft, it is necessary to tap threads into the shaft, to install the removal tool.

2. Using a 12 mm X 1.75 tap, cut threads in the idler shaft center bore.
3. Cover the radiator core with a suitable cover.

CAUTION: Use care when removing the idler shaft, Do not strike the radiator cooling fins with the slide hammer.

4. Using Slide Hammer 8517 remove the idler shaft.

Installation

1. Thoroughly clean the idler shaft bore.
2. Position the idler shaft in the bore.

NOTE: The two lubrication holes in the idler shaft do not require any special alignment.

NOTE: Before using the retaining bolt to install the idler shaft, coat the threads and the pilot on the idler shaft, with clean engine oil.

3. Using the primary idler sprocket retaining bolt and washer, carefully draw the idler shaft into the bore until fully seated.
4. Coat the idler shaft with clean engine oil.
5. Install the timing chains and sprockets(Refer to 09 - Engine/Valve Timing/CHAIN and SPROCKETS, Timing - Installation).

ENGINE, 4.7L

TABLE OF CONTENTS

page

ENGINE, 4.7L
DIAGNOSIS AND TESTING
INTRODUCTION 146
PERFORMANCE 146
MECHANICAL 148
CYLINDER COMPRESSION PRESSURE LEAKAGE 149
CYLINDER COMBUSTION PRESSURE LEAKAGE 149
STANDARD PROCEDURE
DUST COVERS AND CAPS 150
ENGINE CORE AND OIL GALLERY PLUGS. 151
REPAIR DAMAGED OR WORN THREADS . . .151
FORM-IN-PLACE GASKETS AND SEALERS 151
ENGINE GASKET SURFACE PREPARATION 153
REMOVAL 153
INSTALLATION 158
SPECIFICATIONS
SPECIFICATIONS 162
TORQUE 166
SPECIAL TOOLS 168
AIR INTAKE SYSTEM 173
CYLINDER HEAD 177
ENGINE BLOCK 213
ENGINE MOUNTING 241
LUBRICATION 247
MANIFOLDS 261
VALVE TIMING 271

Engine, 4.7L

Diagnosis and Testing

INTRODUCTION

Engine diagnosis is helpful in determining the causes of malfunctions not detected and remedied by routine maintenance.

These malfunctions may be classified as either performance (e.g., engine idles rough and stalls) or mechanical (e.g., a strange noise).

Refer to 9 - ENGINE - DIAGNOSIS AND TESTING - PERFORMANCE and Refer to 9 - ENGINE - DIAGNOSIS AND TESTING - MECHANICAL for possible causes and corrections of malfunctions.

Additional tests and diagnostic procedures may be necessary for specific engine malfunctions that can not be isolated with the Service Diagnosis charts. Information concerning additional tests and diagnosis is provided within the following diagnosis:

- Cylinder Compression Pressure Test.
- Cylinder Combustion Pressure Leakage Test.
- Engine Cylinder Head Gasket Failure Diagnosis.
- Intake Manifold Leakage Diagnosis.

PERFORMANCE

CONDITION	POSSIBLE CAUSE	CORRECTION
ENGINE WILL NOT START	1. Weak battery	1. Charge or replace as necessary.
	2. Corroded or loose battery connections.	2. Clean and tighten battery connections. Apply a coat of light mineral grease to the terminals.
	3. Faulty starter.	3. (Refer to 08 - Electrical/8F - Engine Systems/Starting - Diagnosis and Testing).
	4. Faulty coil or control unit.	4.(Refer to 08 - Electrical/8I - Ignition Control/COIL, Ignition - Removal).
	5. Incorrect spark plug gap.	5. Correct as necessary.
	6. Dirt or water in fuel system.	6. Clean system and replace fuel filter.
	7. Faulty fuel pump, relay or wiring.	7. Repair or replace as necessary.
ENGINE STALLS OR ROUGH IDLE	1. Dirty or incorrectly gapped spark plugs.	1. Correct as necessary.
	2. Idle mixture too lean or too rich.	2. Refer to Powertrain Diagnosis Information.
	3. Vacuum leak.	3. Inspect intake manifold and vacuum hoses, repair or replace as necessary.
	4. Faulty coil.	4. (Refer to 08 - Electrical/8I - Ignition Control/COIL, Ignition - Removal).
	5. Incorrect engine timing.	5. (Refer to 09 - Engine/Valve Timing - Standard Procedure).

CONDITION	POSSIBLE CAUSE	CORRECTION
ENGINE LOSS OF POWER	1. Dirty or incorrectly gapped spark plugs.	1. Correct as necessary.
	2. Dirt or water in fuel system.	2. Clean system and replace fuel filter.
	3. Faulty fuel pump.	3. Refer to the Appropriate Diagnostic Information
	4. Blown cylinder head gasket.	4. Replace cylinder head gasket.
	5. Low compression.	5. (Refer to 09 - Engine - Diagnosis and Testing).
	6. Burned, warped or pitted valves.	6. Replace as necessary.
	7. Plugged or restricted exhaust system.	7. Inspect and replace as necessary.
	8. Faulty coil.	8. (Refer to 08 - Electrical/8I - Ignition Control/COIL, Ignition - Removal).
ENGINE MISSES ON ACCELERATION	1. Spark plugs dirty or incorrectly gapped.	1. Correct as necessary.
	2. Dirt in fuel system.	2. Clean fuel system.
	3. Burned, warped or pitted valves.	3. Replace as necessary.
	4. Faulty coil.	4. (Refer to 08 - Electrical/8I - Ignition Control/COIL, Ignition - Removal).
ENGINE MISSES AT HIGH SPEED	1. Spark plugs dirty or incorrectly gapped.	1. Correct as necessary.
	2. Faulty coil.	2. (Refer to 08 - Electrical/8I - Ignition Control/COIL, Ignition - Removal).
	3. Dirt or water in fuel system.	3. Clean system and replace fuel filter.

MECHANICAL

CONDITION	POSSIBLE CAUSES	CORRECTIONS
NOISY VALVES	1. High or low oil level in crankcase.	1. (Refer to 04 - Vehicle Quick Reference/Capacities and Recommended Fluids - Specifications).
	2. Thin or diluted oil.	2. Change oil and filter.
	3. Low oil pressure.	3. Check oil pump, if OK, check rod and main bearings for excessive wear.
	4. Dirt in lash adjusters.	4. Replace as necessary.
	5. Worn rocker arms.	5. Replace as necessary.
	6. Worn lash adjusters	6. Replace as necessary.
	7. Worn valve guides.	7. Inspect the valve guides for wear, cracks or looseness. If either condition exists, replace the cylinder head (Refer to 09 - Engine/Cylinder Head - Removal)(Refer to 09 - Engine/Cylinder Head - Removal).
	8. Excessive runout of valve seats on valve faces.	8. (Refer to 09 - Engine/Cylinder Head/VALVES, Intake and Exhaust - Standard Procedure).
CONNECTING ROD NOISE	1. Insufficient oil supply.	1. (Refer to 04 - Vehicle Quick Reference/Capacities and Recommended Fluids - Specifications).
	2. Low oil pressure.	2. Check oil pump, if OK, check rod and main bearings for excessive wear.
	3. Thin or diluted oil.	3. Change oil and filter.
	4. Excessive bearing clearance.	4. Replace as necessary.
	5. Connecting rod journal out-of-round.	5. Service or replace crankshaft.
	6. Misaligned connecting rods.	6. Replace bent connecting rods.
MAIN BEARING NOISE	1. Insufficient oil supply.	1. (Refer to 04 - Vehicle Quick Reference/Capacities and Recommended Fluids - Specifications).
	2. Low oil pressure.	2. Check oil pump, if OK, check rod and main bearings for excessive wear.
	3. Thin or diluted oil.	3. Change oil and filter.
	4. Excessive bearing clearance.	4. Replace as necessary.
	5. Excessive end play.	5. Check thrust washers for wear.
	6. Crankshaft journal out-of round.	6. Service or replace crankshaft.
	7. Loose flywheel or torque converter.	7. Tighten to correct torque

CYLINDER COMPRESSION PRESSURE LEAKAGE

NOTE: The results of a cylinder compression pressure test can be utilized to diagnose several engine malfunctions.

NOTE: Ensure the battery is completely charged and the engine starter motor is in good operating condition. Otherwise the indicated compression pressures may not be valid for diagnosis purposes.

1. Clean the spark plug recesses with compressed air.
2. Remove the spark plugs and record the cylinder number of each spark plug for future reference.
3. Inspect the spark plug electrodes for abnormal firing indicators such as fouled, hot, oily, etc.
4. Disable the fuel system (Refer to 14 - Fuel System/Fuel Delivery - Standard Procedure) and preform the fuel system pressure release procedure.
5. Insert a compression pressure gauge and rotate the engine with the engine starter motor for three revolutions.
6. Record the compression pressure on the 3rd revolution. Continue the test for the remaining cylinders.

NOTE: The recommended compression pressures are to be used only as a guide to diagnosing engine problems. An engine should not be disassembled to determine the cause of low compression unless some malfunction is present.

7. Compression should not be less than 689 kPa (100 psi) and not vary more than 25 percent from cylinder to cylinder.
8. If one or more cylinders have abnormally low compression pressures, repeat the compression test.

NOTE: If the same cylinder or cylinders repeat an abnormally low reading on the second compression test, it could indicate the existence of a problem in the cylinder in question.

9. If one or more cylinders continue to have abnormally low compression pressures, perform the cylinder combustion pressure leakage test (Refer to 09 - Engine - Diagnosis and Testing)

CYLINDER COMBUSTION PRESSURE LEAKAGE

The combustion pressure leakage test provides an accurate means for determining engine condition.

Combustion pressure leakage testing will detect:

- Exhaust and intake valve leaks (improper seating).
- Leaks between adjacent cylinders or into water jacket.
- Any causes for combustion/compression pressure loss.

1. Check the coolant level and fill as required. DO NOT install the radiator cap.
2. Start and operate the engine until it attains normal operating temperature, then turn the engine OFF.
3. Remove the spark plugs.
4. Remove the oil filler cap.
5. Remove the air cleaner hose.
6. Calibrate the tester according to the manufacturer's instructions. The shop air source for testing should maintain 483 kPa (70 psi) minimum, 1,379 kPa (200 psi) maximum and 552 kPa (80 psi) recommended.
7. Perform the test procedures on each cylinder according to the tester manufacturer's instructions. Set piston of cylinder to be tested at TDC compression,While testing, listen for pressurized air escaping through the throttle body, tailpipe and oil filler cap opening. Check for bubbles in the radiator coolant.

All gauge pressure indications should be equal, with no more than 25% leakage.

FOR EXAMPLE: At 552 kPa (80 psi) input pressure, a minimum of 414 kPa (60 psi) should be maintained in the cylinder.

Refer to CYLINDER COMBUSTION PRESSURE LEAKAGE DIAGNOSIS CHART.

CYLINDER COMBUSTION PRESSURE LEAKAGE DIAGNOSIS CHART

CONDITION	POSSIBLE CAUSE	CORRECTION
AIR ESCAPES THROUGH THROTTLE BODY	Intake valve bent, burnt, or not seated properly	Inspect valve and valve seat. Reface or replace, as necessary. Inspect valve springs. Replace as necessary.

CYLINDER COMBUSTION PRESSURE LEAKAGE DIAGNOSIS CHART, continued

CONDITION	POSSIBLE CAUSE	CORRECTION
AIR ESCAPES THROUGH TAILPIPE	Exhaust valve bent, burnt, or not seated properly	Inspect valve and valve seat. Reface or replace, as necessary. Inspect valve springs. Replace as necessary.
AIR ESCAPES THROUGH RADIATOR	Head gasket leaking or cracked cylinder head or block	Remove cylinder head and inspect. Replace defective part
MORE THAN 50% LEAKAGE FROM ADJACENT CYLINDERS	Head gasket leaking or crack in cylinder head or block between adjacent cylinders	Remove cylinder head and inspect. Replace gasket, head, or block as necessary
MORE THAN 25% LEAKAGE AND AIR ESCAPES THROUGH OIL FILLER CAP OPENING ONLY	Stuck or broken piston rings; cracked piston; worn rings and/or cylinder wall	Inspect for broken rings or piston. Measure ring gap and cylinder diameter, taper and out-of-round. Replace defective part as necessary

Standard Procedure

DUST COVERS AND CAPS

Due to the high amounts of failures cased by dust, dirt, moisture and other foreign debris being introduced to the engine during service. Covers or caps are needed to reduce the possible damage that can be caused or created.

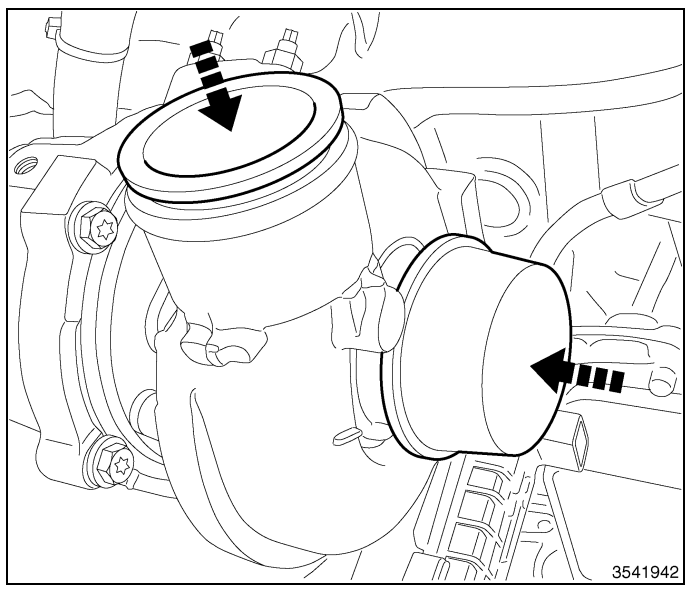

Covers over openings will reduce any possibilities for foreign materials to enter the engine systems. Using miller tool Set, Universal Protective Cap 10368, Select the appropriated cover needed to the procedure.

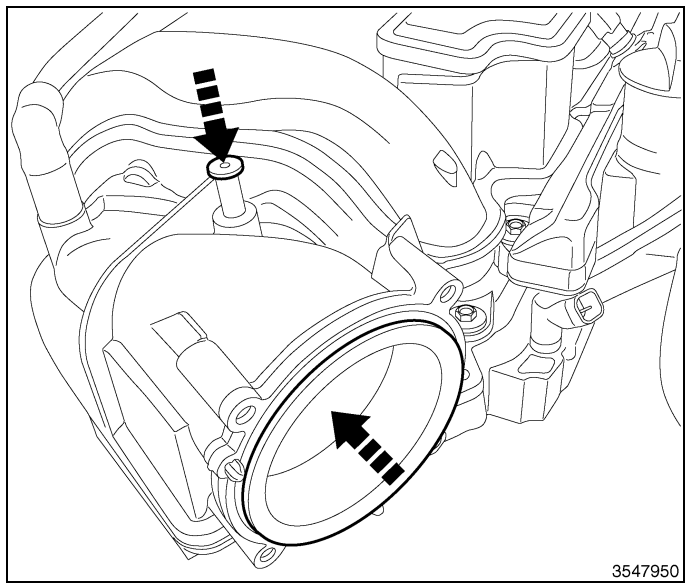

ENGINE CORE AND OIL GALLERY PLUGS

Using a blunt tool such as a drift and a hammer, strike the bottom edge of the cup plug. With the cup plug rotated, grasp firmly with pliers or other suitable tool and remove plug.

CAUTION: Do not drive cup plug into the casting as restricted cooling can result and cause serious engine problems.

Thoroughly clean inside of cup plug hole in cylinder block or head. Be sure to remove old sealer. Lightly coat inside of cup plug hole with Mopar® Stud and Bearing Mount. Make certain the new plug is cleaned of all oil or grease. Using proper drive plug, drive plug into hole so that the sharp edge of the plug is at least 0.5 mm (0.020 in.) inside the lead-in chamfer.

It is not necessary to wait for curing of the sealant. The cooling system can be refilled and the vehicle placed in service immediately.

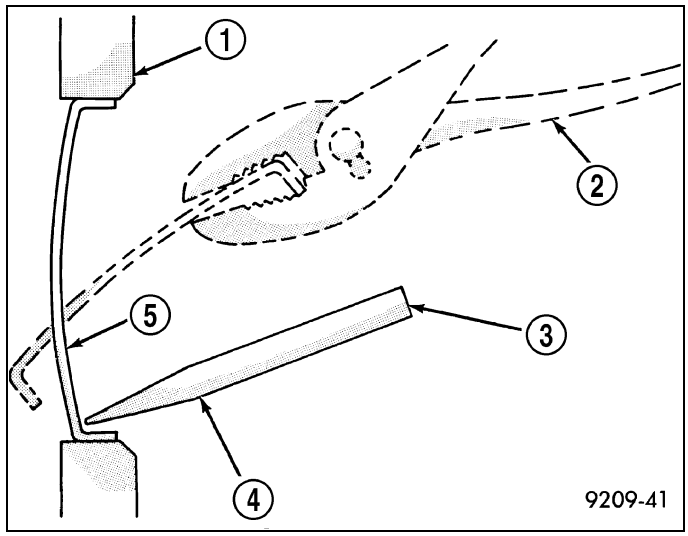

REPAIR DAMAGED OR WORN THREADS

CAUTION: Be sure that the tapped holes maintain the original center line.

Damaged or worn threads can be repaired. Essentially, this repair consists of:

- Drilling out worn or damaged threads.
- Tapping the hole with a special Heli-Coil Tap, or equivalent.
- Installing an insert into the tapped hole to bring the hole back to its original thread size.

FORM-IN-PLACE GASKETS AND SEALERS

NOTE: All of the sealants mentioned below are not used on every engine, they are listed as general reference guide. See service information for specific sealer usage.

There are numerous places where form-in-place gaskets are used on the engine. Care must be taken when applying form-in-place gaskets to assure obtaining the desired results. **Do not use form-in-place gasket material unless specified.** Bead size, continuity, and location are of great importance. Too thin a bead can result in leakage while too much can result in spill-over which can break off and obstruct fluid feed lines. A continuous bead of the proper width is essential to obtain a leak-free gasket. All sealing surfaces that use form-in-place gaskets and sealers **must** free of

grease or oil. Surfaces should be cleaned with Mopar® brake parts cleaner prior to sealer application. After the sealer is applied, the parts should be assembled in no more than 10 minutes.

There are numerous types of form-in-place gasket materials that are used in the engine area. Mopar® Engine RTV GEN II, Mopar® ATF-RTV, and Mopar® Gasket Maker gasket materials, each have different properties and can not be used in place of the other.

MOPAR® ENGINE RTV GEN II is used to seal components exposed to engine oil. This material is a specially designed black silicone rubber RTV that retains adhesion and sealing properties when exposed to engine oil. Moisture in the air causes the material to cure. This material is available in three ounce tubes and has a shelf life of one year. After one year this material will not properly cure. Always inspect the package for the expiration date before use.

MOPAR® ATF RTV is a specifically designed black silicone rubber RTV that retains adhesion and sealing properties to seal components exposed to automatic transmission fluid, engine coolants, and moisture. This material is available in three ounce tubes and has a shelf life of one year. After one year this material will not properly cure. Always inspect the package for the expiration date before use.

MOPAR® GASKET MAKER is an anaerobic type gasket material. The material cures in the absence of air when squeezed between two metallic surfaces. It will not cure if left in the uncovered tube. The anaerobic material is for use between two machined surfaces. Do not use on flexible metal flanges.

MOPAR® BED PLATE SEALANT is a unique (green-in-color) anaerobic type gasket material that is specially made to seal the area between the bed plate and cylinder block without disturbing the bearing clearance or alignment of these components. The material cures slowly in the absence of air when torqued between two metallic surfaces, and will rapidly cure when heat is applied.

MOPAR® GASKET SEALANT is a slow drying, permanently soft sealer. This material is recommended for sealing threaded fittings and gaskets against leakage of oil and coolant. Can be used on threaded and machined parts under all temperatures. This material also will prevent corrosion. Mopar® Gasket Sealant is available in a 13 oz. aerosol can or 4oz./16 oz. can w/applicator.

SEALER APPLICATION

Mopar® Gasket Maker material should be applied sparingly 1 mm (0.040 in.) diameter or less of sealant to one gasket surface. Be certain the material surrounds each mounting hole. Excess material can easily be wiped off. Components should be torqued in place within 15 minutes. The use of a locating dowel is recommended during assembly to prevent smearing material off the location.

Mopar® Engine RTV GEN II or ATF RTV gasket material should be applied in a continuous bead approximately 3 mm (0.120 in.) in diameter. All mounting holes must be circled. For corner sealing and “T” joint locations, a 3.17 or 6.35 mm (1/8 or 1/4 in.) drop is placed in the center of the gasket contact area. Uncured sealant may be removed with a shop towel. Components should be torqued in place while the sealant is still wet to the touch (within 10 minutes). The usage of a locating dowel is recommended during assembly to prevent smearing material off the location.

Mopar® Gasket Sealant in an aerosol can should be applied using a thin, even coat sprayed completely over both surfaces to be joined, and both sides of a gasket. Then proceed with assembly. Material in a can w/applicator can be brushed on evenly over the sealing surfaces.

ENGINE GASKET SURFACE PREPARATION

To ensure engine gasket sealing, proper surface preparation must be performed, especially with the use of aluminum engine components and multi-layer steel cylinder head gaskets.

Never use the following to clean gasket surfaces:

- Metal scraper (1).
- Abrasive pad or paper to clean cylinder block and head
- High speed power tool with an abrasive pad (2).
- High speed power tool with 3M Roloc™ Bristle Disc (white or yellow) or a wire brush (3).

NOTE: Multi-Layer Steel (MLS) head gaskets require a scratch free sealing surface.

CAUTION: The use of unapproved cleaning methods can cause severe engine damage.

Only use the following for cleaning gasket surfaces:

- Solvent or a commercially available gasket remover.
- Plastic or wood scraper (4).

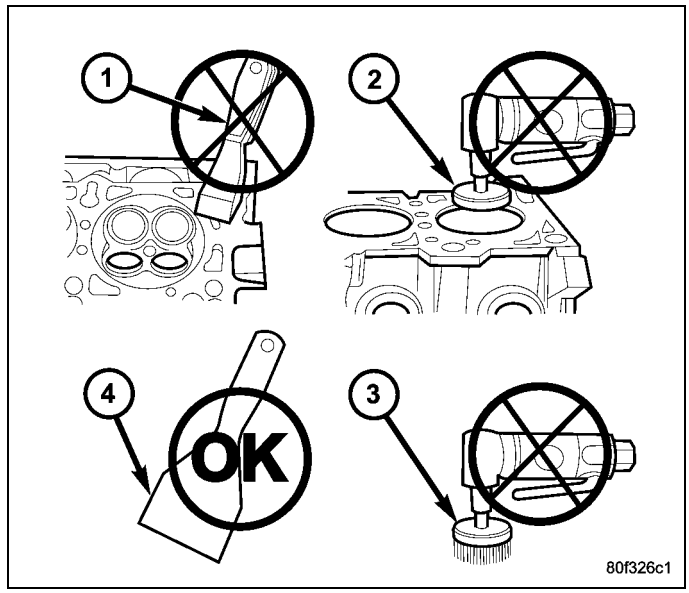

Removal

NOTE: This procedure applies to both the 4X2 and 4X4 vehicles, steps that apply to the 4X4 vehicle only, are identified.

1. Release fuel rail pressure (Refer to 14 - Fuel System/ Fuel Delivery - Standard Procedure) then disconnect the fuel supply quick connect fitting at the fuel rail (Refer to 14 - Fuel System/Fuel Delivery/FITTING, Quick Connect - Standard Procedure).
2. Disconnect the battery negative and positive cables.
3. Raise vehicle on hoist.
4. Remove exhaust crossover pipe (5) from exhaust manifolds.
5. **4X4 vehicles** Disconnect axle vent tube from left side engine mount.

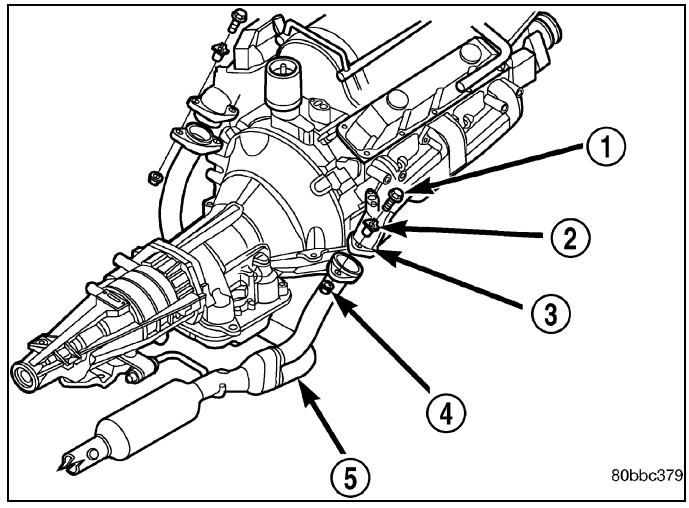

6. Remove the through bolt retaining nut and bolt from both the left and right side engine mounts.
7. **4X4 vehicles** Remove locknut from left and right side engine mount brackets.
8. Disconnect two ground straps from the lower left hand side and one ground strap from the lower right hand side of the engine.
9. Disconnect crankshaft position sensor (1).

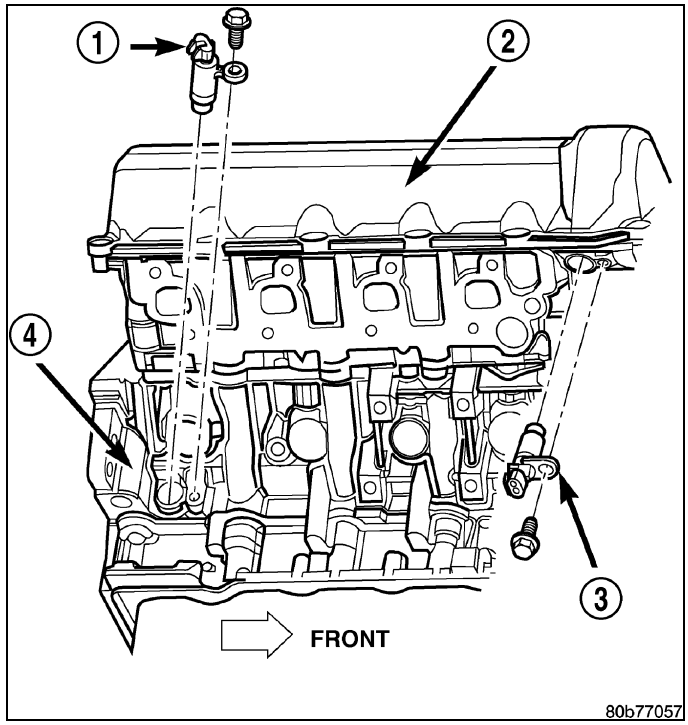

NOTE: The following step applies to 4X4 vehicles equipped with automatic transmission only.

10. **4X4 vehicles** Remove the axle isolator bracket from the engine, transmission and the axle.
11. Remove structural cover (Refer to 09 - Engine/Engine Block/COVER, Structural Dust - Removal).

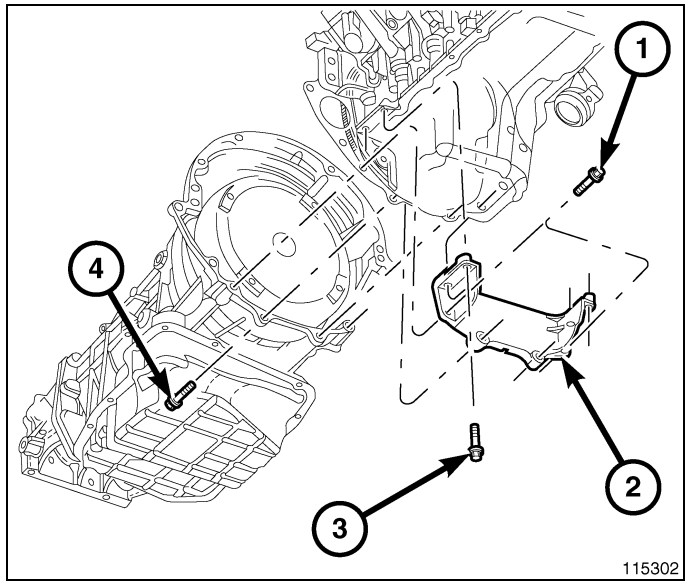

12. Remove starter (4) (Refer to 08 - Electrical/8F - Engine Systems/Starting/STARTER - Removal).
13. Drain cooling system (Refer to 07 - Cooling - Standard Procedure).
14. Remove torque converter bolts (Automatic Transmission Only).
15. Remove transmission to engine mounting bolts.
16. Disconnect the engine block heater power cable from the block heater, if equipped.
17. Lower vehicle.
18. Remove throttle body resonator assembly and air inlet hose.
19. Disconnect throttle and speed control cables.

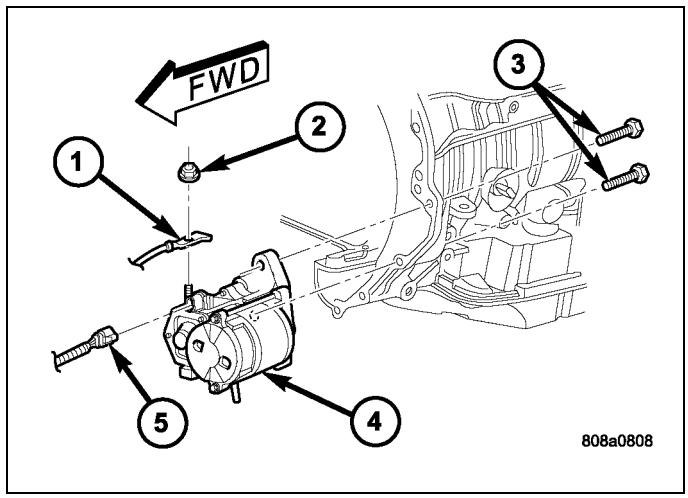

20. Disconnect tube from both the left and right side crankcase breathers (1). Remove breathers.

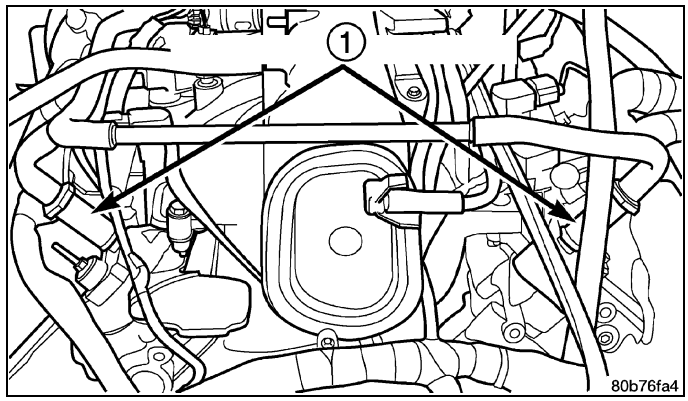

21. Discharge A/C system (Refer to 24 - Heating and Air Conditioning/Plumbing - Standard Procedure).
22. Remove A/C compressor (2) (Refer to 24 - Heating and Air Conditioning/Plumbing/COMPRESSOR, A/C - Removal).
23. Remove shroud, fan assembly and accessory drive belt.
24. Disconnect transmission oil cooler lines at the radiator.
25. Disconnect radiator upper and lower hoses.
26. Remove radiator (Refer to 07 - Cooling/Engine/RADIATOR, Engine Cooling - Removal), A/C condenser (Refer to 24 - Heating and Air Conditioning/Plumbing/CONDENSER, A/C - Removal) and transmission oil cooler.

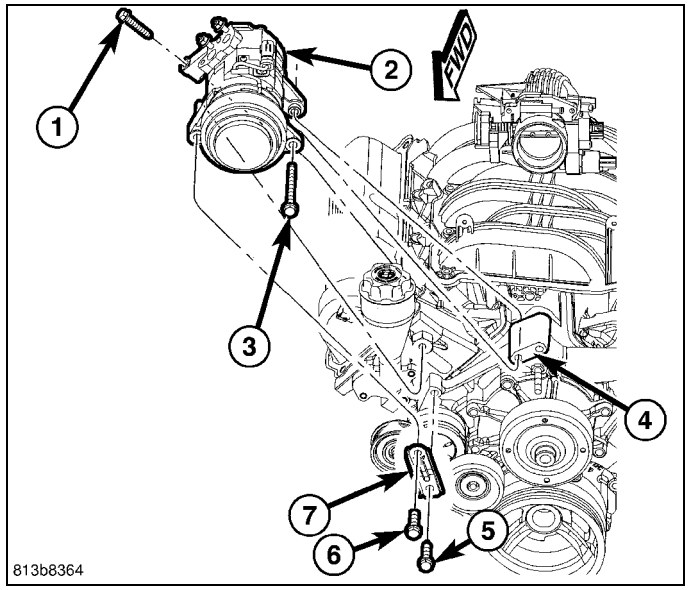

27. Remove generator (3) (Refer to 08 - Electrical/8F - Engine Systems/Charging/GENERATOR - Removal).

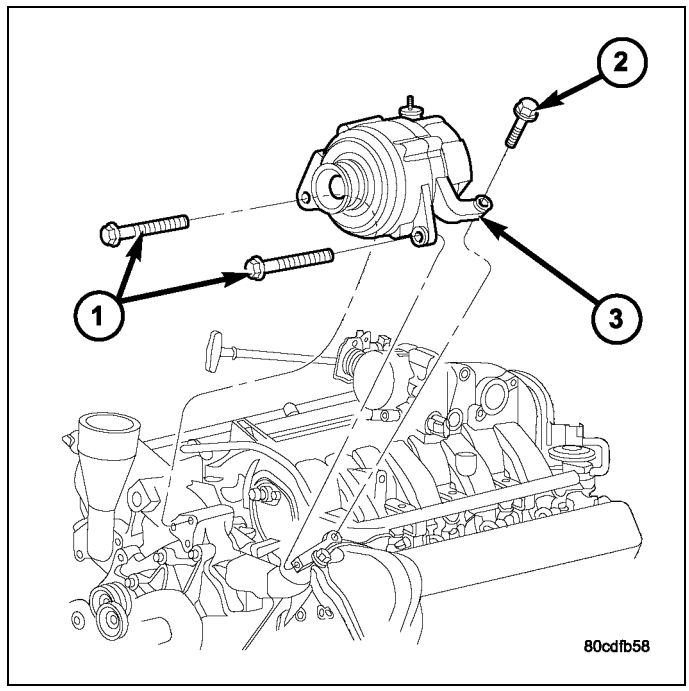

28. Disconnect the two heater hoses from the timing chain cover and heater core.
29. Unclip (2) and remove heater hoses (1) and tubes from the intake manifold.
30. Remove power steering pump and position out of the way.
31. Remove intake manifold.

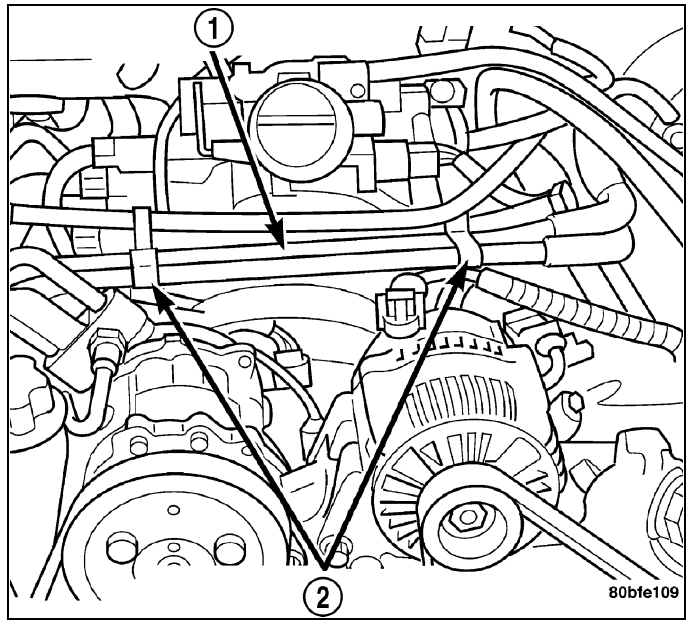

32. Install Engine Lifting Fixture 10101.

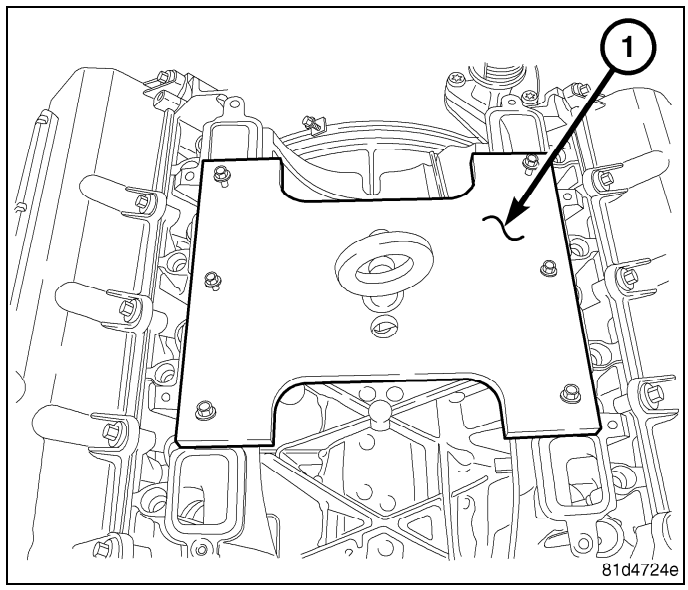

33. Disconnect body ground strap (1) at the right side cowl.

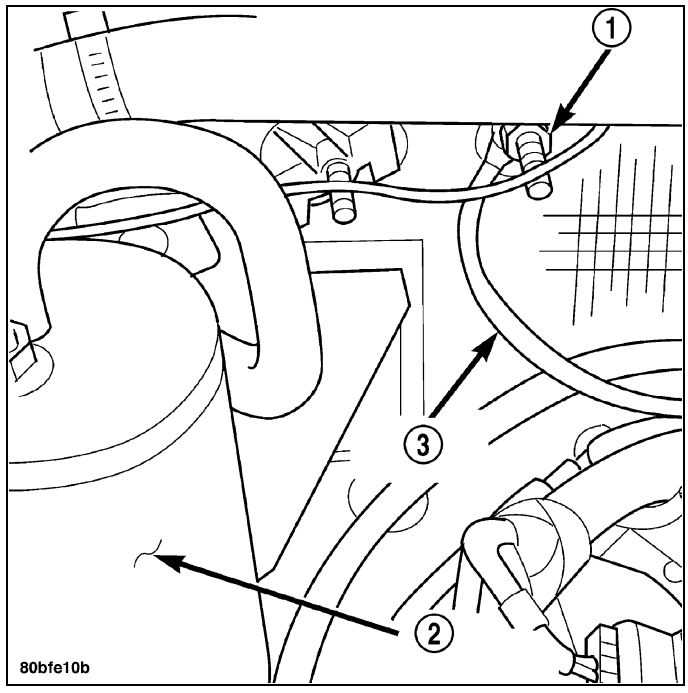

34. Disconnect ground strap (1) at the left side cowl.

NOTE: It will be necessary to support the transmission in order to remove the engine.

35. Position a suitable jack under the transmission.
36. Remove engine from the vehicle.

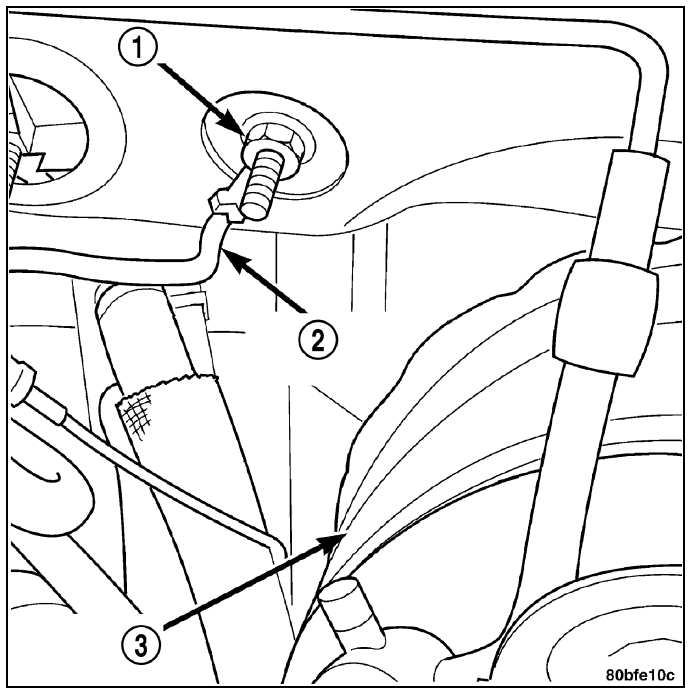

Installation

1. Position engine in the vehicle.
2. Position both the left and right side engine mount brackets and install the through bolts and nuts. Tighten nuts to **4X2 vehicles**95 N·m (70 ft. lbs.).**4X4 vehicles**102 N·m (75 ft. lbs.).
3. **4X4 vehicles**Install locknuts onto the engine mount brackets. Tighten locknuts to 41 N·m (30 ft. lbs.).
4. Remove jack from under the transmission.
5. Remove Engine Lifting Fixture 10101 (1).

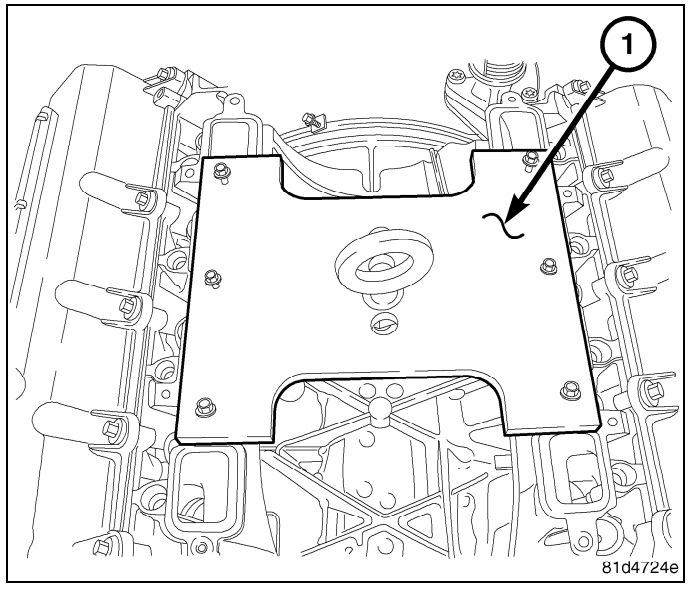

6. Connect right (1) side ground straps.

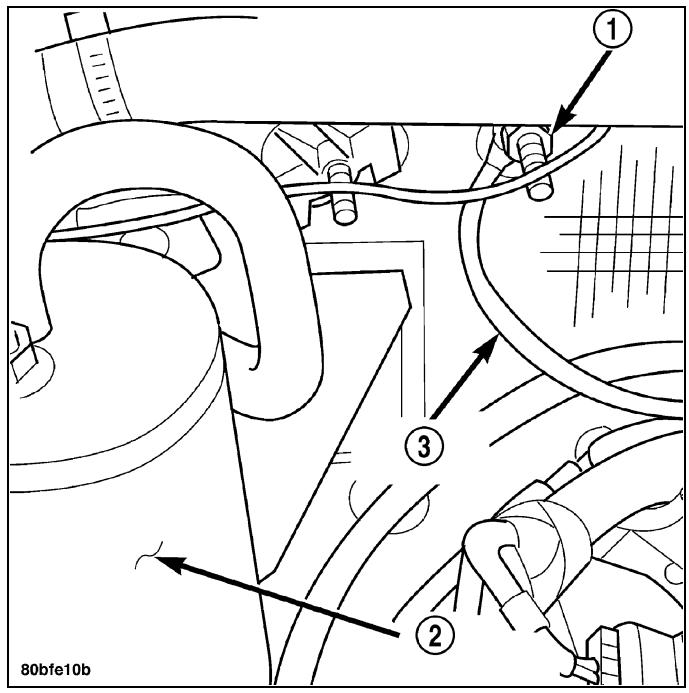

7. Connect left (1) side ground straps.
8. Install intake manifold.
9. Position generator wiring behind the oil dipstick tube, then install the oil dipstick tube upper mounting bolt.
10. Install power steering pump.
11. Connect fuel supply line quick connect fitting (Refer to 14 - Fuel System/Fuel Delivery/FITTING, Quick Connect - Standard Procedure).

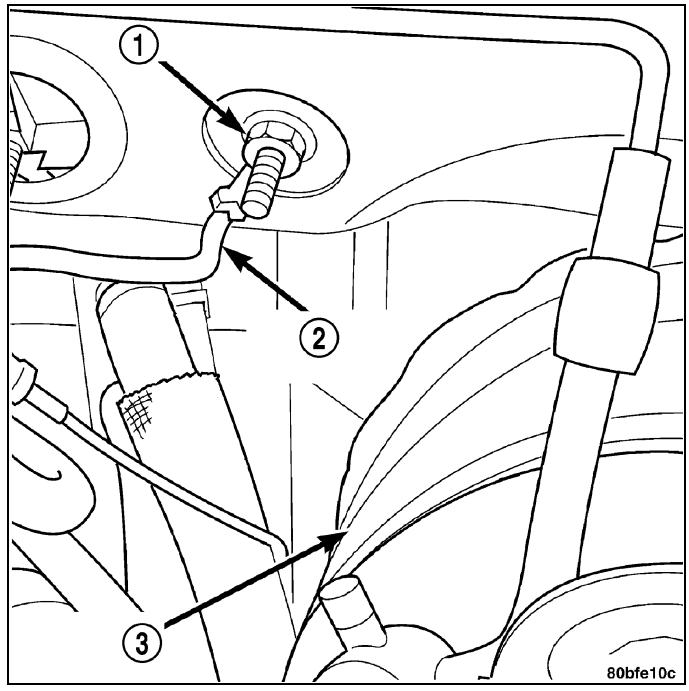

12. Install generator(Refer to 08 - Electrical/8F - Engine Systems/Charging/GENERATOR - Installation)
13. Install A/C condenser (Refer to 24 - Heating and Air Conditioning/Plumbing/CONDENSER, A/C - Installation)
14. Install radiator (Refer to 07 - Cooling/Engine/RADIATOR, Engine Cooling - Installation) and transmission oil cooler.
15. Connect radiator upper and lower hoses.
16. Connect the transmission oil cooler lines to the radiator.
17. Install accessory drive belt, fan assembly and shroud.

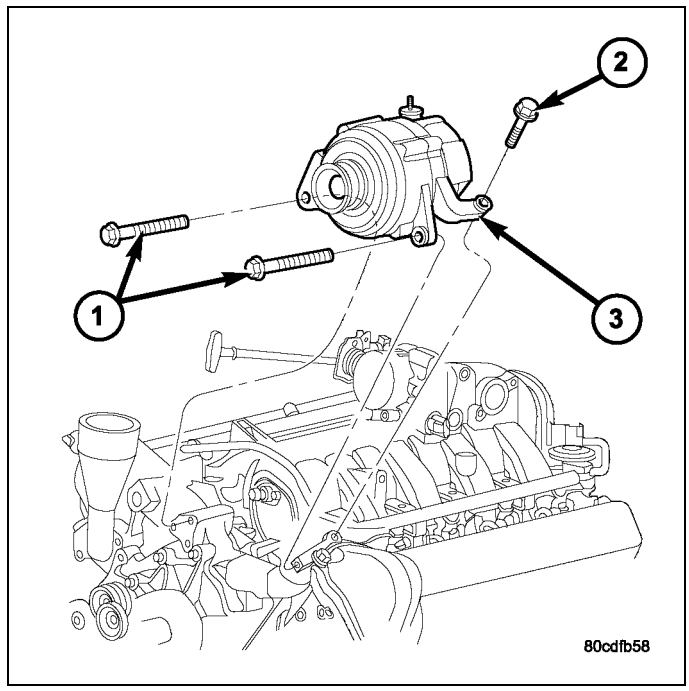

18. Install A/C compressor (2)(Refer to 24 - Heating and Air Conditioning/Plumbing/COMPRESSOR, A/C - Installation)
19. Install throttle body resonator assembly and air inlet hose. Tighten clamps 4 N·m (35 in. lbs.).
20. Raise vehicle.

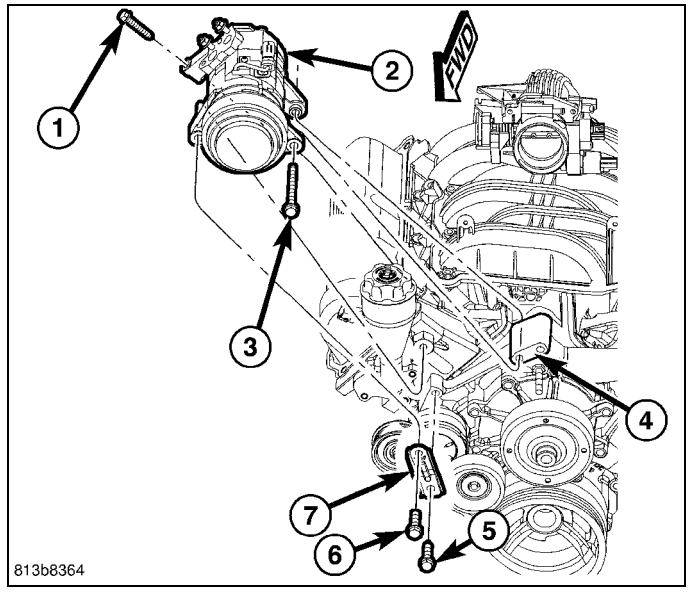

21. Install transmission to engine mounting bolts. Tighten the bolts to 41 N·m (30 ft. lbs.).
22. Install torque converter bolts (Automatic Transmission Only).
23. Connect crankshaft position sensor (1).

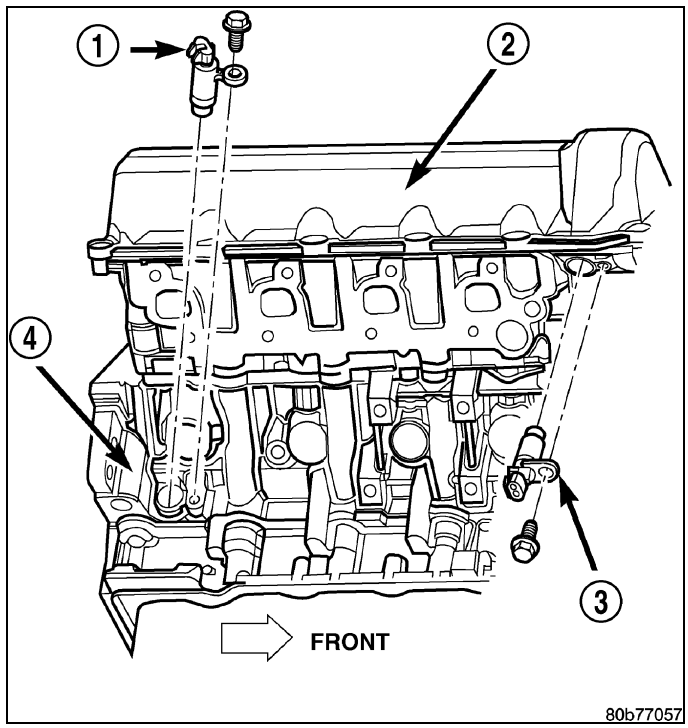

24. **4X4 vehicles**Position and install the axle isolator bracket onto the axle, transmission and engine block. Tighten bolts to specification (Refer to 09 - Engine - Specifications).
25. Install starter (4) (Refer to 08 - Electrical/8F - Engine Systems/Starting/STARTER - Installation).

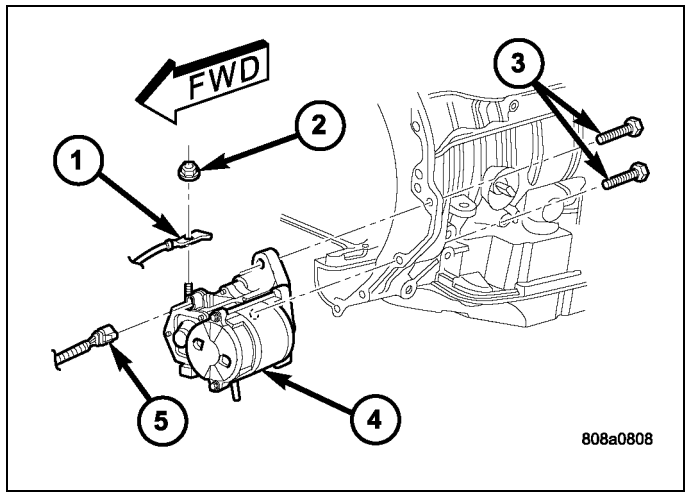

CAUTION: The structural cover requires a specific torque sequence. Failure to follow this sequence may cause severe damage to the cover.

26. Install structural cover (Refer to 09 - Engine/Engine Block/COVER, Structural Dust - Installation).

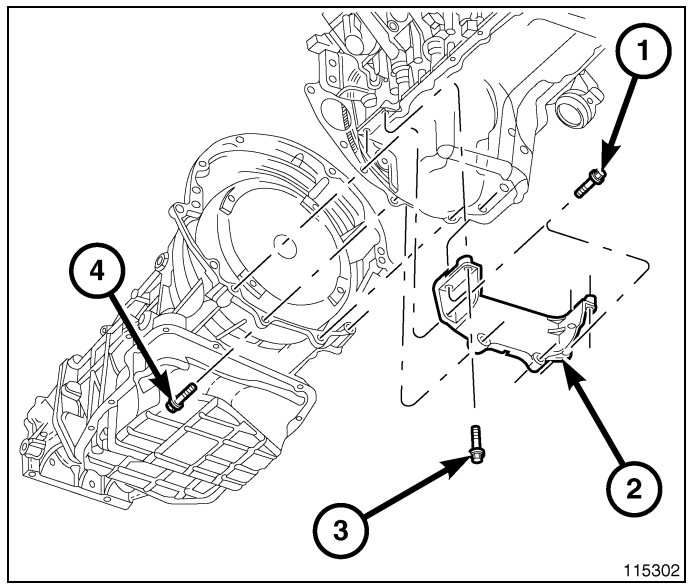

27. Install exhaust crossover pipe (5).
28. Install engine block heater power cable, If equipped.
29. **4X4 vehicles**Connect axle vent tube to left side engine mount.
30. Lower vehicle.
31. Fill engine with clean oil.
32. Recharge the A/C system (Refer to 24 - Heating and Air Conditioning/Plumbing - Standard Procedure).
33. Refill the engine cooling system (Refer to 07 - Cooling - Standard Procedure).
34. Connect the battery positive and negative cables.
35. Start the engine and check for leaks.

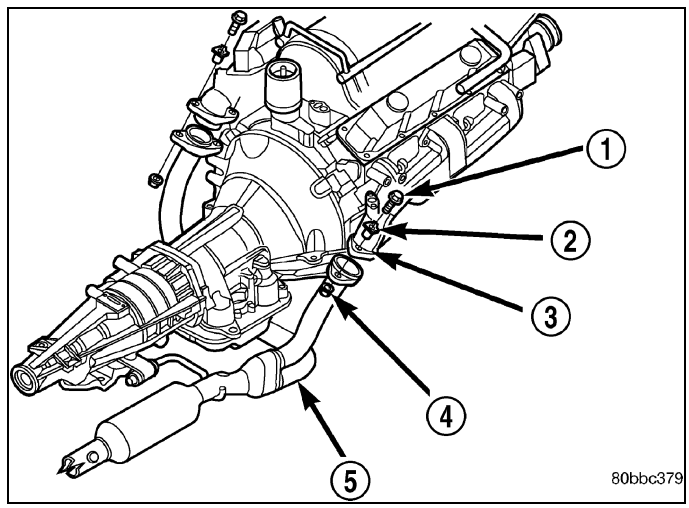

Specifications

SPECIFICATIONS

ENGINE - GENERAL

DESCRIPTION	SPECIFICATION	
	Metric	Standard
Displacement	4.7 Liters / 4701 cc	287 Cubic Inches
Bore	93.0 mm	3.66 in.
Stroke	86.5 mm	3.40 in.
Engine Type	90° SOHC V-8 16-Valve	
Compression Ratio	9.6:1	
Max. Variation Between Cylinders	25%	
Horsepower	303 BHP @ 5650 RPM	
Torque	330 LB-FT @ 3950 RPM	
Lead Cylinder	#1 Left Bank	
Firing Order	1-8-4-3-6-5-7-2	

CYLINDER BLOCK

DESCRIPTION	SPECIFICATION	
	Metric	Standard
Bore Diameter	93.010 ± .0075 mm	3.6619 ± 0.0003 in.
Out of Round (MAX)	0.076 mm	0.003 in.
Taper (MAX)	0.051 mm	0.002 in.

PISTONS

DESCRIPTION	SPECIFICATION	
	Metric	Standard
Diameter	92.975 mm	3.6605 in.
Weight	366 grams	12.9 oz.
No. 1 Ring Groove Diameter	83.37 - 83.13 mm	3.282 - 3.273 in.
No. 2 Ring Groove Diameter	82.833 - 83.033 mm	3.261 - 3.310 in.
No. 3 Ring Groove Diameter	83.88 - 84.08 mm	3.302 - 3.310 in.

PISTON PINS

DESCRIPTION	SPECIFICATION	
	Metric	Standard
Clearance In Piston	0.010 - 0.019 mm	0.0004 - 0.0008 in.
Diameter	24.013 - 24.016 mm	0.9454 - 0.9455 in.

PISTON RINGS

DESCRIPTION	SPECIFICATION	
	Metric	Standard
Top Compression Ring Gap	0.20 - 0.36 mm	0.0079 - 0.0142 in.
Second Compression Ring Gap	0.37 - 0.63 mm	0.0146 - 0.0249 in.
Oil Control (Steel Rails) Ring Gap	0.25 - 0.76 mm	0.0099 - 0.30 in.
Top Compression Ring Side Clearance	.051 - .094 mm	0.0020 - 0.0037 in.
Second Compression Ring Side Clearance	0.040 - 0.080 mm	0.0016 - 0.0031 in.
Oil Ring (Steel Ring) Ring Side Clearance	.019 - .229 mm	.0007 - .0091 in.
Top Compression Ring Width	1.472 - 1.490 mm	0.057 - 0.058 in.
Second Compression Ring Width	1.472 - 1.490 mm	0.057 - 0.058 in.
Oil Ring (Steel Rails) Ring Width	0.445 - 0.470 mm	0.017 - 0.018 in.

CONNECTING RODS

DESCRIPTION	SPECIFICATION	
	Metric	Standard
Bearing Clearance	0.015 - 0.055 mm	0.0006 - 0.0022 in.
Side Clearance	0.10 - 0.35 mm	0.004 - 0.0138 in.
Piston Pin Bore Diameter (Interference Fit)	.025 - .048 mm	0.001 - 0.0019 in.
Bearing Bore Out of Round (MAX)	0.004 mm	0.0002 in.
Total Weight (Less Bearing)	555 grams	19.5771 oz.

CRANKSHAFT

DESCRIPTION	SPECIFICATION	
	Metric	Standard
Main Bearing Journal Diameter	63.488 - 63.512 mm	2.4996 - 2.5005 in.
Bearing Clearance	0.004 - 0.034 mm	0.0002 - 0.0013 in.
Out of Round (MAX)	0.005 mm	0.0004 in.
Taper (MAX)	0.008 mm	0.0004 in.
End Play	0.052 - 0.282 mm	0.0021 - 0.0112 in.
End Play (MAX)	0.282 mm	0.0112 in.
Connecting Rod Journal Diameter	50.992 - 51.008 mm	2.0076 - 2.0082 in.
Bearing Clearance	0.010 - 0.048	0.0004 - 0.0019 in.
Out of Round (MAX)	0.005 mm	0.0002 in.
Taper (MAX)	0.008 mm	0.0004 in.

CAMSHAFT

DESCRIPTION	SPECIFICATION	
	Metric	Standard
Bore Diameter	26.02 - 26.04 mm	1.0245 - 1.0252 in.
Bearing Journal Diameter	25.973 - 25.995 mm	1.0227 - 1.0235 in.
Bearing Clearance	0.025 - 0.065 mm	0.001 - 0.0026 in.
Bearing Clearance (MAX)	0.065 mm	0.0026 in.
End Play	.075 - .200 mm	0.003 - 0.0079 in.
End Play (MAX)	.200 mm	0.0079 in.

VALVE TIMING

DESCRIPTION	LOCATION	SPECIFICATION
Intake Valve Open	BTDC	4.4°
Intake Valve Closed	ATDC	239.1°
Exhaust Valve Open	BTDC	240.5°

VALVE TIMING, continued

DESCRIPTION	LOCATION	SPECIFICATION
Exhaust Valve Closed	ATDC	13.2°
Intake Valve Duration	243.5°	
Exhaust Valve Duration	253.70°	
Valve Overlap	17.6°	

VALVES

DESCRIPTION	SPECIFICATION	
	Metric	Standard
Intake Head Diameter	48.52 - 48.78 mm	1.9103 - 1.9205 in.
Exhaust Head Diameter	36.87 - 37.13 mm	1.4516 - 1.4618 in.
Intake Length (Overall)	113.45 - 114.21 mm	4.4666 - 4.4965
Exhaust Length (Overall)	114.92 - 115.68 mm	4.5244 - 4.5543 in.
Intake Stem Diameter	6.931 - 6.957 mm	0.2729 - 0.2739 in.
Exhaust Stem Diameter	6.902 - 6.928 mm	0.2717 - 0.2728 in.
Intake Stem-to-Guide Clearance	0.018 - 0.069 mm	0.0008 - 0.0028 in.
Exhaust Stem-to-Guide	0.047 - 0.098 mm	0.0019 - 0.0039 in.
Intake Maximum Stem-to-Guide Clearance (Rocking Method)	0.069 mm	0.0028 in.
Exhaust Maximum Stem-to-Guide Clearance (Rocking Method)	0.098 mm	0.0039 in.
Intake Valve Lift (Zero Lash)	11.25 mm	0.443 in.
Exhaust Valve Lift (Zero Lash)	10.90 mm	0.4292 in.
Face Angle	45° - 45.5°	

VALVE SPRING

DESCRIPTION	SPECIFICATION	
	Metric	Standard
Intake Free Length (Approx)	49.0 mm	1.9291 in.
Exhaust Free Length (Approx)	49.0 mm	1.9291 in.
Intake and Exhaust Spring Force (Valve Closed)	313.0 - 354.0 N @ 40.12 mm	70.365 - 79.582 lbs. @ 1.5795 in.
Intake and Exhaust Spring Force (Valve Open)	776.0 - 870.0 N @ 28.88 mm	174.451 - 195.583 lbs. @ 1.137 in.
Intake and Exhaust Spring Wire Diameter	4.6 × 3.67mm	0.1811 - 0.1445 in.
Intake and Exhaust Spring Nominal Installed Height (Spring Seat to Bottom of Retainer)	40.12 mm	1.579 in.
Intake and Exhaust Spring Number of Coils	7.3	

CYLINDER HEAD

DESCRIPTION	SPECIFICATION	
	Metric	Standard
Gasket Thickness (Compressed)	0.7 mm	0.0276 in.
Valve Seat Runout (MAX)	0.051 mm	0.002 in.
Intake Valve Seat Width	1.75 - 2.36 mm	0.0698 - 0.0928 in.
Exhaust Valve Seat Width	1.71 - 2.32 mm	(0.0673 - 0.0911 in.)
Guide Bore Diameter (Std.)	6.975 - 7.00 mm	(0.2747 - 0.2756 in.)
Cylinder Head Warpage (Flatness)	0.0508 mm	(0.002 in.)
Valve Seat Angle	44.5° - 45.0°	

OIL PUMP

DESCRIPTION	SPECIFICATION	
	Metric	Standard
Clearance Over Rotors/End Face (MAX)	0.095 mm	0.0038 in.
Cover Out - of -Flat (MAX)	0.025 mm	0.001 in.
Inner and Outer Rotor Thickness	12.02 mm	0.4731 in.
Outer Rotor to pocket (Diametral) clearance (MAX)	0.235 mm	0.0093 in.
Outer Rotor Diameter (MIN.)	85.925 mm	0.400 in.
Tip Clearance Between Rotors (MAX)	0.150 mm	0.006 in.

OIL PRESSURE

DESCRIPTION	SPECIFICATION	
	Metric	Standard
At Curb Idle Speed (MIN.)*	48 kPa	(7 psi)
@ 3000 rpm	240 - 725 kPa	(35 - 105 psi)
*** CAUTION: If pressure is zero at curb idle, DO NOT run engine at 3000 rpm.**		

TORQUE

DESCRIPTION	N·m	Ft. Lbs.	In. Lbs.
Camshaft Position Sensor Bolt	12	9	-
Camshaft Sprocket Bolt	122	90	-
Camshaft Bearing Cap Bolts	11	8	-
Timing Chain Cover Bolts	58	43	-
Connecting Rod Cap Bolts	27 + 90°	20 + 90°	-
Bed Plate Bolts	Refer to Procedure (Refer to 09 - Engine/Engine Block/CRANKSHAFT - Installation)		
Cylinder Head Bolts	Refer to Procedure (Refer to 09 - Engine/Cylinder Head - Installation)		

DESCRIPTION	N·m	Ft. Lbs.	In. Lbs.
Crankshaft Damper Bolt	175	130	-
Cylinder Head Cover Bolts	12	9	-
Exhaust Manifold Bolts	25	18	-
Exhaust Manifold Heat Shield Nuts	8 - 45°	-	72 - 45°
Flexplate Bolts	60	45	-
Engine Mount Bracket to Block Bolts	61	45	-
Rear Mount to Transmission Bolts	46	34	-
Generator Mounting Bolts			
M10 Bolts	54	40	-
M8 Bolts	28	21	-
Intake Manifold Bolts	12	9	-
Oil Pan Bolts	15	11	-
Oil Pan Drain Plug	34	25	-
Oil Pump Bolts	28	21	-
Oil Pump Cover Bolts	12	-	105
Oil Pickup Tube Bolt and Nut	28	-	250
Block Bolt	15	-	130
Oil Fill Tube Bolts	12	9	-
Timing Chain Guide Bolts	28	21	-
Timing Chain Tensioner Arm	28	21	-
Hydraulic Tensioner Bolts	28	21	-
Timing Chain Primary Tensioner Bolts	28	21	-
Timing Drive Idler Sprocket Bolt	34	25	-
Thermostat Housing Bolts	13	10	-
Water Pump Bolts	58	43	-

Special Tools

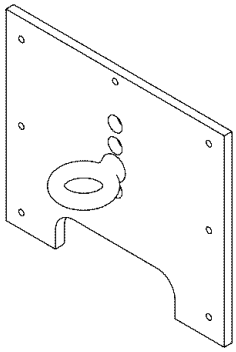

10101 - Fixture, Engine Lifting

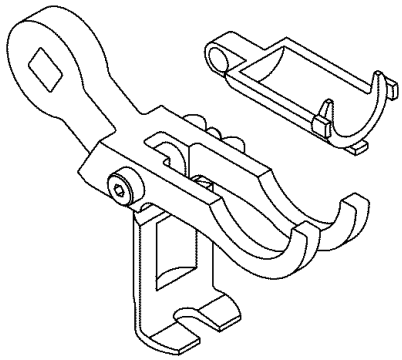

10102 - Remover/Installer, Valve Spring

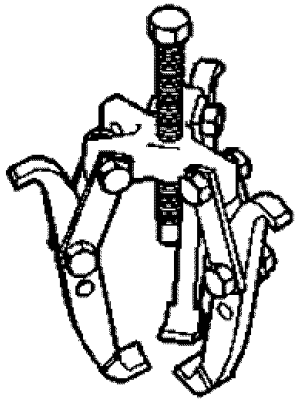

1023 - Puller

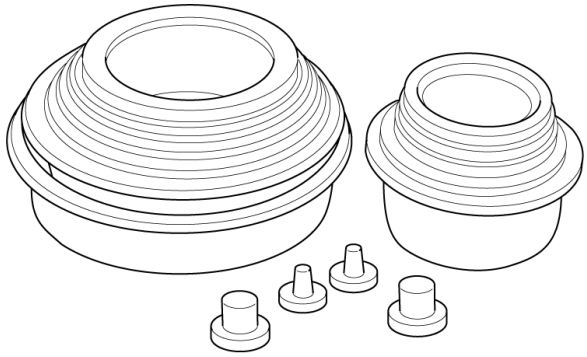

10368 - Set, Universal Protective Cap

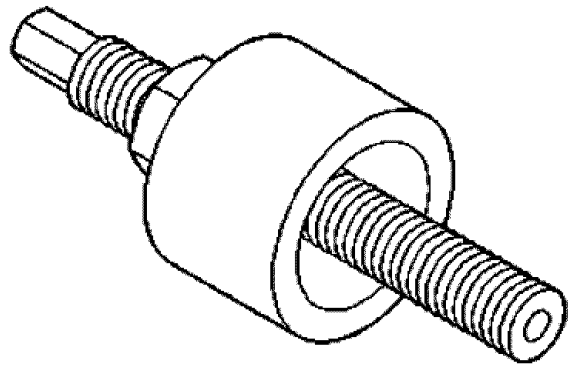

6871 - Installer, A/C Hub

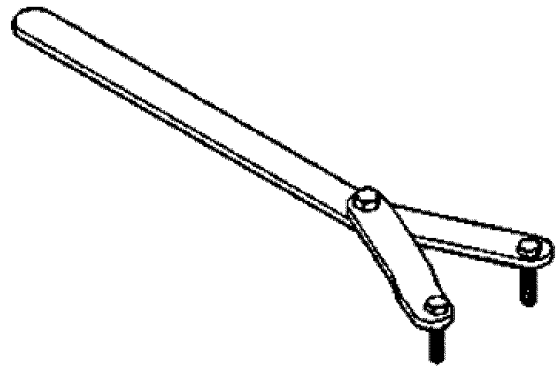

6958 - Wrench, Spanner

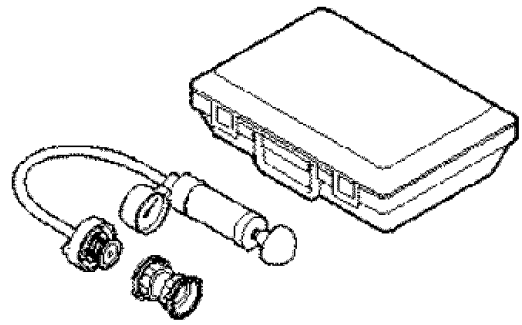

7700 - Tester, Cooling System

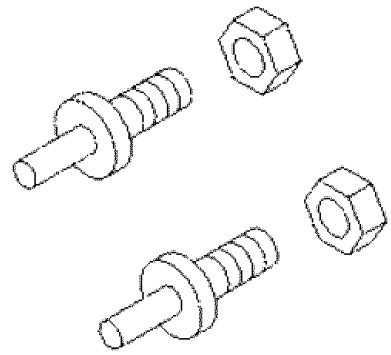

8346 - Pins, Adapter

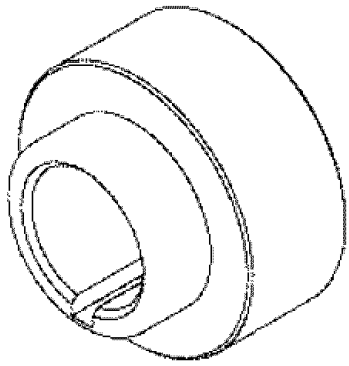

8348 - Installer, Seal

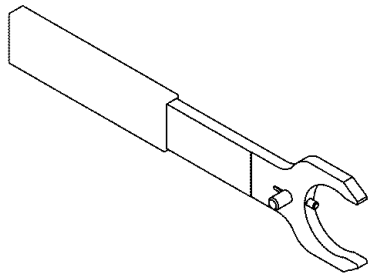

8428A - Holder, Camshaft

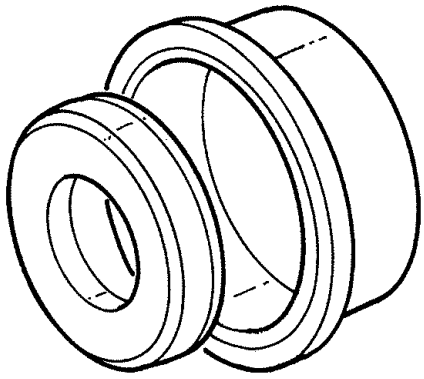

8349 - Installer, Crankshaft Rear Seal

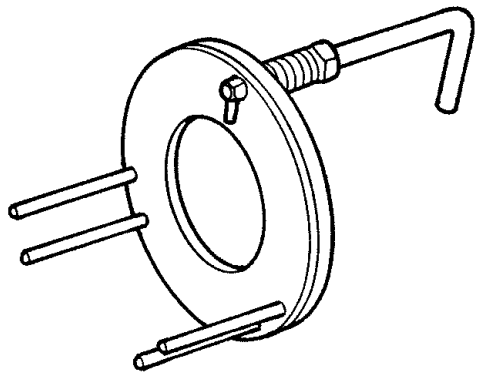

8429 - Holder, Secondary Camshaft Chain

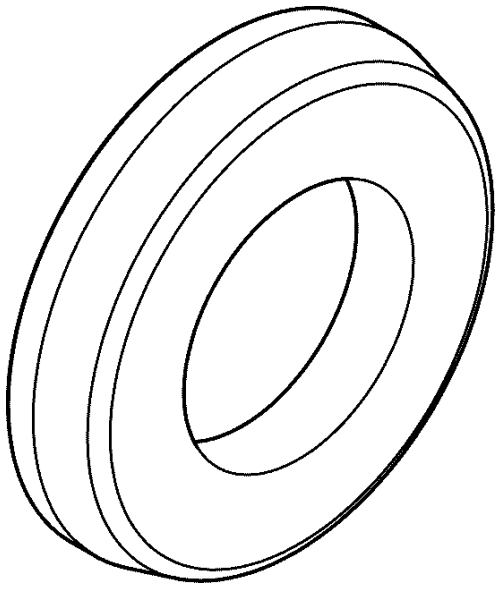

8349-2 - Guide Crank Seal

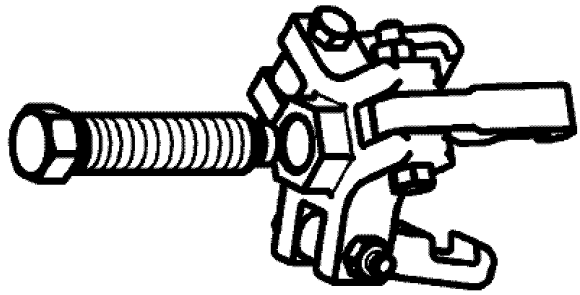

8454 - 3-Jaw Puller

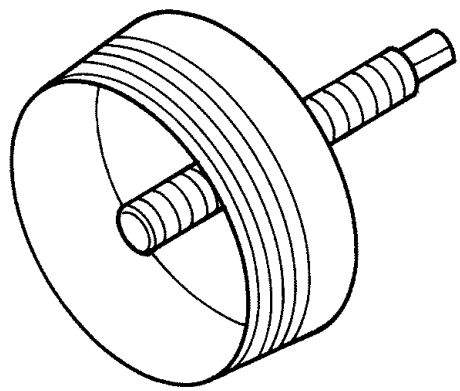

8506 - Remover, Seal

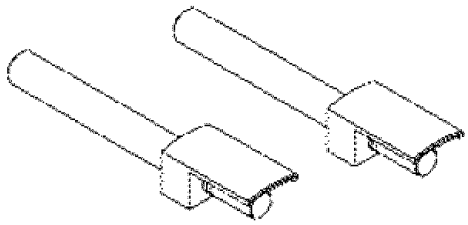

8507 - Guides, Connecting Rod

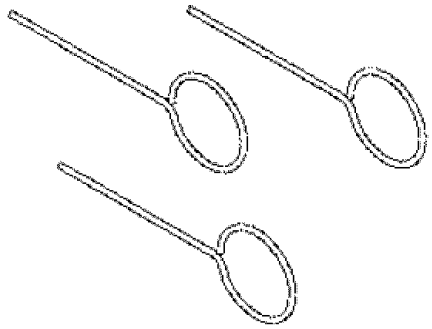

8514 - Pins, Tensioner

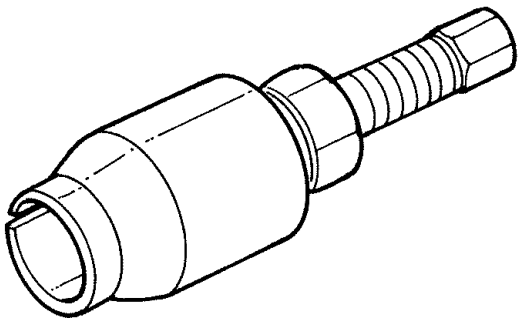

8511 - Remover, Seal

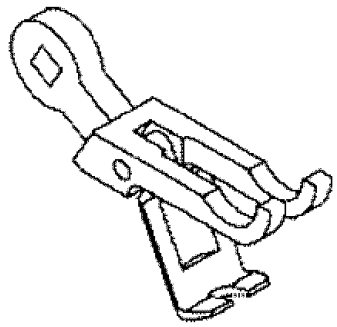

8516A - Remover/Installer

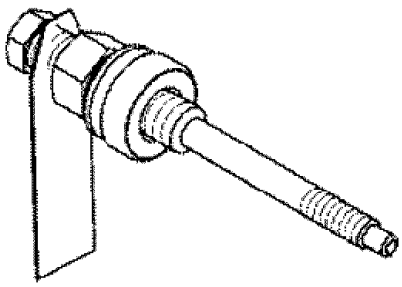

8512A - Installer, Damper

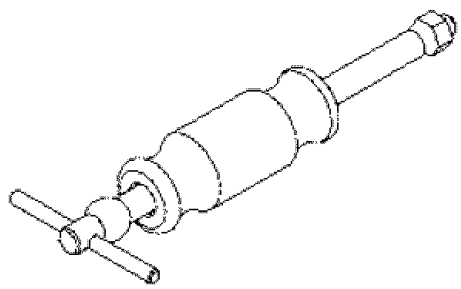

8517 - Remover

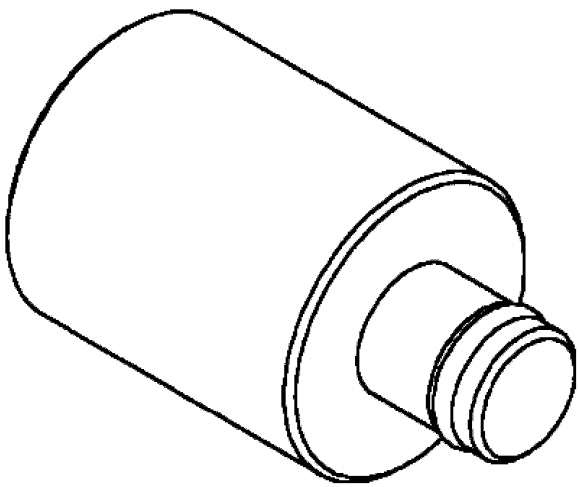

8513A - Insert, Crankshaft

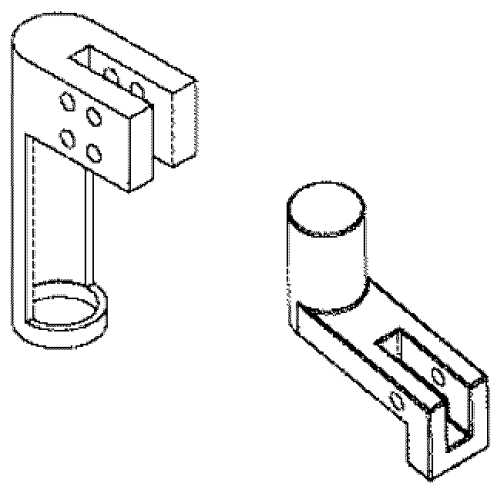

8519 - Adapters, Valve Spring

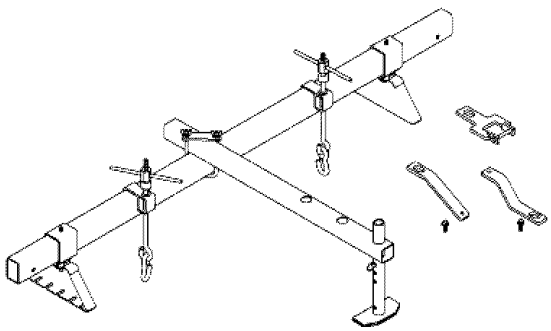

8534B - Support Fixture, Engine

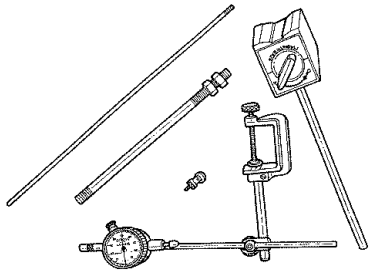

C-3339A - Set, Dial Indicator

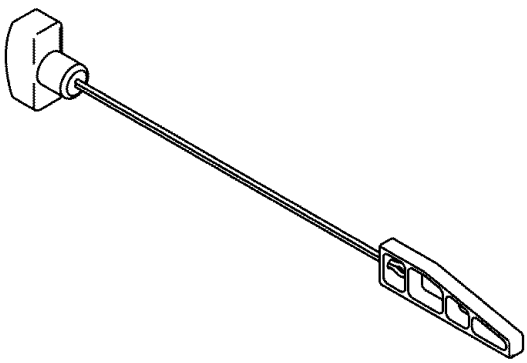

9867 - Wedge, Locking

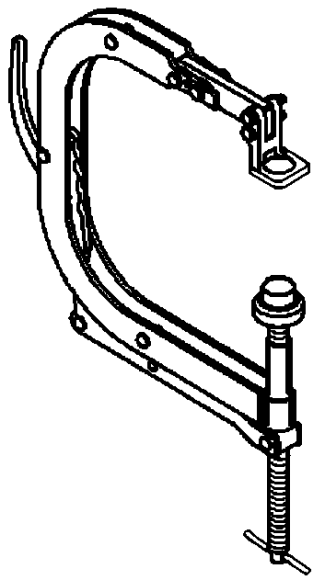

C-3422-D - Compressor, Valve Spring

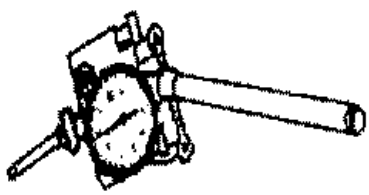

C-119 - Cylinder Indicator



C-3501 - Hone W/Oil, AMMCO Cylinder

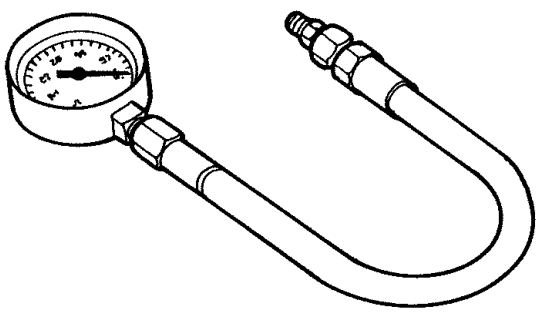

C-3292A - Gauge, Pressure

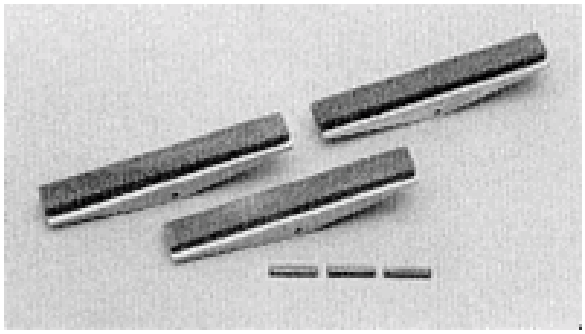

C-3501-3810 - Stones, 220 Grit Honing

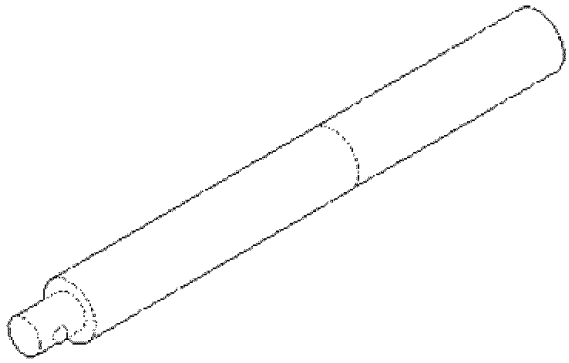

C-4171 - Driver Handle, Universal



C-3501-3880 - Oil, Honing



C-823 - Hone, Cylinder



C-3685-A - Bloc-Chek Kit

AIR INTAKE SYSTEM

TABLE OF CONTENTS

page

AIR INTAKE SYSTEM
AIR CLEANER
REMOVAL 174
INSTALLATION 174

page

BODY, AIR CLEANER
REMOVAL 175
INSTALLATION 176

Air Intake System

AIR CLEANER

Removal

1. Loosen clamp (1) and disconnect air duct (2) at air cleaner cover (3).
2. Pry over 4 spring clips (5) from housing cover (3).
3. Release housing cover (3) from locating tabs on housing and remove cover.
4. Remove air cleaner element (filter) from housing.
5. Clean inside of housing before replacing element.

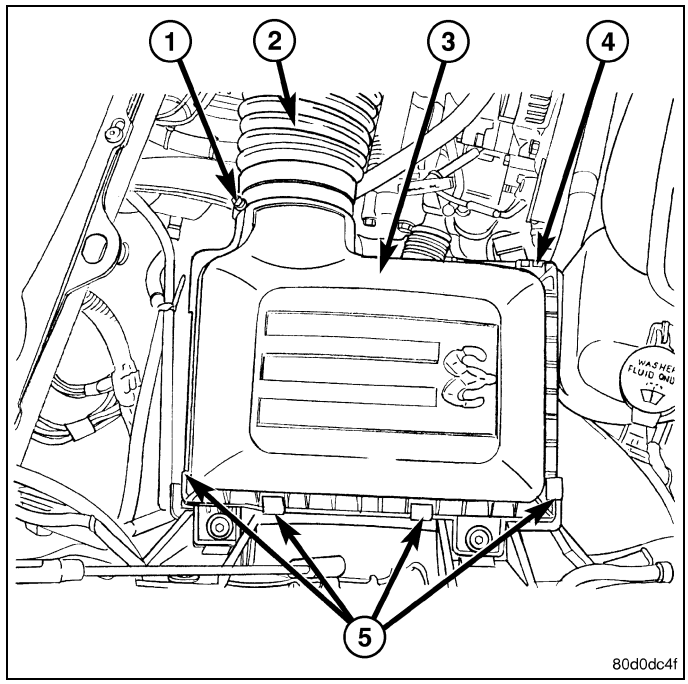

Installation

1. Install filter element into housing.
2. Position housing cover (3) into housing locating tabs.
3. Pry up 4 spring clips (5) and lock cover to housing.
4. Install air duct (2) to air cleaner cover (3) and tighten hose clamp (1) to 3 N·m (30 in. lbs.).

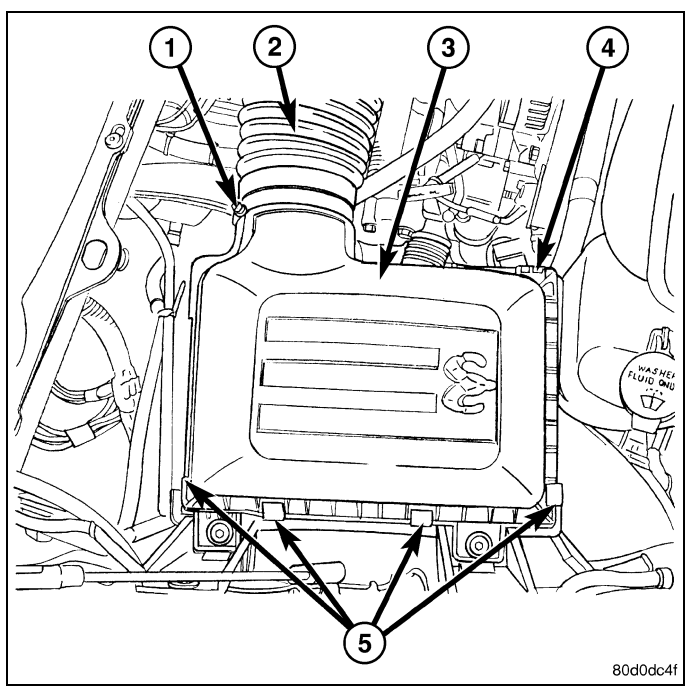

BODY, Air Cleaner

Removal

1. Loosen clamp (1) and disconnect air duct (2) at air cleaner cover (3).

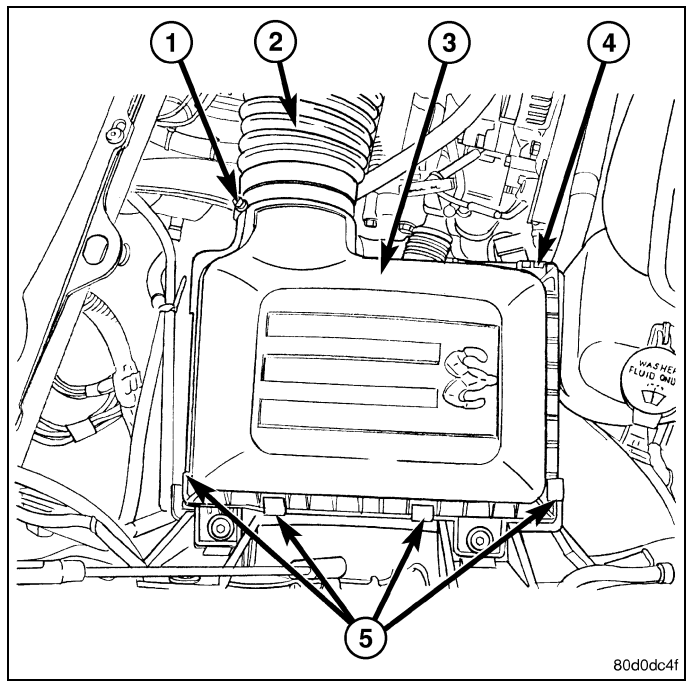

2. Lift entire housing (1) assembly from 4 locating pins (2).

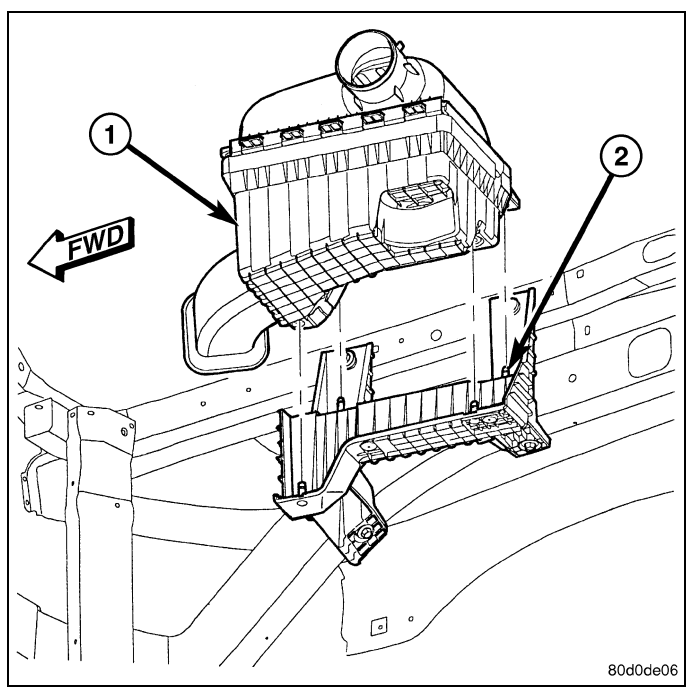

Installation

1. Position housing assembly (1) into 4 locating pins (2).

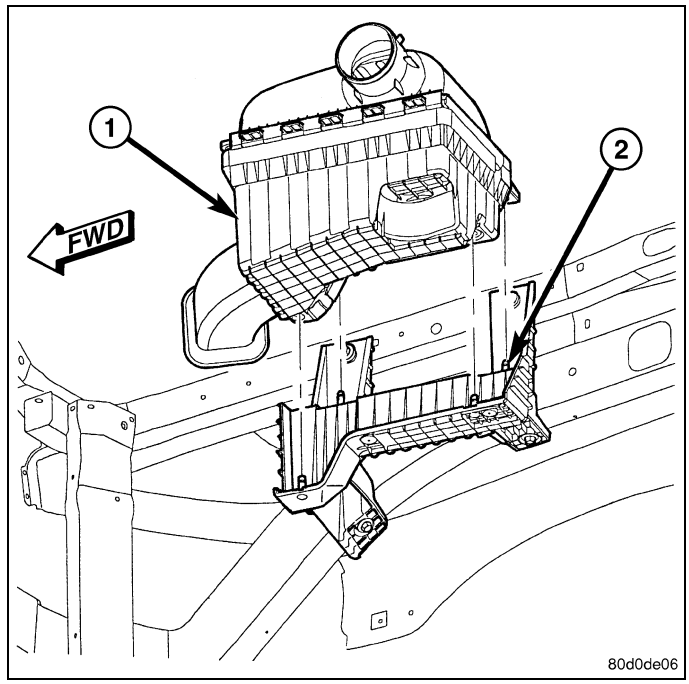

2. Connect air duct (2) at air cleaner cover (3) and tighten clamp (1).

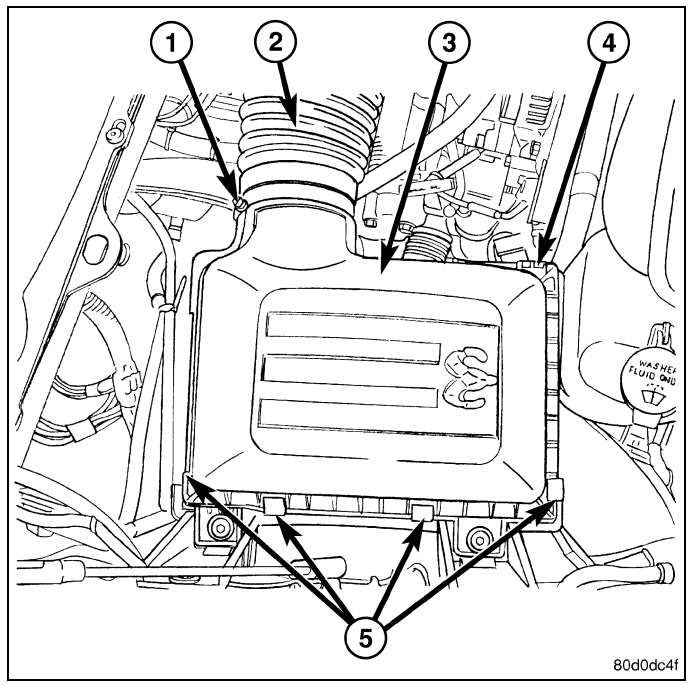

CYLINDER HEAD

TABLE OF CONTENTS

page

CYLINDER HEAD
DESCRIPTION
CYLINDER HEAD 178
VALVE GUIDES 178
DIAGNOSIS AND TESTING 178
REMOVAL
LEFT CYLINDER HEAD 179
RIGHT CYLINDER HEAD 182
CLEANING 184
INSPECTION 185
INSTALLATION
LEFT CYLINDER HEAD 185
RIGHT CYLINDER HEAD 188
CAMSHAFT, ENGINE
DESCRIPTION 191
STANDARD PROCEDURE 192
REMOVAL
REMOVAL - RIGHT CAMSHAFT 192
REMOVAL - LEFT CAMSHAFT 195
INSTALLATION
INSTALLATION - RIGHT CAMSHAFT 198
INSTALLATION - LEFT CAMSHAFT 201
COVER(S), CYLINDER HEAD
DESCRIPTION 204

page

REMOVAL
RIGHT SIDE 204
LEFT SIDE 204
CLEANING 205
INSTALLATION
RIGHT SIDE 205
LEFT SIDE 205
ROCKER ARM, VALVE
DESCRIPTION 206
DIAGNOSIS AND TESTING 206
REMOVAL 206
INSTALLATION 207
SEAL(S), VALVE GUIDE
DESCRIPTION 207
REMOVAL 207
INSTALLATION 207
SPRING(S), VALVE
DESCRIPTION 207
REMOVAL 208
INSTALLATION 208
VALVES, INTAKE AND EXHAUST
DESCRIPTION 209
REMOVAL 209
INSTALLATION 210

Cylinder Head

Description

CYLINDER HEAD

The cylinder heads are made of an aluminum alloy. The cylinder head features two valves per cylinder with pressed in powdered metal valve guides. The cylinder heads also provide enclosures for the timing chain drain, necessitating unique left and right cylinder heads.

VALVE GUIDES

The valve guides are made of powered metal and are pressed into the cylinder head. The guides are not replaceable or serviceable, and valve guide reaming is not recommended. If the guides are worn beyond acceptable limits, replace the cylinder heads.

Diagnosis and Testing

A cylinder head gasket leak can be located between adjacent cylinders or between a cylinder and the adjacent water jacket.

Possible indications of the cylinder head gasket leaking between adjacent cylinders are:

- Loss of engine power
- Engine misfiring
- Poor fuel economy

Possible indications of the cylinder head gasket leaking between a cylinder and an adjacent water jacket are:

- Engine overheating
- Loss of coolant
- Excessive steam (white smoke) emitting from exhaust
- Coolant foaming

CYLINDER-TO-CYLINDER LEAKAGE TEST

To determine if an engine cylinder head gasket is leaking between adjacent cylinders, follow the procedures in Cylinder Compression Pressure Test (Refer to 09 - Engine - Diagnosis and Testing). An engine cylinder head gasket leaking between adjacent cylinders will result in approximately a 50 - 70% reduction in compression pressure.

CYLINDER-TO-WATER JACKET LEAKAGE TEST

WARNING: USE EXTREME CAUTION WHEN THE ENGINE IS OPERATING WITH COOLANT PRESSURE CAP REMOVED.

VISUAL TEST METHOD

With the engine cool, remove the coolant pressure cap. Start the engine and allow it to warm up until thermostat opens.

If a large combustion/compression pressure leak exists, bubbles will be visible in the coolant.

COOLING SYSTEM TESTER METHOD

WARNING: WITH COOLING SYSTEM TESTER IN PLACE, PRESSURE WILL BUILD UP FAST. EXCESSIVE PRESSURE BUILT UP, BY CONTINUOUS ENGINE OPERATION, MUST BE RELEASED TO A SAFE PRESSURE POINT. NEVER PERMIT PRESSURE TO EXCEED 138 kPa (20 psi).

Install Cooling System Tester 7700 or equivalent to pressure cap neck. Start the engine and observe the tester's pressure gauge. If gauge pulsates with every power stroke of a cylinder a combustion pressure leak is evident.

CHEMICAL TEST METHOD

Combustion leaks into the cooling system can also be checked by using Bloc-Chek Kit C-3685-A or equivalent. Perform test following the procedures supplied with the tool kit.

Removal

LEFT CYLINDER HEAD

1. Disconnect the negative cable from the battery.
2. Raise the vehicle on a hoist.
3. Disconnect the exhaust pipe at the left side exhaust manifold.
4. Drain the engine coolant. Refer to COOLING SYSTEM.
5. Lower the vehicle.
6. Remove the intake manifold (Refer to 09 - Engine/Manifolds/MANIFOLD, Intake - Removal).

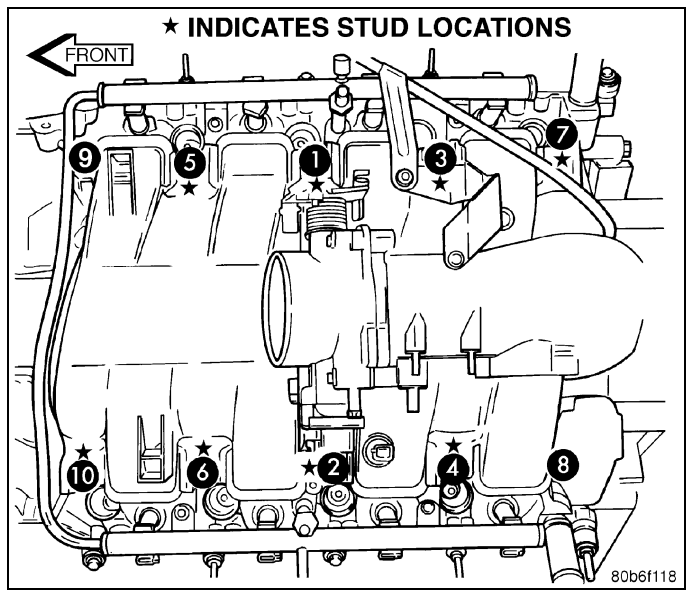

7. Remove the master cylinder and booster assembly(Refer to 05 - Brakes/Hydraulic/Mechanical/BOOSTER, Power Brake - Removal).
8. Remove the cylinder head cover (1)(Refer to 09 - Engine/Cylinder Head/COVER(S), Cylinder Head - Removal) - REMOVAL).

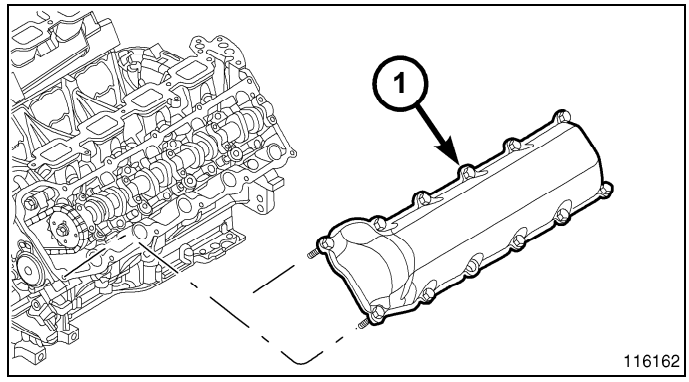

9. Remove the fan shroud and fan blade assembly.
10. Remove accessory drive belt.
11. Remove the power steering pump and set aside.
12. Rotate the crankshaft until the damper timing marks are aligned (2).

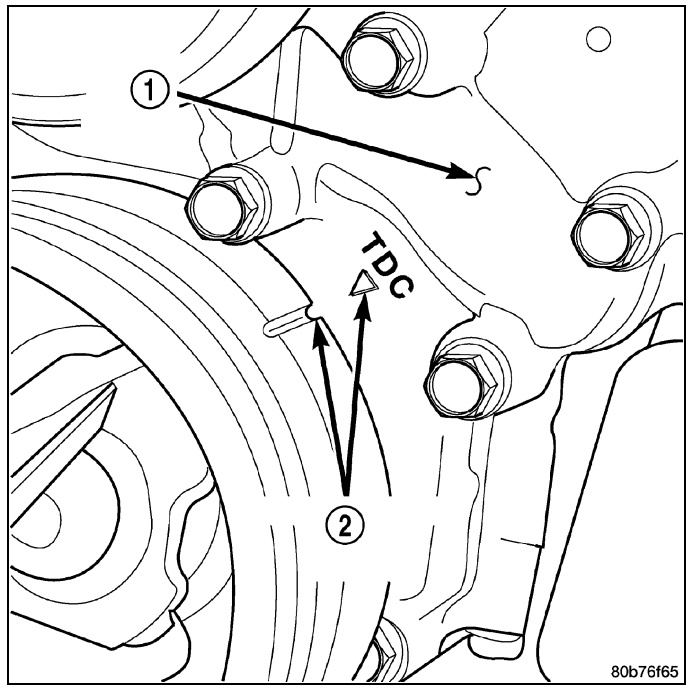

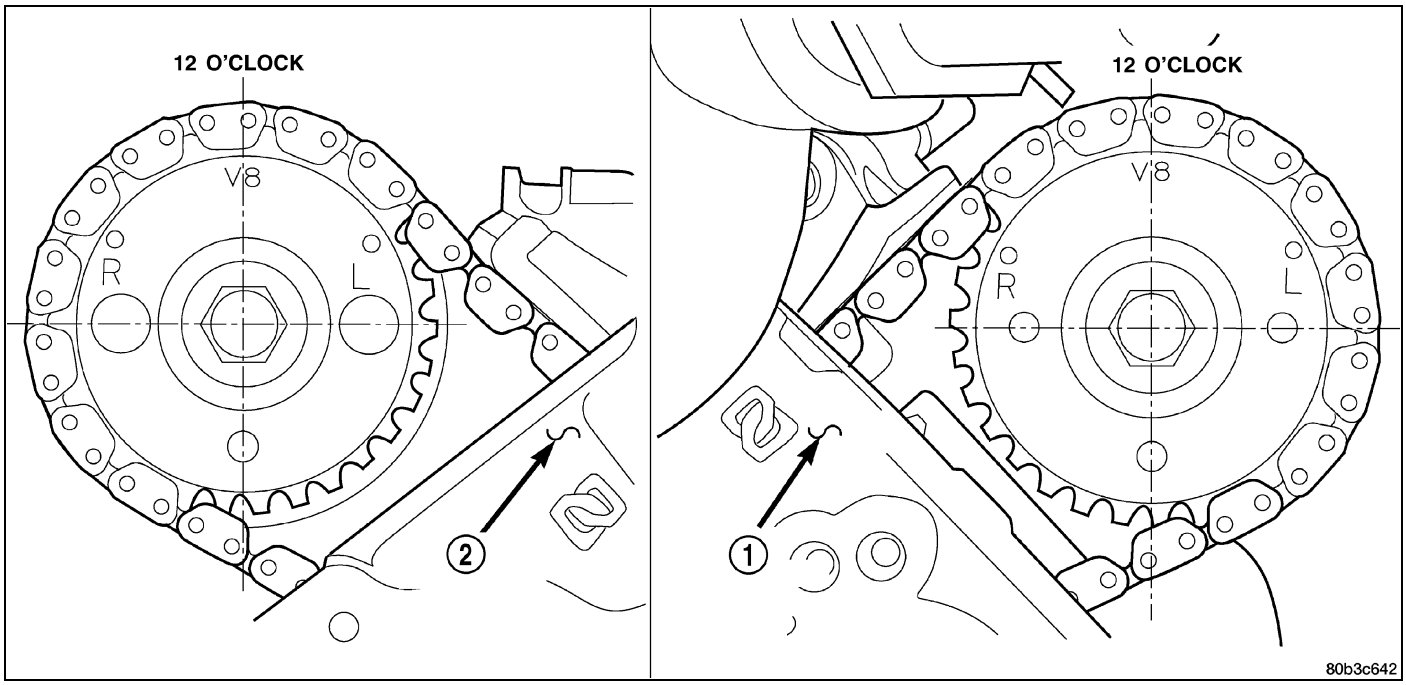

13. Verify the V8 mark on the camshaft sprocket is at the 12 o'clock position. Rotate the crankshaft one turn if necessary.
14. Remove the crankshaft damper (Refer to 09 - Engine/Engine Block/DAMPER, Vibration - Removal).
15. Remove the timing chain cover (Refer to 09 - Engine/Valve Timing/COVER(S), Engine Timing - Removal) - REMOVAL).
16. Lock the secondary timing chains to the idler sprocket using secondary camshaft chain holder 8429 (6).

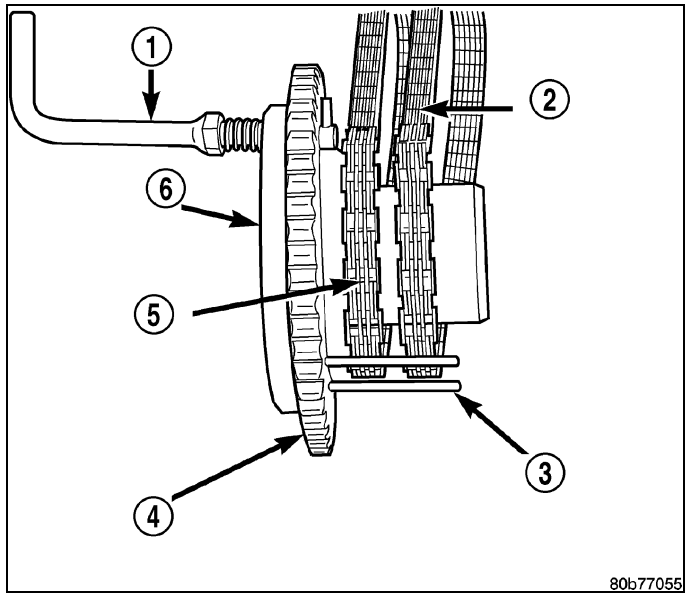

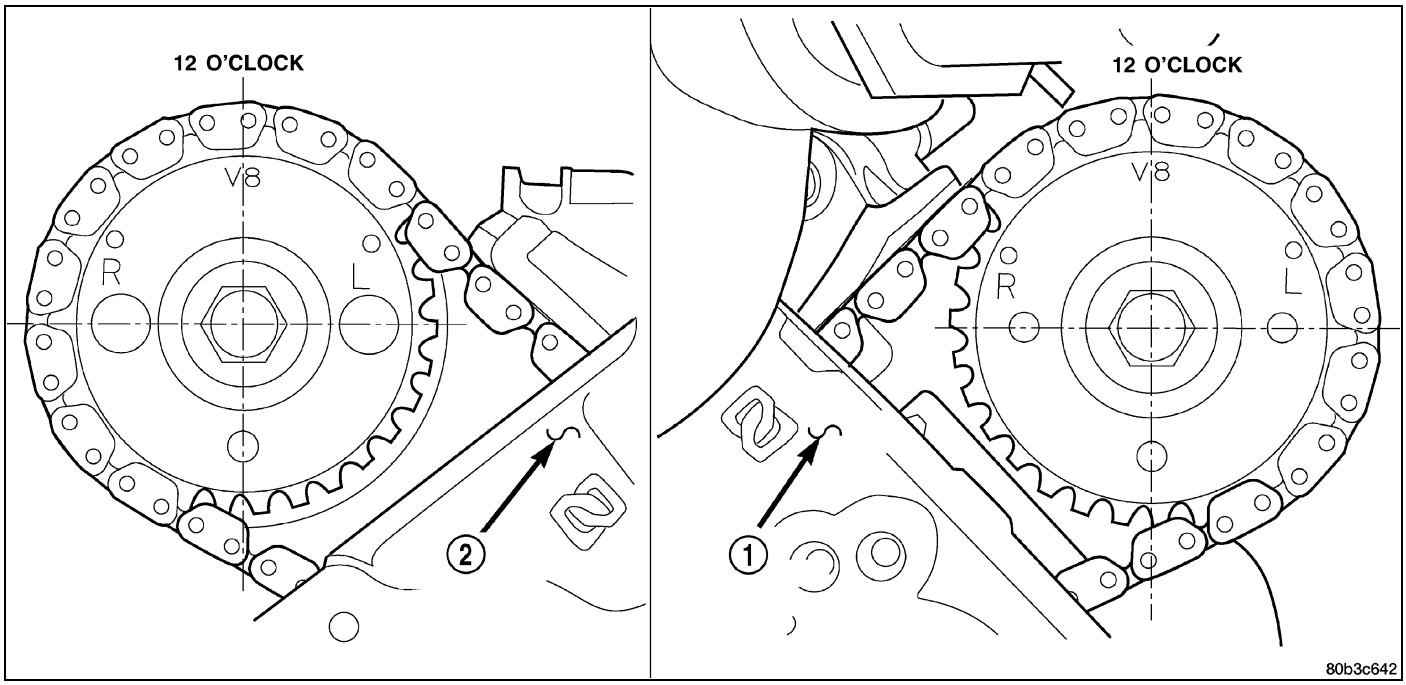

NOTE: Mark the secondary timing chain prior to removal to aid in installation.

17. Mark the secondary timing chain, one link on each side of the V8 mark on the camshaft drive gear.
18. Remove the left side secondary chain tensioner (Refer to 09 - Engine/Valve Timing/CHAIN and SPROCKETS, Timing - Removal).

CAUTION: Do not allow the engine to rotate. Severe damage to the valve train can occur.

19. Remove the cylinder head access plug (2).
20. Remove the left side secondary chain guide (Refer to 09 - Engine/Valve Timing/CHAIN and SPROCKETS, Timing - Removal).
21. Remove the retaining bolt and the camshaft drive gear.

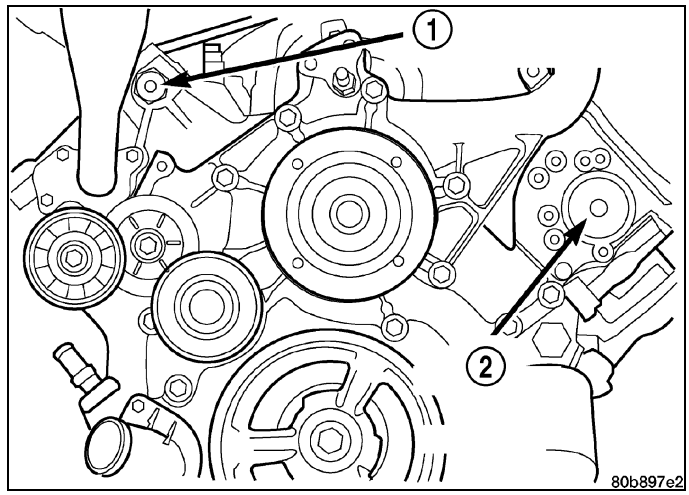

CAUTION: Do not overlook the four smaller bolts at the front of the cylinder head. Do not attempt to remove the cylinder head without removing these four bolts.

NOTE: The cylinder head is attached to the cylinder block with fourteen bolts.

22. Remove the cylinder head retaining bolts using the sequence provided.

CAUTION: Do not lay the cylinder head on its gasket sealing surface, due to the design of the cylinder head gasket, any distortion to the cylinder head sealing surface may prevent the gasket from properly sealing resulting in leaks.

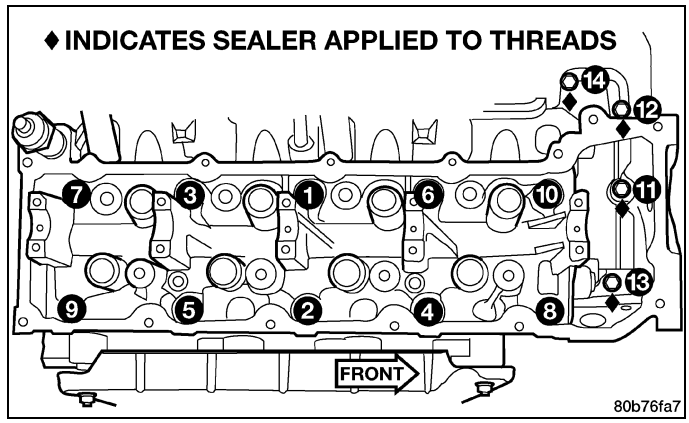

23. Remove the cylinder head and gasket. Discard the gasket.

RIGHT CYLINDER HEAD

1. Disconnect battery negative cable.
2. Raise the vehicle on a hoist.
3. Disconnect the exhaust pipe at the right side exhaust manifold.
4. Drain the engine coolant.
5. Lower the vehicle.
6. Remove the intake manifold (Refer to 09 - Engine/Manifolds/MANIFOLD, Intake - Removal).
7. Remove the cylinder head cover (1)(Refer to 09 - Engine/Cylinder Head/COVER(S), Cylinder Head - Removal) - REMOVAL).

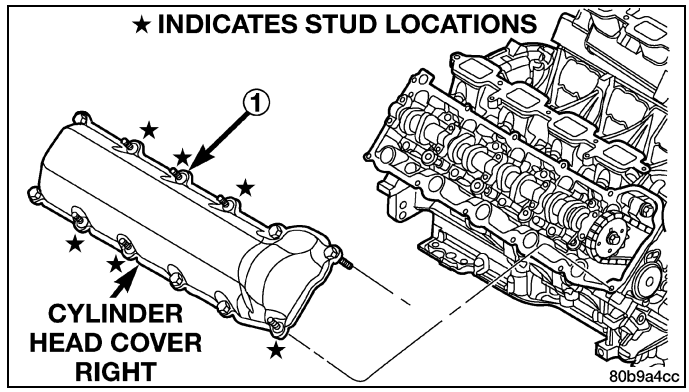

8. Remove the fan shroud, Refer to 7 - COOLING/ENGINE.
9. Remove oil fill housing from cylinder head.
10. Remove accessory drive belt.
11. Rotate the crankshaft until the damper timing mark is aligned with TDC indicator mark (2).

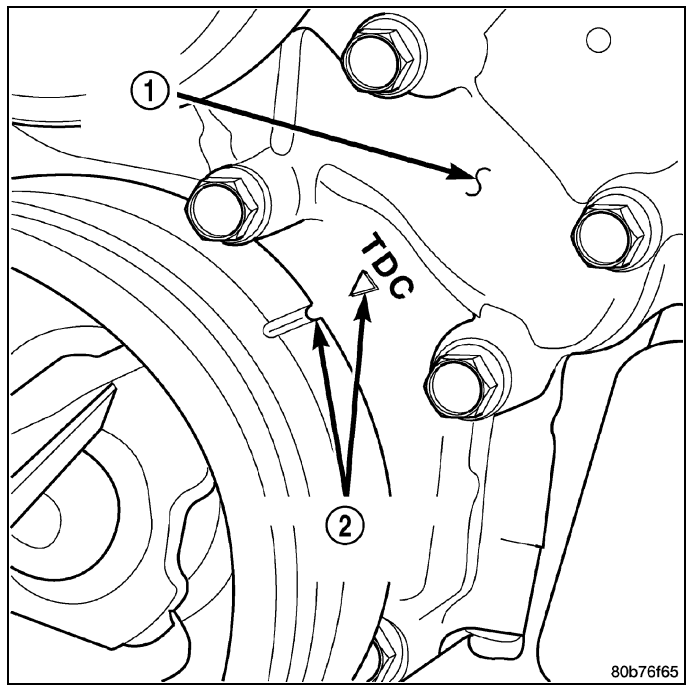

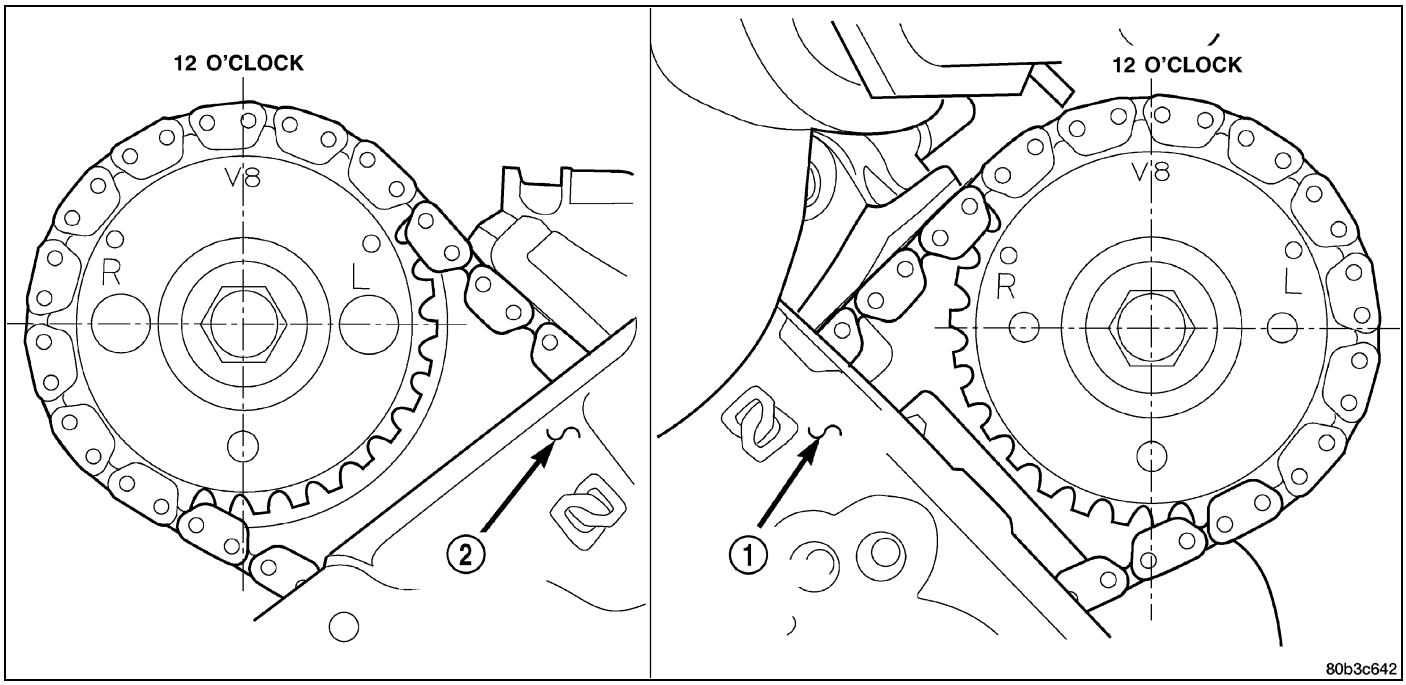

12. Verify the V8 mark on the camshaft sprocket is at the 12 o'clock position (2). Rotate the crankshaft one turn if necessary.
13. Remove the crankshaft damper (Refer to 09 - Engine/Engine Block/DAMPER, Vibration - Removal).
14. Remove the timing chain cover (Refer to 09 - Engine/Valve Timing/CHAIN and SPROCKETS, Timing - Removal).
15. Lock the secondary timing chains to the idler sprocket using Secondary Camshaft Chain Holder 8429 (6).

NOTE: Mark the secondary timing chain prior to removal to aid in installation.

16. Mark the secondary timing chain, one link on each side of the V8 mark on the camshaft drive gear .
17. Remove the right side secondary chain tensioner (Refer to 09 - Engine/Valve Timing/CHAIN and SPROCKETS, Timing - Removal).

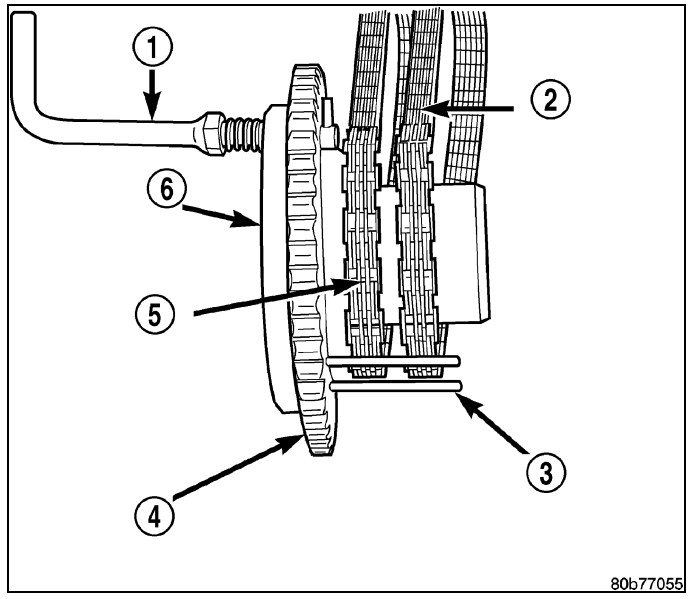

18. Remove the cylinder head access plug (1).
19. Remove the right side secondary chain guide (Refer to 09 - Engine/Valve Timing/CHAIN and SPROCKETS, Timing - Removal).
20. Remove the retaining bolt and the camshaft drive gear.

CAUTION: Do not allow the engine to rotate. severe damage to the valve train can occur.

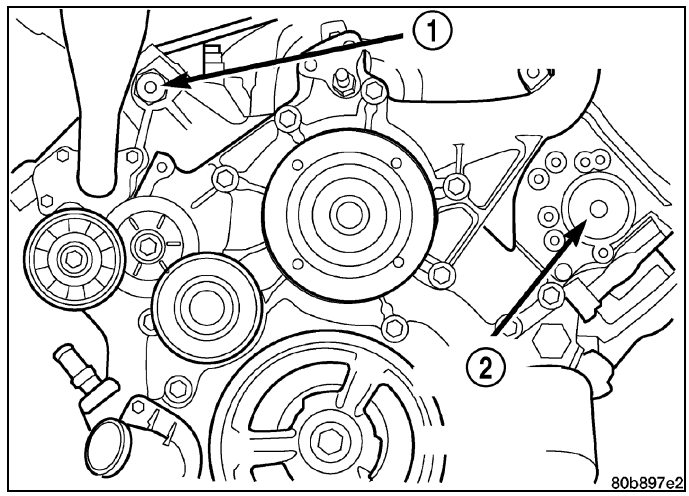

CAUTION: Do not overlook the four smaller bolts at the front of the cylinder head. Do not attempt to remove the cylinder head without removing these four bolts.

CAUTION: Do not hold or pry on the camshaft target wheel for any reason. A damaged target wheel can result in a vehicle no start condition.

NOTE: The cylinder head is attached to the cylinder block with fourteen bolts.

21. Remove the cylinder head retaining bolts using the sequence provided.

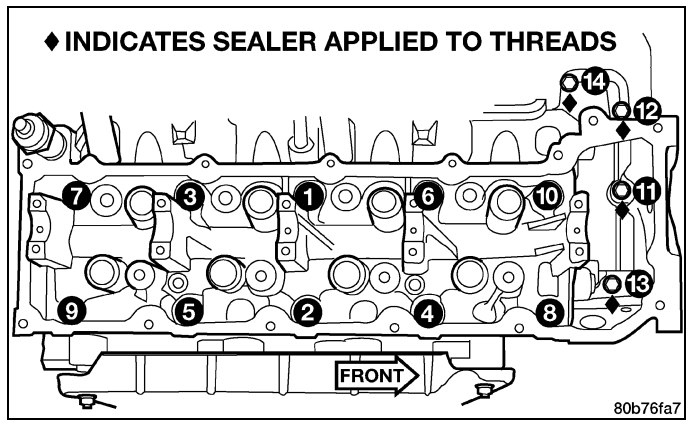

CAUTION: Do not lay the cylinder head on its gasket sealing surface, do to the design of the cylinder head gasket any distortion to the cylinder head sealing surface may prevent the gasket from properly sealing resulting in leaks.

22. Remove the cylinder head and gasket. Discard the gasket.

Cleaning

To ensure engine gasket sealing, proper surface preparation must be performed, especially with the use of aluminum engine components. (Refer to 09 - Engine - Standard Procedure)

Inspection

1. Inspect the cylinder head for out-of-flatness, using a straightedge (2) and a feeler gauge (1). Check Cylinder head in several locations. If tolerances exceed 0.0508 mm (0.002 in.) replace the cylinder head.

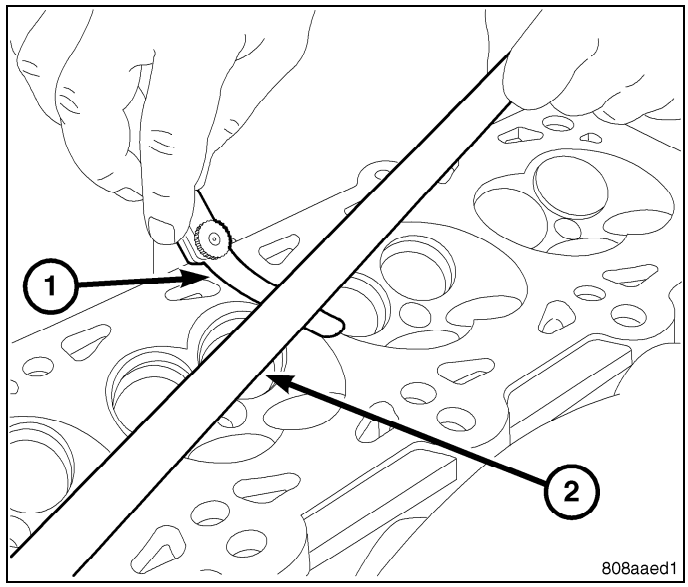

2. Inspect the valve seats for damage. Service the valve seats as necessary.
3. Inspect the valve guides for wear, cracks or looseness. If either condition exist, replace the cylinder head.

Installation

LEFT CYLINDER HEAD

NOTE: The cylinder head bolts are tightened using a torque plus angle procedure. The bolts must be examined BEFORE reuse. If the threads are necked down (2) the bolts should be replaced.

Necking can be checked by holding a straight edge against the threads. If all the threads do not contact the scale, the bolt should be replaced.

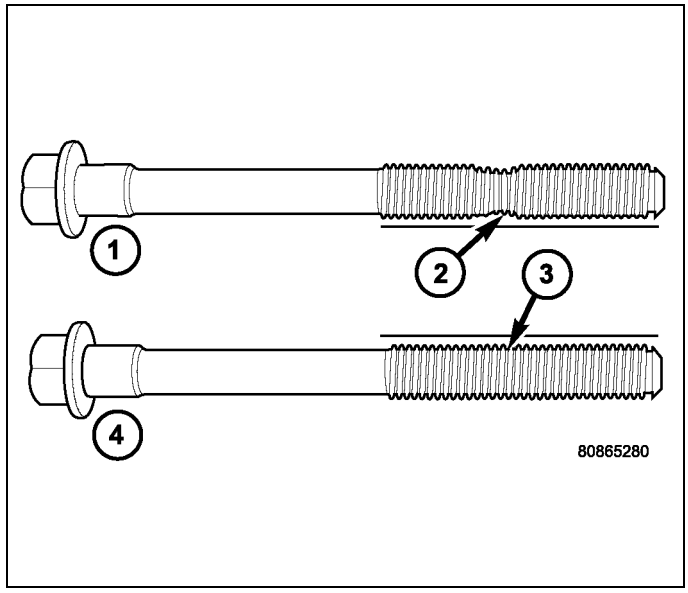

CAUTION: When cleaning cylinder head and cylinder block surfaces, DO NOT use a metal scraper (1), high speed scotch brite (2) or rolock tool (3) because the surfaces could be cut or ground. Use only a wooden or plastic scraper (4).

1. Clean the cylinder head and cylinder block mating surfaces.

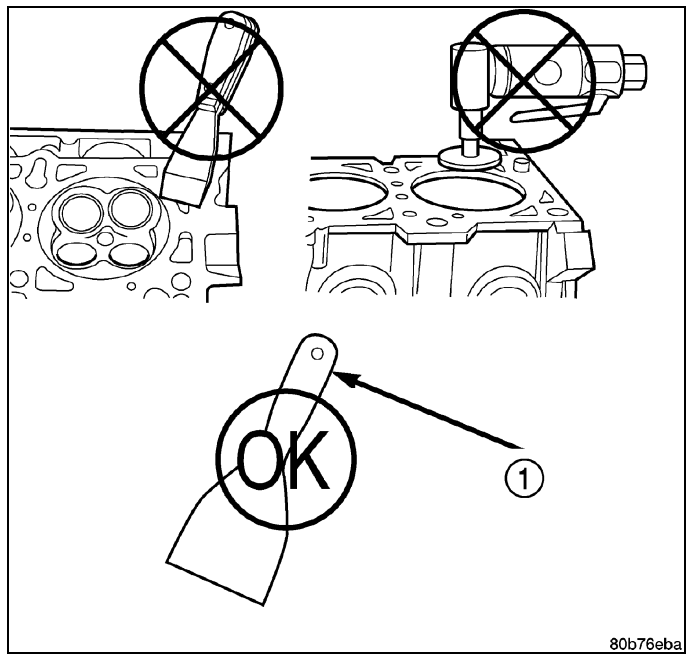

2. Position the new cylinder head gasket on the locating dowels.

CAUTION: When installing cylinder head, use care not damage the tensioner arm or the guide arm.

3. Position the cylinder head onto the cylinder block. Make sure the cylinder head seats fully over the locating dowels.

NOTE: The four M8 cylinder head mounting bolts (11 - 14) require sealant to be added to them before installing. Failure to do so may cause leaks.

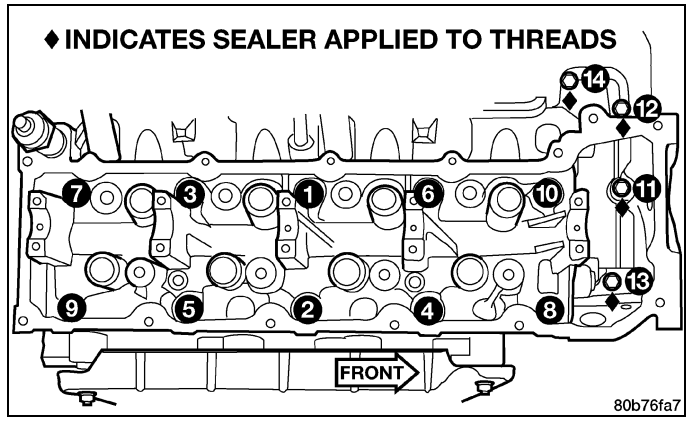

4. Lubricate the cylinder head bolt threads with clean engine oil and install the ten M11 bolts.
5. Coat the four M8 cylinder head bolts with **Mopar® Thread Sealant with PTFE** then install the bolts.

NOTE: The cylinder head bolts are tightened using an torque angle procedure.

6. Tighten the bolts in sequence using the following steps and torque values:

1. Tighten bolts 1 - 10 to 27 N·m (20 ft. lbs.).
2. Verify that bolts 1 - 10 have all reached 27 N·m (20 ft. lbs.), by repeating step 1 without loosening the bolts.
3. Tighten bolts 11 - 14 to 14 N·m (89 in. lbs.).
4. Rotate bolts 1 - 10 an additional 90°.
5. Rotate bolts 1 - 10 an additional 90° again.
6. Tighten bolts 11 - 14 to 26 N·m (19 ft. lbs).

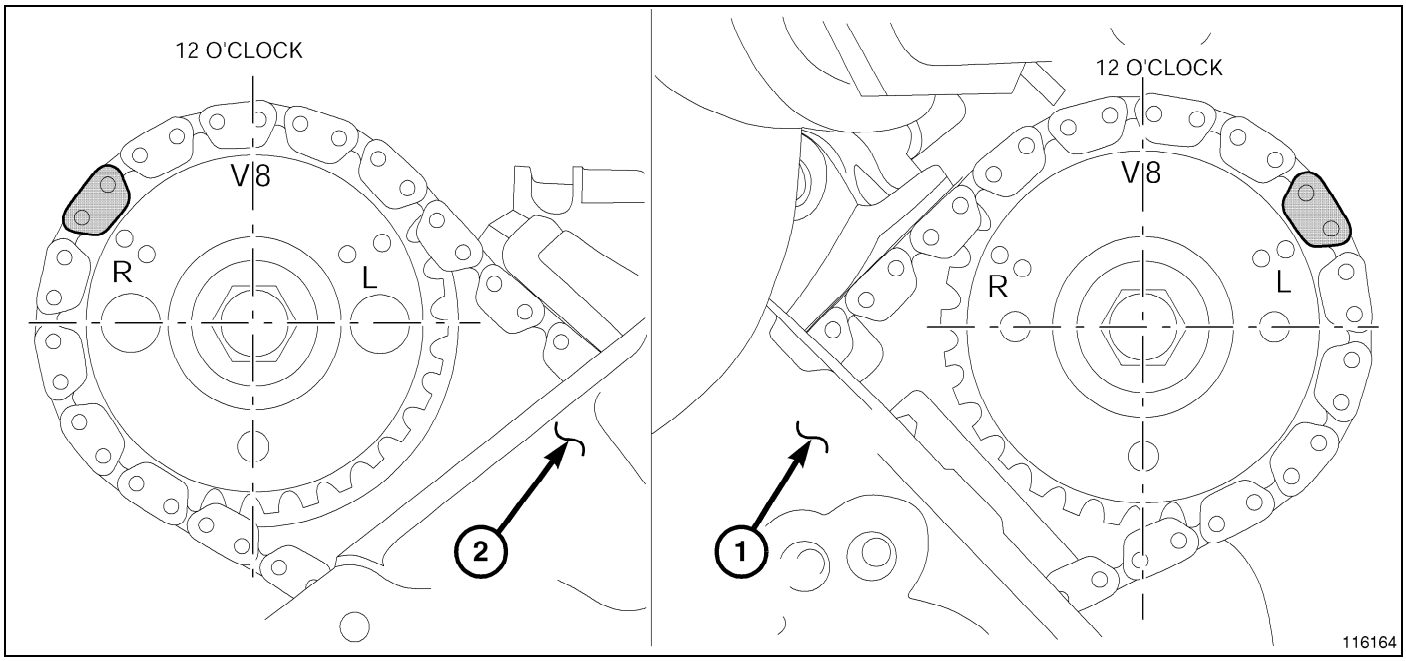

7. Position the secondary chain onto the camshaft drive gear, making sure one marked chain link is on either side of the V8 mark on the gear and position the gear onto the camshaft.
8. Install the camshaft drive gear retaining bolt.
9. Install the left side secondary chain guide (Refer to 09 - Engine/Valve Timing/CHAIN and SPROCKETS, Timing - Installation).
10. Install the cylinder head access plug (2).
11. Re-set and Install the left side secondary chain tensioner (Refer to 09 - Engine/Valve Timing/CHAIN and SPROCKETS, Timing - Installation).

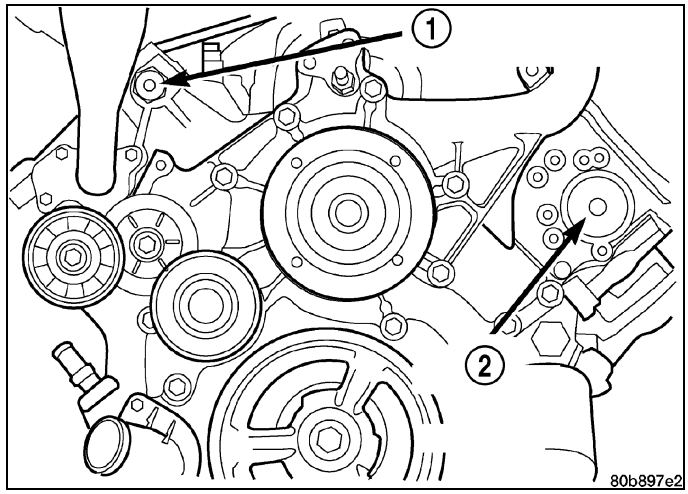

12. Remove Secondary Camshaft Chain Holder 8429 (6).
13. Install the timing chain cover (Refer to 09 - Engine/ Valve Timing/COVER(S), Engine Timing - Installation) - INSTALLATION).
14. Install the crankshaft damper (Refer to 09 - Engine/ Engine Block/DAMPER, Vibration - Installation).
15. Install the power steering pump.
16. Install the fan blade assembly and fan shroud.

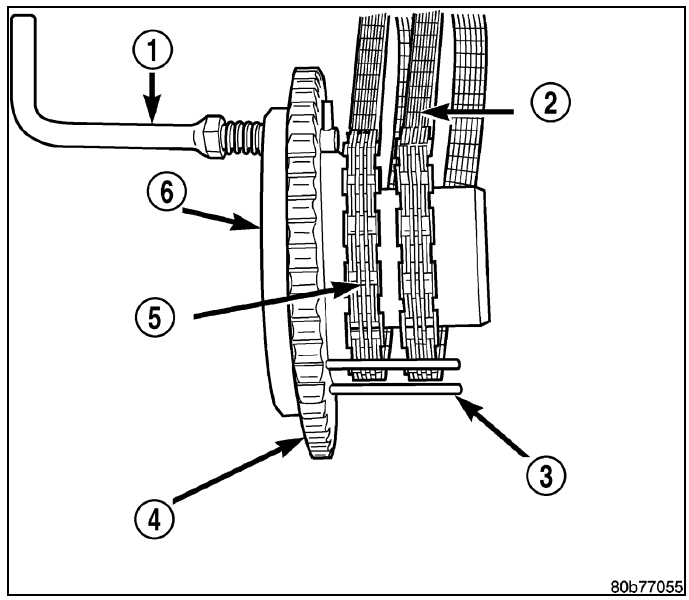

17. Install the cylinder head cover (Refer to 09 - Engine/ Cylinder Head/COVER(S), Cylinder Head - Installation) - INSTALLATION).
18. Reinstall the master cylinder and booster assembly. Refer to section 5 brakes.
19. Install the intake manifold (Refer to 09 - Engine/Manifolds/MANIFOLD, Intake - Installation).
20. Fill the cooling system(Refer to 07 - Cooling - Standard Procedure).
21. Raise the vehicle.
22. Install the exhaust pipe onto the left exhaust manifold.
23. Drain oil.
24. Lower the vehicle.
25. Fill with oil.
26. Connect the negative cable to the battery.
27. Start the engine and check for leaks.

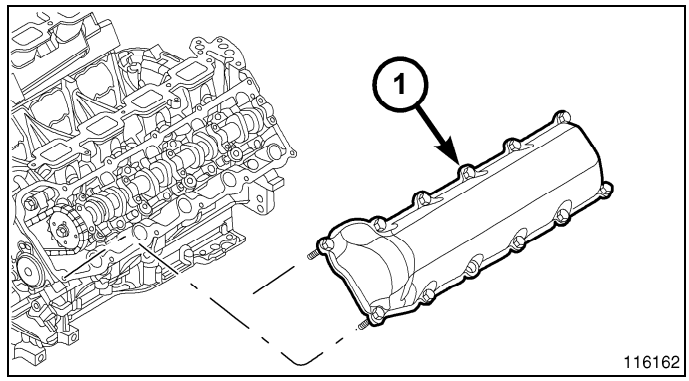

RIGHT CYLINDER HEAD

NOTE: The cylinder head bolts are tightened using a torque plus angle procedure. The bolts must be examined BEFORE reuse. If the threads are necked down (2) the bolts should be replaced.

Necking (2) can be checked by holding a straight edge against the threads. If all the threads do not contact the scale (2), the bolt should be replaced.

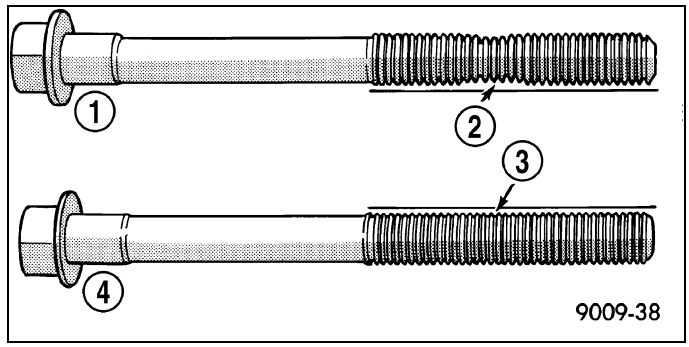

CAUTION: When cleaning cylinder head and cylinder block surfaces, DO NOT use a metal scraper (1), high speed scotch brite (2) or rolock tool (3) because the surfaces could be cut or ground. Use only a wooden or plastic scraper (4).

1. Clean the cylinder head and cylinder block mating surfaces.

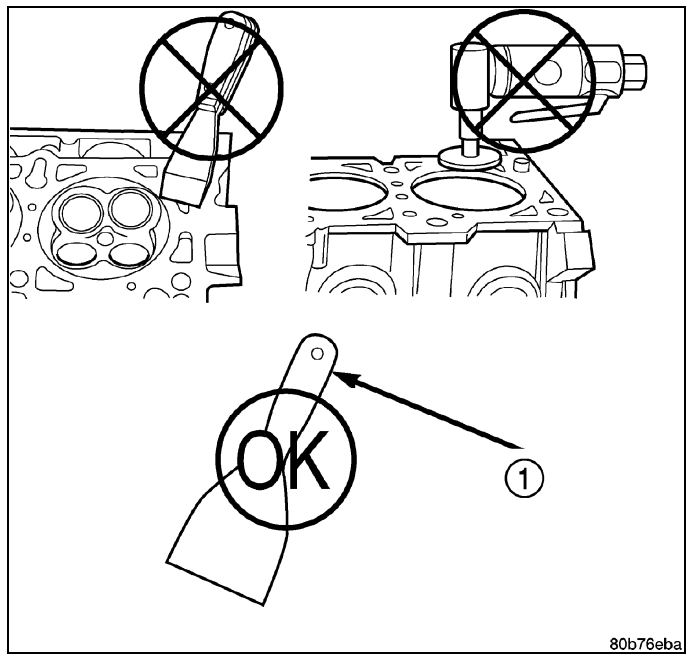

2. Position the new cylinder head gasket on the locating dowels.

CAUTION: When installing cylinder head, use care not damage the tensioner arm or the guide arm.

3. Position the cylinder head onto the cylinder block. Make sure the cylinder head seats fully over the locating dowels.

NOTE: The four M8 cylinder head mounting bolts (11 - 14) require sealant to be added to them before installing. Failure to do so may cause leaks.

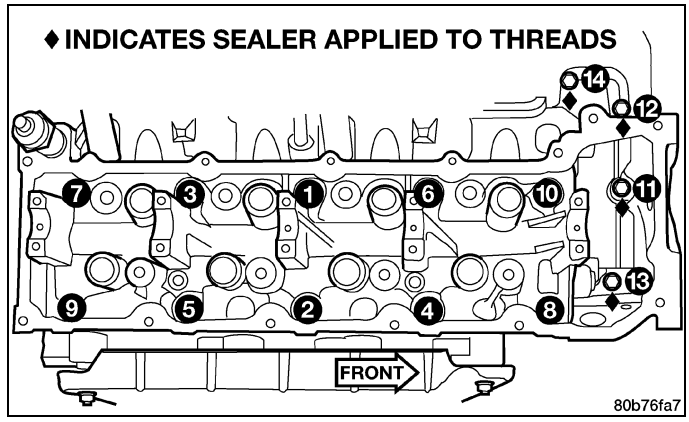

4. Lubricate the cylinder head bolt threads with clean engine oil and install the ten M10 bolts.
5. Coat the four M8 cylinder head bolts with **Mopar® Thread Sealant with PTFE** then install the bolts.

NOTE: The cylinder head bolts are tightened using an angle torque procedure.

6. Tighten the bolts in sequence using the following steps and torque values:

1. Tighten bolts 1 - 10 to 27 N·m (20 ft. lbs.).
2. Verify that bolts 1 - 10 have all reached 27 N·m (20 ft. lbs.), by repeating step 1 without loosening the bolts.
3. Tighten bolts 11 - 14 to 14 N·m (89 in. lbs.).
4. Rotate bolts 1 - 10 an additional 90°.
5. Rotate bolts 1 - 10 an additional 90° again.
6. Tighten bolts 11 - 14 to 26 N·m (19 ft. lbs).

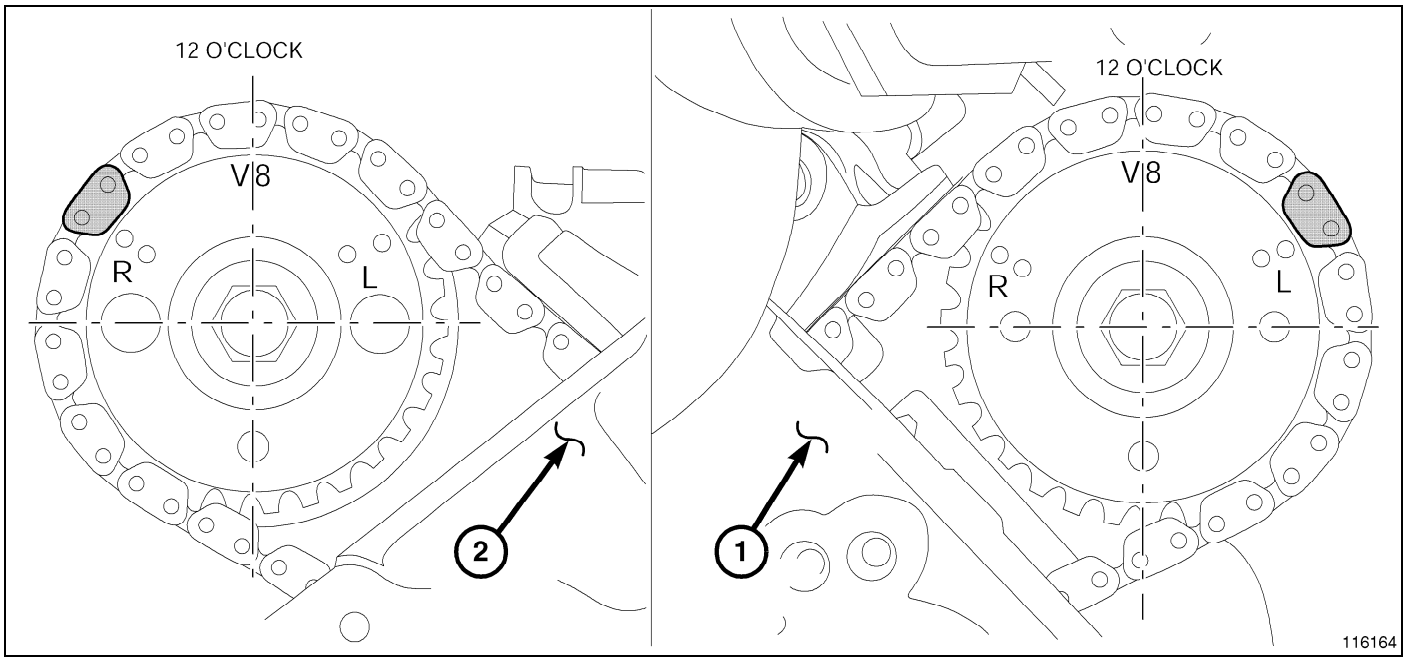

7. Position the secondary chain onto the camshaft drive gear, making sure one marked chain link is on either side of the V8 mark on the gear (2) and position the gear onto the camshaft.
8. Install the camshaft drive gear retaining bolt.
9. Install the right side secondary chain guide(Refer to 09 - Engine/Valve Timing/CHAIN and SPROCKETS, Timing - Installation).
10. Install the right side cylinder head access plug (1).
11. Re-set and install the right side secondary chain tensioner.

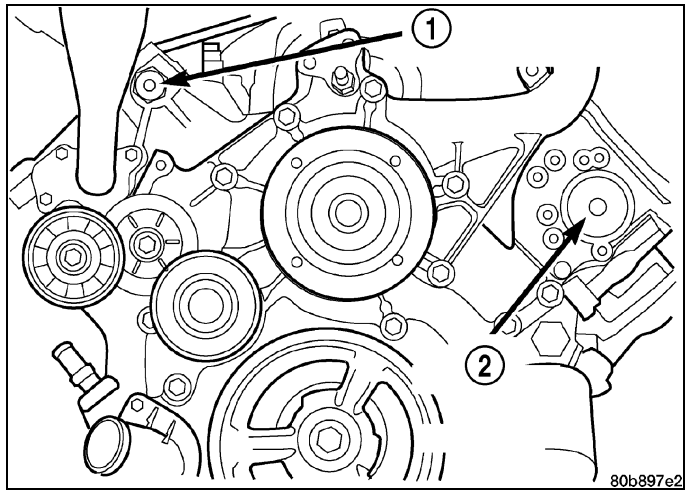

12. Remove Secondary Camshaft Chain Holder 8429 (6).
13. Install the timing chain cover (Refer to 09 - Engine/ Valve Timing/COVER(S), Engine Timing - Installation) - INSTALLATION).
14. Install the crankshaft damper (Refer to 09 - Engine/ Engine Block/DAMPER, Vibration - Installation).
15. Install accessory drive belt.
16. Install the fan shroud.

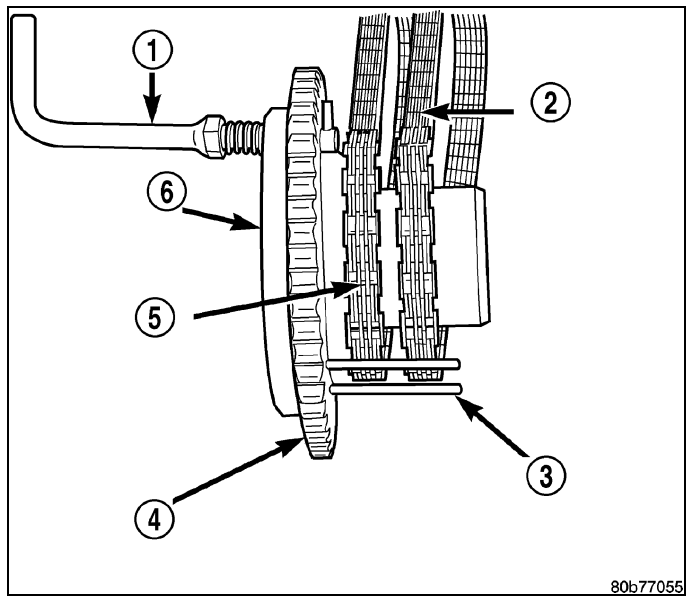

17. Install the cylinder head cover (1)(Refer to 09 - Engine/ Cylinder Head/COVER(S), Cylinder Head - Installation) - INSTALLATION).

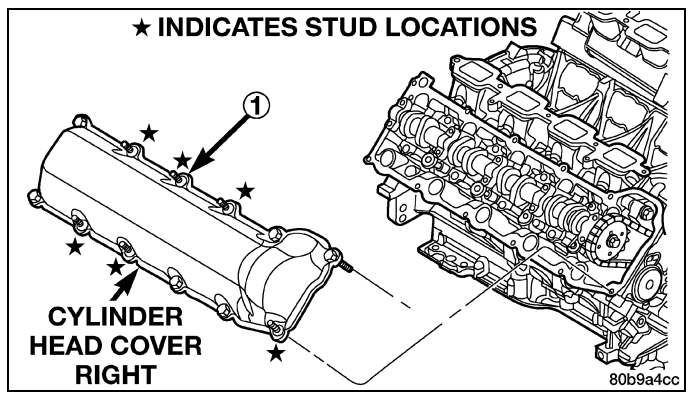

18. Install the intake manifold (Refer to 09 - Engine/Manifolds/MANIFOLD, Intake - Installation).
19. Install oil fill housing onto cylinder head.
20. Refill the cooling system(Refer to 07 - Cooling - Standard Procedure).
21. Raise the vehicle.
22. Drain oil.
23. Install the exhaust pipe onto the right exhaust manifold.
24. Lower the vehicle.
25. Fill with new engine oil.
26. Reconnect battery negative cable.
27. Start the engine and check for leaks.

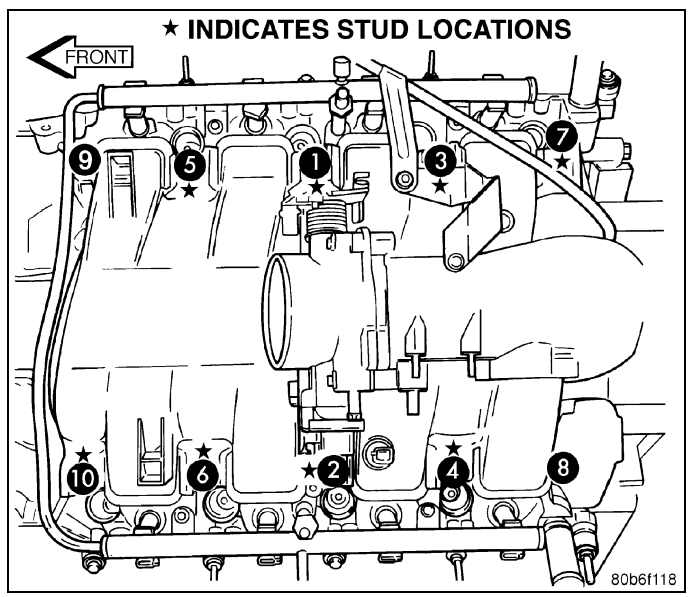

CAMSHAFT, Engine

Description

The camshafts consist of powdered metal steel lobes which are sinter-bonded to a steel tube. A steel post or nose piece is friction-welded to the steel camshaft tube. Five bearing journals are machined into the camshaft, four on the steel

tube and one on the steel nose piece. Camshaft end play is controlled by two thrust walls that border the nose piece journal. Engine oil enters the hollow camshafts at the third journal and lubricates every intake lobe rocker through a drilled passage in the intake lobe.

Standard Procedure

1. Remove the cylinder head cover (Refer to 09 - Engine/ Cylinder Head/COVER(S), Cylinder Head - Removal).
2. Mount Dial Indicator Set C-3339A (1) to a stationary point at the front of the engine.
3. Position the dial indicator tip against the camshaft (2).
4. Push the camshaft toward rear of engine and adjust the dial indicator to zero.
5. Move the camshaft forward and note reading.
6. Camshaft end play must be within specification, if end play is not within specification replace defective part as necessary (Refer to 09 - Engine - Specifications).

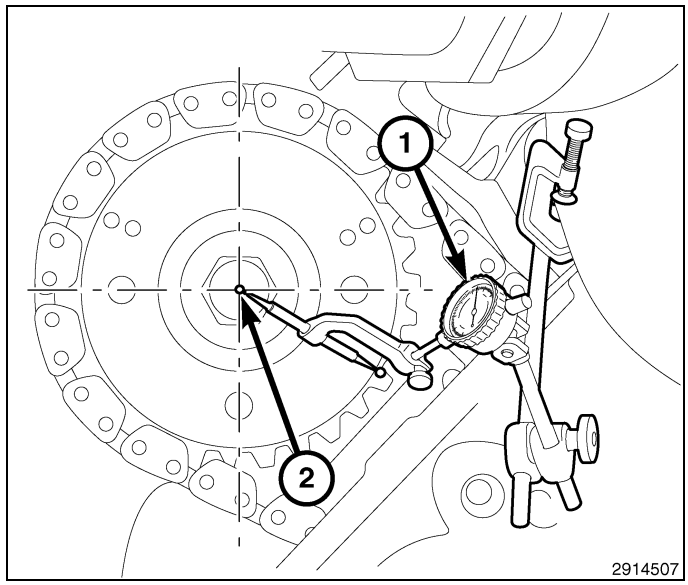

Removal

REMOVAL - RIGHT CAMSHAFT

1. Remove the cylinder head cover(s) (1) (Refer to 09 - Engine/Cylinder Head/COVER(S), Cylinder Head - Removal).

CAUTION: When the timing chain is removed and the cylinder heads are still installed, Do not forcefully rotate the camshafts or crankshaft independently of each other. Severe valve and/or piston damage can occur.

2. Set #1 cylinder to TDC and align the camshaft sprocket V8 mark (1) to the 12 o'clock position.
3. Mark the link on the secondary timing chain that is aligned with the two dots (2) on the camshaft sprocket as shown to aid in installation.

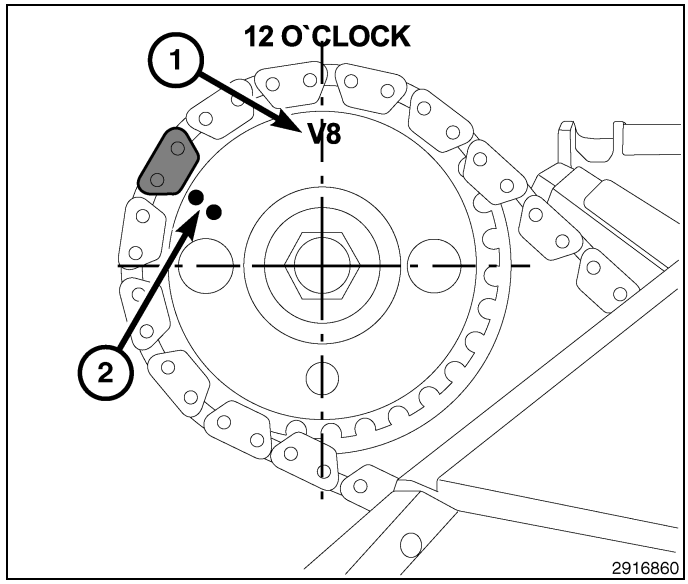

CAUTION: Do not hold or pry on the camshaft target wheel for any reason, severe damage will occur to the target wheel resulting in a vehicle no start condition.

CAUTION: When removing the camshaft sprocket, timing chains or camshaft, the timing chain tensioner must be secured, failure to use Locking Wedge 9867 **will result in hydraulic tensioner ratchet over extension, requiring timing chain cover removal to reset the tensioner ratchet.**

CAUTION: Do not force Locking Wedge 9867 **past the narrowest point between the chain strands. Damage to the tensioners may occur.**

4. Position Locking Wedge 9867 (2) between the timing chain strands (1), gently tap the wedge into position and secure the timing chain against the tensioner arm and guide.

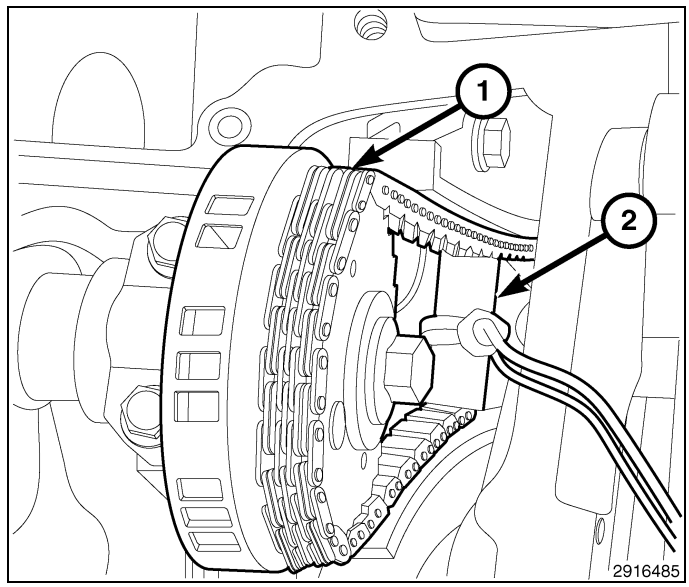

5. Using Spanner Wrench 6958 (2) with Adapter Pins 8346, secure the camshaft sprocket (3) and remove the camshaft sprocket bolt.

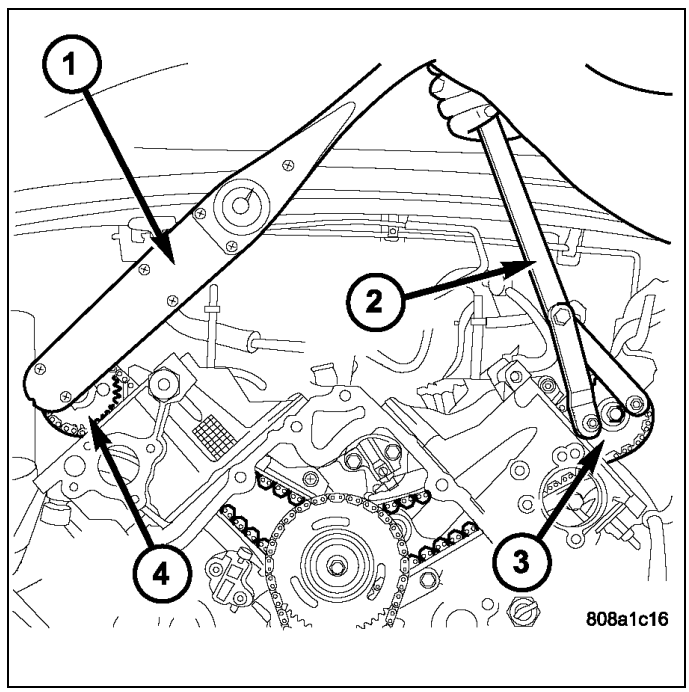

6. Disconnect the electrical connector to the Camshaft Position Sensor (CMP).
7. Remove the CMP sensor retaining bolt
8. Using a slight rocking motion, carefully remove the CMP sensor (1).
9. Check the condition of the CMP sensor O-ring, replace as necessary.

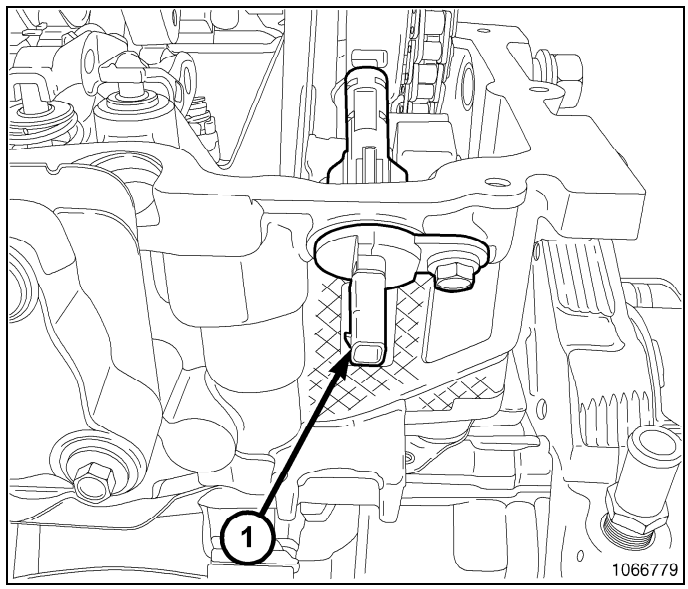

10. Position Camshaft Holder 8428A (1) onto the camshaft (3).

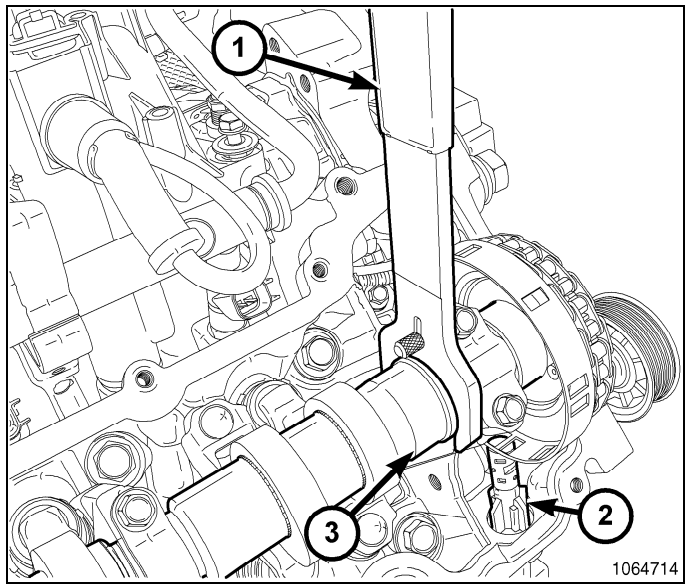

11. Using Camshaft Holder 8428A (1), hold the camshaft while removing the camshaft sprocket (2).
12. Using Camshaft Holder 8428A (1), gently allow the camshaft to rotate 45° counterclockwise until the camshaft is in the neutral position (no valve load).

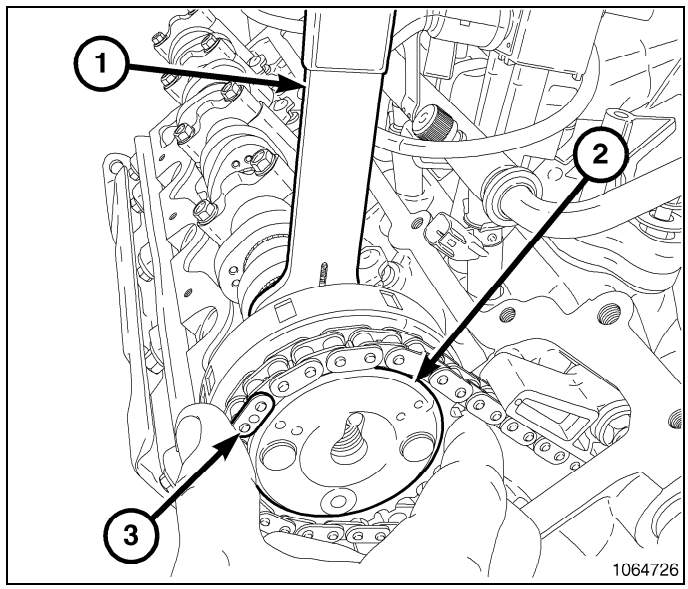

CAUTION: Do not stamp or strike the camshaft bearing caps or severe engine damage may result.

NOTE: When the camshaft is removed the rocker arms may slide downward, mark the rocker arms before removing camshaft.

13. Using the sequence shown, loosen the camshaft bearing cap retaining bolts 1/2 turn at a time until all load is off the bearing caps and remove bolts.
14. Remove the camshaft bearing caps and the camshaft.

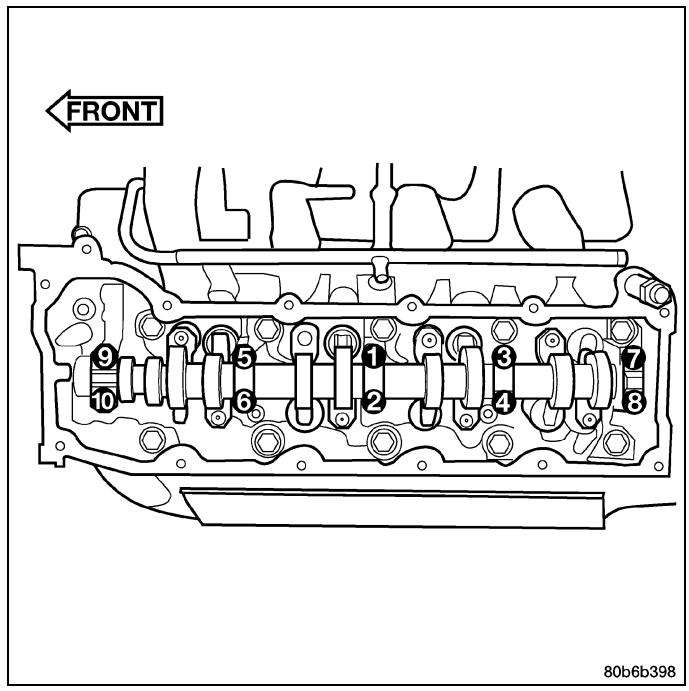

REMOVAL - LEFT CAMSHAFT

1. Remove the cylinder head cover (Refer to 09 - Engine/ Cylinder Head/COVER(S), Cylinder Head - Removal).

CAUTION: When the timing chain is removed and the cylinder heads are still installed, Do not forcefully rotate the camshafts or crankshaft independently of each other. Severe valve and/or piston damage can occur.

2. Set #1 cylinder to TDC and align the camshaft sprocket V8 mark (1) to the 12 o'clock position.
3. Mark the link on the secondary timing chain that is aligned with the two dots (2) on the camshaft sprocket as shown to aid in installation.

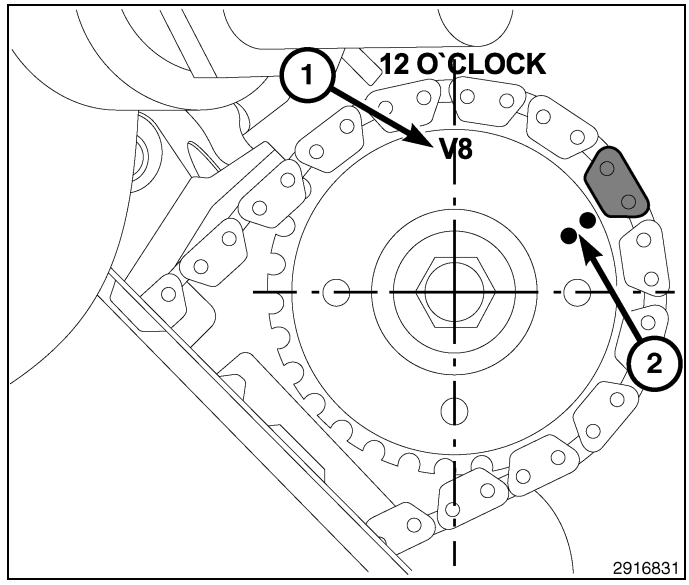

CAUTION: When removing the camshaft sprocket, timing chains or camshaft, the timing chain tensioner must be secured, failure to use Locking Wedge 9867 **will result in hydraulic tensioner ratchet over extension, requiring timing chain cover removal to reset the tensioner ratchet.**

CAUTION: Do not force Locking Wedge 9867 **past the narrowest point between the chain strands. Damage to the tensioners may occur.**

4. Position Locking Wedge 9867 (1) between the timing chain strands (2), gently tap the wedge into position and secure the timing chain against the tensioner arm and guide.

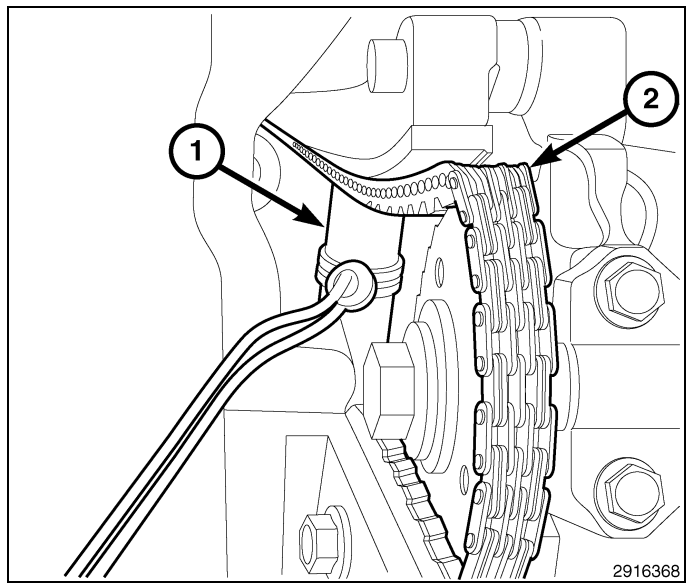

5. Using Spanner Wrench 6958 (4) with Adapter Pins 8346, secure the camshaft sprocket (2) and remove the camshaft sprocket bolt.

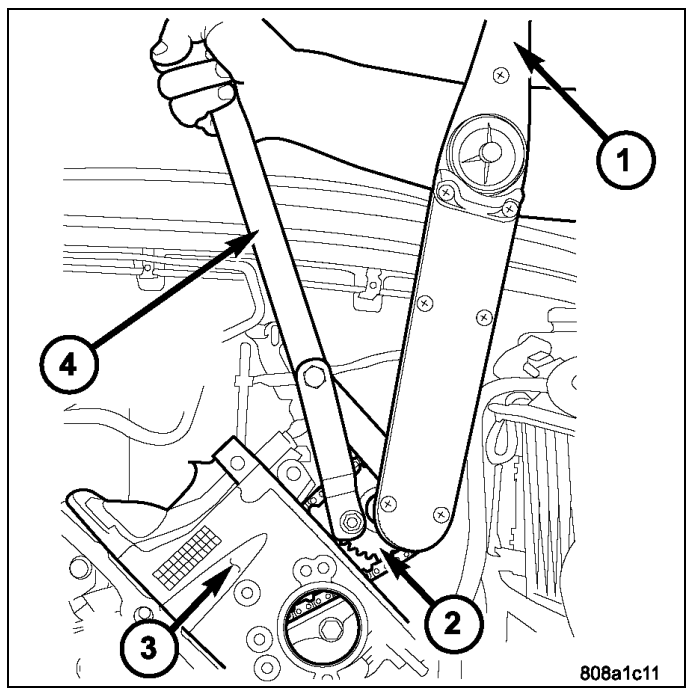

6. Position Camshaft Holder 8428A (1) onto the camshaft (2).

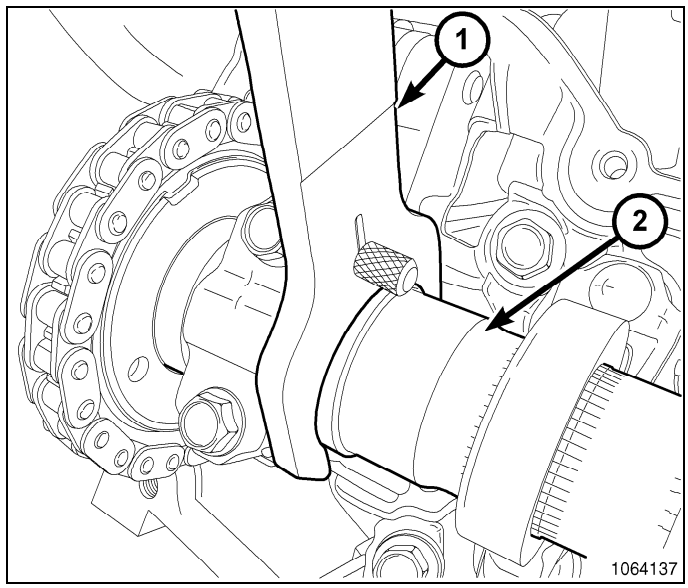

7. Using Camshaft Holder 8428A (1), hold the camshaft while removing the camshaft sprocket (3).
8. Using Camshaft Holder 8428A (1), gently allow the camshaft to rotate 15° clockwise until the camshaft is in the neutral position (no valve load).

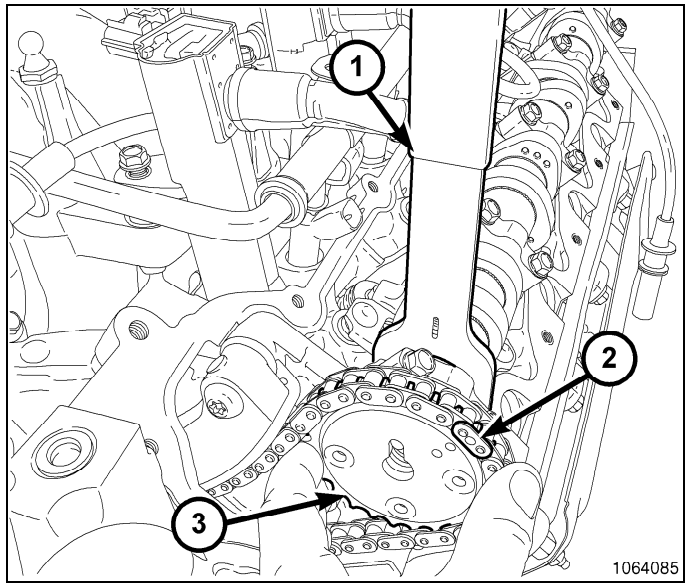

CAUTION: Do not stamp or strike the camshaft bearing caps or severe engine damage may result.

NOTE: When the camshaft is removed the rocker arms may slide downward, mark the rocker arms before removing camshaft.

9. Using the sequence shown, loosen the camshaft bearing cap retaining bolts 1/2 turn at a time until all load is off the bearing caps and remove bolts.
10. Remove the camshaft bearing caps and the camshaft.

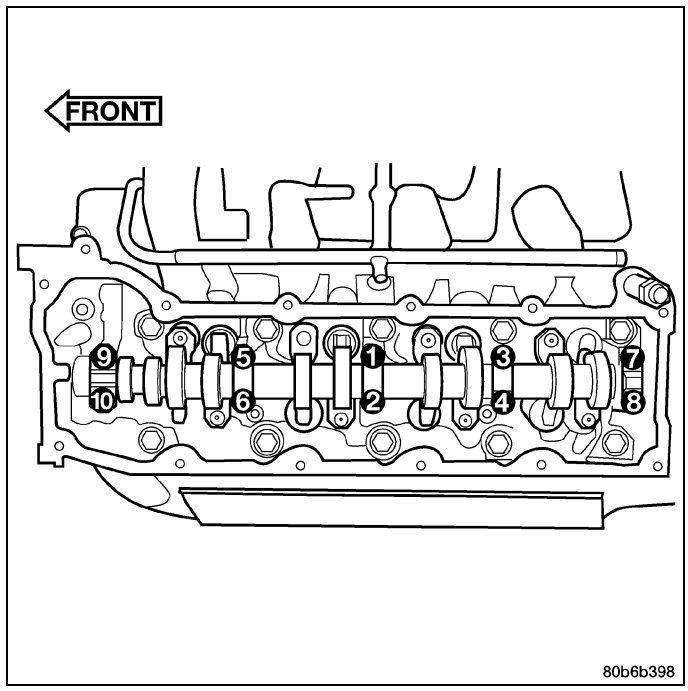

Installation

INSTALLATION - RIGHT CAMSHAFT

1. Lubricate the camshaft journals with clean engine oil.

NOTE: Position the right side camshaft so that the camshaft sprocket dowel is near the 10 o'clock position, this will place the camshaft at the neutral position easing the installation of the camshaft bearing caps.

2. Install the camshaft into the cylinder head while aligning the camshaft sprocket dowel near the 10 o'clock position.

NOTE: The camshaft caps are marked for location. The arrow must point to the front of the engine.

3. Install the camshaft bearing caps in the same position as noted during removal.
4. Install the camshaft bearing cap retaining bolts hand tight.

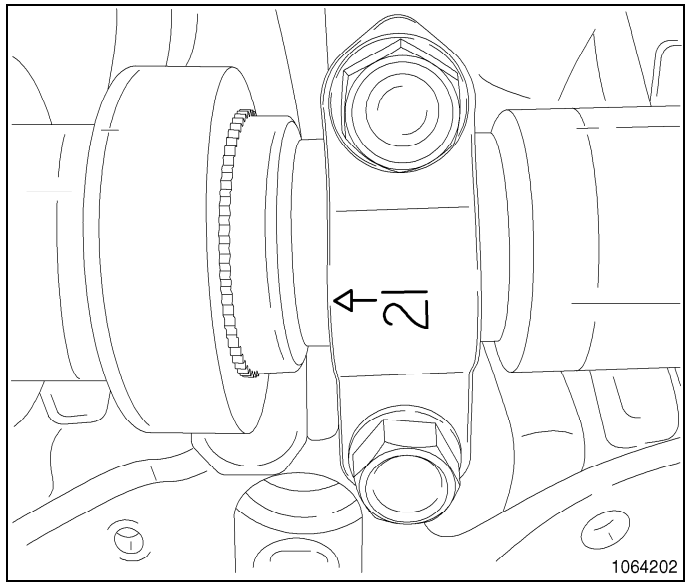

5. Using the sequence shown, working in 1/2 turn increments, tighten the bearing cap retaining bolts to 11 N·m (8 ft. lbs.).
6. Check the camshaft end play (Refer to 09 - Engine/ Cylinder Head/CAMSHAFT, Engine - Standard Procedure).

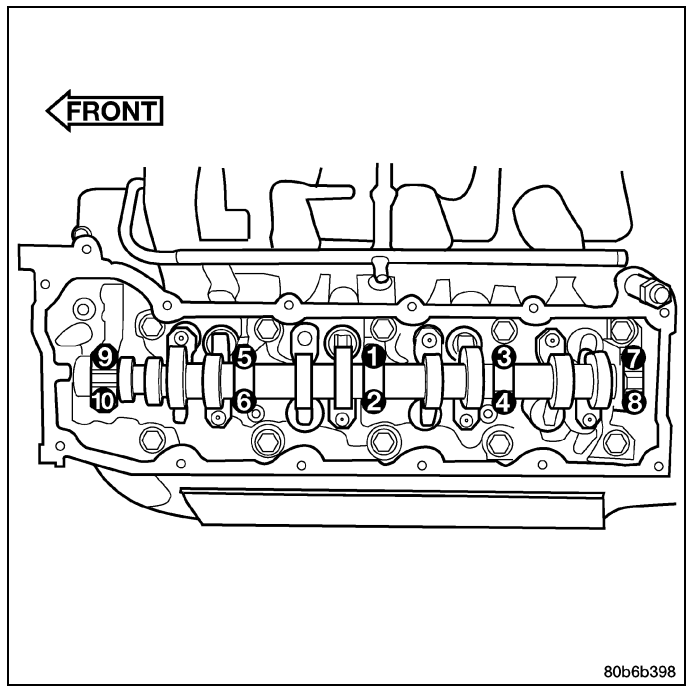

7. Position the camshaft drive gear into the timing chain while aligning the two dots on the camshaft sprocket with the chain link (2) marked during removal.
8. Using Camshaft Holder 8428A (1), rotate the camshaft until the camshaft sprocket dowel is aligned with the slot in the camshaft sprocket.
9. Position the sprocket onto the camshaft.

CAUTION: Remove excess oil from the camshaft sprocket retaining bolt, failure to do so can cause bolt over-torque resulting in bolt failure.

10. Remove excess oil from the camshaft sprocket retaining bolt.
11. Install the camshaft sprocket retaining bolt hand tight.

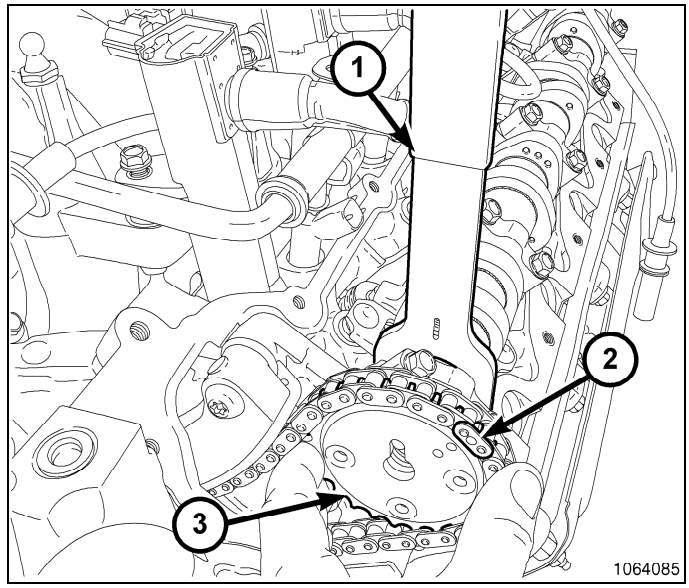

12. Remove the timing chain (1) Locking Wedge 9867 (2).

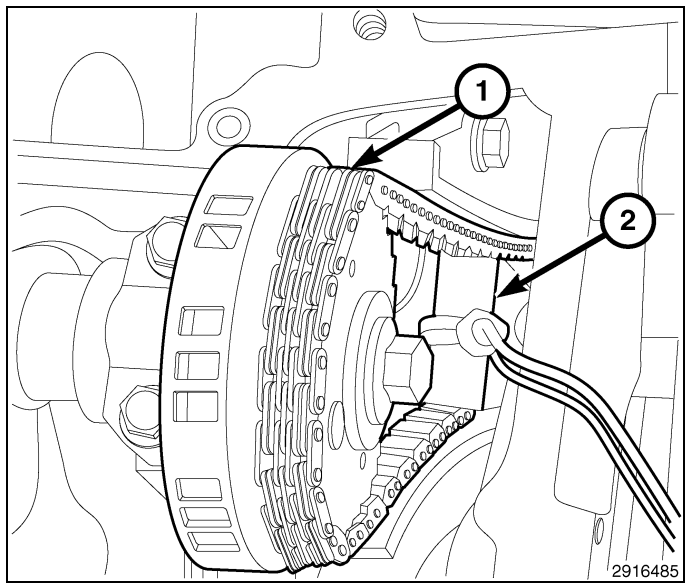

13. Using Spanner Wrench 6958 (2) with Adapter Pins 8346, secure the camshaft sprocket (3) and tighten the retaining bolt (1) to 122 N·m (90 ft. lbs.).

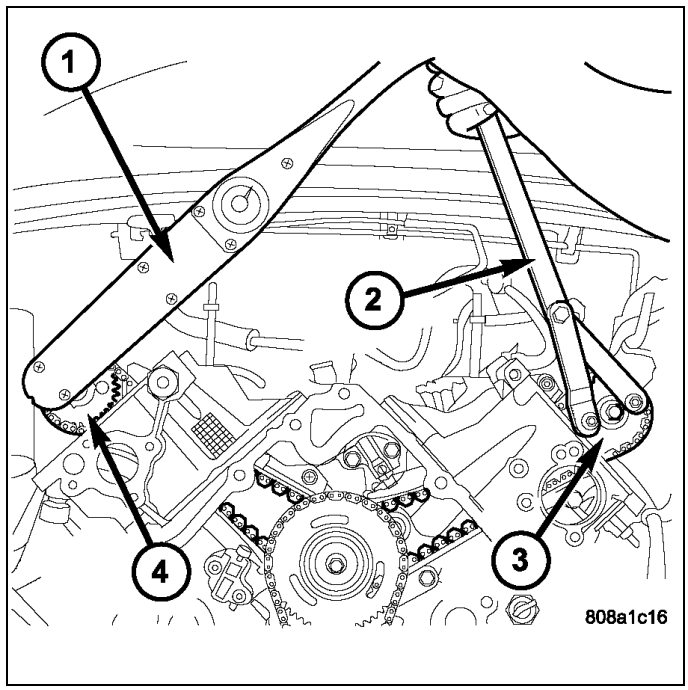

14. Install the cylinder head cover (1) (Refer to 09 - Engine/Cylinder Head/COVER(S), Cylinder Head - Installation).

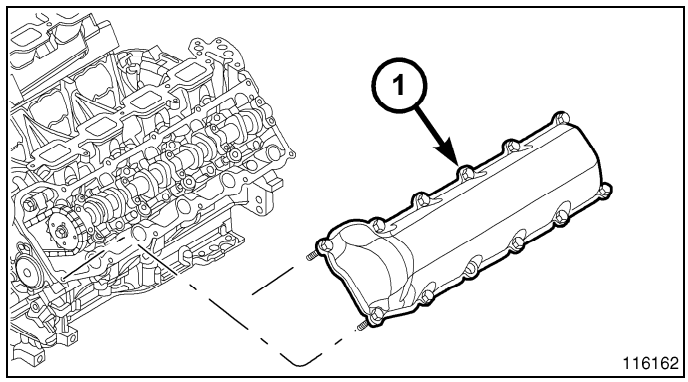

NOTE: Before installing the CMP sensor into the cylinder head, the machined hole must be clean of any dirt or debris.

15. Clean machined hole in the cylinder head (1).
16. Apply a small amount of engine oil to CMP sensor O-ring.
17. Install the CMP sensor (2) into the cylinder head with a slight rocking motion. Do not twist sensor into position as damage to O-ring may result.

CAUTION: Before tightening sensor mounting bolt, be sure sensor is completely flush to cylinder head. If sensor is not flush, damage to sensor mounting tang may result.

18. Install the retaining bolt (3) and tighten to 12 N·m (9 ft. lbs.).
19. Connect the electrical connector (4) to the CMP sensor.

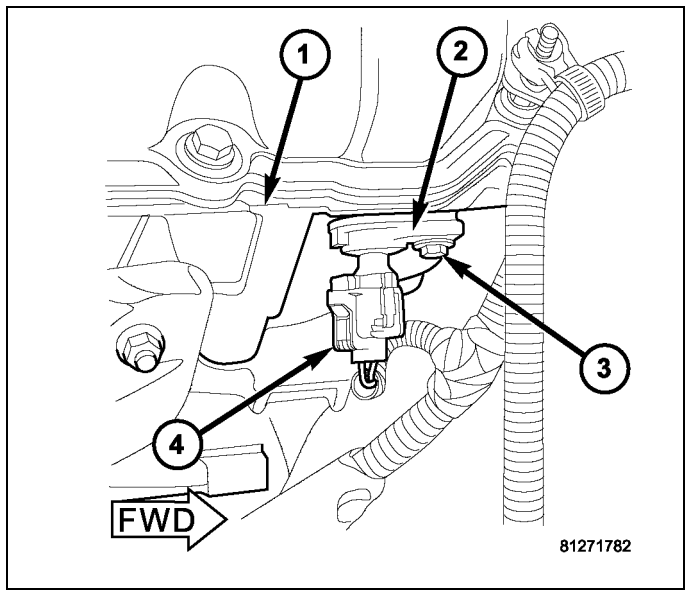

INSTALLATION - LEFT CAMSHAFT

1. Lubricate the camshaft journals with clean engine oil.

NOTE: Position the left side camshaft so that the camshaft sprocket dowel is near the 1 o'clock position, this will place the camshaft at the neutral position easing the installation of the camshaft bearing caps.

2. Install the camshaft into the cylinder head while aligning the camshaft sprocket dowel near the 1 o'clock position.

NOTE: The camshaft caps are marked for location. The arrow must point to the front of the engine.

3. Install the camshaft bearing caps in the same position as noted during removal.
4. Install the camshaft bearing cap retaining bolts hand tight.

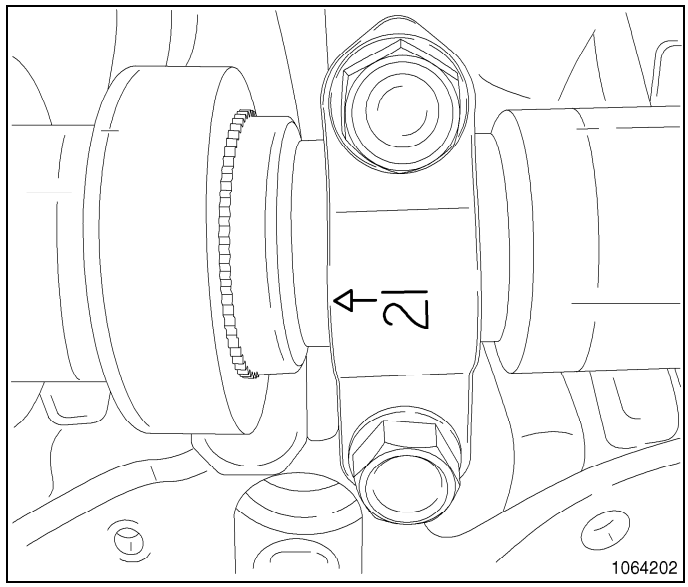

5. Using the sequence shown, working in 1/2 turn increments, tighten the bearing cap retaining bolts to 11 N·m (8 ft. lbs.).
6. Check the camshaft end play (Refer to 09 - Engine/ Cylinder Head/CAMSHAFT, Engine - Standard Procedure).

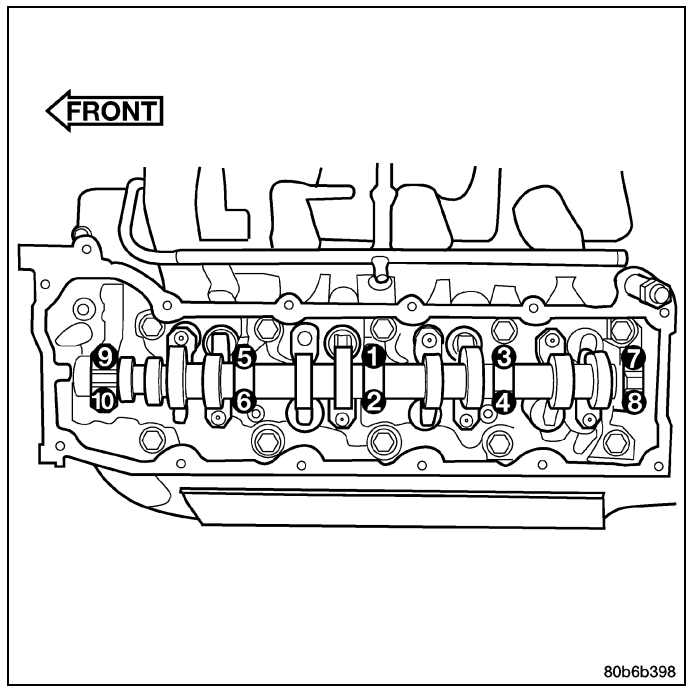

7. Position the camshaft drive gear into the timing chain while aligning the two dots on the camshaft sprocket with the chain link (2) marked during removal.
8. Using Camshaft Holder 8428A (1), rotate the camshaft until the camshaft sprocket dowel is aligned with the slot in the camshaft sprocket.
9. Position the sprocket onto the camshaft.

CAUTION: Remove excess oil from the camshaft sprocket retaining bolt, failure to do so can cause bolt over-torque resulting in bolt failure.

10. Remove excess oil from the camshaft sprocket retaining bolt.
11. Install the camshaft sprocket retaining bolt hand tight.

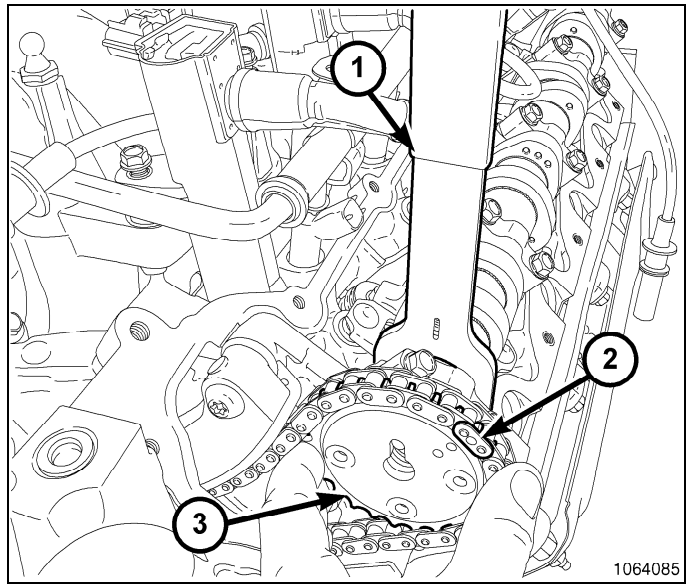

12. Remove the timing chain (2) Locking Wedge 9867 (1).

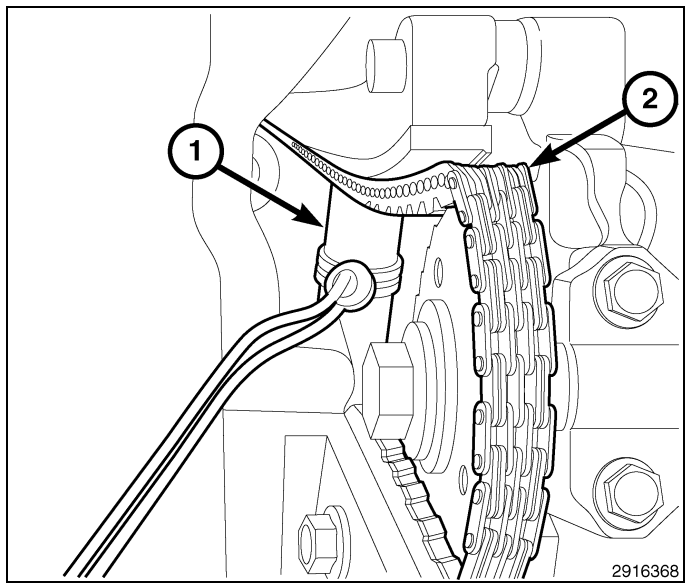

13. Using Spanner Wrench 6958 (4) with Adapter Pins 8346, secure the camshaft sprocket (2) and tighten the retaining bolt (1) to 122 N·m (90 ft. lbs.).

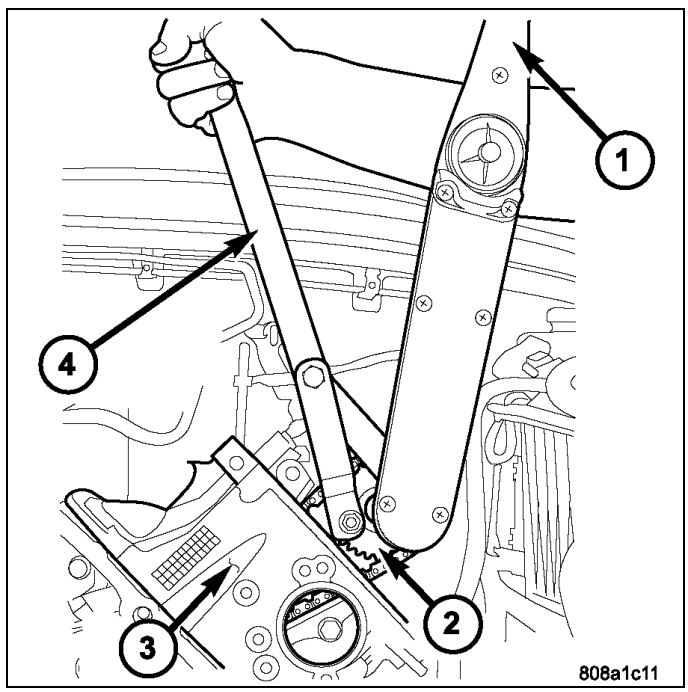

14. Install the cylinder head cover (1) (Refer to 09 - Engine/Cylinder Head/COVER(S), Cylinder Head - Installation).

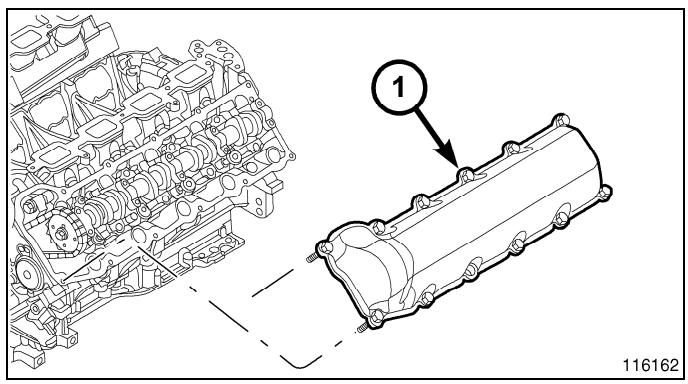

COVER(S), Cylinder Head

Description

The cylinder head covers are made of injection molded thermo-set plastic, and are not interchangeable from side-to-side. It is imperative that nothing rest on the cylinder head covers. Prolonged contact with other items may wear a hole in the cylinder head cover.

Removal

RIGHT SIDE

1. Disconnect battery negative cable.
2. Remove air cleaner assembly, resonator assembly and air inlet hose.
3. Drain cooling system (Refer to 07 - Cooling - Standard Procedure).
4. Remove accessory drive belt (Refer to 07 - Cooling/ Accessory Drive/BELT, Serpentine - Removal).
5. Remove air conditioning compressor retaining bolts and move compressor to the left.
6. Remove heater hoses.
7. Disconnect and remove positive crankcase ventilation (PCV) hose.
8. Remove oil fill tube.
9. Remove spark plug wires (3).
10. Remove right rear breather tube and filter assembly.
11. Remove cylinder head cover retaining bolts.
12. Remove cylinder head cover.

NOTE: The gasket may be used again, provided no cuts, tears, or deformation has occurred.

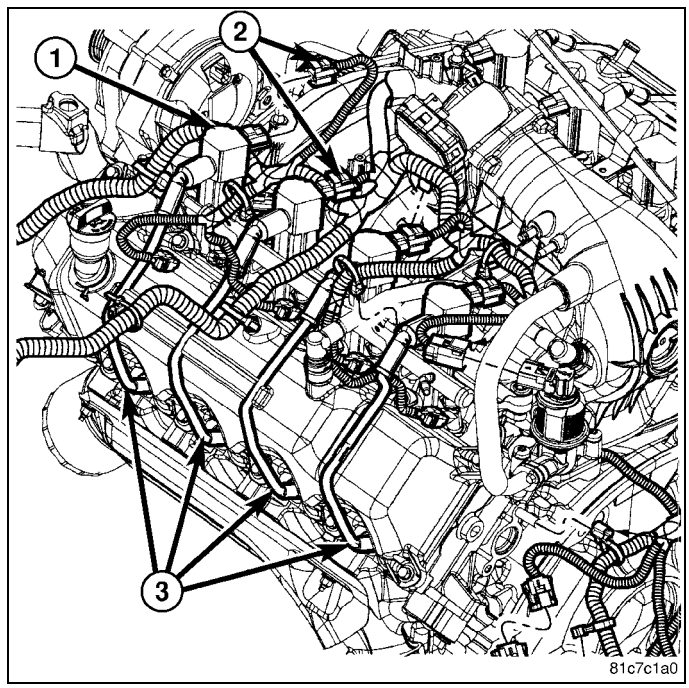

LEFT SIDE

1. Disconnect negative cable from battery.
2. Remove the resonator assemble and air inlet hose.
3. Remove the spark plug wires (3).
4. Route injector harness in front of cylinder head cover.
5. Disconnect the left side breather tube and remove the breather tube.
6. Remove the cylinder head cover mounting bolts.
7. Remove cylinder head cover and gasket.

NOTE: The gasket may be used again, provided no cuts, tears, or deformation has occurred.

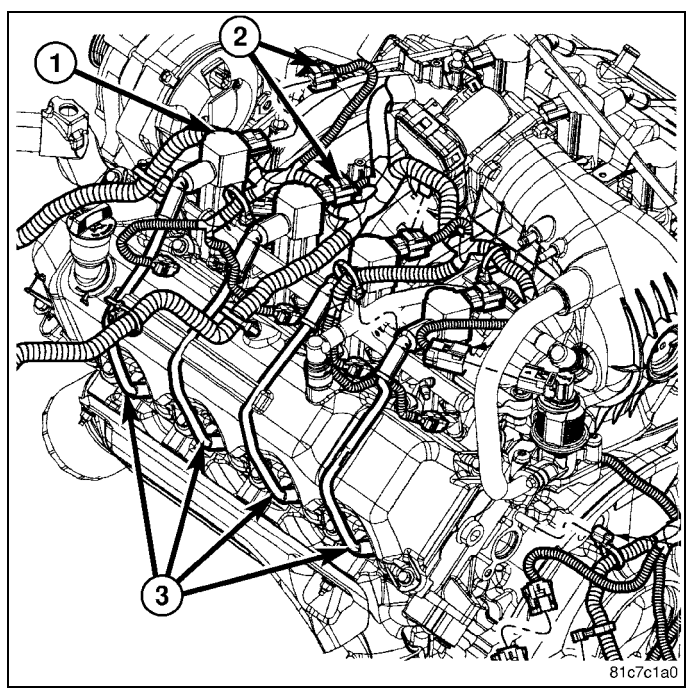

Cleaning

Clean cylinder head cover gasket surface.

Clean head rail, if necessary.

Installation

RIGHT SIDE

CAUTION: Do not use harsh cleaners to clean the cylinder head covers. Severe damage to covers may occur.

1. Clean cylinder head cover and both sealing surfaces. Inspect and replace gasket as necessary.
2. Install cylinder head cover and hand start all fasteners.
3. Tighten cylinder head cover bolts and double ended studs to 12 N·m (105 in. lbs).
4. Install right rear breather tube and filter assembly.
5. Install spark plug wires (3).
6. Install the oil fill tube.
7. Install PCV hose.
8. Install heater hoses.
9. Install air conditioning compressor retaining bolts.
10. Install accessory drive belt (Refer to 07 - Cooling/Accessory Drive/BELT, Serpentine - Installation).
11. Fill Cooling system (Refer to 07 - Cooling - Standard Procedure).

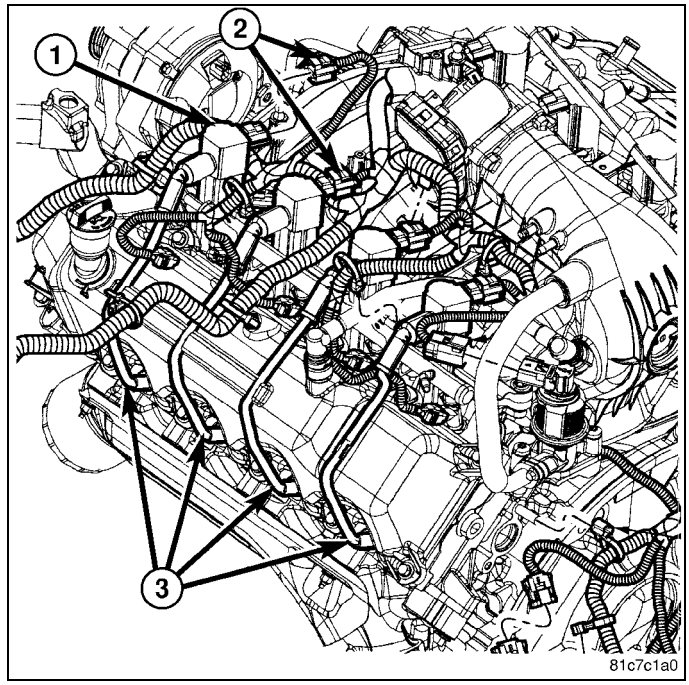

12. Install air cleaner assembly, resonator assembly and air inlet hose.
13. Connect battery negative cable.

LEFT SIDE

CAUTION: Do not use harsh cleaners to clean the cylinder head covers. Severe damage to covers may occur.

1. Clean cylinder head cover and both sealing surfaces. Inspect and replace gasket as necessary.
2. Install cylinder head cover and hand start all fasteners. Verify that all studs are in the correct location as shown.
3. Tighten cylinder head cover bolts and double ended studs to 12 N·m (105 in. lbs.).
4. Install left side breather and connect breather tube.
5. Install the spark plug wires (3).
6. Install the resonator and air inlet hose.
7. Connect negative cable to battery.

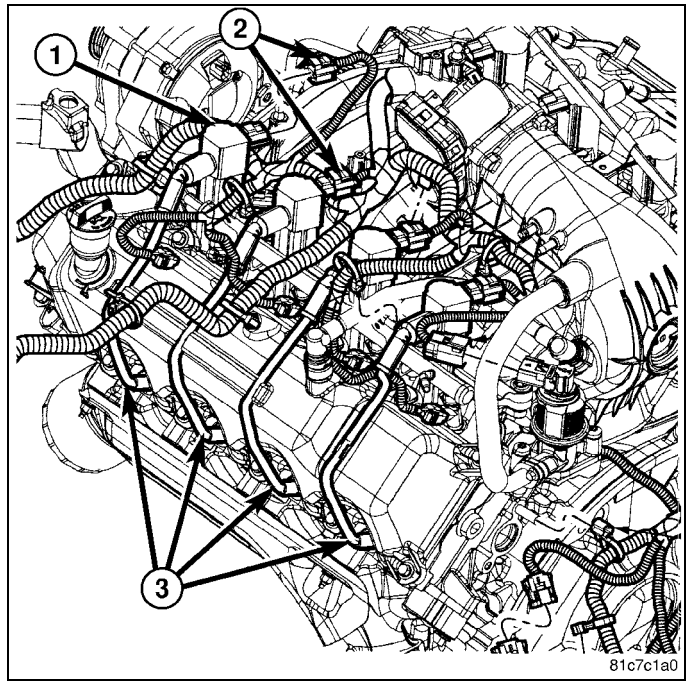

ROCKER ARM, Valve

Description

The rocker arms are steel stampings with an integral roller bearing. The rocker arms incorporate an 0.5 mm (0.019 inch) oil hole in the ball socket for roller and camshaft lubrication.

Diagnosis and Testing

A tappet-like noise may be produced from several items. Check the following items.

1. Engine oil level too high or too low. This may cause aerated oil to enter the adjusters and cause them to be spongy.
2. Insufficient running time after rebuilding cylinder head. Low speed running up to 1 hour may be required.
3. Turn engine off and let set for a few minutes before restarting. Repeat this several times after engine has reached normal operating temperature.
4. Low oil pressure.
5. The oil restrictor in cylinder head gasket or the oil passage to the cylinder head is plugged with debris.
6. Air ingested into oil due to broken or cracked oil pump pick up.
7. Worn valve guides.
8. Rocker arm ears contacting valve spring retainer.
9. Rocker arm loose, adjuster stuck or at maximum extension and still leaves lash in the system.
10. Oil leak or excessive cam bore wear in cylinder head.
11. Faulty lash adjuster.

a. Check lash adjusters for sponginess while installed in cylinder head and cam on camshaft at base circle. Depress part of rocker arm over adjuster. Normal adjusters should feel very firm. Spongy adjusters can be bottomed out easily.

b. Remove suspected lash adjusters, and replace.

c. Before installation, make sure adjusters are at least partially full of oil. This can be verified by little or no plunger travel when lash adjuster is depressed.

Removal

NOTE: Disconnect the battery negative cable to prevent accidental starter engagement.

1. Remove the cylinder head cover (Refer to 09 - Engine/ Cylinder Head/COVER(S), Cylinder Head - Removal) - REMOVAL).
2. For rocker arm removal on cylinders 3 and 5 Rotate the crankshaft until cylinder #1 is at TDC exhaust stroke.
3. For rocker arm removal on cylinders 2 and 8 Rotate the crankshaft until cylinder #1 is at TDC compression stroke.
4. For rocker arm removal on cylinders 4 and 6 Rotate the crankshaft until cylinder #3 is at TDC compression stroke.
5. For rocker arm removal on cylinders 1 and 7 Rotate the crankshaft until cylinder #2 is at TDC compression stroke.
6. Using special tool 8516A Rocker Arm Remover (2), press downward on the valve spring, remove rocker arm.

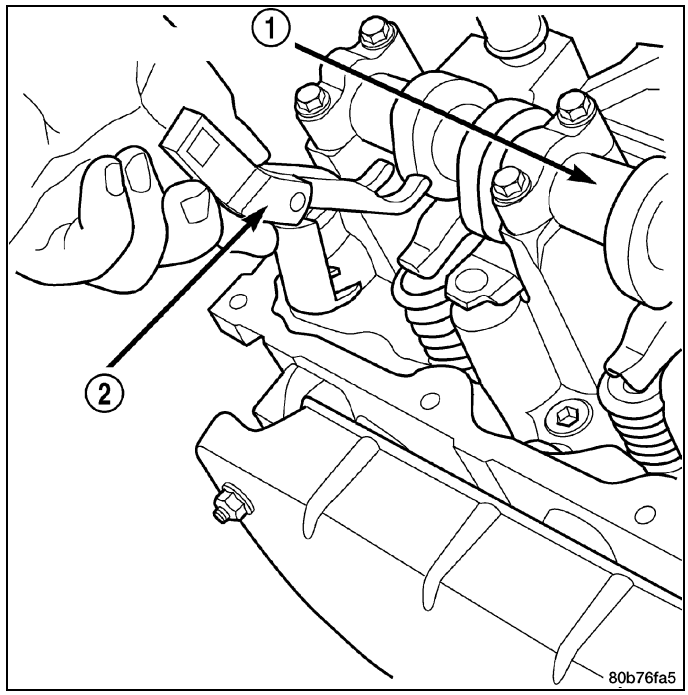

Installation

CAUTION: Make sure the rocker arms are installed with the concave pocket over the lash adjusters. Failure to do so may cause severe damage to the rocker arms and/or lash adjusters.

NOTE: Coat the rocker arms with clean engine oil prior to installation.

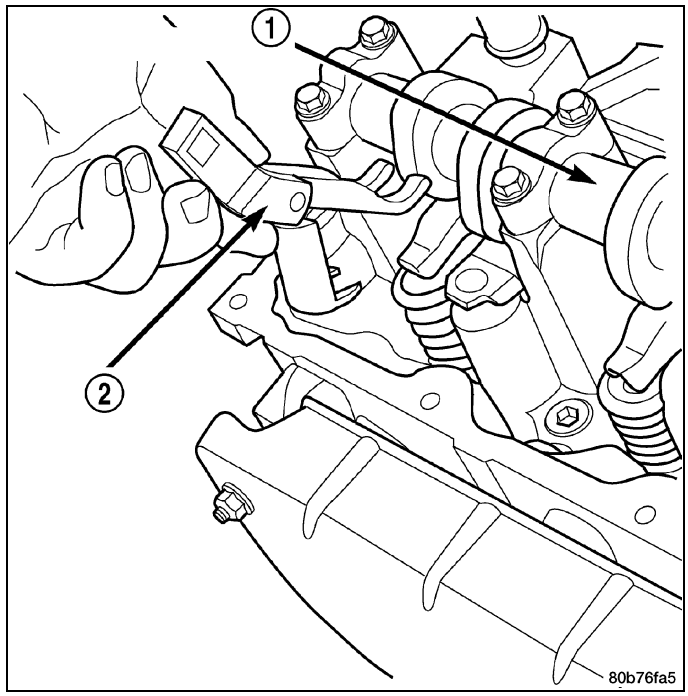

1. For rocker arm installation on cylinders 3 and 5 Rotate the crankshaft until cylinder #1 is at TDC exhaust stroke.
2. For rocker arm installation on cylinders 2 and 8 Rotate the crankshaft until cylinder #1 is at TDC compression stroke.
3. For rocker arm installation on cylinders 4 and 6 Rotate the crankshaft until cylinder #3 is at TDC compression stroke.
4. For rocker arm installation on cylinders 1 and 7 Rotate the crankshaft until cylinder #2 is at TDC compression stroke.
5. Using valve spring compressor 10102 press downward on the valve spring, install rocker arm.
6. Install the cylinder head cover (Refer to 09 - Engine/Cylinder Head/COVER(S), Cylinder Head - Installation) - INSTALLATION).

SEAL(S), Valve Guide

Description

The valve stem seals are made of rubber and incorporate an integral steel valve spring seat. The integral garter spring maintains consistent lubrication control to the valve stems.

Removal

The valve stem seal is integral with the valve spring seat, for removal (Refer to 09 - Engine/Cylinder Head/SPRING(S), Valve - Removal)

Installation

The valve stem seal is integral with the valve spring seat, for installation (Refer to 09 - Engine/Cylinder Head/SPRING(S), Valve - Installation)

SPRING(S), Valve

Description

The valve springs are made from high strength chrome silicon steel. The springs are common for intake and exhaust applications. The valve spring seat is integral with the valve stem seal, which is a positive type seal to control lubrication.

Removal

1. Remove the cylinder head cover (Refer to 09 - Engine/ Cylinder Head/COVER(S), Cylinder Head - Removal) - REMOVAL).
2. Using Valve Spring Compressor 10102 (2), remove the rocker arms and the hydraulic lash adjusters.
3. Remove the spark plug for the cylinder the valve spring and seal are to be removed from.
4. Apply shop air to the cylinder to hold the valves in place when the spring is removed

NOTE: All eight valve springs and seals are removed in the same manner; this procedure only covers one valve seal and valve spring.

5. Using Valve Spring Compressor 10102, compress the valve spring.

NOTE: It may be necessary to tap the top of the valve spring to loosen the spring retainers locks enough to be removed.

6. Remove the two spring retainer lock halves.

NOTE: the valve spring is under tension use care when releasing the valve spring compressor.

7. Remove the valve spring compressor.
8. Remove the spring retainer, and the spring.
9. Remove the valve stem seal.

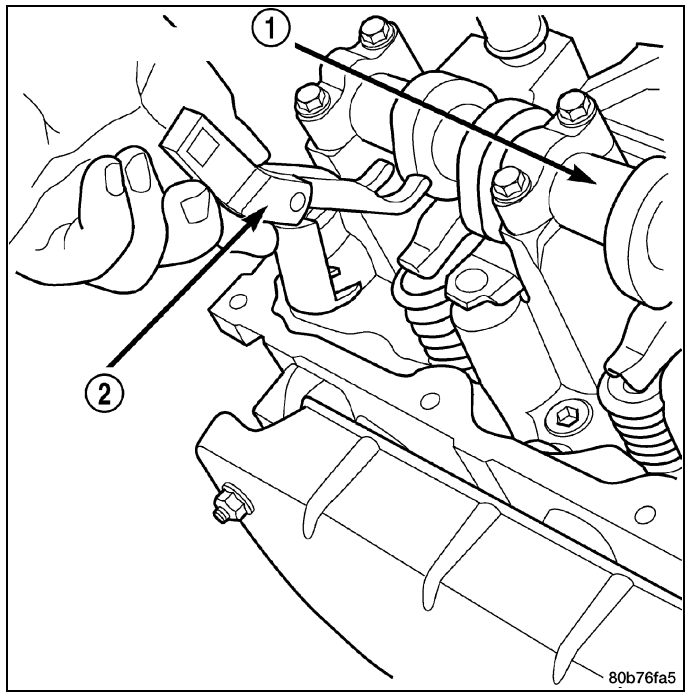

Installation

1. Coat the valve stem with clean engine oil and install the valve stem seal. Make sure the seal is fully seated and that the garter spring at the top of the seal is intact.
2. Install the spring (6) and the spring retainer (2).
3. Using Valve Spring Compressor 10102, compress the spring and install the two valve spring retainer halves.
4. Release the valve spring compressor and make sure the two spring retainer halves and the spring retainer are fully seated.
5. Position the hydraulic lash adjusters and rocker arms.
6. Install the cylinder head cover (Refer to 09 - Engine/ Cylinder Head/COVER(S), Cylinder Head - Installation) - INSTALLATION).
7. Install spark plugs and plug wires.

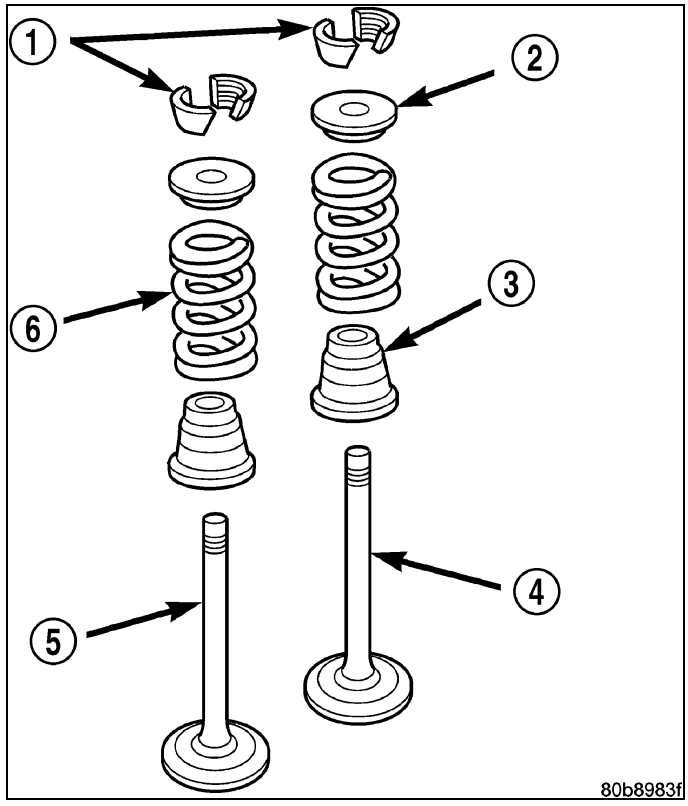

VALVES, Intake and Exhaust

Description

The valves are made of heat resistant steel and have chrome plated stems to prevent scuffing. Each valve is actuated by a roller rocker arm which pivots on a stationary lash adjuster. All valves use three bead lock keepers to retain the springs and promote valve rotation.

Removal

NOTE: The cylinder head(s) must be removed in order to perform this procedure.

1. Remove and isolate the negative battery cable.
2. Remove the cylinder head covers (Refer to 09 - Engine/Cylinder Head/COVER(S), Cylinder Head - Removal)
3. Remove the rocker arms and lash adjusters (Refer to 09 - Engine/Cylinder Head/ROCKER ARM, Valve - Removal)
4. Remove the camshaft bearing caps and the camshaft (Refer to 09 - Engine/Cylinder Head/CAMSHAFT, Engine - Removal)
5. Remove the cylinder head(s) (Refer to 09 - Engine/Cylinder Head - Removal)

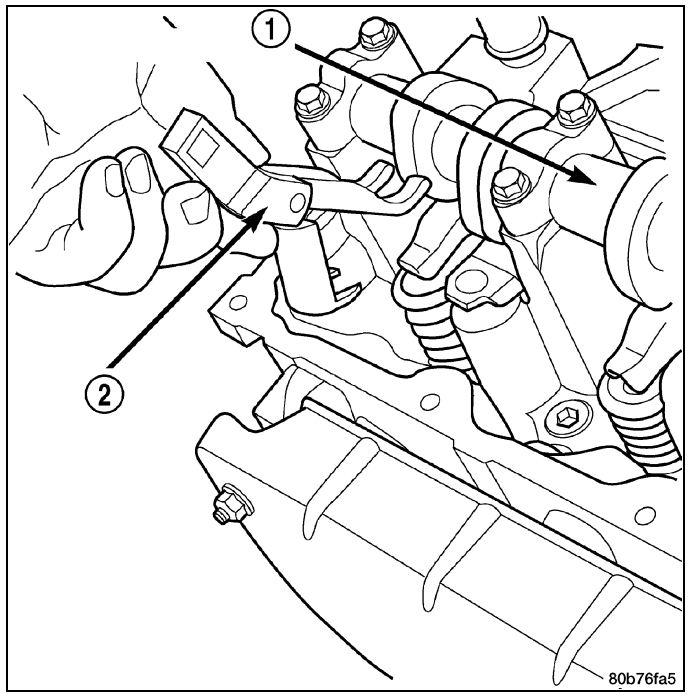

NOTE: All valve springs and valves are removed in the same manner; this procedure only covers one valve and valve spring.

6. Using Valve Spring Compressor C-3422-D and Adapter 8519, compress the valve spring.

NOTE: It may be necessary to tap the top of the valve spring to loosen the spring retainers locks enough to be removed.

7. Remove the two spring retainer lock halves.

NOTE: The valve spring is under tension, use care when releasing the valve spring compressor.

8. Remove the valve spring compressor.
9. Remove the spring retainer, and the spring.

NOTE: Check for sharp edges on the keeper grooves. Remove any burrs from the valve stem before removing the valve from the cylinder head.

10. Remove the valve from the cylinder head.

NOTE: The valve stem seals are common between intake and exhaust.

11. Remove the valve stem seal. Mark the valve for proper installation.

TESTING VALVE SPRINGS

NOTE: Whenever the valves are removed from the cylinder head it is recommended that the valve springs be inspected and tested for reuse.

Inspect the valve springs for physical signs of wear or damage. Using a suitable valve spring tester (1), test the following;

- Specified Spring Height
- Specified Spring Force (Valve Open)
- Specified Spring Force (Valve Closed)

Replace any springs that do not meet specifications (Refer to 09 - Engine - Specifications)

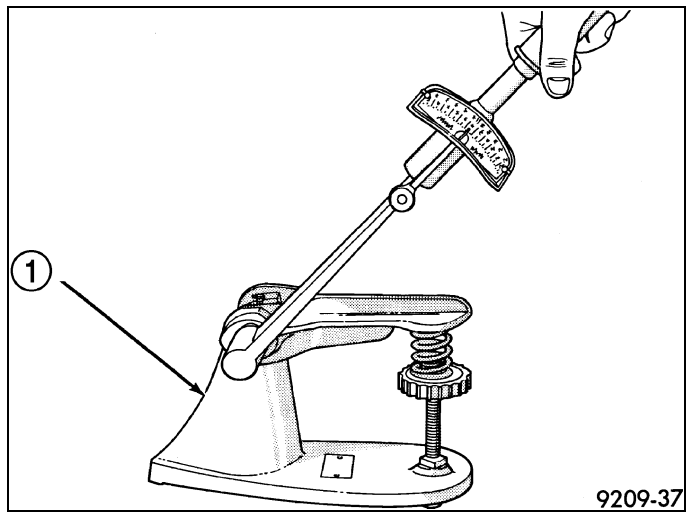

Installation

1. Coat the valve stem (4,5) with clean engine oil and insert it into the cylinder head.
2. Install the valve stem seal (3). Make sure the seal is fully seated and that the garter spring at the top of the seal is intact.
3. Install the spring (6) and the spring retainer (2).
4. Using the valve spring compressor, compress the spring (6) and install the two valve locks (1).
5. Release the valve spring compressor and make sure the two valve locks and the spring retainer are fully seated.

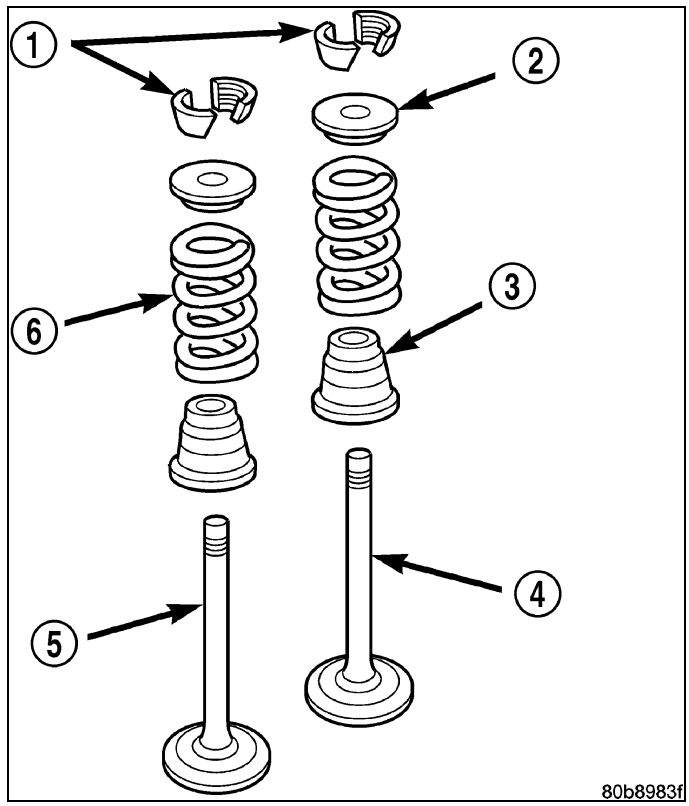

6. lubricate the camshaft journal with clean engine oil then Position the camshaft (with the sprocket dowel on the left camshaft at 11 o'clock and the right camshaft at 12 o'clock), then position the camshaft bearing caps.
7. Install the camshaft bearing cap retaining bolts. Tighten the bolts 9 - 13 N·m (100 in. lbs.) in ½ turn increments in the sequence shown.
8. Position the hydraulic lash adjusters and rocker arms.

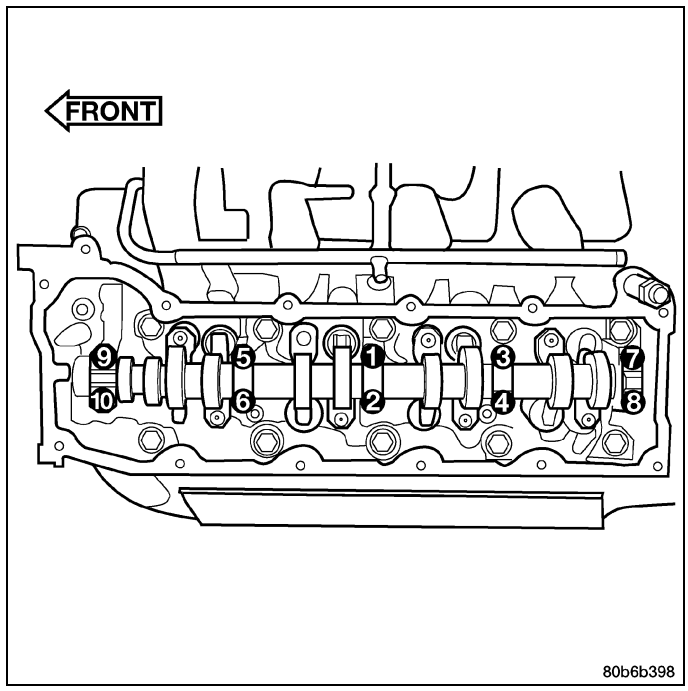

ENGINE BLOCK

TABLE OF CONTENTS

page

ENGINE BLOCK
DESCRIPTION 214
STANDARD PROCEDURE 214
CLEANING 214
INSPECTION 215
BEARING(S), CONNECTING ROD
STANDARD PROCEDURE 216
BEARING(S), CRANKSHAFT, MAIN
STANDARD PROCEDURE 218
INSPECTION. 219
COVER, STRUCTURAL DUST
DESCRIPTION. 220
OPERATION 220
REMOVAL 220
INSTALLATION 220
CRANKSHAFT
DESCRIPTION. 221
REMOVAL 221
INSPECTION. 221
INSTALLATION 222
DAMPER, VIBRATION
REMOVAL 227
INSTALLATION 229

page

FLEXPLATE
REMOVAL 230
INSTALLATION 230
PLUG, CORE
REMOVAL 231
INSTALLATION 231
RING(S), PISTON
STANDARD PROCEDURE 231
ROD, PISTON AND CONNECTING
DESCRIPTION. 234
STANDARD PROCEDURE 234
REMOVAL 234
CLEANING 235
INSPECTION. 235
INSTALLATION 236
SEAL, CRANKSHAFT OIL, FRONT
REMOVAL 237
INSTALLATION 238
SEAL, CRANKSHAFT OIL, REAR
DIAGNOSIS AND TESTING 238
REMOVAL 239
INSTALLATION 239

Engine Block

Description

The cylinder block is made of cast iron. The block is a closed deck design with the left bank forward. To provide high rigidity and improved NVH an enhanced compacted graphite bedplate is bolted to the block. The block design allows coolant flow between the cylinders bores, and an internal coolant bypass to a single poppet inlet thermostat is included in the cast aluminum front cover.

Standard Procedure

Before honing, stuff plenty of clean shop towels under the bores and over the crankshaft to keep abrasive materials from entering the crankshaft area.

1. Used carefully, the Cylinder Bore Sizing Hone C-823, equipped with 220 grit stones, is the best tool for this job. In addition to deglazing, it will reduce taper and out-of-round, as well as removing light scuffing, scoring and scratches. Usually, a few strokes will clean up a bore and maintain the required limits.

CAUTION: DO NOT use rigid type hones to remove cylinder wall glaze.

2. Deglazing of the cylinder walls may be done if the cylinder bore is straight and round. Use a cylinder surfacing hone, Honing Tool C-3501, equipped with 280 grit stones (C-3501-3810). about 20-60 strokes, depending on the bore condition, will be sufficient to provide a satisfactory surface. Using honing oil C-3501-3880, or a light honing oil, available from major oil distributors.

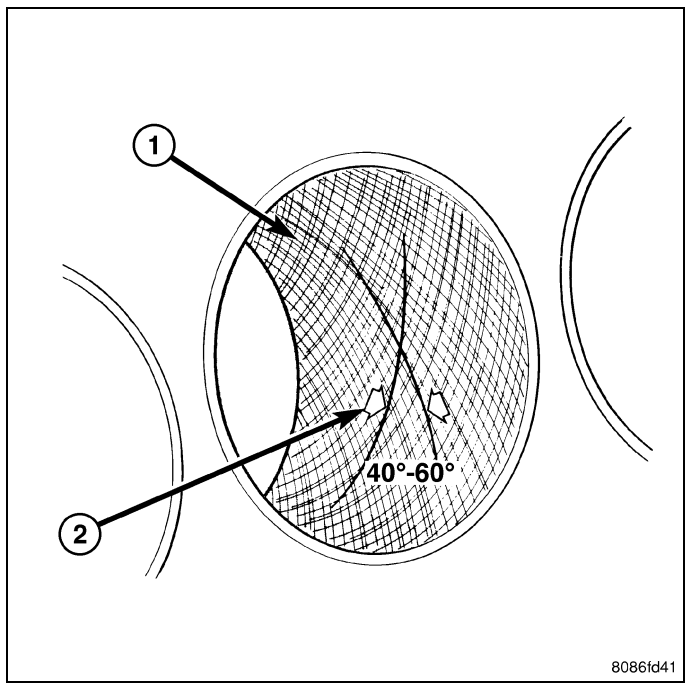

CAUTION: DO NOT use engine or transmission oil, mineral spirits, or kerosene.

3. Honing should be done by moving the hone up and down fast enough to get a crosshatch pattern (1). The hone marks should INTERSECT at 50° to 60° for proper seating of rings (2).
4. A controlled hone motor speed between 200 and 300 RPM is necessary to obtain the proper crosshatch angle. The number of up and down strokes per minute can be regulated to get the desired 50° to 60° angle. Faster up and down strokes increase the crosshatch angle.
5. After honing, it is necessary that the block be cleaned to remove all traces of abrasive. Use a brush to wash parts with a solution of hot water and detergent. Dry parts thoroughly. Use a clean, white, lint-free cloth to check that the bore is clean. Oil the bores after cleaning to prevent rusting.

Cleaning

Thoroughly clean the oil pan and engine block gasket surfaces.

Use compressed air to clean out:

- The galley at the oil filter adaptor hole.
- The front and rear oil galley holes.
- The feed holes for the crankshaft main bearings.

Once the block has been completely cleaned, apply Loctite PST pipe sealant with Teflon 592 to the threads of the front and rear oil galley plugs. Tighten the 1/4 inch NPT plugs to 20 N·m (177 in. lbs.) torque. Tighten the 3/8 inch NPT plugs to 27 N·m (240 in. lbs.) torque.

Inspection

1. Wipe the main bearing inserts (1,2) clean.
2. Inspect the inserts for abnormal wear patterns, scoring, grooving, fatigue, pitting and for metal or other foreign material imbedded in the lining.
3. Inspect the back of the inserts for fractures, scrapes or irregular wear patterns.
4. Inspect the insert locking tabs for damage.
5. Inspect the crankshaft thrust washers for scoring, scratches, wear or blueing.
6. Replace any bearing that shows abnormal wear.
7. Inspect the main bearing bores for signs of scoring, nicks and burrs.
8. If the cylinder block main bearing bores show damage, replace the engine block.

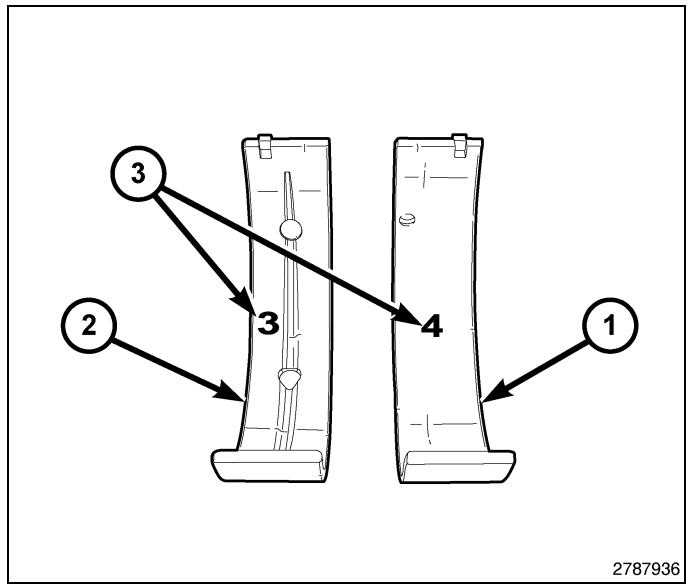

9. Use Cylinder Indicator C-119 (2) to correctly measure the inside diameter of the cylinder bore (3). A cylinder bore gauge capable of reading in 0.003 mm (0.0001 in.) Increments is required. If a bore gauge is not available, do not use an inside micrometer.
10. Measure the inside diameter of the cylinder bore at three levels below the top of the bore (4). Start at the top of the bore, perpendicular (across or at 90°) to the axis of the crankshaft at point A (1).
11. Repeat the measurement near the middle of the bore then repeat the measurement near the bottom of the bore.
12. Determine the taper by subtracting the smaller diameter from the larger diameter.
13. Rotate the measuring device 90° to point B (1) and repeat the three measurements. Verify that the maximum taper is within specifications.
14. Determine out-of-roundness by comparing the difference between each measurement.
15. If the cylinder bore taper does not exceed 0.025 mm (0.001 inch) and out-of-roundness does not exceed 0.015 mm (0.0006 inch) then the cylinder bore can be honed. If the cylinder bore taper or out- of-round condition exceeds the maximum limits, replace the cylinder block.

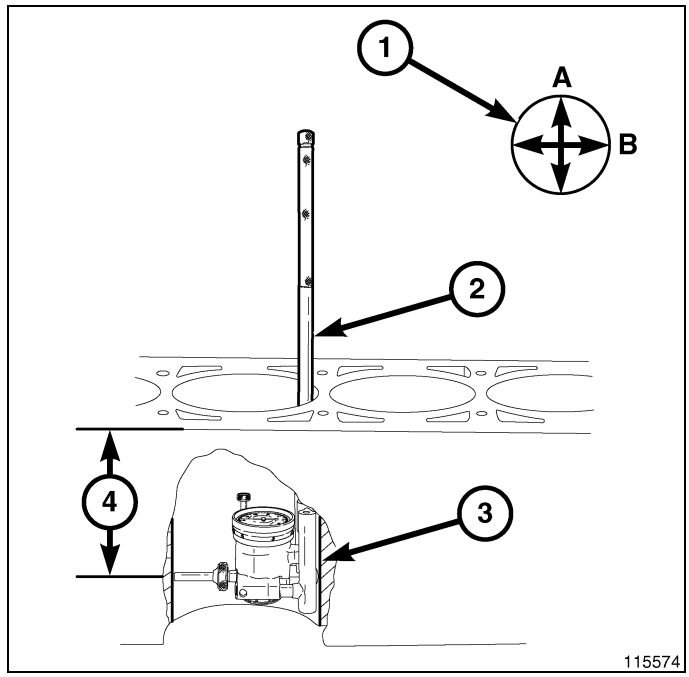

NOTE: A slight amount of taper always exists in the cylinder bore after the engine has been in use for a period of time.

BEARING(S), Connecting Rod

Standard Procedure

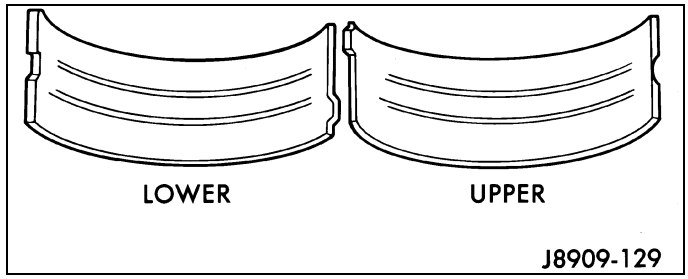

Inspect the connecting rod bearings for scoring. Check the bearings for normal wear patterns, scoring, grooving, fatigue and pitting. Replace any bearing that shows abnormal wear.

Inspect the connecting rod journals for signs of scoring, nicks and burrs.

Misaligned or bent connecting rods can cause abnormal wear on pistons, piston rings, cylinder walls, connecting rod bearings and crankshaft connecting rod journals. If wear patterns or damage to any of these components indicate the probability of a misaligned connecting rod, inspect it for correct rod alignment. Replace misaligned, bent or twisted connecting rods.

1. Wipe the oil from the connecting rod journal.
2. Lubricate the upper bearing insert (2) and install in connecting rod (1). **Center bearing insert (2) in connecting rod.**

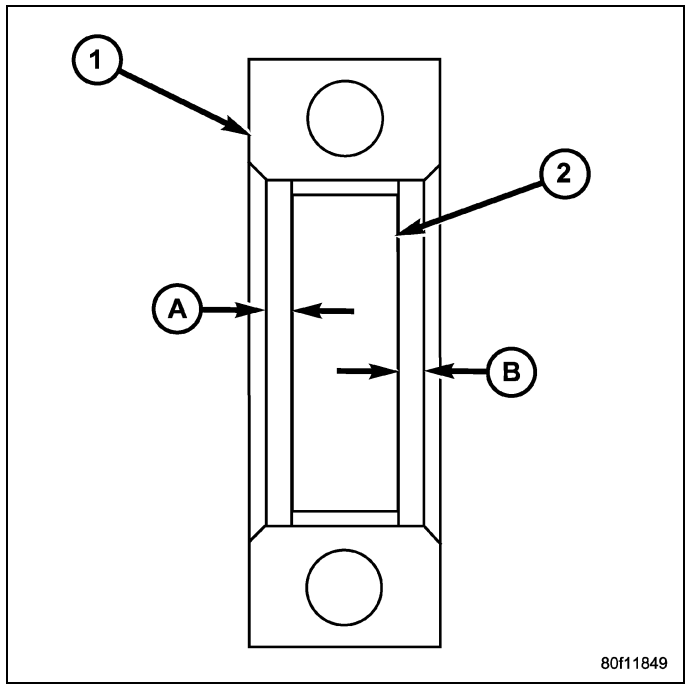

3. Use piston ring compressor (3) and Guide Pins Special Tool 8507 (4) to install the rod and piston assemblies. The oil slinger slots in the rods must face front of the engine. The “F”'s near the piston wrist pin bore should point to the front of the engine.

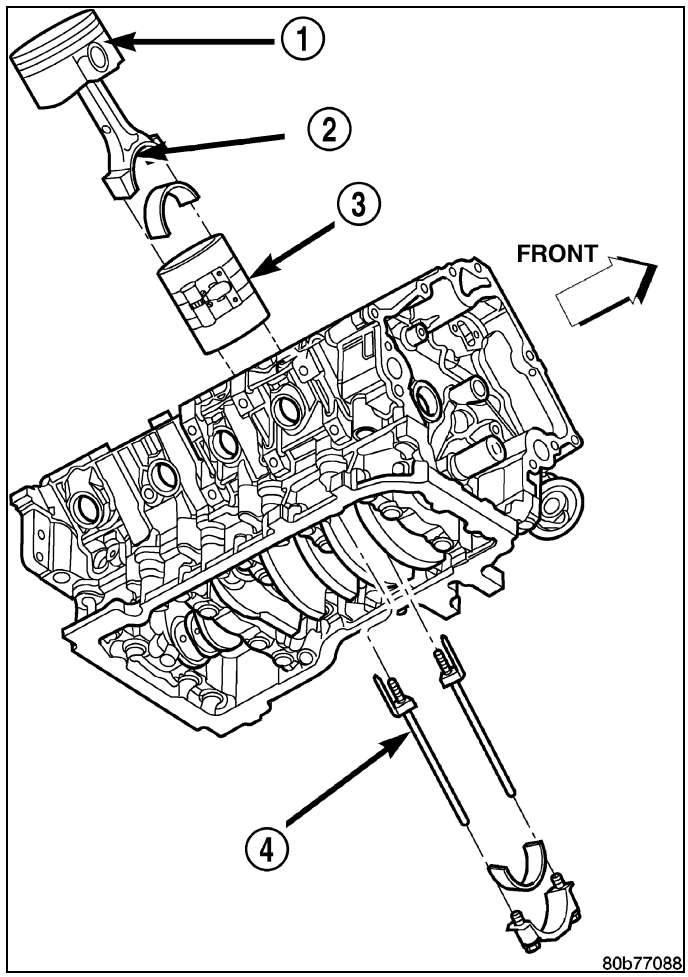

4. Install the lower bearing insert in the bearing cap **Center bearing insert (2) in connecting rod (1).**. The lower insert must be dry. Place strip of Plastigage across full width of the lower insert at the center of bearing cap. Plastigage must not crumble in use. If brittle, obtain fresh stock.

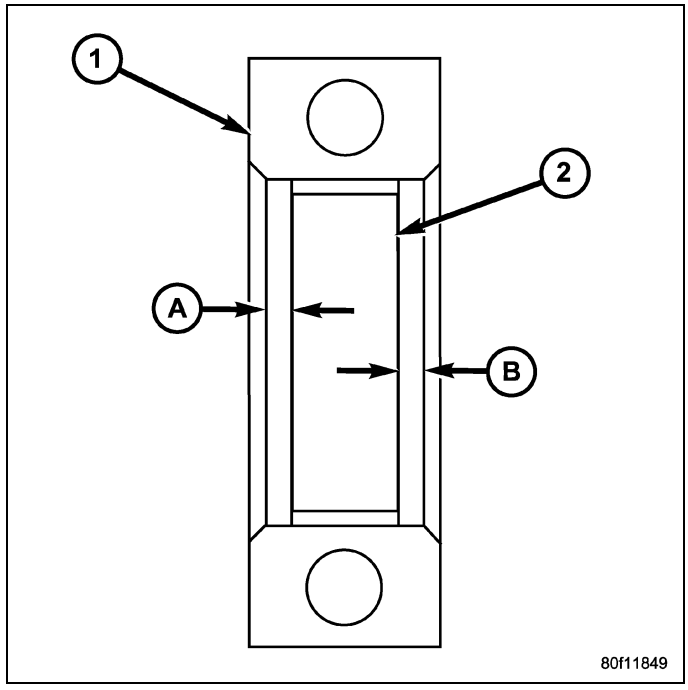

5. Install bearing cap and connecting rod on the journal and tighten bolts to 27 N·m (20 ft. lbs.) plus a 90° turn. DO NOT rotate crankshaft. Plastigage will smear, resulting in inaccurate indication.
6. Remove the bearing cap and determine amount of bearing-to-journal clearance by measuring the width of compressed Plastigage (2). Refer to Engine Specifications for the proper clearance. **Plastigage should indicate the same clearance across the entire width of the insert. If the clearance varies, it may be caused by either a tapered journal, bent connecting rod or foreign material trapped between the insert and cap or rod.**
7. If the correct clearance is indicated, replacement of the bearing inserts is not necessary. Remove the Plastigage (2) from crankshaft journal and bearing insert. Proceed with installation.

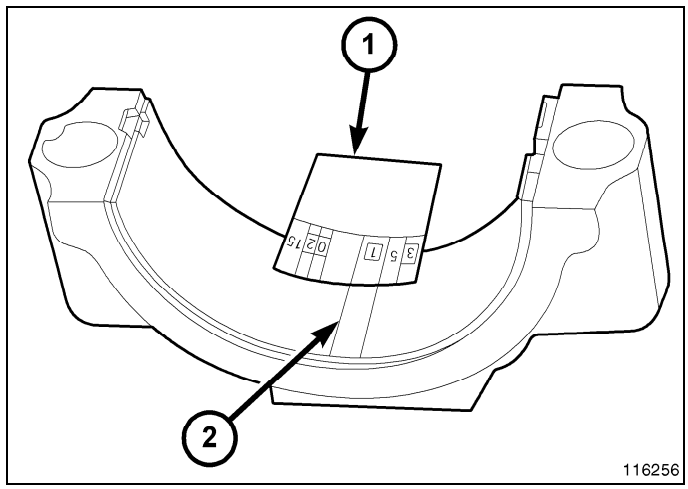

Bearing Mark	SIZE	USED WITH JOURNAL SIZE
.025 US	.025 mm	50.983-50.967 mm
	(.001 in.)	(2.0073-2.0066 in.)
Std.	STANDARD	50.992-51.008 mm (2.0076-2.0082 in.)
.250 US	.250 mm (.010 in.)	50.758-50.742 mm (1.9984-1.9978 in.)

8. If bearing-to-journal clearance exceeds the specification, determine which service bearing set to use, using the chart above.

CAUTION: Connecting Rod Bolts are Torque to Yield Bolts and Must Not Be Reused. Always replace the Rod Bolts whenever they are loosened or removed.

9. Repeat the Plastigage measurement to verify your bearing selection prior to final assembly.
10. Once you have selected the proper insert, install the insert and cap. Tighten the connecting rod bolts to 27 N·m (20 ft. lbs.) plus a 90° turn.

Slide snug-fitting feeler gauge between the connecting rod and crankshaft journal flange. Refer to Engine Specifications for the proper clearance. Replace the connecting rod if the side clearance is not within specification.

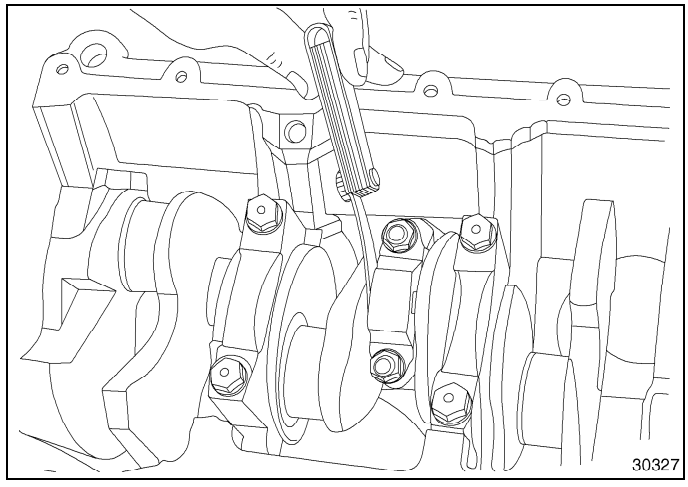

BEARING(S), Crankshaft, Main

Standard Procedure

MAIN BEARING JOURNAL DIAMETER (CRANKSHAFT REMOVED)

Crankshaft removed from the cylinder block.

Clean the oil off the main bearing journal.

Determine the maximum diameter of the journal with a micrometer. Measure at two locations 90° apart at each end of the journal.

The maximum allowable taper is 0.008mm (0.0004 inch.) and maximum out of round is 0.005mm (0.002 inch). Compare the measured diameter with the journal diameter specification (Main Bearing Fitting Chart). Select inserts required to obtain the specified bearing-to-journal clearance.

CRANKSHAFT MAIN BEARING SELECTION

The main bearings are “select fit” to achieve proper oil clearances. For main bearing selection, the crankshaft position sensor target wheel has grade identification marks stamped into it (3). These marks are read from left to right, corresponding with journal number 1, 2, 3, 4 and 5. The crankshaft position sensor target wheel (2) is mounted to the number 8 counter weight (1) on the crankshaft.

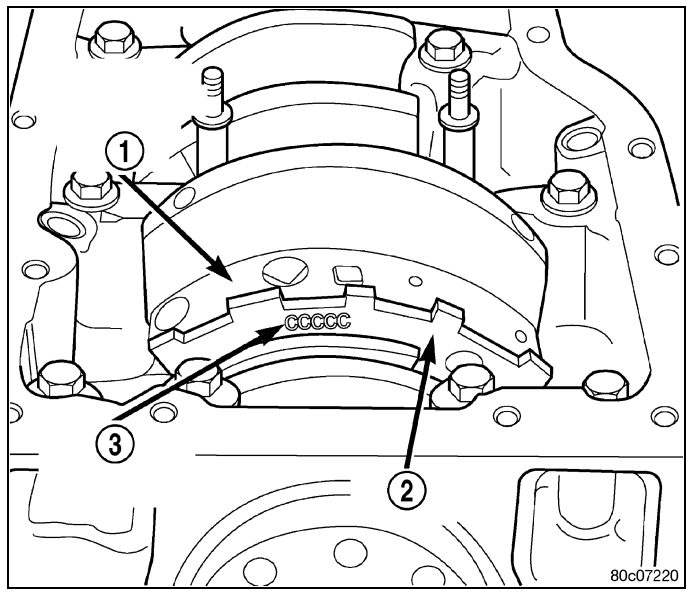

NOTE: Service main bearings are coded. These codes identify what size (grade) the bearing is.

MAIN BEARING SELECTION CHART - 4.7L		
GRADE MARKING	**SIZE mm (in.) JOURNAL SIZE**	**FOR USE WITH**
A	0.008 mm U/S (0.0004 in.) U/S	63.488–63.496 mm (2.4996–2.4999 in.)
B	NOMINAL	63.496–63.504 mm (2.4999–2.5002 in.)
C	0.008 mm O/S (0.0004 in.) O/S	63.504–63.512 mm (2.5002–2.5005 in.)

Inspection

Wipe the inserts clean and inspect for abnormal wear patterns and for metal or other foreign material imbedded in the lining. Normal main bearing insert wear patterns are illustrated.

NOTE: If any of the crankshaft journals are scored, the crankshaft must be repaired or replaced.

Inspect the back of the inserts for fractures, scrapings or irregular wear patterns.

Inspect the upper insert locking tabs for damage.

Replace all damaged or worn bearing inserts.

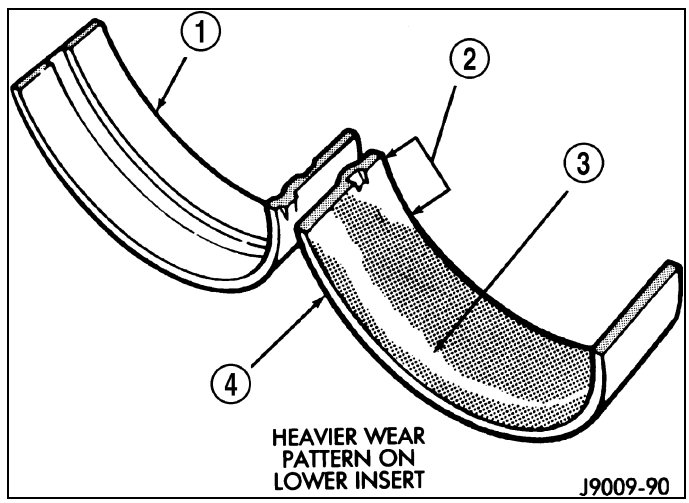

COVER, Structural Dust

Description

The structural dust cover is made of die cast aluminum and joins the lower half of the transmission bell housing to the engine bedplate.

Operation

The structural cover provides additional powertrain stiffness and reduces noise and vibration.

Removal

1. Raise vehicle on hoist.
2. Remove the left hand exhaust pipe from exhaust manifold.
3. Loosen the right hand exhaust manifold-to-exhaust pipe retaining bolts.
4. Remove the eight bolts (1,2,3) retaining structural cover in the sequence shown.
5. Pivot the exhaust pipe downward and remove the structural cover.

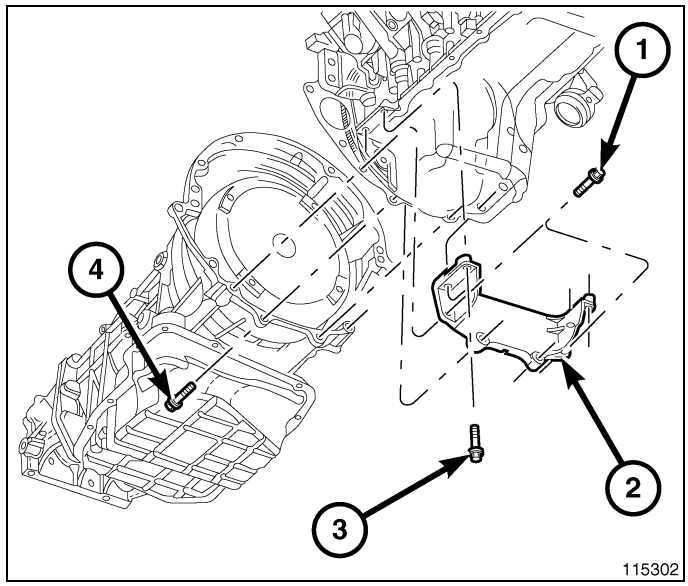

Installation

CAUTION: The structural dust cover must be installed as described in the following steps. Failure to do so may cause severe damage to the cover.

1. Position the structural cover in the vehicle.
2. Install all four bolts (1,2,3)retaining the cover-to-engine . DO NOT tighten the bolts at this time.
3. Install the four cover-to-transmission bolts (1,2,3). Do NOT tighten at this time.

CAUTION: The structural dust cover must be held tightly against both the engine and the transmission bell housing during the tightening sequence. Failure to do so may cause severe damage to the cover.

4. Starting with the two rear cover-to-engine bolts, tighten bolts (1) to 54 N·m (40 ft. lbs.), then tighten bolts (2) and (3) to 54 N·m (40 ft. lbs.) in the sequence shown.
5. Install the exhaust pipe on left hand exhaust manifold.
6. Tighten exhaust manifold-to-exhaust pipe retaining bolts to 20–26 N·m (15–20 ft. lbs.).

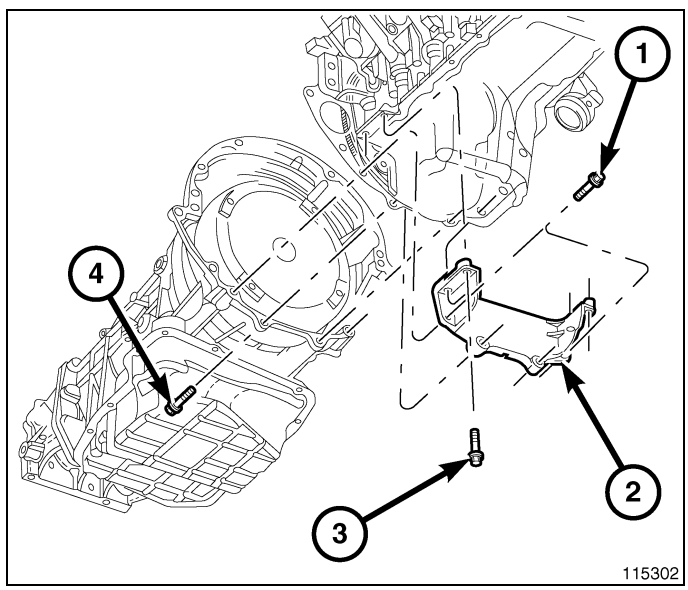

CRANKSHAFT

Description

The crankshaft is constructed of nodular cast iron. The crankshaft is a crosshaped four throw design with eight counterweights for balancing purposes. The crankshaft is supported by five select fit main bearings with the number three serving as the thrust washer location. The main journals of the crankshaft are cross drilled to improve rod bearing lubrication. The number eight counterweight has provisions for crankshaft position sensor target wheel mounting. The select fit main bearing markings are located on the rear side of the target wheel. The crankshaft oil seals are one piece design. The front oil seal is retained in the timing chain cover, and the rear seal is pressed in to a bore formed by the cylinder block and the bedplate assembly.

Removal

NOTE: To remove the crankshaft from the engine, the engine must be removed from the vehicle.

1. Remove the engine. (Refer to 09 - Engine - Removal).
2. Remove the engine oil pump.(Refer to 09 - Engine/Lubrication/PUMP, Engine Oil - Removal).

CAUTION: DO NOT pry on the oil pan gasket when removing the oil pan, The oil pan gasket is mounted to the cylinder block in three locations and will remain attached to block when removing oil pan. Gasket can not be removed with oil pan.

3. Remove oil pan(Refer to 09 - Engine/Lubrication/PAN, Oil - Removal).
4. Remove the oil pump pickup tube and oil pan gasket /windage tray.

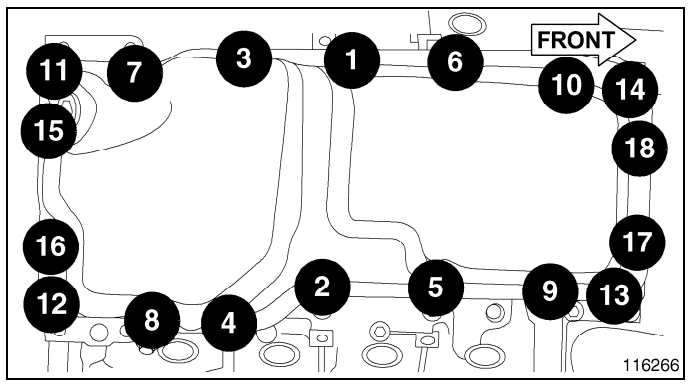

5. Remove the bedplate mounting bolts. Note the location of the three stud bolts for installation.
6. Remove the connecting rods from the crankshaft.

CAUTION: The bedplate to cylinder block mating surface is a critical sealing surface. Do not pry on or damage this surface in any way.

NOTE: The bedplate contains the lower main bearing halves. Use care when handling bedplate as not to drop or damage bearing halves. Installing main bearing halves in the wrong position will cause sever damage to the crankshaft.

NOTE: The bedplate has pry points cast into it. Use these points only. The pry points are on both the left and right sides, only the left side is shown.

7. Carefully pry on the pry points (3) to loosen the bedplate (2) then remove the bedplate.

CAUTION: When removing the crankshaft, use care not to damage bearing surfaces on the crankshaft.

8. Remove the crankshaft.

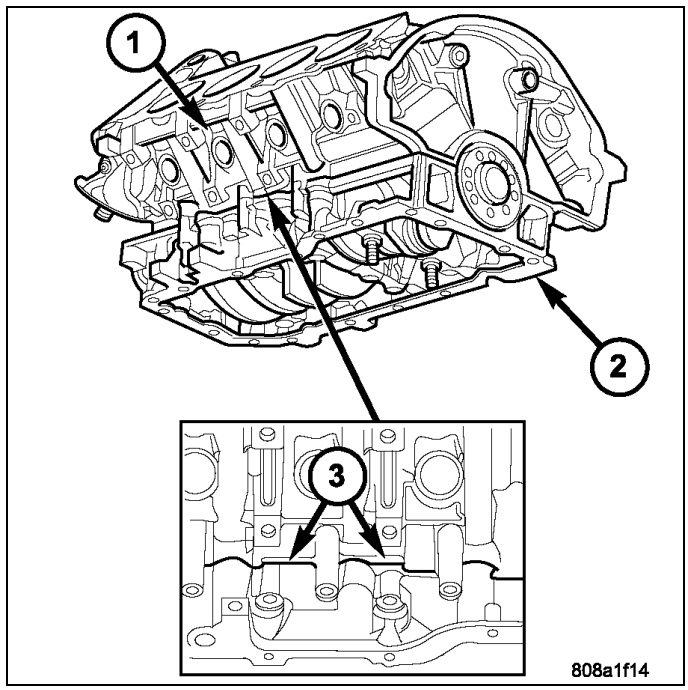

Inspection

NOTE: Thoroughly inspect the connecting rod bearing bores and main bearing bores for scoring, blueing or severe scratches. Further disassembly may be required.

If connecting rod bearing bores show damage, the cylinder heads must be removed to service the piston and rod assemblies. If the bedplate or the cylinder block main bearing bores show damage the engine must be replaced.

1. If required, remove the main bearing halves from the cylinder block and bedplate.
2. Thoroughly clean the bedplate to cylinder block sealing surfaces and main bearing bores. Remove all oil and sealant residue.
3. Inspect the bedplate main bearing bores for cracks, scoring or severe blueing. If either condition exists the engine must be replaced.
4. Inspect the crankshaft thrust washers for scoring, scratches, wear or blueing. If either condition exist replace the thrust washer.
5. Inspect the oil pan gasket/windage tray for splits, tears or cracks in the gasket sealing surfaces. Replace gasket as necessary.

Installation

CAUTION: Main bearings are select fit. (Refer to 09 - Engine/Engine Block/BEARING(S), Crankshaft - Standard Procedure) for proper bearing selections.

1. Lubricate upper main bearing halves with clean engine oil.

CAUTION: When installing the crankshaft, use care not to damage bearing surfaces on the crankshaft.

2. Position crankshaft in cylinder block.
3. Install the thrust washers (1).

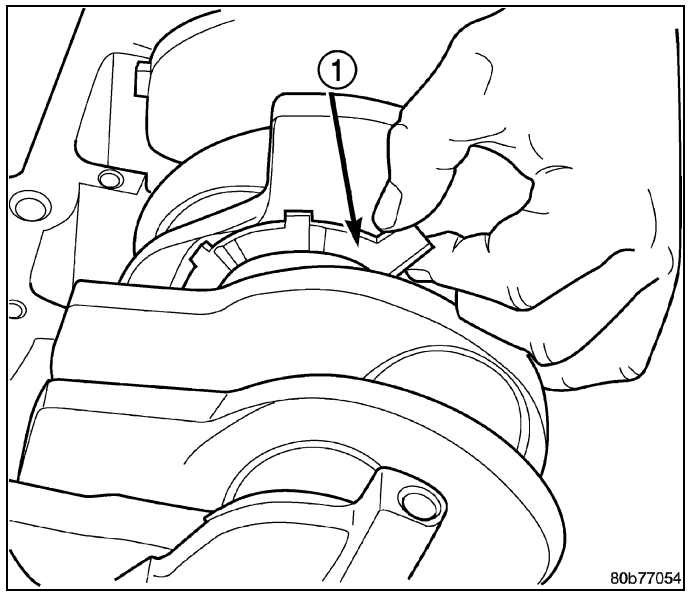

CAUTION: The bedplate to cylinder block mateing surface must be coated with sealant prior to installation. Failure to do so will cause severe oil leaks.

NOTE: The parts must assembled and tightened within 10 after applying sealer.

NOTE: Make sure that the bedplate and cylinder block sealing surfaces are clean and free of oil or other contaminants. Contaminants on the sealing surfaces may cause main bearing distortion and/or oil leaks.

4. Apply a 2.5 mm (0.100 inch) bead of Mopar® Silicone Rubber RTV (2) to the cylinder block-to-bedplate mating surface (1) as shown.

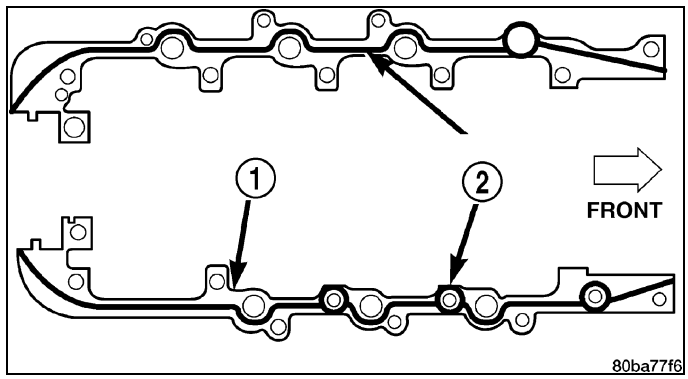

5. Coat the crankshaft main bearing journals with clean engine oil and position the bedplate onto the cylinder block.

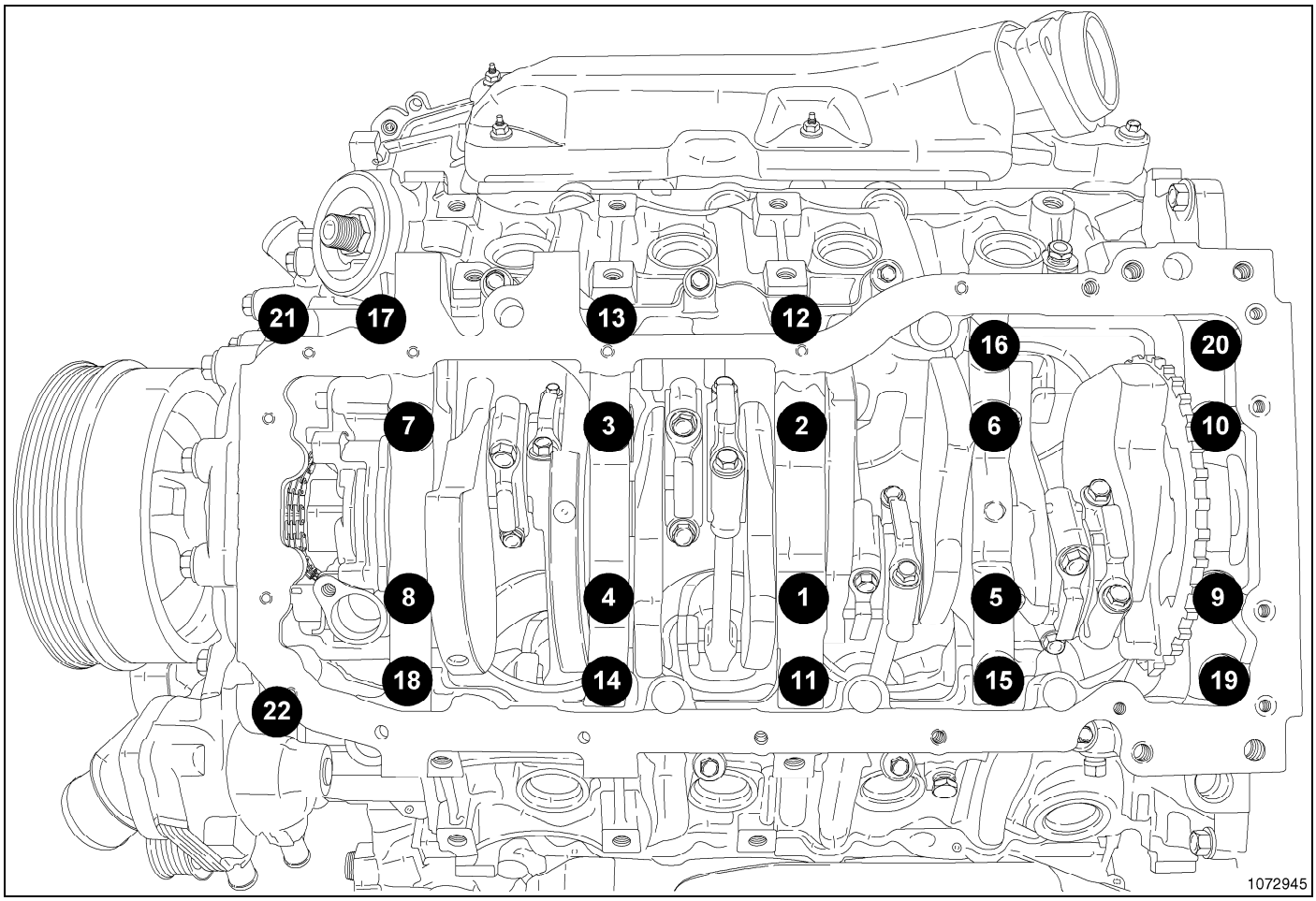

NOTE: Lubricate the bedplate retaining bolts with clean engine oil prior to installation.

NOTE: Install the studs in locations three, five, and six.

6. Install the bedplate retaining bolts.
7. Tighten bolts to 3 N·m (26 in. lbs.) in the sequence shown.

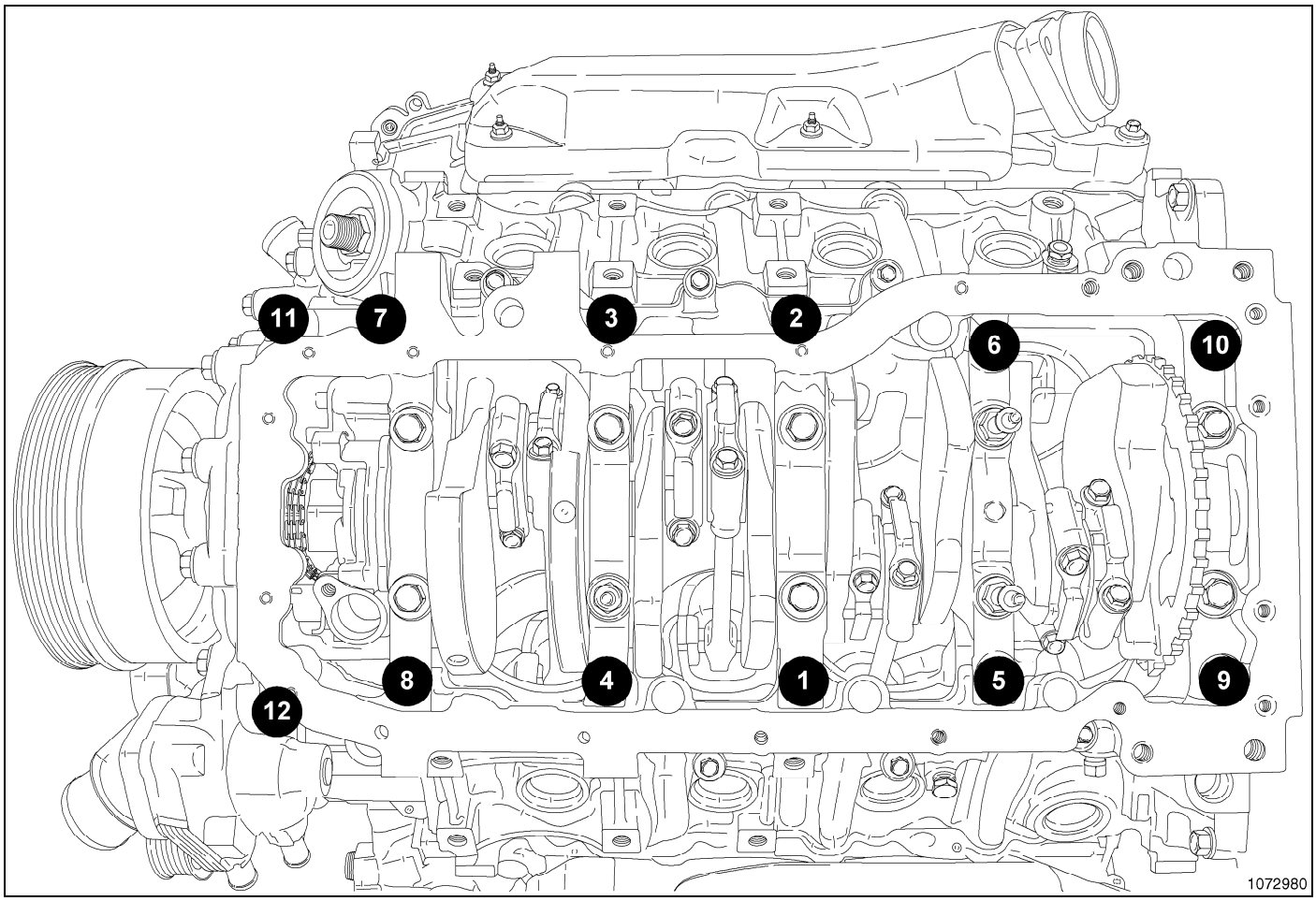

8. Tighten bolts to 54 N·m (40 ft. lbs.) in the sequence shown.

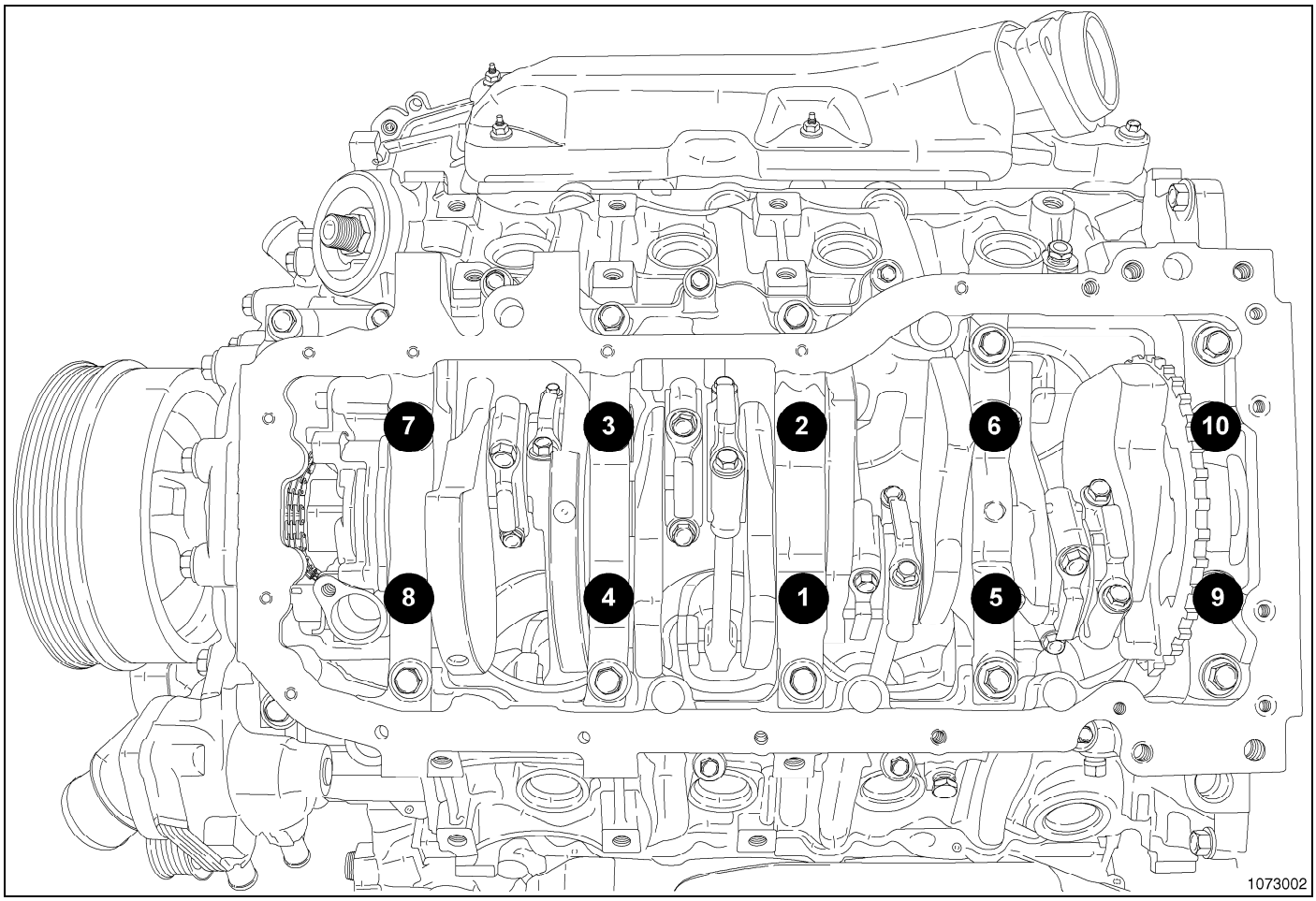

9. Rotate bolts 90° in the sequence shown.

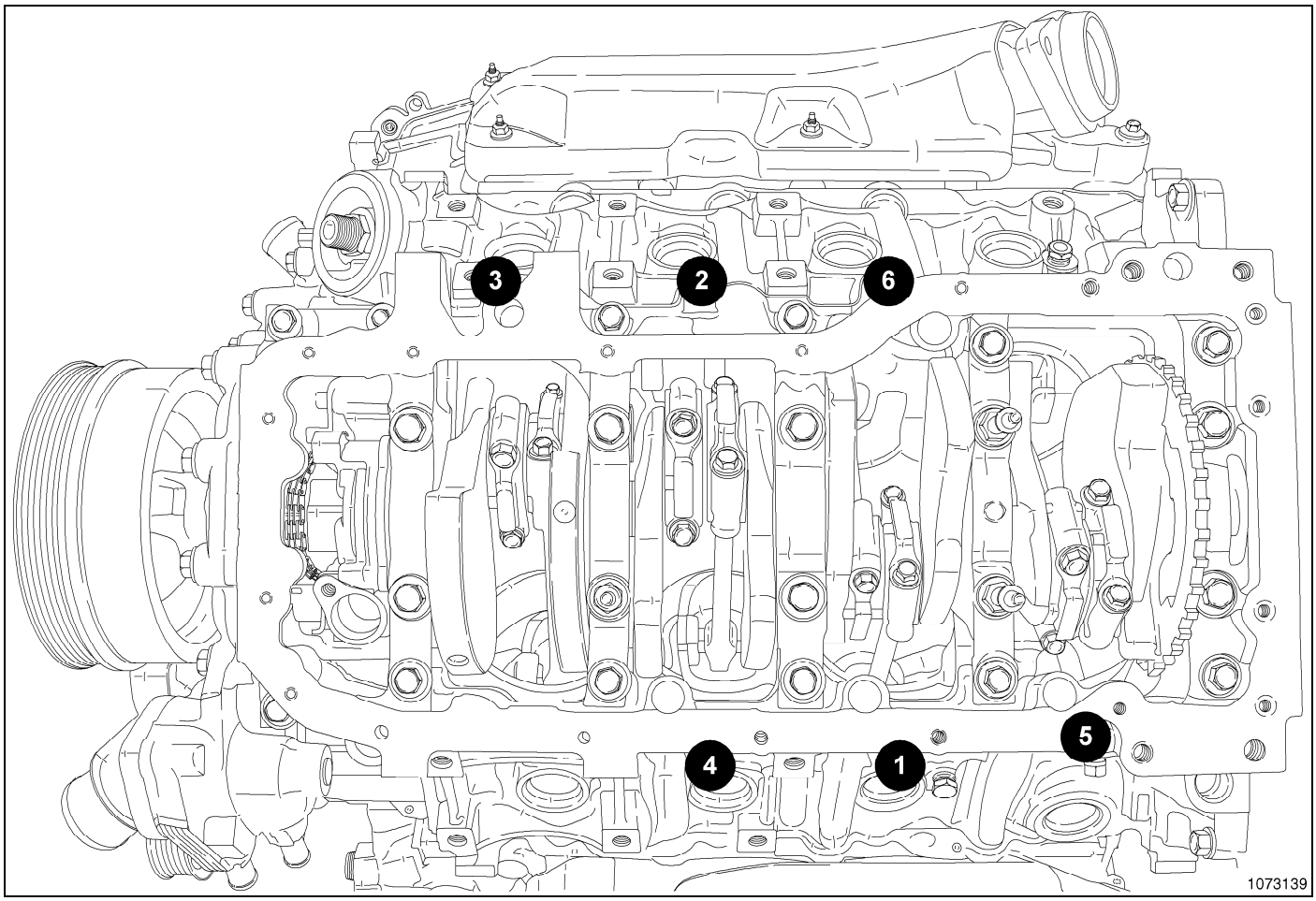

10. Tighten bolts to 23 N·m (20 ft. lbs.) in the sequence shown.
11. Measure crankshaft end play(Refer to 09 - Engine - Specifications).
12. Install the connecting rods and measure side clearance(Refer to 09 - Engine/Engine Block/BEARING(S), Connecting Rod - Standard Procedure).

NOTE: Install the stud in location 10.

13. Position the oil pan gasket/windage tray.
14. Install the oil pickup tube with a new O-ring and tighten the fasteners to 28 N·n (20 ft. lbs.).
15. Position oil pan in place and install bolts.
16. Tighten the oil pan bolts to 15 N·m (11 ft. lbs.) in the sequence shown.
17. Install the engine (Refer to 09 - Engine - Installation).

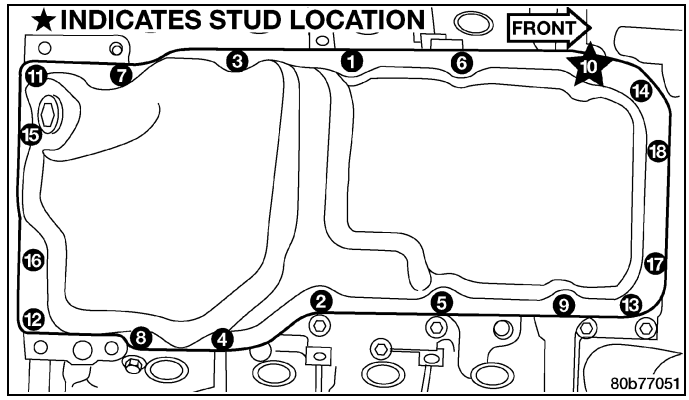

DAMPER, Vibration

Removal

1. Disconnect and isolate the negative battery cable (1).

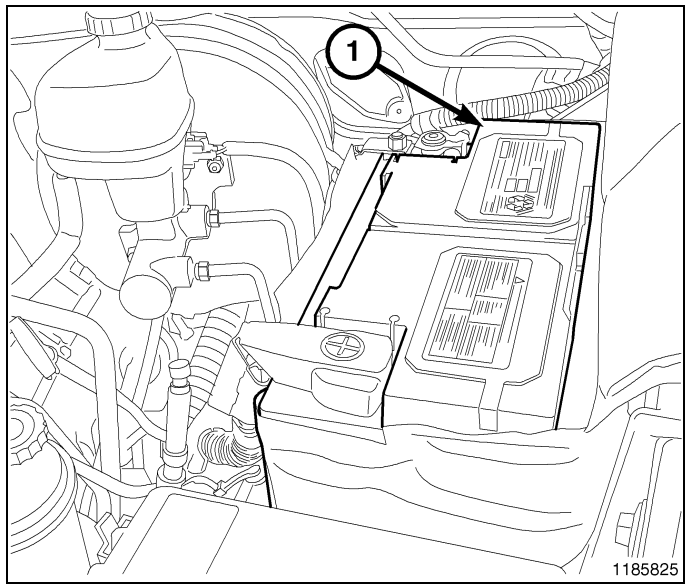

CAUTION: Do not let the tensioner arm snap back to the freearm position, severe damage may occur to the tensioner.

2. Rotate the belt tensioner (6) until it contacts its stop and remove the belt (3), then slowly rotate the tensioner (6) into the freearm position.
3. Raise and support the vehicle.

WARNING: Do not remove the radiator pressure cap, cylinder block drain plugs or loosen the radiator draincock with the system hot and under pressure. Serious burns from coolant can occur.

4. Drain the cooling system (Refer to 07 - Cooling - Standard Procedure).
5. Lower the vehicle.
6. Remove the upper radiator hose.

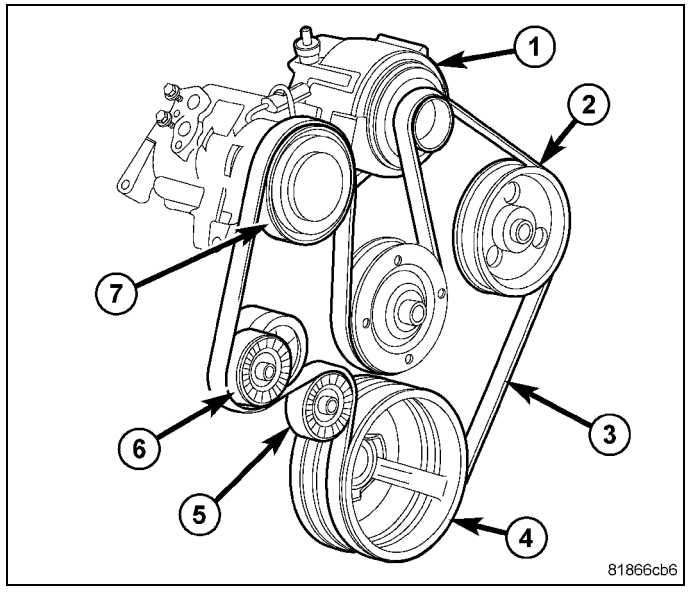

NOTE: The thermal viscous fan drive/fan blade assembly is attached (threaded) to the water pump hub shaft.

NOTE: The transmission cooler line snaps onto the lower right hand corner of the fan shroud.

CAUTION: After removing fan blade/viscous fan drive assembly, do not place viscous fan drive in horizontal position. If stored horizontally, silicone fluid in the viscous fan drive could drain into the bearing assembly and contaminate the bearing lubricant.

7. Remove the fan shroud and fan blade/viscous fan drive assembly as a complete unit from the vehicle (Refer to 07 - Cooling/Engine/FAN, Cooling - Removal)

8. Remove the vibration damper (1) retaining bolt (2).

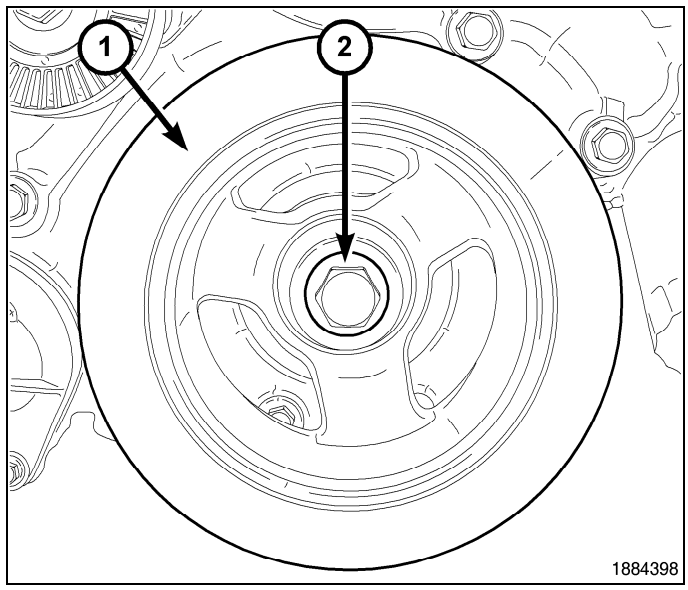

9. Using the crankshaft insert 8513A (1) and the three jaw puller 8454 (2) remove the crankshaft damper.

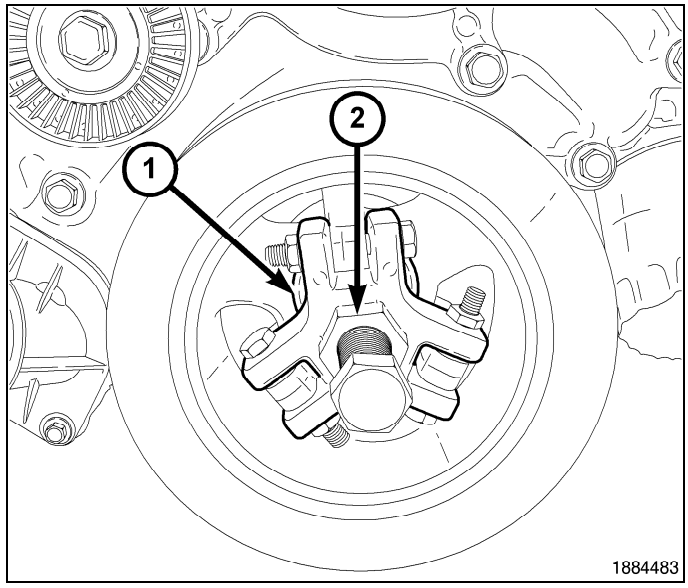

Installation

CAUTION: To prevent severe damage to the crankshaft, damper, and damper installer 8512A**, thoroughly clean the damper bore and the crankshaft nose before installing damper.**

1. Position the damper onto the crankshaft.
2. Assemble the damper installer 8512A (2) and the A/C hub installer cup 6871 (1).

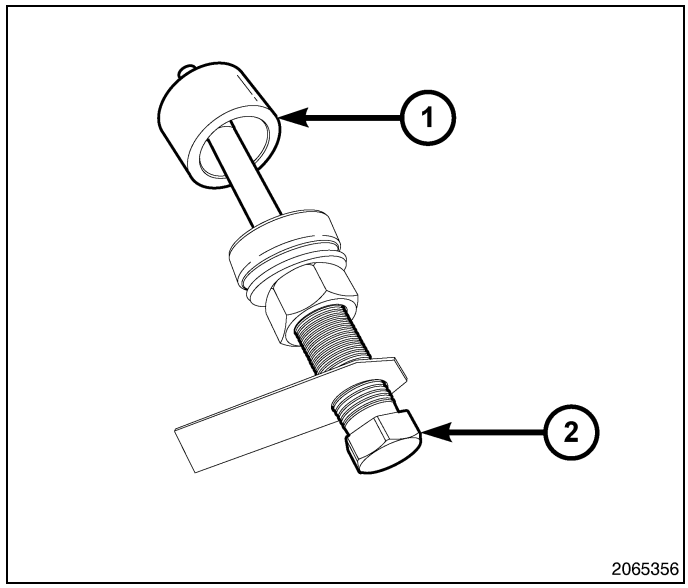

3. Using the damper installer 8512A (2) and the A/C hub installer cup 6871 (1), press the damper onto the crankshaft.
4. Coat the vibration damper bolt threads with Mopar ® Nickel Anti-Seize or equivalent, install and tighten the bolt to 175 N·m (130 ft. lbs.).
5. Install the cooling fan assembly (Refer to 07 - Cooling/ Engine/FAN, Cooling - Installation)
6. Install the radiator upper shroud and tighten fasteners to 11 N·m (95 in. lbs.).
7. Install the radiator upper hose.
8. Install the accessory drive belt (Refer to 07 - Cooling/ Accessory Drive/BELT, Serpentine - Installation)
9. Refill the cooling system (Refer to 07 - Cooling - Standard Procedure)
10. Connect the negative battery cable.

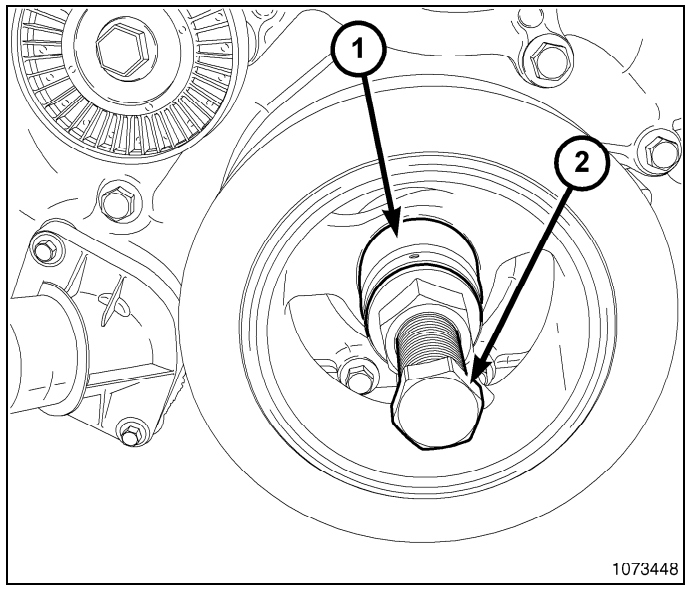

FLEXPLATE

Removal

1. Remove the transmission. (Refer to 21 - Transmission and Transfer Case/Automatic - 545RFE - Removal).
2. Remove the bolts and flexplate (1).

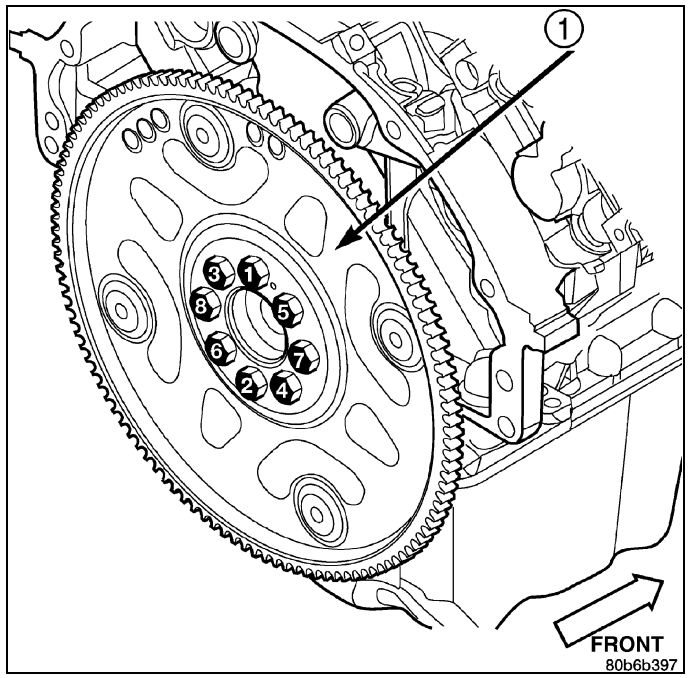

Installation

1. Position the flexplate onto the crankshaft and install the bolts hand tight.
2. Tighten the flexplate retaining bolts to 60 N·m (45 ft. lbs.) in the sequence shown.
3. Install the transmission. (Refer to 21 - Transmission and Transfer Case/Automatic - 545RFE - Installation) .

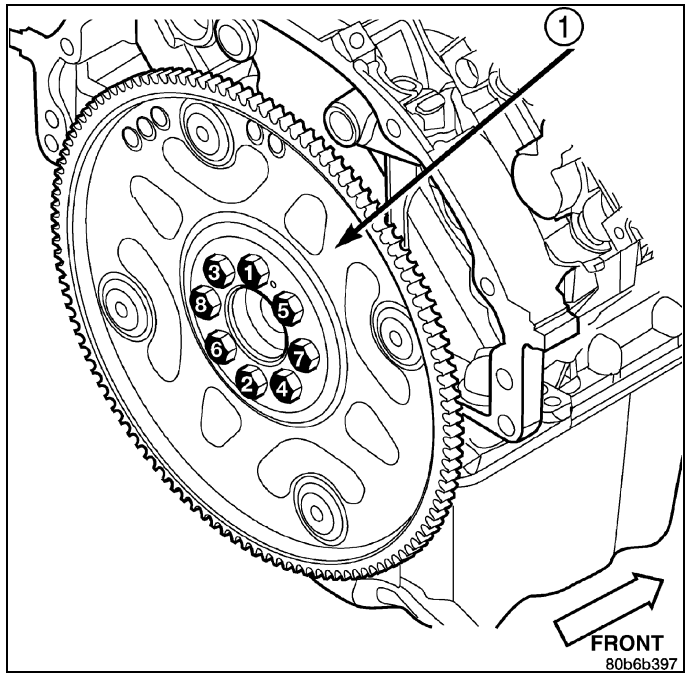

PLUG, Core

Removal

1. Drain the cooling system (Refer to 07 - Cooling - Standard Procedure).
2. Using a blunt tool such as a drift or a screw driver and a hammer, strike the bottom edge of the cup plug (5).
3. Using a suitable pair of pliers, grasp the core plug (5) and remove.

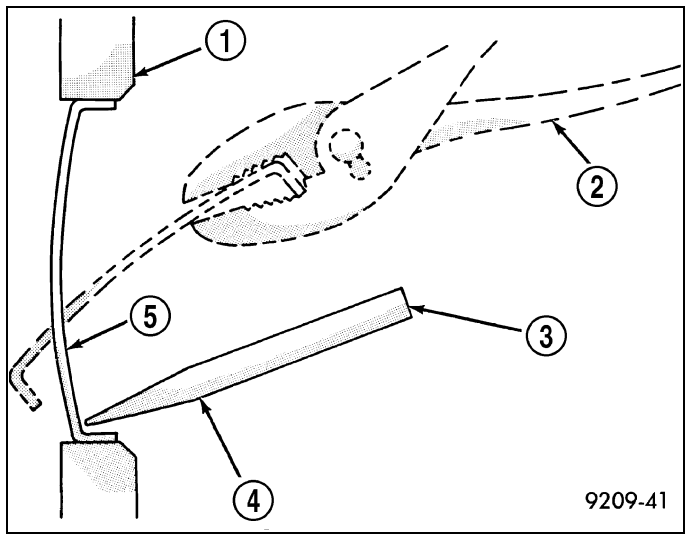

Installation

NOTE: Thoroughly clean core plug bore, remove all of the old sealer.

1. Coat the edges of the engine core plug and the core plug bore with Mopar Gasket Maker, or equivalent.

NOTE: It is not necessary to wait for the sealant to cure on the core plugs. The cooling system can be filled and the vehicle returned to service immediately.

2. Using proper plug driver, drive core plug into the core plug bore. The sharp edge of the core plug should be at least 0.50 mm (0.020 in.) inside the lead in chamfer.
3. Refill the cooling system (Refer to 07 - Cooling - Standard Procedure).

RING(S), Piston

Standard Procedure

Before reinstalling used rings or installing new rings, the ring clearances must be checked.

1. Wipe the cylinder bore clean.
2. Insert the ring in the cylinder bore.

NOTE: The ring gap measurement must be made with the ring positioned at least 12mm (0.50 inch.) from bottom of cylinder bore.

3. Using a piston, to ensure that the ring is squared in the cylinder bore, slide the ring downward into the cylinder.
4. Using a feeler gauge (1) check the ring end gap. Replace any rings not within specification.

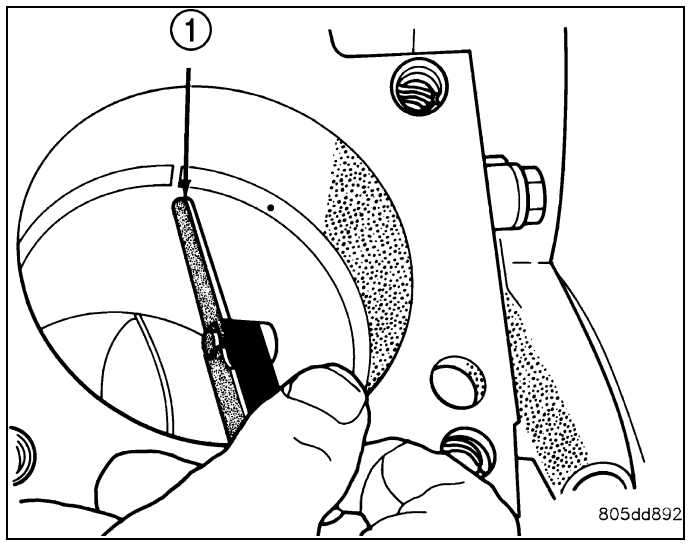

PISTON RING SIDE CLEARANCE

NOTE: Make sure the piston ring grooves are clean and free of nicks and burrs.

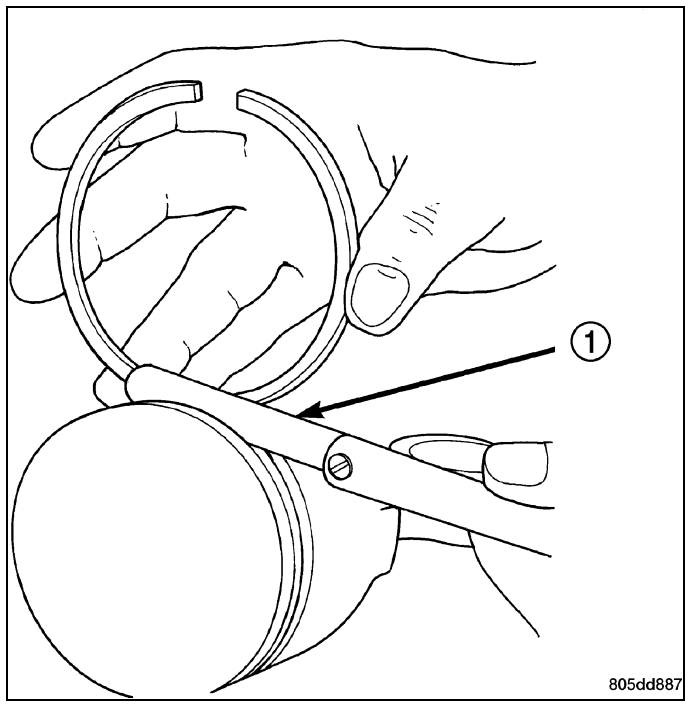

5. Measure the ring side clearance as shown make sure the feeler gauge (1) fits snugly between the ring land and the ring. Replace any ring not within specification.
6. Rotate the ring around the piston, the ring must rotate in the groove with out binding.

PISTON RING SPECIFICATION CHART

Ring Position	Groove Clearance	Maximum Clearance
Upper Ring	0.051 - 0.094 mm (0.0020 - 0.0037 in.)	0.11 mm (0.004 in.)
Intermediate Ring	0.04 - 0.08 mm (0.0016 - 0.0031 in.)	0.10 mm (0.004 in.)
Oil Control Ring (Steel Rails)	0.019 - 0.229 mm (0.0007-.0090 in.)	0.25 mm (0.010 in.)

Ring Position	Ring Gap	Wear Limit
Upper Ring	0.20 - 0.36 mm (0.0079 - 0.0142 in.)	0.43 mm (0.0017 in.)
Intermediate Ring	0.37 - 0.63 mm (0.0146 - 0.0249 in.)	0.74 mm (0.029 in.)
Oil Control Ring (Steel Rail)	0.025 - 0.76 mm (0.0099 - 0.03 in.)	1.55 mm (0.061 in.)

7. The No. 1 and No. 2 piston rings have a different cross section. Ensure No. 2 ring is installed with manufacturers I.D. mark (Dot) facing up, towards top of the piston.

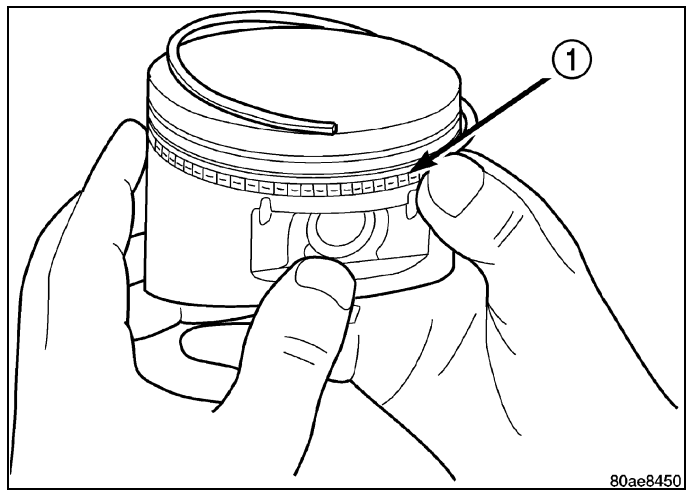

NOTE: Piston rings are installed in the following order:

- **Oil ring expander.**
- **Upper oil ring side rail.**
- **Lower oil ring side rail.**
- **No. 2 Intermediate piston ring.**
- **No. 1 Upper piston ring.**

8. Install the oil ring expander.
9. Install upper side rail (1) by placing one end between the piston ring groove and the expander ring. Hold end firmly and press down the portion to be installed until side rail is in position. Repeat this step for the lower side rail.
10. Install No. 2 intermediate piston ring using a piston ring installer.
11. Install No. 1 upper piston ring using a piston ring installer.

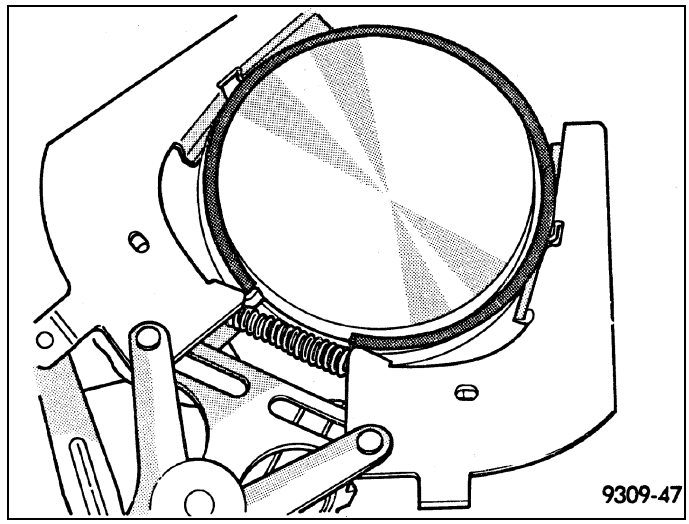

12. Position piston ring end gaps as shown. It is important that expander ring gap (5) is at least 45° from the side rail gaps, but not on the piston pin center or on the thrust direction.

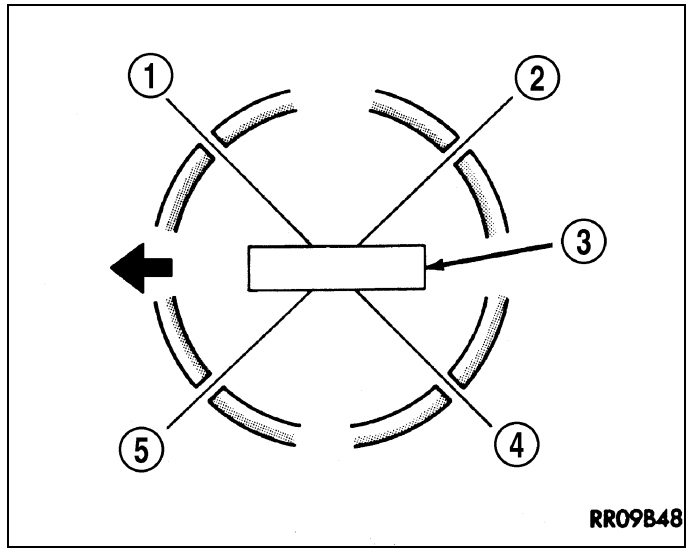

ROD, Piston and Connecting

Description

CAUTION: Do not use a metal stamp to mark connecting rods as damage may result, instead use ink or a scratch awl.

The pistons are made of a high strength aluminum alloy. The anodized top ring groove and crown has been replaced with a coated top ring that is blue in color on the bottom surface. Piston skirts are coated with a solid lubricant (Molykote) to reduce friction and provide scuff resistance. The connecting rods are made of forged powdered metal, with a “fractured cap” design. A pressed fit piston pin is used to attach the piston and connecting rod.

Standard Procedure

1. To correctly select the proper size piston, a cylinder bore gauge (2), capable of reading in 0.003 mm (.0001 in.) INCREMENTS is required. If a bore gauge is not available, do not use an inside micrometer.
2. Measure the inside diameter of the cylinder bore (3) at a point 38.0 mm (1.5 inches) below top of bore. Start perpendicular (across or at 90 degrees) to the axis of the crankshaft at point A and then take an additional bore reading 90 degrees to that at point B.

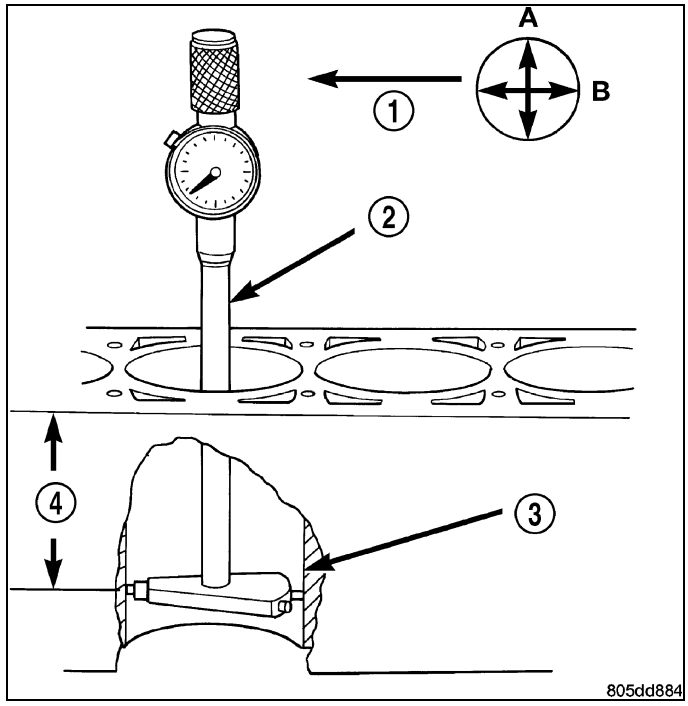

3. The coated pistons (1,2) will be serviced with the piston pin and connecting rod pre-assembled.
4. The coating material is applied to the piston after the final piston machining process. Measuring the outside diameter of a coated piston (1,2) will not provide accurate results. Therefore measuring the inside diameter of the cylinder bore with a dial Bore Gauge is **MANDATORY**. To correctly select the proper size piston, a cylinder bore gauge capable of reading in 0.003 mm (.0001 in.) increments is required.
5. Piston installation into the cylinder bore requires slightly more pressure than that required for non-coated pistons. The bonded coating on the piston will give the appearance of a line-to-line fit with the cylinder bore.

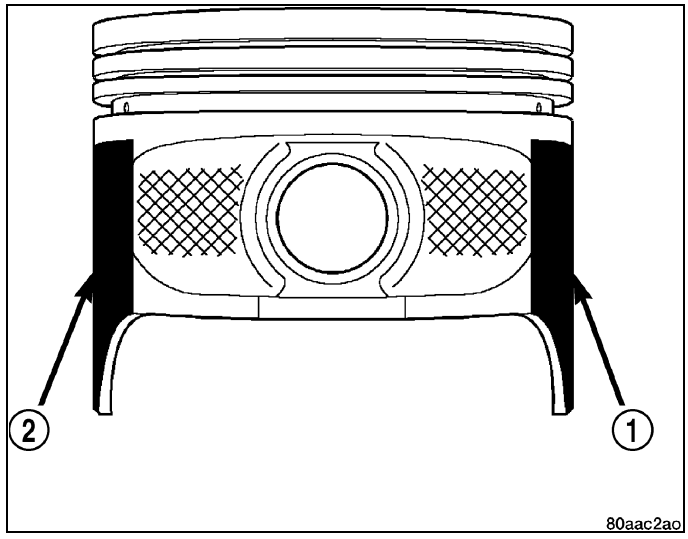

Removal

1. Disconnect negative cable from battery.
2. Remove the following components:

- Oil pan and gasket/windage tray (Refer to 09 - Engine/Lubrication/PAN, Oil - Removal).
- Cylinder head covers (Refer to 09 - Engine/Cylinder Head/COVER(S), Cylinder Head - Removal) .
- Timing chain cover (Refer to 09 - Engine/Valve Timing/COVER(S), Engine Timing - Removal).
- Cylinder head(s) (Refer to 09 - Engine/Cylinder Head - Removal).

3. If necessary, remove top ridge of cylinder bores with a reliable ridge reamer before removing pistons from cylinder block. **Be sure to keep tops of pistons covered during this operation.** Pistons and connecting rods must be removed from top of cylinder block. When removing piston and connecting rod assemblies from the engine, rotate crankshaft so the each connecting rod is centered in cylinder bore.

CAUTION: DO NOT use a number stamp or a punch to mark connecting rods or caps, as damage to connecting rods could occur

NOTE: Connecting rods and bearing caps are not interchangeable and should be marked before removing to ensure correct reassembly.

4. Mark connecting rod and bearing cap positions using a permanent ink marker or scribe tool .

CAUTION: Care must be taken not to damage the fractured rod and cap joint face surfaces, as engine damage may occur.

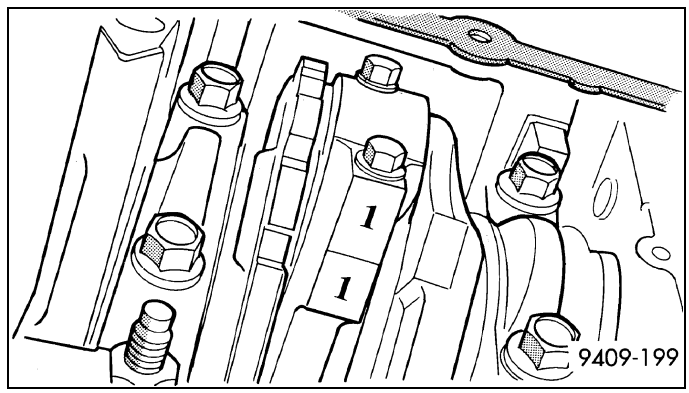

5. Remove connecting rod cap. Install Special Tool 8507 Connecting Rod Guides into the connecting rod being removed. Remove piston from cylinder bore. Repeat this procedure for each piston being removed.

CAUTION: Care must be taken not to nick crankshaft journals, as engine damage may occur.

6. Immediately after piston and connecting rod removal, install bearing cap on the mating connecting rod to prevent damage to the fractured cap and rod surfaces.
7. Carefully remove piston rings from piston(s), starting from the top ring down.

Cleaning

CAUTION: DO NOT use a wire wheel or other abrasive cleaning devise to clean the pistons or connecting rods. The pistons have a Moly coating, this coating must not be damaged.

1. Using a suitable cleaning solvent clean the pistons in warm water and towel dry.
2. Use a wood or plastic scraper to clean the ring land grooves.

CAUTION: Do not remove the piston pin from the piston and connecting rod assembly.

Inspection

Check the connecting rod journal for excessive wear, taper and scoring (Refer to 09 - Engine/Engine Block/BEARING(S), Connecting Rod - Standard Procedure).

Check the connecting rod for signs of twist or bending.

Check the piston for taper and elliptical shape before it is fitted into the cylinder bore (Refer to 09 - Engine/Engine Block/ROD, Piston and Connecting - Standard Procedure).

Check the piston for scoring, or scraping marks in the piston skirts. Check the ring lands for cracks and/or deterioration.

Installation

1. Before installing piston and connecting rod assemblies into the bore, install the piston rings.
2. Immerse the piston head and rings in clean engine oil. Position a ring compressor (3) over the piston and rings. Tighten ring compressor. **Ensure position of rings do not change during this operation.**
3. Position bearing onto connecting rod. Ensure that hole in bearing shell aligns with hole in connecting rod. Lubricate bearing surface with clean engine oil.
4. Install Special Tool 8507 Connecting Rod Guides (4) into connecting rod bolt threads.

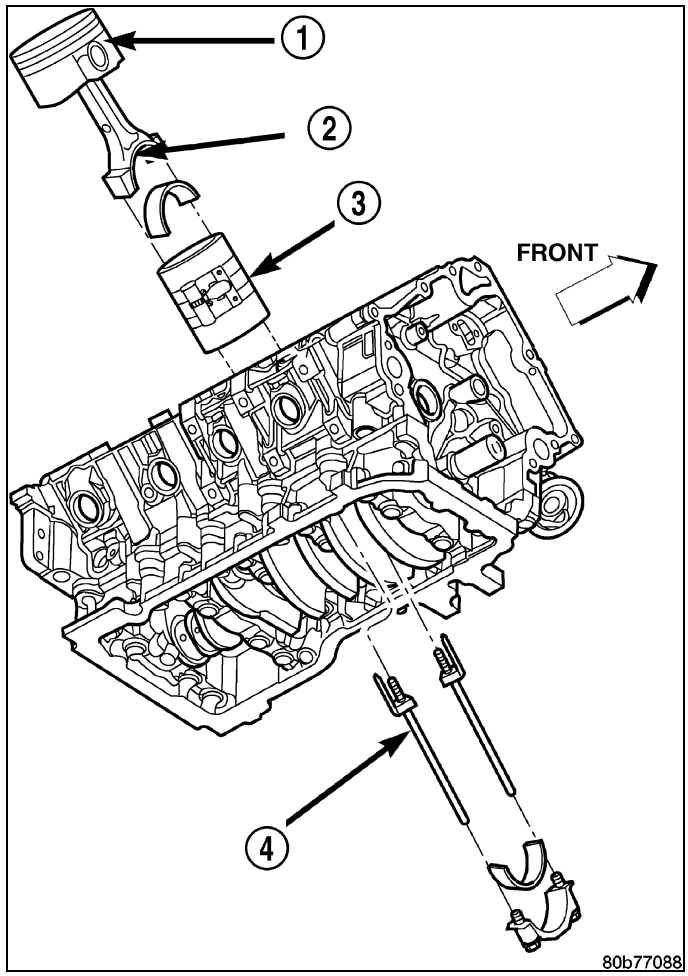

5. The pistons are marked on the piston pin bore surface with an raised “F” indicating installation position (1). This mark must be pointing toward the front of engine on both cylinder banks. The connecting rod oil slinger slot faces the front of the engine .
6. Wipe cylinder bore clean and lubricate with engine oil.
7. Rotate crankshaft until connecting rod journal is on the center of cylinder bore. Insert rod and piston into cylinder bore and carefully position connecting rod guides over crankshaft journal.
8. Tap piston down in cylinder bore using a hammer handle. While at the same time, guide connecting rod into position on rod journal.

CAUTION: Connecting Rod Bolts are Torque to Yield Bolts and Must Not Be Reused. Always replace the Rod Bolts whenever they are loosened or removed.

9. Lubricate rod bolts and bearing surfaces with engine oil. Install connecting rod cap and bearing. Tighten bolts to 27 N·m (20 ft. lbs.) plus 90°.
10. Install the following components:

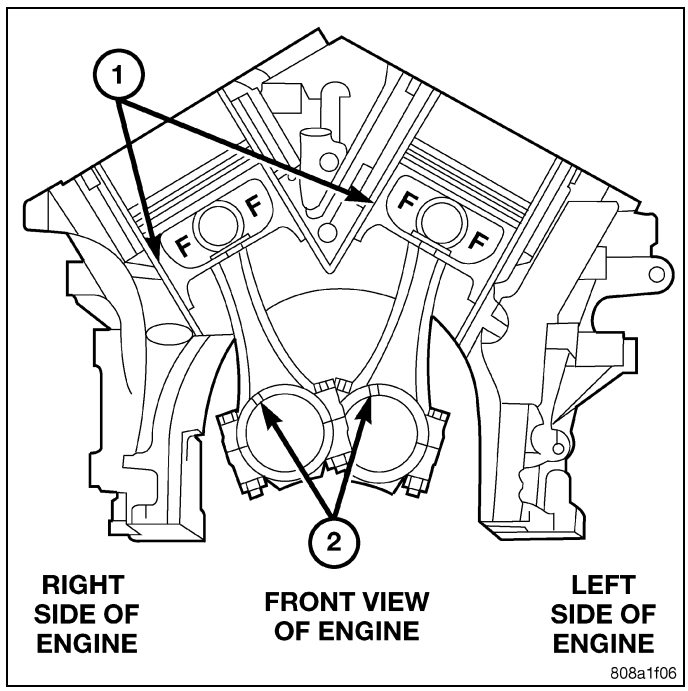

- Cylinder head(s). (Refer to 09 - Engine/Cylinder Head - Installation).
- Timing chain and cover. (Refer to 09 - Engine/Valve Timing/COVER(S), Engine Timing - Installation) - INSTALLATION).
- Cylinder head covers (Refer to 09 - Engine/Cylinder Head/COVER(S), Cylinder Head - Installation) - INSTALLATION).

- Oil pan and gasket/windage tray. (Refer to 09 - Engine/Lubrication/PAN, Oil - Installation).

11. Fill crankcase with proper engine oil to correct level.
12. Connect negative cable to battery.

SEAL, Crankshaft Oil, Front

Removal

1. Disconnect negative cable from battery.
2. Remove accessory drive belt (Refer to 07 - Cooling/ Accessory Drive/BELT, Serpentine - Removal).
3. Remove A/C compressor mounting fasteners and set compressor aside.
4. Drain cooling system (Refer to 07 - Cooling - Standard Procedure).
5. Remove upper radiator hose.
6. Disconnect electrical connector for fan mounted inside radiator shroud.
7. Remove radiator shroud attaching fasteners.

NOTE: Transmission cooler line snaps into shroud lower right hand corner.

8. Remove radiator cooling fan and shroud (Refer to 07 - Cooling/Engine/FAN, Cooling - Removal).
9. Remove crankshaft damper bolt.
10. Remove damper using Crankshaft Insert 8513A (1) and 1023 Three Jaw Puller (2).

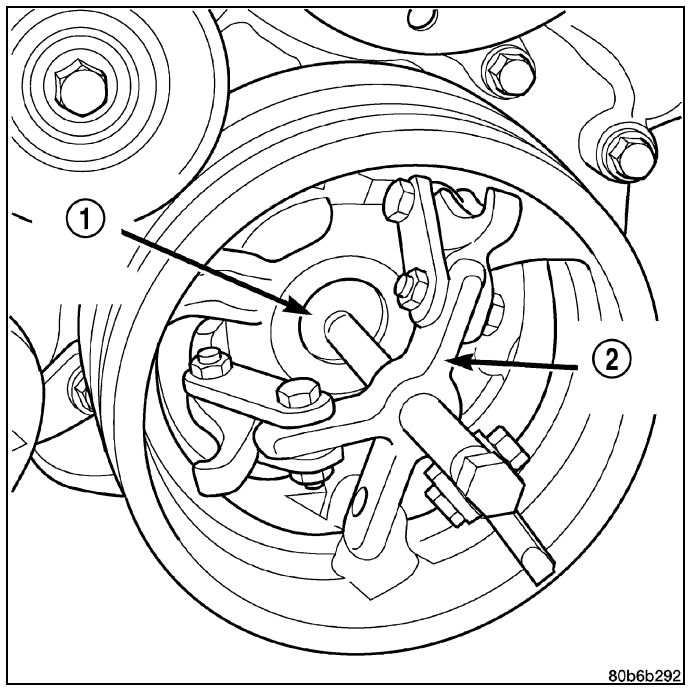

11. Using Crankshaft Front Seal Remover 8511 (1), remove crankshaft front seal.

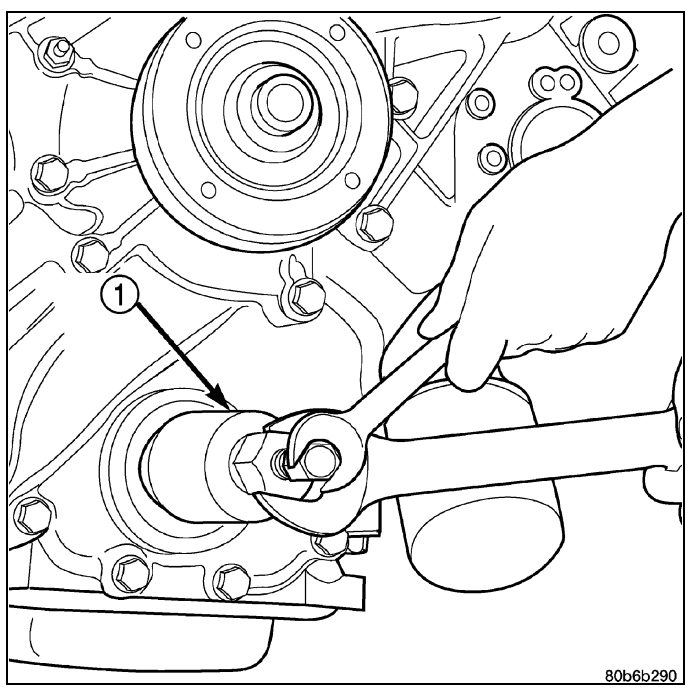

Installation

CAUTION: To prevent severe damage to the Crankshaft, Damper or Special Tool 8512A**, thoroughly clean the damper bore and the crankshaft nose before installing Damper.**

1. Using Seal Installer 8348 and Damper Installer 8512A (2,3), install crankshaft front seal.
2. Install vibration damper (Refer to 09 - Engine/Engine Block/DAMPER, Vibration - Installation).
3. Install radiator cooling fan and shroud (Refer to 07 - Cooling/Engine/FAN, Cooling - Installation).
4. Install upper radiator hose.
5. Install A/C compressor and tighten fasteners to 54 N·m (40 ft. lbs.).
6. Install accessory drive belt refer (Refer to 07 - Cooling/Accessory Drive/BELT, Serpentine - Installation).
7. Refill cooling system (Refer to 07 - Cooling - Standard Procedure).
8. Connect negative cable to battery.

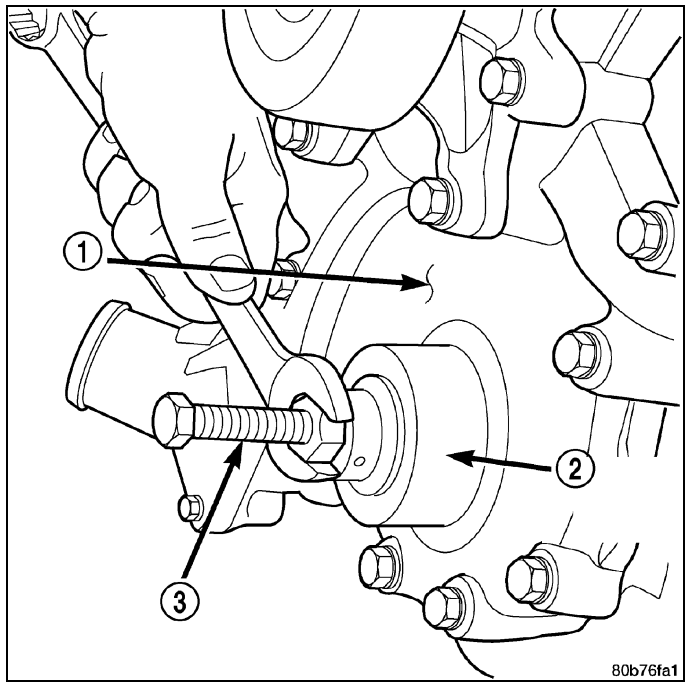

SEAL, Crankshaft Oil, Rear

Diagnosis and Testing

Since it is sometimes difficult to determine the source of an oil leak in the rear seal area of the engine, a more involved inspection is necessary. The following steps should be followed to help pinpoint the source of the leak.

If the leakage occurs at the crankshaft rear oil seal area:

1. Disconnect the battery.
2. Raise the vehicle.
3. Remove torque converter or clutch housing cover and inspect rear of block for evidence of oil. Use a black light to check for the oil leak:
   a. Circular spray pattern generally indicates seal leakage or crankshaft damage.
   b. Where leakage tends to run straight down, possible causes are a porous block, oil galley pipe plugs, oil filter runoff, and main bearing cap to cylinder block mating surfaces. See Engine, for proper repair procedures of these items.
4. If no leaks are detected, pressurized the crankcase as outlined in the section, Inspection (Engine oil Leaks in general)

CAUTION: Do not exceed 20.6 kPa (3 psi).

5. If the leak is not detected, very slowly turn the crankshaft and watch for leakage. If a leak is detected between the crankshaft and seal while slowly turning the crankshaft, it is possible the crankshaft seal surface is damaged. The seal area on the crankshaft could have minor nicks or scratches that can be polished out with emery cloth.

CAUTION: Use extreme caution when crankshaft polishing is necessary to remove minor nicks or scratches. The crankshaft seal flange is specially machined to complement the function of the rear oil seal.

6. For bubbles that remain steady with shaft rotation, no further inspection can be done until disassembled. (Refer to 09 - Engine - Diagnosis and Testing), under the Oil Leak row, for components inspections on possible causes and corrections.
7. After the oil leak root cause and appropriate corrective action have been identified, (Refer to 09 - Engine/Engine Block/SEAL, Crankshaft Oil - Removal).

Removal

NOTE: This procedure can be performed in vehicle.

1. If being performed in vehicle, remove the transmission.
2. Remove the flexplate (Refer to 09 - Engine/Engine Block/FLEXPLATE - Removal).

NOTE: The crankshaft oil seal CAN NOT be reused after removal.

NOTE: The crankshaft rear oil seal remover 8506 **must be installed deeply into the seal. Continue to tighten the removal tool into the seal until the tool can not be turned farther. Failure to install tool correctly the first time will cause tool to pull free of seal without removing seal from engine.**

3. Using Seal Remover 8506 (2), remove the crankshaft rear oil seal (1).

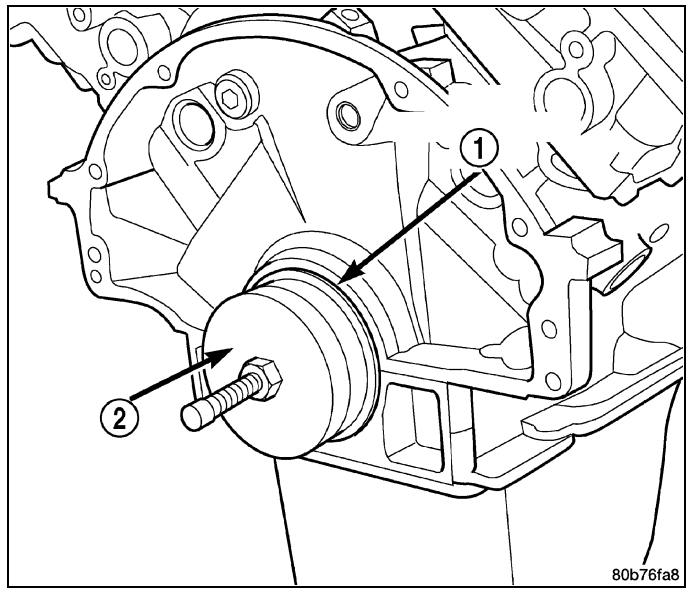

Installation

1. Lubricate the crankshaft flange with engine oil.
2. Position the magnetic seal guide 8349-2 onto the crankshaft rear face. Then position the crankshaft rear oil seal (1) onto the guide (2).

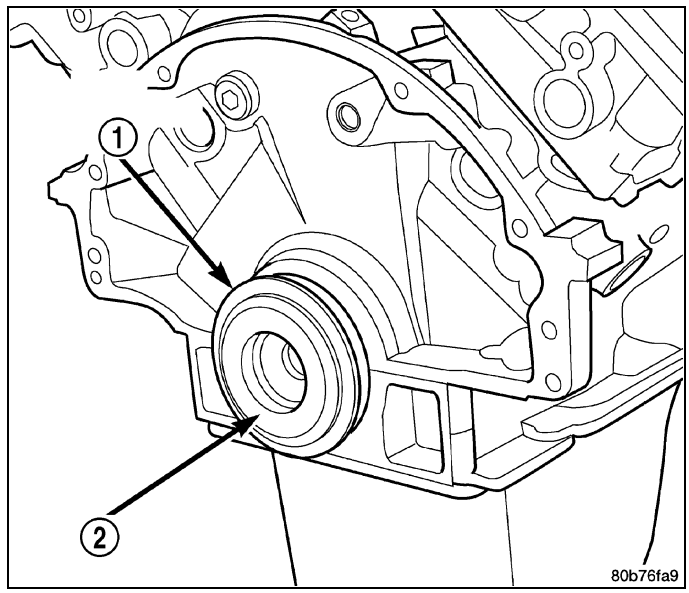

3. Using Crankshaft Rear Oil Seal Installer 8349 (2) and Driver Handle C-4171 (3), with a hammer, tap the seal (1) into place. Continue to tap on the driver handle until the seal installer seats against the cylinder block crankshaft bore.
4. Install the flexplate.
5. Install the transmission.

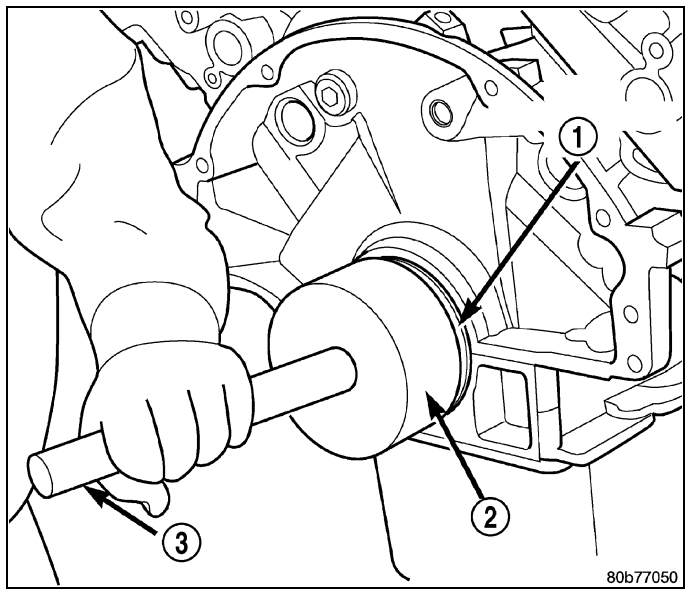

ENGINE MOUNTING

TABLE OF CONTENTS

page

ENGINE MOUNTING
INSULATOR, ENGINE MOUNT, REAR
REMOVAL 242
INSTALLATION 242

page

INSULATOR, ENGINE MOUNT, FRONT
REMOVAL 242
INSTALLATION 244

Engine Mounting

INSULATOR, Engine Mount, Rear

Removal

1. Raise the vehicle on a hoist.
2. Using a suitable jack, support transmission.
3. Remove the nuts from the transmission mount (1).
4. Remove the two bolts that attach the transmission mount to the engine bracket.
5. Raise the transmission enough to remove the mount from the crossmember (2).
6. Remove the mount (1).

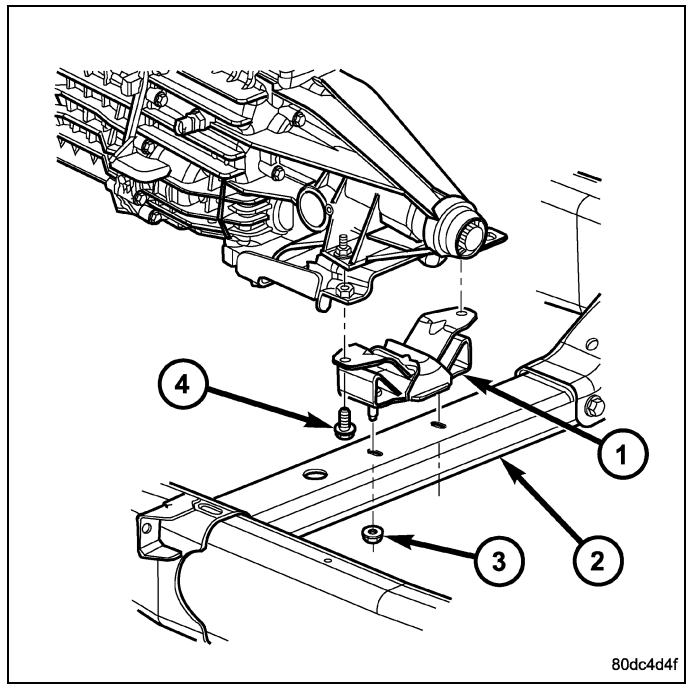

Installation

NOTE: Threadlocking compound must be applied to the bolts before installation.

1. Install the two bolts that attach the transmission mount to the transmission bracket.
2. Torque the bolts to 61N·m (45 ft.lbs.) torque.
3. Lower the transmission so the transmission mount rests on the crossmember, and the studs of the transmission mount are aligned in the slots in the crossmember.
4. Install the nuts onto the transmission mount studs through the crossmember access slot.
5. Torque the nuts to 54N·m (40 ft. lbs.).

INSULATOR, Engine Mount, Front

Removal

2WD

1. Disconnect the negative cable from the battery.

CAUTION: Remove the viscous fan before raising engine. Failure to do so may cause damage to the fan blade, fan clutch and fan shroud.

2. Remove the viscous fan.
3. Raise the vehicle.
4. Remove the engine oil filter.
5. Remove the oil drain trough.
6. Support the engine with a suitable jack and a block of wood across the full width of the engine oil pan.
7. Support the front axle with a suitable jack.
8. Remove the (4) bolts that attach the engine mounts to the front axle.
9. Remove the (3) bolts that attach the front axle to the left engine bracket.

10. Lower the front axle.
11. Remove the through bolts
12. Raise the engine far enough to be able to remove the left and right engine mounts.
13. Remove the (8) mount to engine attaching bolts
14. Remove the engine mounts.

4WD

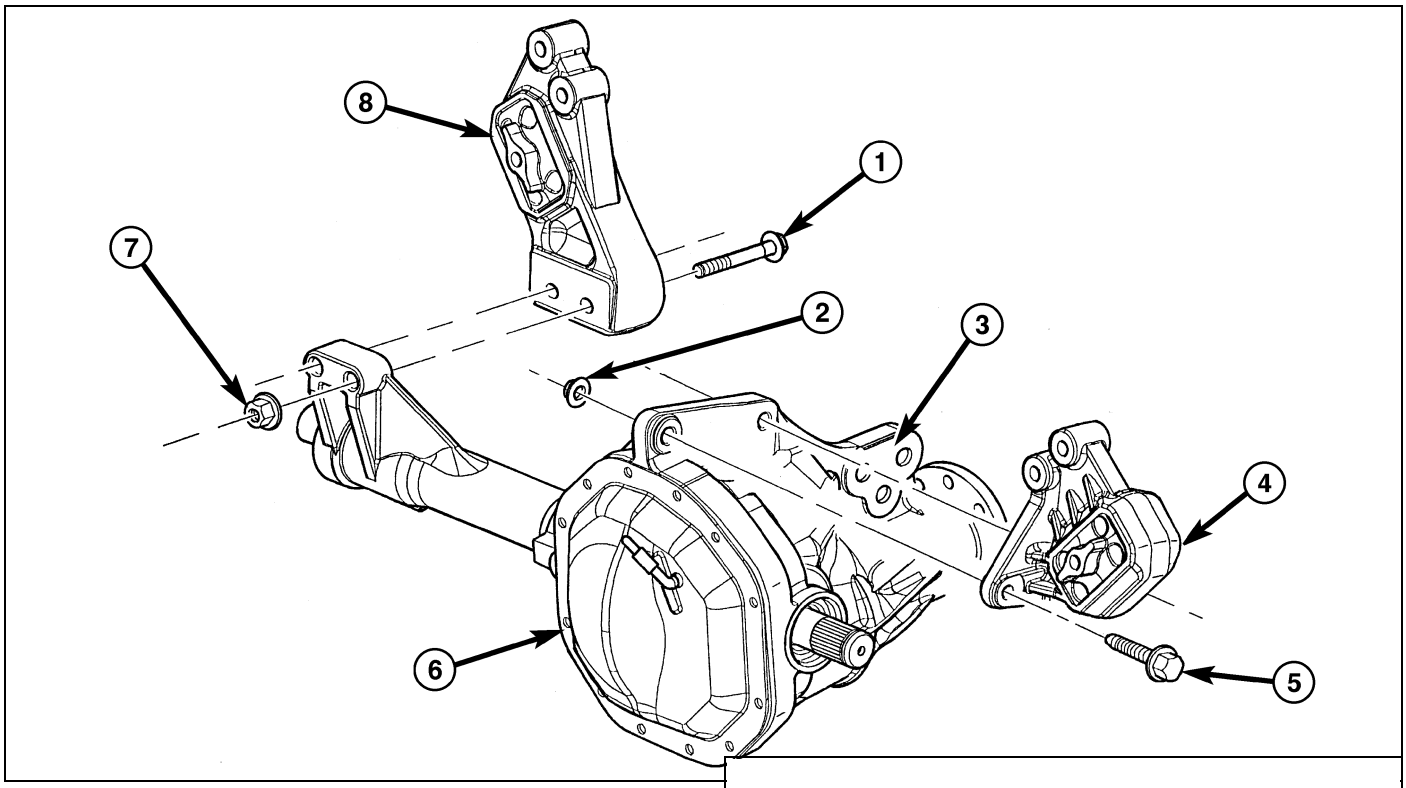

1. Disconnect the negative cable from the battery.
2. Remove the viscous fan.
3. Raise the vehicle.
4. Remove the skid plate.
5. Remove the front crossmember.
6. Remove the engine oil filter.
7. Remove the oil drain trough.
8. Support the engine with a suitable jack and a block of wo
9. Support the front axle with a suitable jack.
10. Remove the 4 bolts that attach the engine mounts to the
11. Remove the 3 bolts (3) that attach the front axle to the le
12. Lower the front axle.
13. Remove the through bolts
14. Raise the engine far enough to be able to remove the lef
15. Remove the engine mounts (4,8).

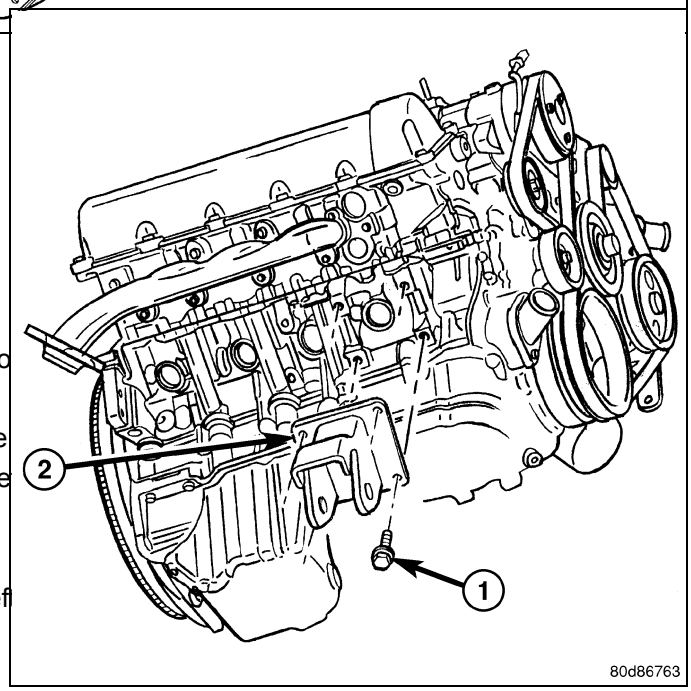

16. Remove the engine mount brackets (2).

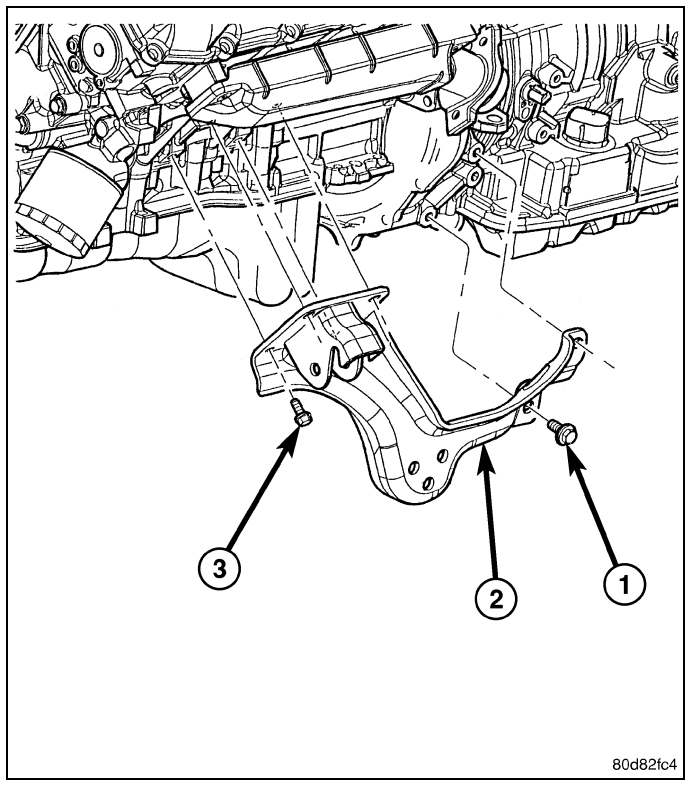

Installation

2WD

NOTE: For mount to engine block and left engine bracket to front axle bolts, apply Mopar® Lock and Seal Adhesive, Medium Strength Threadlocker.

1. Install the right and left side engine mounts to the engine block with (8) bolts. Torque bolts to 54 N·m (40 ft. lbs.).
2. Insert the (2) through bolts into the right and left side engine mounts and loose assemble the two nuts onto the through bolts.
3. Lower the engine until the through bolts rest onto the slots in the frame brackets.
4. Tighten the through bolt nuts to 94 N·m (70 ft. lbs.).
5. Install the oil drain trough .
6. Install the engine oil filter.
7. Lower the vehicle.
8. Install the viscous fan.
9. Reconnect the negative battery cable.

4WD

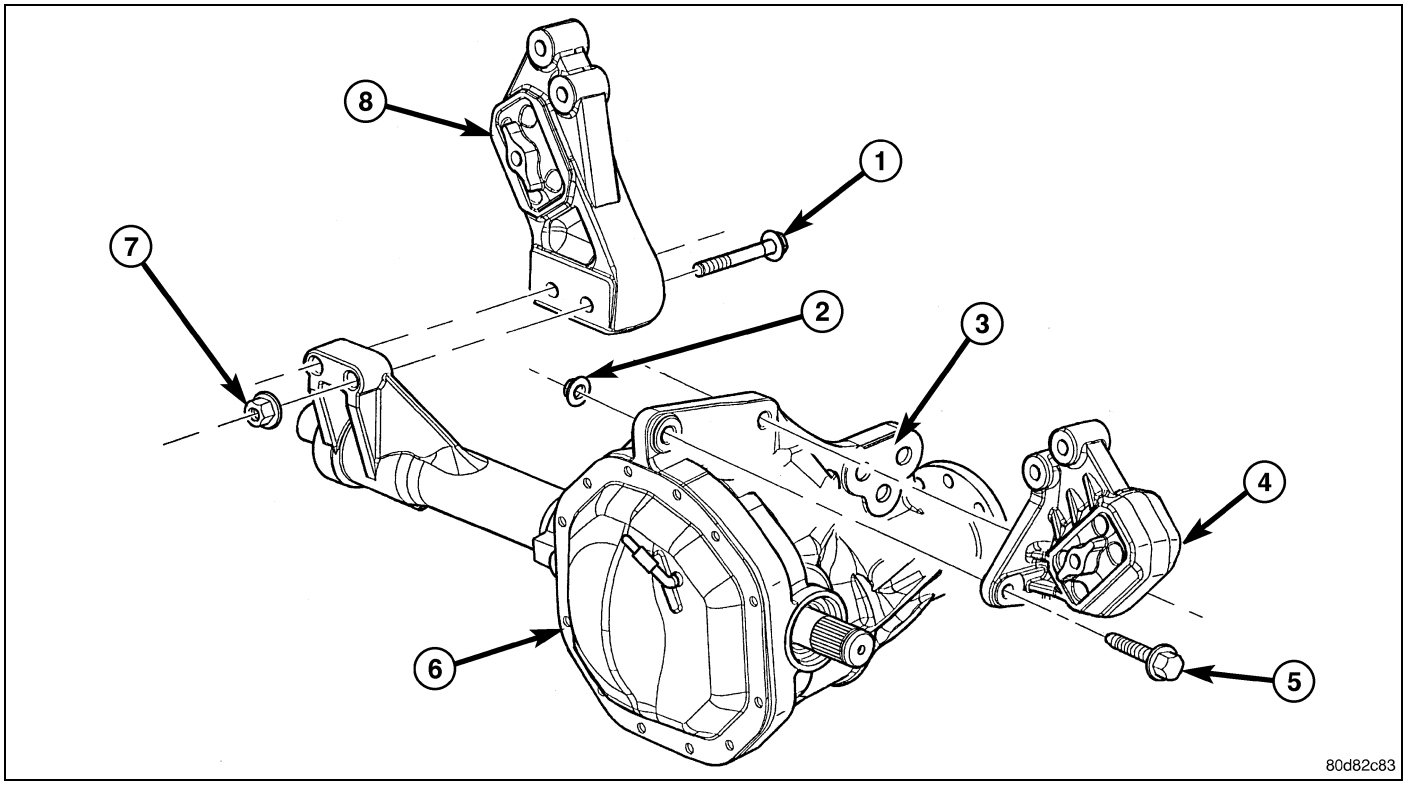

NOTE: For mount to engine block and left engine bracket to front axle bolts, apply Mopar® Lock and Seal Adhesive, Medium Strength Threadlocker.

1. Install the right and left side engine mounts (4,8) to the front axle (6). Torque nuts to 94 N·m (70 ft. lbs.).
2. Raise the front axle into the frame and install the left and right side through bolts. Torque nuts to 94 N·m (70 ft. lbs.).
3. Insert the two upper through bolts into the right and left side engine mounts and loose assemble the two nuts onto the through bolts.
4. Lower the engine until the left and right side engine brackets rest on the through bolts, and the lower engine bracket through holes align with the engine mounts, and the left engine bracket holes align with the front axle slots.
5. Loose assemble the (3) bolts that attach the front axle to the left engine bracket.
6. Loose assemble the lower through bolts.
7. Torque the nuts for the (4) through bolts to 101 N·m (75 ft. lbs.).
8. Torque the (3) bolts that attach the front axle to the left engine bracket to 101 N·m (75 ft. lbs.).
9. Install the oil drain trough.
10. Install the engine oil filter.
11. Install the front crossmember.
12. Install the skid plate.
13. Lower the vehicle.
14. Install the viscous fan.
15. Reconnect the negative battery cable.

LUBRICATION

TABLE OF CONTENTS

page

LUBRICATION
- DESCRIPTION 248
- OPERATION 248
- DIAGNOSIS AND TESTING
  - CHECKING ENGINE OIL PRESSURE 250
  - ENGINE OIL LEAK 250
- **FILTER, ENGINE OIL**
  - REMOVAL 251
  - INSTALLATION 252
- **OIL**
  - STANDARD PROCEDURE 252
- **PAN, OIL**
  - REMOVAL 253
  - INSTALLATION 254

page

PUMP, ENGINE OIL
- REMOVAL 254
- DISASSEMBLY 254
- CLEANING 254
- INSPECTION. 255
- ASSEMBLY. 257
- INSTALLATION 257

SWITCH, OIL PRESSURE
- DESCRIPTION. 258
- OPERATION 258
- REMOVAL 258
- INSTALLATION 259

Lubrication

Description

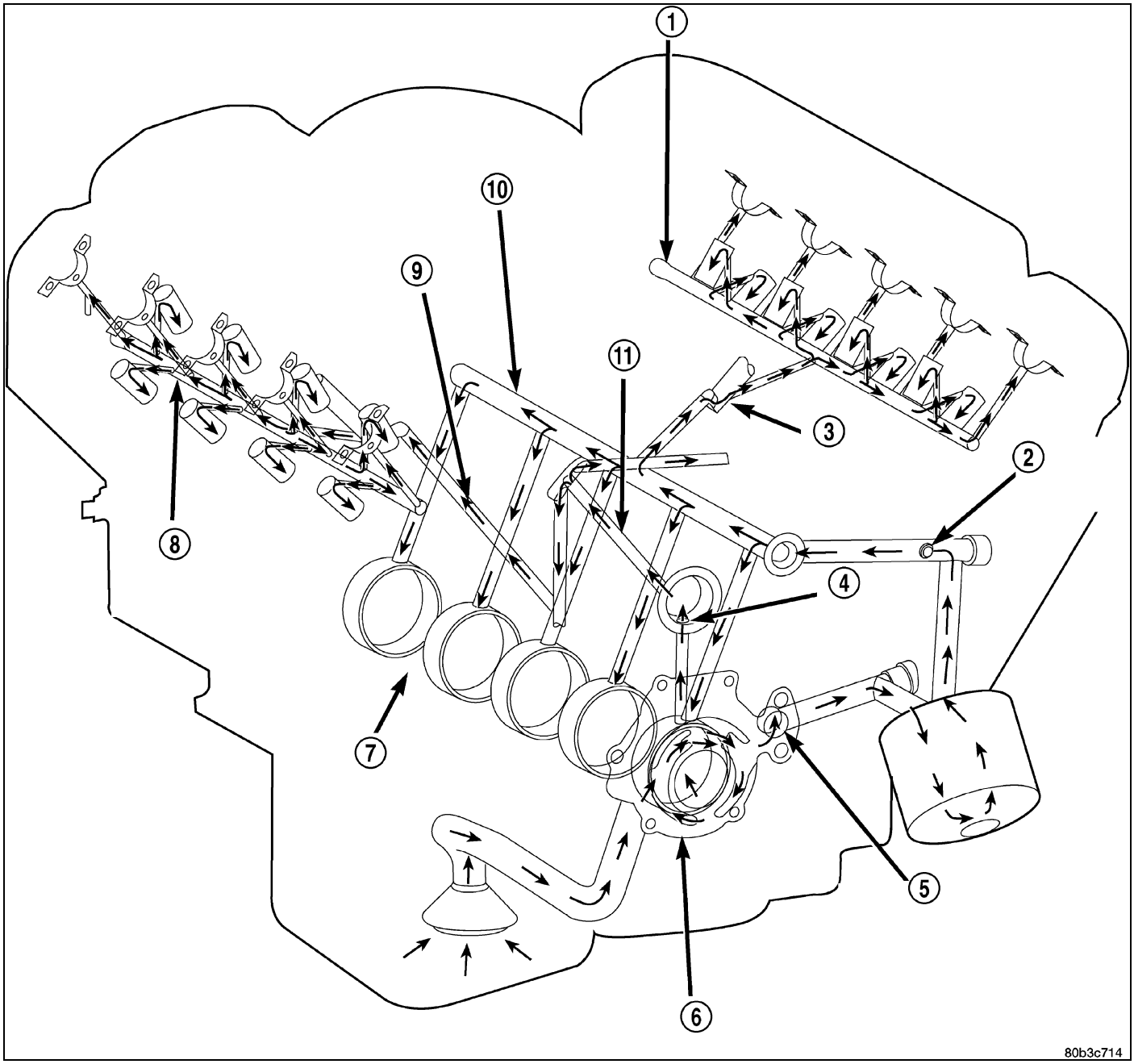

The lubrication system is a full flow filtration pressure feed type.

Operation

Oil from the oil pan is pumped by a gerotor type oil pump directly mounted to the crankshaft nose. Oil pressure is controlled by a relief valve mounted inside the oil pump housing.

The camshaft exhaust valve lobes and rocker arms are lubricated through a small hole in the rocker arm; oil flows through the lash adjuster then through the rocker arm and onto the camshaft lobe. Due to the orentation of the rocker arm, the camshaft intake lobes are not lubed in the same manner as the exhaust lobes. The intake lobes are lubed through internal passages in the camshaft. Oil flows through a bore in the number 3 camshaft bearing bore, and as the camshaft turns, a hole in the camshaft aligns with the hole in the camshaft bore allowing engine oil to enter the camshaft tube. The oil then exits through 1.6mm (0.063 in.) holes drilled into the intake lobes, lubricating the lobes and the rocker arms.

Engine Block Lubrication Flow Chart : Table 1

FROM	TO
Oil Pickup Tube	Oil Pump
Oil Pump	Oil Filter
Oil Filter	Block Main Oil Gallery
Block Main Oil Gallery	• 1. Crankshaft Main Journal • 2. Left Cylinder Head* • 3. Right Cylinder Head*
Crankshaft Main Journals	Crankshaft Rod Journals
Crankshaft Number One Main Journal	• 1.Front Timing Chain Idler Shaft • 2.Both Secondary Chain Tensioners
Left Cylinder Head	See Table 2
Right Cylinder Head	See Table 2
* The cylinder head gaskets have an oil restricter to control oil flow to the cylinder heads.	

Cylinder Heads Lubrication Flow Chart: Table 2

FROM	TO
Cylinder Head Oil Port (in bolt hole)	Diagonal Cross Drilling to Main Oil Gallery
Main Oil Gallery (drilled through head from rear to front)	• 1. Base of Camshaft Towers • 2. Lash Adjuster Towers
Base of Camshaft Towers	Vertical Drilling Through Tower to Camshaft Bearings**
Lash Adjuster Towers	Diagonal Drillings to Hydraulic Lash Adjuster Pockets
** The number three camshaft bearing journal feeds oil into the hollow camshaft tubes. Oil is routed to the intake lobes, which have oil passages drilled into them to lubricate the rocker arms.	

Diagnosis and Testing

CHECKING ENGINE OIL PRESSURE

1. Remove oil pressure sending unit (2) and install gauge assembly C-3292A.
2. Run engine until thermostat opens.
3. Oil Pressure:

- Curb Idle - 25 kPa (4 psi) minimum
- 3000 rpm - 170 - 758 kPa (25 - 110 psi)

4. If oil pressure is 0 at idle, shut off engine. Check for a clogged oil pick-up screen or a pressure relief valve stuck open.

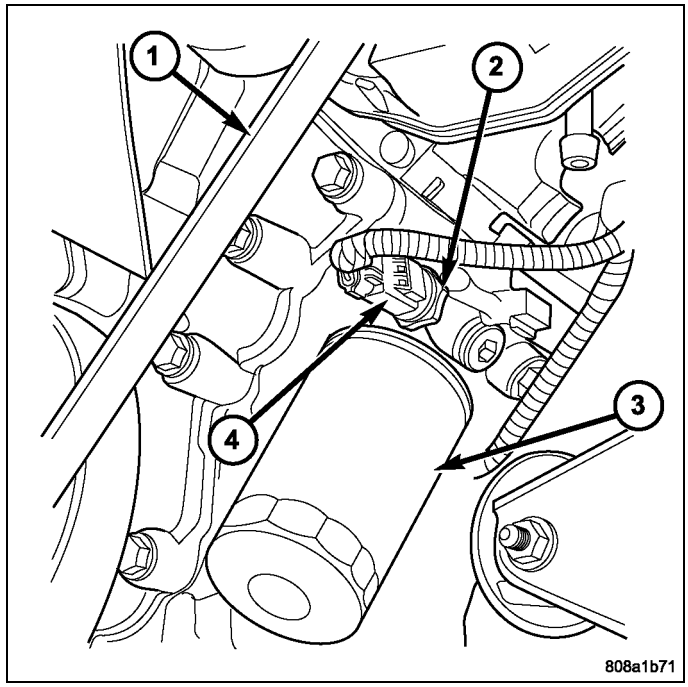

ENGINE OIL LEAK

Begin with a thorough visual inspection of the engine, particularly at the area of the suspected leak. If an oil leak source is not readily identifiable, the following steps should be followed:

1. Do not clean or degrease the engine at this time because some solvents may cause rubber to swell, temporarily stopping the leak.
2. Add an oil soluble dye (use as recommended by manufacturer). Start the engine and let idle for approximately 15 minutes. Check the oil dipstick to make sure the dye is thoroughly mixed as indicated with a bright yellow color under a black light.
3. Using a black light, inspect the entire engine for fluorescent dye, particularly at the suspected area of oil leak. If the oil leak is found and identified, repair per service manual instructions.
4. If dye is not observed, drive the vehicle at various speeds for approximately 24 km (15 miles), and repeat inspection. If the oil leak source is not positively identified at this time, proceed with the air leak detection test method.

Air Leak Detection Test Method

1. Disconnect the breather cap to air cleaner hose at the breather cap end. Cap or plug breather cap nipple.
2. Remove the PCV valve from the cylinder head cover. Cap or plug the PCV valve grommet.
3. Attach an air hose with pressure gauge and regulator to the dipstick tube.

CAUTION: Do not subject the engine assembly to more than 20.6 kPa (3 PSI) of test pressure.

4. Gradually apply air pressure from 1 psi to 2.5 psi maximum while applying soapy water at the suspected source. Adjust the regulator to the suitable test pressure that provide the best bubbles which will pinpoint the leak source. If the oil leak is detected and identified, repair per service manual procedures.
5. If the leakage occurs at the rear oil seal area, refer to the section, Inspection for Rear Seal Area Leak.
6. If no leaks are detected, turn off the air supply and remove the air hose and all plugs and caps. Install the PCV valve and breather cap hose.
7. Clean the oil off the suspect oil leak area using a suitable solvent. Drive the vehicle at various speeds approximately 24 km (15 miles). Inspect the engine for signs of an oil leak by using a black light.

INSPECTION FOR REAR SEAL AREA LEAKS

Since it is sometimes difficult to determine the source of an oil leak in the rear seal area of the engine, a more involved inspection is necessary. The following steps should be followed to help pinpoint the source of the leak.

If the leakage occurs at the crankshaft rear oil seal area:

1. Disconnect the battery.
2. Raise the vehicle.
3. Remove torque converter or clutch housing cover and inspect rear of block for evidence of oil. Use a black light to check for the oil leak:
   a. Circular spray pattern generally indicates seal leakage or crankshaft damage.
   b. Where leakage tends to run straight down, possible causes are a porous block, oil galley pipe plugs, oil filter runoff, and main bearing cap to cylinder block mating surfaces.
4. If no leaks are detected, pressurize the crankcase as outlined in the, Inspection (Engine oil Leaks in general)

CAUTION: Do not exceed 20.6 kPa (3 psi).

5. If the leak is not detected, very slowly turn the crankshaft and watch for leakage. If a leak is detected between the crankshaft and seal while slowly turning the crankshaft, it is possible the crankshaft seal surface is damaged. The seal area on the crankshaft could have minor nicks or scratches that can be polished out with emery cloth.

CAUTION: Use extreme caution when crankshaft polishing is necessary to remove minor nicks and scratches. The crankshaft seal flange is especially machined to complement the function of the rear oil seal.

6. For bubbles that remain steady with shaft rotation, no further inspection can be done until disassembled.

FILTER, Engine Oil

Removal

All engines are equipped with a high quality full-flow, disposable type oil filter. Chrysler Corporation recommends a Mopar® or equivalent oil filter be used.

1. Position a drain pan under the oil filter.
2. Using a suitable oil filter wrench loosen filter.
3. Rotate the oil filter counterclockwise to remove it from the cylinder block oil filter boss.
4. When filter separates from cylinder block oil filter boss, tip gasket end upward to minimize oil spill. Remove filter from vehicle.

NOTE: Make sure filter gasket was removed with filter.

5. With a wiping cloth, clean the gasket sealing surface of oil and grime.

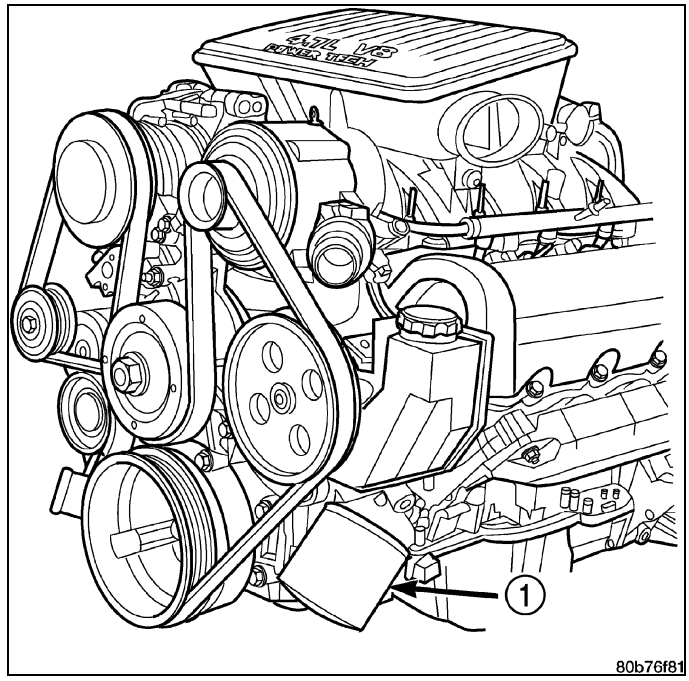

Installation

1. Lightly lubricate oil filter gasket (2) with engine oil.
2. Thread filter (3) onto adapter nipple. When gasket makes contact with sealing surface, hand tighten filter one full turn, do not over tighten.
3. Add oil, verify crankcase oil level and start engine. Inspect for oil leaks.

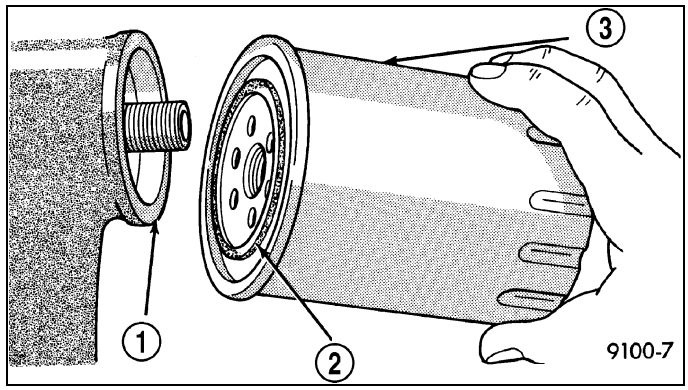

OIL

Standard Procedure

The engine oil level indicator (2) is located at the right rear of the engine on the 4.7L engines.

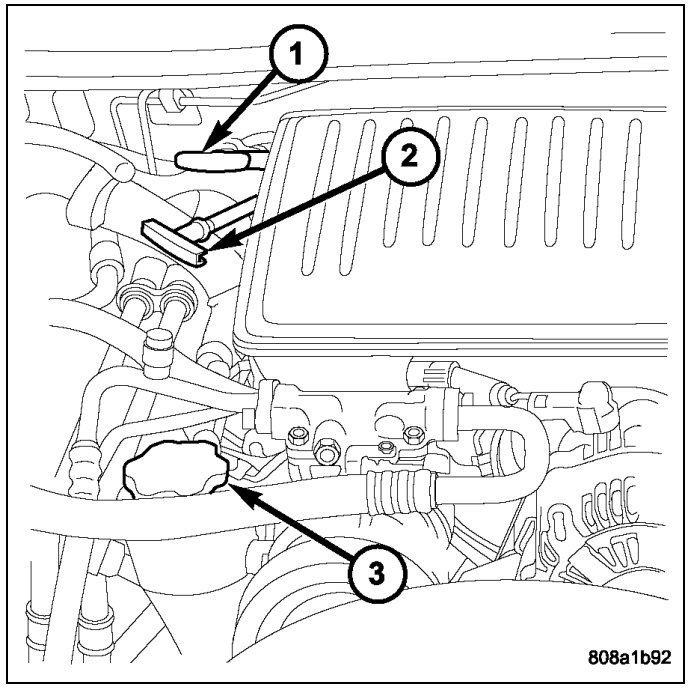

CRANKCASE OIL LEVEL INSPECTION

CAUTION: Do not overfill crankcase with engine oil, pressure loss or oil foaming can result.

Inspect engine oil level approximately every 800 kilometers (500 miles). Unless the engine has exhibited loss of oil pressure, run the engine for about five minutes before checking oil level. Checking engine oil level on a cold engine is not accurate.

To ensure proper lubrication of an engine, the engine oil must be maintained at an acceptable level. The acceptable levels are indicated between the ADD and SAFE marks on the engine oil dipstick.

1. Position vehicle on level surface.
2. With engine OFF, allow approximately ten minutes for oil to settle to bottom of crankcase, remove engine oil dipstick.
3. Wipe dipstick clean.
4. Install dipstick and verify it is seated in the tube.
5. Remove dipstick, with handle held above the tip, take oil level reading.
6. Add oil only if level is below the ADD mark on dipstick.

ENGINE OIL CHANGE

Change engine oil at mileage and time intervals described in Maintenance Schedules.

Run engine until achieving normal operating temperature.

1. Position the vehicle on a level surface and turn engine off.
2. Hoist and support vehicle on safety stands.
3. Remove oil fill cap.
4. Place a suitable drain pan under crankcase drain.
5. Remove drain plug from crankcase and allow oil to drain into pan. Inspect drain plug threads for stretching or other damage. Replace drain plug if damaged.
6. Install drain plug in crankcase. Torque to 34 N·m (25 ft. lbs.).
7. Lower vehicle and fill crankcase with specified type and amount of engine oil described in this section.
8. Install oil fill cap.
9. Start engine and inspect for leaks.
10. Stop engine and inspect oil level.

NOTE: Care should be exercised when disposing used engine oil after it has been drained from a vehicle engine. Refer to the WARNING at beginning of this section.

PAN, Oil

Removal

1. Disconnect the negative battery cable.
2. Install engine support fixture special tool 8534B. **Do not raise engine at this time.**
3. Loosen both left and right side engine mount through bolts. Do not remove bolts.
4. Remove the structural dust cover, if equipped.
5. Drain engine oil.
6. Disconnect transmission fluid cooler lines at radiator, transmission fittings and clips.

NOTE: When disconnecting the transmission oil cooler lines, it is necessary to replace the line clip that is located on the oil pan stud. The retention force of the clip is severely degraded upon removal.

7. Remove the front crossmember(Refer to 13 - Frame and Bumpers/Frame/CROSSMEMBER - Removal) .

CAUTION: Only raise the engine enough to provide clearance for oil pan removal. Check for proper clearance at fan shroud to fan and cowl to intake manifold.

8. Raise engine using special tool 8534B to provide clearance to remove oil pan.

NOTE: Do not pry on oil pan or oil pan gasket. Gasket is integral to engine windage tray and does not come out with oil pan.

9. Remove the oil pan mounting bolts and oil pan.
10. Unbolt oil pump pickup tube and remove tube.
11. Inspect the integral windage tray and gasket and replace as needed.

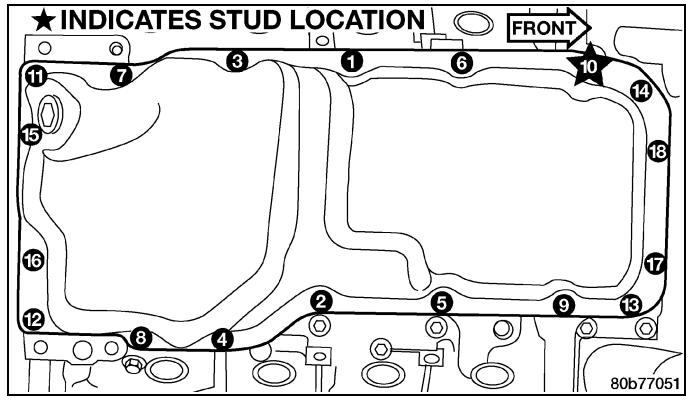

Installation

1. Clean the oil pan gasket mating surface of the bedplate and oil pan.
2. Position the oil pan gasket and pickup tube with new o-ring. Install the mounting bolt and nuts. Tighten bolt and nuts to 28 N·m (20 ft. lbs.).
3. Position the oil pan and install the mounting bolts. Tighten the mounting bolts to 15 N·m (11 ft. lbs.) in the sequence shown.

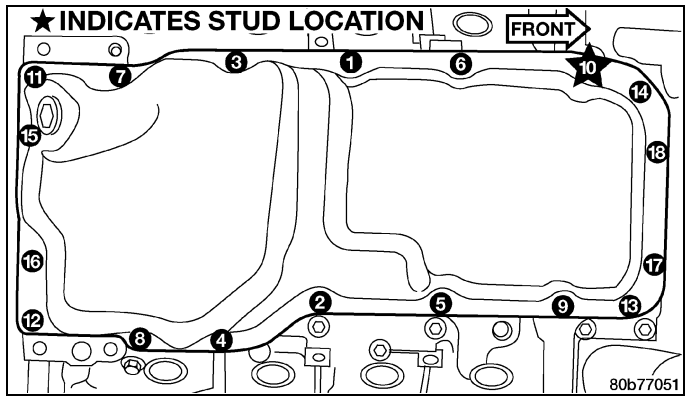

4. Lower the engine into mounts using special tool 8534B.
5. Install both the left and right side engine mount through bolts. Tighten the nuts to 68 N·m (50 ft. lbs.).
6. Remove special tool 8534B.
7. Connect cooler lines to radiator, transmission and clips.

NOTE: When connecting the transmission oil cooler lines, it is necessary to replace the line clip that is located on the oil pan stud. The retention force of the clip is severely degraded upon removal.

8. Install structural dust cover, if equipped.
9. Install the front crossmember (Refer to 13 - Frame and Bumpers/Frame/CROSSMEMBER - Installation).
10. Fill engine oil.
11. Reconnect the negative battery cable.
12. Start engine and check for leaks.

PUMP, Engine Oil

Removal

1. Remove the oil pan and pick-up tube (Refer to 09 - Engine/Lubrication/PAN, Oil - Removal).
2. Remove the timing chain cover (Refer to 09 - Engine/Valve Timing/COVER(S), Engine Timing - Removal) - REMOVAL).
3. Remove the timing chains and tensioners (Refer to 09 - Engine/Valve Timing/CHAIN and SPROCKETS, Timing - Removal).
4. Remove the four bolts, primary timing chain tensioner and the oil pump.

Disassembly

1. Remove oil pump cover screws and lift off cover plate.
2. Remove pump inner and outer rotors.

NOTE: Once the oil pressure relief valve, cup plug, and pin are removed, the pump assembly must be replaced.

3. If it is necessary to remove the pressure relief valve, drive the roll pin from pump housing and remove cup plug, spring and valve.

Cleaning

1. Wash all parts in a suitable solvent.

Inspection

CAUTION: The oil pump pressure relief valve and spring should not be removed from the oil pump. If these components are disassembled and or removed from the pump the entire oil pump assembly must be replaced.

1. Clean all parts thoroughly. Mating surface of the oil pump housing should be smooth. If the pump cover is scratched or grooved the oil pump assembly should be replaced.
2. Lay a straight edge across the pump cover surface (3). If a 0.025 mm (0.001 in.) feeler gauge (2) can be inserted between the cover and the straight edge the oil pump assembly should be replaced.

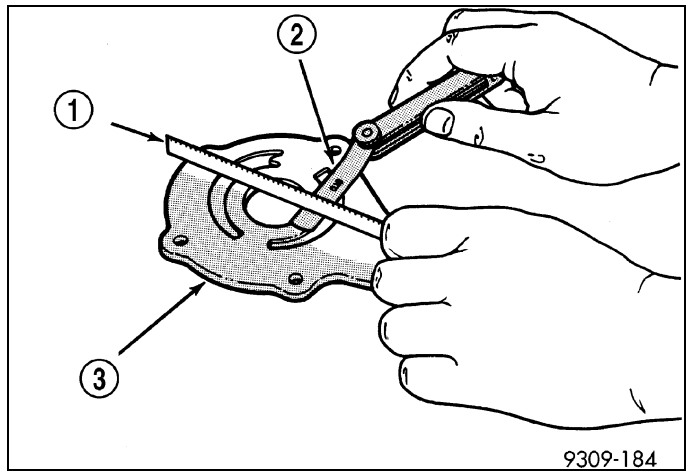

3. Measure the thickness of the outer rotor. If the outer rotor thickness measures at 12.005 mm (0.472 in.) or less the oil pump assembly must be replaced.
4. Measure the diameter of the outer rotor. If the outer rotor diameter measures at 85.925 mm (3.382 in.) or less the oil pump assembly must be replaced.

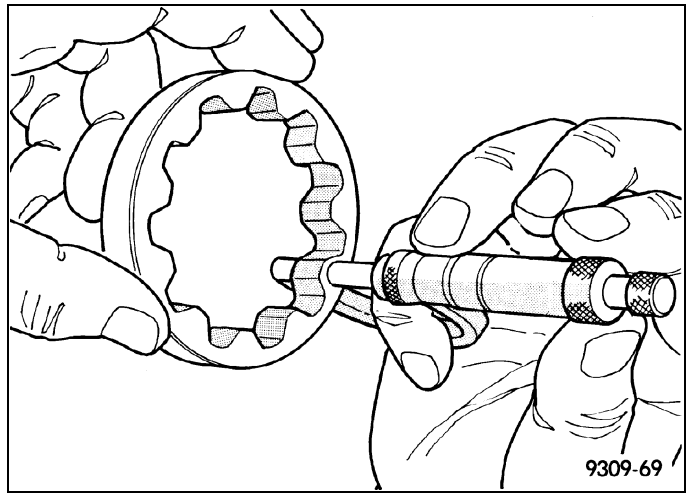

5. Measure the thickness of the inner rotor. If the inner rotor thickness measures at 12.005 mm (0.472 in.) or less then the oil pump assembly must be replaced.

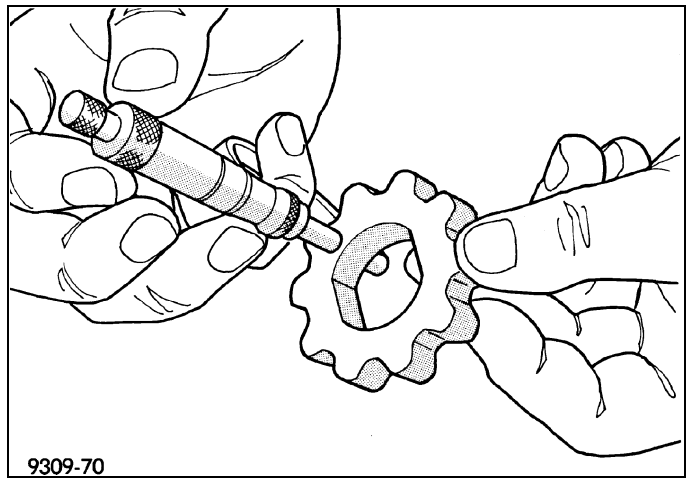

6. Slide outer rotor (2) into the body of the oil pump. Press the outer rotor to one side of the oil pump body and measure clearance between the outer rotor and the body. If the measurement is 0.235mm (0.009 in.) or more the oil pump assembly must be replaced.

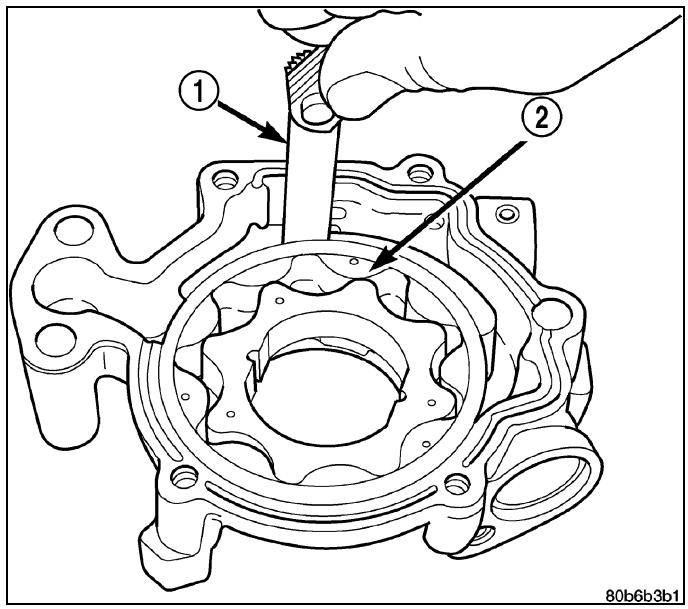

7. Install the inner rotor into the oil pump body. Measure the clearance between the inner (3) and outer (1) rotors. If the clearance between the rotors is .150 mm (0.006 in.) or more the oil pump assembly must be replaced.

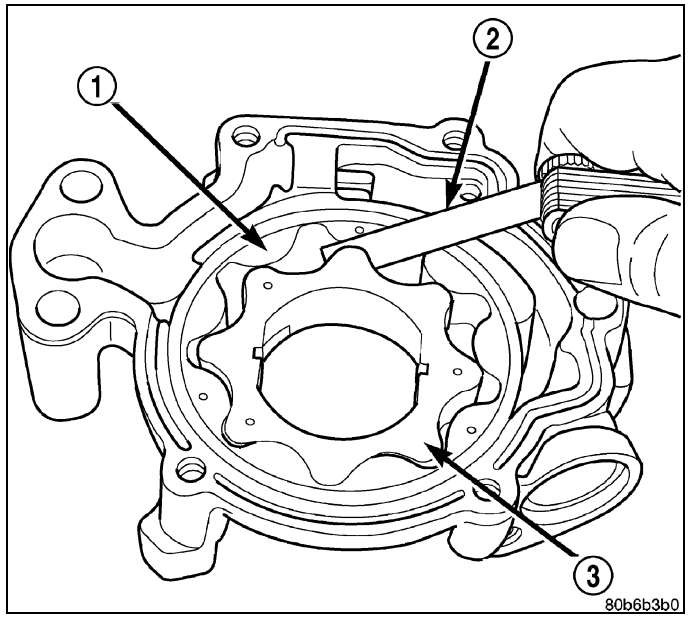

8. Place a straight edge (1) across the body of the oil pump (between the bolt holes), if a feeler gauge (2) of .095 mm (0.0038 in.) or greater can be inserted between the straightedge and the rotors, the pump must be replaced .

NOTE: The 3.7L/4.7L Oil pump is released as an assembly. There are no Chrysler part numbers for Sub-Assembly components. In the event the oil pump is not functioning or out of specification it must be replaced as an assembly.

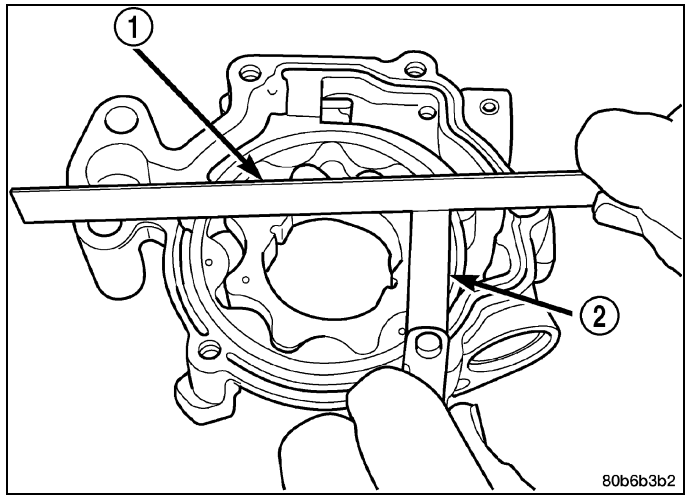

Assembly

1. Wash all parts in a suitable solvent and inspect carefully for damage or wear.
2. Install inner and outer rotors
3. Install oil pump cover plate and install cover bolts and tighten them to 12 N·m (105 in. lbs.).
4. Prime oil pump before installation by filling rotor cavity with engine oil.
5. If oil pressure is low and pump is within specifications, inspect for worn engine bearings or other causes for oil pressure loss.

Installation

1. Position the oil pump onto the crankshaft and install one oil pump retaining bolt.
2. Position the primary timing chain tensioner and install three retaining bolts.
3. Tighten the oil pump and primary timing chain tensioner retaining bolts to 28 N·m (250 in. lbs.) in the sequence shown.
4. Install the secondary timing chain tensioners and timing chains(Refer to 09 - Engine/Valve Timing/CHAIN and SPROCKETS, Timing - Installation) .

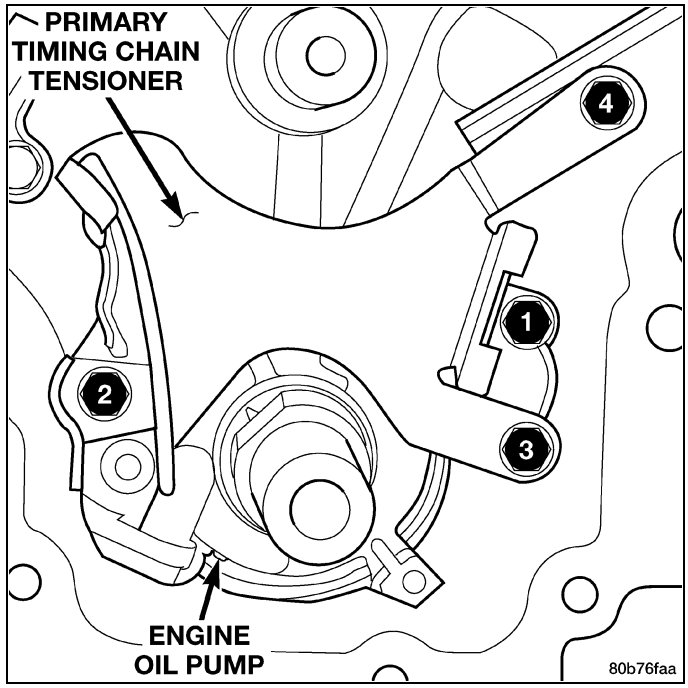

5. Install the timing chain cover (Refer to 09 - Engine/Valve Timing/COVER(S), Engine Timing - Installation) - INSTALLATION).
6. Install the pick-up tube and oil pan (Refer to 09 - Engine/Lubrication/PAN, Oil - Installation).

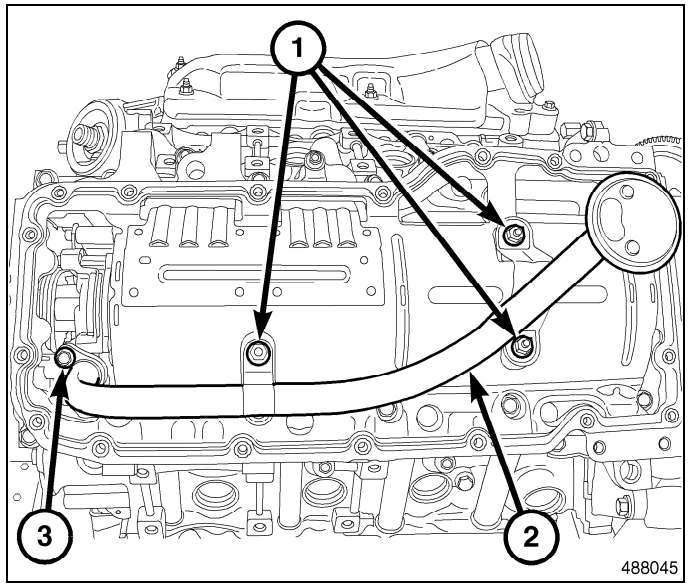

SWITCH, Oil Pressure

Description

The oil pressure switch is a pressure sensitive switch that is activated by the engine's oil pressure (in the main oil gallery). The switch is a two terminal device (one terminal is provided to the wiring harness and the other terminal is the switch's metal housing that screws into the engine block).

Operation

The oil pressure switch is normally “Closed.” The switch changes from a "Closed" circuit to an "Open" circuit, on increasing pressure of 7 psig. The oil pressure switch changes from an "Open" circuit to a "Closed" circuit, on decreasing pressure, between 2 psig and 4 psig.

Removal

1. Disconnect the negative cable from the battery.
2. Raise vehicle on hoist.
3. Remove front splash shield.
4. Disconnect oil pressure sender wire (4).
5. Remove the pressure sender (2).

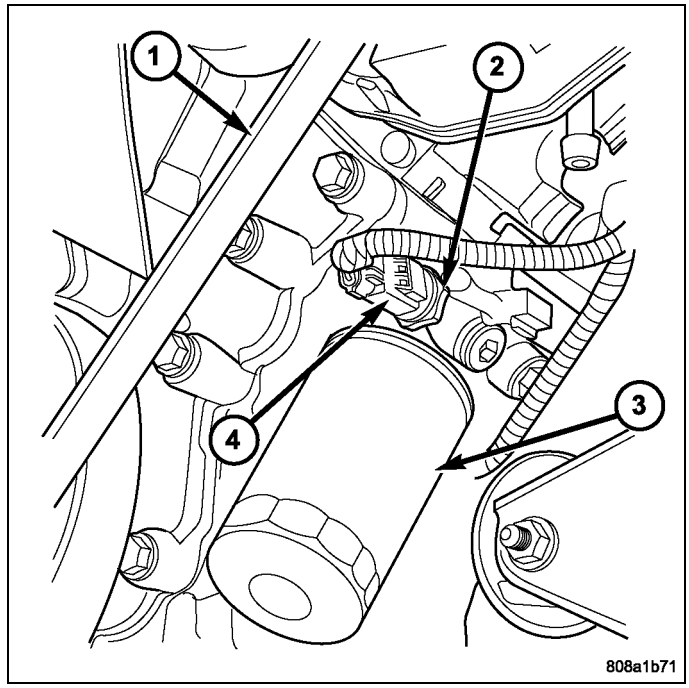

Installation

1. Install oil pressure sender (2).
2. Connect oil pressure sender wire (4).
3. Install front splash shield.
4. Lower vehicle.
5. Connect the negative battery cable.

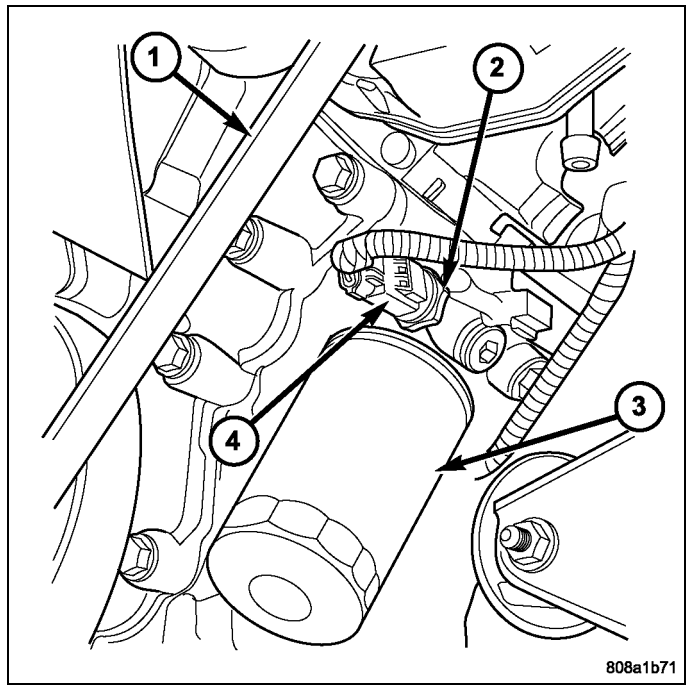

MANIFOLDS

TABLE OF CONTENTS

page

MANIFOLDS
MANIFOLD, EXHAUST
DESCRIPTION 262
REMOVAL 262
CLEANING 264
INSPECTION 264
INSTALLATION 265

page

MANIFOLD, INTAKE
DESCRIPTION 267
DIAGNOSIS AND TESTING 267
REMOVAL 267
CLEANING 268
INSPECTION 268
INSTALLATION 269

Manifolds

MANIFOLD, Exhaust

Description

The exhaust manifolds are log style with a patented flow enhancing design to maximize performance. The exhaust manifolds are made of high silicon molybdenum cast iron. A perforated core graphite exhaust manifold gasket is used to improve sealing to the cylinder head. The exhaust manifolds are covered by a three layer laminated heat shield for thermal protection and noise reduction. The heat shields are fastened with a torque prevailing nut that is backed off slightly to allow for the thermal expansion of the exhaust manifold.

Removal

RIGHT EXHAUST MANIFOLD

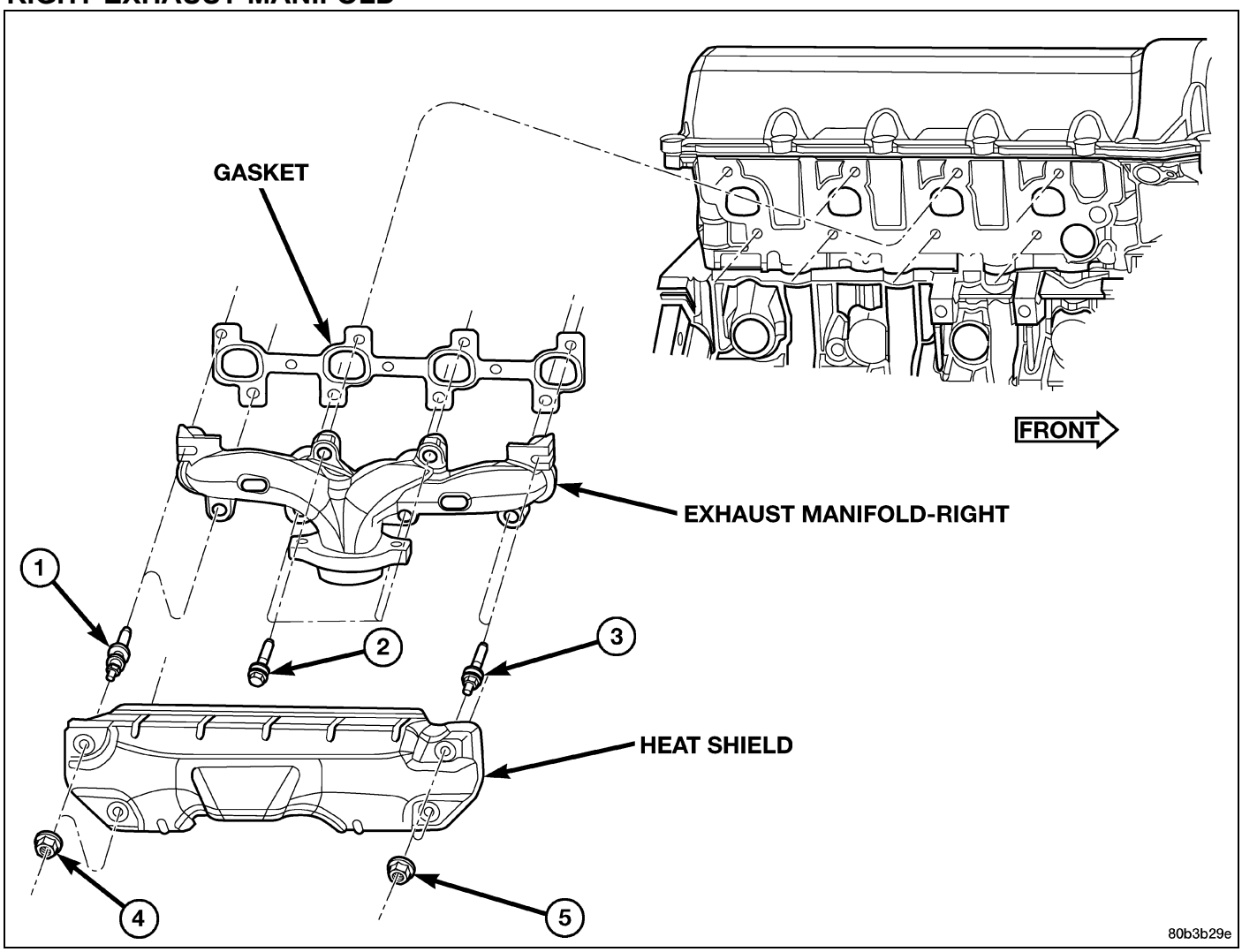

1. Disconnect the negative battery cable.
2. Remove the air cleaner assembly (Refer to 09 - Engine/Air Intake System/BODY, Air Cleaner - Removal).
3. Remove the accessory drive belt (Refer to 07 - Cooling/Accessory Drive/BELT, Serpentine - Removal).
4. Remove the A/C compressor (Refer to 24 - Heating and Air Conditioning/Plumbing/COMPRESSOR, A/C - Removal).
5. Remove A/C accumulator support bracket fastener.
6. Drain the coolant below heater hose level (Refer to 07 - Cooling - Standard Procedure).
7. Remove the heater hoses at the engine.
8. Remove the exhaust manifold heat shield retaining nuts (4,5) and remove the heat shield.

9. Remove the upper exhaust manifold retaining bolts (1, 2, 3).
10. Raise and support the vehicle.

CAUTION: When servicing or replacing exhaust system components, disconnect the oxygen sensor connector(s). Allowing the exhaust to hang by the oxygen sensor wires will damage the harness and/or sensor.

11. Saturate the exhaust pipe/catalytic converter assembly flanged nuts at the exhaust manifold with heat valve lubricant, allow 5 minutes for penetration.
12. Disconnect the exhaust pipe/catalytic converter at the exhaust manifold (Refer to 11 - Exhaust System/CONVERTER, Catalytic - Removal).
13. Remove the starter (Refer to 08 - Electrical/8F - Engine Systems/Starting/STARTER - Removal).
14. Remove the lower exhaust manifold retaining bolts (1, 2, 3).

NOTE: The exhaust manifold is removed from below the engine compartment.

15. Remove the exhaust manifold and gasket.
16. Clean the mating surfaces.

LEFT EXHAUST MANIFOLD

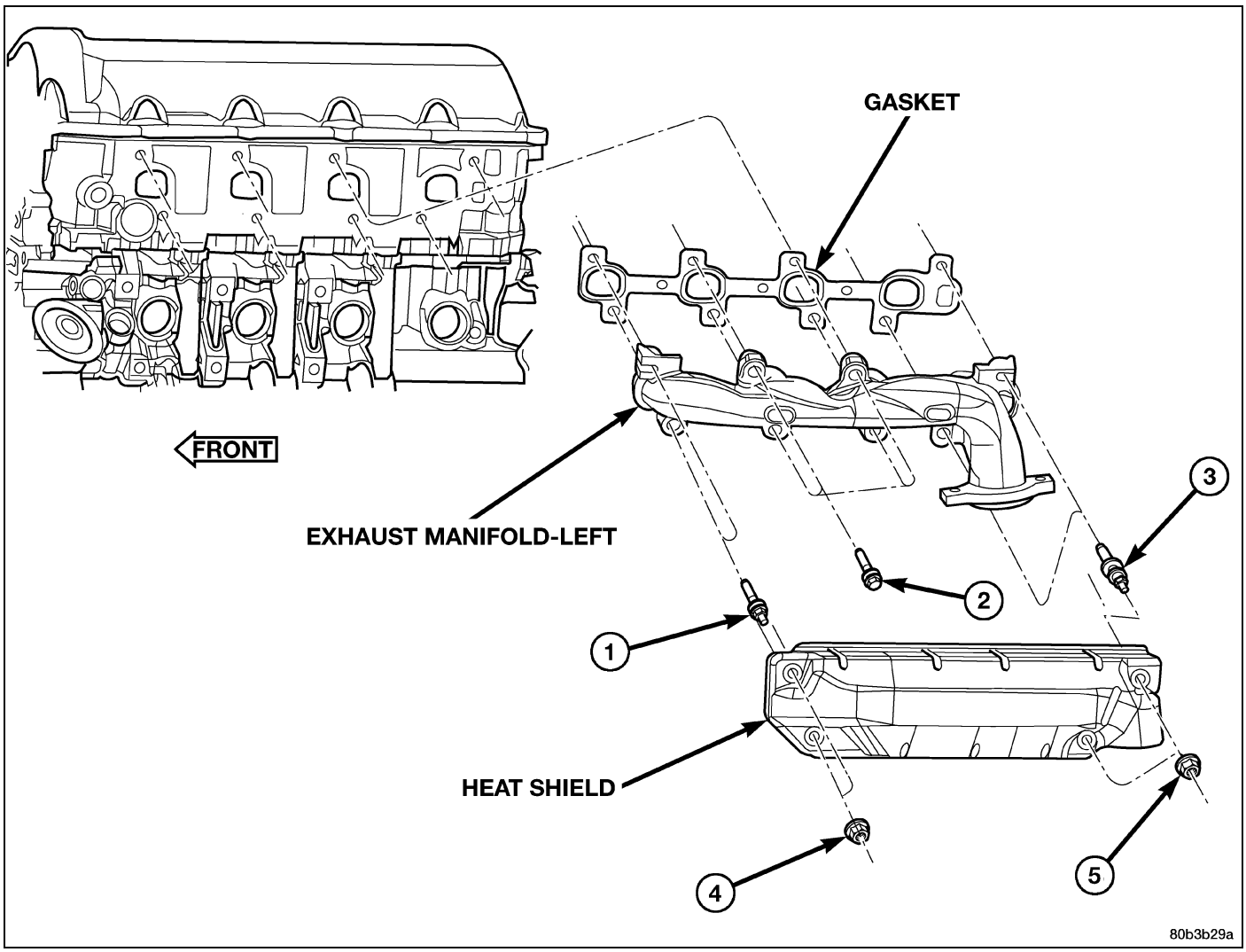

1. Disconnect the negative battery cable.
2. Remove the engine cover.
3. Remove the front two exhaust manifold heat shield retaining nuts (4).
4. Raise and support the vehicle.

CAUTION: When servicing or replacing exhaust system components, disconnect the oxygen sensor connector(s). Allowing the exhaust to hang by the oxygen sensor wires will damage the harness and/or sensor.

5. Saturate the exhaust pipe/catalytic converter assembly flanged nuts at the exhaust manifold with heat valve lubricant, allow 5 minutes for penetration.
6. Disconnect the exhaust pipe at the exhaust manifold (Refer to 11 - Exhaust System/CONVERTER, Catalytic - Removal).
7. Remove the rear heat shield (5) retaining nuts and remove the heat shield.
8. Lower the vehicle.
9. Remove the upper exhaust manifold retaining bolts (1, 2, 3).

NOTE: The exhaust manifold is removed from below the engine compartment.

10. Raise and support the vehicle.
11. Remove the lower exhaust manifold retaining bolts (1, 2, 3).
12. Remove the exhaust manifold and gasket.
13. Clean the mating surfaces.

Cleaning

1. Clean the exhaust manifold using a suitable cleaning solvent, then allow to air dry.
2. Clean all gasket residue from the manifold mating surface.

Inspection

1. Inspect the exhaust manifold for cracks in the mating surface and at every mounting bolt hole.
2. Using a straight edge and a feeler gauge, check the mating surface for warp and twist.
3. Inspect the manifold to exhaust pipe mating surface for cracks, gouges, or other damage that would prevent sealing.

Installation

RIGHT EXHAUST MANIFOLD

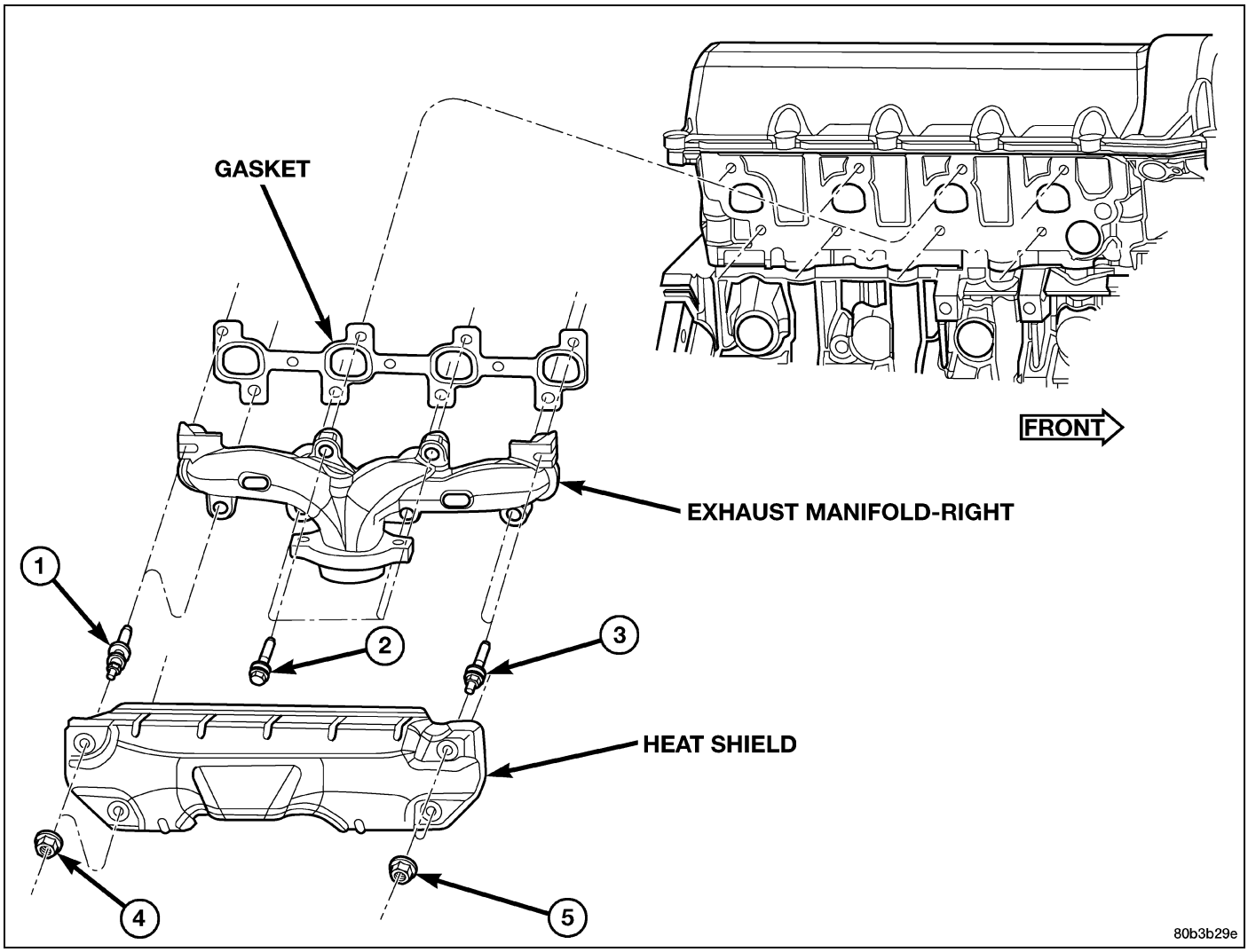

1. Prior to installation, make sure all gasket mating surfaces are clean and free of any debris.

NOTE: The exhaust manifold is installed from below the engine compartment.

2. Position the exhaust manifold and gasket.

NOTE: Do not tighten exhaust manifold retainers until all retainers are in place.

3. Install the lower exhaust manifold retaining bolts (1,2,3).
4. Install the starter (Refer to 08 - Electrical/8F - Engine Systems/Starting/STARTER - Installation).
5. Lower the vehicle.
6. Install the upper exhaust manifold retaining bolts and tighten starting at center and working outward to 25 N·m (18 ft. lbs.).

CAUTION: Over tightening heat shield fasteners, may cause shield to distort and/or crack.

7. Install the exhaust manifold heat shield and tighten retaining nuts (4,5) to 8 N·m (72 in. lbs.), then loosen 45 degrees.
8. Connect the heater hoses at the engine.
9. Install the A/C accumulator support bracket retainers.
10. Install the A/C compressor (Refer to 24 - Heating and Air Conditioning/Plumbing/COMPRESSOR, A/C - Installation).
11. Install the accessory drive belt (Refer to 07 - Cooling/Accessory Drive/BELT, Serpentine - Installation).
12. Raise and support the vehicle.
13. Connect the exhaust pipe/catalytic converter to the exhaust manifold (Refer to 11 - Exhaust System/CONVERTER, Catalytic - Installation).

14. Lower the vehicle.
15. Install air cleaner assembly (Refer to 09 - Engine/Air Intake System/BODY, Air Cleaner - Installation).
16. Connect the negative battery cable.
17. Fill the cooling system (Refer to 07 - Cooling - Standard Procedure).
18. Start the engine and check for leaks.

LEFT EXHAUST MANIFOLD

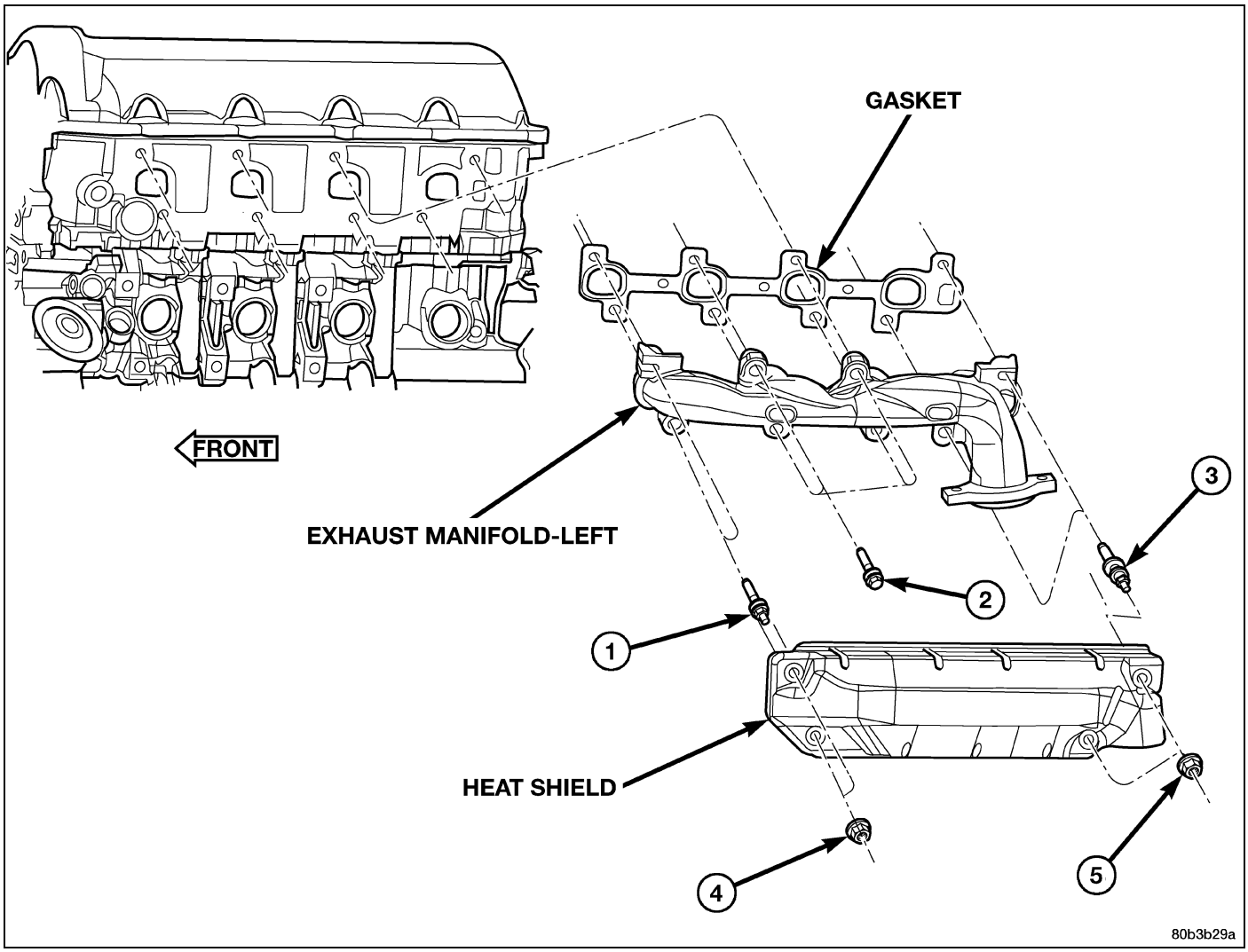

1. Prior to installation, make sure all gasket mating surfaces are clean and free of any debris.

NOTE: The exhaust manifold is installed from below the engine compartment.

2. Position the exhaust manifold and gasket.

NOTE: Do not tighten exhaust manifold retainers until all retainers are in place.

3. Install the lower exhaust manifold retaining bolts (1,2,3).
4. Lower the vehicle.
5. Install the upper exhaust manifold retaining bolts and tighten starting at center and working outward to 25 N·m (18 ft. lbs.).

CAUTION: Over tightening heat shield fasteners, may cause shield to distort and/or crack.

6. Install the front two exhaust manifold heat shield retaining nuts (4).
7. Raise and support the vehicle.
8. Install the rear heat shield (5) retaining nuts and tighten all retaining nuts to 8 N·m (72 in. lbs.), then loosen 45 degrees.

9. Connect the exhaust pipe/catalytic converter to the exhaust manifold (Refer to 11 - Exhaust System/CONVERTER, Catalytic - Installation).
10. Lower the vehicle.
11. Install the engine cover.
12. Connect the negative battery cable.
13. Start the engine and check for leaks.

MANIFOLD, Intake

Description

The intake manifold is made of a composite material and features long runners which maximizes low end torque. The intake manifold uses single plane sealing which consist of eight individual press in place port gaskets to prevent leaks.

Diagnosis and Testing

An intake manifold air leak is characterized by lower than normal manifold vacuum. Also, one or more cylinders may not be functioning.

WARNING: Use extreme caution when the engine is operating. Do not stand in a direct line with the fan. Do not put your hands near the pulleys, belts or the fan. Do not wear loose clothing.

1. Start the engine.
2. Spray a small stream of water at the suspected leak area.
3. If a change in RPM is observed the area of the suspected leak has been found.
4. Repair as required.

Removal

1. Disconnect negative cable from battery.
2. Remove resonator assembly and air inlet hose.
3. Disconnect throttle and speed control cables.
4. Disconnect electrical connectors for the following components:

- Manifold Absolute Pressure (MAP) Sensor
- Intake Air Temperature (IAT) Sensor
- Throttle Position (TPS) Sensor
- Coolant Temperature (CTS) Sensor
- Idle Air Control (IAC) Motor

5. Disconnect brake booster hose and positive crankcase ventilation (PCV) hose.
6. Disconnect generator electrical connections.
7. Disconnect air conditioning compressor electrical connections.
8. Disconnect left and right radio suppressor straps.
9. Disconnect and remove ignition coil towers.
10. Remove top oil dipstick tube retaining bolt and ground strap.
11. Bleed fuel system (Refer to 14 - Fuel System/Fuel Delivery - Standard Procedure).
12. Remove fuel rail (Refer to 14 - Fuel System/Fuel Delivery/RAIL, Fuel - Removal).
13. Remove throttle body assembly and mounting bracket.
14. Drain cooling system below coolant temperature level (Refer to 07 - Cooling - Standard Procedure).

15. Remove the heater hoses (1) from the engine front cover and the heater core.
16. Unclip (2) and remove heater hoses and tubes from intake manifold.
17. Remove coolant temperature sensor.

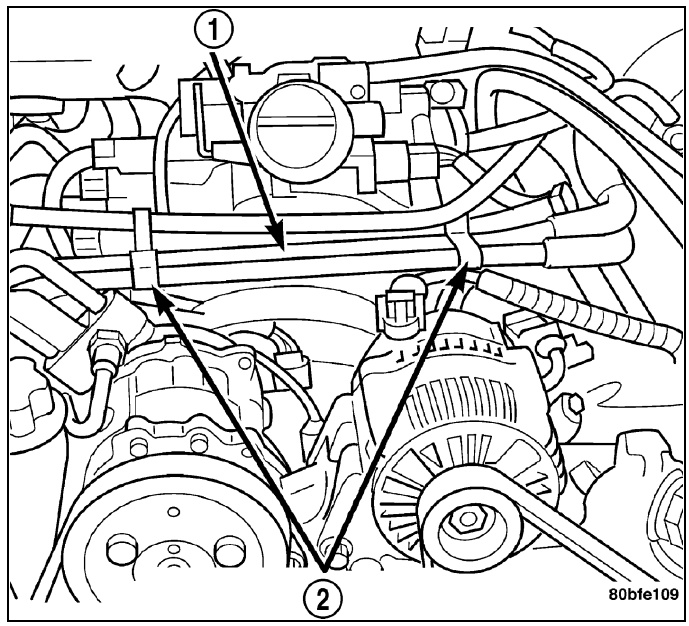

18. Remove intake manifold retaining fasteners in reverse order of tightening sequence.
19. Remove intake manifold.

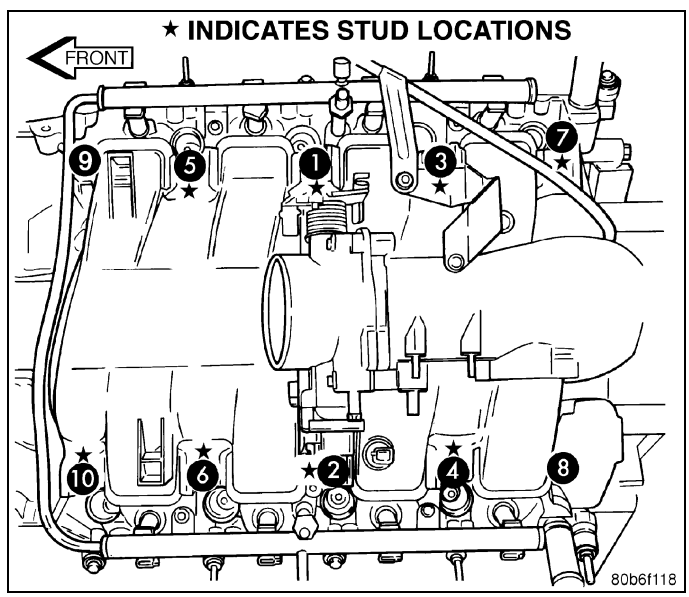

Cleaning

NOTE: There is NO approved repair procedure for the intake manifold. If severe damage is found during inspection, the intake manifold must be replaced.

Before installing the intake manifold thoroughly clean the mating surfaces. Use a suitable cleaning solvent, then air dry.

Inspection

1. Inspect the intake sealing surface for cracks, nicks and distortion.
2. Inspect the intake manifold vacuum hose fittings for looseness or blockage.
3. Inspect the manifold to throttle body mating surface for cracks, nicks and distortion.

Installation

1. Install intake manifold gaskets.
2. Position intake manifold.
3. Install intake manifold retaining bolts and tighten in sequence shown in to 12 N·m (105 in. lbs.).
4. Install left and right radio suppressor straps.
5. Install throttle body assembly.
6. Install throttle cable bracket.
7. Connect throttle cable and speed control cable to throttle body.
8. Install fuel rail (Refer to 14 - Fuel System/Fuel Delivery/RAIL, Fuel - Installation).
9. Install ignition coil towers.

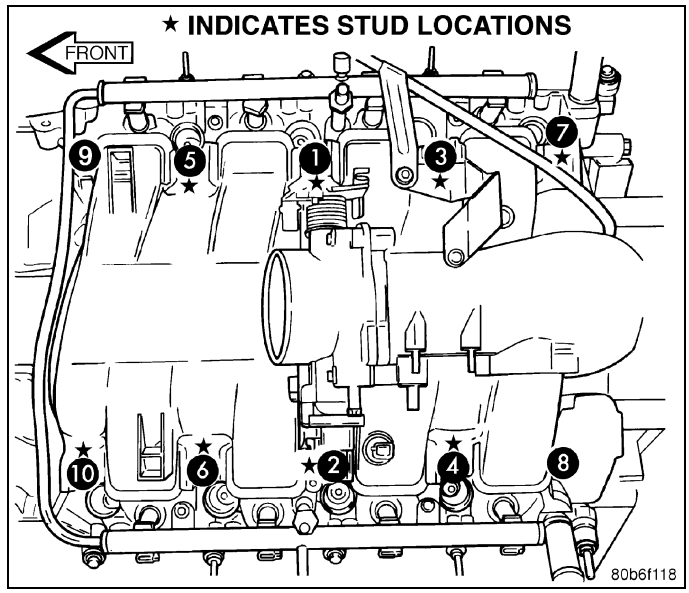

10. Position and install heater hoses and tubes onto intake manifold.
11. Install the heater hoses to the heater core and engine front cover.
12. Connect electrical connectors for the following components:

- Manifold Absolute Pressure (MAP) Sensor
- Intake Air Temperature (IAT) Sensor
- Throttle Position (TPS) Sensor
- Coolant Temperature (CTS) Sensor
- Idle Air Control (IAC) Motor
- Ignition coil towers
- Fuel injectors

13. Install top oil dipstick tube retaining bolt and ground strap.
14. Connect generator electrical connections.
15. Connect Brake booster hose and Positive crankcase ventilation (PCV) hose.
16. Fill cooling system (Refer to 07 - Cooling - Standard Procedure).
17. Install resonator assembly and air inlet hose.
18. Connect negative cable to battery.

VALVE TIMING

TABLE OF CONTENTS

page

VALVE TIMING
- DESCRIPTION 272
- OPERATION 272
- STANDARD PROCEDURE
  - MEASURING TIMING CHAIN WEAR 273
  - ENGINE TIMING VERIFICATION 273

CHAIN AND SPROCKETS, TIMING
- REMOVAL 277
- INSPECTION. 283
- INSTALLATION 284

page

COVER(S), ENGINE TIMING
- REMOVAL 288
- INSTALLATION 289

SHAFT, IDLER
- REMOVAL 289
- INSTALLATION 290

Valve Timing

Description

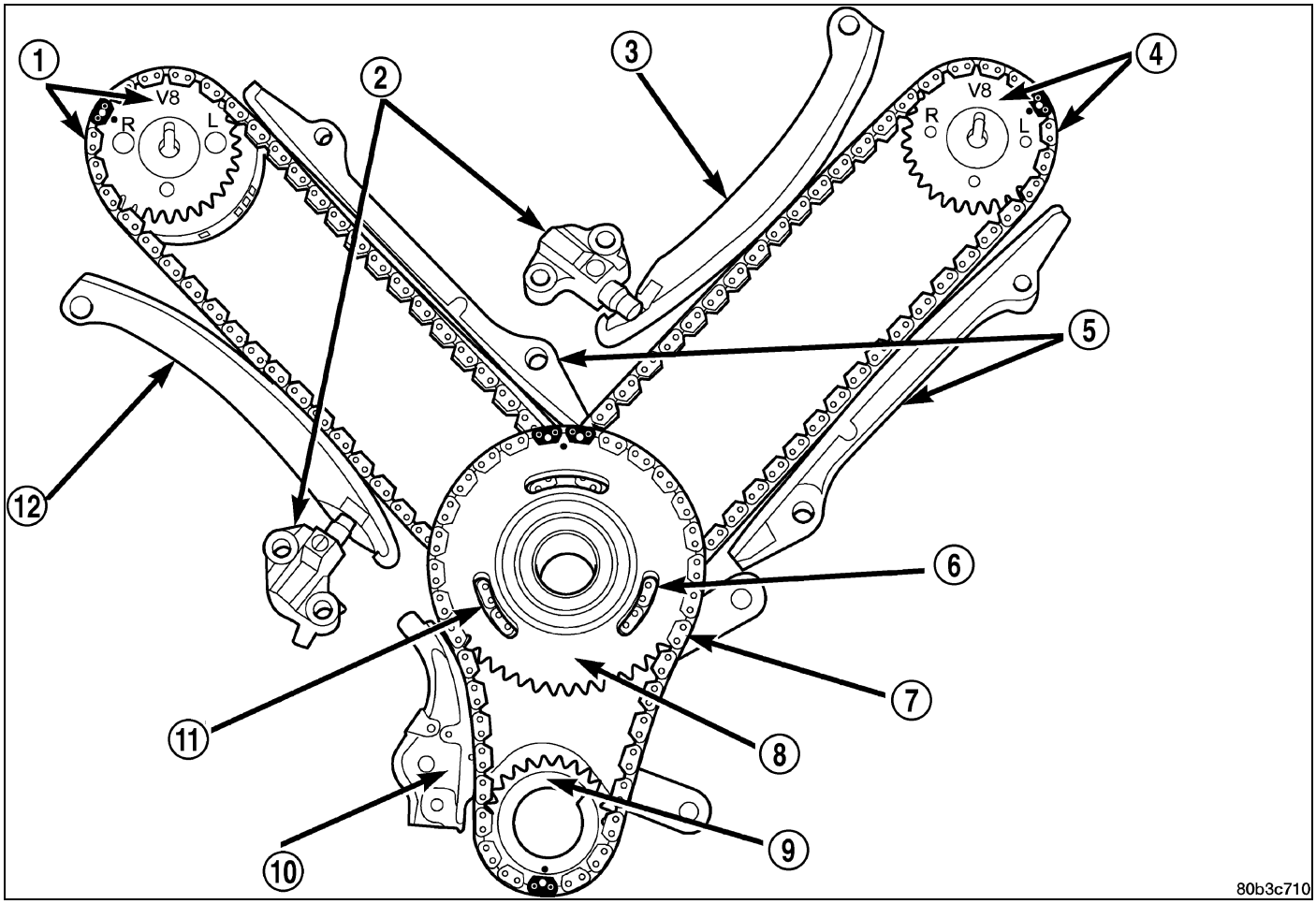

The timing drive system has been designed to provide quiet performance and reliability to support a **non-free wheeling** engine. Specifically the intake valves are non-free wheeling and can be easily damaged with forceful engine rotation if camshaft-to-crankshaft timing is incorrect. The timing drive system consists of a primary chain and two secondary timing chain drives.

Operation

The primary timing chain is a single inverted tooth type. The primary chain drives the large fifty tooth idler sprocket directly from a 25 tooth crankshaft sprocket. Primary chain motion is controlled by a pivoting leaf spring tensioner arm and a fixed guide. The arm and the guide both use nylon plastic wear faces for low friction and long wear. The primary chain receives oil splash lubrication from the secondary chain drive and oil pump leakage. The idler sprocket assembly connects the primary and secondary chain drives. The idler sprocket assembly consists of two integral 26 tooth sprockets and a fifty tooth sprocket that is splined to the assembly. The spline joint is a non – serviceable press fit anti rattle type. The idler sprocket assembly spins on a stationary idler shaft. The idler shaft is press-fit into the cylinder block. A large washer on the idler shaft bolt and the rear flange of the idler shaft are used to control sprocket thrust movement. Pressurized oil is routed through the center of the idler shaft to provide lubrication for the two bushings used in the idler sprocket assembly.

There are two secondary drive chains, one to drive the camshaft in each SOHC cylinder head. There are no shaft speed changes in the secondary chain drive system. Each secondary chain drives a 26 tooth cam sprocket directly from the 26 tooth sprocket on the idler sprocket assembly. A fixed chain guide and a hydraulic oil damped tensioner are used to maintain tension in each secondary chain system. The hydraulic tensioners for the secondary chain systems are fed pressurized oil from oil reservoir pockets in the block. Each tensioner also has a mechanical ratchet system that limits chain slack if the tensioner piston bleeds down after engine shut down. The tensioner arms and guides also utilize nylon wear faces for low friction and long wear. The secondary timing chains receive lubrication from a small orifice in the

tensioners. This orifice is protected from clogging by a fine mesh screen which is located on the back of the hydraulic tensioners.

Standard Procedure

MEASURING TIMING CHAIN WEAR

NOTE: This procedure must be performed with the timing chain cover removed.

1. Remove the timing chain cover. (Refer to 09 - Engine/Valve Timing/COVER(S), Engine Timing - Removal) - REMOVAL).
2. To determine if the secondary timing chains are worn, rotate the engine clockwise until maximum tensioner piston (2) extension is obtained. Measure the distance between the secondary timing chain tensioner housing and the step ledge on the piston. The measurement at point (A) must be less than 15mm (0.5906 inches).
3. If the measurement exceeds the specification the secondary timing chains are worn and require replacement. (Refer to 09 - Engine/Valve Timing/CHAIN and SPROCKETS, Timing - Removal).

NOTE: If the secondary chains are to be replaced the primary chain must also be replaced.

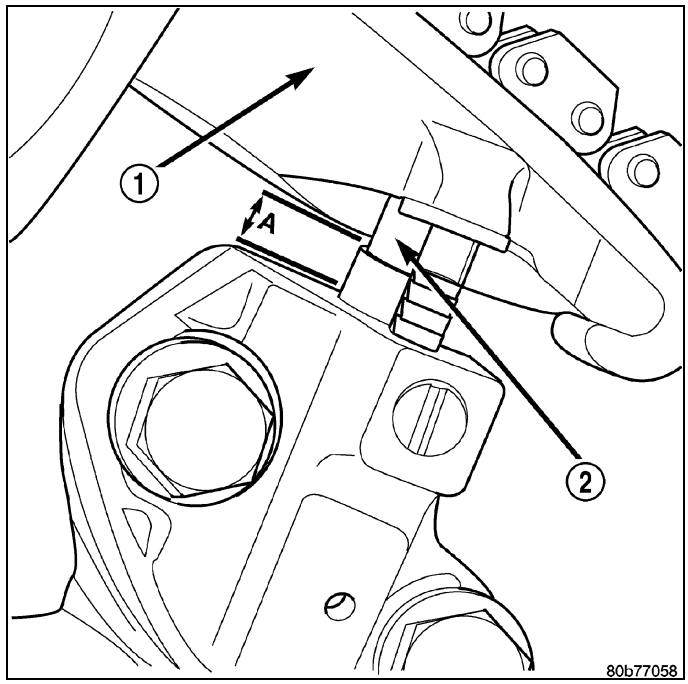

ENGINE TIMING VERIFICATION

CAUTION: The 4.7L is a non free-wheeling design engine. Therefore, correct engine timing is critical.

NOTE: Components referred to as left hand or right hand are as viewed from the drivers position inside the vehicle.

NOTE: The blue link plates on the chains and the dots on the camshaft drive sprockets may not line up during the timing verification procedure. The blue link plates are lined up with the sprocket dots only when re-timing the complete timing drive. Once the timing drive is rotated blue link-to-dot alignment is no longer valid.

Engine base timing can be verified by the following procedure:

1. Remove the cylinder head covers (Refer to 09 - Engine/Cylinder Head/COVER(S), Cylinder Head - Removal) - REMOVAL).

2. Using a mirror, locate the TDC arrow on the front cover. Rotate the crankshaft until the mark on the crankshaft damper is aligned with the TDC arrow on the front cover. The engine is now at TDC.

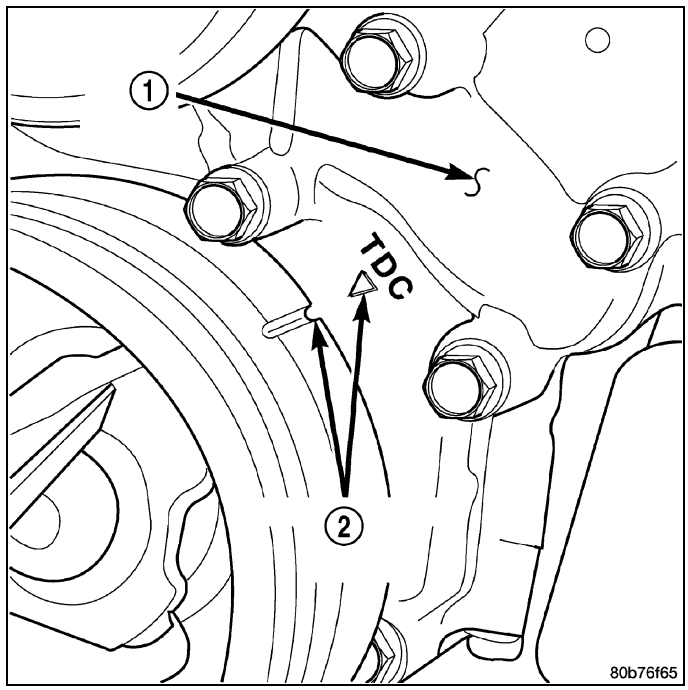

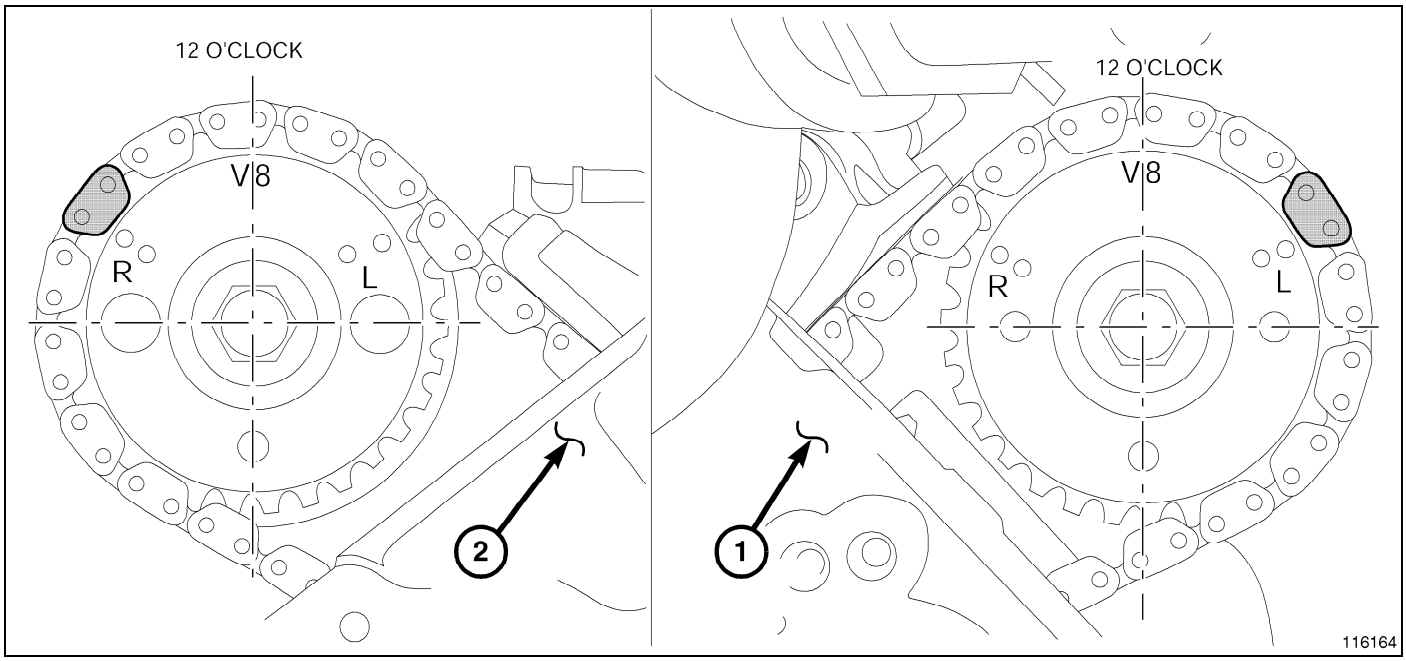

3. Note the location of the V8 mark stamped into the camshaft drive gears. If the V8 mark on each camshaft drive gear is at the twelve o'clock position, the engine is at TDC (cylinder #1) on the exhaust stroke. If the V8 mark on each gear is at the six o'clock position, the engine is at TDC (cylinder #1) on the compression stroke.
4. If both of the camshaft drive gears are off in the same or opposite directions, the primary chain or both secondary chains are at fault. Refer to Timing Chain and Sprockets procedure in this section.
5. If only one of the camshaft drive gears is off and the other is correct, the problem is confined to one secondary chain. Refer to Single camshaft timing, in this procedure.
6. If both camshaft drive gear V8 marks are at the twelve o'clock or the six o' clock position the engine base timing is correct. Reinstall the cylinder head covers.

SINGLE CAMSHAFT TIMING

NOTE: to adjust the timing on one camshaft, perform the following procedure.

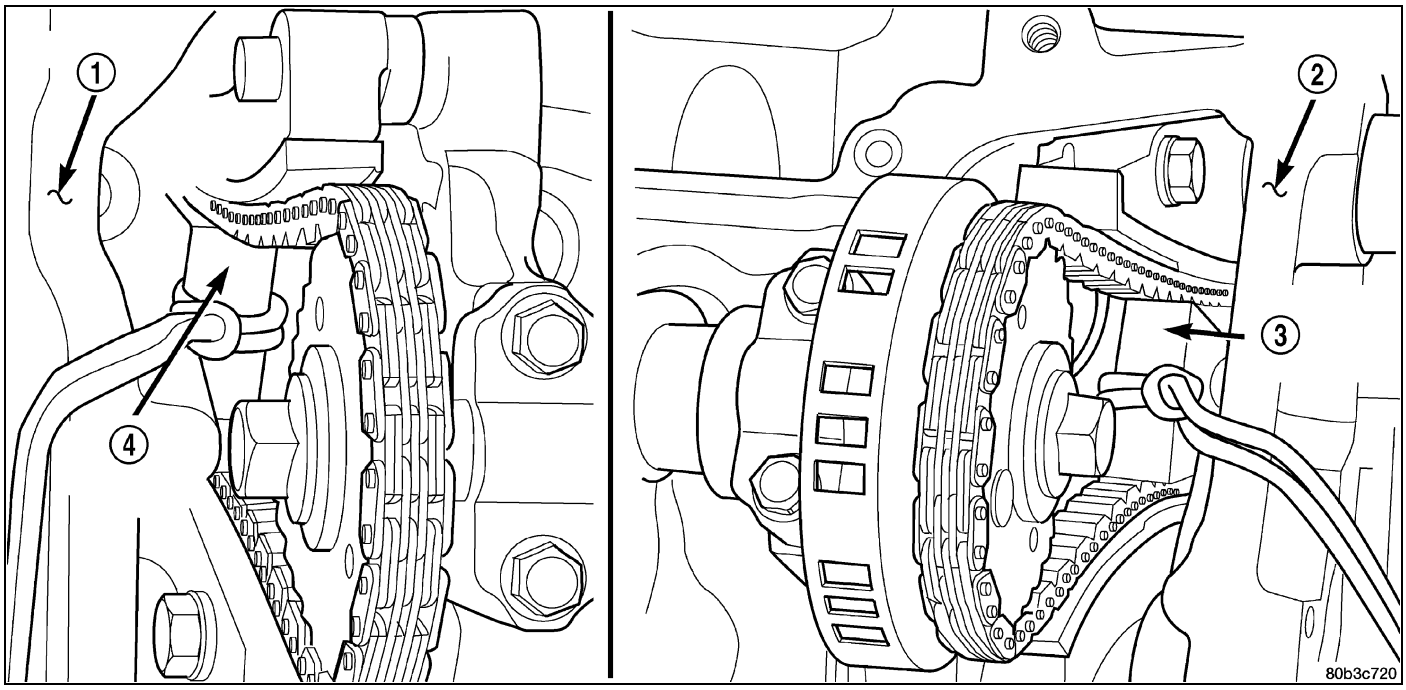

1. Using Chain Tensioner Wedge, special tool 9867 (3), stabilize the secondary chain drive. For reference purposes, mark the chain-to-sprocket position.
2. Remove the camshaft drive gear retaining bolt.
3. Carefully remove the camshaft drive gear from the camshaft.
4. Re-index the camshaft drive gear in the chain until the V8 mark is at the same position as the V8 mark on the opposite camshaft drive gear.

NOTE: When gripping the camshaft, place the pliers on the tube portion of the camshaft only. Do not grip the lobes or the sprocket areas.

5. Using a suitable pair of adjustable pliers (1), rotate the camshaft until the alignment dowel (2) on the camshaft is aligned with the slot in the camshaft drive gear.

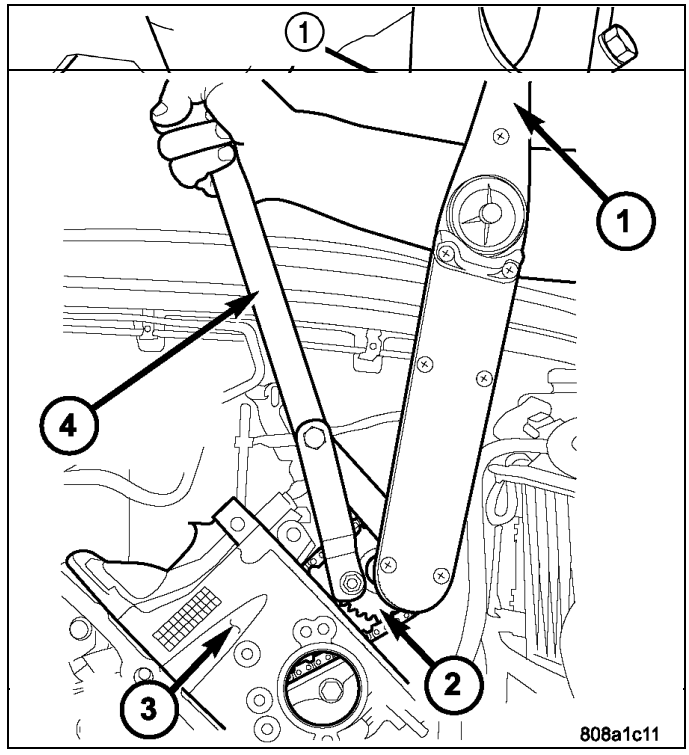

CAUTION: Remove excess oil from camshaft sprocket retaining bolt before reinstalling bolt. Failure to do so may cause over-torqueing of bolt resulting in bolt failure.

6. Position the camshaft drive gear onto the camshaft, remove oil from bolt then install the retaining bolt. Using Special Tools, Spanner Wrench 6958 with Adapter Pins 8346 and a suitable torque wrench (1), Tighten retaining bolt to 122 N·m (90 ft. Lbs.).

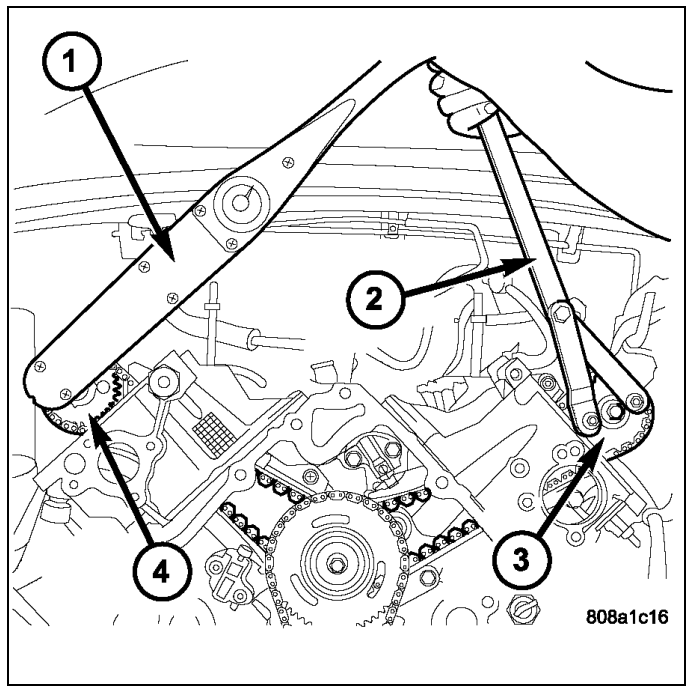

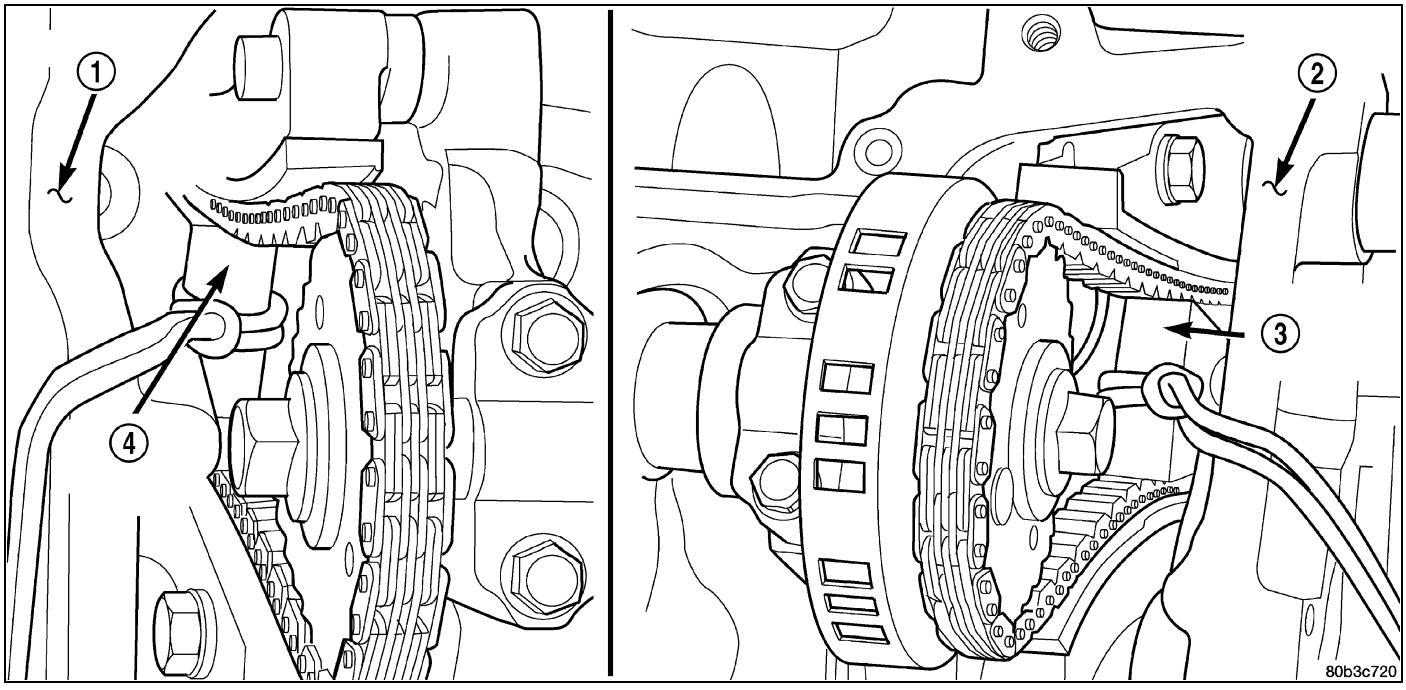

7. Remove special tool 9867(3,4).

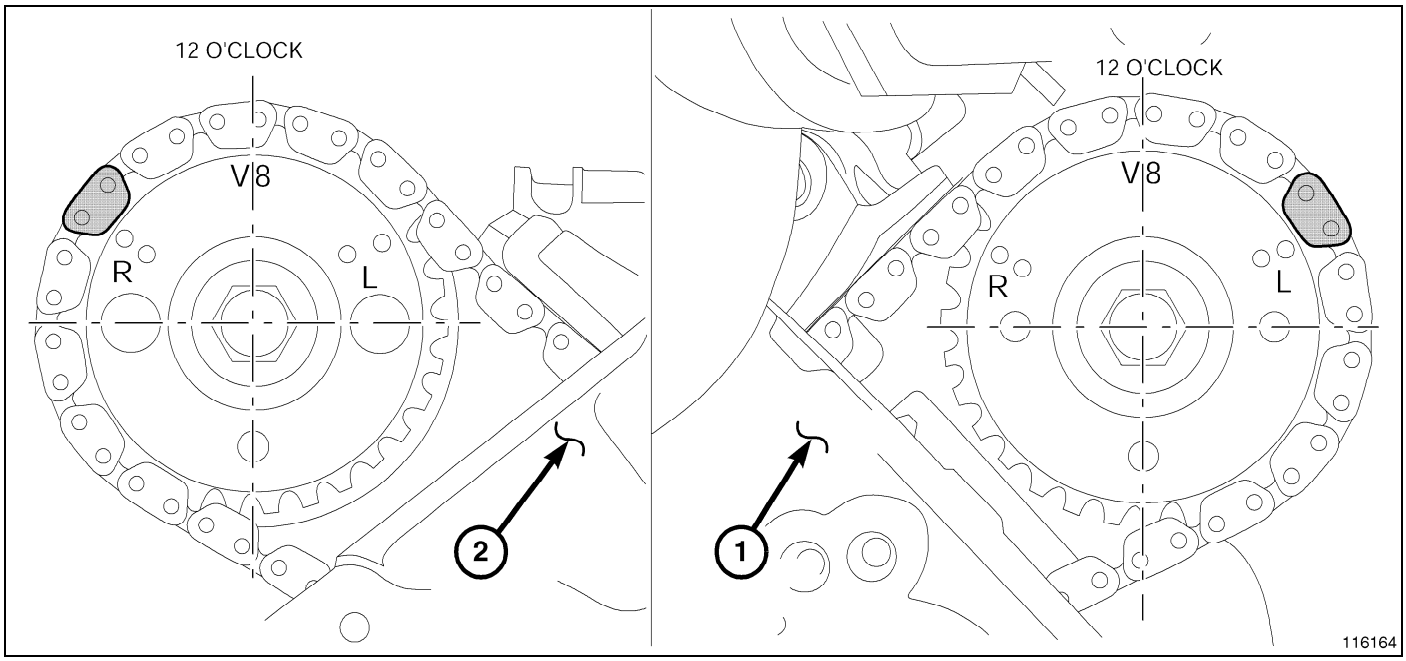

8. Rotate the crankshaft two full revolutions, then reverify that the camshaft drive gear V8 marks are in fact aligned.
9. Install the cylinder head covers (Refer to 09 - Engine/Cylinder Head/COVER(S), Cylinder Head - Installation) - INSTALLATION).

CHAIN and SPROCKETS, Timing

Removal

1. Disconnect and isolate the negative battery cable (2).

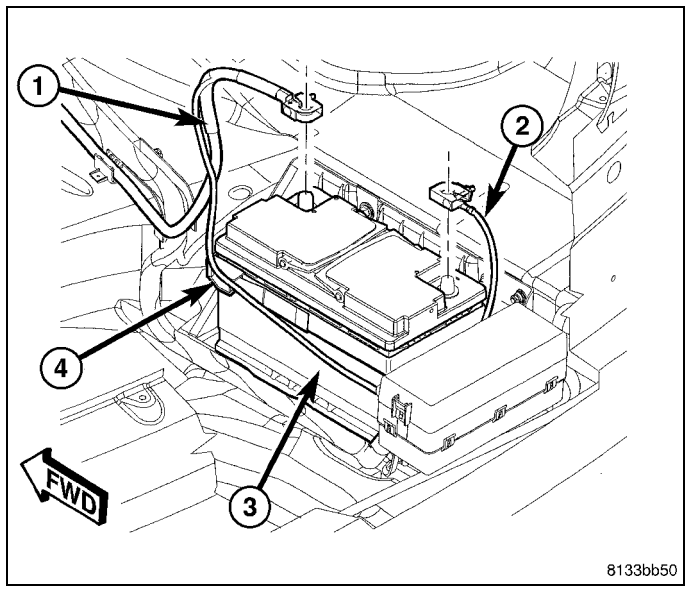

2. Drain the cooling system (Refer to 07 - Cooling - Standard Procedure)

3. Remove both cylinder head covers (1) (Refer to 09 - Engine/Cylinder Head/COVER(S), Cylinder Head - Removal)

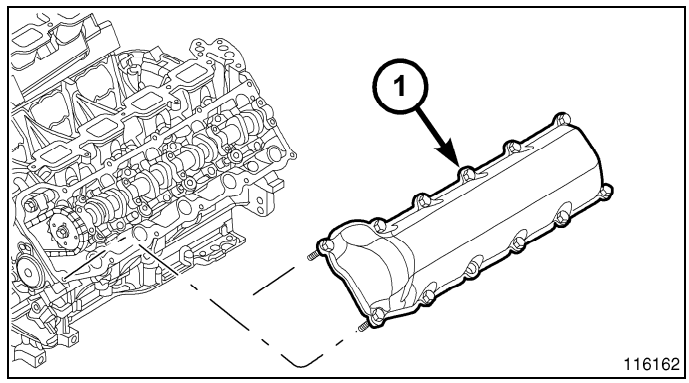

4. Remove the radiator fan shroud (3).

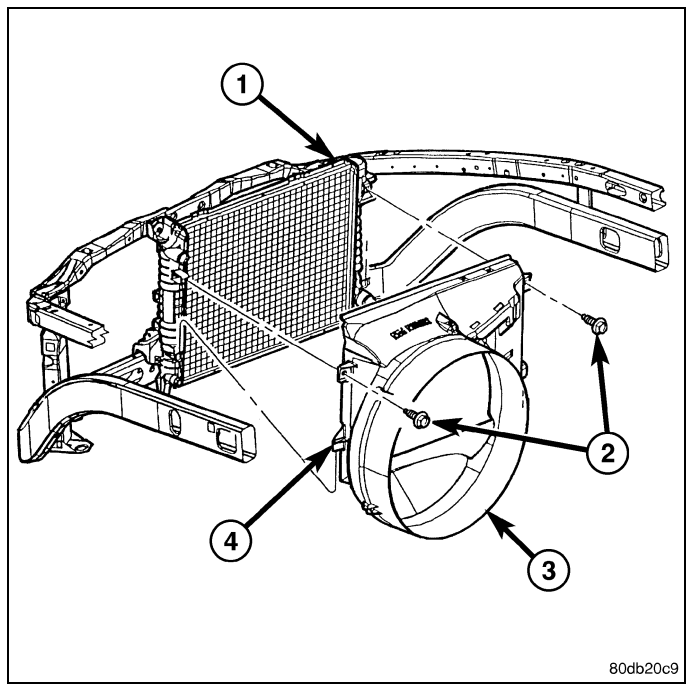

5. Rotate the engine until the timing mark (2) on the crankshaft damper aligns with the TDC mark on timing chain cover (2) (#1 cylinder exhaust stroke).

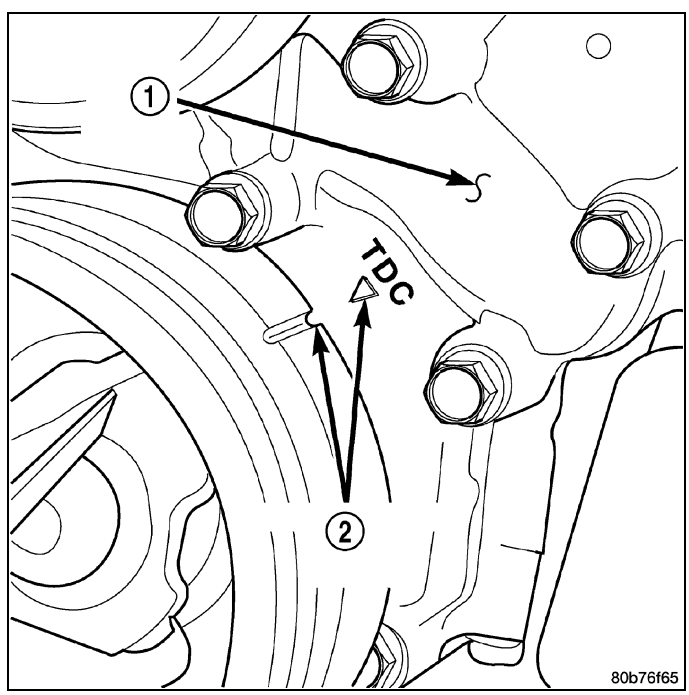

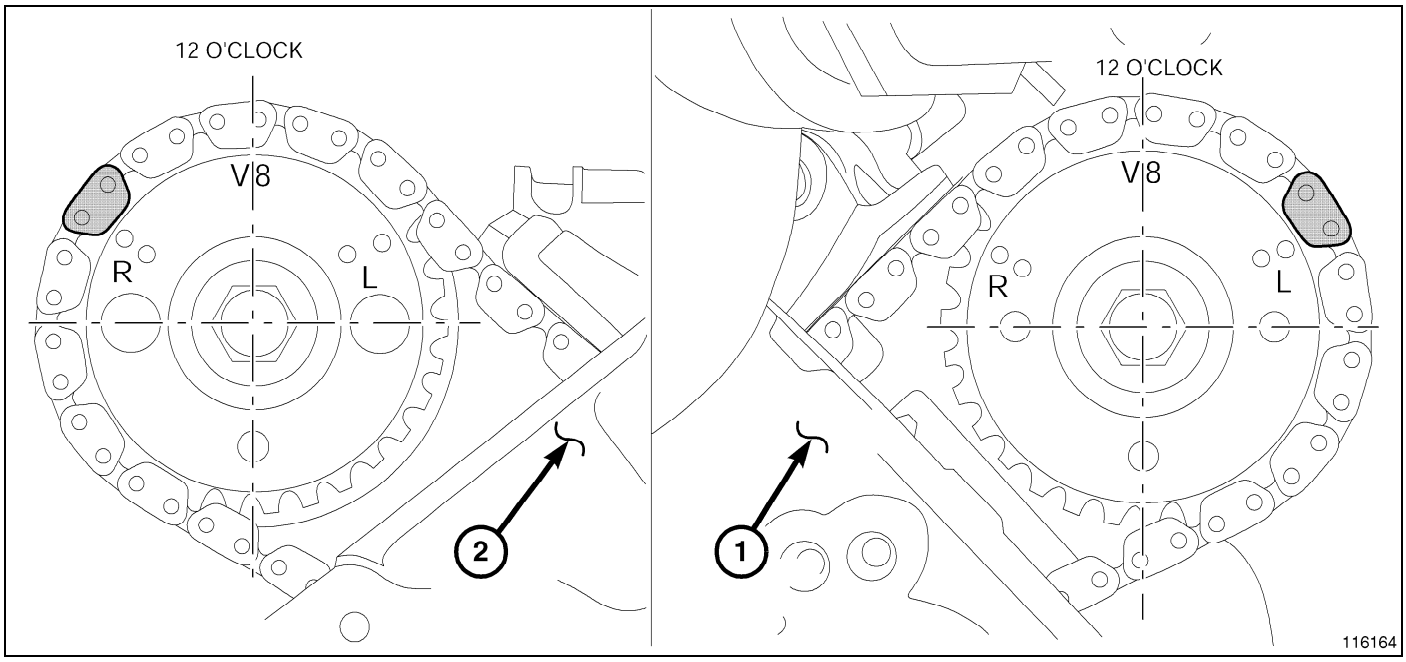

6. Verify the camshaft sprocket “V8” marks are at the 12 o'clock position (1,2).

NOTE: It is not necessary to disconnect the hoses from the power steering pump, for power steering pump removal.

7. Remove the three power steering pump (1) mounting bolts (2) through the access holes in the pulley and secure out of the way.

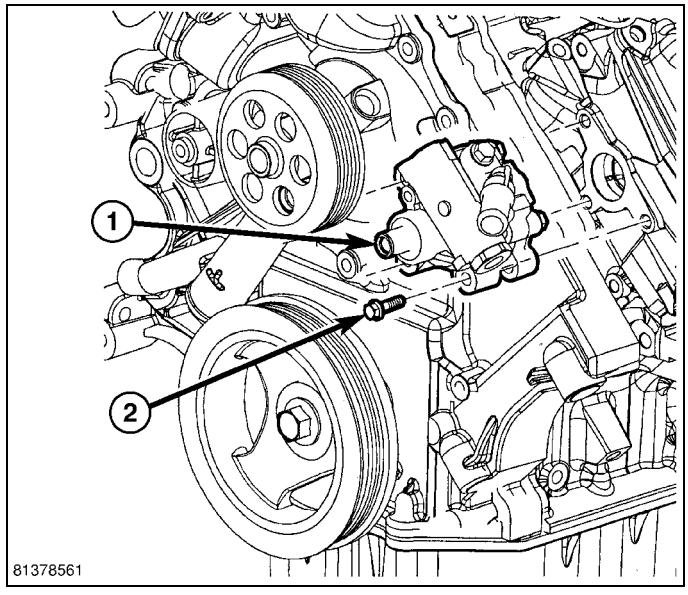

8. Remove the right (1) and left (2) access plug from the cylinder heads for access to chain guide fasteners.
9. Remove the oil fill housing to gain access to the right side tensioner arm fastener.

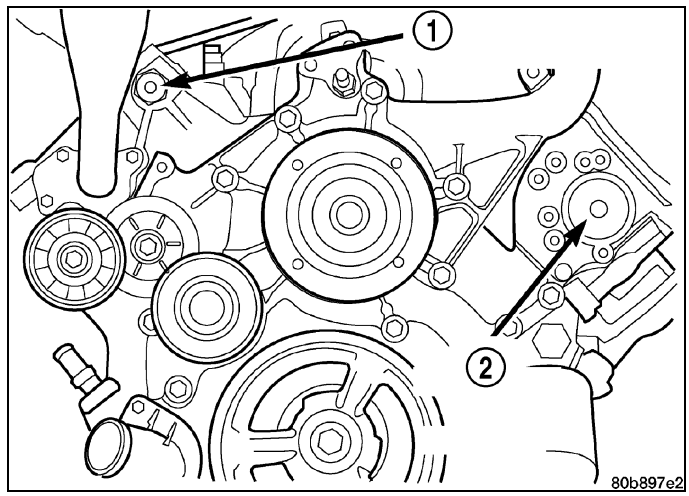

NOTE: Transmission cooler line snaps into shroud lower right hand corner.

10. Remove the vibration damper bolt.
11. Remove the vibration damper using Crankshaft Insert 8513A (1) and 1023 Three Jaw Puller (2).

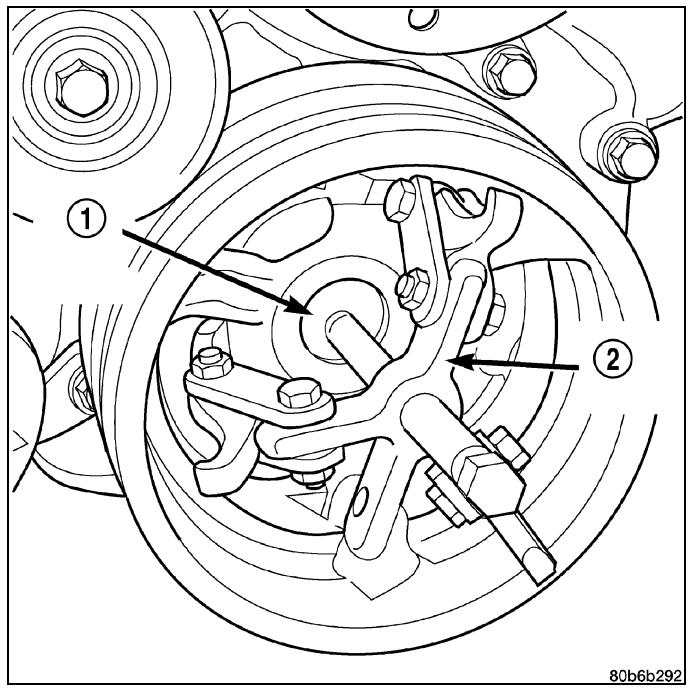

CAUTION: The 4.7L engine uses an RTV sealer instead of a gasket to seal the front cover to the engine block, from the factory. For service, Mopar® Grey Engine RTV sealant must be substituted.

NOTE: It is not necessary to remove the water pump for timing cover removal.

12. Remove the timing chain cover (Refer to 09 - Engine/ Valve Timing/COVER(S), Engine Timing - Removal)

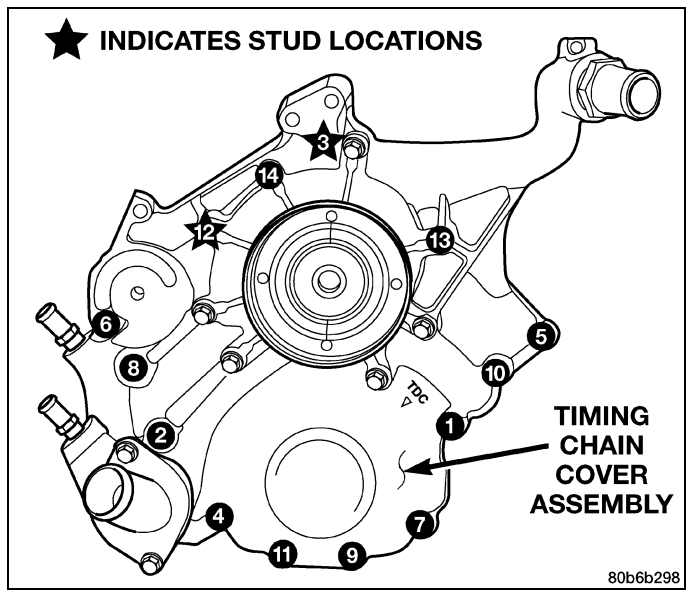

13. Collapse and pin (3) the primary chain tensioner (1).

CAUTION: Plate behind left secondary chain tensioner could fall into oil pan. Therefore, cover pan opening.

14. Remove the secondary chain tensioner.

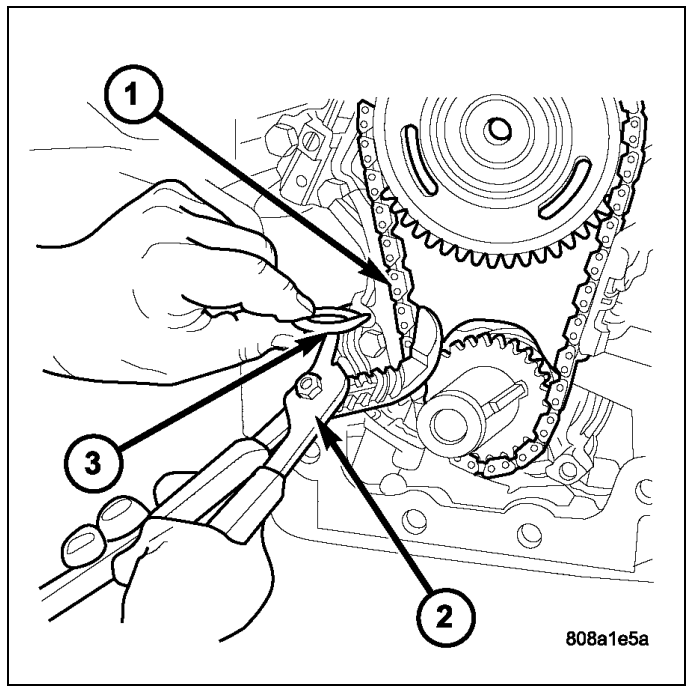

The Camshaft Position Sensor (CMP) (2) is bolted to the front/top of the right cylinder head (1).

15. Disconnect the electrical connector (4) at the CMP sensor.
16. Remove the sensor mounting bolt (3).
17. Carefully twist the sensor from the cylinder head.
18. Check the condition of the sensor O-ring.

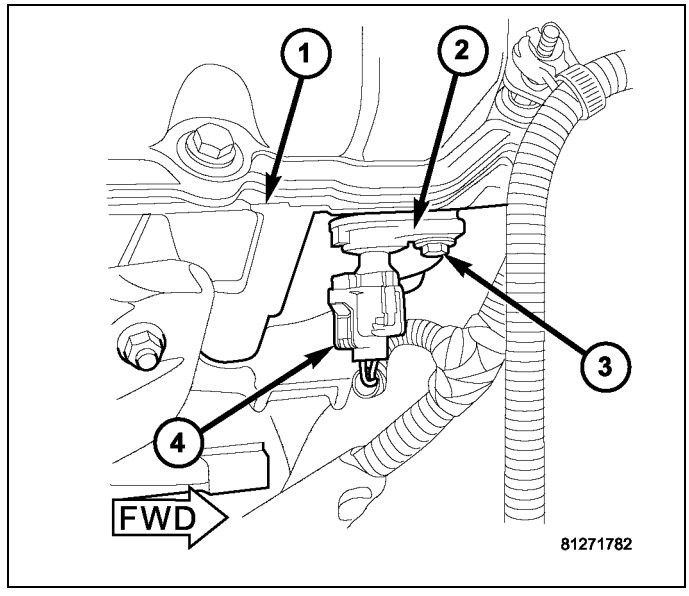

CAUTION: Care should be taken not to damage the camshaft target wheel. Do not hold the target wheel while loosening or tightening the camshaft sprocket. Do not place the target wheel near a magnetic source of any kind. A damaged or magnetized target wheel could cause a vehicle no start condition.

CAUTION: Do not forcefully rotate the camshafts or crankshaft independently of each other. Damaging intake valve to piston contact will occur. Ensure the negative battery cable is disconnected and isolated to guard against accidental starter engagement.

19. Remove both camshaft sprocket bolts.

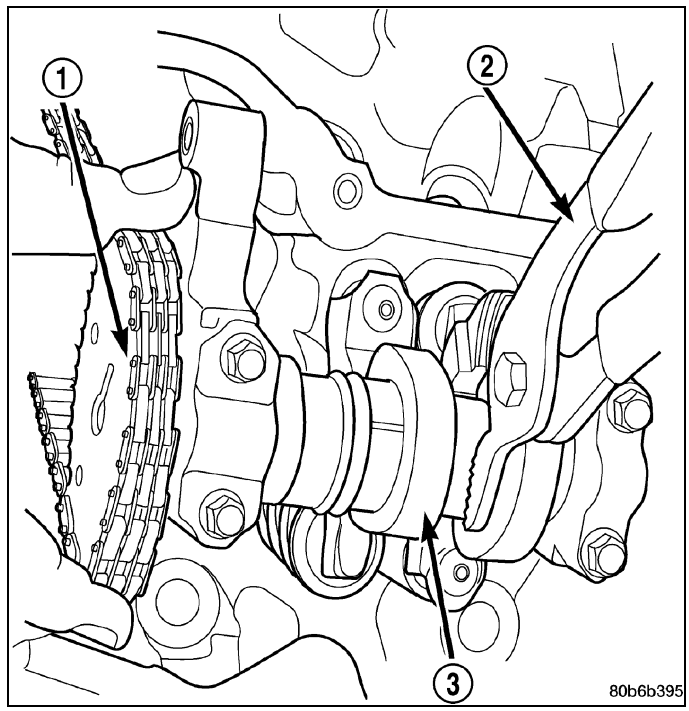

20. While holding the left camshaft steel tube with adjustable pliers (1), remove the left camshaft sprocket. Slowly rotate the camshaft approximately 15 degrees clockwise to a neutral position.
21. While holding the right camshaft steel tube with adjustable pliers (1), remove the right camshaft sprocket. Slowly rotate the camshaft approximately 45 degrees counterclockwise to a neutral position.
22. Remove the idler sprocket assembly bolt.
23. Slide the idler sprocket assembly and the crank sprocket forward simultaneously to remove the primary and secondary chains.
24. Remove both pivoting tensioner arms and chain guides.
25. Remove the chain tensioner.

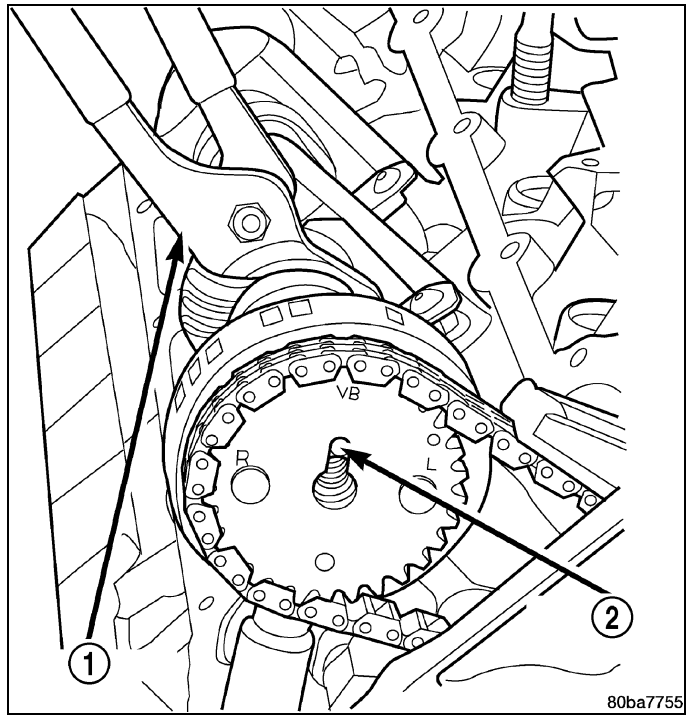

Inspection

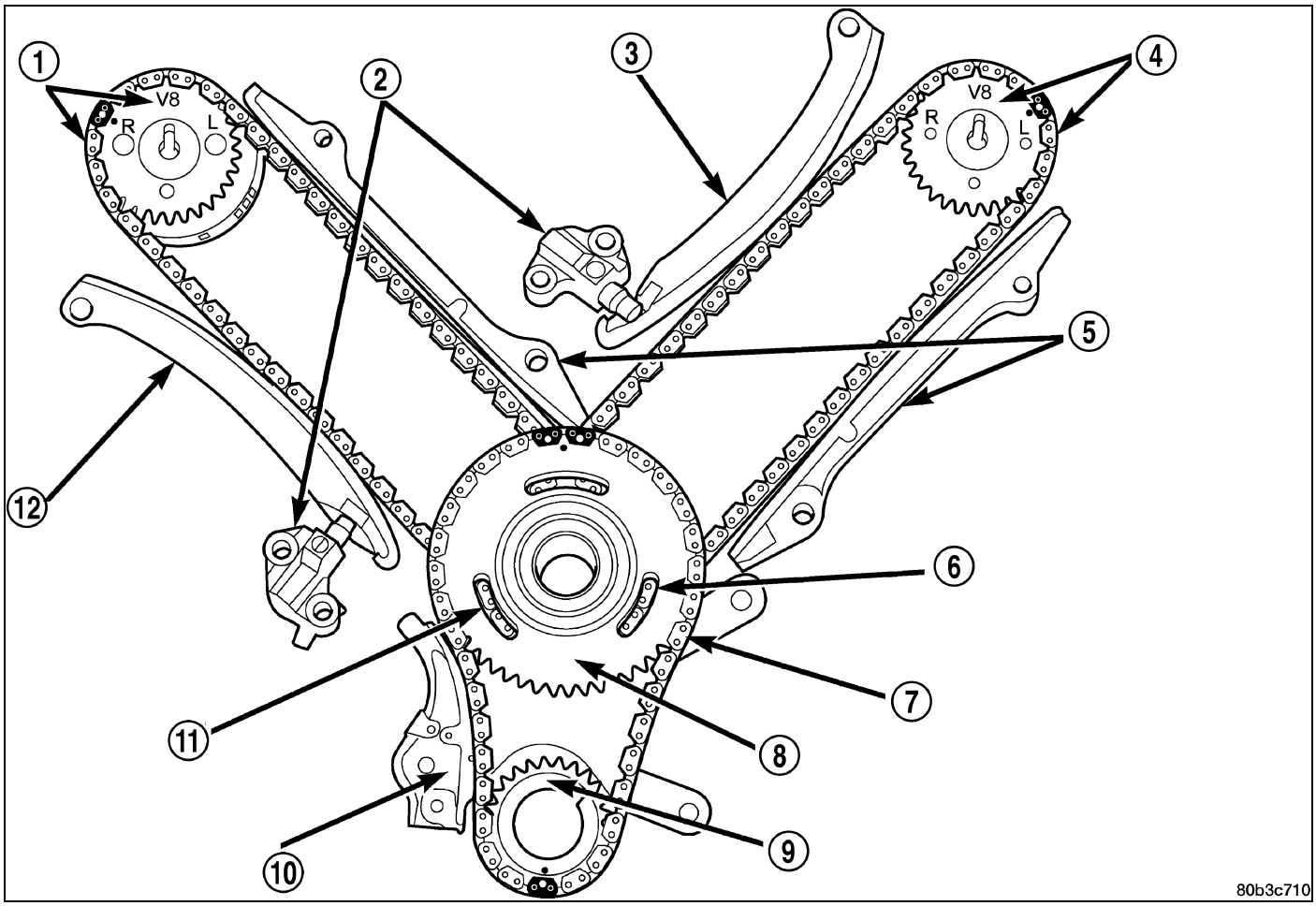

Inspect the following components:

- Sprockets for excessive tooth wear. Some tooth markings are normal and not a cause for sprocket replacement.
- Idler sprocket assembly bushing and shaft for excessive wear.
- Idler sprocket assembly spline joint. The joint should be tight with no backlash or axial movement.
- Chain guides and tensioner arms. Replace these parts if grooving in plastic face is more than 1 mm (0.039 in.) deep. If plastic face is severely grooved or melted, the tensioner lube jet may be clogged. The tensioner should be replaced.
- Secondary chain tensioner piston and ratcheting device. Inspect for evidence of heavy contact between tensioner piston and tensioner arm. If this condition exist the tensioner and tensioner arm should be replaced.
- Primary chain tensioner plastic faces. Replace as required.

Installation

1. Using a vise, lightly compress the secondary chain tensioner piston until the piston step is flush with the tensioner body. Using a pin or suitable tool, release ratchet pawl by pulling pawl back against spring force through access hole on side of tensioner. While continuing to hold pawl back, Push ratchet device to approximately 2 mm from the tensioner body. Install Special Tool 8514 lock pin (3) into hole on front of tensioner (2). Slowly open vise to transfer piston spring force to lock pin.

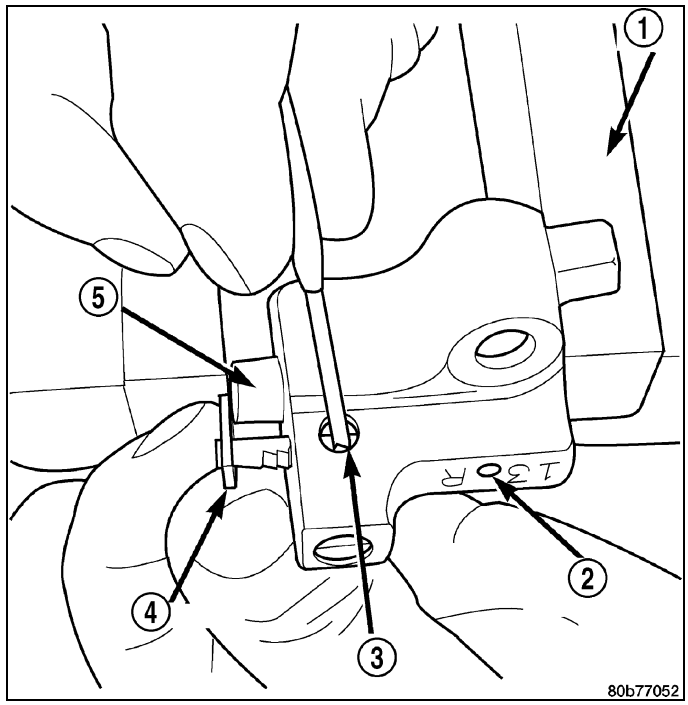

2. Position primary chain tensioner over oil pump and insert bolts into lower two holes on tensioner bracket. Tighten bolts to 28 N·m (250 in. lbs.).
3. Install right side chain tensioner arm. Apply Mopar® Lock N, Seal to torx® bolt, tighten bolt to 28 N·m (250 in. lbs.).

NOTE: The silver bolts retain the guides to the cylinder heads and the black bolts retain the guides to the engine block.

4. Install the left side chain guide. Tighten the bolts to 28 N·m (250 in. lbs.).

CAUTION: Overtightening the tensioner arm torx® bolt can cause severe damage to the cylinder head. Tighten torx® bolt to specified torque only.

5. Install left side chain tensioner arm. Apply Mopar® Lock N, Seal to torx® bolt, tighten bolt to 28 N·m (250 in. lbs.).
6. Install the right side chain guide. Tighten the bolts to 28 N·m (250 in. lbs.).

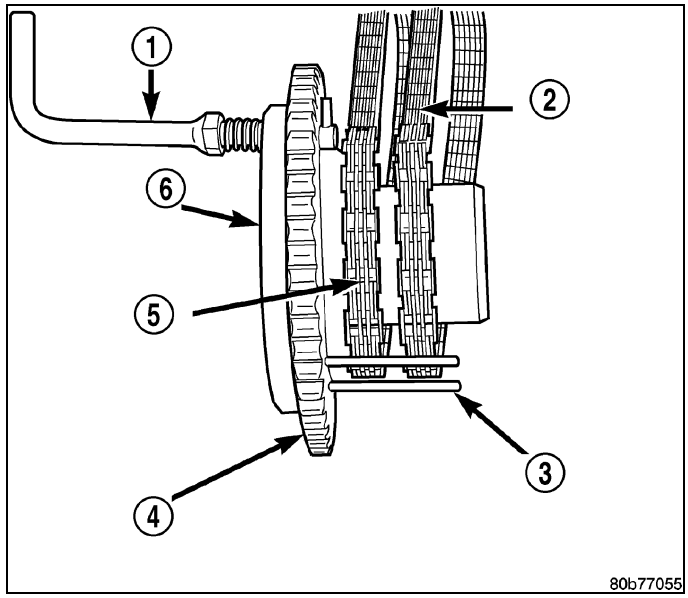

7. Install both secondary chains onto the idler sprocket. Align two plated links on the secondary chains to be visible through the two lower openings on the idler sprocket (4 o'clock and 8 o'clock). Once the secondary timing chains are installed, position special tool 8429 (6) to hold chains in place for installation .
8. Align primary chain double plated links with the timing mark at 12 o'clock (1) on the idler sprocket. Align the primary chain single plated link with the timing mark at 6 o'clock on the crankshaft sprocket (3) .

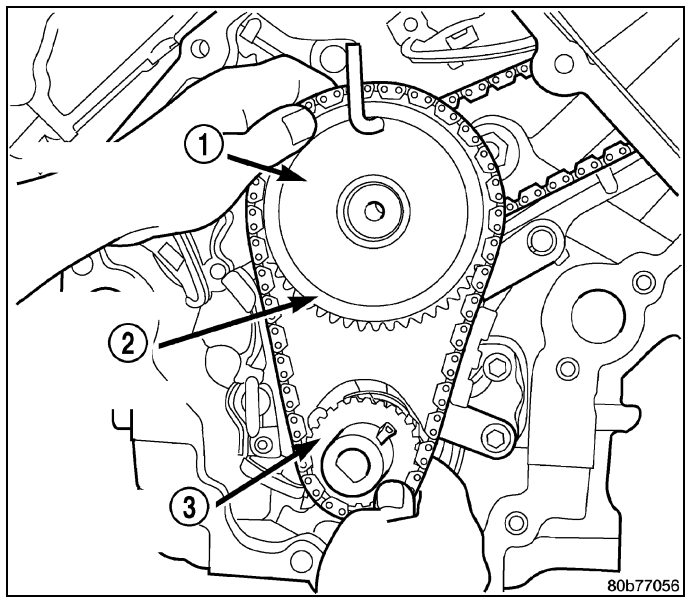

9. Lubricate idler shaft and bushings with clean engine oil.
10. Install all chains, crankshaft sprocket, and idler sprocket as an assembly. After guiding both secondary chains through the block and cylinder head openings, affix chains with a elastic strap or the equivalent, This will maintain tension on chains to aid in installation.

NOTE: It will be necessary to slightly rotate camshafts for sprocket installation.

11. Align left camshaft sprocket “L” dot to plated link on chain.
12. Align right camshaft sprocket “R” dot to plated link on chain.

CAUTION: Remove excess oil from the camshaft sprocket bolt. Failure to do so can result in over-torque of bolt resulting in bolt failure.

13. Remove Special Tool 8429, then attach both sprockets to camshafts. Remove excess oil from bolts, then Install sprocket bolts, but do not tighten at this time.
14. Verify that all plated links are aligned with the marks on all sprockets and the “V8” marks on camshaft sprockets are at the 12 o'clock position .

CAUTION: Ensure the plate between the left secondary chain tensioner and block is correctly installed.

15. Install both secondary chain tensioners. Tighten bolts to 28 N·m (250 in. lbs.).

NOTE: Left and right secondary chain tensioners are not common.

16. Before installing idler sprocket bolt, lubricate washer with oil, and tighten idler sprocket assembly retaining bolt to 34 N·m (25 ft. lbs.).
17. Remove all locking pins from tensioners.

CAUTION: After pulling locking pins out of each tensioner, DO NOT manually extend the tensioner(s) ratchet. Doing so will over tension the chains, resulting in noise and/or high timing chain loads.

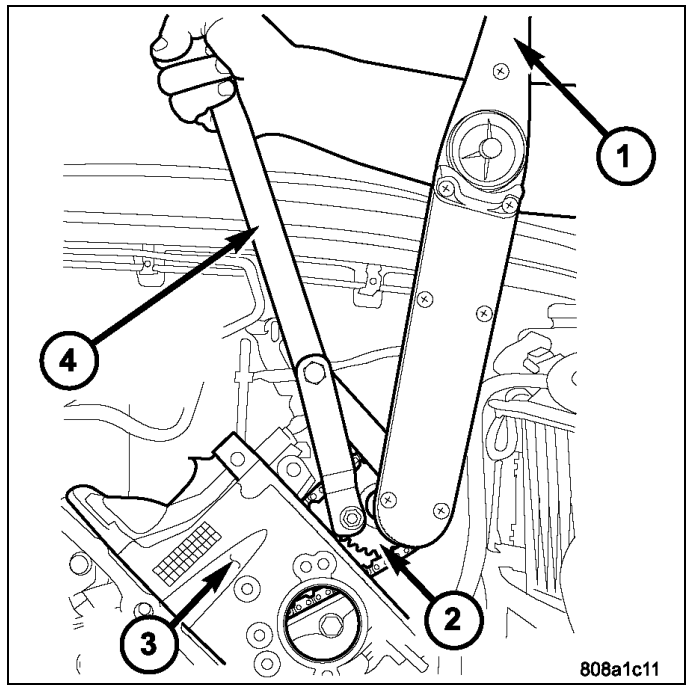

18. Using Special Tool 6958, Spanner with Adaptor Pins 8346, tighten left (3) and right (4), camshaft sprocket bolts to 122 N·m (90 ft. lbs.).
19. Rotate engine two full revolutions. Verify timing marks are at the follow locations:

- primary chain idler sprocket dot is at 12 o'clock
- primary chain crankshaft sprocket dot is at 6 o'clock
- secondary chain camshaft sprockets “V8” marks are at 12 o'clock

20. Lubricate all three chains with engine oil.

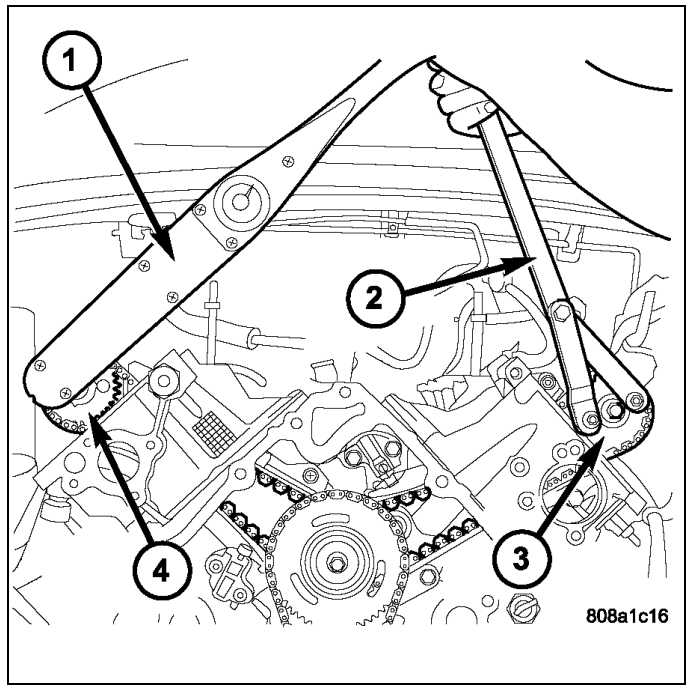

21. After installing all chains, it is recommended that the idler gear (1) end play be checked. The end play must be within 0.10-0.25 mm (0.004-0.010 in.). If not within specification, the idler gear must be replaced.

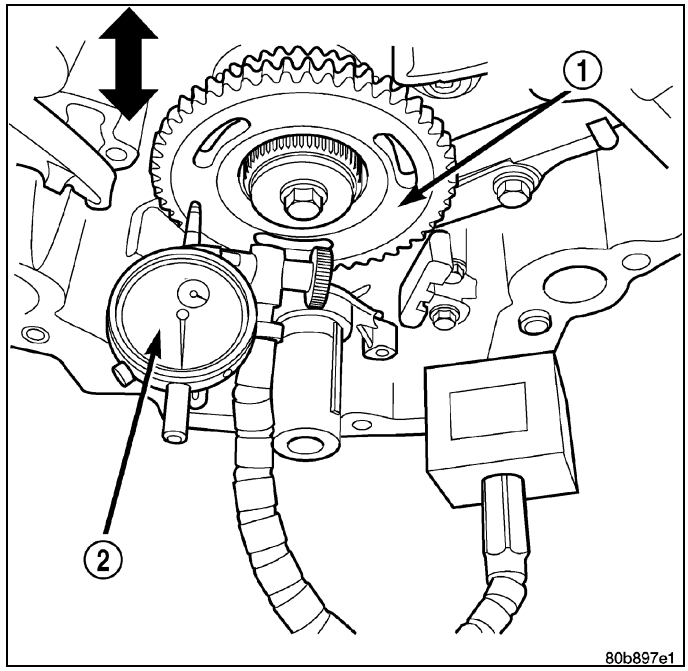

22. Install timing chain cover (Refer to 09 - Engine/Valve Timing/COVER(S), Engine Timing - Installation) - INSTALLATION) and crankshaft damper (Refer to 09 - Engine/Engine Block/DAMPER, Vibration - Installation).
23. Install cylinder head covers (Refer to 09 - Engine/Cylinder Head/COVER(S), Cylinder Head - Installation) - INSTALLATION).

NOTE: Before installing threaded plug in right cylinder head, the plug must be coated with sealant to prevent leaks.

24. Coat the large threaded access plug with **Mopar® Thread Sealant with Teflon**, then install into the right cylinder head and tighten to 81 N·m (60 ft. lbs.) .
25. Install the oil fill housing.
26. Install access plug in left cylinder head .
27. Install power steering pump (Refer to 19 - Steering/Pump - Installation).
28. Install radiator fan shroud.
29. Fill cooling system (Refer to 07 - Cooling - Standard Procedure).
30. Connect negative cable to battery.

COVER(S), Engine Timing

Removal

1. Disconnect the battery negative cable.
2. Drain cooling system (Refer to 07 - Cooling - Standard Procedure).
3. Disconnect both heater hoses at timing cover.
4. Disconnect lower radiator hose at engine.
5. Remove crankshaft damper (Refer to 09 - Engine/Engine Block/DAMPER, Vibration - Removal).
6. Remove accessory drive belt tensioner assembly (1).
7. Remove the generator and A/C compressor.

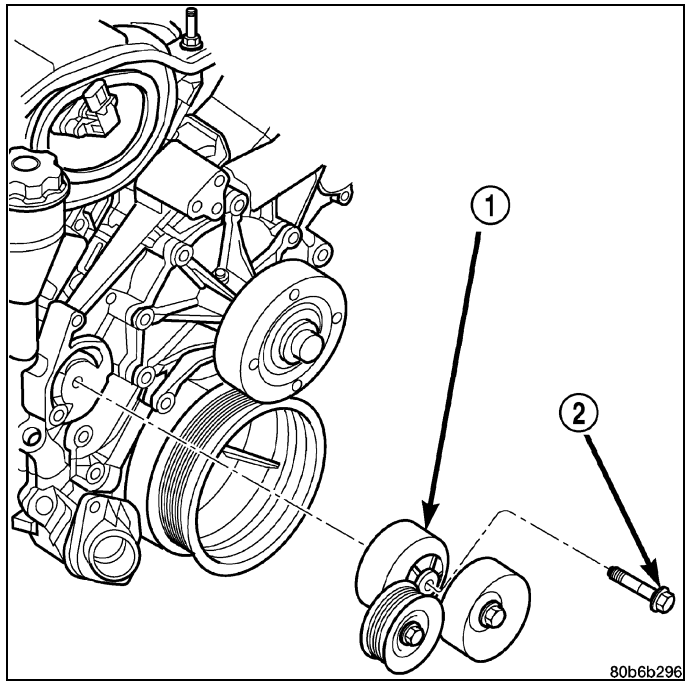

CAUTION: The 4.7L engine uses an RTV sealer instead of a gasket to seal the front cover to the engine block, from the factory. For service, Mopar® Grey Engine RTV sealant must be substituted.

NOTE: It is not necessary to remove the water pump for timing cover removal.

8. Remove the bolts holding the timing cover to engine block.
9. Remove cover .

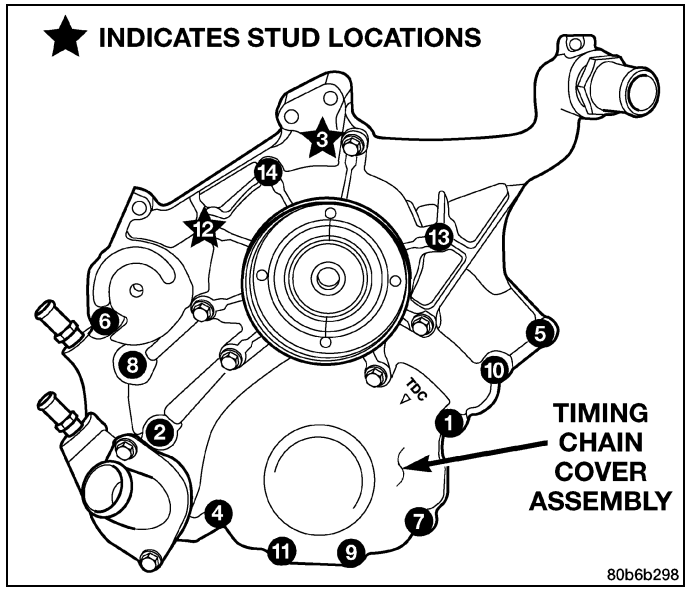

Installation

CAUTION: Do not use oil based liquids to clean timing cover or block surfaces. Use only rubbing alcohol, along with plastic or wooden scrapers. Use no wire brushes or abrasive wheels or metal scrapers, or damage to surfaces could result.

1. Clean timing chain cover and block surface using rubbing alcohol.

CAUTION: The 4.7L can use a special RTV sealer instead of a carrier gasket to seal the timing cover to the engine block, from the factory. For service repairs, Mopar® Grey Engine RTV must be used as a substitute, if RTV is present. If the front cover being used has no provisions for the water passage o-rings, then Mopar® Grey Engine RTV must be applied around the water passages.

2. Inspect the water passage o-rings, if equipped for any damage, and replace as necessary.
3. Apply Mopar® Grey Engine RTV sealer to the front cover following the path above, using a 3 to 4mm thick bead.

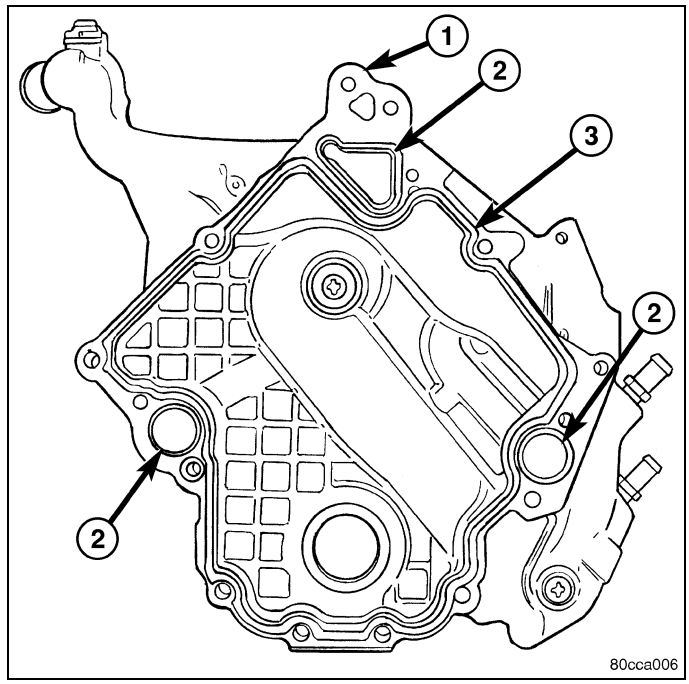

4. Install cover. Tighten flange head fasteners in sequence as shown in to 58 N·m (43 ft. lbs.).
5. Install the A/C compressor and generator.
6. Install crankshaft damper (Refer to 09 - Engine/Engine Block/DAMPER, Vibration - Installation).
7. Install accessory drive belt tensioner assembly. Tighten fastener to 54 N·m (40 ft. lbs.).
8. Install lower radiator hose.
9. Install both heater hoses.
10. Fill cooling system (Refer to 07 - Cooling - Standard Procedure).
11. Connect the battery negative cable.

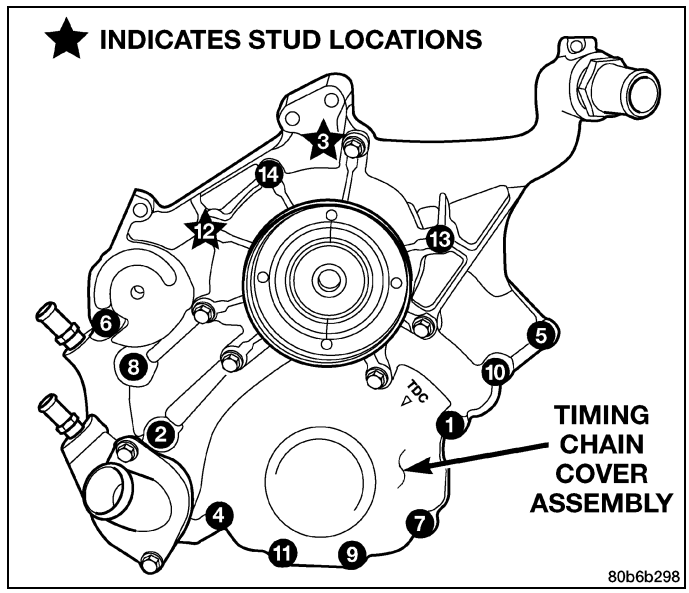

SHAFT, Idler

Removal

1. Remove the primary and secondary timing chains and sprockets (Refer to 09 - Engine/Valve Timing/CHAIN and SPROCKETS, Timing - Removal) .

NOTE: To remove the idler shaft, it is necessary to tap threads into the shaft, to install the removal tool.

2. Using a 12 mm X 1.75 tap, cut threads in the idler shaft center bore.
3. Cover the radiator core with a suitable cover.

CAUTION: Use care when removing the idler shaft, Do not strike the radiator cooling fins with the slide hammer.

4. Using Special Tool 8517 Slide Hammer, remove the idler shaft.

Installation

1. Thoroughly clean the idler shaft bore.
2. Position the idler shaft in the bore.

NOTE: The two lubrication holes in the idler shaft do not require any special alignment.

NOTE: Before using the retaining bolt to install the idler shaft, coat the threads and the pilot on the idler shaft, with clean engine oil.

3. Using the primary idler sprocket retaining bolt and washer, carefully draw the idler shaft into the bore until fully seated.
4. Coat the idler shaft with clean engine oil.
5. Install the timing chains and sprockets (Refer to 09 - Engine/Valve Timing/CHAIN and SPROCKETS, Timing - Installation) .

ENGINE, 5.7L

TABLE OF CONTENTS

page

ENGINE, 5.7L
- DESCRIPTION 292
- DIAGNOSIS AND TESTING
  - INTRODUCTION 292
  - PERFORMANCE 292
  - CYLINDER COMPRESSION PRESSURE LEAKAGE 293
  - CYLINDER COMBUSTION PRESSURE LEAKAGE 293
  - LUBRICATION 294
  - MECHANICAL 295
- STANDARD PROCEDURE
  - DUST COVERS AND CAPS 297
  - REPAIR DAMAGED OR WORN THREADS . . .298
  - HYDROSTATIC LOCK 298
  - FORM-IN-PLACE GASKETS AND SEALERS 298
- REMOVAL 300
- INSTALLATION 306

page

- SPECIFICATIONS
  - SPECIFICATIONS 314
  - TORQUE 319
- SPECIAL TOOLS 322

COVER, ENGINE
- DESCRIPTION 325
- REMOVAL 326
- INSTALLATION 328

MDS SYSTEM
- DESCRIPTION 330
- OPERATION 331

AIR INTAKE SYSTEM 333
CYLINDER HEAD 337
ENGINE BLOCK 373
ENGINE MOUNTING 427
LUBRICATION 431
MANIFOLDS 449
VALVE TIMING 465

Engine, 5.7L

Description

The 5.7L engine (348 CID) eight-cylinder engine is a 90° V-Type lightweight, deep skirt cast iron block, aluminum heads, single cam, overhead valve engine with hydraulic roller tappets. The heads incorporate splayed valves with a hemi-spherical style combustion chamber and dual spark plugs. The cylinders are numbered from front to rear; 1, 3, 5, 7 on the left bank and 2, 4, 6, 8 on the right bank. The firing order is 1-8-4-3-6-5-7-2.

Diagnosis and Testing

INTRODUCTION

Engine diagnosis is helpful in determining the causes of malfunctions not detected and remedied by routine maintenance.

These malfunctions may be classified as either performance (e.g., engine idles rough and stalls) or mechanical (e.g., a strange noise).

(Refer to 09 - Engine - Diagnosis and Testing) for possible causes and corrections of malfunctions.

Additional tests and diagnostic procedures may be necessary for specific engine malfunctions that can not be isolated with the Service Diagnosis charts. Information concerning additional tests and diagnosis is provided within the following diagnosis:

- Cylinder Compression Pressure Test (Refer to 09 - Engine - Diagnosis and Testing).
- Cylinder Combustion Pressure Leakage Test (Refer to 09 - Engine - Diagnosis and Testing).
- Engine Cylinder Head Gasket Failure Diagnosis (Refer to 09 - Engine/Cylinder Head - Diagnosis and Testing).
- Intake Manifold Leakage Diagnosis (Refer to 09 - Engine/Manifolds/MANIFOLD, Intake - Diagnosis and Testing).

PERFORMANCE

CONDITION	POSSIBLE CAUSE	CORRECTION
ENGINE WILL NOT START	1. Weak battery.	1. Charge or replace as necessary.
	2. Corroded or loose battery connections.	2. Clean and tighten battery connections. Apply a coat of light mineral grease to the terminals.
	3. Faulty starter.	3. (Refer to 08 - Electrical/8F - Engine Systems/Starting - Diagnosis and Testing)
	4. Incorrect spark plug gap.	4. (Refer to 08 - Electrical/8I - Ignition Control - Specifications)
	5. Dirt or water in fuel system.	5. Clean system and replace fuel filter.
	6. Faulty fuel pump, relay or wiring.	6. (Refer to 09 - Engine - Diagnosis and Testing)
ENGINE STALLS OR ROUGH IDLE	1. Idle speed set to low.	1. (Refer to 09 - Engine - Diagnosis and Testing)
	2. Vacuum leak.	2. Inspect intake manifold and vacuum hoses, repair or replace as necessary.

CONDITION	POSSIBLE CAUSE	CORRECTION
ENGINE LOSS OF POWER	1. Dirty or incorrectly gapped spark plugs.	1. Replace spark plugs.
	2. Dirt or water in fuel system.	2. Clean system and replace fuel filter.
	3. Blown cylinder head gasket.	3. Replace cylinder head gasket.
	4. Low compression.	4. (Refer to 09 - Engine - Diagnosis and Testing)
	5. Burned, warped or pitted valves.	5. Replace as necessary.
	6. Plugged or restricted exhaust system.	6. Inspect and replace as necessary.

CYLINDER COMPRESSION PRESSURE LEAKAGE

NOTE: The results of a cylinder compression pressure test can be utilized to diagnose several engine malfunctions.

NOTE: Ensure the battery is completely charged and the engine starter motor is in good operating condition. Otherwise the indicated compression pressures may not be valid for diagnosis purposes.

1. Clean the spark plug recesses with compressed air.
2. Remove the spark plugs and record the cylinder number of each spark plug for future reference.
3. Inspect the spark plug electrodes for abnormal firing indicators such as fouled, hot, oily, etc.
4. Disable the fuel system (Refer to 14 - Fuel System/Fuel Delivery - Standard Procedure) and preform the fuel system pressure release procedure.
5. Insert a compression pressure gauge and rotate the engine with the engine starter motor for three revolutions.
6. Record the compression pressure on the 3rd revolution. Continue the test for the remaining cylinders.

NOTE: The recommended compression pressures are to be used only as a guide to diagnosing engine problems. An engine should not be disassembled to determine the cause of low compression unless some malfunction is present.

7. Compression should not be less than 689 kPa (100 psi) and not vary more than 25 percent from cylinder to cylinder.
8. If one or more cylinders have abnormally low compression pressures, repeat the compression test.

NOTE: If the same cylinder or cylinders repeat an abnormally low reading on the second compression test, it could indicate the existence of a problem in the cylinder in question.

9. If one or more cylinders continue to have abnormally low compression pressures, perform the cylinder combustion pressure leakage test (Refer to 09 - Engine - Diagnosis and Testing)

CYLINDER COMBUSTION PRESSURE LEAKAGE

The combustion pressure leakage test provides an accurate means for determining engine condition.

Combustion pressure leakage testing will detect:

- Exhaust and intake valve leaks (improper seating).
- Leaks between adjacent cylinders or into water jacket.
- Any causes for combustion/compression pressure loss.

1. Check the coolant level and fill as required. DO NOT install the radiator cap.
2. Start and operate the engine until it attains normal operating temperature, then turn the engine OFF.
3. Remove the spark plugs.
4. Remove the oil filler cap.
5. Remove the air cleaner hose.
6. Calibrate the tester according to the manufacturer's instructions. The shop air source for testing should maintain 483 kPa (70 psi) minimum, 1,379 kPa (200 psi) maximum and 552 kPa (80 psi) recommended.

7. Perform the test procedures on each cylinder according to the tester manufacturer's instructions. Set piston of cylinder to be tested at TDC compression,While testing, listen for pressurized air escaping through the throttle body, tailpipe and oil filler cap opening. Check for bubbles in the radiator coolant.

All gauge pressure indications should be equal, with no more than 25% leakage.

FOR EXAMPLE: At 552 kPa (80 psi) input pressure, a minimum of 414 kPa (60 psi) should be maintained in the cylinder.

Refer to CYLINDER COMBUSTION PRESSURE LEAKAGE DIAGNOSIS CHART.

CYLINDER COMBUSTION PRESSURE LEAKAGE DIAGNOSIS CHART

CONDITION	POSSIBLE CAUSE	CORRECTION
AIR ESCAPES THROUGH THROTTLE BODY	Intake valve bent, burnt, or not seated properly	Inspect valve and valve seat. Reface or replace, as necessary. Inspect valve springs. Replace as necessary.
AIR ESCAPES THROUGH TAILPIPE	Exhaust valve bent, burnt, or not seated properly	Inspect valve and valve seat. Reface or replace, as necessary. Inspect valve springs. Replace as necessary.
AIR ESCAPES THROUGH RADIATOR	Head gasket leaking or cracked cylinder head or block	Remove cylinder head and inspect. Replace defective part.
MORE THAN 50% LEAKAGE FROM ADJACENT CYLINDERS	Head gasket leaking or crack in cylinder head or block between adjacent cylinders	Remove cylinder head and inspect. Replace gasket, head, or block as necessary.
MORE THAN 25% LEAKAGE AND AIR ESCAPES THROUGH OIL FILLER CAP OPENING ONLY	Stuck or broken piston rings; cracked piston; worn rings and/or cylinder wall	Inspect for broken rings or piston. Measure ring gap and cylinder diameter, taper and out-of-round. Replace defective part as necessary.

LUBRICATION

CONDITION	POSSIBLE CAUSES	CORRECTION
OIL LEAKS	1. Gaskets and O-Rings.	1. Replace as necessary.
	a. Misaligned or damaged.	a. Replace as necessary.
	b. Loose fasteners, broken or porous metal parts.	b. Tighten fasteners, Repair or replace metal parts.
	2. Crankshaft rear seal.	2. Replace as necessary.
	3. Crankshaft seal flange. Scratched, nicked or grooved.	3. Polish or replace crankshaft.
	4. Oil pan flange cracked.	4. Replace oil pan.
	5. Front cover seal, damaged or misaligned.	5. Replace seal.
	6. Scratched or damaged vibration damper hub.	6. Polish or replace damper.
	7. Crankshaft Rear Flange Microporosity.	7. Replace Crankshaft.

CONDITION	POSSIBLE CAUSES	CORRECTION
OIL PRESSURE DROP	1. Low oil level.	1. Check and correct oil level.
	2. Faulty oil pressure sending unit.	2. Replace sending unit.
	3. Low oil pressure.	3. Check pump and bearing clearance.
	4. Clogged oil filter.	4. Replace oil filter.
	5. Worn oil pump.	5. Replace as necessary.
	6. Thin or diluted oil.	6. Change oil and filter.
	7. Excessive bearing clearance.	7. Replace as necessary.
	8. Oil pump relief valve stuck.	8. Replace oil pump.
	9. Oil pickup tube loose or damaged.	9. Replace as necessary.
OIL PUMPING AT RINGS; SPARK PLUGS FOULING	1. Worn or damaged rings.	1. Hone cylinder bores and replace rings.
	2. Carbon in oil ring slots.	2. Replace rings.
	3. Incorrect ring size installed.	3. Replace rings.
	4. Worn valve guides.	4. Ream guides and replace valves.
	5. Leaking intake gasket(s).	5. Replace intake gasket(s).
	6. Leaking valve guide seals.	6. Replace valve guide seals.

MECHANICAL

ENGINE MECHANICAL DIAGNOSIS CHART

CONDITION	POSSIBLE CAUSES	CORRECTION
NOISY VALVES/LIFTERS	1. High or low oil level in crankcase	1. Check for correct oil level. Adjust oil level by draining or adding as needed.
	2. Thin or diluted oil	2. Change oil (Refer to 09 - Engine/Lubrication/OIL - Standard Procedure)
	3. Low oil pressure	3. Check engine oil level. If ok, perform engine oil pressure test (Refer to 09 - Engine/Lubrication - Diagnosis and Testing)
	4. Dirt in tappets/lash adjusters	4. Clean/replace hydraulic tappets/lash adjusters.
	5. Bent push rod(s)	5. Install new push rods.
	6. Worn rocker arms	6. Inspect oil supply to rocker arms and replace worn arms as needed.
	7. Worn tappets/lash adjusters	7. Install new hydraulic tappets/lash adjusters.
	8. Worn valve guides	8. Inspect all valve guides and replace as necessary.
	9. Excessive runout of valve seats or valve faces	9. Grind valves and seats.

ENGINE MECHANICAL DIAGNOSIS CHART, continued

CONDITION	POSSIBLE CAUSES	CORRECTION
CONNECTING ROD NOISE	1. Insufficient oil supply	1. Check engine oil level.
	2. Low oil pressure	2. Check engine oil level. If ok, Perform engine oil pressure test (Refer to 09 - Engine/Lubrication - Diagnosis and Testing)
	3. Thin or diluted oil	3. Change oil to correct viscosity (Refer to 09 - Engine/Lubrication/OIL - Standard Procedure)
	4. Excessive connecting rod bearing clearance	4. Measure bearings for correct clearance with plasti-gage. Repair as necessary.
	5. Connecting rod journal out of round	5. Replace crankshaft or grind journals.
	6. Misaligned connecting rods	6. Replace bent connecting rods.
MAIN BEARING NOISE	1. Insufficient oil supply	1. Check engine oil level.
	2. Low oil pressure	2. Check engine oil level. If ok, Perform engine oil pressure test (Refer to 09 - Engine/Lubrication - Diagnosis and Testing)
	3. Thin or diluted oil	3. Change oil to correct viscosity.
	4. Excessive main bearing clearance	4. Measure bearings for correct clearance. Repair as necessary.
	5. Excessive end play	5. Check crankshaft thrust bearing for excessive wear on flanges.
	6. Crankshaft main journal out of round or worn	6. Grind journals or replace crankshaft.
	7. Loose flywheel or torque converter	7. Inspect crankshaft, flexplate/flywheel and bolts for damage. Tighten to correct torque.
LOW OIL PRESSURE	1. Low oil level	1. Check oil level and fill if necessary.
	2. Faulty oil pressure sending unit	2. Install new sending unit.
	3. Clogged oil filter	3. Install new oil filter.
	4. Worn oil pump	4. Replace oil pump assembly.
	5. Thin or diluted oil	5. Change oil to correct viscosity.
	6. Excessive bearing clearance	6. Measure bearings for correct clearance.
	7. Oil pump relief valve stuck	7. Remove valve to inspect, clean and reinstall.
	8. Oil pickup tube loose, broken, bent or clogged	8. Inspect oil pickup tube and pump, and clean or replace if necessary.
	9. Oil pump cover warped or cracked	9. Install new oil pump.

ENGINE MECHANICAL DIAGNOSIS CHART, continued

CONDITION	POSSIBLE CAUSES	CORRECTION
OIL LEAKS	1. Misaligned or deteriorated gaskets	1. Replace gasket
	2. Loose fastener, broken or porous metal part	2. Tighten, repair or replace the part.
	3. Front or rear crankshaft oil seal leaking	3. Replace seal.
	4. Leaking oil gallery plug or cup plug	4. Remove and reseal threaded plug. Replace cup style plug.
EXCESSIVE OIL CONSUMPTION OR SPARK PLUGS OIL FOULED	1. Defective valve stem seal(s)	1. Repair or replace seal(s).
	2. Worn or broken piston rings	2. Hone cylinder bores. Install new rings.
	3. Scuffed pistons/cylinder walls	3. Hone cylinder bores and replace pistons as required.
	4. Carbon in oil control ring groove	4. Remove rings and de-carbon piston.
	5. Worn valve guides	5. Inspect/replace valve guides as necessary.
	6. Piston rings fitted too tightly in grooves	6. Remove rings and check ring end gap and side clearance. Replace if necessary.

Standard Procedure

DUST COVERS AND CAPS

Due to the high amounts of failures cased by dust, dirt, moisture and other foreign debris being introduced to the engine during service. Covers or caps are needed to reduce the possible damage that can be caused or created.

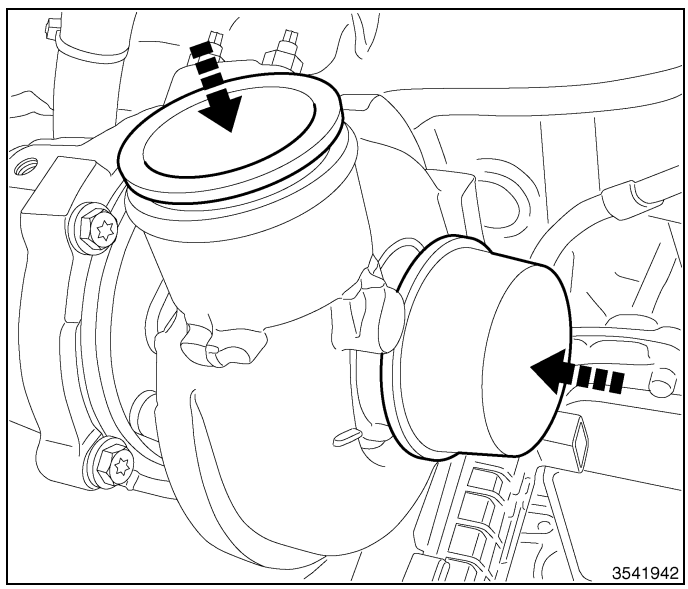

Covers over openings will reduce any possibilities for foreign materials to enter the engine systems. Using miller tool Set, Universal Protective Cap 10368, Select the appropriated cover needed to the procedure.

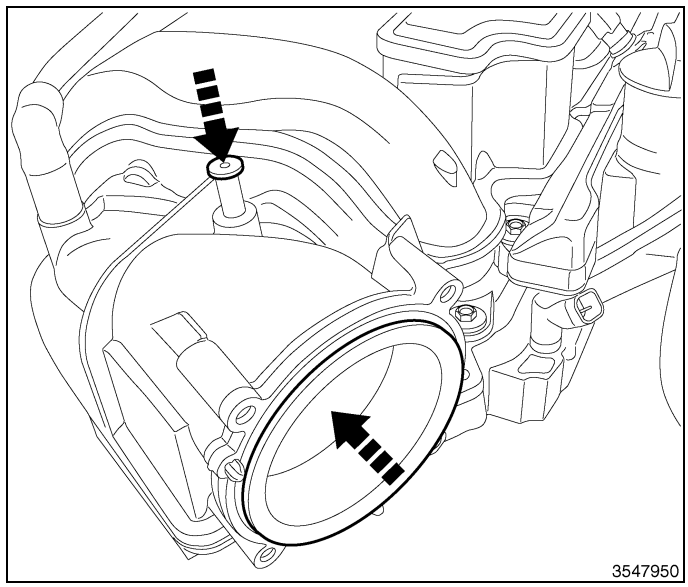

REPAIR DAMAGED OR WORN THREADS

CAUTION: Be sure that the tapped holes maintain the original center line.

Damaged or worn threads can be repaired. Essentially, this repair consists of:

- Drilling out worn or damaged threads.
- Tapping the hole with a special Heli-Coil Tap.
- Installing an insert into the tapped hole to bring the hole back to its original thread size.

HYDROSTATIC LOCK

CAUTION: Do not attempt to run engine. Severe damage could occur.

When an engine is suspected of hydrostatic lock (regardless of what caused the problem), follow the steps below.

1. Perform the Fuel Pressure Release Procedure (Refer to 14 - Fuel System/Fuel Delivery - Standard Procedure).
2. Disconnect the negative battery cable(s) from the battery.
3. Inspect air cleaner, induction system, and intake manifold to make sure the system is dry and clear of foreign material.
4. Place a shop towel around the spark plugs to catch any fluid that may possibly be under pressure in the cylinder head. Remove the spark plugs.
5. With all spark plugs removed, rotate the crankshaft using a breaker bar and socket.
6. Identify the fluid in the cylinders (coolant, fuel, oil).
7. Make sure all fluid has been removed from the cylinders.
8. Repair engine or components as necessary to prevent this problem from occurring again.
9. Squirt a small amount of engine oil into the cylinders to lubricate the walls. This prevents damage on restart.
10. Install new spark plugs. Tighten the spark plugs to 41 N·m (30 ft. lbs.).
11. Drain engine oil. Remove and discard the oil filter.
12. Install the drain plug. Tighten the plug to 34 N·m (25 ft. lbs.).
13. Install a new oil filter.
14. Fill the engine crankcase with the specified amount and grade of oil. (Refer to 04 - Vehicle Quick Reference/Capacities and Recommended Fluids - Specifications).
15. Connect the negative battery cable(s).
16. Start the engine and check for any leaks.

FORM-IN-PLACE GASKETS AND SEALERS

NOTE: All sealants mentioned below are not used on every engine, they are listed as general reference guide. See service information for specific sealer usage.

There are numerous places where form-in-place gaskets are used on the engine. Care must be taken when applying form-in-place gaskets to assure obtaining the desired results. **Do not use form-in-place gasket material unless specified.** Bead size, continuity, and location are of great importance. Too thin of a bead can result in leakage while too much can result in spill-over which can break off and obstruct fluid feed lines. A continuous bead of the proper width is essential to obtain a leak-free gasket. All sealing surfaces that use form-in-place gaskets and sealers must be free of grease or oil. Clean surfaces with Mopar® brake parts cleaner prior to sealer application. After the sealer is applied, assemble the parts within 10 minutes.

Numerous types of form-in-place gasket materials are used in the engine area. Mopar® Sealant RTV Silicone Rubber Adhesive, MOPAR® Silicone Rubber RTV, Mopar® ATF-RTV and Mopar® Gasket Maker gasket materials, each have different properties and cannot be used in place of the other.

MOPAR® SEALANT RTV SILICONE RUBBER ADHESIVE is used to seal components exposed to engine oil. This material is a specially designed black silicone rubber RTV that retains adhesion and sealing properties when exposed to engine oil. Moisture in the air causes the material to cure. This material is available in three ounce tubes and has a shelf life of one year. After one year this material will not properly cure. Always inspect the package for the expiration date before use.

MOPAR® SILICONE RUBBER RTV is used to seal components exposed to engine oil, gear lubricant, and coolant. This material is a specially designed gray silicone rubber RTV that retains adhesion and sealing properties when exposed to engine oil, gear lubricant and coolant. Excellent adhesion even on oily surfaces, withstands temperatures to 330° C (626° F). Moisture in the air causes the material to cure. This material is available in three ounce tubes and has a shelf life of one year. After one year this material will not properly cure. Always inspect the package for the expiration date before use.

MOPAR® ATF-RTV is a specially designed black silicone rubber RTV that retains adhesion and sealing properties to seal components exposed to automatic transmission fluid, engine coolants, and moisture. This material is available in three ounce tubes and has a shelf life of one year. After one year this material will not properly cure. Always inspect the package for the expiration date before use.

MOPAR® GASKET MAKER is an anaerobic type gasket material. The material cures in the absence of air when squeezed between two metallic surfaces. It will not cure if left in the uncovered tube. The anaerobic material is for use between two machined surfaces. Do not use on flexible metal flanges.

MOPAR® GASKET SEALANT is a slow drying, permanently soft sealer. This material is recommended for sealing threaded fittings and gaskets against leakage of oil and coolant. It can be used on threaded and machined parts under all temperatures. This material also prevents corrosion. Mopar® Gasket Sealant is available in a 13 oz. aerosol can or in a 4 oz. or 6 oz. can with applicator.

SEALER APPLICATION

Apply 1 mm (0.040 in.) diameter or less of Mopar® Gasket Maker material to one gasket surface. Be certain the material surrounds each mounting hole. Excess material can easily be wiped off. Tighten the components in place within 15 minutes. Use a locating dowel during assembly to prevent smearing material off the location.

Apply Mopar® RTV or ATF-RTV gasket material in a continuous bead approximately 3 mm (0.120 in.) in diameter. For corner sealing and “T-Joint" locations and waffle pad area, a 0.635 mm (0.025 in.) drop is placed in the center of the gasket contact area. Remove uncured sealant with a shop towel. Tighten the components in place while the sealant is still wet to the touch (within 10 minutes). Use a locating dowel during assembly to prevent smearing material off the location.

Removal

1. Remove the Hood (Refer to 23 - Body/Hood/HOOD - Removal)
2. Disconnect the intake air temperature (IAT) sensor electrical connector (3).
3. Remove the clean air hose (2).
4. Remove the engine cover (1) (Refer to 09 - Engine/ COVER, Engine - Removal)
5. Remove the air cleaner housing (4)
6. Perform the Fuel System Pressure Release procedure (Refer to 14 - Fuel System/Fuel Delivery - Standard Procedure)

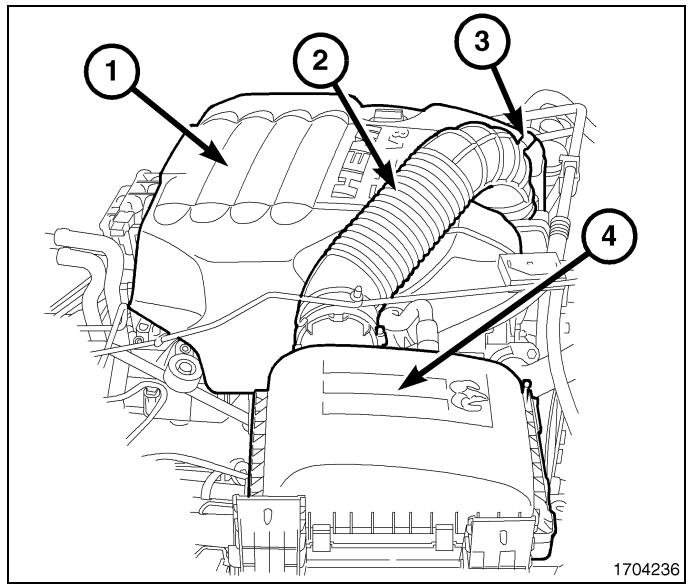

7. Disconnect the negative battery cable (1).

WARNING: Do not remove or loosen the radiator draincock with system hot and under pressure. Serious burns from coolant can occur.

8. Drain the cooling system (Refer to 07 - Cooling - Standard Procedure)

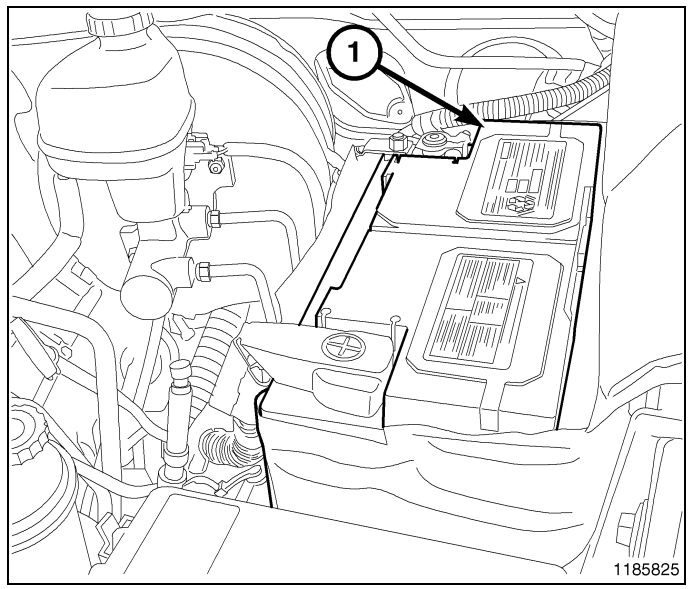

CAUTION: Do not let the tensioner arm snap back to the freearm position, severe damage may occur to the tensioner.

9. Insert a suitable square drive ratchet into the square hole on the belt tensioner arm (7).
10. Release the belt tension by rotating the tensioner (7) clockwise until the accessory drive belt (4) can be removed from the generator pulley only.

CAUTION: Do not place the viscous fan drive in horizontal position. If stored horizontally, silicone fluid in the viscous fan drive could drain into its bearing assembly and contaminate lubricant.

11. Remove the viscous fan drive assembly (Refer to 07 - Cooling/Engine/FAN, Cooling - Removal)
12. Recover the refrigerant system (Refer to 24 - Heating and Air Conditioning/Plumbing - Standard Procedure)

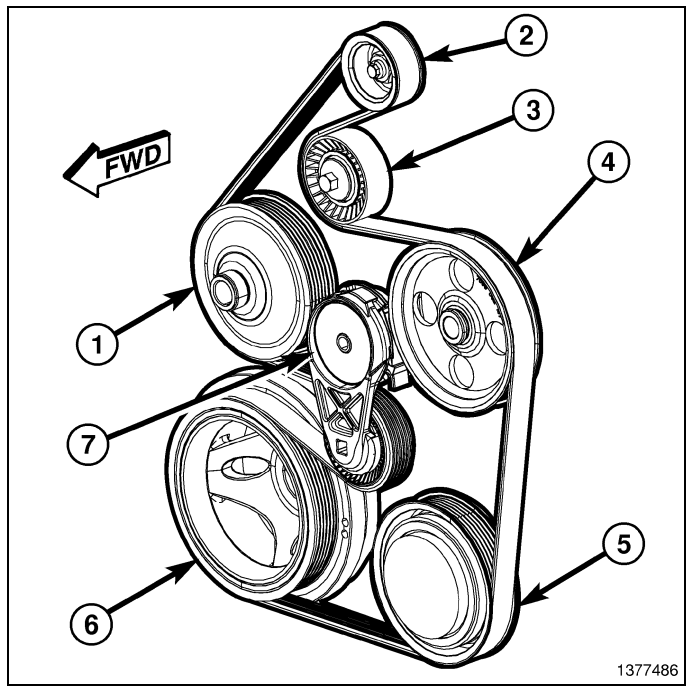

13. Remove the upper radiator seal four push pins (1).
14. Remove the two plastic rivets (2) and remove the upper radiator seal.
15. Remove the fan shroud mounting bolts and pull the shroud up and out of the radiator tank clips.
16. Remove the radiator and A/C condenser as an assembly from the vehicle (Refer to 07 - Cooling/Engine/RADIATOR, Engine Cooling - Removal)

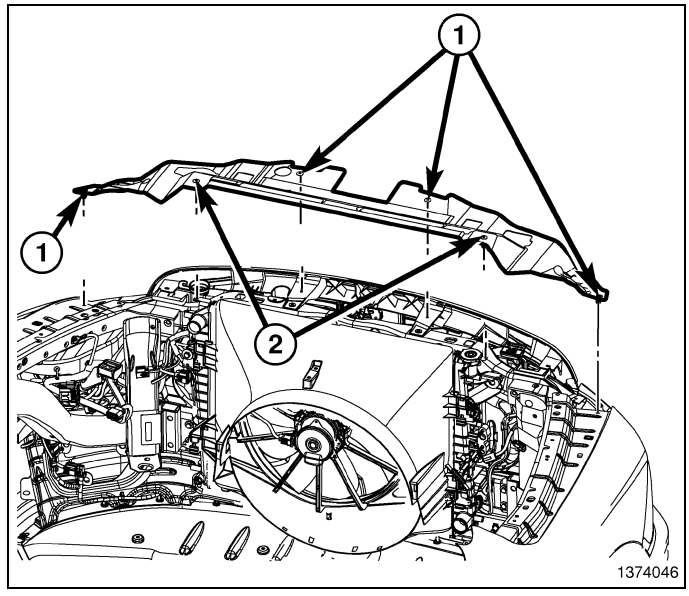

17. Remove the A/C compressor (4) (Refer to 24 - Heating and Air Conditioning/Plumbing/COMPRESSOR, A/C - Removal)
18. Disconnect the generator electrical connectors and remove the generator assembly (2) (Refer to 08 - Electrical/8F - Engine Systems/Charging/GENERATOR - Removal)

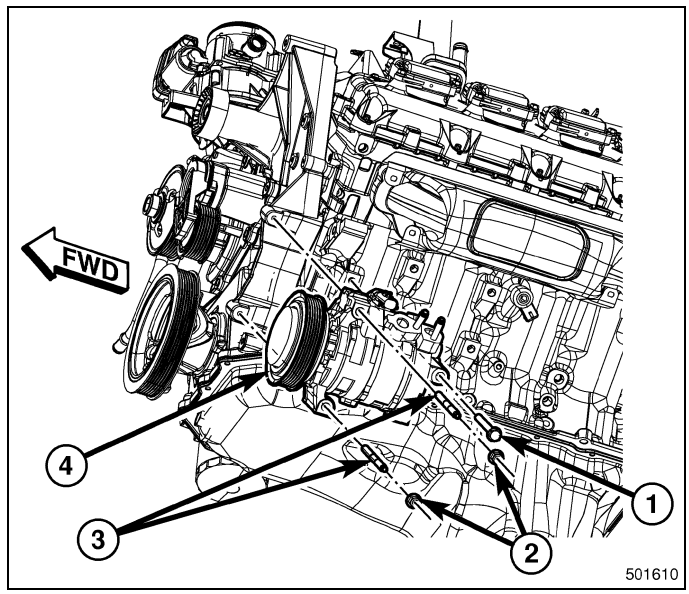

19. Disconnect the heater hoses (2) and lower radiator hose (1).

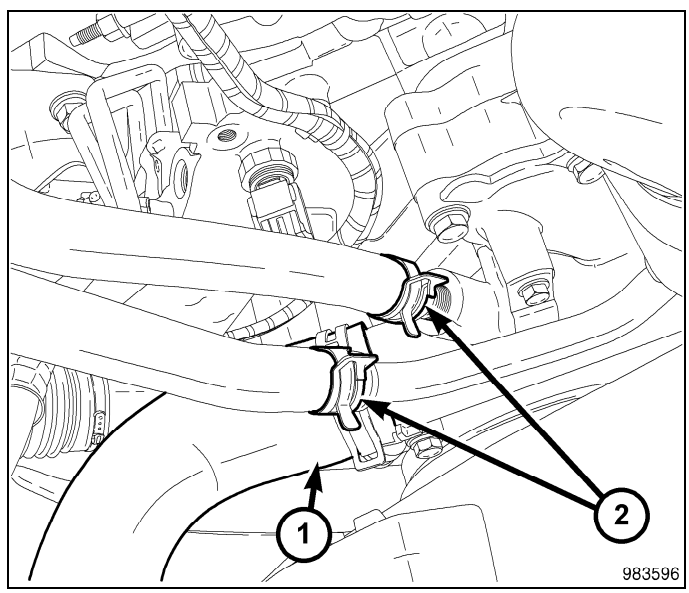

NOTE: It is not necessary to disconnect the power steering hoses from the power steering pump, for power steering pump removal.

20. Remove the three bolts securing the power steering pump through the holes in the pulley (1) and secure the power steering pump out of the way.
21. Disconnect the fuel supply line (Refer to 14 - Fuel System/Fuel Delivery/FITTING, Quick Connect - Standard Procedure)
22. Raise and support the vehicle on a hoist and drain the engine oil.

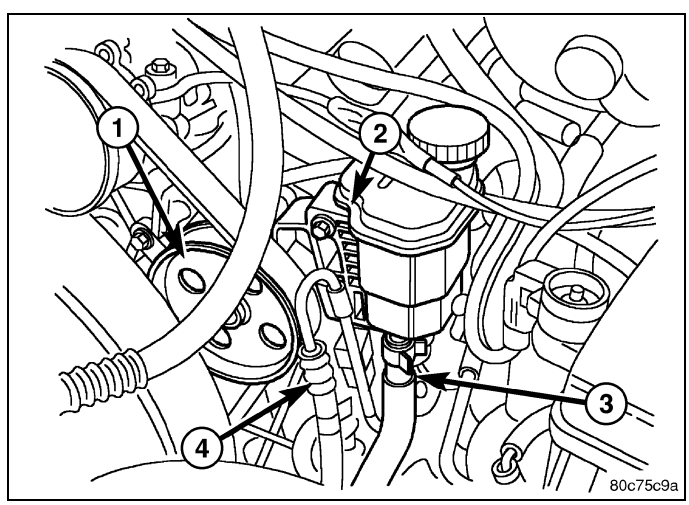

23. Remove the front engine mount through bolts (3).
24. Disconnect the transmission oil cooler lines from their retainers at the oil pan bolts.

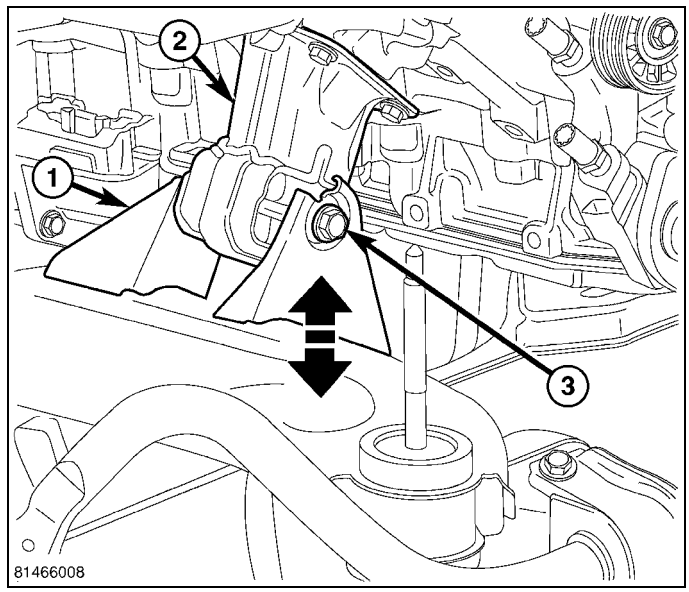

CAUTION: When servicing or replacing exhaust system components, disconnect the oxygen sensor connector(s). Allowing the exhaust to hang by the oxygen sensor wires will damage the harness and/or sensor.

25. Disconnect the oxygen sensor electrical connectors (2).
26. Saturate all exhaust bolts and nuts with Mopar® Rust Penetrant. Allow 5 minutes for penetration.
27. Remove the exhaust pipe to manifold bolts (3) (left side shown, right side similar) and disconnect the front exhaust pipe/catalytic converter assembly (4) at the exhaust manifolds.

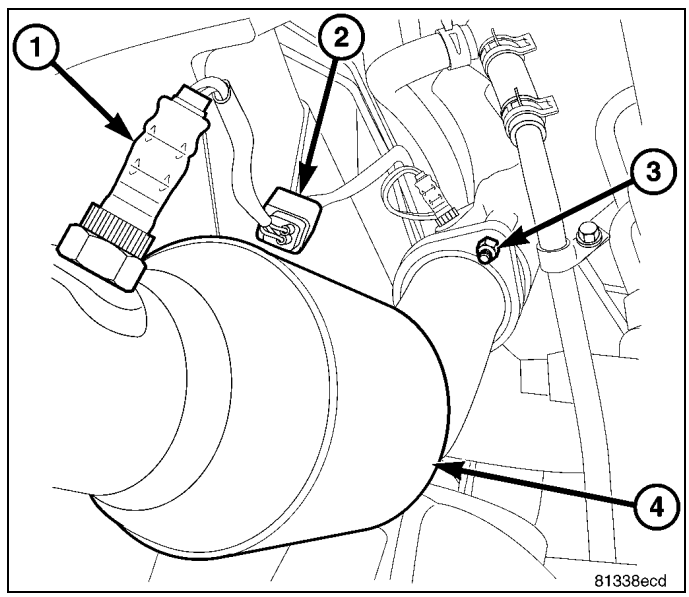

28. Disconnect the starter wires and remove the starter (1) (Refer to 08 - Electrical/8F - Engine Systems/Starting/STARTER - Removal)

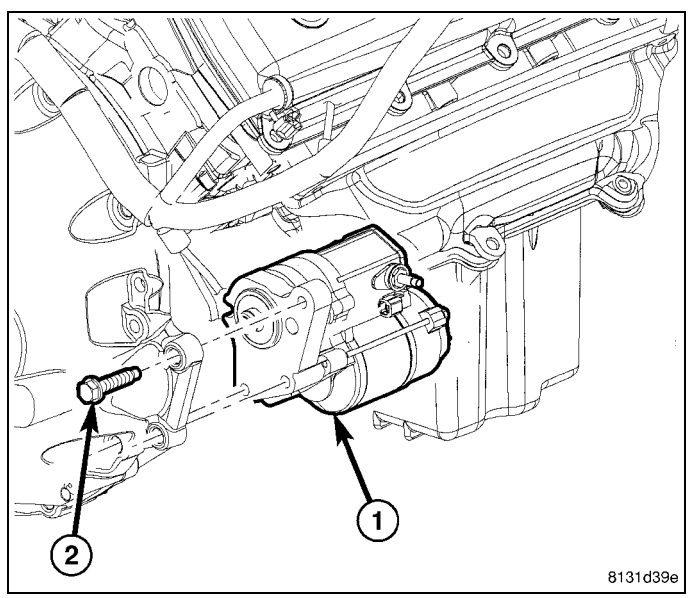

29. Remove the transmission inspection and structural dust covers (2) (Refer to 09 - Engine/Engine Block/COVER, Structural Dust - Removal)

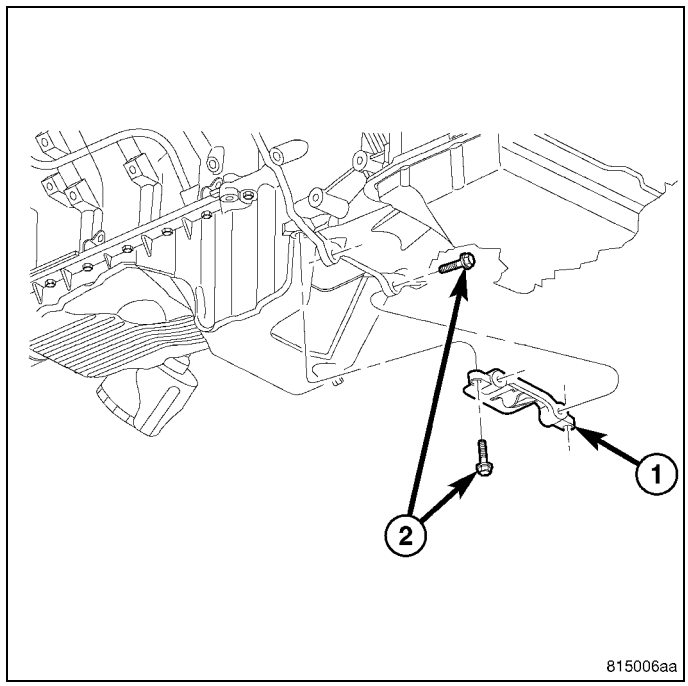

30. Remove the drive plate to converter bolts (Automatic transmission equipped vehicles).

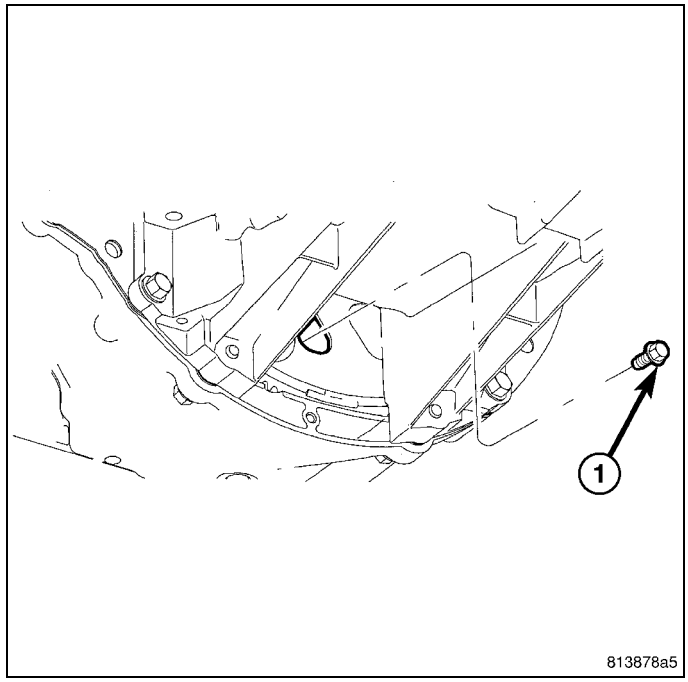

31. Remove both the left and right side oil pan to transmission bolts (1).

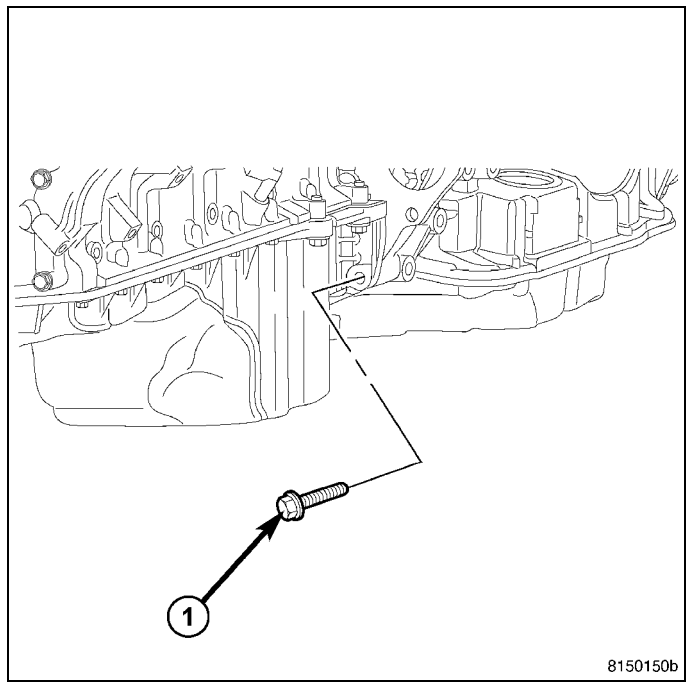

32. Remove the transmission bell housing to engine block bolts (2).
33. Lower the vehicle.
34. Remove the intake manifold (Refer to 09 - Engine/Manifolds/MANIFOLD, Intake - Removal)

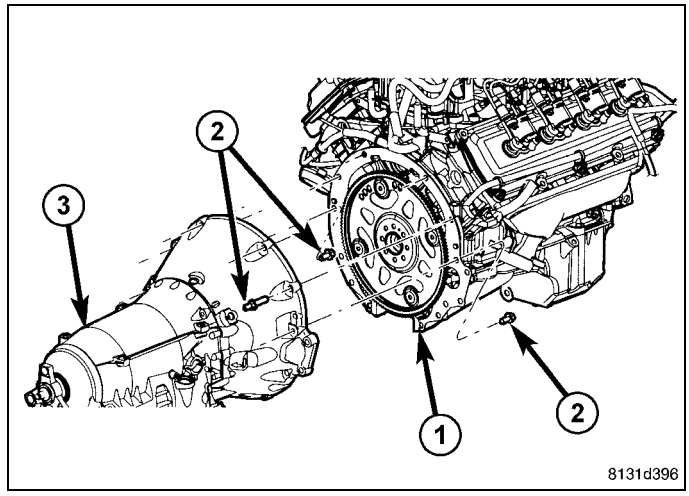

NOTE: To remove the oil control valve, the engine must be at room temperature.

35. Remove the oil control valve (OCV) electrical connector (2).
36. Remove the oil control valve (OCV) retaining bolt (1) and remove the OCV.

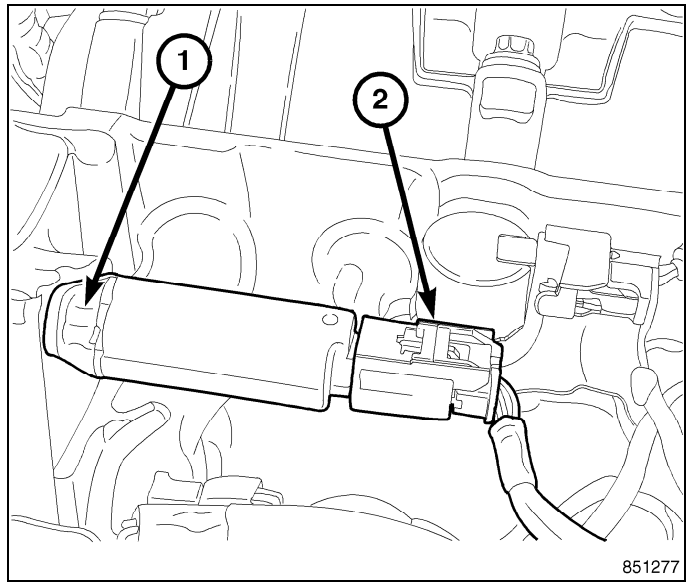

NOTE: Do not use air tools to install 8984B **Engine Lift Fixture (1) and Adapter** 8984B **Eagle (2) .**

37. Install the engine lift fixture 8984B (1) and adapter 8984B Eagle (2).
38. Separate the engine from the transmission and remove engine from the vehicle.

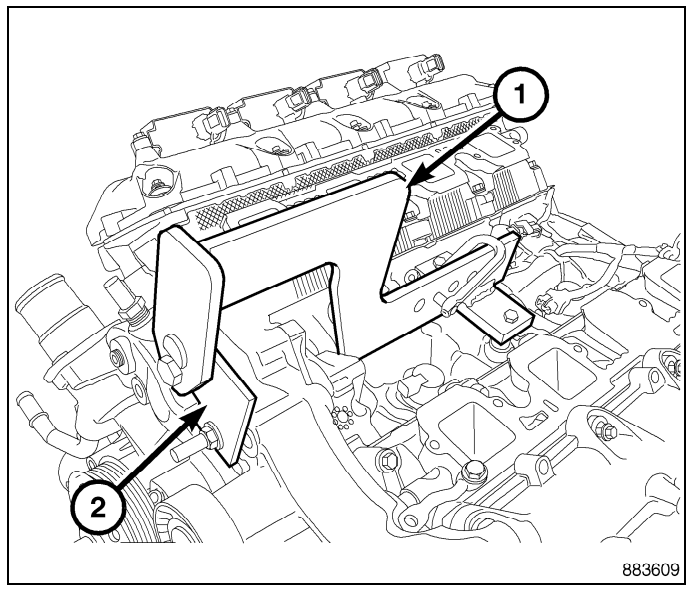

Installation

NOTE: Do not use air tools to install 8984B **Engine Lift Fixture (1) and Adapter** 8984B **Eagle (2).**

1. Install the engine lift fixture 8984B (1) and adapter 8984B Eagle (2).
2. Position the engine in the engine compartment.

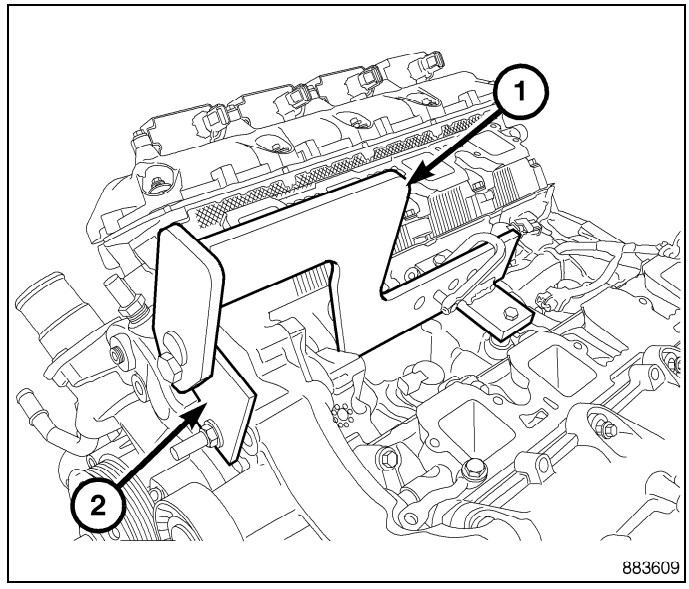

3. Lower and align the engine (1) with the transmission (3).
4. Install two transmission bell housing to engine block mounting bolts (2) finger tight.

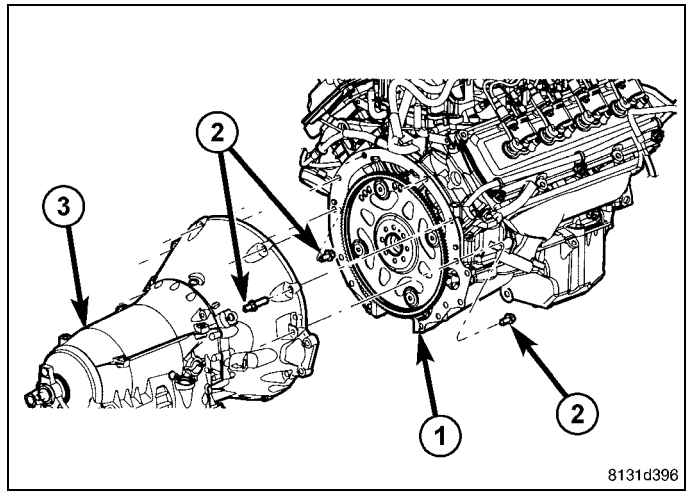

5. Lower the engine assembly until the engine mount through bolts (3) line up in the frame brackets (1).
6. Raise and support the vehicle on a hoist.

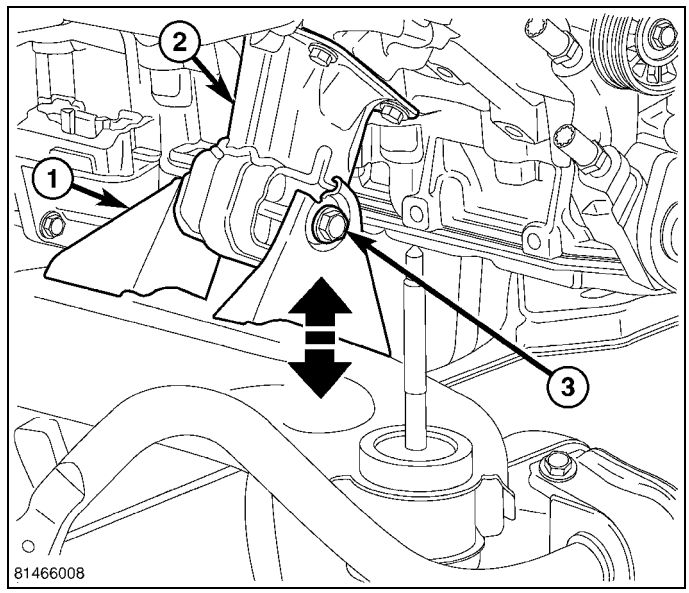

7. Install the remaining transmission bell housing to engine block mounting bolts (2) and tighten to 68 N·m (50 ft. lbs.)

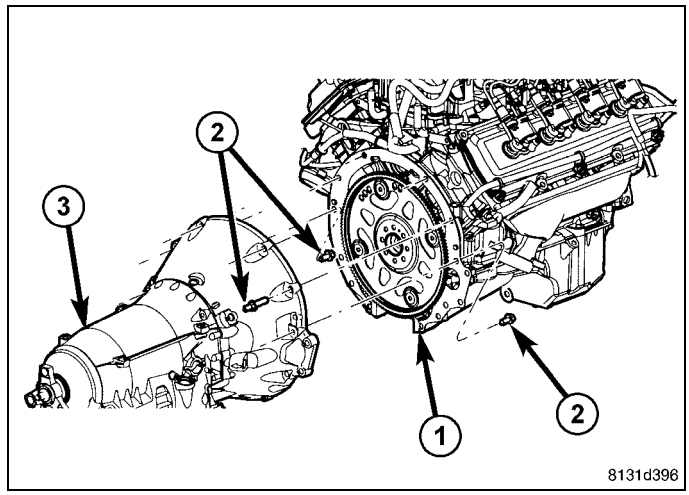

8. Install both the left and right side oil pan to transmission bolts (1) and tighten bolts to 54 N·m (40 ft. lbs.).
9. Connect the transmission oil cooler lines at the oil pan and tighten bolts to 12 N·m (9 ft. lbs.).

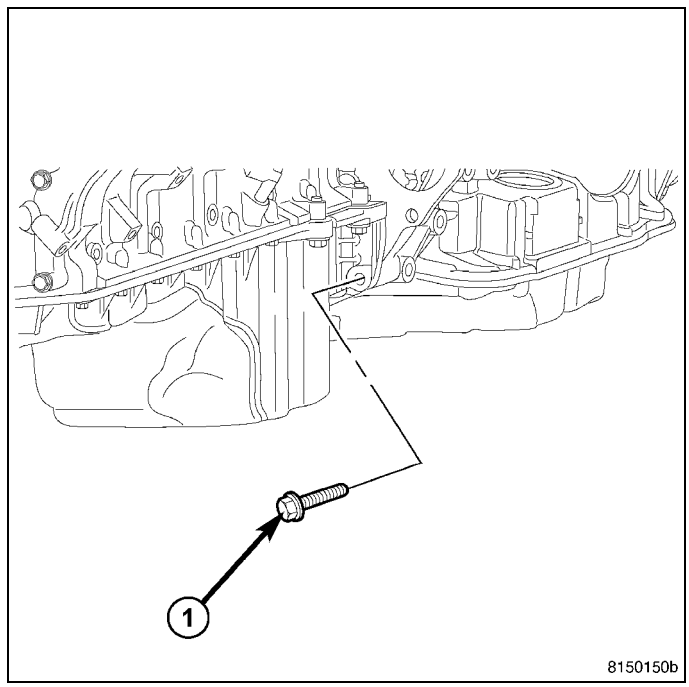

10. Install the engine mount through bolts (3) and nuts and tighten to 95 N·m (70 ft. lbs.).

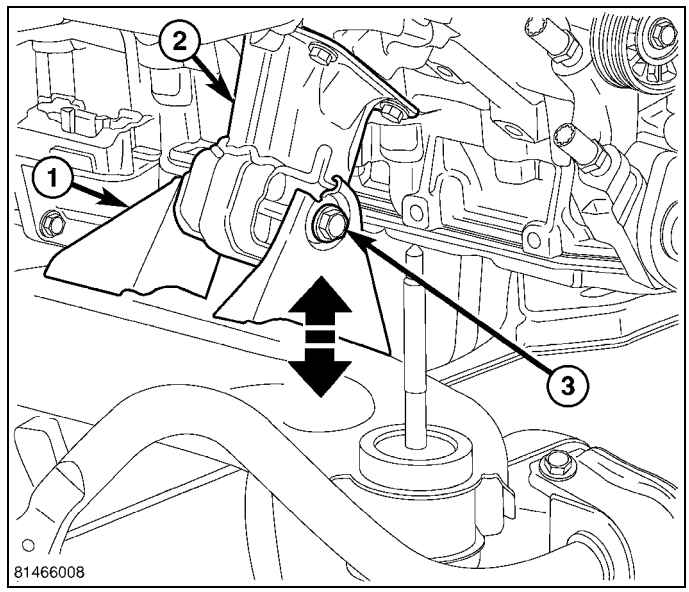

11. Install all torque converter-to-driveplate bolts (1) by hand, verify the torque converter is pulled flush to the driveplate and tighten bolts to 31 N·m (23 ft. lbs.).

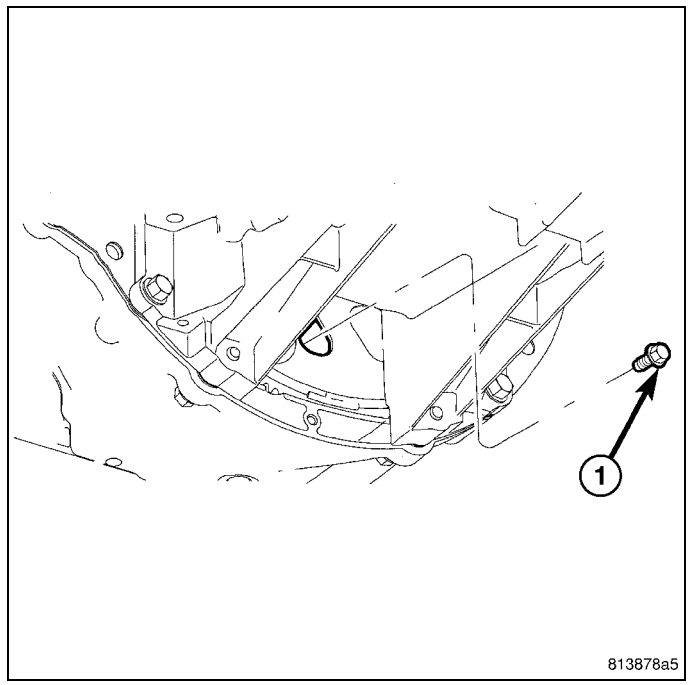

CAUTION: The structural dust cover must be installed as described in the Structural Dust Cover installation procedure. Failure to do so will cause severe damage to the cover.

12. Install the structural dust cover (1) (Refer to 09 - Engine/Engine Block/COVER, Structural Dust - Installation)

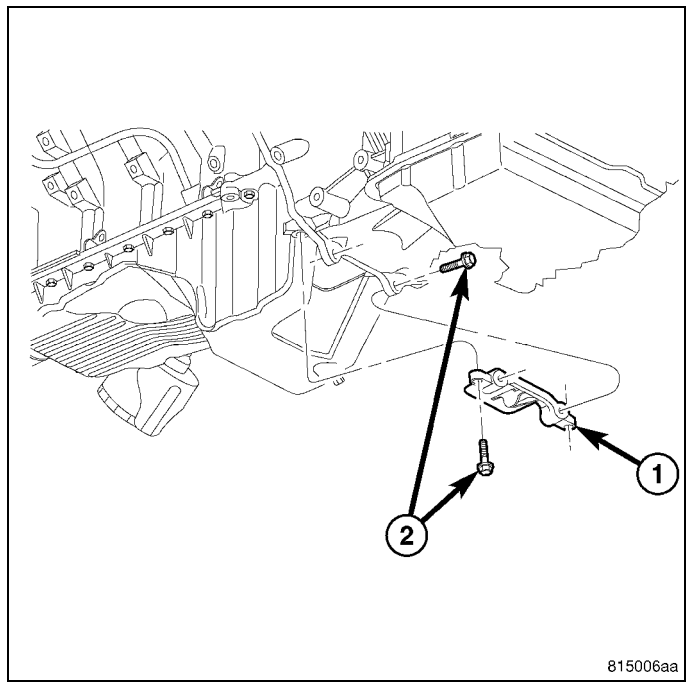

13. Install the starter (1) and connect the starter wires (Refer to 08 - Electrical/8F - Engine Systems/Starting/STARTER - Installation)

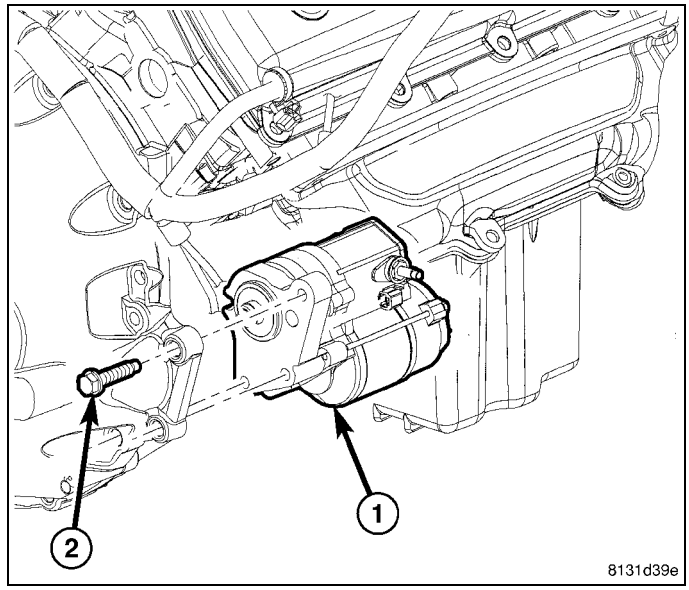

14. Install the front exhaust pipe/catalytic converter assembly (4) to the exhaust manifold flange and tighten the bolts and nuts (3) to 26 N·m (19 ft. lbs.).
15. Lower the vehicle.

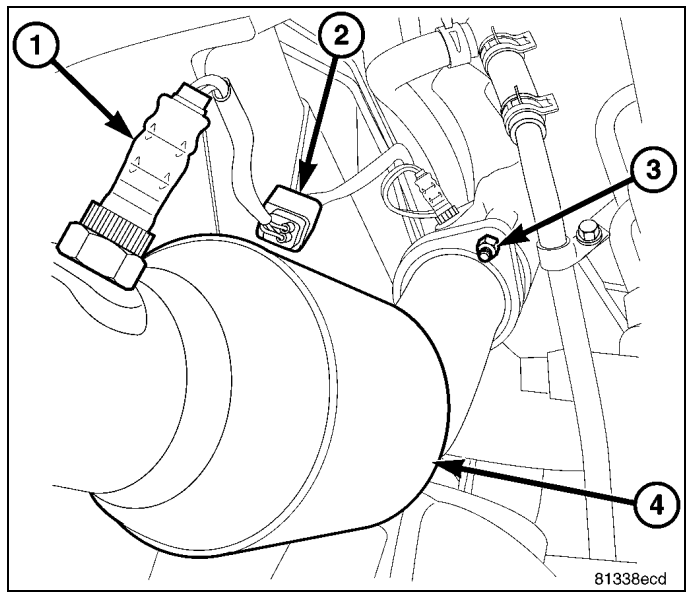

16. Remove the engine lift fixture 8984B and adapter 8984B Eagle (1,2).

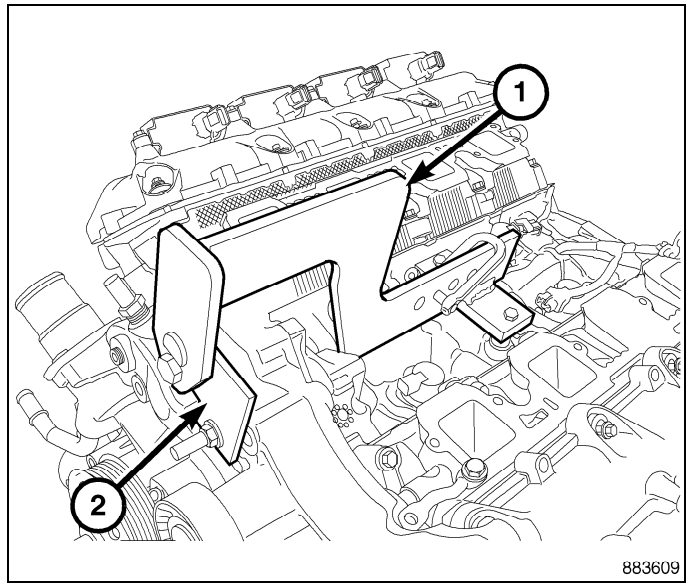

17. Install the oil control valve and securely tighten fastener (1).
18. Connect the oil control valve (OCV) electrical connector (2).
19. Install the intake manifold (Refer to 09 - Engine/Manifolds/MANIFOLD, Intake - Removal)
20. Connect the fuel supply line (Refer to 14 - Fuel System/Fuel Delivery/FITTING, Quick Connect - Standard Procedure)

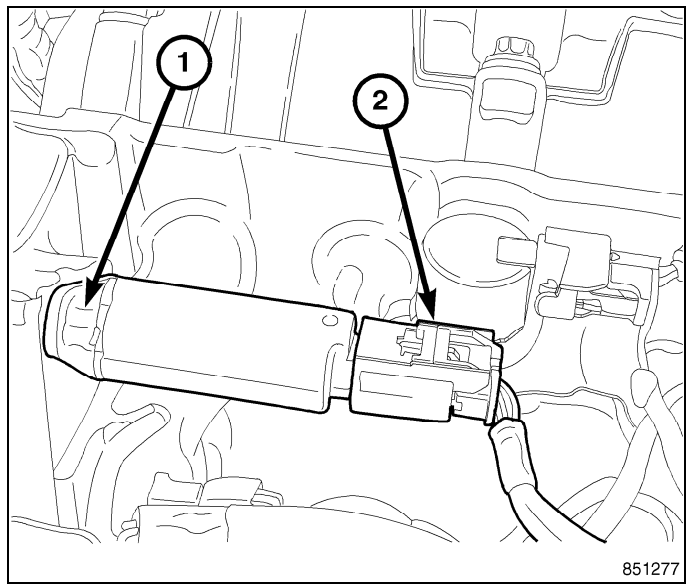

21. Install the three power steering pump mounting bolts through the access holes in the pulley (1) and tighten bolts to 28 N•m (21 ft. lbs.).

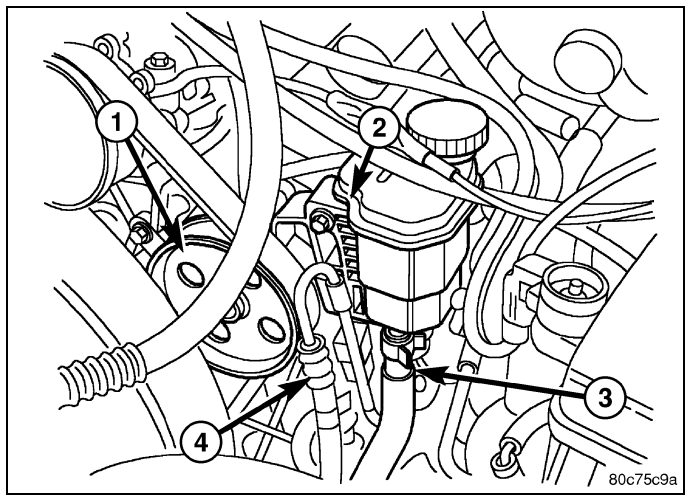

22. Connect the heater hoses (2) and the lower radiator hose (1).

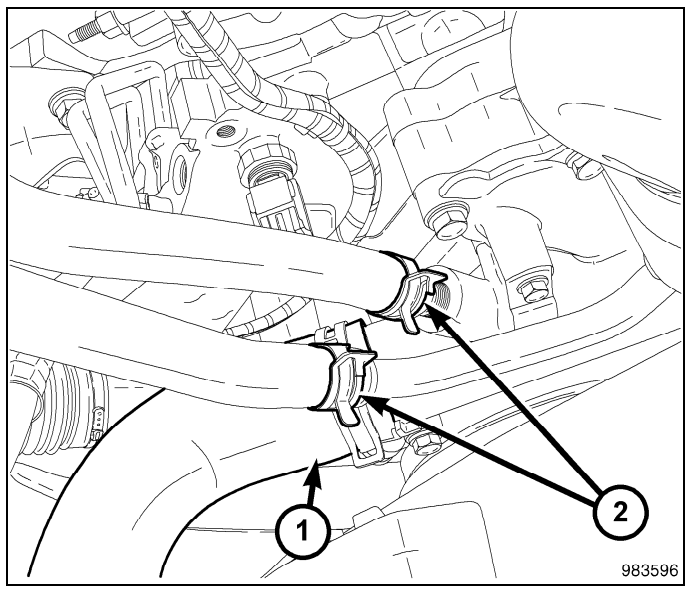

23. Install the generator (2) and electrical connections (Refer to 08 - Electrical/8F - Engine Systems/Charging/GENERATOR - Installation)

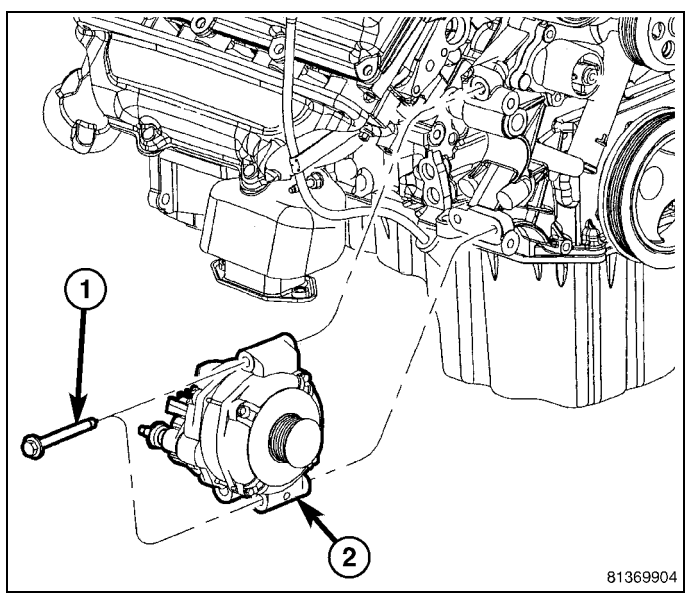

24. Install the A/C compressor (3) (Refer to 24 - Heating and Air Conditioning/Plumbing/COMPRESSOR, A/C - Installation)

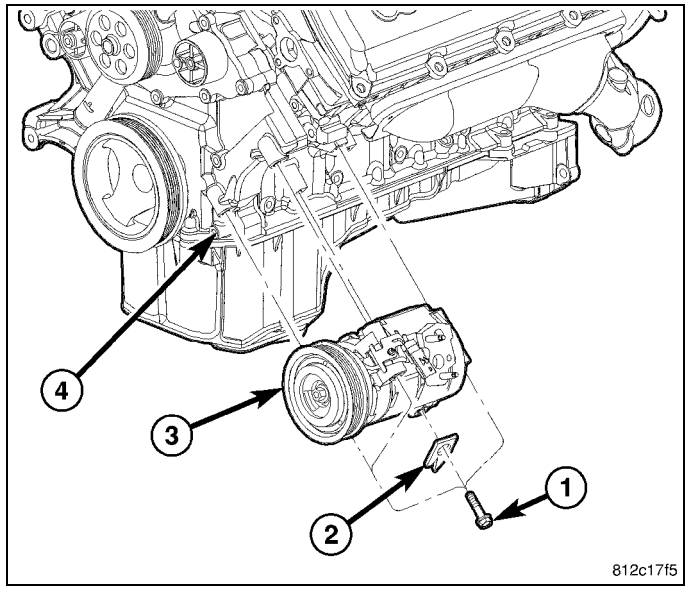

25. Connect the refrigerant lines (1,3) to the A/C compressor (4) and tighten the nuts (2) to 20 N·m (15 ft. lbs.).
26. Install the viscous fan drive assembly (Refer to 07 - Cooling/Engine/FAN, Cooling - Removal)

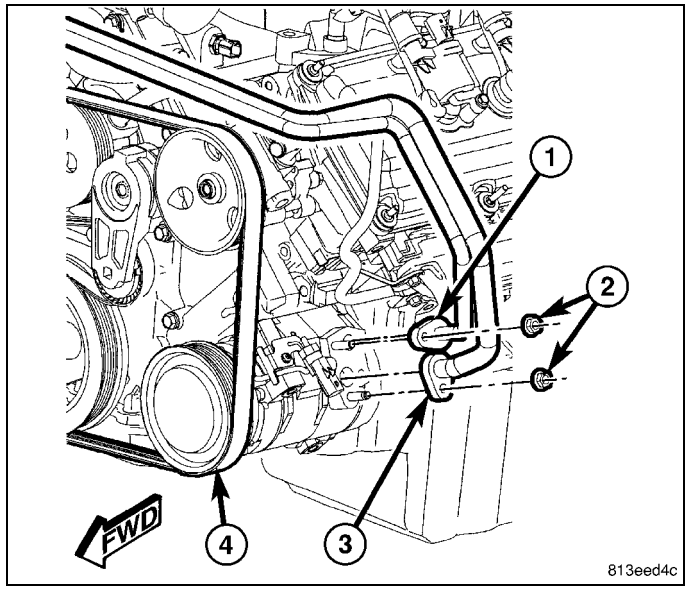

CAUTION: Do not let the tensioner arm snap back to the freearm position, severe damage may occur to the tensioner.

27. Insert a suitable square drive ratchet into the square hole on the belt tensioner arm (7).
28. Rotate the tensioner (7) counter-clockwise and install the accessory drive belt (4).
29. Install the radiator and A/C condenser as an assembly (Refer to 07 - Cooling/Engine/RADIATOR, Engine Cooling - Installation)and (Refer to 24 - Heating and Air Conditioning/Plumbing/CONDENSER, A/C - Installation)
30. Position the shroud in the radiator tank clips and Install the fan shroud mounting bolts.
31. Connect the radiator upper hose.

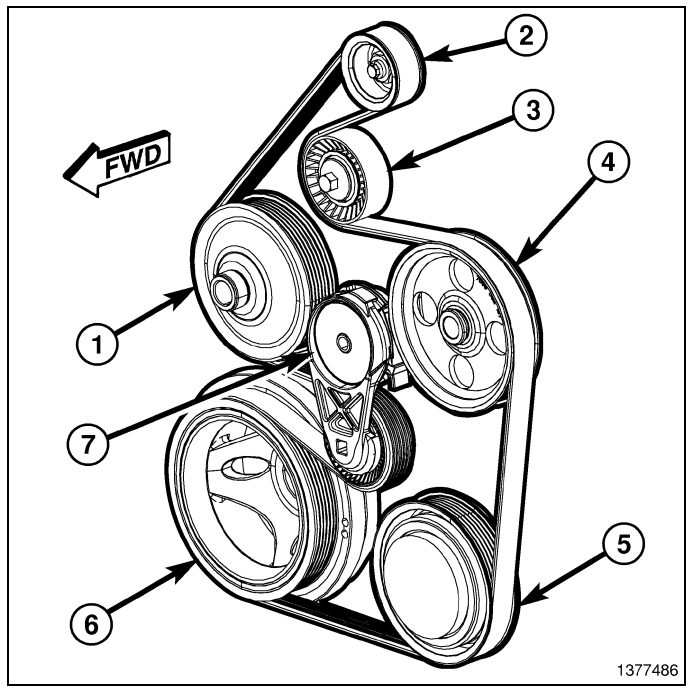

32. Position the upper radiator seal and install the two plastic rivets (2).
33. Install the four push pins (1).
34. Install the washer bottle.

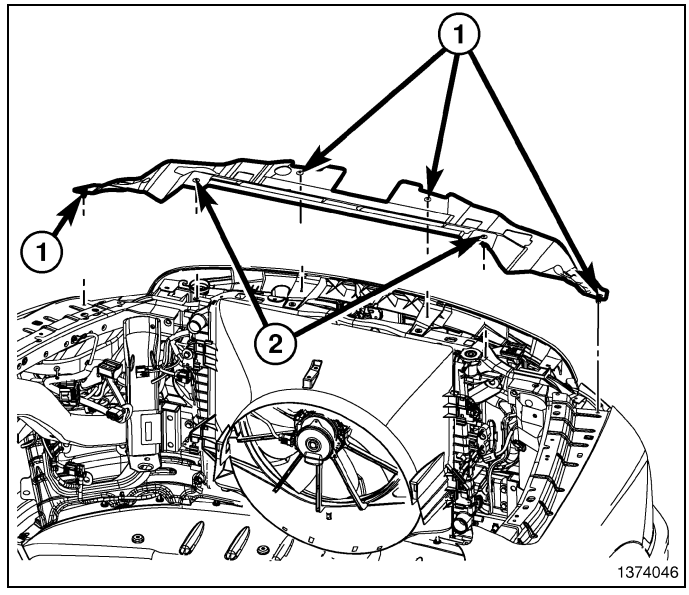

35. Install the engine cover (1) (Refer to 09 - Engine/COVER, Engine - Installation)
36. Install the air cleaner housing (4).
37. Install the clean air hose (2).
38. Connect the intake air temperature (IAT) sensor electrical connector (3).

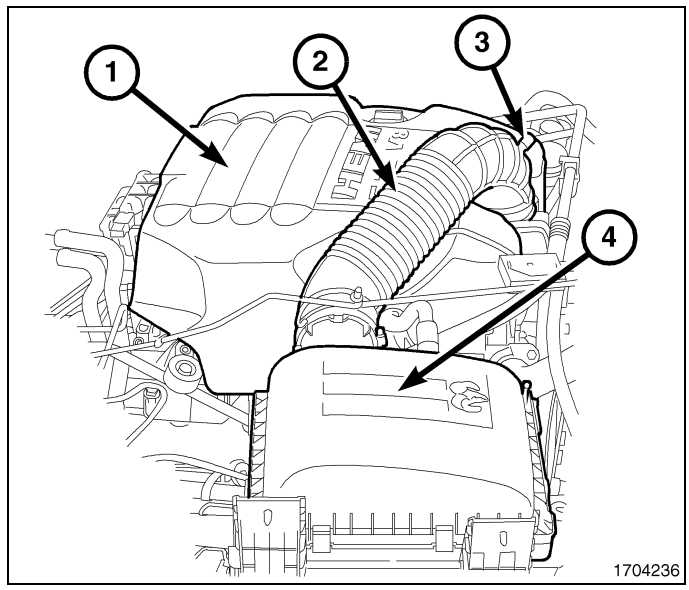

39. Fill the engine with oil (Refer to 04 - Vehicle Quick Reference/Capacities and Recommended Fluids - Specifications)
40. Fill the cooling system (Refer to 07 - Cooling - Standard Procedure)
41. Connect the negative battery cable (1).
42. Start the engine and check for leaks.
43. Evacuate and Charge the refrigerant system (Refer to 24 - Heating and Air Conditioning/Plumbing - Standard Procedure)

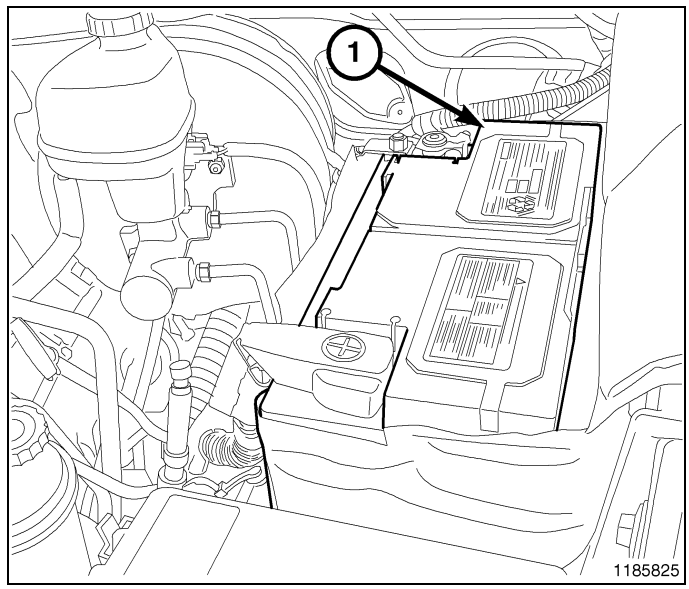

Specifications

SPECIFICATIONS

Eagle Engine - 90° V-8 OHV

DESCRIPTION	SPECIFICATION	
	Metric	Standard
Displacement	5.7 Liters	348 CID
Bore	99.5 mm	3.92 in.
Stroke	90.9 mm	3.58 in.
Compression Ratio	10.5:1	
Max. Variation Between Cylinders	25%	
Firing Order	1-8-4-3-6-5-7-2	
Lubrication	Pressure Feed - Full Flow Filtration	
Cooling System	Liquid Cooled	

Eagle Engine - 90° V-8 OHV, continued

DESCRIPTION	SPECIFICATION	
	Metric	Standard
Cylinder Block	Cast Iron	
Cylinder Head	Aluminum	
Crankshaft	Nodular Iron	
Camshaft	Cast Iron	
Pistons	Aluminum Alloy	
Connecting Rods	Powdered Metal	

CYLINDER BLOCK

DESCRIPTION	SPECIFICATION	
	Metric	Standard
Cylinder Bore Diameter	99.50 mm	3.92 in.
Out of Round (MAX)	0.0076 mm	0.0003 in.
Taper (MAX)	0.0127 mm	0.0005 in.
Lifter Bore Diameter	21.45 - 21.425 mm	0.8444 - 0.8435 in.

PISTONS

DESCRIPTION	SPECIFICATION	
	Metric	Standard
Clearance Measured at 38.0 mm (1.5 in.) Below Deck	0.031 - 0.058 mm	0.012 - 0.023 in.
Ring Groove Diameter		
Top Groove	90.4 - 90.6 mm	3.56 - 3.57 in.
Second Groove	88.4 - 88.7 mm	3.48 - 3.49 in.
Weight	413 grams	14.56 oz
Piston Length	53.3 mm	2.10 in.
Ring Groove Width		
No. 1	1.23 - 1.26 mm	0.048 - 0.0496 in
No. 2	1.23 - 1.25 mm	0.048 - 0.0492 in.
No. 3	2.03 - 2.05 mm	0.079 - 0.080 in.

PISTON PINS

DESCRIPTION	SPECIFICATION	
	Metric	Standard
Clearance In Piston	0.005 - 0.014 mm	0.0001 - 0.0005 in.

PISTON PINS, continued

DESCRIPTION	SPECIFICATION	
	Metric	Standard
Diameter	24.004 - 24.007 mm	0.945 - 0.9451 in.
Length	62.99 - 63.21 mm	2.47 - 2.48 in.

PISTON RINGS

DESCRIPTION	SPECIFICATION	
	Metric	Standard
Ring Gap		
Top Compression Ring	0.40 - 0.55 mm	0.015 - 0.021 in.
Second Compression Ring	0.24 - 0.51 mm	0.009 - 0.020 in.
Oil Control Rails	0.15 - 0.66 mm	0.0059 - 0.0259 in.
Side Clearance		
Top Compression Ring	0.04 - 0.09 mm	0.001 - 0.0035 in.
Second Compression Ring	0.04 - .08 mm	0.001 - 0.0031 in.
Oil Control Rails	0.06 - 0.21 mm	0.002 - 0.008 in.
Ring Width		
Top Compression Ring	1.17 - 1.19 mm	0.0460 - 0.0468 in.
Second Compression Ring	1.17 - 1.19 mm	0.0460 - 0.0468 in.
Oil Control Rails	0.387 - 0.413 mm	0.015 - 0.016 in.

CONNECTING RODS

DESCRIPTION	SPECIFICATION	
	Metric	Standard
Piston Pin Bore Diameter	24.014 - 24.024 mm	0.9454 - 0.9458 in.
Side Clearance	0.10 - 0.35 mm	0.003 - 0.0137 in.

CRANKSHAFT

DESCRIPTION	SPECIFICATION	
	Metric	Standard
Main Bearing Journal Diameter	64.988 - 65.012 mm	2.5585 - 2.5595 in.
Bearing Clearance	0.023 - 0.051 mm	0.0009 - 0.002 in.
Out of Round (MAX)	0.005 mm	0.0002 in.
Taper (MAX)	0.003 mm	0.0001 in.
End Play	0.052 - 0.282 mm	0.002 - 0.011 in.
End Play (MAX)	0.282 mm	0.011 in.
Connecting Rod Journal Diameter	53.992 - 54.008 mm	2.126 in.
Bearing Clearance	0.020 - 0.060 mm	0.0007 - 0.0023 in.

CRANKSHAFT, continued

DESCRIPTION	SPECIFICATION	
	Metric	Standard
Out of Round (MAX)	0.005 mm	0.0002 in.
Taper (MAX)	0.003 mm	0.0001 in.

CAMSHAFT

DESCRIPTION	SPECIFICATION	
	Metric	Standard
Bearing Journal Diameter		
No. 1	58.2 mm	2.29 in.
No. 2	57.8 mm	2.28 in.
No. 3	57.4 mm	2.26 in.
No. 4	57.0 mm	2.24 in.
No. 5	43.633 mm	1.72 in.
Bearing To Journal Clearance Standard		
No. 1	0.040 - 0.080 mm	.0015 - .003 in.
No. 2	0.050 -0.090 mm	0.0019 - .0035 in.
No. 3	0.040 - 0.080 mm	.0015 - .003 in.
No. 4	0.050 - 0.090 mm	0.0019 - .0035 in.
No. 5	0.040 - 0.080 mm	.0015 - .003 in.
Camshaft End Play	.080 - 0.290mm	0.0031 - 0.0114 in.

VALVE TIMING

DESCRIPTION	SPECIFICATION
Intake	
Opens (BTDC)	28.2°
Closes (ATDC)	239.8°
Duration	268°
Exhaust	
Opens (BTDC)	274.2°
Closes (ATDC)	15.8°
Duration	290°
Valve Overlap	44°

CYLINDER HEAD

DESCRIPTION	SPECIFICATION	
	Metric	Standard
Valve Seat Angle	44.5° - 45.0°	
Valve Seat Runout (MAX)	0.05 mm	0.0019 in.
Valve Seat Width (finish)		
Intake	1.18 - 1.62 mm	.0638 in.
Exhaust	1.48 - 1.92 mm	0.0583 - 0.0756 in.
Guide Bore Diameter (Std.)	7.975 - 8.00 mm	0.3134 - 0.315 in.

HYDRAULIC TAPPETS

DESCRIPTION	SPECIFICATION	
	Metric	Standard
Body Diameter	21.387 - 21.405 mm	0.8420 - 0.8427 in.
Clearance (to bore)	0.020 - 0.063 mm	0.0008 - 0.0025 in.
Dry Lash	3.0 mm (at the valve)	0.1181 in. (at the valve)

VALVES

DESCRIPTION	SPECIFICATION	
	Metric	Standard
Face Angle	45.0° - 45.5°	
Head Diameter		
Intake	50.67 - 50.93 mm	1.99 - 2.01 in.
Exhaust	39.27 - 39.53 mm	1.55 - 1.56 in.
Length (overall)		
Intake	123.38 - 123.76 mm	4.857 - 4.872 in.
Exhaust	120.475 - 120.855 mm	4.743 - 4.758 in.
Stem Diameter		
Intake	7.935 - 7.953 mm	0.312 - 0.313 in.
Exhaust	7.932 - 7.950 mm	0.312 - 0.313 in.
Stem - to - Guide Clearance		
Intake	0.022 - 0.065 mm	0.0008 - 0.0025 in.
Exhaust	0.025 - 0.065 mm	0.0009 - 0.0025 in.
Valve Lift (@ zero lash)		
Intake	12.0 mm	0.472 in.
Exhaust	11.70 mm	0.460 in.

VALVE SPRING

DESCRIPTION	SPECIFICATION	
	Metric	Standard
Spring Force (valve closed)	435.0 N +/- 22.0 N @ 45 mm	97.8 lbs +/- 5.0 lbs. @ 1.771 in.
Spring Force (valve open)	1077.0 N +/- 48.0 N @ 32.6 mm.	242.0 lbs. +/- 11 lbs. @ 1.283 in.
Free Length (approx).	55.6 mm	2.189 in.
Number of Coils	7.95	
Wire Diameter	4.95 × 4.1 mm	0.194 - 0.161 in.
Installed Height (spring seat to bottom of retainer)	46.0 mm	1.81 in.

OIL PUMP

DESCRIPTION	SPECIFICATION	
	Metric	Standard
Clearance Over Rotors (MAX)	0.095 mm	0.0038 in.
Outer Rotor to Pump Body Clearance (MAX)	.235 mm	0.009 in.
Tip Clearance Between Rotors (MAX)	0.150 mm	0.006 in.

OIL PRESSURE

DESCRIPTION	SPECIFICATION	
	Metric	Standard
At Curb Idle Speed (MIN)*	25 kPa	4 psi
@ 3000 rpm	170 - 758 kPa	25 - 110 psi
*** CAUTION: If pressure is zero at curb idle, DO NOT run engine.**		

TORQUE

5.7L ENGINE

DESCRIPTION	N·m	Ft. Lbs.	In. Lbs.
Block Pipe Plugs (1/4 – 18 NPT) Oil Galley Plug	20	15	—
(1/4 – 18 NPT) Coolant Drain Plug	34	25	—
(3/8 NPT)	27	20	240
Camshaft Phaser Bolt	85	63	—
Timing Drive Tensioner Bolts	11	—	97
Timing Drive Guide Bolts	11	—	97
Camshaft Thrust Plate Bolts	12	—	106
Camshaft Sprocket Bolt	122	90	—

5.7L ENGINE, continued

DESCRIPTION	N·m	Ft. Lbs.	In. Lbs.
Coil to Cylinder Head Cover Bolts	7	—	62
Timing Chain Case Cover Bolts	28	21	—
Lifting Stud	55	41	—
Connecting Rod Cap Bolts	21 Plus 90° Turn	15 Plus 90° Turn	—
Main Bearing Cap Bolts	See Procedure (Refer to 09 - Engine/Engine Block/CRANKSHAFT - Installation).		
Cylinder Head Bolts	See Procedure (Refer to 09 - Engine/Cylinder Head - Installation)		
Cylinder Head Cover Bolts	8	—	71
Exhaust Manifold to Cylinder Head	25	18	220
Flexplate to Crankshaft Bolts	95	70	—
Flywheel to Crankshaft Bolts	75	55	—
Front Insulator Through Bolt and Nut	95	70	—
Front Insulator to Support Bracket			
Stud and Nut (4WD)	41	30	—
Through Bolt and Nut (4WD)	102	75	—
Front Insulator to Block Bolts (2WD)	95	70	—
Generator Mounting Bolt	55	41	—
Intake Manifold Bolts	Refer to Procedure (Refer to 09 - Engine/Manifolds/ MANIFOLD, Intake - Installation)		
Lifter Guide Holder	12	9	—
Oil Pan Bolts	12	9	—
Oil Dipstick Tube	12	9	—
Oil Pan Drain Plug	34	25	—
Oil Pump Bolts	28	21	—
Oil Pump Pickup Tube Bolt and Nut	28	21	—
Rear Seal Retainer Bolts	15	11	—
Rear Insulator to Bracket Through Bolt (2WD)	68	50	—
Rear Insulator to Crossmember Support Bracket Nut (2WD)	41	30	—
Rear Insulator to Crossmember Nuts (4WD)	68	50	—
Rear Insulator to Transmission Bolts (4WD)	68	50	—
Rear Insulator Bracket Bolts (4WD Automatic)	68	50	—

5.7L ENGINE, continued

DESCRIPTION	N·m	Ft. Lbs.	In. Lbs.
Rear Support Bracket to Crossmember Flange Nuts Crossmember Flange Nuts	41	30	—
Rear Support Plate to Transfer Case Bolts Case Bolts	41	30	—
Rocker Arm Bolts	22	16	—
Thermostat Housing Bolts	28	21	—
Throttle Body Bolts	12	9	—
Transfer Case to Insulator Bolts Mounting Plate Nuts	204	150	—
Transmission Support Bracket Bolts (2WD)	68	50	—
Vibration Damper Bolt	176	130	—
Water Pump to Timing Chain Case Cover Bolts	28	21	—

Special Tools

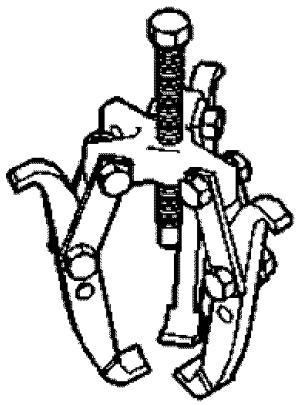

1023 - Puller

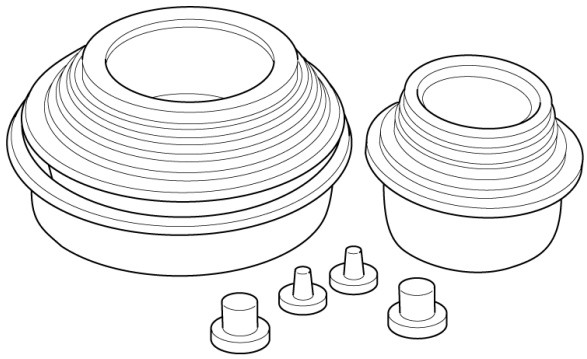

10368 - Set, Universal Protective Cap

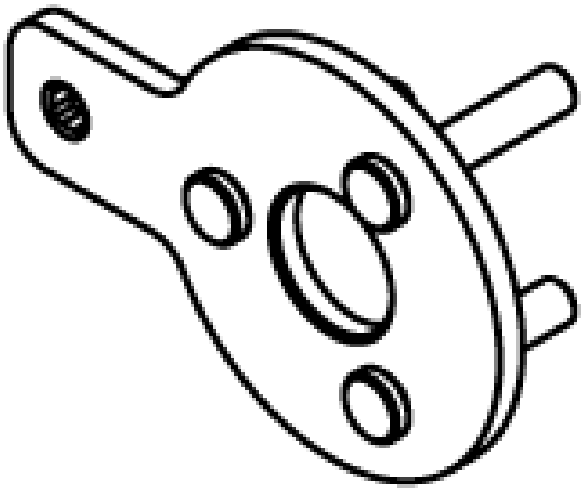

10386 - Holder, Vibration Damper

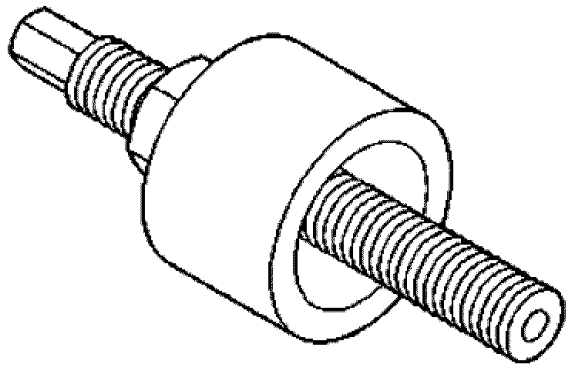

6871 - Installer, A/C Hub

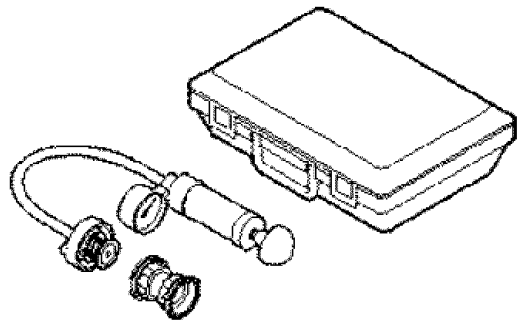

7700 - Tester, Cooling System

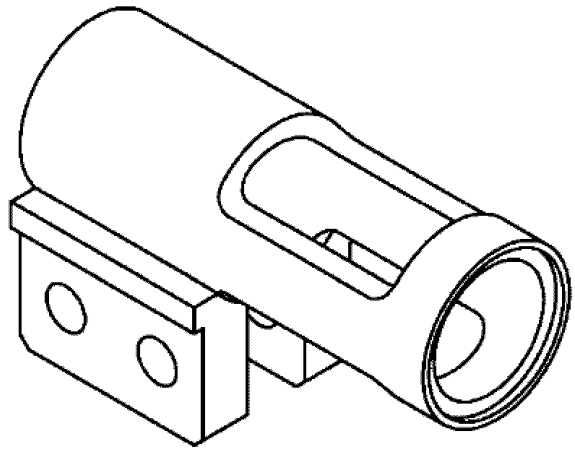

8464 - Adapter, Valve Spring

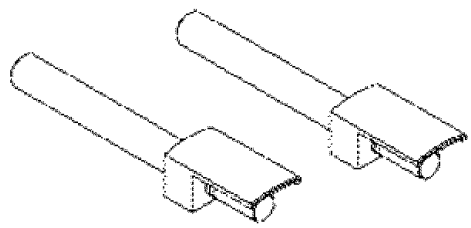

8507 - Guides, Connecting Rod

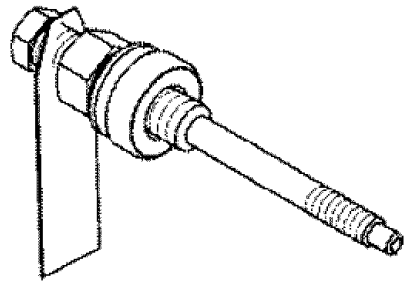

8512A - Installer, Damper

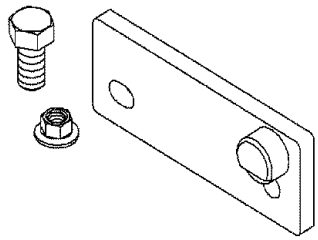

8984-UPD - Adapter, Engine Lift

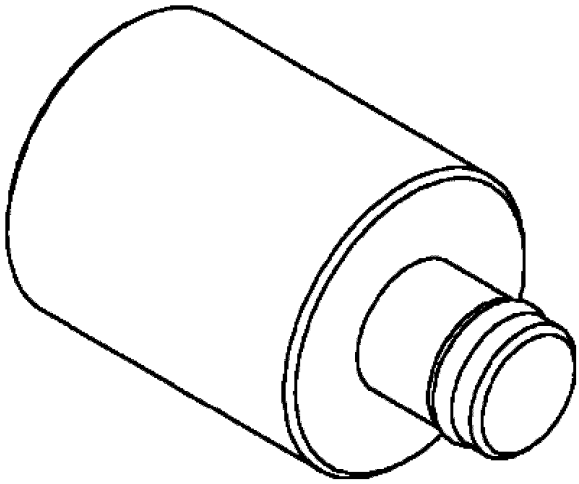

8513A - Insert, Crankshaft

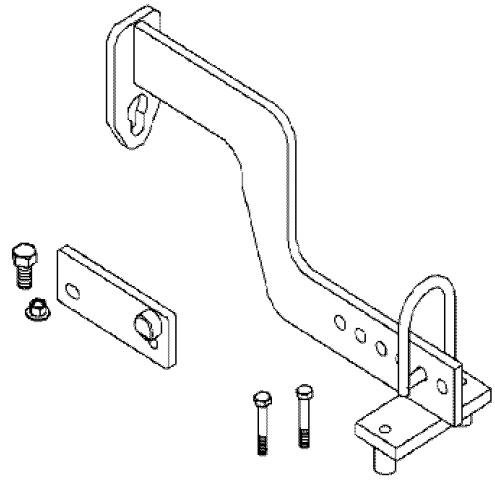

8984B - Engine Lift Fixture

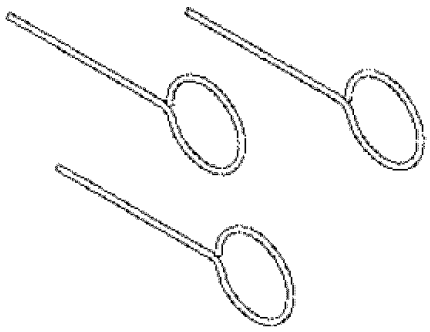

8514 - Pins, Tensioner

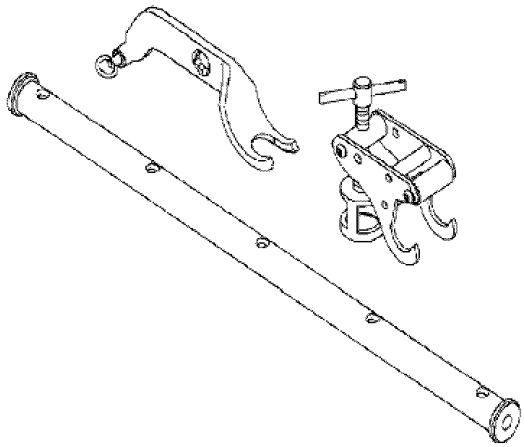

9065B - Compressor, Valve Spring

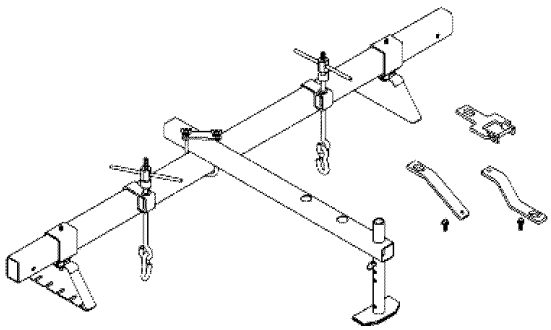

8534B - Support Fixture, Engine

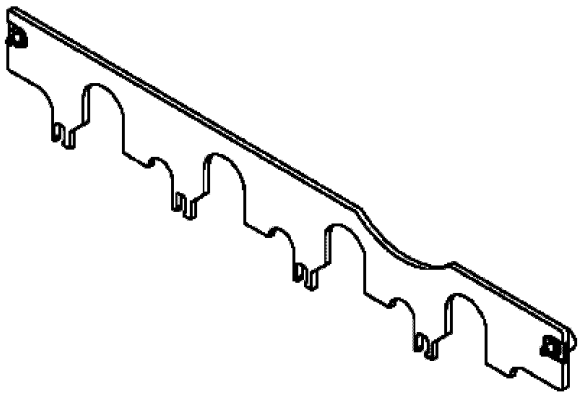

9070 - Retainer, Push Rod

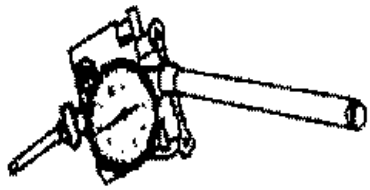

C-119 - Cylinder Indicator

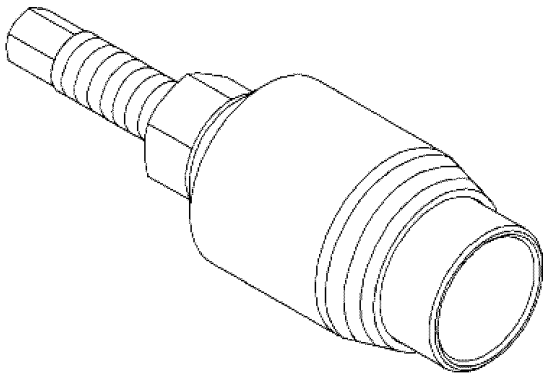

9071 - Remover, Seal

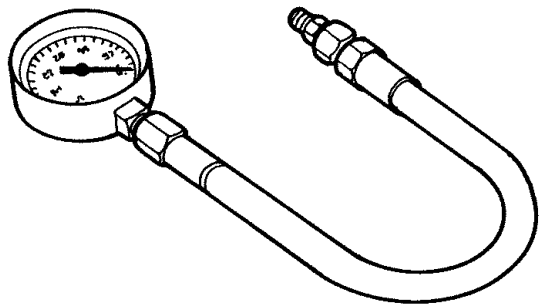

C-3292A - Gauge, Pressure

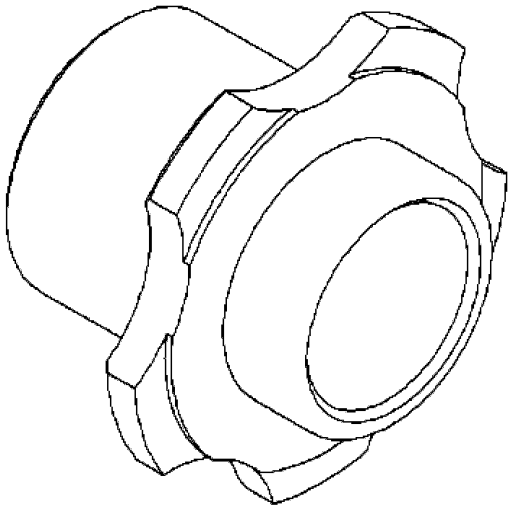

9072 - Installer, Seal

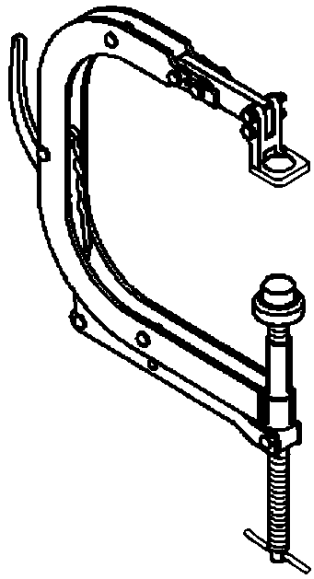

C-3422-D - Compressor, Valve Spring



C-3685-A - Bloc-Chek Kit

COVER, Engine

Description

The engine cover mounts into grommets at the front and rear of the intake manifold.

The front grommets (1,3) are a ball stud type mounts and the rear grommets (2) are a sliding peg design.

The engine cover rear pegs slide into the grommets (2) at the rear of the intake manifold and the engine cover front ball studs snap into the grommets (1,3) at the front of the intake manifold.

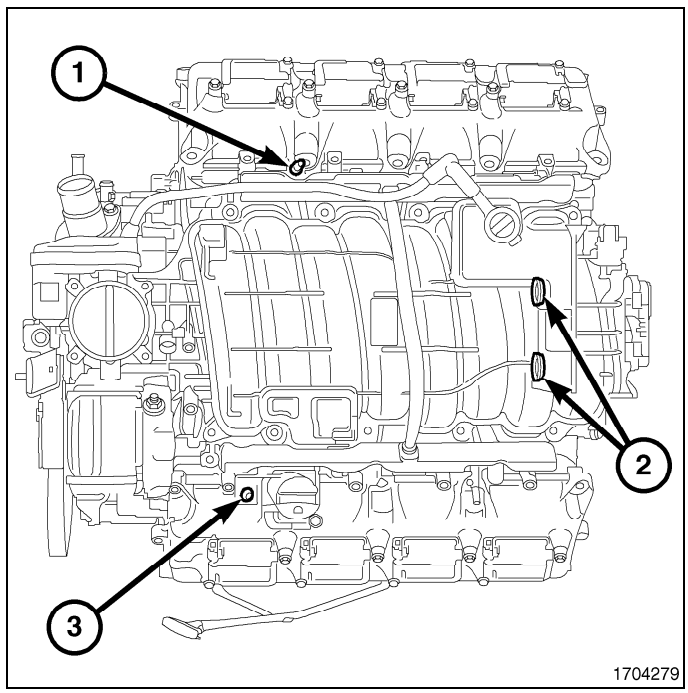

Removal

1. Disconnect the IAT sensor electrical connector (3).
2. Remove the clean air tube (2) from the air cleaner housing (4) and the throttle body.

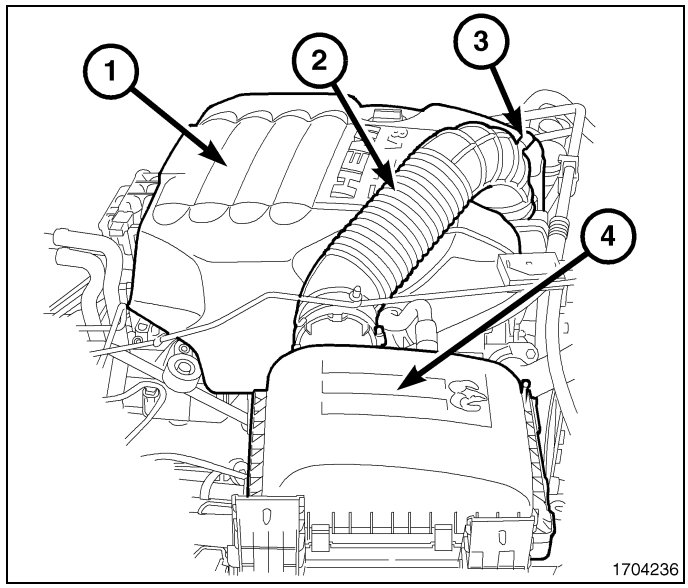

3. Lift up the front of the engine cover (1) and separate the engine cover front grommets (2) from the ball studs on the intake manifold.

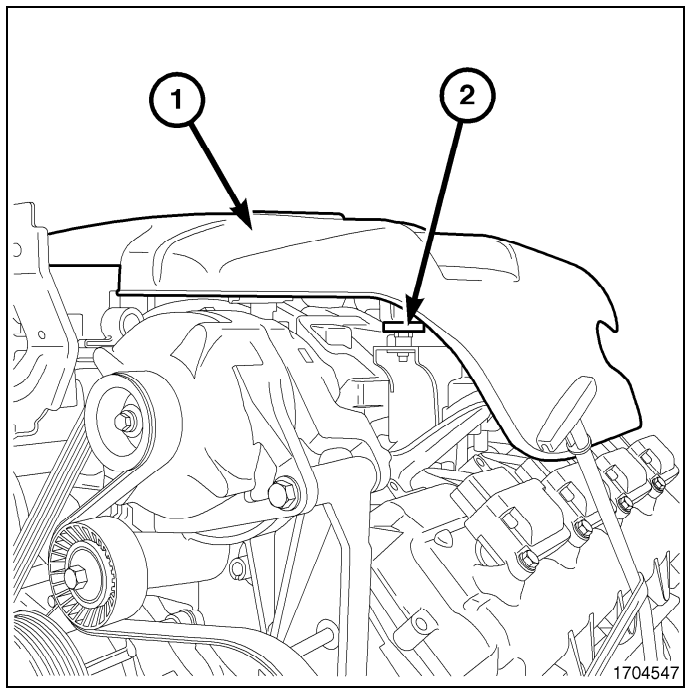

4. Slightly raise the front of the engine cover and slide forward to remove the rear engine cover pegs (2) from the grommets (1) on the rear of the intake manifold.

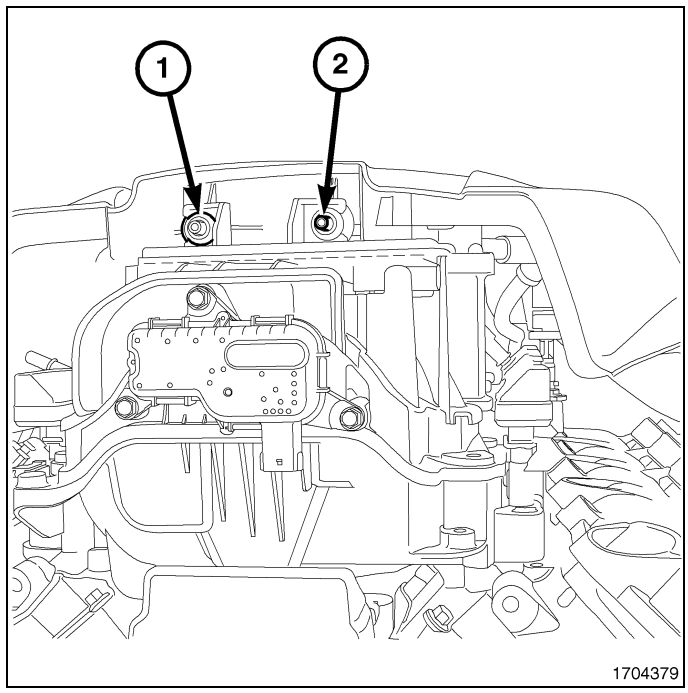

5. Remove the engine cover (1).

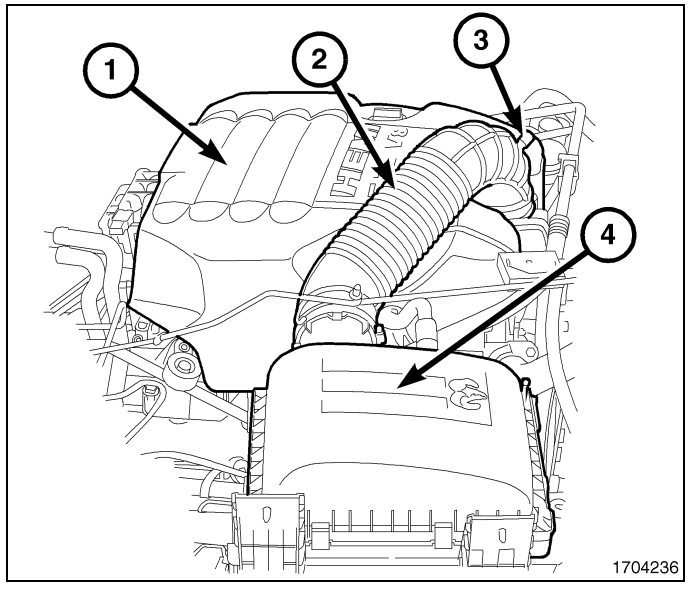

Installation

NOTE: The front grommets (1,3) are a ball stud type mount and the rear grommets (2) are a sliding peg design.

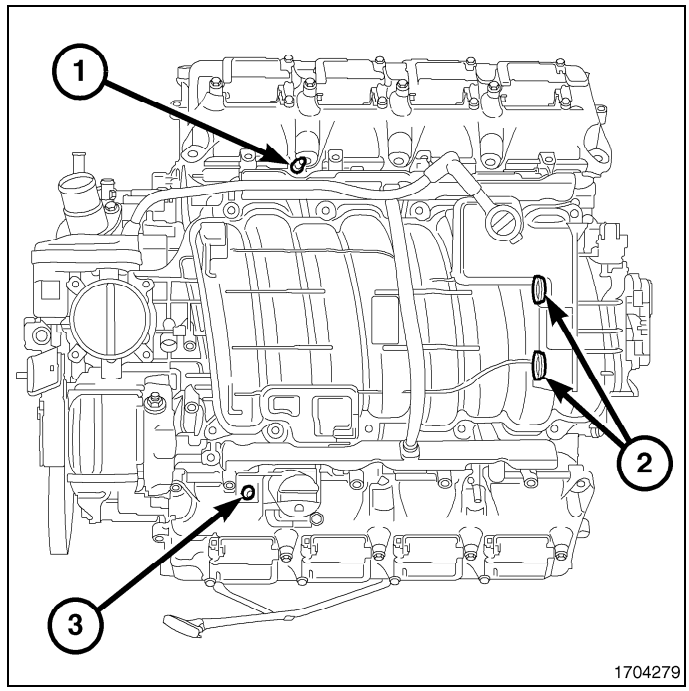

1. Slightly tilt the rear of the engine cover and slide the rear engine cover pegs (2) into the grommets (1) on the rear of the intake manifold until the cover stops.

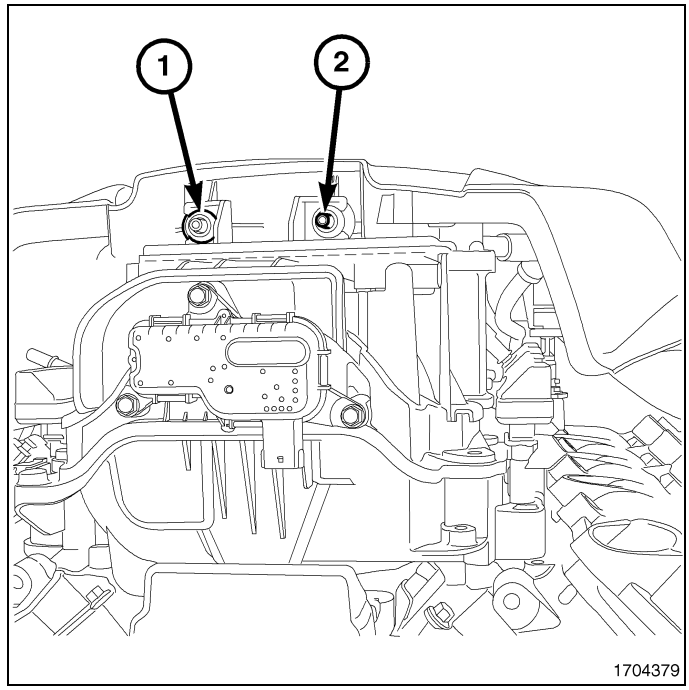

NOTE: While installing the engine cover the front ball studs will make a popping or suction sound as the ball studs are inserted into the front grommets.

2. Lower the front of the engine cover (1) and line up the front ball studs with the grommets (2) on the front of the intake manifold and with a downward motion push the engine cover ball studs into the front grommets.
3. Lightly lift the front of the engine cover to insure the front ball studs are seated into the front grommets correctly.

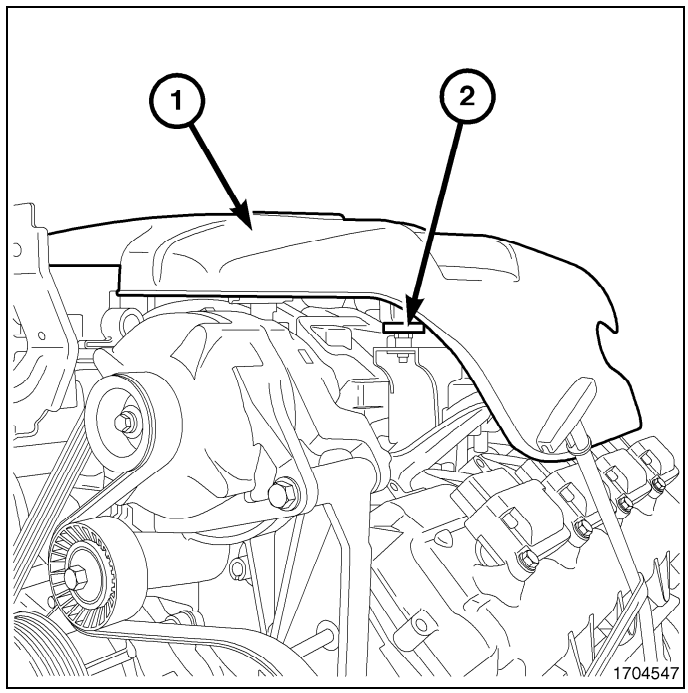

4. Check to make sure the engine cover is installed properly by reaching behind the cover to verify that the pegs (2) are located in the grommets (1).

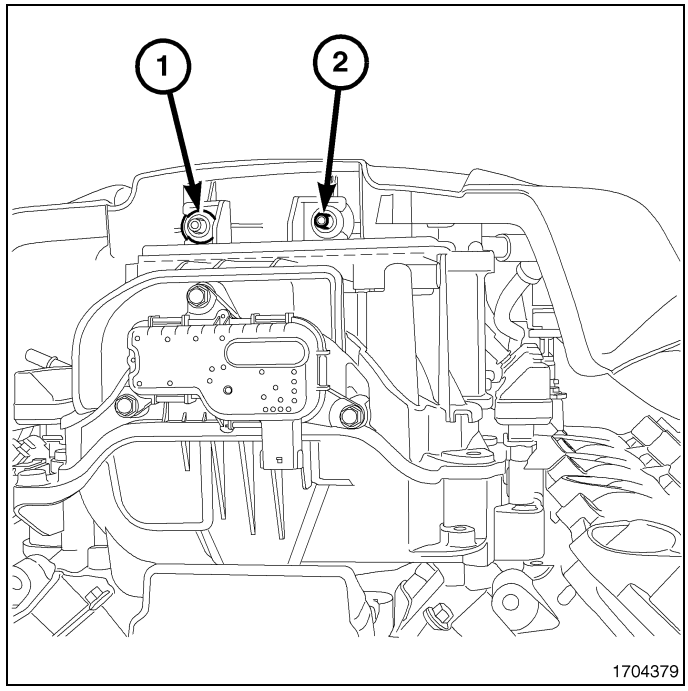

5. Install the clean air tube (2) onto the air cleaner housing (4) and the throttle body.
6. Connect the IAT sensor electrical connector (3).

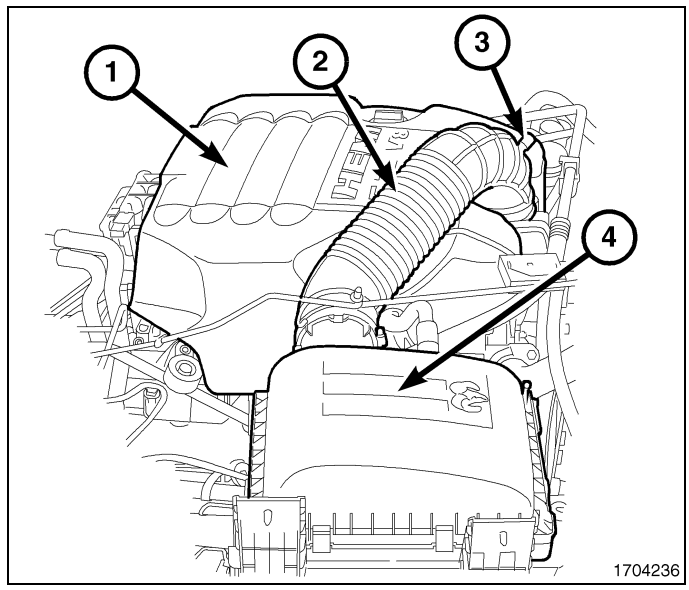

MDS SYSTEM

Description

The Multiple Displacement System (MDS) selectively deactivates cylinders 1, 4, 6 and 7 during steady speed, low acceleration and shallow grade climbing conditions to increase fuel economy.

The MDS can provide a 5 to 20% fuel economy benefit when operating in four-cylinder mode. Depending on driving habits and vehicle usage. For EPA rating purposes the fuel economy is 8 to 15% higher than if the engine was operating on eight-cylinders at all times.

The MDS deactivating lifter (1) can be distinguished from the non-MDS lifter (2) by the disconnecting pin (3) on the side of the MDS lifter.

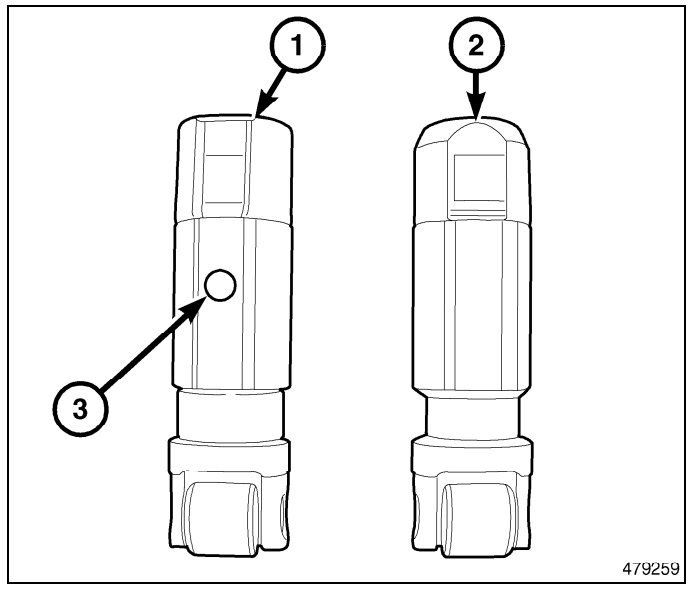

MDS is integrated into the basic engine architecture requiring these additional components:

- Unique MDS camshaft
- 8 deactivating roller lifters
- 4 MDS control valve solenoids
- MDS control valve solenoid wiring harness
- Oil temperature sensor

Operation

The Multiple Displacement System (MDS) provides cylinder deactivation during steady speed, low acceleration and shallow grade climbing conditions to increase fuel economy. Both four and eight cylinder configurations have even firing intervals to provide smooth operation. The MDS selectively deactivates cylinders 1,4,6, and 7, to improve fuel economy. All deactivated cylinders have unique hydraulic lifters that collapse when deactivated to prevent the valves from opening. Engine oil pressure is used to activate and deactivate the valves. Oil is delivered through special oil passages drilled into the cylinder block. The MDS solenoid valves control the flow. When activated, pressurized oil pushes a latching pin on each MDS lifter which becomes a lost motion link. The base of the MDS lifter follows the camshaft while the top remains stationary. The MDS lifter is held in place against the pushrod by light spring pressure but unable to move because of the much higher force of the valve spring.

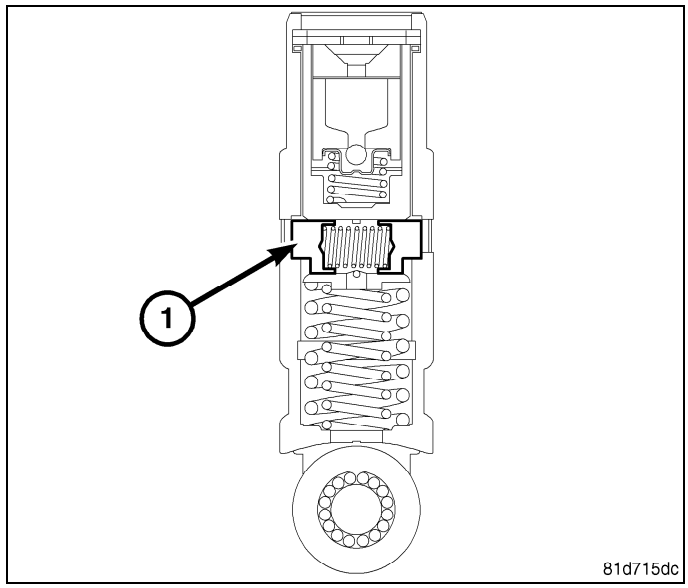

NOTE: It is critical to use the recommended oil viscosity in engines that use MDS.

Deactivation occurs during the compression stroke of each cylinder, after air and fuel enter the cylinder. Ignition occurs, but the combustion products remain trapped in the cylinder under high pressure, because the valves no longer open. No fuel/air enters or leaves during subsequent piston strokes, this high pressure gas is repeatedly compressed and expanded like an air spring.

AIR INTAKE SYSTEM

TABLE OF CONTENTS

page

AIR INTAKE SYSTEM
AIR CLEANER
REMOVAL 334
INSTALLATION 335

page

BODY, AIR CLEANER
REMOVAL 336
INSTALLATION 336

Air Intake System

AIR CLEANER

Removal

1. Disengage the retaining clamps (1) that secure the air cleaner body cover to air cleaner body.
2. Lift and push the air cleaner body cover toward the engine to disengage the cover locating tabs from the air cleaner body and position the cover out of the way.

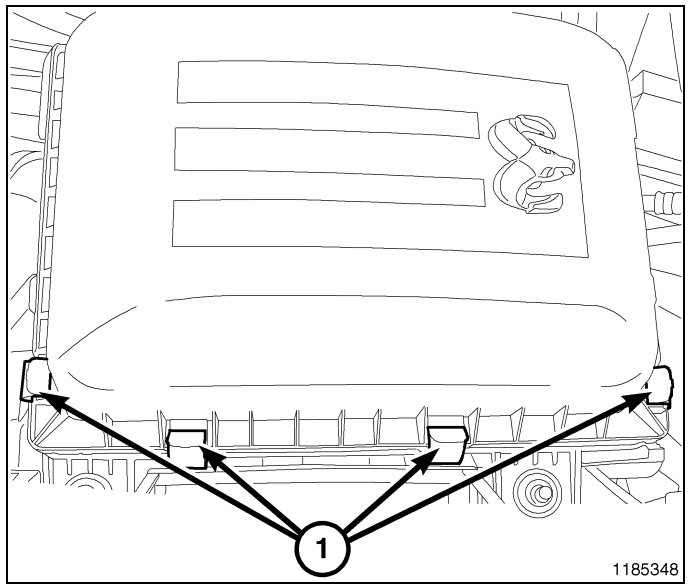

3. Remove the air cleaner element (2) from the inside of the air cleaner body (1).
4. Clean out the inside of the air cleaner body (1).

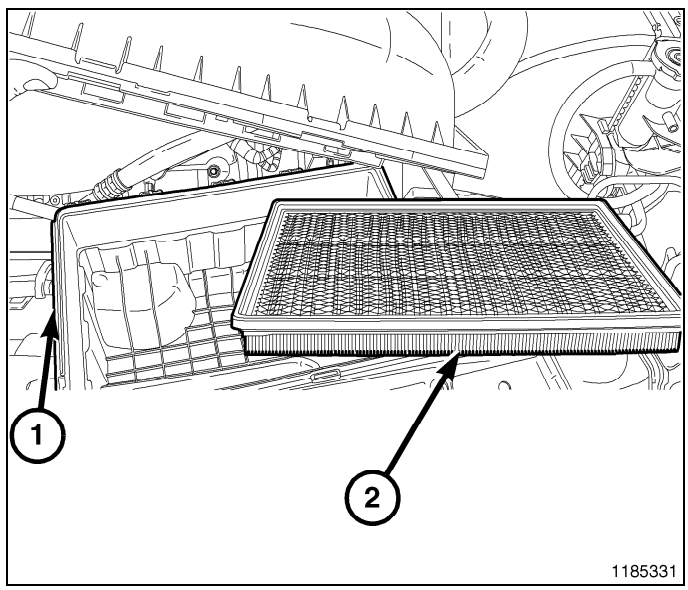

Installation

1. Clean any dirt or foreign matter from the inside of the air cleaner housing (1).
2. Install the air filter element (2) into air cleaner housing. Make sure the element is properly seated in the housing.

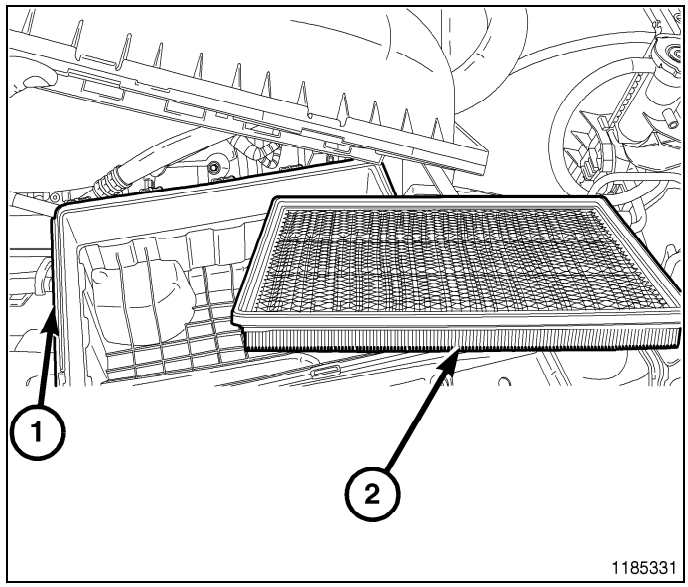

3. Position the air cleaner housing cover to the air cleaner housing and engage the cover locating tabs.
4. Fully install the air cleaner housing cover to the air cleaner housing and engage the four retaining clamps (1).

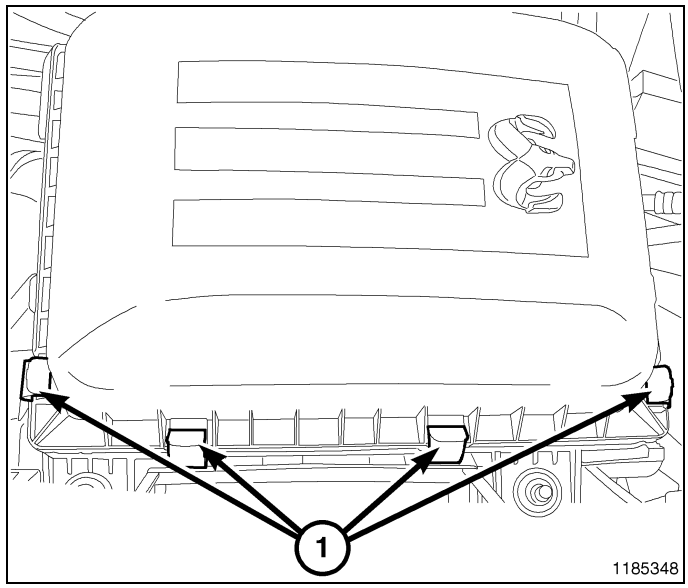

BODY, Air Cleaner

Removal

1. Disconnect the make up air hose (3).
2. Remove clean air tube from air cleaner housing (2).
3. Pull the air cleaner housing straight upward to disengage it from the grommets (1).

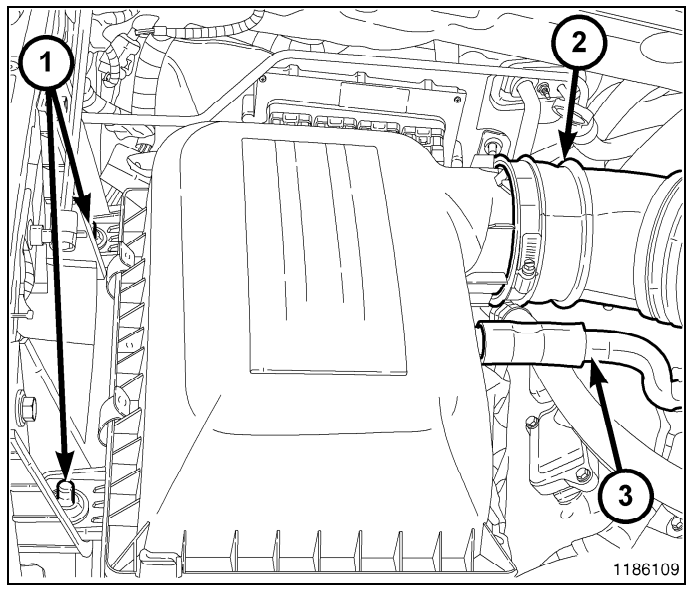

Installation

1. Position the air cleaner housing onto the grommets (1) and push downward.
2. Connect the clean air hose (2) to the air cleaner housing.
3. Connect make up air hose (3) to the air cleaner housing.

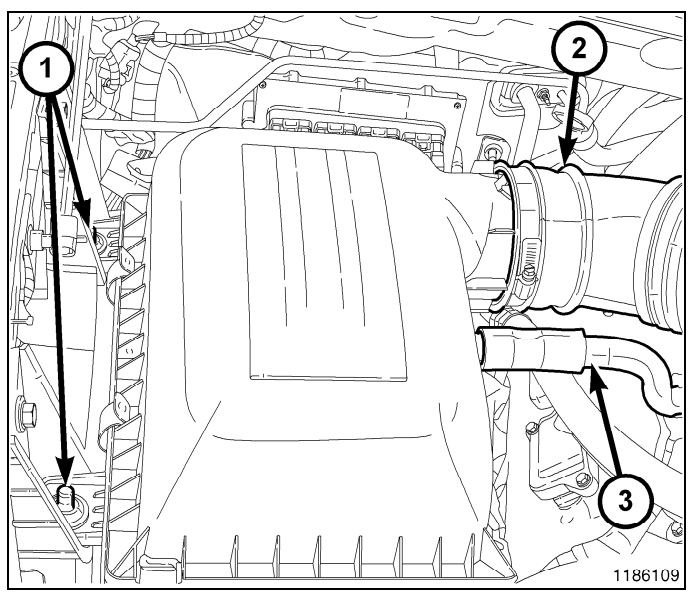

CYLINDER HEAD

TABLE OF CONTENTS

page

CYLINDER HEAD
- OPERATION 338
- DIAGNOSIS AND TESTING 338
- REMOVAL 339
- CLEANING 343
- INSPECTION 343
- INSTALLATION 344

COVER(S), CYLINDER HEAD
- REMOVAL 350
- INSTALLATION 352

ROCKER ARM, VALVE
- REMOVAL 355
- INSTALLATION 358

page

SEAL(S), VALVE GUIDE
- DESCRIPTION 361
- REMOVAL 361
- INSTALLATION 361

SPRING(S), VALVE
- REMOVAL 362
- INSTALLATION 366

VALVES, INTAKE AND EXHAUST
- DESCRIPTION
  - VALVE GUIDES 370
  - VALVES 370
- STANDARD PROCEDURE 370
- REMOVAL 371
- INSTALLATION 371

Cylinder Head

Operation

The cylinder head closes the combustion chamber allowing the pistons to compress the air fuel mixture to the correct ratio for ignition. The valves located in the cylinder head open and close to either allow clean air into the combustion chamber or to allow the exhaust gases out, depending on the stroke of the engine.

Diagnosis and Testing

A cylinder head gasket leak can be located between adjacent cylinders or between a cylinder and the adjacent water jacket.

- Possible indications of the cylinder head gasket leaking between adjacent cylinders are:
  - Loss of engine power
  - Engine misfiring
  - Poor fuel economy
- Possible indications of the cylinder head gasket leaking between a cylinder and an adjacent water jacket are:
  - Engine overheating
  - Loss of coolant
  - Excessive steam (white smoke) emitting from exhaust
  - Coolant foaming

CYLINDER-TO-CYLINDER LEAKAGE TEST

To determine if an engine cylinder head gasket is leaking between adjacent cylinders, follow the procedures in the Cylinder Compression Pressure Test in this section. An engine cylinder head gasket leaking between adjacent cylinders will results in approximately a 50 - 70% reduction in compression pressure.

CYLINDER-TO-WATER JACKET LEAKAGE TEST

WARNING: Use extreme care when the engine is operating with the coolant pressure cap removed. Failure to follow these instructions may result in possible serious or fatal injury.

VISUAL TEST METHOD

With the engine cool, remove the coolant pressure cap. Start the engine and allow it to warm up until thermostat opens.

If a large combustion/compression pressure leak exists, bubbles will be visible in the coolant.

COOLING SYSTEM TESTER METHOD

CAUTION: With the cooling system tester in place, pressure builds up fast. Excessive pressure built up by continuous engine operation must be released to a safe pressure point. Never permit pressure to exceed 138 Kpa (20 psi).

Install the Cooling System Tester 7700 or equivalent to pressure cap neck. Start the engine and observe the tester's pressure gauge. If the gauge pulsates with every power stroke of a cylinder a combustion pressure leak is evident.

CHEMICAL TEST METHOD

Combustion leaks into the cooling system can also be checked by using the Bloc-Chek Kit C-3685-A or equivalent. Perform the test following the procedures supplied with the tool kit.

Removal

1. Remove the cowl grille (4).

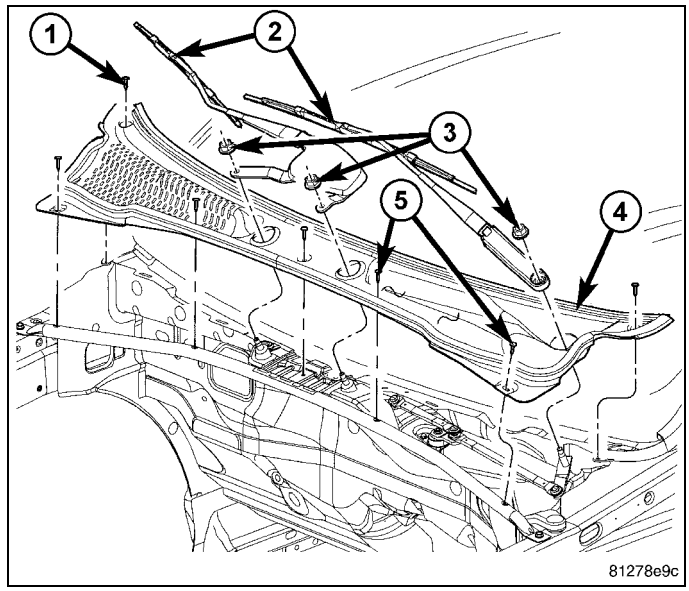

2. Remove the engine cover (1) (Refer to 09 - Engine/ COVER, Engine - Installation)
3. Perform the Fuel System Pressure Release procedure (Refer to 14 - Fuel System/Fuel Delivery - Standard Procedure)
4. Disconnect the fuel supply line (Refer to 14 - Fuel System/Fuel Delivery/FITTING, Quick Connect - Standard Procedure)

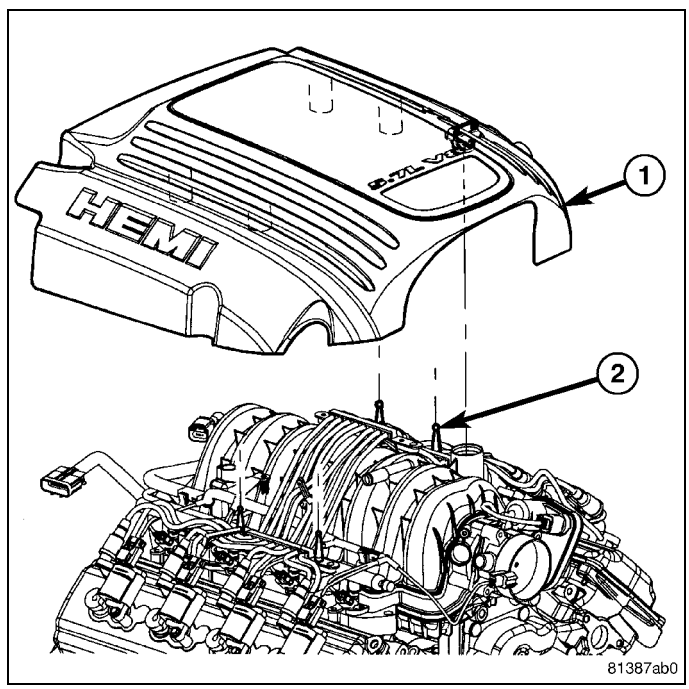

5. Disconnect and isolate the negative battery cable (2).
6. Drain the cooling system (Refer to 07 - Cooling - Standard Procedure)
7. Remove the air cleaner assembly (Refer to 09 - Engine/Air Intake System/BODY, Air Cleaner - Removal)
8. Remove closed crankcase ventilation system.

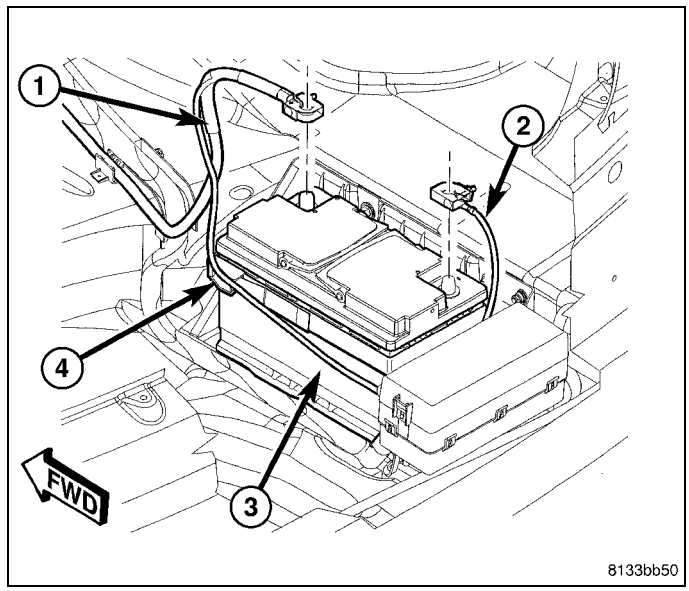

CAUTION: When servicing or replacing exhaust system components, disconnect the oxygen sensor connector(s). Allowing the exhaust to hang by the oxygen sensor wires will damage the harness and/or sensor.

9. Disconnect the oxygen sensor connectors (2).
10. Saturate all exhaust bolts and nuts with Mopar® Rust Penetrant. Allow 5 minutes for penetration.
11. Remove the exhaust pipe to manifold bolts (3) (left side shown, right side similar) and disconnect the front exhaust pipe/catalytic converter assembly (4)(Refer to 11 - Exhaust System/CONVERTER, Catalytic - Removal)
12. Disconnect the evaporation control system.

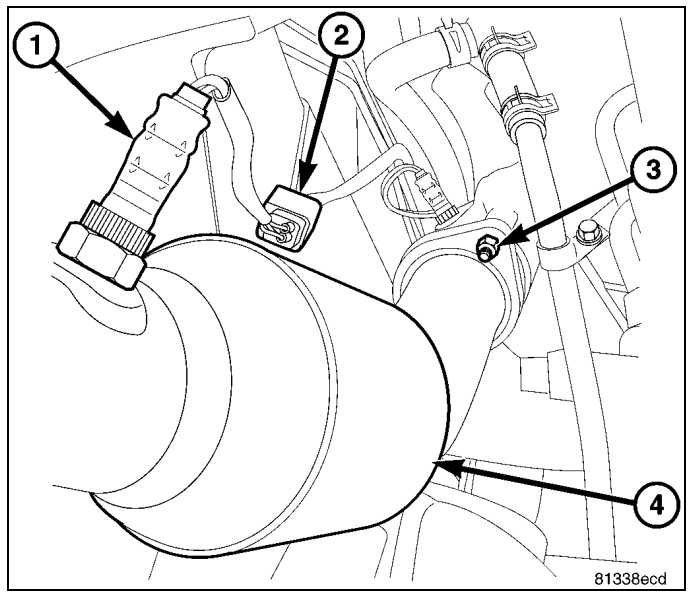

13. Disconnect the heater hoses (2).

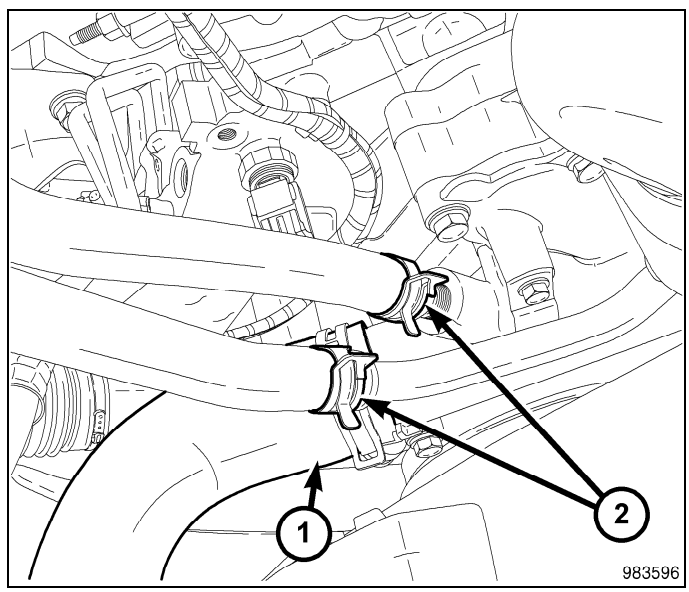

CAUTION: Do not let the tensioner arm snap back to the freearm position, sever damage may occur to the tensioner.

14. Insert a suitable square drive ratchet into the square hole on belt tensioner arm (7).
15. Release the belt tension by rotating the tensioner arm (7)**clockwise**. Rotate the belt tensioner arm (7) until the belt can be removed from the pulleys.
16. Remove the accessory drive belt.
17. Gently release the tensioner arm (7).

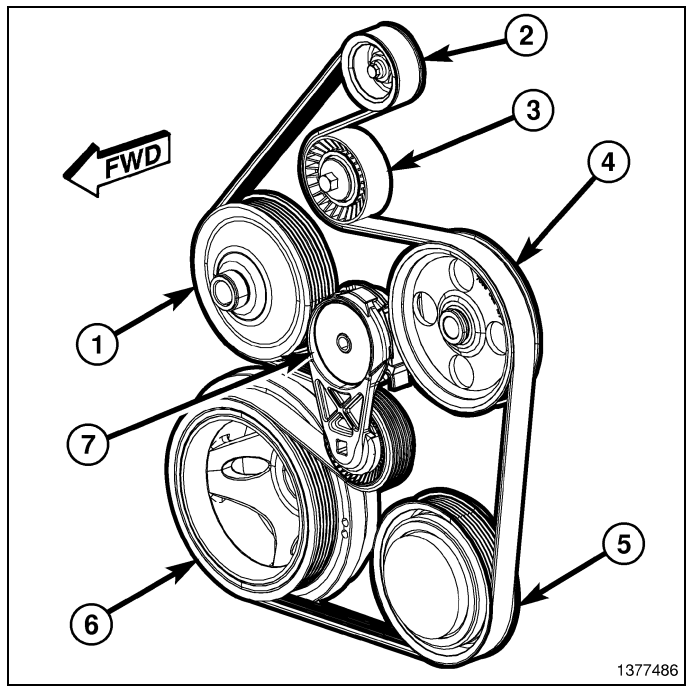

NOTE: It is not necessary to disconnect the hoses from the power steering pump, for power steering pump removal.

18. Remove the three power steering pump (1) mounting bolts (2) through the access holes in the pulley and secure out of the way.

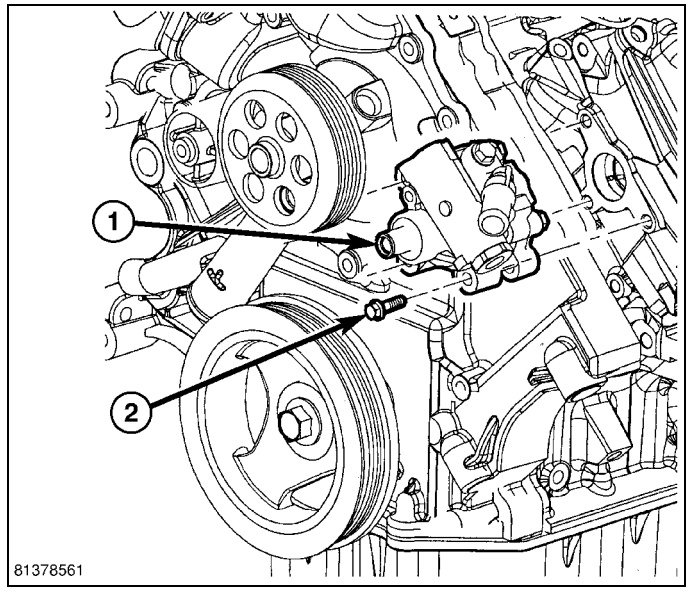

19. Remove the cylinder head covers and gaskets (Refer to 09 - Engine/Cylinder Head/COVER(S), Cylinder Head - Removal)

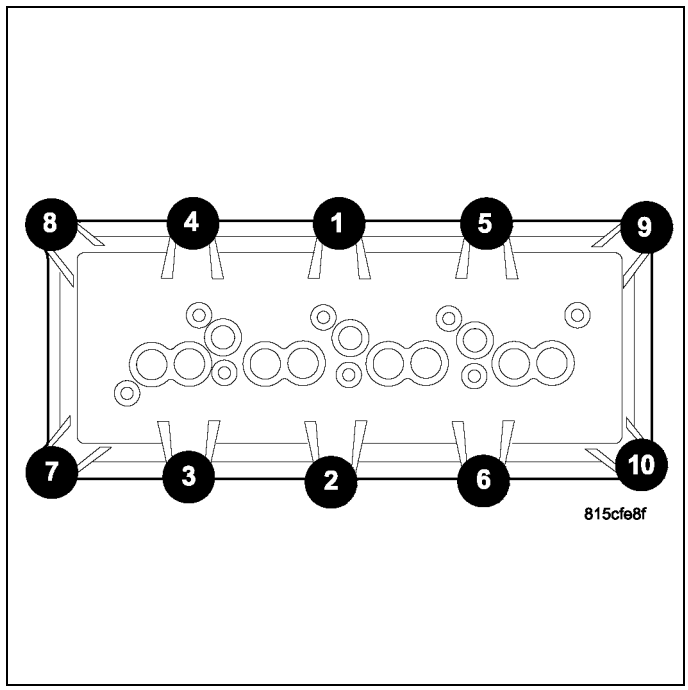

20. Remove the intake manifold and throttle body as an assembly (Refer to 09 - Engine/Manifolds/MANIFOLD, Intake - Removal)

CAUTION: Rocker arm assemblies and pushrods must be installed in their original locations or engine damage could result.

21. Identify the original locations for assembly, remove rocker arm assemblies and pushrods (Refer to 09 - Engine/Cylinder Head/ROCKER ARM, Valve - Removal)

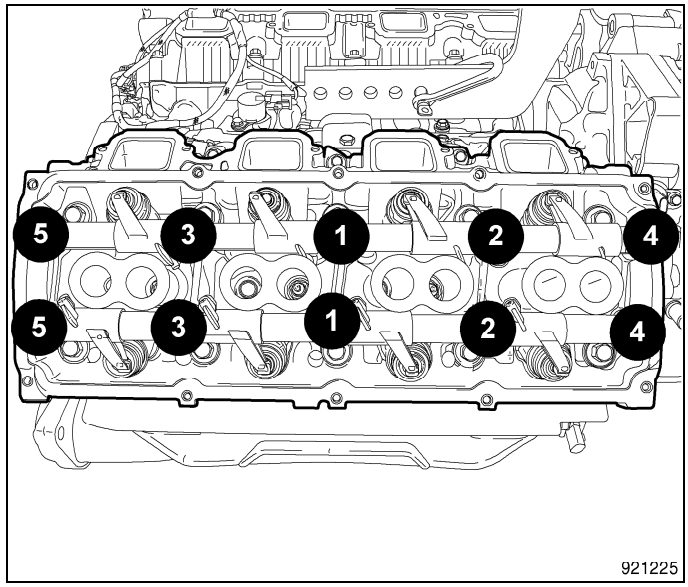

22. Using the sequence shown, remove the head bolts from each cylinder head. Remove the cylinder head and discard the cylinder head gasket.

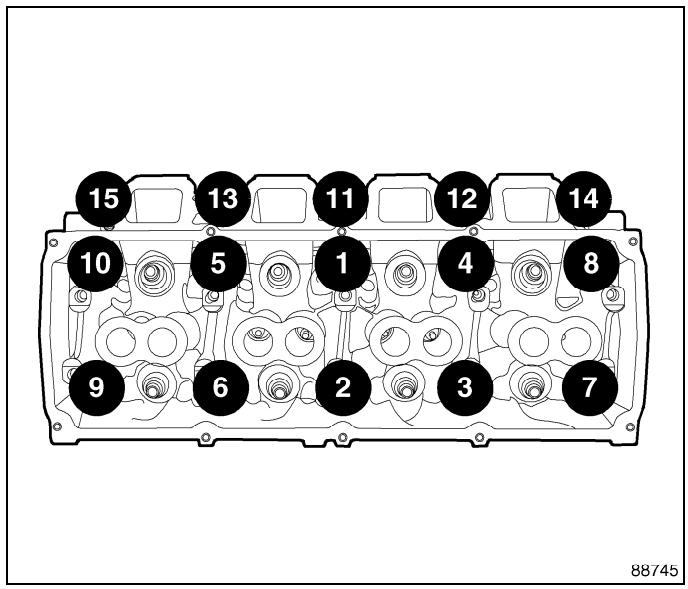

Cleaning

Clean all of the sealing surfaces of cylinder block and cylinder heads Mopar® Brake Parts Cleaner (or equivalent).

Inspection

1. Inspect the cylinder head for out-of-flatness using a straightedge and a feeler gauge. If tolerances exceed 0.0508 mm (0.002 in.) replace the cylinder head.
2. Inspect the valve seats for damage. Service the valve seats as necessary.
3. Inspect the valve guides for wear, cracks or looseness. If either condition exist, replace the cylinder head.
4. Inspect the pushrods. Replace worn or bent pushrods.

Installation

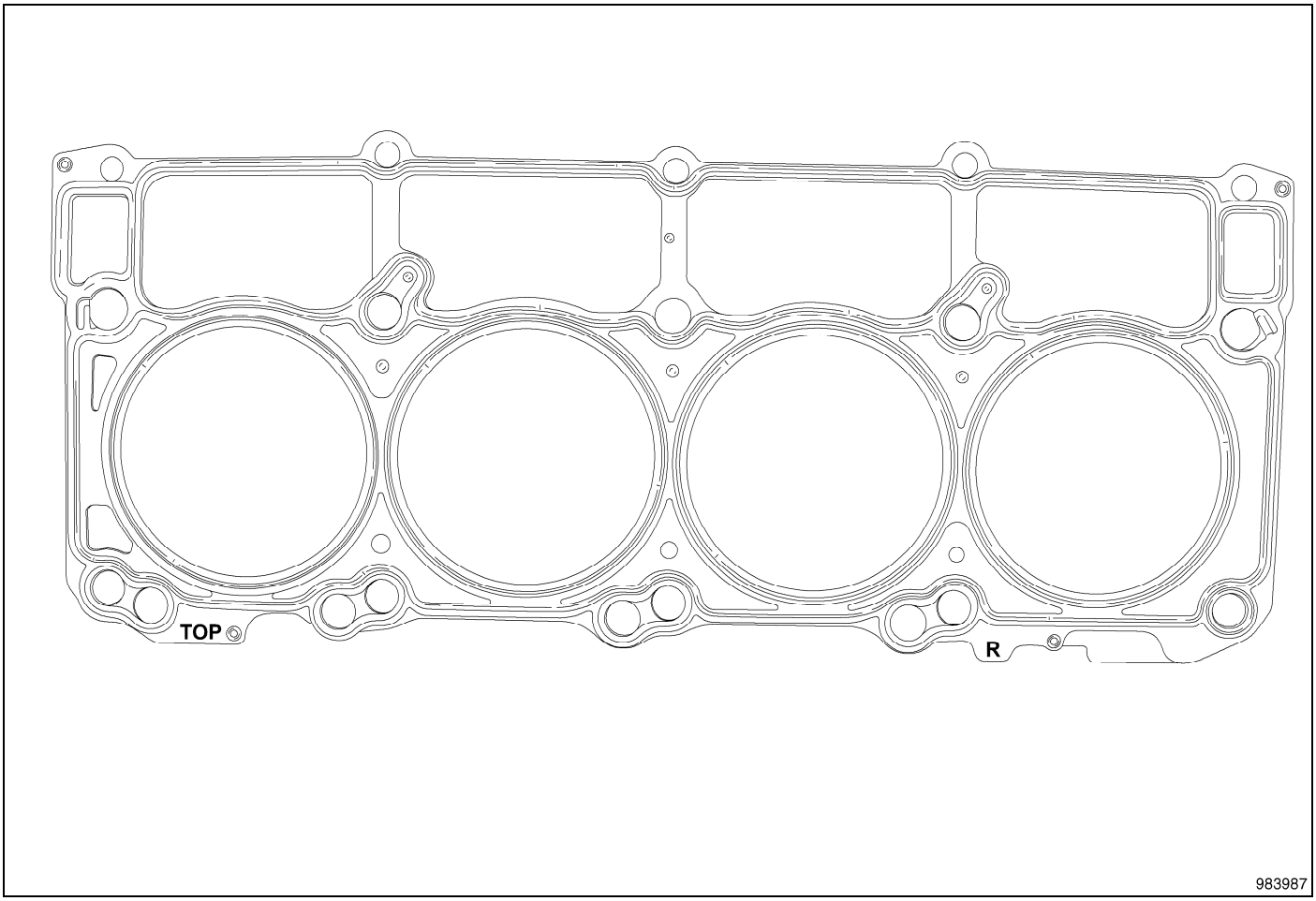

1. Clean all surfaces of cylinder block and cylinder heads.
2. Clean cylinder block front and rear gasket surfaces using a suitable solvent.

CAUTION: The cylinder head gaskets are not interchangeable between the left and right sides. They are marked with an “L” and “R” to indicate the left or right side and they are marked “TOP” to indicate which side goes up.

CAUTION: The head gaskets are marked “TOP” to indicate which side goes up.

3. Position the new cylinder head gasket (5) onto the cylinder block.
4. Position cylinder head (4) onto head gasket (5) and cylinder block.

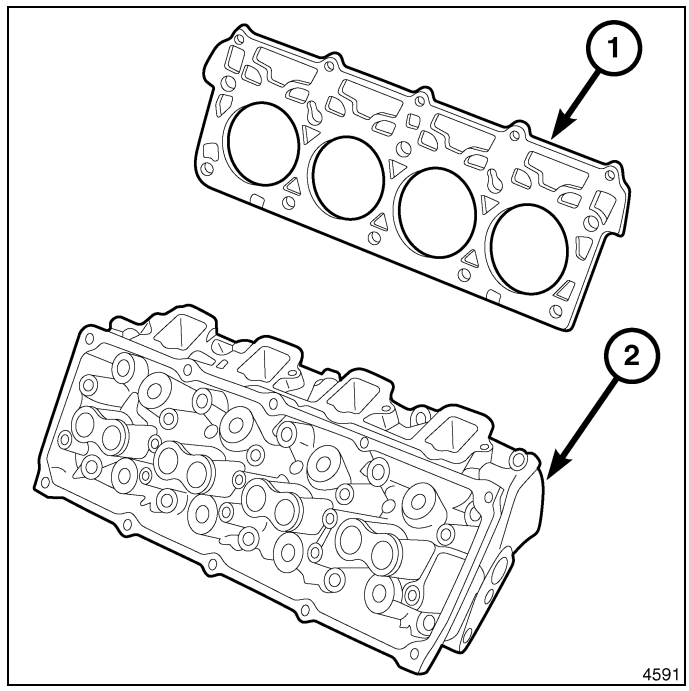

5. Using the sequence shown, tighten the cylinder head bolts 1 through 10 to 34 N·m (25 ft. lbs.).
6. Using the sequence shown, tighten the cylinder head bolts 11 through 15 to 20 N·m (15 ft. lbs.).
7. Using the sequence shown, tighten the cylinder head bolts 1 through 10 to 54 N·m (40 ft. lbs.).
8. Using the sequence shown, tighten the cylinder head bolts 11 through 15 to 20 N·m (15 ft. lbs.).
9. Using the sequence shown, rotate the cylinder head bolts 1 through 10 90° .
10. Using the sequence shown, tighten the cylinder head bolts 11 through 15 to 34 N·m (25 ft. lbs.).

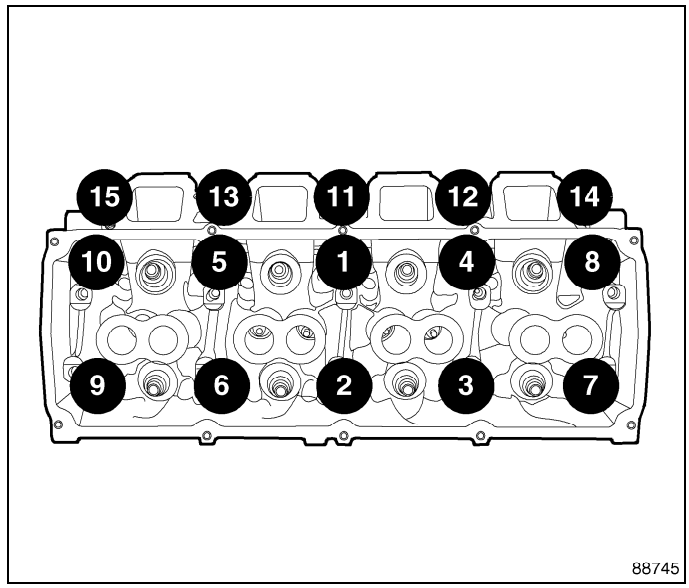

11. Install the push rods and rocker arm assemblies in their original position, using Pushrod Retainer 9070 (1) (Refer to 09 - Engine/Cylinder Head/ROCKER ARM, Valve - Installation)
12. Install the intake manifold (Refer to 09 - Engine/Manifolds/MANIFOLD, Intake - Installation)
13. Install the spark plugs.

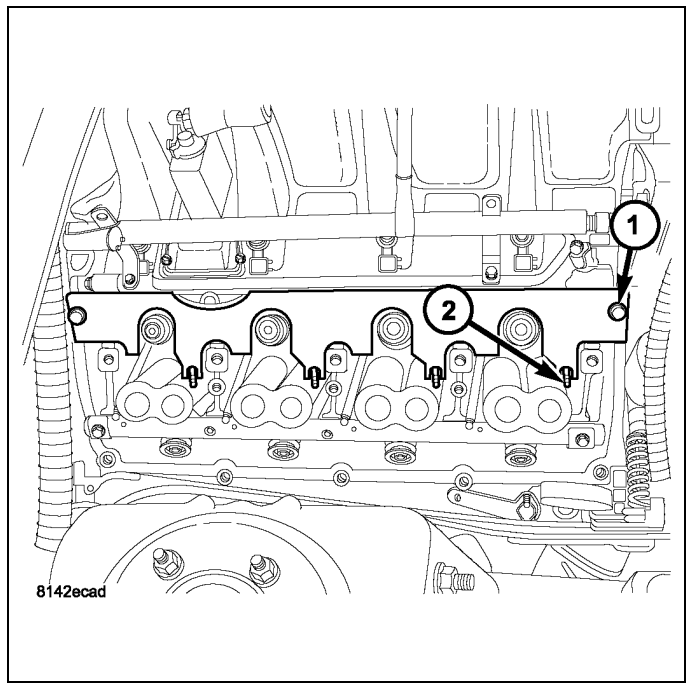

14. Connect the heater hoses (2).
15. Connect the fuel supply line.

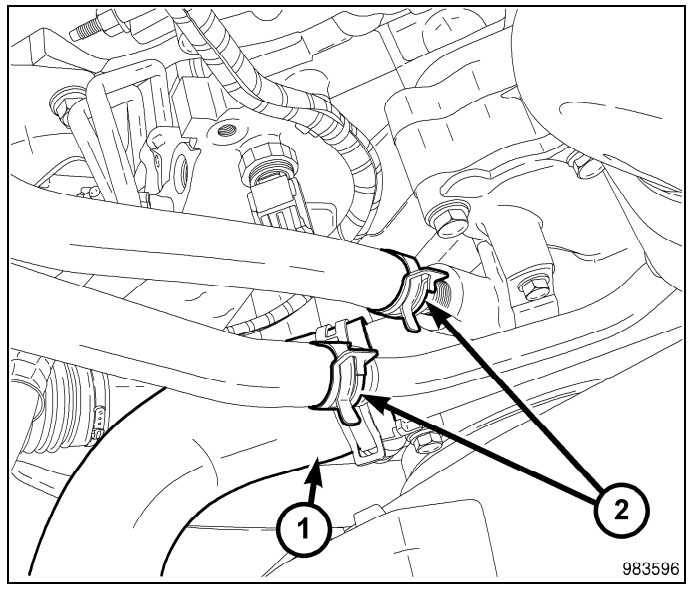

16. Install the three power steering pump mounting bolts (2) through the access holes in the pulley and tighten bolts to 28 N•m (21 ft. lbs.).
17. Install the accessory drive belt (Refer to 07 - Cooling/ Accessory Drive/BELT, Serpentine - Installation)

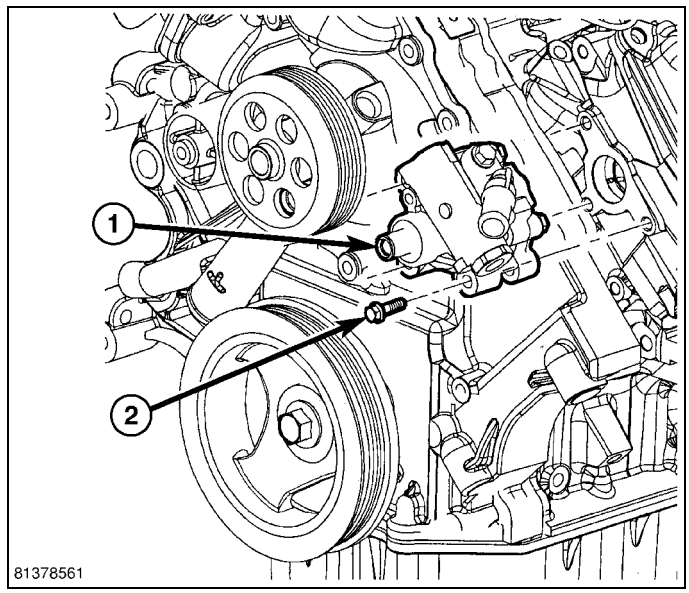

18. Install the cylinder head cover (1) and hand start all fasteners. Verify that all double ended studs (3) are in the correct location(Refer to 09 - Engine/Cylinder Head/COVER(S), Cylinder Head - Installation)

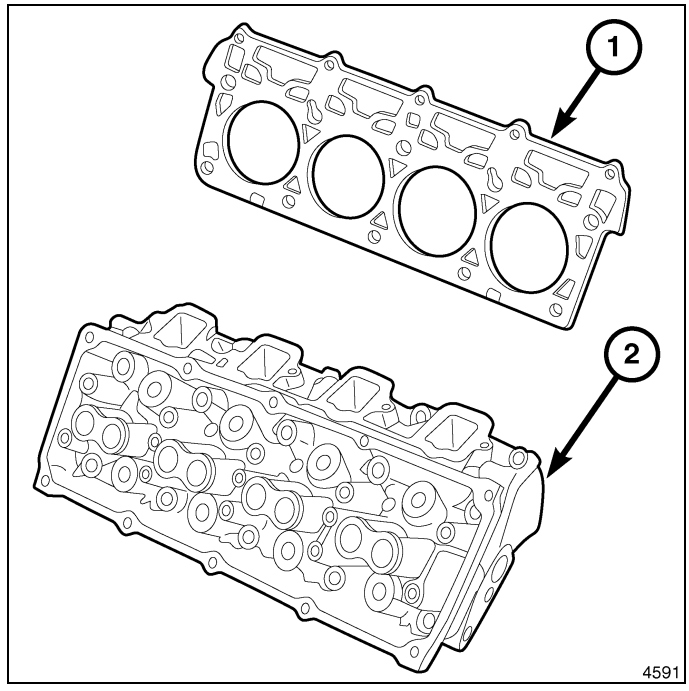

19. Using the sequence shown, tighten the cylinder head cover bolts and double ended studs to 8 N·m (70 in. lbs.).
20. Connect the evaporation control system.
21. Install the air cleaner.

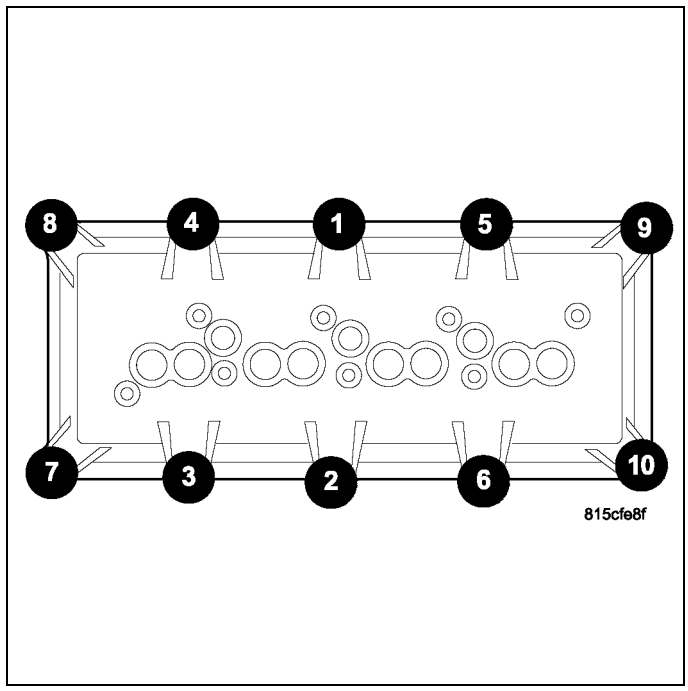

22. Install cowl grille (4).

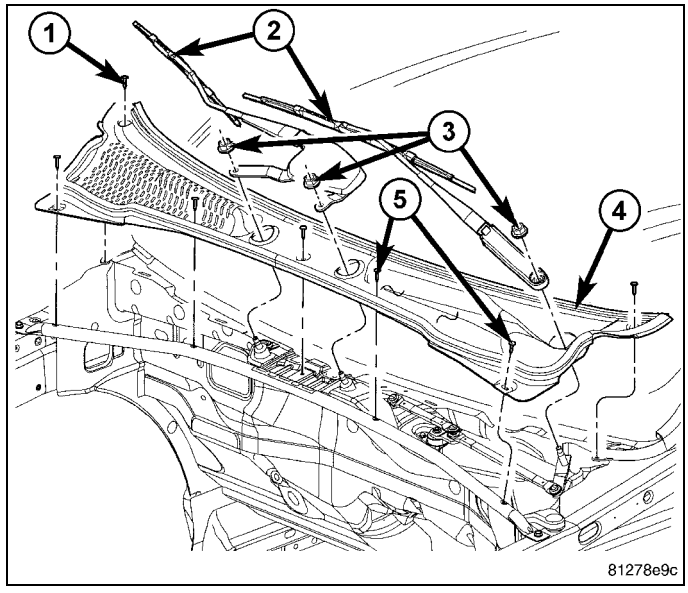

23. Install the engine cover (1) (Refer to 09 - Engine/COVER, Engine - Installation)
24. Fill the cooling system (Refer to 07 - Cooling - Standard Procedure)
25. Drain and fill the engine with new oil.

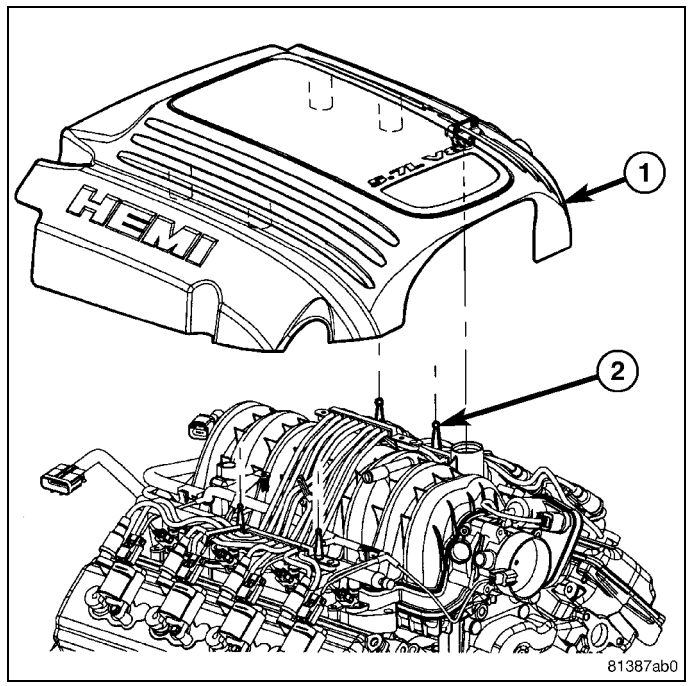

26. Connect the negative battery cable (2).
27. Start the engine and check for leaks.

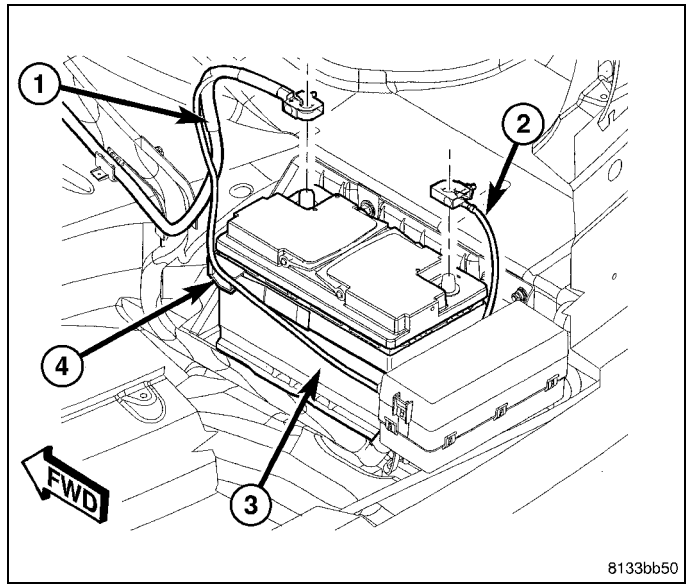

COVER(S), Cylinder Head

Removal

1. Disconnect and isolate the negative battery cable (1).

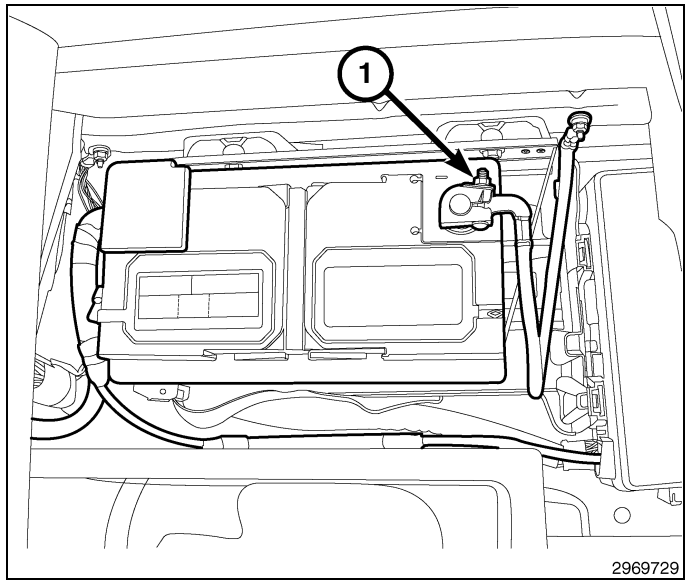

2. Remove the engine cover (2) (Refer to 09 - Engine/ COVER, Engine - Installation)

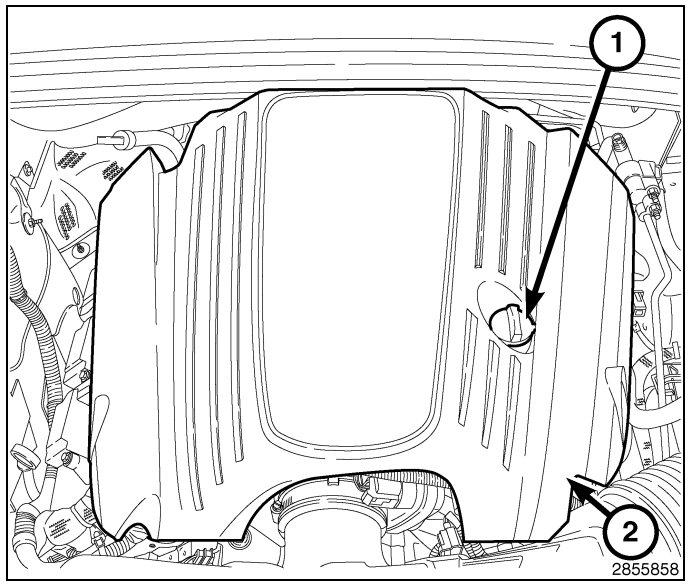

NOTE: Right side shown, left side similar.

3. Disconnect the ignition coil electrical connectors (1).
4. Position the electrical harness (2) aside.
5. Remove the ignition coil retaining bolts (3) and remove the ignition coils.

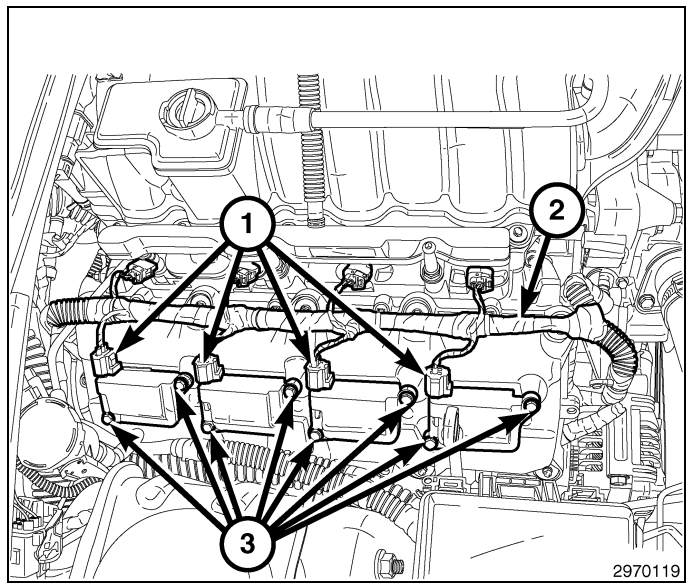

6. Using the sequence shown, remove the cylinder head cover retaining bolts.

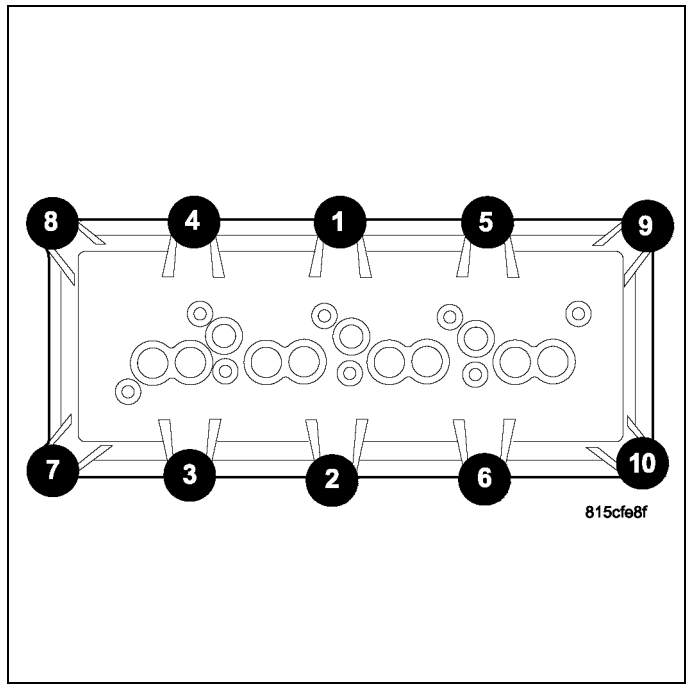

CAUTION: Do not use harsh cleaners to clean the cylinder head covers. Severe damage to covers may occur.

7. Remove the cylinder head cover (1).
8. Clean the sealing surface of the cylinder head (2) and cover.

NOTE: The cylinder head cover gasket may be used again, provided no cuts, tears, or deformation have occurred.

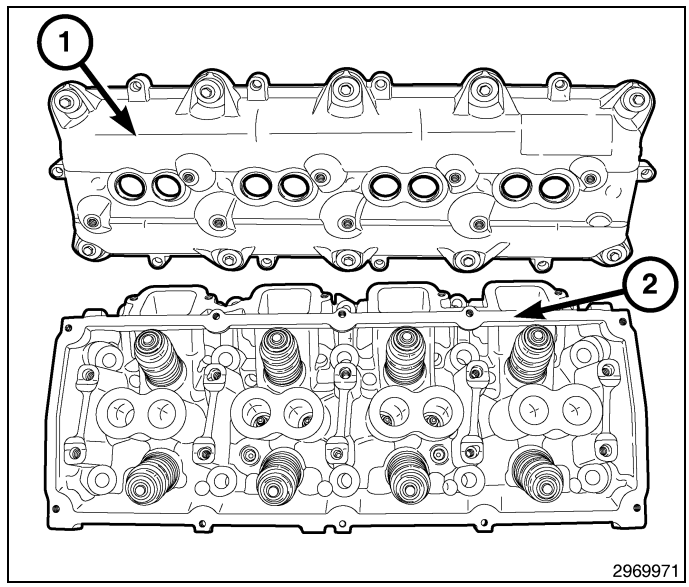

Installation

CAUTION: Do not use harsh cleaners to clean the cylinder head covers. Severe damage to covers may occur.

CAUTION: Do not allow other components including the wire harness to rest on or against the engine cylinder head cover. Prolonged contact with other objects may wear a hole in the cylinder head cover.

NOTE: The cylinder head cover gasket may be used again, provided no cuts, tears, or deformation have occurred.

1. Clean the cylinder head cover (1) and the sealing surface of the cylinder head (2). Inspect and replace gasket if necessary.
2. Install the cylinder head cover and hand start all fasteners.

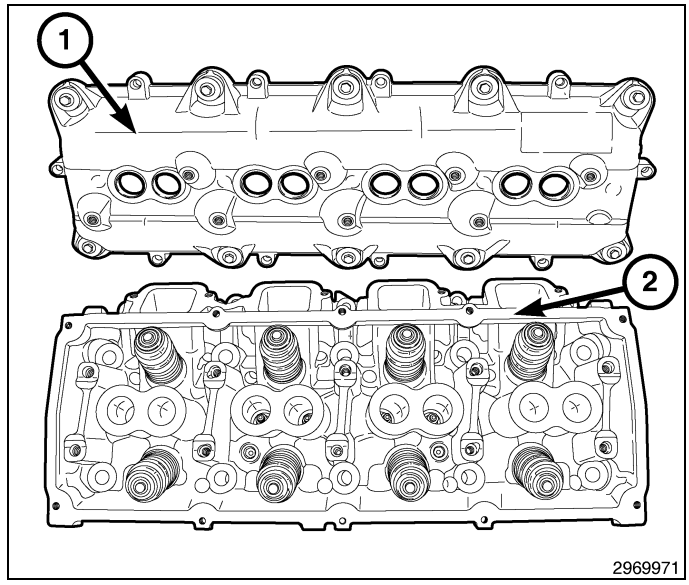

Using the sequence shown, tighten the cylinder head cover bolts to 8 N·m (70 lbs in.).

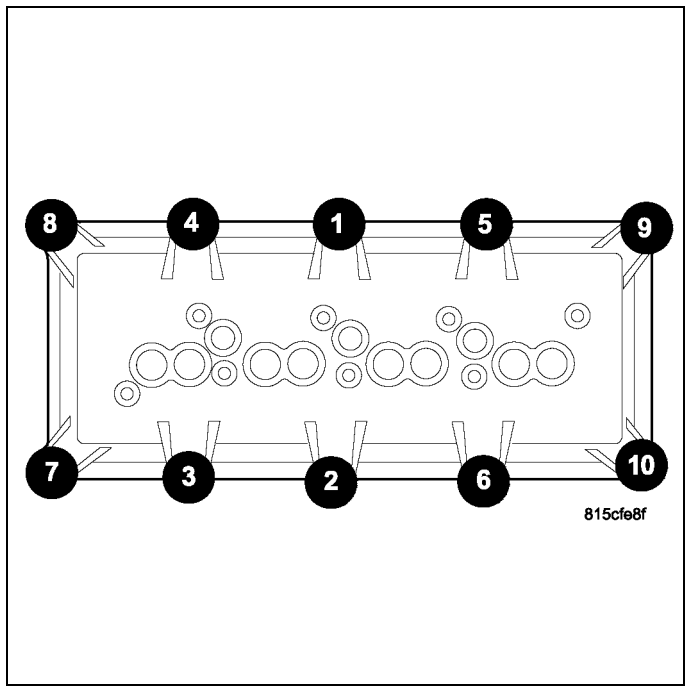

3. Before installing the ignition coils, apply dielectric grease to the inside of the spark plug boots (1).
4. Install the ignition coils.

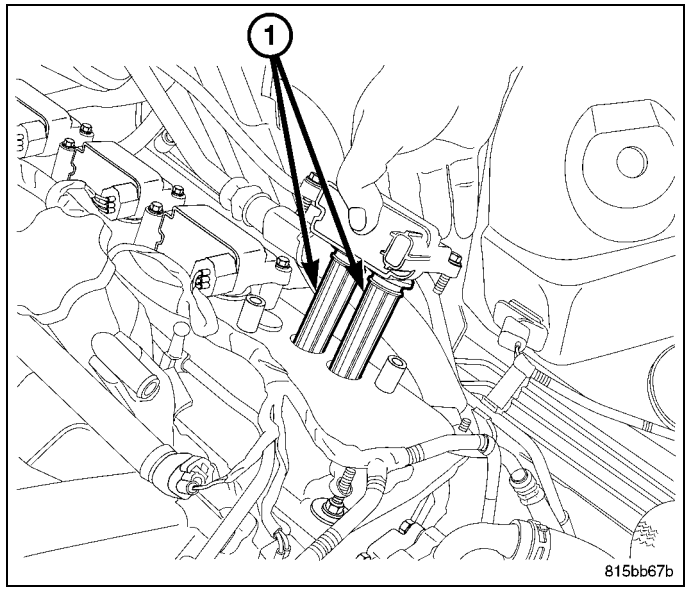

NOTE: Right side shown, left side similar.

5. Tighten the ignition coil retaining bolts (3) to 7 N·m (62 in. lbs.).
6. Position the electrical harness (2).
7. Connect the ignition coil electrical connectors (1).

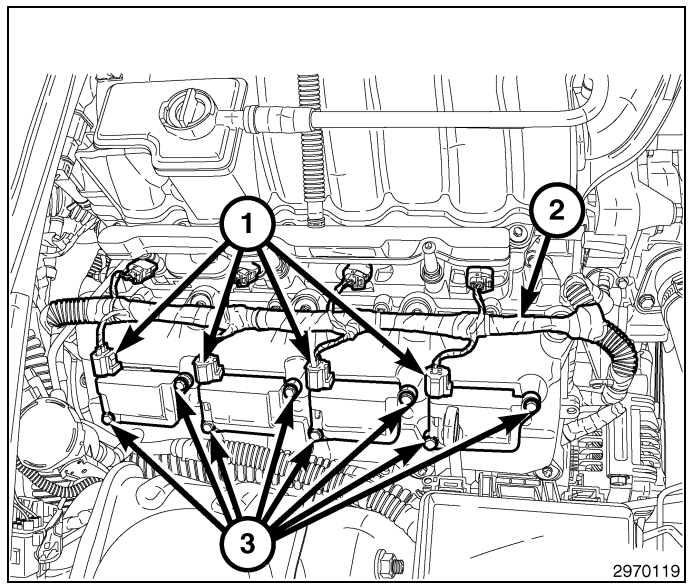

8. Install the engine cover (2).

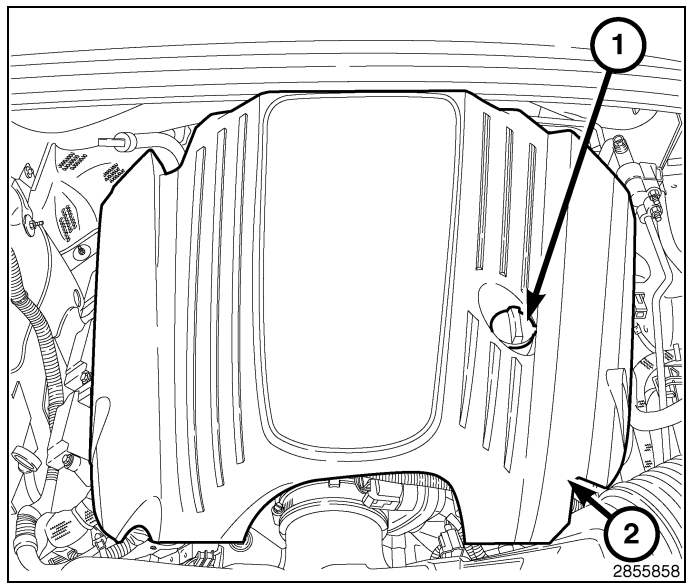

9. Connect the negative battery cable (1).

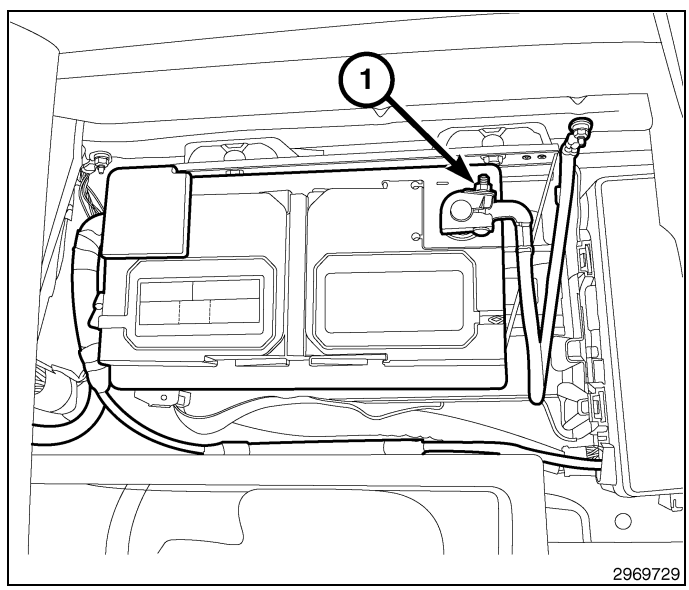

ROCKER ARM, Valve

Removal

1. Disconnect the negative battery cable (1).
2. Remove the engine cover.

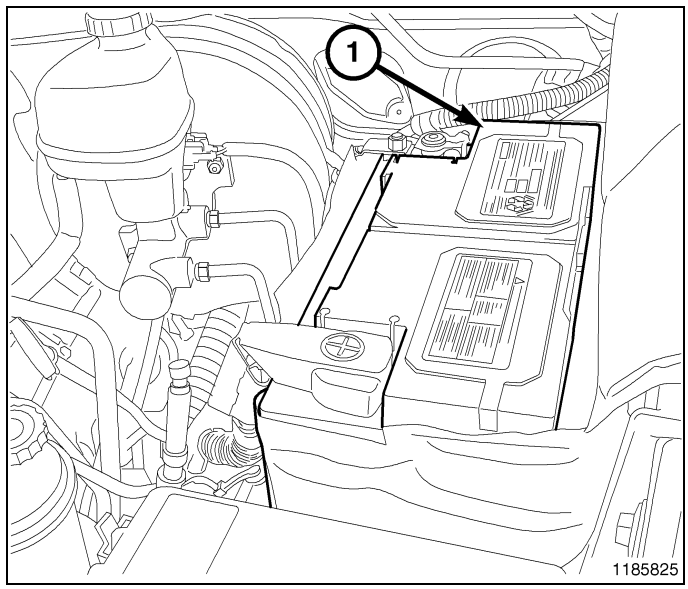

3. Remove the ignition coils (1) (Refer to 08 - Electrical/8I - Ignition Control/COIL, Ignition - Removal)

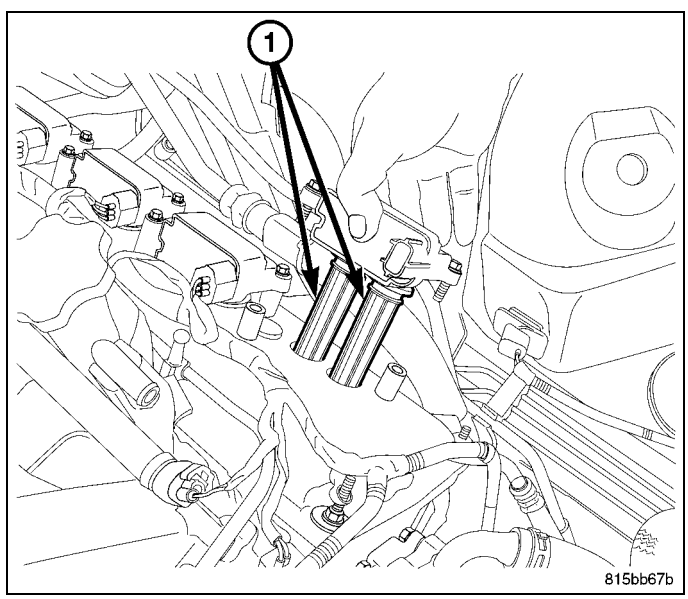

4. Using the sequence shown, remove the cylinder head cover (Refer to 09 - Engine/Cylinder Head/COVER(S), Cylinder Head - Removal)

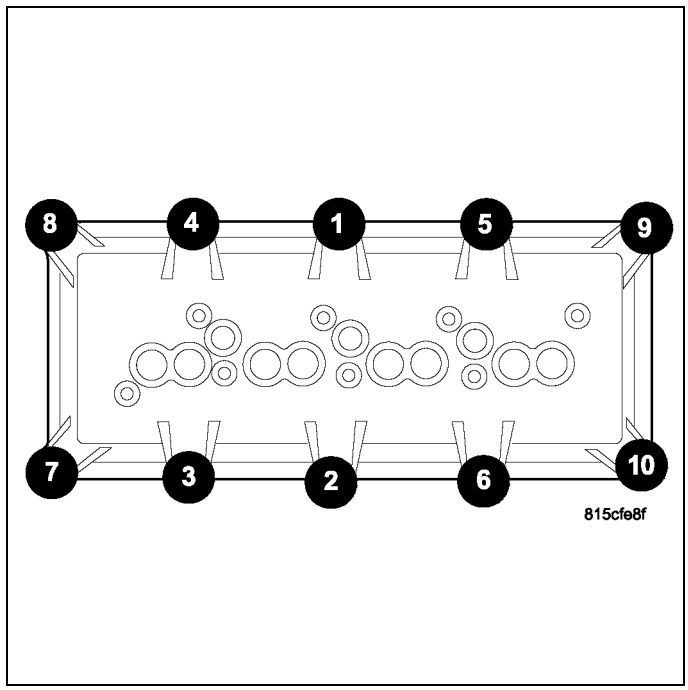

5. Install the pushrod retainer 9070 (1).

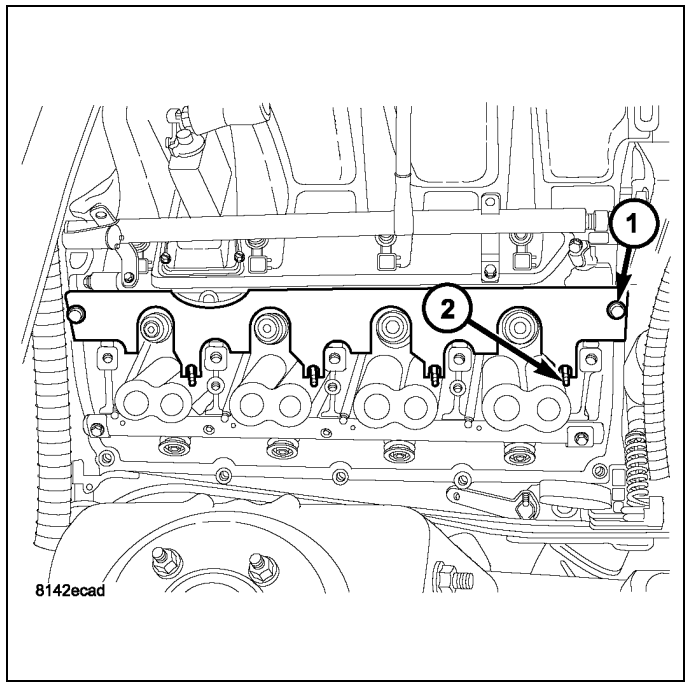

6. Using the sequence shown, loosen the rocker shafts retaining bolts.

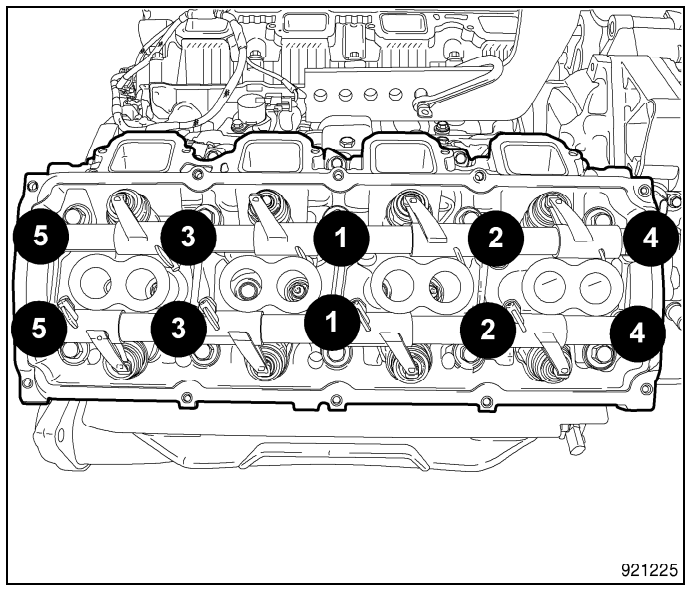

CAUTION: The rocker shaft assemblies are not interchangeable between the intake and the exhaust, failure to install them in the correct location could result in engine damage. The intake rocker arms (1) are marked with the letter "I" (2).

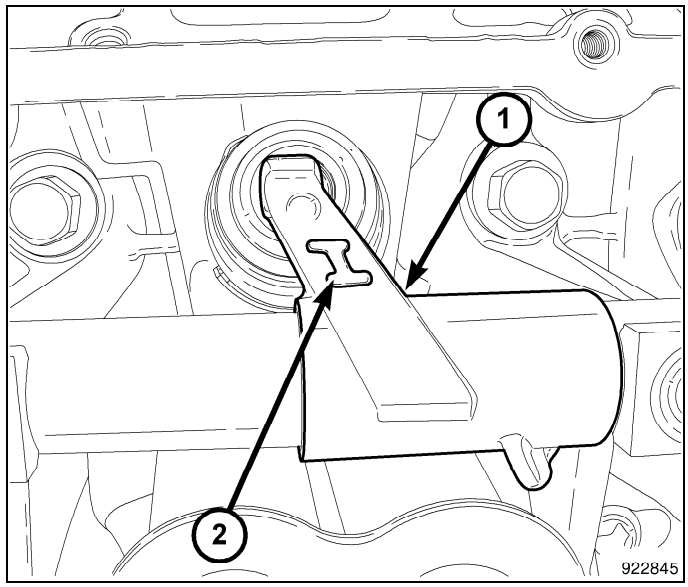

CAUTION: Do not remove the retainers (1) from the rocker shaft (3).

7. Remove the rocker shaft (3). Note the rocker shaft location during removal.

CAUTION: The longer pushrods are for the exhaust side and the shorter pushrods are for the intake side.

8. Remove the pushrods. Note the pushrod location during removal.

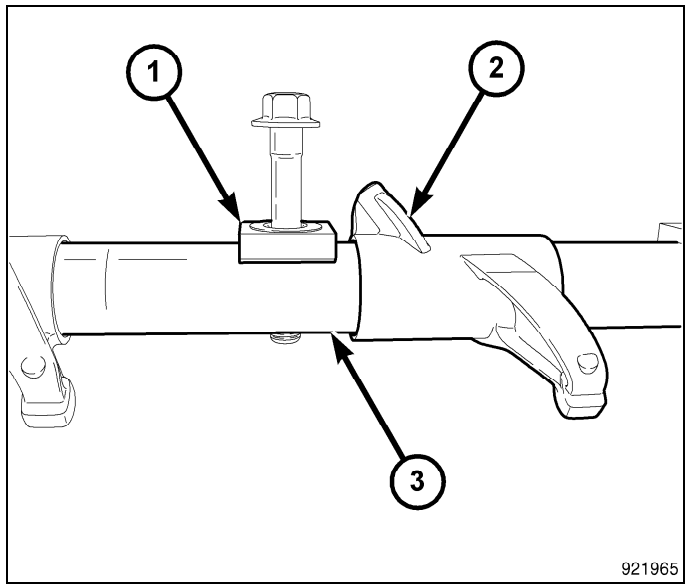

Installation

CAUTION: The longer pushrods are for the exhaust side and the shorter pushrods are for the intake side.

1. Install the pushrods in the same order as removed.
2. Install the pushrod retainer 9070 (1).

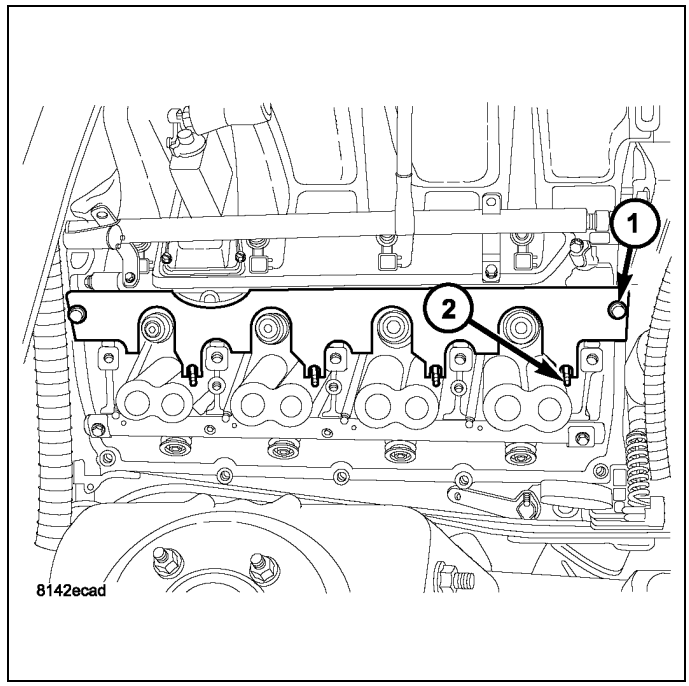

CAUTION: Make sure that the retainers (1) and the rocker arms (2) are not overlapped when tightening bolts or engine damage could result.

CAUTION: Due to the changes in the pushrod clearance holes in the Eagle 5.7L cylinder heads, close attention must be given when installing the pushrod(s) into the tappet(s). Once the pushrod(s) have been installed, use a suitable light to look down through the pushrod hole(s). This will allow you to verify the pushrod(s) are centered properly in the tappet(s) and avoid engine damage. Recheck after the rocker shaft assembly has been installed and tightened to specification.

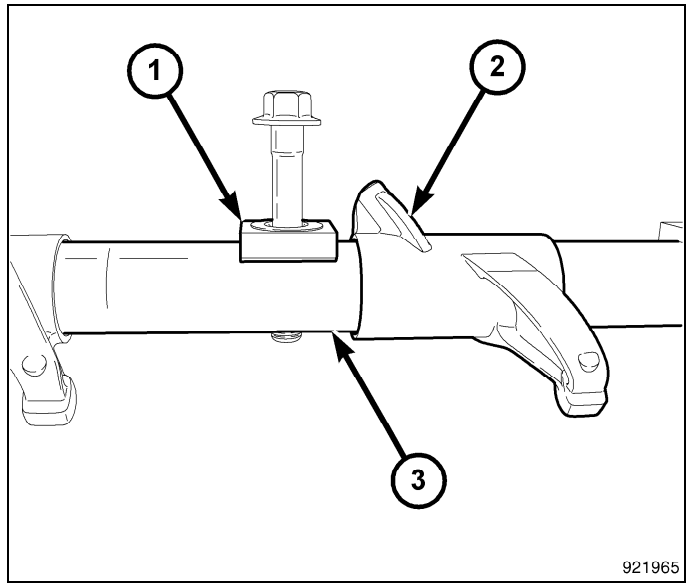

CAUTION: The rocker shaft assemblies are not interchangeable between the intake and the exhaust, failure to install them in the correct location could result in engine damage. The intake rocker arms (1) are marked with the letter "I" (2).

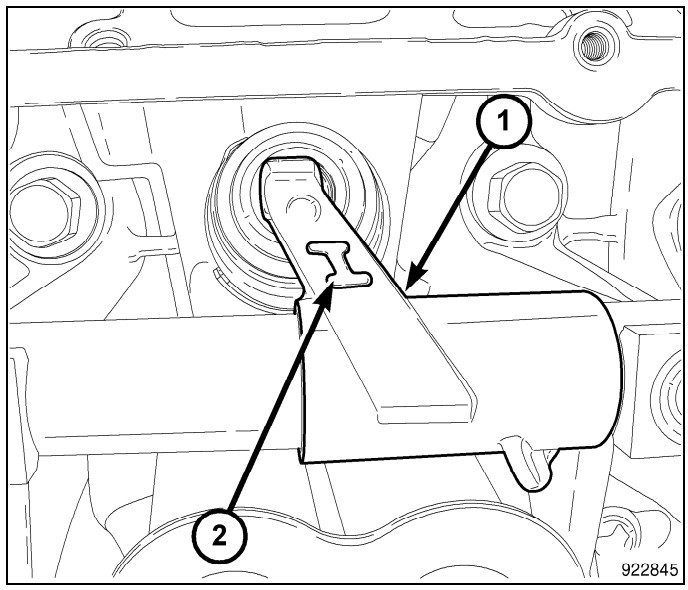

3. Install the rocker shaft assemblies in the same order as removed.
4. Using the sequence shown, tighten the rocker shaft bolts to 22 N·m (16 ft. lbs.).

CAUTION: Do Not rotate or crank the engine during or immediately after rocker arm installation. Allow the hydraulic roller tappets adequate time to bleed down (about five minutes).

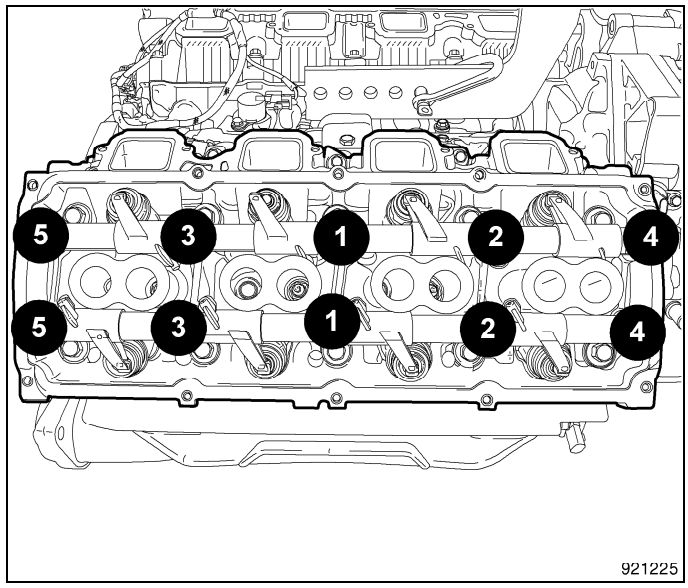

5. Remove pushrod retainer 9070 (1).

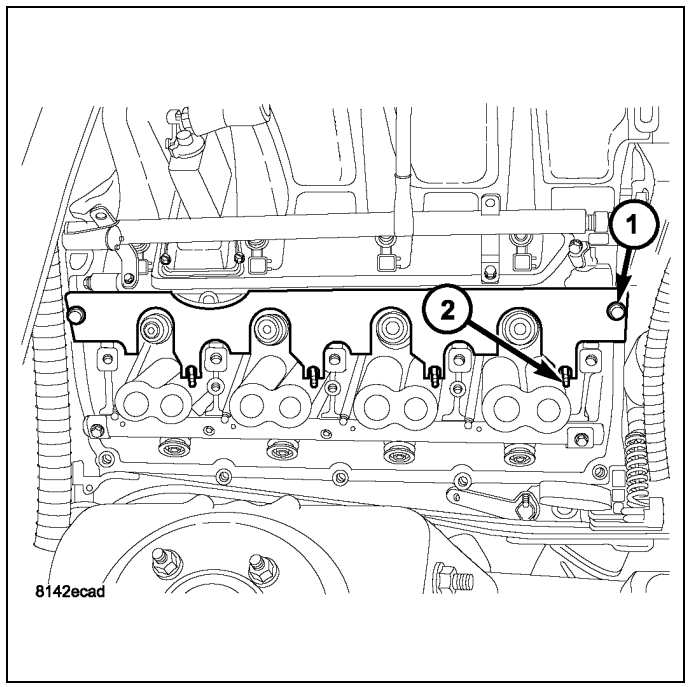

6. Using the sequence shown, install the cylinder head cover (Refer to 09 - Engine/Cylinder Head/COVER(S), Cylinder Head - Installation)

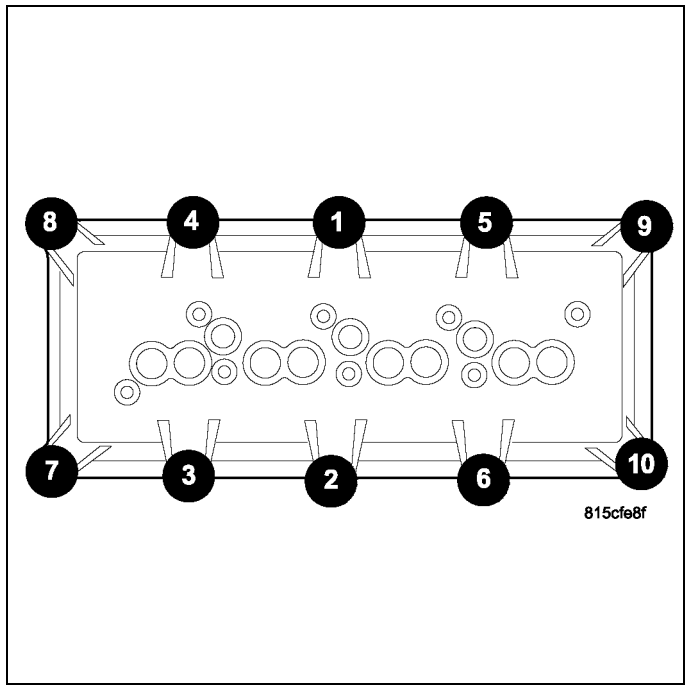

7. Install the ignition coils (1) (Refer to 08 - Electrical/8I - Ignition Control/COIL, Ignition - Removal)
8. Install the engine cover.

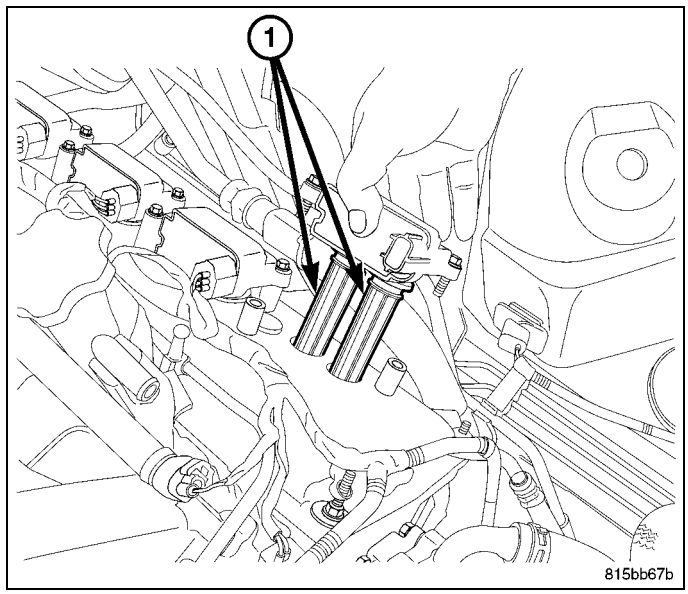

9. Connect the negative battery cable (1).

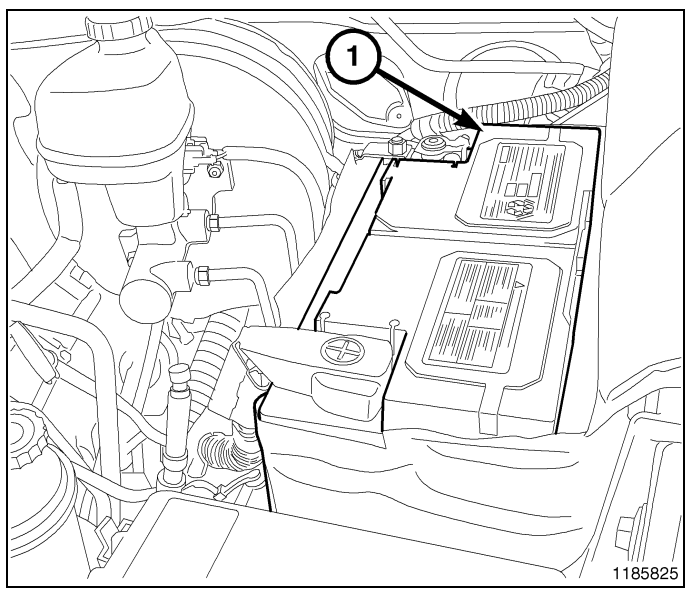

SEAL(S), Valve Guide

Description

The valve guide seals are made of rubber and incorporate an integral steel valve spring seat. The integral garter spring maintains consistent lubrication control to the valve stems.

Removal

The valve stem seal is integral with the valve spring seat, for removal (Refer to 09 - Engine/Cylinder Head/SPRING(S), Valve - Removal)

Installation

The valve stem seal is integral with the valve spring seat, for installation (Refer to 09 - Engine/Cylinder Head/SPRING(S), Valve - Installation)

SPRING(S), Valve

Removal

1. Disconnect the negative battery cable.
2. Remove the air cleaner assembly and the air intake resonator, (Refer to 09 - Engine/Air Intake System/BODY, Air Cleaner - Removal)
3. Remove the ignition coil electrical connectors (1).
4. Remove the ignition coils (2).
5. Remove the spark plugs.

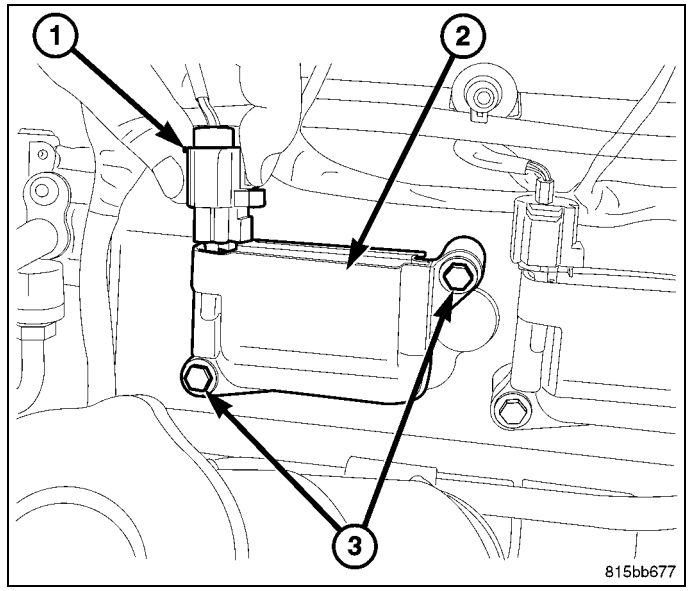

6. Using the sequence shown, remove the cylinder head cover retaining bolts and remove the cylinder head cover (Refer to 09 - Engine/Cylinder Head/COVER(S), Cylinder Head - Removal)

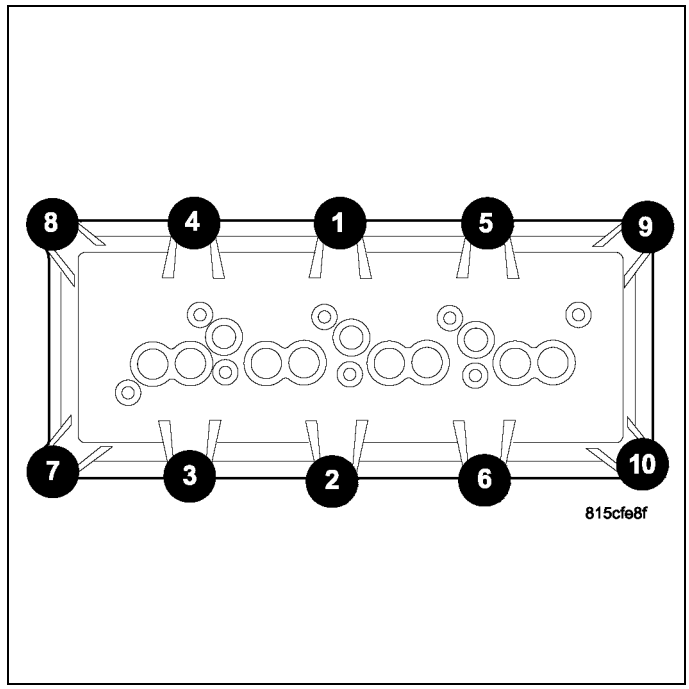

CAUTION: The rocker shaft assemblies are not interchangeable between the intake and the exhaust, failure to install them in the correct location could result in engine damage. The intake rocker arms (1) are marked with the letter "I" (2).

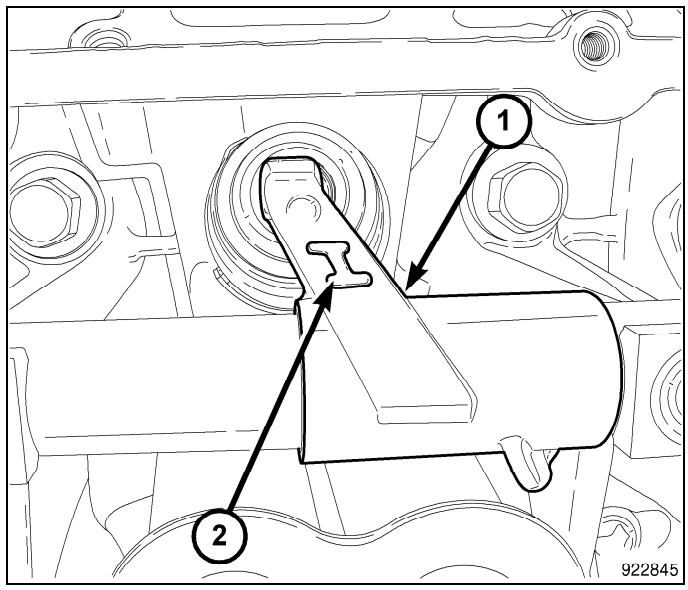

CAUTION: The piston must be at TDC and both valves closed on the cylinder to be serviced.

CAUTION: The longer pushrods are for the exhaust side and the shorter pushrods are for the intake side.

NOTE: Pushrods must be installed in the same order as removed.

NOTE: If removing the intake valve spring, install the pushrod retainer 9070 **(1).**

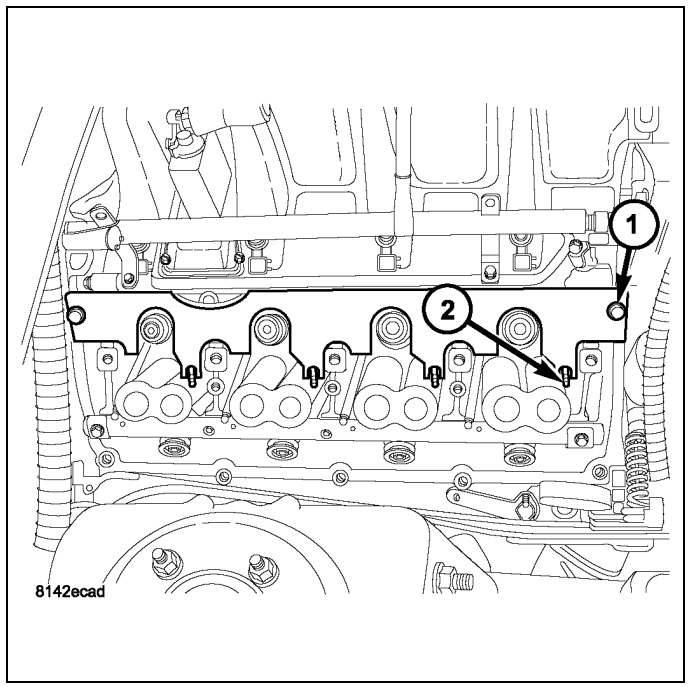

7. Using the sequence shown, remove the exhaust/intake rocker arm shaft retaining bolts.

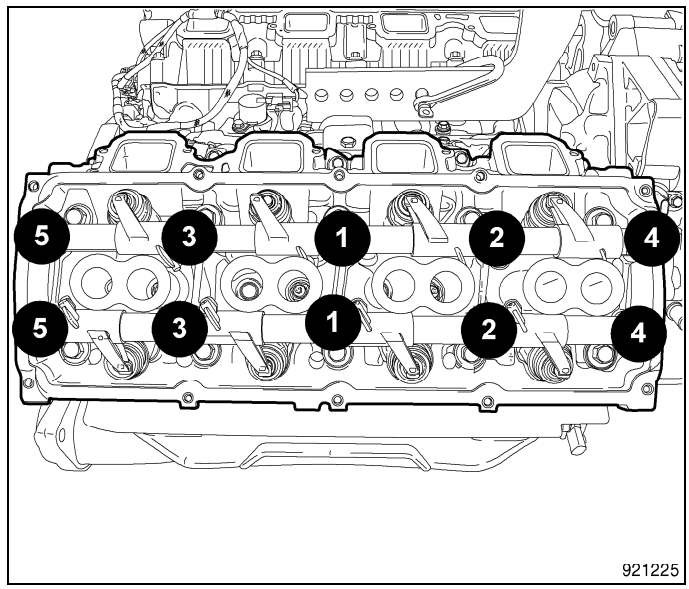

NOTE: Tap the top of the valve spring retainer to loosen the spring retainers locks.

8. Install the rocker arm valve spring compressor shaft 9065B (1).

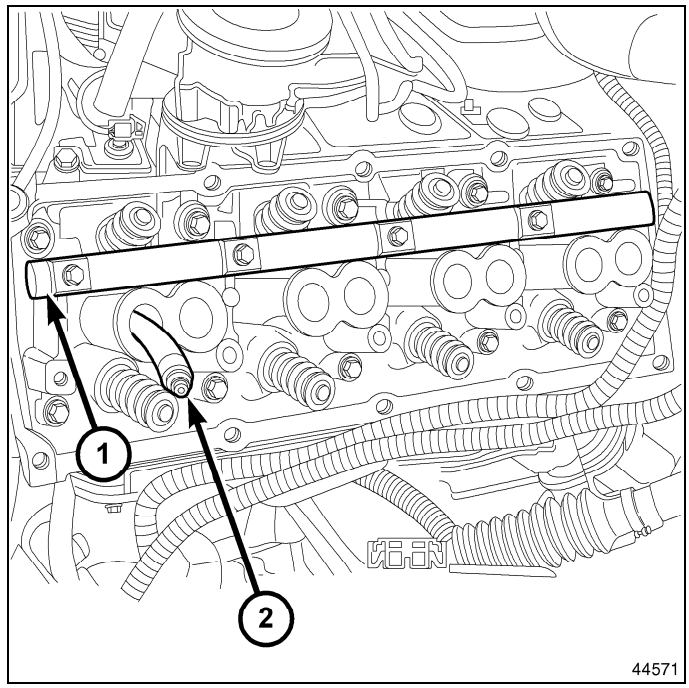

9. Install the spring compressor adapter arm 9065B if needed.
10. Insert an air hose (2) into the spark plug hole and charge the cylinder with air.

NOTE: A fulcrum assembly (1) must be rotated to the appropriate setting as marked on the tool for proper valve spring alignment.

NOTE: Tap the top of the valve spring retainer to loosen the spring retainers locks.

11. Compress the valve spring with valve spring compressor (1) and remove the valve retainer locks.
12. Release the spring compressor and remove valve spring.

NOTE: All valve springs and seals are removed in the same manner and are interchangeable between intake and exhaust.

13. Remove the valve seal.

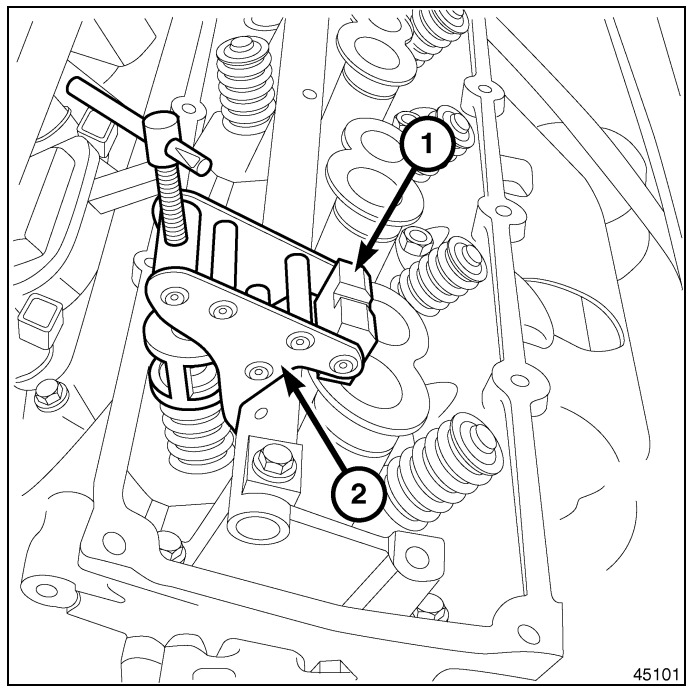

NOTE: When the exhaust spring, seal or valve needs servicing. The exhaust adapter arm (1) must be installed to the spring compressor clamp (3).

14. Install tool 9065B, exhaust adapter arm (1) to the spring compressor (3) for servicing the exhaust side.

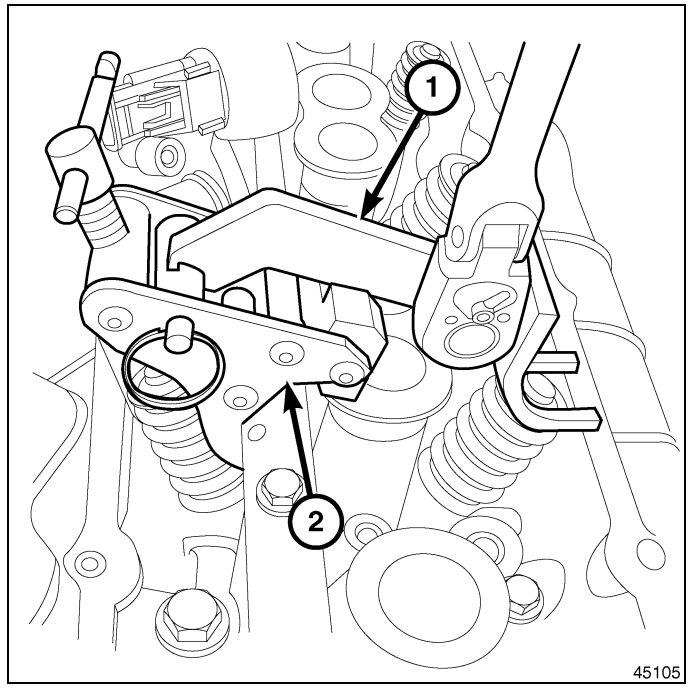

Installation

1. Install the valve seal.
2. Install the valve spring.
3. Using the valve spring compressor 9065B (1), compress the valve spring and install the valve spring retainer and locks.
4. Remove the exhaust extension arm (1).

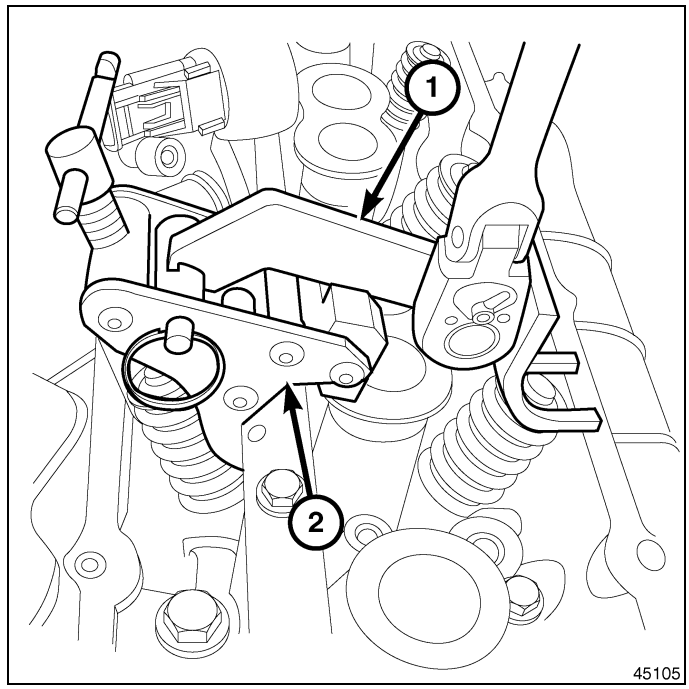

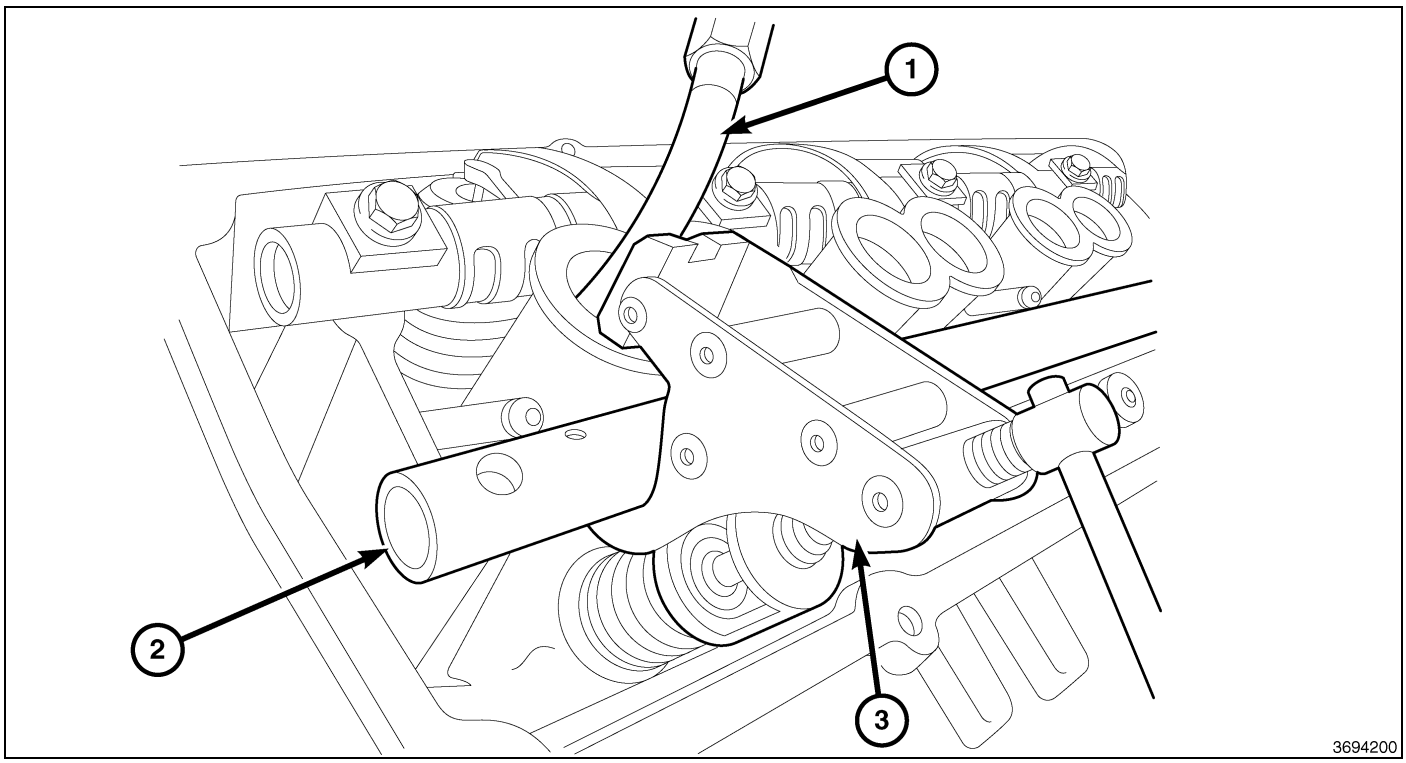

5. Remove the spring compressor (3).
6. Remove the air hose from the spark plug hole.

NOTE: All valve springs and seals are installed in the same manner.

CAUTION: The rocker shaft assemblies are not interchangeable between the intake and the exhaust, failure to install them in the correct location could result in engine damage. The intake rocker arms (1) are marked with the letter "I" (2).

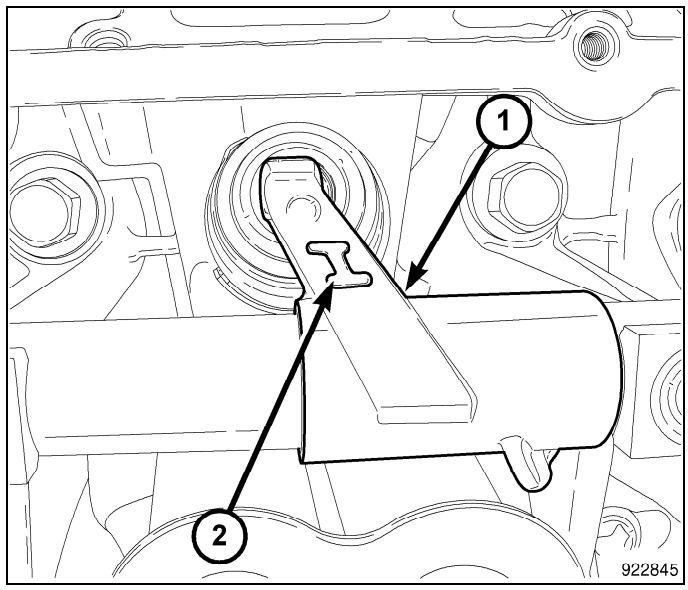

CAUTION: Make sure that the retainers (1) and the rocker arms (2) are not overlapped when tightening bolts or engine damage could result.

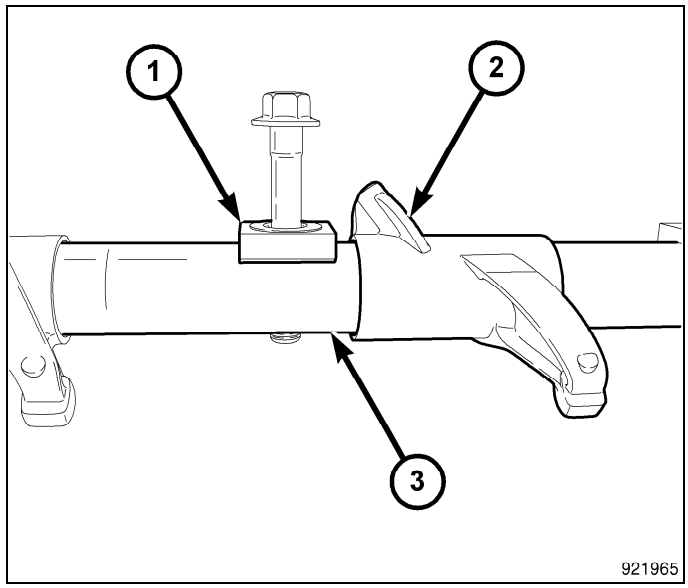

CAUTION: Due to the changes in the pushrod clearance holes in the Eagle 5.7L cylinder heads, close attention must be given when installing the pushrod(s) into the tappet(s). Once the pushrod(s) have been installed, use a suitable light to look down through the pushrod hole(s). This will allow you to verify the pushrod(s) are centered properly in the tappet(s) and avoid engine damage. Recheck after the rocker shaft assembly has been installed and tightened to specification.

CAUTION: The longer pushrods are for the exhaust side and the shorter pushrods are for the intake side.

NOTE: Pushrods must be installed in the same order as removed.

7. Install the rocker arm shaft and pushrods (Refer to 09 - Engine/Cylinder Head/ROCKER ARM, Valve - Installation)
8. Using the sequence shown, tighten the rocker shaft bolts to 22 N·m (16 ft. lbs.).
9. If used, remove the pushrod retainer 9070 (1).

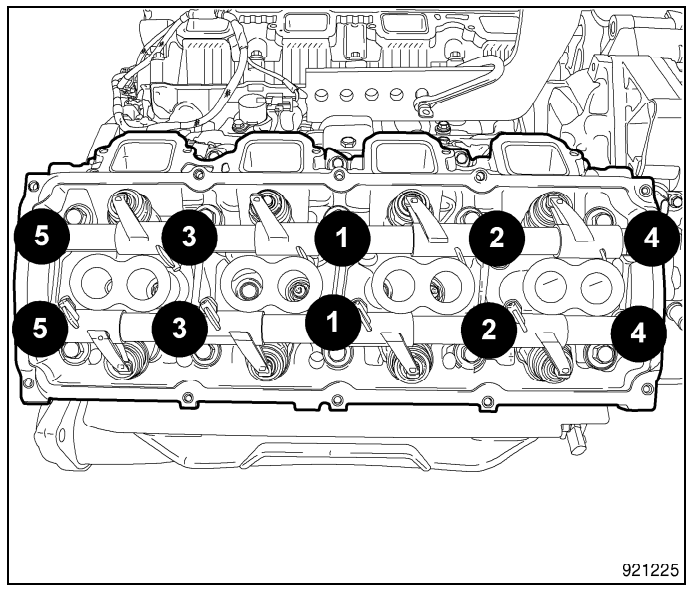

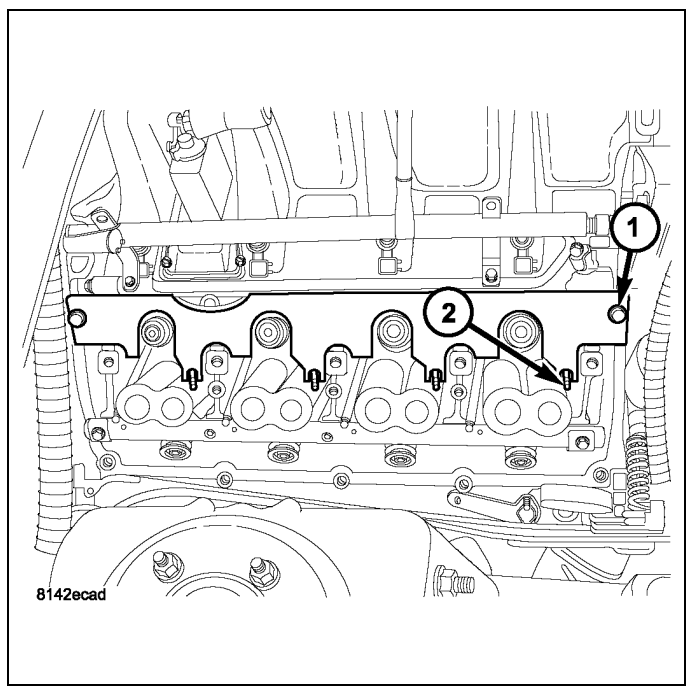

CAUTION: Do not use harsh cleaners to clean the cylinder head covers. Severe damage to covers may occur.

CAUTION: Do not allow other components including the wire harness to rest on or against the engine cylinder head cover. Prolonged contact with other objects may wear a hole in the cylinder head cover.

10. Clean the cylinder head cover and both sealing surfaces, inspect and replace the gasket as necessary.
11. Install the cylinder head cover and hand start all fasteners. Verify that all double ended studs are in the correct location.
12. Using the sequence shown, tighten the cylinder head cover retaining bolts to 8 N·m (71 in. lbs.).
13. Install the spark plugs.

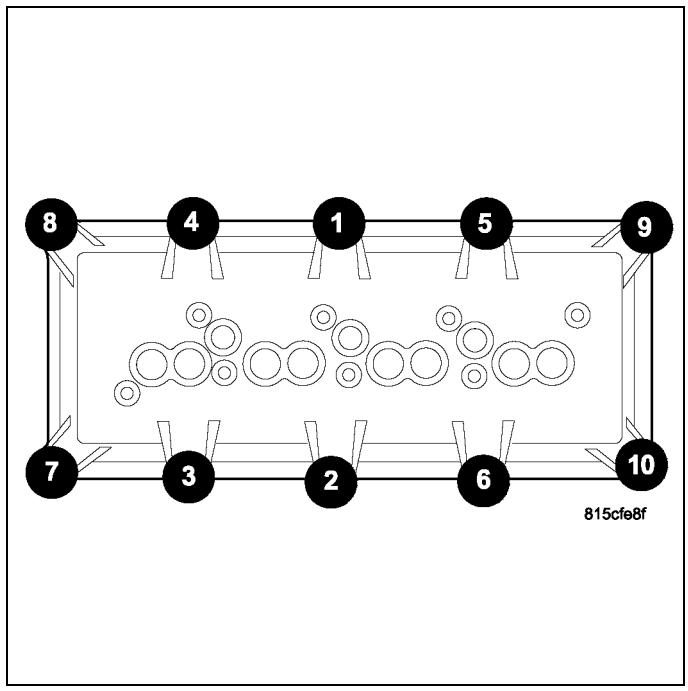

14. Before installing the ignition coils, apply dielectric grease to the inside of the spark plug boots.

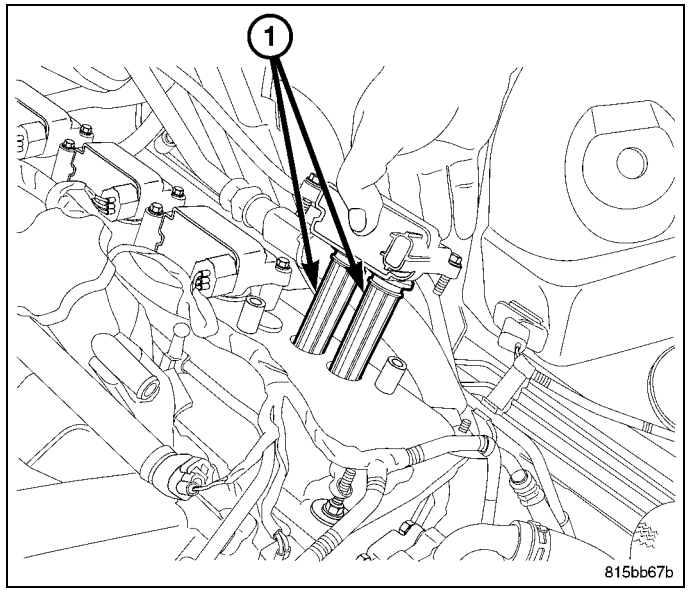

15. Install the ignition coil (2) on the plugs and tighten the fasteners (3) to 7 N·m (62 in. lbs).
16. Connect the ignition coil electrical connectors (1).
17. Install the air intake resonator and the air cleaner assembly.(Refer to 09 - Engine/Air Intake System/BODY, Air Cleaner - Installation)
18. Connect the negative battery cable.

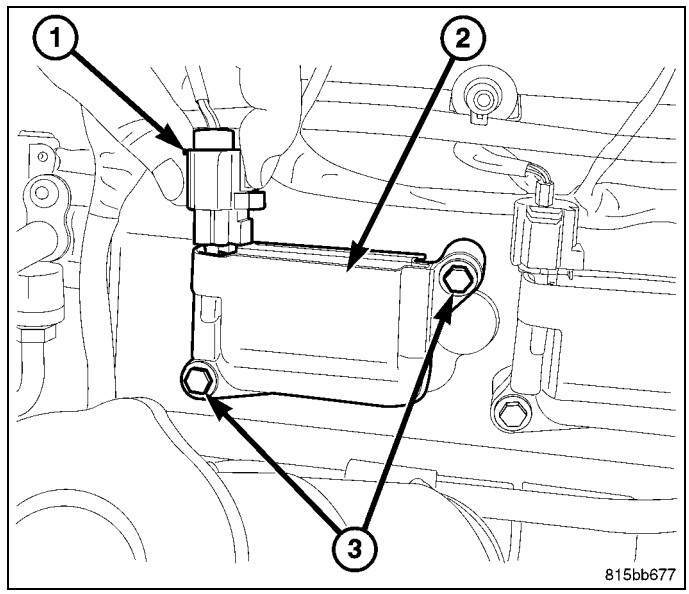

VALVES, Intake and Exhaust

Description

VALVE GUIDES

The valve guides are made of powdered metal and pressed into the cylinder head. The guides are not replaceable or serviceable, and valve guide reaming is not recommended. If the guides are worn beyond acceptable limits, replace the cylinder heads.

VALVES

Both the intake and the exhaust valves are made of steel. The intake valve is 50.93 mm (2.00 inches) in diameter and the exhaust valve is 39.53 mm (1.55 inches) in diameter. All valves use three-bead lock keepers to retain the springs and promote valve rotation.

Standard Procedure

VALVE FACE AND VALVE SEAT ANGLE CHART

DESCRIPTION	SPECIFICATION	
	Metric	Standard
Seat Width		
Intake	1.18 - 1.62 mm	0.0464 - 0.0637 in.
Exhaust	1.48 - 1.92 mm	0.058 - 0.075 in.
Face Angle	45° - 45½°	
Seat Angle	44½° - 45°	

NOTE: Valve seats that are worn or burned can be reworked, provided that correct angle and seat width are maintained. Otherwise the cylinder head must be replaced.

NOTE: When refacing valves and valve seats, it is important that the correct size valve guide pilot be used for reseating stones. A true and complete surface must be obtained.

1. Using a suitable dial indicator, measure the center of the valve seat. Total run out must not exceed 0.051 mm (0.002 in).
2. Apply a small amount of Prussian Blue to the valve seat. Insert the valve into the cylinder head. Rotate valve while applying light pressure on the valve seat. Remove the valve and examine the valve face. If the blue is transferred

below the top edge of the valve face, lower the valve seat using a 15 degree stone. If the blue is transferred to the bottom edge of the valve face, raise the valve seat using a 65 degree stone.

3. When the seat is properly positioned the width of the intake seat must be 1.18 - 1.62 mm (0.0464 - 0.0637 in.) and the exhaust seat must be 1.48 - 1.92 mm (0.058 - 0.075 in.).
4. Check the valve spring installed height after refacing the valve and seat. The installed height for both intake and exhaust valve springs must not exceed 46.0 mm (1.81 in.).
5. The valve seat must maintain a seat angle of 44½° - 45°.
6. The valve face must maintain a face angle of 45° - 45½°.

Removal

1. Remove the cylinder head (Refer to 09 - Engine/Cylinder Head - Removal).
2. Compress valve springs using Valve Spring Compressor Tool C-3422-D and Adapter 8464.
3. Removevalve retaining locks, valve spring retainers, valve stem seals and valve springs.
4. Before removing valves, remove any burrs from valve stem lock grooves to prevent damage to the valve guides. Identify valves to ensure installation in original location.

Installation

1. Clean valves thoroughly. Discard burned, warped and cracked valves.
2. Remove the carbon and varnish deposits from the inside of the valve guides with a reliable guide cleaner.
3. Measure the valve stems for wear. If the wear exceeds 0.051 mm (0.002 inch), replace the valve.
4. Coat the valve stems with clean engine oil and insert them into the cylinder head.
5. If the valves or seats are ground, check the valve stem height. If the valve stem is too long, replace the cylinder head.
6. Install new seals on all valve guides. Install the valve springs and valve retainers.
7. Compress the valve springs with the Valve Spring Compressor C-3422-D and Valve Spring Adapter 8464. Install the locks and release the tool. If the valves and/or seats are ground, measure the installed height of the springs. Make sure the measurement is taken from the bottom of the spring seat in the cylinder head to the bottom surface of the spring retainer.
8. Install the cylinder head (Refer to 09 - Engine/Cylinder Head - Installation).

ENGINE BLOCK

TABLE OF CONTENTS

page

ENGINE BLOCK
- CLEANING 374
- INSPECTION 374

ASSEMBLY, VARIABLE VALVE TIMING, 5.7L
- DESCRIPTION 375
- OPERATION 375
- REMOVAL 376
- INSTALLATION 376

BEARING(S), CRANKSHAFT, MAIN
- STANDARD PROCEDURE 377
- INSPECTION 378

CAMSHAFT, ENGINE
- REMOVAL
  - CAMSHAFT CORE HOLE PLUG 379
  - CAMSHAFT 379
- INSPECTION 382
- INSTALLATION
  - CAMSHAFT CORE HOLE PLUG 382
  - CAMSHAFT 383

COVER, STRUCTURAL DUST
- DESCRIPTION 388
- OPERATION 388
- REMOVAL 388
- INSTALLATION 389

CRANKSHAFT
- REMOVAL 391
- INSTALLATION 395

DAMPER, VIBRATION
- DESCRIPTION 399
- REMOVAL 401
- INSTALLATION 402

FLEXPLATE
- REMOVAL 403
- INSTALLATION 404

page

LIFTER(S), HYDRAULIC, ROLLER
- DESCRIPTION 404
- OPERATION 405
- DIAGNOSIS AND TESTING 405
- REMOVAL 406
- INSTALLATION 407

RETAINER, CRANKSHAFT REAR OIL SEAL
- DIAGNOSIS AND TESTING 408
- REMOVAL 409
- INSTALLATION 409

RING(S), PISTON
- STANDARD PROCEDURE 410

ROD, PISTON AND CONNECTING
- DESCRIPTION 412
- STANDARD PROCEDURE 412
- REMOVAL 413
- CLEANING 416
- INSPECTION 416
- INSTALLATION 417

SEAL, CRANKSHAFT OIL, FRONT
- REMOVAL 422
- INSTALLATION 423

SEAL, CRANKSHAFT OIL, REAR
- DESCRIPTION 423

SOLENOID, MULTIPLE DISPLACEMENT
- DESCRIPTION 423
- OPERATION 424
- DIAGNOSIS AND TESTING 424
- REMOVAL 425
- INSTALLATION 426

Engine Block

Cleaning

Thoroughly clean the oil pan and engine block gasket surfaces.

Use compressed air to clean:

- Gallery at the oil filter adaptor hole
- Front and rear oil gallery holes
- Multiple Displacement System (MDS) oil gallery holes in the valley
- Oil feed holes for the crankshaft main bearings

Drilled and tapped holes should be free of debris upon assembly.

Once the block has been completely cleaned, apply Loctite® PST pipe sealant with Teflon 592 to the threads of the front and rear oil gallery plugs and coolant drain plugs. Tighten the oil gallery 1/4 inch x 18 NPT plugs to 20 N·m (15 ft. lbs.). Tighten the coolant drain 1/4 inch x 18 NPT plugs to 34 N·m (25 ft. lbs.). Tighten the 3/8 inch x 18 NPT plugs to 27 N·m (20 ft. lbs.).

Inspection

1. Wipe the main bearing inserts (1,2) clean.
2. Inspect the inserts for abnormal wear patterns, scoring, grooving, fatigue, pitting and for metal or other foreign material imbedded in the lining.
3. Inspect the back of the inserts for fractures, scrapes or irregular wear patterns.
4. Inspect the insert locking tabs for damage.
5. Inspect the crankshaft thrust washers for scoring, scratches, wear or blueing.
6. Replace any bearing that shows abnormal wear.
7. Inspect the main bearing bores for signs of scoring, nicks and burrs.
8. If the cylinder block main bearing bores show damage, replace the engine block.

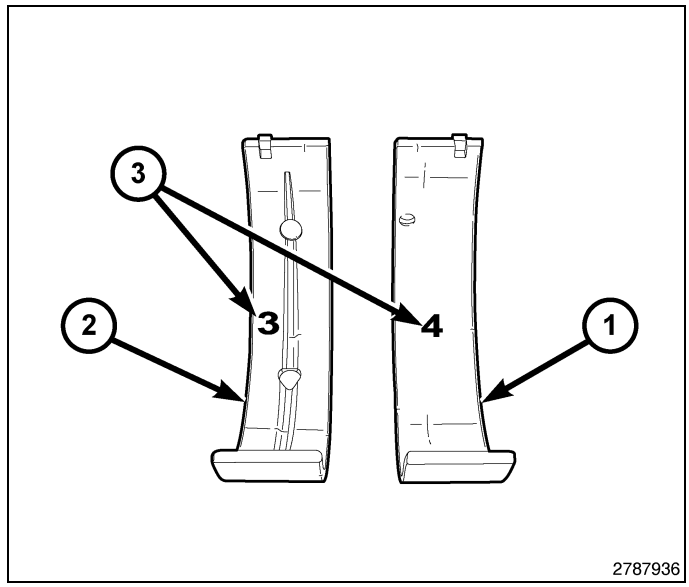

9. Use Cylinder Indicator C-119 (2) to correctly measure the inside diameter of the cylinder bore (3). A cylinder bore gauge capable of reading in 0.003 mm (0.0001 in.) Increments is required. If a bore gauge is not available, do not use an inside micrometer.
10. Measure the inside diameter of the cylinder bore at three levels below the top of the bore (4). Start at the top of the bore, perpendicular (across or at 90°) to the axis of the crankshaft at point A (1).
11. Repeat the measurement near the middle of the bore then repeat the measurement near the bottom of the bore.
12. Determine the taper by subtracting the smaller diameter from the larger diameter.
13. Rotate the measuring device 90° to point B (1) and repeat the three measurements. Verify that the maximum taper is within specifications.
14. Determine out-of-roundness by comparing the difference between each measurement.
15. If the cylinder bore taper does not exceed 0.025 mm (0.001 inch) and out-of-roundness does not exceed 0.015 mm (0.0006 inch) then the cylinder bore can be honed. If the cylinder bore taper or out- of-round condition exceeds the maximum limits, replace the cylinder block.

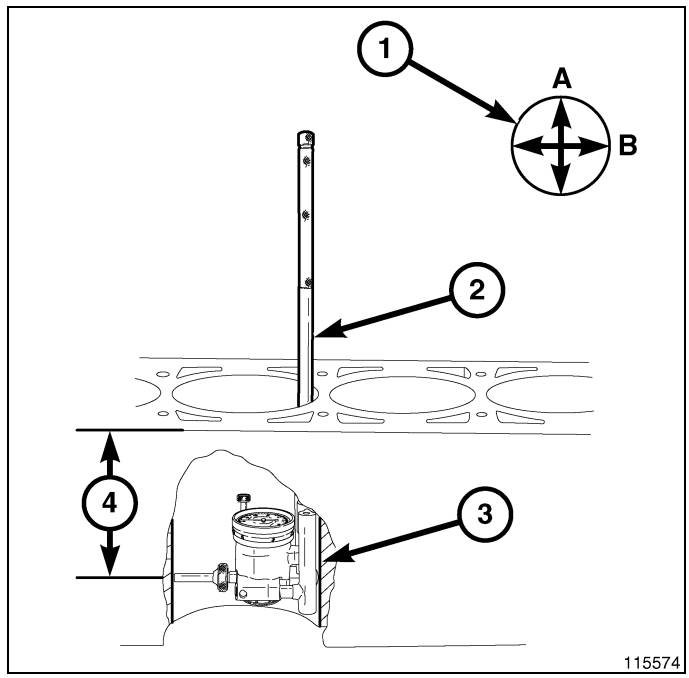

NOTE: A slight amount of taper always exists in the cylinder bore after the engine has been in use for a period of time.

ASSEMBLY, Variable Valve Timing, 5.7L

Description

The 5.7L Eagle engine is equipped with Variable Cam Timing (VCT). This system advances and/or retards the camshaft timing to improve engine performance, mid-range torque, idle quality, fuel economy, and reduce emissions. The VCT assembly is sometimes referred to as a camshaft phaser.

CAUTION: Never attempt to disassemble the camshaft phaser, severe engine damage could result.

The VCT assembly consists of the camshaft sprocket and a timing phaser. The VCT phaser assembly bolts to the camshaft and is serviced as an assembly.

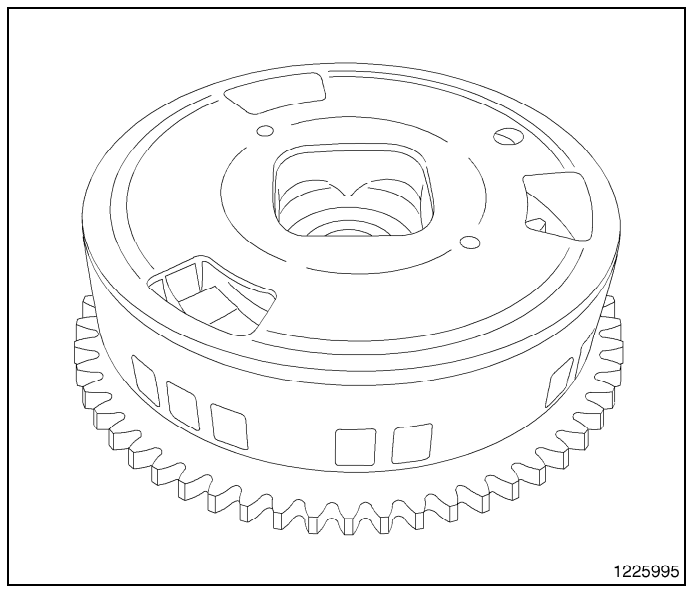

Operation

The Variable Cam Timing (VCT) assembly is actuated with engine oil pressure. The oil flow to the VCT assemblies are controlled by an Oil Control Valve (OCV). The OCV consist of a Pulse Width Modulated (PWM) solenoid and a spool valve. The PCM actuates the OCV to control oil flow through the spool valve into the VCT assemblies. The VCT assembly consists of a rotor, stator, and sprocket. The stator is connected to the timing chain through the sprocket. The rotor is connected to the camshaft. Oil flow in to the VCT assembly rotates the rotor with respect to the stator, thus

rotating the exhaust camshaft with respect to the timing chain and intake camshaft. An infinitely variable cam timing position can be achieved within the limits of the hardware. The CMP monitors the position of the camshaft with respect to the crankshaft and provides feedback to the PCM.

CAUTION: Never attempt to disassemble the camshaft phaser, severe engine damage could result.

Removal

CAUTION: Never attempt to disassemble the camshaft phaser, severe engine damage could result.

1. Remove the timing chain and sprockets (Refer to 09 - Engine/Valve Timing/CHAIN and SPROCKETS, Timing - Removal)
2. Remove the camshaft phaser bolt (1).
3. Remove camshaft phaser (2).

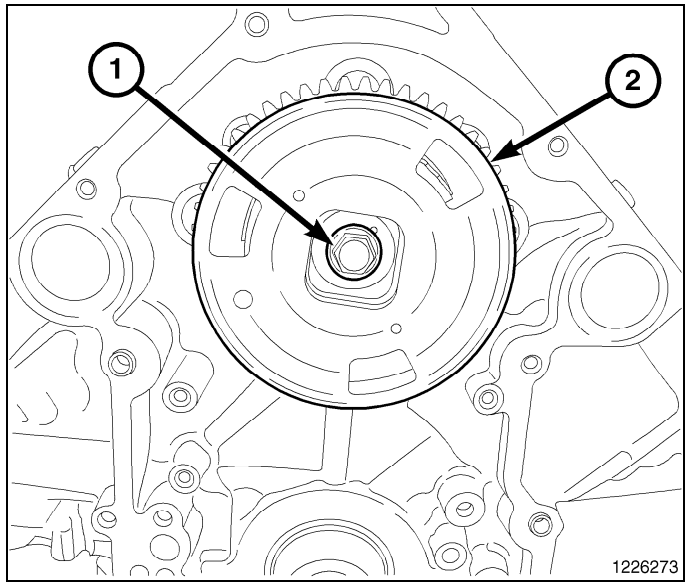

Installation

1. Align the slot (2) in the phaser (1) with the dowel on the camshaft.

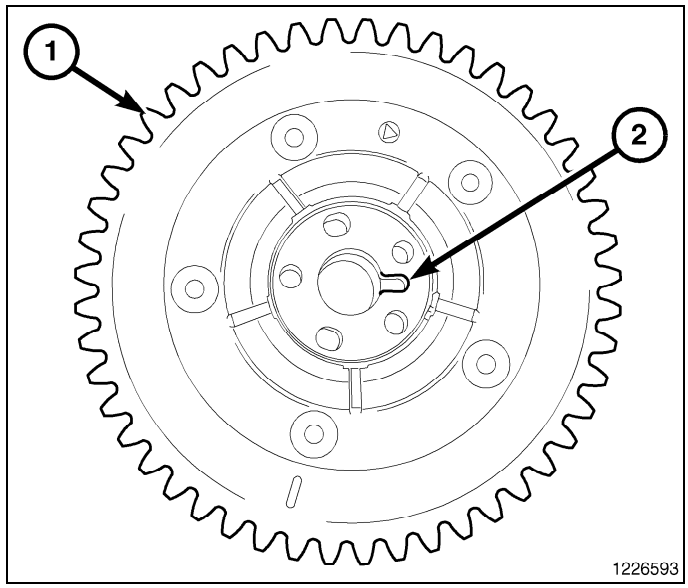

CAUTION: Never attempt to disassemble the camshaft phaser, severe engine damage could result.

2. Position the phaser (2) in place and install phaser retaining bolt (1) and tighten to 122 N·m (90 ft. lbs.).
3. Install the timing chain and sprockets (Refer to 09 - Engine/Valve Timing/CHAIN and SPROCKETS, Timing - Installation)

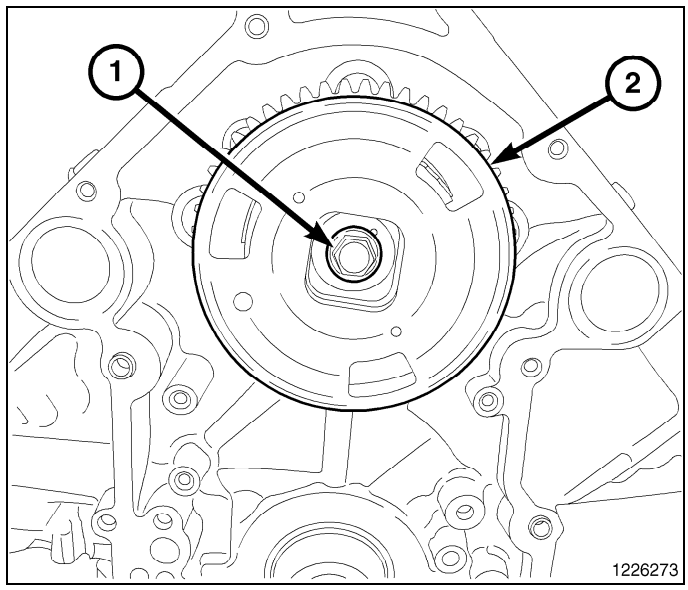

BEARING(S), Crankshaft, Main

Standard Procedure

MAIN BEARING JOURNAL DIAMETER (CRANKSHAFT REMOVED)

With the crankshaft removed from the cylinder block.

Clean the oil off the main bearing journal.

Determine the maximum diameter of the journal with a micrometer. Measure at two locations 90° apart at each end of the journal.

The maximum allowable taper is 0.008mm (0.0004 inch.) and maximum out of round is 0.005mm (0.0002 inch). Compare the measured diameter with the journal diameter specification (Main Bearing Fitting Chart). Select the inserts required to obtain the specified bearing-to-journal clearance.

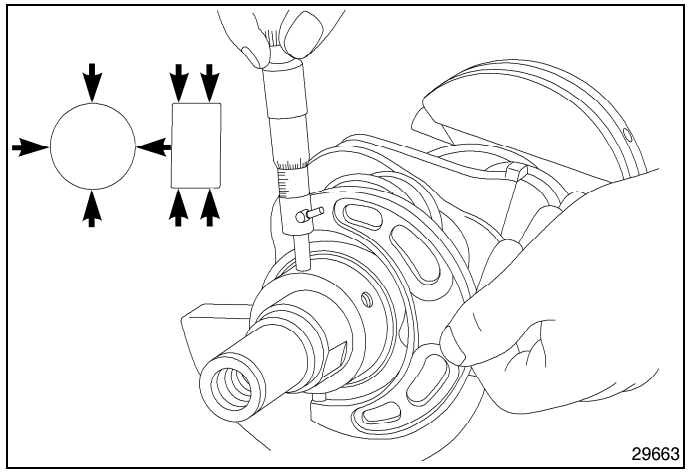

CRANKSHAFT MAIN BEARING SELECTION

The main bearings are “select fit” to achieve proper oil clearances. For main bearing selection, the crankshaft counterweight has grade identification marks stamped into it. These marks are read from left to right.The left letter (1) refers to the number one main journal and the right letter (2) refers to the number 5 journal.

NOTE: Service main bearings are coded. These codes identify what size or grade of the bearing.

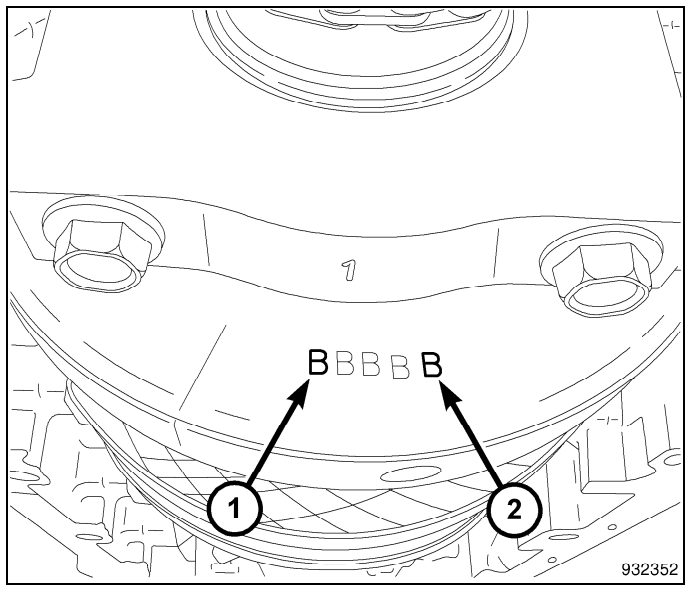

MAIN BEARING SELECTION CHART - 5.7L

GRADE MARKING	BEARING SIZE		FOR USE WITH JOURNAL SIZE	
	METRIC	STANDARD	METRIC	STANDARD
A	0.008 mm U/S	0.0004 in. U/S	64.988 - 64.995 mm	2.5585 - 2.5588in.
B	NOMINAL		64.996 - 65.004 mm	2.5588 - 2.5592 in.
C	0.008 mm O/S	0.0004 in. O/S	65.005 - 65.012 mm	2.5592 - 2.5595 in.

Inspection

Wipe the inserts clean and inspect for abnormal wear patterns and for metal or other foreign material imbedded in the lining. Normal main bearing insert wear patterns are illustrated.

NOTE: If any crankshaft journals are scored, the crankshaft must be repaired or replaced.

Inspect the back of the inserts for fractures, scrapings or irregular wear patterns.

Inspect the upper insert locking tabs for damage.

Replace all damaged or worn bearing inserts.

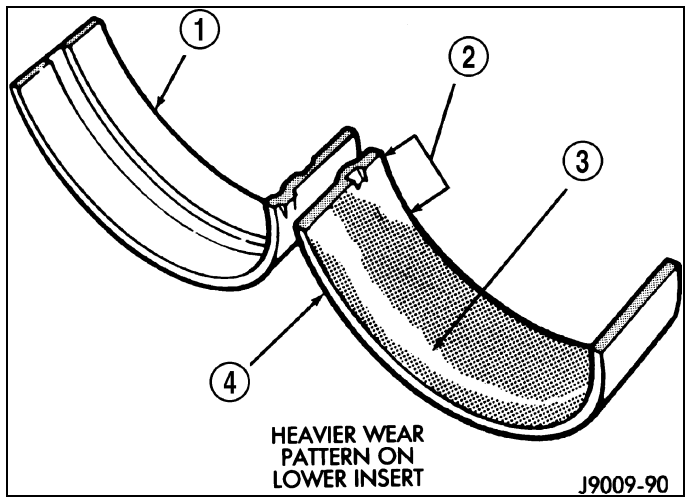

CAMSHAFT, Engine

Removal

CAMSHAFT CORE HOLE PLUG

1. Perform the fuel system pressure release procedure (Refer to 14 - Fuel System/Fuel Delivery - Standard Procedure).
2. Remove the engine from the vehicle (Refer to 09 - Engine - Removal).
3. Remove the flexplate (Refer to 09 - Engine/Engine Block/FLEXPLATE - Removal).

CAUTION: Do not damage the rear surface of the camshaft or the core plug sealing surface, when removing the core plug.

4. Using a suitable sharp punch, punch a small hole in the camshaft core hole plug (1).
5. Insert a short sheet metal screw into the small hole in the camshaft core hole plug.
6. Using a suitable slide hammer puller, remove the rear camshaft core hole plug.

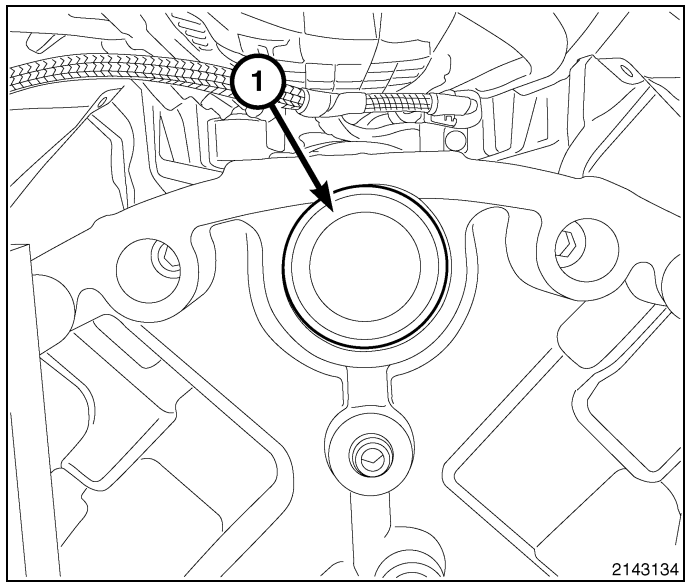

CAMSHAFT

1. Remove the battery negative cable.
2. Remove the air cleaner assembly (Refer to 09 - Engine/Air Intake System/BODY, Air Cleaner - Removal).
3. Drain coolant(Refer to 07 - Cooling - Standard Procedure).
4. Remove the accessory drive belt. (Refer to 07 - Cooling/Accessory Drive/BELT, Serpentine - Removal).
5. Remove the left and right cylinder heads (Refer to 09 - Engine/Cylinder Head - Removal).
6. Remove the radiator (Refer to 07 - Cooling/Engine/RADIATOR, Engine Cooling - Removal).
7. Remove the oil pan(Refer to 09 - Engine/Lubrication/PAN, Oil - Removal).
8. Remove timing case cover (Refer to 09 - Engine/Valve Timing/COVER(S), Engine Timing - Removal).

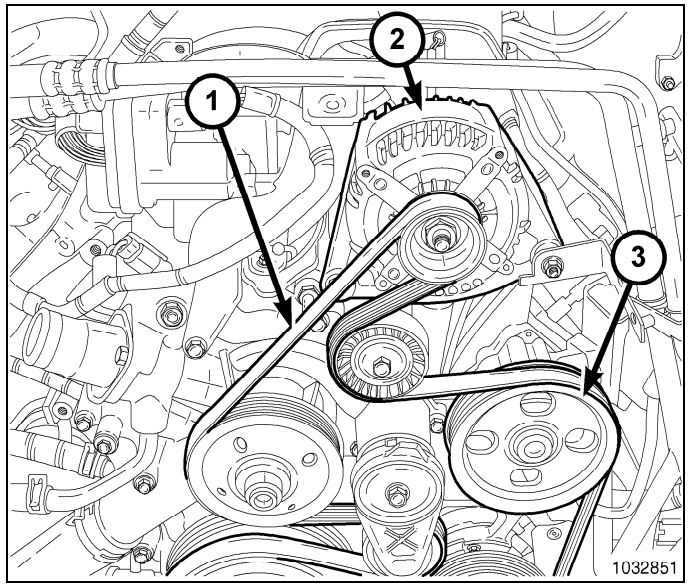

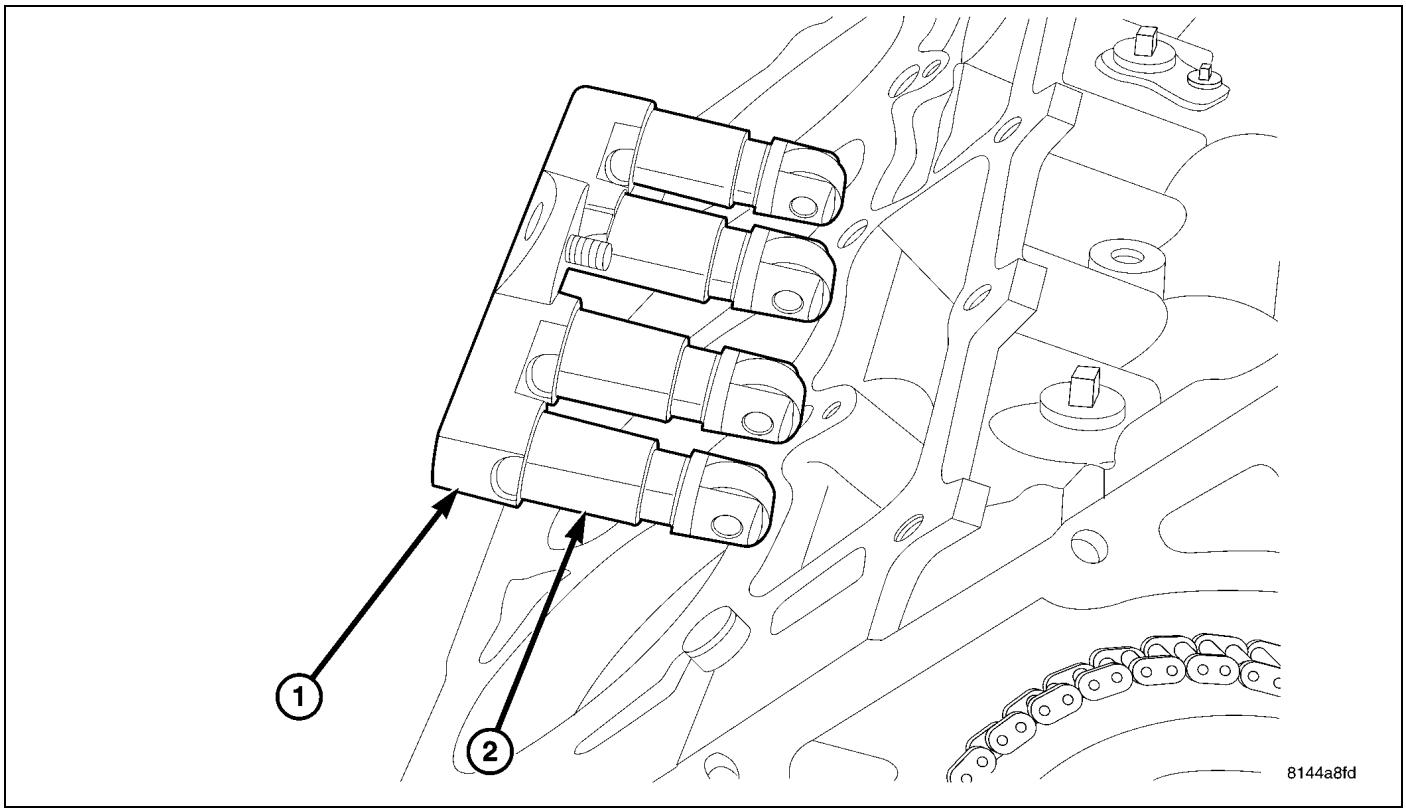

NOTE: Identify lifters to ensure installation in original location.

9. Remove the tappets (2) and retainer (1) assembly.
10. Remove the oil pick up tube (1).

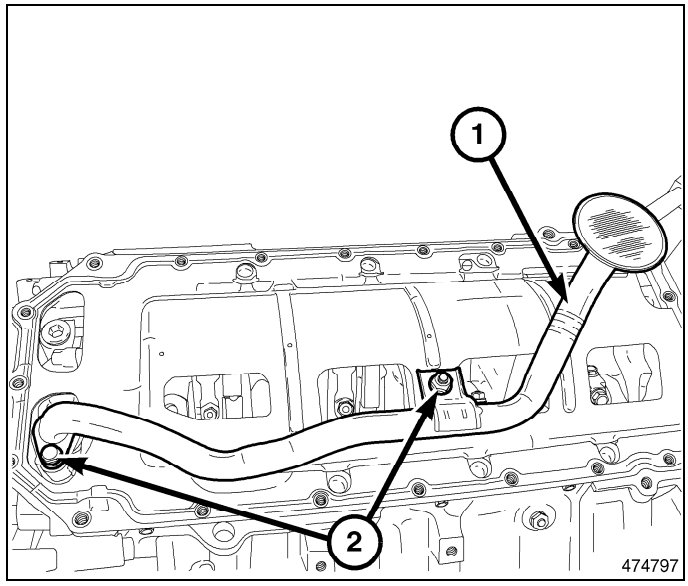

11. Remove the oil pump retaining bolts (2) and remove the oil pump (1).

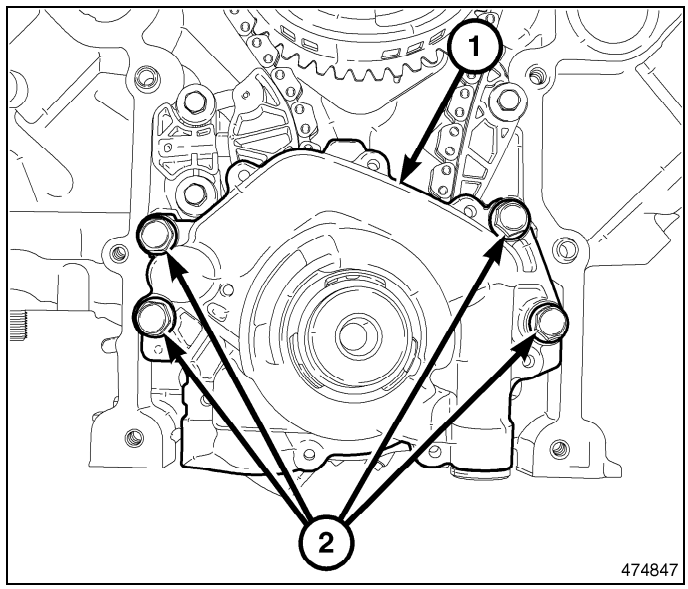

12. Remove timing chain (5)(Refer to 09 - Engine/Valve Timing/CHAIN and SPROCKETS, Timing - Removal).

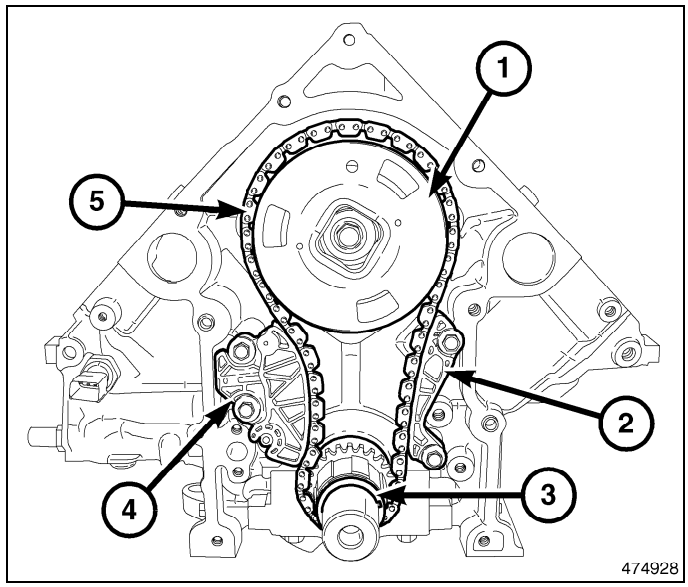

13. Remove camshaft thrust plate (1).

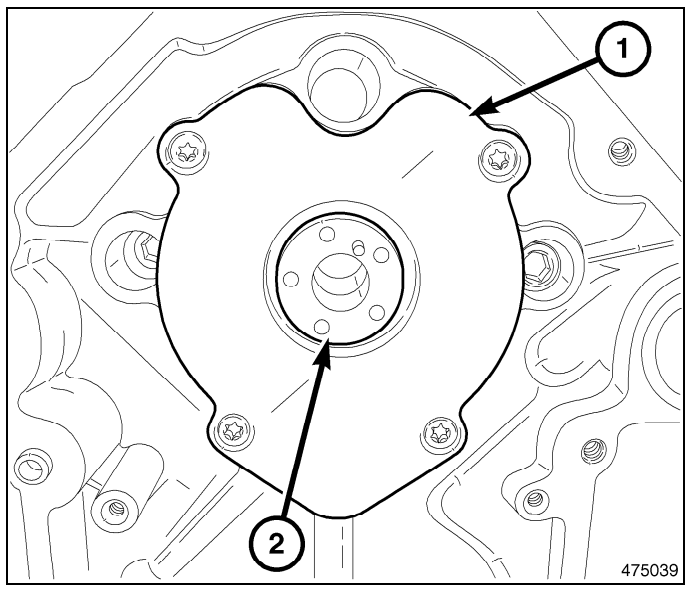

NOTE: Slowly rotate the camshaft while pulling camshaft out.

14. Install a long bolt (2) into front of camshaft (1) to aid in removal of the camshaft. Remove camshaft, being careful not to damage cam bearings with the cam lobes.

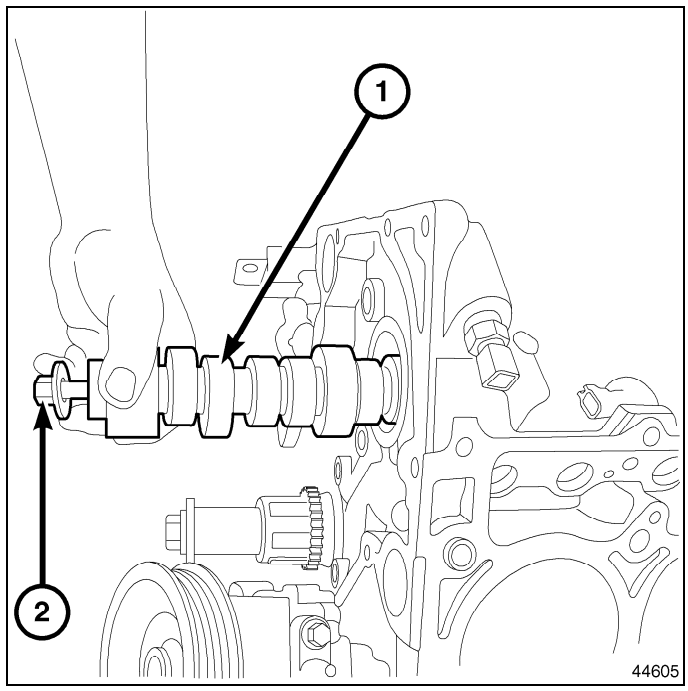

Inspection

The cam bearings are not serviceable. Do not attempt to replace cam bearings for any reason. If the cam bearings are damaged, the cylinder block must be replaced.

Installation

CAMSHAFT CORE HOLE PLUG

1. Clean the core hole in the cylinder block.

NOTE: Do not apply adhesive to the new camshaft core hole plug. A new plug has adhesive pre-applied.

2. Install a new camshaft core hole plug (1) located at the rear of cylinder block, using a suitable flat faced tool. The plug must be fully seated on the cylinder block shoulder.
3. Install the flexplate (Refer to 09 - Engine/Engine Block/FLEXPLATE - Installation).
4. Install the engine (Refer to 09 - Engine - Installation).

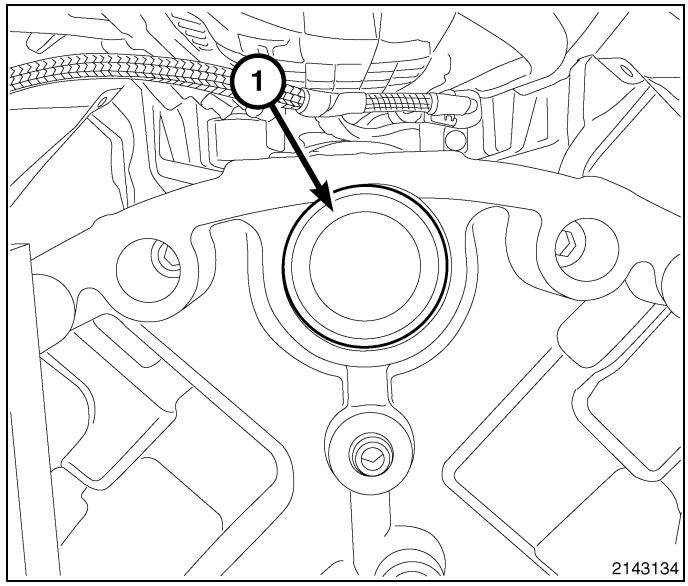

CAMSHAFT

1. Lubricate the camshaft lobes and camshaft bearing journals and insert the camshaft (1).

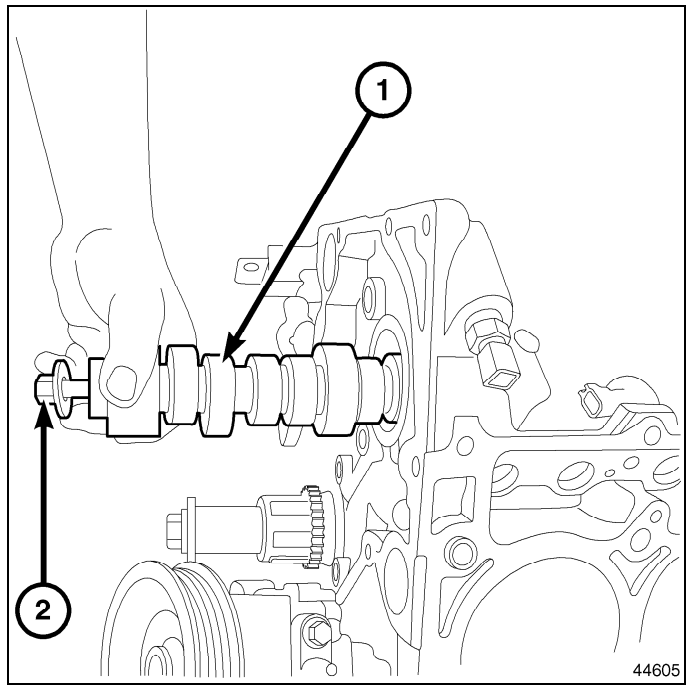

NOTE: Ensure that the plate is installed on the correct side. The fasteners are flat head fasteners so the top of the head of the fastener should not stick above the front face of the plate after they are torqued. The plate has chamfered fastener holes and the chamfered side should be facing forward to ensure the fasteners are flush or below the front surface.

2. Install the camshaft thrust plate (1).

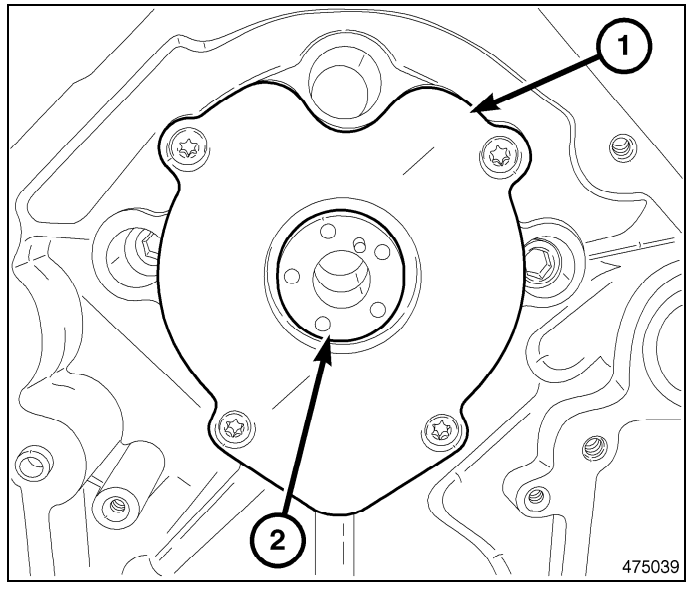

3. Using the sequence shown, tighten the bolts to 12 N·m (9 ft. lbs.).

NOTE: The camshaft phaser must be installed before the camshaft end play can be measured.

4. Measure camshaft end play (Refer to 09 - Engine - Specifications)
5. If not within limits, disassemble, clean, and inspect for burrs or debris. Reassemble and measure end play again. If the end play is still out, then install a new thrust plate.

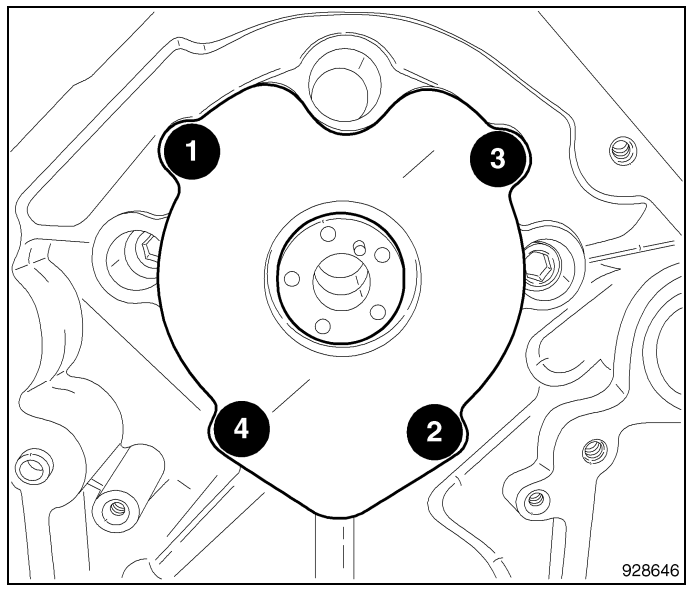

6. Install the timing chain (5) and sprockets (1,3)(Refer to 09 - Engine/Valve Timing/CHAIN and SPROCKETS, Timing - Installation)
7. Install the timing chain tensioner arm (4) and guide (2).

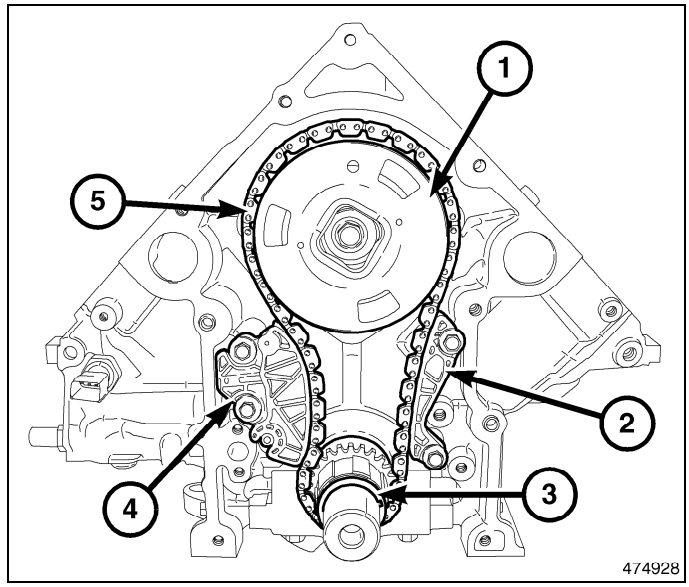

8. Remove the tensioner pin 8514 (1).

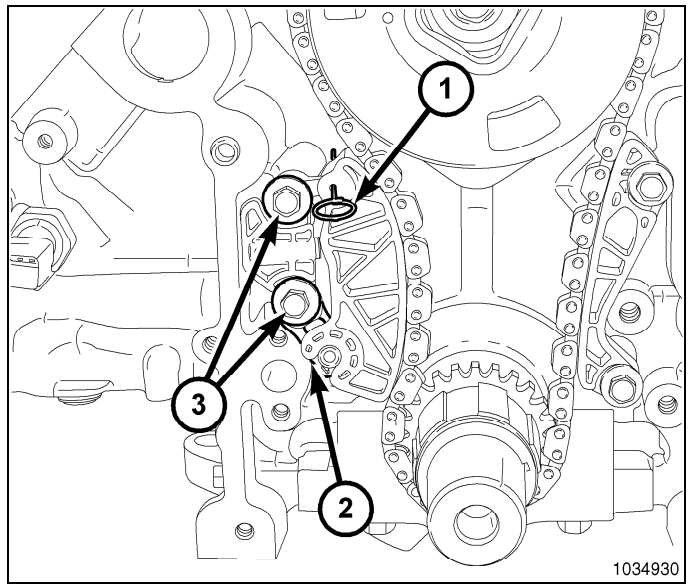

9. Install the oil pump (1) and tighten bolts to 28 N·m (21 ft. lbs.)(Refer to 09 - Engine/Lubrication/PUMP, Engine Oil - Installation).

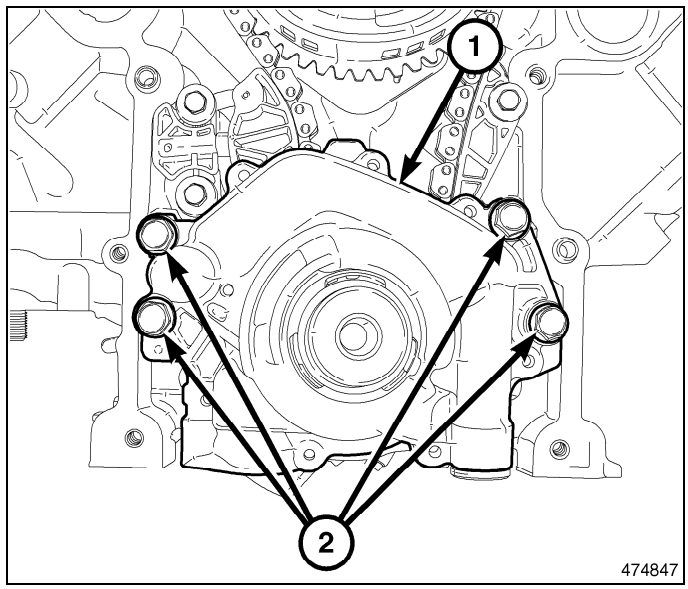

10. Inspect the oil pick up tube O-rings and replace as necessary.
11. Install the oil pick up tube (1) and tighten fasteners (2) to 28 N·m (21 ft. lbs.).

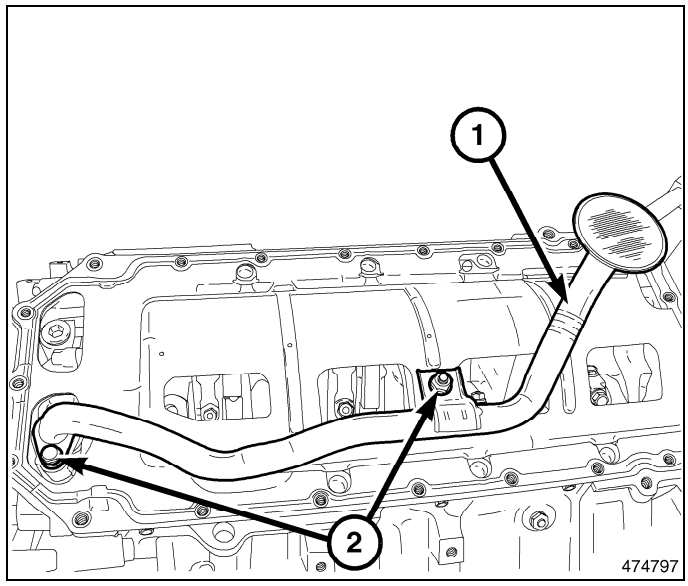

12. Install the timing chain cover (Refer to 09 - Engine/Valve Timing/COVER(S), Engine Timing - Installation)
13. Install the oil pan (Refer to 09 - Engine/Lubrication/PAN, Oil - Installation)

CAUTION: Engines equipped with MDS use both standard roller lifters (2) and deactivating roller lifters (1). The deactivating roller lifters must be used in cylinders 1,4,6,7. The deactivating lifters can be identified by the two holes in the side of the lifter body (3), for the latching pins.

NOTE: Each tappet reused must be installed in the same position from which it was removed. When camshaft is replaced, all of the tappets must be replaced.

14. Install the rear MDS lifter assemby (2) and tighten bolt (1) to 12 N·m (106 in. lbs.)

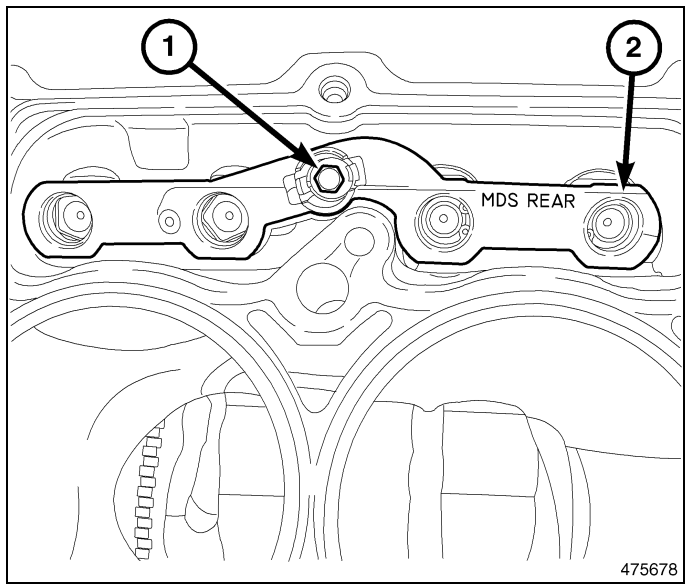

15. Install the front MDS lifter assemby (2) and tighten bolt (1) to 12 N·m (106 in. lbs.).

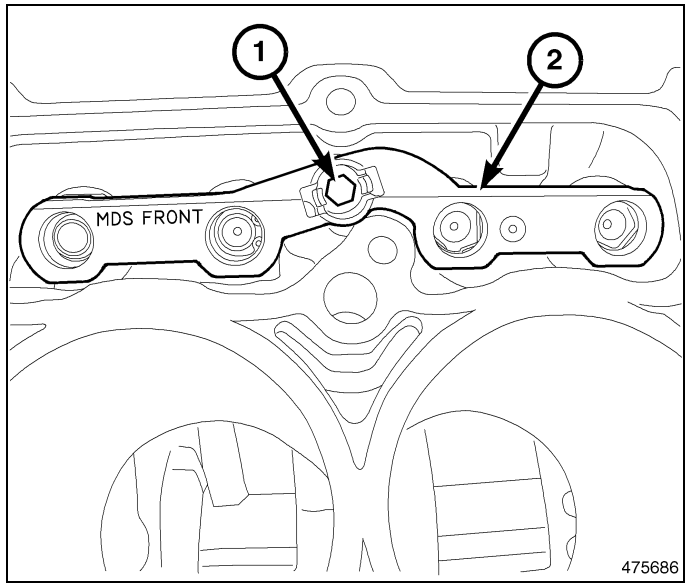

16. Install both the left and right cylinder heads (4)(Refer to 09 - Engine/Cylinder Head - Installation)
17. Install pushrods.
18. Install rocker arms (Refer to 09 - Engine/Cylinder Head/ROCKER ARM, Valve - Installation)

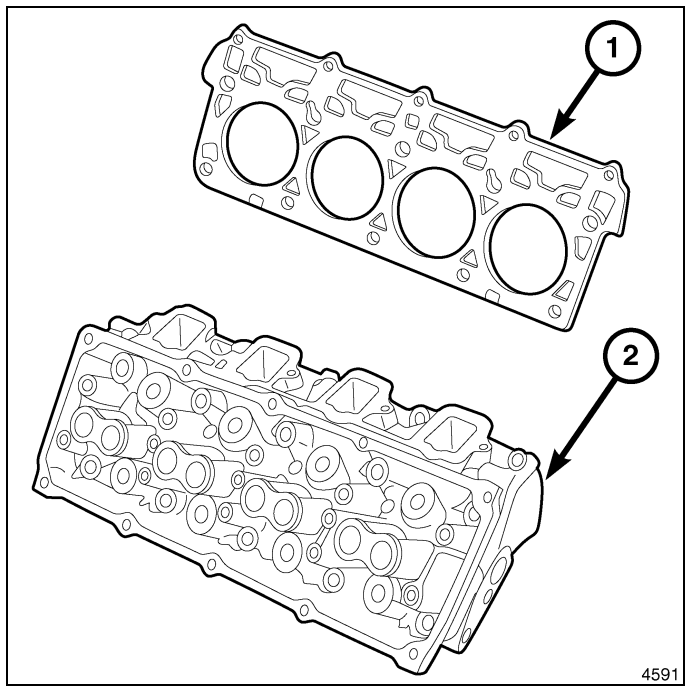

19. Install cylinder head covers (Refer to 09 - Engine/Cylinder Head/COVER(S), Cylinder Head - Installation)

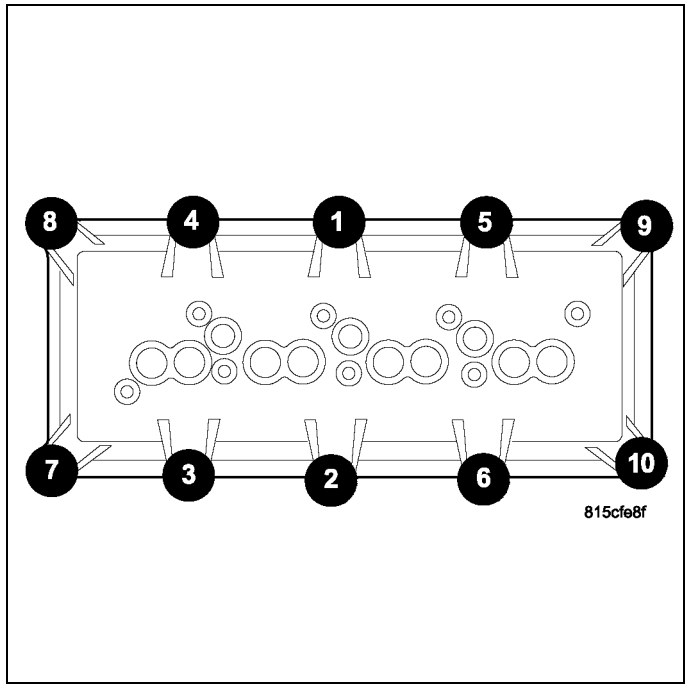

20. Install the intake manifold (Refer to 09 - Engine/Manifolds/MANIFOLD, Intake - Installation)
21. Install the generator (2).
22. Install the power steering pump (3).
23. Install the accessory drive belt (1) (Refer to 07 - Cooling/Accessory Drive/BELT, Serpentine - Installation)
24. Install the radiator (Refer to 07 - Cooling/Engine/RADIATOR, Engine Cooling - Installation)
25. Install the air cleaner assembly (Refer to 09 - Engine/Air Intake System/BODY, Air Cleaner - Installation)
26. Install the negative battery cable.
27. Fill the radiator with coolant (Refer to 07 - Cooling - Standard Procedure)
28. Fill the engine with oil (Refer to 09 - Engine/Lubrication/FILTER, Engine Oil - Installation)
29. Start the engine and check for leaks.

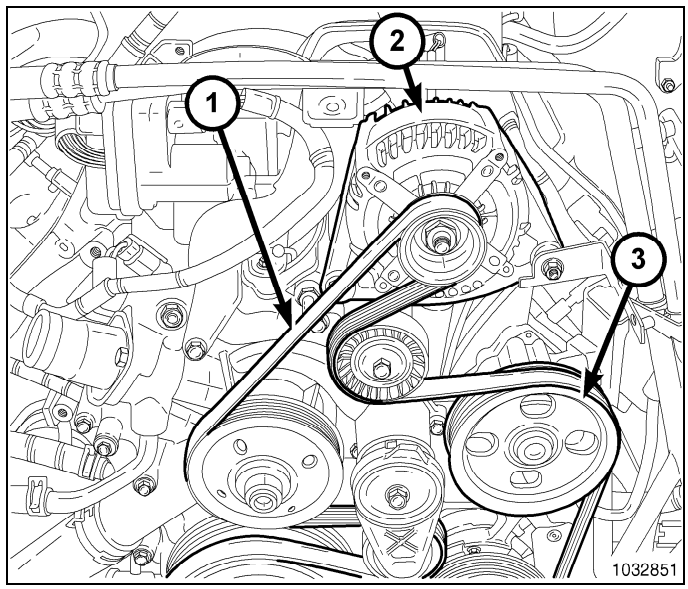

COVER, Structural Dust

Description

The structural dust cover is made of die cast aluminum and joins the lower half of the transmission bell housing to the engine.

Operation

The structural cover provides additional powertrain stiffness and reduces noise and vibration.

Removal

1. Raise and support the vehicle.
2. Remove the steering rack to frame mounting bolts (1) and lower the steering rack enough to gain clearance for the structural dust cover removal.

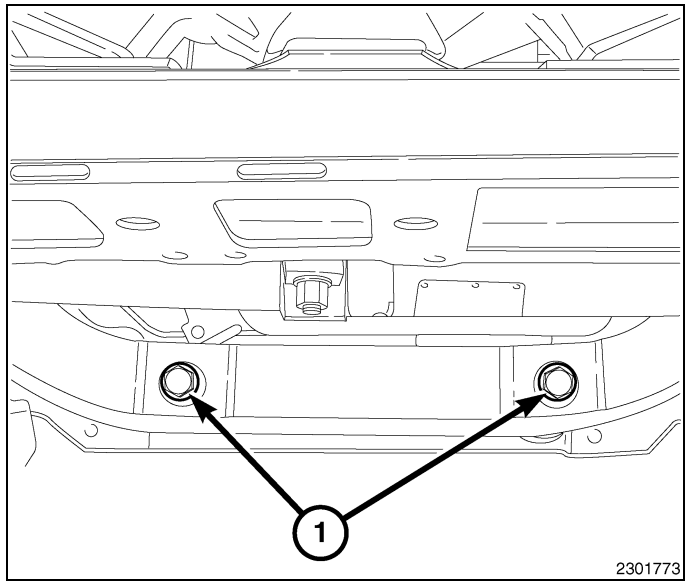

3. Remove the transmission mount to crossmember retaining nuts (1).
4. Using a suitable jack, lift the transmission enough to gain clearance for the structural dust cover removal.

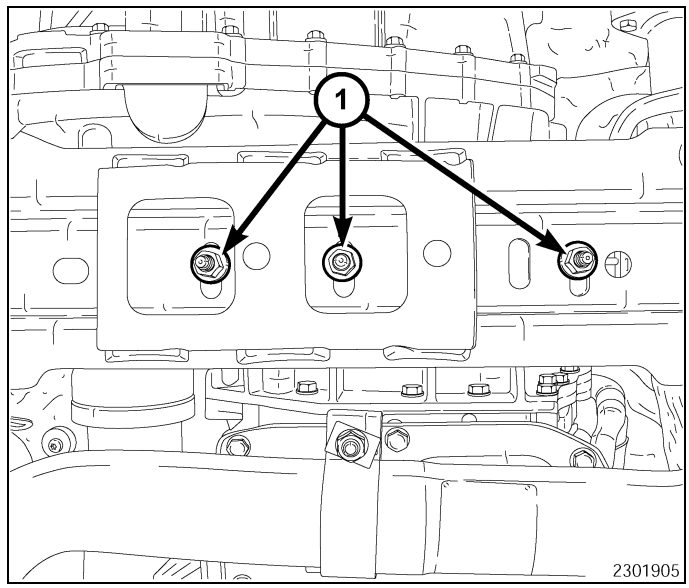

5. Remove the structural dust cover retaining bolts (1,3 & 4).
6. Remove the structural dust cover (2).

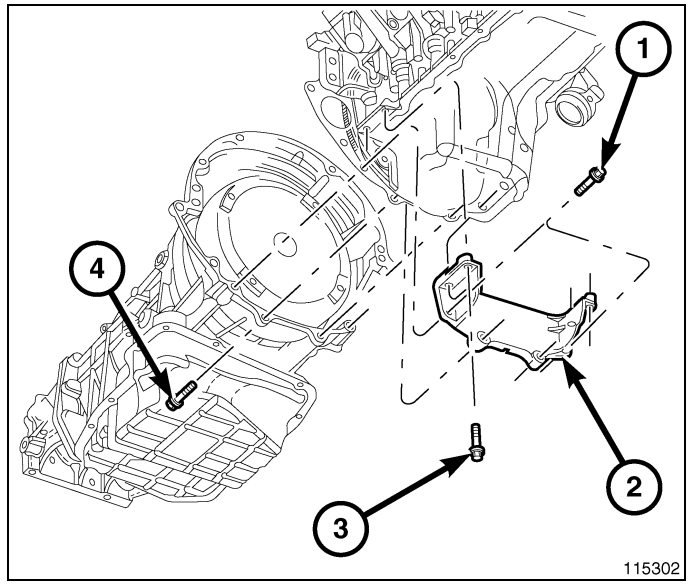

Installation

CAUTION: The structural dust cover must be installed as described in the following steps. Failure to do so may cause severe damage to the cover.

1. Position the structural dust cover in the vehicle
2. Install all four bolts retaining the structural dust cover to the engine (3) hand tight.
3. Install the four cover to transmission bolts (1, 2 & 4) hand tight.

CAUTION: The structural dust cover must be held tightly against both the engine and the transmission bell housing during the tightening sequence. Failure to do so may cause severe damage to the cover.

4. Tighten the structural dust cover-to-transmission bolts (1, 2 & 4) to 9 N·m (80 in. lbs.).
5. Tighten the structural dust cover-to-engine block bolts (3) to 9 N·m (80 in. lbs.).
6. Retighten the structural dust cover-to-transmission bolts to 54 N·m (40 ft. lbs.).
7. Retighten the structural dust cover-to-engine block bolts to 54 N·m (40 ft. lbs.).
8. Lower the transmission onto the crossmember and remove the jack.
9. Install the transmission mount to crossmember retaining nuts (1) and tighten to 54 N·m (40 ft. lbs.).

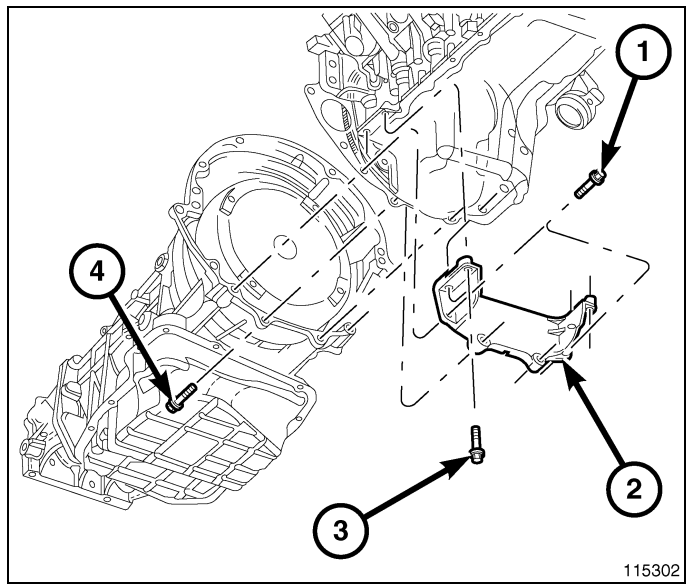

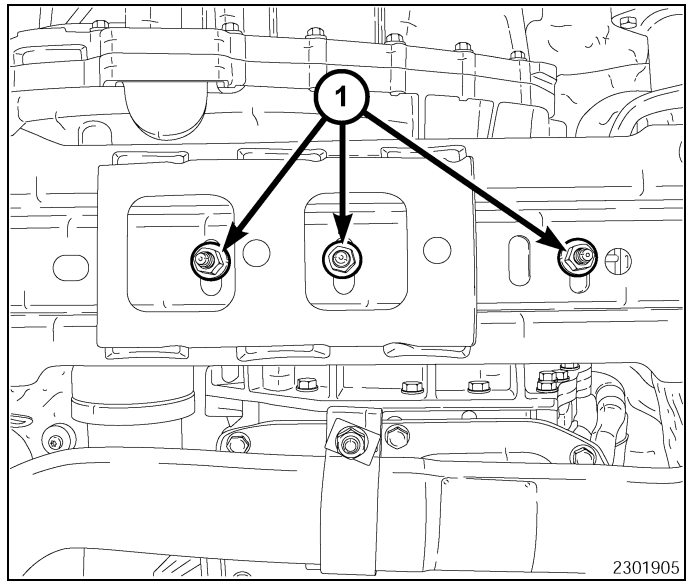

10. Position the steering rack to the frame, install the bolts (1) and tighten bolts/nuts to 258 N·m (190 ft. lbs.).
11. Lower the vehicle.

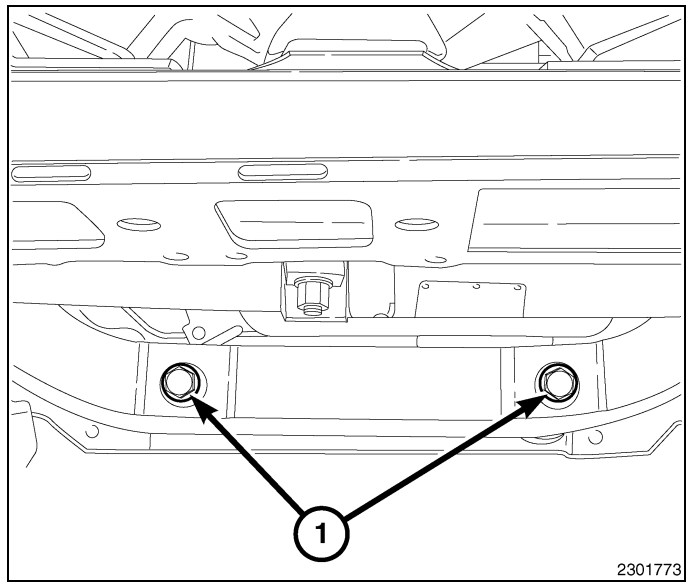

CRANKSHAFT

Removal

1. Remove engine (Refer to 09 - Engine - Removal).
2. Remove the vibration damper (1) using Cranshaft Insert 8513A (2) and Puller 1023 (3)(Refer to 09 - Engine/Engine Block/DAMPER, Vibration - Removal).

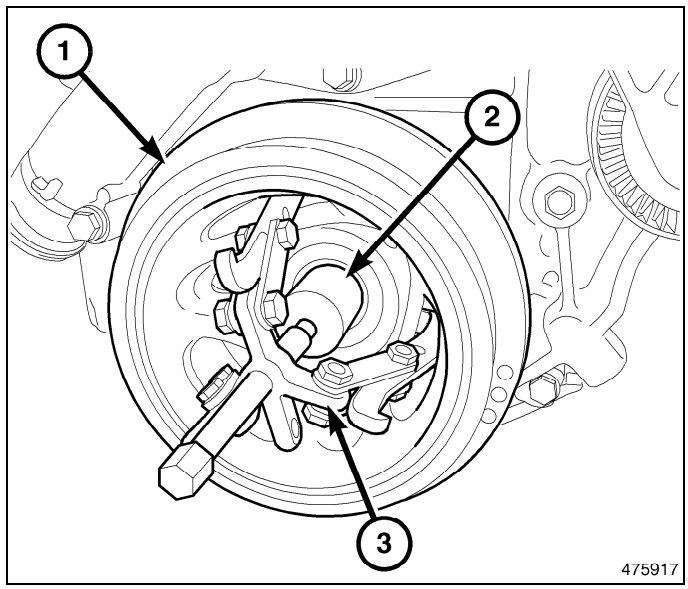

3. Remove the rear oil seal retainer(Refer to 09 - Engine/Engine Block/RETAINER, Crankshaft Rear Oil Seal - Removal) .
4. Remove the oil pan(Refer to 09 - Engine/Lubrication/PAN, Oil - Removal).

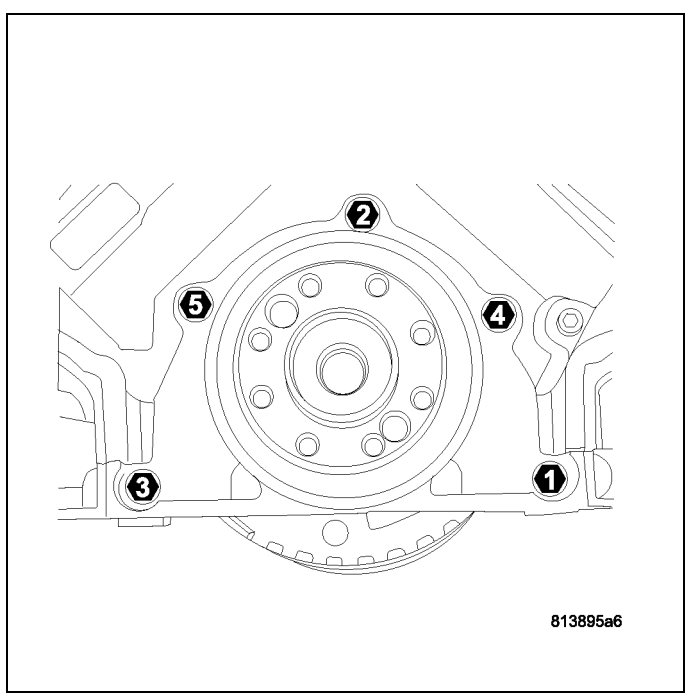

5. Remove the oil pump pickup (1).
6. Remove the windage tray/oil pan gasket.
7. Remove the timing chain cover(Refer to 09 - Engine/Valve Timing/COVER(S), Engine Timing - Removal) - REMOVAL).

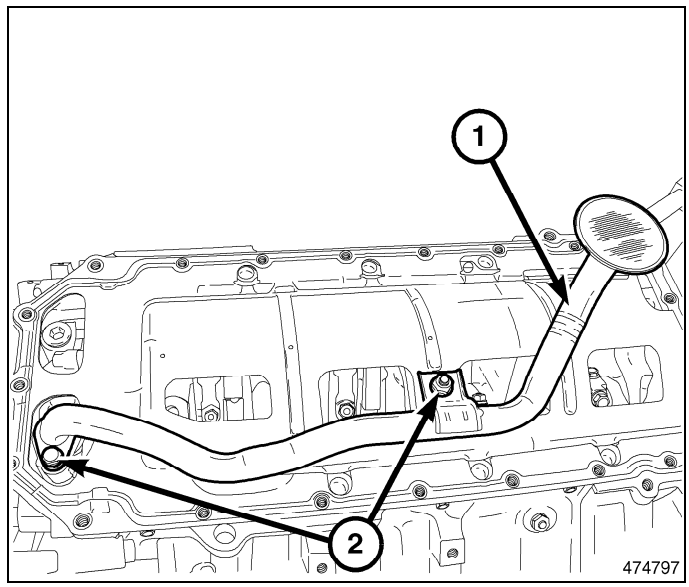

8. Remove the oil pump (1)(Refer to 09 - Engine/Lubrication/PUMP, Engine Oil - Removal).

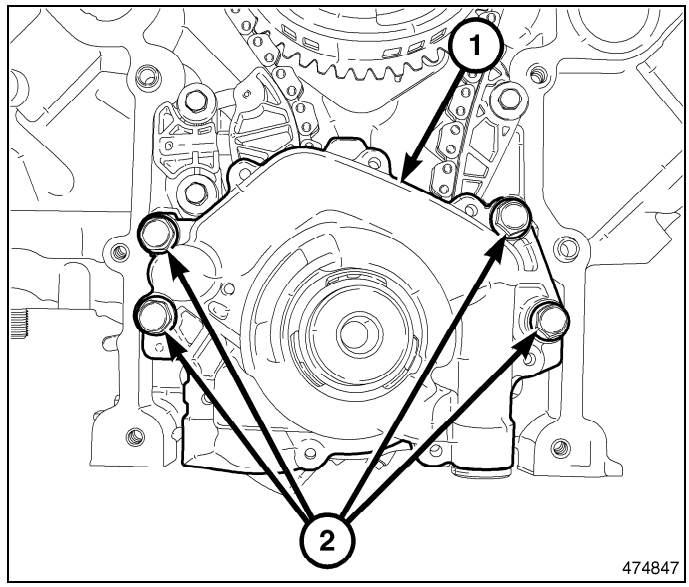

9. Remove the timing chain (5) and sprockets (1,3)(Refer to 09 - Engine/Valve Timing/CHAIN and SPROCKETS, Timing - Removal).

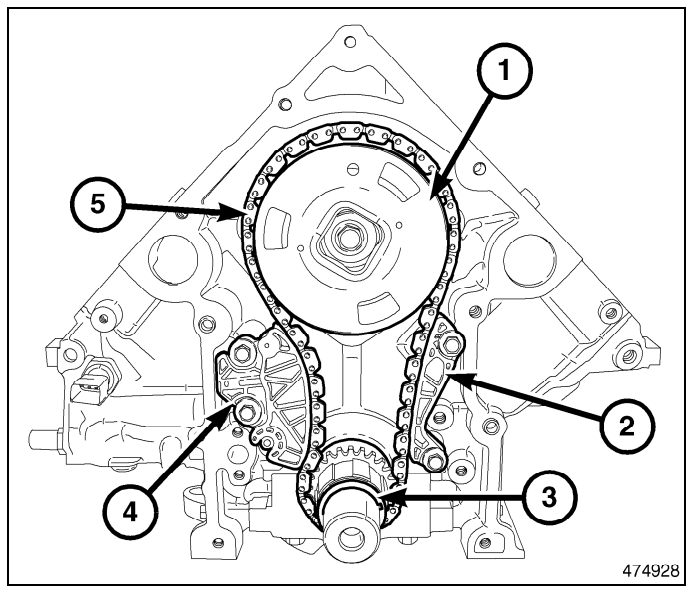

10. Identify rod bearing caps before removal. Remove rod bearing caps with bearings.

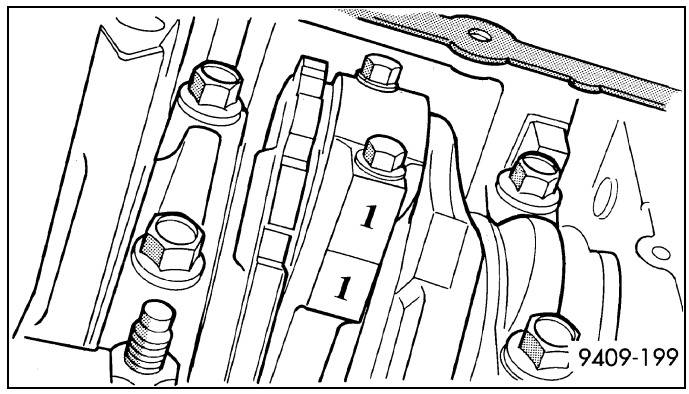

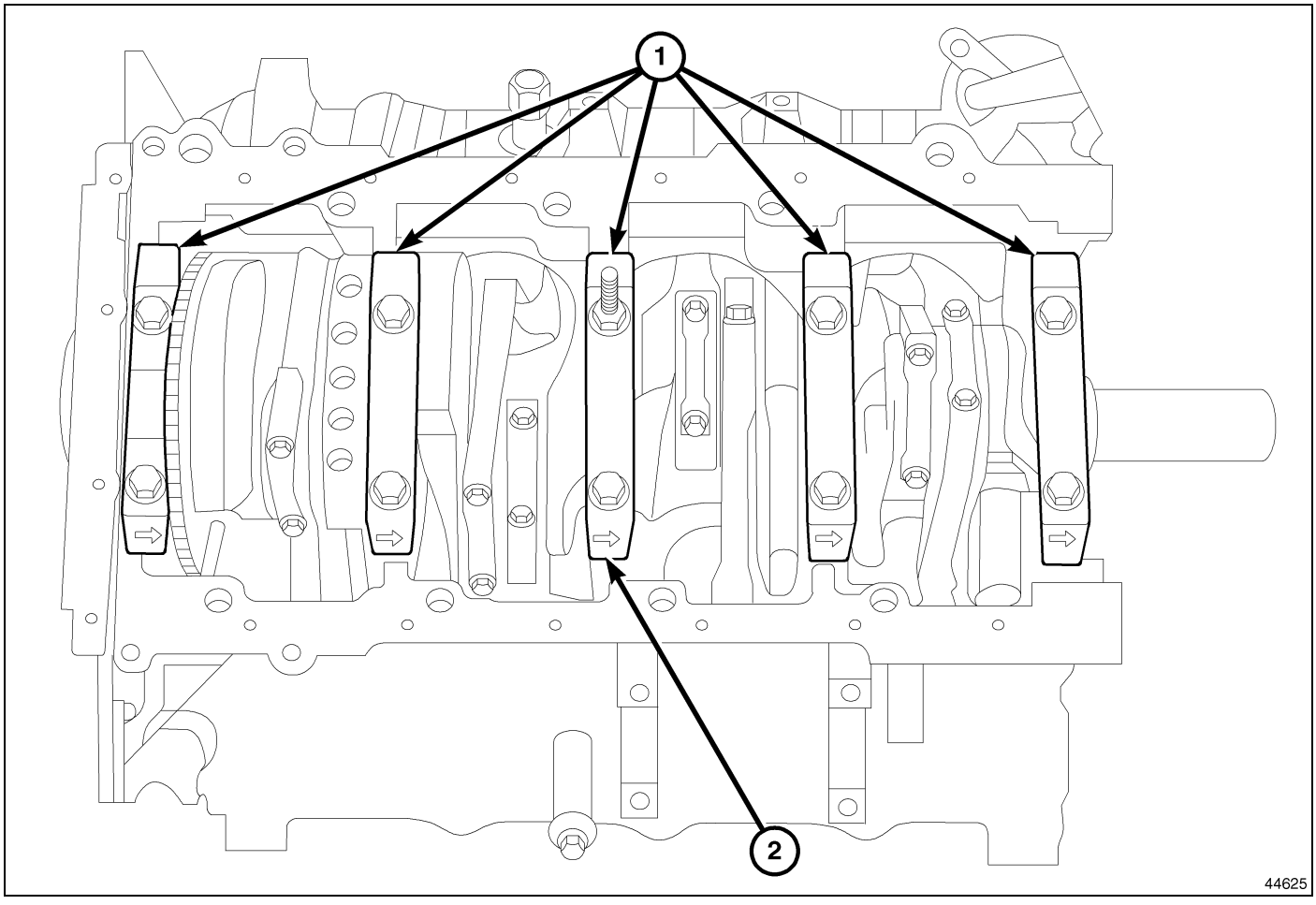

11. Identify main bearing caps (1) before removal.

12. Remove main bearing cap bolts.
13. Remove main bearing caps (1) and bearings one at a time.

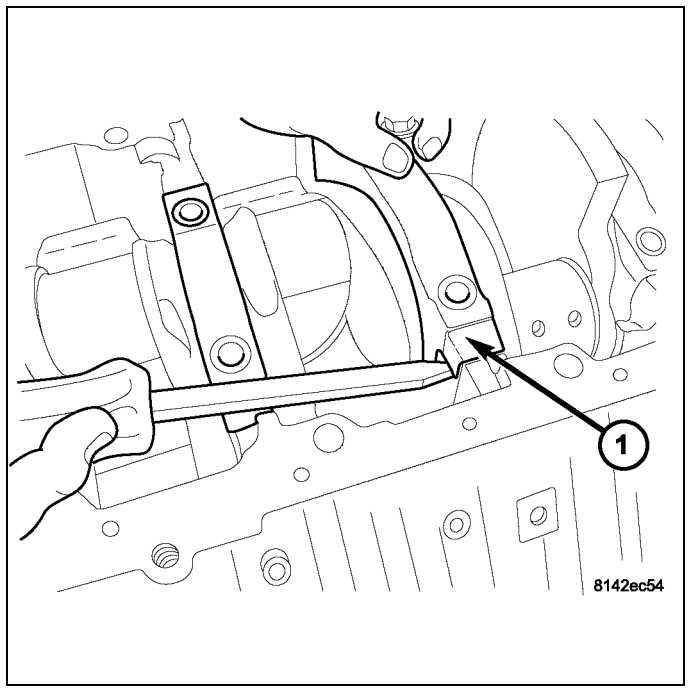

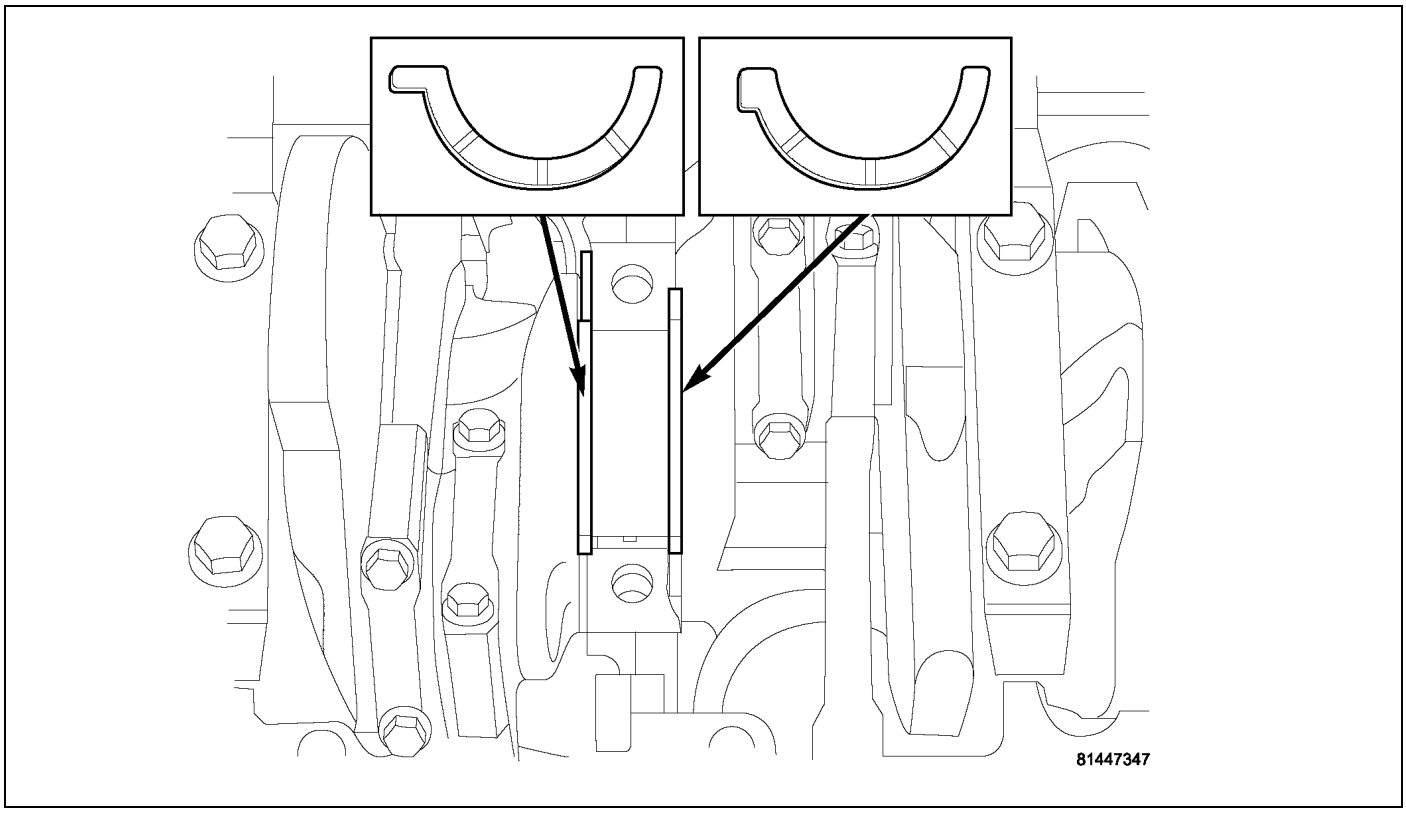

14. Remove the thrust washers.
15. Remove the crankshaft out of the block.

Installation

1. Select the proper main bearings (Refer to 09 - Engine/Engine Block/BEARING(S), Crankshaft - Standard Procedure).
2. Install main bearings in block (1).

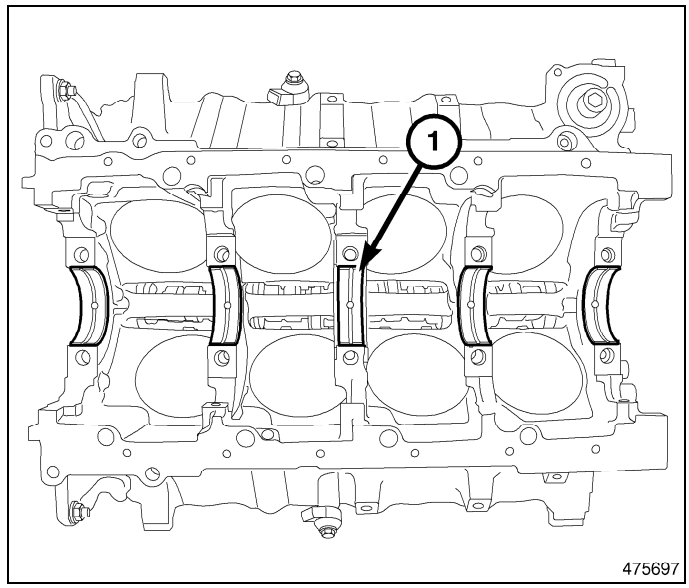

3. Install main bearing shells (2) in the bearing caps (1).

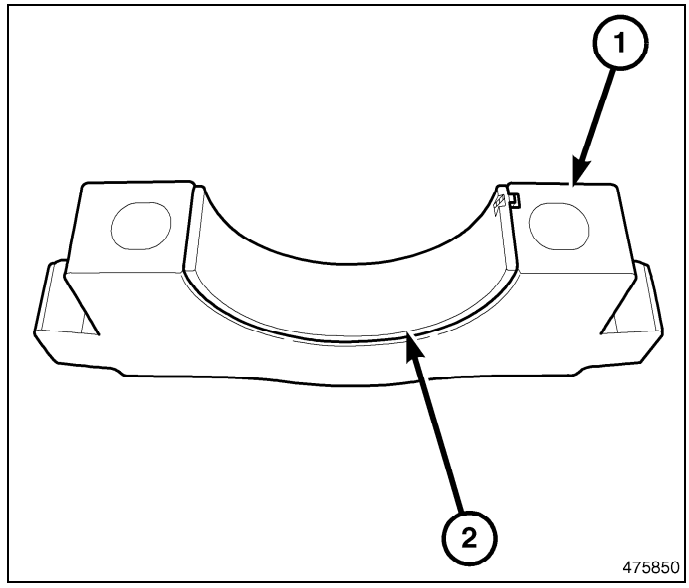

4. Lubricate the main bearing shells with clean engine oil.
5. Position the crankshaft (1) into the cylinder block.

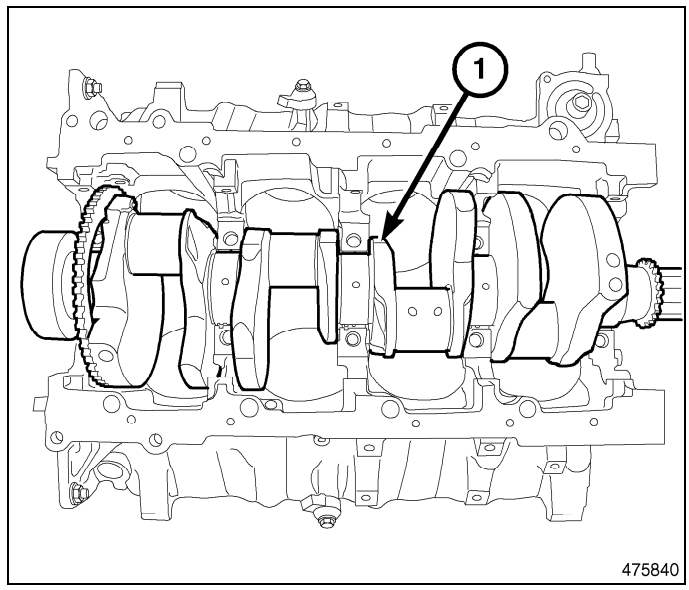

6. Lubricate and install the thrust bearings (1).

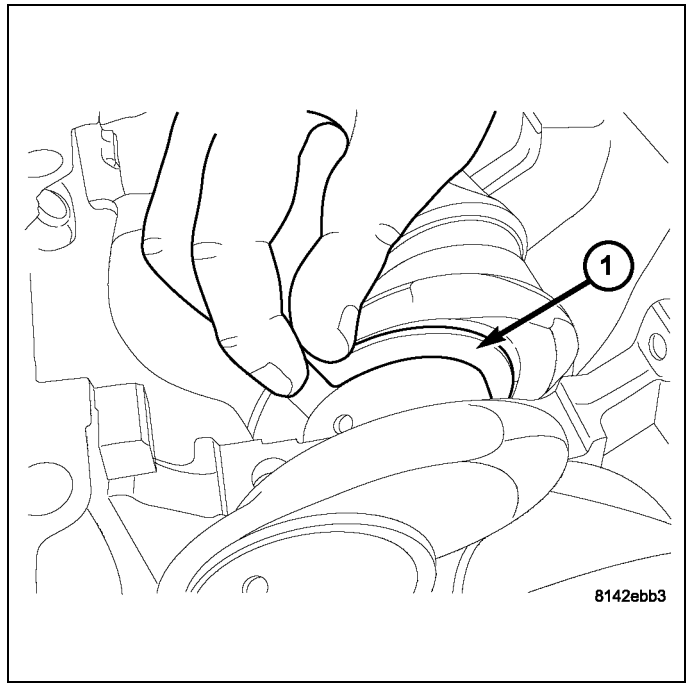

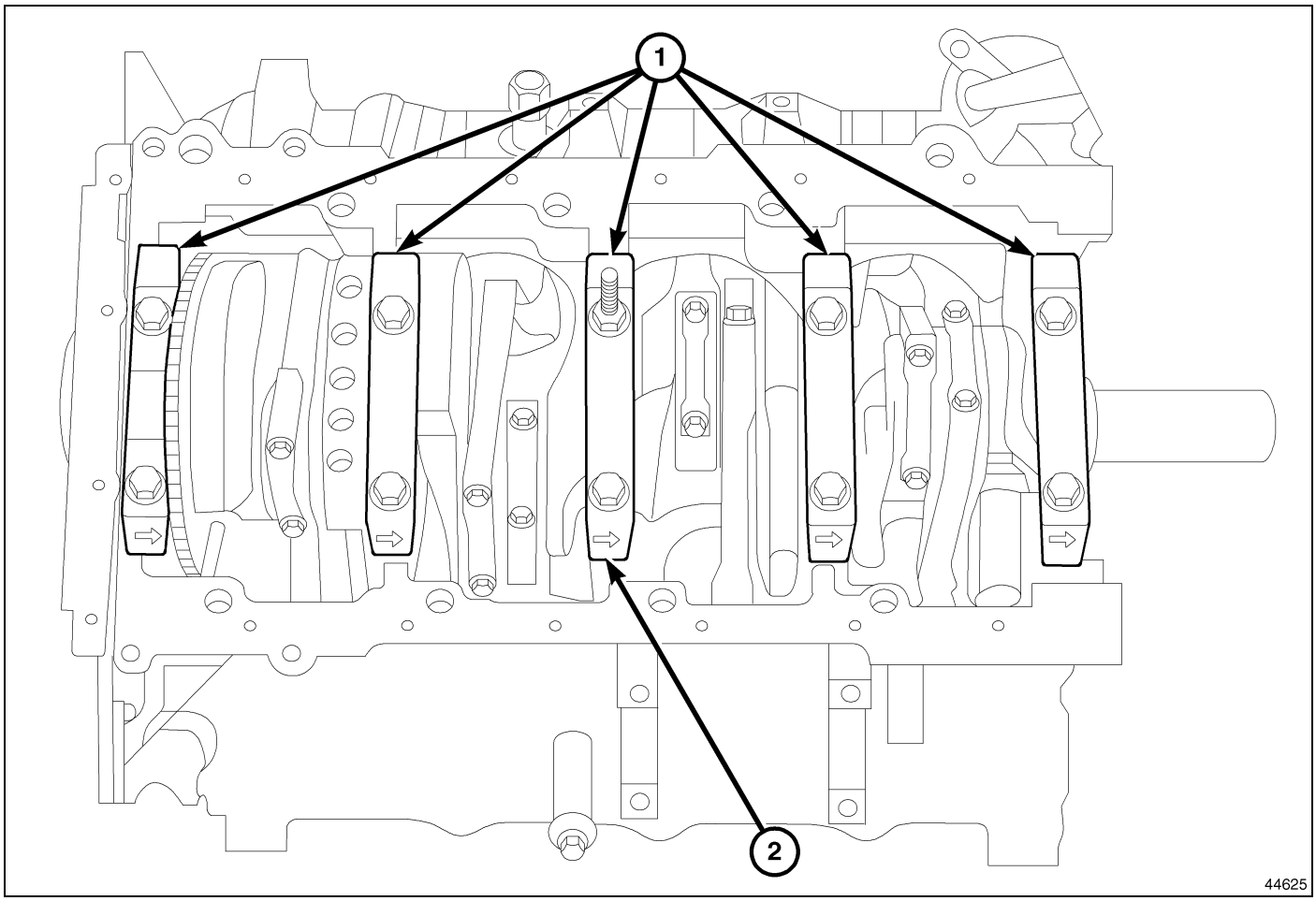

NOTE: The main cap crossbolts are torqued after final torque of the main cap bolts. Always use a new washer/ seal on crossbolts.

7. Clean and oil all cap bolts. Install all main bearing caps (1) making sure the arrow (2) faces forward.
8. Tighten main bearing cap bolts to 13 N·m (10 ft. lbs.) in the sequence shown.
9. Tighten main bearing cap bolts to 27 N·m (20 ft. lbs.) in the sequence shown.
10. Rotate main cap bolts an additional 90° in the sequence shown.

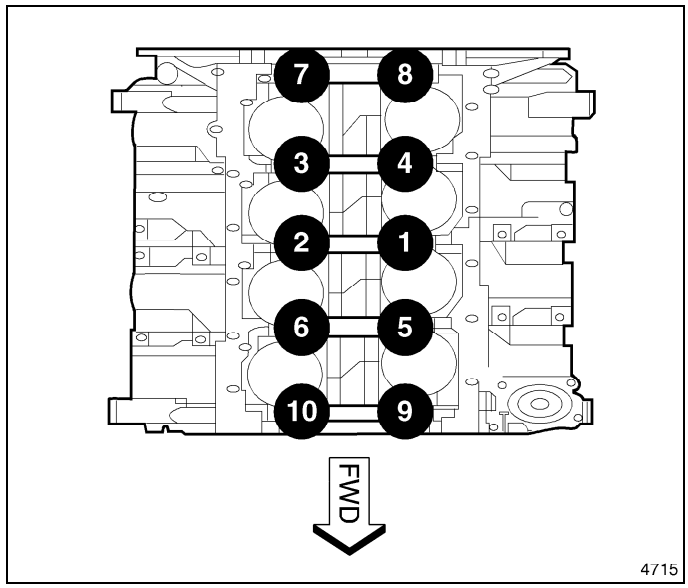

11. Install the crossbolts with new seal washer. Starting with crossbolt A,
12. Tighten crossbolt to 28 N·m (21 ft. lbs.).
13. Repeat crossbolt tightening procedure.
14. Measure crankshaft end play (Refer to 09 - Engine/Engine Block/BEARING(S), Crankshaft - Standard Procedure).
15. Position the connecting rods onto the crankshaft and install the rod bearing caps (Refer to 09 - Engine/Engine Block/ROD, Piston and Connecting - Installation).

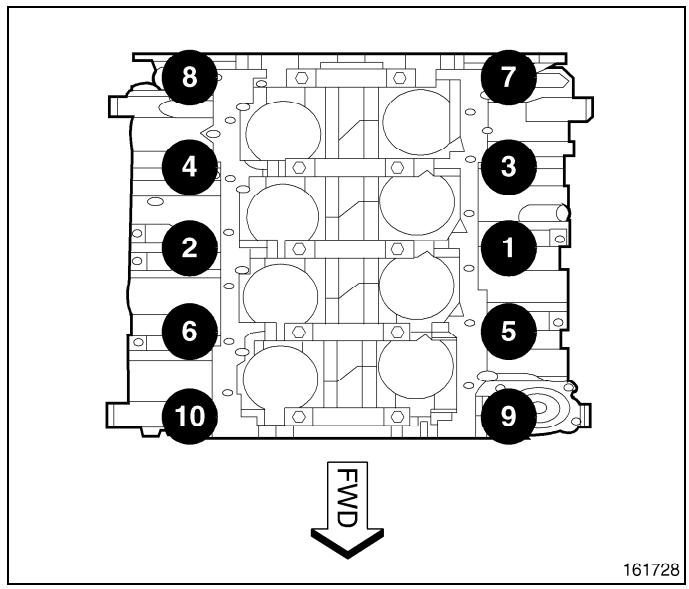

16. Install timing chain (5) and sprockets (1,3)(Refer to 09 - Engine/Valve Timing/CHAIN and SPROCKETS, Timing - Installation).
17. Install the timing chain tensioner (4) and guide (2).

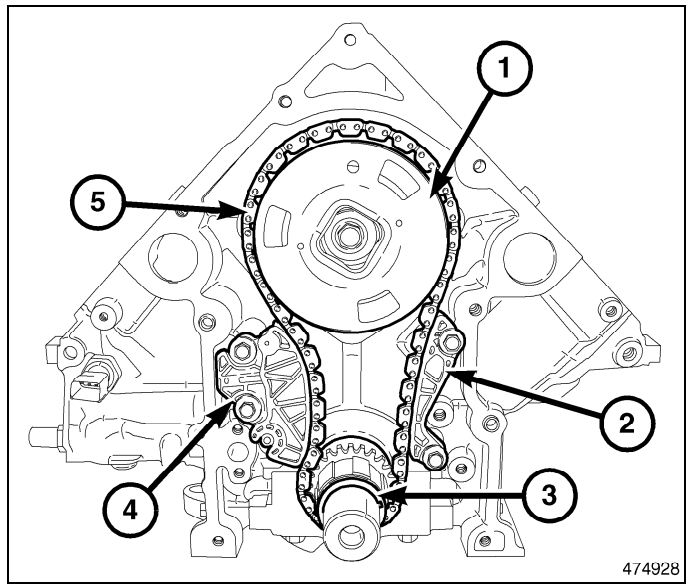

18. Install the oil pump (1)(Refer to 09 - Engine/Lubrication/PUMP, Engine Oil - Installation).
19. Install the timing chain case cover (1)(Refer to 09 - Engine/Valve Timing/COVER(S), Engine Timing - Installation) - INSTALLATION).

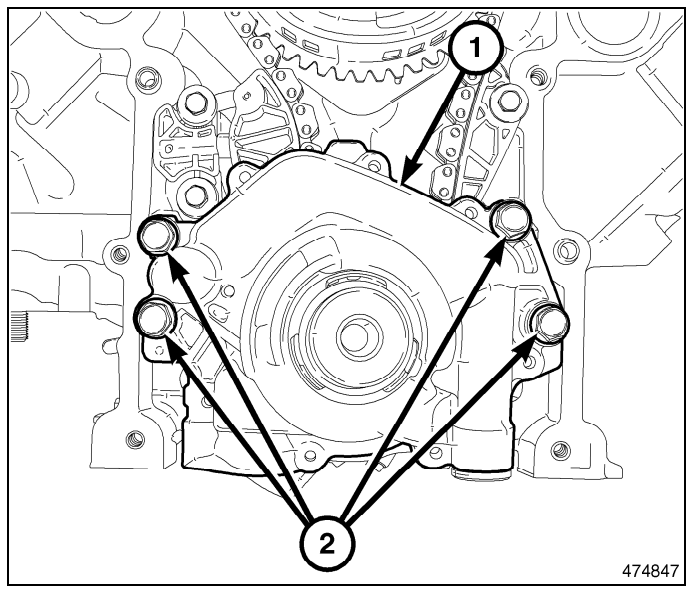

20. Install the rear main seal and retainer (Refer to 09 - Engine/Engine Block/RETAINER, Crankshaft Rear Oil Seal - Installation).

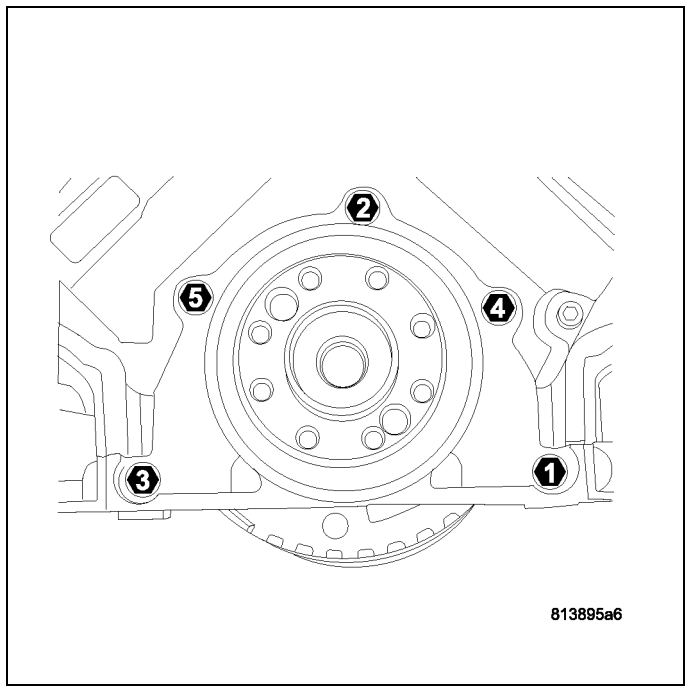

21. Install the windage tray/oil pan gasket.
22. Inspect oil pick up tube O-rings, replace as necessary.
23. Install the oil pick up tube (1) and tighten fasteners (2) to 28 Nm (248 in. lbs.).
24. Install the oil pan (Refer to 09 - Engine/Lubrication/PAN, Oil - Installation).
25. Install the vibration damper (Refer to 09 - Engine/Engine Block/DAMPER, Vibration - Installation).
26. Install the engine (Refer to 09 - Engine - Installation).

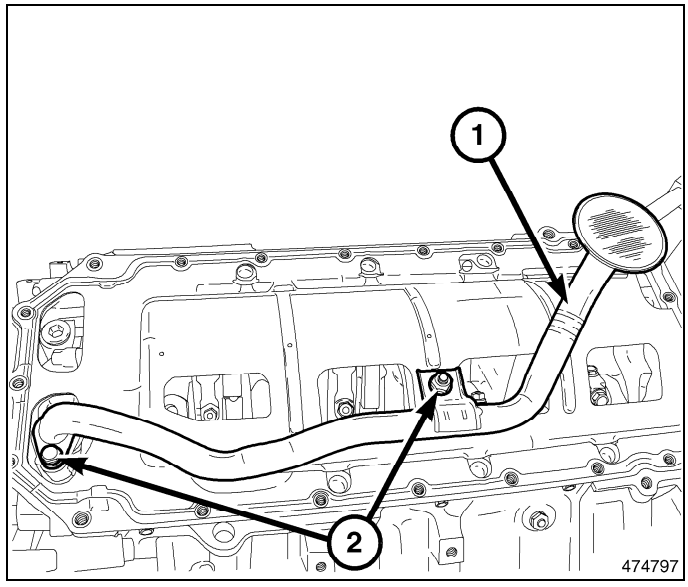

DAMPER, Vibration

Description

The crankshaft damper is used to control the resonance that is produced by the engine. The Noise, Vibration, and Harshness (NVH) created from the crankshaft can be controlled by dissipating the torque energy through the damper.

The crankshaft damper on the engines is held to the crankshaft by means of a harden steel bolt. The damper is pressed onto a specific machined surface of the crankshaft.

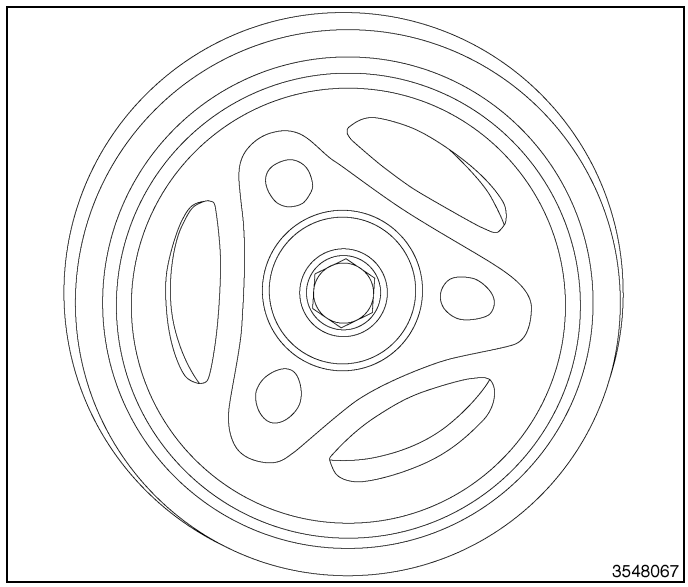

The HEMI® Engines incorporate various crankshaft vibration dampers depending on the engine application. And can be removed depending on the application used.

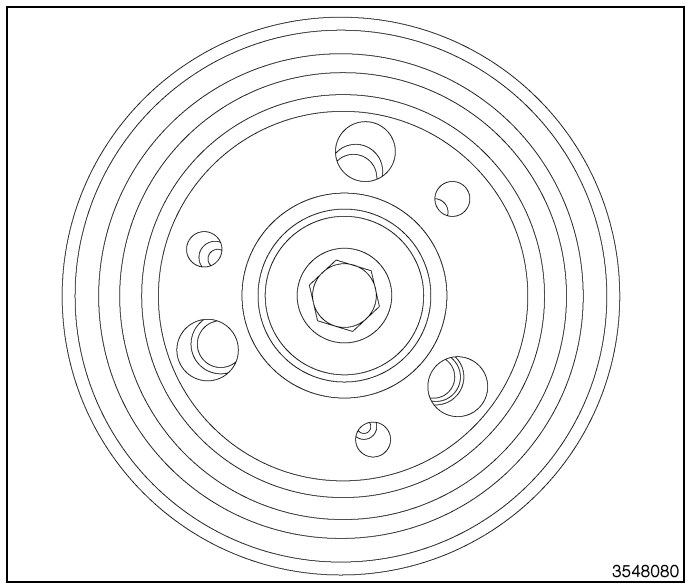

Finding the proper puller for the application will ensure no damage will come to the damper. The flange puller is used by installing 3 bolts into the pre-tapped holes in the damper.

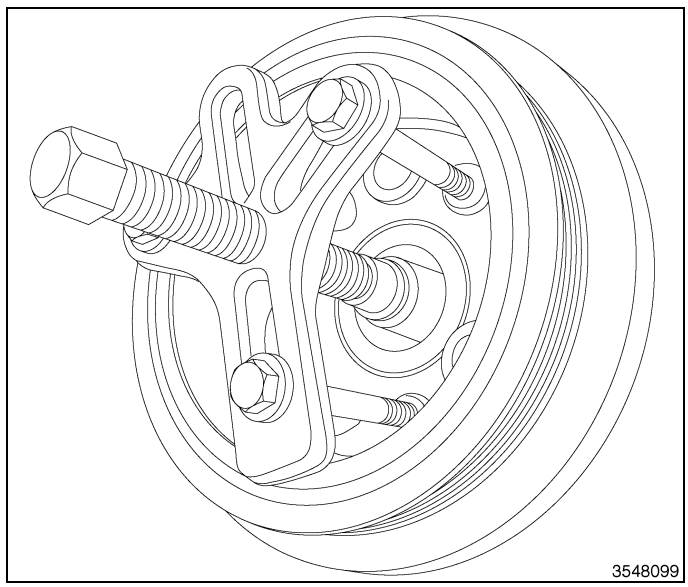

Some pulleys that do not have bolt holes can be removed with a three jaw style Puller 1023.

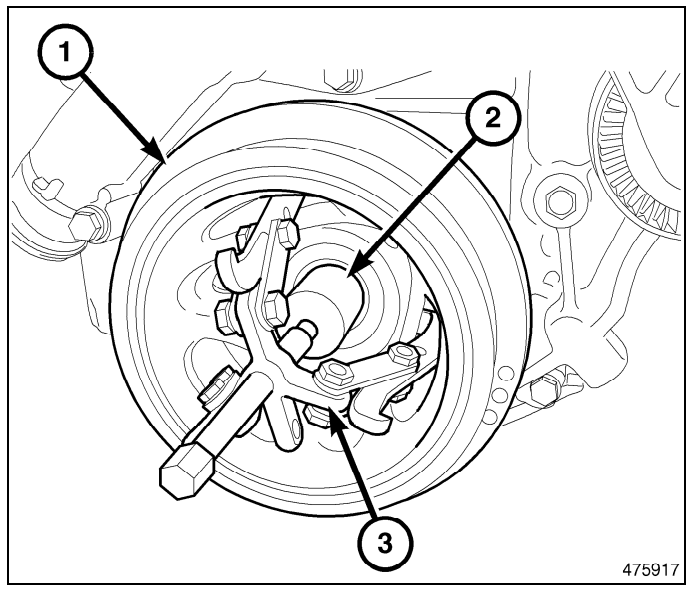

Removal

1. Disconnect negative cable from battery.
2. Remove accessory drive belt (Refer to 07 - Cooling/ Accessory Drive/BELT, Serpentine - Removal).
3. Drain cooling system (Refer to 07 - Cooling - Standard Procedure).
4. Remove radiator upper hose.
5. Remove fan shroud (Refer to 07 - Cooling/Engine/FAN, Cooling - Removal).
6. Remove crankshaft damper bolt.
7. Remove damper (1) using Crankshaft Insert 8513A (2) and Three Jaw Puller 1023 (3).

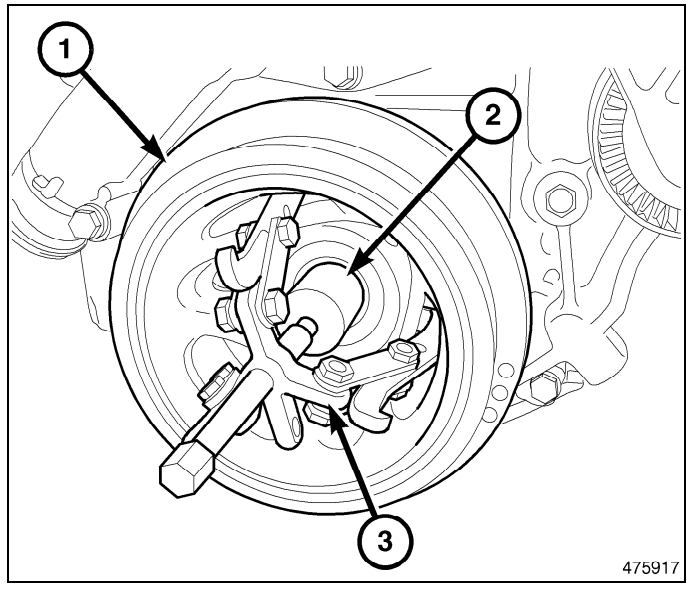

Installation

CAUTION: To prevent severe damage to the crankshaft, damper, and damper installer 8512A**, thoroughly clean the damper bore and the crankshaft nose before installing damper.**

1. Position the damper onto crankshaft.
2. Assemble the damper installer 8512A (2) , and the pressing cup (1) from A/C hub installer 6871.
3. Using the damper installer 8512A (2), and the pressing cup (1) from the A/C hub installer 6871, press the damper onto crankshaft.

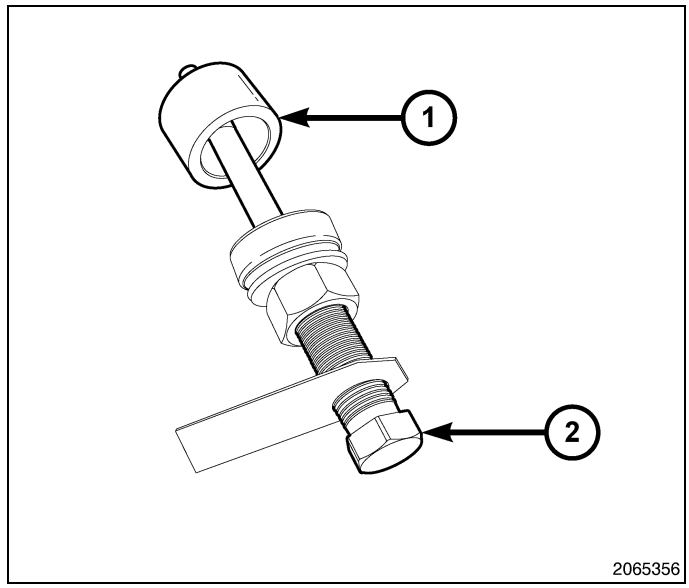

4. Install the crankshaft damper bolt.
5. Position the Holder, Vibration Damper 10386(2), onto the vibration damper (3).
6. Tighten the bolt to 176 N·m (130 ft. lbs.).

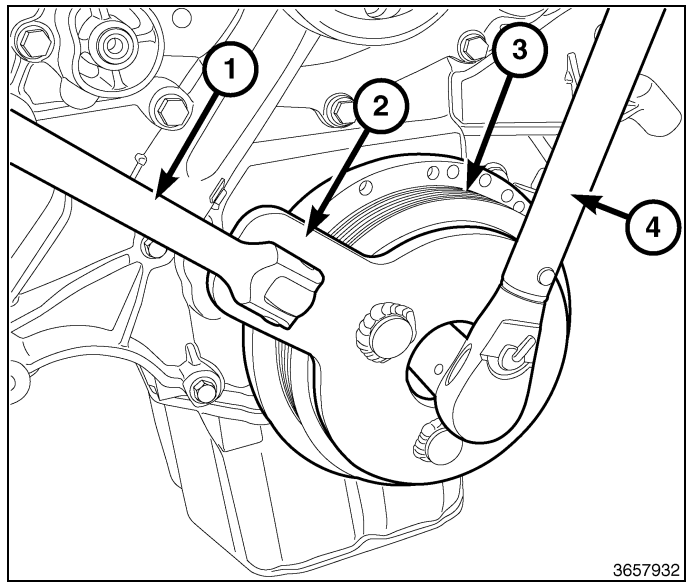

7. Install the cooling fan.

8. Install the radiator upper shroud and tighten the fasteners to 11 N·m (95 in. lbs.).
9. Install the radiator upper hose.
10. Install the accessory drive belt (1) (Refer to 07 - Cooling/Accessory Drive/BELT, Serpentine - Installation).
11. Refill the cooling system (Refer to 07 - Cooling - Standard Procedure).
12. Connect the negative cable to battery.

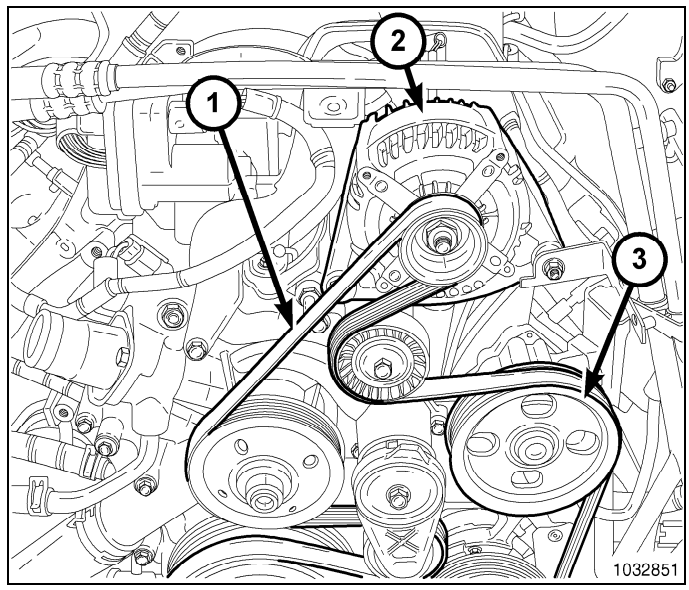

FLEXPLATE

Removal

1. Remove the transmission (Refer to 21 - Transmission and Transfer Case/Automatic - Removal).
2. Using the sequence shown, remove the flexplate retaining bolts.
3. Remove the flexplate.

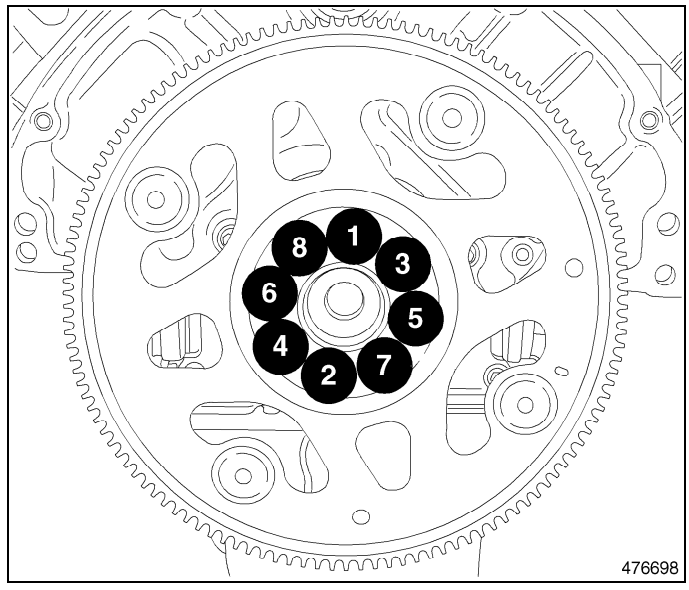

Installation

1. Position the flexplate onto the crankshaft and install the retaining bolts hand tight.
2. Using the sequence shown, tighten the flexplate retaining bolts to 95 N·m (70 ft. lbs.).
3. Install the transmission (Refer to 21 - Transmission and Transfer Case/Automatic - Installation).

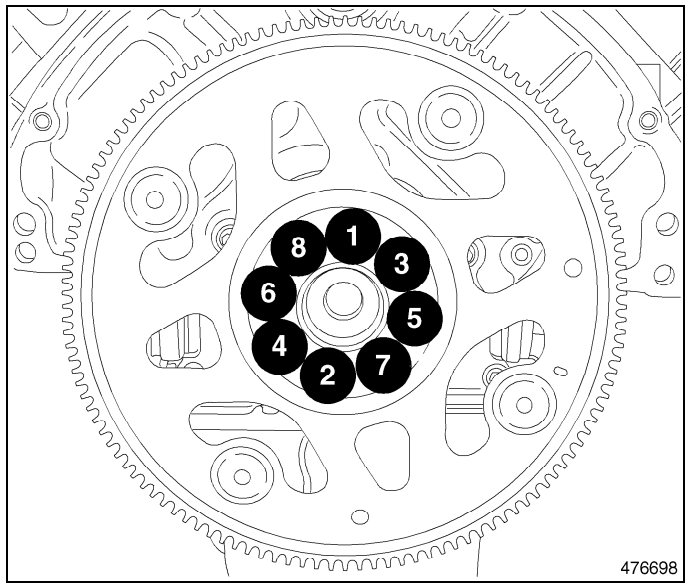

LIFTER(S), Hydraulic, Roller

Description

The Multiple Displacement System (MDS) selectively deactivates cylinders 1, 4, 6 and 7 during steady speed, low acceleration and shallow grade climbing conditions to increase fuel economy.

The MDS can provide a 5 to 20% fuel economy benefit when operating in four-cylinder mode. Depending on driving habits and vehicle usage. For EPA rating purposes the fuel economy is 8 to 15% higher than if the engine was operating on eight-cylinders at all times.

The MDS deactivating lifter (1) can be distinguished from the non-MDS lifter (2) by the disconnecting pin (3) on the side of the MDS lifter.

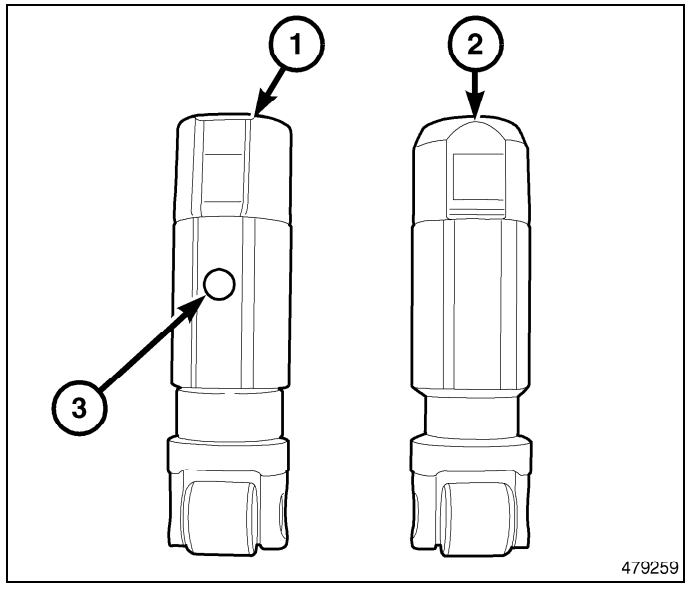

MDS is integrated into the basic engine architecture requiring these additional components:

- Unique MDS camshaft
- 8 deactivating roller lifters
- 4 MDS control valve solenoids
- MDS control valve solenoid wiring harness
- Oil temperature sensor

Operation

The Multiple Displacement System (MDS) provides cylinder deactivation during steady speed, low acceleration and shallow grade climbing conditions to increase fuel economy. Both four and eight cylinder configurations have even firing intervals to provide smooth operation. The MDS selectively deactivates cylinders 1,4,6, and 7, to improve fuel economy. All deactivated cylinders have unique hydraulic lifters that collapse when deactivated to prevent the valves from opening. Engine oil pressure is used to activate and deactivate the valves. Oil is delivered through special oil passages drilled into the cylinder block. The MDS solenoid valves control the flow. When activated, pressurized oil pushes a latching pin on each MDS lifter which becomes a lost motion link. The base of the MDS lifter follows the camshaft while the top remains stationary. The MDS lifter is held in place against the pushrod by light spring pressure but unable to move because of the much higher force of the valve spring.

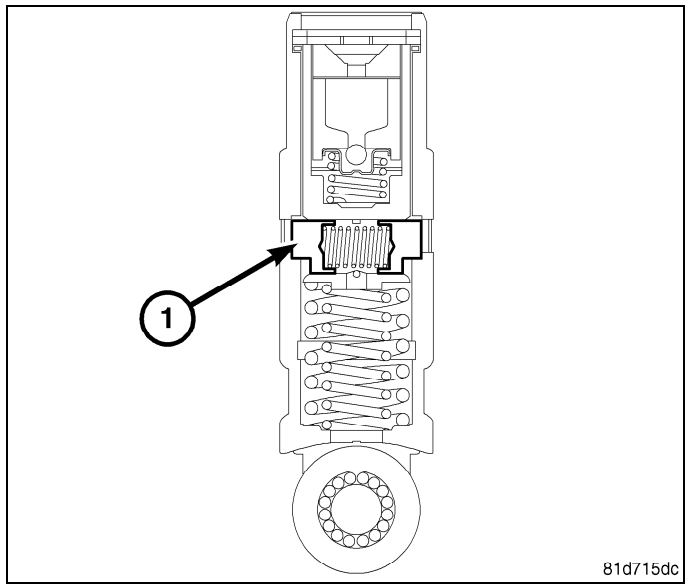

NOTE: It is critical to use the recommended oil viscosity in engines that use MDS.

Deactivation occurs during the compression stroke of each cylinder, after air and fuel enter the cylinder. Ignition occurs, but the combustion products remain trapped in the cylinder under high pressure, because the valves no longer open. No fuel/air enters or leaves during subsequent piston strokes, this high pressure gas is repeatedly compressed and expanded like an air spring.

Diagnosis and Testing

Check the oil pressure before disassembling any part of the engine to correct tappet noise. If vehicle has no oil pressure gauge, install a reliable gauge at the pressure sending-unit. The pressure should be between 207-552 kPa (30-80 psi) at 3,000 RPM.

Check the oil level after the engine reaches normal operating temperature. Allow five minutes for the oil level to stabilize before checking the ol level. The oil level in the pan should never be above the FULL mark or below the ADD OIL mark on thedipstick. Either of these two conditions could be responsible for noisy tappets.

OIL LEVEL

HIGH

If the oil level is above the FULL mark, it is possible for the connecting rods to dip into the oil. With the engine running, this condition could create foam in the oil pan. Foam in the oil pan would be fed to the hydraulic tappets by the oil pump causing them to lose length and allow the valves to seat noisily.

LOW

Low oil level may allow the oil pump to take in air. When air is fed to the tappets, they lose length, which allows valves to seat noisily. Any leaks on the intake side of the oil pump through which air can be drawn creates the same tappet action. Check the lubrication system from the intake strainer to the pump cover, including the relief valve retainer cap. When tappet noise is due to aeration, it may be intermittent or constant, and usually more than one tappet will be noisy. When the oil level and leaks have been corrected, operate the engine at fast idle. Run the engine for a sufficient amount of time to allow all of the air inside the tappets to be bleed out.

TAPPET NOISE DIAGNOSIS

1. To determine the source of tappet noise, crank the engine over with the cylinder head covers removed.
2. Feel each valve spring or rocker arm to detect the noisy tappet. The noisy tappet will cause the affected spring and/or rocker arm to vibrate or feel rough in operation.

NOTE: Worn valve guides or cocked springs are sometimes mistaken for noisy tappets. If such is the case, noise may be dampened by applying side thrust on the valve spring. If noise is not appreciably reduced, it can be assumed the noise is in the tappet. Inspect the rocker arm pushrod sockets and pushrod ends for wear.

3. Valve tappet noise ranges from light noise to a heavy click. A light noise is usually caused by excessive leak-down around the unit plunger, or by the plunger partially sticking in the tappet body cylinder. The tappet should be replaced. A heavy click is caused by a tappet check valve not seating, or by foreign particles wedged between the plunger and the tappet body. This will cause the plunger to stick in the down position. This heavy click will be accompanied by excessive clearance between the valve stem and rocker arm as valve closes. In either case, tappet assembly should be removed for inspection and cleaning.
4. The valve train generates a noise very much like a light tappet noise during normal operation. Care must be taken to ensure that tappets are making the noise. If more than one tappet seems to be noisy, it's probably not the tappets.

Removal

1. Disconnect and isolate the negative battery cable.
2. Remove the cylinder head (Refer to 09 - Engine/Cylinder Head - Removal)
3. Remove the tappet guide holder retaining bolt (1) from the tappet guide holder assembly (2).

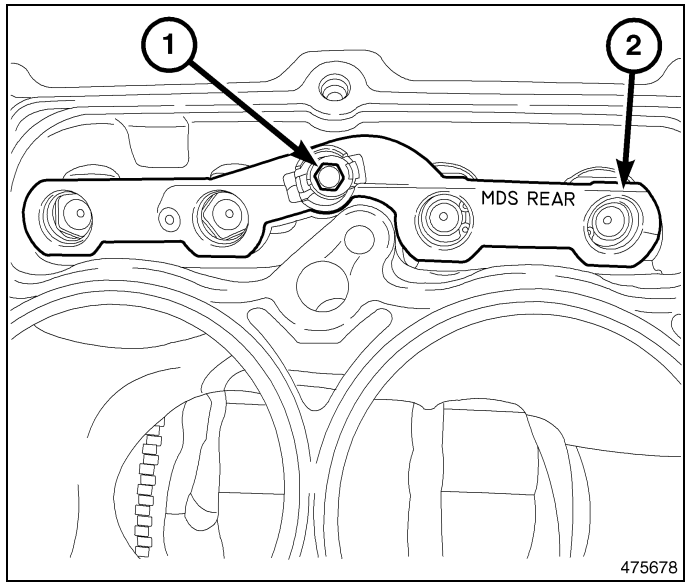

CAUTION: The lifter and retainer assembly must be installed as a unit.

CAUTION: If the lifter and retainer assembly are to be reused, identify the lifters to ensure installation in their original location or engine damage could result.

4. Remove the tappet guide holder (1) and tappets (2) as an assembly.
5. Check the camshaft lobes for abnormal wear.

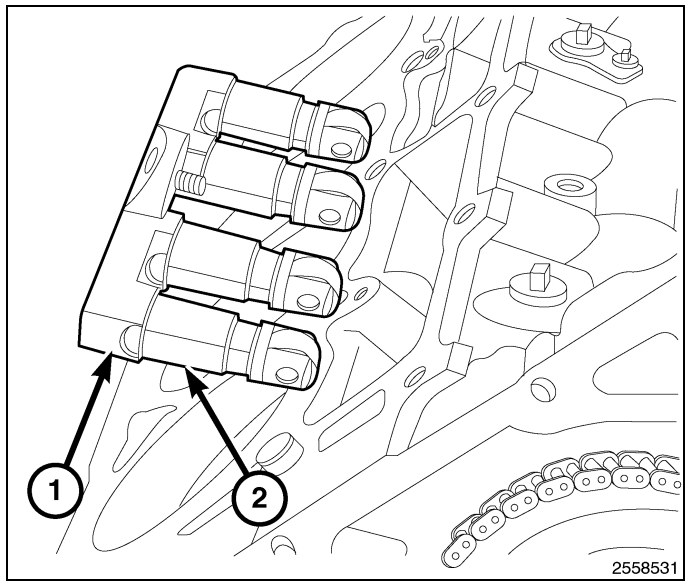

Installation

The Multiple Displacement System (MDS) provides cylinder deactivation during steady speed, low acceleration and shallow grade climbing conditions to increase fuel economy.

CAUTION: Engines equipped with MDS use both standard roller lifters (2) and deactivating roller lifters (1). The deactivating roller lifters must be used in cylinders 1,4,6,7. The deactivating lifters can be identified by the two holes in the side of the lifter body (3), for the latching pins.

CAUTION: The lifter and retainer assembly must be installed as a unit.

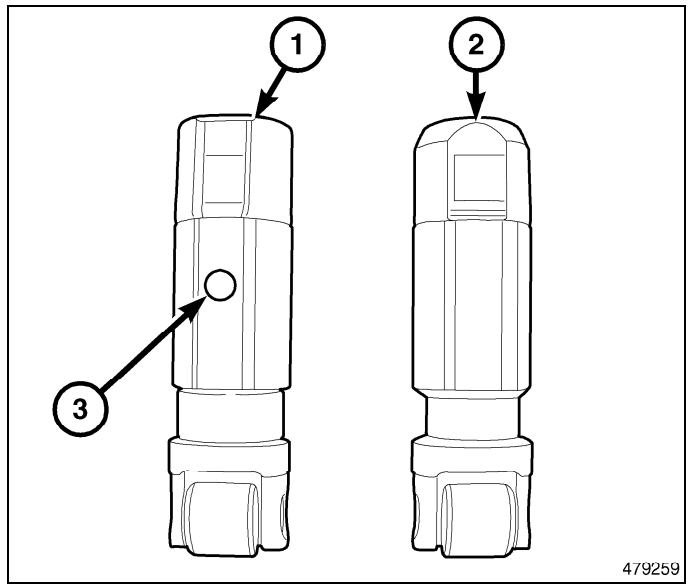

1. Lubricate the tappet guide holder (1) and tappets (2).

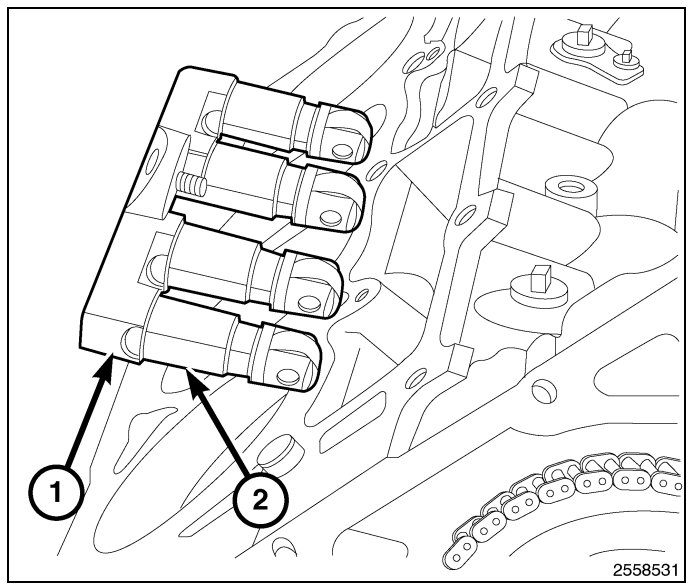

CAUTION: If the lifters and guide holder assembly are to be reused, they must me installed in their original location.

2. Install the tappet guide holder (2) and tappets.
3. Tighten the tappet retainer bolt (1) to 12 N·m (9 ft. lbs.).
4. Install the cylinder head (Refer to 09 - Engine/Cylinder Head - Installation)
5. Connect the negative battery cable.

CAUTION: To prevent damage to valve assemblies, do not run the engine above fast idle until all hydraulic lifters have filled with oil and have become quiet.

6. Start the engine and check for leaks.
7. Road test the vehicle.

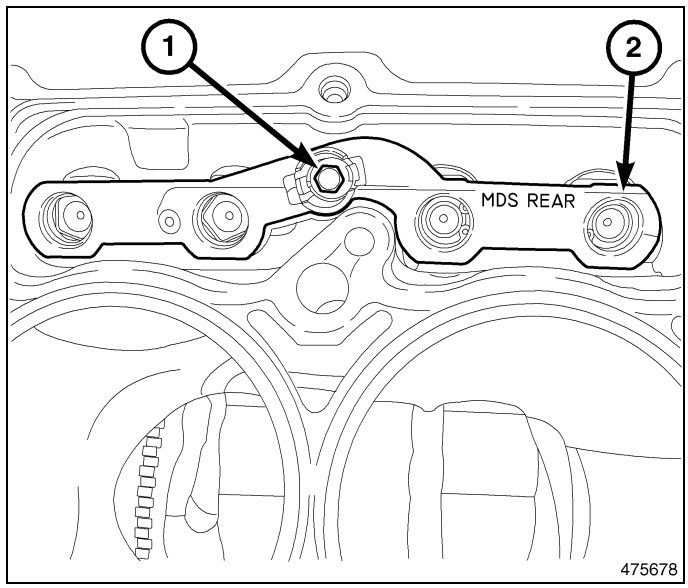

RETAINER, Crankshaft Rear Oil Seal

Diagnosis and Testing

The crankshaft rear oil seal is integral to the crankshaft rear oil seal retainer and cannot be serviced separately.

Since it is sometimes difficult to determine the source of an oil leak in the rear seal area of the engine, a more involved inspection is necessary. The following steps should be followed to help pinpoint the source of the leak.

If the leakage occurs at the crankshaft rear oil seal area:

1. Raise and support the vehicle.
2. Remove the transmission inspection/torque converter access cover.
3. Inspect the rear of the cylinder block for evidence of oil leakage, note the following:
   - Circular spray pattern generally indicates seal leakage or crankshaft damage.
   - Where leakage tends to run straight down, possible causes are a porous block, camshaft bore cup plugs, oil galley pipe plugs, oil filter runoff, and main bearing cap to cylinder block mating surfaces. See Engine, for proper repair procedures of these items.
4. If no leaks are detected, pressurize the crankcase as outlined in the section, Inspection (Engine oil Leaks in general)

CAUTION: Do not exceed 20.6 kPa (3 psi).

5. If the leak is not detected, very slowly turn the crankshaft and watch for leakage. If a leak is detected between the crankshaft and seal while slowly turning the crankshaft, it is possible the crankshaft seal surface is damaged. The seal area on the crankshaft could have minor nicks or scratches that can be polished out using an emery cloth.

CAUTION: Use extreme caution when crankshaft polishing is necessary to remove minor nicks or scratches. The crankshaft seal flange is specially machined to complement the function of the rear oil seal.

6. For bubbles that remain steady with shaft rotation, no further inspection can be done (Refer to 09 - Engine/Engine Block/RETAINER, Crankshaft Rear Oil Seal - Removal)

Removal

NOTE: The crankshaft rear oil seal is integral to the crankshaft rear oil seal retainer and must be replaced as an assembly.

NOTE: The crankshaft rear oil seal retainer can not be reused after removal.

NOTE: This procedure can be performed in vehicle.

1. Disconnect the negative battery cable.
2. Remove the transmission (Refer to 21 - Transmission and Transfer Case - Removal).
3. Remove the flexplate (Refer to 09 - Engine/Engine Block/FLEXPLATE - Removal)
4. Remove the oil pan (Refer to 09 - Engine/Lubrication/ PAN, Oil - Removal)
5. Using the sequence shown, remove the rear oil seal retainer mounting bolts.
6. Carefully remove the retainer from the engine block.

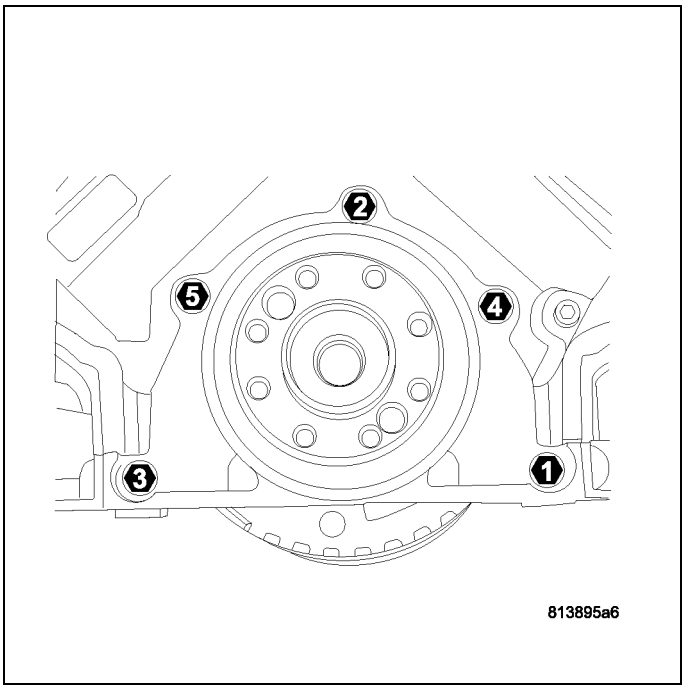

Installation

NOTE: The crankshaft rear oil seal is integral to the crankshaft rear oil seal retainer and must be replaced as an assembly.

NOTE: The crankshaft rear oil seal retainer can not be reused after removal.

1. Thoroughly clean all gasket residue from the engine block.
2. Position the gasket onto the new crankshaft rear oil seal retainer.
3. Position the crankshaft rear oil seal retainer onto the engine block.
4. Using the sequence shown, install the crankshaft rear oil seal retainer mounting bolts and tighten to 15 N·m (11 ft. lbs.).
5. Install the oil pan (Refer to 09 - Engine/Lubrication/ PAN, Oil - Installation)
6. Install the flexplate (Refer to 09 - Engine/Engine Block/FLEXPLATE - Installation)
7. Install the transmission (Refer to 21 - Transmission and Transfer Case - Installation).
8. Fill the engine with oil.
9. Start the engine and check for leaks.

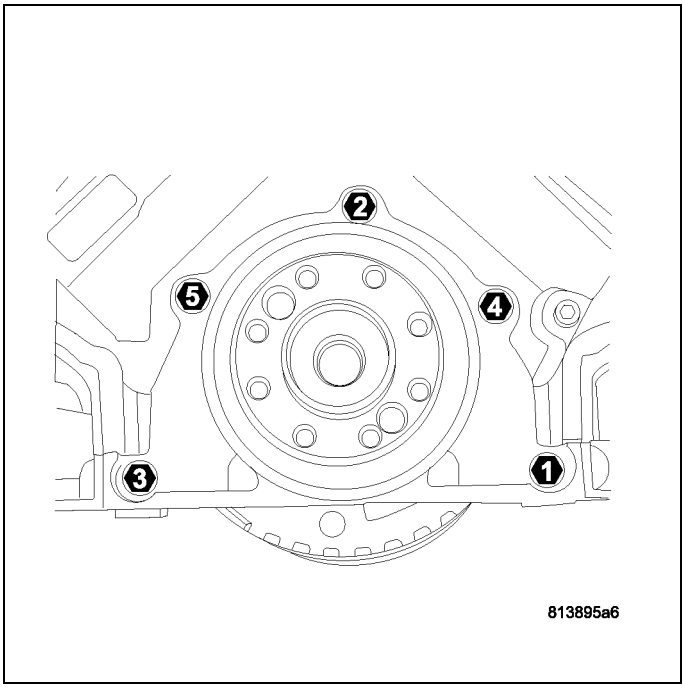

RING(S), Piston

Standard Procedure

PISTON RING END GAP

NOTE: Before reinstalling used rings or installing new rings, the ring clearances must be checked.

1. Wipe the cylinder bore clean.
2. Insert the ring in the cylinder bore.

NOTE: The ring gap measurement must be made with the ring positioned at least 12 mm (0.50 inch.) from bottom of cylinder bore.

3. Using a piston, to ensure that the ring is squared in the cylinder bore, slide the ring downward into the cylinder.
4. Using a feeler gauge check the ring end gap. Replace any rings not within specification.

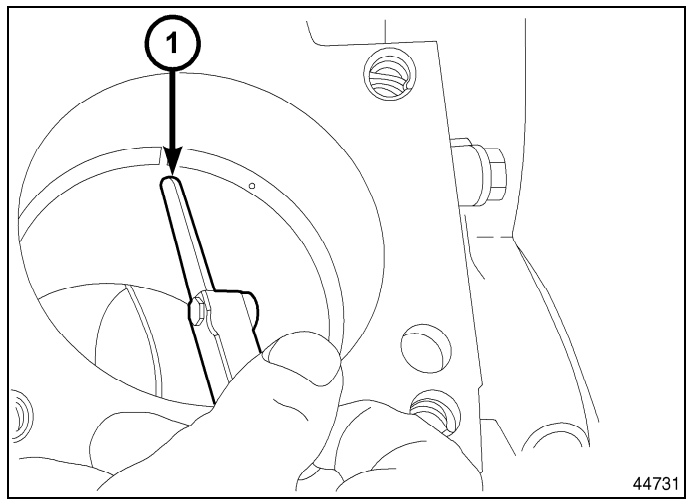

PISTON RING SIDE CLEARANCE

NOTE: Make sure the piston ring grooves are clean and free of nicks and burrs.

1. Measure the ring side clearance as shown make sure the feeler gauge (1) fits snugly between the ring land and the ring. Replace any ring not within specification.
2. Rotate the ring around the piston, the ring must rotate in the groove with out binding.

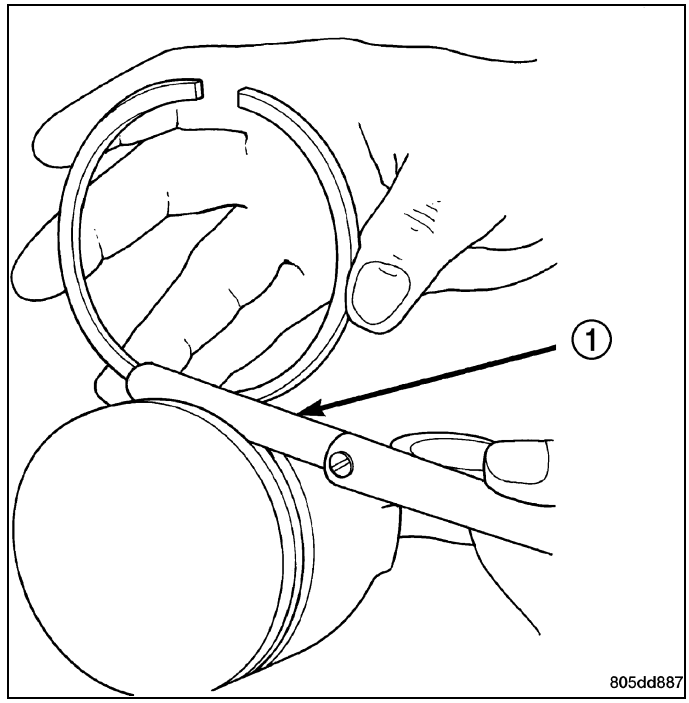

PISTON RING SPECIFICATION CHART

Piston Ring Position	Piston Ring Side Clearance	Maximum Clearance
Upper Ring		
Metric	0.04 - 0.09 mm	0.11 mm
Standard	0.0015 - 0.0035 in.	0.004 in.
Intermediate Ring		
Metric	0.04 - 0.08 mm	0.10 mm

PISTON RING SPECIFICATION CHART, continued

Piston Ring Position	Piston Ring Side Clearance	Maximum Clearance
Standard	0.0015 - 0.0031 in.	0.004 in.
Piston Ring Position	**Piston Ring End Gap**	**Wear Limit**
Upper Ring		
Metric	0.40 - 0.55 mm	0.43 mm
Standard	0.0157 - 0.0216 in.	0.017 in.
Intermediate Ring		
Metric	0.24 - 0.51 mm	0.74 mm
Standard	0.0094 - 0.0200 in.	0.029 in.
Oil Control Ring (Steel Rail)		
Metric	0.015 - 0.66 mm	0.76 mm
Standard	0.0059 - 0.0259 in.	0.030 in.

PISTON RING INSTALLATION

NOTE: The No. 1 and No. 2 piston rings have a different cross section. Ensure No. 2 ring is installed with manufacturers I.D. mark (Dot) facing up, towards top of the piston.

NOTE: Piston rings are installed in the following order:

- **Oil ring expander.**
- **Lower oil ring side rail.**
- **Upper oil ring side rail.**
- **No. 2 Intermediate piston ring.**
- **No. 1 Upper piston ring.**

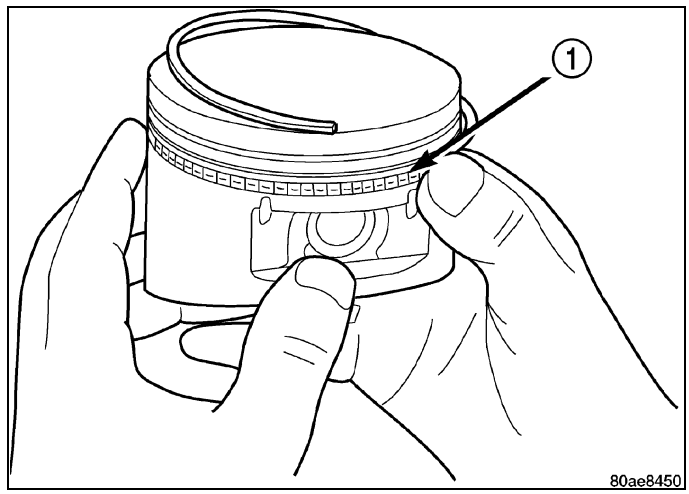

1. Install the oil ring expander.
2. Install upper side rail by placing one end between the piston ring groove and the expander ring. Hold end firmly and press down the portion to be installed until side rail is in position. Repeat this step for the lower side rail.
3. Install No. 2 intermediate piston ring using a piston ring installer.
4. Install No. 1 upper piston ring using a piston ring installer.

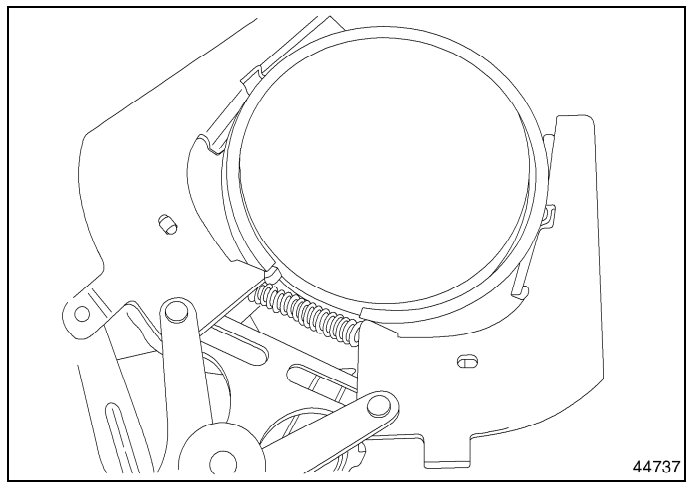

NOTE: Install the piston rings so the gaps positioned as indicated with the piston viewed from the top.

NOTE: Staggering ring gap is important for oil control.

5. Install the oil expander so the ring gap is located in the (1) position.
6. Install the oil ring rails so the ring gap is located in the (2,4) position.
7. Install the second compression ring so the ring gap is located in the (3) position.
8. Install the top compression so the ring gap is located in the (1) position.

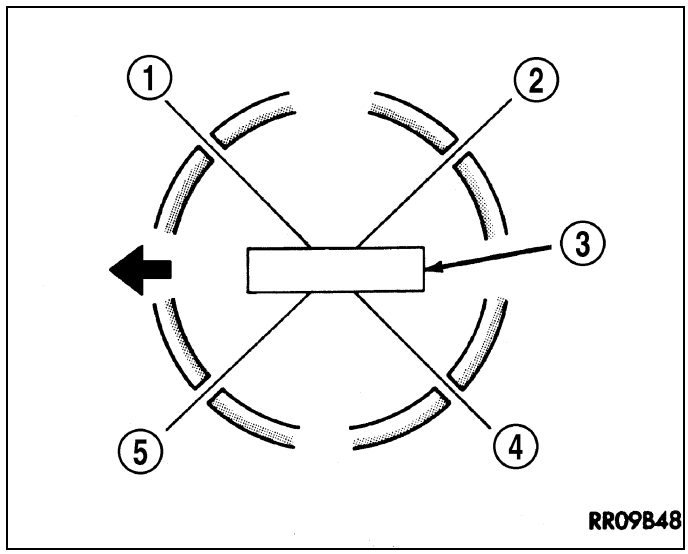

ROD, Piston and Connecting

Description

CAUTION: Do not use a metal stamp to mark connecting rods as damage may result, instead use ink or a scratch awl.

The pistons are made of a high strength aluminum alloy. Piston skirts are coated with a solid lubricant (Molykote®) to reduce friction and provide scuff resistance. The piston top ring groove and land is anodized. The connecting rods are made of forged powdered metal, with a fractured cap design.

Standard Procedure

1. To correctly select the proper size piston, use Cylinder Indicator C-119 (2) to measure the inside diameter of the cylinder bore (3). A cylinder bore gauge capable of reading in 0.003 mm (0.0001 in.) Increments is required. If a bore gauge is not available, do not use an inside micrometer.
2. Measure the inside diameter of the cylinder bore at a point 38.0 mm (1.5 inches) below the top of bore (4). Start perpendicular (across or at 90°) to the axis of the crankshaft at point A (1) and then take an additional bore reading 90° at point B (1).
3. The coated pistons will be serviced with the piston pin and connecting rod pre-assembled. The piston-rod assembly is specific for the left cylinder bank (odd numbered) and the right cylinder bank (even numbered) and must not be interchanged.

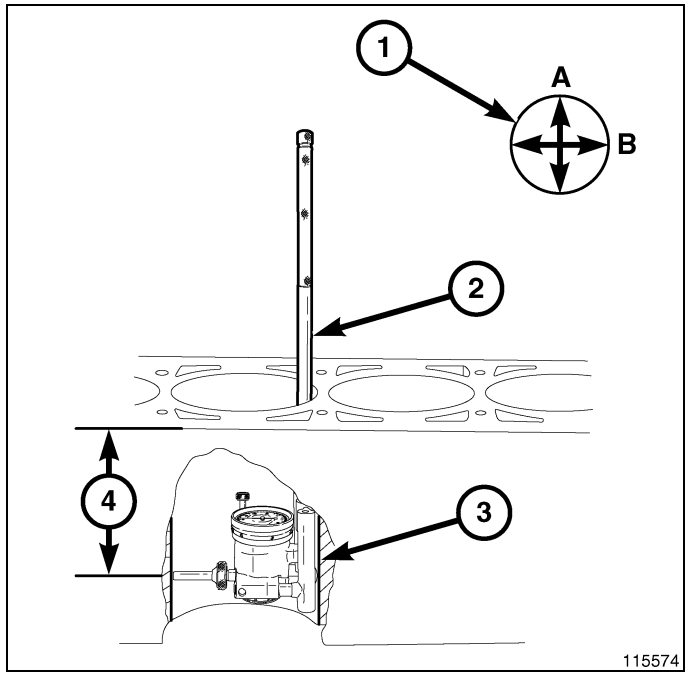

4. Measure the piston diameter with a micrometer at points (1,2).

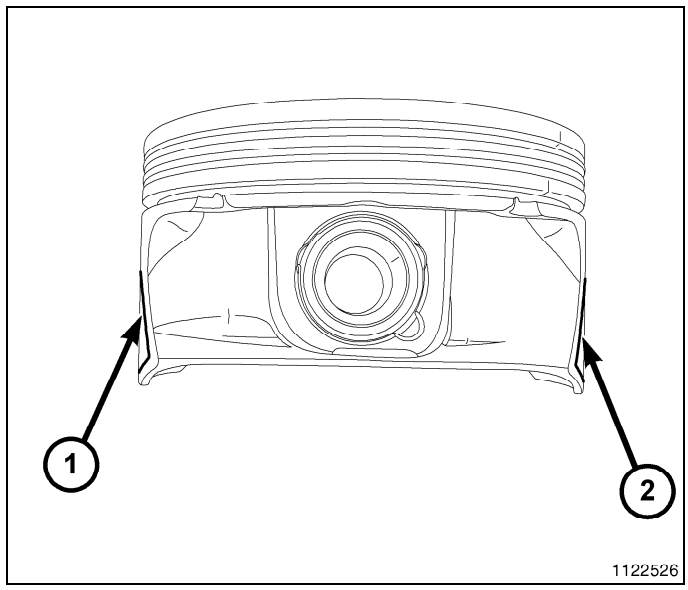

Removal

1. Perform the fuel system pressure release procedure (Refer to 14 - Fuel System/Fuel Delivery - Standard Procedure).
2. Disconnect and isolate the negative battery cable (3).

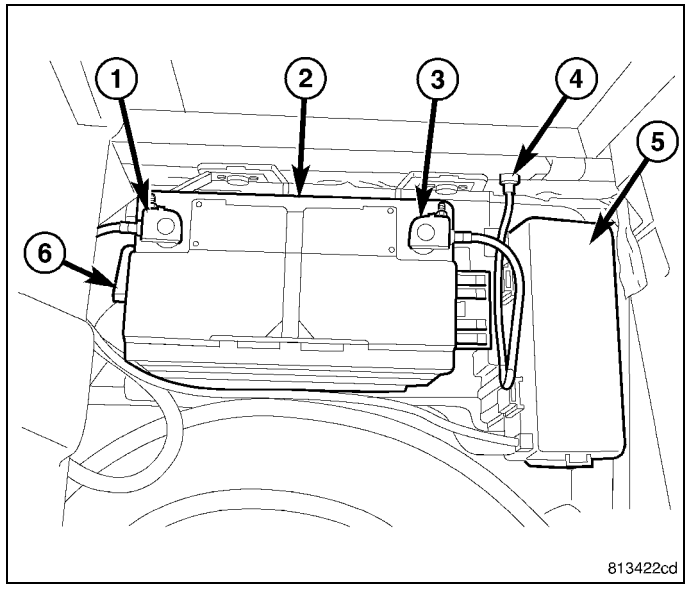

3. Remove the engine covers (1).

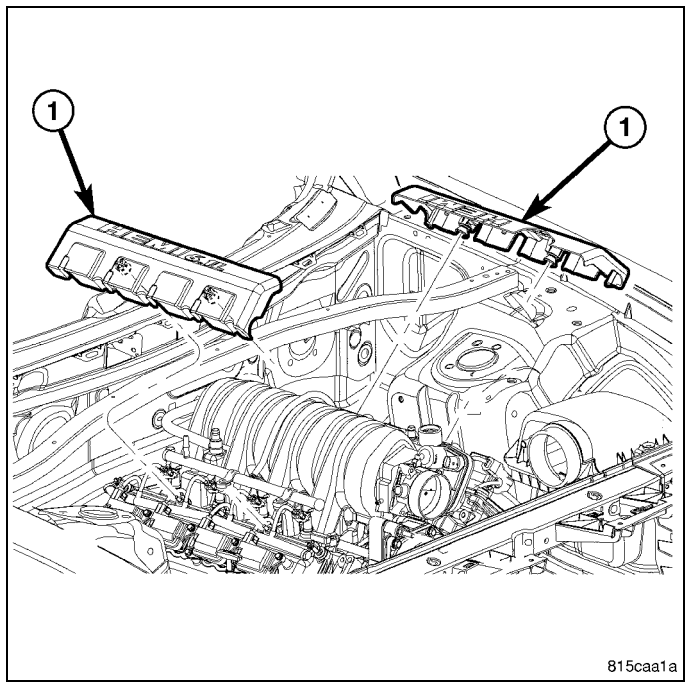

4. Loosen clamp and disconnect the air duct at throttle body.
5. Disconnect the intake air temperature sensor (4) electrical connector.
6. Remove the makeup air hose (1).
7. Remove the air cleaner housing retaining bolt (3) and remove the air cleaner housing (2).
8. Remove the cylinder head(s) (Refer to 09 - Engine/ Cylinder Head - Removal).
9. Raise and support the vehicle.

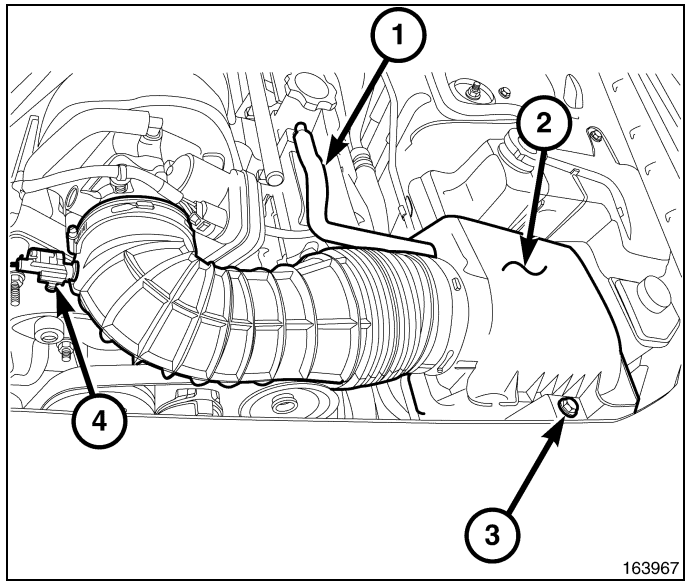

10. Remove the engine mount nuts (1,2).

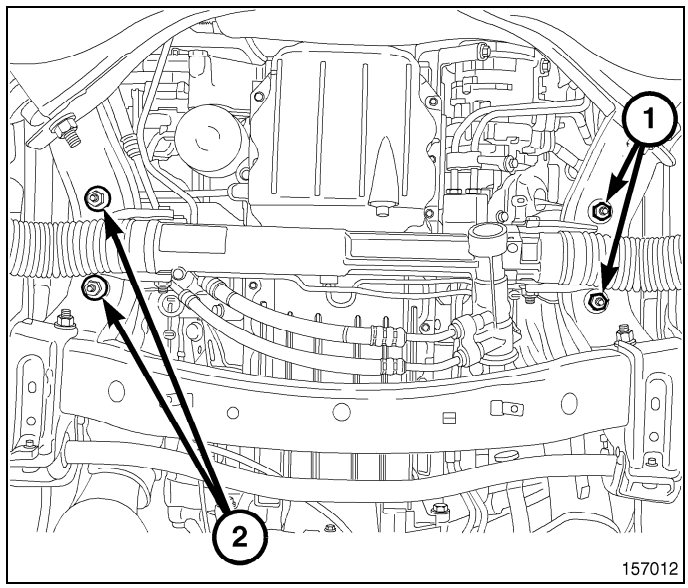

11. Remove the steering gear mounting bolts (1) and position the steering gear (2) aside.
12. Remove the engine oil dipstick and tube from the oil pan.
13. Lower the vehicle.

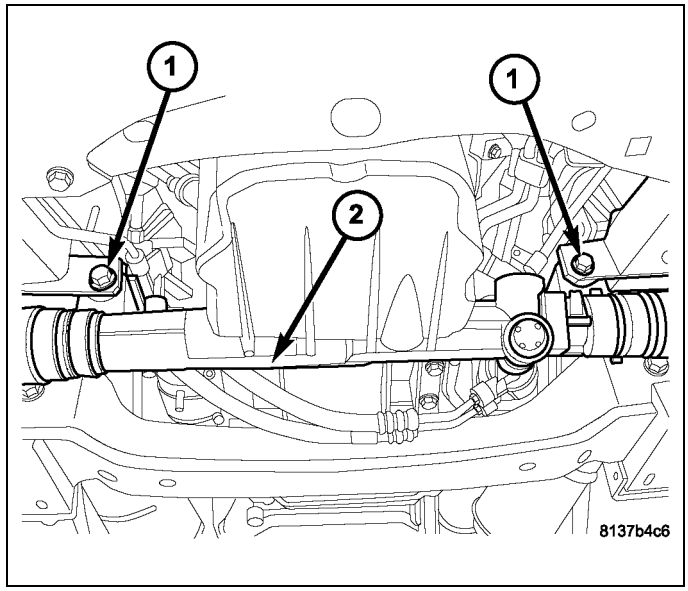

NOTE: Do not use air tools to install engine lift fixture.

14. Install the Engine Lift Fixture 8984B (1), Engine Lift Adapter 8984-UPD (2) and the Engine Support Fixture 8534B (3).
15. Raise the engine to provide clearance to remove the oil pan.
16. Raise and support the vehicle.
17. Remove the oil pan (Refer to 09 - Engine/Lubrication/PAN, Oil - Removal).
18. Lower the vehicle.
19. Remove the timing chain cover (Refer to 09 - Engine/Valve Timing/COVER(S), Engine Timing - Removal).
20. If necessary, remove the ridge on top of the cylinder bores with a reliable ridge reamer before removing the pistons from the cylinder block. **Be sure to keep the tops of the pistons covered during this operation.**

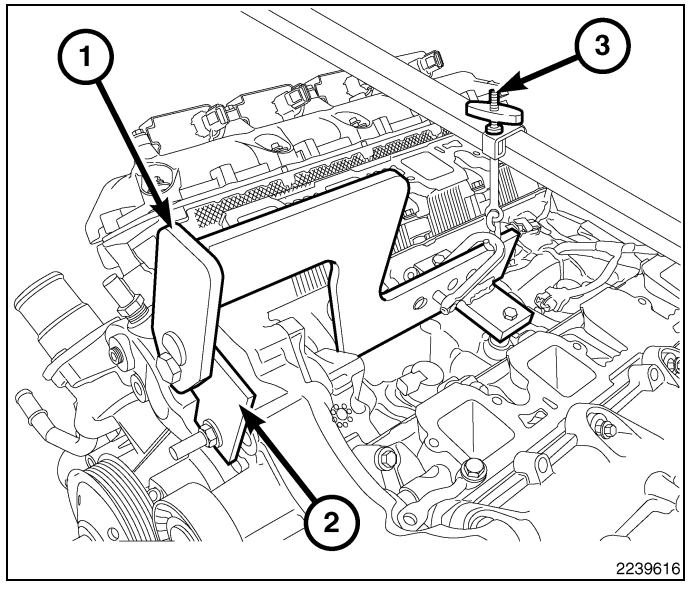

CAUTION: Do not use a number stamp or a punch to mark connecting rods or caps, as damage to connecting rods could occur.

NOTE: Connecting rods and bearing caps are not interchangeable and should be marked before removal to ensure correct reassembly.

21. Raise and support the vehicle.
22. Mark the connecting rod and bearing cap positions using a permanent ink marker or scribe tool.

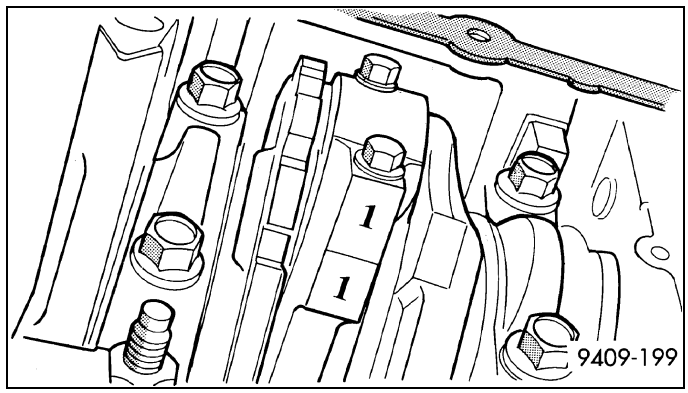

CAUTION: Care must be taken not to damage the fractured rod and cap joint face surfaces, as engine damage may occur.

CAUTION: Care must be taken not to nick crankshaft journals, as engine damage may occur.

NOTE: Pistons and connecting rods assemblies must be removed from the top of cylinder block. When removing the piston and connecting rod assemblies from the engine, rotate the crankshaft so each connecting rod is centered in the cylinder bore.

23. Remove the connecting rod cap, install the Connecting Rod Guides 8507 (1) and carefully remove the piston from the cylinder bore, repeat this procedure for each piston being removed.
24. Immediately after removing the piston and connecting rod, install the bearing cap on the mating connecting rod to prevent damage to the fractured cap and rod surfaces.

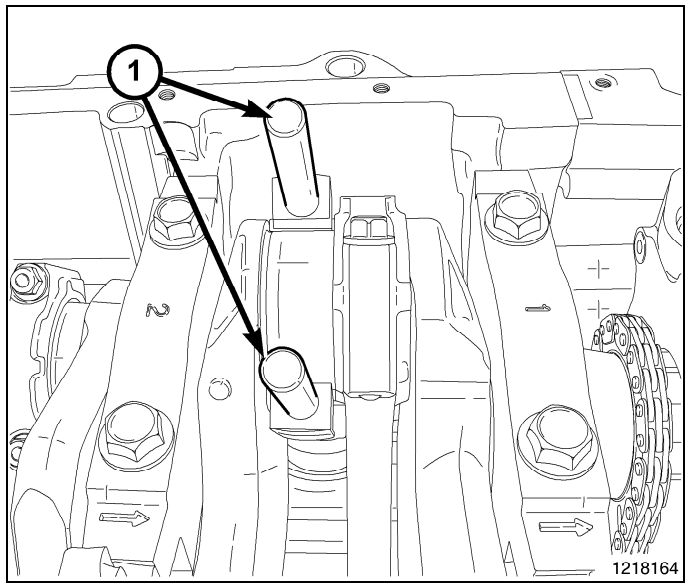

25. Carefully remove the piston rings from the piston(s), starting from the top ring down.

Cleaning

CAUTION: Do not use a wire wheel or other abrasive cleaning devise to clean the pistons or connecting rods. The pistons have a moly coating, this coating must not be damaged.

1. Using a suitable cleaning solvent, clean the pistons in warm water and towel dry.
2. Use a wood or plastic scraper to clean the ring land grooves.

CAUTION: Do not remove the piston pin from the piston and connecting rod assembly.

Inspection

Check the connecting rod journal for excessive wear, taper and scoring.(Refer to 09 - Engine/Engine Block/ROD, Piston and Connecting - Standard Procedure).

Check the connecting rod for signs of twist or bending.

Check the piston for taper and elliptical shape before it is fitted into the cylinder bore. (Refer to 09 - Engine/Engine Block/ROD, Piston and Connecting - Standard Procedure).

Check the piston for scoring or scraping marks in the piston skirts. Check the ring lands for cracks and/or deterioration.

Installation

NOTE: Before reinstalling used rings or installing new rings, the ring clearances must be checked.

NOTE: Make sure the piston ring grooves are clean and free of nicks and burrs.

1. Check piston ring clearance (Refer to 09 - Engine/Engine Block/RING(S), Piston - Standard Procedure).
2. Before installing piston and connecting rod assemblies into the bore, install the piston rings (Refer to 09 - Engine/Engine Block/RING(S), Piston - Standard Procedure).
3. Immerse the piston head and rings in clean engine oil and position a ring compressor over the piston and rings and tighten the ring compressor. **Ensure the position of rings do not change during this operation.**
4. Position the rod bearing (1) onto the connecting rod and lubricate bearing surface with clean engine oil.

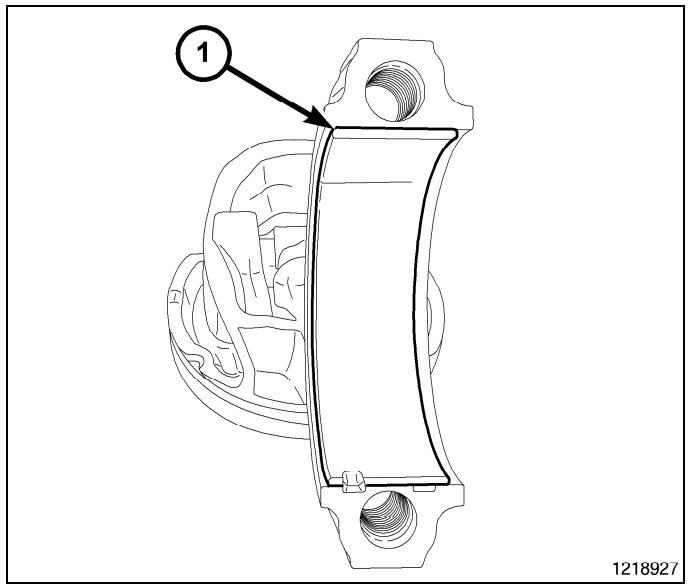

5. Install Connecting Rod Guides 8507 (1) into the connecting rod bolt threads.

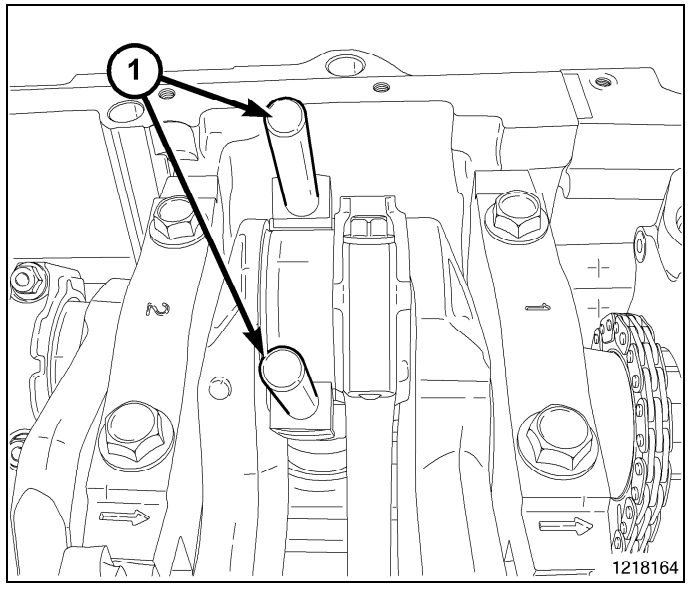

6. The pistons are marked on the piston pin bore surface with an raised “F” or arrow on top of piston indicating installation position. This mark must be pointing toward the front of engine on both cylinder banks.
7. Wipe cylinder bore clean and lubricate with clean engine oil.
8. Rotate the crankshaft until the connecting rod journal is centered with the cylinder bore.
9. Insert the piston and rod assembly into the cylinder bore and carefully position the connecting rod over the crankshaft journal.
10. Tap the piston down into the cylinder bore using a hammer handle while guiding the connecting rod into position on the rod journal.

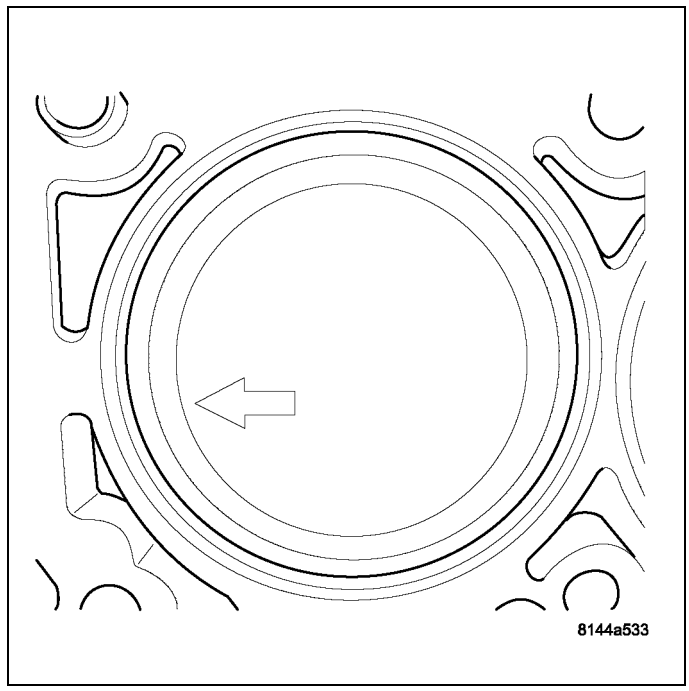

11. Remove the Connecting Rod Guides 8507.
12. Wipe the connecting rod cap (1) clean and lubricate with clean engine oil and install the bearing (3).

NOTE: The connecting rods and bearing caps are not interchangeable, line up the previously marked bearing caps and connecting rods to ensure assembly to their original location.

13. Lubricate the bearing surfaces with clean engine oil and position the rod cap in place.

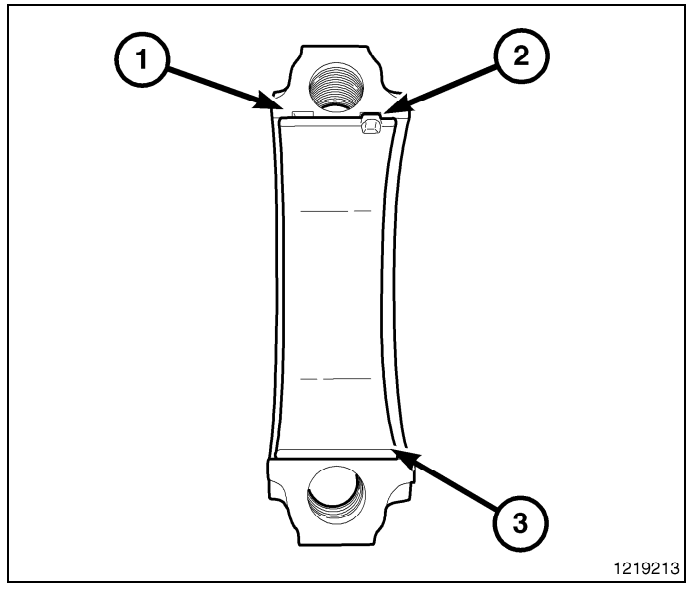

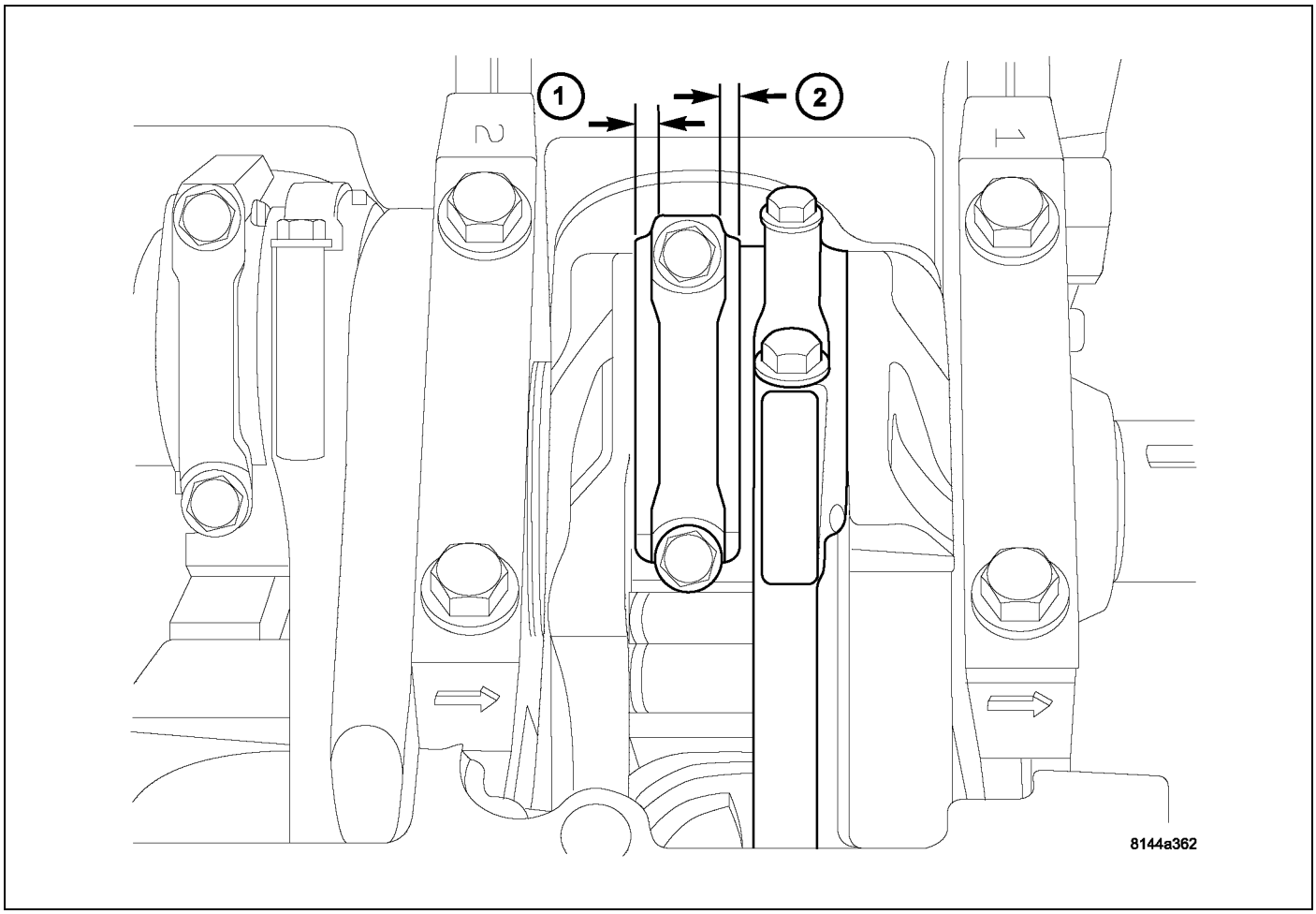

CAUTION: When installing the connecting rods, make sure the wide side of the connecting rod faces the crankshaft and the narrow sides face each other.

CAUTION: Always replace the connecting rod bolts whenever they are loosened or removed.

14. Lubricate the new rod cap bolts with clean engine oil, install and tighten to 21 N·m (15 ft. lbs.) plus 90°.
15. Install the timing chain cover (Refer to 09 - Engine/Valve Timing/COVER(S), Engine Timing - Installation).
16. Install the new oil pan gasket/windage tray and oil pan (Refer to 09 - Engine/Lubrication/PAN, Oil - Installation).
17. Install the engine oil dipstick tube and dipstick.
18. Lower the vehicle.
19. Using the Engine Lift Fixture 8984B (1), Engine Lift Adapter 8984-UPD (2) and the Engine Support Fixture 8534B (3) lower the engine into position and remove.
20. Raise and support the vehicle.

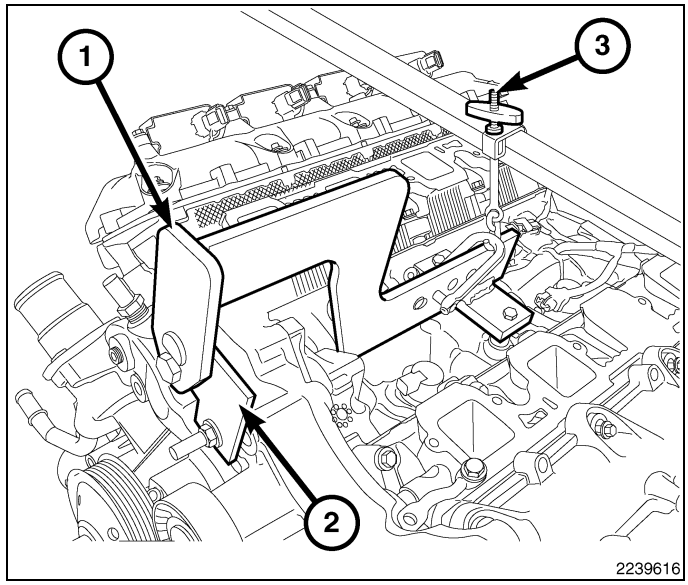

21. Position the steering gear (2), install mounting bolts (1) and tighten to 95 N·m (70 ft. lbs.).

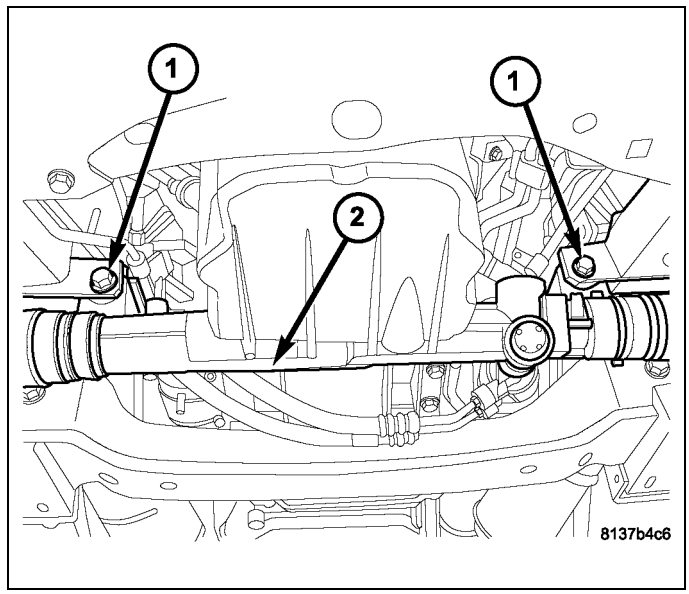

22. Install the engine mount nuts (1,2) and tighten to 95 N·m (70 ft. lbs.).
23. Lower the vehicle.
24. Install the cylinder head(s) (Refer to 09 - Engine/Cylinder Head - Installation).

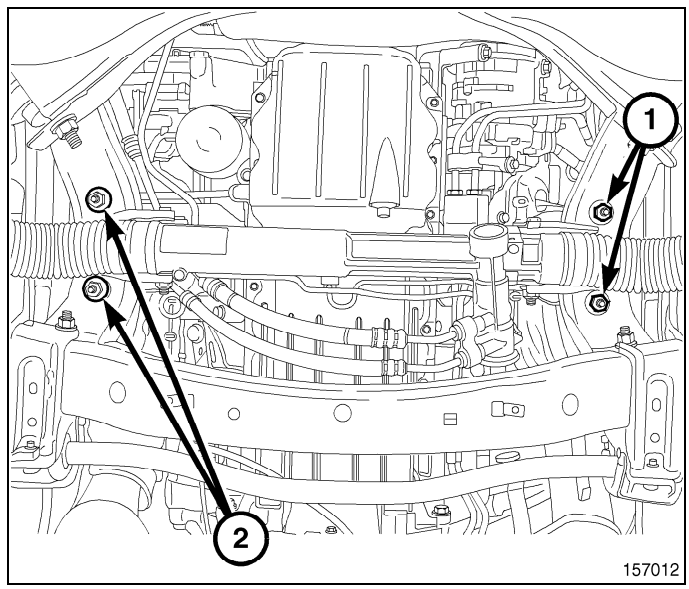

25. Position the air cleaner housing (2), install the air cleaner housing retaining bolt (3) and securely tighten.
26. Connect the makeup air hose (1).
27. Connect the intake air temperature sensor (4) electrical connector.
28. Connect the air duct to the throttle body and tighten clamp to 3 N·m (30 in. lbs.).
29. Fill the engine with oil (Refer to 09 - Engine/Lubrication/OIL - Standard Procedure).

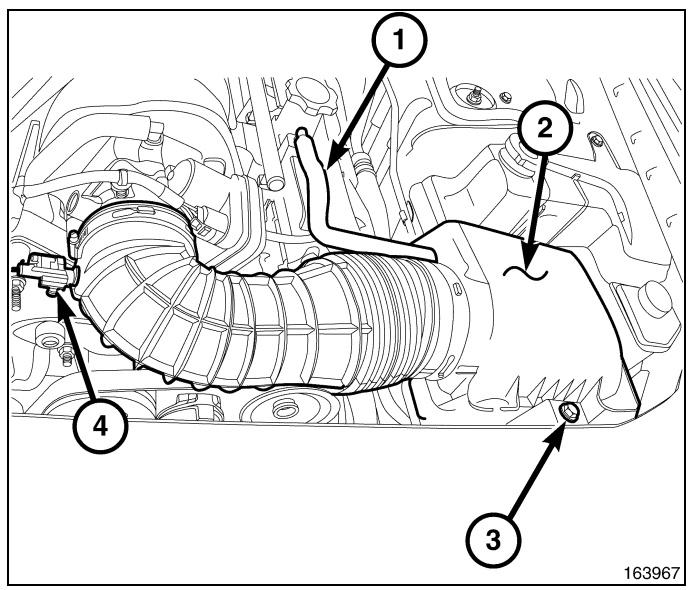

30. Install the engine covers (1).

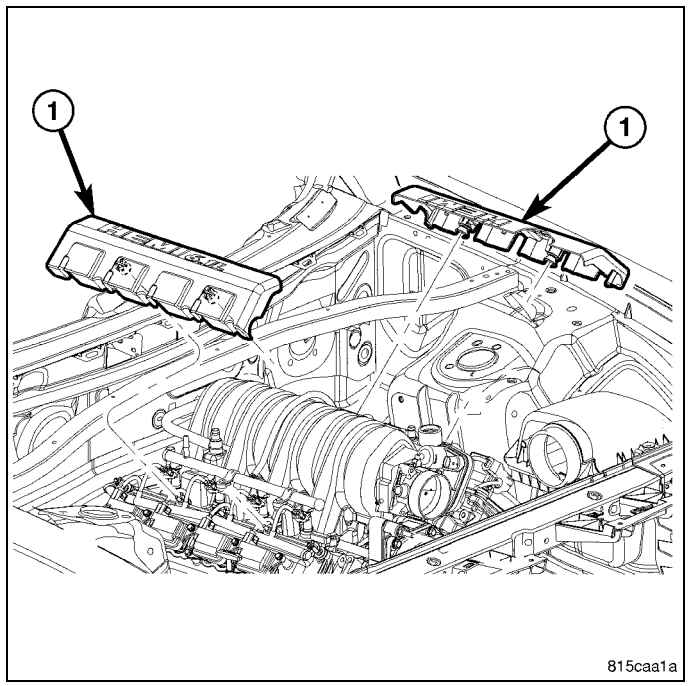

31. Connect the negative battery cable (3).

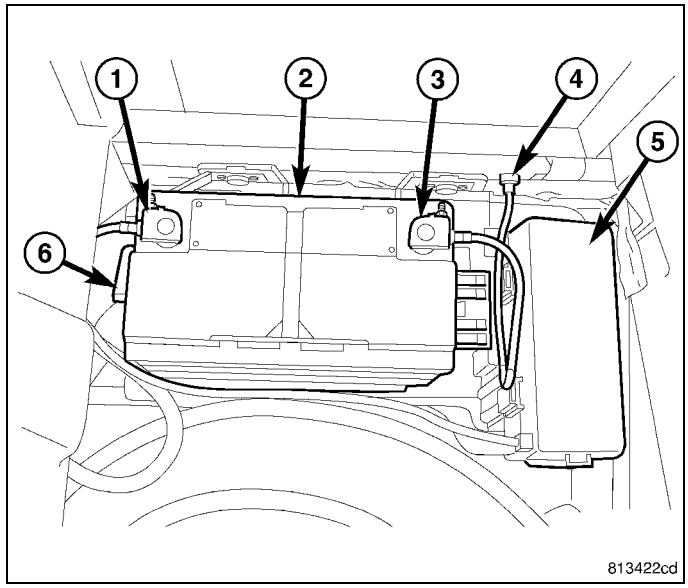

SEAL, Crankshaft Oil, Front

Removal

1. Disconnect negative cable from battery.
2. Remove accessory drive belt (Refer to 07 - Cooling/ Accessory Drive/BELT, Serpentine - Removal).
3. Drain cooling system (Refer to 07 - Cooling - Standard Procedure).
4. Remove upper radiator hose.
5. Remove radiator shroud attaching fasteners.
6. Remove radiator cooling fan and shroud (Refer to 07 - Cooling/Engine/FAN, Cooling - Removal).
7. Remove crankshaft damper bolt.
8. Remove damper using Crankshaft Insert 8513A (2) and Three Jaw Puller 1023 (1) (Refer to 09 - Engine/ Engine Block/DAMPER, Vibration - Removal).

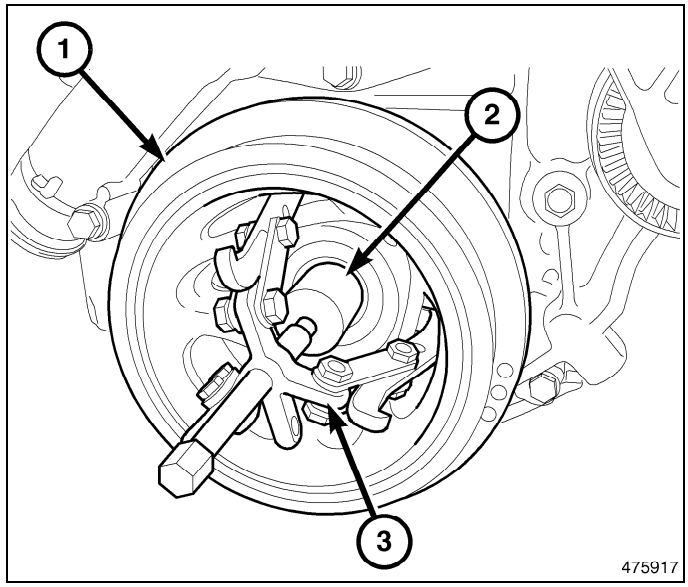

9. Using Seal Remover 9071 (1), remove crankshaft front seal (2).

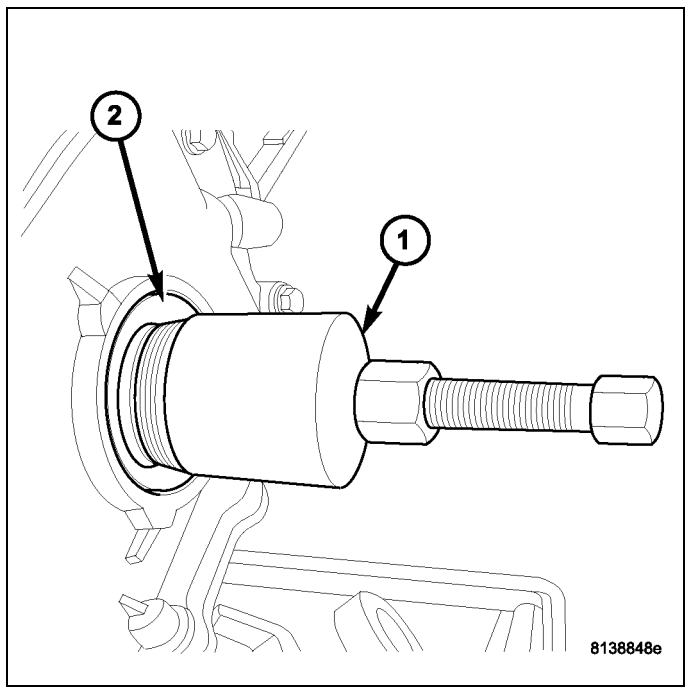

Installation

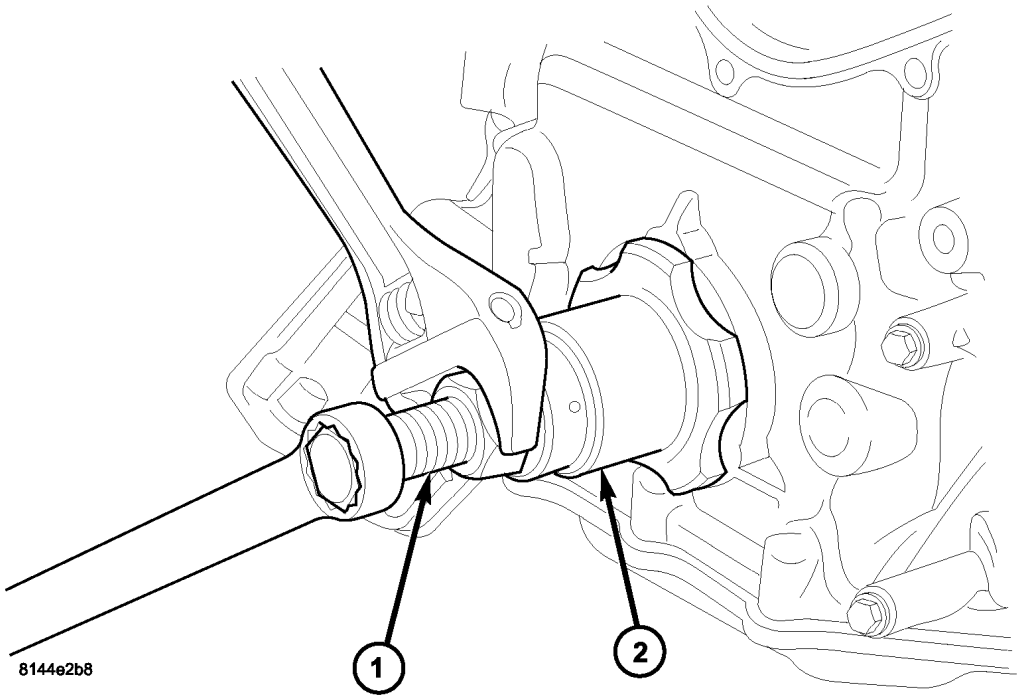

CAUTION: The front crankshaft seal must be installed dry. Do not apply lubricant to the sealing lip or the outer edge.

1. Using Crankshaft Front Oil Seal Installer 9072 (2) and Damper Installer 8512A (1), install crankshaft front seal.

CAUTION: To prevent severe damage to the crankshaft or damper, thoroughly clean the damper bore and the crankshaft nose before installing damper.

2. Install vibration damper (Refer to 09 - Engine/Engine Block/DAMPER, Vibration - Installation)
3. Install radiator cooling fan and shroud (Refer to 07 - Cooling/Engine/FAN, Cooling - Installation)
4. Install upper radiator hose.
5. Install accessory drive belt refer (Refer to 07 - Cooling/Accessory Drive/BELT, Serpentine - Installation)
6. Refill cooling system (Refer to 07 - Cooling - Standard Procedure)
7. Connect negative cable to battery.

SEAL, Crankshaft Oil, Rear

Description

The crankshaft rear oil seal is integral to the crankshaft rear oil seal retainer, for more information refer to the following;

- **Diagnosis and Testing** (Refer to 09 - Engine/Engine Block/RETAINER, Crankshaft Rear Oil Seal - Diagnosis and Testing)
- **Removal** (Refer to 09 - Engine/Engine Block/RETAINER, Crankshaft Rear Oil Seal - Removal)
- **Installation** (Refer to 09 - Engine/Engine Block/RETAINER, Crankshaft Rear Oil Seal - Installation)

SOLENOID, Multiple Displacement

Description

The Multi Displacement System selectively deactivates cylinders 1,4,6, and 7, to improve fuel economy. It has two modes of operation:

- 8 cylinders for acceleration and heavy loads.

- 4 cylinders for cruising and city traffic.

The main components of the Multi Displacement System are:

- Unique MDS camshaft.
- Deactivating roller tappets.
- 4 control valves/solenoids.
- control valve/solenoid wiring harness.
- oil temp sensor.

Operation

Cylinder Deactivation

- Trap an exhaust charge from a normal combustion event
- Normal combustion event
- Don't open the exhaust valve
- Don't open the intake valve
- Piston is an air spring
- Cylinders deactivated in firing sequence

Cylinder Reactivation

- Open the exhaust valve
- Empty the cylinder
- Open the intake valve
- Normal combustion event
- Cylinders reactivated in firing sequence

Diagnosis and Testing

The Multi-Displacement System (MDS) has the following detectable issues:

- solenoid circuit
- fail to deactivate a cylinder(s)
- fail to reactivate a cylinder(s)
- low oil pressure

CONDITION	POSSIBLE CAUSES	CORRECTION
MDS does not activate	1. Low oil pressure.	1. Check for proper oil pressure.
	2. Bad oil temperature sensor.	2. Replace the oil temperature sensor.
	3. Malfunctioning MDS solenoid.	3. Replace the solenoid.
	4. Malfunctioning MDS tappet.	4. Replace tappet (s).
MDS does not deactivate	1. Low oil pressure.	1. Check or proper oil pressure.
	2. Bad oil temperature sensor.	2. Replace the oil temp sensor.
	3. Malfunctioning MDS solenoid.	3. Replace the solenoid.
	4. Malfunctioning MDS tappet.	4. Replace tappet(s).

Removal

1. Disconnect and isolate the negative battery cable.
2. Remove the intake manifold (Refer to 09 - Engine/Manifolds/MANIFOLD, Intake - Removal).
3. Remove foam insulator pad (1).

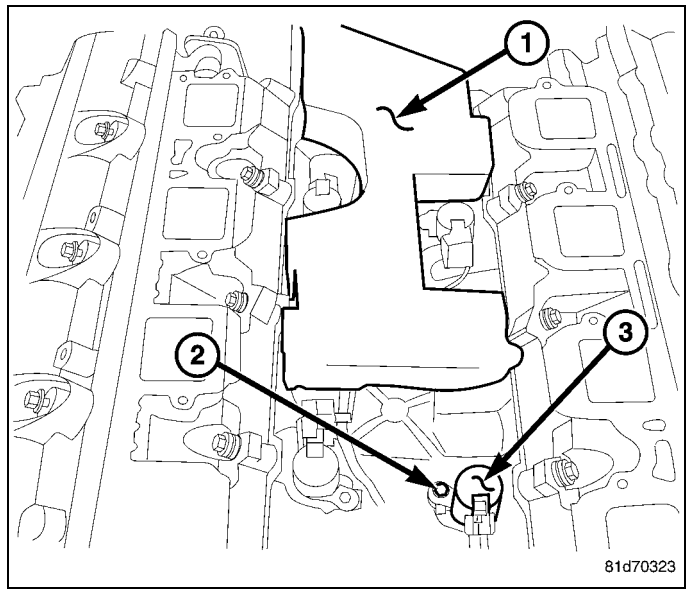

4. Remove the Multiple Displacement Solenoid (MDS) (2) electrical connector(s) (1).
5. Remove the MDS solenoid (2) retaining bolt(s) (3).

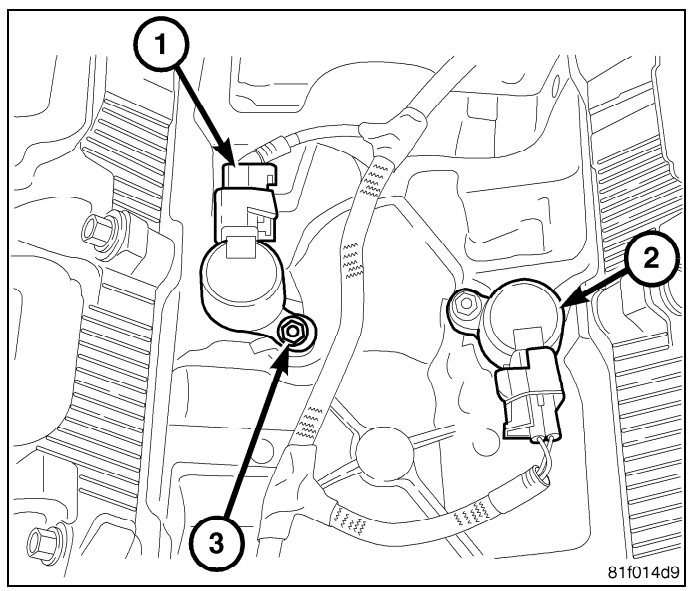

CAUTION: Do not try to pry the solenoid out. This could lead to breakage and contamination of the lubrication system.

6. Lightly tap on the MDS solenoid(s) with a rubber mallet. Rotate the MDS solenoid(s) from side to side to break the seal.
7. Remove the MDS solenoid(s).

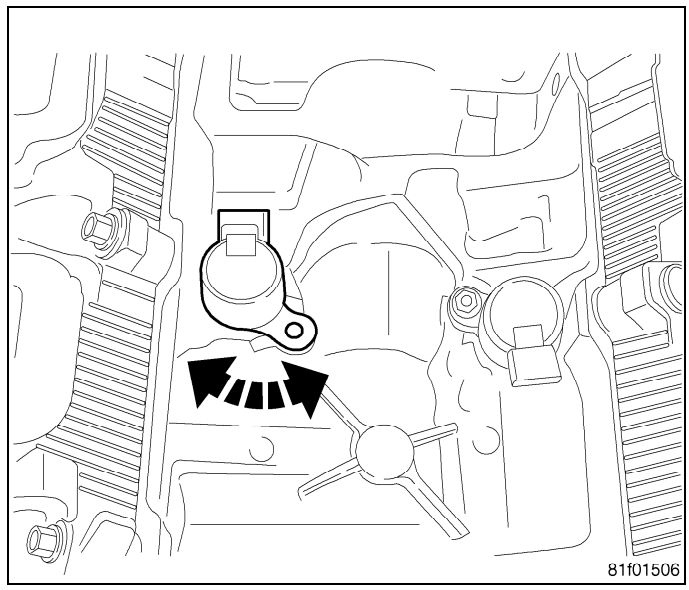

Installation

1. Verify the MDS solenoid bores are free of debris before installing the MDS solenoid into the engine block.
2. Install the MDS solenoid(s) (3), ensure the seal is fully seated into the engine block.
3. Install the retaining bolt(s) (2) and tighten to 11 N·m (8 ft. lbs.).
4. Connect the MDS electrical connector to the solenoid(s) (3).
5. Install the foam insulator pad (1).
6. Install the intake manifold (Refer to 09 - Engine/Manifolds/MANIFOLD, Intake - Installation).

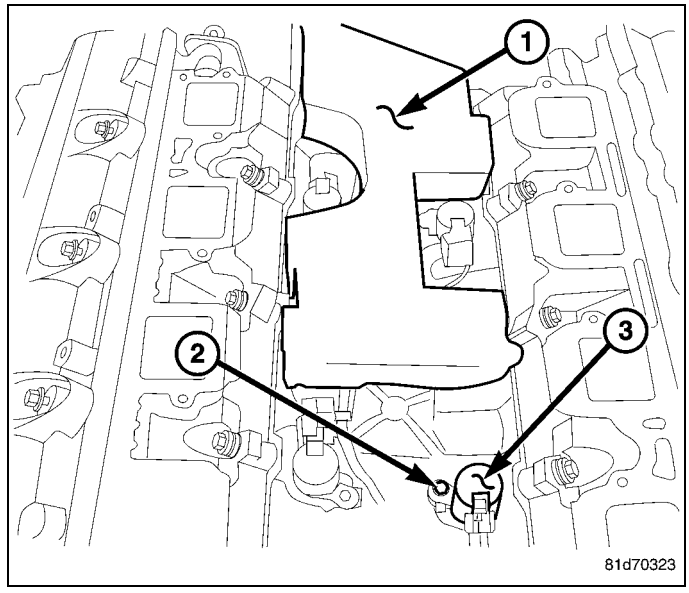

ENGINE MOUNTING

TABLE OF CONTENTS

page

ENGINE MOUNTING
INSULATOR, ENGINE MOUNT, REAR
REMOVAL 428
INSTALLATION 428

page

INSULATOR, ENGINE MOUNT, FRONT
REMOVAL 429
INSTALLATION 430

Engine Mounting

INSULATOR, Engine Mount, Rear

Removal

1. Raise the vehicle on a hoist.
2. Using a suitable jack, support transmission.
3. Remove the nuts (3) from the transmission mount.
4. Remove the transmission to mount bolts (4).
5. Raise the transmission enough to remove the rear mount (1).
6. Remove the mount (1).

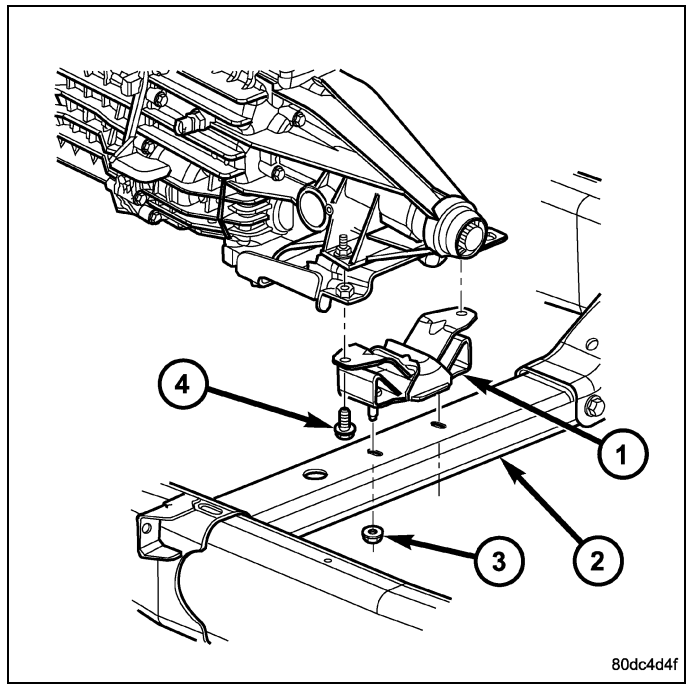

Installation

NOTE: Threadlocking compound must be applied to the bolts before installation.

1. Install the two bolts that attach the transmission mount to the transmission bracket.
2. Tighten the bolts to 61N·m (45 ft.lbs.) torque.
3. Lower the transmission so the transmission mount rests on the crossmember, and the studs of the transmission mount are aligned in the slots in the crossmember.
4. Install the nuts onto the transmission mount studs through the crossmember access slot.
5. Tighten the nuts to 54N·m (40 ft. lbs.).

INSULATOR, Engine Mount, Front

Removal

2WD

1. Disconnect negative battery cable.
2. Raise vehicle.
3. Remove engine mount through bolts.
4. Raise engine using engine support fixture (1) special tool 8534B.
5. Remove engine mount to insulator bolts.
6. Remove insulator from engine.

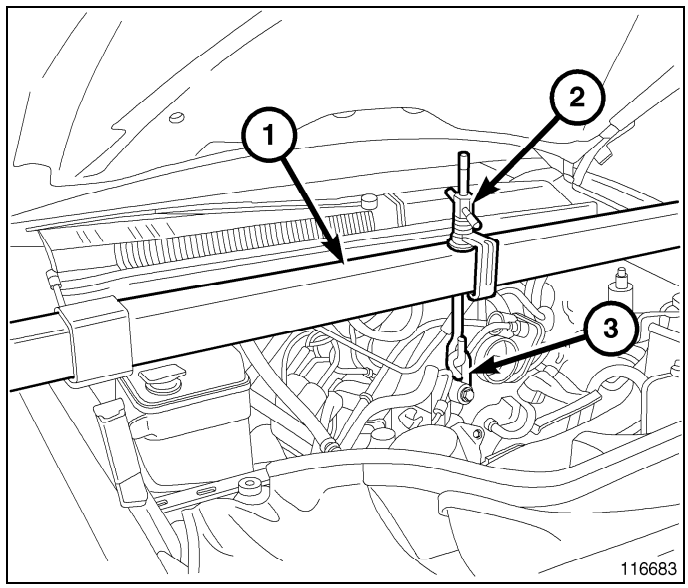

4WD

1. Disconnect the negative cable from the battery.
2. Raise the vehicle.
3. Remove the skid plate.
4. Remove the front crossmember.
5. Remove the engine oil filter.
6. Support the engine using engine support fixture 8534B (1).
7. Support the front axle with a suitable jack.
8. Remove the (4) bolts that attach the engine mounts to the front axle.
9. Remove the (3) bolts that attach the front axle to the left engine bracket.
10. Lower the front axle.
11. Remove the (6) through bolts
12. Raise the engine far enough to be able to remove the left and right engine mounts.
13. Remove the engine mounts.

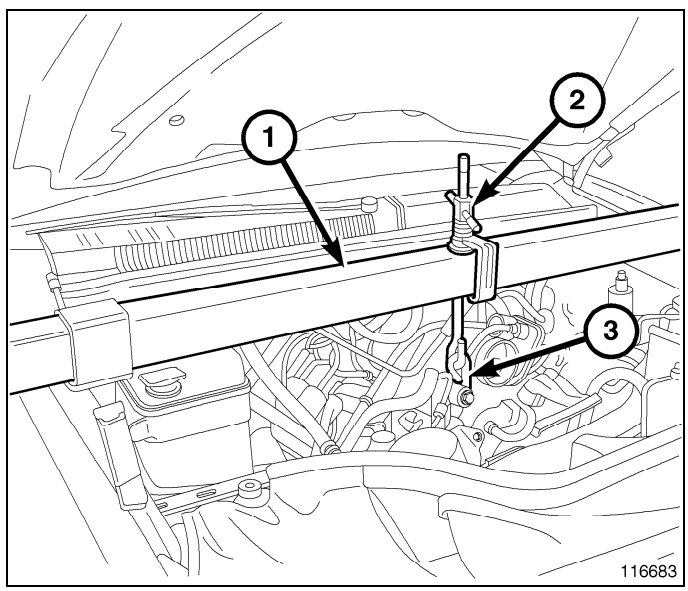

Installation

2WD

1. Install mount on the engine.

NOTE: For mount to engine block and left engine bracket to front axle bolts, apply Mopar® Lock and Seal Adhesive, Medium Strength Threadlocker.

2. Install upper and lower mount mounting bolts. Tighten bolts to 61 N·m (45 ft. lbs.).
3. Lower the engine using engine support fixture 8534B (1).
4. Install mount thru bolts.
5. Tighten through bolts on both sides to 61 N·m (45 ft. lbs.).
6. Lower vehicle.
7. Connect negative battery cable.

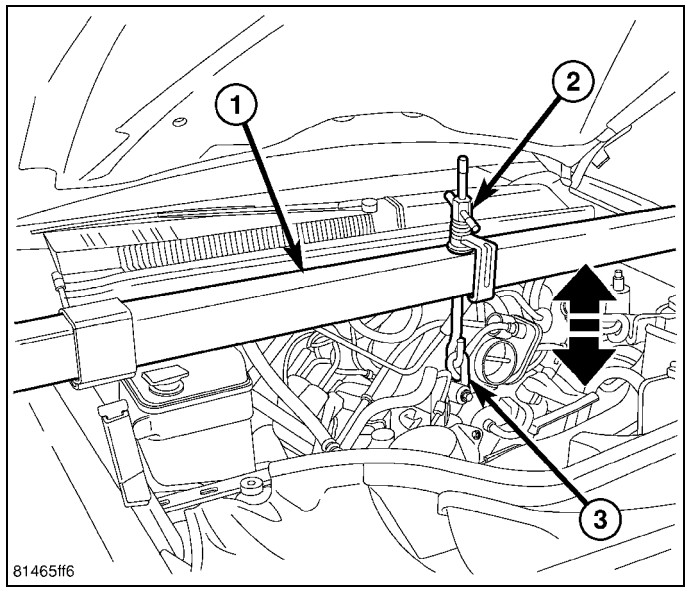

4WD

NOTE: For mount to engine block and left engine bracket to front axle bolts, apply Mopar® Lock and Seal Adhesive, Medium Strength Threadlocker.

1. Install the right and left side engine mounts to the front axle. Tighten nuts to 94 N·m (70 ft. lbs.).
2. Raise the front axle into the frame and install the left and right side through bolts. Tighten nuts to 94 N·m (70 ft. lbs.).
3. Insert the two upper through bolts into the right and left side engine mounts and loose assemble the two nuts onto the through bolts.
4. Lower the engine using engine support fixture 8534B (1), until the left and right side engine brackets rest on the thru bolts, and the lower engine bracket through holes align with the engine mounts, and the left engine bracket holes align with the front axle slots.
5. Loose assemble the bolts that attach the front axle to the left engine bracket.
6. Loose assemble the lower through bolts.
7. Tighten the nuts for the through bolts to 101 N·m (75 ft. lbs.).
8. Tighten the bolts that attach the front axle to the left engine bracket to 101 N·m (75 ft. lbs.).
9. Install the engine oil filter, if removed.
10. Install the front crossmember.
11. Install the skid plate.
12. Lower the vehicle.
13. Reconnect the negative battery cable.

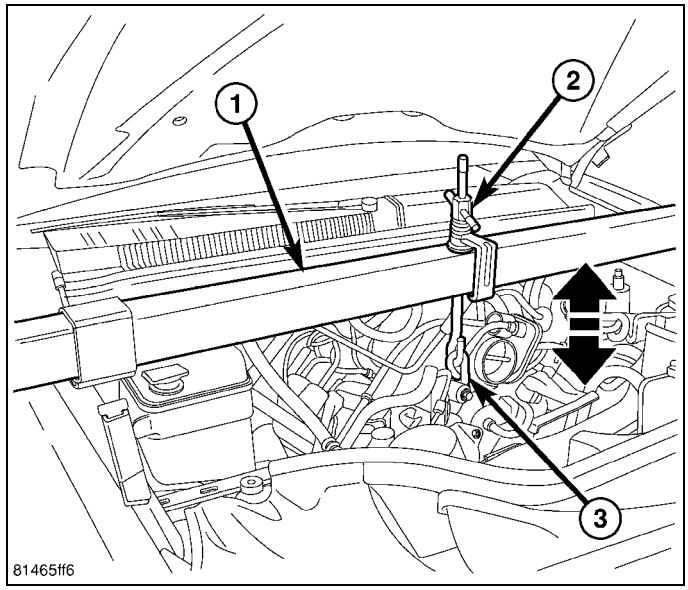

LUBRICATION

TABLE OF CONTENTS

page

LUBRICATION
- DESCRIPTION 432
- DIAGNOSIS AND TESTING
  - CHECKING ENGINE OIL PRESSURE 432
  - ENGINE OIL LEAK 432
- **CONTROL VALVE, OIL INTAKE**
  - OPERATION 433
  - DESCRIPTION 434
  - INSTALLATION 434
  - REMOVAL 434
- **FILTER, ENGINE OIL**
  - REMOVAL 435
  - INSTALLATION 435
- **OIL**
  - STANDARD PROCEDURE 435
- **PAN, OIL**
  - REMOVAL 437
  - INSTALLATION 439

page

PUMP, ENGINE OIL
- REMOVAL 441
- CLEANING 441
- INSPECTION 442
- INSTALLATION 443

SENSOR, OIL PRESSURE
- DESCRIPTION 443
- REMOVAL 443
- INSTALLATION 444

SENSOR, OIL TEMPERATURE
- DESCRIPTION 445
- REMOVAL 445
- INSTALLATION 446

Lubrication

Description

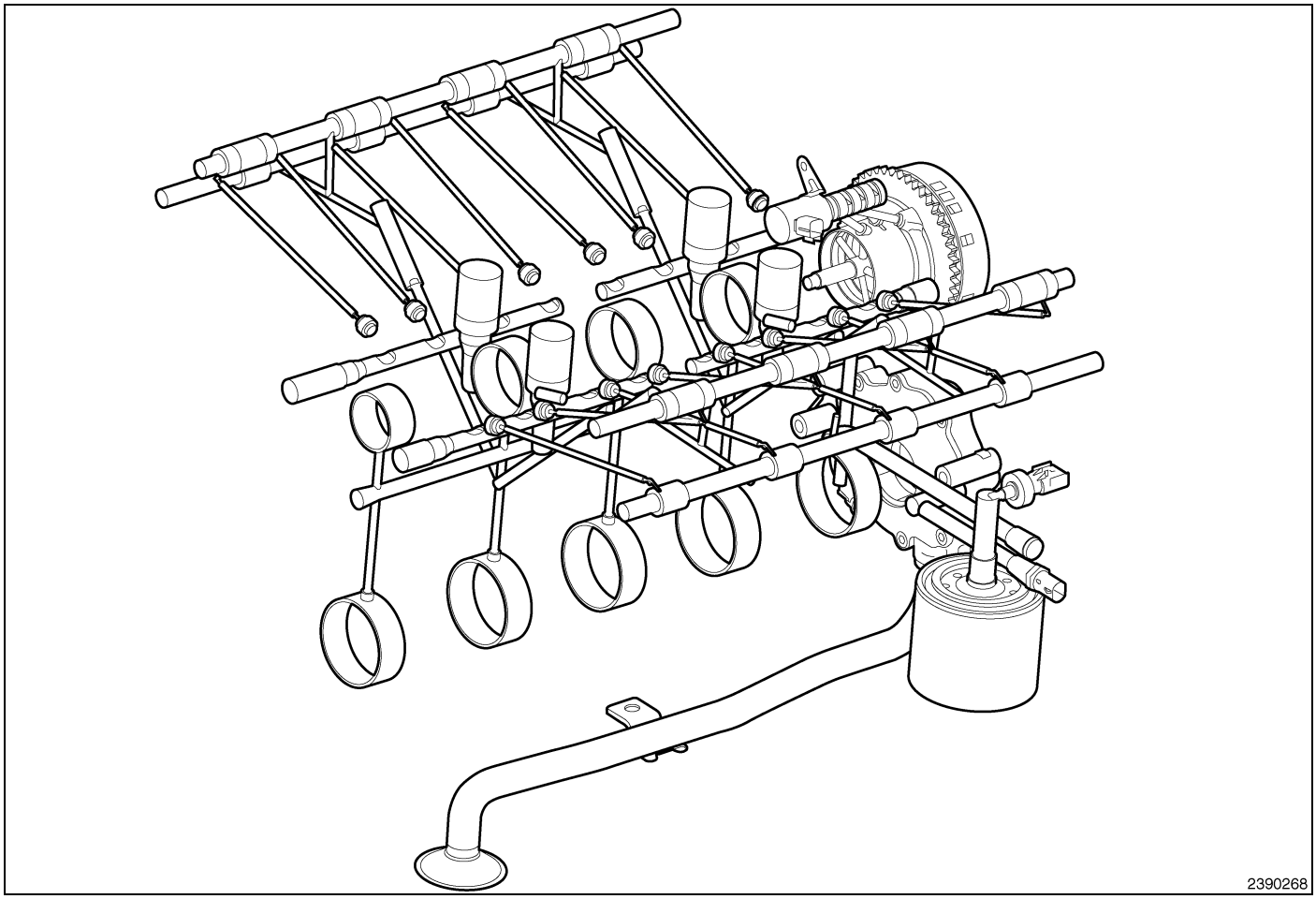

The 5.7L MDS lubrication system is a full flow filtration pressure feed type.

Diagnosis and Testing

CHECKING ENGINE OIL PRESSURE

1. Remove the oil pressure sending unit and install gauge assembly C-3292A.
2. Run the engine until thermostat opens.
3. Oil Pressure:

- Curb Idle-25 kPa (4 psi) minimum
- 3000 rpm-170 - 758 kPa (25 - 110 psi)

4. If oil pressure is 0 at idle, shut off engine. Check for a clogged oil pick-up screen or a pressure relief valve stuck open.

ENGINE OIL LEAK

Begin with a thorough visual inspection of the engine, particularly at the area of the suspected leak. If an oil leak source is not readily identifiable, the following steps should be followed:

1. Do not clean or degrease the engine at this time because some solvents may cause rubber to swell, temporarily stopping the leak.
2. Add an oil soluble dye (use as recommended by manufacturer). Start the engine and let idle for approximately 15 minutes. Check the oil dipstick to make sure the dye is thoroughly mixed as indicated with a bright yellow color under a black light.

3. Using a black light, inspect the entire engine for fluorescent dye, particularly at the suspected area of the oil leak. If the oil leak is found and identified, repair per service manual instructions.
4. If dye is not observed, drive the vehicle at various speeds for approximately 24 km (15 miles), and repeat inspection. **If the oil leak source is not positively identified at this time**, proceed with the air leak detection test method.

Air Leak Detection Test Method

1. Remove the PCV valve from the IAFM. Cap or plug the PCV valve grommet.
2. Attach an air hose with a pressure gauge and regulator to the dipstick tube.

CAUTION: Do not subject the engine assembly to more than 20.6 kPa (3 PSI) of test pressure.

3. Gradually apply air pressure from 1 psi to 2.5 psi maximum while applying soapy water at the suspected source. Adjust the regulator to the suitable test pressure that provide the best bubbles which will pinpoint the leak source. If the oil leak is detected and identified, repair per service manual procedures.
4. If the leakage occurs at the rear oil seal area, refer to the section Inspection for Rear Seal Area Leak.
5. If no leaks are detected, turn off the air supply and remove the air hose and all plugs and caps. Install the PCV valve.
6. Clean the oil off the suspect oil leak area using a suitable solvent. Drive the vehicle at various speeds approximately 24 km (15 miles). Inspect the engine for signs of an oil leak by using a black light.

INSPECTION FOR REAR SEAL AREA LEAKS

Since it is sometimes difficult to determine the source of an oil leak in the rear seal area of the engine, a more involved inspection is necessary. The following steps should be followed to help pinpoint the source of the leak.

If the leakage occurs at the crankshaft rear oil seal area:

1. Disconnect the battery.
2. Raise the vehicle.
3. Remove torque converter or clutch housing cover and inspect rear of block for evidence of oil. Use a black light to check for the oil leak:
   a. Circular spray pattern generally indicates seal leakage or crankshaft damage.
   b. Where leakage tends to run straight down, possible causes are a porous block, distributor seal, camshaft bore cup plugs oil gallery pipe plugs, oil filter runoff, and main bearing cap to cylinder block mating surfaces.
4. If no leaks are detected, pressurize the crankcase as outlined in the, Inspection (Engine oil Leaks in general)

CAUTION: Do not exceed 20.6 kPa (3 psi).

5. If the leak is not detected, very slowly turn the crankshaft and watch for leakage. If a leak is detected between the crankshaft and seal while slowly turning the crankshaft, it is possible the crankshaft seal surface is damaged. The seal area on the crankshaft could have minor nicks or scratches that can be polished out with emery cloth.

CAUTION: Use extreme caution when crankshaft polishing is necessary to remove minor nicks and scratches. The crankshaft seal flange is especially machined to complement the function of the rear oil seal.

6. For bubbles that remain steady with shaft rotation, no further inspection can be done until disassembled.

CONTROL VALVE, Oil Intake

Operation

The Variable Cam Timing (VCT) assembly is actuated with engine oil pressure. The oil flow to the VCT assembly is controlled by an Oil Control Valve (OCV). The OCV consists of a Pulse Width Modulated (PWM) solenoid and a spool valve. The PCM actuates the OCV to control oil flow through the spool valve into the VCT assembly. The VCT assembly consists of a rotor and a stator/sprocket. The stator/sprocket is connected to the timing chain. The rotor is connected to the camshaft. Oil flow into the VCT assembly rotates the rotor with respect to the stator, thus rotating the camshaft with respect to the stator/sprocket. This will rotate both the intake and exhaust lobes on the camshaft by the same amount. The intake and exhaust lobes can not be individually controlled with this VCT system. An infinitely variable valve timing position can be achieved within the limits of the hardware. The camshaft position sensor monitors the position of the camshaft with respect to the crankshaft and provides feedback to the PCM.

Description

The 5.7L engine is equipped with Variable Cam Timing (VCT). This system uses an oil control valve to direct oil pressure into the camshaft phaser assembly. The camshaft phaser assembly advances and/or retards camshaft timing to improve engine performance, mid-range torque, idle quality, fuel economy, and reduce emissions. The oil control valve is located under the intake manifold.

Installation

1. Install the oil control valve.
2. Ensure that the O-ring is fully seated into the cylinder block.
3. Securely tighten the oil control valve fastener (1).
4. Connect the oil control valve electrical connector (2).
5. Install the intake manifold (Refer to 09 - Engine/Manifolds/MANIFOLD, Intake - Removal)

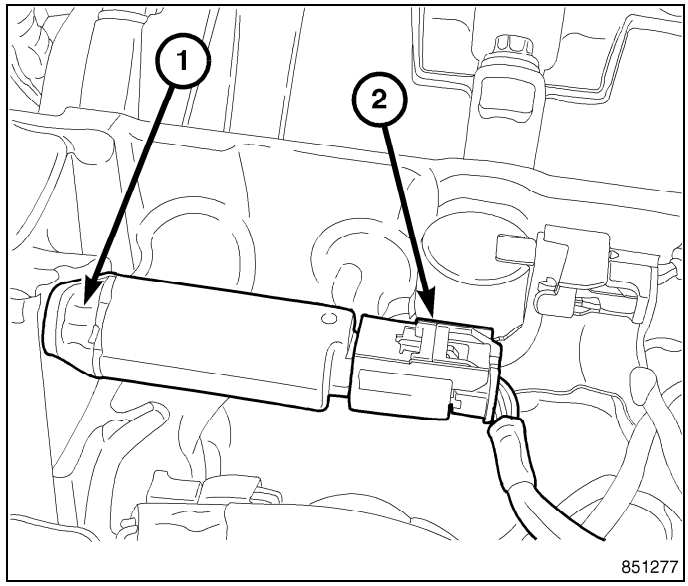

Removal

1. Remove intake manifold (Refer to 09 - Engine/Manifolds/MANIFOLD, Intake - Removal).
2. Disconnect oil control valve electrical connector (2).
3. Remove oil control valve fastener (1).

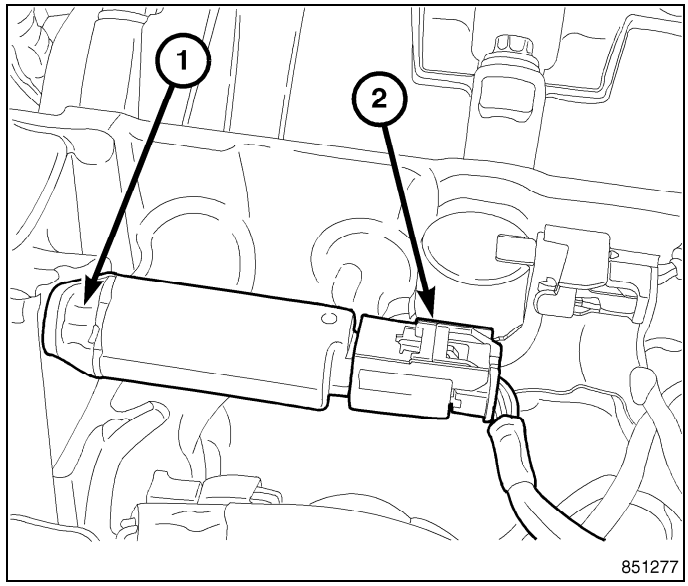

NOTE: To remove the oil control valve, the engine must be at room temperature.

4. Rotate the oil control valve to break the seal. Pull the oil contol valve out.

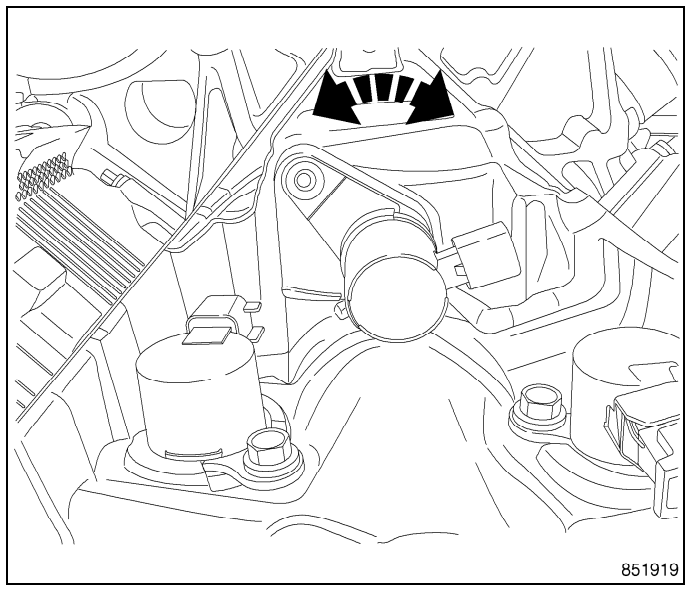

FILTER, Engine Oil

Removal

All engines are equipped with a high quality full-flow, disposable type oil filter. Chrysler Corporation recommends a Mopar® or equivalent oil filter be used.

1. Position a drain pan under the oil filter.
2. Using a suitable oil filter wrench loosen filter.
3. Rotate the oil filter counterclockwise to remove it from the cylinder block oil filter boss.
4. When filter separates from cylinder block oil filter boss, tip gasket end upward to minimize oil spill. Remove filter from vehicle.

NOTE: Make sure filter gasket was removed with filter.

5. With a wiping cloth, clean the gasket sealing surface of oil and grime.

Installation

1. Lightly lubricate the oil filter gasket (2) with engine oil.
2. Thread the oil filter (3) onto adapter nipple and when the gasket makes contact with sealing surface (1), rotate the filter 360° or one full turn, do not over tighten.
3. Add oil, verify crankcase oil level and start engine. Inspect for oil leaks.

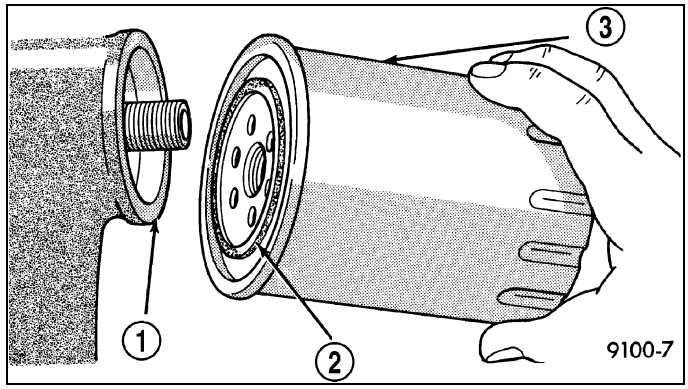

OIL

Standard Procedure

The engine oil level indicator is located at the left hand of the engine on the 5.7L engines.

CRANKCASE OIL LEVEL INSPECTION

CAUTION: Do not overfill crankcase with engine oil, pressure loss or oil foaming can result.

Inspect engine oil level approximately every 800 kilometers (500 miles). Unless the engine has exhibited loss of oil pressure, run the engine for about ten minutes before checking oil level. Checking engine oil level on a cold engine is not accurate.

To ensure proper lubrication of an engine, the engine oil must be maintained at an acceptable level. The acceptable levels are indicated between the ADD and SAFE marks on the engine oil dipstick.

1. Position vehicle on level surface.
2. With engine OFF, allow approximately five minutes for oil to settle to bottom of crankcase, remove engine oil dipstick.
3. Wipe dipstick clean.
4. Install dipstick and verify it is seated in the tube.
5. Remove dipstick, with handle held above the tip, take oil level reading.
6. Add oil only if level is below the ADD mark on dipstick.

ENGINE OIL CHANGE

Change engine oil at mileage and time intervals described in Maintenance Schedules(Refer to 04 - Vehicle Quick Reference/Maintenance Schedules - Description) .

Run engine until achieving normal operating temperature.

1. Position the vehicle on a level surface and turn engine off.
2. Hoist and support vehicle on safety stands.
3. Remove oil fill cap.
4. Place a suitable drain pan under crankcase drain.
5. Remove drain plug from crankcase and allow oil to drain into pan. Inspect drain plug threads for stretching or other damage. Replace drain plug if damaged.
6. Install drain plug in crankcase. Torque to 34 N·m (25 ft. lbs.).
7. Lower vehicle and fill crankcase with specified type and amount of engine oil described in this section.
8. Install oil fill cap.
9. Start engine and inspect for leaks.
10. Stop engine and inspect oil level.

NOTE: Care should be exercised when disposing used engine oil after it has been drained from a vehicle engine. Refer to the WARNING at beginning of this section.

PAN, Oil

Removal

4X2

1. Disconnect the negative battery cable.
2. Loosen both the left and right side engine mount through bolts. Do not remove bolts.
3. Install Engine Support Fixture 8534B (1). **Do not raise engine at this time.**

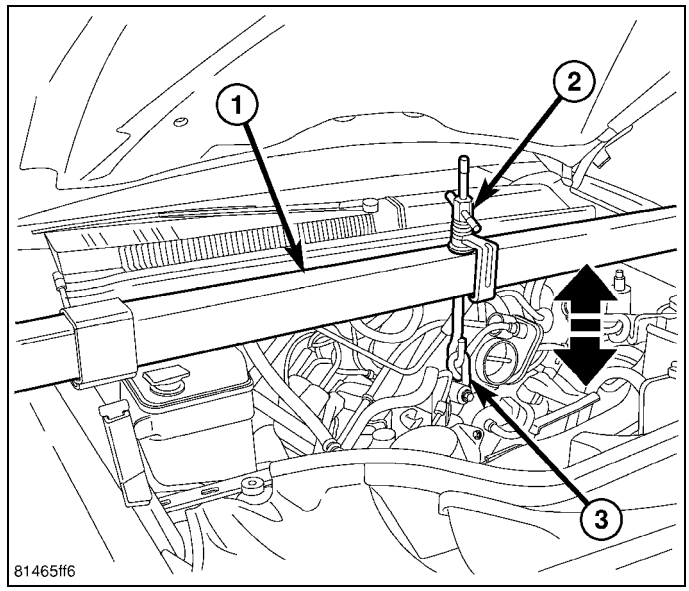

4. Remove the structural dust cover (2). (Refer to 09 - Engine/Engine Block/COVER, Structural Dust - Removal).
5. Remove the fan and the fan shroud.
6. Drain engine oil.
7. Disconnect transmission fluid cooler lines at radiator, transmission fittings and clips.

NOTE: When disconnecting the transmission oil cooler lines, it is necessary to replace the line clip that is located on the oil pan stud. The retention force of the clip is severely degraded upon removal.

8. Remove the front crossmember(Refer to 13 - Frame and Bumpers/Frame/CROSSMEMBER - Removal).

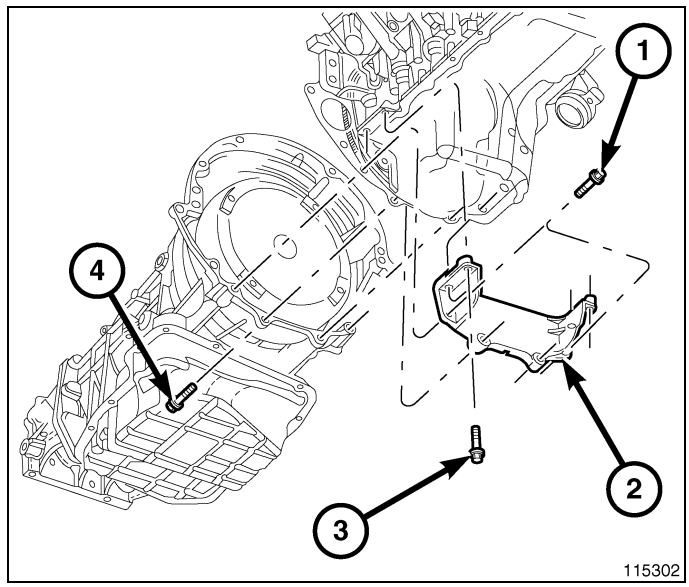

9. Raise engine using Engine Support Fixture 8534B (1) to provide clearance to remove oil pan.

NOTE: Do not pry on oil pan or oil pan gasket. The gasket is integral to engine windage tray and does not come out with oil pan.

NOTE: If more clearance is needed to remove oil pan the transmission mount can be removed, and the transmission can be raised to gain clearance.

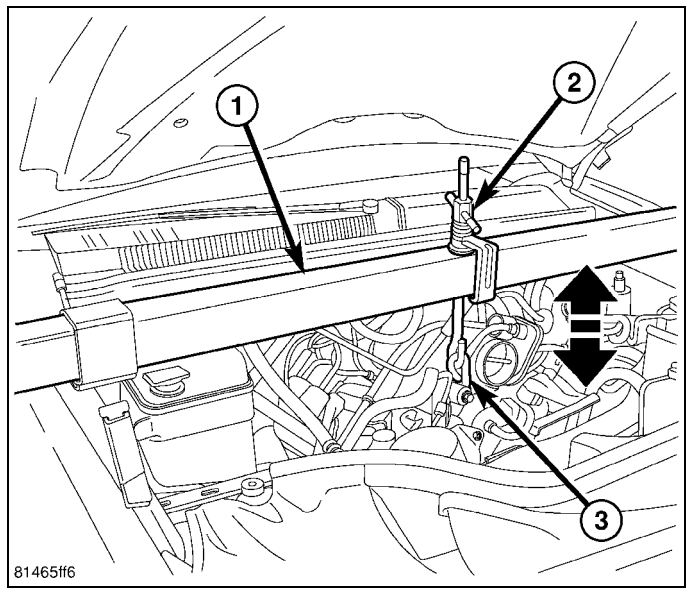

NOTE: The double ended oil pan studs must be installed in the same location that they were removed from.

10. Remove the oil pan mounting bolts using the sequence provided.
11. Unbolt oil pump pickup tube and remove tube.

NOTE: When the oil pan is removed, a new integral windage tray and gasket assembly must be installed. The old gasket cannot be reused.

12. Discard the integral windage tray and gasket and replace.

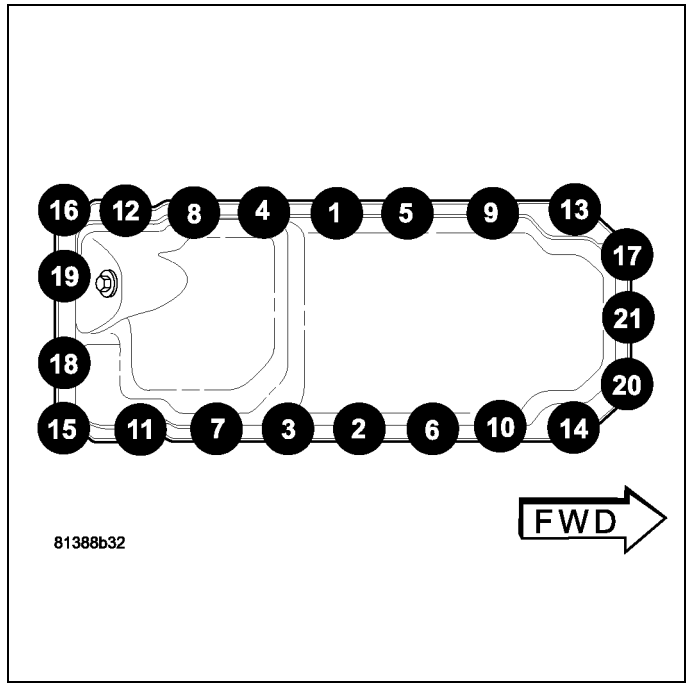

4X4

1. Follow all steps for 4X2 removal.
2. Unbolt and lower the steering rack, without disconnecting the lines.

NOTE: The front axle must be lowered to remove the oil pan on 4X4 vehicles.

3. Remove the front driveshaft at the axle. Mark for reassembly.
4. Support the front axle.
5. Remove the right and left axle to mount bolts.
6. Lower axle.
7. Remove the oil pan mounting bolts and oil pan.
8. Unbolt oil pump pickup tube and remove tube.

NOTE: When the oil pan is removed, a new integral windage tray and gasket assembly must be installed. The old gasket cannot be reused.

9. Discard the integral windage tray and gasket and replace.

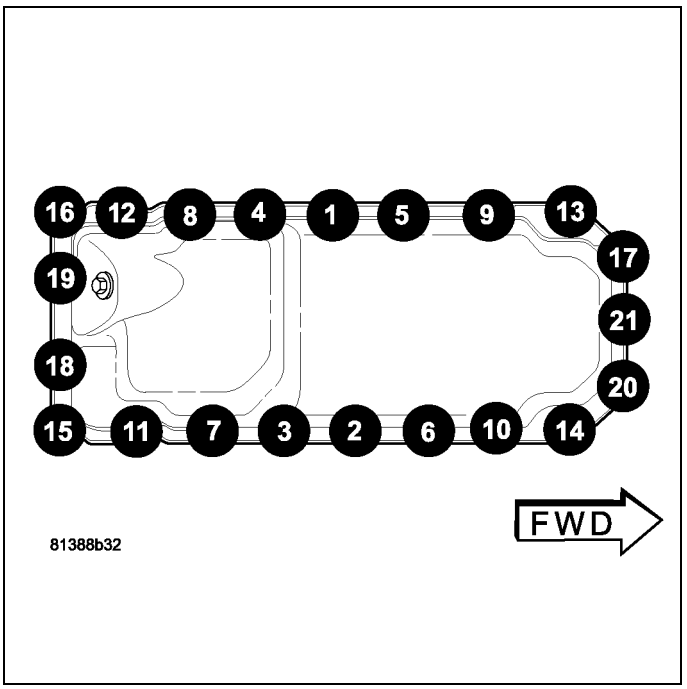

Installation

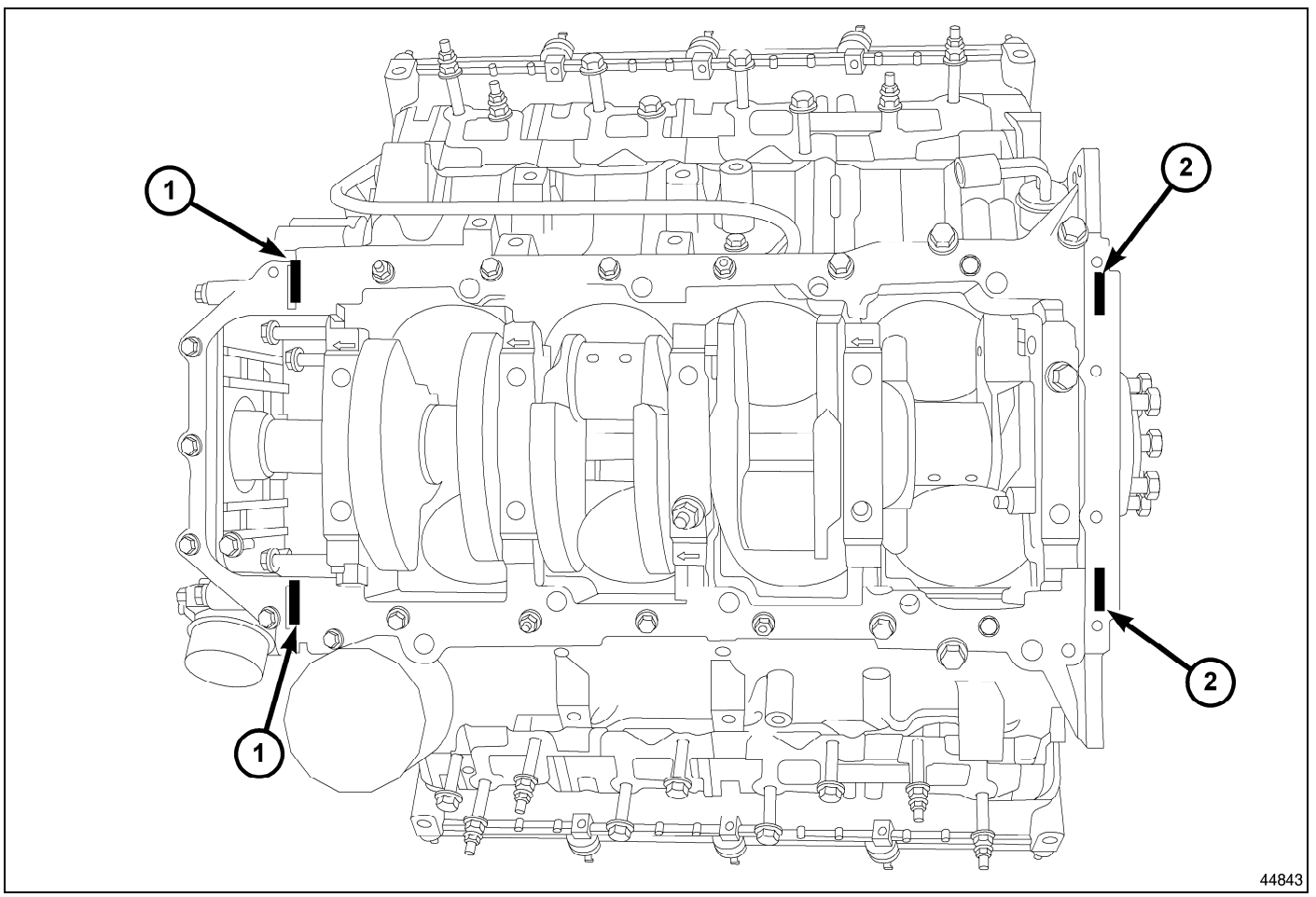

1. Clean the oil pan gasket mating surface of the block and oil pan.

NOTE: Mopar® Engine RTV must be applied to the four T-joints (1,2). The bead of RTV should cover the bottom of the gasket. This area is approximately 4.5 mm x 25 mm in each of the four T-joint locations.

2. Apply Mopar® Engine RTV at the T- joints (1,2).

NOTE: When the oil pan is removed, a new integral windage tray and gasket assembly must be installed. The old gasket cannot be reused.

3. Install a new integral windage tray and gasket.
4. Reinstall the oil pump pickup tube with new O-rings. Tighten tube to pump fasteners to 28 N·m (21 ft.lbs.).

NOTE: The double ended oil pan studs must be installed in the same location that they were removed from.

5. Position the oil pan and install the mounting bolts and studs. Tighten the mounting bolts to 12 N·m (105 in.lbs.).

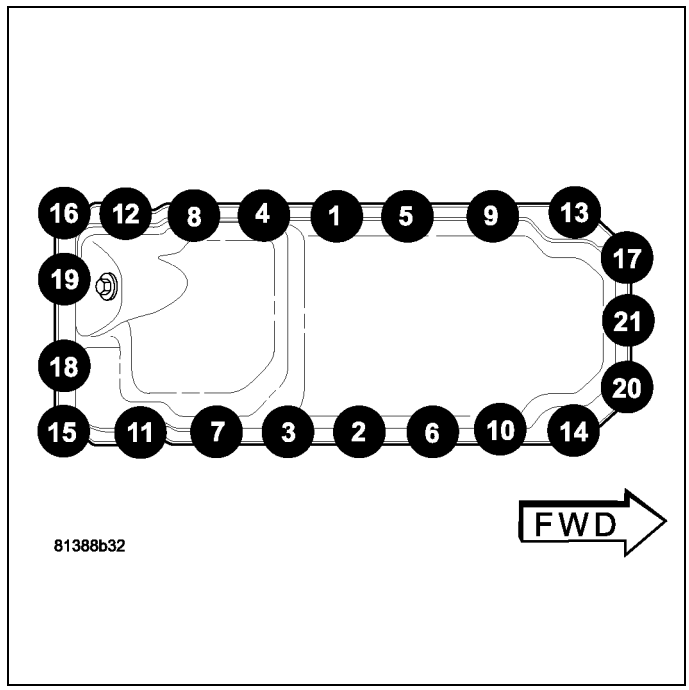

6. Connect cooler lines to radiator, transmission and clips.

NOTE: When connecting the transmission oil cooler lines, it is necessary to replace the line clip that is located on the oil pan stud. The retention force of the clip is severely degraded upon removal.

7. Install the structural cover (2). (Refer to 09 - Engine/ Engine Block/COVER, Structural Dust - Installation).

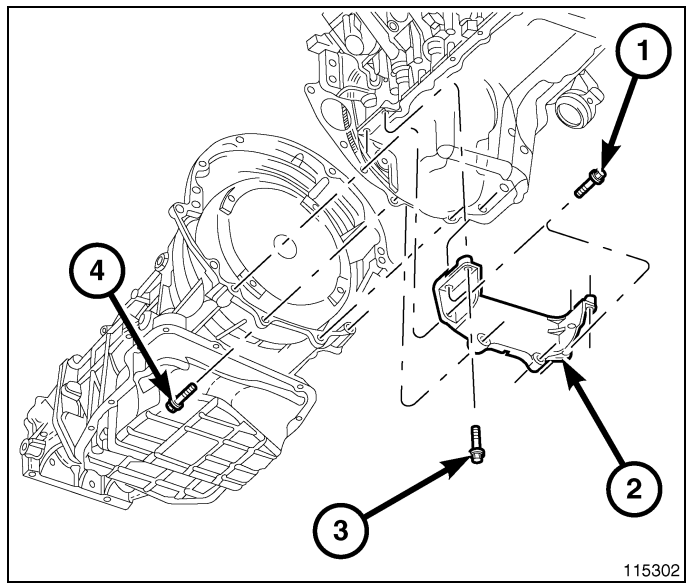

8. Lower the engine into mounts using Engine Support Fixture 8534B (1).
9. Install both the left and right side engine mount through bolts. Tighten the nuts to 68 N·m (50 ft. lbs.).
10. Reinstall the front axle, if removed.
11. Install the steering rack, if removed.
12. Install the rear transmission mount, if removed.
13. Remove Engine Support Fixture 8534B (1).
14. Install the front crossmember(Refer to 13 - Frame and Bumpers/Frame/CROSSMEMBER - Installation).
15. Install the fan shroud and fan.
16. Fill engine oil.
17. Connect the negative battery cable.
18. Start engine and check for leaks.

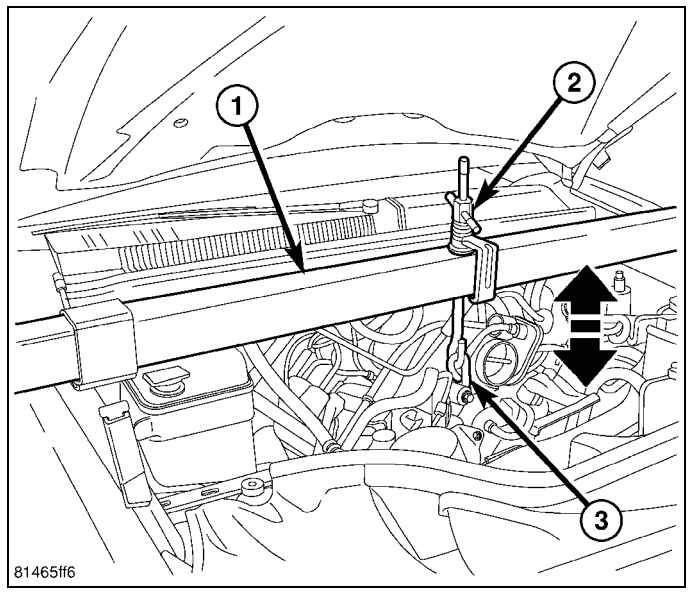

PUMP, Engine Oil

Removal

1. Remove the oil pan (Refer to 09 - Engine/Lubrication/PAN, Oil - Removal).
2. Remove the timing cover (Refer to 09 - Engine/Valve Timing/COVER(S), Engine Timing - Removal).
3. Remove the four bolts (2) and the oil pump (1).

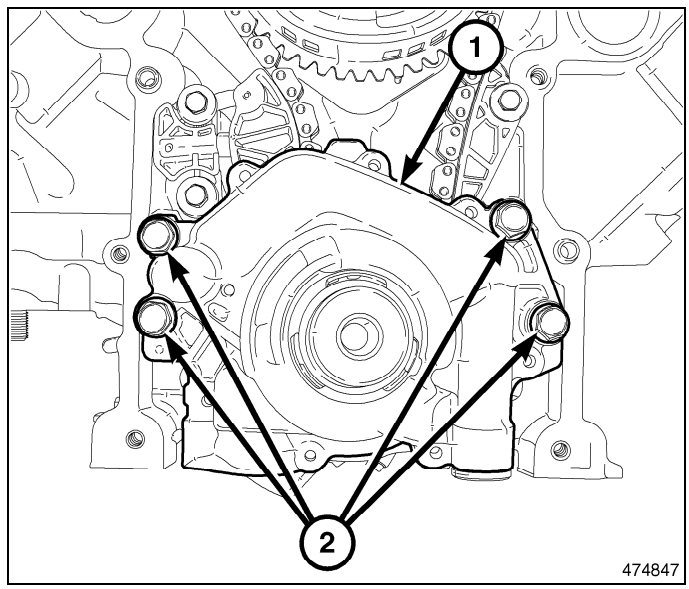

Cleaning

1. Wash all parts in a suitable solvent.

Inspection

CAUTION: The oil pump pressure relief valve and spring should not be removed from the oil pump. If these components are disassembled and or removed from the pump the entire oil pump assembly must be replaced.

1. Remove the pump cover.
2. Clean all parts thoroughly. Mating surface of the oil pump housing should be smooth. If the pump cover is scratched or grooved the oil pump assembly should be replaced.
3. Slide outer rotor into the body of the oil pump. Press the outer rotor to one side of the oil pump body and measure clearance between the outer rotor (2) and the body. If the measurement is 0.235mm (0.009 in.) or more the oil pump assembly must be replaced.

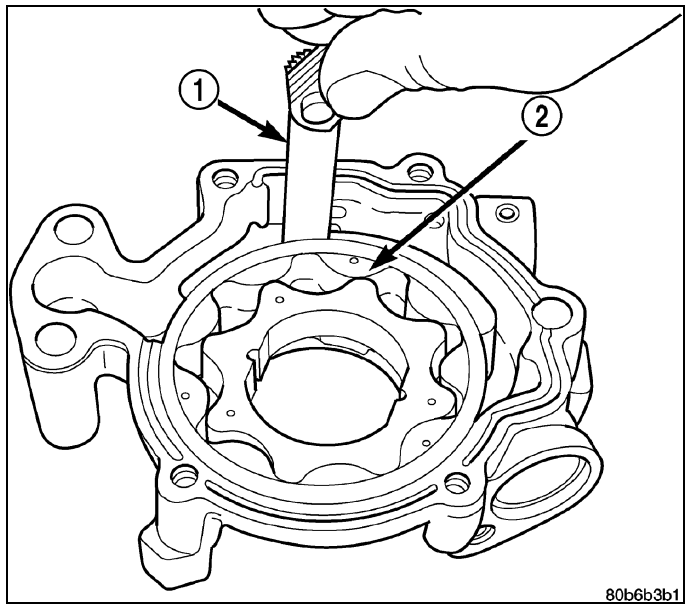

4. Install the inner rotor into the oil pump body. Measure the clearance between the inner (3) and outer rotors (1). If the clearance between the rotors is 0.150 mm (0.006 in.) or more the oil pump assembly must be replaced.

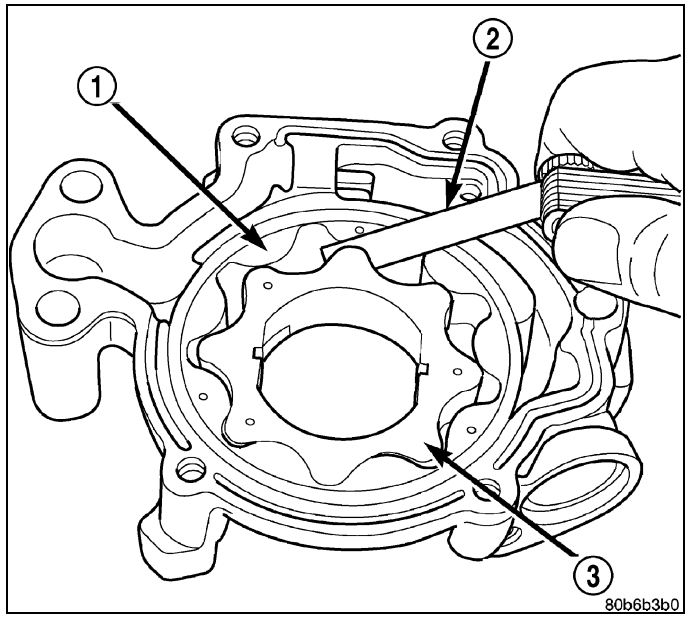

5. Place a straight edge (1) across the body of the oil pump (between the bolt holes), if a feeler gauge (2) of 0.095 mm (0.0038 in.) or greater can be inserted between the straightedge and the rotors, the pump must be replaced.
6. Reinstall the pump cover. Tighten fasteners to 15 N·m (132 in. lbs.).

NOTE: The 5.7 Oil pump is serviced as an assembly. In the event the oil pump is not functioning or out of specification, it must be replaced as an assembly.

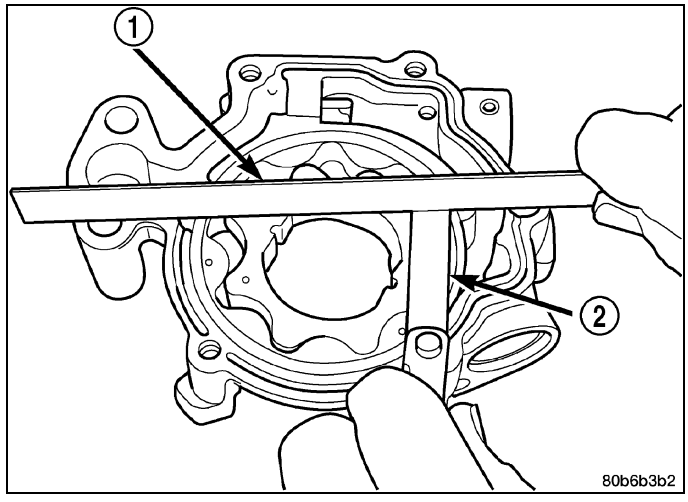

Installation

1. Position the oil pump on the crankshaft and install the oil pump retaining bolts finger tight.
2. Using the sequence shown, tighten the oil pump retaining bolts to 28 N·m (21 ft. lbs.).
3. Install the timing cover (Refer to 09 - Engine/Valve Timing/COVER(S), Engine Timing - Installation).
4. Install the oil pan (Refer to 09 - Engine/Lubrication/PAN, Oil - Installation).

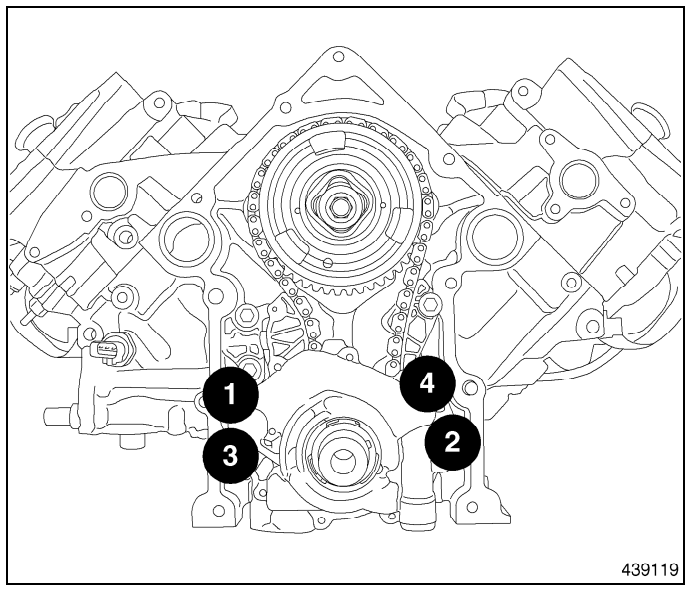

SENSOR, Oil Pressure

Description

The oil pressure sensor uses the following three circuits:

- Signal circuit to the PCM
- Sensor ground circuit from the PCM
- 5 volt reference circuit from the PCM

The oil pressure sensor returns a voltage signal back to the PCM with reference to oil pressure. Ground for the sensor is supplied by the PCM.

The oil pressure sensor is located on the right side of the engine block. The sensor screws into the engines main oil gallery.

Removal

1. Disconnect and isolate the negative battery cable.
2. Disconnect the oil pressure sensor electrical connector (1).

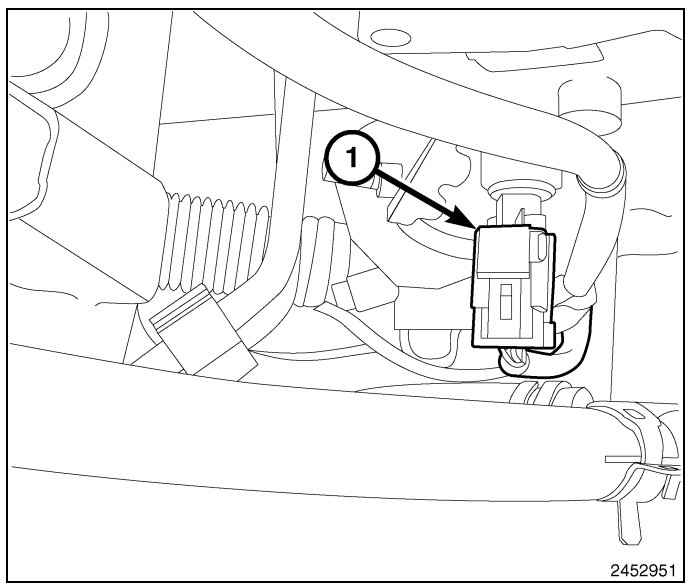

3. Remove the oil pressure sensor (1).

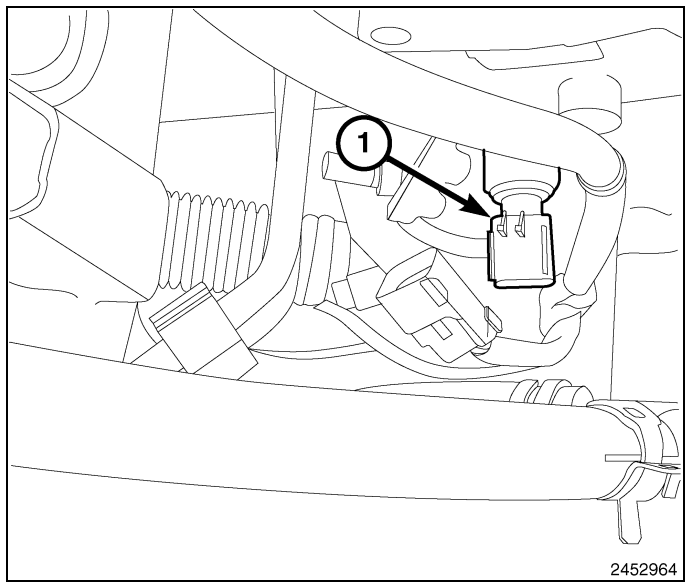

Installation

NOTE: Apply Mopar® Thread Sealant with PTFE to the sensor threads with before installing into the engine block.

1. Install the oil pressure sensor (1).

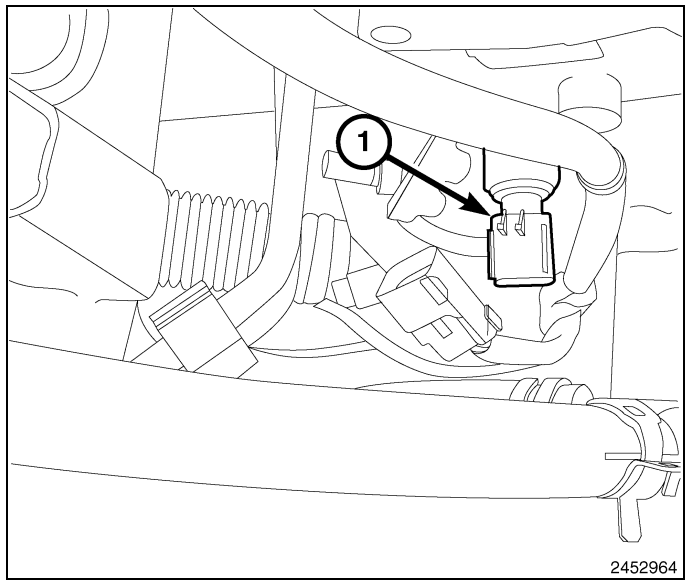

2. Connect the oil pressure sensor electrical connector (1).
3. Connect the negative battery cable.

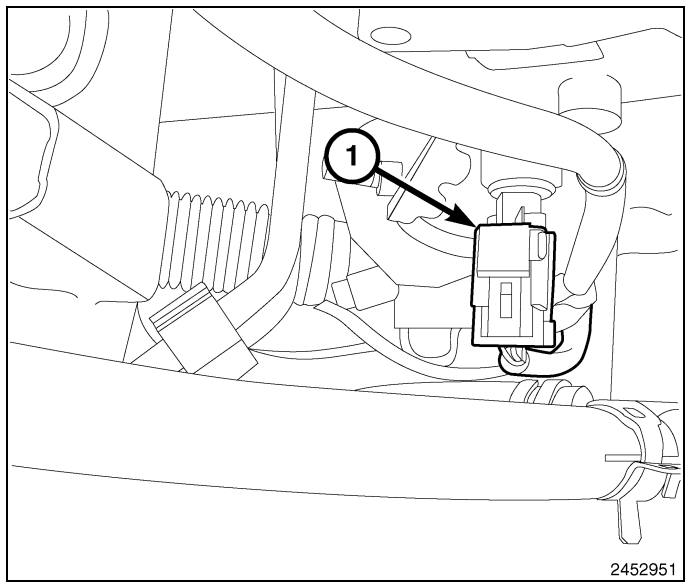

SENSOR, Oil Temperature

Description

The oil temperature sensor uses the following two circuits:

- Signal circuit to the PCM
- Ground circuit from the PCM

The oil temperature sensor is a Negative Thermal Coefficient sensor. The resistance of the sensor changes as oil temperature changes. This results in different output voltages back to the PCM.

The oil temperature sensor is located on the right side of the engine block.

Removal

1. Disconnect and isolate the negative battery cable.
2. Disconnect the oil temperature sensor electrical connector (1).

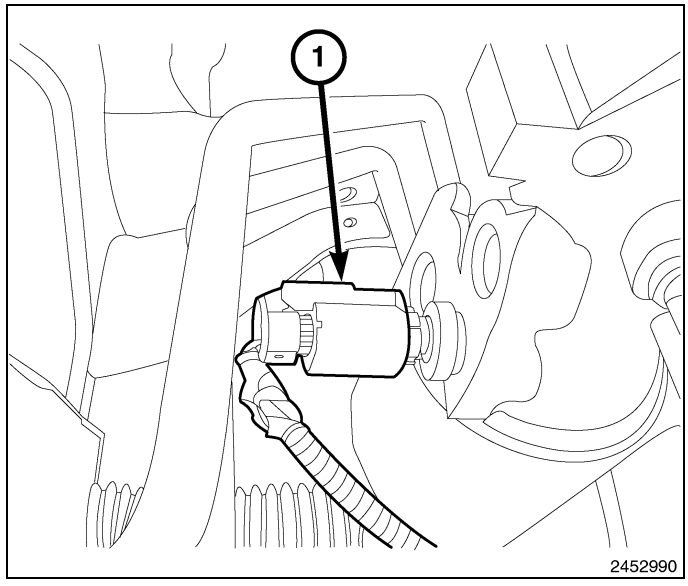

3. Remove the oil temperature sensor (1).

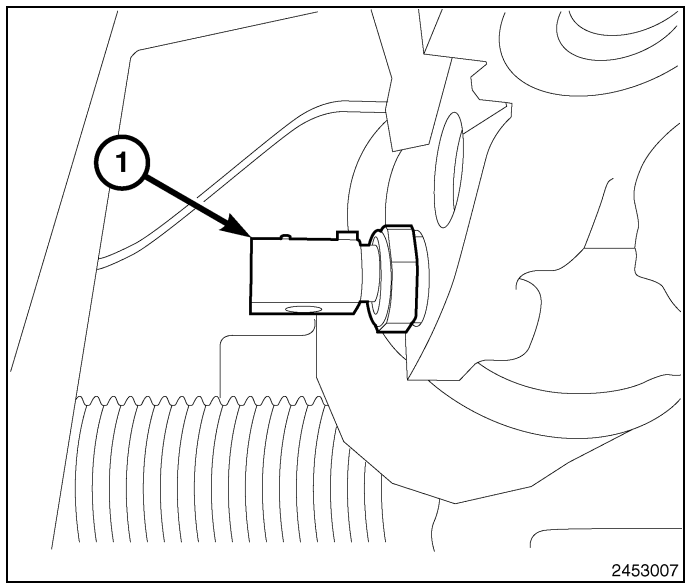

Installation

NOTE: Apply Mopar® Thread Sealant with PTFE to the sensor threads before installing into the engine block.

1. Install the oil temperature sensor (1).

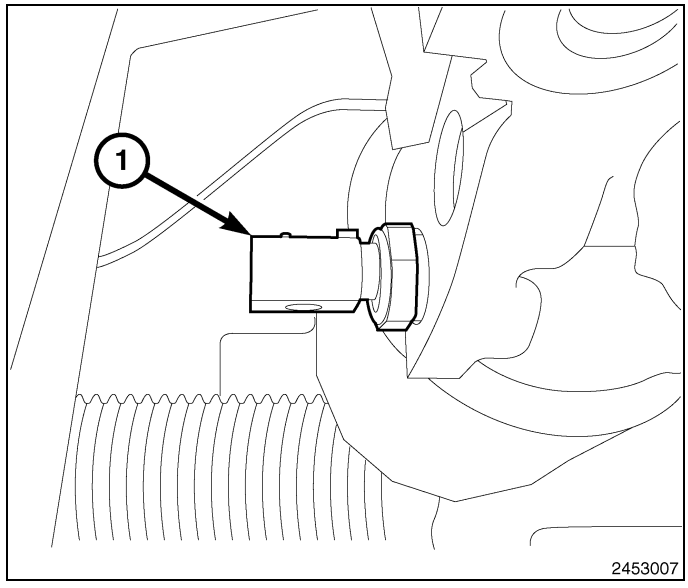

2. Connect the oil temperature sensor electrical connector (1).
3. Connect the negative battery cable.

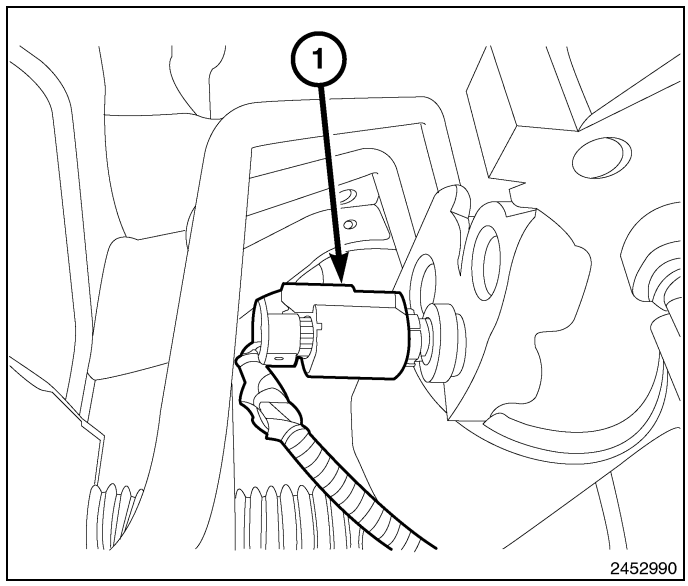

MANIFOLDS

TABLE OF CONTENTS

page

MANIFOLDS
MANIFOLD, EXHAUST
DESCRIPTION 450
OPERATION 450
REMOVAL 450
CLEANING 453
INSPECTION 453
INSTALLATION 453

page

MANIFOLD, INTAKE
DESCRIPTION 457
DIAGNOSIS AND TESTING 457
REMOVAL 457
CLEANING 460
INSPECTION 460
INSTALLATION 461

Manifolds

MANIFOLD, Exhaust

Description

The exhaust manifolds are log style with a patented flow enhancing design to maximize performance. The exhaust manifolds are made of high silicon molybdenum cast iron. A multi-layer stainless steel exhaust manifold gasket is used to improve sealing to the cylinder head. The exhaust manifolds are covered by a three layer laminated heat shield for thermal protection and noise reduction. The heat shields are fastened with a torque prevailing nut that is backed off slightly to allow for the thermal expansion of the exhaust manifold, with the exception of the nut, which also secures the oil dipstick tube bracket. That nut should not be backed off.

Operation

The exhaust manifolds collect the engine exhaust exiting the combustion chambers, then channels the exhaust gases to the exhaust pipes attached to the manifolds.

Removal

1. Disconnect the intake air temperature (IAT) sensor electrical connector (3).
2. Remove the clean air hose (2).
3. Remove the air cleaner housing (4).
4. Remove the engine cover (1).

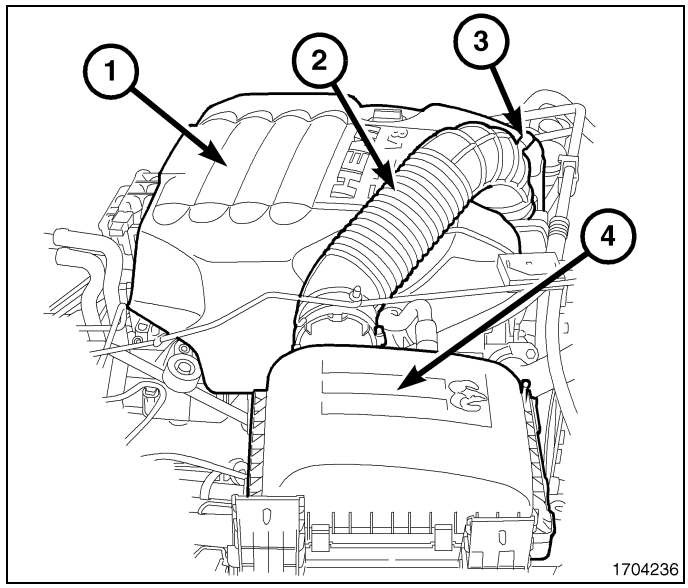

5. Disconnect the negative battery cable (1).

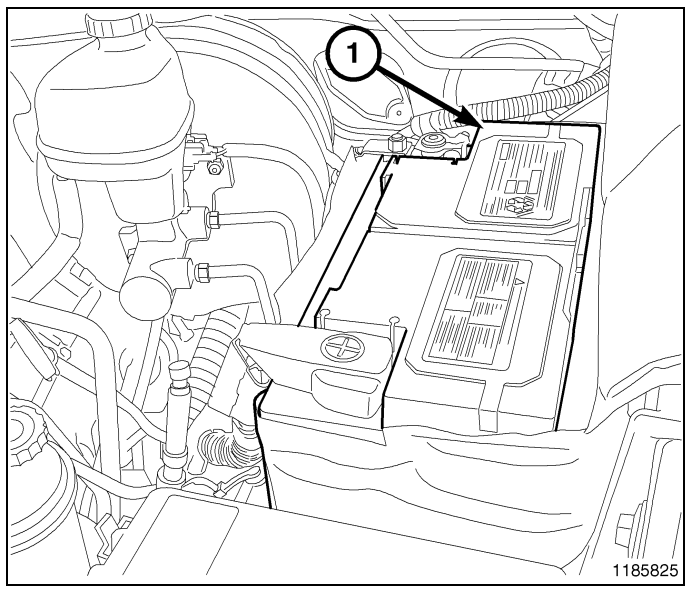

6. Install Engine Support Fixture 8534B (1).

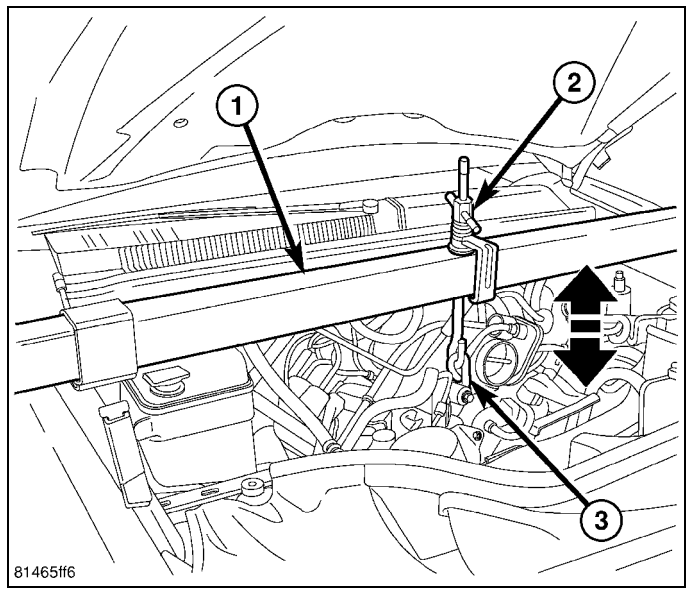

7. Raise and support the vehicle.

CAUTION: When servicing or replacing exhaust system components, disconnect the oxygen sensor connector(s). Allowing the exhaust to hang by the oxygen sensor wires will damage the harness and/or sensor.

8. Disconnect the oxygen sensor electrical connectors (2).
9. Saturate the front exhaust pipe/catalytic converter retaining bolts and nuts with Mopar® Rust Penetrant or equivalent and allow 5 minutes for penetration.
10. Remove the right and left exhaust pipe/catalytic converter assembly (Refer to 11 - Exhaust System/CONVERTER, Catalytic - Removal).

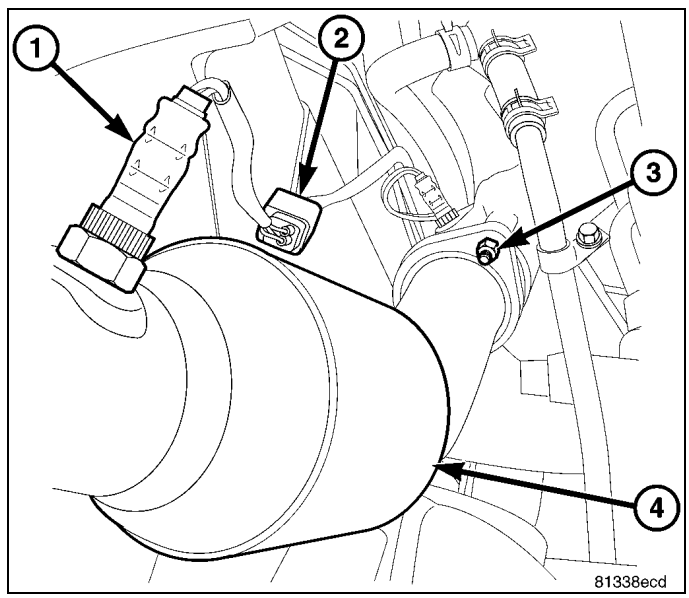

Right side shown, left side similar.

11. Remove the right and left engine mount through bolts (3).
12. Lower the vehicle.

CAUTION: Do not damage engine harness while raising the engine.

13. Using the Engine Support Fixture 8534B, raise the engine enough to gain access to the exhaust manifold retaining bolts.
14. Remove the exhaust manifold heat shield.

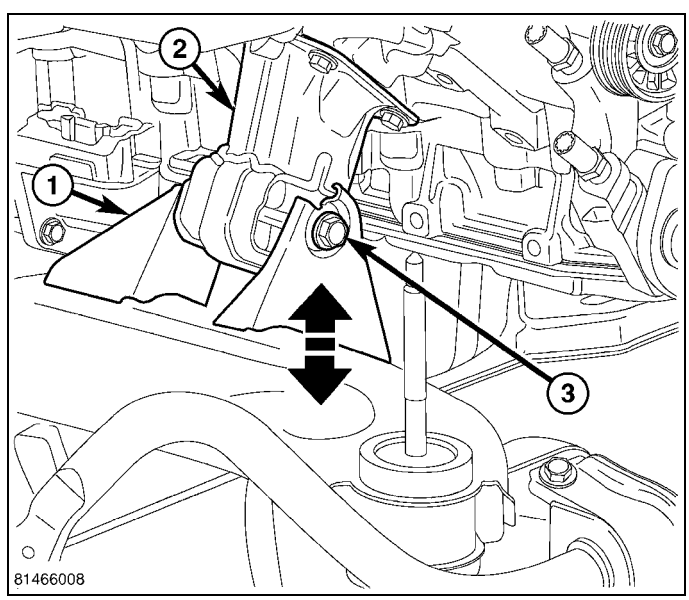

15. **Right Side:** Using the sequence shown, remove the exhaust manifold retaining bolts.

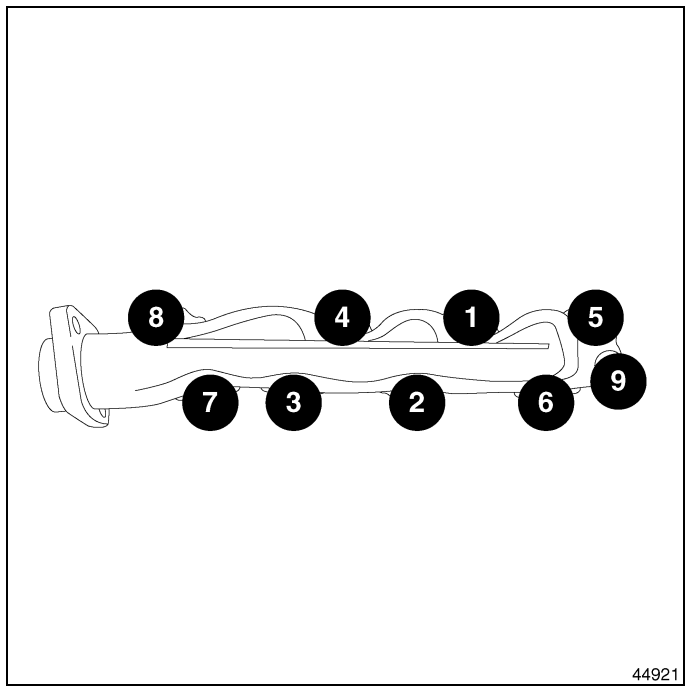

16. **Left Side:** Using the sequence shown, remove the exhaust manifold retaining bolts.

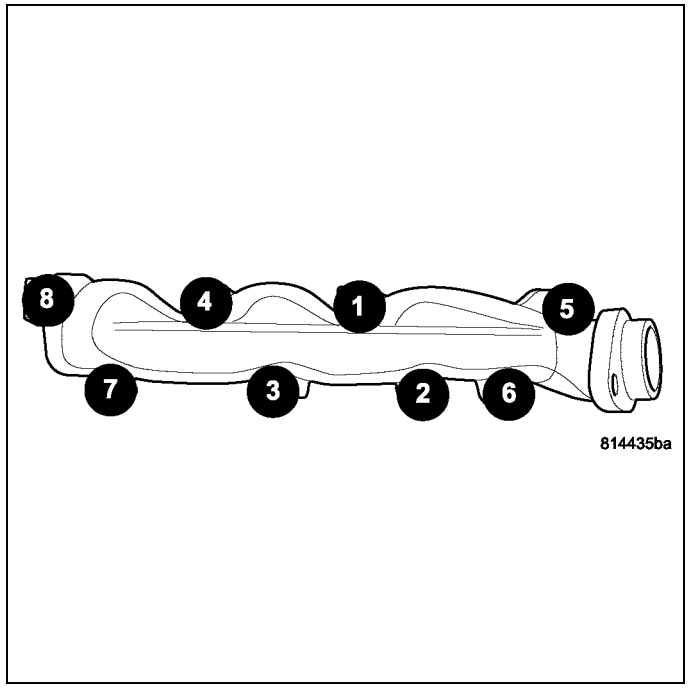

Left side shown, right similar.

17. Remove the exhaust manifold (2) and gasket.
18. Inspect the exhaust manifold for any damage (Refer to 09 - Engine/Manifolds/MANIFOLD, Exhaust - Inspection).
19. Clean the mating surfaces (1, 2).

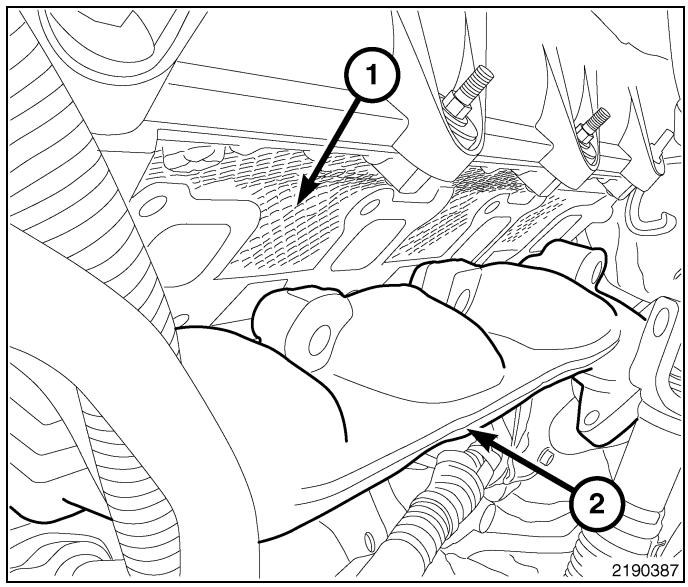

Cleaning

Clean mating surfaces on cylinder head and manifold. Wash with solvent and blow dry with compressed air.

Inspection

Inspect manifold for cracks.

Inspect mating surfaces of manifold for flatness with a straight edge. Gasket surfaces must be flat within 0.2 mm per 300 mm (0.008 inch per foot).

Installation

Left side shown, right similar.

1. Prior to installation, make sure all gasket mating surfaces (1, 2) are clean and free of any debris.
2. Position the exhaust manifold gasket and manifold.

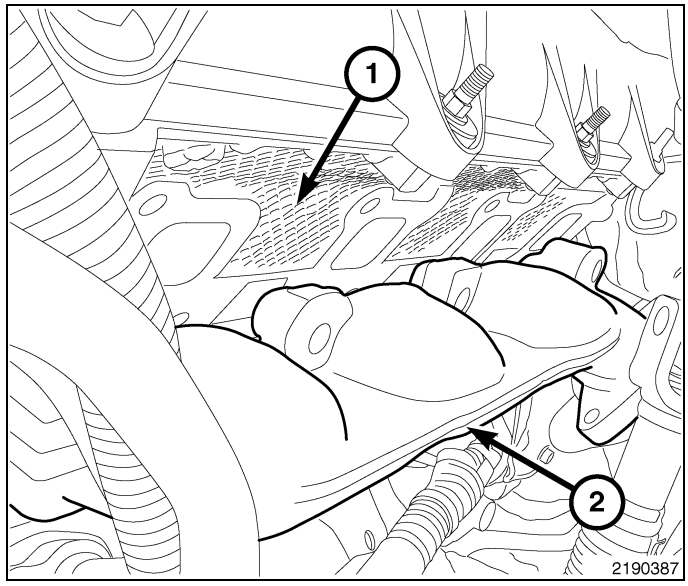

3. **Left Side:** Using the sequence shown, Install the exhaust manifold retaining bolts and tighten to 25 N·m (18 ft. lbs.).

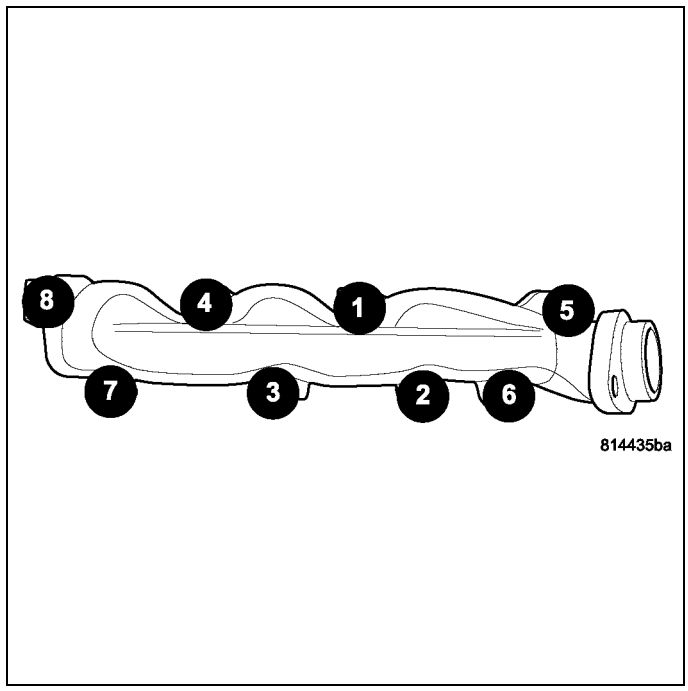

4. **Right Side:** Using the sequence shown, install the exhaust manifold retaining bolts and tighten to 25 N·m (18 ft. lbs.).
5. Install the heat shield and tighten nuts to 8 N·m (70 in. lbs.).

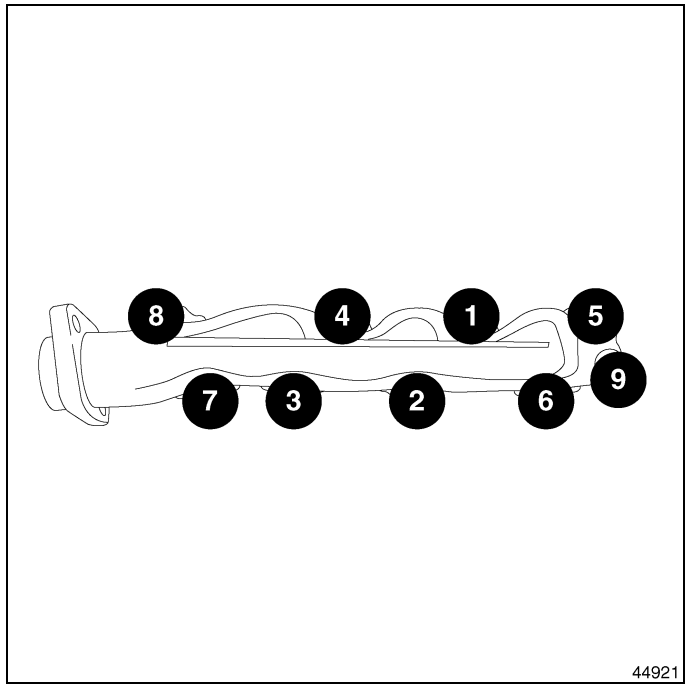

CAUTION: Do not damage engine harness while lowering the engine.

6. Using the Engine Support Fixture 8534B, lower the engine into position.
7. Raise and support the vehicle.

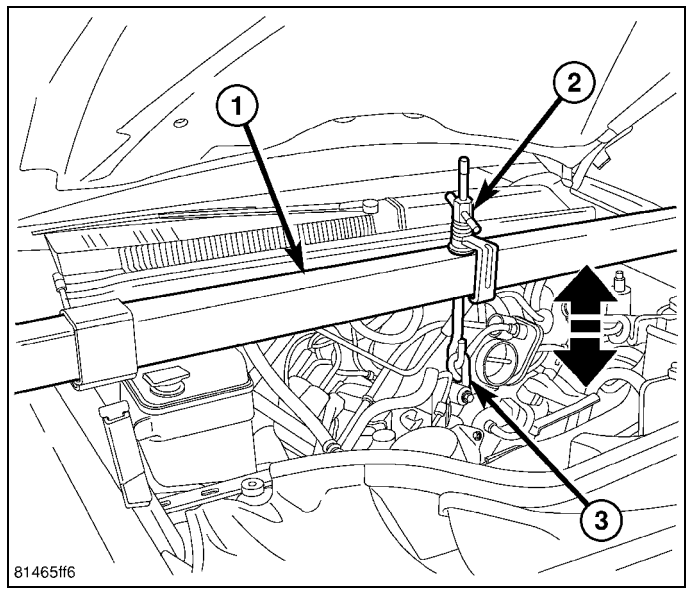

Right side shown, left side similar.

8. Install the right and left engine mount through bolts (3) and tighten to 100 N·m (74 ft. lbs.).

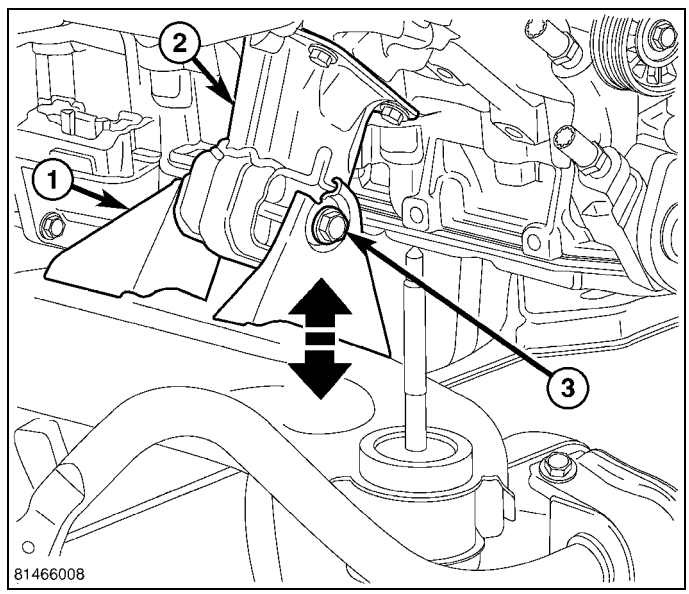

9. Install the right and left exhaust pipe/catalytic converter assembly (Refer to 11 - Exhaust System/CONVERTER, Catalytic - Installation).
10. Connect the oxygen sensor electrical connectors (2).
11. Lower the vehicle.
12. Remove Engine Support Fixture 8534B.

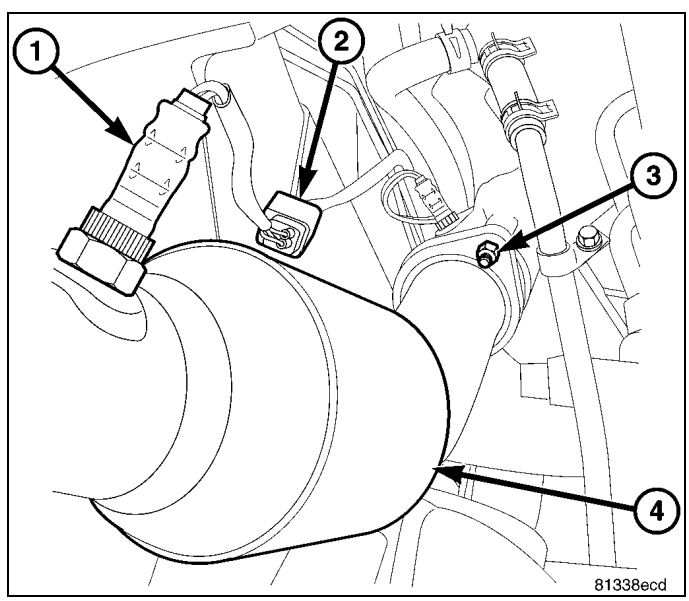

13. Install the air cleaner housing (4).
14. Install the clean air hose (2).
15. Connect the intake air temperature (IAT) sensor electrical connector (3).
16. Install the engine cover (1).

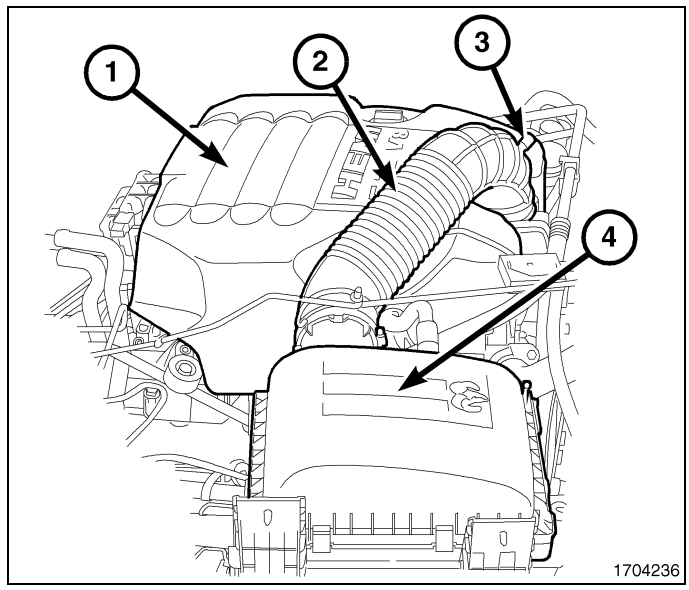

17. Connect the negative battery cable (1).
18. Start the engine and check for leaks.

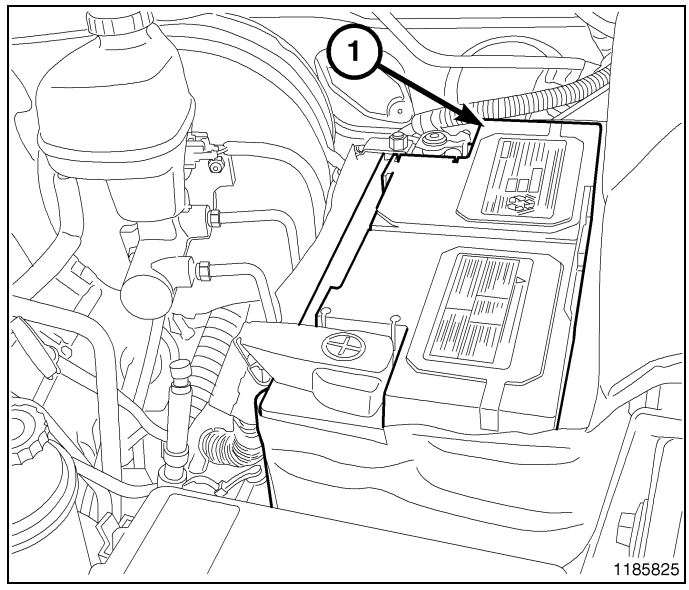

MANIFOLD, Intake

Description

The intake manifold is made of a composite material and features a dual shaft Short Runner Valve (SRV) system to maximize both low end torque and peak power. The SRV is bolted to the rear of the intake manifold and can be service seperately from the manifold. The manifold uses a single plane sealing system with individual port seals and a separate PCV port seal to prevent leaks.

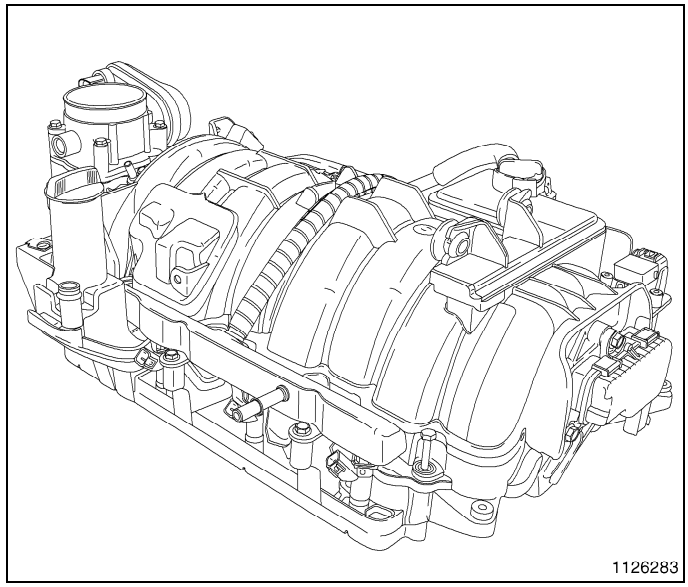

Diagnosis and Testing

An intake manifold air leak is characterized by lower than normal manifold vacuum. Also, one or more cylinders may not be functioning.

WARNING: Use extreme caution when the engine is operating. Do not stand in a direct line with the fan. Do not put your hands near the pulleys, belts or the fan. Do not wear loose clothing. Failure to follow these instructions may result in possible serious or fatal injury.

1. Start the engine.
2. Spray a small stream of water at the suspected leak area.
3. If a change in RPM is observed the area of the suspected leak has been found.
4. Repair as required.

Removal

1. Disconnect the intake air temperature (IAT) sensor electrical connector (3).
2. Remove the clean air tube (2) from the air cleaner housing (4) and the throttle body.
3. Disconnect the makeup air hose.
4. Remove the air cleaner housing (Refer to 09 - Engine/ Air Intake System/BODY, Air Cleaner - Removal)

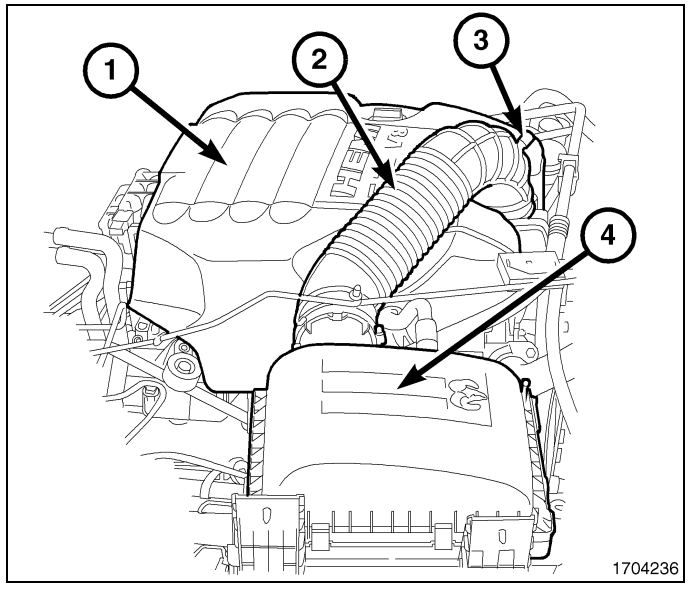

5. Lift up the front of the engine cover (1) and separate the engine cover front grommets (2) from the ball studs on the intake manifold.

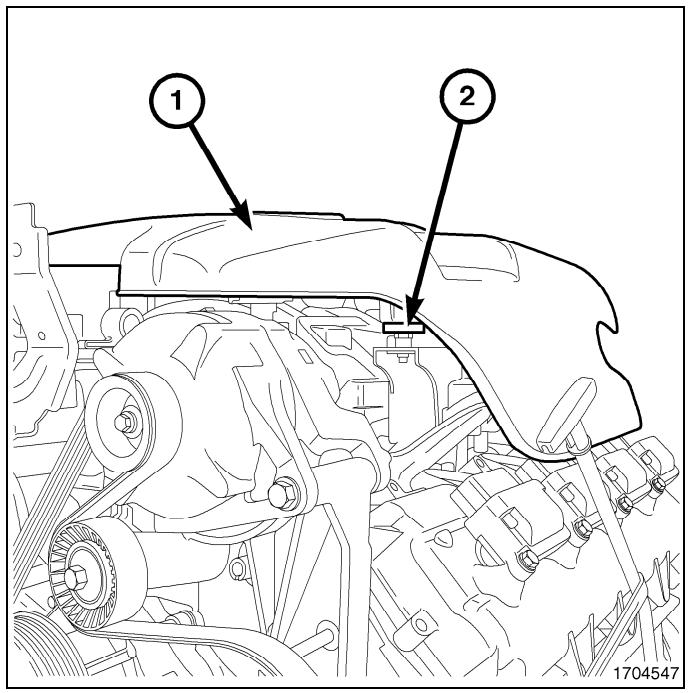

6. Slightly raise the front of the engine cover and slide forward to remove the rear engine cover pegs (2) from the grommets (1) on the rear of the intake manifold.
7. Perform the fuel pressure release procedure (Refer to 14 - Fuel System/Fuel Delivery - Standard Procedure)

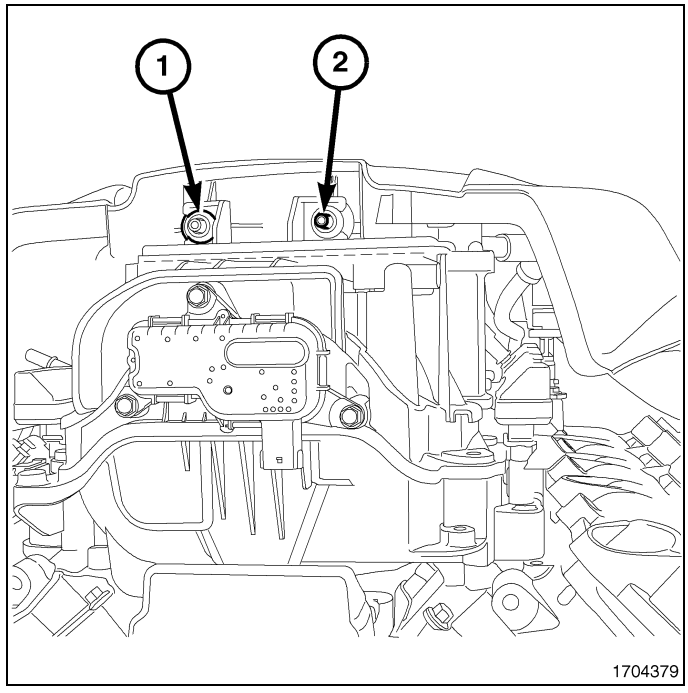

8. Disconnect the negative battery cable (1).

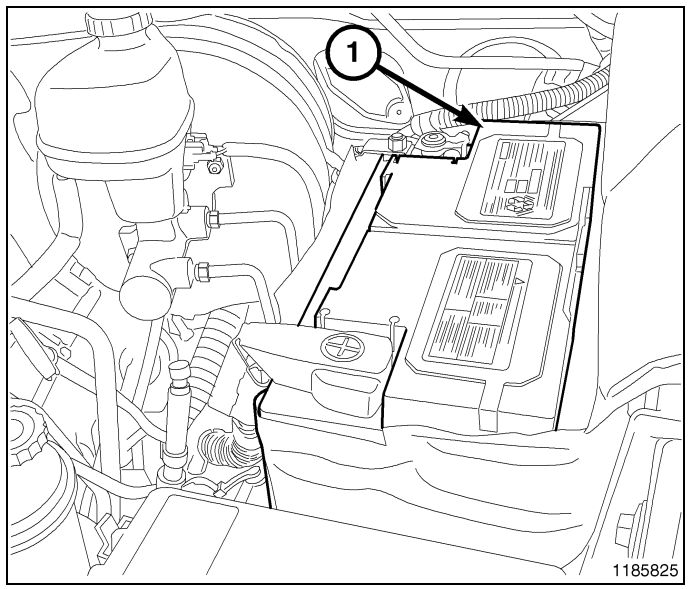

NOTE: Excessive fuel spillage onto the gaskets can cause gaskets to expand and dislodge from the gasket groove.

9. Disconnect the fuel supply line quick connect fitting at the fuel rail (1) and plug the fuel supply line with a shipping cap to prevent spillage (Refer to 14 - Fuel System/Fuel Delivery/FITTING, Quick Connect - Standard Procedure)

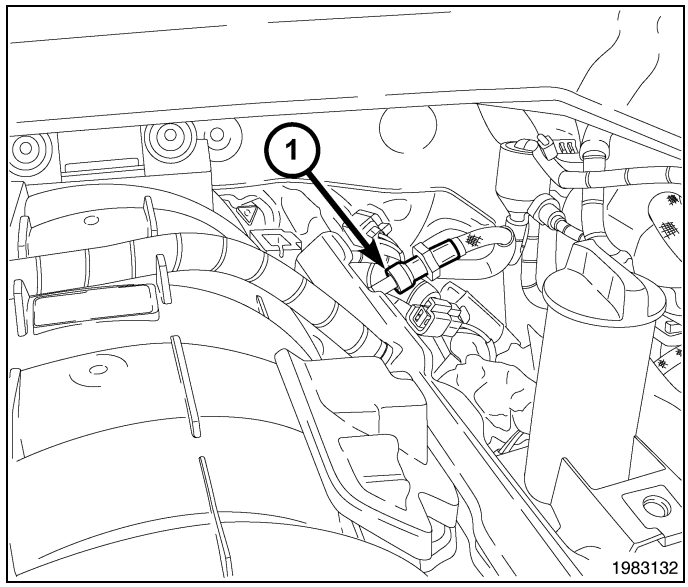

NOTE: The factory fuel injection electrical harness is numerically tagged (INJ 1, INJ 2, etc.) for injector position identification. If the harness was not tagged, note the electrical connector's location during removal.

10. Disconnect the electrical connectors to all fuel injectors and position the fuel injector electrical harness aside.
11. Remove the main engine electrical harness support strap at the rear of the intake manifold and position harness aside.
12. Remove the A/C line P-Clip retaining bolt (1) from the throttle body bracket and remove the P-Clip (2).
13. Secure the A/C line out of the way.
14. Remove the generator (Refer to 08 - Electrical/8F - Engine Systems/Charging/GENERATOR - Removal)
15. Remove the throttle body bracket retaining bolt from the intake manifold and remove the bracket.
16. Disconnect the electrical connector at the throttle body and reposition the harness.
17. Disconnect the brake booster vacuum hose, and the vacuum lines.

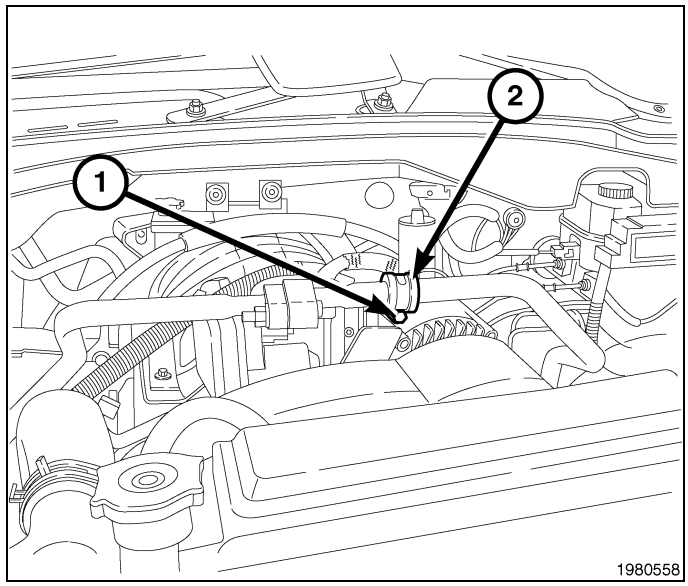

18. Using the sequence shown, remove the intake manifold retaining bolts.

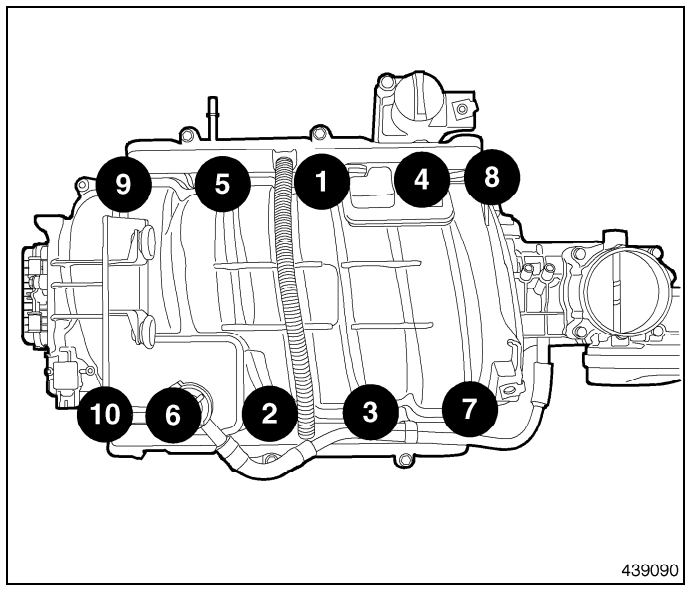

19. Slide the intake manifold forward and disconnect both the manifold air pressure (MAP) sensor (1) and the short runner valve (SRV) connectors located at the rear of the intake manifold.
20. Remove the intake manifold and throttle body as an assembly.

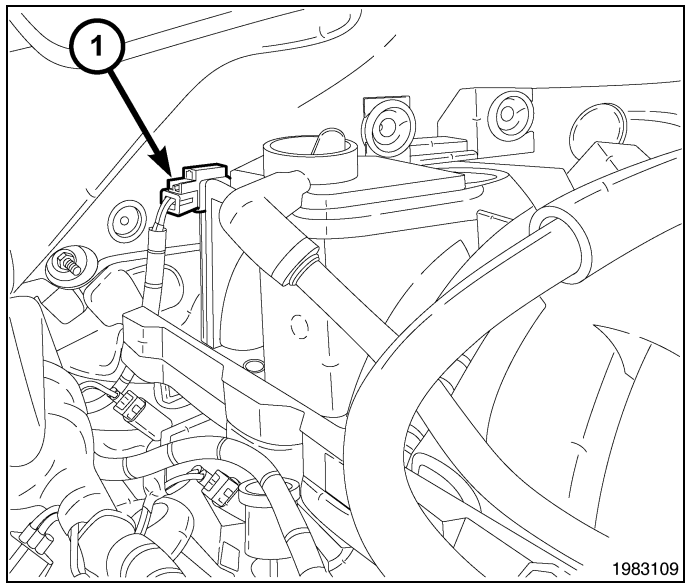

Cleaning

NOTE: There is NO approved repair procedure for the intake manifold. If severe damage is found during inspection, the intake manifold must be replaced.

Before installing the intake manifold thoroughly clean the mating surfaces. Use a suitable cleaning solvent, then air dry.

Inspection

1. Inspect the intake manifold sealing surface for cracks, nicks and distortion.
2. Inspect the intake manifold vacuum hose fittings for looseness or blockage.

Installation

NOTE: If reinstalling the original manifold apply Mopar® Lock & Seal Adhesive to the intake manifold bolts. Not required when installing a new manifold.

1. Apply Mopar® Lock & Seal Adhesive to the intake manifold bolts.
2. Install the intake manifold seals (3) and positive crankcase ventilation (PCV) seals (1).

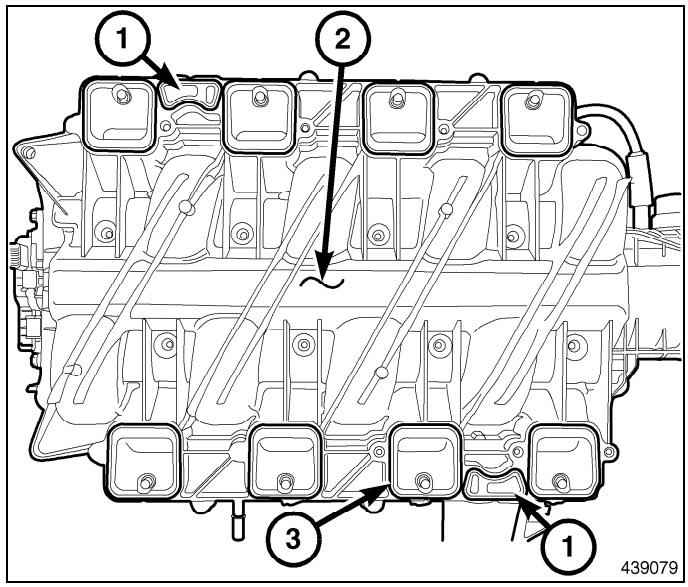

3. Connect both the manifold air pressure (MAP) sensor (1) and the short runner valve (SRV) electrical connectors located at the rear of the intake manifold as you position the intake manifold in place.

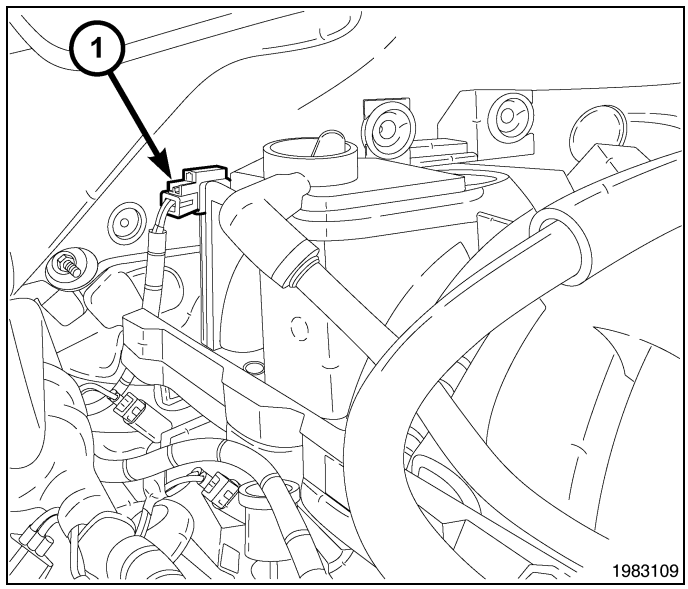

4. Using the sequence shown, tighten the intake manifold bolts to 12 N·m (9 ft. lbs.).
5. Position the main engine electrical harness at the rear of the intake manifold and install the support strap.

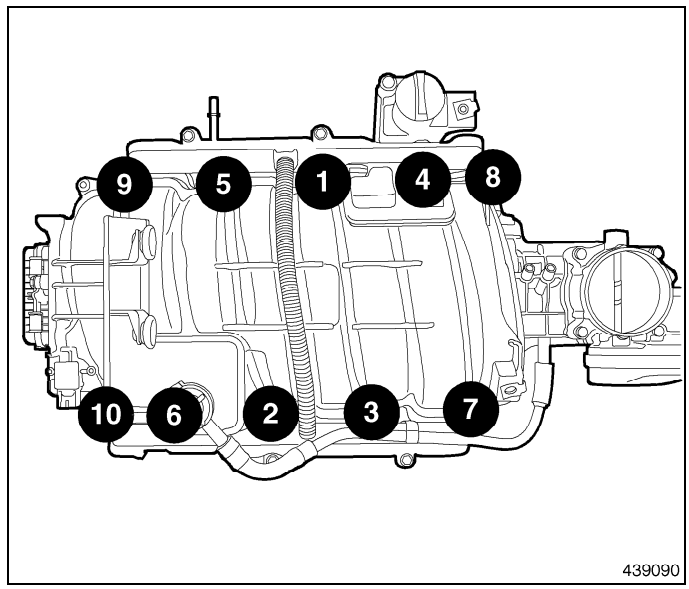

6. Connect the fuel supply line quick connect fitting at the fuel rail (1).

NOTE: The factory fuel injection electrical harness is numerically tagged (INJ 1, INJ 2, etc.) for injector position identification. If the harness was not tagged, use the noted the electrical connector's location during removal.

7. Position the fuel injector electrical harness and connect the electrical connectors to all fuel injectors.
8. Connect the brake booster vacuum hose, and the vacuum lines.
9. Install the throttle body bracket and securely tighten the retaining bolt.
10. Install the generator (Refer to 08 - Electrical/8F - Engine Systems/Charging/GENERATOR - Installation)

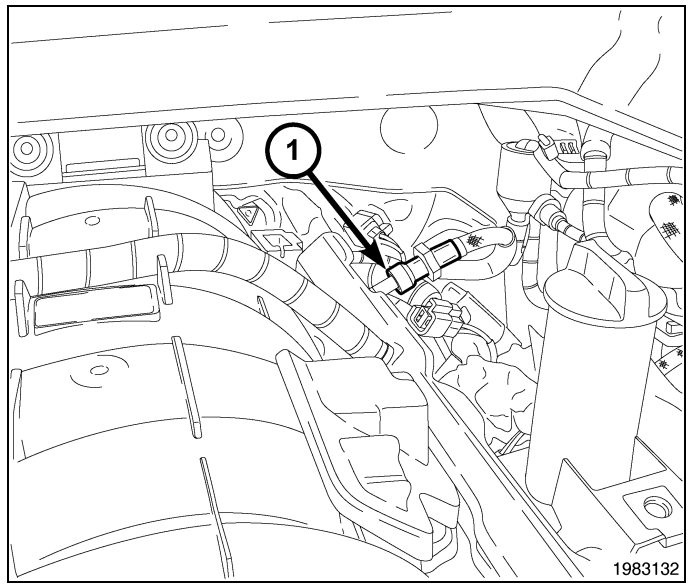

11. Position the A/C lines, install the A/C line P-Clip (2) and tighten P-Clip retaining bolt (1) to 4 N·m (35 in. lbs.).
12. Position the wiring harness and connect the electrical connector at the throttle body.

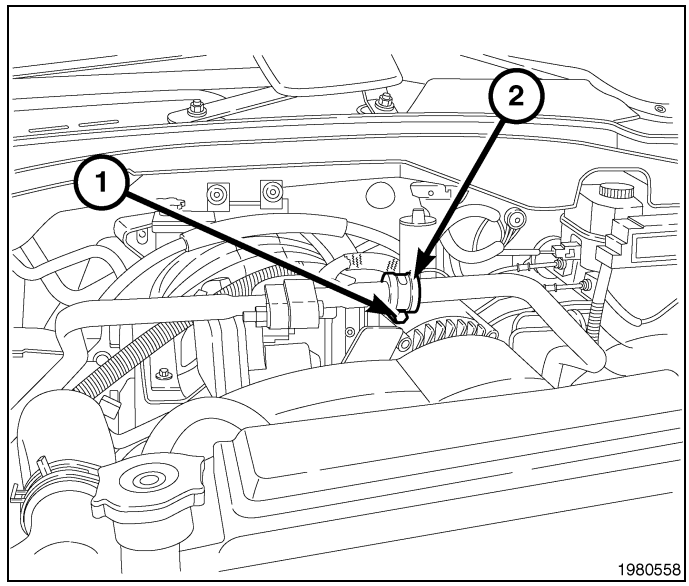

13. Slightly tilt the rear of the engine cover and slide the rear engine cover pegs (2) into the grommets (1) on the rear of the intake manifold until the cover stops.

NOTE: Check to make sure the engine cover is installed properly by reaching behind the cover to verify that the pegs (2) are located in the rear grommets (1).

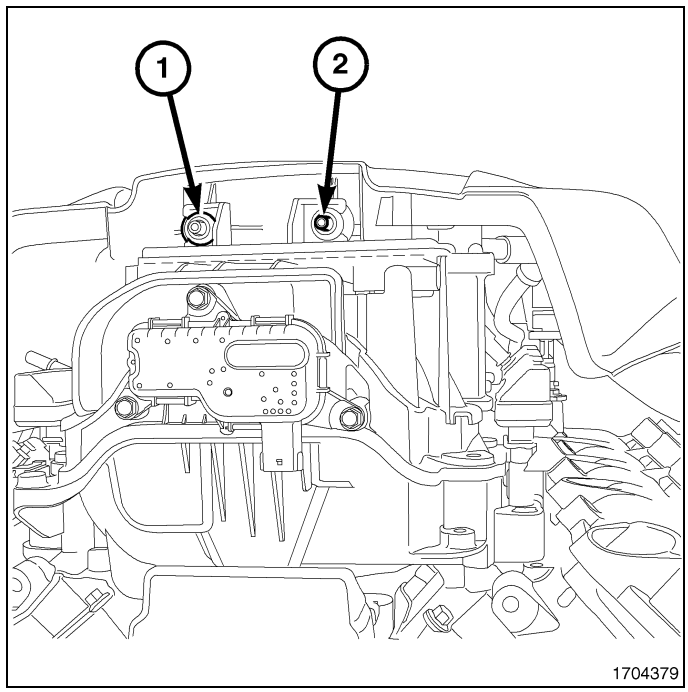

NOTE: While installing the engine cover the front ball studs will make a popping or suction sound as the ball studs are inserted into the front grommets.

14. Lower the front of the engine cover (1) and line up the front grommets (2) with the ball studs on the front of the intake manifold and with a downward motion push the engine cover front grommets onto the ball studs.

NOTE: Lightly lift the front of the engine cover to insure the front ball studs are seated into the front grommets correctly.

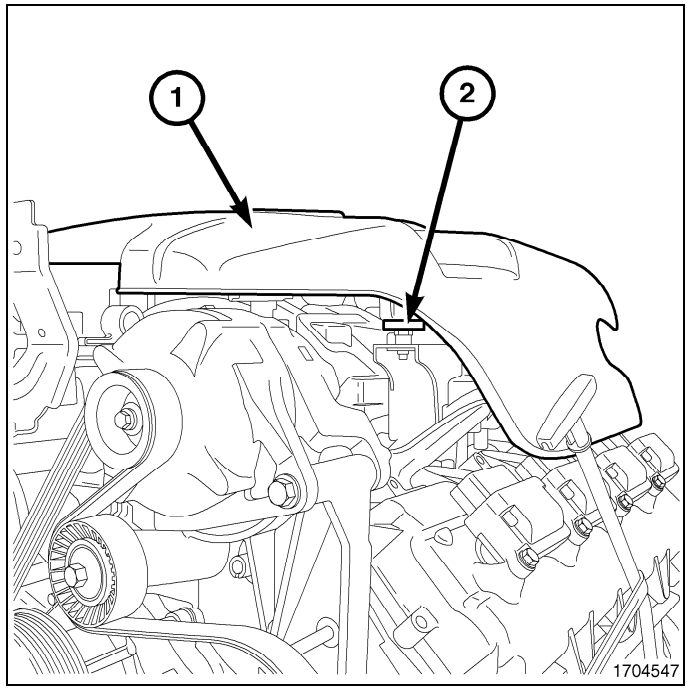

15. Install the air cleaner assembly (4)
16. Connect the clean air tube (2) to the air cleaner assembly (4) and the throttle body.
17. Connect the makeup air hose.
18. Connect the IAT sensor electrical connector (3).

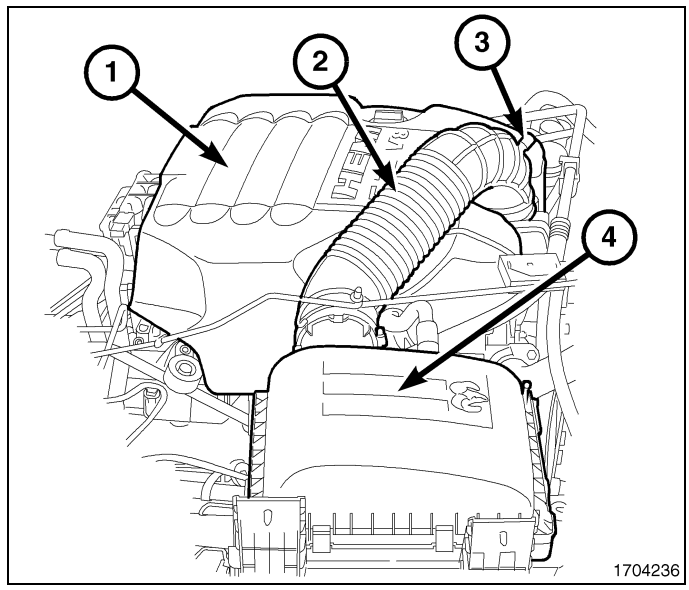

19. Connect the negative battery cable (1).

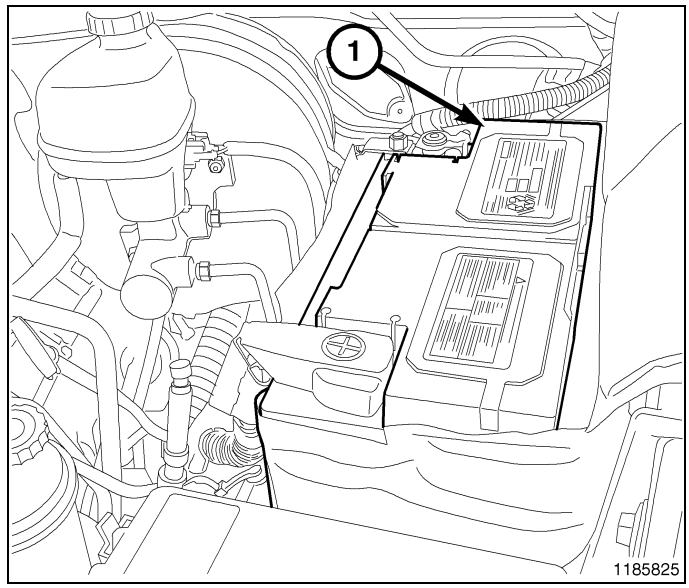

VALVE TIMING

TABLE OF CONTENTS

page

VALVE TIMING
CHAIN AND SPROCKETS, TIMING
REMOVAL 466
INSTALLATION 469
COVER(S), ENGINE TIMING
REMOVAL 475
INSTALLATION 476

page

TENSIONER, ENGINE TIMING
DESCRIPTION 477
OPERATION 478

Valve Timing

CHAIN and SPROCKETS, Timing

Removal

1. Disconnect the negative battery cable.
2. Drain the cooling system (Refer to 07 - Cooling - Standard Procedure)

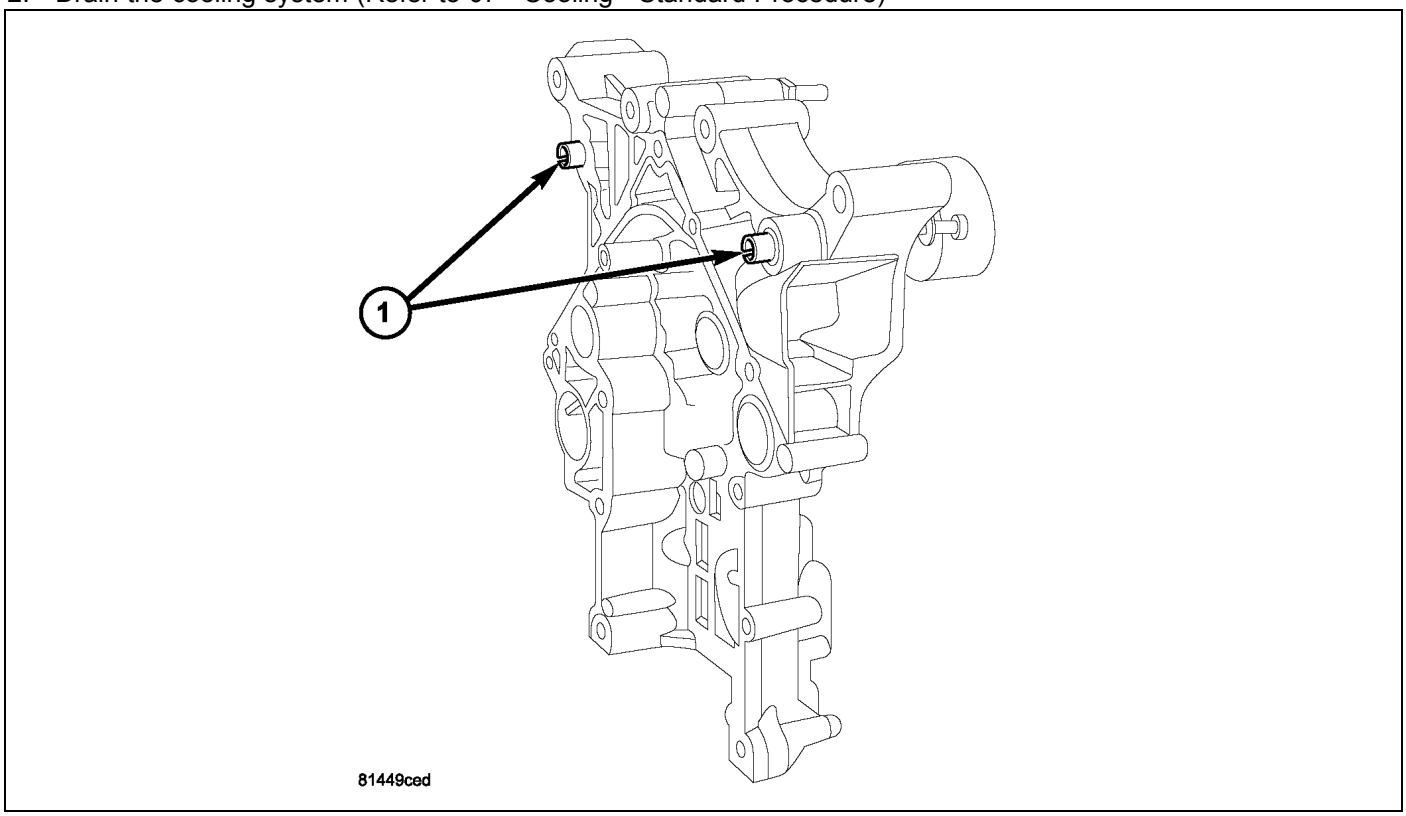

NOTE: It is not necessary to remove water pump for timing chain cover removal.

3. Remove the timing chain cover (Refer to 09 - Engine/Valve Timing/COVER(S), Engine Timing - Removal)
4. Verify the slide bushings (1) remain installed in the timing chain cover during removal.
5. Remove the oil pump retaining bolts (2) and remove the oil pump (1).

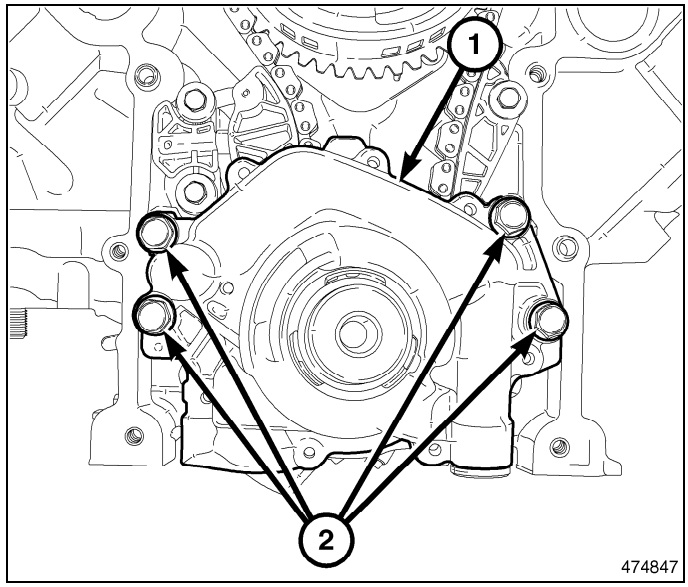

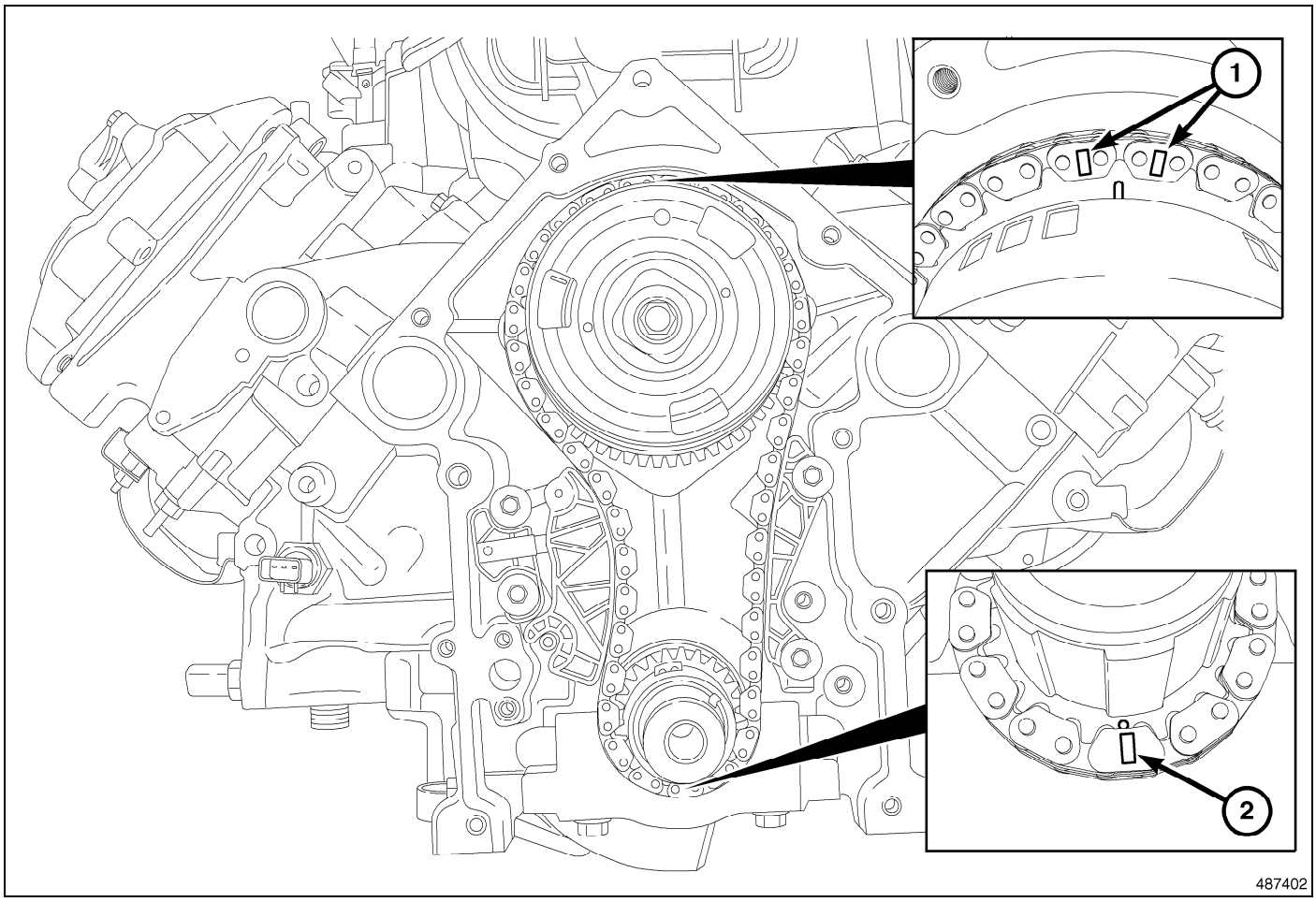

6. Install the vibration damper bolt finger tight. Using a suitable socket and breaker bar, rotate the crankshaft to align the timing marks with the timing chain sprockets (1, 2).
7. Retract the chain tensioner arm (1) until the hole in the arm lines up with the hole in the bracket.

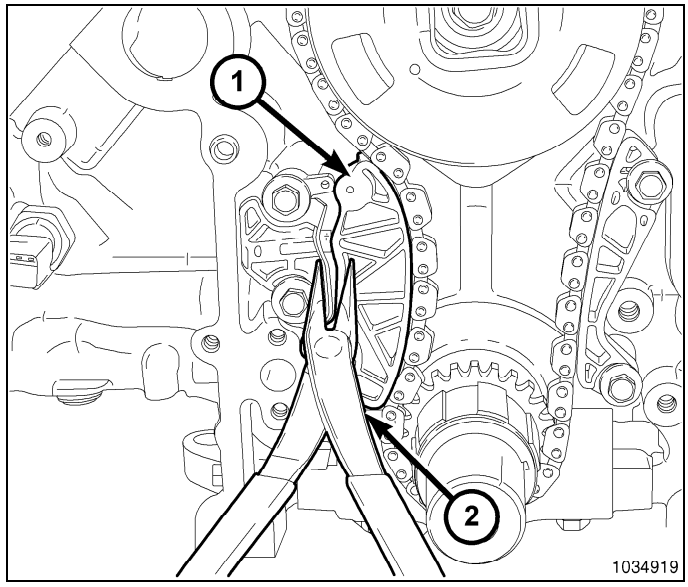

8. Install the Tensioner Pin 8514 (1) into the chain tensioner holes.

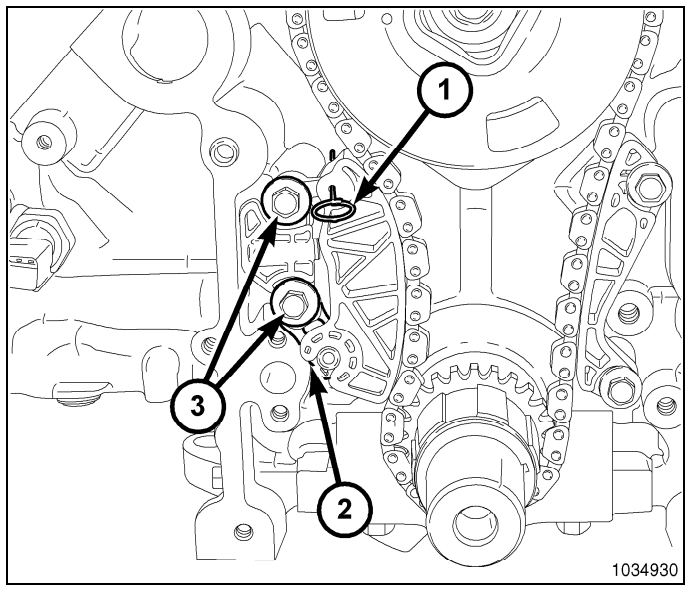

CAUTION: Never attempt to disassemble the camshaft phaser, severe engine damage could result.

9. Remove the camshaft phaser retaining bolt (1) and remove the timing chain with the camshaft phaser and crankshaft sprocket.

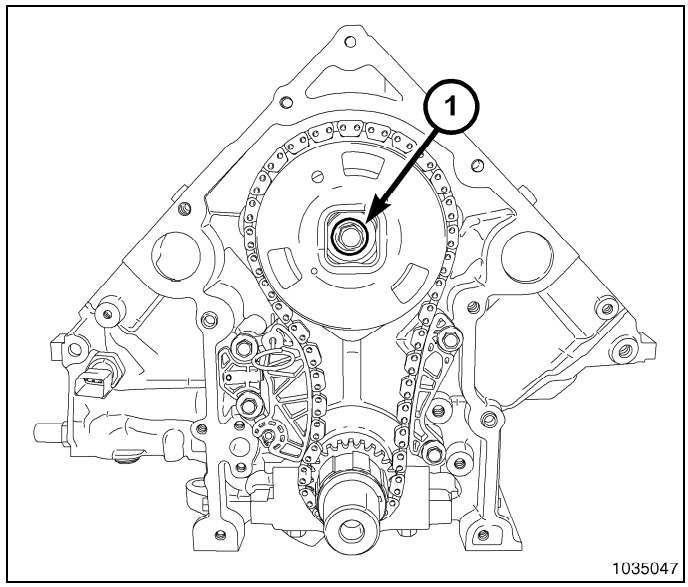

NOTE: Inspect the timing chain tensioner and timing chain guide shoes for wear and replace as necessary.

10. If the timing chain tensioner is being replaced, remove the retaining bolts (3) and remove the timing chain tensioner (2).

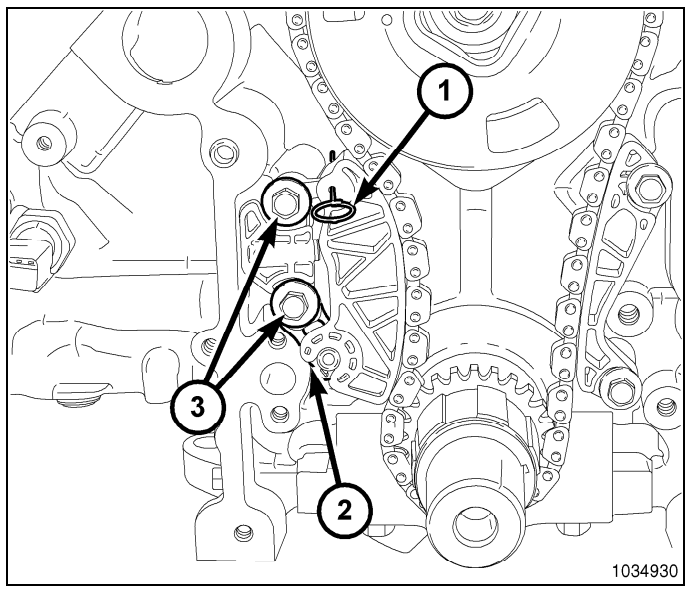

11. If the timing chain guide (1) is being replaced, remove the retaining bolts (2) and remove the timing chain guide.

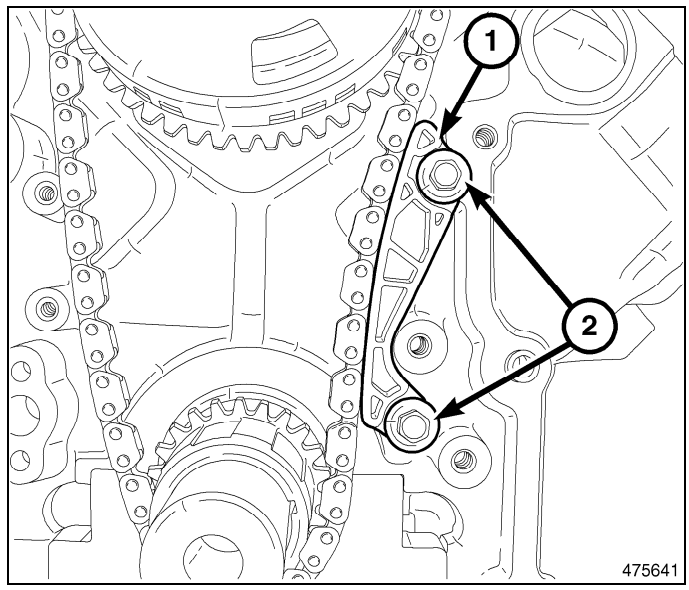

Installation

1. Install the crankshaft sprocket (1) and position halfway onto the crankshaft.

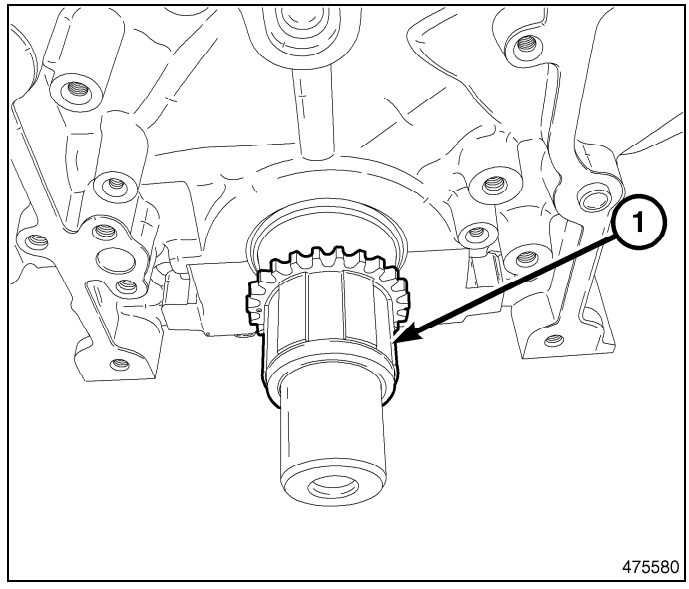

2. While holding the camshaft phaser in hand, position the timing chain on the camshaft phaser and align the timing marks as shown.

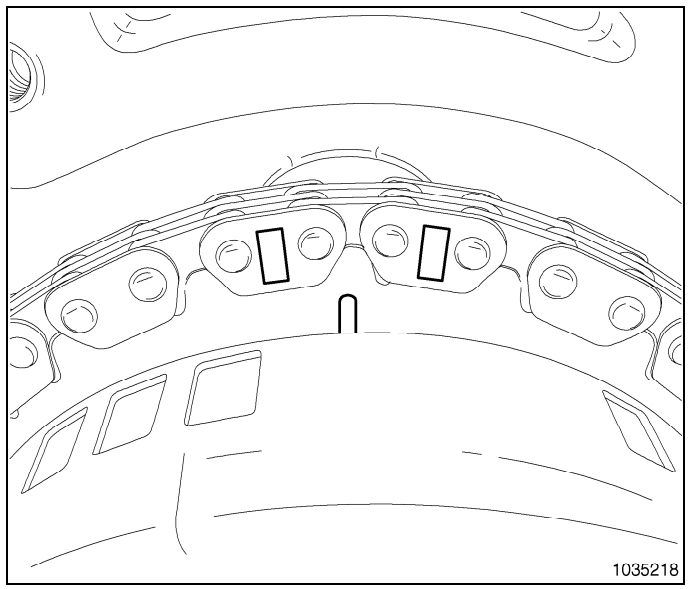

3. While holding the camshaft phaser and timing chain in hand, position the timing chain on the crankshaft sprocket and align the timing mark as shown.

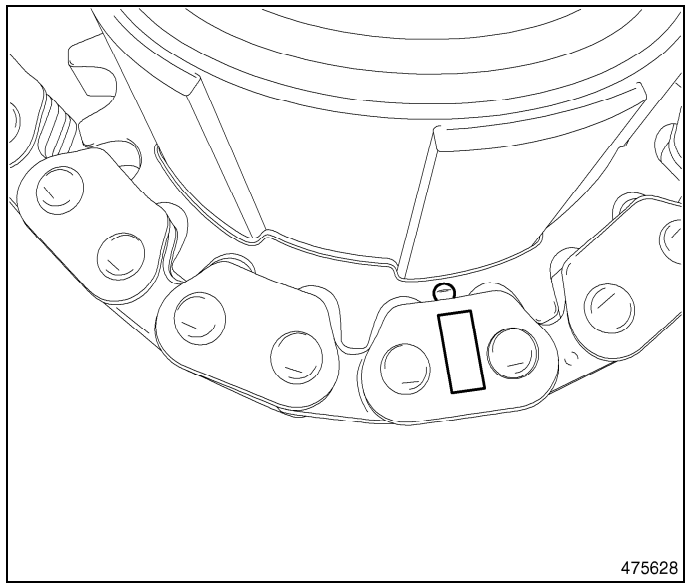

4. Align the slot in the camshaft phaser with the dowel on the camshaft and position the camshaft phaser on the camshaft while sliding the crankshaft sprocket into position.
5. Install the camshaft phaser retaining bolt (1) finger tight.

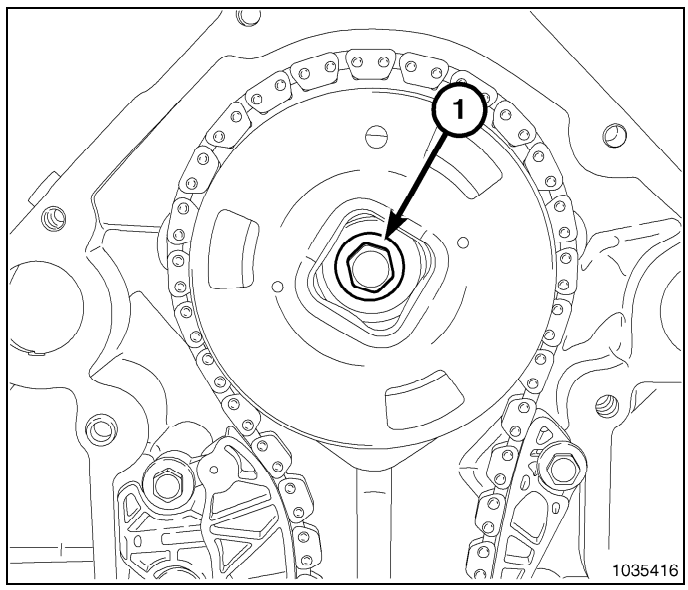

6. If removed, install the timing chain guide (1) and tighten the bolts (2) to 11 N·m (8 ft. lbs.).

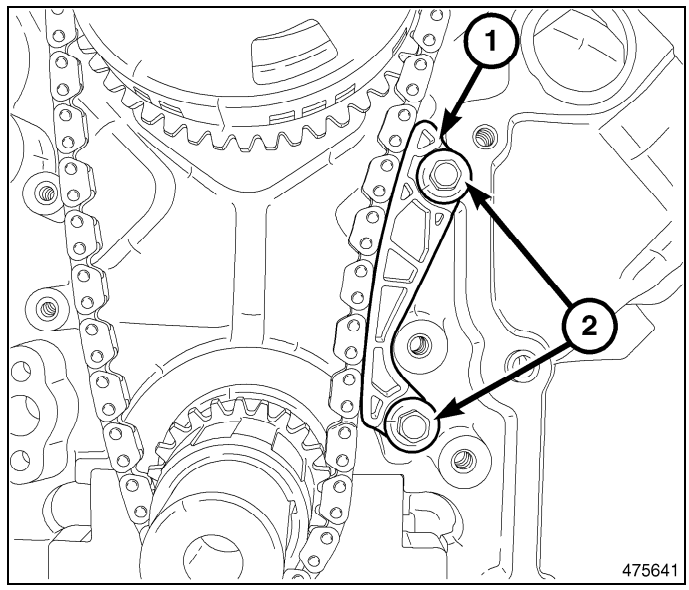

7. If removed, install the timing chain tensioner (2) and tighten the bolts (3) to 11 N·m (8 ft. lbs.).
8. Remove the tensioner pin 8514 (1).

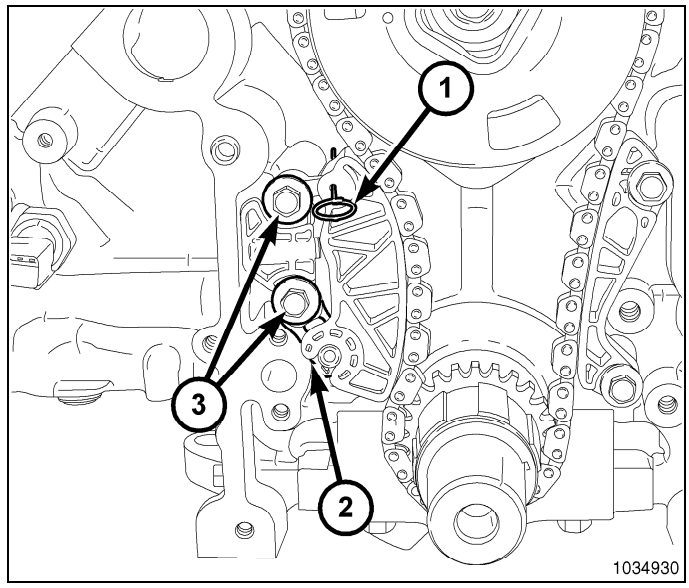

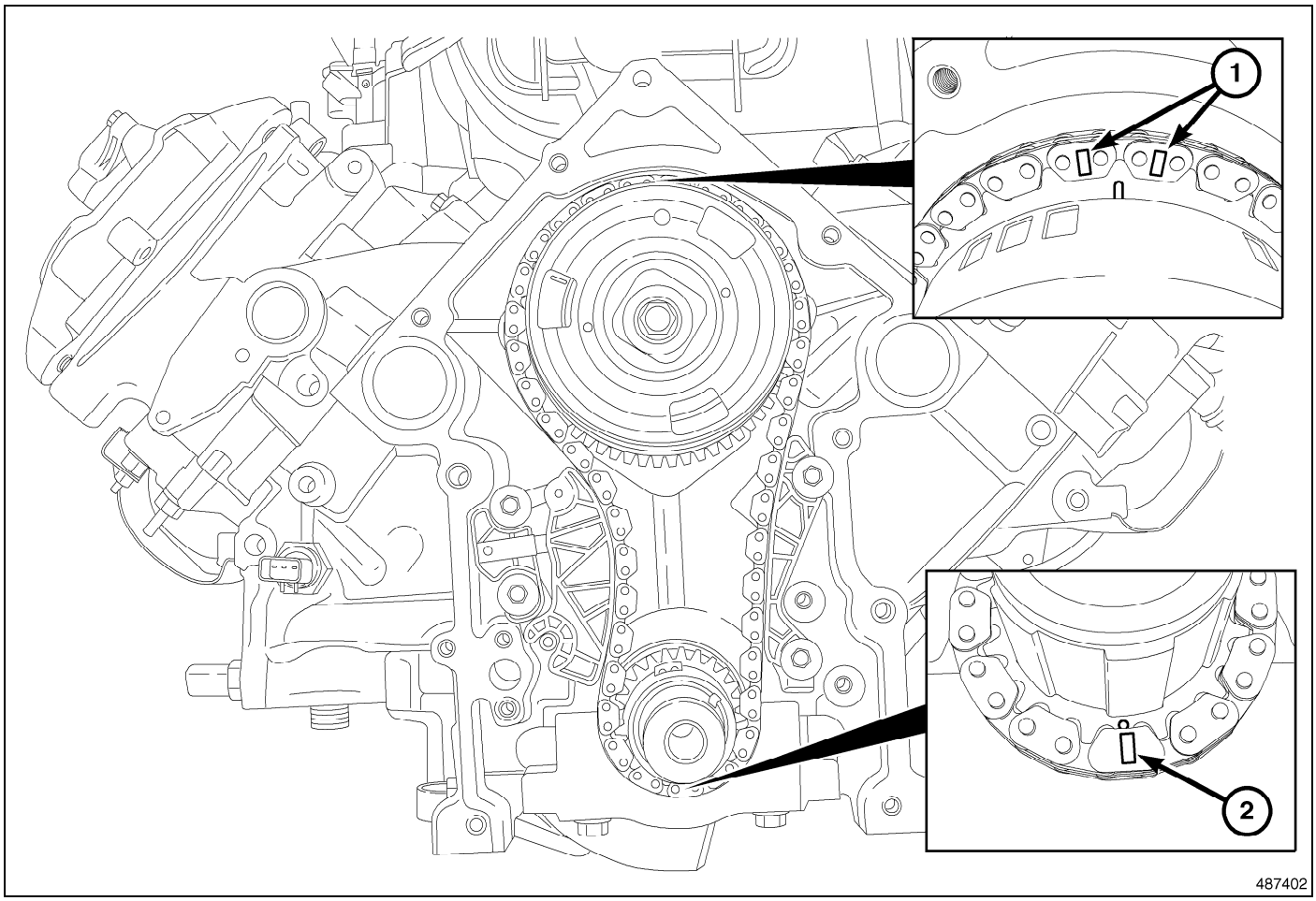

9. Rotate the crankshaft two revolutions and verify the alignment of the timing marks (1, 2). If the timing marks do not line up, remove the camshaft sprocket and realign.
10. Tighten the camshaft phaser bolt (1) to 85 N·m (63 ft. lbs.).

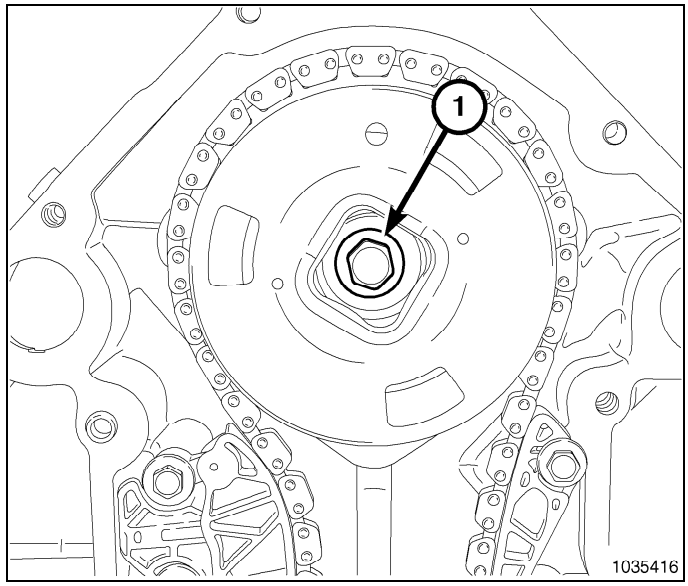

11. Position the oil pump (1) onto the crankshaft and install the oil pump retaining bolts (2) finger tight.

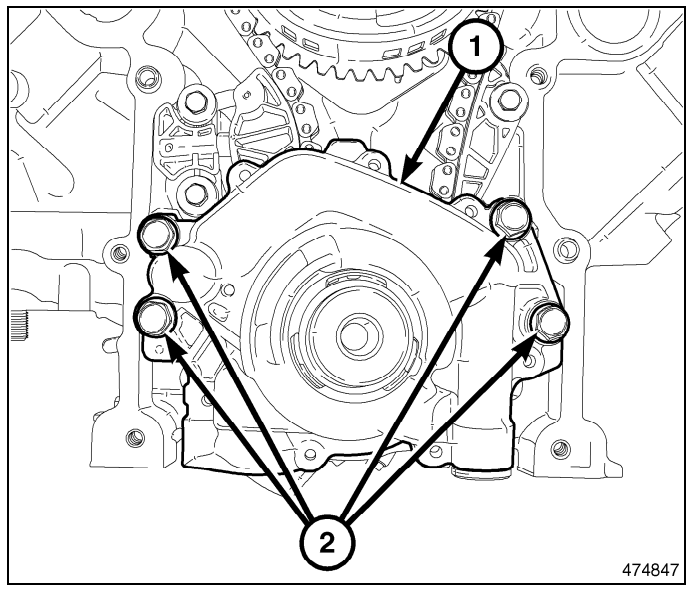

12. Using the sequence shown, tighten the oil pump retaining bolts to 28 N·m (21 ft. lbs.).

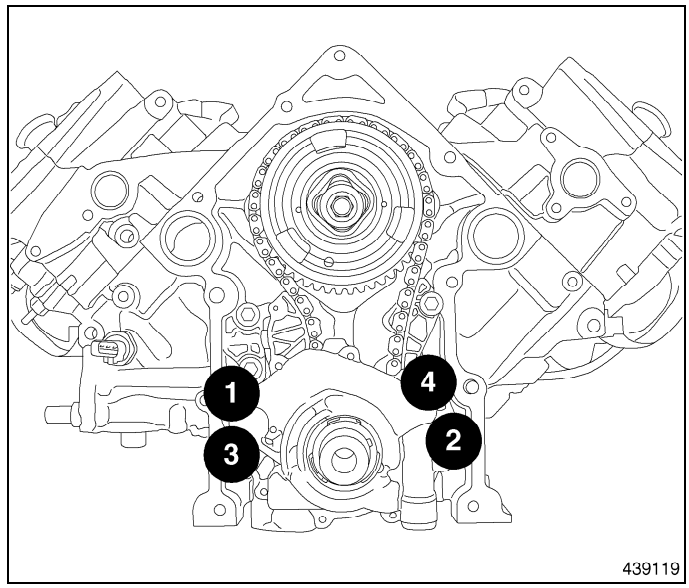

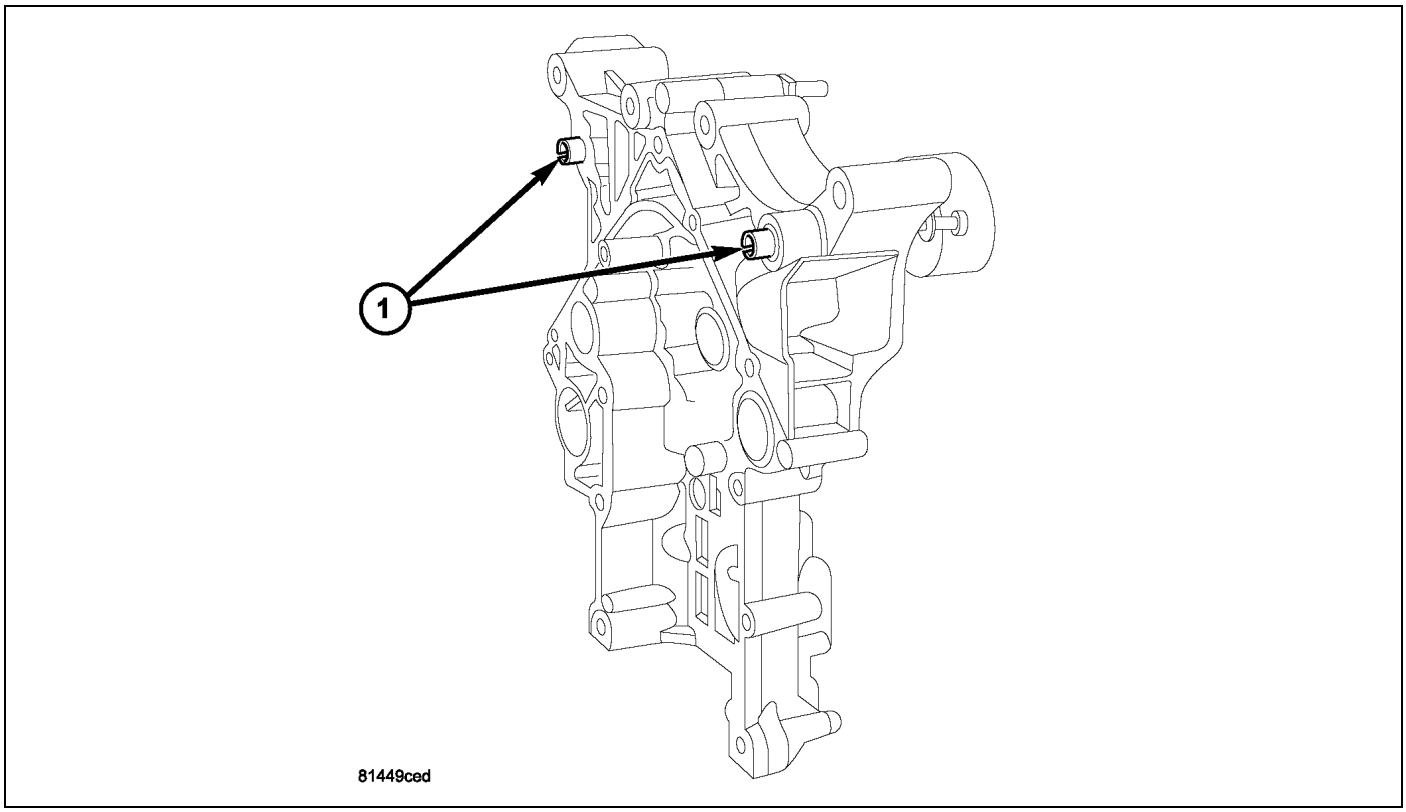

13. Verify the slide bushings (1) are installed in the timing chain cover.
14. Install the timing chain cover (Refer to 09 - Engine/Valve Timing/COVER(S), Engine Timing - Installation)
15. Fill the engine with oil.
16. Fill the cooling system (Refer to 07 - Cooling - Standard Procedure)
17. Connect the negative battery cable.
18. Start the engine and check for leaks.

COVER(S), Engine Timing

Removal

1. Disconnect the battery negative cable.
2. Remove the engine cover.
3. Remove air cleaner assembly.
4. Drain cooling system.
5. Remove accessory drive belt.
6. Remove fan and fan drive assembly.
7. Remove coolant bottle and washer bottle.
8. Remove fan shroud.

NOTE: It is not necessary to disconnect A/C lines or discharge refrigerant.

9. Remove A/C compressor and set aside.
10. Remove the generator.
11. Remove upper radiator hose.
12. Disconnect both heater hoses at timing cover.
13. Disconnect lower radiator hose at engine.
14. Remove accessory drive belt tensioner and both idler pulleys.
15. Remove crankshaft damper (2) (Refer to 09 - Engine/ Engine Block/DAMPER, Vibration - Removal).

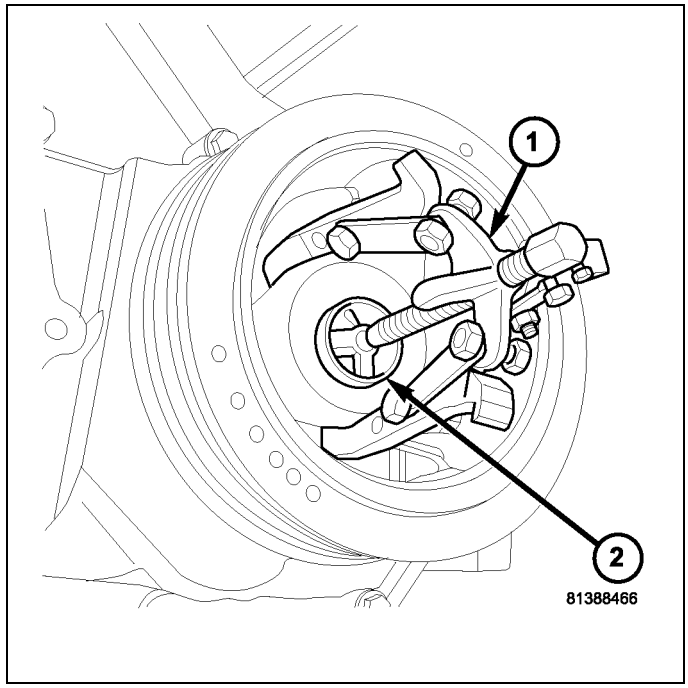

NOTE: Do not remove the hoses from the power steering pump.

16. Remove power steering pump and set aside.

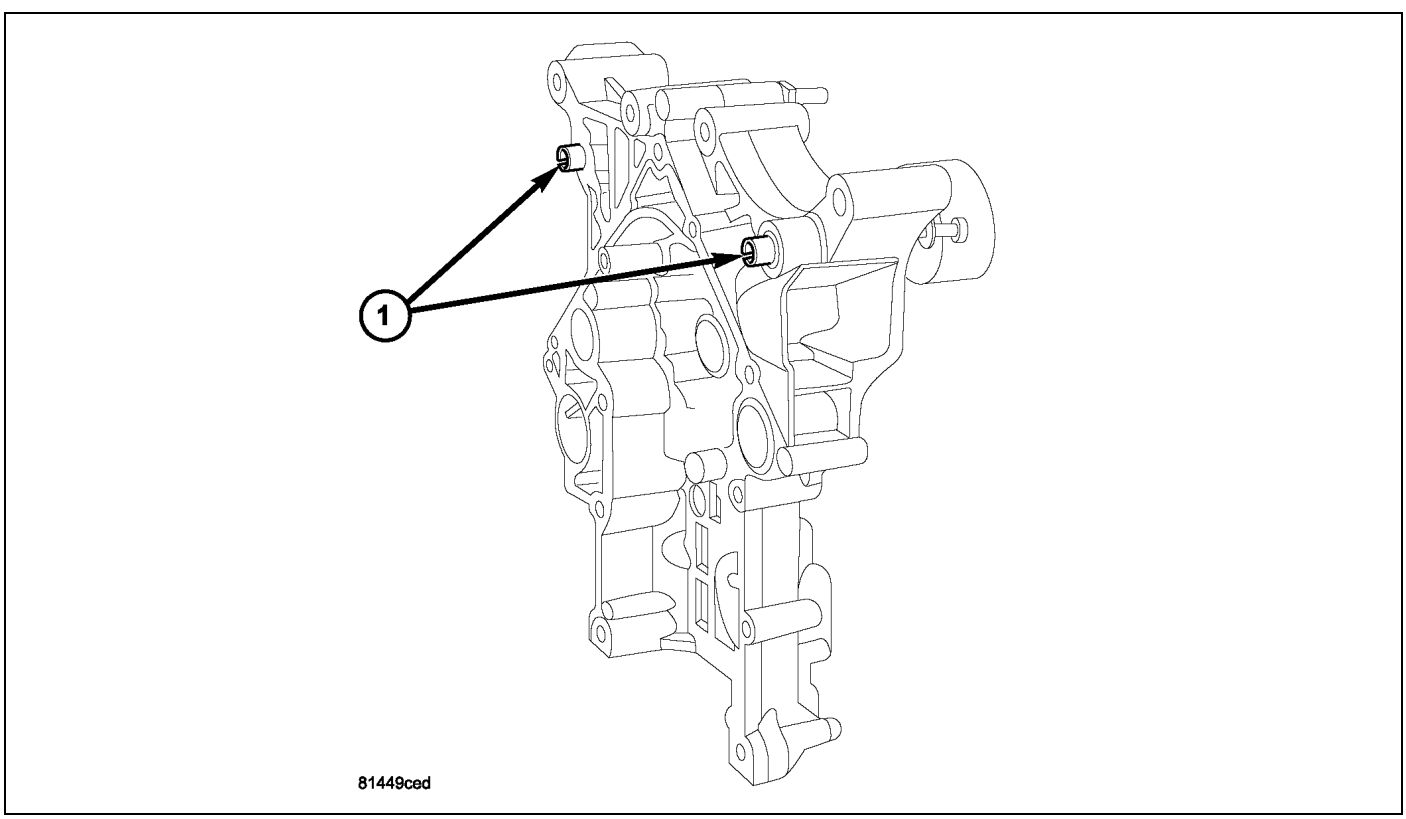

17. Remove the dipstick support bolt.
18. Drain the engine oil.
19. Remove the oil pan and pick up tube(Refer to 09 - Engine/Lubrication/PAN, Oil - Removal).

NOTE: It is not necessary to remove water pump for timing cover removal.

20. Remove timing cover bolts and remove cover.
21. Verify that timing cover slide bushings (1) are located in timing cover.

Installation

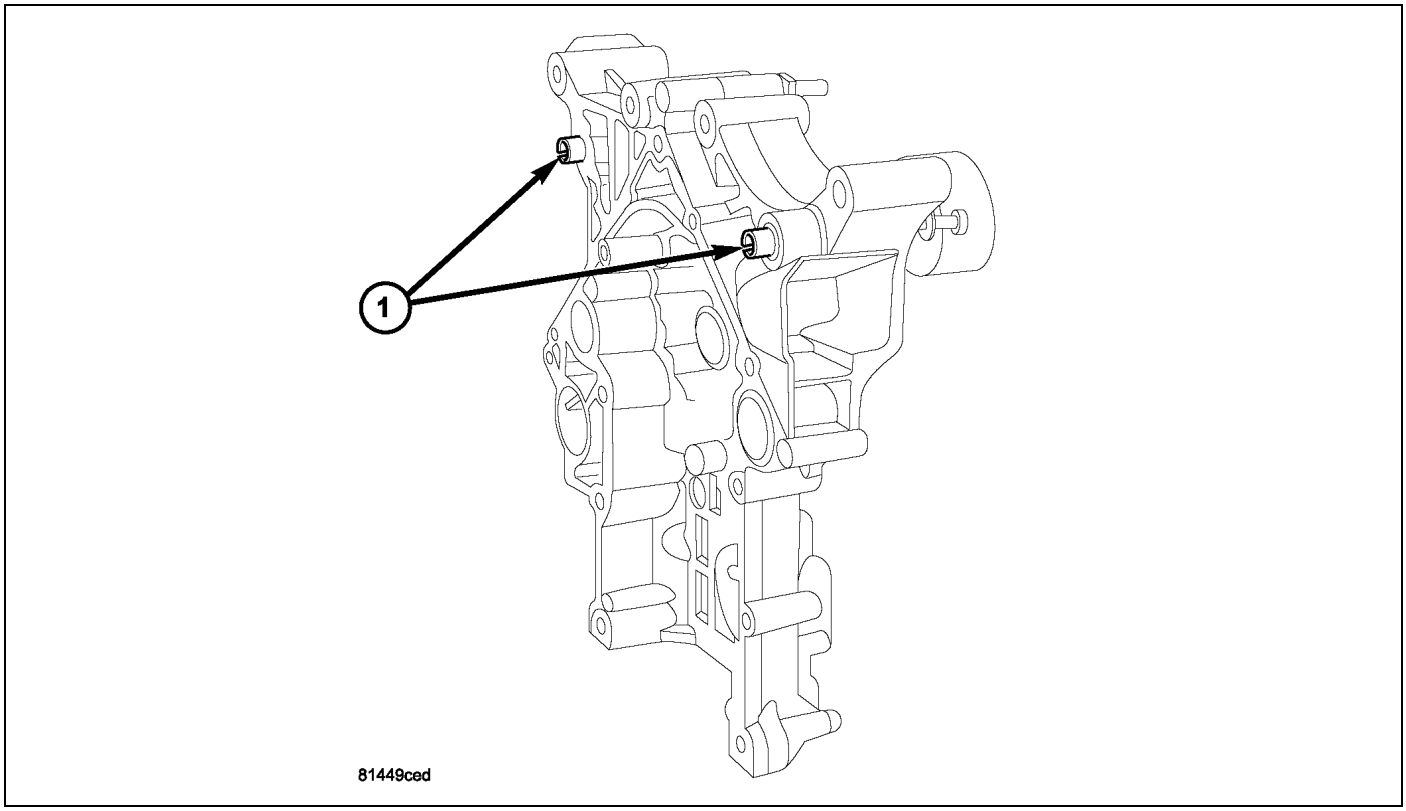

1. Clean timing chain cover and block surface.

NOTE: Always install a new gasket on timing cover.

2. Verify that the slide bushings (1) are installed in timing cover.
3. Install cover and new gasket. Tighten fasteners to 28 N·m (250 in. lbs.).

NOTE: The large lifting stud is tightened to 55 N·m (40 ft. lbs.).

4. Install the oil pan and pick up tube(Refer to 09 - Engine/Lubrication/PAN, Oil - Installation).
5. Install the A/C compressor.
6. Install the generator.
7. Install power steering pump.
8. Install the dipstick support bolt.
9. Install the thermostat housing.
10. Install crankshaft damper(Refer to 09 - Engine/Engine Block/DAMPER, Vibration - Installation).
11. Install accessory drive belt tensioner assembly and both idler pulleys.
12. Install radiator lower hose.
13. Install both heater hoses.
14. Install the cooling module.
15. Install the accessory drive belt.
16. Install the coolant bottle and washer bottle.
17. Install the upper radiator hose.
18. Install the air cleaner assembly.
19. Fill cooling system.
20. Refill engine oil.
21. Connect the battery negative cable.

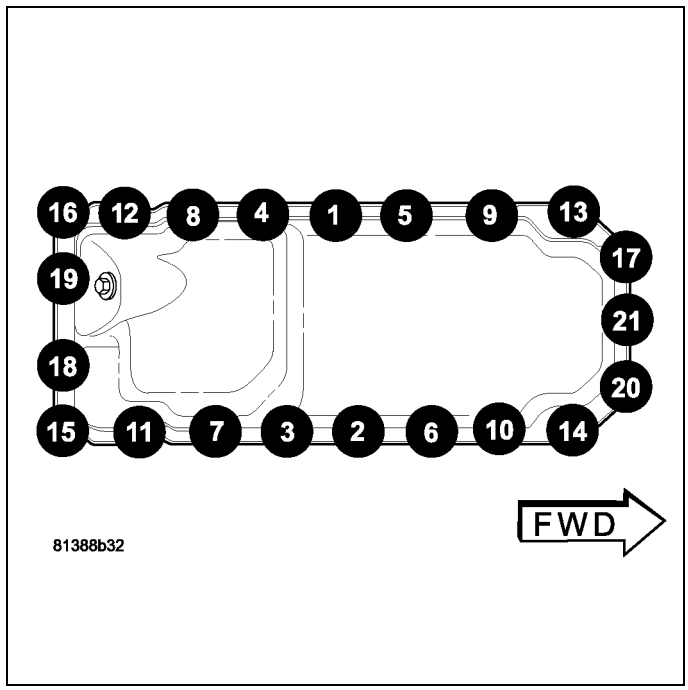

TENSIONER, Engine Timing

Description

The timing chain tensioner arm is a spring loaded design. It consists of two chain guide arms. One arm is fixed in place and the other is spring loaded to keep tension on the chain.

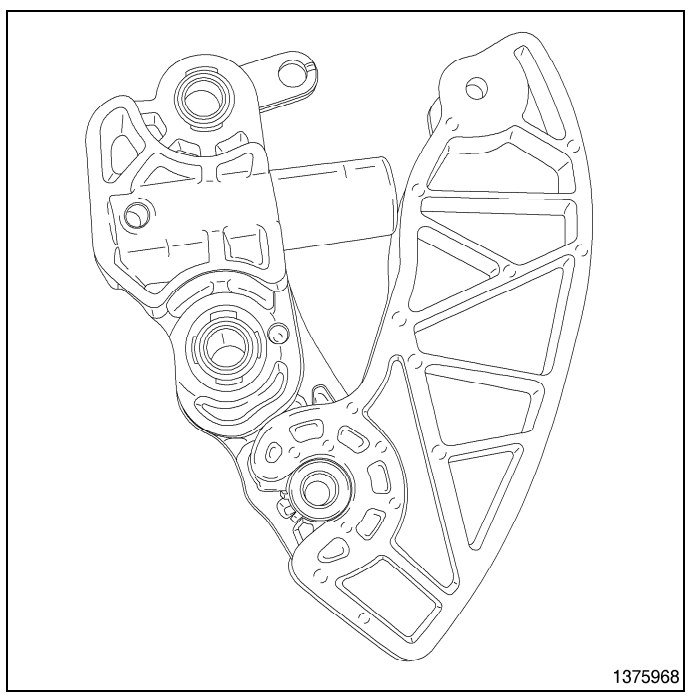

Operation

The timing chain tension is maintained by routing the timing chain through the tensioner arm assembly. A nylon tensioner arm presses on the timing chain maintaining the correct chain tension.

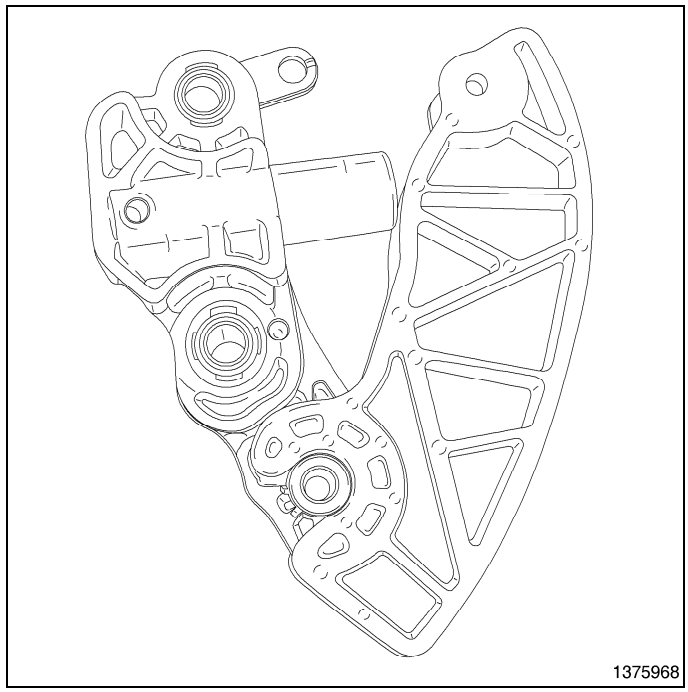

RESTRAINTS

TABLE OF CONTENTS

page

RESTRAINTS
- DESCRIPTION . . . 3
- OPERATION . . . 6
- WARNING . . . 7
- DIAGNOSIS AND TESTING . . . 8
- STANDARD PROCEDURE
  - HANDLING NON-DEPLOYED SUPPLEMENTAL RESTRAINTS . . . 8
  - SERVICE AFTER A SUPPLEMENTAL RESTRAINT DEPLOYMENT . . . 9
  - SUPPLEMENTAL RESTRAINT SYSTEM WIRING REPAIRS . . . 11
  - SUPPLEMENTAL RESTRAINTS VERIFICATION TEST . . . 12
- SPECIFICATIONS . . . 13
- SPECIAL TOOLS . . . 15

ADJUSTER, SEAT BELT TURNING LOOP
- REMOVAL . . . 15
- INSTALLATION . . . 16

AIR BAG, DRIVER
- DESCRIPTION . . . 17
- OPERATION . . . 18
- REMOVAL . . . 19
- DISASSEMBLY . . . 21
- ASSEMBLY . . . 22
- INSTALLATION . . . 23

AIR BAG, PASSENGER
- DESCRIPTION . . . 25
- OPERATION . . . 26
- REMOVAL . . . 27
- INSTALLATION . . . 27

AIR BAG, SIDE CURTAIN
- DESCRIPTION . . . 29
- OPERATION . . . 29
- REMOVAL . . . 30
- INSTALLATION . . . 31

ANCHOR, CHILD SEAT
- DESCRIPTION . . . 32
- OPERATION . . . 35
- REMOVAL . . . 35
- INSTALLATION . . . 36

BUCKLE, SEAT BELT
- REMOVAL
  - FRONT CENTER AND CENTER ANCHOR . . . 36
  - FRONT OUTBOARD . . . 37
  - REAR - QUAD OR CREW CAB . . . 38
- INSTALLATION
  - FRONT CENTER AND CENTER ANCHOR . . . 38
  - FRONT OUTBOARD . . . 39
  - REAR - QUAD OR CREW CAB . . . 40

CLOCKSPRING
- DESCRIPTION . . . 41
- OPERATION . . . 42
- STANDARD PROCEDURE . . . 43
- REMOVAL . . . 43
- INSTALLATION . . . 44

CONTROLLER, OCCUPANT RESTRAINT
- DESCRIPTION . . . 46
- OPERATION . . . 46
- REMOVAL
  - MODULE . . . 47
  - COVER . . . 48
- INSTALLATION
  - MODULE . . . 49
  - COVER . . . 50

RETRACTOR, SEAT BELT
- DESCRIPTION . . . 51
- OPERATION . . . 51
- REMOVAL
  - CENTER - STANDARD CAB . . . 51
  - FRONT OUTBOARD - QUAD OR CREW CAB . . . 52
  - OUTBOARD - STANDARD CAB . . . 54
  - REAR CENTER - QUAD OR CREW CAB . . . 56
  - REAR OUTBOARD - QUAD OR CREW CAB . . . 57
- INSTALLATION
  - CENTER - STANDARD CAB . . . 58
  - FRONT OUTBOARD - QUAD OR CREW CAB . . . 59
  - OUTBOARD - STANDARD CAB . . . 62
  - REAR CENTER - QUAD OR CREW CAB . . . 64
  - REAR OUTBOARD - QUAD OR CREW CAB . . . 65

SEAT BELT
- REMOVAL . . . 66
- INSTALLATION . . . 67

SENSOR, IMPACT
- DESCRIPTION . . . 68
- OPERATION . . . 69

continued..

page

REMOVAL
FRONT 70
SIDE 71
INSTALLATION
FRONT 73
SIDE 74

page

SWITCH, SEAT BELT, DRIVER
DESCRIPTION 76
OPERATION 76
TENSIONER, SEAT BELT
DESCRIPTION 77
OPERATION 77

Restraints

Description

An occupant restraint system is standard factory-installed safety equipment on this vehicle. Available occupant restraints for this vehicle include both active and passive types. Active restraints are those which require the vehicle occupants to take some action to employ, such as fastening and adjusting a seat belt; while passive restraints require no action by the vehicle occupants to be employed.

ACTIVE RESTRAINTS

The active restraints for this vehicle include:

- **Child Restraint Anchors** - All standard cab vehicles are equipped with two, fixed-position, child seat upper tether anchors that are integral to the upper cab back panel reinforcement and concealed behind individual trim cover and bezel units that are integral to the cab back trim panel. All vehicles with rear seats are equipped with three child seat upper tether anchor straps that are secured to the upper cab back panel reinforcement, behind the upright rear seat back. Two lower anchors are also provided for each rear outboard seating position on quad or crew cabs. These lower anchors are accessed from the front of the seat where the seat back meets the seat cushion. Child seat upper tether and lower anchors for the front seat are unavailable on quad and crew cab vehicles. Likewise, lower anchors for the front seat are not available on standard cab vehicles.
- **Front Seat Belts** - Both outboard front seating positions are equipped with three-point seat belt systems employing a lower B-pillar mounted inertia latch-type Emergency Locking Retractor (ELR), a height-adjustable upper B-pillar mounted turning loop, a fixed lower seat belt anchor secured to the lower B-pillar (standard cab) or floor panel adjacent to the B-pillar (quad or crew cab), and a traveling end-release seat belt buckle secured to the inboard seat track. Except for the driver side front seat, the retractors for all vehicles are also switchable from an ELR to an Automatic Locking Retractor (ALR) for compatibility with child seats. The front seat belt buckle for the driver side of all vehicles includes an integral seat belt switch that detects whether its seat belt has been fastened. The center front seating position for standard cabs is also equipped with a three-point seat belt employing a floor panel mounted inertia latch-type ELR, a routing bracket and bezel near the top of the cab back panel, and two fixed end-release buckles secured to the center seat cushion frame. One of the center buckles is specially keyed to serve as the center seat belt lower anchor. The center front seating position for quad and crew cab vehicles with a split bench front seat is equipped with a fixed lap belt and an end-release buckle secured to the center seat cushion frame.
- **Rear Seat Belts** - On all vehicles equipped with rear seats, each rear seating position is equipped with a three-point seat belt system. Each outboard rear seating position seat belt employs a lower C-pillar mounted inertia latch-type Emergency Locking Retractor (ELR), a fixed position upper C-pillar mounted turning loop, and a fixed lower seat belt anchor secured to the lower C-pillar. The rear seat center seating position has a rear floor panel mounted inertia latch-type ELR and a routing bracket and bezel on the top of the cab back panel. A fixed end-release buckle unit for the quad or crew cab right outboard seating position is integral to the right side of the center retractor mounting bracket on the rear floor panel. The end-release buckle units for the quad or crew cab center and left outboard seating positions are individually secured to the rear floor panel on vehicles with the standard equipment rear bench seat, or secured with the rear seat mounting hardware on vehicles with the optional split rear bench seat. The rear seat retractors for all vehicles are also switchable from an ELR to an Automatic Locking Retractor (ALR) for compatibility with child seats.

PASSIVE RESTRAINTS

The passive restraints available for this vehicle include the following:



- **Dual Front Airbags** - Multistage driver and front passenger airbags are used in this vehicle. This airbag system consists of passive, inflatable, Supplemental Restraint System (SRS) components and vehicles with this equipment can be readily identified by the **SRS - AIRBAG** logo molded into the driver airbag trim cover in the center of the steering wheel and also into the passenger airbag door on the top of the instrument panel trim cover above the upper glove box or storage bin opening. Vehicles with the airbag system can also be identified by the airbag indicator, which will illuminate in the ElectroMechanical Instrument Cluster (EMIC) (also known as the Cab Compartment Node/CCN) from four to six seconds as a bulb test each time the ignition switch is turned to the ON position. A pyrotechnic-type seat belt tensioner is also integral to the front outboard seat belt retractors to work in conjunction with the dual front airbags.
- **Side Curtain Airbags** - Side curtain airbags are standard equipment for this vehicle when it is also equipped with dual front airbags. This airbag system consists of passive, inflatable, SRS components and vehicles with this equipment can be readily identified by a molded identification trim button with the **SRS - AIRBAG** logo located at the top of each B-pillar trim (all models) and C-pillar trim (quad and crew cab only) near the headliner.

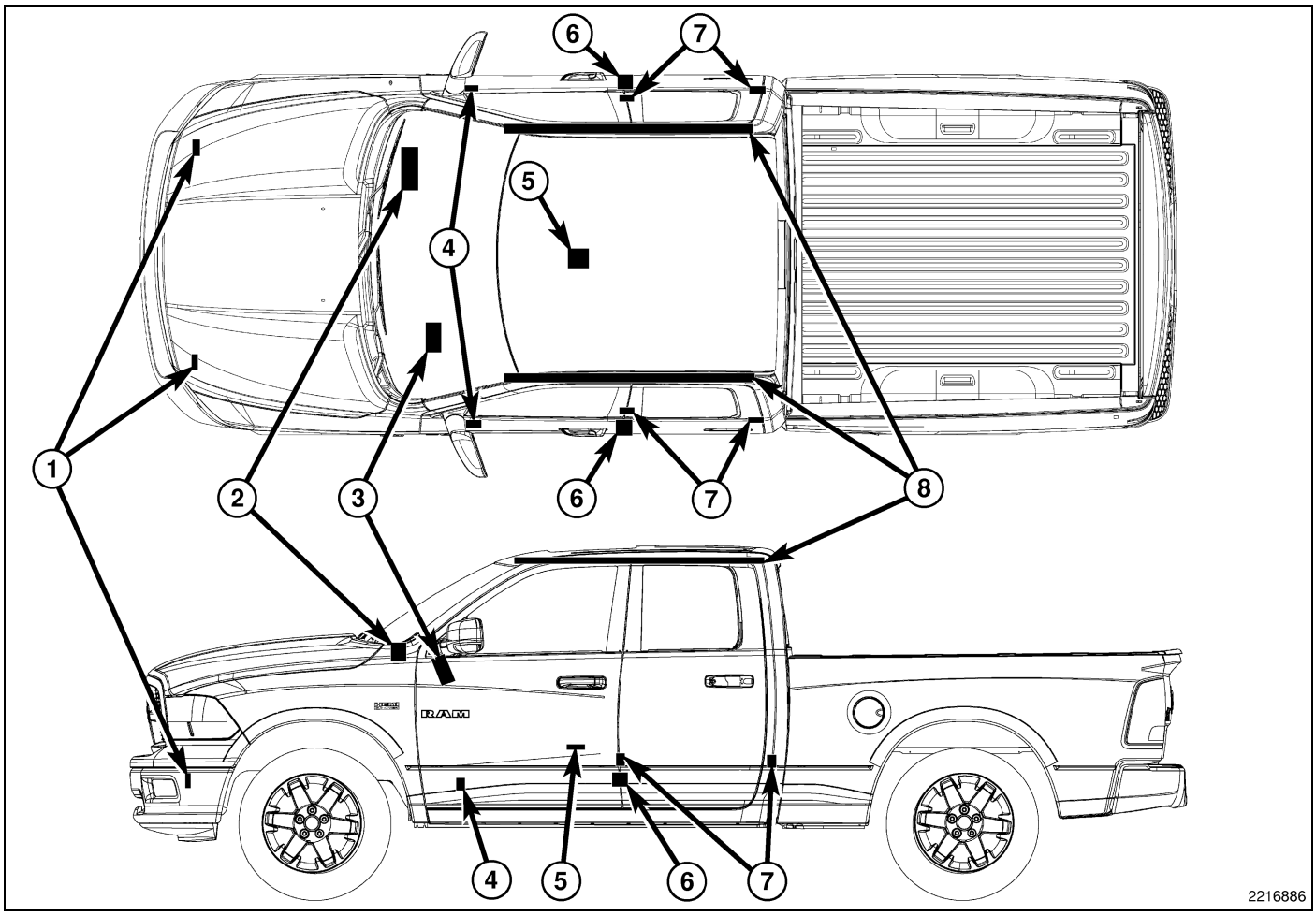

The SRS includes the following major components, which are described in further detail elsewhere in this service information:

- **Airbag Indicator** - The airbag indicator is integral to the ElectroMechanical Instrument Cluster (EMIC) (also known as the Cab Compartment Node/CCN), which is located on the instrument panel in front of the driver.
- **Clockspring** - The clockspring is located near the top of the steering column, directly beneath the steering wheel.
- **Driver Airbag (3)** - The driver airbag is located in the center of the steering wheel horn pad, beneath the driver airbag trim cover.
- **Driver Knee Blocker** - The driver knee blocker is a structural unit secured to the back side of and integral to the instrument panel steering column opening cover.
- **Front Impact Sensor (1)** - Two front impact sensors are used, one left side and one right side. One sensor is located on the back side of each end of the lower radiator support crossmember on each side of the cooling module and below the inboard side of each front lamp unit.
- **Occupant Restraint Controller (5)** - The Occupant Restraint Controller (ORC) is located on a mounting bracket on the floor panel transmission tunnel below the center section of the front seat, or under the center floor console, as the vehicle is equipped.
- **Passenger Airbag (2)** - The passenger airbag is located in the instrument panel, beneath the passenger airbag door integral to the top of the instrument panel trim cover just forward of the upper glove box or storage bin on the passenger side of the vehicle.
- **Passenger Knee Blocker** - The passenger knee blocker is a structural reinforcement that is integral to and concealed within the lower glove box door.
- **Seat Belt Tensioner (6)** - A seat belt tensioner is integral to both front outboard seat belt retractor units. The seat belt retractor tensioner units are secured to the right and left inner B-pillars and concealed beneath the lower B-pillar trim.
- **Side Curtain Airbag (8)** - A side curtain airbag is secured to each inside roof side rail above the headliner, and extends from the A-pillar to near the cab back.
- **Side Impact Sensor** - Up to six side impact sensors are standard equipment on vehicles with side curtain airbags, three on each side of the vehicle. One pressure-type sensor (4) is located on the each right and left front door module

carrier behind the front door trim panel for all models. In addition, an acceleration-type sensor (7) is located on each inner B-pillar behind the lower B-pillar trim on all models, while quad and crew cab models also have one acceleration-type sensor on each inner C-pillar behind the lower C-pillar trim.

The ORC and the EMIC each contain a microprocessor and programming that allow them to communicate with each other using the Controller Area Network (CAN) data bus. This method of communication is used by the ORC for control of the airbag indicator in the EMIC. (Refer to 08 - Electrical/8E - Electronic Control Modules/COMMUNICATION - Description).

Hard wired circuitry connects the SRS components to each other through the electrical system of the vehicle. These hard wired circuits are integral to several wire harnesses, which are routed throughout the vehicle and retained by many different methods. These circuits may be connected to each other, to the vehicle electrical system, and to the SRS components through the use of a combination of soldered splices, splice block connectors, and many different types of wire harness terminal connectors and insulators. Refer to the appropriate wiring information. The wiring information includes wiring diagrams, proper wire and connector repair procedures, further details on wire harness routing and retention, as well as pin-out and location views for the various wire harness connectors, splices and grounds.

Operation

ACTIVE RESTRAINTS

The primary passenger restraints in this or any other vehicle are the standard equipment factory-installed seat belts and child restraint anchors. Seat belts and child restraint anchors are referred to as an active restraint because the vehicle occupants are required to physically fasten and properly adjust these restraints in order to benefit from them.

PASSIVE RESTRAINTS

The passive restraints are referred to as a Supplemental Restraint System (SRS) because they were designed and are intended to enhance the protection for the occupants of the vehicle **only** when used in conjunction with the seat belts. They are referred to as passive restraints because the vehicle occupants are not required to do anything to make them operate; however, the vehicle occupants must be wearing their seat belts in order to obtain the maximum safety benefit from the factory-installed SRS components.

The SRS electrical circuits are continuously monitored and controlled by a microprocessor and software contained within the Occupant Restraint Controller (ORC). An airbag indicator in the ElectroMechanical Instrument Cluster (EMIC) (also known as the Cab Compartment Node/CCN) illuminates from four to six seconds as a bulb test each time the ignition switch is turned to the ON or START positions. Following the bulb test, the airbag indicator is turned ON or OFF by the ORC to indicate the status of the SRS. If the airbag indicator comes ON at any time other than during the bulb test, it indicates that there is a problem in the SRS electrical circuits. Such a problem may cause airbags not to deploy when required, or to deploy when not required.

Deployment of the SRS components depends upon the angle and severity of an impact. Deployment is not based upon vehicle speed; rather, deployment is based upon the rate of deceleration as measured by the forces of gravity (G force) upon the acceleration-type impact sensors, or by a pressure wave within a front door as measured by the pressure-type impact sensor. When an impact is severe enough, the microprocessor in the ORC signals the inflator of the appropriate airbag units to deploy their airbag cushions. The outboard front seat belt retractor tensioners are provided with a deployment signal by the ORC in conjunction with the front airbags. The side curtain airbags are provided with a deployment signal individually by the ORC based upon a side impact sensor input for the same side of the vehicle.

During a frontal vehicle impact, the knee blockers work in concert with properly fastened and adjusted seat belts to restrain both the driver and the right front seat passenger in the proper position for an airbag deployment. The knee blockers also absorb and distribute the crash energy from the driver and the right front seat passenger to the structure of the instrument panel. The seat belt tensioners remove the slack from the outboard front seat belts to provide further assurance that the driver and right front seat passenger are properly positioned and restrained for an airbag deployment.

Typically, the vehicle occupants recall more about the events preceding and following a collision than they do of an airbag deployment itself. This is because the airbag deployment and deflation occur very rapidly. In a typical 48 kilometer-per-hour (30 mile-per-hour) barrier impact, from the moment of impact until the airbags are fully inflated takes about 40 milliseconds. Within one to two seconds from the moment of impact, the airbags are almost entirely deflated. The times cited for these events are approximations, which apply only to a barrier impact at the given speed. Actual times will vary somewhat, depending upon the vehicle speed, impact angle, severity of the impact, and the type of collision.

When the ORC monitors a problem in any of the SRS circuits or components, including the seat belt tensioners, it stores a fault code or Diagnostic Trouble Code (DTC) in its memory circuit and sends an electronic message to the EMIC to turn ON the airbag indicator. The hard wired circuits between components related to the SRS may be diagnosed

using conventional diagnostic tools and procedures. Refer to the appropriate wiring information. The wiring information includes wiring diagrams, proper wire and connector repair procedures, details of wire harness routing and retention, connector pin-out information and location views for the various wire harness connectors, splices and grounds.

However, conventional diagnostic methods will not prove conclusive in the diagnosis of the SRS or the electronic controls or communication between other modules and devices that provide features of the SRS. The most reliable, efficient, and accurate means to diagnose the SRS or the electronic controls and communication related to SRS operation, as well as the retrieval or erasure of a DTC requires the use of a diagnostic scan tool. Refer to the appropriate diagnostic information.

Warning

WARNING: To avoid serious or fatal injury on vehicles equipped with the Supplemental Restraint System (SRS), never attempt to repair the electrically conductive circuits or wiring components related to the SRS for which there is no MOPAR wiring repair kit. It is important to use ONLY the recommended splicing kit and procedure. For applicable and available MOPAR wiring repair kits, please visit the MOPAR Connector Web Site at the following address on the internet: (http://dto.vftis.com/mopar/disclaimer.asp). Inappropriate repairs can compromise the conductivity and current carrying capacity of those critical electrical circuits, which may cause SRS components not to deploy when required, or to deploy when not required. Only minor cuts or abrasions of wire and terminal insulation where the conductive material has not been damaged, or connector insulators where the integrity of the latching and locking mechanisms have not been compromised may be repaired using appropriate methods.

WARNING: To avoid serious or fatal injury during and following any seat belt or child restraint anchor service, carefully inspect all seat belts, buckles, mounting hardware, retractors, tether straps, and anchors for proper installation, operation, or damage. Replace any belt that is cut, frayed, or torn. Straighten any belt that is twisted. Tighten any loose fasteners. Replace any belt that has a damaged or ineffective buckle or retractor. Replace any belt that has a bent or damaged latch plate or anchor plate. Replace any child restraint anchor or the unit to which the anchor is integral that has been bent or damaged. Never attempt to repair a seat belt or child restraint component. Always replace damaged or ineffective seat belt and child restraint components with the correct, new and unused replacement parts listed in the Chrysler Mopar® Parts Catalog. Failure to follow these instructions may result in possible serious or fatal injury.

WARNING: To avoid serious or fatal injury on vehicles equipped with airbags, disable the Supplemental Restraint System (SRS) before attempting any steering wheel, steering column, airbag, seat belt tensioner, impact sensor or instrument panel component diagnosis or service. Disconnect and isolate the battery negative (ground) cable, then wait two minutes for the system capacitor to discharge before performing further diagnosis or service. This is the only sure way to disable the SRS. Failure to take the proper precautions could result in accidental airbag deployment.

WARNING: To avoid potential physical injury or damage to sensitive electronic circuits and systems, always disconnect and isolate the battery negative (ground) cable and the positive cable, then ground the positive cable to discharge the Occupant Restraint Controller (ORC) capacitor before performing any welding operations on the vehicle. Failure to take the proper precautions could result in accidental airbag deployment, possible damage to the Supplemental Restraint System (SRS) circuits and components, and possible damage to other electronic circuits and components. Whenever a welding process is being performed within 12 inches (30 centimeters) of an electronic module or wiring harness, then that module or harness should be relocated out of the way, or disconnected. Always protect against component or vehicle damage from weld spatter by using weld blankets and screens.

WARNING: To avoid serious or fatal injury, do not attempt to dismantle an airbag unit or tamper with its inflator. Do not puncture, incinerate or bring into contact with electricity. Do not store at temperatures exceeding 93° C (200° F). An airbag inflator unit may contain sodium azide and potassium nitrate. These materials are poisonous and extremely flammable. Contact with acid, water, or heavy metals may produce harmful and irritating gases (sodium hydroxide is formed in the presence of moisture) or combustible compounds. An airbag inflator unit may also contain a gas canister pressurized to over 17.24 kPa (2500 psi). Failure to follow these instructions may result in possible serious or fatal injury.

WARNING: To avoid serious or fatal injury when handling a seat belt tensioner retractor. Exercise proper care to keep fingers out from under the retractor cover and away from the seat belt webbing where it exits from the retractor cover. Failure to follow these instructions may result in possible serious or fatal injury.

WARNING: To avoid serious or fatal injury, replace all Supplemental Restraint System (SRS) components only with parts specified in the Chrysler Mopar® Parts Catalog. Substitute parts may appear interchangeable, but internal differences may result in inferior occupant protection.

WARNING: To avoid serious or fatal injury, the fasteners, screws, and bolts originally used for the Supplemental Restraint System (SRS) components must never be replaced with any substitutes. These fasteners have special coatings and are specifically designed for the SRS. Anytime a new fastener is needed, replace it with the correct fasteners provided in the service package or specified in the Chrysler Mopar® Parts Catalog.

WARNING: To avoid serious or fatal injury when a steering column has an airbag unit attached, never place the column on the floor or any other surface with the steering wheel or airbag unit face down. Failure to follow these instructions may result in possible serious or fatal injury.

Diagnosis and Testing

The hard wired circuits between modules and components related to the Supplemental Restraint System (SRS) may be diagnosed using conventional diagnostic tools and procedures. Refer to the appropriate wiring information. The wiring information includes wiring diagrams, proper wire and connector repair procedures, details of wire harness routing and retention, connector pin-out information and location views for the various wire harness connectors, splices and grounds.

However, conventional diagnostic methods will not prove conclusive in the diagnosis of the SRS or the electronic controls or communication between other modules and devices that provide features of the SRS. The most reliable, efficient, and accurate means to diagnose the SRS or the electronic controls and communication related to SRS operation, as well as the retrieval or erasure of a DTC requires the use of a diagnostic scan tool. Refer to the appropriate diagnostic information.

In addition to a diagnostic scan tool that contains the latest version of the proper diagnostic software, certain diagnostic procedures for the SRS may require the use of the SRS Load Tool special tool along with the appropriate Load Tool Jumpers and Adapters. Refer to the appropriate diagnostic information.

WARNING: To avoid serious or fatal injury on vehicles equipped with airbags, disable the Supplemental Restraint System (SRS) before attempting any steering wheel, steering column, airbag, seat belt tensioner, impact sensor or instrument panel component diagnosis or service. Disconnect and isolate the battery negative (ground) cable, then wait two minutes for the system capacitor to discharge before performing further diagnosis or service. This is the only sure way to disable the SRS. Failure to take the proper precautions could result in accidental airbag deployment.

Standard Procedure

HANDLING NON-DEPLOYED SUPPLEMENTAL RESTRAINTS

At no time should any source of electricity be permitted near the inflator on the back of a non-deployed airbag or seat belt tensioner. When carrying a non-deployed airbag, the trim cover or airbag cushion side of the unit should be pointed away from the body to minimize injury in the event of an accidental deployment. If the airbag unit is placed on a bench or any other surface, the trim cover or airbag cushion side of the unit should be face up to minimize movement in the event of an accidental deployment.

When handling a non-deployed seat belt tensioner, take proper care to keep fingers out from under the retractor or buckle cover and away from the seat belt webbing or cable where it exits from the retractor or buckle cover. In addition, the Supplemental Restraint System (SRS) should be disarmed whenever any steering wheel, steering column, seat belt tensioner, airbag, impact sensor, or instrument panel components require diagnosis or service. Failure to observe this warning could result in accidental airbag deployment and possible personal injury.

All damaged, ineffective or non-deployed airbags and seat belt tensioners which are replaced on vehicles are to be handled and disposed of properly. If an airbag or seat belt tensioner unit is ineffective or damaged and non-deployed, refer to the Hazardous Substance Control System for information regarding the potentially hazardous properties of the subject component and the proper safe handling procedures. Then dispose of all non-deployed and deployed airbags and seat belt tensioners in a manner consistent with state, provincial, local and federal regulations.

SUPPLEMENTAL RESTRAINT STORAGE

Airbags and seat belt tensioners must be stored in their original, special container until they are used for service. Also, they must be stored in a clean, dry environment; away from sources of extreme heat, sparks and high electrical energy. Always place or store any airbag on a surface with its trim cover or airbag cushion side facing up, to minimize movement in case of an accidental deployment.

SERVICE AFTER A SUPPLEMENTAL RESTRAINT DEPLOYMENT

Any vehicle which is to be returned to use following a Supplemental Restraint System (SRS) component deployment must have the deployed restraints replaced. In addition, if the driver airbag has been deployed, the clockspring and the steering column must be replaced. If the passenger airbag is deployed, the instrument panel trim cover must be replaced.

The seat belt tensioners are deployed by the same signal that deploys the driver and passenger airbags and must also be replaced if either front airbag has been deployed. If a side curtain airbag has been deployed, the headliner, as well as the upper A, B, and C-pillar trim on the same side of the vehicle as the deployed airbag must be replaced. These components are not intended for reuse and will be damaged or weakened as a result of a SRS component deployment, which may or may not be obvious during a visual inspection. On vehicles with an optional sunroof, the sunroof drain tubes and hoses must be closely inspected following a side curtain airbag deployment.

It is also critical that the mounting surfaces and mounting brackets for the Occupant Restraint Controller (ORC), side impact sensors, and front impact sensors be closely inspected and restored to their original conditions following any vehicle impact damage. Because the ORC and each impact sensor are used by the SRS to monitor or confirm the direction and severity of a vehicle impact, improper orientation or insecure fastening of these components may cause airbags not to deploy when required, or to deploy when not required.

There are two methods by which an airbag or seat belt tensioner may be connected to the vehicle electrical system. The first method involves a short pigtail harness and connector insulator that are integral to the airbag or tensioner unit and are replaced as a unit with the service replacement airbag or seat belt tensioner unit. The second method involves a wire harness takeout and connector insulator (squib circuits) that are connected directly to the air bag or tensioner initiator. The heat created by the initiator during an airbag or tensioner deployment will cause collateral damage to a directly connected wire harness take out and connector insulator. Therefore, these direct-connect type take outs and connector insulators must be repaired following an airbag or seat belt tensioner deployment. (Refer to 10 - Restraints - Standard Procedure).

All other vehicle components should be closely inspected following any SRS component deployment, but are to be replaced only as required by the extent of the visible damage incurred.

AIRBAG SQUIB STATUS

Multistage airbags with multiple initiators (squibs) must be checked to determine that all squibs were used during the deployment event. The driver and passenger airbags in this vehicle are deployed by electrical signals generated by the Occupant Restraint Controller (ORC) through the driver or passenger squib 1 and squib 2 circuits to the two initiators in the airbag inflators. Typically, both initiators are used and all potentially hazardous chemicals are burned during an airbag deployment event. However, it is possible for only one initiator to be used; therefore, it is always necessary to confirm that both initiators have been used in order to avoid the improper handling or disposal of potentially live pyrotechnic or hazardous materials. The following procedure should be performed using a diagnostic scan tool to verify the status of both airbag squibs before either deployed airbag is removed from the vehicle for disposal.

CAUTION: Deployed front airbags having two initiators (squibs) in the airbag inflator may or may not have live pyrotechnic material within the inflator. Do not dispose of these airbags unless you are certain of complete deployment. Refer to the Hazardous Substance Control System for information regarding the potentially hazardous properties of the subject component and the proper safe handling procedures. Then dispose of all non-deployed and deployed airbags and seat belt tensioners in a manner consistent with state, provincial, local and federal regulations.

1. Be certain that the diagnostic scan tool contains the latest version of the proper diagnostic software. Connect the scan tool to the 16-way Data Link Connector (DLC). The DLC is located on the driver side lower edge of the instrument panel, outboard of the steering column.
2. Turn the ignition switch to the ON position.
3. Using the scan tool, read and record the active (current) Diagnostic Trouble Code (DTC) data.

Using the active DTC information, refer to the **Airbag Squib Status** table to determine the status of both driver and passenger airbag squibs.

AIRBAG SQUIB STATUS		
IF THE ACTIVE DTC IS:	**CONDITIONS**	**SQUIB STATUS**
Driver or Passenger Squib 1 open	**AND** the stored DTC minutes for both Driver or Passenger squibs are within 15 minutes of each other	Both Squib 1 and 2 were used.
Driver or Passenger Squib 2 open		
Driver or Passenger Squib 1 open	**AND** the stored DTC minutes for Driver or Passenger Squib 2 open is GREATER than the stored DTC minutes for Driver or Passenger Squib 1 by 15 minutes or more	Squib 1 was used; Squib 2 is live.
Driver or Passenger Squib 2 open		
Driver or Passenger Squib 1 open	**AND** the stored DTC minutes for Driver or Passenger Squib 1 open is GREATER than the stored DTC minutes for Driver or Passenger Squib 2 by 15 minutes or more	Squib 1 is live; Squib 2 was used.
Driver or Passenger Squib 2 open		
Driver or Passenger Squib 1 open	**AND** Driver or Passenger Squib 2 open is NOT an active code	Squib 1 was used; Squib 2 is live.
Driver or Passenger Squib 2 open	**AND** Driver or Passenger Squib 1 open is NOT an active code	Squib 1 is live; Squib 2 was used.

NOTE: If none of the Driver or Passenger Squib 1 or 2 open are active codes, the status of the airbag squibs is unknown. In this case the airbag should be handled and disposed of as if the squibs were both live.

CLEANUP PROCEDURE

Following a Supplemental Restraint System (SRS) component deployment, the vehicle interior will contain a powdery residue. This residue consists primarily of harmless particulate by-products of the small pyrotechnic charge that initiates the propellant used to deploy a SRS component. However, this residue may also contain traces of sodium hydroxide powder, a chemical by-product of the propellant material that is used to generate the inert gas that inflates the airbag. Since sodium hydroxide powder can irritate the skin, eyes, nose, or throat, be certain to wear safety glasses, rubber gloves, and a long-sleeved shirt during cleanup.

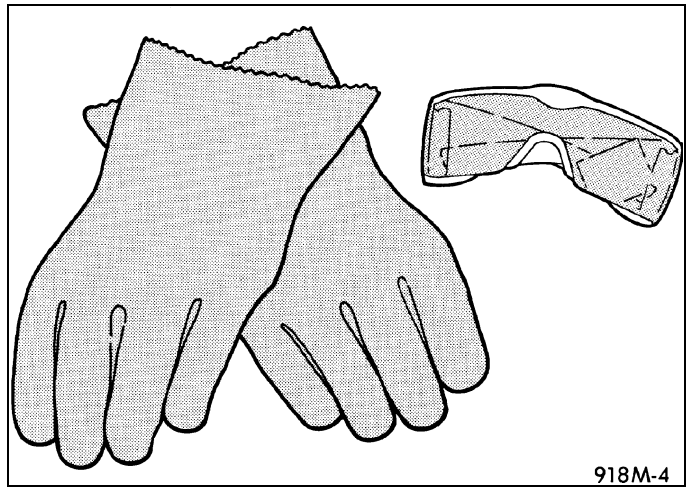

WARNING: To avoid serious or fatal injury, if you experience skin irritation during cleanup, run cool water over the affected area. Also, if you experience irritation of the nose or throat, exit the vehicle for fresh air until the irritation ceases. If irritation continues, see a physician.

1. Begin the cleanup by using a vacuum cleaner to remove any residual powder from the vehicle interior. Clean from outside the vehicle and work your way inside, so that you avoid kneeling or sitting on a non-cleaned area.
2. Be certain to vacuum the heater and air conditioning outlets as well. Run the heater and air conditioner blower on the lowest speed setting and vacuum any powder expelled from the outlets.

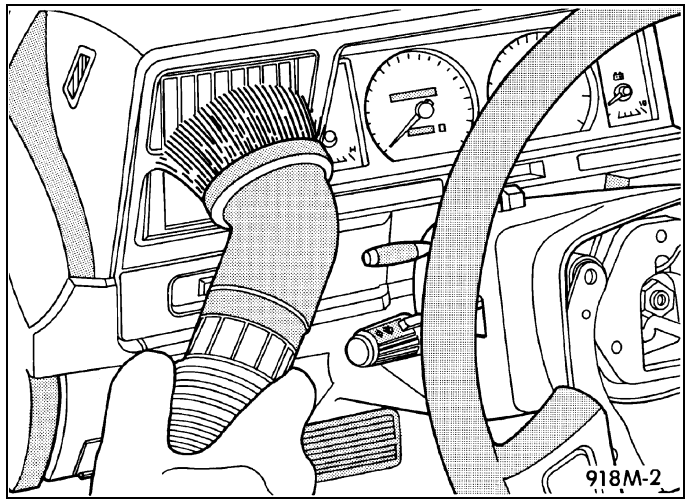

CAUTION: Deployed front airbags having two initiators (squibs) in the airbag inflator may or may not have live pyrotechnic material within the inflator. Do not dispose of these airbags unless you are certain of complete deployment. Refer to the AIRBAG SQUIB STATUS heading within this information. All damaged, ineffective, or non-deployed Supplemental Restraint System (SRS) components which are replaced on vehicles are to be handled and disposed of properly. If an airbag or seat belt tensioner unit is ineffective or damaged and non-deployed, refer to the Hazardous Substance Control System for information regarding the potentially hazardous properties of the subject component and the proper safe handling procedures. Then dispose of all non-deployed and deployed airbags and seat belt tensioners in a manner consistent with state, provincial, local and federal regulations.

3. Next, remove the deployed SRS components from the vehicle. Refer to the appropriate service removal procedures.
4. You may need to vacuum the interior of the vehicle a second time to recover all of the powder.

SUPPLEMENTAL RESTRAINT SYSTEM WIRING REPAIRS

It is important when repairing any Supplemental Restraint System (SRS) electrical circuits to use the recommended splicing kit and procedure. For applicable and available MOPAR wiring repair kits, please visit the MOPAR Connector Web Site at the following address on the internet: (http://dto.vftis.com/mopar/disclaimer.asp).

This recommended procedure involves crimping the wires together with a splice band, soldering the crimped connection and, finally, sealing and protecting the repair. The crimp and solder ensure a strong mechanical bond that will always pass a pull test while also maintaining the conductivity and current carrying capacity of the circuit. The adhesive sealant and heat shrink tubing ensures the splice repair will perform as well or better than the original wire and be safe from potential corrosion or short circuits.

There is no limit to the number of splice repairs that can be made in one harness using this procedure. However, as has been past practice, multiple adjacent splices should be offset from each other. This wiring splice repair procedure is approved for harness side repairs only. Repairs and splices to pigtail wires on SRS components such as airbag units, seat belt tensioner units or clocksprings are not approved or recommended.

REPAIR PROCEDURE

CAUTION: If additional wire is needed when making a splice repair to any wire, it is important that the same or next larger size wire gauge be used. Refer to the appropriate wiring diagram for the original wire gauge size.

1. Remove 13 millimeters (0.50 inch) of insulation from each wire that needs to be spliced.
2. Place a piece of adhesive sealant-lined heat shrink tubing (Part Number 04778570 or equivalent) over the wire on one side of the splice. Be certain the length of tubing will be sufficient to cover and seal the entire repair area.
3. Place the strands of the wires being spliced so that they are overlapping each other within the splice band (1).

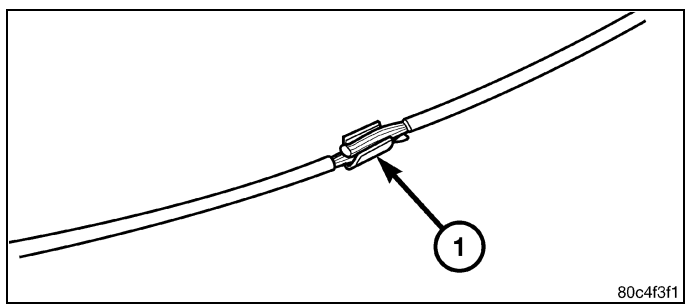

4. Using a crimping tool (1) (MOPAR Part Number 05019912AA, Miller Special Tool Number 10042 or equivalent) crimp the splice band and wires together securely.

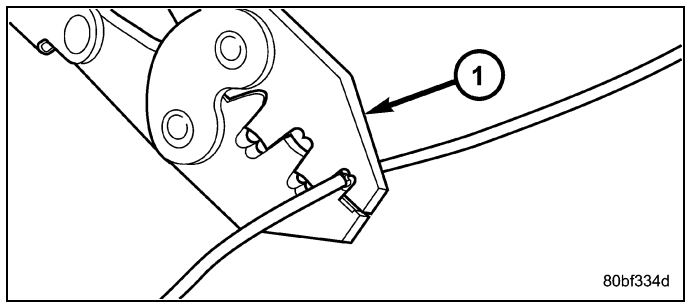

CAUTION: Never use acid core solder for electrical wiring repairs.

5. Using rosin core type solder (1) only and a suitable soldering iron (3), solder the wire and splice band connection (2) together.

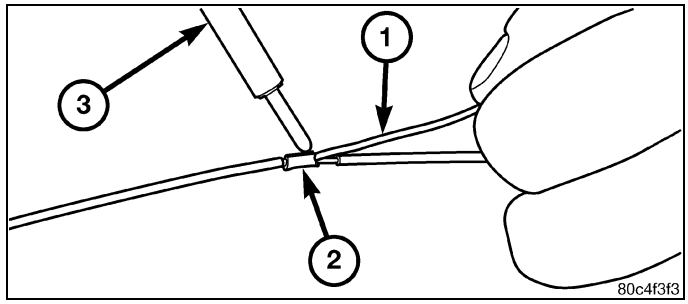

6. Center the heat shrink tubing (2) over the splice joint repair and heat using a suitable heat gun. Heat the joint until the tubing is tightly sealed and sealant (1) begins to ooze out of both ends of the tubing.

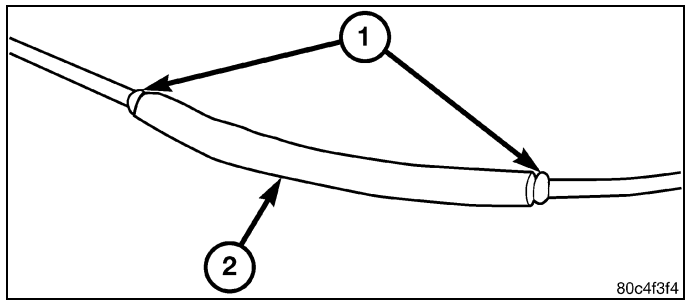

SUPPLEMENTAL RESTRAINTS VERIFICATION TEST

NOTE: The following procedure should be performed using a diagnostic scan tool to verify proper Supplemental Restraint System (SRS) operation following the service or replacement of any SRS component. Refer to the appropriate diagnostic procedures.

WARNING: To avoid serious or fatal injury on vehicles equipped with airbags, disable the Supplemental Restraint System (SRS) before attempting any steering wheel, steering column, airbag, seat belt tensioner, impact sensor or instrument panel component diagnosis or service. Disconnect and isolate the battery negative (ground) cable, then wait two minutes for the system capacitor to discharge before performing further diagnosis or service. This is the only sure way to disable the SRS. Failure to take the proper precautions could result in accidental airbag deployment.

1. During the following test, the battery negative cable remains disconnected and isolated, as it was during the Supplemental Restraint System (SRS) component removal and installation procedures.
2. Be certain that the diagnostic scan tool contains the latest version of the proper diagnostic software. Connect the scan tool to the 16-way Data Link Connector (DLC) (2). The DLC is located on the driver side lower edge of the instrument panel, near the steering column opening cover (1) and outboard of the steering column.
3. Turn the ignition switch to the ON position and exit the vehicle with the scan tool.
4. Check to be certain that nobody is in the vehicle, then reconnect the battery negative cable.
5. Using the scan tool, read and record the active (current) Diagnostic Trouble Code (DTC) data.
6. Next, use the scan tool to read and record any stored (historical) DTC data.

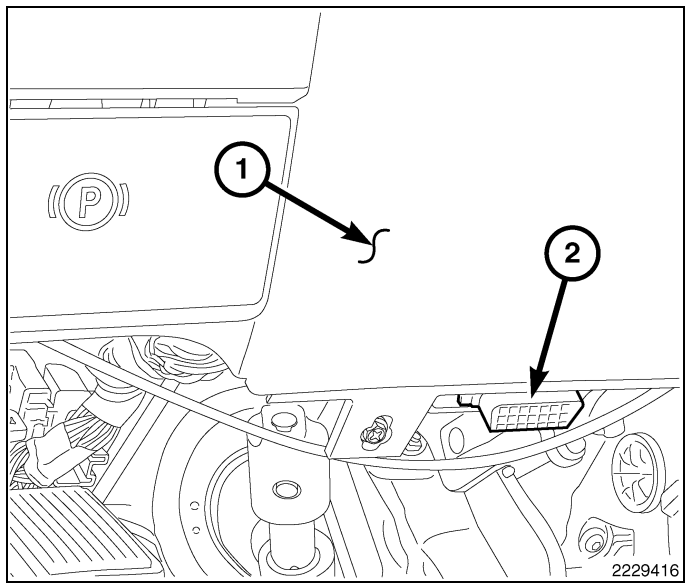

7. If any DTC is found in Step #5 or Step #6, refer to the appropriate diagnostic information.
8. Use the scan tool to erase the stored DTC data. If any problems remain, the stored DTC data will not erase. Refer to the appropriate diagnostic information to diagnose any stored DTC that will not erase. If the stored DTC information is successfully erased, go to Step #9.
9. Turn the ignition switch to the OFF position for about 15 seconds, and then back to the ON position. Observe the airbag indicator in the instrument cluster. It should light from four to six seconds, and then go out. This indicates that the SRS is functioning normally and that the repairs are complete. If the airbag indicator fails to light, or lights and stays ON, there is still an active SRS fault or malfunction. Refer to the appropriate diagnostic information to diagnose the problem.

Specifications

TORQUE SPECIFICATIONS

DESCRIPTION	N·m	Ft. Lbs.	In. Lbs.
Turning Loop Height Adjuster Mounting Screw	39	29	-
Passenger Airbag Lower Bracket Mounting Screws	8	-	71
Side Curtain Airbag Mounting Screws	7	-	62
Child Restraint Tether Strap Mounting Screw	14	10	-
Front Center Seat Belt Center Buckle or Center Anchor Buckle Lower Anchor Mounting Screw	39	29	-
Front Outboard Seat Belt Buckle Lower Anchor Mounting Screw	25	18	-
Rear Seat Belt Center Buckle and Left Outboard Buckle Lower Anchor Bracket Mounting Screws	39	29	-

TORQUE SPECIFICATIONS, continued

DESCRIPTION	N·m	Ft. Lbs.	In. Lbs.
Clockspring Mounting Screws	3	-	25
Occupant Restraint Controller Mounting Nuts	12	9	-
Front Center Seat Belt Retractor Lower Bracket Mounting Screws	39	29	-
Front Center Seat Belt Bracket To Body Bracket Mounting Screws	20	15	-
Front Outboard Seat Belt Retractor Upper Bracket Mounting Screw	12	-	106
Front Outboard Seat Belt Retractor Lower Bracket Mounting Screw	39	29	-
Front Outboard Seat Belt Turning Loop Mounting Screw	39	29	-
Front Outboard Seat Belt Lower Anchor Mounting Screw	39	29	-
Rear Center Seat Belt Bracket To Body Bracket Mounting Screws	20	15	-
Rear Center Seat Belt Retractor Lower Bracket Mounting Screws	39	29	-
Rear Outboard Seat Belt Retractor Lower Bracket Mounting Screw	39	29	-
Rear Outboard Seat Belt Turning Loop Mounting Screw	39	29	-
Rear Outboard Seat Belt Lower Anchor Mounting Screw	39	29	-
Front Impact Sensor Mounting Screw	10	-	90
Side Acceleration-Type Impact Sensor Mounting Screws	9	-	80

Special Tools

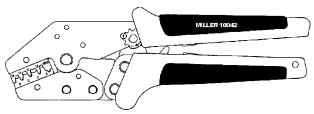

10042 - Crimper, Wire/Terminal

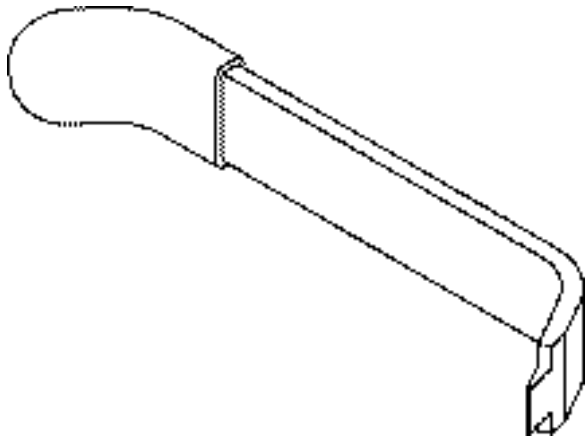

10187 - Remover Tool, Driver's Airbag

ADJUSTER, Seat Belt Turning Loop

Removal

WARNING: To avoid serious or fatal injury during and following any seat belt or child restraint anchor service, carefully inspect all seat belts, buckles, mounting hardware, retractors, tether straps, and anchors for proper installation, operation, or damage. Replace any belt that is cut, frayed, or torn. Straighten any belt that is twisted. Tighten any loose fasteners. Replace any belt that has a damaged or ineffective buckle or retractor. Replace any belt that has a bent or damaged latch plate or anchor plate. Replace any child restraint anchor or the unit to which the anchor is integral that has been bent or damaged. Never attempt to repair a seat belt or child restraint component. Always replace damaged or ineffective seat belt and child restraint components with the correct, new and unused replacement parts listed in the Chrysler Mopar® Parts Catalog. Failure to follow these instructions may result in possible serious or fatal injury.

1. Firmly grasp the top of the trim cover (2) for the front seat belt turning loop height adjuster (1) on the inside of the upper B-pillar and pull it away from the height adjuster far enough unsnap it, then disengage the lower snap features of the trim cover from the adjuster and discard. The trim cover is a one time component and is not intended for reuse.
2. Remove the screw (4) that secures the front seat belt (3) turning loop to the height adjuster on the inside of the upper B-pillar.
3. Remove the seat belt turning loop from the height adjuster.

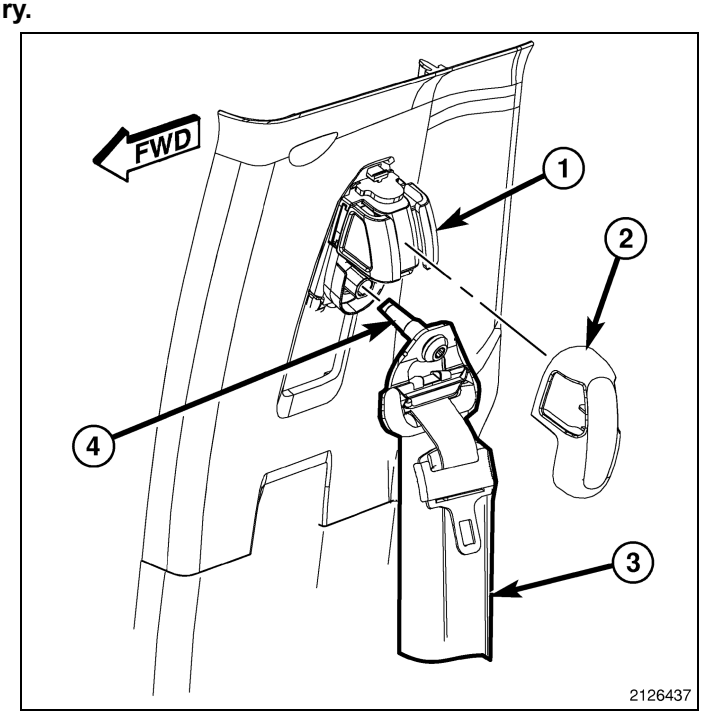

4. Remove the upper trim from the inside of the B-pillar (1). (Refer to 23 - Body/Interior/PANEL, B-Pillar Trim - Removal).
5. Remove the screw (2) that secures the height adjuster (3) to the inside of the upper B-pillar.
6. Lift the height adjuster upward on the B-pillar far enough to disengage the hook (4) on the back of the adjuster from the B-pillar.
7. Rotate the top of the adjuster down and rearward to a horizontal position in order to disengage the T-tab (5) near the lower end of the height adjuster from the hole in the B-pillar.
8. Remove the height adjuster from the B-pillar.

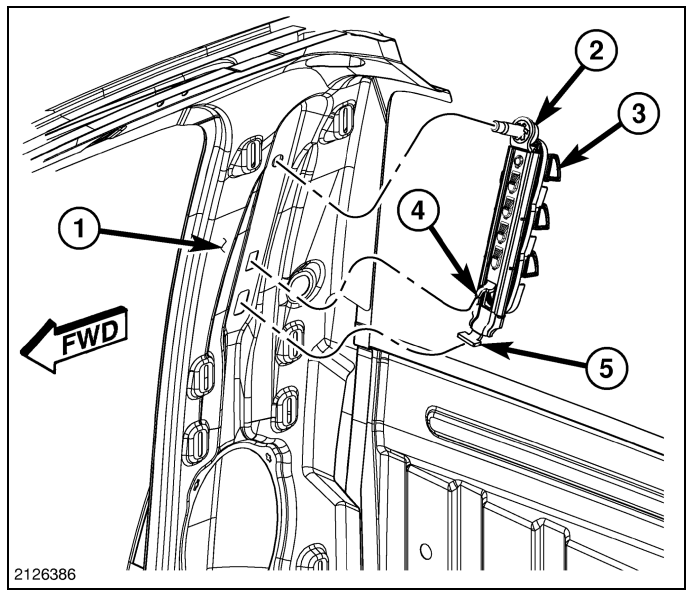

Installation

WARNING: To avoid serious or fatal injury during and following any seat belt or child restraint anchor service, carefully inspect all seat belts, buckles, mounting hardware, retractors, tether straps, and anchors for proper installation, operation, or damage. Replace any belt that is cut, frayed, or torn. Straighten any belt that is twisted. Tighten any loose fasteners. Replace any belt that has a damaged or ineffective buckle or retractor. Replace any belt that has a bent or damaged latch plate or anchor plate. Replace any child restraint anchor or the unit to which the anchor is integral that has been bent or damaged. Never attempt to repair a seat belt or child restraint component. Always replace damaged or ineffective seat belt and child restraint components with the correct, new and unused replacement parts listed in the Chrysler Mopar® Parts Catalog. Failure to follow these instructions may result in possible serious or fatal injury.

1. Position the front seat belt turning loop height adjuster (3) horizontally to the inside of the upper B-pillar (1) with the top of the adjuster oriented rearward.
2. Engage the T-tab (5) near the lower end of the height adjuster into the hole in the B-pillar.
3. Rotate the top of the height adjuster up and forward to a vertical position on the inside of the B-pillar.
4. Lift the height adjuster upward on the B-pillar far enough to engage the hook (4) on the back of the adjuster into the B-pillar clearance hole.
5. Install and tighten the screw (2) that secures the height adjuster to the inside of the upper B-pillar. Tighten the screw to 39 N·m (29 ft. lbs.).
6. Reinstall the upper trim onto the inside of the B-pillar. (Refer to 23 - Body/Interior/PANEL, B-Pillar Trim - Installation).

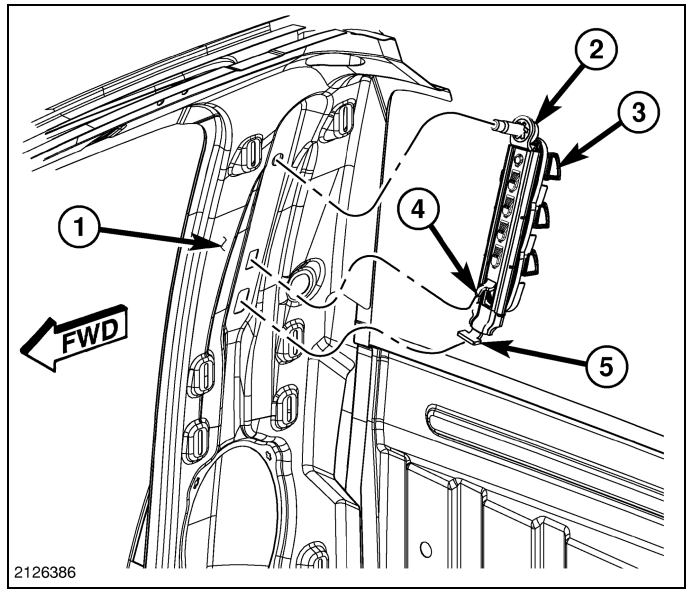

7. Position the front seat belt (3) turning loop onto the height adjuster (1) on the inside of the upper B-pillar.
8. Install and tighten the screw (4) that secures the turning loop to the height adjuster. Tighten the screw to 39 N·m (29 ft. lbs.).
9. Engage the lower snap features of a new trim cover (2) under the height adjuster, then use hand pressure to press the top of the trim cover firmly and evenly over the height adjuster until it snaps into place.

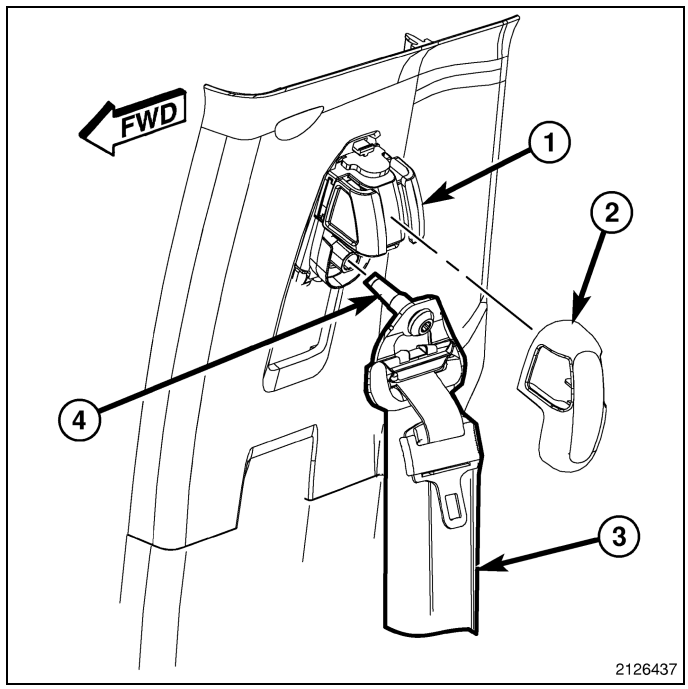

AIR BAG, Driver

Description

The injection molded, thermoplastic driver airbag protective trim cover (2) is the most visible part of the driver airbag. The driver airbag is located in the center of the steering wheel (1), where it is secured to the armature of the four-spoke steering wheel. An injection molded bright emblem with the Dodge Ram logo is applied to the center of the trim cover.

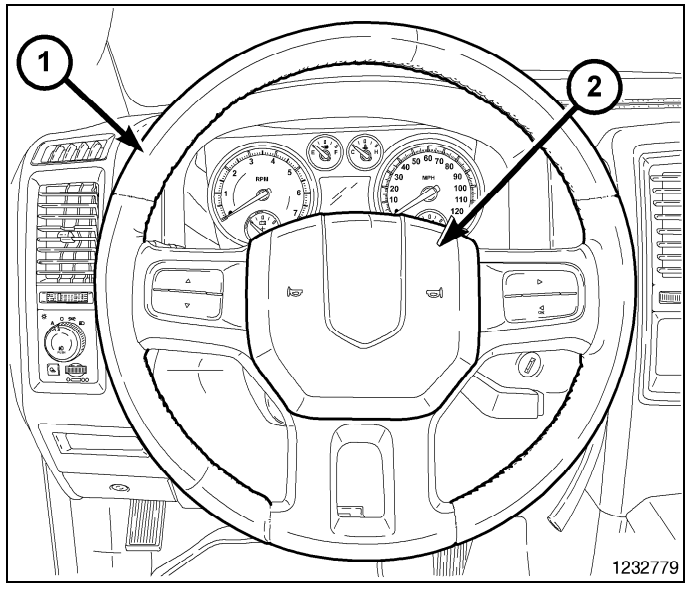

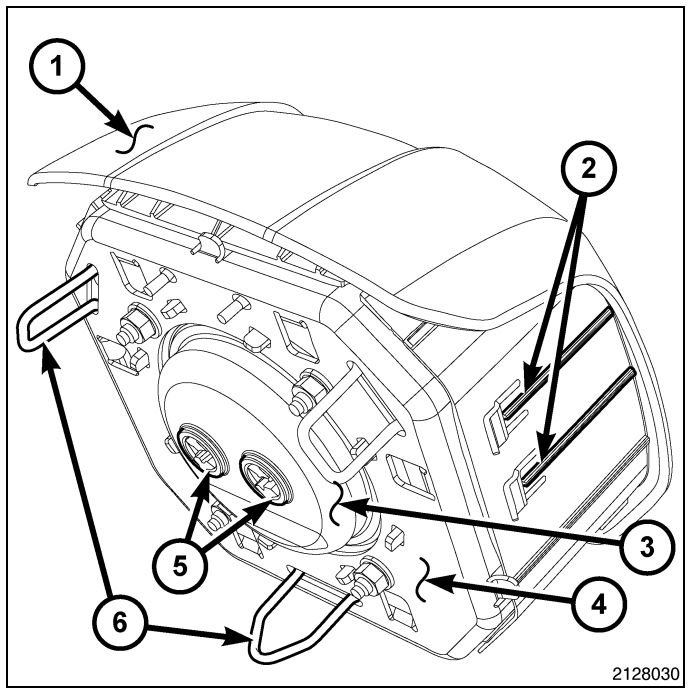

Concealed beneath the driver airbag trim cover (1) are the folded airbag cushion, the airbag housing (4), the airbag inflator (3) and the retainers that secure the inflator to the airbag housing. The airbag cushion, housing, and inflator are secured within an integral receptacle molded into the back of the trim cover. The four vertical walls of this receptacle have numerous small windows with blocking tabs (2) that are engaged by numerous hook formations around the perimeter of the airbag housing. Each hook is inserted through one of the windows and the blocking tab in each window keeps the hook properly engaged with the trim cover, locking the trim cover securely into place on the airbag housing.

Three wire loop snap retainers (6) extend from the housing to secure the airbag to the steering wheel armature. The wire loop at the 6 o'clock position has a distinctive V-shape to ensure proper orientation of the airbag when it is installed onto the steering wheel. Unlike many prior driver airbags, the horn switch used for this application is not a resistive membrane unit located between the airbag cushion and trim cover. The horn switch used in this vehicle is a floating type switch design that is secured to four pods within the steering wheel hub cavity and is separate from the driver airbag. (Refer to 08 - Electrical/8H - Horn - Description).

The airbag used in this vehicle is a multistage-type that complies with revised federal airbag standards to deploy with less force than those used in some prior vehicles. A radial deploying 67 centimeter (26.5 inch) diameter fabric cushion with internal tethers is used. The airbag inflator is a dual-initiator, non-azide, pyrotechnic-type unit and is secured to the stamped metal airbag housing by four studs using four flanged hex nuts. Two keyed and color-coded connector receptacles (5) on the driver airbag inflator connect the two inflator initiators to the vehicle electrical system through two black-jacketed, two-wire pigtail harnesses of the clockspring.

The driver airbag unit cannot be repaired, and must be replaced if deployed, ineffective or in any way damaged. The driver airbag trim cover may be disassembled from the driver airbag unit, and is available for separate service replacement.

Operation

The multistage driver airbag is deployed by electrical signals generated by the Occupant Restraint Controller (ORC) through the driver airbag squib 1 and squib 2 circuits to the two initiators in the airbag inflator. By using two initiators, the airbag can be deployed at multiple levels of force. The force level is controlled by the ORC to suit the monitored impact conditions by providing one of several delay intervals between the electrical signals provided to the two initiators. The longer the delay between these signals, the less forcefully the airbag will deploy.

When the ORC sends the proper electrical signals to each initiator, the electrical energy generates enough heat to initiate a small pyrotechnic charge, which in turn ignites chemical pellets within the inflator. Once ignited, these chemical pellets burn rapidly and produce a large quantity of inert gas. The inflator is sealed to the back of the airbag housing and a diffuser in the inflator directs all of the inert gas into the airbag cushion, causing the cushion to inflate. As the cushion inflates, the driver airbag trim cover will split at predetermined breakout lines, then fold back out of the way. Following an airbag deployment, the airbag cushion quickly deflates by venting the inert gas towards the instrument panel through vent holes within the fabric used to construct the back (steering wheel side) panel of the airbag cushion.

Some of the chemicals used to create the inert gas may be considered hazardous while in their solid state before they are burned, but they are securely sealed within the airbag inflator. Typically, both initiators are used and all potentially hazardous chemicals are burned during an airbag deployment event. However, it is possible for only one initiator to be used during a deployment due to an airbag system fault; therefore, it is necessary to always confirm that both initiators have been used in order to avoid the improper disposal of potentially live pyrotechnic or hazardous materials. (Refer to 10 - Restraints - Standard Procedure).

The inert gas that is produced when the chemicals are burned is harmless. However, a small amount of residue from the burned chemicals may cause some temporary discomfort if it contacts the skin, eyes, or breathing passages. If skin or eye irritation is noted, rinse the affected area with plenty of cool, clean water. If breathing passages are irritated, move to

another area where there is plenty of clean, fresh air to breath. If the irritation is not alleviated by these actions, contact a physician.

Proper diagnosis of the driver airbag inflator and squib circuits requires the use of a diagnostic scan tool. Refer to the appropriate diagnostic information.

Removal

WARNING: To avoid serious or fatal injury on vehicles equipped with airbags, disable the Supplemental Restraint System (SRS) before attempting any steering wheel, steering column, airbag, seat belt tensioner, impact sensor or instrument panel component diagnosis or service. Disconnect and isolate the battery negative (ground) cable, then wait two minutes for the system capacitor to discharge before performing further diagnosis or service. This is the only sure way to disable the SRS. Failure to take the proper precautions could result in accidental airbag deployment.

WARNING: To avoid serious or fatal injury when removing a deployed airbag, rubber gloves, eye protection, and a long-sleeved shirt should be worn. There may be deposits on the airbag cushion and other interior surfaces. In large doses, these deposits may cause irritation to the skin and eyes.

NOTE: The following procedure is for replacement of an ineffective or damaged driver airbag. If the airbag is ineffective or damaged, but not deployed, review the recommended procedures for handling non-deployed supplemental restraints. (Refer to 10 - Restraints - Standard Procedure). If the driver airbag has been deployed, review the recommended procedures for service after a supplemental restraint deployment before removing the airbag from the vehicle. (Refer to 10 - Restraints - Standard Procedure).

1. Disconnect and isolate the battery negative cable. Wait two minutes for the system capacitor to discharge before further service.
2. Remove the upper shroud from the steering column. (Refer to 19 - Steering/Column/SHROUD, Steering Column - Removal).
   .
3. Release the steering column tilt lever and lower the column to its most downward position for easiest driver airbag removal access.

NOTE: It may be helpful to use a small mirror to aid visibility during the initial attempt to remove the driver airbag from the steering wheel.

4. There are three airbag retainer access holes (1) on the instrument panel side of the hub of the steering wheel (2), located at the two o'clock, six o'clock and ten o'clock positions. The steering wheel must be rotated to bring each of these access holes up to the twelve o'clock position of the steering column one at a time for removal access.

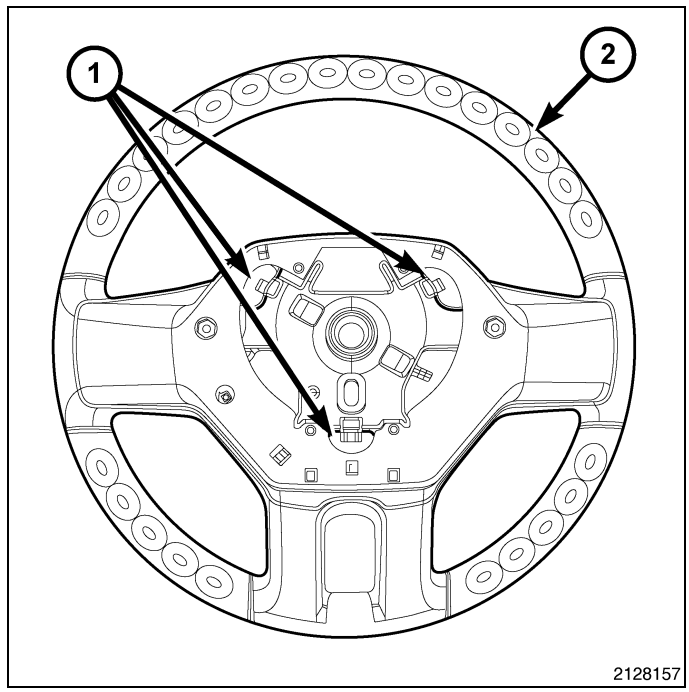

5. Insert the short blade (Tip A) of the Driver Airbag Removal Tool (Special Tool #10187) (1) or the blade of an equivalent prying tool into either of the upper (two o'clock or ten o'clock) access holes (3) of the steering wheel hub rear trim cover (2), being certain to place the blade of the tool on the inboard (steering wheel hub) side of the airbag snap retainer wire loop.

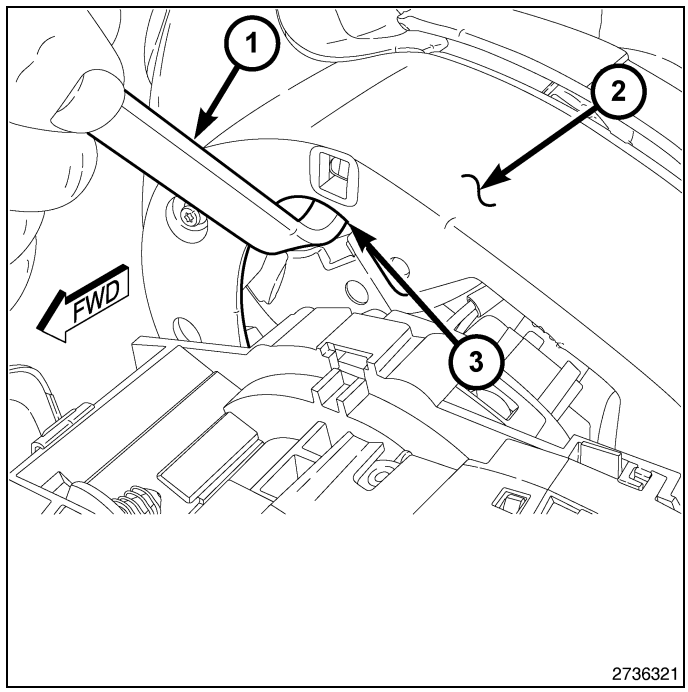

6. Push the handle of the tool downward for the blade to pry the snap retainer wire loop (3) upward far enough to disengage the loop from the hook of the steering wheel armature. At the same time, gently pull the driver airbag (1) away from the steering wheel (2) to prevent the retainer from snapping back into place over the hook once it is disengaged.
7. Repeat Steps 5 and 6 at the other upper (two o'clock or ten o'clock) access hole to disengage the other upper snap retainer wire loop.
8. Repeat Steps 5 and 6 at the lower (six o'clock) access hole to disengage the lower snap retainer wire loop. The lower snap retainer wire loop has a distinctive V-shape and must always be installed onto the six o'clock hook of the steering wheel armature.

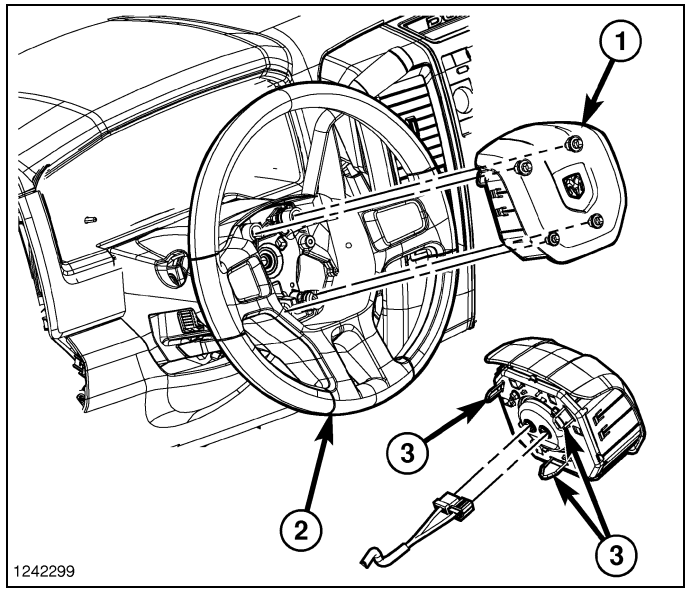

9. Pull the driver airbag (1) away from the steering wheel far enough to access the electrical connections (3) on the back of the airbag housing.

CAUTION: Do not pull on the clockspring pigtail wires or pry on the connector insulator to disengage the connector from the driver airbag inflator connector receptacle. Improper removal of these pigtail wires and their connector insulators can result in damage to the airbag circuits or connector insulators.

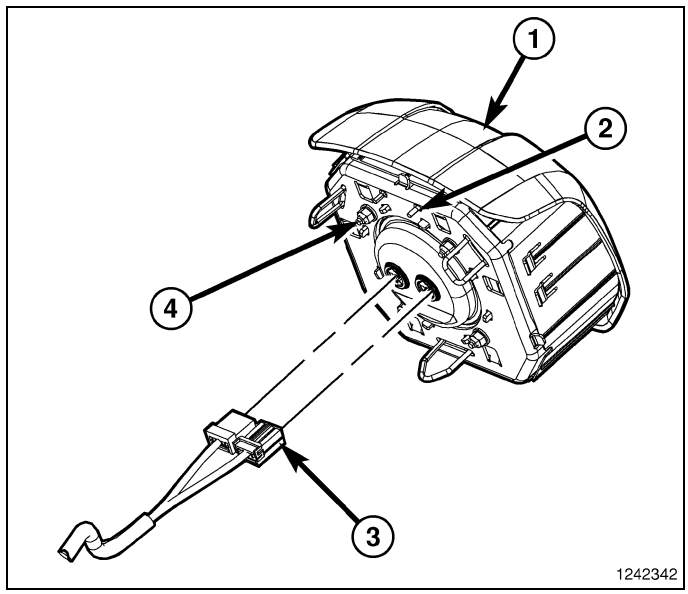

10. The clockspring driver airbag pigtail wire connector insulators (1) are secured by integral latches (2) to the airbag inflator connector receptacles, which are located on the back of the driver airbag housing. Pinch both latches firmly, then pull the insulators straight out from the airbag inflator to disconnect them from the connector receptacles.
11. Remove the driver airbag from the steering wheel.
12. If the driver airbag has been deployed, the clockspring and the steering column must be replaced.

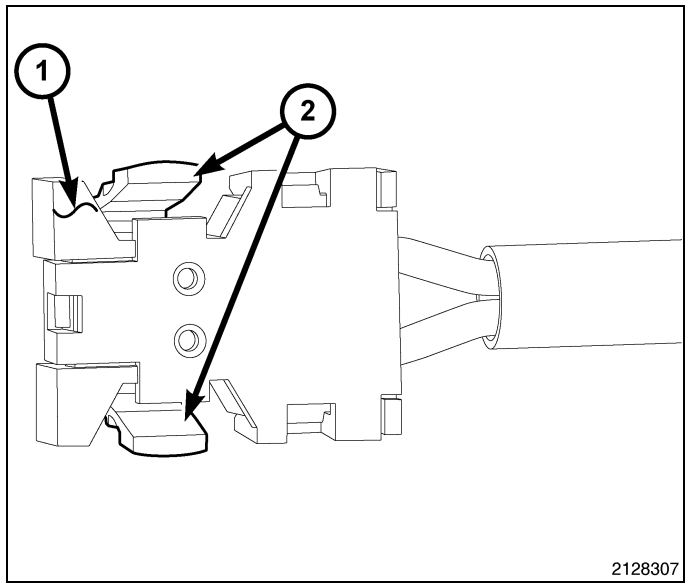

Disassembly

WARNING: To avoid serious or fatal injury on vehicles equipped with airbags, disable the Supplemental Restraint System (SRS) before attempting any steering wheel, steering column, airbag, seat belt tensioner, impact sensor or instrument panel component diagnosis or service. Disconnect and isolate the battery negative (ground) cable, then wait two minutes for the system capacitor to discharge before performing further diagnosis or service. This is the only sure way to disable the SRS. Failure to take the proper precautions could result in accidental airbag deployment.

WARNING: To avoid serious or fatal injury, service of this unit should be performed only by Chrysler-trained and authorized dealer service technicians. Failure to take the proper precautions or to follow the proper procedures could result in accidental, incomplete, or improper airbag deployment and possible occupant injuries.

WARNING: To avoid serious or fatal injury, use extreme care to prevent any foreign material from entering the Driver AirBag (DAB), or becoming entrapped between the DAB cushion and the DAB trim cover. Failure to observe this warning could result in occupant injuries upon airbag deployment.

WARNING: To avoid serious or fatal injury, the Driver AirBag (DAB) trim cover must never be painted. Replacement trim covers are serviced in the original colors. Paint may change the way in which the material of the trim cover responds to an airbag deployment. Failure to observe this warning could result in occupant injuries upon airbag deployment.

NOTE: The following procedures can be used to replace the driver airbag trim cover for service of cosmetic damage issues. If the driver airbag is ineffective or deployed, the entire driver airbag and trim cover must be replaced as a unit.

1. Disconnect and isolate the battery negative cable. Wait two minutes for the system capacitor to discharge before further service.
2. Remove the driver airbag from the steering wheel. (Refer to 10 - Restraints/AIR BAG, Driver - Removal).
3. Place the driver airbag on a suitable clean and dry work surface with the trim cover (1) facing down. If the trim cover will be reused, be certain to take the proper precautions to prevent the trim cover from receiving cosmetic damage during the following procedures.
4. Disengage each of the twelve hooks (3) of the airbag housing (2) from the twelve windows in the vertical walls of the trim cover, one wall at a time. Start by disengaging the upper wall, then do each of the two side walls, and finish with the lower wall. To disengage the hooks, use hand pressure to push outward on the upper edge of the receptacle wall far enough to clear the locating tab (4) on the airbag housing, at the same time push the adjacent edge of the airbag housing firmly and evenly downward into the trim cover receptacle.
5. With all of the hooks disengaged, lift the housing, inflator, and cushion as a unit from the receptacle on the back of the driver airbag trim cover.

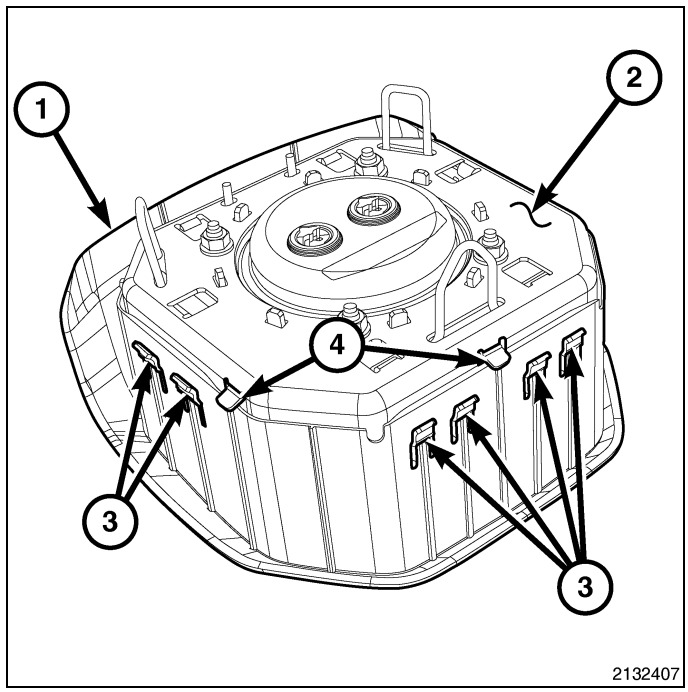

Assembly

WARNING: To avoid serious or fatal injury on vehicles equipped with airbags, disable the Supplemental Restraint System (SRS) before attempting any steering wheel, steering column, airbag, seat belt tensioner, impact sensor or instrument panel component diagnosis or service. Disconnect and isolate the battery negative (ground) cable, then wait two minutes for the system capacitor to discharge before performing further diagnosis or service. This is the only sure way to disable the SRS. Failure to take the proper precautions could result in accidental airbag deployment.

WARNING: To avoid serious or fatal injury, service of this unit should be performed only by Chrysler-trained and authorized dealer service technicians. Failure to take the proper precautions or to follow the proper procedures could result in accidental, incomplete, or improper airbag deployment and possible occupant injuries.

WARNING: To avoid serious or fatal injury, use extreme care to prevent any foreign material from entering the Driver AirBag (DAB), or becoming entrapped between the DAB cushion and the DAB trim cover. Failure to observe this warning could result in occupant injuries upon airbag deployment.

WARNING: To avoid serious or fatal injury, the Driver AirBag (DAB) trim cover must never be painted. Replacement trim covers are serviced in the original colors. Paint may change the way in which the material of the trim cover responds to an airbag deployment. Failure to observe this warning could result in occupant injuries upon airbag deployment.

NOTE: The following procedures can be used to replace the driver airbag trim cover and horn switch unit for service. If the driver airbag is ineffective or deployed, the entire driver airbag, trim cover and horn switch must be replaced as a unit.

1. Place the driver airbag trim cover (1) on a suitable clean and dry work surface with the receptacle facing up. Be certain to take the proper precautions to prevent the trim cover from receiving cosmetic damage during the following procedures.
2. Position the driver airbag housing (2), inflator, and cushion as a unit over the trim cover receptacle.
3. Using hand pressure, push the airbag housing firmly and evenly down into the trim cover receptacle far enough that the hooks (3) of the housing are aligned with the windows in the vertical walls of the receptacle.
4. Work around the perimeter of the unit engaging each of the twelve hooks on the driver airbag housing through the twelve windows in the walls of the trim cover receptacle.
5. After the driver airbag has been assembled, try pulling the trim cover and the airbag housing away from each other. This action will fully seat the edges of the windows into the cradles of the hooks and the vertical walls of the receptacle beneath the locating tabs (4) of the housing.
6. Before reinstalling the airbag onto the steering wheel, check that the blocking tab (1) in each of the trim cover (2) windows is oriented over the airbag housing hook (3) as shown.
7. Reinstall the driver airbag onto the steering wheel. (Refer to 10 - Restraints/AIR BAG, Driver - Installation).

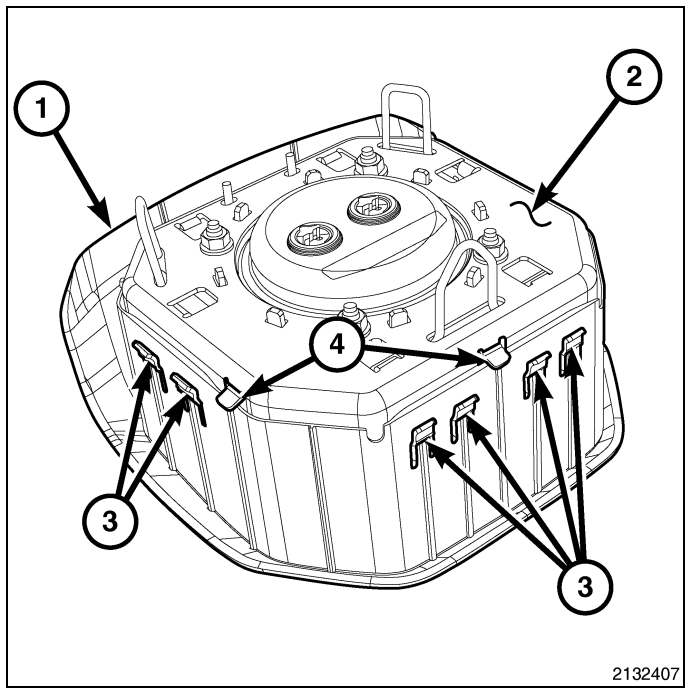

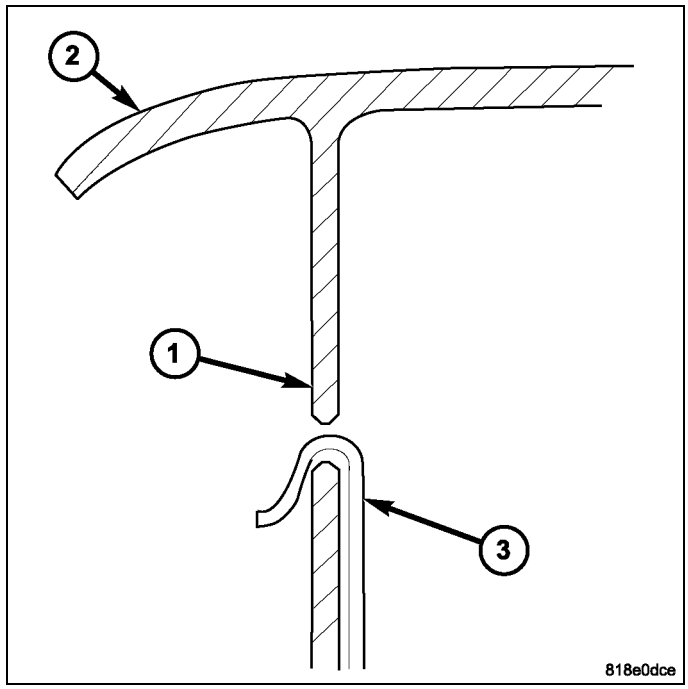

Installation

WARNING: To avoid serious or fatal injury on vehicles equipped with airbags, disable the Supplemental Restraint System (SRS) before attempting any steering wheel, steering column, airbag, seat belt tensioner, impact sensor or instrument panel component diagnosis or service. Disconnect and isolate the battery negative (ground) cable, then wait two minutes for the system capacitor to discharge before performing further diagnosis or service. This is the only sure way to disable the SRS. Failure to take the proper precautions could result in accidental airbag deployment.

WARNING: To avoid serious or fatal injury, use extreme care to prevent any foreign material from entering the Driver AirBag (DAB), or becoming entrapped between the DAB cushion and the DAB trim cover. Failure to observe this warning could result in occupant injuries upon airbag deployment.

WARNING: To avoid serious or fatal injury, the driver airbag trim cover must never be painted. Replacement airbags are serviced with trim covers in the original colors. Paint may change the way in which the material of the trim cover responds to an airbag deployment. Failure to observe this warning could result in occupant injuries upon airbag deployment.

NOTE: The following procedure is for replacement of an ineffective or damaged driver airbag. If the airbag is ineffective or damaged, but not deployed, review the recommended procedures for handling non-deployed supplemental restraints. (Refer to 10 - Restraints - Standard Procedure). If the driver airbag has been deployed, review the recommended procedures for service after a supplemental restraint deployment before removing the airbag from the vehicle. (Refer to 10 - Restraints - Standard Procedure).

1. Position the driver airbag (1) close enough to the steering wheel to reconnect the electrical connections (3) to the back of the airbag housing.
2. When installing the driver airbag, reconnect the two clockspring driver airbag pigtail wire connectors to the airbag inflator connector receptacles by pressing straight in on the connector insulator. Be certain to engage each keyed and color-coded connector to the matching connector receptacle. You can be certain that each connector is fully engaged in its receptacle by listening carefully for a distinct, audible click as the connector latches snap into place.

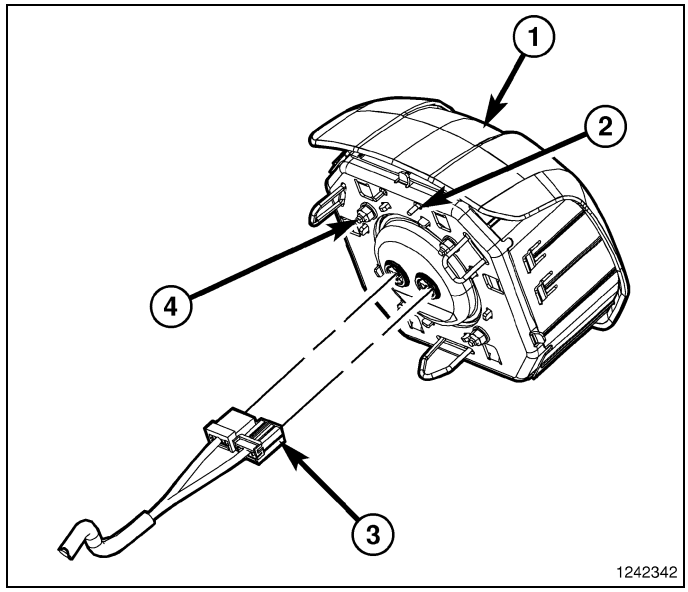

3. Carefully position the driver airbag (1) into the hub cavity of the steering wheel (2). Be certain that the clockspring pigtail wires and the steering wheel wire harness are not pinched between the driver airbag and the horn switch or steering wheel armature.
4. Engage the lower airbag snap retainer wire loop (3) onto the lower hook of the steering wheel armature. The lower snap retainer wire loop has a distinctive V-shape and must always be installed onto the six o'clock hook of the steering wheel armature.
5. Roll the driver airbag upwards and press firmly and evenly over the two upper snap retainer wire loop locations simultaneously until they snap into place over the two upper hooks of the steering wheel armature.
6. Reinstall the upper shroud onto the steering column. (Refer to 19 - Steering/Column/SHROUD, Steering Column - Installation).

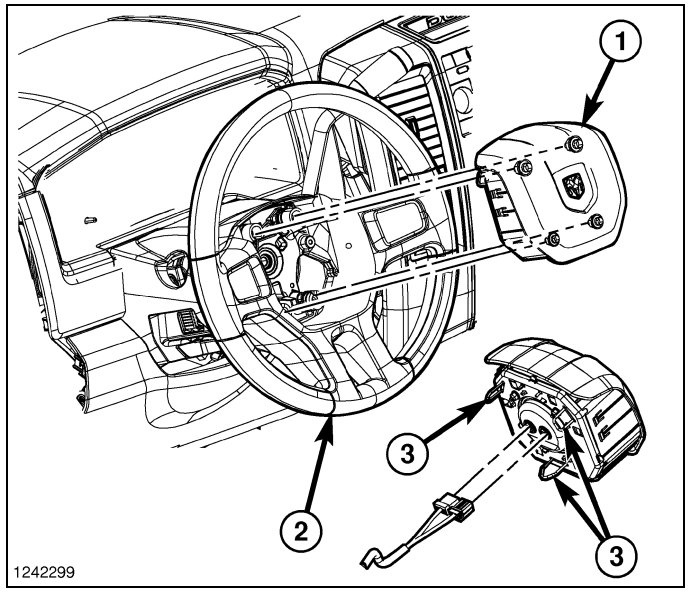

7. Do not reconnect the battery negative cable at this time. The Supplemental Restraint System (SRS) verification test procedure should be performed following service of any SRS component. (Refer to 10 - Restraints - Standard Procedure).

AIR BAG, Passenger

Description

The horizontal surface of the instrument panel trim cover (1) above the upper glove box/storage bin is the most visible part of the passenger airbag. The passenger airbag door is integral to the top of the instrument panel trim cover forward of the upper glove box/storage bin opening on the instrument panel in front of the front seat passenger seating position.

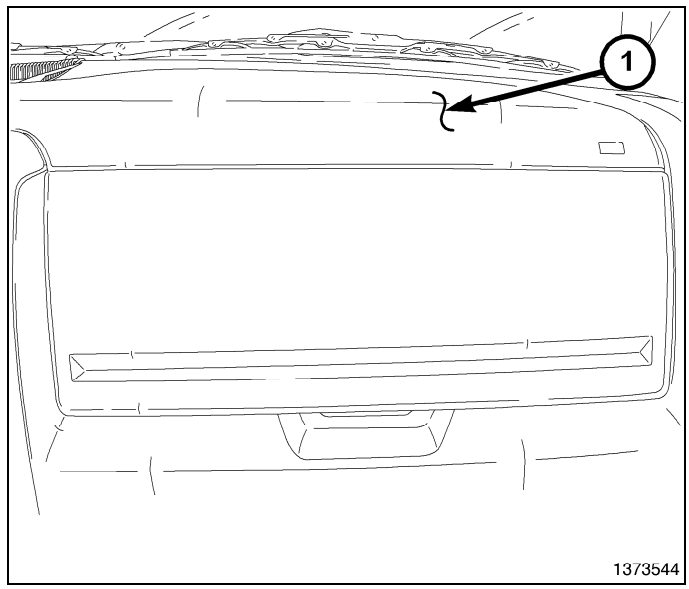

Located below the passenger airbag door area of the instrument panel trim cover (1), the molded thermoplastic passenger airbag retainer (2) or chute is secured to the underside of the trim cover. The retainer defines the airbag door breakout area of the trim cover and serves as the receptacle for the passenger airbag cushion and housing. Numerous small window openings on the forward and rearward flanges of the receptacle receive mating hook formations stamped into the airbag housing, which locate and secure the housing to the trim cover.

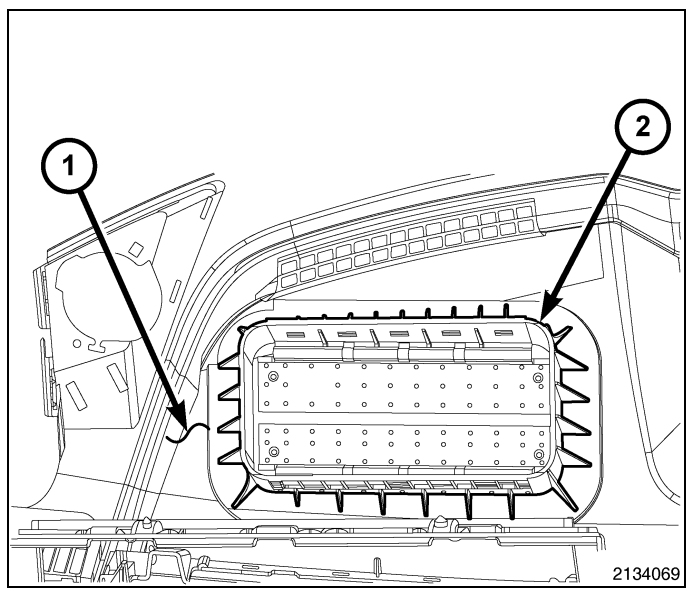

The passenger airbag unit is also secured by two screws through a stamped mounting bracket (2) to the instrument panel structural support. The passenger airbag unit used in this vehicle is a multistage type that complies with revised federal airbag standards to deploy with less force than those used in some prior vehicles.

The passenger airbag unit consists of a stamped metal housing (1), the airbag cushion, and the airbag inflator (3). The airbag inflator is secured to the housing by four screws and nuts. The airbag housing contains the folded rectangular airbag cushion. The folded airbag cushion within the metal housing should never be unfolded.

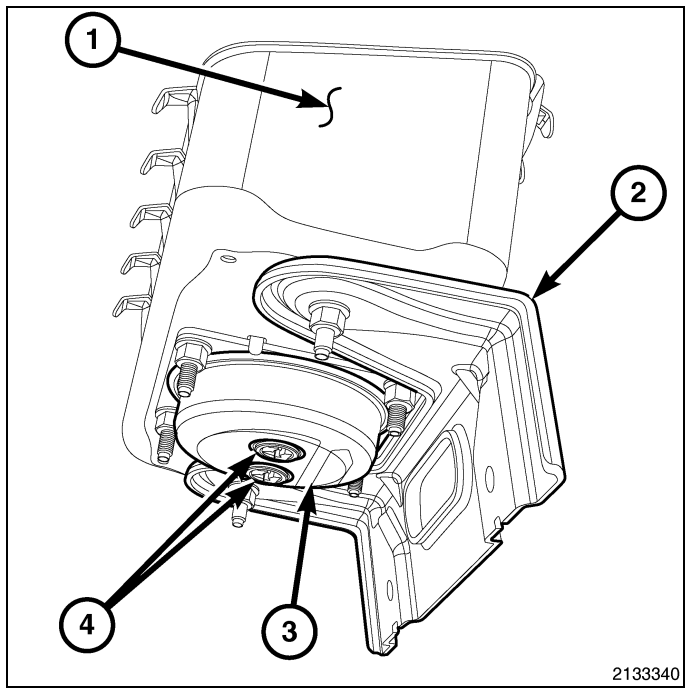

The airbag inflator is a non-azide, pyrotechnic-type unit that is secured to and sealed within the airbag housing. Two dedicated takeouts and yellow connectors of the instrument panel wire harness with keyed, and color-coded (black and orange) insulators connect the two inflator initiators (4) to the vehicle electrical system.

The passenger airbag cannot be repaired, and must be replaced if deployed, ineffective, or in any way damaged. The passenger airbag door and retainer are serviced only as a unit with the instrument panel trim cover. If the passenger airbag is deployed, the instrument panel trim cover must also be replaced.

Operation

The multistage passenger airbag is deployed by electrical signals generated by the Occupant Restraint Controller (ORC) through the passenger airbag squib 1 and squib 2 circuits to the two initiators in the airbag inflator. By using two initiators, the airbag can be deployed at multiple levels of force. The force level is controlled by the ORC to suit the monitored impact conditions by providing one of multiple delay intervals between the electrical signals provided to the two initiators. The longer the delay between these signals, the less forcefully the airbag will deploy.

When the ORC sends the proper electrical signals to each initiator, the electrical energy generates enough heat to initiate a small pyrotechnic charge which, in turn ignites chemical pellets within the inflator. Once ignited, these chemical pellets burn rapidly and produce a large quantity of inert gas. The inflator is sealed to the airbag cushion and a diffuser in the inflator directs all of the inert gas into the airbag cushion, causing the cushion to inflate. As the cushion inflates, the passenger airbag door area of the instrument panel top pad will split at predetermined tear seam lines concealed on the underside of the instrument panel trim cover, then the door will pivot up over the top of the instrument panel and out of the way. Following an airbag deployment, the airbag cushion quickly deflates by venting the inert gas through a discrete vent hole in each fabric side panel of the airbag cushion.

The airbag cushion in this vehicle also has an active vent located on each side of the cushion. The active vents close during an unobstructed deployment to provide a fully inflated bag. However, if the deployment is obstructed by an out-of-position passenger, the active vents open to reduce the likelihood of an airbag-induced injury.

Typically, both initiators are used during an airbag deployment event. However, it is possible for only one initiator to be used during a deployment due to an airbag system fault; therefore, it is necessary to always confirm that both initiators have been used in order to avoid the improper disposal of potentially live pyrotechnic materials. (Refer to 10 - Restraints - Standard Procedure).

Proper diagnosis of the passenger airbag inflator and the passenger airbag squib circuits requires the use of a diagnostic scan tool. Refer to the appropriate diagnostic information.

Removal

WARNING: To avoid serious or fatal injury on vehicles equipped with airbags, disable the Supplemental Restraint System (SRS) before attempting any steering wheel, steering column, airbag, seat belt tensioner, impact sensor or instrument panel component diagnosis or service. Disconnect and isolate the battery negative (ground) cable, then wait two minutes for the system capacitor to discharge before performing further diagnosis or service. This is the only sure way to disable the SRS. Failure to take the proper precautions could result in accidental airbag deployment.

WARNING: To avoid serious or fatal injury when removing a deployed airbag, rubber gloves, eye protection, and a long-sleeved shirt should be worn. There may be deposits on the airbag unit and other interior surfaces. In large doses, these deposits may cause irritation to the skin and eyes.

NOTE: The following procedure is for replacement of an ineffective or damaged passenger airbag. If the airbag is ineffective or damaged, but not deployed, review the recommended procedures for Handling Non-Deployed Supplemental Restraints. (Refer to 10 - Restraints - Standard Procedure). If the passenger airbag has been deployed, review the recommended procedures for Service After A Supplemental Restraint Deployment before removing the airbag from the vehicle. (Refer to 10 - Restraints - Standard Procedure).

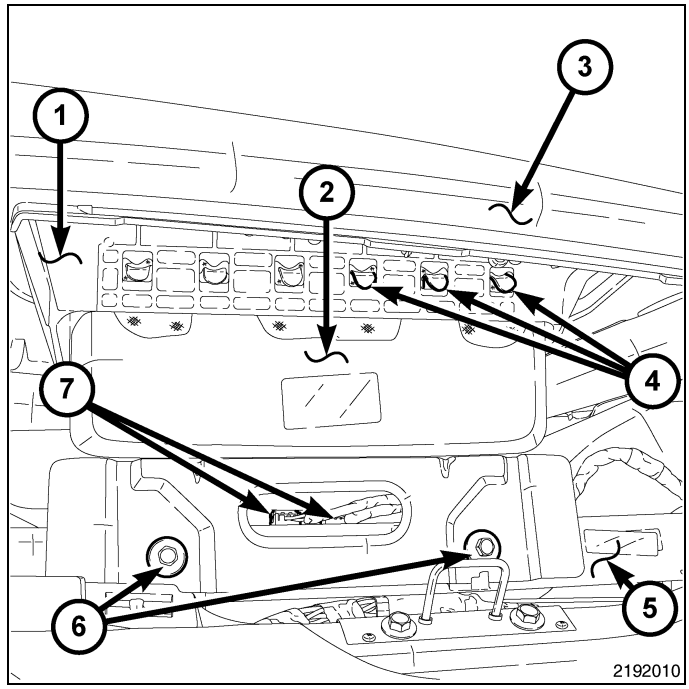

1. Disconnect and isolate the battery negative cable. Wait two minutes for the system capacitor to discharge before further service.
2. Remove the glove box from the instrument panel. (Refer to 23 - Body/Instrument Panel/GLOVE BOX, Instrument Panel - Removal).
3. Remove the upper storage bin/glove box from the instrument panel. (Refer to 23 - Body/Instrument Panel/BIN, Instrument Panel - Removal).
4. Reach through the upper storage bin/glove box opening of the instrument panel to access and remove the two screws (6) that secure the passenger airbag (2) lower bracket to the instrument panel structural support (5).
5. Remove all of the components and fasteners that secure the trim cover (3) to the instrument panel structural support. (Refer to 23 - Body/Instrument Panel/COVER, Instrument Panel - Removal).
6. Slowly and carefully lift the trim cover up from the instrument panel structural support far enough to access and disconnect the instrument panel wire harness connectors (7) from the passenger airbag inflator. To disconnect the connectors:
   a. Pull the connector lock out of the connector insulator.
   b. Pinch both latches firmly, then pull the insulators straight out from the airbag inflator to disconnect them from the connector receptacles.
7. Remove the instrument panel trim cover and passenger airbag from the vehicle as a unit and place it upside down on a suitable work surface. If the trim cover will be reused, be certain to take the proper precautions to protect the trim cover from cosmetic damage.
8. Disengage all of the hooks (4) on one side of the airbag housing from the windows in the forward or rearward vertical wall of the airbag chute/retainer (1) on the underside of the trim cover. To disengage the hooks, use hand pressure to push one edge of the airbag housing firmly and evenly downward into the retainer receptacle. Then, while pulling outward on the adjacent upper edge of the receptacle wall, roll the disengaged side out of the retainer and disengage the hooks on the opposite side from the retainer.
9. With all of the hooks disengaged, lift the housing, inflator, and cushion as a unit from the retainer receptacle on the underside of the instrument panel trim cover.

Installation

WARNING: To avoid serious or fatal injury on vehicles equipped with airbags, disable the Supplemental Restraint System (SRS) before attempting any steering wheel, steering column, airbag, seat belt tensioner, impact sensor

or instrument panel component diagnosis or service. Disconnect and isolate the battery negative (ground) cable, then wait two minutes for the system capacitor to discharge before performing further diagnosis or service. This is the only sure way to disable the SRS. Failure to take the proper precautions could result in accidental airbag deployment.

WARNING: To avoid serious or fatal injury when removing a deployed airbag, rubber gloves, eye protection, and a long-sleeved shirt should be worn. There may be deposits on the airbag unit and other interior surfaces. In large doses, these deposits may cause irritation to the skin and eyes.

WARNING: To avoid serious or fatal injury, use extreme care to prevent any foreign material from entering the passenger airbag, or becoming entrapped between the passenger airbag cushion and the instrument panel trim cover. Failure to observe this warning could result in occupant injuries upon airbag deployment.

WARNING: To avoid serious or fatal injury, the instrument panel trim cover must never be painted. Replacement trim covers are serviced in the original colors. Paint may change the way in which the material of the trim cover responds to an airbag deployment. Failure to observe this warning could result in occupant injuries upon airbag deployment.

NOTE: The following procedure is for replacement of an ineffective or damaged passenger airbag. If the airbag is ineffective or damaged, but not deployed, review the recommended procedures for handling non-deployed supplemental restraints. (Refer to 10 - Restraints - Standard Procedure). If the passenger airbag has been deployed, review the recommended procedures for service after a supplemental restraint deployment before removing the airbag from the vehicle. (Refer to 10 - Restraints - Standard Procedure).

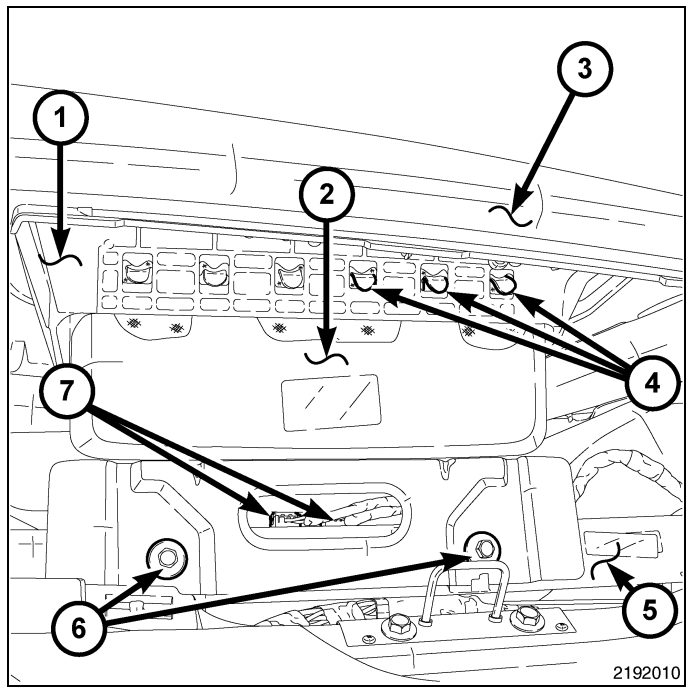

1. Place the instrument panel trim cover (3) on a suitable work surface with the airbag chute/retainer (1) receptacle facing up. Be certain to take the proper precautions to prevent the trim cover from receiving cosmetic damage during the following procedures.
2. Carefully position the passenger airbag housing (2) into the airbag retainer receptacle.
3. Work around the perimeter of the unit engaging each of the hooks (4) on the passenger airbag housing through the windows in the forward and rearward vertical walls of the retainer receptacle.
4. Position the instrument panel trim cover and passenger airbag over the instrument panel structural support (5) as a unit.
5. Lift the trim cover up from the instrument panel structural support far enough to access and reconnect the instrument panel wire harness connectors (7) to the passenger airbag inflator. Be certain that the latches and lock on each connector are fully engaged.
6. Reinstall all of the fasteners and components that secure the trim cover to the instrument panel structural support. (Refer to 23 - Body/Instrument Panel/COVER, Instrument Panel - Installation)(Refer to 23 - Body/Instrument Panel/COVER, Instrument Panel - Installation).
7. Reach through the upper storage bin/glove box opening of the instrument panel to install and tighten the two screws (6) that secure the passenger airbag lower bracket to the instrument panel structural support. Tighten the screws to 8 N·m (71 in. lbs.).
8. Reinstall the upper storage bin/glove box into the instrument panel. (Refer to 23 - Body/Instrument Panel/BIN, Instrument Panel - Installation).
9. Reinstall the glove box into the instrument panel. (Refer to 23 - Body/Instrument Panel/GLOVE BOX, Instrument Panel - Installation).
10. Do not reconnect the battery negative cable at this time. The Supplemental Restraint System (SRS) Verification Test procedure should be performed following service of any SRS component. (Refer to 10 - Restraints - Standard Procedure).

AIR BAG, Side Curtain

Description

Side curtain airbags are standard equipment on this vehicle. These airbags are passive, inflatable, Supplemental Restraint System (SRS) components, and vehicles with this equipment can be readily identified by a molded identification trim button with the **SRS - AIRBAG** logo located on the upper B-pillar trim. This system is designed to reduce injuries to the vehicle occupants in the event of a side impact collision.



Vehicles equipped with side curtain airbags have two individually controlled curtain airbag units (8). These airbag units are concealed and mounted above the headliner where they are each secured to one of the roof side rails (5). Each folded airbag cushion is contained within a fabric wrap and extruded plastic channels that extend along the roof rail from the A-pillar (6) at the front of the vehicle to the rearmost pillar of the vehicle. A long tether (7) extends down the A-pillar toward the belt line from the front of the airbag cushion, where it is retained to the inside of the pillar with plastic push-in fasteners.

The hybrid-type inflator (3) for each airbag is initially secured by a bracket with a T-tab at the front into a keyed slot in the roof rail above the B-pillar (standard cab) or above the rear door opening (quad or crew cab), and is connected to the airbag cushion by a long tubular manifold (4). The airbag is then secured during installation with a single plastic push-in fastener to the roof rail. The entire assembly is then secured along the inside of the roof rail with screws.

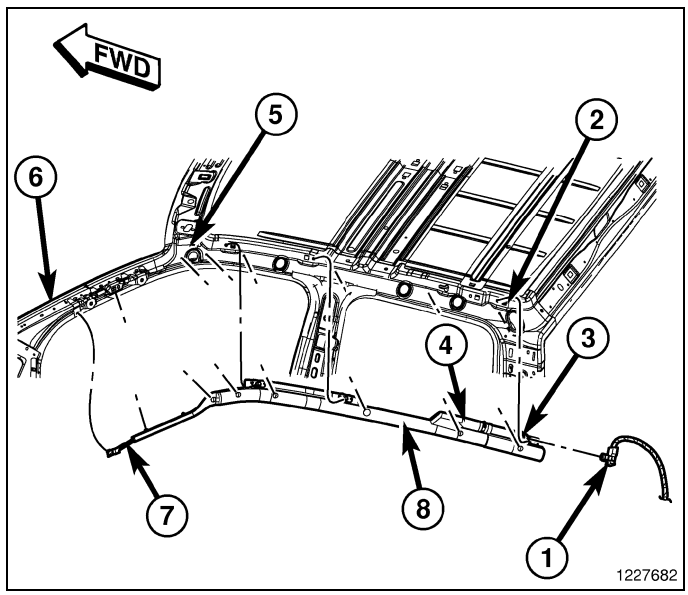

The initiator of the airbag inflator is connected to the vehicle electrical system by a dedicated two-wire take out and connector of the body wire harness routed up the B-pillar (standard cab) or C-pillar (quad or crew cab). A keyed and latched connector insulator (1) is connected directly to the connector receptacle of the initiator near the rear of the inflator. The body wire harness connects each curtain airbag unit to the Occupant Restraint Controller (ORC).

The side curtain airbag unit cannot be adjusted or repaired and must be replaced if deployed, ineffective, or in any way damaged. Once a side curtain airbag has been deployed, the complete airbag unit, the headliner, the upper A, B, and C-pillar trim, and all other visibly damaged components must be replaced.

Operation

Each side curtain airbag is deployed individually by an electrical signal generated by the Occupant Restraint Controller (ORC) to which it is connected through left or right curtain airbag line 1 and line 2 (or squib) circuits. The hybrid-type inflator assembly for each airbag contains a small canister of highly compressed inert gas. When the ORC sends the proper electrical signal to the airbag inflator, the electrical energy creates enough heat to ignite chemical pellets within the inflator.

Once ignited, these chemicals burn rapidly and produce the pressure necessary to rupture a containment disk in the inert gas canister. The inflator and inert gas canister are sealed and connected to a tubular manifold so that all of the

released gas is directed into the folded curtain airbag cushion, causing the cushion to inflate. As the airbag cushion inflates it will drop down from the roof rail between the edge of the headliner and the side glass/body pillars to form a curtain-like cushion to protect the vehicle occupants during a side impact collision.

The front tether keeps the front portion of the side airbag cushion taut to the side of the vehicle, thus ensuring that the bag will deploy in the proper position. Following the airbag deployment, the airbag cushion slowly deflates by venting the inert gas through the loose weave of the cushion fabric, and the deflated cushion hangs down loosely from the roof rail.

Proper diagnosis of the side curtain airbag inflator and the curtain airbag squib circuits requires the use of a diagnostic scan tool. Refer to the appropriate diagnostic information.

Removal

WARNING: To avoid serious or fatal injury on vehicles equipped with airbags, disable the Supplemental Restraint System (SRS) before attempting any steering wheel, steering column, airbag, seat belt tensioner, impact sensor or instrument panel component diagnosis or service. Disconnect and isolate the battery negative (ground) cable, then wait two minutes for the system capacitor to discharge before performing further diagnosis or service. This is the only sure way to disable the SRS. Failure to take the proper precautions could result in accidental airbag deployment.

WARNING: To avoid serious or fatal injury when removing a deployed airbag, rubber gloves, eye protection, and a long-sleeved shirt should be worn. There may be deposits on the airbag unit and other interior surfaces. In large doses, these deposits may cause irritation to the skin and eyes.

WARNING: To avoid serious or fatal injury, use extreme care to prevent any foreign material from entering the side curtain airbag, or becoming entrapped between the side curtain airbag cushion and the headliner. Failure to observe this warning could result in occupant injuries upon airbag deployment.

NOTE: The following procedure is for replacement of an ineffective or damaged side curtain airbag. If the airbag is ineffective or damaged, but not deployed, review the recommended procedures for handling non-deployed supplemental restraints. (Refer to 10 - Restraints - Standard Procedure). If the side curtain airbag has been deployed, review the recommended procedures for service after a supplemental restraint deployment before removing the airbag from the vehicle. (Refer to 10 - Restraints - Standard Procedure).

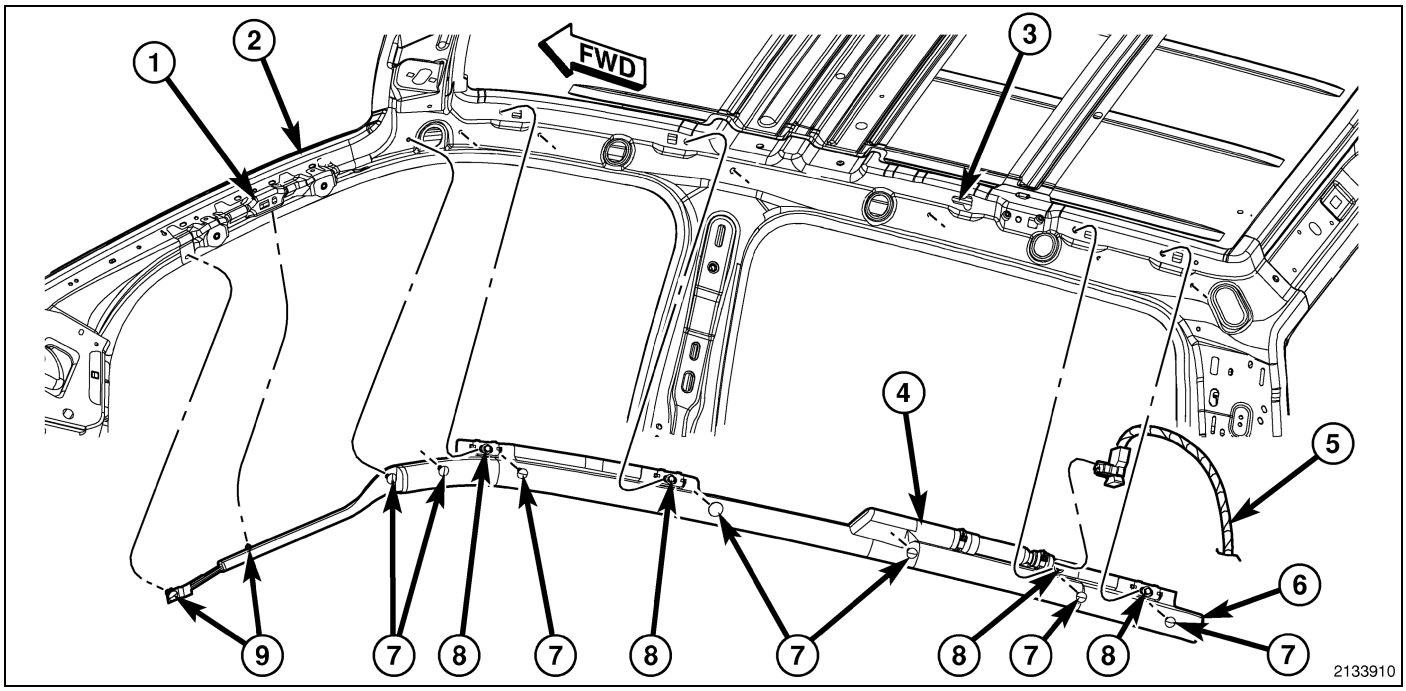

1. Disconnect and isolate the battery negative cable. Wait two minutes for the system capacitor to discharge before further service.

NOTE: If a side curtain airbag is being removed, but has not been deployed, the headliner does not have to be removed from the passenger compartment. Lowering the headliner and resting it on the seat backs will allow enough clearance to remove the side curtain airbag from the vehicle. However, if either side curtain airbag has been deployed, the headliner must be removed from the passenger compartment and replaced with a new unit.

2. Lower or remove the headliner from the vehicle, as required. (Refer to 23 - Body/Interior/HEADLINER - Removal).
3. Remove the 2 (standard cab) or 4 (quad or crew cab) screws (8) that secure the side curtain airbag (6) to the inner roof rail.
4. Disengage the 2 plastic push-in retainers (9) that secure the side curtain airbag front tether to the assist handle bracket (1) on the inner A-pillar (2).
5. Disengage the 1 plastic push-in retainer (7) that secures the side curtain airbag to the inner roof rail.
6. The body wire harness connector (5) insulator is secured by integral latches to the connector receptacle at the rear of the inflator (4). Pinch both latches firmly, then pull the insulator straight out from the airbag inflator to disconnect it from the connector receptacle.
7. Slide the inflator rearward far enough to disengage the T-tab at the front of the inflator bracket from the keyed slot (3) in the inner roof rail over the front door opening (standard cab) or rear door opening (quad or crew cab).
8. Remove the side curtain airbag from the vehicle as a unit.

Installation

WARNING: To avoid serious or fatal injury on vehicles equipped with airbags, disable the Supplemental Restraint System (SRS) before attempting any steering wheel, steering column, airbag, seat belt tensioner, impact sensor or instrument panel component diagnosis or service. Disconnect and isolate the battery negative (ground) cable, then wait two minutes for the system capacitor to discharge before performing further diagnosis or service. This is the only sure way to disable the SRS. Failure to take the proper precautions could result in accidental airbag deployment.

WARNING: To avoid serious or fatal injury when removing a deployed airbag, rubber gloves, eye protection, and a long-sleeved shirt should be worn. There may be deposits on the airbag unit and other interior surfaces. In large doses, these deposits may cause irritation to the skin and eyes.

WARNING: To avoid serious or fatal injury, use extreme care to prevent any foreign material from entering the side curtain airbag, or becoming entrapped between the side curtain airbag cushion and the headliner. Failure to observe this warning could result in occupant injuries upon airbag deployment.

NOTE: The following procedure is for replacement of an ineffective or damaged side curtain airbag. If the airbag is ineffective or damaged, but not deployed, review the recommended procedures for handling non-deployed supplemental restraints. (Refer to 10 - Restraints - Standard Procedure). If the side curtain airbag has been deployed, review the recommended procedures for service after a supplemental restraint deployment before removing the airbag from the vehicle. (Refer to 10 - Restraints - Standard Procedure).

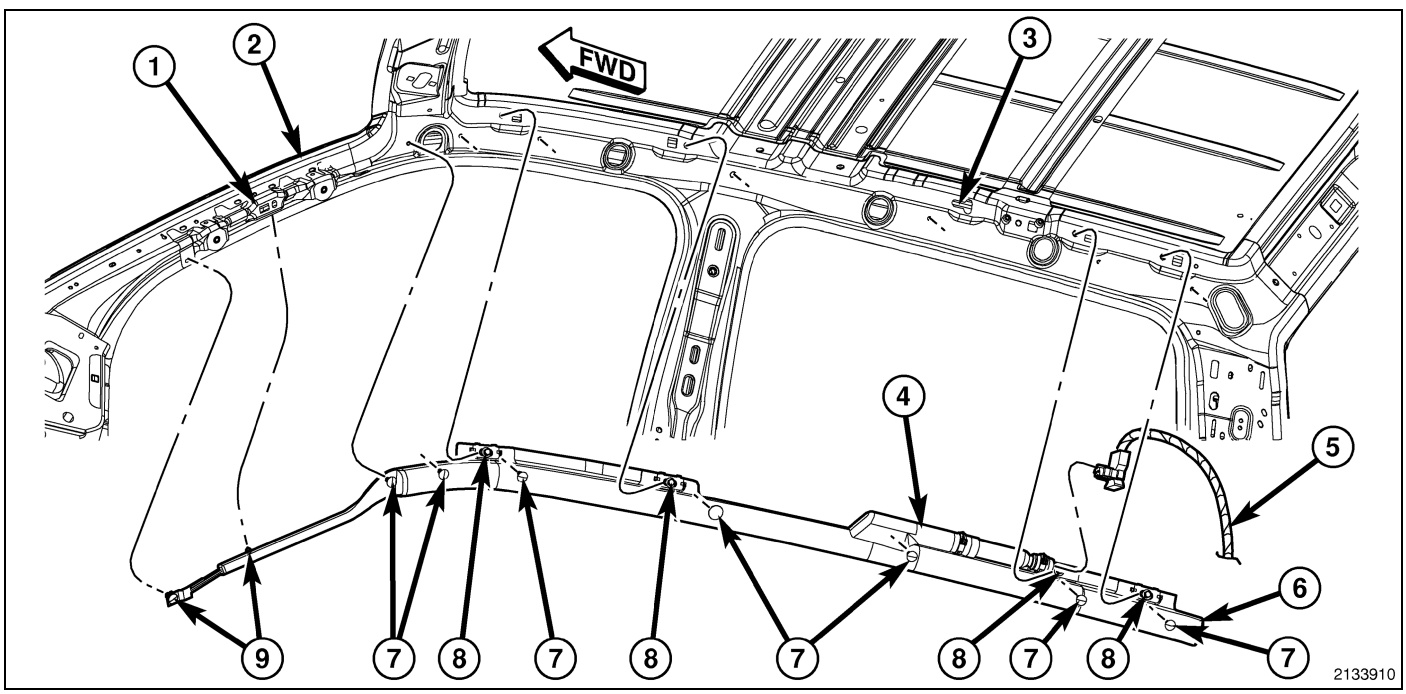

1. Check to be certain that the 2 (standard cab) or 4 (quad or crew cab) spring nuts are properly installed in the inner roof rail and that they are in good condition.

2. Position the side curtain airbag (6) into the vehicle as a unit.
3. Insert the T-tab at the front of the inflator (4) bracket into the keyed slot (3) in the inner roof rail over the front door opening (standard cab) or rear door opening (quad or crew cab) and slide the inflator forward to engage it.
4. Reconnect the body wire harness (5) connector for the side curtain airbag to the connector receptacle at the back of the inflator. You can be certain that each connector is fully engaged in its receptacle by listening carefully for a distinct, audible click as the connector latches snap into place.
5. Align the 1 plastic push-in retainer (7) that secures the side curtain airbag with the hole in the inner roof side rail and push it straight in until it is fully seated.
6. Working from rear to front, install and tighten the 2 (standard cab) or 4 (quad or crew cab) screws (8) that secure the side curtain airbag to the spring nuts in the inner roof rail. Tighten the screws to 7 N·m (62 in. lbs.).
7. Engage the 2 plastic push-in retainers (9) that secure the side curtain airbag front tether to the assist handle bracket (1) on the inner A-pillar (2).
8. Reinstall the headliner into the vehicle. (Refer to 23 - Body/Interior/HEADLINER - Installation).
9. Do not reconnect the battery negative cable at this time. The Supplemental Restraint System (SRS) verification test procedure should be performed following service of any SRS component. (Refer to 10 - Restraints - Standard Procedure).

ANCHOR, Child Seat

Description

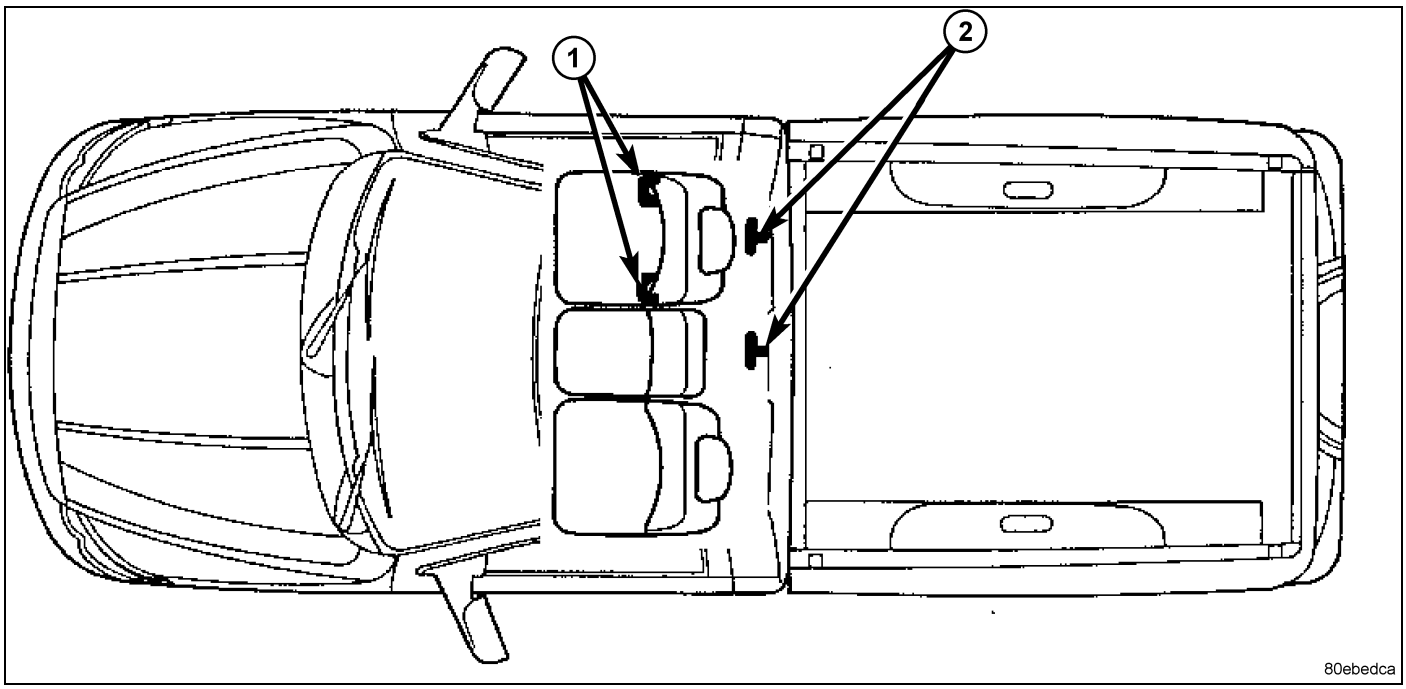

This vehicle is equipped with a Lower Anchors and Tether for CHildren, or LATCH child restraint anchorage system. The LATCH system provides for the installation of suitable child restraints in certain seating positions without using the standard equipment seat belt provided for that seating position.

Standard cab vehicles are equipped with a fixed-position child restraint upper tether anchor for the front center and outboard seating positions (2); and, child restraint lower anchors for the front outboard seating position (1).

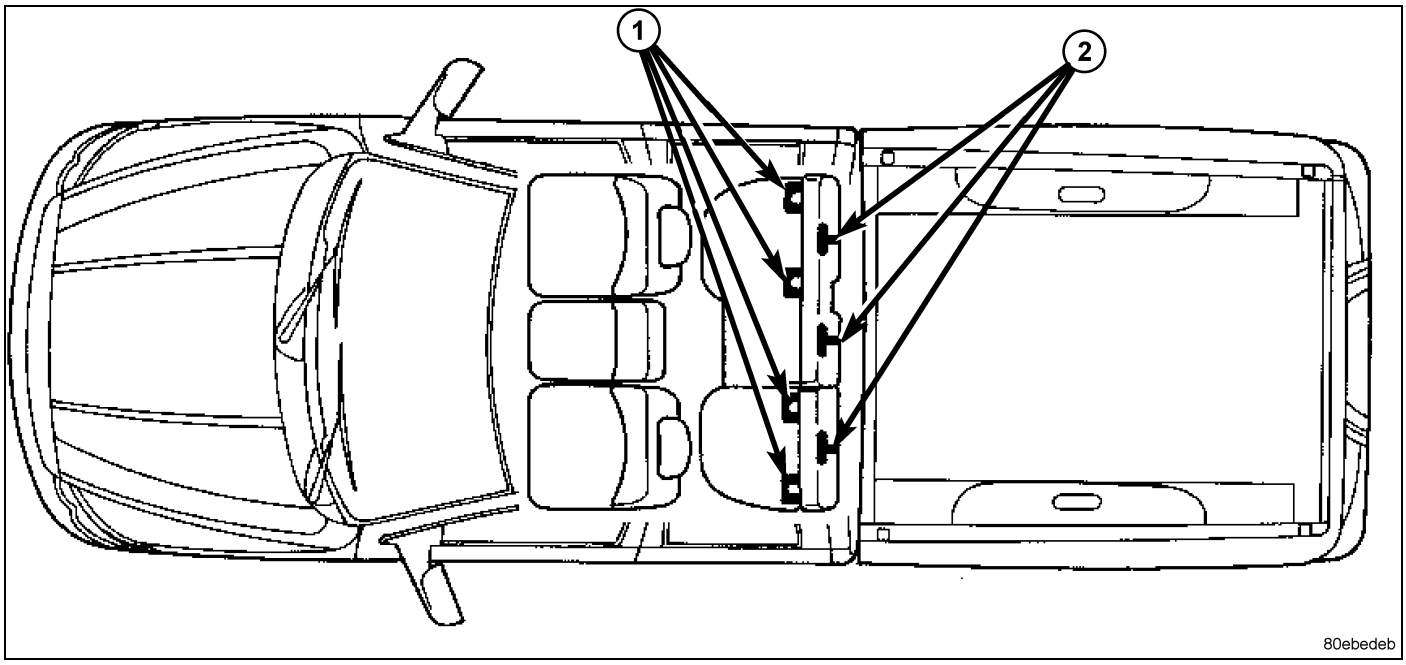

Quad cab and crew cab vehicles are equipped with a fixed-position child restraint upper tether anchor strap for the rear center and both rear outboard seating positions (2), and child restraint lower anchors for both rear outboard seating positions (1). All front seat child restraint anchors are deleted on quad cabs and crew cabs.

The two upper tether anchors (3) for standard cabs are integral to the upper cab back panel reinforcement and are concealed behind individual trim cover and bezel units (1) that are integral to the cab back trim panel (2). These upper tether anchors cannot be adjusted or repaired and, if ineffective or damaged, they must be replaced as a unit with the upper cab back panel reinforcement. The upper tether anchor trim covers and bezels are serviced as a unit with the cab back trim panel.

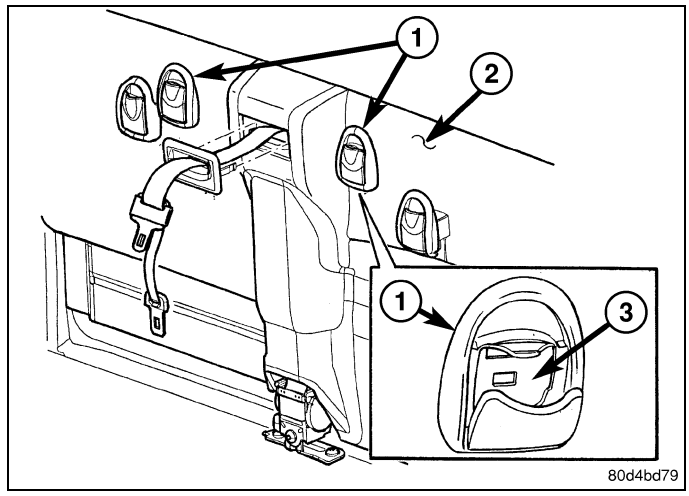

The three upper tether anchor straps (1) for quad cab and crew cab vehicles are secured to the upper cab back panel (2) reinforcement with screws (3). These anchor straps are concealed behind the upright rear seat back. The upper tether anchor straps are available for individual service replacement.

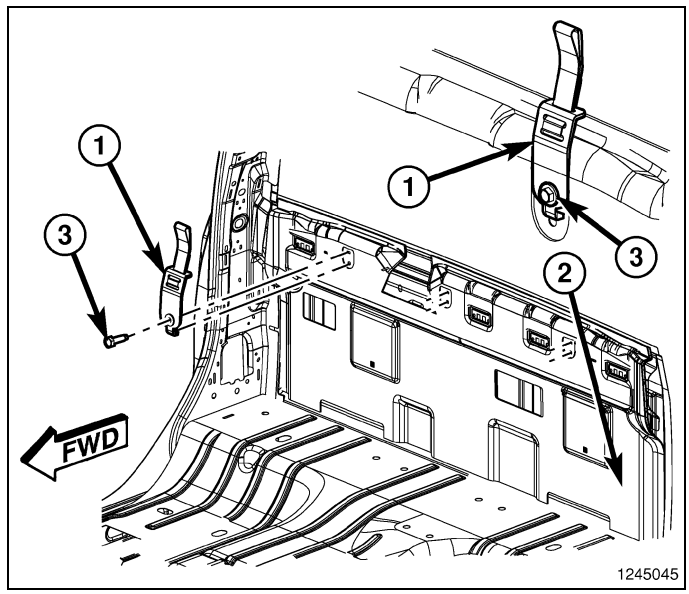

The lower anchors (2) for all vehicles are integral to their respective front or rear seat cushion frame. Round markers (3) with an imprinted child seat icon on the standard cab front seat back trim cover helps identify the anchor locations for that application because they may be otherwise difficult to see with the seat back in the upright position. These lower anchors are each constructed from round steel bar stock that is formed into a U-shape, then securely welded at each end to the seat cushion frame. They are each accessed from the front of their respective seats, at each side where the seat back meets the seat cushion. These lower anchors cannot be adjusted or repaired and, if ineffective or damaged, they must be replaced as a unit with the seat cushion frame.

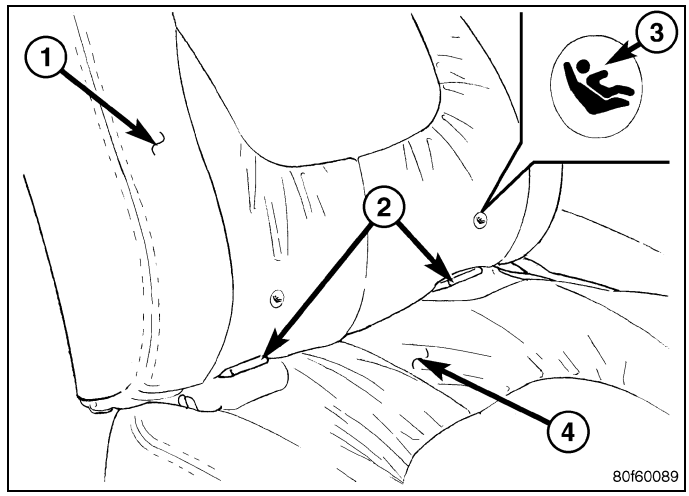

On quad cab or crew cab, if the rear seat lower anchors (2) have been bent or broken as a result of a vehicle collision, the latch for the affected rear seat cushion frame unit must also be replaced.

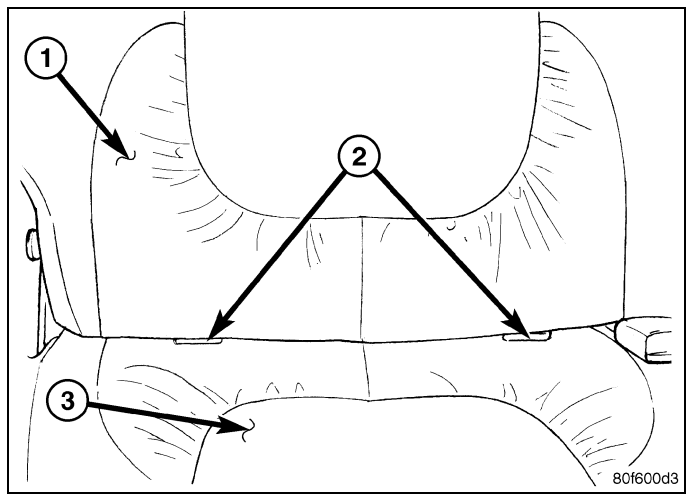

WARNING: To avoid serious or fatal injury during and following any seat belt or child restraint anchor service, carefully inspect all seat belts, buckles, mounting hardware, retractors, tether straps, and anchors for proper installation, operation, or damage. Replace any belt that is cut, frayed, or torn. Straighten any belt that is twisted. Tighten any loose fasteners. Replace any belt that has a damaged or ineffective buckle or retractor. Replace any belt that has a bent or damaged latch plate or anchor plate. Replace any child restraint anchor or the unit to which the anchor is integral that has been bent or damaged. Never attempt to repair a seat belt or child

restraint component. Always replace damaged or ineffective seat belt and child restraint components with the correct, new and unused replacement parts listed in the Chrysler Mopar® Parts Catalog. Failure to follow these instructions may result in possible serious or fatal injury.

Operation

All vehicles manufactured for sale in the United States and Canada are required to be equipped with a Lower Anchors and Tether for CHildren, or LATCH child restraint anchorage system. In standard cab models, the outboard front passenger seat has a single pair of anchor provisions for installing a LATCH-compatible child seat. In quad cab and crew cab models, the second row seats have two pairs of anchor provisions for installing a LATCH-compatible child seat. A single seat may be mounted in the center seating position, or one in each outboard seating position.

With LATCH, child seats are secured by direct attachment to the vehicle seat structure, rather than by the seat belts. With LATCH-compatible child seats, lower anchors attach to the seat structure through heavy-gauge wire loops located at the intersection between the seat cushion and the seat back surfaces.

In standard cab models, two upper tether anchors are integral to the upper cab back panel reinforcement, one each for the front passenger and front center seating positions to secure the top tether strap of child seats equipped with this feature. In quad and crew cab models, three upper tether anchor loops are secured to the upper cab back panel reinforcement to secure the top tether strap of child seats equipped with this feature. These upper tether anchors work with both LATCH-compatible and other child seats equipped with a top tether strap.

The owner's information packet in the vehicle glove box contains details and suggestions on the proper use of all of the factory-installed child restraint anchors.

Removal

WARNING: To avoid serious or fatal injury during and following any seat belt or child restraint anchor service, carefully inspect all seat belts, buckles, mounting hardware, retractors, tether straps, and anchors for proper installation, operation, or damage. Replace any belt that is cut, frayed, or torn. Straighten any belt that is twisted. Tighten any loose fasteners. Replace any belt that has a damaged or ineffective buckle or retractor. Replace any belt that has a bent or damaged latch plate or anchor plate. Replace any child restraint anchor or the unit to which the anchor is integral that has been bent or damaged. Never attempt to repair a seat belt or child restraint component. Always replace damaged or ineffective seat belt and child restraint components with the correct, new and unused replacement parts listed in the Chrysler Mopar® Parts Catalog. Failure to follow these instructions may result in possible serious or fatal injury.

NOTE: The following procedure applies only to the rear seat upper child tether straps used on quad cab and crew cab vehicles. The child restraint anchors used in other vehicles and locations are integral to other components and cannot be serviced separately.

1. Remove the rear seat from the vehicle. (Refer to 23 - Body/Seats/SEAT - Removal).
2. Remove the screw (3) that secures the child tether strap (1) to the upper cab back panel (2) reinforcement.
3. Remove the child tether strap from the upper cab back panel reinforcement.

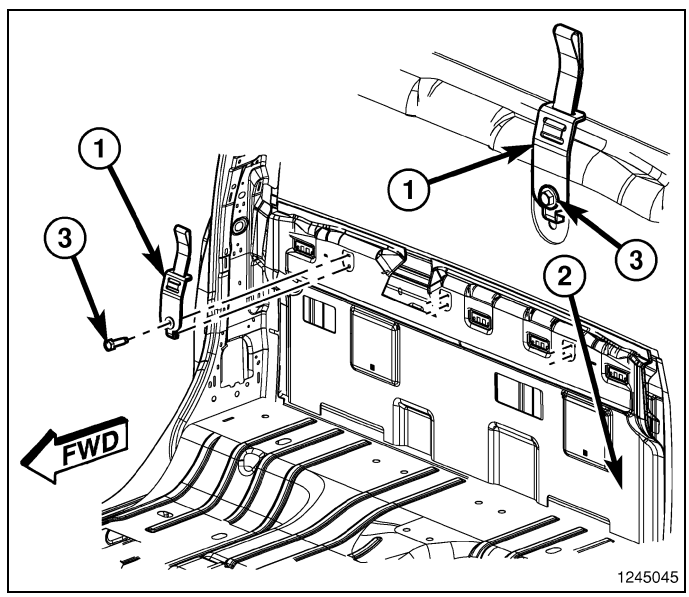

Installation

WARNING: To avoid serious or fatal injury during and following any seat belt or child restraint anchor service, carefully inspect all seat belts, buckles, mounting hardware, retractors, tether straps, and anchors for proper installation, operation, or damage. Replace any belt that is cut, frayed, or torn. Straighten any belt that is twisted. Tighten any loose fasteners. Replace any belt that has a damaged or ineffective buckle or retractor. Replace any belt that has a bent or damaged latch plate or anchor plate. Replace any child restraint anchor or the unit to which the anchor is integral that has been bent or damaged. Never attempt to repair a seat belt or child restraint component. Always replace damaged or ineffective seat belt and child restraint components with the correct, new and unused replacement parts listed in the Chrysler Mopar® Parts Catalog. Failure to follow these instructions may result in possible serious or fatal injury.

NOTE: The following procedure applies only to the rear seat upper child tether straps used on quad cab and crew cab vehicles. The child restraint anchors used in other vehicles and locations are integral to other components and cannot be serviced separately.

1. Position the child tether strap (1) onto the cab back panel (2) upper reinforcement.
2. Install and tighten the screw (3) that secures the child tether strap to the upper cab back panel reinforcement. Tighten the screw to 14 N·m (10 ft. lbs.).
3. Reinstall the rear seat into the vehicle. (Refer to 23 - Body/Seats/SEAT - Installation).

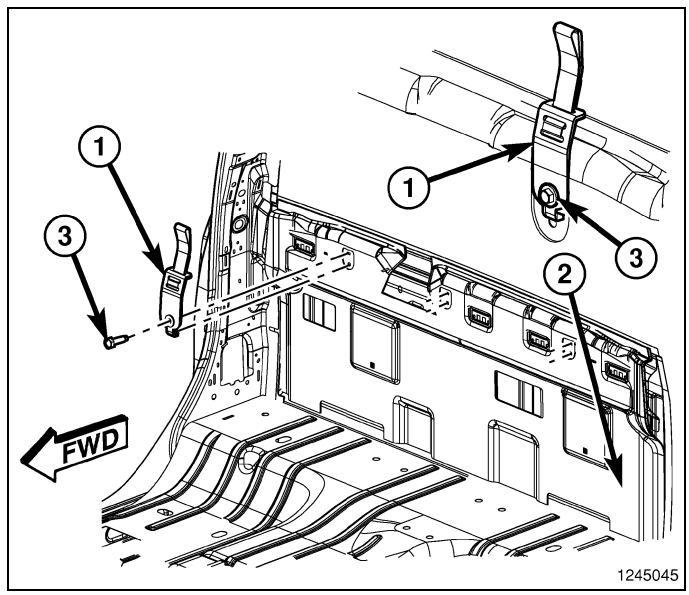

BUCKLE, Seat Belt

Removal

FRONT CENTER AND CENTER ANCHOR

WARNING: To avoid serious or fatal injury during and following any seat belt or child restraint anchor service, carefully inspect all seat belts, buckles, mounting hardware, retractors, tether straps, and anchors for proper installation, operation, or damage. Replace any belt that is cut, frayed, or torn. Straighten any belt that is twisted. Tighten any loose fasteners. Replace any belt that has a damaged or ineffective buckle or retractor. Replace any belt that has a bent or damaged latch plate or anchor plate. Replace any child restraint anchor or the unit to which the anchor is integral that has been bent or damaged. Never attempt to repair a seat belt or child restraint component. Always replace damaged or ineffective seat belt and child restraint components with the correct, new and unused replacement parts listed in the Chrysler Mopar® Parts Catalog. Failure to follow these instructions may result in possible serious or fatal injury.

NOTE: A fixed position front center seat belt buckle is located on the left side of the front center seat section (20 percent) used on all vehicles with a split bench front seat. Standard cab vehicles have a unique, fixed position, black, keyed, lower anchor buckle for the three-point center seat belt lower anchor located on the right side of the front center seat section. Quad cab and crew cab vehicles have a fixed position front center seat lap belt located on the right side of the front center seat section. The following procedure applies to the front center seating position belt buckle, the lap belt or the anchor buckle. The three-point front center seat belt and retractor unit is only used on standard cab vehicles. (Refer to 10 - Restraints/RETRACTOR, Seat Belt - Removal).

1. Move the adjacent right or left front outboard seat section (40 percent) to its most forward position and tilt the seat back forward for easiest access to the lower anchor of the front center seat belt buckle, lap belt or anchor buckle (1).
2. On standard cab vehicles only, if equipped, remove the stowage tray from the rear floor panel behind the seat. (Refer to 23 - Body/Interior/BIN, Storage - Removal).
3. From behind the front seat, remove the screw (5) that secures the lower anchor of the front center seat belt buckle, lap belt or anchor buckle to the center seat support bracket (3).
4. From the front of the front seat, reach between the side of the center seat cushion (6) and the adjacent right or left front outboard seat cushion to access and remove the seat belt buckle, lap belt or anchor buckle through the elastic strap (2) on the side of the center seat cushion.

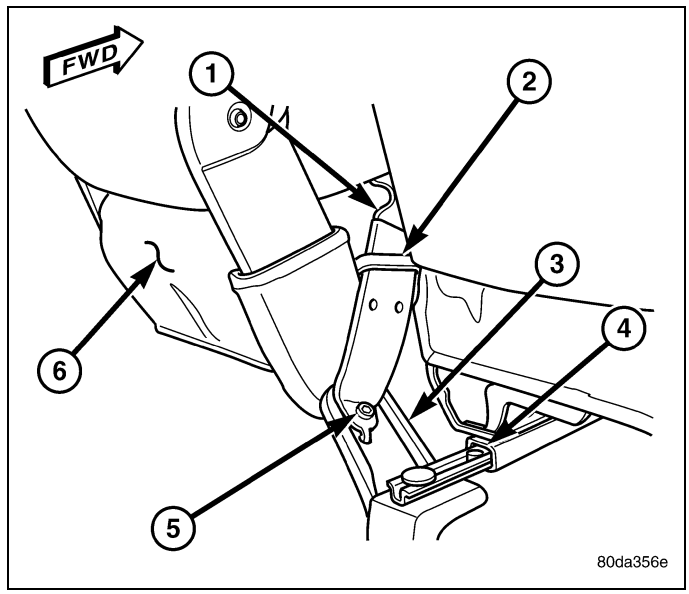

5. Remove the front center seat belt buckle, lap belt or anchor buckle unit from the front seat.

FRONT OUTBOARD

WARNING: To avoid serious or fatal injury during and following any seat belt or child restraint anchor service, carefully inspect all seat belts, buckles, mounting hardware, retractors, tether straps, and anchors for proper installation, operation, or damage. Replace any belt that is cut, frayed, or torn. Straighten any belt that is twisted. Tighten any loose fasteners. Replace any belt that has a damaged or ineffective buckle or retractor. Replace any belt that has a bent or damaged latch plate or anchor plate. Replace any child restraint anchor or the unit to which the anchor is integral that has been bent or damaged. Never attempt to repair a seat belt or child restraint component. Always replace damaged or ineffective seat belt and child restraint components with the correct, new and unused replacement parts listed in the Chrysler Mopar® Parts Catalog. Failure to follow these instructions may result in possible serious or fatal injury.

NOTE: A traveling front outboard seat belt buckle is located on the inboard side of each front outboard split bench seat section (40 percent) or bucket seat used on all vehicles. The seat belt buckle on the driver side front seat for all vehicles also includes a seat belt switch.

1. Move the right or left front outboard split bench seat section or bucket seat to its most rearward position and tilt the seat back forward for easiest access to the front outboard seat belt buckle lower anchor.
2. On standard cab vehicles only equipped with a split bench seat, also move the outboard seat section opposite the side from which the buckle is to be removed to its most forward position and tilt the seat back forward.
3. On standard cab vehicles only, if equipped, remove the stowage tray from the rear floor panel behind the seat. (Refer to 23 - Body/Interior/BIN, Storage - Removal).
4. On the driver side only, from behind the front seat disconnect the seat belt switch pigtail wire connector (4) from the seat wire harness take out and connector located on the lower inboard side of the seat cushion frame just forward of the buckle lower anchor.

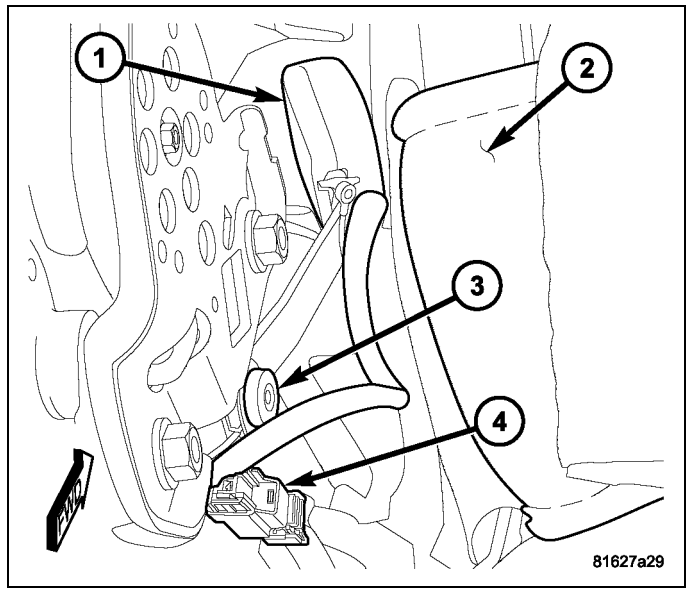

5. From behind the front seat, remove the screw (3) that secures the buckle (1) lower anchor to the lower inboard side of the seat cushion frame.
6. From the front of the front seat, reach between the center seat cushion (2) or center floor console and the right or left front outboard seat cushion to access and remove the front outboard seat belt buckle from the seat.

REAR - QUAD OR CREW CAB

WARNING: To avoid serious or fatal injury during and following any seat belt or child restraint anchor service, carefully inspect all seat belts, buckles, mounting hardware, retractors, tether straps, and anchors for proper installation, operation, or damage. Replace any belt that is cut, frayed, or torn. Straighten any belt that is twisted. Tighten any loose fasteners. Replace any belt that has a damaged or ineffective buckle or retractor. Replace any belt that has a bent or damaged latch plate or anchor plate. Replace any child restraint anchor or the unit to which the anchor is integral that has been bent or damaged. Never attempt to repair a seat belt or child restraint component. Always replace damaged or ineffective seat belt and child restraint components with the correct, new and unused replacement parts listed in the Chrysler Mopar® Parts Catalog. Failure to follow these instructions may result in possible serious or fatal injury.

NOTE: The following removal procedure covers service of the rear seat center and left outboard seat belt buckle units. The rear seat right outboard seat belt buckle is serviced as a unit with the rear seat center seat belt and retractor assembly. (Refer to 10 - Restraints/RETRACTOR, Seat Belt - Removal).

1. Lift up the rear seat cushion into its stowed position against the rear seat back.
2. Remove the screw (2) that secures either the center (4) or the left outboard (3) occupant buckle unit to the rear floor panel near the base of the cab back panel (1). On vehicles with the optional 60/40 split rear bench, the screw that secures the buckle unit also secures one of the rear seat mounting brackets to the rear floor panel.
3. Remove the center or left outboard occupant buckle unit from the rear floor panel or from the rear seat mounting bracket.

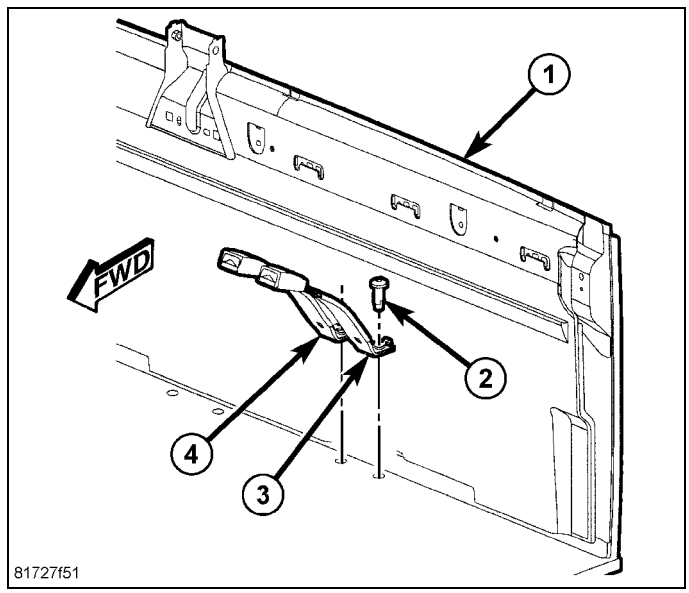

Installation

FRONT CENTER AND CENTER ANCHOR

WARNING: To avoid serious or fatal injury during and following any seat belt or child restraint anchor service, carefully inspect all seat belts, buckles, mounting hardware, retractors, tether straps, and anchors for proper installation, operation, or damage. Replace any belt that is cut, frayed, or torn. Straighten any belt that is twisted. Tighten any loose fasteners. Replace any belt that has a damaged or ineffective buckle or retractor. Replace any belt that has a bent or damaged latch plate or anchor plate. Replace any child restraint anchor or the unit to which the anchor is integral that has been bent or damaged. Never attempt to repair a seat belt or child restraint component. Always replace damaged or ineffective seat belt and child restraint components with the correct, new and unused replacement parts listed in the Chrysler Mopar® Parts Catalog. Failure to follow these instructions may result in possible serious or fatal injury.

NOTE: A fixed position front center seat belt buckle is located on the left side of the front center seat section (20 percent) used on all vehicles with a split bench front seat. Standard cab vehicles have a unique, fixed position, black, keyed, lower anchor buckle for the three-point center seat belt lower anchor located on the right side of the front center seat section. Quad cab and crew cab vehicles have a fixed position front center seat lap belt located on the right side of the front center seat section. The following procedure applies to the front center seating position belt buckle, the lap belt or the anchor buckle. The three-point front center seat belt and retractor unit is only used on standard cab vehicles. (Refer to 10 - Restraints/RETRACTOR, Seat Belt - Installation).

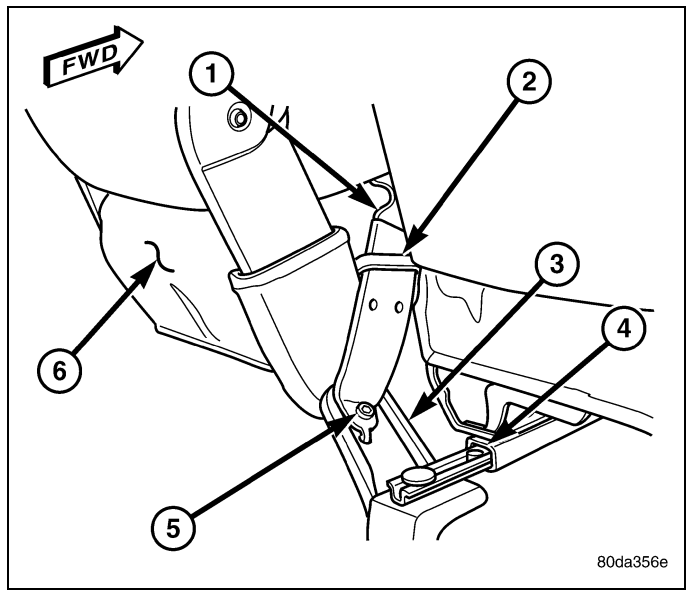

1. From the front of the front seat, position the front center seat belt buckle, lap belt or anchor buckle unit (1) through the elastic strap (2) on the side of the center seat cushion (6).
2. From the front of the front seat, reach between the side of the center seat cushion and the adjacent right or left front outboard seat cushion to route the lower anchor of the seat belt buckle, lap belt or anchor buckle unit down between the side of the center seat cushion and the adjacent right or left front outboard seat cushion. Be certain that the belt webbing is not twisted.
3. From behind the front seat, position the lower anchor of the seat belt buckle, lap belt or anchor buckle to the center seat support bracket (3). Be certain to engage the anti-rotation tab on the lower anchor into the corresponding hole in the center seat support bracket.
4. Install and tighten the screw (5) that secures the lower anchor of the seat belt buckle, lap belt or anchor buckle to the center seat support bracket. Tighten the screw to 39 N·m (29 ft. lbs.).
5. On standard cab vehicles only, if equipped, reinstall the stowage tray onto the rear floor panel behind the seat. (Refer to 23 - Body/Interior/BIN, Storage - Installation).

FRONT OUTBOARD

WARNING: To avoid serious or fatal injury during and following any seat belt or child restraint anchor service, carefully inspect all seat belts, buckles, mounting hardware, retractors, tether straps, and anchors for proper installation, operation, or damage. Replace any belt that is cut, frayed, or torn. Straighten any belt that is twisted. Tighten any loose fasteners. Replace any belt that has a damaged or ineffective buckle or retractor. Replace any belt that has a bent or damaged latch plate or anchor plate. Replace any child restraint anchor or the unit to which the anchor is integral that has been bent or damaged. Never attempt to repair a seat belt or child restraint component. Always replace damaged or ineffective seat belt and child restraint components with the correct, new and unused replacement parts listed in the Chrysler Mopar® Parts Catalog. Failure to follow these instructions may result in possible serious or fatal injury.

NOTE: A traveling front outboard seat belt buckle is located on the inboard side of each front outboard split bench seat section (40 percent) or bucket seat used on all vehicles. The seat belt buckle on the driver side front seat for all vehicles also includes a seat belt switch.

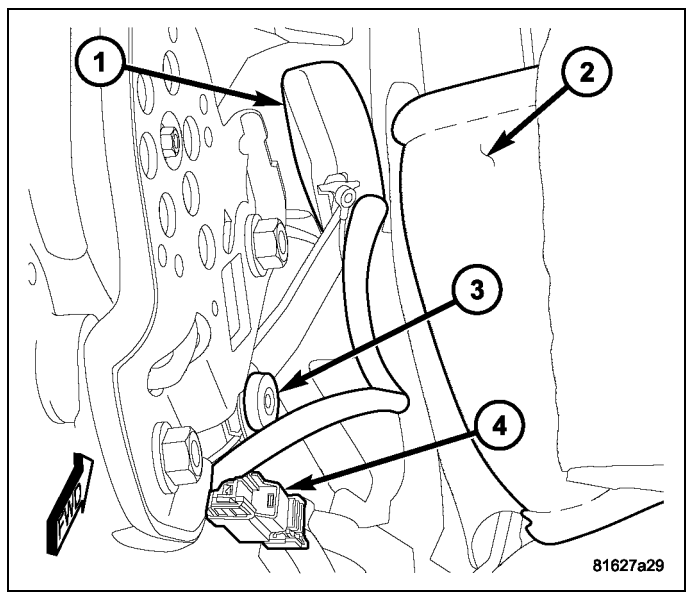

1. From the front of the front seat, reach between the center seat cushion (2) or center floor console and the right or left front outboard seat cushion to position the front outboard seat belt buckle to the seat.
2. From behind the front seat, position the front outboard seat belt buckle lower anchor to the lower inboard side of the seat cushion frame. Be certain to engage the anti-rotation tab on the lower anchor into the corresponding hole in the seat cushion frame.
3. Install and tighten the screw (3) that secures the front outboard seat belt buckle lower anchor to the seat cushion frame. Tighten the screw to 25 N·m (18 ft. lbs.).
4. On the driver side only, reconnect the seat belt switch pigtail wire connector (4) to the seat wire harness take out and connector located on the lower inboard side of the seat cushion frame just forward of the buckle lower anchor.
5. On standard cab vehicles only, if equipped, reinstall the stowage tray onto the rear floor panel behind the seat. (Refer to 23 - Body/Interior/BIN, Storage - Installation).

REAR - QUAD OR CREW CAB

WARNING: To avoid serious or fatal injury during and following any seat belt or child restraint anchor service, carefully inspect all seat belts, buckles, mounting hardware, retractors, tether straps, and anchors for proper installation, operation, or damage. Replace any belt that is cut, frayed, or torn. Straighten any belt that is twisted. Tighten any loose fasteners. Replace any belt that has a damaged or ineffective buckle or retractor. Replace any belt that has a bent or damaged latch plate or anchor plate. Replace any child restraint anchor or the unit to which the anchor is integral that has been bent or damaged. Never attempt to repair a seat belt or child restraint component. Always replace damaged or ineffective seat belt and child restraint components with the correct, new and unused replacement parts listed in the Chrysler Mopar® Parts Catalog. Failure to follow these instructions may result in possible serious or fatal injury.

NOTE: The following installation procedure covers service of the rear seat center and left outboard seat belt buckle units. The rear seat right outboard seat belt buckle is serviced as a unit with the rear seat center seat belt and retractor assembly. (Refer to 10 - Restraints/RETRACTOR, Seat Belt - Installation).

1. Position the center (4) or the left outboard (3) occupant buckle unit onto the rear floor panel or onto the rear seat mounting bracket near the base of the cab back panel (1). On vehicles with the optional 60/40 split rear bench, the screw that secures the buckle unit also secures one of the rear seat mounting brackets to the rear floor panel.
2. Install and tighten the screw (2) that secures the center or the left outboard occupant buckle unit to the rear floor panel. Tighten the screw to 39 N·m (29 ft. lbs.).
3. Restore the rear seat cushion to its seating position.

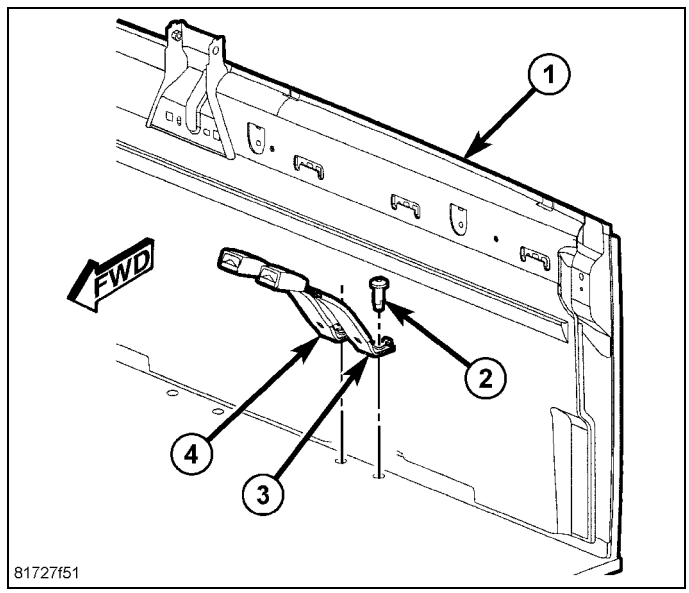

CLOCKSPRING

Description

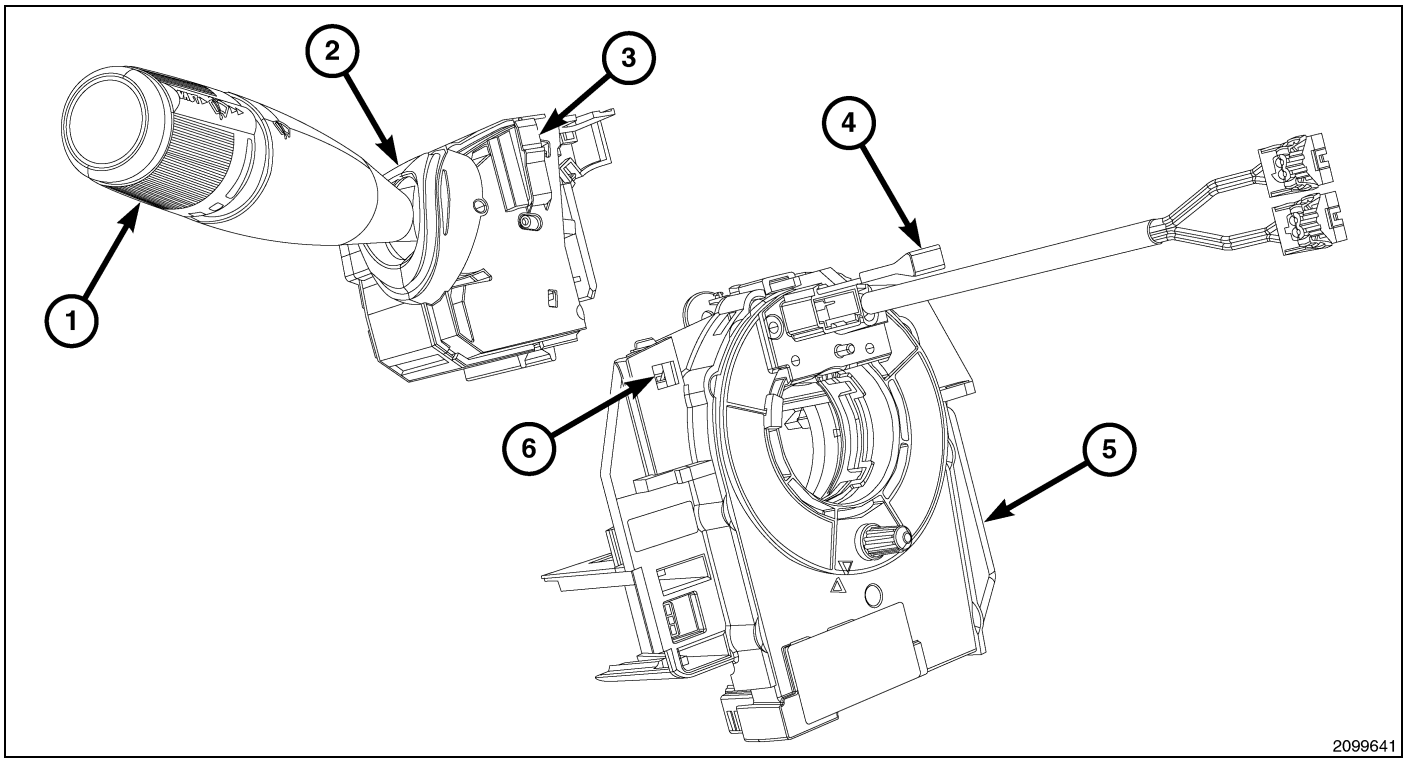

The clockspring (5) for this vehicle is secured near the top of the steering column below the steering wheel. The clockspring also includes an integral, internal turn signal cancel cam, a Steering Angle Sensor (SAS) and, on vehicles equipped with the optional heated steering wheel, a set of internal slip rings. All of these components are serviced as a unit with the clockspring. The clockspring also supports the multi-function switch (1), the Steering Control Module (SCM) internal to the multi-function switch housing (2) and a blank filler (7) for, or the optional adjustable pedal switch, which are secured to the clockspring mounting bracket with integral keyways and latch feature provisions. The multi-function switch, adjustable pedal switch blank filler or the adjustable pedal switch are available for individual service replacement. When combined, these components are sometimes referred to as the Steering Column Control Module (SCCM).

The clockspring case includes integral tabs at the top and bottom for mounting the unit to the steering column housing with two screws, as well as integral provisions for mounting and supporting the multi-function switch, adjustable pedal switch, SAS and heated steering wheel slip rings. The SAS integral to the clockspring includes an electronic circuit board and a microprocessor, which allows it to communicate with other electronic modules in the vehicle over the Controller Area Network (CAN) data bus. The SAS circuitry is contained within a flat, molded plastic case that is secured to the lower surface of the clockspring case that hangs below the steering column.

Within the plastic clockspring case is a spool-like molded plastic rotor with a large exposed hub and an integral turn signal cancel cam. The upper surface of the rotor hub has a large center hole, an engagement dowel or drive pin, a single sleeve containing two short driver airbag squib pigtail wires with connectors, and a connector receptacle that faces toward the steering wheel. On vehicles equipped with the optional heated steering wheel, a third heated steering wheel pigtail wire and connector exits the upper surface of the rotor.

Service replacement clocksprings are shipped pre-centered and with a molded plastic locking pin (4) that snaps into a receptacle on the rotor. The locking pin secures the centered clockspring rotor to the clockspring case and the SAS during shipment and handling, but must be removed from the clockspring after it is installed on the steering column. The locking pin is a one time component and cannot be reinstalled once it has been removed. The clockspring must be replaced if proper centering has been compromised or the tape may be damaged and Diagnostic Trouble Codes (DTCs) or faults may be set within the SAS.

The lower surface of the clockspring case (1) facing toward the instrument panel includes two receptacles on the left for mounting the multi-function switch (2) and the optional adjustable pedal switch (3). There are two integral connector receptacles (4) on the left lower corner of the clockspring case. Clocksprings with a SAS (5) also have a dedicated connector (6) near the right lower corner of that unit. Vehicles equipped with the optional heated steering wheel also have a dedicated connector (7) to the internal slip rings on the upper right corner of the clockspring case.

Within the plastic case and wound around the rotor spool is a long ribbon-like tape that consists of several thin copper wire leads sandwiched between two thin plastic membranes. The outer end of the tape terminates at the connector receptacles that face the instrument panel, while the inner end of the tape terminates at the driver airbag squib pigtail wires and connector receptacle on the hub of the clockspring rotor that face the steering wheel.

The clockspring cannot be repaired. If damaged, ineffective or if the driver airbag has been deployed, the clockspring must be replaced.

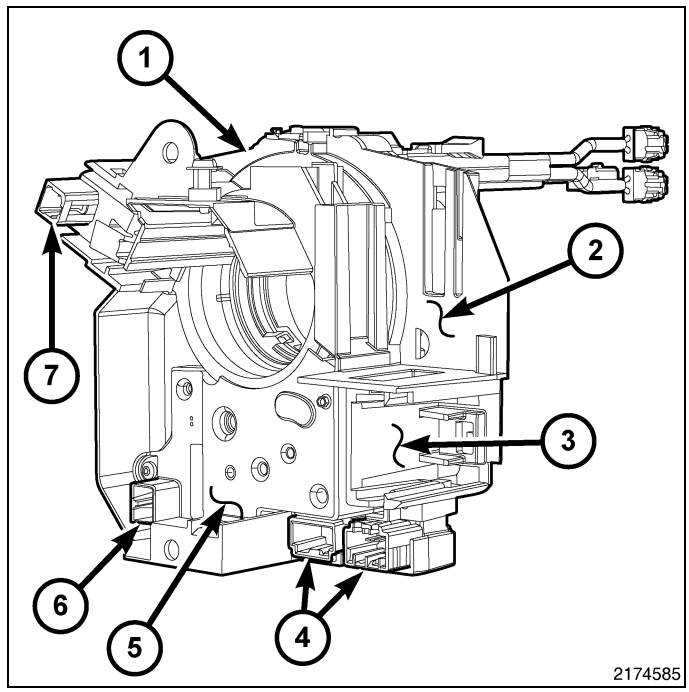

Operation

The clockspring is a mechanical electrical circuit component that is used to provide continuous electrical continuity between the fixed instrument panel wire harness and the electrical components mounted on or in the rotating steering wheel. On this vehicle the rotating electrical components include the driver airbag, the horn switch, the Electronic Vehicle Information Center (EVIC) switches, the speed control switches, the remote radio switches and the steering wheel heating element, if the vehicle is so equipped. The clockspring case is positioned and secured to the top of the steering column. The fixed connector receptacles on the back of the fixed clockspring case connect the clockspring to the vehicle electrical system through several take outs with connectors from the instrument panel wire harness.

The turn signal cancel cam is integral to the rim of the clockspring rotor hub within the clockspring case so it also moves with the rotation of the steering wheel. Two short, black-sleeved pigtail wires on the upper surface of the clockspring rotor connect the clockspring to the driver airbag, while a steering wheel wire harness connected to the connector receptacle on the upper surface of the clockspring rotor completes circuits to the horn switch, the speed control switch and, if the vehicle is so equipped, to the optional remote radio switches and EVIC switches on the steering wheel. A third pigtail wire is dedicated to providing the high current requirements of the heating element for the optional heated steering wheel received through a dedicated connection on the back of the clockspring through a set of slip rings internal to the clockspring case. Another connector receptacle found on the Steering Angle Sensor (SAS) on the back of the clockspring is dedicated to the inputs and outputs of the SAS.

Like the clockspring in a timepiece, the clockspring tape has travel limits and can be damaged by being wound too tightly during full stop-to-stop steering wheel rotation. To prevent this from occurring, the clockspring is centered when it is installed on the steering column. Centering the clockspring indexes the clockspring tape and the SAS integral to the clockspring to the movable steering components so that the tape can operate within its designed travel limits and the SAS can accurately monitor and communicate steering wheel inputs. However, if the clockspring is removed from the steering column or if the steering shaft is disconnected from the steering gear, the clockspring spool and the SAS can change position relative to the movable steering components and relative to each other. The clockspring must be replaced if proper centering has been compromised or the tape may be damaged and Diagnostic Trouble Codes (DTC) or faults may be set within the SAS.

Service replacement clocksprings are shipped pre-centered and with a plastic locking pin installed. This locking pin should not be removed until the clockspring has been installed on the steering column. If the locking pin is removed before the clockspring is installed on a steering column, the clockspring must be replaced with a new unit. Proper clockspring installation must also be confirmed by viewing the SAS Menu Item, Data Display function using a diagnostic scan tool.

The hard wired clockspring circuits as well as the hard wired inputs and outputs of the SAS may be diagnosed using conventional diagnostic tools and procedures. Refer to the appropriate wiring information. However, conventional

diagnostic methods will not prove conclusive in the diagnosis of the SAS or the electronic controls or communication between other modules and devices that provide features of the Electronic Stability Program (ESP) or the Supplemental Restraint System (SRS). The most reliable, efficient, and accurate means to diagnose the SAS or the electronic controls and communication related to ESP or SRS operation requires the use of a diagnostic scan tool. Refer to the appropriate diagnostic information.

Standard Procedure

WARNING: To avoid serious or fatal injury on vehicles equipped with airbags, disable the Supplemental Restraint System (SRS) before attempting any steering wheel, steering column, airbag, seat belt tensioner, impact sensor or instrument panel component diagnosis or service. Disconnect and isolate the battery negative (ground) cable, then wait two minutes for the system capacitor to discharge before performing further diagnosis or service. This is the only sure way to disable the SRS. Failure to take the proper precautions could result in accidental airbag deployment.

CAUTION: Always turn the steering wheel until the front wheels are in the straight-ahead position. Then, prior to removing the clockspring from the steering column or disconnecting the steering column from the steering gear, lock the steering wheel to the steering column or securely fasten the clockspring rotor to the clockspring case. If clockspring centering has been compromised for ANY reason, the entire clockspring and Steering Angle Sensor (SAS) unit MUST be replaced with a new unit.

Like the clockspring in a timepiece, the clockspring tape has travel limits and can be damaged by being wound too tightly during full stop-to-stop steering wheel rotation. To prevent this from occurring, the clockspring is centered when it is installed on the steering column. Centering the clockspring indexes the clockspring tape and the SAS integral to the clockspring to the movable steering components so that the tape can operate within its designed travel limits and the SAS can accurately monitor and communicate steering wheel inputs. However, if the clockspring is removed from the steering column or if the steering shaft is disconnected from the steering gear, the clockspring spool and the SAS can change position relative to the movable steering components and relative to each other. The clockspring must be replaced if proper centering has been compromised or the tape may be damaged and Diagnostic Trouble Codes (DTC) or faults may be set within the SAS.

Service replacement clocksprings are shipped pre-centered and with a plastic locking pin installed. This locking pin should not be removed until the clockspring has been installed on the steering column. If the locking pin is removed before the clockspring is installed on a steering column, the clockspring must be replaced with a new unit. Proper clockspring installation must also be confirmed by viewing the SAS Menu Item, Data Display function using a diagnostic scan tool.

Removal

WARNING: To avoid serious or fatal injury on vehicles equipped with airbags, disable the Supplemental Restraint System (SRS) before attempting any steering wheel, steering column, airbag, seat belt tensioner, impact sensor or instrument panel component diagnosis or service. Disconnect and isolate the battery negative (ground) cable, then wait two minutes for the system capacitor to discharge before performing further diagnosis or service. This is the only sure way to disable the SRS. Failure to take the proper precautions could result in accidental airbag deployment.

CAUTION: Always turn the steering wheel until the front wheels are in the straight-ahead position. Then, prior to removing the clockspring from the steering column or disconnecting the steering column from the steering gear, lock the steering wheel to the steering column or securely fasten the clockspring rotor to the clockspring case. If clockspring centering has been compromised for ANY reason, the entire clockspring and Steering Angle Sensor (SAS) unit MUST be replaced with a new unit.

1. Place the front wheels in the straight ahead position.
2. Disconnect and isolate the battery negative cable.
3. Remove the driver airbag from the steering wheel. (Refer to 10 - Restraints/AIR BAG, Driver - Removal).
4. Disconnect the steering wheel wire harness connector from the upper clockspring (3) connector receptacle.
5. If equipped, disconnect the clockspring pigtail wire connector for the steering wheel heater element from the steering wheel connector receptacle.
6. Remove the steering wheel from the steering column (1). (Refer to 19 - Steering/Column/WHEEL, Steering - Removal).
7. If the removed clockspring is to be reused, be certain to secure the clockspring rotor to the clockspring case to maintain clockspring centering until it is reinstalled on the steering column. If clockspring centering is not maintained, the clockspring and Steering Angle Sensor (SAS) unit must be replaced with a new unit. (Refer to 10 - Restraints/CLOCKSPRING - Standard Procedure).

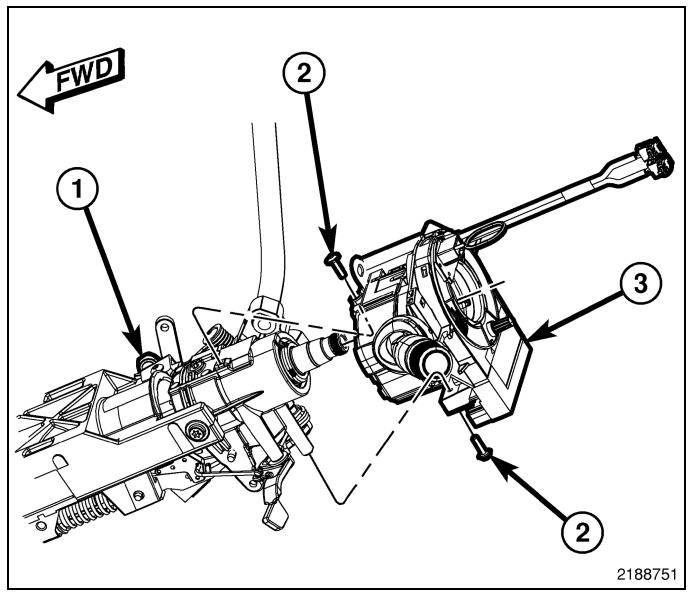

8. Remove the upper and lower shrouds from the steering column. (Refer to 19 - Steering/Column/SHROUD, Steering Column - Removal).
9. Remove the two screws (2) that secure the clockspring to the steering column housing.
10. Pull the clockspring rearward away from the top of the steering column far enough to access and disconnect the following instrument panel wire harness (7) connectors and their wiring retainers from the clockspring, as the vehicle is equipped:
    a. Multi-function switch connector (1)
    b. Heated steering wheel slip ring connector (2)
    c. Steering Angle Sensor (SAS) connector (3)
    d. Two clockspring connectors (4 and 5)
    e. Adjustable pedal switch connector (6).
11. Remove the clockspring from the steering column. The clockspring cannot be repaired. It must be replaced if ineffective, damaged, centering has been compromised or the driver airbag has been deployed.
12. Remove the multi-function switch from the clockspring. (Refer to 08 - Electrical/8L - Lamps and Lighting/Lamps/Lighting - Exterior/SWITCH, Multi-function - Removal).
13. Remove the adjustable pedal switch blank filler or switch from the clockspring. (Refer to 05 - Brakes/Electrical/SWITCH, Adjustable Pedals - Removal).

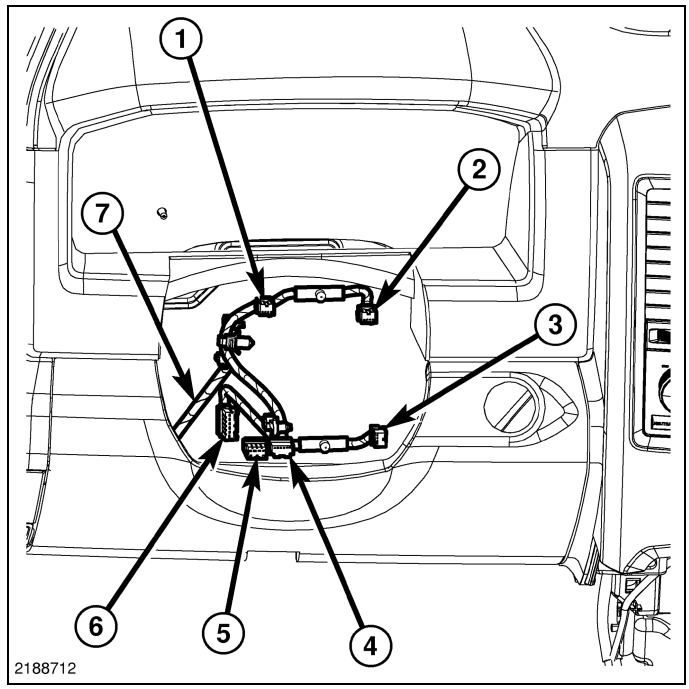

Installation

WARNING: To avoid serious or fatal injury on vehicles equipped with airbags, disable the Supplemental Restraint System (SRS) before attempting any steering wheel, steering column, airbag, seat belt tensioner, impact sensor or instrument panel component diagnosis or service. Disconnect and isolate the battery negative (ground) cable, then wait two minutes for the system capacitor to discharge before performing further diagnosis or service. This is the only sure way to disable the SRS. Failure to take the proper precautions could result in accidental airbag deployment.

CAUTION: If the clockspring is not properly centered in relation to the Steering Angle Sensor (SAS), steering wheel, steering shaft and steering gear, it may be damaged or Diagnostic Trouble Codes (DTC) may be set in

the SAS. (Refer to 10 - Restraints/CLOCKSPRING - Standard Procedure). Service replacement clocksprings are shipped pre-centered and with a locking pin installed. This locking pin should not be removed until the clockspring has been installed on the steering column.

1. Reinstall the adjustable pedal switch blank filler or switch onto the clockspring. (Refer to 05 - Brakes/Electrical/SWITCH, Adjustable Pedals - Installation).
2. Reinstall the multi-function switch onto the clockspring. (Refer to 08 - Electrical/8L - Lamps and Lighting/Lamps/Lighting - Exterior/SWITCH, Multi-function - Installation).
3. With the centered clockspring rotor and case secured to each other, or with the plastic locking pin installed, carefully slide the clockspring down over the steering column upper shaft far enough to access and reconnect the following instrument panel wire harness (7) connectors and their wiring retainers to the clockspring, as the vehicle is equipped:
   a. Multi-function switch connector (1)
   b. Heated steering wheel slip ring connector (2)
   c. Steering Angle Sensor (SAS) connector (3)
   d. Two clockspring connectors (4 and 5)
   e. Adjustable pedal switch connector (6).

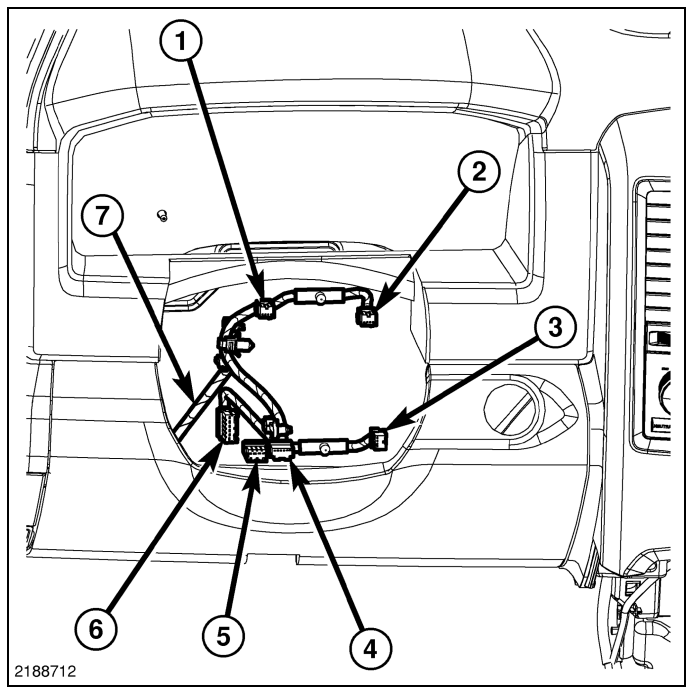

4. Position the clockspring (3) onto the steering column housing (1).
5. Install and tighten the two screws (2) that secure the clockspring to the steering column housing. Tighten the screws to 3 N·m (25 in. lbs.).
6. Reinstall the upper and lower shrouds onto the steering column. (Refer to 19 - Steering/Column/SHROUD, Steering Column - Installation).
7. Remove the plastic locking pin or any other device that is being used to secure the clockspring rotor to the clockspring case to maintain clockspring centering.
8. Reinstall the steering wheel onto the steering column. (Refer to 19 - Steering/Column/WHEEL, Steering - Installation).

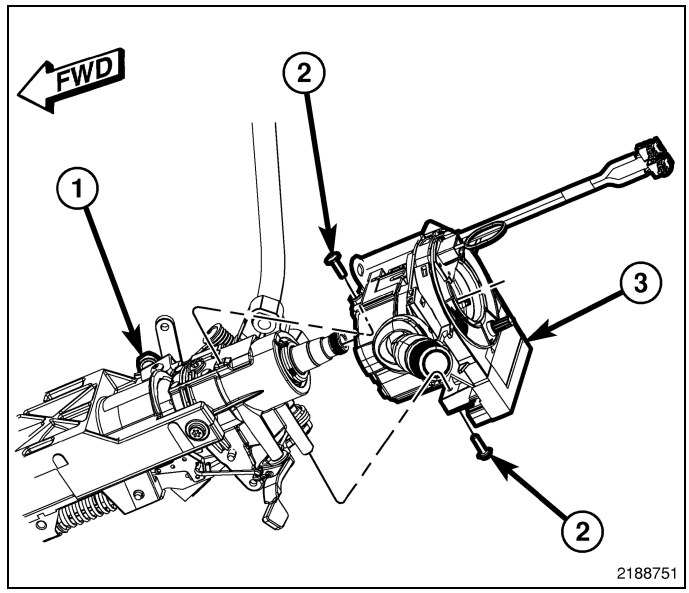

NOTE: When reinstalling the steering wheel, be certain to index the engagement dowel/drive pin on the upper surface of the clockspring rotor between the two fins cast into the lower surface of the steering wheel armature hub.

9. If equipped, reconnect the clockspring pigtail wire connector for the steering wheel heater element to the steering wheel connector receptacle.
10. Reconnect the steering wheel wire harness connector to the upper clockspring connector receptacle. Be certain that the steering wheel wire harness is routed between the steering wheel back trim cover and the steering wheel armature.
11. Reinstall the driver airbag onto the steering wheel. (Refer to 10 - Restraints/AIR BAG, Driver - Installation).
12. Reconnect the battery negative cable.

NOTE: Proper clockspring installation must also be confirmed by viewing the SAS Menu Item, Data Display function using a diagnostic scan tool.

CONTROLLER, Occupant Restraint

Description

The Occupant Restraint Controller (ORC) (1) is located in the passenger compartment of the vehicle, where it is secured by three nuts to three studs on a stamped steel mounting bracket welded onto the top of the floor panel transmission tunnel under the center front seat section or the center floor console, as the vehicle is equipped. Concealed within a hollow in the center of the die cast aluminum ORC housing is the electronic circuitry of the ORC which includes a microprocessor, an electronic impact sensor, an electronic safing sensor, and an energy storage capacitor. A stamped metal cover plate is secured to the bottom of the ORC housing with screws to enclose and protect the internal electronic circuitry and components.

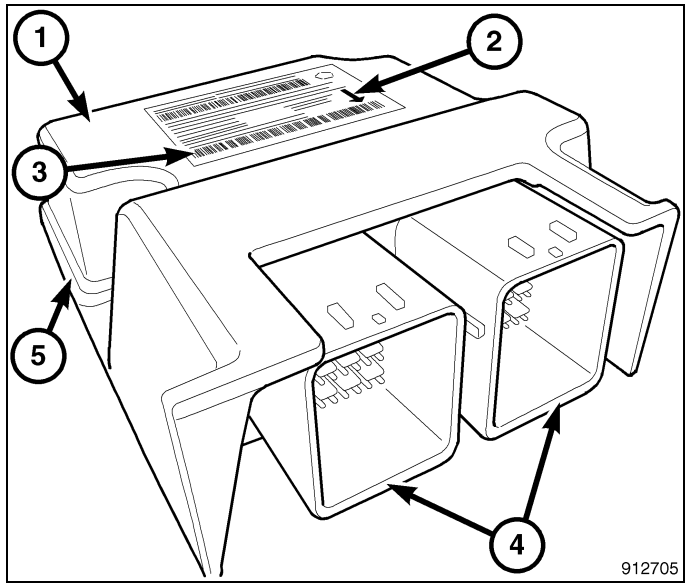

An arrow (2) printed on the label (3) on the top of the ORC housing provides a visual verification of the proper orientation of the unit, and should always be pointed toward the front of the vehicle. The ORC housing has three integral flanges with mounting holes. Two are on the corners oriented towards the left side of the vehicle, and one is near the center of the side facing the right side of the vehicle. A molded plastic electrical connector (4) with two receptacles, each containing up to 32 terminal pins, exits the forward facing side of the ORC housing. These terminal pins connect the ORC to the vehicle electrical system through two dedicated take outs and connectors, one each from the instrument panel and the body wire harnesses.

A molded plastic protective cover is installed over the ORC to provide additional moisture contamination protection to the unit. Integral latch features on each side of the cover engage a slot (5) on each side of the base of the ORC housing to secure the cover to the ORC. This protective cover **must** be reinstalled following any service requiring its removal.

The impact sensor and safing sensor internal to the ORC are calibrated for the specific vehicle, and are only serviced as a unit with the ORC. The ORC cannot be repaired or adjusted and, if damaged or ineffective, it must be replaced.

Operation

The microprocessor in the Occupant Restraint Controller (ORC) contains the Supplemental Restraint System (SRS) logic circuits and controls all of the SRS components. The ORC uses On-Board Diagnostics (OBD) and can communicate with other electronic modules in the vehicle as well as with the diagnostic scan tool using the Controller Area Network (CAN) data bus. This method of communication is used for control of the airbag indicator in the ElectroMechanical Instrument Cluster (EMIC) (also known as the Cab Compartment Node/CCN) and for SRS diagnosis and testing through the 16-way Data Link Connector (DLC) located on the driver side lower edge of the instrument panel.

The ORC microprocessor continuously monitors all of the SRS electrical circuits to determine the system readiness. If the ORC detects a monitored system fault, it sets an active and stored Diagnostic Trouble Code (DTC) and sends electronic messages to the EMIC over the CAN data bus to turn ON the airbag indicator. An active fault only remains for the duration of the fault, or in some cases for the duration of the current ignition cycle, while a stored fault causes a DTC to be stored in memory by the ORC. For some DTCs, if a fault does not recur for a number of ignition cycles, the ORC will automatically erase the stored DTC. For other internal faults, the stored DTC is latched forever.

The ORC receives battery current through two circuits; a fused ignition switch output (run) circuit through a fuse in the Totally Integrated Power Module (TIPM), and a fused ignition switch output (run-start) circuit through a second fuse in the TIPM. The ORC receives ground through a ground circuit and take out of the instrument panel wire harness that is secured by a ground screw to the body sheet metal. These connections allow the ORC to be operational whenever the ignition switch is in the START or ON positions.

The ORC also contains an energy-storage capacitor. When the ignition switch is in the START or ON positions, this capacitor is continually being charged with enough electrical energy to deploy the SRS components for up to one second

following a battery disconnect or failure. The purpose of the capacitor is to provide backup SRS protection in case there is a loss of battery current supply to the ORC during an impact.

Various sensors within the ORC are continuously monitored by the ORC logic. These internal sensors, along with several external impact sensor inputs allow the ORC to determine both the severity of an impact and to verify the necessity for deployment of any SRS components. Two remote front impact sensors are located on the back of the right and left ends of the lower radiator crossmember near the front of the vehicle. The electronic impact sensors are accelerometers that sense the rate of vehicle deceleration, which provides verification of the direction and severity of an impact.

The ORC also monitors inputs from an internal rollover sensor and up to six additional remote side impact sensors located within both the left and right front doors, B-pillars and C-pillars to control deployment of the side curtain airbag units.

The impact sensors within the ORC are electronic accelerometer sensors that provide an additional logic input to the ORC microprocessor. These sensors are used to verify the need for a SRS component deployment by detecting impact energy of a lesser magnitude than that of the primary electronic impact sensors, and must exceed a safing threshold in order for the SRS components to deploy. A separate impact sensor within the ORC provides confirmation to the ORC microprocessor of side impact forces. This separate sensor is a bi-directional unit that detects impact forces from either side of the vehicle.

Pre-programmed decision algorithms in the ORC microprocessor determine when the deceleration rate as signaled by the impact sensors indicate an impact that is severe enough to require SRS protection and, based upon the severity of the monitored impact, determines the level of front airbag deployment force required for each front seating position. When the programmed conditions are met, the ORC sends the proper electrical signals to deploy the dual multistage front airbags at the programmed force levels, the front seat belt tensioners and either side curtain airbag unit.

The hard wired inputs and outputs for the ORC may be diagnosed using conventional diagnostic tools and procedures. Refer to the appropriate wiring information. However, conventional diagnostic methods will not prove conclusive in the diagnosis of the ORC or the electronic controls or communication between other modules and devices that provide features of the SRS. The most reliable, efficient, and accurate means to diagnose the ORC or the electronic controls and communication related to SRS operation requires the use of a diagnostic scan tool. Refer to the appropriate diagnostic information.

Removal

MODULE

WARNING: To avoid serious or fatal injury on vehicles equipped with airbags, disable the Supplemental Restraint System (SRS) before attempting any steering wheel, steering column, airbag, seat belt tensioner, impact sensor or instrument panel component diagnosis or service. Disconnect and isolate the battery negative (ground) cable, then wait two minutes for the system capacitor to discharge before performing further diagnosis or service. This is the only sure way to disable the SRS. Failure to take the proper precautions could result in accidental airbag deployment.

WARNING: To avoid serious or fatal injury, never strike or drop the Occupant Restraint Controller (ORC) as it can damage the impact sensor or affect its calibration. The ORC contains the impact sensor, which enables the system to deploy the Supplemental Restraint System (SRS) components. If an ORC is accidentally dropped during service, the module must be scrapped and replaced with a new unit. Failure to observe this warning could result in accidental, incomplete or improper SRS component deployment.

1. Disconnect and isolate the battery negative cable. Wait two minutes for the system capacitor to discharge before further service.
2. Remove the protective cover from the Occupant Restraint Controller (ORC) (1). (Refer to 10 - Restraints/ CONTROLLER, Occupant Restraint - Removal).
3. Disconnect the instrument panel and body wire harness connectors (3) for the ORC from the ORC connector receptacles (2 and 4) located on the forward facing side of the module. To disconnect the connectors from the ORC:
   a. Slide the red Connector Position Assurance (CPA) lock on the top of the connector to the side.
   b. Depress the edge of the CPA lock closest to the ORC to release the connector latch tab and pull the connector straight away from the ORC connector receptacle.

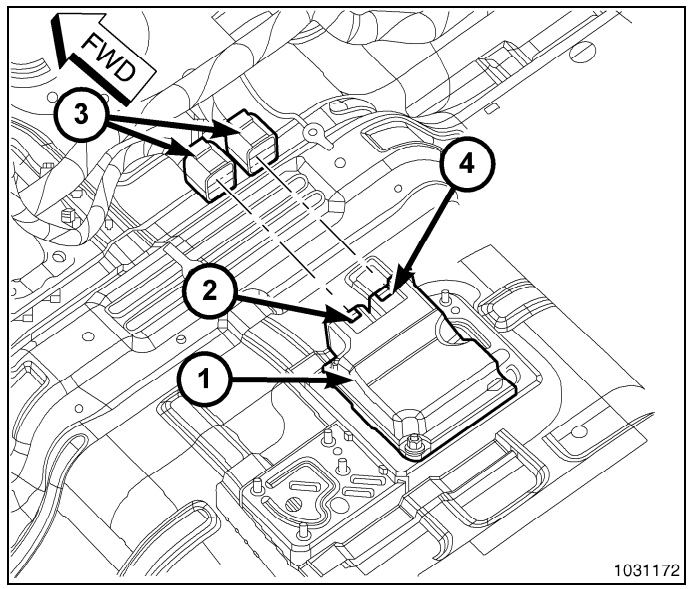

4. Remove the three nuts (2) that secure the ORC (1) to the studs of the ORC mount (3) welded onto the top of the floor panel transmission tunnel.
5. Remove the ORC from the ORC mount.

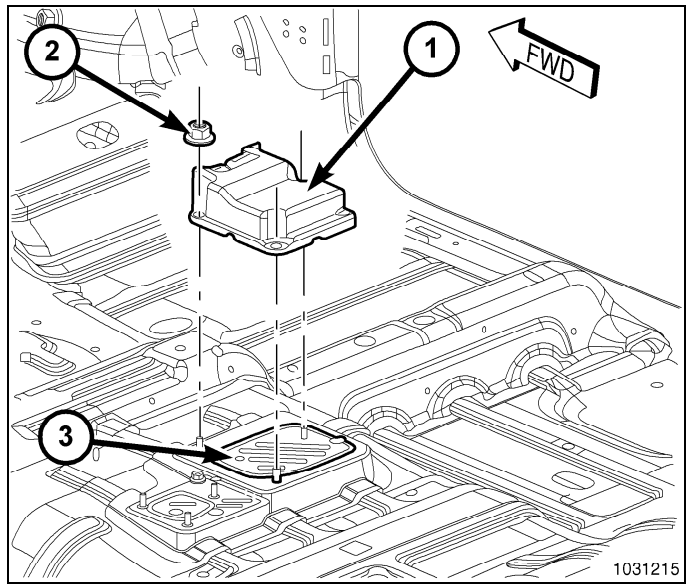

COVER

WARNING: To avoid serious or fatal injury on vehicles equipped with airbags, disable the Supplemental Restraint System (SRS) before attempting any steering wheel, steering column, airbag, seat belt tensioner, impact sensor or instrument panel component diagnosis or service. Disconnect and isolate the battery negative (ground) cable, then wait two minutes for the system capacitor to discharge before performing further diagnosis or service. This is the only sure way to disable the SRS. Failure to take the proper precautions could result in accidental airbag deployment.

1. Disconnect and isolate the battery negative cable. Wait two minutes for the system capacitor to discharge before further service.
2. On vehicles equipped with front bucket seats, remove the front floor console from the vehicle. (Refer to 23 - Body/Interior/CONSOLE, Floor - Removal).

NOTE: The front bench seat assembly must be unfastened from the floor panel, but need not be removed from the vehicle for access to the Occupant Restraint Controller (ORC) cover for service.

3. On vehicles equipped with a front bench seat, detach the front seat from the floor panel. (Refer to 23 - Body/Seats/SEAT - Removal).
4. Using a trim stick or another suitable wide flat-bladed tool, gently pry the latch feature on either side of the ORC cover (1) away from the base of the ORC (2) far enough to disengage the cover from the module.
5. Remove the ORC cover from over the ORC.

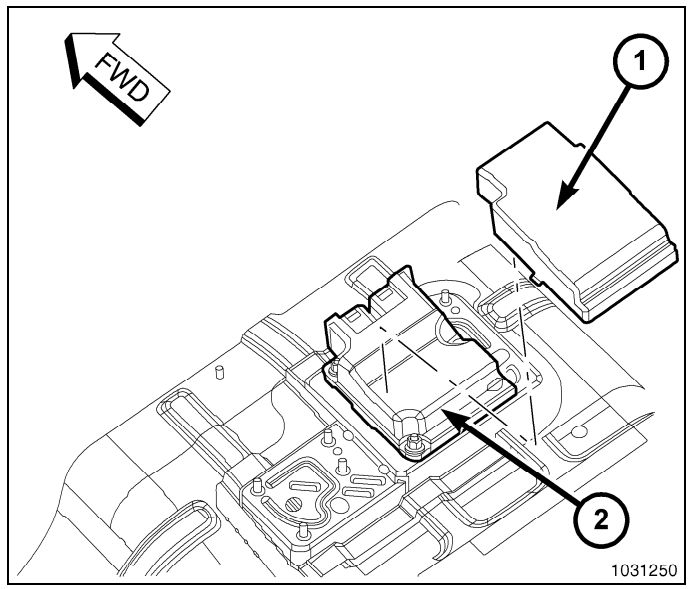

Installation

MODULE

WARNING: To avoid serious or fatal injury on vehicles equipped with airbags, disable the Supplemental Restraint System (SRS) before attempting any steering wheel, steering column, airbag, seat belt tensioner, impact sensor or instrument panel component diagnosis or service. Disconnect and isolate the battery negative (ground) cable, then wait two minutes for the system capacitor to discharge before performing further diagnosis or service. This is the only sure way to disable the SRS. Failure to take the proper precautions could result in accidental airbag deployment.

WARNING: To avoid serious or fatal injury, never strike or drop the Occupant Restraint Controller (ORC) as it can damage the impact sensor or affect its calibration. The ORC contains the impact sensor, which enables the system to deploy the Supplemental Restraint System (SRS) components. If an ORC is accidentally dropped during service, the module must be scrapped and replaced with a new unit. Failure to observe this warning could result in accidental, incomplete or improper SRS component deployment.

1. Position the Occupant Restraint Controller (ORC) (1) over the three studs of the ORC mount (3) welded onto the top of the floor panel transmission tunnel. When the ORC is correctly positioned, the arrow on the ORC label will be pointed forward in the vehicle.
2. Install and tighten the three nuts (2) that secure the ORC to the studs of the ORC mount that is welded onto the floor panel transmission tunnel. Tighten the nuts to 12 N·m (9 ft. lbs.).

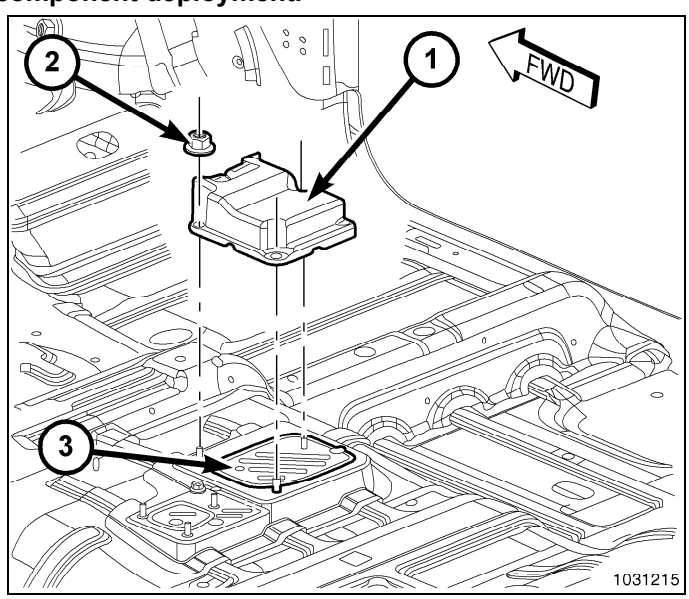

3. Reconnect the instrument panel and body wire harness connectors (3) for the ORC (1) to the ORC connector receptacles (2 and 4) located on the forward facing side of the module. Be certain that the latches and the red Connector Position Assurance (CPA) locks on both connectors are each fully engaged.
4. Reinstall the ORC cover onto the ORC. (Refer to 10 - Restraints/CONTROLLER, Occupant Restraint - Installation).
5. Do not reconnect the battery negative cable at this time. The Supplemental Restraint System (SRS) Verification Test procedure should be performed following service of any SRS component. (Refer to 10 - Restraints - Standard Procedure).

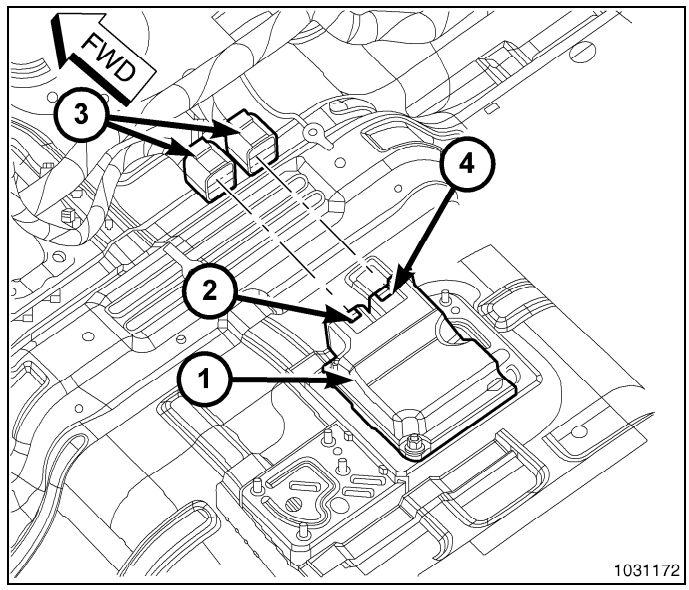

COVER

WARNING: To avoid serious or fatal injury on vehicles equipped with airbags, disable the Supplemental Restraint System (SRS) before attempting any steering wheel, steering column, airbag, seat belt tensioner, impact sensor or instrument panel component diagnosis or service. Disconnect and isolate the battery negative (ground) cable, then wait two minutes for the system capacitor to discharge before performing further diagnosis or service. This is the only sure way to disable the SRS. Failure to take the proper precautions could result in accidental airbag deployment.

1. Position the ORC cover (1) over the Occupant Restraint Controller (ORC) (2).
2. Align the latch feature on each side of the ORC cover with the notch in each side at the base of the ORC housing.
3. Using hand pressure, press firmly and evenly downward on the ORC cover until each latch feature is fully engaged with the ORC housing.
4. On vehicles equipped with a front bench seat, reinstall the front seat onto the floor panel. (Refer to 23 - Body/Seats/SEAT - Installation).
5. On vehicles equipped with front bucket seats, reinstall the front floor console into the vehicle. (Refer to 23 - Body/Interior/CONSOLE, Floor - Installation).
6. Reconnect the battery negative cable.

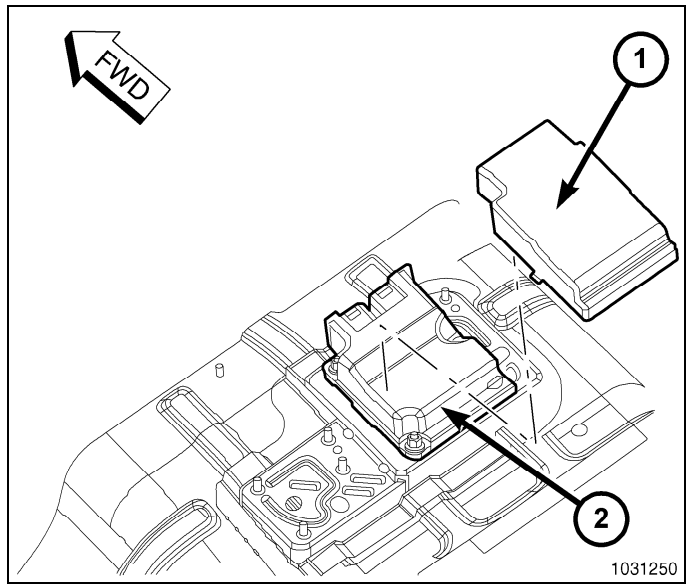

RETRACTOR, Seat Belt

Description

The seat belt retractors (1) used in all seating positions include an inertia-type, emergency locking mechanism as standard equipment. However, the retractor locking mechanisms for all seating positions except the driver side front position are mechanically switchable from an Emergency Locking Retractor (ELR) to an Automatic Locking Retractor (ALR). The primary function of this feature is to securely accommodate a child seat in any seating position of the vehicle without the need for a self-cinching seat belt tip half latch plate unit or another supplemental device that would be required to prevent the seat belt webbing from unwinding freely from the retractor spool of an inertia-type emergency locking retractor mechanism.

The emergency and automatic locking mechanisms are integral to the seat belt and retractor unit and are concealed beneath a molded plastic cover (2) located on one side of the retractor spool. These locking mechanisms cannot be adjusted or repaired and, if ineffective or damaged, the entire seat belt and retractor unit must be replaced.

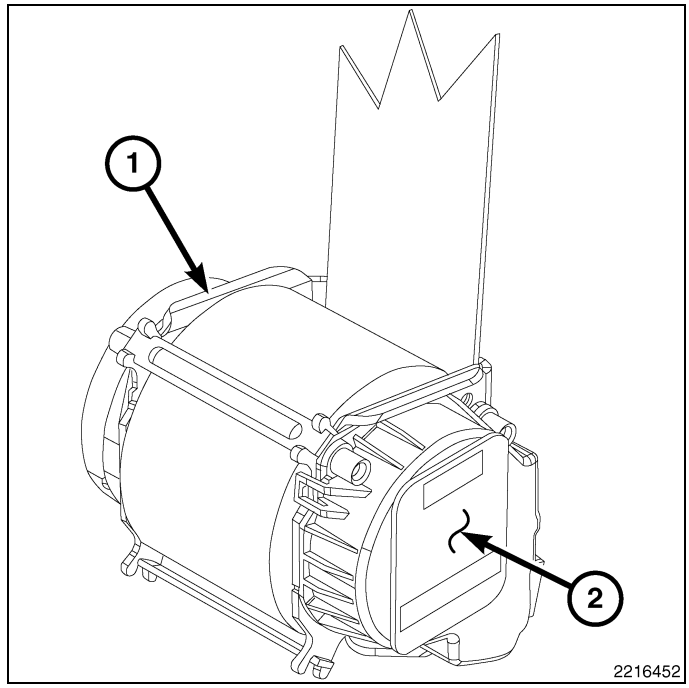

Operation

The locked mode of the Automatic Locking Retractor (ALR) is engaged and the retractor is switched from operating as a standard inertia-type Emergency Locking Retractor (ELR) by first buckling the combination lap and shoulder belt buckle. Then grasp the shoulder belt and pull all of the webbing out of the retractor. Once all of the belt webbing is extracted from the spool, the retractor will automatically become engaged in the pre-locked automatic locking mode and will make a light, audible clicking or ratcheting sound as the shoulder belt is allowed to retract to confirm that the automatic locking mode is now engaged. Once the automatic locking mode is engaged, the retractor will remain locked and the belt will remain tight around whatever it is restraining.

The retractor is returned to standard emergency locking (inertia) mode by unbuckling the combination lap and shoulder belt buckle and allowing the belt webbing to be almost fully retracted onto the retractor spool. The emergency locking mode is confirmed by the absence of the light, audible clicking or ratcheting sound as the belt webbing retracts. This mode will allow the belt to unwind from and wind onto the retractor spool freely unless and until a predetermined inertia load is sensed, or until the retractor is again switched to the automatic locking mode.

Removal

CENTER - STANDARD CAB

WARNING: To avoid serious or fatal injury during and following any seat belt or child restraint anchor service, carefully inspect all seat belts, buckles, mounting hardware, retractors, tether straps, and anchors for proper installation, operation, or damage. Replace any belt that is cut, frayed, or torn. Straighten any belt that is twisted. Tighten any loose fasteners. Replace any belt that has a damaged or ineffective buckle or retractor. Replace any belt that has a bent or damaged latch plate or anchor plate. Replace any child restraint anchor or the unit to which the anchor is integral that has been bent or damaged. Never attempt to repair a seat belt or child restraint component. Always replace damaged or ineffective seat belt and child restraint components with the correct, new and unused replacement parts listed in the Chrysler Mopar® Parts Catalog. Failure to follow these instructions may result in possible serious or fatal injury.

NOTE: A front center three-point seat belt and retractor is used only on standard cab vehicles. Quad cab and crew cab vehicles with a front bench seat have a two-point lap belt in the front center seating position. (Refer to 10 - Restraints/BUCKLE, Seat Belt - Removal).

NOTE: All seat belt retractors except the driver side front retractor include a switchable automatic locking mechanism. (Refer to 10 - Restraints/RETRACTOR, Seat Belt - Description).

1. Reach between the center of the front seat cushion and front seat back to access and unbuckle the front center seat belt lower anchor latch plate from the unique black, keyed lower anchor buckle. Use an ignition key or a small screwdriver to depress the small white release button on the anchor buckle.
2. Move the front seat to its most forward position for easiest access to the front center seat belt and retractor unit.
3. Remove the stowage tray from the rear floor panel behind the seat. (Refer to 23 - Body/Interior/BIN, Storage - Removal).
4. Using a trim stick or another suitable wide flat-bladed tool, gently pry at each side of the front center seat belt bezel (5) on the cab back trim panel (1) to release the snap features that secure the bezel to the panel.
5. Remove the bezel from the webbing of the front center seat belt (4).
6. Remove the trim from the cab back panel. (Refer to 23 - Body/Interior/PANEL, Cab Back Trim - Removal).

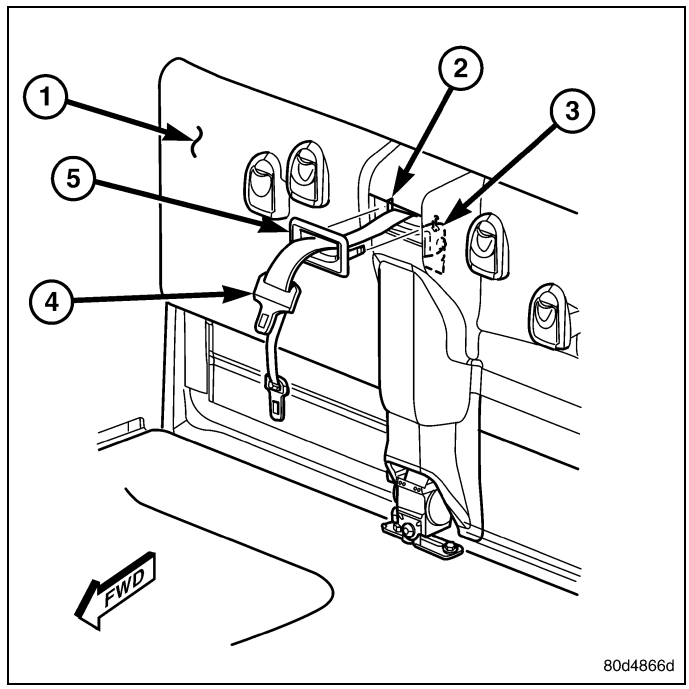

7. Remove the two screws (3) that secure the belt bracket (2) of the front center seat belt (7) to the body bracket (1) on the upper cab back panel (8) reinforcement.
8. Remove the belt bracket of the front center seat belt from the body bracket on the upper cab back panel reinforcement.
9. Remove the two screws (4) that secure the front center seat belt retractor bracket (5) to the floor panel (6) near the base of the cab back panel.
10. Remove the front center seat belt and retractor unit from the floor panel.

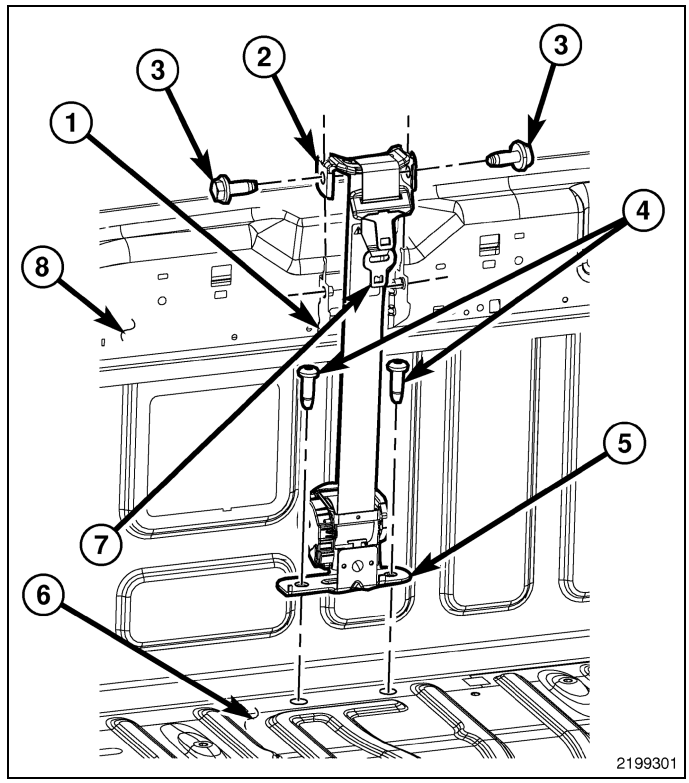

FRONT OUTBOARD - QUAD OR CREW CAB

WARNING: To avoid serious or fatal injury on vehicles equipped with airbags, disable the Supplemental Restraint System (SRS) before attempting any steering wheel, steering column, airbag, seat belt tensioner, impact sensor or instrument panel component diagnosis or service. Disconnect and isolate the battery negative (ground) cable, then wait two minutes for the system capacitor to discharge before performing further diagnosis or service. This is the only sure way to disable the SRS. Failure to take the proper precautions could result in accidental airbag deployment.

WARNING: To avoid serious or fatal injury during and following any seat belt or child restraint anchor service, carefully inspect all seat belts, buckles, mounting hardware, retractors, tether straps, and anchors for proper installation, operation, or damage. Replace any belt that is cut, frayed, or torn. Straighten any belt that is twisted. Tighten any loose fasteners. Replace any belt that has a damaged or ineffective buckle or retractor. Replace any belt that has a bent or damaged latch plate or anchor plate. Replace any child restraint anchor or the unit to which the anchor is integral that has been bent or damaged. Never attempt to repair a seat belt or child restraint component. Always replace damaged or ineffective seat belt and child restraint components with the correct, new and unused replacement parts listed in the Chrysler Mopar® Parts Catalog. Failure to follow these instructions may result in possible serious or fatal injury.

NOTE: The following procedure is for replacement of an ineffective or damaged seat belt and retractor unit. The front outboard retractors also include a seat belt tensioner. If the front seat belt or retractor is ineffective or damaged, but the seat belt tensioner is not deployed, review the recommended procedures for handling non-deployed supplemental restraints. (Refer to 10 - Restraints - Standard Procedure). If the seat belt tensioner has been deployed, review the recommended procedures for service after a supplemental restraint deployment before removing the unit from the vehicle. (Refer to 10 - Restraints - Standard Procedure).

NOTE: All seat belt retractors except the driver side front retractor include a switchable automatic locking mechanism. (Refer to 10 - Restraints/RETRACTOR, Seat Belt - Description).

1. Adjust the front seat to its most forward position for easiest access to the front seat belt lower anchor (3) and the lower B-pillar trim.
2. Disconnect and isolate the battery negative cable. Wait two minutes for the system capacitor to discharge before further service.
3. On the passenger side only, remove the trim cover from the front seat riser as necessary to access the front seat belt lower anchor. (Refer to 23 - Body/Seats/SEAT - Removal).
4. Remove the screw (2) that secures the lower anchor (3) to the floor panel (4) near the base of the B-pillar (1).

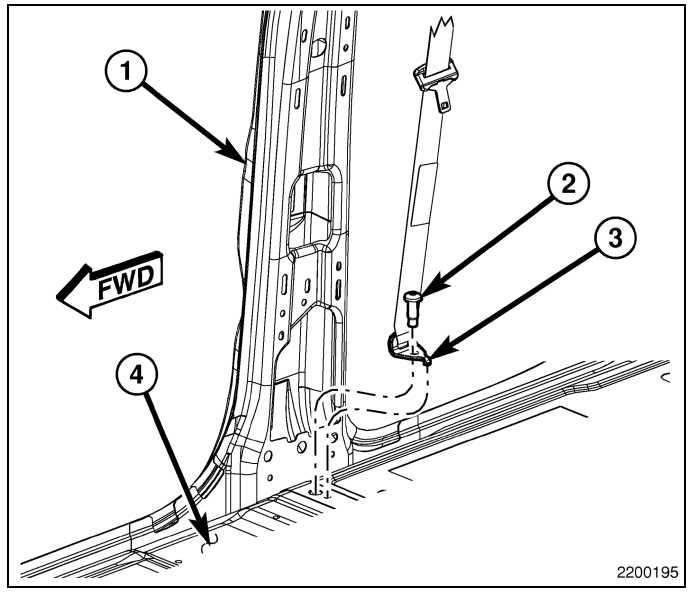

5. Firmly grasp the top of the trim cover (3) for the front seat belt turning loop height adjuster (1) on the inside of the upper B-pillar and pull it away from the height adjuster far enough unsnap it, then disengage the lower snap features of the trim cover from the adjuster and discard. The trim cover is a one time component and is not intended for reuse.
6. Remove the screw (4) that secures the seat belt turning loop (5) to the height adjuster on the upper B-pillar.
7. Remove the seat belt turning loop from the height adjuster.
8. Remove the lower trim from the inside of the B-pillar. (Refer to 23 - Body/Interior/PANEL, B-Pillar Trim - Removal).

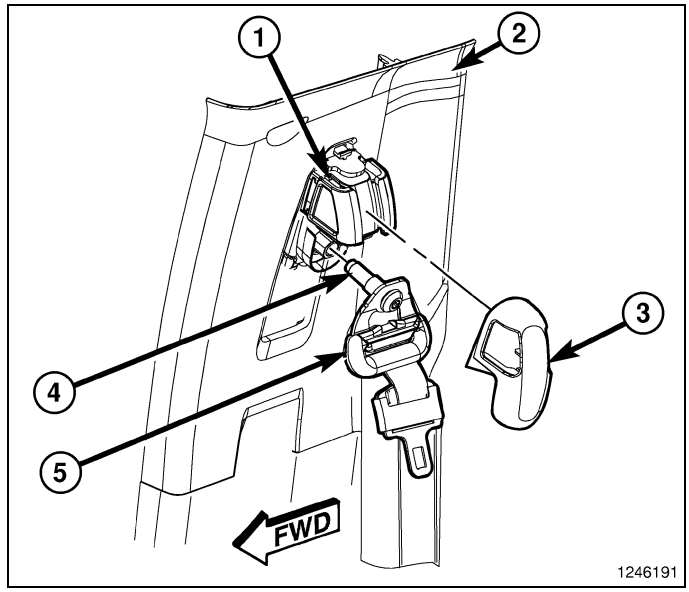

9. Disengage the two clips that secure the belt web guide (2) to the B-pillar (1).
10. Remove the screw (3) that secures the upper retractor (6) bracket to the B-pillar.
11. Remove the screw (5) that secures the lower retractor bracket to the B-pillar.
12. Disengage the locating tab on the upper retractor bracket from the clearance hole in the inner B-pillar

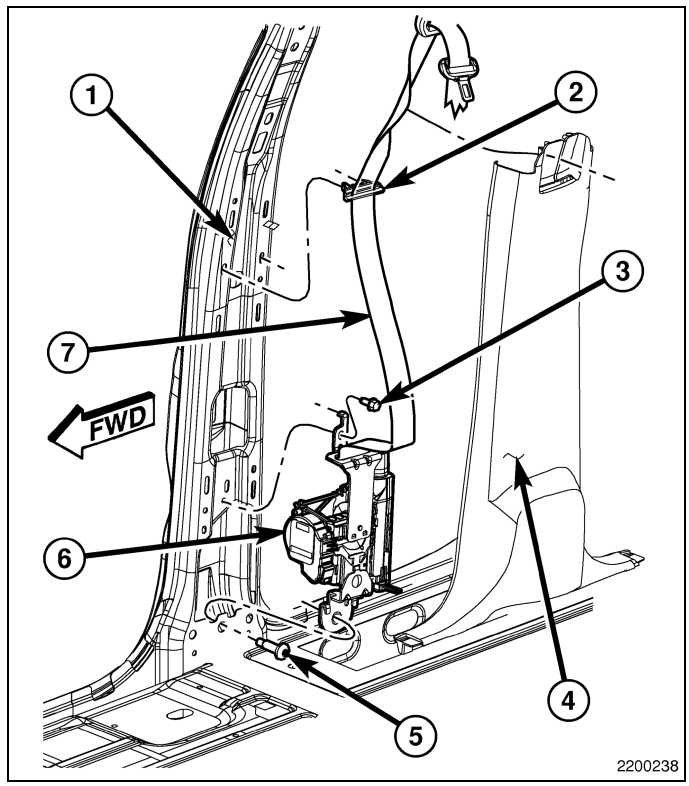

.

13. Disconnect the yellow connector (2) of the body wire harness (3) from the seat belt tensioner initiator on the retractor (1).
14. Remove the front outboard seat belt and retractor from the vehicle as a unit.

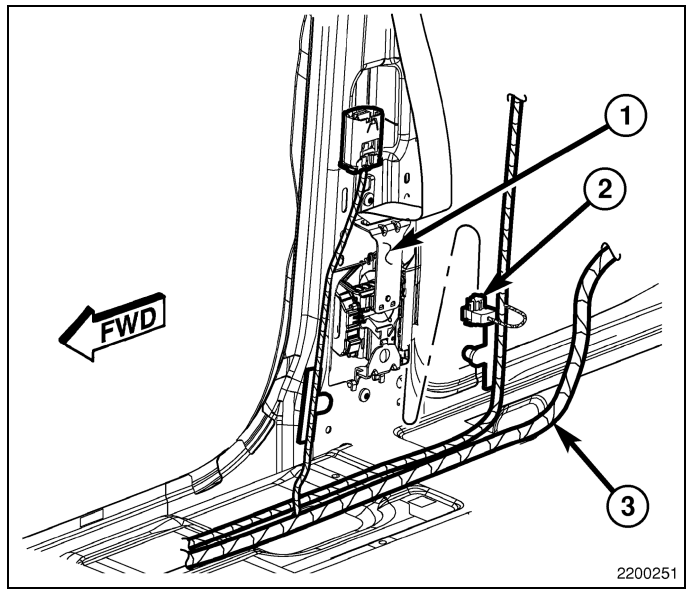

OUTBOARD - STANDARD CAB

WARNING: To avoid serious or fatal injury on vehicles equipped with airbags, disable the Supplemental Restraint System (SRS) before attempting any steering wheel, steering column, airbag, seat belt tensioner, impact sensor or instrument panel component diagnosis or service. Disconnect and isolate the battery negative (ground) cable, then wait two minutes for the system capacitor to discharge before performing further diagnosis or service. This is the only sure way to disable the SRS. Failure to take the proper precautions could result in accidental airbag deployment.

WARNING: To avoid serious or fatal injury during and following any seat belt or child restraint anchor service, carefully inspect all seat belts, buckles, mounting hardware, retractors, tether straps, and anchors for proper installation, operation, or damage. Replace any belt that is cut, frayed, or torn. Straighten any belt that is twisted. Tighten any loose fasteners. Replace any belt that has a damaged or ineffective buckle or retractor. Replace

any belt that has a bent or damaged latch plate or anchor plate. Replace any child restraint anchor or the unit to which the anchor is integral that has been bent or damaged. Never attempt to repair a seat belt or child restraint component. Always replace damaged or ineffective seat belt and child restraint components with the correct, new and unused replacement parts listed in the Chrysler Mopar® Parts Catalog. Failure to follow these instructions may result in possible serious or fatal injury.

NOTE: The following procedure is for replacement of an ineffective or damaged seat belt and retractor unit. The front outboard retractors also include a seat belt tensioner. If the front seat belt or retractor is ineffective or damaged, but the seat belt tensioner is not deployed, review the recommended procedures for Handling Non-Deployed Supplemental Restraints. (Refer to 10 - Restraints - Standard Procedure). If the seat belt tensioner has been deployed, review the recommended procedures for Service After A Supplemental Restraint Deployment before removing the unit from the vehicle. (Refer to 10 - Restraints - Standard Procedure).

1. Adjust the front seat to its most forward position for easiest access to the front seat belt lower anchor (4) and the lower B-pillar trim (2).
2. Disconnect and isolate the battery negative cable. Wait two minutes for the system capacitor to discharge before further service.
3. Remove the screw (3) that secures the lower anchor to the inner B-pillar (1).
4. Remove the lower trim from the inside of the B-pillar. (Refer to 23 - Body/Interior/PANEL, B-Pillar Trim - Removal).

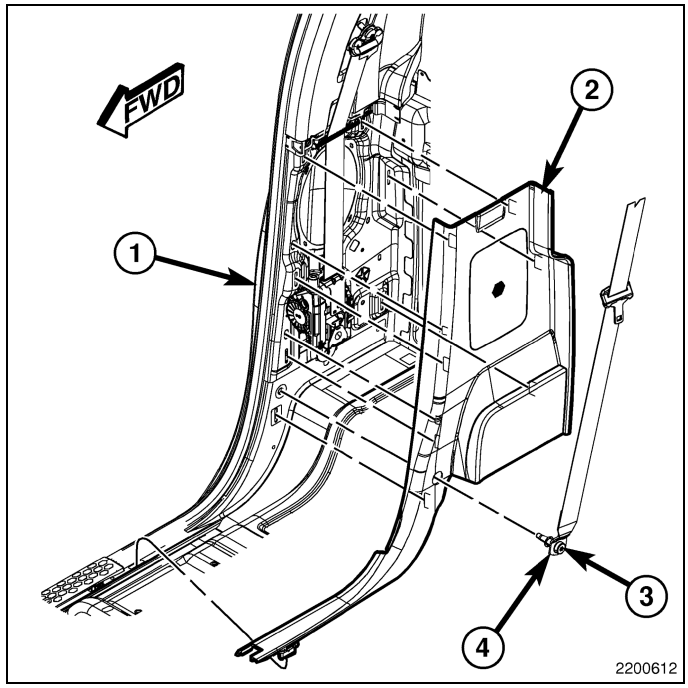

5. Grasp the upper edge of the lower anchor cover and pull upward to unsnap it from the front seat cushion outboard side shield.
6. Firmly grasp the top of the trim cover (3) for the front seat belt turning loop height adjuster (1) on the inside of the upper B-pillar and pull it away from the height adjuster far enough unsnap it, then disengage the lower snap features of the trim cover from the adjuster and discard. The trim cover is a one time component and is not intended for reuse.
7. Remove the screw (4) that secures the seat belt turning loop (5) to the height adjuster on the upper B-pillar.
8. Remove the seat belt turning loop from the height adjuster.

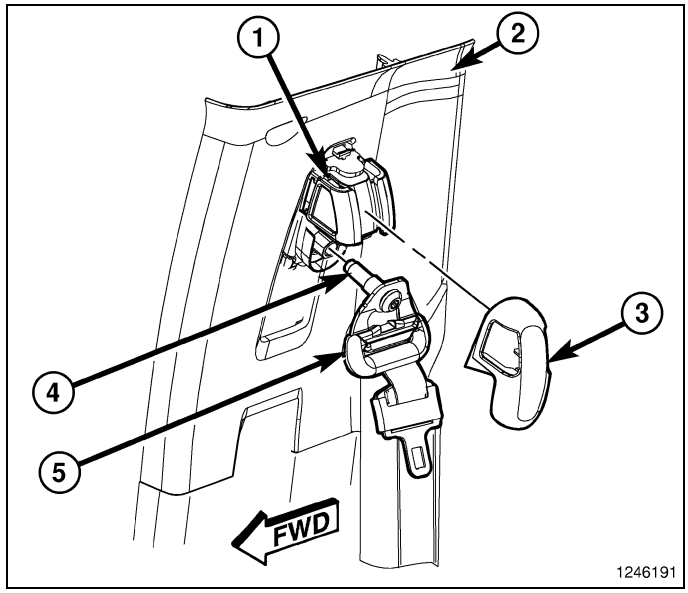

9. Disengage the two clips that secure the belt web guide (2) to the B-pillar (6).
10. Remove the screw (3) that secures the upper retractor (4) bracket to the B-pillar.
11. Remove the screw (5) that secures the lower retractor bracket to the B-pillar.
12. Disengage the locating tab on the upper retractor bracket from the clearance hole in the inner B-pillar.
13. Remove the front outboard seat belt and retractor from the B-pillar as a unit.

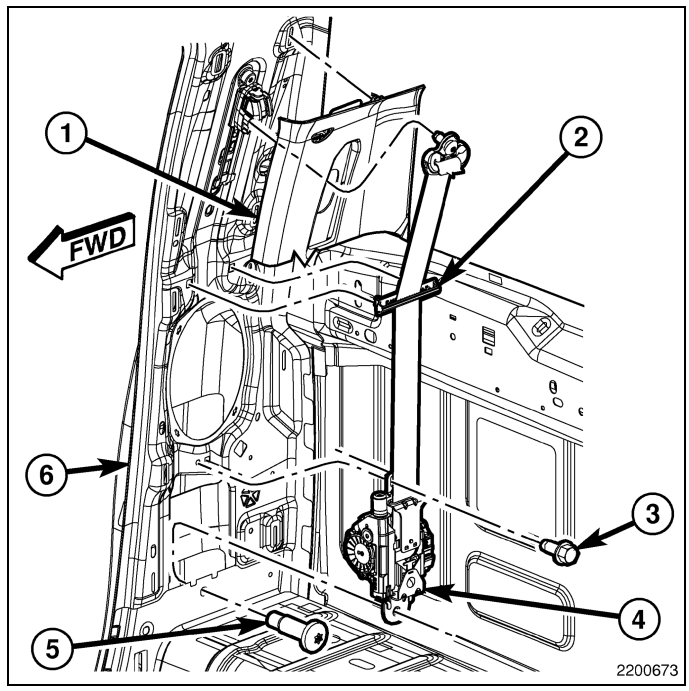

14. Disconnect the yellow connector (2) of the body wire harness (3) from the seat belt tensioner initiator on the retractor (1).
15. Remove the front outboard seat belt and retractor from the vehicle as a unit.

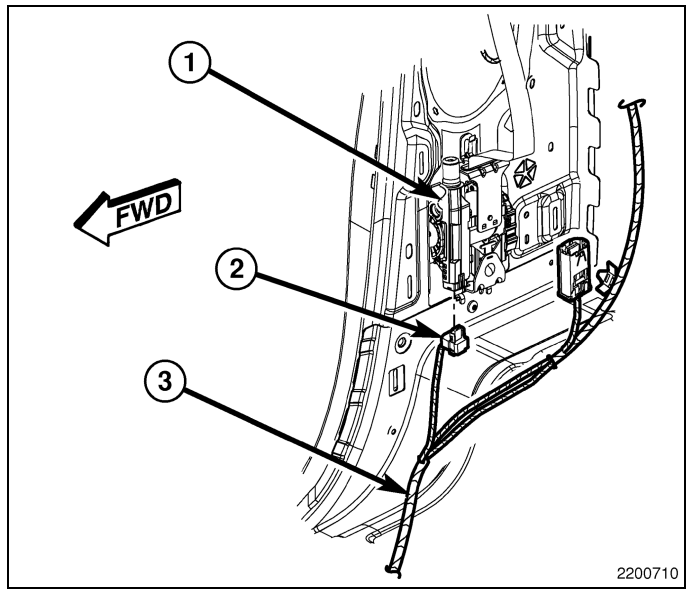

REAR CENTER - QUAD OR CREW CAB

WARNING: To avoid serious or fatal injury during and following any seat belt or child restraint anchor service, carefully inspect all seat belts, buckles, mounting hardware, retractors, tether straps, and anchors for proper installation, operation, or damage. Replace any belt that is cut, frayed, or torn. Straighten any belt that is twisted. Tighten any loose fasteners. Replace any belt that has a damaged or ineffective buckle or retractor. Replace any belt that has a bent or damaged latch plate or anchor plate. Replace any child restraint anchor or the unit to which the anchor is integral that has been bent or damaged. Never attempt to repair a seat belt or child restraint component. Always replace damaged or ineffective seat belt and child restraint components with the correct, new and unused replacement parts listed in the Chrysler Mopar® Parts Catalog. Failure to follow these instructions may result in possible serious or fatal injury.

NOTE: The rear center seat belt and retractor is secured to a mounting bracket that includes the right outboard occupant seat belt buckle. The rear right outboard occupant buckle is available for service only as a unit with the center seat belt and retractor.

NOTE: All seat belt retractors except the driver side front retractor include a switchable automatic locking mechanism. (Refer to 10 - Restraints/RETRACTOR, Seat Belt - Description).

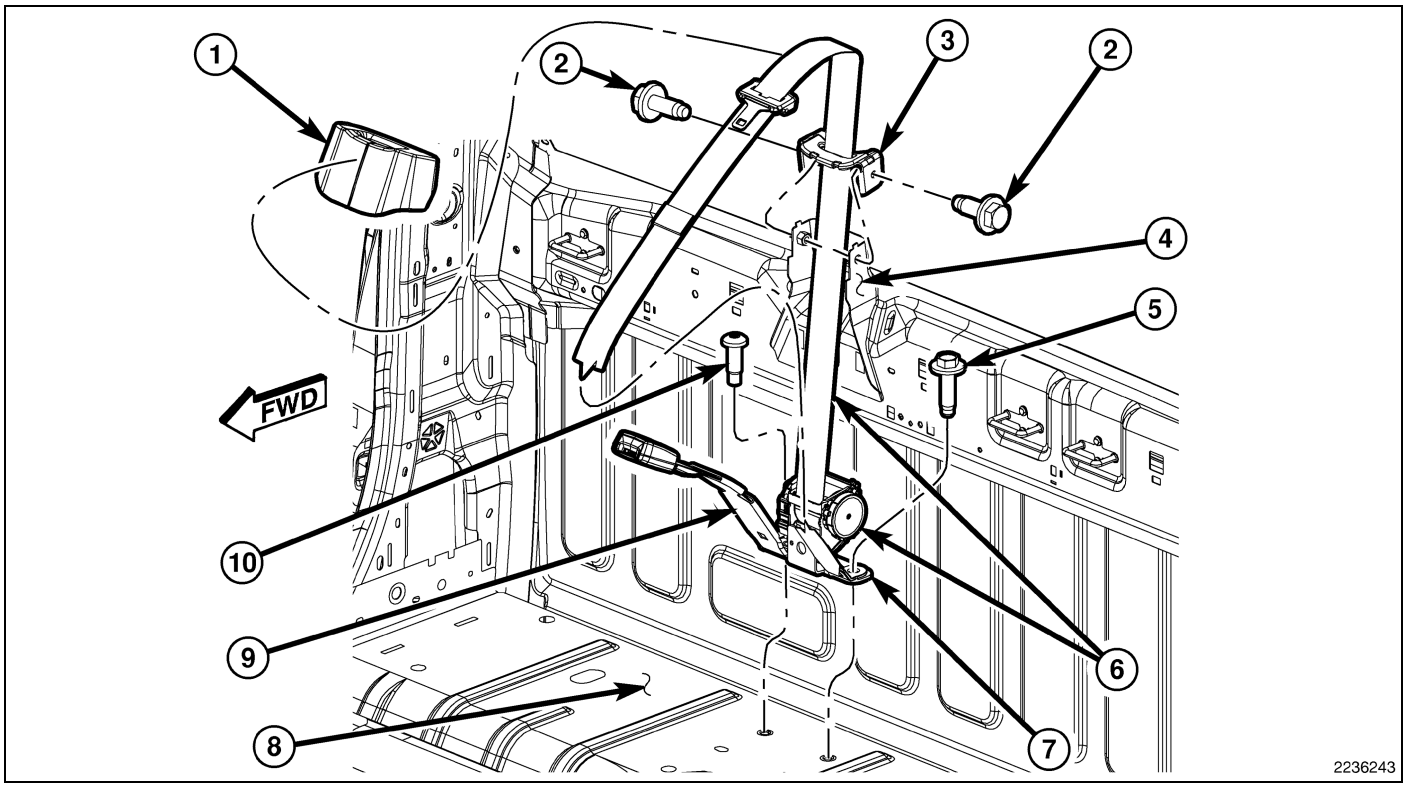

1. Lift up the rear seat cushion into its stowed position against the rear seat back.
2. Remove the screw (5) that secures the center seat belt lower anchor (7) and the left side of the seat belt retractor (6) mounting bracket to the rear floor panel (8).
3. Remove the rear seat from the vehicle. On vehicles with the optional 60/40 split rear bench, only the 60 percent section (right side) of the rear seat must be removed. (Refer to 23 - Body/Seats/SEAT - Removal).
4. Lift upward on the forward edge of the rear center seat belt bezel (1) at the top of the cab back panel to release the snap features that secure the bezel to the belt bracket (3).
5. Remove the bezel from the webbing of the rear center seat belt.
6. Remove the two screws (2) that secure the belt bracket of the rear center seat belt to the body bracket (4) on the upper cab back panel reinforcement.
7. Remove the belt bracket of the rear center seat belt from the body bracket.
8. Remove the screw (10) that secures the right side of the seat belt retractor mounting bracket and the right outboard occupant buckle (9) unit to the rear floor panel near the base of the cab back panel.
9. Remove the rear center seat belt and retractor unit from the vehicle.

REAR OUTBOARD - QUAD OR CREW CAB

WARNING: To avoid serious or fatal injury during and following any seat belt or child restraint anchor service, carefully inspect all seat belts, buckles, mounting hardware, retractors, tether straps, and anchors for proper installation, operation, or damage. Replace any belt that is cut, frayed, or torn. Straighten any belt that is twisted. Tighten any loose fasteners. Replace any belt that has a damaged or ineffective buckle or retractor. Replace any belt that has a bent or damaged latch plate or anchor plate. Replace any child restraint anchor or the unit to which the anchor is integral that has been bent or damaged. Never attempt to repair a seat belt or child restraint component. Always replace damaged or ineffective seat belt and child restraint components with the correct, new and unused replacement parts listed in the Chrysler Mopar® Parts Catalog. Failure to follow these instructions may result in possible serious or fatal injury.

NOTE: All seat belt retractors except the driver side front retractor include a switchable automatic locking mechanism. (Refer to 10 - Restraints/RETRACTOR, Seat Belt - Description).

1. Remove the rear seat from the vehicle. (Refer to 23 - Body/Seats/SEAT - Removal).
2. Remove the screw (5) that secures the seat belt lower anchor (6) to the base of the inner C-pillar.
3. Unsnap the trim cover (3) from the front seat belt turning loop (2) and discard. The trim cover is a one time component and is not intended for reuse.
4. Remove the screw (4) that secures the seat belt turning loop to the upper C-pillar.
5. Remove the seat belt turning loop from the upper C-pillar.
6. Remove the upper trim (1) from the inside of the C-pillar. (Refer to 23 - Body/Interior/PANEL, C-Pillar Trim - Removal).

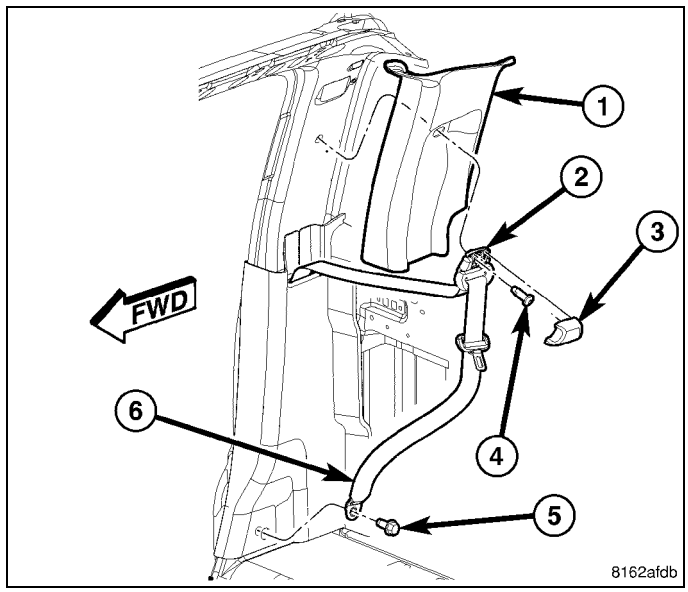

7. Remove the lower trim (2) from the inside of the C-pillar. (Refer to 23 - Body/Interior/PANEL, C-Pillar Trim - Removal).
8. Disengage the two clips that secure the belt web guide (5) to the inner C-pillar.
9. Remove the screw (3) that secures the lower bracket of the retractor (4) to the C-pillar.
10. Disengage the hooks on the upper retractor bracket from the slots in the C-pillar above the retractor mounting hole.
11. Remove the rear outboard seat belt and retractor from the C-pillar as a unit.

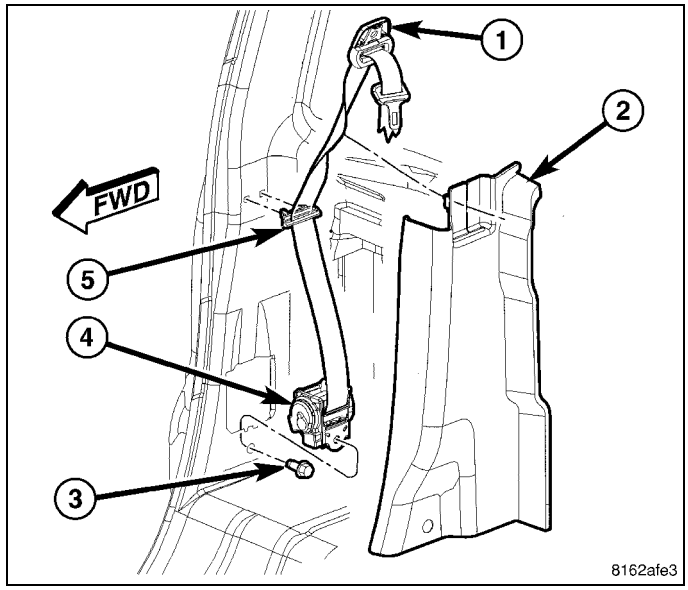

Installation

CENTER - STANDARD CAB

WARNING: To avoid serious or fatal injury during and following any seat belt or child restraint anchor service, carefully inspect all seat belts, buckles, mounting hardware, retractors, tether straps, and anchors for proper installation, operation, or damage. Replace any belt that is cut, frayed, or torn. Straighten any belt that is twisted. Tighten any loose fasteners. Replace any belt that has a damaged or ineffective buckle or retractor. Replace any belt that has a bent or damaged latch plate or anchor plate. Replace any child restraint anchor or the unit to which the anchor is integral that has been bent or damaged. Never attempt to repair a seat belt or child restraint component. Always replace damaged or ineffective seat belt and child restraint components with the correct, new and unused replacement parts listed in the Chrysler Mopar® Parts Catalog. Failure to follow these instructions may result in possible serious or fatal injury.

NOTE: A front center three-point seat belt and retractor is used only on standard cab vehicles. Quad cab and crew cab vehicles with a front bench seat have a two-point lap belt in the front center seating position. (Refer to 10 - Restraints/BUCKLE, Seat Belt - Installation).

NOTE: All seat belt retractors except the driver side front retractor include a switchable automatic locking mechanism. (Refer to 10 - Restraints/RETRACTOR, Seat Belt - Description).

1. Position the front center seat belt and retractor unit (5) to the floor panel (6) at the base of the cab back panel (8) to the right of center.
2. Install and tighten the two screws (4) that secure the front center seat belt retractor bracket to the floor panel near the base of the cab back panel. Tighten the screws to 39 N·m (29 ft. lbs.).
3. Position the belt bracket (2) of the front center seat belt (7) to the body bracket (1) on the upper cab back panel reinforcement.
4. Install and tighten the two screws (3) that secure the belt bracket of the front center seat belt to the body bracket on the upper cab back panel reinforcement. Tighten the screws to 20 N·m (15 ft. lbs.).

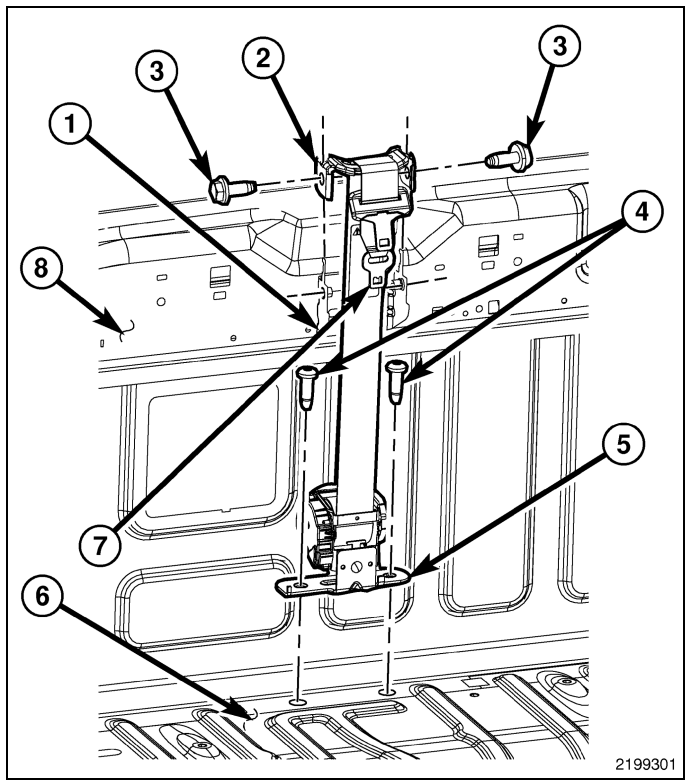

5. Reinstall the trim (1) onto the cab back panel. (Refer to 23 - Body/Interior/PANEL, Cab Back Trim - Installation).
6. Route the webbing of the front center seat belt (4) through the bezel (5) and position the bezel to the belt opening near the top of the cab back trim panel.
7. Using hand pressure, press firmly and evenly on each side of the front center seat belt bezel until it snaps into place on the cab back trim panel.
8. Reinstall the stowage tray onto the rear floor panel behind the seat. (Refer to 23 - Body/Interior/BIN, Storage - Installation).
9. Reach between the center of the front seat cushion and front seat back to access and buckle the front center seat belt lower anchor latch plate to the unique black, keyed lower anchor buckle.

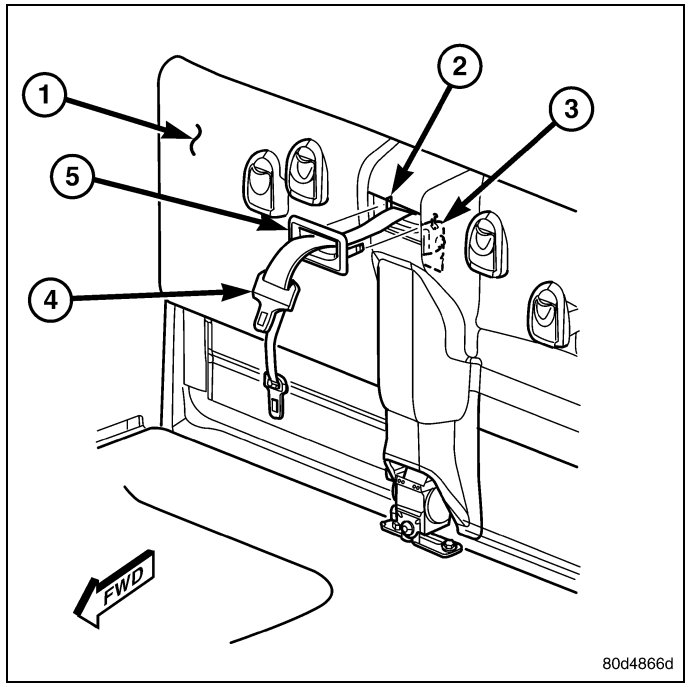

FRONT OUTBOARD - QUAD OR CREW CAB

WARNING: To avoid serious or fatal injury on vehicles equipped with airbags, disable the Supplemental Restraint System (SRS) before attempting any steering wheel, steering column, airbag, seat belt tensioner, impact sensor or instrument panel component diagnosis or service. Disconnect and isolate the battery negative (ground) cable, then wait two minutes for the system capacitor to discharge before performing further diagnosis or service. This is the only sure way to disable the SRS. Failure to take the proper precautions could result in accidental airbag deployment.

WARNING: To avoid serious or fatal injury during and following any seat belt or child restraint anchor service, carefully inspect all seat belts, buckles, mounting hardware, retractors, tether straps, and anchors for proper installation, operation, or damage. Replace any belt that is cut, frayed, or torn. Straighten any belt that is twisted.

Tighten any loose fasteners. Replace any belt that has a damaged or ineffective buckle or retractor. Replace any belt that has a bent or damaged latch plate or anchor plate. Replace any child restraint anchor or the unit to which the anchor is integral that has been bent or damaged. Never attempt to repair a seat belt or child restraint component. Always replace damaged or ineffective seat belt and child restraint components with the correct, new and unused replacement parts listed in the Chrysler Mopar® Parts Catalog. Failure to follow these instructions may result in possible serious or fatal injury.

NOTE: The following procedure is for replacement of an ineffective or damaged seat belt and retractor unit. The front outboard retractors also include a seat belt tensioner. If the front seat belt or retractor is ineffective or damaged, but the seat belt tensioner is not deployed, review the recommended procedures for handling non-deployed supplemental restraints. (Refer to 10 - Restraints - Standard Procedure). If the seat belt tensioner has been deployed, review the recommended procedures for service after a supplemental restraint deployment before removing the unit from the vehicle. (Refer to 10 - Restraints - Standard Procedure).

NOTE: All seat belt retractors except the driver side front retractor include a switchable automatic locking mechanism. (Refer to 10 - Restraints/RETRACTOR, Seat Belt - Description).

1. Position the front outboard seat belt and retractor (1) into the vehicle.
2. Reconnect the yellow connector (2) of the body wire harness (3) to the seat belt tensioner initiator on the retractor.

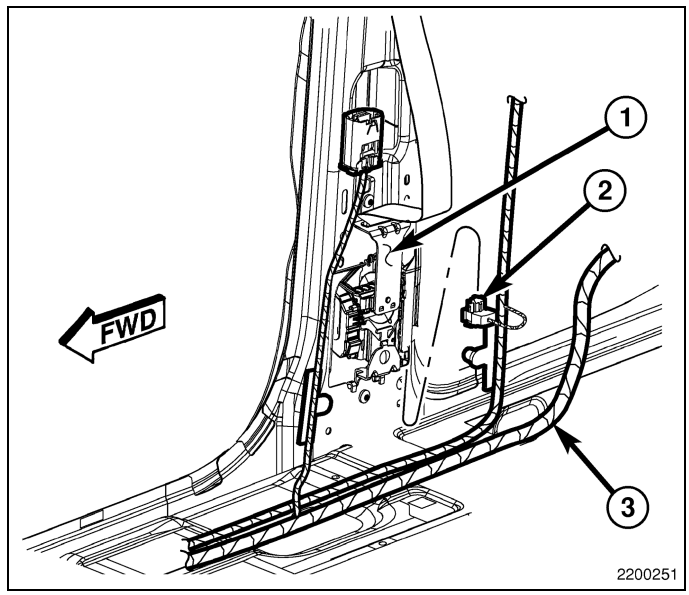

3. Position the seat belt (7) and retractor (6) to the inner B-pillar (1) as a unit. Be certain to engage the locating tab on the upper retractor bracket into the clearance hole in the B-pillar.
4. Loosely install the screw (5) that secures the lower retractor bracket to the B-pillar.
5. Install and tighten the screw (3) that secures the upper retractor bracket to the B-pillar. Tighten the screw to 12 N·m (106 in. lbs.).
6. Tighten the screw that secures the lower retractor bracket to the B-pillar. Tighten the screw to 39 N·m (29 ft. lbs.).
7. Position the belt web guide (2) to the B-pillar and use hand pressure to press it firmly and evenly until the two clips that secure it snap into place. Be certain that the seat belt webbing between the retractor and the web guide is not twisted.
8. Reinstall the lower trim (4) onto the inside of the B-pillar. (Refer to 23 - Body/Interior/PANEL, B-Pillar Trim - Installation).

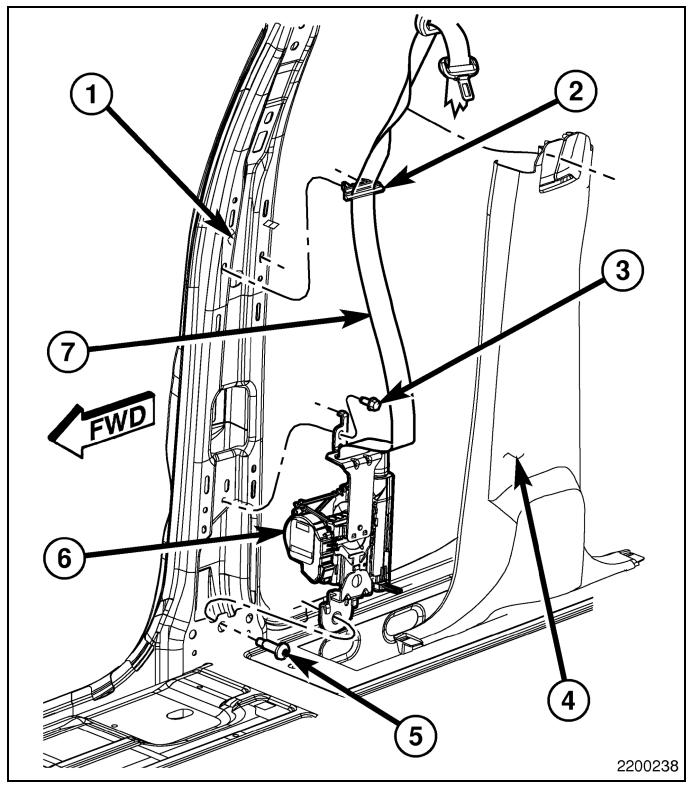

9. Position the seat belt turning loop (5) onto the height adjuster (1) on the upper B-pillar. Be certain that the seat belt webbing between the web guide and the turning loop is not twisted.
10. Install and tighten the screw (4) that secures the turning loop to the height adjuster. Tighten the screw to 39 N·m (29 ft. lbs.).
11. Position a new trim cover (3) over the top of the turning loop, then snap it into place. Engage the lower snap features first, then the upper snap features. The trim cover is a one time component and is not intended for reuse.

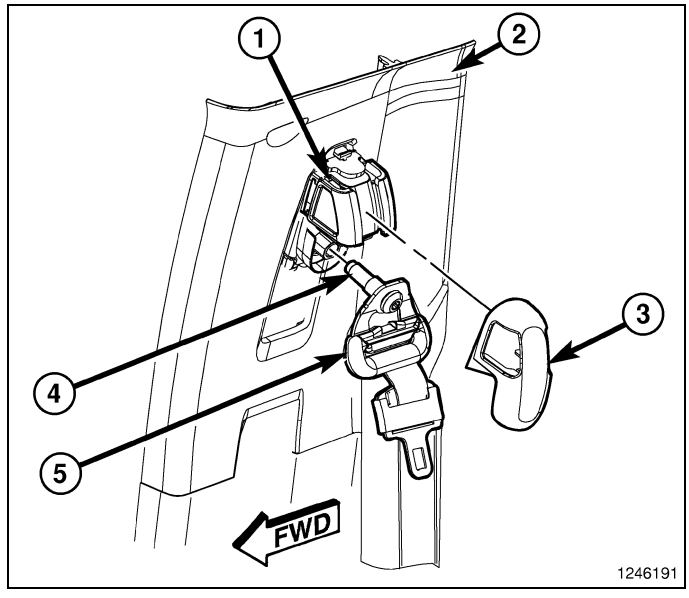

12. Position the seat belt lower anchor (3) to the mounting hole in the floor panel (4) near the base of the B-pillar (1) cushion frame. Be certain that the seat belt webbing between the turning loop and the lower anchor is not twisted.
13. Install and tighten the screw (2) that secures the lower anchor to the floor panel. Tighten the screw to 39 N·m (29 ft. lbs.).
14. Do not reconnect the battery negative cable at this time. The Supplemental Restraint System (SRS) verification test procedure should be performed following service of any SRS component. (Refer to 10 - Restraints - Standard Procedure).

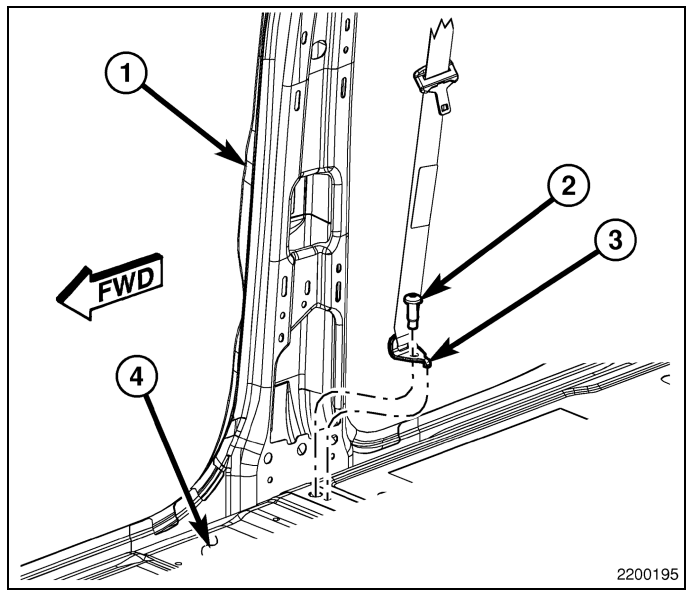

OUTBOARD - STANDARD CAB

WARNING: To avoid serious or fatal injury on vehicles equipped with airbags, disable the Supplemental Restraint System (SRS) before attempting any steering wheel, steering column, airbag, seat belt tensioner, impact sensor or instrument panel component diagnosis or service. Disconnect and isolate the battery negative (ground) cable, then wait two minutes for the system capacitor to discharge before performing further diagnosis or service. This is the only sure way to disable the SRS. Failure to take the proper precautions could result in accidental airbag deployment.

WARNING: To avoid serious or fatal injury during and following any seat belt or child restraint anchor service, carefully inspect all seat belts, buckles, mounting hardware, retractors, tether straps, and anchors for proper installation, operation, or damage. Replace any belt that is cut, frayed, or torn. Straighten any belt that is twisted. Tighten any loose fasteners. Replace any belt that has a damaged or ineffective buckle or retractor. Replace any belt that has a bent or damaged latch plate or anchor plate. Replace any child restraint anchor or the unit to which the anchor is integral that has been bent or damaged. Never attempt to repair a seat belt or child restraint component. Always replace damaged or ineffective seat belt and child restraint components with the correct, new and unused replacement parts listed in the Chrysler Mopar® Parts Catalog. Failure to follow these instructions may result in possible serious or fatal injury.

NOTE: The following procedure is for replacement of an ineffective or damaged seat belt and retractor unit. The front outboard retractors also include a seat belt tensioner. If the front seat belt or retractor is ineffective or damaged, but the seat belt tensioner is not deployed, review the recommended procedures for Handling Non-Deployed Supplemental Restraints. (Refer to 10 - Restraints - Standard Procedure). If the seat belt tensioner has been deployed, review the recommended procedures for Service After A Supplemental Restraint Deployment before removing the unit from the vehicle. (Refer to 10 - Restraints - Standard Procedure).

1. Position the front outboard seat belt and retractor (1) into the vehicle.
2. Reconnect the yellow connector (2) of the body wire harness (3) to the seat belt tensioner initiator on the retractor.

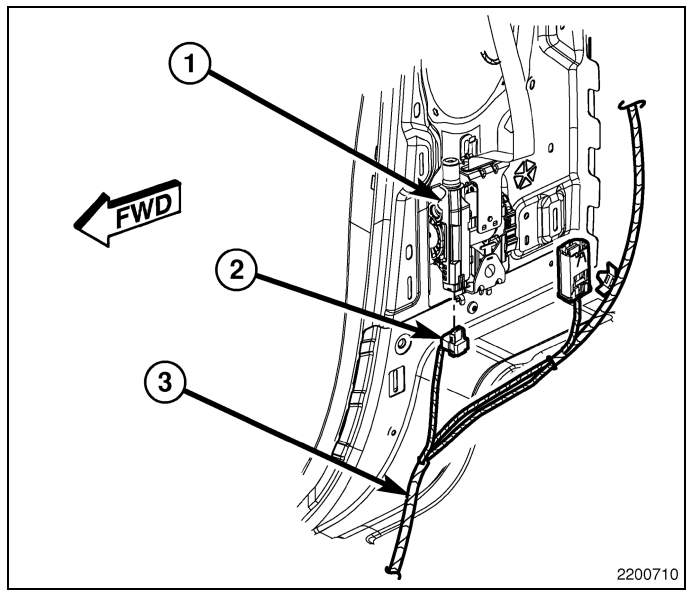

3. Position the seat belt and retractor (4) to the inner B-pillar (6) as a unit. Be certain to engage the locating tab on the upper retractor bracket into the clearance hole in the B-pillar.
4. Loosely install the screw (5) that secures the lower retractor bracket to the B-pillar.
5. Install and tighten the screw (3) that secures the upper retractor bracket to the B-pillar. Tighten the screw to 12 N·m (106 in. lbs.).
6. Tighten the screw that secures the lower retractor bracket to the B-pillar. Tighten the screw to 39 N·m (29 ft. lbs.).
7. Position the belt web guide (2) to the B-pillar and use hand pressure to press it firmly and evenly until the two clips that secure it snap into place. Be certain that the seat belt webbing between the retractor and the web guide is not twisted.
8. Reinstall the lower trim (3) onto the inside of the B-pillar. (Refer to 23 - Body/Interior/PANEL, B-Pillar Trim - Installation).

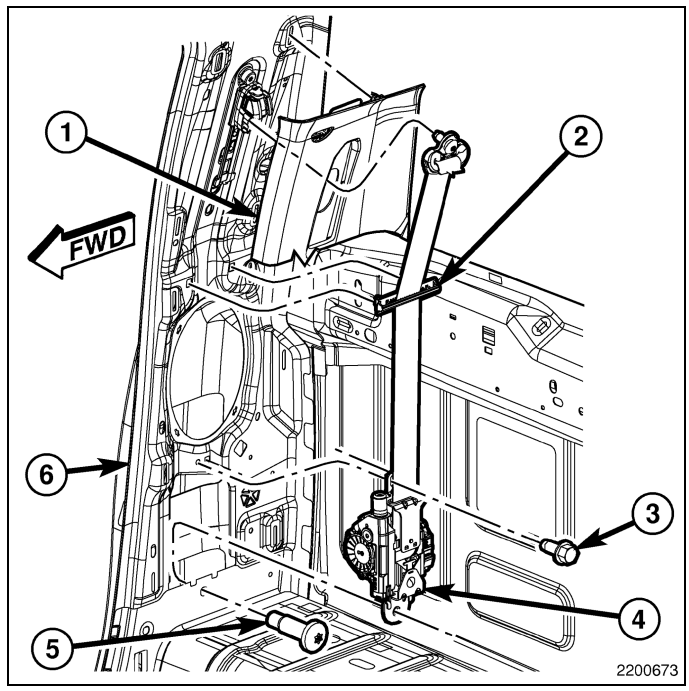

9. Position the seat belt turning loop (5) onto the height adjuster (1) on the upper B-pillar. Be certain that the seat belt webbing between the web guide and the turning loop is not twisted.
10. Install and tighten the screw (4) that secures the turning loop to the height adjuster. Tighten the screw to 39 N·m (29 ft. lbs.).
11. Position a new trim cover (3) over the top of the turning loop, then snap it into place. Engage the lower snap features first, then the upper snap features. The trim cover is a one time component and is not intended for reuse.

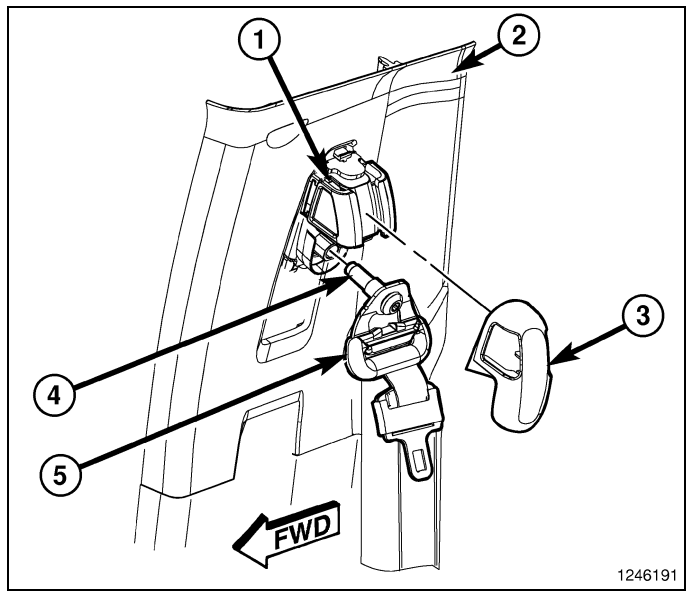

12. Position the seat belt lower anchor (4) to the mounting hole near the base of the inner B-pillar (1). Be certain that the seat belt webbing between the turning loop and the lower anchor is not twisted.
13. Install and tighten the screw (3) that secures the lower anchor to the B-pillar. Tighten the screw to 39 N·m (29 ft. lbs.).
14. Do not reconnect the battery negative cable at this time. The Supplemental Restraint System (SRS) verification test procedure should be performed following service of any SRS component. (Refer to 10 - Restraints - Standard Procedure).

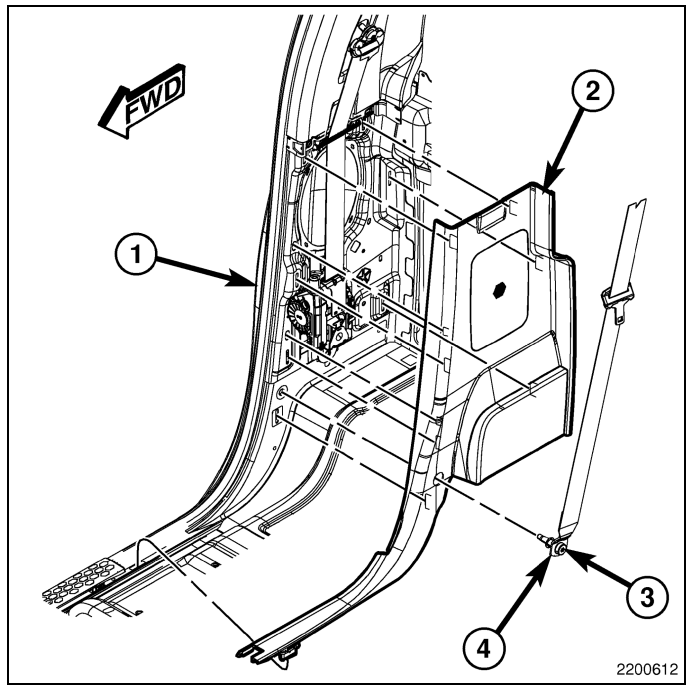

REAR CENTER - QUAD OR CREW CAB

WARNING: To avoid serious or fatal injury during and following any seat belt or child restraint anchor service, carefully inspect all seat belts, buckles, mounting hardware, retractors, tether straps, and anchors for proper installation, operation, or damage. Replace any belt that is cut, frayed, or torn. Straighten any belt that is twisted. Tighten any loose fasteners. Replace any belt that has a damaged or ineffective buckle or retractor. Replace any belt that has a bent or damaged latch plate or anchor plate. Replace any child restraint anchor or the unit to which the anchor is integral that has been bent or damaged. Never attempt to repair a seat belt or child restraint component. Always replace damaged or ineffective seat belt and child restraint components with the correct, new and unused replacement parts listed in the Chrysler Mopar® Parts Catalog. Failure to follow these instructions may result in possible serious or fatal injury.

NOTE: The rear center seat belt and retractor is secured to a mounting bracket that includes the right outboard occupant seat belt buckle. The rear right outboard occupant buckle is available for service only as a unit with the center seat belt and retractor.

NOTE: All seat belt retractors except the driver side front retractor include a switchable automatic locking mechanism. (Refer to 10 - Restraints/RETRACTOR, Seat Belt - Description).

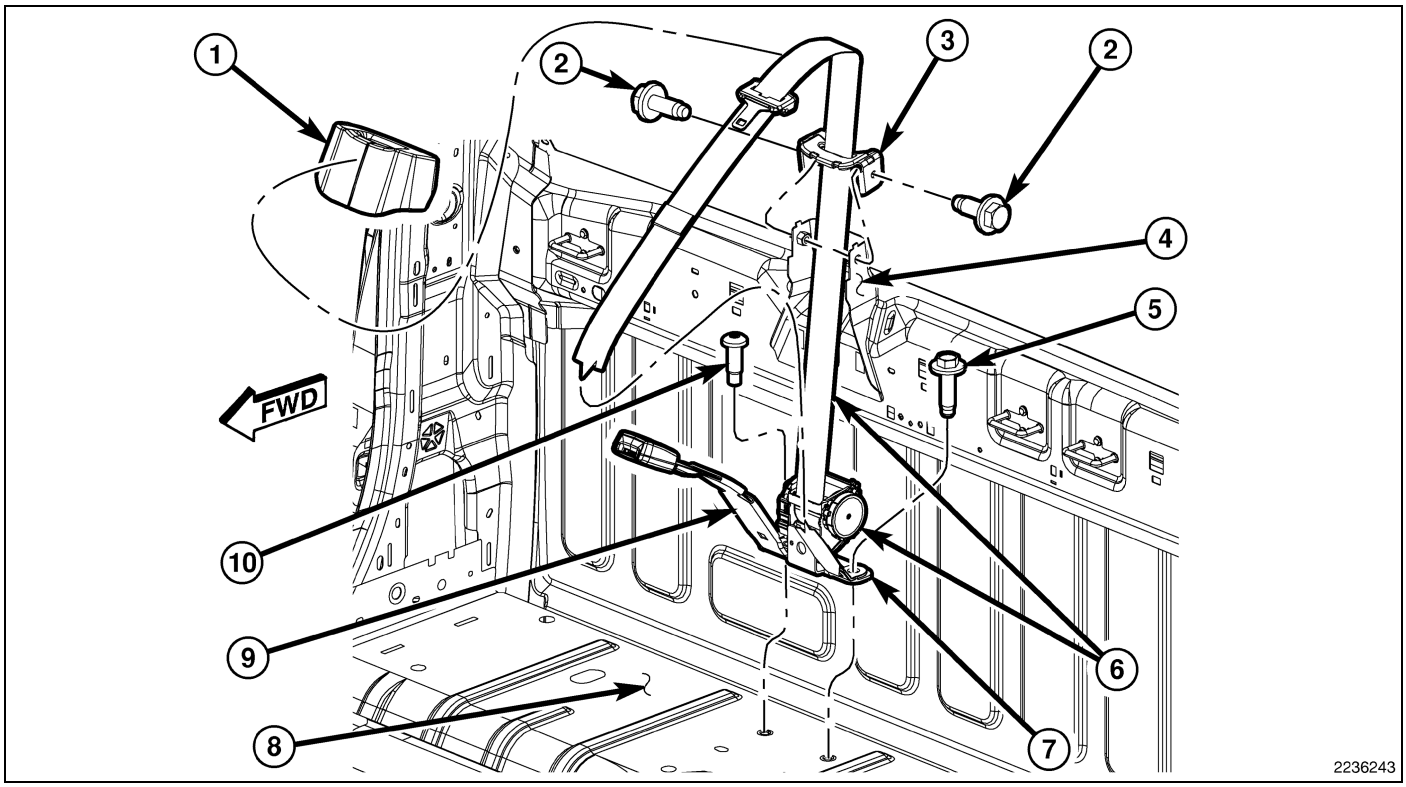

1. Position the rear center seat belt retractor (6) and right outboard occupant buckle unit (9) onto the rear floor panel (8) near the base of the cab back panel.
2. Loosely install the screw (10) that secures the right side of the seat belt retractor mounting bracket and the right outboard occupant buckle unit to the rear floor panel near the base of the cab back panel.
3. Position the belt bracket (3) of the rear center seat belt onto the body bracket (4) on the upper cab back panel reinforcement.
4. Install and tighten the two screws (2) that secure the belt bracket to the body bracket. Tighten the screws to 20 N·m (15 ft. lbs.).
5. Lift the webbing of the rear center seat belt and slide the bezel (1) over the webbing to position it over the belt bracket at the top of the cab back panel. Engage the rearward snap features of the bezel with the belt bracket. Using hand pressure, press firmly and evenly downward on the front of the bezel until it snaps into place over the belt bracket.
6. Reinstall the rear seat into the vehicle. On vehicles with the optional 60/40 split rear bench, only the 60 percent section (right side) of the rear seat must be reinstalled. (Refer to 23 - Body/Seats/SEAT - Installation).
7. Insert the rear center seat belt lower anchor (7) between the rear seat back and the seat cushion, and position the anchor to the left side of the seat belt retractor mounting bracket on the rear floor panel.
8. Install and tighten the screw (5) that secures the center seat belt lower anchor and the left side of the seat belt retractor mounting bracket to the rear floor panel. Tighten the screw to 39 N·m (29 ft. lbs.).
9. Tighten the screw that secures the right side of the seat belt retractor mounting bracket to the rear floor panel. Tighten the screw to 39 N·m (29 ft. lbs.).
10. Restore the rear seat cushion to its seating position.

REAR OUTBOARD - QUAD OR CREW CAB

WARNING: To avoid serious or fatal injury during and following any seat belt or child restraint anchor service, carefully inspect all seat belts, buckles, mounting hardware, retractors, tether straps, and anchors for proper installation, operation, or damage. Replace any belt that is cut, frayed, or torn. Straighten any belt that is twisted. Tighten any loose fasteners. Replace any belt that has a damaged or ineffective buckle or retractor. Replace any belt that has a bent or damaged latch plate or anchor plate. Replace any child restraint anchor or the unit to which the anchor is integral that has been bent or damaged. Never attempt to repair a seat belt or child restraint component. Always replace damaged or ineffective seat belt and child restraint components with the correct, new and unused replacement parts listed in the Chrysler Mopar® Parts Catalog. Failure to follow these instructions may result in possible serious or fatal injury.

NOTE: All seat belt retractors except the driver side front retractor include a switchable automatic locking mechanism. (Refer to 10 - Restraints/RETRACTOR, Seat Belt - Description).

1. Position the rear outboard seat belt and retractor (4) to the inner C-pillar as a unit. Be certain to engage the hooks on the upper retractor bracket into the mounting hole in the C-pillar.
2. Install and tighten the screw (3) that secures the lower retractor bracket to the C-pillar. Tighten the screw to 39 N·m (29 ft. lbs.).
3. Position the belt web guide (5) to the B-pillar and use hand pressure to press it firmly and evenly until the two clips that secure it snap into place. Be certain that the seat belt webbing between the retractor and the web guide is not twisted.
4. Reinstall the lower trim (2) onto the inside of the C-pillar. (Refer to 23 - Body/Interior/PANEL, C-Pillar Trim - Installation).

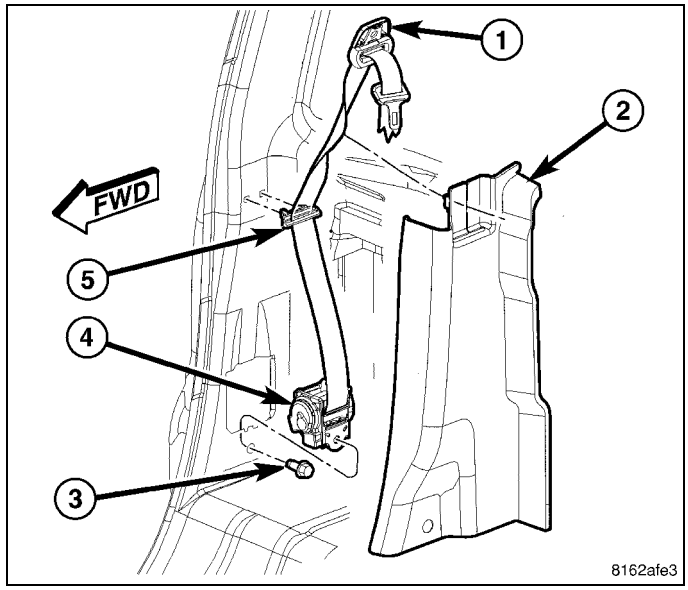

5. Reinstall the upper trim (1) onto the inside of the C-pillar. (Refer to 23 - Body/Interior/PANEL, C-Pillar Trim - Installation).
6. Position the seat belt turning loop (2) onto the upper C-pillar.
7. Install and tighten the screw (4) that secures the turning loop to the C-pillar. Tighten the screw to 39 N·m (29 ft. lbs.).
8. Engage the upper edge of a new trim cover (3) over the top of the turning loop. Then squeeze the lower end of the trim cover and the turning loop together firmly and evenly until the engagement tabs of the trim cover snap into the slots of the turning loop.
9. Position the seat belt lower anchor (6) to the mounting hole at the base of the C-pillar.
10. Install and tighten the screw (5) that secures the lower anchor to the C-pillar. Tighten the screw to 39 N·m (29 ft. lbs.).

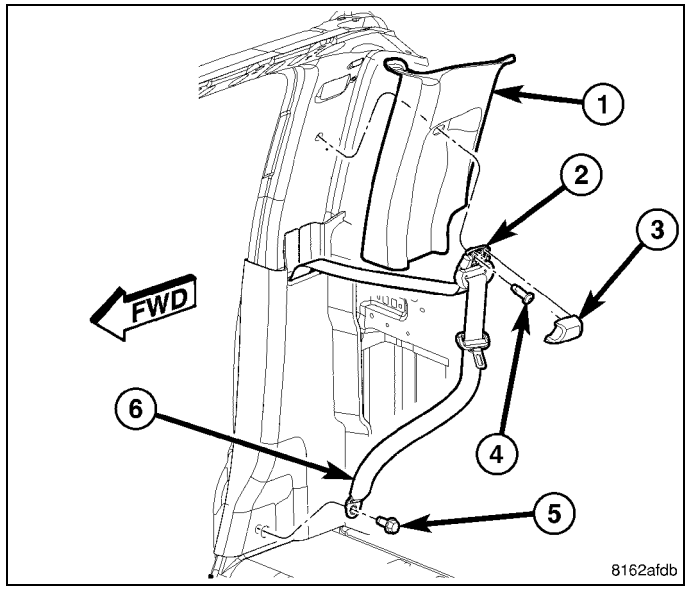

11. Reinstall the rear seat into the vehicle. (Refer to 23 - Body/Seats/SEAT - Installation).

SEAT BELT

Removal

WARNING: To avoid serious or fatal injury during and following any seat belt or child restraint anchor service, carefully inspect all seat belts, buckles, mounting hardware, retractors, tether straps, and anchors for proper installation, operation, or damage. Replace any belt that is cut, frayed, or torn. Straighten any belt that is twisted. Tighten any loose fasteners. Replace any belt that has a damaged or ineffective buckle or retractor. Replace any belt that has a bent or damaged latch plate or anchor plate. Replace any child restraint anchor or the unit to which the anchor is integral that has been bent or damaged. Never attempt to repair a seat belt or child restraint component. Always replace damaged or ineffective seat belt and child restraint components with the correct, new and unused replacement parts listed in the Chrysler Mopar® Parts Catalog. Failure to follow these instructions may result in possible serious or fatal injury.

NOTE: A fixed position front center seat belt buckle is located on the left side of the front center seat section (20 percent) used on all vehicles with a split bench front seat. Standard cab vehicles have a unique, fixed position,

black, keyed, lower anchor buckle for the three-point center seat belt lower anchor located on the right side of the front center seat section. Quad cab and crew cab vehicles have a fixed position front center seat lap belt located on the right side of the front center seat section. The following procedure applies to the front center seating position belt buckle, the lap belt or the anchor buckle. The three-point front center seat belt and retractor unit is only used on standard cab vehicles. (Refer to 10 - Restraints/RETRACTOR, Seat Belt - Removal).

1. Move the adjacent right or left front outboard seat section (40 percent) to its most forward position and tilt the seat back forward for easiest access to the lower anchor of the front center seat belt buckle, lap belt or anchor buckle (1).
2. On standard cab vehicles only, if equipped, remove the stowage tray from the rear floor panel behind the seat. (Refer to 23 - Body/Interior/BIN, Storage - Removal).
3. From behind the front seat, remove the screw (5) that secures the lower anchor of the front center seat belt buckle, lap belt or anchor buckle to the center seat support bracket (3).
4. From the front of the front seat, reach between the side of the center seat cushion (6) and the adjacent right or left front outboard seat cushion to access and remove the seat belt buckle, lap belt or anchor buckle through the elastic strap (2) on the side of the center seat cushion.

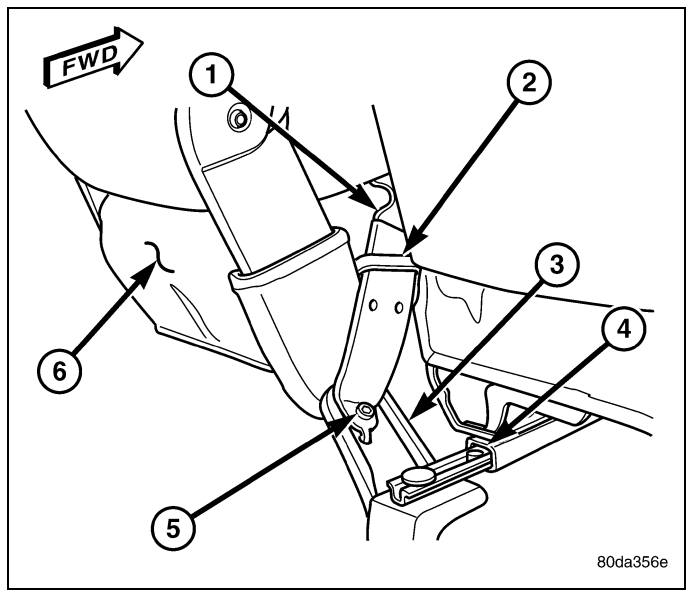

5. Remove the front center seat belt buckle, lap belt or anchor buckle unit from the front seat.

Installation

WARNING: To avoid serious or fatal injury during and following any seat belt or child restraint anchor service, carefully inspect all seat belts, buckles, mounting hardware, retractors, tether straps, and anchors for proper installation, operation, or damage. Replace any belt that is cut, frayed, or torn. Straighten any belt that is twisted. Tighten any loose fasteners. Replace any belt that has a damaged or ineffective buckle or retractor. Replace any belt that has a bent or damaged latch plate or anchor plate. Replace any child restraint anchor or the unit to which the anchor is integral that has been bent or damaged. Never attempt to repair a seat belt or child restraint component. Always replace damaged or ineffective seat belt and child restraint components with the correct, new and unused replacement parts listed in the Chrysler Mopar® Parts Catalog. Failure to follow these instructions may result in possible serious or fatal injury.

NOTE: A fixed position front center seat belt buckle is located on the left side of the front center seat section (20 percent) used on all vehicles with a split bench front seat. Standard cab vehicles have a unique, fixed position, black, keyed, lower anchor buckle for the three-point center seat belt lower anchor located on the right side of the front center seat section. Quad cab and crew cab vehicles have a fixed position front center seat lap belt located on the right side of the front center seat section. The following procedure applies to the front center seating position belt buckle, the lap belt or the anchor buckle. The three-point front center seat belt and retractor unit is only used on standard cab vehicles. (Refer to 10 - Restraints/RETRACTOR, Seat Belt - Installation).

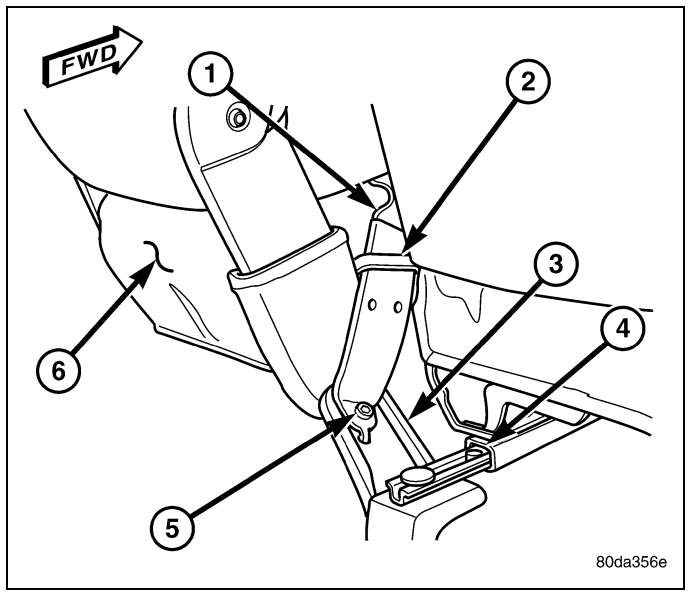

1. From the front of the front seat, position the front center seat belt buckle, lap belt or anchor buckle unit (1) through the elastic strap (2) on the side of the center seat cushion (6).
2. From the front of the front seat, reach between the side of the center seat cushion and the adjacent right or left front outboard seat cushion to route the lower anchor of the seat belt buckle, lap belt or anchor buckle unit down between the side of the center seat cushion and the adjacent right or left front outboard seat cushion. Be certain that the belt webbing is not twisted.
3. From behind the front seat, position the lower anchor of the seat belt buckle, lap belt or anchor buckle to the center seat support bracket (3). Be certain to engage the anti-rotation tab on the lower anchor into the corresponding hole in the center seat support bracket.
4. Install and tighten the screw (5) that secures the lower anchor of the seat belt buckle, lap belt or anchor buckle to the center seat support bracket. Tighten the screw to 39 N·m (29 ft. lbs.).
5. On standard cab vehicles only, if equipped, reinstall the stowage tray onto the rear floor panel behind the seat. (Refer to 23 - Body/Interior/BIN, Storage - Installation).

SENSOR, Impact

Description

Remote or satellite impact sensors are located in various locations in the vehicle. These sensors are mounted remotely from the impact sensor that is internal to the Occupant Restraint Controller (ORC). Sensors at the front of the vehicle provide an additional logic input for use by the Occupant Restraint Controller (ORC) to control the front airbags and the seat belt pretensioners. Sensors on each side of the vehicle provide an additional logic input for use by the ORC to control the side curtain airbags and the seat belt pretensioners. Two types of sensors are used in this vehicle. They are the acceleration-type and the pressure-type, which are described in further detail in the following paragraphs.

ACCELERATION TYPE

Each vehicle has at least four, but as many as six remote acceleration-type impact sensors (1). Two front sensors, one each for the left and right sides of the vehicle are secured with a screw to the back of the right or left end of the lower radiator crossmember within the engine compartment. Two side sensors, one each for the left and right sides of the vehicle are secured with a screw near the base of the right or left inner B-pillar within the passenger compartment. Quad cab and crew cab models have two additional side sensors, one each for the left and right sides of the vehicle, secured with a screw near the base of the right or left inner C-pillar within the passenger compartment.

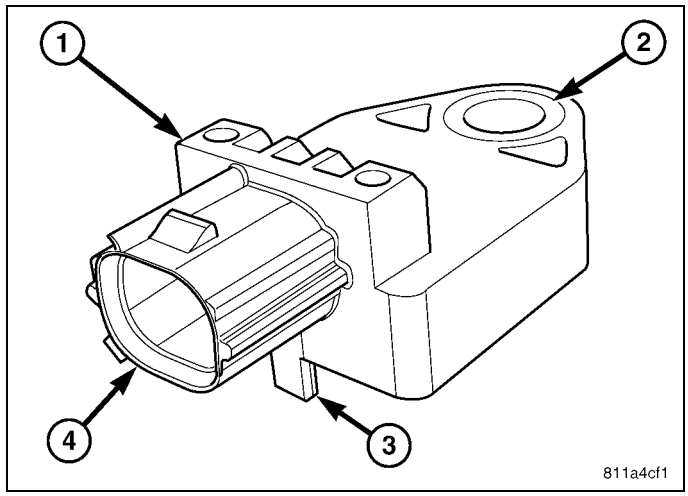

The right and left front impact sensors are identical in construction and calibration. The right and left side impact sensors are also identical in construction and calibration. Although the front and side impact sensors are similar in appearance and construction, they are not interchangeable. The front sensors are designed to withstand the harsher operating environment found within the engine compartment.

Each sensor housing has an integral connector receptacle (4), an integral anti-rotation pin (3), and an integral mounting hole (2) with a metal sleeve to provide crush protection. A cavity in the center of the molded plastic impact sensor

housing contains the electronic circuitry of the sensor which includes an electronic communication chip and an electronic acceleration sensor. Potting material fills the cavity to seal and protect the internal electronic circuitry and components. The front impact sensors are each connected to the vehicle electrical system through a dedicated take out and connector of the Front End Module (FEM) wire harness, while the side impact sensors are connected through dedicated take outs and connectors of the body wire harness.

The acceleration-type impact sensors cannot be repaired or adjusted and, if damaged or ineffective, they must be replaced.

PRESSURE TYPE

Two pressure-type front door side impact sensors (2) are used on this vehicle, one each for the left and right sides of the vehicle. These sensors are mounted remotely from the impact sensor that is internal to the Occupant Restraint Controller (ORC). Each pressure-type sensor is secured with two screws and is sealed by a resilient gasket (1) to the front door module carrier on the inside of each front door. The sensors are concealed behind the front door trim panel within the passenger compartment.

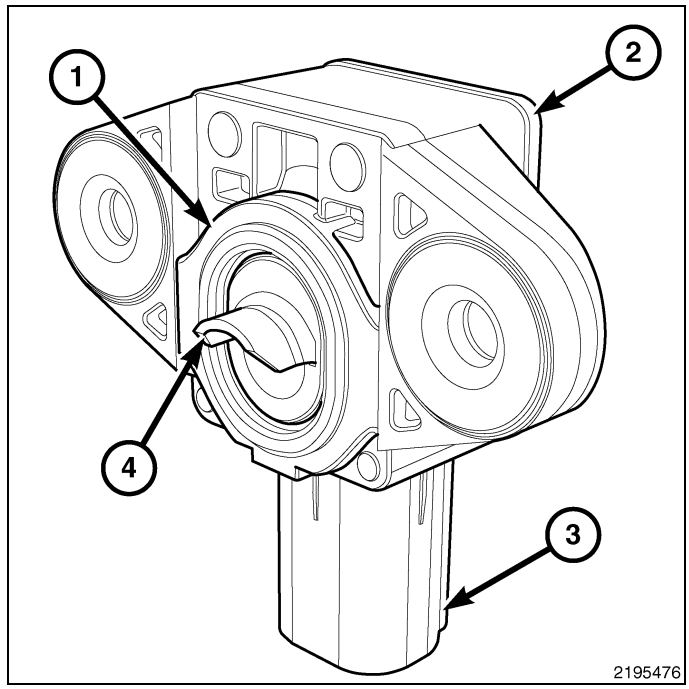

The right and left front door side impact sensors are identical in construction and calibration, and are interchangeable. The sensor housing has an integral connector receptacle (3), two integral mounting tabs, and an integral hood-like water shield (4) that extends through a hole in the front door module carrier into the interior of the door cavity and protects the sensor orifice from contamination.

A cavity in the center of the molded plastic sensor housing contains the electronic circuitry of the sensor, which includes an electronic communication chip and the electronic pressure sensor. The housing cavity is filled with a potting material to seal and protect the internal electronic circuitry and components. A label on the sensor has a directional arrow and the word **down** imprinted upon it to provide verification of the correct sensor orientation in the vehicle. The pressure-type side impact sensors are each connected to the vehicle electrical system through a dedicated take out and connector of the front door wire harnesses.

The pressure-type side impact sensors cannot be repaired or adjusted and, if damaged or ineffective, they must be replaced.

Operation

ACCELERATION-TYPE

The acceleration-type impact sensors are electronic accelerometers that sense the rate of vehicle deceleration, which provides verification of the direction and severity of an impact. Each sensor also contains an electronic communication chip that allows the unit to communicate the sensor status as well as sensor fault information to the microprocessor in the Occupant Restraint Controller (ORC).

The ORC microprocessor continuously monitors all of the passive restraint system electrical circuits to determine the system readiness. If the ORC detects a monitored system fault, it sets a Diagnostic Trouble Code (DTC) and controls the airbag indicator operation accordingly. The impact sensors each receive battery current and ground through dedicated left and right sensor plus and minus circuits from the ORC. The impact sensors and the ORC communicate by modulating the voltage in the sensor plus circuit.

The hard wired circuits between the impact sensors and the ORC may be diagnosed using conventional diagnostic tools and procedures. Refer to the appropriate wiring information. However, conventional diagnostic methods will not prove conclusive in the diagnosis of the impact sensors or the electronic controls or communication between other modules and devices that provide some features of the Supplemental Restraint System (SRS). The most reliable, efficient, and accurate means to diagnose the acceleration-type impact sensors or the electronic controls and communication related to impact sensor operation requires the use of a diagnostic scan tool. Refer to the appropriate diagnostic information.

PRESSURE-TYPE

The pressure-type front door side impact sensors recognize a side impact in the front door area by monitoring changes in pressure within the front door cavity. A sudden pressure wave is created as the door collapses during an impact event. Each sensor also contains an electronic communication chip that allows the unit to communicate the sensor status as well as sensor fault information to the microprocessor in the Occupant Restraint Controller (ORC).

The ORC microprocessor continuously monitors all of the passive restraint system electrical circuits to determine the system readiness. If the ORC detects a monitored system fault, it sets a Diagnostic Trouble Code (DTC) and controls the airbag indicator operation accordingly. The impact sensors each receive battery current and ground through dedicated left and right sensor plus and minus circuits from the ORC. The impact sensors and the ORC communicate by modulating the current in the sensor plus circuit.

The hard wired circuits between the pressure-type front door side impact sensors and the ORC may be diagnosed using conventional diagnostic tools and procedures. Refer to the appropriate wiring information. However, conventional diagnostic methods will not prove conclusive in the diagnosis of the impact sensors or the electronic controls or communication between other modules and devices that provide features of the Supplemental Restraint System (SRS). The most reliable, efficient, and accurate means to diagnose the pressure-type impact sensors or the electronic controls and communication related to impact sensor operation requires the use of a diagnostic scan tool. Refer to the appropriate diagnostic information.

Removal

FRONT

WARNING: To avoid serious or fatal injury on vehicles equipped with airbags, disable the Supplemental Restraint System (SRS) before attempting any steering wheel, steering column, airbag, seat belt tensioner, impact sensor or instrument panel component diagnosis or service. Disconnect and isolate the battery negative (ground) cable, then wait two minutes for the system capacitor to discharge before performing further diagnosis or service. This is the only sure way to disable the SRS. Failure to take the proper precautions could result in accidental airbag deployment.

WARNING: To avoid serious or fatal injury, never strike or drop the Electronic Pedestrian Protection (EPP) system impact sensor, as it can damage the impact sensor or affect its calibration. The EPP impact sensor enables the system to deploy the EPP system active hood hinge actuators. If an impact sensor is accidentally dropped during service, the sensor must be scrapped and replaced with a new unit. Failure to observe this warning could result in accidental, incomplete, or improper EPP active hood hinge actuator deployment.

1. Disconnect and isolate the battery negative cable. Wait two minutes for the system capacitor to discharge before further service.
2. Disconnect the Front End Module (FEM) (1) wire harness connector (4) from the right or left front impact sensor (5) connector receptacle.
3. Remove the screw (2) that secures the front impact sensor to the back of the right or left end of the lower radiator crossmember (3).
4. Remove the right or left front impact sensor from the engine compartment.

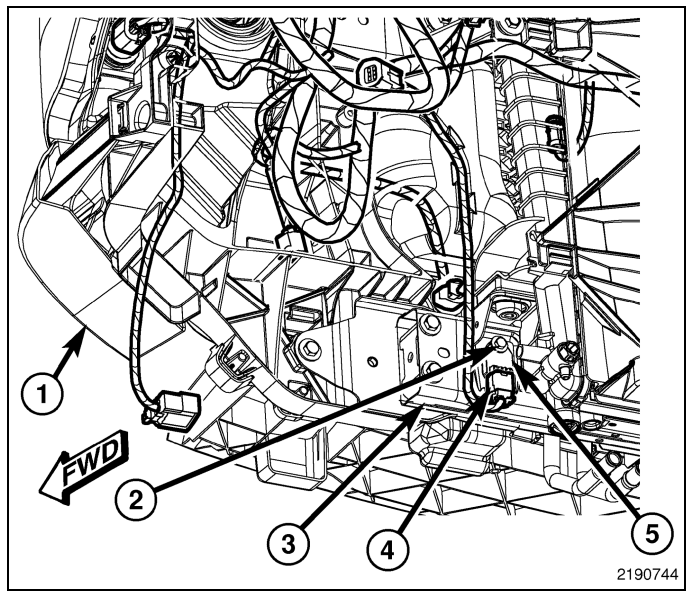

SIDE

WARNING: To avoid serious or fatal injury on vehicles equipped with airbags, disable the Supplemental Restraint System (SRS) before attempting any steering wheel, steering column, airbag, seat belt tensioner, impact sensor or instrument panel component diagnosis or service. Disconnect and isolate the battery negative (ground) cable, then wait two minutes for the system capacitor to discharge before performing further diagnosis or service. This is the only sure way to disable the SRS. Failure to take the proper precautions could result in accidental airbag deployment.

WARNING: To avoid serious or fatal injury, never strike or drop the side impact sensor, as it can damage the impact sensor or affect its calibration. The side impact sensor enables the system to deploy the side Supplemental Restraint System (SRS) components. If an impact sensor is accidentally dropped during service, the sensor must be scrapped and replaced with a new unit. Failure to observe this warning could result in accidental, incomplete, or improper side SRS component deployment.

FRONT DOOR

1. Disconnect and isolate the battery negative cable. Wait two minutes for the system capacitor to discharge before further service.
2. Remove the trim panel from the inside of the right or left front door. (Refer to 23 - Body/Door - Front/PANEL, Door Trim - Removal).
3. Disconnect the front door module wire harness connector (3) from the side impact sensor (1) connector receptacle.
4. Remove the two screws (4) that secure the sensor to the front door module carrier panel (2).
5. Remove the side impact sensor from the front door.

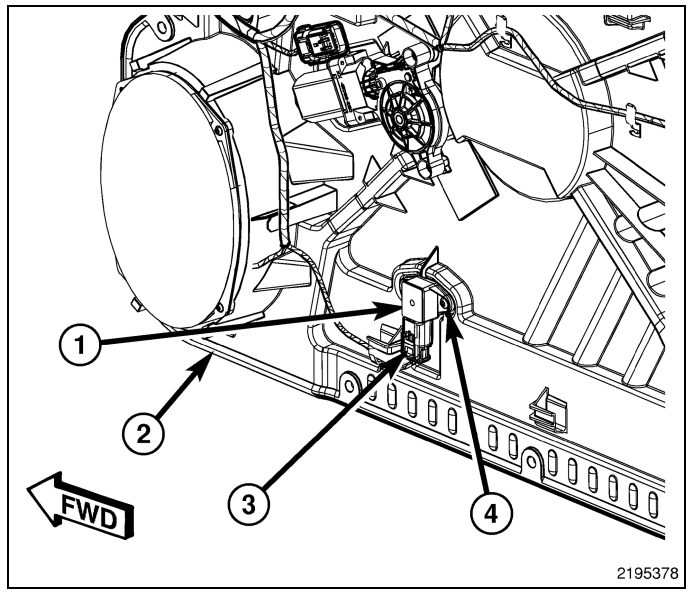

B-PILLAR - STANDARD CAB

1. Adjust the driver or passenger side front seat to its most forward position for easiest access to the B-pillar trim.
2. Disconnect and isolate the battery negative cable. Wait two minutes for the system capacitor to discharge before further service.
3. Remove the trim from the inside of the lower B-pillar. (Refer to 23 - Body/Interior/PANEL, B-Pillar Trim - Removal).
4. Disconnect the body wire harness connector (1) from the side impact sensor (2) connector receptacle.
5. Remove the screw (3) that secures the sensor to the inner B-pillar.
6. Remove the sensor from the inner B-pillar.

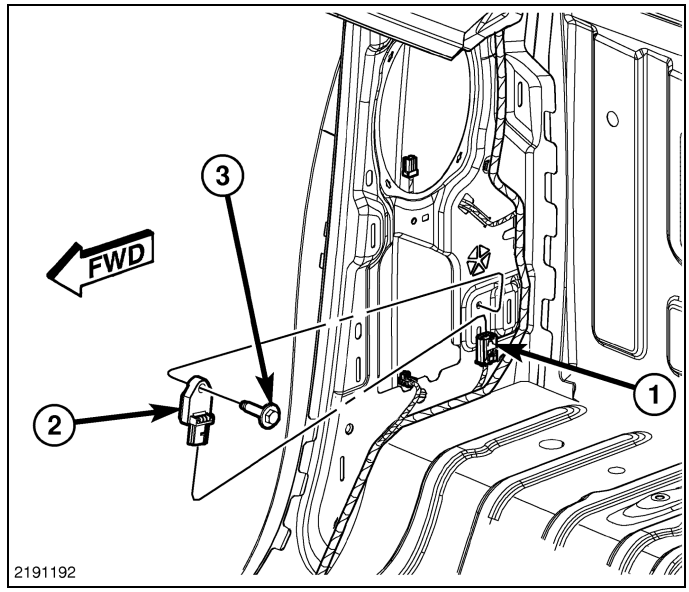

B-PILLAR - EXCEPT STANDARD CAB

1. Adjust the driver or passenger side front seat to its most forward position for easiest access to the B-pillar trim.
2. Disconnect and isolate the battery negative cable. Wait two minutes for the system capacitor to discharge before further service.
3. Remove the trim from the inside of the lower B-pillar. (Refer to 23 - Body/Interior/PANEL, B-Pillar Trim - Removal).
4. Disconnect the body wire harness connector (1) from the side impact sensor (2) connector receptacle.
5. Remove the screw (3) that secures the sensor to the inner B-pillar.
6. Remove the sensor from the inner B-pillar.

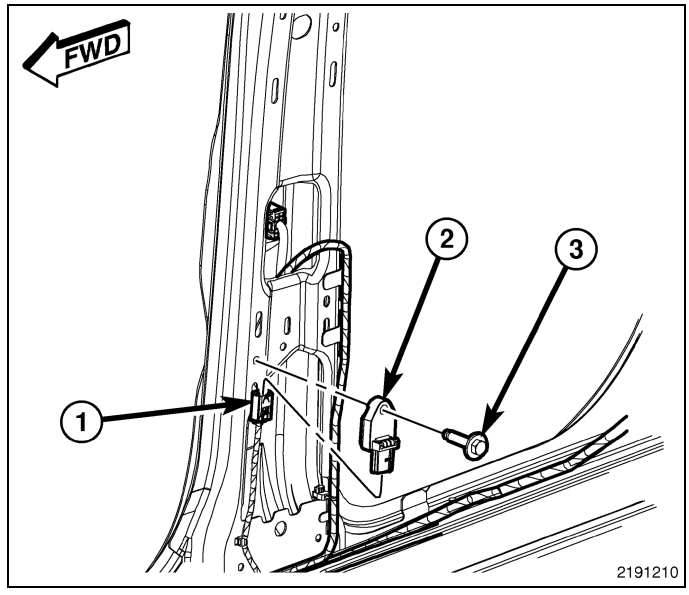

C-PILLAR

1. Disconnect and isolate the battery negative cable. Wait two minutes for the system capacitor to discharge before further service.
2. Remove the trim from the inside of the lower C-pillar. (Refer to 23 - Body/Interior/PANEL, C-Pillar Trim - Removal).
3. Disconnect the body wire harness connector (1) from the side impact sensor (2) connector receptacle.
4. Remove the screw (3) that secures the sensor to the inner C-pillar.
5. Remove the sensor from the inner C-pillar.

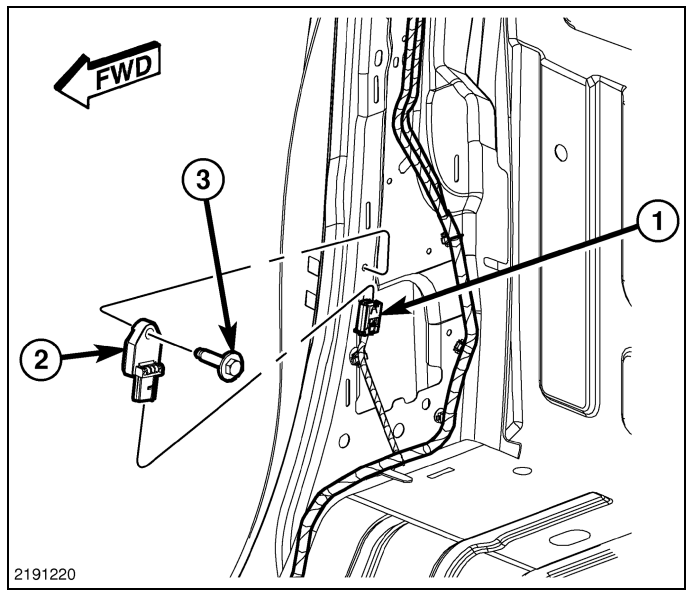

Installation

FRONT

WARNING: To avoid serious or fatal injury on vehicles equipped with airbags, disable the Supplemental Restraint System (SRS) before attempting any steering wheel, steering column, airbag, seat belt tensioner, impact sensor or instrument panel component diagnosis or service. Disconnect and isolate the battery negative (ground) cable, then wait two minutes for the system capacitor to discharge before performing further diagnosis or service. This is the only sure way to disable the SRS. Failure to take the proper precautions could result in accidental airbag deployment.

WARNING: To avoid serious or fatal injury, never strike or drop the Electronic Pedestrian Protection (EPP) system impact sensor, as it can damage the impact sensor or affect its calibration. The EPP impact sensor enables the system to deploy the EPP system active hood hinge actuators. If an impact sensor is accidentally dropped during service, the sensor must be scrapped and replaced with a new unit. Failure to observe this warning could result in accidental, incomplete, or improper EPP active hood hinge actuator deployment.

1. Position the right or left front impact sensor (5) onto the back of the right or left end of the lower radiator cross member (3). Be certain that the anti-rotation pin on the back of the sensor is engaged in the clearance hole of the cross member.
2. Install and tighten the screw (2) that secures the sensor to the back of the cross member. Tighten the screw to 10 N·m (90 in. lbs.).
3. Reconnect the Front End Module (FEM) (1) wire harness connector (4) to the sensor connector receptacle.
4. Do not reconnect the battery negative cable at this time. The Supplemental Restraint System (SRS) Verification Test procedure should be performed following service of any SRS component. (Refer to 10 - Restraints - Standard Procedure).

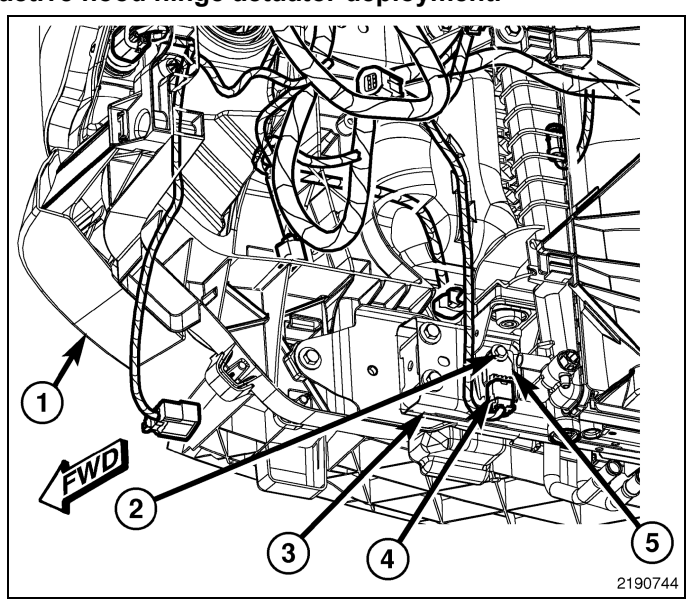

SIDE

WARNING: To avoid serious or fatal injury on vehicles equipped with airbags, disable the Supplemental Restraint System (SRS) before attempting any steering wheel, steering column, airbag, seat belt tensioner, impact sensor or instrument panel component diagnosis or service. Disconnect and isolate the battery negative (ground) cable, then wait two minutes for the system capacitor to discharge before performing further diagnosis or service. This is the only sure way to disable the SRS. Failure to take the proper precautions could result in accidental airbag deployment.

WARNING: To avoid serious or fatal injury, never strike or drop the side impact sensor, as it can damage the impact sensor or affect its calibration. The side impact sensor enables the system to deploy the side Supplemental Restraint System (SRS) components. If an impact sensor is accidentally dropped during service, the sensor must be scrapped and replaced with a new unit. Failure to observe this warning could result in accidental, incomplete, or improper side SRS component deployment.

FRONT DOOR

NOTE: Be certain that the gasket between the pressure-type side impact sensor and the front door module carrier panel is in good condition and positioned on the back of the sensor. There MUST be a good seal between the sensor and the module carrier panel for the sensor to operate properly. If the gasket is in poor condition, replace the sensor.

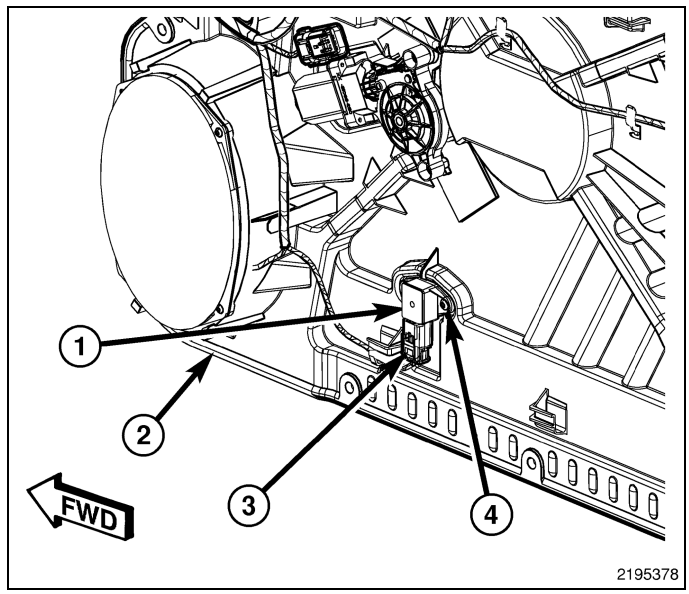

1. Position the side impact sensor (1) to the right or left front door module carrier panel (2). When the sensor is correctly positioned, the arrow on the sensor label will be pointed toward the bottom of the door.
2. Install and tighten the two screws (4) that secure the sensor to the carrier panel. Tighten the screws securely.
3. Reconnect the front door module wire harness connector (3) to the sensor connector receptacle.
4. Reinstall the trim panel onto the inside of the right or left front door. (Refer to 23 - Body/Door - Front/PANEL, Door Trim - Installation).
5. Do not reconnect the battery negative cable at this time. The Supplemental Restraint System (SRS) Verification Test procedure should be performed following service of any SRS component. (Refer to 10 - Restraints - Standard Procedure).

B-PILLAR - STANDARD CAB

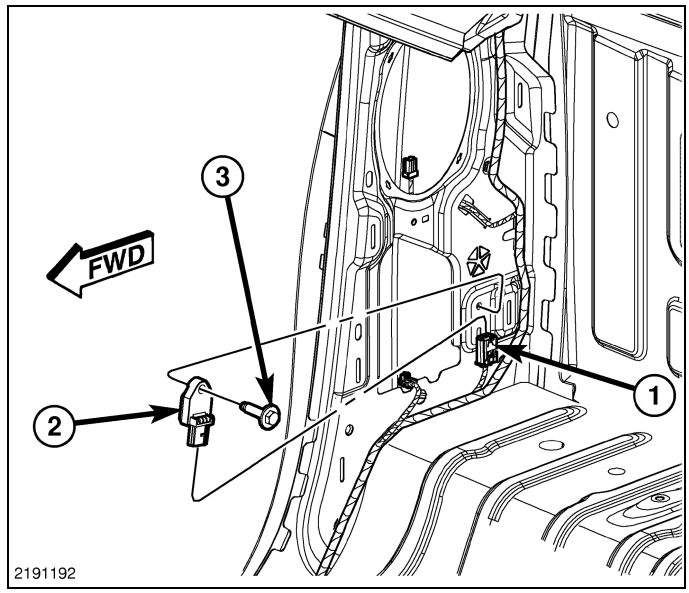

1. Position the side impact sensor (2) to the inside of B-pillar. Be certain that the anti-rotation pin on the back of the sensor is engaged in the clearance hole of the B-pillar.
2. Install and tighten the screw (3) that secures the sensor to the inner B-pillar. Tighten the screw to 9 N·m (80 in. lbs.).
3. Reconnect the body wire harness connector (1) to the sensor connector receptacle.
4. Reinstall the trim onto the inside of the lower B-pillar. (Refer to 23 - Body/Interior/PANEL, B-Pillar Trim - Installation).
5. Do not reconnect the battery negative cable at this time. The Supplemental Restraint System (SRS) Verification Test procedure should be performed following service of any SRS component. (Refer to 10 - Restraints - Standard Procedure).

B-PILLAR - EXCEPT STANDARD CAB

1. Position the side impact sensor (2) to the inside of B-pillar. Be certain that the anti-rotation pin on the back of the sensor is engaged in the clearance hole of the B-pillar.
2. Install and tighten the screw (3) that secures the sensor to the inner B-pillar. Tighten the screw to 9 N·m (80 in. lbs.).
3. Reconnect the body wire harness connector (1) to the sensor connector receptacle.
4. Reinstall the trim onto the inside of the lower B-pillar. (Refer to 23 - Body/Interior/PANEL, B-Pillar Trim - Installation).
5. Do not reconnect the battery negative cable at this time. The Supplemental Restraint System (SRS) Verification Test procedure should be performed following service of any SRS component. (Refer to 10 - Restraints - Standard Procedure).

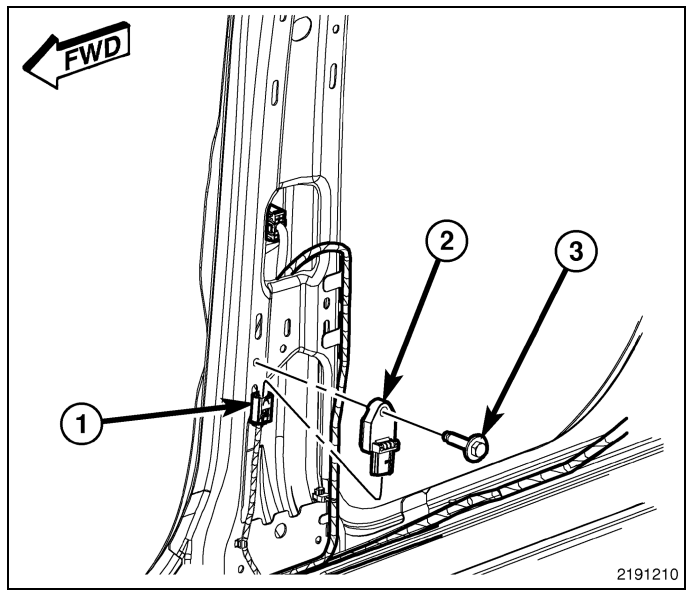

C-PILLAR

1. Position the side impact sensor (2) to the inside of C-pillar. Be certain that the anti-rotation pin on the back of the sensor is engaged in the clearance hole of the C-pillar.
2. Install and tighten the screw (3) that secures the sensor to the inner B-pillar. Tighten the screw to 9 N·m (80 in. lbs.).
3. Reconnect the body wire harness connector (1) to the sensor connector receptacle.
4. Reinstall the trim onto the inside of the lower C-pillar. (Refer to 23 - Body/Interior/PANEL, C-Pillar Trim - Installation).
5. Do not reconnect the battery negative cable at this time. The Supplemental Restraint System (SRS) Verification Test procedure should be performed following service of any SRS component. (Refer to 10 - Restraints - Standard Procedure).

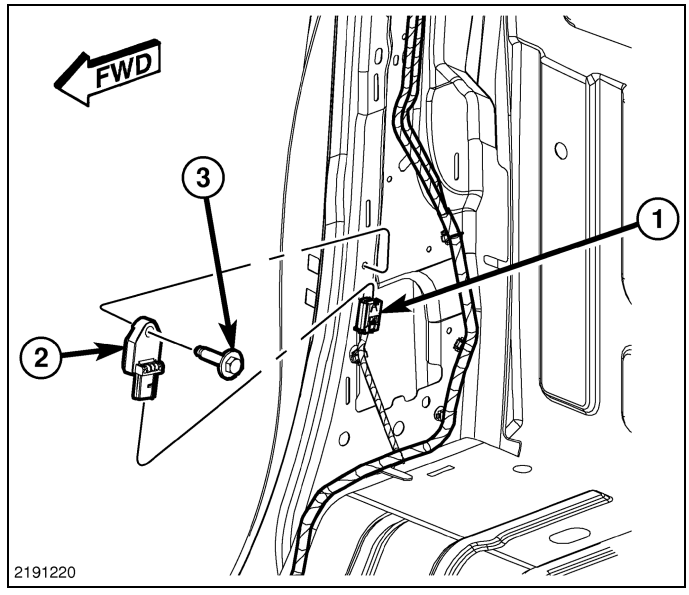

SWITCH, Seat Belt, Driver

Description

All vehicles are equipped with a driver side seat belt switch that is a small, normally open, single pole, single throw, leaf contact, momentary switch. The driver side seat belt switch is integral to the buckle (1) of the driver side front seat belt buckle, which is located within a molded plastic scabbard (2) and secured by a screw to the inboard side of the driver side front seat cushion frame.

The seat belt switch is connected to the vehicle electrical system through a two-lead pigtail wire and connector (3) on the seat belt buckle-half, which is connected to a wire harness connector and take out of the seat wire harness routed beneath the driver side front seat cushion in the passenger compartment.

The seat belt switch cannot be adjusted or repaired. If ineffective or damaged, the entire driver side front seat belt buckle-half unit must be replaced.

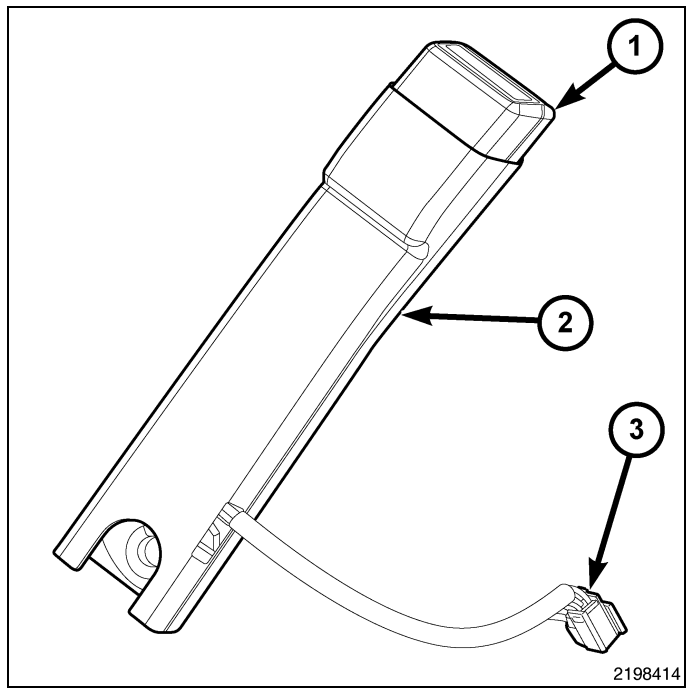

Operation

The driver side seat belt switch is designed to control a path to ground for the seat belt switch sense input of the Occupant Restraint Controller (ORC). When the driver side front seat belt tip-half is inserted into the seat belt buckle, the switch closes the path to ground; and, when the driver side front seat belt tip-half is removed from the seat belt buckle, the switch opens the ground path. The switch is actuated by the latch mechanism within the seat belt buckle.

The seat belt switch is connected in series between ground and the seat belt switch sense input of the ORC. The ORC relays an electronic **seat belt switch status** message to other electronic modules in the vehicle over the Controller Area Network (CAN) data bus. The seat belt switch receives ground at all times through its pigtail wire connection to the seat wire harness from a take out of the body wire harness. An eyelet terminal connector on the body wire harness ground take out is secured beneath a ground screw to the body sheet metal.

The seat belt switch as well as the hard wired circuits between the switch and the ORC may be diagnosed using conventional diagnostic tools and procedures. Refer to the appropriate wiring information. However, conventional diagnostic methods will not prove conclusive in the diagnosis of the electronic controls or communication between modules related to seat belt switch operation. The most reliable, efficient and accurate means to diagnose the seat belt switch requires the use of a diagnostic scan tool. Refer to the appropriate diagnostic information.

TENSIONER, Seat Belt

Description

Seat belt retractor tensioners supplement the dual front airbag system for all versions of this vehicle. These tensioners are integral to the front seat belt and retractor units (1), which are secured to the B-pillars on the right and left sides of the vehicle. The retractors are concealed beneath the molded plastic B-pillar trim. The seat belt tensioner consists primarily of a molded plastic tensioner housing (3), a tubular metal piston housing (4), a piston, a short rack gear, a set of pinion gears and a pyrotechnically activated gas generator (2).

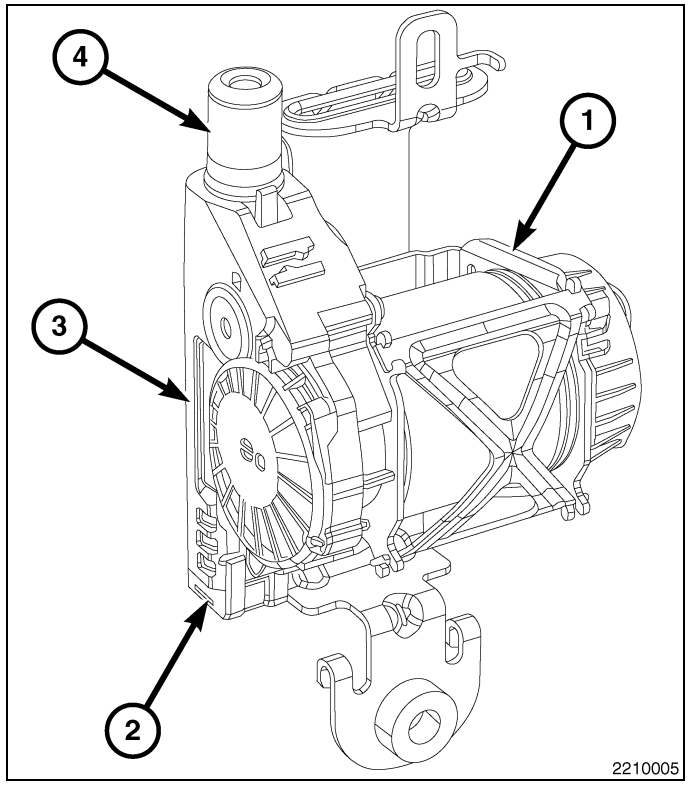

All of these components are located on one side of the retractor spool on the outside of the retractor housing. The seat belt tensioners are controlled by the Occupant Restraint Controller (ORC) and are connected to the vehicle electrical system through dedicated take outs of the body wire harness by keyed and latching molded plastic connector insulators to ensure a secure connection.

The retractor tensioners cannot be repaired and, if ineffective or damaged, the entire front seat belt and retractor unit must be replaced. The retractor tensioners are not intended for reuse and must be replaced following any front airbag deployment. A locked retractor that will not allow the seat belt webbing to be retracted or extracted is a sure indication that the seat belt tensioner has been deployed and requires replacement. (Refer to 10 - Restraints/RETRACTOR, Seat Belt - Removal).

Operation

The seat belt tensioners are deployed in conjunction with the dual front airbags by a signal generated by the Occupant Restraint Controller (ORC) through the driver or passenger seat belt tensioner line 1 and line 2 (or squib) circuits. When the ORC sends the proper electrical signal to the tensioners, the electrical energy generates enough heat to initiate a small pyrotechnic gas generator.

The gas generator is installed in one end of the tubular metal piston housing, which contains a piston and a small rack gear. As the gas expands, it pushes the piston and the rack gear through the tube. The rack gear engages a pinion gear that drives a gear set within the tensioner housing, which rotates the seat belt retractor spool causing slack to be removed from the front seat belt webbing.

Removing excess slack from the front seat belts not only keeps the occupants properly positioned for an airbag deployment following a frontal impact of the vehicle, but also helps to reduce injuries that the occupant might experience in these situations as a result of harmful contact with the steering wheel, steering column, instrument panel or windshield. Also, the seat belt retractor has a two-stage mechanism that is designed to control the loading being applied to the occupants by the seat belts during a frontal impact, further reducing the potential for occupant injuries.

The ORC monitors the condition of the seat belt tensioners through circuit resistance, and will illuminate the airbag indicator in the ElectroMechanical Instrument Cluster (EMIC) (also known as the Cab Compartment Node/CCN) and

store a Diagnostic Trouble Code (DTC) for any fault that is detected. Proper diagnosis of the seat belt tensioner gas generator and squib circuits requires the use of a diagnostic scan tool. Refer to the appropriate diagnostic information.

EXHAUST SYSTEM

TABLE OF CONTENTS

page

EXHAUST SYSTEM
- DESCRIPTION . . . 2
- DIAGNOSIS AND TESTING
  - EXHAUST SYSTEM . . . 6
  - LEAK TESTING . . . 6
- SPECIFICATIONS . . . 7
- SPECIAL TOOLS . . . 8
- **CONVERTER, CATALYTIC**
  - DESCRIPTION . . . 8
  - OPERATION . . . 9
  - REMOVAL . . . 9
  - INSPECTION . . . 9
  - INSTALLATION . . . 10
- **MUFFLER, EXHAUST**
  - REMOVAL
    - 3.7L/4.7L/5.7L ENGINE EXHAUST . . . 10
    - 5.7L ENGINE DUAL EXHAUST . . . 11
  - INSTALLATION
    - 3.7L/4.7L/5.7L ENGINE EXHAUST . . . 11
    - 5.7L ENGINE DUAL EXHAUST . . . 12

page

PIPE, EXHAUST
- REMOVAL . . . 12
- INSPECTION . . . 12
- INSTALLATION . . . 13

SHIELD, HEAT
- DESCRIPTION . . . 13
- REMOVAL . . . 13
- INSTALLATION . . . 14

TAILPIPE, EXHAUST
- REMOVAL
  - 3.7L/4.7L/5.7L . . . 14
  - 5.7L ENGINE DUAL EXHAUST . . . 15
- INSPECTION . . . 15
- INSTALLATION
  - 3.7L/4.7L/5.7L ENGINE . . . 16
  - 5.7L ENGINE DUAL EXHAUST . . . 16

Exhaust System

Description

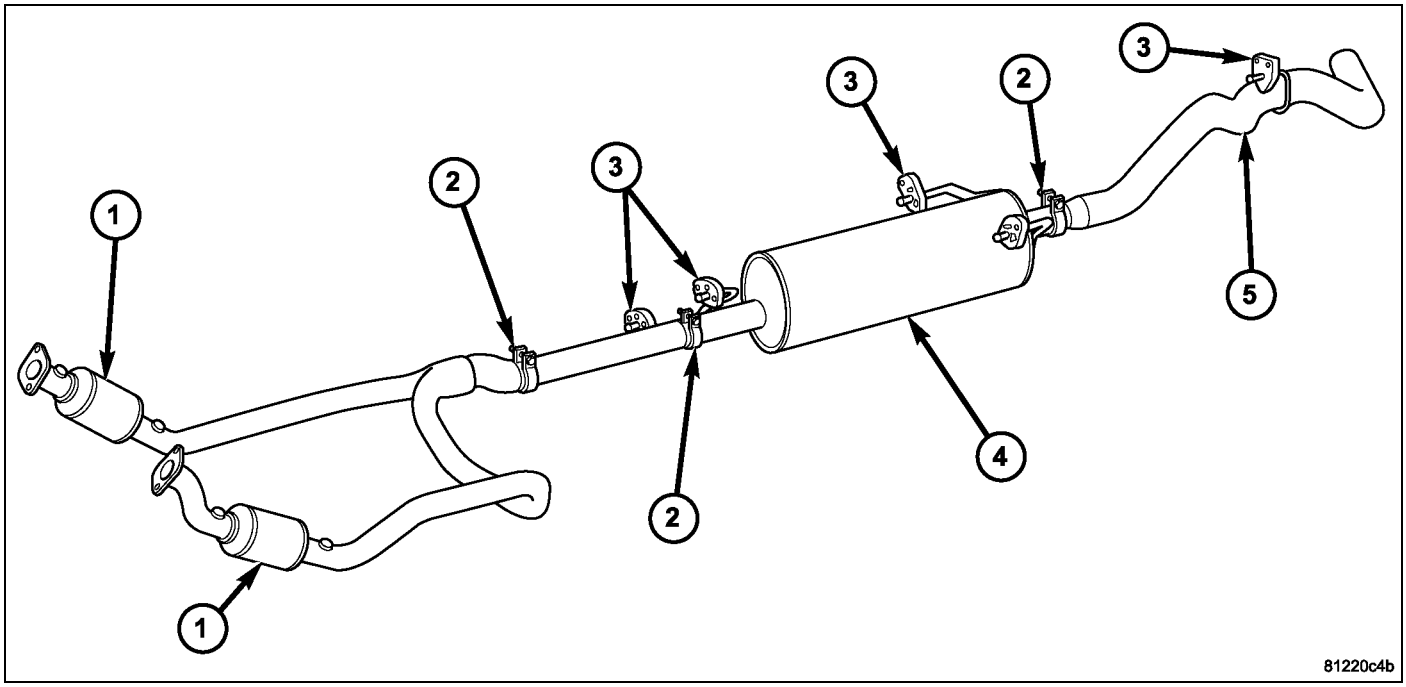

Exhaust System - 3.7L Engine - Typical

1 - CATALYTIC CONVERTER
2 - CLAMP
3 - INSULATOR
4 - MUFFLER
5 - TAILPIPE

CAUTION: Avoid application of rust prevention compounds or undercoating materials to exhaust system floor pan exhaust heat shields. Light overspray near the edges is permitted. Application of coating will result in excessive floor pan temperatures and objectionable fumes.

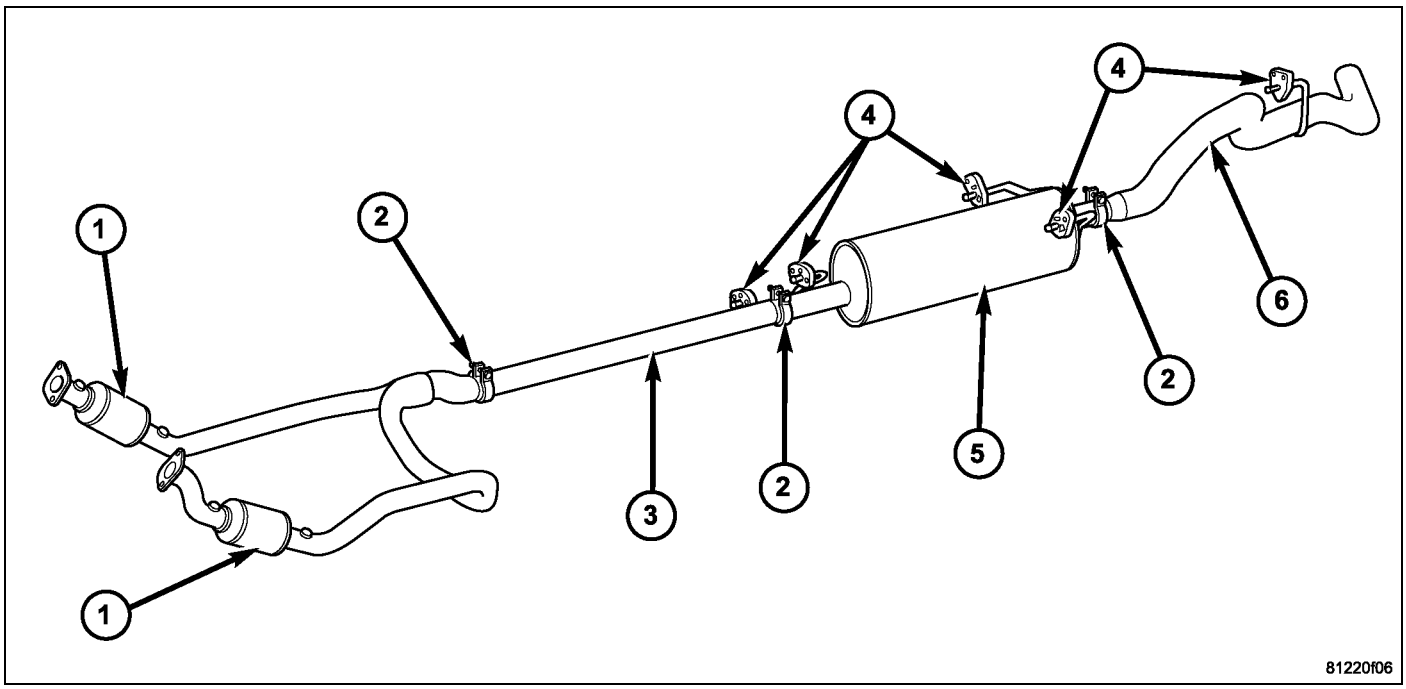

Exhaust System 4.7L Engine - Typical

1 - CATALYTIC CONVERTER	4 - INSULATOR
2 - CLAMP	5 - MUFFLER
3 - EXTENSION PIPE	6 - TAILPIPE/RESONATOR

The federal gasoline engine exhaust system consists of engine exhaust manifolds, exhaust pipes, catalytic converter(s), extension pipe (if needed), exhaust heat shields, muffler and exhaust tailpipe.

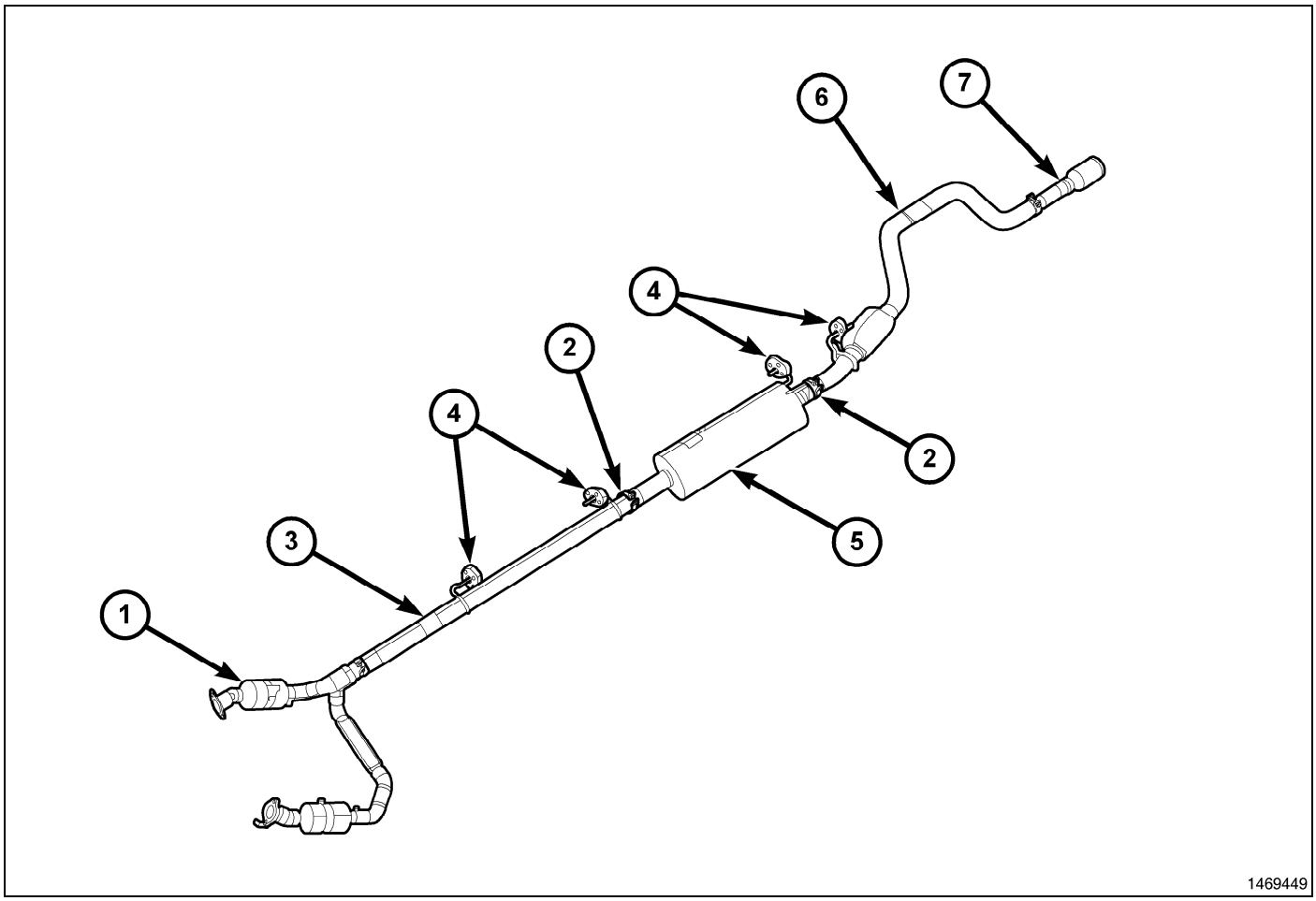

Exhaust System 5.7L Engine - Typical

1 - CATALYTIC CONVERTER	4 - INSULATOR
2 - CLAMP	5 - MUFFLER
3 - EXTENSION PIPE	6 - TAILPIPE/RESONATOR

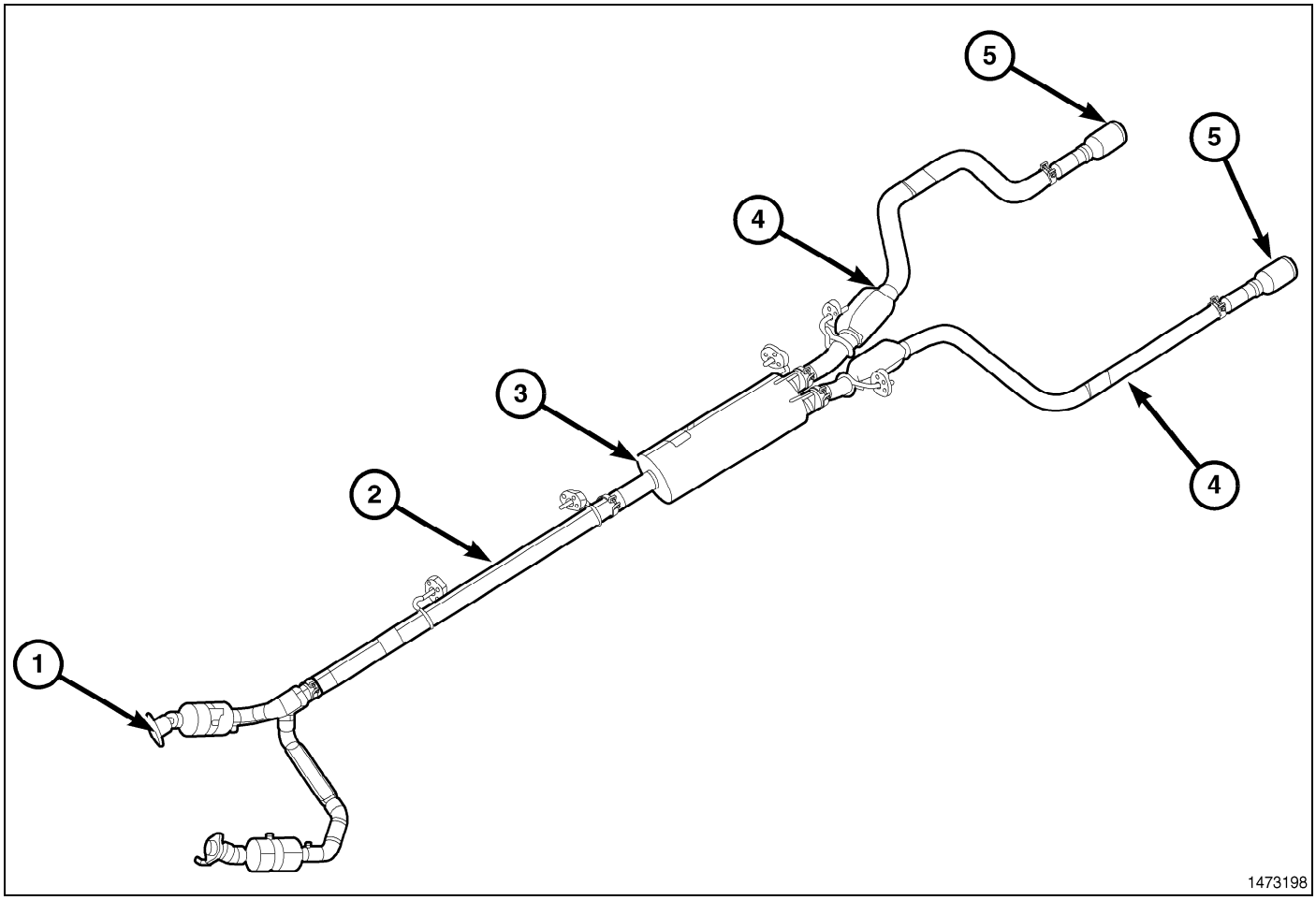

Exhaust System 5.7L Engine - Dual

The California emission vehicles exhaust system also contains the above components as well as mini catalytic converters added to the exhaust pipe.

The exhaust system must be properly aligned to prevent stress, leakage and body contact. Minimum clearance between any exhaust component and the body or frame is 25.4 mm (1.0 in.). If the system contacts any body panel, it may amplify objectionable noises from the engine or body.

Diagnosis and Testing

EXHAUST SYSTEM

EXHAUST SYSTEM DIAGNOSIS CHART

CONDITION	POSSIBLE CAUSE	CORRECTION
EXCESSIVE EXHAUST NOISE OR LEAKING EXHAUST GASES	1. Leaks at pipe joints.	1. Tighten clamps/bolts at leaking joints.
	2. Rusted or blown out muffler.	2. Replace muffler. Inspect exhaust system.
	3. Broken or rusted out exhaust pipe.	3. Replace exhaust pipe.
	4. Exhaust pipe leaking at manifold flange.	4. Tighten/replace flange attaching nuts/bolts.
	5. Exhaust manifold cracked or broken.	5. Replace exhaust manifold.
	6. Leak between exhaust manifold and cylinder head.	6. Tighten exhaust manifold to cylinder head bolts.
	7. Catalytic converter rusted or blown out.	7. Replace catalytic converter assembly and gasket.
	8. Restriction in exhaust system.	8. Remove restriction, if possible. Replace restricted part if necessary.
CAUTION: When servicing and replacing exhaust system components, disconnect the oxygen sensor connector(s). Allowing the exhaust to hang by the oxygen sensor wires will damage the harness and/or sensor.		

LEAK TESTING

WARNING: The normal operating temperature of the exhaust system is very high. Therefore, never work around or attempt to service any part of the exhaust system until it is cooled. Special care should be taken when working near the catalytic converter. The temperature of the converter rises to a high level after a short period of engine operation time.

1. Raise and support vehicle.

CAUTION: The air pressure must not exceed 4 psi, otherwise engine damage can occur.

2. Connect Tool 8404-ECT, Exhaust Cone to Air Pressure Regulator (with hose) W-18-MIL-1146AS.
3. Attach shop air to the air pressure regulator.
4. Adjust the air pressure regulator to 4 psi
5. Insert Tool 8404-EC or 8404-ECT, Exhaust Cone into the vehicle tail pipe.
6. If the vehicle is equipped with dual exhaust, use Tool 8404-EC or 8404-ECT, Exhaust Cone with equipped attached plug. Plug one side of the dual exhaust pipe. Pressurize the other as described.
7. Apply a mixture of MOPAR® Air Leak Detector to the following areas:

- - All welded joints from 6 inches rearward of the downstream O2 sensor forward
- - O2 sensor seal points
- - O2 sensor boss welds
- - Flange/joint connection(s)
- - Exhaust manifold to cylinder head connection(s)
- - EGR solenoid gasket base and tube seal points (if equipped)

8. Watch for the Air Detector to bubble.
9. Use the following definitions to help determine if system or component repair/replacement is necessary:

- **Type 1 Leak** is defined as a leak where very small foam like bubbles 1mm (.039 in.) or less appear. Any Type 1 or greater leaks found in welded joints, O2 sensor seal points or O2 sensor boss welds must be repaired or the component must be replaced.

- **Type 2 Leak** is defined as a leak where larger bubbles 8mm (.32 in.) or greater appear. Any Type 2 or greater leaks found in flange or joint connections, exhaust manifold to cylinder head connections, or EGR gasket and tube seal points must be repaired or the components must be replaced.

Leak Location	Repair required if results at 4 psi reveal bubble size:
Welded joints	Type 1 - 1 mm (.039 in.) or greater
O2 Sensor seal points	Type 1 - 1 mm (.039 in.) or greater
O2 Sensor boss welds	Type 1 - 1 mm (.039 in.) or greater
Flange/joint connections	Type 2 - 8 mm (.32 in.) or greater
Exhaust Manifold to cylinder head connections	Type 2 - 8 mm (.32in.) or greater
EGR gasket and tube seal points	Type 2 - 8 mm (.32 in.) or greater

If a leak is found that matches the above definition, repair or replace the component as necessary.

Once the repair is complete, repeat the procedure to verify that all leaks have been repaired.

Specifications

DESCRIPTION	N·m	Ft. Lbs.	In. Lbs.
Bolt-Adjusting Strap	23	17	-
Nuts-Air Heater Power Supply	14	10	124
Nuts-Cab Heater Supply/Return Line	24	18	-
Nuts-Exhaust Clamp	54	40	-
Bolts-Exhaust Pipe to Manifold	31	23	-
Bolts-Generator Mounting	41	30	-
Nuts and Bolts-Heat Shield	11	8	97
Band Clamp Nut	54	40	-

Special Tools

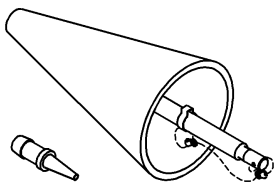

8404-EC - Exhaust Cone

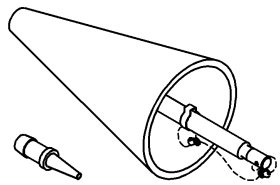

8404-ECT - Exhaust Cone, Truck

CONVERTER, Catalytic

Description

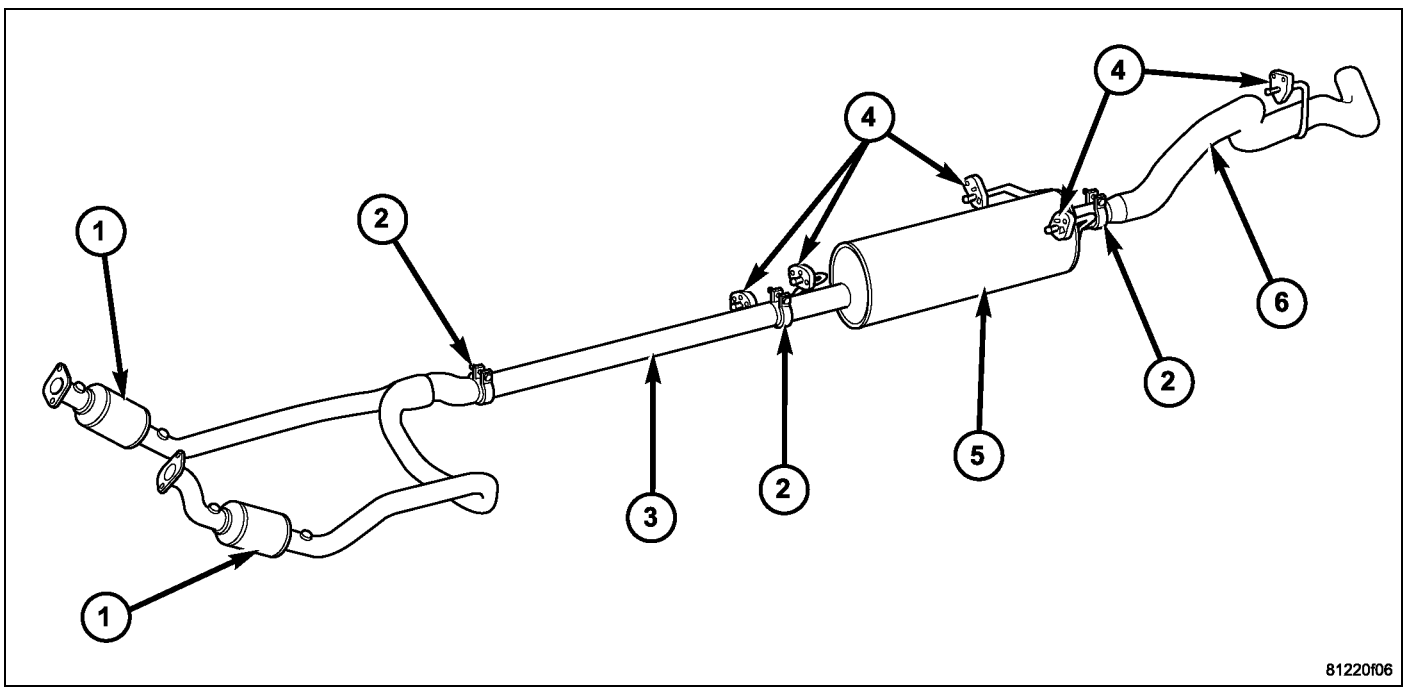

Exhaust System 4.7L Engine - Typical

1 - CATALYTIC CONVERTER	4 - INSULATOR
2 - CLAMP	5 - MUFFLER
3 - EXTENSION PIPE	6 - TAILPIPE/RESONATOR

WARNING: The normal operating temperature of the exhaust system is very high. Therefore, never work around or attempt to service any part of the exhaust system until it is cooled. Special care should be taken when working near the catalytic converter. The temperature of the converter rises to a high level after a short period of engine operation time.

CAUTION: DO NOT remove spark plug wires from plugs or by any other means short out cylinders. Failure of the catalytic converter can occur due to a temperature increase caused by unburned fuel passing through the converter.

The stainless steel catalytic converter body is designed to last the life of the vehicle. Excessive heat can result in bulging or other distortion, but excessive heat will not be the fault of the converter. If unburned fuel enters the converter, overheating may occur. If a converter is heat-damaged, correct the cause of the damage at the same time the converter is replaced. Also, inspect all other components of the exhaust system for heat damage.

Unleaded gasoline must be used to avoid contaminating the catalyst core.

50 State emission vehicles incorporate two mini catalytic converters located after the exhaust manifolds and before the inline catalytic converter.

Operation

The catalytic converter captures and burns any unburned fuel mixture exiting the combustion chambers during the exhaust stroke of the engine. This process aids in reducing emissions output.

Removal

1. Raise and support vehicle.
2. Saturate the bolts and nuts with heat valve lubricant. Allow 5 minutes for penetration.
3. Disconnect oxygen sensor electrical connectors.
4. Remove clamp (4).
5. Remove bolts exhaust to manifold (2).
6. Remove catalytic converter (3).

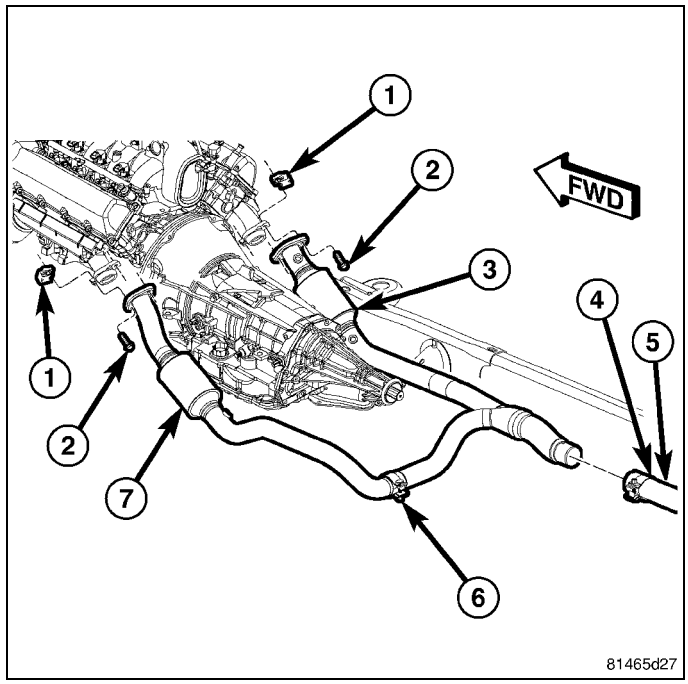

Inspection

ON VEHICLE

Look at the stainless steel body of the Catalytic Converter assembly, inspect for bulging or other distortion that could be a result of overheating. Inspect for:

- Indiction of exhaust gas leakage such as soot trails.
- Temperature sensor wiring for damage
- Joint misalignment
- Denting of greater then 6.3 mm (0.25 in.)
- Outer shell torn, cracked or otherwise damaged
- Loose or damaged core

OFF VEHICLE

With Catalytic Converter assembly off the vehicle and separated, visually inspect ceramic faces (Inlet and Outlet) for indication of damage from:

- Fuel fouling
- Oil fouling
- Coolant fouling
- Shifted or move ceramic element
- Ceramic element appears to be plugged and the soot is wet
- More then 20 cells are damaged (broken through), showing soot on the outlet face of the filter.

Installation

1. Install RH catalytic converter to exhaust clamp (4) on RH catalytic converter (3) and position into exhaust pipe (5).
2. Install and hand tighten RH catalytic converter to exhaust manifold bolts (2).
3. Install c-clip nut (1) and bolt (2) to converter (3) to manifold.
4. Tighten catalytic converter to exhaust manifold bolts (1) to 31 N·m (23 ft. lbs.).
5. Tighten all clamp nuts (4) to 52.2 N·m (40 ft. lbs.) torque.
6. Check the exhaust system for contact with the body panels. A minimum of 25 mm (1.0 in.) is required between the exhaust system components and body/frame parts. Make the necessary adjustments, if needed.
7. Check to ensure you have at least 25 mm clearance to oil pan.
8. Plug in O2 sensor wiring.
9. Lower the vehicle.
10. Start the engine and inspect for exhaust leaks. Repair exhaust leaks as necessary.

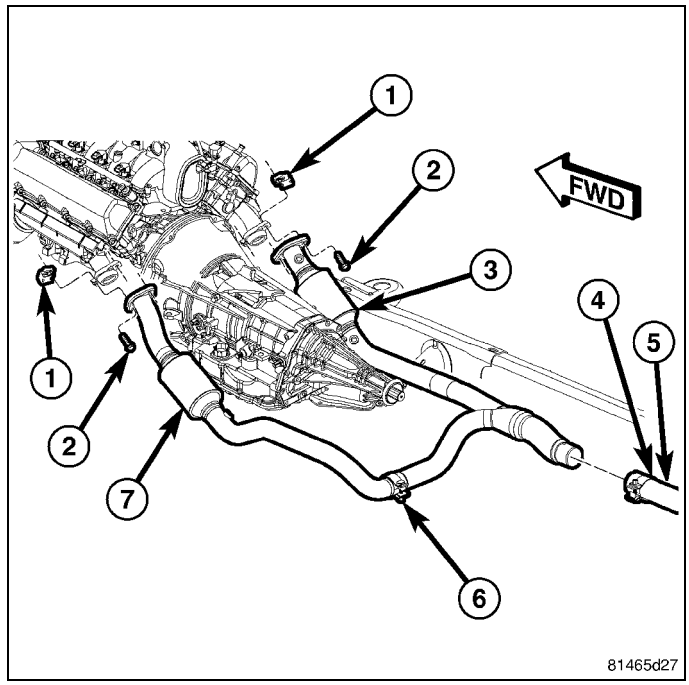

MUFFLER, Exhaust

Removal

3.7L/4.7L/5.7L ENGINE EXHAUST

1. Raise and support the vehicle.
2. Saturate the clamp nuts with spray lubricant. Allow 5 minutes for penetration.
3. Remove the tailpipe assembly. (Refer to 11 - Exhaust System/TAILPIPE, Exhaust - Removal)
4. Loosen clamps and nuts from muffler assembly (3).
5. Remove the muffler assembly (3) from the isolators (1, 2 and 4) .

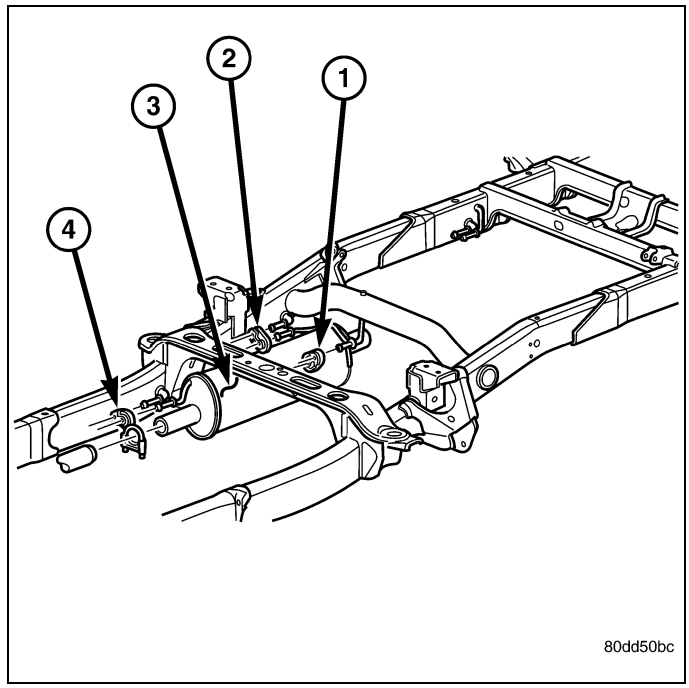

5.7L ENGINE DUAL EXHAUST

1. Raise and support the vehicle.
2. Remove the tailpipe assembly.(Refer to 11 - Exhaust System/TAILPIPE, Exhaust - Removal)
3. Saturate the muffler exhaust clamp nut (1) located on the front of the muffler assembly (2) with spray lubricant.
4. Loosen the muffler exhaust clamp (1).
5. Remove the muffler (2) from the isolators (4) and remove from the exhaust pipe (3).

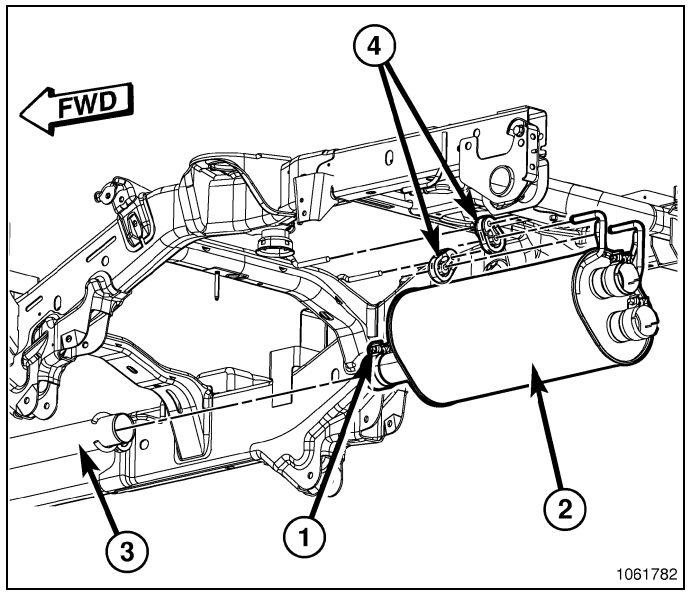

Installation

3.7L/4.7L/5.7L ENGINE EXHAUST

1. Assemble muffler assembly (3) and clamps loosely to permit proper alignment of all parts.
2. Hang the muffler assembly (3) to the isolators (1, 2 and 4).
3. Tighten the clamp nuts to 54 N·m (40 ft. lbs.) torque.
4. Install the tailpipe assembly. (Refer to 11 - Exhaust System/TAILPIPE, Exhaust - Installation)
5. Insure isolators (1, 2, and 4) are fully seated on exhaust hangers.
6. Check the exhaust system for contact with the body panels. A minimum of 25 mm (1.0 in.) is required between the exhaust system components and body/frame parts. Make the necessary adjustments, if needed.
7. Lower the vehicle.
8. Start the engine and inspect for exhaust leaks. Repair exhaust leaks as necessary.

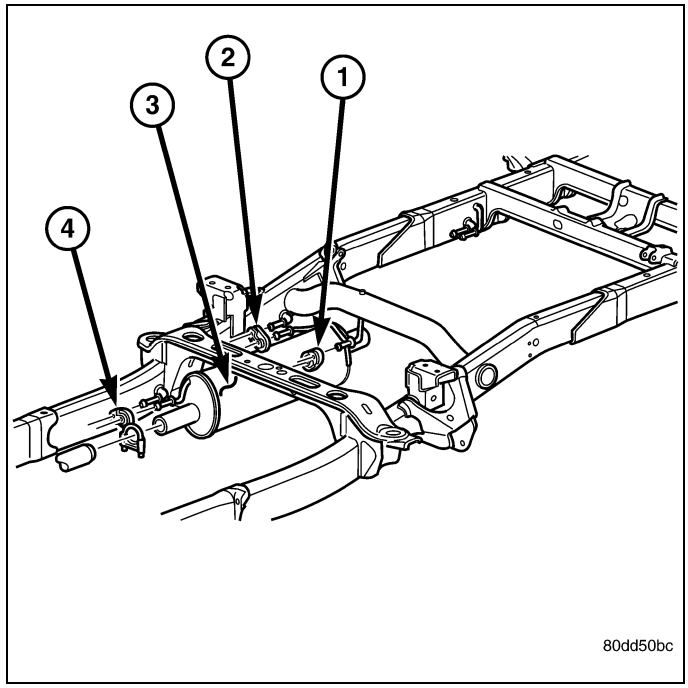

5.7L ENGINE DUAL EXHAUST

1. Pre-assemble muffler (2) and clamp (1) loosely to permit proper alignment of all parts.
2. Raise and support the vehicle.
3. Hang the dual outlet muffler (2) on the isolators (4).
4. Install muffler (2) on the exhaust pipe (3). Tighten to 54 N·m (40 ft. lbs.).
5. Check the exhaust system for contact with the body panels. A minimum of 25 mm (1.0 in.) is required between the exhaust system components and body/frame parts. Make the necessary adjustments, if needed.

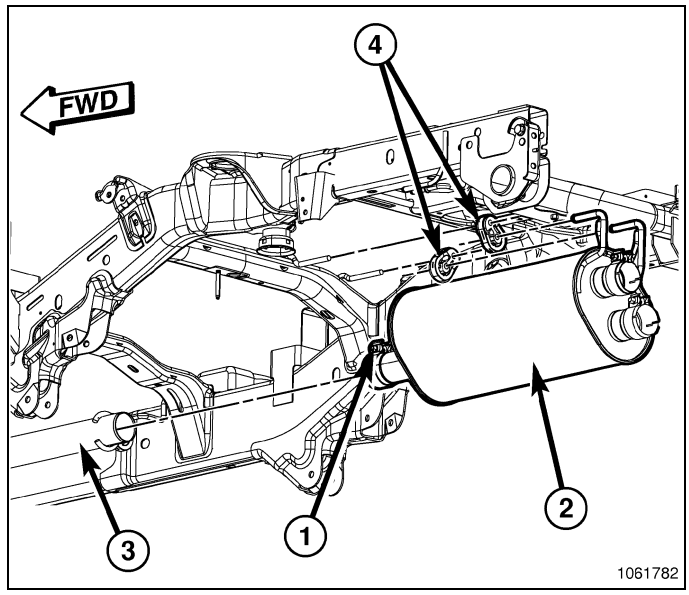

PIPE, Exhaust

Removal

1. Raise and support the vehicle.
2. Saturate the bolts and nuts with spray lubricant. Allow 5 minutes for penetration.
3. Remove exhaust pipe to manifold bolts (1) and nuts (4).
4. Remove the clamp nuts.
5. Remove the exhaust pipe (5).

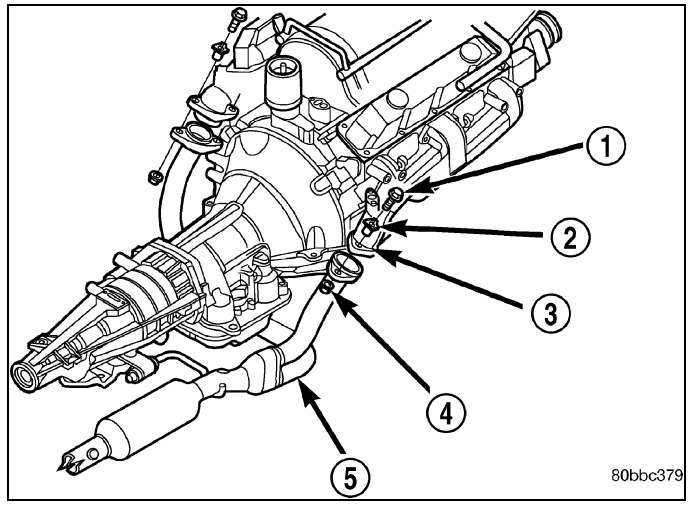

Inspection

Discard rusted clamps, broken or worn supports and attaching parts. Replace a component with original equipment parts, or equivalent. This will assure proper alignment with other parts in the system and provide acceptable exhaust noise levels.

Installation

1. Position the exhaust pipe (5) for proper clearance with the frame and underbody parts. A minimum clearance of 25 mm (1.0 in.) is required.
2. Position the exhaust pipe (5) to manifold (3). Install the bolts (1) and nuts (4). Tighten the nuts to 31 N·m (23 ft. lbs.) torque.
3. Tighten the clamp nuts to 54 N·m (40 ft. lbs.) torque.
4. Lower the vehicle.
5. Start the engine and inspect for exhaust leaks and exhaust system contact with the body panels. Adjust the alignment, if needed.(Refer to 11 - Exhaust System - Diagnosis and Testing)

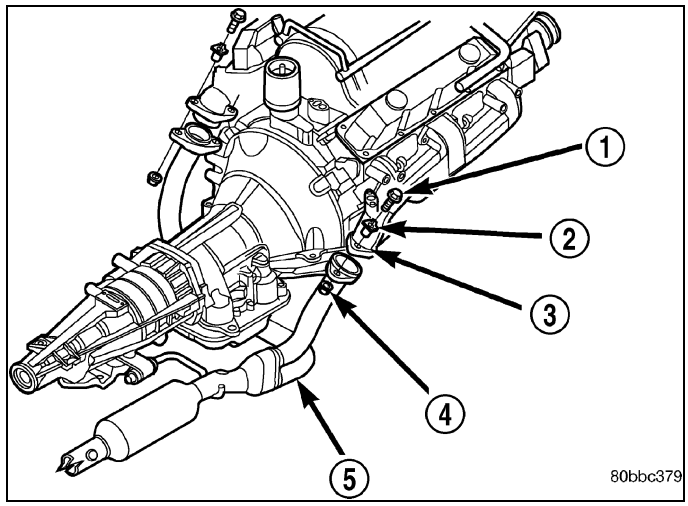

SHIELD, Heat

Description

There are two types of heat shields used. One is stamped steel the other is molded foil sheets. The shields attach to the vehicle around the exhaust system to prevent heat from the exhaust system from entering the passenger area and other areas where the heat can cause damage to other components.

Removal

1. Raise and support the vehicle.
2. Remove the nuts and/or bolts holding the exhaust heat shield (1,2) to the floor pan, crossmember or bracket.
3. Slide the shield(s) (1,2) out around the exhaust system.

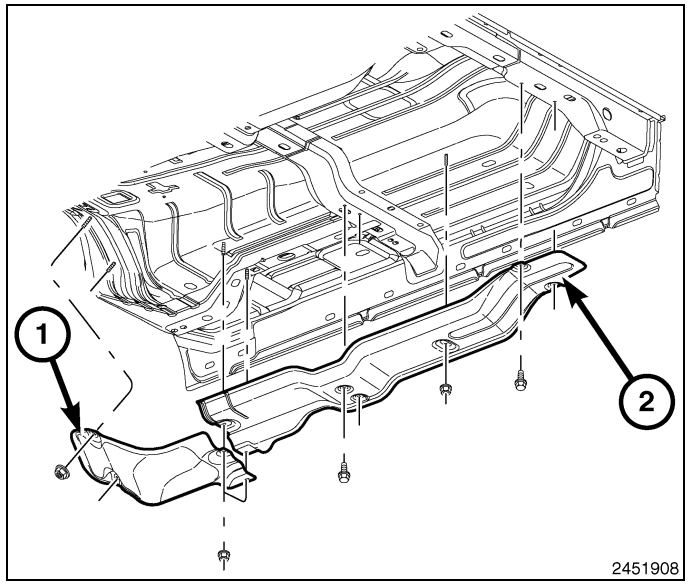

Installation

1. Position the exhaust heat shield(s) (1,2) to the floor pan, crossmember or bracket and install the nuts and/or bolts.
2. Tighten the nuts and/or bolts to 11 N·m (97 in. lbs.).
3. Lower the vehicle.

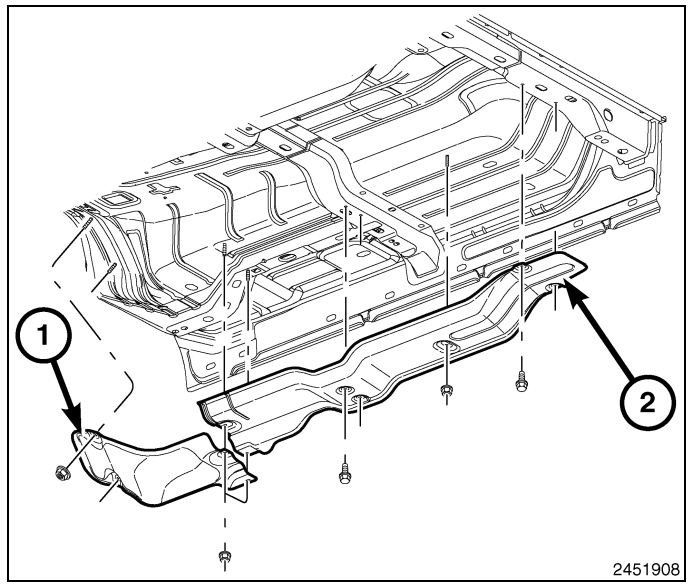

TAILPIPE, Exhaust

Removal

3.7L/4.7L/5.7L

1. Raise and support the vehicle.
2. Saturate the clamp (3) nuts with heat valve lubricant. Allow 5 minutes for penetration.
3. Remove clamps and nuts.
4. Disconnect the exhaust tailpipe (2) from the isolator (1).
5. Remove the exhaust tailpipe (2).

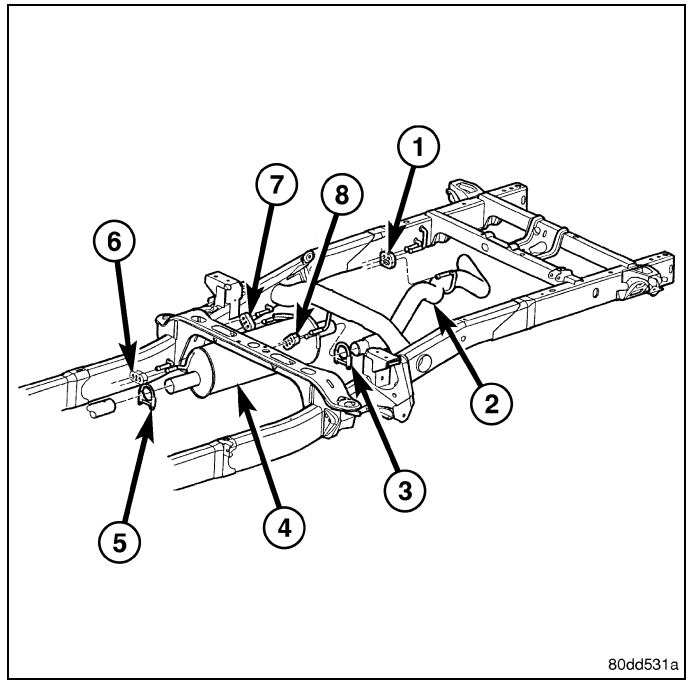

5.7L ENGINE DUAL EXHAUST

1. Raise and support the vehicle.
2. Saturate the tailpipe tip clamp nuts (3) with spray lubricant.
3. Loosen the exhaust tailpipe tip clamp nuts (3) and remove the exhaust tailpipe tips (1) .

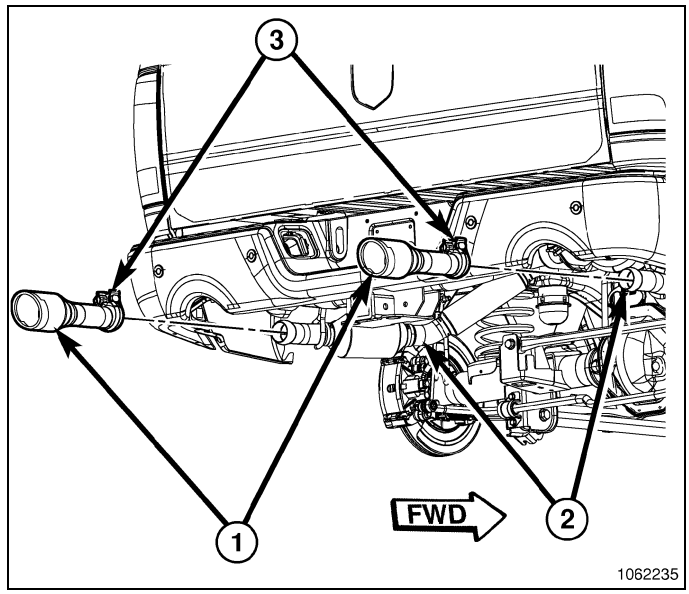

4. Saturate the muffler exhaust clamp nuts located on the muffler assembly (3) with spray lubricant.
5. Loosen the muffler exhaust clamp nuts located on the rear muffler assembly (3).
6. Pull the exhaust tailpipes off the isolators (2) and remove the exhaust tailpipes (1) from the dual outlet muffler assembly (3).

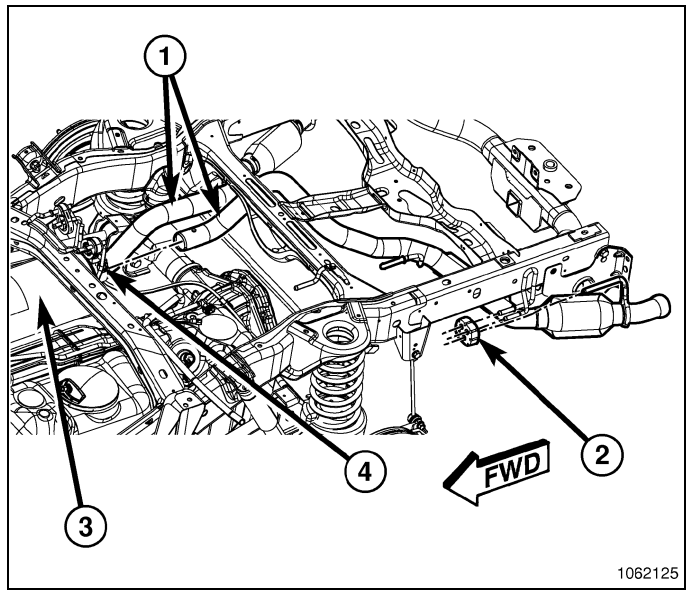

Inspection

Discard rusted clamps, broken or worn supports and attaching parts. Replace a component with original equipment parts, or equivalent. This will assure proper alignment with other parts in the system and provide acceptable exhaust noise levels.

Installation

3.7L/4.7L/5.7L ENGINE

1. Loosely assemble exhaust tailpipe (2) and clamp (2) to permit proper alignment of all parts.
2. Position the exhaust tailpipe (2) for proper clearance with the underbody parts.
3. Tighten all clamp nuts to 54 N·m (40 ft. lbs.) torque.
4. Hang the tailpipe (2) onto the isolator (1).
5. Check the exhaust system for contact with the body panels. A minimum of 25 mm (1.0 in.) is required between the exhaust system components and body/frame parts. Make the necessary adjustments, if needed.
6. Lower the vehicle.
7. Start the engine and inspect for exhaust leaks. Repair exhaust leaks as necessary.(Refer to 11 - Exhaust System - Diagnosis and Testing)

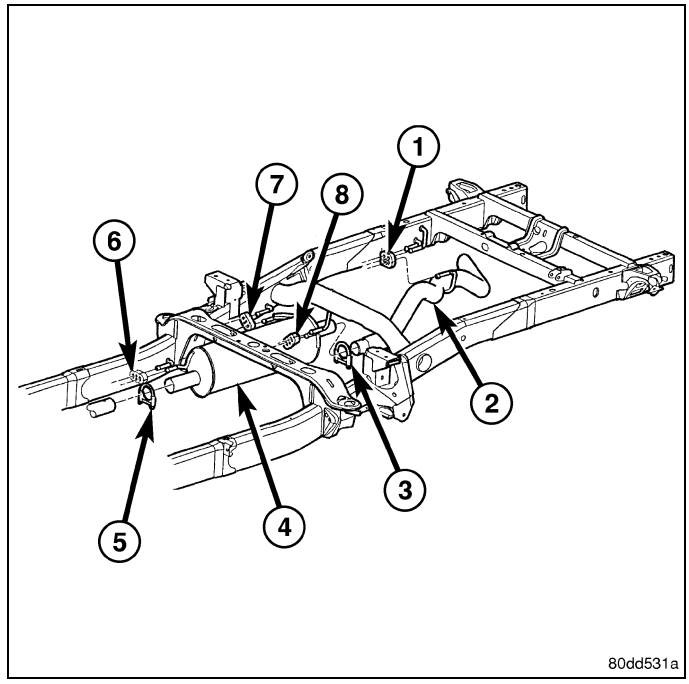

5.7L ENGINE DUAL EXHAUST

1. Pre-assemble tailpipe (2) and clamp (1) loosely to permit proper alignment of all parts.
2. Raise and support the vehicle.
3. Hang the driver side tailpipe assembly (1) on the isolator (2).
4. Install driver side tailpipe assembly (1) to the top left outlet of the muffler assembly (3).Tighten to 54 N·m (40 ft. lbs.).
5. Install passenger side tailpipe assembly (1) to the lower right outlet of the muffler assembly (3).Tighten to 54 N·m (40 ft. lbs.).

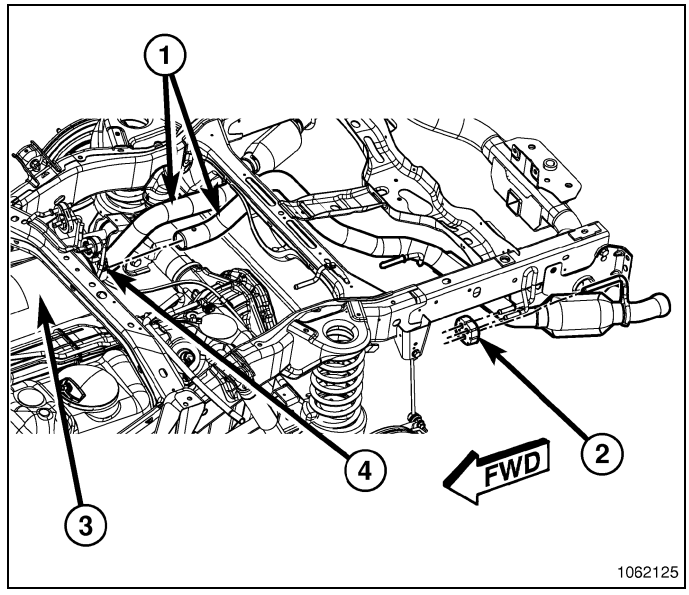

6. Loosely install tailpipe tips (1) to the tailpipe assembly (2).

NOTE: DO NOT tighten tailpipe tips at this time.

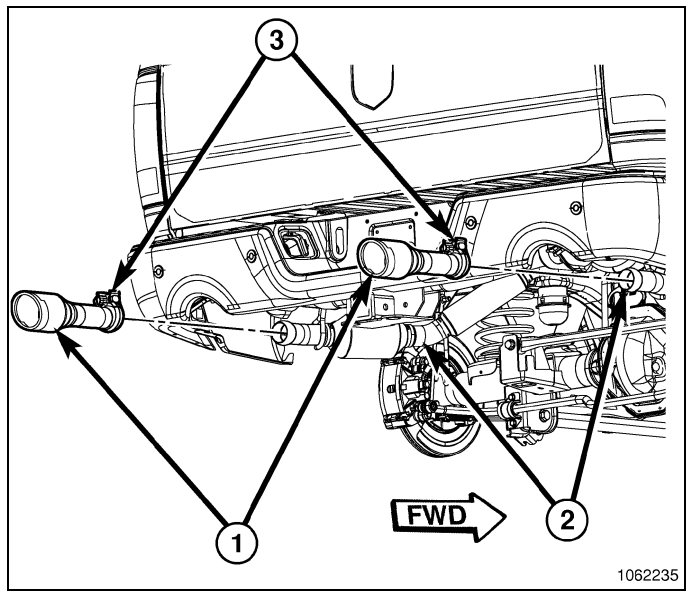

7. Check the exhaust system components for any contact with the body panels. A minimum of 25 mm (1.0 in.) is required between the exhaust system components and body/frame parts. Make the necessary adjustments, if needed.
8. One properly aligned, tighten the tailpipe tips (2) to 25 N·m (19 ft. lbs.).
9. Lower the vehicle.
10. Start the engine and inspect for exhaust leaks. Repair exhaust leaks as necessary.(Refer to 11 - Exhaust System - Diagnosis and Testing)

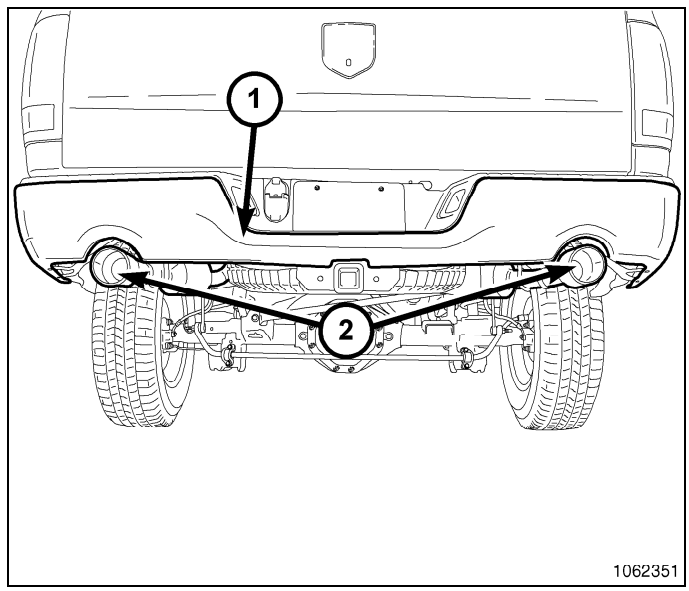

FRAME AND BUMPERS

TABLE OF CONTENTS

page

FRAME AND BUMPERS
SPECIAL TOOLS 2
BUMPERS. 3
FRAME 17

Special Tools

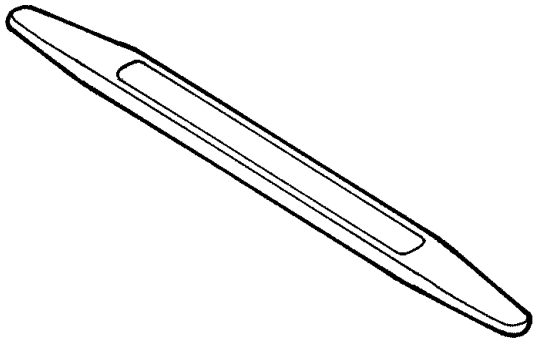

C-4755 - Trim Stick

BUMPERS

TABLE OF CONTENTS

page

BUMPERS
- SPECIFICATIONS 4
- **BUMPER, FRONT**
  - REMOVAL 4
  - INSTALLATION 6
- **BUMPER, REAR**
  - REMOVAL 7
  - INSTALLATION 9

page

FASCIA, FRONT
- REMOVAL 10
- INSTALLATION 13

Bumpers

Specifications

Description	N·m	Ft. Lbs	In. Lbs.
Front bumper support nuts	90	70	—
Rear bumper support bolts	54	40	—

BUMPER, Front

Removal

Sport Bumper

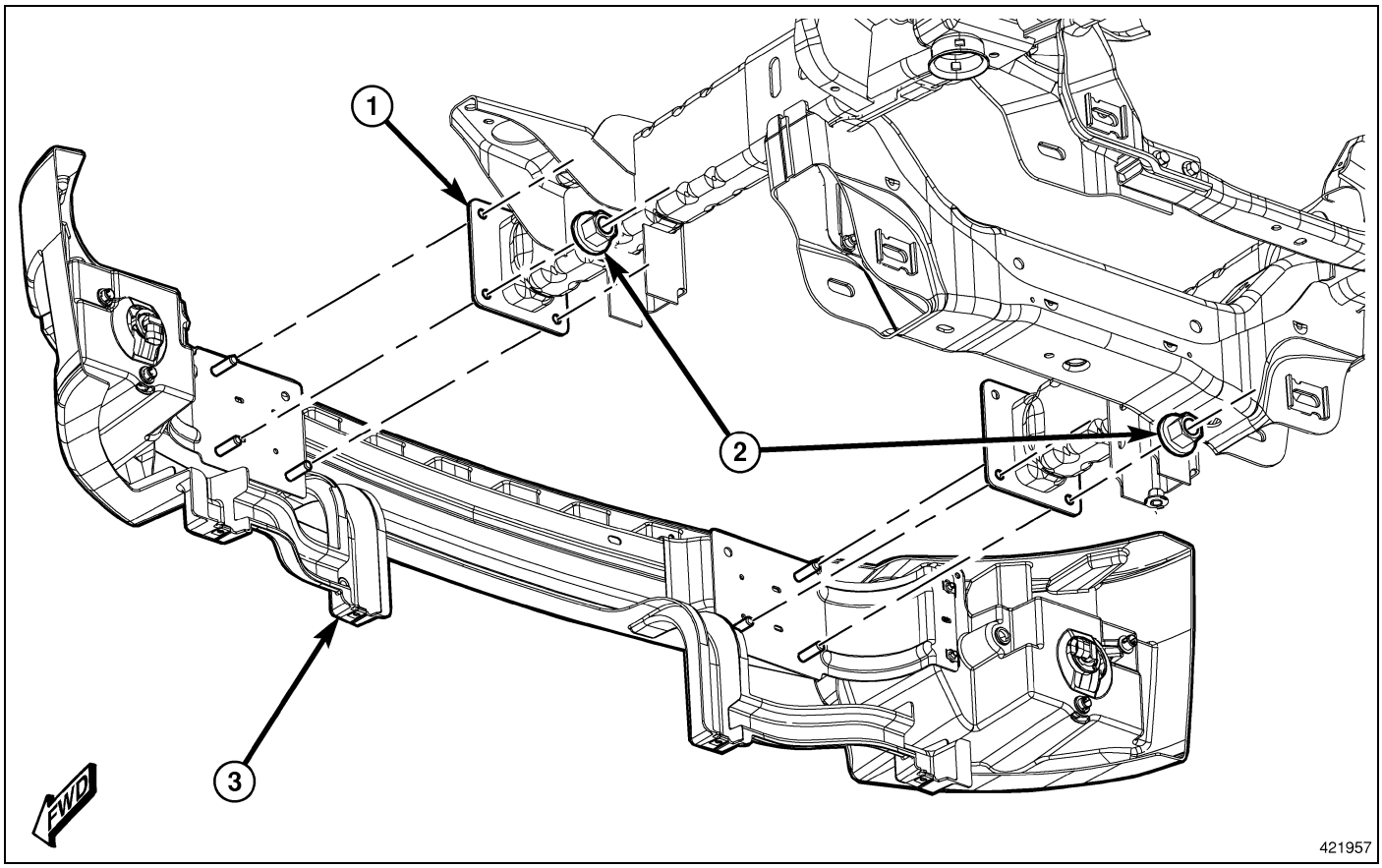

1. Remove the front fascia. (Refer to 13 - Frame and Bumpers/Bumpers/FASCIA, Front - Removal)
2. Disconnect the electrical connectors.
3. Support the bumper with a suitable lifting device.
4. Remove the nuts (2) and remove the bumper (3).

Non Sport Bumper

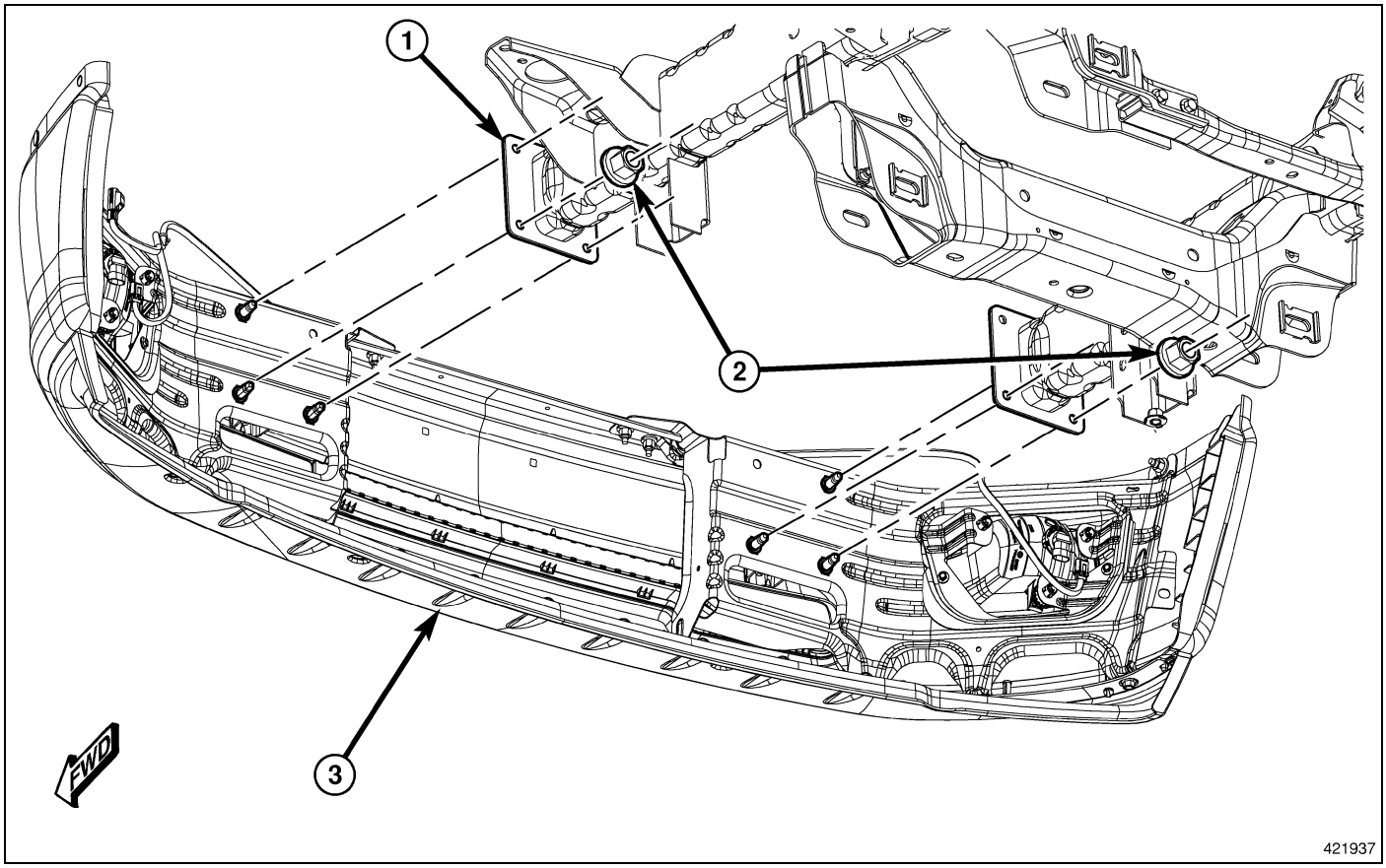

Non Sport Bumper

1. Remove the front fascia. (Refer to 13 - Frame and Bumpers/Bumpers/FASCIA, Front - Removal)
2. Disconnect the electrical connectors.
3. Support the bumper with a suitable lifting device.
4. Remove the nuts (2) and remove the bumper (3).

Installation

Sport Bumper

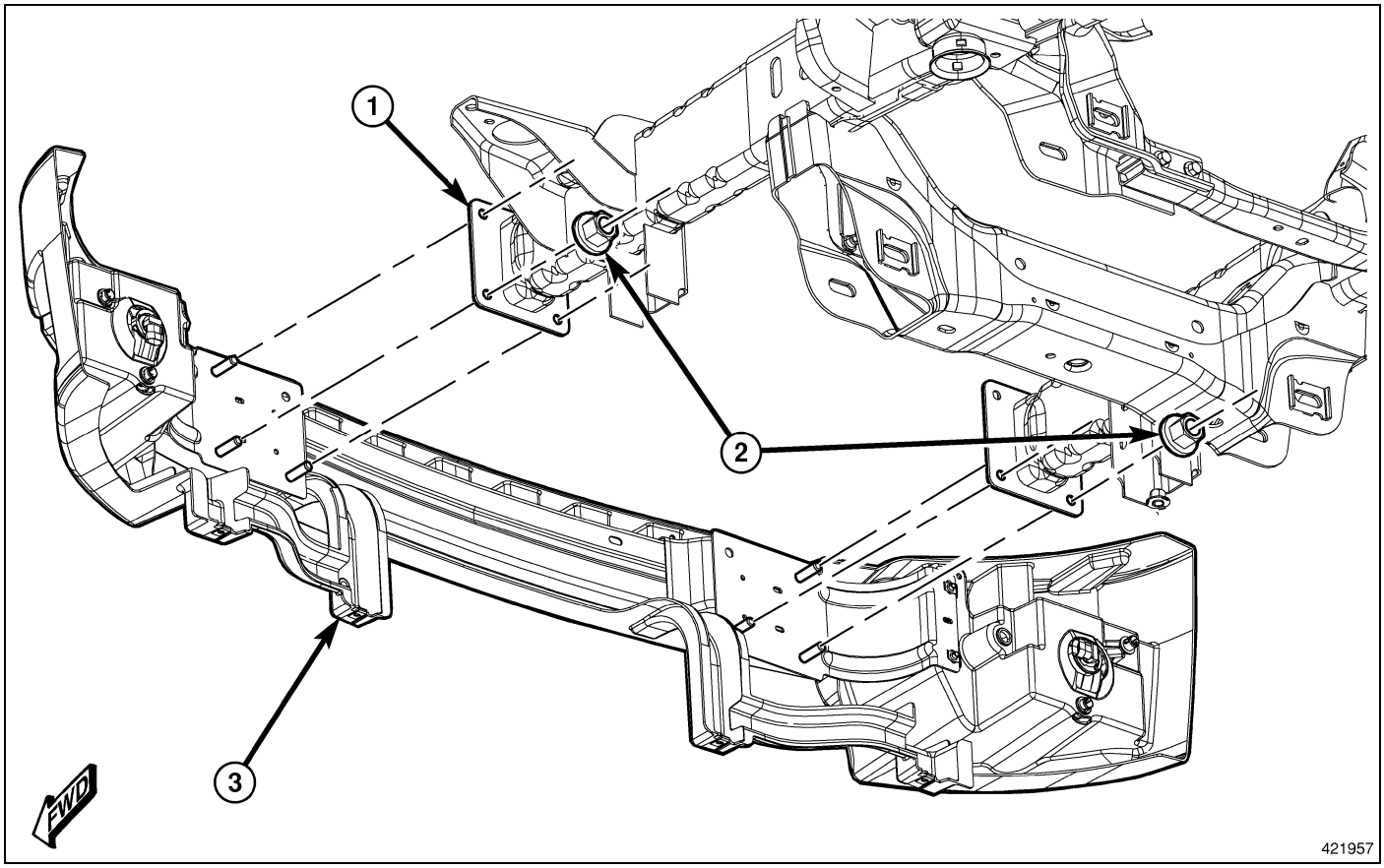

1. Position the bumper (3) onto the frame tip brackets (1) and install the nuts (2).
2. Check and adjust the bumper alignment as necessary. (Refer to 23 - Body/Body Structure/Gap and Flush - Specifications)
3. Tighten the nuts (2) to 95 N·m (70 ft. lbs.).

Non Sport Bumper

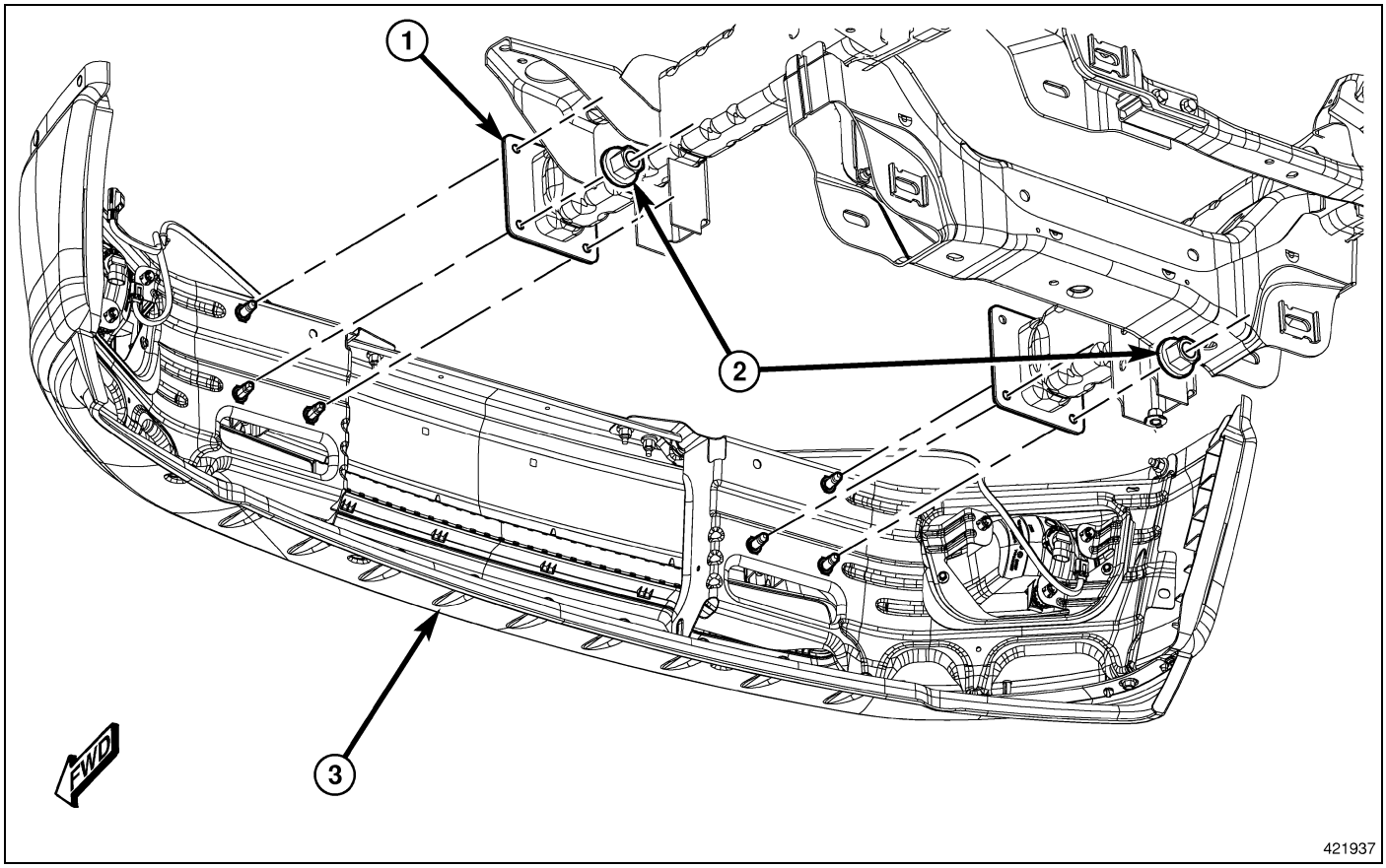

Non Sport Bumper

1. Position the bumper (3) onto the frame tip brackets (1) and install the nuts (2).
2. Check and adjust the bumper alignment as necessary. (Refer to 23 - Body/Body Structure/Gap and Flush - Specifications)
3. Tighten the nuts (2) to 95 N·m (70 ft. lbs.).

BUMPER, Rear

Removal

1. Disconnect theelectrical connectors (2).

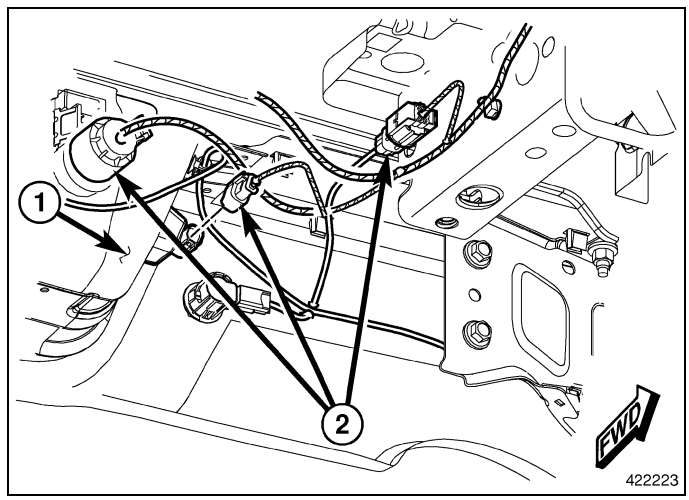

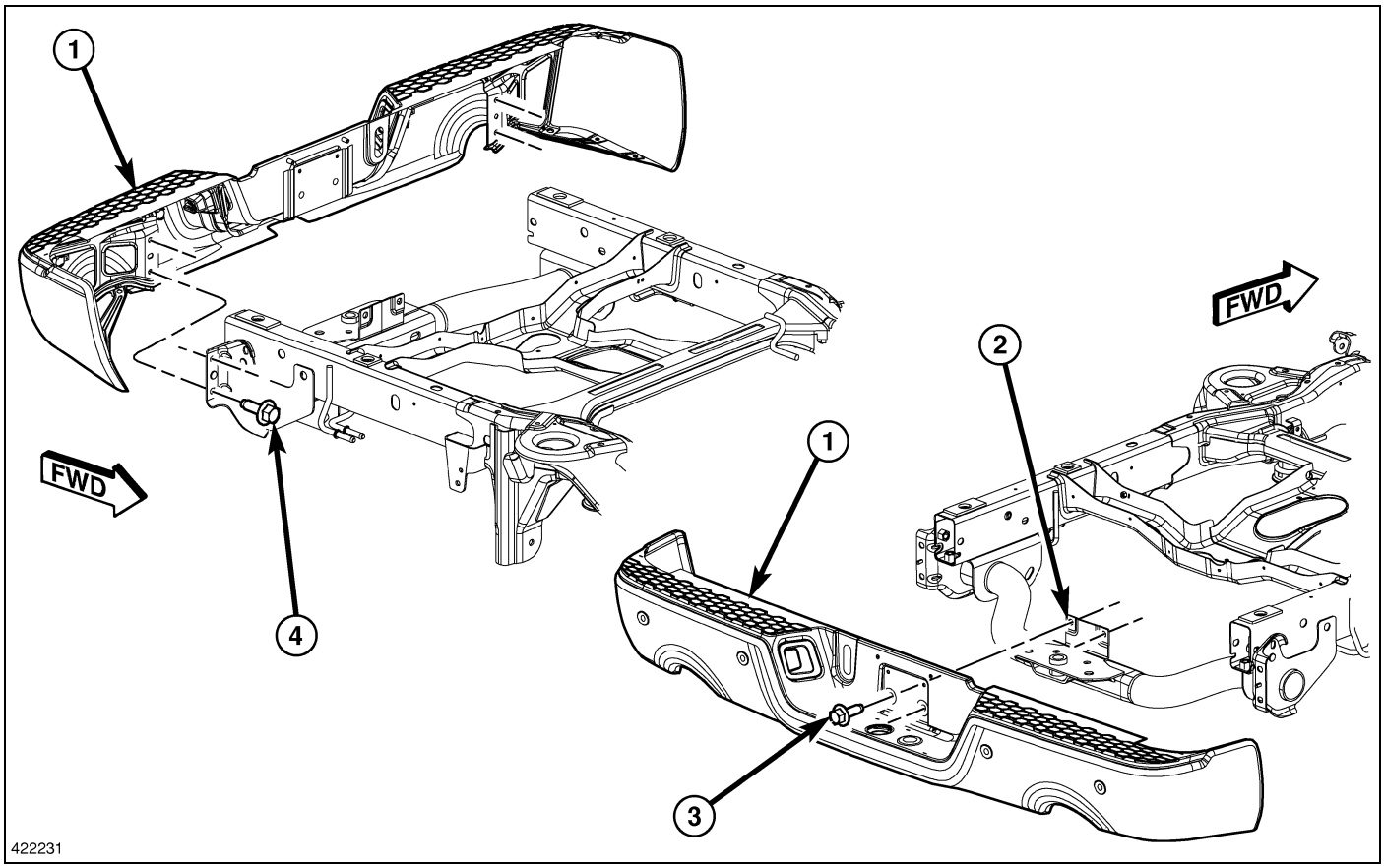

2. Raise and support the vehicle. (Refer to 04 - Vehicle Quick Reference/Hoisting - Standard Procedure)
3. Remove the license plate.
4. Remove the bolts behind the plate (3).
5. Support the bumper with a suitable lifting device.
6. Remove the bolts attaching the bumper support brackets (4) to the trailer hitch (2).

Installation

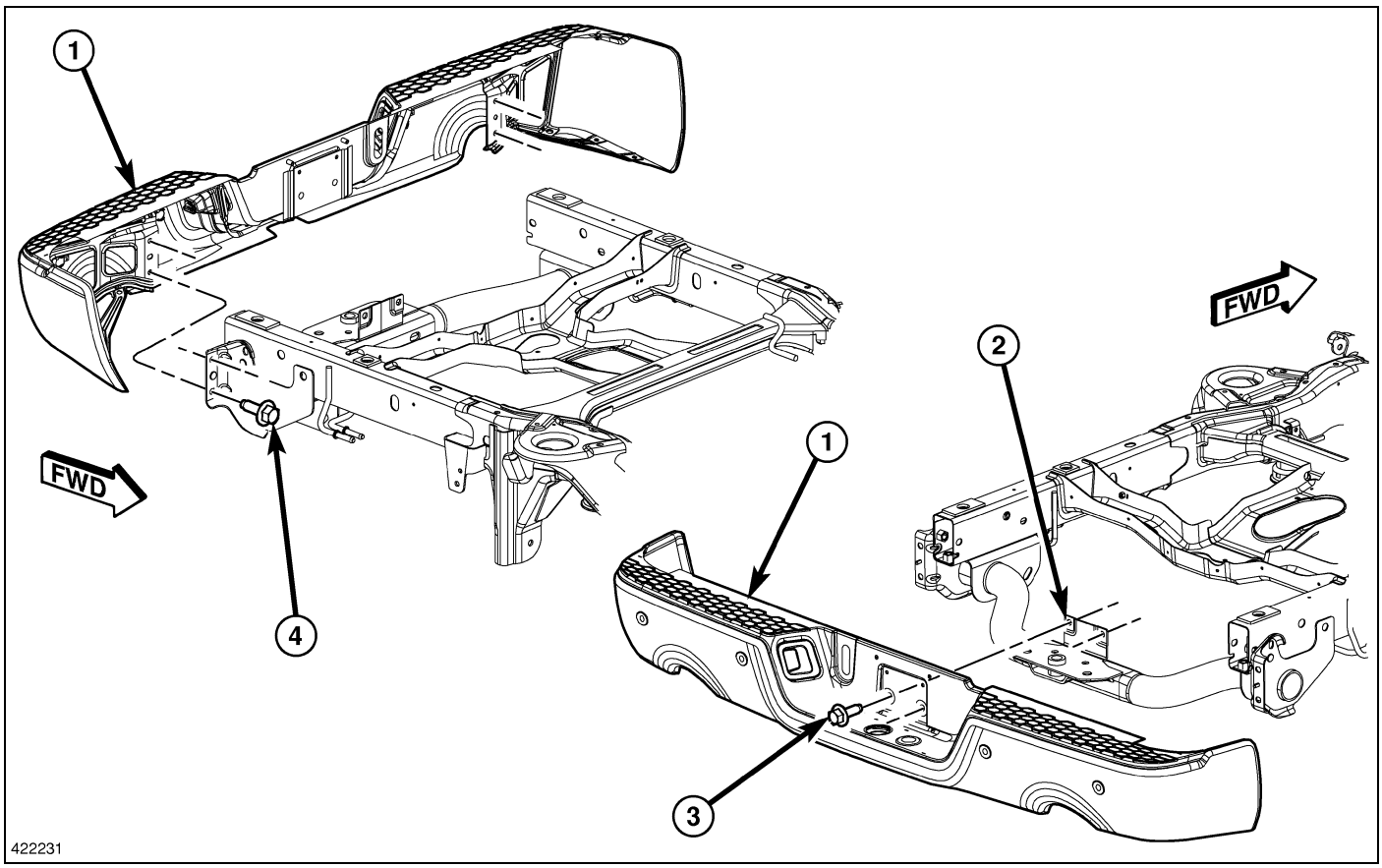

1. Position the bumper (1) onto the vehicle and line up the pins on the sides.
2. Install the bolts (3 and 4).
3. Tighten the bolts (3) to 54 N·m (40 ft. lbs.).
4. Tighten the bolts (4) to 54 N·m (40 ft. lbs.).
5. Connect the electrical connectors (2).

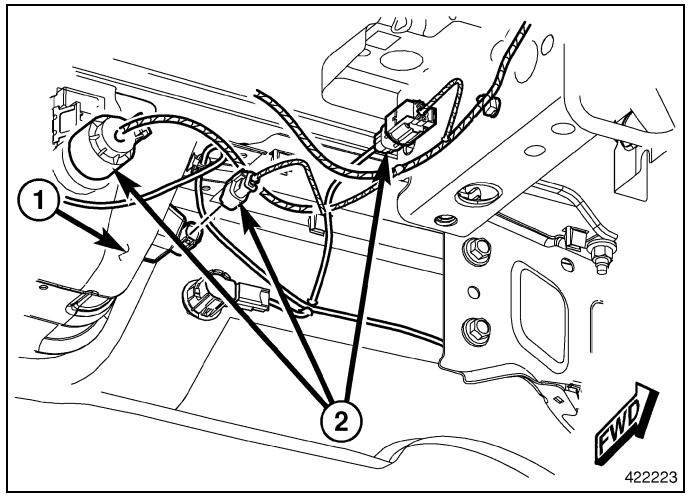

FASCIA, Front

Removal

Upper

NOTE: Sport fascia shown, upper fascia similar.

1. Remove the push pins (3) and position the wheelhouse splash shield (2) aside.

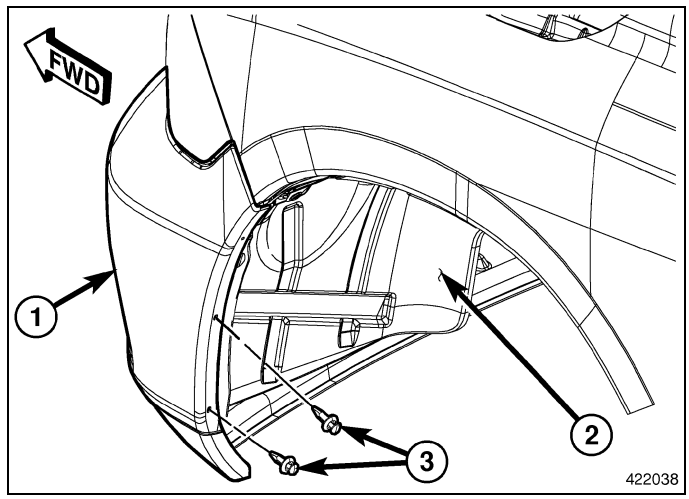

NOTE: Sport fascia shown, upper fascia similar.

2. Remove the fender screws (1).

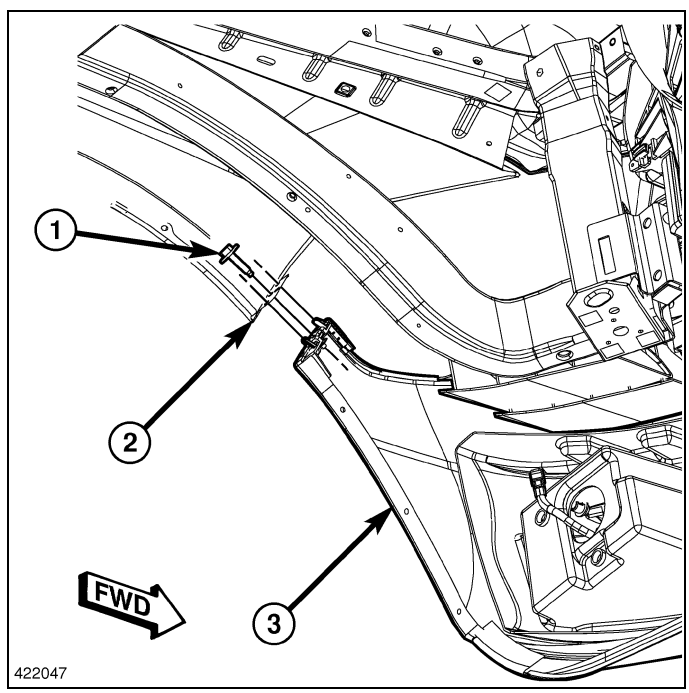

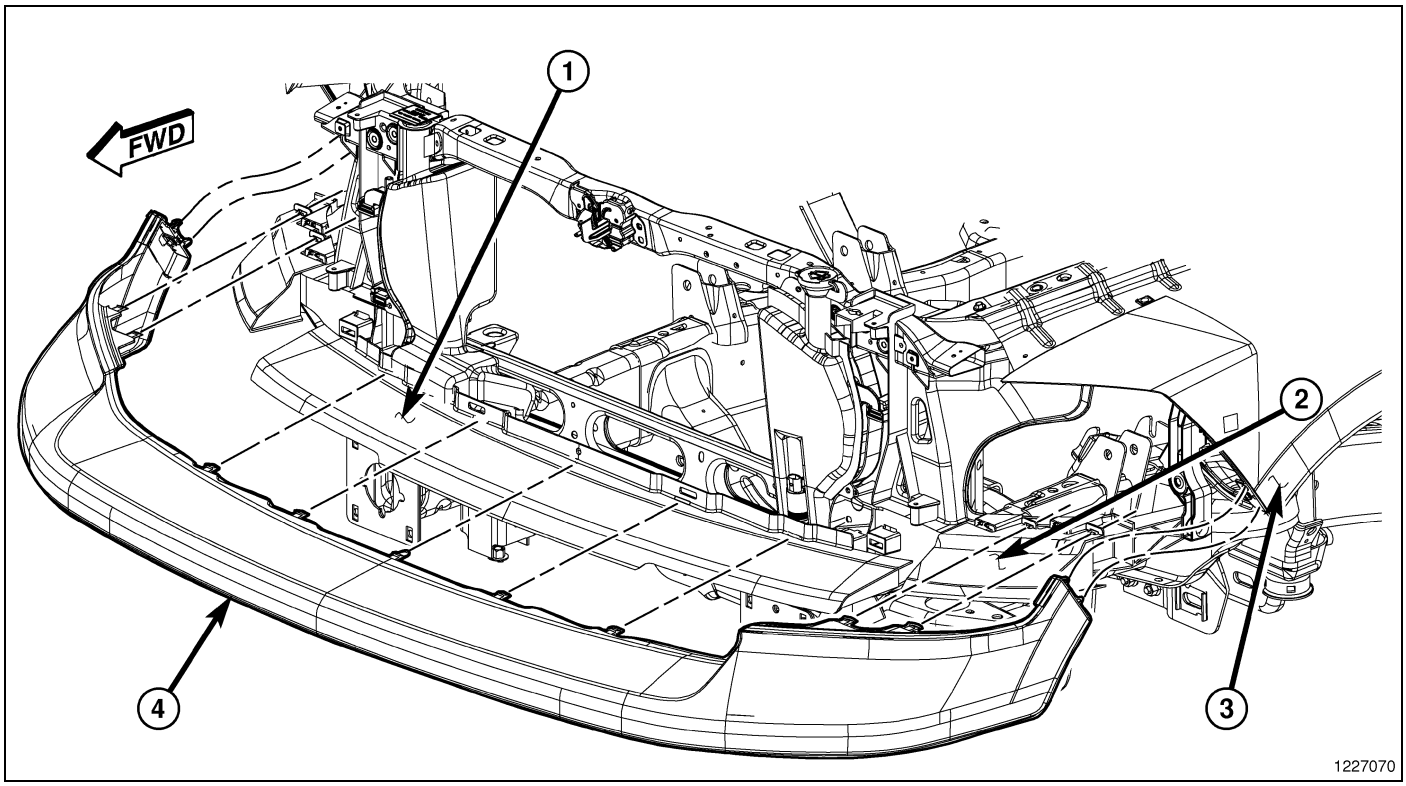

3. Remove the grille.(Refer to 23 - Body/Exterior/GRILLE - Removal)
4. Using trim stick C-4755 or equivalent, separate the upper clips and remove the fascia (4).

Sport

1. Remove the push pins (3) and position aside the wheelhouse splash shields (2).

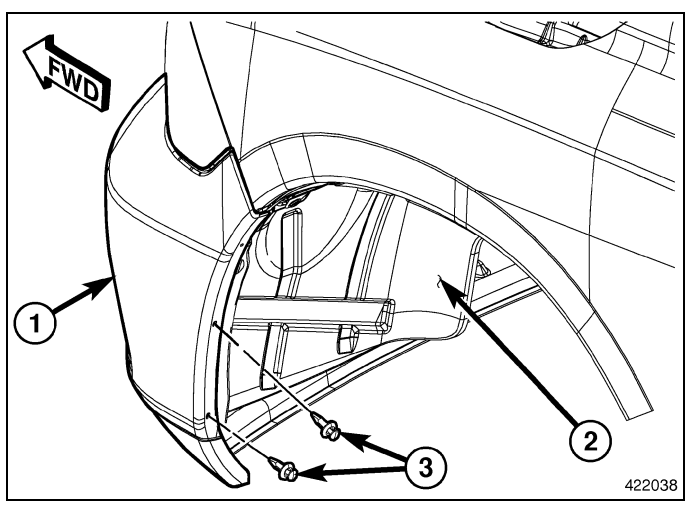

2. Remove the screws (1) and separate the fascia (3) from the fender (2).

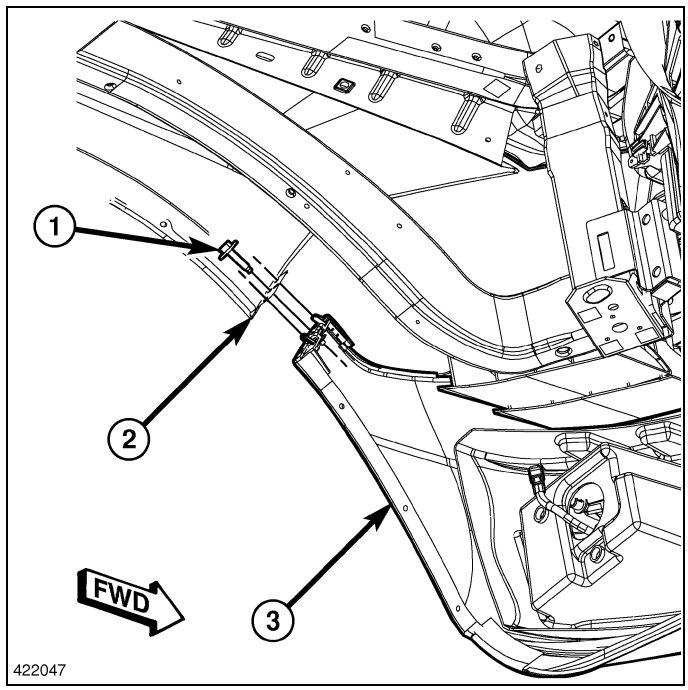

3. Remove the four lower fasteners (2).

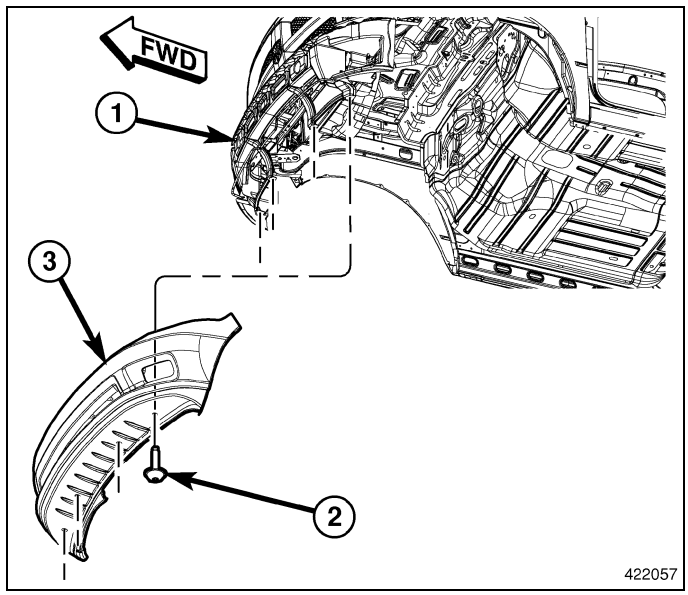

4. Remove the grille.(Refer to 23 - Body/Exterior/GRILLE - Removal)
5. Using trim stick C-4755 or equivalent, separate the upper clips and remove the fascia (4).

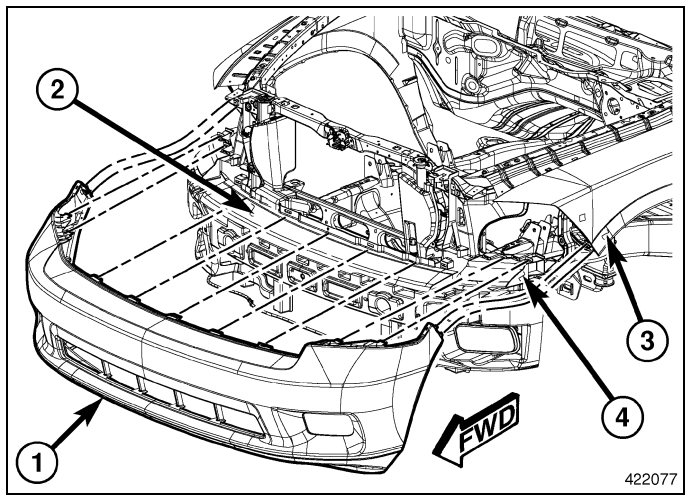

Installation

Upper

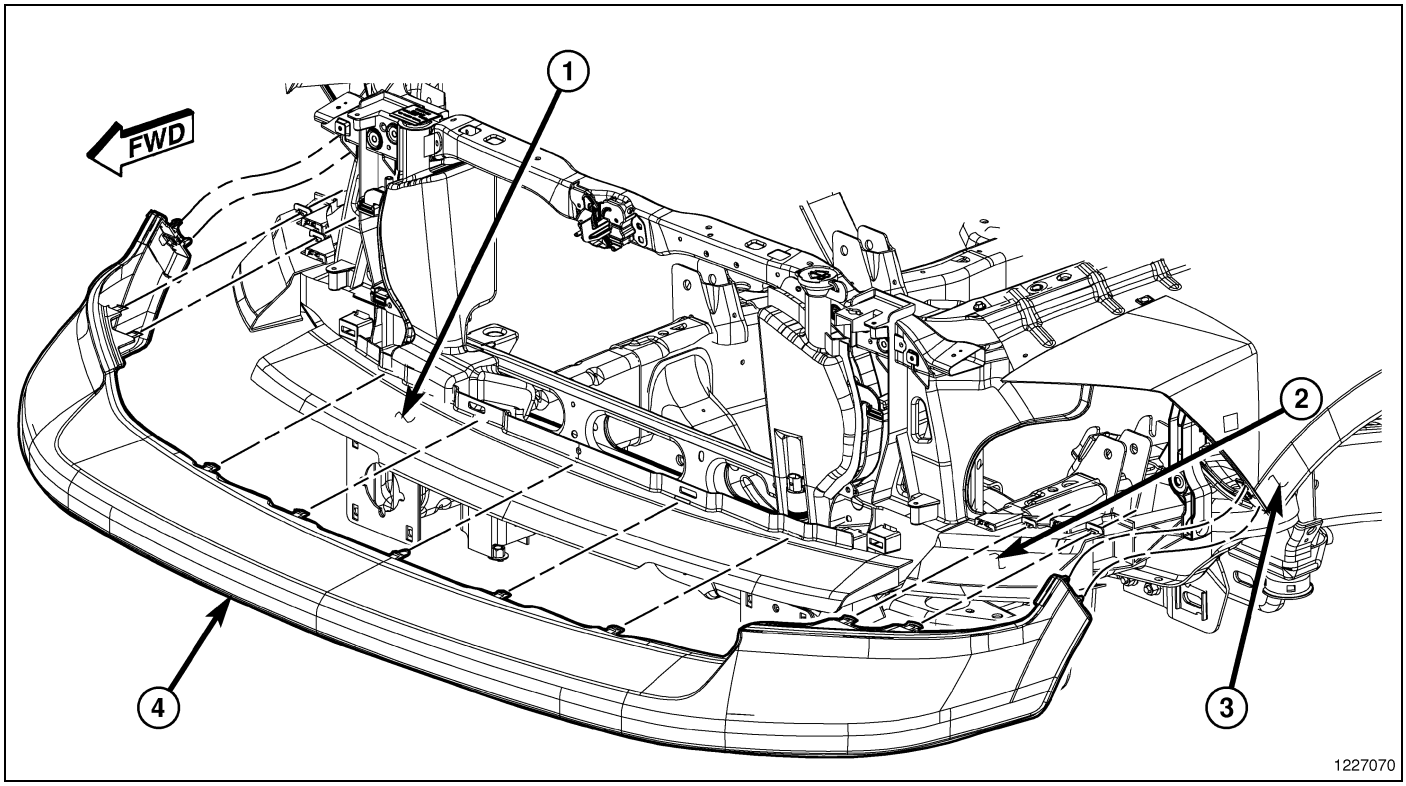

1. Locate the end wings under the headlamp (3) and roll down into position.
2. Position the center locator pin in the center of the fascia to the retainer hole and seat fully.
3. Working from the center out, seat all the clips fully.
4. Install the grille. (Refer to 23 - Body/Exterior/GRILLE - Installation)

NOTE: Sport fascia shown, upper fascia similar.

5. Install the screws (1) attaching the fascia (3) to the fender (2).

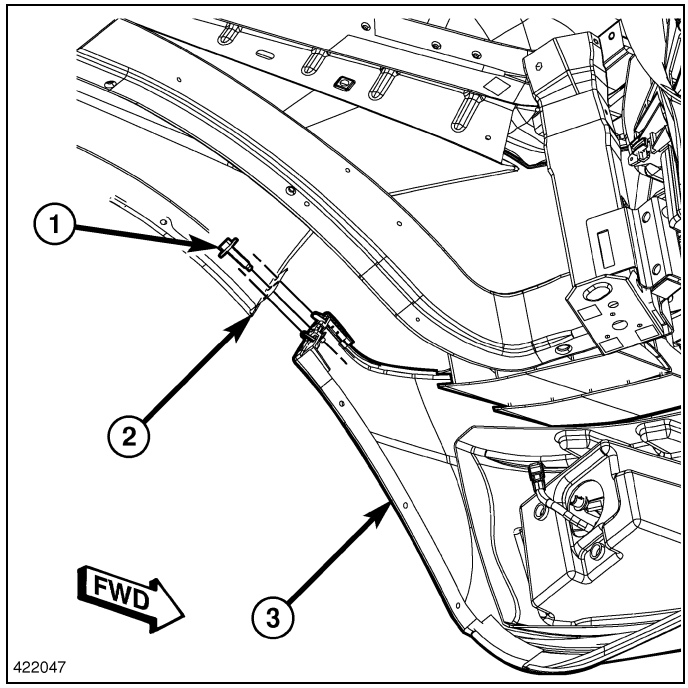

6. Position the wheelhouse splash shield back and install the push pins (3).

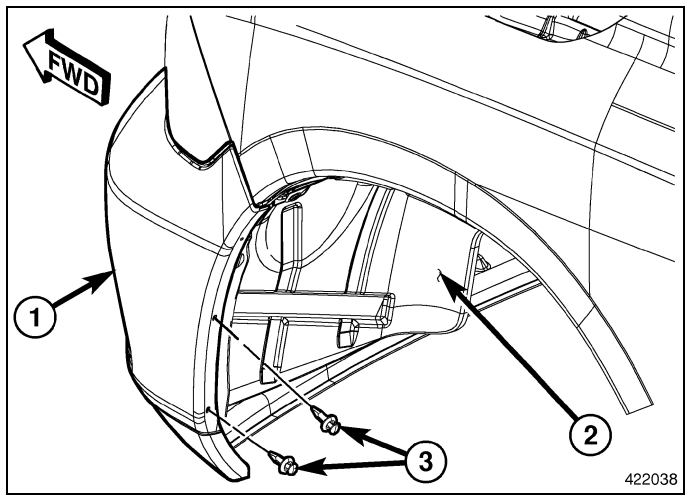

Sport

1. Locate the fascia (1) over the upper surface of the bumper beam (2).
2. Position the center locator pin in the center of the fascia to the retainer hole and seat fully.
3. Pry or bend the outer ears of the fascia (1) around the headlamps and align to the fender (3).
4. Confirm that the fascia (1) and the bumper (2) are lined up correctly and seat the upper clips fully.
5. Install the grille. (Refer to 23 - Body/Exterior/GRILLE - Installation)

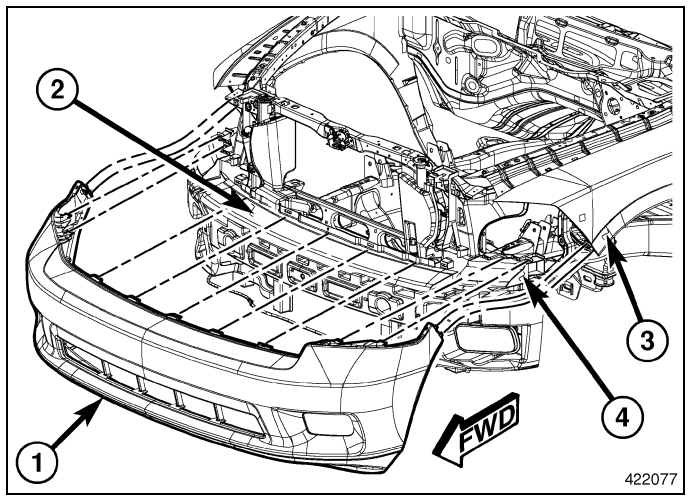

6. Install the four lower fasteners (2).

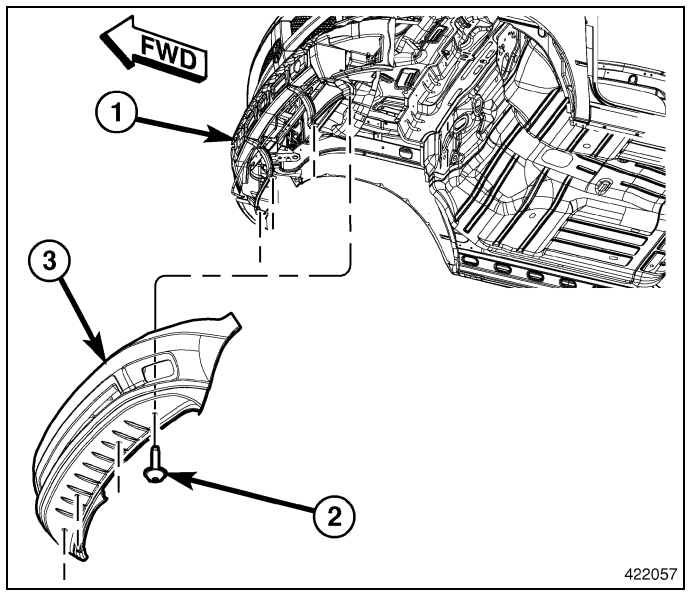

7. Install the screws (1) attaching the fascia (3) to the fender (2).

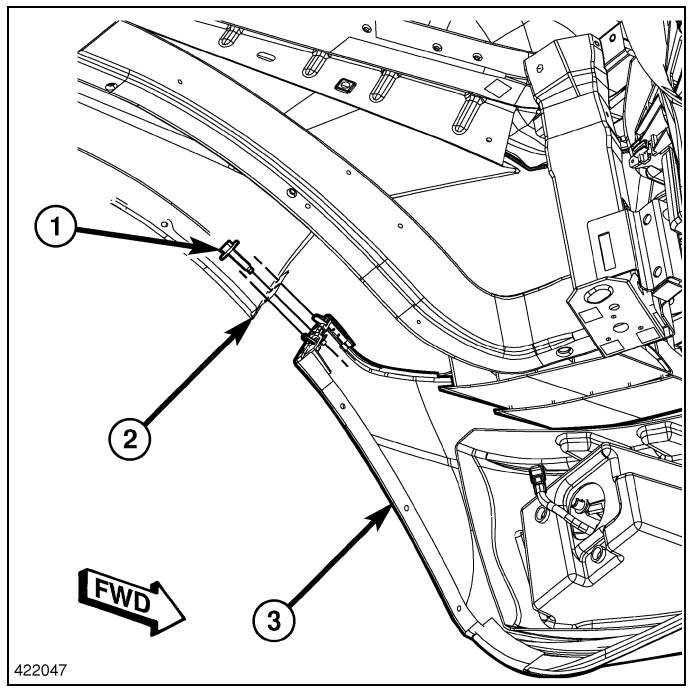

8. Position the wheelhouse splash shield back and install the push pins (3).

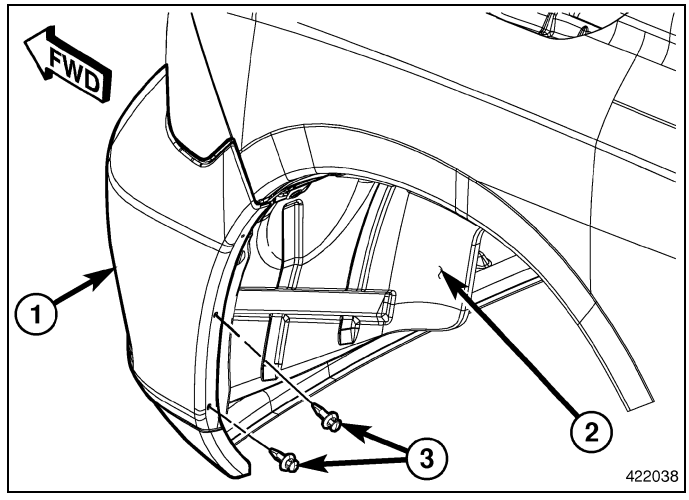

FRAME

TABLE OF CONTENTS

page

FRAME
- WARNING
  - USE OF HEAT DURING REPAIR 18
  - WARNINGS 18
- STANDARD PROCEDURE 19
- SPECIFICATIONS
  - WELD PROCESS 22
  - FRAME DIMENSIONS 23
  - TORQUE 29
- **CROSSMEMBER, FRONT**
  - REMOVAL 29
  - INSTALLATION 30
- **CROSSMEMBER, TRANSMISSION**
  - REMOVAL 31
  - INSTALLATION 33

page

HITCH, TRAILER
- REMOVAL 34
- INSTALLATION 35

HOOK(S), TOW, FRONT
- REMOVAL 35
- INSTALLATION 36

PLATE, SKID, FRONT
- REMOVAL 36
- INSTALLATION 37

PLATE, SKID, TRANSFER CASE
- REMOVAL 37
- INSTALLATION 38

Frame

Warning

USE OF HEAT DURING REPAIR

WARNING: Chrysler Group LLC engineering's position on the use of heat during collision repair is as follows:

- **Any body panel or frame component damaged which is to be repaired and reused, must be repaired using the "cold straightening" method. No heat may be used during the straightening process.**
- **During rough straightening prior to panel replacement, damaged panels or frame components may be heated to assist in body/frame realignment. The application of heat must be constrained to the parts which will be replaced and not allowed to affect any other components.**

This "no heat" recommendation is due to the extensive use of high strength and advanced high strength steels in Chrysler Group LLC products. High-strength materials can be substantially and negatively affected from heat input which will not be obviously known to the repairer or consumer.

Ignoring these recommendations may lead to serious compromises in the ability to protect occupants in a future collision event, reduce the engineered qualities and attributes, or decrease the durability and reliability of the vehicle.

This statement supersedes any previously released information by the Chrysler Group LLC.

Failure to follow these instructions may result in serious or fatal injury.

WARNINGS

WARNING: Chrysler Group LLC engineering's position on the use of heat during collision repair is as follows:

- **Any body panel or frame component damaged which is to be repaired and reused, must be repaired using the "cold straightening" method. No heat may be used during the straightening process.**
- **During rough straightening prior to panel replacement, damaged panels or frame components may be heated to assist in body/frame realignment. The application of heat must be constrained to the parts which will be replaced and not allowed to affect any other components.**

This "no heat" recommendation is due to the extensive use of high strength and advanced high strength steels in Chrysler Group LLC products. High-strength materials can be substantially and negatively affected from heat input which will not be obviously known to the repairer or consumer.

Ignoring these recommendations may lead to serious compromises in the ability to protect occupants in a future collision event, reduce the engineered qualities and attributes, or decrease the durability and reliability of the vehicle.

This statement supersedes any previously released information by the Chrysler Group LLC.

Failure to follow these instructions may result in serious or fatal injury.

Use eye protection when grinding or welding metal. Failure to do this could result in serious personal injury or death.

Before proceeding with frame repair involving grinding or welding, verify that the vehicle fuel system is not leaking or in contact with the repair area. Failure to do this could result in serious personal injury or death.

Do not allow an open flame or heat and metal spatter from arc welding to contact plastic body panels. Fire, explosion can result causing serious personal injury or death.

When welded frame components are replaced, ensure that a complete penetration weld is achieved during installation. If not, dangerous operating conditions can result.

Stand clear of cables or chains on pulling equipment during frame straightening operations. Failure to do this can result in serious personal injury or death.

Do not venture under a hoisted vehicle that is not supported on safety stands. Walking under an unsupported vehicle can result in serious personal injury or death.

1500 series Dodge Ram Trucks (2002 and later) are not designed for snow plow equipment. The front collision repair tips must not be installed on any truck equipped with a snow plow, or even intended to be equipped with a snow plow.

Do not reuse damaged fasteners. The quality of repair would be suspect. Failure to use only production fasteners or fasteners of equivalent hardness can result in loosening or failure of the part. Do not drill any holes

in the frame that are not specifically outlined in this, or in other Chrysler procedures as frame rail failure can result causing serious personal injury or death.

Standard Procedure

CAUTION: This procedure is designed to replace the front frame rail tips that have been damaged in the crush initiator zones. Prior to any cutting, the vehicle must be mounted on the appropriate frame repair equipment ("frame rack"), checked with three dimensional measuring equipment, and the necessary pull corrections made without the use of heat. For further information see Frame Dimensions, (Refer to 13 - Frame and Bumpers/Frame - Specifications).

- **If damage remains in the frame beyond the area covered by this service part after the pull, the frame must be replaced in its entirety.**
- **If damage to the front body structure is evident, repair the Front End Sheet Metal (FESM) fender rails as necessary.**
- **Inspect all body mount bolts for damage and repair if necessary.**

CAUTION: Inspect the spare tire winch assembly for damage. If any one or more of the following are evident, replace the winch assembly.

- **Indications of cracked or bulging plastic.**
- **Housing flanges are bent or cracked.**
- **If winch was loose before repair.**
- **If the rivet heads are separated from the housing in any way.**

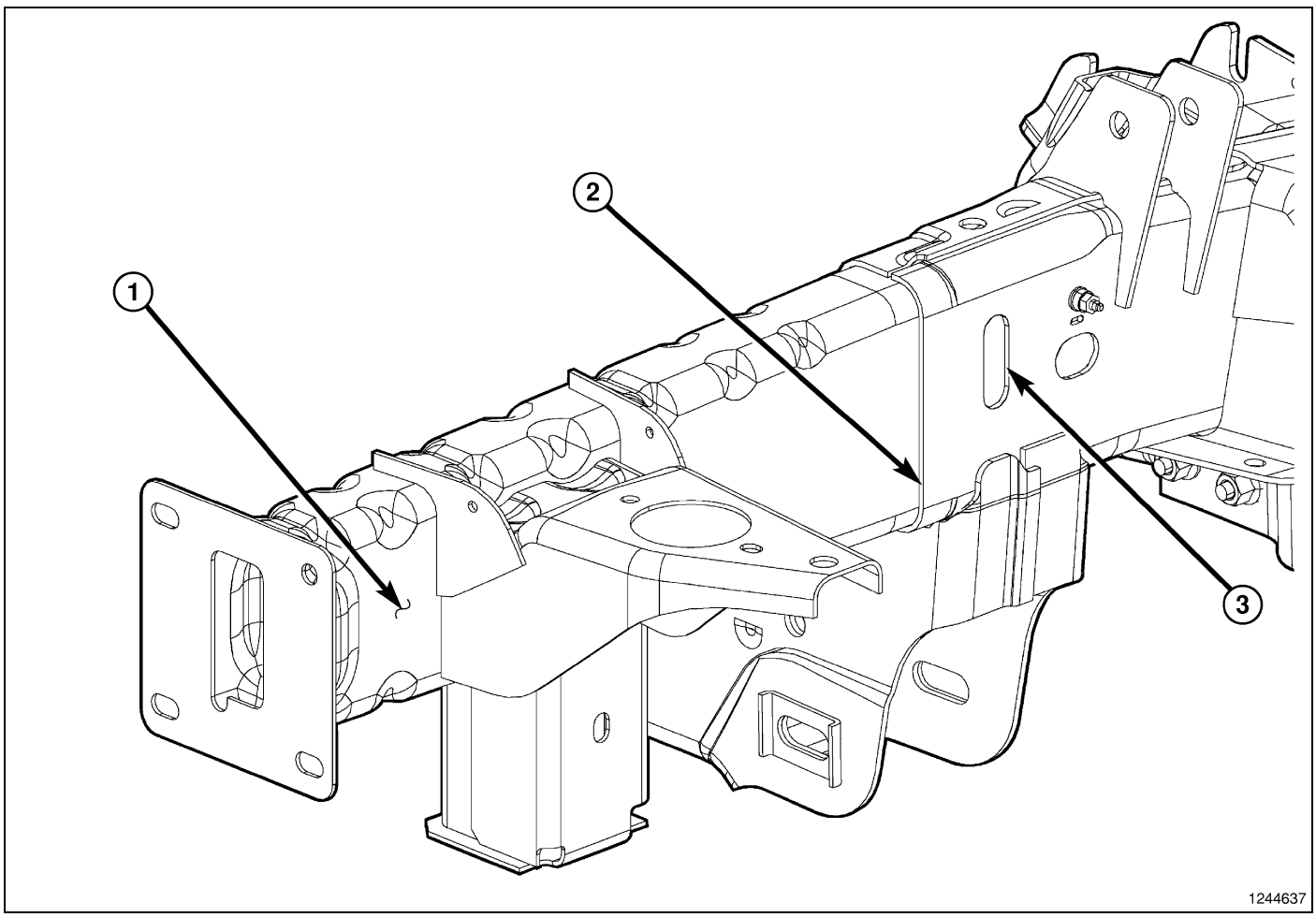

1. Before proceeding with this repair procedure review the required service warnings and precautions. (Refer to 13 - Frame and Bumpers/Frame - Warning)
2. Remove all parts needed to gain access to the repair area. (Refer to appropriate Service Information - Removal Procedures.)

CAUTION: Do not use an oxy-acetylene cutting torch to remove the damaged frame rail tip. This is due to the inaccurate nature of the cut-line and the fact that the high temperatures achieved during flame cutting will change the metal characteristics and may weaken the frame and/or repair location.

3. Using a plasma cutter, reciprocating saw, or equivalent tool, carefully cut and remove the damaged frame rail tip (1). Cut at the forward edge of the weld at the tip to frame joint (2), do not cut the main frame rail.
4. Using a plasma cutter, or die grinder, remove the puddle weld (3) that attaches the frame tip to the frame rail.

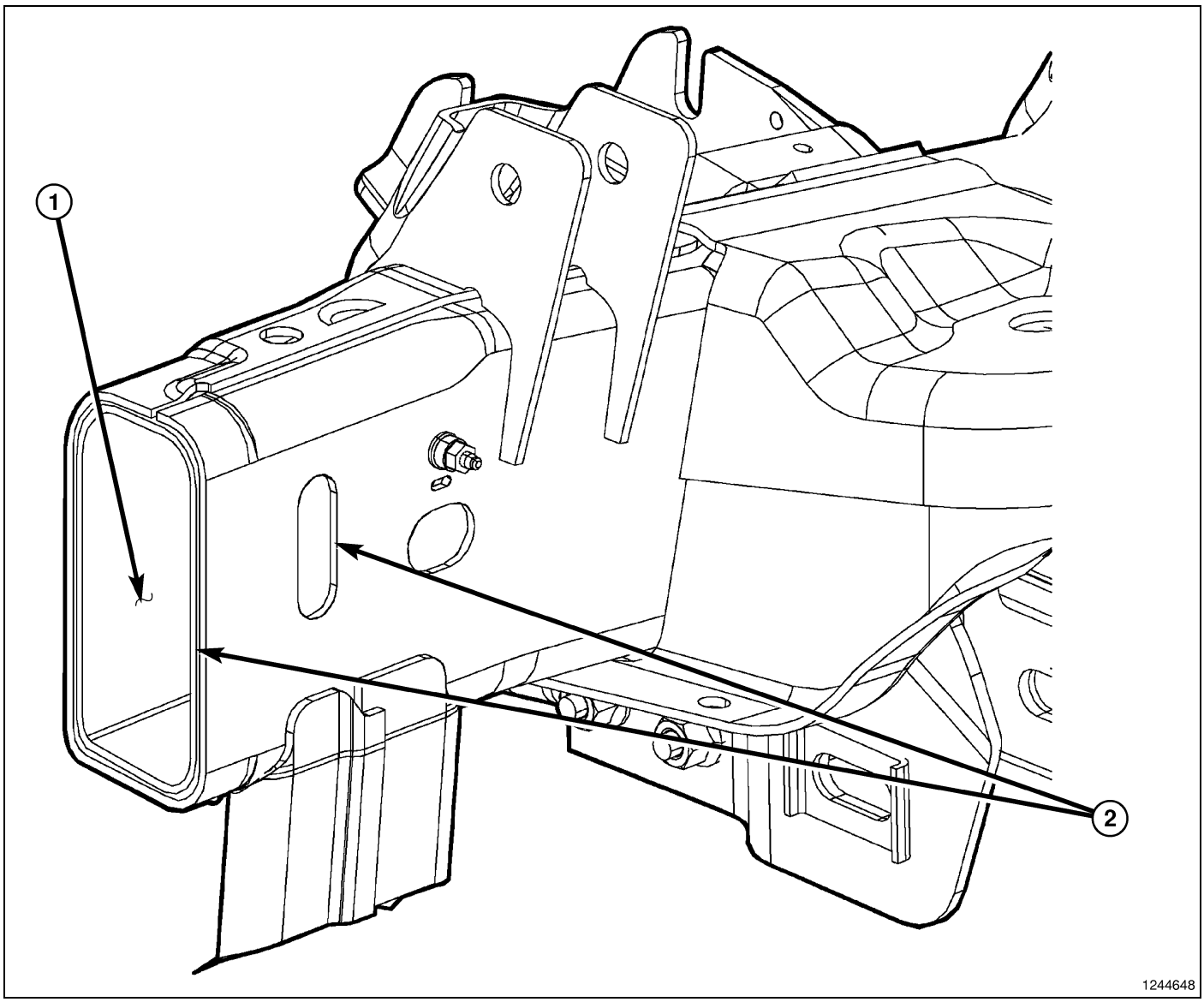

5. With the puddle weld removed, grind any remaining weld and remove the remaining piece of the frame tip (1) from within the frame rail and discard.
6. Smooth and square the cut edges of the original frame.
7. Remove any burrs at the hole and frame edge (2).

CAUTION: Shield the surrounding area and components from exposure to the welding spatter and heat.

8. Dry fit the new rail to verify alignment and make any adjustments as necessary.
9. Remove all internal and external OEM e-coat within 25 mm (1.0 in.) of the weld joint on the replacement tip and the existing frame rail.
10. Using the appropriate measuring equipment, verify the front end sheet metal bracket's location and adjust if required. (Refer to 13 - Frame and Bumpers/Frame - Specifications)
11. When correctly aligned, tack weld the new rail tip into place.

12. Confirm that the alignment of the replacement frame rail tip is within specifications. (Refer to 13 - Frame and Bumpers/Frame - Specifications)
13. Apply ring-fillet weld (3) into the ring-fillet weld hole on the replacement frame tip.
14. Start the ring-fillet welds at location (1) and follow around the circumference of the ring-fillet weld hole and end weld overlapping start point (2).

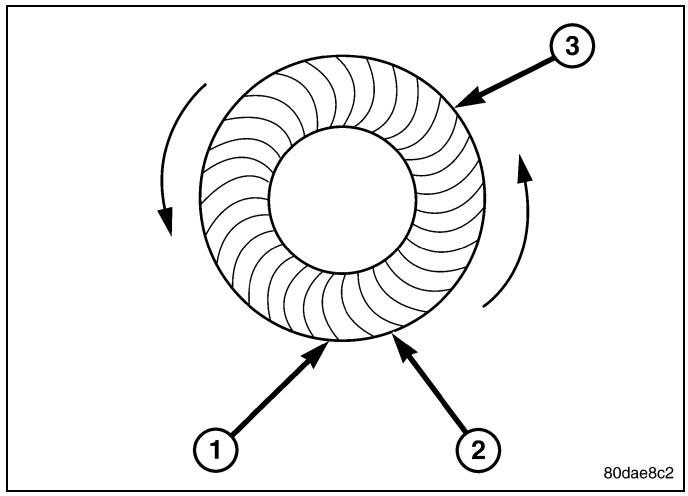

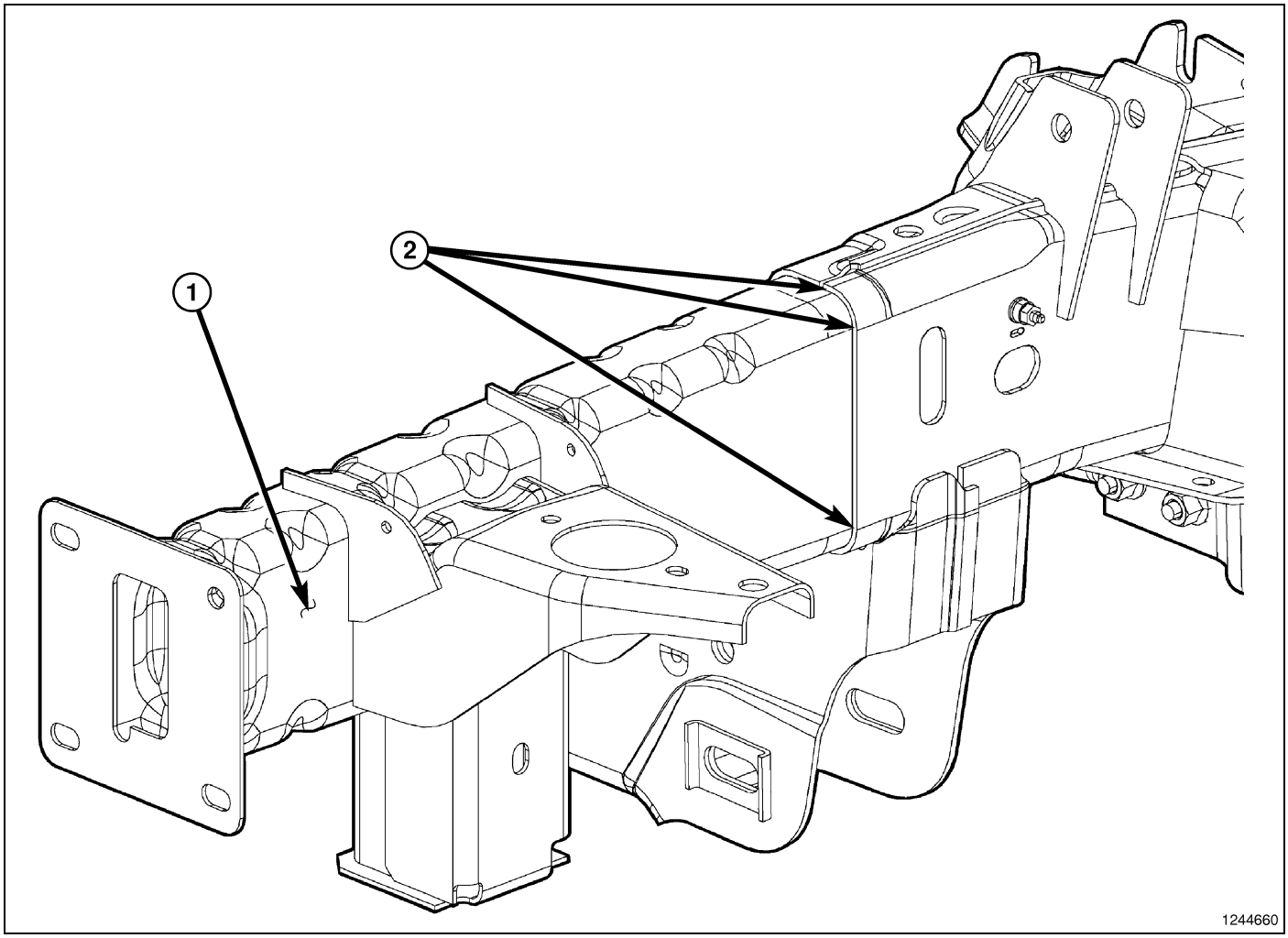

15. The weld at the tip to frame joint (2) should be performed in a skip (stitch) type method to minimize the heat buildup and frame distortion, utilizing the Weld Process Specifications. The preferred method is GMAW (MIG).(Refer to 13 - Frame and Bumpers/Frame - Specifications).
16. Weld the joint, one quadrant at a time, switching to the opposite side of the frame rail for each quadrant.
17. Confirm alignment of the replacement frame rail tip (1). (Refer to 13 - Frame and Bumpers/Frame - Specifications)

NOTE: Any burned surface coatings will need to be removed prior to application of corrosion preventative coatings.

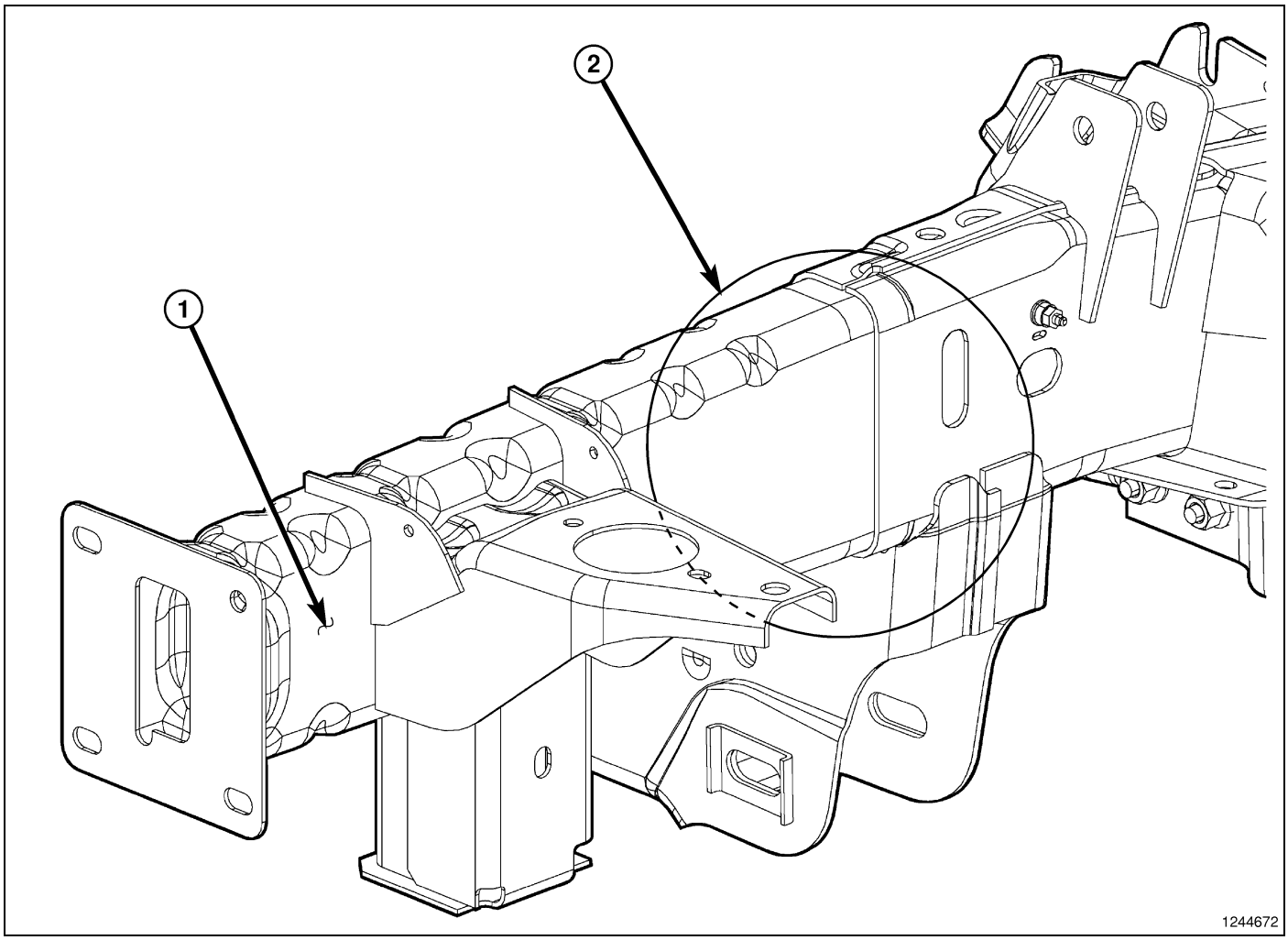

NOTE: Using Mopar Cavity wax kit (part # 68042969AA) / Undercoating kit (part # 68042967AA) or equivalent.

18. Dress the welded area (2) and apply corrosion resistant coatings inside and out.
    a. Apply etch-primer to the inside of the frame rail repair area.
    b. Inside the rail, inject a creeping wax based rust inhibitor compound through the existing holes in the frame ensuring 100% coverage including the space between the original frame rail and the replacement rail tip (1) using Mopar Cavity wax kit (part # 68042969AA) / Undercoating kit (part # 68042967AA) or equivalent.
    c. Apply a durable top coat to the outside of the repair area (2).
19. Complete other repairs.
20. Install all removed parts. (Refer to appropriate Service Information – Installation Procedures.)

Specifications

WELD PROCESS

COMPONENT PARTS	TRUCK FRAME		BODYSHELL EXTERIOR & UNDERBODY PANELS			
	Zinc and Zinc Iron Alloy coated sheet steels					
WELDING PROCESS	GAS METAL ARC (Note: 1)	FLUX CORED ARC	GAS METAL ARC (Note: 1)	MIG BRAZE (Note: 2)	GAS METAL ARC (Note: 1)	FLUX CORED ARC
Material Type	High Strength and Structural Quality Steels which includes HSLA, Martensitic, and Dual Phase materials					

COMPONENT PARTS	TRUCK FRAME		BODYSHELL EXTERIOR & UNDERBODY PANELS			
Material Thickness Range	2 mm - 4 mm		0.6 mm - 1.02 mm		>1.02 mm - 3.0 mm	
ELECTRODE TYPE (AWS SPEC. A5.18)	AWS CLASS. ER70S-6	AWS CLASS. E71T-11 (Note 3)	AWS CLASS. ER70S-6	AWS CLASS. ERCuSi - A Silicon Bronze	AWS CLASS. ER70S-6	AWS CLASS. E71T-11 (Note 3)
ELECTRODE SIZE	0.035	0.045	0.023 - 0.025	0.035	0.035	0.045
ELECTRODE MAKER	Lincoln®	Lincoln® NR-211-MP	Lincoln®		Lincoln®	Lincoln® NR-211-MP
WIRE FEED SPEED (in/min)	245-250 Vertical Down 70-90 Flat & Horizontal	110 Vertical Down 70-90 Flat & Horizontal	95-115 All Welds	150-155 Flat & Horizontal	245-250 Vertical Down 70-90 Flat & Horizontal	110 Vertical Down 70-90 Flat & Horizontal
TRAVEL SPEED (in/min)			10			
VOLTAGE	19-20	15-18	16-19	18-19	19-20	15-18
POLARITY	DCEP	DCEN	DCEP	DCEP	DCEP	DCEN
GAS FLOW (cfh)	25-35	N/A	25-35	25-35	25-35	N/A
ELECTRICAL STICKOUT (in)	1/2 - 5/8	3/8 - 1/2	1/2 - 5/8	5/8 - 3/4	1/2- 5/8	3/8 - 1/2
GAS TYPE	75% Ar 25% CO2	N/A	75% Ar 25% CO2	100% Ar	75% Ar 25% CO2	N/A
TYPE OF ARC TRANSFER	Short Circuit		Short Circuit	Pulse	Short Circuit	

These Procedure Specifications are appropriate as of this publication. Procedures may be superceeded with new spec's at a later date.

Always process to the thinner material thickness (TMT)

All persons performing welding must be qualified to weld in all positions.

NOTE:

1. Must remove Zinc Coating on both sides of metal at the weld zone.

2. MIG Braze welding process requires use of Pulse Arc® or STT® welding machine.

3. Must use Lincoln® product since E 71T-11 product differs from other suppliers.

FRAME DIMENSIONS

NOTE: Frame dimensions are listed in metric scale. All dimensions are from center to center of Principal Locating Point (PLP), or from center to center of PLP and fastener location.

VEHICLE PREPARATION

Position the vehicle on a level work surface. Using screw or bottle jacks, adjust the vehicle PLP heights to the specified dimension above a level work surface. Vertical dimensions can be taken from the work surface to the locations indicated were applicable.

INDEX

DESCRIPTION	FIGURE
Front View – All	(Fig. 1)
120.5 In. Wheelbase – Regular Cab – 6.3 Ft. Box	(Fig. 2)
140.5 In. Wheelbase – Regular Cab – 8.0 Ft. Box	(Fig. 3)
140.5 In. Wheelbase – Quad Cab – 6.3 Ft. Box	(Fig. 4)
140.5 In. Wheelbase – Crew Cab – 5.7 Ft. Box	(Fig. 5)

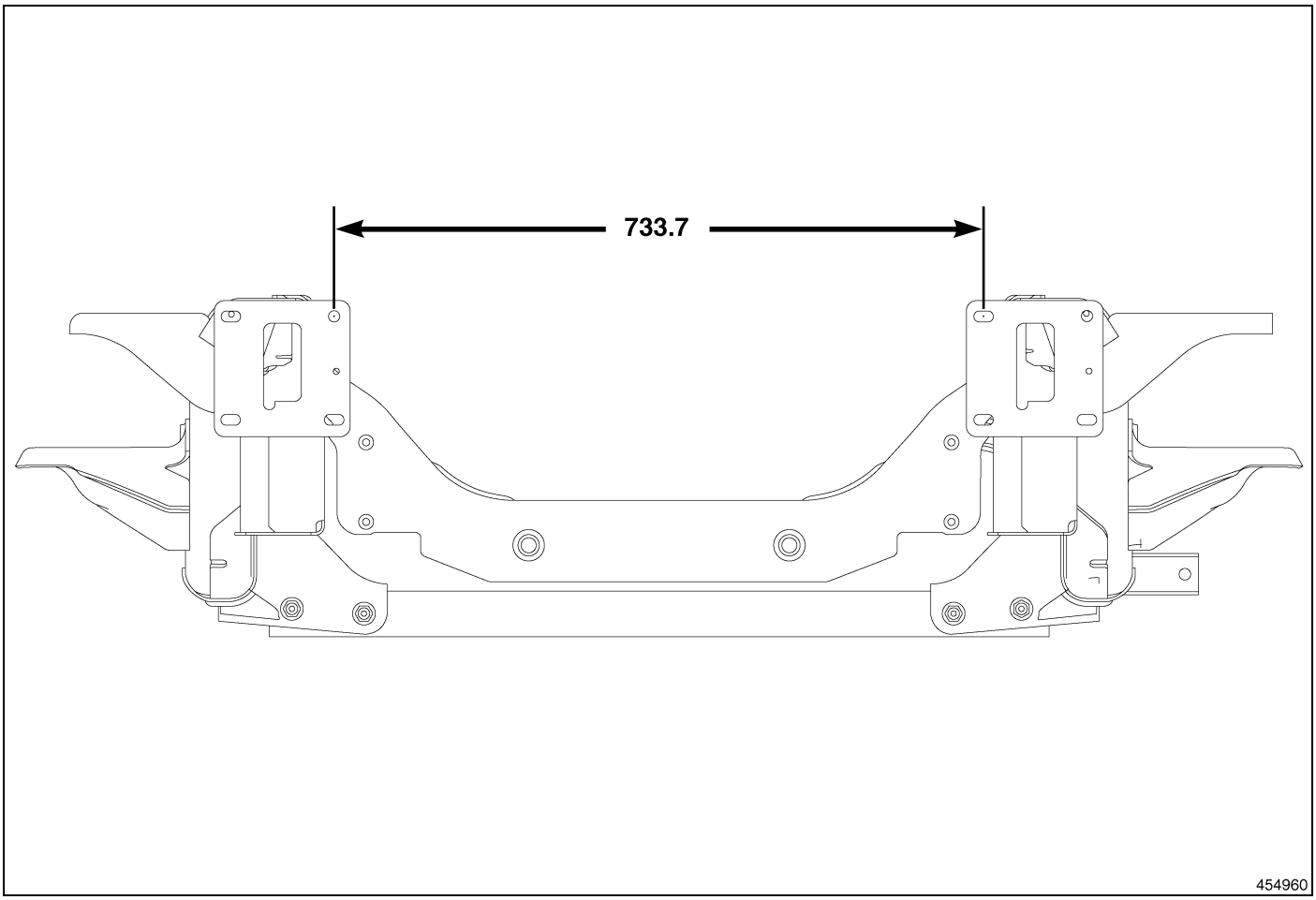

Fig. 1 Front View – All

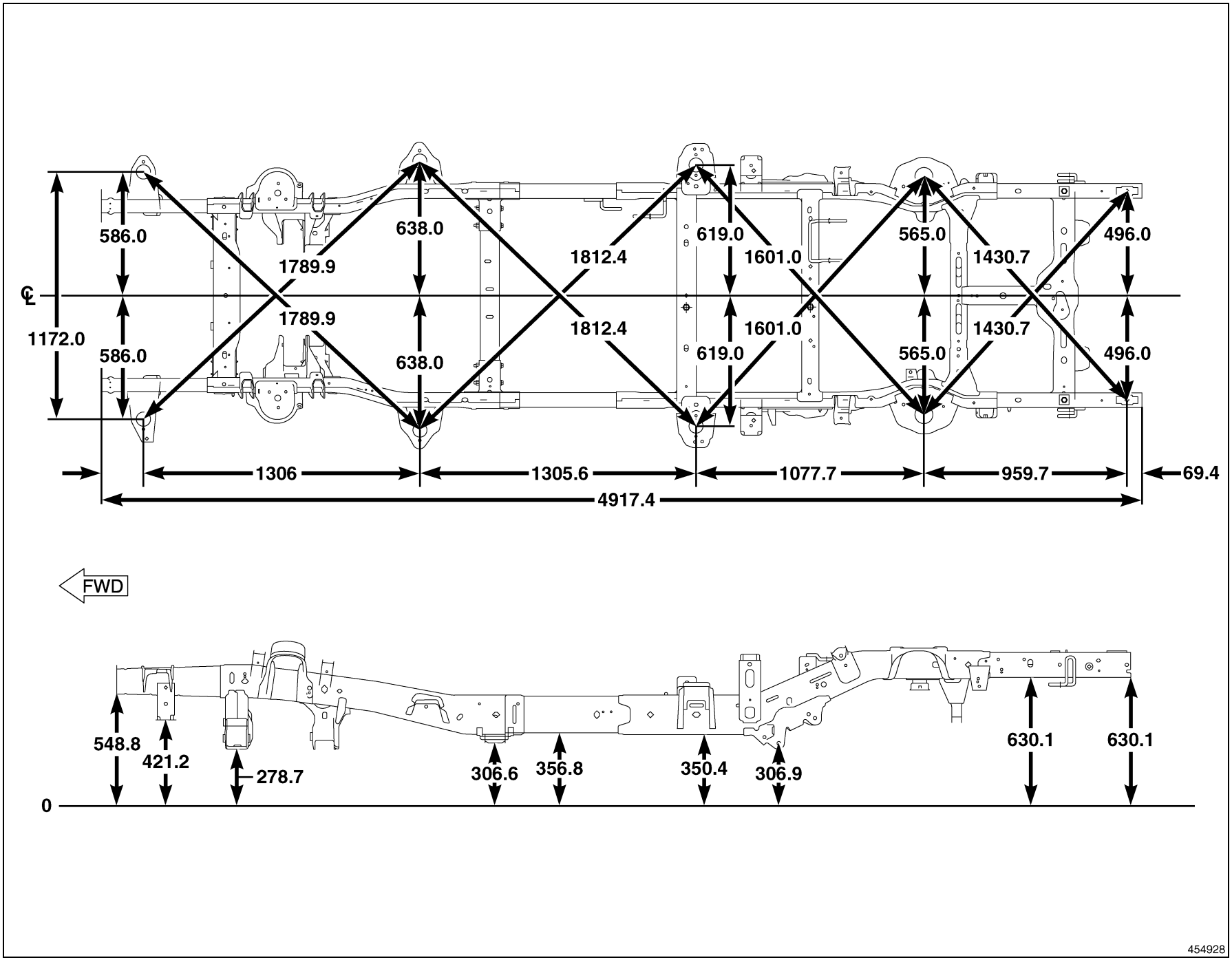

Fig. 2 120.5 In. Wheelbase – Regular Cab – 6.3 Ft. Box

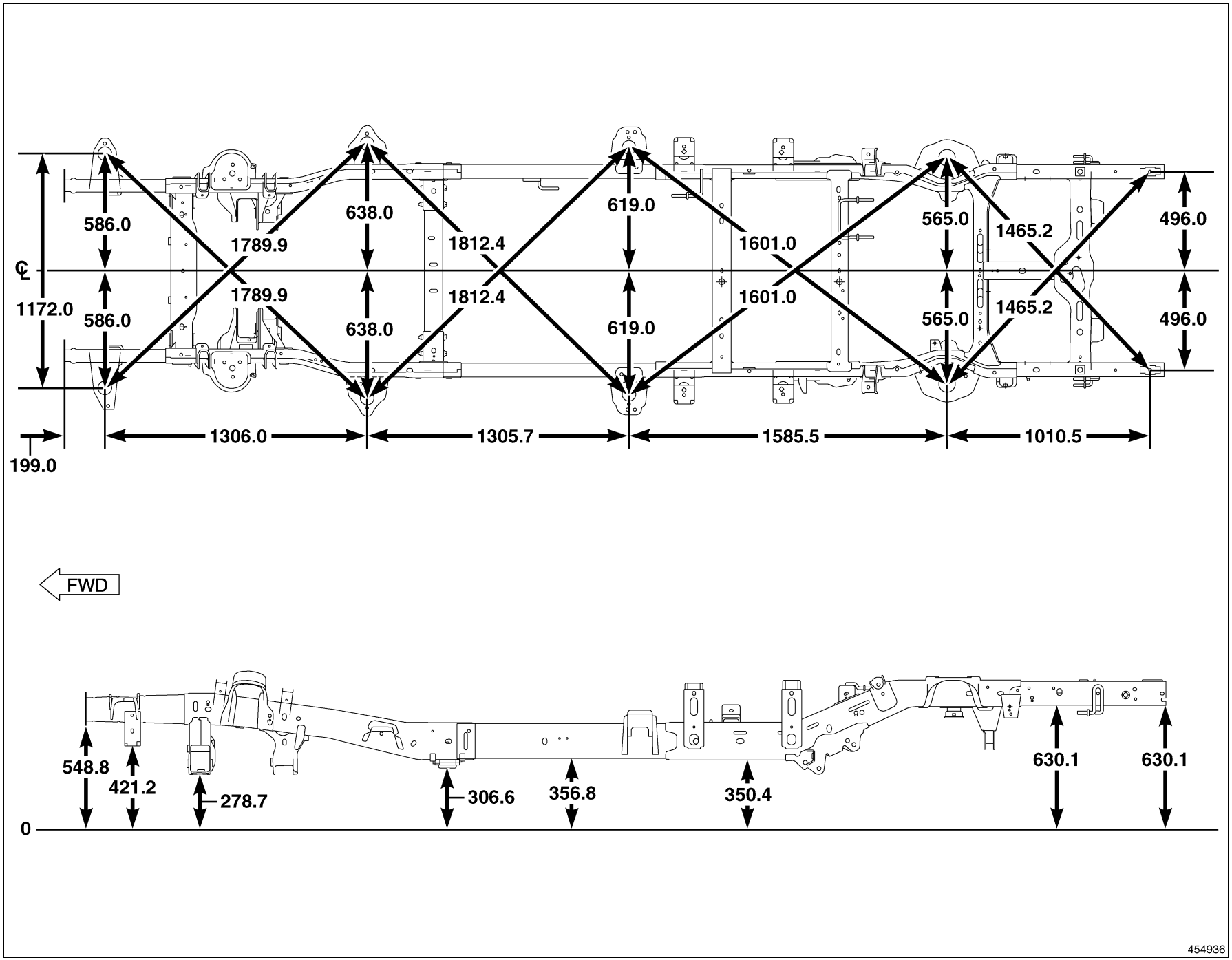

Fig. 3 140.5 In. Wheelbase – Regular Cab – 8.0 Ft. Box

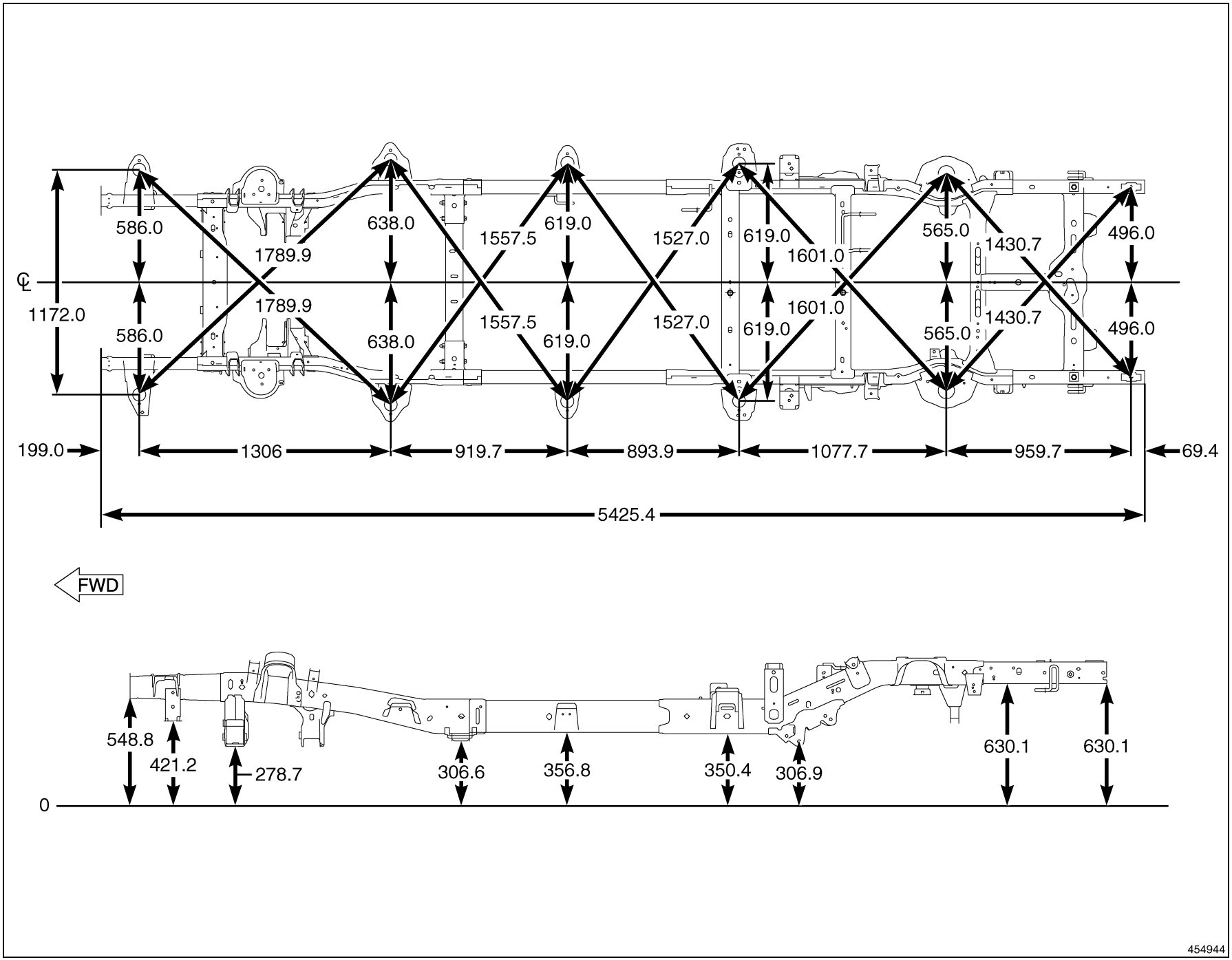

Fig. 4 140.5 In. Wheelbase – Quad Cab – 6.3 Ft. Box

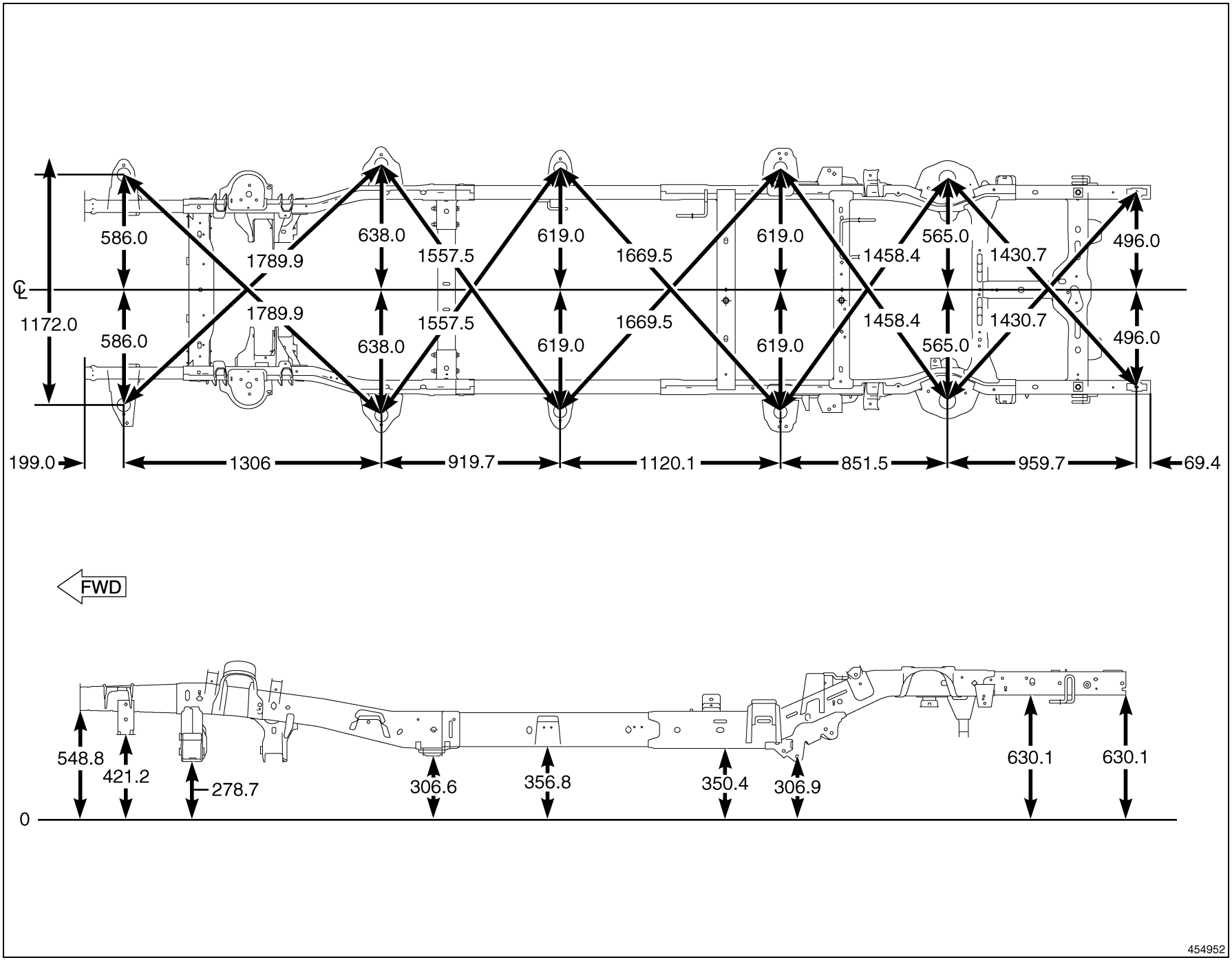

Fig. 5 140.5 In. Wheelbase – Crew Cab – 5.7 Ft. Box

TORQUE

Description	N·m	Ft. Lbs	In. Lbs.
Front Skid Plate Bolts	18	13	—
Front Tow Hook Bolts - 1500 Light Duty	85	63	—
Lower Control Arm Crossmember Bolts/Nuts	85	63	—
Trailer Hitch Bolts	190	140	—
Transfer Case Skid Plate Bolts	18	13	—
Transmission Crossmember	102	75	—
Transmission Mount to Crossmember Nuts	61	45	—
Transmission Mount to Crossmember Nuts - 2500 - 5500 Heavy Duty	122	90	—

CROSSMEMBER, Front

Removal

1. Raise and support the vehicle. (Refer to 04 - Vehicle Quick Reference/Hoisting - Standard Procedure)
2. Remove the front skid plate (2). (Refer to 13 - Frame and Bumpers/Frame/PLATE, Skid - Removal)

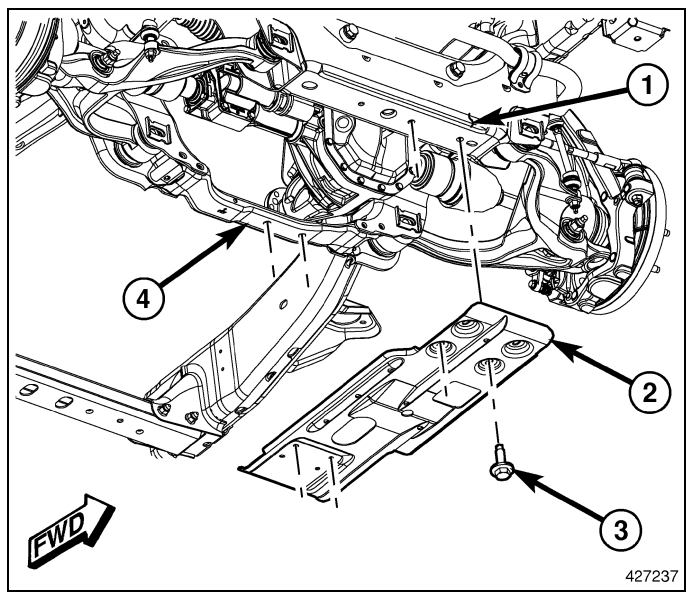

3. Remove the bolts (1) and remove the crossmember (3).

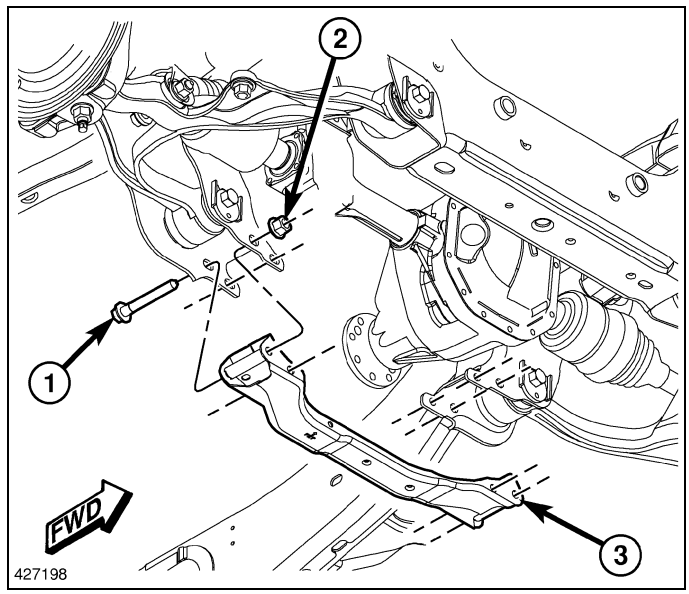

Installation

1. Install the crossmember (3).
2. Install the bolts (1).

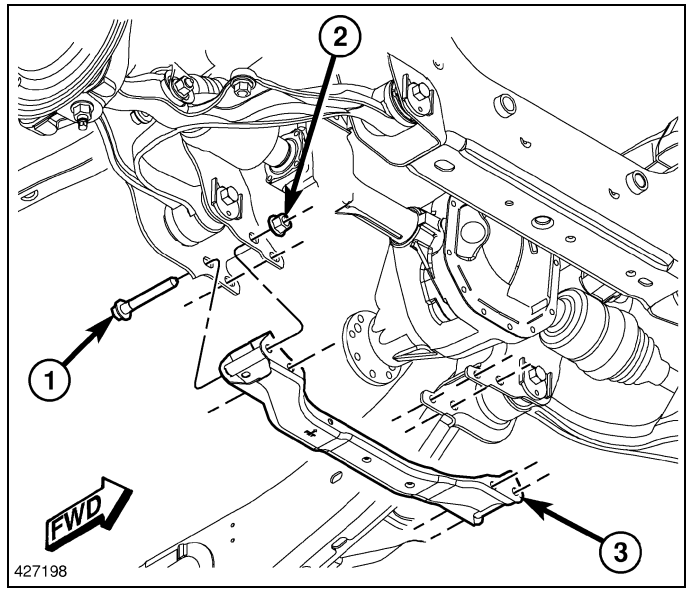

3. Install the front skid plate, if equipped (2). (Refer to 13 - Frame and Bumpers/Frame/PLATE, Skid - Installation)

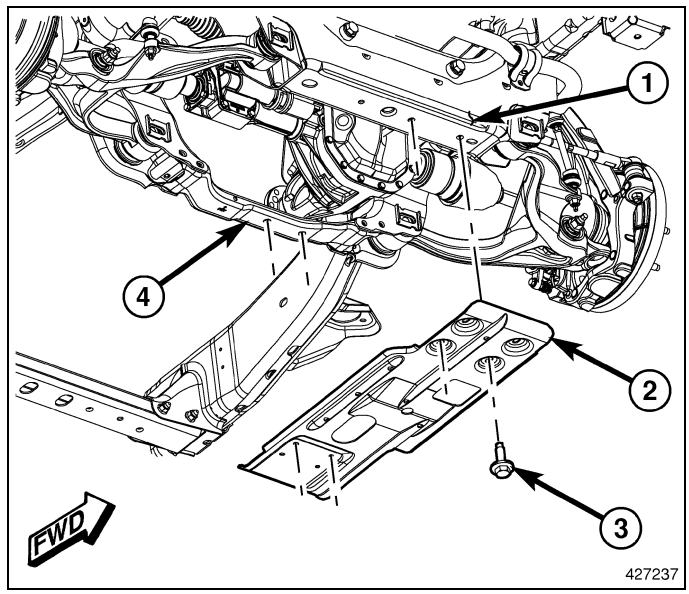

CROSSMEMBER, Transmission

Removal

1. Raise and support the vehicle. (Refer to 04 - Vehicle Quick Reference/Hoisting - Standard Procedure)
2. Remove the transfer case skid plate(4), if equipped. (Refer to 13 - Frame and Bumpers/Frame/PLATE, Skid - Removal)

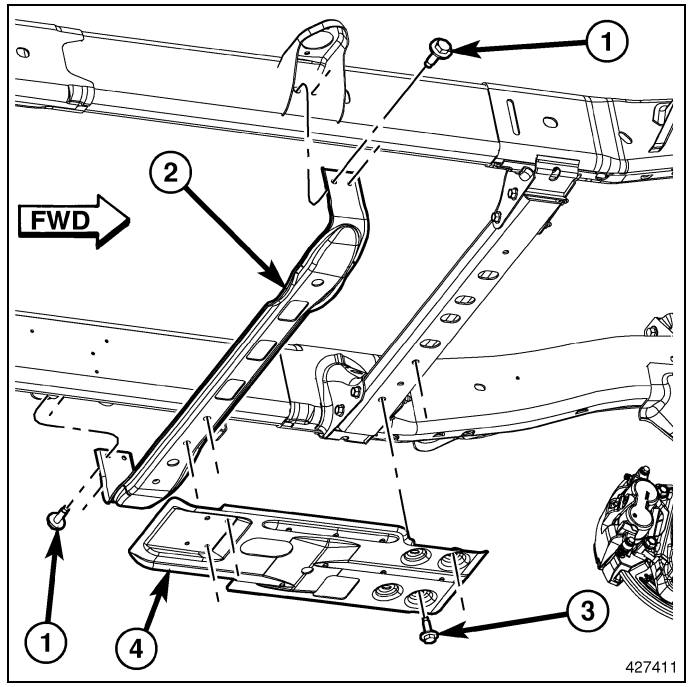

3. Remove the nuts (3) fastening the transmission mount (1) to the crossmember (2).

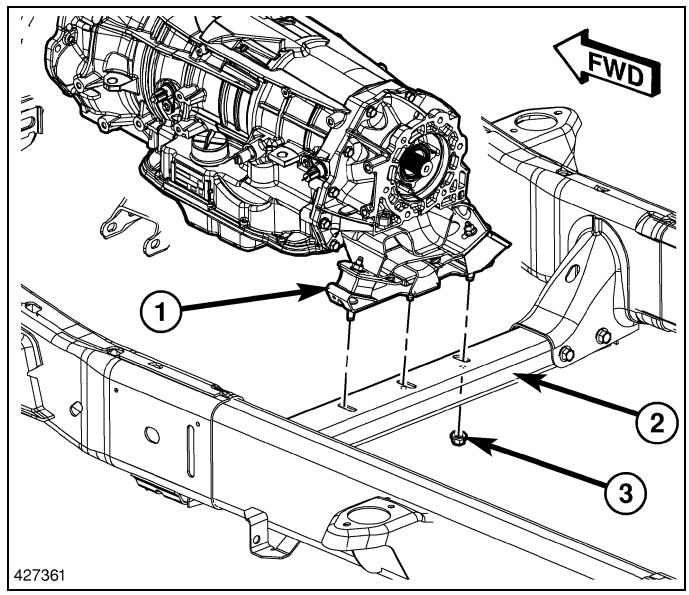

4. Support the transmission with a transmission jack or suitable lifting device.
5. Remove the four bolts (1) and remove the crossmember (2).

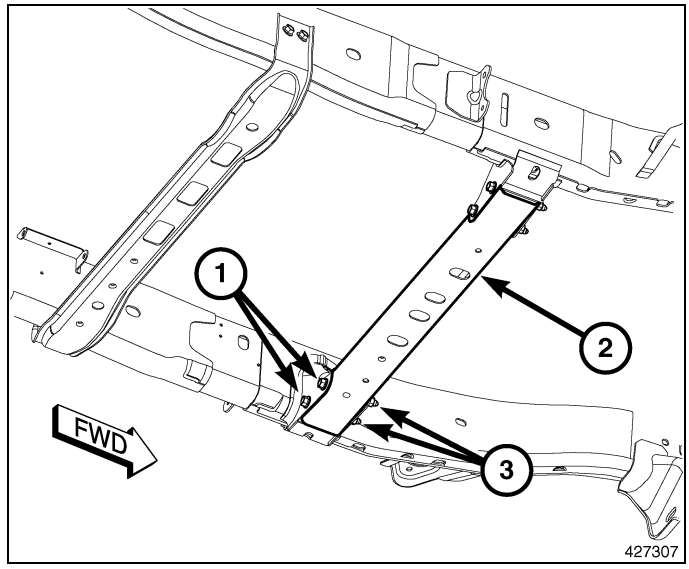

Installation

1. Install the crossmember (2) and the bolts (1). Tighten the bolts to 102 N·m (75 ft. lbs.).

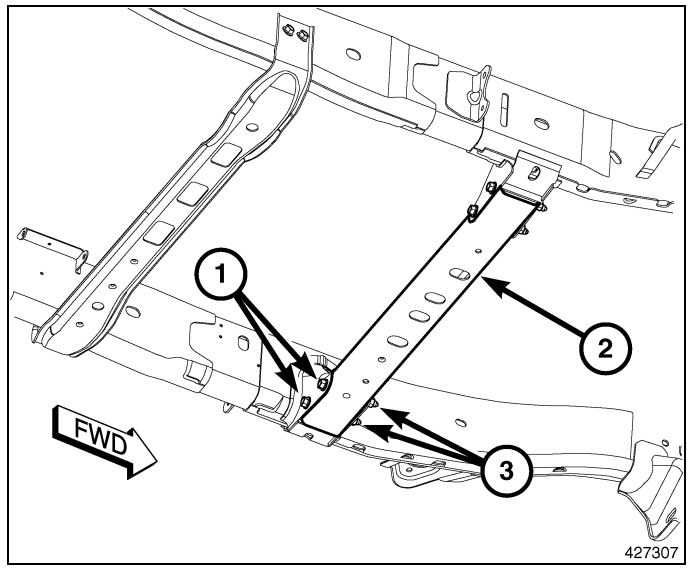

2. Remove the transmission support and install the transmission mount nuts (3).
3. Tighten the nuts (3) to 61 N·m (45 ft. lbs.).

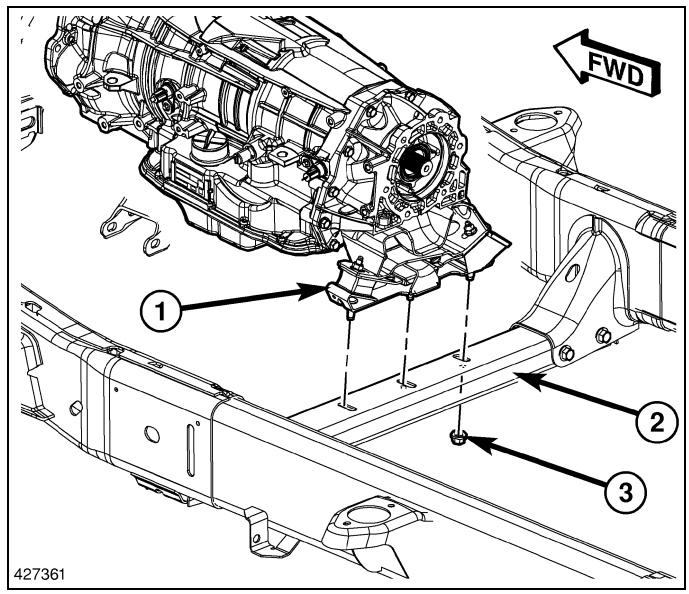

4. Install the transfer case skid plate (4), if equipped.(Refer to 13 - Frame and Bumpers/Frame/PLATE, Skid - Installation)

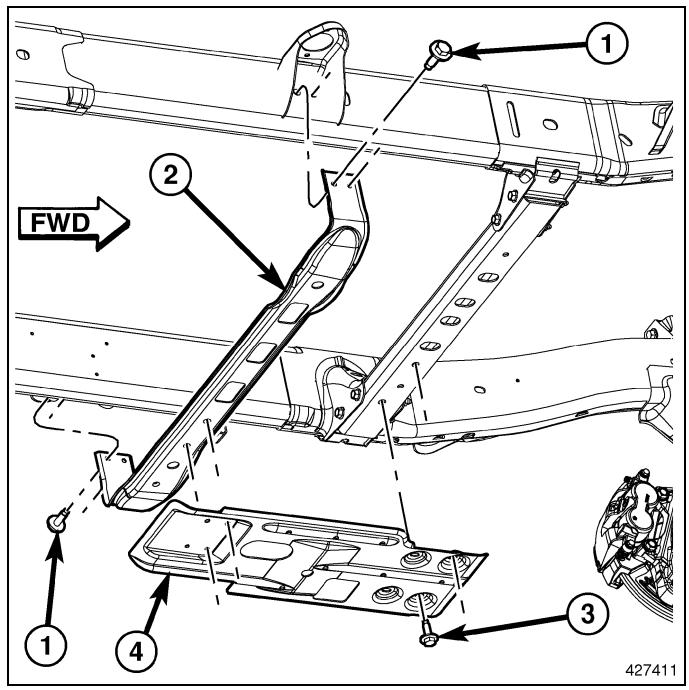

HITCH, Trailer

Removal

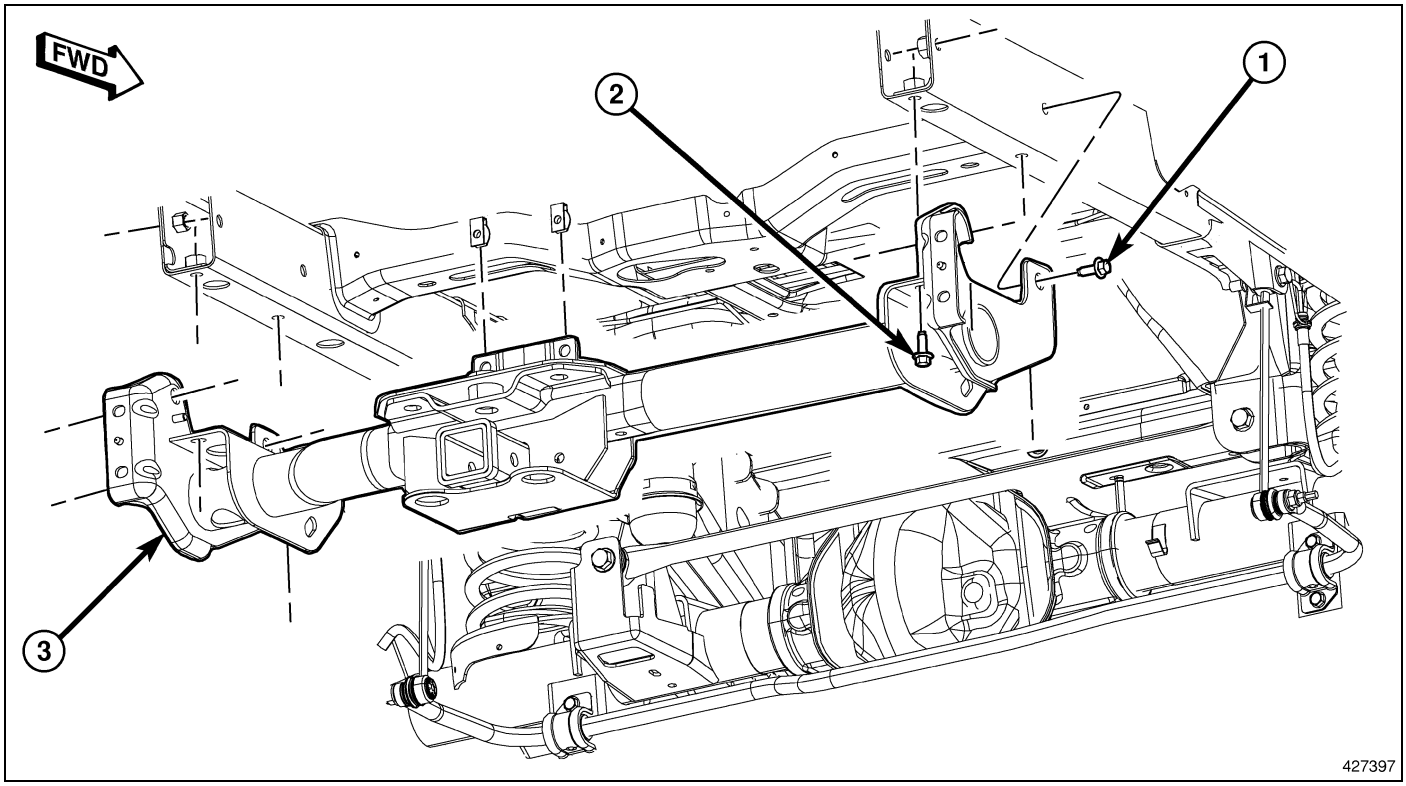

1. Remove the rear bumper (Refer to 13 - Frame and Bumpers/Bumpers/BUMPER, Rear - Removal).
2. Remove the hitch bolts (1).
3. Support the hitch (3) with a suitable lifting device and remove the remaining hitch bolts (2).

Installation

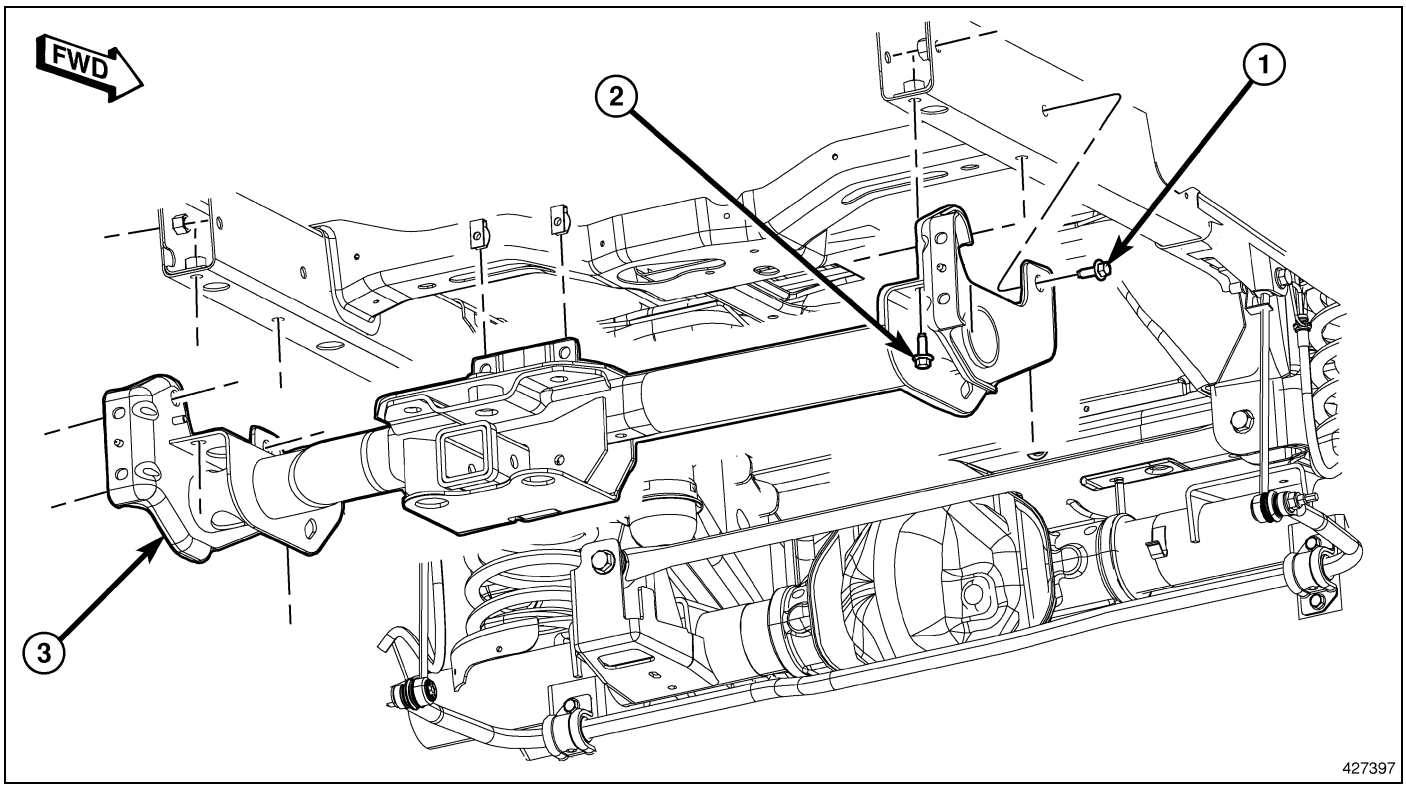

1. Install the hitch (3) and install the four bolts (2).
2. Install the four bolts (1).
3. Tighten the bolts (2) to 190 N·m (140 ft. lbs.).
4. Tighten the bolts (1) to 190 N·m (140 ft. lbs.).
5. Install the rear bumper. (Refer to 13 - Frame and Bumpers/Bumpers/BUMPER, Rear - Installation)

HOOK(S), Tow, Front

Removal

1. Remove the front bumper. (Refer to 13 - Frame and Bumpers/Bumpers/BUMPER, Front - Removal)
2. Remove the bolts (3) and remove the tow hook assembly (2).

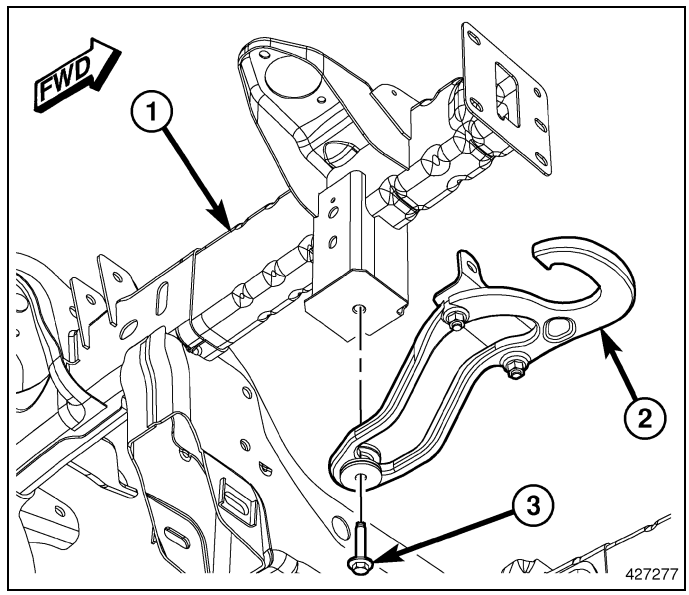

Installation

1. Install the tow hook (2) onto the frame tip (1) and install the bolt (3).
2. Make sure the hook is positioned fully against the bumper mount and tighten the bolt (3) to 85 N·m (63 ft. lbs.)
3. Install the front bumper. (Refer to 13 - Frame and Bumpers/Bumpers/BUMPER, Front - Installation)

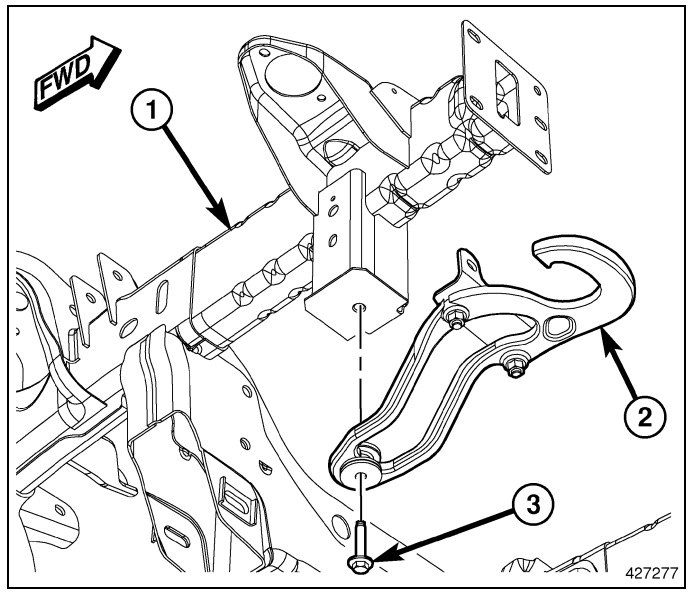

PLATE, Skid, Front

Removal

1. Raise and support the vehicle. (Refer to 04 - Vehicle Quick Reference/Hoisting - Standard Procedure)
2. Remove the bolts (3).
3. Remove the skid plate (2).

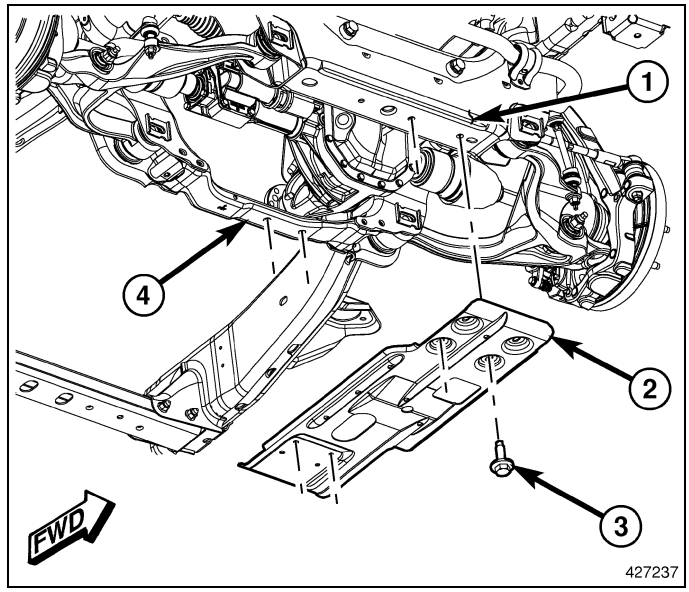

Installation

1. Position the skid plate (2) onto the vehicle and line up the holes.
2. Install the bolts (3) and tighten to 18 N·m (13 ft. lbs.).

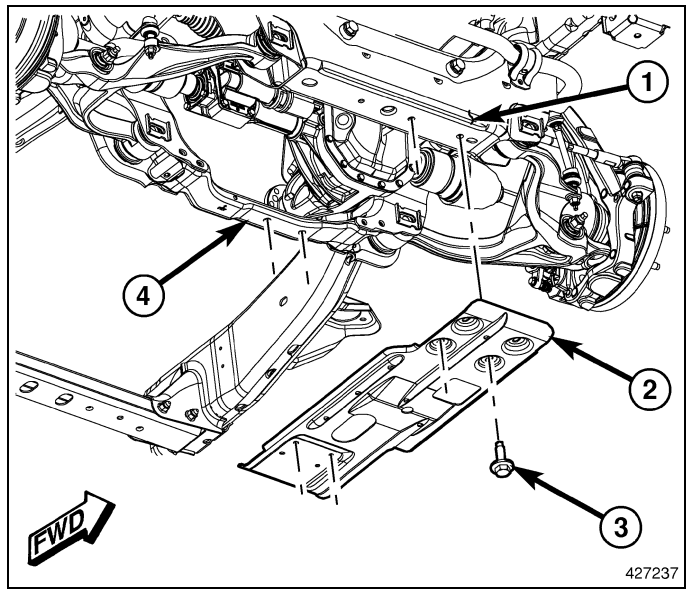

PLATE, Skid, Transfer Case

Removal

1500 - 3500 Standard Chassis

1. Raise and support the vehicle. (Refer to 04 - Vehicle Quick Reference/Hoisting - Standard Procedure)
2. Support the skid plate (4) and remove the bolts (3).
3. Remove the skid plate (4).
4. Support the skid plate crossmember (2) and remove the bolts (1).
5. Remove the skid plate crossmember (2).

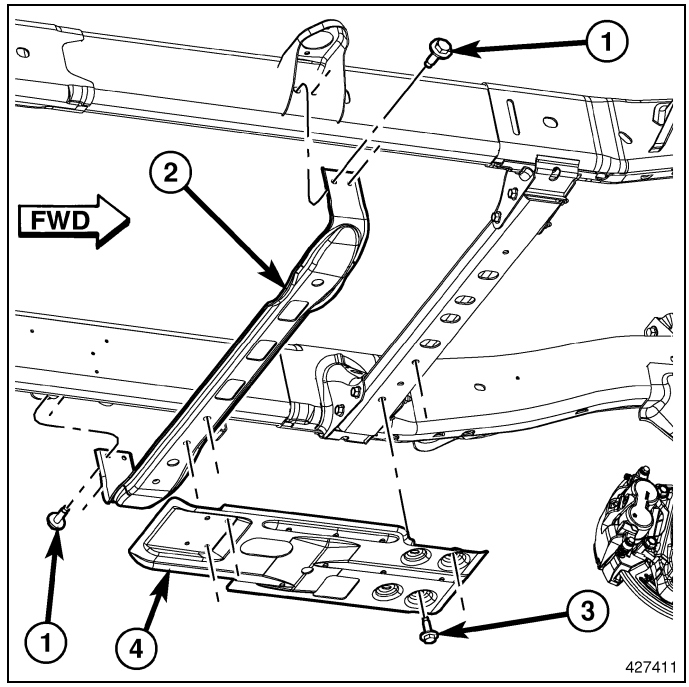

3500 - 5500 Heavy Duty - Cab Chassis

1. Raise and support the vehicle. (Refer to 04 - Vehicle Quick Reference/Hoisting - Standard Procedure)
2. Support the skid plate (2) and remove the bolts (1).
3. Remove the skid plate (3).

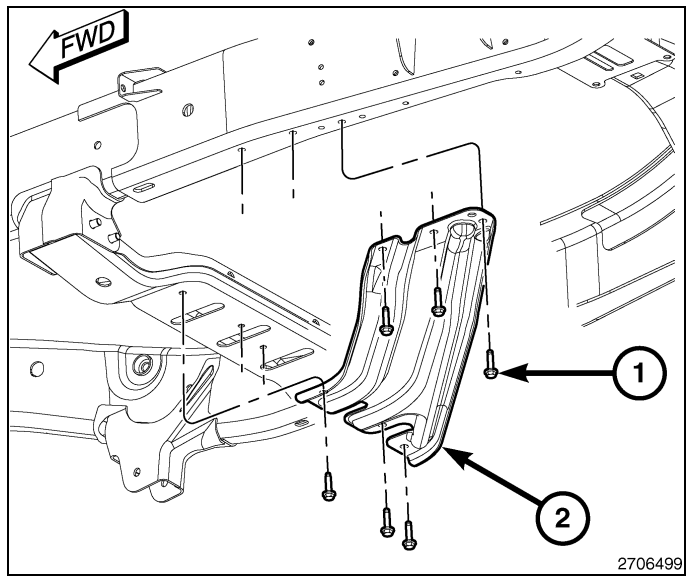

Installation

1500 Standard Chassis

1. Install the skid plate crossmember (2) and bolts (1).
2. Tighten the bolts (1) to 18 N·m (13 ft. lbs.).
3. Install the skid plate (4) and bolts (3).
4. Tighten the bolts (3) to 18 N·m (13 ft. lbs.).

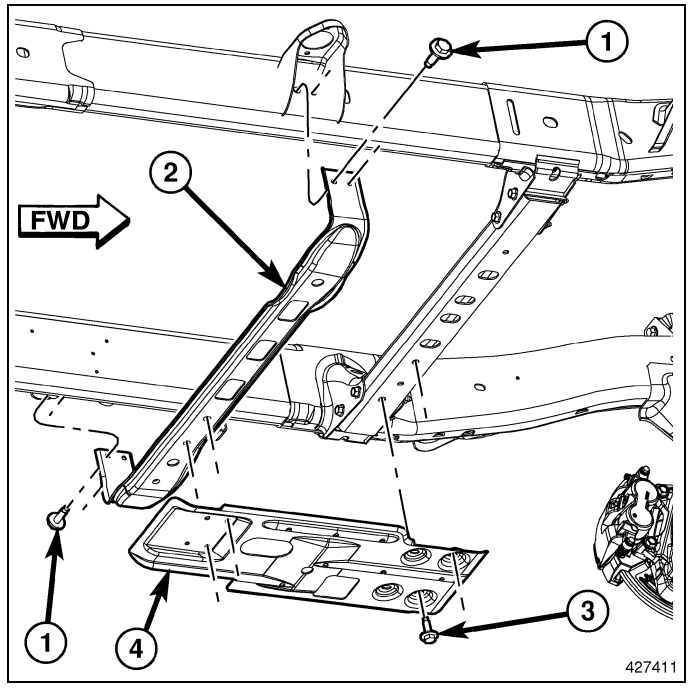

2500/3500 Standard Chassis

NOTE: 1500 Standard Chassis shown, 2500/3500 similar

1. Install the skid plate crossmember (2) and bolts (1).
2. Tighten the bolts (1) to 24 N·m (18 ft. lbs.).
3. Install the skid plate (4) and bolts (3).
4. Tighten the bolts (3) to 24 N·m (18 ft. lbs.).

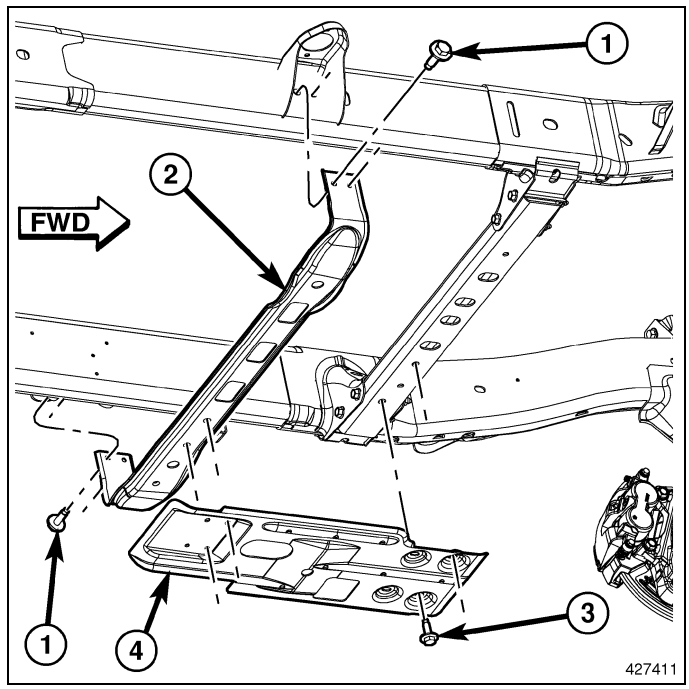

3500 - 5500 Heavy Duty - Cab Chassis

1. Install the skid plate (2) and bolts (1).
2. Tighten the bolts (1) to 37 N·m (27 ft. lbs.).

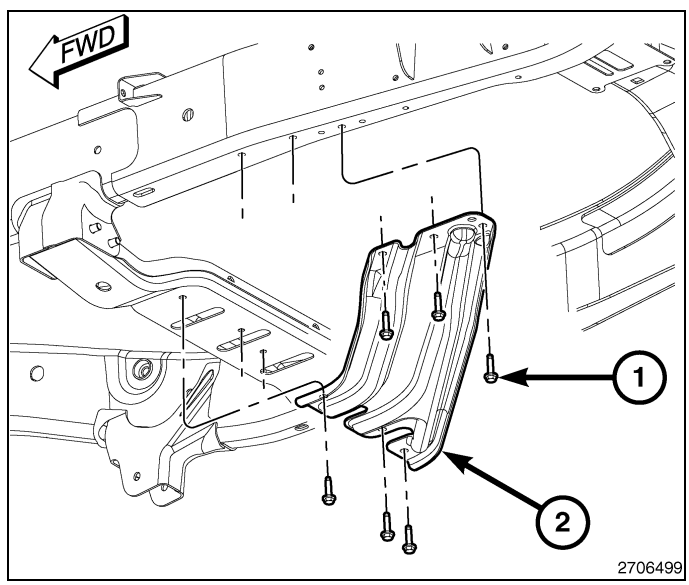

FUEL SYSTEM

TABLE OF CONTENTS

page

FUEL SYSTEM
FUEL DELIVERY, GAS. 3
FUEL INJECTION, GAS 37

FUEL DELIVERY, GAS

TABLE OF CONTENTS

page

FUEL DELIVERY, GAS
STANDARD PROCEDURE
FUEL SYSTEM PRESSURE RELEASE 4
DRAINING FUEL TANK 5
SPECIFICATIONS
FUEL SYSTEM PRESSURE 7
TORQUE 7
SPECIAL TOOLS 9
FITTING, QUICK CONNECT
DESCRIPTION 9
STANDARD PROCEDURE 9
MODULE, FUEL PUMP, ELECTRIC
DESCRIPTION 16
OPERATION 16
MODULE, FUEL PUMP
DESCRIPTION 17
OPERATION 17
REMOVAL 17
INSTALLATION 18
RAIL, FUEL
DESCRIPTION 19
OPERATION 19

page

REMOVAL
3.7L 20
4.7L 21
5.7L 22
INSTALLATION
3.7L 25
4.7L 26
5.7L 26
REGULATOR, FUEL PRESSURE
DESCRIPTION 30
SENDING UNIT AND SENSOR, FUEL LEVEL
DESCRIPTION 30
TANK, FUEL
REMOVAL 30
INSTALLATION 33
TUBE(S), FUEL
DESCRIPTION 36

Fuel Delivery, Gas

Standard Procedure

FUEL SYSTEM PRESSURE RELEASE

Use this procedure whether or not the fuel rail is equipped with a fuel pressure test port.

A separate fuel pump relay is no longer used. A circuit within the Totally Integrated Power Module (TIPM) is used to control the electric fuel pump located within the fuel pump module. The TIPM (2) is located in the engine compartment in front of the battery.

1. Remove the fuel fill cap.
2. Remove the TIPM cover (1) from the TIPM housing base (2).

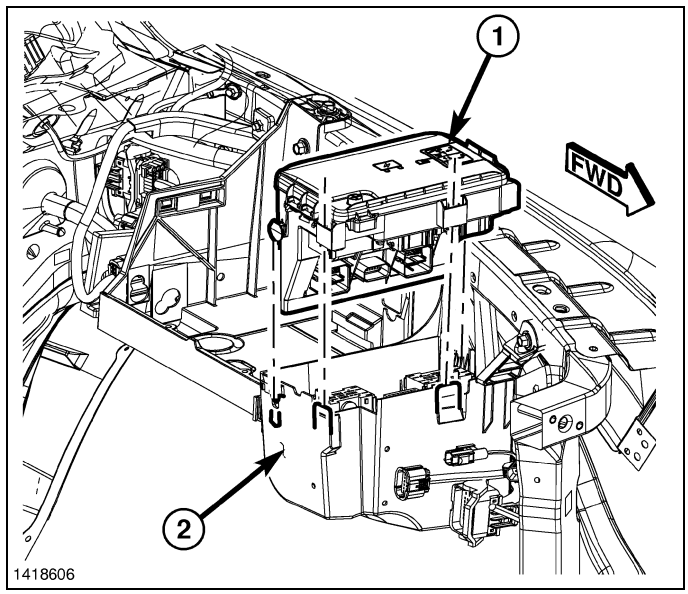

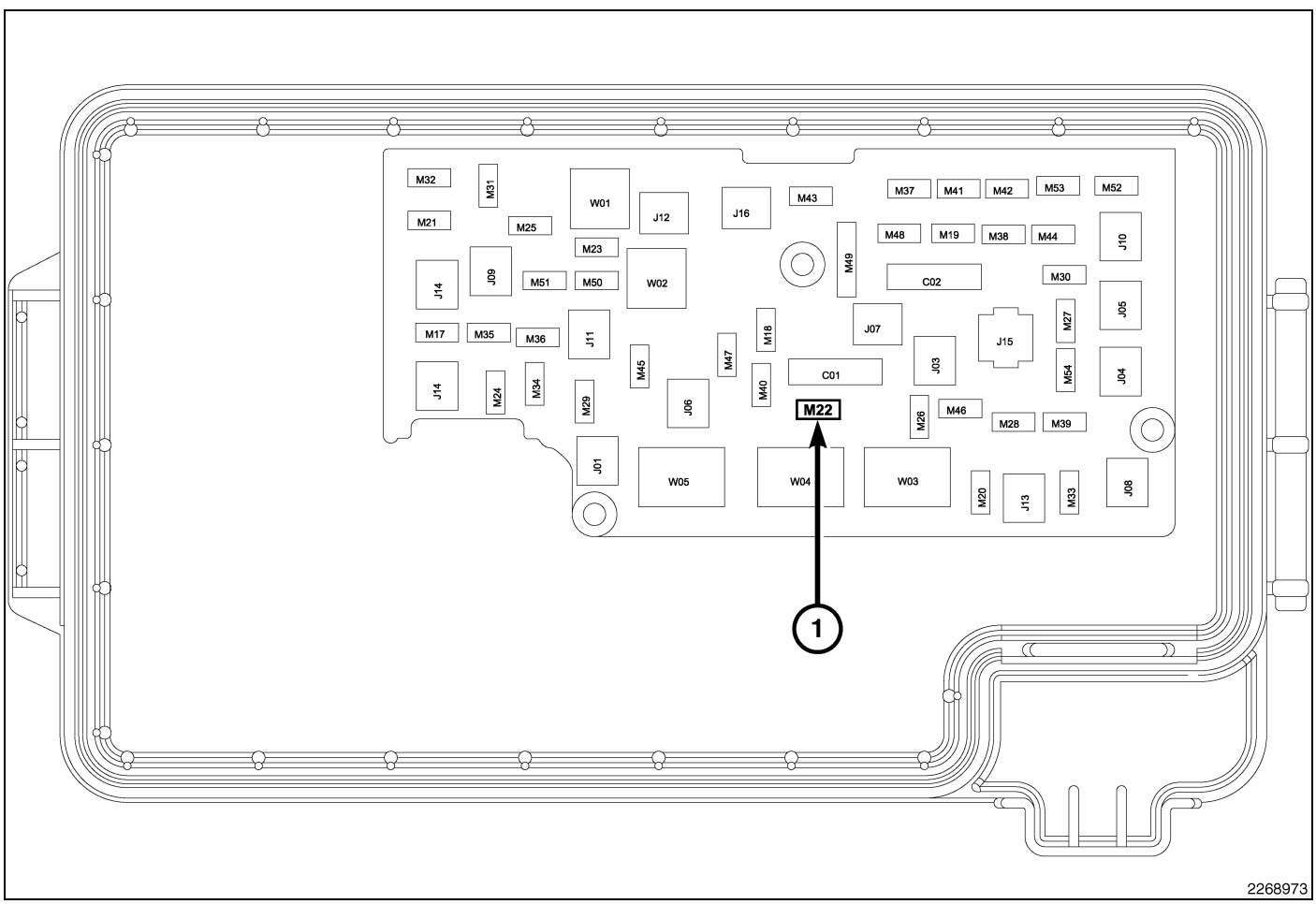

3. Remove fuse M22 from the TIPM (1).
4. Start and run the engine until it stalls.

5. Attempt restarting the engine until it will no longer start.
6. Turn the ignition key to the OFF position.

CAUTION: Before separating a Quick-Connect fitting, pay attention to what type of fitting is being used (Refer to 14 - Fuel System/Fuel Delivery/FITTING, Quick Connect - Standard Procedure). This will prevent unnecessary fitting or fitting latch breakage.

NOTE: Excessive fuel spillage onto the gaskets can cause gaskets to expand and dislodge from gasket groove.

7. Place a rag or towel below the fuel line quick-connect fitting at the fuel rail.
8. Disconnect the fuel line quick-connect fitting at the fuel rail (1) and plug with a shipping cap to prevent spillage (Refer to 14 - Fuel System/Fuel Delivery/FITTING, Quick Connect - Standard Procedure)

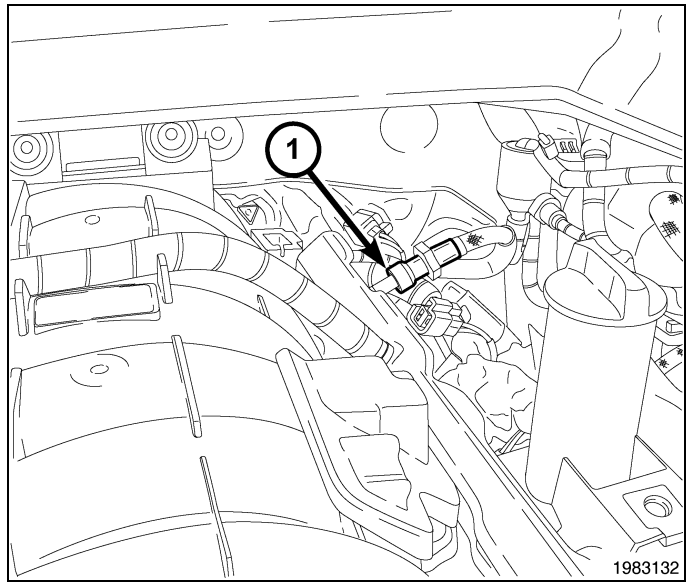

NOTE: One or more Diagnostic Trouble Codes (DTC's) may have been stored in the PCM memory due to disconnecting fuel pump module circuit. A diagnostic scan tool must be used to erase a DTC.

DRAINING FUEL TANK

Conventional Procedure

WARNING: The fuel system may be under constant fuel pressure even with the engine off. This pressure must be released before servicing the fuel tank.

Due to a one-way check valve installed into the fuel fill fitting at the tank, the tank cannot be drained at the fuel fill cap.

1. Perform the fuel system pressure release procedure (Refer to 14 - Fuel System/Fuel Delivery - Standard Procedure)
2. Disconnect the fuel supply line (2) from the fuel rail (Refer to 14 - Fuel System/Fuel Delivery/FITTING, Quick Connect - Standard Procedure).

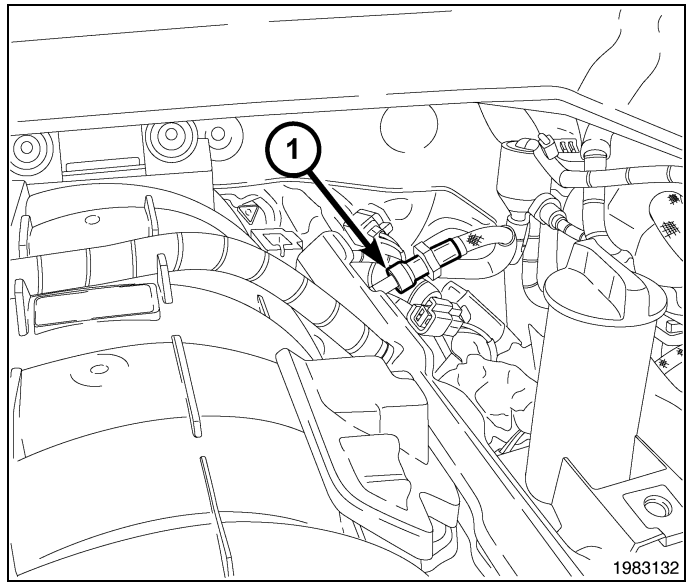

NOTE: Tool number 8978-2 is used on 5/16” fuel lines while tool number 8531-1 is used on 3/8” fuel lines.

3. Install the appropriate fuel line adapter fitting from the Decay Tool, Fuel 8978A to the fuel supply line. Route the opposite end of this hose to an OSHA approved fuel storage tank such as the John Dow Gas Caddy 320-FC-P30-A or equivalent.
4. Using a diagnostic scan tool, activate the fuel pump until the fuel tank has been evacuated.

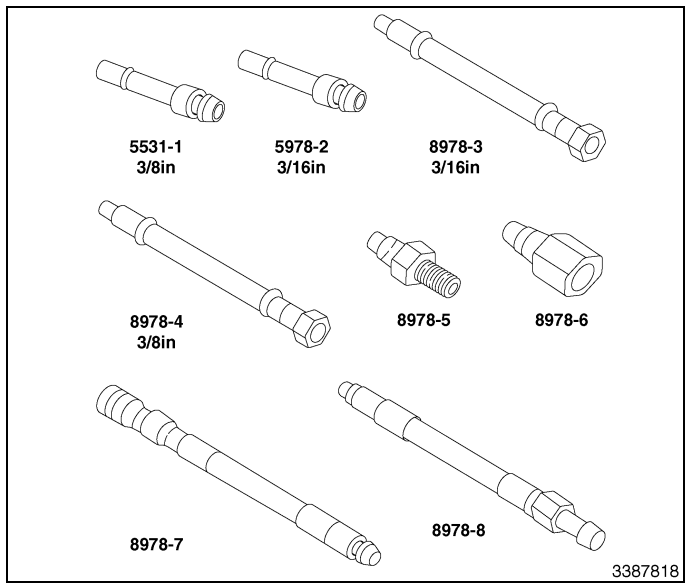

Alternative Procedure

NOTE: If the electric fuel pump is not operating, the fuel tank must be removed and drained through the fuel pump module opening of the fuel tank.

1. Perform the Fuel System Pressure Release procedure (Refer to 14 - Fuel System/Fuel Delivery - Standard Procedure)
2. Disconnect and isolate the negative battery cable (1).
3. Raise and support the vehicle.
4. Remove the fuel tank (Refer to 14 - Fuel System/Fuel Delivery/TANK, Fuel - Removal)

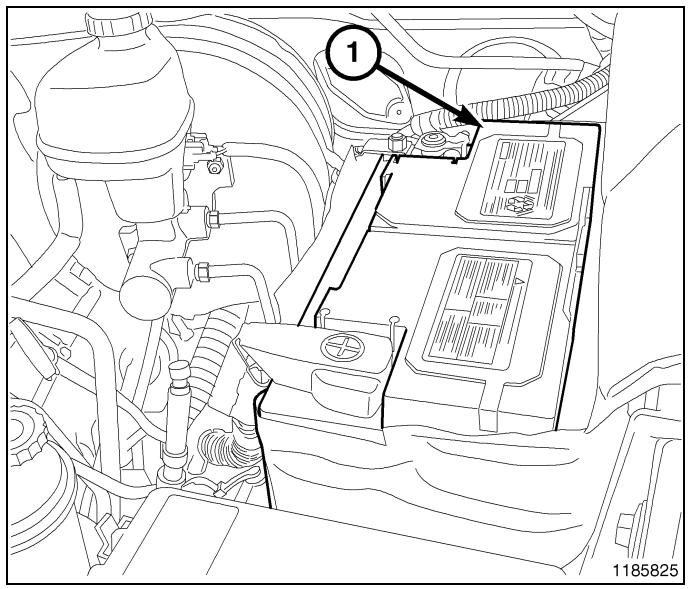

5. Remove the fuel pump module (1) (Refer to 14 - Fuel System/Fuel Delivery/MODULE, Fuel Pump - Removal)
6. Position a 3/8” hose into the fuel pump module opening of the fuel tank.
7. Attach the opposite end of this hose to the Fuel Chief Gas Caddy 320-FC-P30-A or an OSHA approved gas caddy.
8. Using the gas caddy, evacuate the fuel tank.

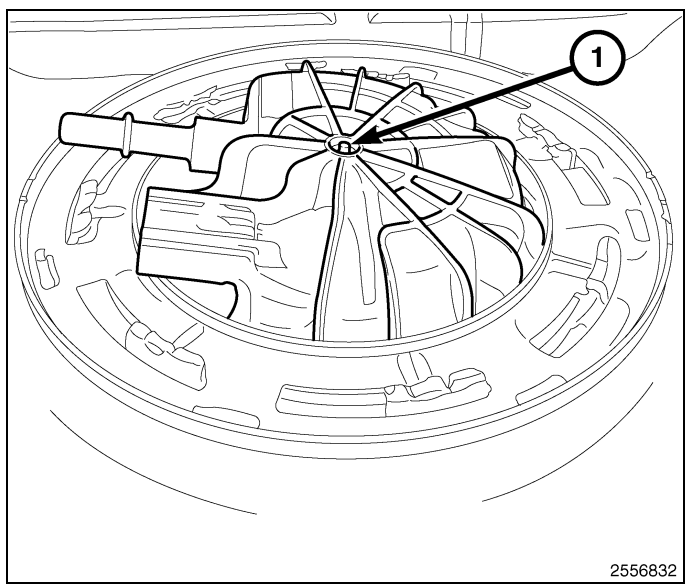

Specifications

FUEL SYSTEM PRESSURE

58 psi +/- 2 psi

TORQUE

DESCRIPTION	N·m	Ft. lbs.	In. lbs.
Accelerator Pedal Bracket Mounting	12	-	105
Accelerator Pedal Position Sensor Bracket-to-Battery Tray Bolts	3	-	30
Crankshaft Position Sensor - 3.7L	28	21	-
Crankshaft Position Sensor - 4.7L	28	21	-
Crankshaft Position Sensor - 5.7L	12	-	105 (+/-20)
Camshaft Position Sensor - 3.7L	12	-	106
Camshaft Position Sensor - 4.7L	12	-	106
Camshaft Position Sensor - 5.7L	12	9	105 (+/-) 20
EVAP Canister- to-Bracket Nuts	8.5	-	75
EVAP Canister-to-Frame Bolts	34	25	
Fuel Filler Hose Clamp at Tank	3	-	30
Fuel Filler Housing-to-Body Screws	2	-	17
Fuel Rail Mounting Bolts - 3.7L	11	-	100
Fuel Rail Mounting Bolts - 4.7L	11	-	100
Fuel Rail Mounting Bolts - 5.7L	11	-	100
Fuel Tank Mounting Straps	41	30	-
Fuel Tank Mounting Bolts - 52 Gallon Tank	55	41	-
Map Sensor Mounting Screws - 3.7L	3	-	25
Map Sensor Mounting Screws - 4.7L	3	-	25
PCM-to-Mounting Bracket Mounting Screws	4	-	35
Throttle Body Mounting Bolts - 3.7L	7.5	-	65

DESCRIPTION	N·m	Ft. lbs.	In. lbs.
Throttle Body Mounting Bolts - 4.7L	7.5	-	65
Throttle Body Mounting Bolts - 5.7L	5.6	-	50
Oxygen Sensors	41	30	-
Ignition Coil Mounting Bolts	11	-	100

Special Tools

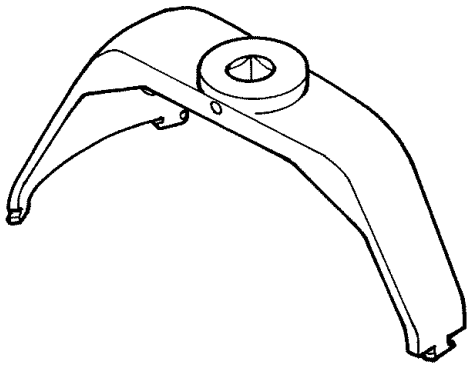

9340 - Sae Fuel Pump Lock Ring Wrench

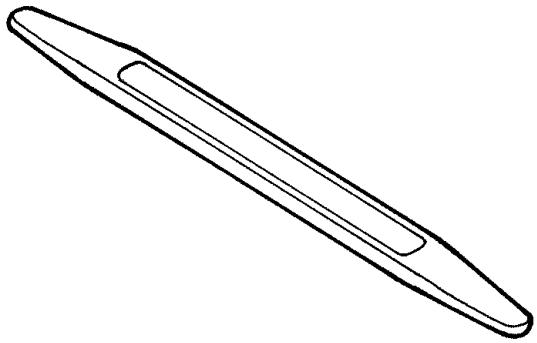

C-4755 - Trim Stick

FITTING, Quick Connect

Description

Different types of quick-connect fittings are used to attach the various fuel system components, lines and tubes. These are: a single-button type, a two-button type, a pinch type, a single-tab type, a two-tab type or a plastic retainer ring type. Some are equipped with safety latch clips. Some may require the use of a special tool for disconnection and removal. (Refer to 14 - Fuel System/Fuel Delivery/FITTING, Quick Connect - Standard Procedure)

CAUTION: Before separating a Quick-Connect fitting, pay attention to what type of fitting is being used (Refer to 14 - Fuel System/Fuel Delivery/FITTING, Quick Connect - Standard Procedure). This will prevent unnecessary fitting or fitting latch breakage.

CAUTION: The interior components (O-rings, clips) of quick-connect fittings are not serviced separately, but new plastic spacers and latches are available for some types. If service parts are not available, do not attempt to repair the damaged fitting or fuel line (tube). If repair is necessary, replace the complete fuel line (tube) assembly.

Standard Procedure

Different types of quick-connect fittings are used to attach the various fuel system components, lines and tubes. Some quick-connect fittings require the use of a special tool for disconnection and removal.

These are the quick-connect fittings:

- Redundant Latch Single Button Type Fitting
- Single Button Type Fitting
- Pinch Type Fitting
- Single Tab Type Fitting
- Two Tab Type Fitting
- Plastic Retainer Ring Type Fitting
- Latch Clip Type 1 Fitting
- Latch Clip Type 2 Fitting
- Wing Type Fitting

DISCONNECTING

WARNING: The fuel system is under a constant pressure (even with engine off). Before servicing any fuel system hose, fitting or line, fuel system pressure must be released. (Refer to 14 - Fuel System/Fuel Delivery - Standard Procedure)

CAUTION: Before separating a Quick-Connect fitting, pay attention to what type of fitting is being used (Refer to 14 - Fuel System/Fuel Delivery/FITTING, Quick Connect - Standard Procedure). This will prevent unnecessary fitting or fitting latch breakage.

CAUTION: The interior components (O-rings, clips) of quick-connect fittings are not serviced separately, but new plastic spacers and latches are available for some types. If service parts are not available, do not attempt to repair the damaged fitting or fuel line (tube). If repair is necessary, replace the complete fuel line (tube) assembly.

Redundant Latch Single Button Type Fitting:

This type of quick-connect fitting is equipped with a redundant latch (2) and a single push button (1) that releases two internal latches located in the quick-connect fitting. Special tools are not required for removal.

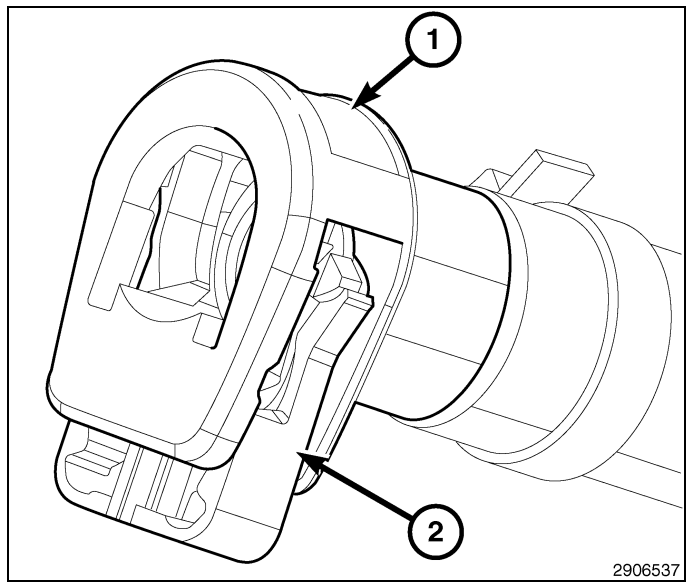

CAUTION: Do not pry or pull up on the push button as damage to the latches of the quick-connect fitting will occur.

1. Pull the redundant latch (2) out away from the quick-connect fitting.
2. Press on the push button with your thumb, release the internal latches (1) and remove the quick-connect fitting from the fuel system component.

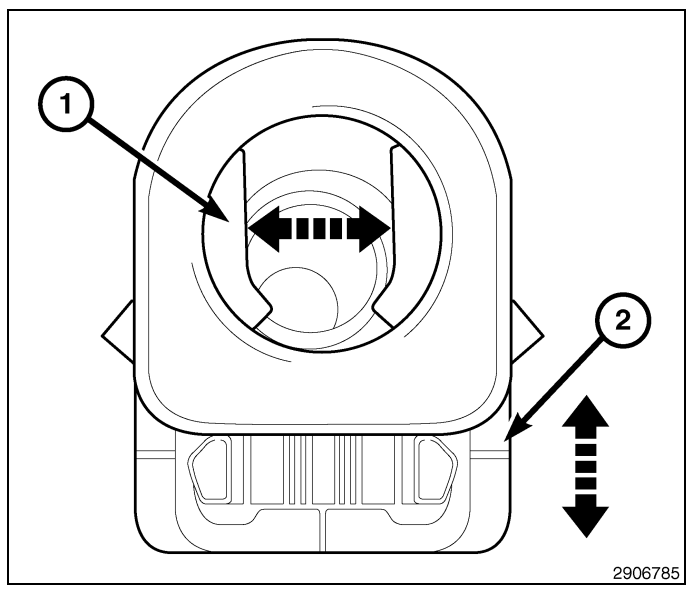

Single Button Type Fitting:

CAUTION: Do not pry or pull up on the push button as damage to the latches of the quick-connect fitting will occur.

This type of quick-connect fitting is equipped with a single push button (2) that releases two internal latches located in the quick-connect fitting. Special tools are not required for removal.

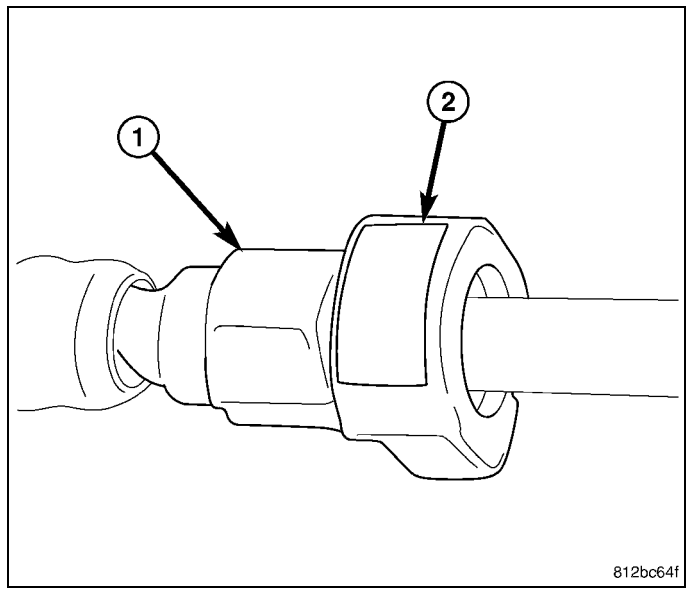

1. Press on the push button with your thumb, release the internal latches (1).
2. Remove the quick-connect fitting from the fuel system component.

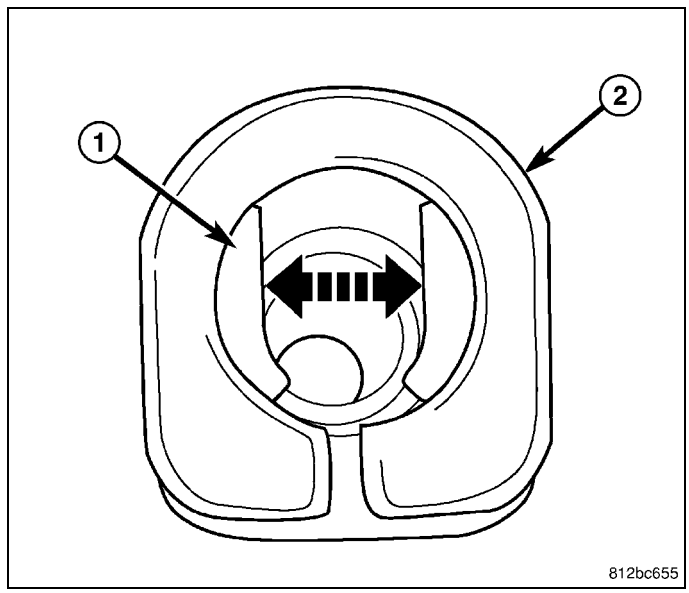

2 Button Type Fitting

This type of quick-connect fitting (1) is equipped with two push buttons (2) that releases two internal latches located in the quick-connect fitting. Special tools are not required for removal.

1. Press on both push buttons with your thumb, release the internal latches.
2. While holding the two push buttons simultaneously, remove the quick-connect fitting from the fuel system component.

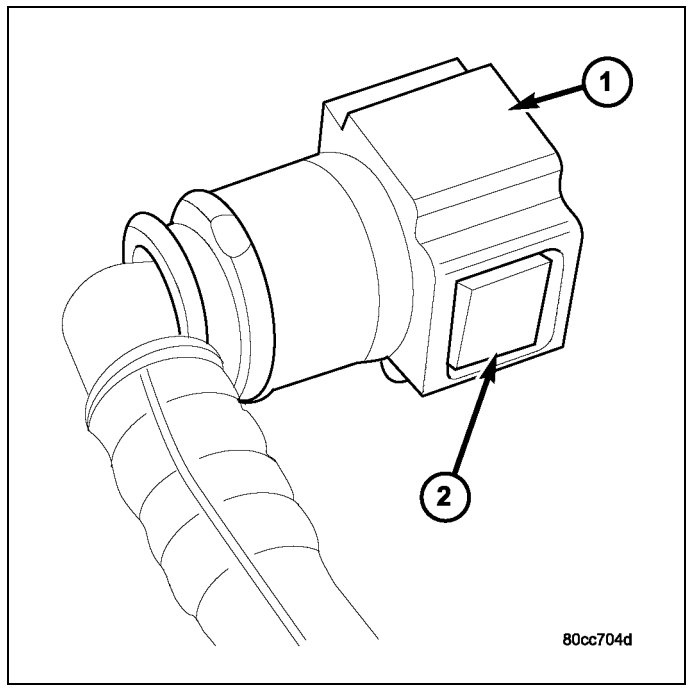

Pinch Type Fitting

This type of quick-connect fitting (1) is equipped with two finger tabs (2). Special tools are not required for removal.

1. Pinch both tabs (2) together and release the quick-connect fitting.
2. Remove the quick-connect fitting from the fuel system component.

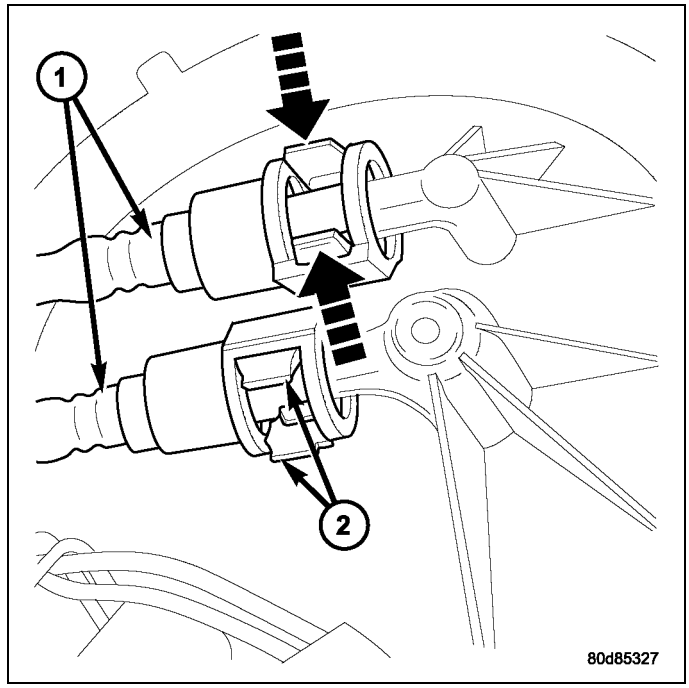

Single Tab Type Fitting

This type of quick-connect fitting (3) is equipped with a single pull tab (1). The tab is removable. After tab is removed the quick-connect fitting can be separated from the fuel system component. Special tools are not required for removal.

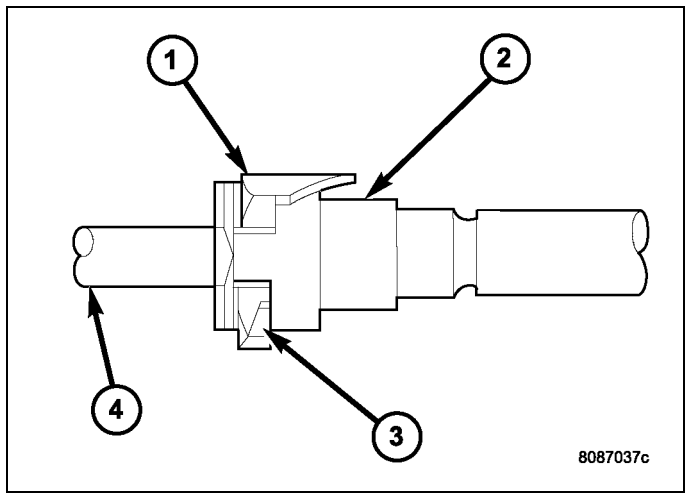

1. Press release tab on side of fitting to release pull tab (1). **If release tab is not pressed prior to releasing pull tab, pull tab will be damaged.**
2. While pressing the release tab on the side of the quick-connect fitting use a screwdriver (2) to pry up the pull tab.
3. Raise the pull tab until it separates from the quick-connect fitting.
4. Remove the quick-connect fitting from the fuel system component.

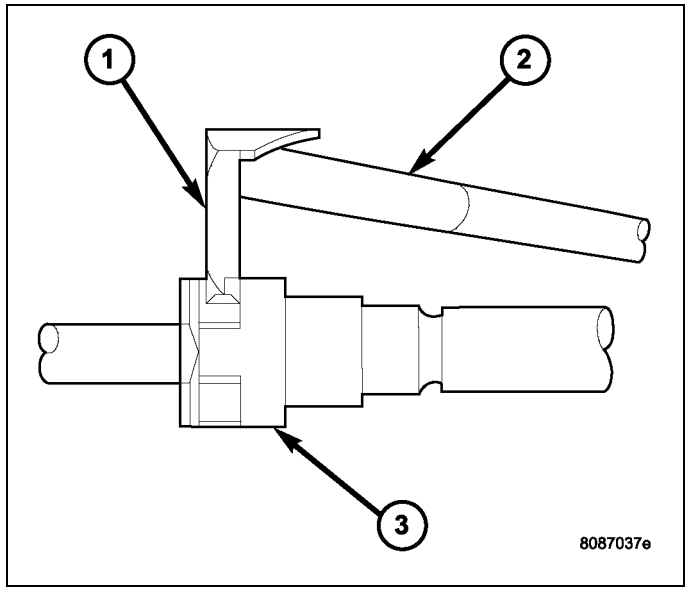

Two Tab Type Fitting

This type of quick-connect fitting (2) is equipped with tabs located on both sides of the fitting (1). These tabs are integral to the fuel system component. The plastic tabs will remain on the component being serviced after the quick-connect fitting is removed. The O-ring and spacer will remain in the quick-connect fitting. Special tools are not required for removal.

1. Squeeze the plastic tabs (1) against the sides of component being serviced with your fingers.
2. Remove the quick-connect fitting from the fuel system component.

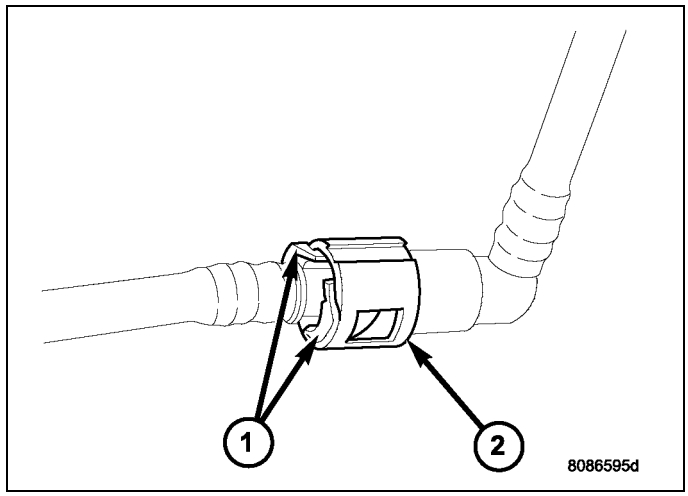

Plastic Retainer Ring Type Fitting

This type of fitting can be identified by the use of a round plastic retainer ring (4) usually black in color. Special tools are not required for removal.

NOTE: The round plastic retainer ring must be pressed squarely into the quick-connect fitting body. If this retainer is cocked during removal it will be difficult to disconnect the quick-connect fitting. Use an open-end wrench on the shoulder of the plastic retainer ring to aid in disconnection.

1. Firmly push the quick-connect fitting (5) towards the component being serviced while firmly pushing the round plastic retainer ring into the quick-connect fitting (6). With the round plastic ring depressed, remove the quick-connect fitting from the fuel system component.
2. After removal the plastic retainer ring will remain with the quick-connect fitting.

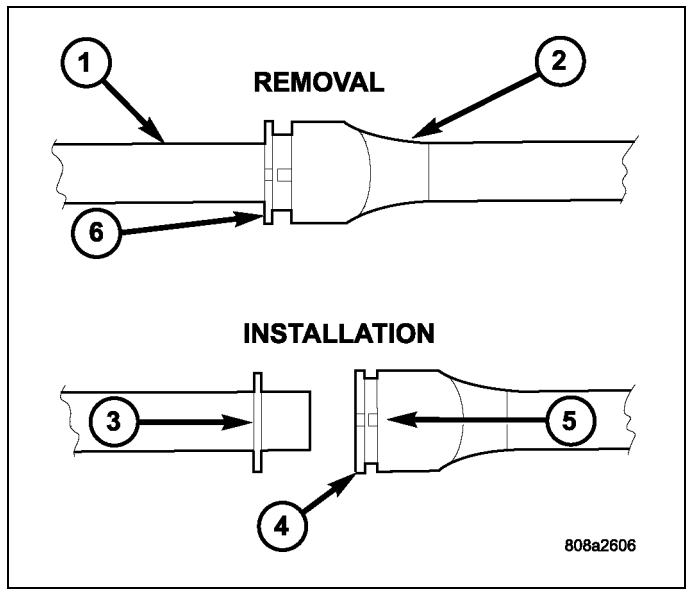

Latch Clip Type 1 Fitting

Depending on vehicle model and engine, 2 different types of safety latch clips are used. One is tethered (1) to fuel line and the other is not. A special tool will be necessary to disconnect the fuel line after latch clip is removed. The latch clip may be used on certain fuel line and fuel rail connections or to join fuel lines together.

1. Pry up on the latch clip (4) with a screwdriver (3).
2. Slide the latch clip away from the quick-connect fitting while lifting the screwdriver and position aside.

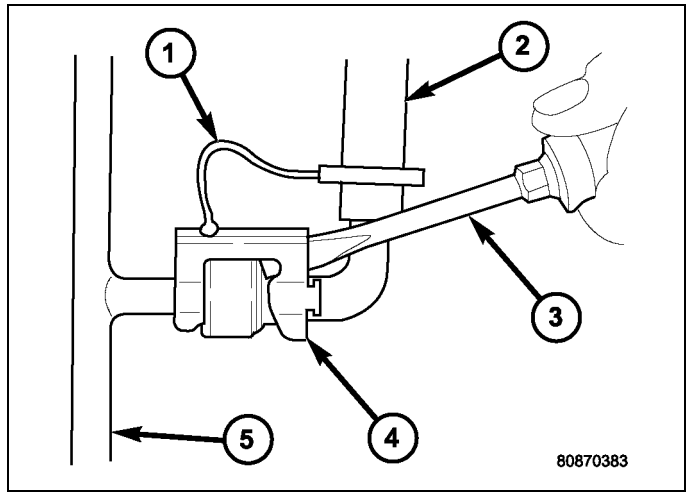

3. Insert the commercially available fuel line removal tool (1) into the quick-connect fitting and release the internal latches.

NOTE: After removal the internal latches will remain in the quick-connect fitting.

4. With the commercially available fuel line removal tool (1) still inserted, remove the quick-connect fitting from the fuel system component.

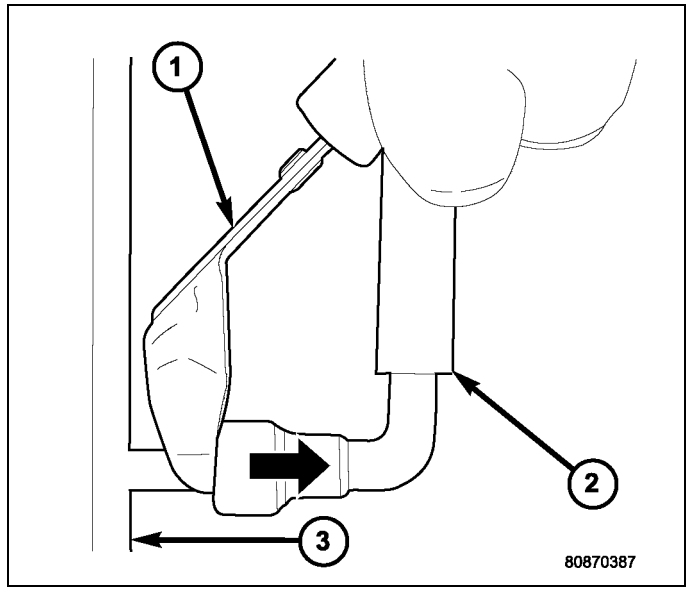

Latch Clip Type 2 Fitting

Depending on vehicle model and engine, 2 different types of safety latch clips are used. One is tethered to the fuel line and the other is not. A special tool will be necessary to disconnect the fuel line after the latch clip is removed. The latch clip may be used on certain fuel line and fuel rail connections or to join fuel lines together.

1. Unlatch the small arms on the end of clip, swing away and separate from the fuel system component.
2. Slide the latch clip away from the quick-connect fitting while lifting with a screwdriver and position aside.

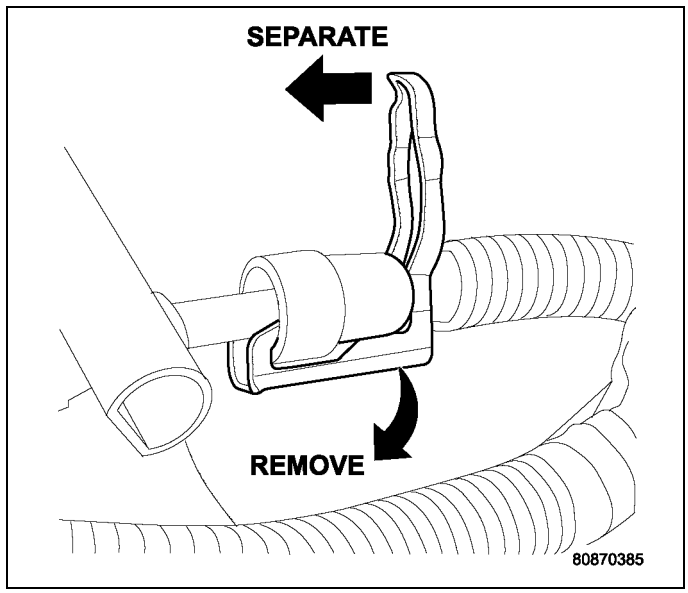

3. Insert the commercially available fuel line removal tool (1) into the quick-connect fitting and release the internal latches.

NOTE: After removal the internal latches will remain in the quick-connect fitting.

4. With the commercially available fuel line removal tool (1) inserted, remove the quick-connect fitting from the fuel system component.

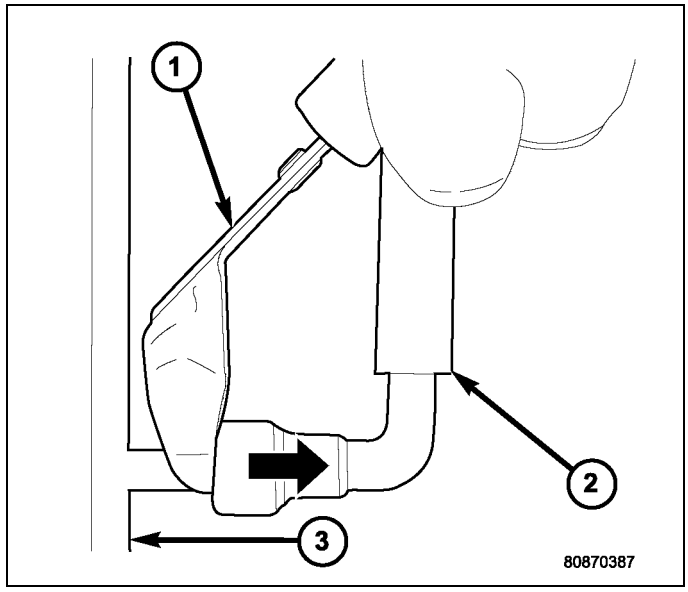

Wing Type Fitting

The wing type fitting is used on fuel system and emission components. The wing type fitting is most commonly used on the EVAP canister (3). Special tools are not required for removal.

1. Using two fingers, press both wings (2) and release the locking tabs.

NOTE: After removal the locking tabs will remain with the quick-connect fitting.

2. While holding the wings, remove the quick-connect fitting from the fuel system component.

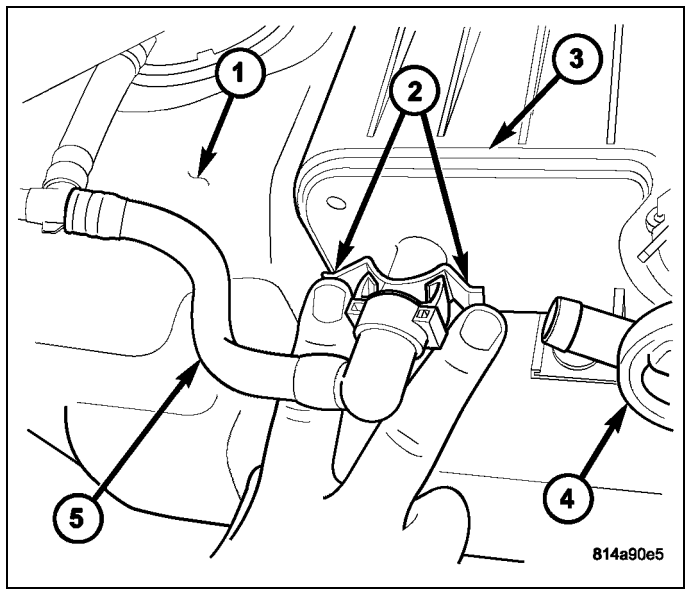

CONNECTING

1. Inspect the quick-connect fitting body and fuel system components for damage. Replace as necessary.
2. Prior to connecting any quick-connect fitting to components, check condition of fitting and components. Clean parts with a lint-free cloth. Lubricate with clean engine oil.
3. Insert the quick-connect fitting onto the fuel tube or fuel system component until the built-in stop on the fuel tube or component rests against the back of fitting.
4. Continue pushing until a click is felt.
5. If Equipped:

- **Redundant Latch Single Button Type Fitting:** Push redundant latch until it locks into position in the quick-connect fitting.
- **Single Tab Type Fitting:** Push new tab down until it locks into position in the quick-connect fitting.
- **Latch Clip Type Fitting:** Install latch clip (snaps into position). **If latch clip will not snap into position, this indicates the quick-connect fitting is not properly installed onto fuel system component, recheck the connection.**

6. Verify a locked condition by firmly pulling on the quick-connect fitting connection of the fuel system component.

MODULE, Fuel Pump, Electric

Description

The electric fuel pump is located inside of the fuel pump module. A 12 volt, permanent magnet, electric motor powers the fuel pump. The electric fuel pump is not a separate, serviceable component.

Operation

Voltage to operate the electric pump is supplied through the fuel pump relay.

Fuel is drawn in through a filter at the bottom of the module and pushed through the electric motor gearset to the pump outlet.

Check Valve Operation: The bottom section of the fuel pump module contains a one-way check valve to prevent fuel flow back into the tank and to maintain fuel supply line pressure (engine warm) when pump is not operational. It is also used to keep the fuel supply line full of gasoline when pump is not operational. After the vehicle has cooled down, fuel pressure may drop to 0 psi (cold fluid contracts), but liquid gasoline will remain in fuel supply line between the check valve and fuel injectors. **Fuel pressure that has dropped to 0 psi on a cooled down vehicle (engine off) is a normal condition.**

The electric fuel pump is not a separate, serviceable component.

MODULE, Fuel Pump

Description

The fuel pump module assembly is located on the top of the fuel tank . The complete assembly contains the following components:

- A combination fuel filter/fuel pressure regulator
- A separate fuel pick-up, or inlet filter
- An electric fuel pump
- A lockring to retain pump module to tank
- A soft gasket between tank flange and module
- A fuel gauge sending unit (fuel level sensor)
- Fuel line connection

The fuel gauge sending unit may be serviced separately. If the electrical fuel pump, primary inlet filter, fuel filter or fuel pressure regulator require service, the fuel pump module must be replaced.

Operation

Refer to Fuel Pump, Inlet Filter, Fuel Filter / Fuel Pressure Regulator and Fuel Gauge Sending Unit.

Removal

WARNING: The fuel system may be under a constant pressure (even with the engine off). Before servicing the fuel pump module, the fuel system pressure must be released.

1. Perform the fuel system pressure release procedure (Refer to 14 - Fuel System/Fuel Delivery - Standard Procedure)
2. Disconnect and isolate the negative battery cable (1).
3. Remove the fuel tank (Refer to 14 - Fuel System/Fuel Delivery/TANK, Fuel - Removal)

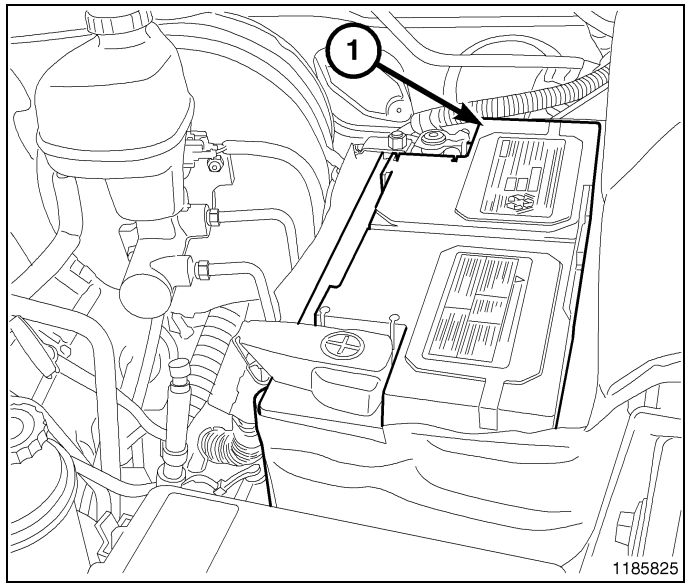

NOTE: Prior to removing the fuel pump module, use compressed air to remove any accumulated dirt and debris from around fuel tank opening.

CAUTION: An indexing arrow is located on top of the main fuel pump module to clock it's position into the fuel tank, note it's location for reassembly.

4. Position the lock ring remover/installer 9340 (3) into the notches on the outside edge of the lock ring (5).
5. Install a 1/2 inch drive breaker bar (1) into the lock ring remover/installer 9340 (3).
6. Rotate the breaker bar counterclockwise and remove the lock ring.

CAUTION: Whenever the fuel pump module is serviced, the rubber O-ring seal must be replaced.

7. Remove the fuel pump module (4) from the fuel tank. Be careful not to bend float arm during removal.
8. Remove and discard the rubber O-ring seal.

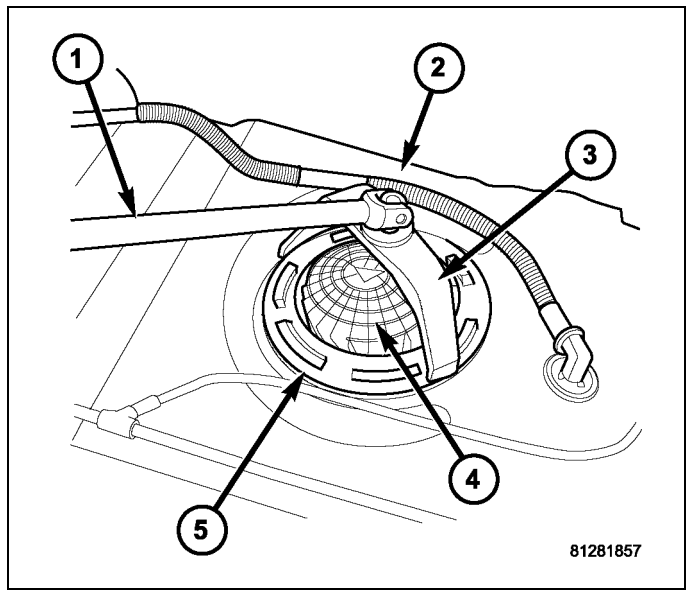

Installation

CAUTION: An indexing arrow is located on top of the main fuel pump module to clock it's position into the fuel tank. The fuel pump module must be installed in the same position as removed.

1. Using a new rubber O-ring seal, position the fuel pump module into the fuel tank opening.
2. Position the lock ring (5) over top of the fuel pump module.
3. Rotate the fuel pump module until the embossed alignment arrow points to the center alignment mark or the same position as noted during removal. This step must be performed to prevent the float from contacting the side of the fuel tank.
4. Install the lock ring remover/installer 9340 (3) into the notches on the outside edge of the lock ring (5).
5. Install a 1/2 inch drive breaker bar (1) into the lock ring remover/installer 9340 (3).
6. Rotate the breaker bar clockwise until all seven notches of the lock ring have engaged.
7. Install the fuel tank (Refer to 14 - Fuel System/Fuel Delivery/TANK, Fuel - Installation)

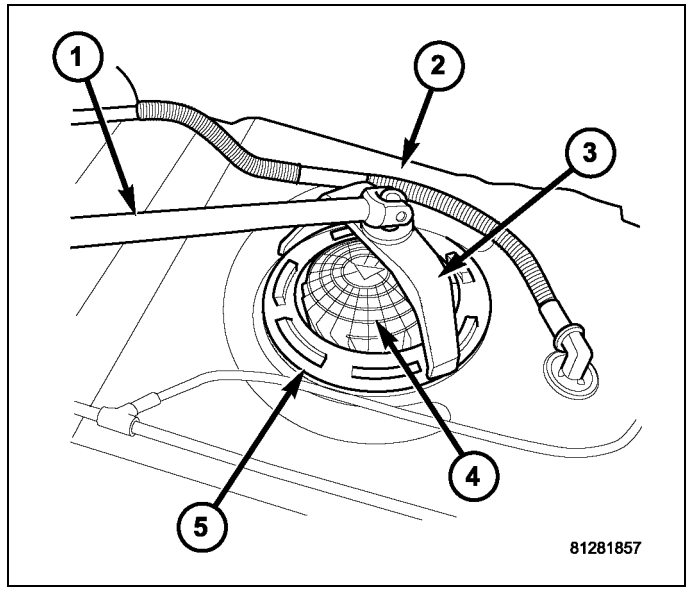

8. Connect the fuel line quick-connect fitting at the fuel rail (1).

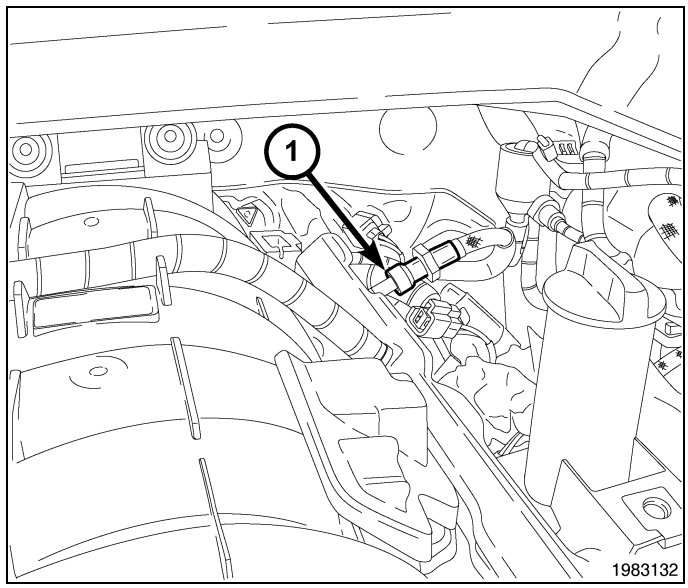

9. Connect the negative battery cable (1).
10. Fill the fuel tank.
11. Start the engine and check for leaks at all fuel tank connections.

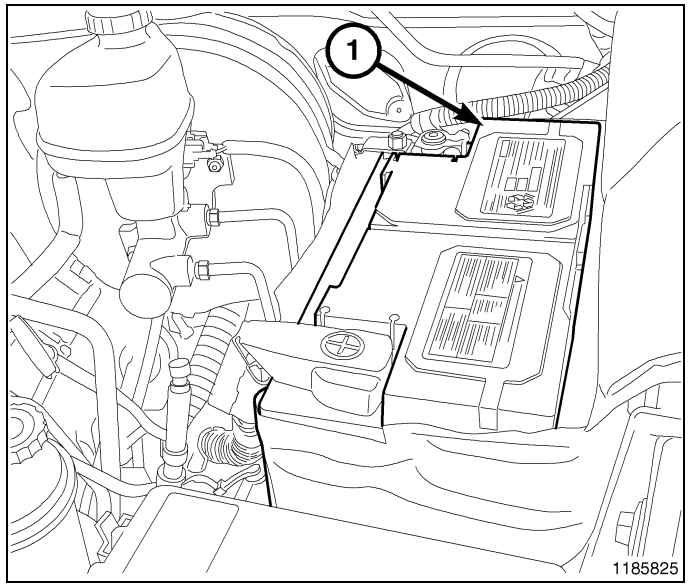

RAIL, Fuel

Description

The fuel injector rail is used to mount the fuel injectors to the engine.

Operation

High pressure from the fuel pump is routed to the fuel rail. The fuel rail then supplies the necessary fuel to each individual fuel injector.

A quick-connect fitting with a safety latch clip is used to attach the fuel line to the fuel rail.

The fuel rail is not repairable.

CAUTION: The left and right sections of the fuel rail are connected with either a flexible connecting hose, or joints. Do not attempt to separate the rail halves at these connecting hose or joints. Due to the design of the connecting hose or joint, it does not use any clamps. Never attempt to install a clamping device of any kind to the hose or joint. When removing the fuel rail assembly for any reason, be careful not to bend or kink the connecting hose or joint.

Removal

3.7L

WARNING: The fuel system is under constant pressure even with engine off. Before servicing fuel rail, fuel system pressure must be released.

CAUTION: The left and right fuel rails are replaced as an assembly. Do not attempt to separate rail halves at connector tubes . Due to design of tubes, it does not use any clamps. Never attempt to install a clamping device of any kind to tubes. When removing fuel rail assembly for any reason, be careful not to bend or kink tubes.

1. Remove fuel tank filler tube cap.
2. Perform Fuel System Pressure Release Procedure. (Refer to 14 - Fuel System/Fuel Delivery - Standard Procedure)
3. Remove negative battery cable at battery.
4. Remove air duct at throttle body air box.
5. Remove air box at throttle body.
6. Remove air resonator mounting bracket at front of throttle body (2 bolts).
7. Disconnect fuel line latch clip and fuel line at fuel rail. A special tool will be necessary for fuel line disconnection. (Refer to 14 - Fuel System/Fuel Delivery/FITTING, Quick Connect - Standard Procedure)
8. Remove necessary vacuum lines at throttle body.
9. Disconnect electrical connectors at all 6 fuel injectors. To remove connector refer to . Push red colored slider away from injector (1). While pushing slider, depress tab (2) and remove connector (3) from injector. The factory fuel injection wiring harness is numerically tagged (INJ 1, INJ 2, etc.) for injector position identification. If harness is not tagged, note wiring location before removal.
10. Disconnect electrical connectors at all throttle body sensors.

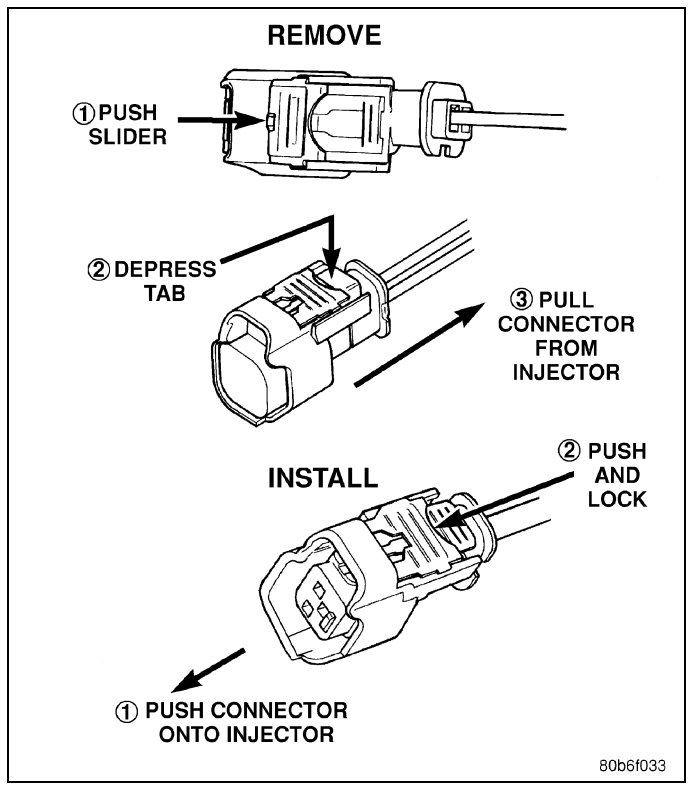

11. Remove 6 ignition coils. (Refer to 08 - Electrical/8I - Ignition Control/COIL, Ignition - Removal)
12. Remove 4 fuel rail mounting bolts (1) .
13. Gently rock and pull **left** side of fuel rail until fuel injectors just start to clear machined holes in cylinder head. Gently rock and pull **right** side of rail until injectors just start to clear cylinder head holes. Repeat this procedure (left/right) until all injectors have cleared cylinder head holes.
14. Remove fuel rail (with injectors attached) from engine.
15. If fuel injectors are to be removed, (Refer to 14 - Fuel System/Fuel Injection/INJECTOR(S), Fuel - Removal).

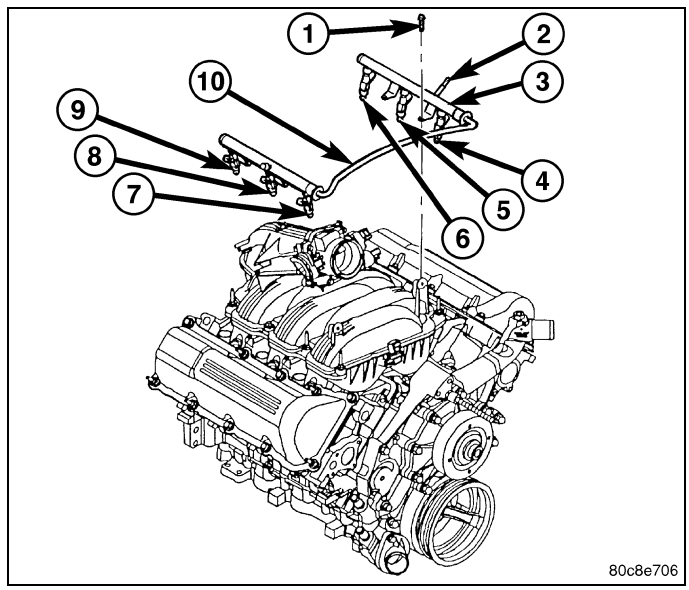

4.7L

WARNING: The fuel system is under constant pressure even with engine off. Before servicing fuel rail, fuel system pressure must be released.

CAUTION: The left and right fuel rails are replaced as an assembly. Do not attempt to separate rail halves at connector tubes . Due to design of tubes, it does not use any clamps. Never attempt to install a clamping device of any kind to tubes. When removing fuel rail assembly for any reason, be careful not to bend or kink tubes.

1. Remove fuel tank filler tube cap.
2. Perform Fuel System Pressure Release Procedure. (Refer to 14 - Fuel System/Fuel Delivery - Standard Procedure)
3. Remove negative battery cable at battery.
4. Remove air duct at throttle body air box.
5. Remove air box at throttle body.
6. Remove air resonator mounting bracket at front of throttle body (2 bolts).
7. Disconnect fuel line latch clip and fuel line at fuel rail. A special tool will be necessary for fuel line disconnection. (Refer to 14 - Fuel System/Fuel Delivery/FITTING, Quick Connect - Standard Procedure)
8. Remove necessary vacuum lines at throttle body.
9. Disconnect electrical connectors at all 8 fuel injectors. To remove connector refer to . Push red colored slider away from injector (1). While pushing slider, depress tab (2) and remove connector (3) from injector. The factory fuel injection wiring harness is numerically tagged (INJ 1, INJ 2, etc.) for injector position identification. If harness is not tagged, note wiring location before removal.
10. Disconnect electrical connectors at all throttle body sensors.

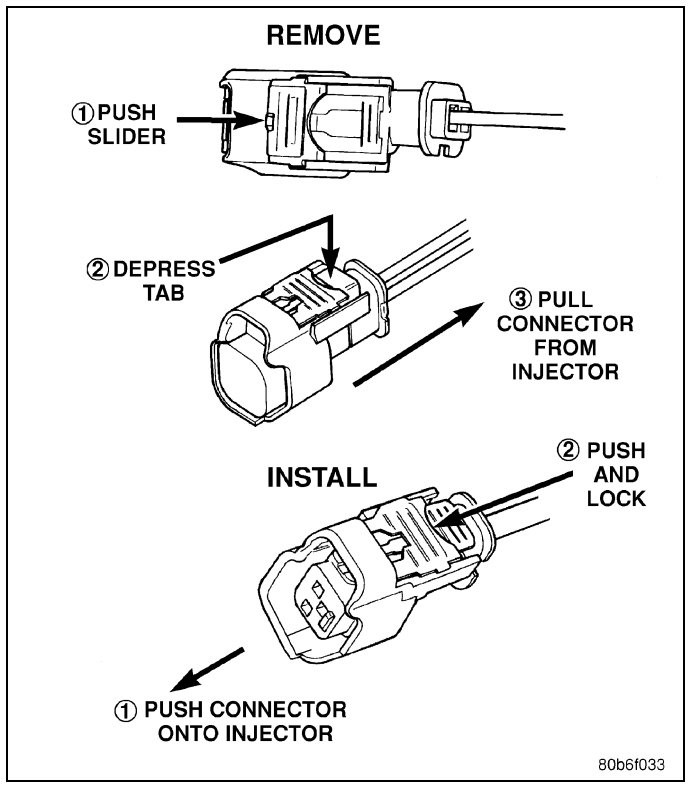

11. Remove 8 ignition coils. (Refer to 08 - Electrical/8I - Ignition Control/COIL, Ignition - Removal)

12. Remove 4 fuel rail mounting bolts (1) .
13. Gently rock and pull **left** side of fuel rail until fuel injectors just start to clear machined holes in cylinder head. Gently rock and pull **right** side of rail until injectors just start to clear cylinder head holes. Repeat this procedure (left/right) until all injectors have cleared cylinder head holes.
14. Remove fuel rail (with injectors attached) from engine.
15. If fuel injectors are to be removed, (Refer to 14 - Fuel System/Fuel Injection/INJECTOR(S), Fuel - Removal).

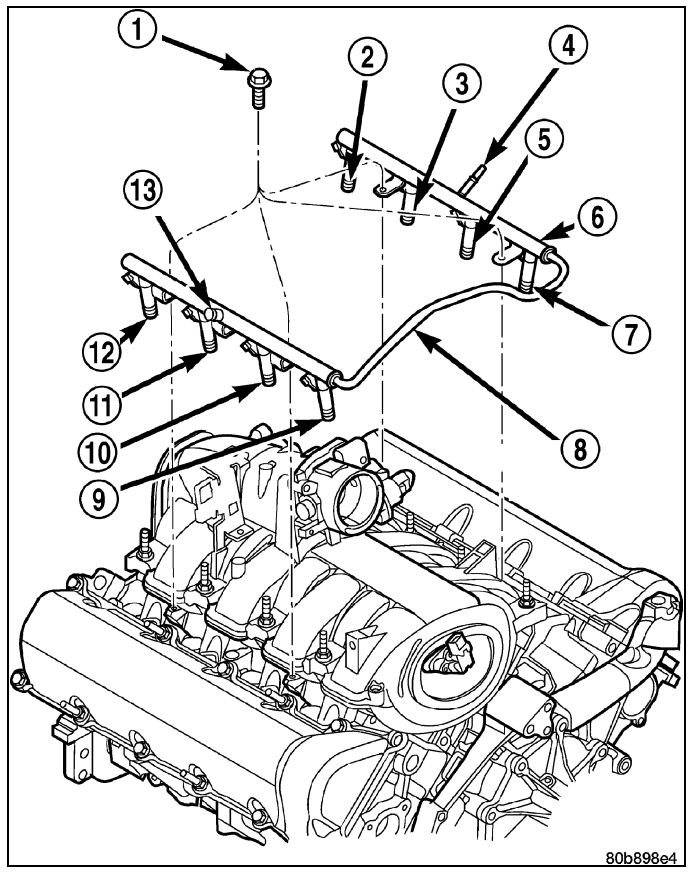

5.7L

WARNING: The fuel system is under constant pressure even with engine off. Before servicing the fuel rail, fuel system pressure must be released.

1. Perform the fuel system pressure release procedure (Refer to 14 - Fuel System/Fuel Delivery - Standard Procedure)
2. Remove the negative battery cable.
3. Disconnect the IAT sensor electrical connector (3).
4. Remove the clean air tube (2) from the air cleaner housing (4) and the throttle body.

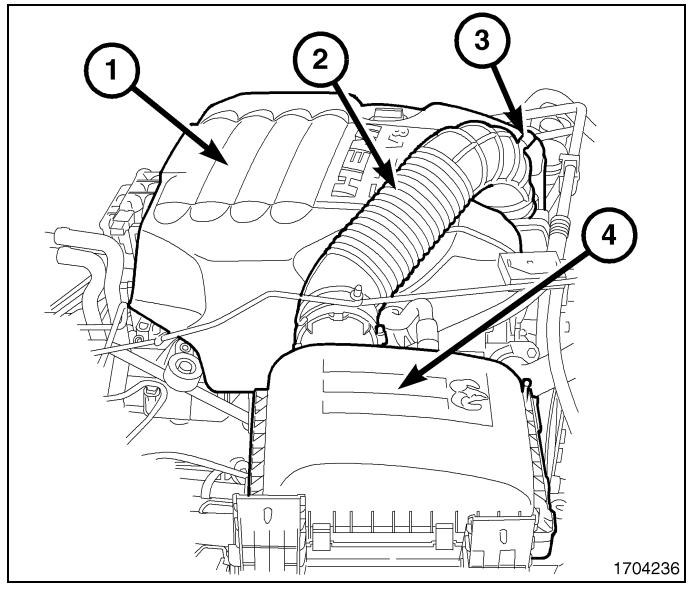

NOTE: The front grommets (1, 3) are a ball stud type mount and the rear grommets (2) are a sliding peg design.

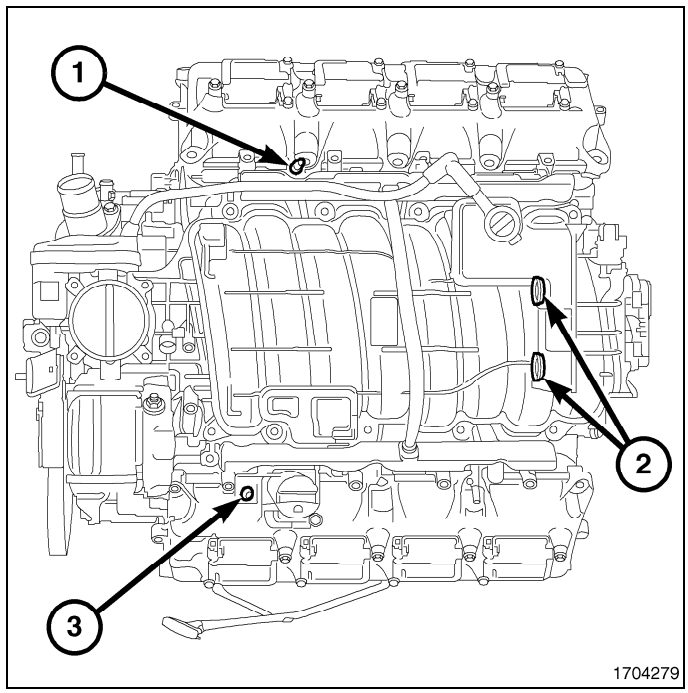

5. Lift up the front of the engine cover (1) and separate the engine cover front grommets (2) from the ball studs on the intake manifold.

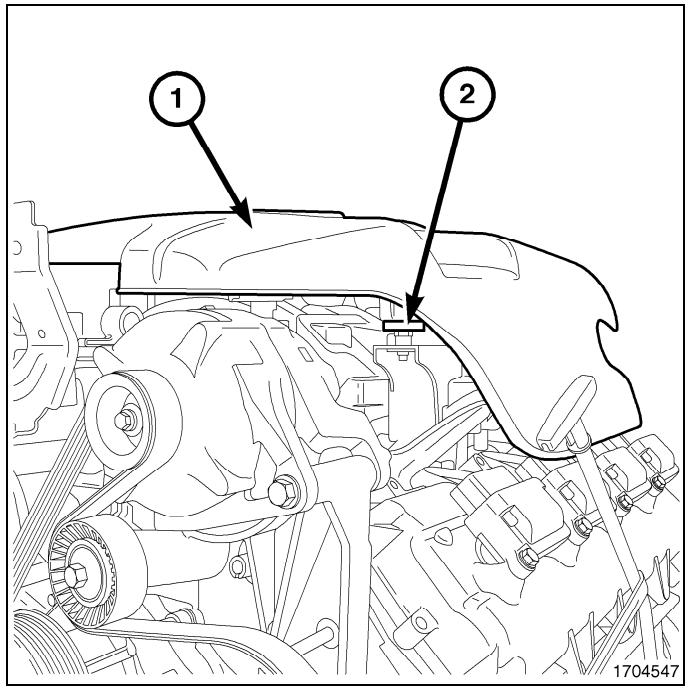

6. Slightly raise the front of the engine cover and slide forward to remove the rear engine cover pegs (2) from the grommets (1) located on the rear of the intake manifold and remove the engine cover.

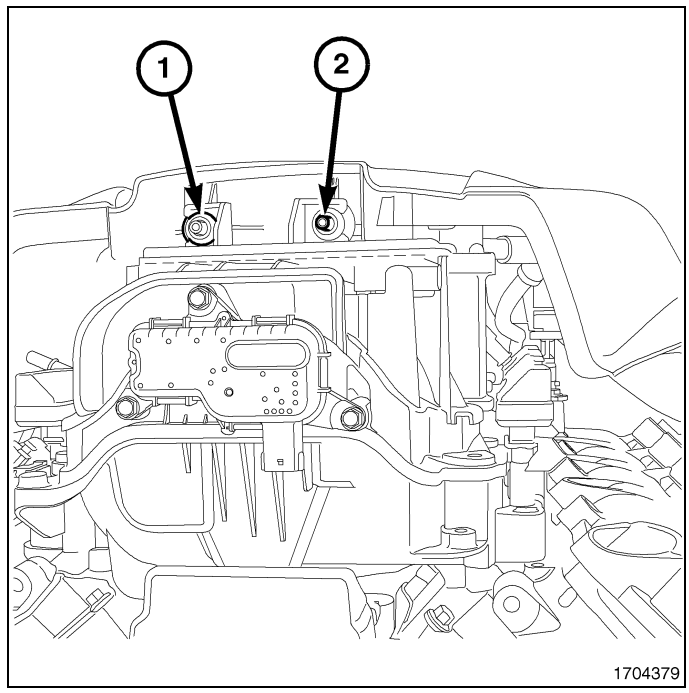

CAUTION: The left and right fuel rails are replaced as an assembly. Do not attempt to separate the fuel rail halves at the connector tube. Due to the design of the connector tube, it does not use any clamps. Never attempt to install a clamping device of any kind to the connector tube. When removing the fuel rail assembly for any reason, be careful not to bend or kink the connector tube.

NOTE: The factory fuel injection electrical harness is numerically tagged (INJ 1, INJ 2, etc.) for injector position identification. If the electrical harness is not tagged, note the injector position before electrical harness removal.

7. Disconnect the electrical connectors at all eight fuel injectors. Push the red colored slider away from the injector (1) while pushing slider, depress tab (2) and remove the electrical connector (3) from the injector.

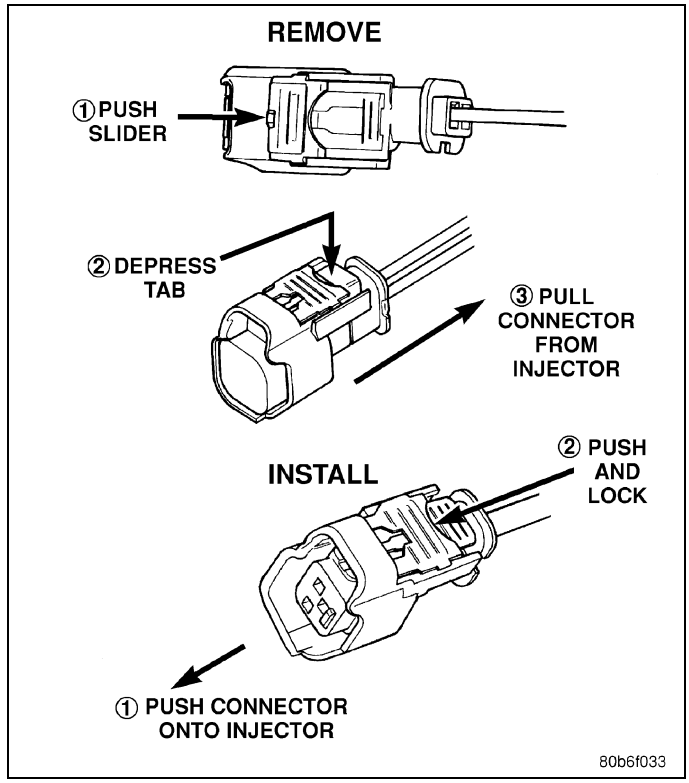

8. Disconnect the PCV hose (1) and position aside to gain access to the fuel rail.
9. Disconnect the fuel line quick connect fitting (2) at the fuel rail (Refer to 14 - Fuel System/Fuel Delivery/FITTING, Quick Connect - Standard Procedure)
10. Disconnect the make up air hose (3) and position aside to gain access to the fuel rail.
11. Remove the four fuel rail mounting bolts (4) from both the left and right fuel rails.
12. Using a side to side motion, gently rock the left fuel rail while pulling up until all four left side fuel injectors just start to clear the machined holes in the intake manifold.
13. Using a side to side motion, gently rock the right fuel rail while pulling up until all four right side fuel injectors just start to clear the machined holes in the intake manifold.

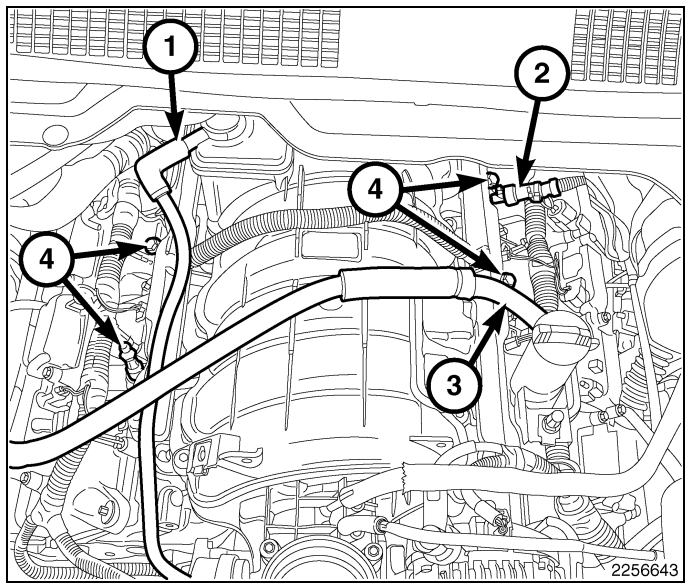

NOTE: Make sure the O-rings are still attached to the fuel injectors during removal.

14. Remove the left and right fuel rails (with injectors attached) as an assembly from the engine.

NOTE: If the same fuel injectors are to be reinstalled, install new O-rings.

15. If the fuel injectors are to be removed from the fuel rail (Refer to 14 - Fuel System/Fuel Injection/INJECTOR(S), Fuel - Removal)

Installation

3.7L

1. If fuel injectors are to be installed, (Refer to 14 - Fuel System/Fuel Injection/INJECTOR(S), Fuel - Installation).
2. Clean out fuel injector machined bores in intake manifold.
3. Apply a small amount of engine oil to each fuel injector O-ring. This will help in fuel rail installation.
4. Position fuel rail/fuel injector assembly to machined injector openings in cylinder head.
5. Guide each injector into cylinder head. Be careful not to tear injector O-rings.
6. Push **right** side of fuel rail down until fuel injectors have bottomed on cylinder head shoulder. Push **left** fuel rail down until injectors have bottomed on cylinder head shoulder.
7. Install 4 fuel rail mounting bolts and tighten. (Refer to 14 - Fuel System/Fuel Delivery - Specifications)
8. Install 6 ignition coils. (Refer to 08 - Electrical/8I - Ignition Control/COIL, Ignition - Installation)
9. Connect electrical connectors to throttle body.
10. Connect electrical connectors at all fuel injectors. To install connector, refer to . Push connector onto injector (1) and then push and lock red colored slider (2). Verify connector is locked to injector by lightly tugging on connector.

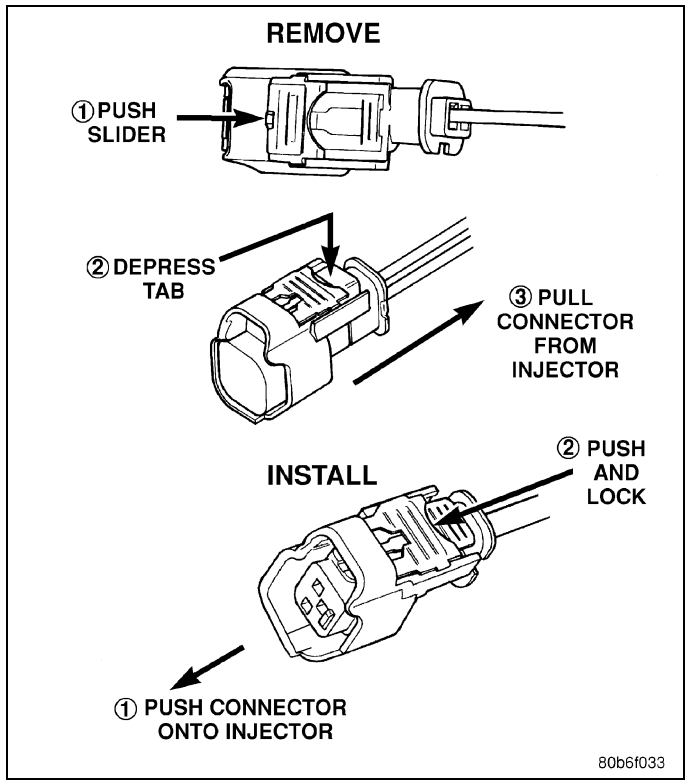

11. Connect necessary vacuum lines to throttle body.
12. Install air resonator mounting bracket near front of throttle body (2 bolts).

13. Connect fuel line latch clip and fuel line to fuel rail. (Refer to 14 - Fuel System/Fuel Delivery/FITTING, Quick Connect - Standard Procedure)
14. Install air box to throttle body.
15. Install air duct to air box.
16. Connect battery cable to battery.
17. Start engine and check for leaks.

4.7L

1. If fuel injectors are to be installed, (Refer to 14 - Fuel System/Fuel Injection/INJECTOR(S), Fuel - Installation).
2. Clean out fuel injector machined bores in intake manifold.
3. Apply a small amount of engine oil to each fuel injector O-ring. This will help in fuel rail installation.
4. Position fuel rail/fuel injector assembly to machined injector openings in cylinder head.
5. Guide each injector into cylinder head. Be careful not to tear injector O-rings.
6. Push **right** side of fuel rail down until fuel injectors have bottomed on cylinder head shoulder. Push **left** fuel rail down until injectors have bottomed on cylinder head shoulder.
7. Install 4 fuel rail mounting bolts and tighten. (Refer to 14 - Fuel System/Fuel Delivery - Specifications)
8. Install 8 ignition coils. (Refer to 08 - Electrical/8I - Ignition Control/COIL, Ignition - Installation)
9. Connect electrical connectors to throttle body.
10. Connect electrical connectors at all fuel injectors. To install connector, refer to . Push connector onto injector (1) and then push and lock red colored slider (2). Verify connector is locked to injector by lightly tugging on connector.

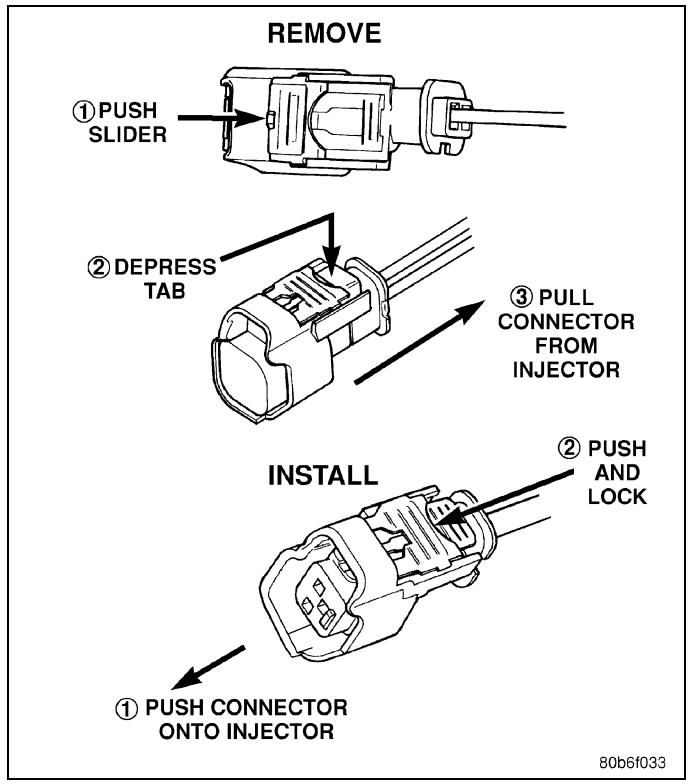

11. Connect necessary vacuum lines to throttle body.
12. Install air resonator mounting bracket near front of throttle body (2 bolts).
13. Connect fuel line latch clip and fuel line to fuel rail. (Refer to 14 - Fuel System/Fuel Delivery/FITTING, Quick Connect - Standard Procedure)
14. Install air box to throttle body.
15. Install air duct to air box.
16. Connect battery cable to battery.
17. Start engine and check for leaks.

5.7L

1. If the fuel injectors are to be installed into the fuel rail (Refer to 14 - Fuel System/Fuel Injection/INJECTOR(S), Fuel - Installation)
2. Clean out the fuel injector machined holes in the intake manifold.

NOTE: If the same fuel injectors are to be reinstalled, install new O-rings.

3. Apply a small amount of engine oil to each fuel injector O-ring. This will help in the fuel rail installation.
4. Position the fuel rail assembly while aligning the injectors into the machined holes in the intake manifold.
5. Guide each injector into the intake manifold using care not to tear the injector O-rings.
6. Using a side to side motion, gently rock the left fuel rail while pushing down until all four left side fuel injectors have completely seated into the machined holes in the intake manifold.
7. Using a side to side motion, gently rock the right fuel rail while pushing down until all four right side fuel injectors have completely seated into the machined holes in the intake manifold.

8. Install the four fuel rail mounting bolts (4) and tighten to 11 N·m (8 ft. lbs.).
9. Connect the make up air hose (3).
10. Connect the fuel line quick connect fitting to the fuel rail (2) (Refer to 14 - Fuel System/Fuel Delivery/FITTING, Quick Connect - Standard Procedure)
11. Connect the PCV hose (1).

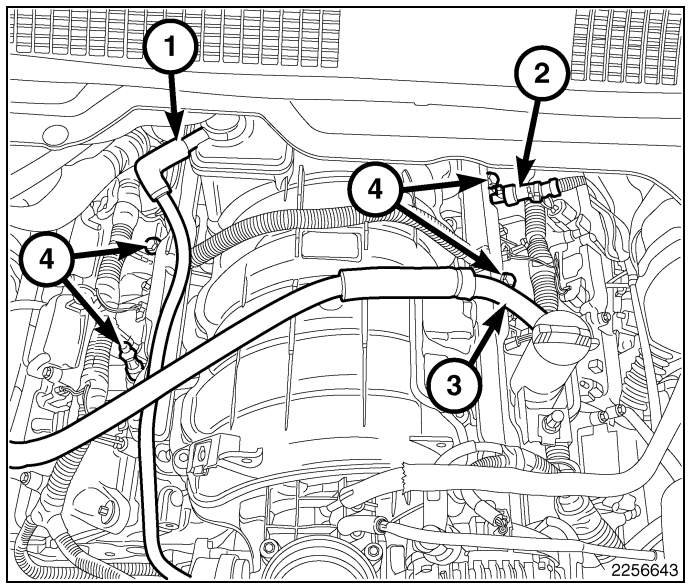

12. Connect the electrical connectors to all eight fuel injectors. Push the connector onto the injector (1) and then push and lock the red colored slider (2). Verify the connector is locked to the injector by lightly tugging on the connector.

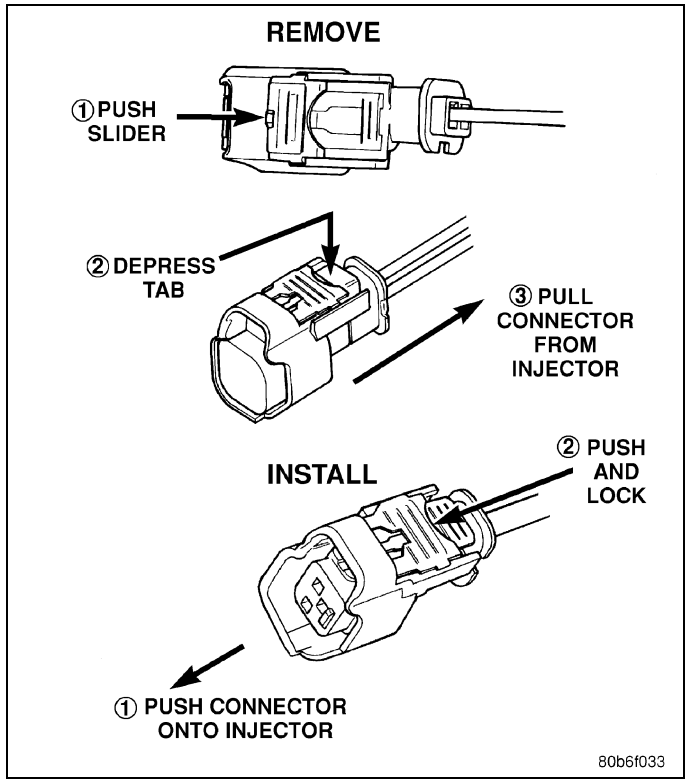

NOTE: The front grommets (1,3) are a ball stud type mount and the rear grommets (2) are a sliding peg design.

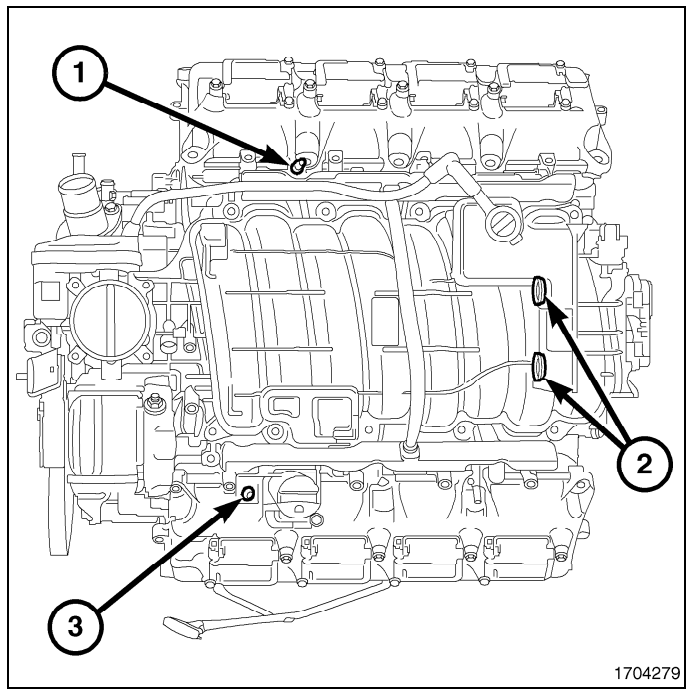

13. Slightly tilt the rear of the engine cover and slide the rear engine cover pegs (2) into the grommets (1) on the rear of the intake manifold until the cover stops.

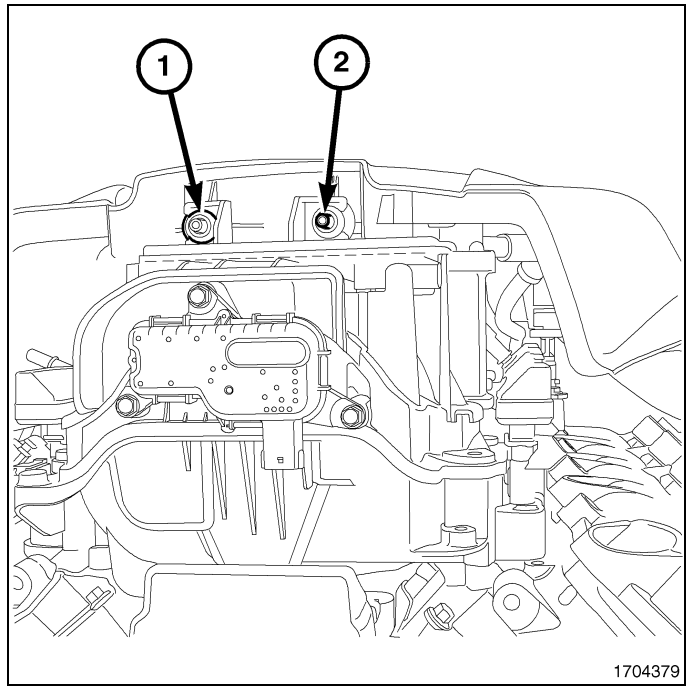

NOTE: While installing the engine cover, the front ball studs will make a popping or suction sound as the ball studs are inserted into the front grommets.

14. Lower the front of the engine cover (1) and line up the front ball studs with the grommets (2) on the front of the intake manifold and with a downward motion push the engine cover front grommets onto the ball studs.
15. Lightly lift the front of the engine cover to insure the front the front grommets are seated onto the ball studs correctly.

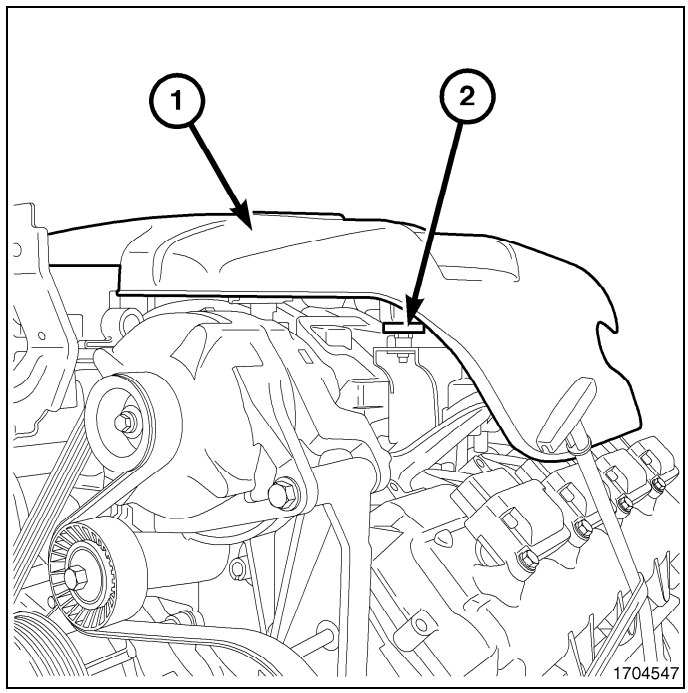

16. Check to insure the engine cover is installed properly by reaching behind the left side of the cover to verify that the pegs (2) are located in the grommets (1).

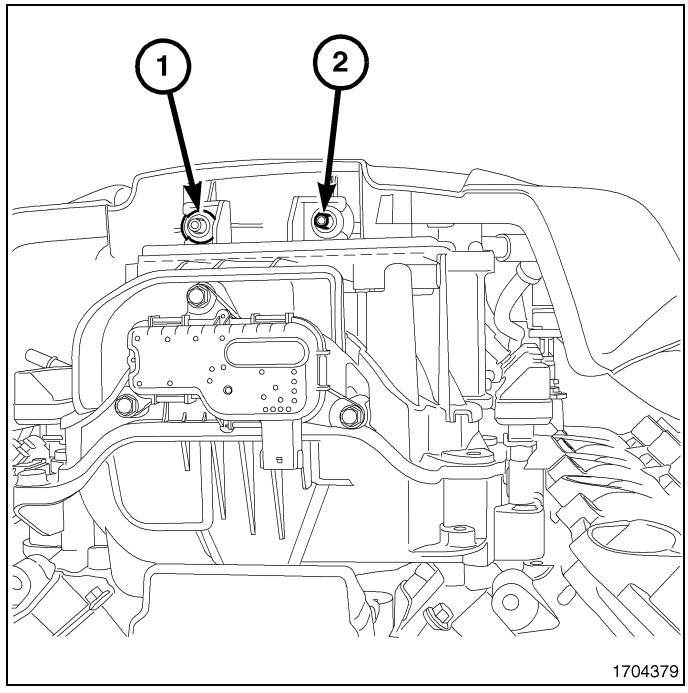

17. Install the clean air tube (2) onto the air cleaner housing (4) and the throttle body.
18. Connect the IAT sensor electrical connector (3).
19. Connect the negative battery cable.
20. Start the engine and check for leaks.

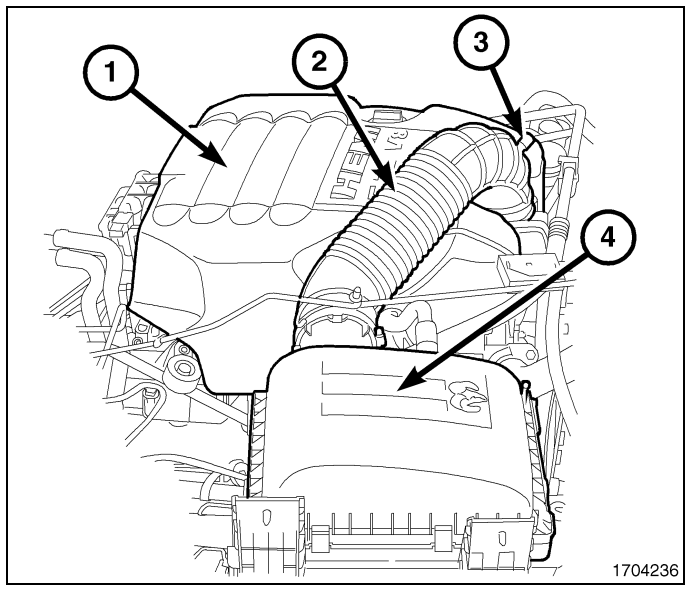

REGULATOR, Fuel Pressure

Description

The fuel pressure regulator is located in the fuel pump module assembly and is non-serviceable.

SENDING UNIT and SENSOR, Fuel Level

Description

The fuel gauge sending unit (fuel level sensor) is attached to the fuel pump module. The sending unit consists of a float, an arm, and a variable resistor track (card).

The sensor is non-servicable. If replacement is necessary, the fuel pump module assembly must be replaced.

TANK, Fuel

Removal

WARNING: The fuel system may be under a constant pressure (even with the engine off). Before servicing the fuel pump module, the fuel system pressure must be released.

1. Perform the fuel system pressure release procedure (Refer to 14 - Fuel System/Fuel Delivery - Standard Procedure)
2. Disconnect and isolate the negative battery cable (1).

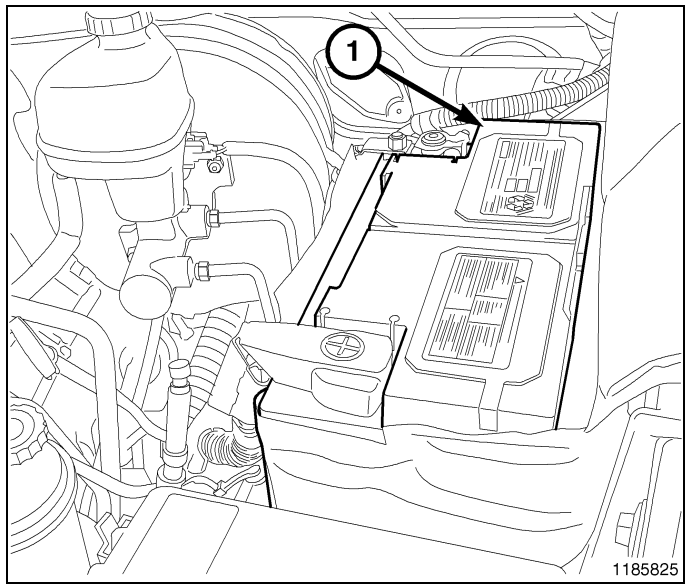

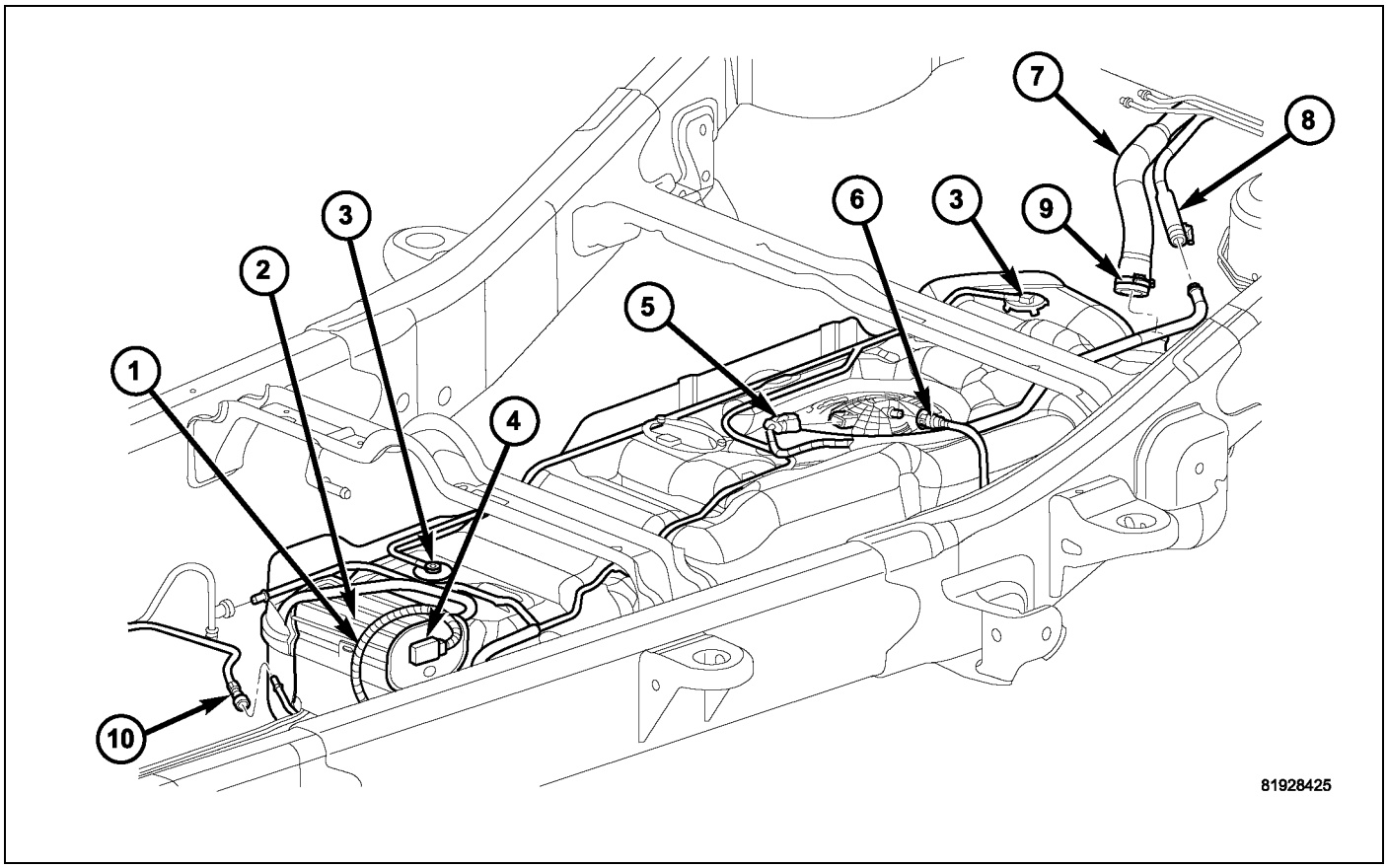

3. Raise and support vehicle.
4. Perform the fuel tank draining procedure (Refer to 14 - Fuel System/Fuel Delivery - Standard Procedure)
5. Disconnect the electrical connector from ESIM switch (4).
6. Disconnect the quick-connect fitting at the front of the fuel tank (10).
7. Disconnect the quick-connect fitting (8) at the rear of the fuel tank.
8. Loosen the fill hose retaining clamp (9) at the rear of the fuel tank and disconnect the fill hose.
9. Using a suitable hydraulic jack with a fuel tank adapter, support the fuel tank.

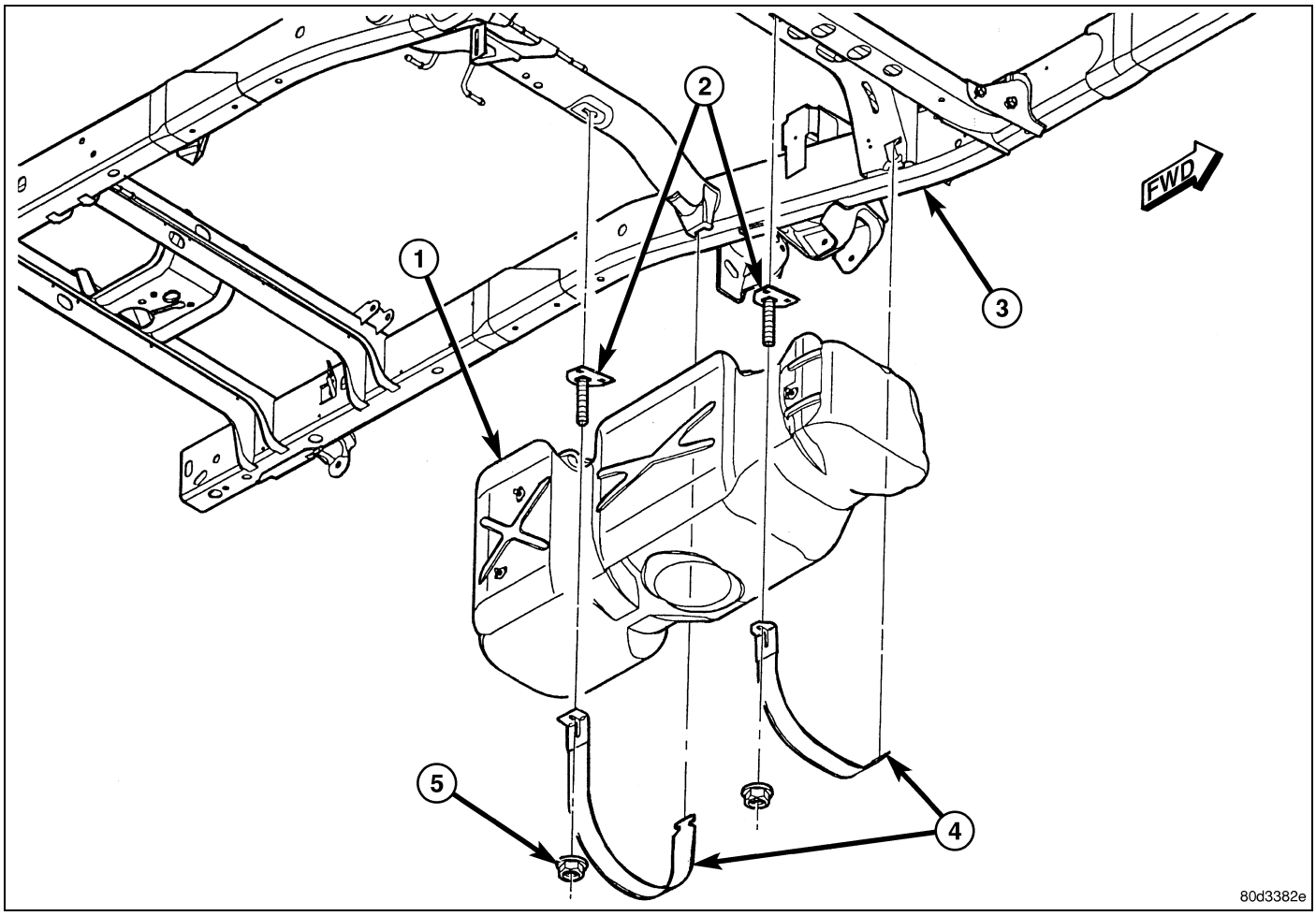

10. Remove the two fuel tank support strap retaining nuts (5) and remove both fuel tank support straps (4).
11. Carefully lower the fuel tank a few inches and disconnect the fuel pump module electrical connector.
12. Disconnect the fuel line quick-connect fitting at the fuel pump module.
13. Lower the fuel tank and remove from hydraulic jack.
14. If fuel pump module removal is necessary (Refer to 14 - Fuel System/Fuel Delivery/MODULE, Fuel Pump - Removal)

Installation

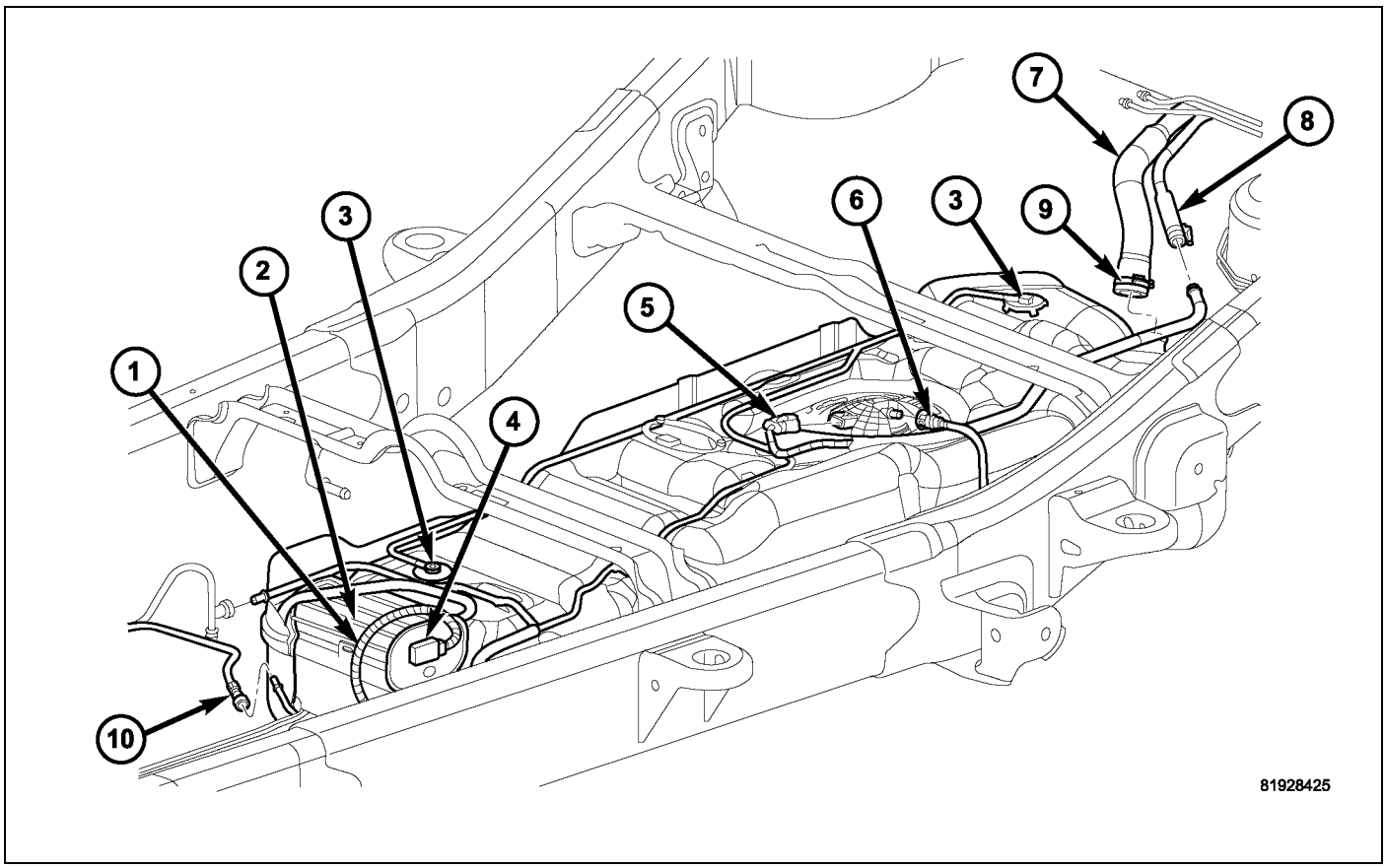

1. If fuel pump module installation is necessary (Refer to 14 - Fuel System/Fuel Delivery/MODULE, Fuel Pump - Installation)
2. Secure the fuel tank onto a suitable hydraulic jack with a fuel tank adapter.
3. Raise and position the fuel tank leaving room to make the connections at the top of the fuel tank.
4. Connect the fuel supply line (6) to the fuel pump module.
5. Connect the electrical connector (5) to the fuel pump module.

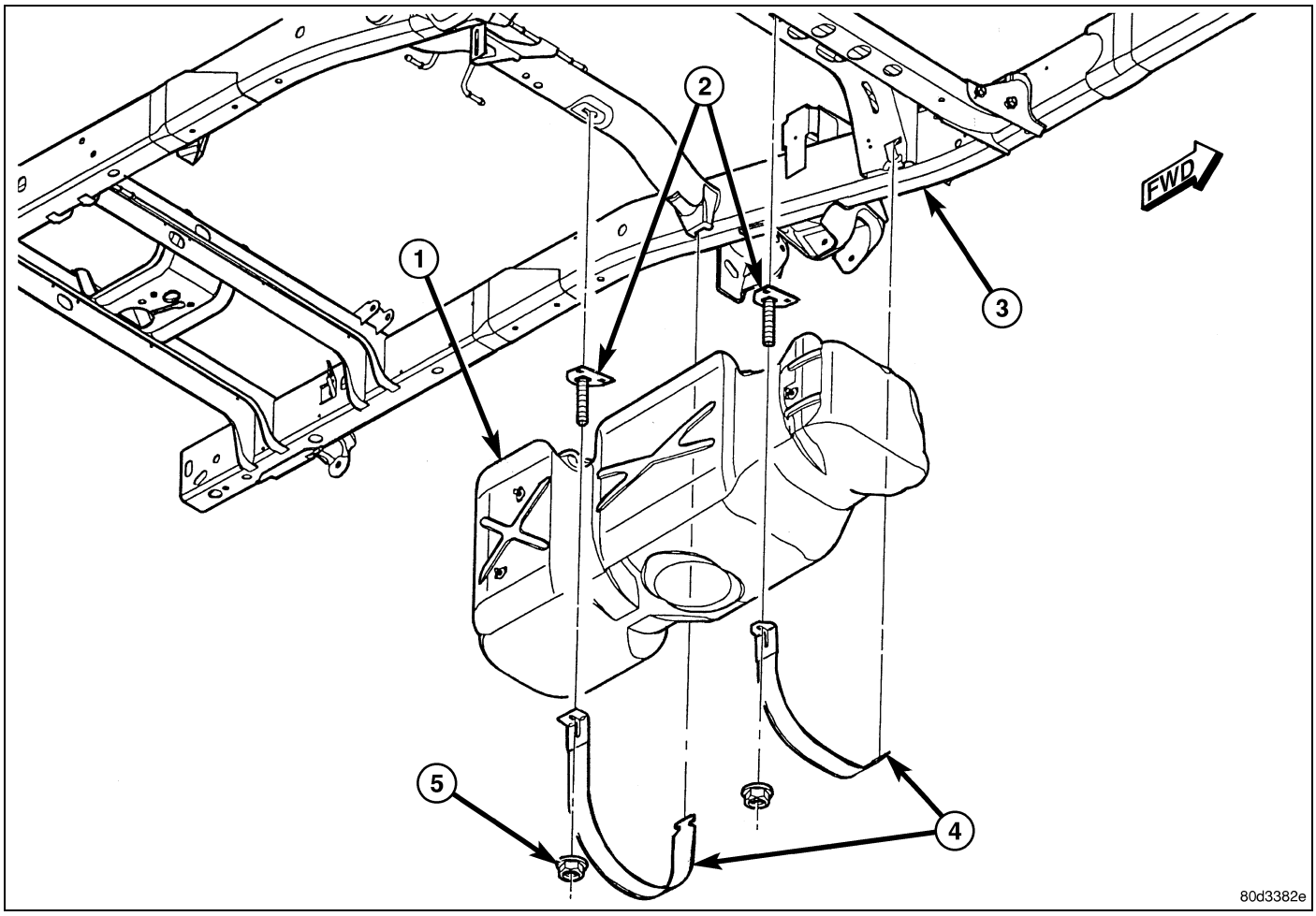

6. Raise the fuel tank (1) until snug to the body.
7. Install the fuel tank straps (4).
8. Install the strap nuts (5) and tighten to 41 N·m (30 ft. lbs.).
9. Remove the hydraulic jack.

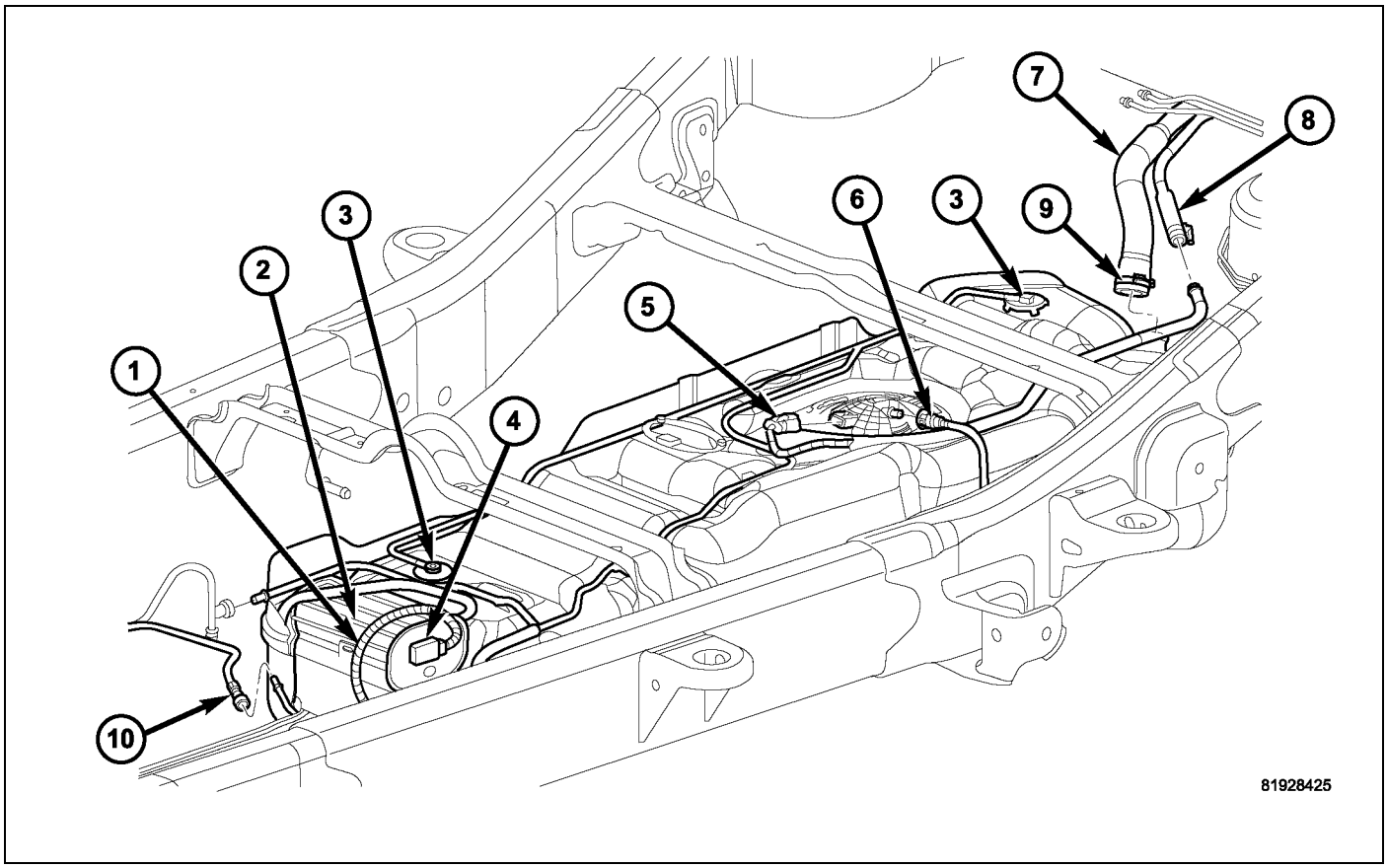

10. Connect the electrical connector to the ESIM switch (4).
11. Connect the quick-connect fitting at the front of the fuel tank (10).
12. Connect the quick-connect fitting (8) at the rear of the fuel tank.
13. Connect the fill hose (7) at the rear of the fuel tank and securely tighten the fill hose retaining clamp (9).
14. Connect the fuel line quick-connect fitting at the fuel rail (1).

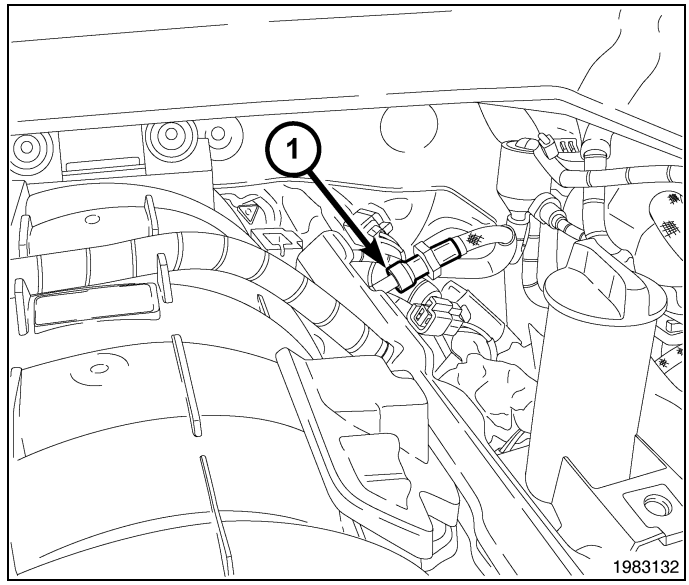

15. Connect the negative battery cable (1).
16. Fill the fuel tank.
17. Start the engine and check for leaks at all fuel tank connections.

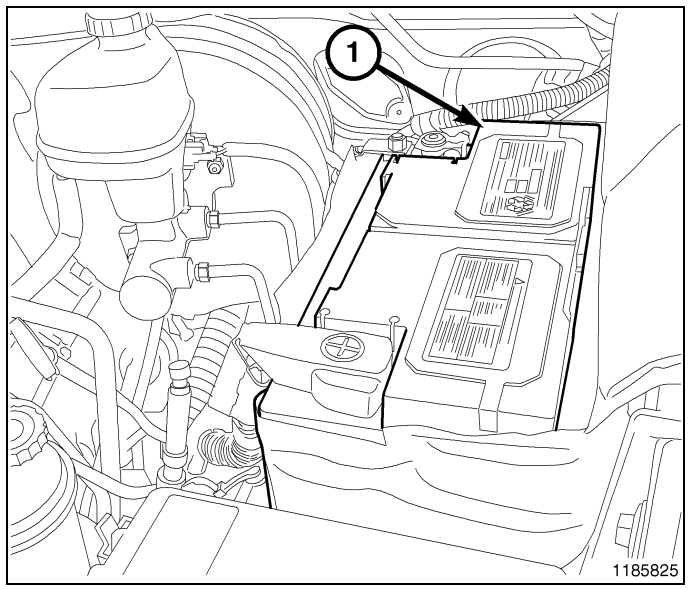

TUBE(S), Fuel

Description

Also refer to Quick-Connect Fittings.

WARNING: The fuel system may be under a constant pressure (even with the engine off). Before servicing any fuel system hoses, fittings, lines, or most components, fuel system pressure must be released. Refer to the fuel system pressure release procedure.

The lines/tubes/hoses used on fuel injected vehicles are of a special construction. This is due to the higher fuel pressures and the possibility of contaminated fuel in this system. If it is necessary to replace these lines/tubes/hoses, only those marked EFM/EFI may be used.

If equipped: The hose clamps used to secure rubber hoses on fuel injected vehicles are of a special rolled edge construction. This construction is used to prevent the edge of the clamp from cutting into the hose. Only these rolled edge type clamps may be used in this system. All other types of clamps may cut into the hoses and cause high-pressure fuel leaks.

Use new original equipment type hose clamps.

FUEL INJECTION, GAS

TABLE OF CONTENTS

page

FUEL INJECTION, GAS
OPERATION . . . 38
INJECTOR(S), FUEL
DESCRIPTION . . . 38
OPERATION
FUEL INJECTOR . . . 39
PCM OUTPUT . . . 39
REMOVAL
3.7L/4.7L . . . 40
5.7L . . . 40
INSTALLATION
3.7L/4.7L . . . 41
5.7L . . . 41
PEDAL, ACCELERATOR
REMOVAL . . . 41
INSTALLATION . . . 42
RELAY, FUEL PUMP
DESCRIPTION . . . 43
OPERATION . . . 43
SENSOR, ACCELERATOR PEDAL POSITION
DESCRIPTION . . . 43
OPERATION . . . 44
REMOVAL . . . 44
INSTALLATION . . . 44
SENSOR, AIR TEMPERATURE, INTAKE
OPERATION . . . 45
REMOVAL
3.7L . . . 46
4.7L . . . 47
5.7L . . . 48
INSTALLATION
3.7L . . . 49
4.7L . . . 50
5.7L . . . 51
SENSOR, CRANKSHAFT POSITION
DESCRIPTION
3.7L . . . 51
4.7L . . . 52
5.7L . . . 52

page

OPERATION
3.7L . . . 53
4.7L . . . 53
5.7L . . . 54
REMOVAL
3.7L . . . 54
4.7L . . . 55
5.7L . . . 55
INSTALLATION
3.7L . . . 56
4.7L . . . 56
5.7L . . . 57
SENSOR, MANIFOLD AIR PRESSURE (MAP)
OPERATION . . . 57
REMOVAL
3.7L/4.7L . . . 58
5.7L . . . 59
INSTALLATION
3.7L/4.7L . . . 60
5.7L . . . 61
SENSOR, OXYGEN
DESCRIPTION . . . 61
REMOVAL . . . 62
INSTALLATION . . . 62
THROTTLE BODY
DESCRIPTION . . . 63
REMOVAL
3.7L . . . 63
4.7L . . . 63
5.7L . . . 64
INSTALLATION
3.7L . . . 65
4.7L . . . 67
5.7L . . . 68
VALVE, SHORT RUNNER
DESCRIPTION . . . 69
REMOVAL . . . 70
INSTALLATION . . . 72

Fuel Injection, Gas

Operation

A vehicle that is not properly tuned and maintained cannot be expected to perform at its maximum efficiency and can have an adverse effect on fuel economy. The following recommendations will ensure that the vehicle is performing at its maximum efficiency:

- **Use the recommended motor oil grade.** Using the manufacturer's recommended grade of Mopar® motor oil can improve fuel mileage by 1-2%. Mopar® motor oil labeled "Energy Conserving" contains friction-reducing additives.
- **Check and replace air filters.** Replacing a clogged air filter with a new Mopar® air filter can improve fuel mileage by as much as 10%.
- **Keep the engine tuned.** Repairing a vehicle that is noticeably out of tune can improve fuel mileage by an average of 4%. Maintaining a vehicle and repairing problems, such as a faulty oxygen sensor, can improve mileage by as much as 40%.
- **Keep tires properly inflated.** Underinflated tires can lower fuel mileage by 0.4% for every 1 psi drop in pressure of all four tires.

INJECTOR(S), Fuel

Description

An individual fuel injector (1) is used for each individual cylinder.

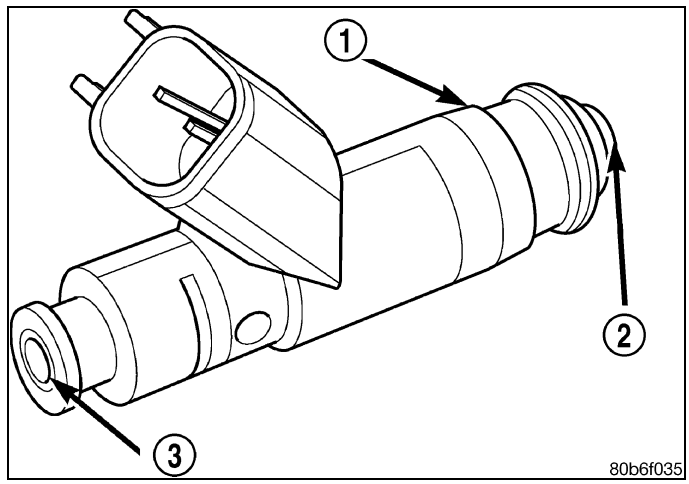

Operation

FUEL INJECTOR

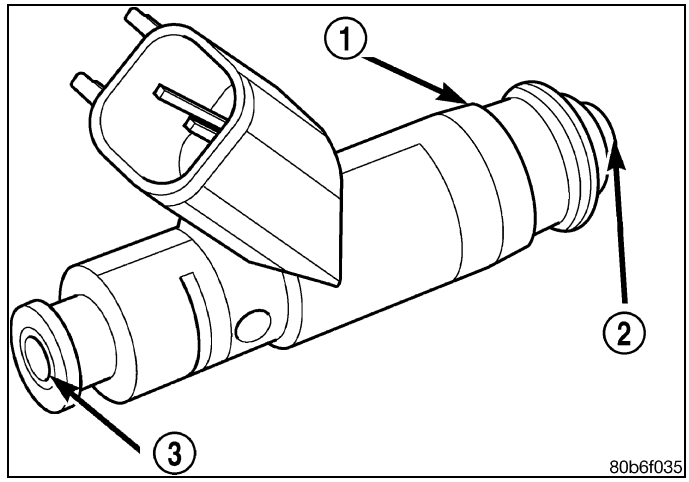

The top (fuel entry) end of the injector (1) is attached into an opening on the fuel rail.

The fuel injectors are electrical solenoids. The injector contains a pintle that closes off an orifice at the nozzle end. When electric current is supplied to the injector, the armature and needle move a short distance against a spring, allowing fuel to flow out the orifice. Because the fuel is under high pressure, a fine spray is developed in the shape of a pencil stream. The spraying action atomizes the fuel, adding it to the air entering the combustion chamber.

The nozzle (outlet) ends of the injectors are positioned into openings in the intake manifold just above the intake valve ports of the cylinder head. The engine wiring harness connector for each fuel injector is equipped with an attached numerical tag (INJ 1, INJ 2 etc.). This is used to identify each fuel injector.

The injectors are energized individually in a sequential order by the Powertrain Control Module (PCM). The PCM will adjust injector pulse width by switching the ground path to each individual injector on and off. Injector pulse width is the period of time that the injector is energized. The PCM will adjust injector pulse width based on various inputs it receives.

Battery voltage is supplied to the injectors through the ASD relay.

The PCM determines injector pulse width based on various inputs.

PCM OUTPUT

The nozzle ends of the injectors are positioned into openings in the intake manifold just above the intake valve ports of the cylinder head. The engine wiring harness connector for each fuel injector is equipped with an attached numerical tag (INJ 1, INJ 2 etc.). This is used to identify each fuel injector with its respective cylinder number.

The injectors are energized individually in a sequential order by the Powertrain Control Module (PCM). The PCM will adjust injector pulse width by switching the ground path to each individual injector on and off. Injector pulse width is the period of time that the injector is energized. The PCM will adjust injector pulse width based on various inputs it receives.

Battery voltage (12 volts +) is supplied to the injectors through the ASD relay. The ASD relay will shut-down the 12 volt power source to the fuel injectors if the PCM senses the ignition is on, but the engine is not running. This occurs after the engine has not been running for approximately 1.8 seconds.

The PCM determines injector on-time (pulse width) based on various inputs.

Removal

3.7L/4.7L

1. Remove the fuel rail assembly (Refer to 14 - Fuel System/Fuel Delivery/RAIL, Fuel - Removal)
2. Using suitable pliers (1), remove the fuel injector retaining clip (2).
3. Remove the fuel injector (3) from the fuel rail (4) using a side to side motion while pulling the injector out of the fuel rail assembly.

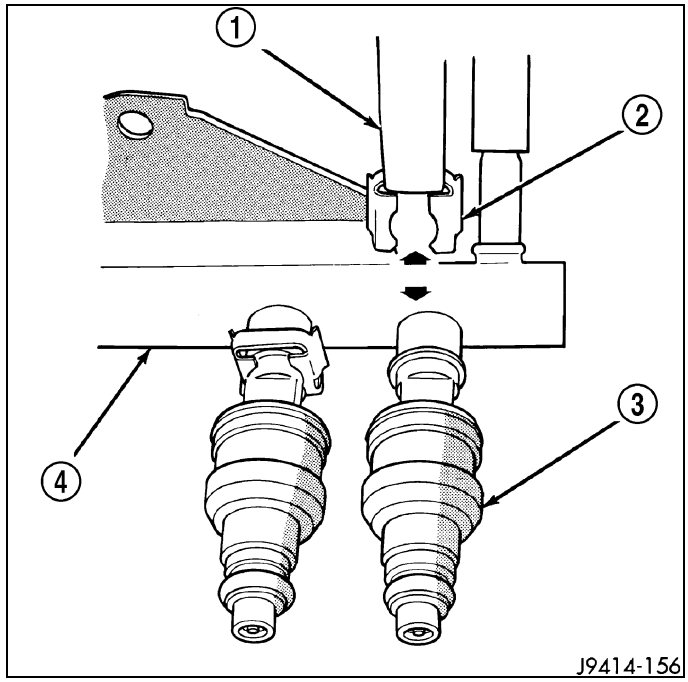

5.7L

1. Remove the fuel rail assembly (Refer to 14 - Fuel System/Fuel Delivery/RAIL, Fuel - Removal)
2. Using suitable pliers (1), remove the fuel injector retaining clip (2).
3. Remove the fuel injector (3) from the fuel rail (4) using a side to side motion while pulling the injector out of the fuel rail assembly.

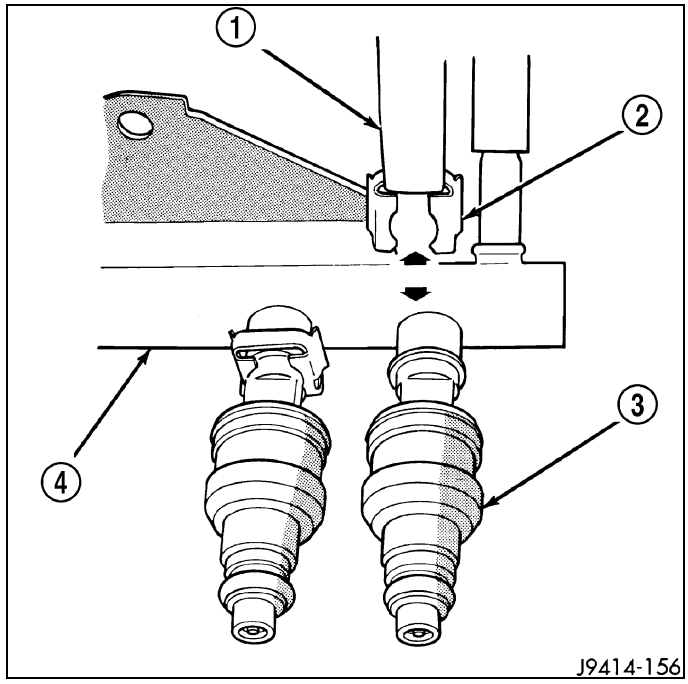

Installation

3.7L/4.7L

NOTE: If the same fuel injector is to be reinstalled, install new O-rings.

NOTE: Apply a small amount of clean engine oil to each injector O-ring. This will aid in the installation.

1. Install the fuel injector (3) into the fuel rail (4) using a side to side motion while pushing injector into the fuel rail assembly.
2. Using suitable pliers (1), install the fuel injector retaining clip (2).
3. Install the fuel rail assembly (Refer to 14 - Fuel System/Fuel Delivery/RAIL, Fuel - Installation)
4. Start the engine and check for fuel leaks.

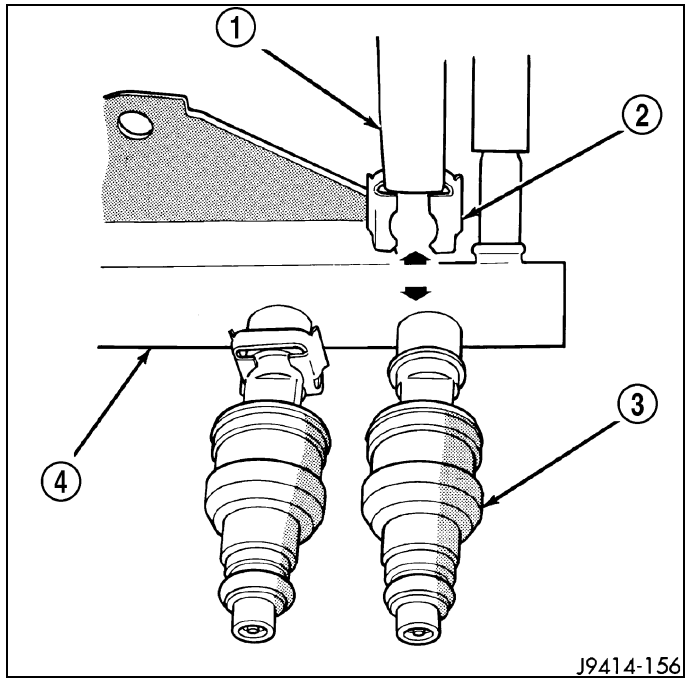

5.7L

NOTE: If the same fuel injector is to be reinstalled, install new O-rings.

NOTE: Apply a small amount of clean engine oil to each injector O-ring. This will aid in the installation.

1. Install the fuel injector (3) into the fuel rail (4) using a side to side motion while pushing injector into the fuel rail assembly.
2. Using suitable pliers (1), install the fuel injector retaining clip (2).
3. Install the fuel rail assembly (Refer to 14 - Fuel System/Fuel Delivery/RAIL, Fuel - Installation)
4. Start the engine and check for fuel leaks.

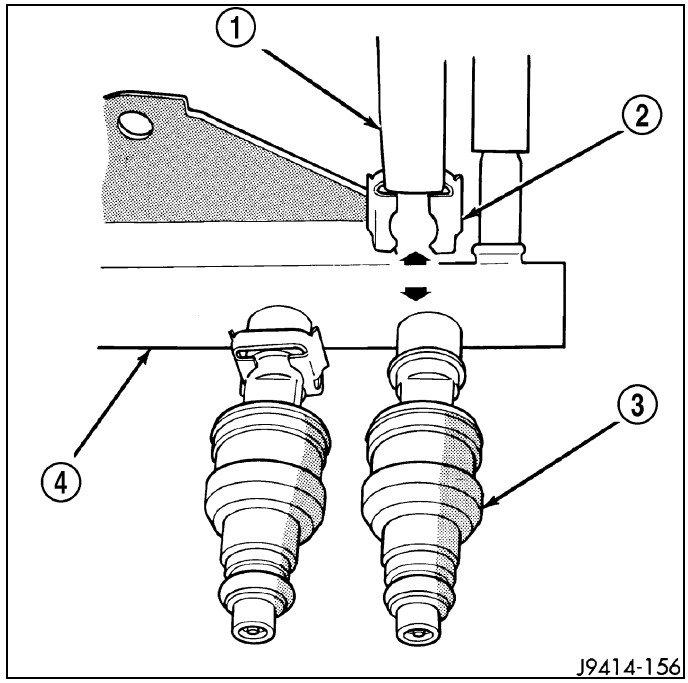

PEDAL, Accelerator

Removal

CAUTION: Do not attempt to separate or remove the Accelerator Pedal Position Sensor (APPS) from the accelerator pedal assembly. The APPS and the accelerator pedal is replaced as an assembly. If the sensor is removed from the pedal, the electronic calibration may be destroyed.

1. Disconnect the 6-way electrical connector at the APPS (1).
2. Remove the upper accelerator pedal mounting bolt (2).
3. Remove the lower accelerator pedal mounting bolt (3).
4. Remove the accelerator pedal assembly from the vehicle.

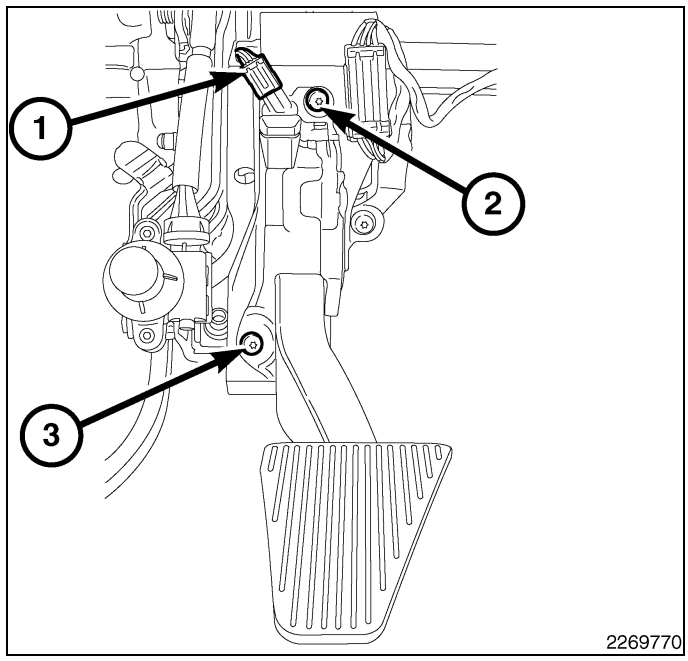

Installation

CAUTION: Do not attempt to separate or remove the Accelerator Pedal Position Sensor (APPS) from the accelerator pedal assembly. The APPS and the accelerator pedal is replaced as an assembly. If the sensor is removed from the pedal, the electronic calibration may be destroyed.

1. Position the accelerator pedal assembly on the pedal sled.
2. Install the lower accelerator pedal mounting bolt (3) and tighten to 7 N·m (5 ft. lbs.).
3. Install the upper accelerator pedal mounting bolt (2) 7 N·m (5 ft. lbs.).
4. Connect the 6-way electrical connector at the APPS (1).
5. If necessary, use a Scan Tool to erase any Diagnostic Trouble Codes (DTC's).

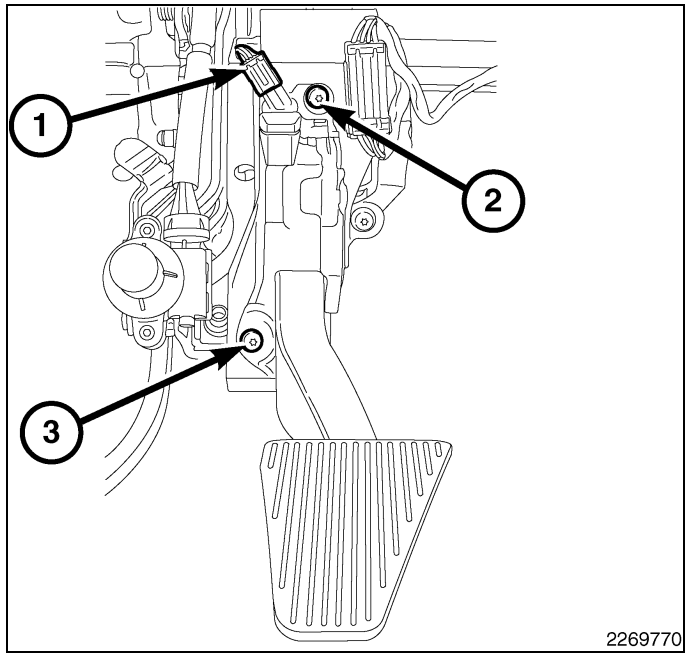

RELAY, Fuel Pump

Description

A separate fuel pump relay is no longer used. A circuit within the TIPM (Totally Integrated Power Module) is used to control the electric fuel pump located within the fuel pump module. The TIPM (1) is located in the engine compartment in front of the battery.

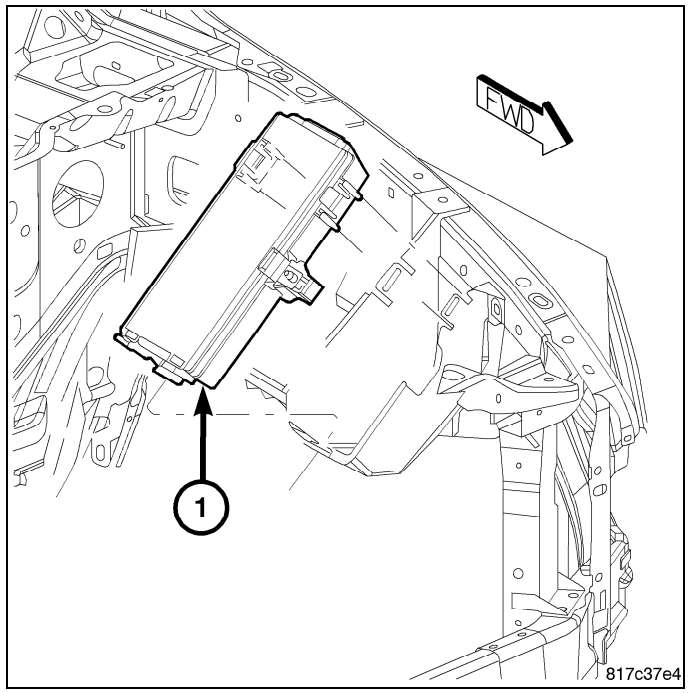

Operation

The Powertrain Control Module (PCM) energizes the electric fuel pump through the fuel pump relay. The fuel pump relay is energized by first applying battery voltage to it when the ignition key is turned ON, and then applying a ground signal to the relay from the PCM.

Whenever the ignition key is turned ON, the electric fuel pump will operate. But, the PCM will shut-down the ground circuit to the fuel pump relay in approximately 1–3 seconds unless the engine is operating or the starter motor is engaged.

SENSOR, Accelerator Pedal Position

Description

The Accelerator Pedal Position Sensor (APPS) (1) is located inside the vehicle. It is attached to the accelerator pedal assembly (3). It is used only with 3.7L V-6 and 5.7L V-8 gas engines.

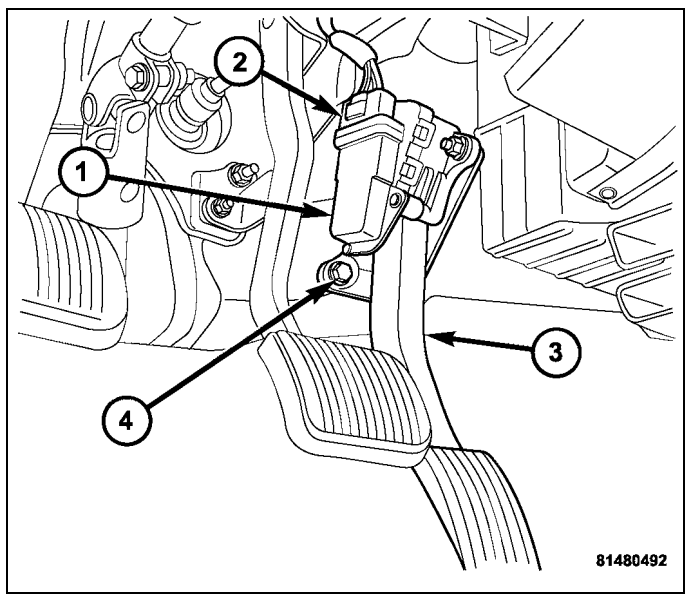

Operation

The Accelerator Pedal Position Sensor (APPS) provides the Powertrain Control Module (PCM) with two DC voltage signals which change as the position of the accelerator pedal changes. One of the DC voltage signals will be half the voltage of the other signal.

Removal

CAUTION: Do not attempt to separate or remove the Accelerator Pedal Position Sensor (APPS) from the accelerator pedal assembly. The APPS and the accelerator pedal is replaced as an assembly. If the sensor is removed from the pedal, the electronic calibration may be destroyed.

1. Remove the accelerator pedal assembly (Refer to 14 - Fuel System/Fuel Injection/PEDAL, Accelerator - Removal)

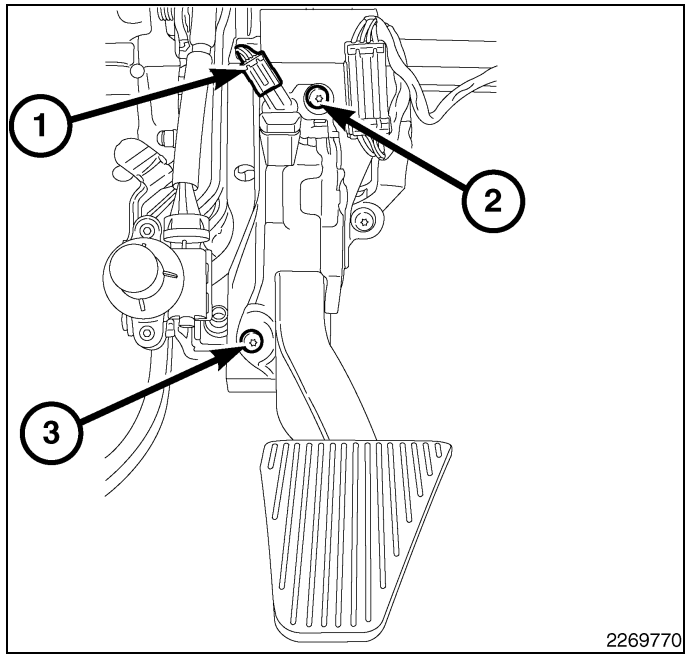

Installation

CAUTION: Do not attempt to separate or remove the Accelerator Pedal Position Sensor (APPS) from the accelerator pedal assembly. The APPS and the accelerator pedal is replaced as an assembly. If the sensor is removed from the pedal, the electronic calibration may be destroyed.

1. Install the accelerator pedal assembly (Refer to 14 - Fuel System/Fuel Injection/PEDAL, Accelerator - Installation)

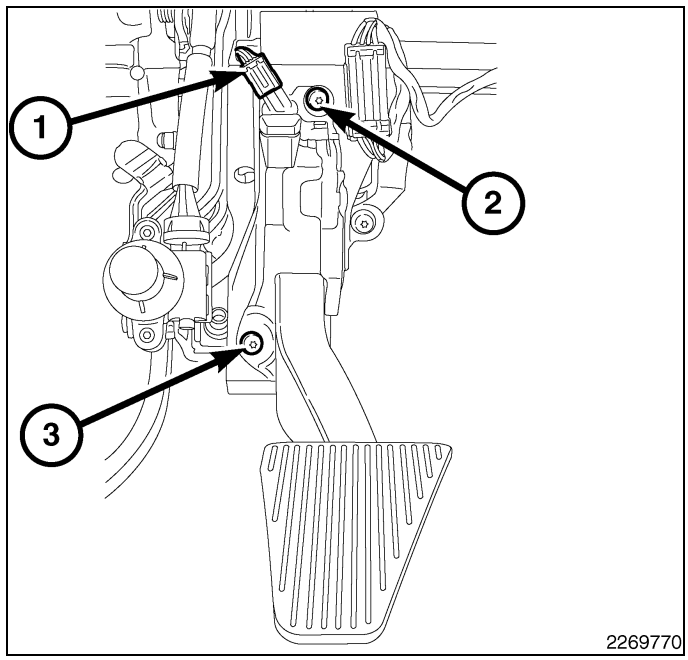

2. If necessary, use a Scan Tool to erase any Diagnostic Trouble Codes (DTC's).

SENSOR, Air Temperature, Intake

Operation

The IAT sensor provides an input voltage to the Powertrain Control Module (PCM) indicating the density of the air entering the intake manifold based upon intake manifold temperature. At key-on, a 5–volt power circuit is supplied to the sensor from the PCM. The sensor is grounded at the PCM through a low-noise, sensor-return circuit.

The PCM uses this input to calculate the following:

- Injector pulse-width
- Adjustment of spark timing (to help prevent spark knock with high intake manifold air-charge temperatures)

The resistance values of the IAT sensor is the same as for the Engine Coolant Temperature (ECT) sensor.

Removal

3.7L

The intake manifold air temperature (IAT) sensor (1) is installed into the air intake tube near the throttle body (2).

1. Disconnect electrical connector (1) from IAT sensor.
2. Clean dirt from intake tube at sensor base.

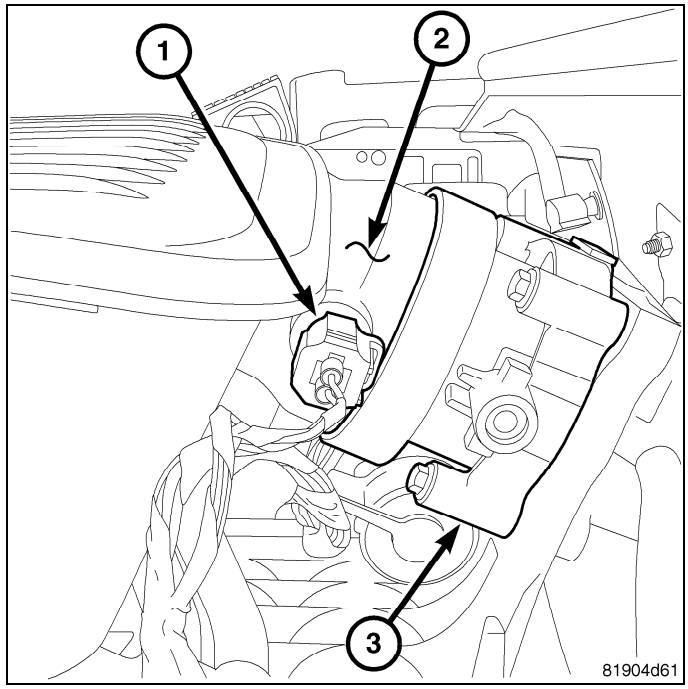

3. Gently lift on small plastic release tab (3) and rotate sensor about 1/4 turn counter-clockwise for removal.
4. Check condition of sensor o-ring (2).

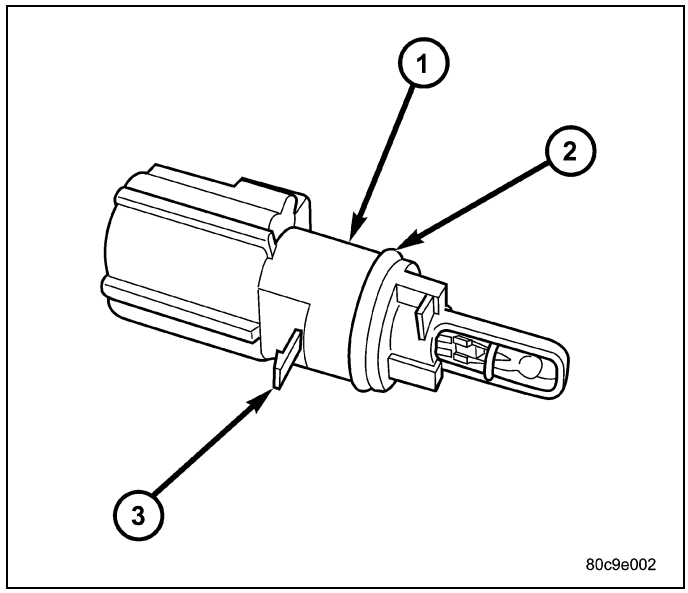

4.7L

The intake manifold air temperature (IAT) sensor (1) is located near the throttle body.

1. Disconnect electrical connector (2) from IAT sensor.

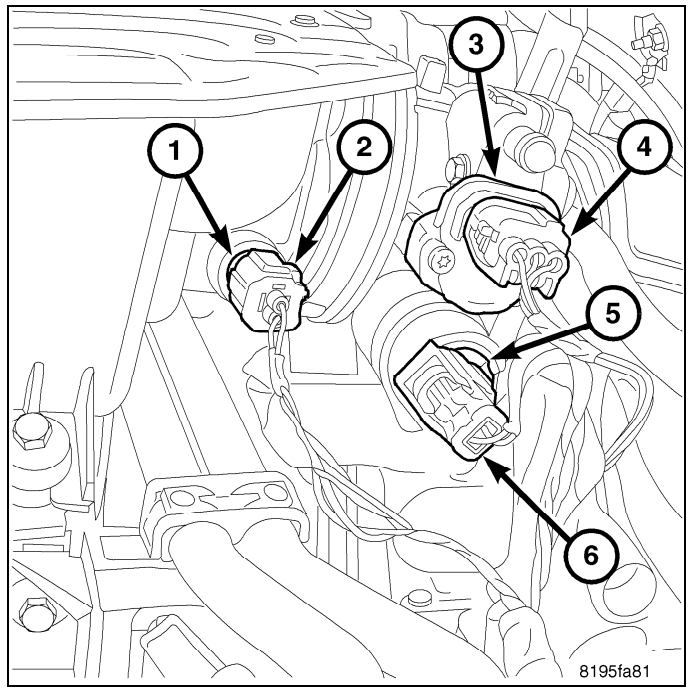

2. Clean dirt from sensor base.
3. Gently lift on small plastic release tab (3) and rotate sensor about 1/4 turn counter-clockwise for removal.
4. Check condition of sensor o-ring (2).

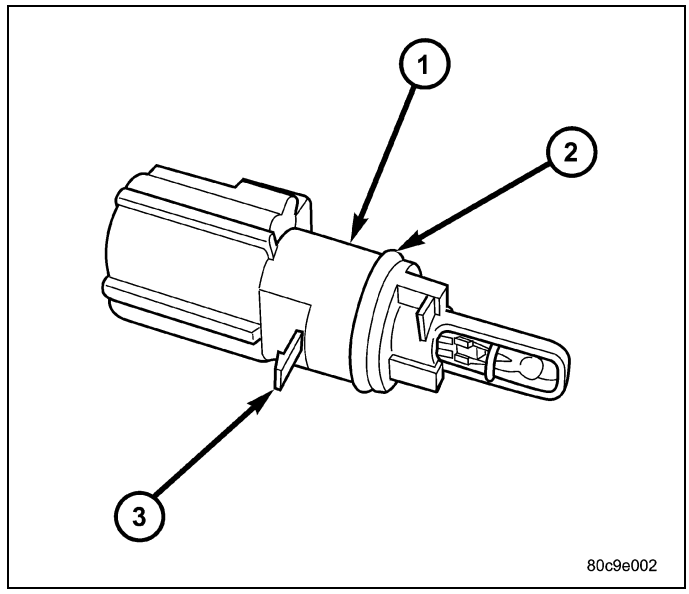

5.7L

The intake manifold air temperature (IAT) sensor (2) is installed into the front of the intake manifold air box plenum .

1. Disconnect electrical connector (2) from IAT sensor .
2. Clean dirt from intake manifold at sensor base.

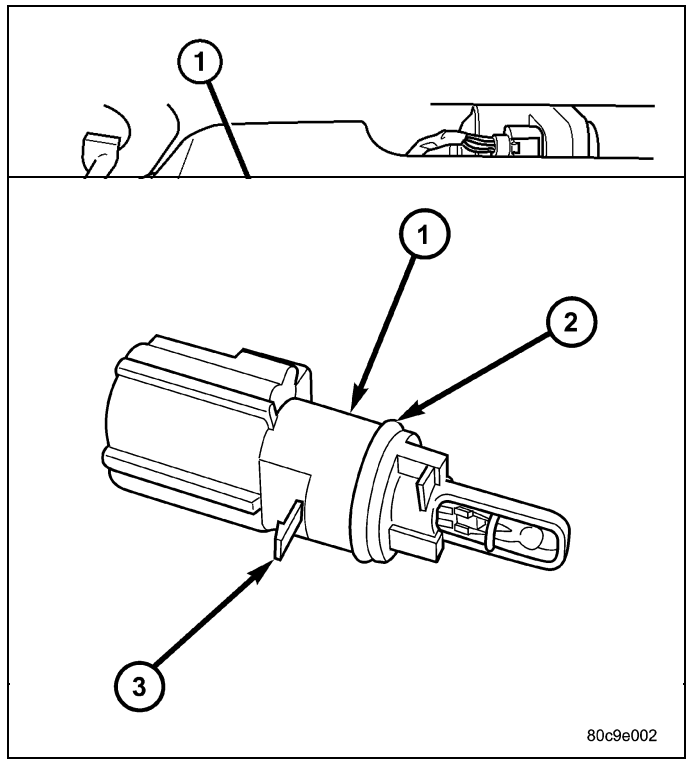

3. Gently lift on small plastic release tab (3) and rotate sensor about 1/4 turn counterclockwise for removal.
4. Check condition of sensor O-ring.

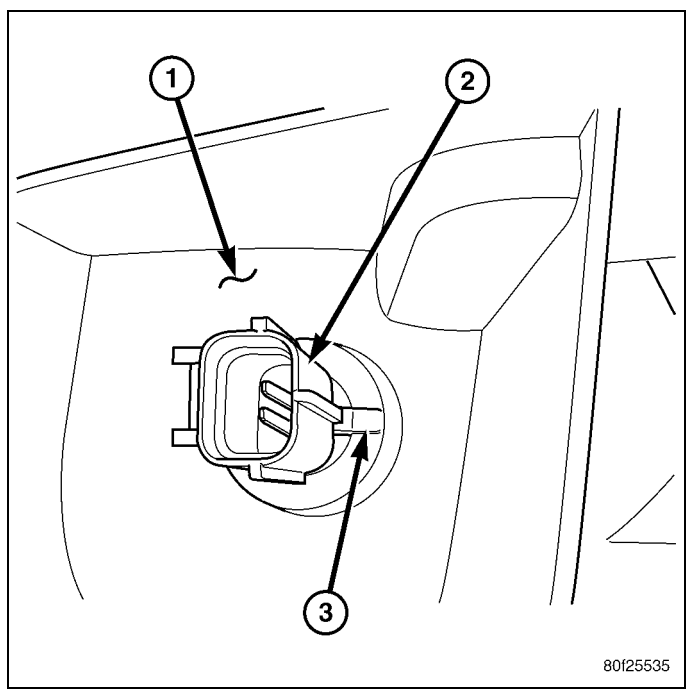

Installation

3.7L

1. Check condition of sensor o-ring (2).

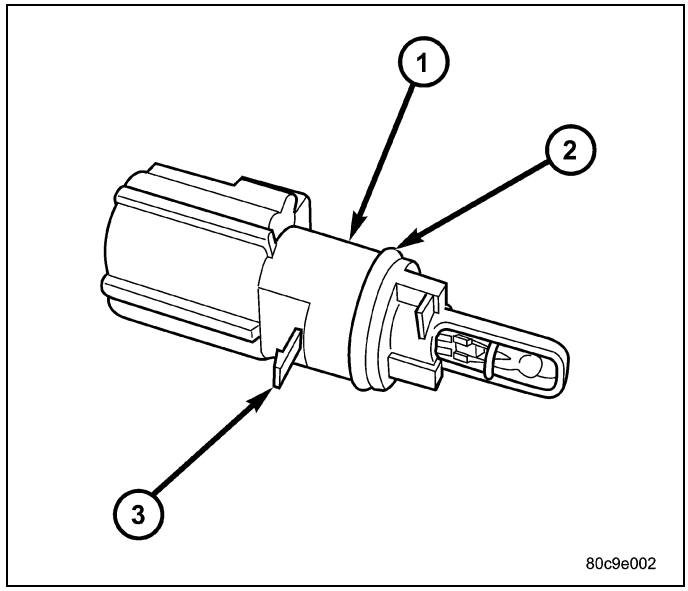

2. Clean sensor mounting hole in air intake tube.
3. Position sensor into air intake tube and rotate clockwise until past release tab.
4. Install electrical connector (1).

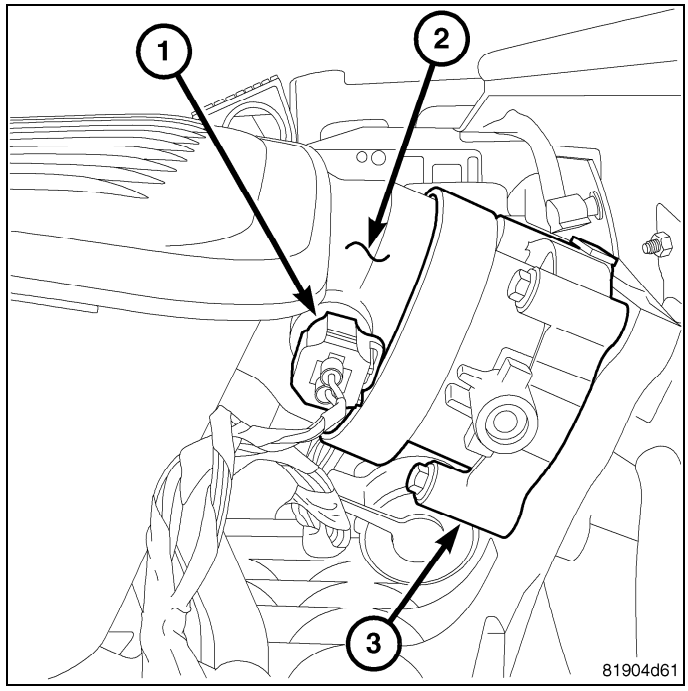

4.7L

1. Check condition of sensor o-ring (2).
2. Clean sensor mounting hole.
3. Position sensor (1) into base and rotate clockwise until past release tab (3).

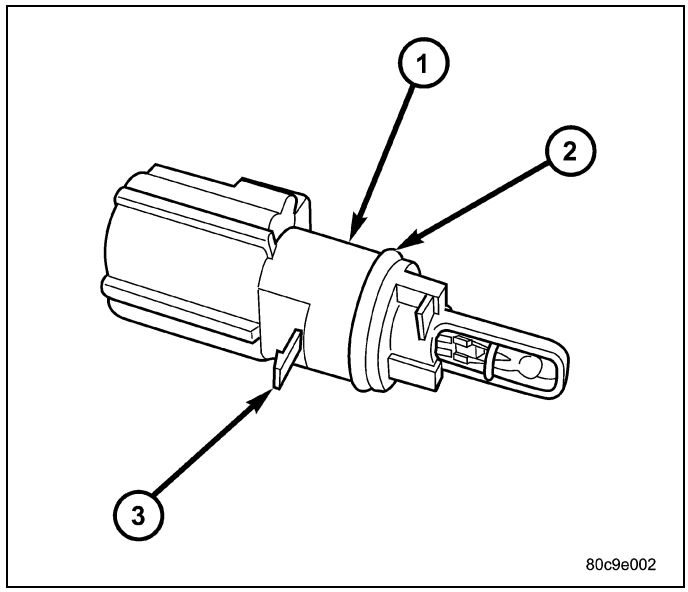

4. Install electrical connector (2).

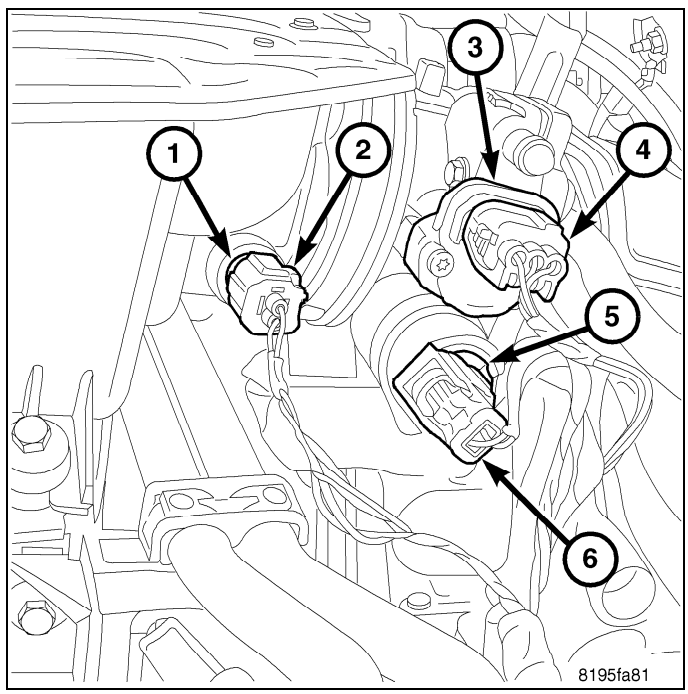

5.7L

The intake manifold air temperature (IAT) sensor (2) is installed into the front of the intake manifold air box plenum .

1. Check condition of sensor O-ring.
2. Clean sensor mounting hole in intake manifold.
3. Position sensor into intake manifold and rotate clockwise until past release tab.
4. Install electrical connector.

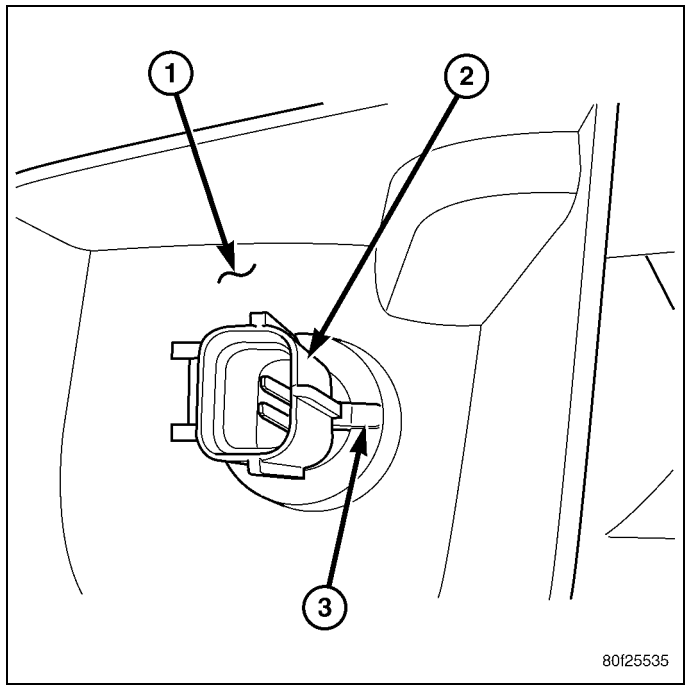

SENSOR, Crankshaft Position

Description

3.7L

The Crankshaft Position (CKP) (2) sensor is mounted into the right rear side of the cylinder block. It is positioned and bolted into a machined hole.

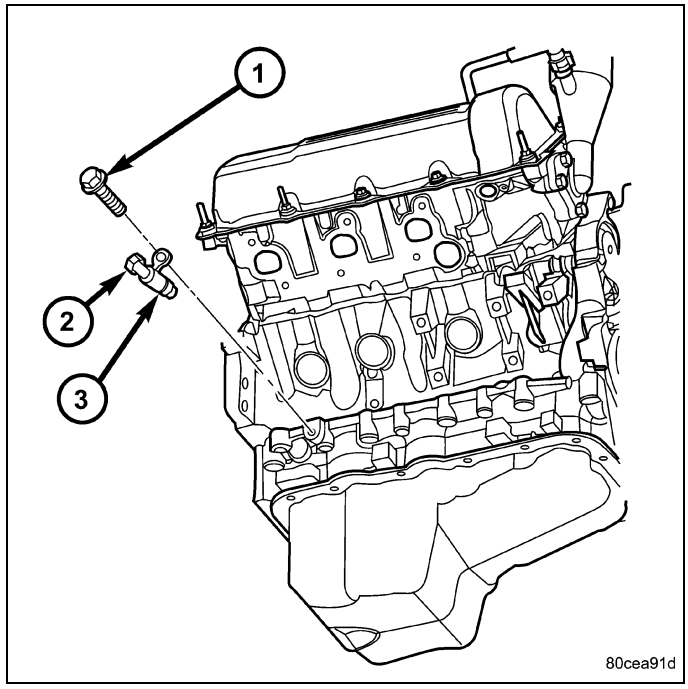

4.7L

The Crankshaft Position (CKP) (1) sensor is mounted into the right rear side of the cylinder block. It is positioned and bolted into a machined hole.

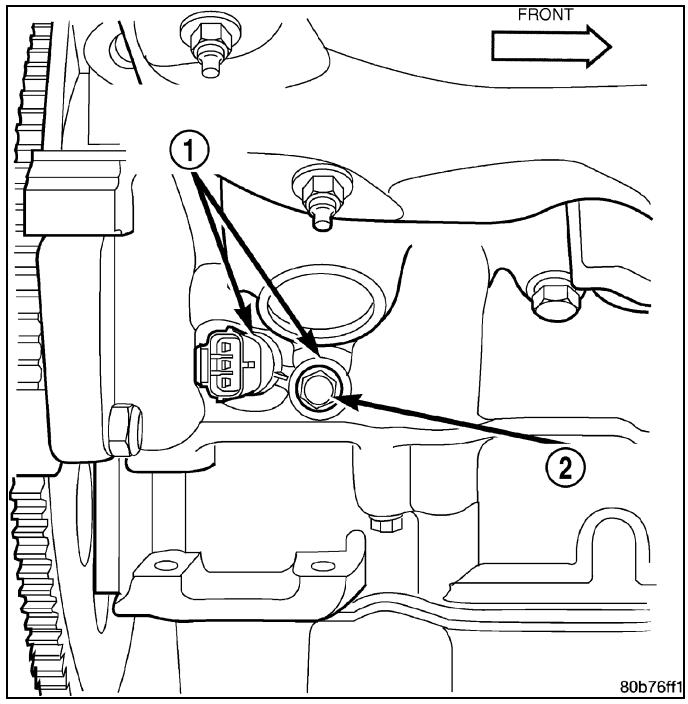

5.7L

The Crankshaft Position (CKP) (4) sensor is mounted into the right rear side of the cylinder block. It is positioned and bolted into a machined hole.

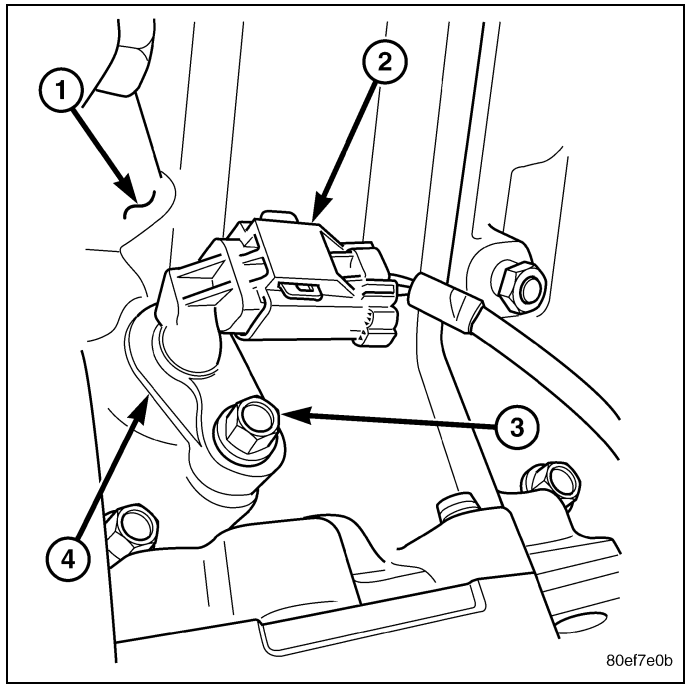

Operation

3.7L

Engine speed and crankshaft position are provided through the CKP (Crankshaft Position) sensor. The sensor generates pulses that are the input sent to the Powertrain Control Module (PCM). The PCM interprets the sensor input to determine the crankshaft position. The PCM then uses this position, along with other inputs, to determine injector sequence and ignition timing.

The sensor is a hall effect device combined with an internal magnet. It is also sensitive to steel within a certain distance from it.

A tonewheel (targetwheel) (1) is bolted to the engine crankshaft . This tonewheel has sets of notches (2) at its outer edge .

The notches cause a pulse to be generated when they pass under the sensor. The pulses are the input to the PCM.

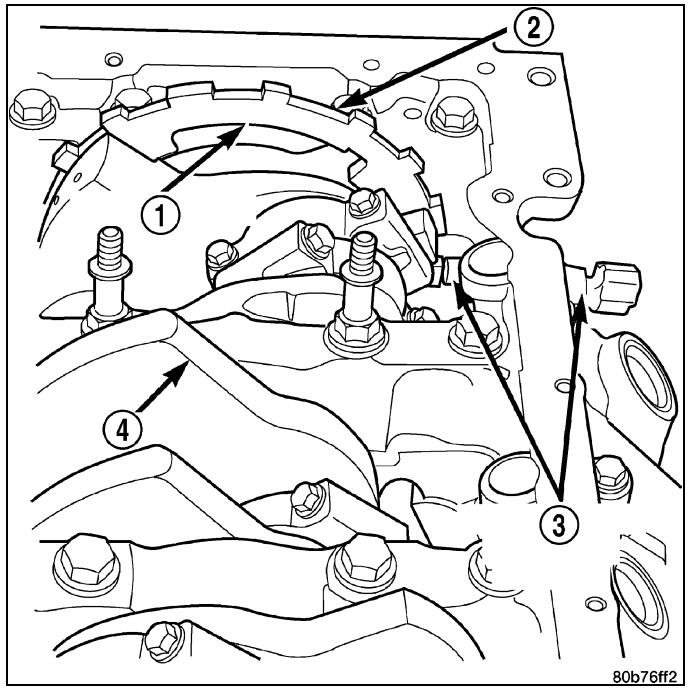

4.7L

Engine speed and crankshaft position are provided through the CKP (Crankshaft Position) sensor. The sensor generates pulses that are the input sent to the Powertrain Control Module (PCM). The PCM interprets the sensor input to determine the crankshaft position. The PCM then uses this position, along with other inputs, to determine injector sequence and ignition timing.

The sensor is a hall effect device combined with an internal magnet. It is also sensitive to steel within a certain distance from it.

A tonewheel (1) is bolted to the engine crankshaft . This tonewheel has sets of notches (2) at its outer edge .

The notches cause a pulse to be generated when they pass under the sensor. The pulses are the input to the PCM.

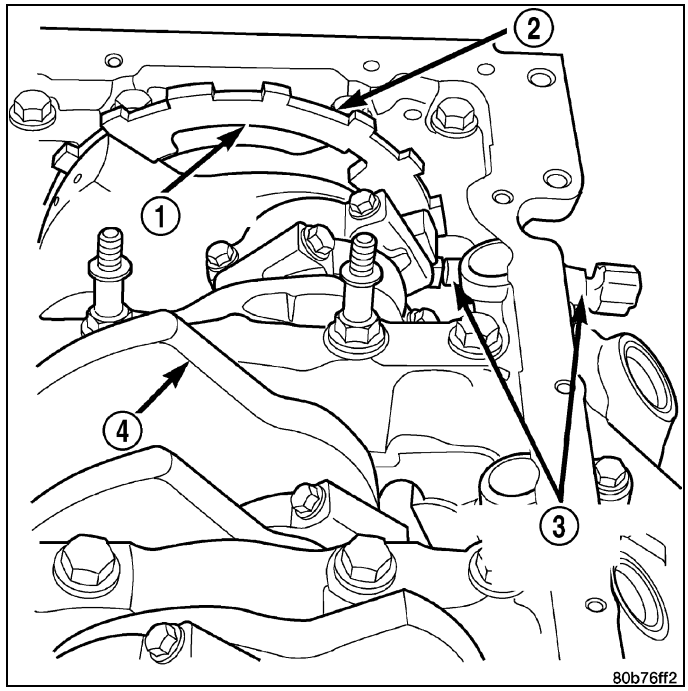

5.7L

Engine speed and crankshaft position are provided through the CKP (Crankshaft Position) sensor. The sensor generates pulses that are the input sent to the Powertrain Control Module (PCM). The PCM interprets the sensor input to determine the crankshaft position. The PCM then uses this position, along with other inputs, to determine injector sequence and ignition timing.

The sensor is a hall effect device combined with an internal magnet. It is also sensitive to steel within a certain distance from it.

A tonewheel is bolted to the engine crankshaft. This tonewheel has sets of notches (3) at its outer edge .

The notches cause a pulse to be generated when they pass under the sensor. The pulses are the input to the PCM.

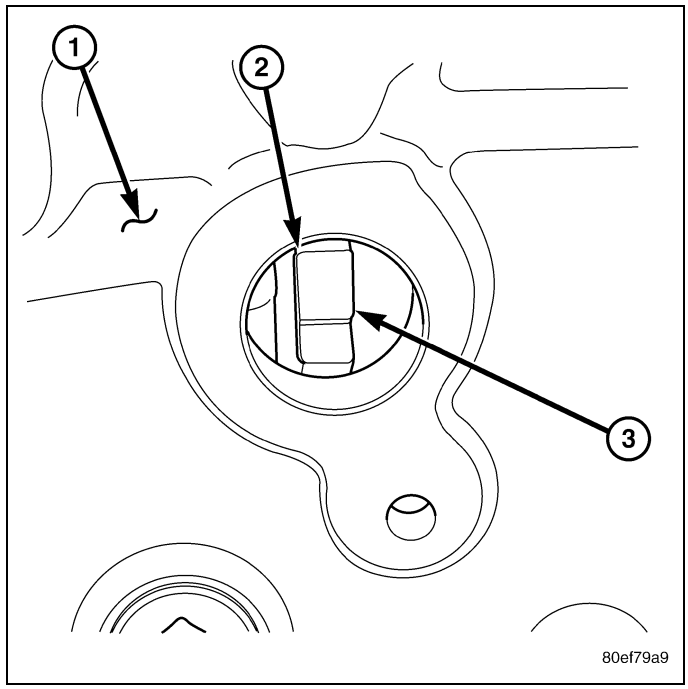

Removal

3.7L

The Crankshaft Position (CKP) sensor is mounted into the right rear side of the cylinder block . It is positioned and bolted into a machined hole.

1. Raise vehicle.
2. Disconnect sensor electrical connector.
3. Remove sensor mounting bolt (1) .
4. Carefully twist sensor (2) from cylinder block.
5. Check condition of sensor O-ring (3).

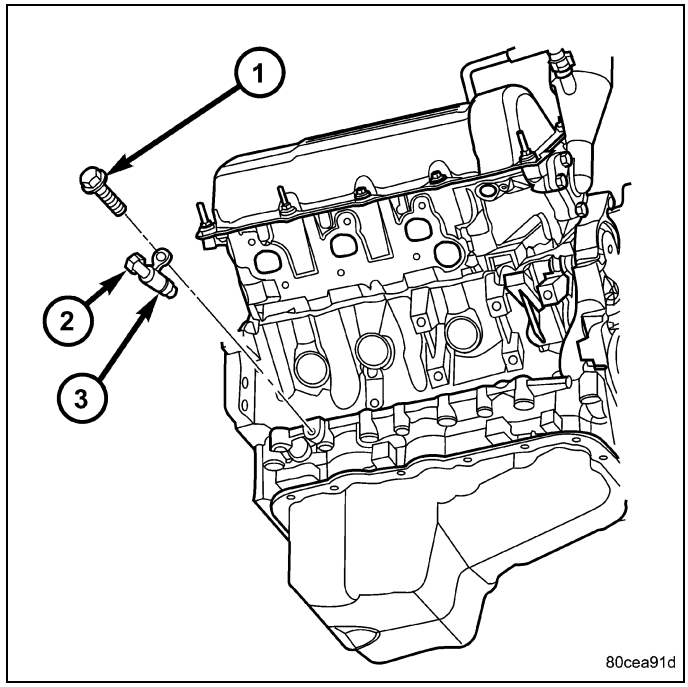

4.7L

The Crankshaft Position (CKP) sensor is located at the right-rear side of the engine cylinder block . It is positioned and bolted into a machined hole in the engine block.

1. Raise vehicle.
2. Disconnect CKP electrical connector at sensor.
3. Remove CKP mounting bolt (2) .
4. Carefully twist sensor (1) from cylinder block.
5. Remove sensor from vehicle.
6. Check condition of sensor O-ring.

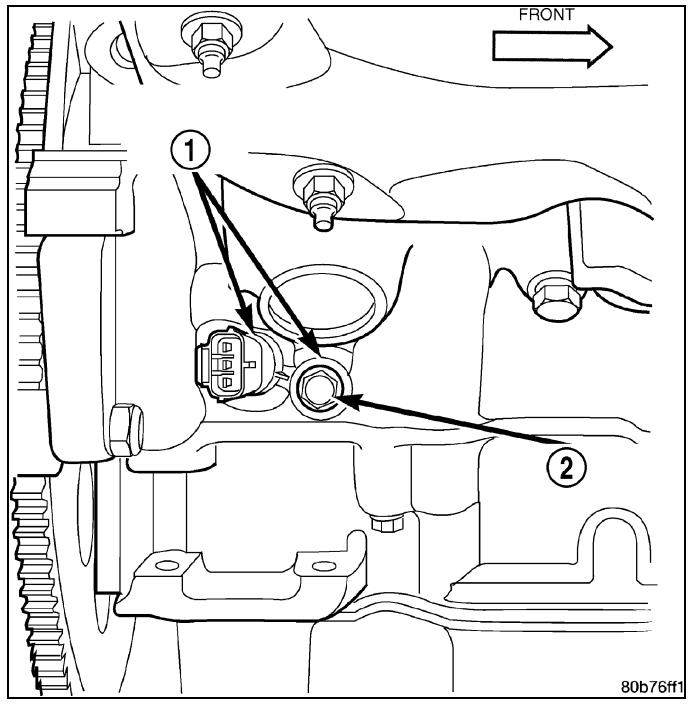

5.7L

The Crankshaft Position (CKP) sensor (4) is located at the right-rear side of the engine cylinder block . It is positioned and bolted into a machined hole in the engine block.

1. Raise vehicle.
2. Disconnect CKP electrical connector at sensor .
3. Remove CKP mounting bolt (3) .
4. Carefully twist sensor (4) from cylinder block.
5. Remove sensor from vehicle.
6. Check condition of sensor O-ring.

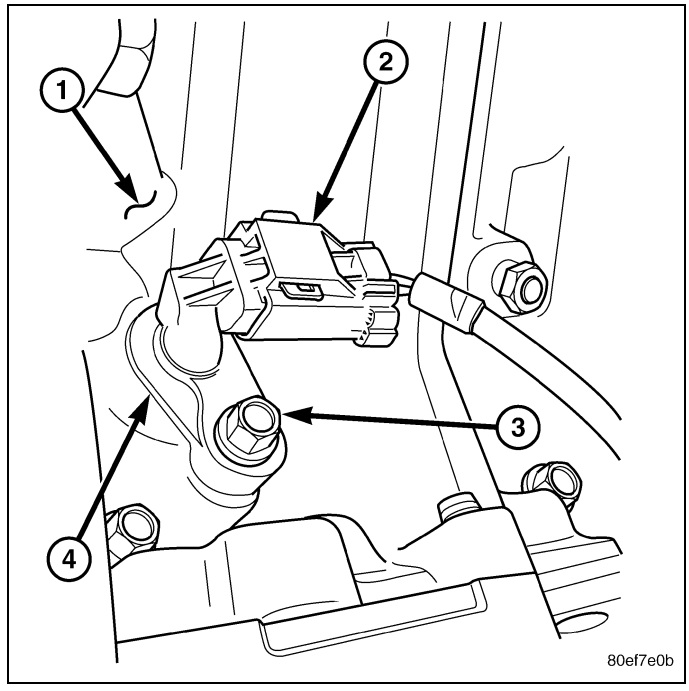

Installation

3.7L

1. Clean out machined hole in engine block.
2. Apply a small amount of engine oil to sensor O-ring (3).
3. Install sensor into engine block with a slight rocking and twisting action.

CAUTION: Before tightening the CKP sensor mounting bolt, be sure the sensor is completely flush to the cylinder block. If the CKP sensor is not flush, damage to the sensor mounting tang may result.

4. Install mounting bolt and tighten to 28 N·m (21 ft. lbs.) torque.
5. Connect electrical connector to sensor.
6. Lower vehicle.

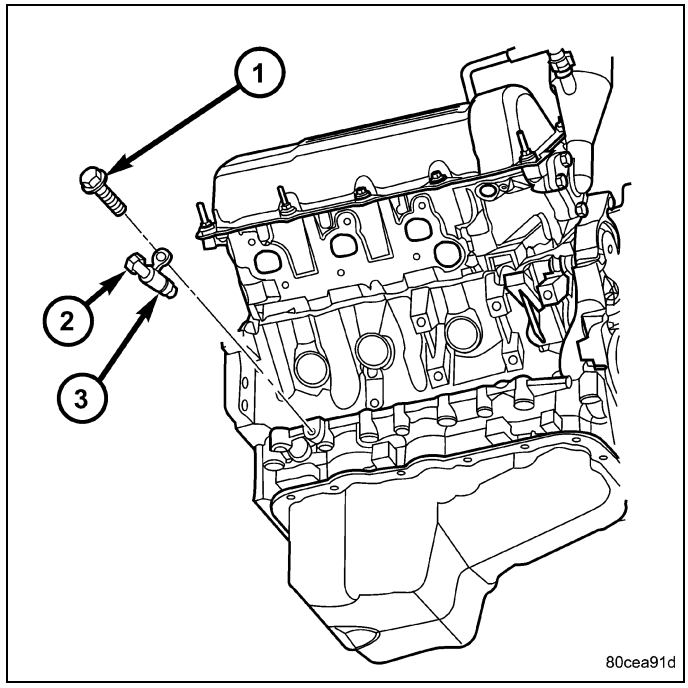

4.7L

1. Clean out machined hole in engine block.
2. Apply a small amount of engine oil to sensor o-ring.
3. Install sensor (1) into engine block with a slight rocking and twisting action.

CAUTION: Before tightening the CKP sensor mounting bolt, be sure the sensor is completely flush to the cylinder block. If the CKP sensor is not flush, damage to the sensor mounting tang may result.

4. Install mounting bolt and tighten to 28 N·m (21 ft. lbs.) torque.
5. Connect electrical connector to sensor.
6. Lower vehicle.

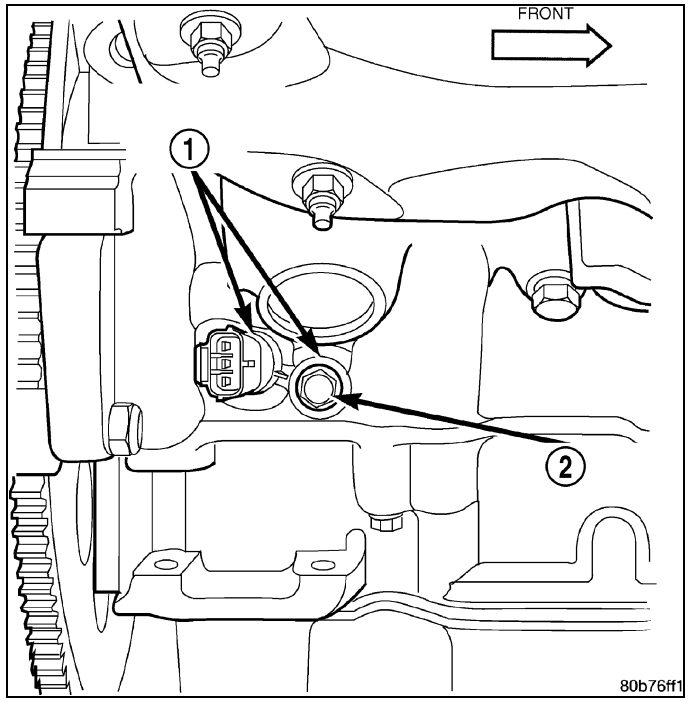

5.7L

1. Clean out machined hole in engine block.
2. Apply a small amount of engine oil to sensor o-ring.
3. Install sensor (4) into engine block with a slight rocking and twisting action.

CAUTION: Before tightening the CKP sensor mounting bolt, be sure the sensor is completely flush to the cylinder block. If the CKP sensor is not flush, damage to the sensor mounting tang may result.

4. Install mounting bolt (3) and tighten to 28 N·m (21 ft. lbs.) torque.
5. Connect electrical connector to sensor.
6. Lower vehicle.

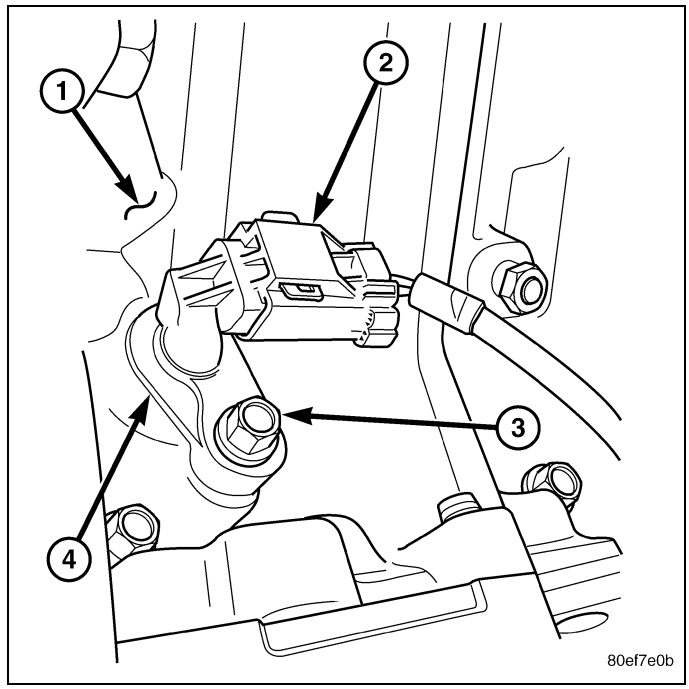

SENSOR, Manifold Air Pressure (MAP)

Operation

The MAP sensor is used as an input to the Powertrain Control Module (PCM). It contains a silicon based sensing unit to provide data on the manifold vacuum that draws the air/fuel mixture into the combustion chamber. The PCM requires this information to determine injector pulse width and spark advance. When manifold absolute pressure (MAP) equals Barometric pressure, the pulse width will be at maximum.

A 5 volt reference is supplied from the PCM and returns a voltage signal to the PCM that reflects manifold pressure. The zero pressure reading is 0.5V and full scale is 4.5V. For a pressure swing of 0–15 psi, the voltage changes 4.0V. To operate the sensor, it is supplied a regulated 4.8 to 5.1 volts. Ground is provided through the low-noise, sensor return circuit at the PCM.

The MAP sensor input is the number one contributor to fuel injector pulse width. The most important function of the MAP sensor is to determine barometric pressure. The PCM needs to know if the vehicle is at sea level or at a higher altitude, because the air density changes with altitude. It will also help to correct for varying barometric pressure. Barometric pressure and altitude have a direct inverse correlation; as altitude goes up, barometric goes down. At key-on, the PCM powers up and looks at MAP voltage, and based upon the voltage it sees, it knows the current barometric pressure (relative to altitude). Once the engine starts, the PCM looks at the voltage again, continuously every 12 milliseconds, and compares the current voltage to what it was at key-on. The difference between current voltage and what it was at key-on, is manifold vacuum.

During key-on (engine not running) the sensor reads (updates) barometric pressure. A normal range can be obtained by monitoring a known good sensor.

As the altitude increases, the air becomes thinner (less oxygen). If a vehicle is started and driven to a very different altitude than where it was at key-on, the barometric pressure needs to be updated. Any time the PCM sees Wide Open Throttle (WOT), based upon Throttle Position Sensor (TPS) angle and RPM, it will update barometric pressure in the MAP memory cell. With periodic updates, the PCM can make its calculations more effectively.

The PCM uses the MAP sensor input to aid in calculating the following:

- Manifold pressure
- Barometric pressure
- Engine load
- Injector pulse-width
- Spark-advance programs

- Shift-point strategies (certain automatic transmissions only)
- Idle speed
- Decel fuel shutoff

The MAP sensor signal is provided from a single piezoresistive element located in the center of a diaphragm. The element and diaphragm are both made of silicone. As manifold pressure changes, the diaphragm moves causing the element to deflect, which stresses the silicone. When silicone is exposed to stress, its resistance changes. As manifold vacuum increases, the MAP sensor input voltage decreases proportionally. The sensor also contains electronics that condition the signal and provide temperature compensation.

The PCM recognizes a decrease in manifold pressure by monitoring a decrease in voltage from the reading stored in the barometric pressure memory cell. The MAP sensor is a linear sensor; meaning as pressure changes, voltage changes proportionately. The range of voltage output from the sensor is usually between 4.6 volts at sea level to as low as 0.3 volts at 26 in. of Hg. Barometric pressure is the pressure exerted by the atmosphere upon an object. At sea level on a standard day, no storm, barometric pressure is approximately 29.92 in Hg. For every 100 feet of altitude, barometric pressure drops 0.10 in. Hg. If a storm goes through, it can change barometric pressure from what should be present for that altitude. You should know what the average pressure and corresponding barometric pressure is for your area.

Removal

3.7L/4.7L

The Manifold Absolute Pressure (MAP) sensor (7) is mounted into the front of the intake manifold (1).

1. Disconnect electrical connector (2) at sensor.
2. Clean area around MAP sensor.
3. Remove one sensor mounting screw (8).
4. Remove MAP sensor from intake manifold by slipping it from locating pin (6).

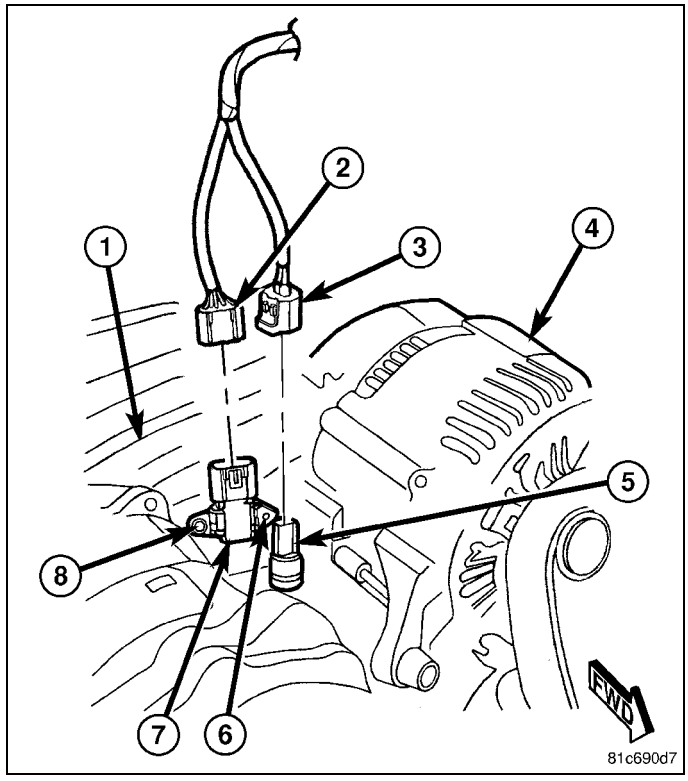

5. Check condition of sensor o-ring (2)

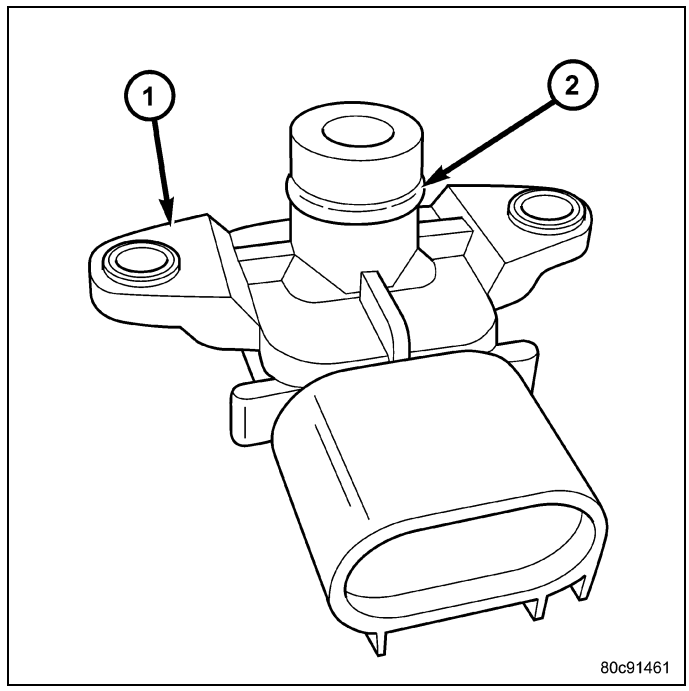

5.7L

The Manifold Absolute Pressure (MAP) sensor is mounted to the front of the intake manifold air plenum box .

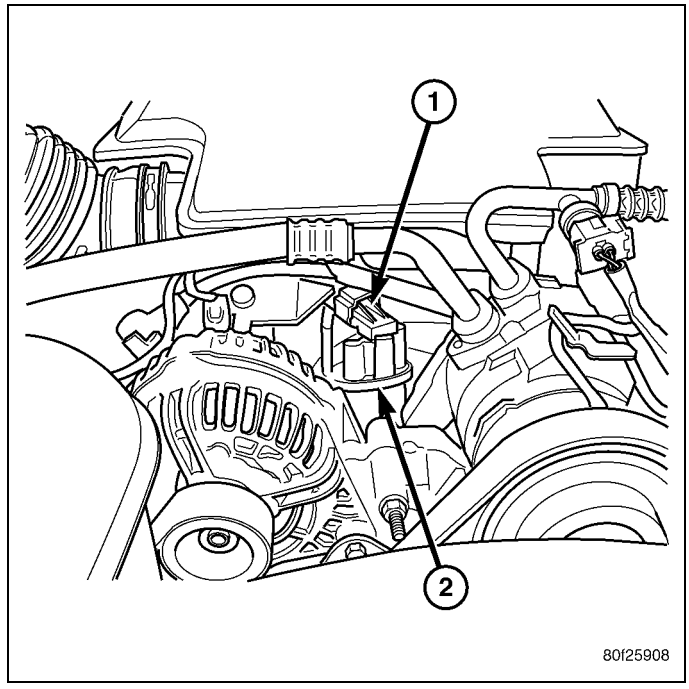

1. Disconnect electrical connector at sensor by sliding release lock out . Press down on lock tab for removal.
2. Rotate sensor (3) 1/4 turn counterclockwise for removal.
3. Check condition of sensor O-ring.

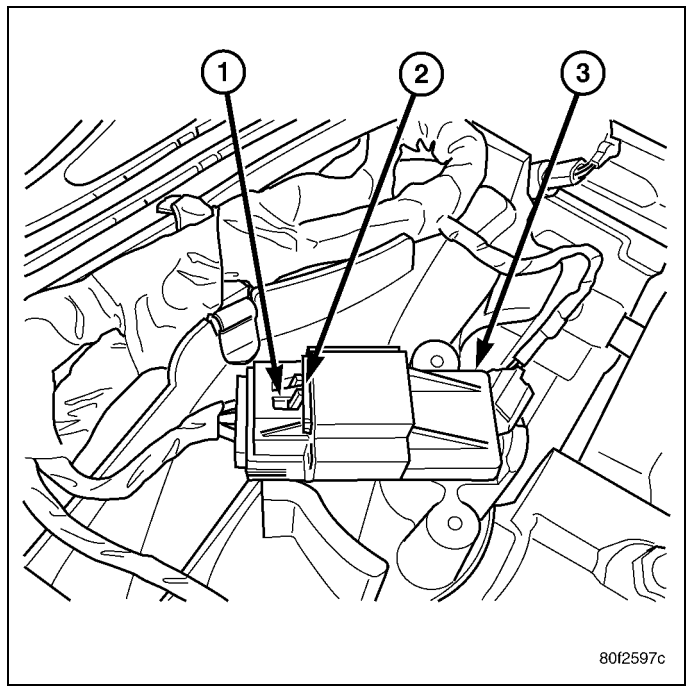

Installation

3.7L/4.7L

1. Clean MAP sensor mounting hole at intake manifold.
2. Check MAP sensor o-ring seal (2) for cuts or tears.

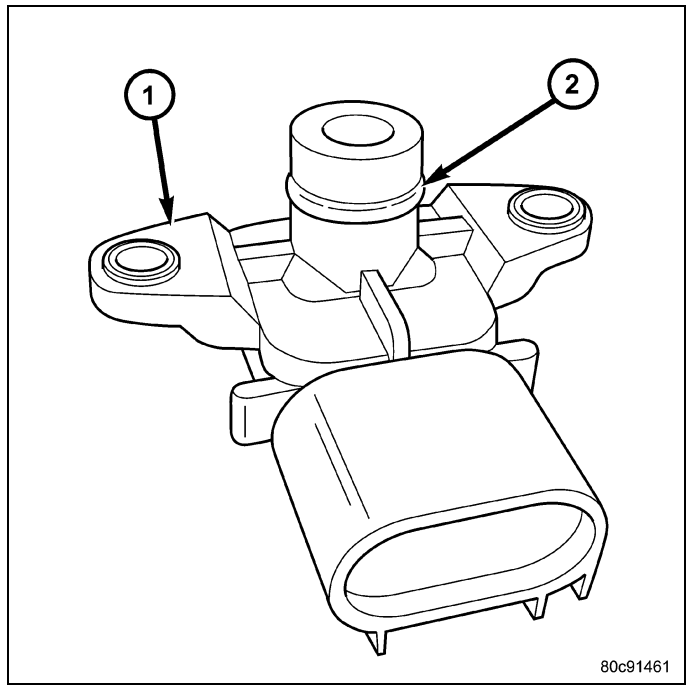

3. Position MAP sensor into manifold by sliding sensor over locating pin (6).
4. Install mounting bolt (8). Tighten to 3 N·m (25 in. lbs.) torque.
5. Connect electrical connector (2).

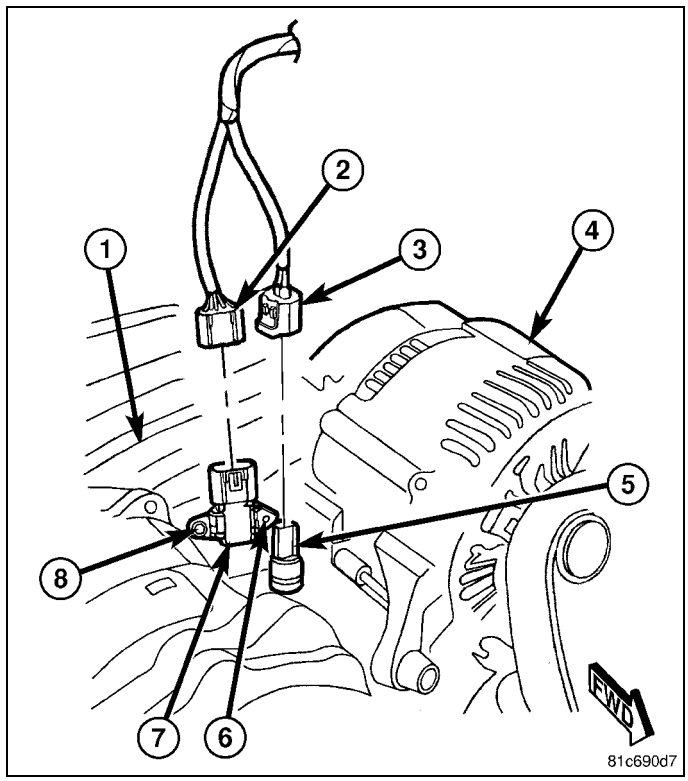

5.7L

The Manifold Absolute Pressure (MAP) sensor (1) is mounted to the front of the intake manifold air plenum box .

1. Clean MAP sensor mounting hole at intake manifold.
2. Check MAP sensor O-ring seal for cuts or tears.
3. Position sensor into manifold.
4. Rotate sensor 1/4 turn clockwise for installation.
5. Connect electrical connector.

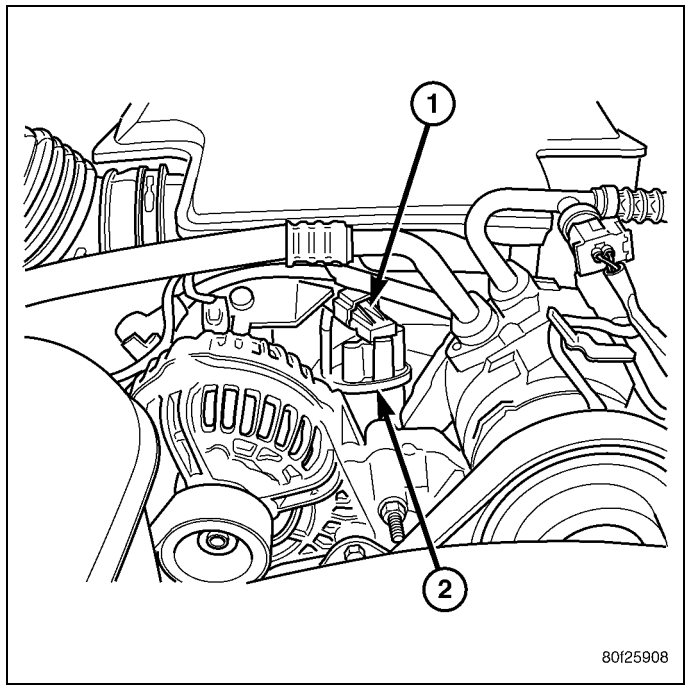

SENSOR, Oxygen

Description

The Oxygen Sensors (O2S) are attached to, and protrude into the vehicle exhaust system. Depending on the engine or emission package, the vehicle may use a total of either 2 or 4 sensors.

Federal Emission Packages : Two sensors are used: upstream (referred to as 1/1) and downstream (referred to as 1/2). With this emission package, the upstream sensor (1/1) is located just before the main catalytic convertor. The downstream sensor (1/2) is located just after the main catalytic convertor.

California Emission Packages: On this emissions package, 4 sensors are used: 2 upstream (referred to as 1/1 and 2/1) and 2 downstream (referred to as 1/2 and 2/2). With this emission package, the right upstream sensor (2/1) is located in the right exhaust downpipe just before the mini-catalytic convertor. The left upstream sensor (1/1) is located in the left exhaust downpipe just before the mini-catalytic convertor. The right downstream sensor (2/2) is located in the right exhaust downpipe just after the mini-catalytic convertor, and before the main catalytic convertor. The left downstream sensor (1/2) is located in the left exhaust downpipe just after the mini-catalytic convertor, and before the main catalytic convertor.

Removal

CAUTION: Never apply any type of grease to the oxygen sensor electrical connector, or attempt any repair of the sensor wiring harness.

WARNING: The exhaust pipes and catalytic converter become very hot during engine operation. Allow the engine to cool before removing the oxygen sensor.

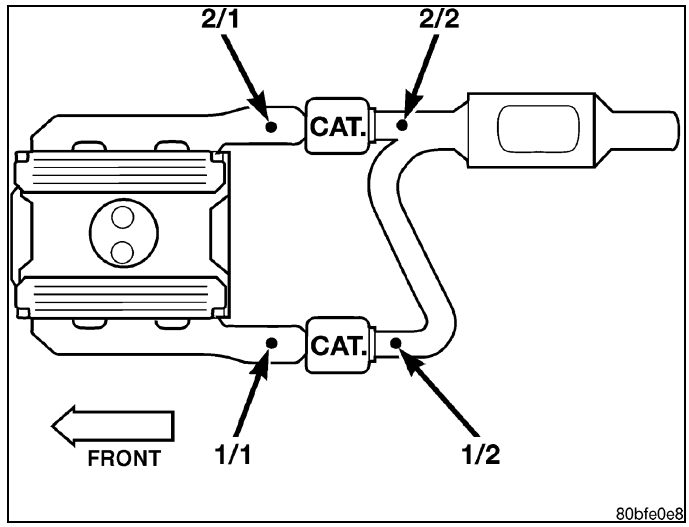

1. Raise and support vehicle.
2. Disconnect wire connector from O2S sensor.

CAUTION: When disconnecting the oxygen sensor electrical connector, do not pull directly on the wire going into the sensor. The sensor wiring can be damaged resulting in sensor failure.

3. Remove O2S sensor with an oxygen sensor removal and installation tool.
4. Clean threads in exhaust pipe using appropriate tap.

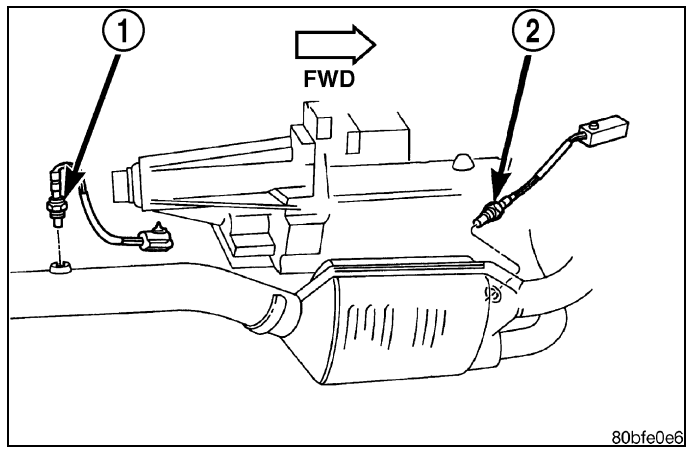

Installation

Threads of new oxygen sensors are factory coated with anti-seize compound to aid in removal. **DO NOT add any additional anti-seize compound to threads of a new oxygen sensor.**

1. Install O2S sensor. Tighten to 41N·m (30 ft. lbs.) torque.
2. Connect O2S sensor wire connector.
3. Lower vehicle.

THROTTLE BODY

Description

The throttle body is located on the intake manifold. Fuel does not enter the intake manifold through the throttle body. Fuel is sprayed into the manifold by the fuel injectors.

Removal

3.7L

CAUTION: Using a diagnostic scan tool, record any previous DTC's (Diagnostic Trouble Codes).

CAUTION: Never have the ignition key in the ON position when checking the throttle body shaft for a binding condition. This may set DTC's.

A (factory adjusted) set screw is used to mechanically limit the position of the throttle body throttle plate. **Never attempt to adjust the engine idle speed using this screw.** All idle speed functions are controlled by the Powertrain Control Module (PCM).

1. Disconnect and isolate negative battery cable at battery.
2. Remove air intake tube at throttle body flange (1).
3. Disconnect throttle body electrical connector (3).
4. Disconnect necessary vacuum lines at throttle body.
5. Remove four throttle body mounting bolts (2).
6. Remove throttle body from intake manifold.
7. Check condition of old throttle body-to-intake manifold o-ring.

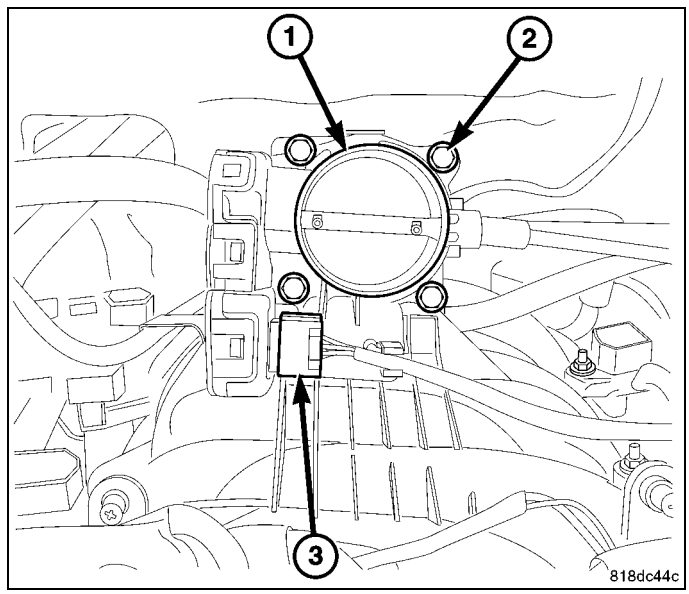

4.7L

CAUTION: Using a diagnostic scan tool, record any previous DTC's (Diagnostic Trouble Codes).

CAUTION: Never have the ignition key in the ON position when checking the throttle body shaft for a binding condition. This may set DTC's.

1. Disconnect and isolate negative battery cable at battery.
2. Remove air duct and air resonator box at throttle body (3).
3. Disconnect throttle body electrical connector (2).
4. Disconnect necessary vacuum lines at throttle body.
5. Remove four throttle body mounting bolts (1).
6. Remove throttle body from intake manifold.
7. Check condition of old throttle body-to-intake manifold o-ring.

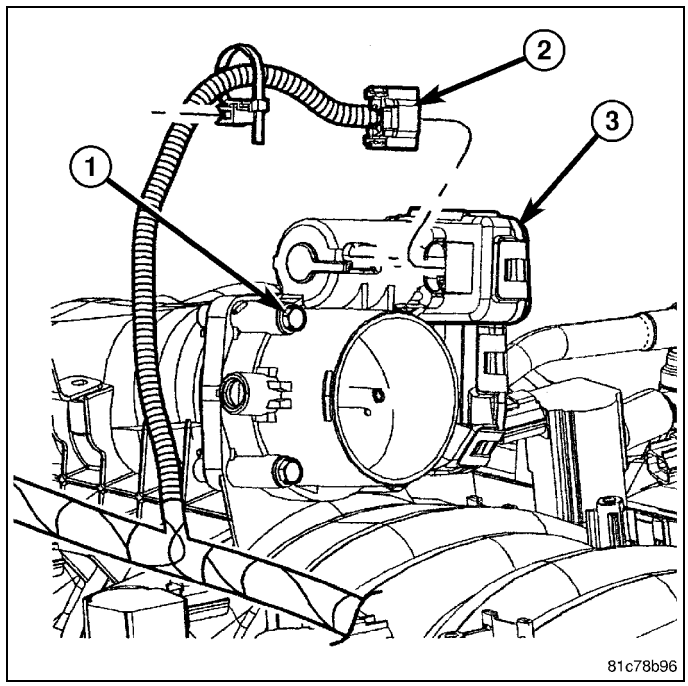

5.7L

CAUTION: Using a diagnostic scan tool, record any previous DTC's (Diagnostic Trouble Codes).

CAUTION: Never have the ignition key in the ON position when checking the throttle body shaft for a binding condition. This may set DTC's.

1. Disconnect and isolate negative battery cable from battery.
2. Remove air duct and air resonator box at throttle body.
3. Disconnect electrical connector (2) at throttle body.
4. Remove four throttle body mounting bolts (4).
5. Remove throttle body from intake manifold.

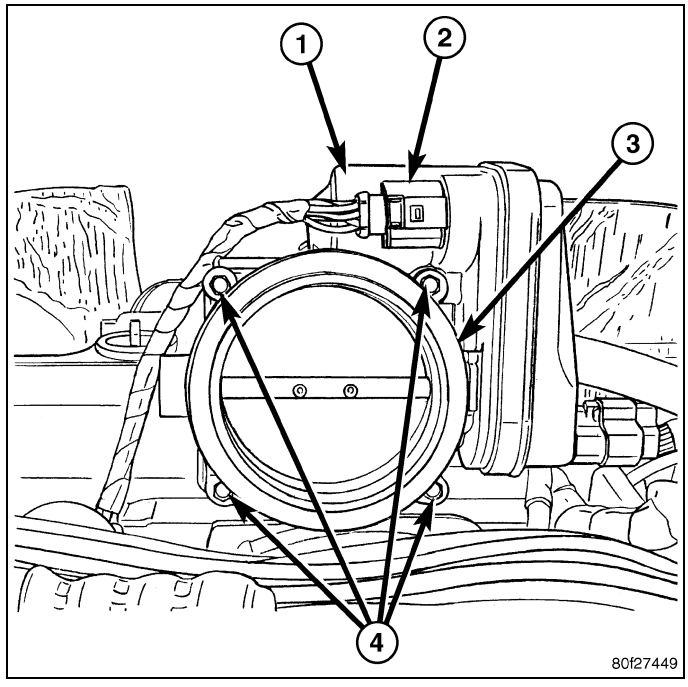

6. Check condition of throttle body O-ring (2).

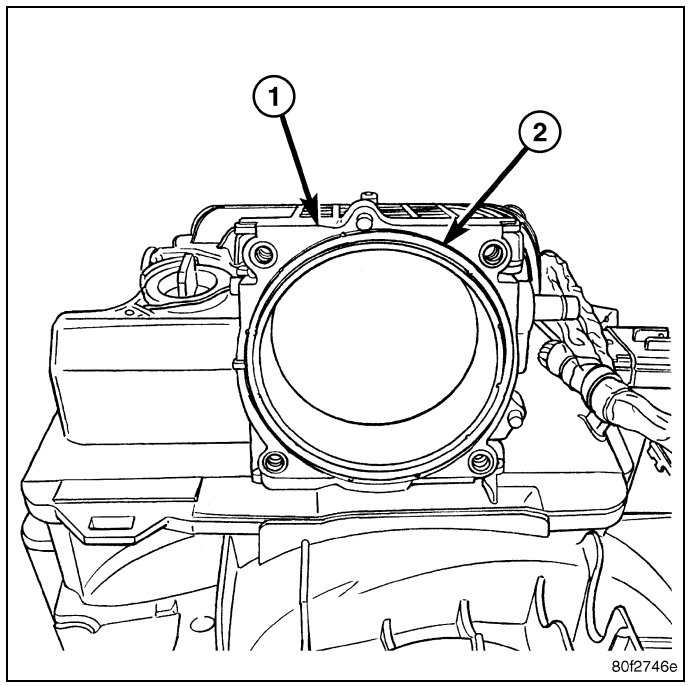

Installation

3.7L

1. Check condition of throttle body-to-intake manifold O-ring. Replace as necessary.
2. Clean mating surfaces of throttle body and intake manifold.
3. Install O-ring between throttle body and intake manifold.
4. Position throttle body (1) to intake manifold.
5. Install all throttle body mounting bolts (2) finger tight.

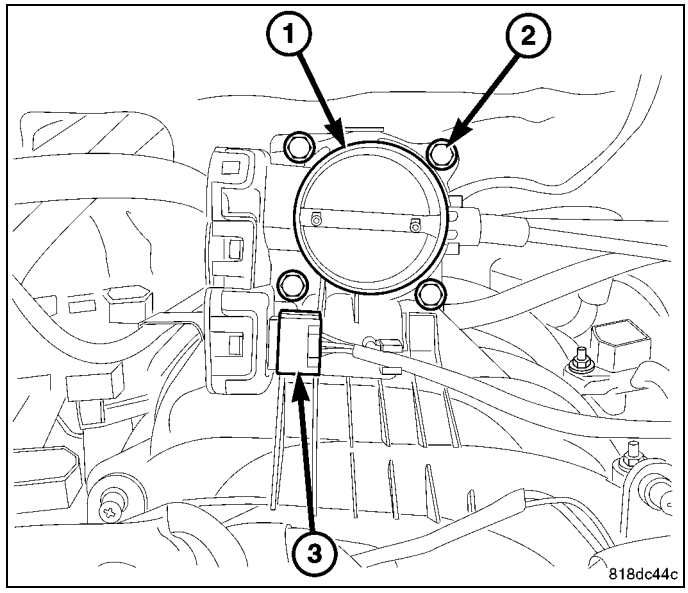

CAUTION: The throttle body mounting bolts MUST be tightened to specifications. Over tightening can cause damage to the throttle body or the intake manifold.

6. Obtain a torque wrench. Tighten mounting bolts (as shown) in a mandatory torque criss-cross pattern sequence to 7.5 N·m (65 in. lbs.).

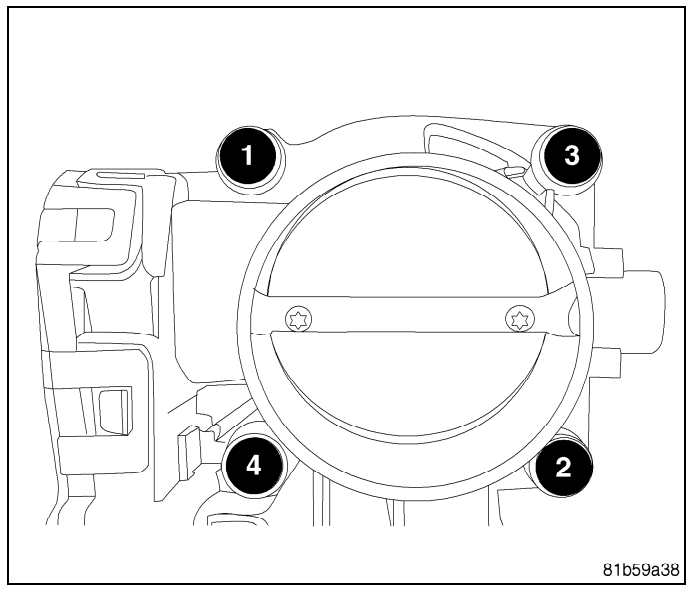

7. Install electrical connector (3).
8. Install necessary vacuum lines.
9. Install air cleaner duct at throttle body.
10. Connect negative battery cable.
11. Using the diagnostic scan tool, erase all previous DTC's and perform the ETC Relearn function.

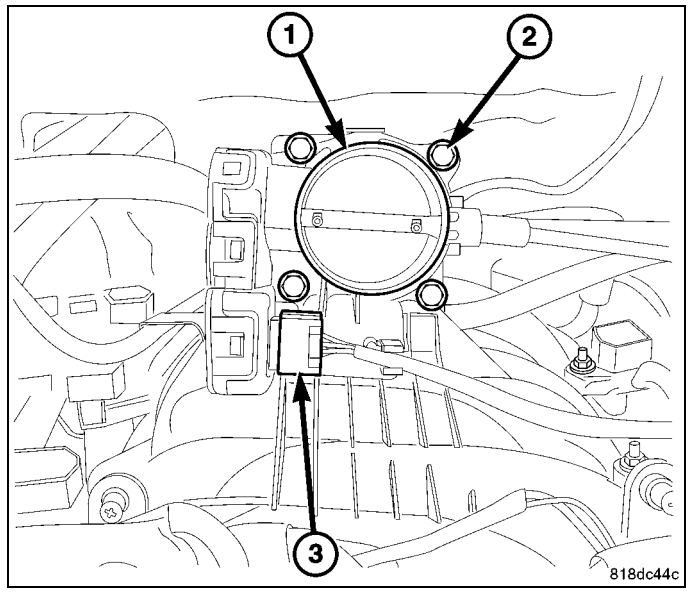

4.7L

1. Check condition of throttle body-to-intake manifold O-ring. Replace as necessary.
2. Clean mating surfaces of throttle body and intake manifold.
3. Install throttle body-to-intake manifold O-ring.
4. Install all throttle body mounting bolts (1) finger tight.

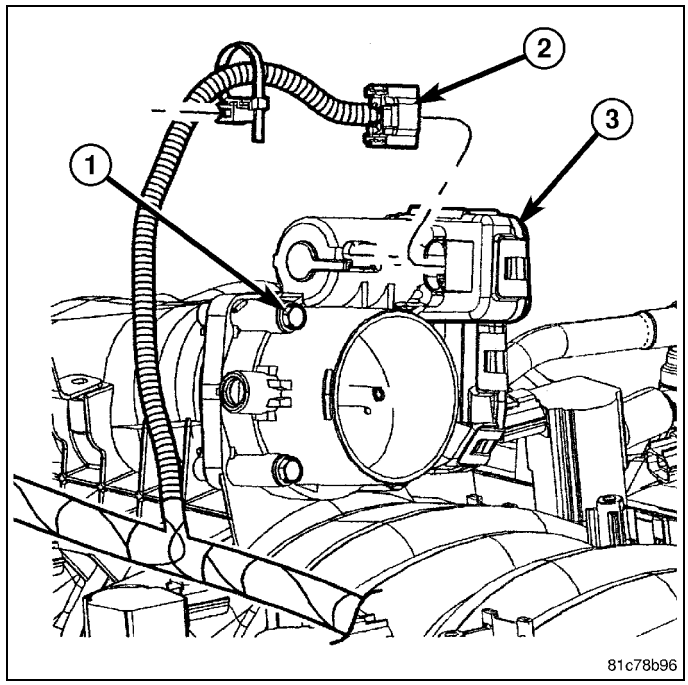

CAUTION: The throttle body mounting bolts MUST be tightened to specifications. Over tightening can cause damage to the throttle body or the intake manifold.

5. Obtain a torque wrench. Tighten mounting bolts (as shown) in a mandatory torque criss-cross pattern sequence to 7.5 N·m (65 in. lbs.).

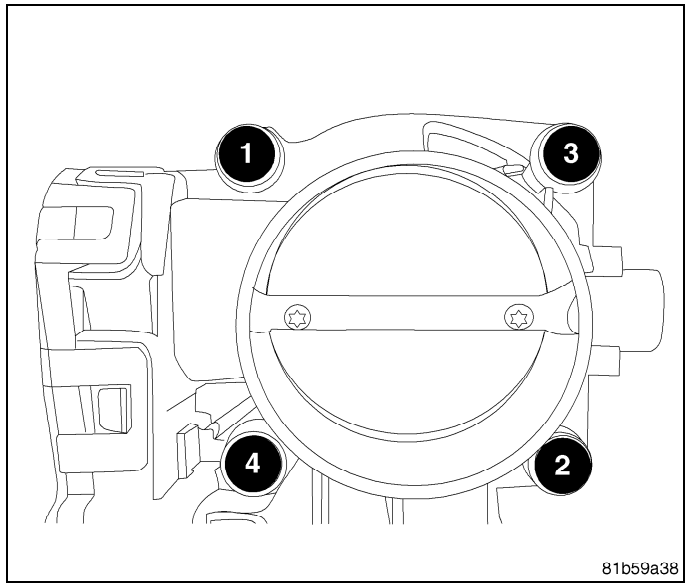

6. Install electrical connector (2).
7. Install necessary vacuum lines.
8. Install air cleaner duct and plenum at throttle body.
9. Connect negative battery cable.
10. Using the diagnostic scan tool, erase all previous DTC's and perform the ETC Relearn function.

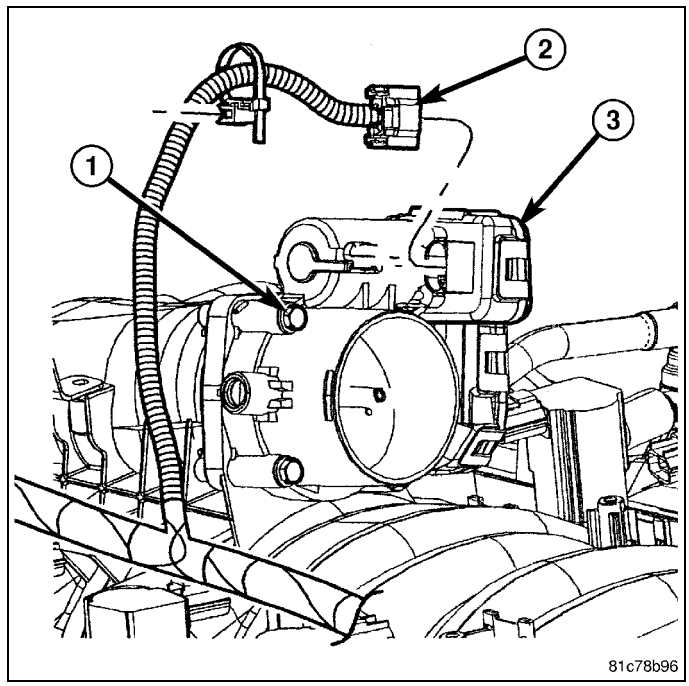

5.7L

1. Clean and check condition of throttle body-to-intake manifold O-ring (2).
2. Clean mating surfaces of throttle body and intake manifold.
3. Install O-ring (2) between throttle body and intake manifold.
4. Install throttle body to intake manifold by positioning throttle body to manifold alignment pins.
5. Install all throttle body mounting bolts finger tight.

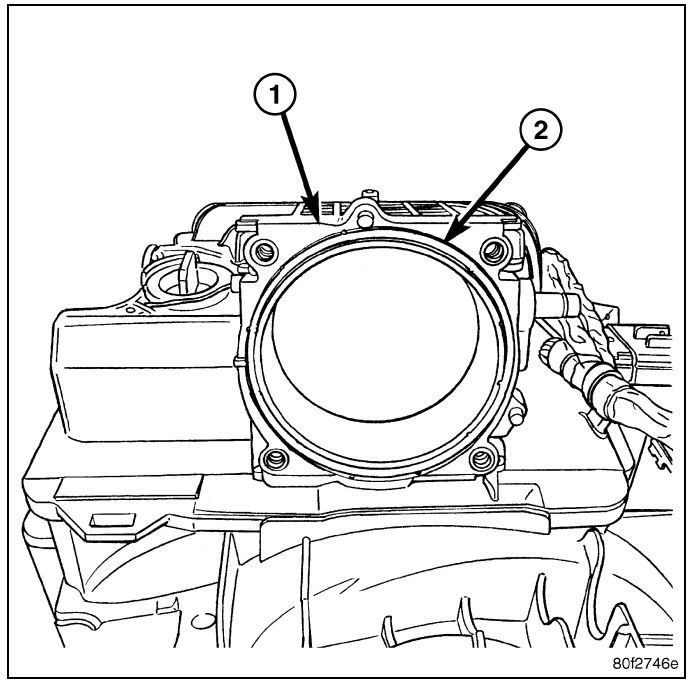

CAUTION: The throttle body mounting bolts MUST be tightened to specifications. Over tightening can cause damage to the throttle body or the intake manifold.

6. Obtain a torque wrench. Tighten mounting bolts (as shown) in a mandatory torque criss-cross pattern sequence to 5.6 N·m (50 in. lbs.).

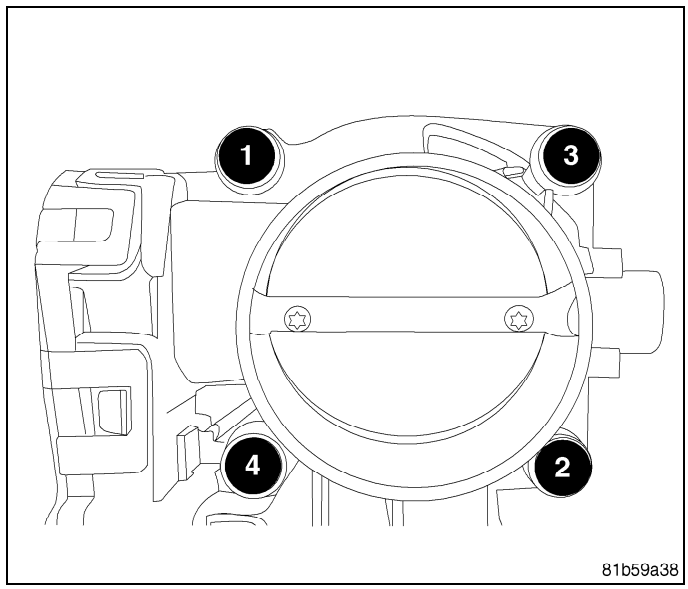

7. Install electrical connector (2).
8. Install air plenum to flange (3).
9. Connect negative battery cable.
10. Using the diagnostic scan tool, erase all previous DTC's and perform the ETC Relearn function.

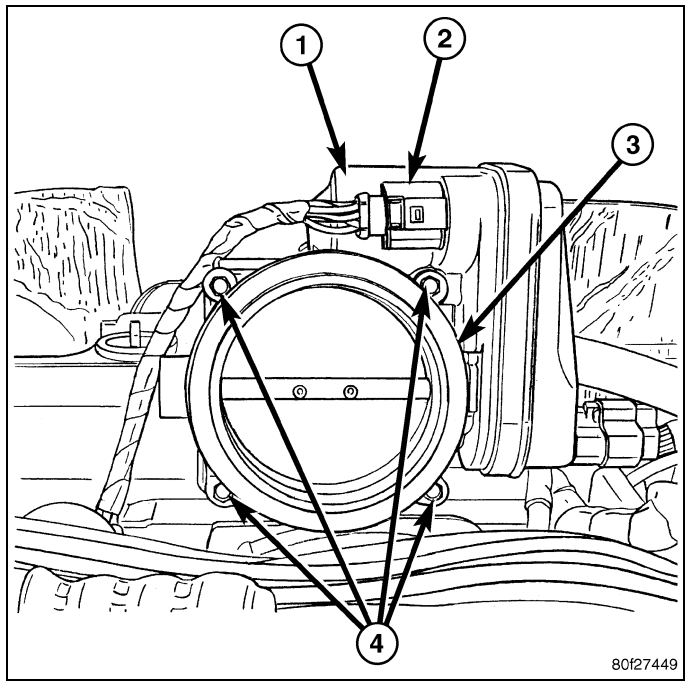

VALVE, Short Runner

Description

The intake manifold features a dual shaft Short Runner Valve (SRV) system to maximize both low end torque and peak power. The SRV is bolted to the rear of the intake manifold and can be service separately from the manifold.

The SRV system operates under Wide Open Throttle conditions to maximize engine performance. When activated by the PCM, the SRV actuates a mechanical linkage to redirect the intake air flow to eight short runners. The PCM looks for a signal feedback when the actuator is activated. If the signal feedback is not present, the PCM sets the DTC.

Removal

1. Disconnect the negative battery cable (1).

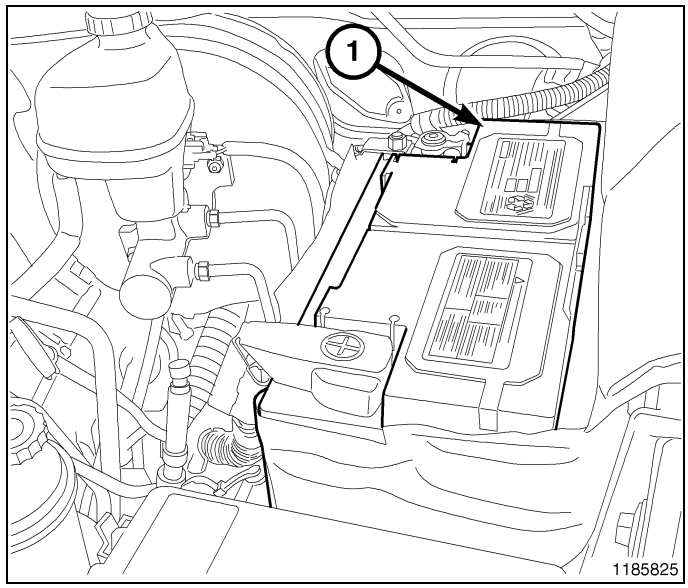

2. Remove the intake manifold and throttle body as an assembly (Refer to 09 - Engine/Manifolds/MANIFOLD, Intake - Removal)

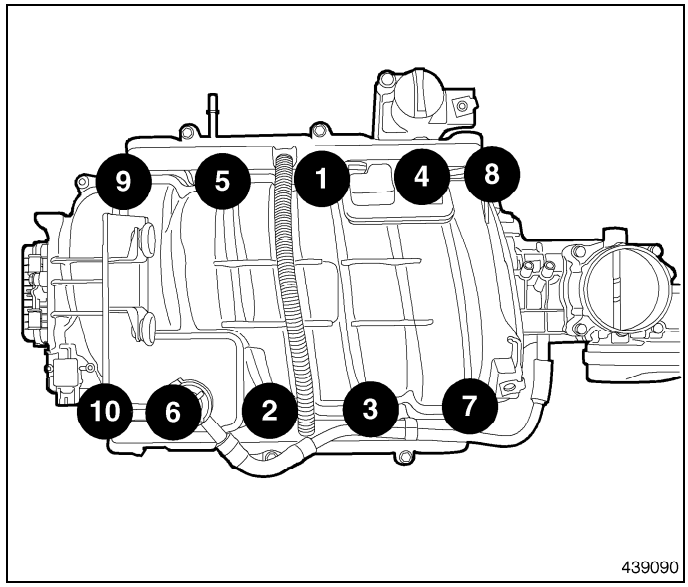

3. Remove the short runner valve actuator retaining bolts (1) and remove valve.

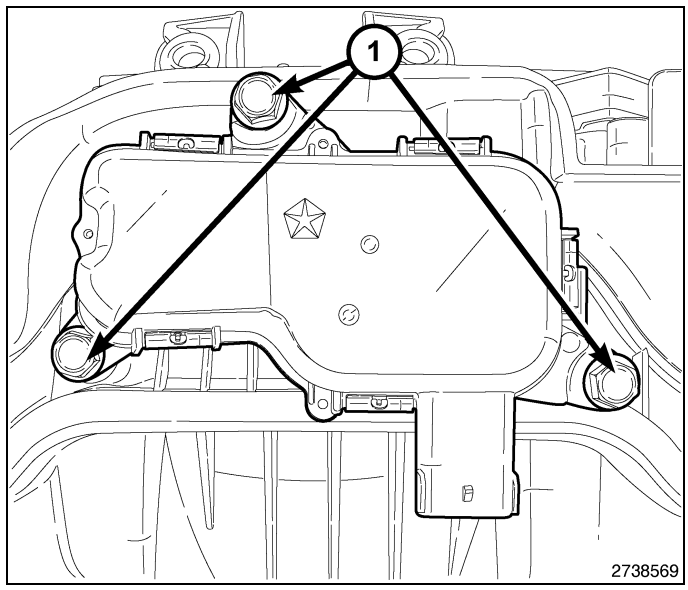

4. Remove and discard the short runner valve actuator rubber O-ring seal (1).

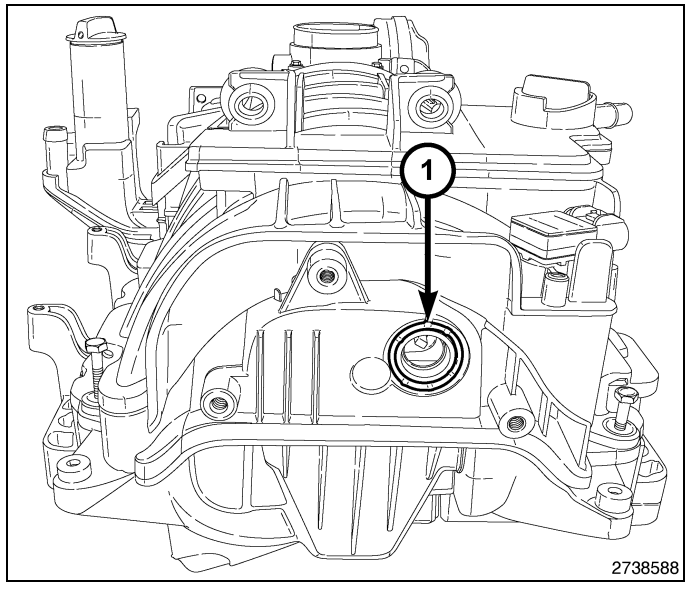

Installation

1. Install a new short runner valve actuator rubber O-ring seal (1).

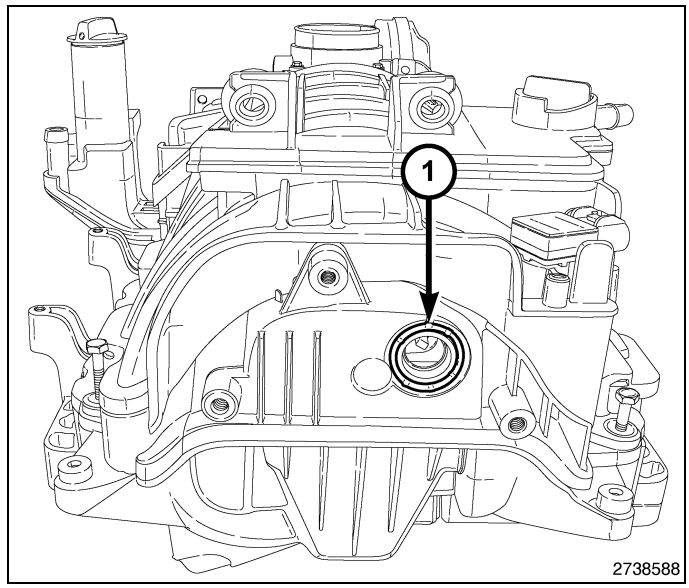

2. Position the short runner valve actuator, install the retaining bolts (1) and tighten to 5 N·m (44 in. lb.).

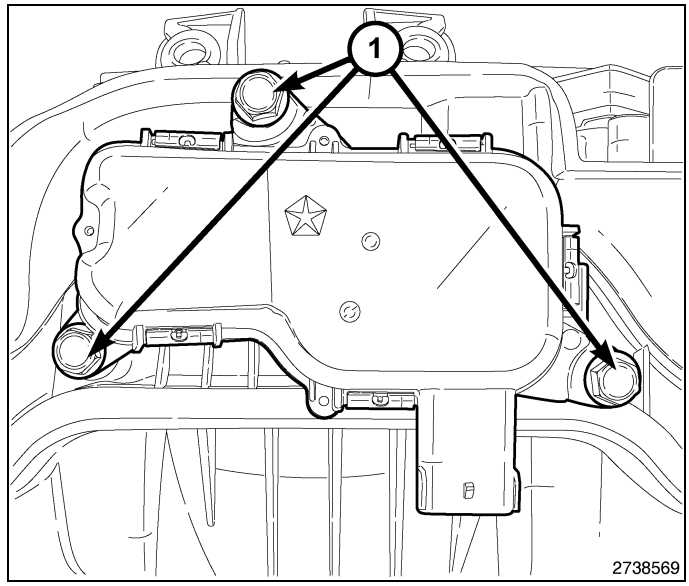

3. Install the intake manifold and throttle body as an assembly (Refer to 09 - Engine/Manifolds/MANIFOLD, Intake - Installation).

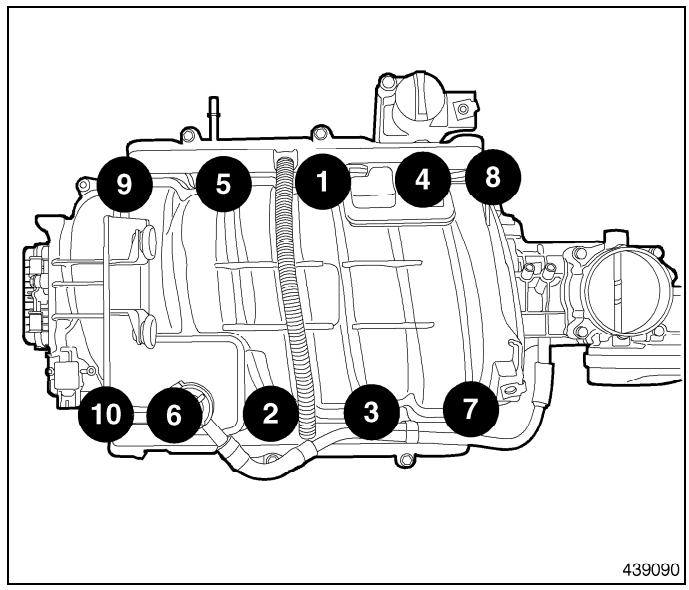

4. Connect the negative battery cable (1).

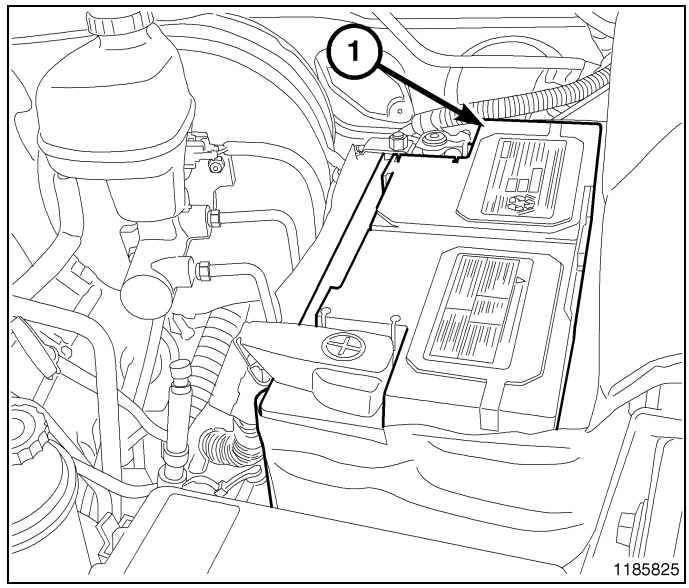

REAR SUSPENSION

TABLE OF CONTENTS

page

REAR SUSPENSION
- DESCRIPTION . . . 2
- DIAGNOSIS AND TESTING . . . 2
- SPECIFICATIONS . . . 3
- **ARM, LOWER CONTROL**
  - REMOVAL . . . 3
  - INSTALLATION . . . 4
- **ARM, UPPER CONTROL**
  - REMOVAL . . . 5
  - INSTALLATION . . . 6
- **BUMPER, JOUNCE**
  - REMOVAL . . . 6
  - INSTALLATION . . . 7
- **LINK, STABILIZER BAR**
  - REMOVAL . . . 7
  - INSTALLATION . . . 8

page

SHOCK ABSORBER, SUSPENSION
- REMOVAL . . . 8
- INSTALLATION . . . 8

SPRING(S)
- REMOVAL . . . 9
- INSTALLATION . . . 10

STABILIZER BAR, REAR SUSPENSION
- REMOVAL . . . 11
- INSTALLATION . . . 11

TRACK BAR, REAR
- REMOVAL . . . 12
- INSTALLATION . . . 12

Rear Suspension

Description

The rear suspension is comprised of:

- Shock Absorbers (7)
- Jounce Bumpers (3)
- Stabilizer Bar (9)
- Stabilizer links (1)
- Coil Springs (2)
- Upper Control Arms (above lower control arms, not shown)
- Lower Control Arms (6)
- Track Bar (5)

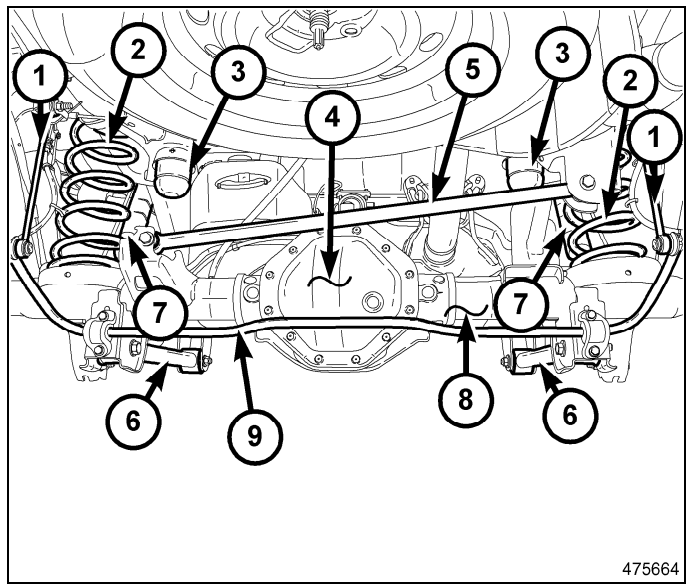

CAUTION: A vehicle should always be loaded so the vehicle weight center-line is located immediately forward of the rear axle. Correct vehicle loading provides proper front tire-to-road contact. This results in maximum vehicle handling stability and safety. Incorrect vehicle weight distribution can cause excessive tire tread wear, spring fatigue or failure, and erratic steering.

CAUTION: Suspension components with rubber/urethane bushings (except stabilizer bar) should be tightened with the vehicle at normal ride height. It is important to have the springs supporting the weight of the vehicle when the fasteners are torqued. If springs are not at their normal ride position, vehicle ride comfort could be affected and premature bushing wear may occur.

Diagnosis and Testing

A knocking or rattling noise from a shock absorber may be caused by movement between mounting bushings and metal brackets or attaching components. These noises can usually be stopped by tightening the attaching nuts. If the noise persists, inspect for damaged and worn bushings, and attaching components. Repair as necessary if any of these conditions exist.

A squeaking noise from the shock absorber may be caused by the hydraulic valving and may be intermittent. This condition is not repairable and the shock absorber must be replaced.

The shock absorbers are not refillable or adjustable. If a malfunction occurs, the shock absorber must be replaced. To test a shock absorber, hold it in an upright position and force the piston in and out of the cylinder four or five times. The action throughout each stroke should be smooth and even.

If the vehicle is used for severe, off-road operation, the springs should be examined periodically. Check for broken springs.

SPRING AND SHOCK ABSORBER

CONDITION	POSSIBLE CAUSES	CORRECTION
REAR OF VEHICLE SAGS	1. Broken spring.	1. Replace spring.
	2. Spring fatigue.	2. Replace spring.
SPRING NOISE	1. Worn springs.	1. Replace spring.
	2. Worn isolators.	2. Replace isolators.
	3. Severely overloaded.	3. Check GVW of vehicle (Unload cargo).
SHOCK NOISE	1. Loose mounting fastener.	1. Tighten to specification.
	2. Worn bushings.	2. Replace shock.
	3. Leaking shock.	3. Replace shock.

Specifications

DESCRIPTION	N·m	Ft. Lbs.	In. Lbs.
Control Arm Bolt/Nut	305	225	—
Park Brake Cable Guide Bolt	20	15	177
Shock Absorber Bolt/Nut	135	100	—
Stabilizer Bar To Axle Bracket Bolts	50	37	—
Stabilizer Bar Link To Frame Bolt/Nut	75	55.5	—
Stabilizer Bar Link To Stabilizer Bar Nut	107	74	—
Track Bar Bolts	175	129	—

ARM, Lower Control

Removal

1. Raise and support the vehicle (Refer to 04 - Vehicle Quick Reference/Hoisting - Standard Procedure).
2. Support the rear axle with a suitable holding fixture.
3. Remove the parking brake cable guide bolt (Left side only).

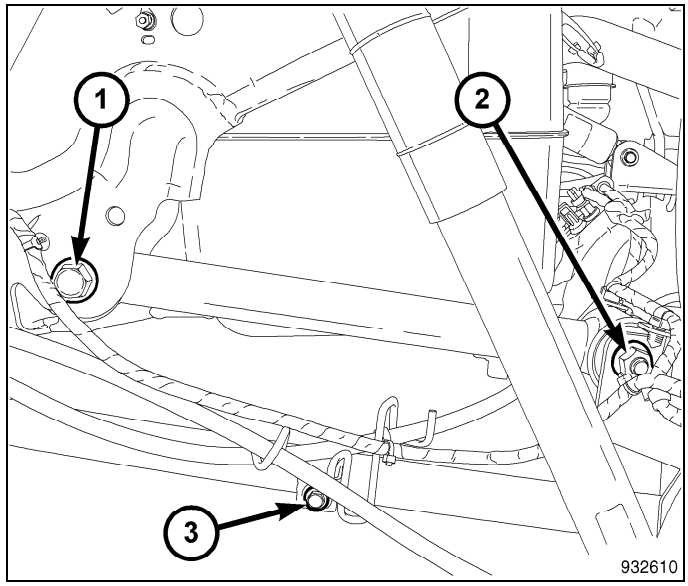

4. Remove the lower control arm bolt (1) and nut at the axle **and discard the nut**.
5. Remove the lower control arm bolt and nut (2) at the frame.
6. Remove the lower control arm from the vehicle.

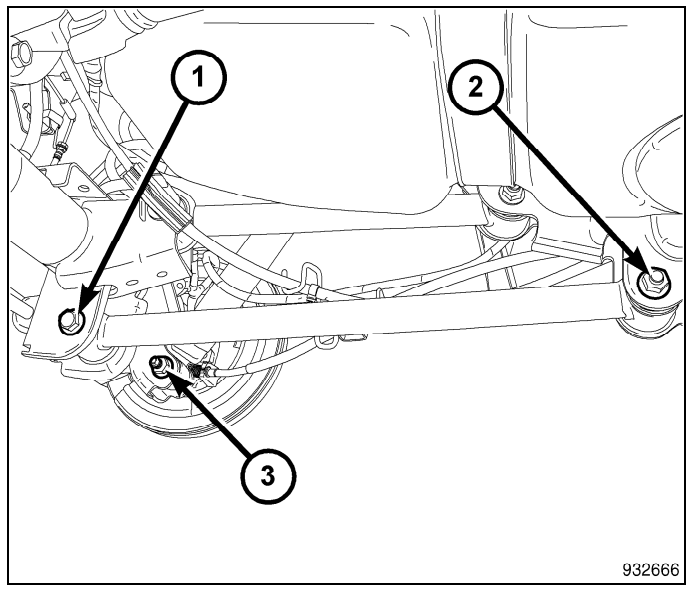

Installation

NOTE: The small bushing attaches to the frame and the large bushing to the axle.

1. Install the lower control arm to the vehicle.
2. Install the lower control arm bolt (1) with a **new** nut at the axle. Do not tighten.
3. Install the lower control arm bolt and nut (2) at the frame. Do not tighten.

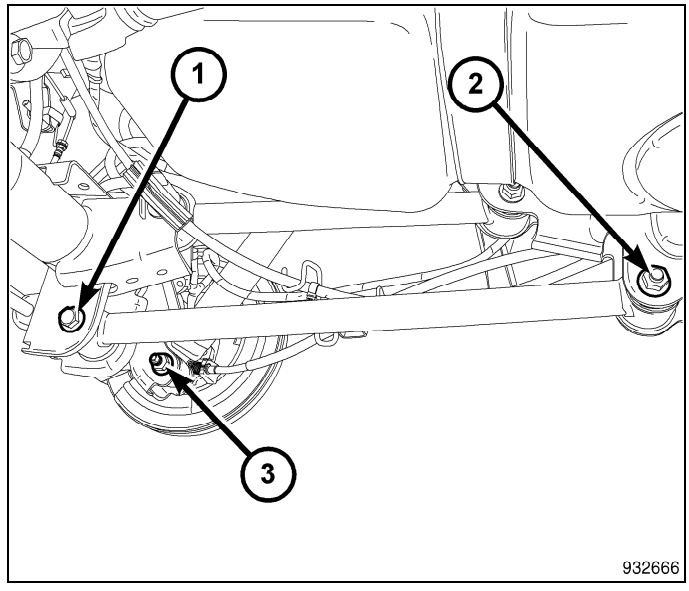

4. Position the parking brake cable guide (Left side only), install the guide bolt (3) and tighten to specifications (Refer to 17 - Rear Suspension - Specifications).
5. Remove the holding fixture supporting the axle.
6. Remove the support and lower the vehicle.
7. Tighten the lower control arm bolts to specifications (Refer to 17 - Rear Suspension - Specifications).

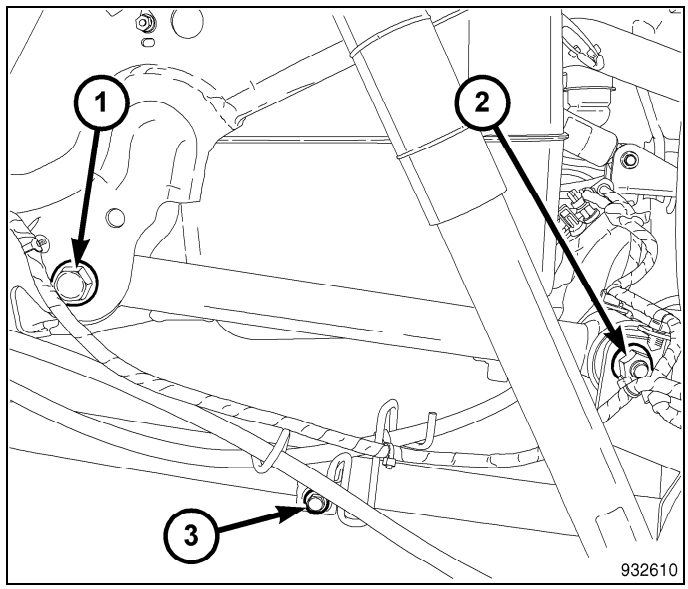

ARM, Upper Control

Removal

1. Raise and support the vehicle (Refer to 04 - Vehicle Quick Reference/Hoisting - Standard Procedure).
2. Support the rear axle with a suitable holding fixture.
3. Remove the upper control arm bolt and nut (2) at the axle **and discard the nut**.
4. Remove the upper control arm front bolt (1) and nut at the frame.
5. Remove the upper control arm from the vehicle.

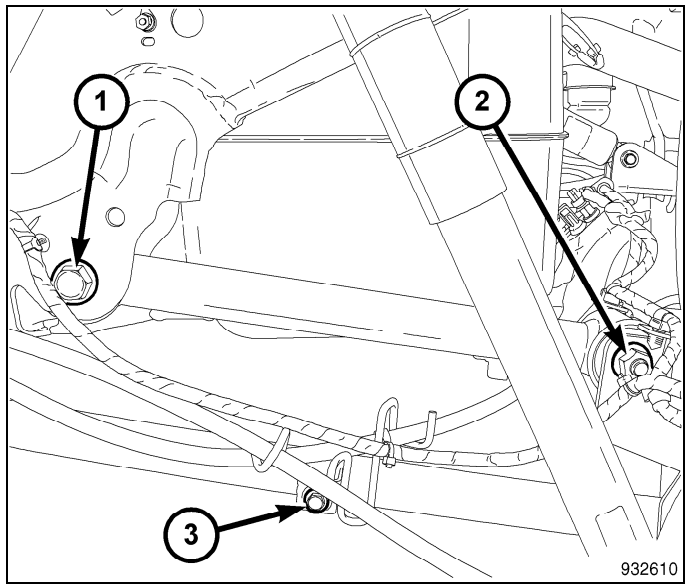

Installation

NOTE: The small bushing attaches to the axel and the large bushing to the frame.

1. Position the upper control arm to the vehicle.
2. Install the upper control arm bolt (1) and nut at the frame. Do not tighten.
3. Install the upper control arm bolt with a **new** nut (2) at the axle. Do not tighten.
4. Remove the holding fixture supporting the axle.
5. Remove the support and lower the vehicle.
6. Tighten the upper control arm bolts/nuts to specifications (Refer to 17 - Rear Suspension - Specifications).

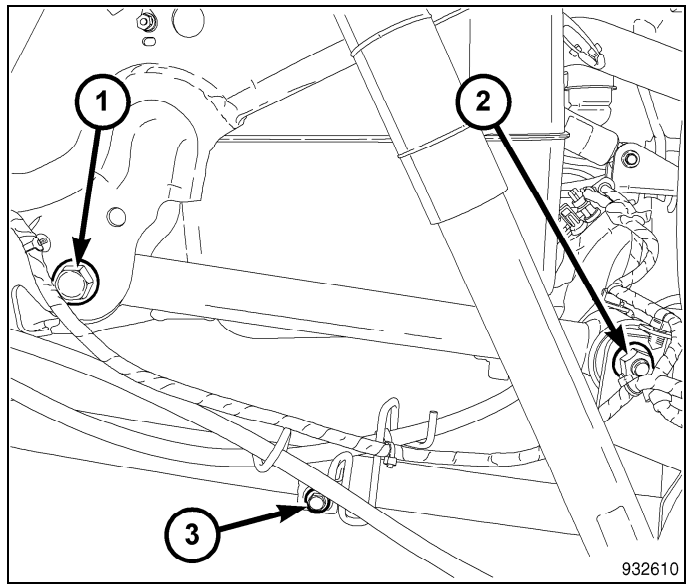

BUMPER, Jounce

Removal

1. Raise and support the vehicle (Refer to 04 - Vehicle Quick Reference/Hoisting - Standard Procedure).

NOTE: Rocking motion may be required while pulling the jounce bumper from the seating bracket

2. Twist and pull out the jounce bumper (3) to remove from the seating bracket.

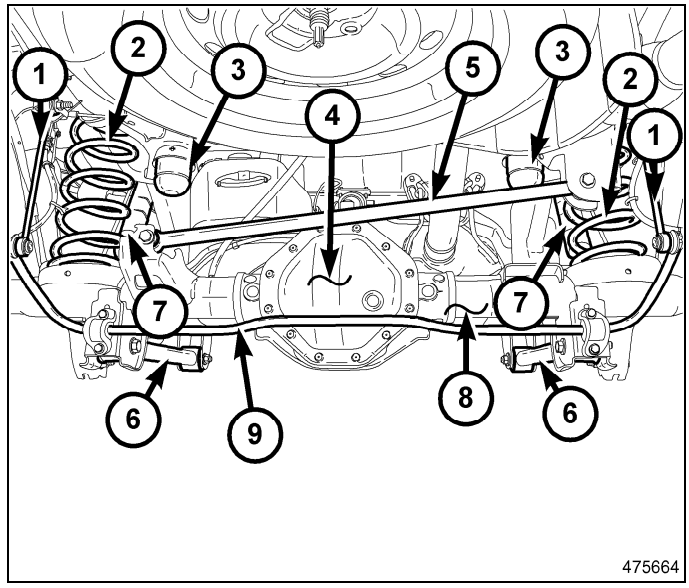

Installation

1. Install the jounce bumper (3) and twist to seat in the bracket.
2. Remove the support and lower the vehicle.

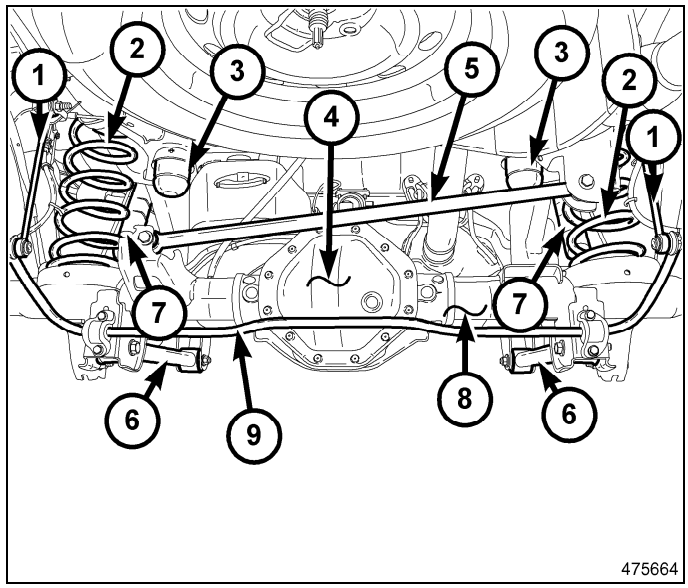

LINK, Stabilizer Bar

Removal

1. Raise and support the vehicle (Refer to 04 - Vehicle Quick Reference/Hoisting - Standard Procedure).
2. Support the rear axle with a suitable holding fixture.
3. Remove the stabilizer link upper bolt (2) and nut.
4. Remove the stabilizer link lower nut (4).
5. Remove stabilizer link (3).

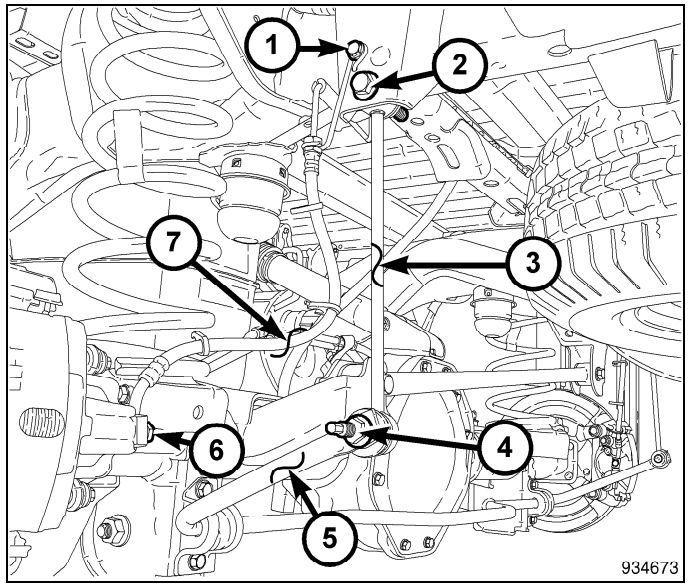

Installation

1. Position the stabilizer link and install the link upper bolt (2) and nut. Do not tighten.
2. Install the stabilizer link lower nut (4). Do not tighten.
3. Remove the holding fixture supporting the axle.
4. Remove the support and lower the vehicle.
5. Tighten stabilizer link upper nuts (2) to 75 N·m (55.5 ft. lbs.).
6. Tighten stabilizer link lower nuts (4) to 107 N·m (79 ft. lbs.).

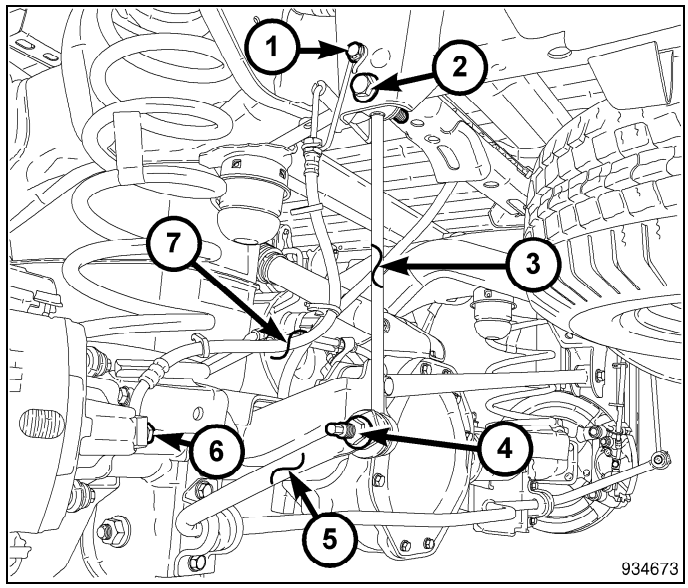

SHOCK ABSORBER, Suspension

Removal

NOTE: View is typical of a coil spring system. A leaf spring system is similar.

1. Raise and support the vehicle (Refer to 04 - Vehicle Quick Reference/Hoisting - Standard Procedure).
2. Support the rear axle with a suitable holding fixture.
3. Remove the shock upper bolt (1) and nut.
4. Remove the shock lower bolt (3) and nut.
5. Remove the shock absorber (2) from the vehicle.

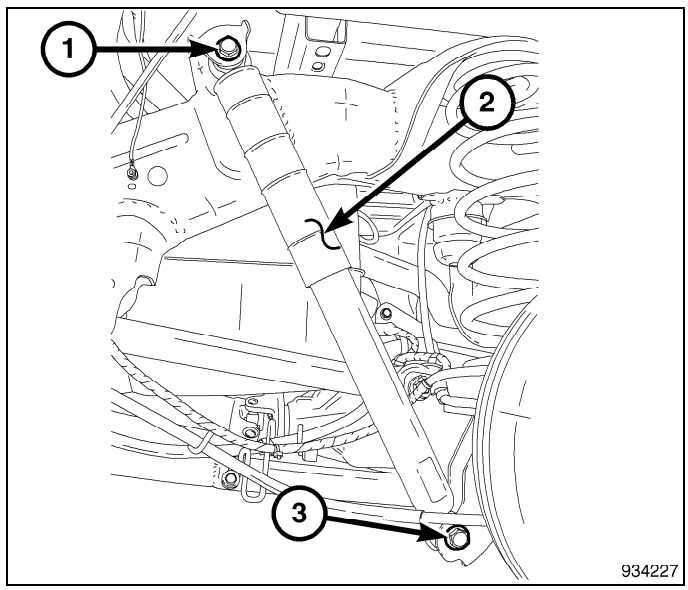

Installation

NOTE: View is typical of a coil spring system. A leaf spring system is similar.

NOTE: All torques should be made with the full vehicle weight on the ground being supported by the tires.

1. Position the shock absorber (2) in the brackets.
2. Install the bolts (1, 3) through the brackets and the shock (2).
3. Install the nuts on the bolts (1, 3) and do not tighten.
4. Remove the holding fixture supporting the axle.
5. Remove the support and lower the vehicle.
6. Tighten shock bolts (1, 3) and nuts to specifications (Refer to 17 - Rear Suspension - Specifications).

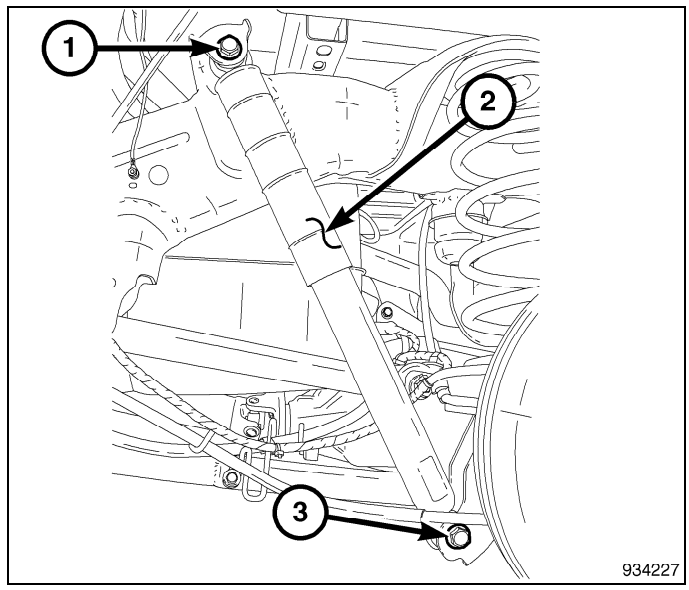

SPRING(S)

Removal

1. Raise and support the vehicle (Refer to 04 - Vehicle Quick Reference/Hoisting - Standard Procedure).
2. Support the axle with a suitable holding fixture.
3. Remove the shock lower bolt (3) and nut.

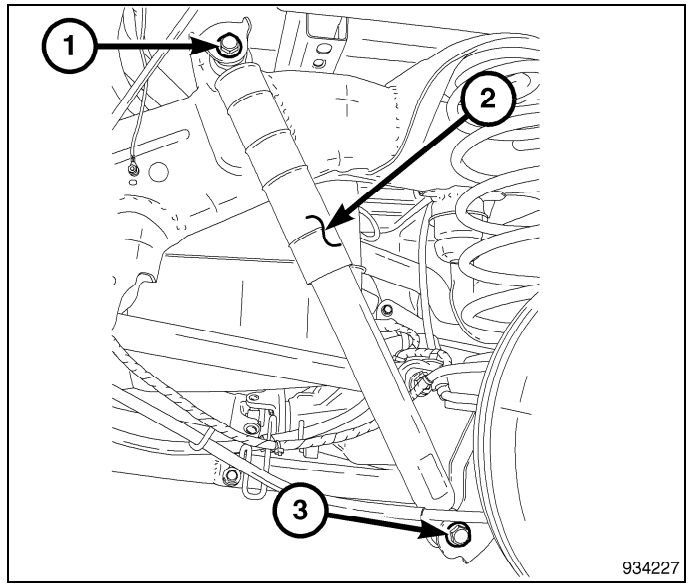

NOTE: Lower the axle carefully and avoid putting stress on the flexible brake line.

4. Lower the axle support and tilt the axel to remove the spring (3) and isolator (2) from the vehicle.

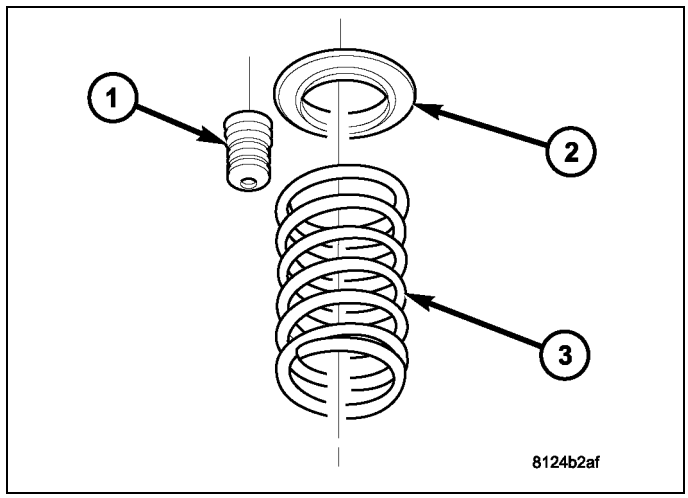

Installation

NOTE: All torques should be made with the full vehicle weight on the ground being supported by the tires.

1. Position spring (3) and isolator (2) on the axle and align into the spring upper pocket.
2. Carefully raise the rear axle into place.

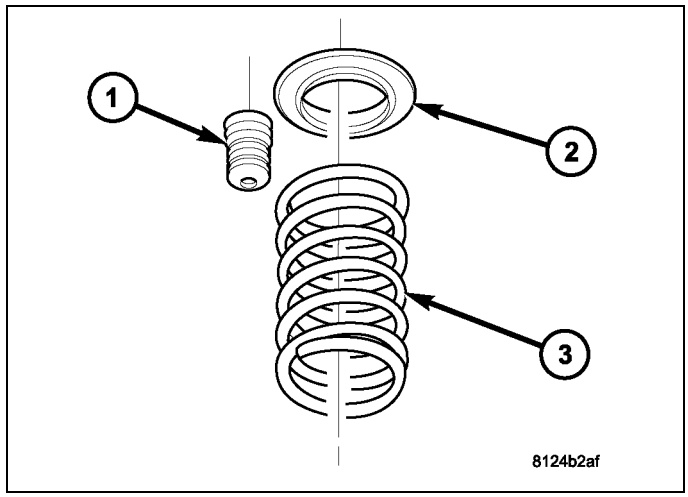

3. Install the shock lower bolt (3) and nut, and do not tighten.
4. Remove the holding fixture for the rear axle.
5. Remove the support and lower the vehicle.
6. Tighten shock lower bolt (3) and nut to 136 N·m (100.5 ft. lbs.).

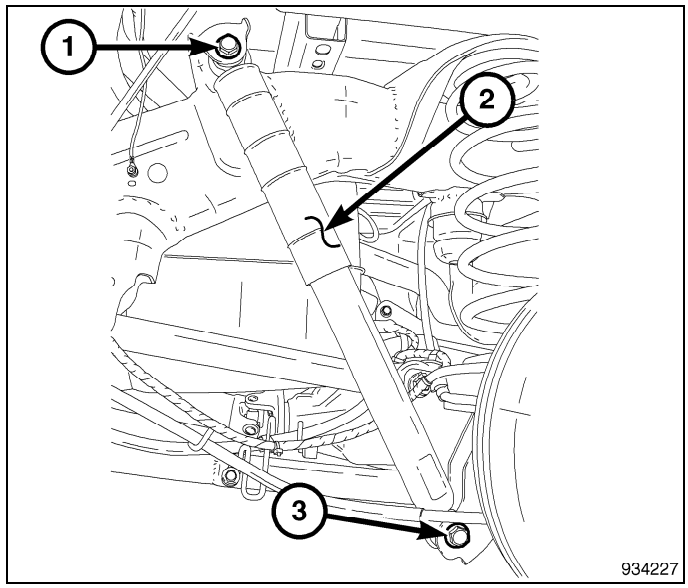

STABILIZER BAR, Rear Suspension

Removal

1. Raise and support vehicle (Refer to 04 - Vehicle Quick Reference/Hoisting - Standard Procedure).
2. Remove both stabilizer bar link lower mounting nuts (2).
3. Remove stabilizer bar retainer bolts (3) and retainers (4).
4. Remove stabilizer bar (5).
5. Remove and transfer the bushings if necessary.

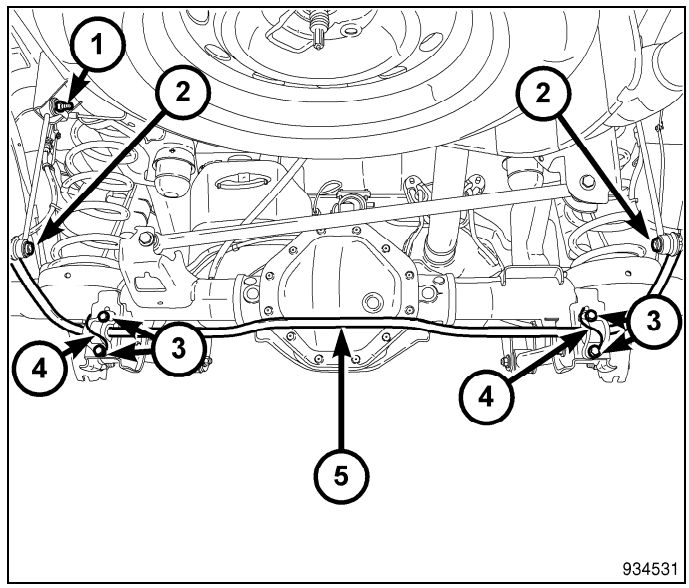

Installation

1. Install stabilizer bar bushings.
2. Install the stabilizer bar (5) and center it with equal spacing on both sides.
3. Install stabilizer bar retainers (4) and bolts (3). Do not tighten.
4. Install the stabilizer bar links on the stabilizer bar (5) and install link lower mounting nuts. Do not tighten.
5. Remove the support and lower the vehicle.
6. Tighten the stabilizer bar retainer bolts (3) to 50 N·m (37 ft. lbs.).
7. Tighten stabilizer link lower nuts (2) to 107 N·m (79 ft. lbs.).

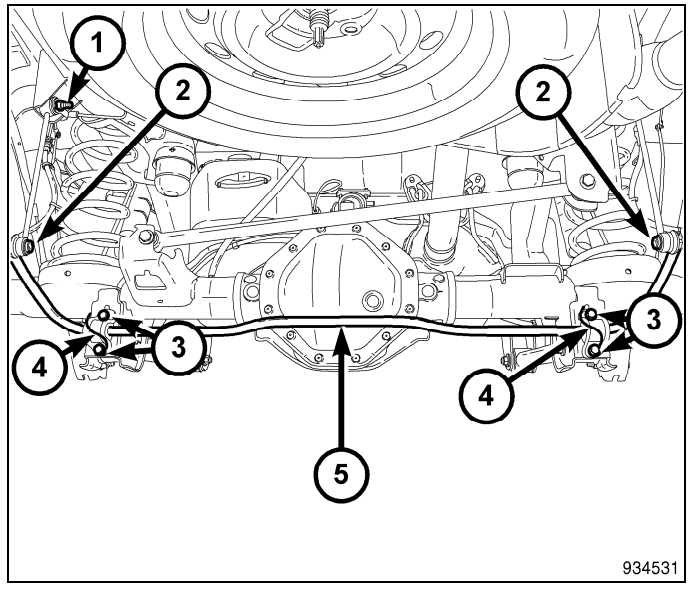

TRACK BAR, Rear

Removal

1. Raise and support the vehicle (Refer to 04 - Vehicle Quick Reference/Hoisting - Standard Procedure).
2. Support the rear axle with a suitable holding fixture.
3. Remove the track bar bolt/nut from the frame bracket.
4. Remove the track bar bolt/nut from the axle bracket.
5. Remove the track bar (5).

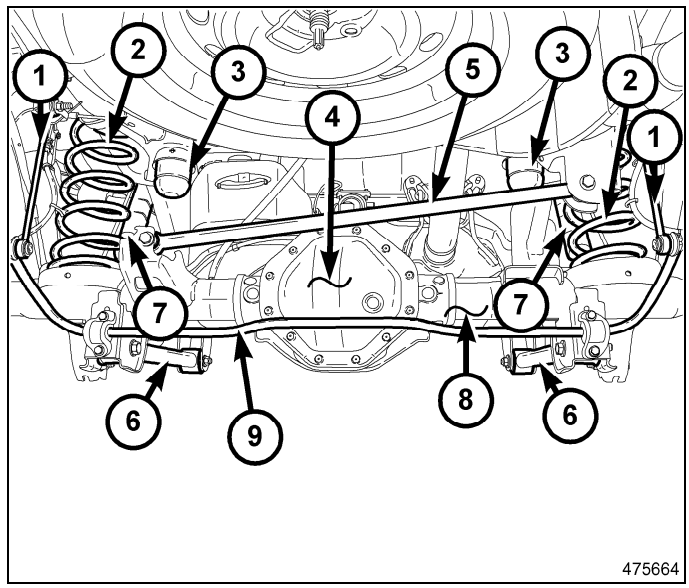

Installation

1. Position the track bar (5) onto the vehicle.
2. Install the track bar bolt and nut in the frame bracket. Do not tighten.
3. Install the track bar bolt and nut in the axle bracket. Do not tighten.
4. Remove the holding fixture supporting the axle.
5. Remove the supports and lower the vehicle.
6. Tighten the track bar mounting bolts/nuts to specifications (Refer to 17 - Rear Suspension - Specifications).

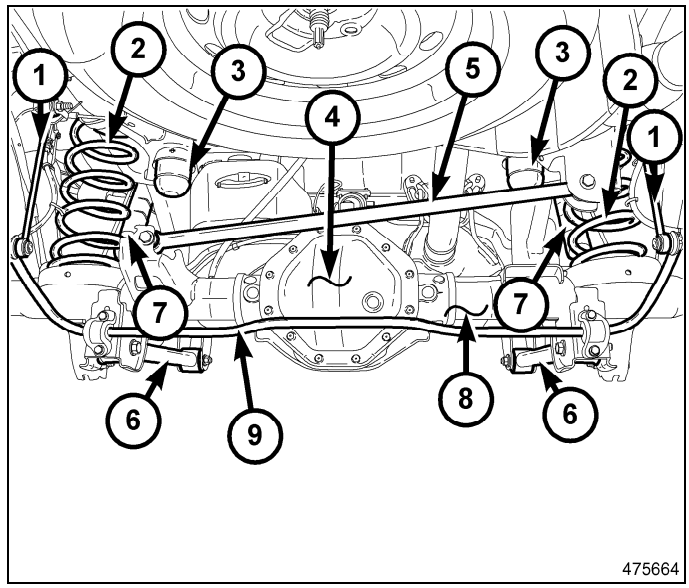

STEERING

TABLE OF CONTENTS

	page
STEERING	
DESCRIPTION	2
OPERATION	2
DIAGNOSIS AND TESTING	
STEERING SYSTEM DIAGNOSIS CHARTS	2
POWER STEERING FLOW AND PRESSURE	9
SPECIAL TOOLS	10
COLUMN	**13**
GEAR	**33**
LINKAGE	**37**
PUMP	**45**

Steering

Description

CAUTION: MOPAR® ATF+4 is to be used in the power steering system. No other power steering or automatic transmission fluid is to be used in the system. Damage may result to the power steering pump and system if any other fluid is used, and do not overfill.

Power steering systems consist of:

- Steering column
- Rack and pinion steering gear
- Belt driven hydraulic steering pump
- Pump pressure and return hoses
- Oil Cooler

Operation

The steering column shaft is attached to the gear pinion. The rotation of the pinion moves the gear rack from side-to-side. This lateral action of the rack pushes and pulls the tie rods (4) to change the direction of the front wheels .

Power assist is provided by an engine mounted hydraulic pump which supplies hydraulic fluid pressure to the steering gear (6).

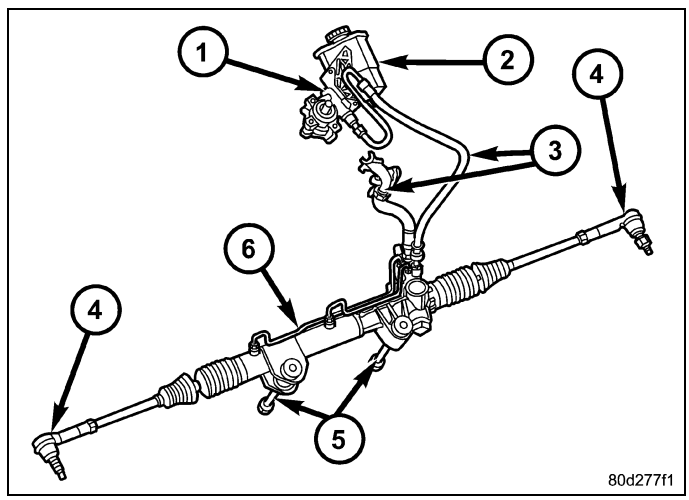

Diagnosis and Testing

STEERING SYSTEM DIAGNOSIS CHARTS

NOTE: There are four diagnosis charts following that cover POWER STEERING NOISE, BINDING AND STICKING, INSUFFICIENT ASST. OR POOR RETURN TO CENTER and LOOSE STEERING AND VEHICLE LEAD.

NOTE: * There is some noise in all power steering systems. One of the most common is a hissing sound evident when turning the steering wheel when at a standstill or when parking and the steering wheel is at the end of its travel. Hiss is a very high frequency noise similar to that experienced while slowly closing a water tap. The noise is present in every valve and results when high velocity fluid passes valve orifice edges. There is no relationship between this noise and the performance of the steering system.

NOTE: ** A light clunk may be felt or heard during steering wheel reversal while vehicle is stationary. This results from internal steering gear rack movement at the bushings and in no way affects the performance of the steering system. This movement may be felt in the steering components during steering wheel reversal.

NOTE: * Power steering pump growl/moan/groan results from the development of high pressure fluid flow. Normally this noise level should not be high enough to be objectionable.**

POWER STEERING NOISE

CONDITION	POSSIBLE CAUSES	EVALUATION/CORRECTION
OBJECTIONABLE HISS OR WHISTLE WHILE TURNING STEERING WHEEL WHEN STATIONARY OR MOVING SLOWLY*	1. Damaged or mispositioned steering column shaft/coupling dash boot seal.	1. Check to ensure boot is properly installed and seals against sheet metal. Reposition or replace steering column shaft/coupling dash boot seal as necessary.
	2. Mis-routed power steering hose.	2. Check routing of power steering hoses. Ensure hoses do not come in unwanted contact with other components and objects.
	3. Restriction in pressure or return hose.	3. Using an electronic listening tool, determine if noise is coming from either pressure or return hose. Replace hose that noise is present within.
	4. Noisy valve in power steering gear.	4. For evaluation and correction, (Refer to 19 - Steering - Diagnosis and Testing).

POWER STEERING NOISE, continued

CONDITION	POSSIBLE CAUSES	EVALUATION/CORRECTION
RATTLE OR EXCESSIVE CLUNK**	1. Power steering gear loose on frame.	1. Check fastener torque and tighten to specifications. Replace as necessary. Check steering wheel center following repair.
	2. Loose shock assembly mounting fasteners at tower or knuckle.	2. Check fastener torque and tighten to specifications.
	3. Excessive play in outer tie rod.	3. Inspect and replace if necessary.
	4. Engine cradle/crossmember mounting fasteners loose at frame or bushings worn.	4. Check fastener torque and tighten to specifications. Inspect bushings and repair as necessary.
	5. Wheel Mounting (Lug) nuts loose.	5. Inspect wheel mounting (Lug) nuts and studs and repair as necessary. Tighten nuts to specifications.
	6. Power steering hose touching the body or frame of vehicle.	6. For evaluation and correction, (Refer to 19 - Steering/Pump - Diagnosis and Testing).
	7. Stabilizer bar link joints worn (occurs with steering input only when moving, not stationary).	7. At park, jounce only one side of vehicle front to exercise stabilizer bar. Replace stabilizer bar link.
	8. Loose lower control arm mounting bolts at engine cradle, frame or crossmember (occurs with steering input only when moving, not stationary).	8. Check control arm mounting bolts and tighten to specified torque.
	9. Loose intermediate shaft or column.	9. Rotate intermediate (steering) shaft in relationship to gear, checking for free-play. Check column fasteners and tighten to specifications as necessary.
	10. Lower control arm pivot bushing worn (occurs with steering input only when moving, not stationary).	10. Inspect bushings for wear and replace lower control arm as necessary.
	11. Internal power steering gear noise.	11. Drive vehicle on rough road, then steer rapidly back and forth when stopped. Replace power steering gear as necessary.
	12. Loose inner tie rod.	12. Inspect and replace if necessary.
	13. Damaged engine cradle/ crossmember.	13. Inspect the cradle/crossmember for cracks or other damage. Replace as necessary.

POWER STEERING NOISE, continued

CONDITION	POSSIBLE CAUSES	EVALUATION/CORRECTION
POPPING NOISE	1. Loose steering gear mounting fasteners.	1. Check fasteners for proper torque and retighten as necessary.
	2. Loose outer tie rod mounting nut or jam nut.	2. Check fastener torque. Replace nuts as necessary and tighten to specifications.
	3. Loose intermediate (steering) shaft coupling at gear input shaft.	3. Make sure coupling is fully seated on gear input shaft. Retighten or re-seat as necessary.
	4. Worn tie rod (outer or inner).	4. Inspect and replace if necessary.
	5. Worn axle half-shaft.	5. For evaluation and correction, go to Section 03 - Differential and Driveline, Half Shaft, Diagnosis and Testing.
CHIRP OR SQUEAL (POWER STEERING PUMP)	1. Loose power steering pump drive belt.	1. Inspect belt. Replace belt if worn or glazed. Tighten/adjust power steering pump drive belt if equipped with a manual tensioner.
	2. Pulley alignment incorrect.	2. Realign accessory drives.
	4. Power steering pump noisy (worn bearing/bushing noise).	4. Using an electronic listening tool, determine if noise is coming from pump. Replace power steering pump as required.
	5. Generator or water pump noisy.	5. Using an electronic listening tool, determine if noise is coming from Generator or water pump. Replace faulty component.
WHINE, GROWL, MOAN OR GROAN (POWER STEERING PUMP)***	1. Low power steering fluid level.	1. Fill power steering fluid reservoir to proper level and check for leaks (make sure all air is bled from the system fluid).
	2. Air in power steering fluid.	2. Inspect for excessive air bubbles in fluid (fluid will appear foamy and lighter in color). Inspect hoses for leaks and replace as necessary. Bleed air from fluid. (Refer to 19 - Steering/Pump - Standard Procedure)
	3. Power steering hose touching body or frame of vehicle.	3. For evaluation and correction, (Refer to 19 - Steering/Pump - Diagnosis and Testing).
	4. Wear of power steering pump internal components.	4. For evaluation and correction, (Refer to 19 - Steering/Pump - Diagnosis and Testing).

POWER STEERING NOISE, continued

CONDITION	POSSIBLE CAUSES	EVALUATION/CORRECTION
COLD START WHINE OR MOAN (POWER STEERING PUMP)***	1. Low power steering fluid level.	1. Fill power steering fluid reservoir to proper level and check for leaks (make sure all air is bled from the system fluid).
	2. Extremely low ambient temperature (near 0 F° (-18 C°) or below)	2. Some noise is expected as pump attempts to pull cold, thick fluid. Noise should go away as vehicle warms up. Acceptable levels of excessive noise are one second at 0 F° (-18 C°) and 15 seconds at -20 F° (-29 C°). If noise is excessive, look for poor sealing on the return hose or a possible fluid leak.
SQUEAKING OR RUBBING SOUND	1. Steering column shroud or shaft rubbing.	1. While turning the steering wheel, listen down column to locate. Check interference between moving components. Move or realign shrouds or shaft as necessary. Replace components if this does not correct problem.
	2. Clockspring inside steering column noisy.	2. Remove clockspring and reinstall steering wheel for testing. If noise is gone, replace clockspring.
	3. Boot/dash seal lubrication inadequate.	3. Remove boot seal and recheck for noise. Lubricate seal as necessary.
	4. Steering gear outer tie rod noisy.	4. While a helper turns the steering wheel, use an electronic listening tool to determine if noise is coming from either outer tie rod. Replace outer tie rods as necessary.
	5. Steering gear internally noisy.	5. Remove dash seal boot, then exercise the steering wheel. If noise is still present at gear, replace steering gear.

POWER STEERING NOISE, continued

CONDITION	POSSIBLE CAUSES	EVALUATION/CORRECTION
SCRUBBING OR KNOCKING SOUND.	1. Incorrect tire or wheel size.	1. Replace incorrect size tire or wheel with original equipment size.
	2. Worn motor or transmission mount.	2. Drive vehicle, moving accelerator pedal rapidly up and down attempting to locate noise. Try in both forward and reverse. Replace mounts as necessary.
	3. Tires contacting wheel well.	3. Make sure wheel house is properly positioned. If not, reposition as necessary. If steering wheel is properly centered, check steering gear travel left to right by rotating the steering wheel to each stop. Steering wheel should rotate the same amount in both directions from center. If not, replace steering gear.
	4. Interference between moving steering components and other components.	4. Check for bent or misaligned components. Correct or replace as necessary.
	5. Accessory drive pulley rubbing against another component.	5. Check pulleys for wear. Check for worn engine or transmission mount. Reposition components or replace mounts as necessary.

BINDING AND STICKING

CONDITION	POSSIBLE CAUSE	CORRECTION
DIFFICULT TO TURN WHEEL STICKS OR BINDS	1. Low fluid level.	1. Fill to proper level.
	2. Tire pressure.	2. Adjust tire pressure.
	3. Steering components (ball joints/tie rod ends).	3 Inspect and repair as necessary.
	4. Loose belt.	4. Adjust or replace.
	5. Low pump pressure.	5. Pressure test and replace if necessary.
	6. Intermediate shaft binding.	6. Replace intermediate shaft.
	7. Column shaft coupler binding.	7. Replace coupler.
	8. Steering gear worn.	8. Replace gear.
	9. Pump seized / Stuck valve	9. Replace pump.

INSUFFICIENT ASST. OR POOR RETURN TO CENTER

CONDITION	POSSIBLE CAUSE	CORRECTION
HARD TURNING OR MOMENTARY INCREASE IN TURNING EFFORT	1. Tire pressure.	1. Adjust tire pressure.
	2. Low fluid level.	2. Fill to proper level.
	3. Loose belt.	3. Adjust or replace.
	4. Low pump pressure.	4. Pressure test and repair as necessary.
	5. Internal gear leak.	5. Replace gear.
STEERING WHEEL DOES NOT WANT TO RETURN TO CENTER POSITION	1. Tire pressure.	1. Adjust tire pressure.
	2. Wheel alignment.	2. Align front end.
	3. Lack of lubrication.	3. Inspect and lubricate suspension components.
	4. High friction in steering gear.	4. Replace gear.

LOOSE STEERING AND VEHICLE LEAD

CONDITION	POSSIBLE CAUSE	CORRECTION
EXCESSIVE PLAY IN STEERING WHEEL	1. Worn or loose suspension or steering components.	1. Inspect and repair as necessary.
	2. Worn or loose wheel bearings.	2. Inspect and repair or adjust bearings.
	3. Steering gear mounting.	3. Tighten gear mounting bolts to specification.
	4. Gear out of adjustment.	4. Replace gear.
	5. Worn or loose steering coupler.	5. Inspect and replace as necessary.
VEHICLE PULLS OR LEADS TO ONE SIDE.	1. Tire Pressure.	1. Adjust tire pressure.
	2. Radial tire lead.	2. Rotate tires.
	3. Brakes dragging.	3. Repair as necessary.
	4. Wheel alignment.	4. Align front end.
	5. Steering gear valve bias.	5. Replace steering gear.

NOTE: * Steering shudder can be expected in new vehicles and vehicles with recent steering system repairs. Shudder should dissipate after the vehicle has been driven several weeks.

NOTE: ** To evaluate this condition, it may be necessary to disconnect the coupling at the base of the steering column. Turn the steering wheel and feel or listen for internal rubbing in steering column. To avoid damaging the column clockspring, note the following. Before disconnecting coupling, place tires in the straight-ahead position and center steering wheel. Once disconnected, DO NOT rotate steering wheel more than one revolution in either direction and place steering wheel in original location before reconnecting coupling. If this position is lost, the steering column clockspring must be recentered following the procedure found within the procedure for steering column installation in the steering column section.

NOTE: * Increased low speed or stationary steering effort can be expected if the steering fluid is at a high temperature. High fluid temperature usually results from high engine rpm due to trailer towing, ascending grades, or racing the engine for prolonged periods of time.**

POWER STEERING FLOW AND PRESSURE

The following procedure is used to test the operation of the power steering system on the vehicle. This test will provide the gallons per minute (GPM) or flow rate of the power steering pump along with the maximum relief pressure. Perform test any time a power steering system problem is present. This test will determine if the power steering pump or power steering gear is not functioning properly. The following pressure and flow test is performed using Power Steering Kit 6815 and Power Steering Kit 6893A.

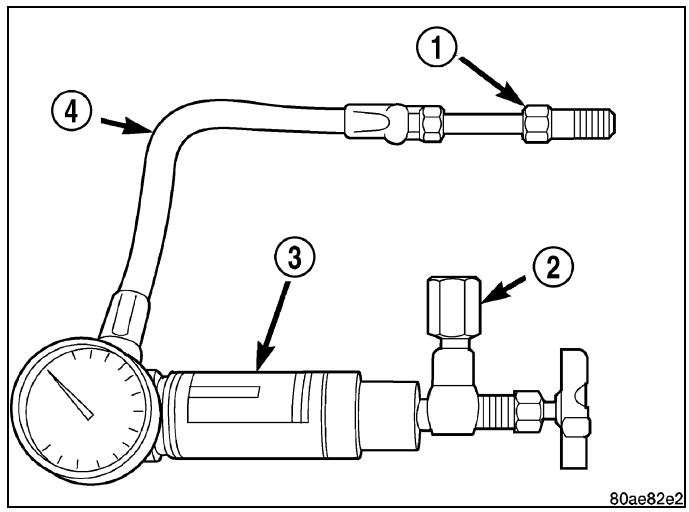

FLOW AND PRESSURE TEST

1. Check the power steering belt to ensure it is in good condition and adjusted properly.
2. Connect pressure gauge hose from the Power Steering Kit 6815 to Adapter 6826 (part of Power Steering Kit 6893A).
3. Connect Power Steering Adapter 6825A to test valve end of Power Steering Kit 6815.
4. Disconnect the high pressure hose from the power steering pump.
5. Connect Power Steering Adapter 6825A to the pump fitting.
6. Connect the power steering hose from the steering gear to Adapter 6826 (part of Power Steering Kit 6893A).

NOTE: If fluid leaked from the steering system, it should be filled to correct level prior to starting the engine.

7. Open the test valve completely.
8. Start engine and let idle long enough to circulate power steering fluid through flow/pressure test gauge and to get air out of the fluid. Then shut off engine.
9. Check fluid level, add fluid as necessary. Start engine again and let idle.
10. Gauge should read below 862 kPa (125 psi), if above, inspect the hoses for restrictions and repair as necessary. The initial pressure reading should be in the range of 345-552 kPa (50-80 psi).
11. Increase the engine speed to 1500 RPM and read the flow meter. If the flow rate (GPM) is below specification, (refer to pump specification chart for GPM) the pump should be replaced.

CAUTION: The following test procedure involves testing maximum pump pressure output and flow control valve operation. Do not leave the valve closed for more than three seconds as the pump could be damaged.

12. Close valve fully three times and record highest pressure indicated each time. **All three readings must be above specifications and within 345 kPa (50 psi) of each other.**

- Pressures above specifications but not within 345 kPa (50 psi) of each other, replace pump.
- Pressures within 345 kPa (50 psi) of each other but below specifications, replace pump.

13. Open the test valve and turn the steering wheel to the extreme left and right positions three times against the stops. Record the highest pressure reading at each position. Compare readings to the pump specifications chart. If pressures readings are not within 50 psi of each other, the gear is leaking internally and must be replaced.

CAUTION: Do not force the pump to operate against the stops for more than 2 to 3 seconds at a time because, pump damage will result.

PUMP SPECIFICATION

ENGINE	RELIEF PRESSURE ± 65	FLOW RATE (GPM) AT 1500 RPM
All	11032 kPa (1615 ± 65 psi)	3.1 - 3.5

Special Tools

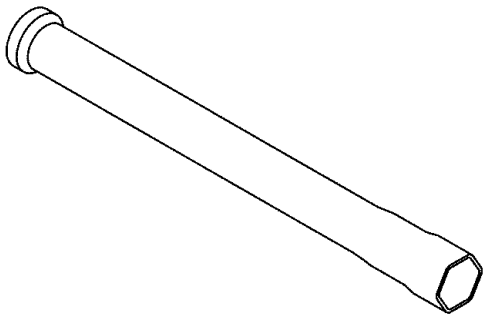

10087-2A - Adapter Wrench, Inner Tie Rod

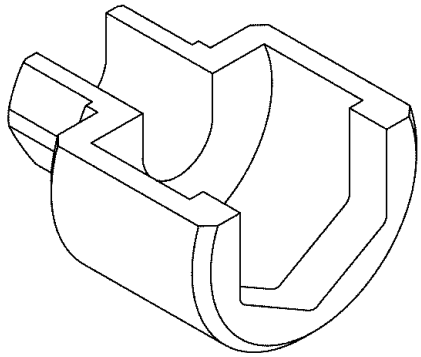

10087-3 - Wrench, Inner Tie Rod

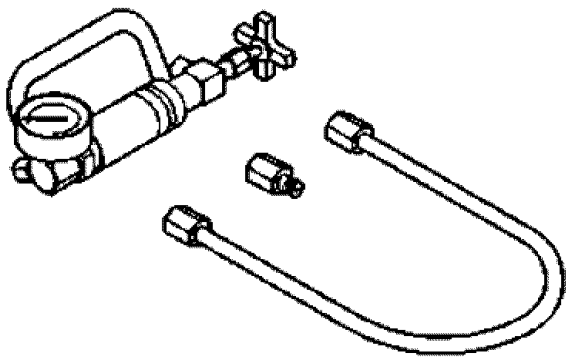

6815 - Kit, Power Steering

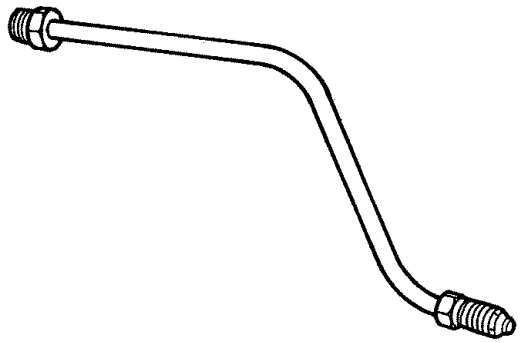

6825A - Adapter, Power Steering

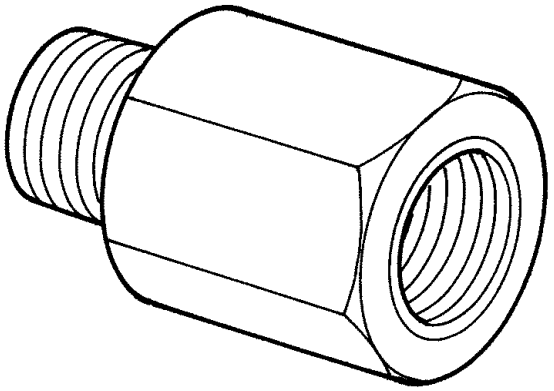

6826 - Adapter, LH P/S Tester

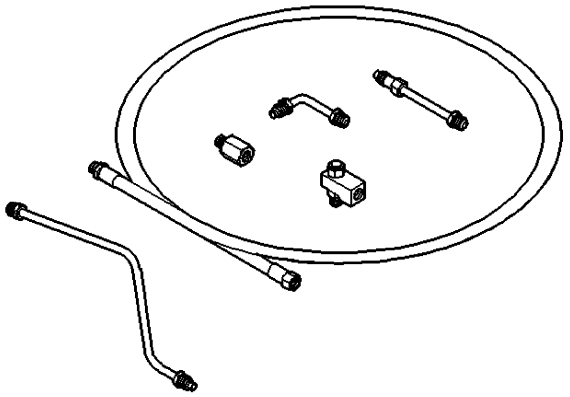

6893A - Kit, Power Steering

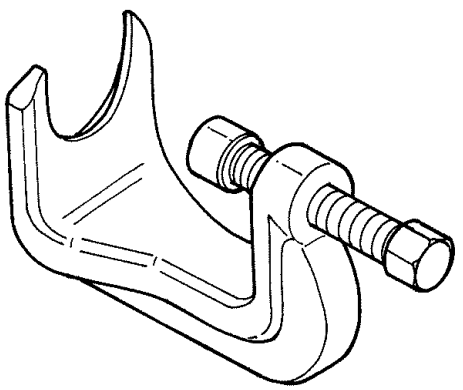

8677 - Remover, Ball Joint

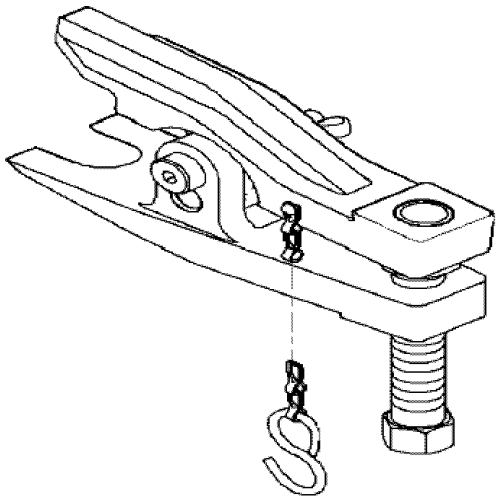

9360 - Remover, Ball Joint

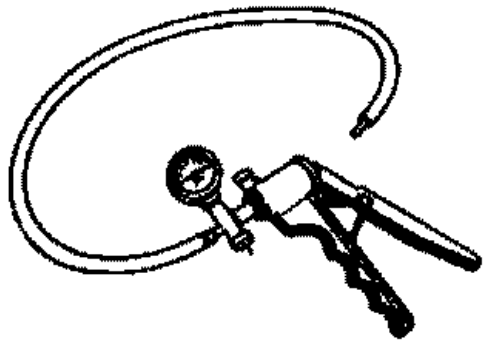

C-4207-A - Vacuum Pump, Hand

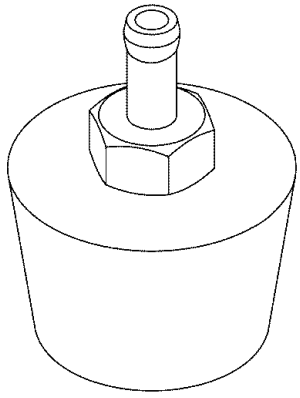

9688A - Cap Adapter, Power Steering Pump

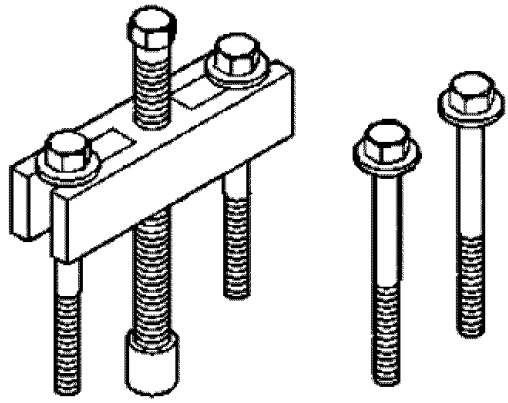

L-4407A - Puller, Gear

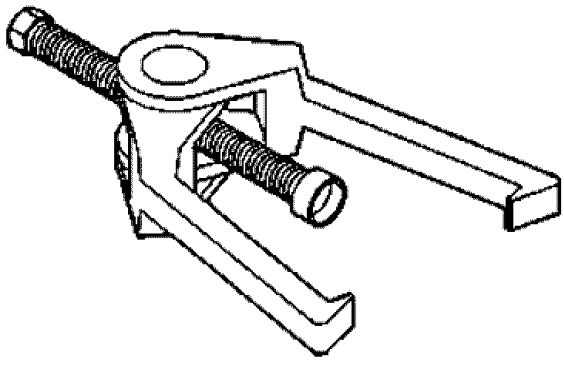

C-3894-A - Puller, Tie Rod

COLUMN

TABLE OF CONTENTS

page

COLUMN
- DESCRIPTION 14
- DIAGNOSIS AND TESTING 14
- REMOVAL 16
- INSTALLATION 17
- SPECIFICATIONS 18
- **COUPLING, STEERING COLUMN, LOWER**
  - REMOVAL 19
  - INSTALLATION 20
- **COUPLING, STEERING COLUMN, UPPER**
  - REMOVAL 21
  - INSTALLATION 22
- **KNOB, TILT LEVER RELEASE**
  - REMOVAL 22
  - INSTALLATION 24
- **LEVER, GEARSHIFT**
  - REMOVAL
    - ASSEMBLY 26
    - LEVER ONLY 27
  - INSTALLATION
    - ASSEMBLY 28
    - LEVER ONLY 28
- **SHROUD, STEERING COLUMN**
  - REMOVAL
    - UPPER 29
    - LOWER 29
  - INSTALLATION
    - UPPER 30
    - LOWER 31
- **WHEEL, STEERING**
  - REMOVAL 32
  - INSTALLATION 32

Column

Description

The tilt and standard column (2) has been designed to be serviced as an assembly; less wiring, switches, shrouds, steering wheel, etc. Most steering column components can be serviced without removing the steering column from the vehicle. The adjustable pedal switch is now mounted on the left side of the steering column below the multi-function switch and the ignition switch has been moved to the instrument panel.

To service the steering wheel, switches or airbag, (Refer to 10 - Restraints - Warning) and follow all WARNINGS and CAUTIONS.

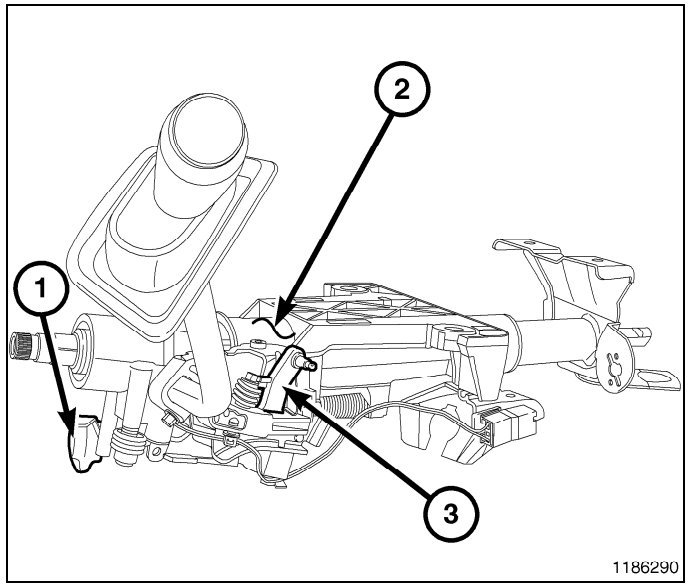

WARNING: The airbag system is a sensitive, complex electro-mechanical unit. Before attempting to diagnose, remove or install the airbag system components you must first disconnect and isolate the battery negative (ground) cable. Then wait two minutes for the system capacitor to discharge. Failure to do so could result in accidental deployment of the airbag and possible personal injury. The fasteners, screws, and bolts, originally used for the airbag components, have special coatings and are specifically designed for the airbag system. They must never be replaced with any substitutes. Anytime a new fastener is needed, replace with the correct fasteners provided in the service package or fasteners listed in the parts books.

CAUTION: Do not hammer on steering column shaft. This may cause damage to the shaft or bearing.

CAUTION: Do not attempt to remove the pivot bolts to disassemble the tilting mechanism. Do not remove shaft lock plate or plate retainer. This will damage the column.

CAUTION: Do not attempt to remove or modify the park lock slider or link.

NOTE: When servicing the steering wheel after removing the old bolt, a new bolt must be used when installing.

NOTE: When servicing the coupler a new bolt must be used when installing.

Diagnosis and Testing

The steering column bracket rear mounts that the studs or bolts go through on both sides of the steering column have a plastic/metal capsule designed to fracture or move when enough force to damage the steering column has occurred. There are 2 steering column mounting capsules, one on each side of the column. A collapse may occur where the tube housing may move into the rear bracket assembly OR the tube may move inside the tube housing. Typically if this type of collapse happens, the capsules should have indicated damage. However, if the any of the following steps indicate a collapse, the steering column will still need replacement.

NOTE: All illustrations within this procedure are typical; however the steering column capsules are the same in all vehicles.

1. Grasp the steering wheel at the 9 and 3 o'clock positions, and again at the 12 and 6 o'clock positions and attempt to rock the steering wheel back and forth and up and down. If there is excessive movement or an audible clunking or grinding sound, replace the steering column (Refer to 19 - Steering/Column - Removal).
2. Remove the steering column opening cover (Refer to 23 - Body/Instrument Panel/COVER, Steering Column Opening - Removal).
3. If equipped, remove the retaining screws (1) and the steering column opening cover reinforcement (2).

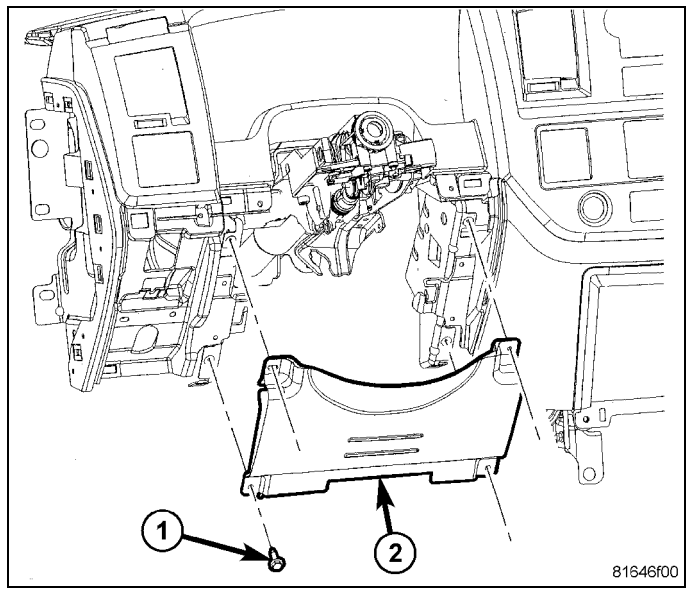

4. Visually inspect for fractures in the plastic area (1) and movement in the metal area (2) of the two capsules while pushing and pulling the steering wheel up and down, and left and right.
5. If capsules are fractured or have moved, replace the steering column (Refer to 19 - Steering/Column - Removal).

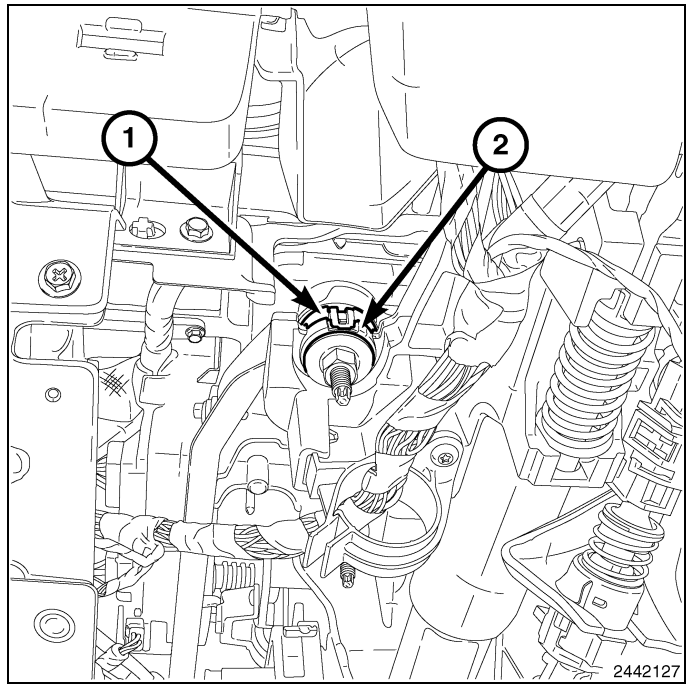

6. Loosen the steering column retaining bolts (or nuts) (2, 5) several turns but do not remove. Remove **only one** of the rear retaining bolts (or nuts) (2). Verify that the capsule has movement, but it should not slide out of the bracket assembly. If the capsule **does** come out of the bracket assembly, replace the steering column (Refer to 19 - Steering/Column - Removal).
7. Install the previously removed bolt (or nut) (2) several turns, and remove the opposite one (2) and check that capsule in the same way. If the capsule **does** come out of the bracket assembly, replace the steering column (Refer to 19 - Steering/Column - Removal).
8. Install the steering column retaining bolts (or nuts) (2, 5) and tighten to 27 N·m (20 ft. lbs.).

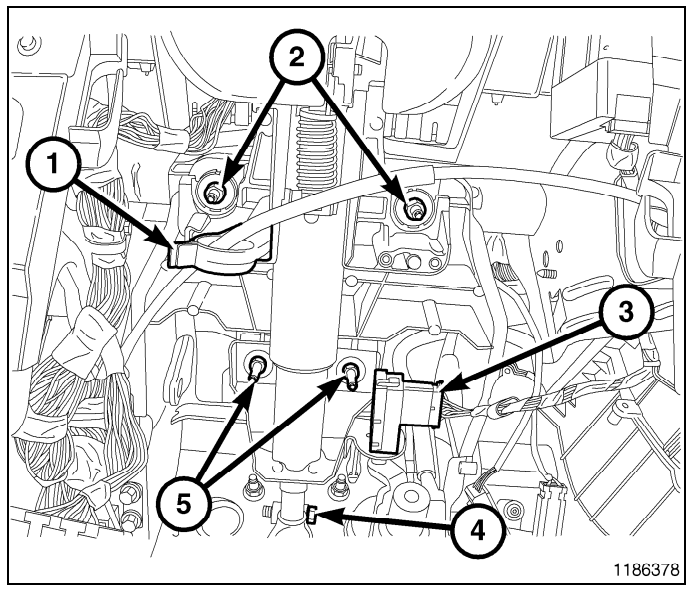

9. Measure the distance from the brake switch mounting bracket (4) to the flat of the rear mounting bracket (3). If less than 144 mm (5.6875 in. or 5 -11/16 in.), replace the steering column (Refer to 19 - Steering/Column - Removal).
10. If the steering column passes all tests and measurements above, the steering column is not collapsed and should not need to be replaced.

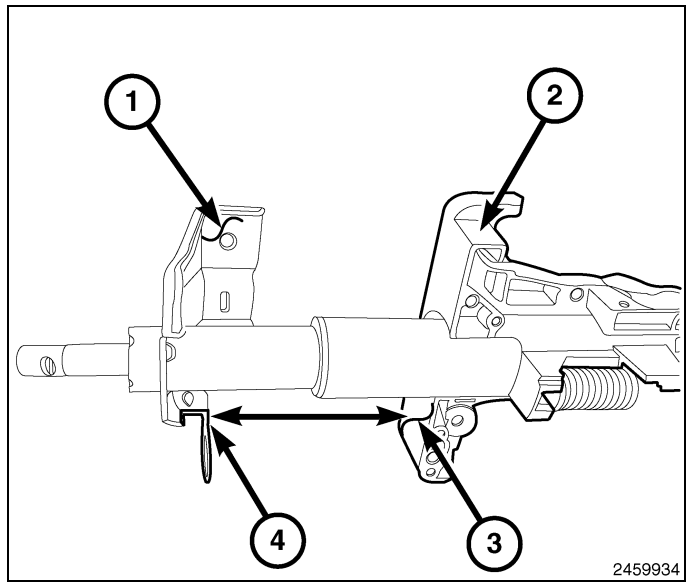

Removal

WARNING: Before servicing the steering column the airbag system must be disarmed. Refer to electrical restraint system for service procedures. Failure to do so may result in accidental deployment of the airbag and possible personal injury.

CAUTION: All fasteners must be torqued to specification to ensure proper operation of the steering column.

1. Position the front wheels **straight ahead**.
2. Disconnect the negative battery cable from the battery.
3. Remove the airbag, (Refer to 10 - Restraints/AIR BAG, Driver - Removal).

4. Partially remove the steering wheel bolt (1) and leave the bolt in the column.
5. Install Steering Wheel Puller C-3894-A or equivalent using the top of the bolt to push on, and loosen the steering wheel (2).
6. Remove the tool and steering wheel bolt (1), and discard the steering wheel bolt (1).

NOTE: Route the harness through the steering wheel during removal.

7. Remove the steering wheel (2).

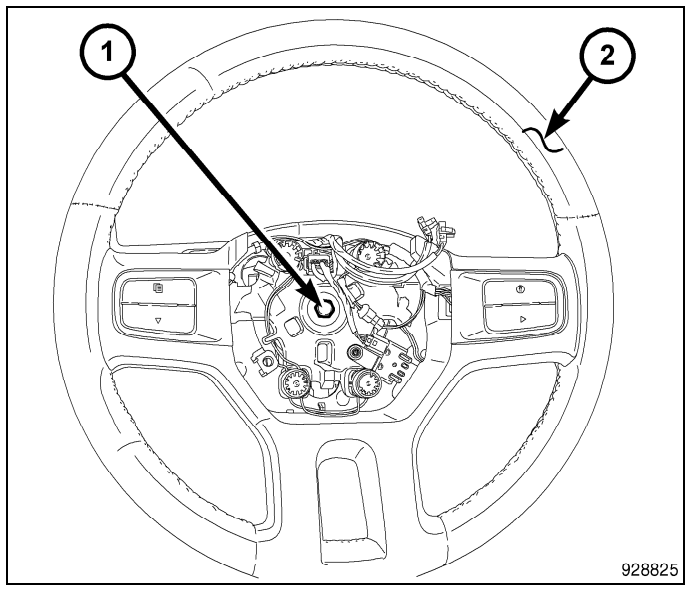

8. Remove the clock spring, (Refer to 10 - Restraints/CLOCKSPRING - Removal).
9. Remove the upper and lower column shrouds, (Refer to 19 - Steering/Column/SHROUD, Steering Column - Removal).
10. Disconnect the wiring harness routing retainers and connectors to the various components of the steering column.
11. If equipped with a floor shift, remove the shift cable from the routing clip (1).
12. If equipped with a column shift, disconnect the shift cable from the shift assembly lever and remove the cable from the bracket.
13. Remove the brake light switch (3) and discard.
14. Remove the upper steering shaft coupler bolt (4) and discard. Separate the shaft from the coupler.
15. Remove the forward steering column mounting nuts (5).
16. Support the steering wheel and remove the forward steering column mounting nuts (2).

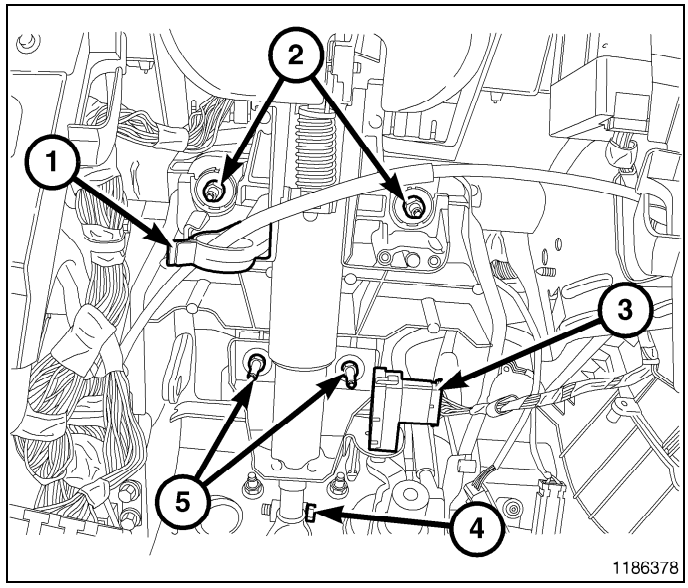

17. Remove the steering column assembly from the vehicle.
18. Remove and transfer any necessary components.

Installation

WARNING: Before servicing the steering column the airbag system must be disarmed. Refer to electrical restraint system for service procedures. Failure to do so may result in accidental deployment of the airbag and possible personal injury.

CAUTION: All fasteners must be torqued to specification to ensure proper operation of the steering column.

1. Position the steering column on the dash panel support and loosely install the mounting nuts (2, 5).

NOTE: A new bolt must be used for reinstallation.

2. Install the steering shaft coupler on the steering shaft and loosely install a **new** bolt (4).
3. Center steering column in dash opening and tighten mounting nuts (2, 5) to 27 N·m (20 ft. lbs.).
4. Tighten the coupler bolt (4) to 38 N·m (28 ft. lbs.).
5. Install a new brake light switch (3),(Refer to 08 - Electrical/8L - Lamps and Lighting/Lamps/Lighting - Exterior/SWITCH, Stop Lamp - Installation) .
6. If equipped with a floor shift, install the shift cable in the routing clip (1).

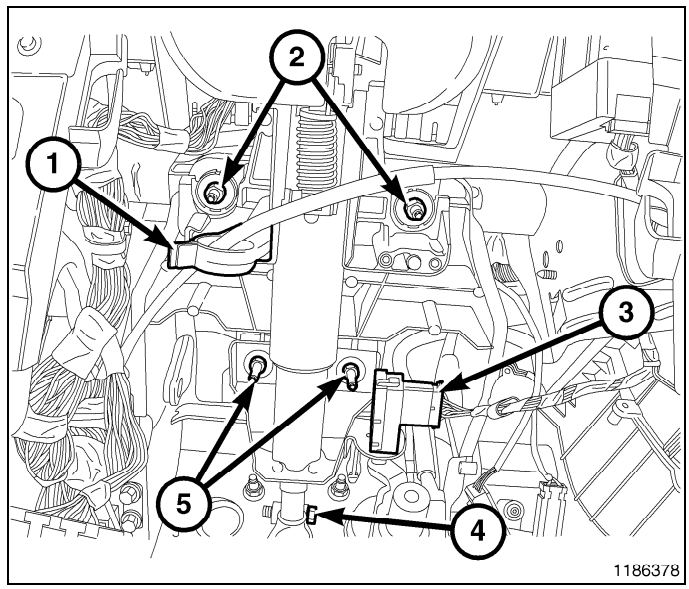

7. If equipped with a column shift, install the shift cable to the shift assembly lever and the bracket. Adjust the shift cable.
8. Install the clockspring (Refer to 10 - Restraints/CLOCKSPRING - Installation).
9. Connect the wiring harness routing clips and connectors to the column components.
10. Install the upper and lower shrouds, (Refer to 19 - Steering/Column/SHROUD, Steering Column - Installation).
11. Align the spline on the steering wheel hub to shaft and install the steering wheel (2).
12. Install a **new** steering wheel bolt (1) and tighten the to 61 N·m (45 ft. lbs.).

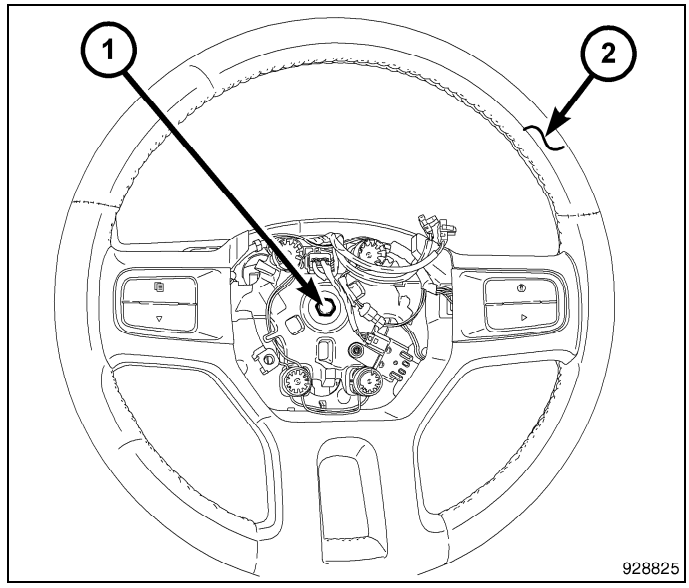

13. Install the airbag (Refer to 10 - Restraints/AIR BAG, Driver - Installation).
14. Connect the negative battery cable to the battery.
15. Test the operation of the horn, Electronic PRNDL Indicator, lights and any other functions that are steering column operated.

Specifications

DESCRIPTION	N·m	Ft. Lbs.	In. Lbs.
Upper Steering Coupling Pinch Bolt	38	28	—
Lower Steering Coupling Upper Pinch Bolt	38	28	—

DESCRIPTION	N·m	Ft. Lbs.	In. Lbs.
Lower Steering Coupling Lower Pinch Bolt (to gear)	57	42	—
Steering Wheel Bolt	61	45	—
Steering Column Mounting Nuts	27	20	239
Tilt Lever Release Mounting Screws	4.5	—	40
Gearshift Lever Assembly	12	—	105
Gearshift Lever, Lever Only	12	—	105

COUPLING, Steering Column, Lower

Removal

1. Disconnect the negative battery cable.
2. Raise and support the vehicle (Refer to 04 - Vehicle Quick Reference/Hoisting - Standard Procedure).
3. Lock the steering wheel with the wheels in the straight position.
4. Remove the left front tire and wheel assembly.

NOTE: Mark both lower coupling (5) connections for proper installation.

5. Remove and discard the lower coupling upper pinch bolt (1).

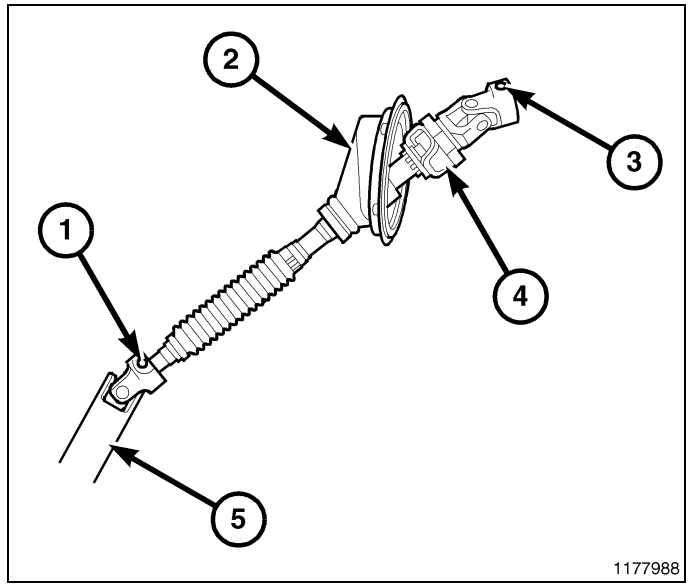

6. Remove and discard the lower coupling lower pinch bolt (1).
7. Remove the lower steering shaft coupling (2).

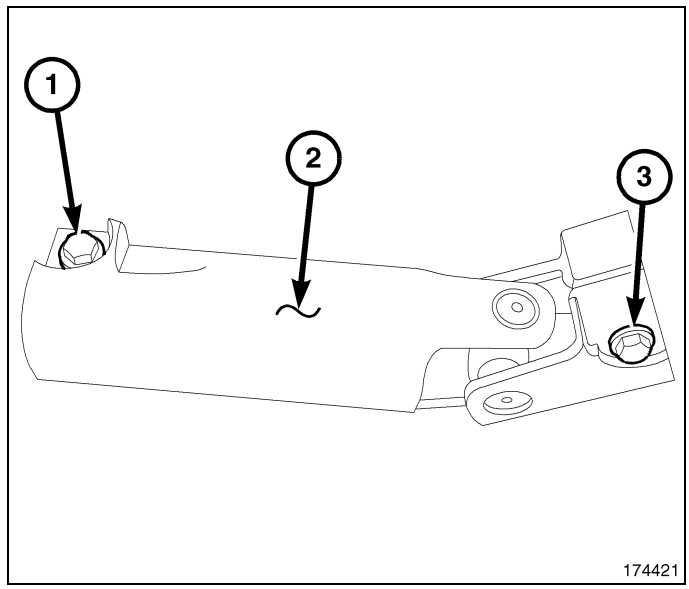

Installation

1. Install the coupling (2) to the steering rack and pinion, and intermediate shaft using the marks made in the removal process.

NOTE: New pinch bolts must be used for reinstallation.

2. Install the lower coupling lower pinch bolt (1) and tighten to 57 N·m (42 ft. lbs.).

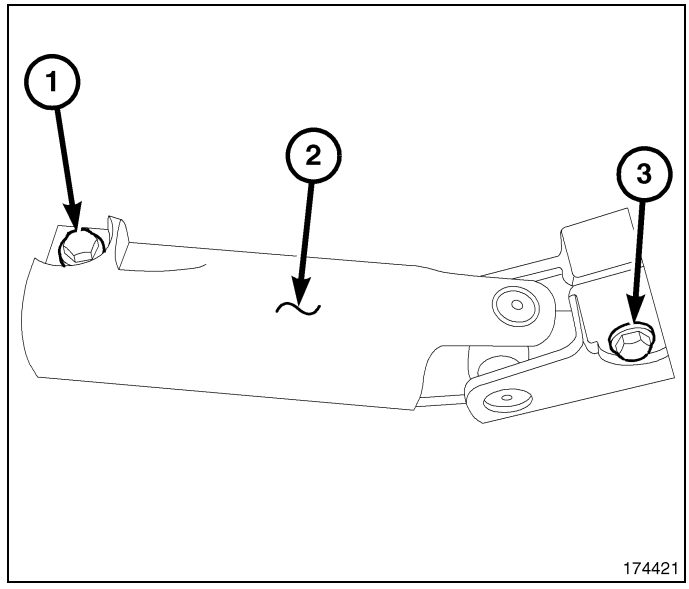

3. Install the lower coupling upper pinch bolt (1) and tighten to 38 N·m (28 ft. lbs.).
4. Install the left front tire and wheel assembly (Refer to 22 - Tires and Wheels - Specifications).
5. Remove the support and lower the vehicle.
6. Reconnect the negative battery cable.
7. Unlock the steering wheel.

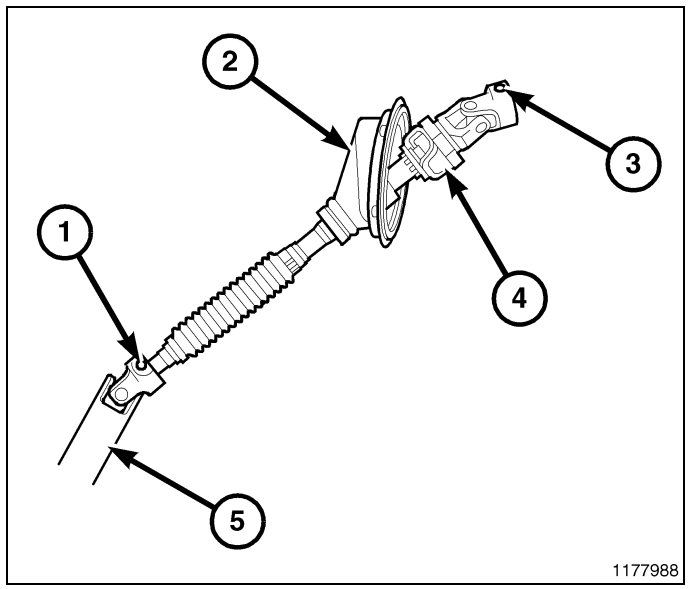

COUPLING, Steering Column, Upper

Removal

1. Disconnect the negative battery cable.
2. Lock the steering wheel with the wheels in the straight position.
3. Remove and discard the upper coupling pinch bolt (3).
4. Lower the upper steering coupling shaft (4) from the column.
5. Remove the upper steering coupling shaft seal (2) from the cowl panel.
6. Remove and discard the lower coupling upper pinch bolt (1).
7. Remove the upper steering coupling shaft (3) from the vehicle.

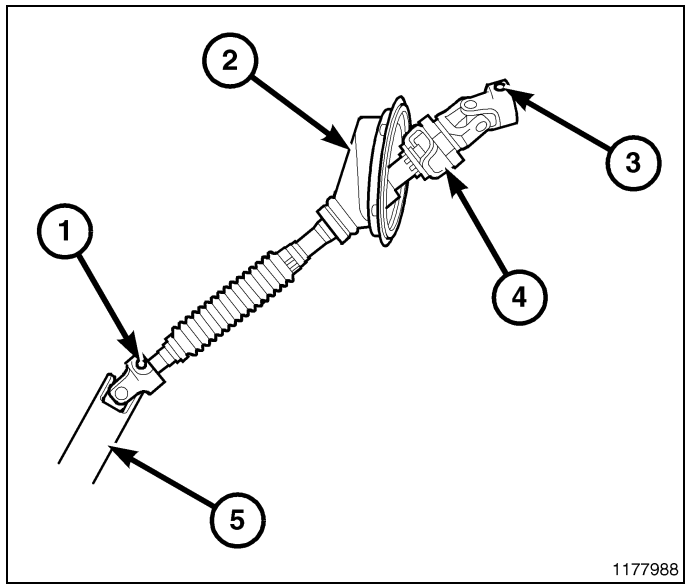

Installation

1. Install the upper steering coupling shaft (3) to the vehicle inserting the shaft into the lower coupling.

NOTE: New steering coupling shaft pinch bolts for the upper and lower shafts must be used.

2. Install a new lower coupling upper pinch bolt (1) and tighten to 38 N.m (28 ft.lbs).
3. Install the upper steering coupling shaft seal (2) to the cowl panel.
4. Install the steering column shaft into the upper coupling.
5. Install a new upper coupling pinch bolt (3) and tighten to 38 N.m (28 ft.lbs).
6. Unlock the steering wheel.
7. Reconnect the negative battery cable.

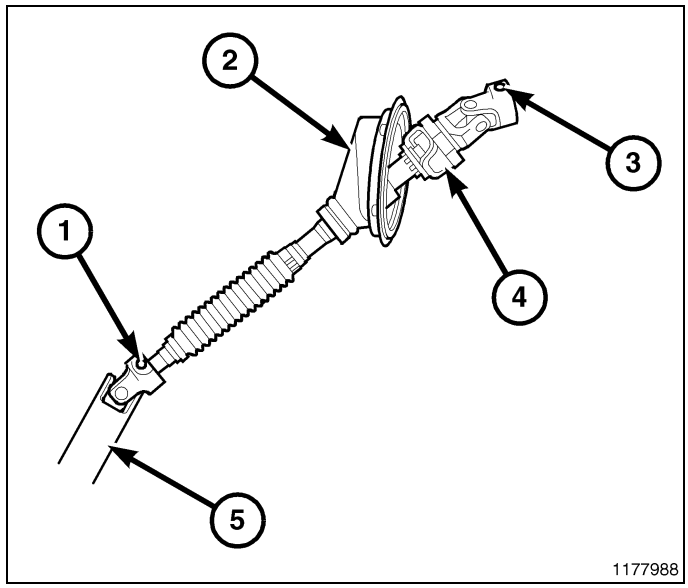

KNOB, Tilt Lever Release

Removal

1. Disconnect the negative battery cable.
2. Remove the steering column upper and lower shrouds, (Refer to 19 - Steering/Column/SHROUD, Steering Column - Removal).
3. Remove the multi-function switch mounting bracket upper retaining screw (2).

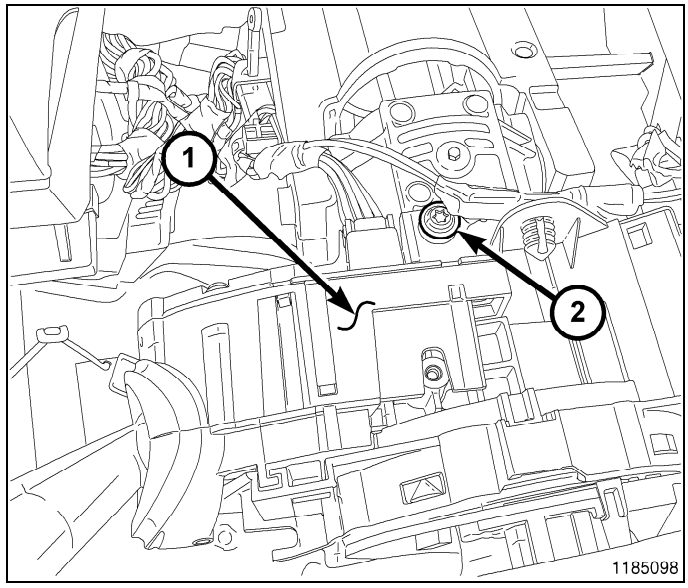

4. Disconnect the clockspring connectors (1).
5. If equipped, disconnect the Steering Angle Sensor (SAS) harness routing retainer (2) and connector (3).
6. If equipped, disconnect the adjustable pedals switch connector (5).
7. Remove the multi-function switch mounting bracket lower retaining screw (4).

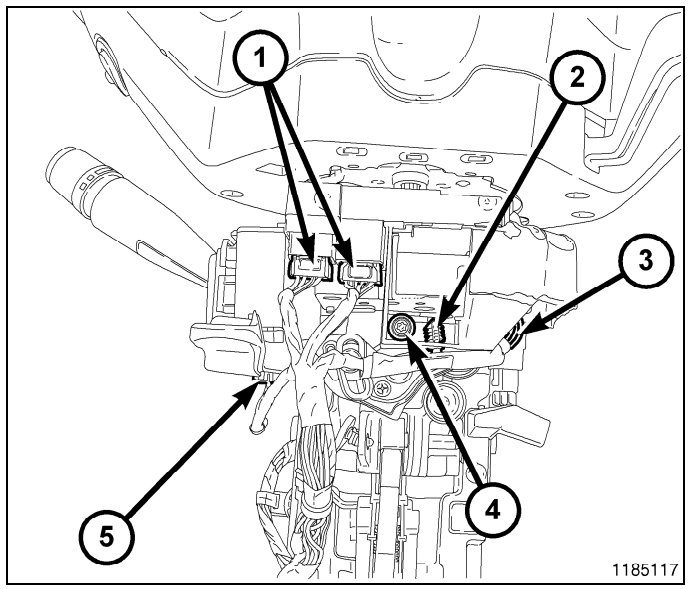

8. Carefully pull the multi-function switch mounting bracket (2) toward the steering wheel (1) to gain access to the tilt release lever screws (3).
9. Remove the tilt release lever screws (3).

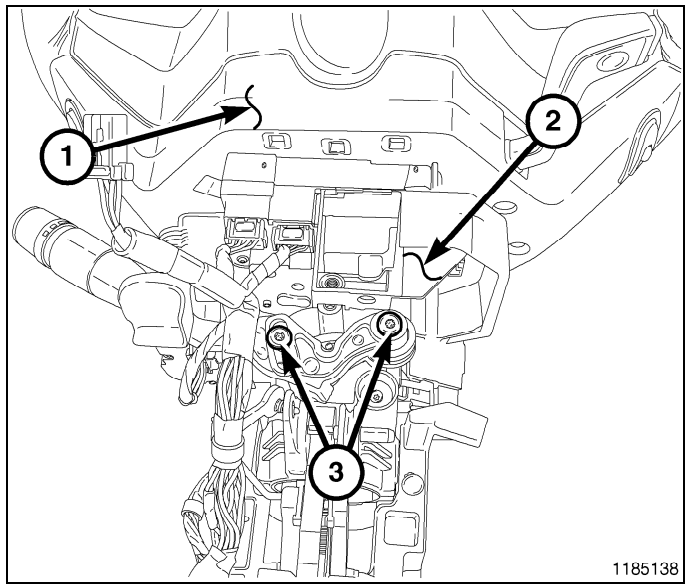

NOTE: The release cam linkage (3) is tabbed to lock into the release cam (1) after installation.

10. Remove the tilt release lever/cam linkage from the steering column by rotating the tilt release lever (4) down (clockwise) to align the linkage tabs with the rectangular hole (2) of the cam (1) and pull out.

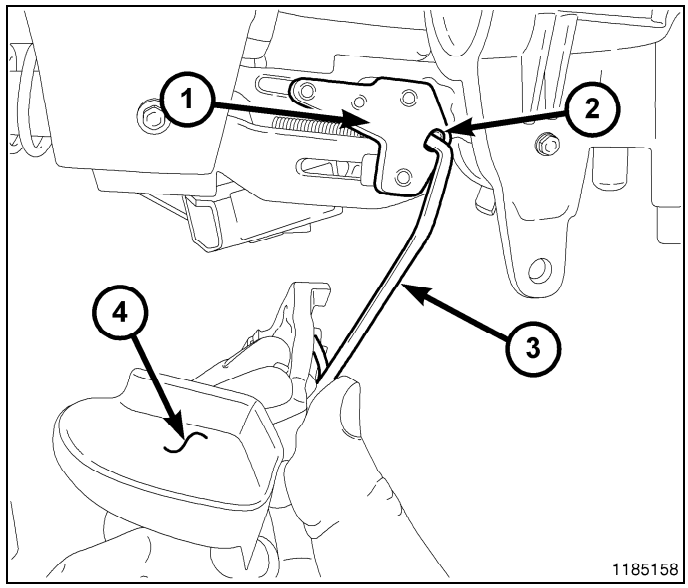

NOTE: A new tilt release lever (1) includes a pre-loaded spring (3) and the linkage.

11. If the tilt release lever (1) is to be reinstalled on the column, reload the spring (3) against the tab (2) as shown.

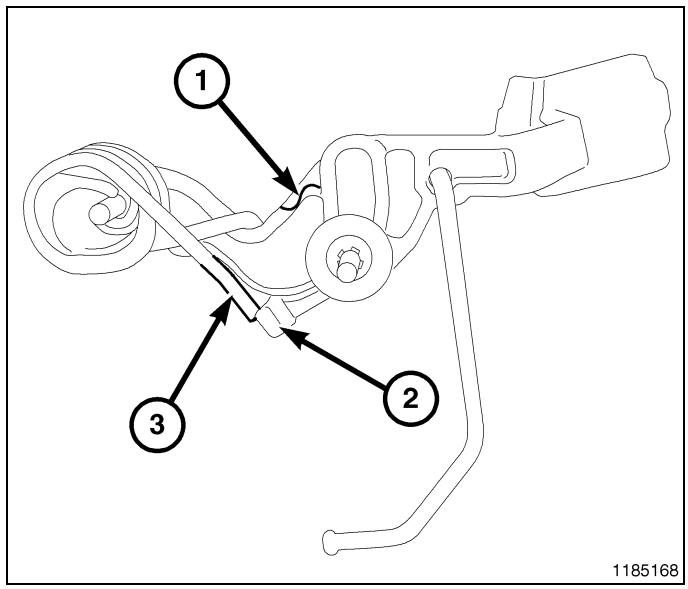

Installation

NOTE: A new tilt release lever (1) includes a pre-loaded spring (3) and the linkage. The spring will have tension and should not be released prior to installation.

1. If the original tilt release lever (1) is to be reinstalled on the column, carefully reload the spring (3) against the tab (2) as shown.

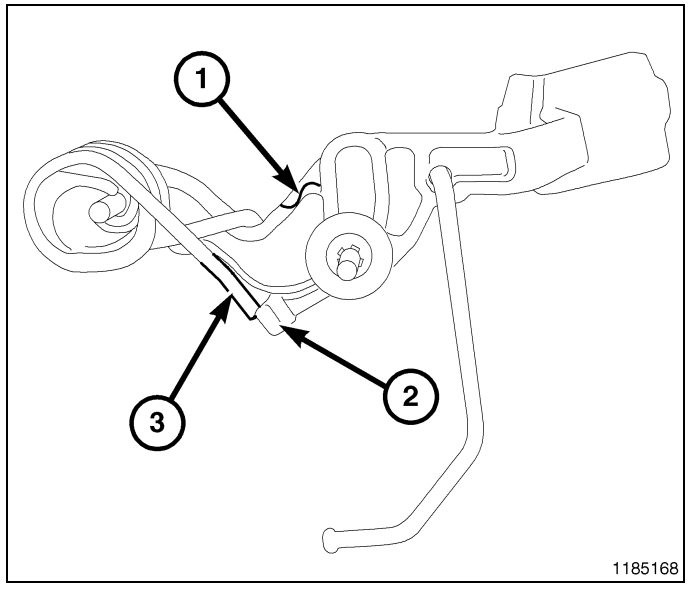

NOTE: The release lever/cam linkage (3) is tabbed to lock into the release cam (1) after installation.

2. Insert the tilt release lever/cam linkage (3) into the slotted cam hole (2) and rotate the tilt release lever (4) into position.

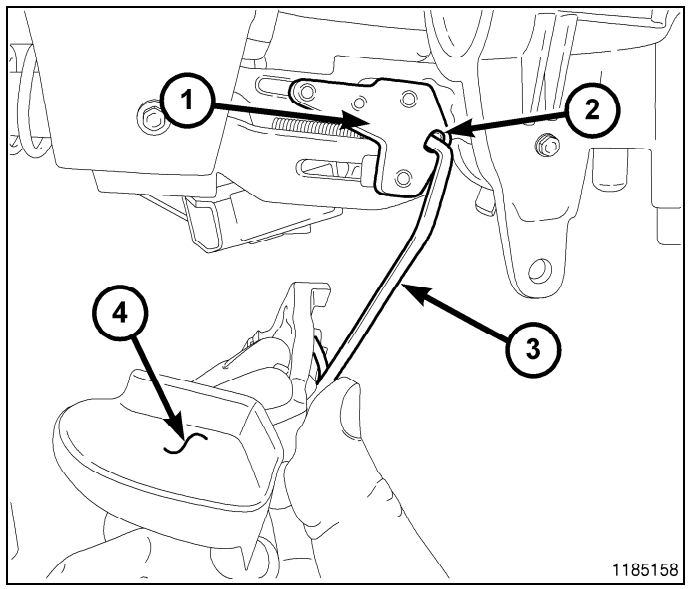

3. Install the tilt release lever screws (3).

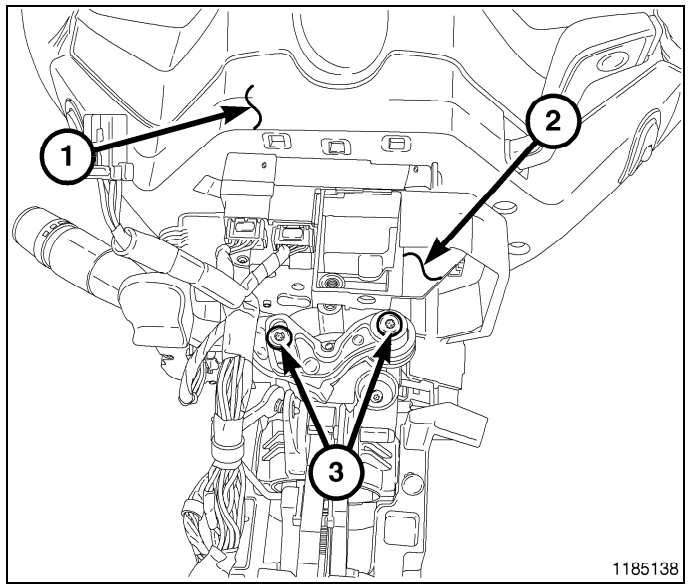

4. From the underside the column, push the pre-loaded spring tip (1) up with a small flat blade screwdriver or suitable tool to release the spring from the tab. The spring should snap against the column in the area shown (3). Verify the tilt release lever for proper operation before proceeding.

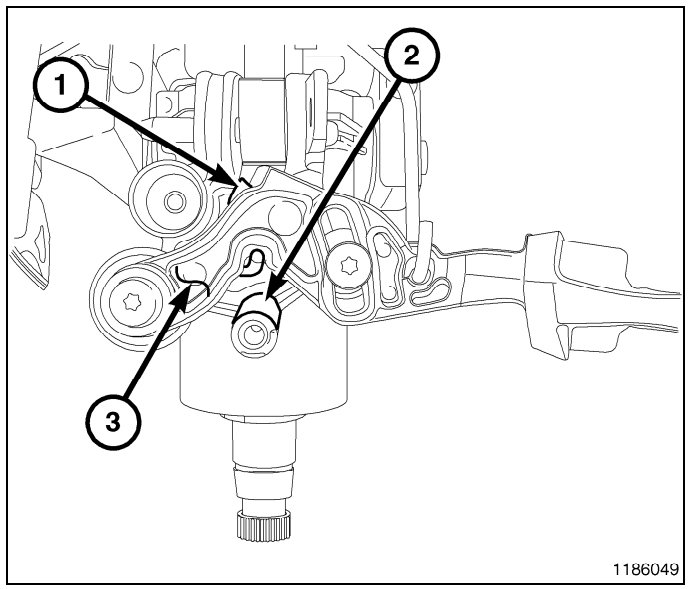

5. Position the multi-function switch mounting bracket and install the lower retaining screw (4).
6. If equipped, connect the adjustable pedals switch connector (5), harness routing retainer (2), and SAS connector (3).
7. Connect the clockspring connectors (1).

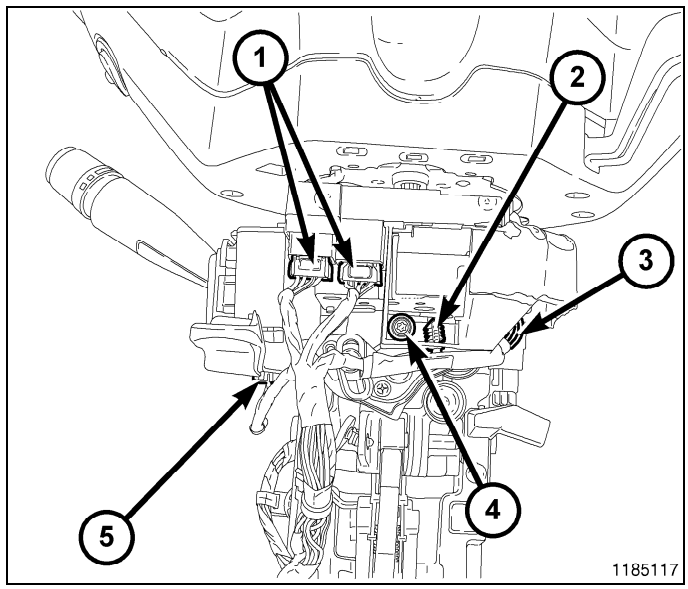

8. Install the multi-function switch mounting bracket upper retaining screw (2).
9. Install the steering column shrouds, (Refer to 19 - Steering/Column/SHROUD, Steering Column - Installation).
10. Connect the negative battery cable.

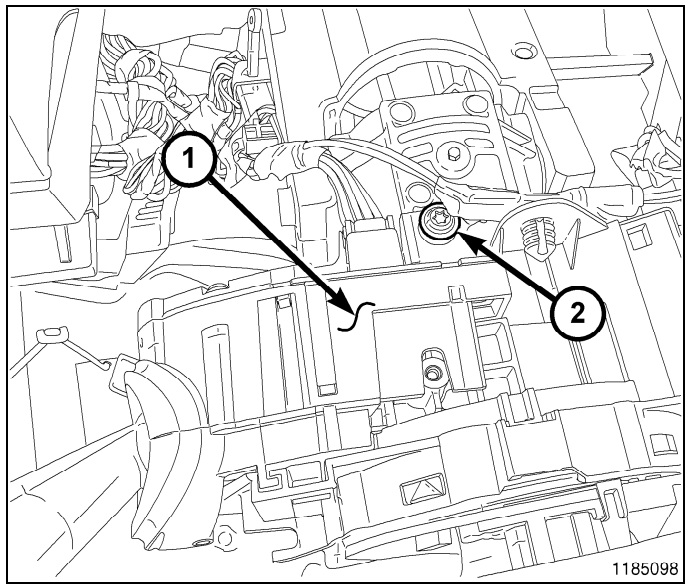

LEVER, Gearshift

Removal

ASSEMBLY

1. Disconnect the negative battery cable.
2. Remove the upper and lower column shrouds, (Refer to 19 - Steering/Column/SHROUD, Steering Column - Removal).

3. Disconnect the gearshift harness connector (5).
4. Disconnect the shift cable (3) from the gearshift lever assembly (2).
5. Remove the gearshift lever assembly mounting screws (4).
6. Remove the gearshift lever assembly.

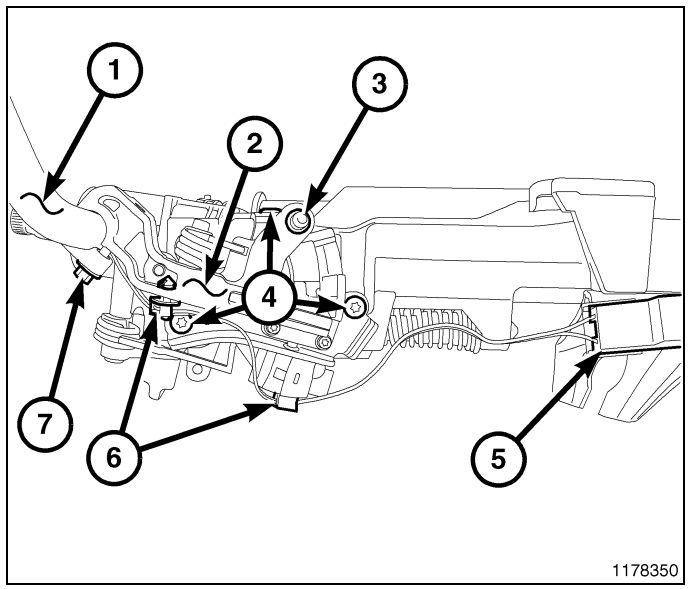

LEVER ONLY

1. Disconnect the negative battery cable.
2. Remove the upper and lower column shrouds, (Refer to 19 - Steering/Column/SHROUD, Steering Column - Removal).
3. Disconnect the gearshift harness connector (5).
4. Disconnect the gearshift harness retainers (6).
5. Remove the gearshift lever pinch bolt (7) from the gearshift lever assembly (2).

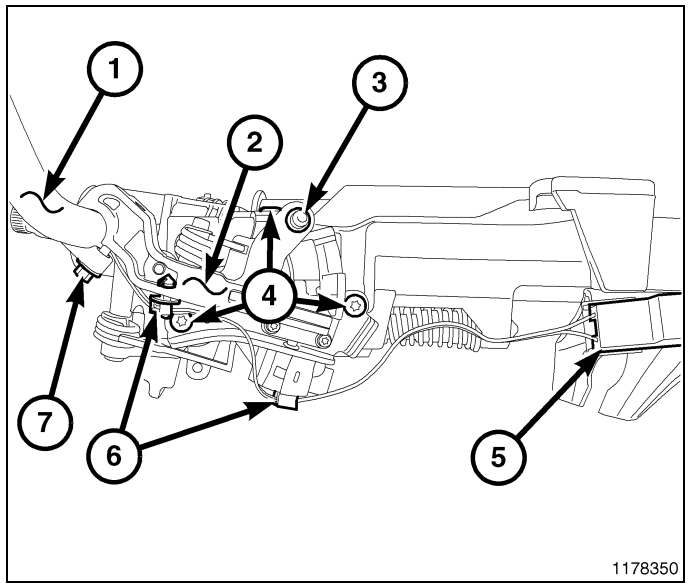

6. Remove the gearshift lever (1) from the gearshift lever assembly (2).

Installation

ASSEMBLY

1. Position the gearshift lever assembly (2), install the retaining screws and tighten to 12 N·m (105 in. lbs.).
2. Connect the shift cable to the lever (2).
3. Connect the gearshift harness connector (5).
4. Ensure the gear shift lever and transmission are in the PARK position and snap the cable adjust clip in place.
5. Install the upper and lower column shrouds, steering column opening cover, and reinforcement. (Refer to 19 - Steering/Column/SHROUD, Steering Column - Installation)
6. Connect the negative battery cable.

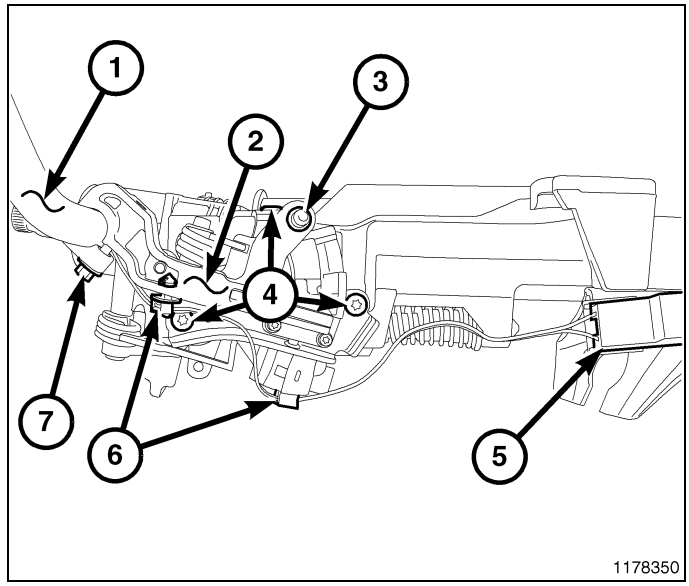

LEVER ONLY

1. Install the gearshift lever (1) in the gearshift lever assembly (2).
2. Install the gearshift lever pinch bolt (7) and tighten to 12 N·m (105 in. lbs.).
3. Connect the gearshift harness retainers (6).
4. Connect the gearshift harness connector (5).
5. Install the upper and lower column shrouds, steering column opening cover, and reinforcement. (Refer to 19 - Steering/Column/SHROUD, Steering Column - Installation)
6. Connect the negative battery cable.

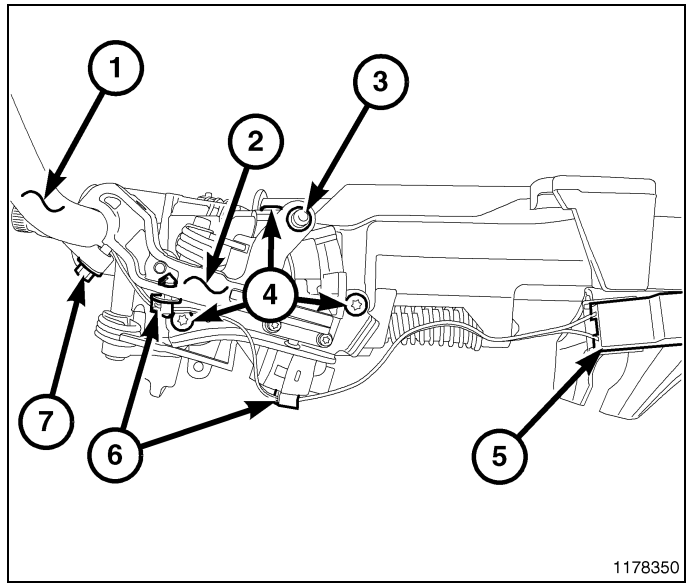

SHROUD, Steering Column

Removal

UPPER

1. From below the steering column, remove the two outboard screws within the recess areas (2) that secure the upper shroud (1) to the lower shroud (4).

NOTE: There are snap connections near the instrument cluster and between the shroud and the steering wheel that secure the upper and lower shroud.

2. Remove the upper shroud (1) by pushing gently inward and upward on both sides of the upper shroud above the parting line of the lower shroud to release the snap features that secure the two shroud halves to each other.

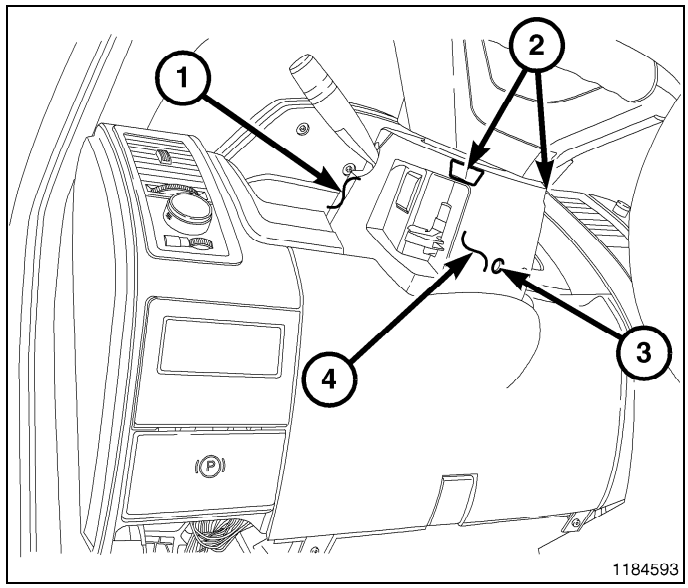

LOWER

1. From below the steering column, remove the two outboard screws within the recess areas (2) that secure the upper shroud (1) to the lower shroud (4).

NOTE: There are snap connections near the instrument cluster and between the shroud and the steering wheel that secure the upper and lower shroud.

2. Remove the upper shroud (1) by pushing gently inward and upward on both sides of the upper shroud above the parting line of the lower shroud to release the snap features that secure the two shroud halves to each other.
3. Remove the steering column opening cover from the instrument panel, (Refer to 23 - Body/Instrument Panel/COVER, Steering Column Opening - Removal).

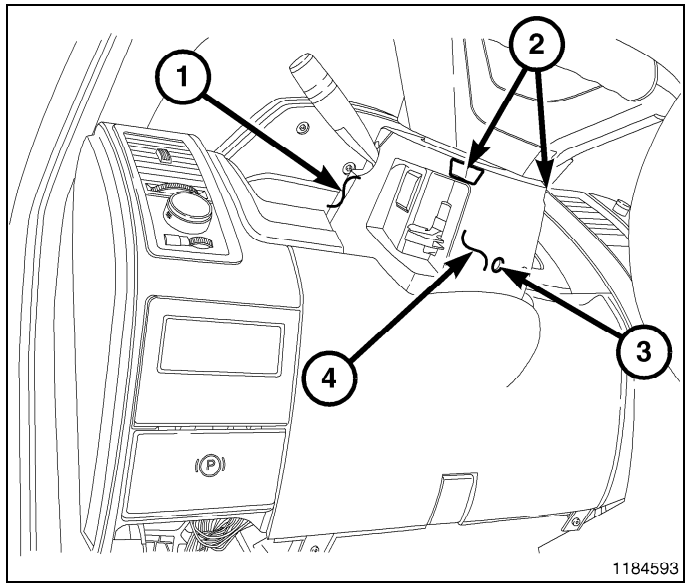

4. Remove the lower shroud to column retaining screw (2) and carefully move the lower shroud over the steering column tilt lever and off the steering column.

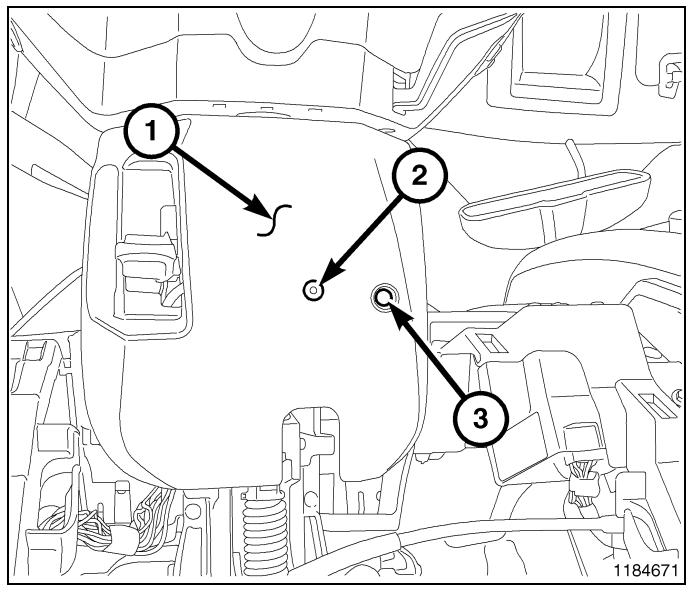

Installation

UPPER

NOTE: If the vehicle is equipped with an automatic transmission, be certain to engage the gearshift lever boot into the opening in both shroud halves.

1. Position the upper shroud (1) onto the steering column over the lower shroud (4).
2. Align the snaps features on the upper and lower shroud halves and apply hand pressure to snap together.
3. From below the steering column, install the two outboard screws within the recess areas (2) that secure the upper shroud (1) to the lower shroud (4).

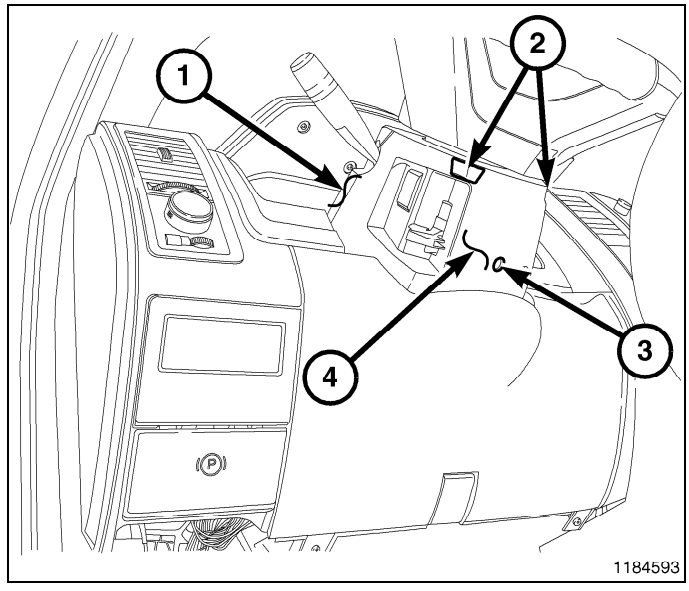

LOWER

1. Position the lower shroud (4) over the steering column tilt lever and align on the steering column.

NOTE: If the vehicle is equipped with an automatic transmission, be certain to engage the gearshift lever boot into the opening in both shroud halves.

2. Position the upper shroud (1) onto the steering column over the lower shroud (4).
3. Align the snap features on the upper and lower shroud halves (1, 4) and apply hand pressure to snap together.
4. From below the steering column, install the two outboard screws within the recess areas (2) that secure the upper shroud (1) to the lower shroud (4).

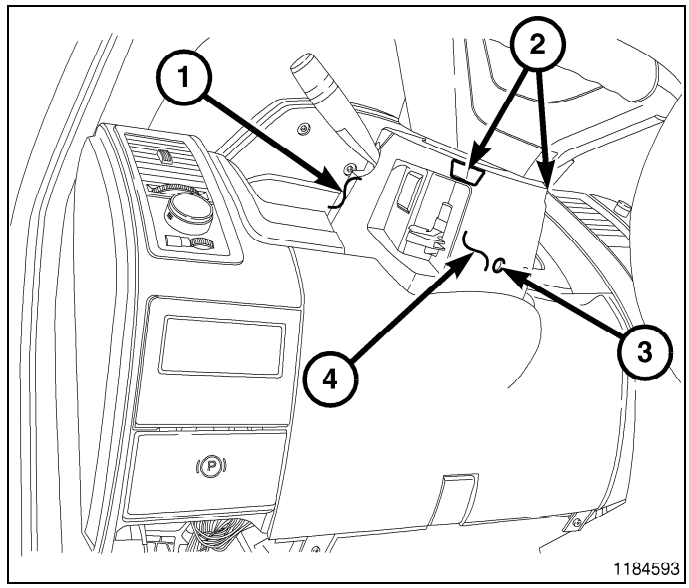

5. Install the lower shroud to column retaining screw (3).
6. Install the steering column opening cover, (Refer to 23 - Body/Instrument Panel/COVER, Steering Column Opening - Installation).

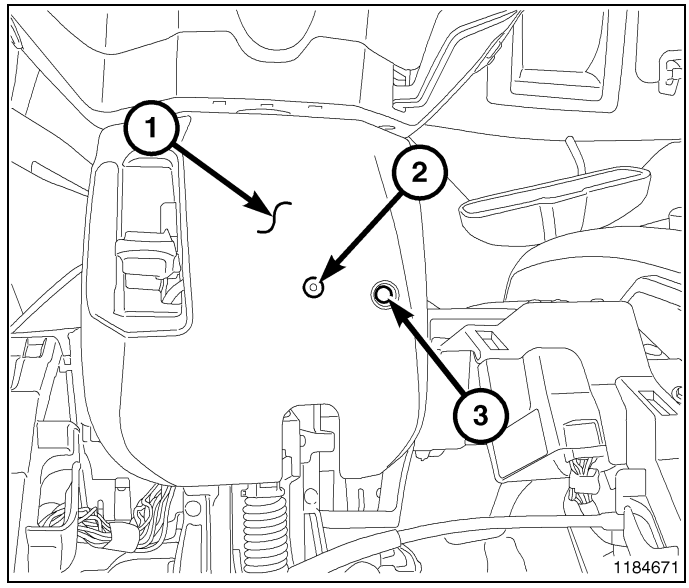

WHEEL, Steering

Removal

1. Disable and remove the driver's side airbag.(Refer to 10 - Restraints/AIR BAG, Driver - Removal).
2. Remove the steering wheel bolt and discard.

NOTE: The jaws should point outward from the center of the steering wheel for removal.

3. Install Gear Puller L-4407A (1) and OTC® 7929A jaws (3) or equivalent and loosen the steering wheel (2).
4. Remove the tools (1,3) and then remove the steering wheel (2).

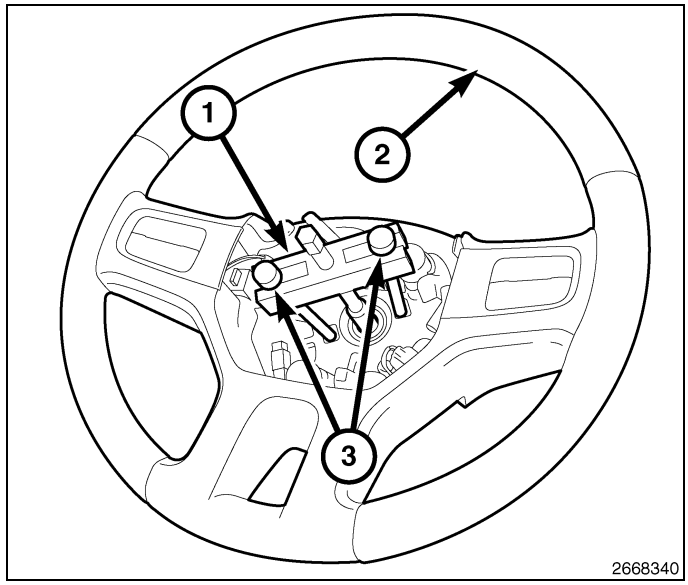

Installation

NOTE: Do not reuse the old steering wheel bolt (a new bolt must be used)

1. Install steering wheel to the column

NOTE: Be certain that the steering wheel mounting bolt is tightened to the proper torque specification to ensure proper clockspring operation.

2. Install the new steering wheel bolt. Tighten the bolt to 61 N·m (45 ft. lbs.).
3. Install the driver's side air bag. (Refer to 10 - Restraints/AIR BAG, Driver - Installation).

GEAR

TABLE OF CONTENTS

	page
GEAR	
DESCRIPTION	34
REMOVAL	34
INSTALLATION	35
SPECIFICATIONS	35
BUSHING, STEERING GEAR	
REMOVAL	36
INSTALLATION	36

Gear

Description

A rack and pinion steering gear is made up of two main components, the pinon shaft and the rack. The gear cannot be adjusted or internally serviced. If a malfunction or a fluid leak occurs, the gear must be replaced as an assembly.

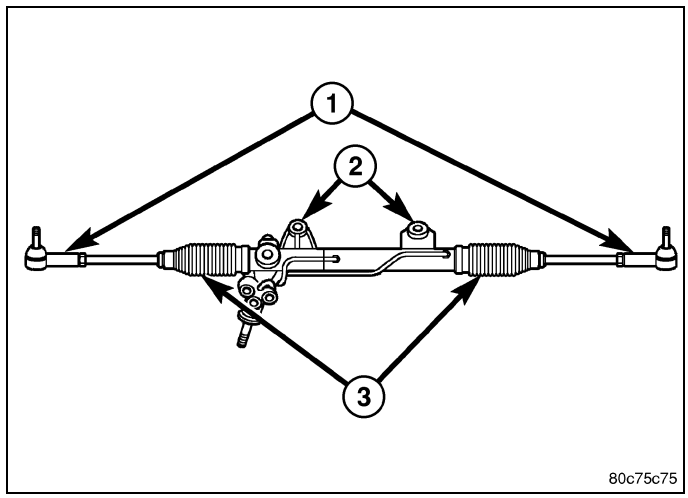

Removal

NOTE: The steering column on vehicles with an automatic transmission may not be equipped with an internal locking shaft that allows the ignition key cylinder to be locked with the key. Alternative methods of locking the steering wheel for service will have to be used.

1. Lock the steering wheel.
2. Drain and siphon the power steering fluid from the reservoir.
3. Raise and support the vehicle.
4. Remove and discard the steering coupler pinch bolt.
5. Disconnect the power steering hoses from the rack and pinion (2).
6. Remove the front tires and wheels.
7. Remove the outer tie rod nuts and separate outer tie rods (3) from the knuckles (5) using Ball Joint Remover 8677 (Refer to 19 - Steering/Linkage/END, Tie Rod - Removal).

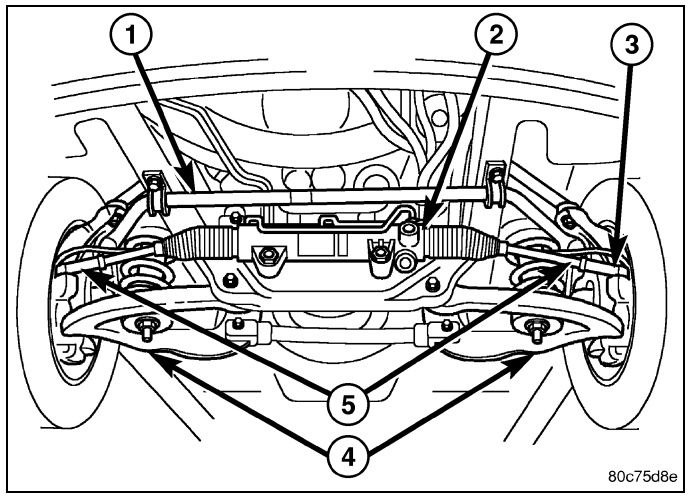

NOTE: 4wd model shown. 2wd model similar.

8. If equipped, remove the skid plate.
9. Remove the rack and pinion mounting bolts (2) and remove the rack from the vehicle.

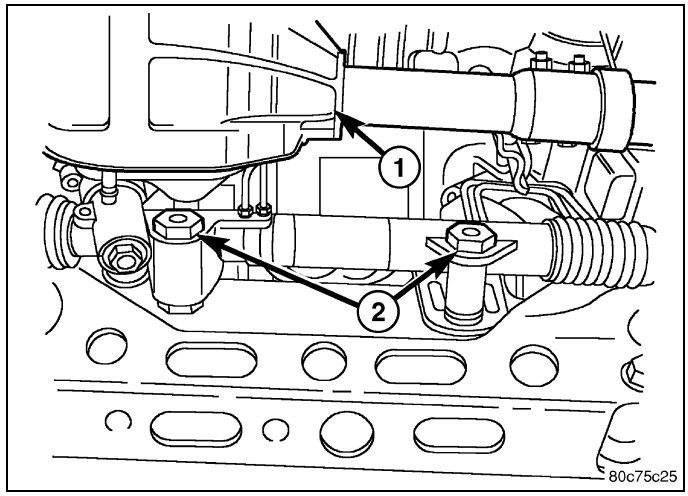

Installation

NOTE: Before installing gear inspect bushings and replace if worn or damaged.

NOTE: In the frame there are two holes for the mounting of the steering gear, one is slotted and one is round. When tightening the gear to specifications make sure to tighten the mounting bolt with the hole first to avoid movement of the steering gear.

NOTE: 4wd model shown. 2wd model similar.

1. Position the rack and pinion to the front crossmember.
2. Install the retaining bolts (2). Tighten the bolts (2) to 319 N·m (235 ft. lbs.).

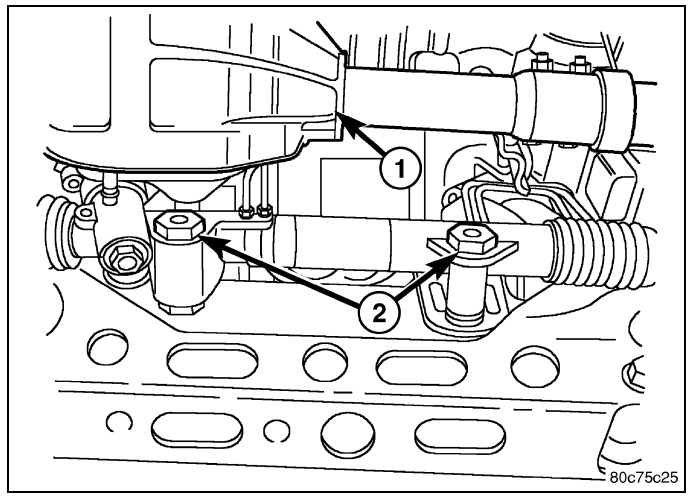

3. Slide the shaft coupler onto the gear and install a **new** pinch bolt. Tighten the pinch bolt to 49 N·m (36 ft. lbs.).
4. Clean and dry the tie rod end studs (3) and the tapers in the knuckles (5).
5. Install the tie rod ends into the steering knuckles. Install and tighten the retaining nuts to 61 N·m (45 ft. lbs.), then turn an additional 90° (Refer to 19 - Steering/Linkage/END, Tie Rod - Installation).
6. Connect the pressure power steering hose to the steering gear and tighten to 32 N·m (23 ft. lbs.) (Refer to 19 - Steering/Pump/HOSE, Power Steering - Installation).
7. Connect the return power steering hose to the steering gear and tighten to 50 N·m (37 ft. lbs.) (Refer to 19 - Steering/Pump/HOSE, Power Steering - Installation).

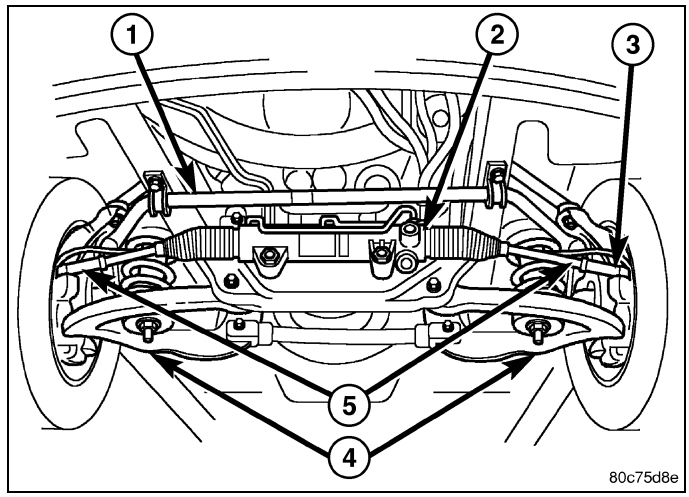

8. If equipped, install the front skid plate.
9. Install the front tires and wheels (Refer to 22 - Tires and Wheels/Wheels - Standard Procedure).
10. Lower the vehicle.
11. Fill the power steering system with fluid (Refer to 19 - Steering/Pump - Standard Procedure).
12. Adjust the toe alignment (Refer to 02 - Front Suspension/Wheel Alignment - Standard Procedure).

Specifications

DESCRIPTION	N·m	Ft. Lbs.	In. Lbs.
Steering Gear to Frame Bolts	319	235	—
Steering Gear Coupler Bolt	49	36	—
Tie Rod End Knuckle Nut	61, Then tighten an additional 90°	45, Then tighten an additional 90°	—
Tie Rod End Jam Nut	127	94	—

DESCRIPTION	N·m	Ft. Lbs.	In. Lbs.
Tie Rod End, Inner	169	125	—
Power Steering Pressure Line to Gear	32	23	—
Power Steering Pressure Line To Pump	37	27	—
Power Steering Return Line	50	37	—

BUSHING, Steering Gear

Removal

1. Remove the steering gear (Refer to 19 - Steering/Gear - Removal).

CAUTION: Do not overtighten the vise on the gear case.

2. Mount the steering gear in a soft jawed vise.

NOTE: If the bushings are seized a brass punch can be used to remove the bushings from the gear using care not to strike the gear.

3. Remove the front mounting bushings.
4. Remove the rear mounting bushings.
5. Remove the steering gear from the vise and place it on the bench.

Installation

NOTE: Coat all bushings with a thin rubber lubricate oil prior to installation.

NOTE: A rubber mallet can be used to assist in the installation of the bushings once lubricated.

1. Coat the rear bushings with a thin rubber lubricate oil then install the rear bushings using a rubber mallet to seat the bushings in the gear.
2. Coat the front bushings with a thin rubber lubricate oil then install the front bushings using a rubber mallet to seat the bushings in the gear.
3. Install the steering gear (Refer to 19 - Steering/Gear - Installation).
4. Adjust the toe position (if necessary) (Refer to 02 - Front Suspension/Wheel Alignment - Standard Procedure).

LINKAGE

TABLE OF CONTENTS

page

LINKAGE
END, TIE ROD
DIAGNOSIS AND TESTING 38
REMOVAL
OUTER TIE ROD END 39
INNER TIE ROD END 40

page

INSTALLATION
OUTER TIE ROD END 41
INNER TIE ROD END 42

Linkage

END, Tie Rod

Diagnosis and Testing

Tie rod free-play can be measured using the following hand methods:

OUTER TIE ROD

1. Raise and support the vehicle. (Refer to 04 - Vehicle Quick Reference/Hoisting - Standard Procedure).
2. Remove the front wheels.
3. Install two standard wheel mounting nuts, flat side to rotor, diagonally opposite to each on the rotor.
4. Attach a magnetic dial indicator (2) to the inside or outside of the brake rotor, then align the dial indicator's contact pointer (1) with the direction of the stud axis and touch the outer tie rod.
5. Zero the dial indicator. (3)

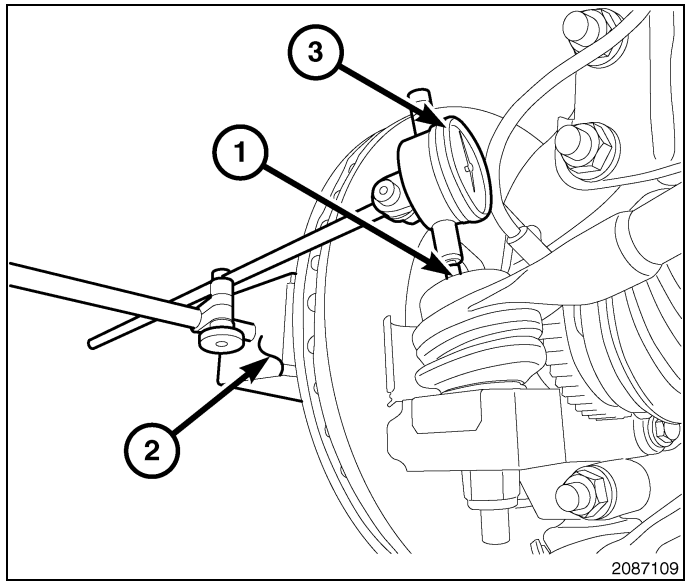

NOTE: When checking free-play, DO NOT rotate the tie rod. Just because a tie rod rotates easily does not mean that it is necessarily faulty. Using more than light hand pressure will result in a false reading.

6. Grasp the outer tie rod near the ball stud and attempt to move the tie rod straight up and down using light hand pressure. (Less than 10 lbs. of force.)
7. Measure and record any tie rod free-play movement.

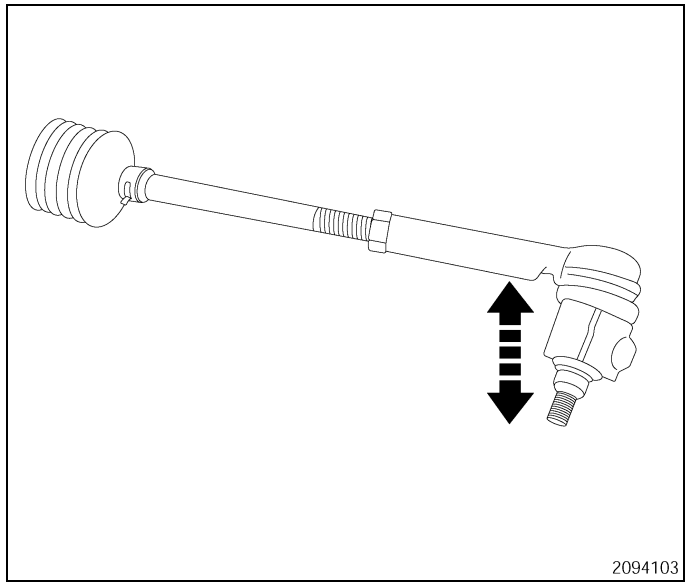

8. Remove the magnetic dial indicator.
9. Remove the standard wheel mounting nuts from the two studs.

If the free-play in the tie rod exceeds 0.05 mm (.002 in.), replace the outer tie rod (Refer to 19 - Steering/Linkage/END, Tie Rod - Removal). If the free-play is less than 0.05 mm (.002 in.) at the outer tie rod check the inner tie rod for free-play. Refer to the following procedure.

INNER TIE ROD

1. Grasp the inner tie rod near the steering gear bellows and attempt to move the tie rod straight up and down. If any free-play is felt, replace the inner tie rod end (Refer to 19 - Steering/Linkage/END, Tie Rod - Removal).
2. If no free-play is felt, install the front wheels (Refer to 22 - Tires and Wheels/Wheels - Standard Procedure).
3. Remove support and lower the vehicle.

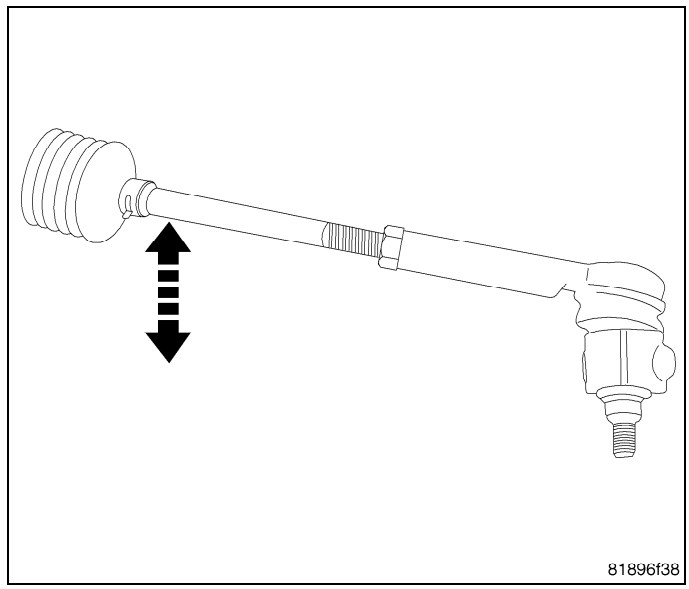

Removal

OUTER TIE ROD END

NOTE: Do not twist the boot anytime during removal or installation.

1. Loosen the jam nut (3).
2. Remove the outer tie rod end nut from the ball stud.
3. Separate the tie rod ball stud (1) from the knuckle with Ball Joint Remover 9360 (2) .
4. Unthread the outer tie rod end (1) from the inner tie rod.

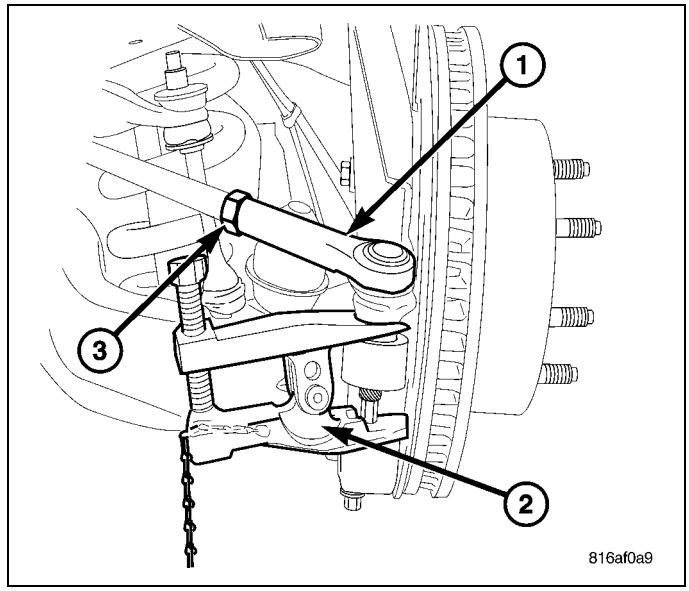

INNER TIE ROD END

1. Remove the outer tie rod end (1) **Count the number of turns when removing, this will aid in setting the toe after installation.**(Refer to 19 - Steering/Linkage/ END, Tie Rod - Removal).
2. Remove the jam nut (3).

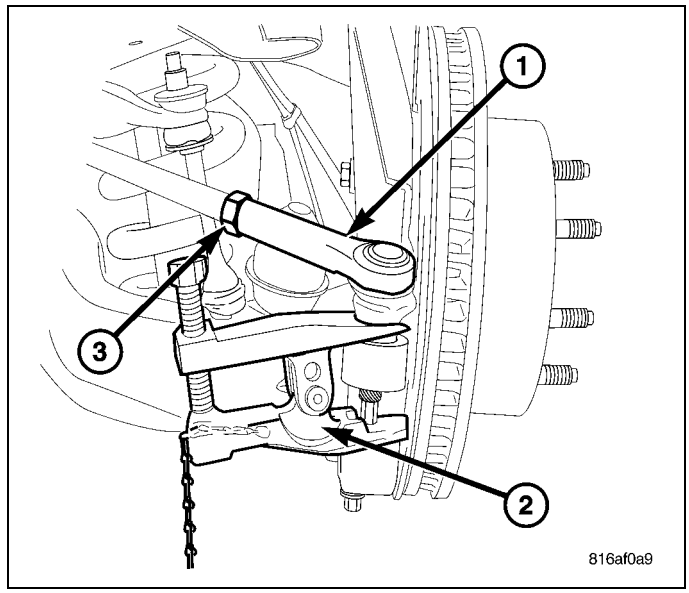

3. Remove the clamps (1, 3) for the inner tie rod boot (2).
4. Remove the boot (2).

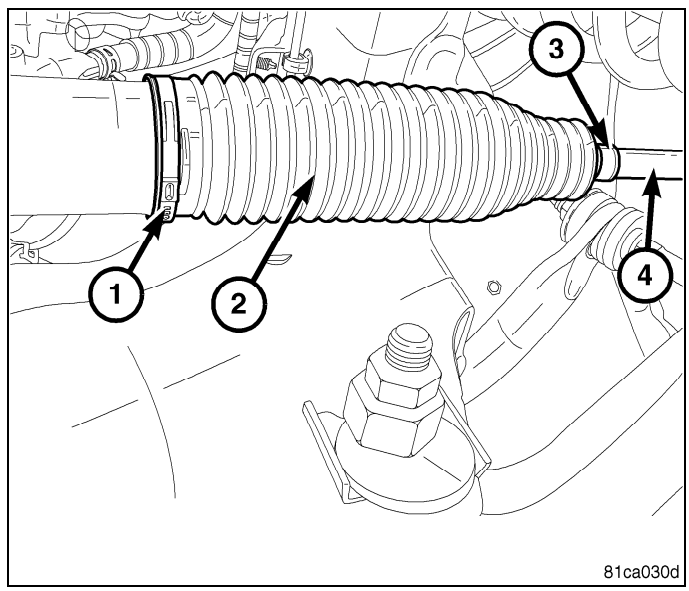

5. Install Inner Tie Rod Wrench 10087-3 (2) and Inner Tie Rod Adapter Wrench 10087-2A (1) and remove the inner tie rod end.

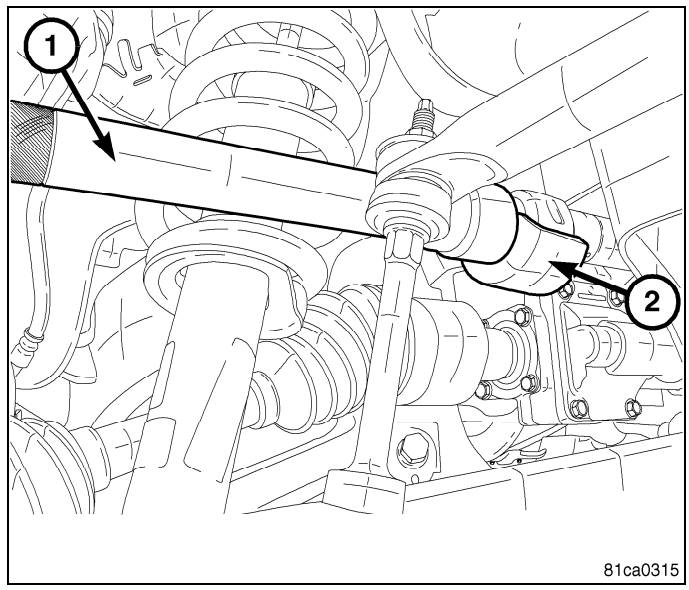

Installation

OUTER TIE ROD END

NOTE: Do not twist the boot at anytime during removal or installation.

1. Thread the outer tie rod end (3) onto the inner tie rod (2), to it's original position .
2. Install the outer tie rod end (3) into the steering knuckle .
3. Tighten the ball stud nut on the ball stud to 61 N·m (45 ft. lbs.) then an additional 90°.
4. Set wheel toe pattern, (Refer to 02 - Front Suspension/Wheel Alignment - Standard Procedure) .
5. Tighten jam nut (1) to 127 N·m (94 ft. lbs.) .

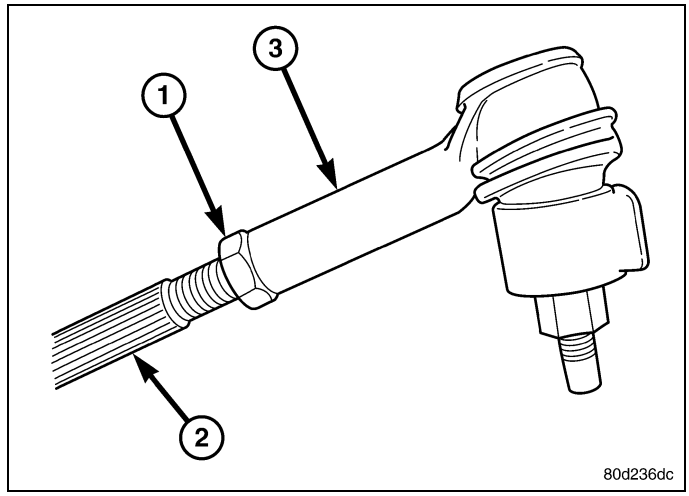

INNER TIE ROD END

1. Thread the inner tie rod (1) to the rack and pinion (2).

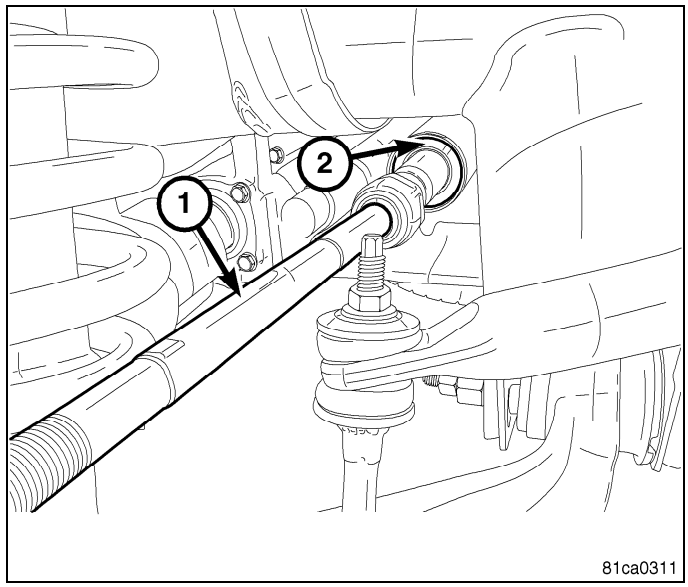

2. Tighten the inner tie rod end using Inner Tie Rod Wrench 10087-3 (2) and Inner Tie Rod Adapter Wrench 10087-2A (1) to 169 N·m (125 ft.lbs.).

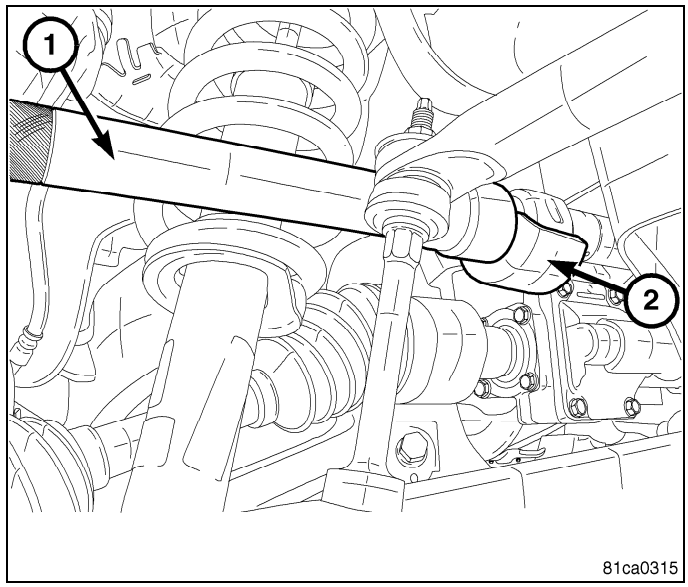

3. Install the inner tie rod end boot (2) and reclamp (1, 3) to the tie rod (4) and rack.

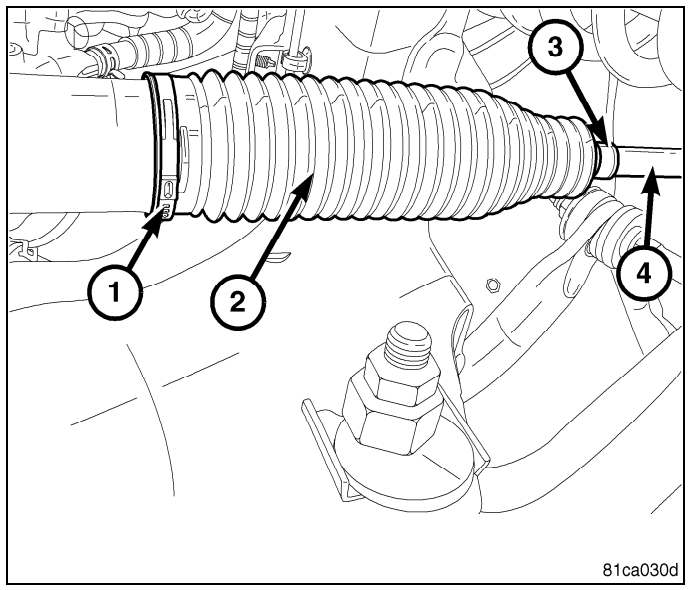

4. Install the jam nut (1) to the inner tie rod end (2).
5. Install the outer tie rod (3) the same number of turns when removed (Refer to 19 - Steering/Linkage/END, Tie Rod - Installation).
6. Install the front wheels.
7. Lower the vehicle.
8. Perform toe adjustment.
9. Tighten the jam nut (1) after toe adjustment. Tighten to 50 N·m (37 ft. lbs.).

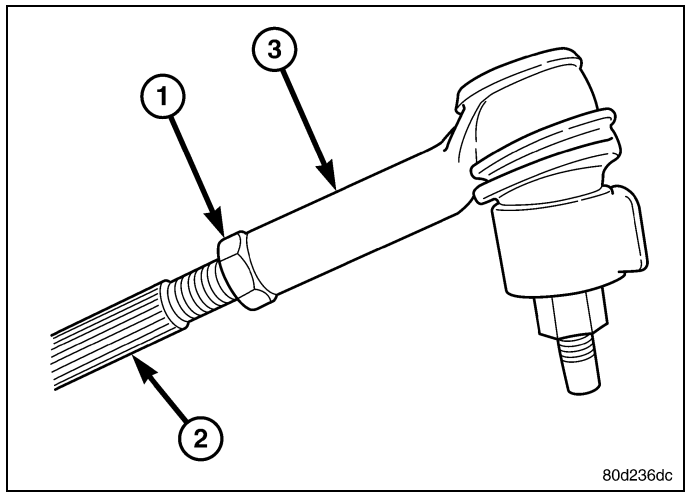

PUMP

TABLE OF CONTENTS

page

PUMP
- DESCRIPTION . . . 46
- OPERATION . . . 46
- DIAGNOSIS AND TESTING
  - PUMP LEAKAGE . . . 46
  - POWER STEERING PUMP AND HOSES . . . 46
- STANDARD PROCEDURE
  - POWER STEERING SYSTEM BLEEDING . . . 47
  - FLUSHING POWER STEERING SYSTEM . . . 48
- REMOVAL . . . 48
- INSTALLATION . . . 49
- SPECIFICATIONS . . . 49

COOLER, POWER STEERING
- REMOVAL . . . 50
- INSTALLATION . . . 51

FLUID
- DESCRIPTION . . . 51
- STANDARD PROCEDURE . . . 52

page

HOSE, POWER STEERING, INDEPENDENT FRONT SUSPENSION
- REMOVAL
  - RETURN HOSE - GEAR TO COOLER . . . 52
  - PRESSURE HOSE . . . 52
  - RETURN HOSE - RESERVOIR TO COOLER . . . 52
- INSTALLATION
  - RETURN HOSE - GEAR TO COOLER . . . 53
  - PRESSURE HOSE . . . 53
  - RETURN HOSE - RESERVOIR TO COOLER . . . 53

PULLEY, POWER STEERING PUMP
- REMOVAL . . . 54
- INSTALLATION . . . 54

RESERVOIR, POWER STEERING PUMP
- REMOVAL . . . 54
- INSTALLATION . . . 55

Pump

Description

CAUTION: MOPAR® ATF+4 is to be used in the power steering system. No other power steering or automatic transmission fluid is to be used in the system. Damage may result to the power steering pump and system if any other fluid is used, and do not overfill.

The pump is connected to the steering gear via the pressure hose and the return hose. The pump shaft has a pressed-on pulley that is belt driven by the crankshaft pulley.

All vehicles are equipped with a power steering fluid cooler.

NOTE: Power steering pumps are not interchangeable with pumps installed on other vehicles.

Operation

Hydraulic pressure is provided for the power steering gear by the belt driven power steering pump (2) . The power steering pumps are constant flow rate and displacement, vane-type pumps.

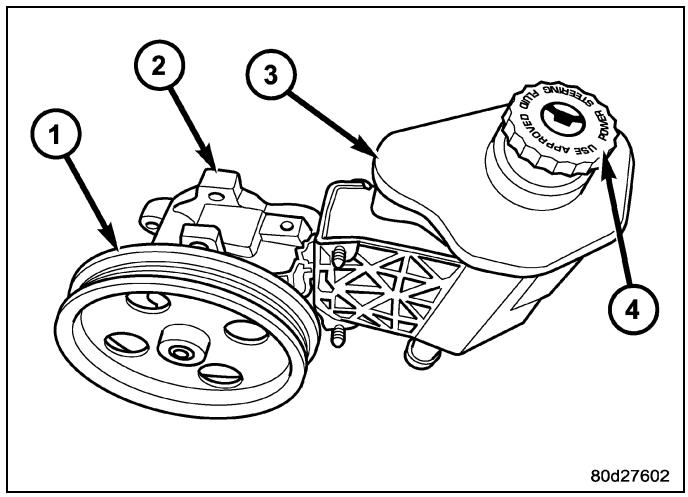

Diagnosis and Testing

PUMP LEAKAGE

The pump is serviced as an assembly and should not be disassembled. The plastic pump reservoir and the reservoir o-rings can be replaced.

Check for leaks in the following areas:

- Pump shaft seal behind the pulley
- Pump to reservoir O-ring
- Reservoir cap
- Pressure and return lines
- Flow control valve fitting

POWER STEERING PUMP AND HOSES

NOTE: This information is designed to be used in conjunction with the diagnostic charts at the beginning of the Steering section. (Refer to 19 - Steering - Diagnosis and Testing)

CHECKING FOR WEAR OF POWER STEERING PUMP INTERNAL COMPONENTS

1. Place gear selector in PARK (or NEUTRAL) with wheels chalked.
2. With the engine idling, have a helper turn the steering wheel.
3. Using an electronic listening tool, determine if noise is coming from the pump.
4. Increase the engine speed and have a helper turn the steering wheel. Does the noise change with load?
5. Replace the power steering pump if excessive noise is present. (Refer to 19 - Steering/Pump - Removal)

CHECKING FOR POWER STEERING HOSES TOUCHING BODY OR FRAME OF VEHICLE

Check hoses and hose tubes as following:

- Inspect hoses and hose tubes for witness marks. If witness marks are present, adjust hose(s) to the proper position by loosening, repositioning and tightening attachments to the specified torque (Refer to 19 - Steering/Pump - Specifications). **Do not bend tubing to adjust.** Replace the hose assembly if damaged.
- Check fastener torque of hose mounting brackets and tube nuts. (Refer to 19 - Steering/Pump - Specifications)
- Have a helper bump the steering gear off of the stops to induce pressure fluctuations which may move the hose. If hose contact is made, adjust hose(s) to the proper position by loosening, repositioning and tightening attachments to the specified torque (Refer to 19 - Steering/Pump - Specifications). **Do not bend tubing to adjust.** Replace the hose assembly if damaged.

Standard Procedure

POWER STEERING SYSTEM BLEEDING

WARNING: The fluid level should be checked with engine off to prevent injury from moving components.

CAUTION: Mopar® Power Steering Fluid + 4 or Mopar® ATF+4 Automatic Transmission Fluid is to be used in the power steering system. Both Fluids have the same material standard specifications (MS-9602). No other power steering or automatic transmission fluid is to be used in the system. Damage may result to the power steering pump and system if another fluid is used. Do not overfill the system.

CAUTION: If the air is not purged from the power steering system correctly, pump failure could result.

NOTE: Be sure the vacuum tool used in the following procedure is clean and free of any fluids.

1. Check the fluid level. As measured on the side of the reservoir, the level should indicate between MAX and MIN when the fluid is at normal ambient temperature. Adjust the fluid level as necessary.(Refer to 19 - Steering/Pump/FLUID - Standard Procedure)
2. Tightly insert P/S Cap Adapter 9688A (4) into the mouth of the reservoir (3).

CAUTION: Failure to use a vacuum pump reservoir (1) may allow power steering fluid to be sucked into the hand vacuum pump.

3. Attach Hand Vacuum Pump C-4207-A (2), or equivalent, with reservoir (1) attached, to the P/S Cap Adapter 9688A (4).

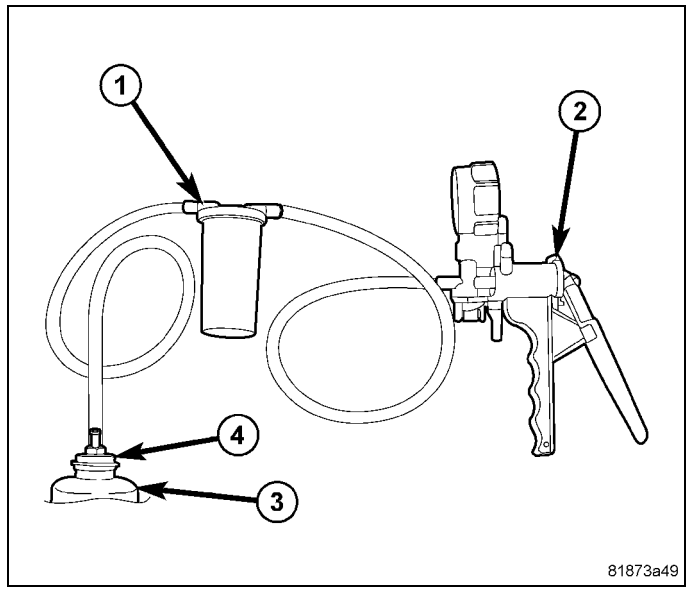

CAUTION: Do not run the vehicle while vacuum is applied to the power steering system. Damage to the power steering pump can occur.

NOTE: When performing the following step make sure the vacuum level is maintained during the entire time period.

4. Using Hand Vacuum Pump (2), apply 68-85 kPa (20-25 in. Hg) of vacuum to the system for a minimum of three minutes.
5. Slowly release the vacuum and remove the special tools.
6. Adjust the fluid level as necessary. Refer to Step #1.
7. Repeat Step #1 through Step #6 until the fluid no longer drops when vacuum is applied.
8. Start the engine and cycle the steering wheel lock-to-lock three times.

NOTE: Do not hold the steering wheel at the stops.

9. Stop the engine and check for leaks at all connections.
10. Check for any signs of air in the reservoir and check the fluid level. If air is present, repeat the procedure as necessary.

FLUSHING POWER STEERING SYSTEM

Flushing is required when the power steering/hydraulic booster system fluid has become contaminated. Contaminated fluid in the steering/booster system can cause seal deterioration and affect steering gear/booster spool valve operation.

NOTE: The engine should not be run so that all of the fluid is drained from the system. The pump should never be run without fluid.

1. Raise the front end of the vehicle off the ground until the wheels are free to turn.
2. Remove the return line from the pump.
3. Plug the return line port/ports at the pump.
4. Position the return line/lines into a large container to catch the fluid.
5. While an assistant is filling the pump reservoir start the engine.
6. With the engine running at idle turn the wheel back and forth.

NOTE: Do not contact or hold the wheel against the steering stops.

7. Run a quart of fluid through the system then stop the engine and install the return line/lines.
8. Fill the system with fluid and perform Steering Pump Initial Operation, (Refer to 19 - Steering/Pump - Standard Procedure).
9. Start the engine and run it for fifteen minutes then stop the engine.
10. Remove the return line/lines from the pump and plug the pump port/ports.
11. Pour fresh fluid into the reservoir and check the draining fluid for contamination. If the fluid is still contaminated, then flush the system again.
12. Install the return line/lines and perform Steering Pump Initial Operation, (Refer to 19 - Steering/Pump - Standard Procedure).

Removal

1. Drain and siphon the power steering fluid from the reservoir.
2. Remove the serpentine belt (Refer to 07 - Cooling/Accessory Drive/BELT, Serpentine - Removal).

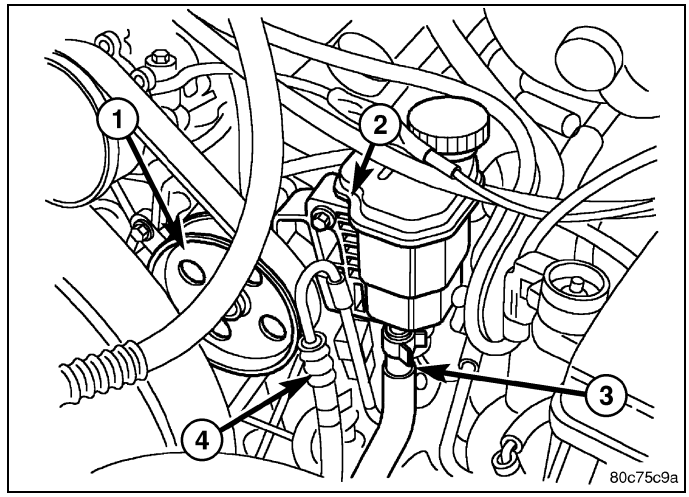

CAUTION: Do not remove the fitting on the pump that the high pressure hose screws into. The fitting may come loose unless it is backed up using another wrench. If the fitting does come loose, it must be retightened before continuing. (57 - 67 Nm, 40 - 50 lb.ft.). If this fitting comes out of the pump body, the internal spring and valve parts will fall out of the pump and they cannot be reinstalled properly. If this occurs the pump needs to be replaced with a new pump.

3. Disconnect the return hose (3).
4. Disconnect the pressure hose (4).
5. Remove the three bolts securing the pump to the cylinder head thru the pulley holes (1).

Installation

1. Align the pump with the mounting holes in the left cylinder head.
2. Install 3 pump mounting bolts through the pulley access holes (1). Tighten the bolts to 28 N·m (21 ft. lbs.).
3. Reconnect the pressure line (4) and return hose (3) to the pump and reservoir (2). Tighten the pressure line to 31 N·m (23 ft. lbs.).
4. Install the serpentine drive belt, (Refer to 07 - Cooling/ Accessory Drive/BELT, Serpentine - Installation).
5. Fill the power steering pump, (Refer to 19 - Steering/ Pump - Standard Procedure).

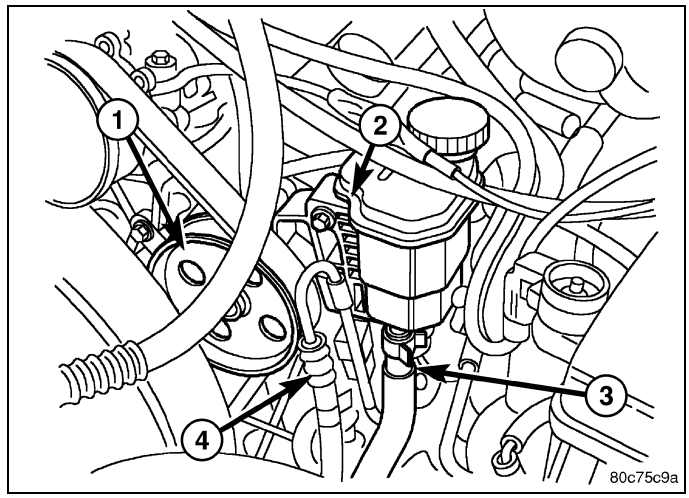

Specifications

DESCRIPTION	N·m	Ft. Lbs.	In. Lbs.
Power Steering Pressure Switch	10	—	80
Power Steering Pressure Line to Gear	32	23	—
Power Steering Return Line	50	37	—
Power Steering Pressure Line to Pump	31	23	—
Power Steering Pump Mounting Bolts	28	21	—
Power Steering Pump Reservoir Bolts	13	10	120
Power Steering Pump Bracket Bolts	5	5	62

COOLER, Power Steering

Removal

1. Drain and siphon the power steering fluid.
2. Raise and support the vehicle (Refer to 04 - Vehicle Quick Reference/Hoisting - Standard Procedure).
3. If equipped, remove the eight lower engine splash shield push pins (1) and remove the splash shield (2).

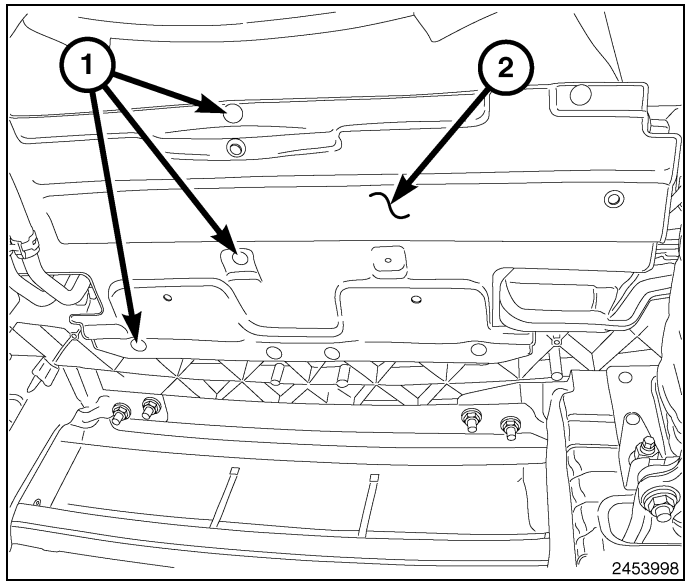

4. Disconnect the return and supply hoses connected to the power steering fluid cooler lines (3).
5. Remove the mounting bracket bolts (2) securing the fluid cooler (1) to the brace.
6. Remove the fluid cooler (1) from the vehicle.

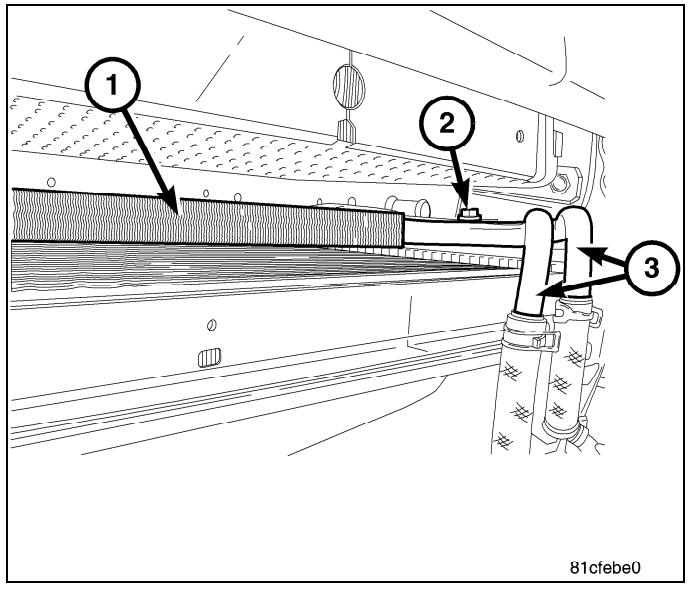

Installation

1. Position the fluid cooler (1) to the vehicle.
2. Install the mounting bracket bolts (2) securing the fluid cooler (1) to the brace.
3. Install and clamp the return and supply hoses to the power steering fluid cooler lines (3).

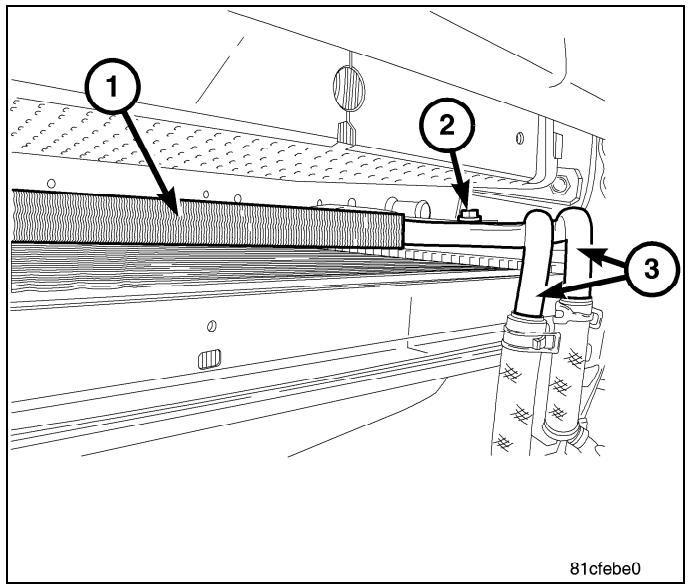

4. If equipped, position the lower engine splash shield (2) and install the eight retainers (1).
5. Remove the support and lower the vehicle.
6. Refill the power steering fluid (Refer to 19 - Steering/ Pump - Standard Procedure).

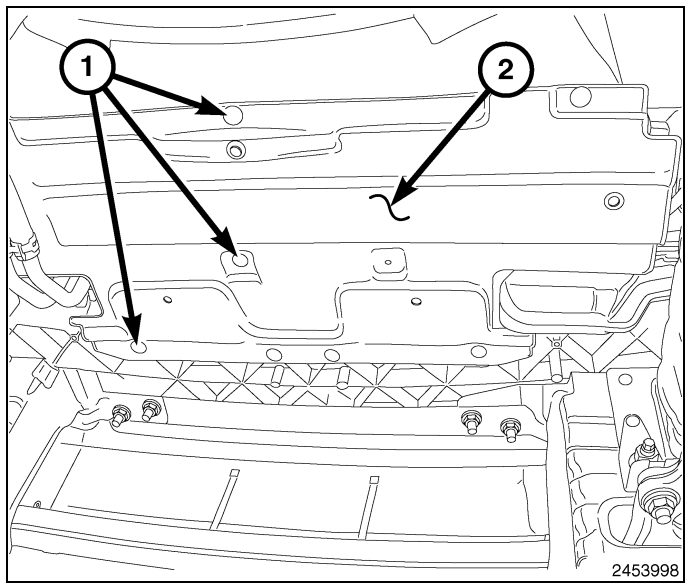

FLUID

Description

NOTE: It is normal that some pressure will build up inside the reservoir, especially, with a warm vehicle. A slight popping noise upon removal of the cap is normal. The fluid level should read between the ADD and the FULL COLD marks. When the fluid is hot it should read between ADD and FULL HOT marks. Only add fluid when the vehicle is cold.

The recommended fluid for the power steering system is Mopar® ATF +4.

Mopar® ATF+4, when new is red in color. The ATF+4 is dyed red so it can be identified from other fluids used in the vehicle such as engine oil or antifreeze. The red color is not permanent and is not an indicator of fluid condition, As the vehicle is driven, the ATF+4 will begin to look darker in color and may eventually become brown. **THIS IS NORMAL.** ATF+4 also has a unique odor that may change with age. Consequently, odor and color cannot be used to indicate the fluid condition or the need for a fluid change.

Standard Procedure

WARNING: FLUID LEVEL SHOULD BE CHECKED WITH THE ENGINE OFF TO PREVENT PERSONAL INJURY FROM MOVING PARTS.

CAUTION: MOPAR® ATF+4 is to be used in the power steering system. No other power steering or automatic transmission fluid is to be used in the system. Damage may result to the power steering pump and system if any other fluid is used, and do not overfill.

The power steering fluid level can be viewed on the dipstick attached to the filler cap. There are two ranges listed on the dipstick, COLD and HOT. Before opening power steering system, wipe the reservoir filler cap free of dirt and debris. Remove the cap and check the fluid level on its dipstick. When the fluid is at normal ambient temperature, approximately 21°C to 27°C (70°F to 80°F), the fluid level should read between the minimum and maximum area of the cold range. When the fluid is hot, fluid level is allowed to read up to the highest end of the HOT range. Only add fluid when the vehicle is cold.

Use only Mopar® ATF+4. Do not overfill the power steering system.

HOSE, Power Steering, Independent Front Suspension

Removal

RETURN HOSE - GEAR TO COOLER

1. Drain and siphon the power steering system.
2. Raise and support the vehicle.
3. Disconnect the return hose at the cooler.
4. Disconnect the return hose (1) at the gear .
5. Remove the return hose from the routing clamp at the fan shroud and then remove from the vehicle.

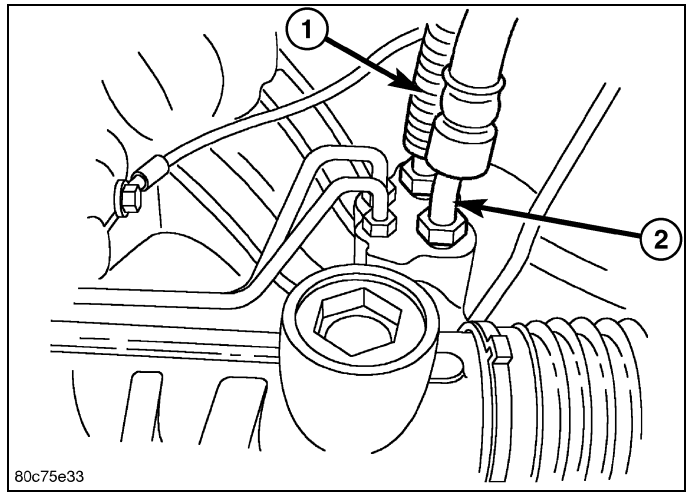

PRESSURE HOSE

1. Drain and siphon the power steering system.
2. Raise and support the vehicle.
3. Disconnect the pressure hose at the pump.
4. Disconnect the pressure hose (2) at the gear .
5. Remove the pressure hose from the vehicle.

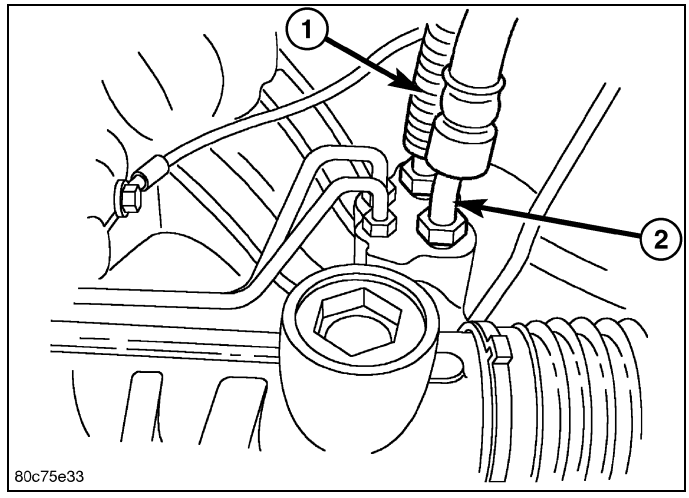

RETURN HOSE - RESERVOIR TO COOLER

1. Drain and siphon the power steering system.

2. Disconnect the return hose at the reservoir.
3. Raise and support the vehicle.
4. Remove the return hose from the routing clamp at the fan shroud.
5. Disconnect the return hose at the cooler.
6. Remove the hose from the vehicle.

Installation

RETURN HOSE - GEAR TO COOLER

1. Install the return hose to the vehicle.
2. Reconnect the return hose at the cooler.
3. Reconnect the return hose (1) at the gear. Tighten the hose to 50 N·m (37 ft. lbs.) .
4. Reattach the hose to the routing clip at the fan shroud.
5. Remove the support and lower the vehicle.
6. Refill the power steering system,(Refer to 19 - Steering/Pump - Standard Procedure) .

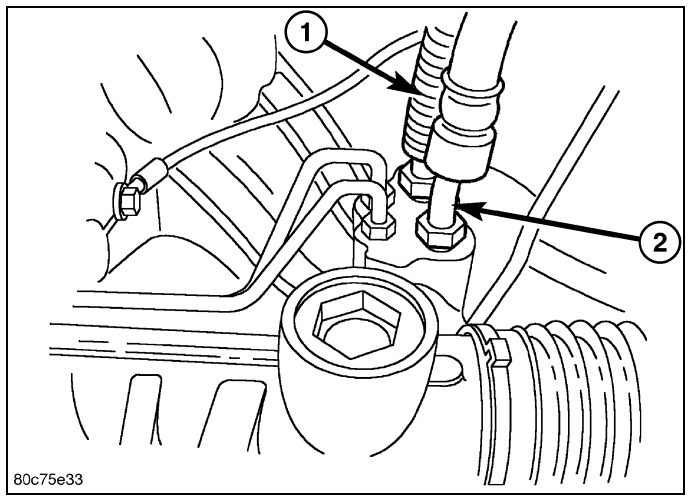

PRESSURE HOSE

NOTE: Be sure to align the pressure hose so it does not contact the fan shroud or the frame rail.

1. Install the pressure hose to the vehicle.
2. Reconnect the pressure hose (2) at the gear. Tighten the hose to 32 N·m (23 ft. lbs.) .
3. Reconnect the pressure hose at the pump. Tighten the hose to 31 N·m (23 ft. lbs.).
4. Remove the support and lower the vehicle.
5. Refill the power steering system,(Refer to 19 - Steering/Pump - Standard Procedure) .

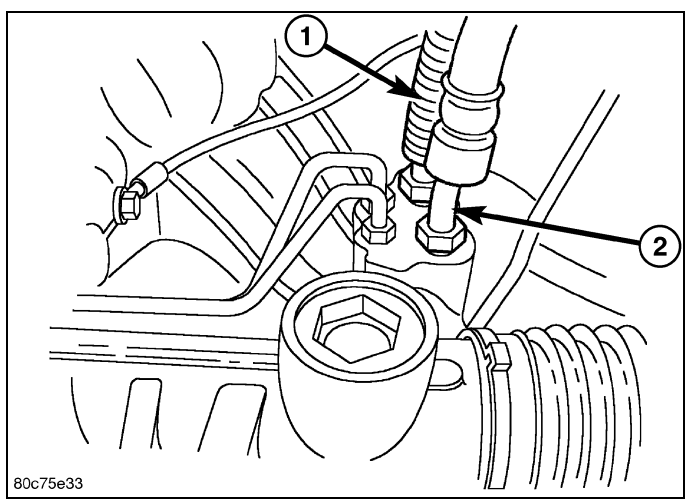

RETURN HOSE - RESERVOIR TO COOLER

1. Install the return hose to the vehicle.
2. Reconnect the return hose at the cooler.
3. Reattach the hose to the routing clip at the fan shroud.
4. Remove the support and lower the vehicle.
5. Reconnect the return hose at the reservoir.
6. Refill the power steering system,(Refer to 19 - Steering/Pump - Standard Procedure) .

PULLEY, Power Steering Pump

Removal

CAUTION: Do not reuse the old power steering pump pulley it is not intended for reuse. A new pulley must be installed if removed.

1. Remove the power steering pump assembly (1), (Refer to 19 - Steering/Pump - Removal).
2. Remove the pulley (2) from the pump using (OTC® 7185) power steering pulley removal tool or equivalent (3) .

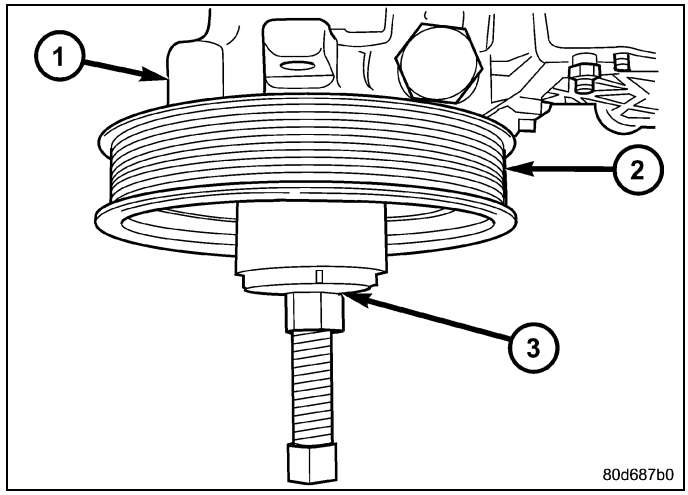

Installation

CAUTION: Do not reuse the old power steering pump pulley it is not intended for reuse. A new pulley must be installed if removed.

1. Replace the pulley (2) if it's bent, cracked, or loose.
2. Install the pulley (2) on the pump (1) using (OTC® 7771) power steering pulley installation tool or equivalent (3) making sure it is flush with the end of the shaft. Ensure the tool and pulley remain aligned with the pump shaft.
3. Install the power steering pump assembly, (Refer to 19 - Steering/Pump - Installation).

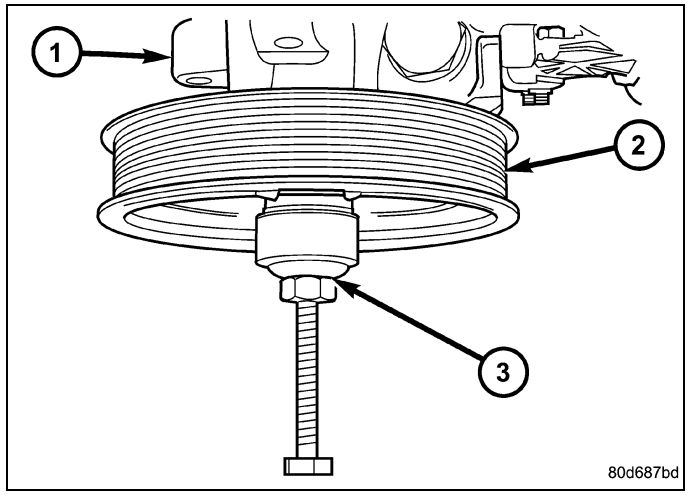

4. Run engine until warm (5 min.) and note any belt chirp. If chirp exists, move pulley outward approximately 0.5 mm (0.020 in.). If noise increases, press on 1.0 mm (0.040 in.). **Be careful that pulley does not contact mounting bolts.**

RESERVOIR, Power Steering Pump

Removal

1. Drain and siphon the power steering fluid from the reservoir.
2. Remove the serpentine belt.
3. Remove the power steering pump (Refer to 19 - Steering/Pump - Removal).

4. Remove the reservoir mounting bolts (2).
5. Remove the reservoir (1).
6. Remove the rear bracket to the pump mounting bolts (if equipped).

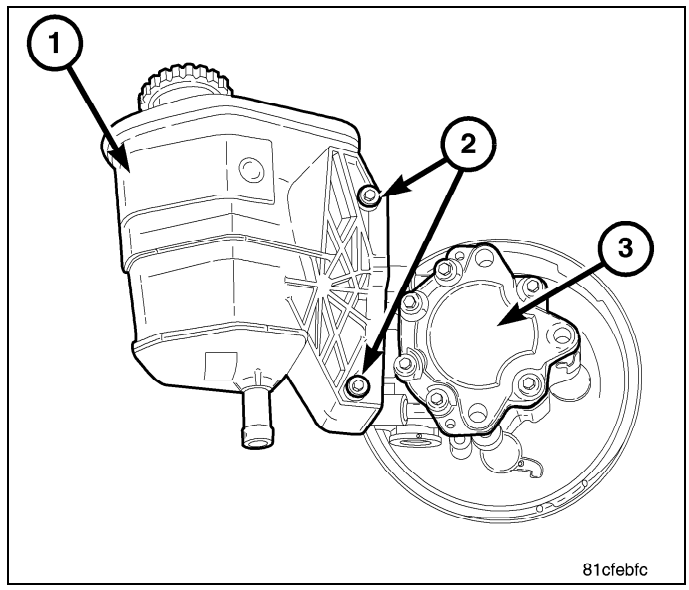

Installation

1. Install the reservoir bracket to the pump housing (if equipped). **Do not reuse the o-rings (install new o-rings).** Tighten bolts to 7 N·m (62 in. lbs.).

NOTE: Ensure the reservoir (1) is fully seated onto the pump (3).

2. Install the reservoir (1) to the bracket/pump body (3).
3. Install the reservoir mounting bolts (2). Tighten bolts to 13 N·m (120 in. lbs.).
4. Install the power steering pump (3)(Refer to 19 - Steering/Pump - Installation).
5. Install the serpentine drive belt, (Refer to 07 - Cooling/Accessory Drive/BELT, Serpentine - Installation).
6. Fill the power steering pump, (Refer to 19 - Steering/Pump - Standard Procedure).

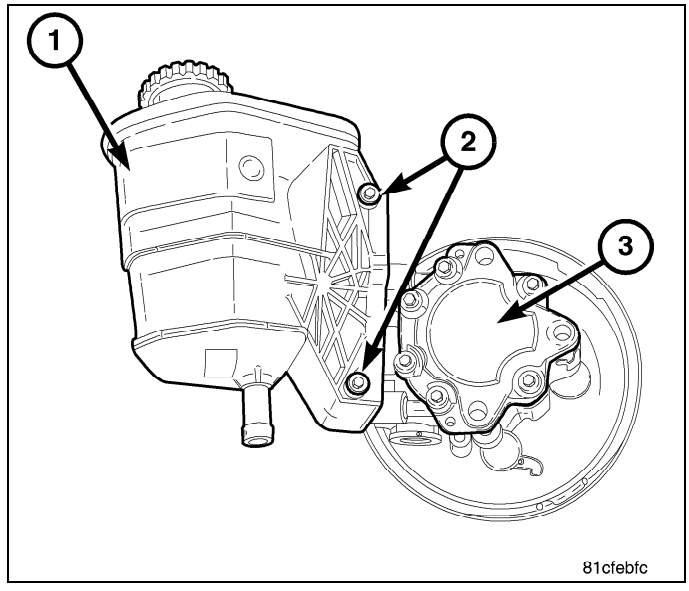

TRANSMISSION AND TRANSFER CASE

TABLE OF CONTENTS

page

TRANSMISSION AND TRANSFER CASE
AUTOMATIC - 42RLE 3
AUTOMATIC - 545RFE. 193
TRANSFER CASE, NV243 353
TRANSFER CASE, NV246 393

AUTOMATIC - 42RLE

TABLE OF CONTENTS

page

AUTOMATIC - 42RLE
DESCRIPTION 5
OPERATION 8
DIAGNOSIS AND TESTING
AUTOMATIC TRANSMISSION 13
ROAD TEST 14
PRELIMINARY 15
HYDRAULIC PRESSURE TESTS 15
CLUTCH AIR PRESSURE TESTS 18
FLUID LEAKAGE 19
STANDARD PROCEDURE 20
REMOVAL 21
DISASSEMBLY 23
ASSEMBLY 44
INSTALLATION 69
SCHEMATICS AND DIAGRAMS 72
SPECIFICATIONS 82
SPECIAL TOOLS 85
ACCUMULATOR
DESCRIPTION 90
OPERATION 91
ASSEMBLY, INPUT CLUTCH
DISASSEMBLY 91
ASSEMBLY 101
ASSEMBLY, TRANSMISSION SOLENOID AND PRESSURE SWITCH
DESCRIPTION 115
OPERATION 115
REMOVAL 116
INSTALLATION 117
BEARING
ADJUSTMENTS 117
CABLE, SHIFT
DIAGNOSIS AND TESTING 118
REMOVAL 118
INSTALLATION 119
ADJUSTMENTS 120
DRIVING CLUTCHES
DESCRIPTION 121
OPERATION 121
FLUID AND FILTER
DIAGNOSIS AND TESTING
CAUSES OF BURNT FLUID 122
EFFECTS OF INCORRECT FLUID LEVEL 122
FLUID CONTAMINATION 122
STANDARD PROCEDURE
FLUID LEVEL CHECK 123
FLUID/FILTER SERVICE 124
TRANSMISSION FILL 124
GEARTRAIN, PLANETARY
DESCRIPTION 125
OPERATION 125
HOLDING CLUTCHES
DESCRIPTION 125
OPERATION 126
MECHANISM, BRAKE TRANSMISSION SHIFT INTERLOCK
DESCRIPTION 126
OPERATION 126
DIAGNOSIS AND TESTING 126
ADJUSTMENTS 127
PUMP, TRANSMISSION OIL
DESCRIPTION 128
OPERATION 128
DISASSEMBLY 128
CLEANING 129
INSPECTION 129
ASSEMBLY 130
RELAY, TRANSMISSION CONTROL
DESCRIPTION 130
OPERATION 131
SEAL, EXTENSION HOUSING
REMOVAL 131
INSTALLATION 131
SEAL, OIL PUMP
REMOVAL 131
INSTALLATION 131
SENSOR, SPEED, INPUT
DESCRIPTION 132
OPERATION 132
REMOVAL 133
INSTALLATION 133
SENSOR, SPEED, OUTPUT
DESCRIPTION 133
OPERATION 134
REMOVAL 134
INSTALLATION 134
SENSOR, TRANSMISSION OIL TEMPERATURE
DESCRIPTION 135
OPERATION 135

continued..

page

SENSOR, TRANSMISSION RANGE
DESCRIPTION 136
OPERATION 136
REMOVAL 137
INSTALLATION 138
SENSOR, VARIABLE LINE PRESSURE
DESCRIPTION 139
OPERATION 139
REMOVAL 139
INSTALLATION 140
SHIFTER, TRANSMISSION
DESCRIPTION 140
OPERATION 140
REMOVAL
SHIFTER 141
CONSOLE PRNDL BEZEL 144
INSTALLATION
SHIFTER 148
CONSOLE PRNDL BEZEL 151
SOLENOID, PRESSURE CONTROL
DESCRIPTION 154
OPERATION 154
REMOVAL 155
INSTALLATION 155

page

SWITCH, OVERDRIVE LOCKOUT, TOW AND HAUL
DESCRIPTION 156
OPERATION 156
REMOVAL 156
INSTALLATION 157
TORQUE CONVERTER
DESCRIPTION 158
OPERATION 162
REMOVAL 165
INSTALLATION 165
VALVE BODY
DESCRIPTION 166
OPERATION 167
REMOVAL 172
DISASSEMBLY 174
ASSEMBLY 182
INSTALLATION 190

Automatic - 42RLE

Description

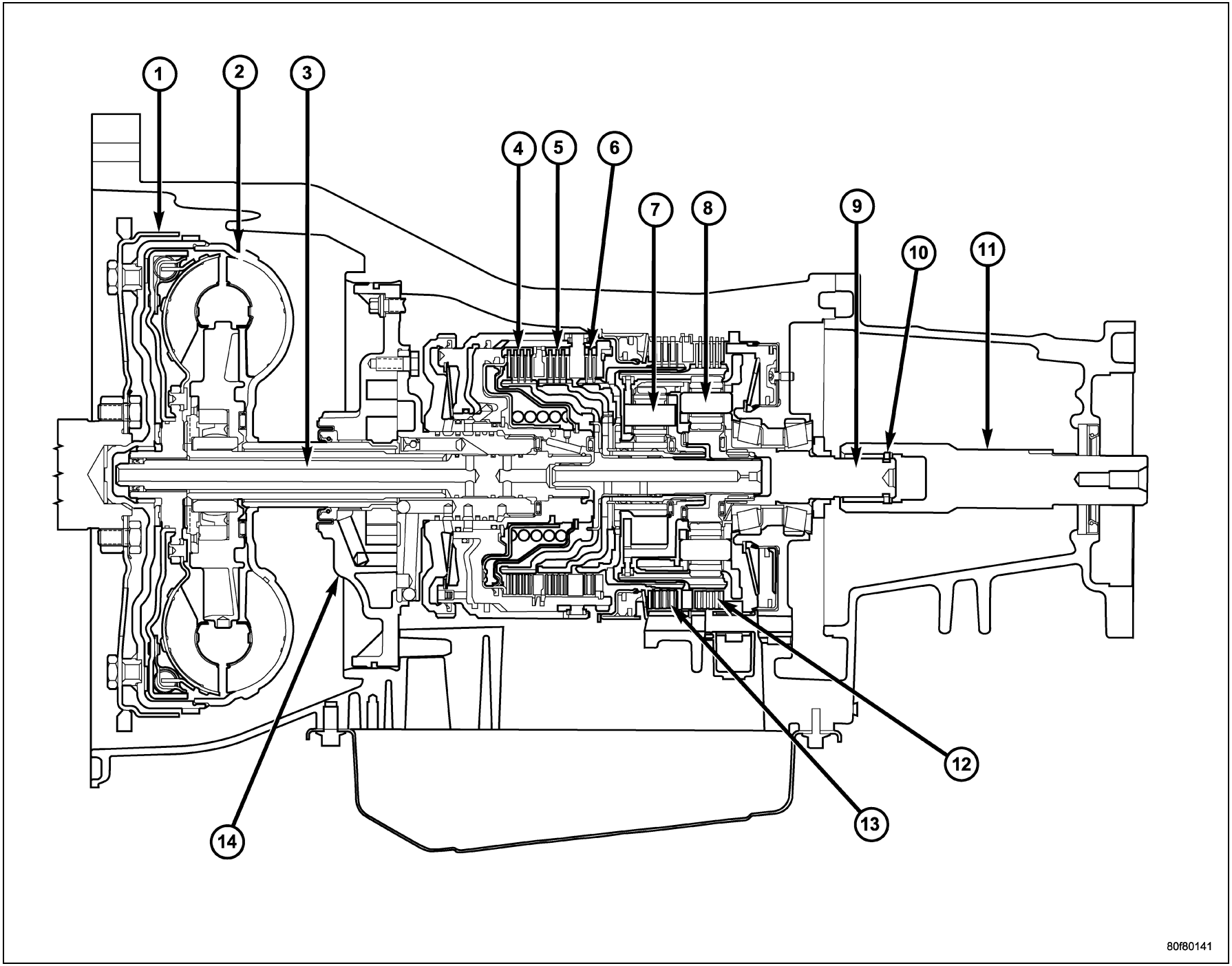

42RLE Automatic Transmission

1 - DRIVEPLATE
2 - TORQUE CONVERTER
3 - INPUT SHAFT
4 - UNDERDRIVE CLUTCH
5 - OVERDRIVE CLUTCH
6 - REVERSE CLUTCH
7 - FRONT PLANET CARRIER
8 - REAR PLANET CARRIER
9 - OUTPUT SHAFT
10 - SNAP RING
11 - STUB SHAFT
12 - LOW/REVERSE CLUTCH
13 - 2/4 CLUTCH
14 - OIL PUMP

The 42RLE is a four-speed transmission that is a conventional hydraulic/mechanical assembly controlled with adaptive electronic controls and monitors. The hydraulic system of the transmission consists of the transmission fluid, fluid passages, hydraulic valves, and various line pressure control components. An input clutch assembly which houses the underdrive, overdrive, and reverse clutches is used. It also utilizes separate holding clutches: 2nd/4th gear and Low/Reverse. The primary mechanical components of the transmission consist of the following:

- Three multiple disc input clutches
- Two multiple disc holding clutches
- Four hydraulic accumulators
- Two planetary gear sets
- Hydraulic oil pump
- Valve body
- Solenoid/Pressure switch assembly

Control of the transmission is accomplished by fully adaptive electronics. Optimum shift scheduling is accomplished through continuous real-time sensor feedback information provided to the Transmission Control Module (TCM) portion of the Powertrain Control Module (PCM).

The TCM is the heart of the electronic control system and relies on information from various direct and indirect inputs (sensors, switches, etc.) to determine driver demand and vehicle operating conditions. With this information, the TCM can calculate and perform timely and quality shifts through various output or control devices (solenoid pack, transmission control relay, etc.).

The TCM also performs certain self-diagnostic functions and provides comprehensive information (sensor data, DTC's, etc.) which is helpful in proper diagnosis and repair. This information can be viewed with the scan tool.

TRANSMISSION IDENTIFICATION

The 42RLE transmission can be identified by a barcode label that is affixed to the upper left area of the bellhousing.

The label contains a series of digits that can be translated into useful information such as transmission part number (10), date of manufacture (4, 5), manufacturing origin (2), assembly line identifier (6), build sequence number (7), etc. .

If the tag is not legible or is missing, the “PK” number, which is stamped into the left rear flange of the transmission case, can be referred to for identification. The entire part number, build code, and sequence number are stamped into the flange.

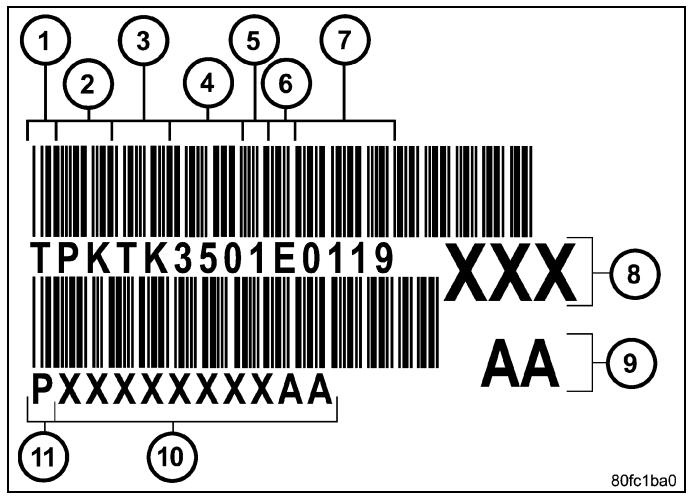

Operation

The 42RLE transmission ratios are:

Gear	Gear Ratio
First	2.84 : 1
Second	1.57 : 1
Third	1.00 : 1
Overdrive	0.69 : 1
Reverse	2.21 : 1

FIRST GEAR POWERFLOW

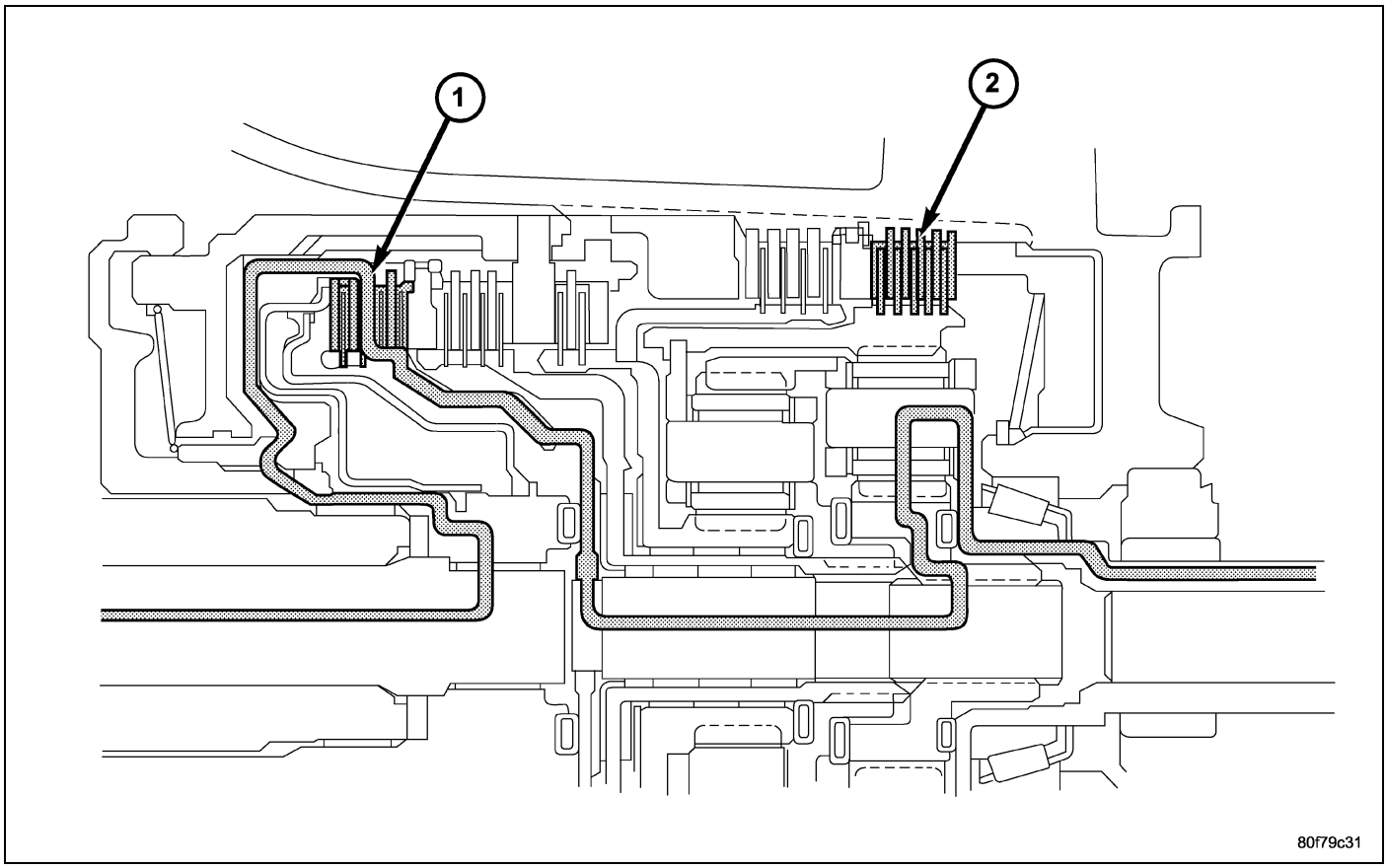

First Gear Powerflow

1 - UNDERDRIVE CLUTCH APPLIED (Turns Rear Sun)

2 - LOW-REVERSE CLUTCH APPLIED (Holds Rear Annulus/Front Carrier)

In first gear range, torque input is through the underdrive clutch (1) to the underdrive hub assembly. The underdrive hub is splined to the rear sun gear. When the underdrive clutch is applied, it rotates the underdrive hub and rear sun gear. The L/R clutch (2) is applied to hold the front carrier/rear annulus assembly. The rear sun gear drives the rear planetary pinion gears. The rear planetary pinion gears are forced to walk around the inside of the stationary rear annulus gear. The pinions are pinned to the rear carrier and cause the rear carrier assembly to rotate as they walk around the annulus gear. This provides the torque output for first gear. The other planetary gearset components are freewheeling. The first gear ratio is 2.84:1.

SECOND GEAR POWERFLOW

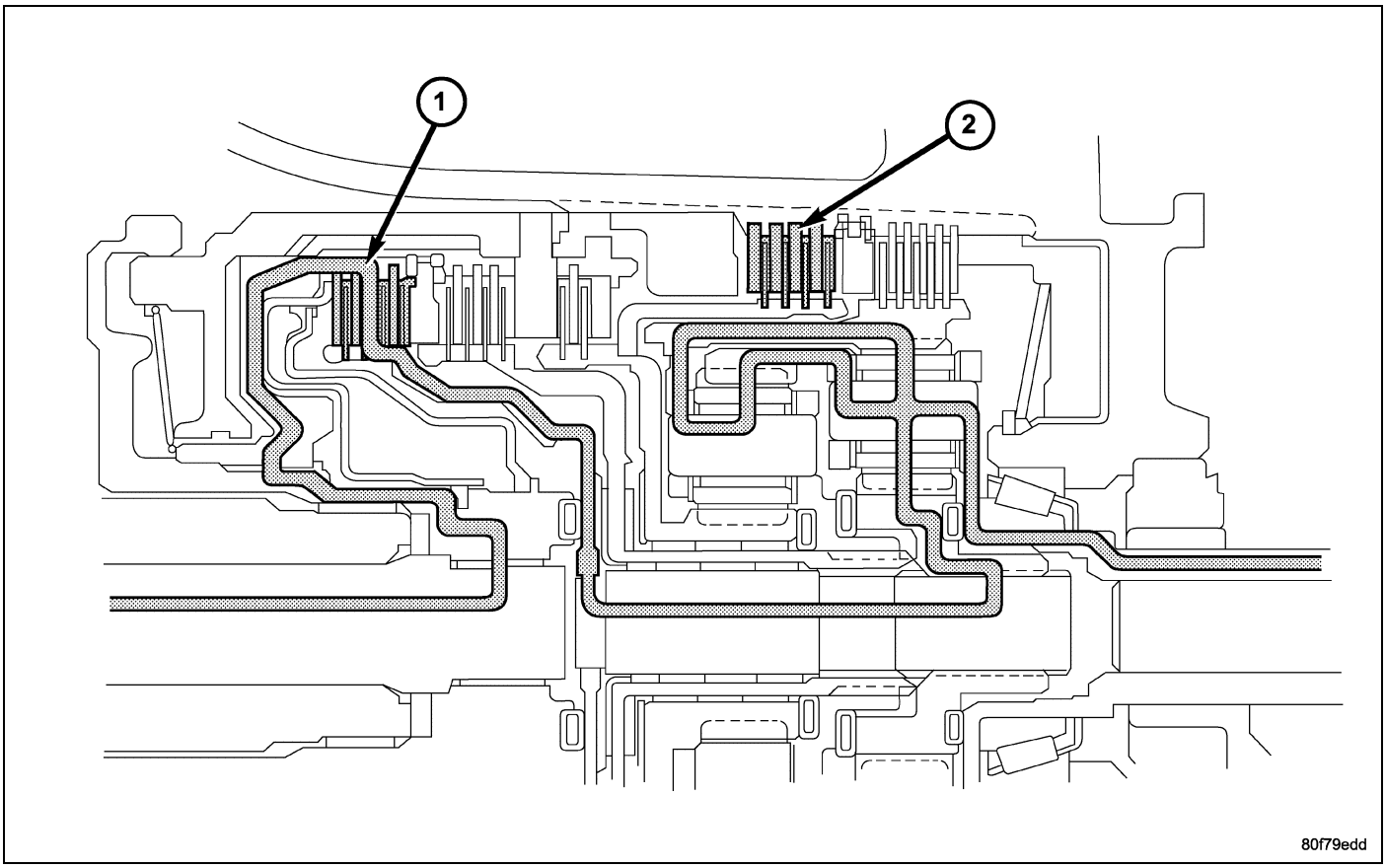

Second Gear Powerflow

1 - UNDERDRIVE CLUTCH APPLIED (Turns Rear Sun)

2 - 2-4 CLUTCH APPLIED (Holds Front Sun)

Second gear is achieved by having both planetary gear sets contribute to torque multiplication. As in first gear, torque input is through the underdrive clutch (1) to the rear sun gear. The 2/4 clutch (2) is applied to hold the front sun gear stationary. The rotating rear sun gear turns the rear planetary pinions. The rear pinions rotate the rear annulus/front carrier assembly. The pinions of the front carrier walk around the stationary front sun gear. This transmits torque to the front annulus/rear carrier assembly, which provides output torque and a gear ratio of 1.57:1.

THIRD GEAR POWERFLOW

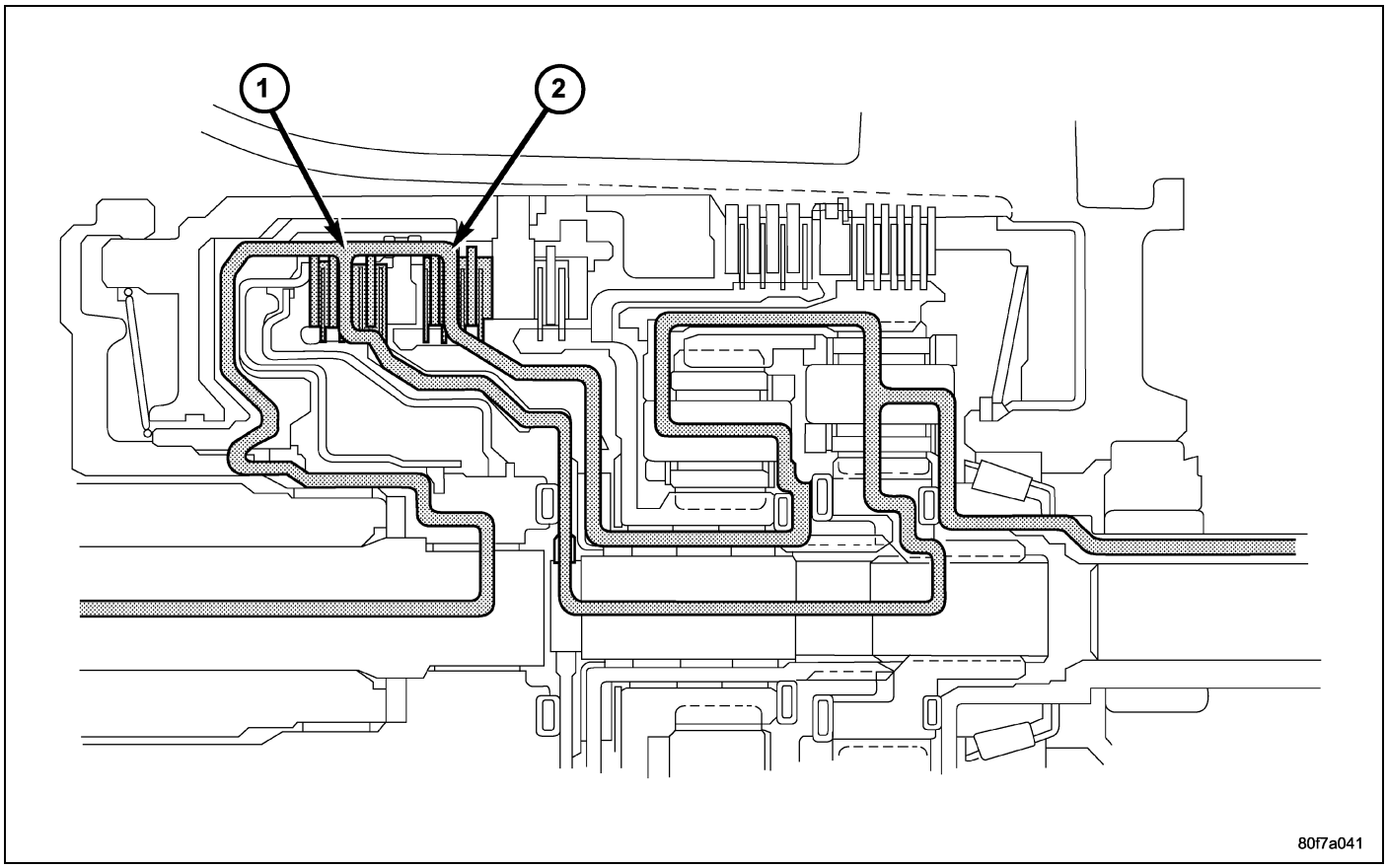

Third Gear Powerflow

1 - UNDERDRIVE CLUTCH APPLIED (Turns Rear Sun)

2 - OVERDRIVE CLUTCH APPLIED (Turns Front Carrier/Rear Annulus)

In third gear, two input clutches are applied to provide torque input: the underdrive clutch (1) and overdrive clutch (2). The underdrive clutch rotates the rear sun gear, while the overdrive clutch rotates the front carrier/rear annulus assembly. The result is two components (rear sun gear and rear annulus gear) rotating at the same speed and in the same direction. This effectively locks the entire planetary gearset together and is rotated as one unit. The gear ratio in third is 1:1.

FOURTH GEAR POWERFLOW

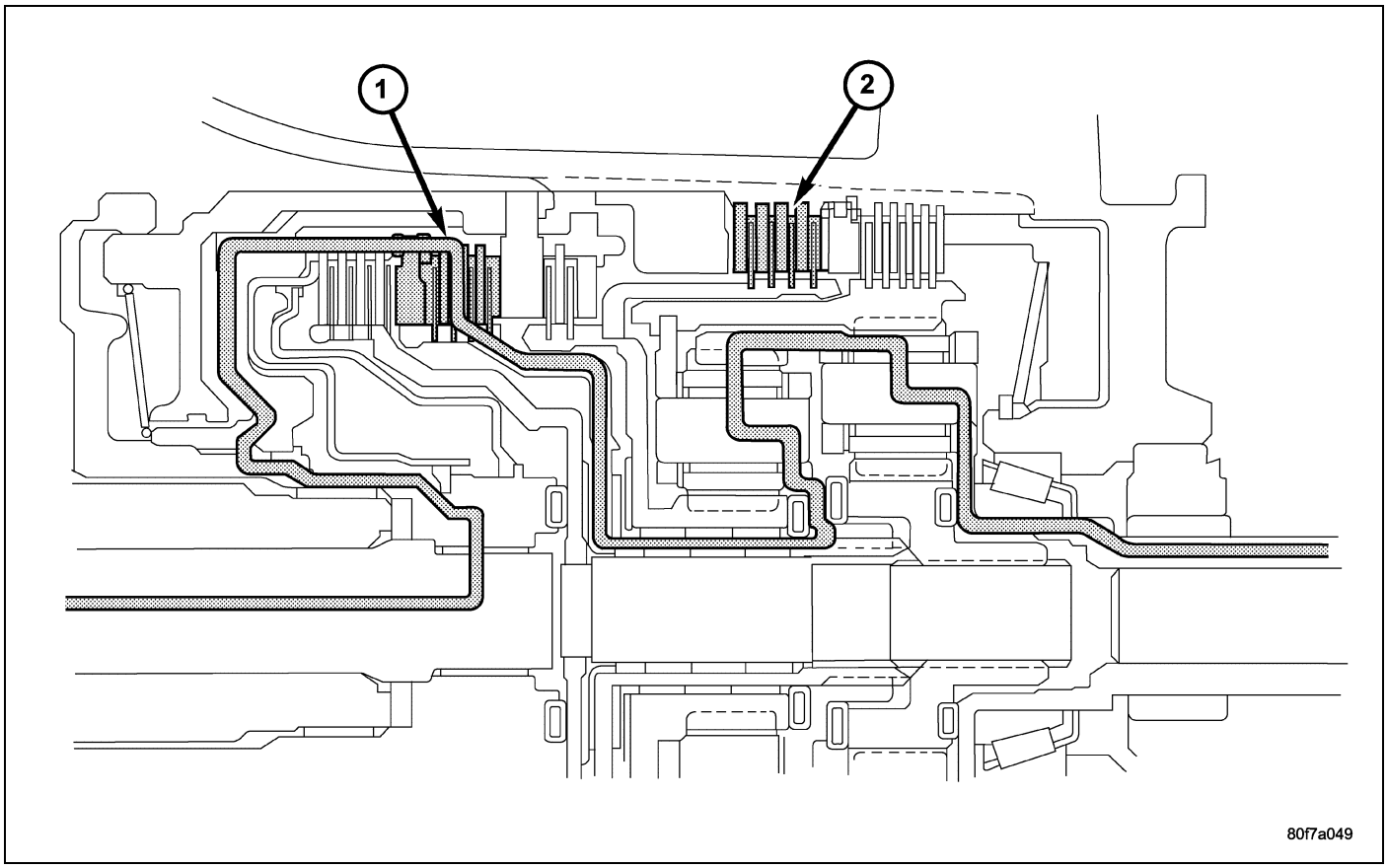

Fourth Gear Powerflow

1 - OVERDRIVE CLUTCH APPLIED (Turns Rear Sun)

2 - 2-4 CLUTCH APPLIED (Holds Front Sun)

In fourth gear input torque is through the overdrive clutch (1) which drives the front carrier. The 2/4 clutch (2) is applied to hold the front sun gear. As the overdrive clutch rotates the front carrier, it causes the pinions of the front carrier to walk around the stationary front sun gear. This causes the front carrier pinions to turn the front annulus/rear carrier assembly which provides output torque. In fourth gear, transmission output speed is more than engine input speed. This situation is called overdrive and the gear ratio is 0.69:1.

REVERSE GEAR POWERFLOW

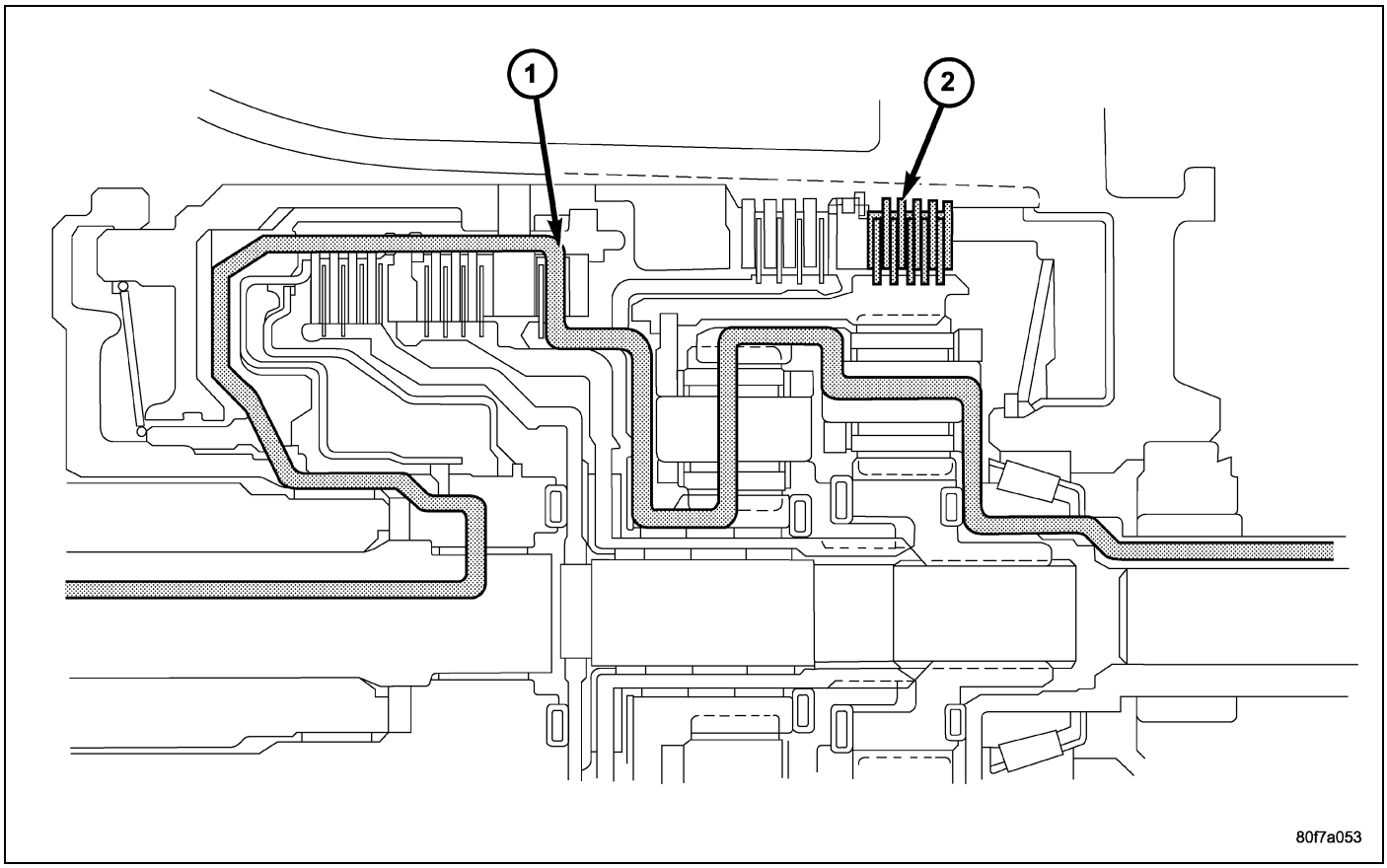

Reverse Gear Powerflow

1 - LOW-REVERSE CLUTCH APPLIED (Holds Rear Annulus Front Carrier)

2 - REVERSE CLUTCH APPLIED (Turns Front Sun)

In reverse, input power is through the reverse clutch (1). When applied, the reverse clutch drives the front sun gear through the overdrive hub and shaft. The L/R clutch (2) is applied to hold the front carrier/rear annulus assembly stationary. The front carrier is being held by the L/R clutch so the pinions are forced to rotate the front annulus/rear carrier assembly in the reverse direction. Output torque is provided, in reverse, with a gear ratio of 2.21:1.

Diagnosis and Testing

AUTOMATIC TRANSMISSION

CAUTION: Before attempting any repair on the 42RLE Four Speed Automatic Transmission, always check for proper shift cable adjustment. Also check for diagnostic trouble codes with the scan tool and the 42RLE Transmission Diagnostic information.

42RLE automatic transmission malfunctions may be caused by these general conditions:

- Poor engine performance
- Improper adjustments
- Hydraulic malfunctions
- Mechanical malfunctions
- Electronic malfunctions

When diagnosing a problem always begin with recording the complaint. The complaint should be defined as specific as possible. Include the following checks:

- Temperature at occurrence (cold, hot, both)
- Dynamic conditions (acceleration, deceleration, upshift, cornering)
- Elements in use when condition occurs (what gear is transmission in during condition)
- Road and weather conditions

- Any other useful diagnostic information.

After noting all conditions, check the easily accessible variables:

- Fluid level and condition
- Shift cable adjustment
- Diagnostic trouble code inspection

Then perform a road test to determine if the problem has been corrected or that more diagnosis is necessary. If the problem exists after the preliminary tests and corrections are completed, hydraulic pressure checks should be performed.

ROAD TEST

Prior to performing a road test, verify that the fluid level, fluid condition, and linkage adjustment have been approved.

During the road test, the transmission should be operated in each position to check for slipping and any variation in shifting.

If the vehicle operates properly at highway speeds, but has poor acceleration, the converter stator overrunning clutch may be slipping. If acceleration is normal, but high throttle opening is needed to maintain highway speeds, the converter stator clutch may have seized. Both of these stator defects require replacement of the torque converter and thorough transmission cleaning.

Slipping clutches can be isolated by comparing the “Elements in Use” chart with clutch operation encountered on a road test. This chart identifies which clutches are applied at each position of the selector lever.

A slipping clutch may also set a DTC and can be determined by operating the transmission in all selector positions.

ELEMENTS IN USE AT EACH POSITION OF SELECTOR LEVER

Shift Lever Position	INPUT CLUTCHES			HOLDING CLUTCHES	
	Underdrive	Overdrive	Reverse	2/4	Low/Reverse
P - PARK					X
R - REVERSE			X		X
N - NEUTRAL					X
OD - OVERDRIVE					
First	X				X
Second	X			X	
Direct	X	X			
Overdrive		X		X	
D - DRIVE*					
First	X				X
Second	X			X	
Direct	X	X			
L - LOW*					
First	X				X
Second	X			X	
Direct	X	X			
* Vehicle upshift and downshift speeds are increased when in these selector positions.					

The process of elimination can be used to detect any unit which slips and to confirm proper operation of good units. Road test analysis can diagnose slipping units, but the cause of the malfunction cannot be determined. Practically any condition can be caused by leaking hydraulic circuits or sticking valves.

PRELIMINARY

Two basic procedures are required. One procedure for vehicles that are drivable and an alternate procedure for disabled vehicles (will not back up or move forward).

VEHICLE IS DRIVABLE

1. Record all DTCs and the accompanying DTC Event Data.
2. Check for an appropriate Technical Service Bulletin that applies to the customer complaint.
3. Check fluid level and condition.
4. Road test and note how transmission upshifts, downshifts, and engages.
5. If the complaint was related to shift quality, perform the Quick Learn procedure, (Refer to 08 - Electrical/8E - Electronic Control Modules/MODULE, Transmission Control - Standard Procedure), and the Drive Learn Procedure, (Refer to 08 - Electrical/8E - Electronic Control Modules/MODULE, Transmission Control - Standard Procedure).
6. If the shift complaint still exists, compare actual line pressure (sensor reading, using the scan tool) to the Desired Line Pressure reading, in Park, Drive, and Reverse at 1500 RPM. Check that the LP sensor reads 30 psi (the minimum it should ever display) with key on / engine off.
7. Perform air-pressure test to check clutch operation. (Refer to 21 - Transmission and Transfer Case/Automatic - 42RLE - Diagnosis and Testing)
8. Replace the Transmission Solenoid/TRS Assembly and perform the Quick Learn and Drive Learn procedures again.
9. If the complaint still exists, remove, inspect, and repair the transmission as necessary.

VEHICLE IS DISABLED

1. Record all DTCs and the accompanying DTC Event Data.
2. With engine running, place transmission in gear and verify correct PRNDL reading. Observe the Input and Output speeds using the scan tool. If output RPM is greater than zero but vehicle does not move, check for transfer case in Neutral (or failed internally), failed propshaft, or failed / disconnected drive axle. If output RPM is zero and input RPM is greater than zero, internal transmission slippage is indicated. Run clutch slip tests using the scan tool, check oil pan for debris, and air check the various clutch circuits.
3. Shift the transmission into neutral, if both input and output speeds are zero, check flexplate bolts, torque converter, and transmission input shaft.
4. Compare actual line pressure (sensor reading, using the scan tool) to the Desired Line Pressure reading, in Park, Drive, and Reverse at 1500 RPM. Check that the LP sensor reads 30 psi (the minimum it should ever display) with key on / engine off. If line pressure is incorrect, check fluid level and condition.
5. Remove, inspect, and repair the transmission as necessary.

HYDRAULIC PRESSURE TESTS

NOTE: Before preforming the hydraulic pressure tests be certain to disconnect the Variable Line Pressure (VLP) electrical connector at the transmission. Check for and clear any codes that may have been set after preforming any hydraulic pressure test and connecting the Variable Line Pressure (VLP) electrical connector.

Pressure testing is a very important step in the diagnostic procedure. These tests usually reveal the cause of most transmission problems.

Before performing pressure tests, be certain that fluid level and condition, and shift cable adjustments have been checked and approved. Fluid must be at operating temperature (150 to 200 degrees F.).

Install an engine tachometer, raise vehicle on hoist which allows the wheels to turn, and position tachometer so it can be read.

Using special adapters L-4559A, attach 300 psi gauge(s) C-3293-SP to the port(s) required for test being conducted.

Test port locations are shown in the Pressure Taps graphic.

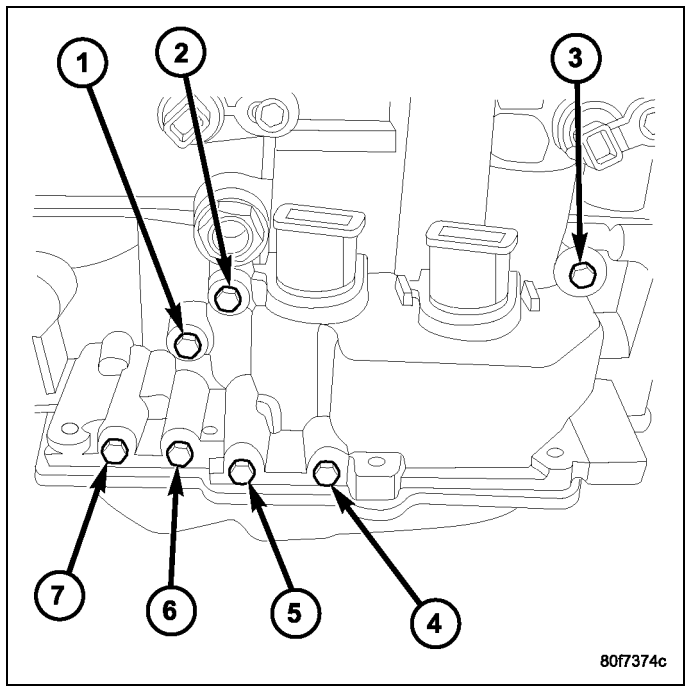

Pressure Taps

1 - TORQUE CONVERTER CLUTCH OFF
2 - REVERSE
3 - LOW/REVERSE
4 - 2/4
5 - UNDERDRIVE
6 - TORQUE CONVERTER CLUTCH ON
7 - OVERDRIVE

TEST ONE - SELECTOR IN MANUAL 1 (1st Gear)

NOTE: This test checks pump output, pressure regulation and condition of the low/reverse clutch hydraulic circuit and shift schedule.

1. Attach pressure gauge to the low/reverse clutch tap.
2. Move selector lever to the MANUAL 1 position.
3. Allow vehicle wheels to turn and increase throttle opening to achieve an indicated vehicle speed to 20 mph.
4. Low/reverse clutch pressure should read 115 to 145 psi.

TEST TWO - SELECTOR IN MANUAL 2 (Second Gear)

NOTE: This test checks the underdrive clutch hydraulic circuit as well as the shift schedule.

1. Attach gauge to the underdrive clutch tap.
2. Move selector lever to the MANUAL 2 position.
3. Allow vehicle wheels to turn and increase throttle opening to achieve an indicated vehicle speed of 30 mph.
4. In second gear the underdrive clutch pressure should read 110 to 145 psi.

TEST TWO A - SELECTOR IN DRIVE (OD ON - Fourth Gear)

NOTE: This test checks the underdrive clutch hydraulic circuit as well as the shift schedule.

1. Attach gauge to the underdrive clutch tap.
2. Move selector lever to the DRIVE position. Verfy that the OD switch is ON.
3. Allow wheels to rotate freely and increase throttle opening to achieve an indicated speed of 40 mph.

4. Underdrive clutch pressure should read below 5 psi. If not, than either the solenoid assembly or controller is at fault.

TEST THREE - SELECTOR IN DRIVE (OD OFF - Third and Second Gear)

NOTE: This test checks the overdrive clutch hydraulic circuit as well as the shift schedule.

1. Attach gauge to the overdrive clutch tap.
2. Move selector lever to the DRIVE position.
3. Allow vehicle wheels to turn and increase throttle opening to achieve an indicated vehicle speed of 20 mph.
4. Overdrive clutch pressure should read 74 to 95 psi.
5. Move selector lever to the DRIVE position and increase indicated vehicle speed to 30 mph.
6. The vehicle should be in second gear and overdrive clutch pressure should be less than 5 psi.

TEST FOUR - SELECTOR IN DRIVE (OD ON - Fourth Gear)

NOTE: This test checks the 2/4 clutch hydraulic circuit.

1. Attach gauge to the 2/4 clutch tap.
2. Move selector lever to the DRIVE position.
3. Allow vehicle front wheels to turn and increase throttle opening to achieve an indicated vehicle speed of 30 mph. Vehicle should be in fourth gear.
4. The 2/4 clutch pressure should read 75 to 95 psi.

TEST FIVE-SELECTOR IN DRIVE (OD ON - Fourth Gear, CC on)

NOTE: These tests check the torque converter clutch hydraulic circuit.

1. Attach gauge to the torque converter clutch off pressure tap.
2. Move selector lever to the DRIVE position.
3. Allow vehicle wheels to turn and increase throttle opening to achieve an indicated vehicle speed of 50 mph. Vehicle should be in 4th gear, CC on.

CAUTION: Both wheels must turn at the same speed.

4. Torque converter clutch off pressure should be less than 5 psi.
5. Now attach the gauge to the torque converter clutch on pressure tap.
6. Move selector to the OD position.
7. Allow vehicle wheels to turn and increase throttle opening to achieve an indicated vehicle speed of 50 mph.
8. Verify the torque converter clutch is applied mode using the RPM display of the scan tool.
9. Torque converter clutch on pressure should be 60-90 psi.

TEST SIX-SELECTOR IN REVERSE

NOTE: This test checks the reverse clutch hydraulic circuit.

1. Attach gauge to the reverse and low/reverse clutch tap.
2. Move selector lever to the REVERSE position.
3. Read reverse clutch pressure with output stationary (foot on brake) and throttle opened to achieve 1500 rpm.
4. Reverse and low/reverse clutch pressure should read 165 to 235 psi.

TEST RESULT INDICATIONS

1. If proper line pressure is found in any one test, the pump and pressure regulator are working properly.
2. Low pressure in all positions indicates a defective pump, a clogged filter, or a stuck pressure regulator valve.
3. Clutch circuit leaks are indicated if pressures do not fall within the specified pressure range.
4. If the overdrive clutch pressure is greater than 5 psi in Step #6 of Test Three, a worn reaction shaft seal ring or a defective solenoid assembly is indicated.
5. If the underdrive clutch pressure is greater than 5 psi in Step #4 of Test Two-A, a defective solenoid/pressure switch assembly or controller is the cause.

ALL PRESSURE SPECIFICATIONS ARE PSI (on hoist, with wheels free to turn)

Gear Selector Position	Actual Gear	PRESSURE TAPS						
		Under-drive Clutch	Over-drive Clutch	Re-verse Clutch	Torque Con-verter Clutch Off	Torque Con-verter Clutch On	2/4 Clutch	Low/ Re-verse Clutch
PARK - 0 mph *	PARK	0-2	0-5	0-2	60-110	45-100	0-2	115-145
REVERSE - 0 mph *	REVERSE	0-2	0-7	165-235	50-100	35-85	0-2	165-235
NEUTRAL - 0 mph *	NEUTRAL	0-2	0-5	0-2	60-110	45-100	0-2	115-145
Low - 20 mph #	FIRST	110-145	0-5	0-2	60-110	45-100	0-2	115-145
Third - 30 mph #	SECOND	110-145	0-5	0-2	60-110	45-100	115-145	0-2
Third - 45 mph #	DIRECT	75-95	75-95	0-2	60-90	45-80	0-2	0-2
OD - 30 mph #	OVERDRIVE	0-2	75-95	0-2	60-90	45-80	75-95	0-2
OD - 50 mph #	OVERDRIVE WITH TCC	0-2	75-95	0-2	0-5	60-95	75-95	0-2

*** Engine Speed at 1500 rpm**

 # CAUTION: Both wheels must be turning at same speed.

CLUTCH AIR PRESSURE TESTS

Inoperative clutches can be located by substituting air pressure for fluid pressure. The clutches may be tested by applying air pressure to their respective passages after the valve body has been removed. Use Plate Set 6599-1 (1) and 6599-2 (1) to perform test .

To make air pressure tests, proceed as follows:

NOTE: The compressed air supply must be free of all dirt and moisture. Use a pressure of 30psi.

1. Remove oil pan and valve body.(Refer to 21 - Transmission and Transfer Case/Automatic - 42RLE/VALVE BODY - Removal)
2. Apply air pressure to the holes in the plates (1), one at a time.
3. Listen for the clutch to apply. It will give a slight thud sound. If a large amount of air is heard escaping, the transmission must be removed from vehicle, disassembled and all seals inspected.

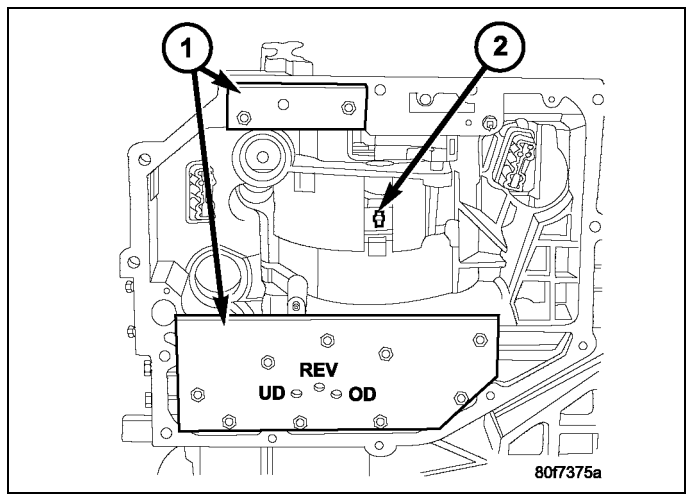

Air Pressure Test Plate

1 - AIR PRESSURE TEST PLATES

2 - 2/4 CLUTCH RETAINER HOLE

2/4 CLUTCH

Apply air pressure to the feed hole located on the 2/4 clutch retainer (2). Look in the area where the 2/4 piston contacts the first separator plate and watch carefully for the 2/4 piston to move rearward. The piston should return to its original position after the air pressure is removed.

OVERDRIVE CLUTCH

Apply air pressure to the overdrive clutch apply passage and watch for the push/pull piston to move forward. The piston should return to its starting position when the air pressure is removed.

REVERSE CLUTCH

Apply air pressure to the reverse clutch apply passage and watch for the push/pull piston to move rearward. The piston should return to its starting position when the air pressure is removed.

LOW/REVERSE CLUTCH

Apply air pressure to the low/reverse clutch feed hole passage. Look in the area where the low/reverse piston contacts the first separator plate. Watch carefully for the piston to move forward. The piston should return to its original position after the air pressure is removed.

UNDERDRIVE CLUTCH

Because this clutch piston cannot be seen, its operation is checked by function. Use an air nozzle (2) to apply air pressure is to the low/reverse or the 2/4 clutch opening in Test Plate 6599-1 (2). This locks the output shaft. Use a piece of rubber hose wrapped around the input shaft and a pair of clamp-on pliers to turn the input shaft. Next apply air pressure to the underdrive clutch. The input shaft should not rotate with hand torque. Release the air pressure and confirm that the input shaft will rotate.

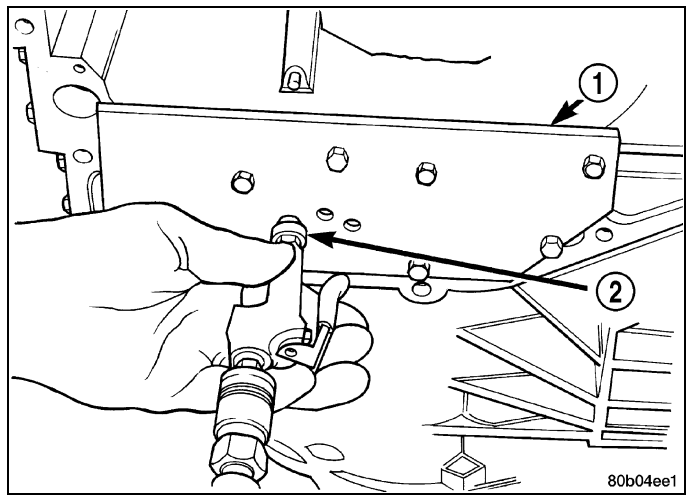

FLUID LEAKAGE

TRANSMISSION OIL LEAK

Begin with a thorough inspection of the transmission , particularly at the area of the suspected leak. If an oil leak source is not readily identifiable, the following steps should be followed:

1. Clean or degrease the transmission with a water soluble solvent only.
2. Add an oil soluble dye (use as recommended by manufacturer) while the powertrain is at ambient temperature. Start the engine and let idle for approximately 15 minutes. Check the oil dip stick (if equipped) to make sure the dye is thoroughly mixed as indicated with a fluorescent color under a black light.
3. Using a black light, inspect the entire transmission for fluorescent dye, practically at the suspected area of oil leak. If the oil leak is found and identified , repair per service manual instructions .
4. If dye is not observed , drive the vehicle at various speeds for approximately 24 km (15 miles) and repeat inspection.

TORQUE CONVERTER HOUSING AREA

When diagnosing converter housing (5) fluid leaks, three actions must be taken before repair:

1. Verify proper transmission fluid level.
2. Verify that the leak originates from the converter housing area and is transmission fluid.
3. Determine the true source of the leak.

Fluid leakage at or around the torque converter area may originate from an engine oil leak (7). The area should be examined closely. Factory fill fluid is red and, therefore, can be distinguished from engine oil.

Some suspected converter housing fluid leaks may not be leaks at all. They may only be the result of residual fluid in the converter housing, or excess fluid spilled during factory fill, or fill after repair. Converter housing leaks have several potential sources. Through careful observation, a leak source can be identified before removing the transmission for repair.

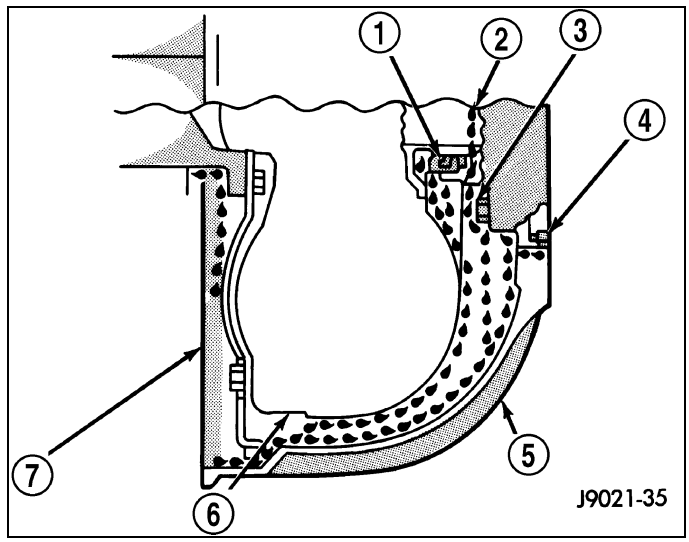

Pump seal leaks tend to run down the front cover from the hub area. Front cover O-ring leaks will wet the inside of the bellhousing but the cover itself will generally be dry. If the torque converter is wet, the problem is generally a converter hub weld or seam weld leak .

TORQUE CONVERTER LEAKAGE

Possible sources of torque converter leakage are:

- Torque converter weld leaks at the outside diameter weld (1).
- Torque converter hub weld (2).

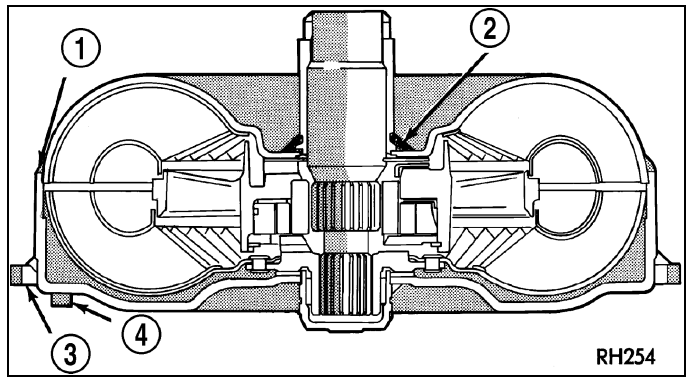

Standard Procedure

Damaged or worn threads in the aluminum transmission case and valve body can be repaired by the use of Heli-Coils®, or equivalent. This repair consists of drilling out the worn-out damaged threads. Then tap the hole with a special Heli-Coil® tap, or equivalent, and installing a Heli-Coil® insert, or equivalent, into the hole. This brings the hole back to its original thread size.

Heli-Coil®, or equivalent, tools, and inserts are readily available from most automotive parts suppliers.

Removal

1. Disconnect the negative battery cable.
2. Raise and support the vehicle
3. Remove any necessary skid plates (2).

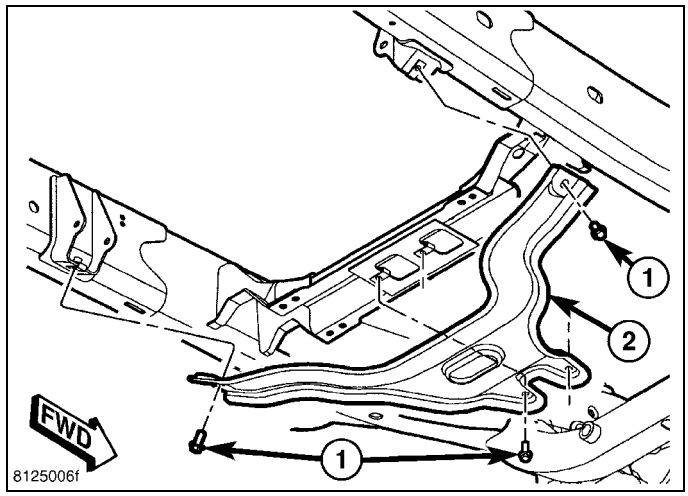

4. Mark propeller shaft and axle companion flanges for assembly alignment.
5. Remove the rear propeller shaft. (Refer to 03 - Differential and Driveline/Propeller Shaft/SHAFT, Drive - Removal)
6. Remove the front propeller shaft, if necessary.(Refer to 03 - Differential and Driveline/Propeller Shaft/SHAFT, Drive - Removal)
7. Disconnect the input (1) and output (2) speed sensors.
8. Disconnect the transfer case shift motor and mode sensor assembly (3).
9. Disconnect the variable line pressure connector (4) from the transmission, if equipped.
10. Disconnect the transmission range sensor (5).

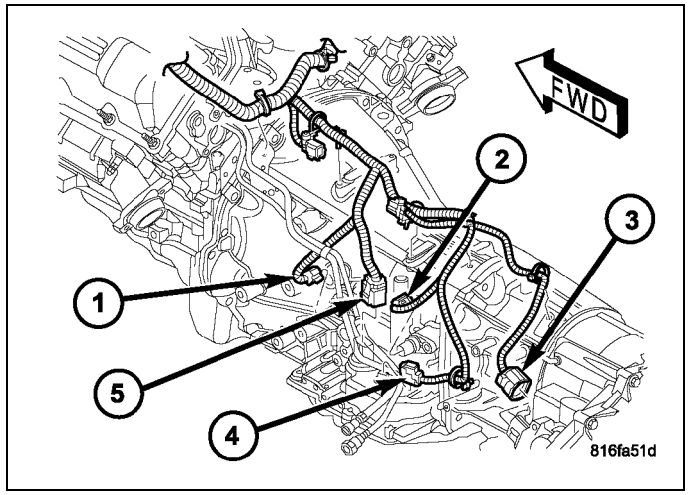

11. Disconnect wires (1) from the solenoid/pressure switch assembly.

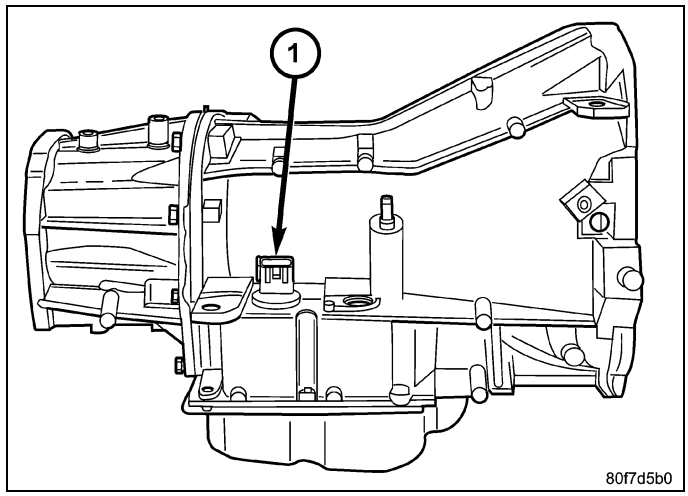

12. Disconnect the connecters for the oxygen sensors.
13. Remove the bolts (2) holding the exhaust crossover pipe to the pipe flanges.
14. Loosen the clamp (4) that holds the crossover pipe to the exhaust pipe (5).
15. Remove crossover pipe (6).

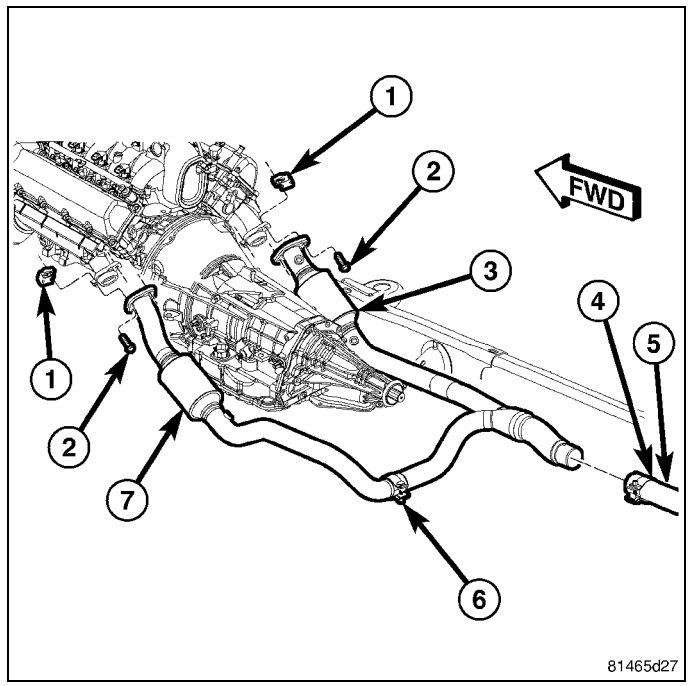

16. Disconnect gearshift cable (1) from transmission manual valve lever (3).
17. Disengage the shift cable (1) from the cable support bracket (2).

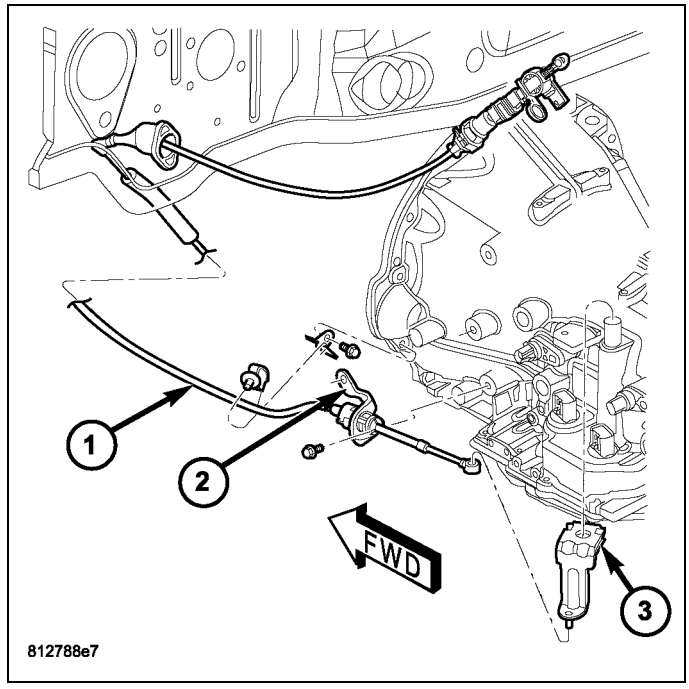

18. Remove the starter motor.
19. Remove the engine to transmission collar.
20. Rotate crankshaft in clockwise direction until converter bolts are accessible. Then remove bolts one at a time. Rotate crankshaft with socket wrench on dampener bolt.
21. Disconnect the transmission vent hose from the transmission.
22. Support rear of engine with safety stand or jack.
23. Raise transmission slightly with service jack to relieve load on crossmember and supports.
24. Remove bolts securing rear support and cushion to transmission and crossmember (1).
25. Remove bolts attaching crossmember to frame and remove crossmember.

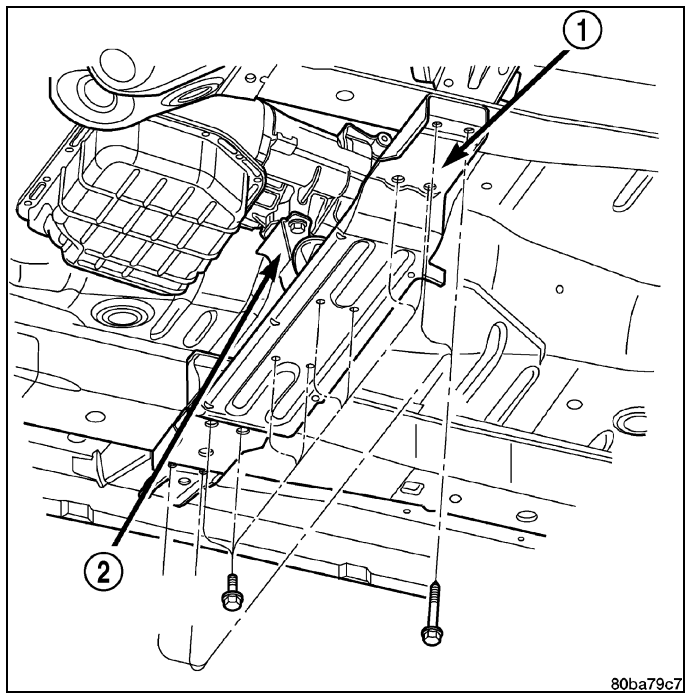

26. Disconnect transmission fluid cooler lines (1) at transmission fittings (3) and clips (2).

NOTE: When disconnecting the transmission oil cooler lines, it is necessary to replace the line clip that is located on the oil pan stud. The retention force of the clip is severely degraded upon removal.

27. Remove all remaining converter housing bolts.
28. Carefully work transmission and torque converter assembly rearward off engine block dowels.
29. Hold torque converter in place during transmission removal.
30. Lower transmission and remove assembly from under the vehicle.
31. To remove torque converter, carefully slide torque converter out of the transmission.

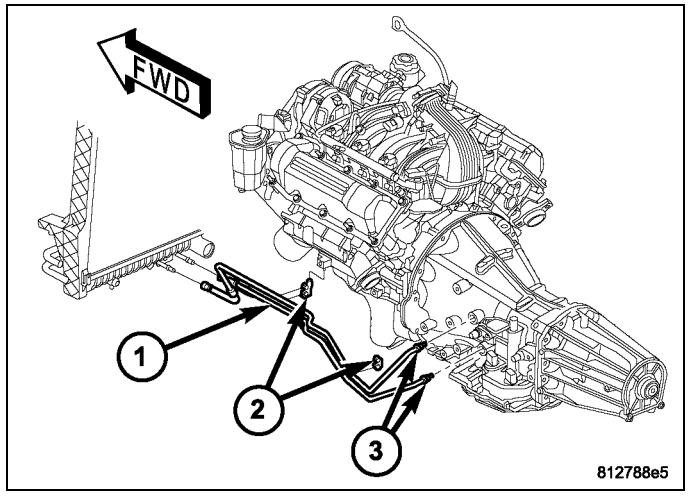

Disassembly

NOTE: If the transmission is being reconditioned (clutch/seal replacement) or replaced, it is necessary to perform the Quick Learn Procedure using the scan tool (Refer to 08 - Electrical/8E - Electronic Control Modules/ MODULE, Transmission Control - Standard Procedure).

NOTE: Tag all clutch pack assemblies, as they are removed, for reassembly identification.

CAUTION: Do not intermix clutch discs or plates as the unit might then fail.

Before disassembling transmission, move the shift lever clockwise as far as it will go and then remove the shift lever.

1. Remove the torque converter (1) from the transmission input shaft (3).

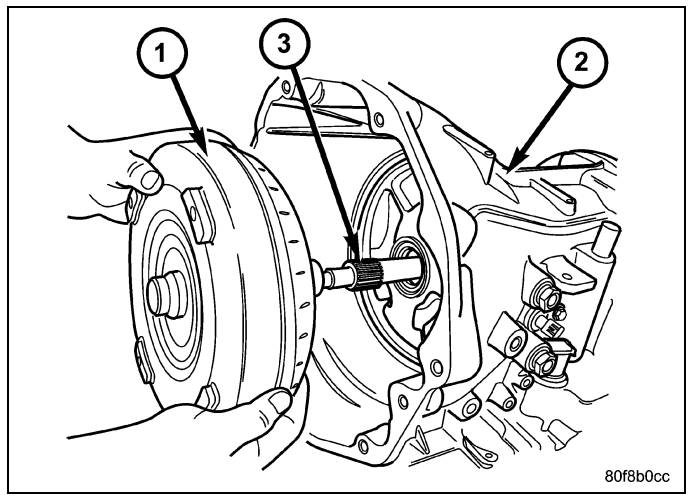

2. Measure input shaft end play using pieces from End Play Set 8266B (1, 2). Set up tool 8266B and Dial Indicator C-3339A as shown.
3. Move input shaft in and out to obtain end play reading. End play specifications are 0.127 to 0.635 mm (0.005 to 0.025 inch). Record indicator reading for reference when reassembling the transmission. If endplay exceeds the specified range, the #4 thrust plate needs to be inspected and changed if necessary.

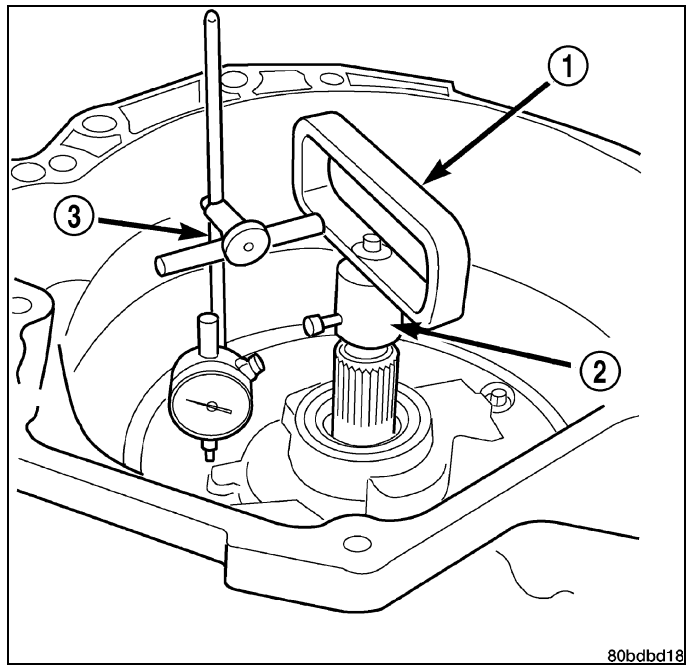

NOTE: The four bolts (3) along the bottom of the extension housing (2) have a sealing patch applied from the factory. Note the locations of these bolts and separate these bolts for reuse.

4. Remove the bolts that hold the extension housing (2) onto the transmission case.
5. Remove the extension (2) housing, from the transmission case. There are two pry slots located near the bottom corners of the housing for separating the housing from the transmission case.

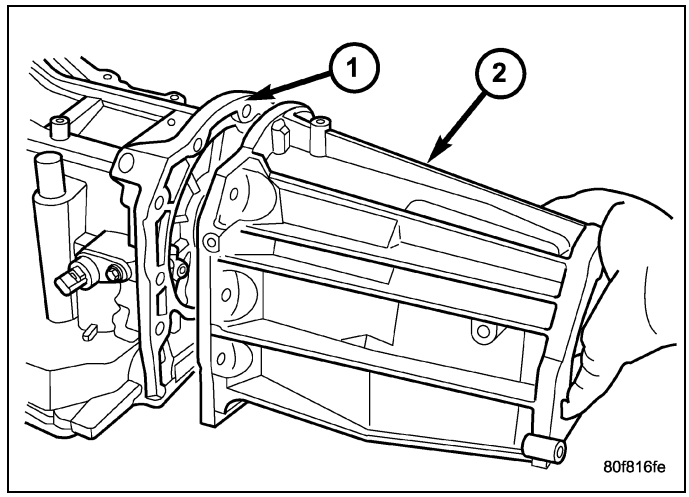

6. Inspect the lube tube grommet (3) for damage. If the grommet lip is damaged, it will need to be replaced.

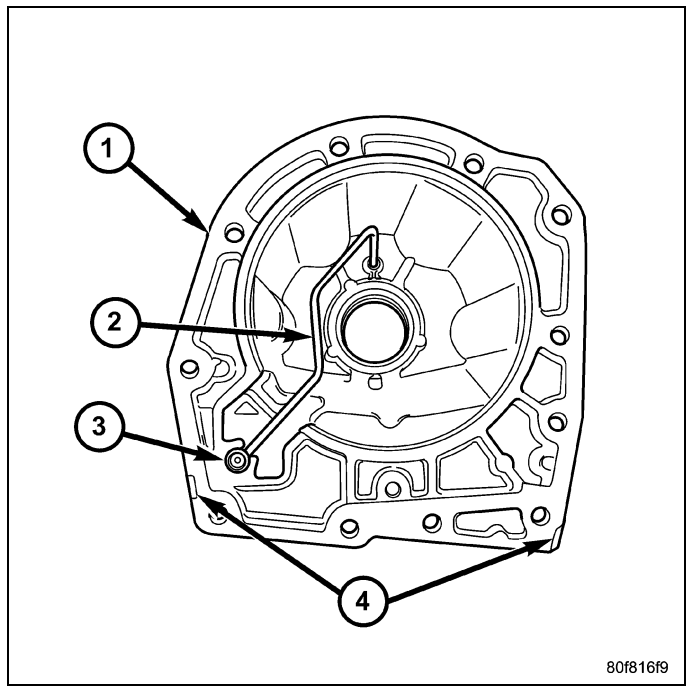

7. Perform the following, if necessary:
   a. Remove the extension shaft bearing snap ring (3) from the extension housing.

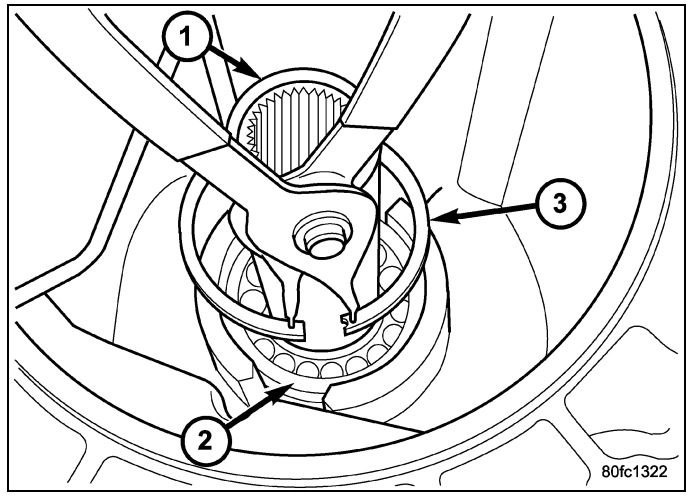

   b. Remove the extension shaft and bearing assembly (2) from the extension housing (1).

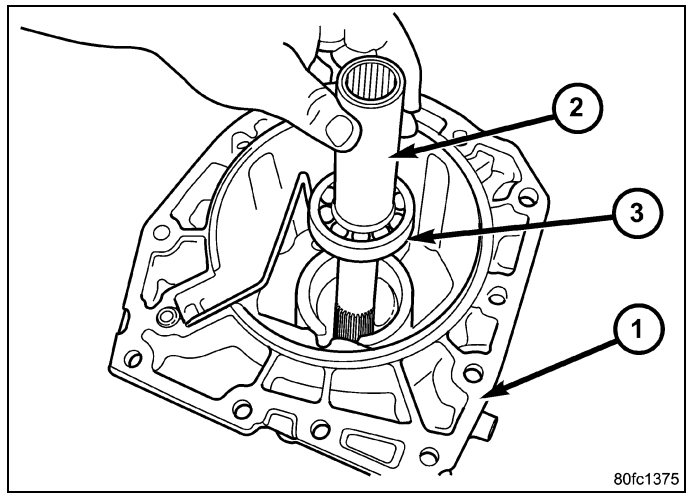

c. Remove the extension shaft bearing retaining ring (3) from the extension shaft (1).

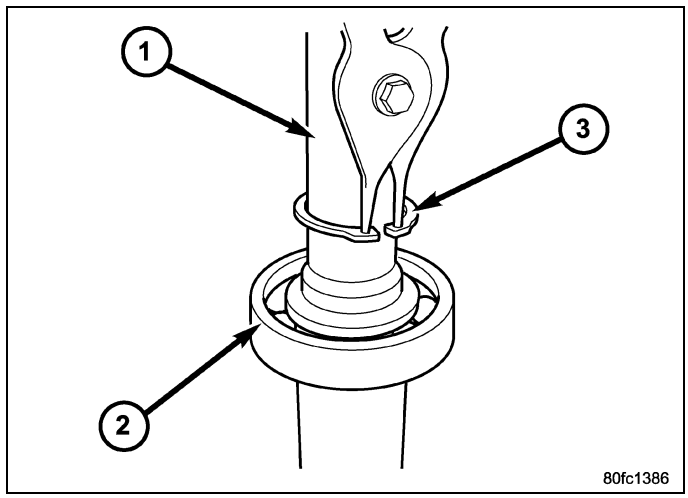

d. Remove the extension shaft bearing (2) from the extension shaft (1).

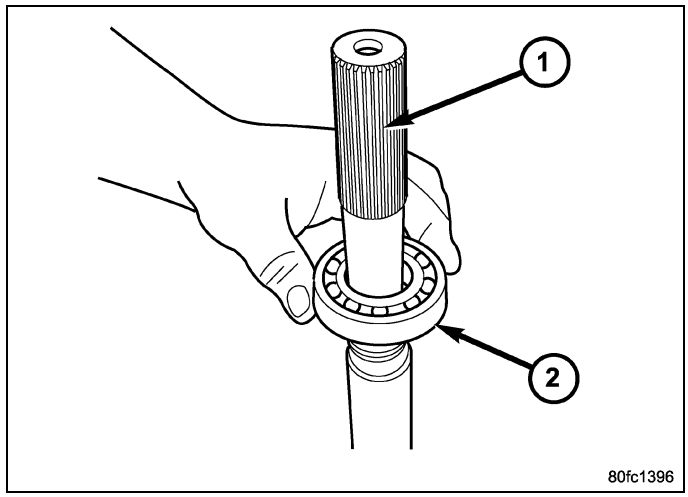

8. Using OTC® Slide Hammer 1155 or 7703 (3), or equivalent, and Adapter 10171 (2), remove the 4X4 stub shaft (1).
9. Inspect the cir-clip on the shaft for damage and replace the clip if necessary.

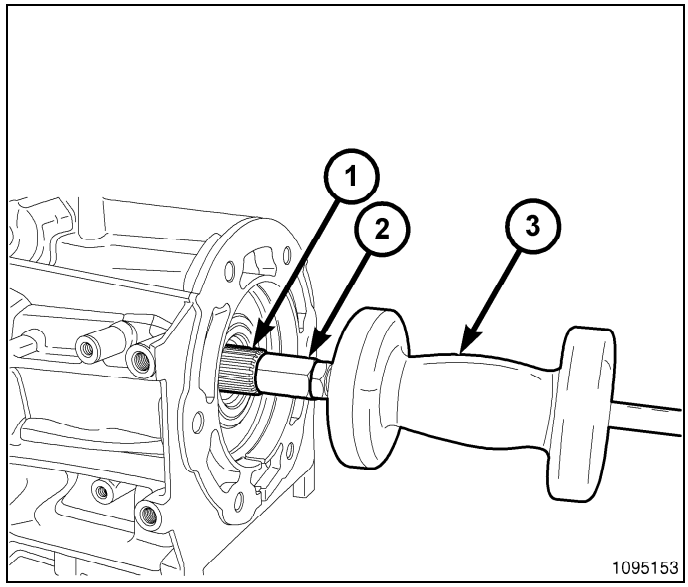

NOTE: The speed sensor bolts have a sealing patch applied from the factory. Separate these bolts for reuse.

10. Remove the input speed sensor bolt.

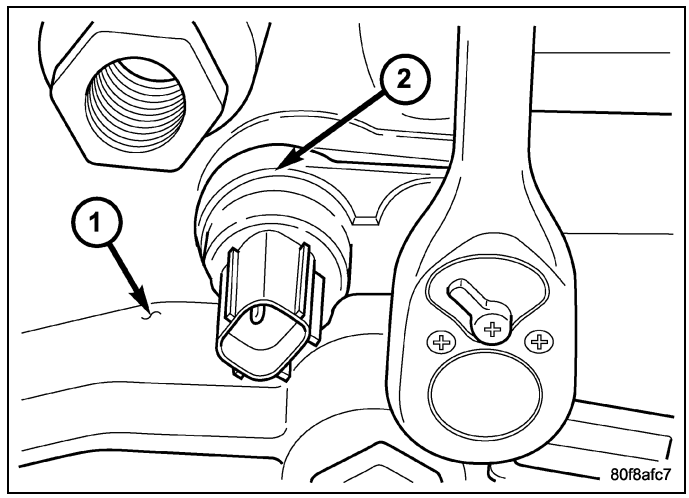

NOTE: The speed sensor bolts have a sealing patch applied from the factory. Separate these bolts for reuse.

11. Remove the output speed sensor bolt.

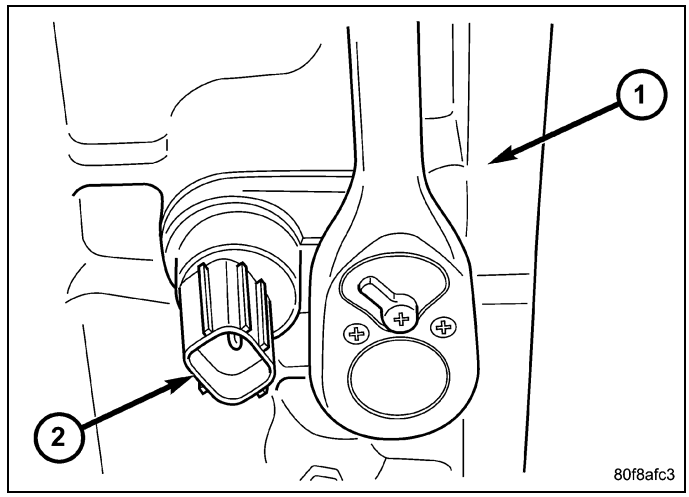

12. Remove the input and output (2) speed sensors. Identify the speed sensors for re-installation since they are not interchangeable.

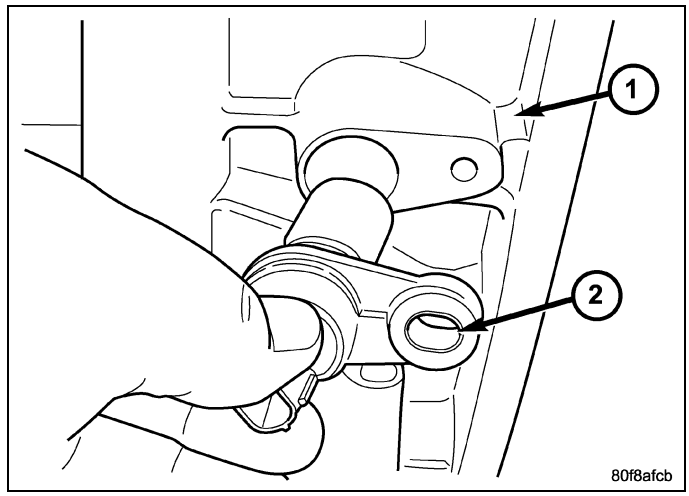

NOTE: One of the oil pan bolts has a sealing patch applied from the factory. Separate this bolt for reuse.

13. Remove the transmission oil pan bolts (2) .

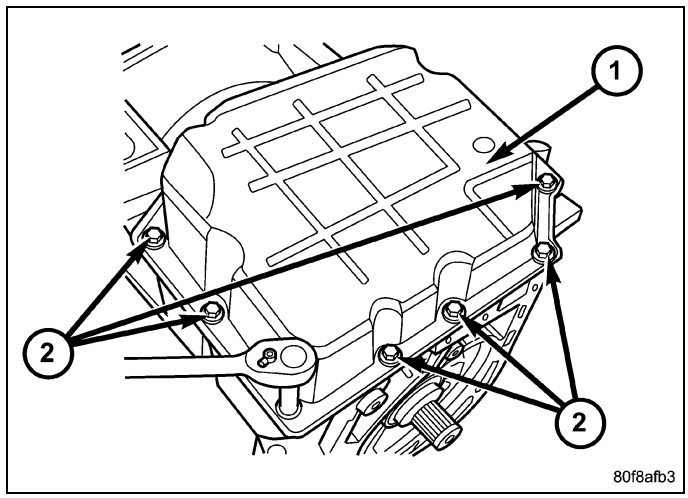

14. Remove the transmission oil pan (1) .

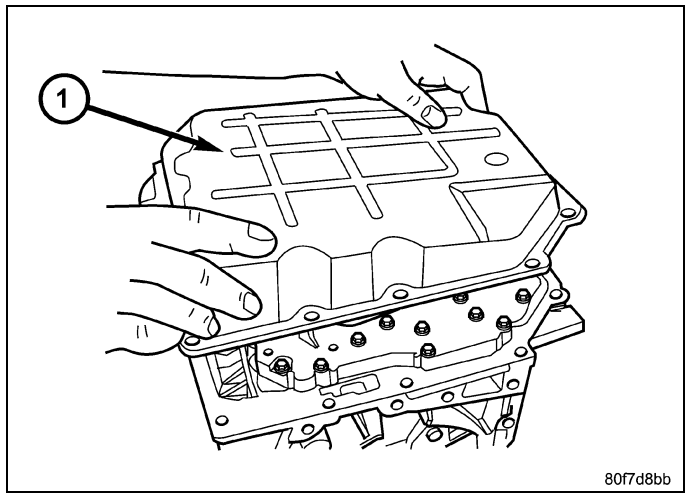

15. Remove the transmission oil filter screws (2) .

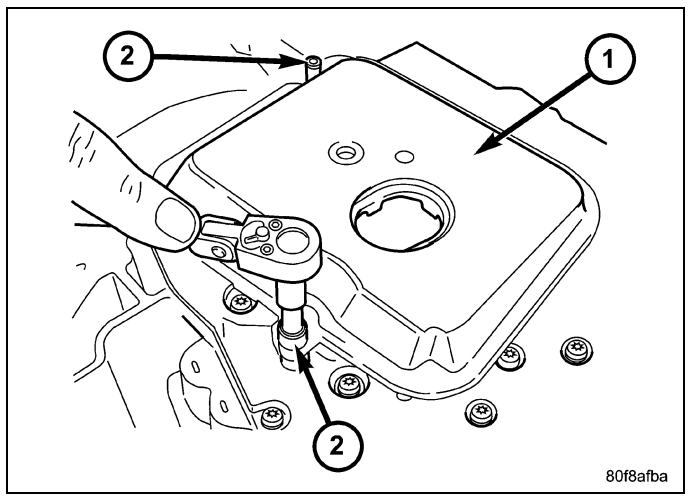

16. Remove transmission oil filter (1) .

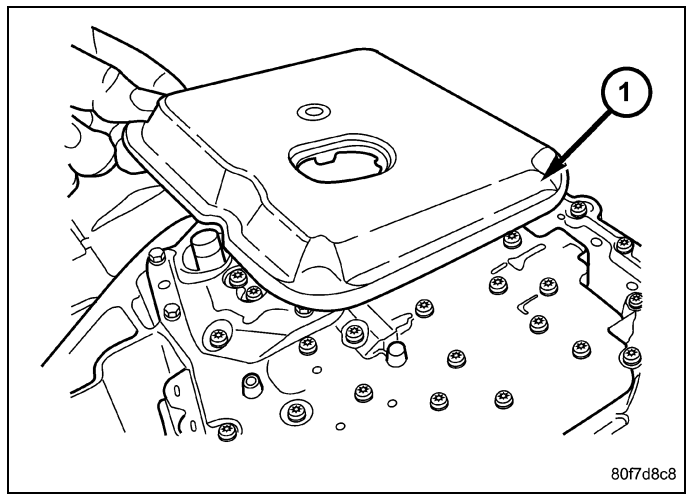

17. Remove the oil filter o-ring (2) from the valve body.

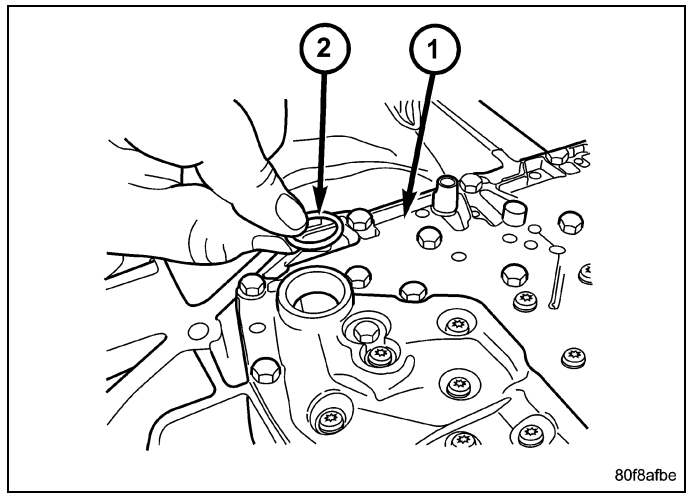

18. Remove valve body-to-case bolts (1) .

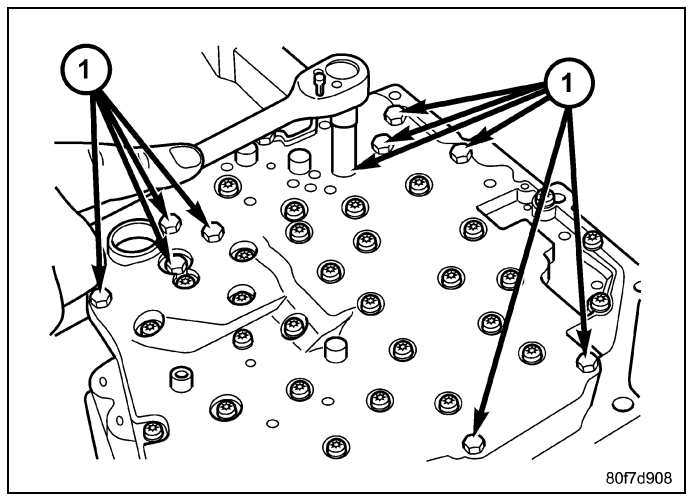

CAUTION: Do not handle the valve body by the manual shaft. Damage could result.

19. Remove valve body (1) from transmission.

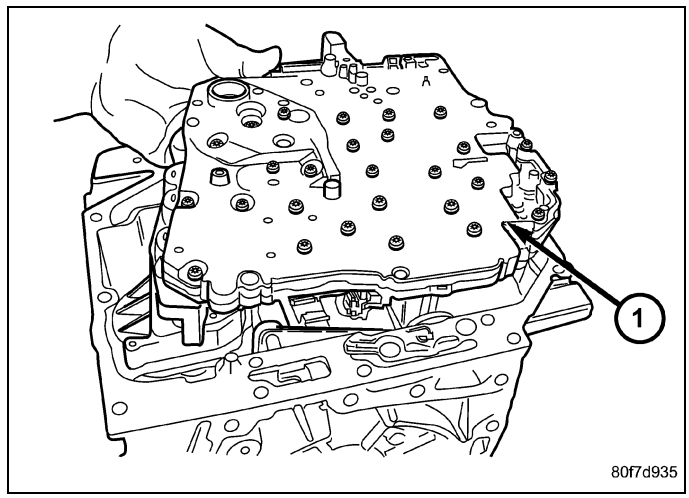

20. Remove underdrive and overdrive accumulators (1, 2) .

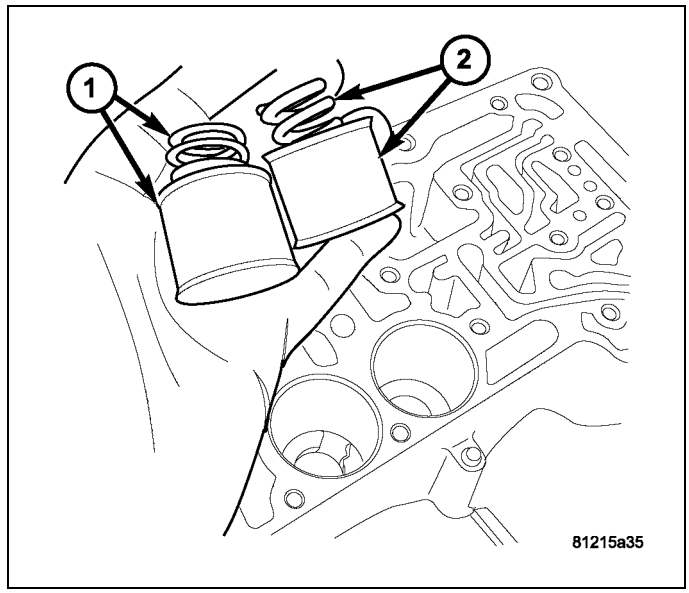

21. Remove the low/reverse accumulator snap ring (1) .

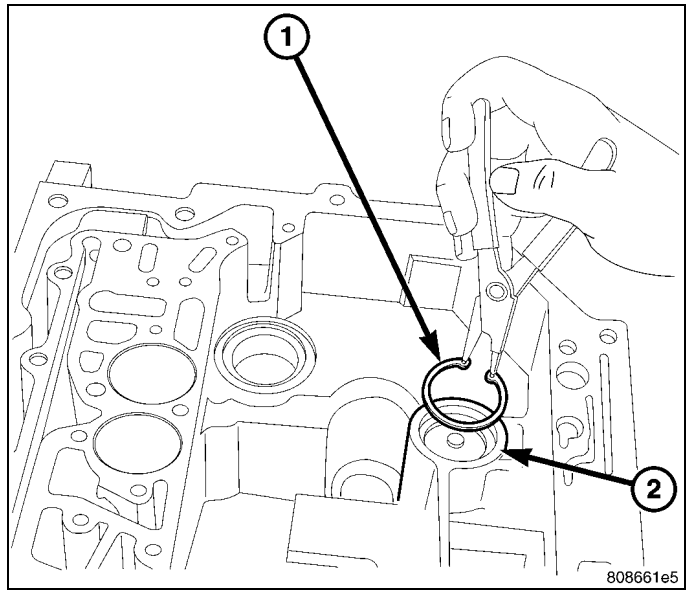

22. Remove the low/reverse accumulator plug (2) .

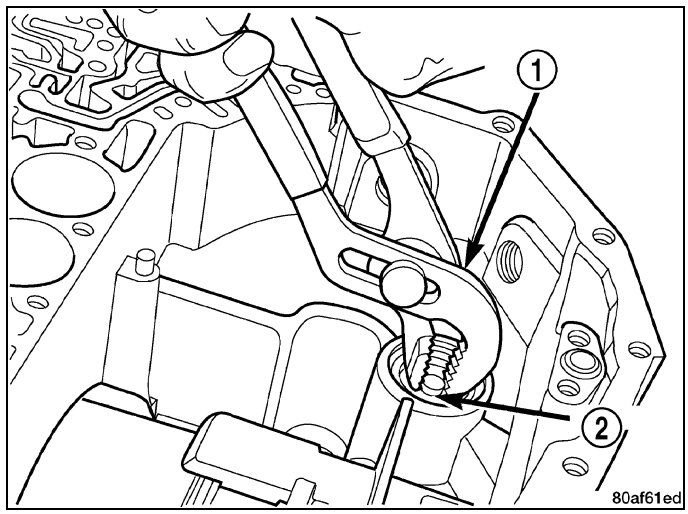

23. Remove low/reverse accumulator piston (1) using suitable pliers.

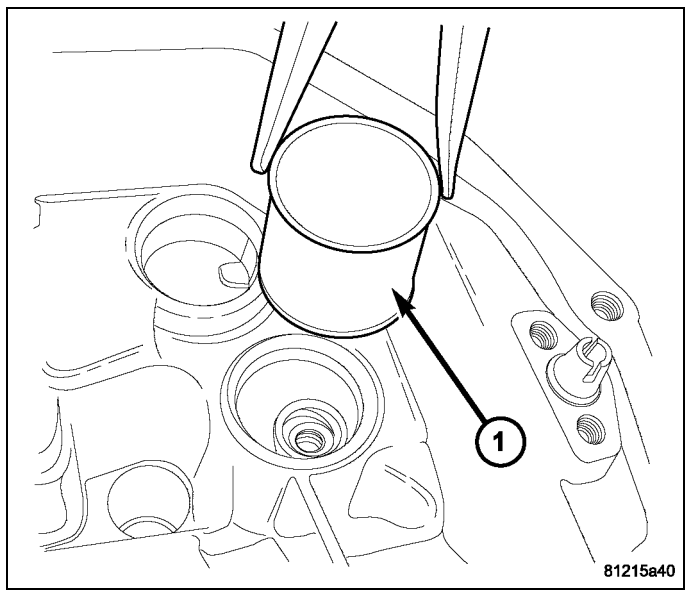

24. Remove piston (1) and springs (2) .

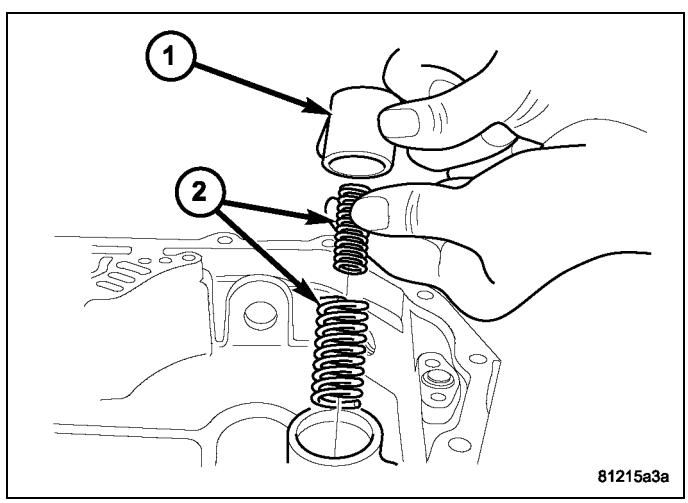

25. Remove and discard the oil pump-to-case bolts (1) . The oil pump bolts are not to be reused.

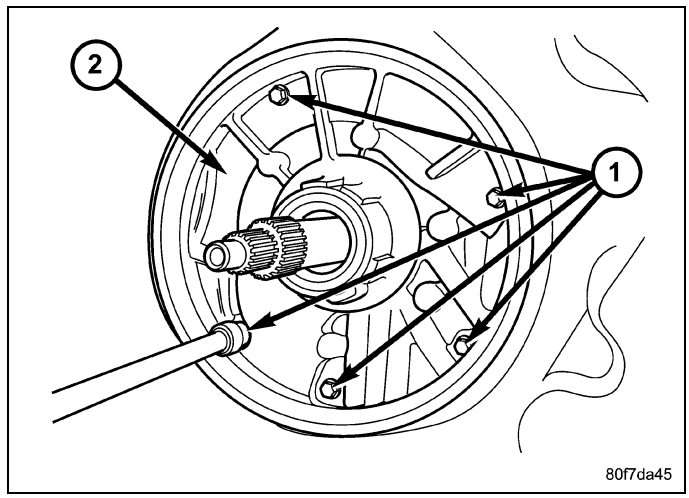

26. Remove oil pump using Slide Hammers C-3752 (2) .

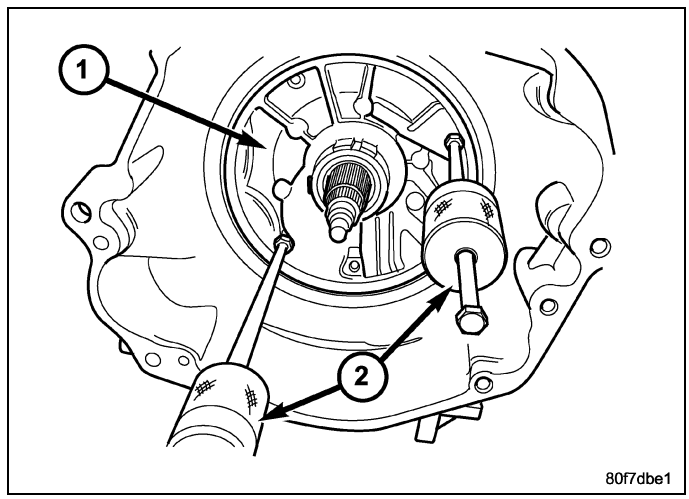

27. Remove oil pump while pushing in on input shaft (1) .

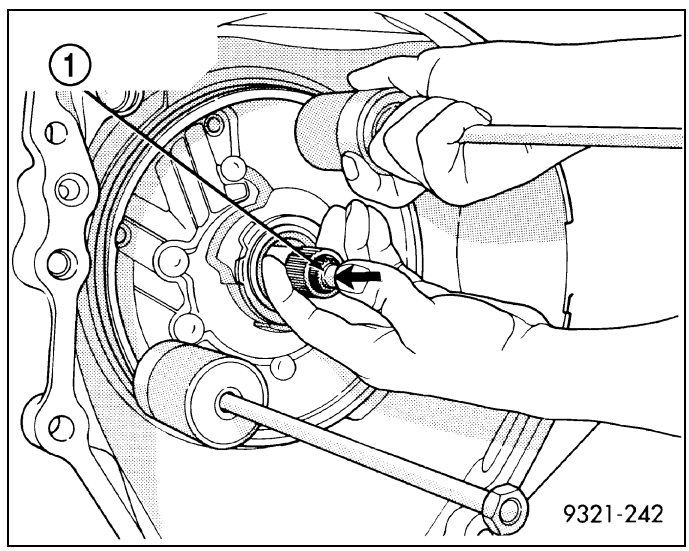

28. Remove oil pump gasket (2) .

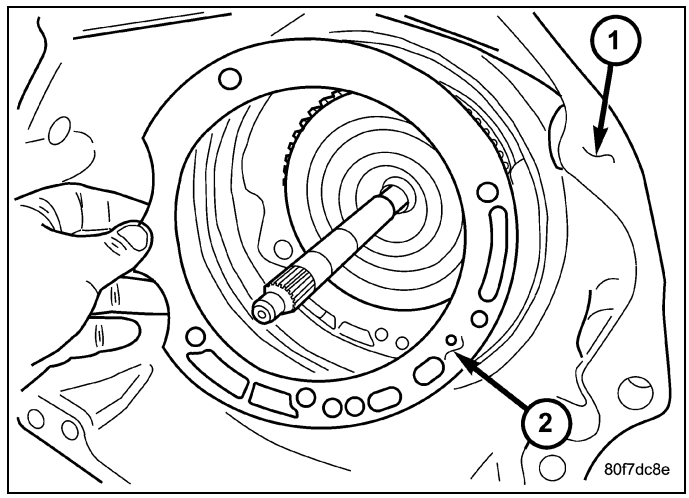

CAUTION: By-pass valve must be replaced if a transmission failure has occured.

29. Remove the cooler by-pass valve (1) .

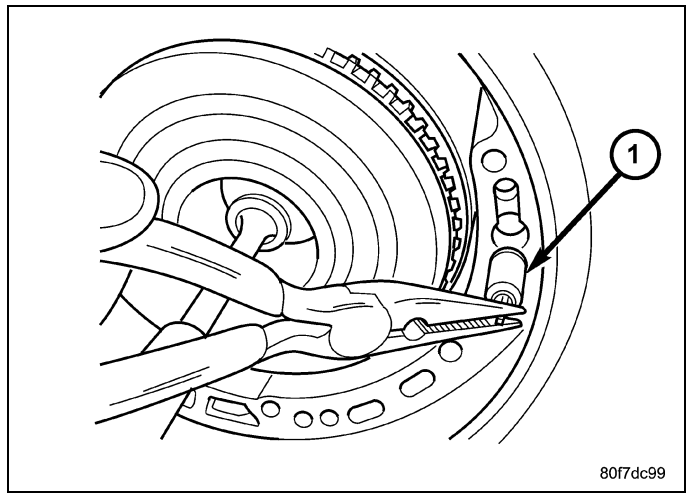

30. Remove the #1 caged needle bearing (1) .

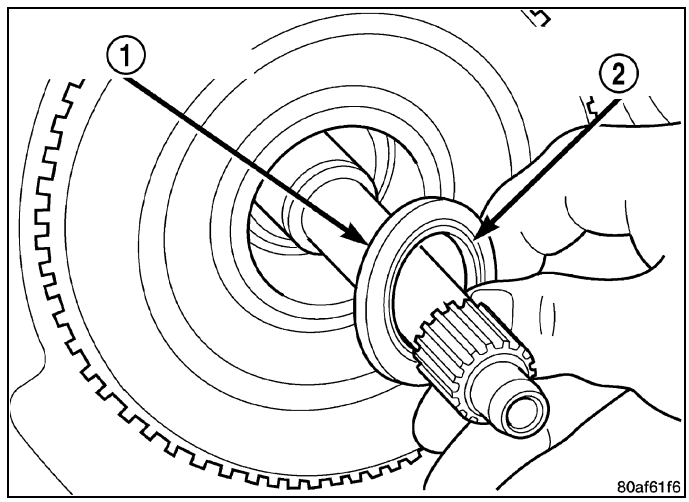

31. Remove the input clutch assembly (1) .

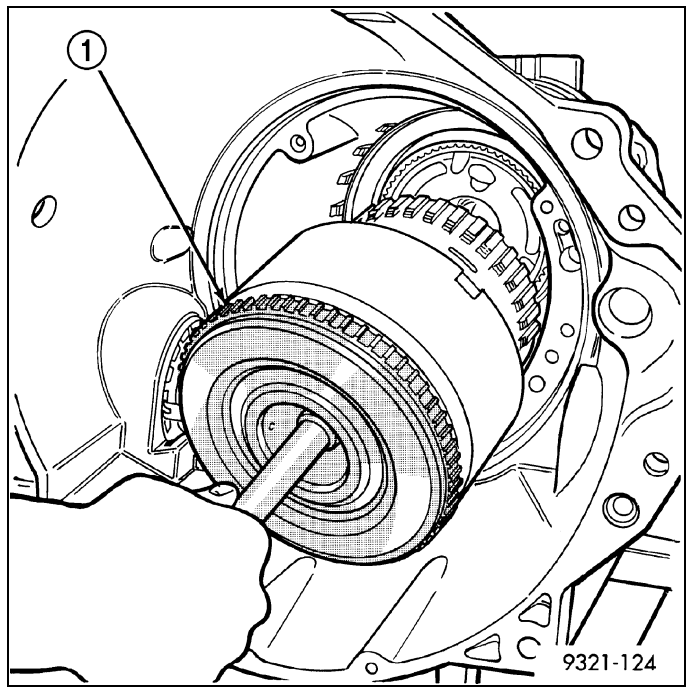

32. Remove the #4 thrust plate (2) .

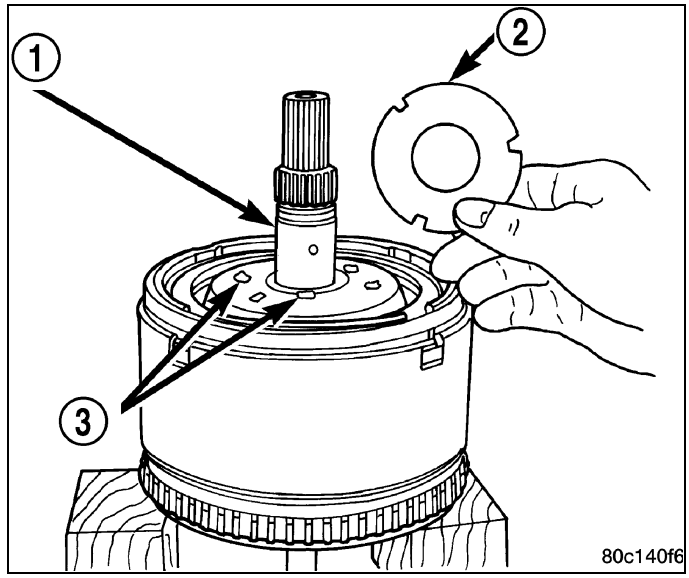

33. Remove the front sun gear assembly (1) and #4 thrust washer (if still in place).

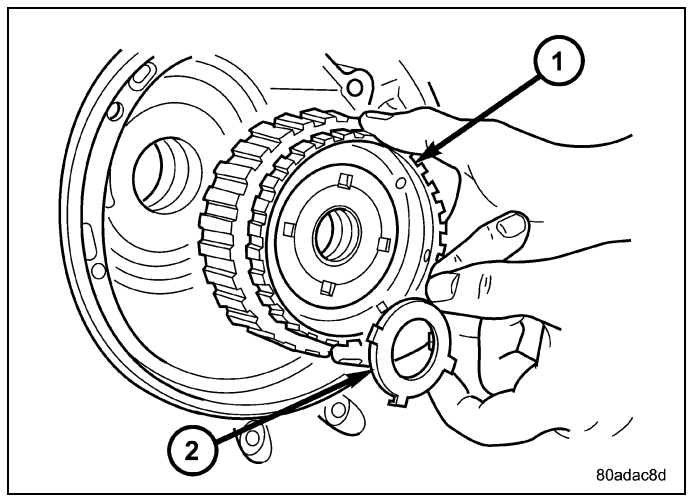

34. Remove the front carrier/rear annulus (2) and #6 needle bearing (1) .

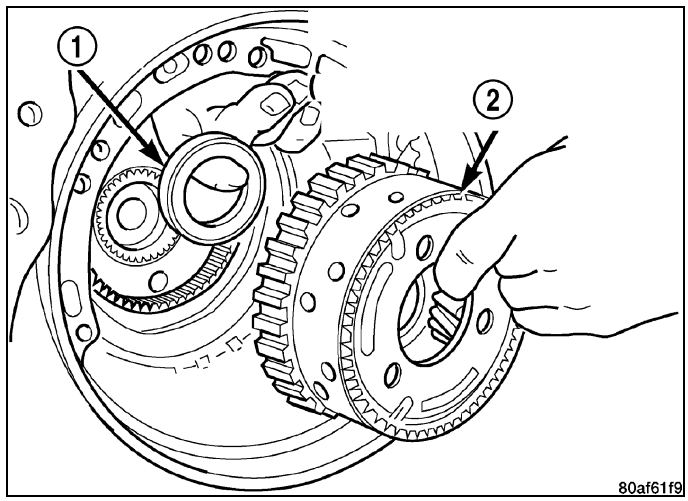

35. Remove the rear sun gear (2) and #7 needle bearing (1) .

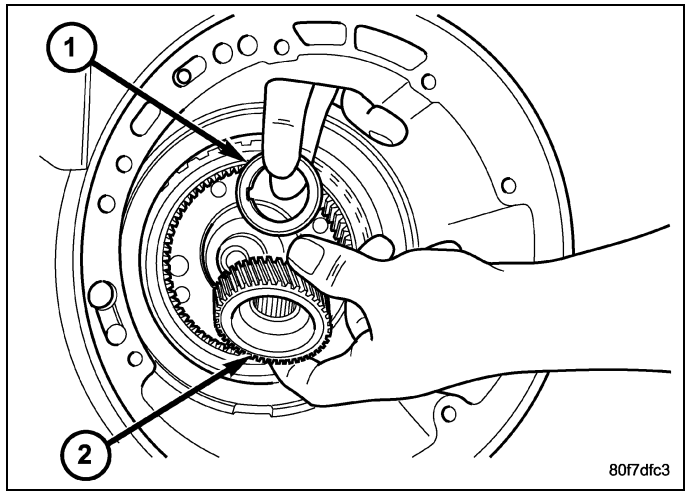

NOTE: The number seven needle bearing (1) has three antireversal tabs and is common with the number five and number two position. The orientation should allow the bearing to seat flat against the rear sun gear. A small amount of petrolatum can be used to hold the bearing to the rear sun gear.

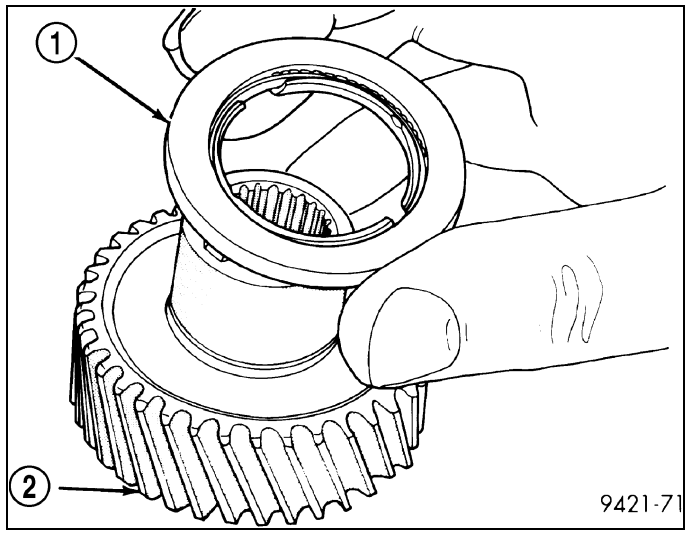

NOTE: Verify that Compressor 5058A **(1) is centered properly over the 2/4 clutch retainer (4) before compressing. If necessary, fasten the** 5058A **bar to the bellhousing flange with any combination of locking pliers and bolts to center the tool properly.**

36. Install and load Compressor 5058A to remove the 2/4 clutch retainer snap ring (3) .

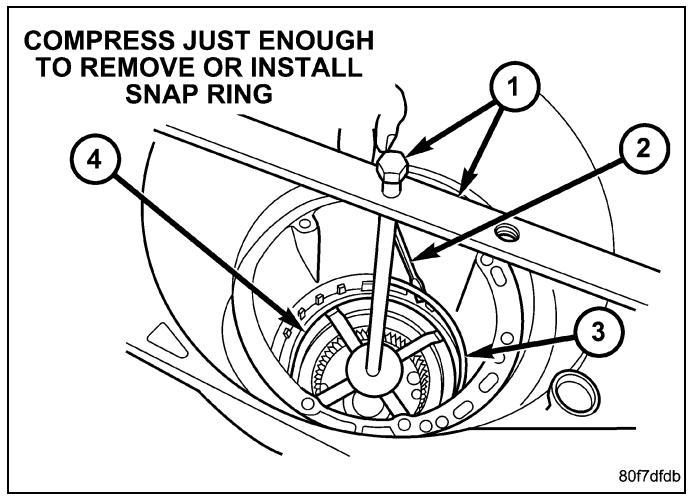

NOTE: The 2/4 Clutch Piston has bonded seals which are not individually serviceable. Seal replacement requires replacement of the piston assembly.

37. Remove the 2/4 clutch retainer (1) .

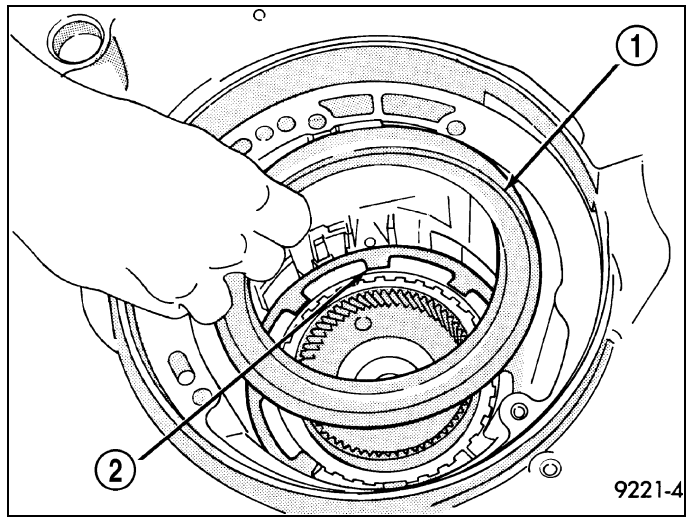

38. Remove the 2/4 clutch return spring (1) .

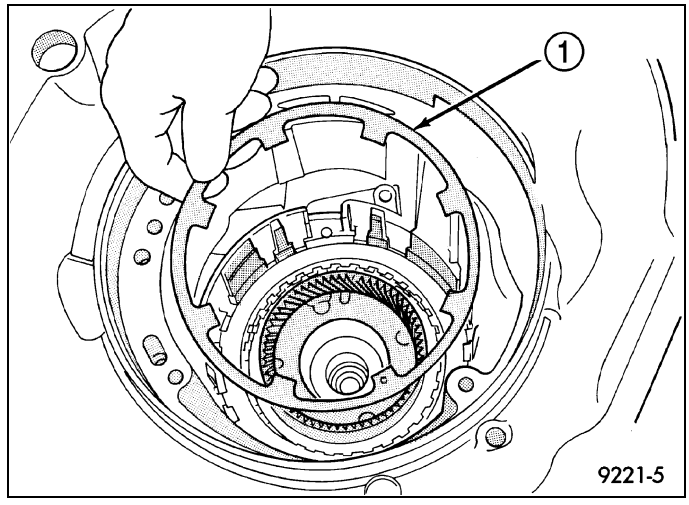

39. Remove the 2/4 clutch pack (1, 2) .

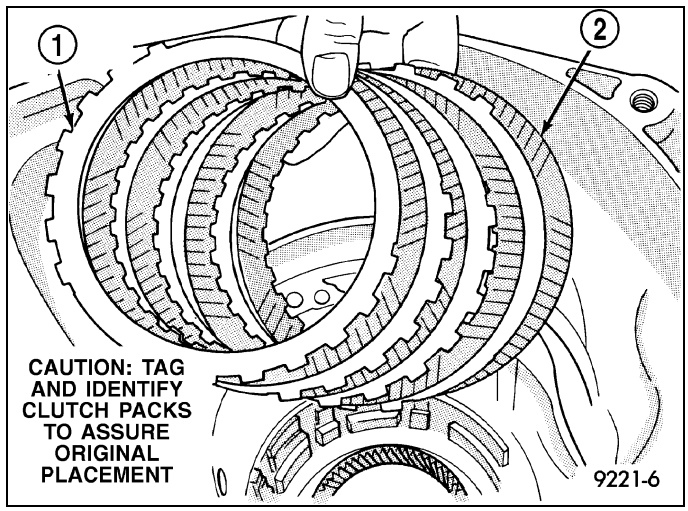

40. Remove the tapered snap ring (4) .

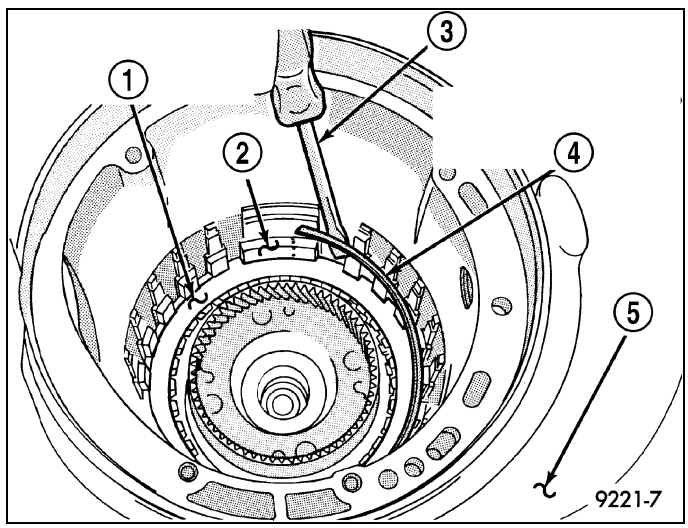

41. Remove the low/reverse reaction plate (1) .

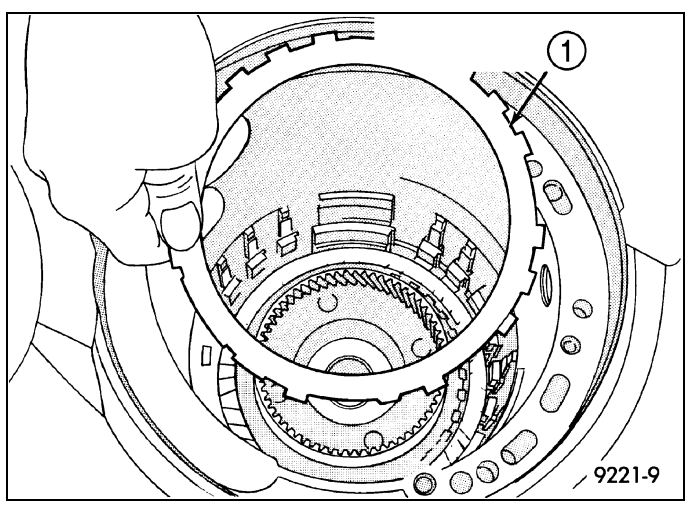

42. Remove one (1) low/reverse clutch disc to facilitate snap ring removal.

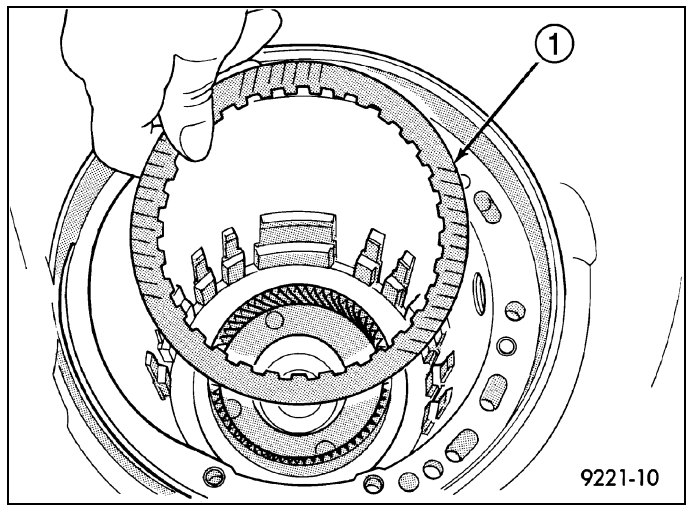

43. Remove the low/reverse reaction plate snap ring (2) .

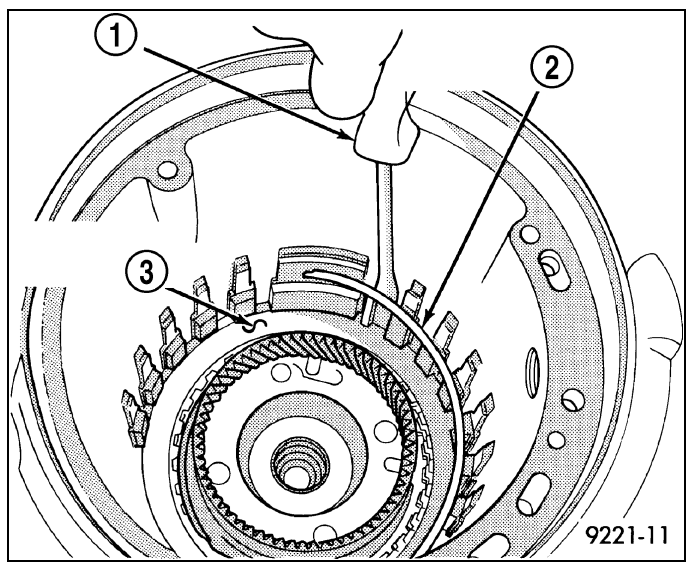

44. Remove the low/reverse clutch pack (1, 2) .

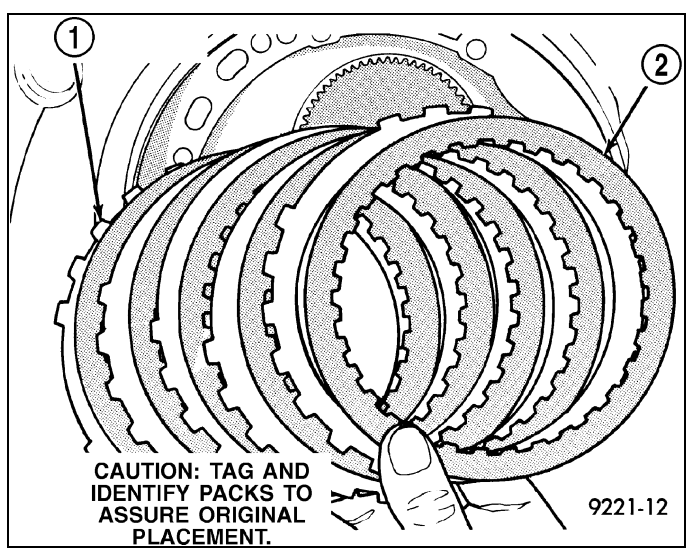

CAUTION: Failure to grind and open stakes (4) of the output shaft nut will result in thread damage to the shaft during nut removal.

WARNING: Wear safety goggles while grinding stake nuts.

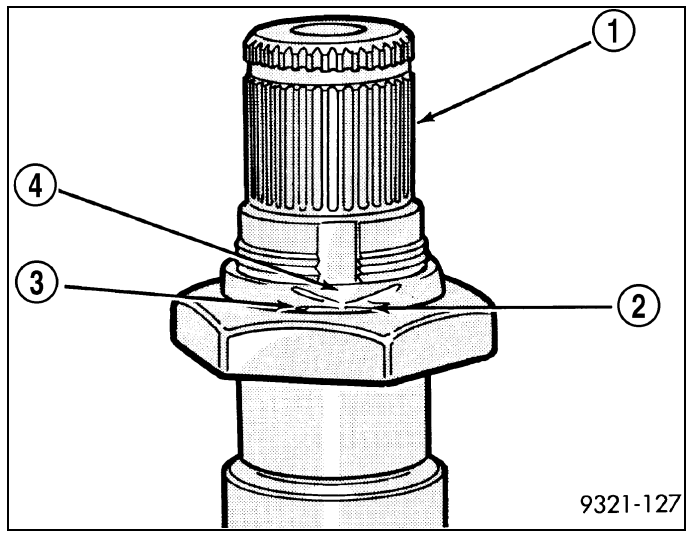

45. Using a die grinder or equivalent, grind the stakes in the shoulder of the shaft nut (2) as shown. Do not grind all the way through the nut and into the shaft. There are two stakes on each nut.

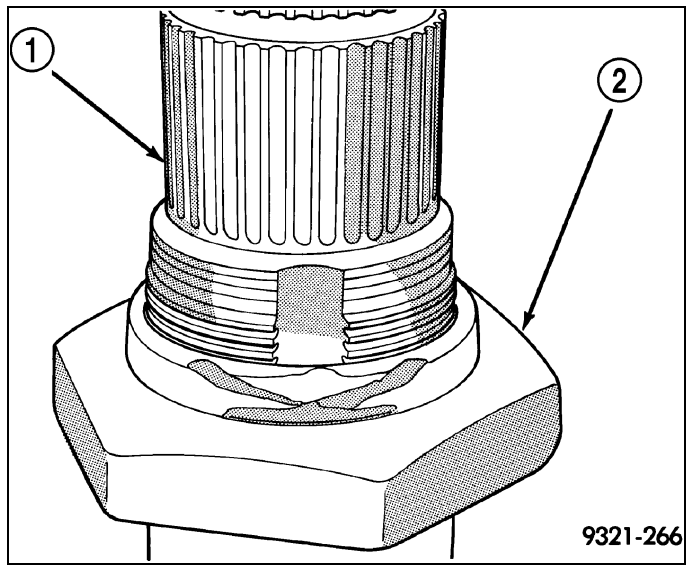

46. Using a small chisel (1), carefully open the stakes on nut (2) .

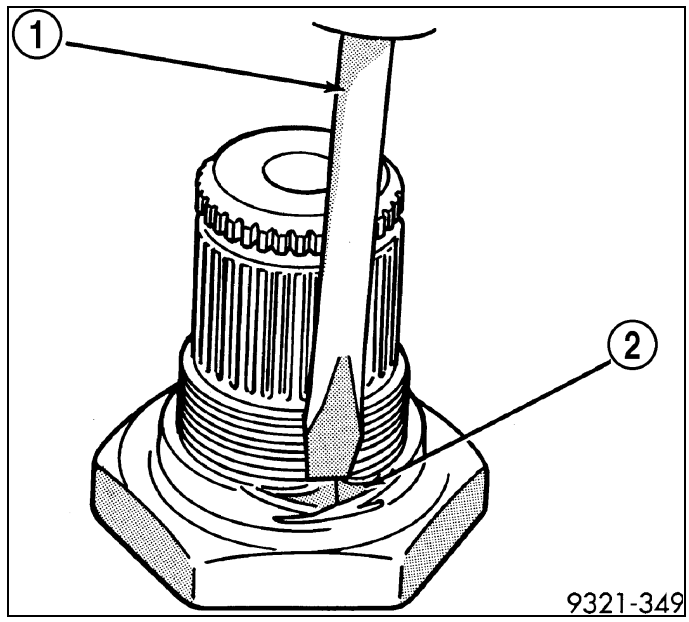

47. Remove output shaft snap ring.
48. Use Wrench 6497 (1) and Wrench 6498A (2) to remove the output shaft nut.

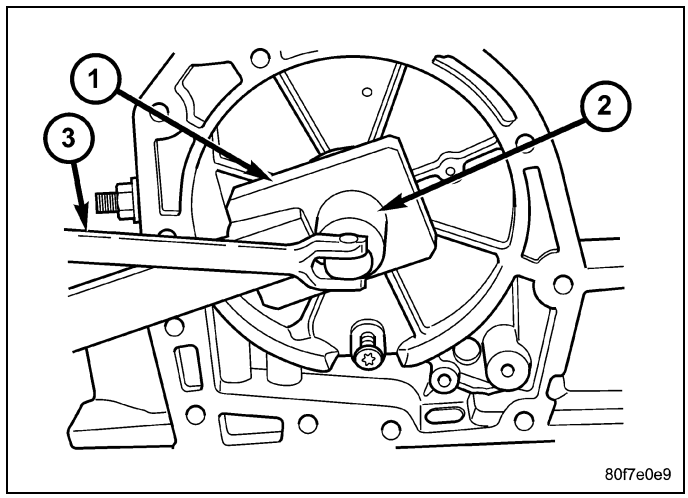

49. Remove the output shaft (1) from case (3) using a shop press (2).

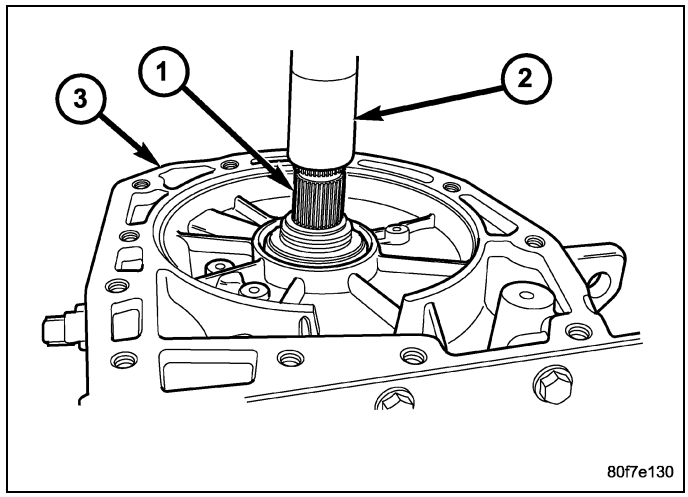

50. Use Remover 6596 (2) with a shop press (1) to remove the front output shaft bearing cup.

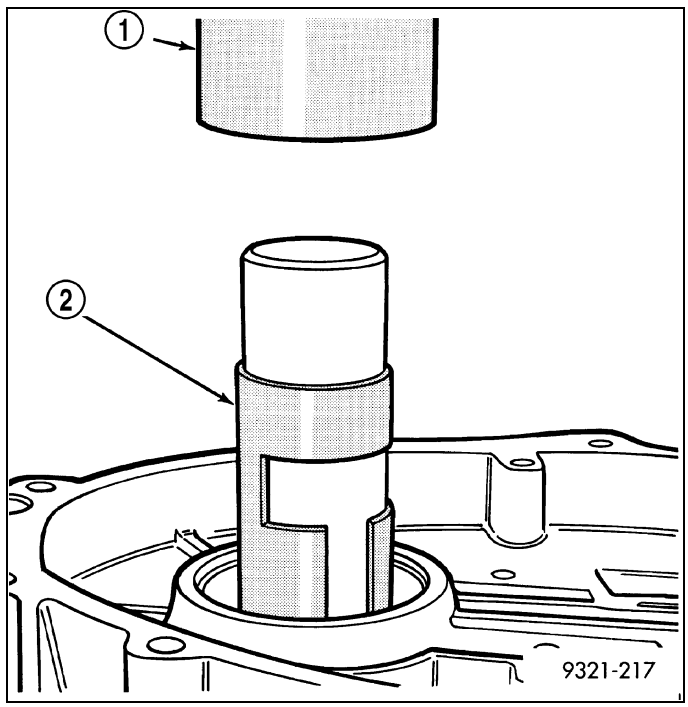

51. Use Remover 6597 (2) and Universal Handle C-4171 (1) and Handle Extension C-4171-2 to press the rear output shaft bearing cup rearward.

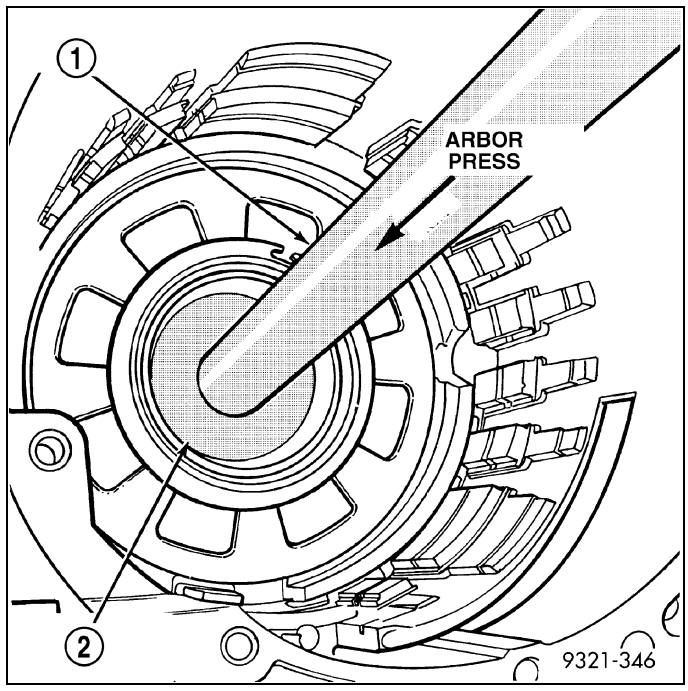

52. Remove the rear carrier front bearing cone (3) .

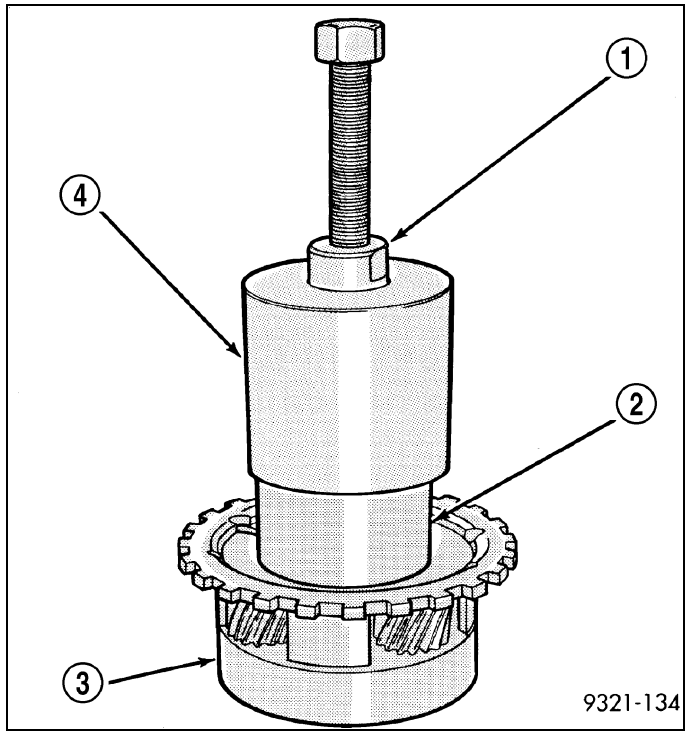

53. Install and load compressor 5059-A (4) as shown.

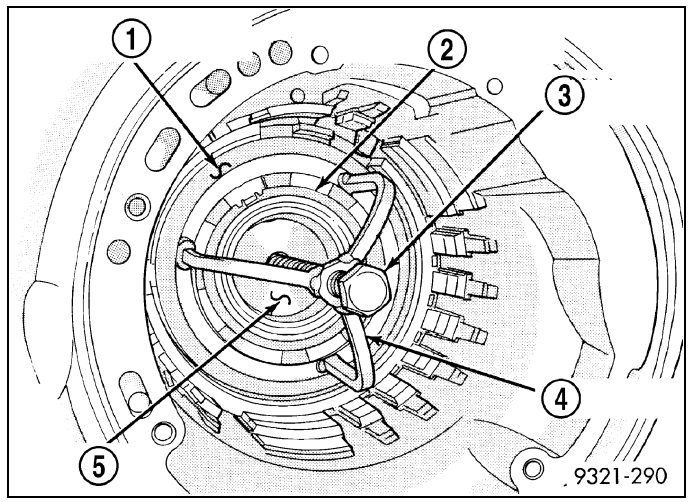

54. Remove the low/reverse belleville spring snap ring (1) .

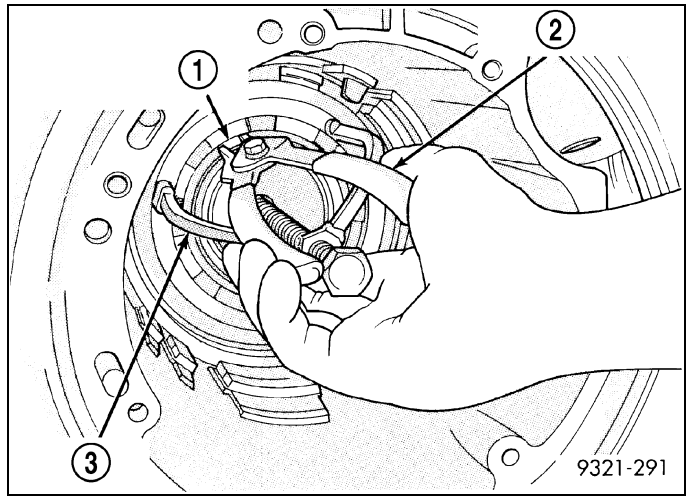

55. Remove the low/reverse piston belleville spring (1) .

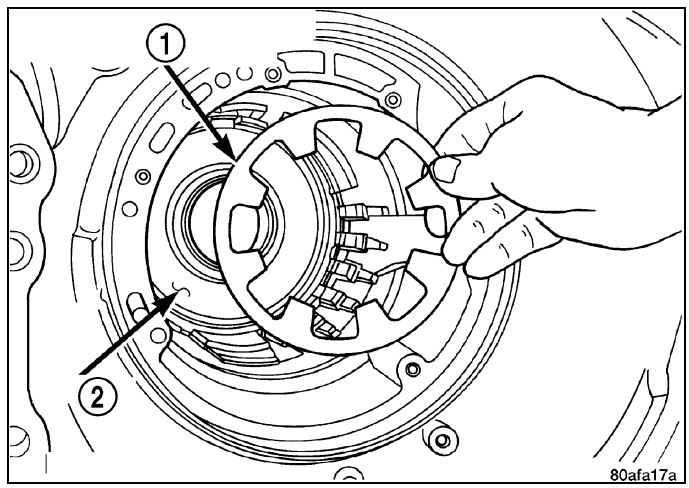

56. Remove the park sprag pivot retaining screw.
57. Drive out the anchor shaft using suitable punch (1) .

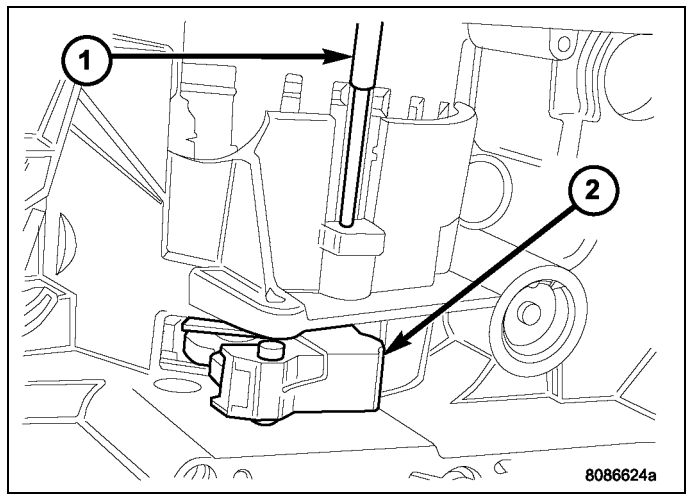

58. Remove the guide bracket pivot pin (1) . Inspect all components for wear and replace if necessary.

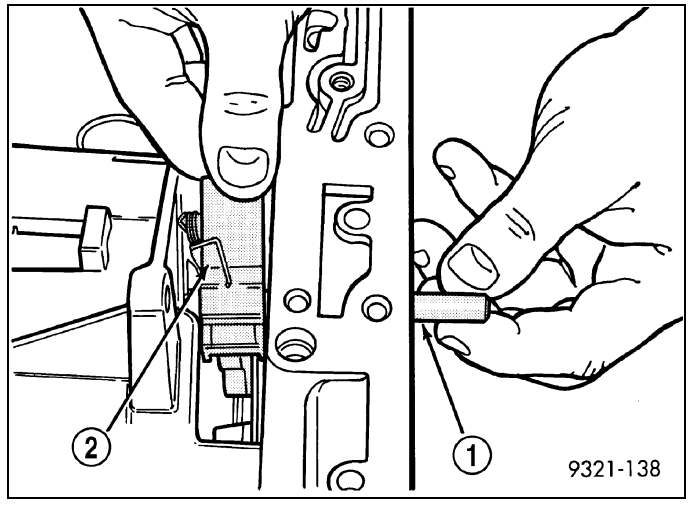

NOTE: The Low/Reverse Clutch Piston has bonded seals which are not individually serviceable. Seal replacement requires replacement of the piston assembly.

59. Remove the low/reverse clutch piston (1) .
60. Remove the low/reverse piston retainer screws.

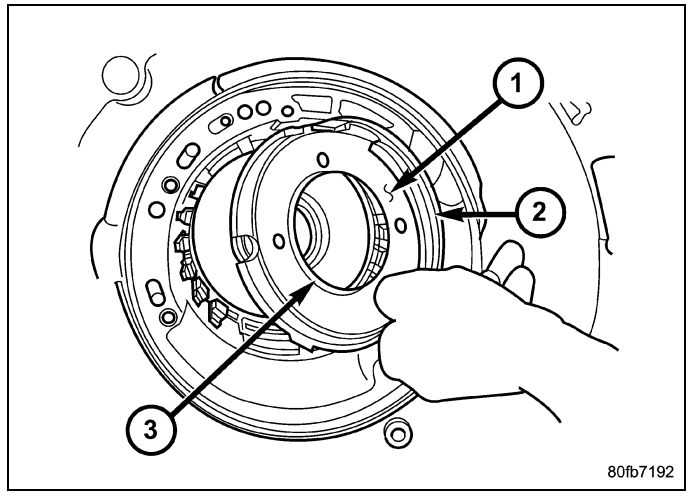

61. Remove low/reverse piston retainer (1) .

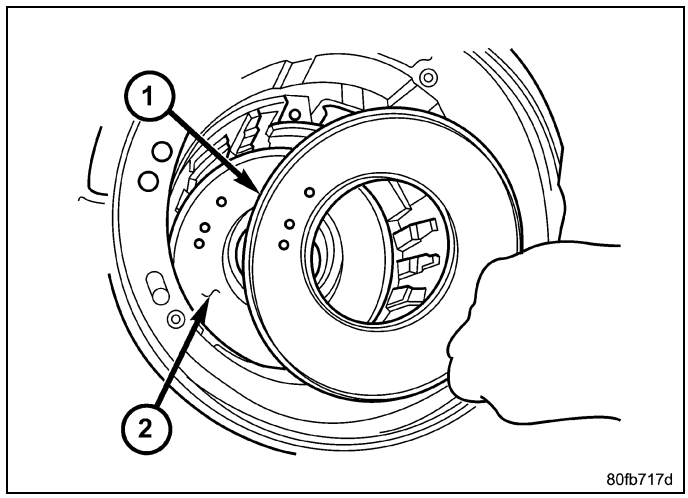

62. Remove the low/reverse piston retainer gasket (2) .

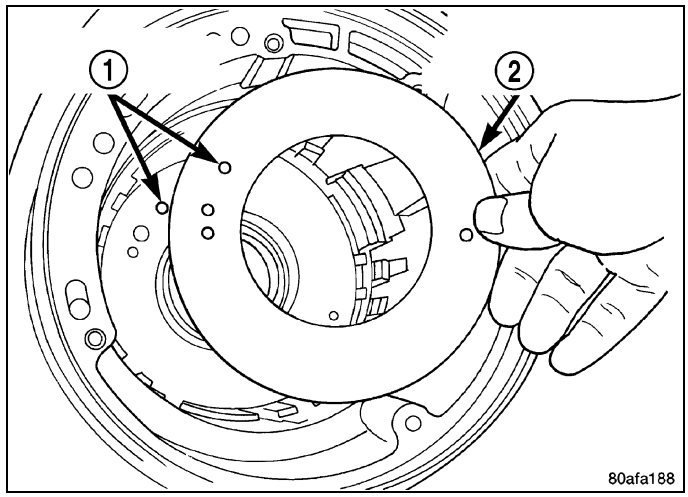

Assembly

NOTE: Apply trans jell or petroleum jelly to all slide portions, rolling contacts surfaces, thrust surfaces etc. to prevent burnout during initial operation. Lubricate O-rings and O-ring seals with MOPAR® ATF +4. Soak all friction disks in MOPAR® ATF +4 for at least two hours before assembly of clutch packs.

NOTE: If the transmission assembly is being reconditioned (clutch/seal replacement) or replaced, it is necessary to perform the Quick Learn Procedure using the scan tool (Refer to 08 - Electrical/8E - Electronic Control Modules/MODULE, Transmission Control - Standard Procedure).

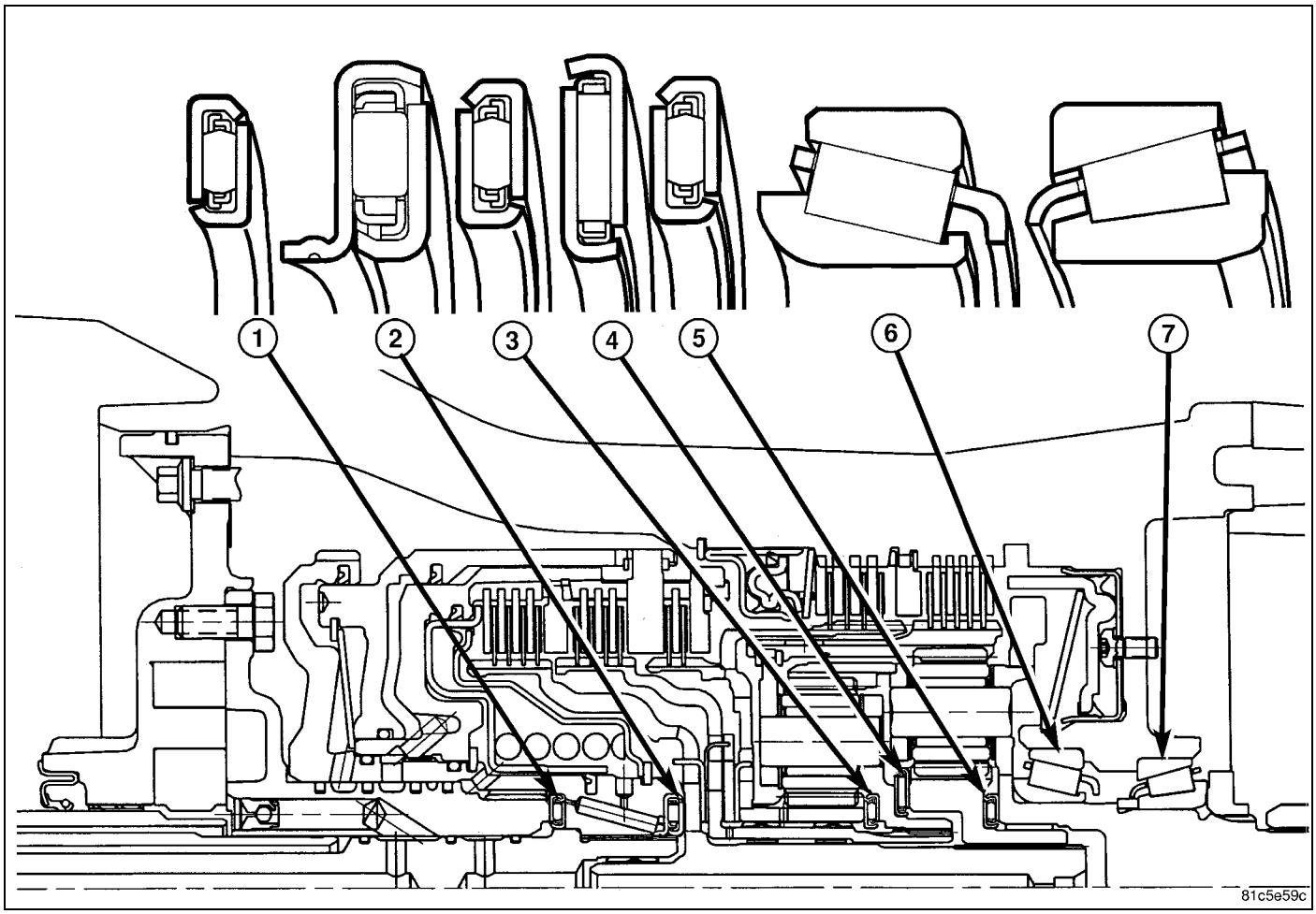

42RLE BEARING ORIENTATION

1 - THRUST BEARING NO.1
2 - THRUST BEARING NO.2
3 - THRUST BEARING NO.3
4 - THRUST BEARING NO.4
5 - THRUST BEARING NO.5
6 - NEEDLE BEARING NO.6
7 - NEEDLE BEARING NO.7

1. Install the output bearing cups using Installer 5050A.

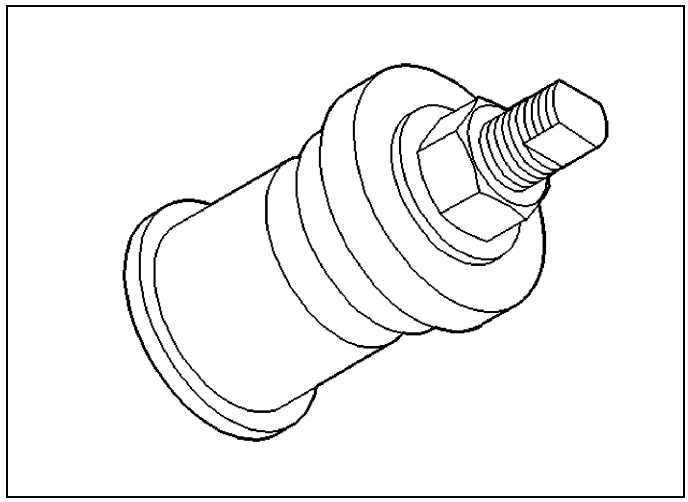

2. Install low/reverse piston retainer gasket (2) .

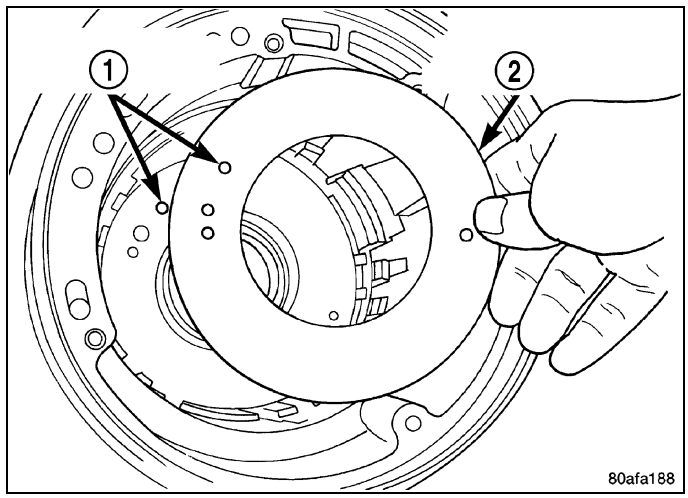

3. Install low/reverse piston retainer (1) .

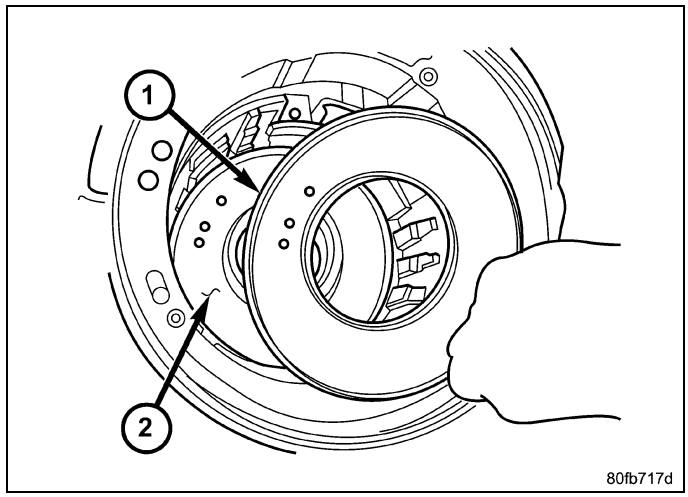

4. Install low/reverse piston retainer-to-case screws (3) and tighten to 5 N·m (45 in. lbs.).

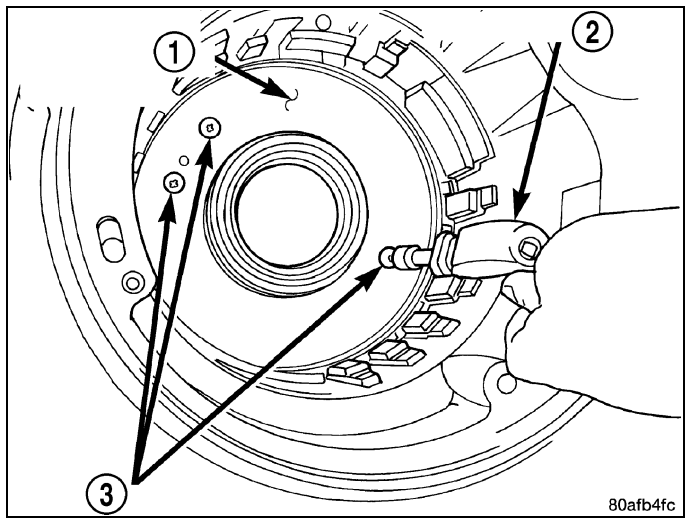

NOTE: The Low/Reverse Clutch Piston has bonded seals which are not individually serviceable. Seal replacement requires replacement of the piston assembly.

5. Install low/reverse clutch piston (1) .

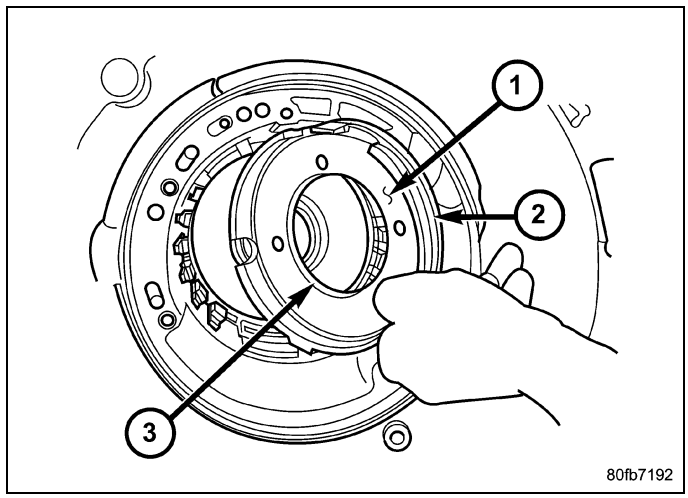

6. Assemble guide bracket (1) assembly as shown, if necessary.

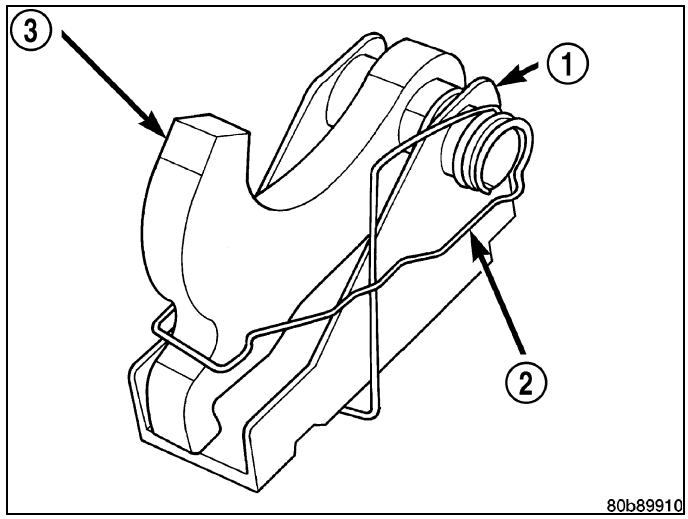

CAUTION: When installing, be sure guide bracket and split sleeve touch the rear of the transmission case.

7. Install guide bracket pivot pin (1) .
8. Install park sprag pivot retaining bolt and torque to 4.5 N·m (40 in. lbs.).

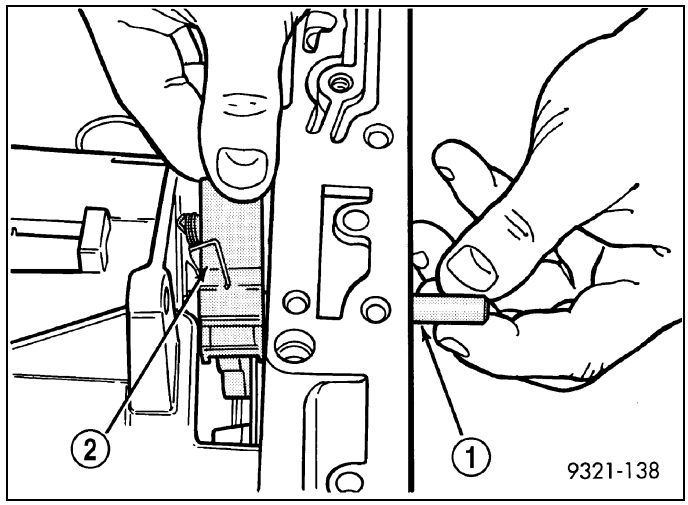

9. Install low/reverse piston belleville spring (1) into position.

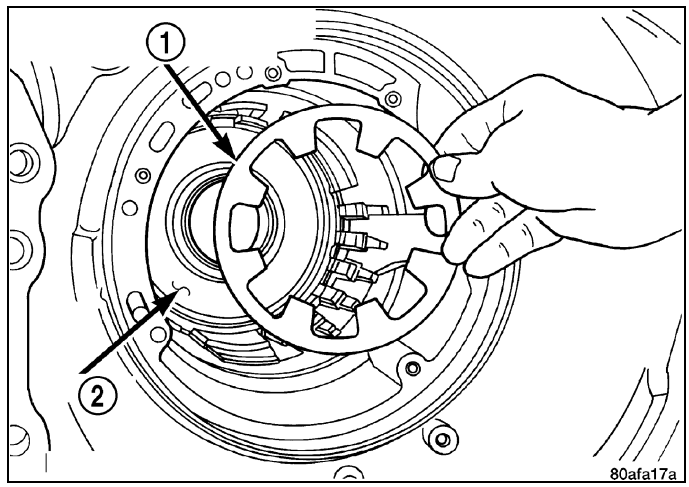

10. Install and load low/reverse spring compressor tools (Compressors 5058A-3 and 5059-A and Disc 6057) (3, 4, 5) as shown to facilitate snap ring (2) installation.

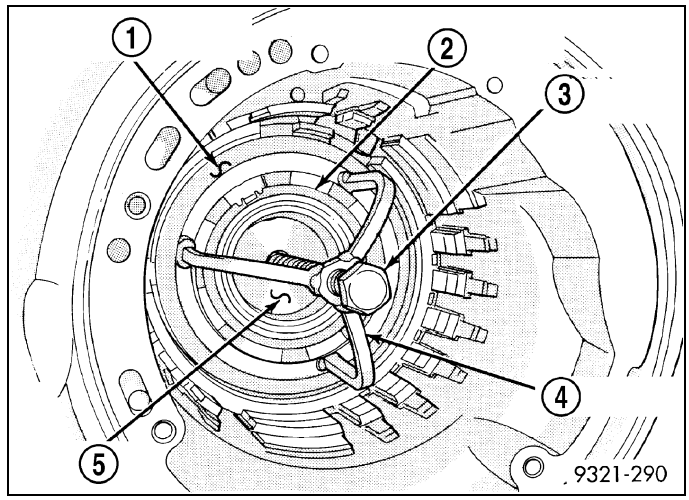

11. Install snap ring (1) and remove the tools.

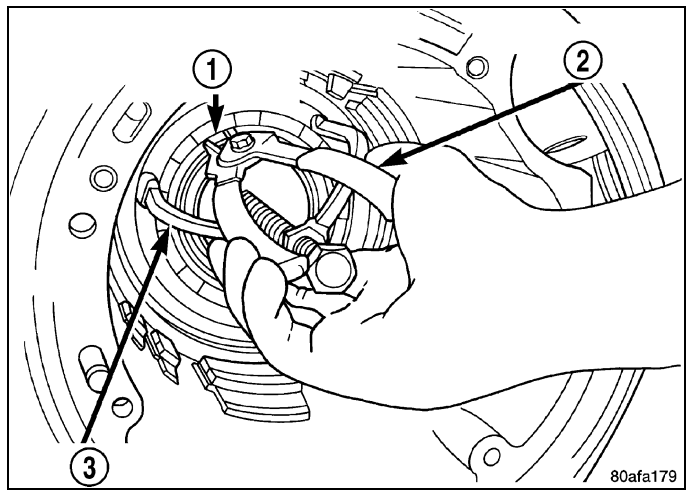

12. Install rear carrier (4) front bearing cone.

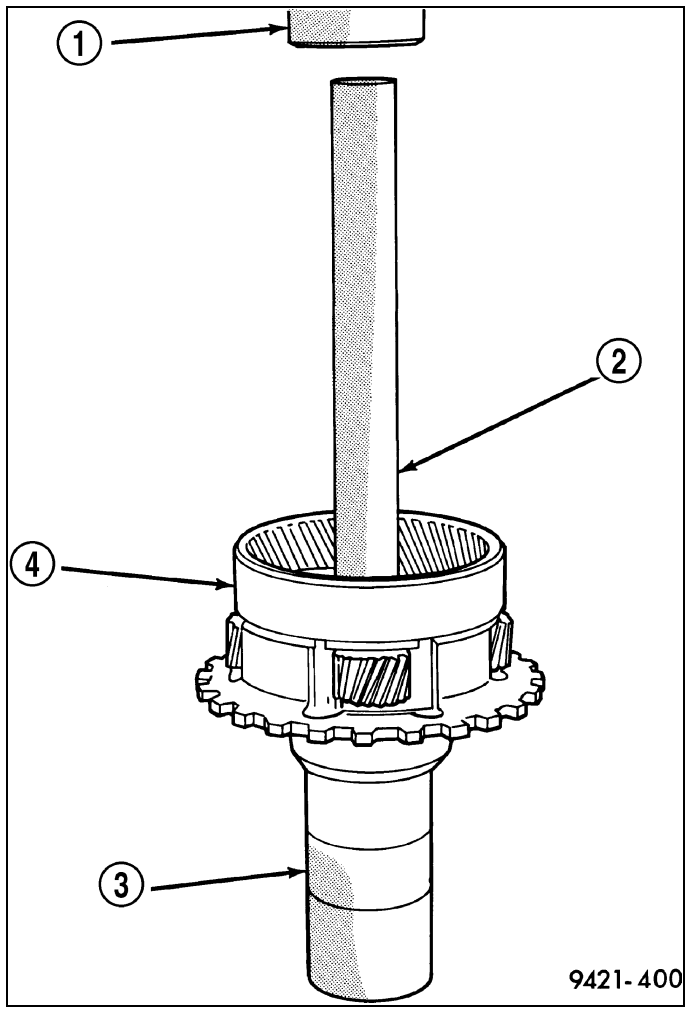

Check output bearing preload. **Output bearing preload must be checked and/or adjusted if any of the following items have been replaced:**

- Output shaft (rear carrier assembly)
- Output shaft bearings
- Transmission case

13. **PRELOAD CHECK/SHIM SELECTION:** Install rear output shaft bearing cone and Support Plate 6618A (1) .

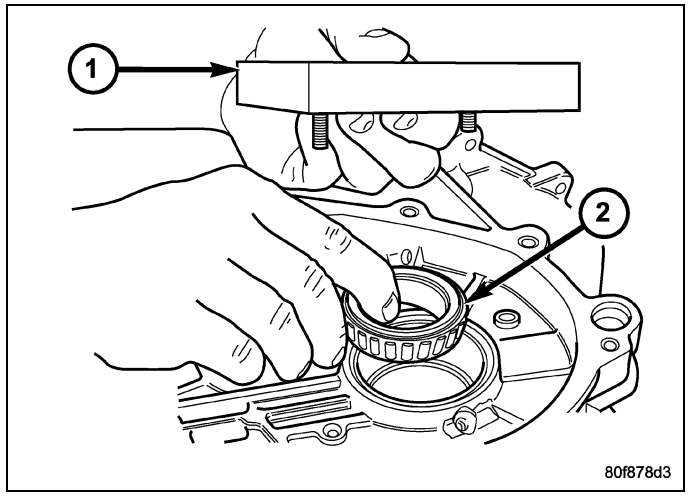

14. Install Support Plate 6618A (1) . Lightly tighten retaining screws. Screws should be below the plate surface, but do not snug screws.
15. Turn case over on arbor press so that the plate is resting on the press base. **CAUTION: The output shaft will extend through the hole of Support Plate** 6618A**. Ensure your press table has clearance for the output shaft.**

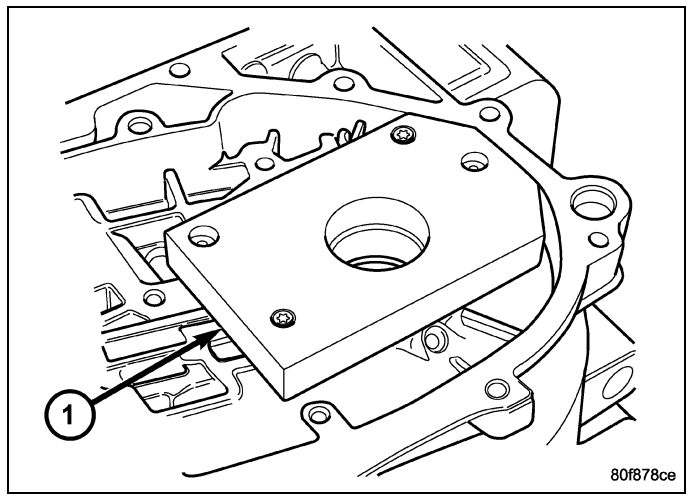

16. Install shim (1) on output shaft (2) . Apply small amount of petrolatum onto the shim to hold it in place. Use the original shim as a starting point. If original shim is not available, use the thickest shim available.

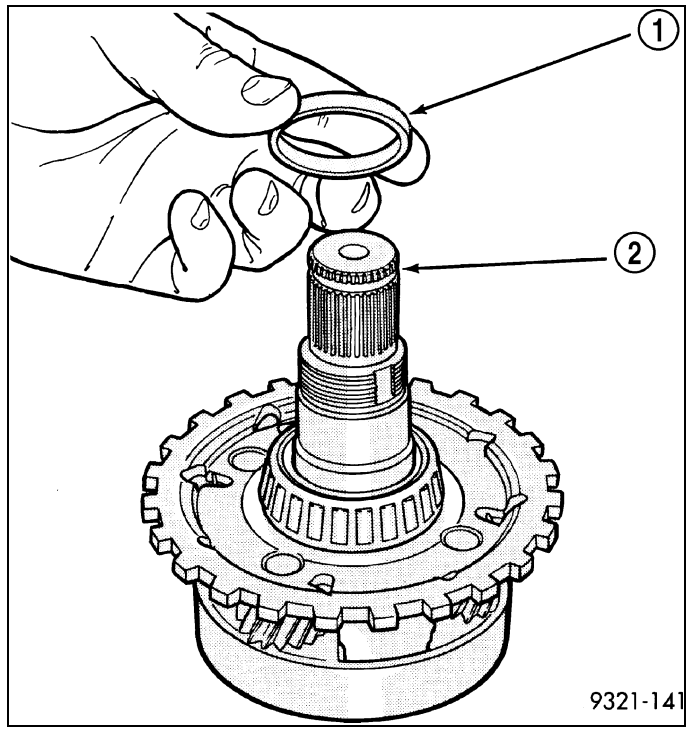

17. Install output shaft/rear carrier into rear bearing. The shaft must be pressed into position. Use Disc MD-998911 (2), Universal Handle C-4171 and Handle Extension C-4171-2 (1) to press shaft into rear bearing .

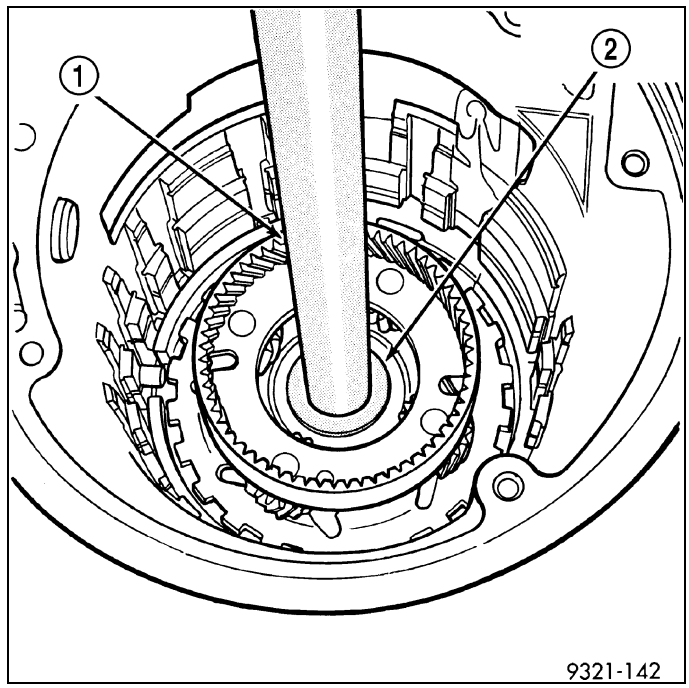

CAUTION: Do not re-use old output shaft nut because the removed stake weakens the nut flange. Using Wrenches 6497 **and 6498A, install new output shaft nut. Tighten new output shaft nut to 271 N·m (200 ft. lbs.).**

18. Check the turning torque (1) of the output shaft . The shaft should have 1-8 in. lbs. of turning torque. If the turning torque is **higher than** 8 in. lbs., install a thicker shim. If turning torque is **less than** 1in.lb., install a thinner shim. Make sure there is no end play.

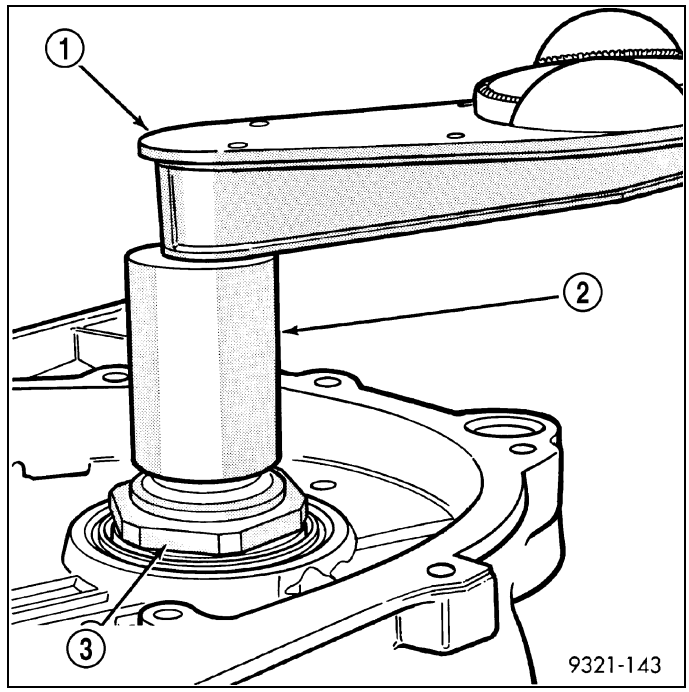

CAUTION: Failure to stake nut could allow the nut to back-off during use.

19. The new nut (3) must be staked after the correct turning torque is obtained . Use Staking Tool 6639 (2) to stake output shaft nut.

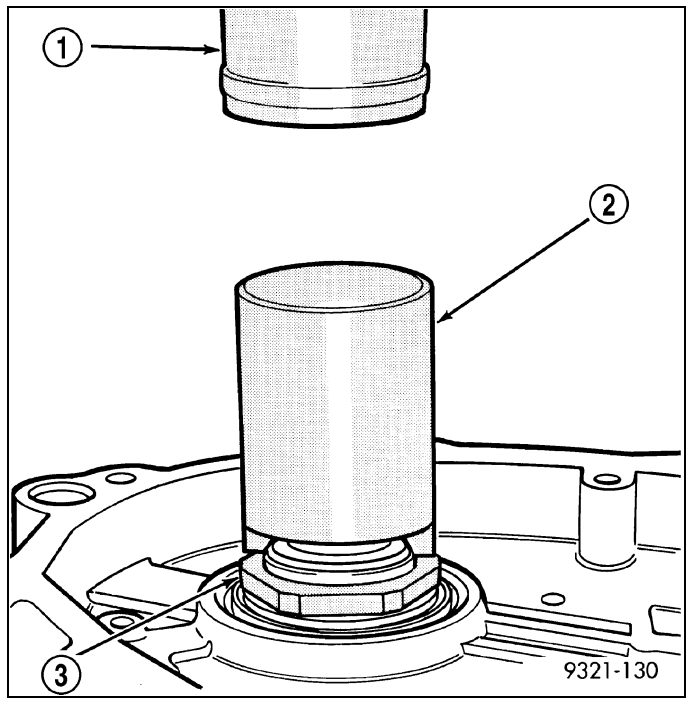

20. Verify that the nut has been properly staked to the output shaft.
21. Install the snap ring onto the output shaft.

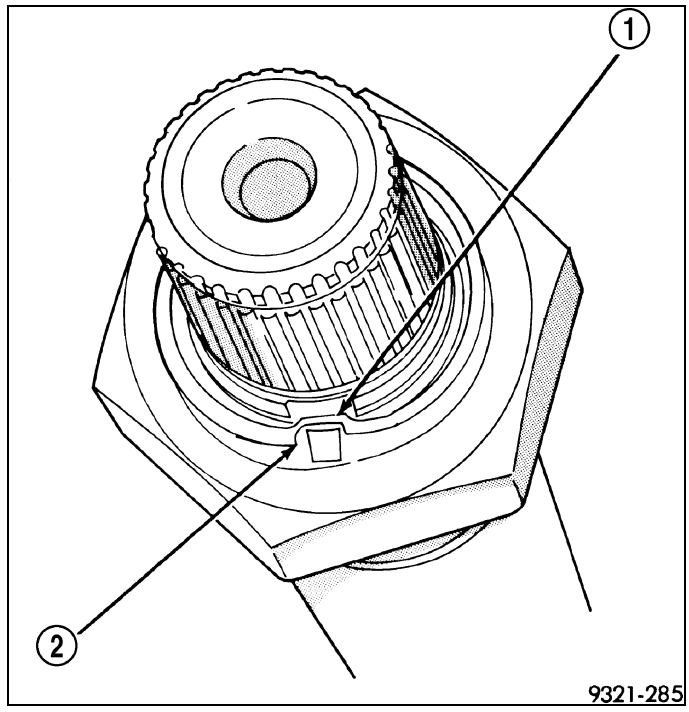

22. Install low/reverse clutch pack (1, 2) . Leave uppermost disc out to facilitate snap ring installation.

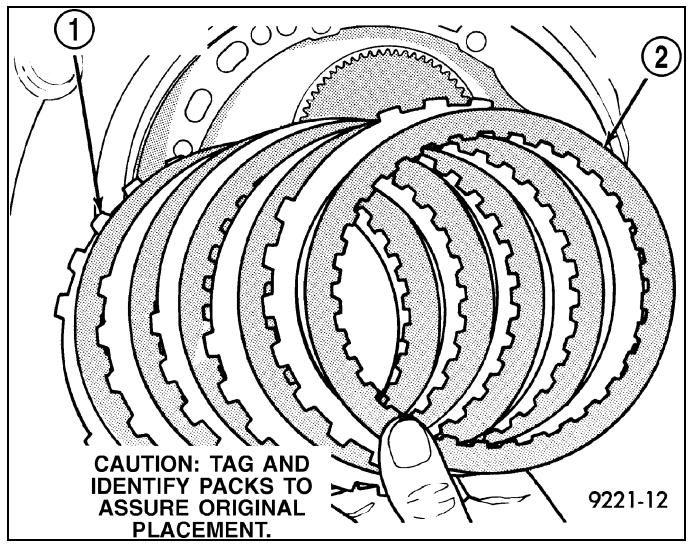

23. Install low/reverse reaction plate snap ring (2) .

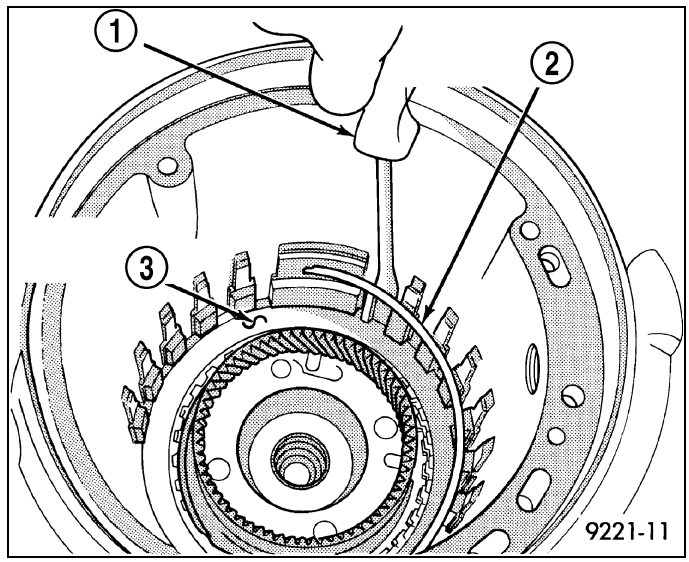

24. Install one low/reverse clutch disc (1) .

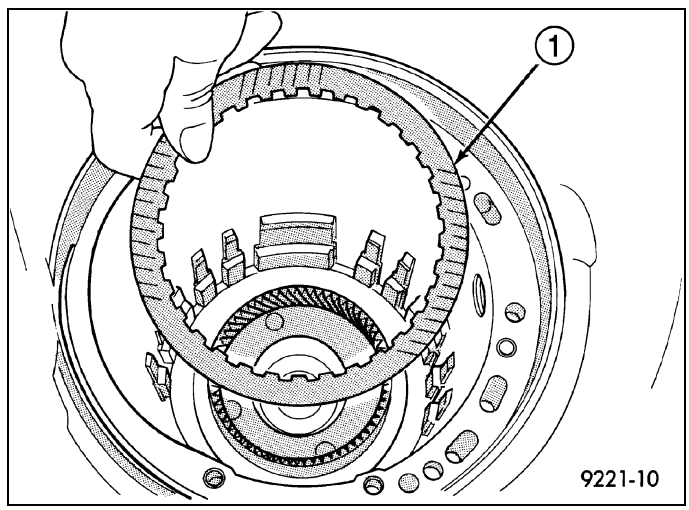

25. Install low/reverse reaction plate (1) with flat side up.

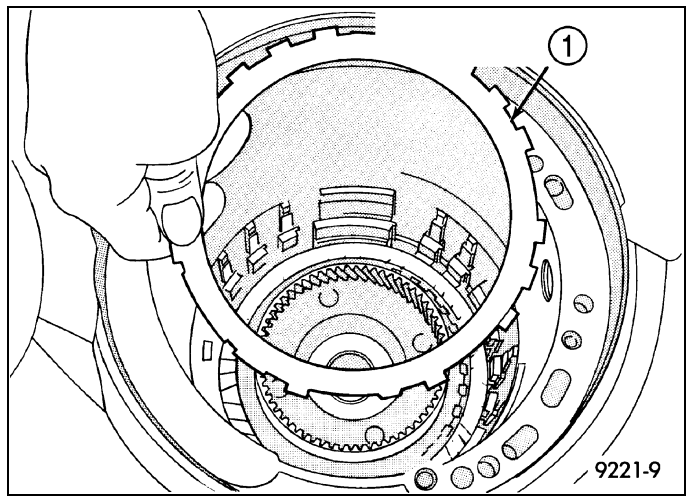

26. Install a new tapered snap ring (2) (tapered side out).

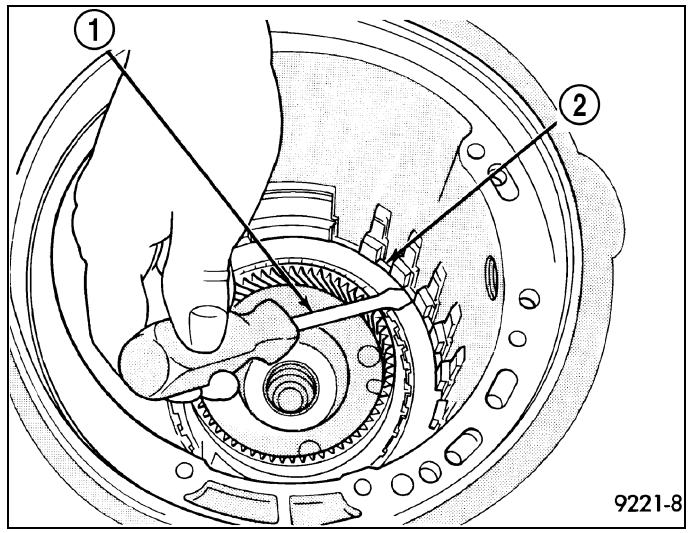

27. Make sure that the snap ring ends are oriented as shown.

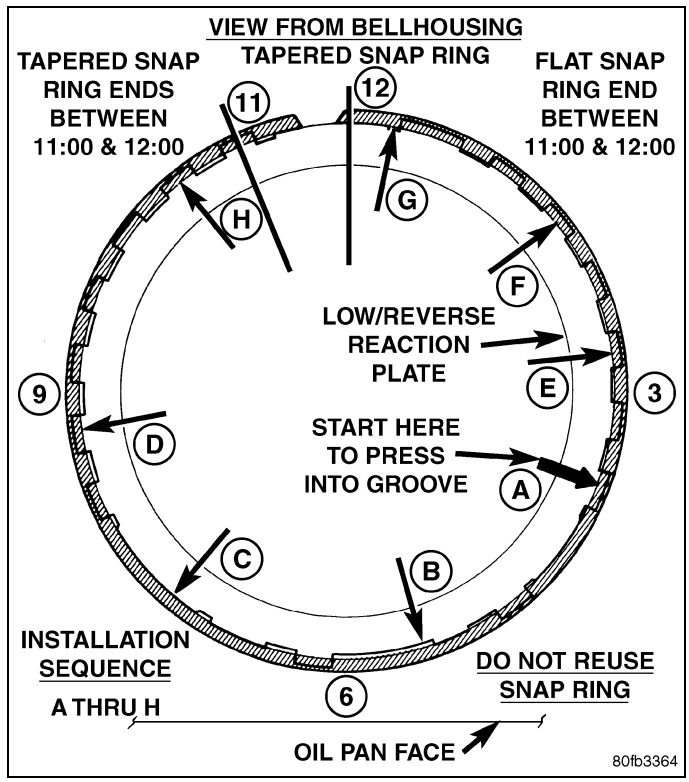

28. Measure low/reverse clutch pack. Set up Dial Indicator C-3339A (1) as shown. Press down clutch pack with finger and zero dial indicator. Record measurement in four (4) places and take average reading. **Low/Reverse clutch pack clearance is 0.84 to 1.60 mm (0.033 to 0.063 inch).**
29. Select the proper low/reverse reaction plate to achieve specifications.

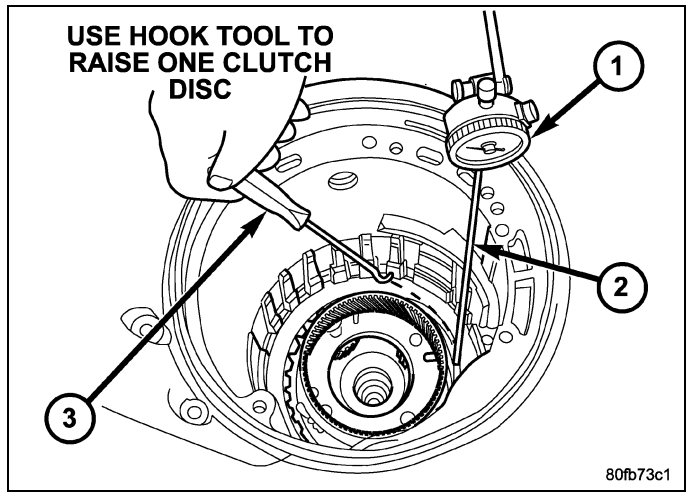

30. Install 2/4 clutch pack (1, 2) .

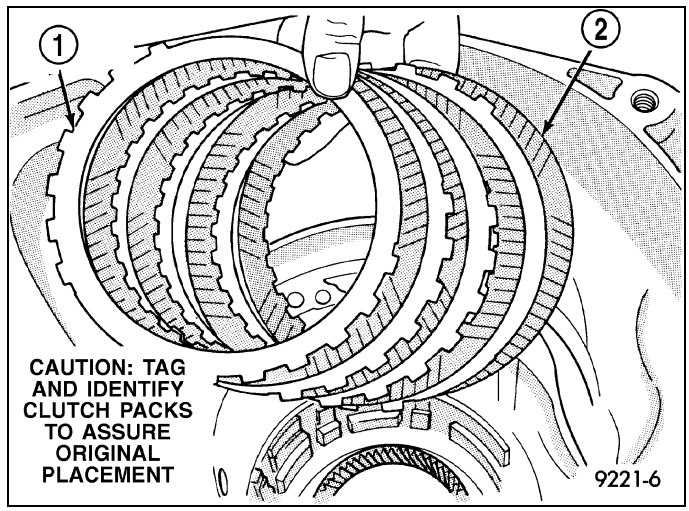

NOTE: The 2/4 Clutch Piston has bonded seals which are not individually serviceable. Seal replacement requires replacement of the piston assembly.

31. Install 2/4 clutch belleville spring (1) .

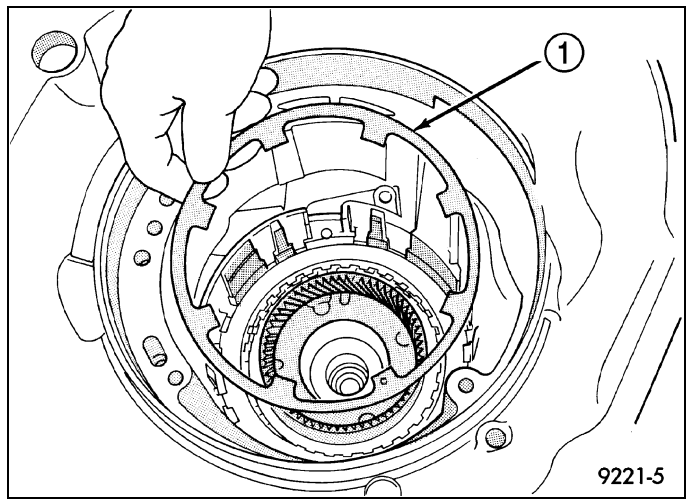

32. Verify the proper orientation of the return spring (2) to the 2/4 retainer (3).

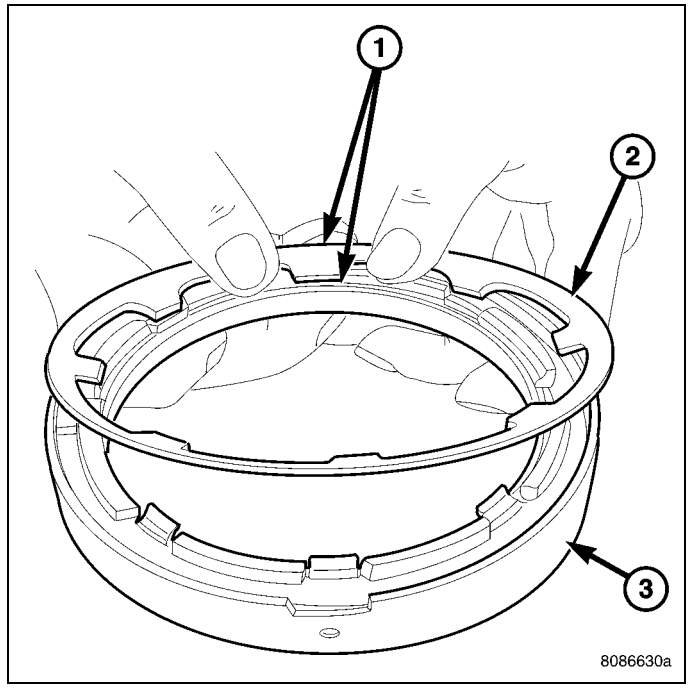

33. Install 2/4 clutch retainer (1) .

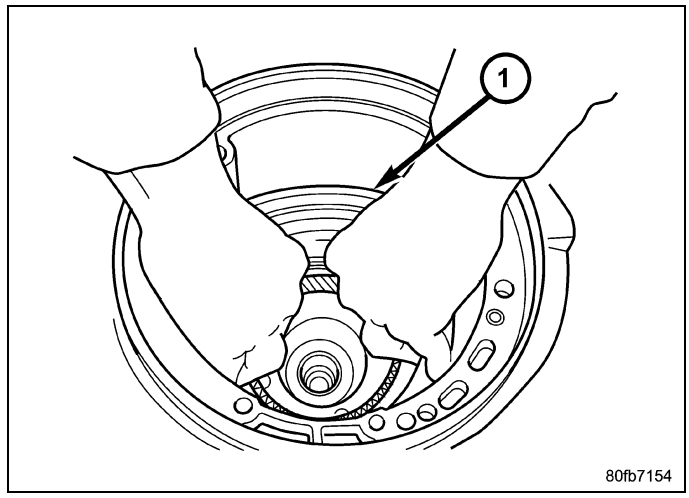

NOTE: Verify that Compressor 5058A **(1) is centered properly over the 2/4 clutch retainer (4) before compressing. If necessary, fasten the** 5058A **bar to the bellhousing flange with any combination of locking pliers and bolts to center the tool properly.**

34. Set up Compressor 5058A (1) as shown. Compress 2/4 clutch just enough to facilitate snap ring installation.

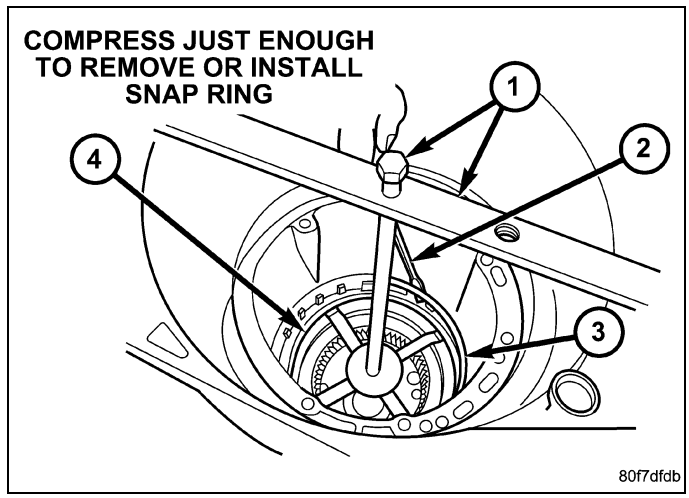

35. **Measure 2/4 clutch clearance:** Set up dial indicator (1) as shown. Press down clutch pack with finger and zero dial indicator. Record measurement in four (4) places and take average reading. **The 2/4 clutch pack clearance is 0.76 to 2.64 mm (0.030 to 0.104 inch).** If not within specifications, the clutch is not assembled properly or is excessively worn. **There is no adjustment for the 2/4 clutch clearance.**

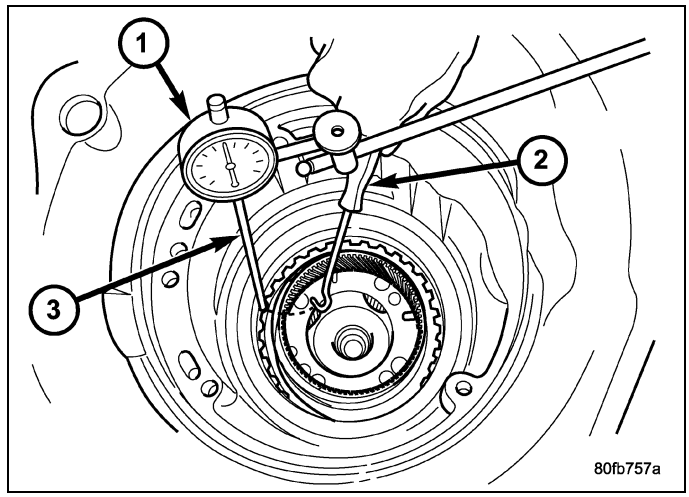

36. Install the #7 needle bearing (1) to the rear sun gear (2). **The number 7 needle bearing has three anti-reversal tabs and is common with the number 5 and number 2 position. The orientation should allow the bearing to seat flat against the rear sun gear. A small amount of petrolatum can be used to hold the bearing to the rear sun gear.**

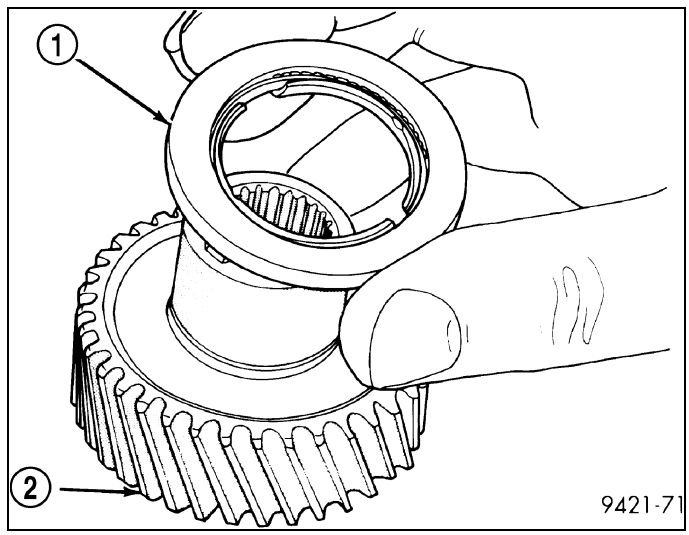

37. Install rear sun gear (2) and #7 needle bearing (1) .

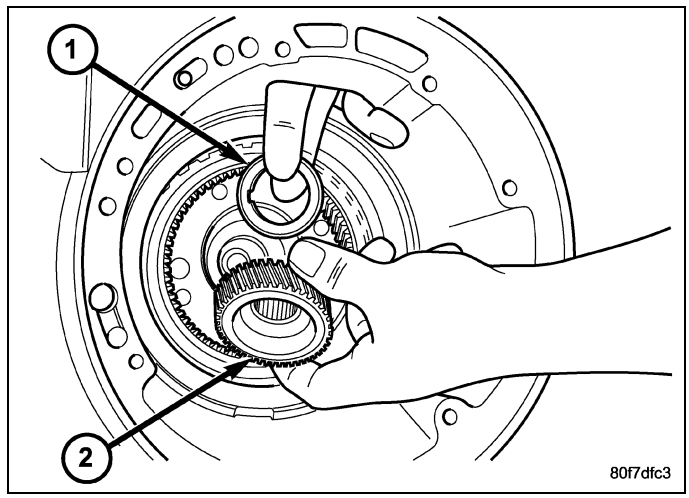

38. Install front carrier/rear annulus assembly (2) and #6 needle bearing (1) .

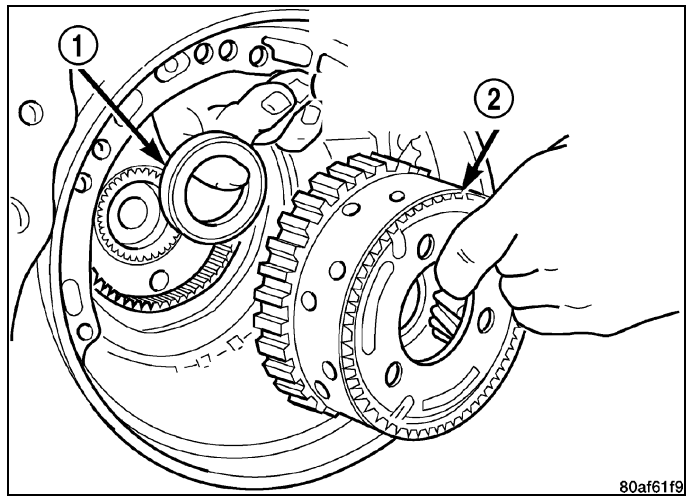

39. Install front sun gear assembly (1) and #4 thrust washer (2) .

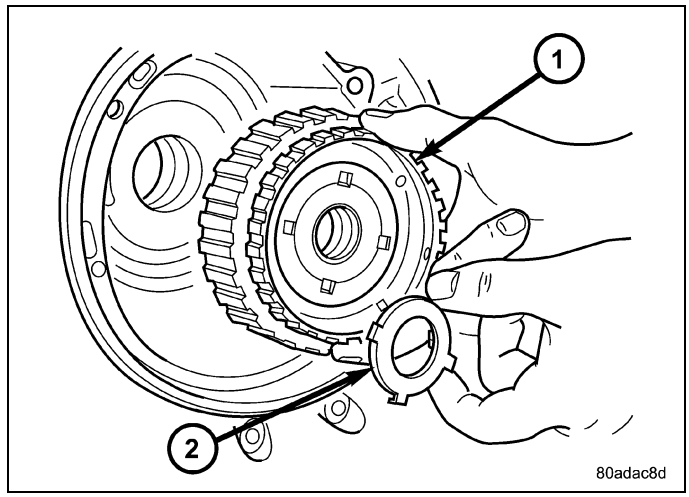

40. Determine proper #4 thrust plate thickness. Select the thinnest available #4 thrust plate.
41. Install #4 thrust plate (2) using petrolatum to hold into position.
42. Install input clutch assembly. Ensure the input clutch assembly is completely seated by viewing position through input speed sensor hole. **If the speed sensor tone wheel is not centered in the opening, the input clutches assembly is not seated properly.**

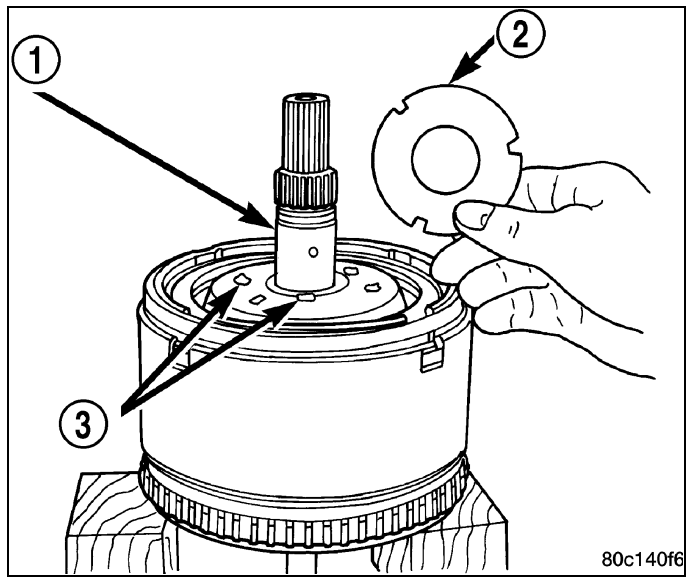

43. Remove the oil pump o-ring (2) and install oil pump and gasket to transmission. **Use screw-in dowels or Phillips head screwdrivers to align pump to case. Be sure to reinstall O-ring on oil pump after selecting the proper No. 4 thrust plate.**

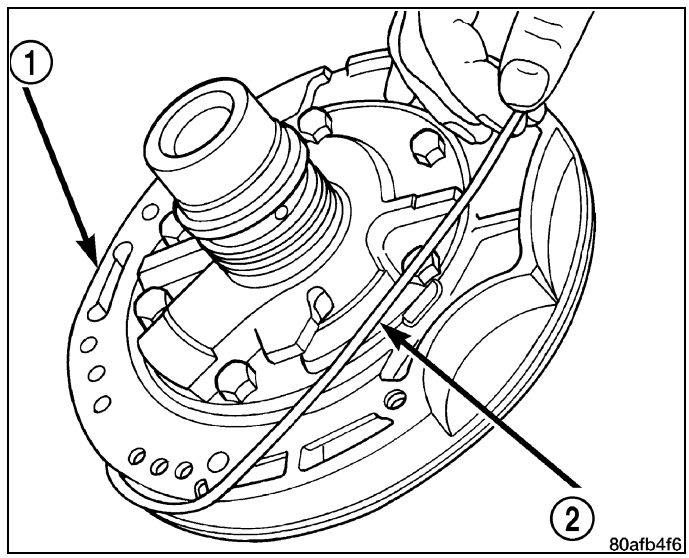

44. Measure the input shaft end play with the transmission in the vertical position. This will ensure that the measurement will be accurate.
45. Set up and measure endplay using End Play Set 8266B (1, 2) and Dial Indicator Set C-3339A (3) as shown.
46. Measure input shaft end play. **Input shaft end play must be 0.127 to 0.635 mm (0.005 to 0.025 inch).** For example, if end play reading is 0.055 in. , select No. 4 Thrust Plate which is 0.071 to 0.074 in. thick. This should provide an input shaft end play reading of 0.020 in. , which is within specifications.

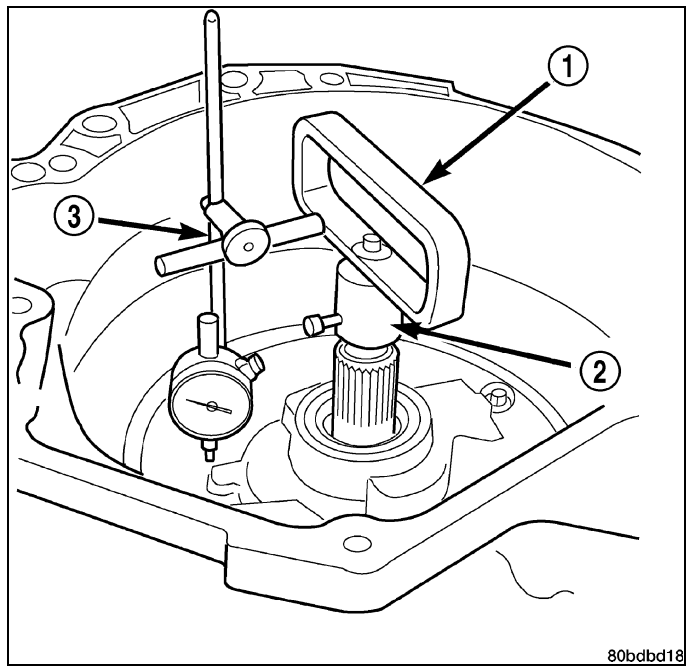

47. Remove oil pump, gasket, and input clutch assembly to gain access to and install proper #4 thrust plate.
48. Install input clutch assembly (1) with proper thrust plate .

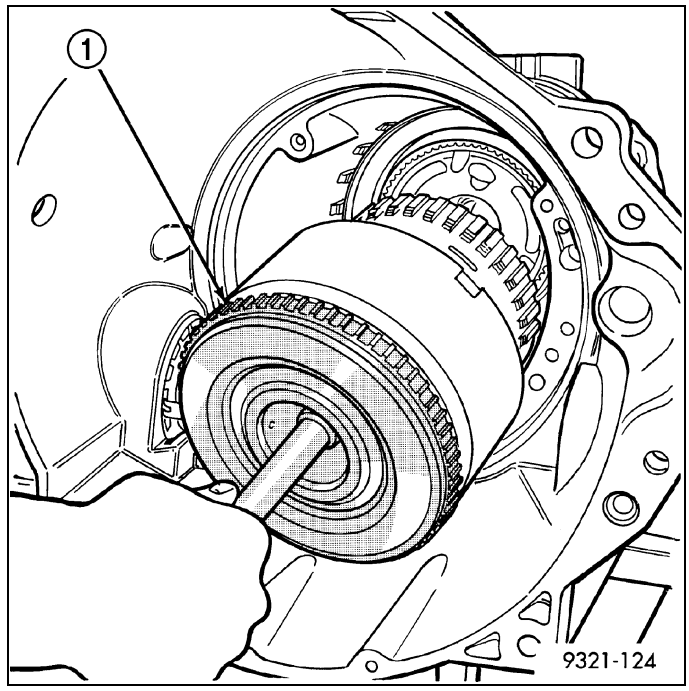

49. Install #1 caged needle bearing (1) .

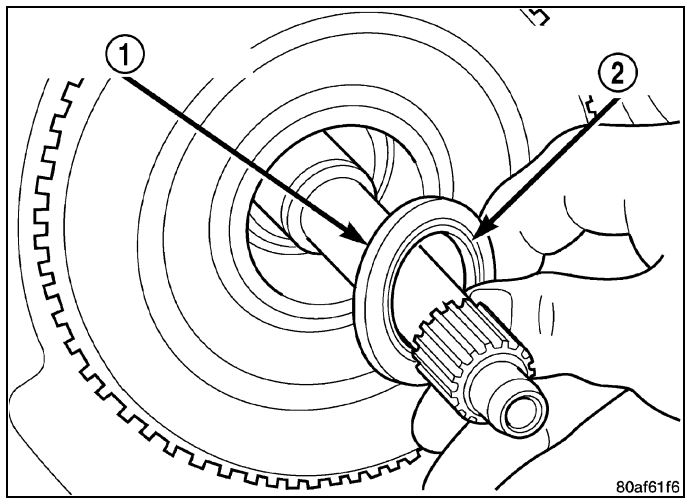

CAUTION: By-pass valve MUST be replaced if a transmission failure has occured.

50. Replace cooler by-pass valve (1) if transmission failure has occurred.

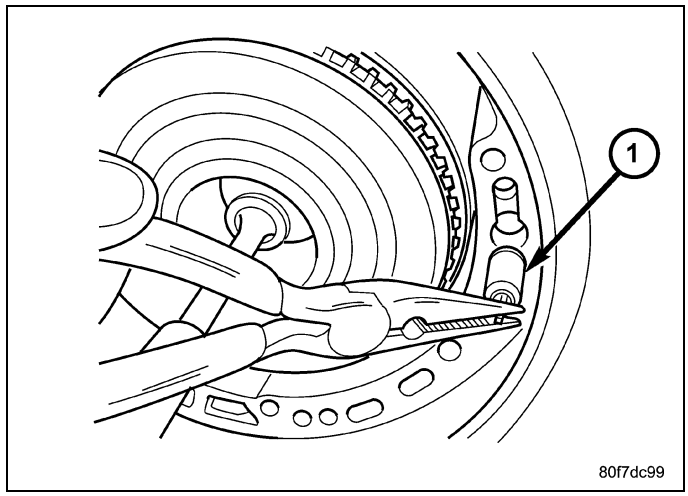

NOTE: To align oil pump, gasket, and case during installation, use threaded dowels or Phillips screwdrivers.

51. Install oil pump gasket (2) .

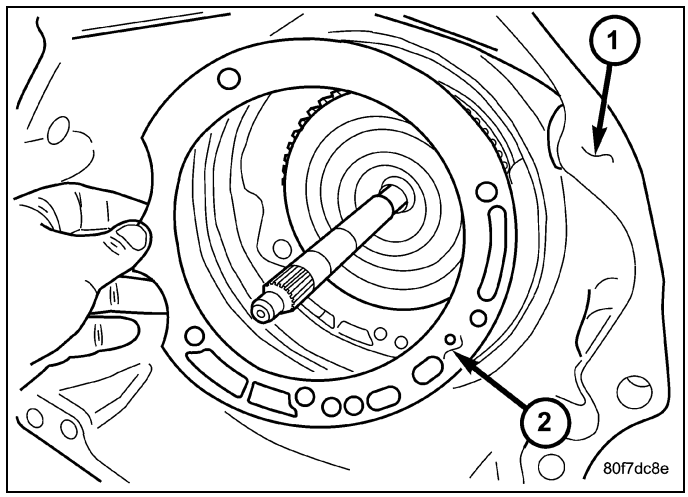

52. Install oil pump (2) and torque oil pump-to-case bolts (1) to 30 N·m (265 in. lbs.). Do not reuse original oil pump bolts.

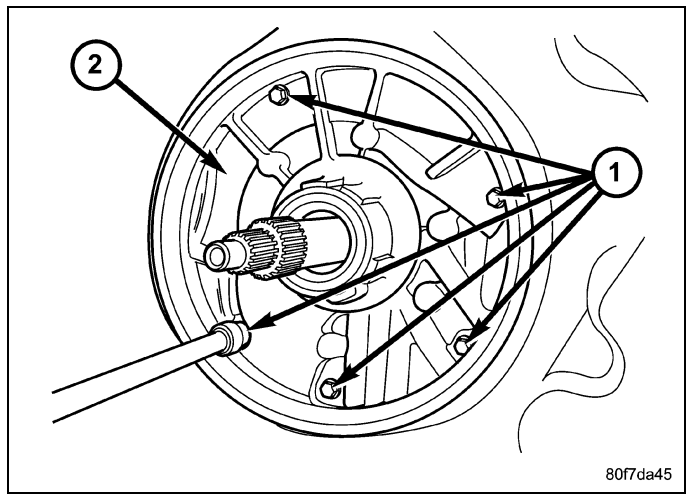

53. Install low/reverse accumulator (1) as shown.

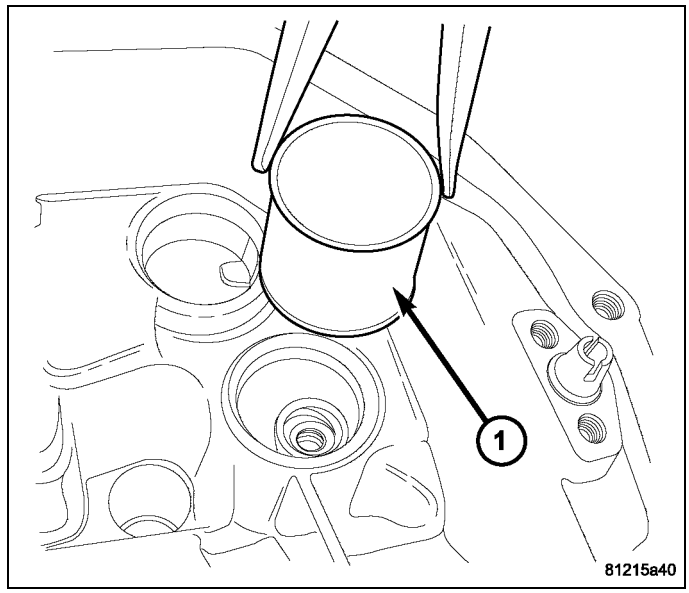

54. Install low/reverse accumulator plug (2) .

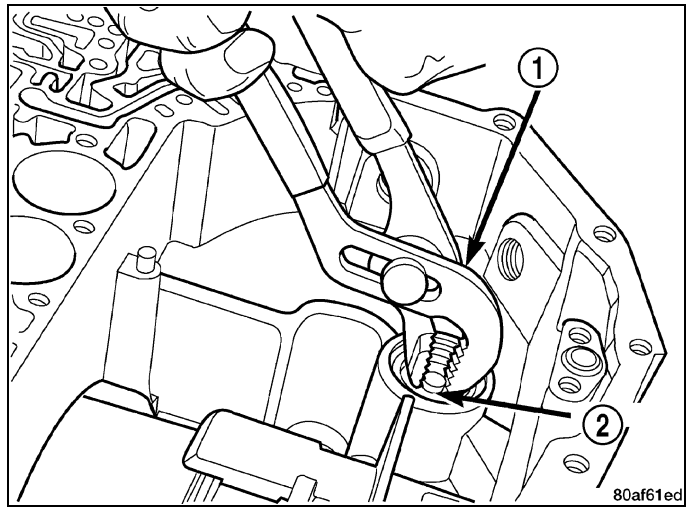

55. Install low/reverse accumulator snap ring (1) .

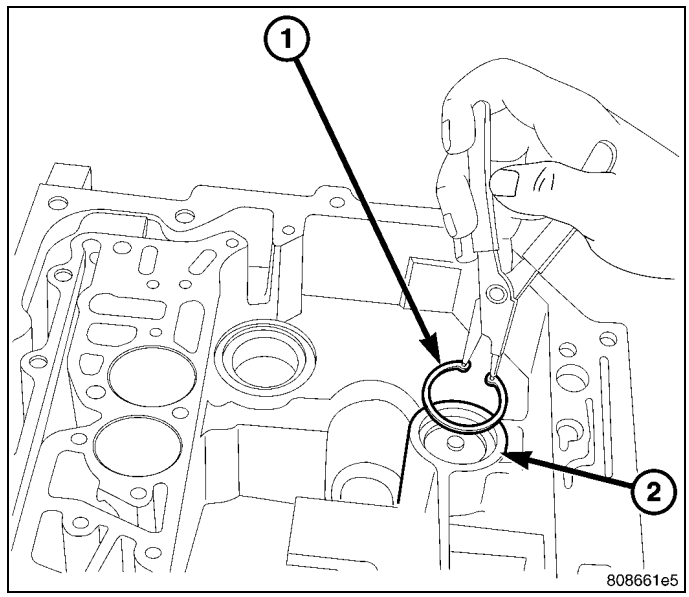

56. Install underdrive (2) and overdrive (1) accumulators and springs .

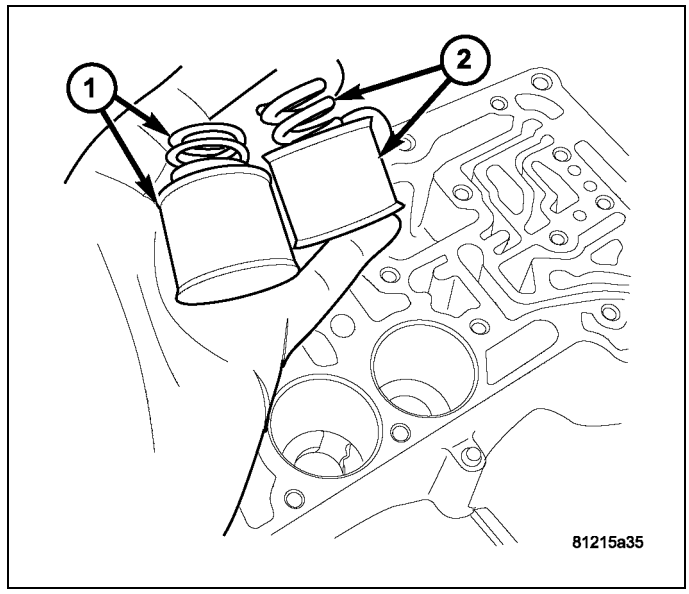

CAUTION: Do not handle the valve body by the manual shaft. Damage could result.

57. Install valve body (1) into place as shown.

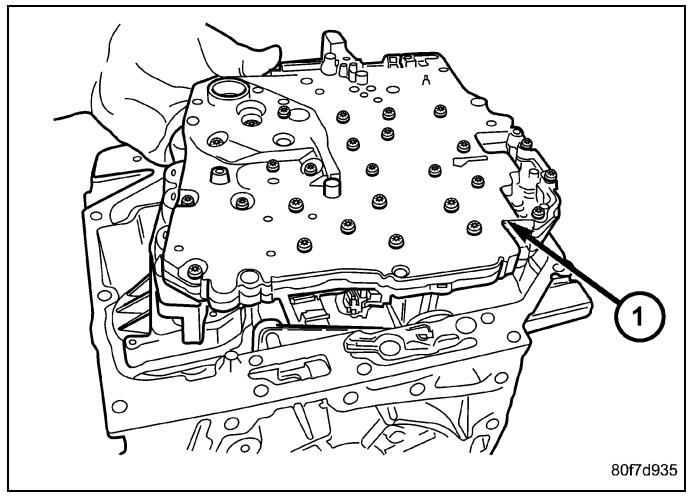

58. Install seven (7) valve body-to-case bolts (1) and tighten to 12 N·m (105 in.lbs.).

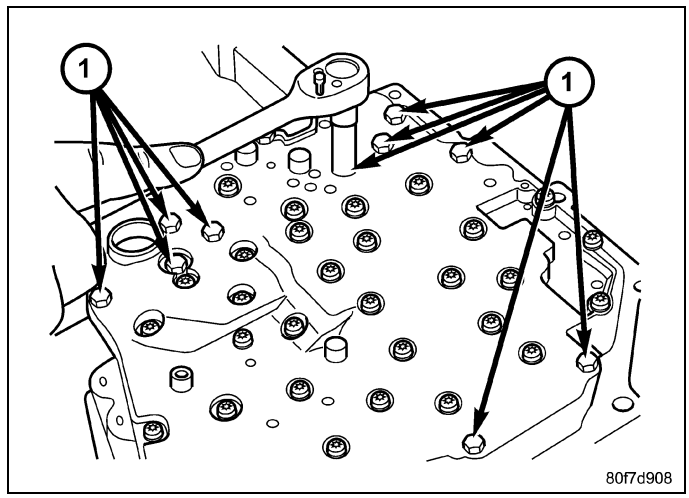

59. Install transmission oil filter (1) . Tighten the bolts to 5 N·m (45 in. lbs.).

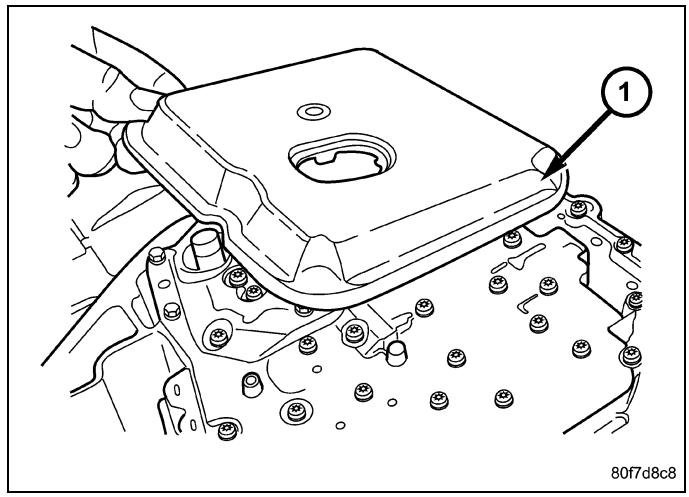

60. Install transmission oil pan (1) with a bead of Mopar® ATF RTV.

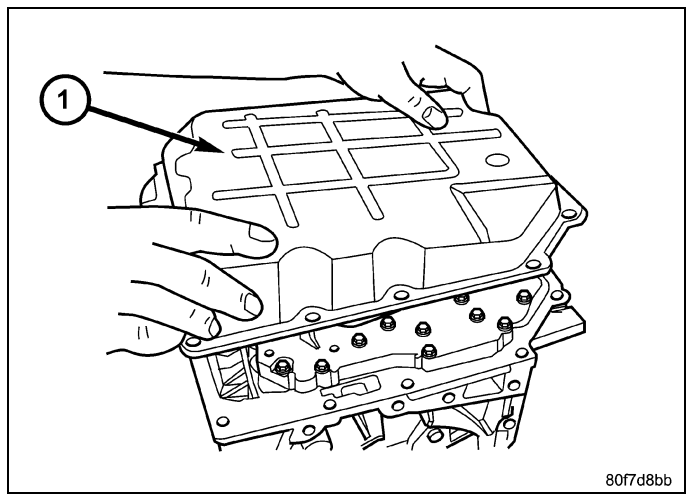

NOTE: Before installing the oil pan bolt in the bolt hole located between the torque converter clutch on and U/D clutch pressure tap circuits , it will be necessary to replenish the sealing patch on the bolt using MOPAR® Lock AND Seal Adhesive.

61. Install and tighten the oil pan-to-case bolts to 20 N·m (14.5 ft. lbs.).

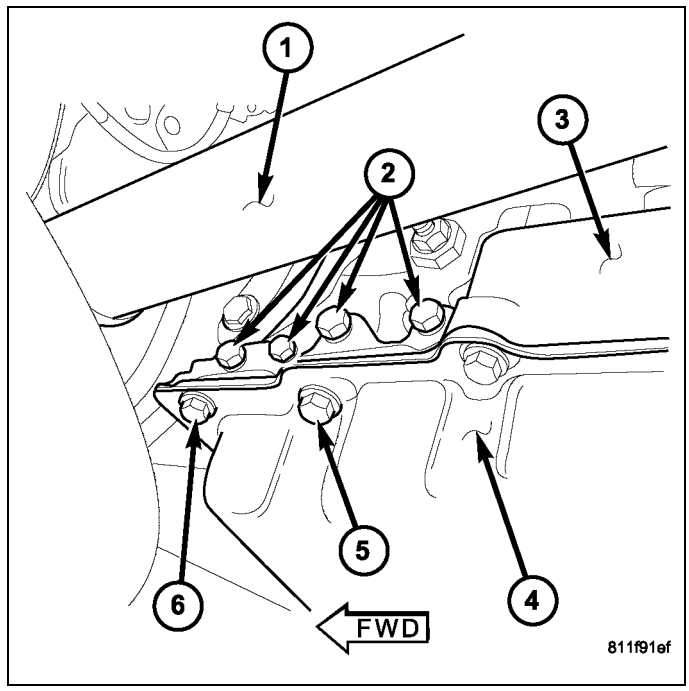

NOTE: Before installing either speed sensor bolt, it will be necessary to replenish the sealing patch on the bolt using Mopar® Lock AND Seal Adhesive.

62. Install both speed sensors (1, 2) into the transmission case. Torque the speed sensor bolts to 9 N·m (80 in. lbs.).

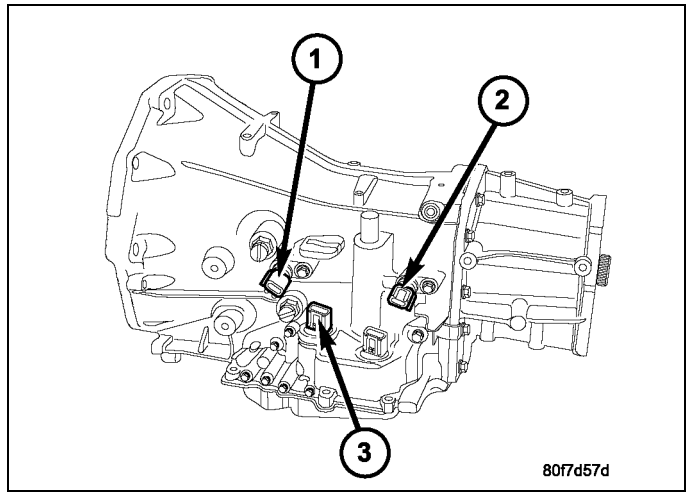

63. As a final check of the transmission, measure the input shaft end play. This will indicate when a #4 thrust plate change is required. The #4 thrust plate is located behind the overdrive clutch hub. Attach a dial indicator C-3339A (3) to transmission bell housing with its plunger seated against end of input shaft . Install End Play tool 8266-2 (2) , 8266-8 (1) and move input shaft in and out to obtain end play reading. **Input shaft end play must be 0.127 to 0.635 mm (0.005 to 0.025 inch).** If not within specifications, make the necessary thrust plate adjustment.

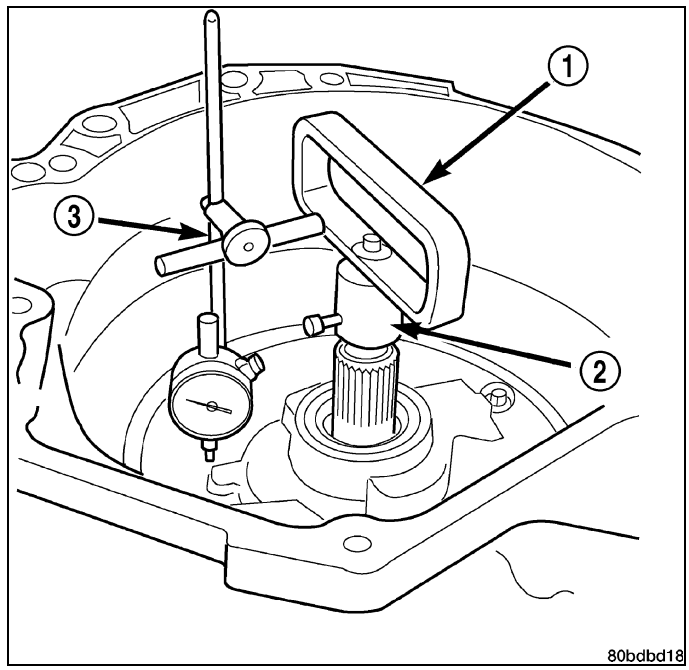

64. Perform the following, if necessary:
    a. Install the extension shaft bearing (2) onto the extension shaft.

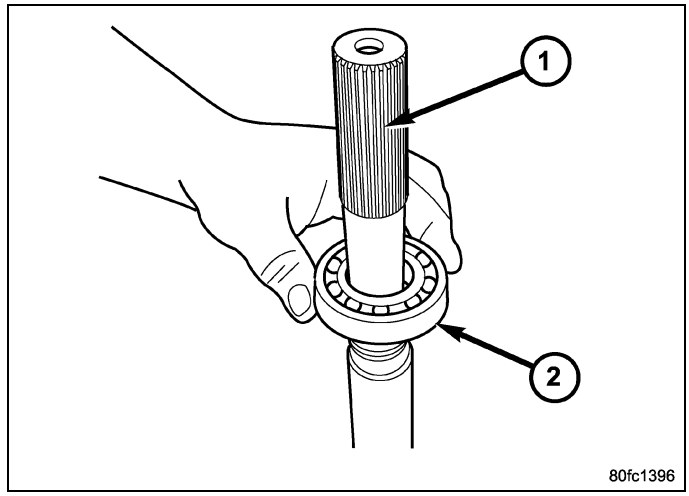

    b. Install the extension shaft bearing retaining ring (3) onto the extension shaft (1).

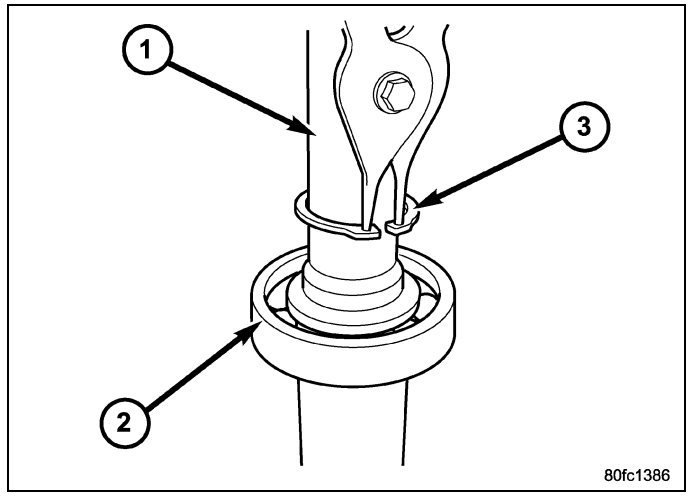

c. Install the extension shaft (2) and bearing assembly (3) into the extension housing (1).

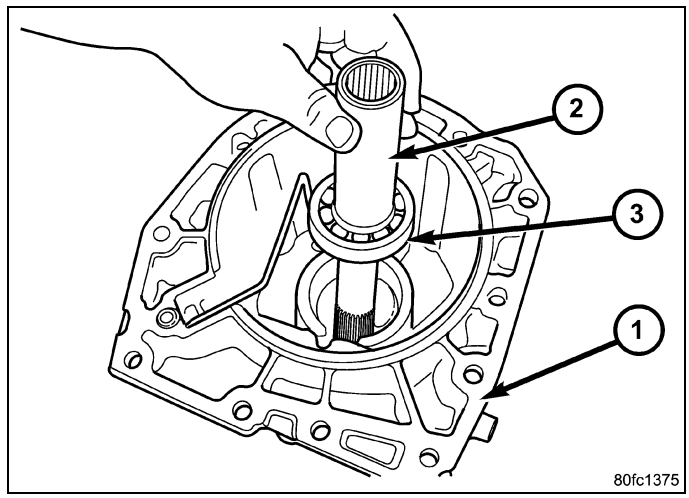

d. Install the extension shaft bearing snap ring (3) into the extension housing.

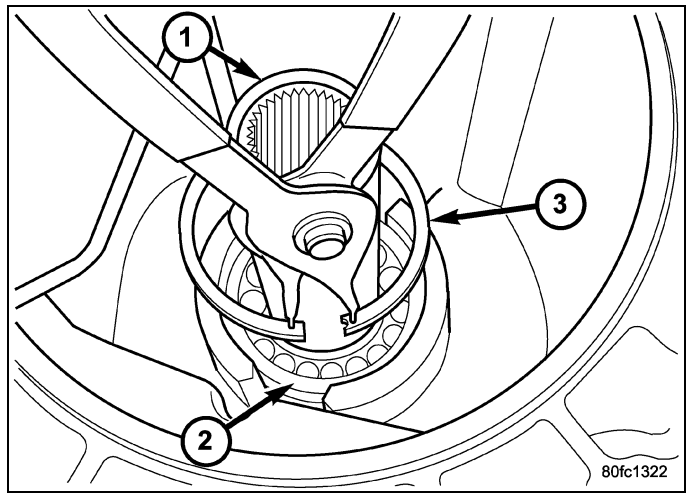

e. Verify that the extension shaft snap ring (3) is fully engaged in the snap ring groove.

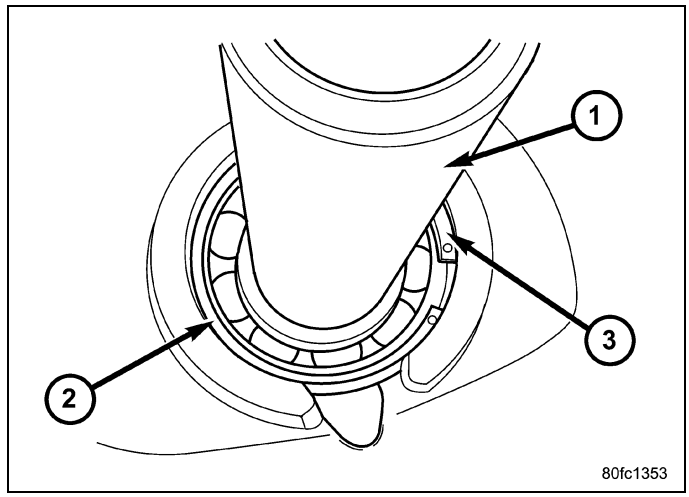

65. Inspect the lube tube grommet (3) for damage. If the grommet lip is damaged, it will need to be replaced.

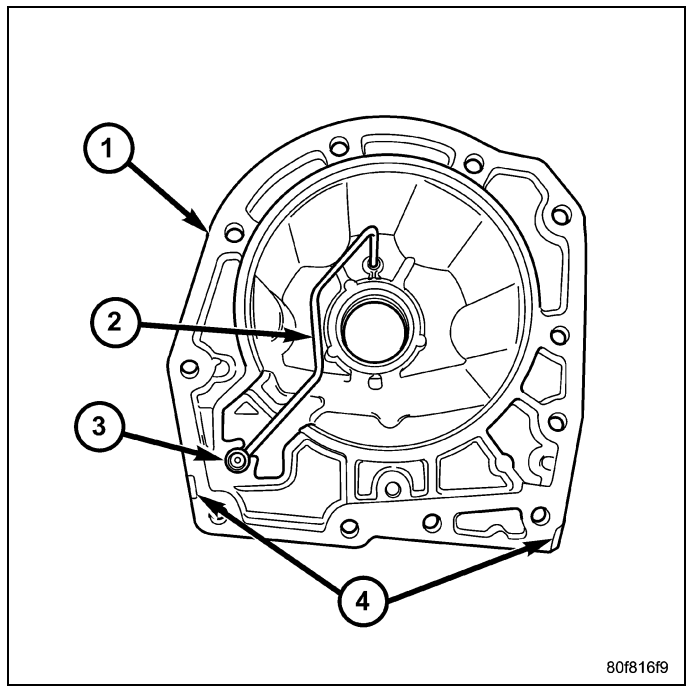

66. Place a bead of Mopar® ATF RTV on the rear surface of the transmission case for the extension housing.
67. Install the extension housing (2) onto the transmission case, 4X2 vehicles only.

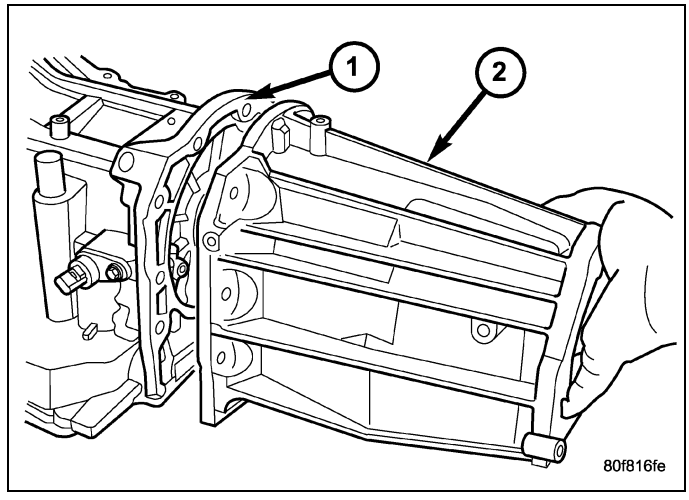

NOTE: Before installing the lowermost four extension housing bolts , it will be necessary to replenish the sealing patch on the bolts using MOPAR® Lock AND Seal Adhesive.

68. Install the bolts that hold the extension housing onto the transmission case. Be sure to install any stud bolts to their original locations. Tighten the bolts to 54 N·m (40 ft.lbs.).

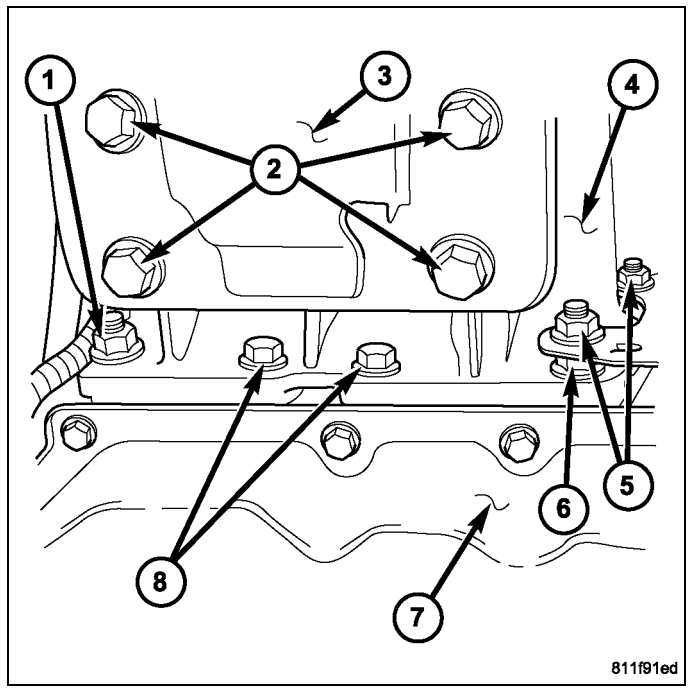

Installation

NOTE: Check torque converter hub and hub drive flats for sharp edges burrs, scratches, or nicks. Polish the hub and flats with 320/400 grit paper and crocus cloth if necessary. The hub must be smooth to avoid damaging pump seal at installation.

1. If a replacement transmission is being installed, transfer any components necessary, such as the manual shift lever and shift cable bracket, from the original transmission onto the replacement transmission.
2. Lubricate oil pump seal lip with transmission fluid.
3. Align converter and oil pump.
4. Carefully insert converter in oil pump. Then rotate converter back and forth until fully seated in pump gears.
5. Check converter seating with steel scale (1) and straightedge (2) . Surface of converter lugs should be at least 13mm (1/2 in.) to rear of straightedge when converter is fully seated.
6. Temporarily secure converter with C-clamp.

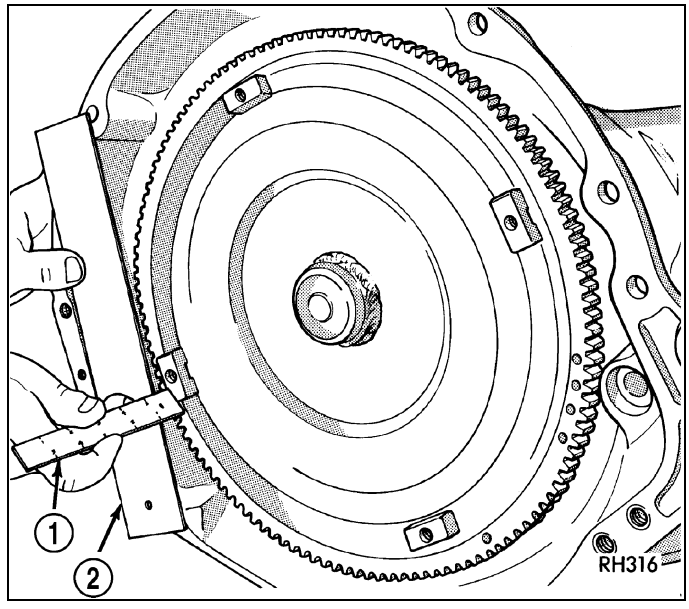

7. Position transmission on jack and secure it with chains.
8. Check condition of converter driveplate. Replace the plate if cracked, distorted or damaged. **Also be sure transmission dowel pins are seated in engine block and protrude far enough to hold transmission in alignment.**
9. Apply a light coating of Mopar® High Temp Grease to the torque converter hub pocket in the rear pocket of the engine's crankshaft.
10. Raise transmission and align the torque converter with the drive plate and transmission converter housing with the engine block.

11. Move transmission forward. Then raise, lower or tilt transmission to align the converter housing with engine block dowels.
12. Carefully work transmission forward and over engine block dowels until converter hub is seated in crankshaft. Verify that no wires, or the transmission vent hose, have become trapped between the engine block and the transmission.
13. Install two bolts to attach the transmission to the engine.
14. Install remaining torque converter housing to engine bolts. Tighten to 68 N·m (50 ft. lbs.).
15. Install rear transmission crossmember. Tighten crossmember to frame bolts to 68 N·m (50 ft.lbs.).
16. Install rear support to transmission. Tighten bolts to 47 N·m (35 ft. lbs.).
17. Lower transmission onto crossmember and install bolts attaching transmission mount to crossmember. Tighten clevis bracket to crossmember bolts to 47 N·m (35 ft. lbs.). Tighten the clevis bracket to rear support bolt to 68 N·m (50 ft.lbs.).
18. Connect gearshift cable (1) to support bracket (2) and transmission manual lever (3).

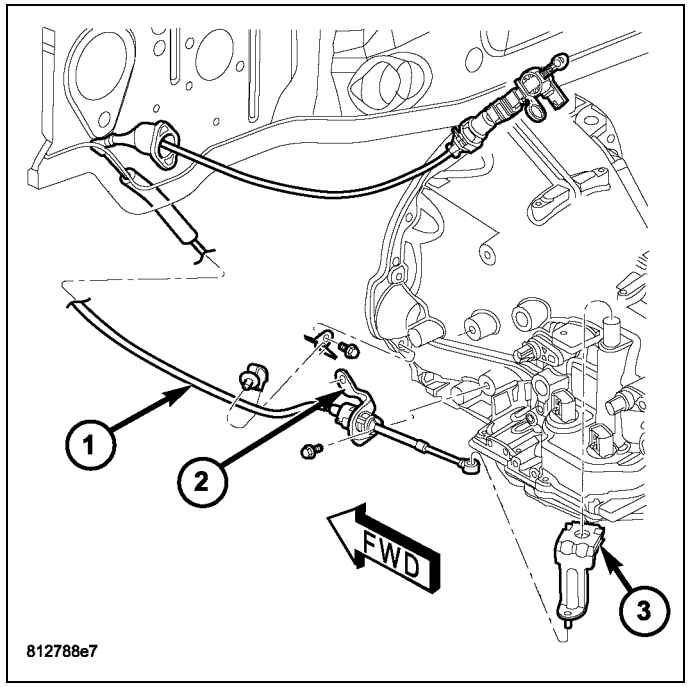

19. Connect the input (1) and output (2) speed sensor and the transmission range sensor (5) .
20. Connect the variable line pressure connector (4), if equipped.

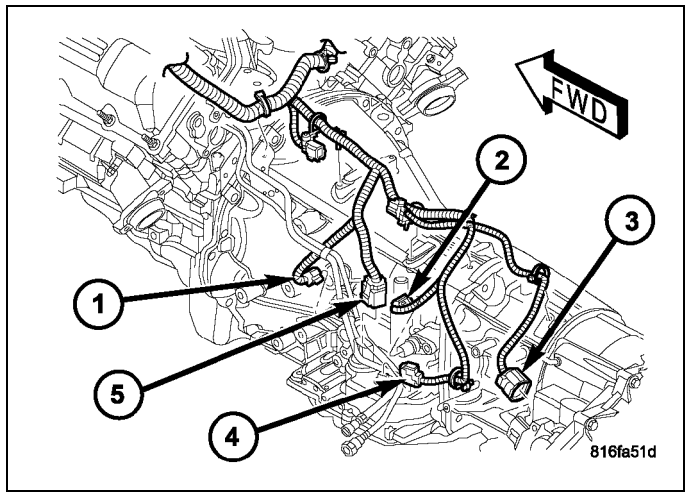

21. Connect wires to the solenoid/pressure switch assembly (1) .

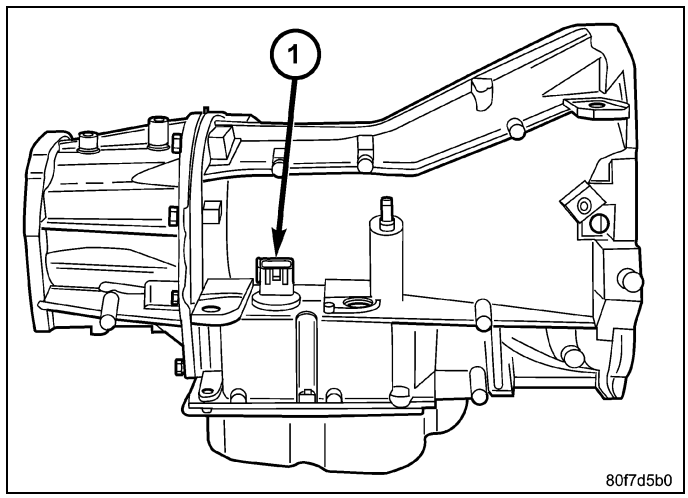

CAUTION: It is essential that the correct length bolts are used to attach the converter to the flexplate. Bolts that are too long will damage the clutch surface inside the torque converter.

22. Install torque converter-to-driveplate bolts. Tighten bolts to 88 N·m (65 ft. lbs.).
23. Install starter motor and cooler line bracket.
24. Install the engine to transmission collar.
25. Connect cooler lines (1) to transmission and clips.

NOTE: When connecting the transmission oil cooler lines, it is necessary to replace the line clip that is located on the oil pan stud. The retention force of the clip is severely degraded upon removal.

26. Install transmission fill tube.
27. Install exhaust components (1) .

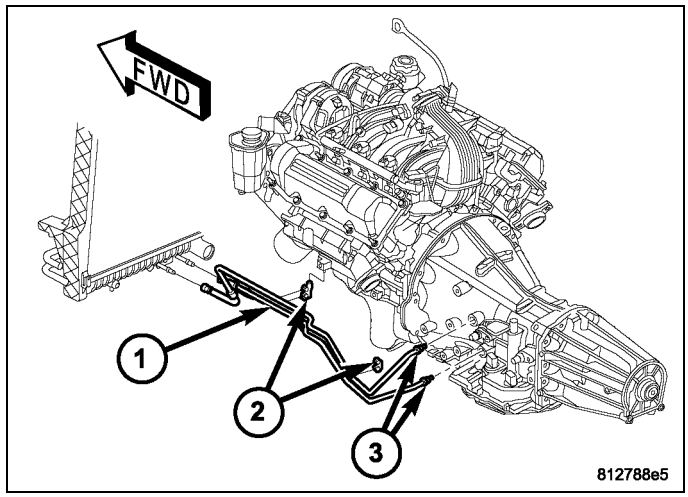

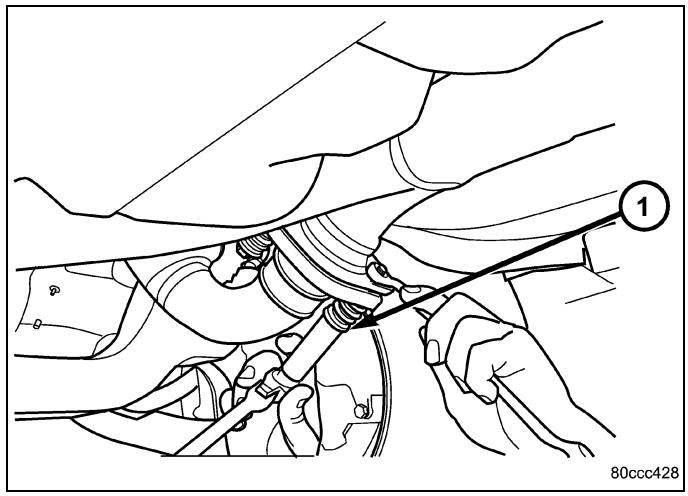

28. Align and connect propeller shaft(s).
29. Adjust gearshift cable if necessary.
30. Install any skid plates removed previously.
31. Lower vehicle.
32. Fill transmission with Mopar® ATF +4, Automatic Transmission Fluid.

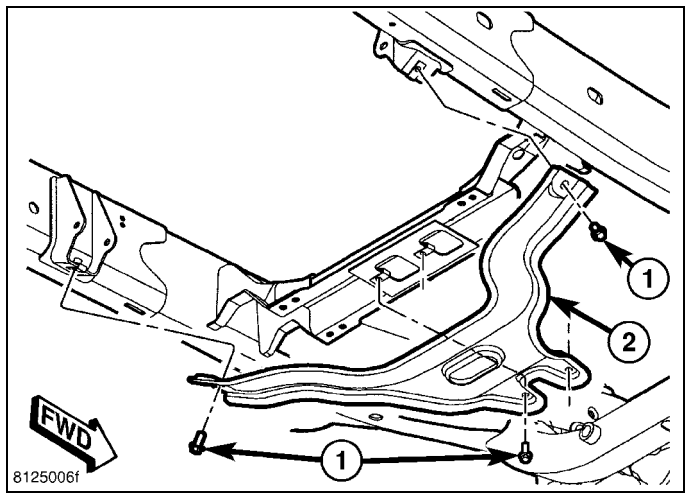

Schematics and Diagrams

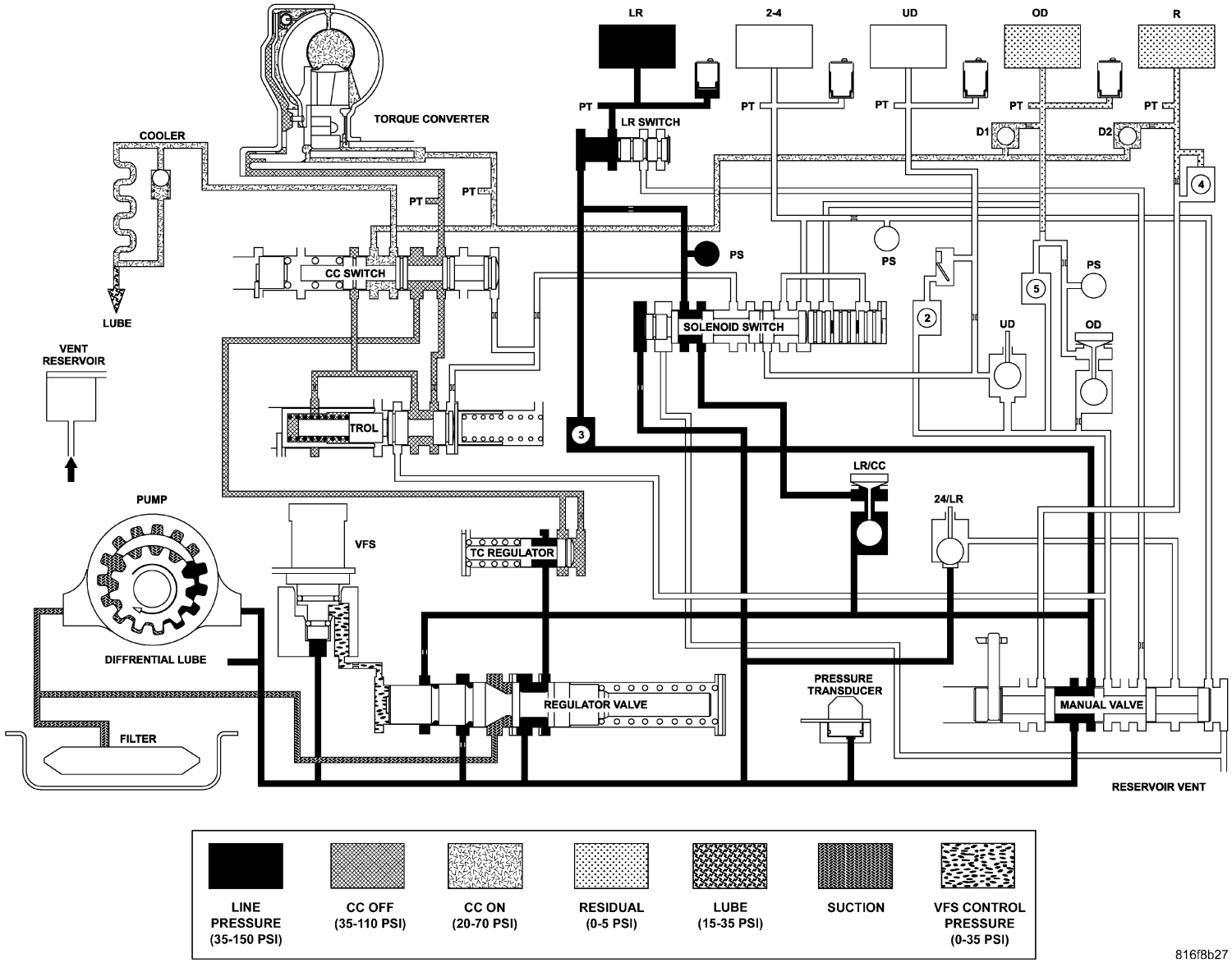
LR
2-4
UD
OD
R
PT
LR SWITCH
D1
D2
TORQUE CONVERTER
COOLER
LUBE
VENT RESERVOIR
CC SWITCH
PS
SOLENOID SWITCH
UD
OD
TROL
LR/CC
24/LR
PUMP
VFS
TC REGULATOR
DIFFRENTIAL LUBE
FILTER
REGULATOR VALVE
PRESSURE TRANSDUCER
MANUAL VALVE
RESERVOIR VENT
LINE PRESSURE (35-150 PSI)
CC OFF (35-110 PSI)
CC ON (20-70 PSI)
RESIDUAL (0-5 PSI)
LUBE (15-35 PSI)
SUCTION
VFS CONTROL PRESSURE (0-35 PSI)
816f8b27

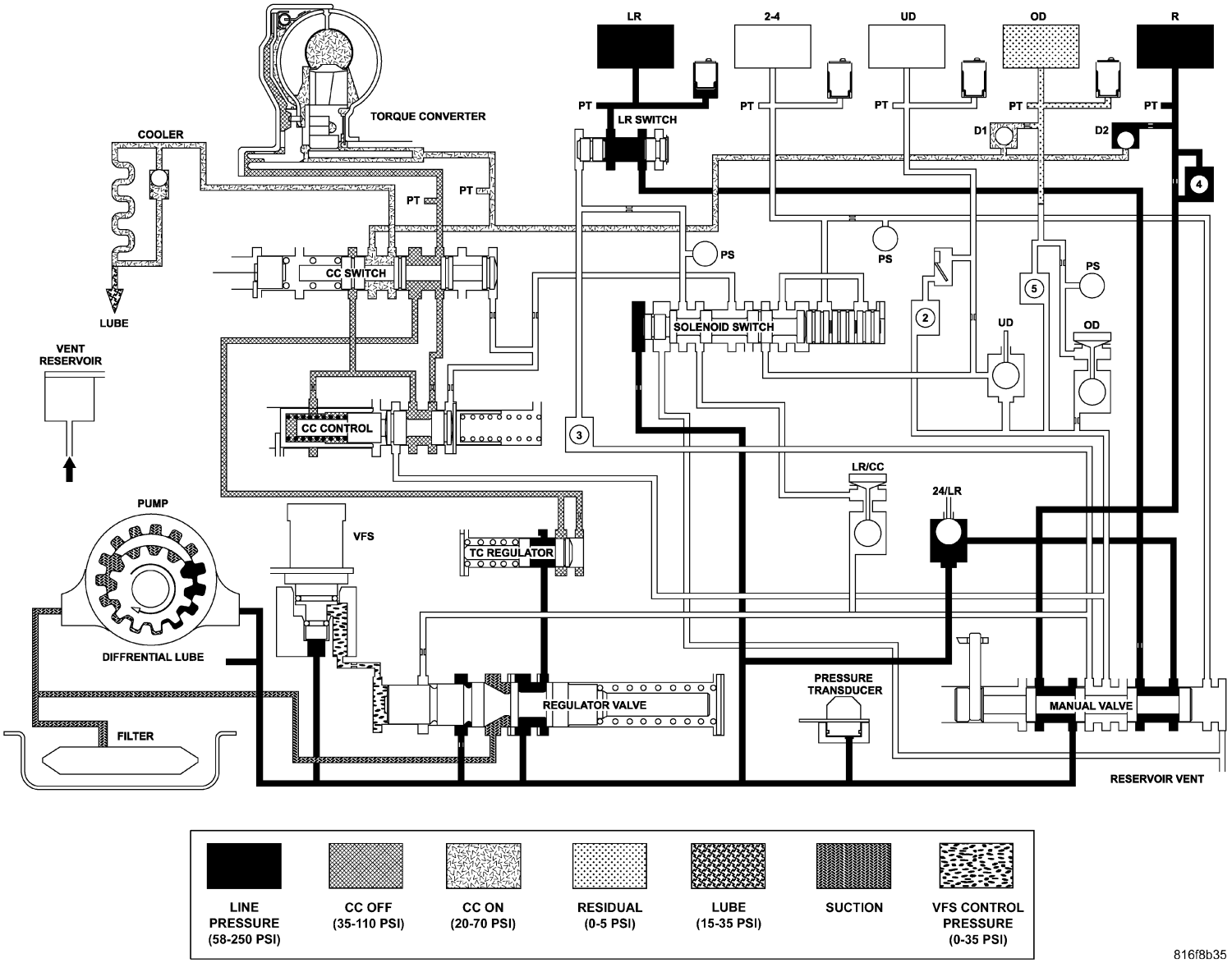
LR
2-4
UD
OD
R
PT
LR SWITCH
D1
D2
TORQUE CONVERTER
COOLER
LUBE
CC SWITCH
PS
SOLENOID SWITCH
VENT RESERVOIR
CC CONTROL
LR/CC
24/LR
PUMP
VFS
TC REGULATOR
DIFFRENTIAL LUBE
REGULATOR VALVE
PRESSURE TRANSDUCER
MANUAL VALVE
FILTER
RESERVOIR VENT
LINE PRESSURE (58-250 PSI)
CC OFF (35-110 PSI)
CC ON (20-70 PSI)
RESIDUAL (0-5 PSI)
LUBE (15-35 PSI)
SUCTION
VFS CONTROL PRESSURE (0-35 PSI)

816f8b35

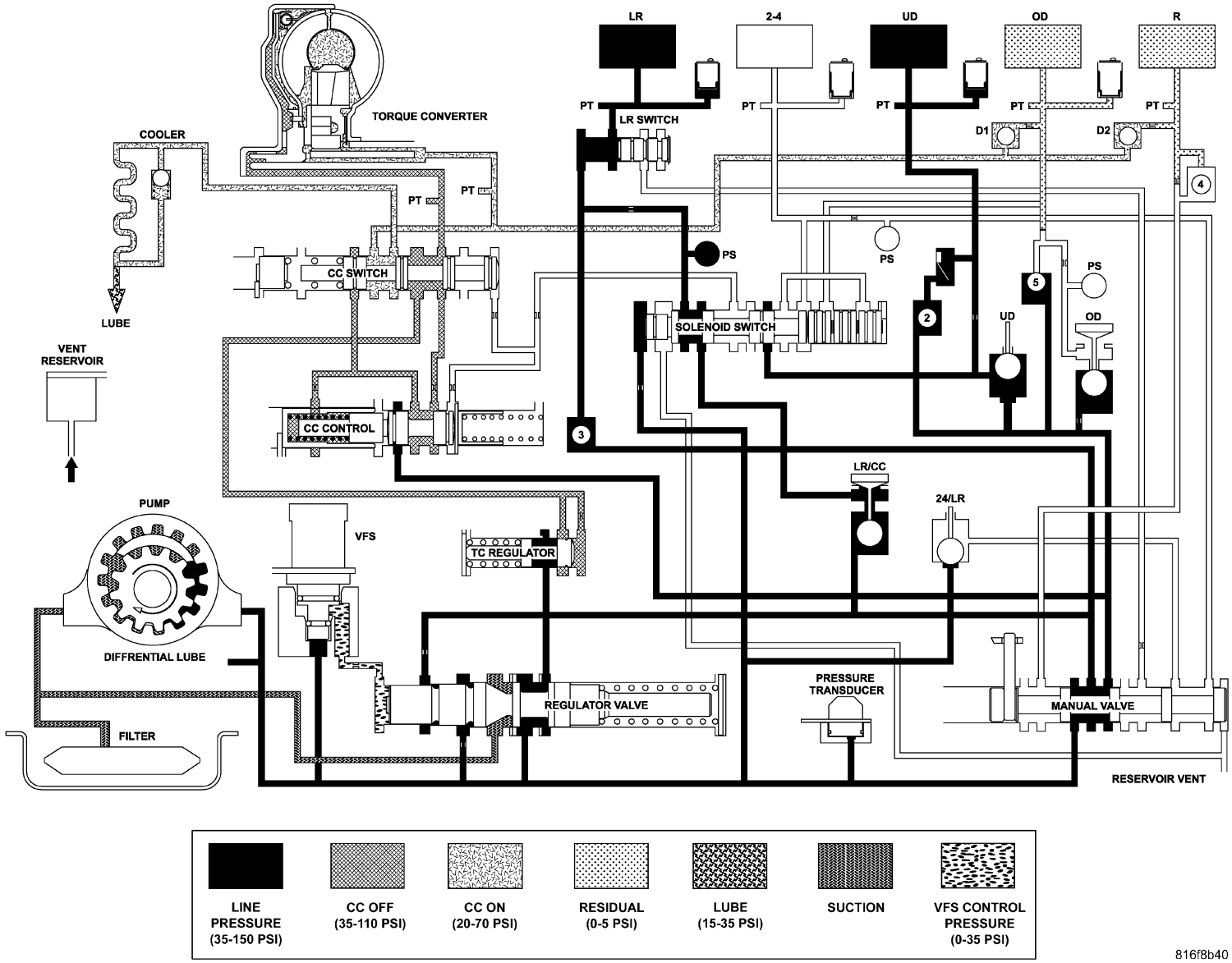
LR
2-4
UD
OD
R
PT
LR SWITCH
D1
D2
TORQUE CONVERTER
COOLER
LUBE
VENT RESERVOIR
CC SWITCH
SOLENOID SWITCH
PS
UD
OD
CC CONTROL
LR/CC
24/LR
PUMP
VFS
TC REGULATOR
DIFFRENTIAL LUBE
FILTER
REGULATOR VALVE
PRESSURE TRANSDUCER
MANUAL VALVE
RESERVOIR VENT
LINE PRESSURE (35-150 PSI)
CC OFF (35-110 PSI)
CC ON (20-70 PSI)
RESIDUAL (0-5 PSI)
LUBE (15-35 PSI)
SUCTION
VFS CONTROL PRESSURE (0-35 PSI)
816f8b40

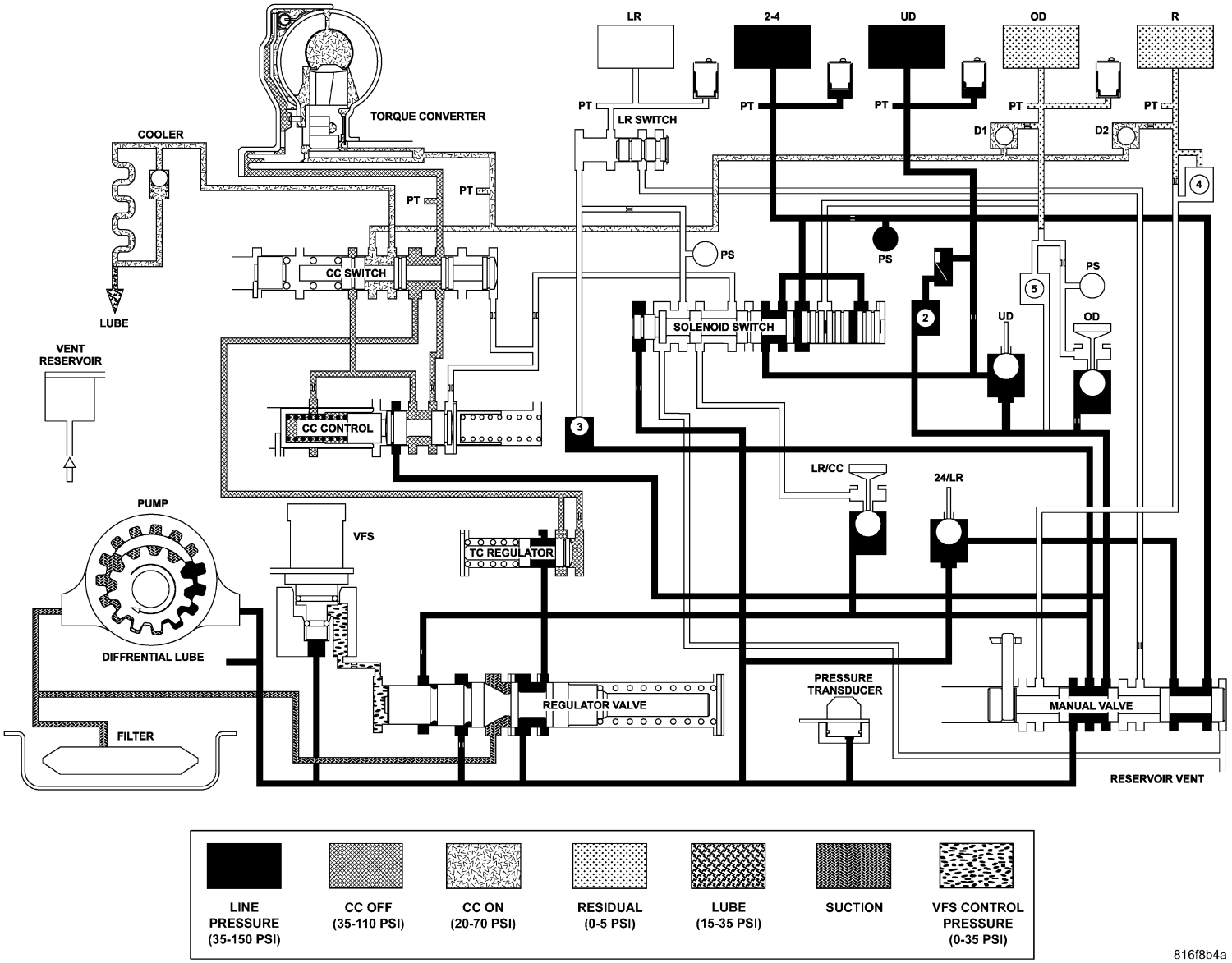
LR
2-4
UD
OD
R
PT
LR SWITCH
D1
D2
TORQUE CONVERTER
COOLER
LUBE
CC SWITCH
PS
SOLENOID SWITCH
VENT RESERVOIR
CC CONTROL
LR/CC
24/LR
PUMP
VFS
TC REGULATOR
DIFFRENTIAL LUBE
REGULATOR VALVE
PRESSURE TRANSDUCER
MANUAL VALVE
FILTER
RESERVOIR VENT
LINE PRESSURE (35-150 PSI)
CC OFF (35-110 PSI)
CC ON (20-70 PSI)
RESIDUAL (0-5 PSI)
LUBE (15-35 PSI)
SUCTION
VFS CONTROL PRESSURE (0-35 PSI)

816f8b4a

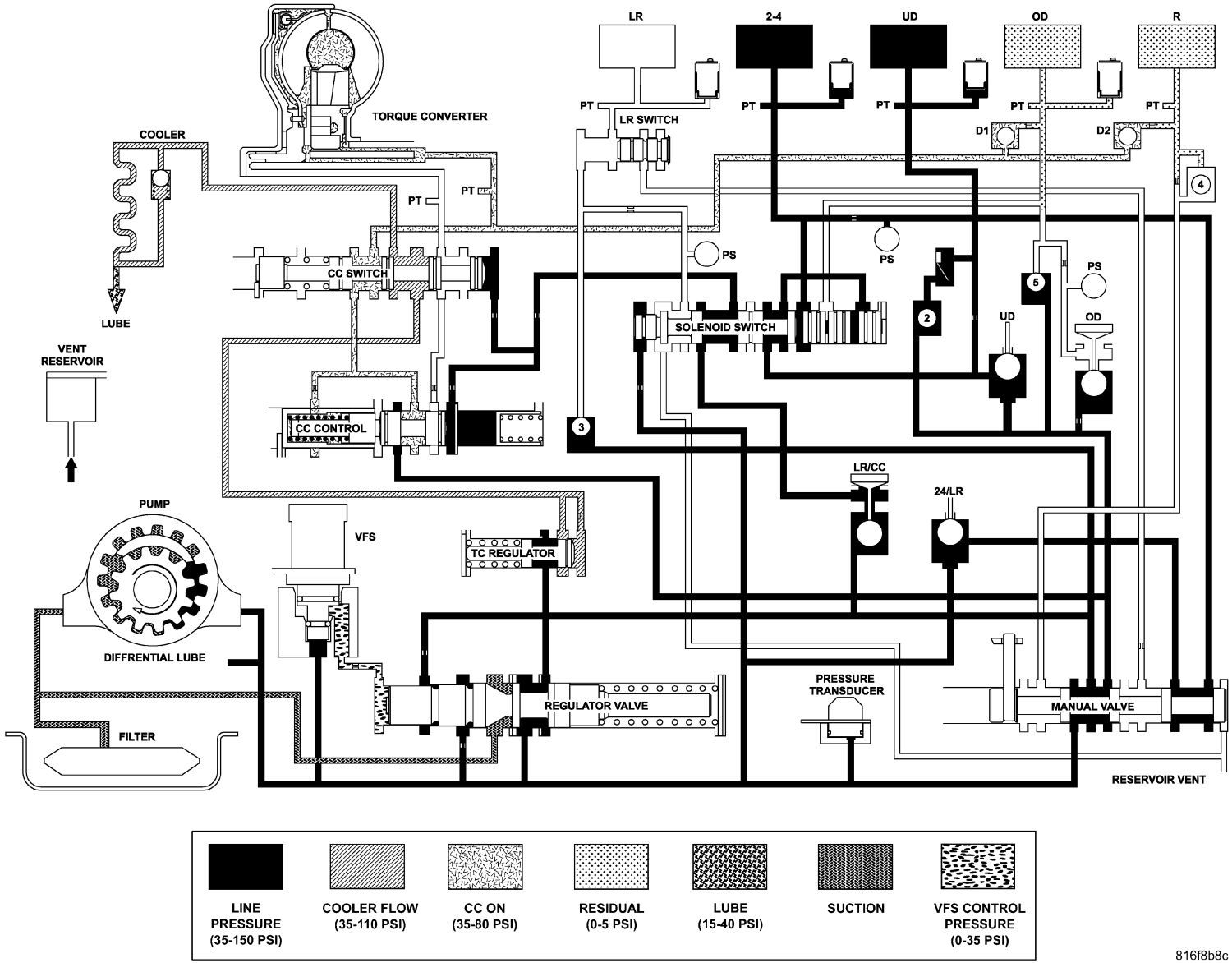
LR
2-4
UD
OD
R
PT
LR SWITCH
D1
D2
TORQUE CONVERTER
COOLER
LUBE
VENT RESERVOIR
CC SWITCH
PS
SOLENOID SWITCH
CC CONTROL
PUMP
VFS
TC REGULATOR
LR/CC
24/LR
DIFFRENTIAL LUBE
FILTER
REGULATOR VALVE
PRESSURE TRANSDUCER
MANUAL VALVE
RESERVOIR VENT
LINE PRESSURE (35-150 PSI)
COOLER FLOW (35-110 PSI)
CC ON (35-80 PSI)
RESIDUAL (0-5 PSI)
LUBE (15-40 PSI)
SUCTION
VFS CONTROL PRESSURE (0-35 PSI)
816f8b8c

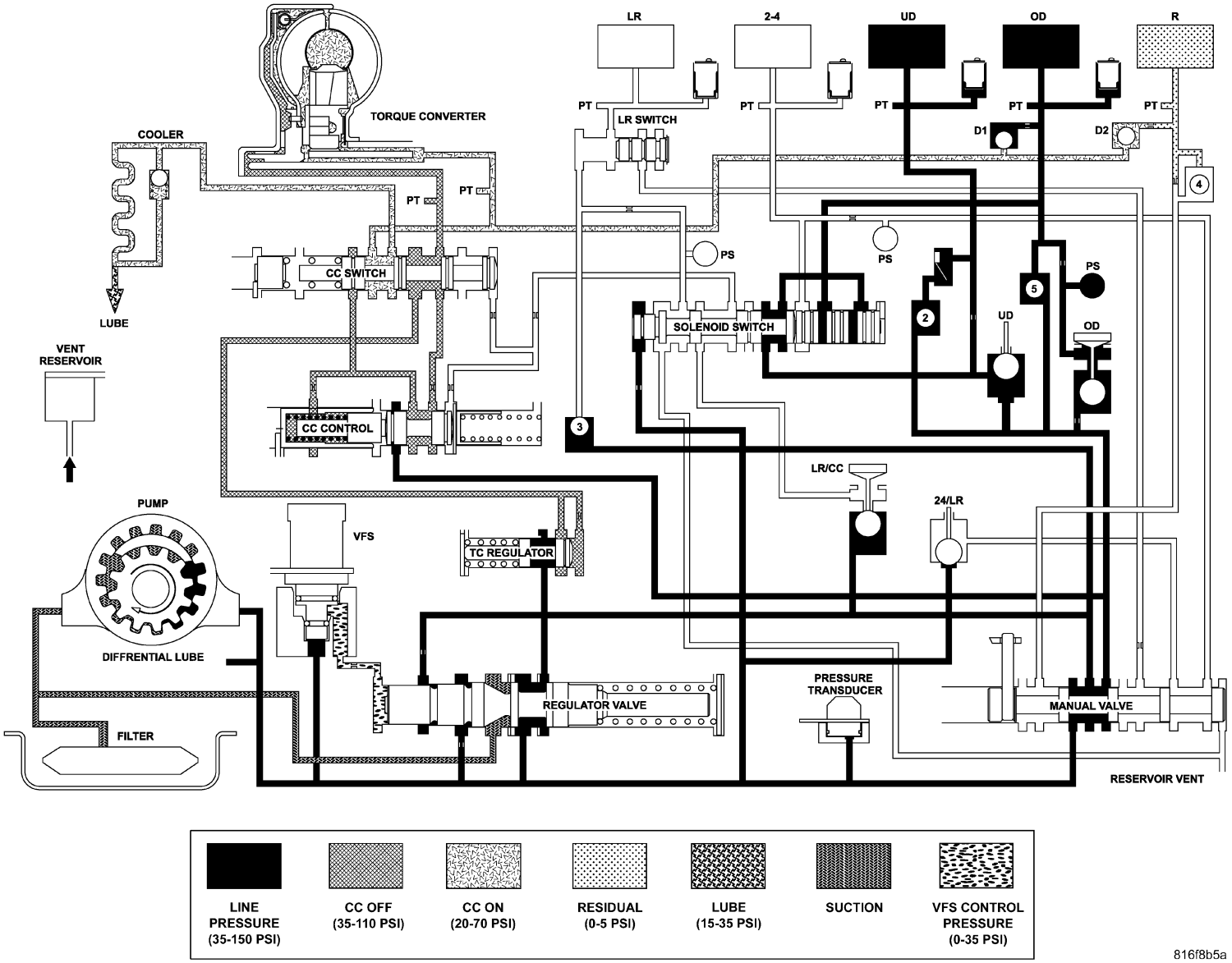
LR
2-4
UD
OD
R
PT
LR SWITCH
D1
D2
TORQUE CONVERTER
COOLER
LUBE
CC SWITCH
PS
SOLENOID SWITCH
VENT RESERVOIR
CC CONTROL
LR/CC
24/LR
PUMP
VFS
TC REGULATOR
DIFFRENTIAL LUBE
REGULATOR VALVE
PRESSURE TRANSDUCER
MANUAL VALVE
FILTER
RESERVOIR VENT
LINE PRESSURE (35-150 PSI)
CC OFF (35-110 PSI)
CC ON (20-70 PSI)
RESIDUAL (0-5 PSI)
LUBE (15-35 PSI)
SUCTION
VFS CONTROL PRESSURE (0-35 PSI)
816f8b5a

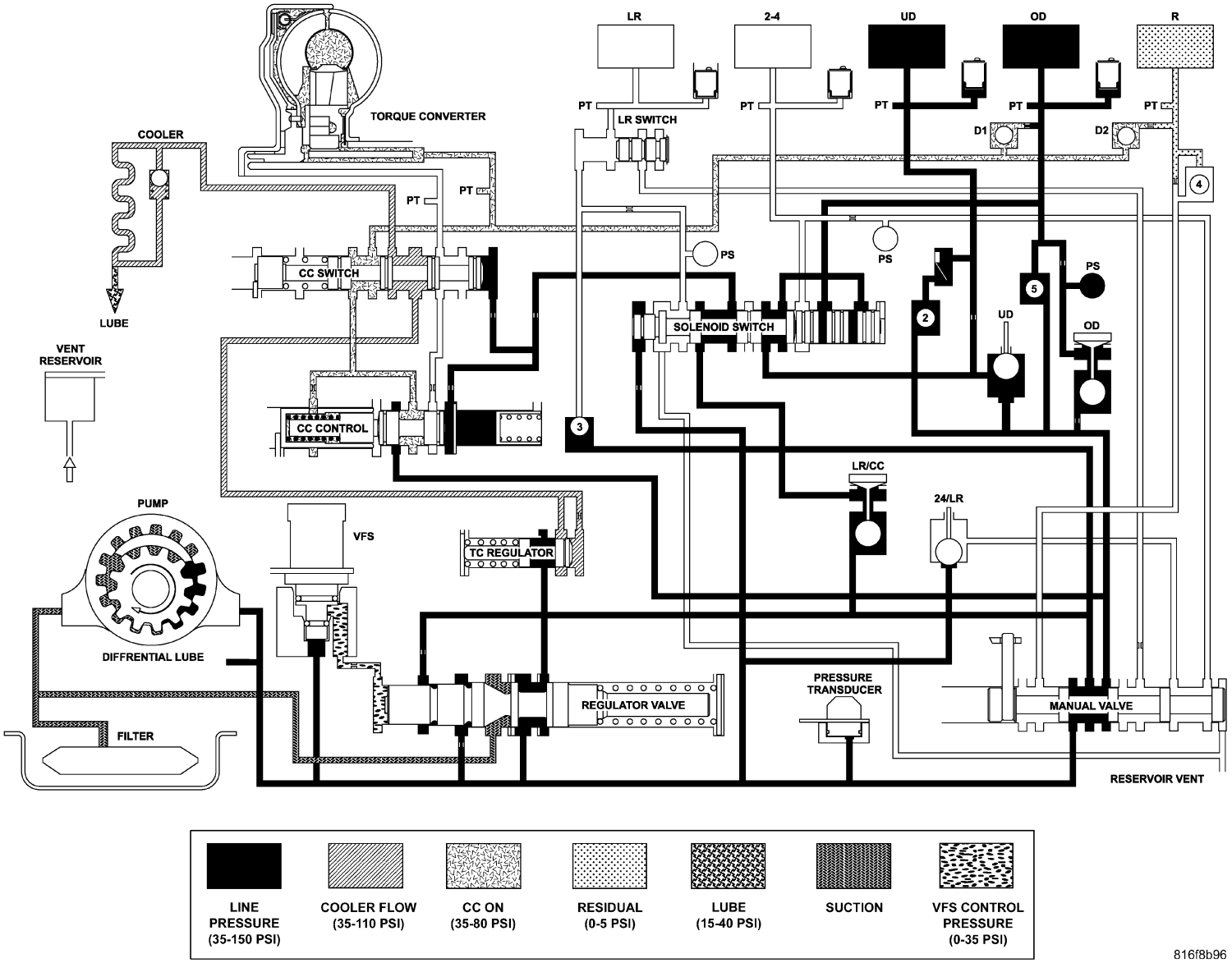
LR
2-4
UD
OD
R
PT
LR SWITCH
D1
D2
TORQUE CONVERTER
COOLER
LUBE
CC SWITCH
PS
SOLENOID SWITCH
VENT RESERVOIR
CC CONTROL
LR/CC
24/LR
PUMP
VFS
TC REGULATOR
DIFFRENTIAL LUBE
REGULATOR VALVE
PRESSURE TRANSDUCER
MANUAL VALVE
FILTER
RESERVOIR VENT
LINE PRESSURE (35-150 PSI)
COOLER FLOW (35-110 PSI)
CC ON (35-80 PSI)
RESIDUAL (0-5 PSI)
LUBE (15-40 PSI)
SUCTION
VFS CONTROL PRESSURE (0-35 PSI)
816f8b96

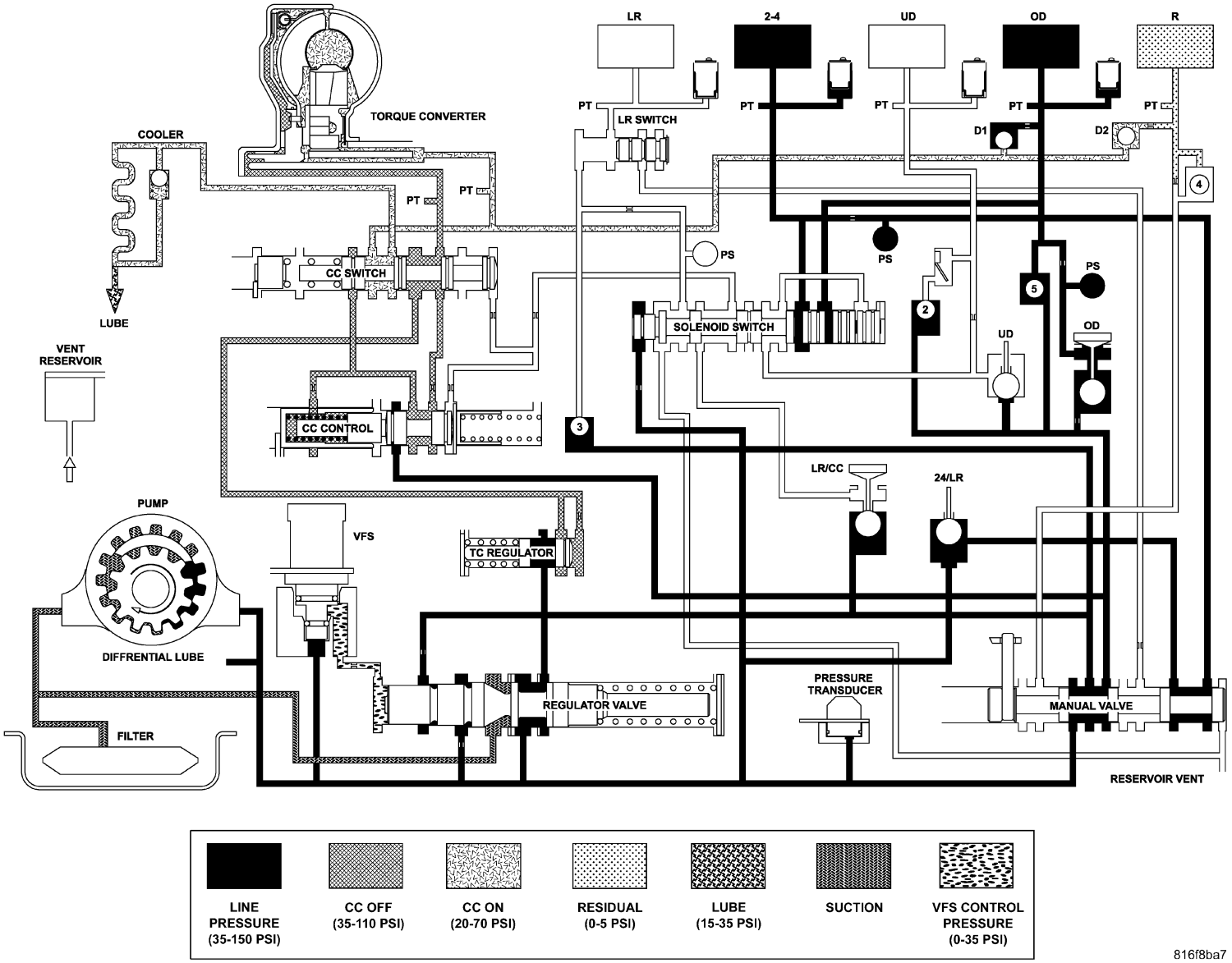
LR
2-4
UD
OD
R
PT
LR SWITCH
D1
D2
TORQUE CONVERTER
COOLER
LUBE
CC SWITCH
PS
SOLENOID SWITCH
VENT RESERVOIR
CC CONTROL
LR/CC
24/LR
PUMP
VFS
TC REGULATOR
DIFFRENTIAL LUBE
REGULATOR VALVE
PRESSURE TRANSDUCER
MANUAL VALVE
FILTER
RESERVOIR VENT
LINE PRESSURE (35-150 PSI)
CC OFF (35-110 PSI)
CC ON (20-70 PSI)
RESIDUAL (0-5 PSI)
LUBE (15-35 PSI)
SUCTION
VFS CONTROL PRESSURE (0-35 PSI)
816f8ba7

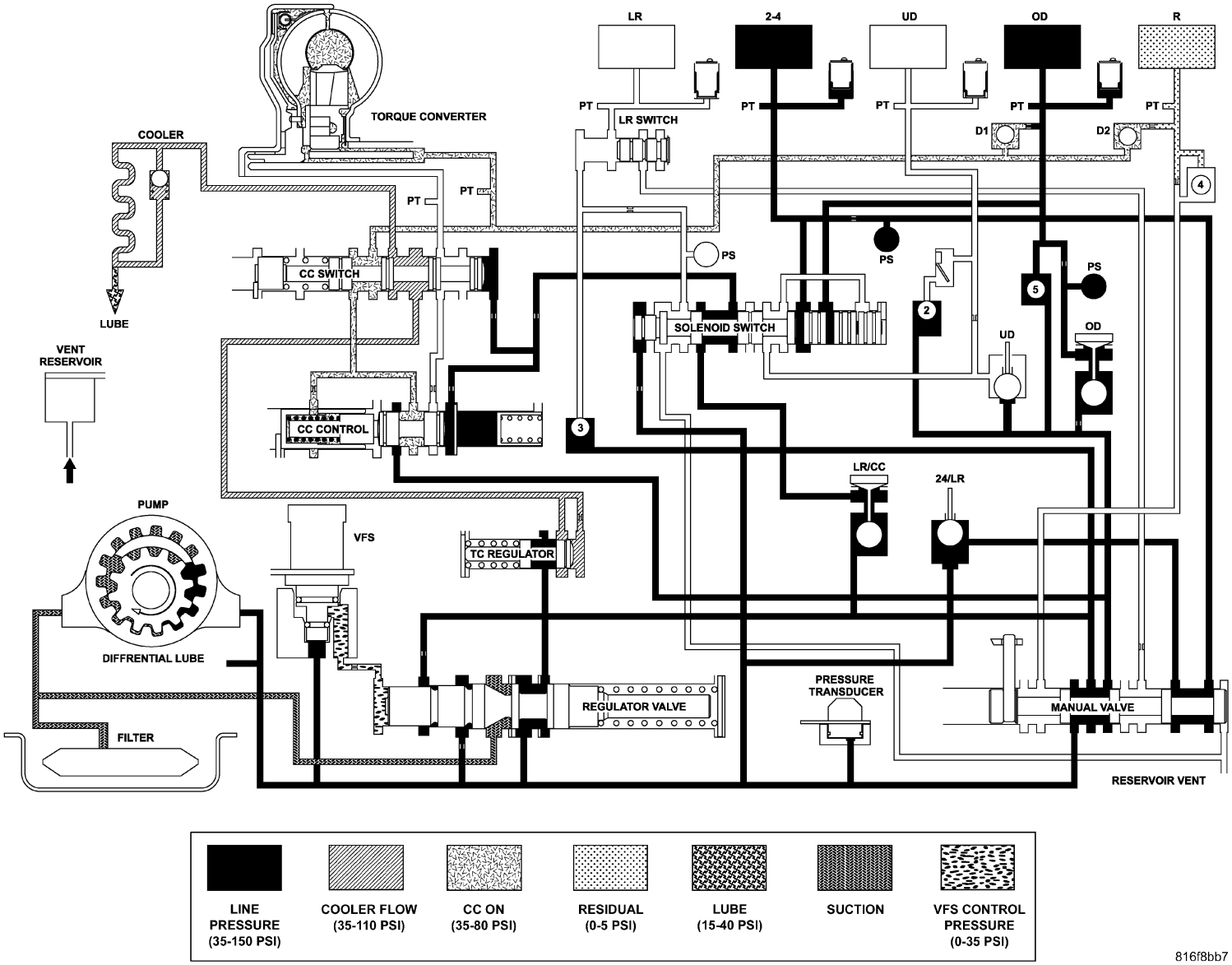
LR
2-4
UD
OD
R
PT
LR SWITCH
D1
D2
TORQUE CONVERTER
COOLER
LUBE
VENT RESERVOIR
CC SWITCH
PS
SOLENOID SWITCH
CC CONTROL
PUMP
VFS
TC REGULATOR
LR/CC
24/LR
DIFFRENTIAL LUBE
FILTER
REGULATOR VALVE
PRESSURE TRANSDUCER
MANUAL VALVE
RESERVOIR VENT
LINE PRESSURE (35-150 PSI)
COOLER FLOW (35-110 PSI)
CC ON (35-80 PSI)
RESIDUAL (0-5 PSI)
LUBE (15-40 PSI)
SUCTION
VFS CONTROL PRESSURE (0-35 PSI)
816f8bb7

Specifications

GENERAL SPECIFICATIONS

Transmission information type	General Information
Transmission Type	Four-Speed Automatic, Electronically Controlled, Fully Adaptive, Electronically Modulated Torque Converter
Lubrication Method	Pump (internal - external gear-type)
Cooling Method	Water Heat Exchanger and/or Air-to-Oil Heat Exchanger

GEAR RATIOS

Gear	Gear Ratio
1st Gear	2.84:1
2nd Gear	1.57:1
3rd Gear (Direct)	1.00:1
4th Gear (Overdrive)	0.69:1
Reverse Gear	2.21:1

BEARING PRELOAD (Drag Torque)

Description	Metric	Standard
Output Shaft	0.22-0.903 N·m	1-8 in. lbs.

CLUTCH PACK

Description	Metric	Standard
Low/Reverse Clutch (Select Reaction Plate)	0.84-1.60 mm	0.033-0.063 in.
Two/Four Clutch (No Select)	0.76-2.64 mm	0.030-0.104 in.
Reverse Clutch (Select Snap Ring)	0.89-1.37 mm	0.035-0.054 in.
Overdrive Clutch (No Select)	1.07-3.25 mm	0.042-0.128 in.
Underdrive Clutch (Select Reaction Plate)	0.94-1.50 mm	0.037-0.059 in.

INPUT SHAFT

Description	Metric	Standard
End Play	0.127-0.635 mm	0.005-0.025 in.

OIL PUMP CLEARANCES

DESCRIPTION	METRIC	STANDARD
Outer Gear-to-Crescent	0.060-0.298 mm	0.0023-0.0117 in.
Inner Gear-to-Crescent	0.093-0.385 mm	0.0036-0.0151 in.
Outer Gear-to-Pocket	0.089-0.202 mm	0.0035-0.0079 in.

OIL PUMP CLEARANCES, continued

DESCRIPTION	METRIC	STANDARD
Outer Gear Side Clearance	0.020-0.046 mm	0.0008-0.0018 in.
Inner Gear Side Clearance	0.020-0.046 mm	0.0008-0.0018 in.
Reaction Shaft Support Bearing Sleeve	45.22 - 45.23 mm	1.780 - 1.781 in.

GEAR TRAIN MEASUREMENTS

Description	Metric	Standard
Front Sun Gear Bushings	29.55 - 29.60 mm	1.163 -1.165 in.
Rear Carrier Bushing	29.75 - 30.00 mm	1.171 - 1.181 in.
Overdrive Hub / Shaft Bushing	21.52 - 21.58 mm	0.847 - 0.850 in.
Oil Pump Reaction Support Sleeve	45.27 - 45.31 mm	1.782 - 1.784 in.
Front / Rear Carrier Pinion end Play	0.15 - 0.61 mm	0.006 - 0.024 in.
Torque Converter Hub Bushing	38.019 - 38.11	1.499 - 1.501 in.

TORQUE SPECIFICATIONS

Description	N·m	Ft. Lbs.	In. Lbs.
Bolt, Torque Converter Housing to Engine	68	50	-
Bolt, Converter-to-Driveplate	88	65	-
Bolt, Fluid Filter-to-Valve Body	5	-	45
Bolt, L/R Piston Retainer-to-Case	5	-	45
Bolt, Adapter/Extension Housing	54	40	-
Bolt, Manual Valve Lever-to-Manual Valve	5	-	45
Bolt, Oil Pan-to-Case	20	14.5	-
Bolt, Oil Pump-to-Case	30	-	265
Bolt, Park Sprag Retainer	4.5	-	40
Bolt, Reaction Shaft Support Halves	28	-	250
Screw, Solenoid/Pressure Switch Assembly-to-Valve Body	5.5	-	50
Bolt, Valve Body-to-Case	12	-	105
Bolt, Valve Body-to-Transfer Plate	5	-	45
Fitting, Cooler Line	47.5	35	-
Nut, Output Shaft	271	200	-
Plug, Pressure Tap	5	-	45
Bolt, Input Speed-to-Case Sensor	9	-	80
Bolt, Output Speed-to-Case Sensor	9	-	80
Bolt, Crossmember to Frame	68	50	-
Bolt, Rear Support to Transmission	47	35	-
Bolt, Clevis Bracket to Crossmember	47	35	-

TORQUE SPECIFICATIONS, continued

Description	N·m	Ft. Lbs.	In. Lbs.
Bolt, Clevis Bracket to Transmission	68	50	-
Screw, TRS/Manual Shaft Retaining	5	-	45
Screw, 2/4 Accumulator Retainer Plate	5	-	45

Special Tools

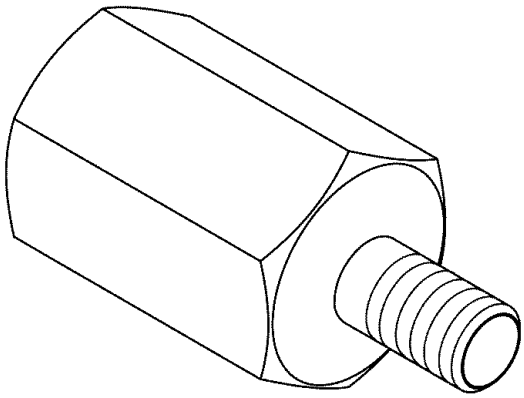

10171 - Adapter, Stub Shaft Remover

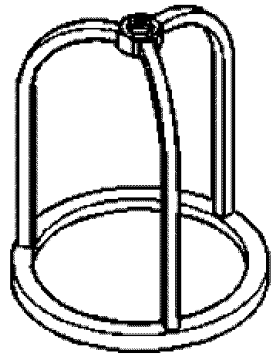

5059-A - Compressor, Spring

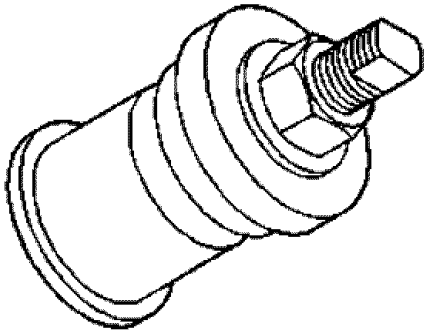

5050A - Installer, Bearing Cup

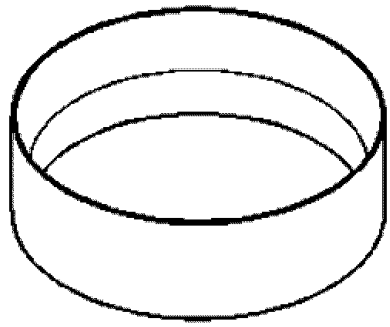

5067 - Installer, Seal

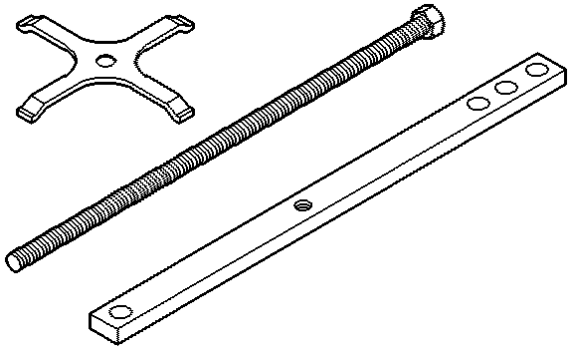

5058A - Compressor, Spring

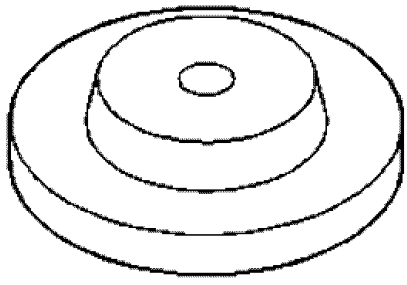

6057 - Disc, Spring Compressor

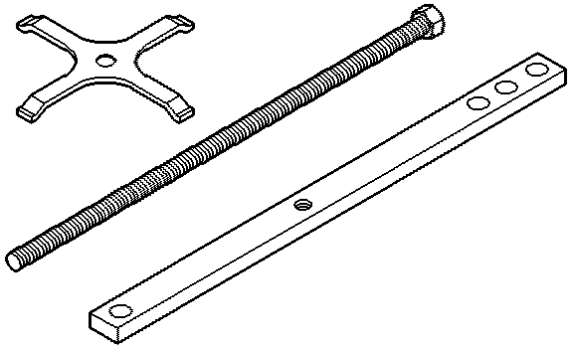

5058A-3 - Screw, Forcing

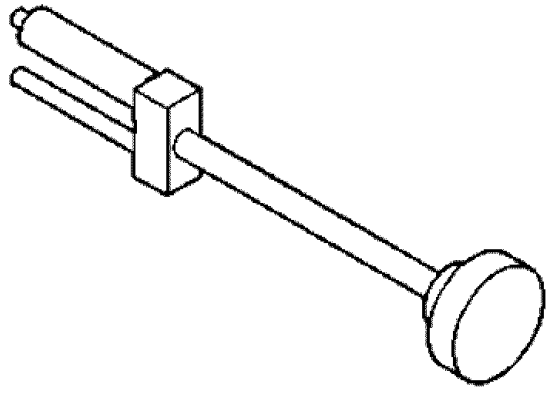

6301 - Remover/Installer

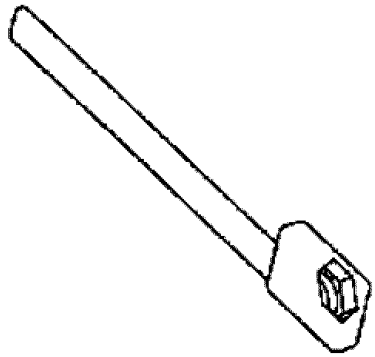

6497 - Wrench, Transfer Shaft

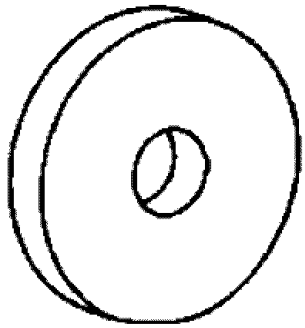

6597 - Remover, Bearing Cup

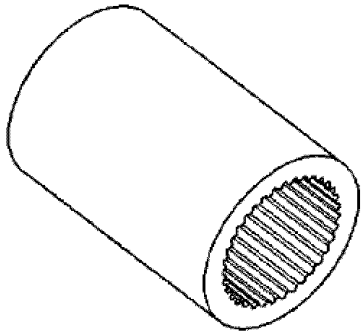

6498A - Wrench, Socket

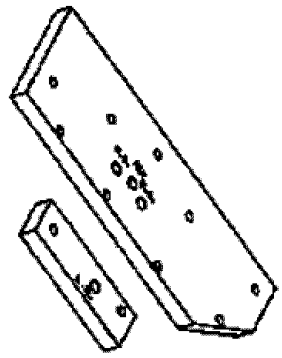

6599-1 - Plate

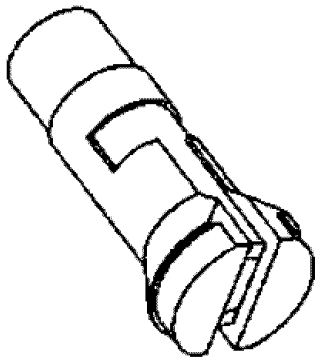

6596 - Remover, Bearing Cup

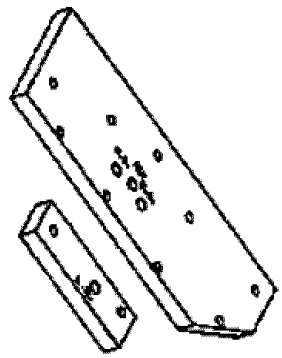

6599-2 - Plate

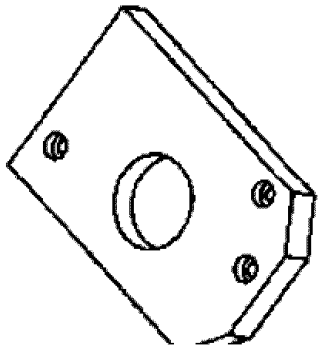

6618A - Plate, Bearing Installer

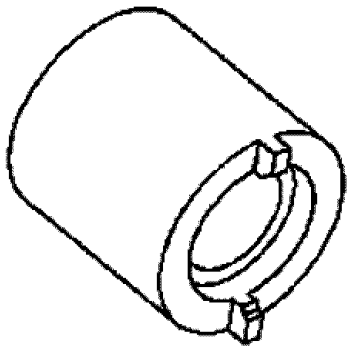

6639 - Tool, Staking

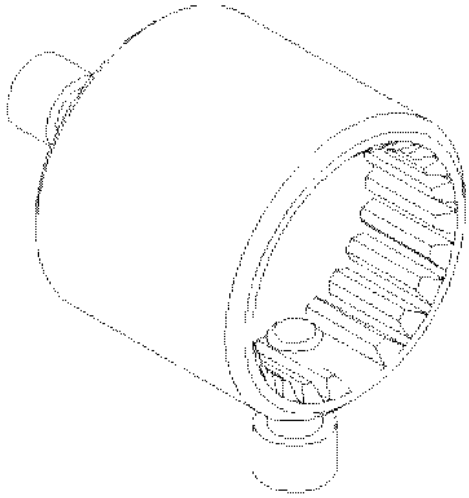

8266-2 - Spline Tool, 42LE

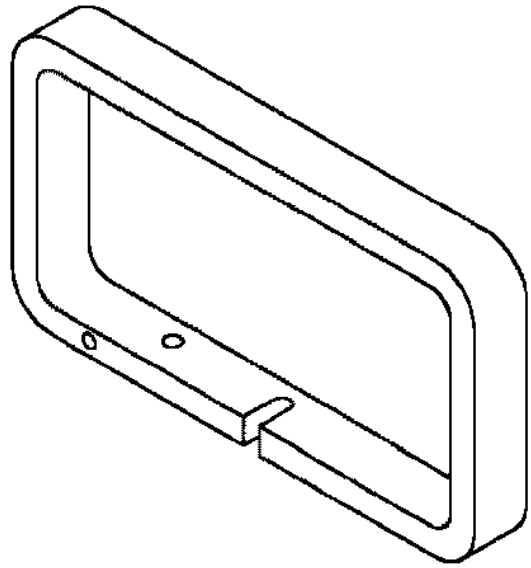

8266-8 - Handle

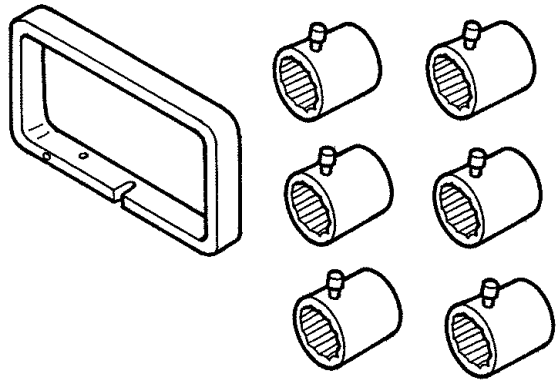

8266B - End Play Socket Set

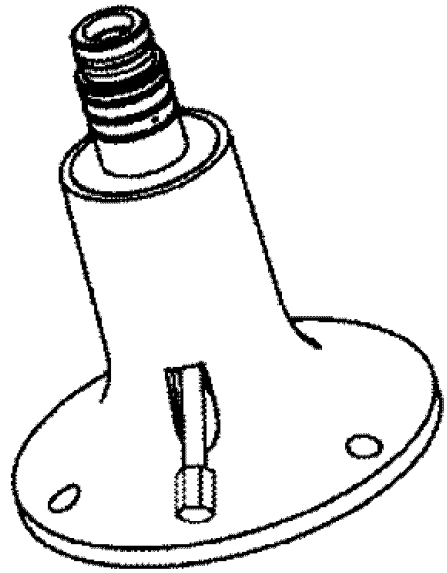

8391 - Fixture, Pressure Test

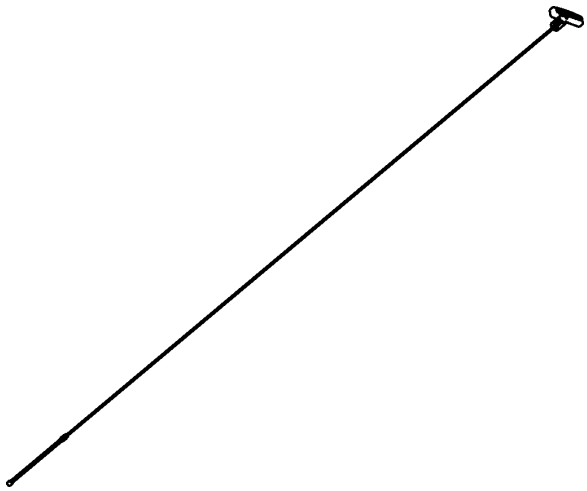

9336A - Dipstick

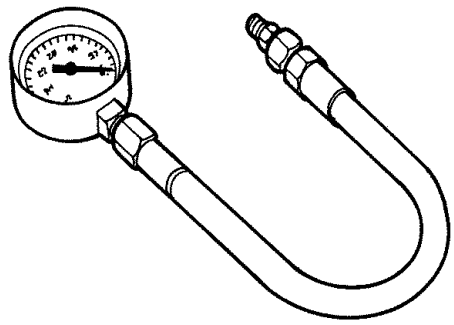

C-3293-SP - Gauge, Pressure 0-300 P.S.I.

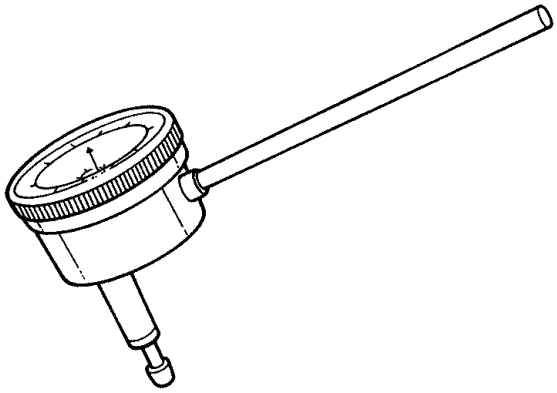

9524 - Indicator, Dial

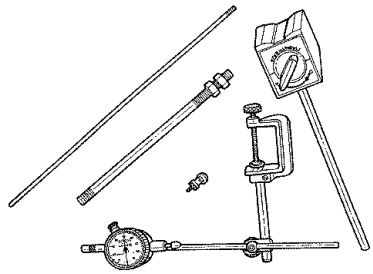

C-3339A - Set, Dial Indicator

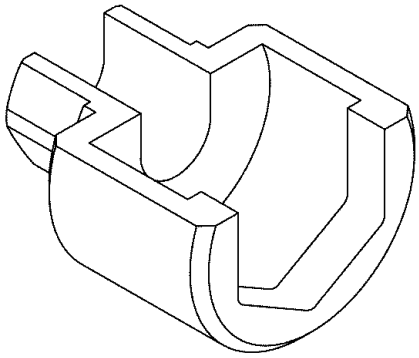

9688A - Cap Adapter, Power Steering Pump

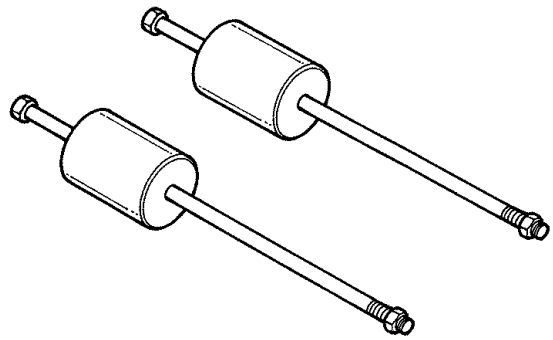

C-3752 - Slide Hammers

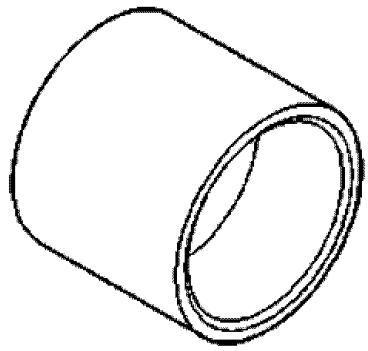

C-3995-A - Installer, Seal

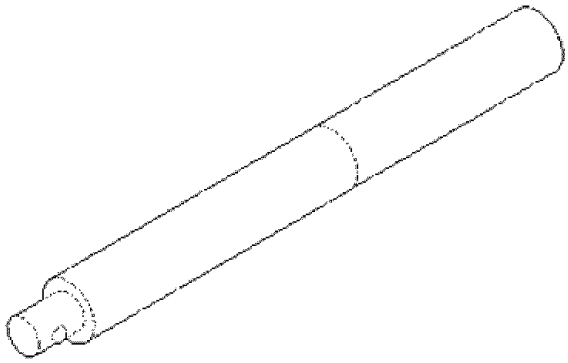

C-4171 - Driver Handle, Universal

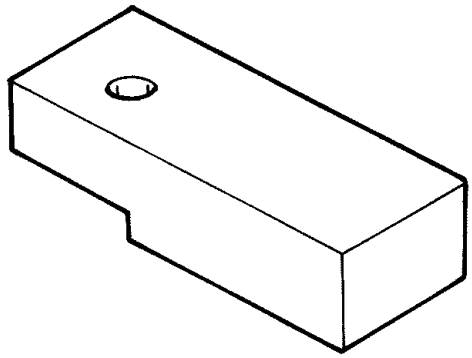

D-115-2A - Block, Scooter

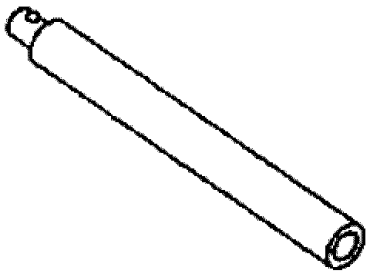

C-4171-2 - Extension, Drive Handle

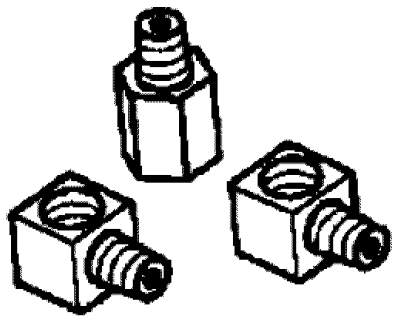

L-4559A - Adapter Set, Pressure

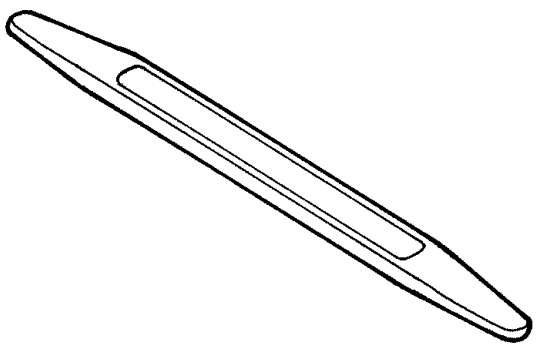

C-4755 - Trim Stick

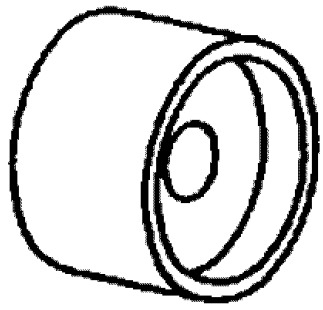

MD-998911 - Installer, Bearing

ACCUMULATOR

Description

The 42RLE underdrive, overdrive, low/reverse, and 2/4 clutch hydraulic circuits each contain an accumulator. An accumulator typically consists of a piston, return spring(s), and a cover or plug. The overdrive (1) and underdrive (2) accumulators are located within the transmission case, and are retained by the valve body .

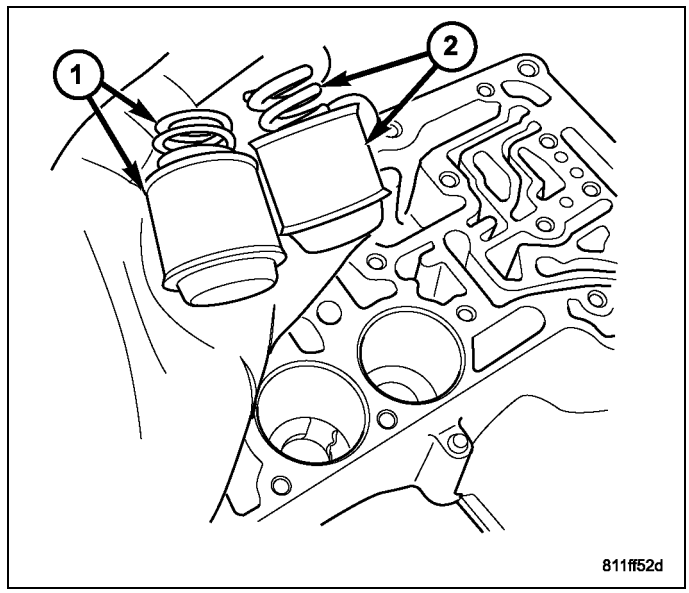

The low reverse (1) accumulator is also located within the transmission case, but the assembly is retained by a cover and a snap-ring.

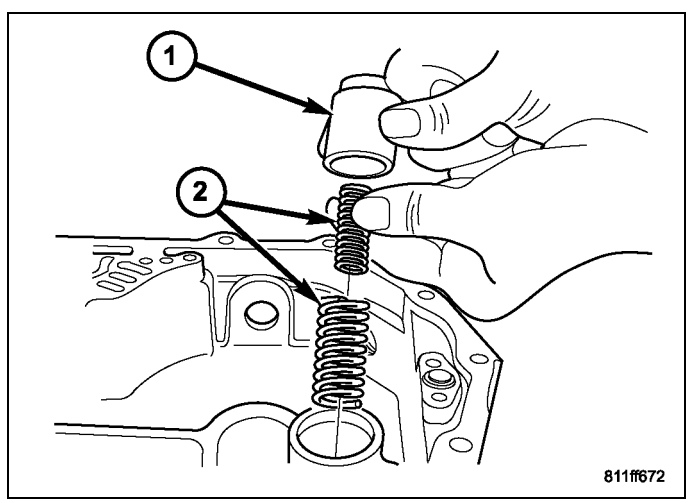

The 2/4 accumulator (5) is located in the valve body. It is retained by a cover and retaining screws .

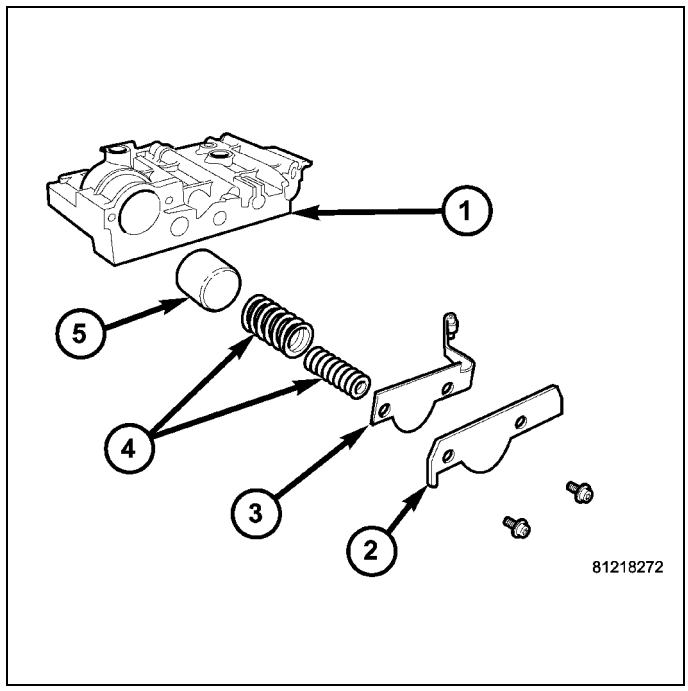

Operation

The function of an accumulator is to cushion the application of a frictional clutch element. When pressurized fluid is applied to a clutch circuit, the application force is dampened by fluid collecting in the respective accumulator chamber against the piston and springs. The intended result is a smooth, firm clutch application.

ASSEMBLY, Input Clutch

Disassembly

NOTE: If the input clutch assembly is being reconditioned (clutch/seal replacement) or replaced, it is necessary to perform the Quick Learn Procedure using the scan tool (Refer to 08 - Electrical/8E - Electronic Control Modules/MODULE, Transmission Control - Standard Procedure).

1. Mount input clutch assembly to Input Clutch Pressure Fixture (Tool 8391).
2. Tap down (2) reverse clutch reaction plate (4) to release pressure from snap ring.

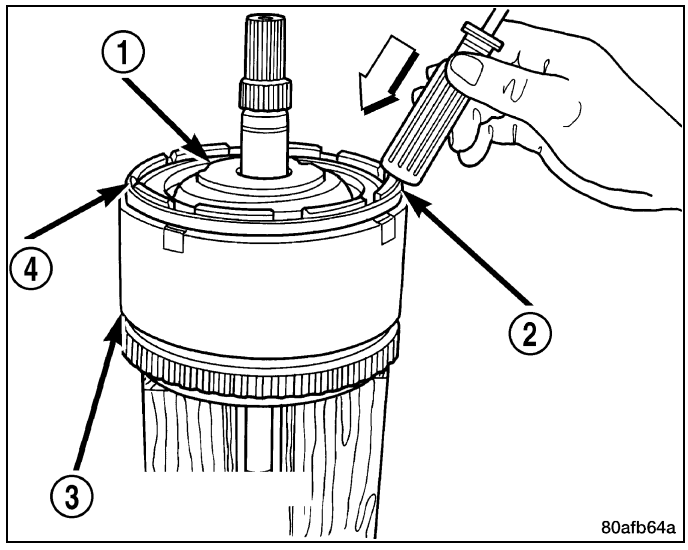

3. Remove reverse clutch snap ring (3) .

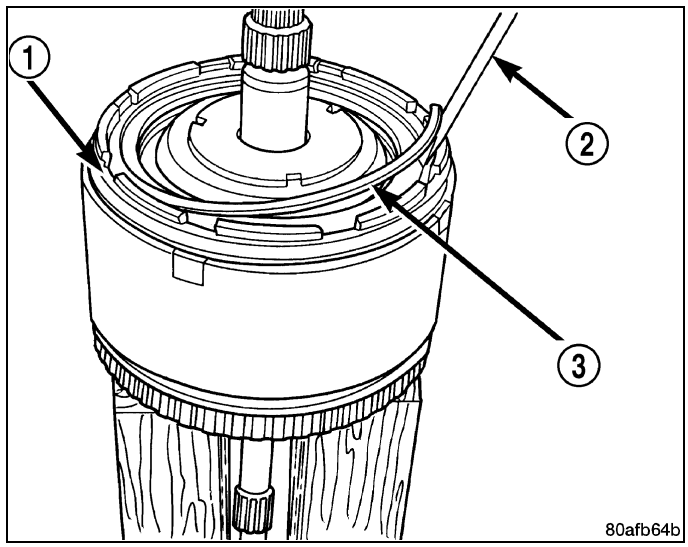

4. Pry up reverse clutch reaction plate (1) .

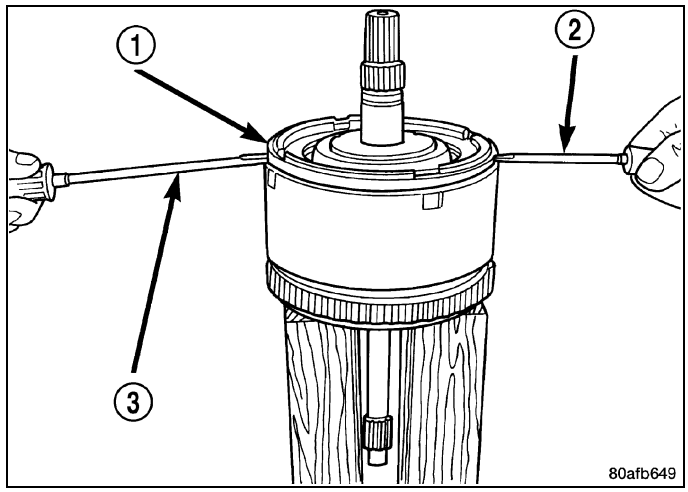

5. Remove reverse clutch reaction plate (1) .

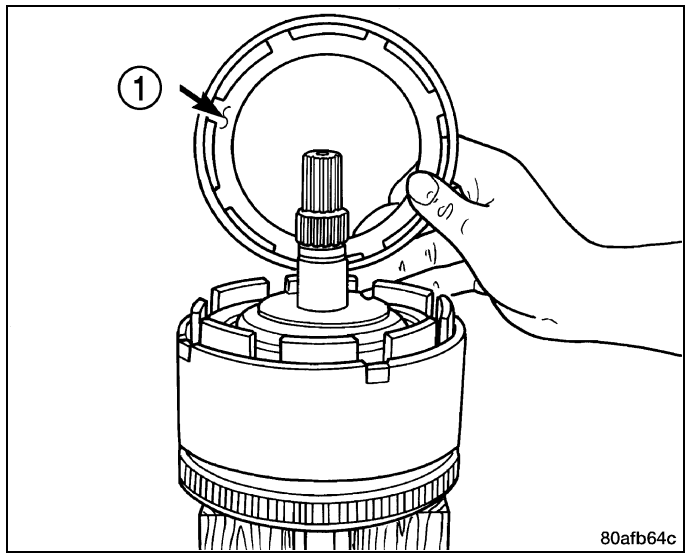

NOTE: Tag reverse clutch pack for reassembly identification.

6. Remove the reverse clutch pack (two fibers/one steel) (1, 2) .

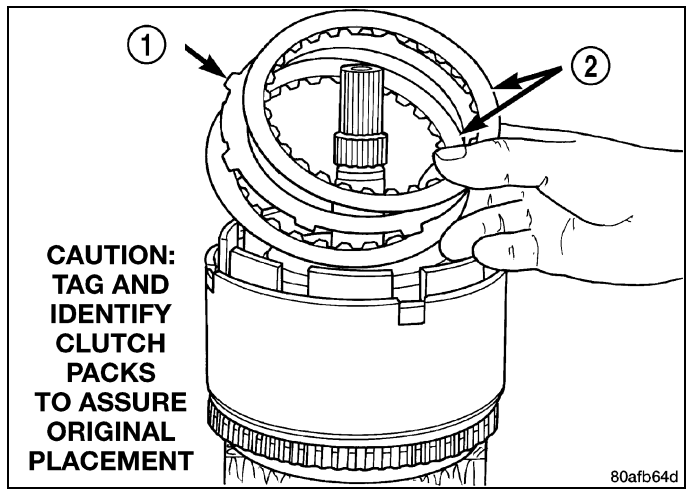

7. Remove the OD/Reverse reaction plate (1) snap ring (3) .

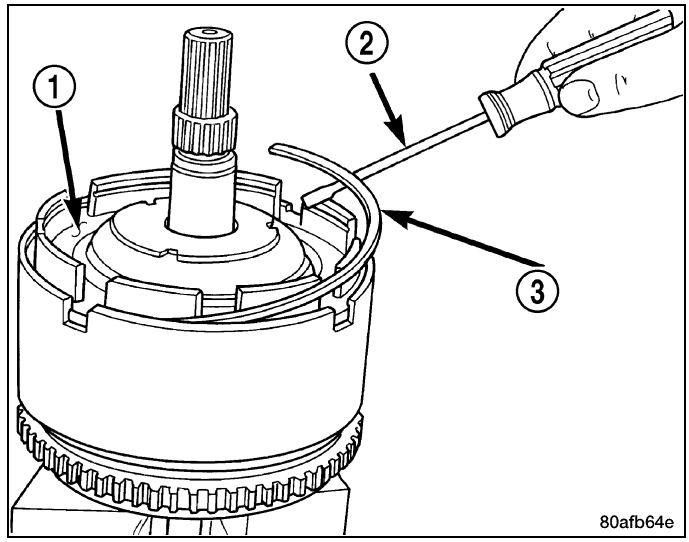

8. Remove OD/Reverse pressure plate (1) .

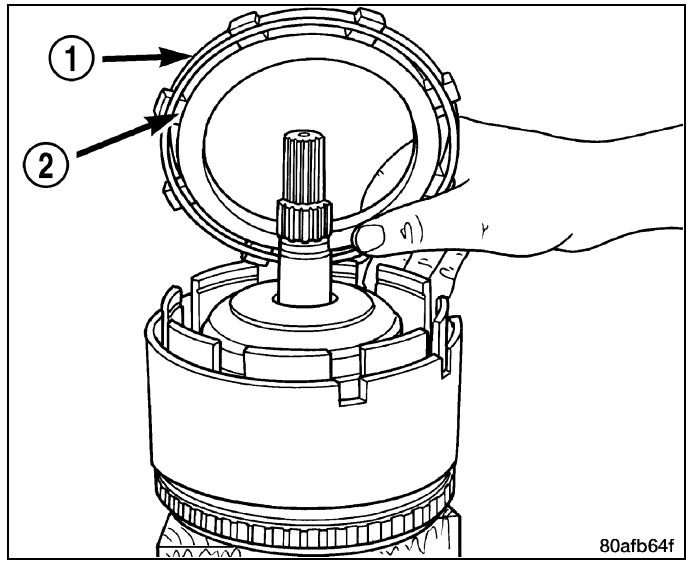

9. Remove OD/Reverse reaction plate wave snap ring (2) .

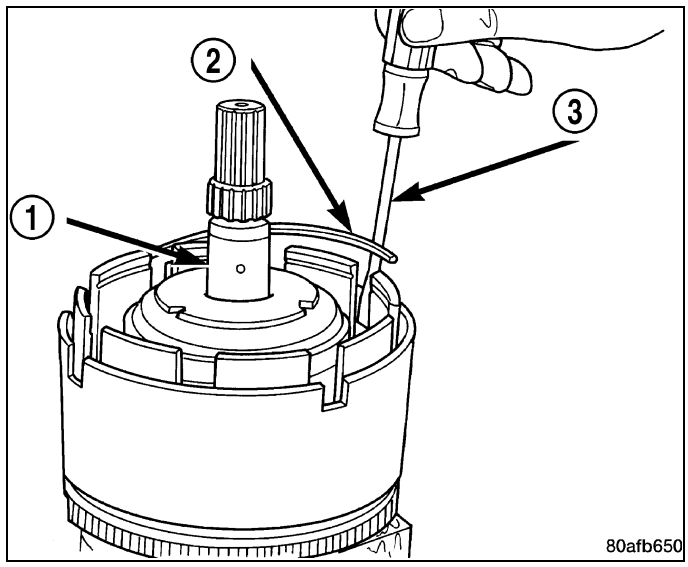

10. Remove OD shaft/hub and OD clutch pack (1) .

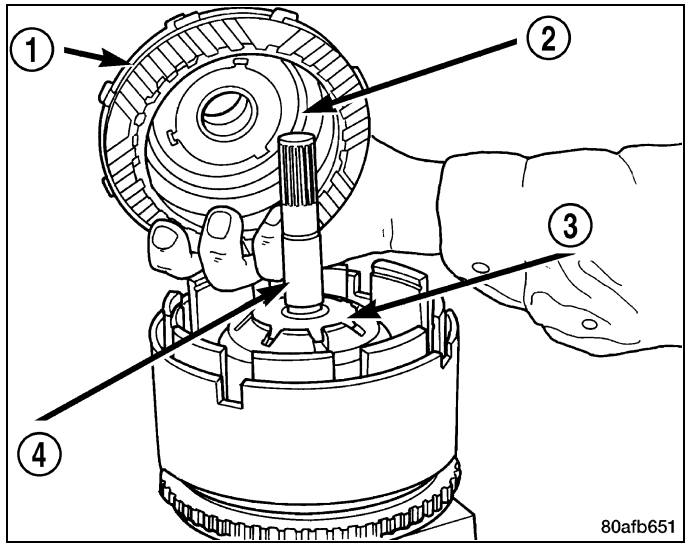

NOTE: Tag overdrive clutch pack for reassembly identification.

11. Remove the overdrive clutch (1, 3) from the overdrive hub/shaft (2) .

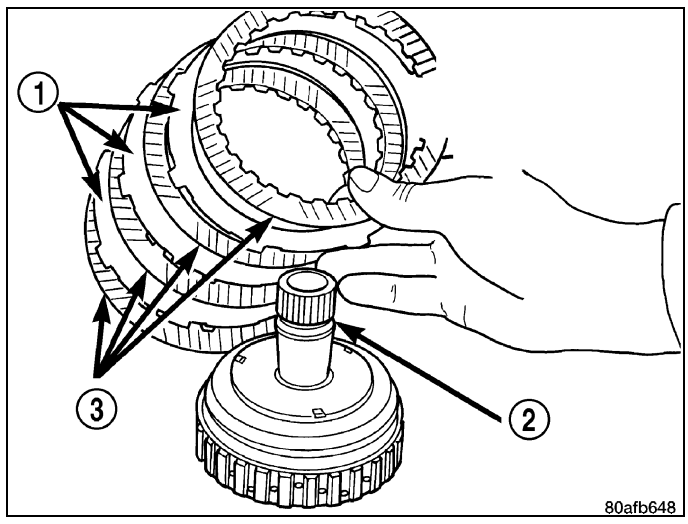

12. Remove and inspect number 3 and 4 thrust plates (1, 3) .

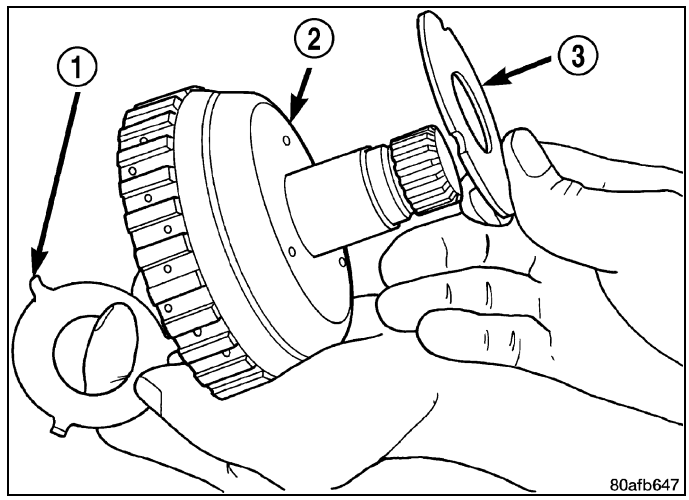

13. Remove the underdrive shaft assembly (2) .

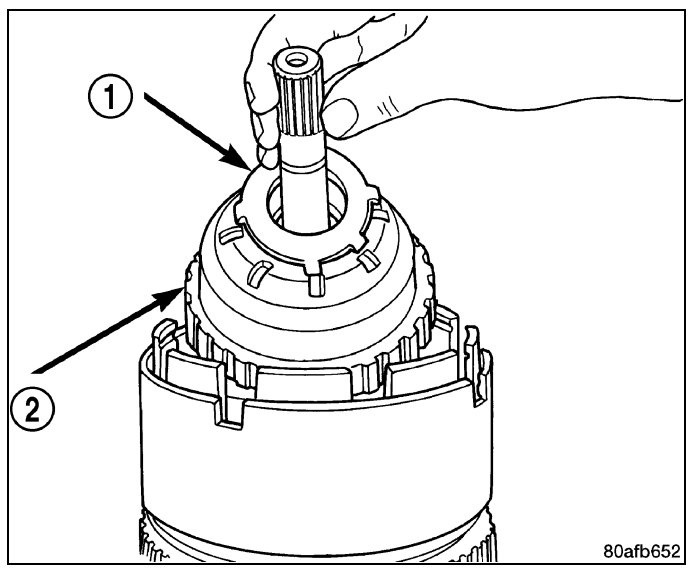

14. Remove the number 2 needle bearing (1) .

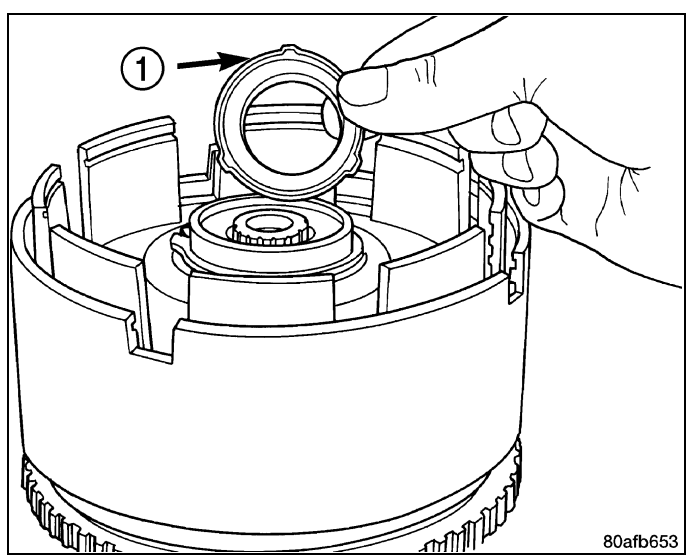

15. Remove the OD/UD reaction plate tapered snap ring (1) .

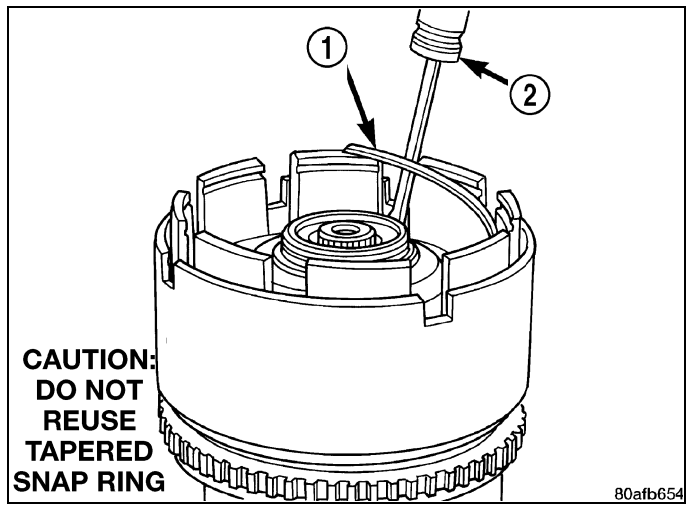

NOTE: The OD/UD clutch reaction plate has a step on both sides. The OD/UD clutches reaction plate goes tapered step side up.

16. Remove the OD/UD reaction plate (1) .

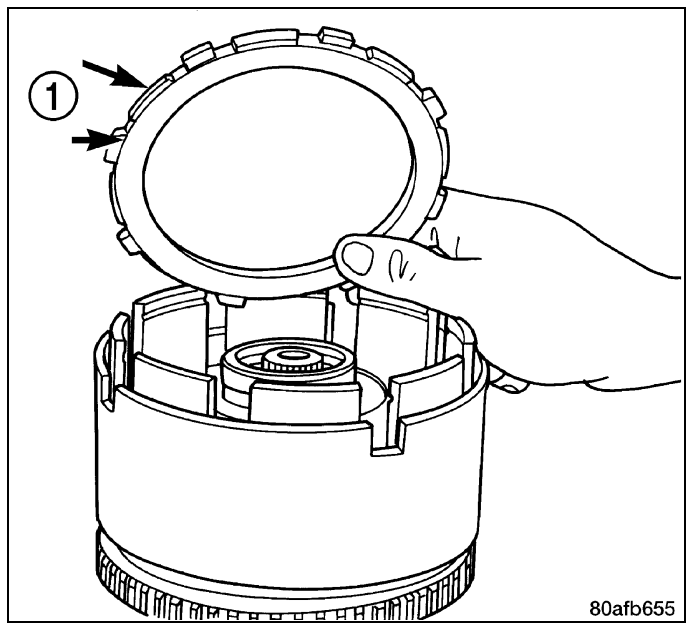

17. Remove the first UD clutch disc (1) .

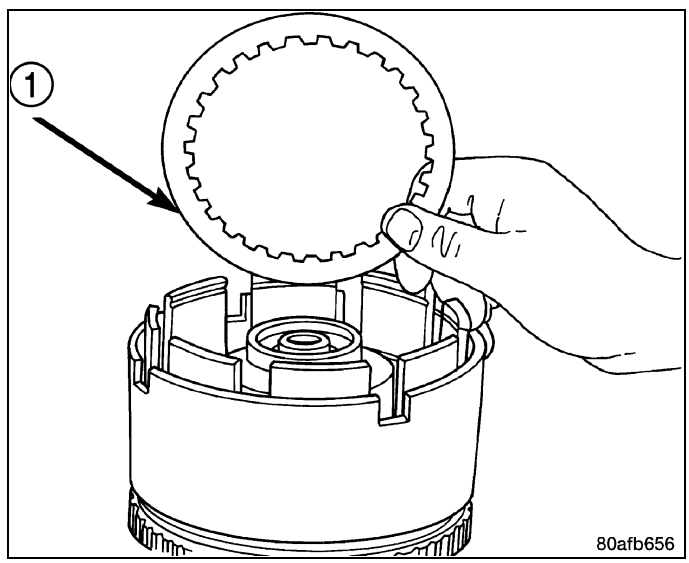

18. Remove the UD clutch flat snap ring (1) .

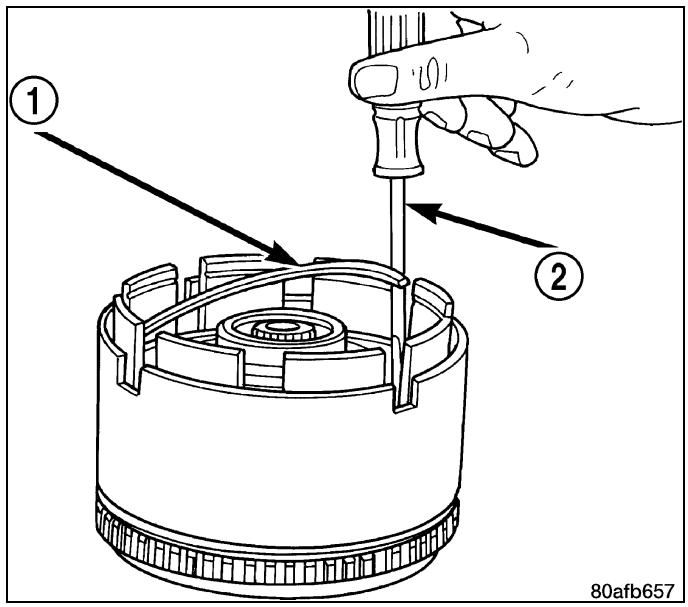

NOTE: Tag underdrive clutch pack for reassembly identification.

19. Remove the UD clutch pack (1, 3) .

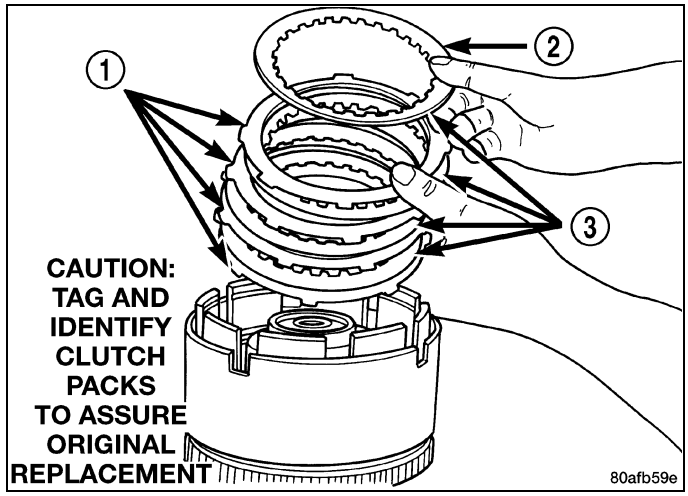

CAUTION: Compress return spring just enough to remove or install snap ring.

20. Using Compressor 5059-A (4) and an arbor press (2), compress UD clutch piston enough to remove snap ring (3) .

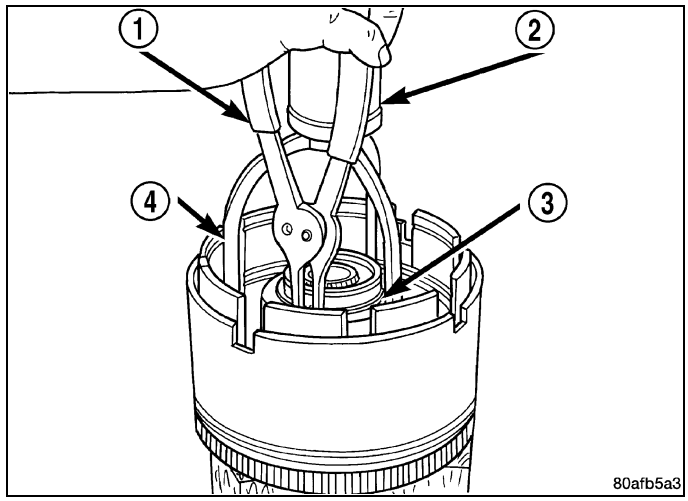

21. Remove the underdrive spring retainer snap ring (2), spring retainer (1), and spring (4) .

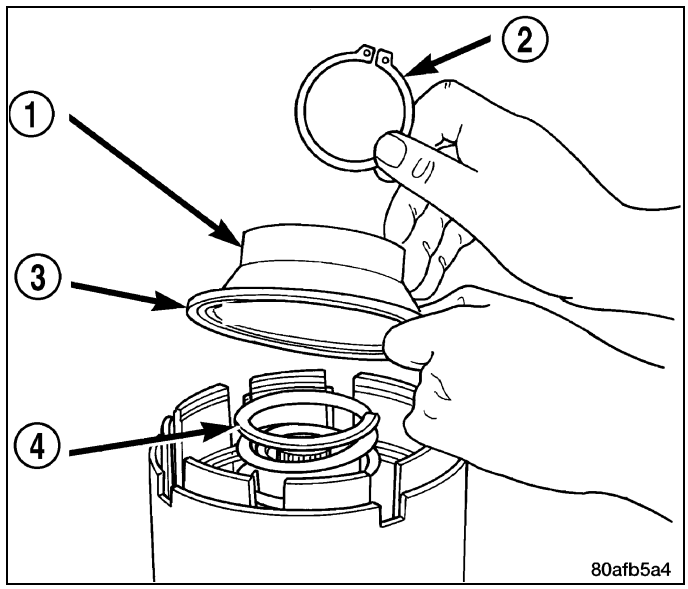

22. Remove the UD clutch piston (1) .

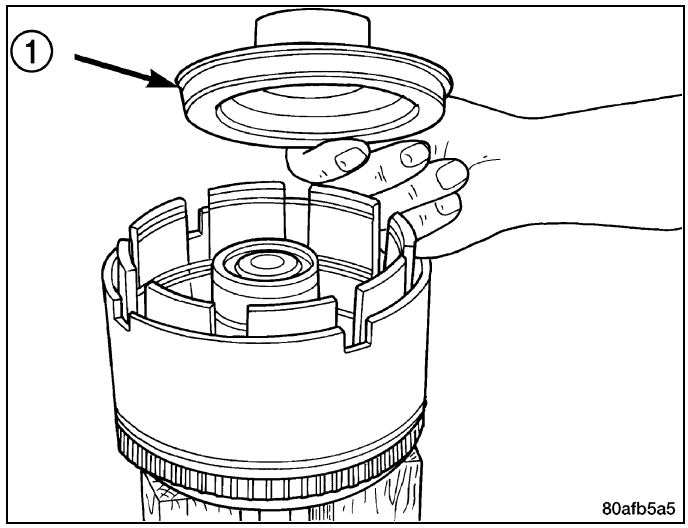

23. Remove the input hub tapered snap ring (2) .

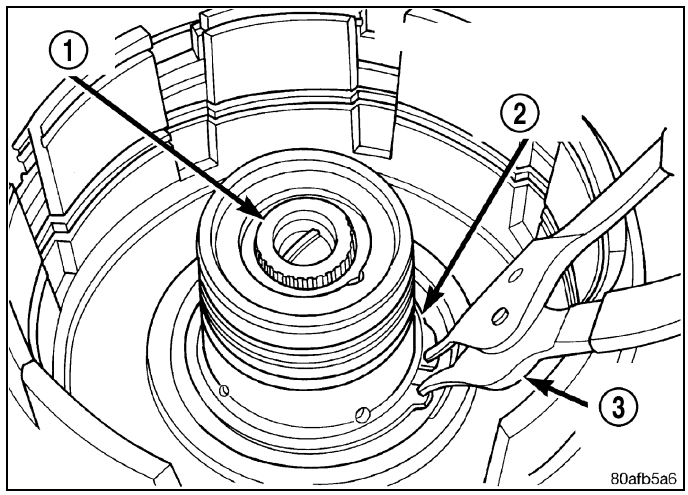

24. Tap on input hub (1) with soft faced hammer (2) and separate input hub from OD/Reverse piston and clutch retainer.

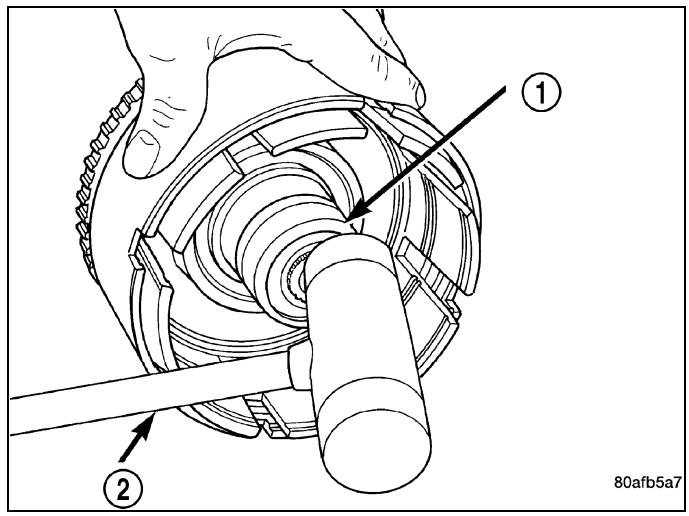

25. Separate the input hub from OD/Reverse piston (5) and clutch retainer (2) .

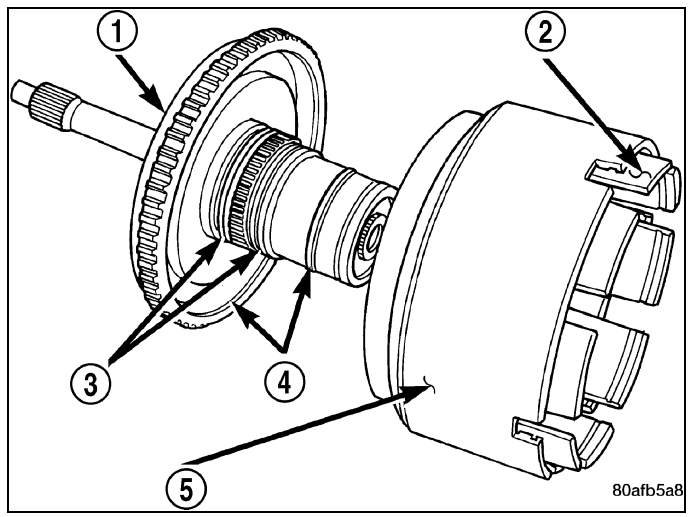

26. Separate clutch retainer (2) from OD/Reverse piston (1) .

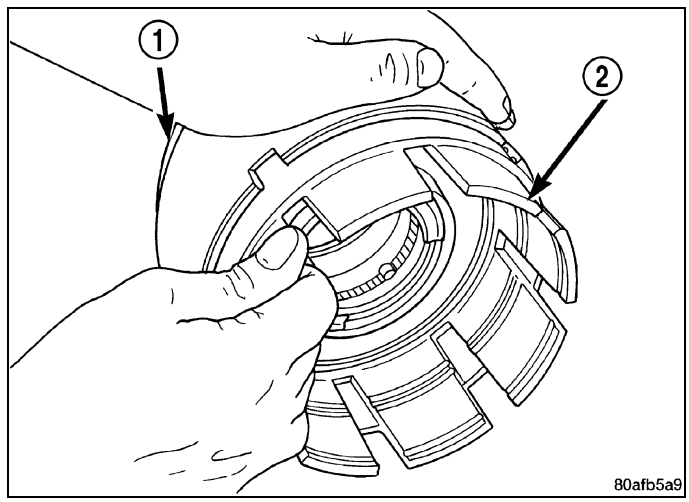

27. Using Disc 6057 (4) and an arbor press (1), compress OD/Reverse piston (5) return spring just enough to remove snap ring (3) .

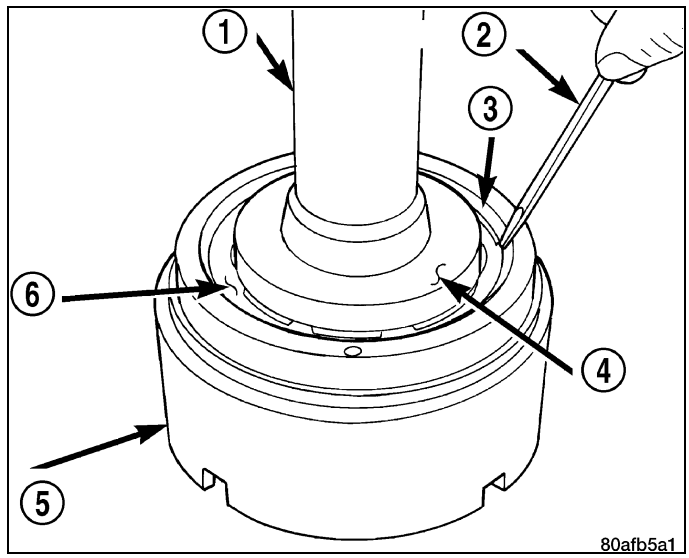

28. Remove the OD/Reverse piston return spring (2) and snap ring (3) .

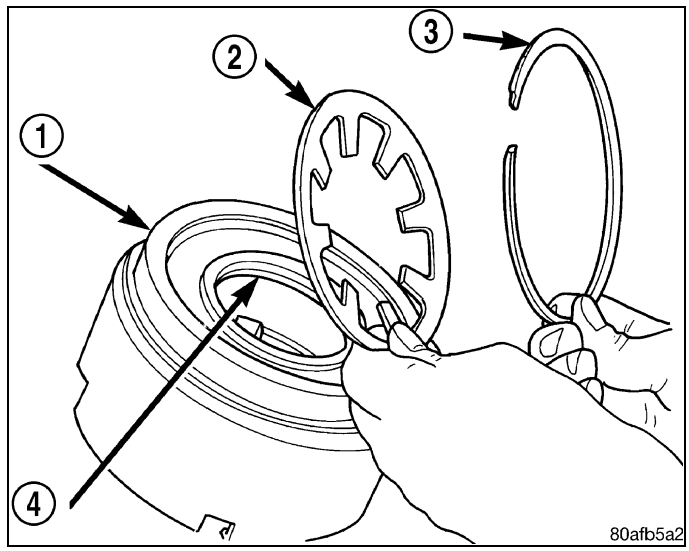

29. Remove input shaft (1) to input clutch hub snap ring (3) .

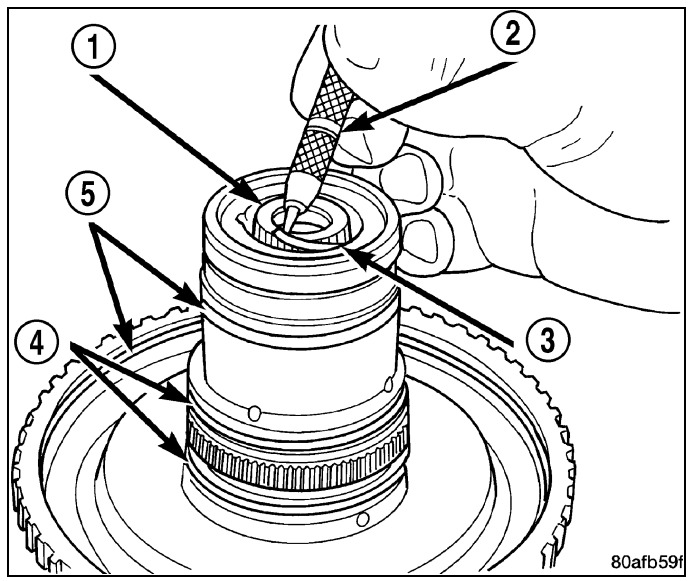

30. Using a suitably sized socket (2) and an arbor press (1), remove input shaft (5) from input shaft hub.

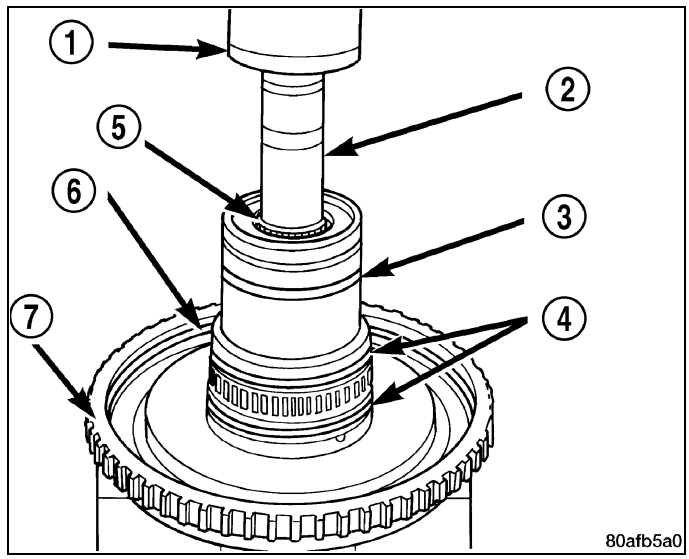

Assembly

Use petrolatum on all seals to ease assembly of components.

1. Using an arbor press (2), install input shaft (1) to input shaft hub (3) .

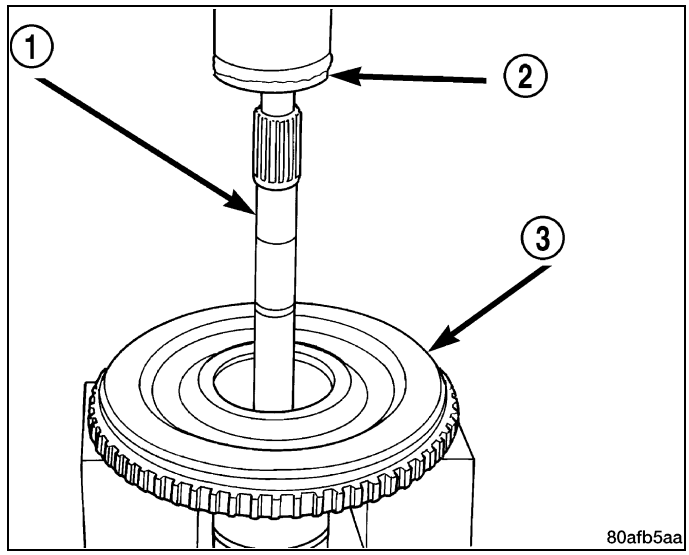

2. Install input shaft snap ring (3) .

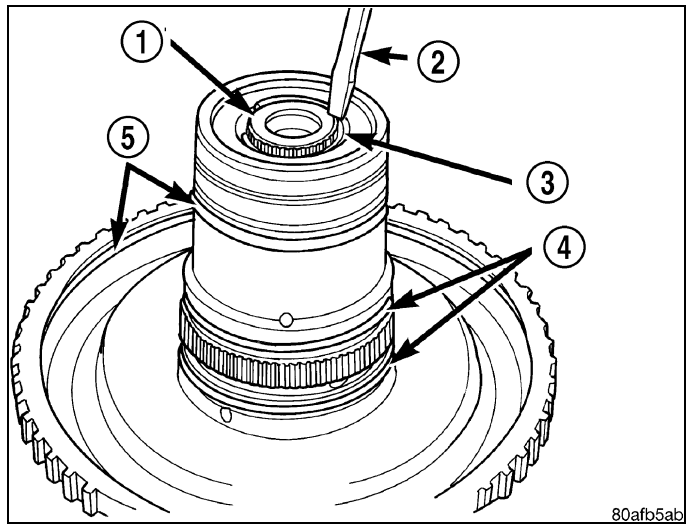

3. Position the OD/Reverse piston return spring (2) and snap ring (3) onto the OD/Reverse piston (1) .

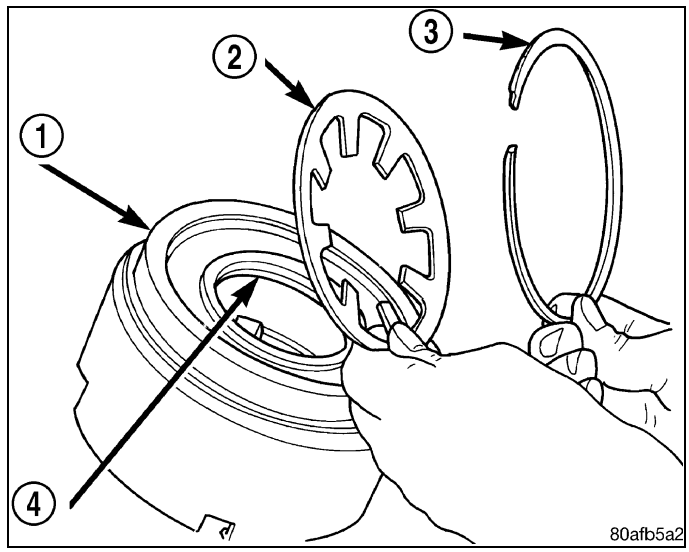

4. Using an arbor press (1) and Disc 6057 (4), install the OD/Reverse piston return spring (6) and snap ring (3) .

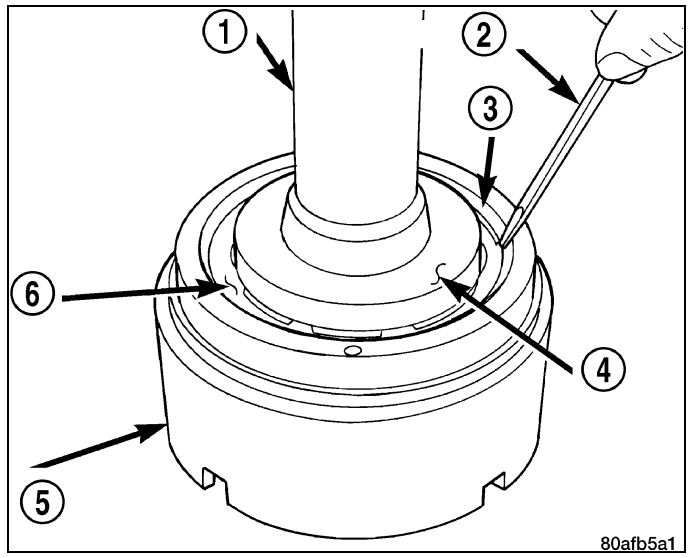

5. Install the OD/Reverse piston (1) assembly to the input clutch retainer (2) .

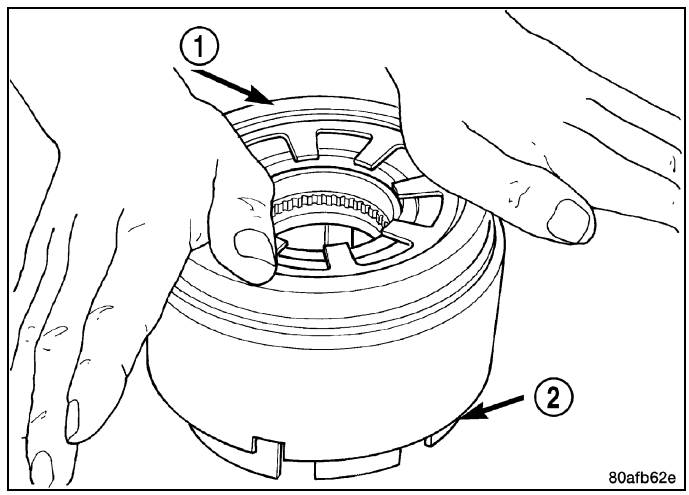

6. Install the input hub/shaft assembly (1) to the OD/Reverse piston/clutch retainer assembly (2) .

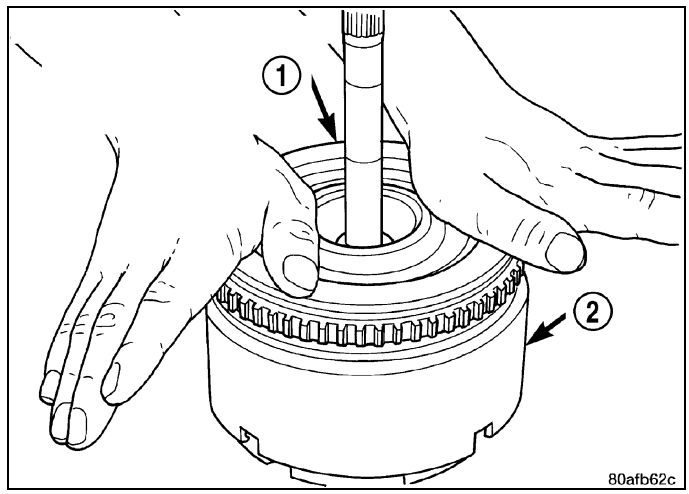

7. Install input hub tapered snap ring (2) . **Make sure snap ring is fully seated.**

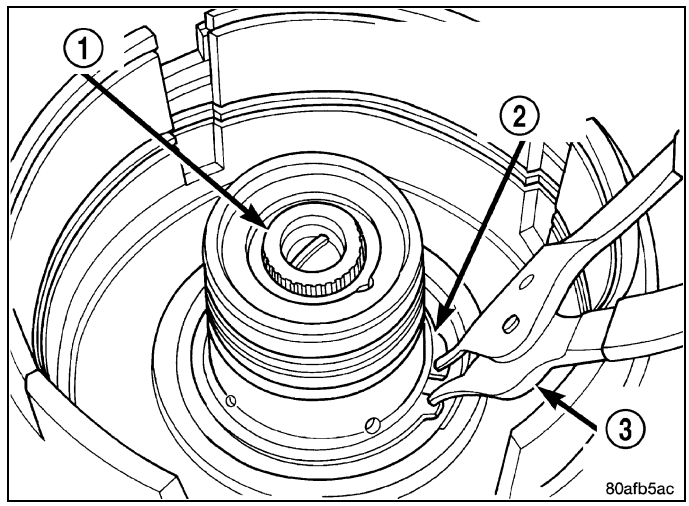

8. Install the UD clutch piston (1) .

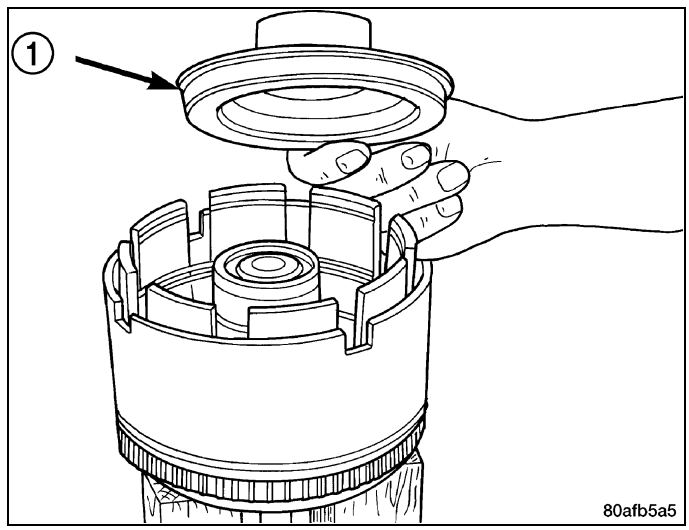

9. Install UD piston return spring (1) and Disc 5067 (2) .

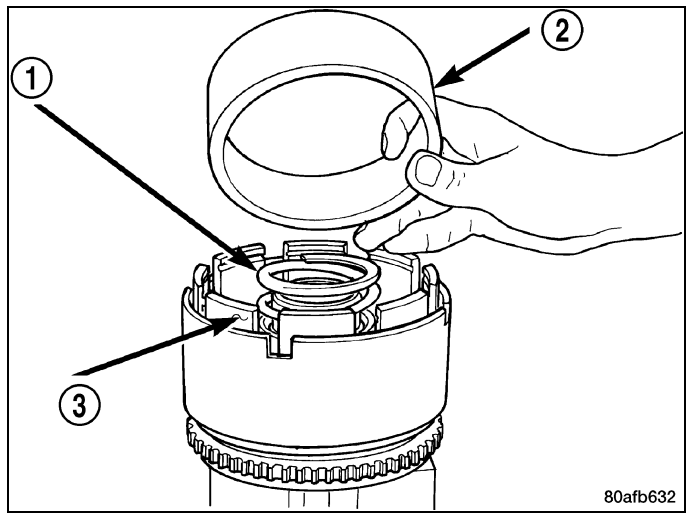

10. Position the UD spring retainer (1) and snap ring (2) on the piston return spring (4) .

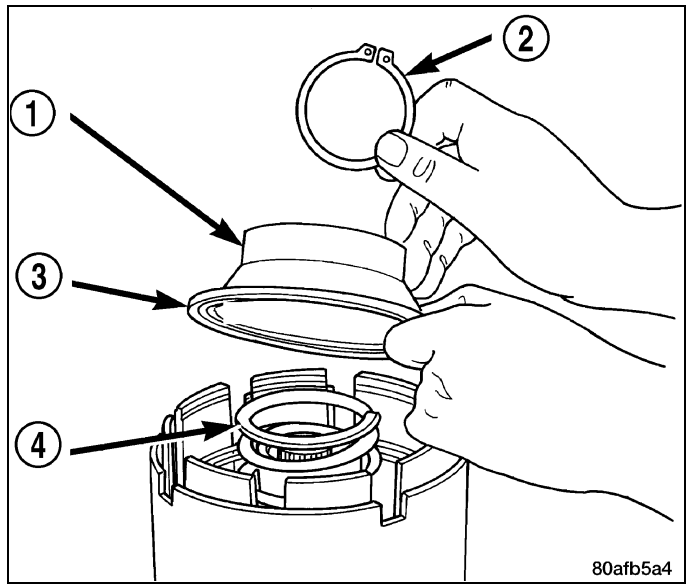

CAUTION: Compress return spring just enough to install snap ring.

11. Using Compressor 5059-A (6) with Installer 5067 (5) and an arbor press (1), install the UD spring retainer and snap ring (3) .

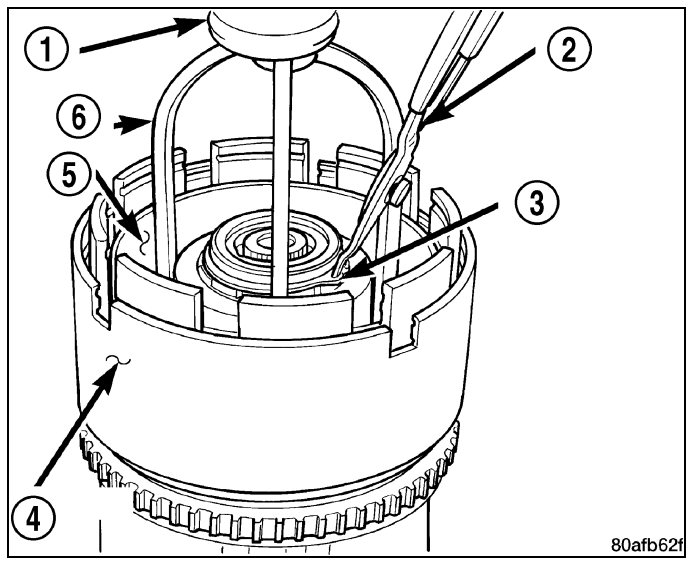

12. Install the UD clutch pack (four fibers/four steels) (1, 3) . Leave the top disc (2) out until after the snap ring is installed.

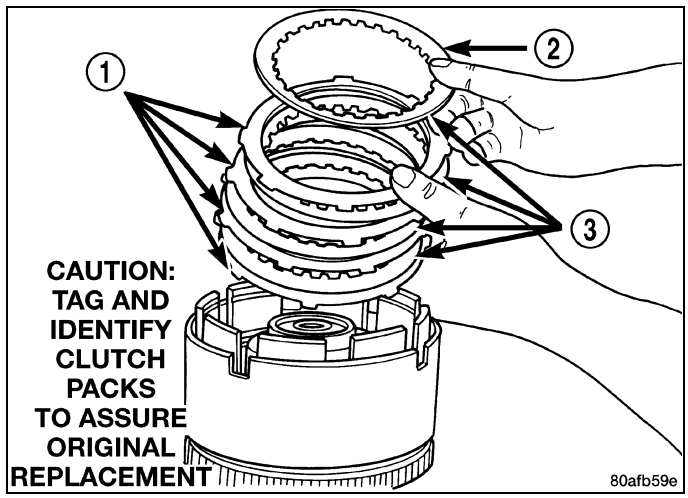

13. Install the UD clutch flat snap ring (1) .

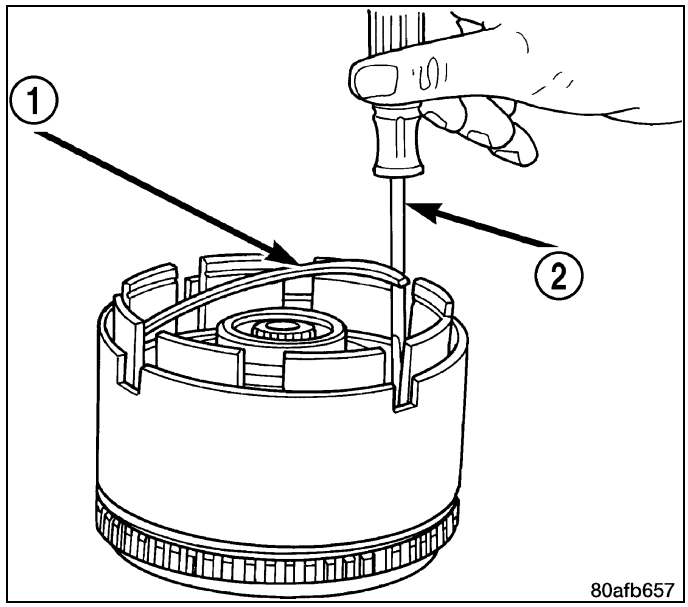

14. Install the last UD clutch disc (1) .

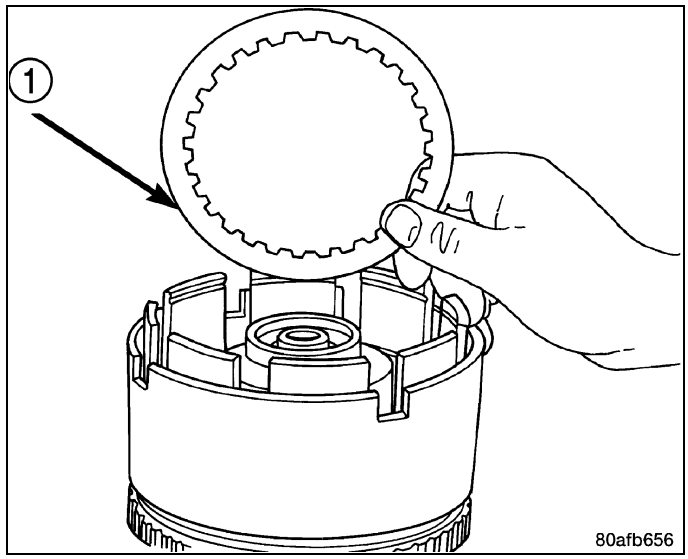

15. Install the OD/UD clutch reaction plate (1) . The OD/UD clutches reaction plate has a step on both sides. Install the OD/UD clutches reaction plate tapered step side up.

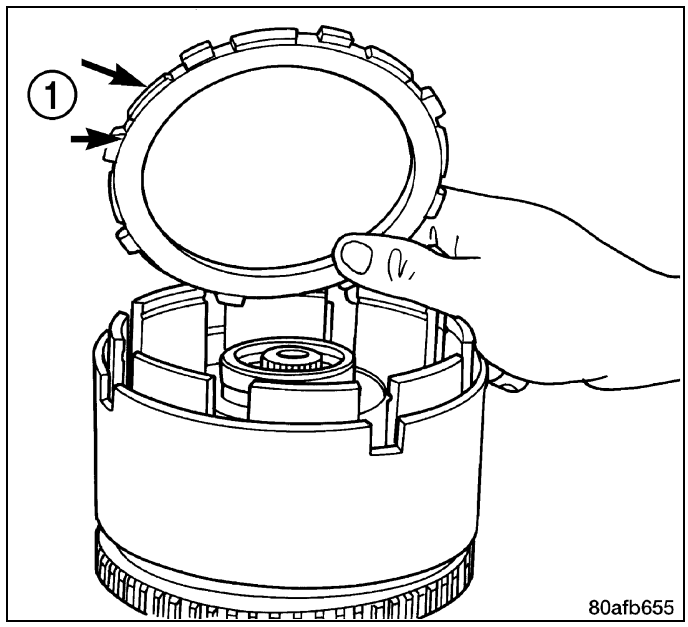

NOTE: Snap ring ends must be located within one finger of the input clutch hub. Be sure that snap ring is fully seated, by pushing with screwdriver, into snap ring groove all the way around.

16. Install the UD/OD tapered snap ring (1) .

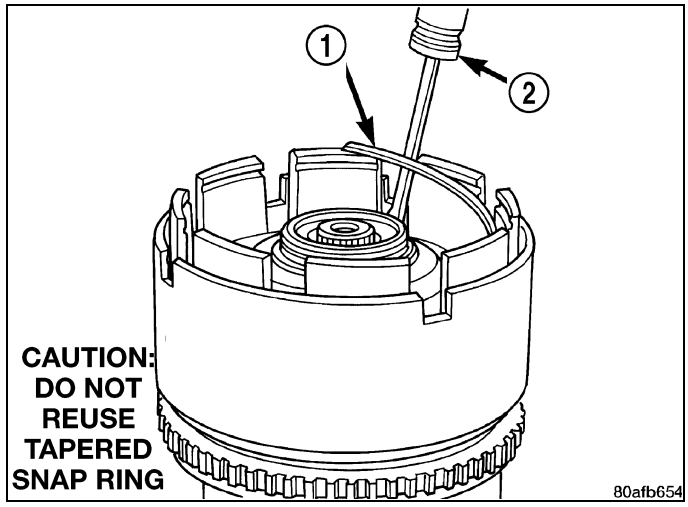

17. Seat tapered snap ring (1) to ensure proper installation.

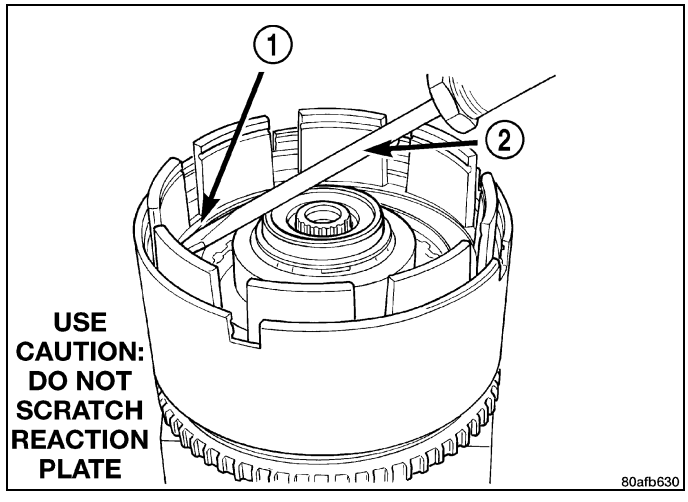

18. Install input clutch assembly (1) to the Input Clutch Pressure Fixture 8391 (2).

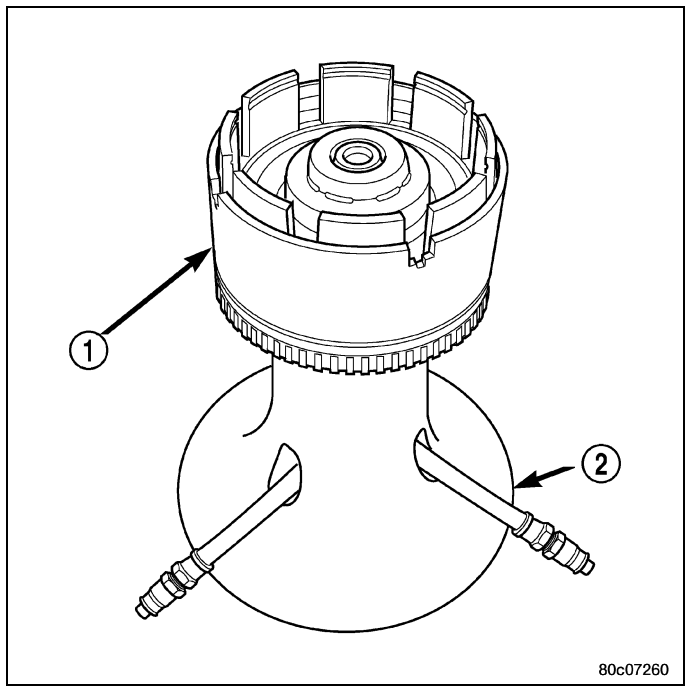

19. Set up Dial Indicator C-3339A (1) on the UD clutch pack (2).

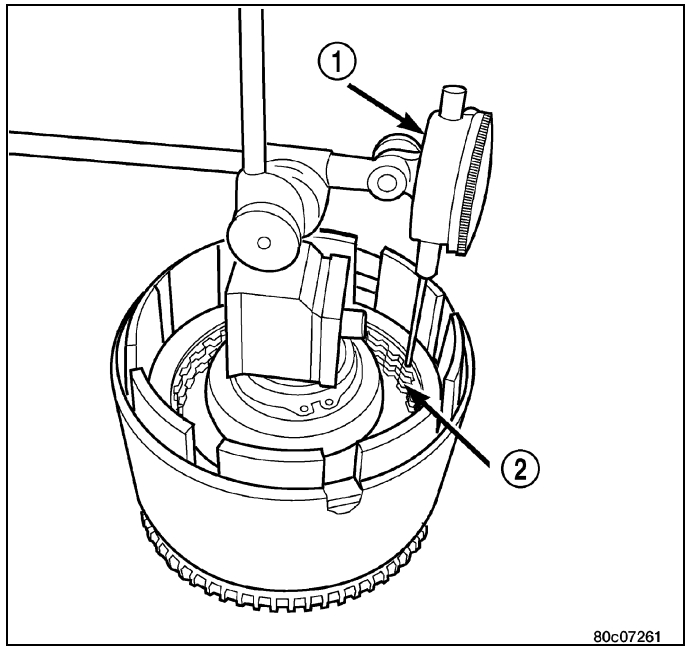

20. Using moderate pressure, press down and hold (near indicator) the UD clutch pack (2) with screwdriver or suitable tool and zero dial indicator (1) . When releasing pressure on clutch pack, indicator reading should advance 0.005-0.010 inches.

CAUTION: Do not apply more than 30 psi (206 kPa) to the underdrive clutch pack.

21. Apply 30 psi (206 kPa) to the underdrive hose on Pressure Fixture 8391 and measure UD clutch clearance. Measure and record UD clutch pack measurement in four (4) places, 90° apart.
22. Take average of four measurements and compare with UD clutch pack clearance specification. **Underdrive clutch pack clearance must be 0.94-1.50 mm (0.037-0.059 in.).**
23. If necessary, select the proper reaction plate to achieve specifications.

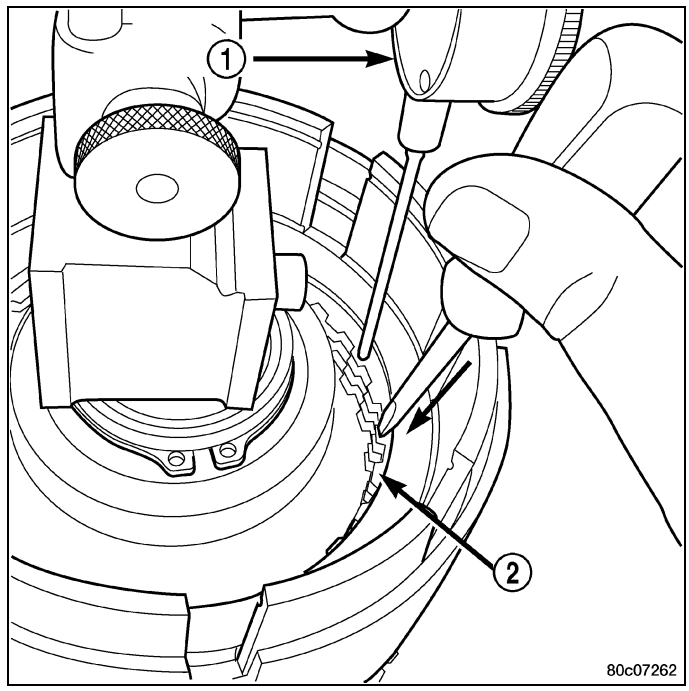

24. Install the OD clutch pack (four fibers/three steels) (1) .

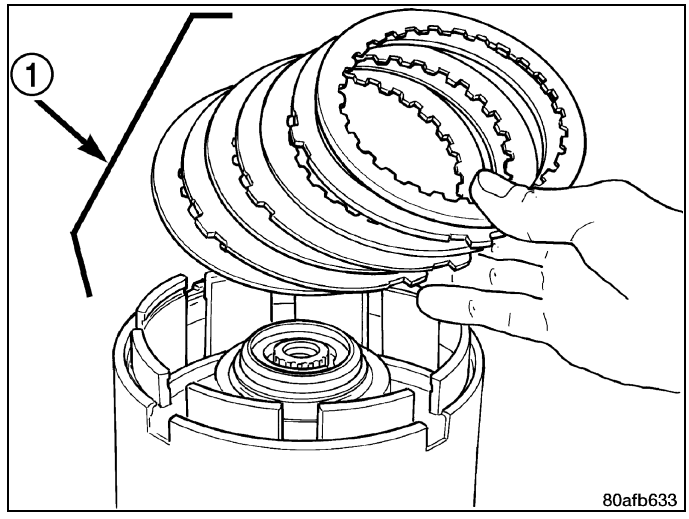

25. Install OD reaction plate waved snap ring (1) .

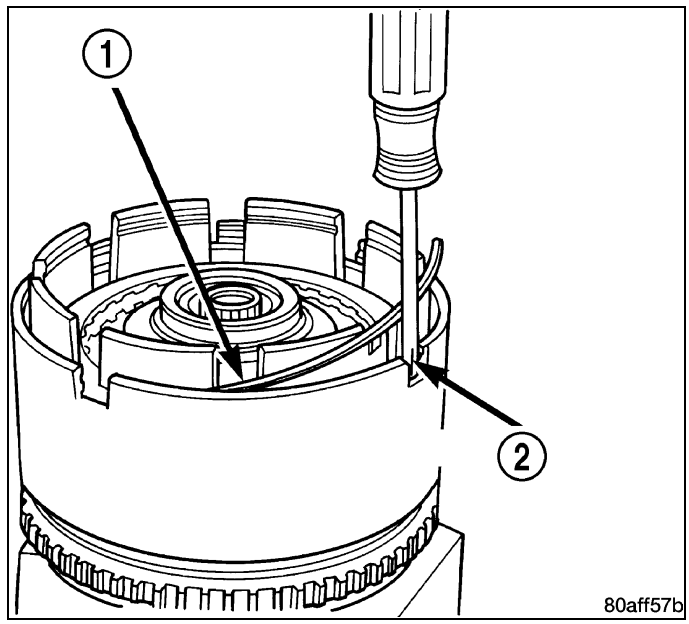

26. Install the OD/Reverse reaction plate (1) with large step down (towards OD clutch pack) .

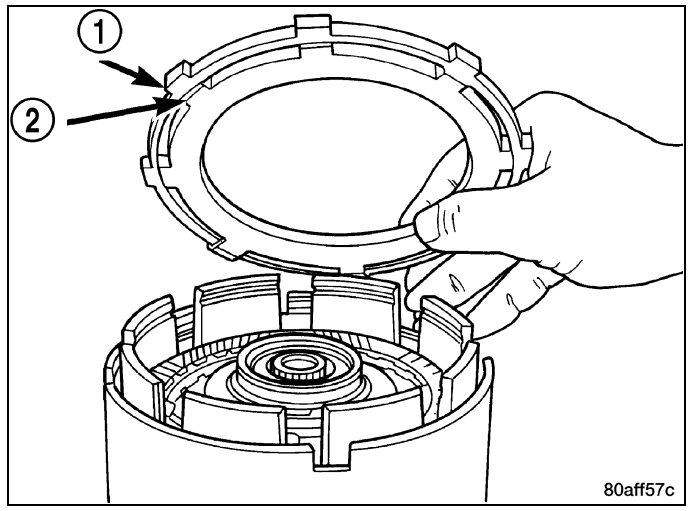

27. Install Compressor tool 5059-A-A (2).
28. Using shop press (1) compress clutch pack enough to expose snap ring grove.
29. Install OD reaction plate flat snap ring (3) .

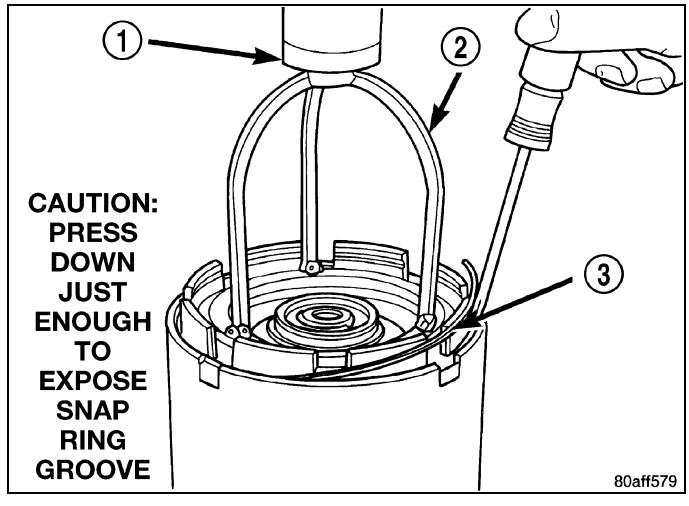

30. Measure OD clutch pack clearance. Set up Dial Indicator C-3339A (1) on top of the OD/Reverse reaction plate (2).
31. Zero dial indicator and apply 30 psi (206 kPa) air pressure to the overdrive clutch hose on Pressure Fixture 8391. Measure and record OD clutch pack measurement in four (4) places, 90° apart.
32. Take average of four measurements and compare with OD clutch pack clearance specification. **The overdrive (OD) clutch pack clearance is 1.07-3.25 mm (0.042-0.128 in.).**

If not within specifications, the clutch is not assembled properly. There is no adjustment for the OD clutch clearance.

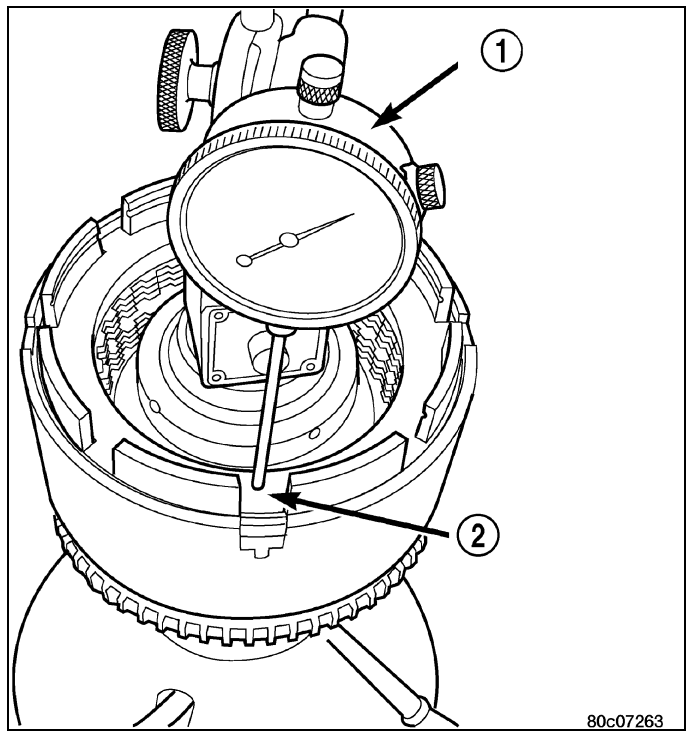

33. Install reverse clutch pack (two fibers/one steel) (1, 2).

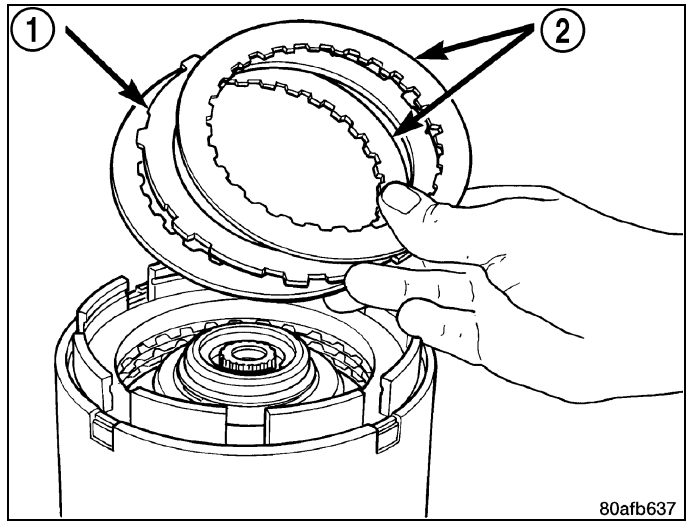

34. Install reverse clutch reaction plate (1) with the flat side down towards reverse clutch .

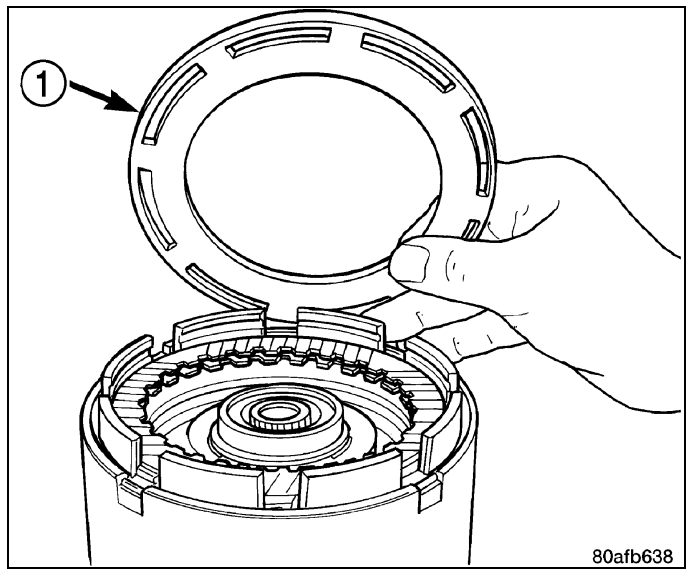

35. Tap reaction plate (3) down to allow installation of the reverse clutch snap ring (1). Install reverse clutch snap ring (1).

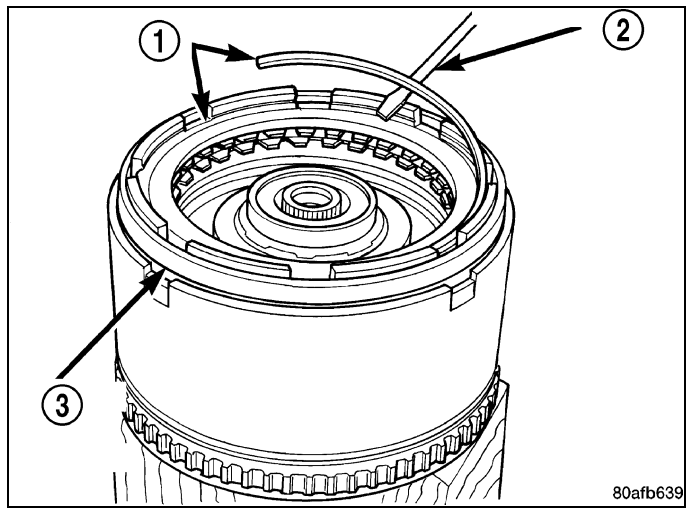

36. Pry up reverse reaction plate (4) to seat against snap ring (2).

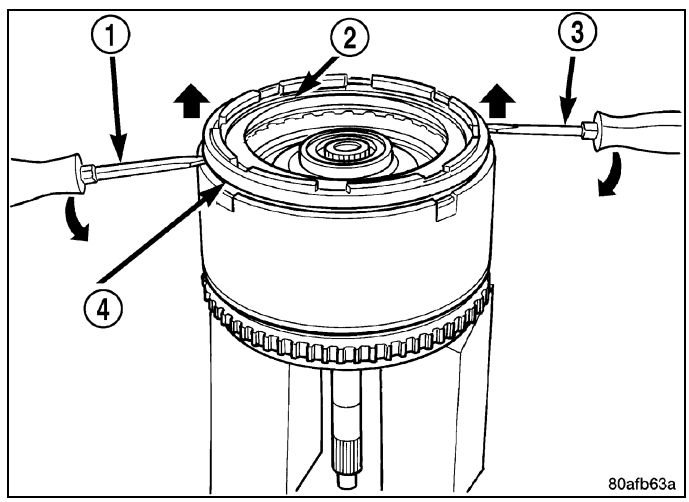

37. Set up a Dial Indicator C-3339A (1) on the reverse clutch pack (2).

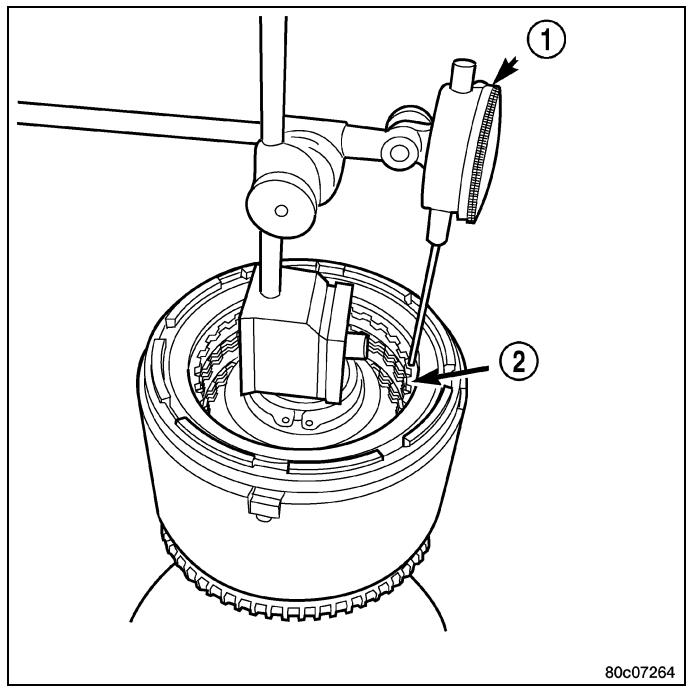

38. Using moderate pressure, press down and hold (near indicator) reverse clutch disc (2) with screwdriver or suitable tool and zero dial indicator (1). When releasing pressure, indicator should advance 0.005-0.010 inches as clutch pack relaxes.
39. Apply 30 psi (206 kPa) air pressure to the reverse clutch hose on Pressure Fixture 8391. Measure and record reverse clutch pack measurement in four (4) places, 90° apart.
40. Take average of four measurements and compare with reverse clutch pack clearance specification. **The reverse clutch pack clearance is 0.89-1.37 mm (0.035-0.054 in.).** Select the proper reverse clutch snap ring to achieve specifications.
41. To complete the assembly, reverse clutch and overdrive clutch must be removed.

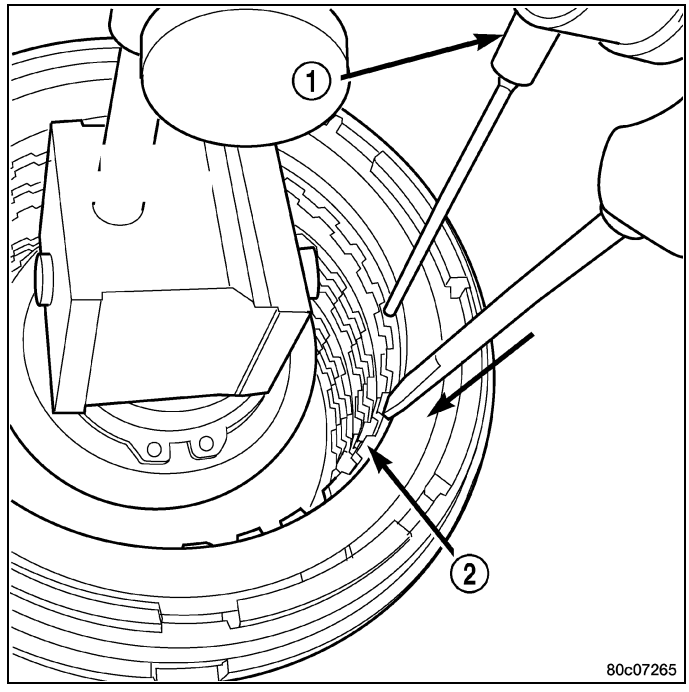

42. Install the number 2 needle bearing (1) .

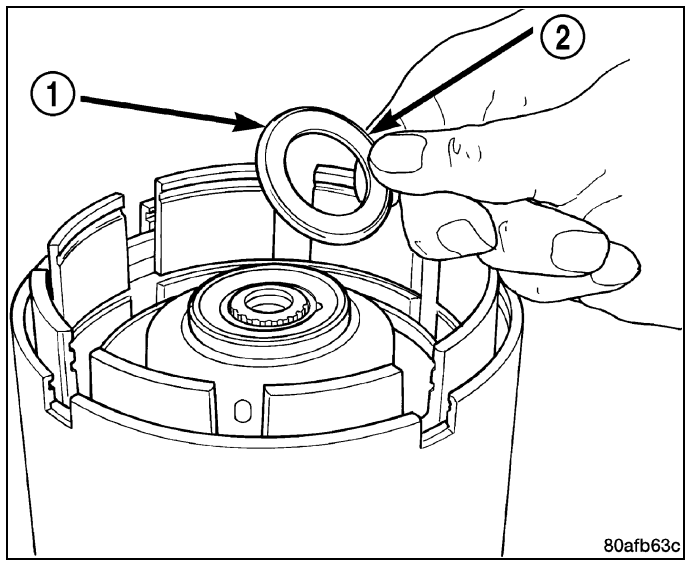

43. Install the underdrive shaft assembly (1) .

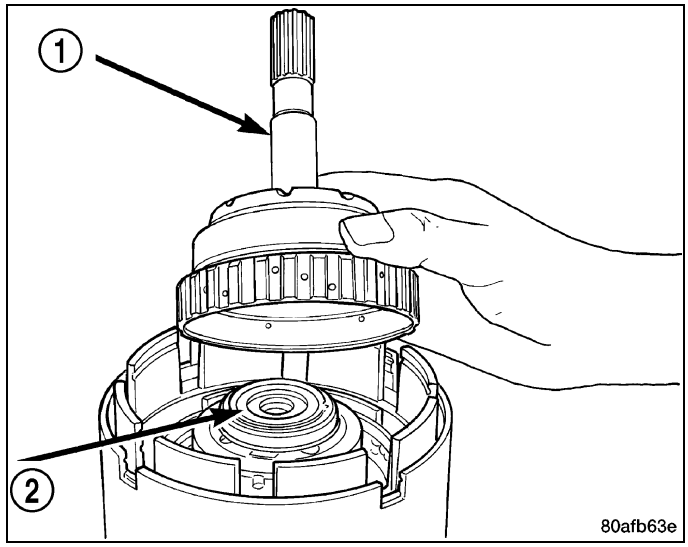

44. Install the number 3 thrust washer (1) to the underdrive shaft assembly (2). Be sure five tabs are seated properly.

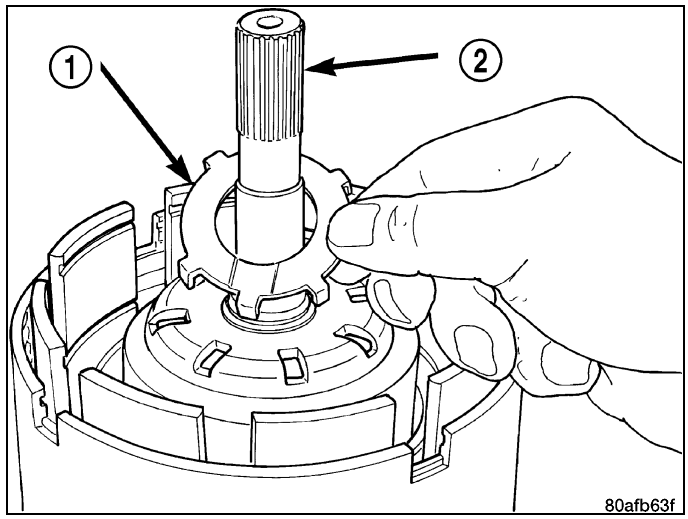

45. Install the number 3 thrust plate (3) to the bottom of the overdrive shaft assembly (1). Retain with petrolatum or transmission assembly gel (2).

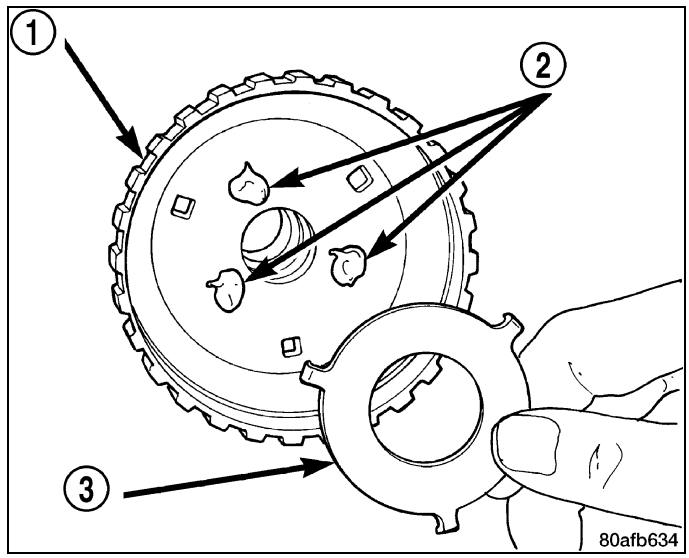

46. Install the overdrive shaft assembly (1).

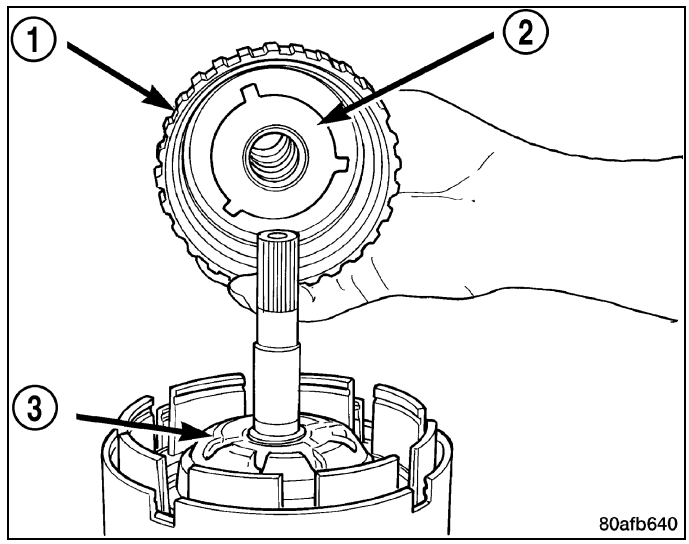

47. Reinstall overdrive and reverse clutch. **Rechecking these clutch clearances is not necessary.**

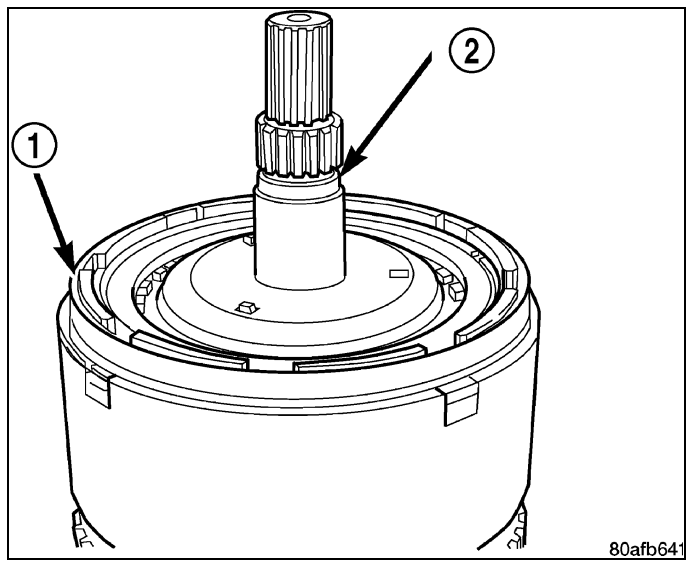

ASSEMBLY, Transmission Solenoid and Pressure Switch

Description

The Solenoid/Pressure Switch Assembly (1) is inside the transmission and mounted to the valve body assembly. The assembly consists of four solenoids that control hydraulic pressure to the L/R, 2/4, OD, and UD friction elements (transmission clutches), and the torque converter clutch. The reverse clutch is controlled by line pressure from the manual valve in the valve body. The solenoids are contained within the Solenoid/Pressure Switch Assembly, and can only be serviced by replacing the assembly.

The solenoid assembly also contains pressure switches that monitor and send hydraulic circuit information to the TCM. Likewise, the pressure switches can only be service by replacing the assembly.

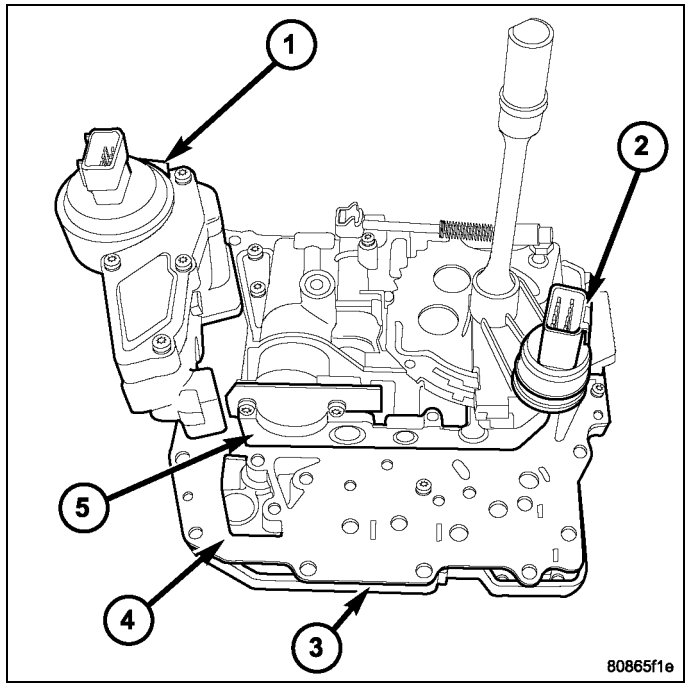

Operation

SOLENOIDS

The solenoids receive electrical power from the Transmission Control Relay through a single wire. The TCM energizes or operates the solenoids individually by grounding the return wire of the solenoid needed. When a solenoid is energized, the solenoid valve shifts, and a fluid passage is opened or closed (vented or applied), depending on its default operating state. The result is an apply or release of a frictional element.

The 2/4 and UD solenoids are normally applied, which allows fluid to pass through in their relaxed or “off” state. By design, this allows transmission limp-in (P,R,N,2) in the event of an electrical failure.

The continuity of the solenoids and circuits are periodically tested. Each solenoid is turned on or off depending on its current state. An inductive spike should be detected by the TCM during this test. If no spike is detected, the circuit is tested again to verify the failure. In addition to the periodic testing, the solenoid circuits are tested if a speed ratio or pressure switch error occurs.

PRESSURE SWITCHES

The TCM relies on three pressure switches to monitor fluid pressure in the L/R, 2/4, and OD hydraulic circuits. The primary purpose of these switches is to help the TCM detect when clutch circuit hydraulic failures occur. The range for the pressure switch closing and opening points is 11-23 psi. Typically the switch opening point will be approximately one psi lower than the closing point. For example, a switch may close at 18 psi and open at 17 psi. The switches are continuously monitored by the TCM for the correct states (open or closed) in each gear as shown in the following chart:

PRESSURE SWITCH STATES

GEAR	L/R	2/4	OD
R	OP	OP	OP
P/N	CL	OP	OP
1st	CL	OP	OP
2nd	OP	CL	OP

PRESSURE SWITCH STATES, continued

GEAR	L/R	2/4	OD
D	OP	OP	CL
OD	OP	CL	CL
OP = OPEN			
CL = CLOSED			

A Diagnostic Trouble Code (DTC) will set if the TCM senses any switch open or closed at the wrong time in a given gear.

The TCM also tests the 2/4 and OD pressure switches when they are normally off (OD and 2/4 are tested in 1st gear, OD in 2nd gear, and 2/4 in 3rd gear). The test simply verifies that they are operational, by looking for a closed state when the corresponding element is applied. Immediately after a shift into 1st, 2nd, or 3rd gear with the engine speed above 1000 rpm, the TCM momentarily turns on element pressure to the 2/4 and/or OD clutch circuits to identify that the appropriate switch has closed. If it doesn't close, it is tested again. If the switch fails to close the second time, the appropriate Diagnostic Trouble Code (DTC) will set.

Removal

NOTE: If the Solenoid/Pressure Switch Assembly is being replaced, the Quick Learn Procedure must be performed. (Refer to 08 - Electrical/8E - Electronic Control Modules/MODULE, Transmission Control - Standard Procedure)

1. Raise vehicle on hoist.
2. Remove valve body assembly from transmission. (Refer to 21 - Transmission and Transfer Case/Automatic - 42RLE/VALVE BODY - Removal)
3. Remove Solenoid/Pressure Switch Assembly retaining screws (2) from solenoid .

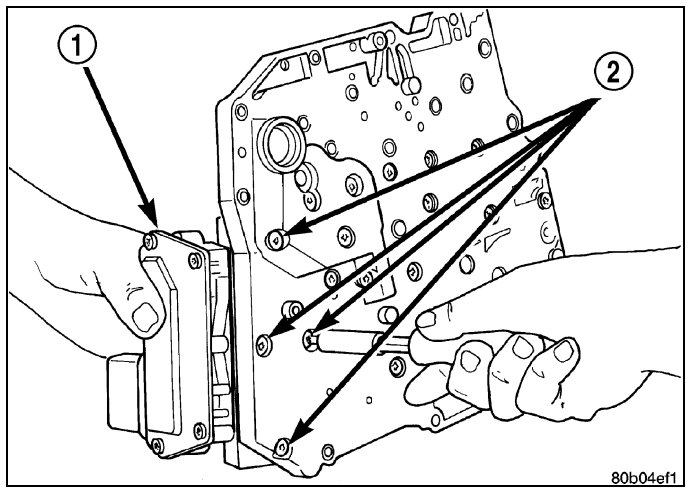

4. Remove Solenoid/Pressure Switch Assembly (1) and screen from valve body (2) .

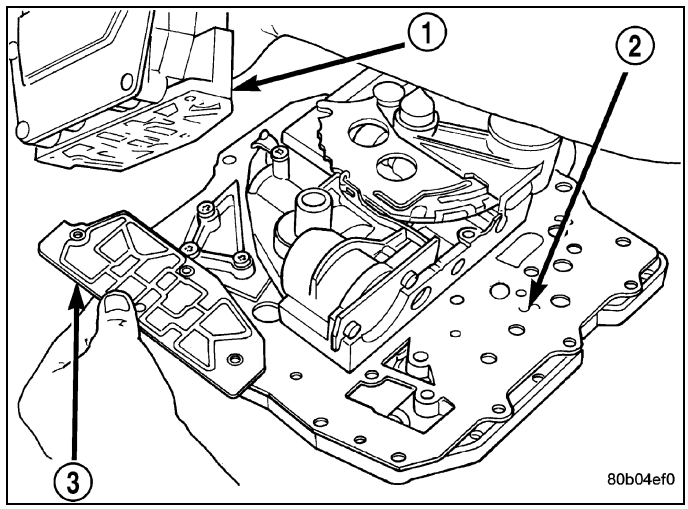

Installation

NOTE: If the Solenoid/Pressure Switch assembly is being replaced, the Quick Learn Procedure must be performed. (Refer to 08 - Electrical/8E - Electronic Control Modules/MODULE, Transmission Control - Standard Procedure)

1. Install Solenoid/Pressure Switch Assembly (1) and screen (3) to the separator and transfer plates.

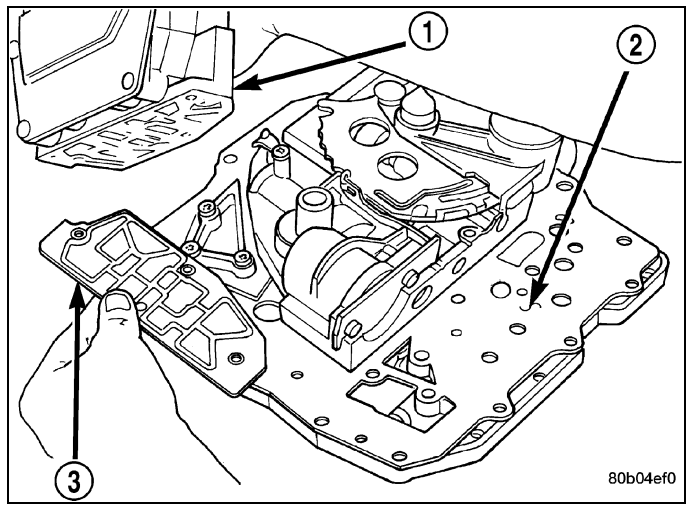

2. Install and tighten retaining screws (2) to 5.5 N·m (50 in. lbs.) torque.
3. Install valve body. (Refer to 21 - Transmission and Transfer Case/Automatic - 42RLE/VALVE BODY - Installation)

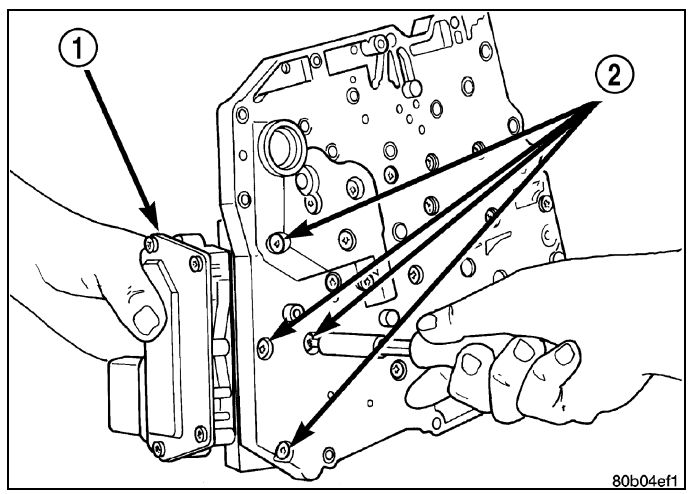

BEARING

Adjustments

Take extreme care when removing and installing bearing cups and cones. **Use only an arbor press for installation,** as a hammer may not properly align the bearing cup or cone. Burrs or nicks on the bearing seat will give a false end play reading, while gauging for proper shims. Improperly seated bearing cup and cones are subject to low-mileage failure.

Bearing cups and cones should be replaced if they show signs of pitting or heat distress.

If distress is seen on either the cup or bearing rollers, both cup and cone must be replaced.

NOTE: Bearing drag torque specifications must be maintained to avoid premature bearing failures.

Used (original) bearing may lose up to 50 percent of the original drag torque after break-in.

NOTE: All bearing adjustments must be made with no other component interference or gear inter-mesh.

Oil all bearings before checking turning torque.

CABLE, Shift

Diagnosis and Testing

1. Engine starts must be possible with shift lever in PARK or NEUTRAL positions only. Engine starts must not be possible in any other gear position.
2. With the shift lever in the:
   a. PARK position - Apply upward force on the shift arm and remove pressure. Engine starts must be possible.
   b. PARK position - Apply downward force on the shift arm and remove pressure. Engine starts must be possible.
   c. NEUTRAL position - Normal position. Engine starts must be possible.
   d. NEUTRAL position - Engine running and brakes applied, apply upward force on the shift arm. Transmission shall not be able to shift from neutral to reverse.

Removal

1. Shift transmission into PARK.
2. Raise vehicle.
3. Disengage cable (1) eyelet at transmission manual shift lever (3) and pull cable adjuster out of mounting bracket.

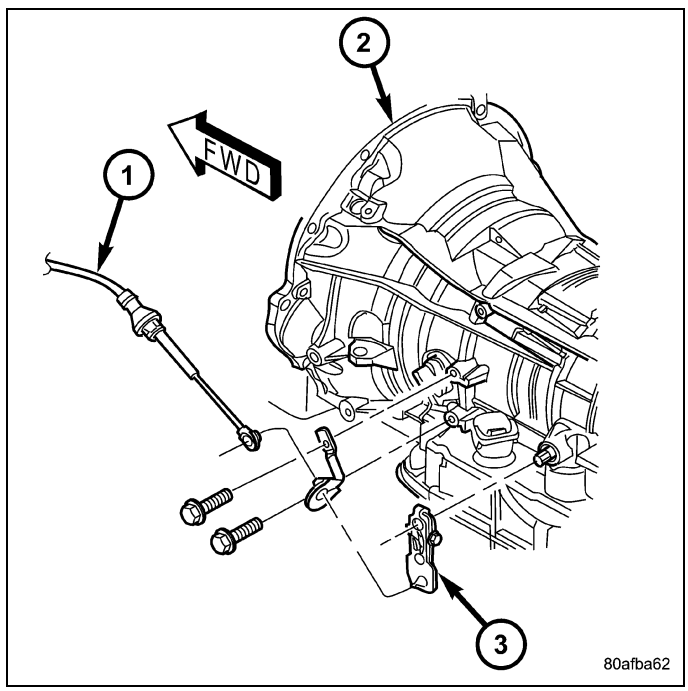

4. Lower the vehicle.
5. Remove the dash panel insulation pad as necessary to access the gearshift cable grommet (2).
6. Remove grommet (2) from the dash panel.

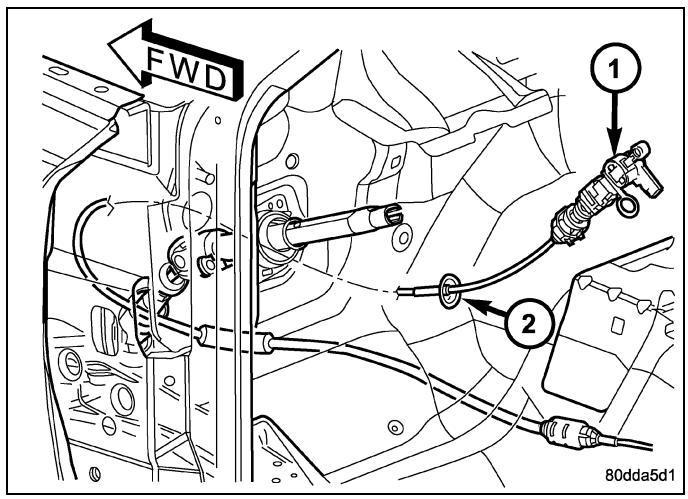

7. Remove any steering column (1) trim necessary to access the gearshift cable (2) and BTSI mechanism.
8. Disconnect the BTSI wiring connector (5).
9. Disconnect cable at lower column bracket and shift lever pin and pull the cable through the dash panel opening into the vehicle.
10. Remove gearshift cable (2) from vehicle.

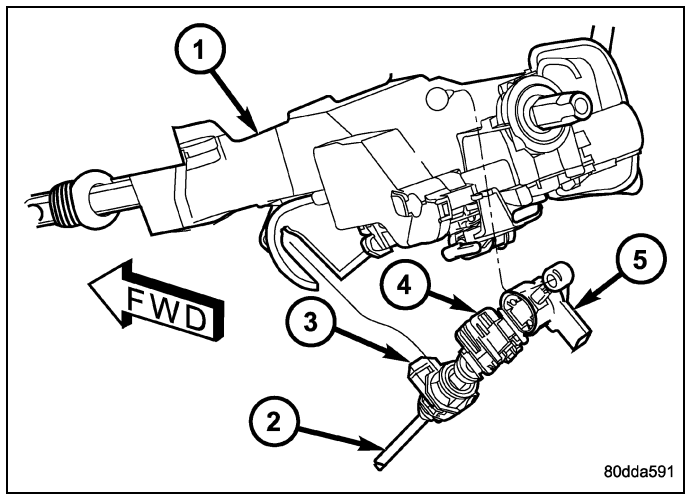

Gearshift Cable at Steering Column

1 - STEERING COLUMN
2 - GEARSHIFT CABLE
3 - GEARSHIFT CABLE LOCK TAB
4 - BTSI SOLENOID LOCK TAB
5 - BTSI CONNECTOR

Installation

1. Route the transmission end of the gearshift cable (1) through the opening in the dash panel.
2. Seat the cable grommet (2) into the dash panel opening.

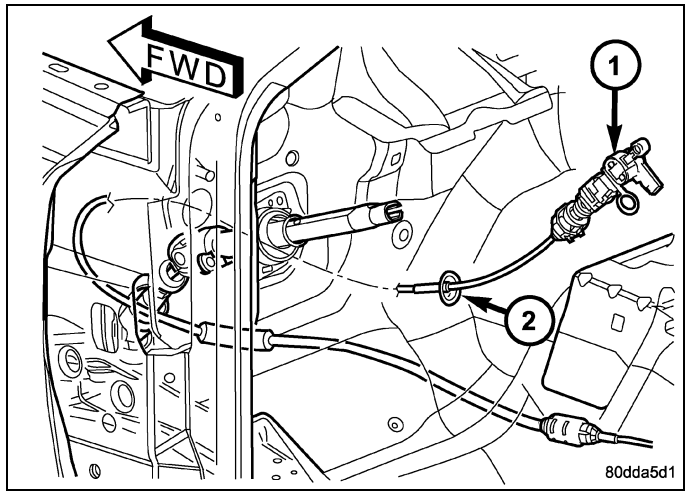

3. Snap the cable into the steering column (1) bracket so the retaining ears are engaged and snap the cable eyelet onto the shift lever ball stud.
4. Raise the vehicle.
5. Place the transmission manual shift lever in the “PARK” detent (rearmost) position and rotate prop shaft to ensure transmission is in PARK.
6. Route the gearshift cable through the transmission mounting bracket and secure the cable by snapping the cable retaining ears into the transmission bracket and snapping the cable eyelet on the manual shift lever ball stud.
7. Lower vehicle.
8. Lock the shift cable adjustment by pressing the cable adjuster lock tab (3) downward until it snaps into place.
9. Check for proper operation of the transmission range sensor.
10. Adjust the gearshift cable(Refer to 21 - Transmission and Transfer Case/Automatic - 42RLE/CABLE, Shift - Adjustments)and BTSI mechanism(Refer to 21 - Transmission and Transfer Case/Automatic - 42RLE/MECHANISM, Brake Transmission Shift Interlock - Adjustments).

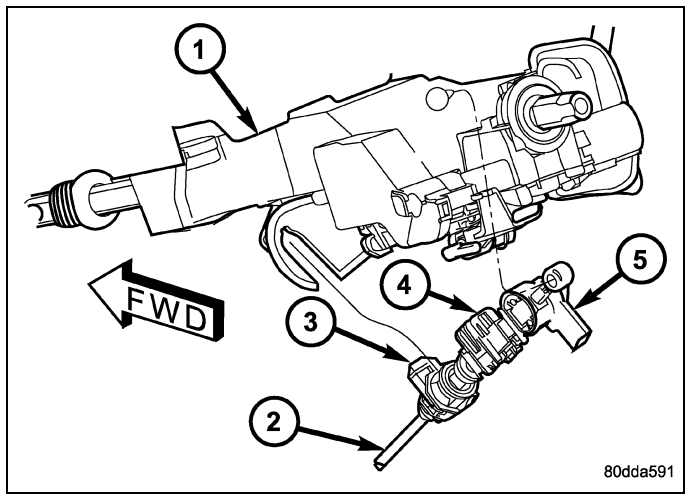

Gearshift Cable at Steering Column

1 - STEERING COLUMN
2 - GEARSHIFT CABLE
3 - GEARSHIFT CABLE LOCK TAB
4 - BTSI SOLENOID LOCK TAB
5 - BTSI CONNECTOR

Adjustments

NOTE: Always run the shift lever test using the scan tool to help diagnose a potential TRS problem

Check adjustment by starting the engine in PARK and NEUTRAL. Adjustment is CORRECT if the engine starts only in these positions. Adjustment is INCORRECT if the engine starts in one but not both positions. If the engine starts in any position other than PARK or NEUTRAL, or if the engine will not start at all, the transmission range sensor may be faulty.

Gearshift Adjustment Procedure

1. Shift transmission into PARK.
2. Raise vehicle.
3. Disengage the cable eyelet from the transmission manual shift lever (3).
4. Verify the transmission manual shift lever (3) is in the PARK detent by moving lever fully rearward. Last rearward detent is PARK position.
5. Verify positive engagement of transmission park lock by attempting to rotate propeller shaft. Shaft will not rotate when park lock is engaged.

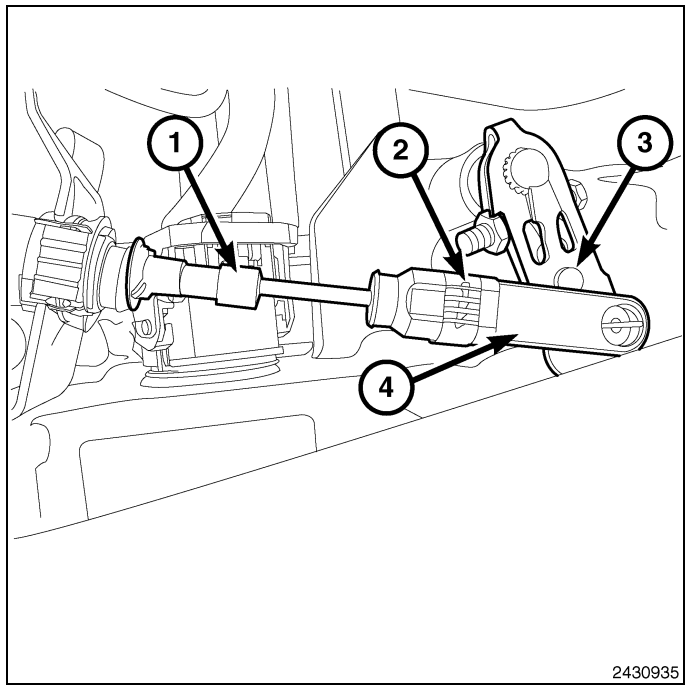

6. Disengage shift cable adjustment lock clip (1) by pushing up rom the back side of the lock clip.
7. Adjust the spring loaded shifter cable end (2), by pushing in or out to change the length until shift cable eyelet fits over the manual shift lever stud, then push the lock clip (1) down until fully engaged.
8. Position the shift cable eyelet over the manual shift lever stud until fully engaged.
9. Lower vehicle.
10. Check engine starting. Engine should start only in PARK and NEUTRAL.

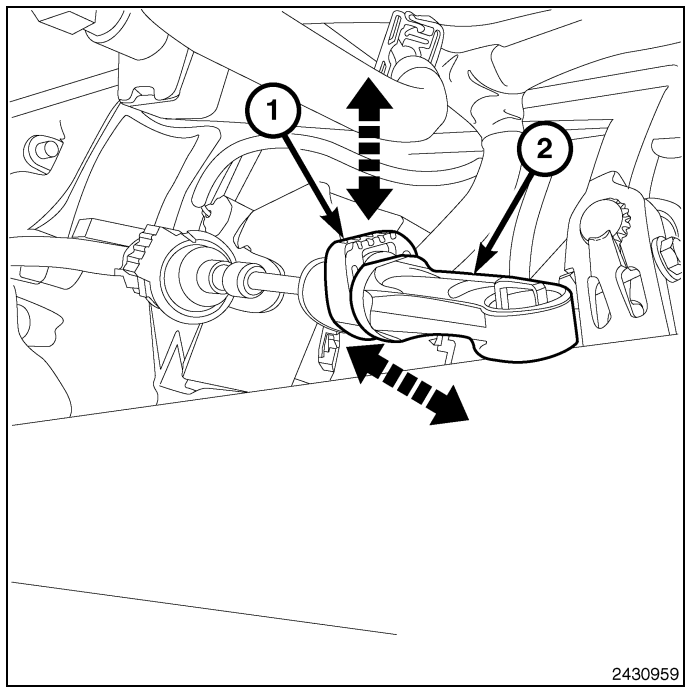

DRIVING CLUTCHES

Description

Three hydraulically applied input clutches are used to drive planetary components. The underdrive (2), overdrive (3), and reverse (4) clutches are considered input/driving clutches and are contained within the input clutch assembly . The input clutch assembly also contains:

- Input shaft.
- Input hub.
- Clutch retainer.
- Underdrive piston.
- Overdrive/reverse piston.
- Overdrive hub.
- Underdrive hub.

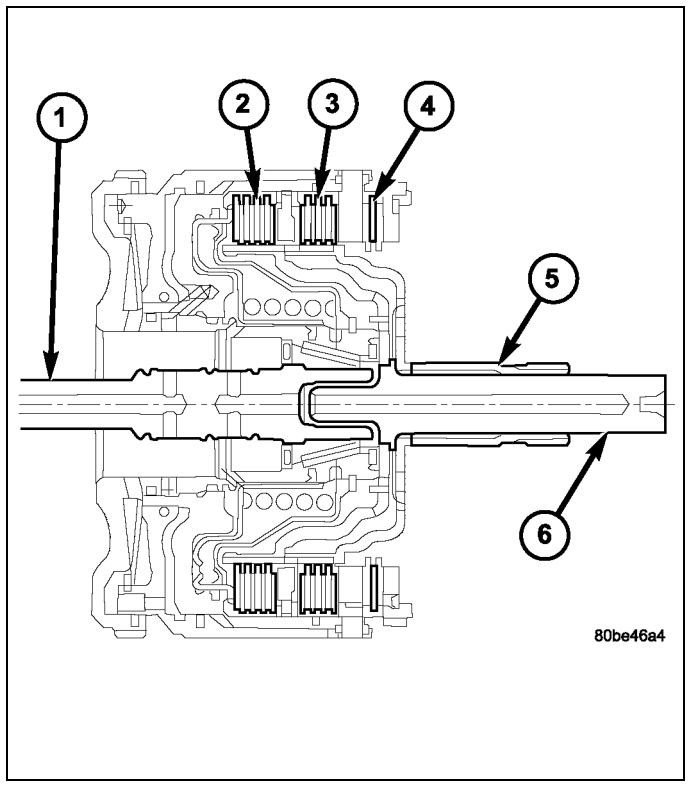

Operation

The three input clutches are responsible for driving different components of the planetary geartrain.

NOTE: (Refer to 21 - Transmission and Transfer Case/Automatic - 42RLE - Diagnosis and Testing) for a collective view of which clutch elements are applied at each position of the selector lever.

UNDERDRIVE CLUTCH

The underdrive clutch is hydraulically applied in first, second, and third (direct) gears by pressurized fluid against the underdrive piston. When the underdrive clutch is applied, the underdrive hub drives the rear sun gear.

OVERDRIVE CLUTCH

The overdrive clutch is hydraulically applied in third (direct) and overdrive gears by pressurized fluid against the overdrive/reverse piston. When the overdrive clutch is applied, the overdrive hub drives the front planet carrier.

REVERSE CLUTCH

The reverse clutch is hydraulically applied in reverse gear only by pressurized fluid against the overdrive/reverse piston. When the reverse clutch is applied, the front sun gear assembly is driven.

FLUID and FILTER

Diagnosis and Testing

CAUSES OF BURNT FLUID

Burnt, discolored fluid is a result of overheating which has two primary causes.

1. A result of restricted fluid flow through the main and/or auxiliary cooler. This condition is usually the result of a faulty or improperly installed drainback valve, a damaged oil cooler, or severe restrictions in the coolers and lines caused by debris or kinked lines.
2. Heavy duty operation with a vehicle not properly equipped for this type of operation. Trailer towing or similar high load operation will overheat the transmission fluid if the vehicle is improperly equipped. Such vehicles should have an auxiliary transmission fluid cooler, a heavy duty cooling system, and the engine/axle ratio combination needed to handle heavy loads.

EFFECTS OF INCORRECT FLUID LEVEL

A low fluid level allows the pump to take in air along with the fluid. Air in the fluid will cause fluid pressures to be low and develop slower than normal. If the transmission is overfilled, the gears churn the fluid into foam. This aerates the fluid and causing the same conditions occurring with a low level. In either case, air bubbles cause fluid overheating, oxidation, and varnish buildup which interferes with valve and clutch operation. Foaming also causes fluid expansion which can result in fluid overflow from the transmission vent or fill tube. Fluid overflow can easily be mistaken for a leak if inspection is not careful.

FLUID CONTAMINATION

Transmission fluid contamination is generally a result of:

- adding incorrect fluid
- failure to clean dipstick and fill tube when checking level
- engine coolant entering the fluid
- internal failure that generates debris
- overheat that generates sludge (fluid breakdown)
- failure to replace contaminated converter after repair

The use of non-recommended fluids can result in transmission failure. The usual results are erratic shifts, slippage, abnormal wear and eventual failure due to fluid breakdown and sludge formation. Avoid this condition by using recommended fluids only.

The dipstick cap and fill tube should be wiped clean before checking fluid level. Dirt, grease and other foreign material on the cap and tube could fall into the tube if not removed beforehand. Take the time to wipe the cap and tube clean before withdrawing the dipstick.

Engine coolant in the transmission fluid is generally caused by a cooler malfunction. The only remedy is to replace the radiator as the cooler in the radiator is not a serviceable part. If coolant has circulated through the transmission, an overhaul is necessary.

The torque converter should also be replaced whenever a failure generates sludge and debris. This is necessary because normal converter flushing procedures will not remove all contaminants.

Standard Procedure

FLUID LEVEL CHECK

1. Verify that the vehicle is parked on a level surface.
2. Remove the dipstick tube cap.

WARNING: There is a risk of accident from vehicle starting off by itself when engine running. There is a risk of injury from contusions and burns if you insert your hands into the engine when it is started or when it is running. Secure vehicle to prevent it from moving off by itself. Wear properly fastened and close-fitting work clothes. Do not touch hot or rotating parts.

3. Actuate the service brake. Start engine and let it run at idle speed in selector lever position "P".
4. Shift through the transmission modes several times with the vehicle stationary and the engine idling
5. Warm up the transmission, wait at least 2 minutes and check the oil level with the engine running. Push the Oil Dipstick 9336A into transmission fill tube until the dipstick tip contacts the oil pan and pull out again, read off oil level, repeat if necessary.

NOTE: The dipstick protrudes from the fill tube when installed.

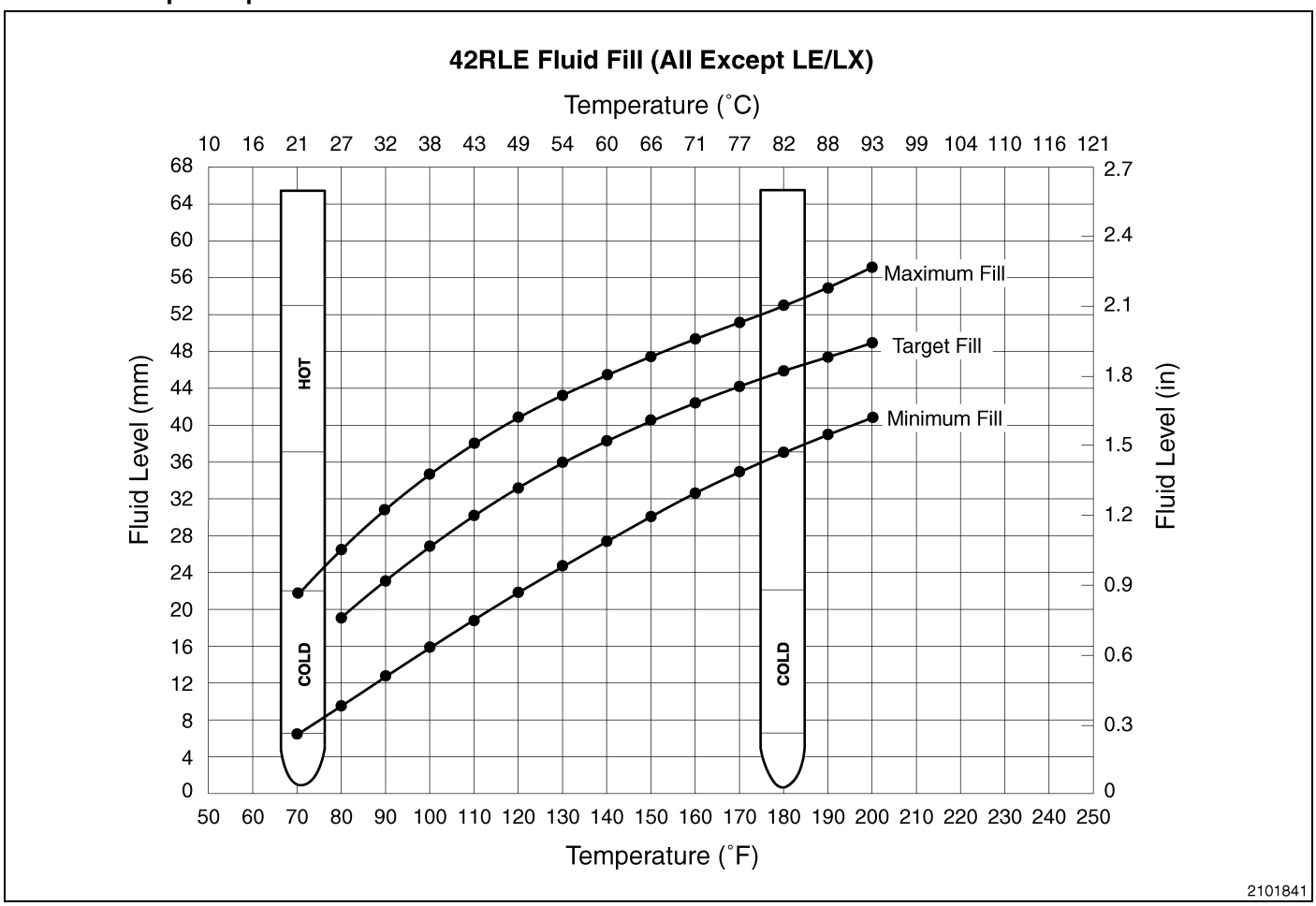

6. Check transmission oil temperature using the appropriate scan tool.

NOTE: The true transmission oil temperature can only be read by a scan tool in Reverse or any forward gear position.

7. The transmission Oil Dipstick 9336A has indicator marks every 10mm. Determine the height of the oil level on the dipstick and using the height, the transmission temperature, and the Transmission Fluid Graph, determine if the transmission oil level is correct.
8. Add or remove oil as necessary and recheck the oil level.
9. Once the oil level is correct, install the dipstick tube cap.

FLUID/FILTER SERVICE

NOTE: Only fluids of the type labeled Mopar® ATF+4, Automatic Transmission Fluid, should be used in the transmission sump. A filter change should be made at the time of the transmission oil change. The magnet (on the inside of the oil pan) should also be cleaned with a clean, dry cloth.

NOTE: If the transmission is disassembled for any reason, the fluid and filter should be changed.

1. Raise vehicle on a hoist. Place a drain container with a large opening, under transmission oil pan.

NOTE: One of the oil pan bolts (5) has a sealing patch applied from the factory. Separate this bolt for reuse.

2. Loosen pan bolts and tap the pan at one corner to break it loose allowing fluid to drain, then remove the oil pan.
3. Install a new filter and o-ring on bottom of the valve body and tighten retaining screws to 5 N·m (45 in. lbs.).

NOTE: Before installing the oil pan bolt (5) in the bolt hole located between the torque converter clutch on and U/D clutch pressure tap circuits , it will be necessary to replentish the sealing patch on the bolt using Mopar® Lock AND Seal Adhesive.

4. Clean the oil pan and magnet. Reinstall pan using new Mopar® Silicone Adhesive sealant. Tighten oil pan bolts to 20 N·m (14.5 ft. lbs.).
5. Pour four quarts of Mopar® ATF+4, Automatic Transmission Fluid, through the dipstick opening.
6. Start engine and allow to idle for at least one minute. Then, with parking and service brakes applied, move selector lever momentarily to each position, ending in the park or neutral position.

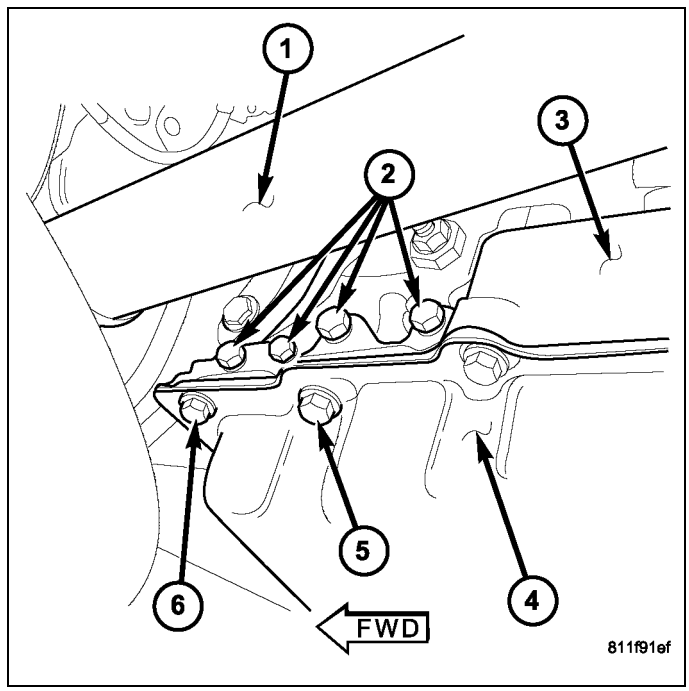

7. Check the transmission fluid level and add an appropriate amount to bring the transmission fluid level to 3mm (1/8 in.) below the lowest mark on the dipstick.
8. Recheck the fluid level after the transmission has reached normal operating temperature, 82° C (180°F).
9. To prevent dirt from entering transmission, make certain that dipstick is fully seated into the dipstick opening.

TRANSMISSION FILL

To avoid overfilling transmission after a fluid change or overhaul, perform the following procedure:

1. Remove dipstick and insert clean funnel in transmission fill tube.
2. Add following initial quantity of Mopar® ATF +4 to transmission:
   a. If only fluid and filter were changed, add **3 pints (1-1/2 quarts)** of ATF +4 to transmission.
   b. If transmission was completely overhauled, torque converter was replaced or drained, and cooler was flushed, add **12 pints (6 quarts)** of ATF +4 to transmission.
3. Apply parking brakes.
4. Start and run engine at normal curb idle speed.
5. Apply service brakes, shift transmission through all gear ranges then back to NEUTRAL, set parking brake, and leave engine running at curb idle speed.
6. Remove funnel, insert dipstick and check fluid level. If level is low, **add fluid to bring level to MIN mark on dipstick.** Check to see if the oil level is equal on both sides of the dipstick. If one side is noticably higher than the other, the dipstick has picked up some oil from the dipstick tube. Allow the oil to drain down the dipstick tube and re-check.
7. Drive vehicle until transmission fluid is at normal operating temperature.
8. With the engine running at curb idle speed, the gear selector in NEUTRAL, and the parking brake applied, check the transmission fluid level.

CAUTION: Do not overfill transmission, fluid foaming and shifting problems can result.

9. Add fluid to bring level up to MAX arrow mark.

When fluid level is correct, shut engine off, release park brake, remove funnel, and install dipstick in fill tube.

GEARTRAIN, Planetary

Description

The planetary geartrain is located between the input clutch assembly and the rear of the transmission case. The planetary geartrain consists of two sun gears, two planetary carriers, two annulus (ring) gears, and one output shaft .

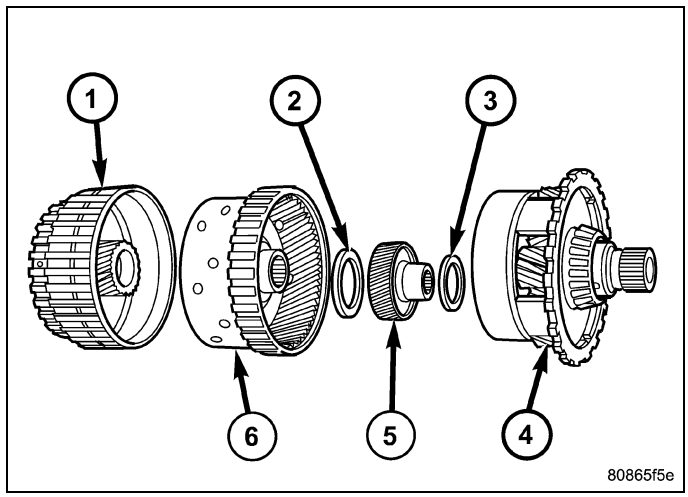

Operation

The planetary geartrain utilizes two planetary gear sets that connect the transmission input shaft to the output shaft. Input and holding clutches drive or lock different planetary members to change output ratio or direction.

HOLDING CLUTCHES

Description

Two hydraulically applied multi-disc clutches are used to hold planetary geartrain components stationary while the input clutches drive others. The 2/4 (2) and Low/Reverse (3) clutches are considered holding clutches and are contained at the rear of the transmission case .

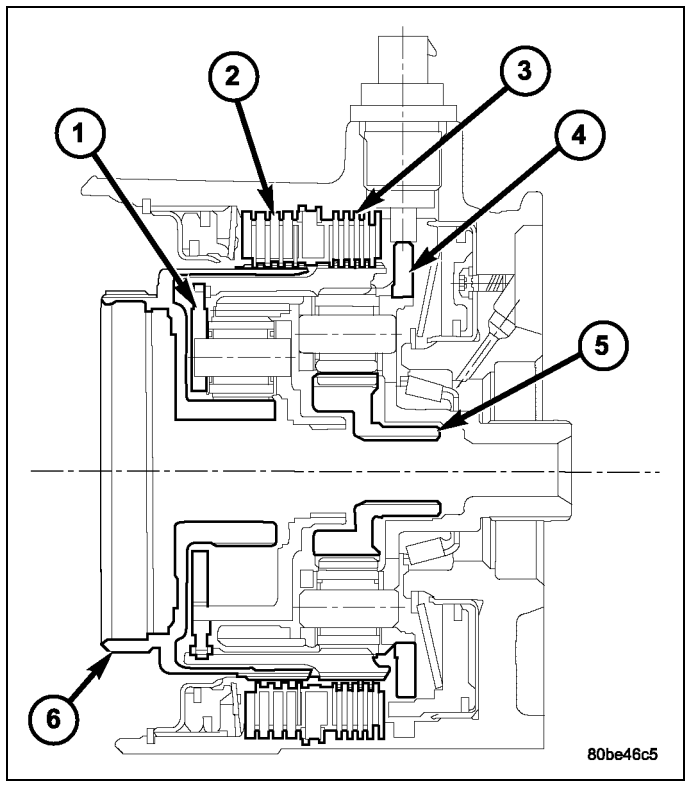

Operation

NOTE: (Refer to 21 - Transmission and Transfer Case/Automatic - 42RLE - Diagnosis and Testing) for a collective view of which clutch elements are applied at each position of the selector lever.

2/4 CLUTCH

The 2/4 clutch is hydraulically applied in second and fourth gears by pressurized fluid against the 2/4 clutch piston. When the 2/4 clutch is applied, the front sun gear assembly is held or grounded to the transmission case.

LOW/REVERSE CLUTCH

The Low/Reverse clutch is hydraulically applied in park, reverse, neutral, and first gears by pressurized fluid against the Low/Reverse clutch piston. When the Low/Reverse clutch is applied, the front planet carrier/rear annulus assembly is held or grounded to the transmission case.

MECHANISM, Brake Transmission Shift Interlock

Description

The Brake Transmission Shifter Interlock (BTSI), is a solenoid operated system. It consists of a solenoid permanently mounted on the gearshift lever assembly.

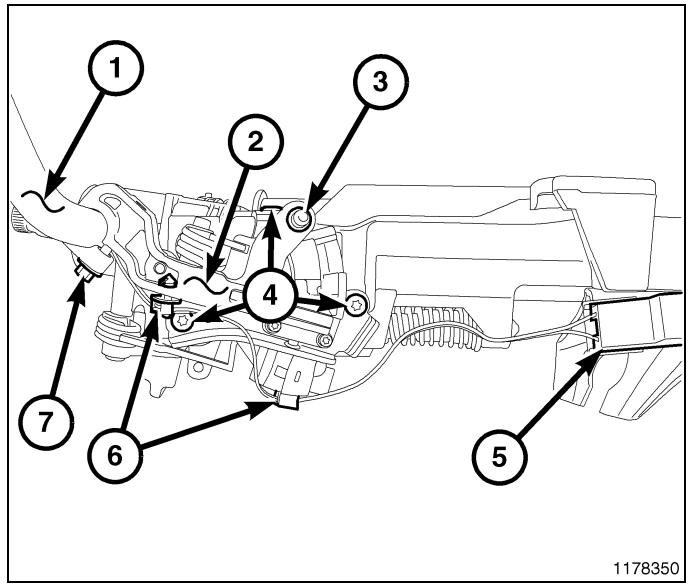

Operation

The system locks the shifter into the PARK position. The interlock system is engaged whenever the ignition switch is in the LOCK or ACCESSORY position. An additional electrically activated feature will prevent shifting out of the PARK position unless the brake pedal is depressed approximately one-half an inch. A magnetic holding device in line with the park lock cable is energized when the ignition is in the RUN position. When the key is in the RUN position and the brake pedal is depressed, the shifter is unlocked and will move into any position. The interlock system also prevents the ignition switch from being turned to the LOCK or ACCESSORY position, unless the shifter is fully locked into the PARK position.

Diagnosis and Testing

1. Verify that the key can only be removed in the PARK position.
2. When the shift lever is in PARK And the shift handle pushbutton is in the “OUT” position, the ignition key cylinder should rotate freely from OFF to LOCK. When the shifter is in any other gear or neutral position, the ignition key cylinder should not rotate to the LOCK position.
3. Shifting out of PARK should not be possible when the ignition key cylinder is in the OFF position.
4. Shifting out of PARK should not be possible while applying normal pushbutton force and ignition key cylinder is in the RUN or START positions unless the foot brake pedal is depressed approximately 1/2 inch (12mm).
5. Shifting out of PARK should not be possible when the ignition key cylinder is in the ACCESSORY or LOCK positions.

6. Shifting between any gears, NEUTRAL or into PARK may be done without depressing foot brake pedal with ignition switch in RUN or START positions.

Adjustments

ADJUSTMENT PROCEDURE

The BTSI is part of the shift lever assembly (2) and is non-adjustable.

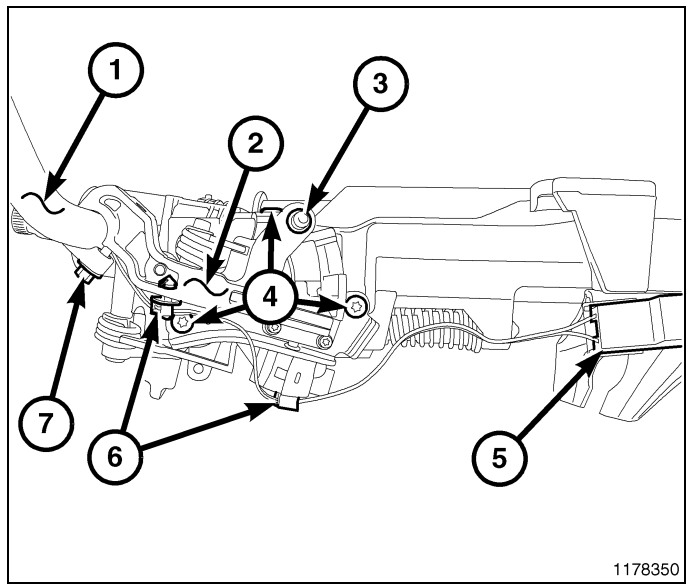

BTSI FUNCTION CHECK

1. Verify removal of ignition key allowed in PARK position only.
2. When the shift lever is in PARK, the ignition key cylinder should rotate freely from off to lock. When the shifter is in any other position, the ignition key should not rotate from off to lock.
3. Shifting out of PARK should not be possible when the ignition key cylinder is in the off position.
4. Shifting out of PARK should not be possible while applying normal force, and ignition key cylinder is in the run or start positions, unless the foot brake pedal is depressed approximately 1/2 inch (12mm).
5. Shifting out of PARK should not be possible when the ignition key cylinder is in the accessory or lock position.
6. Shifting between any gear and NEUTRAL, or PARK, may be done without depressing foot brake with ignition switch in run or start positions.
7. Engine starts must be possible with shifter lever in PARK or NEUTRAL positions only. Engine starts must not be possible in any position other than PARK or NEUTRAL.
8. With shifter lever in the:

- PARK position - Apply upward force on the shift arm and remove pressure. Engine starts must be possible.
- PARK position - Apply downward force on the shift arm and remove pressure. Engine starts must be possible.
- NEUTRAL position - Normal position. Engine starts must be possible.
- NEUTRAL position - Engine running and brakes applied, apply upward force on the shift arm. Transmission shall not be able to shift from neutral to reverse.

PUMP, Transmission Oil

Description

The oil pump is located in the pump housing inside the bell housing of the transmission case. The oil pump assembly consists of an inner (3) and outer (2) gear, a housing (1), and a cover that also serves as the reaction shaft support (6).

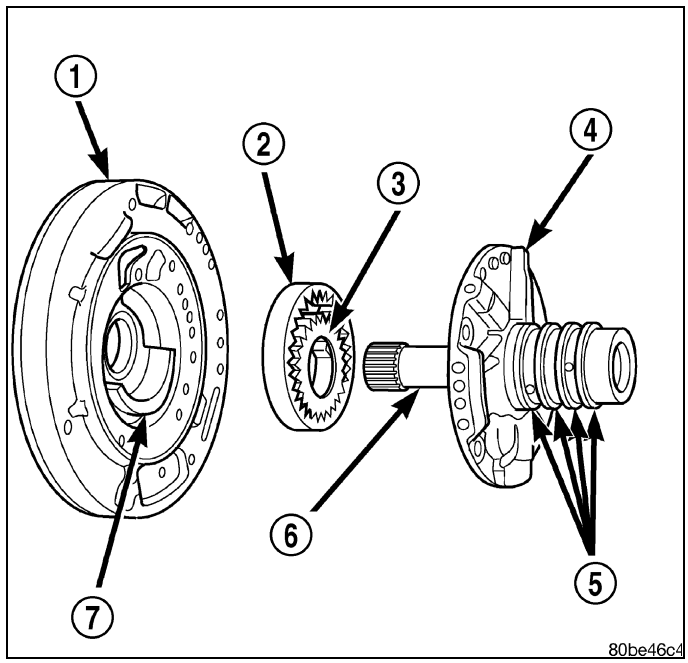

Operation

As the torque converter rotates, the converter hub rotates the inner and outer gears. As the gears rotate, the clearance between the gear teeth increases in the crescent area, and creates a suction at the inlet side of the pump. This suction draws fluid through the pump inlet from the oil pan. As the clearance between the gear teeth in the crescent area decreases, it forces pressurized fluid into the pump outlet and to the valve body.

Disassembly

1. Remove the reaction shaft support bolts.
2. Remove the reaction shaft support (2) from the pump housing (1).

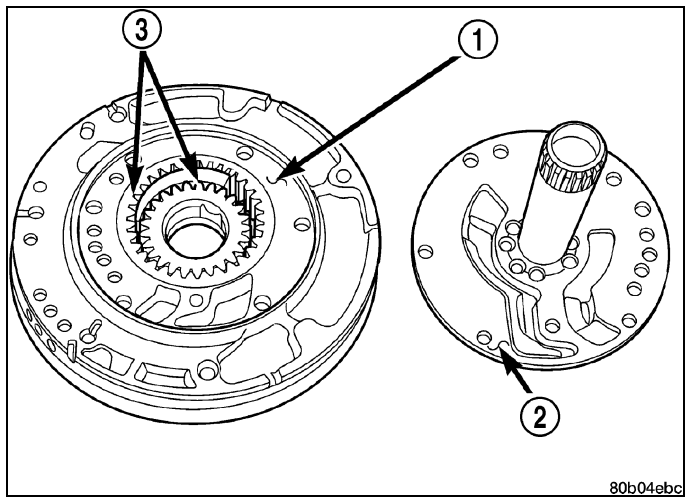

3. Remove the pump gears (2, 3) and check for wear and damage on pump housing (1) and gears (2, 3).

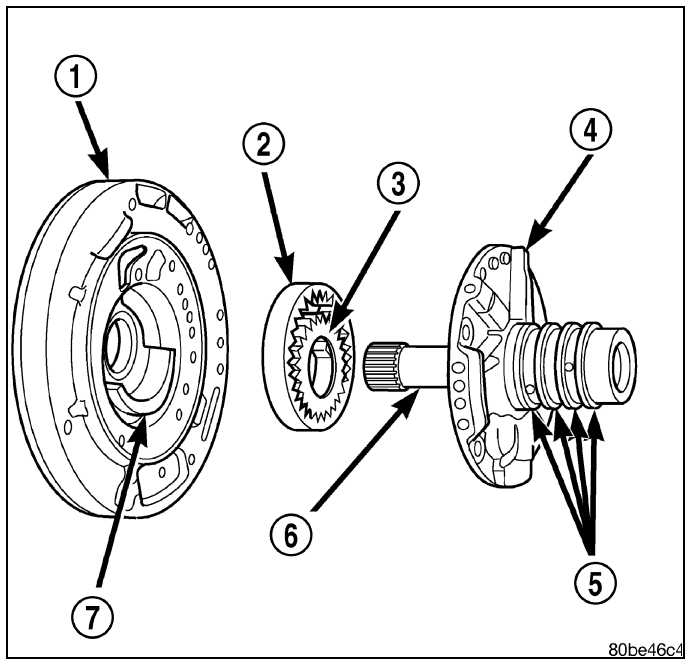

Cleaning

Clean pump and support components with solvent and dry them with compressed air.

Inspection

1. Re-install the gears and check clearances.
2. Measure the clearance between the outer gear (1) and the pump pocket (2) . Clearance should be 0.089-0.202 mm (0.0035-0.0079 in.).
3. Measure clearance between outer gear and crescent. Clearance should be 0.060-0.298 mm (0.0023-0.0117 in.).
4. Measure clearance between inner gear and crescent. Clearance should be 0.093-0.385 mm (0.0036-0.0151 in.).

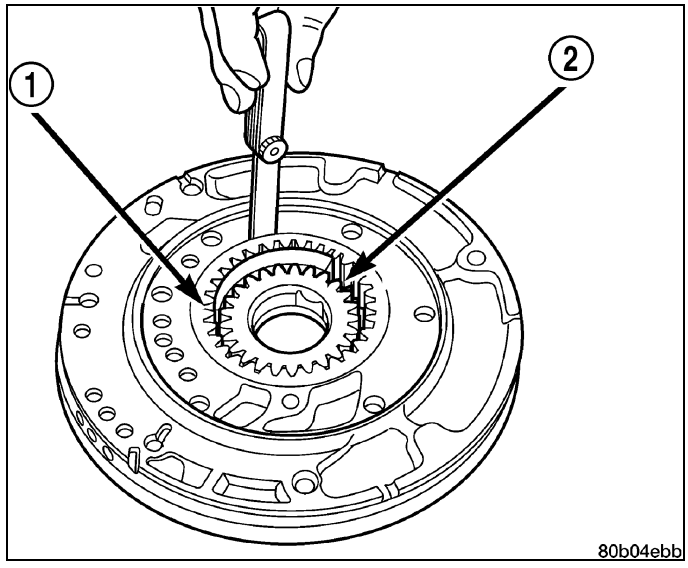

5. Install the 9524 90° or the C-3339A Dial indicator (3) into the Scooter Block D-115-2A (2).
6. Zero the Dial Indicator (3) in the scooter block assembly on a flat surface (1) of the pump housing.
7. While applying slight downward pressure rotate the front of the scooter block side ways onto the outer gear (4).
8. Measure and record the gear height to the pump housing case clearance.
9. The clearance should be 0.020-0.046 mm (0.0008-0.0018 in.). If not replace the oil pump assembly.

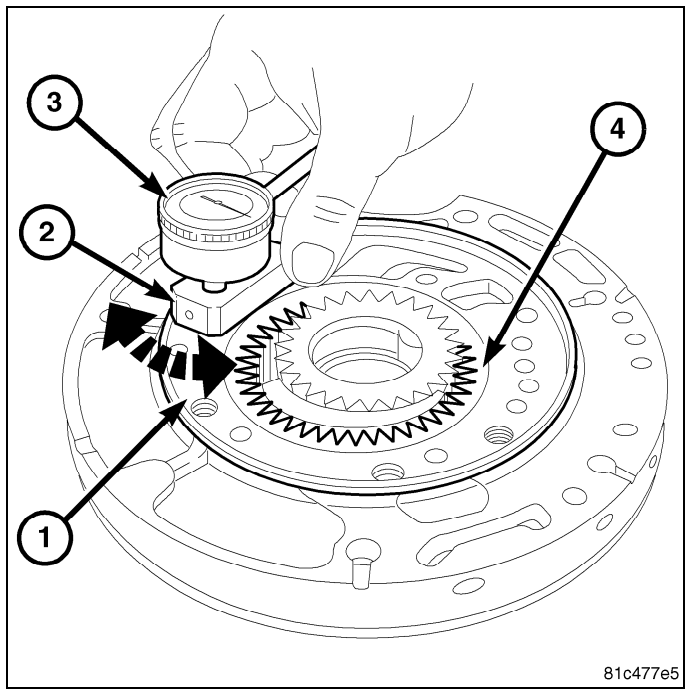

Assembly

1. Assemble oil pump as shown
2. Install and torque reaction shaft support-to-oil pump housing bolts to 28 N·m (250 in. lbs.) torque.

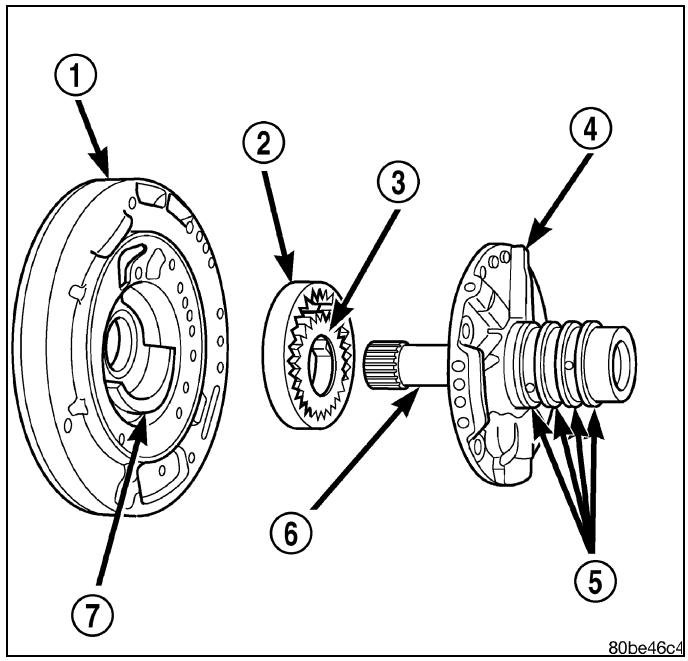

RELAY, Transmission Control

Description

NOTE: Due to different power control configurations, the Transmission Control Relay (if equipped) may be referred to as a PCM relay.

The relay is supplied fused B+ voltage, energized by the TCM, and is used to supply power to the solenoid pack when the transmission is in normal operating mode.

Operation

NOTE: Due to different power control configurations, the Transmission Control Relay (if equipped) may be referred to as a PCM relay.

When the relay is “off”, no power is supplied to the solenoid pack and the transmission is in “limp-in” mode. After a controller reset, the TCM energizes the relay. Prior to this, the TCM verifies that the contacts are open by checking for no voltage at the switched battery terminals. After this is verified, the voltage at the solenoid pack pressure switches is checked. After the relay is energized, the TCM monitors the terminals to verify that the voltage is greater than 3 volts.

SEAL, Extension Housing

Removal

1. Raise vehicle.
2. Mark propeller shaft and axle yoke, or companion flange, for alignment reference.
3. Disconnect and remove propeller shaft.
4. Remove old seal with a generic seal remover (1) from overdrive extension housing.

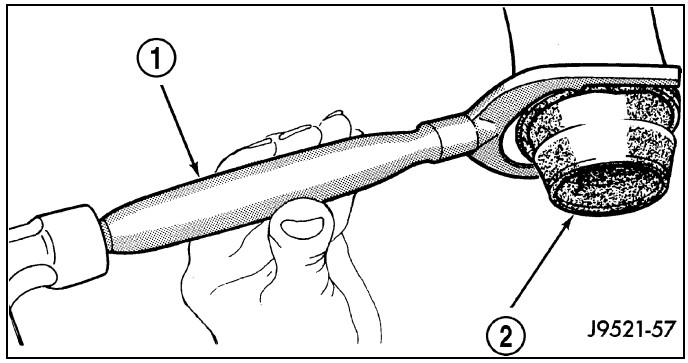

Installation

1. Place seal in position on overdrive housing.
2. Drive seal into overdrive housing with Seal Installer C-3995-A (1) .
3. Carefully guide propeller shaft slip yoke into housing and onto output shaft splines. Align marks made at removal and connect propeller shaft to rear axle pinion yoke.

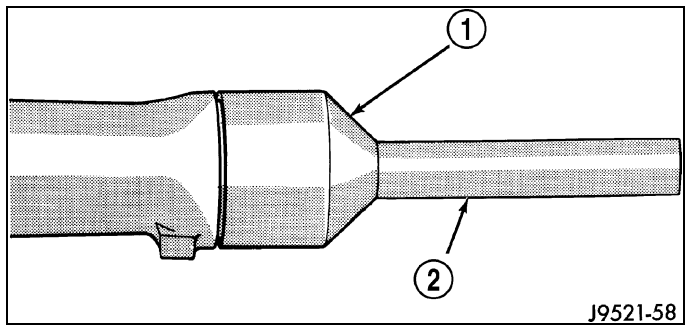

SEAL, Oil Pump

Removal

1. Remove the transmission from the vehicle (Refer to 21 - Transmission and Transfer Case/Automatic - 42RLE - Removal) .
2. Remove the torque converter from the transmission bellhousing.
3. Use a screw mounted in a slide hammer to remove oil pump seal.

Installation

1. Clean and inspect oil pump seal seat. Then install seal using Seal Installer C-4193A.
2. Clean and inspect torque converter hub. If nicks, scratches or hub wear are found, torque converter replacement will be required.

CAUTION: If the torque converter is being replaced, apply a light coating of grease to the crankshaft pilot hole. Also inspect the engine drive plate for cracks. If any cracks are found replace the drive plate. Do not attempt to repair a cracked drive plate. Always use new torque converter to drive plate bolts.

3. Apply a light film of transmission oil to the torque converter hub and oil seal lips. Then install torque converter into transmission. Be sure that the hub lugs mesh with the front pump lugs when installing.
4. Reinstall the transmission into the vehicle.(Refer to 21 - Transmission and Transfer Case/Automatic - 42RLE - Installation)

SENSOR, Speed, Input

Description

The Input (1) and Output (2) Speed Sensors are two-wire magnetic pickup devices that generate AC signals as rotation occurs. They are mounted in the left side of the transmission case and are considered primary inputs to the Transmission Control Module (TCM).

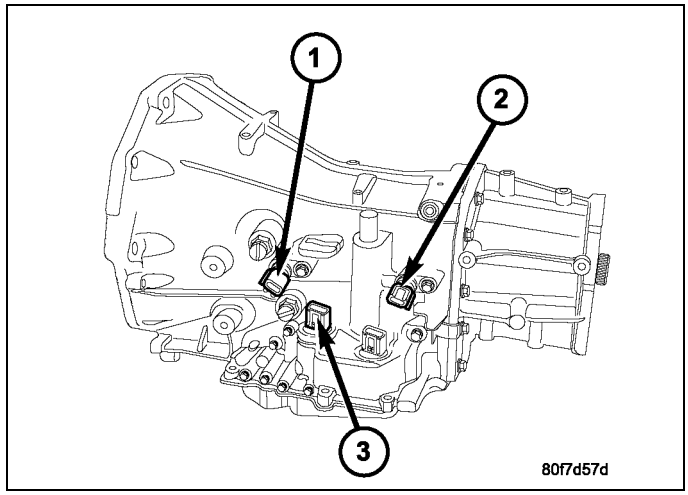

Operation

The Input Speed Sensor provides information on how fast the input shaft is rotating. As the teeth of the input clutch hub pass by the sensor coil, an AC voltage is generated and sent to the TCM. The TCM interprets this information as input shaft rpm.

The Output Speed Sensor generates an AC signal in a similar fashion, though its coil is excited by rotation of the rear planetary carrier lugs. The TCM interprets this information as output shaft rpm.

The TCM compares the input and output speed signals to determine the following:

- Transmission gear ratio
- Speed ratio error detection
- CVI calculation

The TCM also compares the input speed signal and the engine speed signal to determine the following:

- Torque converter clutch slippage
- Torque converter element speed ratio

Removal

1. Raise vehicle.
2. Place a suitable fluid catch pan under the transmission.
3. Remove the wiring connector from the input speed sensor .

NOTE: The speed sensor bolt has a sealing patch applied from the factory. Be sure to reuse the same bolt.

4. Remove the bolt holding the input speed sensor to the transmission case.
5. Remove the input speed sensor from the transmission case.

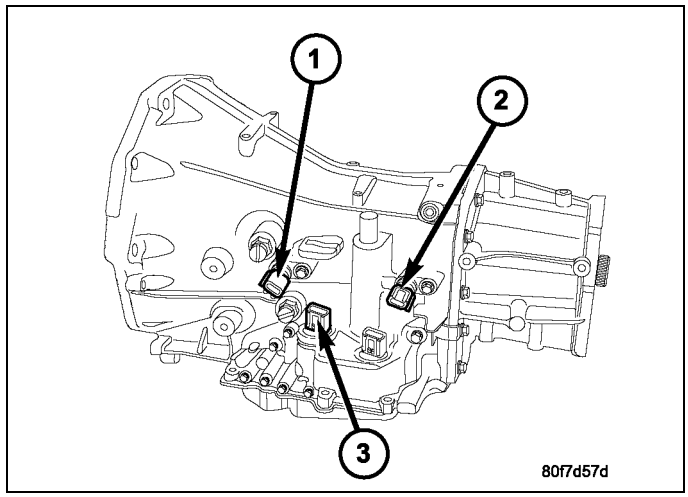

Installation

1. Install the input speed sensor (1) into the transmission case.

NOTE: Before installing the speed sensor bolt, it will be necessary to replenish the sealing patch on the bolt using MOPAR® Lock AND Seal Adhesive.

2. Install the bolt to hold the input speed sensor into the transmission case. Tighten the bolt to 9 N·m (80 in.lbs.).
3. Install the wiring connector onto the input speed sensor
4. Verify the transmission fluid level. Add fluid as necessary.
5. Lower vehicle.

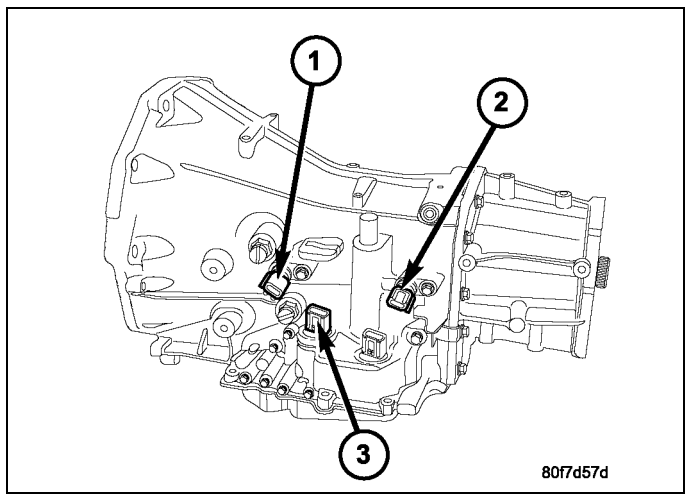

SENSOR, Speed, Output

Description

The Input (1) and Output (2) Speed Sensors are two-wire magnetic pickup devices that generate AC signals as rotation occurs. They are mounted in the left side of the transmission case and are considered primary inputs to the Transmission Control Module (TCM).

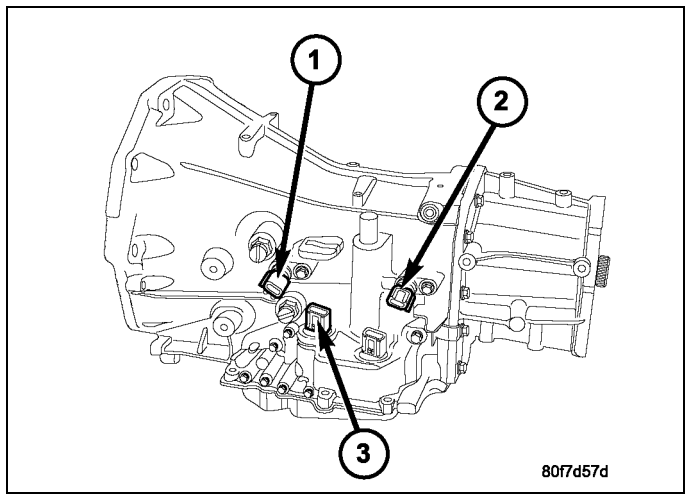

Operation

The Input Speed Sensor provides information on how fast the input shaft is rotating. As the teeth of the input clutch hub pass by the sensor coil, an AC voltage is generated and sent to the TCM. The TCM interprets this information as input shaft rpm.

The Output Speed Sensor generates an AC signal in a similar fashion, though its coil is excited by rotation of the rear planetary carrier lugs. The TCM interprets this information as output shaft rpm.

The TCM compares the input and output speed signals to determine the following:

- Transmission gear ratio
- Speed ratio error detection
- CVI calculation

The TCM also compares the input speed signal and the engine speed signal to determine the following:

- Torque converter clutch slippage
- Torque converter element speed ratio

Removal

1. Raise vehicle.
2. Place a suitable fluid catch pan under the transmission.
3. Remove the wiring connector from the output speed sensor (2) .

NOTE: The speed sensor bolt has a sealing patch applied from the factory. Be sure to reuse the same bolt.

4. Remove the bolt holding the output speed sensor to the transmission case.
5. Remove the output speed sensor (2) from the transmission case.

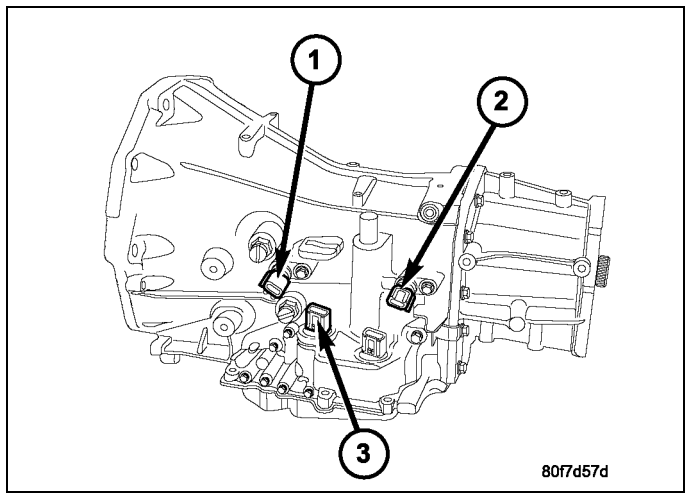

Installation

1. Install the output speed sensor (2) into the transmission case.

NOTE: Before installing the speed sensor bolt, it will be necessary to replenish the sealing patch on the bolt using MOPAR® Lock AND Seal Adhesive.

2. Install the bolt to hold the output speed sensor into the transmission case. Tighten the bolt to 9 N·m (80 in.lbs.).
3. Install the wiring connector onto the output speed sensor
4. Verify the transmission fluid level. Add fluid as necessary.
5. Lower vehicle.

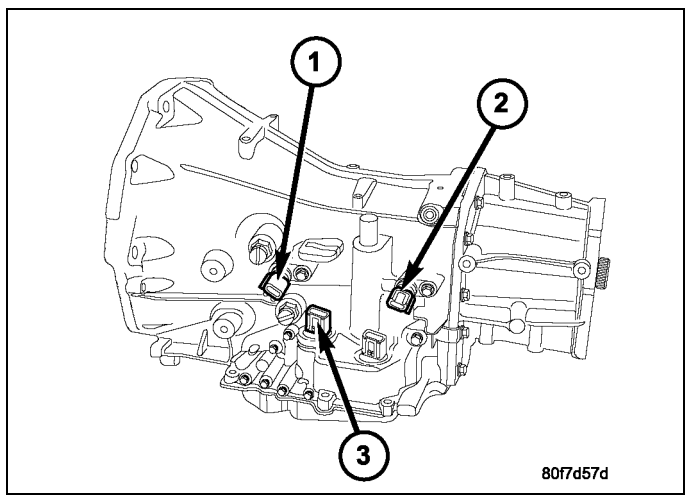

SENSOR, Transmission Oil Temperature

Description

The transmission temperature sensor (2) is located in the transmission range sensor (1) and communicates transmission sump temperature to the TCM.

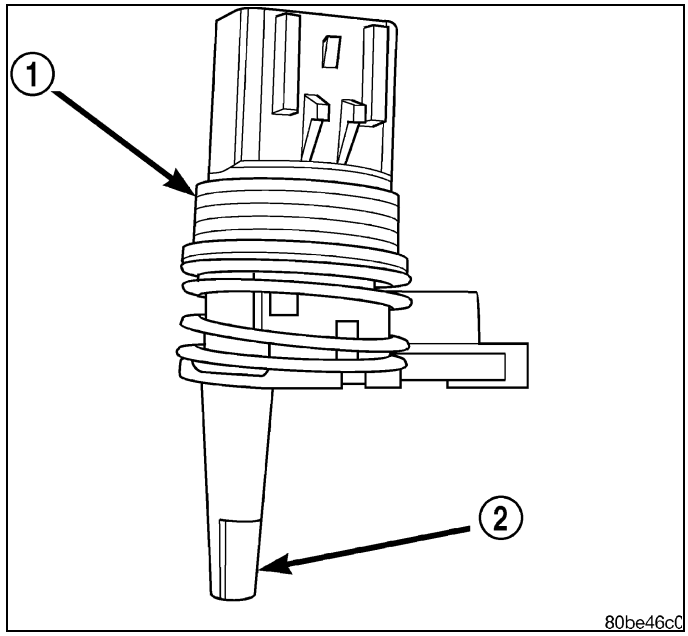

Operation

The transmission range sensor (TRS) has an integrated thermistor that the TCM uses to monitor the transmission's sump temperature. Since fluid temperature can affect transmission shift quality and convertor lock up, the TCM requires this information to determine which shift schedule to operate in. The TCM also monitors this temperature data so it can energize the vehicle cooling fan(s) when a transmission “overheat” condition exists. If the thermistor circuit fails, the TCM will revert to calculated oil temperature usage.

CALCULATED TEMPERATURE

A failure in the temperature sensor or circuit will result in calculated temperature being substituted for actual temperature. Calculated temperature is a predicted fluid temperature which is calculated from a combination of inputs:

- Battery (ambient) temperature
- Engine coolant temperature
- In-gear run time since start-up

SENSOR, Transmission Range

Description

The Transmission Range Sensor (TRS) (2) is mounted to the top of the valve body inside the transmission and can only be serviced by removing the valve body assembly. The electrical connector extends through the transmission case.

The Transmission Range Sensor (TRS) has four switch contacts that monitor shift lever position and send the information to the PCM.

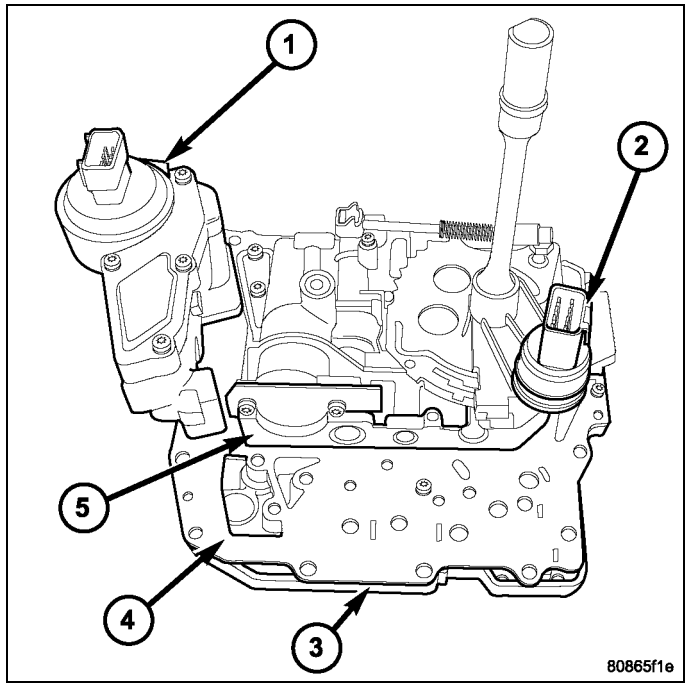

Operation

The Transmission Range Sensor (TRS) communicates shift lever position (SLP) to the TCM as a combination of open and closed switches. Each shift lever position has an assigned combination of switch states (open/closed) that the TCM receives from four sense circuits. The TCM interprets this information and determines the appropriate transmission gear position and shift schedule.

Since there are four switches, there are 16 possible combinations of open and closed switches (codes). Seven of these codes are related to gear position and three are recognized as “between gear” codes. This results in six codes which should never occur. These are called “invalid” codes. An invalid code will result in a DTC, and the TCM will then determine the shift lever position based on pressure switch data. This allows reasonably normal transmission operation with a TRS failure.

TRS SWITCH STATES

SLP	T42	T41	T3	T1
P	CL	CL	CL	OP
R	CL	OP	OP	OP
N	CL	CL	OP	CL
D	OP	OP	OP	CL
2	OP	OP	CL	OP
1	CL	OP	CL	CL

Removal

1. Remove valve body assembly from vehicle.(Refer to 21 - Transmission and Transfer Case/Automatic - 42RLE/VALVE BODY - Removal)
2. Remove the manual shaft seal (1) .

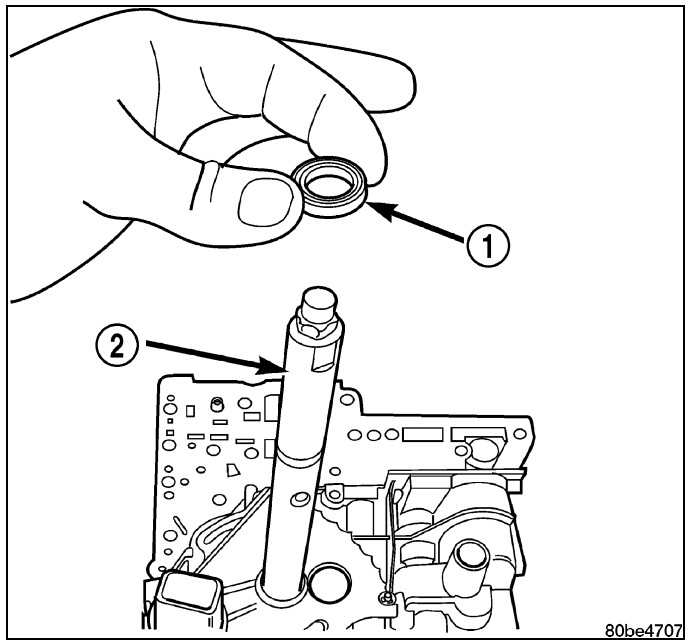

3. Remove manual shaft/TRS retaining screw (1) .
4. Slide TRS off of manual valve shaft.

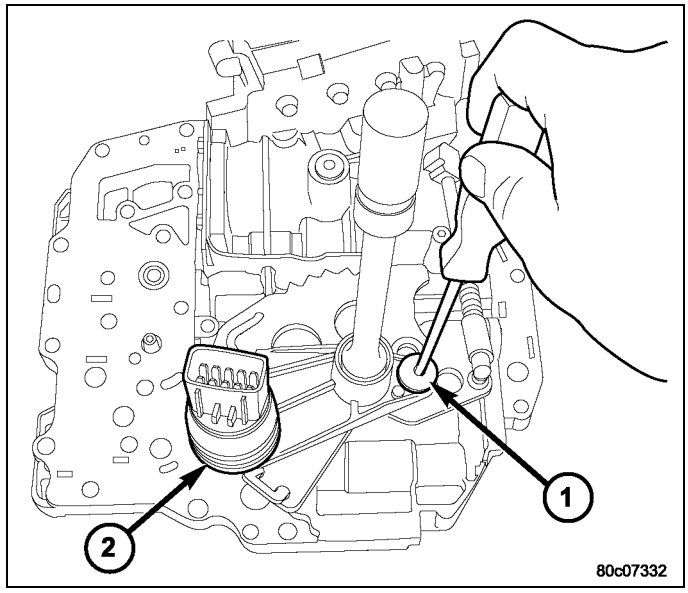

Installation

1. Install the TRS (2) to the manual shaft. Make sure TRS locating pin rests in manual valve bore slot.
2. Install the TRS/manual shaft retaining screw (1) and torque to 5 N·m (45 in. lbs.) torque.

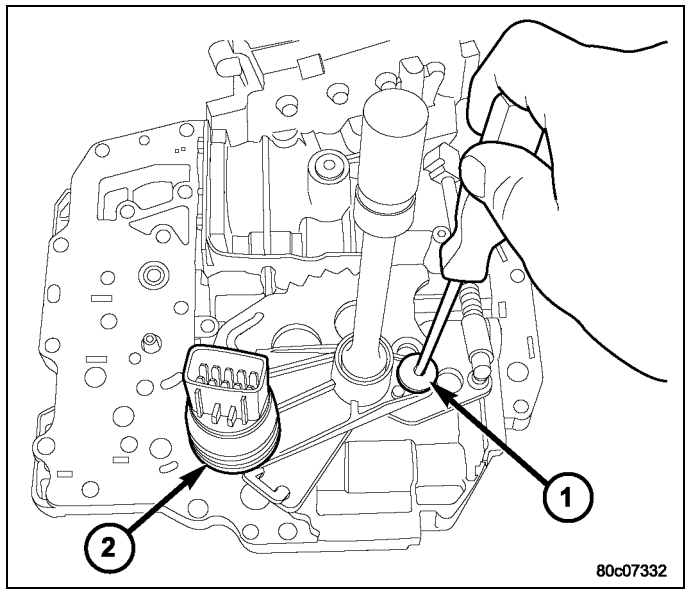

3. Install the manual shaft seal (1) .
4. Install valve body to the transmission.(Refer to 21 - Transmission and Transfer Case/Automatic - 42RLE/ VALVE BODY - Installation)

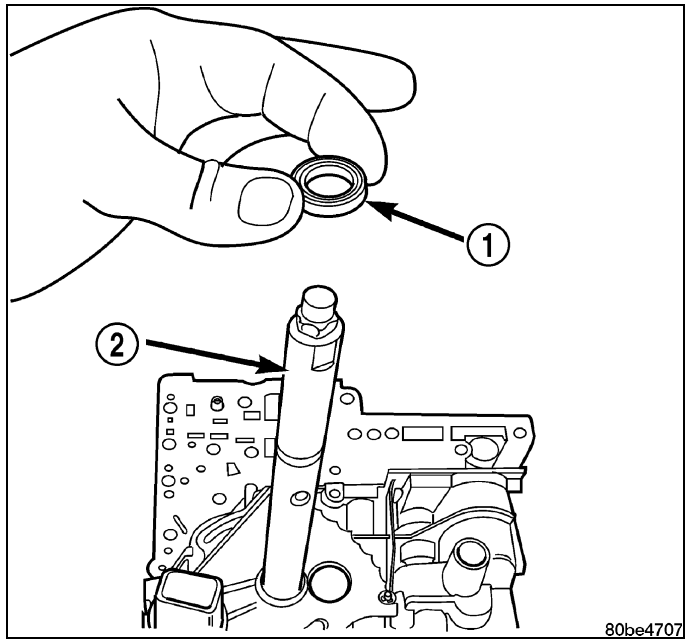

SENSOR, Variable Line Pressure

Description

The line pressure sensor (2) is mounted on the top of the valve body, next to the pressure control solenoid (1).

The TCM utilizes a closed-loop system to control transmission line pressure. The system contains a variable force style solenoid, the Pressure Control Solenoid. The solenoid is duty cycle controlled by the TCM to vent the unnecessary line pressure supplied by the oil pump back to the sump. The system also contains a variable pressure style sensor, the Line Pressure Sensor, which is a direct input to the TCM. The line pressure solenoid monitors the transmission line pressure and completes the feedback loop to the TCM. The TCM uses this information to adjust its control of the pressure control solenoid to achieve the desired line pressure.

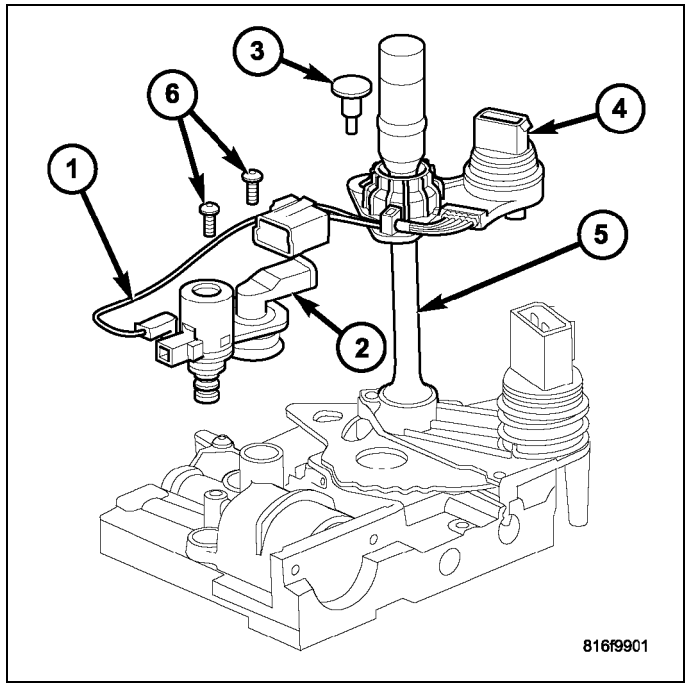

Operation

The TCM calculates the desired line pressure based upon inputs from the transmission and engine. The TCM calculates the torque input to the transmission and uses that information as the primary input to the calculation. The line pressure is set to a predetermined value during shifts and when the transmission is in the PARK and NEUTRAL positions. This is done to ensure consistent shift quality. During all other operation, the actual line pressure is compared to the desired line pressure and adjustments are made to the pressure control solenoid duty cycle.

Removal

1. Remove the valve body from the transmission. (Refer to 21 - Transmission and Transfer Case/Automatic - 42RLE/VALVE BODY - Removal)
2. Remove the electrical connectors from the pressure control solenoid (1) and the line pressure sensor (2).
3. Remove the screws (6) holding the pressure control solenoid (1) and line pressure sensor (2) to the valve body.
4. Remove the pressure control solenoid and line pressure sensor from the valve body.

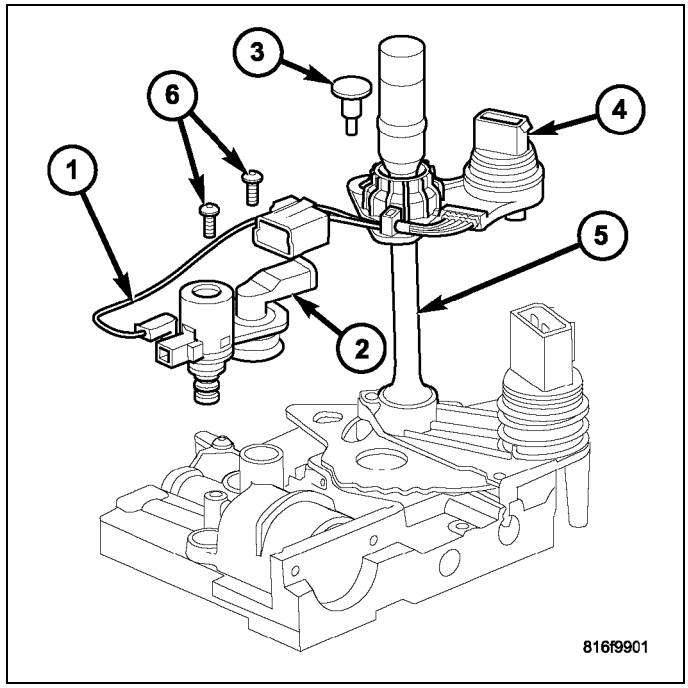

Installation

1. Install the pressure control solenoid (1) and line pressure sensor (2) into the valve body.
2. Install the screws (6) to hold the pressure control solenoid (1) and line pressure sensor (2) to the valve body.
3. Install the electrical connectors to the pressure control solenoid (1) and the line pressure sensor (2).
4. Install the valve body into the transmission. (Refer to 21 - Transmission and Transfer Case/Automatic - 42RLE/VALVE BODY - Installation)

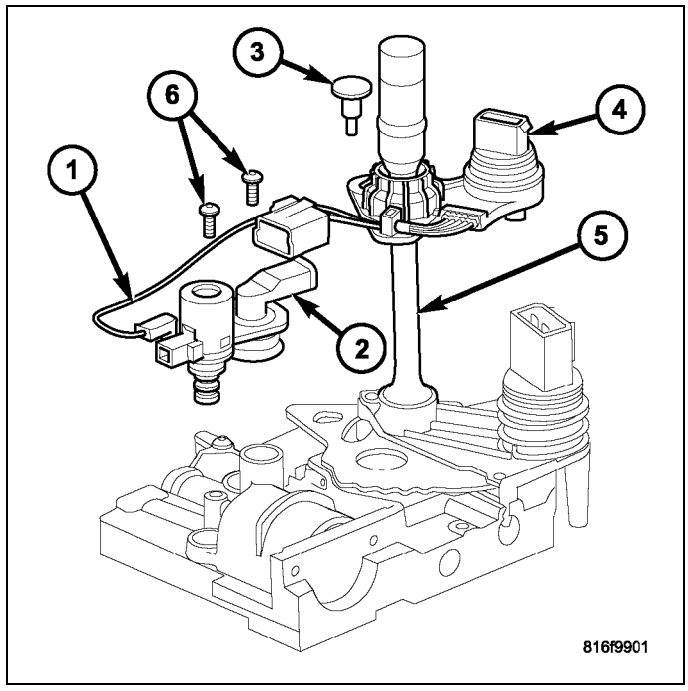

SHIFTER, Transmission

Description

The gear shift mechanism provides six shift positions which are:

- Park (P)
- Reverse (R)
- Neutral (N)
- Drive (D)
- Manual second (2)
- Manual low (1)

Operation

MANUAL LOW (1) range provides FIRST gear only. Overrun braking is also provided in this range. MANUAL SECOND (2) range provides FIRST and SECOND gear only.

DRIVE range provides FIRST, SECOND, THIRD and OVERDRIVE FOURTH gear ranges. The shift into OVERDRIVE FOURTH gear range occurs only after the transmission has completed the shift into D THIRD gear range. No further movement of the shift mechanism is required to complete the 3-4 shift.

The FOURTH gear upshift occurs automatically when the overdrive selector switch is in the ON position. An upshift to FOURTH gear may not occur or may be delayed in some of the possible shift schedules. (Refer to 08 - Electrical/8E - Electronic Control Modules/MODULE, Transmission Control - Operation)

Removal

SHIFTER

1. Using trim stick C-4755 or equivalent, remove the console bezel trim ring (1).

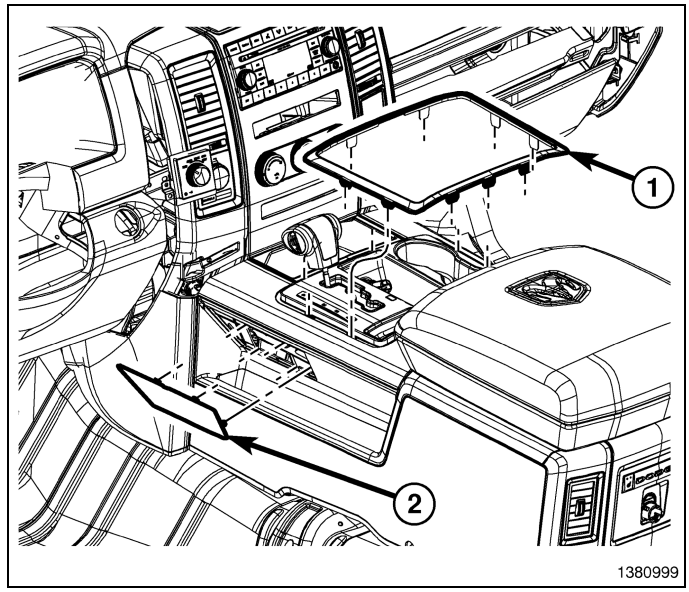

2. Remove the rubber insert (1) from the console bezel.

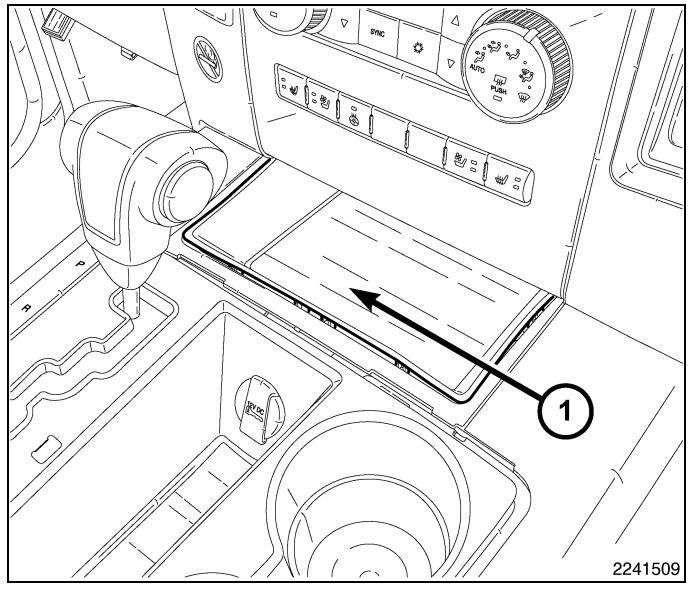

3. Remove the fasteners (1) at the front of the console bezel.

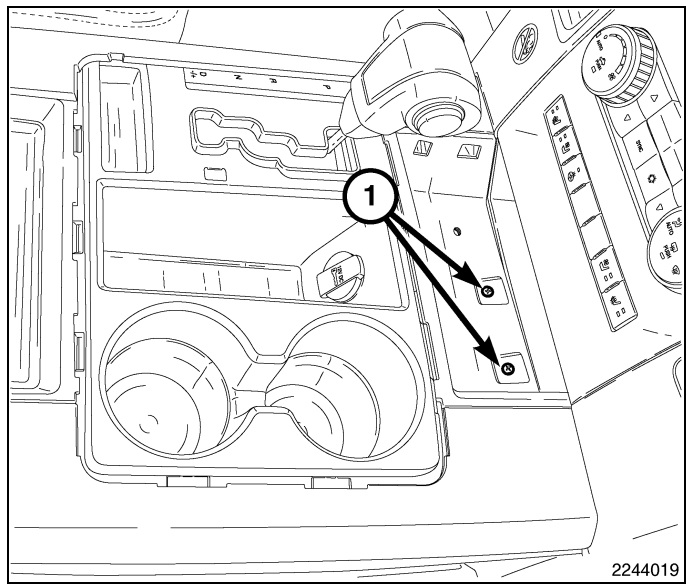

4. Using trim stick C-4755 or equivalent, remove console bezel (1).

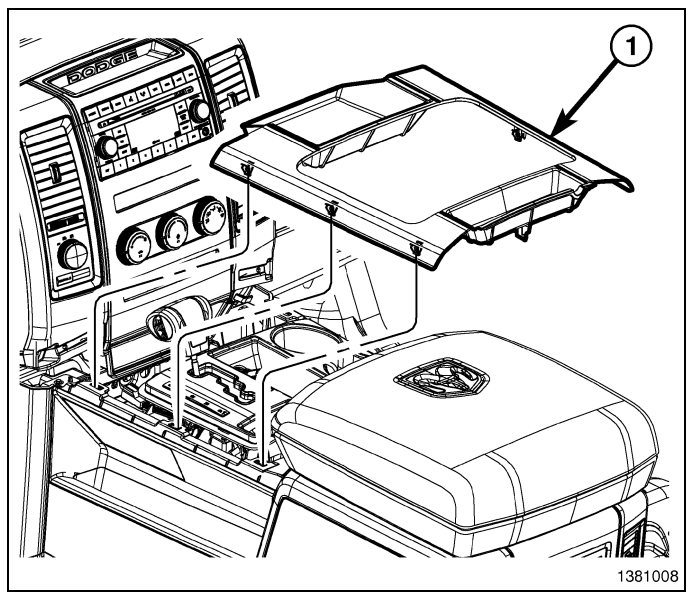

5. Remove the rubber liners from the center storage tray and cupholders in the console PRNDL bezel, and remove the fasteners (1).

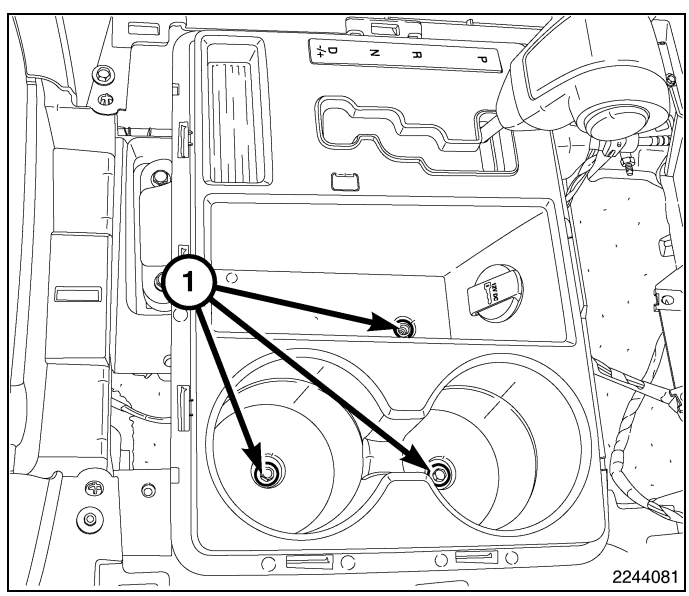

6. Disconnect the power outlet harness connector (1) and the shifter harness connector (2).

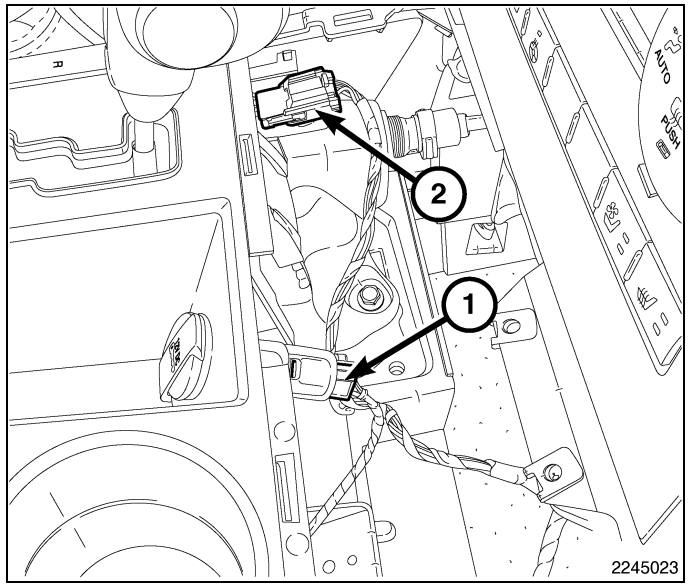

7. Place the shifter in park.
8. Remove the fasteners (1), and position the shifter assembly (2) so the cable end is accessible.

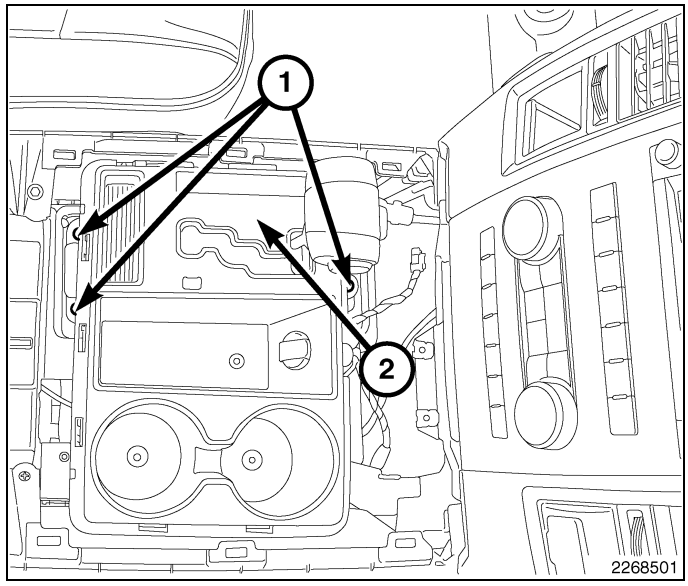

9. Disconnect the shift cable retainer (2) from the bracket.
10. Disconnect the shifter cable end (1) from the shifter lever.

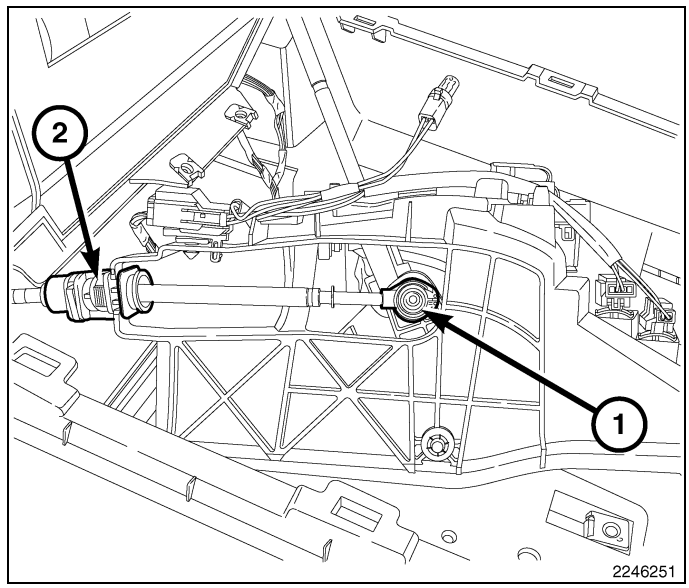

11. Remove the shifter assembly.

CONSOLE PRNDL BEZEL

1. Using trim stick C-4755 or equivalent, remove the console bezel trim ring (1).

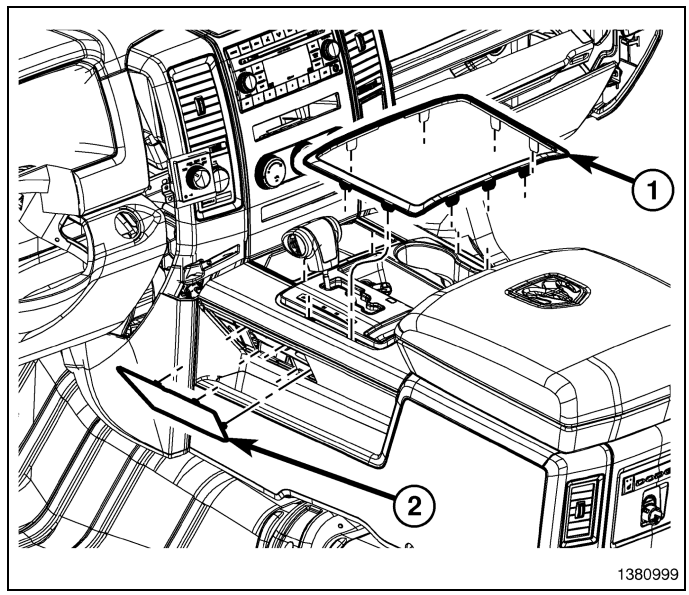

2. Remove the rubber insert (1) from the console bezel.

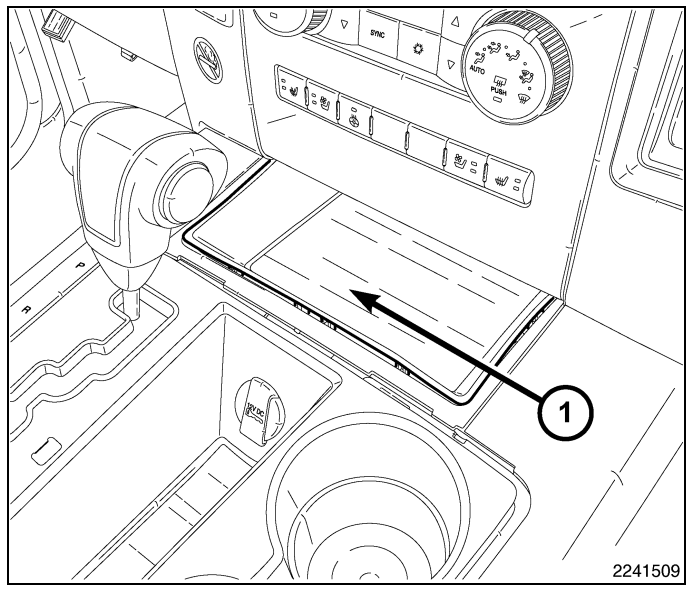

3. Remove the fasteners (1) at the front of the console bezel.

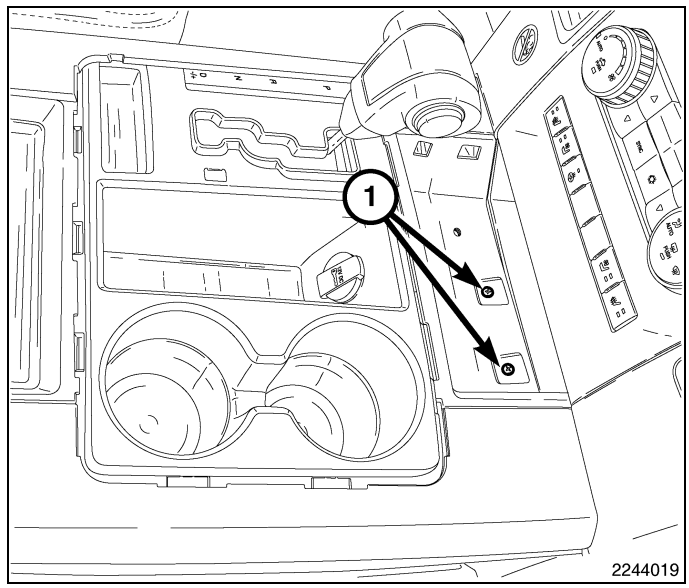

4. Using trim stick C-4755 or equivalent, remove the console bezel (1).

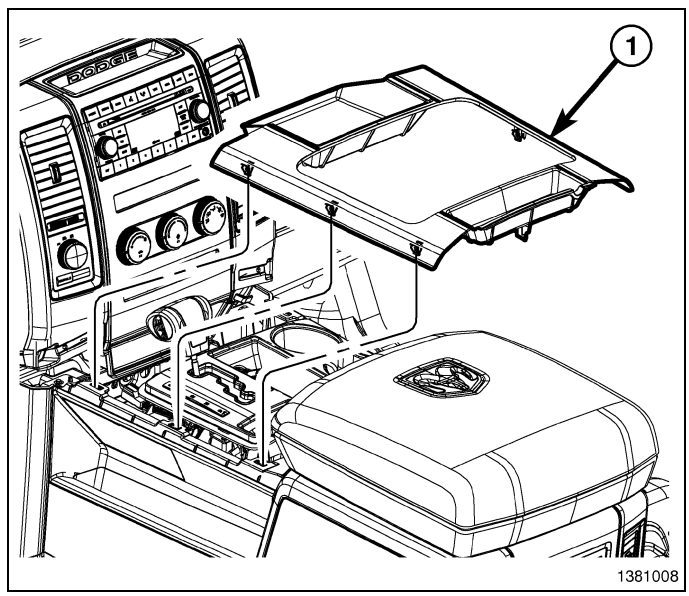

5. Remove the rubber liners from the center storage tray and cupholders in the console PRDL bezel, and remove the fasteners (1).

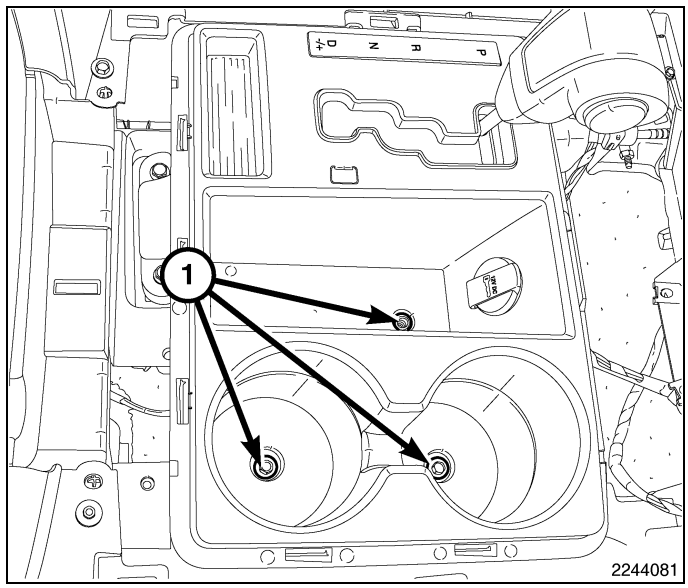

6. Disconnect the power outlet harness connector (1) and the shifter harness connector (2).

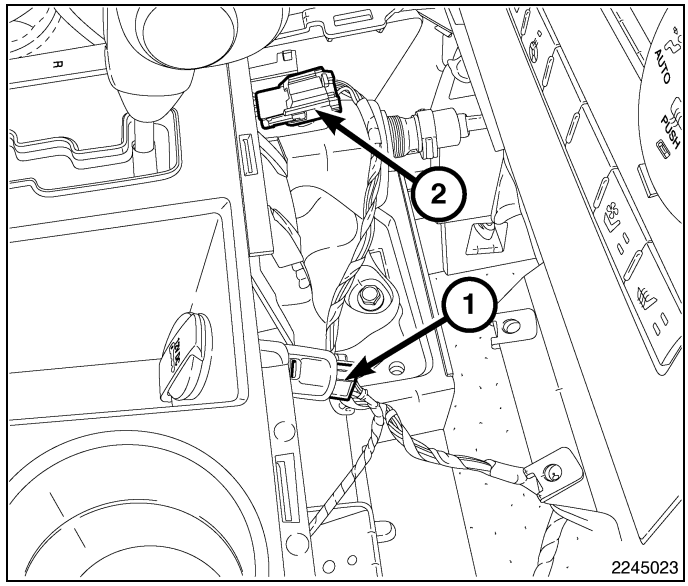

7. Twist the lower trim piece (1) on the base of the shifter knob counterclockwise, then push down to disengage the trim piece (1).

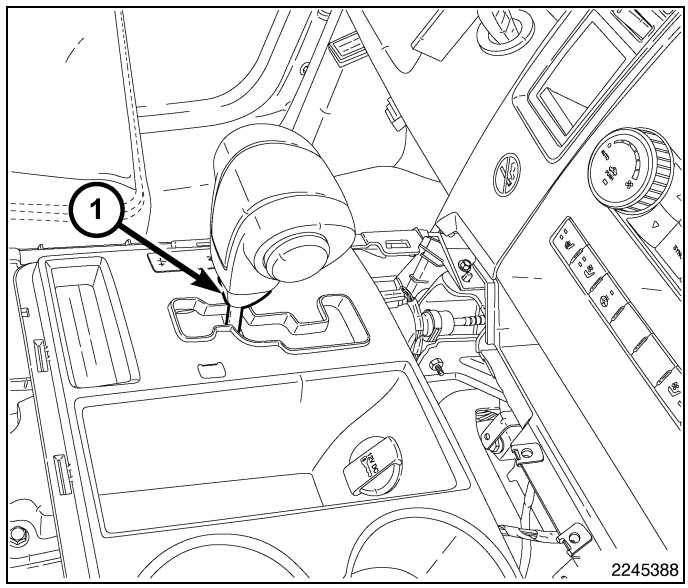

8. Remove the shifter knob.
9. Twist the shift position indicator lamp connector (1) 1/4 turn counterclockwise, then disconnect the lamp from the console PRNDL bezel.

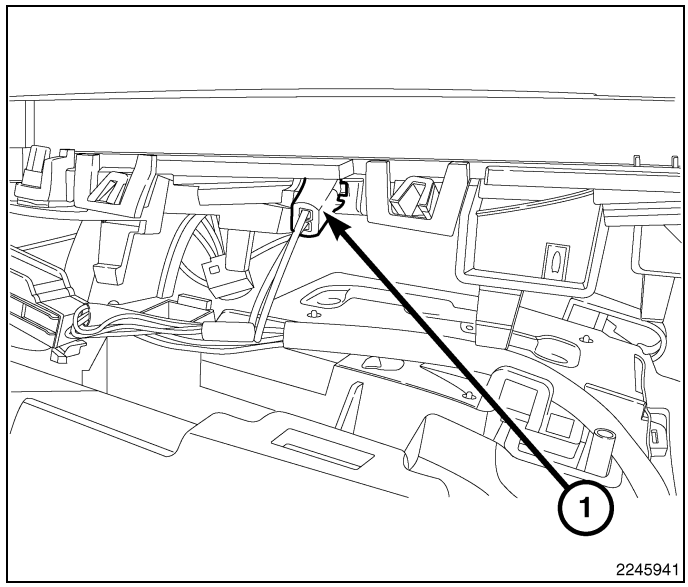

10. Release the clips (1) on the console PRNDL bezel, and remove the console PRNDL bezel.

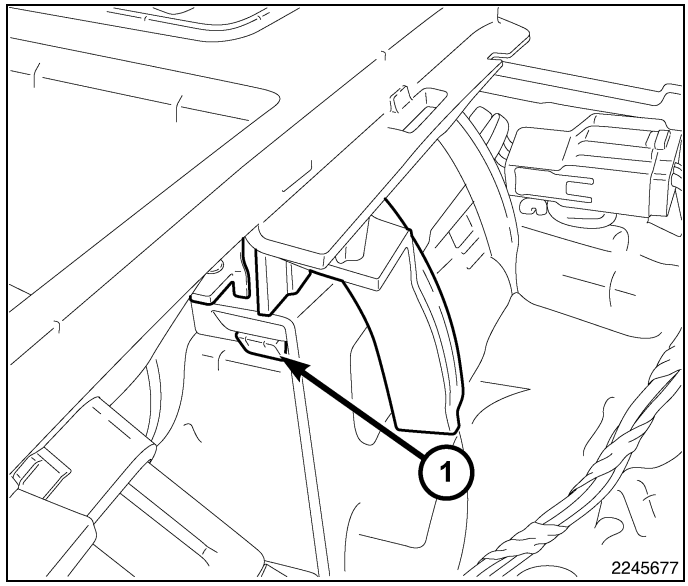

Installation

SHIFTER

1. Install the shift cable retainer (2).
2. Install the shifter cable end (1).

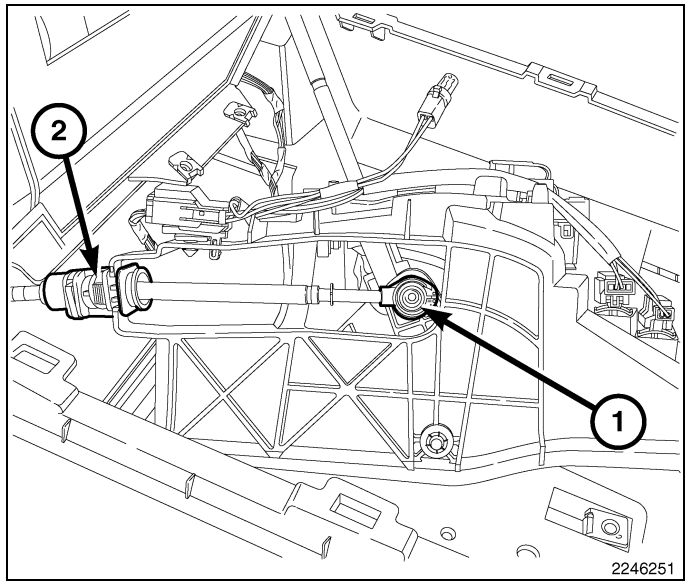

3. Install the shifter assembly.
4. Install the fasteners (1), and tighten to 7 N·m (65 in. lbs.).

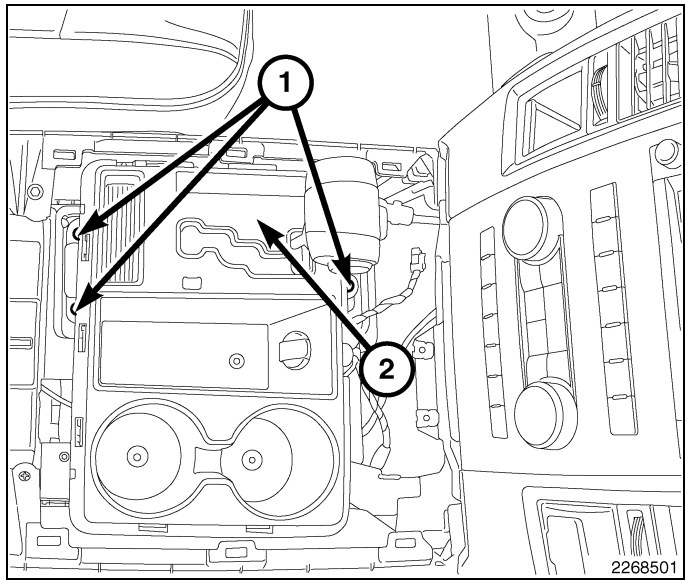

5. Install the fasteners (1), then install the rubber liners into the storage tray and cupholders.

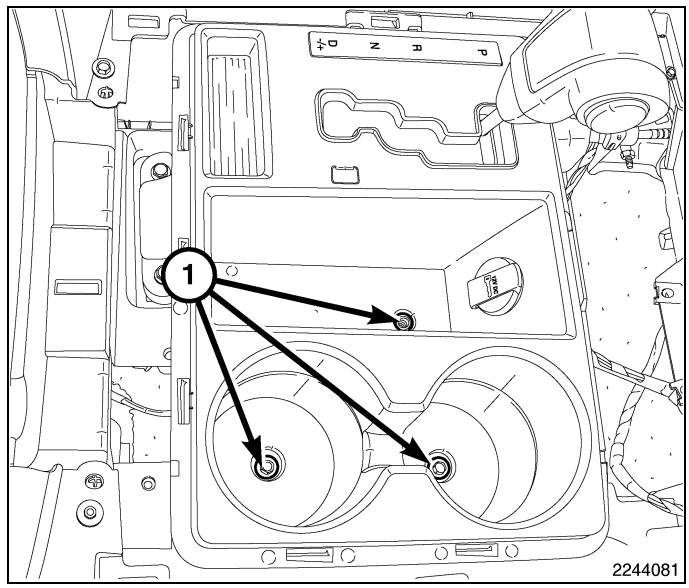

6. Reconnect the power outlet harness connector (1) and the shifter harness connector (2).

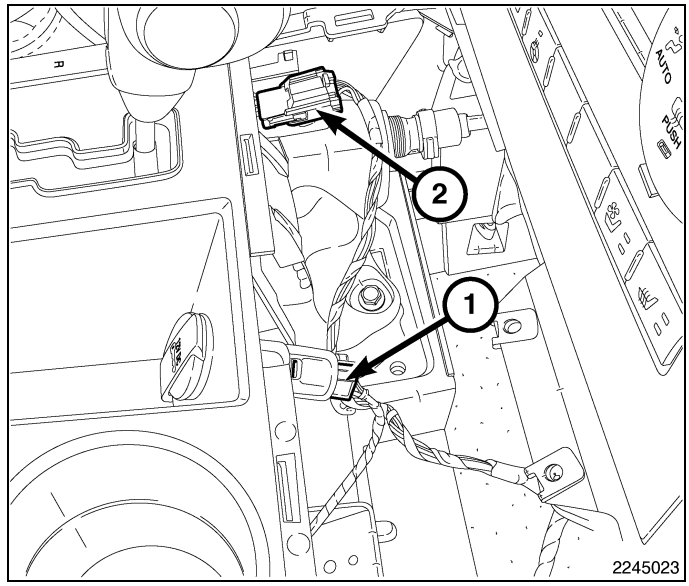

7. Install the console bezel (1).

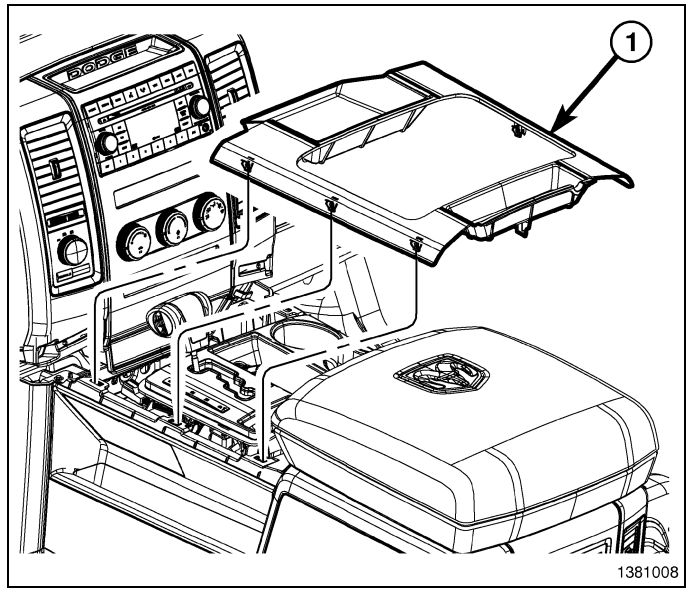

8. Install the fasteners (1) at the front of the console bezel.

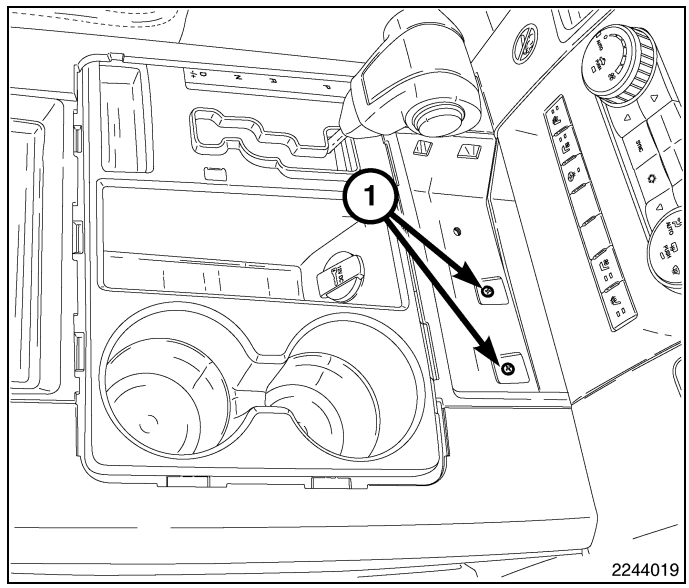

9. Install the rubber insert (1).

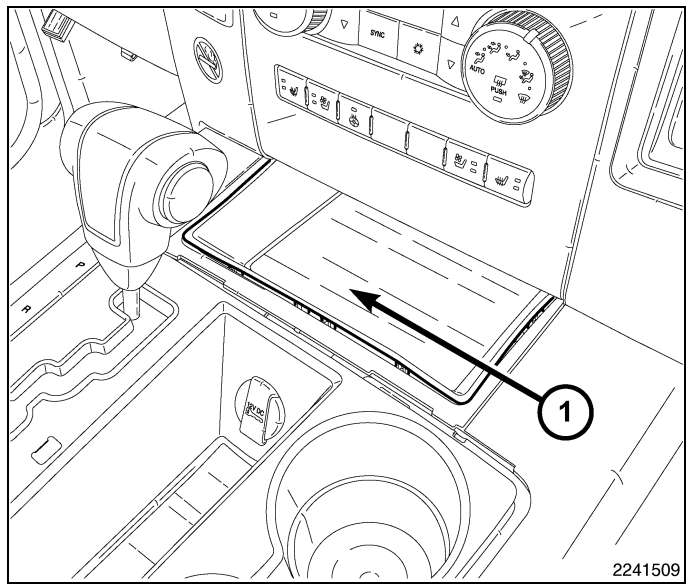

10. Install the console bezel trim ring (1).

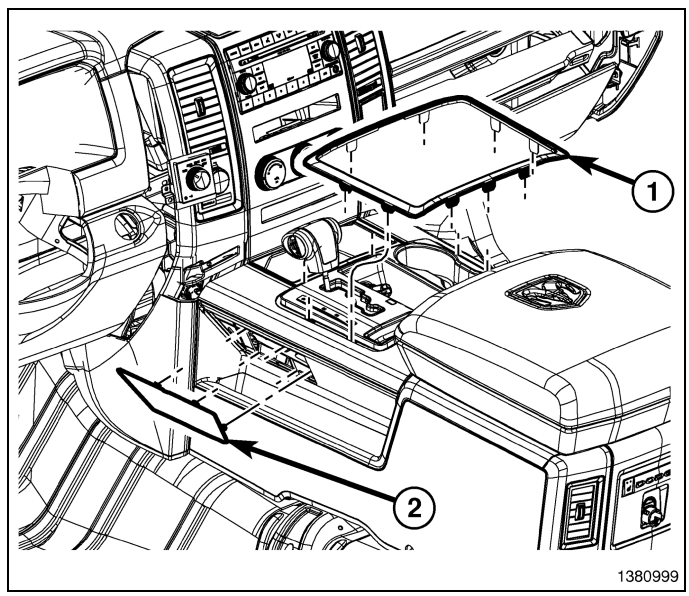

11. Verify correct shifter operation. The vehicle should only start in PARK or NEUTRAL.

CONSOLE PRNDL BEZEL

1. Install the console PRNDL bezel, and verify all clips (1) are engaged.

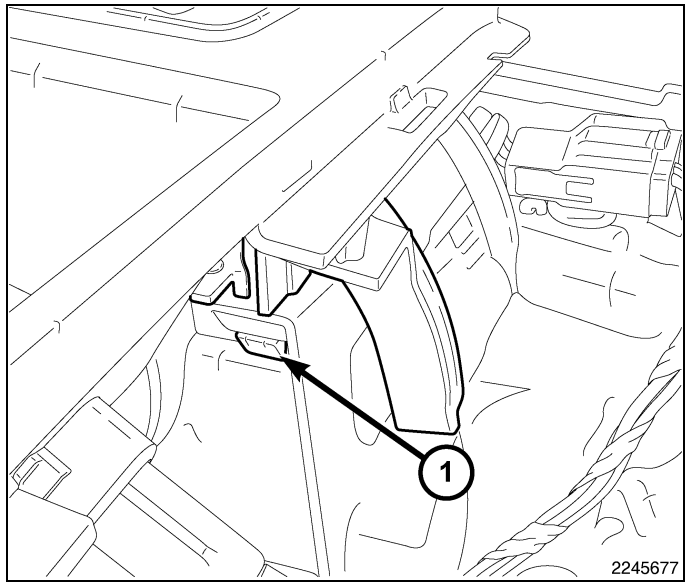

2. Install the lamp into the console PRNDL bezel, and turn the harness connector 1/4 turn clockwise to engage the tabs.

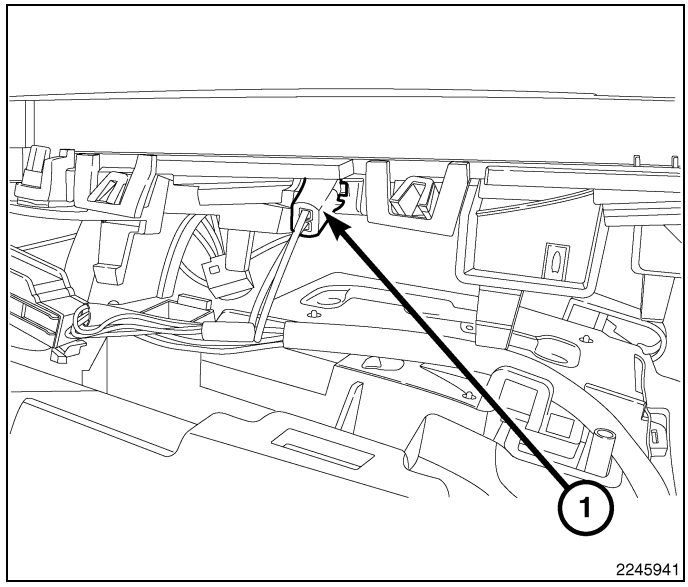

3. Install the lower trim piece (1) onto the shifter lever.
4. Install shifter knob.
5. Pull the lower trim piece (1) upward to engage it on the shifter knob.

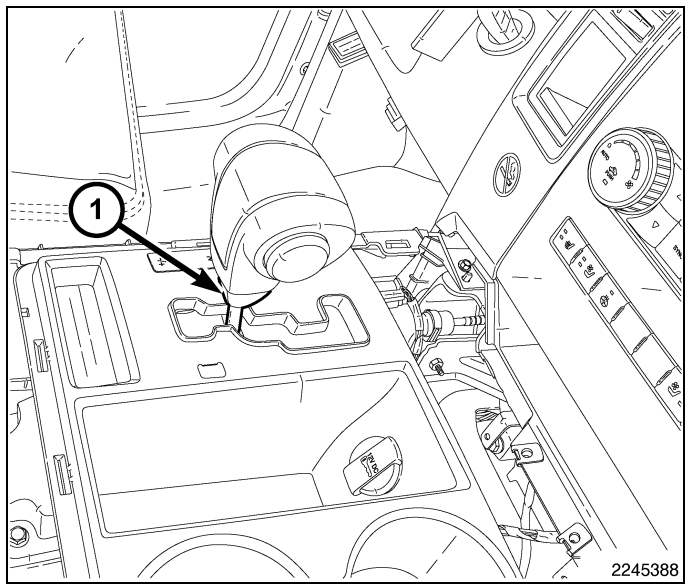

6. Connect the power outlet harness connector (1) and the shifter harness connector (2).

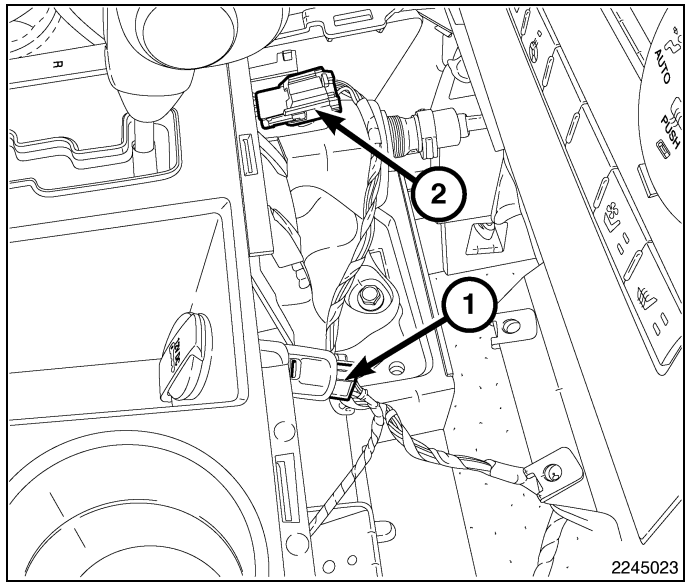

7. Install the fasteners (1), and the rubber liners from the center storage tray and cupholders.

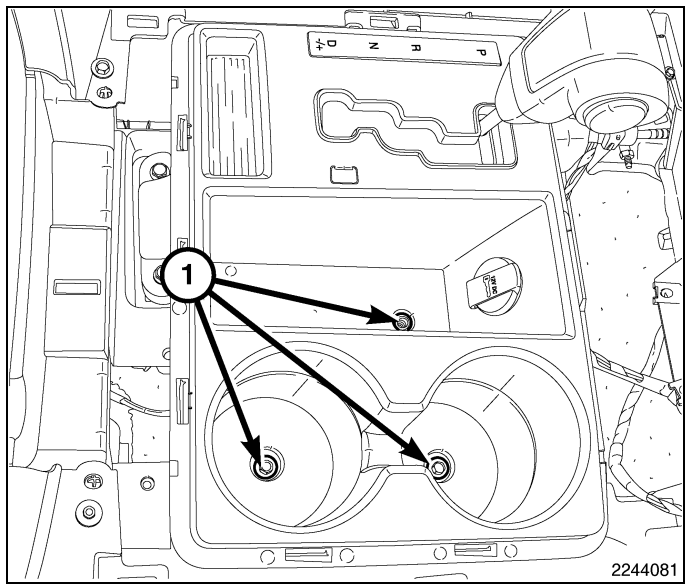

8. Install the console bezel (1).

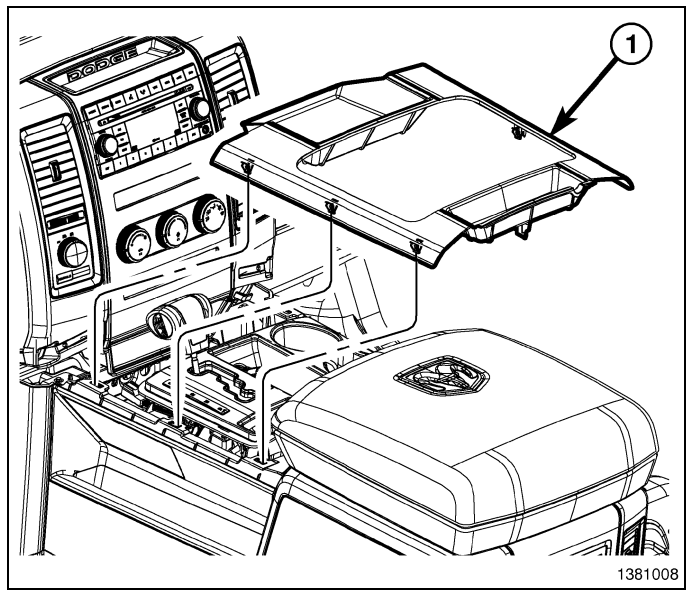

9. Install the fasteners (1) at the front of the console bezel.

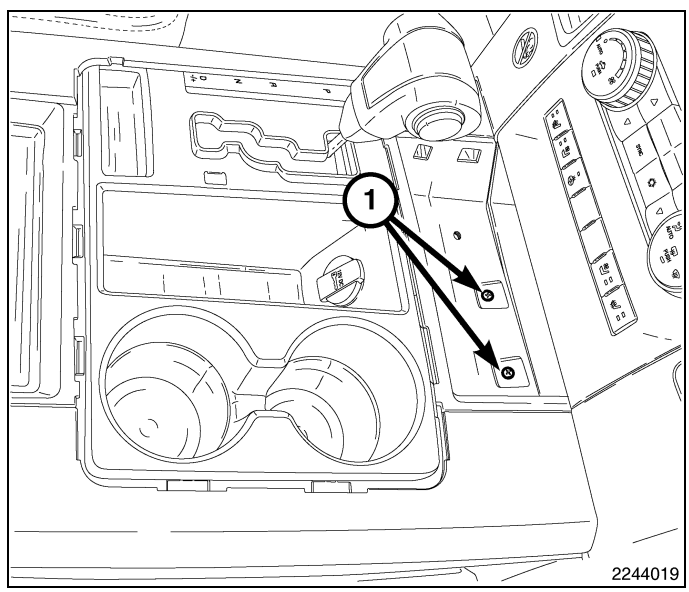

10. Install the rubber insert (1).

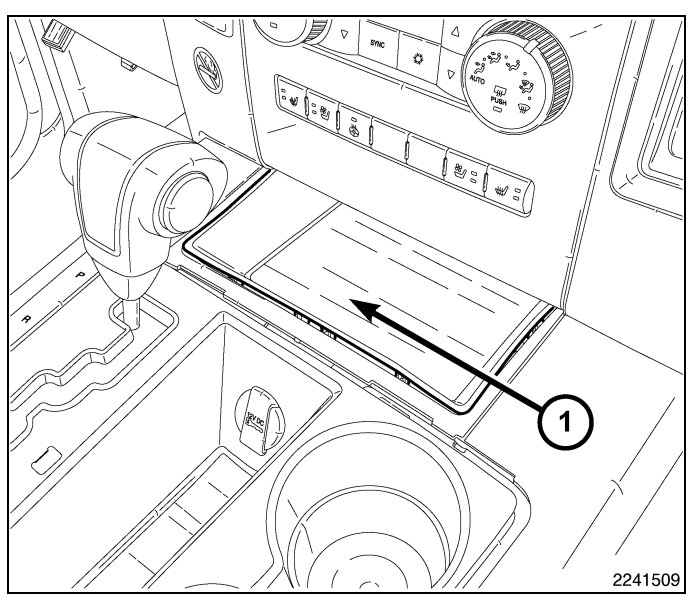

11. Install the console bezel trim ring (1).

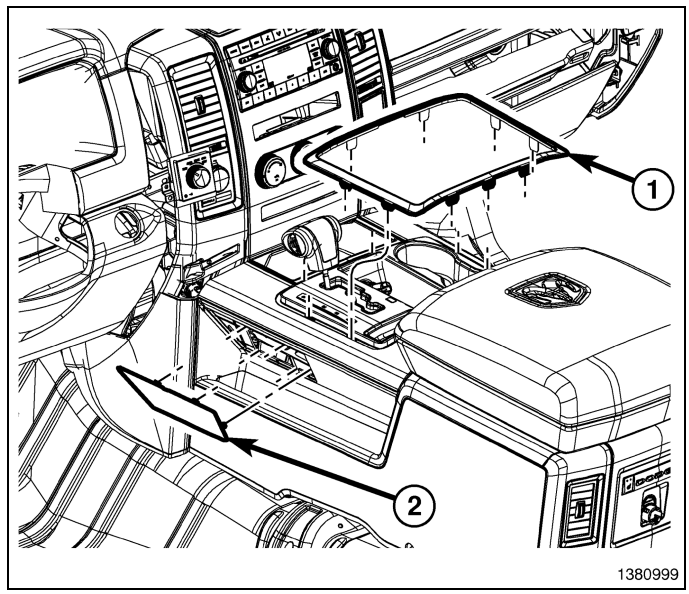

SOLENOID, Pressure Control

Description

The pressure control solenoid (1) is mounted on the top of the valve body, next to the line pressure sensor (2).

The TCM utilizes a closed-loop system to control transmission line pressure. The system contains a variable force style solenoid, the Pressure Control Solenoid. The solenoid is duty cycle controlled by the TCM to vent the unnecessary line pressure supplied by the oil pump back to the sump. The system also contains a variable pressure style sensor, the Line Pressure Sensor, which is a direct input to the TCM. The line pressure solenoid monitors the transmission line pressure and completes the feedback loop to the TCM. The TCM uses this information to adjust its control of the pressure control solenoid to achieve the desired line pressure.

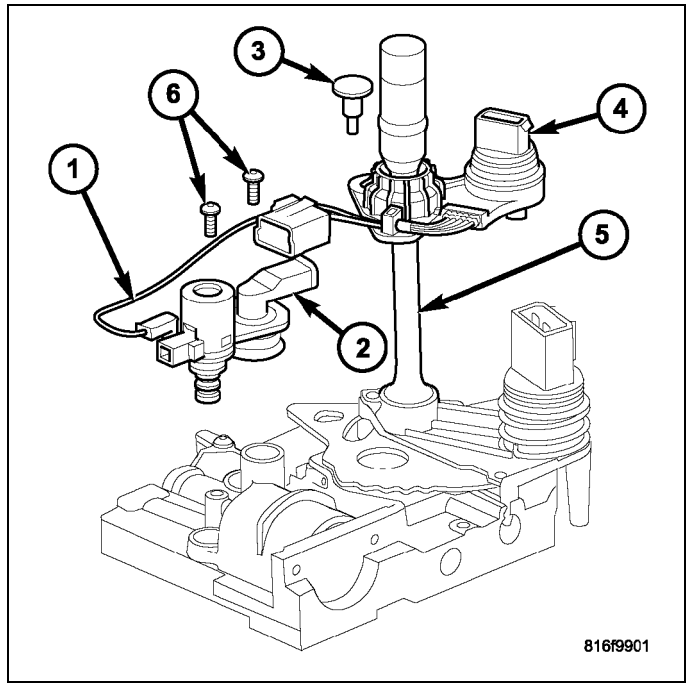

Operation

The pressure control solenoid (PCS) is a variable force (VFS) style solenoid. A VFS solenoid is an electro-hydraulic actuator, combining a solenoid and a regulating valve.

The transmission control module varies the current for the PCS, which varies the pressure in the line pressure hydraulic circuit. When the current (duty cycle) of the PCS is low, the pressure in the circuit is higher. At 0 current (0% duty cycle), the pressure is at the maximum value. Conversely, when the current is maximized (100% duty cycle), the pressure in the circuit is at the lowest possible value.

Removal

1. Remove the valve body from the transmission. (Refer to 21 - Transmission and Transfer Case/Automatic - 42RLE/VALVE BODY - Removal)
2. Remove the electrical connectors from the pressure control solenoid (1) and the line pressure sensor (2).
3. Remove the screws (6) holding the pressure control solenoid (1) and line pressure sensor (2) to the valve body.
4. Remove the pressure control solenoid and line pressure sensor from the valve body.

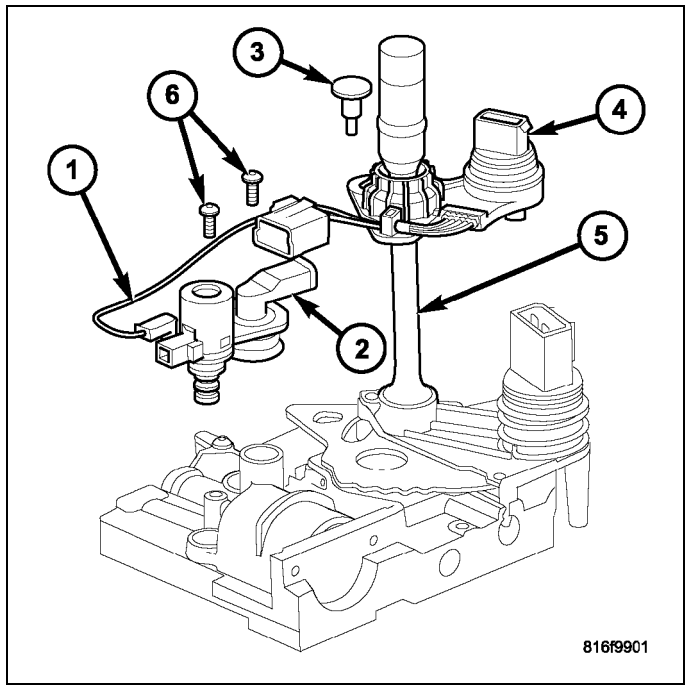

Installation

1. Install the pressure control solenoid (1) and line pressure sensor (2) into the valve body.
2. Install the screws (6) to hold the pressure control solenoid (1) and line pressure sensor (2) to the valve body.
3. Install the electrical connectors to the pressure control solenoid (1) and the line pressure sensor (2).
4. Install the valve body into the transmission. (Refer to 21 - Transmission and Transfer Case/Automatic - 42RLE/VALVE BODY - Installation)

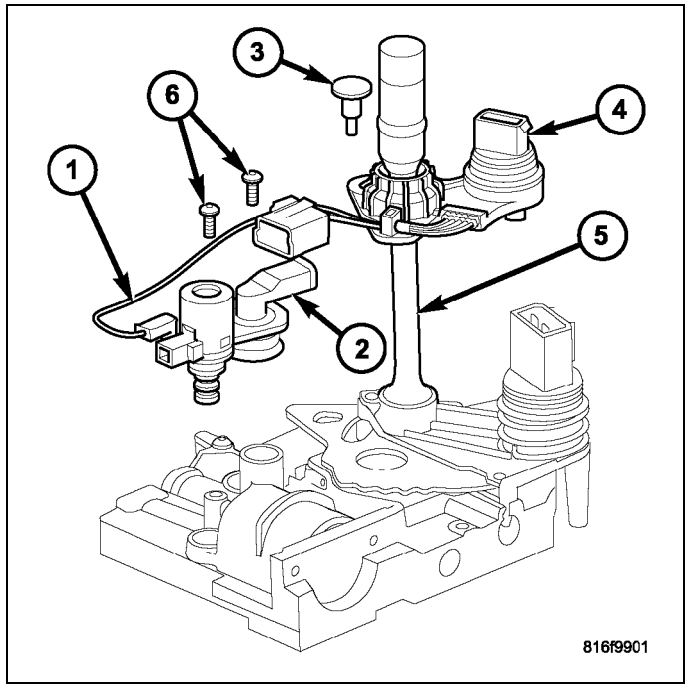

SWITCH, Overdrive Lockout, Tow and Haul

Description

The tow/haul overdrive OFF (control) switch is located in the shift lever arm. The switch is a momentary contact device that signals the PCM to toggle current status of the overdrive function.

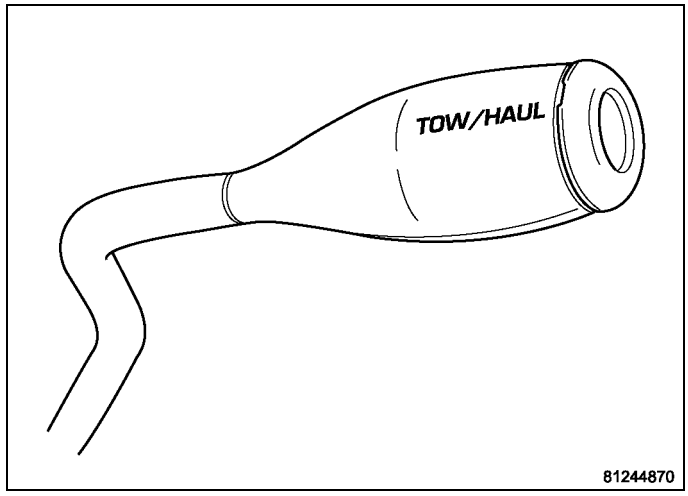

Operation

At key-on, overdrive operation is allowed. Pressing the switch once enables Tow/Haul mode and the Tow/Haul lamp will be illuminated. In Tow/Haul mode, 5th gear is disabled and 3-4 upshifts are delayed. Shifts into 4th gear are still allowed under steady cruise conditions. Closed throttle downshifts (for improved engine braking) may occur during steady braking maneuvers. Pressing the switch a second time enables OD Off mode, where all 4th and 5th gear operation is inhibited. Pressing the switch a third time restores normal operation. Normal operation is always the default at start-up; the switch must be pressed after each key start if Tow/Haul mode is desired.

Removal

1. Using a plastic trim tool, remove the tow/haul overdrive off switch retainer (2) from the shift lever (1).

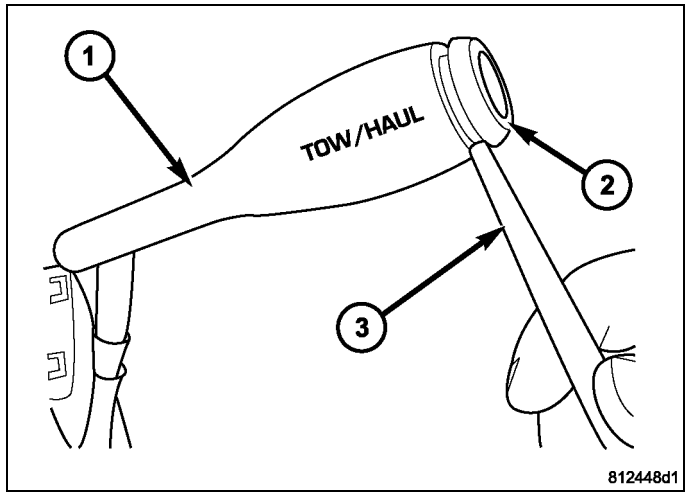

2. Pull the switch (2) outwards to release it from the connector in the lever (1).

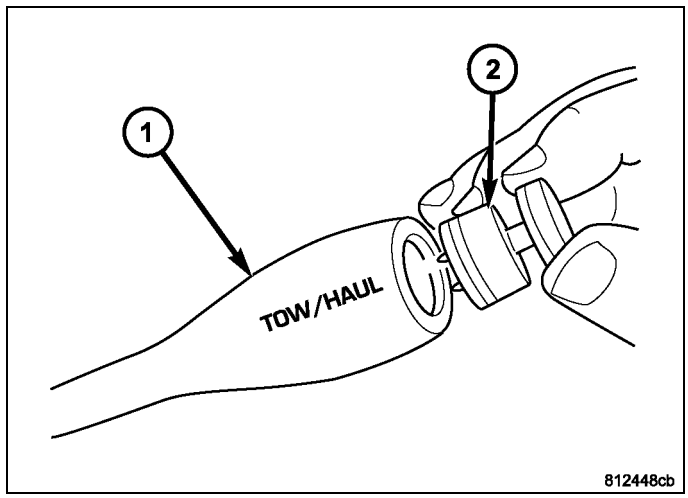

Installation

NOTE: There is enough slack in the wire to pull out the connector from the lever.

1. Pull the connector (2) out of the lever (1) just enough to grasp it.

CAUTION: Be careful not to bend the pins on the tow/haul overdrive off switch. Use care when installing the switch, as it is not indexed, and can be accidentally installed incorrectly.

2. Install the tow/haul overdrive off switch (3) into the connector (2).
3. Push the tow/haul overdrive off switch (3) and wiring into the shift lever (1).
4. Install the tow/haul overdrive off switch retainer onto the shift lever.

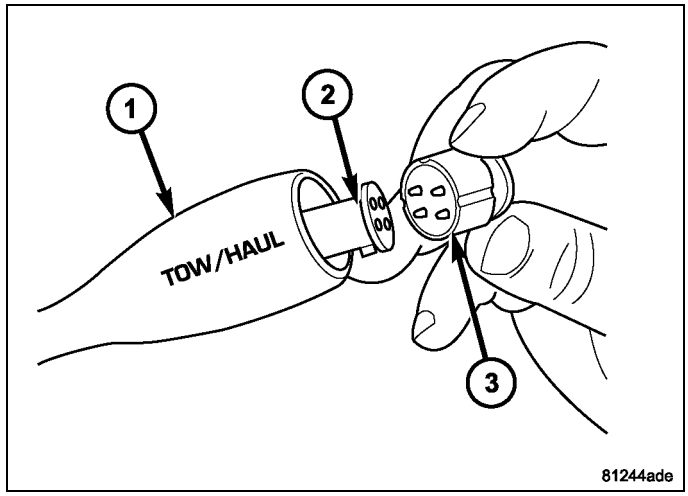

TORQUE CONVERTER

Description

The torque converter is a hydraulic device that couples the engine crankshaft to the transmission. The torque converter consists of an outer shell with an internal turbine (1), a stator (4), an overrunning clutch, an impeller (2) and an electronically applied converter clutch (6). The converter clutch provides reduced engine speed and greater fuel economy when engaged. Clutch engagement also provides reduced transmission fluid temperatures. The torque converter hub drives the transmission oil (fluid) pump.

The torque converter is a sealed, welded unit that is not repairable and is serviced as an assembly.

CAUTION: The torque converter must be replaced if a transmission failure resulted in large amounts of metal or fiber contamination in the fluid.

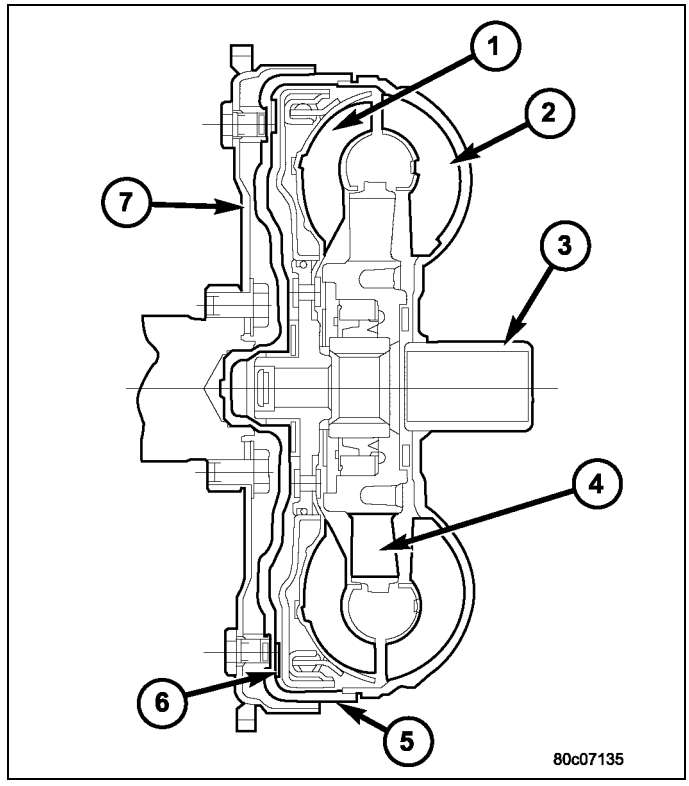

IMPELLER

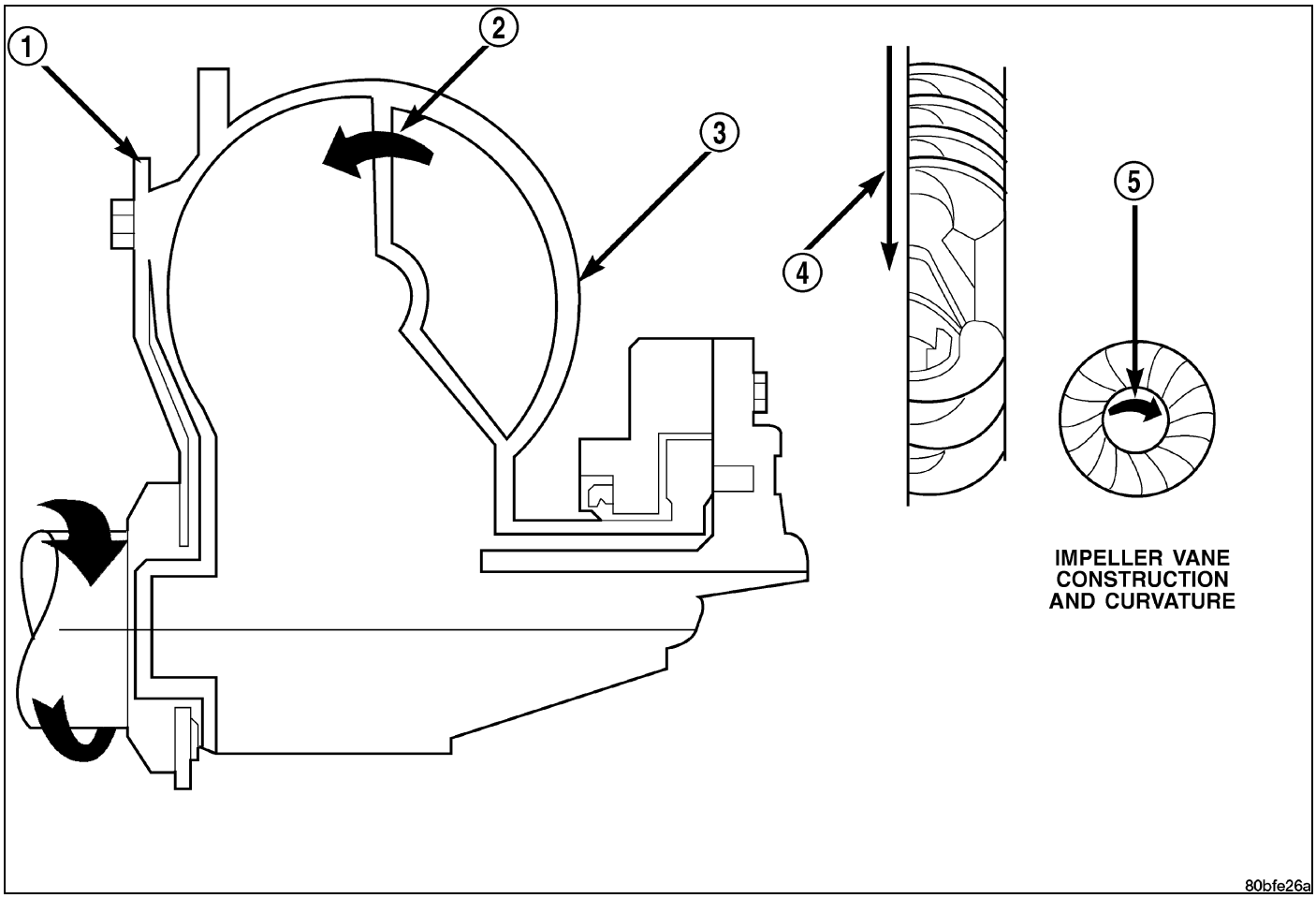

Impeller

1 - ENGINE FLEXPLATE
2 - OIL FLOW FROM IMPELLER SECTION INTO TURBINE SECTION
3 - IMPELLER VANES AND COVER ARE INTEGRAL
4 - ENGINE ROTATION
5 - ENGINE ROTATION

The impeller is an integral part of the converter housing. The impeller consists of curved blades placed radially along the inside of the housing on the transmission side of the converter. As the converter housing is rotated by the engine, so is the impeller, because they are one and the same and are the driving members of the system.

TURBINE

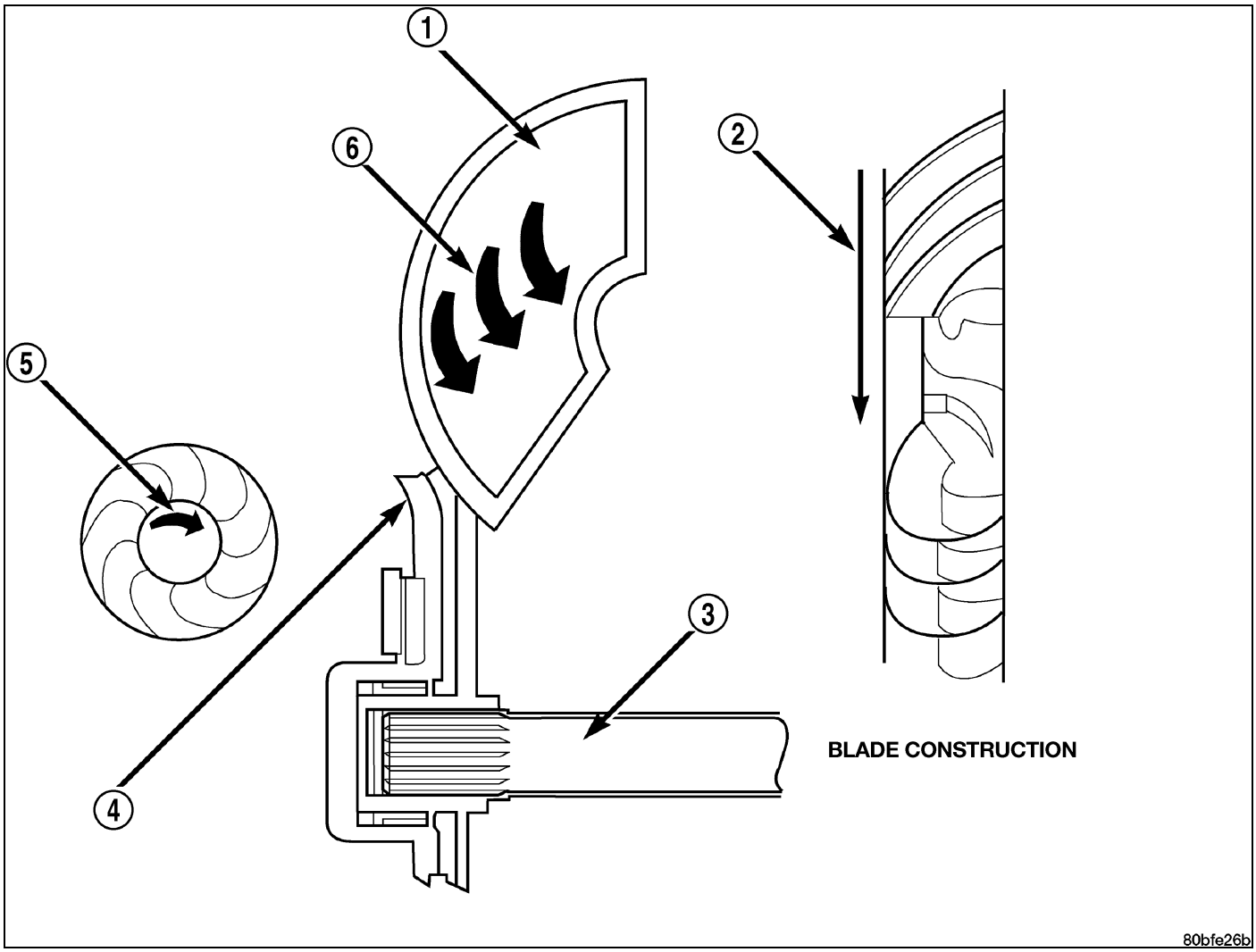

Turbine

1 - TURBINE VANE	4 - PORTION OF TORQUE CONVERTER COVER
2 - ENGINE ROTATION	5 - ENGINE ROTATION
3 - INPUT SHAFT	6 - OIL FLOW WITHIN TURBINE SECTION

The turbine is the output, or driven, member of the converter. The turbine is mounted within the housing opposite the impeller, but is not attached to the housing. The input shaft is inserted through the center of the impeller and splined into the turbine. The design of the turbine is similar to the impeller, except the blades of the turbine are curved in the opposite direction.

STATOR

The stator assembly is mounted on a stationary shaft which is an integral part of the oil pump. The stator (1) is located between the impeller (2) and the turbine (4) within the torque converter case.

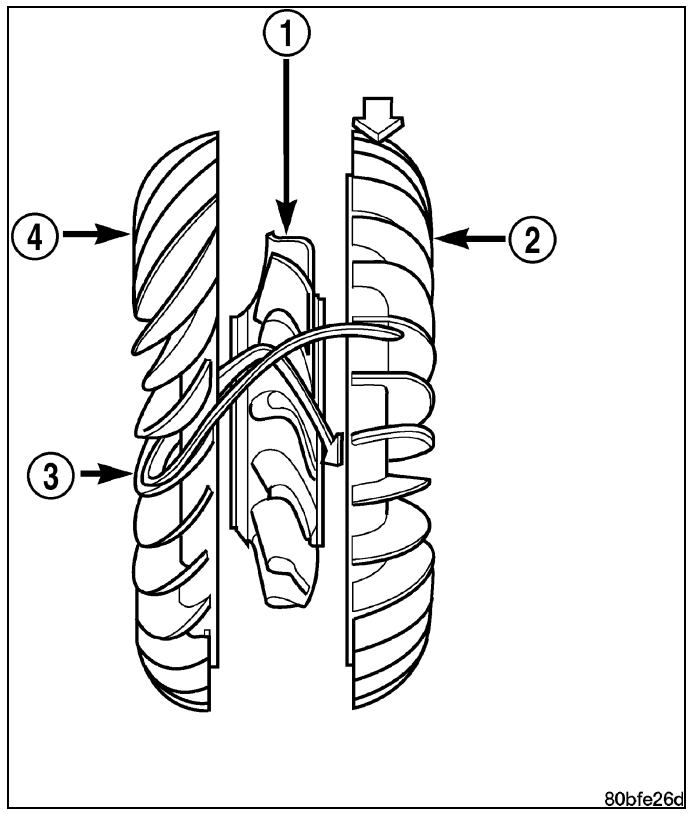

The stator contains an over-running clutch (1-4) , which allows the stator to rotate only in a clockwise direction. When the stator is locked against the over-running clutch, the torque multiplication feature of the torque converter is operational.

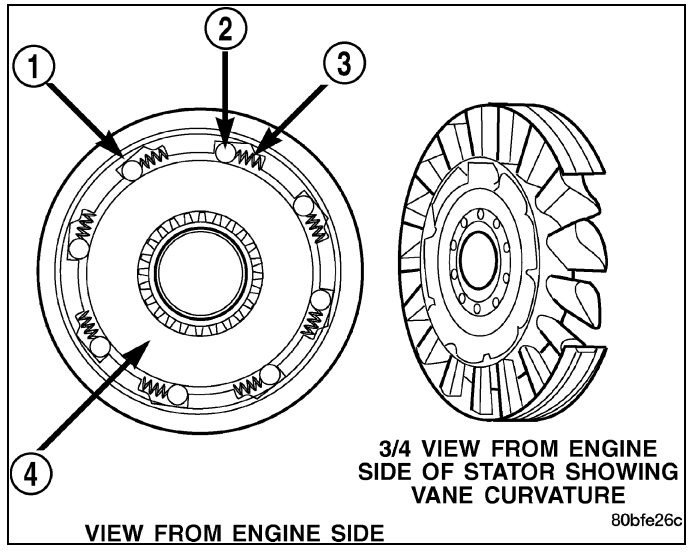

TORQUE CONVERTER CLUTCH (TCC)

The TCC was installed to improve the efficiency of the torque converter that is lost to the slippage of the fluid coupling. Although the fluid coupling provides smooth, shock-free power transfer, it is natural for all fluid couplings to slip. If the impeller (3) and turbine (5) were mechanically locked together, a zero slippage condition could be obtained. A hydraulic piston (6) with friction material (7) was added to the turbine assembly (5) to provide this mechanical lock-up.

In order to reduce heat build-up in the transmission and buffer the powertrain against torsional vibrations, the TCM can duty cycle the L/R-CC Solenoid to achieve a smooth application of the torque converter clutch. This function, referred to as Electronically Modulated Converter Clutch (EMCC) can occur at various times depending on the following variables:

- Shift lever position
- Current gear range
- Transmission fluid temperature
- Engine coolant temperature
- Input speed
- Throttle angle
- Engine speed

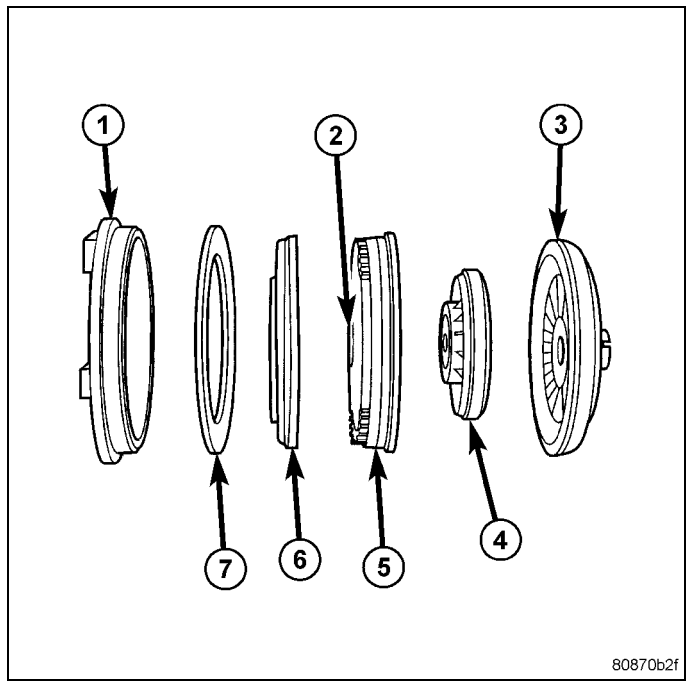

Operation

The converter impeller (driving member), which is integral to the converter housing and bolted to the engine drive plate, rotates at engine speed. The converter turbine (driven member), which reacts from fluid pressure generated by the impeller, rotates and turns the transmission input shaft.

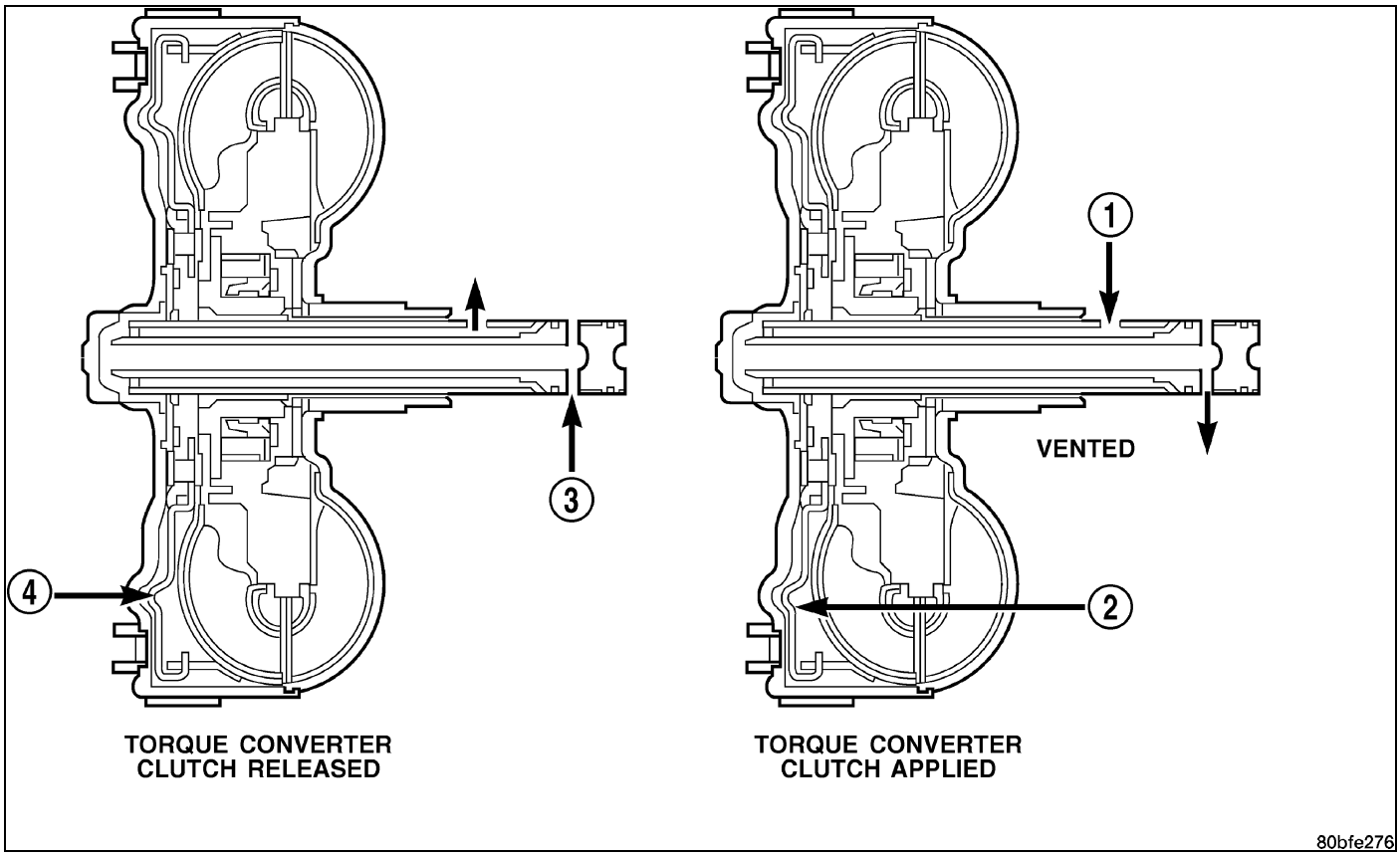

Torque Converter Fluid Operation - Typical

1 - APPLY PRESSURE	3 - RELEASE PRESSURE
2 - THE PISTON MOVES SLIGHTLY FORWARD	4 - THE PISTON MOVES SLIGHTLY REARWARD

TURBINE

As the fluid that was put into motion by the impeller blades strikes the blades of the turbine, some of the energy and rotational force is transferred into the turbine and the input shaft. This causes both of them (turbine and input shaft) to rotate in a clockwise direction following the impeller. As the fluid is leaving the trailing edges of the turbine's blades it continues in a “hindering” direction back toward the impeller. If the fluid is not redirected before it strikes the impeller, it will strike the impeller in such a direction that it would tend to slow it down.

STATOR

Torque multiplication is achieved by locking the stator's over-running clutch to its shaft . Under stall conditions (the turbine is stationary), the oil leaving the turbine blades strikes the face of the stator blades and tries to rotate them in a counterclockwise direction. When this happens the over-running clutch of the stator locks and holds the stator from rotating. With the stator locked, the oil strikes the stator blades and is redirected into a “helping” direction before it enters the impeller. This circulation of oil from impeller to turbine, turbine to stator, and stator to impeller, can produce a maximum torque multiplication of about 2.4:1. As the turbine begins to match the speed of the impeller, the fluid that was hitting the stator in such as way as to cause it to lock-up is no longer doing so. In this condition of operation, the stator begins to free wheel and the converter acts as a fluid coupling.

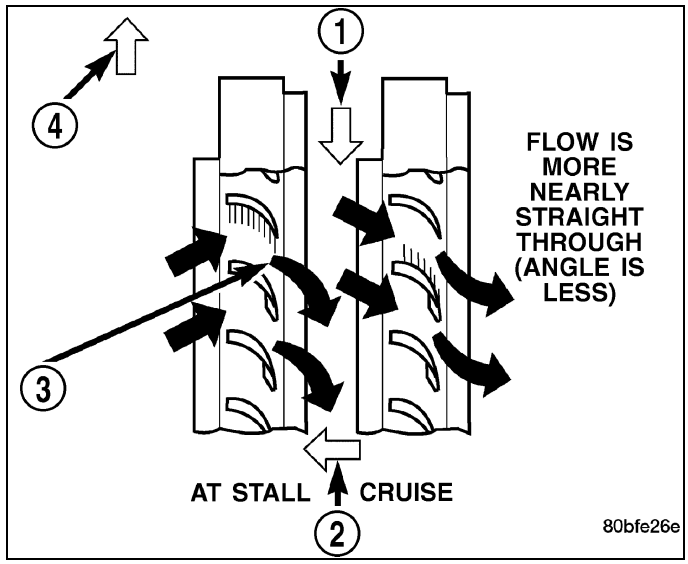

Stator Operation

1 - DIRECTION STATOR WILL FREE WHEEL DUE TO OIL PUSHING ON BACKSIDE OF VANES

2 - FRONT OF ENGINE

3 - INCREASED ANGLE AS OIL STRIKES VANES

4 - DIRECTION STATOR IS LOCKED UP DUE TO OIL PUSHING AGAINST STATOR VANES

TORQUE CONVERTER CLUTCH (TCC)

In a standard torque converter, the impeller and turbine are rotating at about the same speed and the stator is free-wheeling, providing no torque multiplication. By applying the turbine's piston and friction material to the front cover, a total converter engagement can be obtained. The result of this engagement is a direct 1:1 mechanical link between the engine and the transmission.

The clutch can be engaged in second, third, fourth, and fifth (if appicable) gear ranges depending on overdrive control switch position. If the overdrive control switch is in the normal ON position, the clutch will engage after the shift to fourth gear. If the control switch is in the OFF position, the clutch will engage after the shift to third gear.

The TCM controls the torque converter clutch via the L/R-CC Solenoid. There are four TCC operational modes:

- No EMCC
- Partial EMCC
- Full EMCC
- Gradual-to-no EMCC

NO EMCC

Under No EMCC conditions, the L/R Solenoid is OFF. There are several conditions that can result in NO EMCC operations. No EMCC can be initiated due to a fault in the transmission or because the TCM does not see the need for EMCC under current driving conditions.

PARTIAL EMCC

Partial EMCC operation modulates the L/R Solenoid (duty cycle) to obtain partial torque converter clutch application. Partial EMCC operation is maintained until Full EMCC is called for and actuated. During Partial EMCC some slip does occur. Partial EMCC will usually occur at low speeds, low load and light throttle situations.

FULL EMCC

During Full EMCC operation, the TCM increases the L/R Solenoid duty cycle to full ON after Partial EMCC control brings the engine speed within the desired slip range of transmission input speed relative to engine rpm.

GRADUAL-TO-NO EMCC

This operation is to soften the change from Full or Partial EMCC to No EMCC. This is done at mid-throttle by slowly decreasing the L/R Solenoid duty cycle.

Removal

1. Remove transmission and torque converter from vehicle.
2. Place a suitable drain pan under the converter housing end of the transmission.

CAUTION: Verify that transmission is secure on the lifting device or work surface, the center of gravity of the transmission will shift when the torque converter is removed creating an unstable condition. The torque converter is a heavy unit. Use caution when separating the torque converter from the transmission.

3. Pull the torque converter forward until the center hub clears the oil pump seal.
4. Separate the torque converter from the transmission.

Installation

NOTE: Check converter hub and drive notches for sharp edges, burrs, scratches, or nicks. Polish the hub and notches with 320/400 grit paper or crocus cloth if necessary. The hub must be smooth to avoid damaging the pump seal at installation.

1. Lubricate oil pump seal lip with transmission fluid.
2. Place torque converter in position on transmission.

CAUTION: Do not damage oil pump seal or bushing while inserting torque converter into the front of the transmission.

3. Align torque converter to oil pump seal opening.
4. Insert torque converter hub into oil pump.
5. While pushing torque converter inward, rotate converter until converter is fully seated in the oil pump gears.
6. Check converter seating with a scale (1) and straightedge (2) . Surface of converter lugs should be 1/2 in. to rear of straightedge when converter is fully seated.
7. If necessary, temporarily secure converter with C-clamp attached to the converter housing.
8. Install the transmission in the vehicle.
9. Fill the transmission with the recommended fluid.

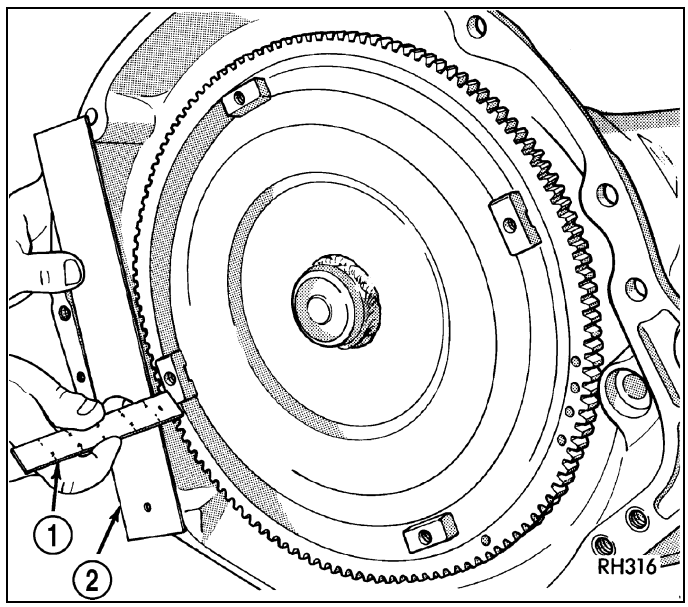

VALVE BODY

Description

The valve body assembly consists of a cast aluminum valve body (5), separator plate (4), and transfer plate (3). The valve body contains valves and check balls that control fluid delivery to the torque converter clutch, solenoid/pressure switch assembly, and frictional clutches.

Also mounted to the valve body assembly are the solenoid/pressure switch assembly and the transmission range sensor (2) .

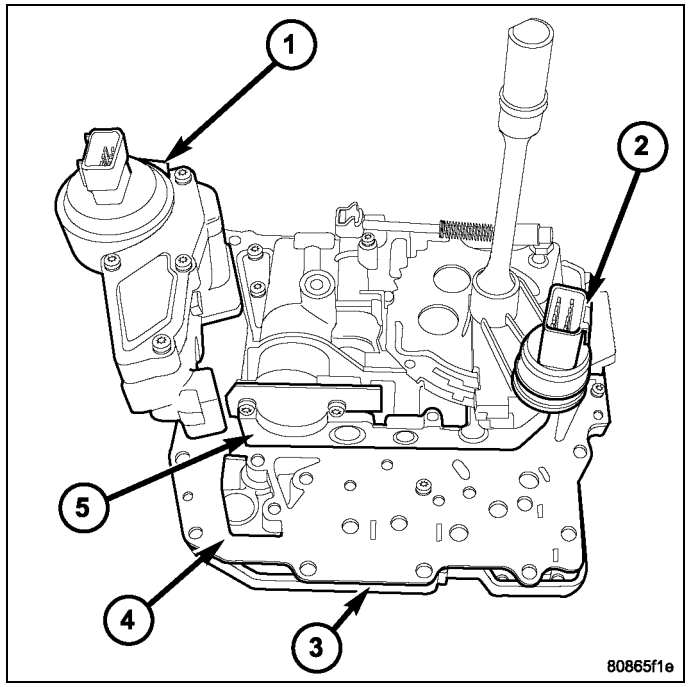

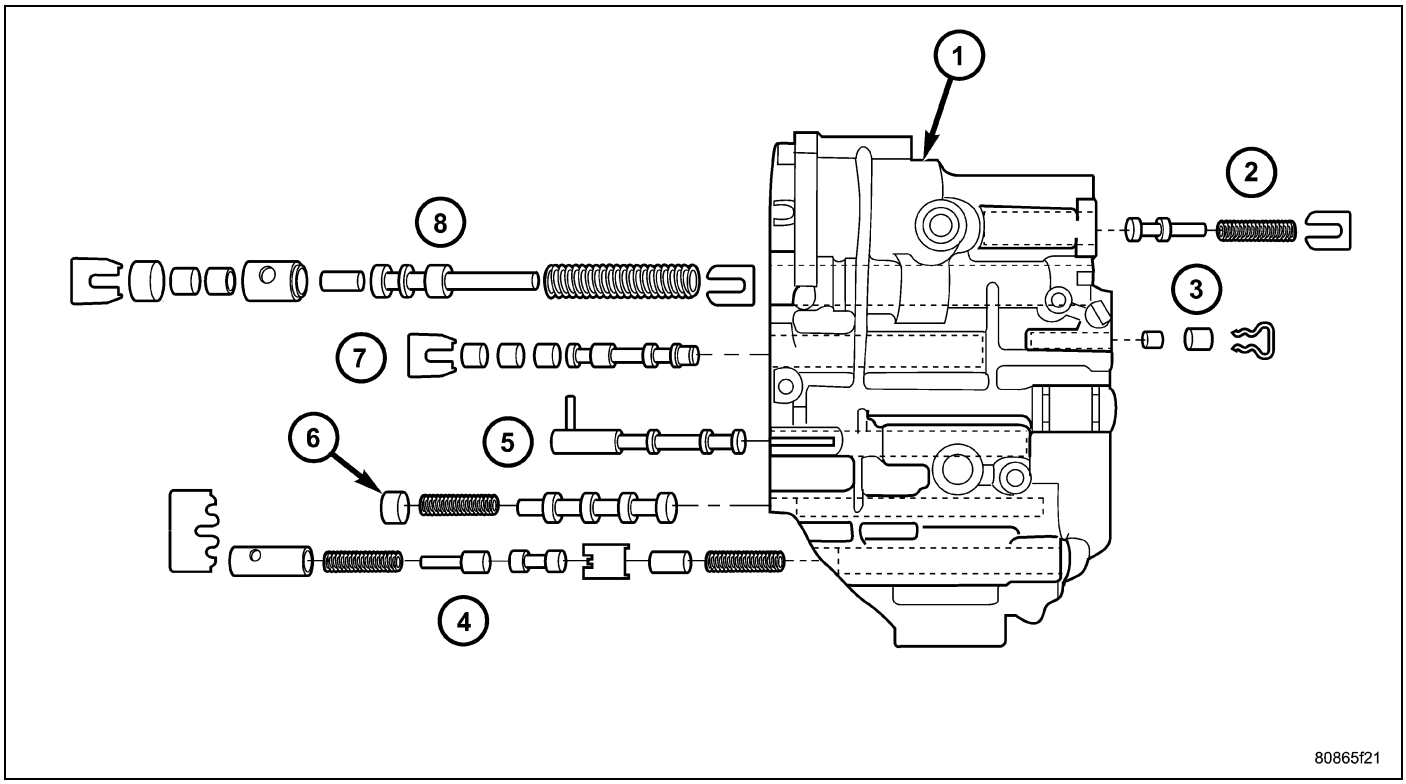

Valve Body - Exploded

1 - VALVE BODY
2 - T/C REGULATOR VALVE
3 - L/R SWITCH VALVE
4 - CONVERTER CLUTCH CONTROL VALVE
5 - MANUAL VALVE
6 - CONVERTER CLUTCH SWITCH VALVE
7 - SOLENOID SWITCH VALVE
8 - REGULATOR VALVE

The valves contained within the valve body (1) include the following:

- Regulator valve (8)
- Solenoid switch valve (7)
- Manual valve (5)
- Converter clutch switch valve (6)
- Converter clutch control valve (4)
- Torque converter regulator valve (2)
- Low/Reverse switch valve (3)

In addition, the valve body also contains the thermal valve, #2, 3, 4 AND 5 check balls and the 2/4 accumulator assembly.

Operation

NOTE: (Refer to 21 - Transmission and Transfer Case/Automatic - 42RLE - Schematics and Diagrams) for a visual aid in determining valve location, operation and design.

THERMAL VALVE

The thermal valve (1) is a bi-metallic shudder valve that helps control the venting rate of oil pressure in the underdrive clutch passage during release of the clutch. When the oil temperature is approximately 20 degrees Fahrenheit or less, the valve is fully open to assist in venting oil past the U1 orifice (2). At temperatures above 20 degrees, the valve starts to close and becomes fully closed at approximately 140 degrees. The thermal valve is located in the transfer plate of the valve body.

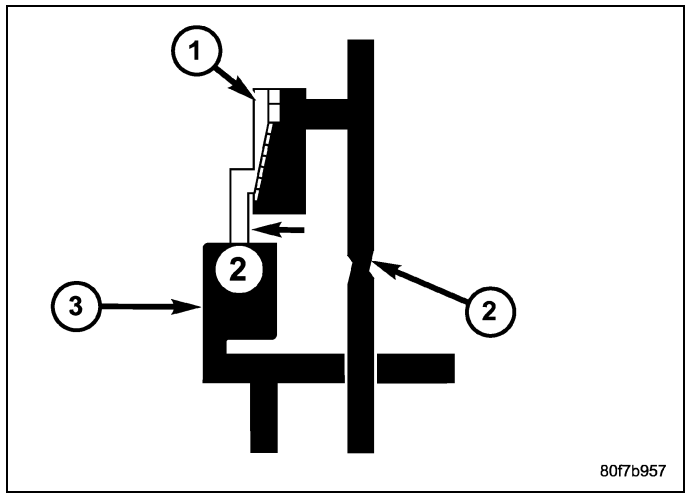

1 - THERMAL VALVE
2 - U1 ORIFICE
3 - NUMBER 2 CHECK BALL

REGULATOR VALVE

The regulator valve (9) controls hydraulic pressure in the transmission. It receives unregulated pressure from the pump (6), which works against spring tension (8) to maintain oil at specific pressures. A system of sleeves and ports allows the regulator valve to work at one of three predetermined pressure levels. Regulated oil pressure is also referred to as “line pressure.”

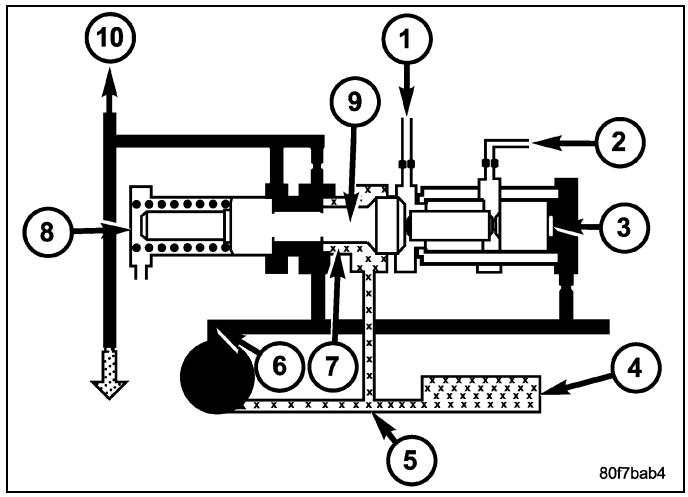

1 - FROM OVERDRIVE CLUTCH CIRCUIT
2 - FROM MANUAL VALVE
3 - HYDRAULIC PRESSURE
4 - FILTER
5 - PUMP INLET
6 - PUMP OUTLET
7 - OIL PRESSURE REGULATED AT THIS POINT
8 - SPRING TENSION
9 - REGULATOR VALVE
10 - TORQUE CONVERTER CONTROL VALVE

SOLENOID SWITCH VALVE

The solenoid switch valve controls line pressure from the LR/CC solenoid (4). In one position, it allows the low/reverse clutch to be pressurized. In the other, it directs line pressure to the converter control and converter clutch valves (7).

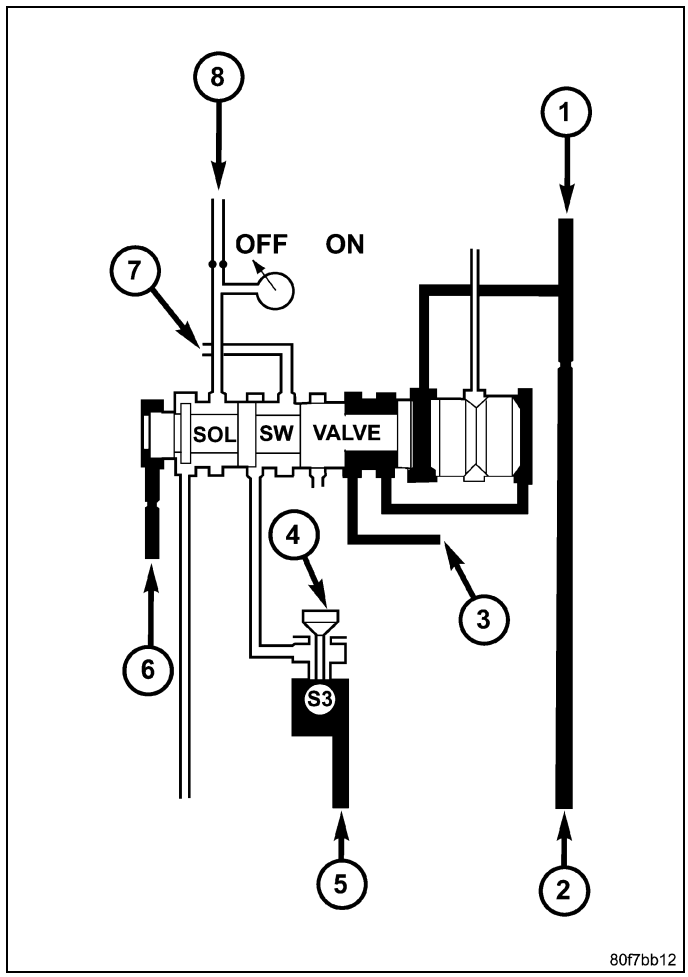

1 - 2/4 CLUTCH
2 - MANUAL VALVE
3 - UD CLUTCH
4 - LR/CC SOLENOID DE-ENERGIZED
5 - MANUAL VALVE
6 - LINE PRESSURE
7 - CONVERTER CLUTCH SWITCH AND CONTROL VALVES
8 - LR CLUTCH

MANUAL VALVE

The manual valve (4) is operated by the mechanical shift linkage. Its primary responsibility is to send line pressure to the appropriate hydraulic circuits and solenoids. The valve has three operating ranges or positions.

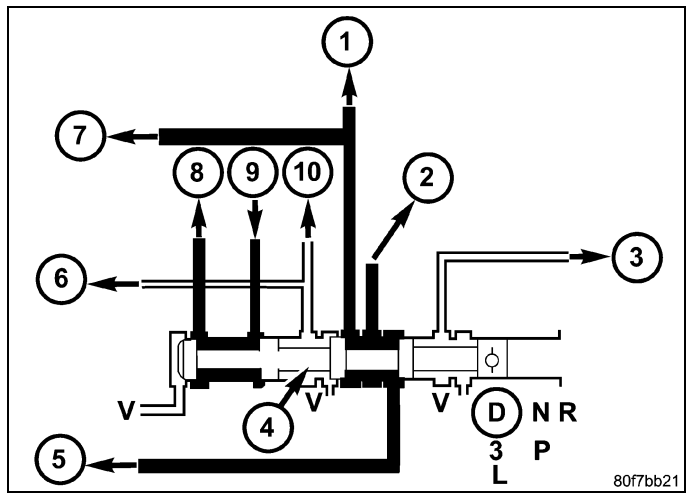

1 - UD CLUTCH
2 - LR/CC CLUTCH
3 - REVERSE CLUTCH
4 - MANUAL VALVE
5 - REGULATOR VALVE
6 - REGULATOR VALVE
7 - CONVERTER CLUTCH CONTROL VALVE
8 - 2/4 CLUTCH
9 - 2/4 - L/R SOLENOID
10 - L/R CLUTCH

CONVERTER CLUTCH SWITCH VALVE

The main responsibility of the converter clutch switch valve (10) is to control hydraulic pressure applied to the front (off) side of the converter clutch piston. Line pressure from the regulator valve (5) is fed to the torque converter regulator valve (8). The pressure is then directed to the converter clutch switch valve (10) and to the front side of the converter clutch piston. This pressure pushes the piston back and disengages the converter clutch.

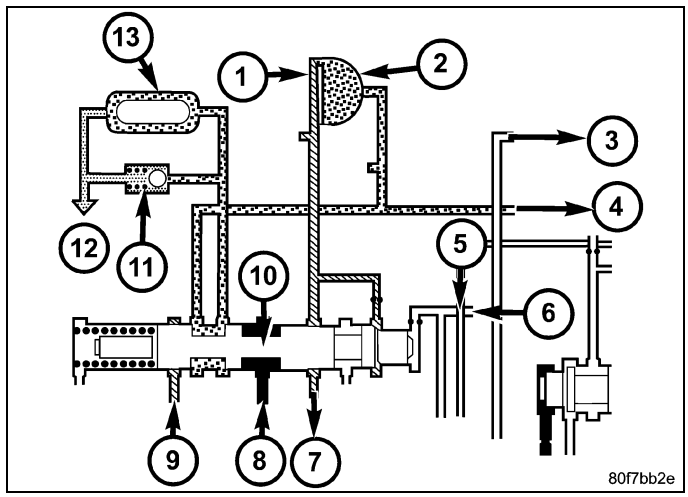

1 - CONVERTER CLUTCH
2 - TORQUE CONVERTER
3 - LR CLUTCH
4 - DRIBBLERS
5 - REGULATOR VALVE
6 - SOLENOID SWITCH VALVE
7 - CONVERTER CLUTCH CONTROL VALVE
8 - TORQUE CONVERTER REGULATOR VALVE
9 - CONVERTER CLUTCH CONTROL VALVE
10 - CONVERTER CLUTCH SWITCH VALVE
11 - BYPASS VALVE
12 - LUBE
13 - COOLER

CONVERTER CLUTCH CONTROL VALVE

The converter clutch control valve (5) controls the back (on) side of the torque converter clutch (1). When the controller energizes or modulates the LR/CC solenoid to apply the converter clutch piston, both the converter clutch control valve (5) and the converter control valve move, allowing pressure to be applied to the back side of the clutch.

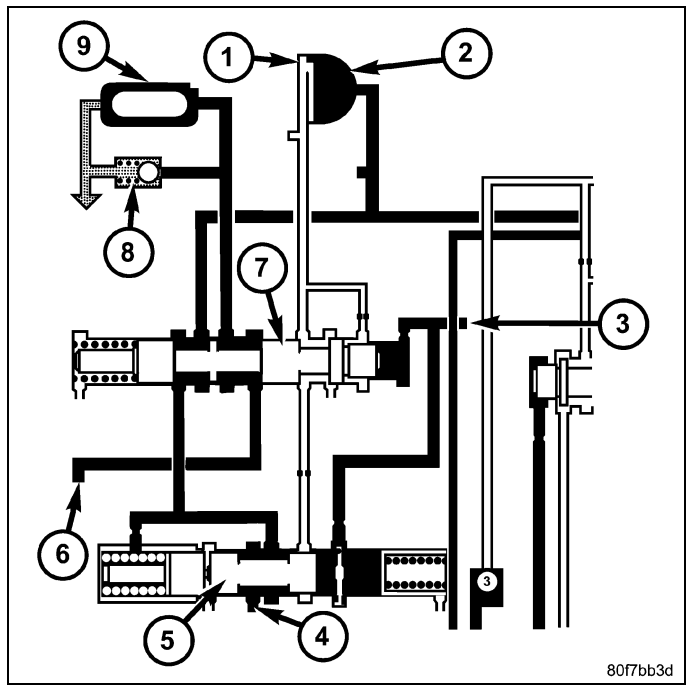

1 - CONVERTER CLUTCH
2 - TORQUE CONVERTER
3 - LR/CC SOLENOID
4 - FROM MANUAL VALVE
5 - CONVERTER CLUTCH CONTROL VALVE
6 - TORQUE CONVERTER REGULATOR VALVE
7 - CONVERTER CLUTCH SWITCH VALVE
8 - BYPASS VALVE
9 - COOLER

T/C REGULATOR VALVE

The torque converter regulator valve slightly regulates the flow of fluid to the torque converter.

LOW/REVERSE SWITCH VALVE

The low/reverse clutch is applied from different sources, depending on whether low (1st) gear or reverse is selected. The low/reverse switch valve alternates positions depending on from which direction fluid pressure is applied. By design, when the valve is shifted by fluid pressure from one channel, the opposing channel is blocked. The switch valve alienates the possibility of a sticking ball check, thus providing consistent application of the low/reverse clutch under these operating conditions.

Removal

NOTE: If valve body is being reconditioned or replaced, it is necessary to perform the Quick Learn Procedure.(Refer to 08 - Electrical/8E - Electronic Control Modules/MODULE, Transmission Control - Standard Procedure)

1. Disconnect the transmission range sensor (5) and solenoid/pressure switch assembly wiring connectors.
2. Disconnect the variable line pressure connector (4), if equipped.
3. Disconnect the shift cable from the shift lever (at the transmission).
4. Move the manual shift lever clockwise as far as it will go. This should be one position past the L position. Then remove the manual shift lever.

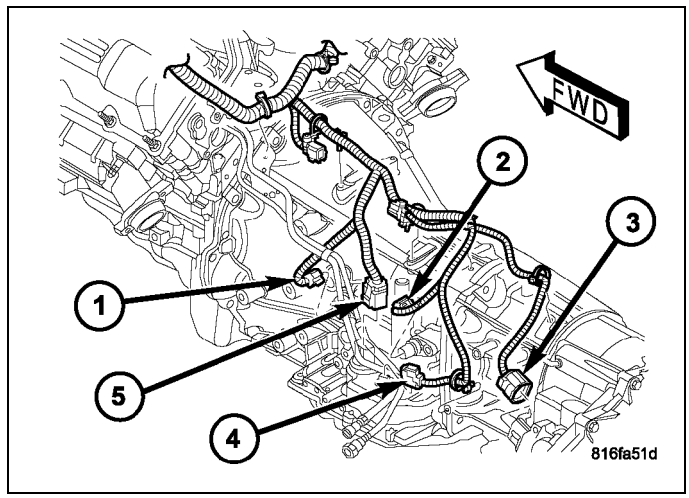

NOTE: One of the oil pan bolts has a sealing patch applied from the factory. Separate this bolts for reuse.

5. Remove transmission pan bolts (2) .

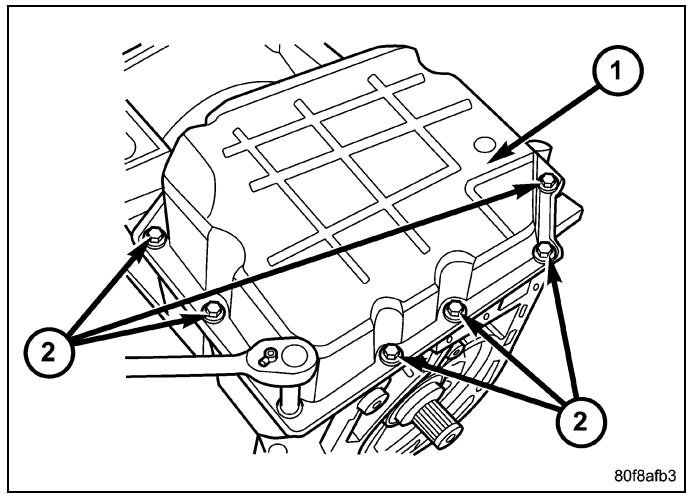

6. Remove transmission oil pan (1) .

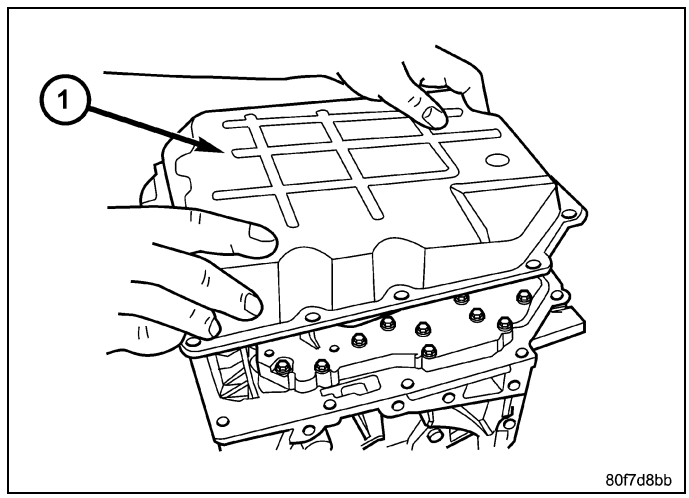

7. Remove oil filter (1) from valve body. It is held in place by two screws.

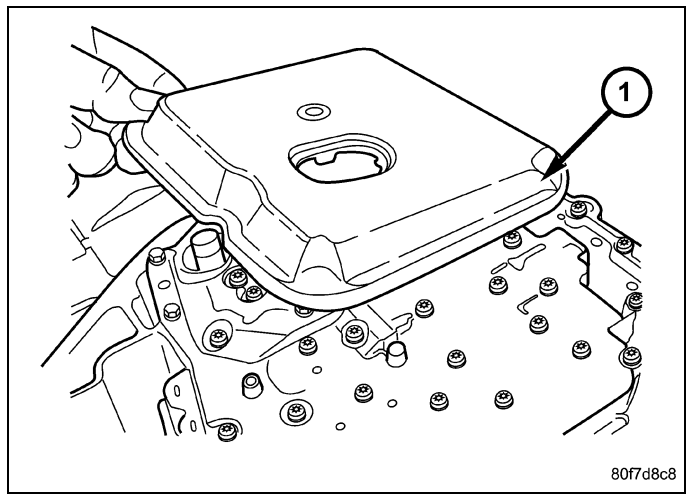

8. Remove valve body bolts-to-case (1) .

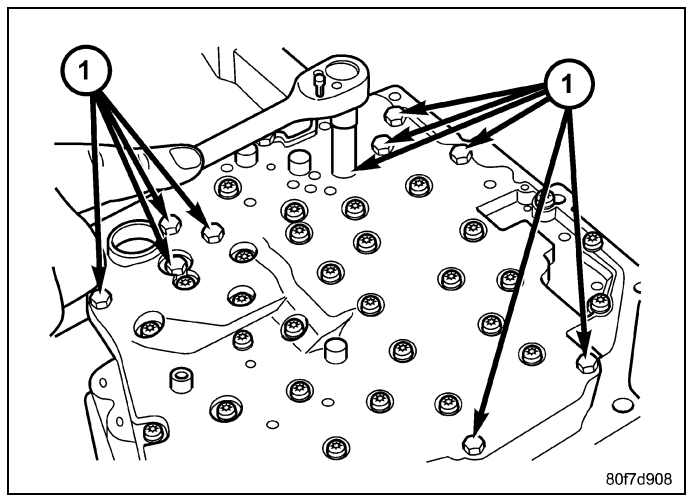

CAUTION: The overdrive and underdrive accumulators and springs may fall out when removing the valve body.

9. Carefully remove valve body assembly (1) from the transmission .

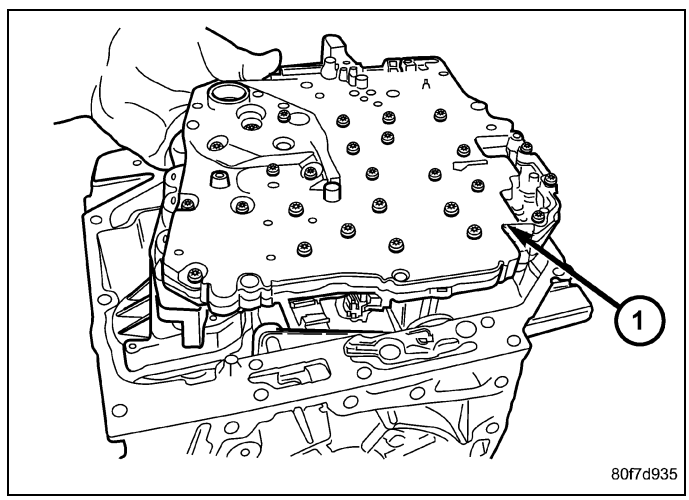

Disassembly

NOTE: If the valve body is being reconditioned or replaced, it is necessary to perform the Quick Learn Procedure using the scan tool (Refer to 08 - Electrical/8E - Electronic Control Modules/MODULE, Transmission Control - Standard Procedure)

1. Remove the electrical connectors from the pressure control solenoid (1) and the line pressure sensor (2).
2. Remove the screws (6) holding the pressure control solenoid (1) and line pressure sensor (2) to the valve body.
3. Remove the pressure control solenoid and line pressure sensor from the valve body.
4. Remove the shoulder screw (3) holding the variable line pressure header (4) to the valve body.
5. Remove the variable line pressure header from the manual shaft (5).

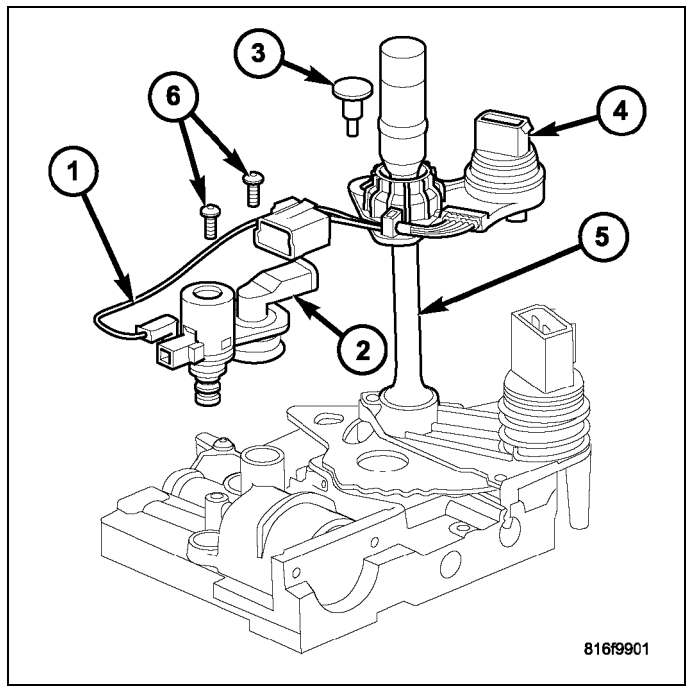

6. Remove manual shaft seal.
7. Remove manual shaft screw (1).

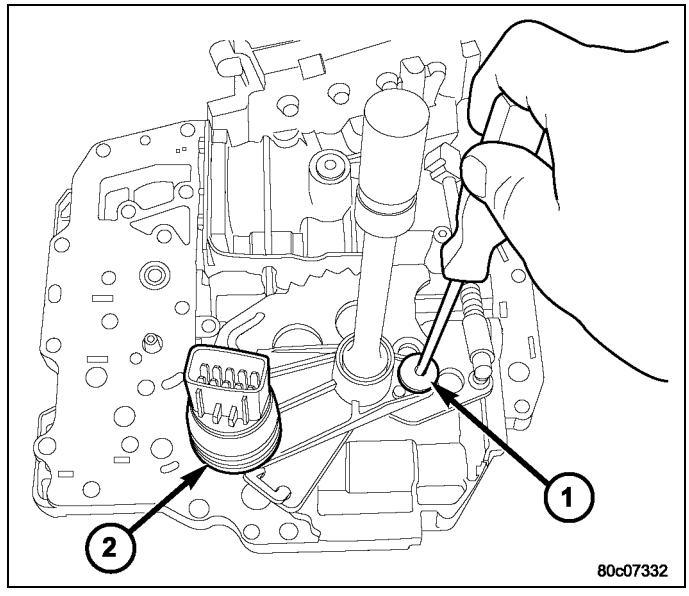

8. Remove Transmission Range Sensor (TRS) (1) and manual shaft (2).

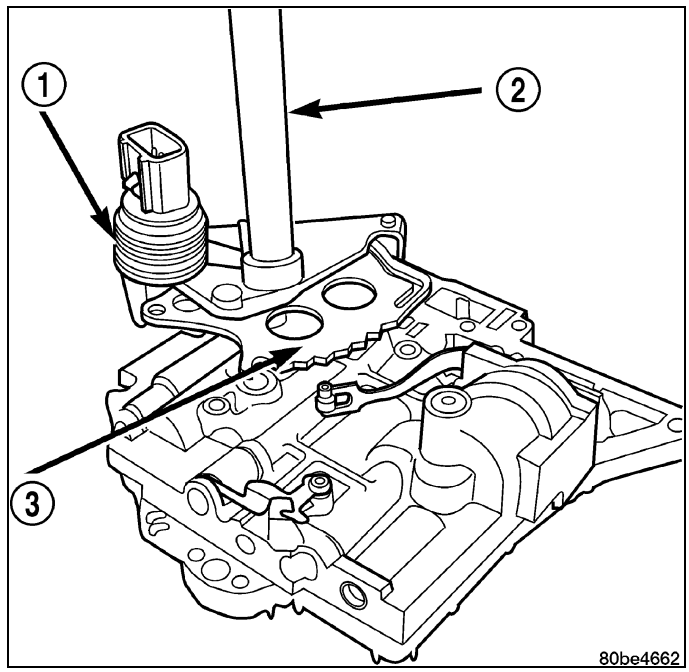

9. Remove Solenoid/Pressure Switch Assembly (1) from valve body.

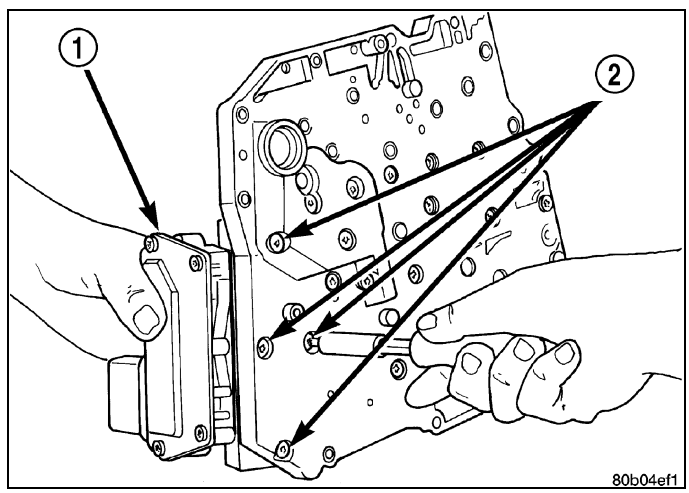

10. Remove valve body stiffener plate (1).

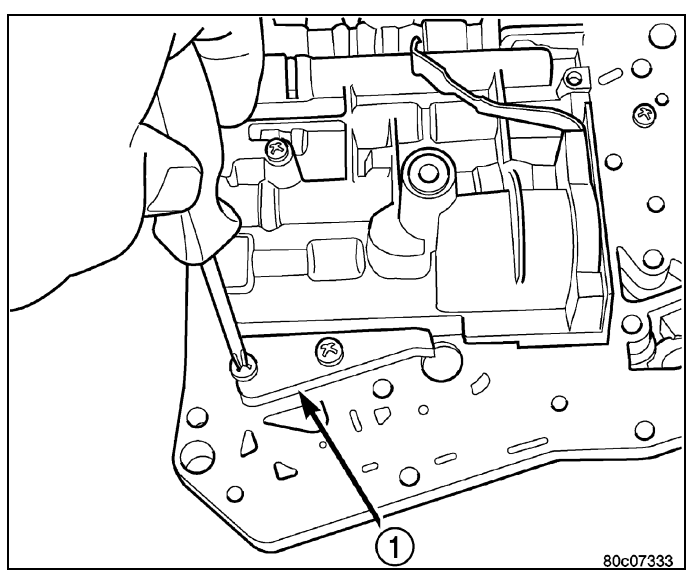

11. Invert valve body assembly and remove transfer plate-to-valve body screws (1).

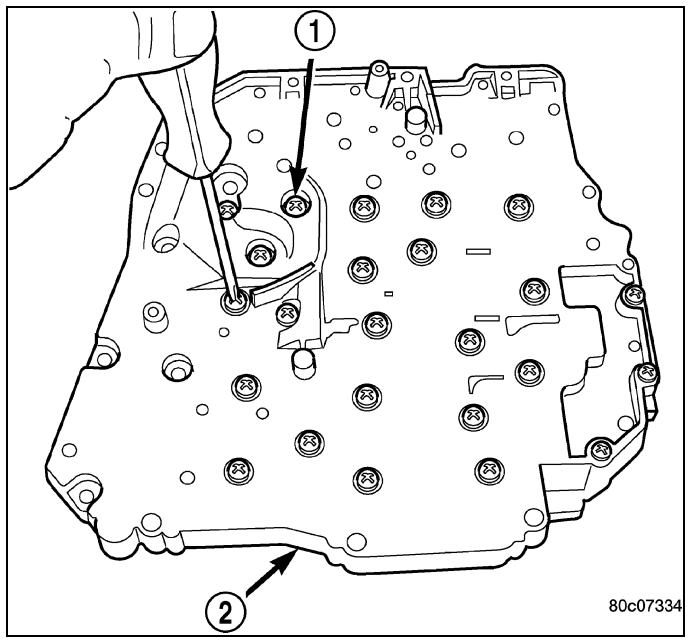

12. Remove transfer/separator plate (1) from valve body (2).

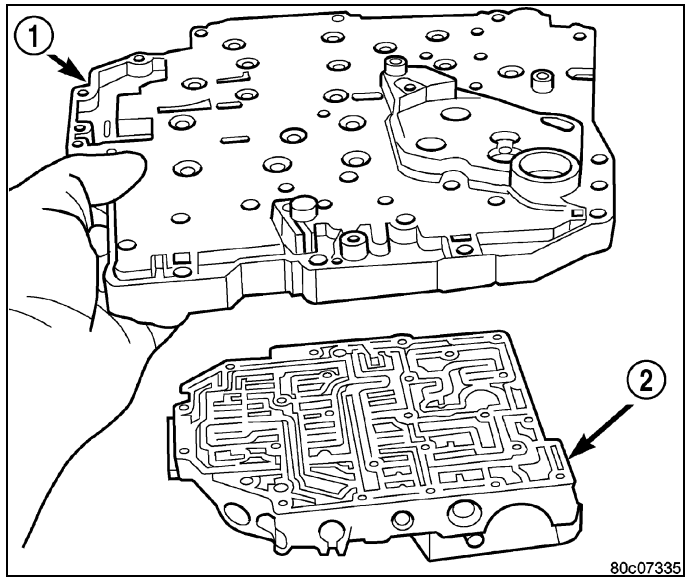

13. Remove separator plate-to-transfer plate screws (2).

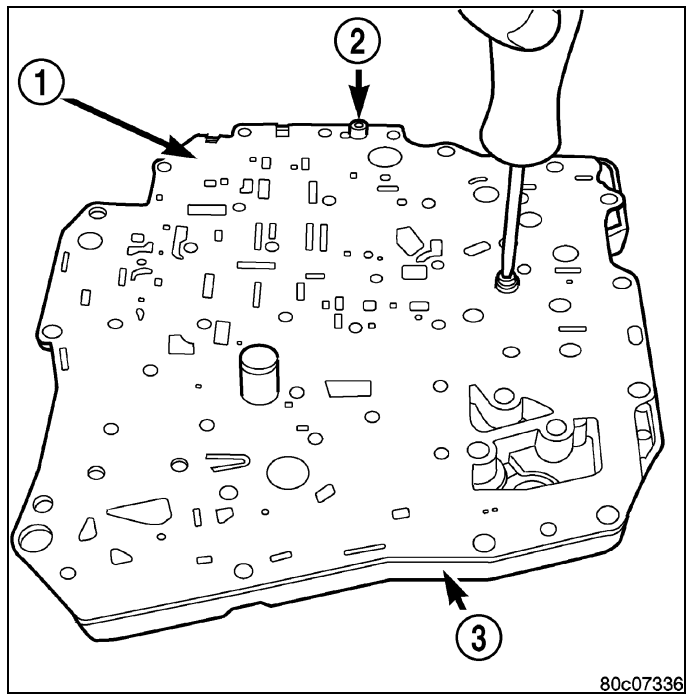

14. Remove separator plate (1) from transfer plate (2).

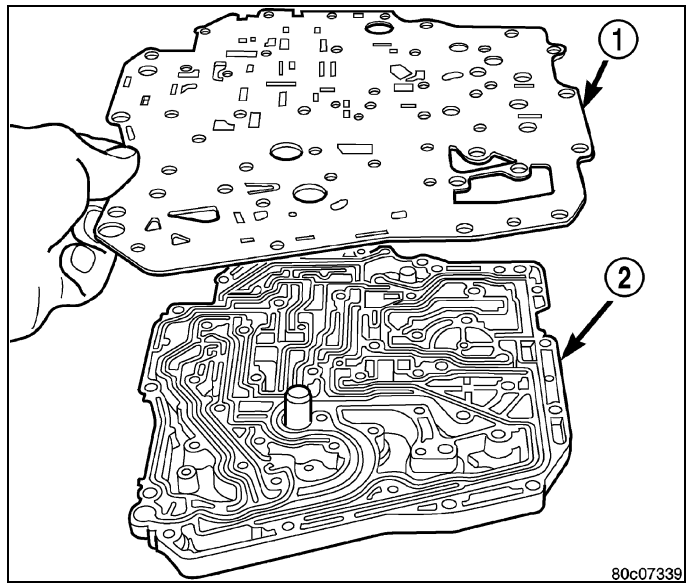

15. Remove the oil screen (1) from the transfer plate.

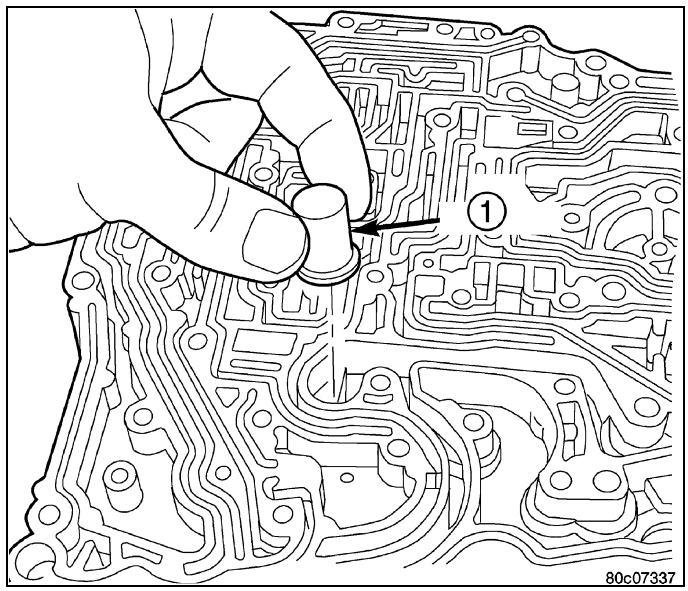

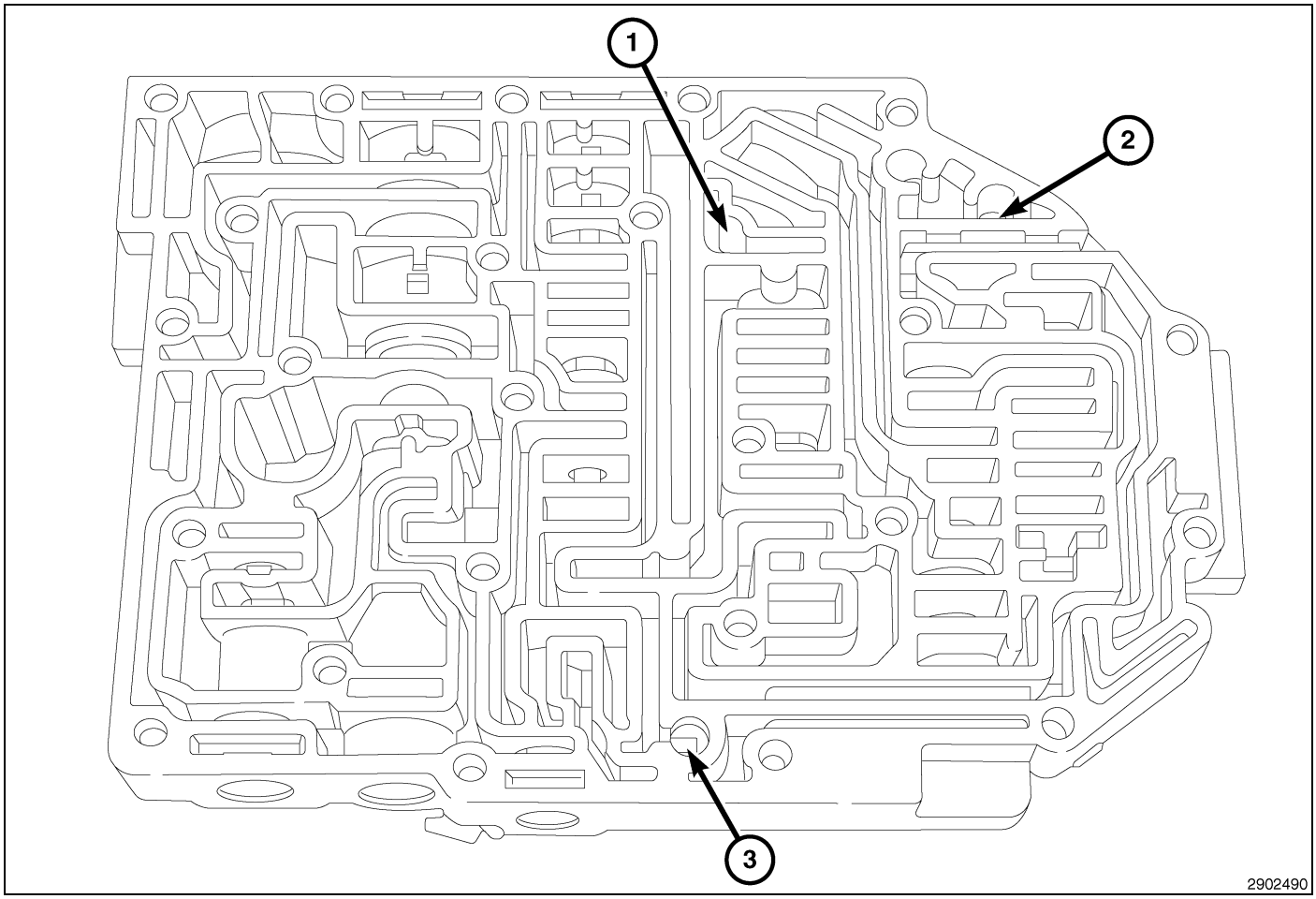

Ball Check Location

1 - (#4) BALL CHECK LOCATION
2- (#5) BALL CHECK LOCATION
3 - (#3) BALL CHECK LOCATION

16. Remove valve body check balls (1-4). Note their location for assembly ease.

17. Remove 2/4 accumulator assembly (1-5).

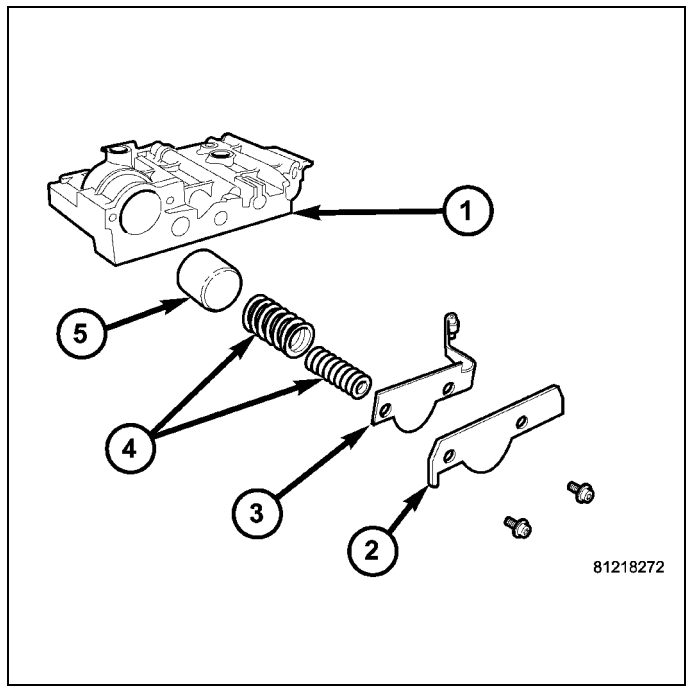

18. Remove dual retainer plate (2) from valve body. Use Remover/Installer 6301 (1) to remove plate (2).

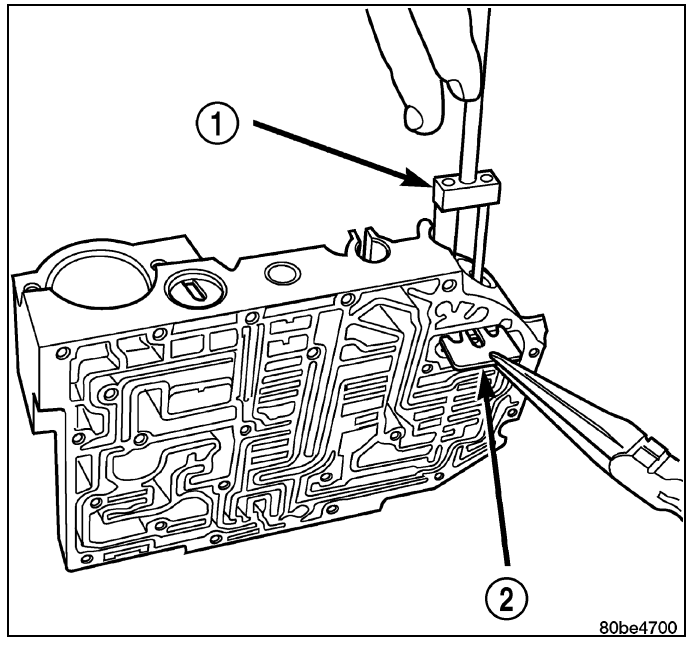

19. Remove regulator valve spring retainer (2).

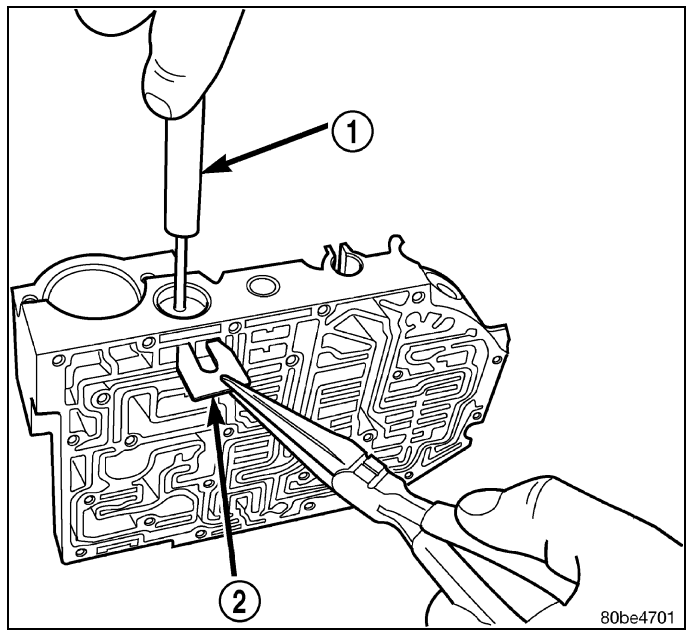

20. Remove remaining retainers (1, 2).

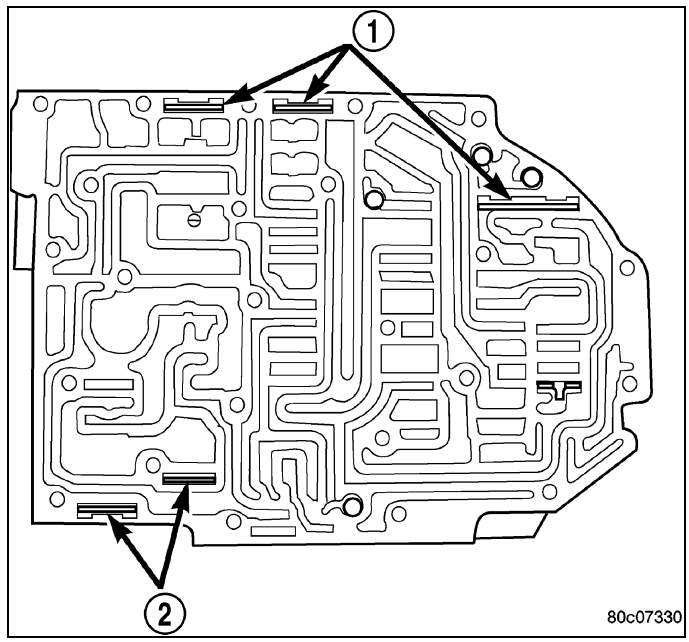

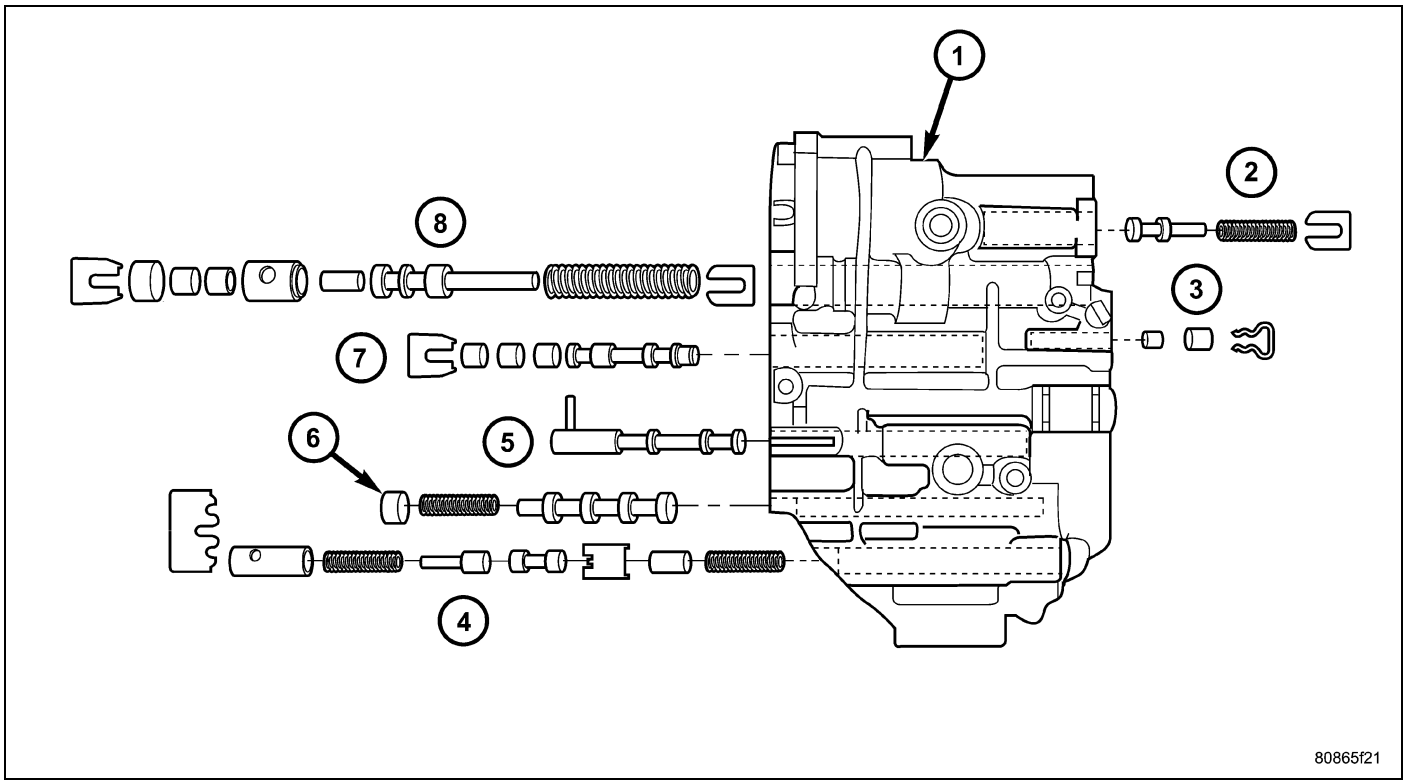

Valve Body Assembly

1 - VALVE BODY
2 - T/C REGULATOR VALVE
3 - L/R SWITCH VALVE
4 - CONVERTER CLUTCH CONTROL VALVE
5 - MANUAL VALVE
6 - CONVERTER CLUTCH SWITCH VALVE
7 - SOLENOID SWITCH VALVE
8 - REGULATOR VALVE

21. Remove all valves and springs.
22. Cleanliness through entire disassembly and assembly of the valve body cannot be overemphasized. When disassembling, each part should be washed in a suitable solvent, then dried by compressed air. **Do not wipe parts with shop towels.** All mating surfaces in the valve body are accurately machined; therefore, careful handling of all parts must be exercised to avoid nicks or burrs.

Assembly

NOTE: If the valve body assembly is being reconditioned or replaced, it is necessary to perform the Quick Learn Procedure using the scan tool. (Refer to 08 - Electrical/8E - Electronic Control Modules/MODULE, Transmission Control - Standard Procedure)

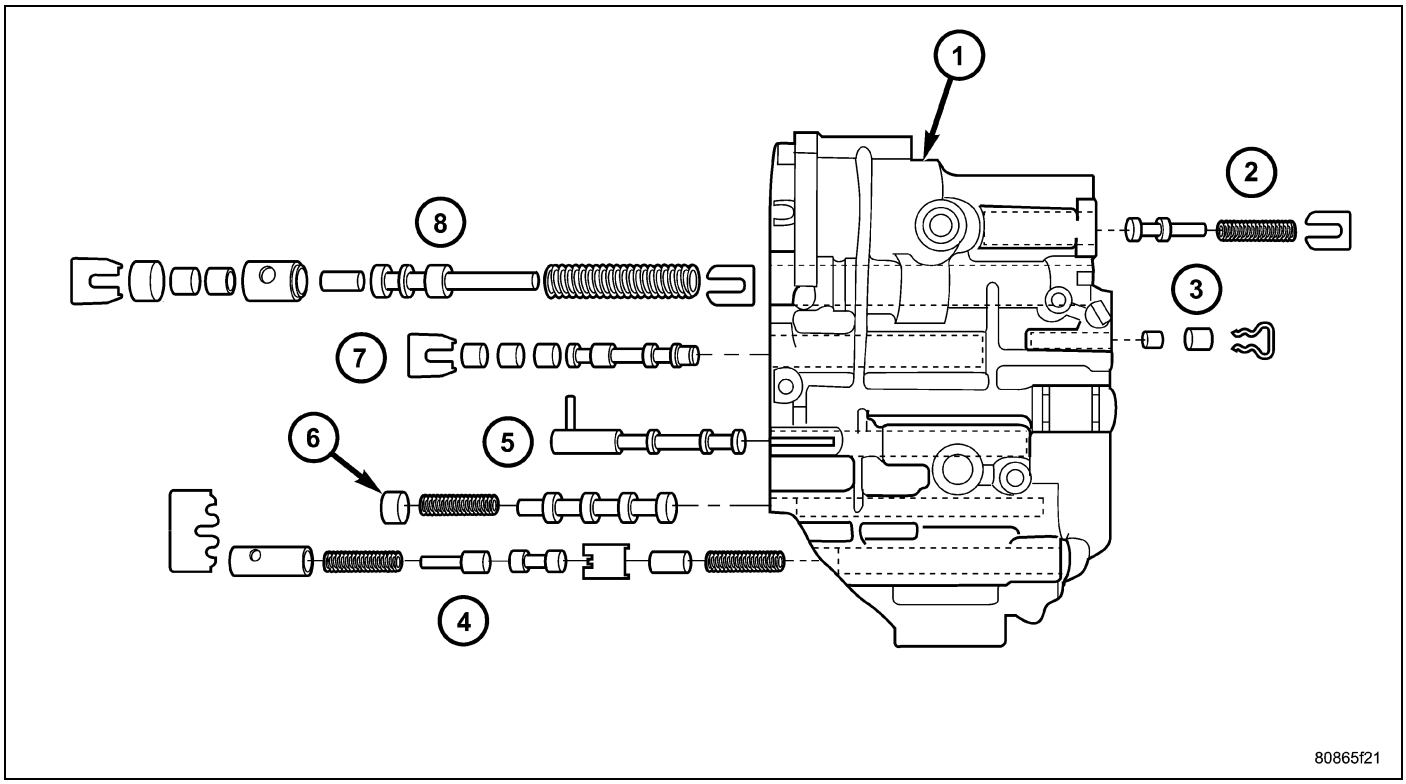

Valve Body Assembly

1 - VALVE BODY
2 - T/C REGULATOR VALVE
3 - L/R SWITCH VALVE
4 - CONVERTER CLUTCH CONTROL VALVE
5 - MANUAL VALVE
6 - CONVERTER CLUTCH SWITCH VALVE
7 - SOLENOID SWITCH VALVE
8 - REGULATOR VALVE

1. Install all valves and springs as shown.

2. Using Remover / Installer l regulator valve spring retainer (2).

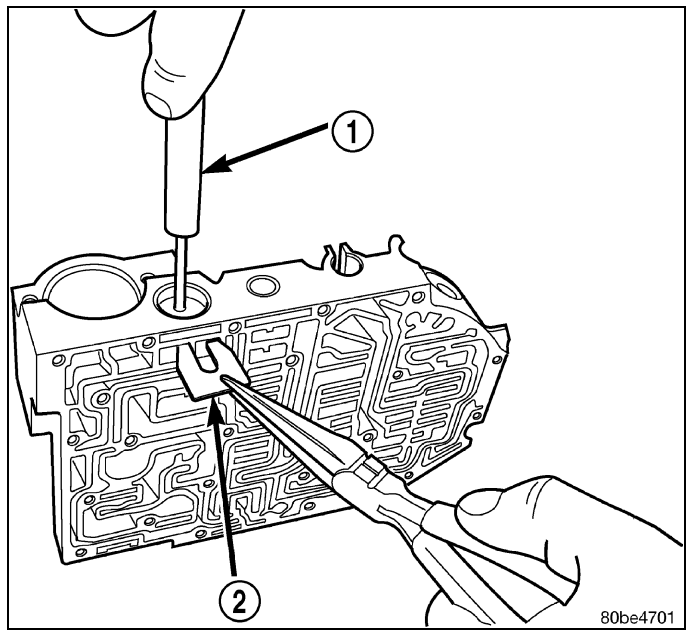

3. Install dual retainer plate (2) using Remover/Installer 6301 (1).

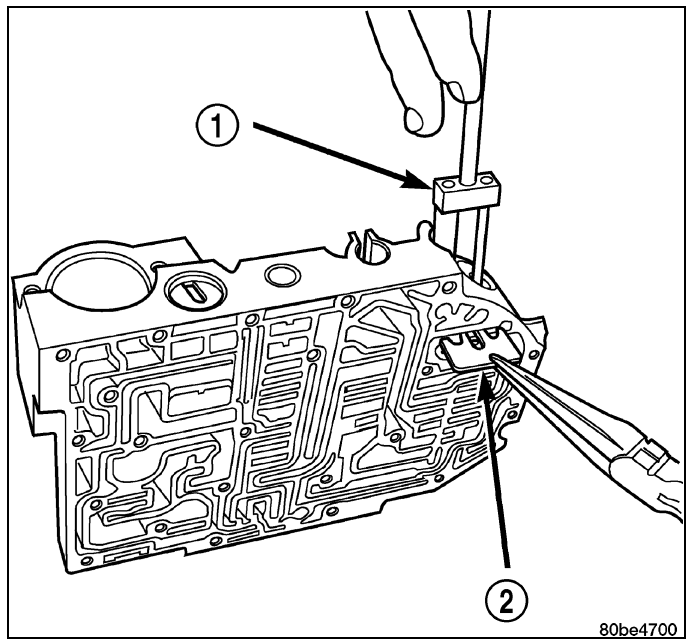

4. Verify that all retainers (1, 2) are installed as shown. Retainers should be flush or below valve body surface.

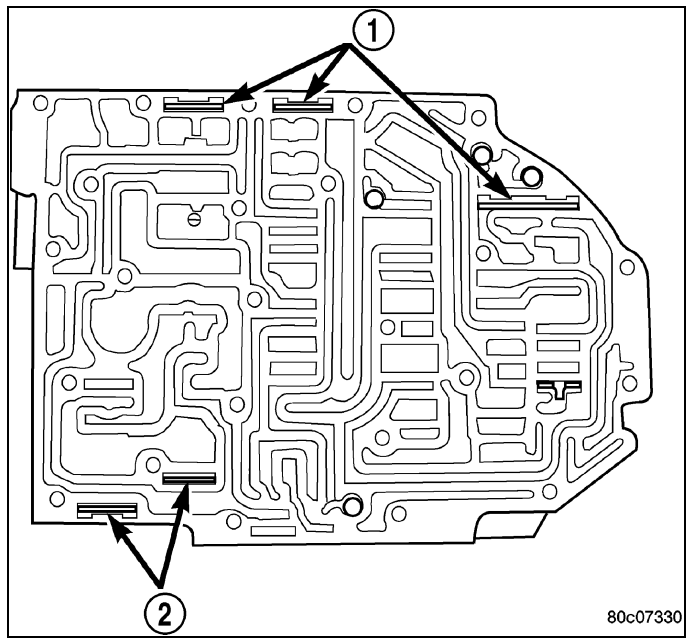

5. Install 2/4 Accumulator components (1-5) as shown. Torque 2/4 Accumulator retainer plate to 5 N·m (45 in. lbs.).

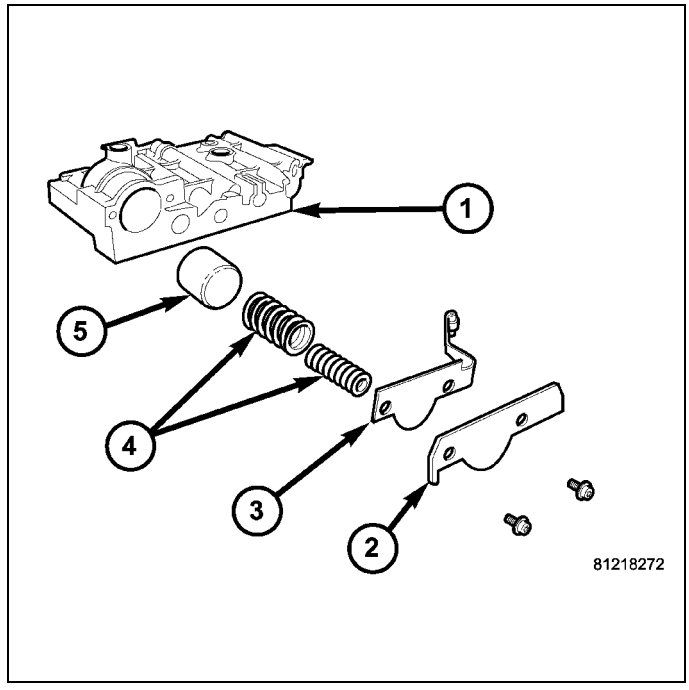

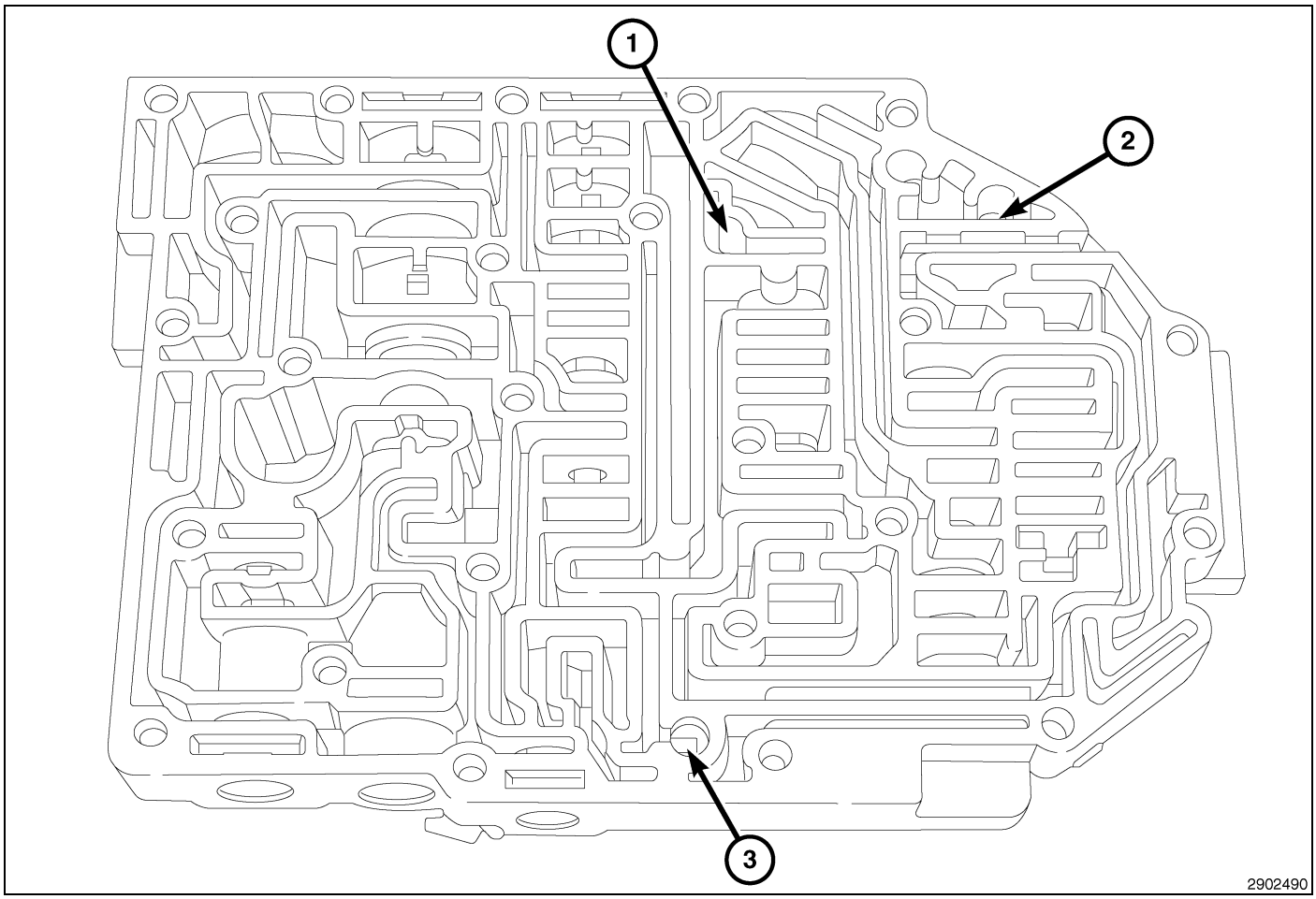

6. Install check balls into position as shown. If necessary, secure them with petrolatum or transmission assembly gel for assembly ease.
7. Install the oil screen (1) to the transfer plate.

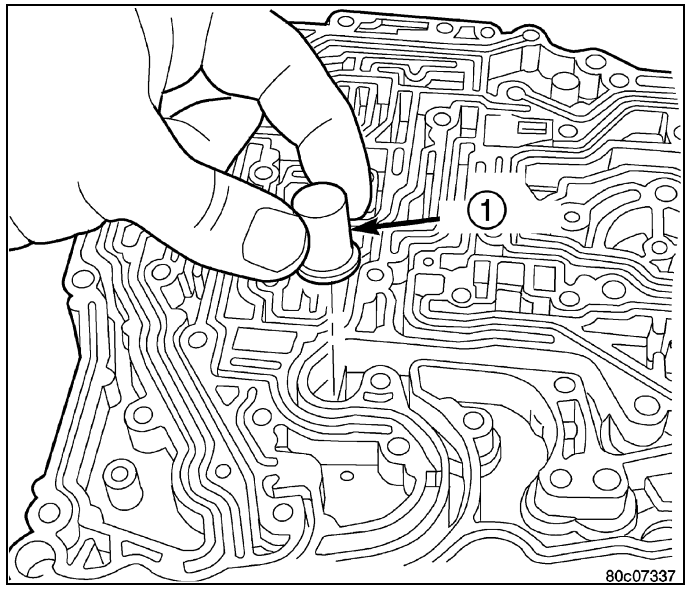

8. Install separator plate (1) to transfer plate (2).

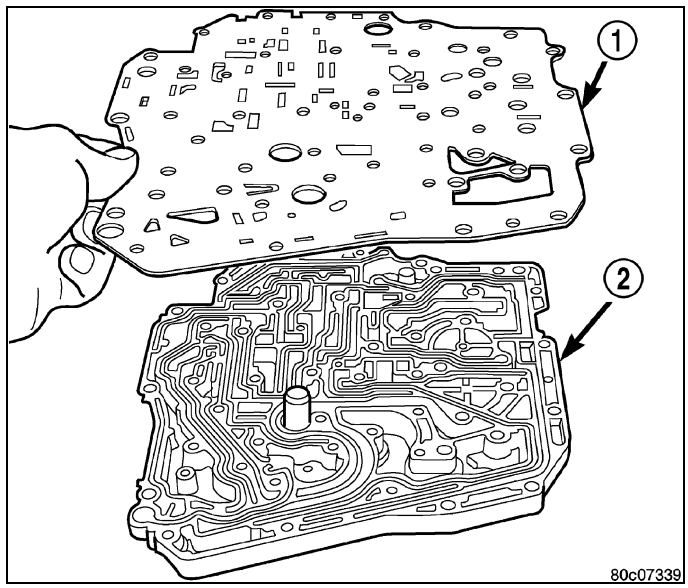

9. Install the two separator plate-to-transfer plate screws (2).

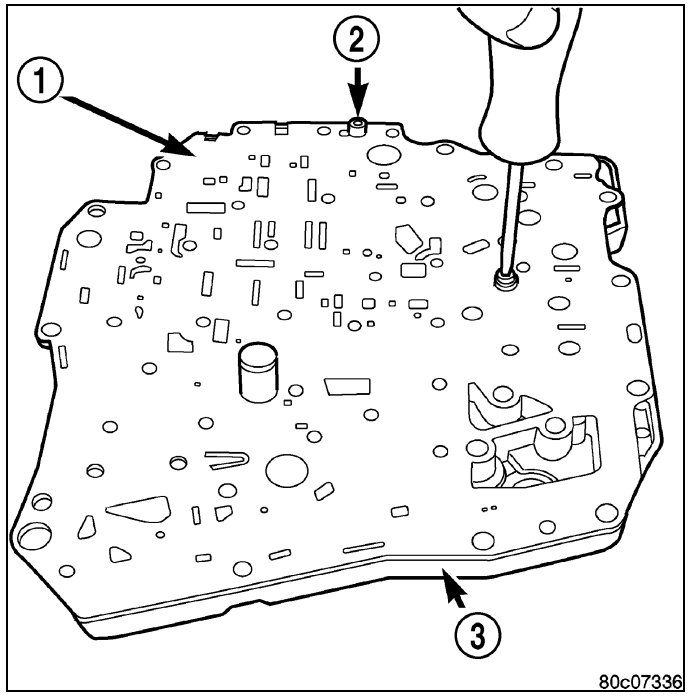

10. Install the transfer plate (1) to the valve body (2).

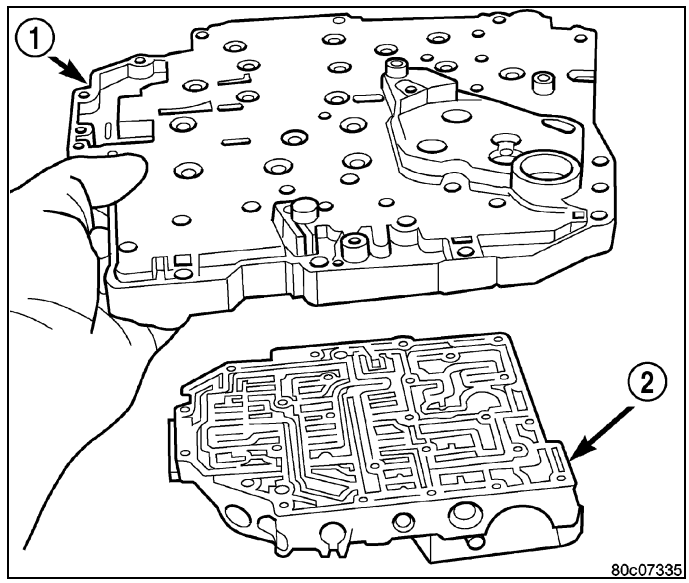

11. Install the transfer plate-to-valve body screws (1) and torque to 5 N·m (45 in. lbs.).

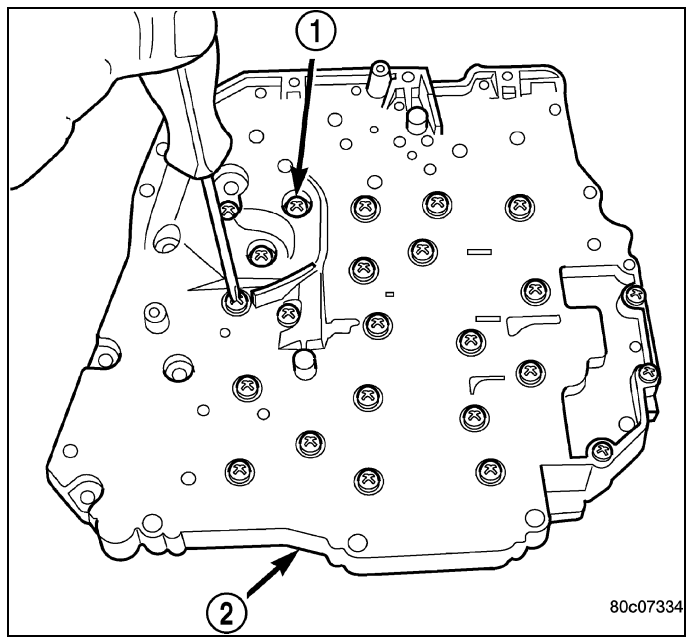

12. Install the stiffener plate (1).

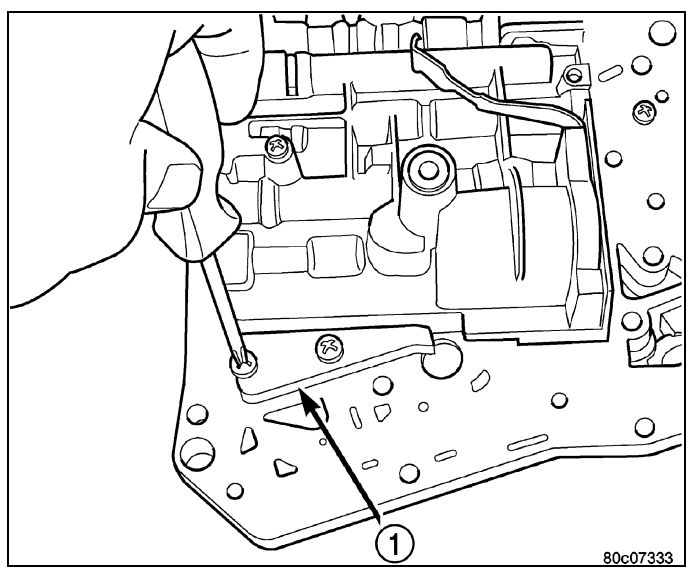

13. Install the solenoid/pressure switch assembly (1) and screws to the transfer plate and torque to 5.5 N·m (50 in. lbs.).

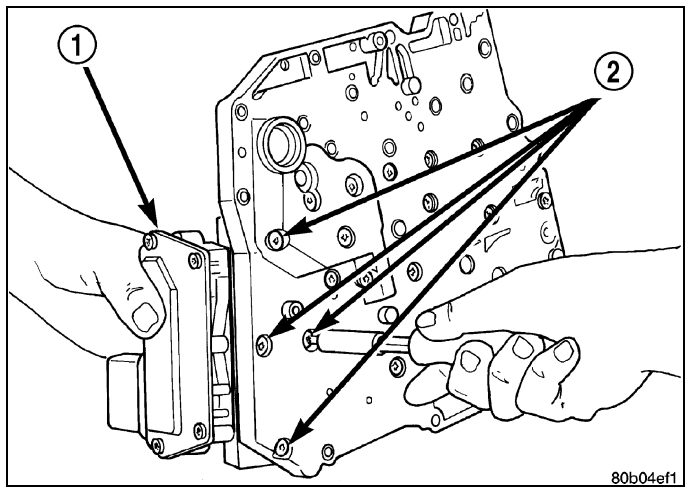

14. Install the manual shaft/rooster comb (3) and transmission range sensor (1) to the valve body.

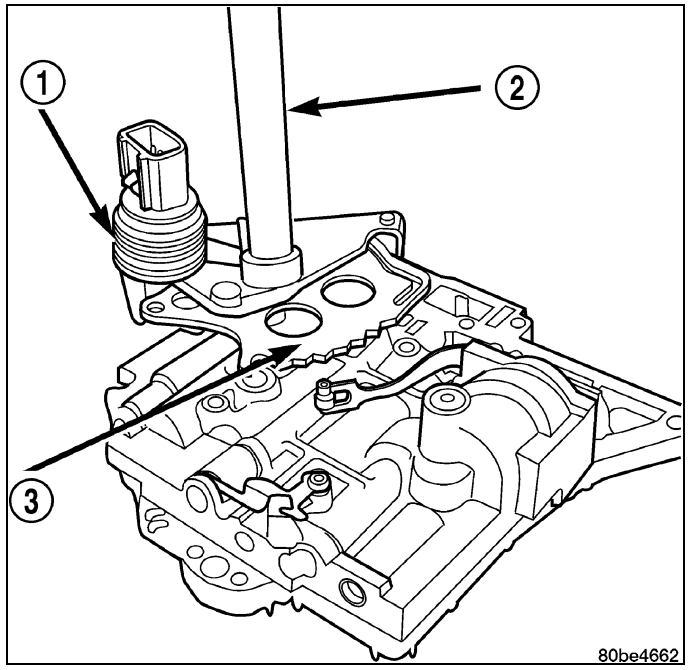

15. Install the TRS/manual shaft retaining screw (1) and torque to 5 N·m (45 in. lbs.).
16. Install manual shaft seal.

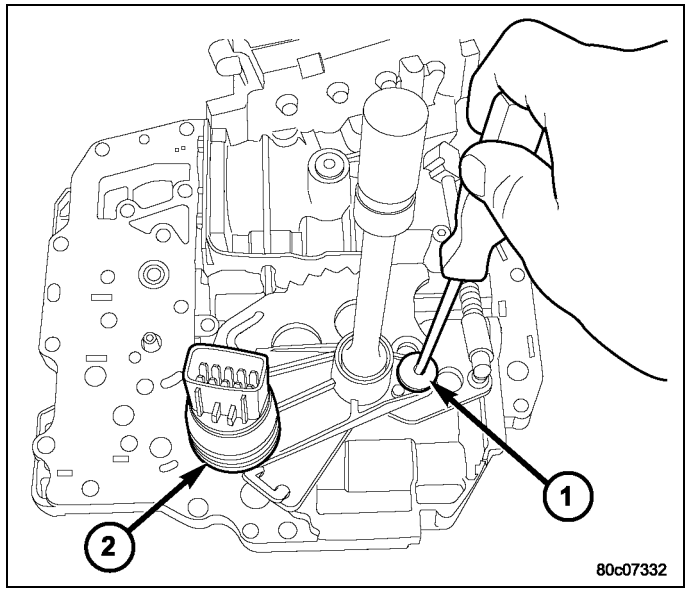

17. Install the variable line pressure header onto the manual shaft (5).
18. Install the shoulder screw (3) to hold the variable line pressure header (4) to the valve body.
19. Install the pressure control solenoid and line pressure sensor into the valve body.
20. Install the screws (6) to hold the pressure control solenoid (1) and line pressure sensor (2) to the valve body.
21. Install the electrical connectors to the pressure control solenoid (1) and the line pressure sensor (2).

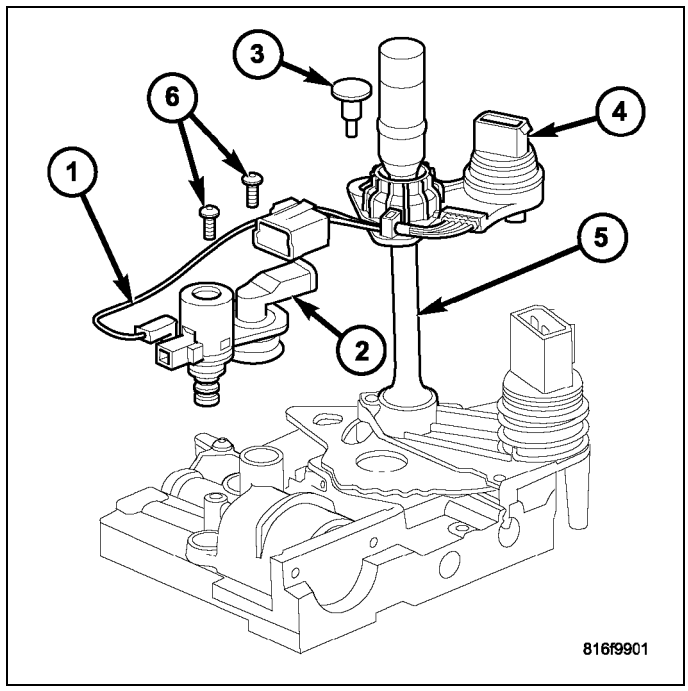

Installation

1. Install valve body into position and start bolts (1). Torque valve body to transmission case bolts (1) to 12 N·m (105 in. lbs.) torque.

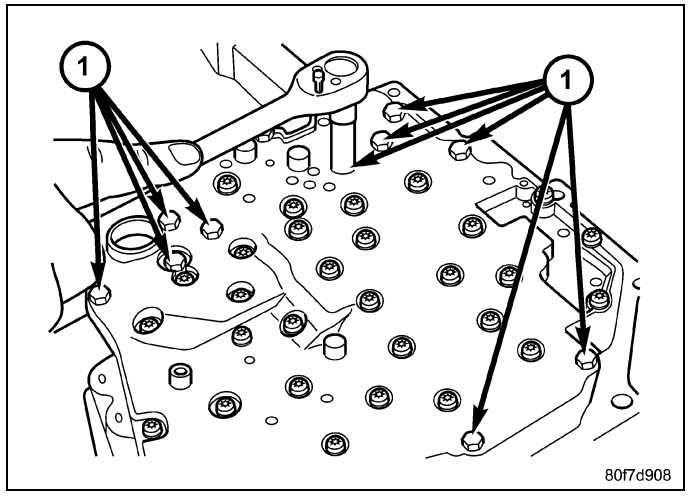

2. Install transmission oil filter (1) .

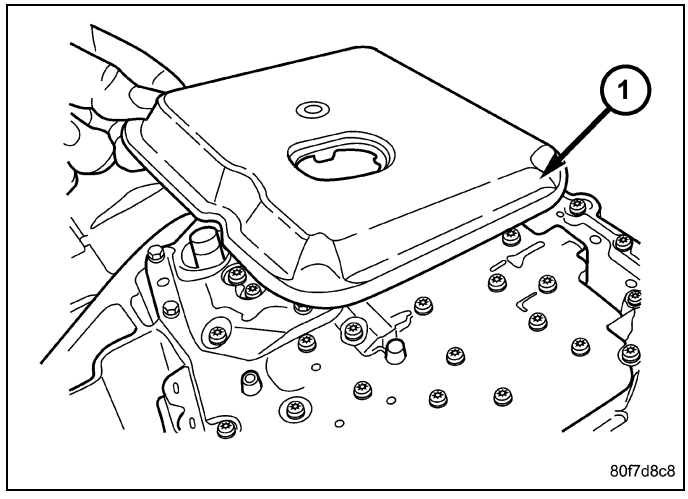

NOTE: Before installing the oil pan bolt in the bolt hole (5) located between the torque converter clutch on and U/D clutch pressure tap circuits, it will be necessary to replenish the sealing patch on the bolt using MOPAR® Lock AND Seal Adhesive.

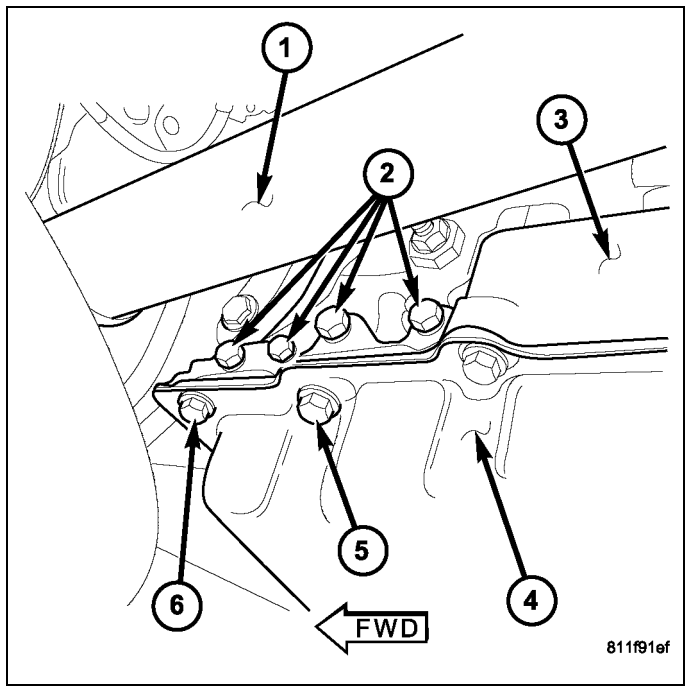

3. Make sure oil pan (1) and case rail are clean and dry. Install an 1/8" bead of RTV to the transmission oil pan and install to case. Tighten bolts (2) to 20 N·m (14.5 ft. lbs.).

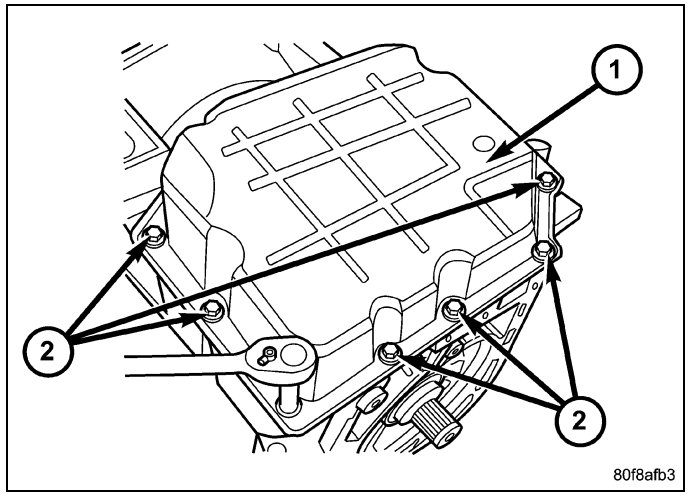

4. Lower vehicle and connect the transmission range sensor (5) connector.
5. Connect solenoid/pressure switch assembly connector.
6. Connect the variable line pressure connector (4), if equipped.
7. Lower vehicle.
8. Fill transmission with ATF+4, Automatic Transmission Fluid. Verify proper fluid level. (Refer to 21 - Transmission and Transfer Case/Automatic - 42RLE/FLUID and FILTER - Standard Procedure)

NOTE: If the valve body has been reconditioned or replaced, it is necessary to perform the Quick Learn Procedure. (Refer to 08 - Electrical/8E - Electronic Control Modules/MODULE, Transmission Control - Standard Procedure)

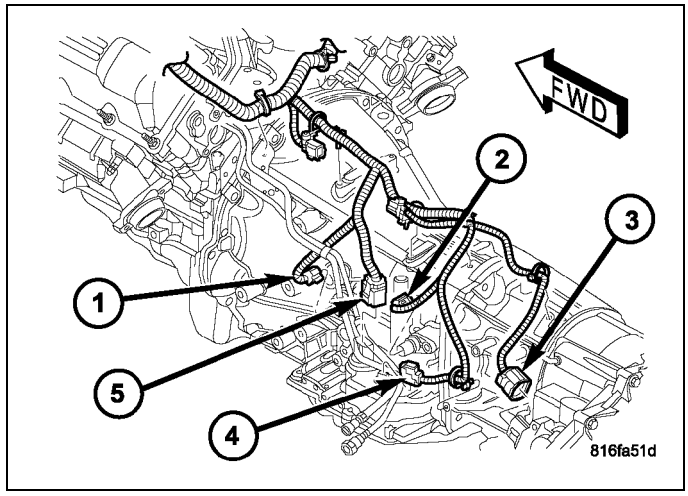

AUTOMATIC - 545RFE

TABLE OF CONTENTS

page

AUTOMATIC - 545RFE
DESCRIPTION 195
OPERATION 196
DIAGNOSIS AND TESTING
AUTOMATIC TRANSMISSION 196
FLUID LEAKAGE 197
PRELIMINARY 197
ROAD TESTING 198
HYDRAULIC PRESSURE TEST 199
AIR CHECKING TRANSMISSION CLUTCH OPERATION 201
CONVERTER HOUSING FLUID LEAK 201
STANDARD PROCEDURE
STANDARD PROCEDURE - ALUMINUM THREAD REPAIR 202
DRIVE LEARN - RFE TRANSMISSIONS 202
TCM QUICK LEARN - RLE AND RFE TRANSMISSIONS 204
REMOVAL 205
DISASSEMBLY 208
CLEANING 216
INSPECTION 217
ASSEMBLY 217
INSTALLATION 230
SCHEMATICS AND DIAGRAMS 233
SPECIFICATIONS 255
SPECIAL TOOLS 257
ASSEMBLY, INPUT CLUTCH
DESCRIPTION 261
OPERATION 261
DISASSEMBLY 262
ASSEMBLY 264
ASSEMBLY, TRANSMISSION SOLENOID AND TRS
DESCRIPTION 271
OPERATION 271
REMOVAL 272
INSTALLATION 273
CABLE, SHIFT
DIAGNOSIS AND TESTING 273
REMOVAL 274
INSTALLATION 275
ADJUSTMENTS 275

page

CLUTCH, LOW AND REVERSE
DISASSEMBLY 277
CLEANING 278
INSPECTION 278
ASSEMBLY 279
COVER, OIL PUMP
REMOVAL 281
INSTALLATION 281
FLUID AND FILTER
DIAGNOSIS AND TESTING
EFFECTS OF INCORRECT FLUID LEVEL 282
CAUSES OF BURNT FLUID 283
FLUID CONTAMINATION 283
STANDARD PROCEDURE
FLUID LEVEL CHECK 283
FLUID AND FILTER REPLACEMENT 284
TRANSMISSION FILL 286
GEARTRAIN, PLANETARY
DESCRIPTION 287
OPERATION 288
DISASSEMBLY 289
CLEANING 289
INSPECTION 289
ASSEMBLY 290
HOLDING CLUTCHES
DESCRIPTION 291
OPERATION 292
MECHANISM, BRAKE TRANSMISSION SHIFT INTERLOCK
DESCRIPTION 293
OPERATION 293
DIAGNOSIS AND TESTING 293
ADJUSTMENTS 294
PUMP, TRANSMISSION OIL
DESCRIPTION 295
OPERATION 297
DISASSEMBLY 297
CLEANING 299
INSPECTION 300
ASSEMBLY 300
RETAINER, TRANSMISSION 2ND AND 4TH CLUTCH PISTON
DISASSEMBLY 303
ASSEMBLY 305

continued..

page

SEAL, ADAPTER HOUSING
REMOVAL 310
INSTALLATION 310
SENSOR, SPEED, INPUT
DESCRIPTION 311
OPERATION 311
REMOVAL 311
INSTALLATION 312
SENSOR, SPEED, OUTPUT
DESCRIPTION 312
OPERATION 312
REMOVAL 313
INSTALLATION 313
SENSOR, TRANSMISSION OIL TEMPERATURE
DESCRIPTION 313
OPERATION 313
SENSOR, TRANSMISSION RANGE
DESCRIPTION 314
OPERATION 314
SENSOR, VARIABLE LINE PRESSURE
DESCRIPTION 314
OPERATION 315
REMOVAL 315
INSTALLATION 315
SHIFTER, TRANSMISSION
DESCRIPTION 315
OPERATION 316

page

REMOVAL
SHIFTER 316
CONSOLE PRNDL BEZEL 320
INSTALLATION
SHIFTER 324
CONSOLE PRNDL BEZEL 327
SWITCH, OVERDRIVE LOCKOUT, TOW AND HAUL
DESCRIPTION 330
OPERATION 330
TORQUE CONVERTER
DESCRIPTION 331
OPERATION 335
REMOVAL 338
INSTALLATION 338
VALVE BODY
DESCRIPTION 339
OPERATION 340
REMOVAL 341
DISASSEMBLY 342
CLEANING 345
INSPECTION 346
ASSEMBLY 348
INSTALLATION 350
VALVE, SOLENOID SWITCH
DESCRIPTION 351
OPERATION 351

Automatic - 545RFE

Description

The 45RFE/545RFE automatic transmissions is a sophisticated, multi-range, electronically controlled transmission which combines optimized gear ratios for responsive performance, state of the art efficiency features and low NVH. Other features include driver adaptive shifting and three planetary gear sets to provide wide ratio capability with precise ratio steps for optimum driveability. The three planetary gear sets also make available a unique alternate second gear ratio. The primary 2nd gear ratio fits between 1st and 3rd gears for normal through-gear accelerations. The alternate second gear ratio (2prime) allows smoother 4-2 kickdowns at high speeds to provide 2nd gear passing performance over a wider highway cruising range.

The hydraulic portion of the transmission consists of the transmission fluid, fluid passages, hydraulic valves, and various line pressure control components.

The primary mechanical components of the transmission consist of the following:

- Three multiple disc input clutches
- Three multiple disc holding clutches
- Five hydraulic accumulators
- Three planetary gear sets
- Dual Stage Hydraulic oil pump
- Valve body
- Solenoid pack

The Transmission Control Module (TCM) is the “heart” or “brain” of the electronic control system and relies on information from various direct and indirect inputs (sensors, switches, etc.) to determine driver demand and vehicle operating conditions. Depending on the vehicle configuration, the TCM may be a standalone module or it may be housed along with the Powertrain Control Module (PCM) in a single module. With this information, the TCM can calculate and perform timely and quality shifts through various output or control devices (solenoid pack, transmission control relay, etc.).

TRANSMISSION IDENTIFICATION

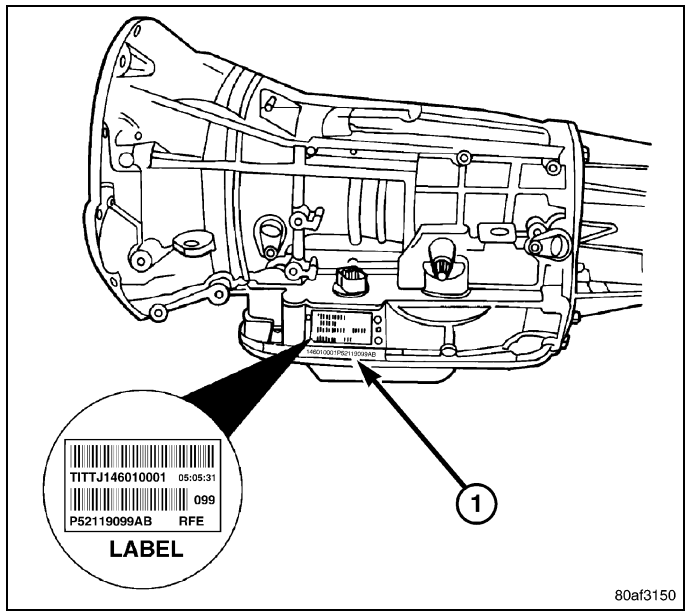

Transmission identification numbers are stamped (1) on the left side of the case just above the oil pan sealing surface. Refer to this information when ordering replacement parts. A label is attached to the transmission case above the stamped numbers. The label gives additional information which may also be necessary for identification purposes.

GEAR RATIOS

The 545RFE gear ratios are:

1st	3.00:1
2nd	1.67:1
2nd Prime	1.50:1
3rd	1.00:1
4th	0.75:1
5th	0.67:1
Reverse	3.00:1

Operation

The 45/545RFE offers full electronic control of all automatic up and downshifts, and features real-time adaptive closed-loop shift and pressure control. Electronic shift and torque converter clutch controls help protect the transmission from damage due to high temperatures, which can occur under severe operating conditions. By altering shift schedules, line pressure, and converter clutch control, these controls reduce heat generation and increase transmission cooling.

To help reduce efficiency-robbing parasitic losses, the transmissions includes a dual-stage transmission fluid pump with electronic output pressure control. Under most driving conditions, pump output capacity greatly exceeds that which is needed to keep the clutches applied. The 68RFE pump-pressure control system monitors input torque and adjusts the pump pressure accordingly. The primary stage of the pump works continuously; the second stage is bypassed when demand is low. The control system also monitors input and output speed and, if incipient clutch slip is observed, the pressure control solenoid duty cycle is varied, increasing pressure in proportion to demand.

A high-travel torque converter damper assembly allows earlier torque converter clutch engagement to reduce slippage. Needle-type thrust bearings reduce internal friction. The 45/545RFE is packaged in a one-piece die-cast aluminum case. To reduce NVH, the case has high lateral, vertical and torsional stiffness. Dual filters protect the pump and other components. A cooler return filter is added to the customary main sump filter. Independent lubrication and cooler circuits assure ample pressure for normal transmission operation even if the cooler is obstructed or the fluid cannot flow due to extremely low temperatures.

NOTE: Vehicles equipped with ERS (Electronic Range Select) do not provide 2nd gear in limp-in, because the shift lever has no "2" or "1" position.

The hydraulic control system design (without electronic assist) provides the transmission with PARK, REVERSE, NEUTRAL, SECOND, and THIRD gears, based solely on driver shift lever selection. This design allows the vehicle to be driven (in “limp-in” mode) in the event of a electronic control system failure, or a situation that the Transmission Control Module (TCM) recognizes as potentially damaging to the transmission.

The TCM also performs certain self-diagnostic functions and provides comprehensive information (sensor data, DTC's, etc.) which is helpful in proper diagnosis and repair. This information can be viewed with the scan tool.

Diagnosis and Testing

AUTOMATIC TRANSMISSION

NOTE: Before attempting any repair on a automatic transmission, check for Diagnostic Trouble Codes with the scan tool.

Transmission malfunctions may be caused by these general conditions:

- Poor engine performance
- Improper adjustments
- Hydraulic malfunctions
- Mechanical malfunctions
- Electronic malfunctions

Diagnosis of these problems should always begin by checking the easily accessible variables: fluid level and condition, gearshift cable adjustment. Then perform a road test to determine if the problem has been corrected or if more diagnosis is necessary. If the problem persists after the preliminary tests and corrections are completed, hydraulic pressure checks should be performed.

FLUID LEAKAGE

TRANSMISSION OIL LEAK

Begin with a thorough inspection of the transmission , particularly at the area of the suspected leak. If an oil leak source is not readily identifiable, the following steps should be followed:

1. Clean or degrease the transmission with a water soluble solvent only.
2. Add an oil soluble dye (use as recommended by manufacturer) while the powertrain is at ambient temperature. Start the engine and let idle for approximately 15 minutes. Check the oil dip stick (if equipped) to make sure the dye is thoroughly mixed as indicated with a fluorescent color under a black light.
3. Using a black light, inspect the entire transmission for fluorescent dye, practically at the suspected area of oil leak. If the oil leak is found and identified , repair per service manual instructions .
4. If dye is not observed , drive the vehicle at various speeds for approximately 24 km (15 miles) and repeat inspection.

TORQUE CONVERTER HOUSING AREA

When diagnosing converter housing (5) fluid leaks, three actions must be taken before repair:

1. Verify proper transmission fluid level.
2. Verify that the leak originates from the converter housing area and is transmission fluid.
3. Determine the true source of the leak.

Fluid leakage at or around the torque converter area may originate from an engine oil leak (7). The area should be examined closely. Factory fill fluid is red and, therefore, can be distinguished from engine oil.

Some suspected converter housing fluid leaks may not be leaks at all. They may only be the result of residual fluid in the converter housing, or excess fluid spilled during factory fill, or fill after repair. Converter housing leaks have several potential sources. Through careful observation, a leak source can be identified before removing the transmission for repair.

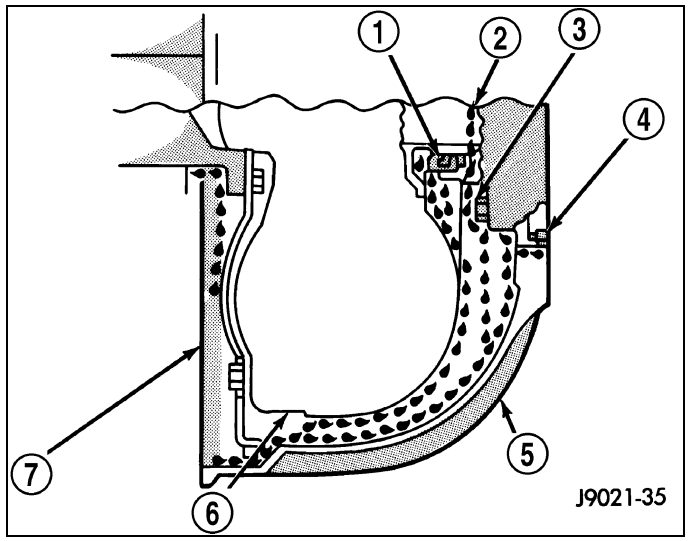

Pump seal leaks tend to run down the front cover from the hub area. Front cover O-ring leaks will wet the inside of the bellhousing but the cover itself will generally be dry. If the torque converter is wet, the problem is generally a converter hub weld or seam weld leak .

TORQUE CONVERTER LEAKAGE

Possible sources of torque converter leakage are:

- Torque converter weld leaks at the outside diameter weld (1).
- Torque converter hub weld (2).

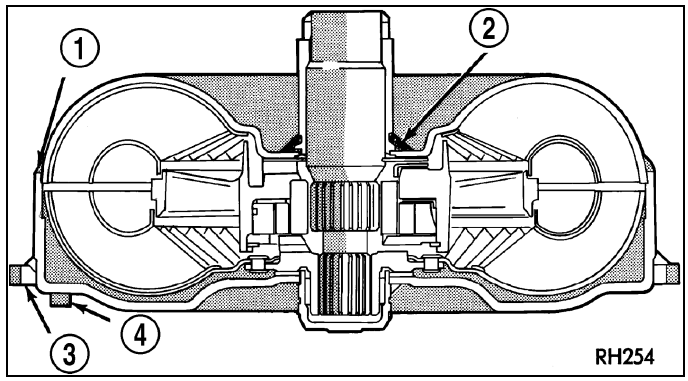

PRELIMINARY

Two basic procedures are required. One procedure for vehicles that are drivable and an alternate procedure for disabled vehicles (will not back up or move forward).

VEHICLE IS DRIVABLE

1. Record all DTCs and the accompanying DTC Event Data.
2. Check for an appropriate Technical Service Bulletin that applies to the customer complaint.

3. Check fluid level and condition.
4. Road test and note how transmission upshifts, downshifts, and engages.
5. If the complaint was related to shift quality, perform the Quick Learn procedure, (Refer to 08 - Electrical/8E - Electronic Control Modules/MODULE, Transmission Control - Standard Procedure), and the Drive Learn Procedure, (Refer to 08 - Electrical/8E - Electronic Control Modules/MODULE, Transmission Control - Standard Procedure).
6. If the shift complaint still exists, compare actual line pressure (sensor reading, using the scan tool) to the Desired Line Pressure reading, in Park, Drive, and Reverse at 1500 RPM. Check that the LP sensor reads 30 psi (the minimum it should ever display) with key on / engine off.
7. Perform air-pressure test to check clutch operation. (Refer to 21 - Transmission and Transfer Case/Automatic - 545RFE - Diagnosis and Testing)
8. Replace the Transmission Solenoid/TRS Assembly and perform the Quick Learn and Drive Learn procedures again.
9. If the complaint still exists, remove, inspect, and repair the transmission as necessary

VEHICLE IS DISABLED

1. Record all DTCs and the accompanying DTC Event Data.
2. With engine running, place transmission in gear and verify correct PRNDL reading. Observe the Input and Output speeds using the scan tool. If output RPM is greater than zero but vehicle does not move, check for transfer case in Neutral (or failed internally), failed propshaft, or failed / disconnected drive axle. If output RPM is zero and input RPM is greater than zero, internal transmission slippage is indicated. Run clutch slip tests using the scan tool, check oil pan for debris, and air check the various clutch circuits.
3. Shift the transmission into neutral, if both input and output speeds are zero, check flexplate bolts, torque converter, and transmission input shaft.
4. Compare actual line pressure (sensor reading, using the scan tool) to the Desired Line Pressure reading, in Park, Drive, and Reverse at 1500 RPM. Check that the LP sensor reads 30 psi (the minimum it should ever display) with key on / engine off. If line pressure is incorrect, check fluid level and condition.
5. Remove, inspect, and repair the transmission as necessary

ROAD TESTING

Before road testing, be sure the fluid level and control cable adjustments have been checked and adjusted if necessary. Verify that all diagnostic trouble codes have been resolved.

Observe engine performance during the road test. A poorly tuned engine will not allow accurate analysis of transmission operation.

Operate the transmission in all gear ranges. Check for shift variations and engine flare which indicates slippage. Note if shifts are harsh, spongy, delayed, early, or if part throttle downshifts are sensitive.

Slippage indicated by engine flare, usually means clutch or line pressure problems.

A slipping clutch can often be determined by comparing which internal units are applied in the various gear ranges. The Clutch Application charts provide a basis for analyzing road test results.

NOTE: Vehicles equipped with ERS will actually display as if the transmission were a six speed (ERS second prime as third, third as fourth, fourth as fifth etc..

545RFE CLUTCH APPLICATION CHART

SLP	UD	OD	R	2C	4C	L/R	OVERRUNNING
P–PARK						ON	
R–REVERSE			ON			ON	
N-NEUTRAL						ON	
D–FIRST (ERS one)	ON					ON*	ON
D–SECOND (ERS two)	ON			ON			

545RFE CLUTCH APPLICATION CHART, continued

SLP	UD	OD	R	2C	4C	L/R	OVERRUNNING
D–SECOND PRIME (ERS third)	ON				ON		
D–THIRD (ERS fourth)	ON	ON					
D–FOURTH (ERS fifth)		ON			ON		
D–FIFTH (ERS drive)		ON		ON			
D–LIMP-IN	ON	ON					
2–FIRST	ON					ON*	ON
2–SECOND	ON			ON			
2–LIMP-IN	ON			ON			
1–LOW	ON					ON	ON
*L/R clutch is on only with the output shaft speed below 150 rpm.							

HYDRAULIC PRESSURE TEST

An accurate tachometer and pressure test gauges are required. Test Gauge C-3293-SP has a 300 psi range and is used at all locations where pressures exceed 100 psi.

Pressure Test Port Locations

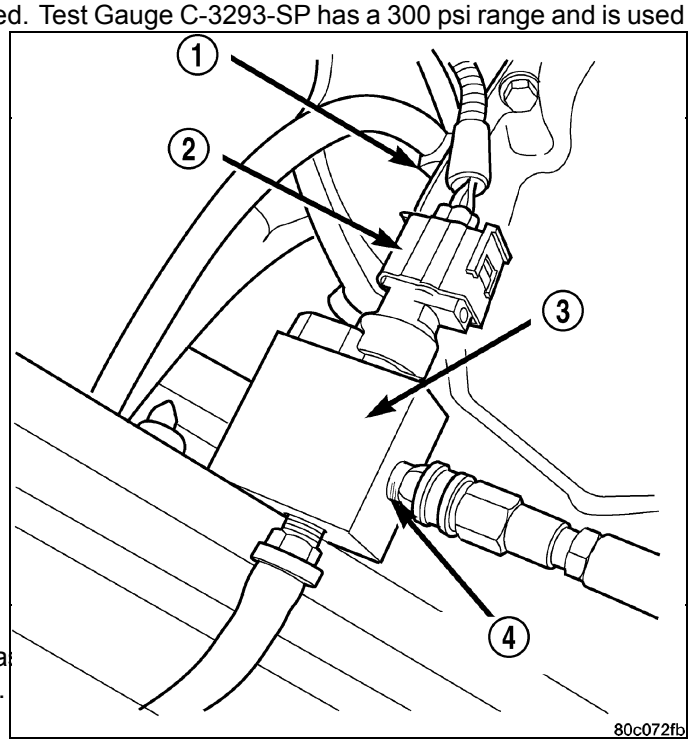

Only two pressure ports are supplied on the transmission ca
ports are located on the right side of the transmission case .

To determine the line pressure, there are two available methods. The scan tool can be used to read line pressure from the line pressure sensor. The second method is to install Line Pressure Adapter 8259 (3) into the transmission case and then install the pressure gauge and the original sensor (2) into the adapter. This will allow a comparison of the scan tool readings and the gauge reading to determine the accuracy of the line pressure sensor. The scan tool line pressure reading should match the gauge reading within ±10 psi.

TEST PROCEDURE

All pressure readings should be taken with the transmission fluid level full, transmission oil at the normal operating temperature, and the engine at 1500 rpm. Check the transmission for proper operation in each gear position that is in question or if a specific element is in question, check the pressure readings in at least two gear positions that employ

that element. Refer to the Hydraulic Schematics at the rear of this section to determine the correct pressures for each element in a given gear position.

NOTE: The 545RFE utilizes closed loop control of pump line pressure. The pressure readings may therefore vary greatly but should always follow line pressure.

Some common pressures that can be measured to evaluate pump and clutch performance are the upshift/downshift pressures, garage shift pressures, and TCC pressure. The upshift/downshift pressure for all shifts are shown in and . In-gear maximum pressure for each gear position is shown in . The garage shift pressure when performing a N-R shift is 220 psi for 3.7L/4.7L equipped vehicles and 250 psi for 5.7L equipped vehicles. The garage shift pressure for the R-N shift is 120 psi. The garage shift pressure for the N-1 shift is 135 psi for 3.7L/4.7L equipped vehicles and 165 psi for 5.7L equipped vehicles. Torque converter lock-up pressure is 120 psi for 3.7L/4.7L equipped vehicles and 125 psi for 5.7L equipped vehicles.

UPSHIFT PRESSURES								
ENGINE	**1-2**	**2-3**	**2prime-3**	**3-4**	**2prime-4**	**2-5**	**3-5**	**4-5**
5.7L	150	125	125	135	135	135	135	135
3.7L/4.7L	120	120	120	120	120	120	120	130

DOWNSHIFT PRESSURES										
EN-GINE	**5-4**	**5-3**	**5-2**	**4-3**	**4-2prime**	**3-2**	**3-2prime**	**2prime-1**	**2-1**	**3-1**
5.7L	135	135	135	135	135	135	135	135	135	135
3.7L/ 4.7L	120	120	120	120	120	120	120	120	120	120

IN-GEAR PRESSURES								
ENGINE	**1**	**2**	**2prime**	**3**	**4**	**5**	**NEUTRAL**	**REVERSE**
5.7L	160	135	135	135	135	135	120	250
3.7L/4.7L	135	120	120	120	120	120	120	220

AIR CHECKING TRANSMISSION CLUTCH OPERATION

Air-pressure testing can be used to check transmission clutch operation. The test can be conducted with the transmission either in the vehicle or on the work bench, as a final check.

Air-pressure testing requires that the oil pan and valve body be removed from the transmission. The clutch apply passages are shown in the Air Pressure Test Passages graphic .

NOTE: The air supply which is used must be free of moisture and dirt. Use a pressure of 30 psi to test clutch operation.

Apply air pressure at each port. If the clutch is functioning, a soft thump will be heard as the clutch is applied. The clutch application can also be felt by touching the appropriate element while applying air pressure. As the air pressure is released, the clutch should also release.

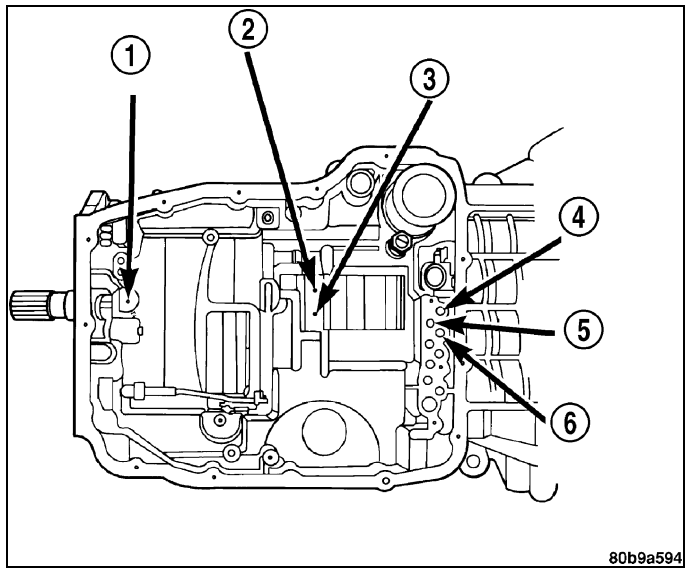

1 - LOW REVERSE CLUTCH
2 - 4TH CLUTCH
3 - 2ND CLUTCH
4 - OVERDRIVE CLUTCH
5 - UNDERDRIVE CLUTCH
6 - REVERSE CLUTCH

CONVERTER HOUSING FLUID LEAK

When diagnosing converter housing fluid leaks, two items must be established before repair.

1. Verify that a leak condition actually exists.
2. Determined the true source of the leak.

Some suspected converter housing fluid leaks may not be leaks at all. They may only be the result of residual fluid in the converter housing, or excess fluid spilled during factory fill or fill after repair. Converter housing leaks have several potential sources. Through careful observation, a leak source can be identified before removing the transmission for repair. Torque converter seal leaks tend to move along the drive hub and onto the rear of the converter. Pump cover seal leaks tend to run down the cover and the inside surface of the bellhousing.

Some leaks, or suspected leaks, may be particularly difficult to locate. If necessary, a Mopar® approved dye should be used to locate and confirm a leak.

TORQUE CONVERTER LEAK POINTS

Possible sources of converter leaks are:

1. Leaks at the weld joint around the outside diameter weld.
2. Leaks at the converter hub weld.

In most cases, a torque converter which is wet from transmission fluid indicates a leak at one of these areas.

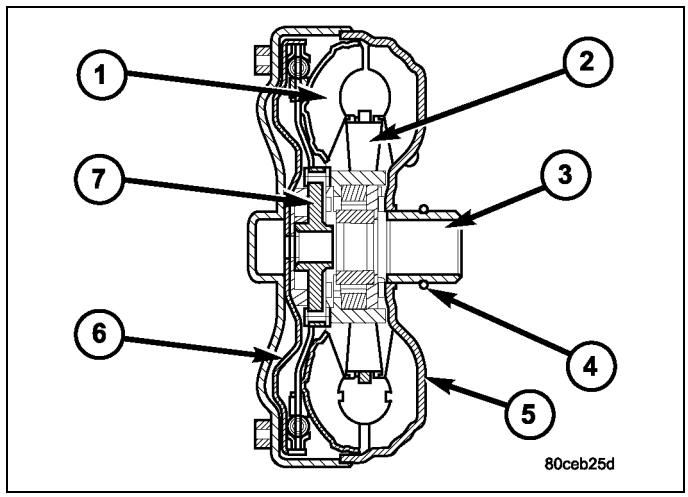

1 - TURBINE ASSEMBLY	5 - IMPELLER ASSEMBLY
2 - STATOR	6 - CONVERTER CLUTCH PISTON
3 - CONVERTER HUB	7 - TURBINE HUB
4 - O-RING (IF EQUIPPED)	

Standard Procedure

STANDARD PROCEDURE - ALUMINUM THREAD REPAIR

Damaged or worn threads in the aluminum transmission case and valve body can be repaired by the use of Heli-Coils™, or equivalent. This repair consists of drilling out the worn-out damaged threads. Then tap the hole with a special Heli-Coil™ tap, or equivalent, and installing a Heli-Coil™ insert, or equivalent, into the hole. This brings the hole back to its original thread size.

Heli-Coil™, or equivalent, tools and inserts are readily available from most automotive parts suppliers.

DRIVE LEARN - RFE TRANSMISSIONS

When a transmission is repaired and a Quick Learn procedure has been performed on the Transmission Control Module (TCM), the following Drive Learn procedure can be performed to fine tune any shifts which are particularly objectionable.

NOTE: It is not necessary to perform the complete Drive Learn procedure every time the TCM is Quick Learned. Perform only the portions which target the objectionable shift.

LEARN A SMOOTH 1ST NEUTRAL TO DRIVE SHIFT

Perform this procedure only if the complaint is for a delayed or harsh shift the first time the transmission is put into gear after the vehicle is allowed to set with the engine not running for at least 10 minutes. Use the following steps to have the TCM learn the 1st N-D UD CVI.

NOTE: The transmission oil temperature must be between 80 - 110°F (27 - 43°C).

1. Start the engine only when the engine and ignition have been off for at least ten (10) minutes.
2. With the vehicle at a stop and the service brake applied, record the 1st N-D UD CVI while performing a Neutral to Drive shift. The 1st N-D UD CVI accounts for air entrapment in the UD clutch that may occur after the engine has been off for a period of time.
3. Repeat Step #1 and Step #2 until the recorded 1st N-D UD CVI value stabilizes.

NOTE: It is important that this procedure be performed when the transmission temperature is between 80 - 110°F (27 - 43°C). If this procedure takes too long to complete fully for the allowed transmission oil temperature, the vehicle may be returned to the customer with an explanation that the shift will improve daily during normal vehicle usage. The TCM also learns at higher oil temperatures, but these values (line pressure correction values) are not available for viewing on the scan tool.

LEARN A SMOOTH NEUTRAL TO DRIVE GARAGE SHIFT

Perform this procedure if the complaint is for a delayed or harsh shift when the transmission is put into gear after the vehicle has had its first shift. Use the following steps to have the TCM learn the Norm N-D UD CVI.

NOTE: The transmission oil temperature must be between 80 - 110°F (27 - 43°C) to learn the UD CVI. Additional learning occurs at temperatures as low as 0°F and as high as 200°F. This procedure may be performed at any temperature that experiences poor shift quality. Although the UD CVI may not change, shift quality should improve.

1. Start the vehicle engine and shift to drive.
2. Move the vehicle forward to a speed of at least 16 km/h (10 MPH) and come to a stop. This ensures no air is present in the UD hydraulic circuit.
3. Perform repeated N-D shifts at a stop while pausing in Neutral for at least 2-3 seconds and monitor Norm N-D UD CVI volume until the value stabilizes. The value will change during the N-D shift. This is normal since the UD value is different for the N-D shift then the normal value shown which is used for 4-3 coastdown and kickdowns. Perform repeated shifts in this temperature range until the Norm N-D UD CVI value stabilizes and the N-D shifts become smooth.

LEARN THE 1ST 2-3 SHIFT AFTER A RESTART OR SHIFT TO REVERSE

Use the following steps to have the TCM learn the 1st 2-3 shift OD CVI.

NOTE: The transmission oil temperature must be above 80°F (27°C).

1. With the vehicle engine running, select reverse gear for over 2 seconds.
2. Shift the transmission to Drive and accelerate the vehicle from a stop at a steady 15 degree throttle opening and perform a 2-3 shift while noting the 1st 2-3 OD CVI.
3. Repeat Step #1 and Step #2 until the 1st 2-3 upshift becomes smooth and the 1st 2-3 OD CVI stabilizes.

LEARN A SMOOTH 2-3 AND 3-4 UPSHIFT

NOTE: The transmission oil temperature must be above 110°F (43°C).

Use the following steps to have the TCM learn the OD and 4C CVI's.

1. Accelerate the vehicle from a stop at a steady 15 degree throttle opening and perform multiple 1-2, 2-3, and 3-4 upshifts. The 2nd 2-3 shift following a restart or shift to reverse will be shown during the shift as a value between the 1st 2-3 OD CVI and the normal OD CVI. Updates to the normal OD CVI will occur after the 2nd shift into 3rd gear, following a restart or shift to reverse.
2. Repeat Step #1 until the 2-3 and 3-4 shifts become smooth and the OD and 4C CVI become stable.

LEARN A SMOOTH 4-3 COASTDOWN AND PART THROTTLE 4-3 KICKDOWN

NOTE: The transmission oil temperature must be above 110°F (43°C).

Use the following steps to have the TCM learn the UD shift volume.

1. At a vehicle speed between 64-97 km/h (40-60 MPH), perform repeated 4-3 kickdown shifts.
2. Repeat Step #1 until the UD volume becomes somewhat stable and the shift becomes smooth.

LEARN A SMOOTH 1-2 UPSHIFT AND 3-2 KICKDOWN

Use the following steps to have the TCM learn the 2C shift volume.

NOTE: The transmission oil temperature must be above 110°F (43°C).

1. With a vehicle speed below 48 km/h (30 MPH) and the transmission in 3rd gear, perform multiple 3-2 kickdowns.
2. Repeat Step #1 until the 3-2 kickdowns become smooth and the 2C CVI becomes stable.

LEARN A SMOOTH MANUAL 2-1 PULLDOWN SHIFT AS WELL AS A NEUTRAL TO REVERSE SHIFT

NOTE: The transmission oil temperature must be above 110°F (43°C).

Use the following steps to have the TCM learn the LR volume.

1. With the vehicle speed around 40-48 km/h (25-30 MPH) in Manual 2nd, perform manual pulldowns to Low or 1st gear at closed throttle.
2. Repeat Step #1 until the LR CVI becomes stable and the manual 2-1 becomes smooth.

LEARN A SMOOTH NEUTRAL TO REVERSE SHIFT

NOTE: The transmission oil temperature must be above 110°F (43°C).

1. With the vehicle at a stop, perform Neutral to Reverse shifts until the shift is smooth. An unlearned Neutral to Reverse shift may be harsh or exhibit a double bump.
2. If any of the shifts are still not smooth after the clutch volume stabilizes, an internal transmission problem may be present.

LEARN A SMOOTH 4-5 UPSHIFT

NOTE: The transmission oil temperature must be above 110°F (43°C).

Use the following steps to have the TCM learn the Alt 2C CVI.

1. Accelerate the vehicle through 88 km/h (55mph) at a steady 10-15 degree throttle opening and perform multiple 4-5 upshifts.
2. Repeat Step #1 until the 4-5 shift become smooth and theAlt 2C CVI become stable. There is a separate 2C volume used and learned for 4-5 shifts, 2CA. It is independent of the 2C CVI learned on 3-2 kickdowns.

TCM QUICK LEARN - RLE AND RFE TRANSMISSIONS

The quick learn procedure requires the use of the scan tool.

This program allows the electronic transmission system to recalibrate itself. This will provide the proper transmission operation. The quick learn procedure should be performed if any of the following procedures are performed:

- Transmission Assembly Replacement.
- Transmission Control Module Replacement.
- Solenoid Pack Replacement.
- Clutch Plate and/or Seal Replacement.
- Valve Body Replacement or Recondition.

To perform the Quick Learn Procedure, the following conditions must be met:

- The brakes must be applied.
- The engine speed must be above 500 rpm.
- The throttle angle (TPS) must be less than 3 degrees.
- The shift lever position must stay in PARK until prompted to shift to overdrive.
- The shift lever position must stay in overdrive after the Shift to Overdrive prompt until the scan tool indicates the procedure is complete.
- The calculated oil temperature must be above 60° and below 200°.

Removal

1. Disconnect the negative battery cable.
2. Raise and support the vehicle
3. Remove any necessary skid plates. (Refer to 13 - Frame and Bumpers/Frame/PLATE, Skid - Removal)
4. Mark propeller shaft and axle companion flanges for assembly alignment.
5. Remove the rear propeller shaft
6. If necessary, remove the front propeller shaft.
7. Remove the engine (1) to transmission (3) structural dust cover (2) .

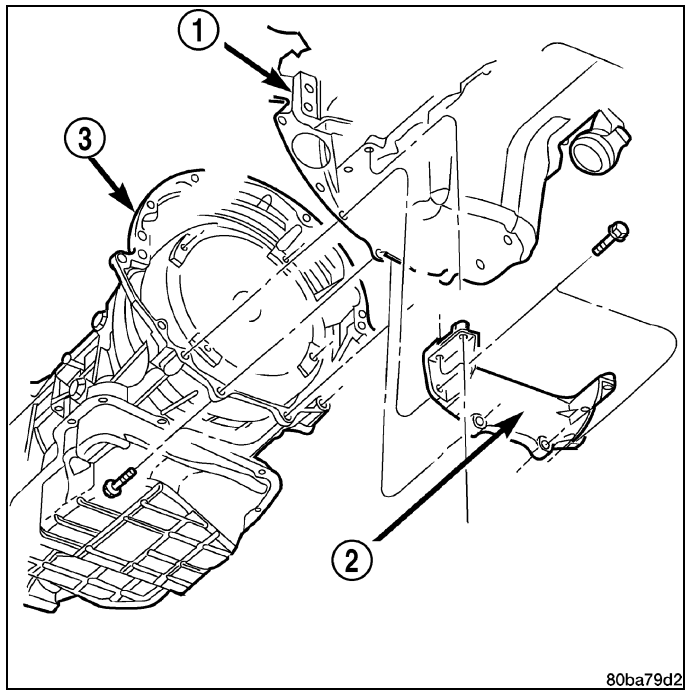

8. Remove the exhaust support bracket from the rear of the transmission.
9. Disconnect and lower or remove any necessary exhaust components.
10. Remove the starter motor.
11. Rotate crankshaft in clockwise direction until converter bolts are accessible. Then remove bolts one at a time. Rotate crankshaft with socket wrench on dampener bolt.
12. Disengage the output speed sensor connector from the output speed sensor (2) .

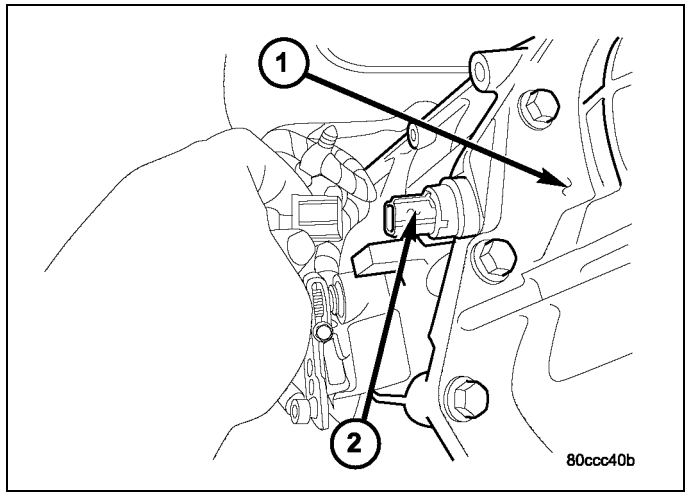

13. Disengage the input speed sensor connector from the input speed sensor (2) .

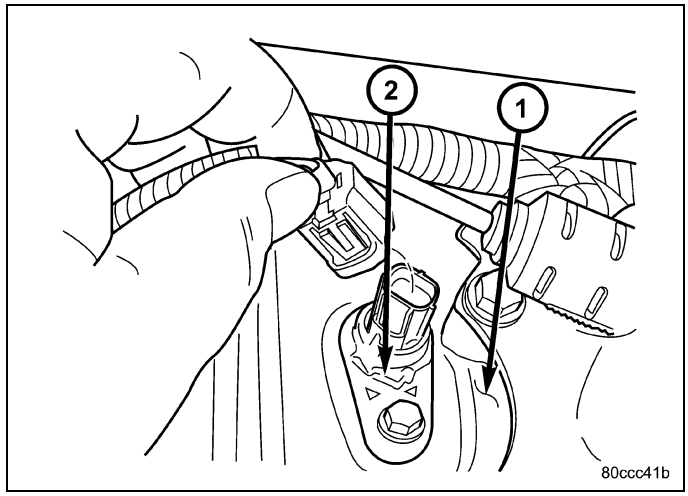

14. Disengage the transmission solenoid/TRS assembly connector from the transmission solenoid/TRS assembly (2) .

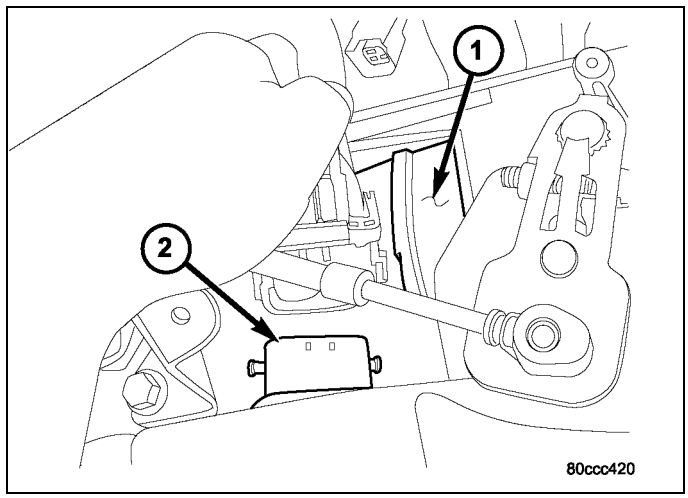

15. Disengage the line pressure sensor connector from the line pressure sensor (2) .

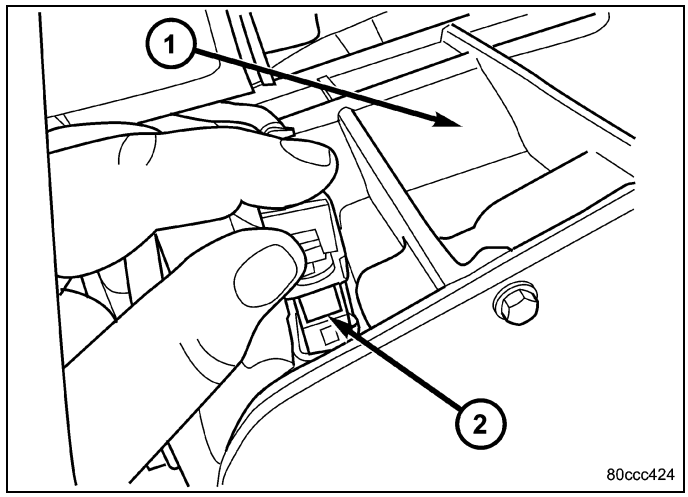

16. Disconnect gearshift cable (1) from transmission manual valve lever (3) .

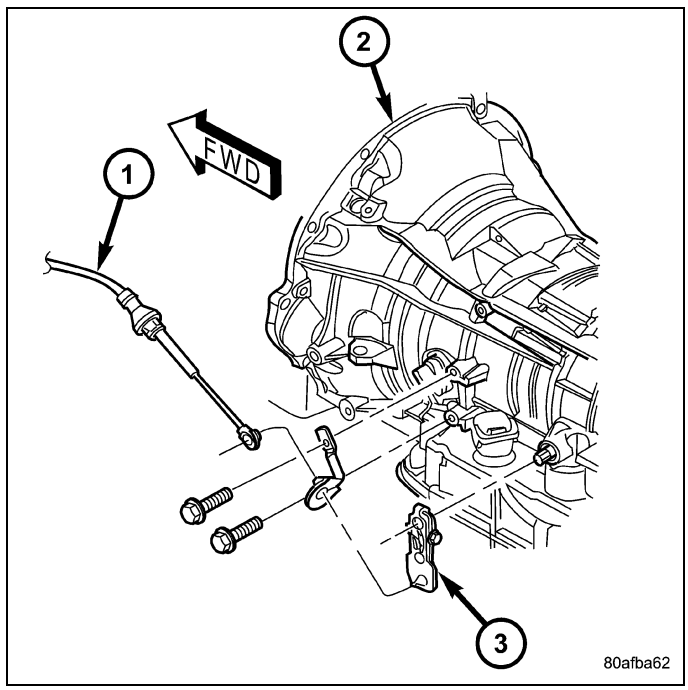

17. Disconnect the transmission vent hose from the transmission.
18. Support rear of engine with safety stand or jack.
19. Remove bolts securing rear support and cushion to transmission and crossmember.
20. Raise transmission slightly with service jack to relieve load on crossmember and supports.
21. Remove the cross member
22. If necessary, remove transfer case.

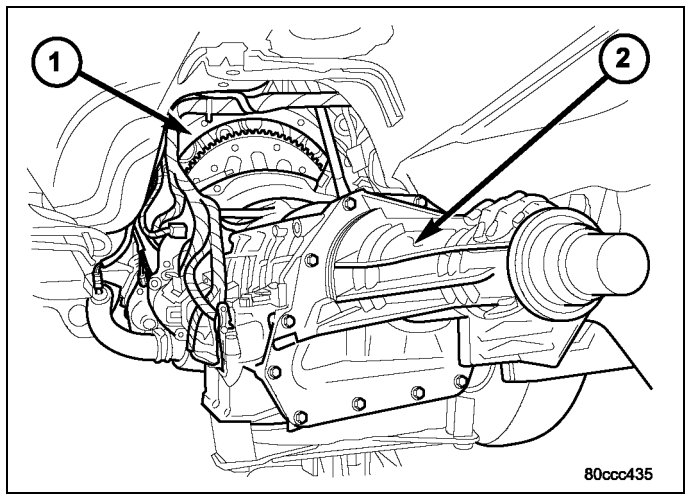

NOTE: When disconnecting the transmission oil cooler lines, it is necessary to replace the line clip that is located on the oil pan stud. The retention force of the clip is severely degraded upon removal.

23. Disconnect transmission fluid cooler lines at transmission fittings and clips.
24. Remove all remaining converter housing bolts.
25. Remove the transmission dip stick tube.
26. Carefully work transmission and torque converter assembly rearward off engine block dowels.
27. Hold torque converter in place during transmission removal.
28. Lower transmission (2) and remove assembly from under the vehicle.
29. To remove torque converter, carefully slide torque converter out of the transmission.

Disassembly

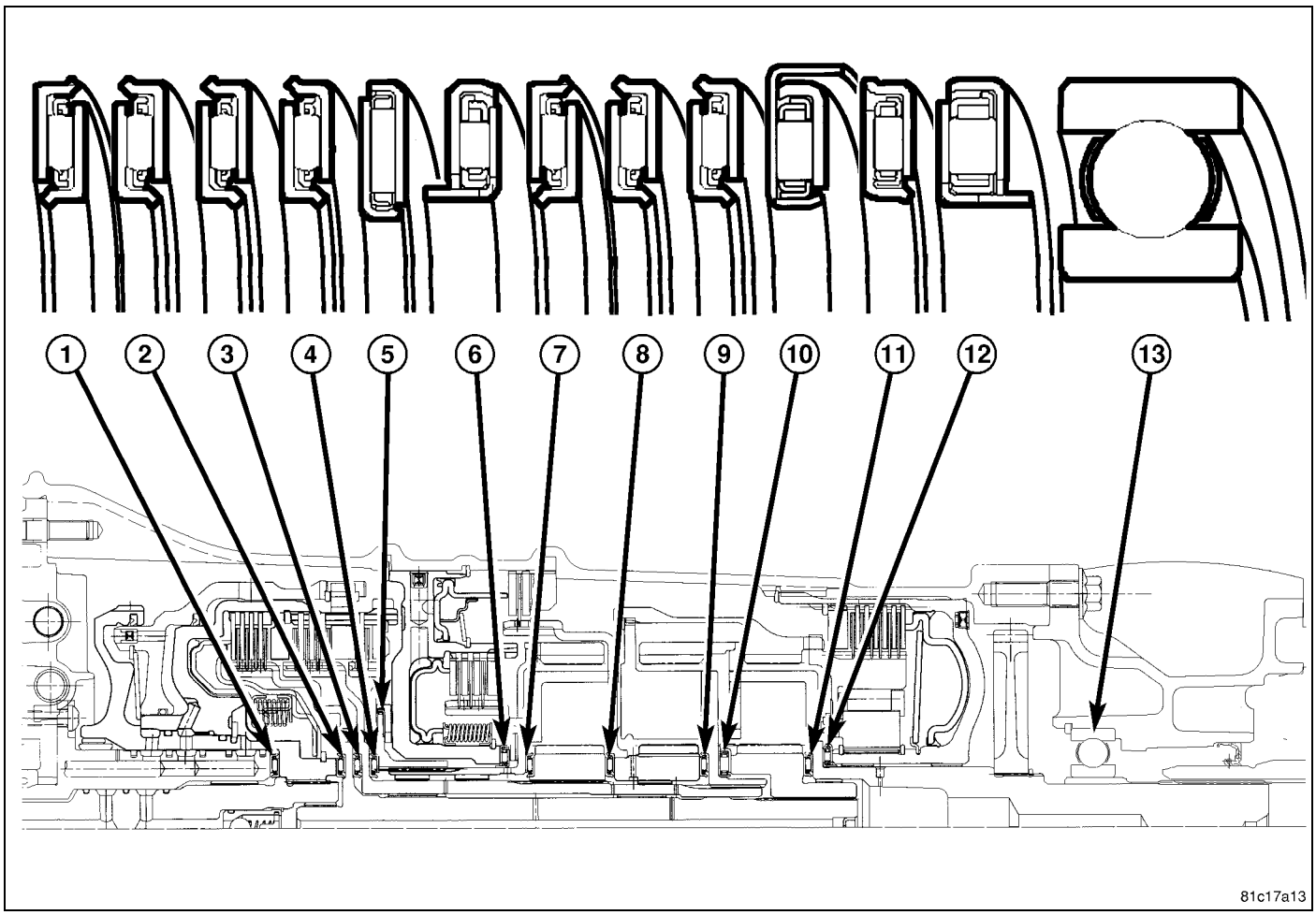

545RFE BEARING ORIENTATION

1 - THRUST BEARING NO. 1
2 - THRUST BEARING NO .2
3 - THRUST BEARING NO. 3
4 - THRUST BEARING NO. 4
5 - THRUST BEARING NO. 5
6 - THRUST BEARING NO. 6
7 - THRUST BEARING NO. 7
8 - THRUST BEARING NO. 8
9 - THRUST BEARING NO. 9
10 - THRUST BEARING NO. 10
11 - THRUST BEARING NO. 11
12 - THRUST BEARING NO. 12
13 - OUTPUT SHAFT BEARING

1. Drain fluid from transmission.
2. Clean exterior of transmission with suitable solvent or pressure washer.
3. Remove the torque converter from the transmission.
4. Remove the manual shift lever (1) from the transmission.

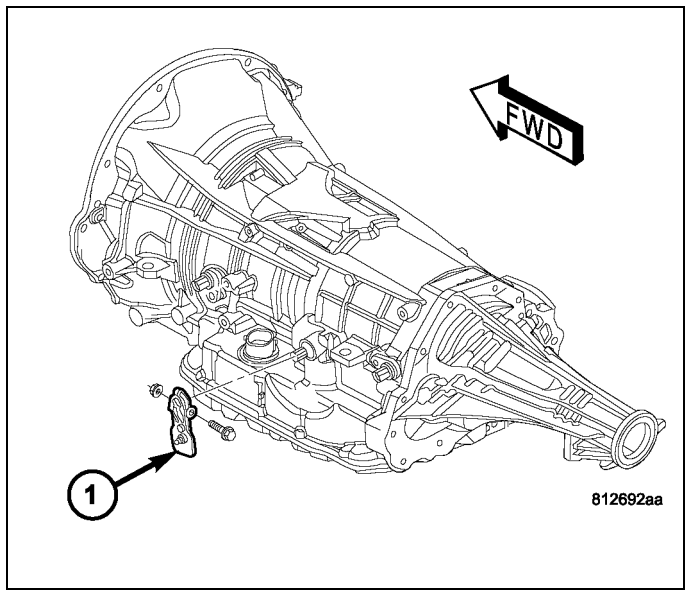

5. Remove the input (3), output (1), and line pressure sensors (2) from the transmission case.
6. Inspect the ends of the sensors for debris, which may indicate the nature of the transmission failure.

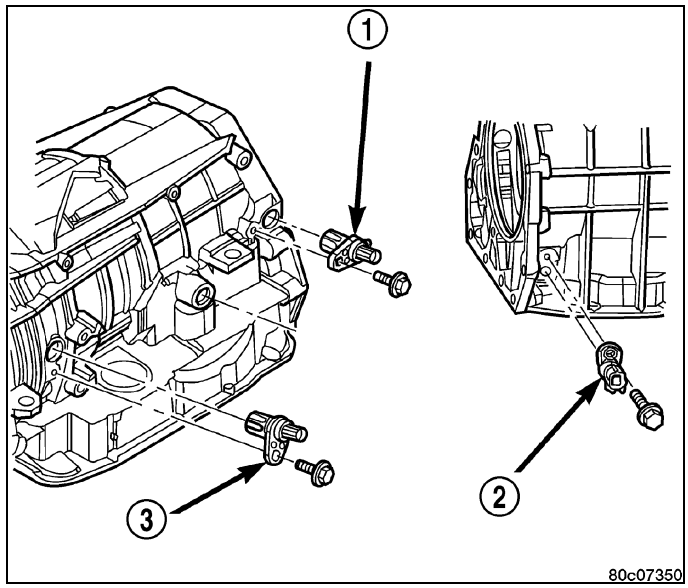

7. Install Support Stand 8257 (1) onto the transmission case.

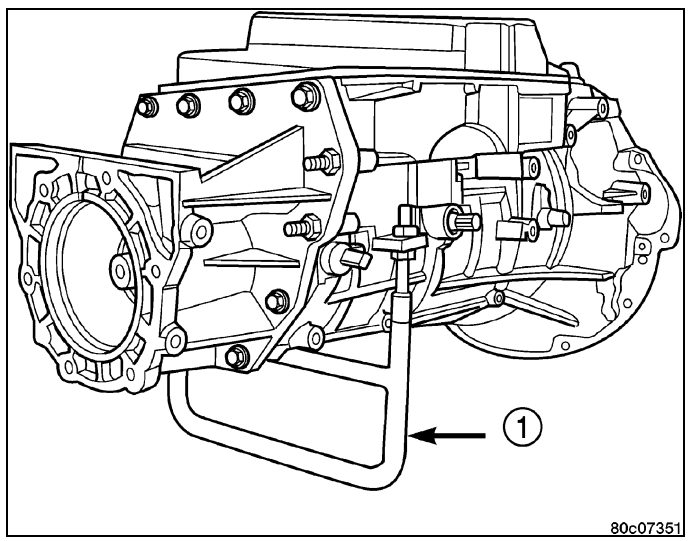

8. Using Adapter 8266-1 from End-Play Tool Set 8266B (1) and Dial Indicator C-3339A (2), measure and record the input shaft end-play.

NOTE: When measuring the input shaft end-play, two "stops" will be felt. When the input shaft is pushed inward and the dial indicator zeroed, the first "stop" felt when the input shaft is pulled outward is the movement of the input shaft in the input clutch housing hub. This value should not be included in the end-play measured value and therefore must be recorded and subtracted from the dial indicator reading.

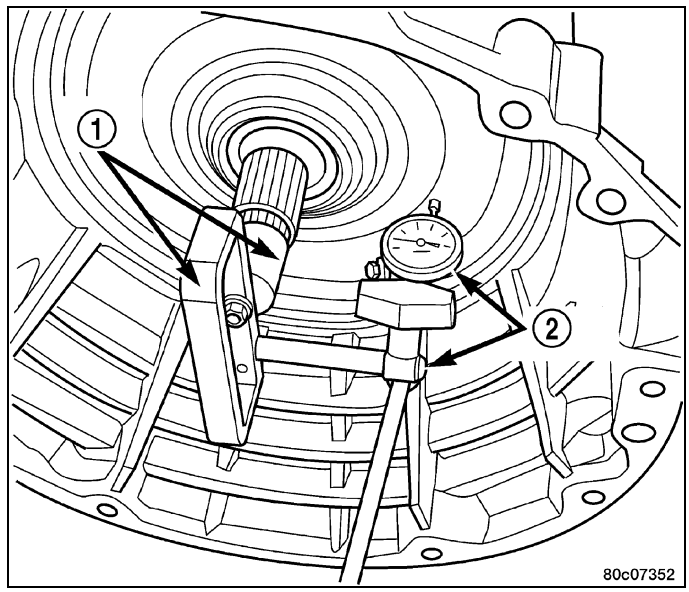

9. Remove the bolts holding the transmission extension/adapter housing to the transmission case.
10. Remove the extension/adapter housing from the transmission case.
11. Using Alignment Plate 8261 (1), Adapter 8266-17 from End-Play Tool Set 8266B (2) and Dial Indicator C-3339A (3), measure and record the output shaft end-play.

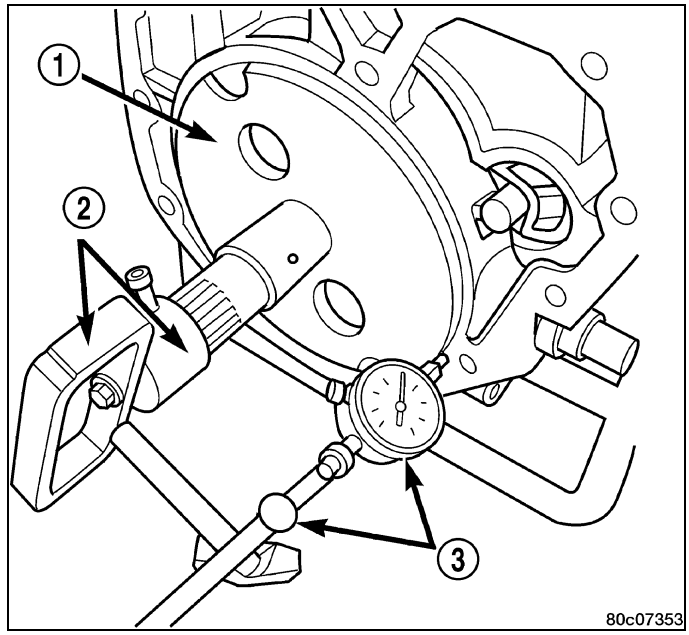

12. Remove the bolts holding the transmission oil pan to the transmission case.
13. Remove the transmission oil pan from the transmission case.
14. Remove the primary oil filter (1) and the oil cooler return filter (2).

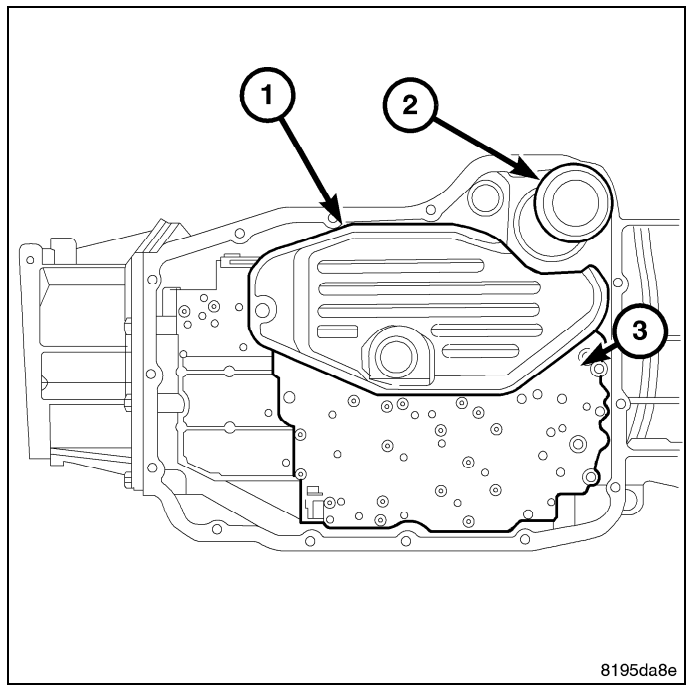

15. Remove the bolts (1) holding the valve body to the transmission case.
16. Remove the valve body from the transmission case.

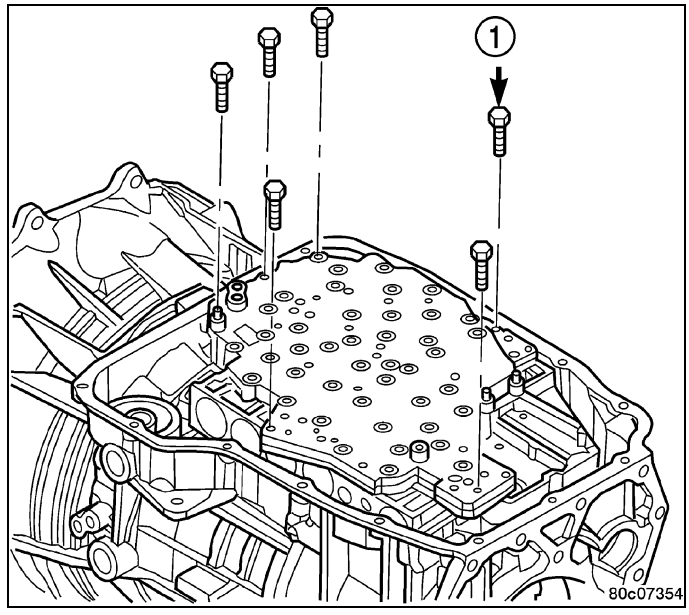

17. Remove the outer snap-ring (3) securing the transmission front cover (1) into the transmission case.
18. Reaching through a case opening in the valve body area with a long blunted tool, remove the transmission front cover (1) from the transmission case.

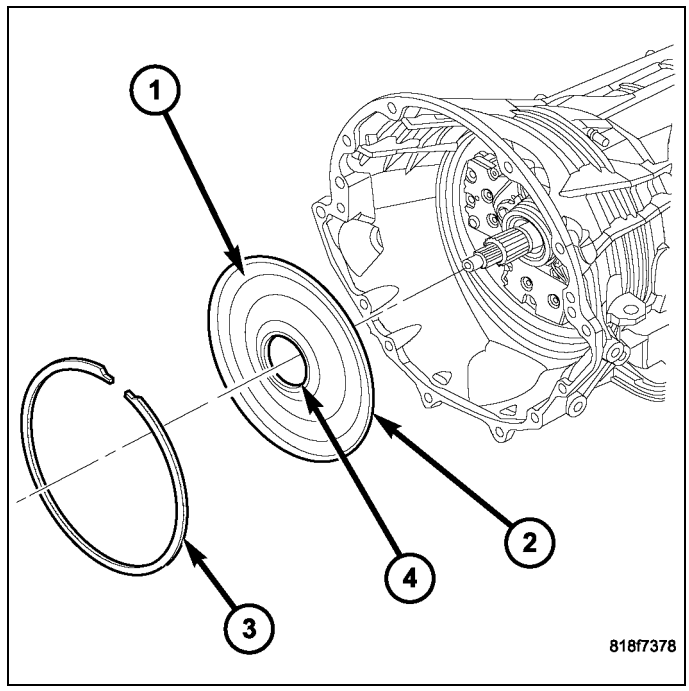

19. Remove the bolts (1) holding the oil pump into the transmission case.
20. Remove the oil pump (2). Hold inward on the input shaft to prevent pulling the input clutch assembly with the oil pump.

CAUTION: If the input shaft is not held during oil pump removal, the input clutch assembly will attempt to move forward with the oil pump and the numbers 2, 3, or 4 bearings inside the input clutch assembly may become dislodged.

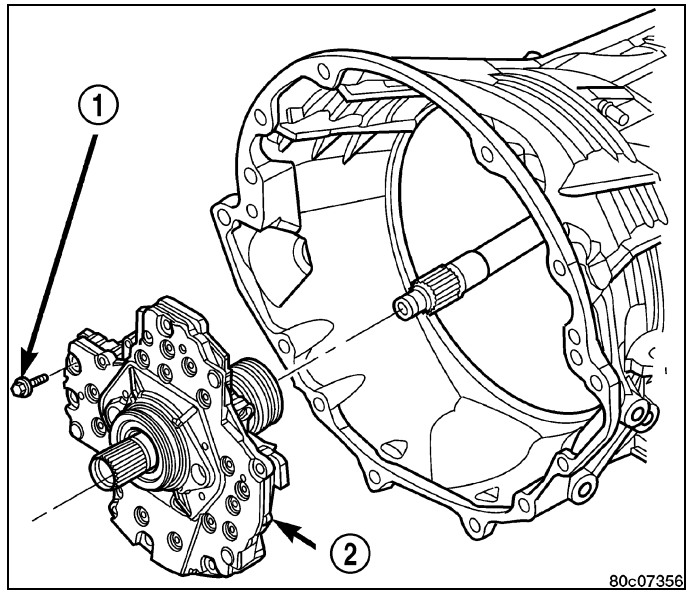

21. Remove the number 1 thrust bearing (4) from the input clutch assembly.
22. Remove the input clutch assembly (3) from the transmission case.
23. Remove the number 5 thrust bearing (1) and selective thrust plate (2) from the input clutch assembly (3) , or the 4C clutch retainer/bulkhead.

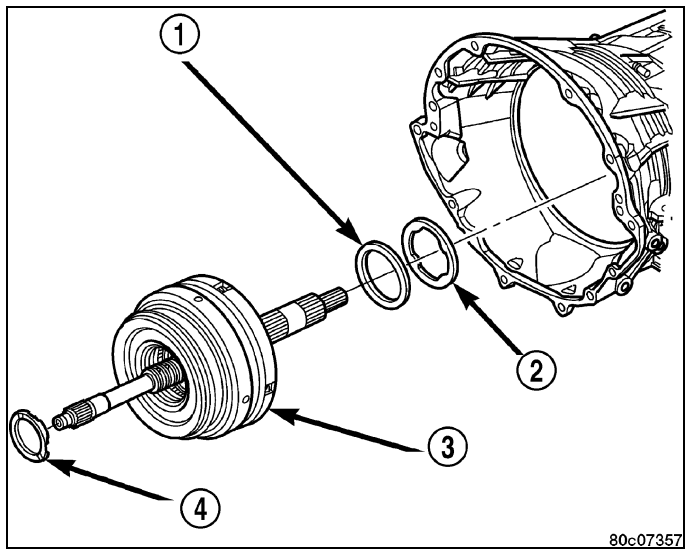

24. Remove the 4C clutch retainer/bulkhead tapered snap-ring (1) from the transmission case.
25. Remove the 4C clutch retainer/bulkhead (2) from the transmission case.

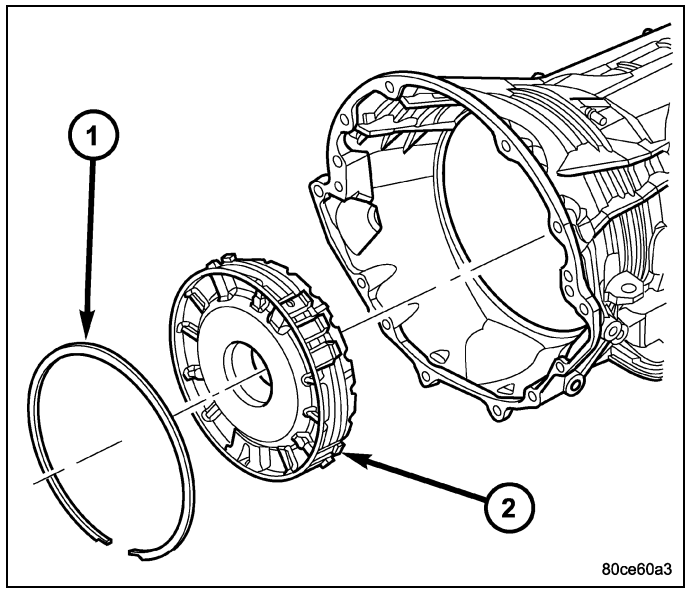

26. Remove the front 2C clutch pack snap-ring (1) from the transmission case.
27. Remove the 2C clutch pack (2, 3, 4) from the transmission case.

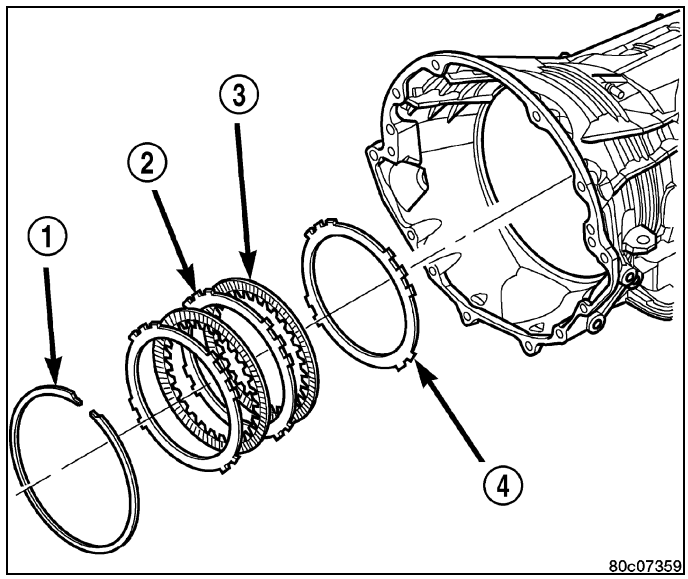

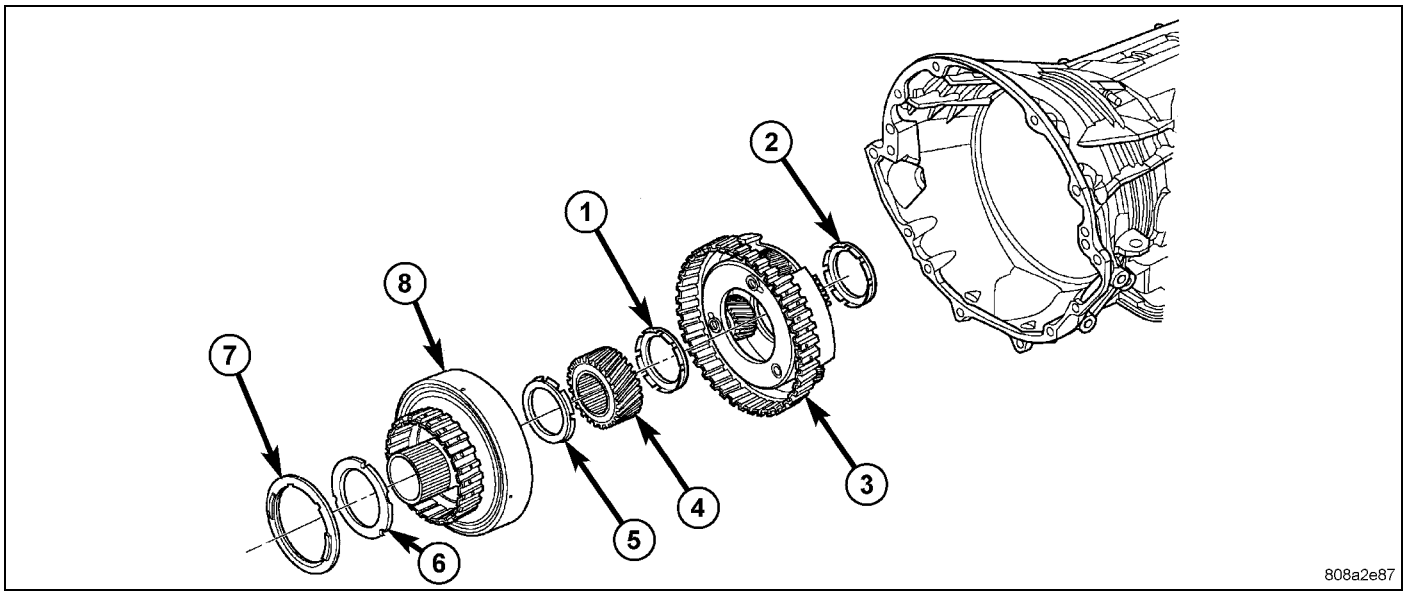

Remove Reaction Annulus and Carrier

1 - THRUST BEARING NUMBER 8	5 - THRUST BEARING NUMBER 7
2 - THRUST BEARING NUMBER 9	6 - THRUST PLATE (SELECT)
3 - REACTION PLANETARY CARRIER	7 - THRUST BEARING NUMBER 6
4 - REACTION SUN GEAR	8 - REACTION ANNULUS

28. Remove the rear selective thrust plate (6) and number 6 thrust bearing (7) from the reaction annulus (8).
29. Remove the reaction annulus (8) from the reaction planetary carrier (3).
30. Remove the number 7 thrust bearing (5).
31. Remove the reaction sun gear (4).
32. Remove the number 8 thrust bearing (1) from the reaction planetary carrier (3).
33. Remove the reaction planetary carrier (3) . Note that this planetary gear set has three pinion gears.
34. Remove the number 9 thrust bearing (2) from the reverse planetary gear set.
35. Remove the snap-ring (1) holding the park sprag gear onto the output shaft.

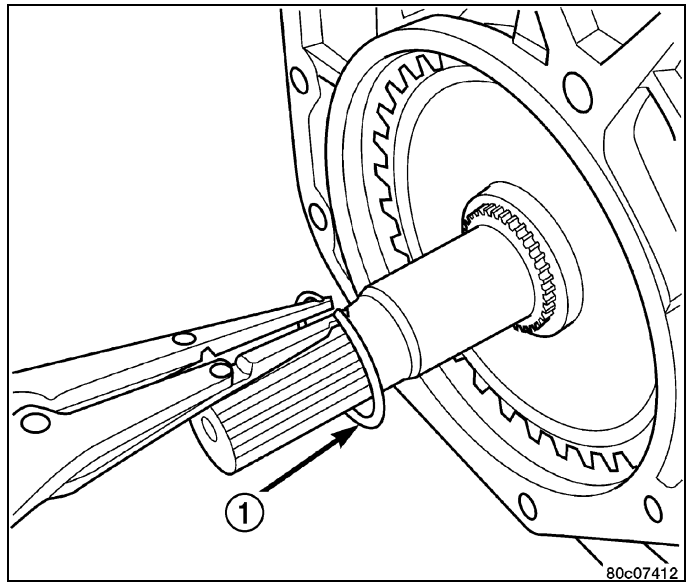

36. Remove the park sprag gear (1) from the output shaft.

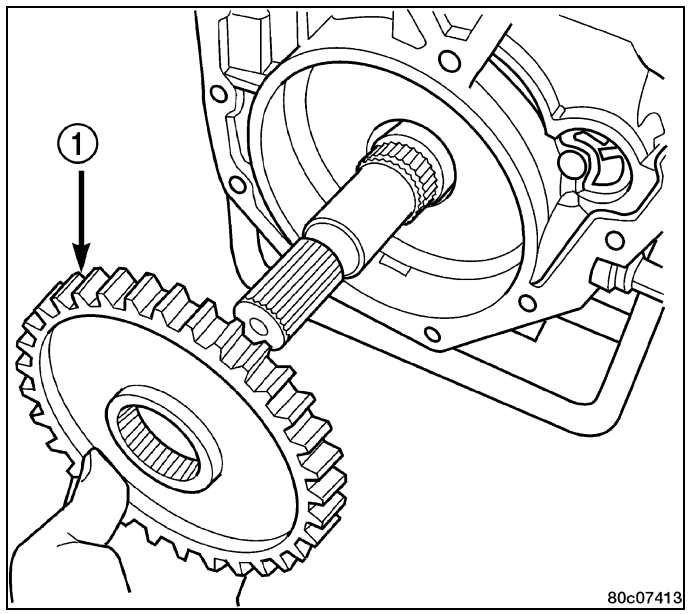

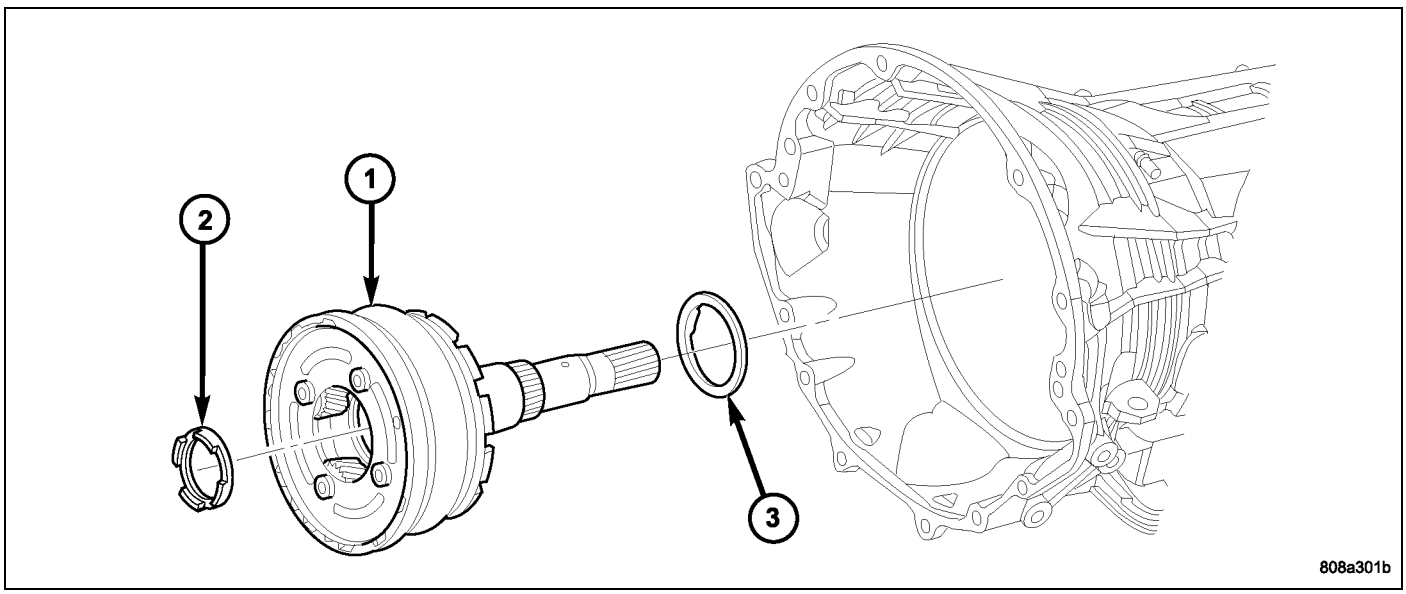

37. Remove the input/reverse planetary assembly (1).
38. Remove the number 12 thrust bearing (3) from the input/reverse planetary assembly (1).

39. Remove the snap-ring (2) holding the low/reverse clutch retainer (1) into the transmission case.
40. Remove the low/reverse clutch retainer (1) from the transmission case.

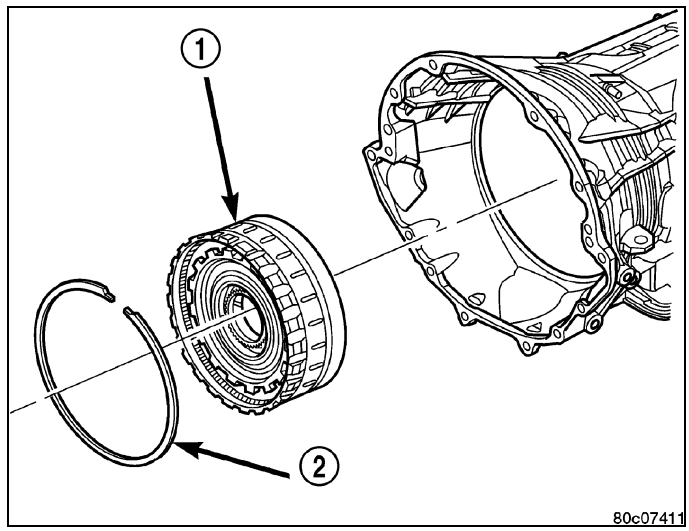

41. Remove the park rod (7) and e-clip.
42. Remove the park rod guide snap-ring (2).
43. Remove the park rod guide (1).
44. Remove the park pawl pivot shaft (3), park pawl (5), and spring (4).
45. Remove the manual selector shaft (6).
46. Remove the manual selector shaft seal.
47. Remove the dipstick tube seal.

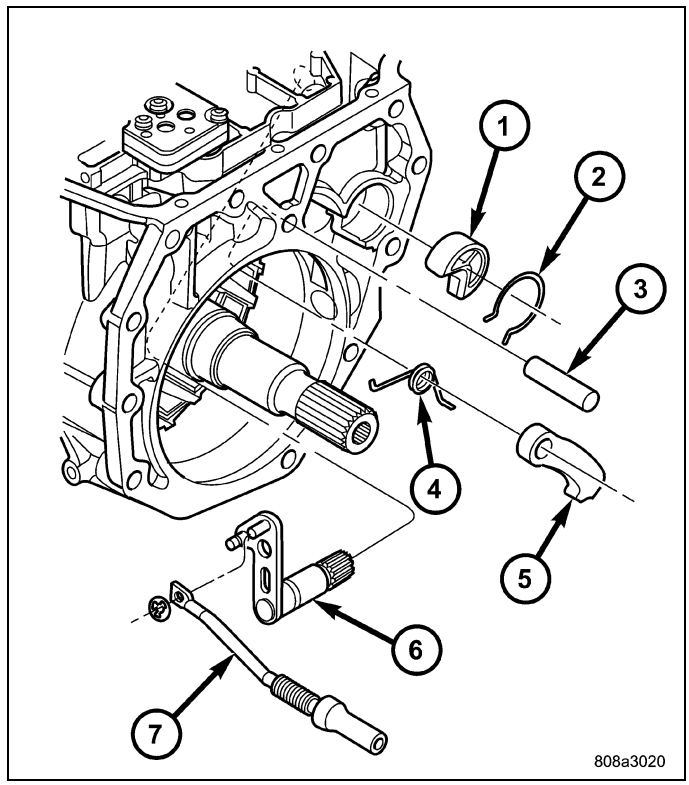

Cleaning

The use of crocus cloth is permissible where necessary, providing it is used carefully. When used on shafts, or valves, use extreme care to avoid rounding off sharp edges. Sharp edges are vital as they prevent foreign matter from getting between the valve and valve bore.

Do not reuse oil seals, gaskets, seal rings, or O-rings during overhaul. Replace these parts as a matter of course. Also do not reuse snap rings or E-clips that are bent or distorted. Replace these parts as well.

Lubricate transmission parts with Mopar® ATF +4, Automatic Transmission Fluid, during overhaul and assembly. Use petroleum jelly, Mopar® Door Ease, or Ru-Glyde to prelubricate seals, O-rings, and thrust washers. Petroleum jelly can also be used to hold parts in place during reassembly.

Clean the case in a solvent tank. Flush the case bores and fluid passages thoroughly with solvent. Dry the case and all fluid passages with compressed air. Be sure all solvent is removed from the case and that all fluid passages are clear.

NOTE: Do not use shop towels or rags to dry the case (or any other transmission component) unless they are made from lint-free materials. Lint will stick to case surfaces and transmission components and circulate

throughout the transmission after assembly. A sufficient quantity of lint can block fluid passages and interfere with valve body operation.

Inspection

Inspect the case for cracks, porous spots, worn bores, or damaged threads. Damaged threads can be repaired with Helicoil® thread inserts. However, the case will have to be replaced if it exhibits any type of damage or wear.

Assembly

NOTE: Apply trans jell or petroleum jelly to all slide portions, rolling contacts surfaces, thrust surfaces etc. to prevent burnout during initial operation. Lubricate O-rings and O-ring seals with MOPAR® ATF+4. Soak all friction disks in MOPAR® ATF+4 for at least two hours before assembly of clutch packs.

NOTE: Clean and inspect all components. Replace any components which show evidence of excessive wear or scoring.

NOTE: If the transmission assembly is being reconditioned (clutch/seal replacement) or replaced, it is necessary to perform the Quick Learn Procedure using the scan tool.(Refer to 08 - Electrical/8E - Electronic Control Modules/MODULE, Transmission Control - Standard Procedure)

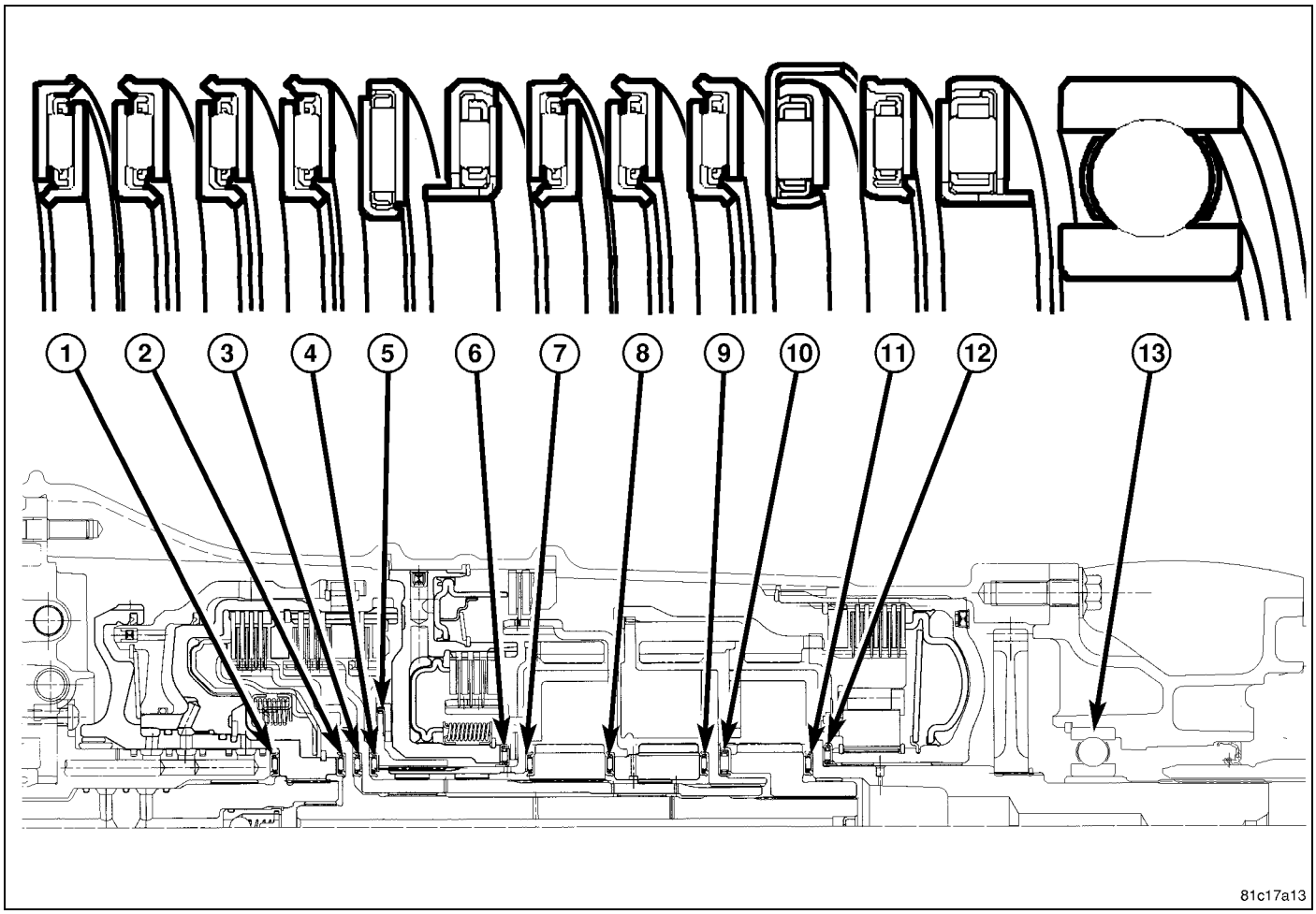

545RFE BEARING ORIENTATION

1 - THRUST BEARING NO. 1
2 - THRUST BEARING NO .2
3 - THRUST BEARING NO. 3
4 - THRUST BEARING NO. 4
5 - THRUST BEARING NO. 5
6 - THRUST BEARING NO. 6
7 - THRUST BEARING NO. 7
8 - THRUST BEARING NO. 8
9 - THRUST BEARING NO. 9
10 - THRUST BEARING NO. 10
11 - THRUST BEARING NO. 11
12 - THRUST BEARING NO. 12
13 - OUTPUT SHAFT BEARING

1. Install a new selector shaft seal (1) using Seal Installer 8253 (2).

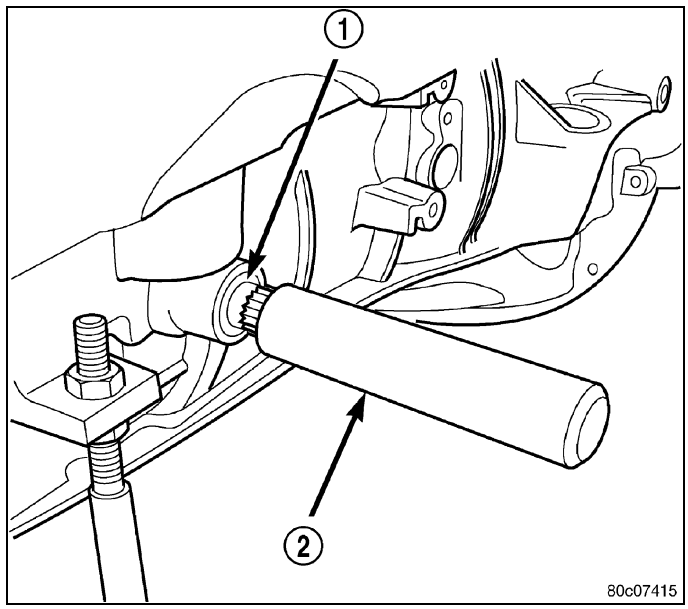

2. Install the manual selector shaft and retaining screw. Tighten the manual selector shaft retaining screw to 28 N·m (250 in.lbs.).
3. Install the manual shift lever (1) onto the manual selector shaft. Tighten the retaining cross-bolt to 16 N·m (140 in.lbs.).

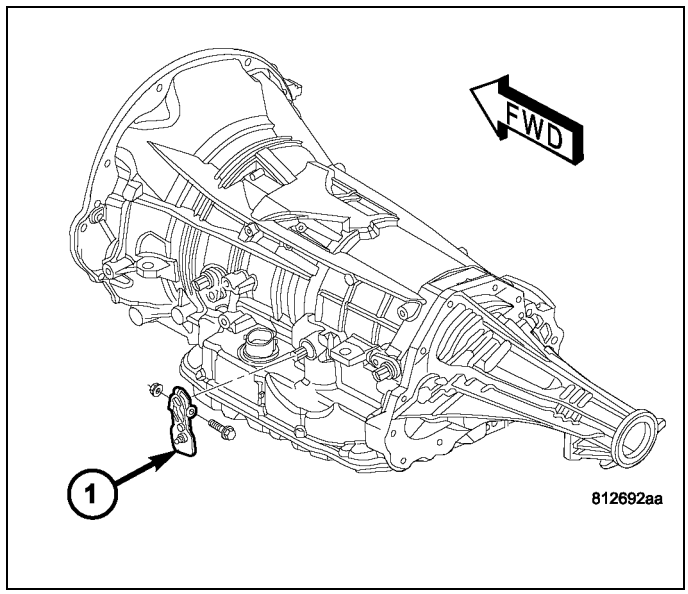

4. Install the park pawl (5), spring (4), and shaft (3).
5. Install the park rod (7) and e-clip.
6. Install the park rod guide (1) and snap-ring (2).

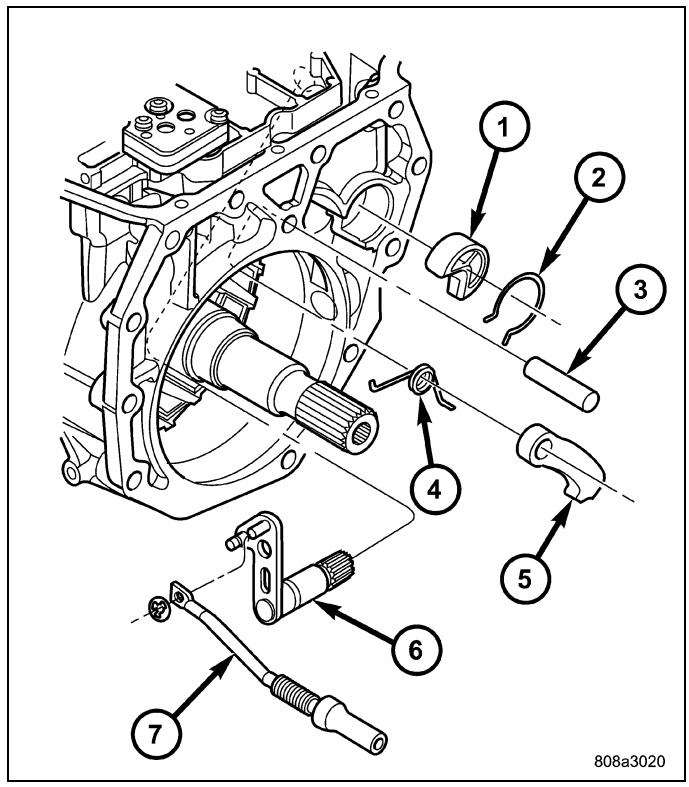

7. Install a new fill tube seal (2) using Seal Installer 8254 (1).

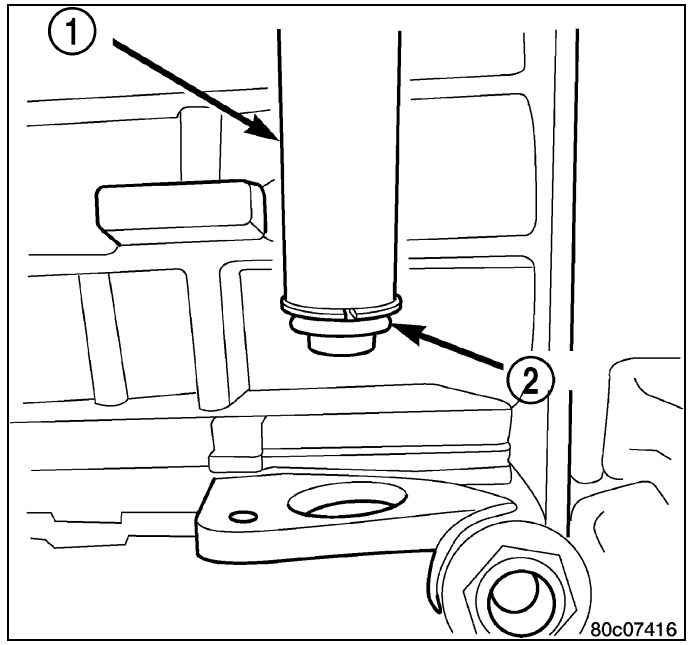

NOTE: Before final assembly of transmission centerline, the 2C/4C clutch components should be installed into position and measured as follows:

8. Install the 2C reaction plate (4) with the beveled edge down (rearward) into the transmission case.
9. Install the 2C clutch pack (2, 3) into the transmission case.
10. Install the flat 2C clutch snap-ring (1) into the transmission case.

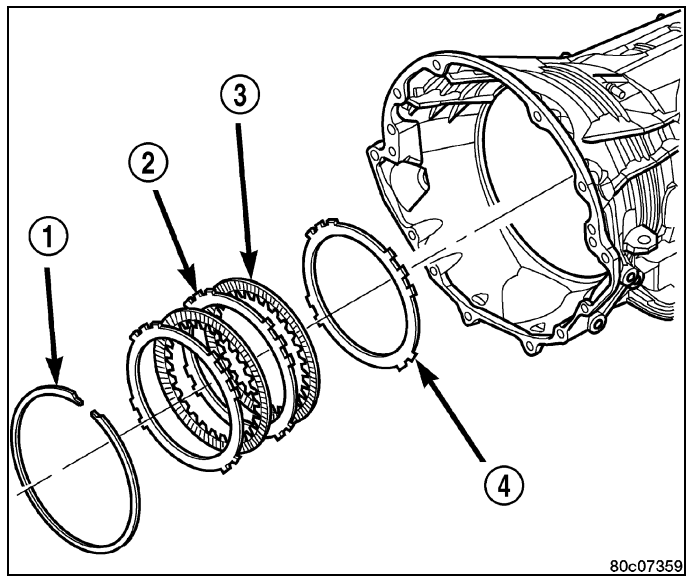

11. Install the 4C retainer/bulkhead (2) into the transmission case. Make sure that the oil feed holes are pointing toward the valve body area.
12. Install the 4C retainer/bulkhead tapered snap-ring (1) into the transmission case. Make sure that the open ends of the snap-ring are located in the case opening toward the valve body area.
13. Using a feeler gauge through the opening in the rear of the transmission case, measure the 2C clutch pack clearance between the 2C reaction plate and the transmission case at four different points. The average of these measurements is the 2C clutch pack clearance. The correct clutch clearance is 0.455-1.335 mm (0.018-0.053 in.). The reaction plate is not selective. If the clutch pack clearance is not within specification, the reaction plate, all the friction discs, and steels must be replaced.
14. Remove the 4C retainer/bulkhead and all of the 2C clutch components from the transmission case.

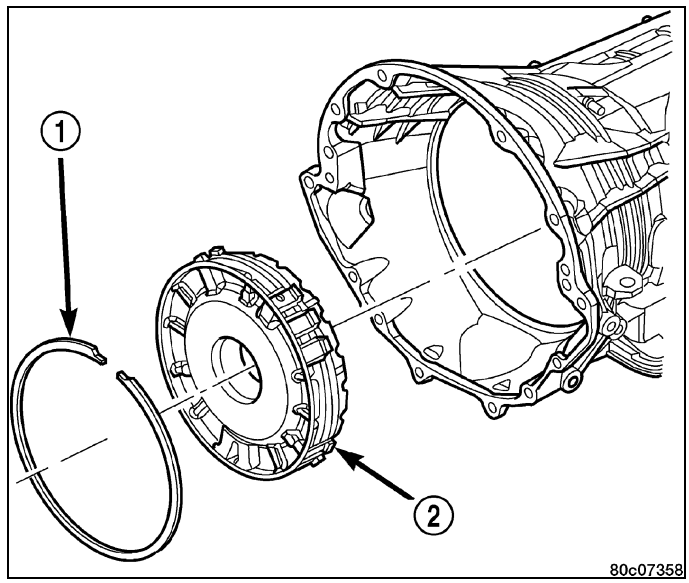

15. Install the low/reverse clutch assembly (1). Make sure that the oil feed hole points toward the valve body area and that the bleed orifice is aligned with the notch in the rear of the transmission case.
16. Install the snap-ring (2) to hold the low/reverse clutch retainer into the transmission case. The snap-ring is tapered and must be installed with the tapered side forward. Once installed, verify that the snap-ring is fully seated in the snap-ring groove.
17. Air check the low/reverse clutch and verify correct overrunning clutch operation.

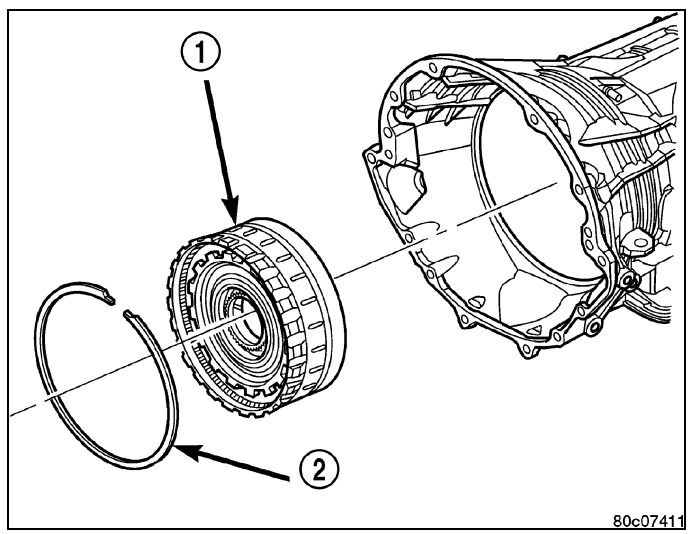

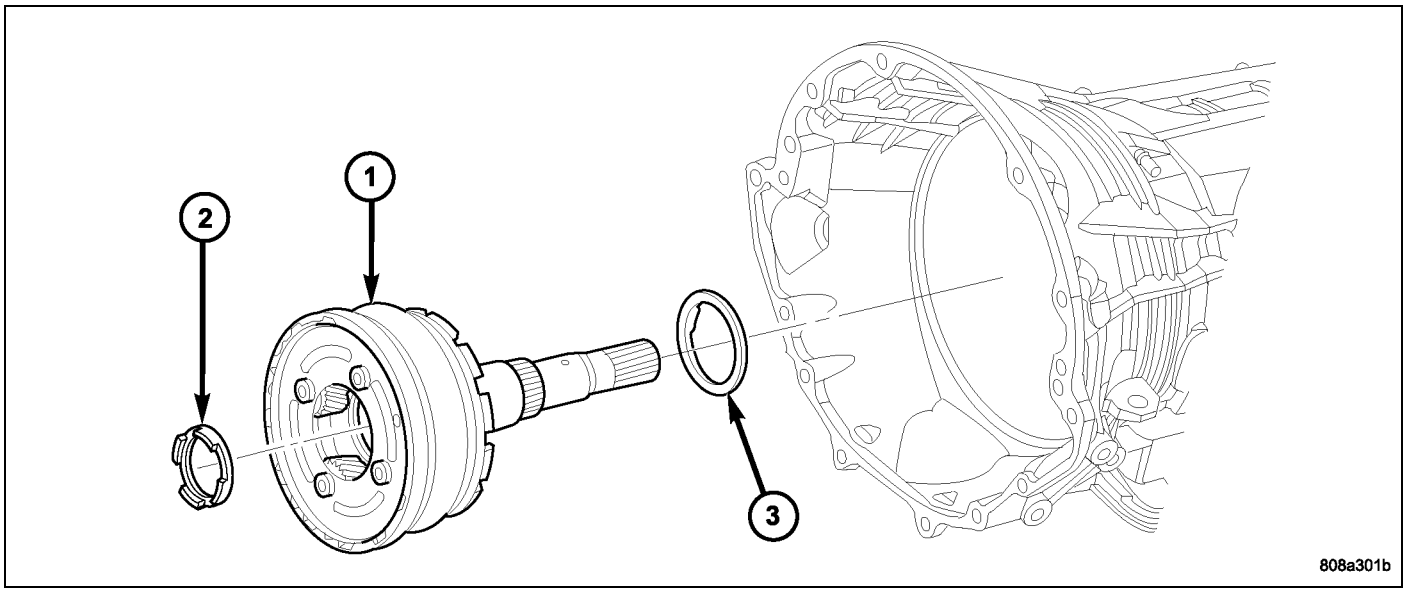

18. Install the number 12 thrust bearing (3) over the output shaft and against the rear planetary gear set. The flat side of the bearing goes toward the planetary gearset and the raised tabs on the inner race should face the rear of the transmission.
19. Install the reverse/input planetary assembly (1) through the low/reverse clutch assembly.
20. Install the park sprag gear (1) onto the output shaft.

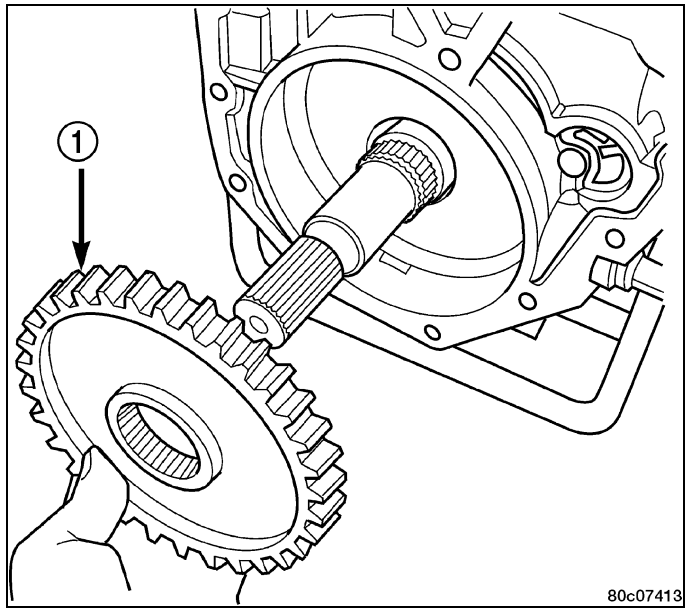

21. Install the snap-ring (1) to hold the park sprag onto the output shaft.

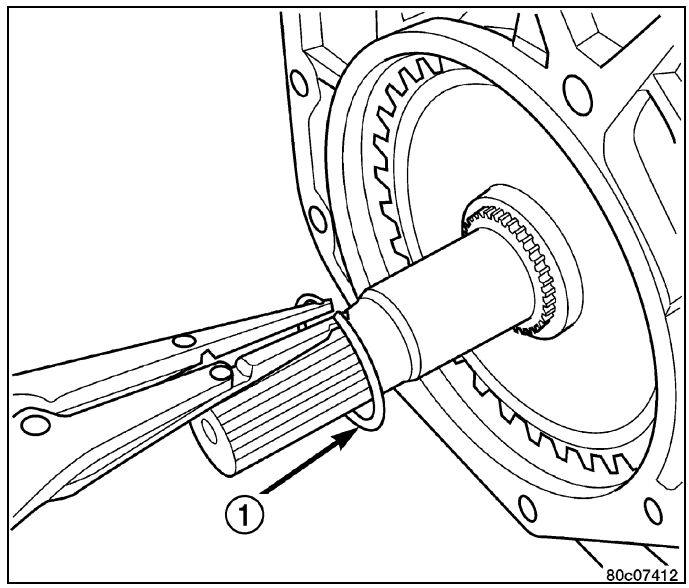

22. Install the 2C reaction plate (4) with the beveled edge down (rearward) into the transmission case.
23. Install the 2C clutch pack (2, 3, 4) into the transmission case.

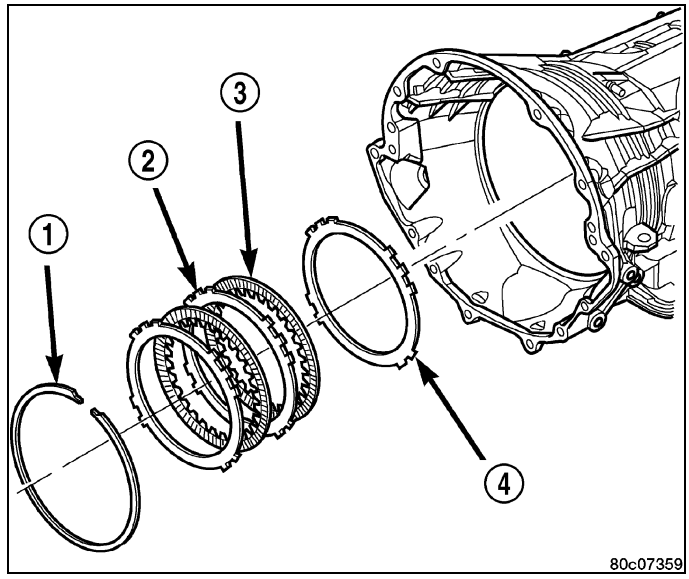

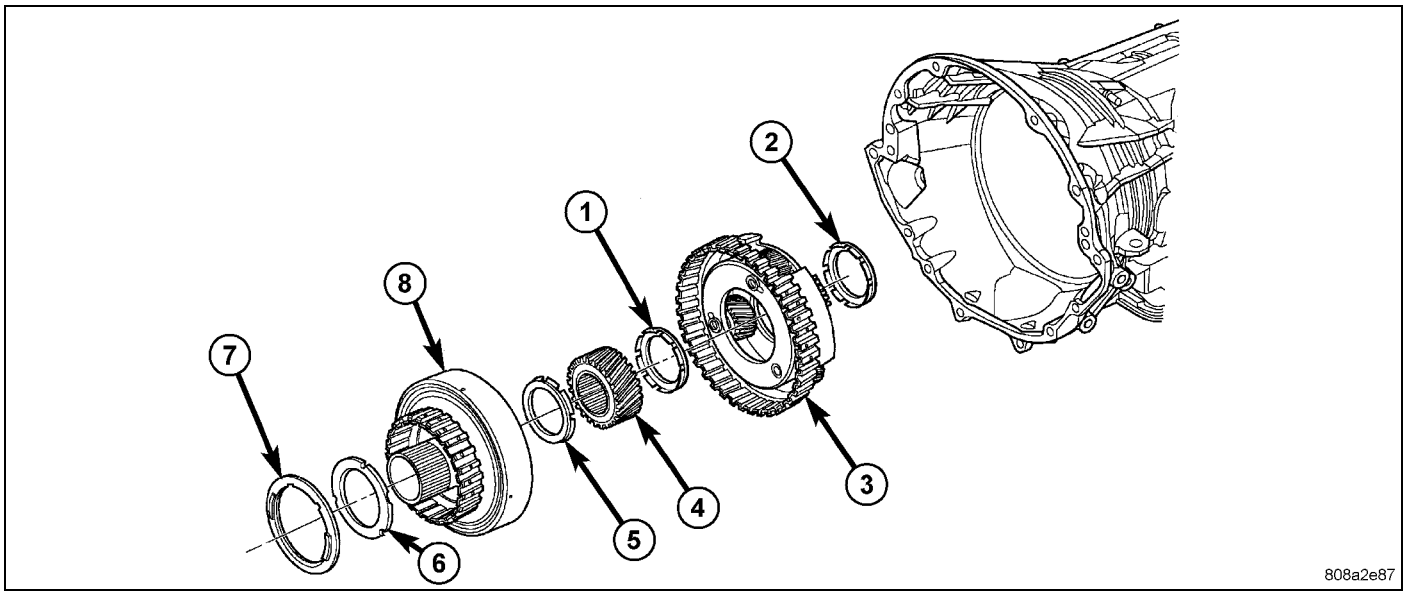

Install Reaction Annulus and Carrier

1 - THRUST BEARING NUMBER 8	5 - THRUST BEARING NUMBER 7
2 - THRUST BEARING NUMBER 9	6 - THRUST PLATE (SELECT)
3 - REACTION PLANETARY CARRIER	7 - THRUST BEARING NUMBER 6
4 - REACTION SUN GEAR	8 - REACTION ANNULUS

24. Install the number 8 thrust bearing (1) inside the reaction carrier with the outer race against the reaction planetary carrier (3).
25. Install the reaction planetary gear set and the number 9 thrust bearing (2), with the inner race against the reaction planetary carrier (3), into the transmission case.
26. Install the flat 2C clutch snap-ring into the transmission case.
27. Install the reaction sun gear (4) into the reaction planetary gear set. **Make sure** the small shoulder is facing the front of the transmission.
28. Install the number 7 thrust bearing (5) onto the reaction sun gear (4) with the inner race against the sun gear.
29. Install the output shaft selective thrust plate (2) onto the reaction annulus with the oil grooves facing the annulus gear and the lugs (1) and notches aligned as shown.

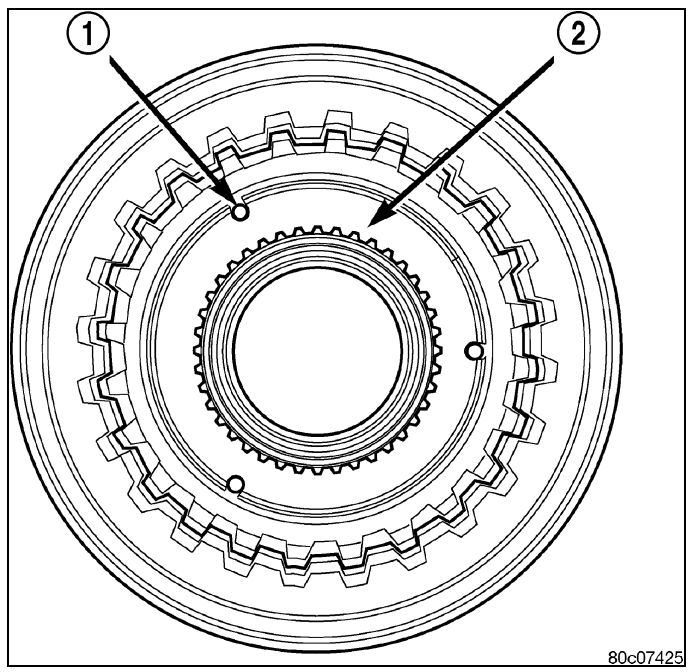

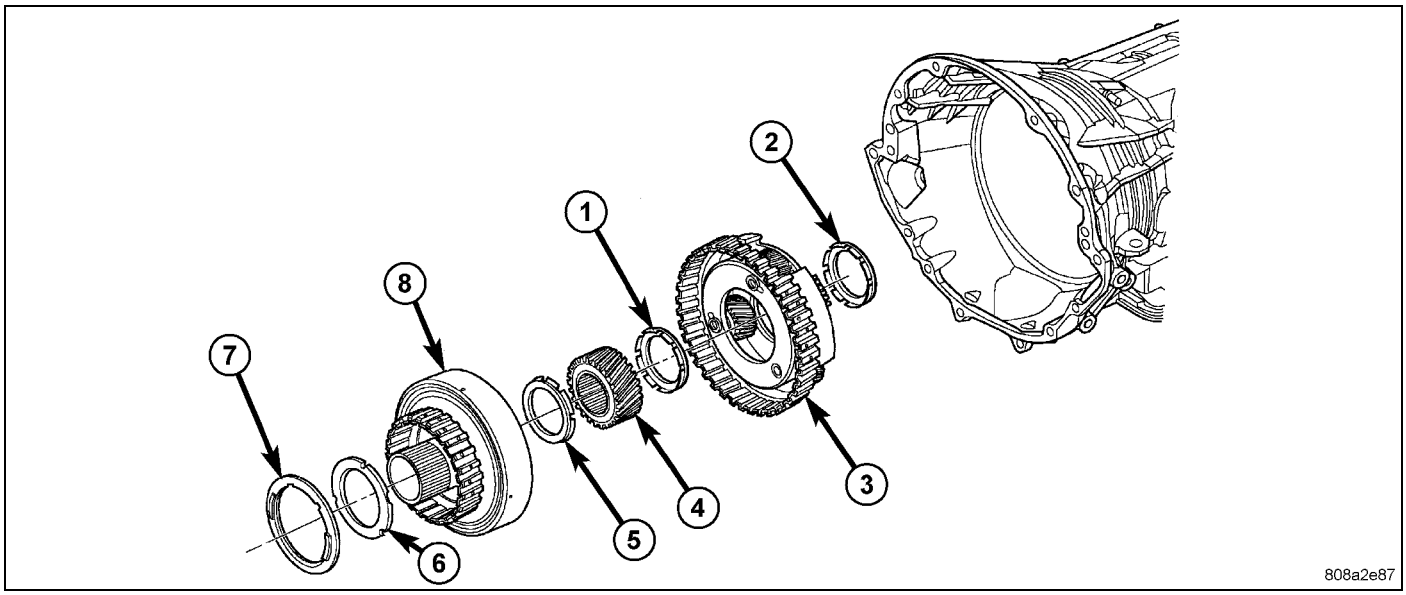

Install Reaction Annulus and Carrier

1 - THRUST BEARING NUMBER 8	5 - THRUST BEARING NUMBER 7
2 - THRUST BEARING NUMBER 9	6 - THRUST PLATE (SELECT)
3 - REACTION PLANETARY CARRIER	7 - THRUST BEARING NUMBER 6
4 - REACTION SUN GEAR	8 - REACTION ANNULUS

30. Install the number 6 thrust bearing (7) against the output shaft selective thrust plate (6) with the flat side against the thrust plate and the raised tabs on the inner race facing the front of the transmission.
31. Install the reaction annulus (8) into the reaction planetary gear set.
32. Install the 4C retainer/bulkhead (2) into the transmission case. Make sure that the oil feed holes are pointing toward the valve body area. Rotate the reaction annulus during the installation of the 4C retainer/bulkhead to ease installation.
33. Install the 4C retainer/bulkhead tapered snap-ring (1) into the transmission case with the taper toward the front of the case. Make sure that the open ends of the snap-ring are located in the case opening toward the valve body area.
34. Air check the 2C and 4C clutch operation.

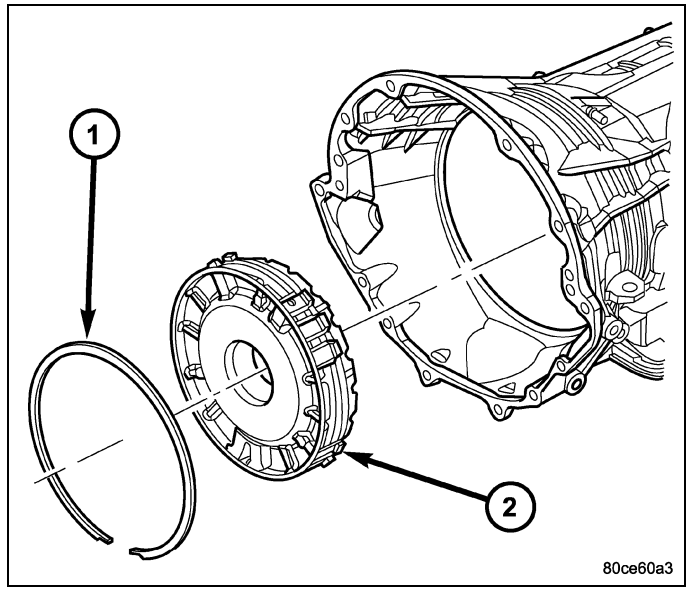

35. Using Alignment Plate 8261 (1), Adapter 8266-17 from End-Play Tool Set 8266B (2) and Dial Indicator C-3339A (3), measure and record the output shaft end-play. The correct output shaft end-play is 0.22-0.55 mm (0.009-0.021 in.). Adjust as necessary. Install the chosen output shaft selective thrust plate and re-measure end-play to verify selection.

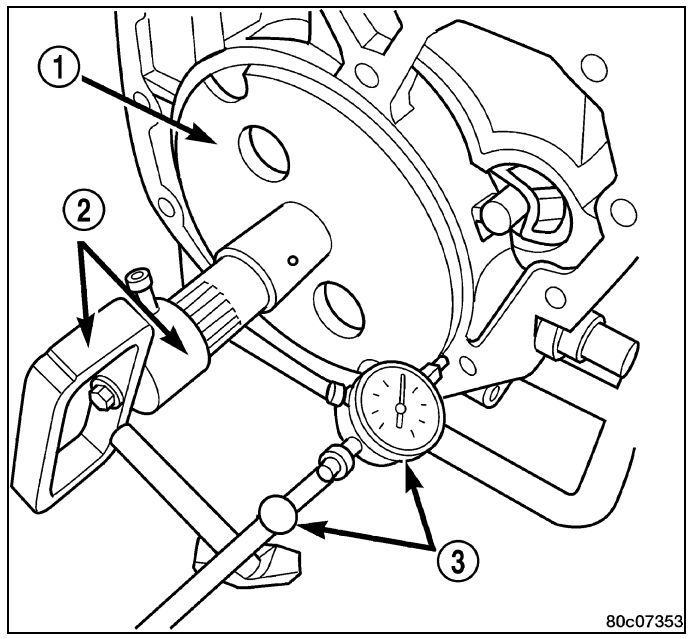

Output Shaft End Play Selectable Bearing Spacer Thickness

- 09 = 2.18 mm (0.086 in.)
- 10 = 2.33 mm (0.092 in.)
- 11 = 2.48 mm (0.098 in.)
- 12 = 2.63 mm (0.103 in.)
- 13 = 2.78 mm (0.109 in.)
- 14 = 2.69 mm (0.115 in.)
- 43 = 3.08 mm (0.121 in.)
- 16 = 3.23 mm (0.127 in.)
- 17 = 3.38 mm (0.133 in.)
- 18 = 3.53 mm (0.139 in.)
- 19 = 3.68 mm (0.145 in.)

36. Apply a bead of RTV silicone and install the extension/adapter housing onto the transmission case.
37. Install and torque the bolts to hold the extension/adapter housing onto the transmission case. The correct torque is 54 N·m (40 ft.lbs.).
38. Install the number 5 thrust bearing (1) and selective thrust plate (2) onto the 4C retainer/bulkhead. Be sure that the outer race of the bearing is against the thrust plate.
39. Install the input clutch assembly (3) into the transmission case. Make sure that the input clutch assembly is fully installed by performing a visual inspection through the input speed sensor hole. If the tone wheel teeth on the input clutch assembly are centered in the hole, the assembly is fully installed.
40. Install the number 1 thrust bearing (4) with the outer race up in the pocket of the input clutch assembly.

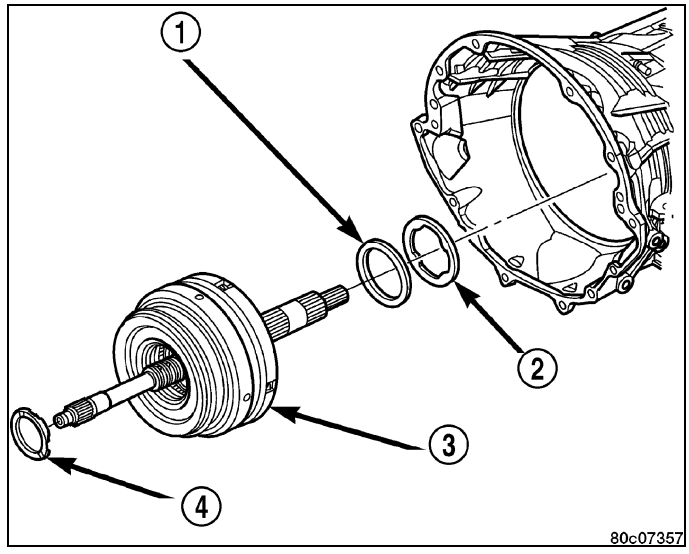

41. Install the oil pump (2) into the transmission case making certain the oil pump is flush with the transmission case.
42. Install the bolts (1) to hold the oil pump into the transmission case. Tighten the oil pump bolts to 28 N·m (250 in.lbs.).

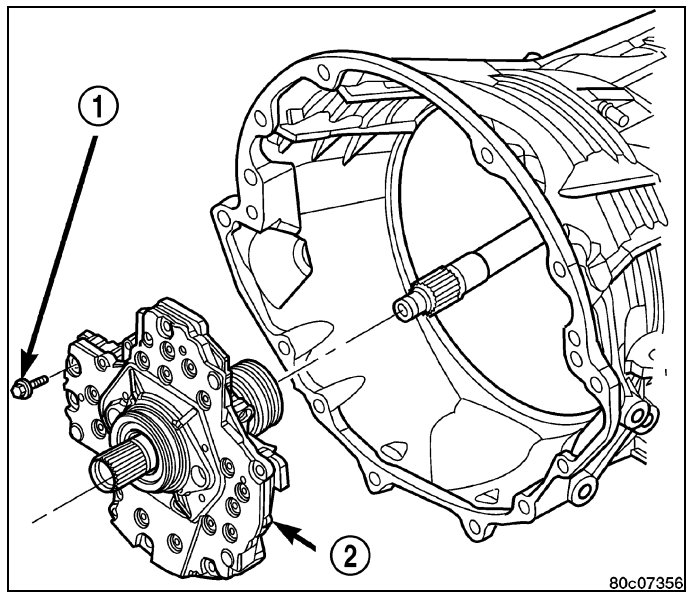

NOTE: When measuring the input shaft end-play, two "stops" will be felt. When the input shaft is pushed inward and the dial indicator zeroed, the first "stop" felt when the input shaft is pulled outward is the movement of the input shaft in the input clutch housing hub. This value should not be included in the end-play measured value and therefore must be recorded and subtracted from the dial indicator reading. If NO input shaft end play is noted, disassemble the input clutch assembly and check for the #2, #3, or #4 thrust bearing fallen out of position or cracked. Replace any cracked thrust bearing and reassemble using trans jell or petroleum jelly to retain the thrust bearings.

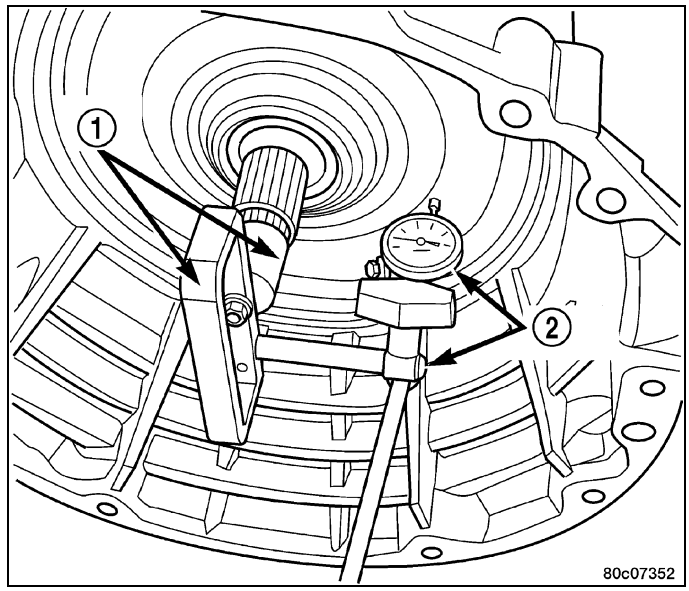

43. Using Adapter 8266-1 from End-Play Tool Set 8266B (1) and Dial Indicator C-3339A (2), measure and record the input shaft end-play. The correct end-play is 0.46-0.89 mm (0.018-0.035 in.). Adjust as necessary. Install the chosen thrust plate on the number 5 thrust bearing and re-measure end-play to verify selection.

Input Shaft End Play Selectable Bearing Spacer Thickness

- 27 = 1.57 mm (0.062 in.)
- 28 = 1.71 mm (0.067 in.)
- 29 = 1.85 mm (0.073 in.)
- 30 = 1.99 mm (0.078 in.)
- 31 = 2.13 mm (0.084 in.)
- 32 = 2.27 mm (0.089 in.)
- 33 = 2.41 mm (0.095 in.)
- 34 = 2.55 mm (0.100 in.)
- 35 = 2.69 mm (0.106 in.)
- 36 = 2.83 mm (0.111 in.)
- 37 = 2.97 mm (0.117 in.)
- 38 = 3.11 mm (0.122 in.)
- 39 = 3.25 mm (0.128 in.)
- 40 = 3.39 mm (0.133 in.)
- 41 = 3.67 mm (0.144 in.)

•

NOTE: To avoid contamination and garter spring dislodgement, do not handle the front cover seal when installing the front cover into the transmission case.

44. Position the new front cover (1) onto transmission case.

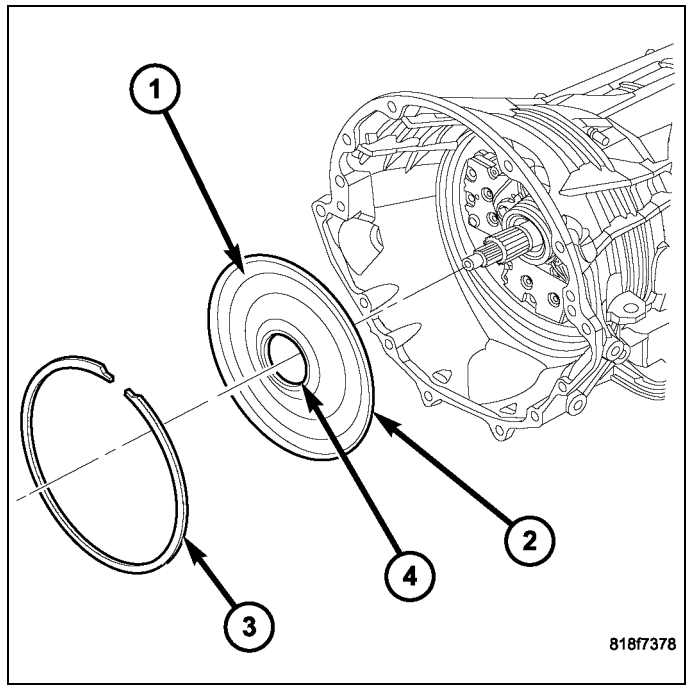

45. Using a dead-blow mallet and the Front Cover installation tool 9955, install the front cover into the transmission case .
46. Install the snap ring into the transmission case.

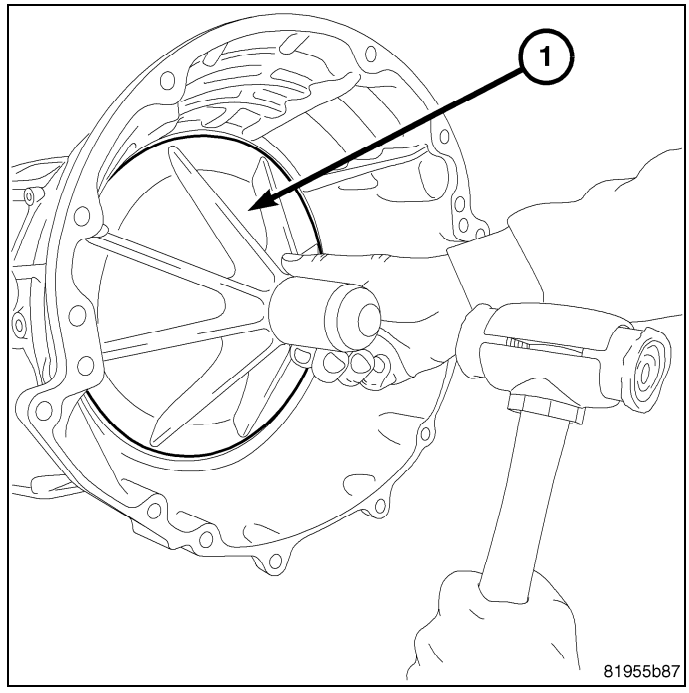

47. Install the valve body. Verify that the pin on the manual lever has properly engaged the TRS selector plate. Tighten the valve body to transmission case bolts (1) to 12 N·m (105 in.lbs.).

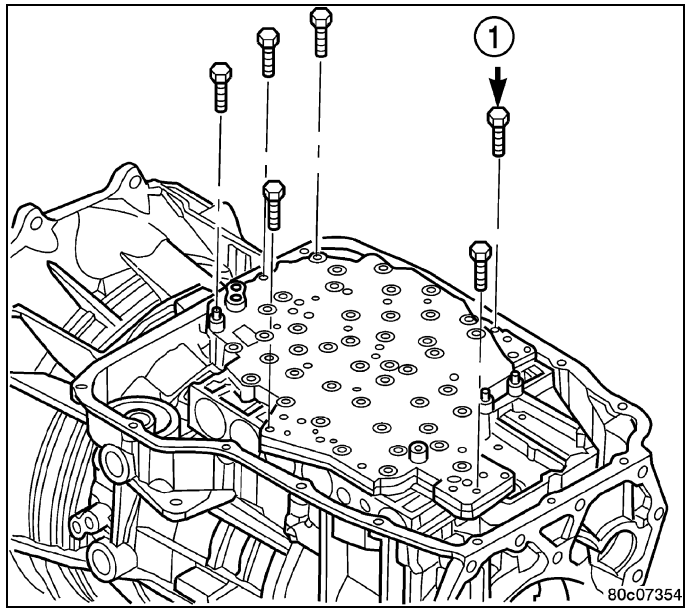

CAUTION: The primary oil filter seal MUST be fully installed flush against the oil pump body. DO NOT install the seal onto the filter neck and attempt to install the filter and seal as an assembly. Damage to the transmission will result.

48. Install a new primary oil filter seal in the oil pump inlet bore. Seat the seal in the bore with the butt end of a hammer, or other suitable tool.
49. Install the primary oil filter (1) and the oil cooler return filter (2). Tighten the screw to hold the primary oil filter to the valve body to 4.5 N·m (40 in.lbs.). Using Filter Wrench 8321, tighten the cooler return oil filter to the transmission case to 9.5 N·m (84 in.lbs.).
50. Apply RTV silicone to the oil pan and install the transmission oil pan. Tighten the bolts to 12 N·m (105 in.lbs.).

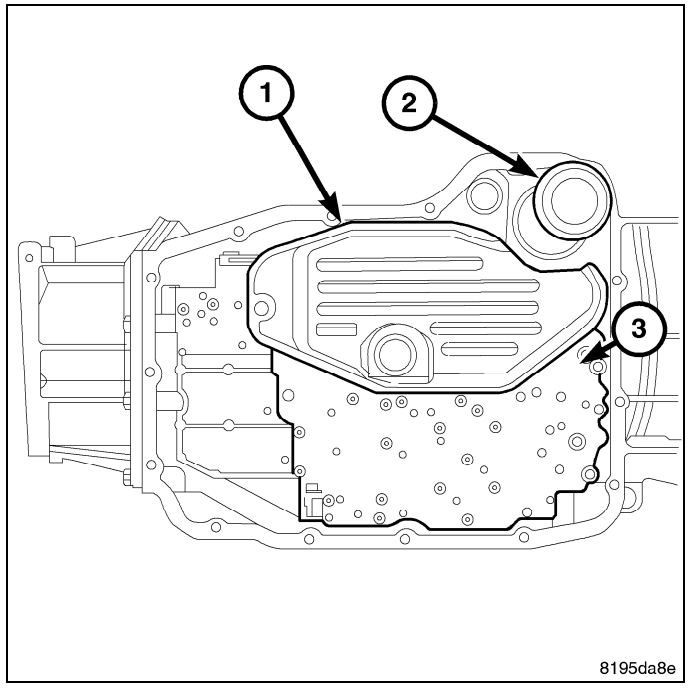

51. Install the input (3), output (1), and line pressure sensors (2) . Tighten the bolts to 12 N·m (105 in.lbs.).

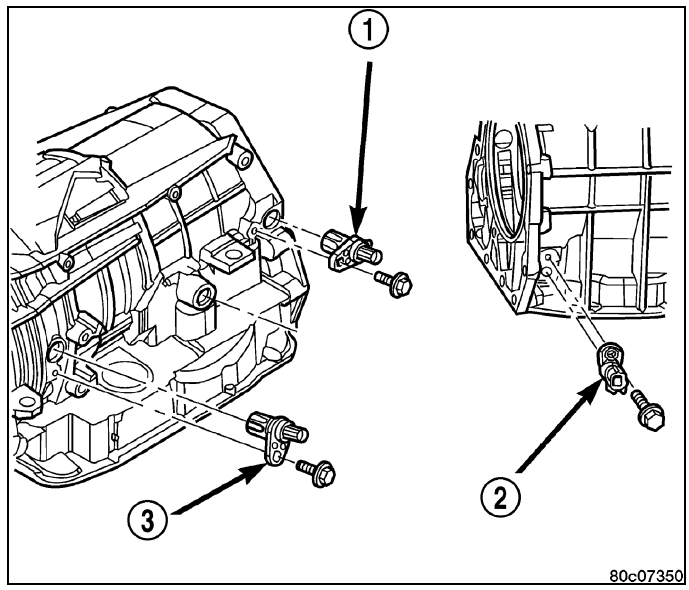

Installation

1. Check torque converter hub and hub drive flats for sharp edges burrs, scratches, or nicks. Polish the hub and flats with 320/400 grit paper and crocus cloth if necessary. Verify that the converter hub o-ring is properly installed and is free of any debris. The hub must be smooth to avoid damaging pump seal at installation.
2. If a replacement transmission is being installed, transfer any components necessary, such as the manual shift lever and shift cable bracket, from the original transmission onto the replacement transmission.
3. Lubricate oil pump seal lip with transmission fluid.
4. Align converter and oil pump.
5. Carefully insert converter in oil pump. Then rotate converter back and forth until fully seated in pump gears.
6. Check converter seating with steel scale (1) and straightedge (2) . Surface of converter lugs should be at least 13mm (1/2 in.) to rear of straightedge when converter is fully seated.
7. Temporarily secure converter with C-clamp.

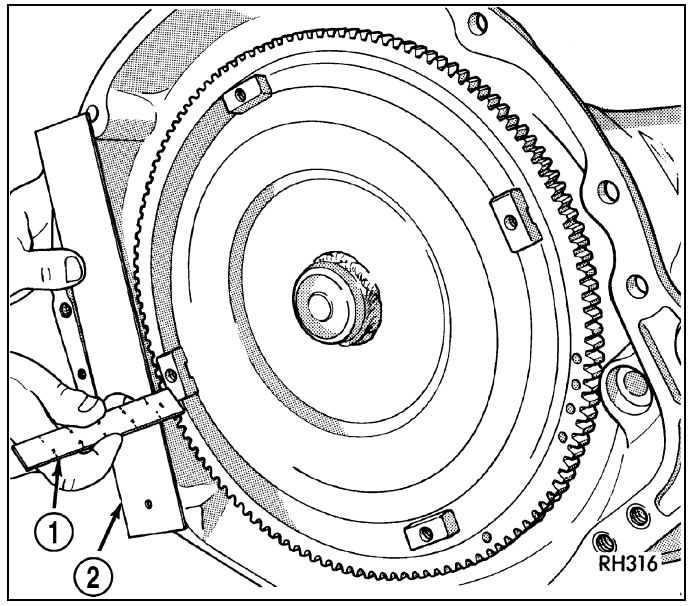

8. Position transmission on jack and secure it with chains.
9. Check condition of converter flexplate. Replace the plate if cracked, distorted or damaged. **Also be sure transmission dowel pins are seated in engine block and protrude far enough to hold transmission in alignment.**
10. Apply a light coating of Mopar® High Temp Grease to the torque converter hub pocket in the rear pocket of the engine's crankshaft.
11. Raise transmission (2) and align the torque converter with the flexplate and transmission converter housing with the engine block.

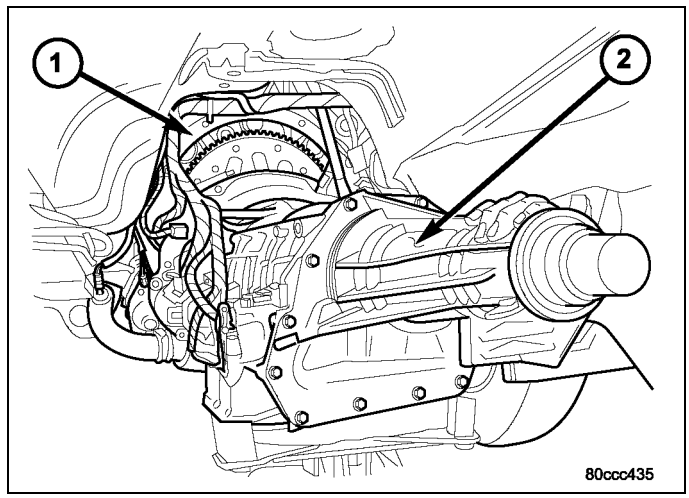

12. Move transmission forward. Then raise, lower or tilt transmission to align the converter housing with engine block dowels.
13. Carefully work transmission forward and over engine block dowels until converter hub is seated in crankshaft. Verify that no wires, or the transmission vent hose, have become trapped between the engine block and the transmission.
14. Install two bolts to attach the transmission to the engine.
15. Install remaining torque converter housing to engine bolts. Tighten to 68 N·m (50 ft.lbs).
16. If equipped, Install transfer case. Tighten transfer case nuts to 35 N·m (26 ft.lbs).
17. Install rear support to transmission. Tighten bolts to 47 N·m (35 ft.lbs).

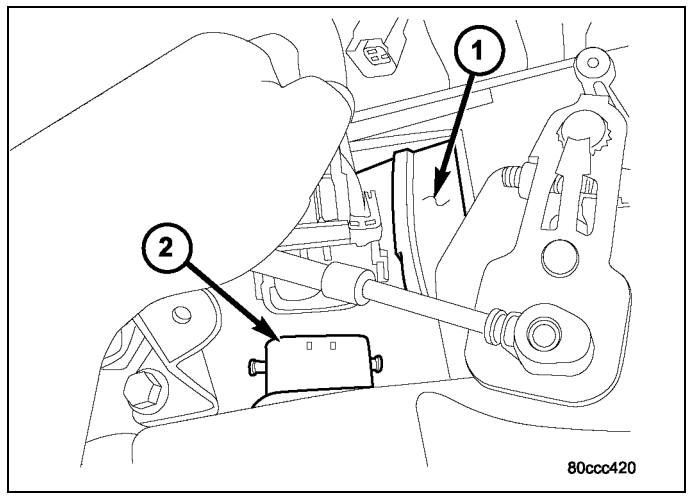

18. Lower transmission onto crossmember and install bolts attaching transmission mount to crossmember. Tighten clevis bracket to crossmember bolts to 47 N·m (35 ft.lbs.). Tighten the clevis bracket to rear support bolt to 68 N·m (50 ft.lbs.).
19. Remove engine support fixture.
20. Connect gearshift cable to transmission.
21. Connect wires to solenoid and pressure switch assembly (2) connector.
22. Connect wires to input speed sensor (2) .

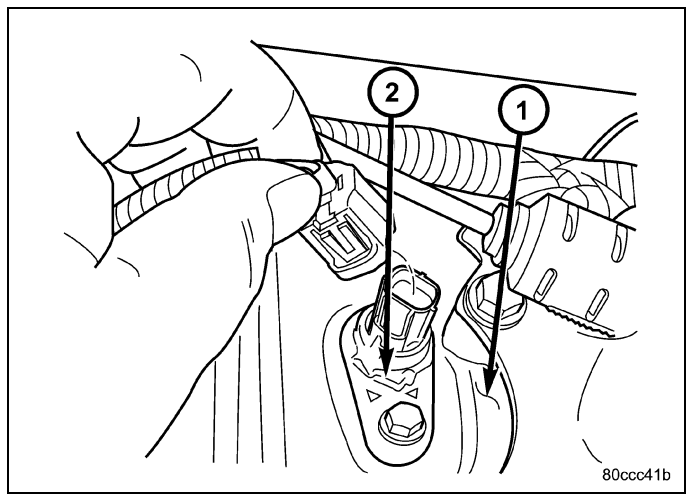

23. Connect wires to output speed sensor (2) .

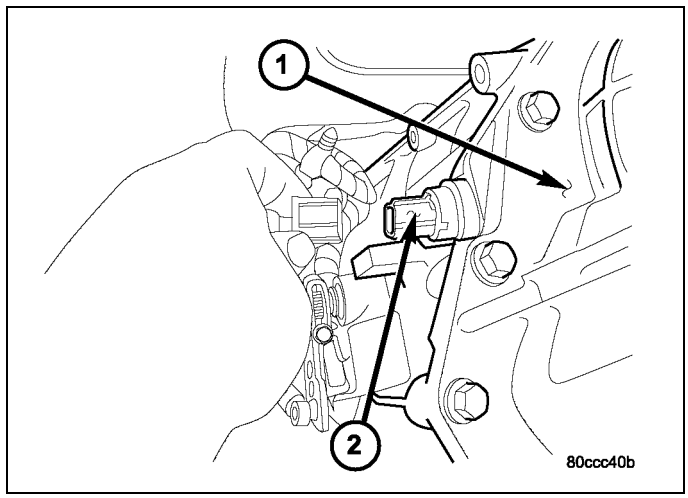

24. Connect wires to line pressure sensor (2) . Be sure transmission harnesses are properly routed.

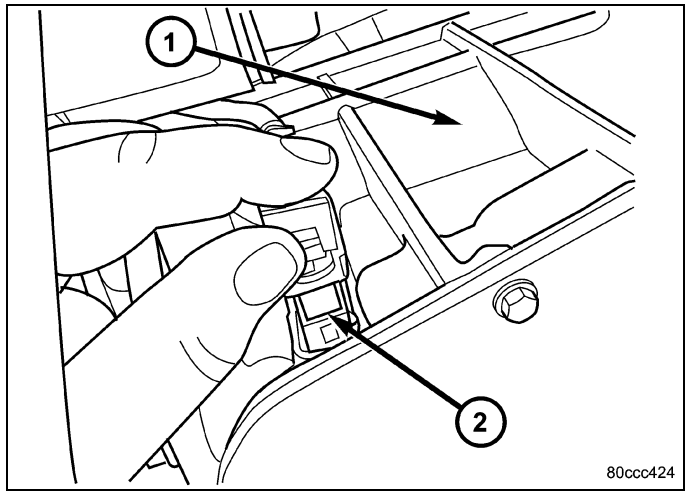

CAUTION: It is essential that the correct length bolts are used to attach the converter to the flexplate. Bolts that are too long will damage the clutch surface inside the torque converter.

25. Install torque converter-to-flexplate bolts. Tighten bolts to 31 N·m (270 in. lbs.).
26. Install starter motor and cooler line bracket.

NOTE: When connecting the transmission oil cooler lines, it is necessary to replace the line clip that is located on the oil pan stud. The retention force of the clip is severely degraded upon removal.

27. Connect cooler lines to transmission.
28. Install transmission fill tube.
29. Install exhaust components.
30. Install the structural dust cover (2) (Refer to 09 - Engine/Engine Block/COVER, Structural Dust - Installation) onto the transmission and the engine.
31. Align and connect propeller shaft(s).
32. Install rear support and cushion to transmission.
33. Install cross member.
34. Adjust gearshift cable if necessary.
35. Install any skid plates removed previously.

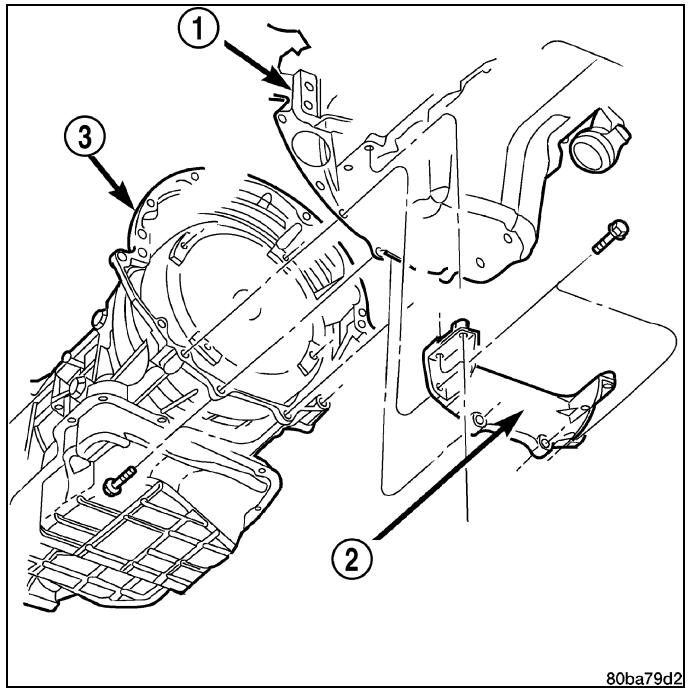

36. Lower vehicle.
37. Fill transmission with Mopar® ATF +4, Automatic Transmission Fluid.

Schematics and Diagrams

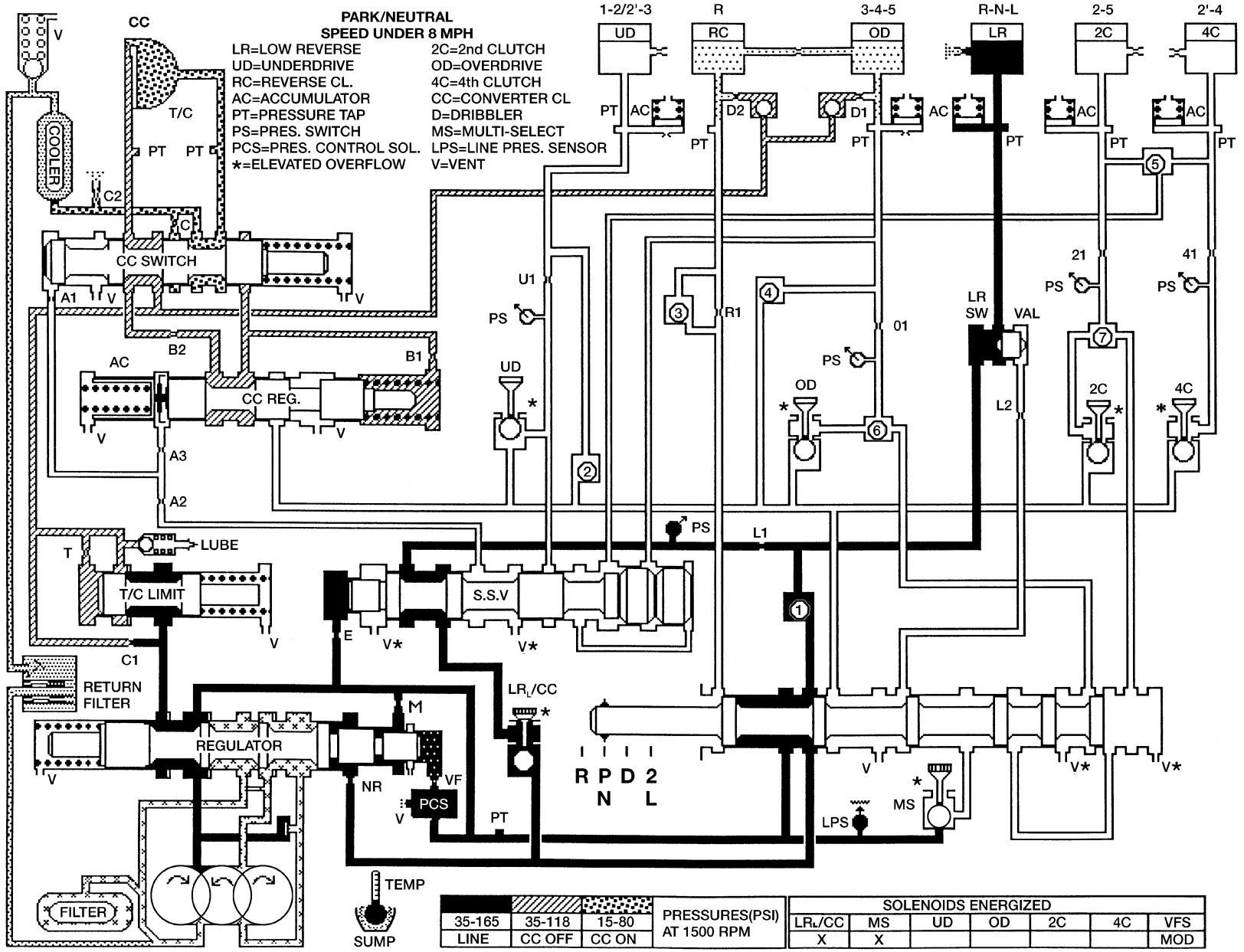

HYDRAULIC FLOW IN PARK/NEUTRAL

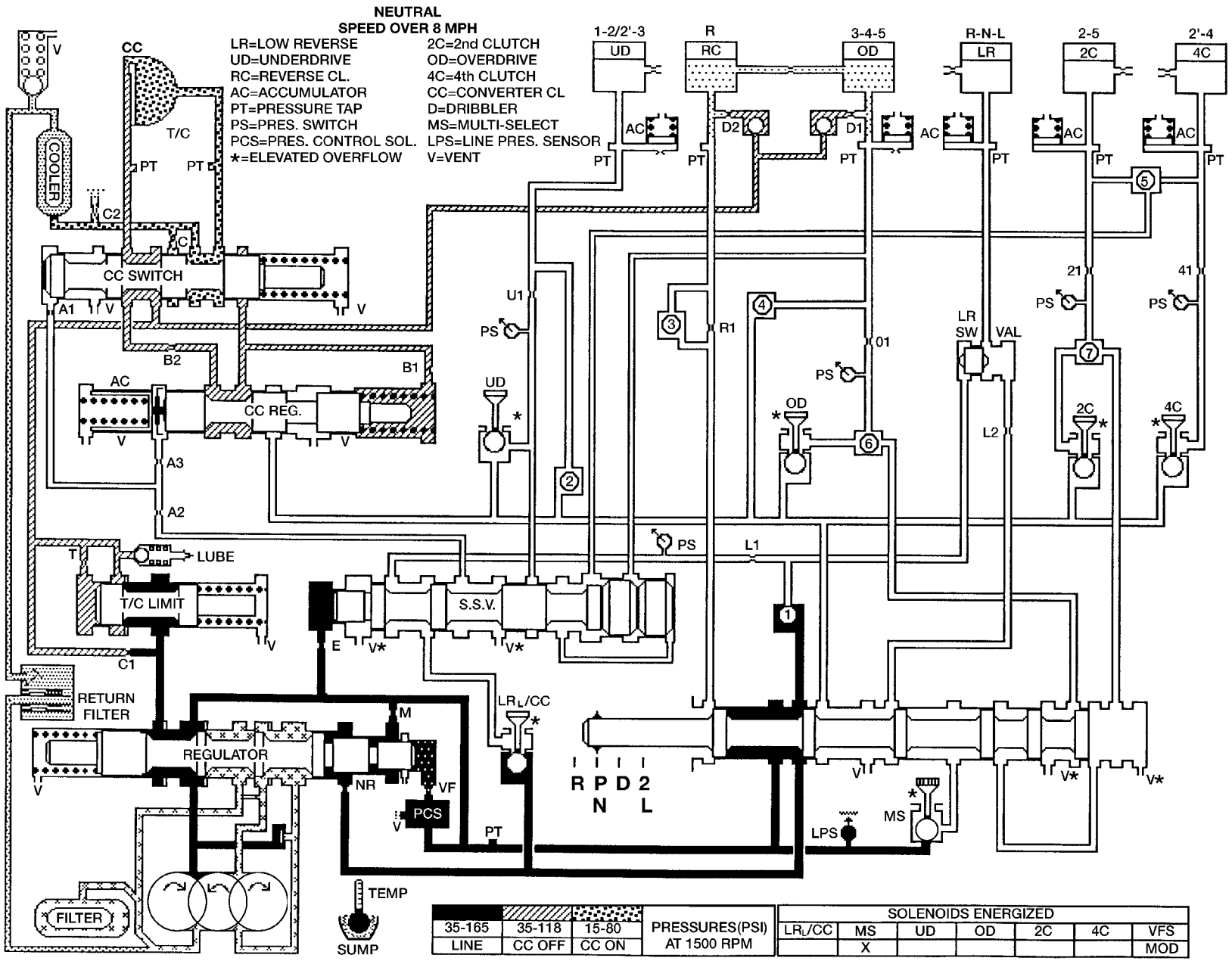

HYDRAULIC FLOW IN NEUTRAL OVER 8MPH

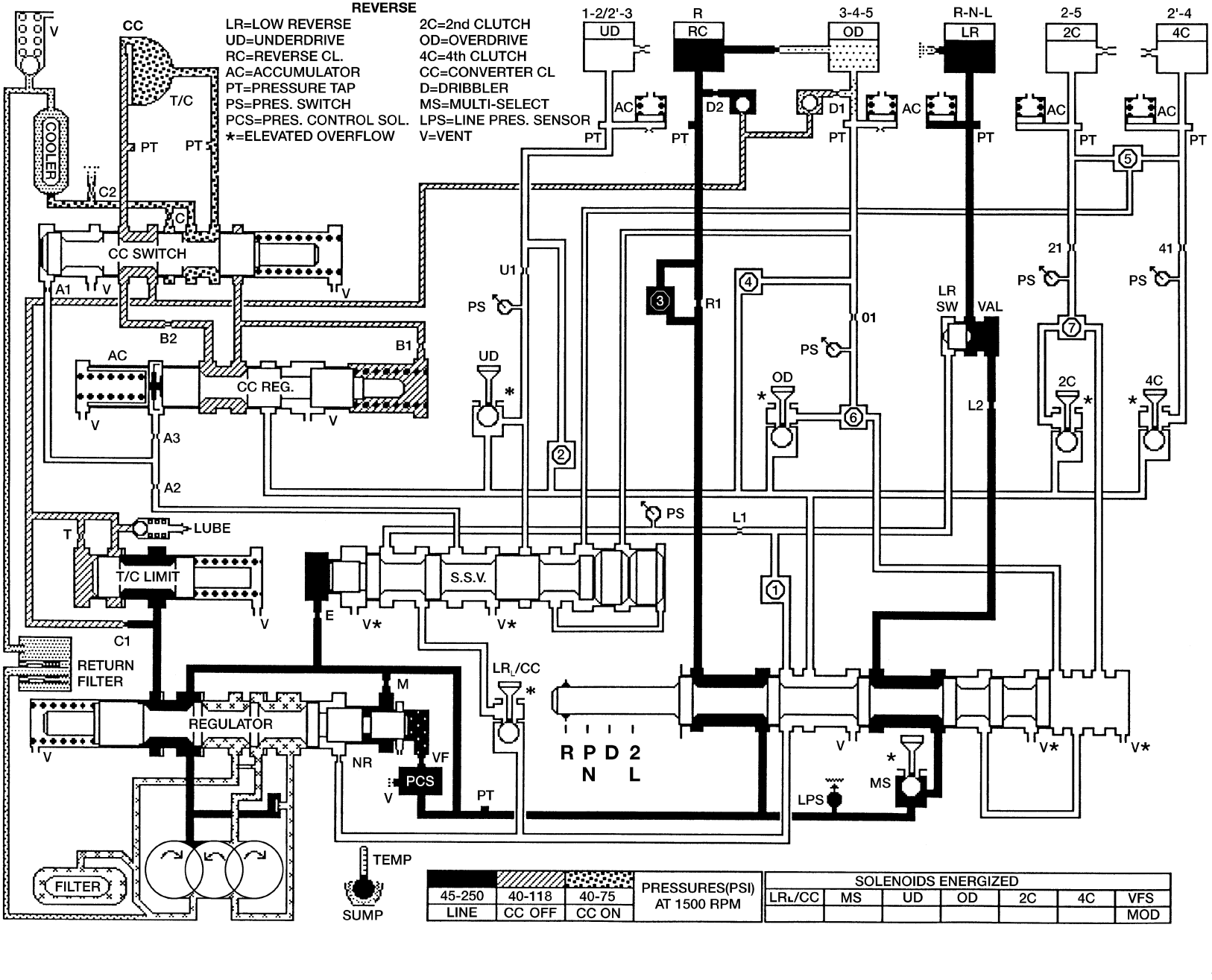

HYDRAULIC FLOW IN REVERSE

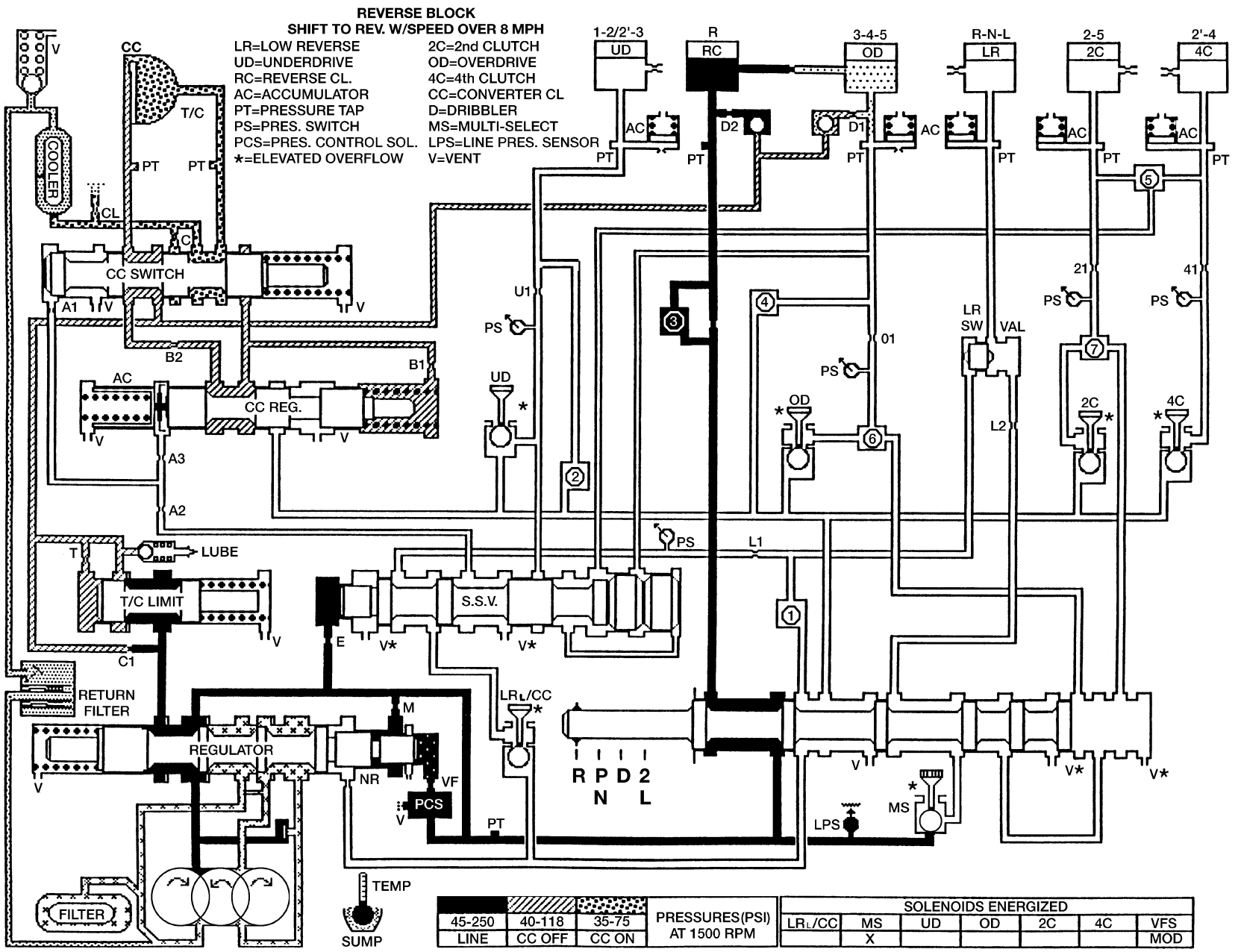

HYDRAULIC FLOW IN REVERSE BLOCK

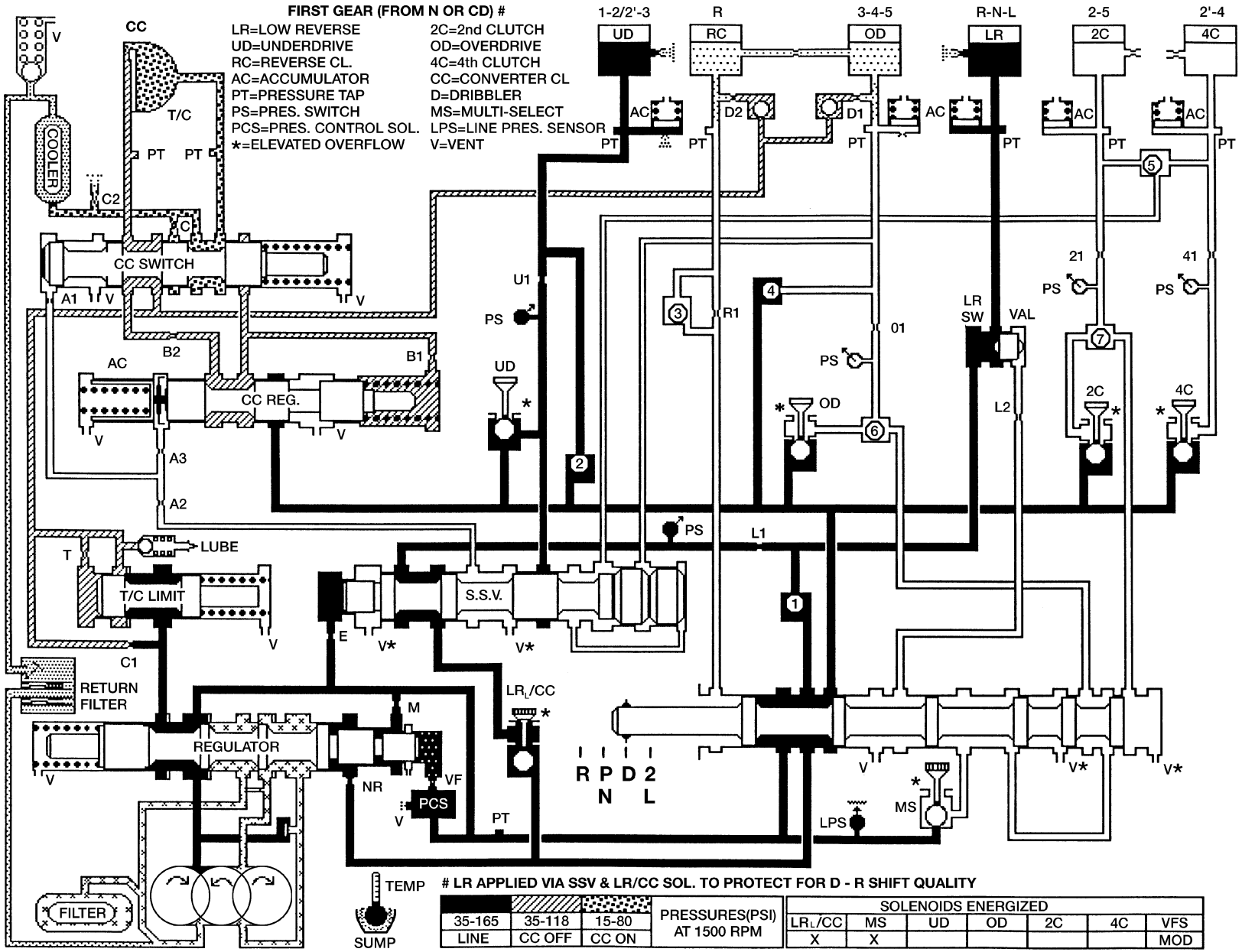

HYDRAULIC FLOW IN FIRST GEAR (FROM N OR OD)

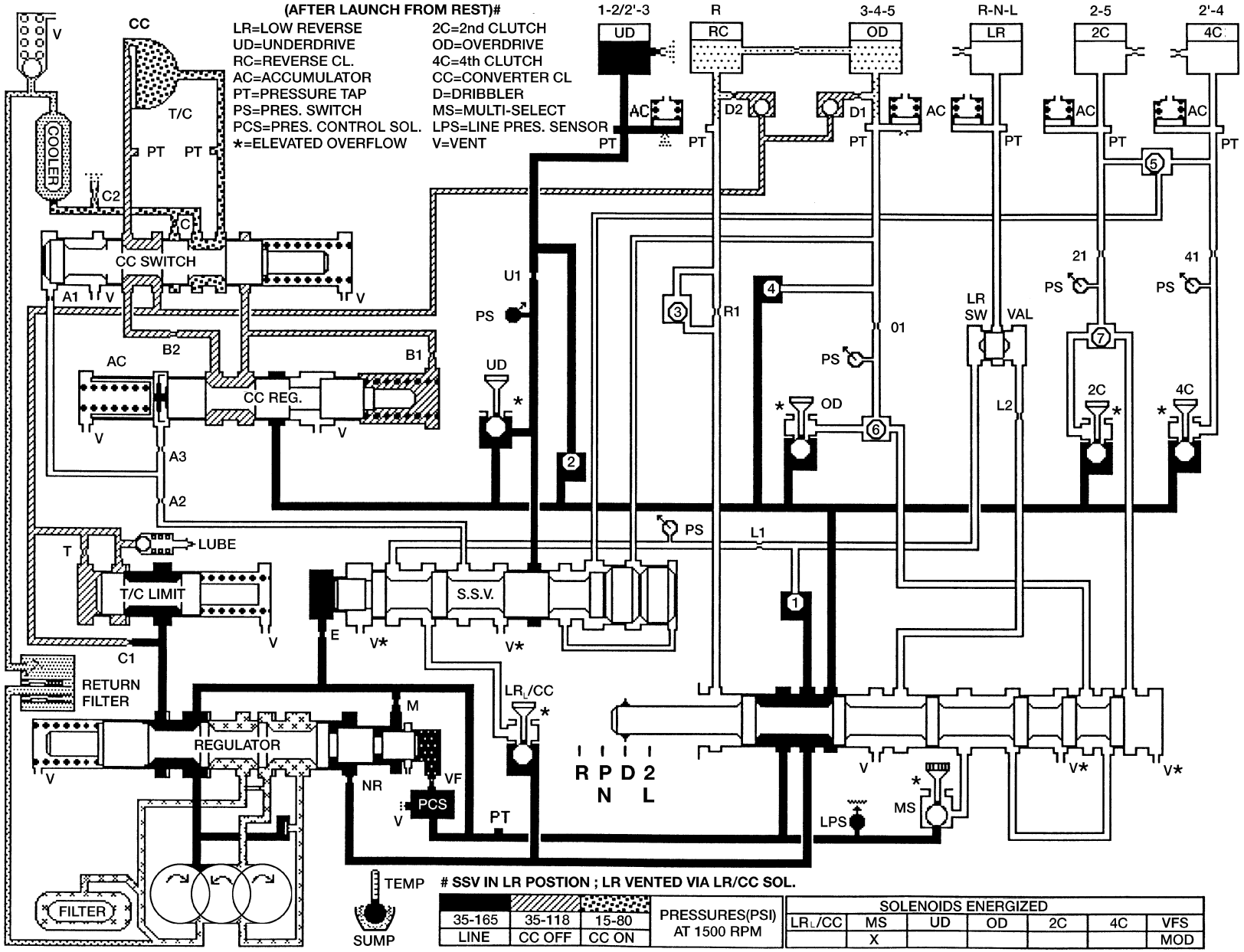

HYDRAULIC FLOW IN FIRST GEAR (AFTER LAUNCH FROM REST)

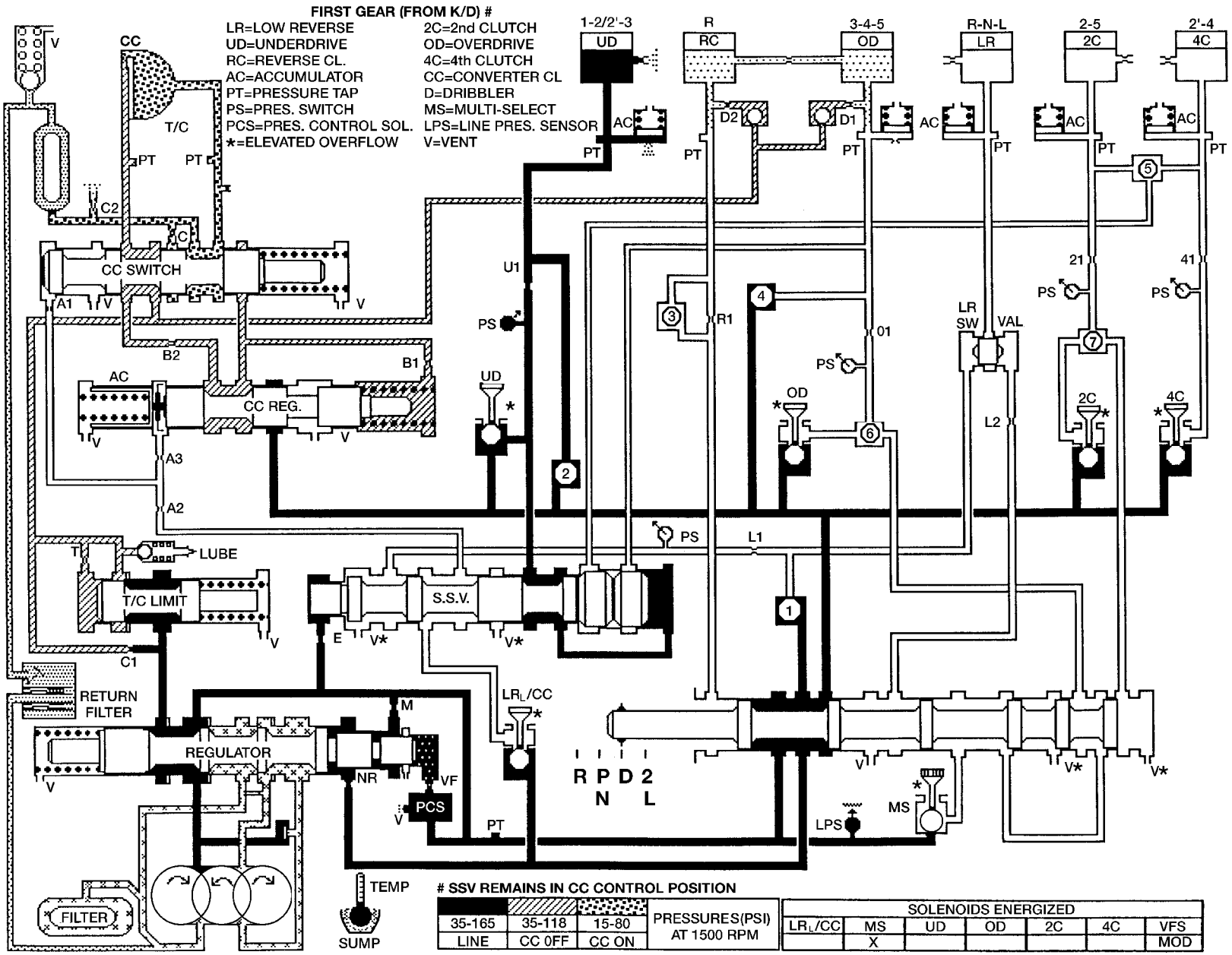

HYDRAULIC FLOW IN FIRST GEAR (FROM K/D)

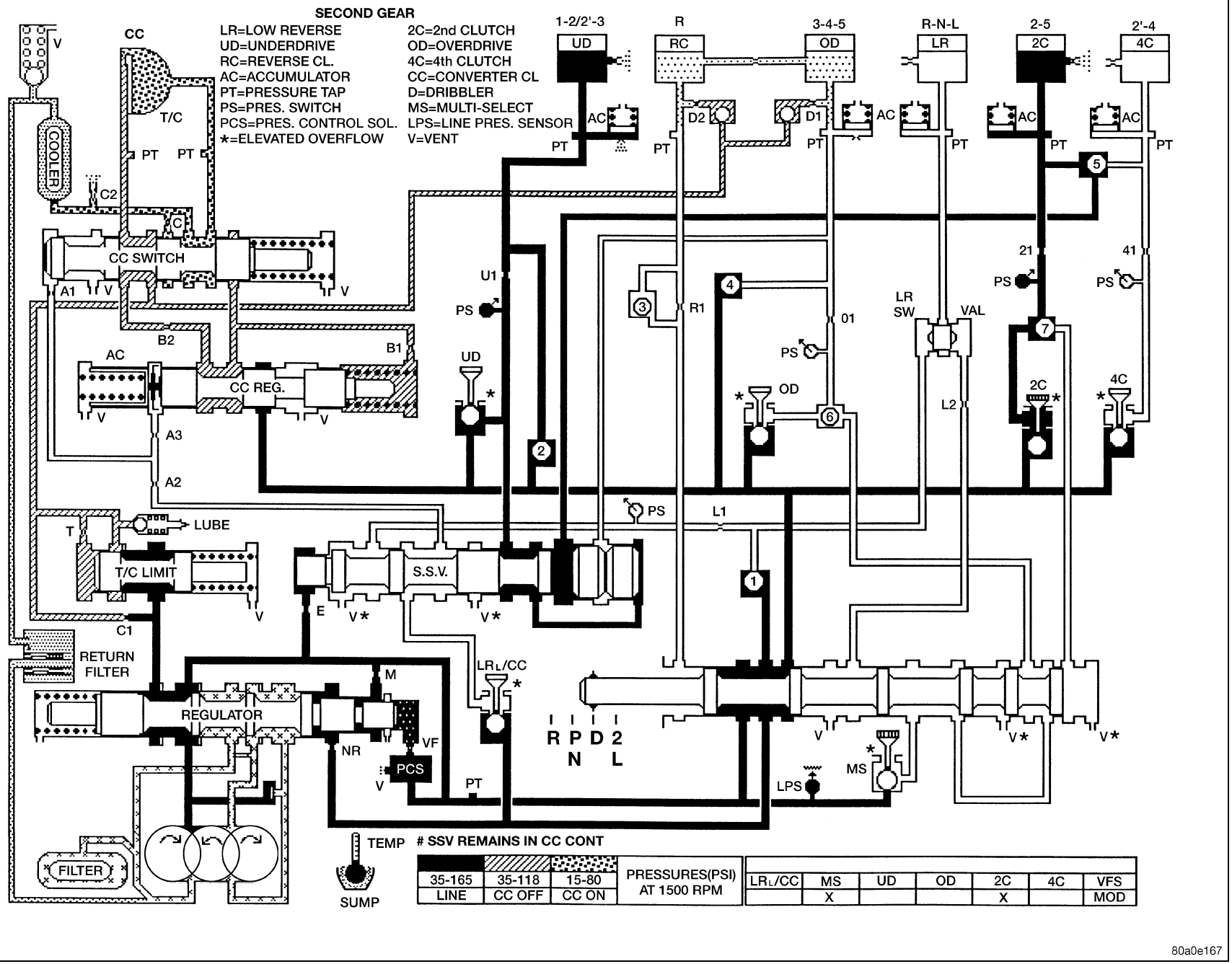

80a0e167

HYDRAULIC FLOW IN SECOND GEAR

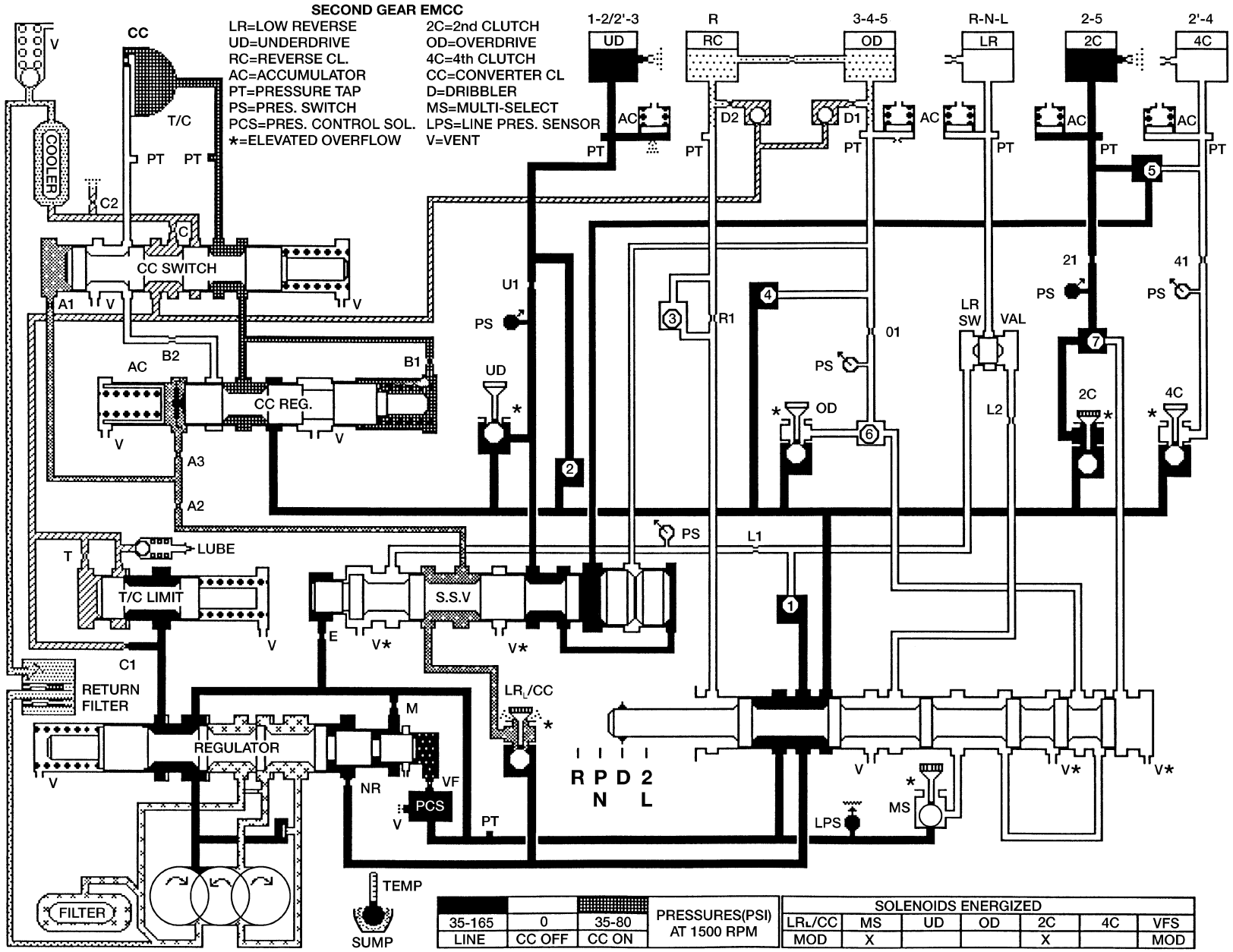

HYDRAULIC FLOW IN SECOND GEAR EMCC

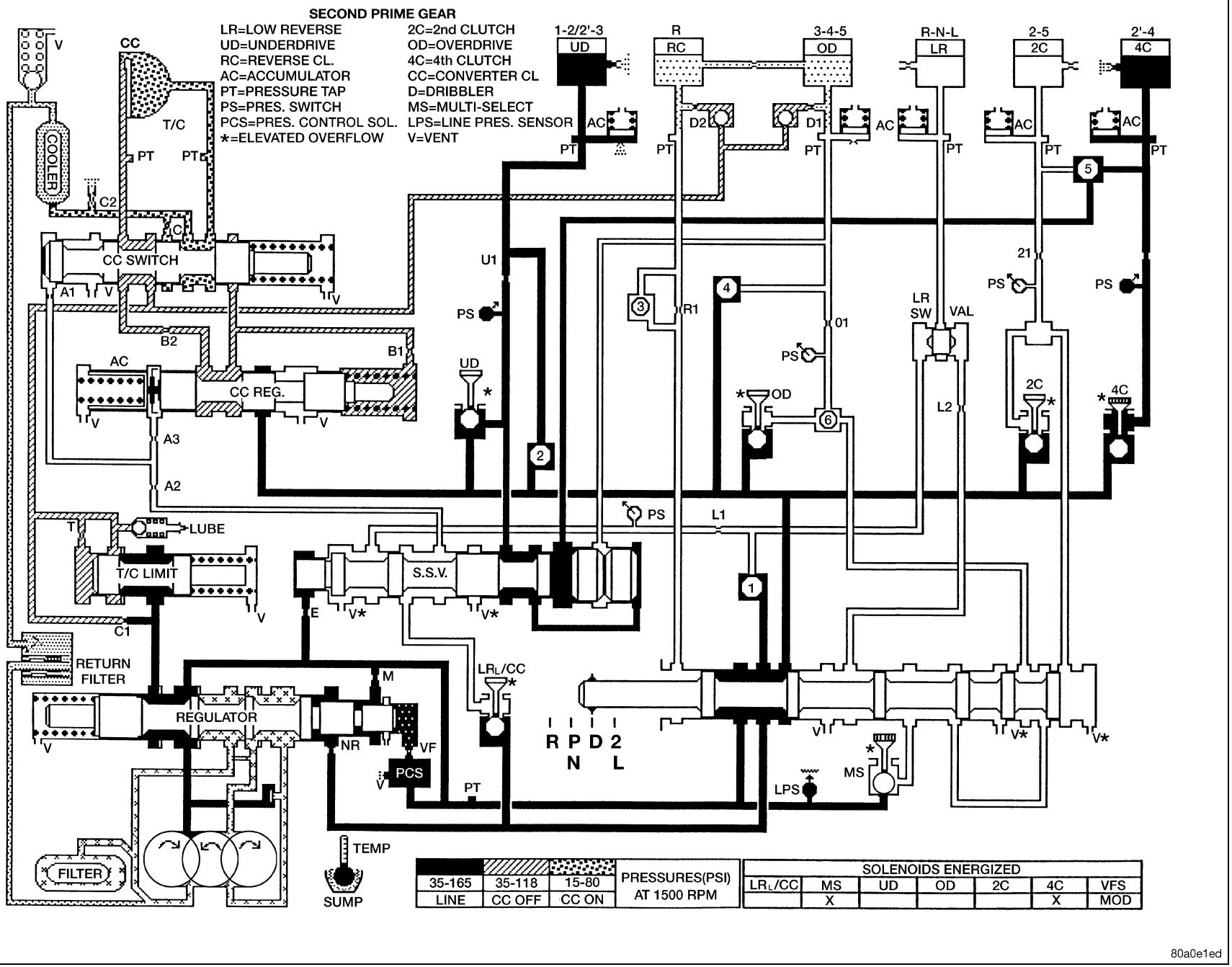

HYDRAULIC FLOW IN SECOND PRIME GEAR

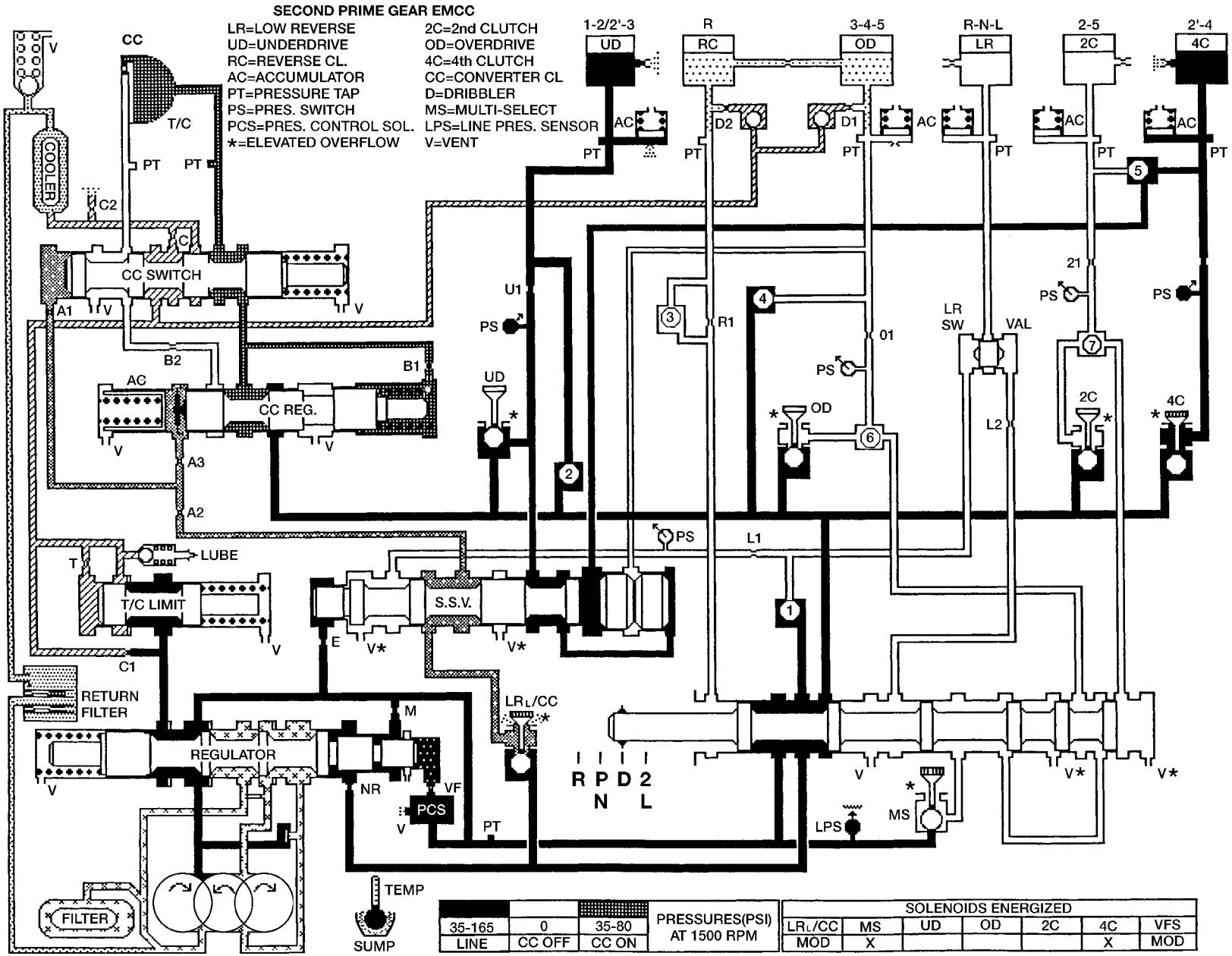

HYDRAULIC FLOW IN SECOND PRIME GEAR EMCC

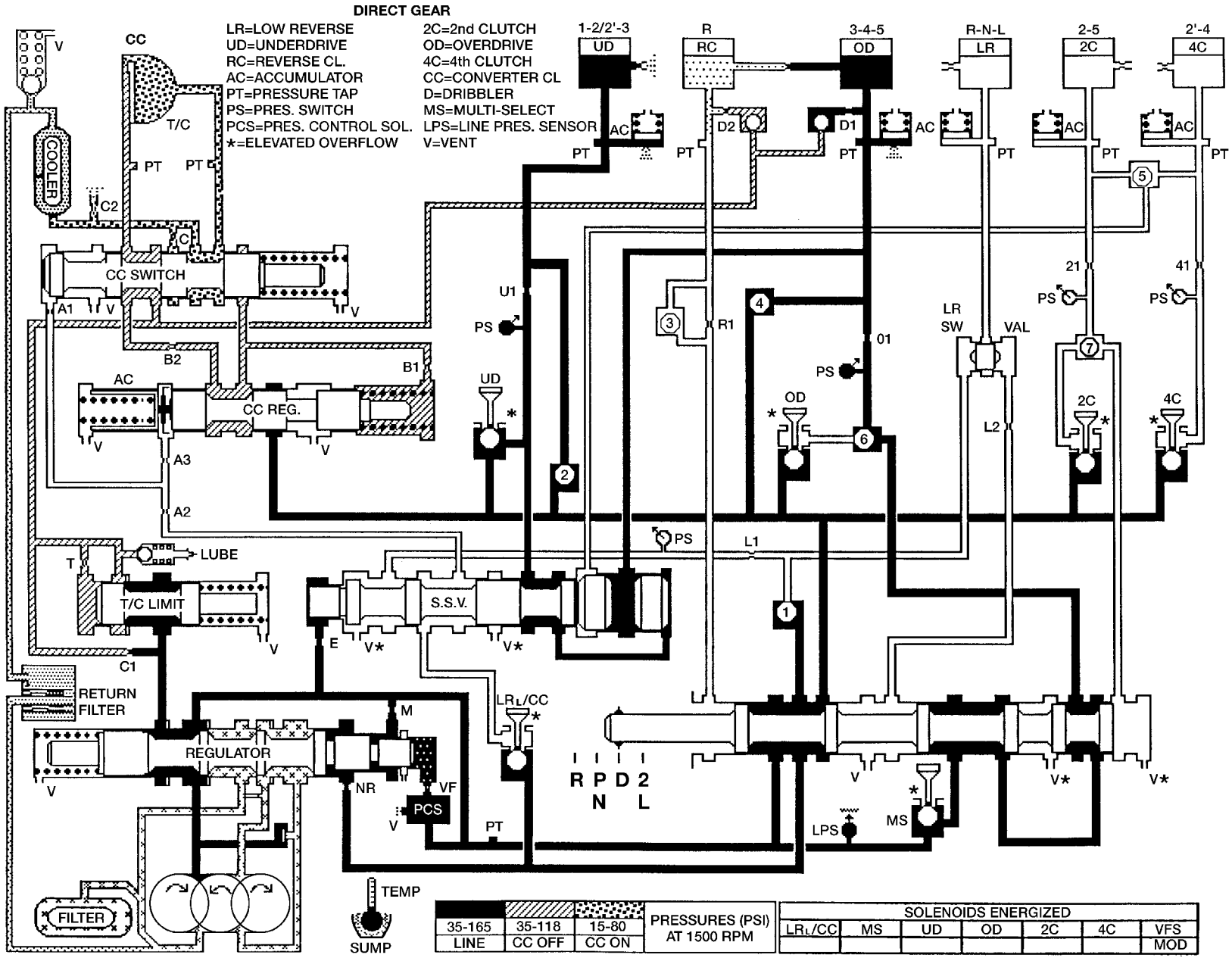

HYDRAULIC FLOW IN DIRECT GEAR

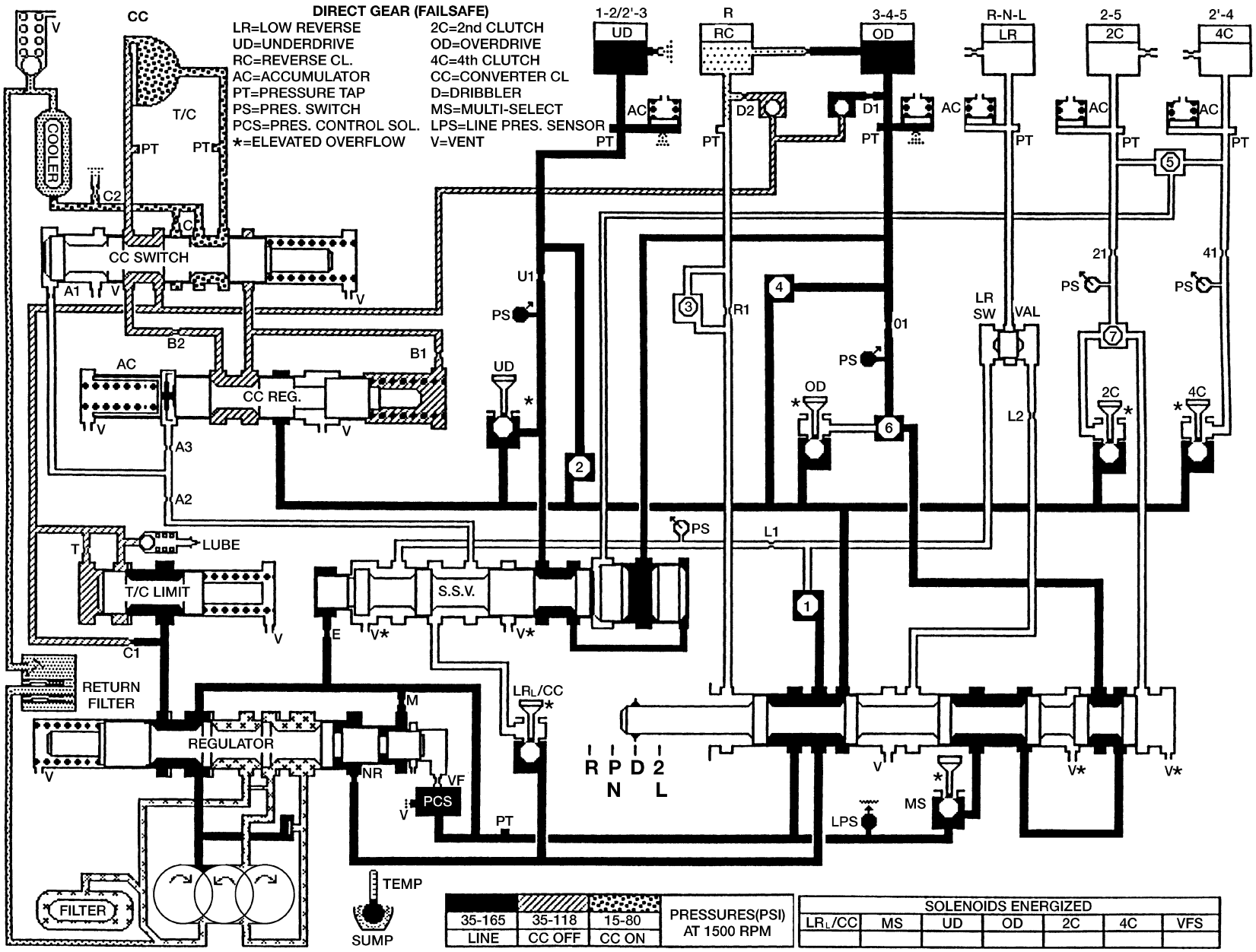

80a0e26d

HYDRAULIC FLOW IN DIRECT GEAR (FAILSAFE)

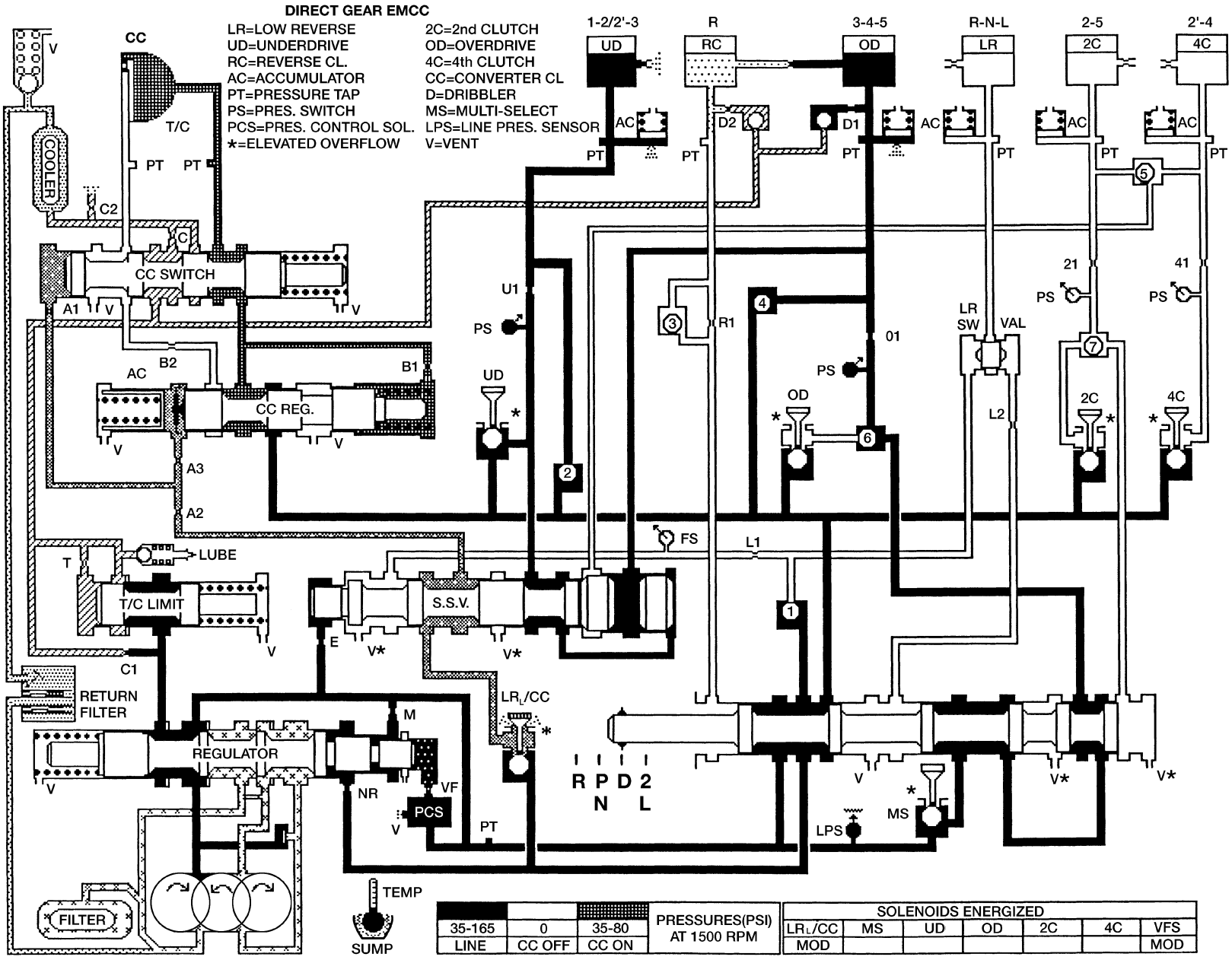

HYDRAULIC FLOW IN DIRECT GEAR EMCC

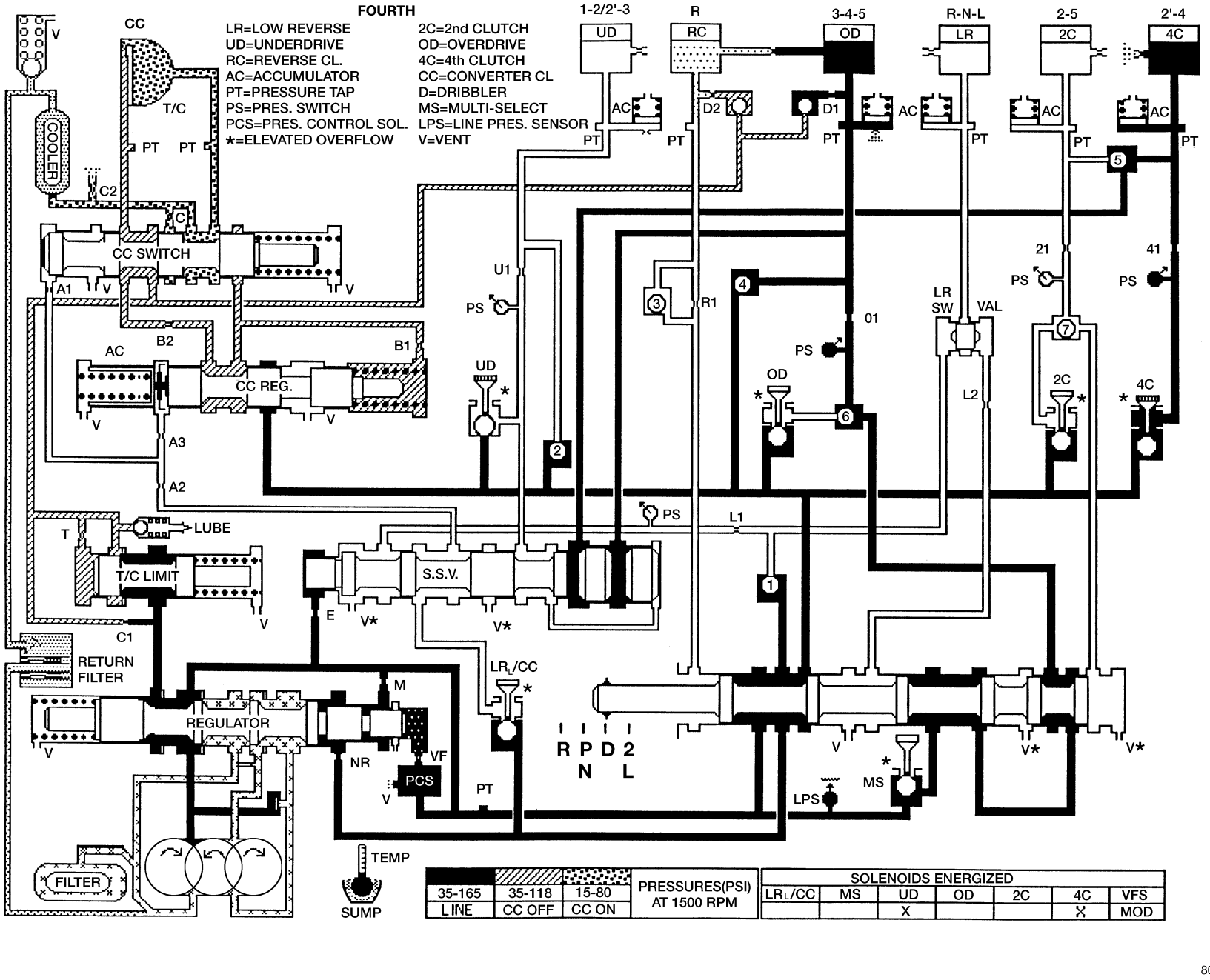

HYDRAULIC FLOW IN FOURTH

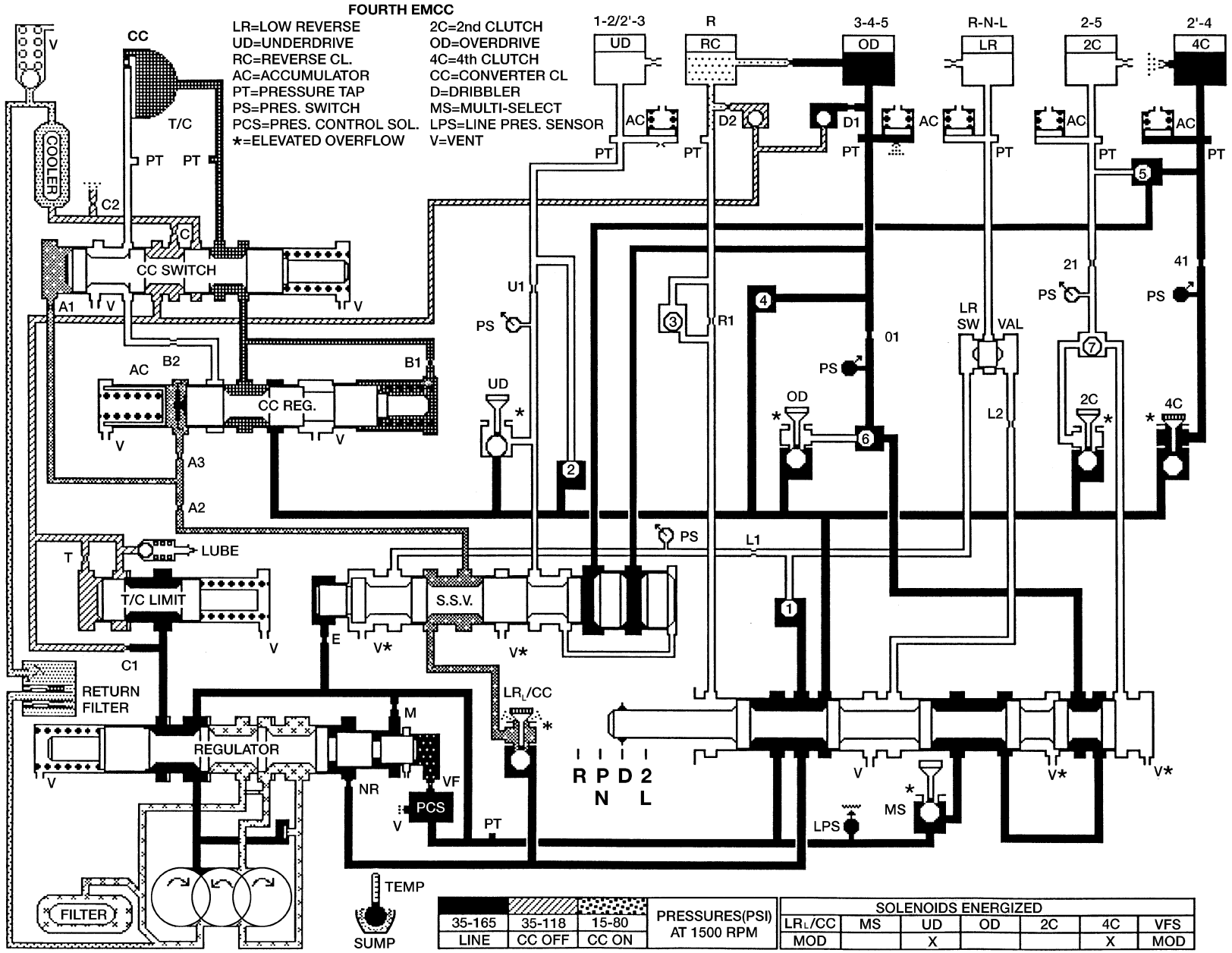

80a0e384

HYDRAULIC FLOW IN FOURTH EMCC

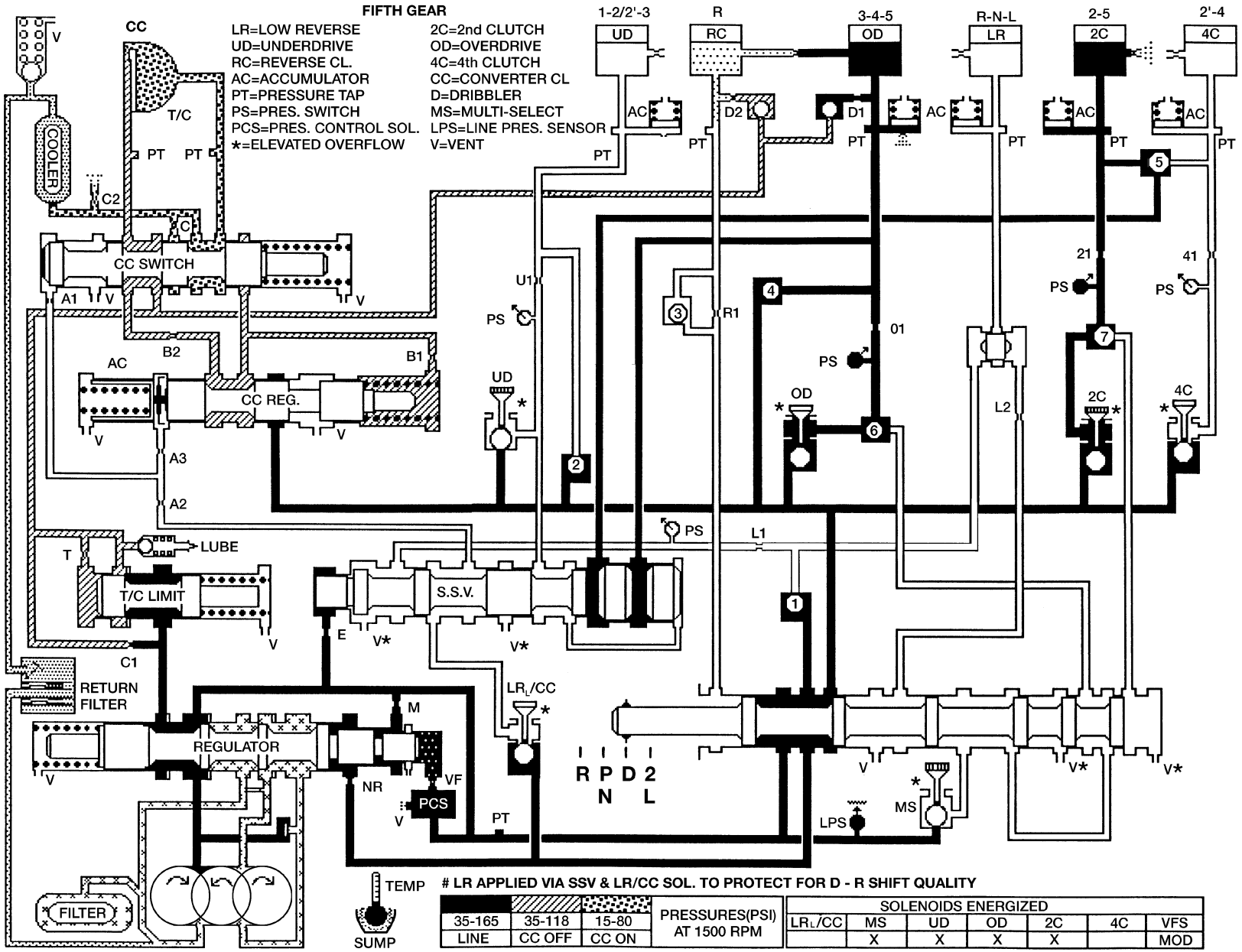

HYDRAULIC FLOW IN FIFTH

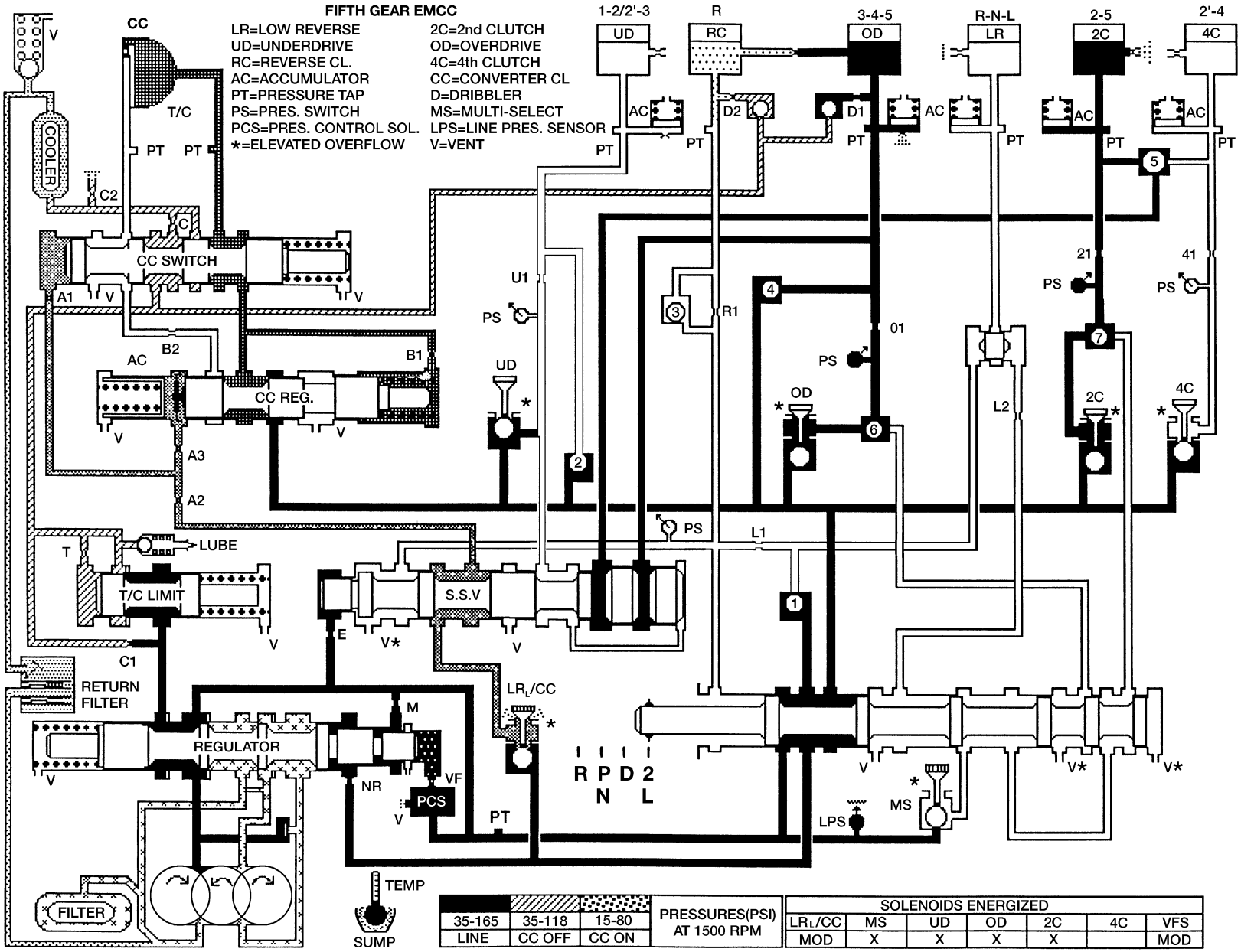

80a0e555

HYDRAULIC FLOW IN FIFTH EMCC

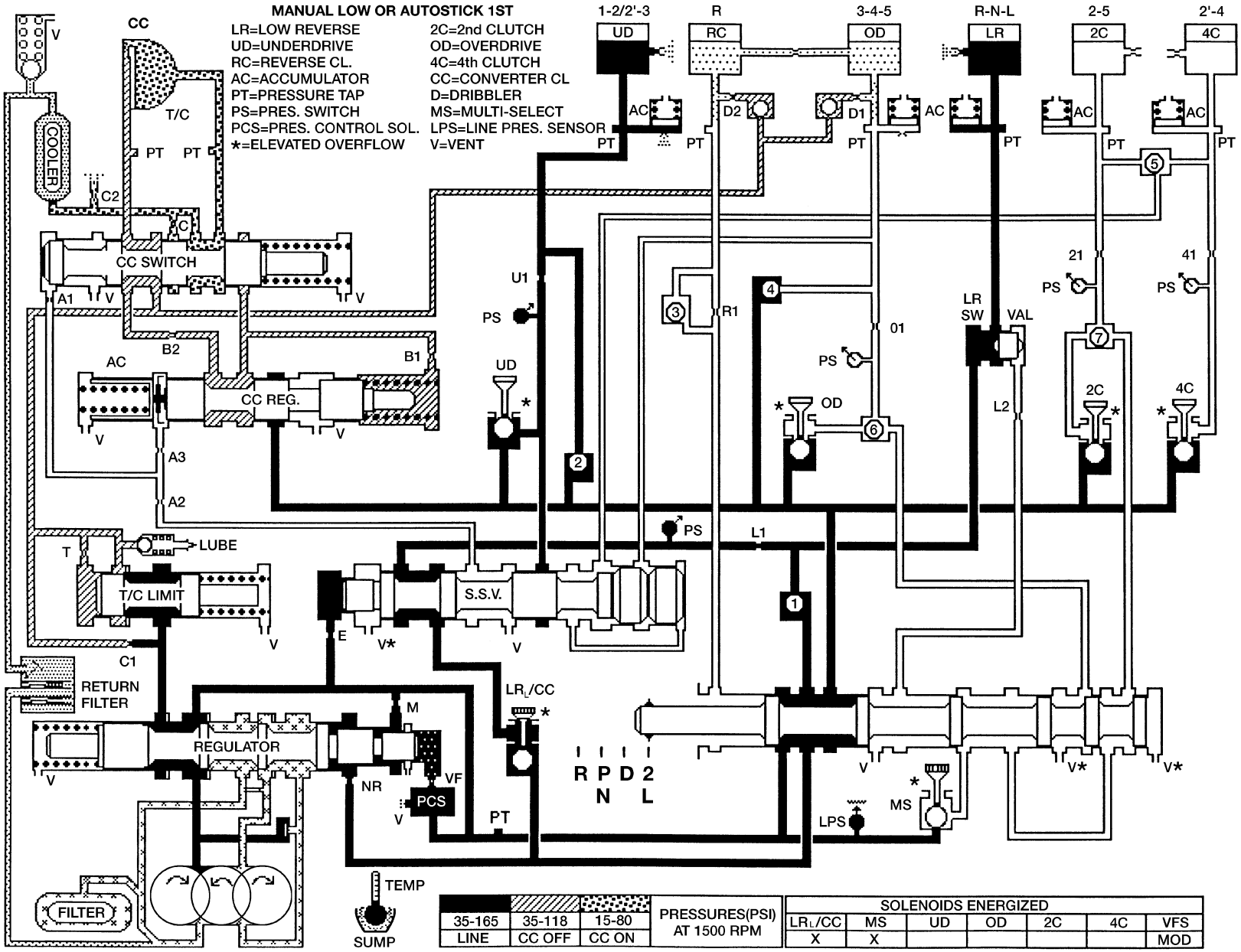

HYDRAULIC FLOW IN MANUAL LOW OR AUTOSTICK 1ST

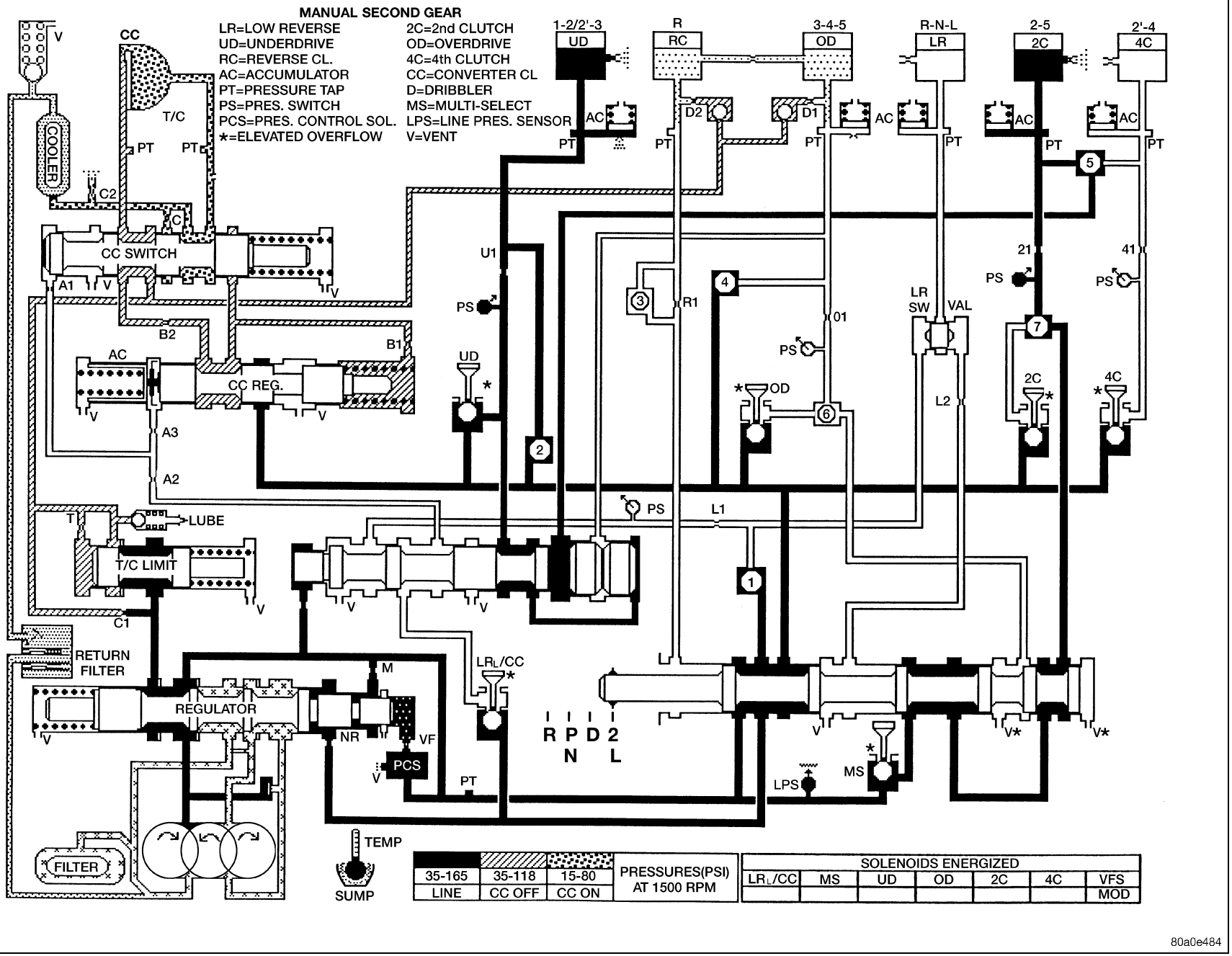

HYDRAULIC FLOW IN MANUAL SECOND

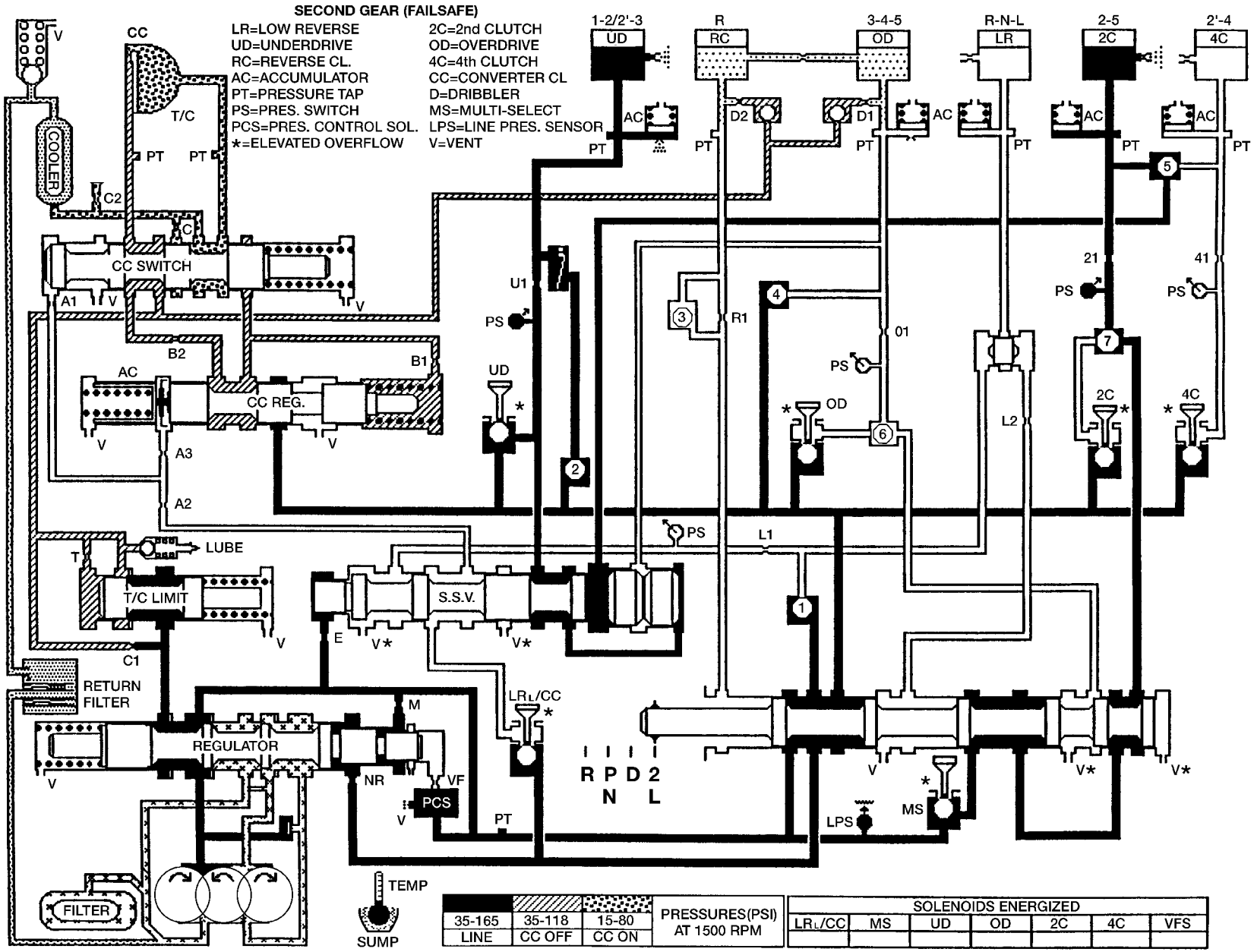

35-165 LINE	35-118 CC OFF	15-80 CC ON	PRESSURES(PSI) AT 1500 RPM

SOLENOIDS ENERGIZED						
LRL/CC	MS	UD	OD	2C	4C	VFS

80a0e533

HYDRAULIC FLOW IN MANUAL SECOND (FAILSAFE)

Specifications

GENERAL

Component	mm	in.
Output Shaft End Play	0.22-0.55	0.009-0.021
Input Shaft End Play	0.46-0.89	0.018-0.035.
2C Clutch Pack Clearance	0.455-1.335	0.018-0.053.
4C Clutch Pack Clearance	0.770-1.390	0.030-0.055
L/R Clutch Pack Clearance	1.00-1.74	0.039-0.069
OD Clutch Pack Clearance	1.103-1.856	0.043-0.073
UD Clutch Pack Clearance	0.84-1.54	0.033-0.061
Reverse Clutch Pack Clearance	0.81-1.24	0.032-0.049
Recommended fluid	Mopar® ATF +4	

GEAR RATIOS

Gear	Gear Ratio
1ST	3.00:1
2ND	1.67:1
2ND PRIME	1.50:1
3RD	1.00:1
4TH	0.75:1
5TH	0.67:1
REVERSE	3.00:1

TORQUE SPECIFICATIONS

DESCRIPTION	N·m	Ft. Lbs.	In. Lbs.
Nut, Output Shaft Flange (2WD Models equipped with flange)	149	110	-
Fitting, cooler line at trans	17.5	-	155
Bolt, torque converter housing to engine upper four	41	30	-
Bolt, torque converter housing to engine lower four	54	40	-
Bolts, transmission collar	68	50	-
Bolt, torque converter to driveplate	31	23	270
Bolt/nut, crossmember	68	50	-
Bolt, driveplate to crankshaft	75	55	-

TORQUE SPECIFICATIONS, continued

DESCRIPTION	N·m	Ft. Lbs.	In. Lbs.
Bolts, clevis bracket / rear support	47	35	-
Bolt , converter housing	68	50	-
Bolt, oil pan	12	-	105
Screw, primary fluid filter	4.5	-	40
Nuts, transfer case	35	26	-
Oil Filter, Cooler Return	9.5		84
Bolt, oil pump	28	-	250
Bolt, oil pump body to cover	4.5	-	40
Screw, plate to oil pump body	4.5	-	40
Bolt, valve body to case	12	-	105
Plug, pressure test port	5	-	45
Bolt, reaction shaft support	12	-	105
Screw, valve body to transfer plate	5.5	-	50
Screw, solenoid module to transfer plate	6	-	50
Screw, accumulator cover	7	-	60
Screw, detent spring	4.5	-	40
Bolt, input speed sensor	12	-	105
Bolt, output speed sensor	12	-	105
Bolt, line pressure sensor	12	-	105
Bolt, extension housing	54	40	-
Screw, manual valve cam retaining	4.5	-	40
Screw, manual selector shaft retaining	28	-	250
Cross-bolt, manual selector shaft	16	-	140

Special Tools

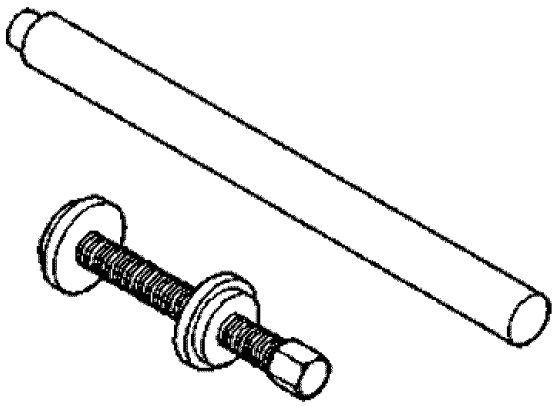

6960 - Tools, Trak-Lok Axle

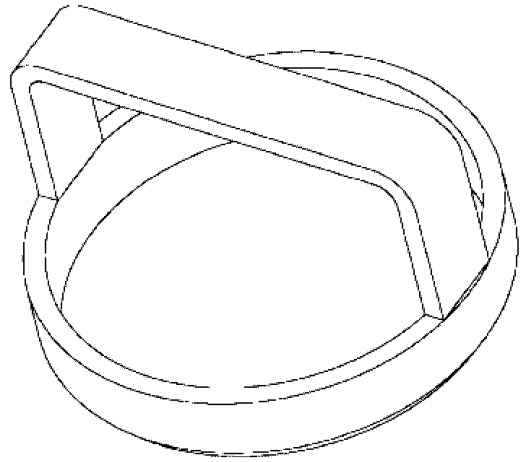

8251 - Compressor, Spring

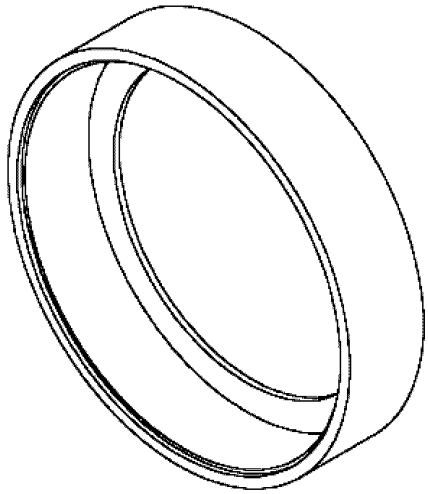

8249 - Compressor, Spring

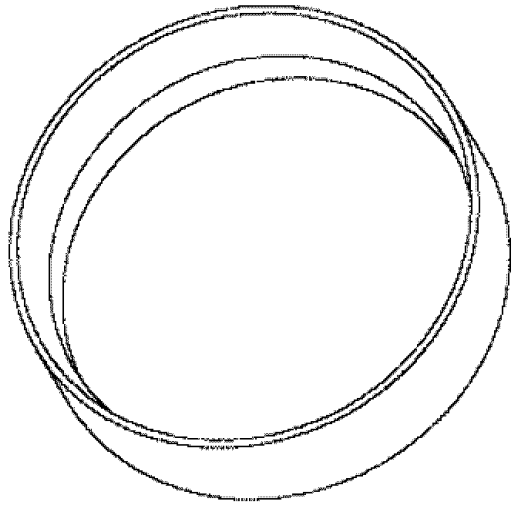

8252 - Installer

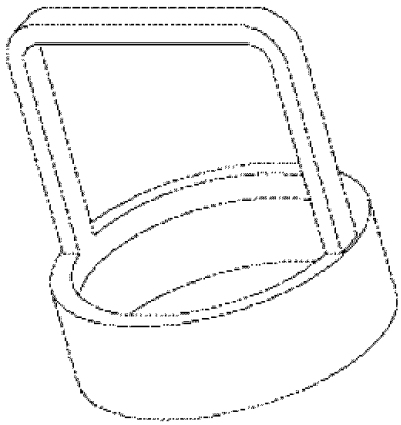

8250 - Compressor, Spring

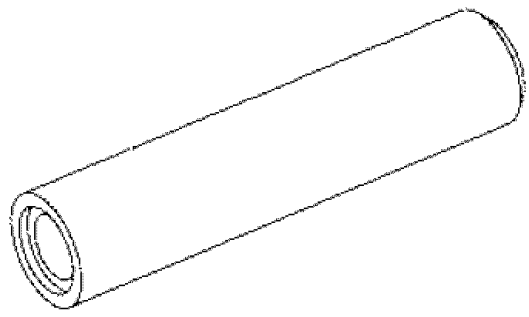

8253 - Installer, Seal

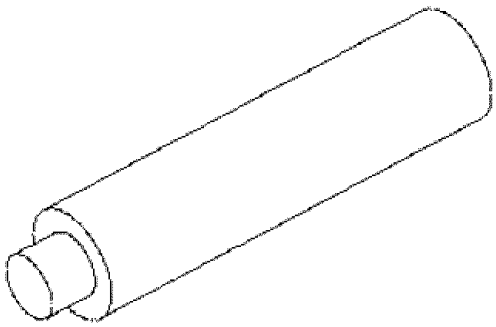

8254 - Installer, Grommet

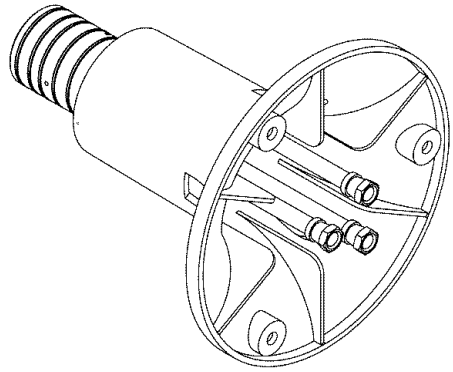

8260A - Fixture, Input Clutch

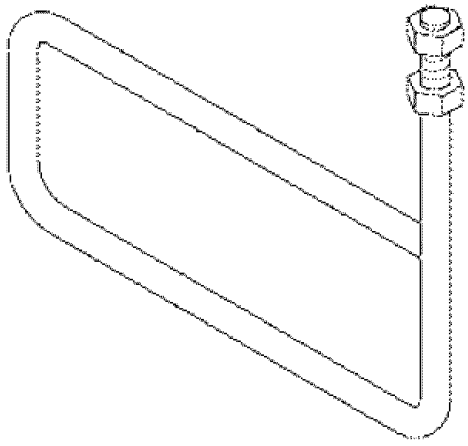

8257 - Support, Transmission

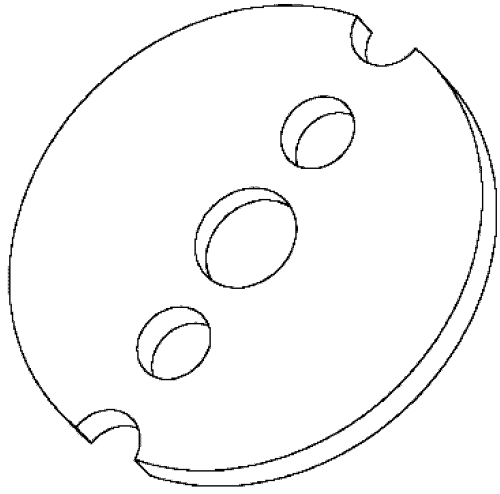

8261 - Plate, Alignment

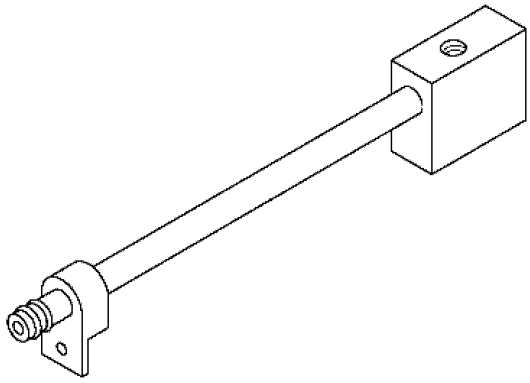

8259 - Adapter, Pressure Test

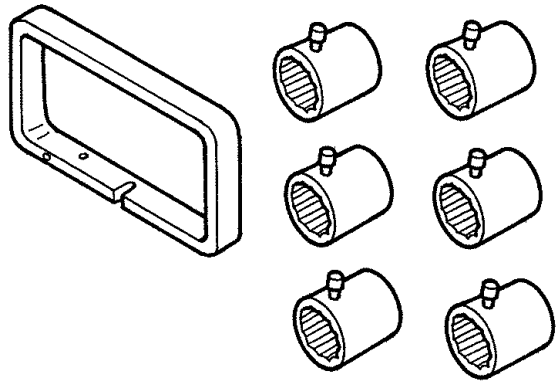

8266-1 - Spline Tool, RFE Input

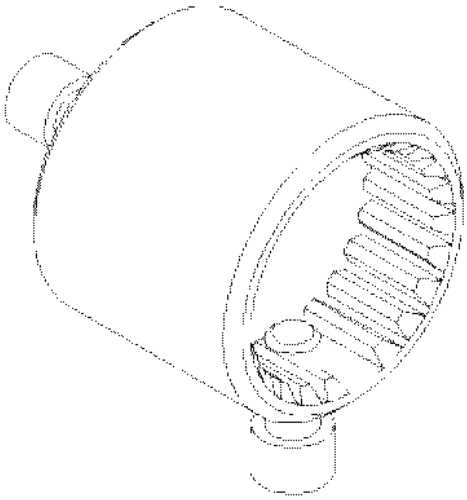

8266-17 - Spline Tool, RFE Output

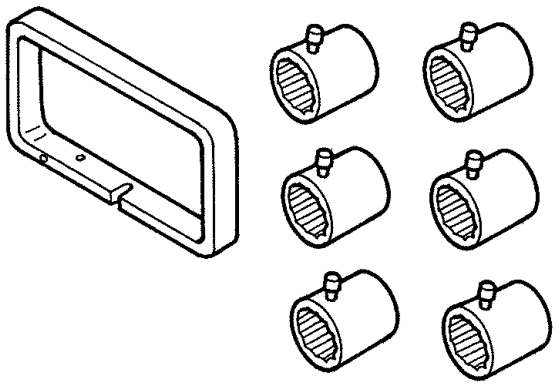

8266B - End Play Socket Set

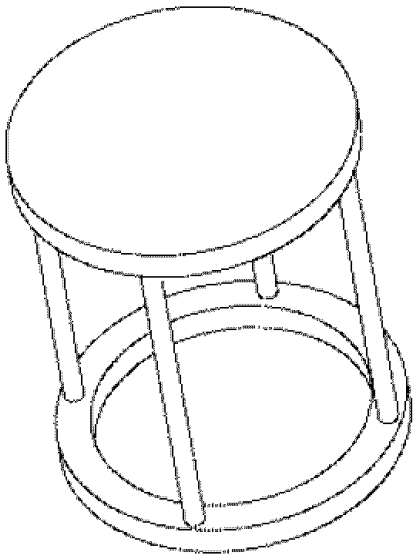

8285 - Compressor, Spring

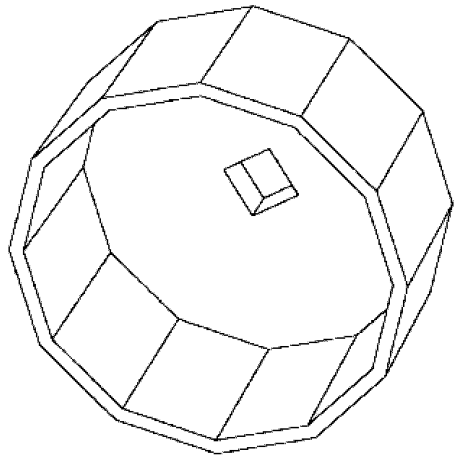

8321 - Wrench, Oil Filter

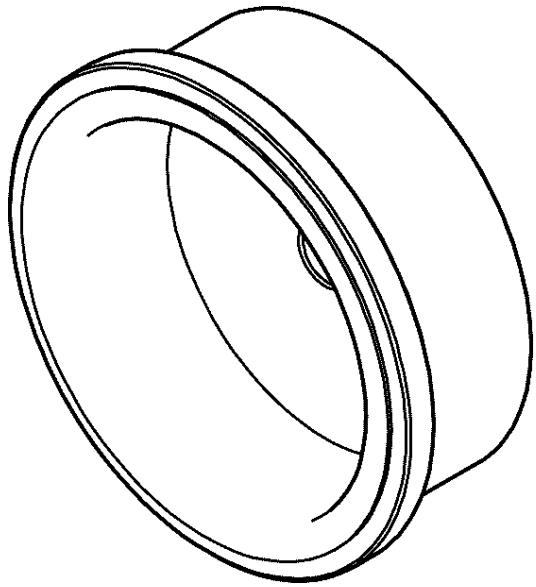

8349-1 - Installer Crank Seal

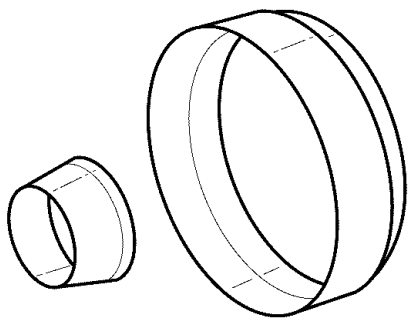

8504 - Installer

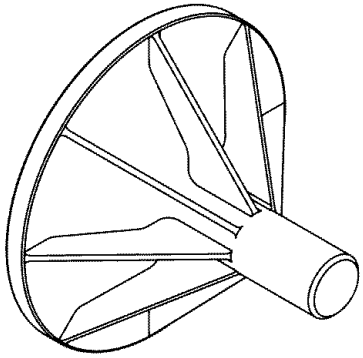

9955 - Installer, Front Cover

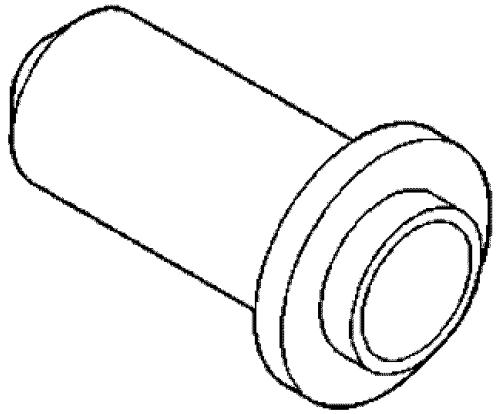

C-3860-A - Installer, Seal

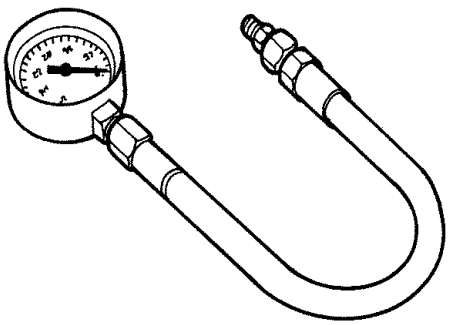

C-3293-SP - Gauge, Pressure 0-300 P.S.I.

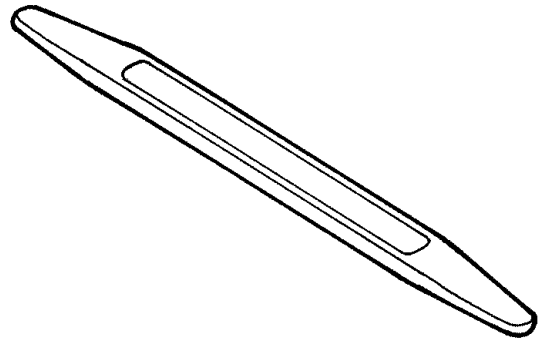

C-4755 - Trim Stick

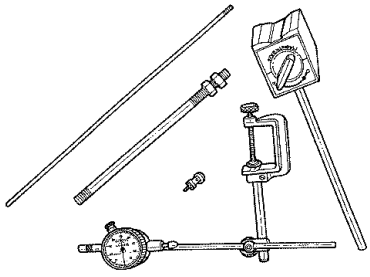

C-3339A - Set, Dial Indicator

ASSEMBLY, Input Clutch

Description

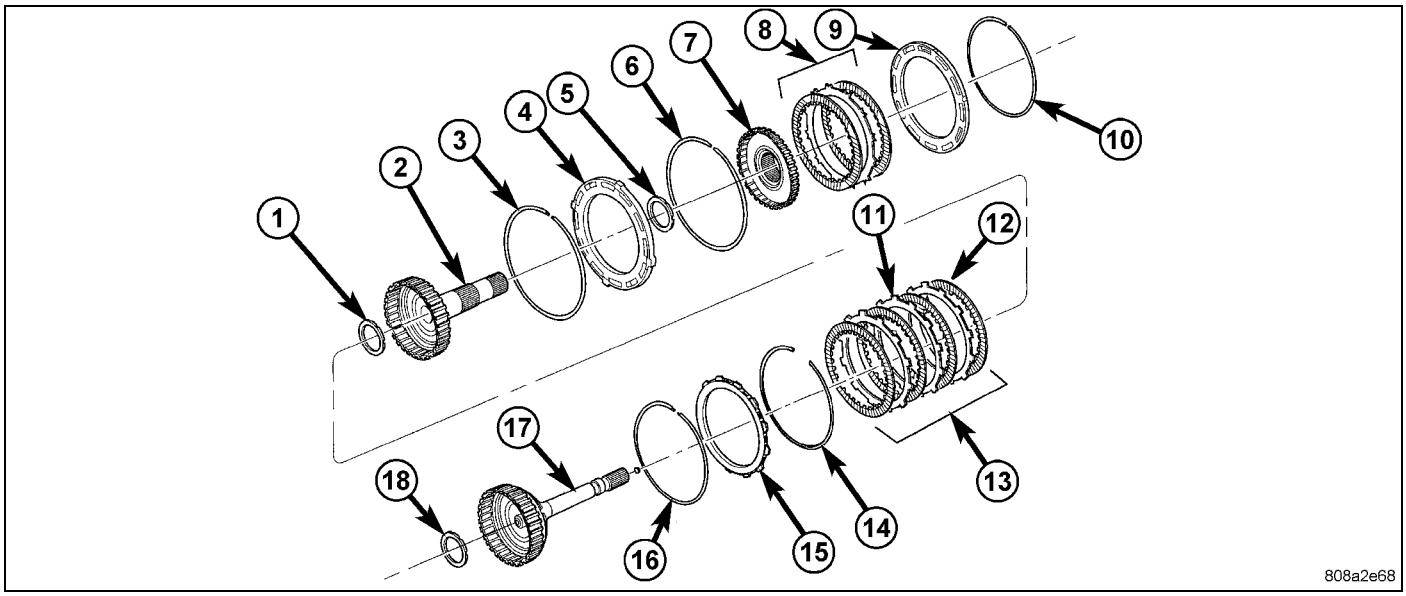

Input Clutch Assembly - Part 2

1 - THRUST BEARING NUMBER 3	10 - SNAP-RING (SELECT)
2 - OD HUB/SHAFT	11 - PLATE
3 - SNAP-RING (WAVE)	12 - DISC
4 - REV/OD REACTION PLATE	13 - OD CLUTCH
5 - THRUST BEARING NUMBER 4	14 - SNAP-RING (TAPERED)
6 - SNAP-RING (FLAT)	15 - UD/OD REACTION PLATE
7 - REVERSE HUB/SHAFT	16 - SNAP-RING (FLAT)
8 - REVERSE CLUTCH	17 - UD HUB/SHAFT
9 - REVERSE REACTION PLATE	18 - THRUST BEARING NUMBER 2

Three hydraulically applied input clutches are used to drive planetary components. The underdrive, overdrive, and reverse clutches are considered input clutches and are contained within the input clutch assembly.

The input clutch assembly also contains:

- Input shaft
- Input hub
- Clutch retainer
- Underdrive piston
- Overdrive/reverse piston
- Overdrive hub
- Underdrive hub

Operation

The three input clutches are responsible for driving different components of the planetary geartrain.

UNDERDRIVE CLUTCH

The underdrive clutch is hydraulically applied in first, second, second prime, and third (direct) gears by pressurized fluid against the underdrive piston. When the underdrive clutch is applied, the underdrive hub drives the input sun gear.

OVERDRIVE CLUTCH

The overdrive clutch is hydraulically applied in third (direct), fourth, and fifth gears by pressurized fluid against the overdrive/reverse piston. When the overdrive clutch is applied, the overdrive hub drives the reverse carrier/input annulus assembly.

REVERSE CLUTCH

The reverse clutch is hydraulically applied in reverse gear by pressurized fluid against the overdrive/reverse piston. When the reverse clutch is applied, the reaction annulus gear is driven.

Disassembly

NOTE: If the input clutch assembly is being reconditioned (clutch/seal replacement) or replaced, it is necessary to perform the Quick Learn Procedure using the scan tool (Refer to 08 - Electrical/8E - Electronic Control Modules/MODULE, Transmission Control - Standard Procedure).

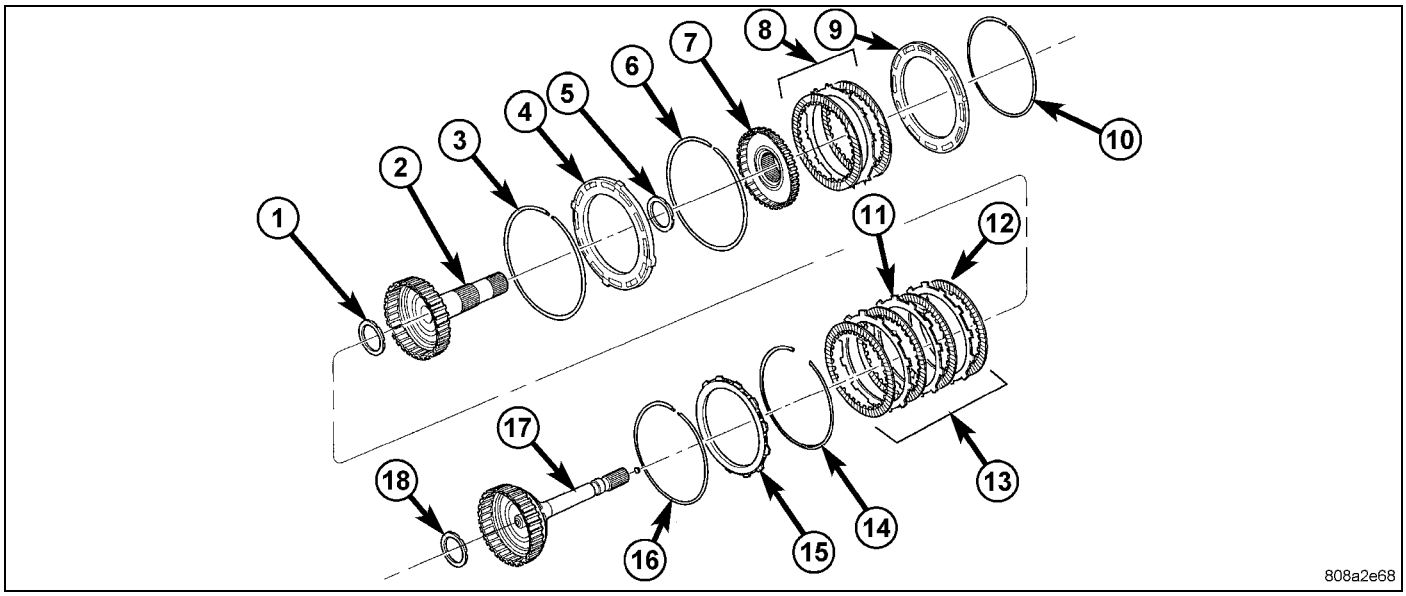

1. Remove the reverse reaction plate selective snap-ring (10) from the input clutch retainer.
2. Remove the reverse reaction plate (9) from the input clutch retainer.
3. Remove the reverse hub (7) and reverse clutch pack (8) from the input clutch retainer.
4. Remove the number 4 thrust bearing (5) from the overdrive hub (2).
5. Remove the overdrive hub (2) from the input clutch retainer.
6. Remove the number 3 thrust bearing (1) from the underdrive hub (17).
7. Remove the OD/reverse pressure plate snap-ring (6) from the from the OD/reverse piston.
8. Remove the underdrive hub (17), overdrive clutch (13), and overdrive reaction plate (15) from the input clutch retainer.

NOTE: The overdrive friction discs and steel discs are thicker than the matching components in the underdrive and reverse clutches.

9. Remove the number 2 thrust bearing (18) from the input clutch hub.
10. Remove the overdrive clutch wave snap-ring (3) from the from the OD/reverse piston.
11. Remove the UD/OD reaction plate tapered snap-ring (14) from the input clutch retainer (13).
12. Remove the UD/OD reaction plate (15) from the input clutch retainer.
13. Remove the UD/OD reaction plate flat snap-ring (16) from the input clutch retainer.

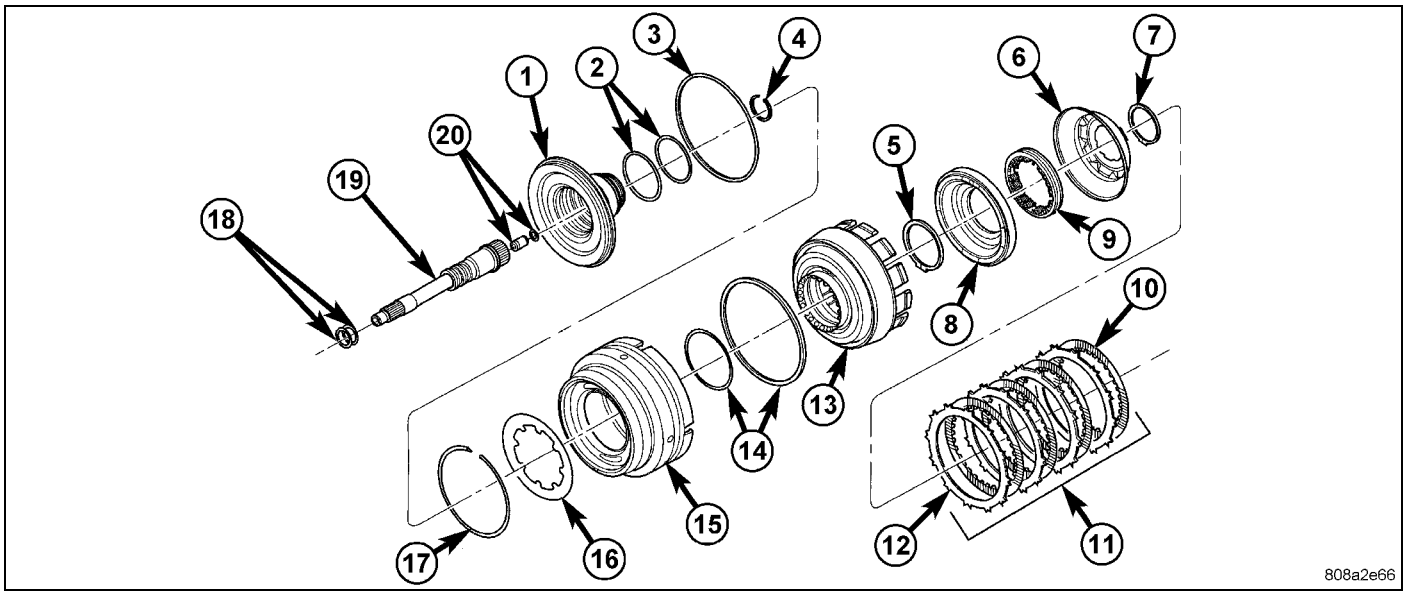

14. Remove the underdrive clutch pack (11) from the input clutch retainer (13).
15. Using Spring Compressor 8251 (2) , compress the UD balance piston (3) and remove the snap-ring from the input clutch hub.

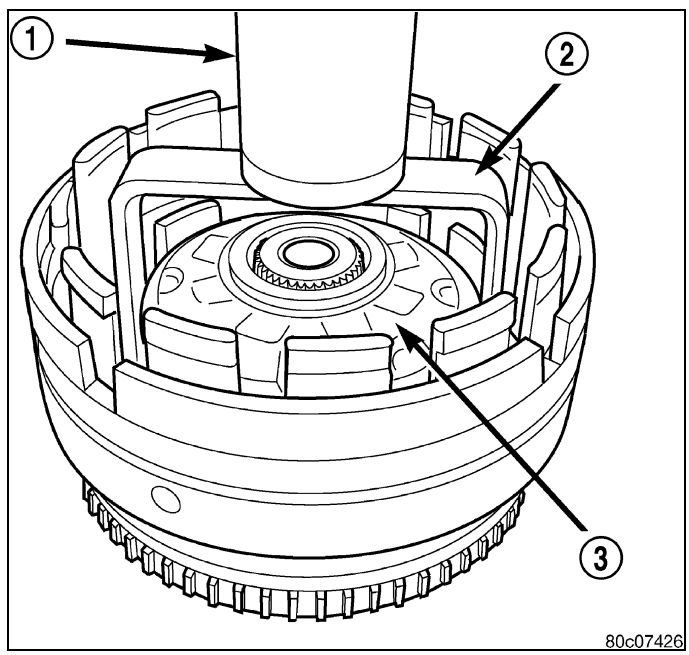

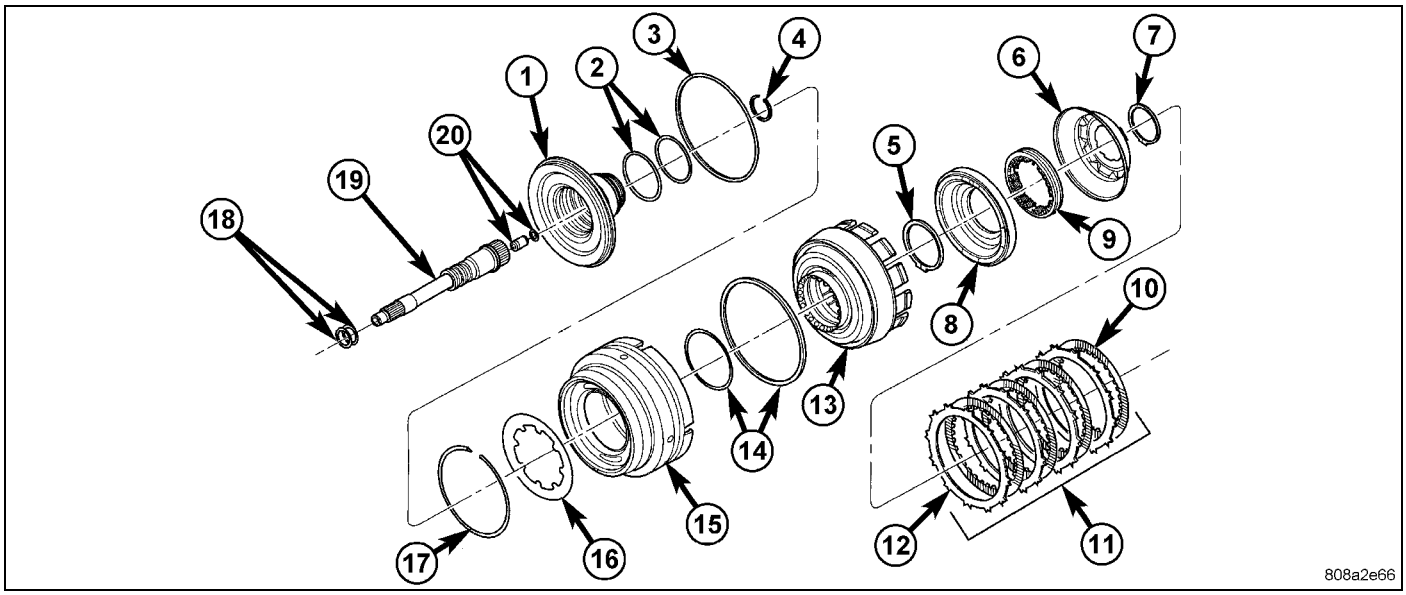

16. Remove the UD balance piston (6) and piston return spring (9) from the input clutch retainer (13).
17. Remove the underdrive piston (8) from the input clutch retainer (13).

NOTE: Both the UD balance piston and the underdrive piston have seals molded onto them. If the seal is damaged, do not attempt to install a new seal onto the piston. The piston/seal must be replaced as an assembly.

18. Remove the input clutch retainer tapered snap-ring (5).
19. Separate input clutch retainer (13) from input clutch hub (1).
20. Separate OD/reverse piston (15) from input clutch hub retainer (13).
21. Using Arbor Press (1) and tool 8349-1 (2) compress the OD / Reverse belleville spring just enough to remove the snap ring.
22. Remove the belleville spring and snap ring from the OD / Reverse piston (3).
23. Remove all seals and o-rings from the input shaft and input hub. The o-rings on the input hub are color coded. Be sure to make note of which o-ring belongs in which location.

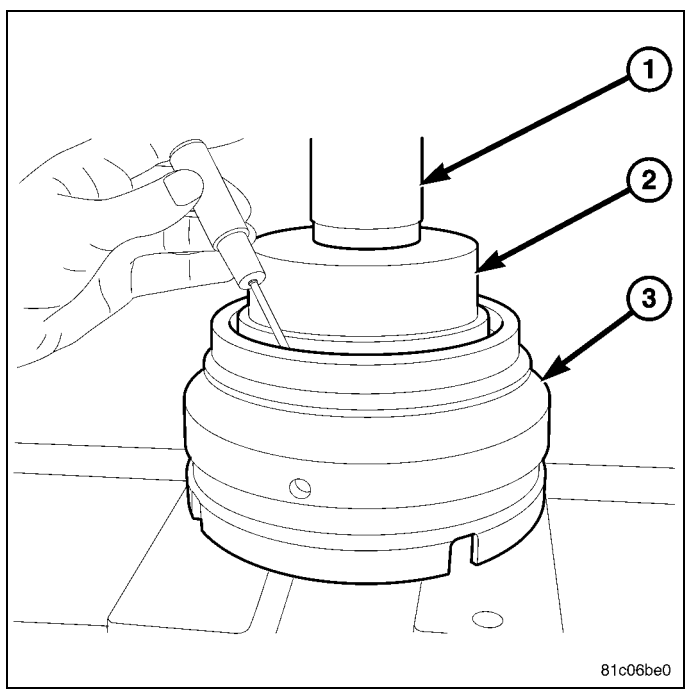

Assembly

NOTE: When installing the OD / Reverse piston belleville spring, orientate it such that it contacts a new surface on the piston.

1. Install the belleville spring and snap ring loosely onto the OD / Reverse piston (3).
2. Using an Arbor Press (1) and tool 8349-1 (2) compress the belleville spring just enough to install the snap ring.

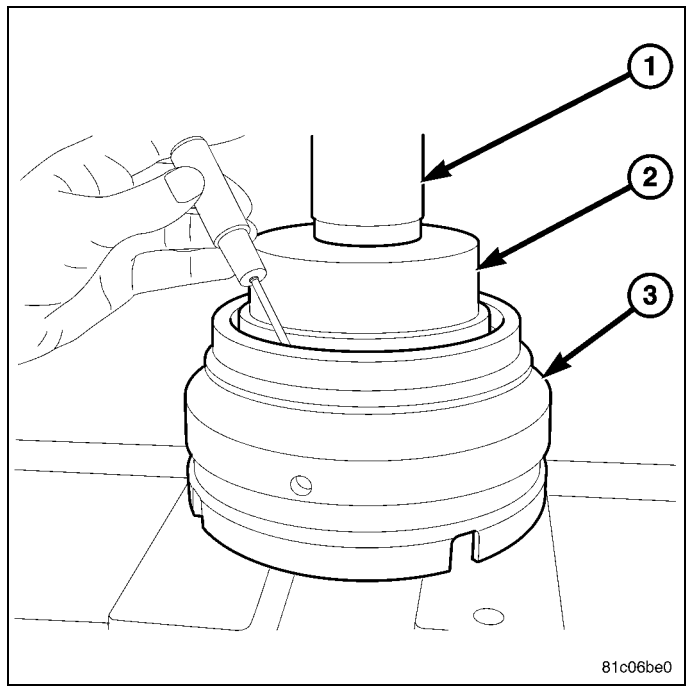

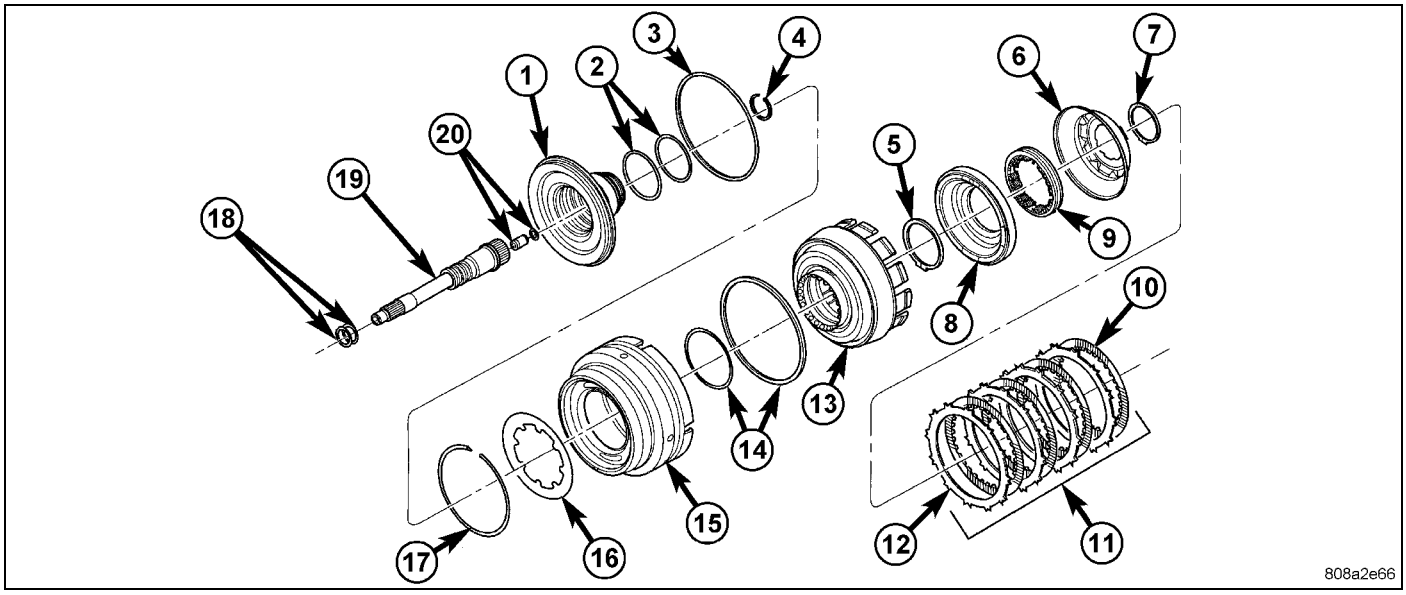

NOTE: Install all new seals and o-rings onto the input shaft and input hub. The o-rings on the input hub are color coded. Be sure to install the correct o-ring in the correct location.

3. Check the transmission lubrication check valve (20) located in the input shaft using shop air. The valve should only allow air flow in one direction. If the valve allows no air flow, or air flow in both directions, the valve will need to be replaced.
4. Lubricate all seals with Mopar® ATF +4, Automatic Transmission Fluid, prior to installation.
5. Assemble the OD/reverse piston (15) onto the input clutch hub (1).
6. Assemble the input clutch retainer (13) onto the input clutch hub (1).
7. Install the input clutch retainer tapered snap-ring (5) with tapered side up onto the input clutch hub (1).

8. Install Piston Installer 8504 (1) into the input clutch retainer and onto the input clutch hub to guide the inner and outer underdrive piston seals into position.
9. Install the underdrive piston into the input clutch retainer and over the input clutch hub.

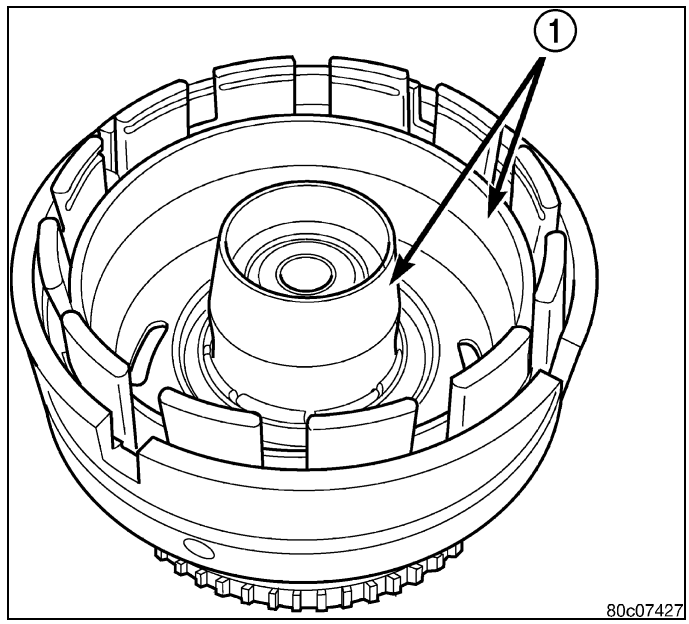

10. Install the UD balance piston return spring pack into the input clutch retainer.
11. Install Piston Installer 8252 (1) into the input clutch retainer to guide the UD balance piston seal into position inside the underdrive piston.

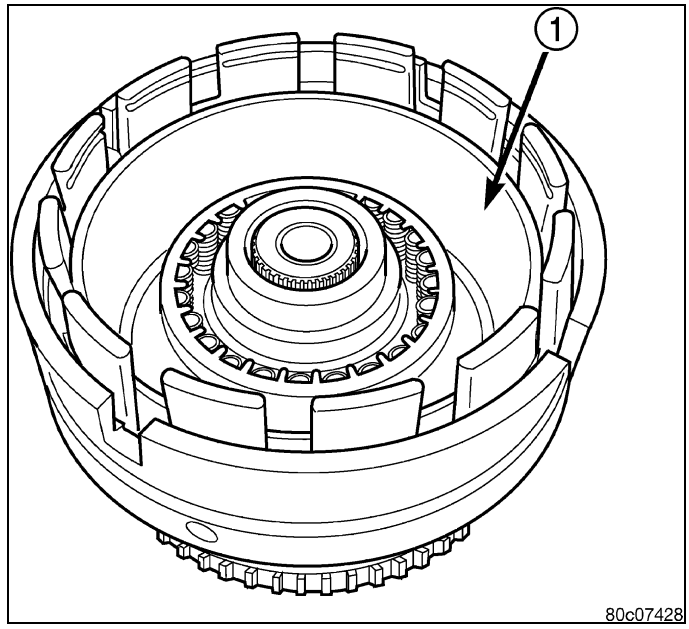

NOTE: The UD clutch discs can be identified by their cross-hatched groove pattern (two sets of parallel grooves at 90 degrees to each other). The UD separator plates can be identified by semi-circular cutouts on the edges of the teeth. The reverse clutch and UD clutch use common separator plates.

12. Install the UD balance piston (3) into the input clutch retainer and the underdrive piston.
13. Using Spring Compressor 8251 (2), compress the UD return spring pack and secure the piston in place with the snap-ring.
14. Install the underdrive clutch pack into the input clutch retainer.

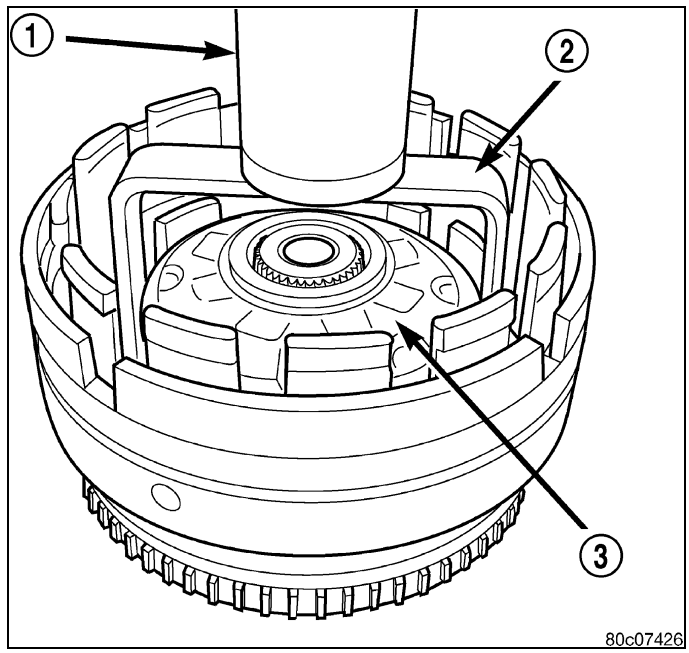

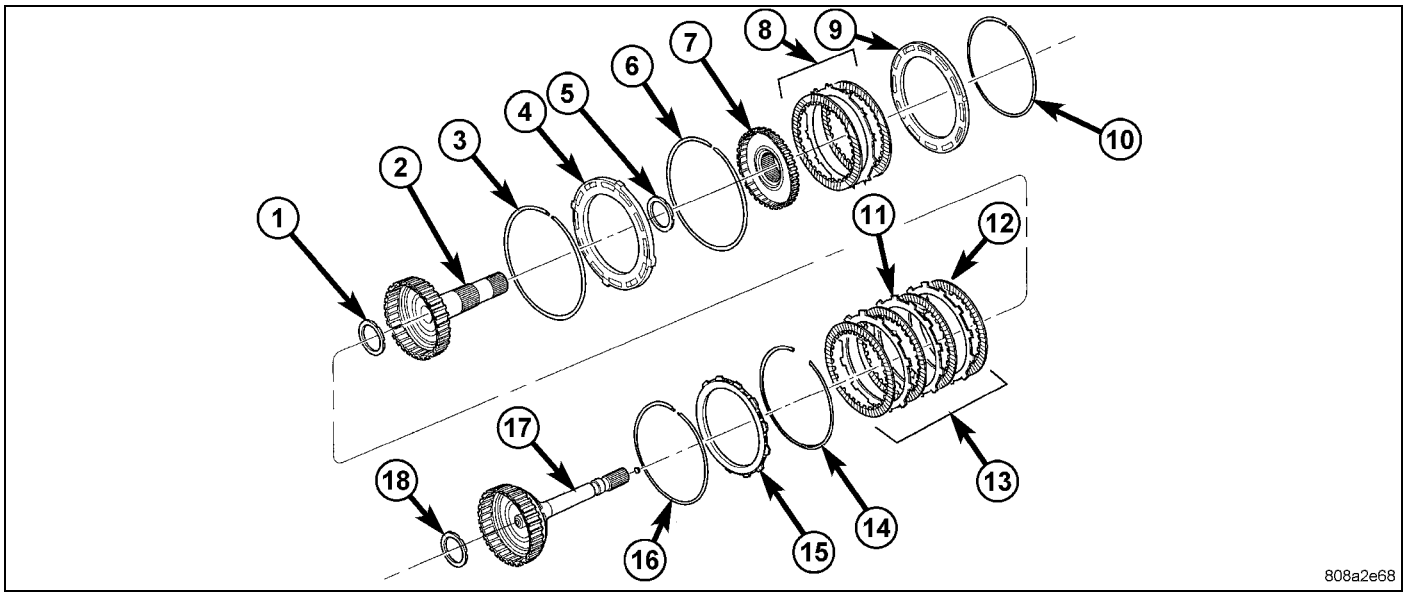

15. Install the UD reaction plate lower flat snap-ring (16) . The correct snap-ring can be identified by the two tabbed ears.
16. Install the UD reaction plate (15) into the input clutch retainer. The reaction plate is to be installed with the big step down.
17. Install the UD reaction plate upper tapered snap-ring (14) with tapered side up.

18. Install the input clutch assembly into Input Clutch Pressure Fixture 8260A (2).

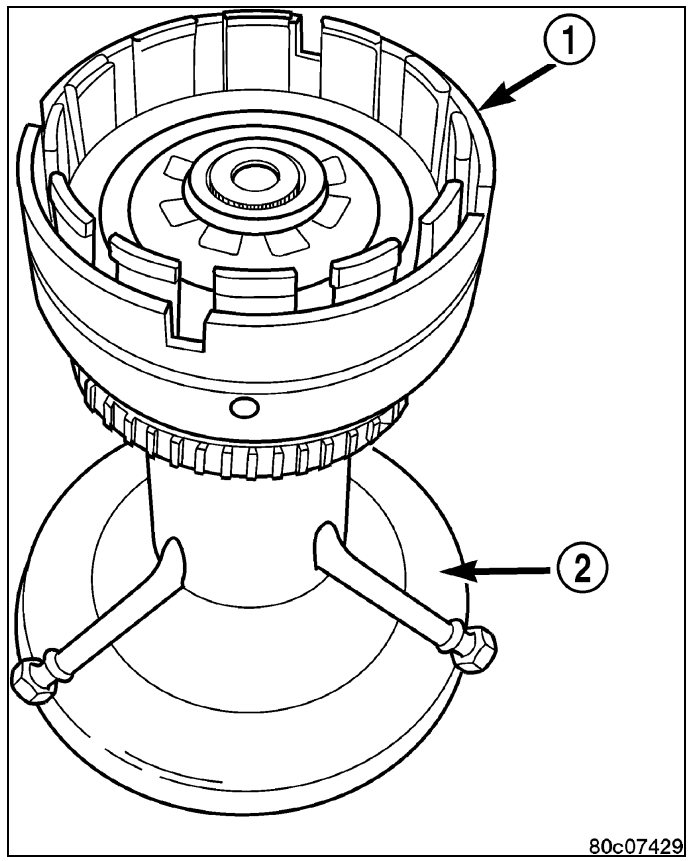

19. Mount a dial indicator C-3339A (1) on the input clutch hub. Push down on the UD clutch discs and zero the indicator against the underdrive clutch discs . Apply 20 psi of air pressure to the underdrive clutch and record the dial indicator reading. Measure and record UD clutch pack measurement in four (4) places, 90° apart. Take average of four measurements and compare with UD clutch pack clearance specification. The correct clutch clearance is 0.84-1.54 mm (0.033-0.061 in.). The reaction plate is not selective. If the clutch clearance is not within specification, replace the reaction plate along with all the friction and steel discs.

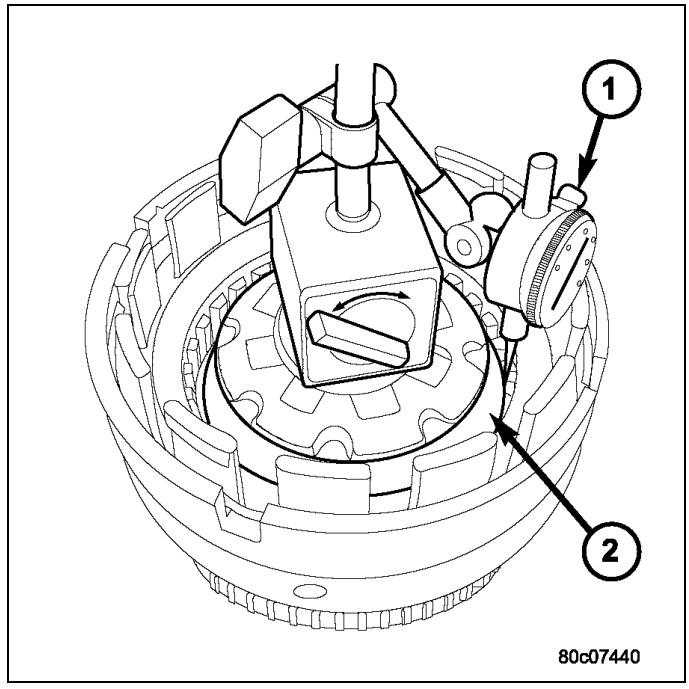

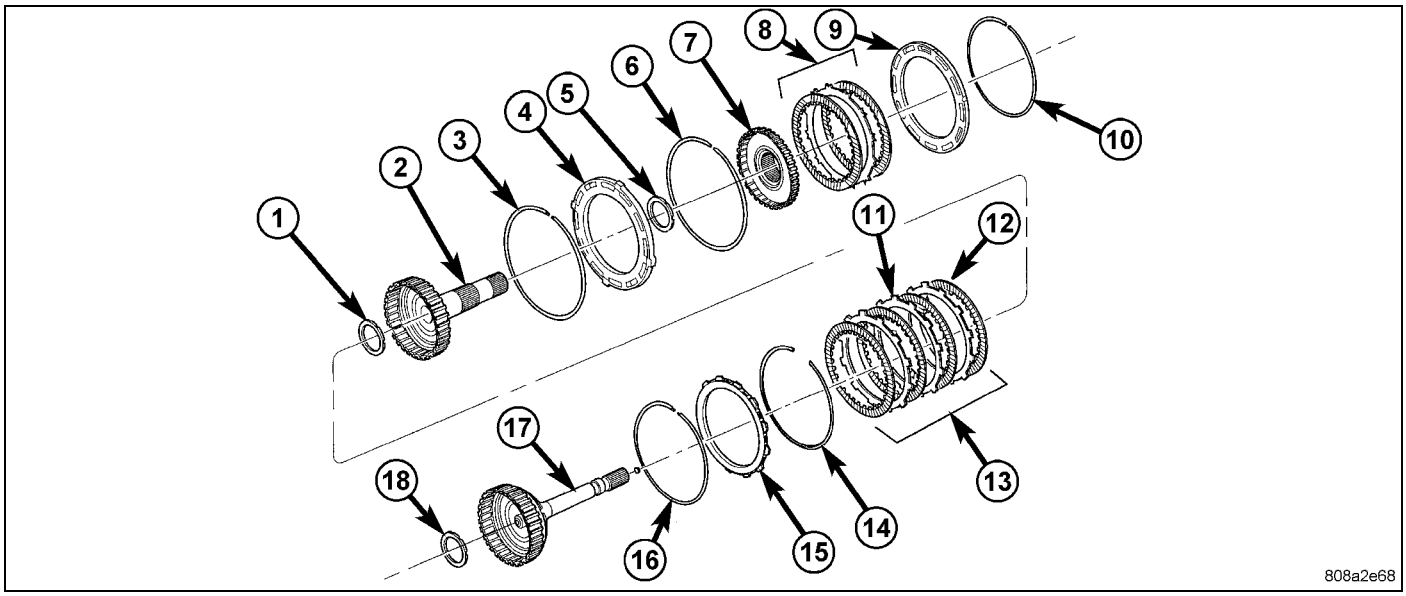

20. Install the overdrive clutch pack (13) into the input clutch retainer. The overdrive steel separator plates can be identified by the lack of the half-moon cuts in the locating tabs. The OD clutch discs can be identified by their radial groove pattern.The OD clutch discs can be identified by their radial groove pattern.
21. Install the overdrive clutch wavy snap-ring (3) with the two tabbed ears into the OD/reverse piston .
22. Install the OD/reverse pressure plate (4) into the input clutch retainer. The pressure plate is non-directional.
23. Install the OD/reverse reaction plate flat snap-ring (6) into the OD/reverse piston .
24. Mount a dial indicator C-3339A (1) on the input clutch hub and zero the indicator against the OD/reverse pressure plate (2). . Apply 20 psi of air pressure to the overdrive clutch and record the dial indicator reading. Measure and record OD clutch pack measurement in four (4) places, 90° apart. Take average of four measurements and compare with OD clutch pack clearance specification. Verify that the clutch clearance is 1.103-1.856 mm (0.043-0.073 in.). The pressure plate is not selective. If the clutch clearance is not within specification, replace the pressure plate along with all the friction and steel discs.

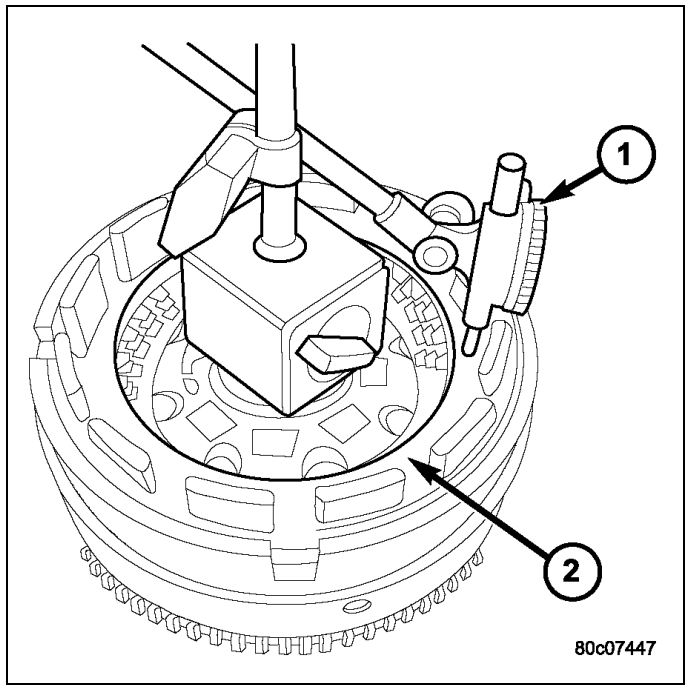

25. Install the reverse clutch pack into the input clutch retainer.
26. Install the reverse reaction plate into the input clutch retainer.
27. Install the reverse reaction plate selective snap-ring into the input clutch retainer.

28. Mount a dial indicator to the assembly, push down on the clutch discs, pull up on the reaction plate to ensure the plate is properly seated and zero the indicator against the reverse clutch discs (2) . Apply 20 psi of air pressure to the reverse clutch and record the dial indicator reading. Measure and record Reverse clutch pack measurement in four (4) places, 90° apart. Take average of four measurements and compare with Reverse clutch pack clearance specification. The correct clutch clearance is 0.81-1.24 mm (0.032-0.049 in.). Adjust as necessary. Install the chosen snap-ring and re-measure to verify selection.

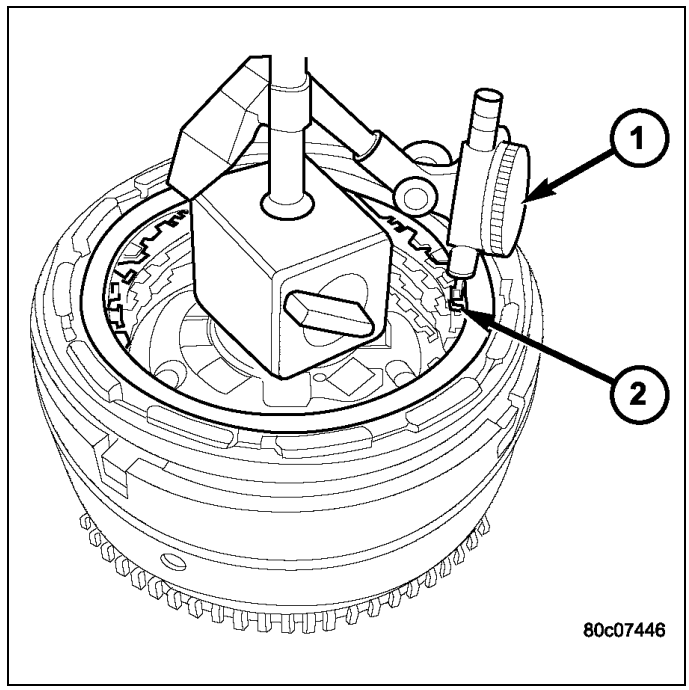

NOTE: The 545RFE uses one of three (3) different selective snap rings. They are identified by the end cuts (either straight [square] cut or "butterfly" [S-curved] cut):

SELECTABLE END PLAY SNAP RINGS

- One Square End, One Buttery Fly End = 1.55 mm (0.061 in.)
- Both Ends Square Cut = 1.85 mm (0.073 in)
- Both Ends Buttery Fly Cut = 2.2 mm (0.087 in.)

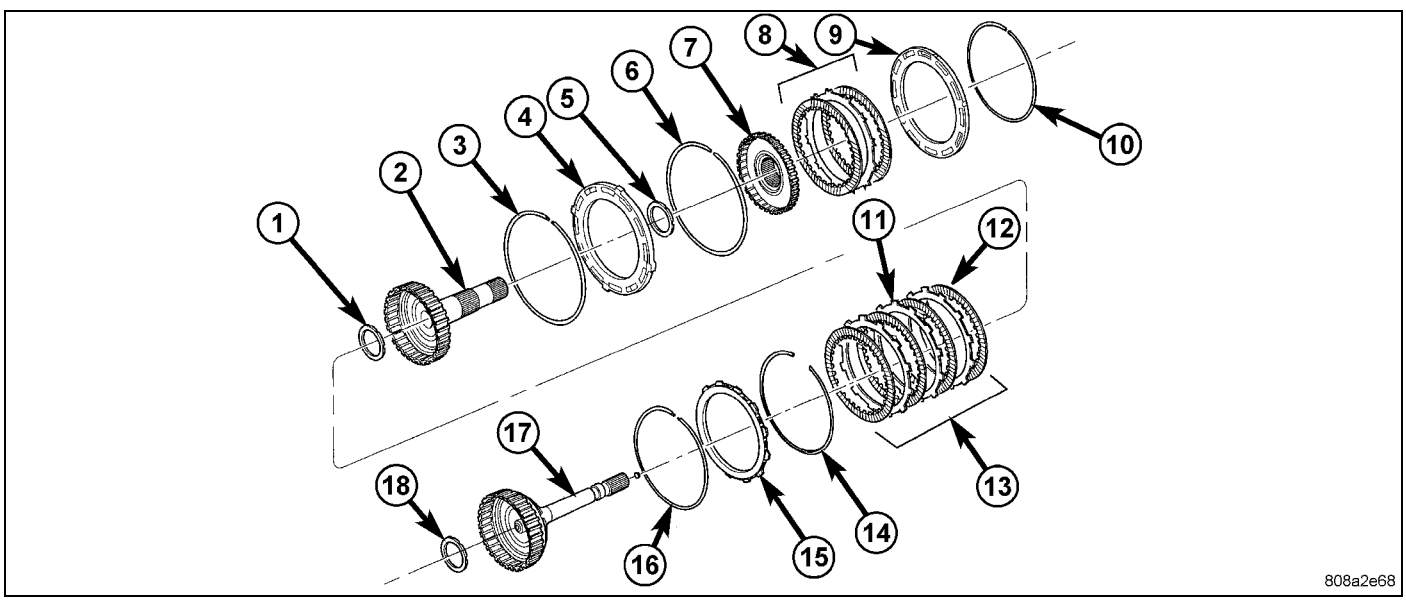

29. Remove the reverse clutch pack (8) from the input clutch retainer.
30. Install the number 2 thrust bearing (18) onto the underdrive hub (17) with outer race against the hub with petroleum jelly.
31. Install the underdrive hub (17) into the input clutch retainer.
32. Install the number 3 thrust bearing (1) into the overdrive hub (2) with the outer race against the hub with petroleum jelly.
33. Install the overdrive hub (2) into the input clutch retainer.
34. Install the number 4 thrust bearing (5) into the reverse hub with outer race against the hub with petroleum jelly.
35. Install the reverse hub (7) into the input clutch retainer.
36. Install the complete reverse clutch pack (8).
37. Install the reverse reaction plate (9) and snap-ring (10).
38. Push up on reaction plate to allow reverse clutch to move freely.

ASSEMBLY, Transmission Solenoid and TRS

Description

The transmission solenoid/TRS assembly is internal to the transmission and mounted on the valve body assembly . The assembly consists of six solenoids that control hydraulic pressure to the six friction elements (transmission clutches), and the torque converter clutch. The pressure control solenoid is located on the side of the solenoid/TRS assembly. The solenoid/TRS assembly also contains the Transmission Range Sensor (TRS) and five pressure switches that feed information to the TCM.

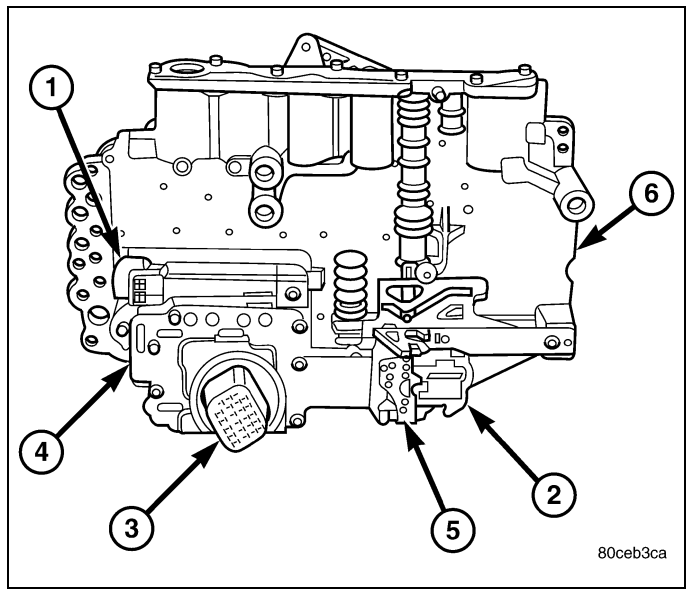

Operation

SOLENOIDS

Solenoids are used to control the L/R, 2C, 4C, OD, and UD friction elements. The reverse clutch is controlled by line pressure and the position of the manual valve in the valve body. All the solenoids are contained within the Solenoid and Pressure Switch Assembly. The solenoid and pressure switch assembly contains one additional solenoid, Multi-Select (MS), which serves primarily to provide 2nd and 3rd gear limp-in operation.

The solenoids receive electrical power from the Transmission Control Relay through a single wire. The TCM energizes or operates the solenoids individually by grounding the return wire of the solenoid as necessary. When a solenoid is energized, the solenoid valve shifts, and a fluid passage is opened or closed (vented or applied), depending on its default operating state. The result is an apply or release of a frictional element.

The MS and UD solenoids are normally applied to allow transmission limp-in in the event of an electrical failure.

The continuity of the solenoids and circuits are periodically tested. Each solenoid is turned on or off depending on its current state. An inductive spike should be detected by the TCM during this test. If no spike is detected, the circuit is tested again to verify the failure. In addition to the periodic testing, the solenoid circuits are tested if a speed ratio or pressure switch error occurs.

PRESSURE SWITCHES

The TCM relies on five pressure switches to monitor fluid pressure in the L/R, 2C, 4C, UD, and OD hydraulic circuits. The primary purpose of these switches is to help the TCM detect when clutch circuit hydraulic failures occur. The switches close at 23 psi and open at 11 psi, and simply indicate whether or not pressure exists. The switches are continuously monitored by the TCM for the correct states (open or closed) in each gear as shown in the following charts and 545RFE PRESSURE SWITCH STATES:

545RFE PRESSURE SWITCH STATES

GEAR	L/R	2C	4C	UD	OD
R	OP	OP	OP	OP	OP
P/N	CL	OP	OP	OP	OP
1ST	CL*	OP	OP	CL	OP
2ND	OP	CL	OP	CL	OP

545RFE PRESSURE SWITCH STATES, continued

GEAR	L/R	2C	4C	UD	OD
2ND PRIME	OP	OP	CL	CL	OP
3RD	OP	OP	OP	CL	CL
4TH	OP	OP	CL	OP	CL
5TH	OP	CL	OP	CL	CL

*L/R is closed if output speed is below 100 rpm in Drive and Manual 2. L/R is open in Manual 1.

A Diagnostic Trouble Code (DTC) will set if the TCM senses any switch open or closed at the wrong time in a given gear.

Removal

NOTE: If the Transmission Solenoid/TRS Assembly is being replaced, the Quick Learn Procedure must be performed. (Refer to 08 - Electrical/8E - Electronic Control Modules/MODULE, Transmission Control - Standard Procedure)

1. Remove the valve body from the transmission .(Refer to 21 - Transmission and Transfer Case/Automatic - 545RFE/VALVE BODY - Removal)

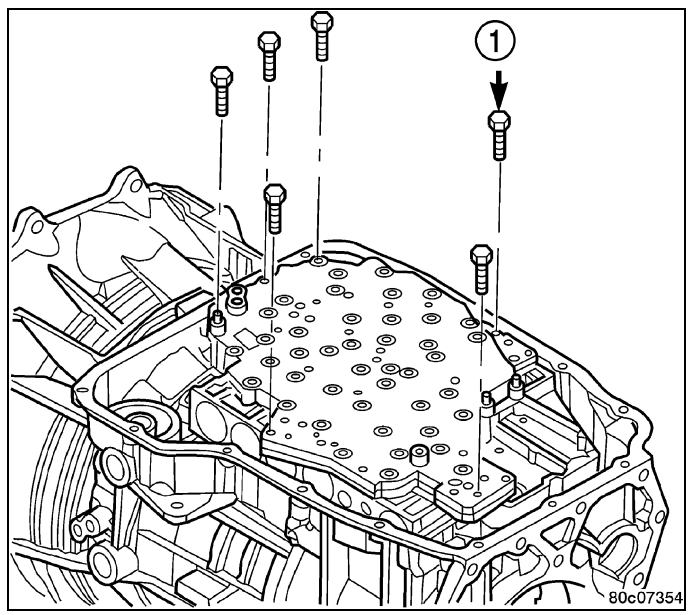

2. Remove the bolts (1) holding the transmission solenoid/TRS assembly onto the valve body .
3. Separate the transmission solenoid/TRS assembly from the valve body.

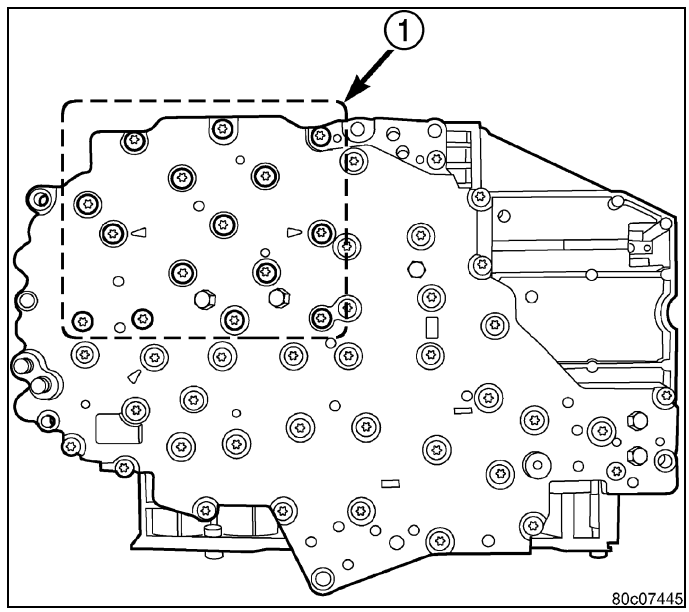

Installation

1. Place TRS selector plate in the PARK position.
2. Position the transmission solenoid/TRS assembly onto the valve body. Be sure that both alignment dowels are fully seated in the valve body and that the TRS switch contacts are properly positioned in the selector plate
3. Install the bolts (1) to hold the transmission solenoid/ TRS assembly onto the valve body.
4. Tighten the solenoid assembly screws adjacent to the arrows cast into the bottom of the valve body first. Tighten the screws to 6 N·m (50 in.lbs.).
5. Tighten the remainder of the solenoid assembly screws to 6 N·m (50 in.lbs.).
6. Install the valve body into the transmission.

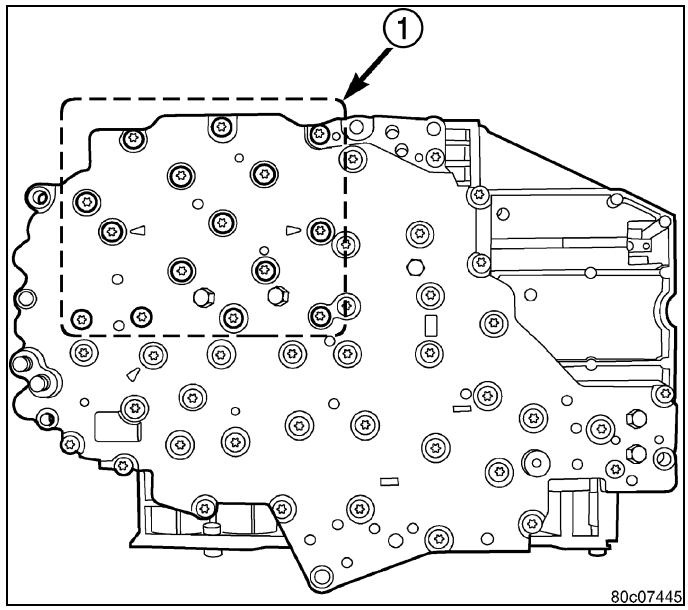

CABLE, Shift

Diagnosis and Testing

1. Engine starts must be possible with shift lever in PARK or NEUTRAL positions only. Engine starts must not be possible in any other gear position.
2. With the shift lever in the:
   a. PARK position - Apply upward force on the shift arm and remove pressure. Engine starts must be possible.
   b. PARK position - Apply downward force on the shift arm and remove pressure. Engine starts must be possible.
   c. NEUTRAL position - Normal position. Engine starts must be possible.
   d. NEUTRAL position - Engine running and brakes applied, apply upward force on the shift arm. Transmission shall not be able to shift from neutral to reverse.

Removal

1. Shift transmission into PARK.
2. Raise vehicle.
3. Disengage cable (1) eyelet at transmission manual shift lever (3) and pull cable adjuster out of mounting bracket.

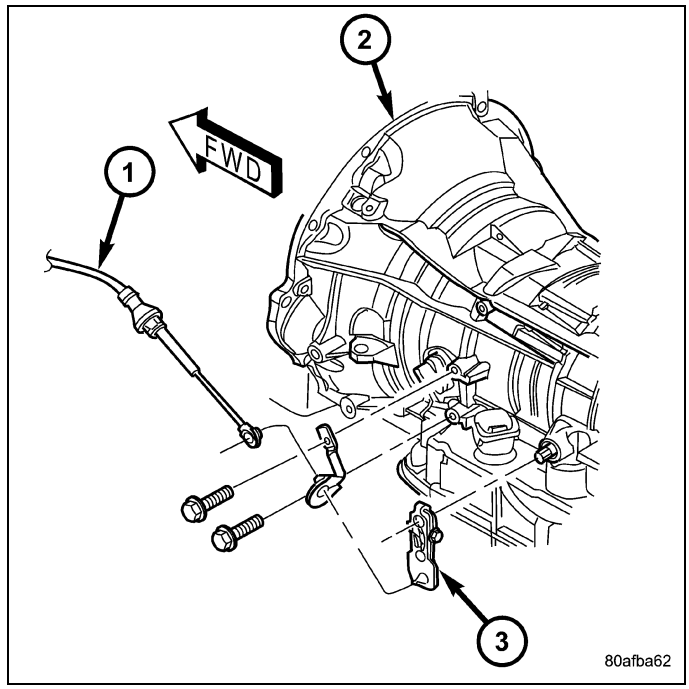

4. Lower the vehicle.
5. Remove the dash panel insulation pad as necessary to access the gearshift cable grommet (2).
6. Remove grommet (2) from the dash panel.

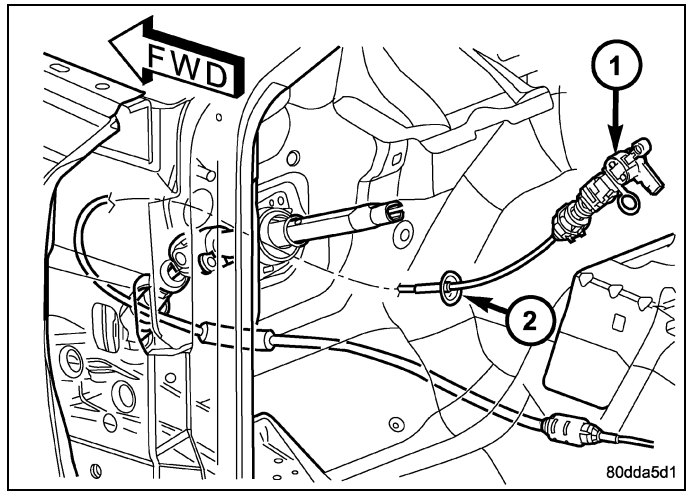

7. Remove any steering column (1) trim necessary to access the gearshift cable (2) and BTSI mechanism.
8. Disconnect the BTSI wiring connector (5).
9. Disconnect cable at lower column bracket and shift lever pin and pull the cable through the dash panel opening into the vehicle.
10. Remove gearshift cable (2) from vehicle.

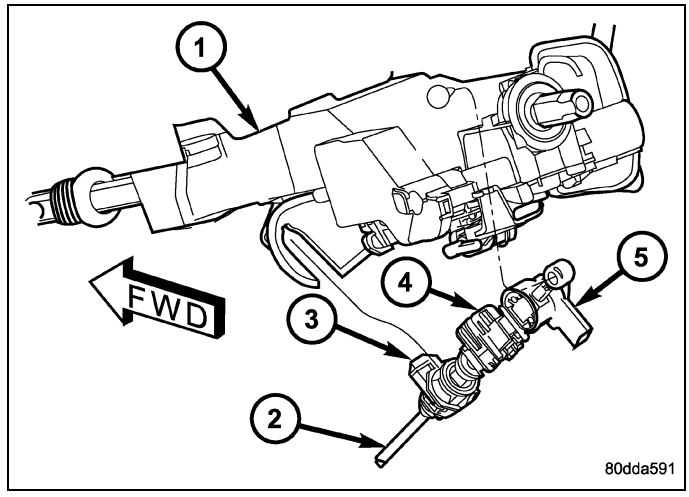

Installation

1. Route the transmission end of the gearshift cable (1) through the opening in the dash panel.
2. Seat the cable grommet (2) into the dash panel opening.

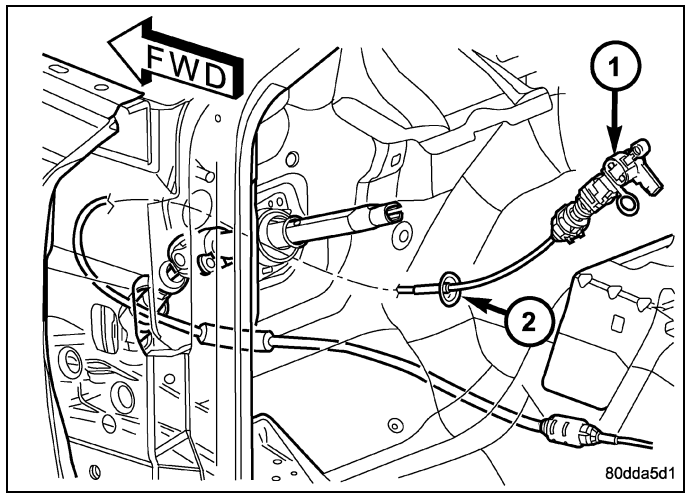

3. Snap the cable into the steering column (1) bracket so the retaining ears are engaged and snap the cable eyelet onto the shift lever ball stud.
4. Raise the vehicle.
5. Place the transmission manual shift lever in the “PARK” detent (rearmost) position and rotate prop shaft to ensure transmission is in PARK.
6. Route the gearshift cable through the transmission mounting bracket and secure the cable by snapping the cable retaining ears into the transmission bracket and snapping the cable eyelet on the manual shift lever ball stud.
7. Lower vehicle.
8. Lock the shift cable adjustment by pressing the cable adjuster lock tab (3) downward until it snaps into place.

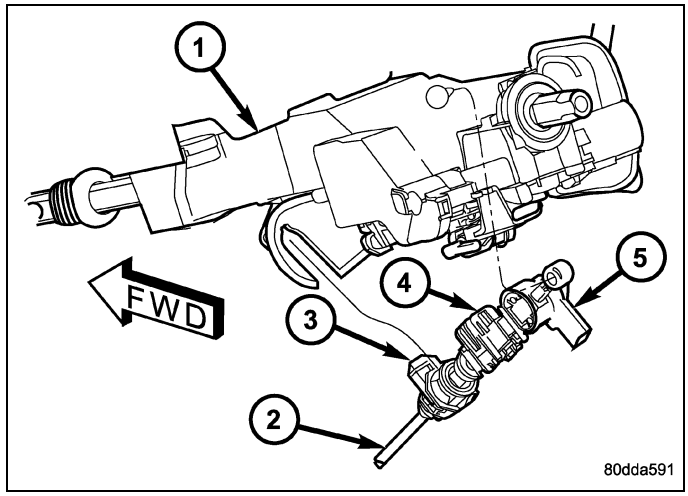

9. Check for proper operation of the transmission range sensor.
10. Adjust the gearshift cable(Refer to 21 - Transmission and Transfer Case/Automatic - 545RFE/CABLE, Shift - Adjustments)(Refer to 21 - Transmission and Transfer Case/Automatic - 545RFE/MECHANISM, Brake Transmission Shift Interlock - Adjustments).

Adjustments

NOTE: Always run the shift lever test using the scan tool to help diagnose a potential TRS problem

Check adjustment by starting the engine in PARK and NEUTRAL. Adjustment is CORRECT if the engine starts only in these positions. Adjustment is INCORRECT if the engine starts in one but not both positions. If the engine starts in any position other than PARK or NEUTRAL, or if the engine will not start at all, the transmission range sensor may be faulty.

Gearshift Adjustment Procedure

1. Shift transmission into PARK.
2. Raise vehicle.
3. Disengage the cable eyelet from the transmission manual shift lever (3).
4. Verify the transmission manual shift lever (3) is in the PARK detent by moving lever fully rearward. Last rearward detent is PARK position.
5. Verify positive engagement of transmission park lock by attempting to rotate propeller shaft. Shaft will not rotate when park lock is engaged.

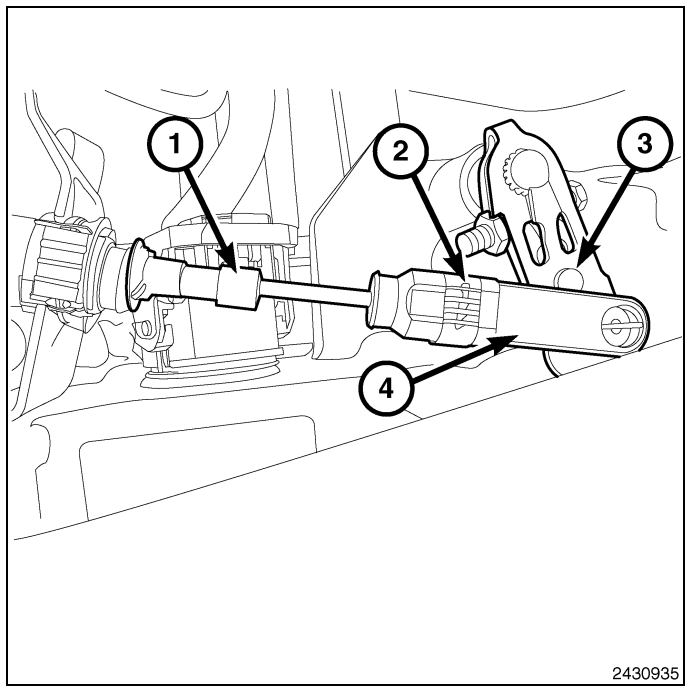

6. Disengage shift cable adjustment lock clip (1) by pushing up rom the back side of the lock clip.
7. Adjust the spring loaded shifter cable end (2), by pushing in or out to change the length until shift cable eyelet fits over the manual shift lever stud, then push the lock clip (1) down until fully engaged.
8. Position the shift cable eyelet over the manual shift lever stud until fully engaged.
9. Lower vehicle.
10. Check engine starting. Engine should start only in PARK and NEUTRAL.

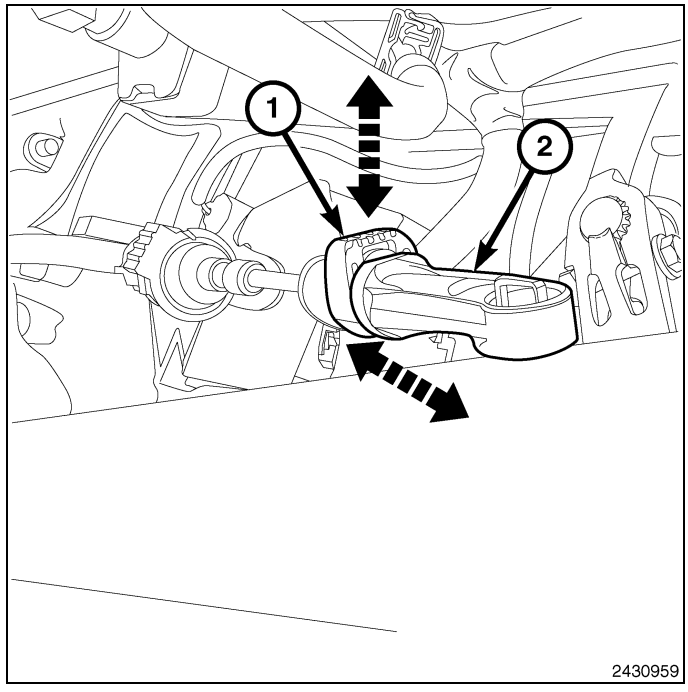

CLUTCH, Low and Reverse

Disassembly

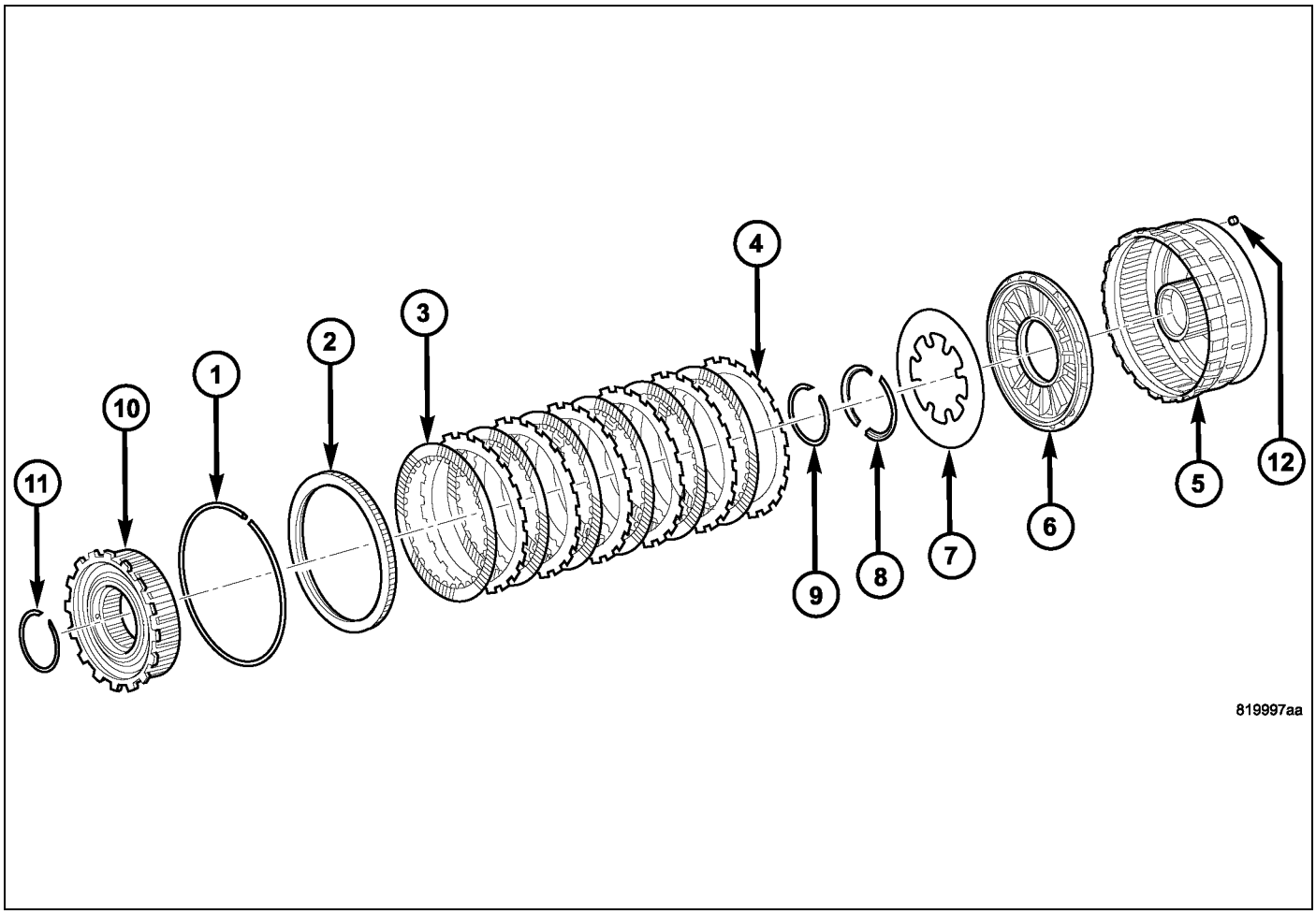

1 - SNAP-RING (SELECT)
2 - REACTION PLATE
3 - DISC
4 - PLATE
5 - L/R CLUTCH RETAINER
6 - PISTON
7 - BELLEVILLE SPRING
8 - RETAINER
9 - SNAP-RING
10 - OVERRUNNING CLUTCH
11 - SNAP-RING
12 - BLEED ORIFICE

1. Remove the inner overrunning clutch snap-ring (11) from the low/reverse clutch retainer (5).
2. Remove the outer low/reverse reaction plate flat snap-ring (1).
3. Remove the low/reverse clutch (3, 4) and the overrunning clutch (10) from the low/reverse clutch retainer (5) as an assembly.
4. Separate the low/reverse clutch (3, 4) from the overrunning clutch (10).

NOTE: The ORC is no longer serviced , it is sold an assembly only. Be certain that the outer race will rotate in one direction but not both relative to the inner race

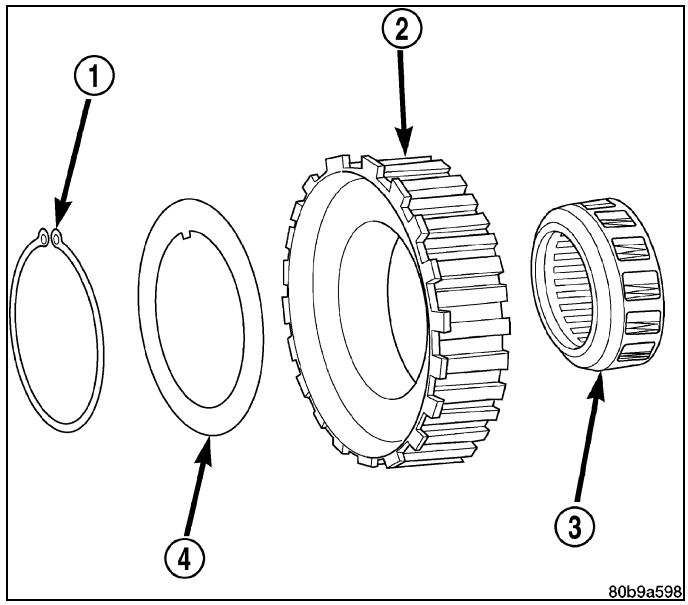

5. Using Spring Compressor 8285 (2) and a suitable shop press (1), compress the low/reverse Belleville spring (3) and remove the split retaining ring holding the Belleville spring into the low/reverse clutch retainer.
6. Remove the low/reverse Belleville spring (3) and piston from the low/reverse clutch retainer. Use 20 psi of air pressure to remove the piston if necessary.

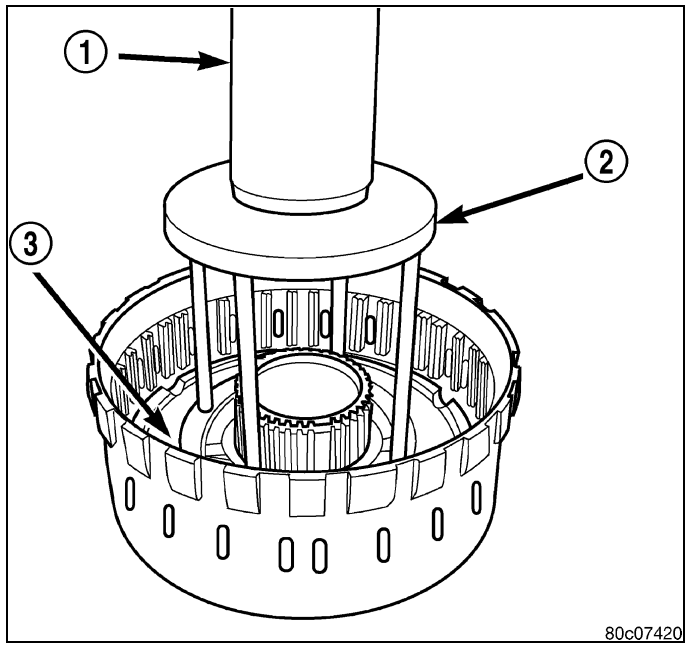

Cleaning

Clean the overrunning clutch assembly, clutch cam, and low-reverse clutch retainer. Dry them with compressed air after cleaning.

Inspection

Verify that the overrunning clutch assembly turns smoothly in one direction, and locks in the opposite direction. Verify that the oil feed holes in the inner race are not blocked by debris.

Replace the LR clutch retainer if the piston bores or bushing surfaces are badly scored, worn or damaged.

Assembly

1. Check the bleed orifice to ensure that it is not plugged or restricted.
2. Lubricate the seals with Mopar® ATF +4, Automatic Transmission Fluid, prior to installation.
3. Install the low/reverse piston into the low/reverse clutch retainer.
4. Position the low/reverse Belleville spring (3) on the low/reverse piston.
5. Using Spring Compressor 8285 (2) and a suitable shop press (1) , compress the low/reverse Belleville spring (3) and install the split retaining ring to hold the Belleville spring into the low/reverse clutch retainer.

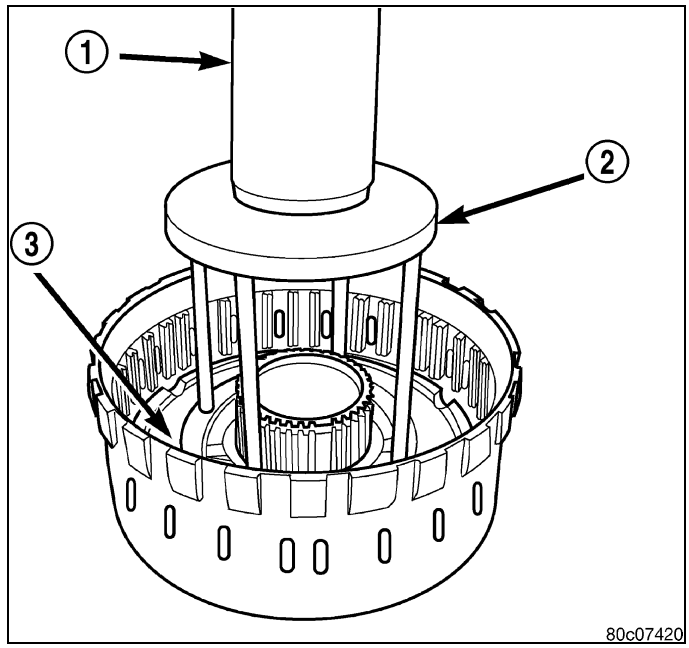

6. Install the lower overrunning clutch snap-ring.
7. Assemble the inner and outer races (2) of the overrunning clutch (3).
8. Position the overrunning clutch spacer (4) on the overrunning clutch (3).
9. Install the upper overrunning clutch snap-ring (1).

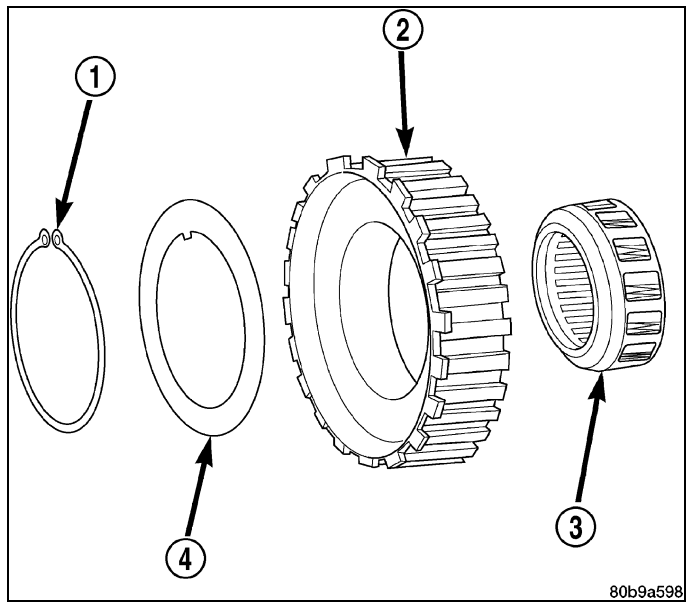

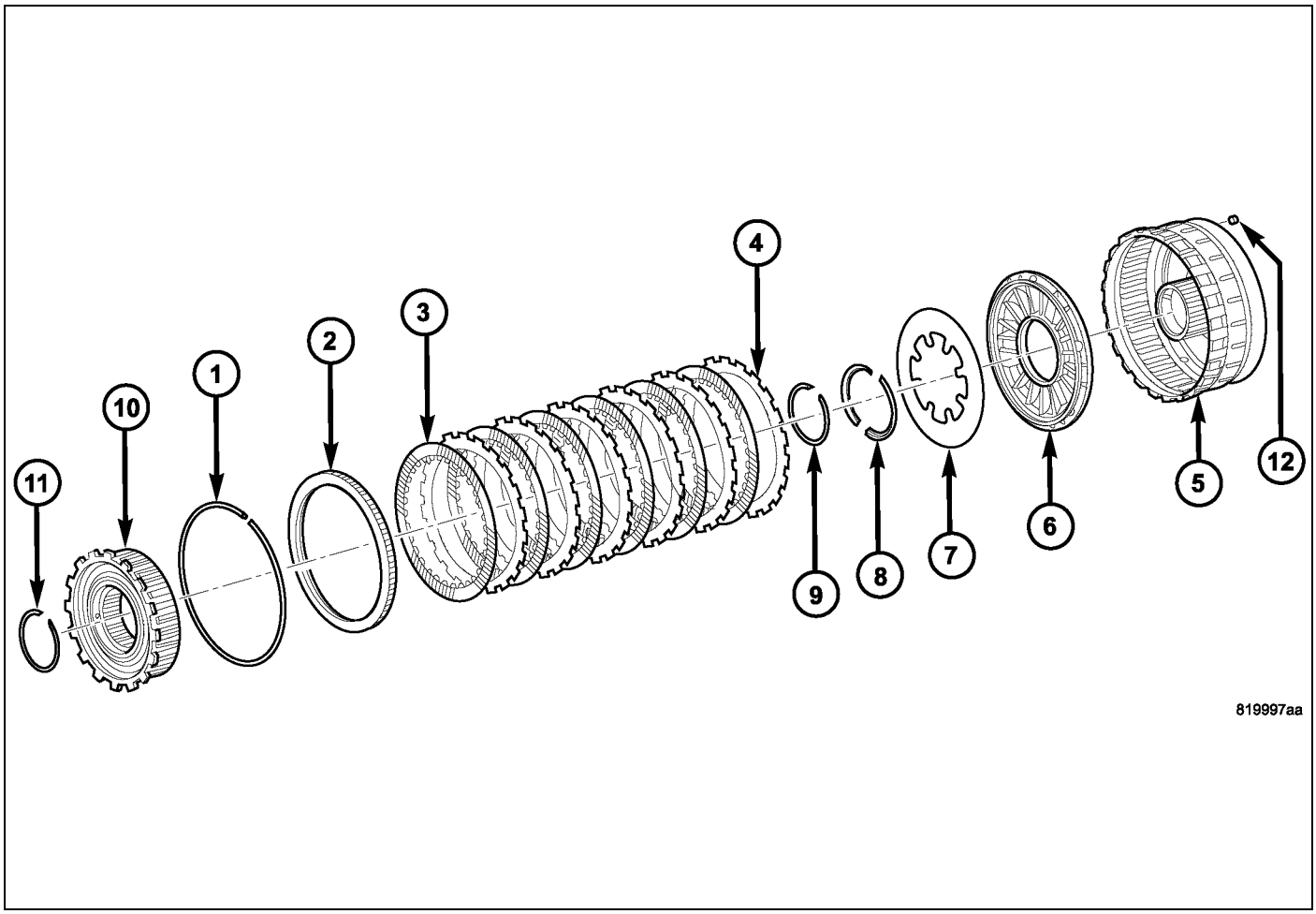

1 - SNAP-RING (SELECT)
2 - REACTION PLATE
3 - DISC
4 - PLATE
5 - L/R CLUTCH RETAINER
6 - PISTON
7 - BELLEVILLE SPRING
8 - RETAINER
9 - SNAP-RING
10 - OVERRUNNING CLUTCH
11 - SNAP-RING
12 - BLEED ORIFICE

10. Assemble and install the low/reverse clutch pack (3, 4) into the low/reverse clutch retainer (5).
11. Install the low/reverse reaction plate (2) into the low/reverse clutch retainer (5). The reaction plate is directional and must be installed with the flat side down.
12. Install the low/reverse clutch pack snap-ring (1). The snap-ring is selectable and should be chosen to give the correct clutch pack clearance.
13. Measure the low/reverse clutch pack clearance and adjust as necessary. The correct clutch clearance is 1.00-1.74 mm (0.039-0.069 in.).

NOTE: When installing the overrunning clutch be certain the steps on the gear face upward.

14. Install the overrunning clutch (10) into the low/reverse clutch retainer (5) making sure that the index splines are aligned with the retainer.
15. Install the overrunning clutch inner snap-ring (11).

COVER, Oil Pump

Removal

1. Remove the bolts holding the transmission oil pan to the transmission case .
2. Remove the transmission oil pan from the transmission case.
3. Remove the snap ring (3) from the transmission case.
4. Reaching through a case opening in the valve body area with a long blunted tool, remove the transmission front cover (1) from the transmission case.

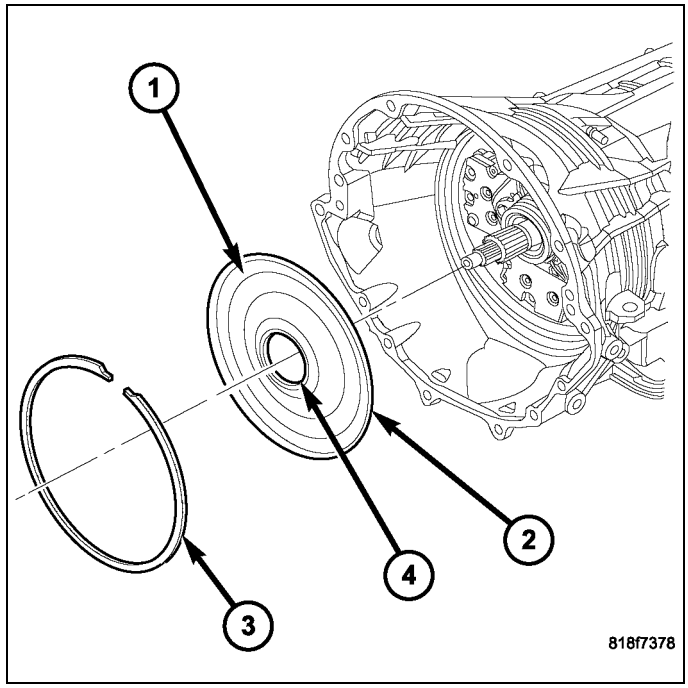

Installation

NOTE: To avoid contamination and garter spring dislodgement, do not handle the front cover seal (4) when positioning the front cover into the transmission case.

1. Position a new front cover (1) into the transmission case.

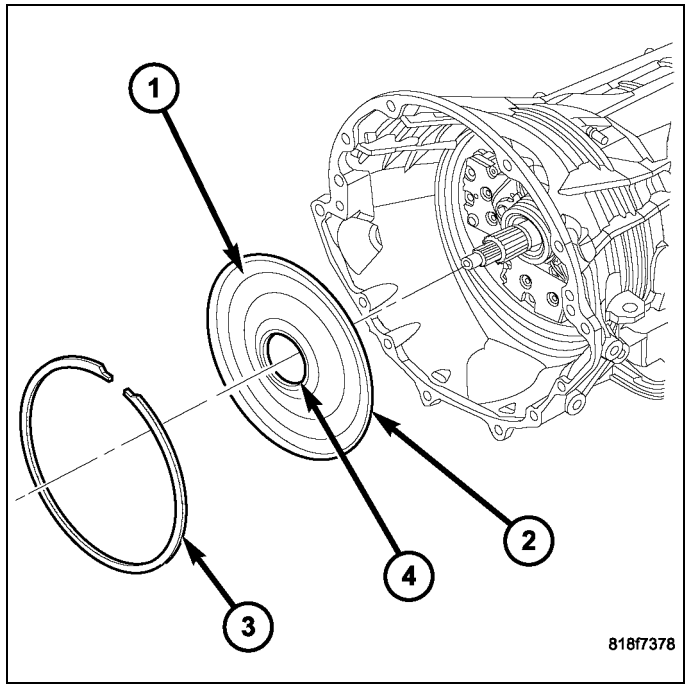

2. Using the front cover installation tool 9955 (1) and a dead-blow mallet, install the front cover into transmission case .

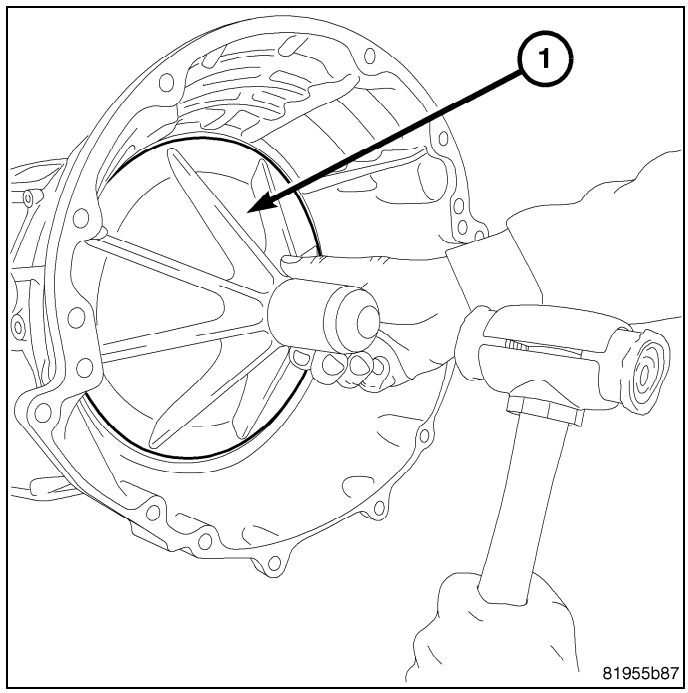

3. Install the snap ring (3) into the transmission case.
4. Apply RTV silicone to the oil pan and install the transmission oil pan.
5. Tighten the bolts to 12 N·m (105 in. lbs.).

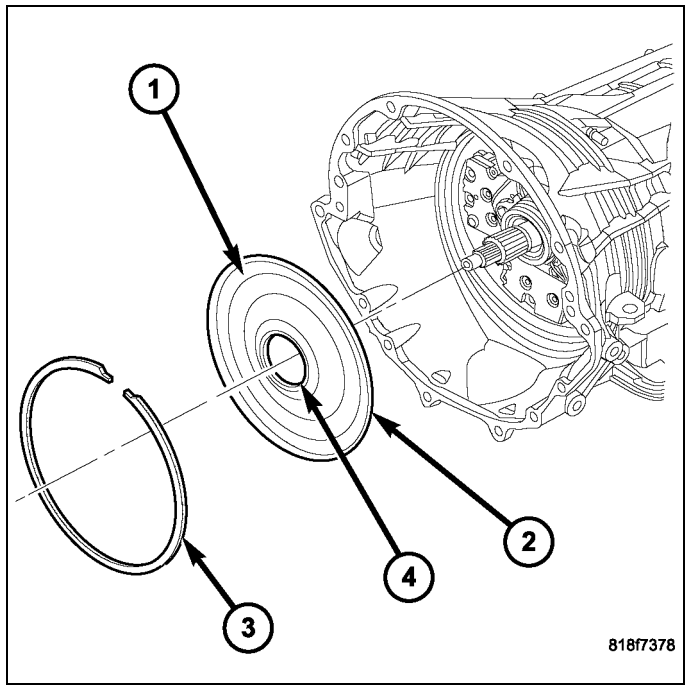

FLUID and FILTER

Diagnosis and Testing

EFFECTS OF INCORRECT FLUID LEVEL

A low fluid level allows the pump to take in air along with the fluid. Air in the fluid will cause fluid pressures to be low and develop slower than normal. If the transmission is overfilled, the gears churn the fluid into foam. This aerates the fluid and causing the same conditions occurring with a low level. In either case, air bubbles cause fluid overheating, oxidation, and varnish buildup which interferes with valve and clutch operation. Foaming also causes fluid expansion which can result in fluid overflow from the transmission vent or fill tube. Fluid overflow can easily be mistaken for a leak if inspection is not careful.

CAUSES OF BURNT FLUID

Burnt, discolored fluid is a result of overheating which has three primary causes.

1. Internal clutch slippage, usually caused by low line pressure, inadequate clutch apply pressure, or clutch seal failure.
2. A result of restricted fluid flow through the main and auxiliary cooler. This condition is usually the result of a faulty or improperly installed drainback valve, a damaged oil cooler, or severe restrictions in the coolers and lines caused by debris or kinked lines.
3. Heavy duty operation with a vehicle not properly equipped for this type of operation. Trailer towing or similar high load operation will overheat the transmission fluid if the vehicle is improperly equipped. Such vehicles should have an auxiliary transmission fluid cooler, a heavy duty cooling system, and the engine/axle ratio combination needed to handle heavy loads.

FLUID CONTAMINATION

Transmission fluid contamination is generally a result of:

- adding incorrect fluid
- failure to clean dipstick and fill tube when checking level
- engine coolant entering the fluid
- internal failure that generates debris
- overheat that generates sludge (fluid breakdown)
- failure to replace contaminated converter after repair

The use of non-recommended fluids can result in transmission failure. The usual results are erratic shifts, slippage, abnormal wear and eventual failure due to fluid breakdown and sludge formation. Avoid this condition by using recommended fluids only.

The dipstick cap and fill tube should be wiped clean before checking fluid level. Dirt, grease and other foreign material on the cap and tube could fall into the tube if not removed beforehand. Take the time to wipe the cap and tube clean before withdrawing the dipstick.

Engine coolant in the transmission fluid is generally caused by a cooler malfunction. The only remedy is to replace the radiator as the cooler in the radiator is not a serviceable part. If coolant has circulated through the transmission, an overhaul is necessary.

The torque converter should also be replaced whenever a failure generates sludge and debris. This is necessary because normal converter flushing procedures will not remove all contaminants.

Standard Procedure

FLUID LEVEL CHECK

Low fluid level can cause a variety of conditions because it allows the pump to take in air along with the fluid. As in any hydraulic system, air bubbles make the fluid spongy, therefore, pressures will be low and build up slowly.

Improper filling can also raise the fluid level too high. When the transmssion has too much fluid, the geartrain churns up foam and cause the same conditions which occur with a low fluid level.

In either case, air bubbles can cause overheating and fluid oxidation, and varnishing. This can interfere with normal valve, clutch, and accumulator operation. Foaming can also result in fluid escaping from the transmission vent where it may be mistaken for a leak.

The transmission has a dipstick to check oil level. It is located on the right side of the engine. Be sure to wipe all dirt from dipstick handle before removing.

The torque converter fills in both the P (PARK) and N (NEUTRAL) positions. Place the selector lever in P (PARK) to be sure that the fluid level check is accurate. **The engine should be running at idle speed for at least one minute, with the vehicle on level ground.** At normal operating temperature (approximately 82° C. or 180° F), the fluid level is correct if it is in the HOT region (cross-hatched area) on the oil level indicator. The fluid level will be approximately at the upper COLD hole of the dipstick at 21° C (70° F) fluid temperature.

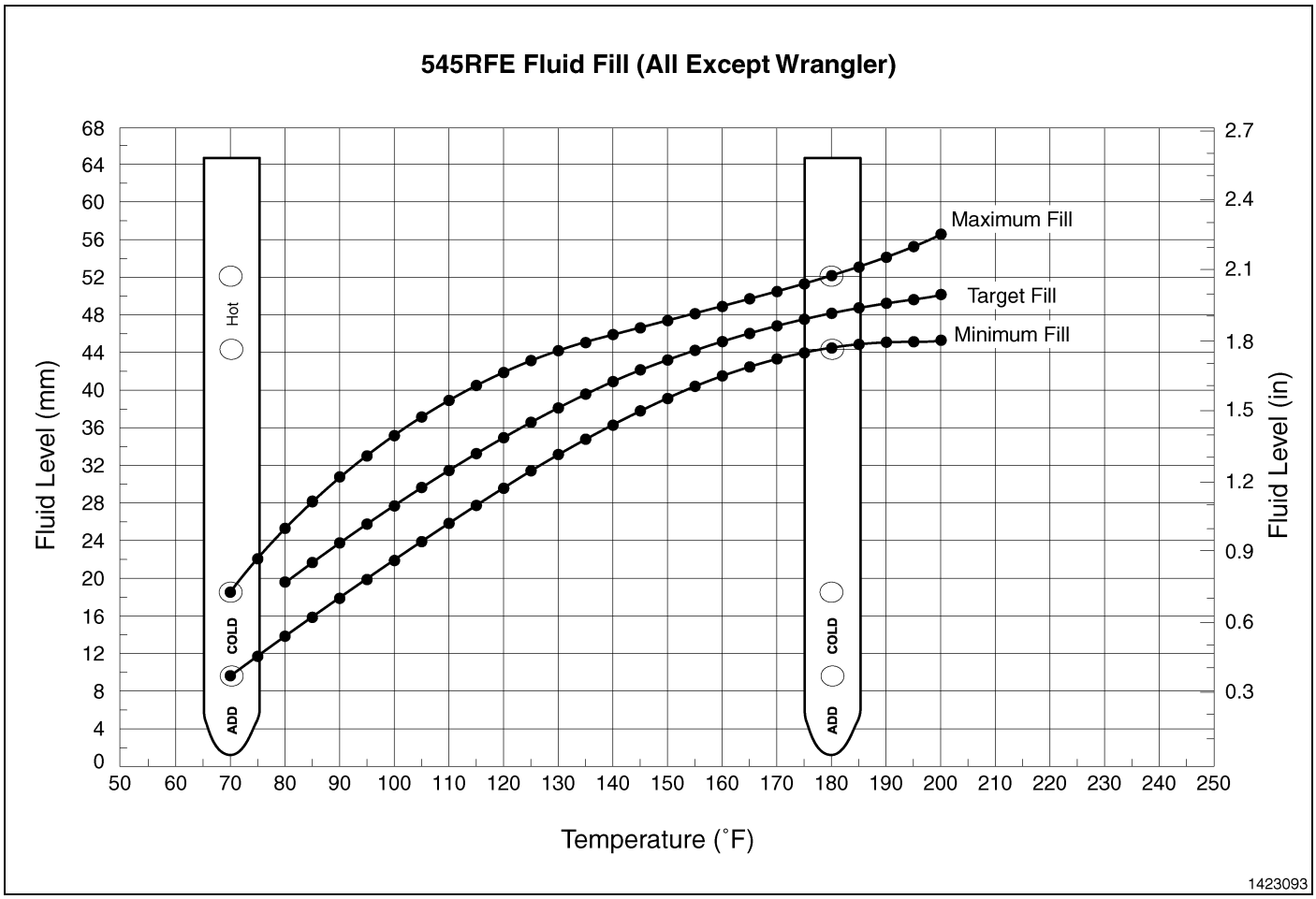

NOTE: Engine and Transmission should be at normal operating temperature before performing this procedure. After the fluid has been checked, seat the dipstick fully to seal out water and dirt.

1. Start engine and apply parking brake.
2. Shift the transmission into DRIVE for approximately 2 seconds.
3. Shift the transmission into REVERSE for approximately 2 seconds.
4. Shift the transmission into PARK.
5. Hook up scan tool and select transmission.
6. Select sensors.
7. Read the transmission temperature value.
8. Compare the fluid temperature value with the chart.
9. Adjust transmission fluid level shown on the dipstick according to the Transmission Fluid Temperature Chart.

NOTE: After adding any fluid to the transmission, wait a minimum of 2 minutes for the oil to fully drain from the fill tube into the transmission before rechecking the fluid level.

10. Check transmission for leaks.

FLUID AND FILTER REPLACEMENT

For proper service intervals (Refer to 04 - Vehicle Quick Reference/Maintenance Schedules - Description).

REMOVAL

1. Hoist and support vehicle on safety stands.
2. Place a large diameter shallow drain pan beneath the transmission pan.
3. Remove bolts holding front and sides of pan to transmission.
4. Loosen bolts holding rear of pan to transmission.
5. Slowly separate front of pan away from transmission allowing the fluid to drain into drain pan.

6. Hold up pan and remove remaining bolts holding pan to transmission.
7. While holding pan level, lower pan away from transmission.
8. Pour remaining fluid in pan into drain pan.

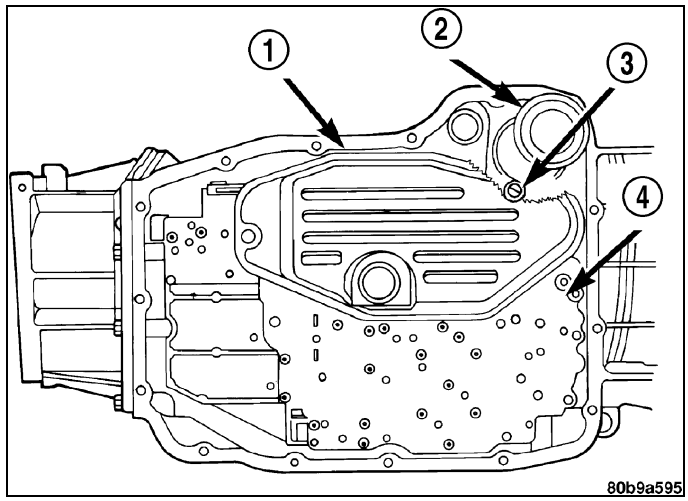

Transmission Filters - 4X4 Shown

1 - PRIMARY OIL FILTER
2 - COOLER RETURN FILTER
3 - COOLER RETURN FILTER BYPASS VALVE
4 - VALVE BODY

9. Remove the screw holding the primary oil filter (1) to valve body.
10. Separate filter from valve body and oil pump and pour fluid in filter into drain pan.
11. Inspect the oil filter seal in the bottom of the oil pump. If the seal is not installed completely in the oil pump, or is otherwise damaged, then remove and discard the oil filter seal from the bottom of the oil pump. If the seal is installed correctly and is in good condition, it can be reused.
12. If replacing the cooler return filter (2), use Oil Filter Wrench 8321 to remove the filter from the transmission.
13. Dispose of used trans fluid and filter(s) properly.

INSPECTION

Inspect bottom of pan and magnet for excessive amounts of metal. A light coating of clutch material on the bottom of the pan does not indicate a problem unless accompanied by a slipping condition or shift lag. If fluid and pan are contaminated with excessive amounts of debris, refer to (Refer to 21 - Transmission and Transfer Case/Automatic - 545RFE - Diagnosis and Testing)

CLEANING

1. Using a suitable solvent, clean pan and magnet.
2. Using a suitable gasket scraper, clean original sealing material from surface of transmission case and the transmission pan.

INSTALLATION

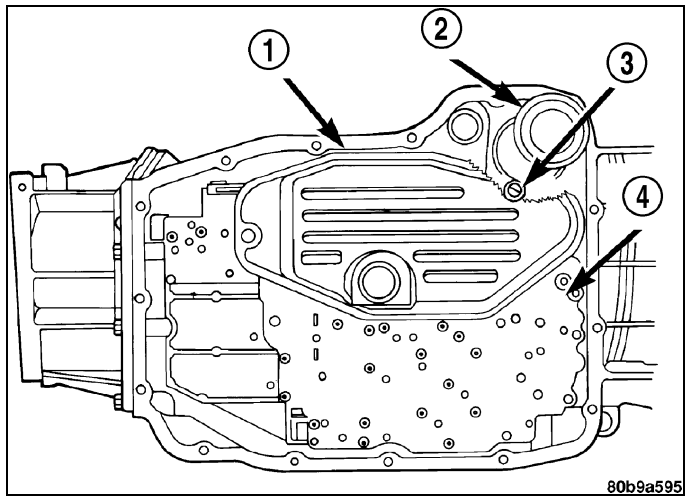

Transmission Filters - 4X4 Shown

1 - PRIMARY OIL FILTER
2 - COOLER RETURN FILTER
3 - COOLER RETURN FILTER BYPASS VALVE
4 - VALVE BODY

CAUTION: The primary oil filter seal MUST be fully installed flush against the oil pump body. DO NOT install the seal onto the filter neck and attempt to install the filter and seal as an assembly. Damage to the transmission will result.

1. If necessary, install a new primary oil filter seal in the oil pump inlet bore. Seat the seal in the bore with Installer 6960 or another suitable tool (appropriately sized drift or socket, the butt end of a hammer etc.).
2. Place replacement filter in position on valve body and into the oil pump.
3. Install screw to hold the primary oil filter (1) to valve body. Tighten screw to 4.5 N·m (40 in. lbs.) torque.
4. Install new cooler return filter (2) onto the transmission, if necessary. Torque the filter to 9.5 N·m (84 in.lbs.).
5. Place bead of Mopar® RTV sealant onto the transmission case sealing surface.
6. Place pan in position on transmission.
7. Install bolts to hold pan to transmission. Tighten bolts to 12 N·m (105 in. lbs.) torque.
8. Lower vehicle and fill transmission with MOPAR® ATF +4.

TRANSMISSION FILL

To avoid overfilling transmission after a fluid change or overhaul, perform the following procedure:

1. Remove dipstick and insert clean funnel in transmission fill tube.
2. Add following initial quantity of Mopar® ATF +4 to transmission:
   a. If only fluid and filter were changed, add **10 pints (5 quarts)** of ATF +4 to transmission.
   b. If transmission was completely overhauled and the torque converter was replaced or drained, add **24 pints (12 quarts)** of ATF +4 to transmission.
3. Check the transmission fluid (Refer to 21 - Transmission and Transfer Case/Automatic - 545RFE/FLUID and FILTER - Standard Procedure) and adjust as required.

GEARTRAIN, Planetary

Description

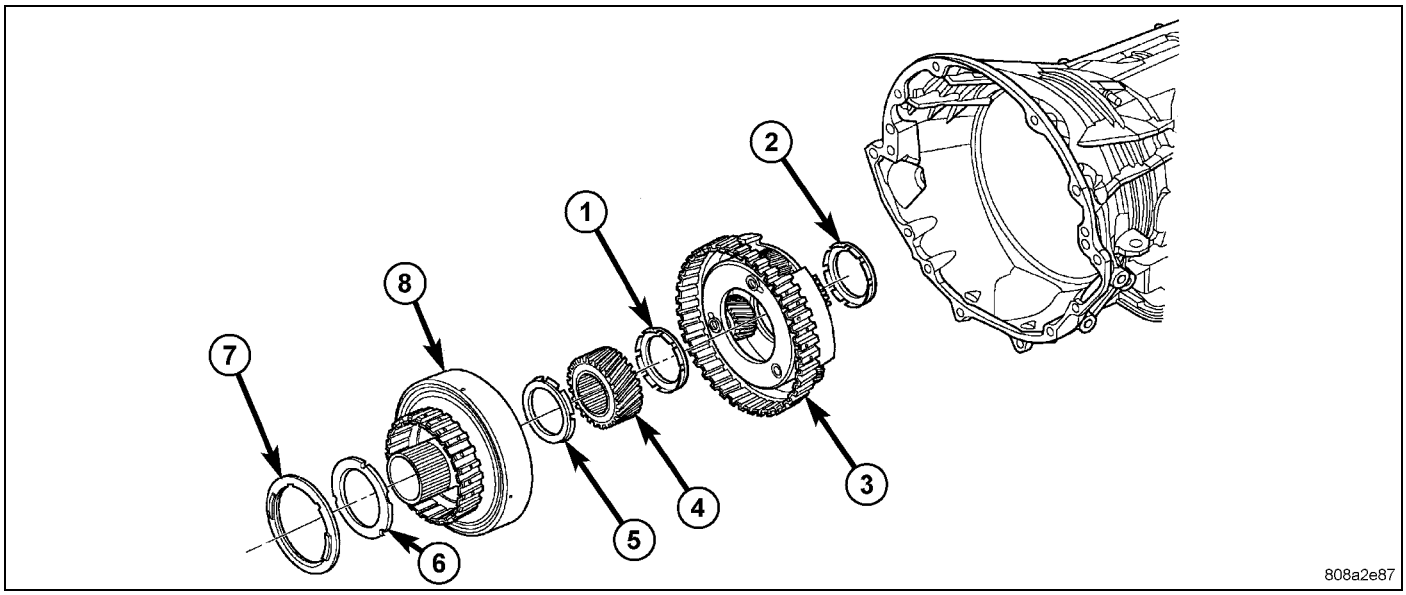

Reaction Planetary Geartrain

1 - THRUST BEARING NUMBER 8	5 - THRUST BEARING NUMBER 7
2 - THRUST BEARING NUMBER 9	6 - THRUST PLATE (SELECT)
3 - REACTION PLANETARY CARRIER	7 - THRUST BEARING NUMBER 6
4 - REACTION SUN GEAR	8 - REACTION ANNULUS

The planetary geartrain is located behind the 4C retainer/bulkhead, toward the rear of the transmission. The planetary geartrain consists of three primary assemblies:

- Reaction (3, 4, 8).

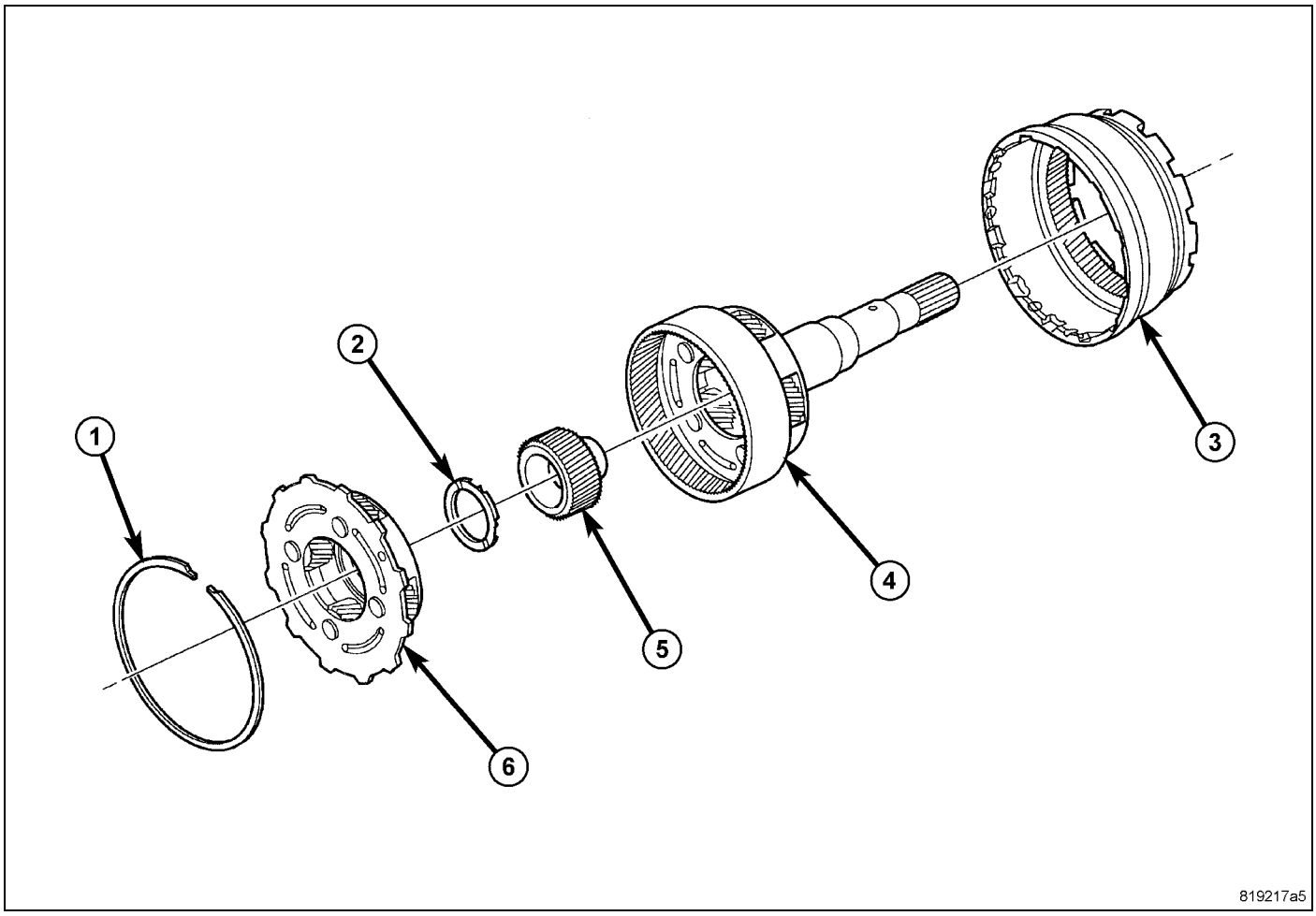

- Reverse (6).
- Input (3, 4, 5).

Operation

REACTION PLANETARY GEARSET

The reaction planetary carrier and reverse sun gear of the reaction planetary gearset are a single component which is held by the 2C clutch when required. The reaction annulus gear is a stand alone component that can be driven by the reverse clutch or held by the 4C clutch. The reaction sun gear is driven by the overdrive clutch.

REVERSE PLANETARY GEARSET

The reverse planetary gearset is the middle of the three planetary sets. The reverse planetary carrier can be driven by the overdrive clutch as required. The reverse planetary carrier is also splined to the input annulus gear, which can be held by the low/reverse clutch. The reverse planetary annulus, input planetary carrier, and output shaft are all one piece.

INPUT PLANETARY GEARSET

The input sun gear of the input planetary gearset is driven by the underdrive clutch.

Disassembly

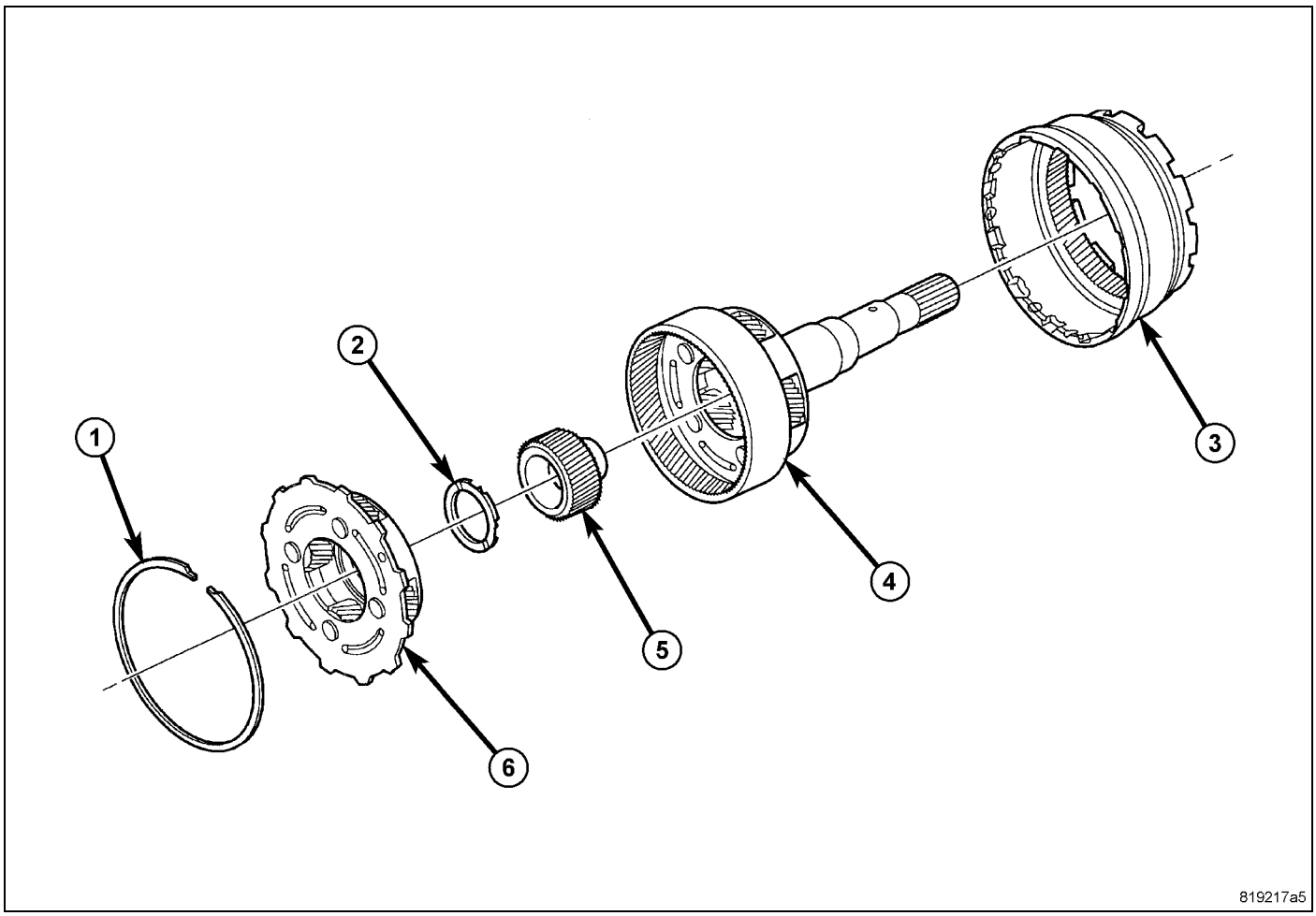

1. Remove the snap-ring (1) holding the input annulus (4) into the input carrier (5).
2. Remove the input annulus (4) from the input carrier (5).
3. Remove the number 9 thrust bearing from the reverse planetary carrier (7). Note that this planetary carrier has four pinion gears.
4. Remove the reverse planetary gear carrier (7).
5. Remove the number 10 thrust bearing (2) from the input sun gear (6).
6. Remove the input sun gear (6) from the input carrier (5).

Cleaning

Clean the planetary components in solvent and dry them with compressed air.

Inspection

Inspect each planetary carrier assembly for damage. Check that each pinion gear rotates freely and smoothly on its shaft. Check that the tabbed thrust washer on each side of each pinion gear is in place. Check that the outer ends of the pinion shafts are not discolored from overheating. Replace the carrier assembly if jammed or sticky pinion gears, spun or missing tabbed washers, or blackened pinion shafts are found.

Check sun gear and driving shell condition. Replace the gear if damaged or if the bushings are scored or worn. The bushings are not serviceable. Replace the driving shell if worn, cracked or damaged.

Replace planetary gear sets if gears, pinion pins, or carrier are damaged in any way. Replace the annulus gears and supports if either component is worn or damaged.

Replace the output shaft if the machined surfaces are scored, pitted, or damaged in any way. Also replace the shaft if the splines are damaged, or exhibits cracks at any location.

Assembly

NOTE: Clean and inspect all components. Replace any components which show evidence of excessive wear or scoring.

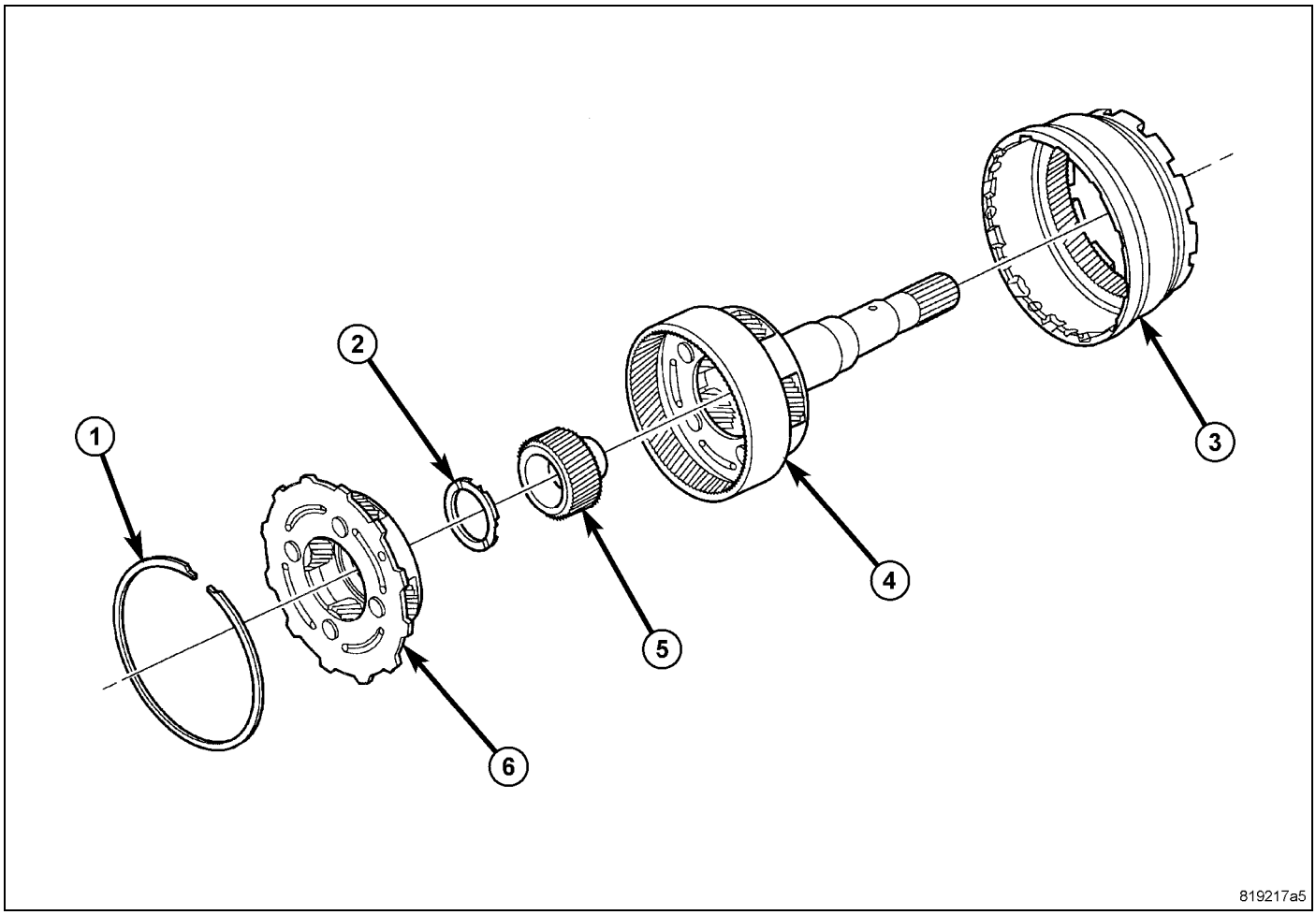

1. Install the input sun gear (5) into the input carrier (4).
2. Install the number 10 thrust bearing (2) onto the rear of the reverse planetary carrier (6) with the inner race toward the carrier.
3. Install the reverse planetary gear carrier (6) into the input carrier (4).
4. Install the input annulus gear (3) into the input carrier (4).
5. Install the snap-ring (1) to hold the input annulus gear (3) into the input carrier (4).

HOLDING CLUTCHES

Description

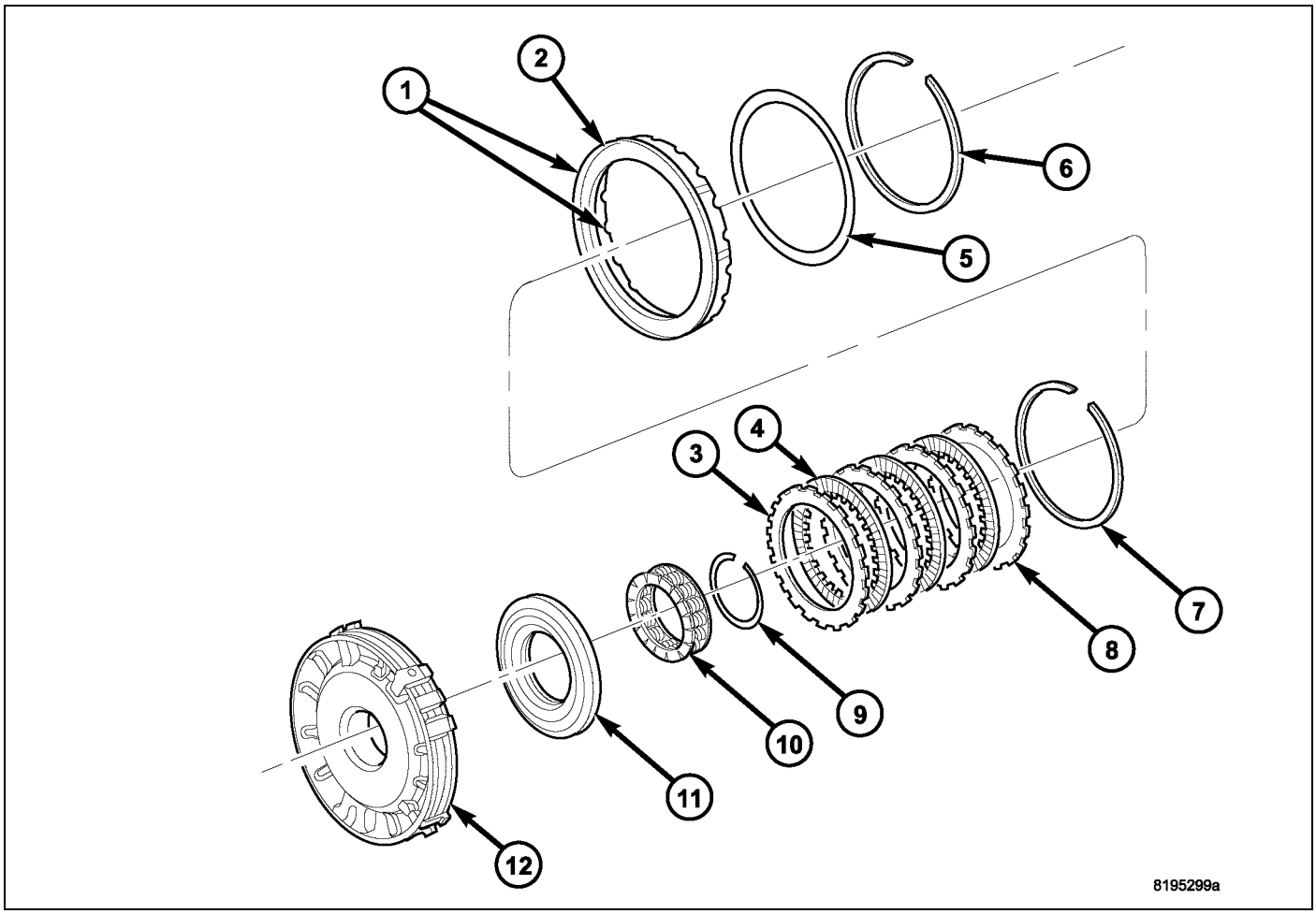

1 - SEALS
2 - 2C PISTON
3 - 4C PLATE
4 - 4C DISC
5 - 2C BELLEVILLE SPRING
6 - SNAP-RING
7 - SNAP-RING (SELECT)
8 - REACTION PLATE
9 - SNAP-RING
10 - RETURN SPRING
11 - 4C PISTON
12 - 4C RETAINER/BULKHEAD

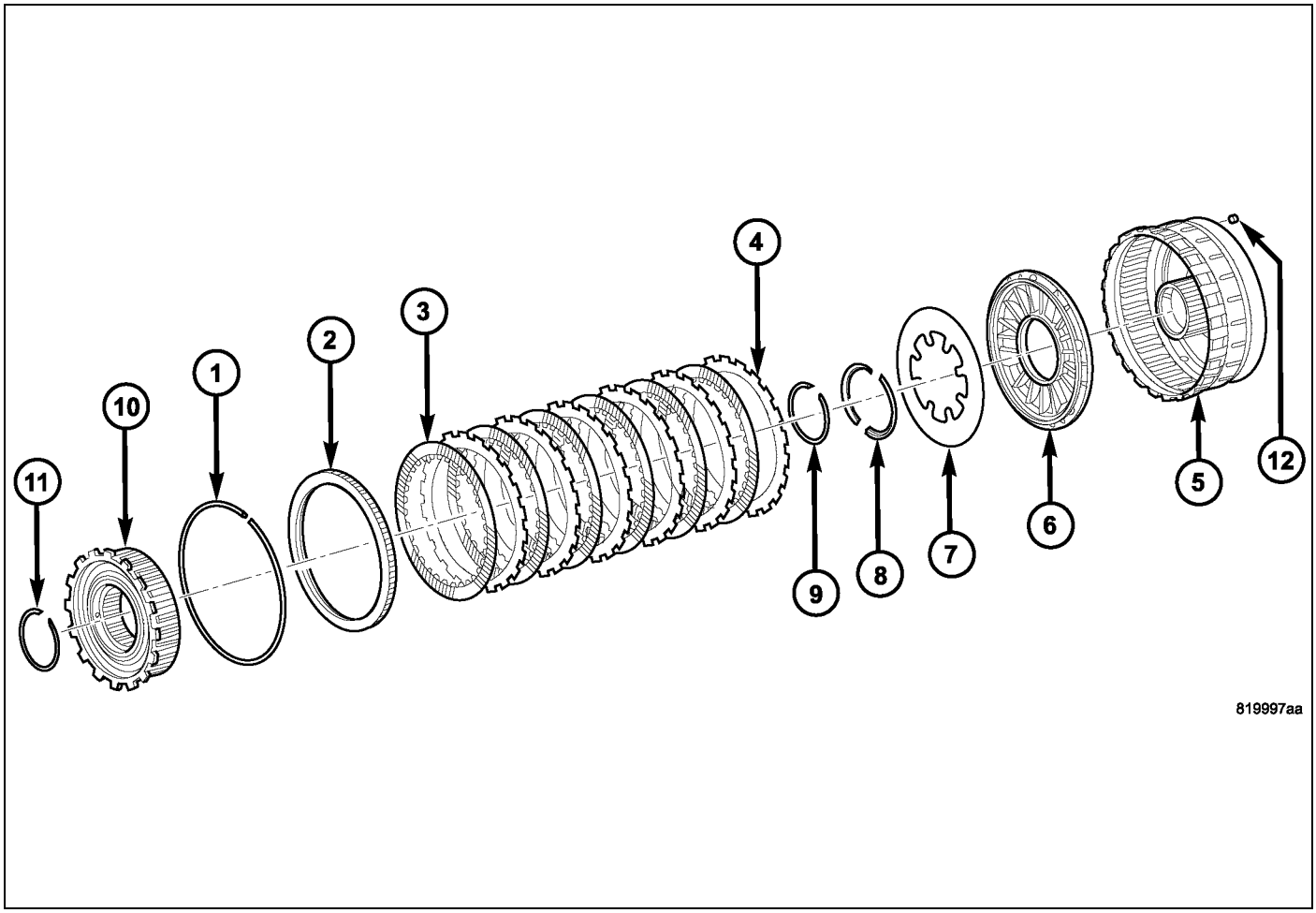

1 - SNAP-RING (SELECT)
2 - REACTION PLATE
3 - DISC
4 - PLATE
5 - L/R CLUTCH RETAINER
6 - PISTON
7 - BELLEVILLE SPRING
8 - RETAINER
9 - SNAP-RING
10 - OVERRUNNING CLUTCH
11 - SNAP-RING
12 - BLEED ORIFICE

Three hydraulically applied multi-disc clutches are used to hold some planetary geartrain components stationary while the input clutches drive others. The 2C, 4C, and Low/Reverse clutches are considered holding clutches. The 2C and 4C clutches are located in the 4C retainer/bulkhead (12).

The Low/Reverse clutch is located at the rear of the transmission case.

Operation

2C CLUTCH

The 2C clutch is hydraulically applied in second and fifth gear by pressurized fluid against the 2C piston. When the 2C clutch is applied, the reverse sun gear assembly is held or grounded to the transmission case by holding the reaction planetary carrier.

4C CLUTCH

The 4C clutch is hydraulically applied in second prime and fourth gear by pressurized fluid against the 4C clutch piston. When the 4C clutch is applied, the reaction annulus gear is held or grounded to the transmission case.

LOW/REVERSE CLUTCH

The Low/Reverse clutch is hydraulically applied in park, reverse, neutral, and first gear, only at low speeds, by pressurized fluid against the Low/Reverse clutch piston. When the Low/Reverse clutch is applied, the input annulus assembly is held or grounded to the transmission case.

MECHANISM, Brake Transmission Shift Interlock

Description

The Brake Transmission Shifter Interlock (BTSI), is a solenoid operated system. It consists of a solenoid permanently mounted on the gearshift lever assembly.

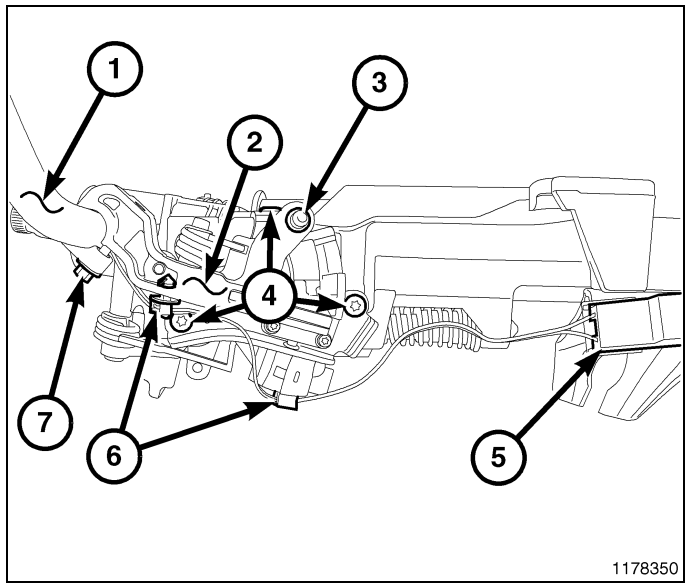

Operation

The system locks the shifter into the PARK position. The interlock system is engaged whenever the ignition switch is in the LOCK or ACCESSORY position. An additional electrically activated feature will prevent shifting out of the PARK position unless the brake pedal is depressed approximately one-half an inch. A magnetic holding device in line with the park lock cable is energized when the ignition is in the RUN position. When the key is in the RUN position and the brake pedal is depressed, the shifter is unlocked and will move into any position. The interlock system also prevents the ignition switch from being turned to the LOCK or ACCESSORY position, unless the shifter is fully locked into the PARK position.

Diagnosis and Testing

1. Verify that the key can only be removed in the PARK position.
2. When the shift lever is in PARK And the shift handle pushbutton is in the “OUT” position, the ignition key cylinder should rotate freely from OFF to LOCK. When the shifter is in any other gear or neutral position, the ignition key cylinder should not rotate to the LOCK position.
3. Shifting out of PARK should not be possible when the ignition key cylinder is in the OFF position.
4. Shifting out of PARK should not be possible while applying normal pushbutton force and ignition key cylinder is in the RUN or START positions unless the foot brake pedal is depressed approximately 1/2 inch (12mm).
5. Shifting out of PARK should not be possible when the ignition key cylinder is in the ACCESSORY or LOCK positions.
6. Shifting between any gears, NEUTRAL or into PARK may be done without depressing foot brake pedal with ignition switch in RUN or START positions.

Adjustments

ADJUSTMENT PROCEDURE

The BTSI is part of the shift lever assembly (2) and is non-adjustable.

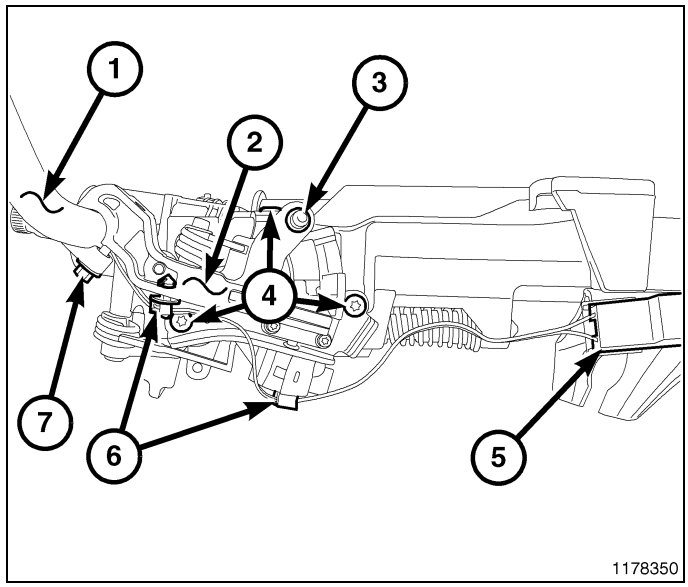

BTSI FUNCTION CHECK

1. Verify removal of ignition key allowed in PARK position only.
2. When the shift lever is in PARK, the ignition key cylinder should rotate freely from off to lock. When the shifter is in any other position, the ignition key should not rotate from off to lock.
3. Shifting out of PARK should not be possible when the ignition key cylinder is in the off position.
4. Shifting out of PARK should not be possible while applying normal force, and ignition key cylinder is in the run or start positions, unless the foot brake pedal is depressed approximately 1/2 inch (12mm).
5. Shifting out of PARK should not be possible when the ignition key cylinder is in the accessory or lock position.
6. Shifting between any gear and NEUTRAL, or PARK, may be done without depressing foot brake with ignition switch in run or start positions.
7. Engine starts must be possible with shifter lever in PARK or NEUTRAL positions only. Engine starts must not be possible in any position other than PARK or NEUTRAL.
8. With shifter lever in the:

- PARK position - Apply upward force on the shift arm and remove pressure. Engine starts must be possible.
- PARK position - Apply downward force on the shift arm and remove pressure. Engine starts must be possible.
- NEUTRAL position - Normal position. Engine starts must be possible.
- NEUTRAL position - Engine running and brakes applied, apply upward force on the shift arm. Transmission shall not be able to shift from neutral to reverse.

PUMP, Transmission Oil

Description

The oil pump (2) is located at the front of the transmission inside the bell housing and behind the transmission front cover.

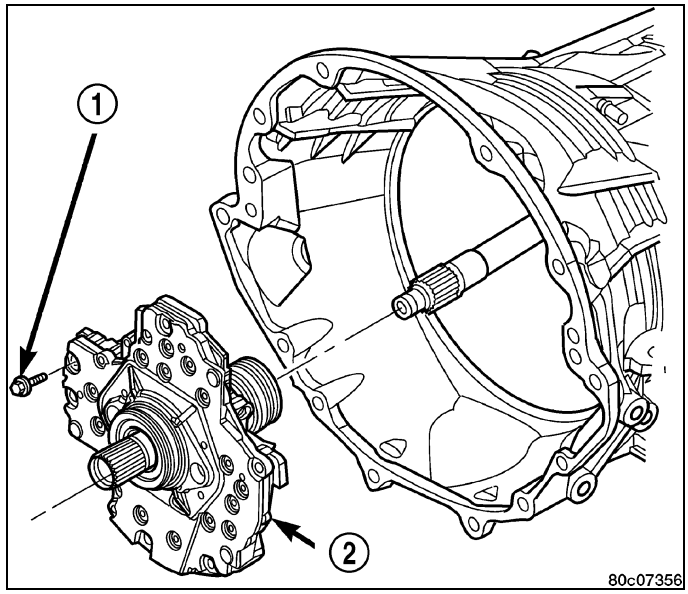

The oil pump consists of two independent pumps.

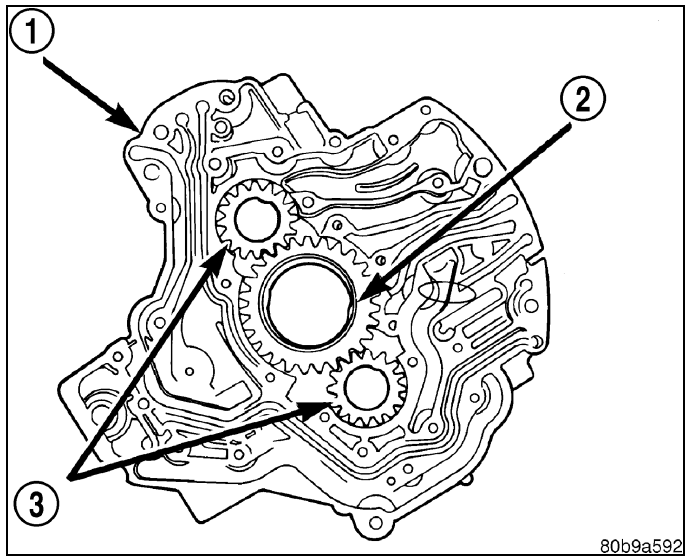

Oil Pump Gears

1 - PUMP HOUSING
2 - DRIVE GEAR
3 - DRIVEN GEARS

The oil pump also contains a number of valves. The converter clutch switch (3) and control valves (2), pressure regulator valve (5), and converter pressure limit valve (6) are all located in the oil pump valve body.

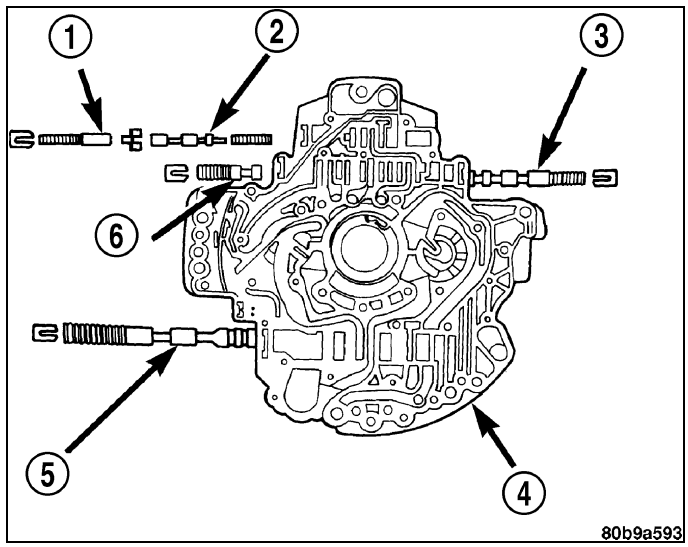

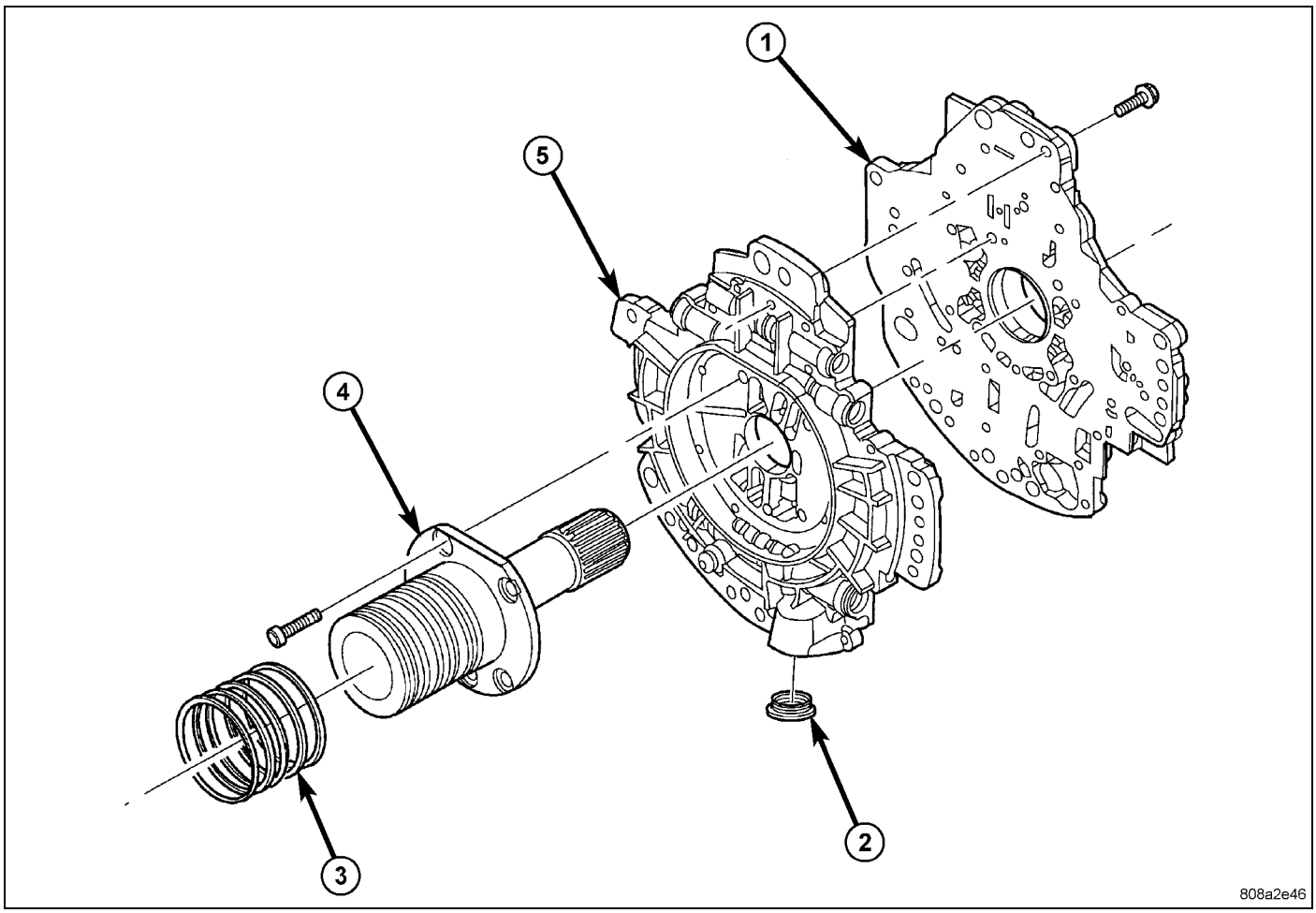

Oil Pump Reaction Shaft

1 - PUMP HOUSING
2 - OIL FILTER SEAL
3 - SEAL RING (5)
4 - REACTION SHAFT SUPPORT
5 - PUMP VALVE BODY

A filter seal (2), and a bolt on reaction shaft (4) complete the oil pump assembly.

Operation

As the torque converter rotates, the converter hub rotates the oil pump drive gear. As the drive gear rotates both driven gears, a vacuum is created when the gear teeth come out of mesh. This suction draws fluid through the pump inlet from the oil pan. As the gear teeth come back into mesh, pressurized fluid is forced into the pump outlet and to the oil pump valves.

At low speeds, both sides of the pump supply fluid to the transmission. As the speed of the torque converter increases, the flow from both sides increases until the flow from the primary side alone is sufficient to meet system demands. At this point, the check valve located between the two pumps closes. The secondary side is shut down and the primary side supplies all the fluid to the transmission.

CONVERTER CLUTCH SWITCH VALVE

The converter clutch switch valve is used to control the direction of oil flow to the torque converter. When the converter clutch is released (CC switch valve downshifted), hydraulic pressure is supplied to the front (OFF) side of the torque converter clutch. When the converter clutch is applied (CC switch valve upshifted), regulated oil pressure is supplied to the back (ON) side of the converter clutch.

CONVERTER CLUTCH REGULATOR VALVE

The converter clutch regulator valve is used to control the hydraulic pressure supplied to the back (ON) side of the torque converter clutch.

TORQUE CONVERTER LIMIT VALVE

The torque converter limit valve serves to limit the available line pressure to the torque converter clutch.

Disassembly

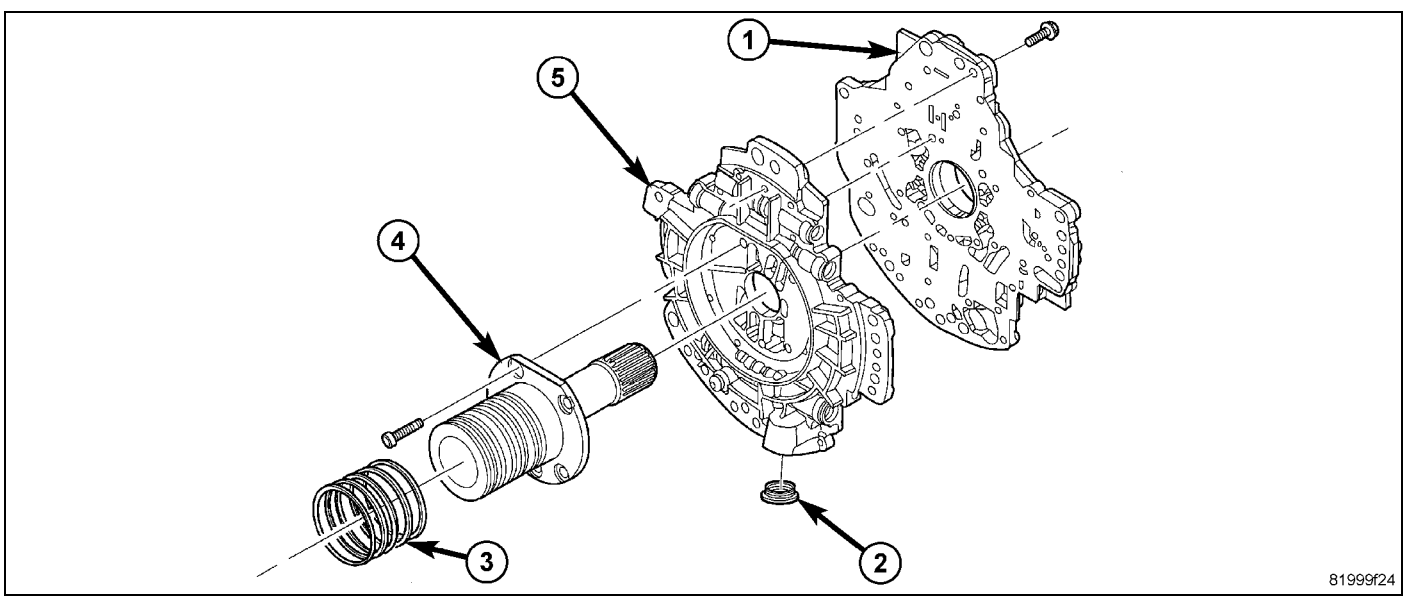

1. Remove the bolts holding the reaction shaft support (4) to the oil pump.
2. Remove the reaction shaft support (4) from the oil pump.
3. Remove all bolts holding the oil pump halves together.
4. Using suitable prying tools, separate the oil pump sections by inserting the tools in the supplied areas and prying the halves apart.

NOTE: The oil pump halves are aligned to each other through the use of two dowels. Be sure to pry upward evenly to prevent damage to the oil pump components.

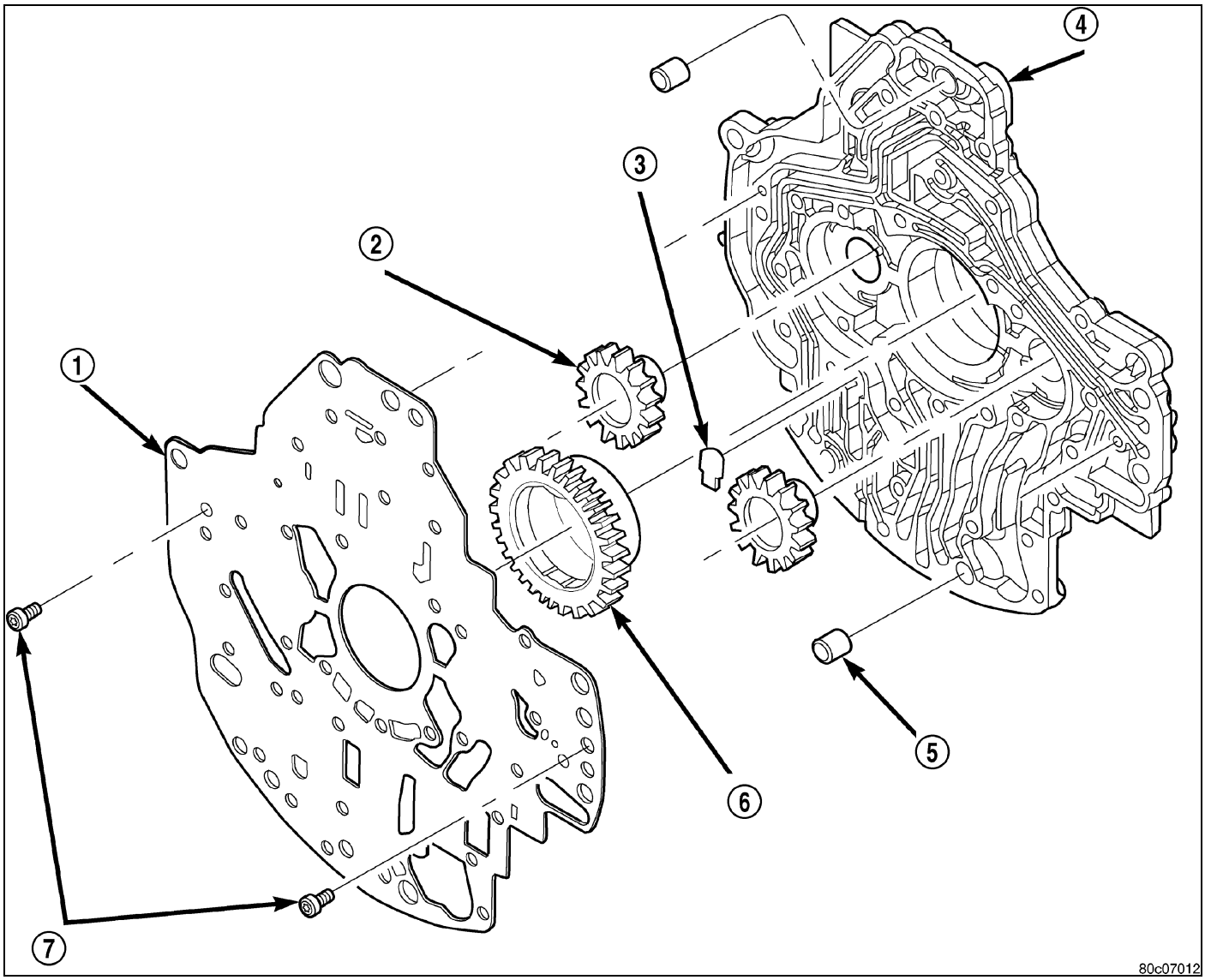

5. Remove the screws (7) holding the separator plate (1) onto the oil pump housing (4).
6. Remove the separator plate (1) from the oil pump housing (4).
7. Mark all gears for location. The gears are select fit and if the oil pump is to be reused, the gears must be returned to their original locations.
8. Remove the oil pump flapper valve (3) from its pocket in the pump housing.
9. Remove the oil pump gears (2, 6) from the oil pump housing (4).

10. Remove the oil pump valve retainers (1) and associated valve (2) and spring one at a time. Mark the combination of components as a group and tag them as to the location from which they were removed.

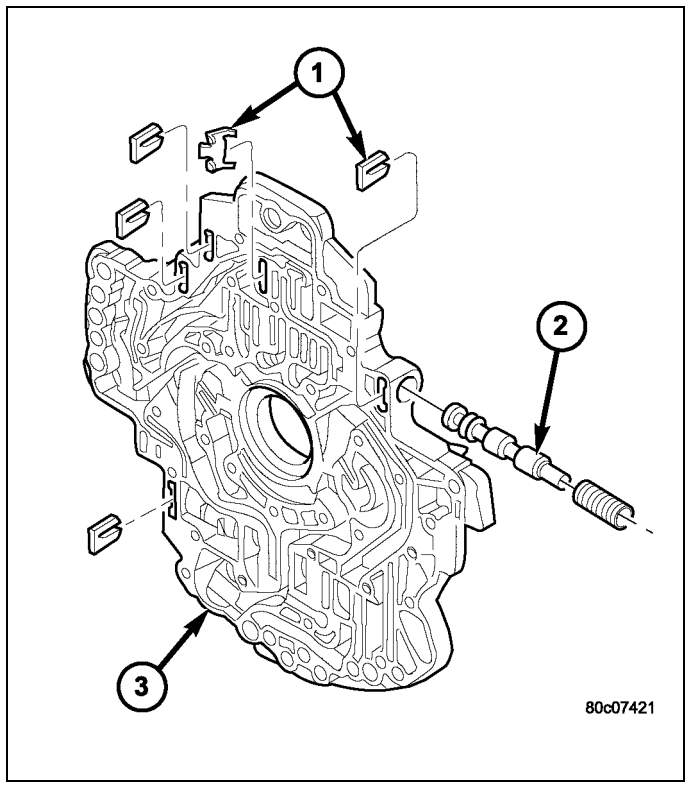

11. Remove the T/C regulator valve (1), T/C limit valve (2), and main regulator valve (3).

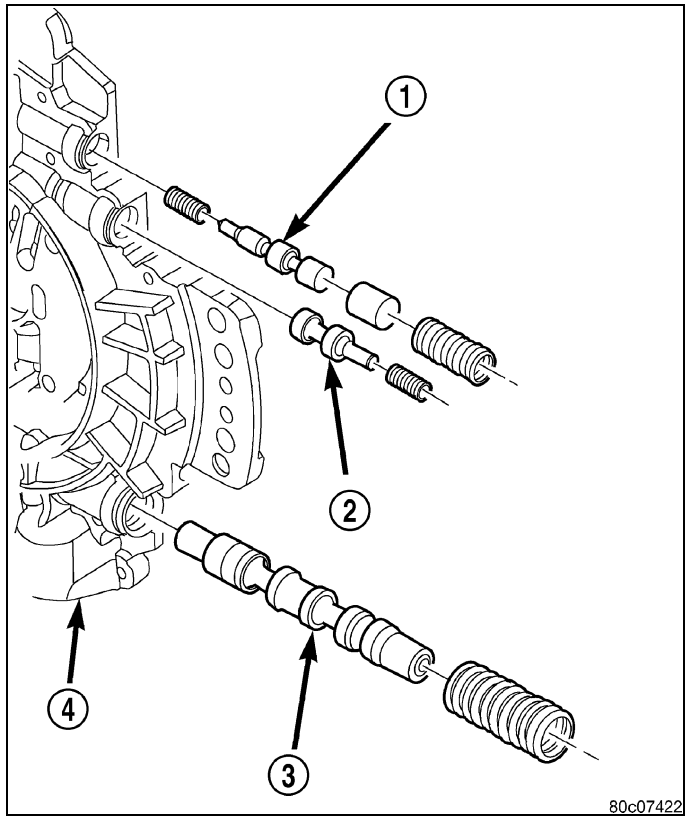

Cleaning

Clean pump and support components with solvent and dry them with compressed air.

Inspection

Check condition of the seal rings and thrust washer on the reaction shaft support. The seal rings do not need to be replaced unless cracked, broken, or severely worn.

Inspect the pump and support components. Replace the pump or support if the seal ring grooves or machined surfaces are worn, scored, pitted, or damaged. Replace the pump gears if pitted, worn chipped, or damaged.

Inspect the pump reaction shaft support bushings. Replace either bushing only if heavily worn, scored or damaged. It is not necessary to replace the bushings unless they are actually damaged.

Inspect the valves and plugs for scratches, burrs, nicks, or scores. Minor surface scratches on steel valves and plugs can be removed with crocus cloth but **do not round off the edges of the valve or plug lands.** Maintaining sharpness of these edges is vitally important. The edges prevent foreign matter from lodging between the valves and plugs and the bore.

Inspect all the valve and plug bores in the oil pump valve body. Use a penlight to view the bore interiors. Replace the oil pump if any bores are distorted or scored. Inspect all of the valve springs. The springs must be free of distortion, warpage or broken coils.

Trial fit each valve and plug in its bore to check freedom of operation. When clean and dry, the valves and plugs should drop freely into the bores. Tip the pump valve body back and forth and check to see that each valve slides freely in its bore under its own weight (without pushing or prying).

Assembly

NOTE: Clean and inspect all components. Make sure that all passages are thoroughly cleaned and are free from dirt or debris. Make sure that all valves move freely in their proper bore. Make sure that all gear pockets and bushings are free from excessive wear and scoring. Replace the oil pump if any excessive wear or scoring is found.

1. Lubricate the oil pump valves with Mopar® ATF +4 and install the valve (2), spring, and retainer (1) into the appropriate oil pump valve body (3) bore.

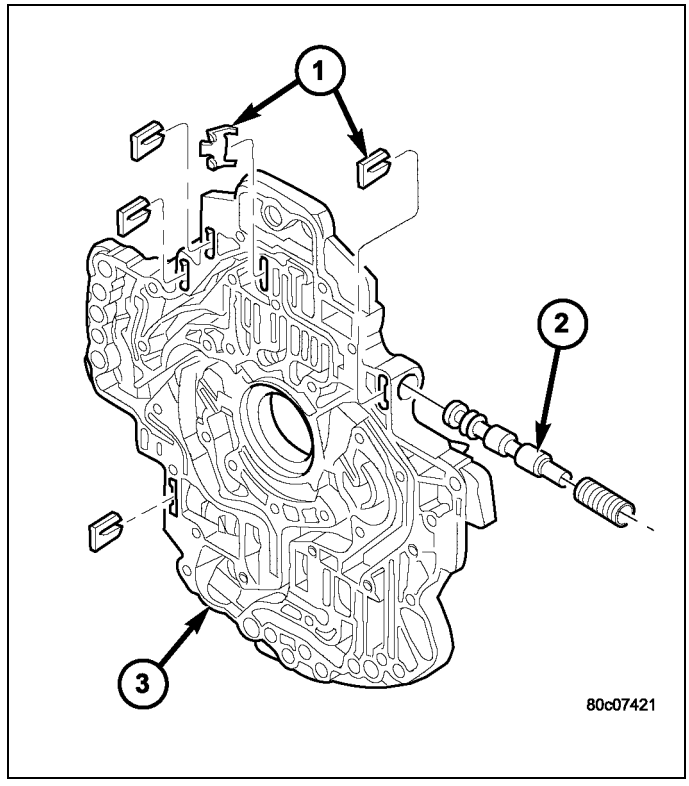

2. Install the T/C regulator valve (1) , T/C limit valve (2), and regulator valve (3).

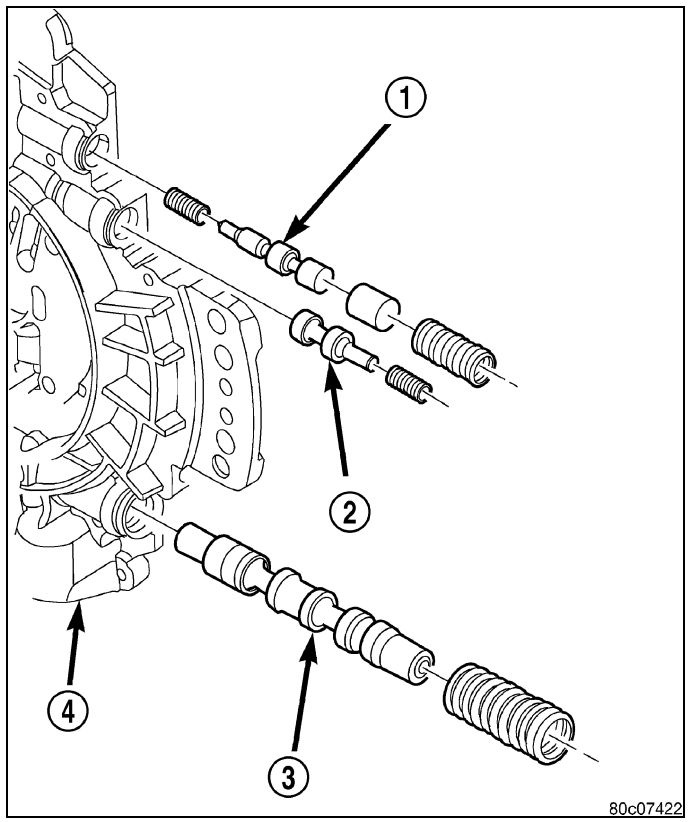

NOTE: The pump separator plate is heat treated and therefore may exhibit a blue color or other discoloration in some areas. This is normal.

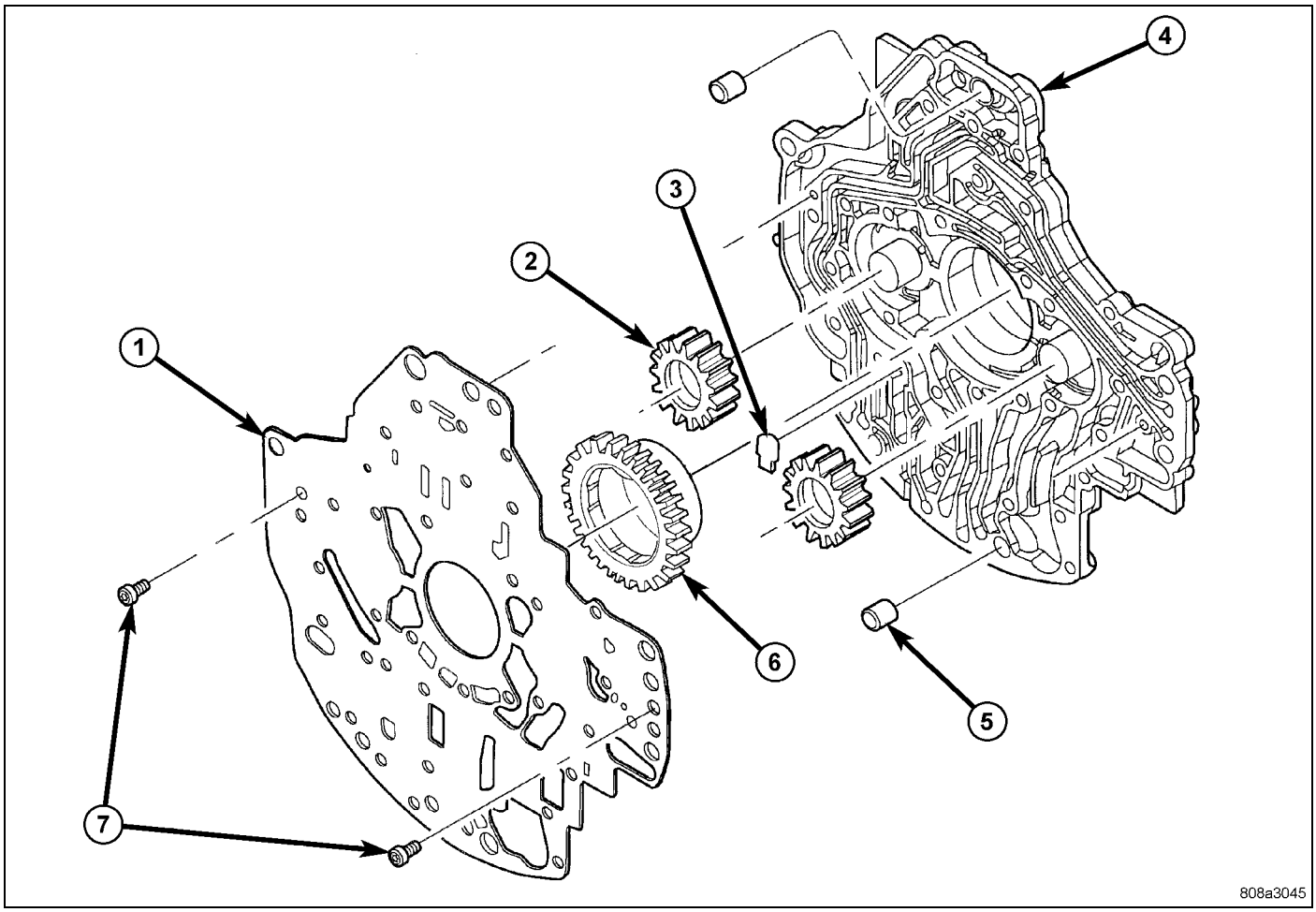

3. Coat the gears (2, 6) with Mopar® ATF +4 and install into their original locations.
4. Place the oil pump flapper valve (3) into its pocket in the pump housing, with the rounded edges facing down.
5. Place the separator plate (1) onto the oil pump housing (4).
6. Install the screws (7) to hold the separator plate (1) onto the oil pump housing (4). Tighten the screws to 4.5 N·m (40 in.lbs.).

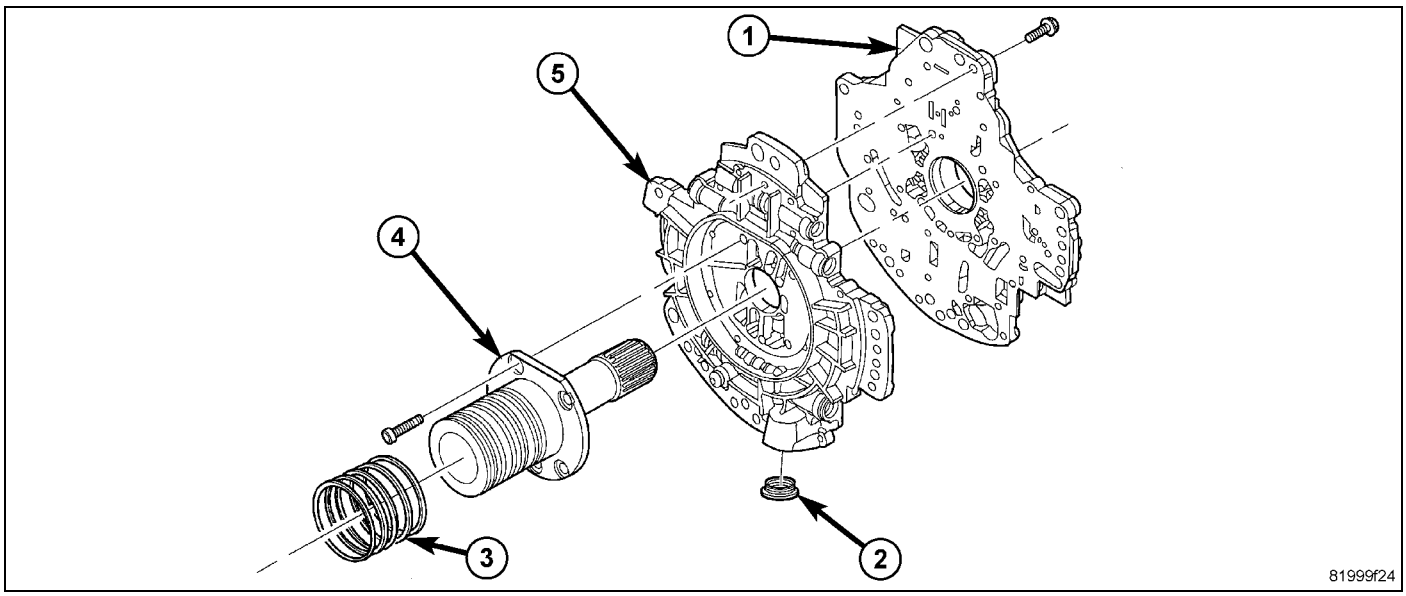

7. Position the oil pump valve body (5) onto the locating dowels.
8. Seat the two oil pump halves together and install all bolts finger tight.

9. Torque all bolts down slowly starting in the center and working outward. The correct torque is 4.5 N·m (40 in.lbs.).
10. Verify that the oil pump gears rotate freely and smoothly.
11. Position the reaction shaft support (4) onto the oil pump valve body (6).
12. Install and tighten the bolts to hold the reaction shaft support (4) to the oil pump valve body (5). The correct torque is 12 N·m (105 in.lbs.).

RETAINER, Transmission 2nd and 4th Clutch Piston

Disassembly

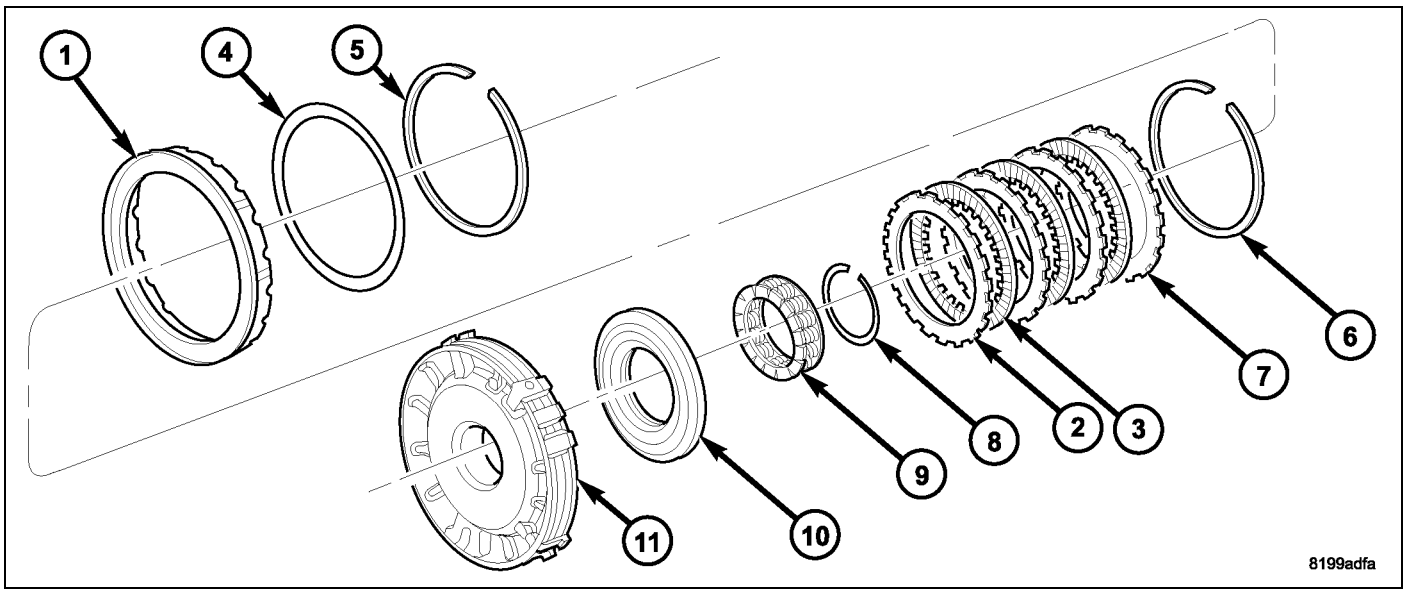

1 - 2C PISTON
2 - 4C PLATE
3 - 4C DISC
4 - 2C BELLEVILLE SPRING
5 - SNAP-RING
6 - SNAP-RING (SELECT)
7 - REACTION PLATE
8 - SNAP-RING
9 - RETURN SPRING
10 - 4C PISTON
11 - 4C RETAINER/BULKHEAD

1. Remove the 2C piston Belleville spring snap-ring (5) from the 4C retainer/bulkhead (12).
2. Remove the 2C piston Belleville spring (4) from the retainer/bulkhead (11).
3. Remove the 2C piston (1) from the retainer/bulkhead (11). Use 20 psi of air pressure to remove the piston if necessary.
4. Remove the 4C clutch snap-ring (6) from the retainer/bulkhead (11)
5. Remove the 4C clutch pack (2, 3, 7) from the retainer/bulkhead (11).

6. Using Spring Compressor 8250 (2) and a suitable shop press (1), compress the 4C piston return spring and remove the snap-ring.

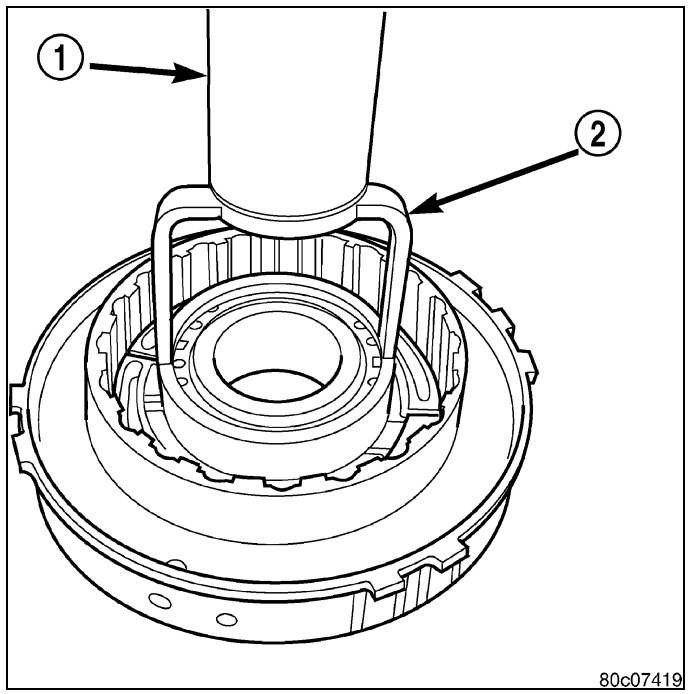

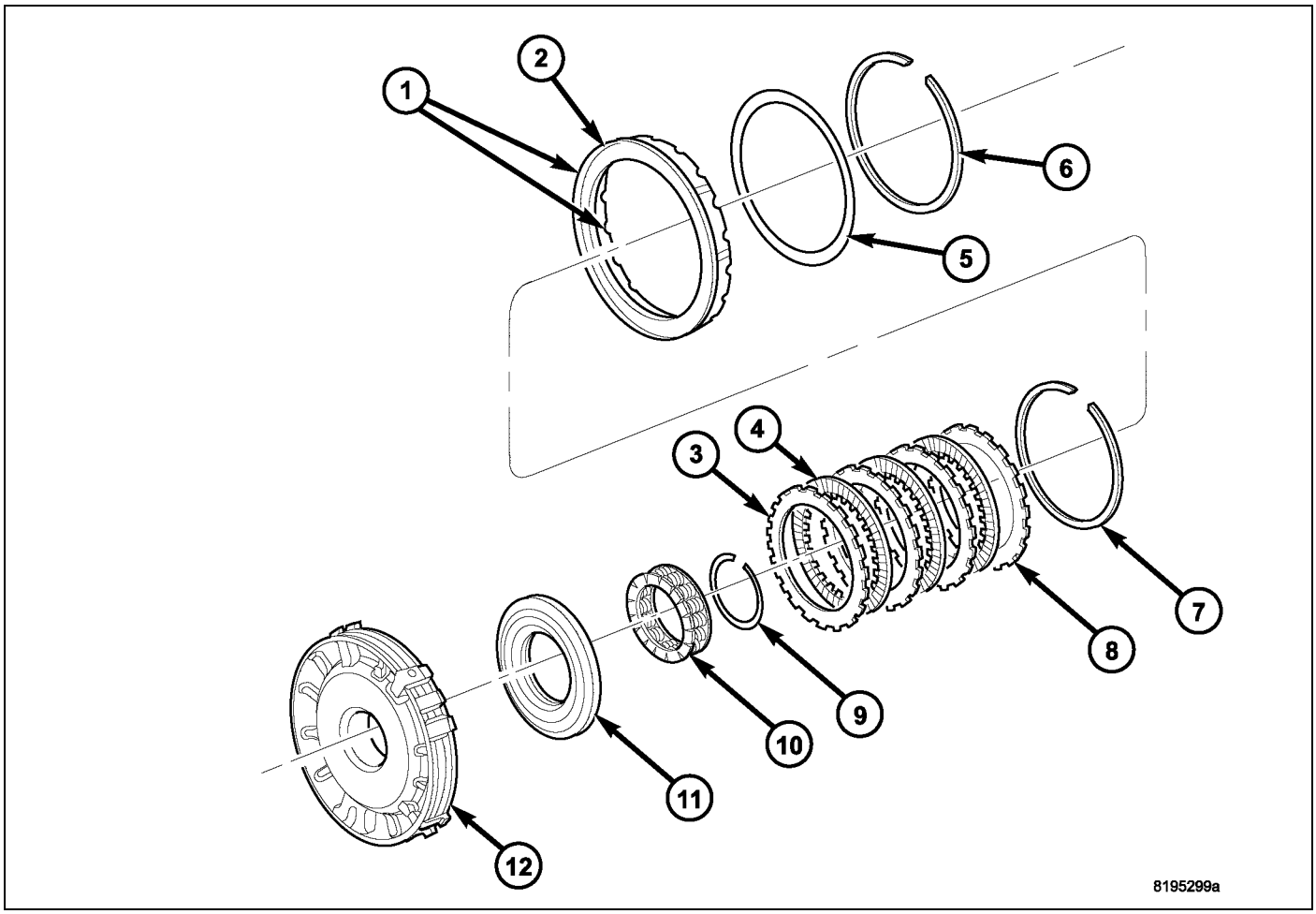

1 - SEALS
2 - 2C PISTON
3 - 4C PLATE
4 - 4C DISC
5 - 2C BELLEVILLE SPRING
6 - SNAP-RING
7 - SNAP-RING (SELECT)
8 - REACTION PLATE
9 - SNAP-RING
10 - RETURN SPRING
11 - 4C PISTON
12 - 4C RETAINER/BULKHEAD

7. Remove the 4C piston return spring (10) and piston (11) from the retainer/bulkhead (12). Use 20 psi of air pressure to remove the piston if necessary.

Assembly

NOTE:
Clean and inspect all components. Replace any components which show evidence of excessive wear or scoring.

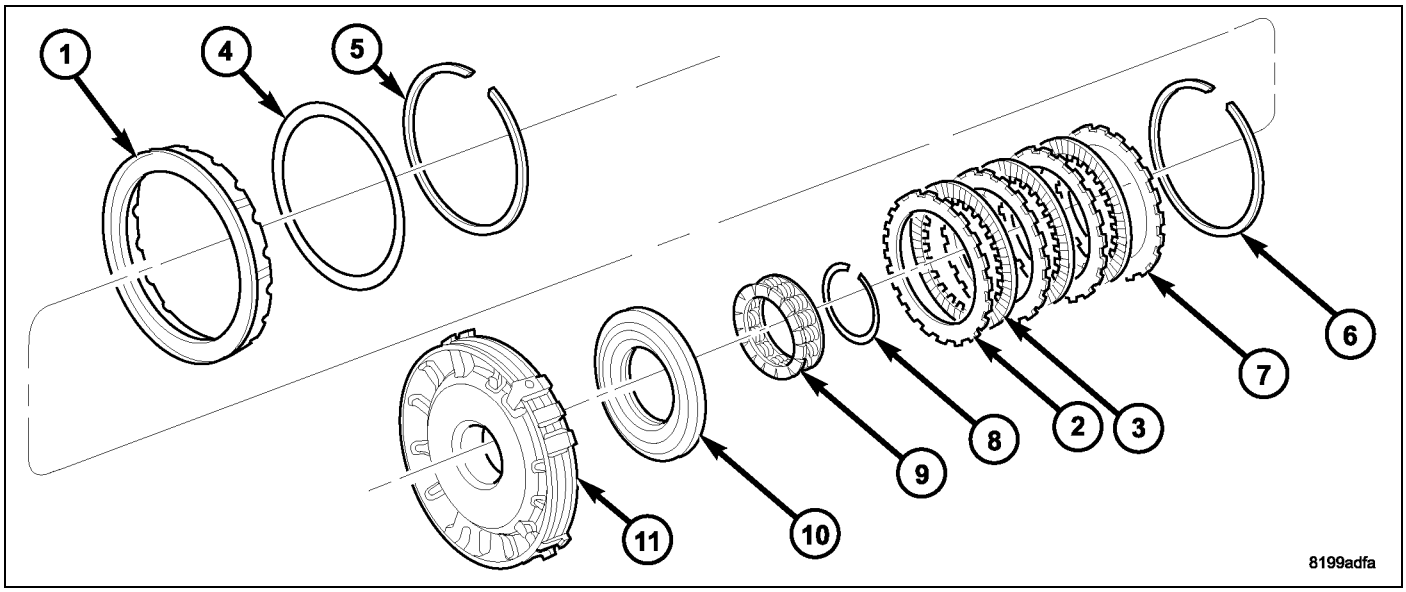

1 - 2C PISTON
2 - 4C PLATE
3 - 4C DISC
4 - 2C BELLEVILLE SPRING
5 - SNAP-RING
6 - SNAP-RING (SELECT)
7 - REACTION PLATE
8 - SNAP-RING
9 - RETURN SPRING
10 - 4C PISTON
11 - 4C RETAINER/BULKHEAD

1. Lubricate all seals with Mopar® ATF +4 prior to installation.

NOTE: The 4C piston installation aid is only available with procurement of a new 4C piston.

2. Insert the installation aid (1) into the 4C retainer / bulkhead (2) .

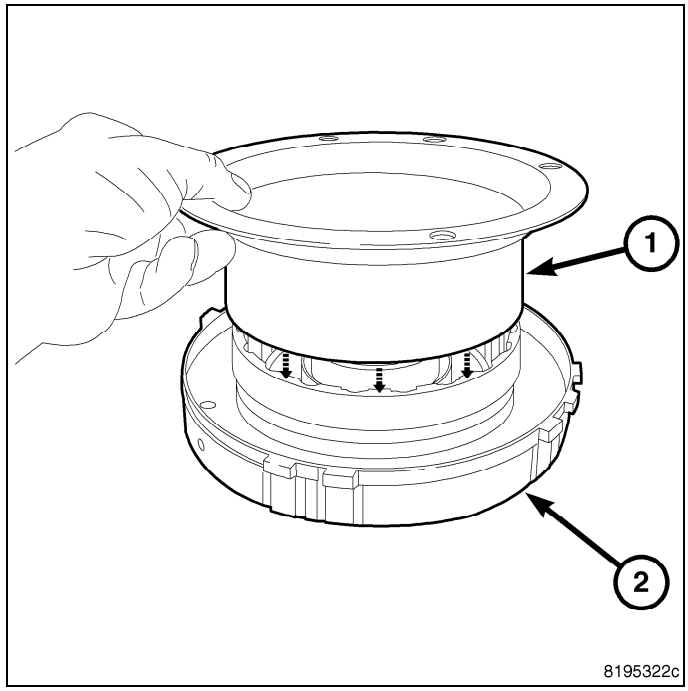

3. Lubricate the inner and outer 4C piston seals (3) with MOPAR® ATF+ 4.
4. Install the 4C piston (3) into the installation aid (1) .

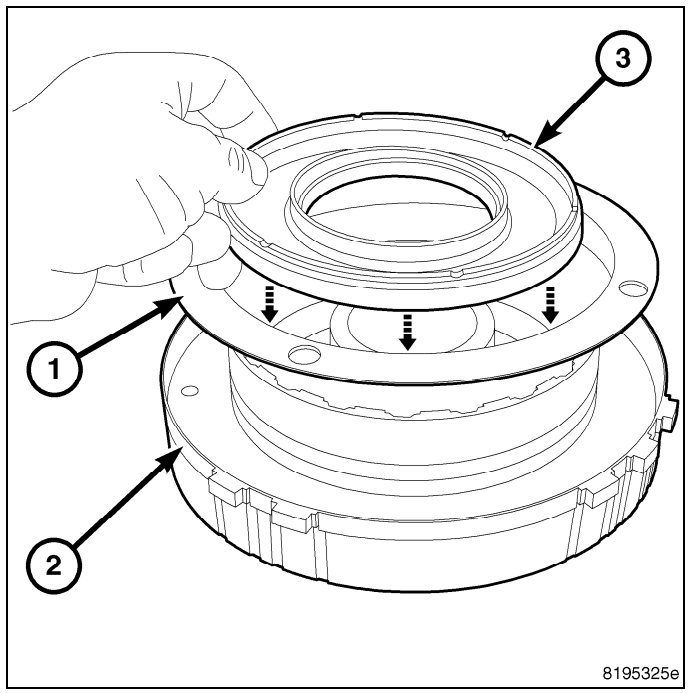

5. Push the 4C piston (3) down evenly until it is seated in the 4C retainer / bulkhead (2).

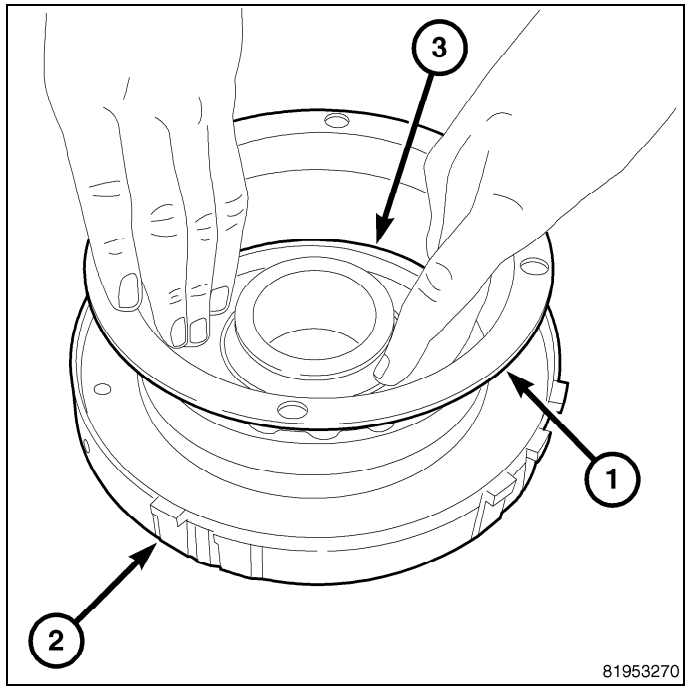

6. Remove the installation aid (1) from the 4C retainer / bulkhead (2).

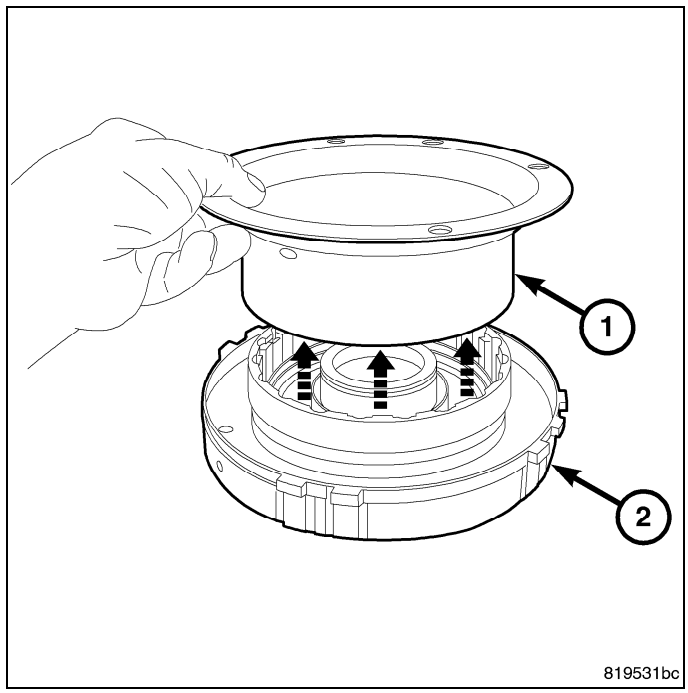

7. Position the 4C piston return spring onto the 4C piston.
8. Using Spring Compressor 8250 (2) and a suitable shop press (1), compress the 4C piston return spring and install the snap-ring.

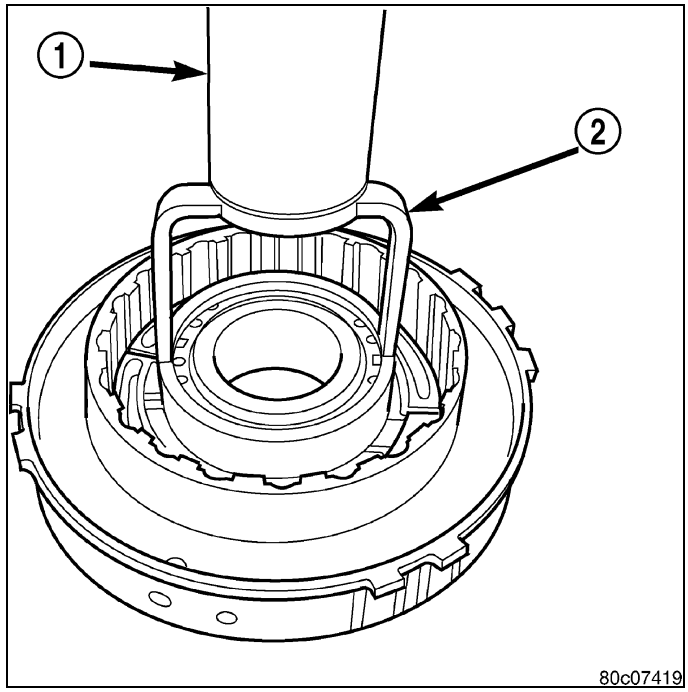

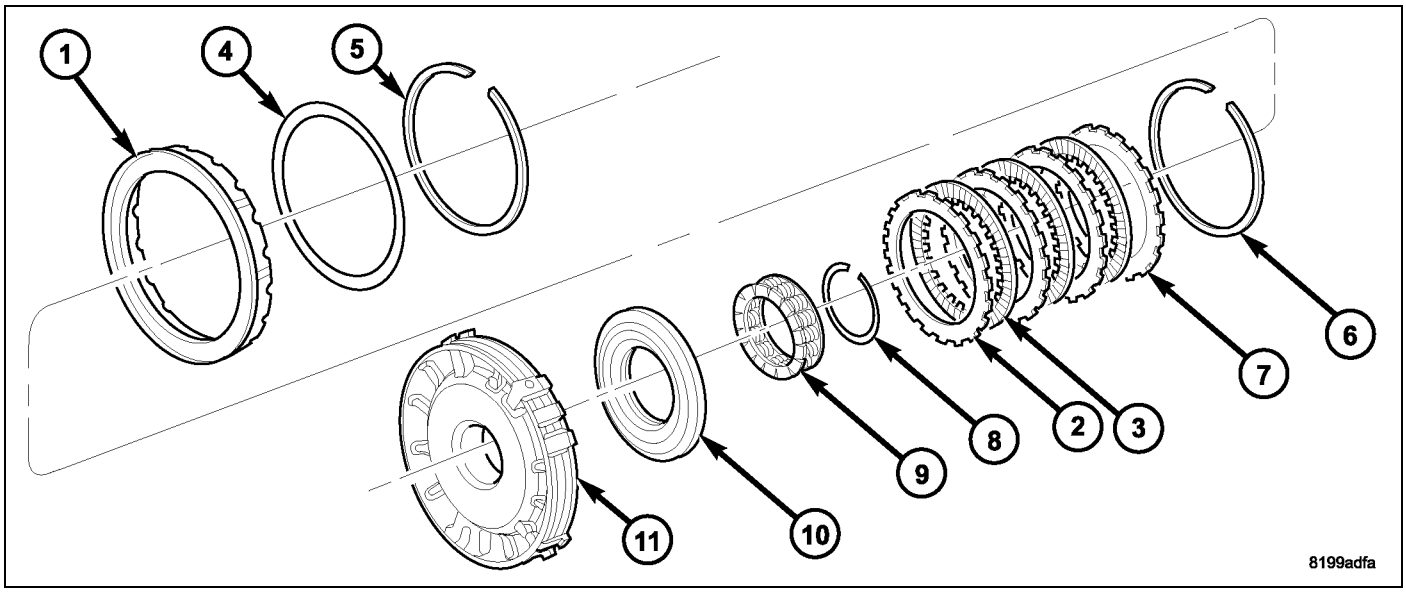

1 - 2C PISTON
2 - 4C PLATE
3 - 4C DISC
4 - 2C BELLEVILLE SPRING
5 - SNAP-RING
6 - SNAP-RING (SELECT)
7 - REACTION PLATE
8 - SNAP-RING
9 - RETURN SPRING
10 - 4C PISTON
11 - 4C RETAINER/BULKHEAD

9. Assemble and install the 4C clutch pack (2, 3) into the retainer/bulkhead (11) with a steel separator plate against the piston.
10. Install the 4C reaction plate (7) and snap-ring (6) into the retainer/bulkhead (11). The 4C reaction plate is non-directional.
11. Measure the 4C clutch clearance. The correct clutch clearance is 0.770-1.390 mm (0.030-0.055 in.). The snap-ring (6) is selectable. Install the chosen snap-ring and re-measure to verify the selection.

The 4C selectable snap ring thickness are as follows:

4C SELECTABLE SNAP RING THICKNESS

- One Butterfly End, One Square End = 1.79 mm (0.070 in.).
- Both Ends Buttery Fly Cut = 2.20 mm (0.087 in.).
- One Butterfly End, One Inverted Butterfly End = 2.61 mm (0.103 in.).

12. Install the 2C piston (1) into the retainer/bulkhead (11).
13. Position the 2C Belleville spring (5) onto the 2C piston (2).
14. Position the 2C Belleville spring snap-ring (6) onto the 2C Belleville spring (5).

15. Using Spring Compressor 8249 (2) and a suitable shop press (1), compress the Belleville spring until the snap-ring is engaged with the snap-ring groove in the retainer/bulkhead.

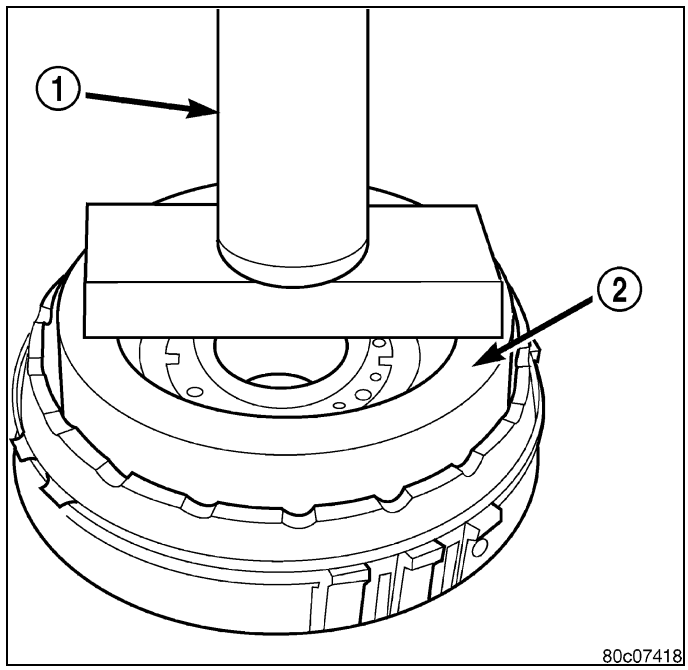

SEAL, Adapter Housing

Removal

1. Remove the transfer case from the transmission.
2. Using a screw mounted on a slide hammer, remove the adapter housing seal.

Installation

1. Clean the adapter seal bore in the adapter housing of any residue or particles remaining from the original seal.
2. Install new oil seal in the adapter housing using Seal Installer C-3860-A (1) . A properly installed seal is flush to the face of the seal bore.
3. Install the transfer case onto the transmission.

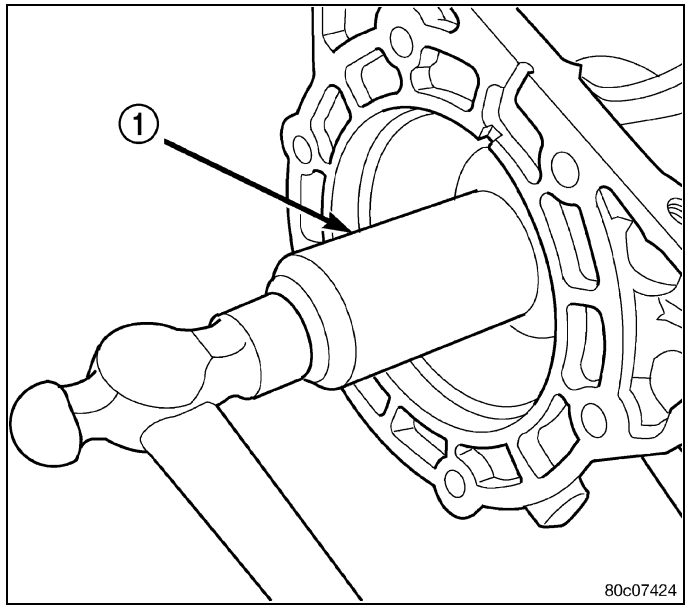

SENSOR, Speed, Input

Description

The Input and Output Speed Sensors are two-wire magnetic pickup devices that generate AC signals as rotation occurs. They are mounted in the left side of the transmission case and are considered primary inputs to the Transmission Control Module (TCM).

Operation

The Input Speed Sensor provides information on how fast the input shaft is rotating. As the teeth of the input clutch hub pass by the sensor coil, an AC voltage is generated and sent to the TCM. The TCM interprets this information as input shaft rpm.

The Output Speed Sensor generates an AC signal in a similar fashion, though its coil is excited by rotation of the park gear teeth. The TCM interprets this information as output shaft rpm.

The TCM compares the input and output speed signals to determine the following:

- Transmission gear ratio
- Speed ratio error detection
- CVI calculation

The TCM also compares the input speed signal and the engine speed signal to determine the following:

- Torque converter clutch slippage
- Torque converter element speed ratio

Removal

1. Raise vehicle.
2. Place a suitable fluid catch pan under the transmission.
3. Remove the wiring connector from the input speed sensor (3).
4. Remove the bolt holding the input speed sensor to the transmission case.
5. Remove the input speed sensor (3) from the transmission case.

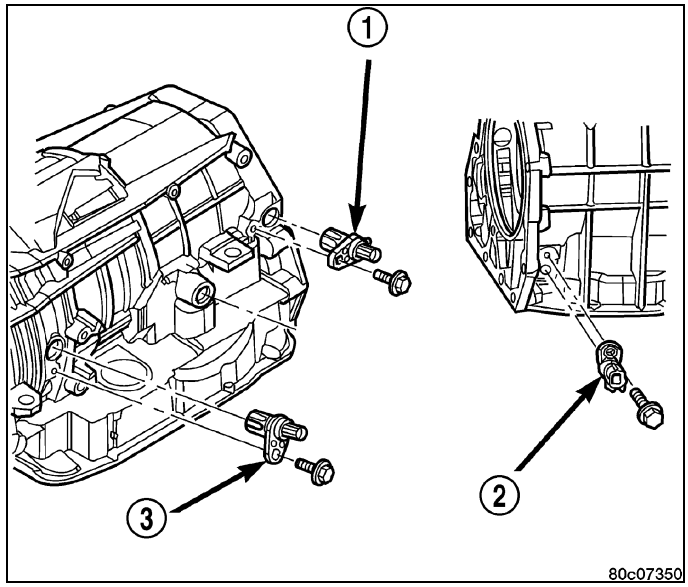

Installation

1. Install the input speed sensor (3) into the transmission case.
2. Install the bolt to hold the input speed sensor (3) into the transmission case. Tighten the bolt to 12 N·m (105 in.lbs.).
3. Install the wiring connector onto the input speed sensor.
4. Verify the transmission fluid level. Add fluid as necessary.
5. Lower vehicle.

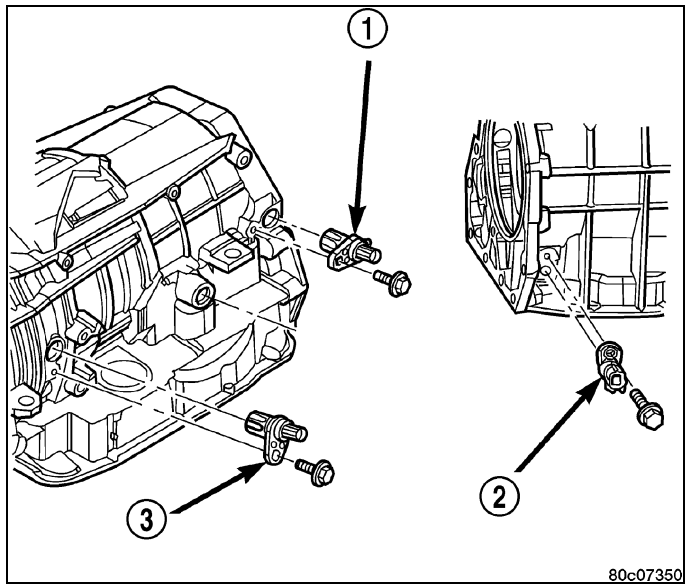

SENSOR, Speed, Output

Description

The Input and Output Speed Sensors are two-wire magnetic pickup devices that generate AC signals as rotation occurs. They are mounted in the left side of the transmission case and are considered primary inputs to the Transmission Control Module (TCM).

Operation

The Input Speed Sensor provides information on how fast the input shaft is rotating. As the teeth of the input clutch hub pass by the sensor coil, an AC voltage is generated and sent to the TCM. The TCM interprets this information as input shaft rpm.

The Output Speed Sensor generates an AC signal in a similar fashion, though its coil is excited by rotation of the park gear teeth. The TCM interprets this information as output shaft rpm.

The TCM compares the input and output speed signals to determine the following:

- Transmission gear ratio
- Speed ratio error detection
- CVI calculation

The TCM also compares the input speed signal and the engine speed signal to determine the following:

- Torque converter clutch slippage
- Torque converter element speed ratio

Removal

1. Raise vehicle.
2. Place a suitable fluid catch pan under the transmission.
3. Remove the wiring connector from the output speed sensor (1) .
4. Remove the bolt holding the output speed sensor (1) to the transmission case.
5. Remove the output speed sensor (1) from the transmission case.

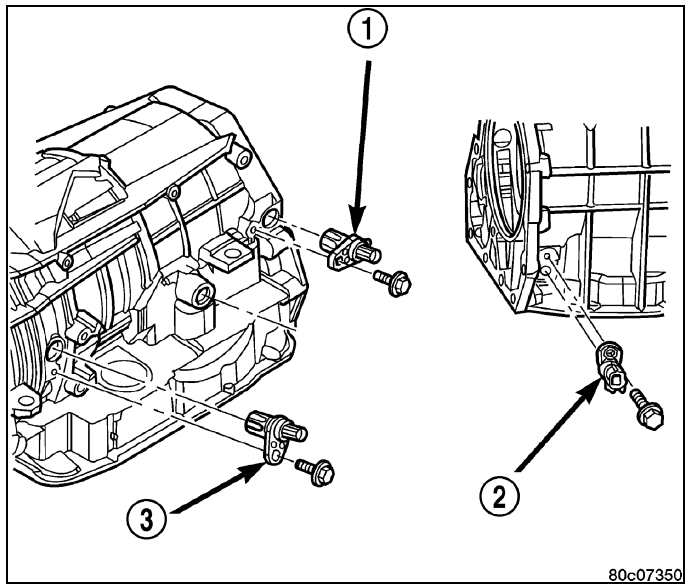

Installation

1. Install the output speed sensor (1) into the transmission case.
2. Install the bolt to hold the output speed sensor (1) into the transmission case. Tighten the bolt to 12 N·m (105 in.lbs.).
3. Install the wiring connector onto the output speed sensor (1).
4. Verify the transmission fluid level. Add fluid as necessary.
5. Lower vehicle.

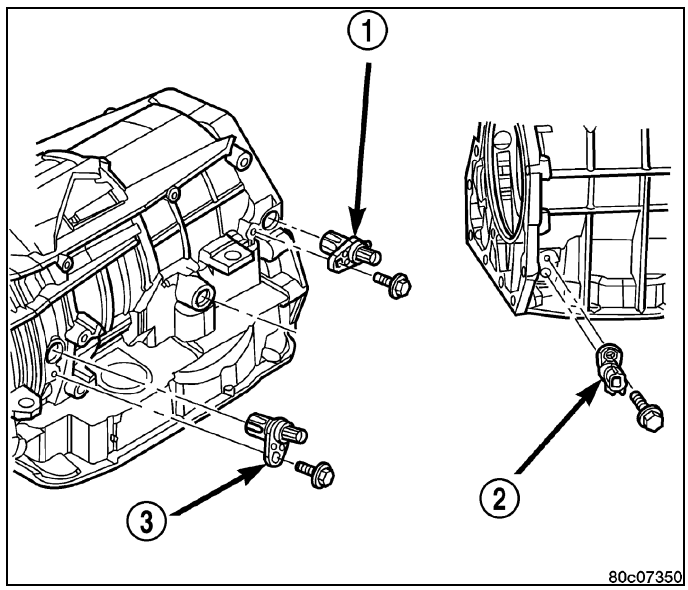

SENSOR, Transmission Oil Temperature

Description

The transmission temperature sensor is a thermistor that is integral to the Transmission Range Sensor (TRS).

Operation

The transmission temperature sensor is used by the TCM to sense the temperature of the fluid in the sump. Since fluid temperature can affect transmission shift quality and convertor lock up, the TCM requires this information to determine which shift schedule to operate in.

Calculated Temperature

A failure in the temperature sensor or circuit will result in calculated temperature being substituted for actual temperature. Calculated temperature is a predicted fluid temperature which is calculated from a combination of inputs:

- Battery (ambient) temperature

- Engine coolant temperature
- In-gear run time since start-up

SENSOR, Transmission Range

Description

The Transmission Range Sensor (TRS) is part of the solenoid module, which is mounted to the top of the valve body inside the transmission.

The Transmission Range Sensor (TRS) has five switch contact pins that:

- Determine shift lever position
- Supply ground to the Starter Relay in Park and Neutral only.
- Supply +12 V to the backup lamps in Reverse only.

The TRS also has an integrated temperature sensor (thermistor) that communicates transmission temperature to the TCM and PCM.

Operation

The Transmission Range Sensor (TRS) communicates shift lever position to the TCM as a combination of open and closed switches. Each shift lever position has an assigned combination of switch states (open/closed) that the TCM receives from four sense circuits. The TCM interprets this information and determines the appropriate transmission gear position and shift schedule.

There are many possible combinations of open and closed switches (codes). Seven of these possible codes are related to gear position and five are recognized as “between gear” codes. This results in many codes which should **never occur**. These are called “invalid” codes. An invalid code will result in a DTC, and the TCM will then determine the shift lever position based on pressure switch data. This allows reasonably normal transmission operation with a TRS failure.

GEAR	C5	C4	C3	C2	C1
Park	CL	OP	OP	CL	CL
Temp 1	CL	OP	OP	CL	OP
Reverse	OP	OP	OP	CL	OP
Temp 2	OP	OP	CL	CL	OP
Neutral 1	OP	OP	CL	CL	CL
Neutral 2	OP	CL	CL	CL	CL
Temp 3	OP	CL	CL	CL	OP
Drive	OP	CL	CL	OP	OP
Temp 4	OP	CL	OP	OP	OP
Manual 2	CL	CL	OP	OP	OP
Temp 5	CL	OP	OP	OP	OP
Manual 1	CL	OP	CL	OP	OP

SENSOR, Variable Line Pressure

Description

The TCM utilizes a closed-loop system to control transmission line pressure. The system contains a variable force style solenoid, the Pressure Control Solenoid, which is part of the pressure switch assembly. The solenoid is duty cycle controlled by the TCM to vent the unnecessary line pressure supplied by the oil pump back to the pump inlet. The system contains a Line Pressure Sensor, which is a direct input to the TCM. The line pressure sensor monitors the transmission line pressure and completes the feedback loop to the TCM. The TCM uses this information to adjust its control of the pressure control solenoid to achieve the desired line pressure.

Operation

The TCM calculates the desired line pressure based upon inputs from the transmission and engine. The TCM calculates the torque input to the transmission and uses that information as the primary input to the calculation. The line pressure is set to a predetermined value during shifts, to ensure consistent shift quality. During all other operation, the desired line pressure value is adjusted based on torque level and other transmission requirements.

Removal

1. Raise vehicle.
2. Place a suitable fluid catch pan under the transmission.
3. Remove the wiring connector from the line pressure sensor (2).
4. Remove the bolt holding the line pressure sensor (2) to the transmission case.
5. Remove the line pressure sensor (2) from the transmission case.

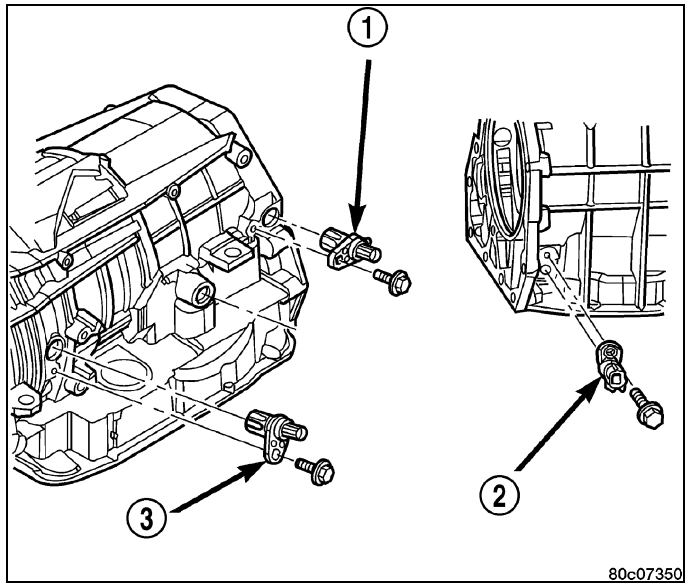

Installation

1. Install the line pressure sensor (2) into the transmission case.
2. Install the bolt to hold the line pressure sensor (2) into the transmission case. Tighten the bolt to 12 N·m (105 in.lbs.).
3. Install the wiring connector onto the line pressure sensor (2).
4. Verify the transmission fluid level. Add fluid as necessary.
5. Lower vehicle.

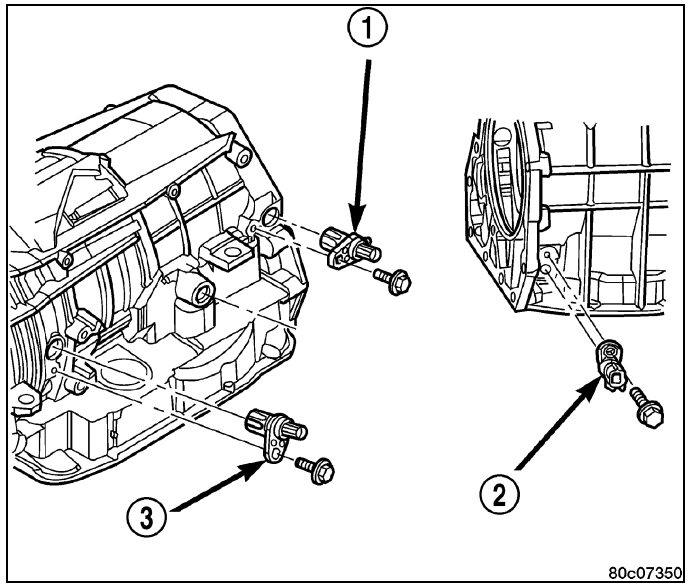

SHIFTER, Transmission

Description

The gear shift mechanism provides six shift positions which are:

- Park (P)
- Reverse (R)
- Neutral (N)

- Drive (D)
- Manual second (2)
- Manual low (1)

Operation

MANUAL LOW (1) range provides first gear only. Maximum engine braking is also provided in this range. MANUAL SECOND (2) range provides first and second gear only.

DRIVE range provides FIRST, SECOND, THIRD, OVERDRIVE FOURTH, and OVERDRIVE FIFTH gear ranges. The shift into OVERDRIVE FOURTH and FIFTH gear ranges occurs only after the transmission has completed the shift into D THIRD gear range. No further movement of the shift mechanism is required to complete the 3-4 or 4-5 shifts.

The FOURTH and FIFTH gear upshifts occur automatically unless the Tow/Haul or OD Off mode is enabled. No upshift to FOURTH or FIFTH gears will occur if any of the following are true:

- The transmission fluid temperature is below 10° C (50° F) or above 121° C (250° F).
- The shift to THIRD is not yet complete.
- Vehicle speed is too low for the 3-4 or 4-5 shifts to occur.

Upshifts into FOURTH or FIFTH will be delayed when the transmission fluid temperature is below 4.5° C (40° F) or above 115.5° C (240° F).

Removal

SHIFTER

1. Using trim stick C-4755 or equivalent, remove the console bezel trim ring (1).

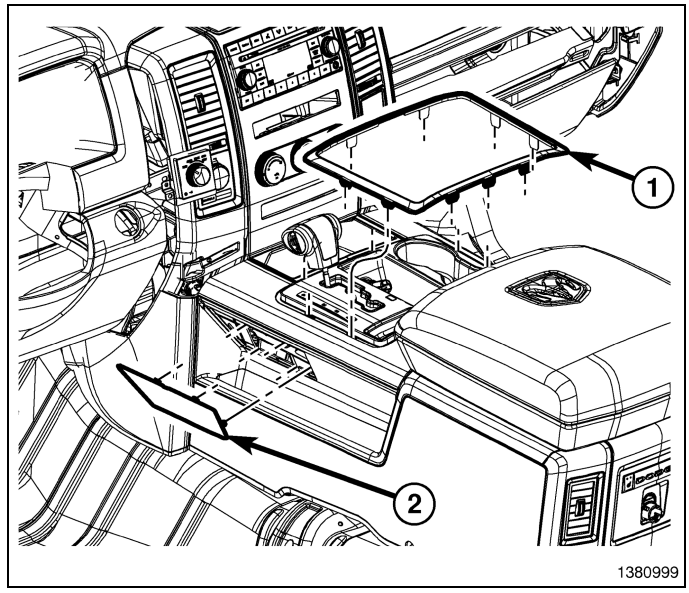

2. Remove the rubber insert (1) from the console bezel.

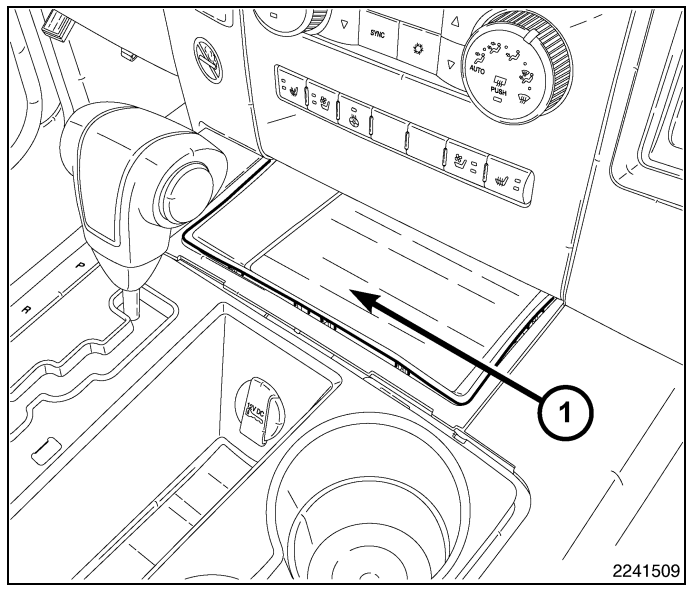

3. Remove the fasteners (1) at the front of the console bezel.

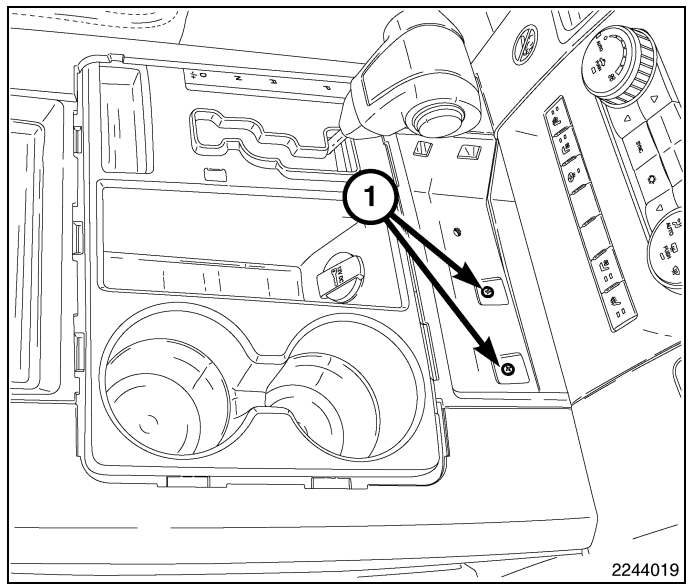

4. Using trim stick C-4755 or equivalent, remove console bezel (1).

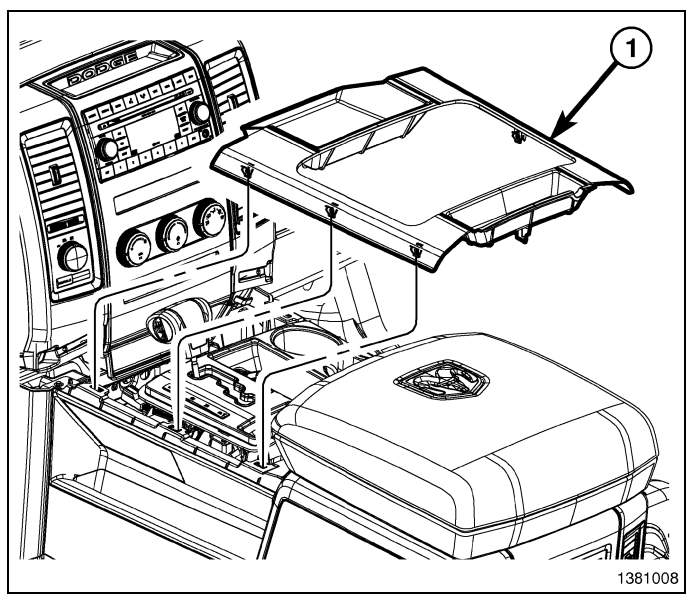

5. Remove the rubber liners from the center storage tray and cupholders in the console PRNDL bezel, and remove the fasteners (1).

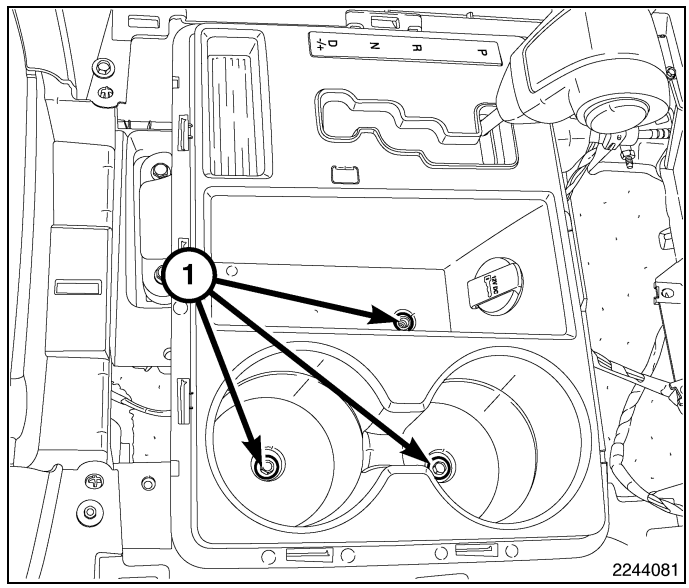

6. Disconnect the power outlet harness connector (1) and the shifter harness connector (2).

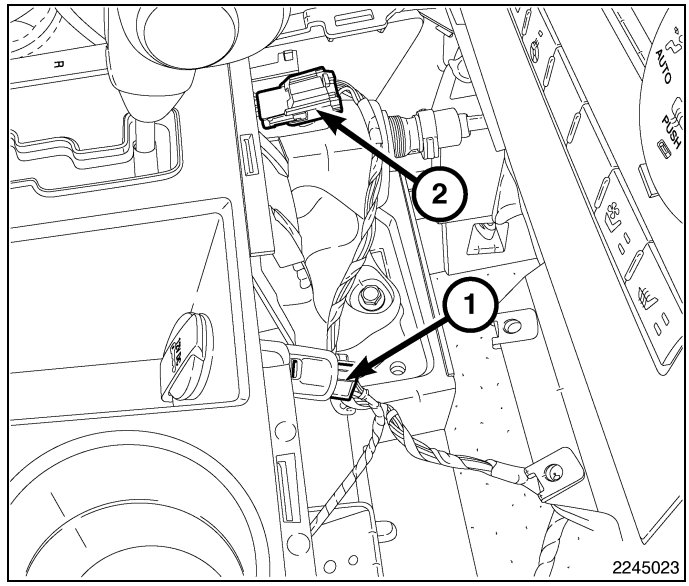

7. Place the shifter in park.

8. Remove the fasteners (1), and position the shifter assembly (2) so the cable end is accessible.

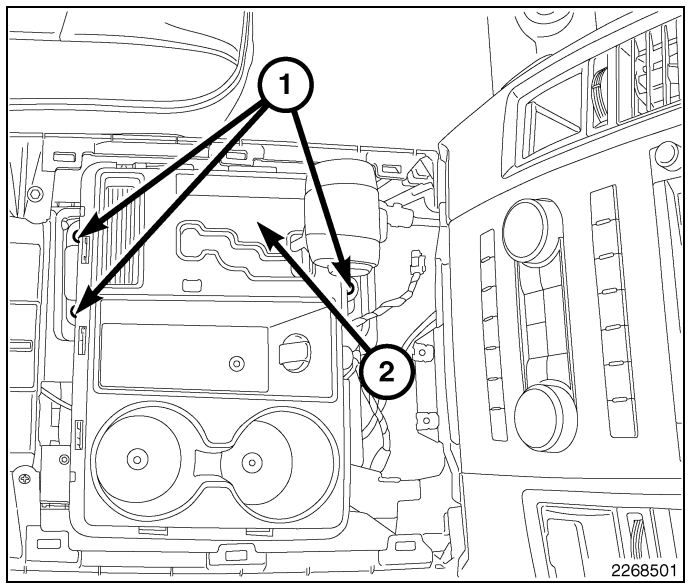

9. Disconnect the shift cable retainer (2) from the bracket.
10. Disconnect the shifter cable end (1) from the shifter lever.

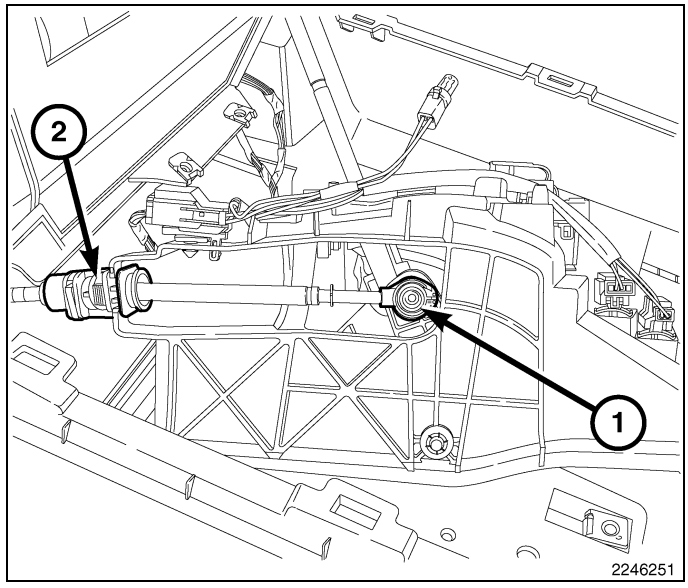

11. Remove the shifter assembly.

CONSOLE PRNDL BEZEL

1. Using trim stick C-4755 or equivalent, remove the console bezel trim ring (1).

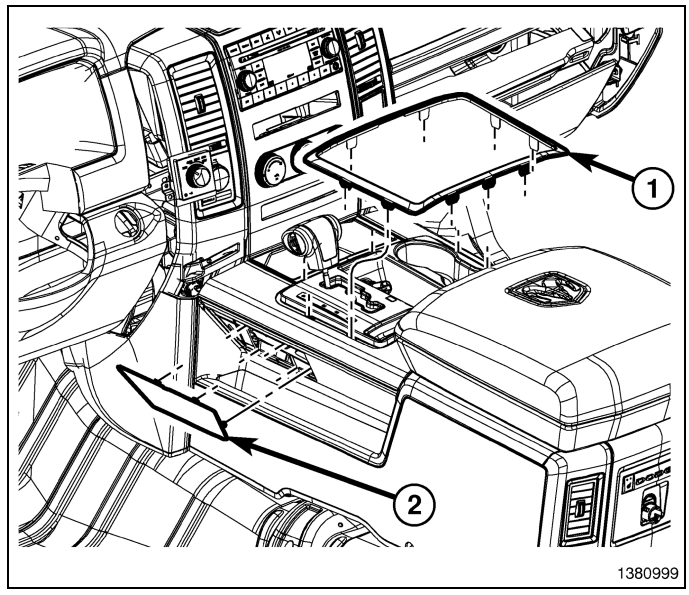

2. Remove the rubber insert (1) from the console bezel.

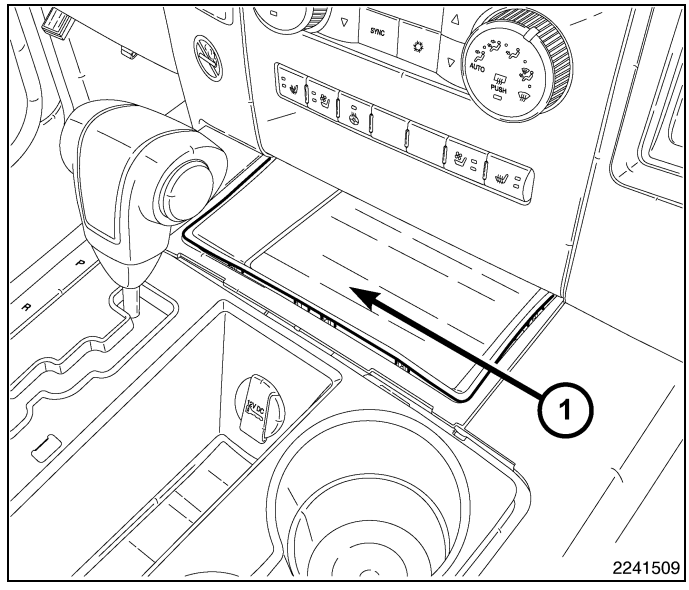

3. Remove the fasteners (1) at the front of the console bezel.

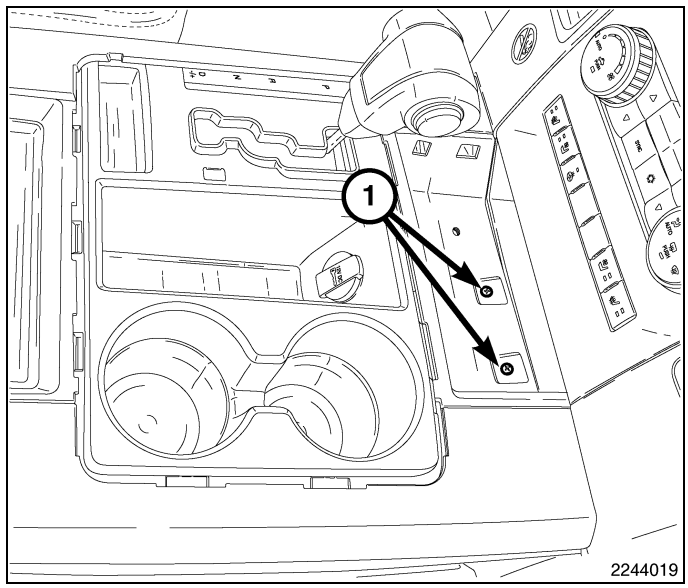

4. Using trim stick C-4755 or equivalent, remove the console bezel (1).

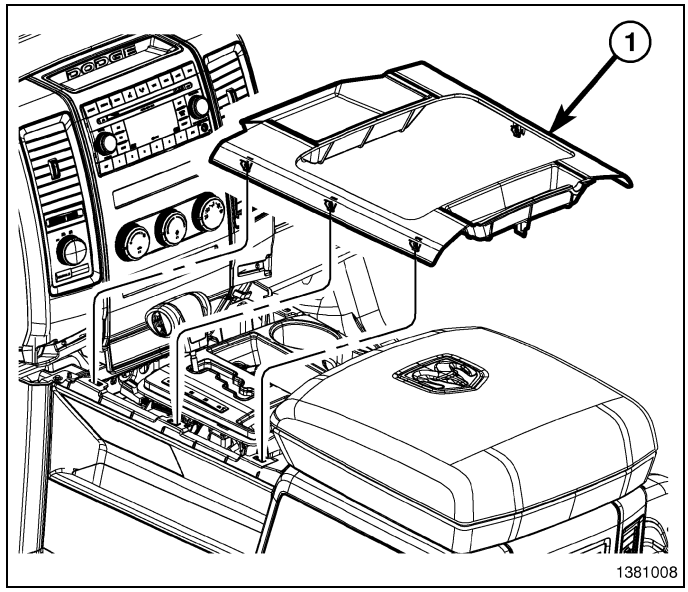

5. Remove the rubber liners from the center storage tray and cupholders in the console PRDL bezel, and remove the fasteners (1).

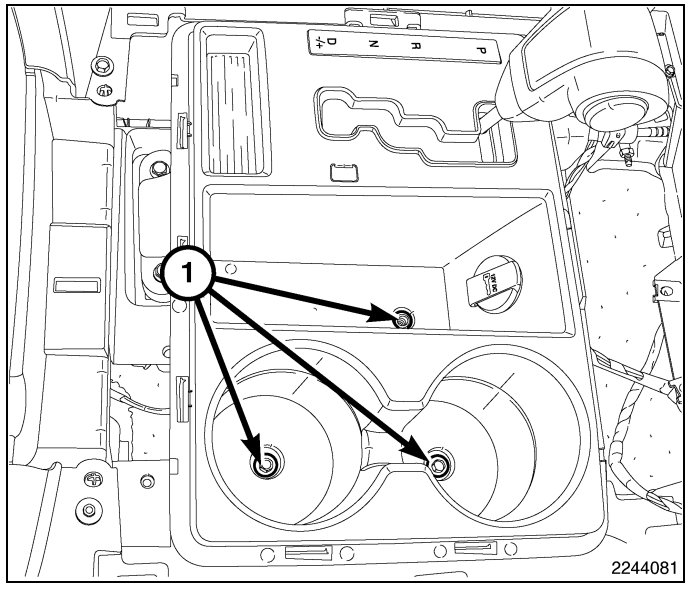

6. Disconnect the power outlet harness connector (1) and the shifter harness connector (2).

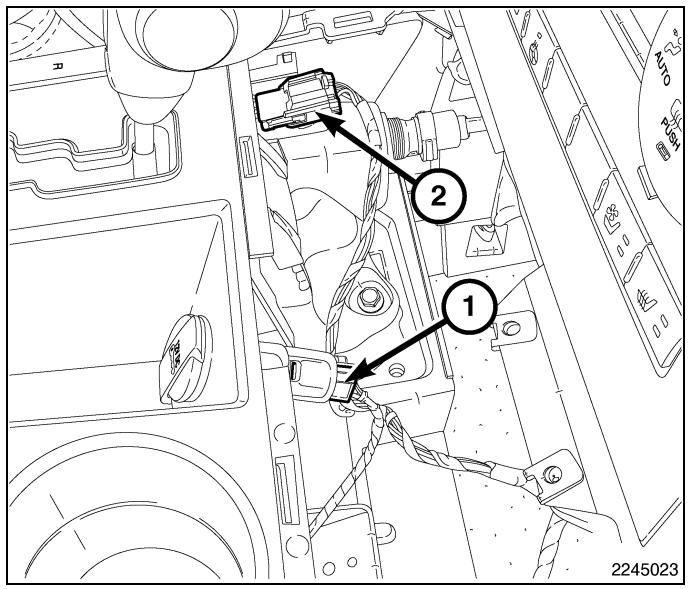

7. Twist the lower trim piece (1) on the base of the shifter knob counterclockwise, then push down to disengage the trim piece (1).

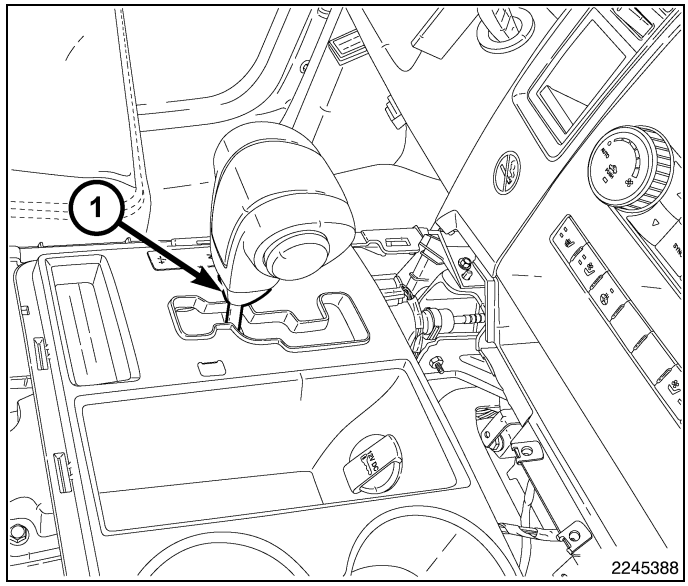

8. Remove the shifter knob.

9. Twist the shift position indicator lamp connector (1) 1/4 turn counterclockwise, then disconnect the lamp from the console PRNDL bezel.

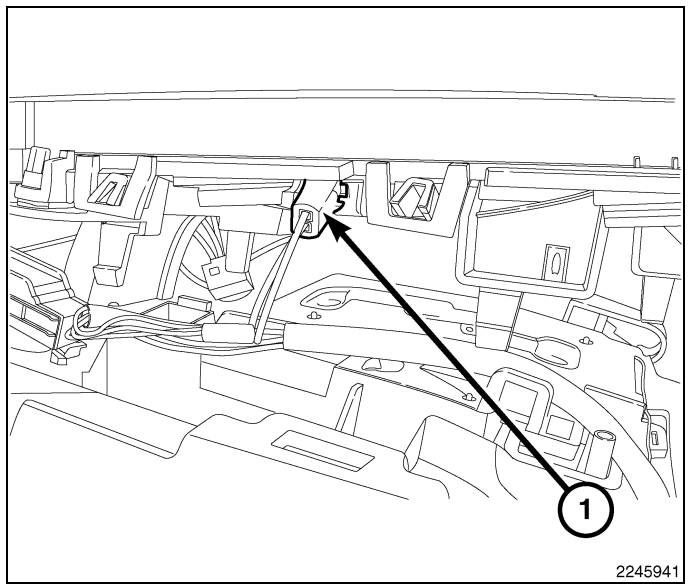

10. Release the clips (1) on the console PRNDL bezel, and remove the console PRNDL bezel.

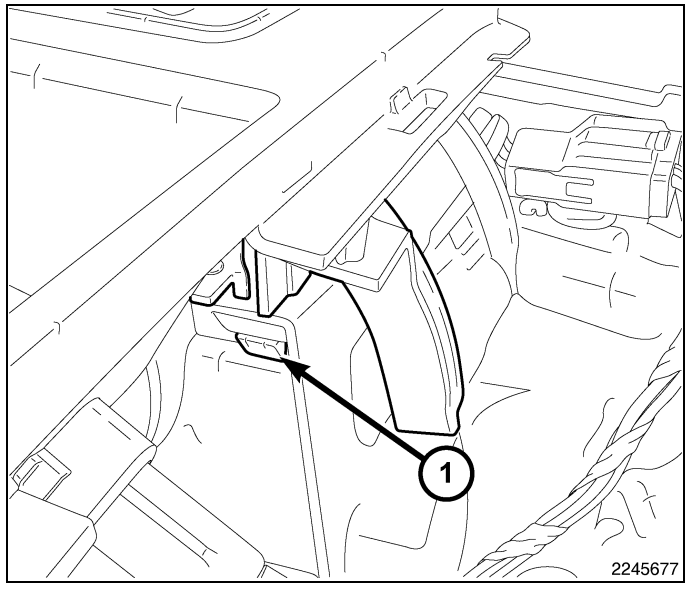

Installation

SHIFTER

1. Install the shift cable retainer (2).
2. Install the shifter cable end (1).

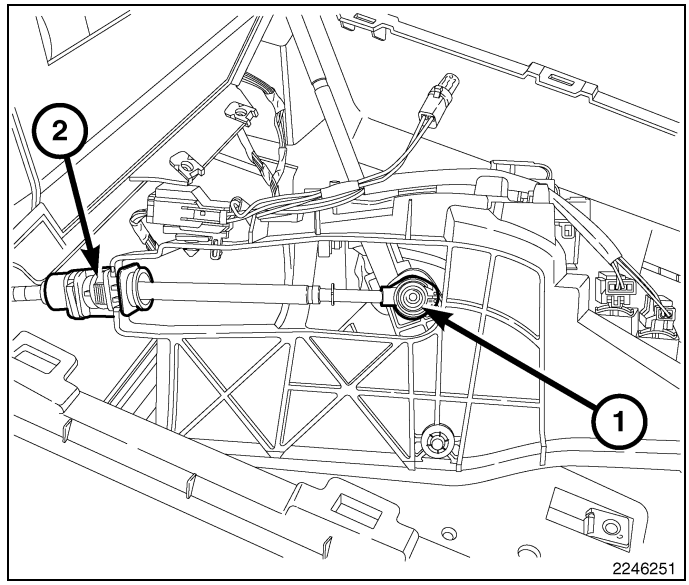

3. Install the shifter assembly.
4. Install the fasteners (1), and tighten to 7 N·m (65 in. lbs.).

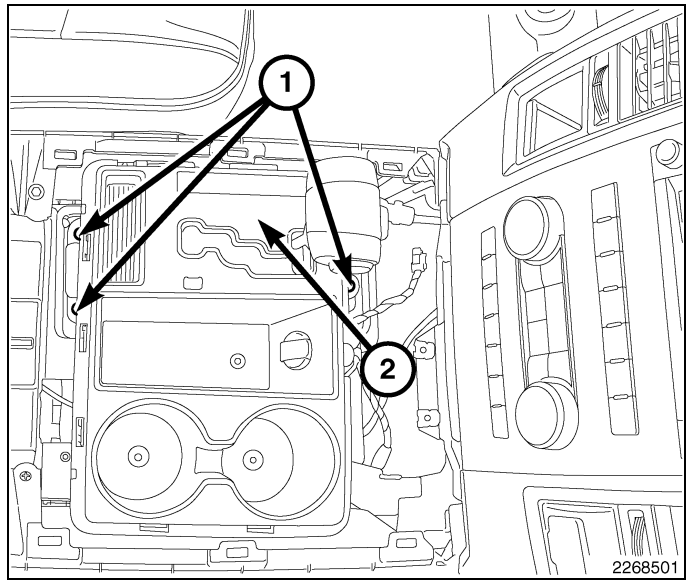

5. Install the fasteners (1), then install the rubber liners into the storage tray and cupholders.

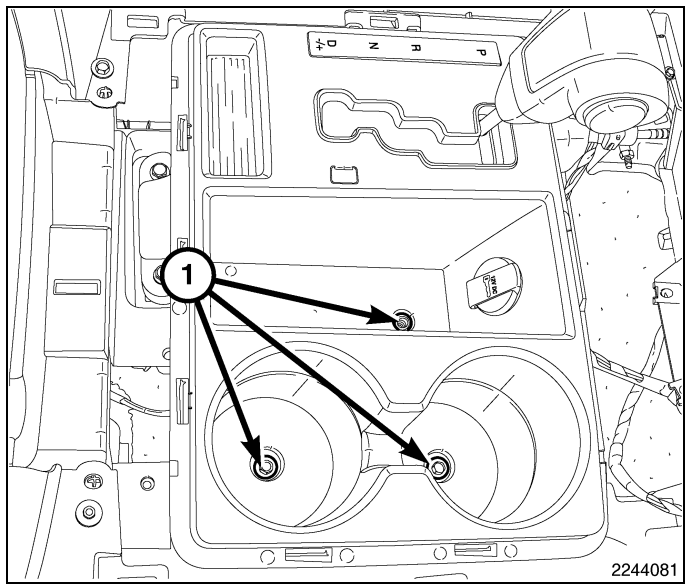

6. Reconnect the power outlet harness connector (1) and the shifter harness connector (2).

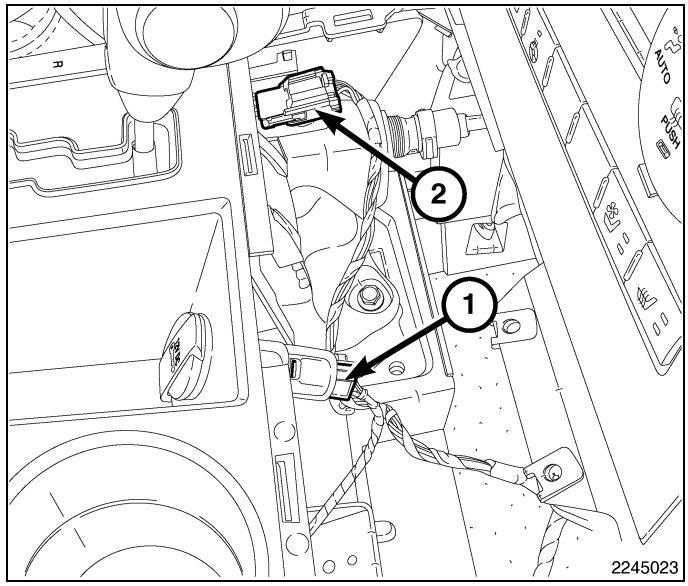

7. Install the console bezel (1).

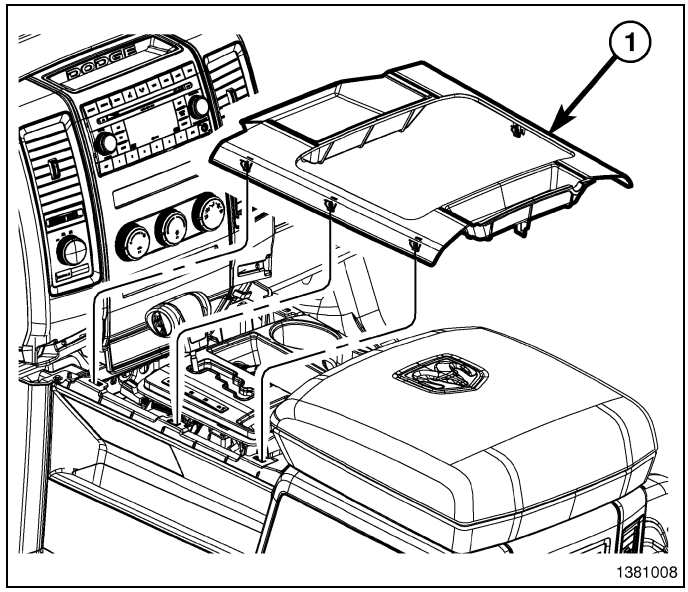

8. Install the fasteners (1) at the front of the console bezel.

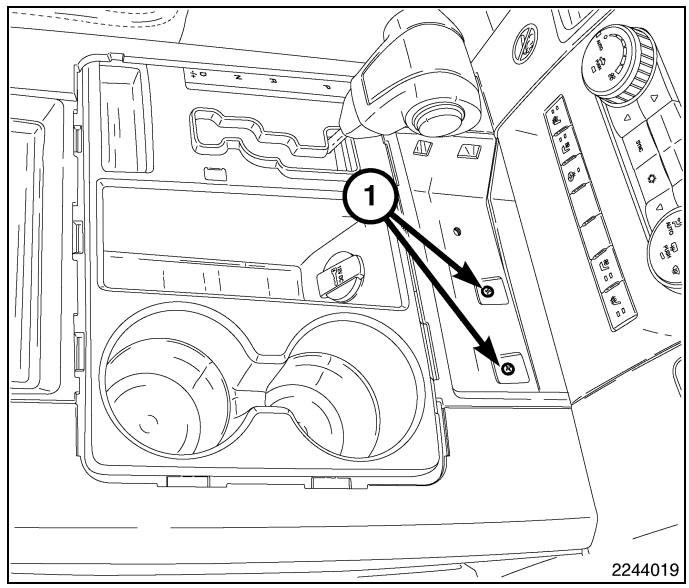

9. Install the rubber insert (1).

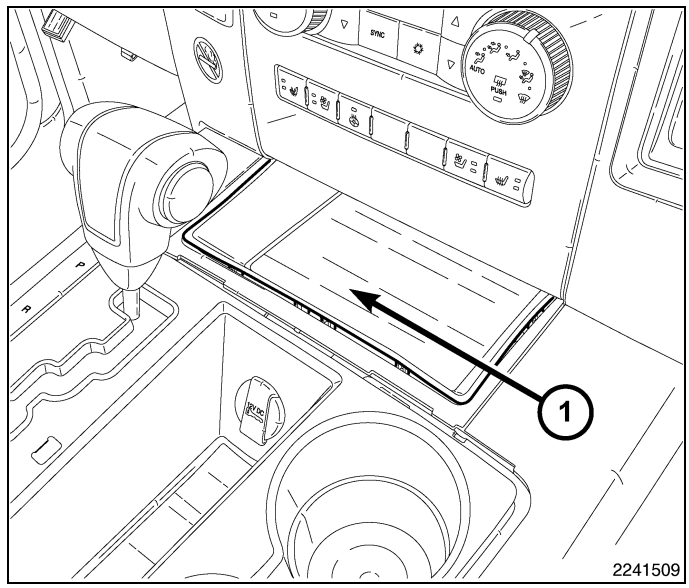

10. Install the console bezel trim ring (1).

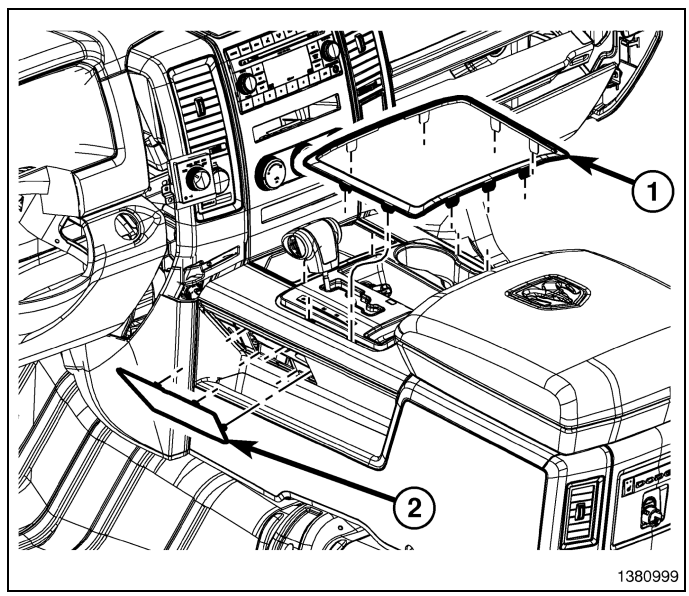

11. Verify correct shifter operation. The vehicle should only start in PARK or NEUTRAL.

CONSOLE PRNDL BEZEL

1. Install the console PRNDL bezel, and verify all clips (1) are engaged.

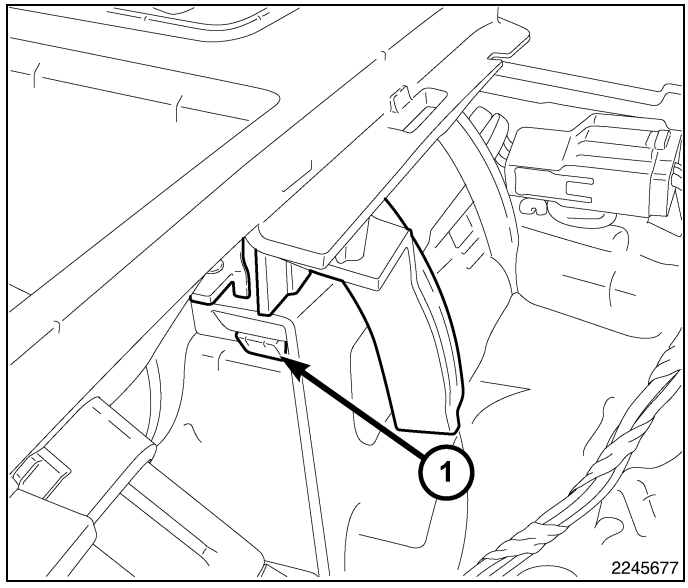

2. Install the lamp into the console PRNDL bezel, and turn the harness connector 1/4 turn clockwise to engage the tabs.

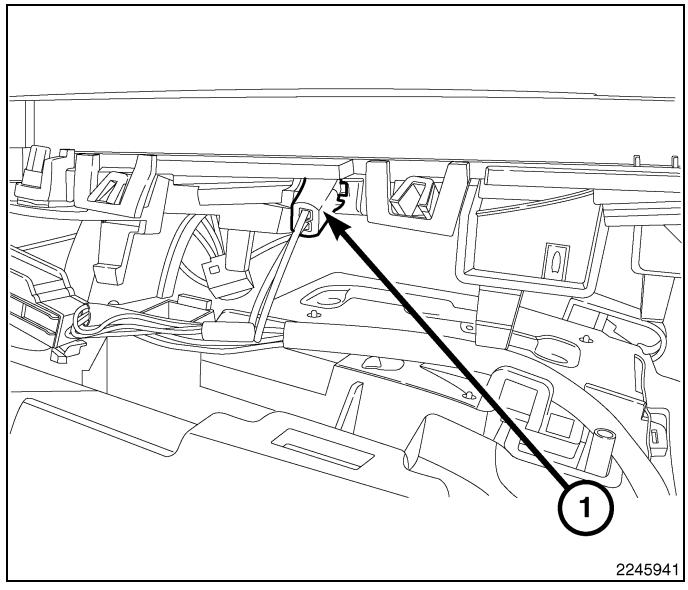

3. Install the lower trim piece (1) onto the shifter lever.
4. Install shifter knob.
5. Pull the lower trim piece (1) upward to engage it on the shifter knob.

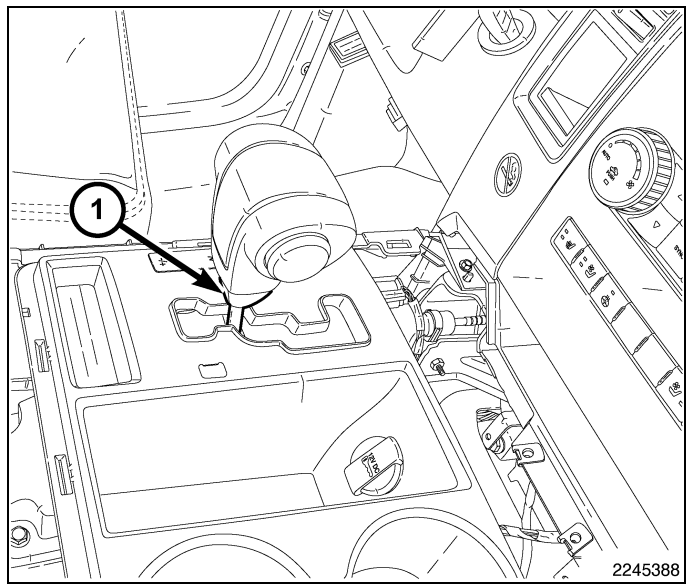

6. Connect the power outlet harness connector (1) and the shifter harness connector (2).

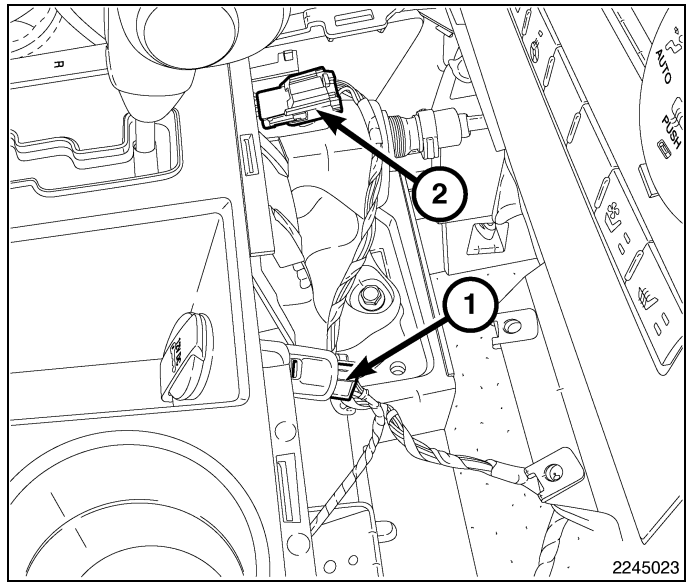

7. Install the fasteners (1), and the rubber liners from the center storage tray and cupholders.

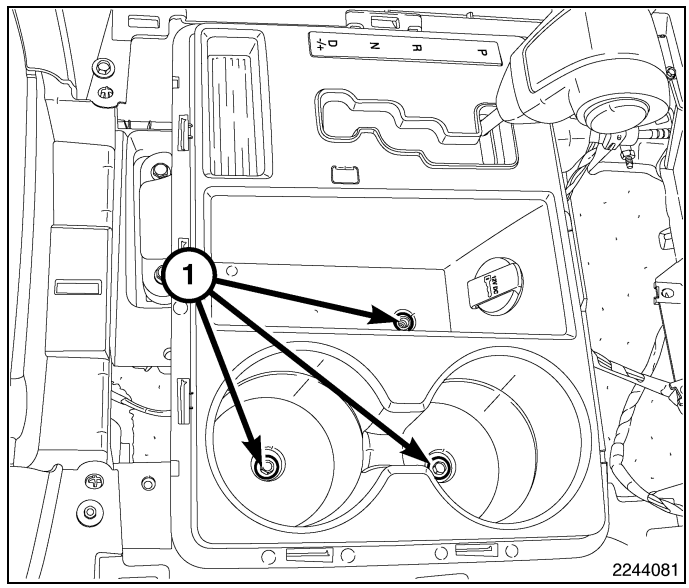

8. Install the console bezel (1).

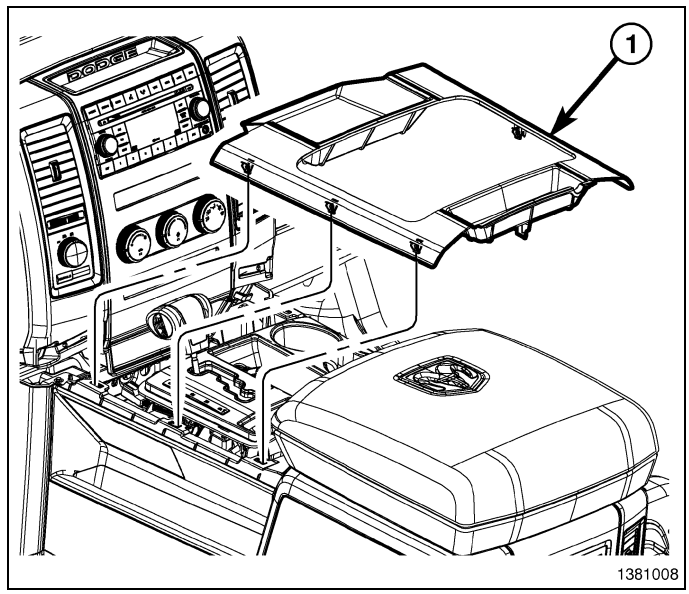

9. Install the fasteners (1) at the front of the console bezel.

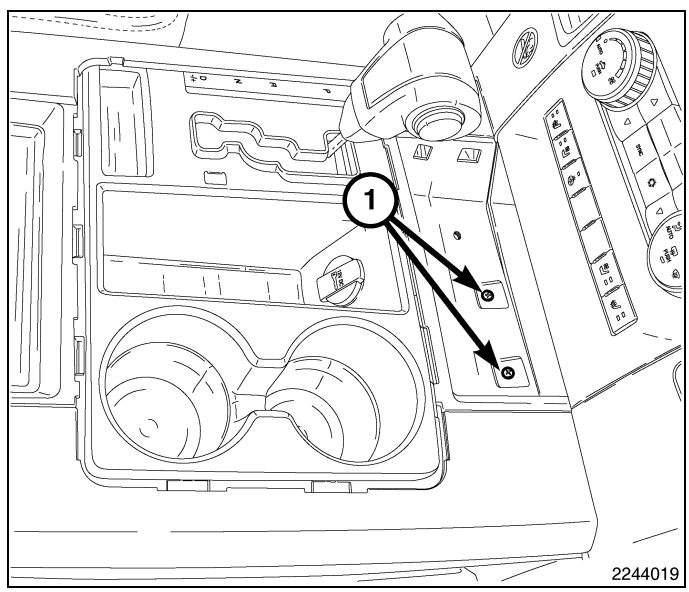

10. Install the rubber insert (1).

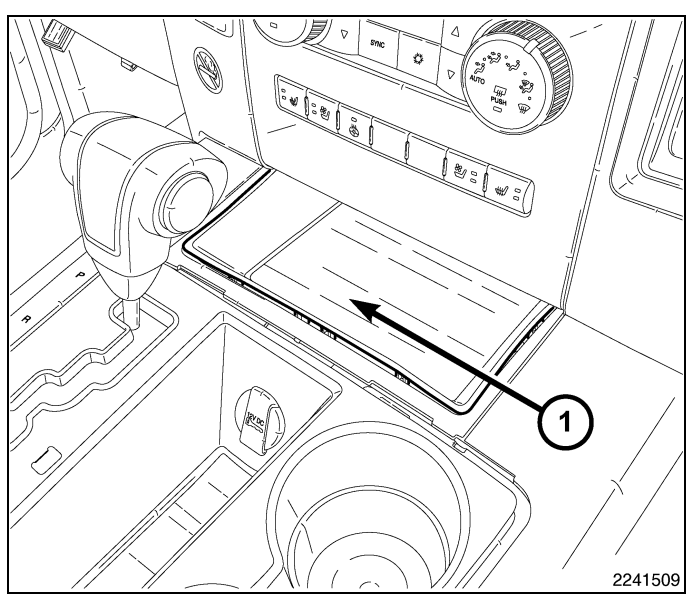

11. Install the console bezel trim ring (1).

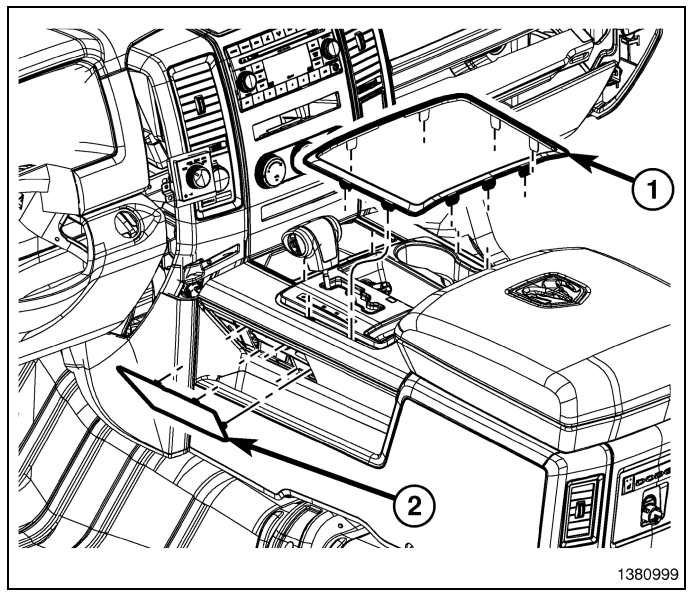

SWITCH, Overdrive Lockout, Tow and Haul

Description

The tow/haul overdrive OFF (control) switch is located in the instrument panel switch pod. The switch is a momentary contact device that signals the PCM to toggle current status of the overdrive function.(Refer to 08 - Electrical/8J - Instrument Cluster/POD, Switch - Description)

Operation

At key-on, overdrive operation is allowed. Pressing the switch once enables Tow/Haul mode and the Tow/Haul lamp will be illuminated. In Tow/Haul mode, 5th gear is disabled and 3-4 upshifts are delayed. Shifts into 4th gear are still allowed under steady cruise conditions. Closed throttle downshifts (for improved engine braking) may occur during steady braking maneuvers. Pressing the switch a second time enables OD Off mode, where all 4th and 5th gear operation is inhibited. Pressing the switch a third time restores normal operation. Normal operation is always the default at start-up; the switch must be pressed after each key start if Tow/Haul mode is desired.

TORQUE CONVERTER

Description

The torque converter is a hydraulic device that couples the engine crankshaft to the transmission. The torque converter consists of an outer shell with an internal turbine (1), a stator (2), an overrunning clutch, an impeller (5), and an electronically applied converter clutch (6). The converter clutch provides reduced engine speed and greater fuel economy when engaged. Clutch engagement also provides reduced transmission fluid temperatures. The torque converter hub (3) drives the transmission oil (fluid) pump and contains an o-ring seal (4) to better control oil flow.

The torque converter is a sealed, welded unit that is not repairable and is serviced as an assembly.

CAUTION: The torque converter must be replaced if a transmission failure resulted in large amounts of metal or fiber contamination in the fluid.

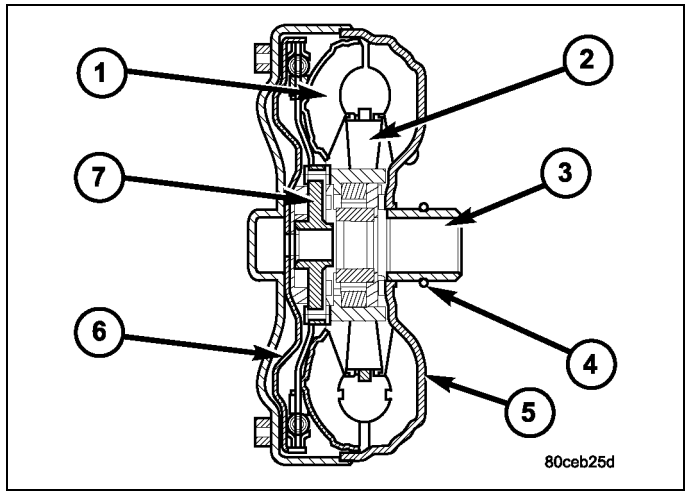

1 - TURBINE ASSEMBLY	5 - IMPELLER ASSEMBLY
2 - STATOR	6 - CONVERTER CLUTCH PISTON
3 - CONVERTER HUB	7 - TURBINE HUB
4 - O-RING (IF EQUIPPED)	

IMPELLER

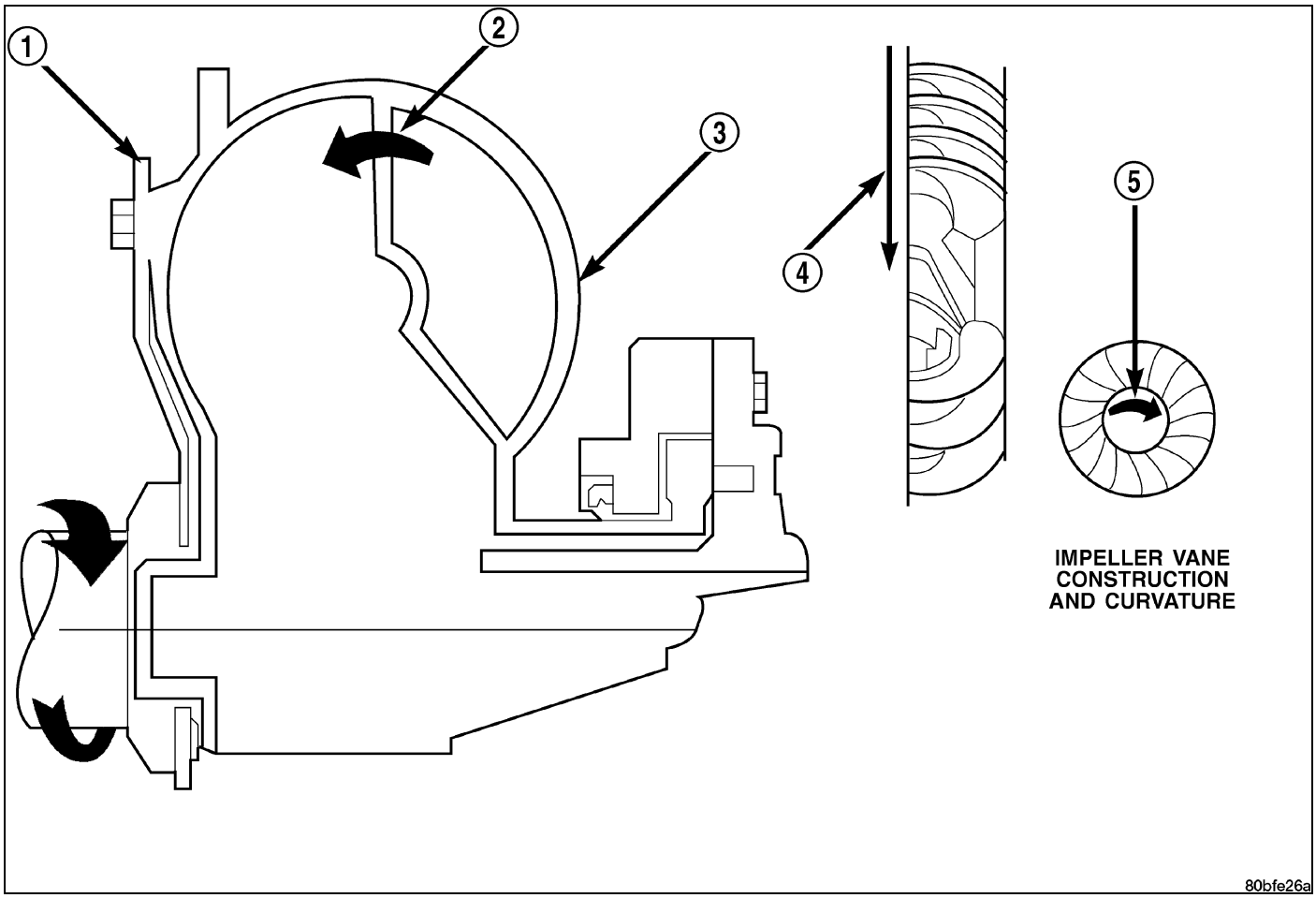

Impeller

1 - ENGINE FLEXPLATE
2 - OIL FLOW FROM IMPELLER SECTION INTO TURBINE SECTION
3 - IMPELLER VANES AND COVER ARE INTEGRAL
4 - ENGINE ROTATION
5 - ENGINE ROTATION

The impeller is an integral part of the converter housing. The impeller consists of curved blades placed radially along the inside of the housing on the transmission side of the converter. As the converter housing is rotated by the engine, so is the impeller, because they are one and the same and are the driving members of the system.

TURBINE

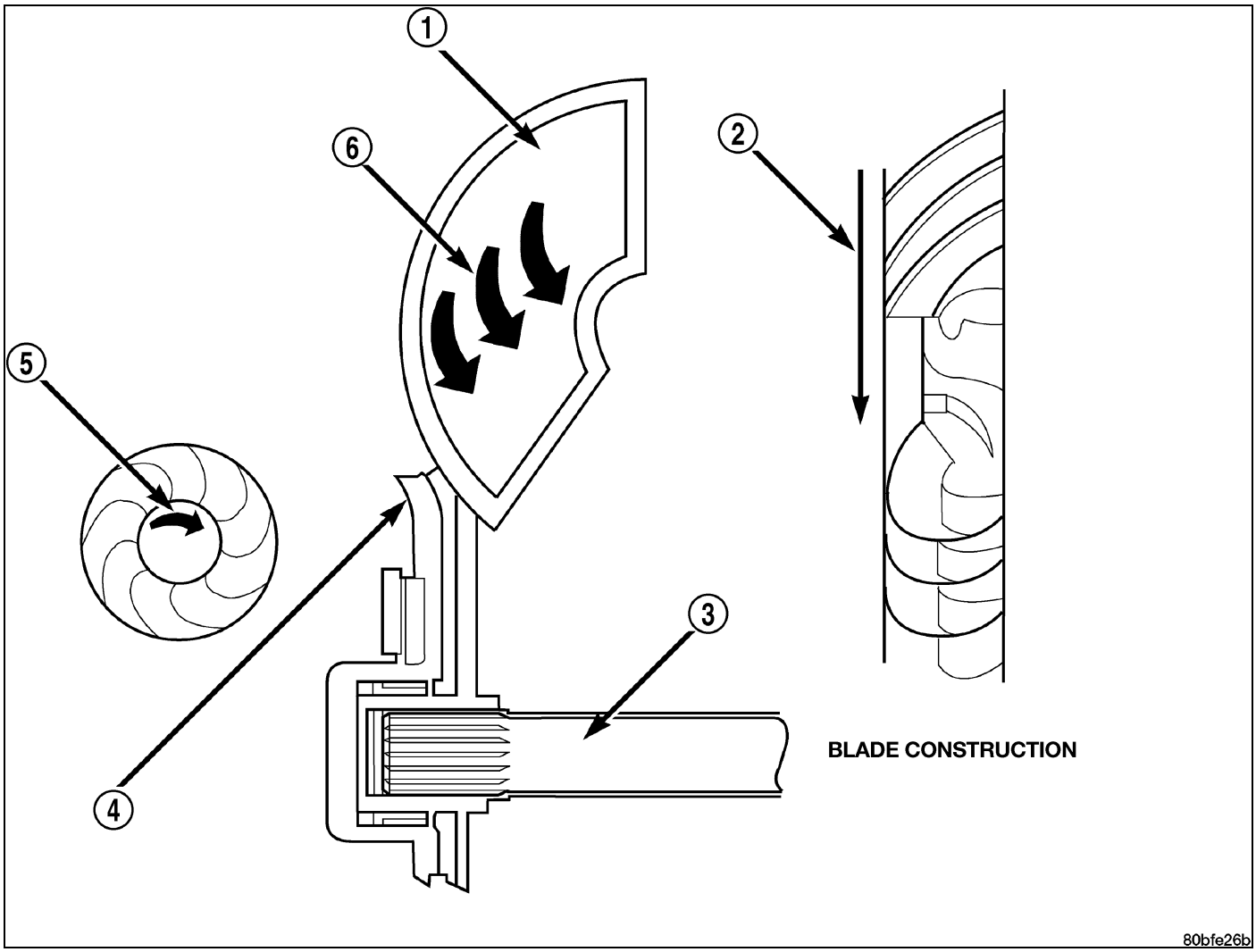

Turbine

1 - TURBINE VANE	4 - PORTION OF TORQUE CONVERTER COVER
2 - ENGINE ROTATION	5 - ENGINE ROTATION
3 - INPUT SHAFT	6 - OIL FLOW WITHIN TURBINE SECTION

The turbine is the output, or driven, member of the converter. The turbine is mounted within the housing opposite the impeller, but is not attached to the housing. The input shaft is inserted through the center of the impeller and splined into the turbine. The design of the turbine is similar to the impeller, except the blades of the turbine are curved in the opposite direction.

STATOR

The stator assembly is mounted on a stationary shaft which is an integral part of the oil pump. The stator (1) is located between the impeller (2) and the turbine (4) within the torque converter case.

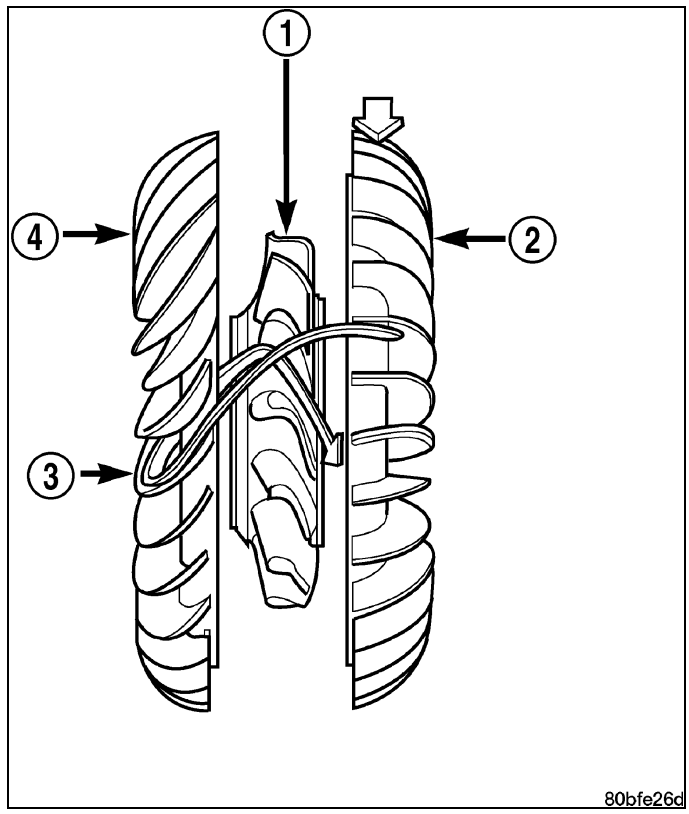

The stator contains an over-running clutch (1-4) , which allows the stator to rotate only in a clockwise direction. When the stator is locked against the over-running clutch, the torque multiplication feature of the torque converter is operational.

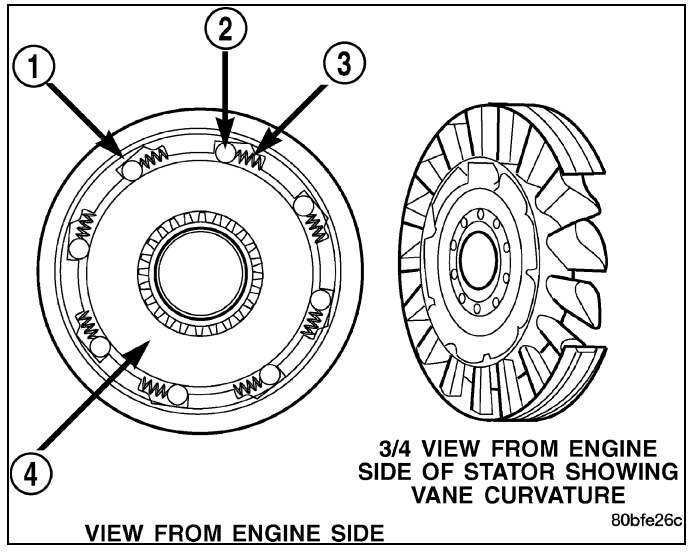

TORQUE CONVERTER CLUTCH (TCC)

The TCC was installed to improve the efficiency of the torque converter that is lost to the slippage of the fluid coupling. Although the fluid coupling provides smooth, shock-free power transfer, it is natural for all fluid couplings to slip. If the impeller (3) and turbine (5) were mechanically locked together, a zero slippage condition could be obtained. A hydraulic piston (6) with friction material (7) was added to the turbine assembly (5) to provide this mechanical lock-up.

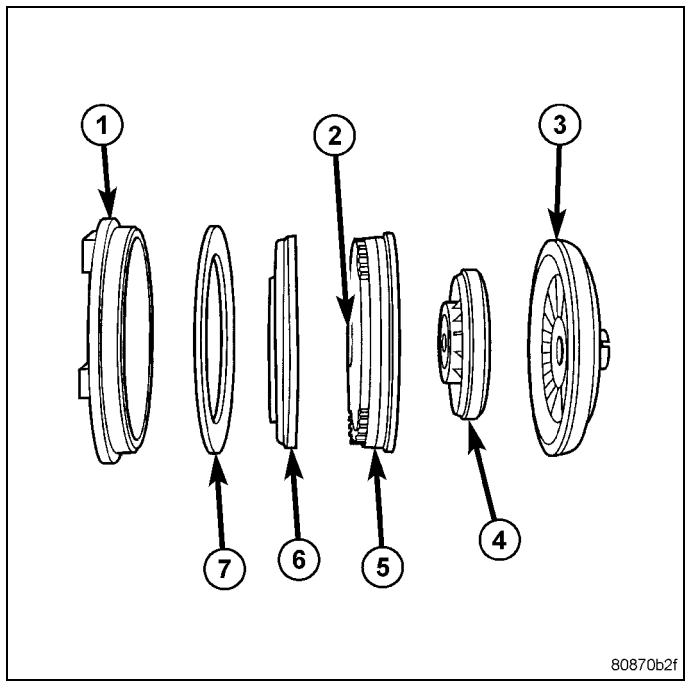

In order to reduce heat build-up in the transmission and buffer the powertrain against torsional vibrations, the TCM can duty cycle the L/R-CC Solenoid to achieve a smooth application of the torque converter clutch. This function, referred to as Electronically Modulated Converter Clutch (EMCC) can occur at various times depending on the following variables:

- Shift lever position
- Current gear range
- Transmission fluid temperature
- Engine coolant temperature
- Input speed
- Throttle angle
- Engine speed

Operation

The converter impeller (driving member), which is integral to the converter housing and bolted to the engine drive plate, rotates at engine speed. The converter turbine (driven member), which reacts from fluid pressure generated by the impeller, rotates and turns the transmission input shaft.

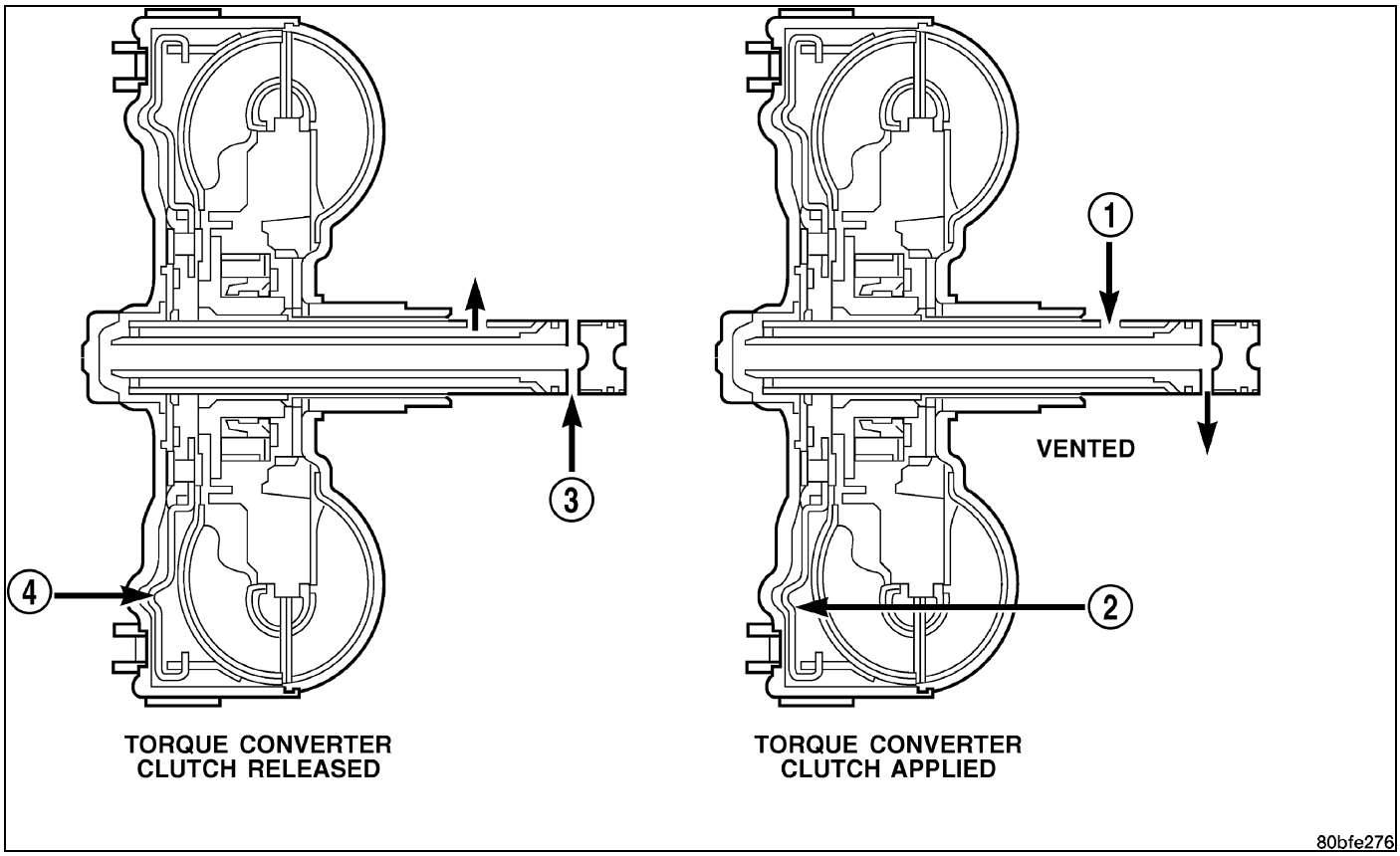

Torque Converter Fluid Operation - Typical

1 - APPLY PRESSURE	3 - RELEASE PRESSURE
2 - THE PISTON MOVES SLIGHTLY FORWARD	4 - THE PISTON MOVES SLIGHTLY REARWARD

TURBINE

As the fluid that was put into motion by the impeller blades strikes the blades of the turbine, some of the energy and rotational force is transferred into the turbine and the input shaft. This causes both of them (turbine and input shaft) to rotate in a clockwise direction following the impeller. As the fluid is leaving the trailing edges of the turbine's blades it continues in a “hindering” direction back toward the impeller. If the fluid is not redirected before it strikes the impeller, it will strike the impeller in such a direction that it would tend to slow it down.

STATOR

Torque multiplication is achieved by locking the stator's over-running clutch to its shaft . Under stall conditions (the turbine is stationary), the oil leaving the turbine blades strikes the face of the stator blades and tries to rotate them in a counterclockwise direction. When this happens the over-running clutch of the stator locks and holds the stator from rotating. With the stator locked, the oil strikes the stator blades and is redirected into a “helping” direction before it enters the impeller. This circulation of oil from impeller to turbine, turbine to stator, and stator to impeller, can produce a maximum torque multiplication of about 2.4:1. As the turbine begins to match the speed of the impeller, the fluid that was hitting the stator in such as way as to cause it to lock-up is no longer doing so. In this condition of operation, the stator begins to free wheel and the converter acts as a fluid coupling.

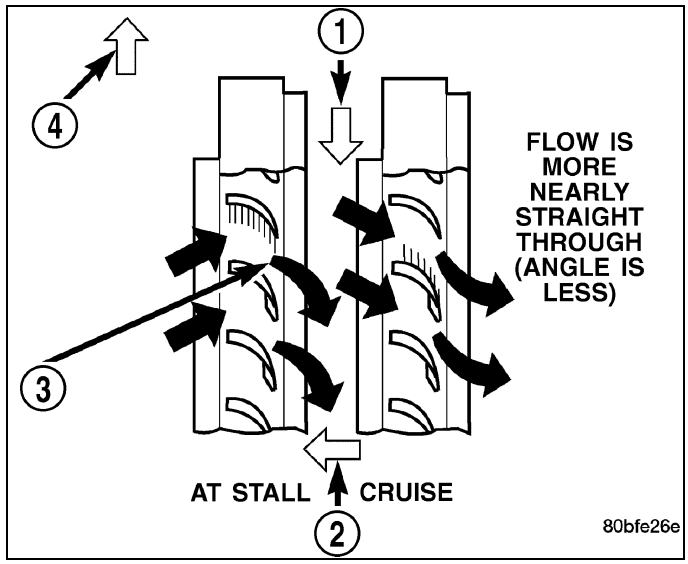

Stator Operation

1 - DIRECTION STATOR WILL FREE WHEEL DUE TO OIL PUSHING ON BACKSIDE OF VANES

2 - FRONT OF ENGINE

3 - INCREASED ANGLE AS OIL STRIKES VANES

4 - DIRECTION STATOR IS LOCKED UP DUE TO OIL PUSHING AGAINST STATOR VANES

TORQUE CONVERTER CLUTCH (TCC)

In a standard torque converter, the impeller and turbine are rotating at about the same speed and the stator is free-wheeling, providing no torque multiplication. By applying the turbine's piston and friction material to the front cover, a total converter engagement can be obtained. The result of this engagement is a direct 1:1 mechanical link between the engine and the transmission.

The clutch can be engaged in second, third, fourth, and fifth (if appicable) gear ranges depending on overdrive control switch position. If the overdrive control switch is in the normal ON position, the clutch will engage after the shift to fourth gear. If the control switch is in the OFF position, the clutch will engage after the shift to third gear.

The TCM controls the torque converter clutch via the L/R-CC Solenoid. There are four TCC operational modes:

- No EMCC
- Partial EMCC
- Full EMCC
- Gradual-to-no EMCC

NO EMCC

Under No EMCC conditions, the L/R Solenoid is OFF. There are several conditions that can result in NO EMCC operations. No EMCC can be initiated due to a fault in the transmission or because the TCM does not see the need for EMCC under current driving conditions.

PARTIAL EMCC

Partial EMCC operation modulates the L/R Solenoid (duty cycle) to obtain partial torque converter clutch application. Partial EMCC operation is maintained until Full EMCC is called for and actuated. During Partial EMCC some slip does occur. Partial EMCC will usually occur at low speeds, low load and light throttle situations.

FULL EMCC

During Full EMCC operation, the TCM increases the L/R Solenoid duty cycle to full ON after Partial EMCC control brings the engine speed within the desired slip range of transmission input speed relative to engine rpm.

GRADUAL-TO-NO EMCC

This operation is to soften the change from Full or Partial EMCC to No EMCC. This is done at mid-throttle by slowly decreasing the L/R Solenoid duty cycle.

Removal

1. Remove transmission and torque converter from vehicle.
2. Place a suitable drain pan under the converter housing end of the transmission.

CAUTION: Verify that transmission is secure on the lifting device or work surface, the center of gravity of the transmission will shift when the torque converter is removed creating an unstable condition. The torque converter is a heavy unit. Use caution when separating the torque converter from the transmission.

3. Pull the torque converter forward until the center hub clears the oil pump seal.
4. Separate the torque converter from the transmission.

Installation

NOTE: Check converter hub and drive flats for sharp edges, burrs, scratches, or nicks. Polish the hub and flats with 320/400 grit paper or crocus cloth if necessary. Verify that the converter hub o-ring is properly installed and is free from debris. The hub must be smooth to avoid damaging the pump seal at installation.

1. Lubricate oil pump seal lip with transmission fluid.
2. Place torque converter in position on transmission.

CAUTION: Do not damage oil pump seal or converter hub o-ring while inserting torque converter into the front of the transmission.

3. Align torque converter to oil pump seal opening.
4. Insert torque converter hub into oil pump.
5. While pushing torque converter inward, rotate converter until converter is fully seated in the oil pump gears.
6. Check converter seating with a scale (1) and straightedge (2) . Surface of converter lugs should be at least 13 mm (1/2 in.) to rear of straightedge when converter is fully seated.
7. If necessary, temporarily secure converter with C-clamp attached to the converter housing.
8. Install the transmission in the vehicle.
9. Fill the transmission with the recommended fluid.

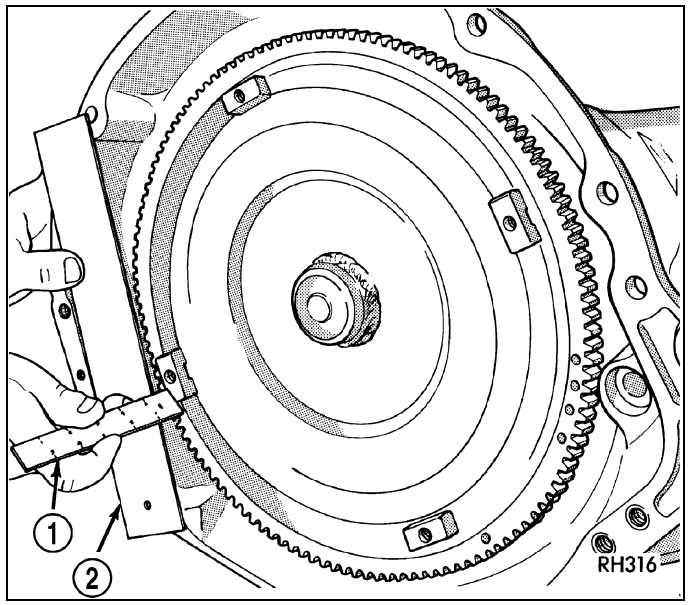

VALVE BODY

Description

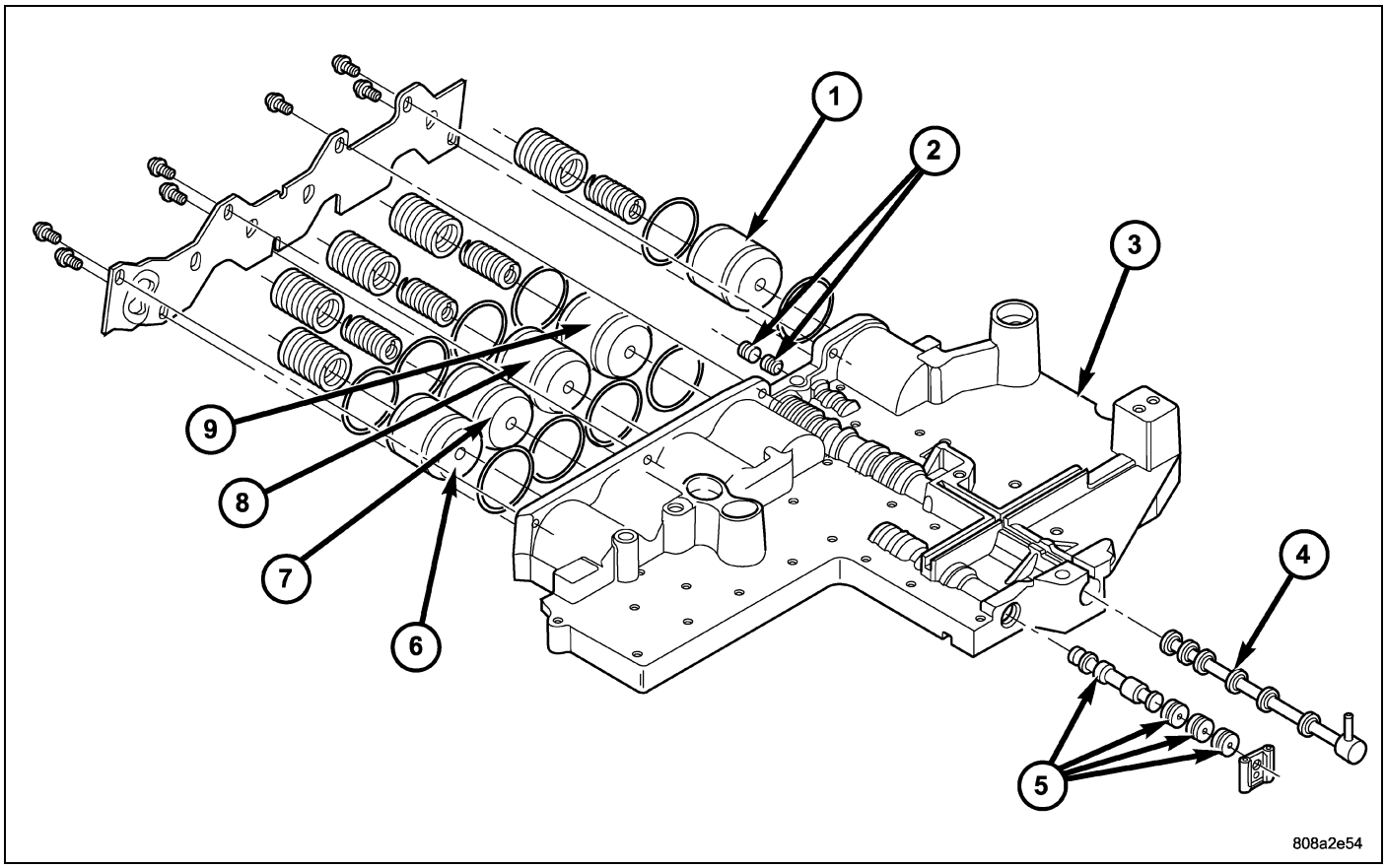

Valve Body Components

1 - LOW/REVERSE ACCUMULATOR
2 - LOW/REVERSE SHUTTLE VALVE AND PLUG
3 - UPPER VALVE BODY
4 - MANUAL VALVE
5 - SOLENOID SWITCH VALVE AND PLUGS
6 - OVERDRIVE ACCUMULATOR
7 - UNDERDRIVE ACCUMULATOR
8 - 4C ACCUMULATOR
9 - 2C ACCUMULATOR

The valve body consists of a cast aluminum valve body, a separator plate, and a transfer plate. The valve body contains valves and check balls that control fluid delivery to the torque converter clutch and frictional clutches. The valve body contains the following components:

- Solenoid switch valve
- Manual valve
- Low/reverse shuttle valve
- 5 Accumulators

- 7 check balls

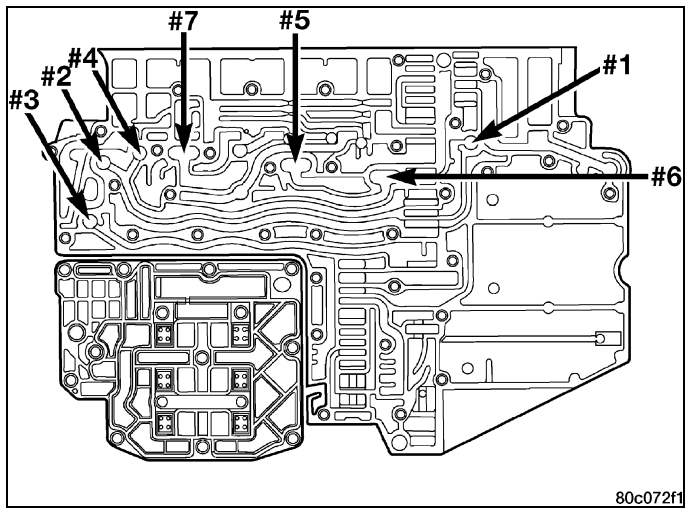

Operation

NOTE: For a visual aid in determining valve location, operation and design (Refer to 21 - Transmission and Transfer Case/Automatic - 545RFE - Schematics and Diagrams)

SOLENOID SWITCH VALVE

The Solenoid Switch Valve (SSV) controls the direction of the transmission fluid when the L/R-TCC solenoid is energized.

The Solenoid Switch Valve controls line pressure from the LR-TCC solenoid. In 1st gear, the SSV will be in the downshifted position, thus directing fluid to the L/R clutch circuit. In 2nd, 3rd, 4th, and fifth gears, the solenoid switch valve will be in the upshifted position and directs the fluid into the torque converter clutch (TCC) circuit.

When shifting into 1st gear, a special hydraulic sequence is performed to ensure SSV movement into the downshifted position. The L/R pressure switch is monitored to confirm SSV movement. If the movement is not confirmed (the L/R pressure switch does not close), 2nd gear is substituted for 1st. A DTC will be set after three unsuccessful attempts are made to get into 1st gear in one given key start.

MANUAL VALVE

The manual valve is a relay valve. The purpose of the manual valve is to direct fluid to the correct circuit needed for a specific gear or driving range. The manual valve, as the name implies, is manually operated by the driver with a lever located on the top of the valve body. The valve is connected mechanically by a cable to the gearshift mechanism. The valve is held in each of its positions by a roller detent spring (2) that engages the roostercomb of the TRS selector plate (1).

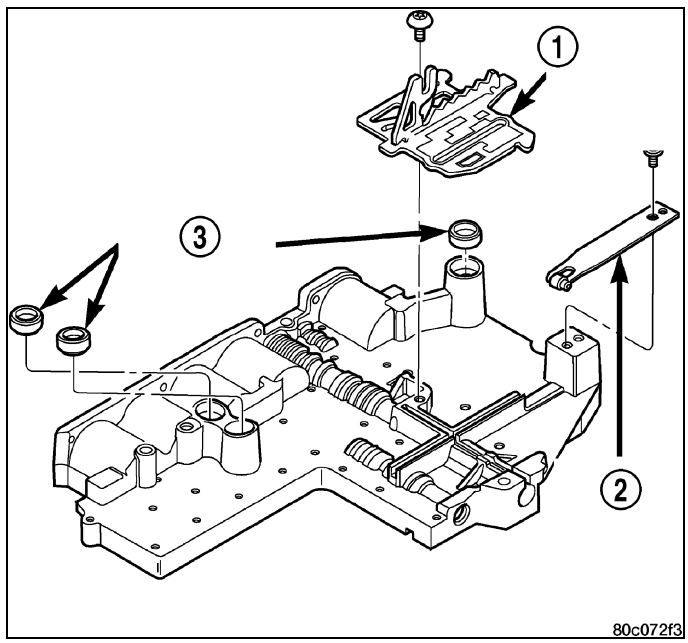

LOW/REVERSE SWITCH VALVE

The low/reverse switch valve allows the low/reverse clutch to be operated by either the LR/CC solenoid or the MS solenoid.

Removal

NOTE: The valve body can be removed for service without having to remove the transmission assembly. The valve body can be disassembled for cleaning and inspection of the individual components. (Refer to 21 - Transmission and Transfer Case/Automatic - 545RFE/VALVE BODY - Disassembly)

1. Shift transmission into PARK.
2. Raise vehicle.
3. Disconnect wires at the solenoid and pressure switch assembly 23 pin electrical connector.
4. Position drain pan under transmission oil pan.
5. Remove transmission oil pan.
6. Remove the primary oil filter (1) from valve body.

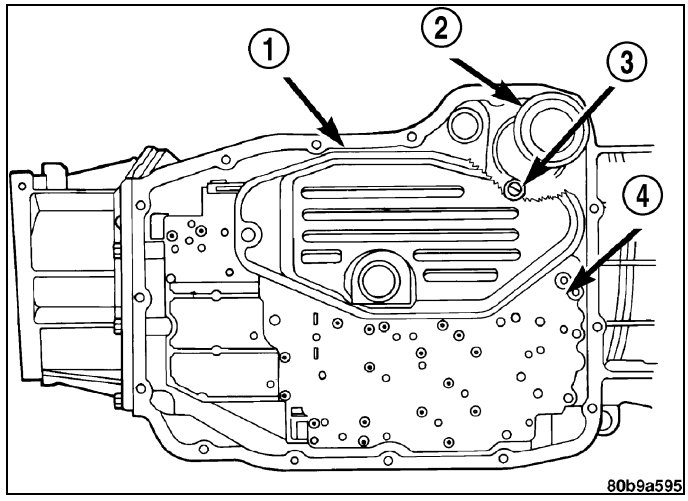

Remove Primary Oil Filter

1 - PRIMARY OIL FILTER
2 - COOLER RETURN FILTER
3 - COOLER RETURN FILTER BYPASS VALVE
4 - VALVE BODY

7. Remove bolts (1) attaching valve body to transmission case.
8. Lower the valve body and work the electrical connector out of transmission case.
9. Separate the valve body from the transmission.

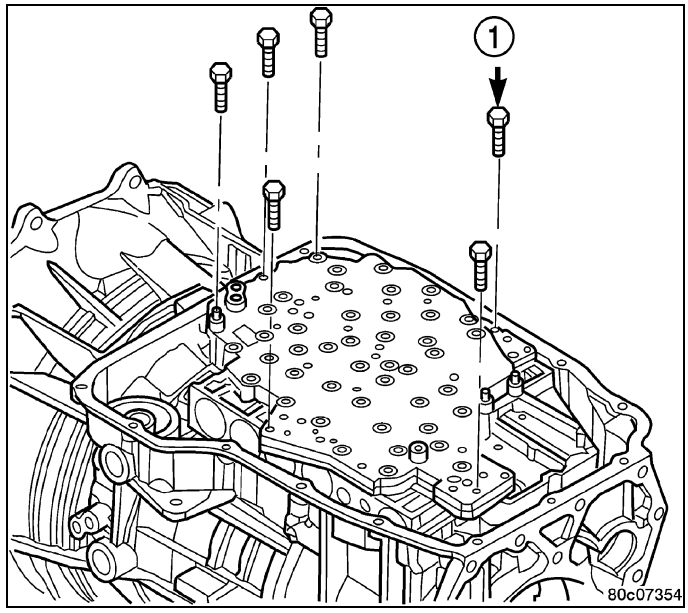

Disassembly

1. Remove the bolts (1) holding the solenoid and pressure switch assembly to the valve body. Do not remove the screws on the top of the solenoid and pressure switch assembly.
2. Separate the solenoid and pressure switch assembly from the valve body.

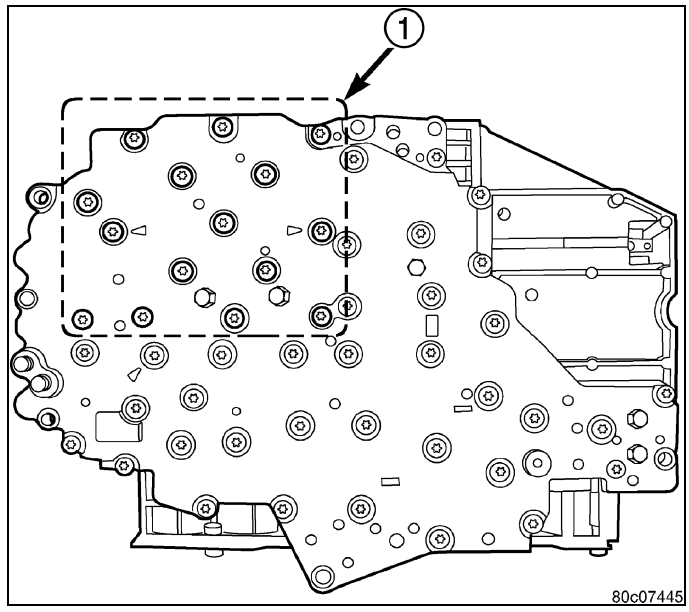

3. Remove the screw holding the detent spring (2) onto the valve body.
4. Remove the detent spring (2) from the valve body.
5. Remove the TRS selector plate (1) from the valve body and the manual valve.
6. Remove the clutch passage seals (3) from the valve body, if necessary.

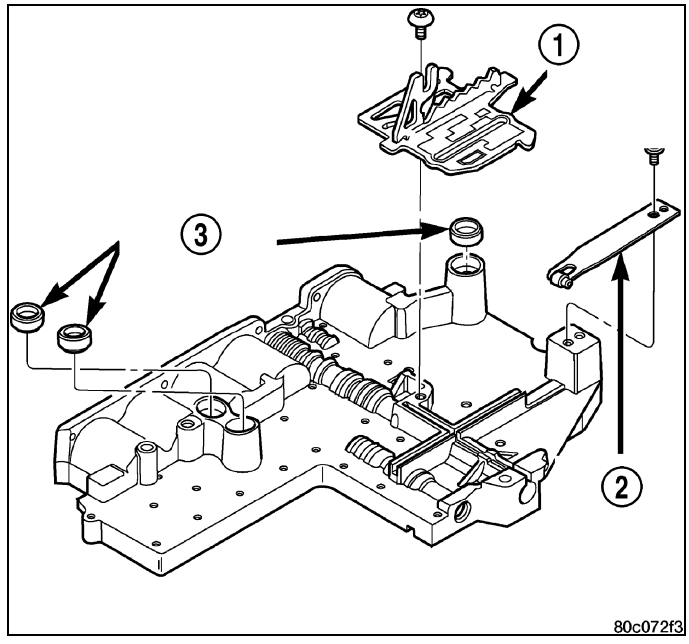

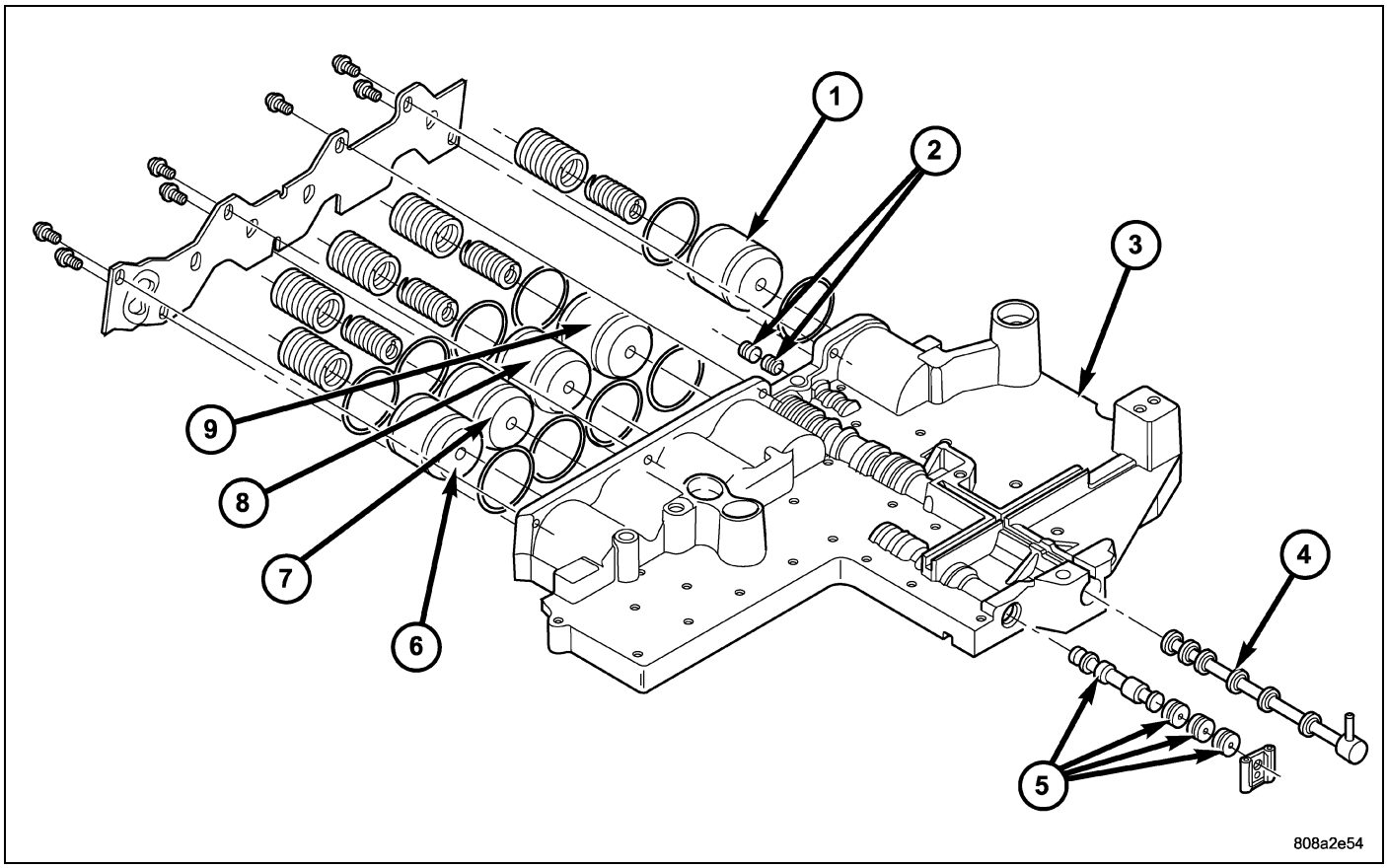

7. Remove the screws holding the accumulator cover onto the valve body .
8. Remove the accumulator springs and pistons (1, 6-9) from the valve body. Note which accumulator piston and spring belong in each location.
9. Place the valve body on the bench with the transfer plate upward.

NOTE: The valve body contains seven check balls. The transfer plate must be placed upward to prevent losing the check balls when the transfer plate is removed from the valve body.

10. Remove the screws holding the valve body to the valve body transfer plate.
11. Remove the transfer plate from the valve body. Note the location of all check balls .
12. Remove the check balls from the valve body.

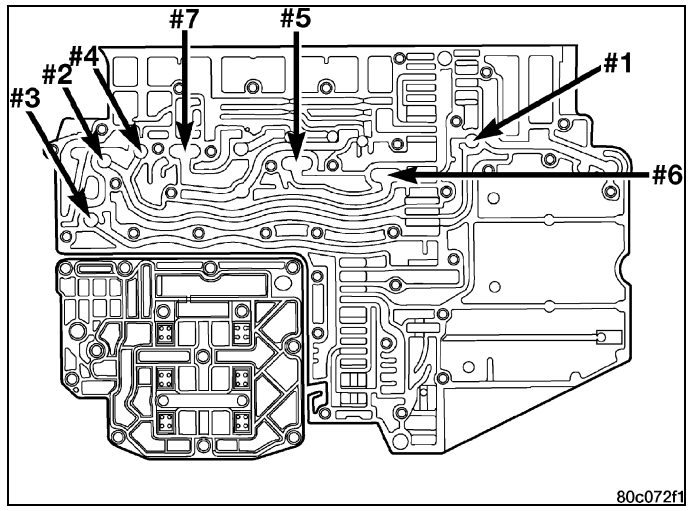

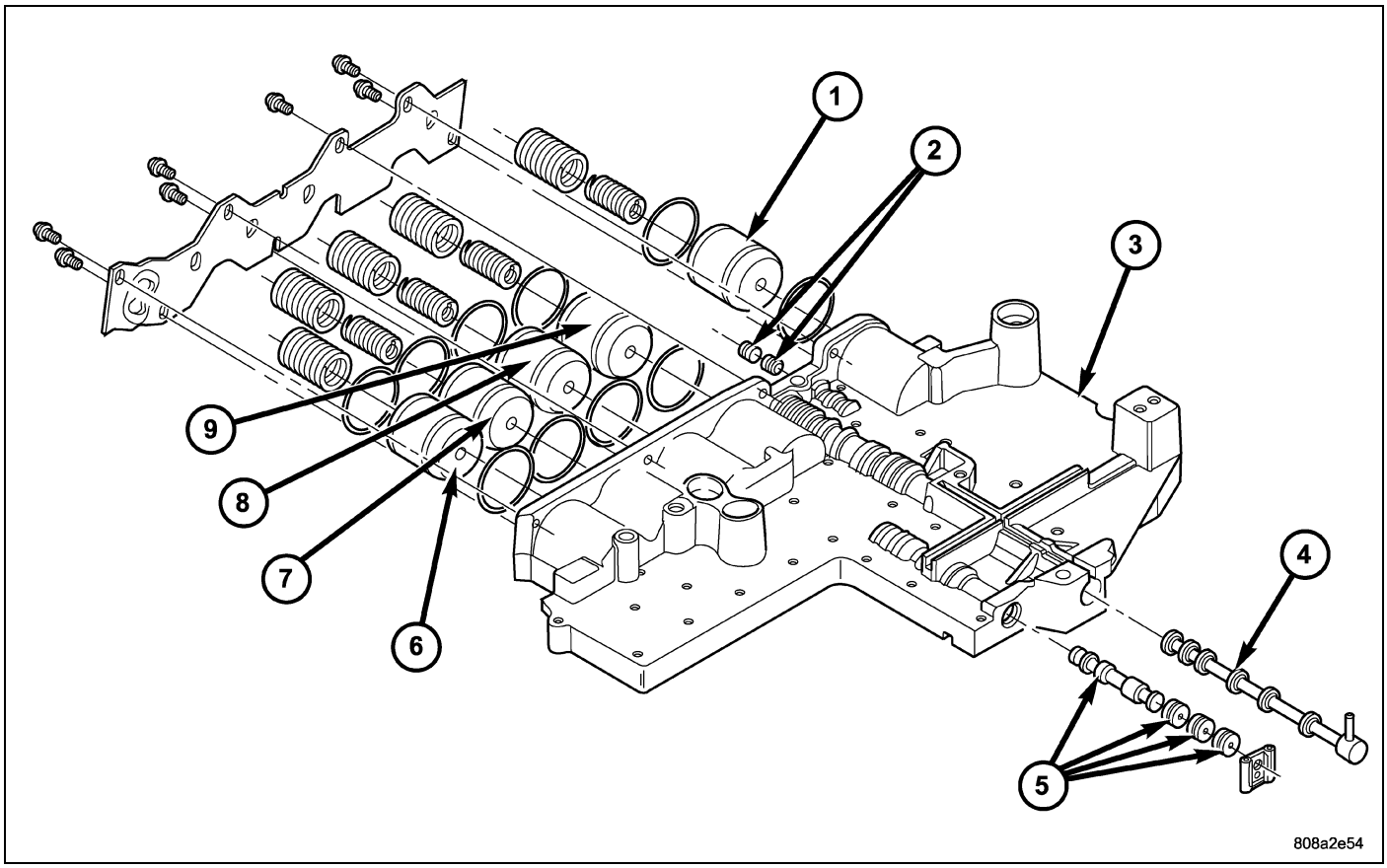

13. Remove the retainer securing the solenoid switch valve (5) from the valve body. Remove the solenoid switch valve and plugs (5), the manual valve (4) and low reverse shuttle valve and plug (2). Tag each valve and plug combination with location information to aid in assembly.

Cleaning

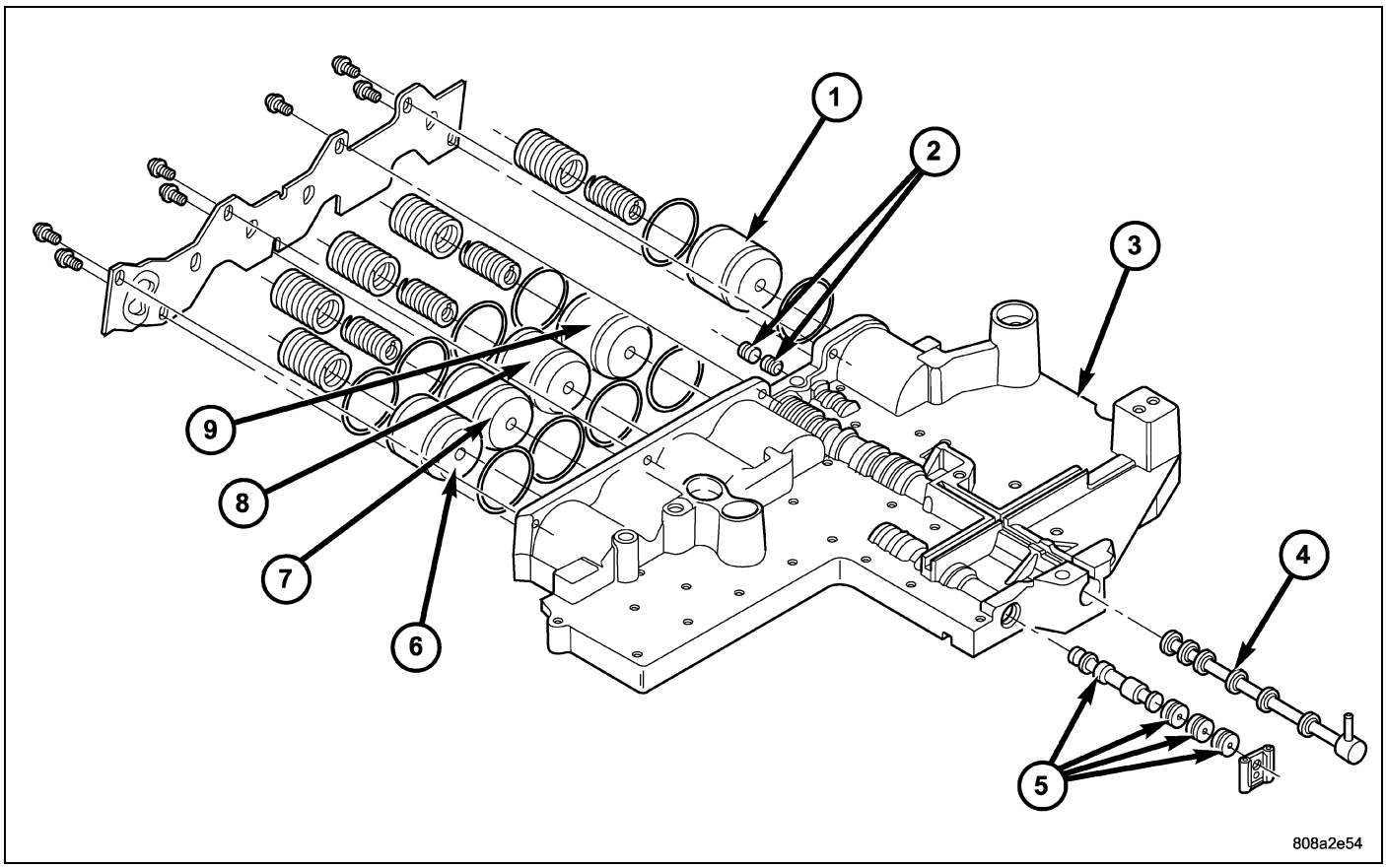

Valve Body Components

1 - LOW/REVERSE ACCUMULATOR
2 - LOW/REVERSE SHUTTLE VALVE AND PLUG
3 - UPPER VALVE BODY
4 - MANUAL VALVE
5 - SOLENOID SWITCH VALVE AND PLUGS
6 - OVERDRIVE ACCUMULATOR
7 - UNDERDRIVE ACCUMULATOR
8 - 4C ACCUMULATOR
9 - 2C ACCUMULATOR

Clean the valve housings, valves, plugs, springs, and separator plate with a standard parts cleaning solution only. Do not use gasoline, kerosene, or any type of caustic solution.

Do not immerse any of the electrical components in cleaning solution. Clean the electrical components by wiping them off with dry shop towels only.

Dry all except the electrical parts with compressed air. Make sure all passages are clean and free from obstructions. **Do not use rags or shop towels to dry or wipe off valve body components. Lint from these materials can stick to valve body parts, interfere with valve operation, and clog filters and fluid passages.**

Inspection

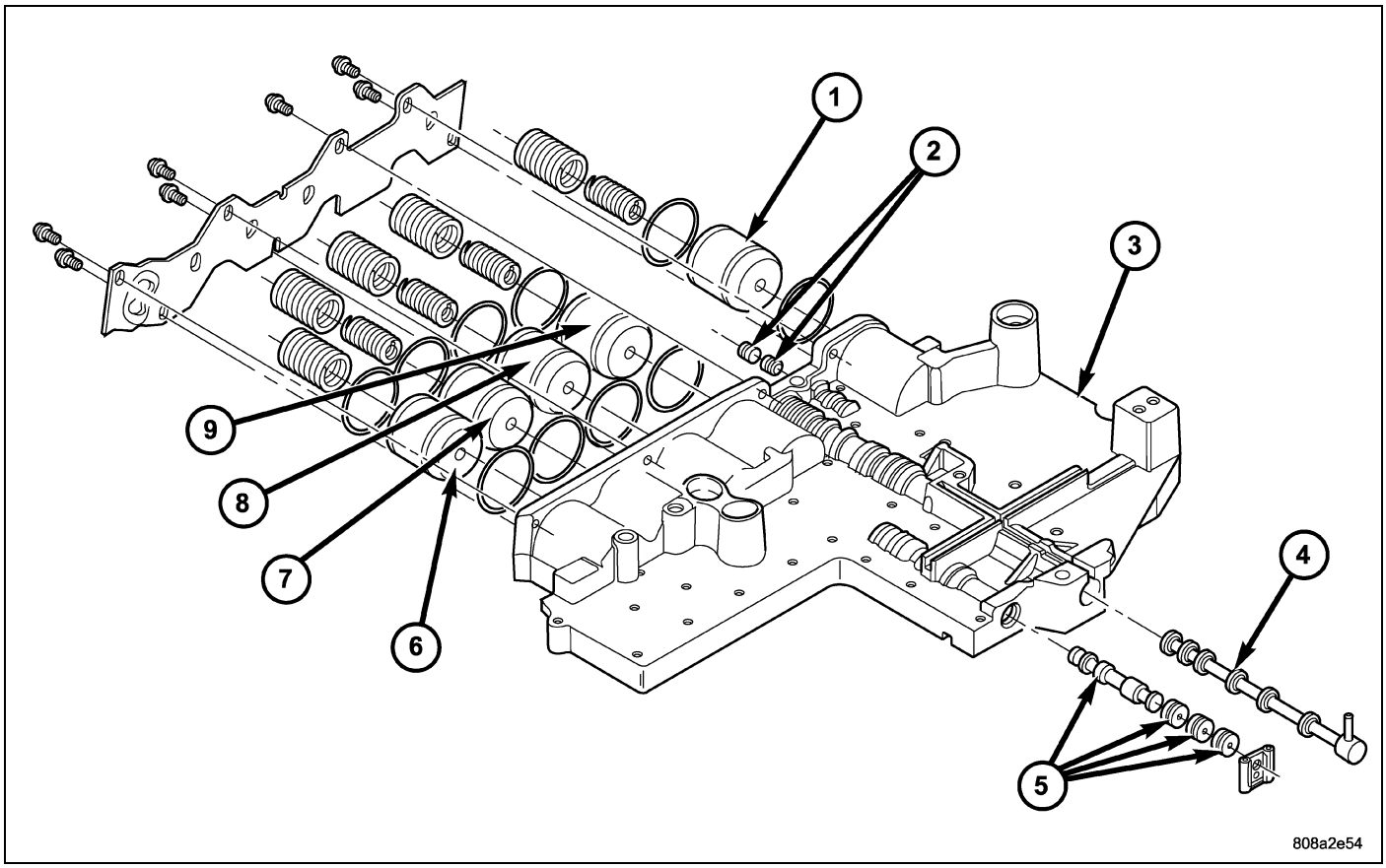

Valve Body Components

1 - LOW/REVERSE ACCUMULATOR
2 - LOW/REVERSE SHUTTLE VALVE AND PLUG
3 - UPPER VALVE BODY
4 - MANUAL VALVE
5 - SOLENOID SWITCH VALVE AND PLUGS
6 - OVERDRIVE ACCUMULATOR
7 - UNDERDRIVE ACCUMULATOR
8 - 4C ACCUMULATOR
9 - 2C ACCUMULATOR

NOTE: Only the INNER accumulator seal ring actually seals the pressure in the bore. The outer seal ring only serves to guide the piston in the bore. Gouges which do not extend past the inner seal ring (and have no raised edges, which could damage the guide ring) are acceptable. The machined accumulator bores often have a tiger-striped appearance. This is NORMAL and does NOT require replacement, as long as the bores are smooth in the inner seal ring area.

Inspect all of the valve body mating surfaces for scratches, nicks, burrs, or distortion. Use a straightedge to check surface flatness. Minor scratches may be removed with crocus cloth using only very light pressure.

Minor distortion of a valve body mating surface may be corrected by smoothing the surface with a sheet of crocus cloth. Position the crocus cloth on a surface plate, sheet of plate glass or equally flat surface. If distortion is severe or any surfaces are heavily scored, the valve body will have to be replaced.

Inspect the valves and plugs for scratches, burrs, nicks, or scores. Minor surface scratches on steel valves and plugs can be removed with crocus cloth but **do not round off the edges of the valve or plug lands.** Maintaining sharpness of these edges is vitally important. The edges prevent foreign matter from lodging between the valves and plugs and the bore.

Inspect all the valve and plug bores in the valve body. Use a penlight to view the bore interiors. Replace the valve body if any bores are distorted or scored. Inspect all of the valve body springs. The springs must be free of distortion, warpage or broken coils.

Trial fit each valve and plug in its bore to check freedom of operation. When clean and dry, the valves and plugs should drop freely into the bores.

Valve body bores do not change dimensionally with use. If the valve body functioned correctly when new, it will continue to operate properly after cleaning and inspection. It should not be necessary to replace a valve body assembly unless it is damaged in handling.

Inspect all the accumulator bores in the valve body. Use a penlight to view the bore interiors. Replace the valve body if any bores are distorted or scored. Inspect all of the accumulator springs. The springs must be free of distortion, warpage or broken coils.

Inspect all the fluid seals on the valve body. Replace any seals that are cracked, distorted, or damaged in any way. These seals pass fluid pressure directly to the clutches. Any pressure leak at these points, may cause transmission performance problems.

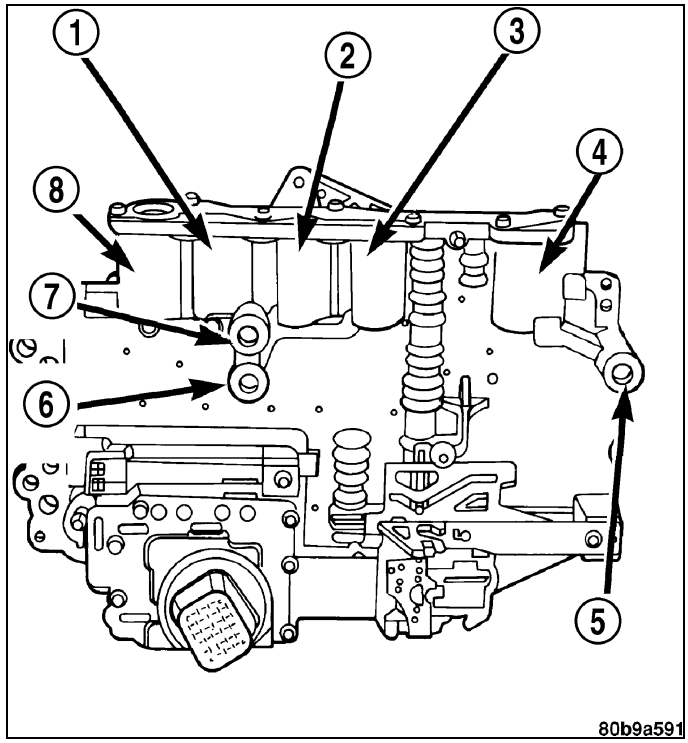

Assembly

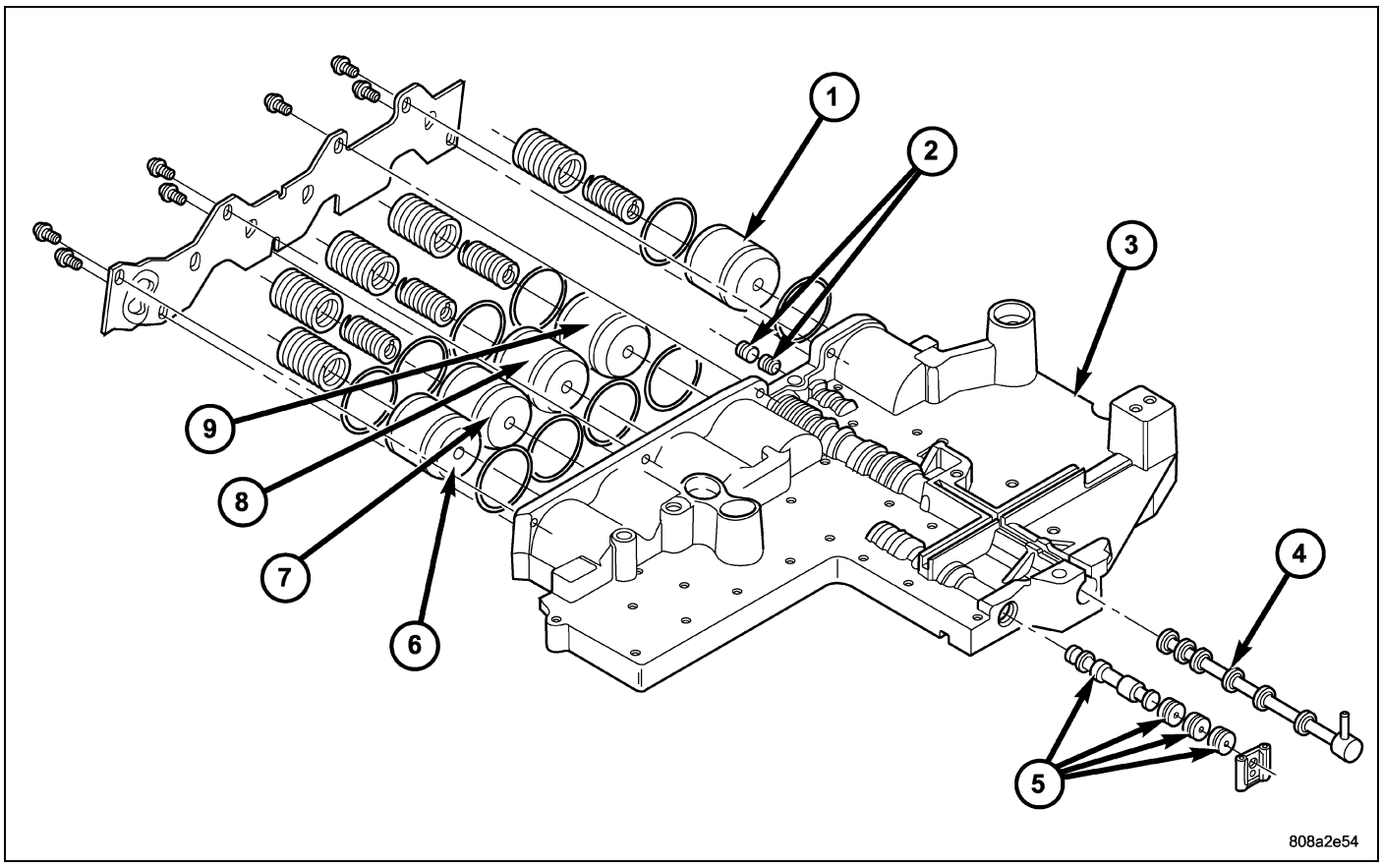

1. Lubricate valves and the housing valve bores with clean transmission fluid.
2. Install solenoid switch valve and plugs (5) and manual valve (4) into the valve body.
3. Install the retainers to hold each valve into the valve body.
4. Install the valve body check balls into their proper locations.
5. Position the separator and transfer plate onto the valve body.
6. Install the screws to hold the transfer plate to the valve body. Tighten the screws to 6 N·m (50 in. lbs.).

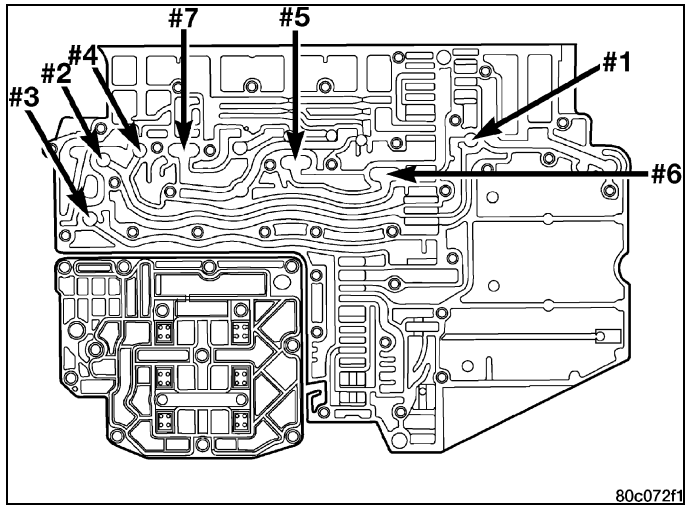

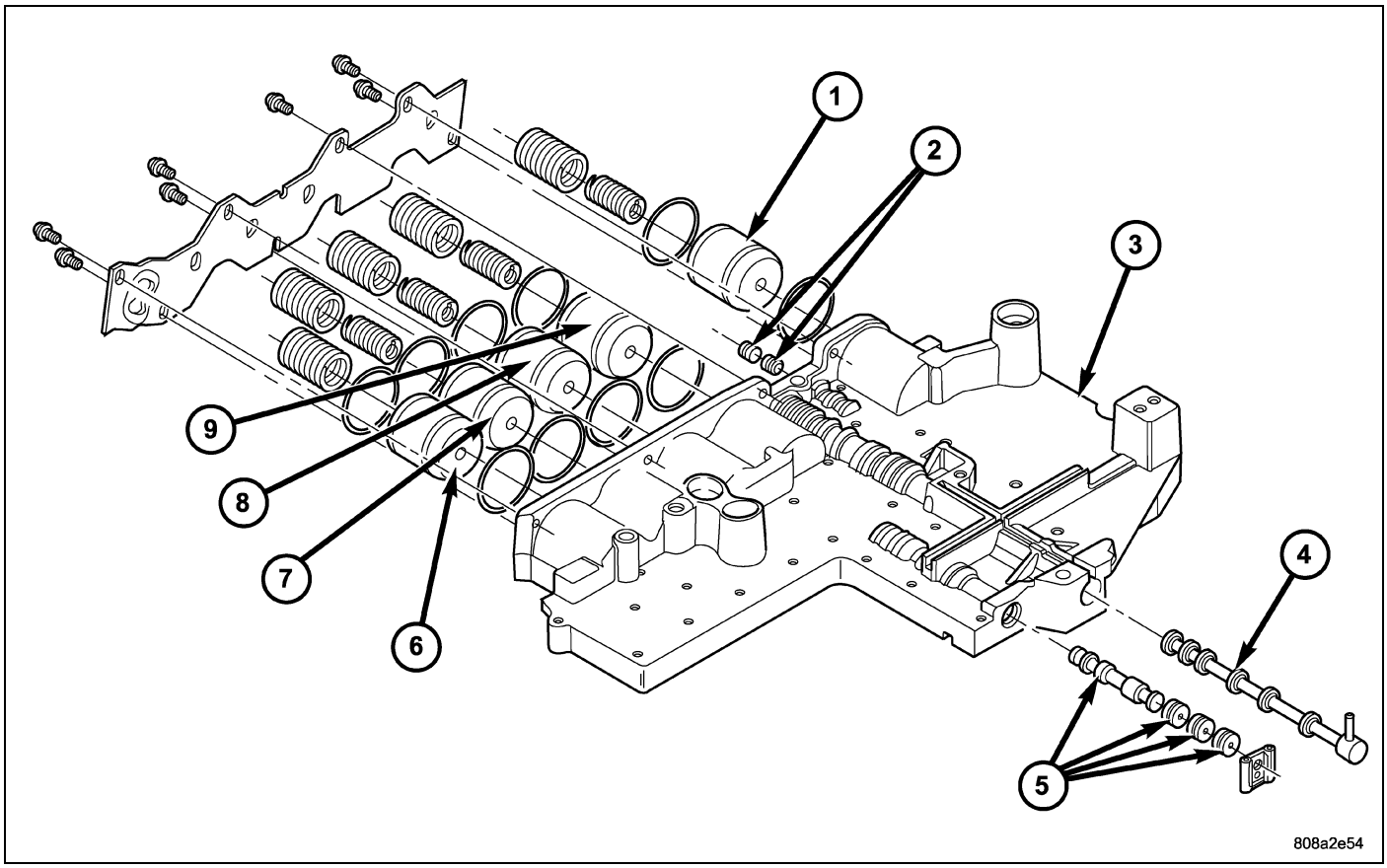

7. Install the accumulator pistons (1, 6-9) and springs into the valve body in the location from which they were removed. Note that all accumulators except the overdrive have two springs. The overdrive accumulator piston (6) has only one spring.
8. Install the Low / Reverse shuttle valve, plug and retainer (2) into the valve body housing.
9. Position the accumulator cover onto the valve body.
10. Install the screws to hold the accumulator cover onto the valve body. Tighten the screws to 7 N·m (60 in. lbs.).
11. Install the TRS selector plate (1) onto the valve body and the manual valve.
12. Position the detent spring (2) onto the valve body.
13. Install the screw to hold the detent spring (2) onto the valve body. Tighten the screw to 4.5 N·m (40 in. lbs.).
14. Install new clutch passage seals (3) onto the valve body, if necessary.

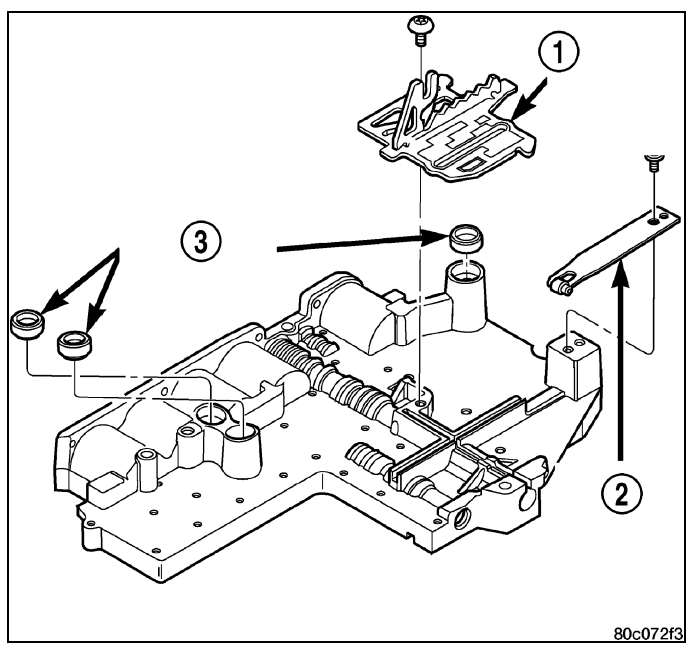

15. Install the solenoid and pressure switch assembly onto the valve body.
16. Install the bolts (1) to hold the solenoid and pressure switch assembly onto the valve body. Tighten the bolts to 6 N·m (50 in. lbs.). Tighten the bolts adjacent to the arrows cast into the bottom of the transfer plate first.

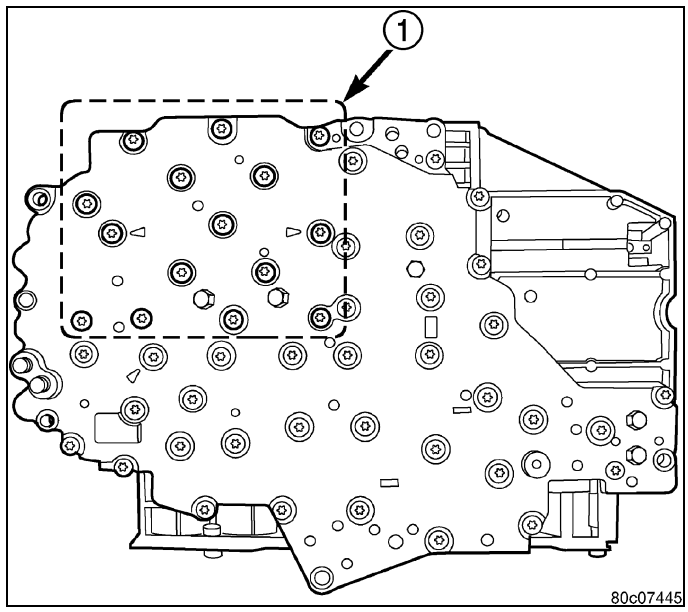

Installation

1. Check condition of seals on valve body and the solenoid and pressure switch assembly. Replace seals if cut or worn.
2. Place TRS selector plate in the PARK position.
3. Place the transmission in the PARK position.
4. Lubricate seal on the solenoid and pressure switch assembly connector with petroleum jelly.
5. Position valve body in transmission and align the manual lever on the valve body to the pin on the transmission manual shift lever.
6. Seat valve body in case and install one or two bolts to hold valve body in place.
7. Tighten valve body bolts alternately and evenly to 12 N·m (105 in. lbs.) torque.
8. Operate the external manual shift lever and ensure that the TRS selector plate moves correctly into all gear range positions.

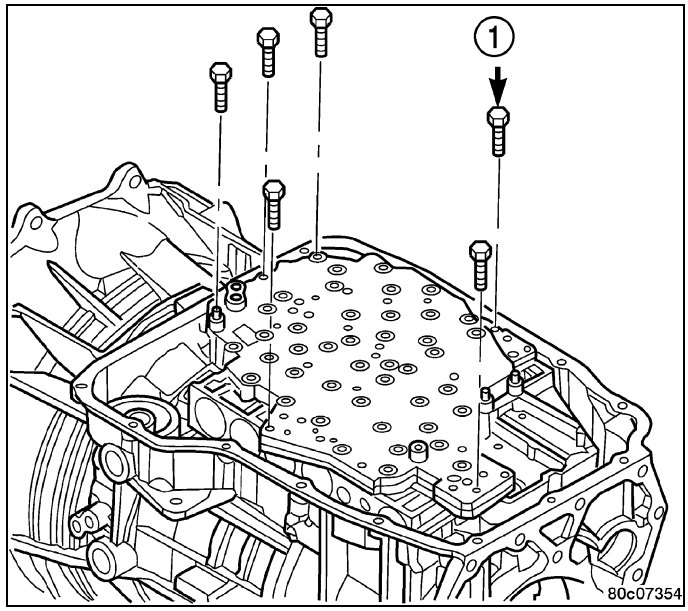

CAUTION: The primary oil filter seal MUST be fully installed flush against the oil pump body. DO NOT install the seal onto the filter neck and attempt to install the filter and seal as an assembly. Damage to the transmission will result.

9. Install a new primary oil filter seal in the oil pump inlet bore. Seat the seal in the bore with the butt end of a hammer, or other suitable tool.
10. Place replacement filter (1) in position on valve body and into the oil pump.
11. Install screw to hold filter to valve body. Tighten screw to 4.5 N·m (40 in. lbs.) torque.
12. Connect the solenoid and pressure switch 23 pin electrical assembly connector.
13. Install oil pan using silicone gasket sealer. Tighten pan bolts to 12 N·m (105 in. lbs.) torque.
14. Lower vehicle and fill transmission with Mopar® ATF +4.
15. Check and adjust gearshift cable, if necessary.

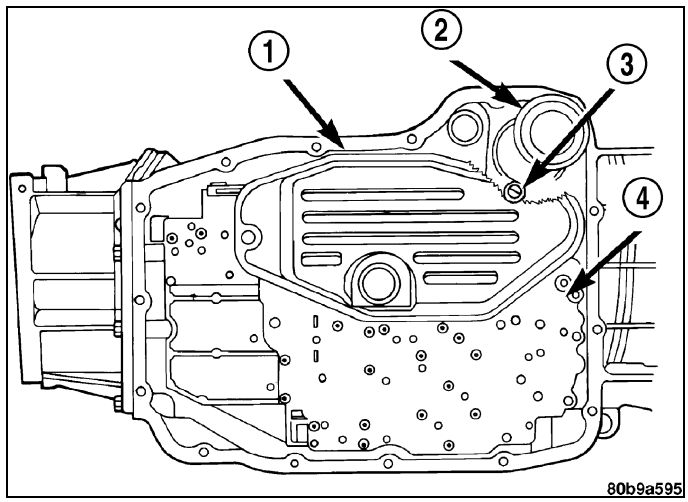

Remove Primary Oil Filter

1 - PRIMARY OIL FILTER
2 - COOLER RETURN FILTER
3 - COOLER RETURN FILTER BYPASS VALVE
4 - VALVE BODY

VALVE, Solenoid Switch

Description

The Solenoid Switch Valve (SSV) is located in the main valve body and directs the output from the L/R-TCC solenoid to either the L/R clutch or the TCC control valves

Operation

The Solenoid Switch Valve directs the output pressure from the LR-TCC solenoid. In 1st gear, the SSV will be in the downshifted position, thus directing fluid to the L/R clutch circuit. In 2nd, 3rd, 4th, and 5th gears, the solenoid switch valve will be in the upshifted position and directs the fluid to the torque converter clutch (TCC) switch valve and TCC regulator valve.

When shifting into 1st gear, a special hydraulic sequence is performed to ensure SSV movement into the downshifted position. The L/R pressure switch is monitored to confirm SSV movement. If the movement is not confirmed (the L/R pressure switch does not close), 2nd gear is substituted for 1st. A DTC will be set after three unsuccessful attempts are made to get into 1st gear in one given key start.

TRANSFER CASE, NV243

TABLE OF CONTENTS

page

TRANSFER CASE, NV243
- DESCRIPTION 354
- OPERATION 354
- DIAGNOSIS AND TESTING 355
- REMOVAL 356
- DISASSEMBLY 356
- CLEANING 368
- INSPECTION 368
- ASSEMBLY 370
- INSTALLATION 382
- SPECIFICATIONS 382
- SPECIAL TOOLS 384

FLUID
- STANDARD PROCEDURE 385

MOTOR, SHIFT
- DESCRIPTION 386
- OPERATION 386
- REMOVAL 386
- INSTALLATION 387

page

MOTOR, SHIFT, WITH MODE SENSOR
- DESCRIPTION 387
- OPERATION 387

SEAL, OUTPUT SHAFT, FRONT
- REMOVAL 388
- INSTALLATION 389

SEAL, OUTPUT SHAFT, REAR
- REMOVAL 389
- INSTALLATION 389

SENSOR, MODE
- DESCRIPTION 390
- OPERATION 390

SWITCH, TRANSFER CASE
- DESCRIPTION 391
- OPERATION 391

Transfer Case, NV243

Description

The NV243 is an electronically controlled part-time transfer case with a low range gear reduction system. The NV243 has three operating ranges plus a NEUTRAL position. The low range system provides a gear reduction ratio for increased low speed torque capability.

The geartrain is mounted in two aluminum case halves attached with bolts. The mainshaft front and rear bearings are mounted in aluminum retainer housings bolted to the case halves.

OPERATING RANGES

Transfer case operating ranges are:

- 2WD (2-wheel drive).
- 4HI (4-wheel drive).
- 4LO (4-wheel drive low range).
- NEUTRAL.

The 2WD range is for use on any road surface at any time.

The 4HI and 4LO ranges are for off road use only. They are not for use on hard surface roads. The only exception being when the road surface is wet or slippery or covered by ice and snow.

The low range reduction gear system is operative in 4LO range only. This range is for extra pulling power in off road situations. Low range reduction ratio is 2.72:1.

SHIFT MECHANISM

Operating ranges are selected with a dash mounted shift selector switch. The shift selector switch provides a input to the Drive Train Control Module (DTCM) to indicate the driver's desire to change operating ranges. The DTCM uses this input, along with input from the transfer case mounted mode sensor and information from the vehicle's bus, to determine if a shift is permitted. If the DTCM decides the shift is permitted, the DTCM controls the shift motor, mounted to the exterior of the transfer case, to perform the shift.

IDENTIFICATION

A circular ID tag (1) is attached to the rear case of each transfer case. The ID tag provides the transfer case model number, assembly number, serial number, and low range ratio.

The transfer case serial number also represents the date of build.

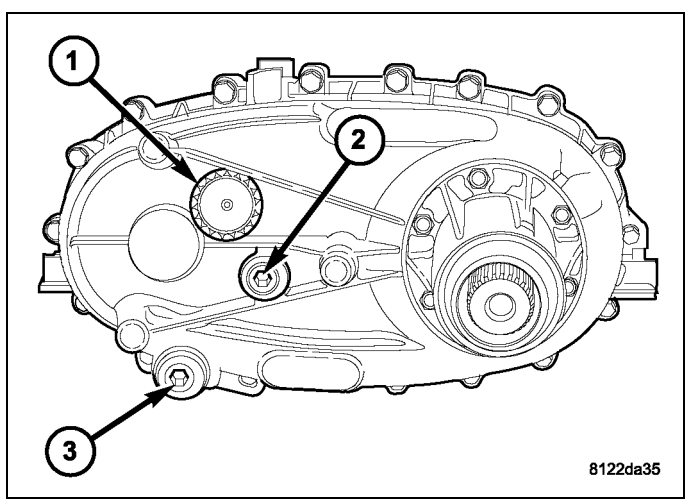

Operation

The input gear is splined to the transmission output shaft. The input gear drives the mainshaft through the planetary assembly and range sleeve. The front output shaft is operated by a drive chain that connects the shaft to a drive sprocket on the mainshaft. The drive sprocket is engaged/disengaged by the mode fork, which operates the mode sleeve and hub. The sleeve and hub are not equipped with a synchronizer mechanism for shifting.

Diagnosis and Testing

DIAGNOSIS CHART

Condition	Possible Cause	Correction
Transfer case difficult to shift or will not shift into desired range.	1) Transfer case electronically controlled shift system malfunction.	1) Check for Transfer Case DTCs. Refer to Section 28 - DTC Based Diagnostics and depending on vehicle configuration (FCM, FDCM, or DTCM), perform the appropriate diagnostic procedure and verification test.
	2) If vehicle was operated for an extended period in 4HI mode on dry surface, driveline torque load may cause difficulty.	2) Drive the vehicle in a straight line and momentarily release the accelerator. The transfer case can then be shifted to the desired mode.
	3) Insufficient or incorrect lubricant.	3) Drain and refill transfer case with the correct quantity of Mopar® ATF +4, Automatic Transmission Fluid.
	4) Internal transfer case components binding, worn, or damaged.	4) Repair or replace components as necessary.
Transfer case noisy in all drive modes.	1) Insufficient or incorrect lubricant.	1) Drain and refill transfer case with the correct quantity of Mopar® ATF +4, type 9602, Automatic Transmission Fluid.
	2) Internal transfer case components binding, worn, or damaged.	2) Repair or replace components as necessary.
Transfer case noisy while in, or jumps out of, 4LO mode.	1) Transfer case not completely engaged in 4LO position.	1) While rolling 2-3 MPH and the transmission in NEUTRAL, shift transfer case to the 2WD or 4HI position, and then back into the 4LO position.
	2) Range fork damaged, inserts worn, or fork is binding on the shift rail.	2) Repair or replace components as necessary.
	3) Low range gear worn or damaged.	3) Repair or replace components as necessary.
Lubricant leaking from transfer case seals or vent.	1) Transfer case overfilled.	1) Drain lubricant to the correct level.
	2) Transfer case vent closed or restricted.	2) Clean or replace vent as necessary.
	3) Transfer case seals damaged or installed incorrectly.	3) Replace suspect seal.
Abnormal tire wear.	1) Extended operation in 4HI mode on dry surfaces,	1) Operate vehicle in 2WD mode on dry surfaces.

Removal

1. Shift transfer case into 2WD.
2. Raise vehicle.
3. Drain transfer case lubricant.
4. Remove the transfer case skid plate, if equipped.
5. Support transmission with jack stand.
6. Remove crossmember and transmission mount.
7. Mark front and rear propeller shafts for alignment reference.
8. Remove front and rear propeller shafts.
9. Disconnect transfer case shift motor and mode sensor wire connectors (3) .
10. Disconnect transfer case vent hose.
11. Support transfer case with transmission jack.
12. Secure transfer case to jack with chains.
13. Remove nuts attaching transfer case (2) to transmission (1).
14. Pull transfer case and jack rearward to disengage transfer case.
15. Remove transfer case from under vehicle.

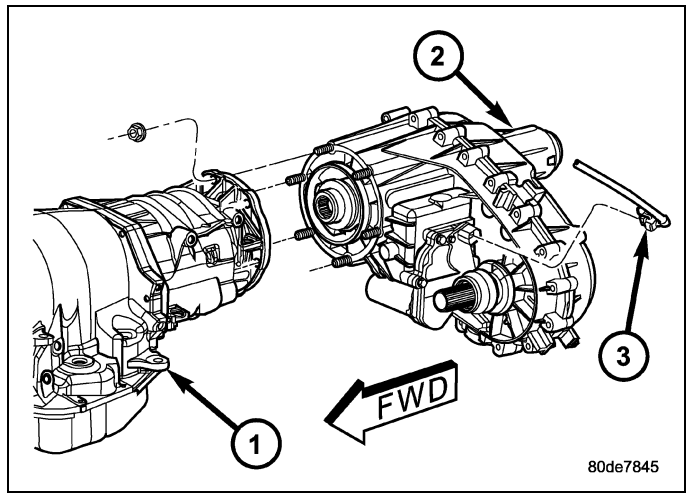

Disassembly

Position transfer case in a shallow drain pan. Remove drain plug and drain any remaining lubricant remaining in case.

SHIFT MOTOR ASSEMBLY AND FRONT OUTPUT SHAFT SEAL

1. Remove the bolts (3) which hold the shift motor and mode sensor assembly (2) to the transfer case (1).

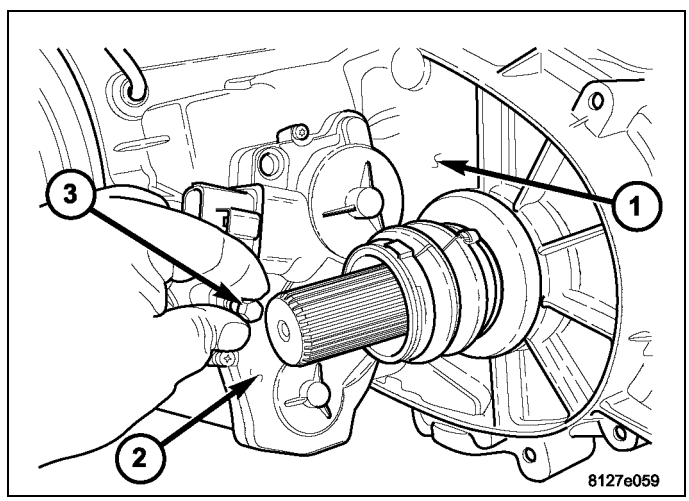

2. Remove the shift motor and mode sensor assembly from the transfer case.
3. Remove the front propeller shaft seal boot (1) retaining clamp (2) .

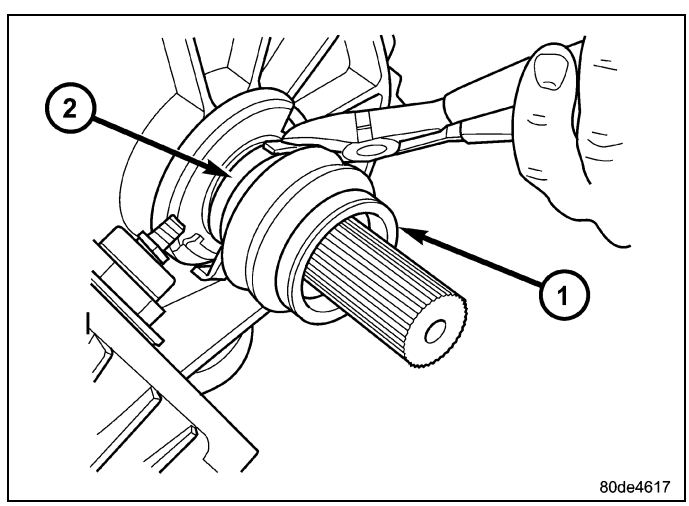

4. Remove the front propeller shaft seal boot (1) .

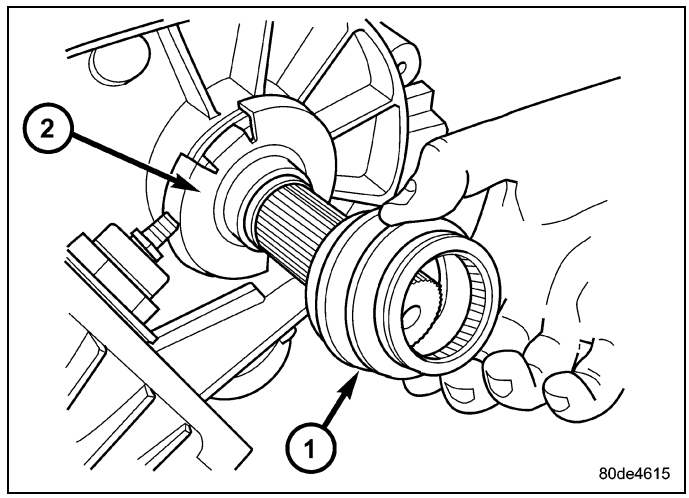

5. Remove the front output shaft seal slinger (1) by bending (2) the slinger ears away from the transfer case.

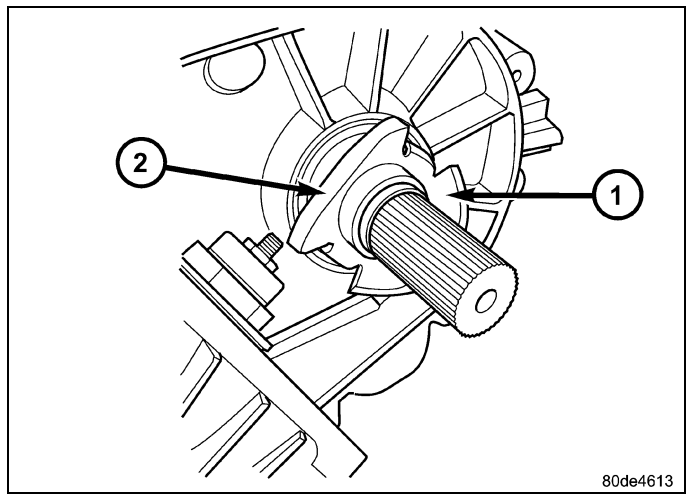

6. Using a suitable pry tool (2) , remove the slinger (1) from the output shaft using care not to damage the shaft.
7. Using a screw and a slide hammer, remove the front output shaft seal.

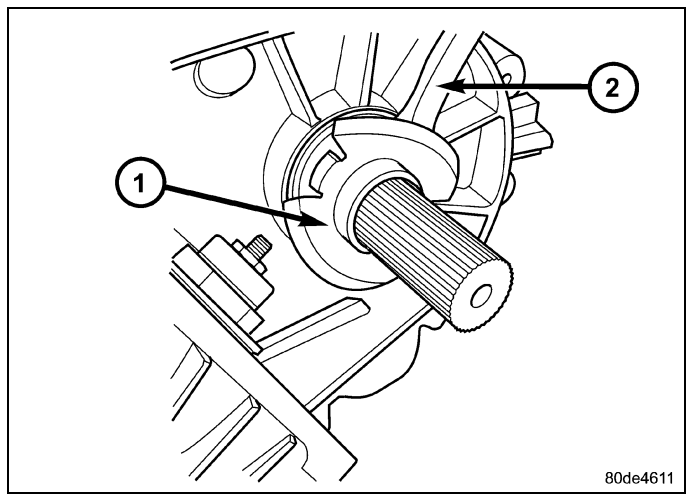

REAR EXTENSION

1. Remove rear extension bolts (1) .

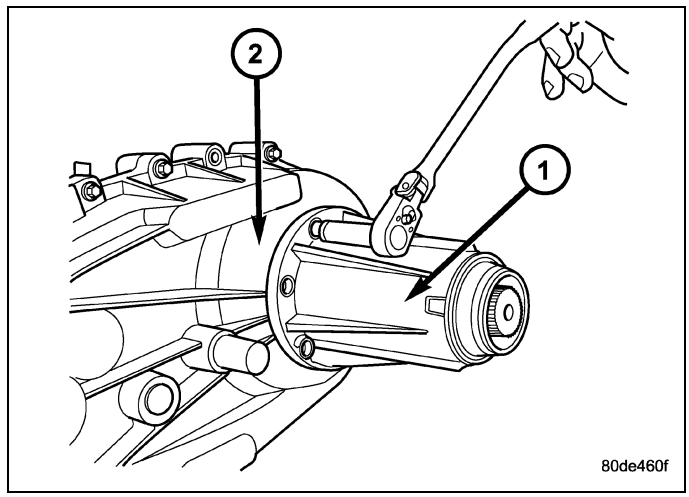

2. Remove rear extension housing (1). Tap extension once or twice with a plastic mallet to break sealer bead and loosen it.

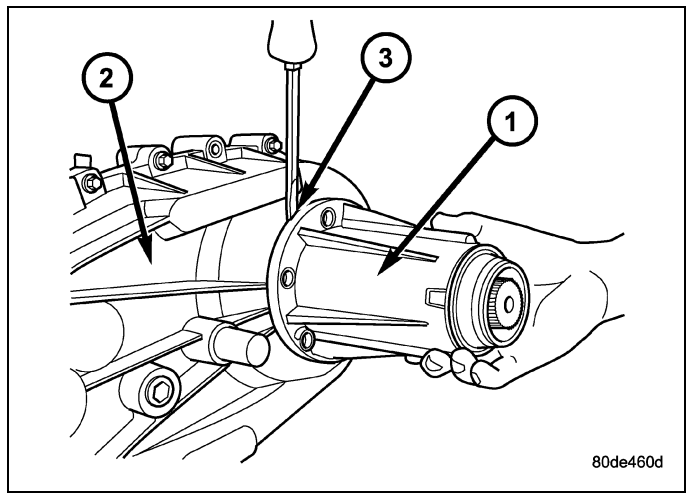

3. Remove output bearing (2) retaining ring (3) with heavy duty snap-ring pliers.

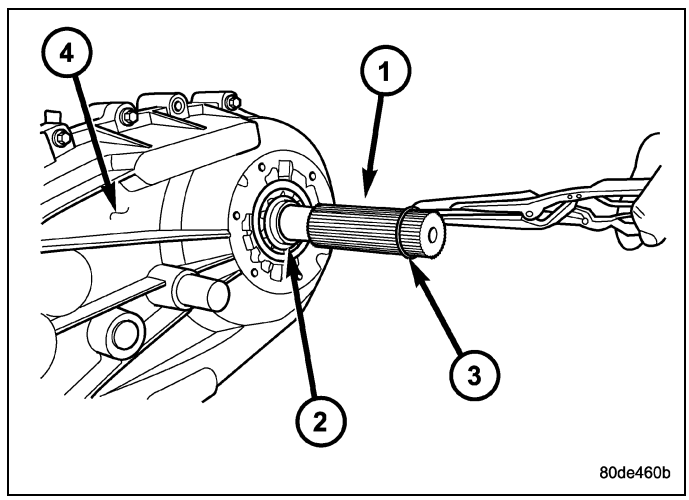

OIL PUMP AND REAR CASE

1. Remove rear case (1)-to-front case (2) bolts (3).

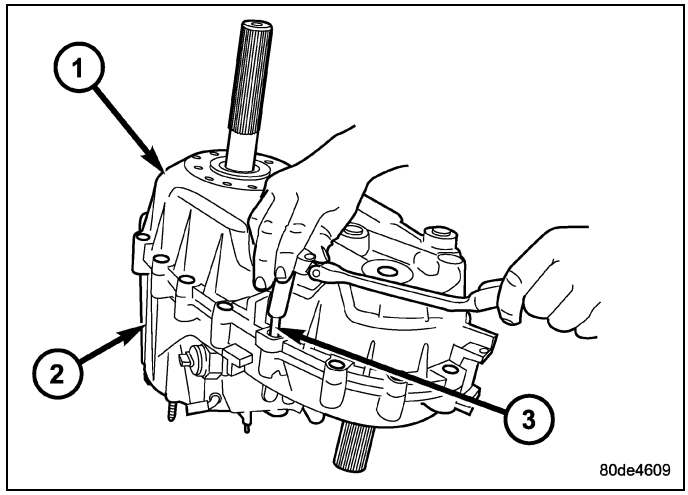

2. Loosen rear case (1) with pry tool to break sealer bead. Insert tool in slot (3) at each end of case.

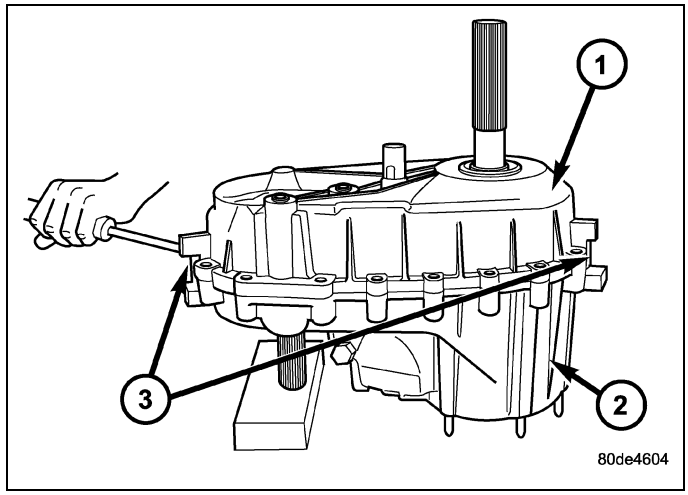

3. Unseat rear case from alignment dowels.
4. Remove rear case (1) and oil pump assembly from front case (2).

CAUTION: Do not remove the bolts holding the oil pump cover to the rear case half. The oil pump cover is aligned to the rear output shaft inner bearing race and will become mis-aligned if the bolts are loosened. If the transfer case failure has generated any debris which may have become trapped in the oil pump. the rear case and oil pump assembly MUST be replaced.

5. Remove the oil pump pickup tube.

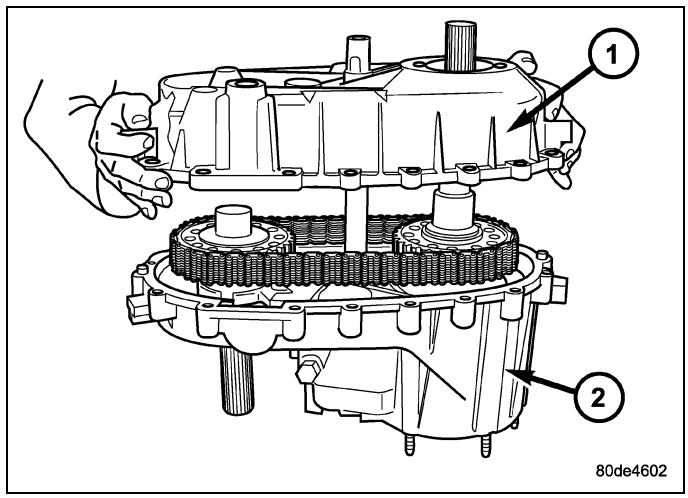

FRONT OUTPUT SHAFT AND DRIVE CHAIN

1. Remove shift rail cup (3) and spring (2).

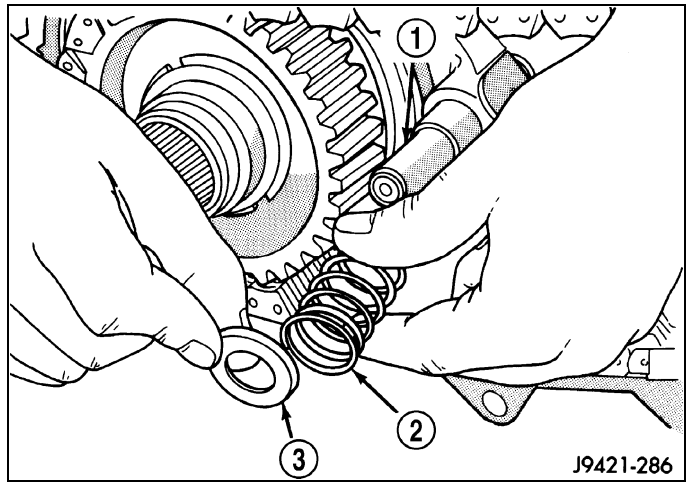

2. Remove front sprocket (1) retaining ring (2).

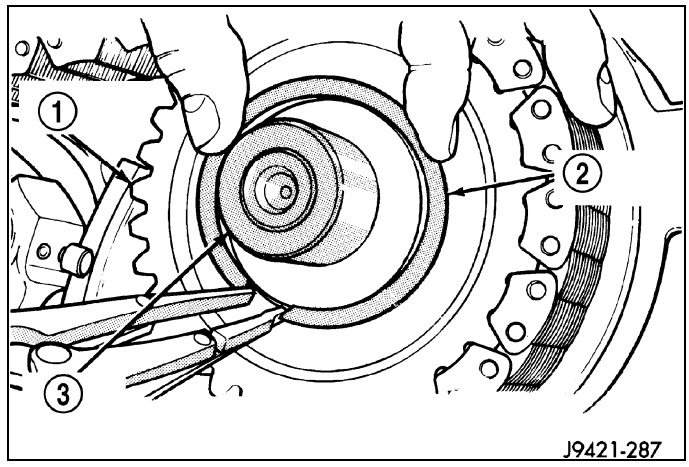

3. Pull mainshaft (3), front sprocket (1), and chain (2) outward about 25 mm (1 inch) simultaneously.
4. Remove chain from mainshaft drive sprocket and remove front sprocket and chain as assembly.

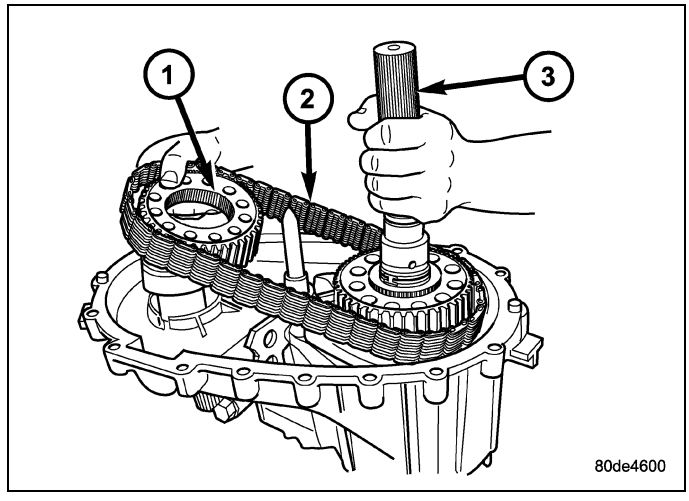

SHIFT FORKS AND MAINSHAFT

1. Loosen detent plug (2).
2. Remove detent plug (2), spring (3), and plunger (4). Note that the plug has an O-ring seal. Remove and discard this seal.

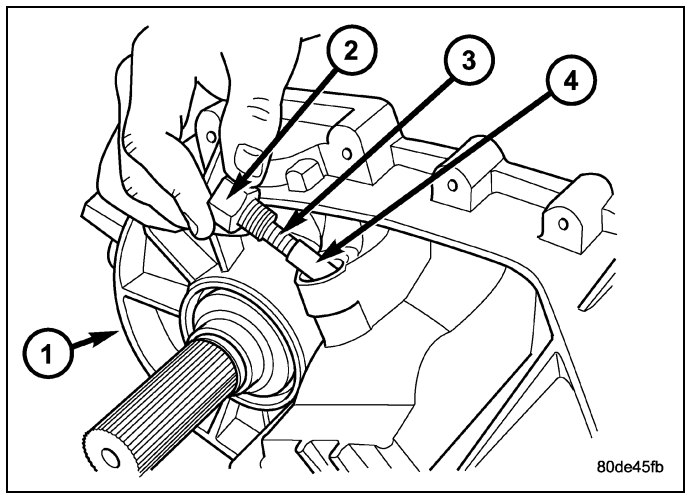

3. Remove the front output shaft (1) snap-ring (2).

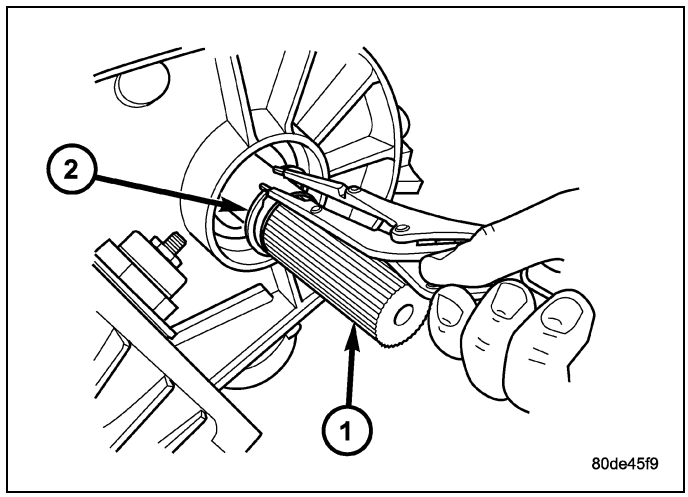

4. Remove front output shaft (2) from bearing in the front case (1).

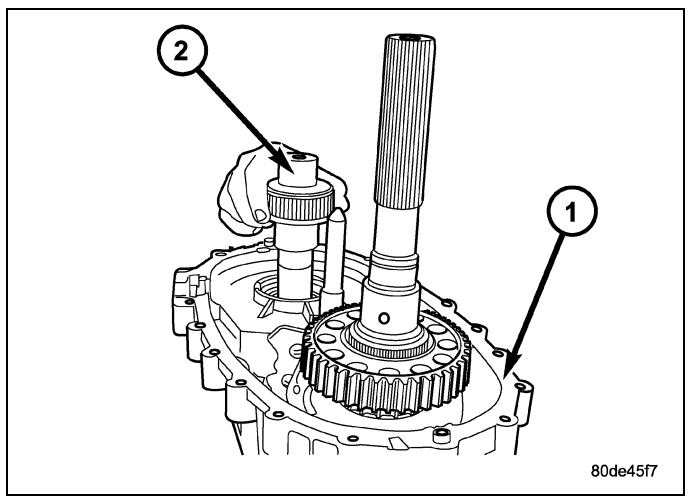

5. Pull mainshaft assembly (2) out of input gear, mode sleeve, and front case (1).

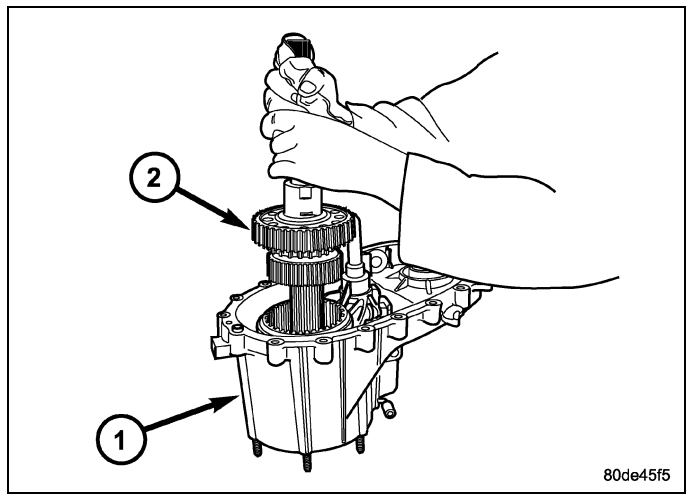

6. Remove mode fork (2), mode sleeve (1), and shift rail as assembly. Note which way the sleeve fits in the fork (long side of sleeve goes to front).

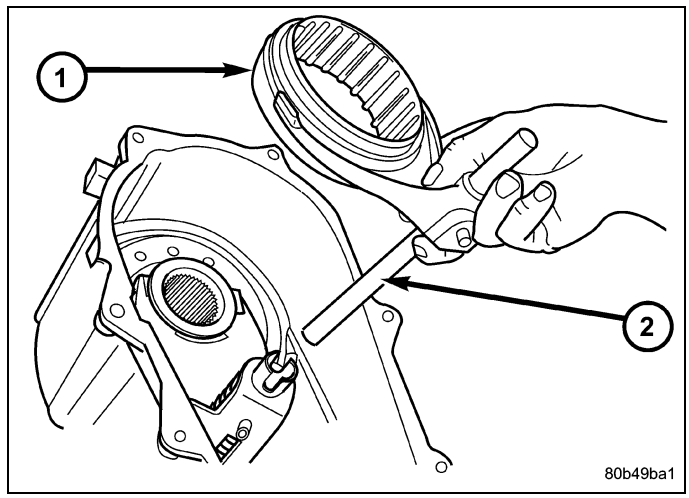

7. Remove range fork retaining ring.
8. Remove range fork (2) and hub (1) as an assembly. Note fork position for installation reference.

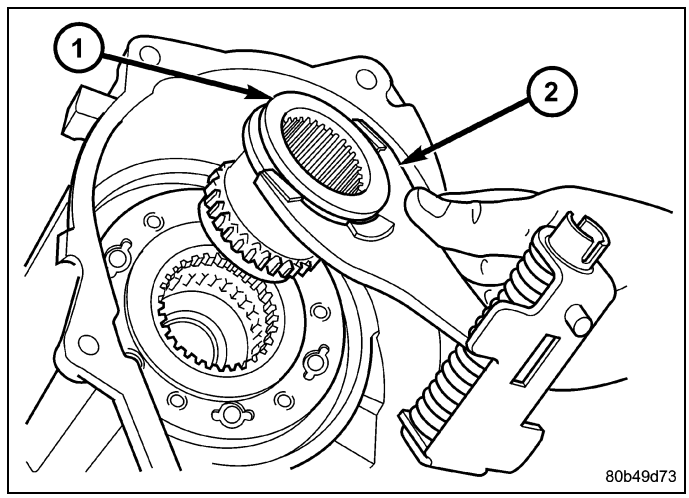

9. Remove shift sector (1).

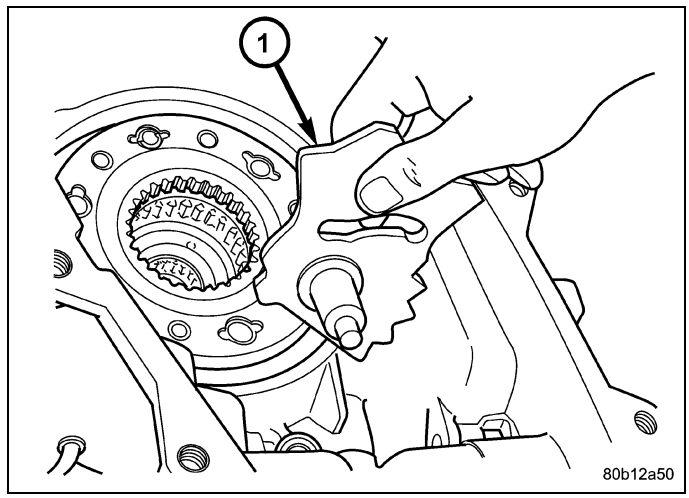

10. Remove the shift sector o-ring (2) from the front housing (1).

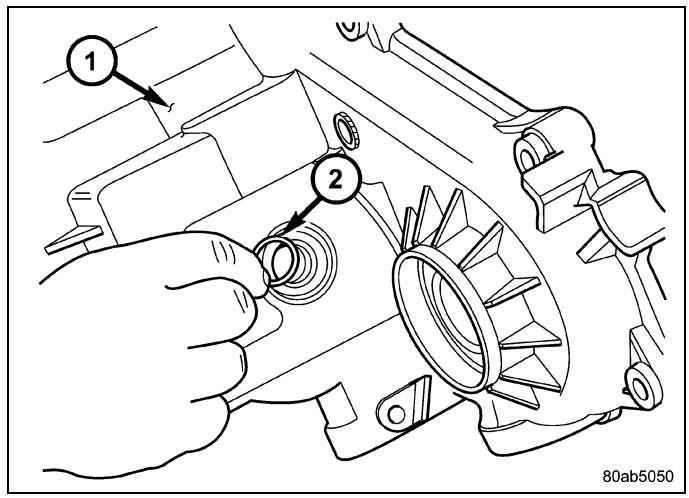

MAINSHAFT

1. Remove the drive sprocket (3) retaining ring (2) from the output shaft (1).

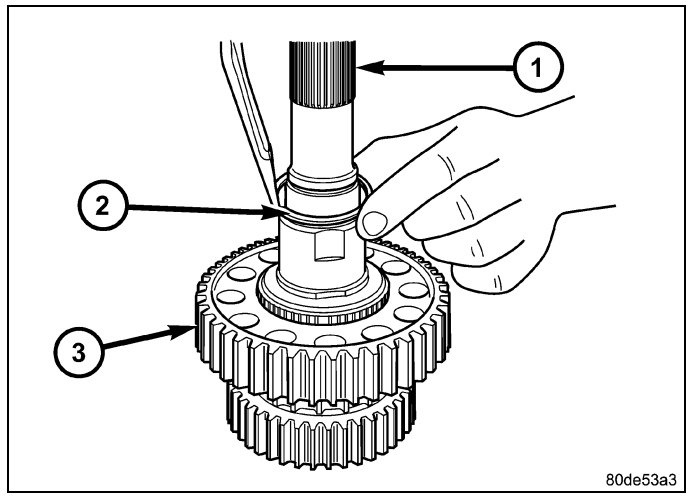

2. Remove the drive sprocket (3) thrust washer (2) from the output shaft (1).

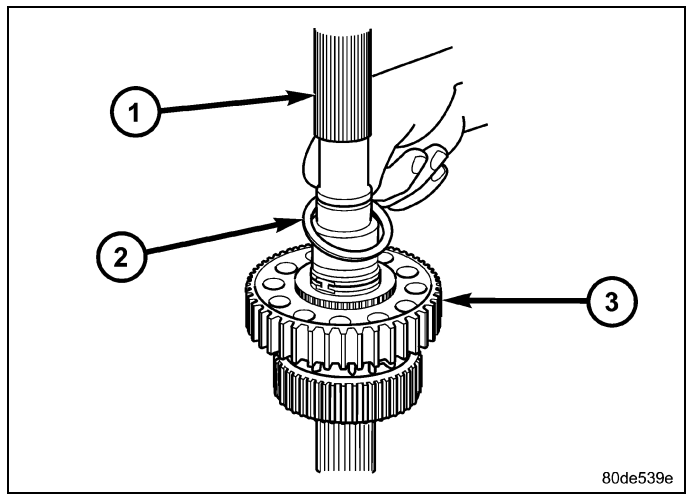

3. Remove drive sprocket (2) from the output shaft (1).

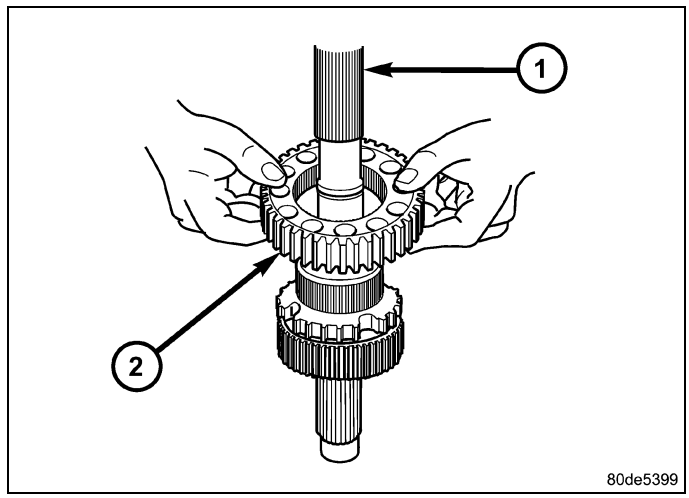

4. Remove the clutch gear (2) from the output shaft (1).

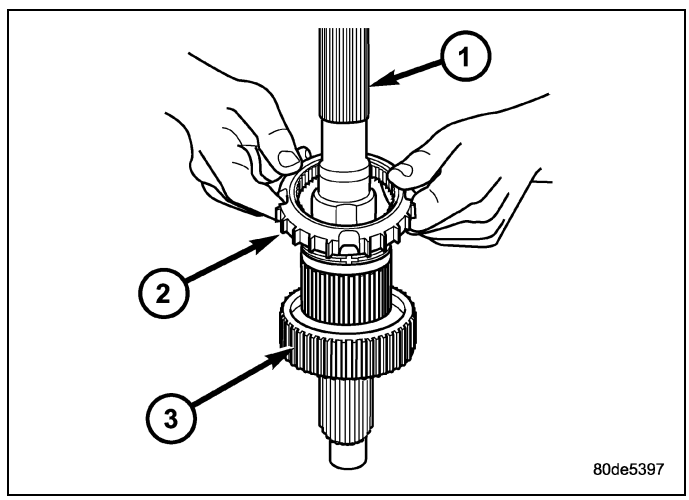

5. Remove the sprocket hub (2) from the output shaft (1).

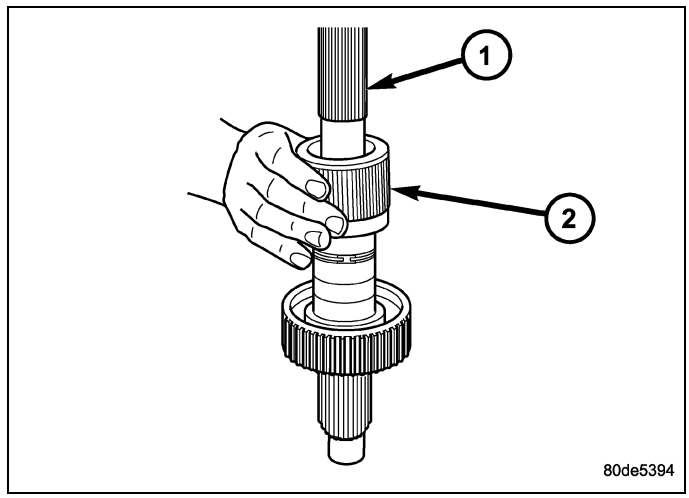

6. Remove the mode hub retaining ring (2) from the output shaft (1).

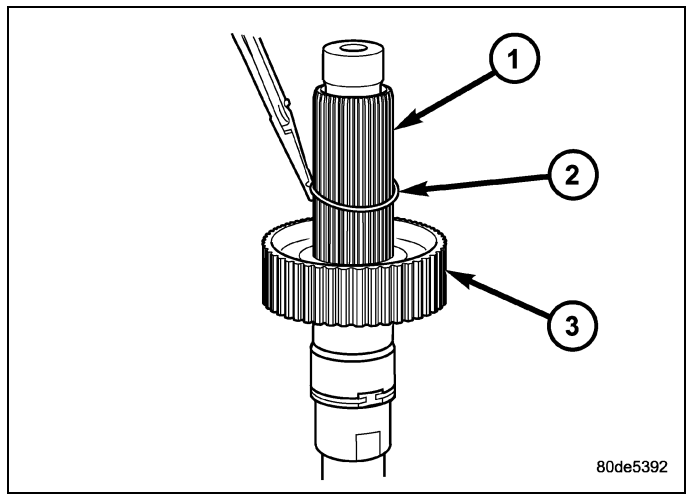

7. Remove the mode hub (2) from the output shaft (1).

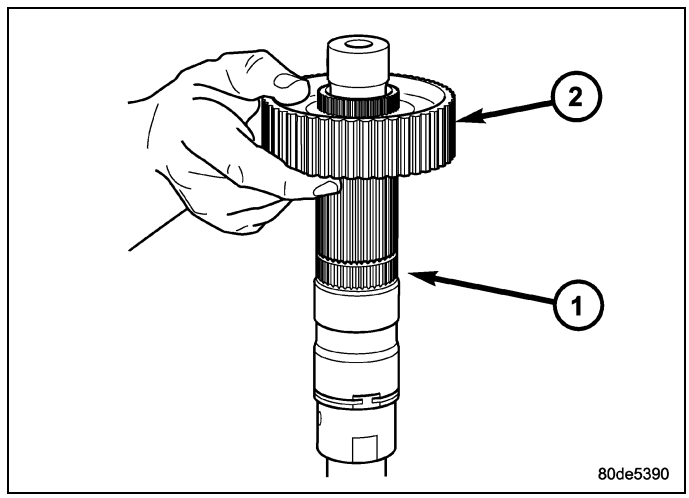

INPUT AND PLANETARY GEAR

1. Remove input gear seal with suitable screw and slide hammer.
2. Remove input gear (1) retaining ring (2) with heavy duty snap-ring pliers.

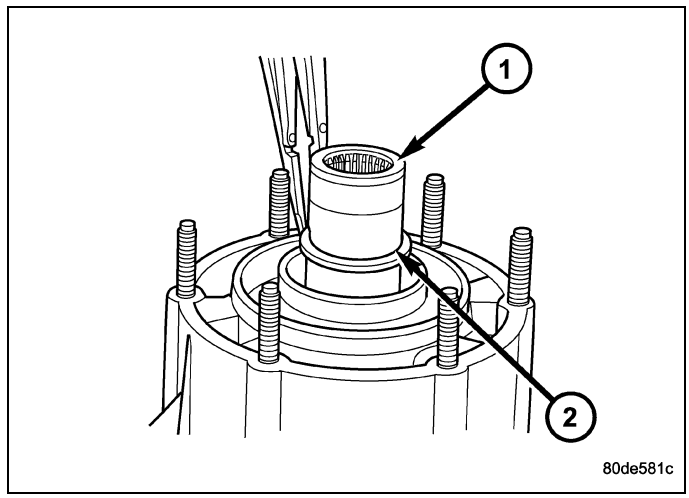

3. Place front case in horizontal position. Then remove input gear and low range gear as an assembly (2). Tap gear out of bearing with plastic mallet, if necessary.

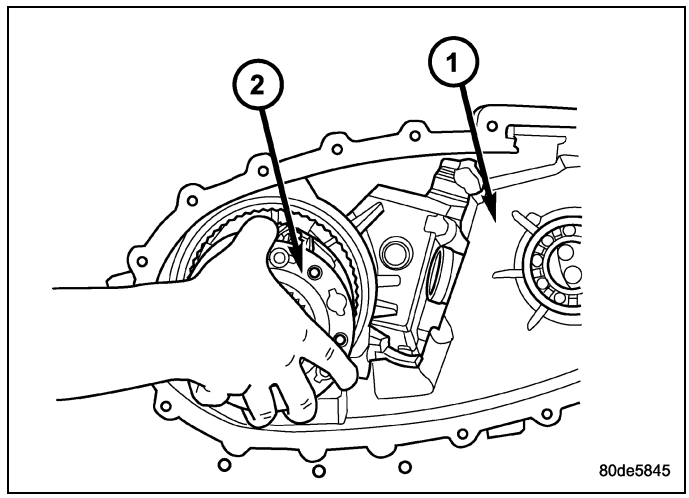

INPUT AND PLANETARY GEAR

1. Remove snap-ring (1) that retains input gear in low range gear.

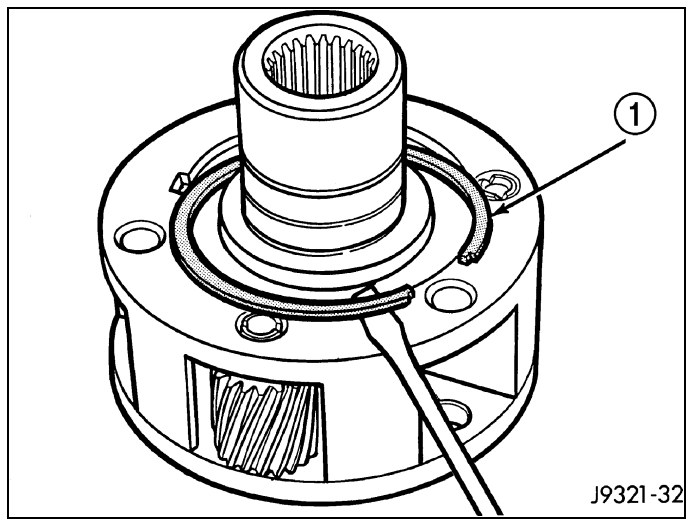

2. Remove retainer (3).

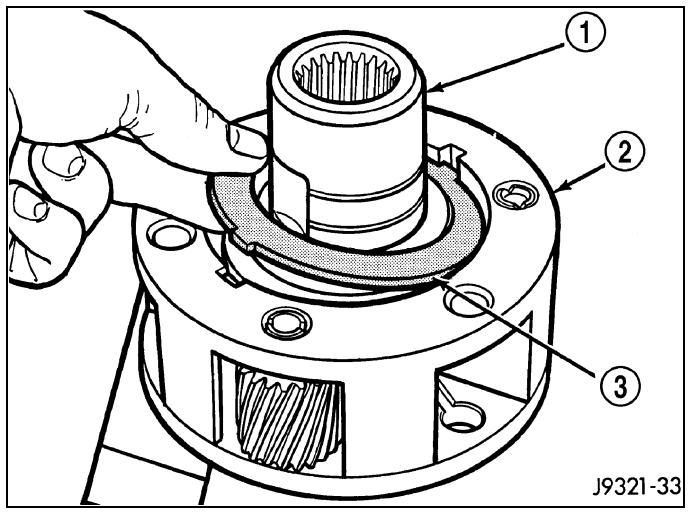

3. Remove front tabbed thrust washer (1).

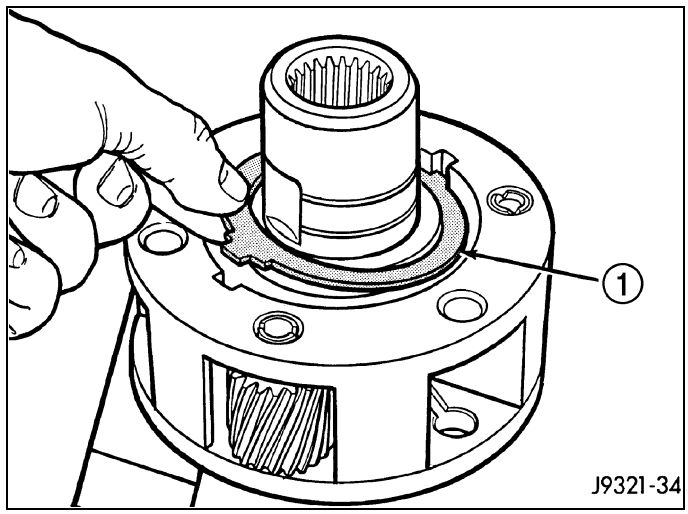

4. Remove input gear (1).

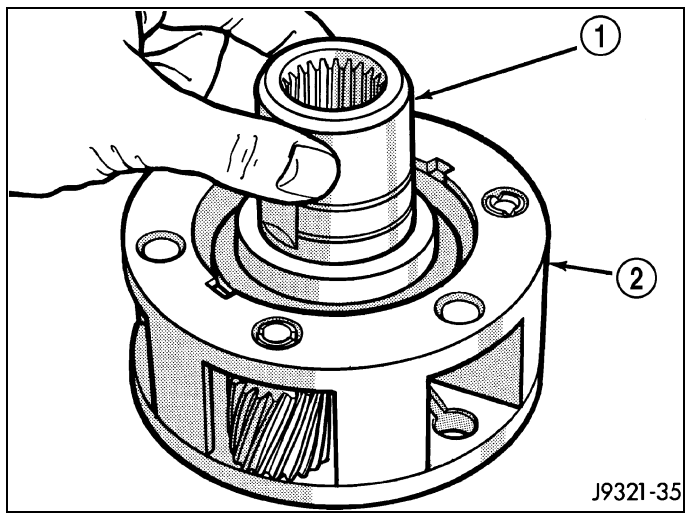

5. Remove rear tabbed thrust washer (2) from low range gear (1).

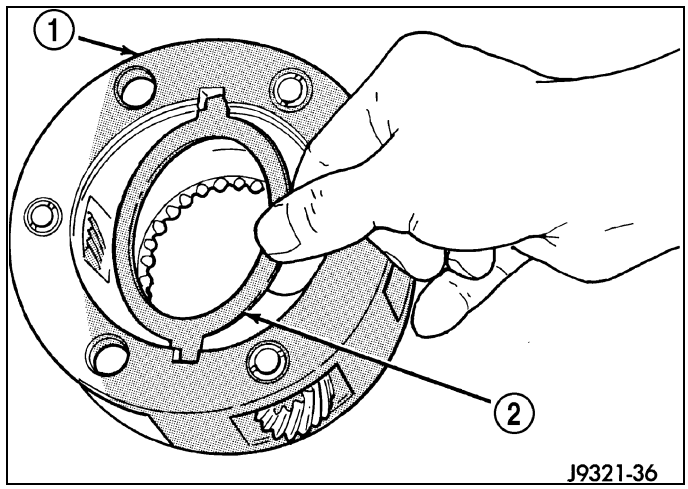

Cleaning

Clean the transfer case parts with a standard parts cleaning solvent. Remove all traces of sealer from the cases and retainers with a scraper and 3M™ all purpose cleaner. Use compressed air to remove solvent residue from oil feed passages in the case halves, retainers, gears, and shafts.

Inspection

MAINSHAFT/SPROCKET/HUB INSPECTION

Inspect the splines on the hub and shaft and the teeth on the sprocket. Minor nicks and scratches can be smoothed with an oilstone. However, replace any part that is damaged.

Check the contact surfaces in the sprocket bore and on the mainshaft. Minor nicks and scratches can be smoothed with 320-400 grit emery cloth but do not try to salvage the shaft if nicks or wear is severe.

INPUT GEAR AND PLANETARY CARRIER

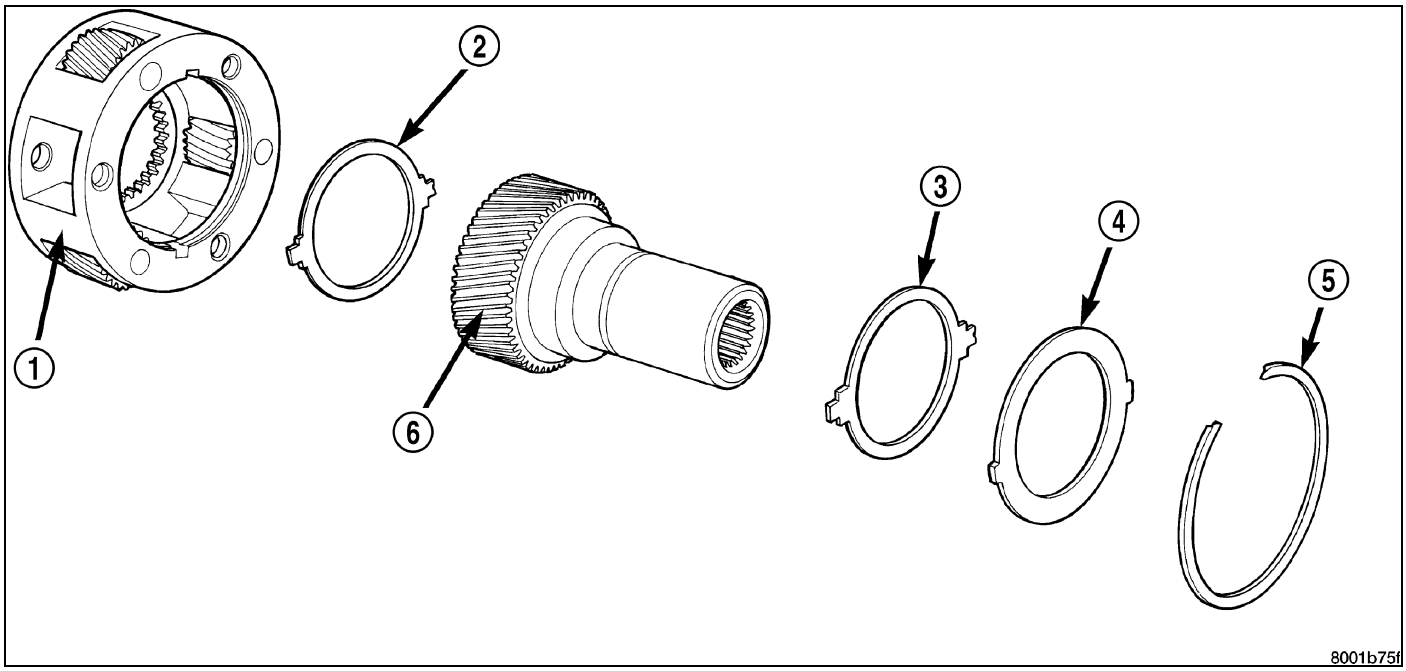

Input Gear and Carrier Components

1 - PLANETARY CARRIER
2 - REAR THRUST WASHER
3 - FRONT THRUST WASHER
4 - CARRIER LOCK RING
5 - CARRIER LOCK RETAINING RING
6 - INPUT GEAR

Check the teeth on the input gear (6) . Minor nicks can be dressed off with an oilstone but replace the gear if any teeth are broken, cracked, or chipped. The bearing surface on the gear can be smoothed with 300-400 grit emery cloth if necessary.

Examine the planetary carrier body (1) and pinion gears for wear or damage. The carrier will have to be replaced as an assembly if the body, pinion pins, or pinion gears are damaged.

Check the carrier lock ring (4) and both thrust washers (2, 3) for wear or cracks. Replace them if necessary. Also replace the lock retaining ring if bent, distorted, or broken.

SHIFT FORKS/HUBS/SLEEVES

Check condition of the shift forks and mode fork shift rail (2) . Minor nicks on the shift rail can be smoothed with 320-400 grit emery cloth.

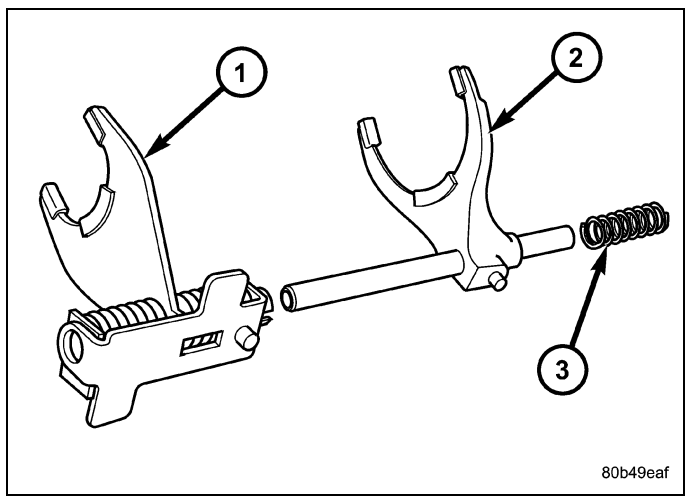

Inspect the shift fork wear pads (3, 4) . The mode (2) and range (1) fork pads are serviceable and can be replaced if necessary.

Check both of the sleeves for wear or damage, especially on the interior teeth. Replace the sleeves if wear or damage is evident.

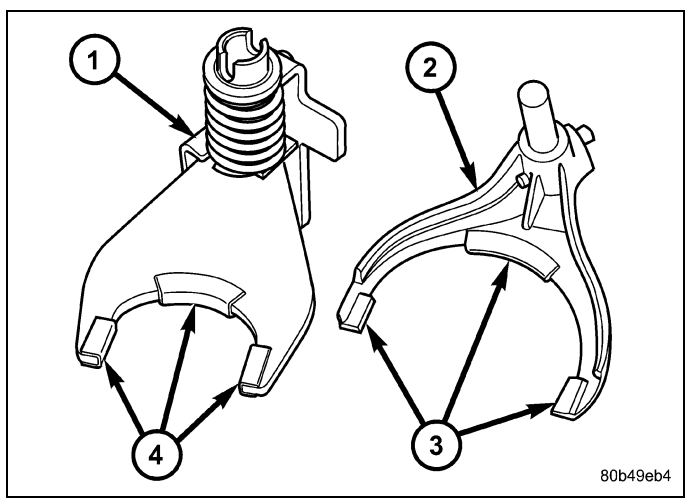

REAR EXTENSION HOUSING

Inspect the extension housing seal and bushing. Replace both components if either show any sign of wear or damage.

FRONT OUTPUT SHAFT AND DRIVE CHAIN

Inspect the shaft threads, sprocket teeth, and bearing surfaces. Minor nicks on the teeth can be smoothed with an oilstone. Use 320-400 grit emery to smooth minor scratches on the shaft bearing surfaces. Rough threads on the shaft can be chased if necessary. Replace the shaft if the threads are damaged, bearing surfaces are scored, or if any sprocket teeth are cracked or broken.

Examine the drive chain and shaft bearings. Replace the chain and both sprockets if the chain is stretched, distorted, or if any of the links bind. Replace the bearings if rough, or noisy.

LOW RANGE ANNULUS GEAR

Inspect annulus gear (2) condition carefully. The gear is only serviced as part of the front case (1). If the gear is damaged, it will be necessary to replace the gear and front case as an assembly. Do not attempt to remove the gear.

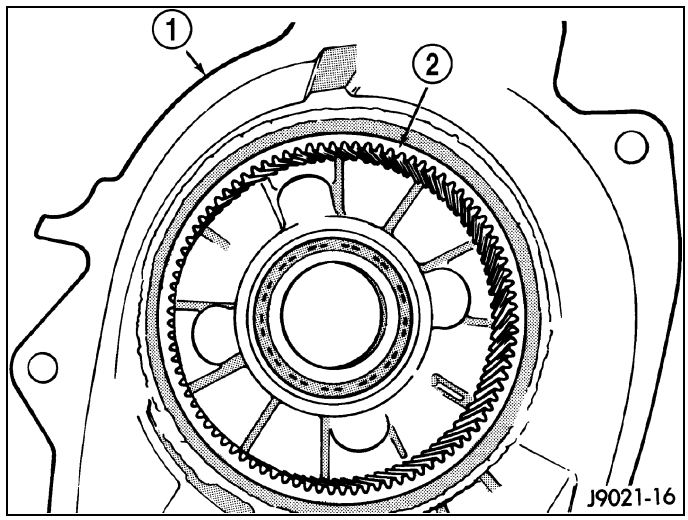

FRONT AND REAR CASES

Inspect the cases for wear and damage.

Check case condition. If leaks were a problem, look for gouges and severe scoring of case sealing surfaces. Also make sure the front case mounting studs are in good condition.

Check the front case mounting studs and vent tube. The tube can be secured with Loctite™ 271 or 680 if loose. The stud threads can be cleaned up with a die if necessary. Also check condition of the fill/drain plug threads in the rear case. The threads can be repaired with a thread chaser or tap if necessary. Or the threads can be repaired with Helicoil® stainless steel inserts if required.

OIL PUMP/OIL PICKUP

Examine the oil pump pickup parts. Replace the pump if any part appears to be worn or damaged. Do not disassemble the pump as individual parts are not available. The pump is only available as a complete assembly. The pickup screen, hose, and tube are the only serviceable parts and are available separately.

Assembly

BEARINGS AND SEALS

1. Remove the input shaft bearing (1) from the front case (2) with suitable snap-ring pliers.
2. Transfer the retaining ring to the new bearing if necessary and install the bearing into the front case.

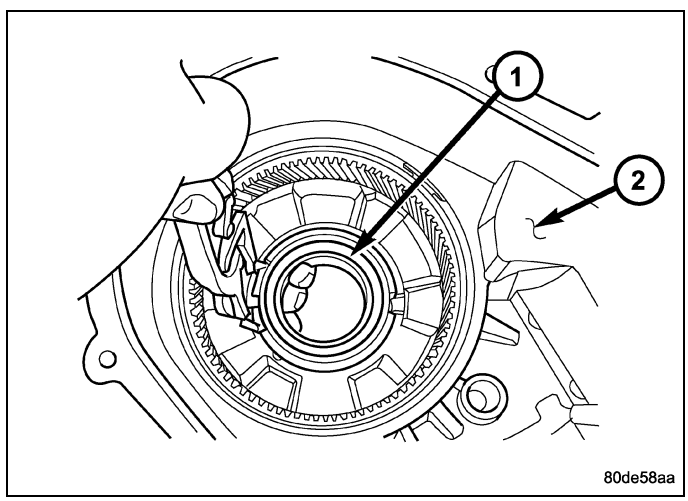

3. Using Bearing Installer 6436 (2) and Universal Handle C-4171 (3), remove front output shaft bearing.
4. Start front output shaft bearing in case. Then seat bearing with Universal Handle C-4171 and Bearing Remover/Installer 6953.
5. Install front output shaft bearing retaining ring.

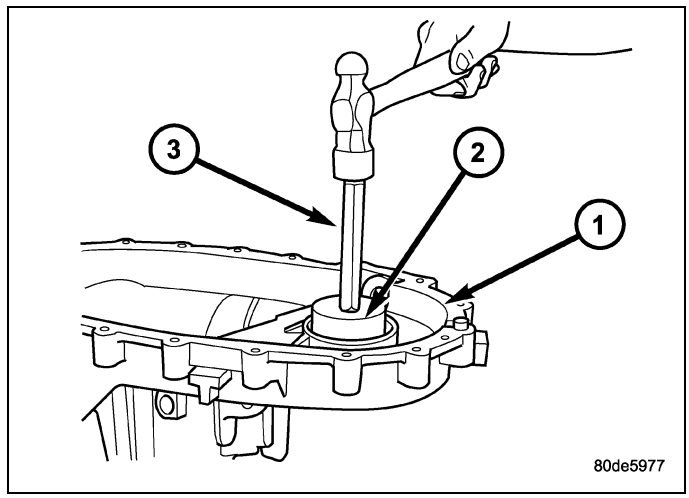

6. Remove input gear (2) pilot bearing by inserting a suitably sized drift (1) into the splined end of the input gear and driving the bearing out with the drift and a hammer.
7. Install new pilot bearing with Bearing Installer 8684.

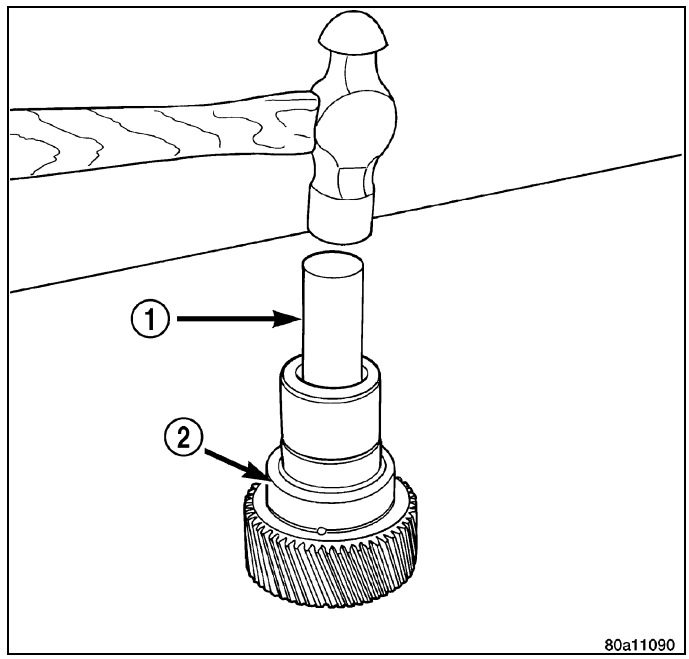

8. Remove the front output shaft rear bearing with the screw and jaws from Remover L-4454A (2) and Cup 8148 (3).

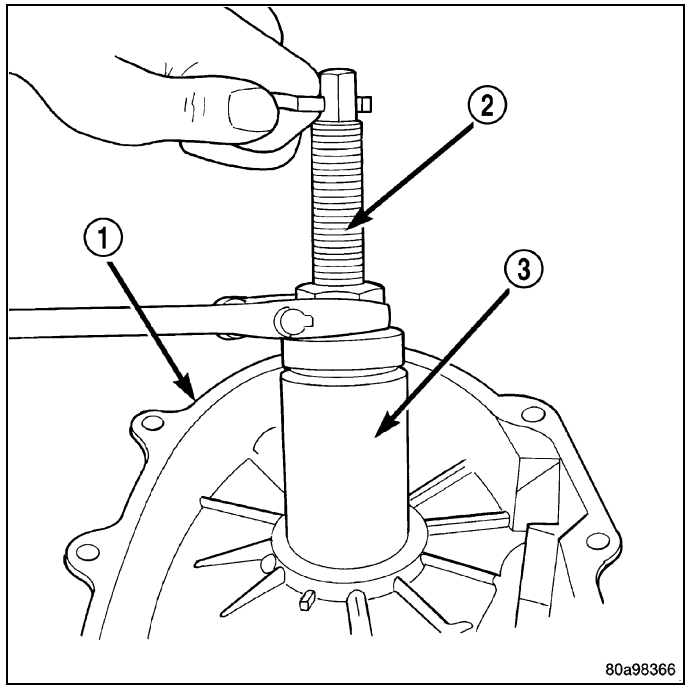

9. Install new bearing with Universal Handle C-4171 and Bushing Installer 5066 .

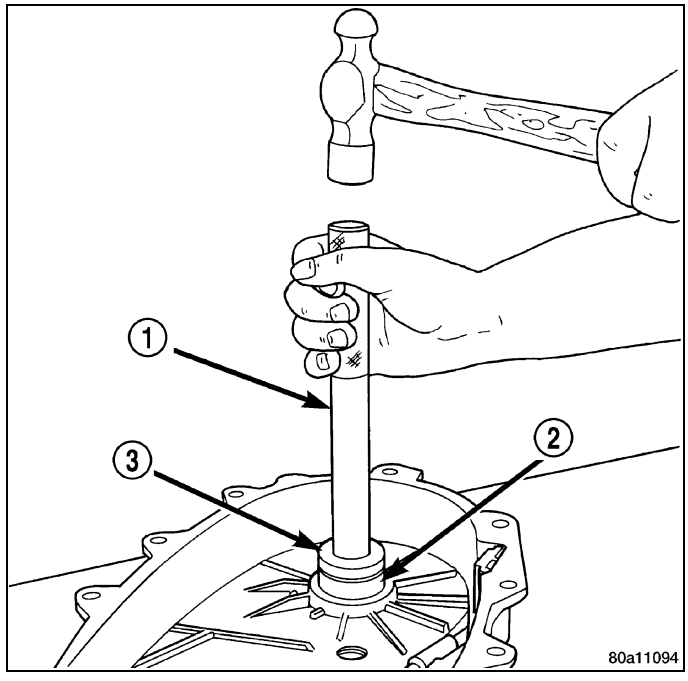

10. The bearing bore is chamfered at the top. Install the bearing (1) so it is flush with the lower edge of this chamfer (2).

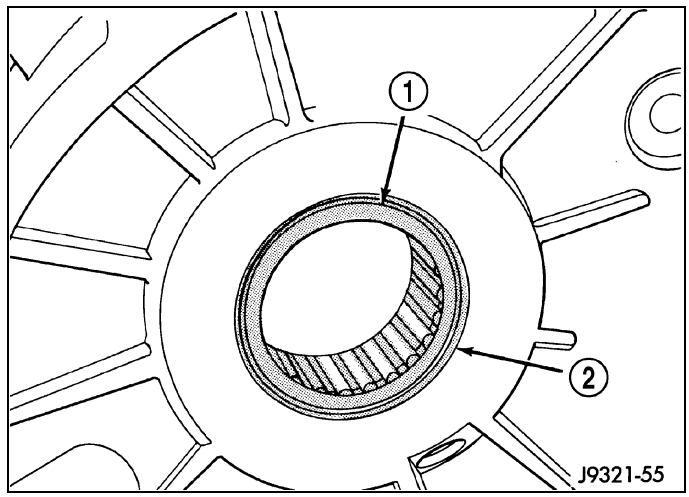

11. Remove the rear output shaft bearing from the rear case (1) using Bearing Installer 8684 (2) and Universal Handle C-4171 (3).

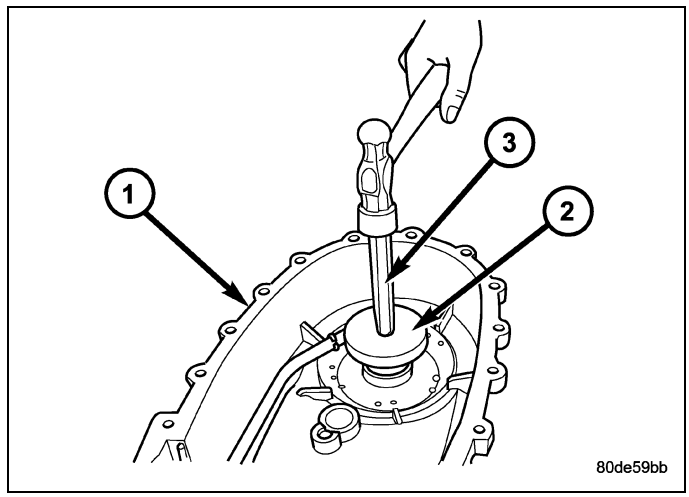

12. Install the rear output shaft bearing into the rear case (1) using Bearing Remover/Installer 6953 (2) and Universal Handle C-4171 (3).

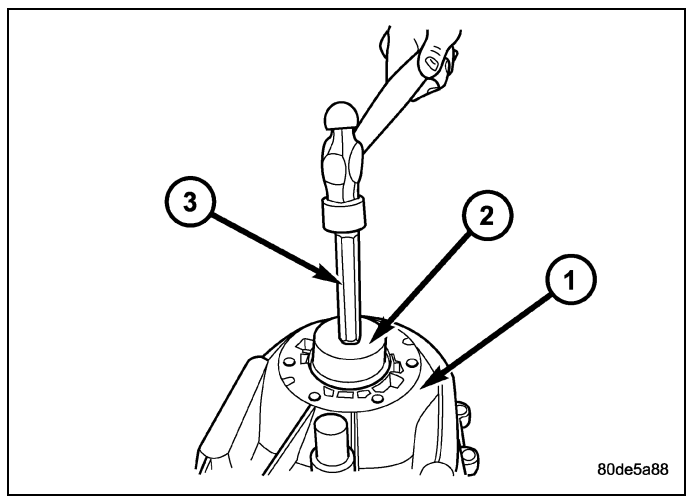

INPUT AND PLANETARY GEAR

1. Lubricate gears (4) and thrust washers (5) with recommended transmission fluid.
2. Install first thrust washer in low range gear (5). Be sure washer tabs are properly aligned in gear notches.
3. Install input gear (3) in low range gear (4). Be sure input gear is fully seated.
4. Install remaining thrust washer (5) in low range gear (4) and on top of input gear (3). Be sure washer tabs are properly aligned in gear notches.
5. Install retainer (2) on input gear and install snap-ring (1).

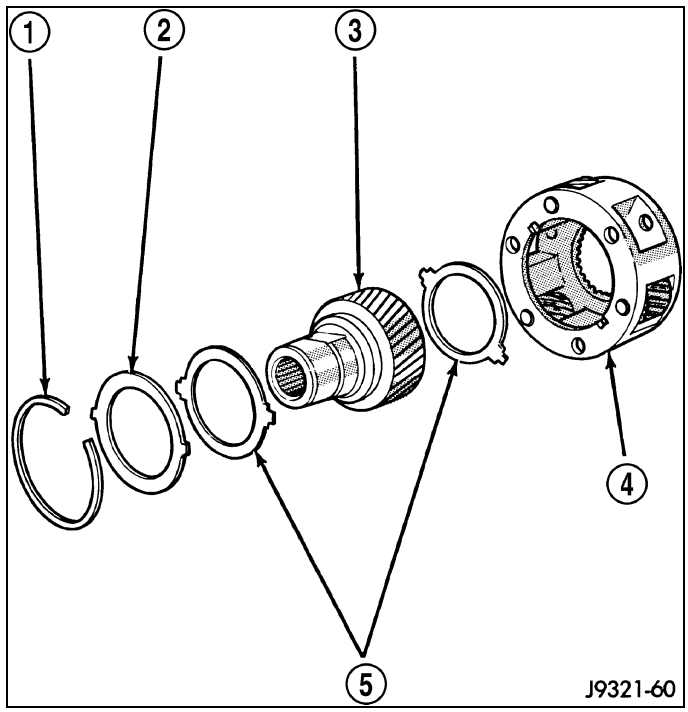

6. Align and install low range/input gear assembly (2) in front case (1). Be sure low range gear pinions are engaged in annulus gear and that input gear shaft is fully seated in front bearing.

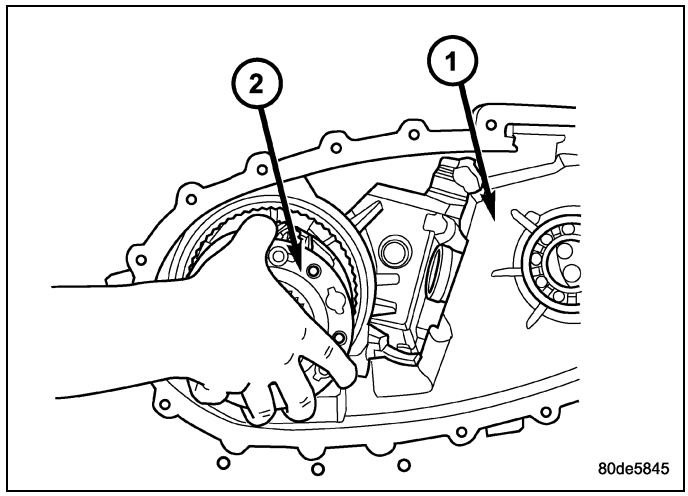

7. Install snap-ring (2) to hold input/low range gear (1) into front bearing .
8. Install a new input gear seal using Installer 8841 and Universal Handle C-4171.

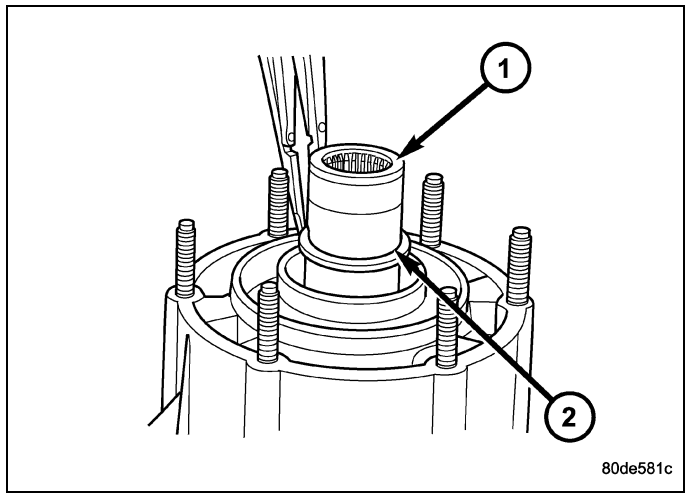

SHIFT FORKS AND MAINSHAFT

1. Lubricate mainshaft splines with recommended transmission fluid.
2. Install the mode hub (2) onto the output shaft (1).

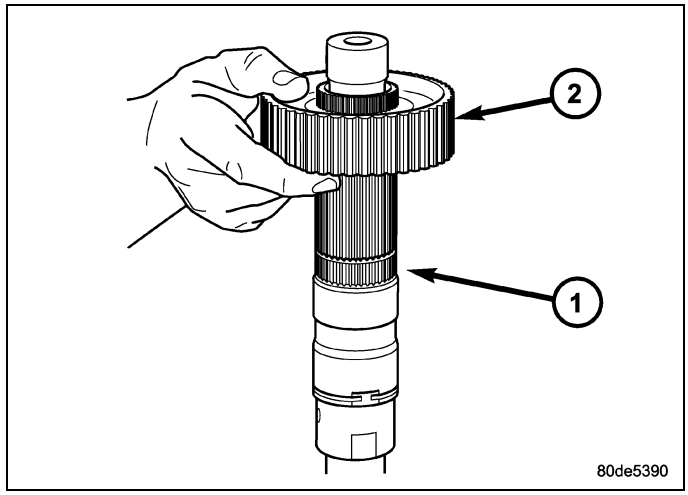

3. Install the mode hub retaining ring (2) onto the output shaft (1).

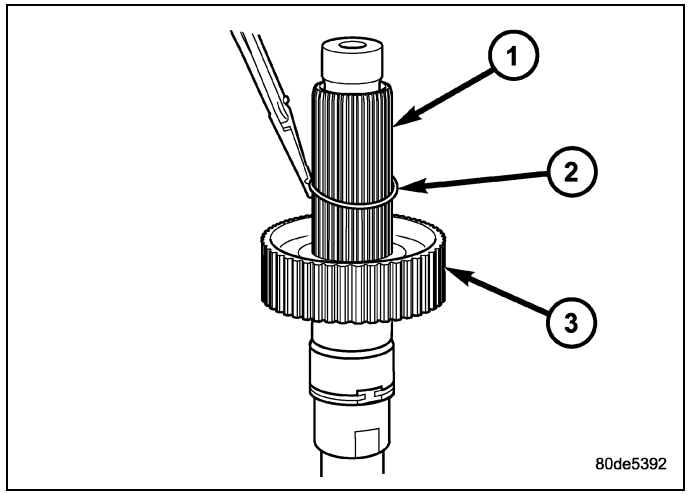

4. Install the sprocket hub (2) onto the output shaft (1).

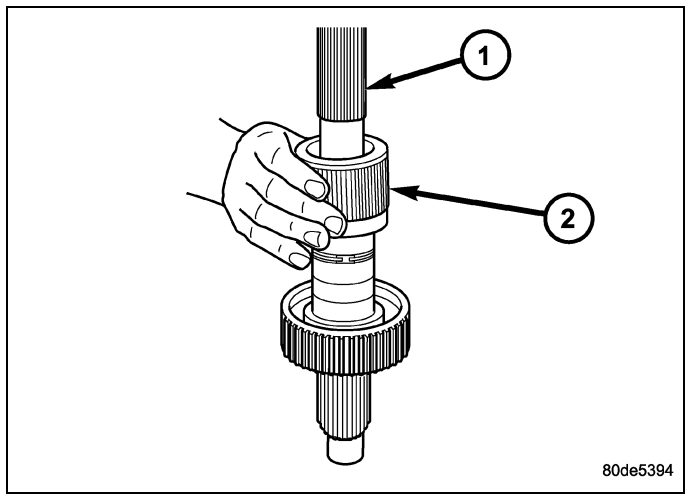

5. Install the clutch gear (2) onto the output shaft (1).

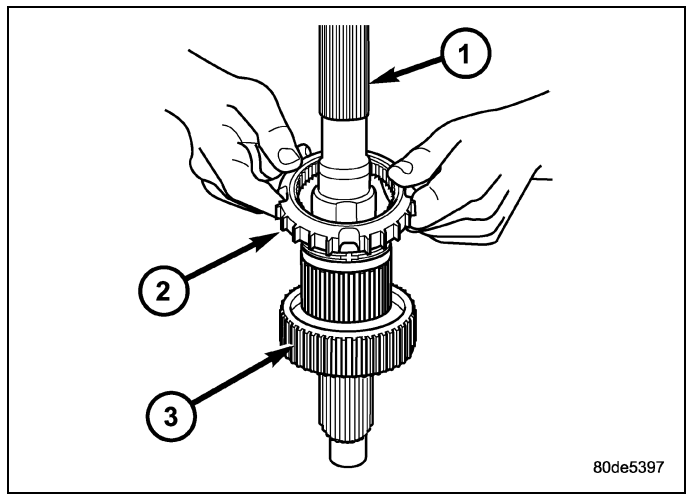

6. Install the drive sprocket (2) onto the output shaft (1).

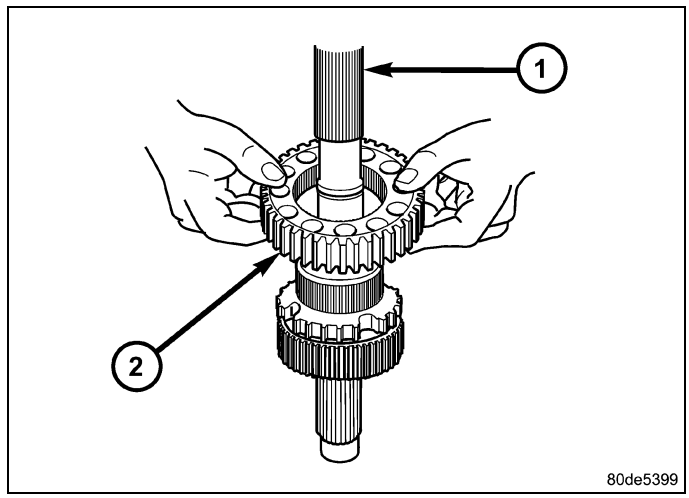

7. Install the drive sprocket (3) thrust washer (2) onto the output shaft (1).

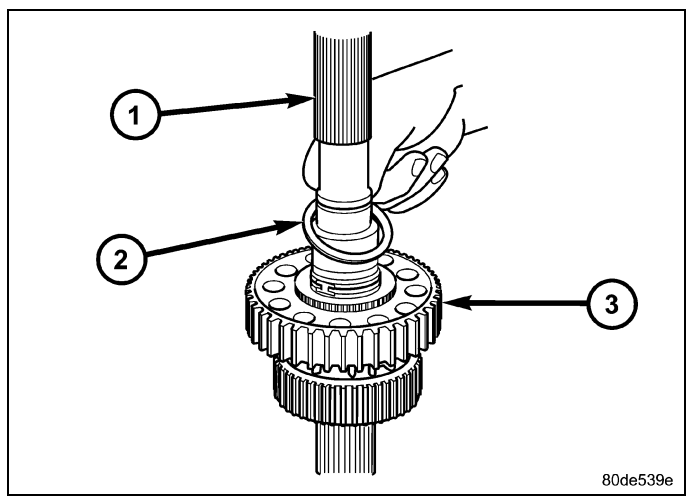

8. Install the drive sprocket (3) retaining ring (2) onto the output shaft (1).

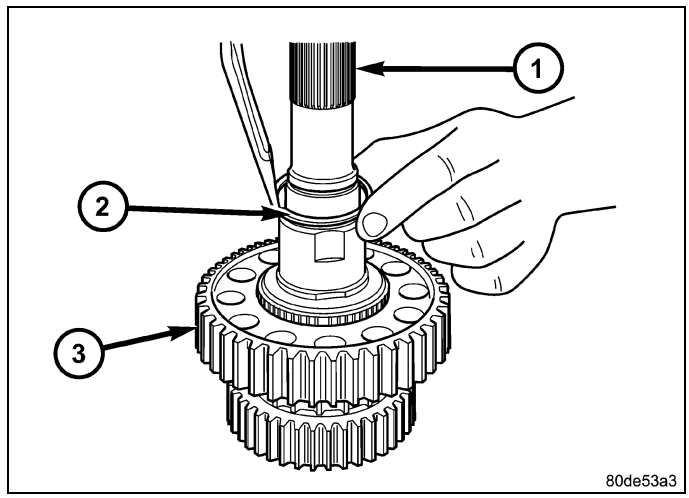

9. Lubricate sector shaft (1) with transmission fluid and install shift sector in case. Position slot in sector so it will be aligned with shift fork pin when shift forks are installed.

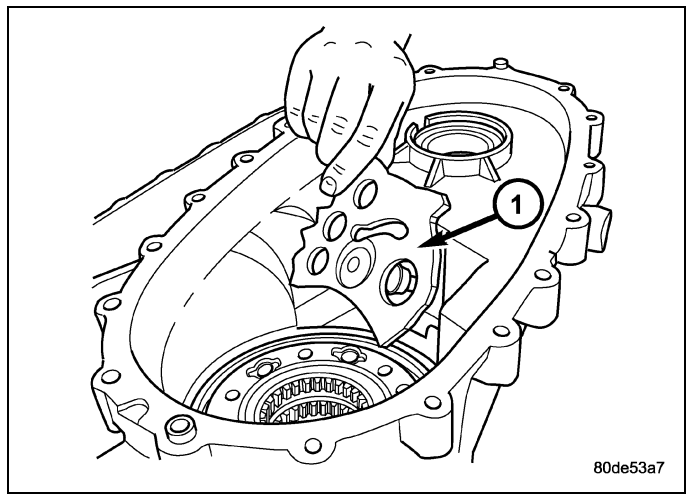

10. Install the shift sector o-ring.
11. Assemble and install range fork (2) and hub (1). Be sure hub is properly seated in low range gear and engaged to the input gear.
12. Align and insert range fork pin in shift sector slot.
13. Install the range fork retaining ring.

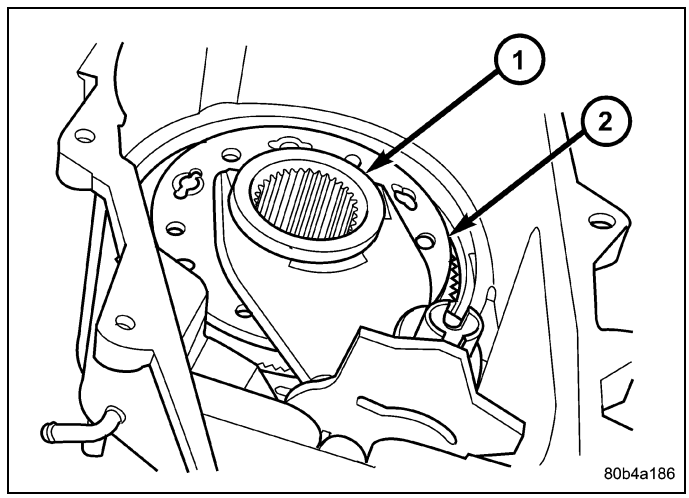

14. Install mode fork and shift rail onto the mode sleeve.
15. Install the mode fork (2), sleeve (1), and shift rail (2) into the transfer case.

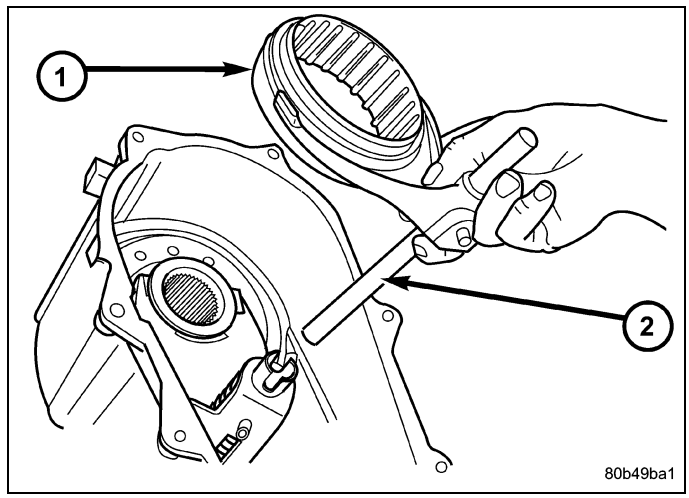

16. Install mainshaft (2) into the transfer case front housing (1). Guide mainshaft through the mode and range sleeves and into the input gear.

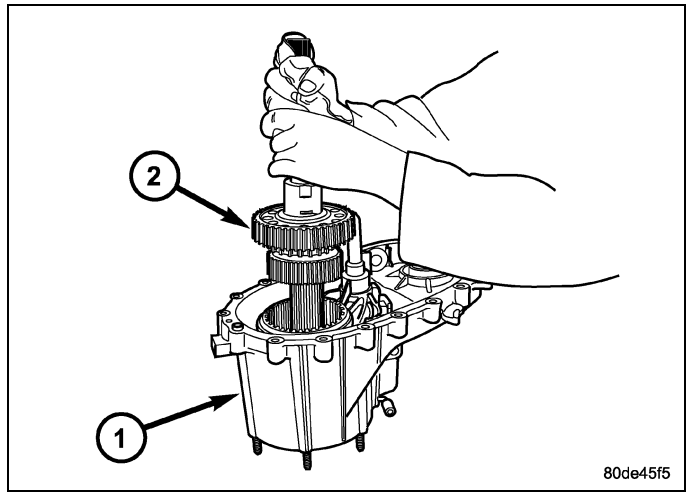

17. Install new o-ring (1) on detent plug (2).

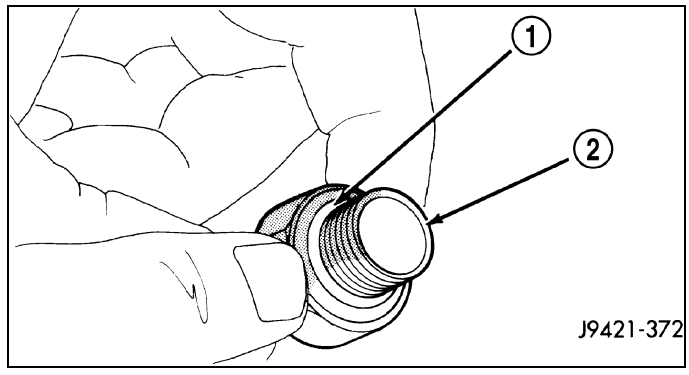

18. Install detent plunger (4), spring (3), and plug (2). Tighten the plug to 16-24 N·m (12-18 ft. lbs.).

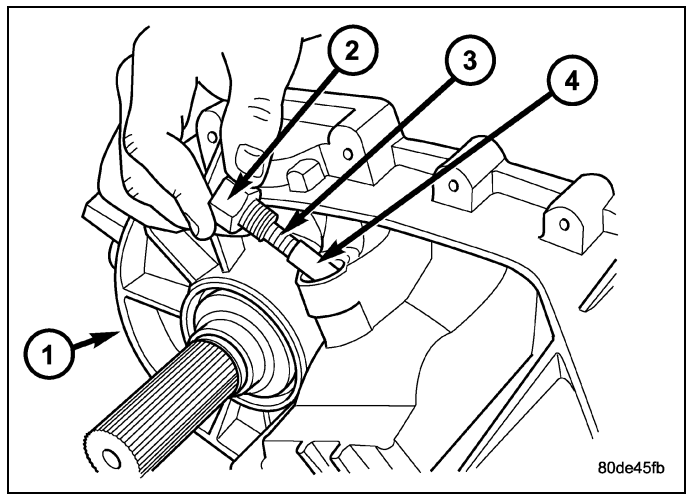

FRONT OUTPUT SHAFT AND DRIVE CHAIN

1. Install the front output shaft (2) into the front output shaft bearing.

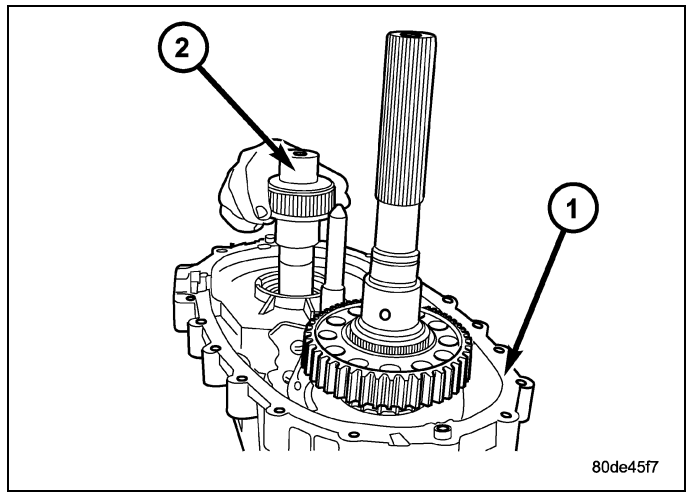

2. Install the front output shaft retaining ring (2) onto the output shaft (1).
3. Install the new front output shaft seal with Seal Installer MB-991168-A.

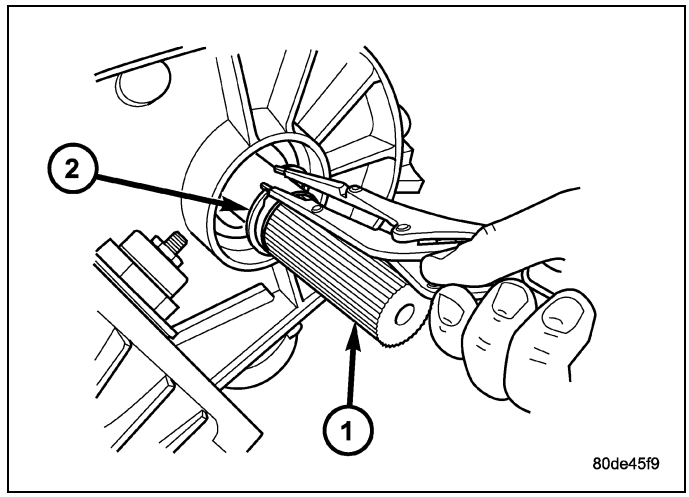

4. Insert front sprocket (1) in drive chain (2).
5. Install drive chain (2) around mainshaft sprocket. Then position front sprocket over front shaft.
6. Raise mainshaft about 2.54 cm (one inch) and seat front sprocket on front output shaft.

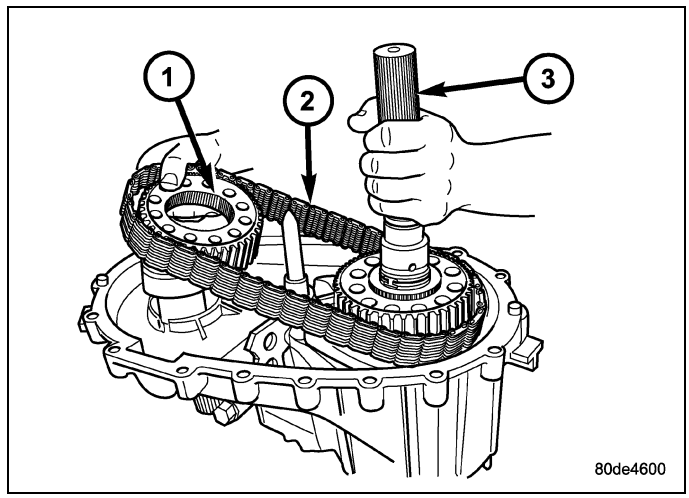

7. If mainshaft and mode sleeve were unseated during chain installation, align and reseat mainshaft in input gear and hub.
8. Install front sprocket (1) retaining ring (2).

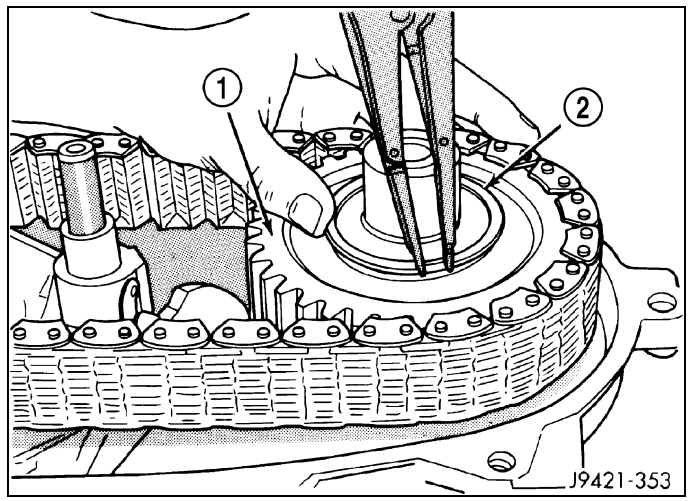

9. Install spring (2) and cup (1) on shift rail.

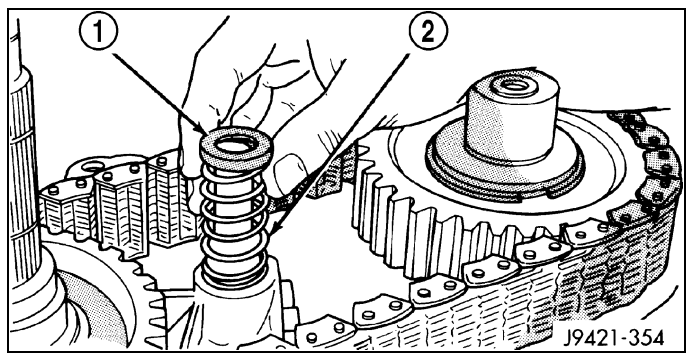

10. Insert magnet (1) in front case pocket (2).

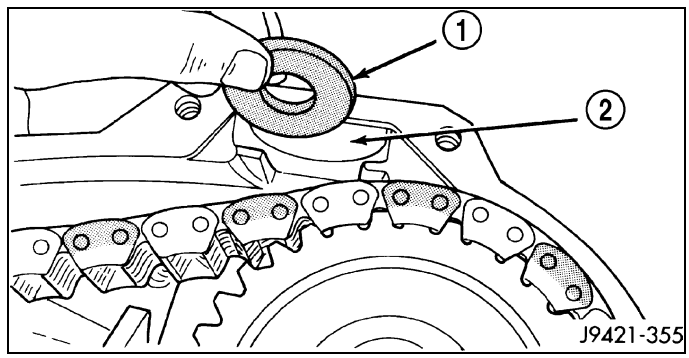

OIL PUMP AND REAR CASE

Lubricate the oil pump components with transmission fluid before installation. Prime the oil pickup tube by pouring a little oil into the tube before installation.

CAUTION: Do not remove the bolts holding the oil pump cover to the rear case half. The oil pump cover is aligned to the rear output shaft inner bearing race and will become mis-aligned if the bolts are loosened. If the transfer case failure has generated any debris which may have become trapped in the oil pump. the rear case and oil pump assembly MUST be replaced.

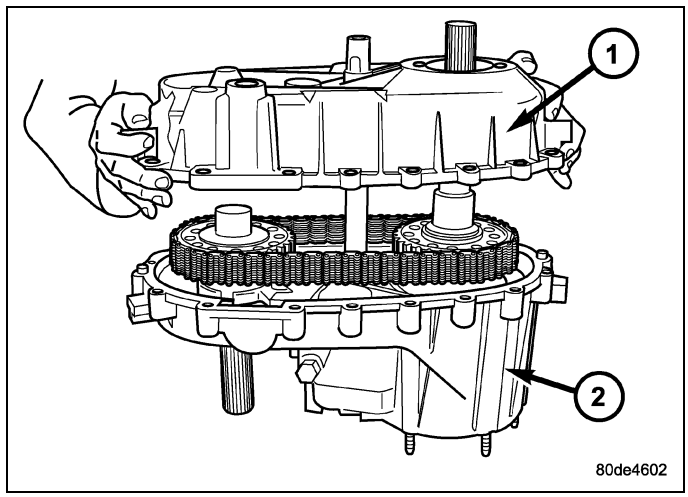

1. Install new o-ring in pickup tube inlet of oil pump.
2. Insert oil pickup tube into the oil pump.
3. Apply bead of Mopar® Gasket Maker, or equivalent, to mating surface of front case. Keep sealer bead width to maximum of 3/16 inch. Do not use excessive amount of sealer as excess will be displaced into case interior.
4. Align oil pump with mainshaft and align shift rail with bore in rear case. Then install rear case (1) and oil pump assembly onto the front case (2).
5. Install 4-5 rear case (1)-to front case (2) bolts (3) to hold rear case in position. Tighten bolts snug but not to specified torque at this time.

CAUTION: Verify that shift rail, and case alignment dowels are seated before installing any bolts. Case could be cracked if shaft rail or dowels are misaligned.

6. Apply Loctite™ 242 to remainder of rear case-to-front case bolt threads and install bolts. Tighten bolts to 20-27 N·m (15-24 ft. lbs.).

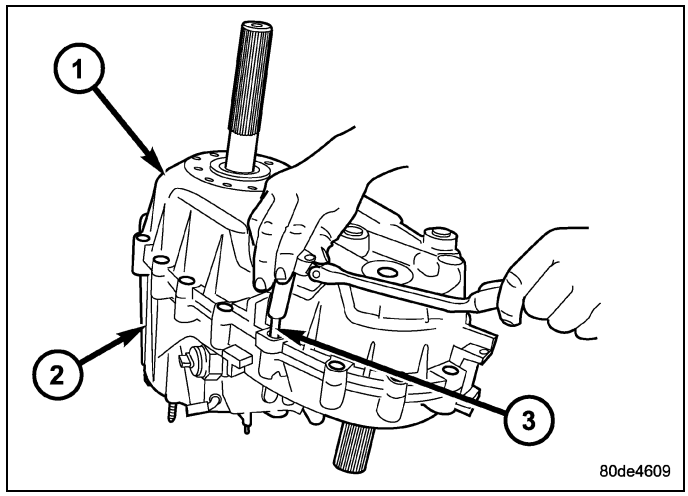

7. Install rear output bearing (2) snap-ring (3) to output shaft (1).

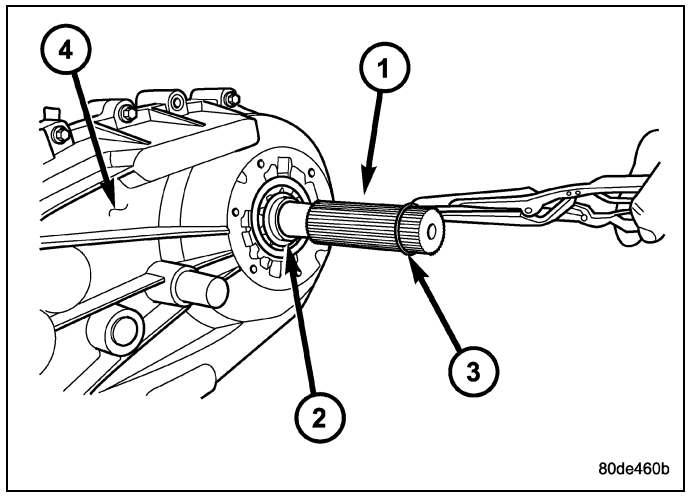

SEAL BOOT AND SHIFT MOTOR ASSEMBLY

1. Install the front output shaft seal slinger with Installer 8840. Install the slinger onto the shaft until the tool contacts the rear of the output shaft.
2. Install a new seal boot clamp onto the seal boot.

3. Install the seal boot and clamp onto the slinger hub and tighten the clamp with Crimp Tool C-4975A.
4. Position the shift motor and mode sensor assembly (2) onto the transfer case (1).
5. Install the bolts (3) to hold the shift motor and mode sensor assembly to the transfer case. Tighten the bolts to 16-24 N·m (12-18 ft. lbs.).

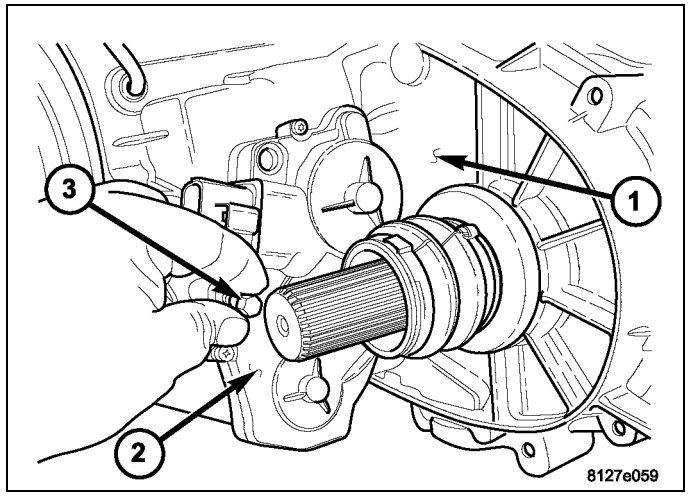

REAR EXTENSION

1. Install new seal in rear extension housing seal with Installer D-163 and Universal Handle C-4171.
2. Apply bead of Mopar® Gasket Maker, or equivalent, to mating surface of rear extension housing. Keep sealer bead width to maximum of 3/16 inch. Do not use excessive amount of sealer as excess could be displaced into output bearing.
3. Align and install rear extension (1) on the transfer case (2).
4. Apply Mopar® Silicone Sealer to threads of rear extension housing bolts. Then install and tighten bolts to 16-24 N·m (12-18 ft. lbs.) torque.

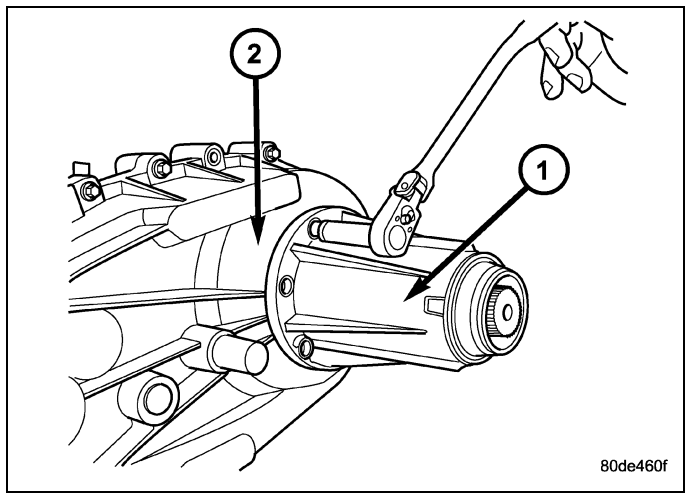

Installation

1. Mount transfer case on a transmission jack.
2. Secure transfer case to jack with chains.
3. Position transfer case under vehicle.
4. Align transfer case and transmission shafts and install transfer case onto the transmission.
5. Install and tighten transfer case attaching nuts to 27-34 N·m (20-25 ft. lbs.) torque.
6. Connect the vent hose.
7. Connect the shift motor and mode sensor wiring connectors. Secure wire harness to clips on transfer case.
8. Align and connect the propeller shafts.(Refer to 03 - Differential and Driveline/Propeller Shaft/SHAFT, Drive - Installation)(Refer to 03 - Differential and Driveline/Propeller Shaft/SHAFT, Drive - Installation)
9. Fill transfer case with correct fluid. (Refer to 21 - Transmission and Transfer Case/Transfer Case/FLUID - Standard Procedure)
10. Install skid plate, if equipped.
11. Remove transmission jack and support stand.
12. Lower vehicle and verify transfer case shift operation.

Specifications

DESCRIPTION	N-m	Ft. Lbs.	In. Lbs.
Plug, Detent	16-24	12-18	-

DESCRIPTION	N-m	Ft. Lbs.	In. Lbs.
Plug, Drain/Fill	20-34	15-25	-
Bolt, Extension Housing	16-24	12-18	-
Bolt, Case Half	20-27	15-24	-
Screw, Oil Pump	12-16	8-12	-
Nuts, Mounting	30-41	20-30	-
Bolts, Shift Motor and Mode Sensor Assembly	16-24	12-18	-
Bolts , Transfer Case to Transmission	27-34	20-25	

Special Tools

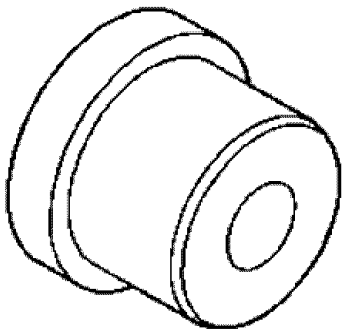

5066 - Installer, Bushing

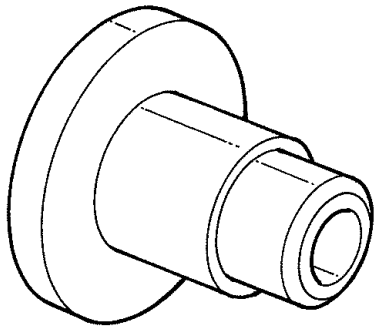

8684 - Installer, Bearing

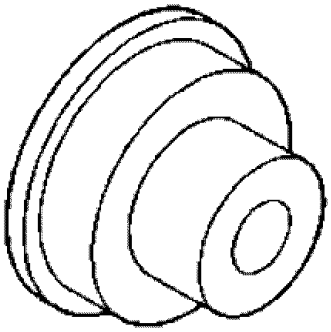

6436 - Installer, Bearing

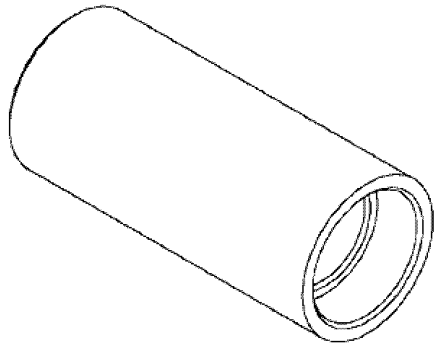

8840 - Installer, Oil Slinger

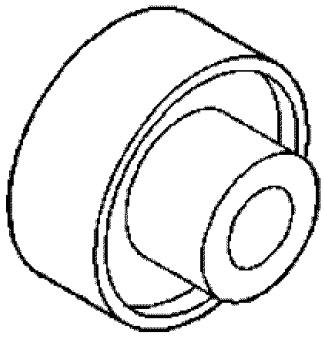

6953 - Remover/Installer, Bearing

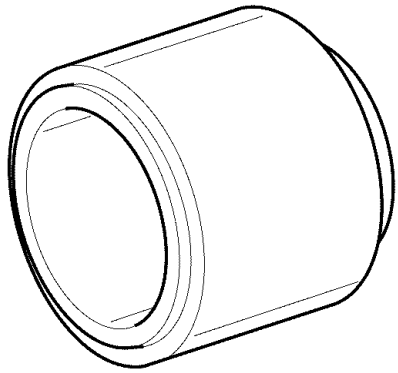

8841 - Installer, Seal

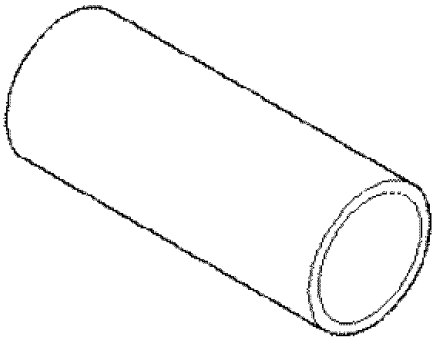

8148 - Cup

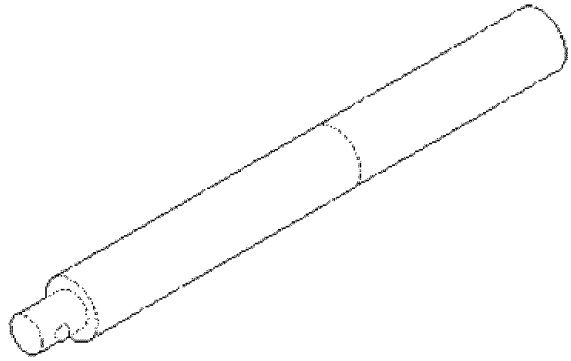

C-4171 - Driver Handle, Universal

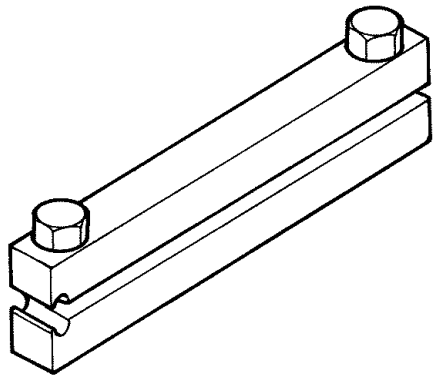

C-4975A - Installer, Axle Clamp

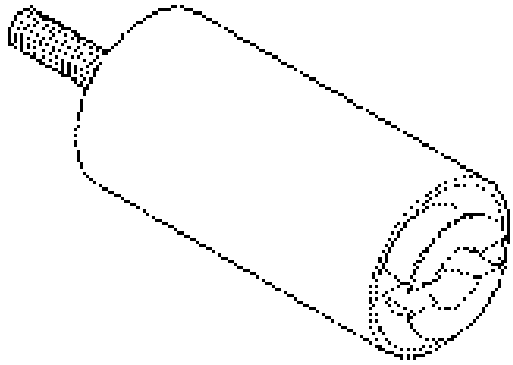

L-4454A - Remover, Bearing Cup

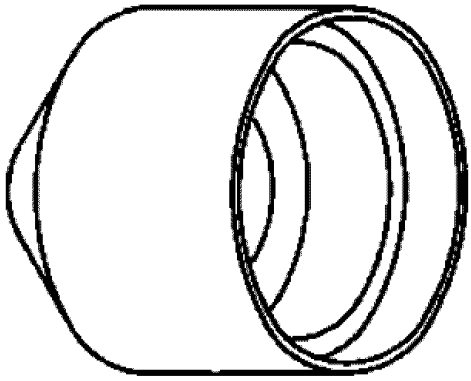

D-163 - Installer, Seal

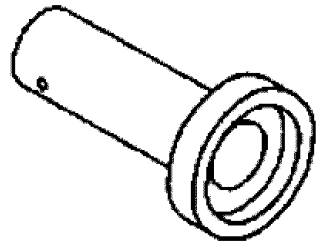

MB-991168-A - Installer, Seal

FLUID

Standard Procedure

The fill (2) and drain (3) plugs are both in the rear case.

1. Raise vehicle.
2. Position drain pan under transfer case.

NOTE: It may be necessary to remove the exhaust y-pipe at the exhaust manifold to properly access the fill and drain plugs. Lowering the exhaust will allow the plugs to be accessed for torquing during installation. (Refer to 11 - Exhaust System/PIPE, Exhaust - Removal)

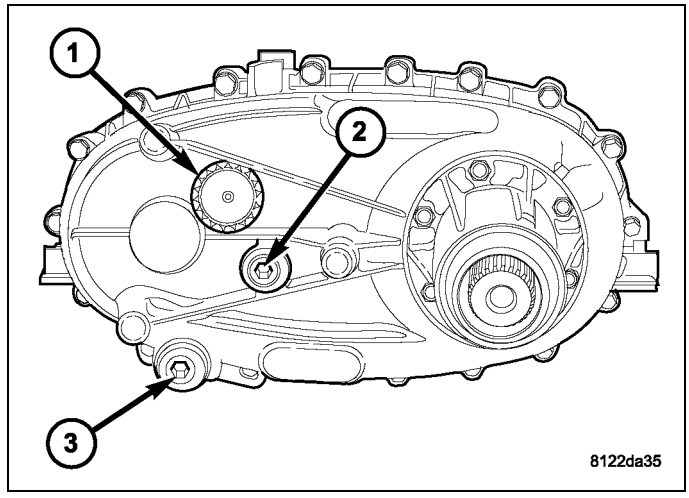

3. Remove drain and fill plugs and drain lubricant completely.
4. Install drain plug. Tighten plug to 20-34 N·m (15-25 ft. lbs.).
5. Remove drain pan.
6. Fill transfer case to bottom edge of fill plug opening with Mopar® ATF +4, Automatic Transmission fluid.
7. Install and tighten fill plug to 20-34 N·m (15-25 ft. lbs.).
8. Install the exhaust y-pipe to the exhaust manifold, if removed. (Refer to 11 - Exhaust System/PIPE, Exhaust - Installation)
9. Wipe any excess fluid that may have spilled onto the exhaust.
10. Lower vehicle.

MOTOR, Shift

Description

The shift motor (2) consists of a permanent magnet D.C. motor with gear reduction to convert a high speed-low torque device into a low speed-high torque device. The output of the device is coupled to a shaft which internally moves the mode and range forks that change the transfer case operating ranges. The motor is rated at 25 amps maximum at 23° C (72° F) with 10 volts at the motor leads.

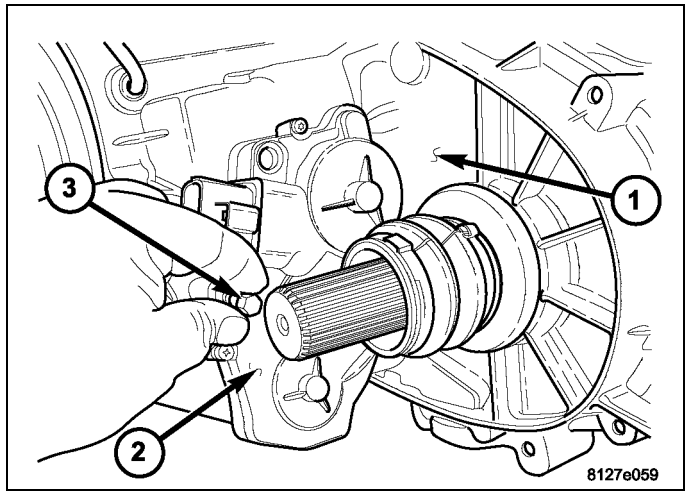

Operation

The transfer case shift motor responds to the Drive Train Control Module (DTCM) commands to move the transfer case shift sector bi-directionally, as required, to obtain the transfer case operating mode indicated by the instrument panel mounted selector switch.

Removal

NOTE: New shift motor assemblies are shipped in the 2WD/AWD position. If a new shift motor assembly will be installed, it will be necessary to shift the transfer case to the 2WD/AWD position prior to motor removal.

1. Raise the vehicle on a suitable hoist.
2. Disengage the wiring connectors from the shift motor and mode sensor.
3. Remove the bolts (3) holding the shift motor and mode sensor assembly (2) onto the transfer case (1).
4. Separate the shift motor and mode sensor assembly (2) from the transfer case.

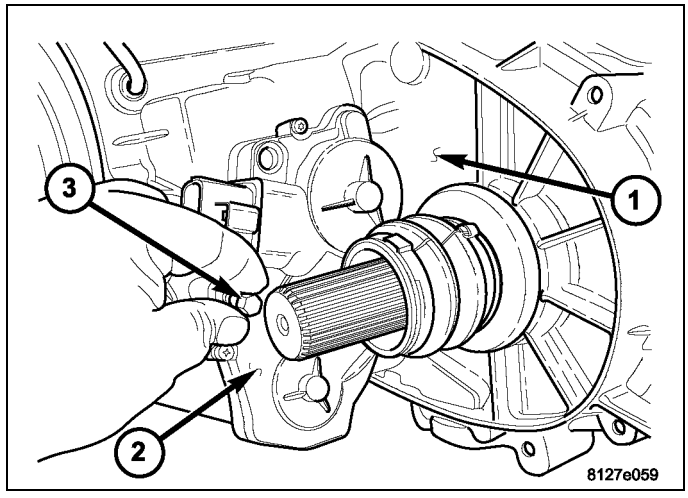

Installation

1. Verify that the shift sector o-ring is clean and properly positioned over the shift sector and against the transfer case.

NOTE: Verify that the shift motor position and sector shaft orientation are aligned. It may be necessary to manually shift the transfer case if the shift motor and sector shaft are not aligned.

2. Position the shift motor and mode sensor assembly (2) onto the transfer case (1).
3. Install the bolts (3) to hold the assembly onto the transfer case. Tighten the bolts to 16-24 N·m (12-18 ft.lbs.).

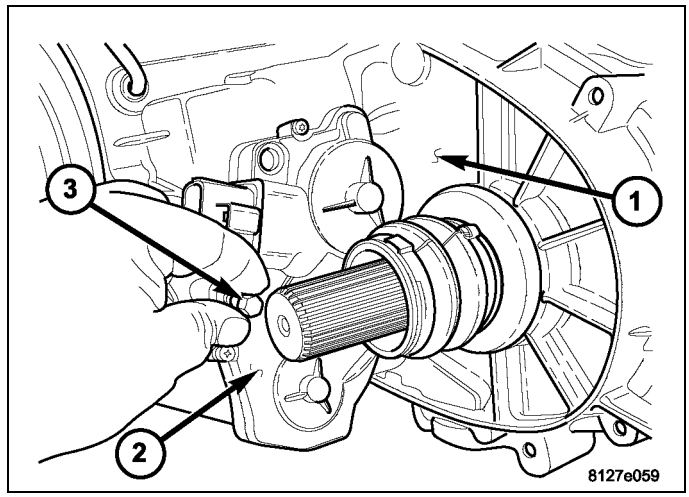

CAUTION: If the original shift motor and mode sensor assembly bolts are reused, be sure to use Mopar® Lock AND Seal or Loctite™ 242 to replenish the lock patch material originally found on the bolts

4. Engage the wiring connectors to the shift motor and mode sensor.
5. Refill the transfer case as necessary.
6. Lower vehicle and verify transfer case operation.

MOTOR, Shift, with Mode Sensor

Description

The shift motor (2) consists of a permanent magnet D.C. motor with gear reduction to convert a high speed-low torque device into a low speed-high torque device. The output of the device is coupled to a shaft which internally moves the mode and range forks that change the transfer case operating ranges. The motor is rated at 25 amps maximum at 23° C (72° F) with 10 volts at the motor leads.

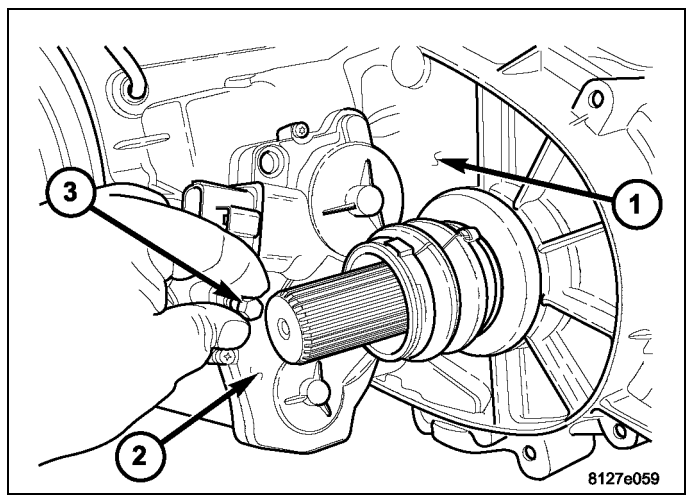

Operation

The transfer case shift motor responds to the Drive Train Control Module (DTCM) commands to move the transfer case shift sector bi-directionally, as required, to obtain the transfer case operating mode indicated by the instrument panel mounted selector switch.

SEAL, Output Shaft, Front

Removal

1. Remove the front propeller shaft (Refer to 03 - Differential and Driveline/Propeller Shaft/SHAFT, Drive - Removal) .
2. Remove the front propeller shaft seal boot (1) retaining clamp (2) .

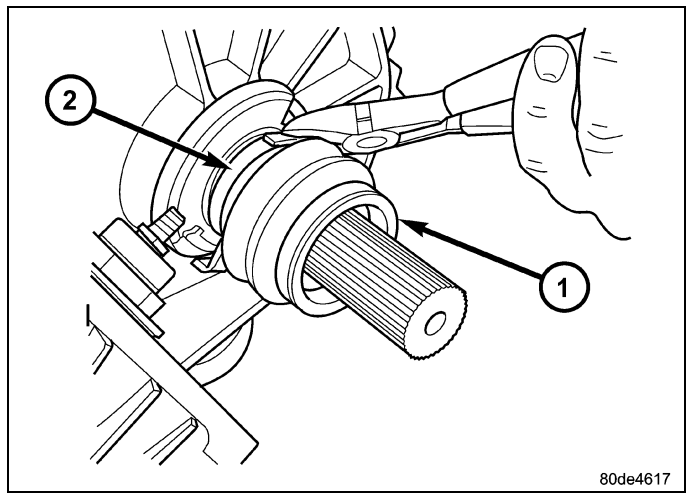

3. Remove the front propeller shaft seal boot (1) .

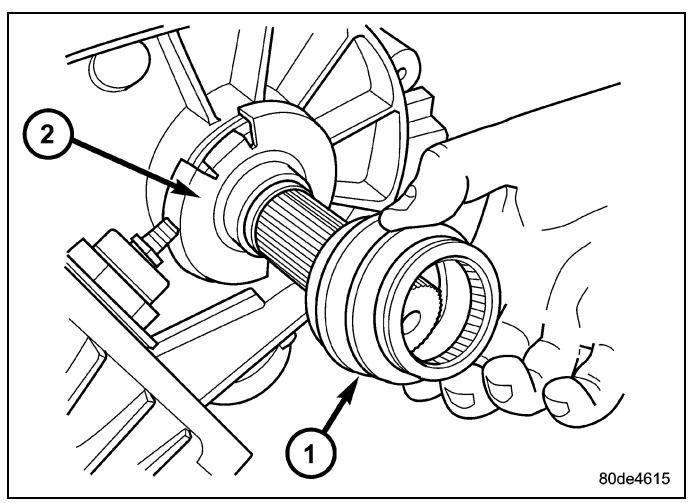

4. Remove the front output shaft seal slinger (1) by bending (2) the slinger ears away from the transfer case.

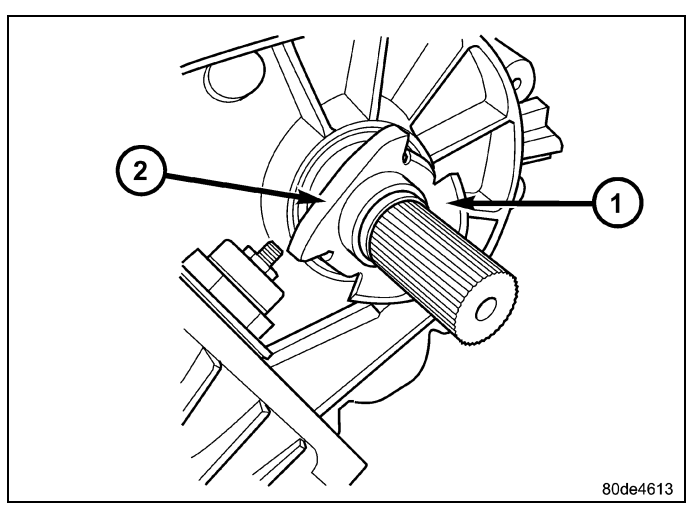

5. Using a suitable pry tool (2) , remove the slinger (1) from the output shaft using care not to damage the shaft.
6. Using a screw and a slide hammer, remove the front output shaft seal.

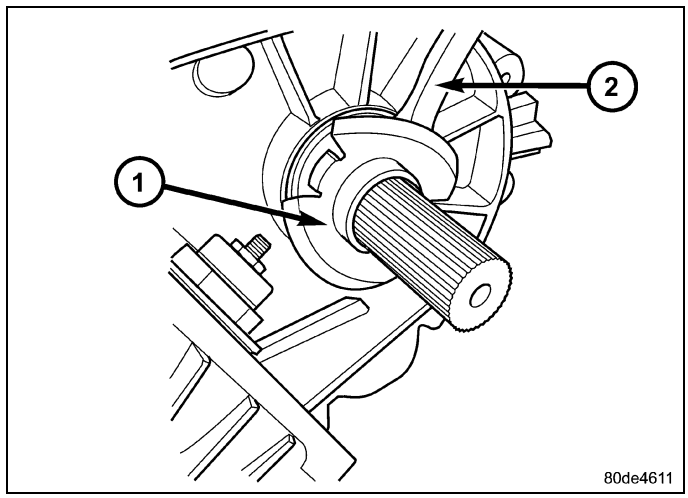

Installation

1. Install the new front output shaft seal with Seal Installer MB-991168-A.
2. Install the front output shaft seal slinger with Oil Slinger Installer 8840. Install the slinger onto the shaft until the tool contacts the rear of the output shaft.
3. Install a new seal boot clamp onto the seal boot.
4. Install the seal boot and clamp onto the slinger hub and tighten the clamp with Axle Clamp Installer C-4975A.
5. Install front propeller shaft(Refer to 03 - Differential and Driveline/Propeller Shaft/SHAFT, Drive - Installation) .

SEAL, Output Shaft, Rear

Removal

1. Raise and support vehicle.
2. Remove rear propeller shaft. (Refer to 03 - Differential and Driveline/Propeller Shaft/SHAFT, Drive - Removal)
3. Using a suitable pry tool or slide-hammer mounted screw, remove the extension housing seal.

Installation

1. Clean fluid residue from sealing surface and inspect for defects.
2. Using Seal Installer D-163 (2) and Universal Handle C-4171 (1), install seal in extension housing .
3. Install propeller shaft. (Refer to 03 - Differential and Driveline/Propeller Shaft/SHAFT, Drive - Installation)
4. Verify proper transfer case fluid level.
5. Lower vehicle.

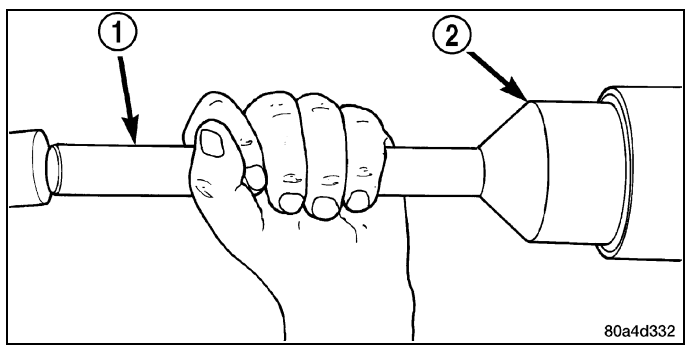

SENSOR, Mode

Description

The transfer case mode sensor (1) is an electronic device whose output can be interpreted to indicate the shift motor shaft's rotary position. The sensor consists of a magnetic ring and four Hall Effect Transistors to create a 4 channel digital device (non-contacting) whose output converts the motor shaft position into a coded signal. The Drive Train Control Module (DTCM) must supply 5VDC (+/- 0.5v) to the sensor and monitor the shift motor position. The four channels are denoted A, B, C, and D. The sensor is mechanically linked to the shaft of the cam which causes the transfer case shifting. The mode sensor draws less than 53 mA.

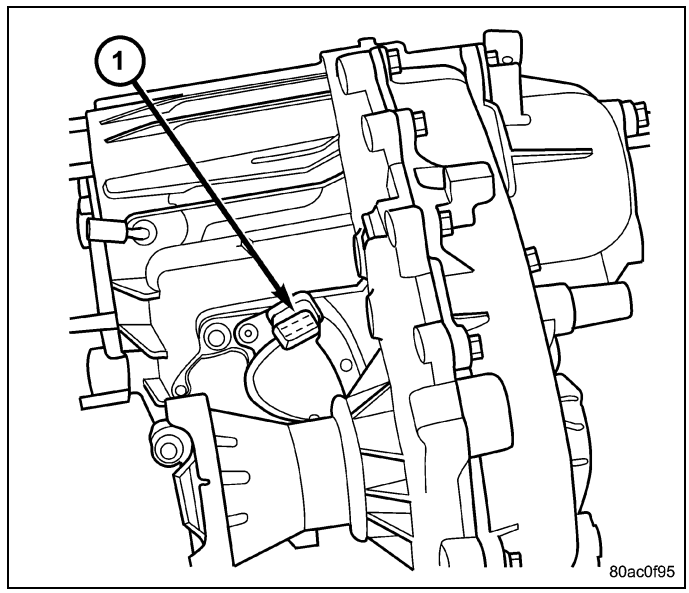

Operation

During normal vehicle operation, the Drive Train Control Module (DTCM) monitors the mode sensor outputs at least every 250 (+/-50) milliseconds when the shift motor is stationary and 400 microseconds when the shift motor is active. A mode sensor signal between 3.8 Volts and 0.8 Volts is considered to be undefined.

Refer to SECTOR ANGLES vs.TRANSFER CASE POSITION for the relative angles of the transfer case shift sector versus the interpreted transfer case gear operating mode. Refer to MODE SENSOR CHANNEL STATES for the sensor codes returned to the TCCM for each transfer case mode sensor position. The various between gears positions can also be referred as the transfer case's coarse position. These coarse positions come into play during shift attempts.

SECTOR ANGLES vs. TRANSFER CASE POSITION

Shaft Angle (Degrees)	Transfer Case Position
+40	4LO
+20	N
0	2WD/AWD
-20	4HI

MODE SENSOR CHANNEL STATES

Transfer Case Angle (degrees)	Sensor Channel A	Sensor Channel B	Sensor Channel C	Sensor Channel D
Between Gears	H	H	L	H
+40 (4LO)	H	H	L	L
Between Gears	H	H	L	H
Between Gears	H	L	L	H
+20 (NEUTRAL)	H	L	L	L
Between Gears	H	L	L	H

MODE SENSOR CHANNEL STATES, continued

Transfer Case Angle (degrees)	Sensor Channel A	Sensor Channel B	Sensor Channel C	Sensor Channel D
Between Gears	H	L	H	H
0 (2WD/AWD)	H	L	H	L
Between Gears	H	L	H	H
Between Gears	L	L	H	H
-20 (4HI)	L	L	H	L
Between Gears	L	L	H	H
Between Gears	L	H	H	H

SWITCH, Transfer Case

Description

The selector switch assembly is mounted in the left side of the vehicle's Instrument Panel (IP) and consists of a rotary knob connected to a resistive network for the mode and range shift selections. Also located in this assembly is a recessed, normally open momentary switch for making shifts into and out of transfer case NEUTRAL. A pen, or similar instrument, is used to make a NEUTRAL shift selection, thus reducing the likelihood of an inadvertent shift request.

The selector switch also contains four light emitting diode's (LED's) to indicate the transfer case position and whether a shift is in progress.

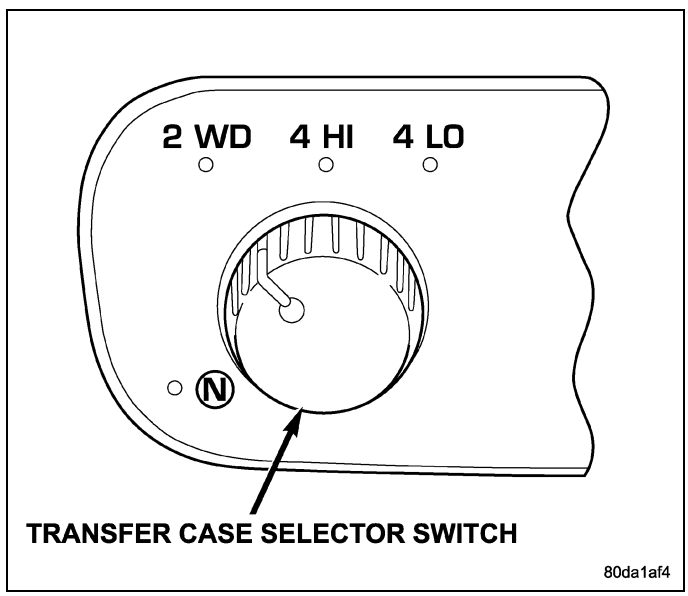

Operation

As the position of the selector switch varies, the resistance between the Mode Sensor supply voltage pin and the Mode Sensor output will vary. Hardware, software, and calibrations within the Drive Train Control Module (DTCM) are provided that interpret the selector switch resistance as given in the table below: **SELECTOR SWITCH INTERPRETATION**

SELECTOR SWITCH INTERPRETATION

Step	Resistance Range (ohms)	Required Interpretation
A	<200	Shorted
B	400-700	NEUTRAL
C	1050-1450	4LO
D	1850-2300	4HI
E	3050-5950	2WD (Default)

SELECTOR SWITCH INTERPRETATION, continued

Step	Resistance Range (ohms)	Required Interpretation
F	9.5-12.5K	In between positions
G	>15.5K	Open

For resistances between the ranges B-E shown for each valid position (T-Case NEUTRAL, 4LO, 4HI, 2WD), the DTCM may interpret the resistance as:

- either of the neighboring valid positions.
- as an invalid fault position.

For resistances between the ranges E and F shown for 2WD and in-between positions, the DTCM may interpret the resistance as:

- the 2WD position.
- an invalid fault position.
- a valid in-between position.

For resistances between the ranges F and G shown for in-between positions and fault condition (open), the DTCM may interpret the resistance as:

- a valid in-between position.
- an invalid fault position.

For resistances between the ranges A and B shown for the fault condition (short) and T-Case NEUTRAL, the DTCM may interpret the resistance as:

- the T-Case NEUTRAL position.
- an invalid fault position.

The LED's in the selector assembly are illuminated/flashed in the following manner to indicate a particular condition or state.

- A solidly illuminated LED indicates a successfully completed shift and the current operating mode of the transfer case. While a shift has been requested but not yet completed, the LED for the desired transfer case position is flashed.
- A flashing operating mode LED for the desired gear indicates that a shift to that position has been requested, but all of the driver controllable conditions have not been met. This is in an attempt to notify the driver that the transmission needs to be put into NEUTRAL, the vehicle speed is too great, or some other condition outlined (other than a diagnostic failure that would prevent this shift) elsewhere(Refer to 08 - Electrical/8E - Electronic Control Modules/MODULE, Drivetrain Control - Operation) is not met. Note that this flashing will continue indefinitely until the conditions are eventually met, or the selector switch position is changed, or if diagnostic routines no longer allow the requested shift.
- If the driver attempts to make a shift into transfer case NEUTRAL, and any of the driver controllable conditions are not met, the request will be ignored until all of the conditions are met or until the NEUTRAL select button is released. Additionally the neutral lamp will flash, or begin to flash while the button is depressed and operator controllable conditions are not being met. All of the LED's except the Neutral will flash if any of the operator controllable conditions for shifting are not met while the Neutral button is depressed. This "toggle" type of feature is necessary because the TCCM would interpret another request immediately after the shift into transfer case NEUTRAL has completed.
- No LED's illuminated indicate a fault in the transfer case control system.

TRANSFER CASE, NV246

TABLE OF CONTENTS

page

TRANSFER CASE, NV246
DESCRIPTION 394
OPERATION 394
DIAGNOSIS AND TESTING 395
REMOVAL 396
DISASSEMBLY 396
ASSEMBLY 415
INSTALLATION 436
SPECIFICATIONS 436
SPECIAL TOOLS 437
CLUTCH
DISASSEMBLY 438
ASSEMBLY 442
FLUID
STANDARD PROCEDURE 447
MOTOR, SHIFT
DESCRIPTION 448
OPERATION 448
REMOVAL 448
INSTALLATION 450

page

SEAL, OUTPUT SHAFT, NV246 FRONT
REMOVAL 451
INSTALLATION 453
SEAL, OUTPUT SHAFT, REAR
REMOVAL 453
INSTALLATION 453
SENSOR, MODE
DESCRIPTION 453
OPERATION 454
SENSOR, SPEED, FRONT OUTPUT
REMOVAL 455
INSTALLATION 455
SENSOR, SPEED, REAR OUTPUT
REMOVAL 456
INSTALLATION 456
SWITCH, TRANSFER CASE
DESCRIPTION 456
OPERATION 457

Transfer Case, NV246

Description

The NV246 is an electronically controlled active full-time transfer case.

A wet clutch in the transfer case is used to control torque transfer to the front and rear axles. A low range gear reduction system provides increased low speed torque capability for off road operation. The low range provides a 2.72:1 reduction ratio.

OPERATING RANGES

NV246 operating ranges are:

- AWD (All-Wheel Drive).
- 4LO.
- NEUTRAL.
- 2HI
- 4HI Lock

The AWD mode can be used at any time and on any road surface.

SHIFT MECHANISM

Operating ranges are selected with a dash mounted shift selector switch. The shift selector switch provides a input to the Drive Train Control Module (DTCM) to indicate the driver's desire to change operating ranges. The DTCM uses this input, along with the input from the transfer case mounted mode sensor and information from the vehicle's bus, to determine if a shift is permitted. If the DTCM decides the shift is permitted, the DTCM controls the shift motor, mounted to the exterior of the transfer case, to perform the shift.

IDENTIFICATION

A circular ID tag (3) is attached to the rear case of each transfer case. The ID tag provides the transfer case model number, assembly number, serial number, and low range ratio.

The transfer case serial number also represents the date of build.

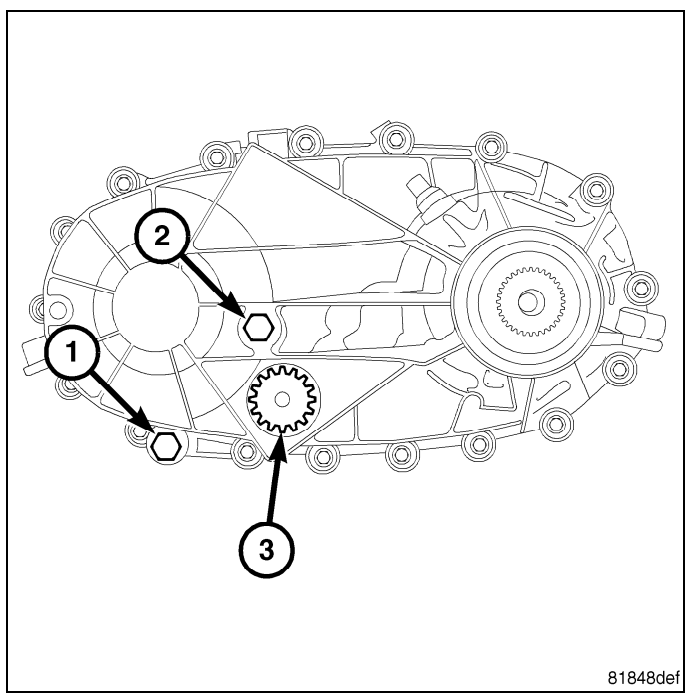

Operation

The input gear is splined to the transmission output shaft. The input gear drives the mainshaft through the planetary assembly and range sleeve. The front output shaft is operated by a drive chain that connects the shaft to a drive sprocket on the mainshaft. The drive sprocket is engaged/disengaged by moving the clutch lever, which compresses the clutch pack

Diagnosis and Testing

DIAGNOSIS CHART

Condition	Possible Cause	Correction
Transfer case difficult to shift or will not shift into desired range.	1) Transfer case electronically controlled shift system malfunction.	1) Verify proper operation per the appropriate diagnostic manual.
	2) If vehicle was operated for an extended period in 4HI mode on dry surface, driveline torque load may cause difficulty.	2) Drive the vehicle in a straight line and momentarily release the accelerator. The transfer case can then be shifted to the desired mode.
	3) Insufficient or incorrect lubricant.	3) Drain and refill transfer case with the correct quantity of fluid. (Refer to 04 - Vehicle Quick Reference/Capacities and Recommended Fluids - Description)
	4) Internal transfer case components binding, worn, or damaged.	4) Repair or replace components as necessary.
Transfer case noisy in all drive modes.	1) Insufficient or incorrect lubricant.	1) Drain and refill transfer case with the correct quantity of fluid. (Refer to 04 - Vehicle Quick Reference/Capacities and Recommended Fluids - Description)
	2) Internal transfer case components binding, worn, or damaged.	2) Repair or replace components as necessary.
Transfer case noisy while in, or jumps out of, 4LO mode.	1) Transfer case not completely engaged in 4LO position.	1) While rolling 2-3 MPH and the transmission in NEUTRAL, shift transfer case to the 2WD or 4HI position, and then back into the 4LO position.
	2) Range fork damaged, inserts worn, or fork is binding on the shift rail.	2) Repair or replace components as necessary.
	3) Low range gear worn or damaged.	3) Repair or replace components as necessary.
Lubricant leaking from transfer case seals or vent.	1) Transfer case overfilled.	1) Drain lubricant to the correct level.
	2) Transfer case vent closed or restricted.	2) Clean or replace vent as necessary.
	3) Transfer case seals damaged or installed incorrectly.	3) Replace suspect seal.
Abnormal tire wear.	1) Extended operation in 4HI mode on dry surfaces,	1) Operate vehicle in 2WD mode on dry surfaces.

Removal

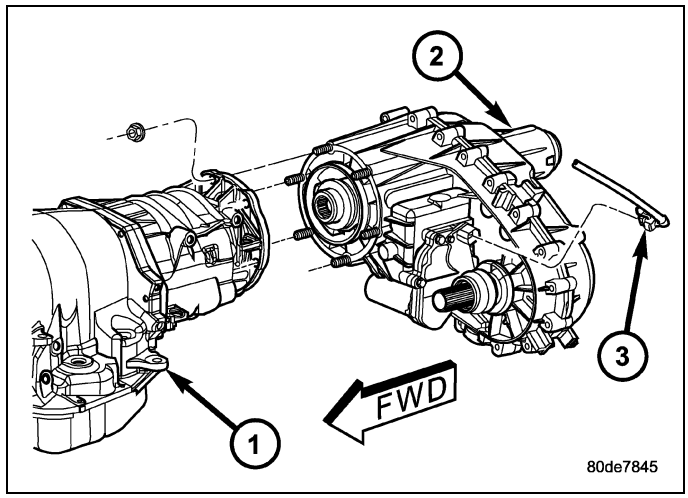

1. Raise vehicle.
2. Drain transfer case lubricant.
3. Mark front and rear propeller shafts for alignment reference.
4. Support transmission with jack stand.
5. Remove the transfer case skid plate, if equipped.
6. Disconnect front and rear propeller shafts at transfer case.
7. Disconnect transfer case shift motor and mode sensor wire connectors (3) , front output speed sensor, and rear output speed sensor wire connectors.
8. Disconnect transfer case vent hose.
9. Support transfer case with transmission jack.
10. Secure transfer case to jack with chains.
11. Remove nuts attaching transfer case (2) to transmission (1).
12. Pull transfer case and jack rearward to disengage transfer case.
13. Remove transfer case from under vehicle.

Disassembly

Position transfer case in a shallow drain pan. Remove drain plug (1) and drain any remaining lubricant remaining in case.

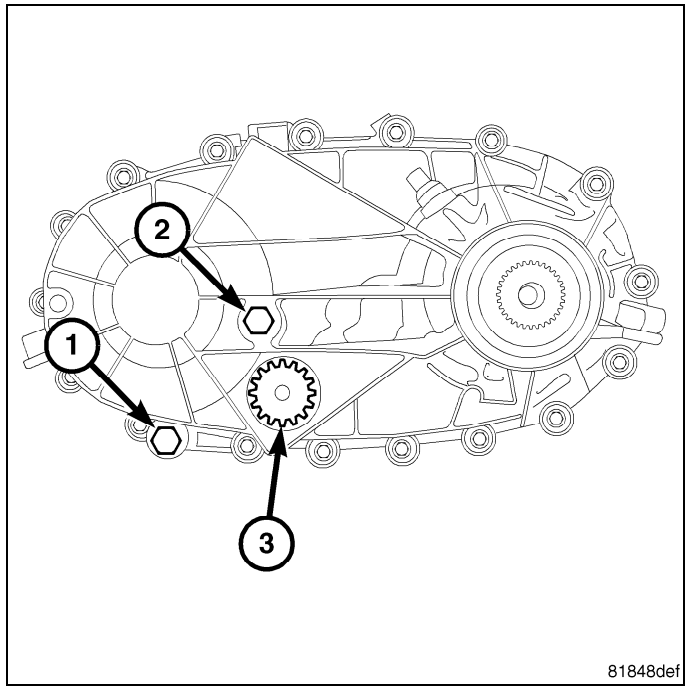

SHIFT MOTOR ASSEMBLY AND FRONT OUTPUT SHAFT SEAL

1. Remove the transfer case isolator gasket (1) from the transfer case (2).

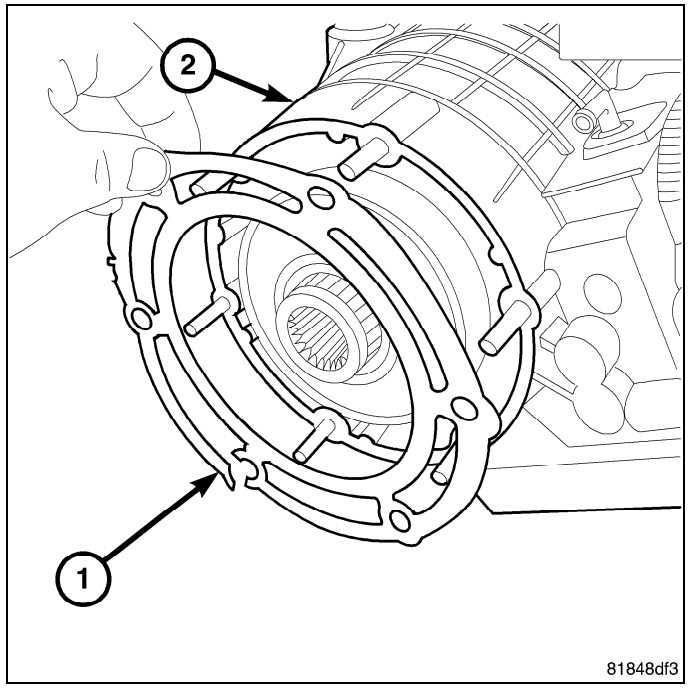

2. Remove the front output shaft speed sensor (1) from the front case (2).

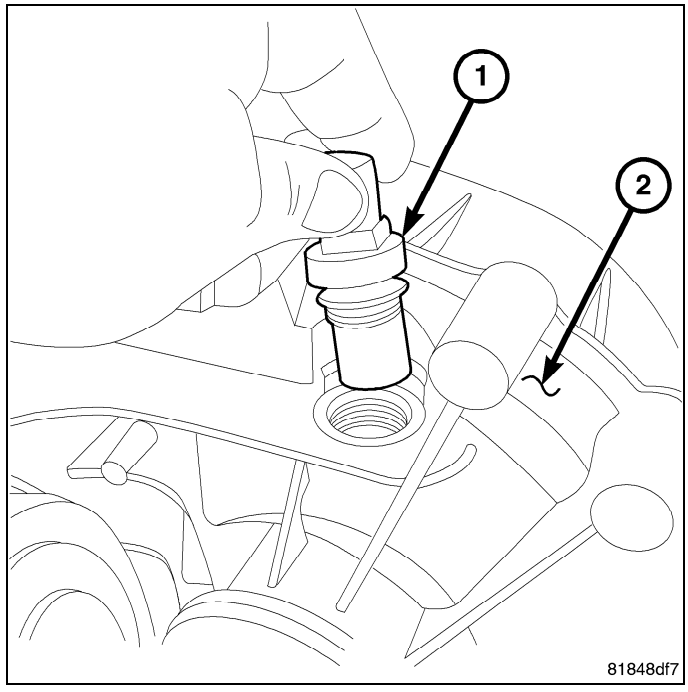

3. Remove the front propeller shaft seal boot (1) retaining clamp (2) .

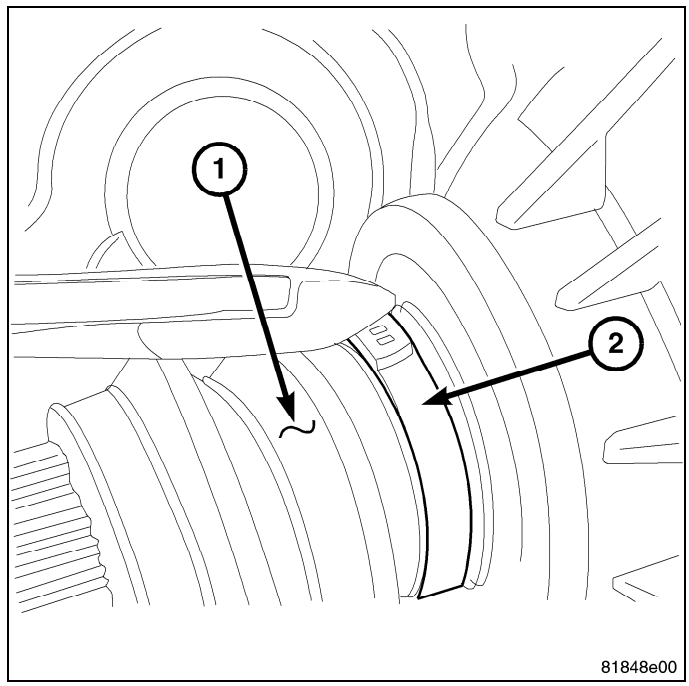

4. Remove the front propeller shaft seal boot (1) .

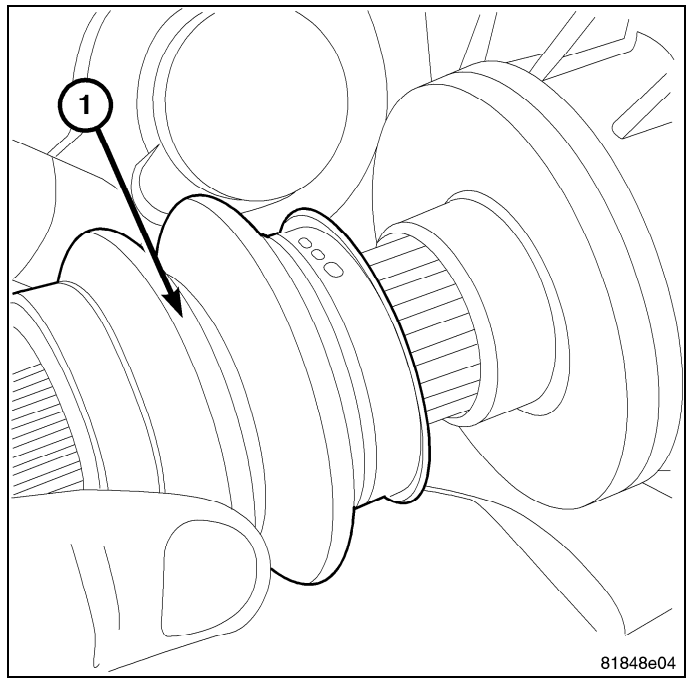

5. Remove the front output shaft seal slinger (1) by bending (2) the slinger ears away from the transfer case.

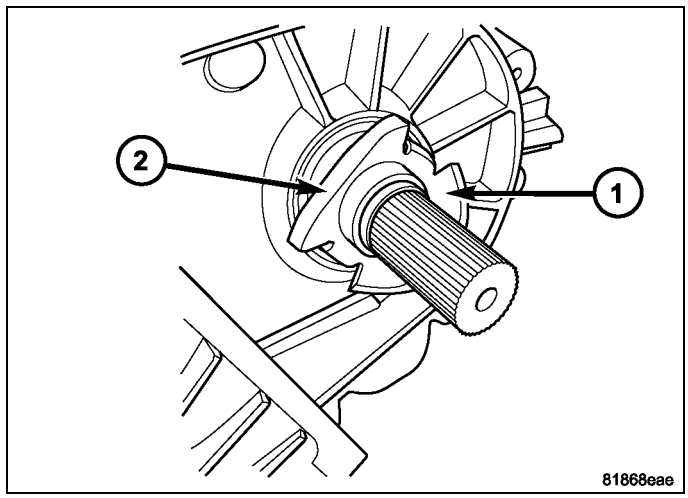

6. Using a suitable pry tool (2) , remove the slinger (1) from the output shaft using care not to damage the shaft.

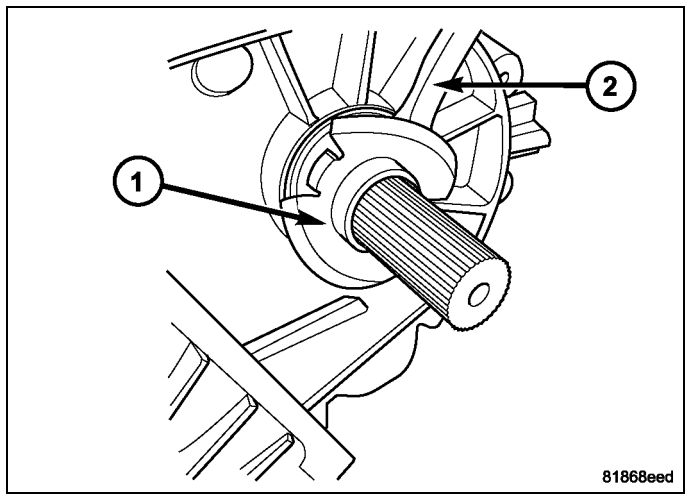

7. Remove the bolts (1) holding the shift motor and mode sensor assembly (2) to the transfer case.

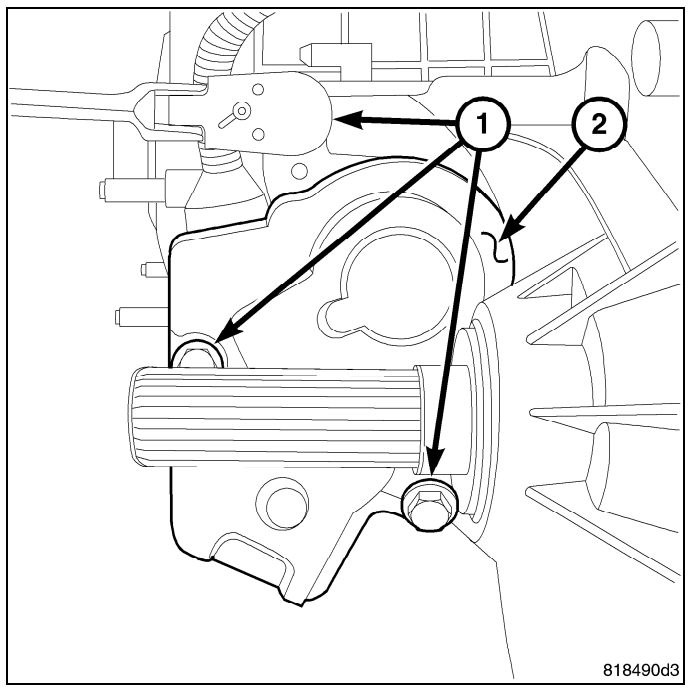

8. Remove the shift motor and mode sensor assembly (1) from the transfer case.

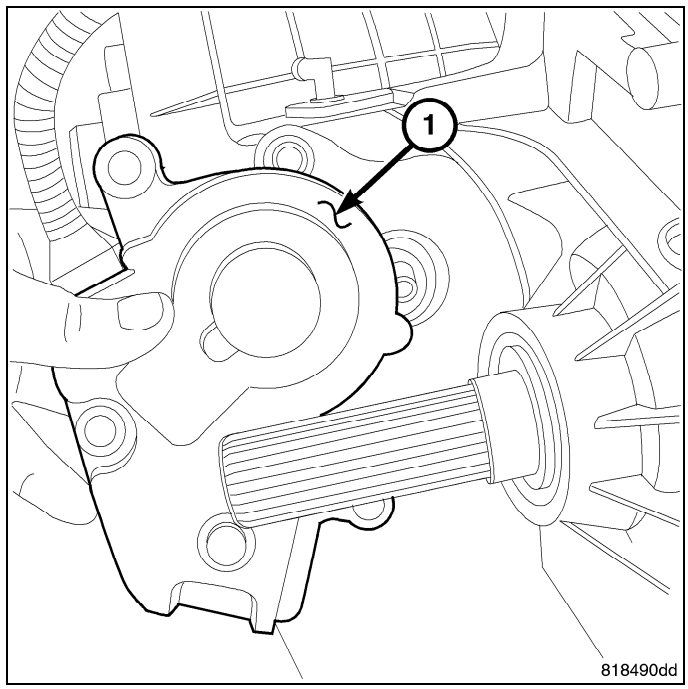

9. Remove the shift motor isolator (1) from the transfer case (2).

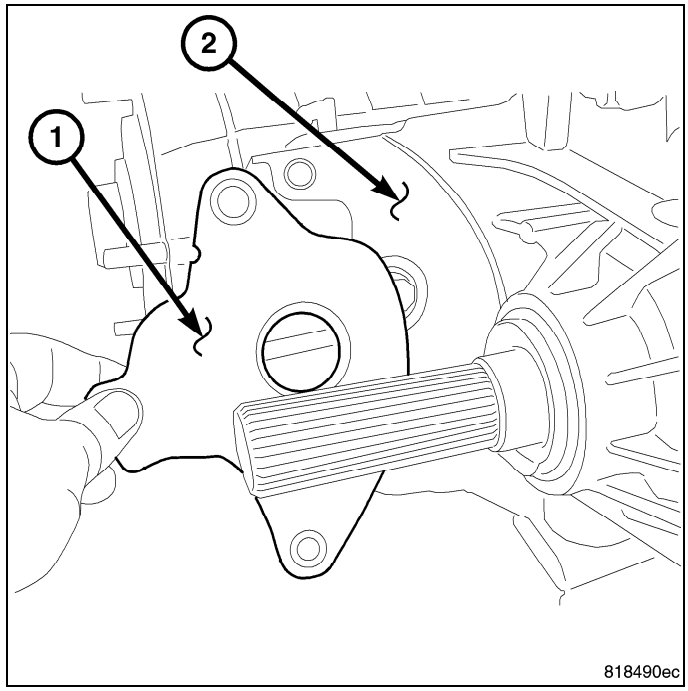

10. Using a screw and a slide hammer, remove the front output shaft seal (1) from the transfer case (2).

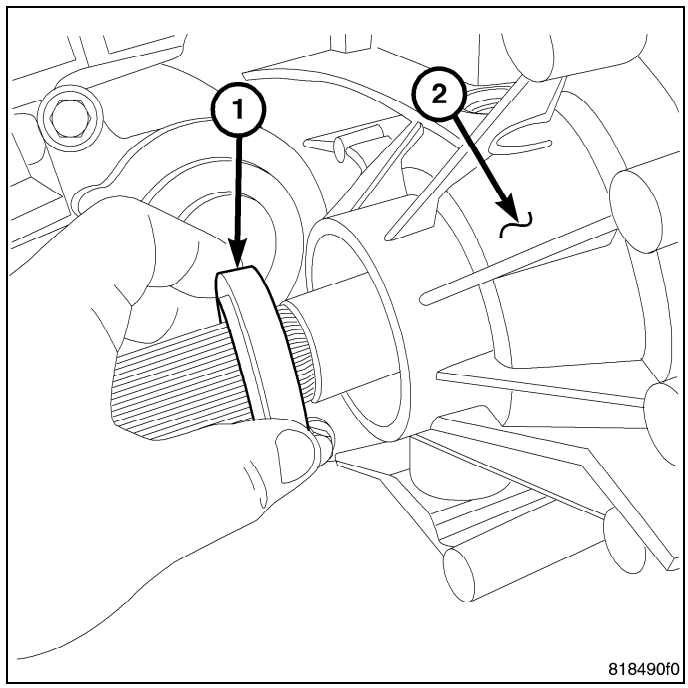

OIL PUMP AND REAR CASE

1. Remove the rear output shaft speed sensor (1) from the transfer case (2).

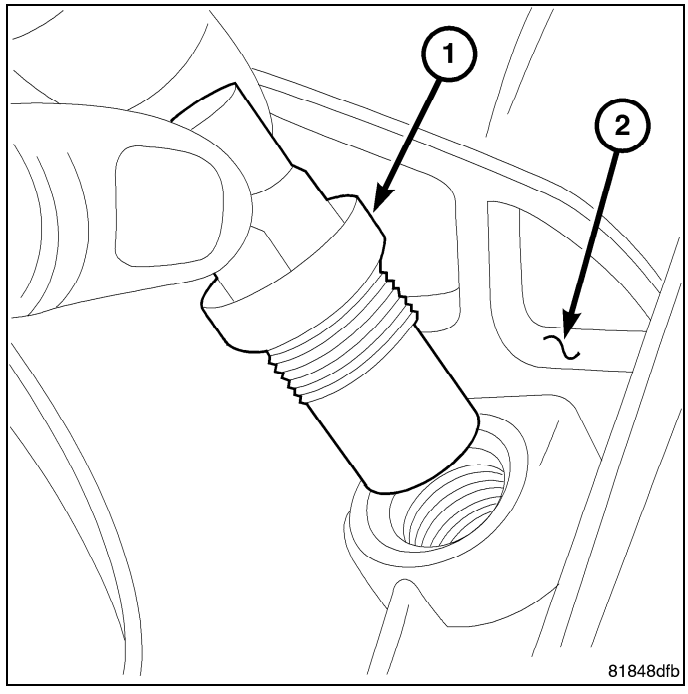

2. Remove the rear output seal (1) from the rear case half (2).

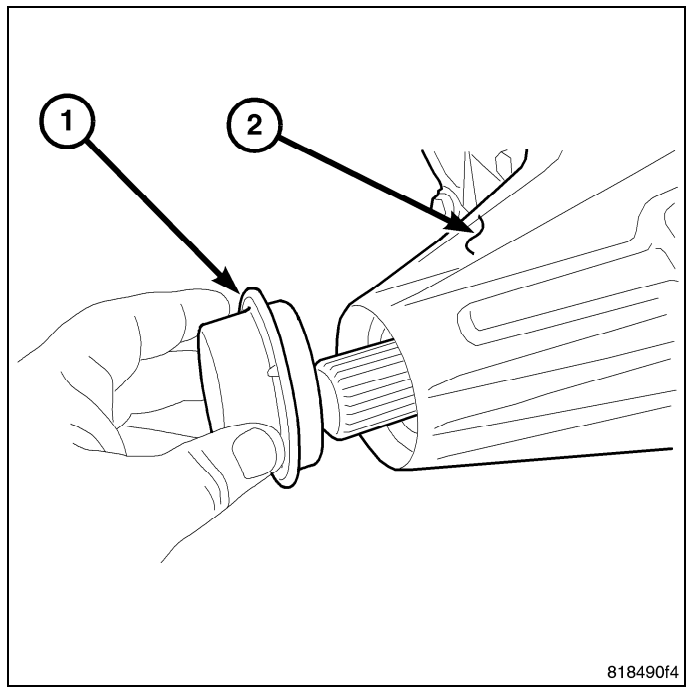

3. Remove rear case (1)-to-front case (2) bolts (3) .

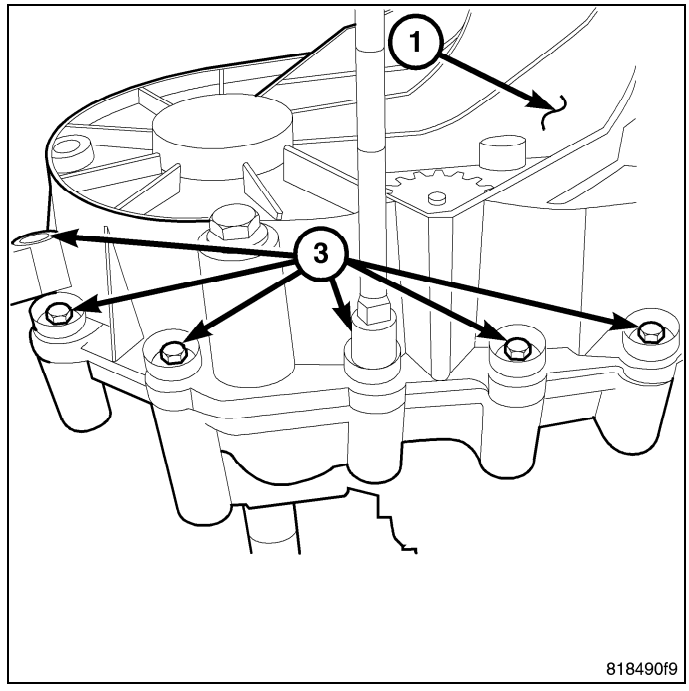

4. Remove the access plug (1) in the rear case half (2).

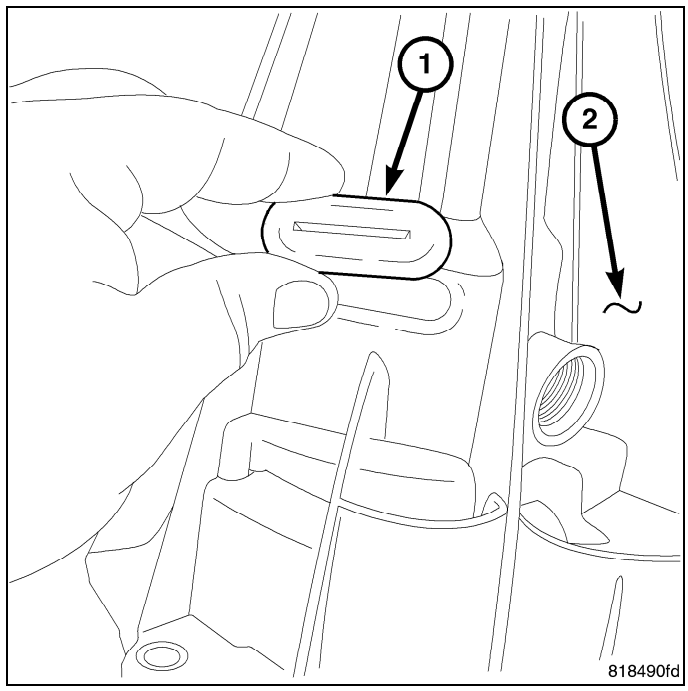

5. Through the access hole (1) in the rear case half (2), release the output shaft bearing from the rear case with a suitable pair of snap-ring pliers.

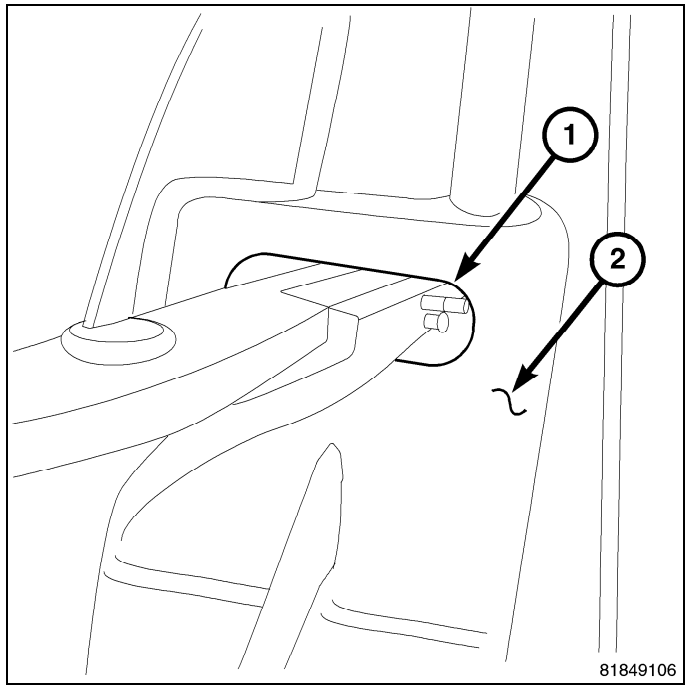

6. Separate the rear case from the front case by gently prying the case apart at the locations provided.
7. Remove the rear case (1) from the front case (2).

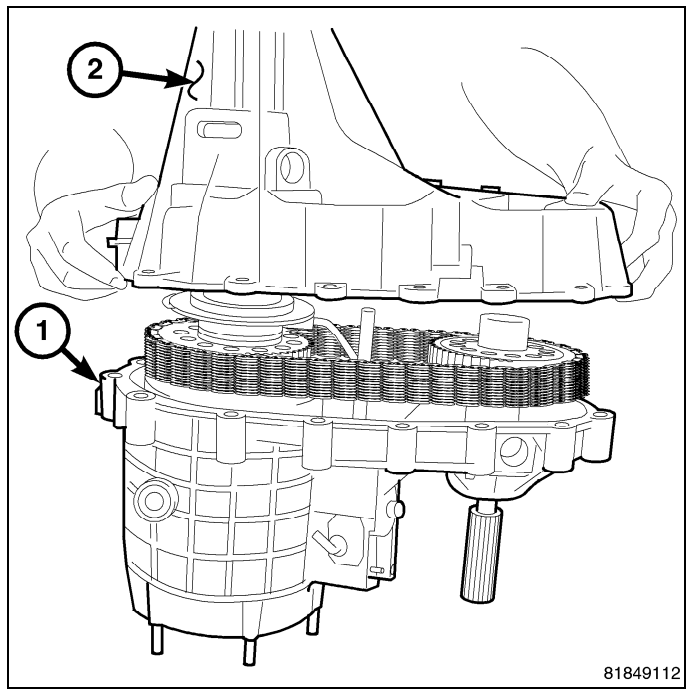

8. Remove the rear output shaft bearing (3) retaining ring (2) from the output shaft (1).

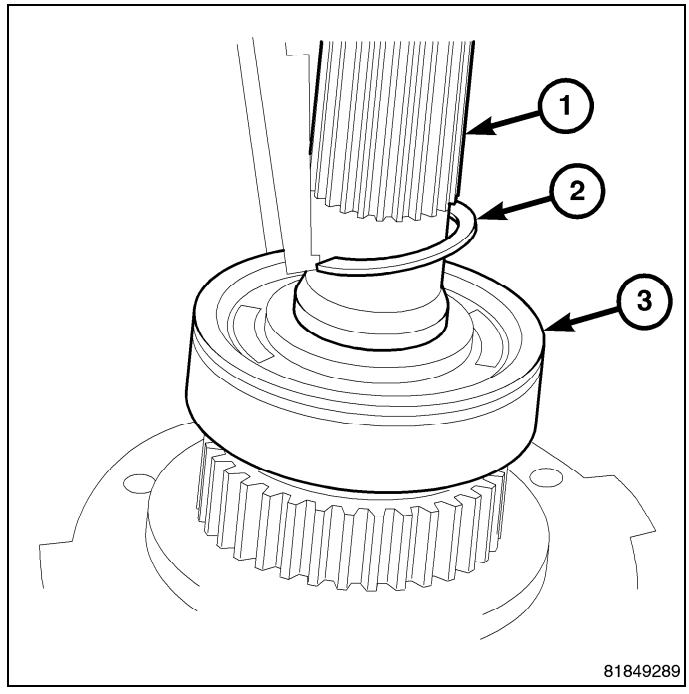

9. Remove the rear output shaft bearing (1) from the output shaft (2).

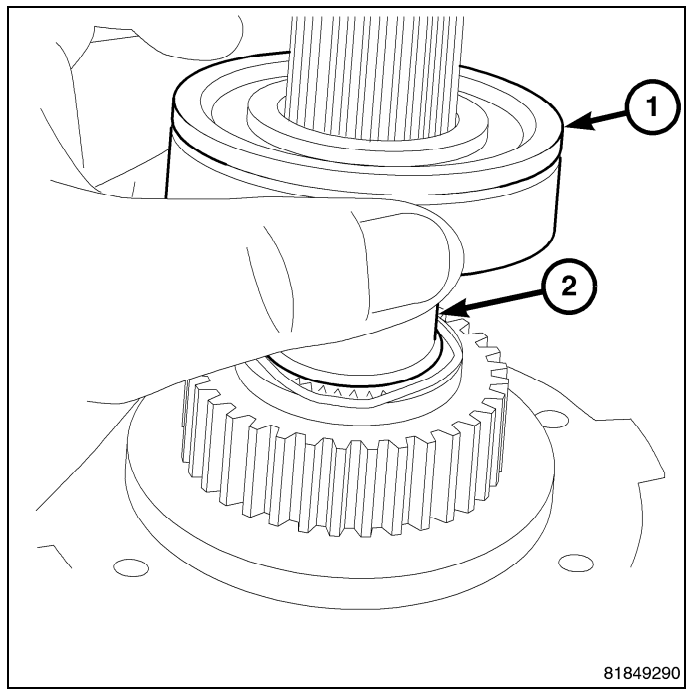

10. Remove the wave washer (1) from the output shaft (2).

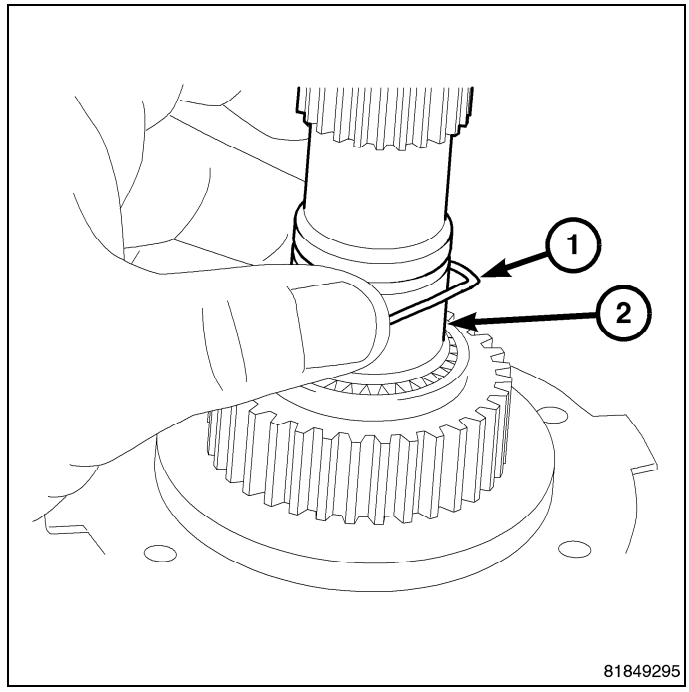

11. Remove the output shaft tone wheel (1) from the output shaft (2).

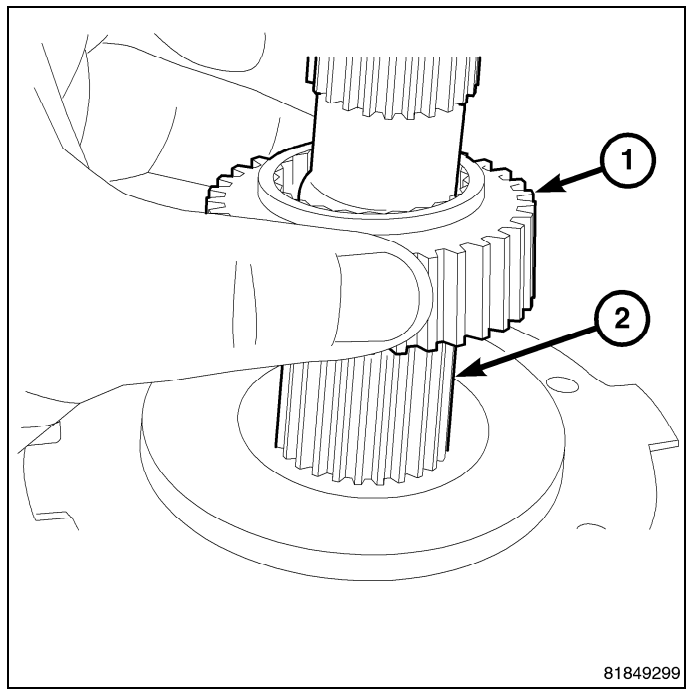

12. Disengage the oil pump pick-up tube (2) from the oil pump (1).

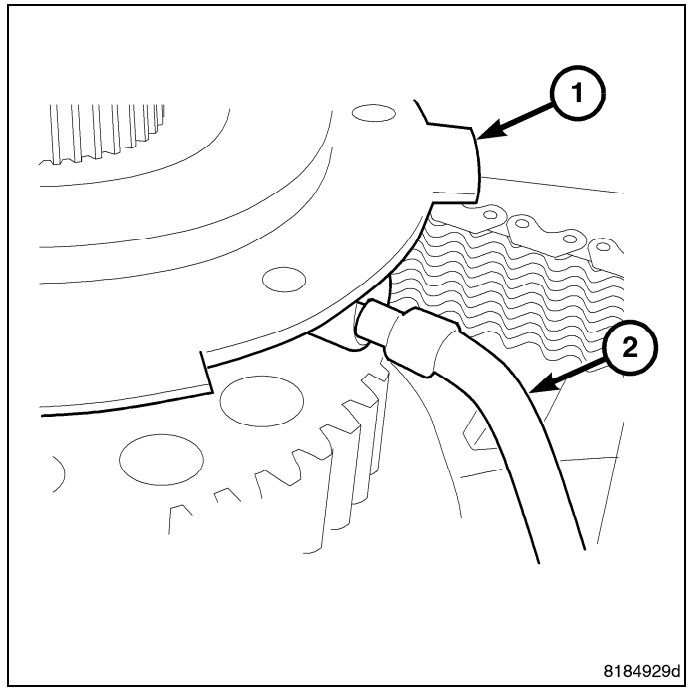

13. Remove the oil pump (1) from the output shaft (2).

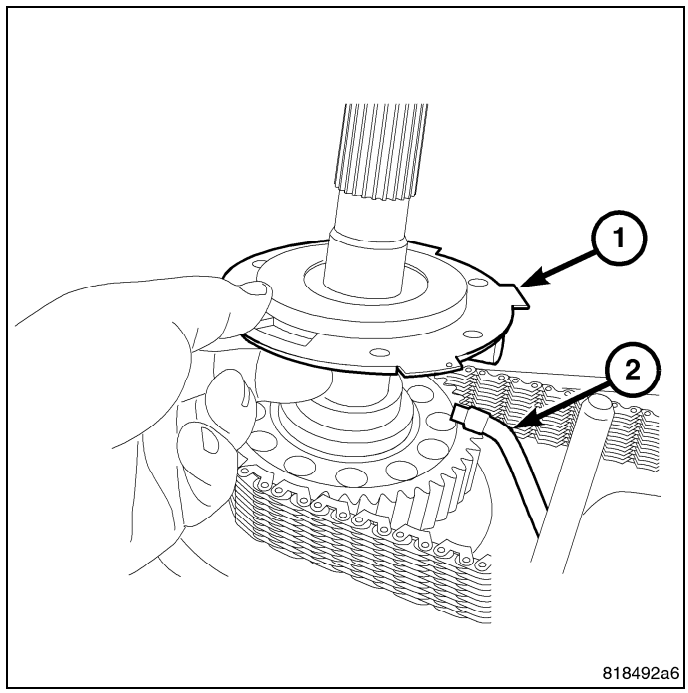

DRIVE CHAIN, SPROCKETS, AND MAINSHAFT

1. Remove front sprocket (1) retaining ring (2).

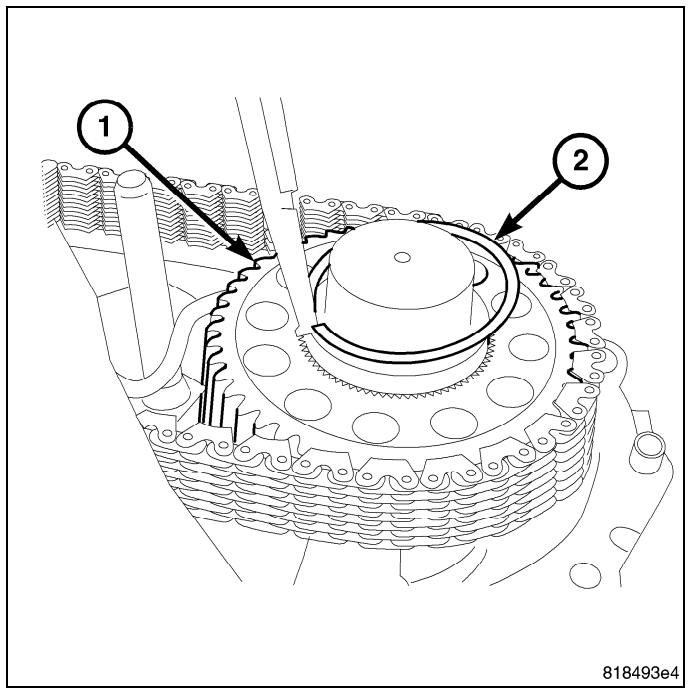

2. Remove the mainshaft drive sprocket (1) retaining ring (2) from the mainshaft.

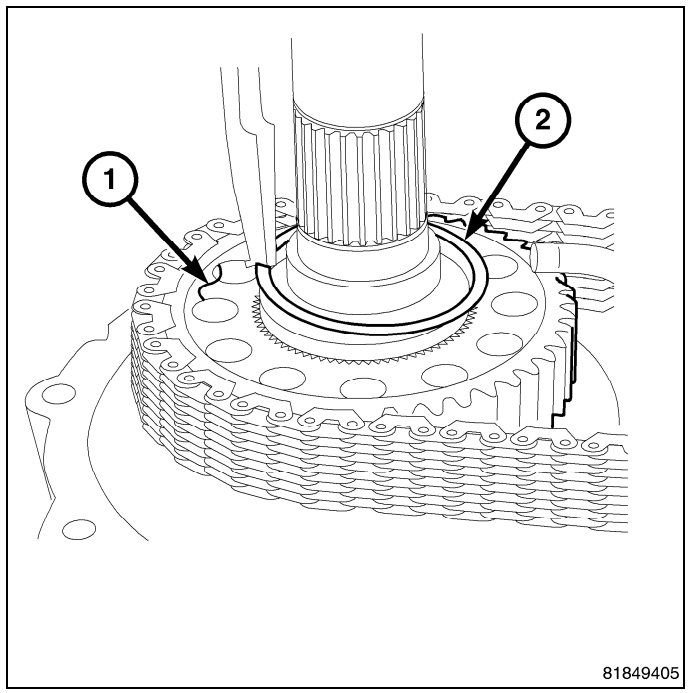

3. Remove the mainshaft drive sprocket (1) , front drive sprocket (3), and chain (2) as assembly.

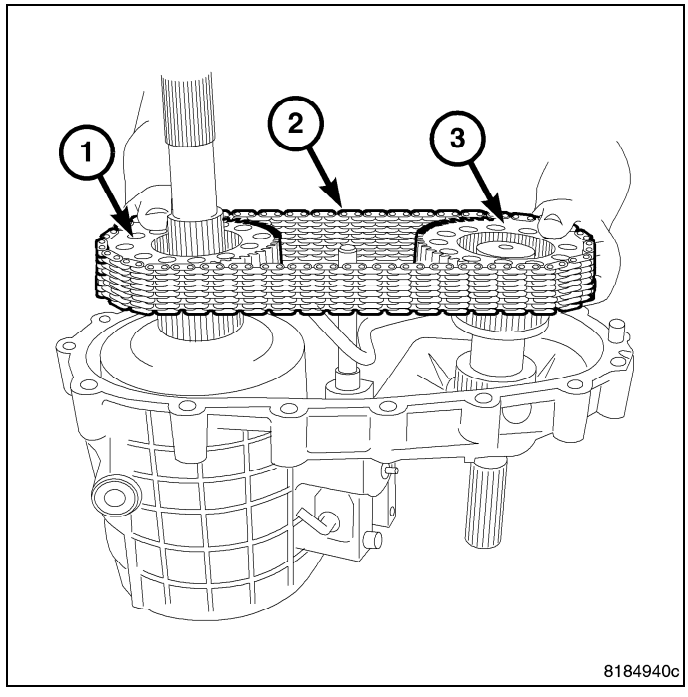

4. Remove the mainshaft and clutch assembly (1) from the transfer case.

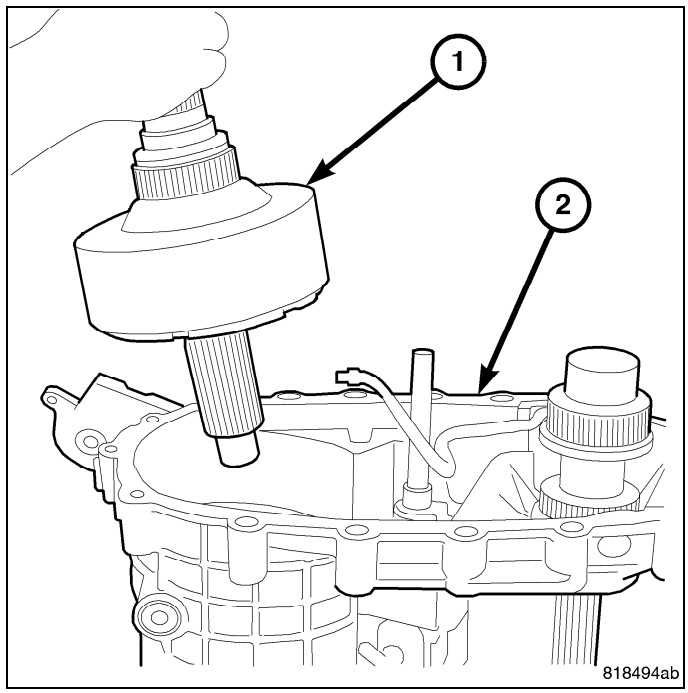

5. Remove the oil pump pick-up tube (1) from the transfer case (2).

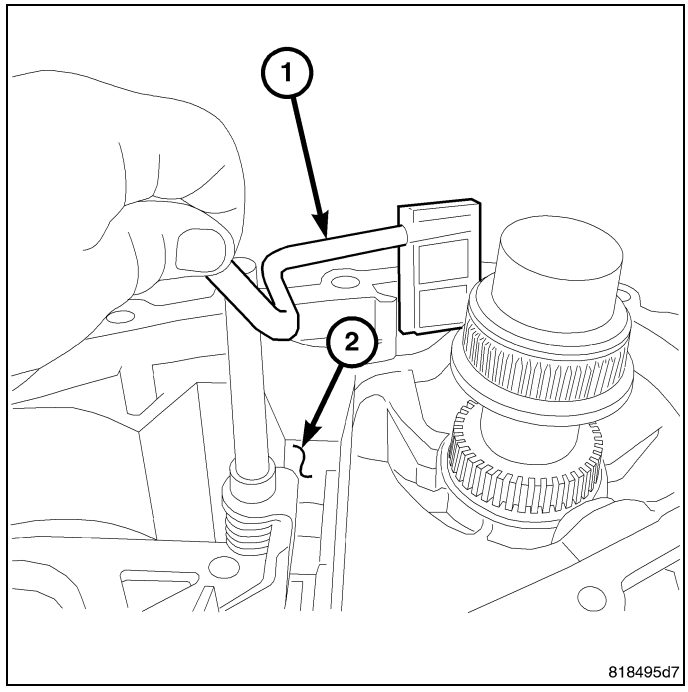

SHIFT COMPONENTS

1. Loosen the clutch lever pivot bolt (1) in the front case (2).

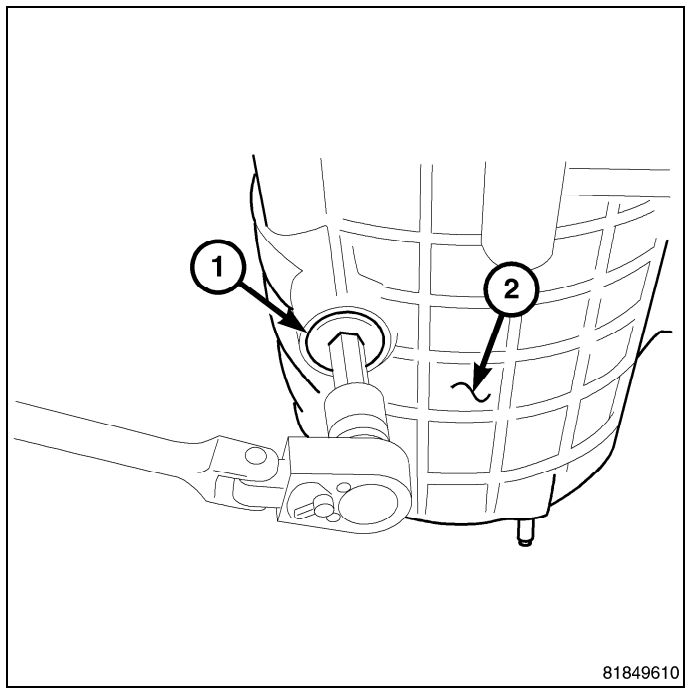

2. Remove the pivot bolt (1) from the transfer case (2).

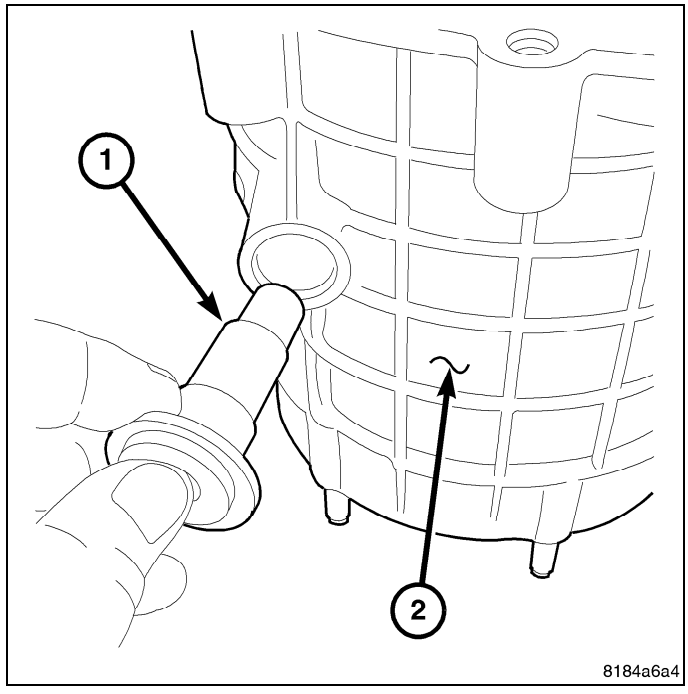

3. Remove the clutch lever (1) from the transfer case (2).

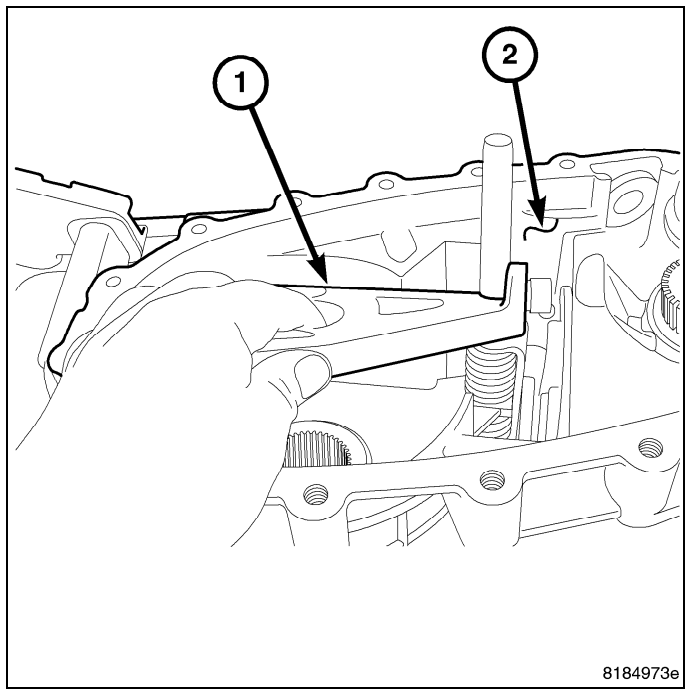

4. Remove the shift rail (1) from the range fork assembly (2).

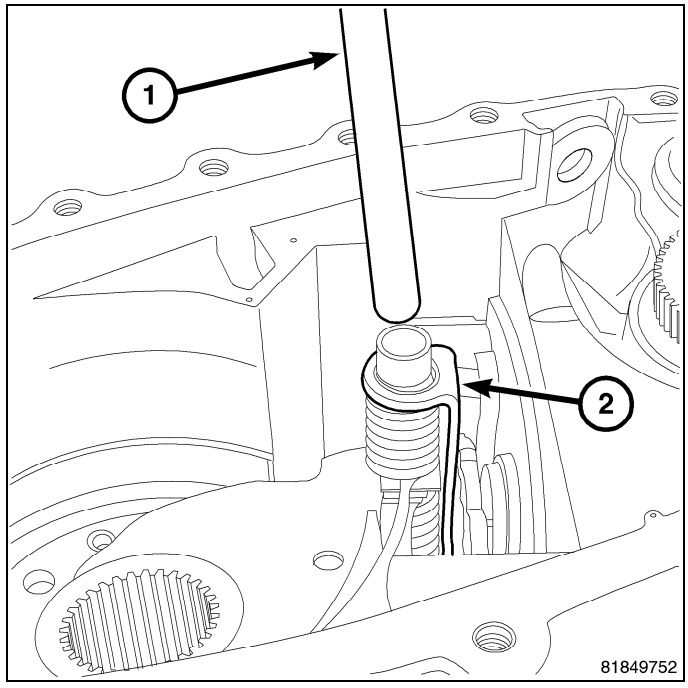

5. Remove the range sleeve (1) and range fork assembly from the transfer case.

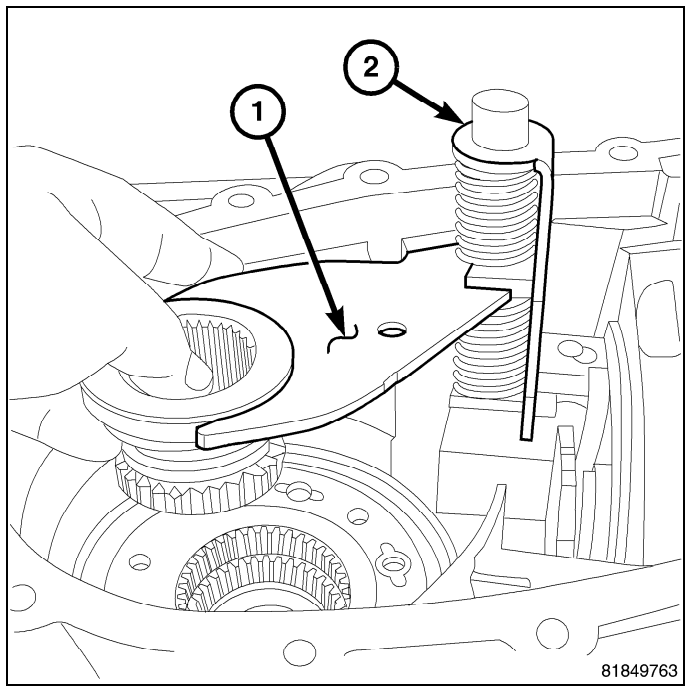

6. Remove the snap-ring that holds the shift sector into the transfer case.
7. Remove the shift sector (1) from the transfer case (2).

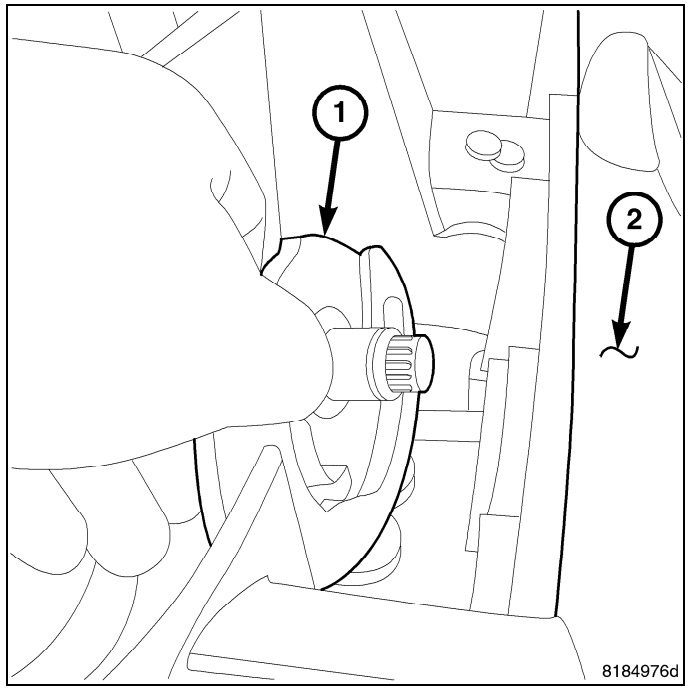

FRONT OUTPUT SHAFT

1. Remove the retaining ring (1) from the front output shaft (2).

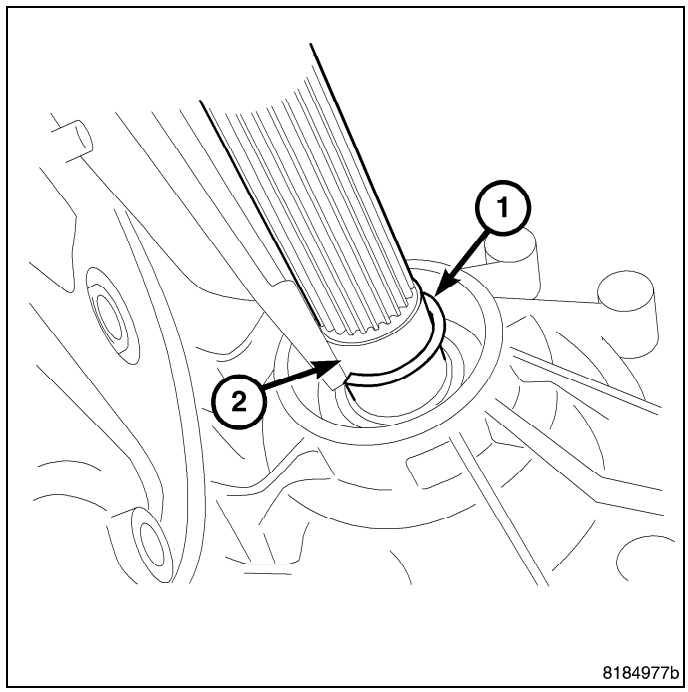

2. Remove the front output shaft (1) from the bearing in the front case (2).

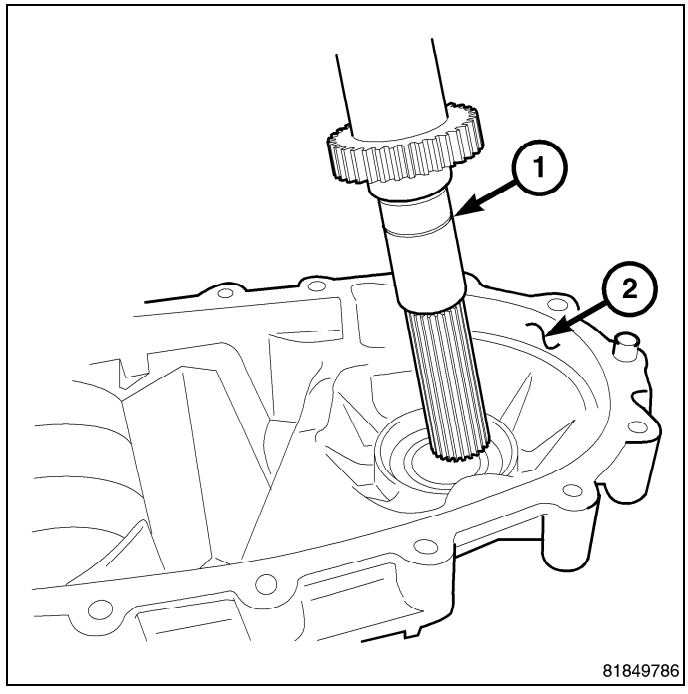

INPUT AND PLANETARY GEAR

1. Remove the input gear seal (1) from the front case (3) with suitable screw and slide hammer.

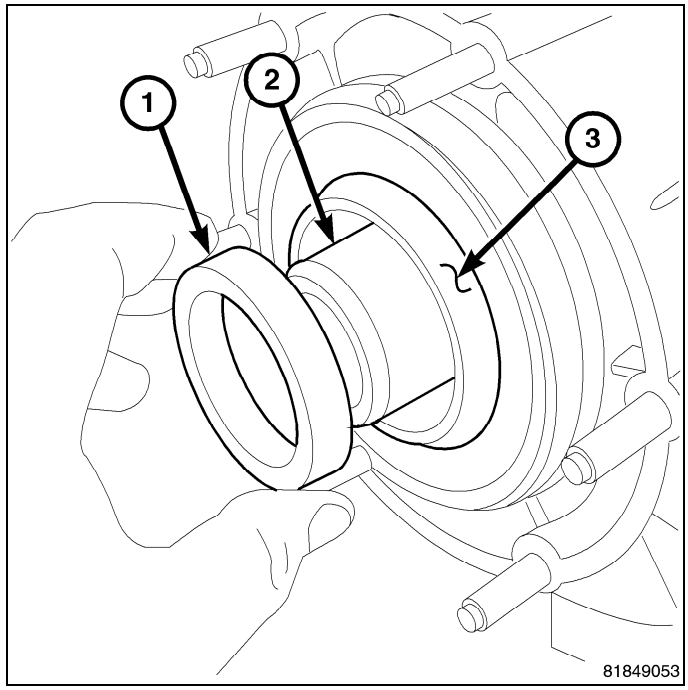

2. Remove input gear (1) retaining ring (2) with heavy duty snap-ring pliers.

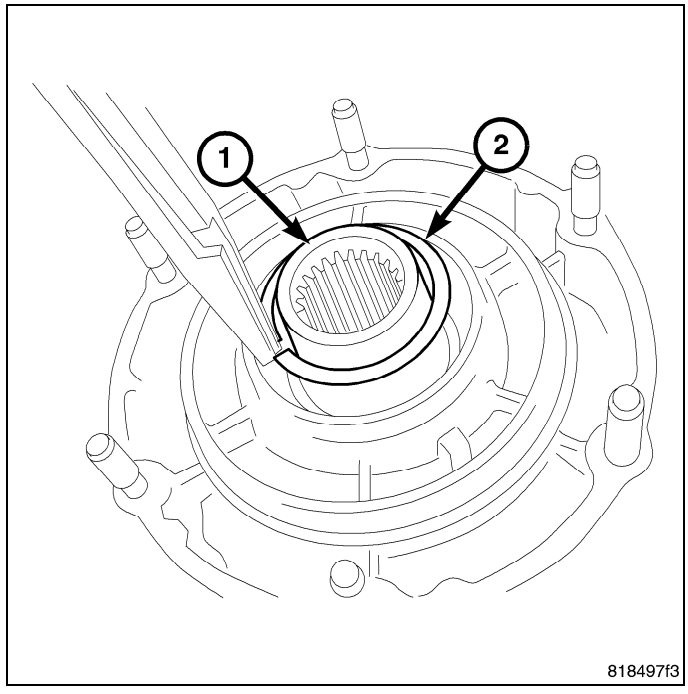

3. Remove input gear and low range gear as an assembly (2) . Tap gear out of bearing with plastic mallet, if necessary.

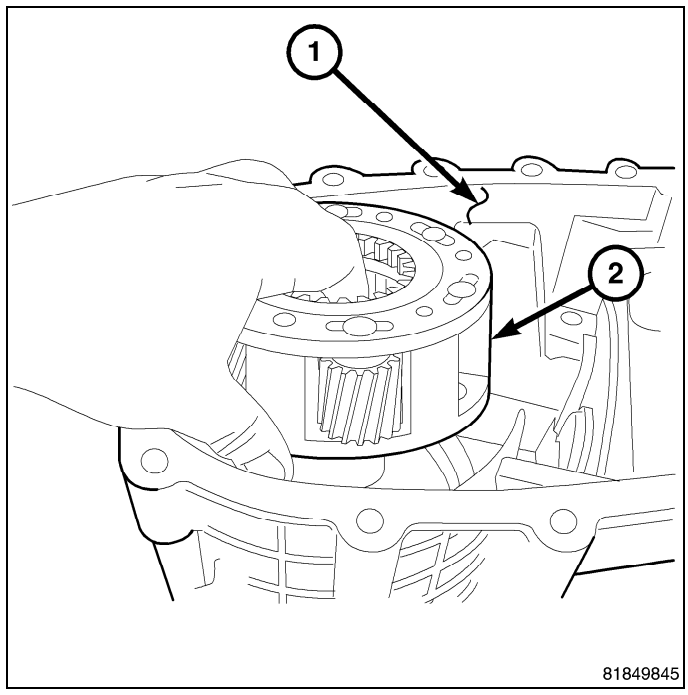

Assembly

1. Using a suitable pair of snap-ring pliers, expand the input gear bearing retaining ring (1) to release the bearing (2).

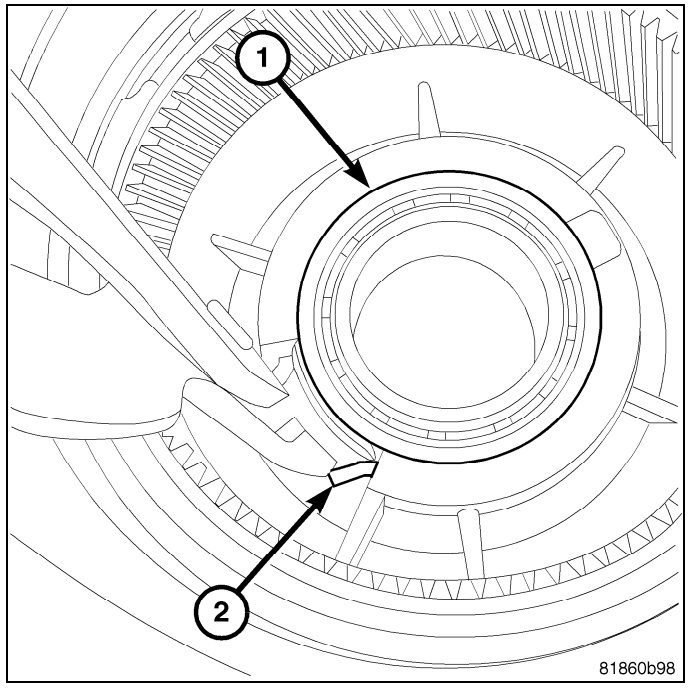

2. Pull up on the bearing (1) to remove it from the front case (2).
3. To install the input gear bearing, install the bearing into the front case as far as possible by hand, making sure the retaining ring groove is up. Expand the retaining ring with snap-ring pliers and push the bearing the remainder of the way into the case. Verify that the ring has engaged its groove in the bearing outer race.

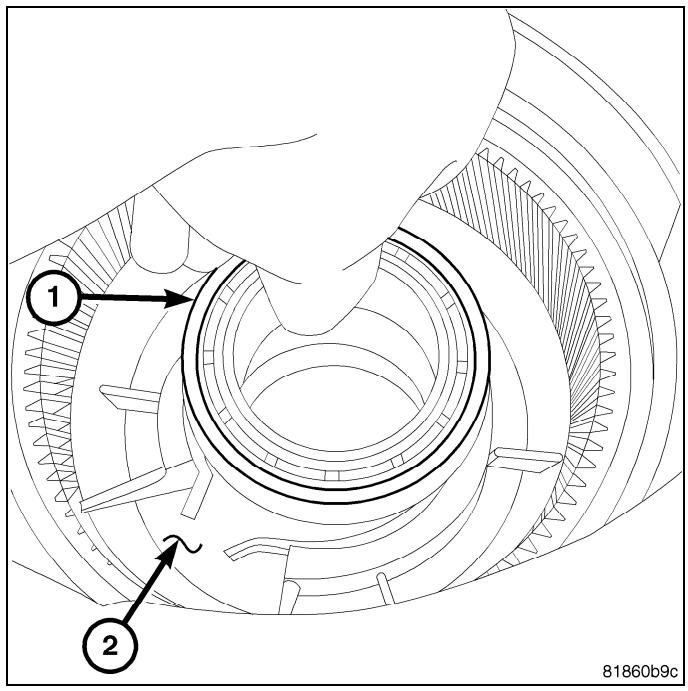

4. Remove the front output shaft bearing retaining ring (1) from the front case

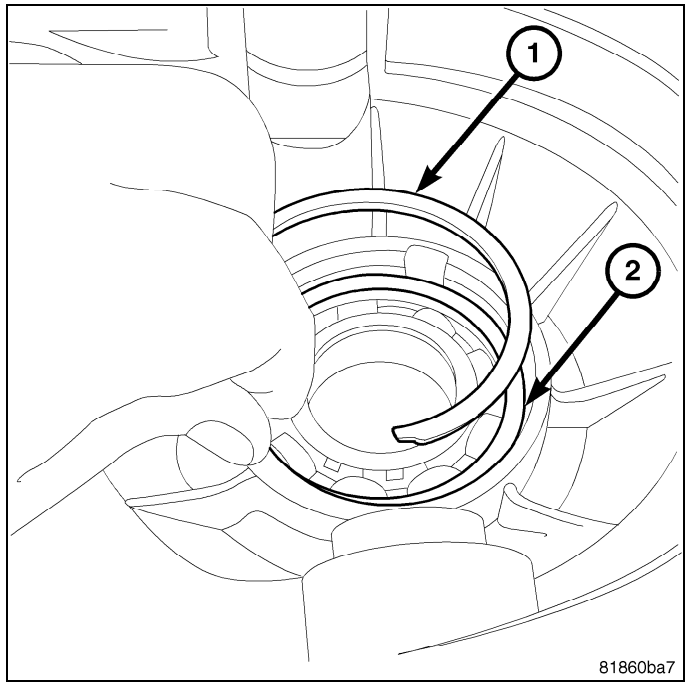

5. Using Universal Handle C-4171 (1) and Bearing Installer 9523A (2), remove the front output shaft bearing from the front case (3).

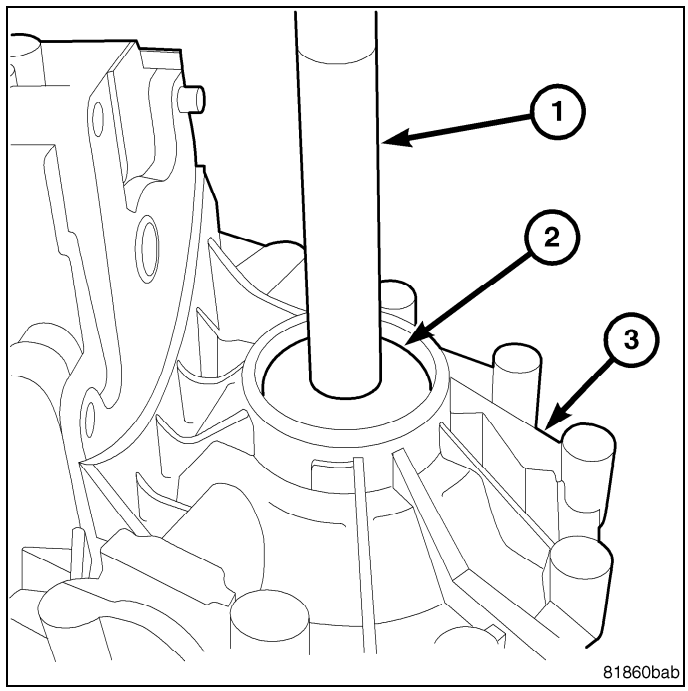

6. Install the front output shaft bearing into the front case half (3) using Universal Handle C-4171 (1) and Bearing Installer 9523A (2).
7. Install the front output shaft bearing retaining ring into the front case.

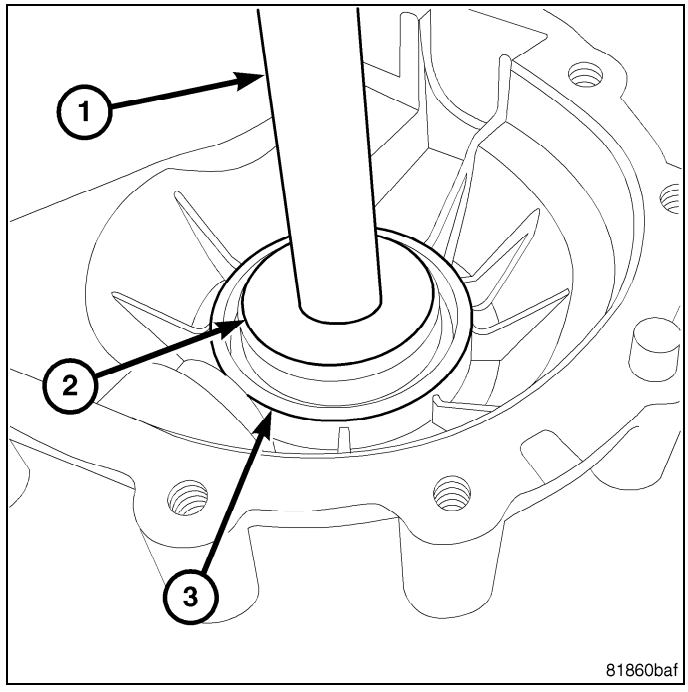

8. Install input gear and low range gear as an assembly (2) .

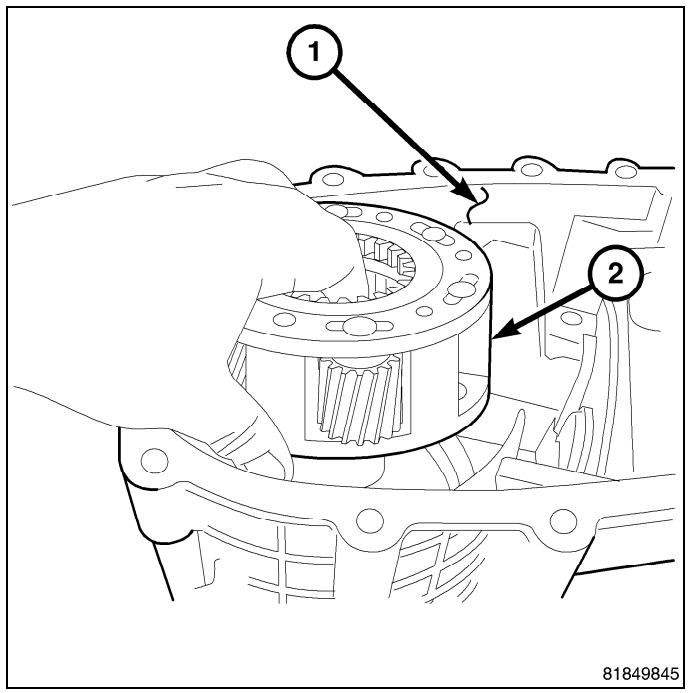

9. Install input gear (1) retaining ring (2) with heavy duty snap-ring pliers.

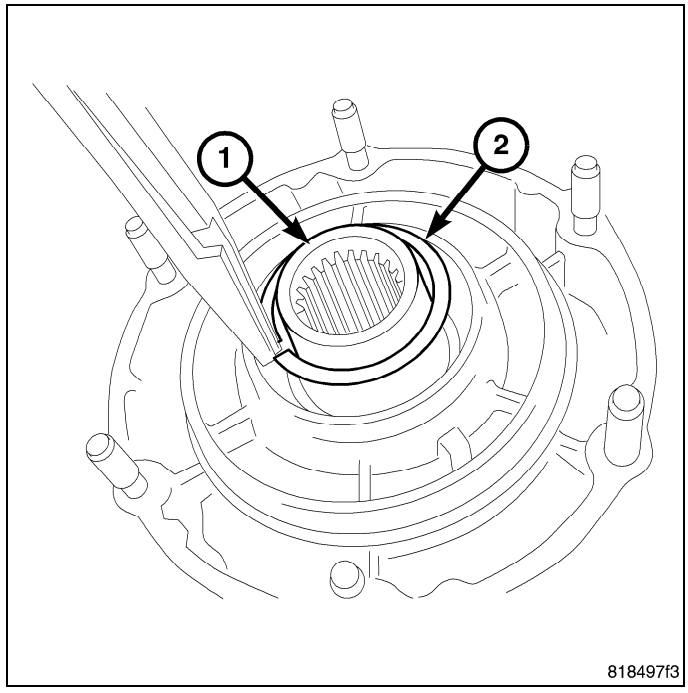

10. Install the new input gear seal (1) into the front case (3).

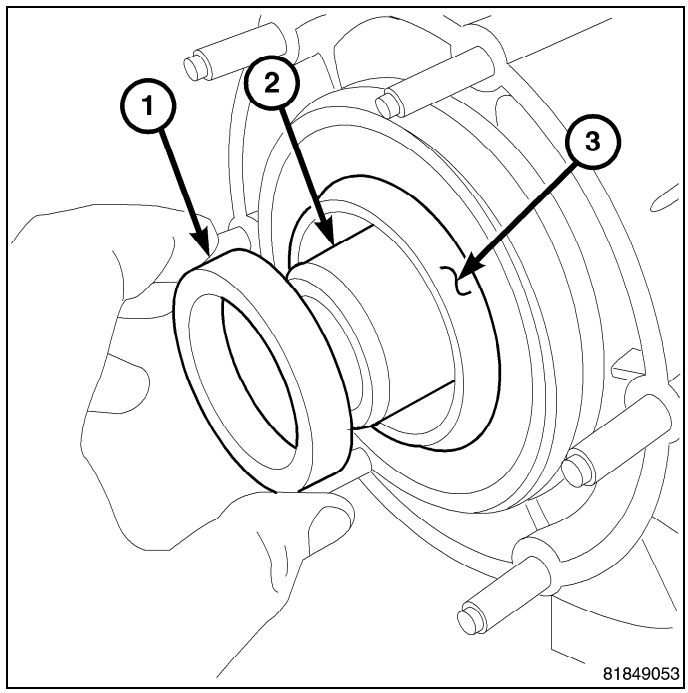

11. Install the input shaft seal the remainder of the way with Universal Handle C-4171 (1) and Seal Installer 9036.

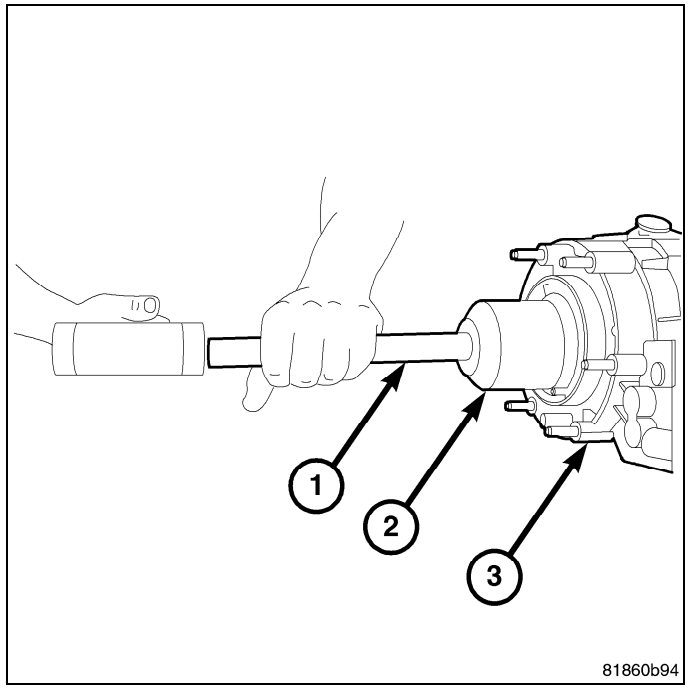

FRONT OUTPUT SHAFT

1. Install the front output shaft (1) into the bearing in the front case (2).

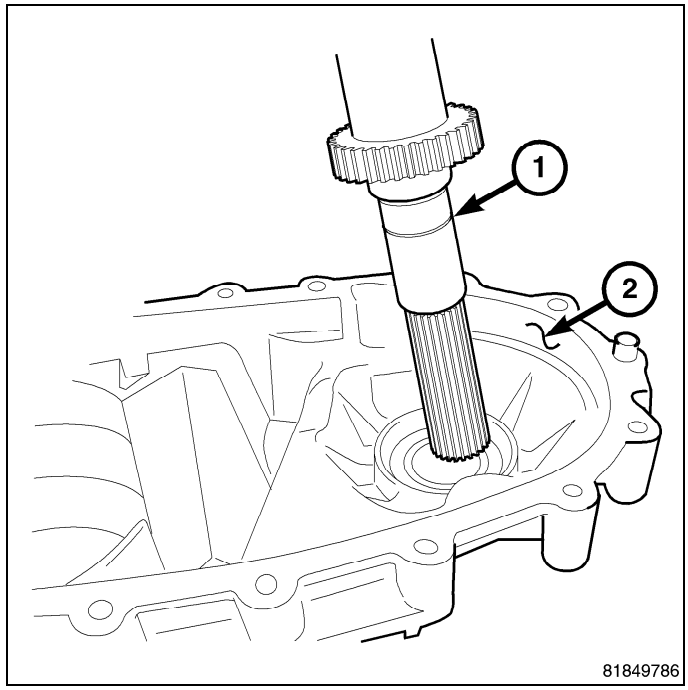

2. Install the retaining ring (1) onto the front output shaft (2).
3. Install the new front output shaft seal with Seal Installer MB-991168-A.

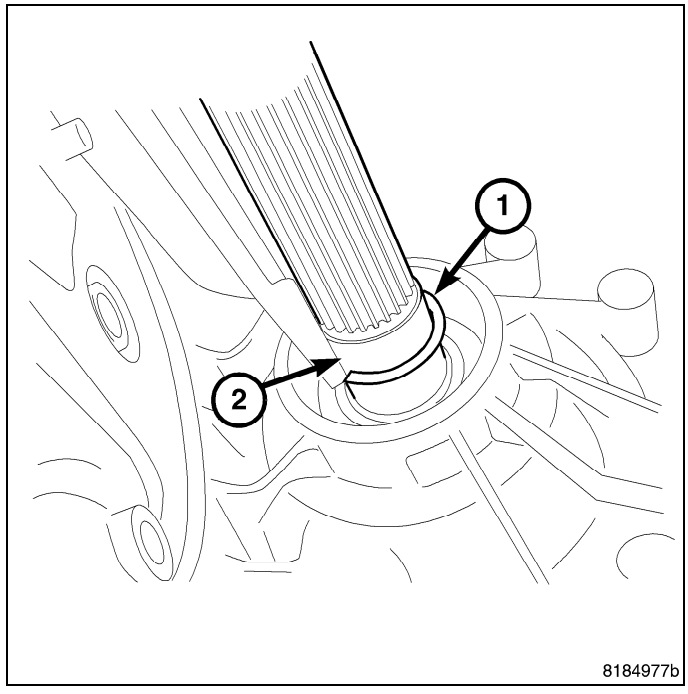

SHIFT COMPONENTS

1. Install the shift sector (1) into the transfer case (2).
2. Install the snap-ring that holds the shift sector to the transfer case.

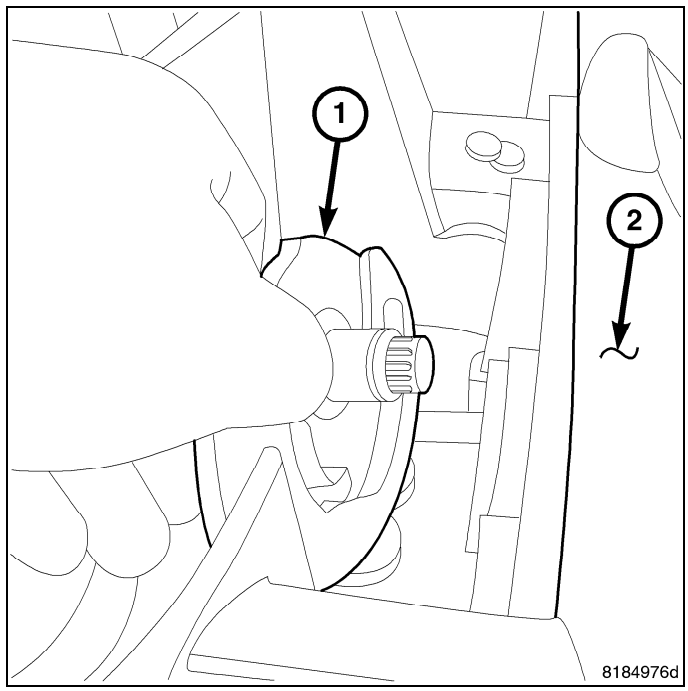

3. Install the range sleeve (1) and range fork assembly into the transfer case.

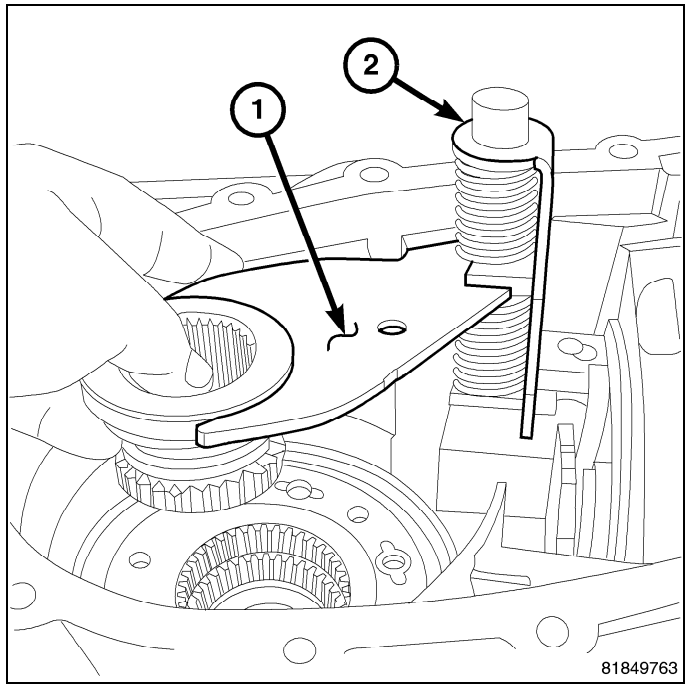

4. Install the shift rail (1) into the range fork assembly (2).

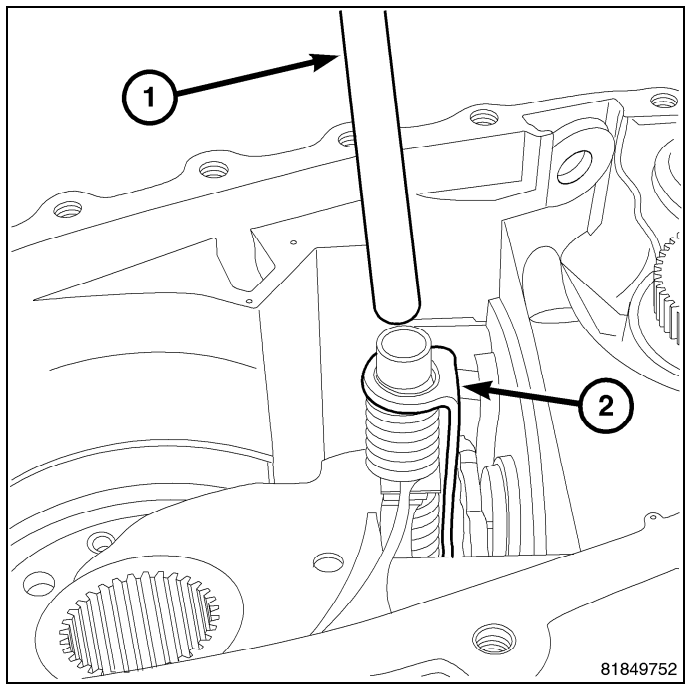

5. Install the clutch lever(1) into the transfer case (2).

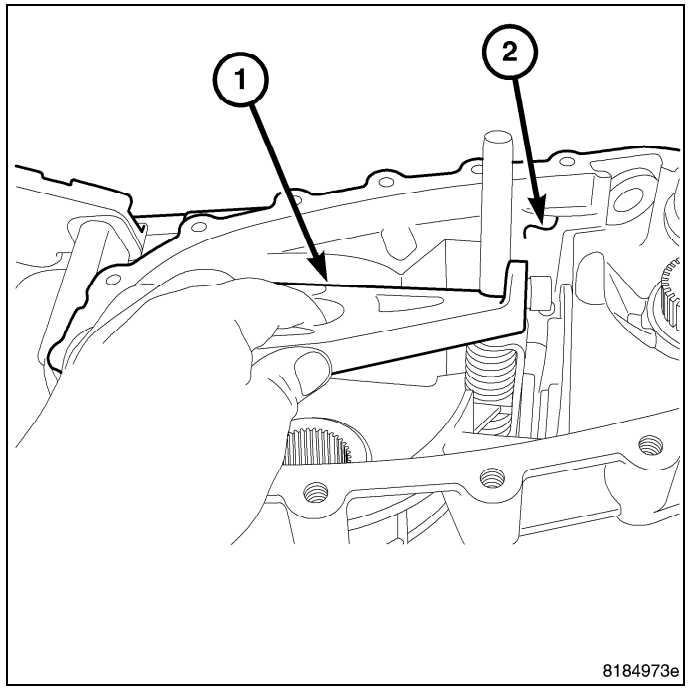

6. Install the clutch lever pivot bolt (1) into the transfer case (2).

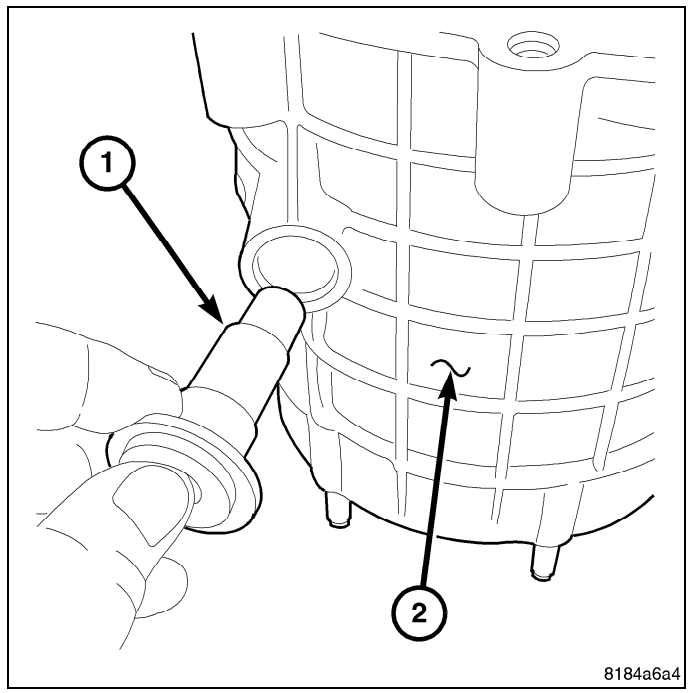

7. Tighten the clutch lever pivot bolt (1) to 61 N·m (45 ft.lbs.).

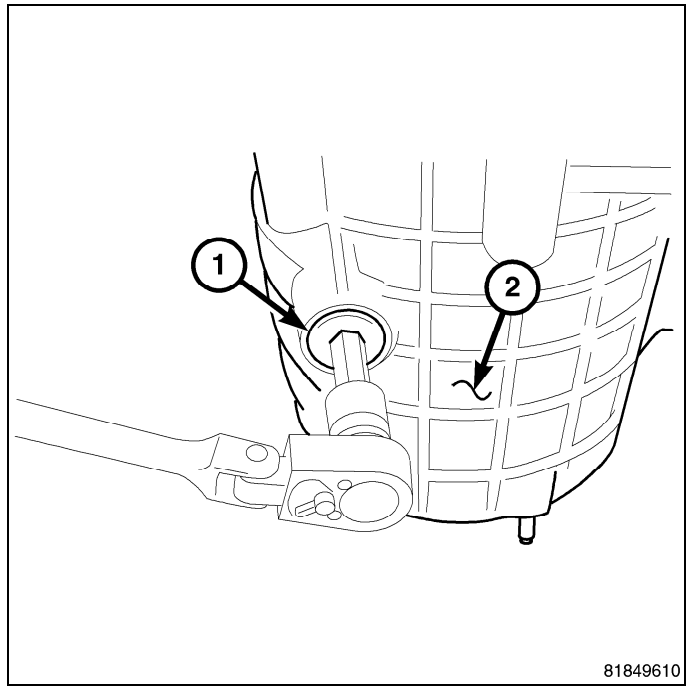

DRIVE CHAIN, SPROCKETS, AND MAINSHAFT

1. Install the oil pump pick-up tube (1) into the transfer case (2).

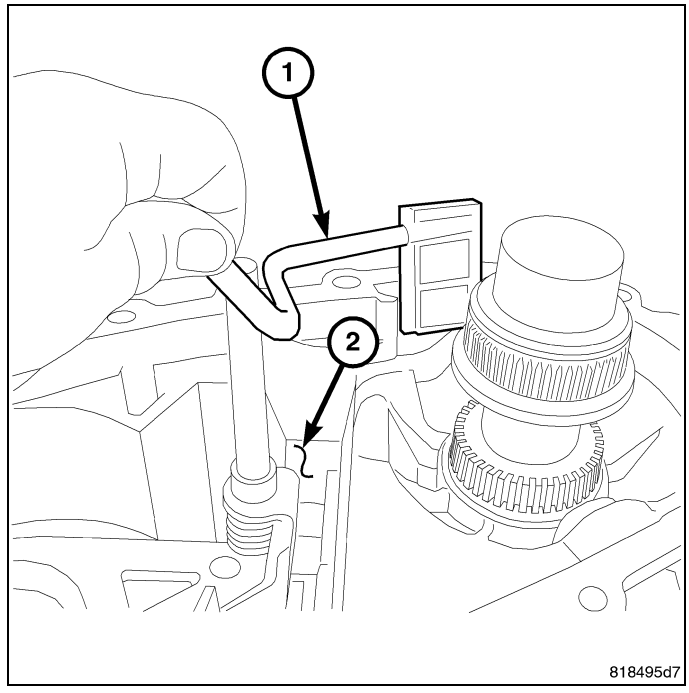

CAUTION: Make certain that the anti-rotation tab on the clutch apply plate is located between the clutch lever pivot arms.

2. Install the mainshaft and clutch assembly (1) into the transfer case and input gear.

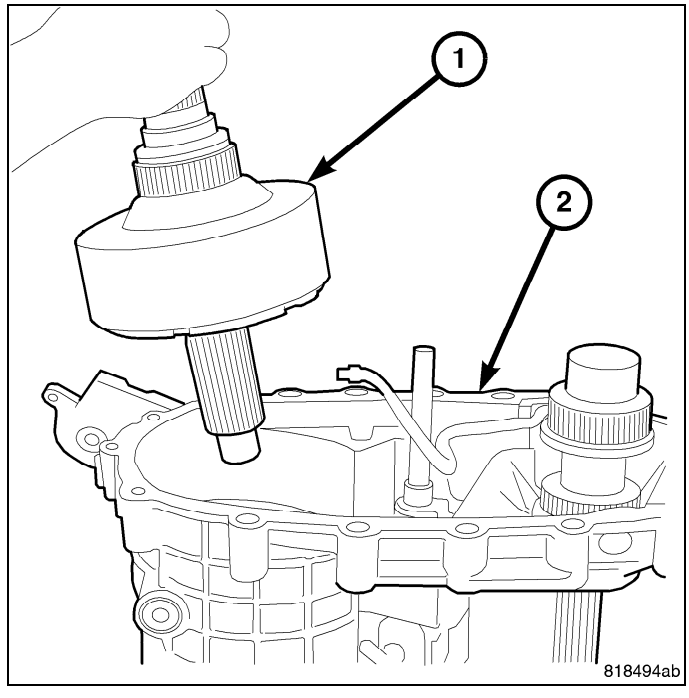

3. Install the mainshaft drive sprocket (1) , front drive sprocket (3), and chain (2) as an assembly.

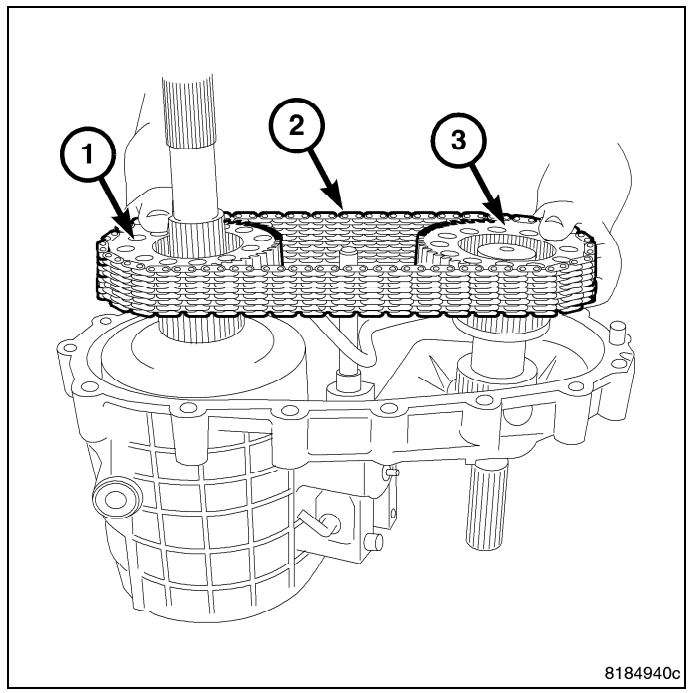

4. Install the mainshaft drive sprocket (1) retaining ring (2) onto the mainshaft.

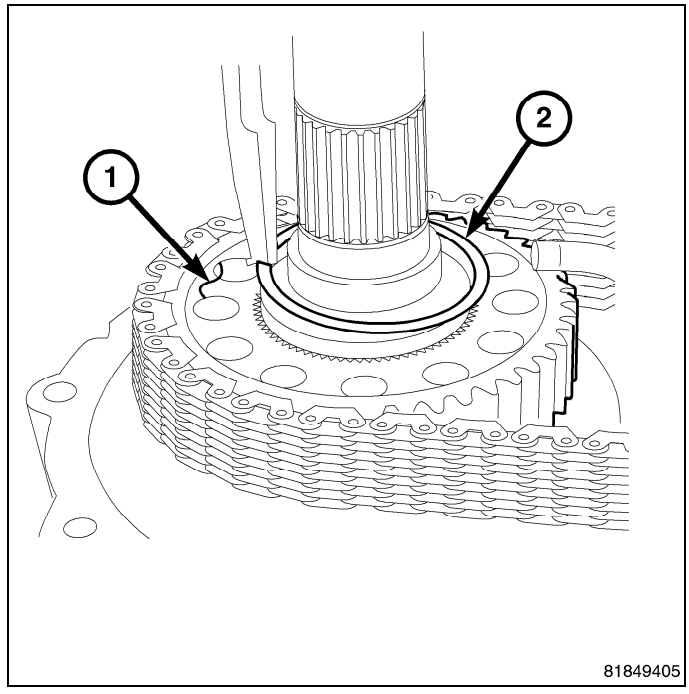

5. Install the front sprocket (1) retaining ring (2).

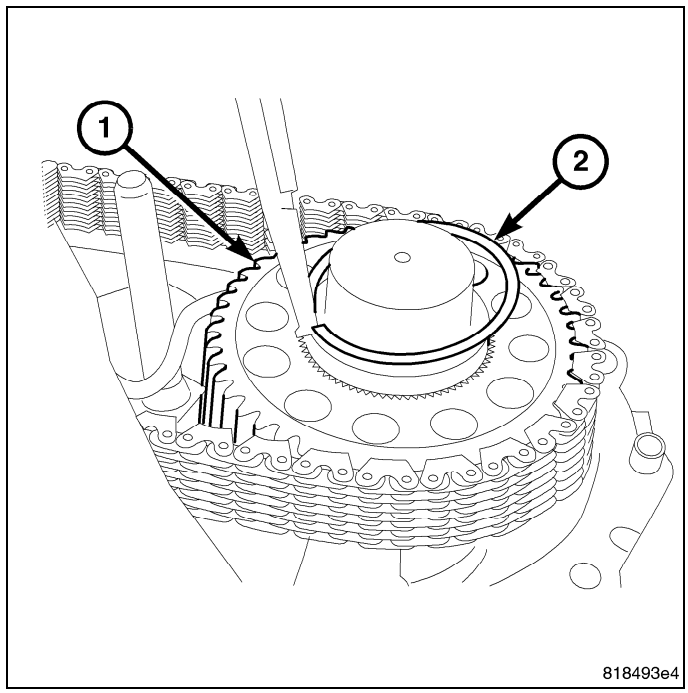

OIL PUMP AND REAR CASE

1. Install the oil pump (1) onto the output shaft (2).

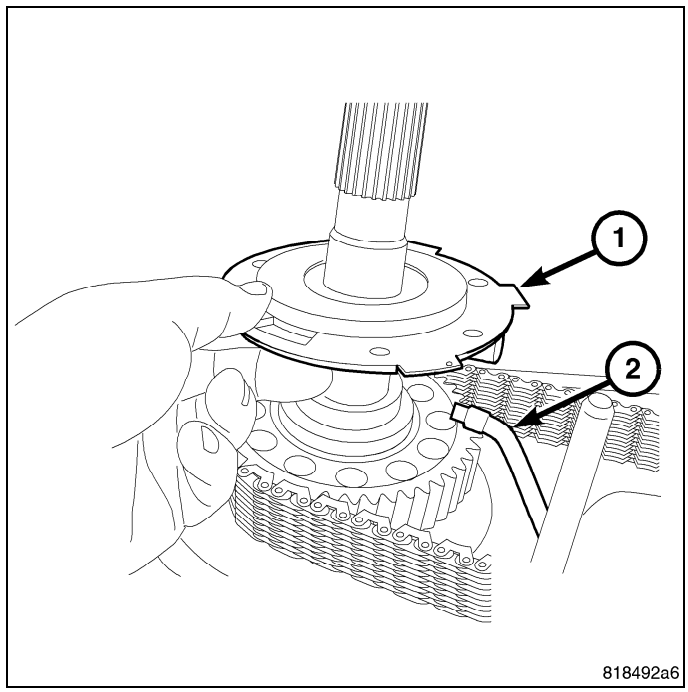

2. Install a new o-ring onto the oil pump pick-up tube.
3. Engage the oil pump pick-up tube (2) to the oil pump (1).

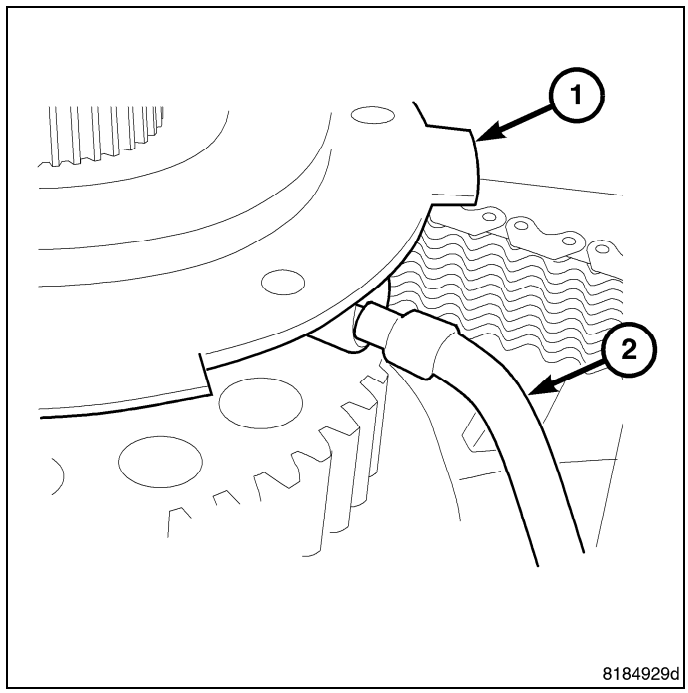

4. Install the output shaft tone wheel (1) onto the output shaft (2).

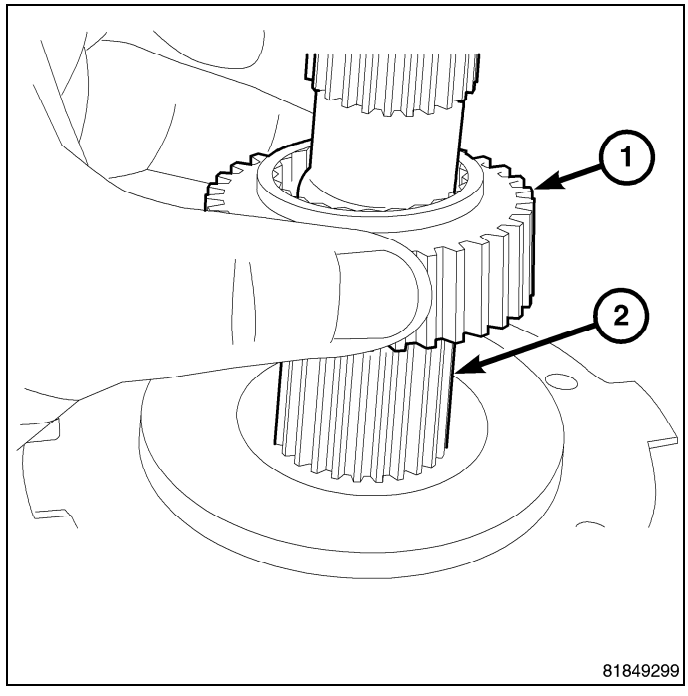

5. Install the wave washer (1) onto the output shaft (2).

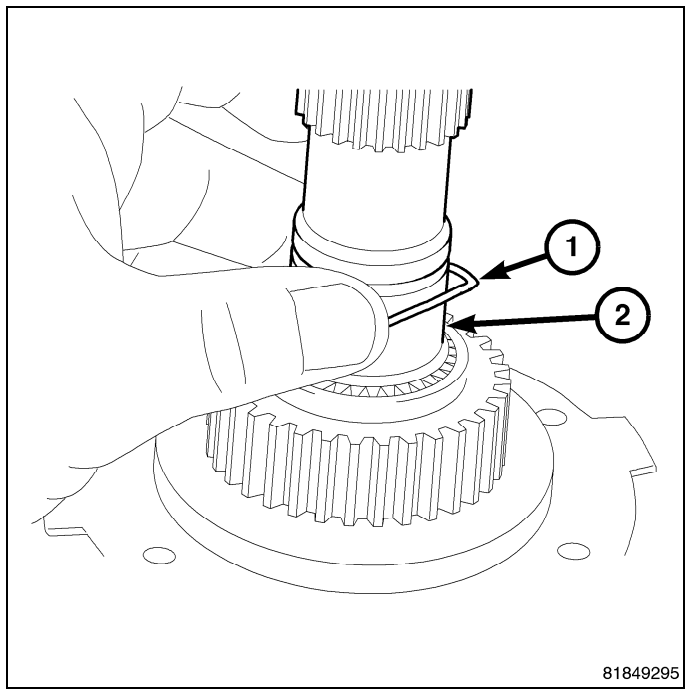

6. Install the rear output shaft bearing (1) onto the output shaft (2).

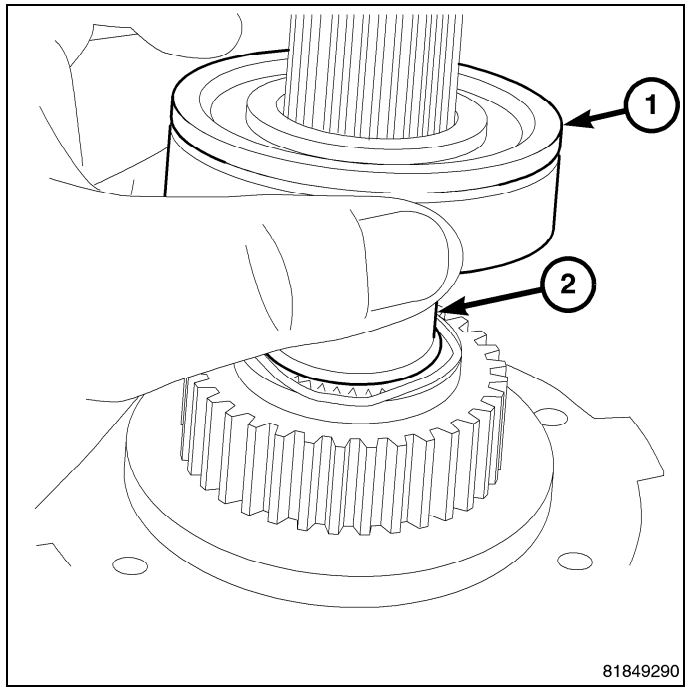

7. Install the rear output shaft bearing (3) retaining ring (2) onto the output shaft (1).

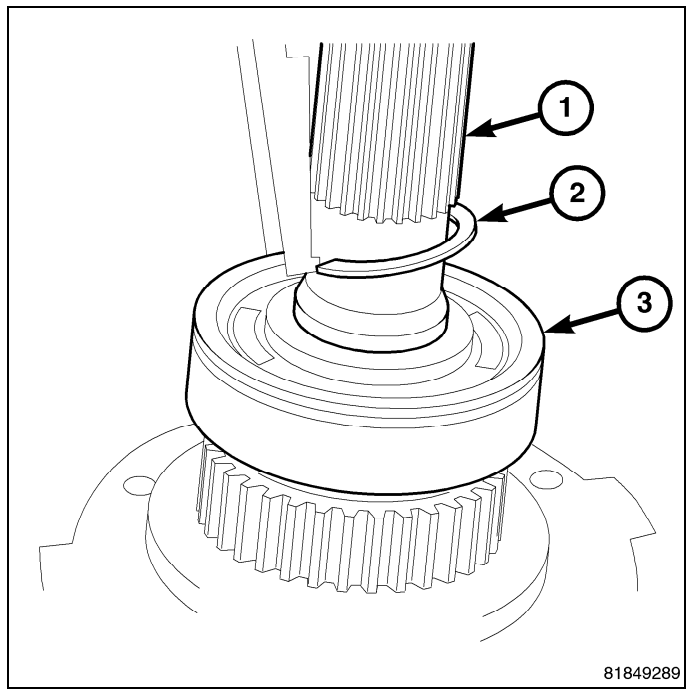

8. Apply bead of MOPAR® Gasket Maker, or equivalent, to mating surface of front case. Keep sealer bead width to maximum of 3 mm (0.125 inch). Do not use excessive amount of sealer as excess will be displaced into case interior.
9. Install the rear case (1) onto the front case (2).

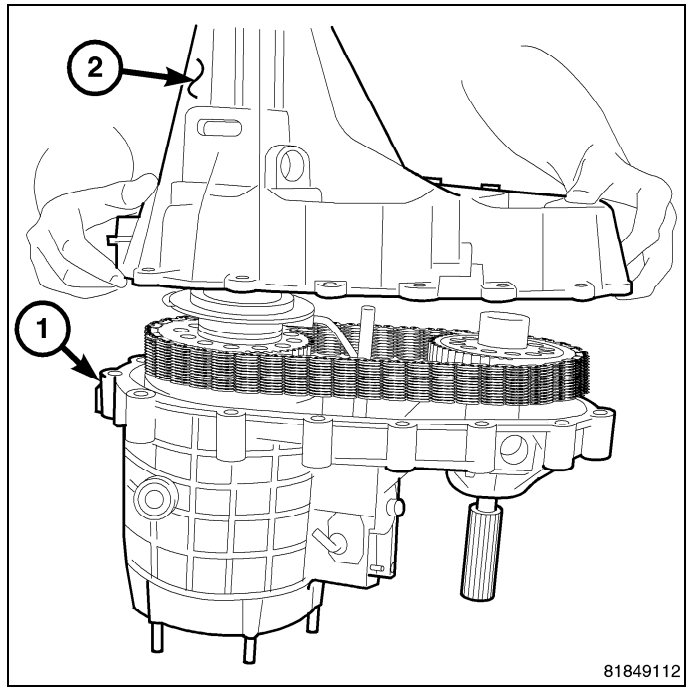

10. Through the access hole (1) in the rear case half (2), expand the output shaft bearing retaining ring in the rear extension with a suitable pair of snap-ring pliers until the snap ring engages the groove in the bearing.

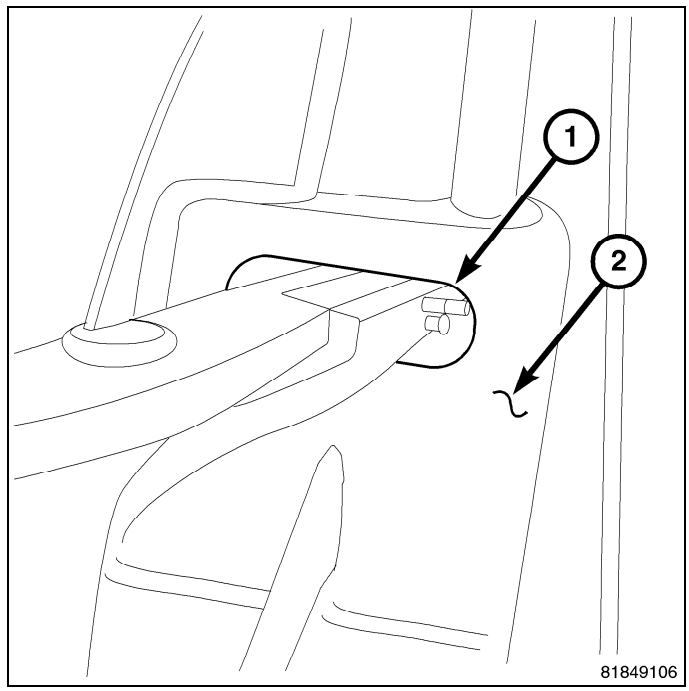

11. Install the access plug (1) in the rear case half (2).

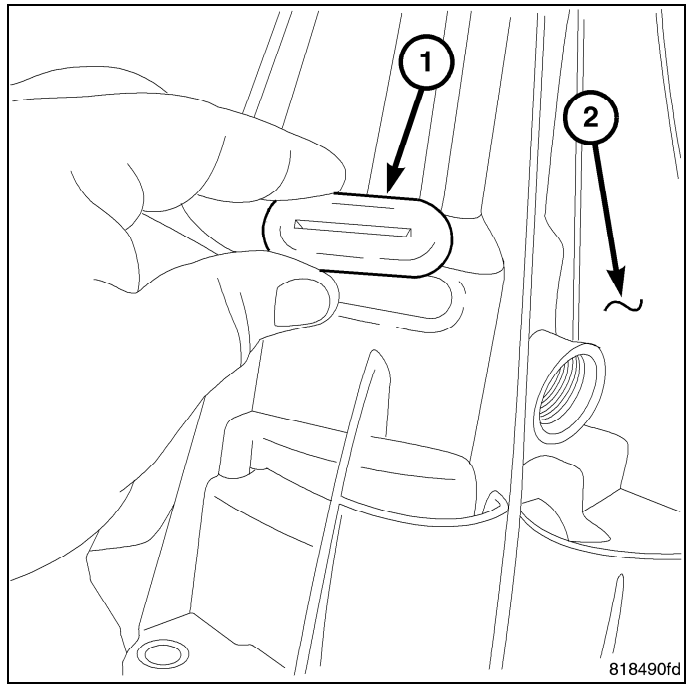

CAUTION: If any of the aluminium cups protecting the heads of the case bolts are damaged, be sure to replace the entire bolt with the correct part through MOPAR®. DO NOT substitute a plain bolt without the protective cup or else severe corrosion at that location could occur.

12. Install the rear case (1)-to-front case bolts (3). Tighten the bolts to 37 N·m (27 ft.lbs.).

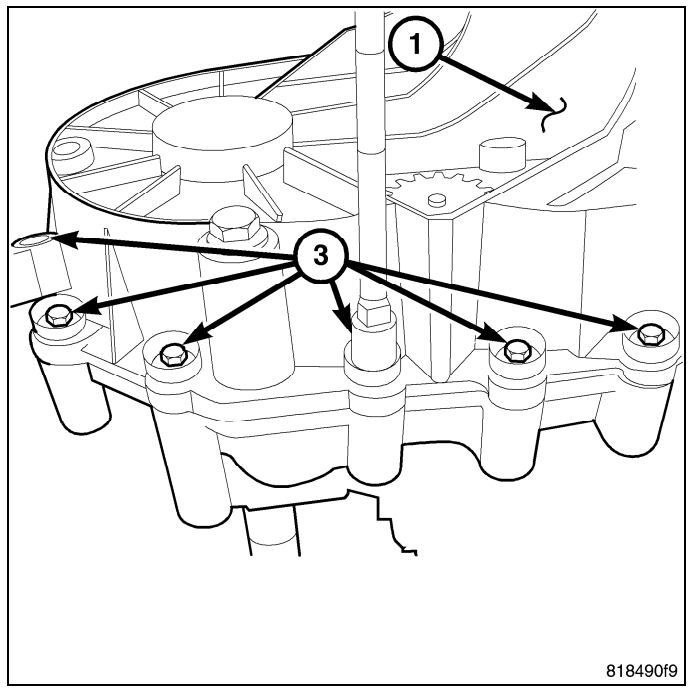

13. Install the rear output seal (1) into the rear case half (2). Use Universal Handle C-4171 and Seal Installer D-163 to install the seal the remainder of the way.

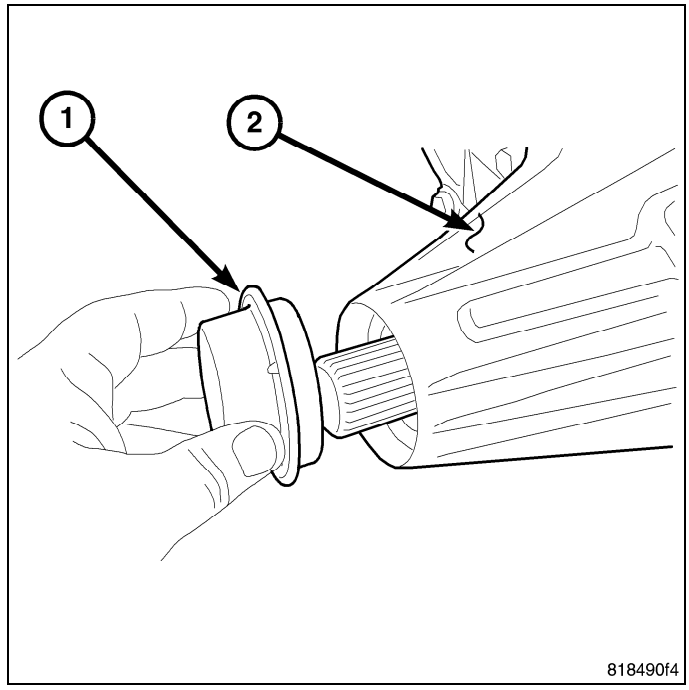

14. Install the rear output shaft speed sensor (1) to the transfer case (2). Tighten the speed sensor to 17 N·m (12.5 ft.lbs.).

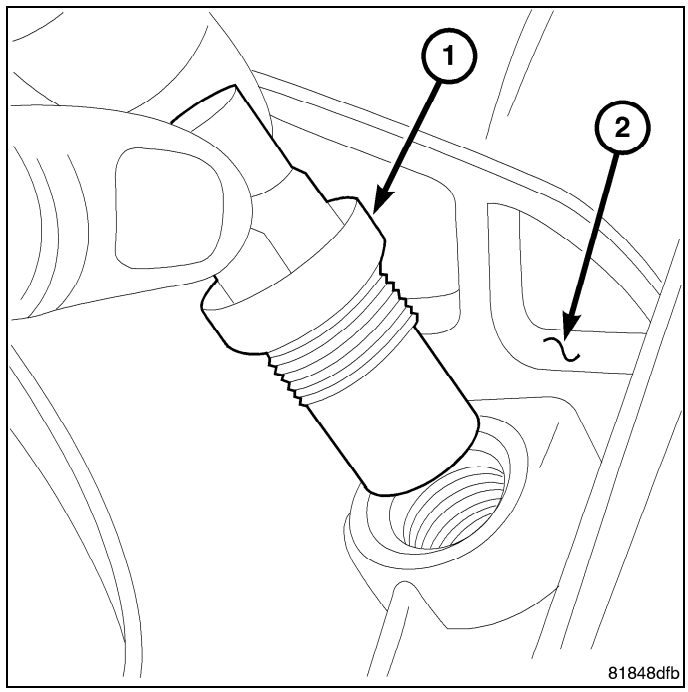

SHIFT MOTOR ASSEMBLY AND FRONT OUTPUT SHAFT BOOT

1. Install the shift motor isolator (1) onto the transfer case (2).

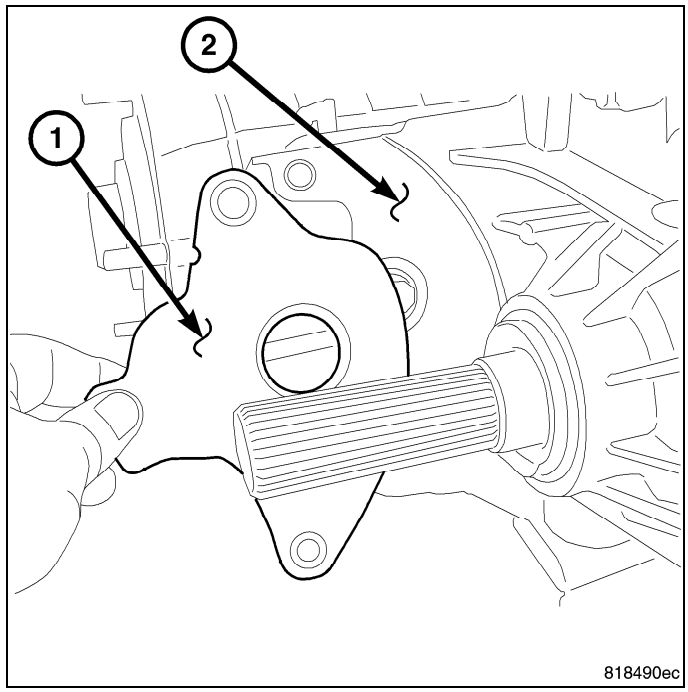

2. Install the shift motor and mode sensor assembly (1) onto the transfer case.

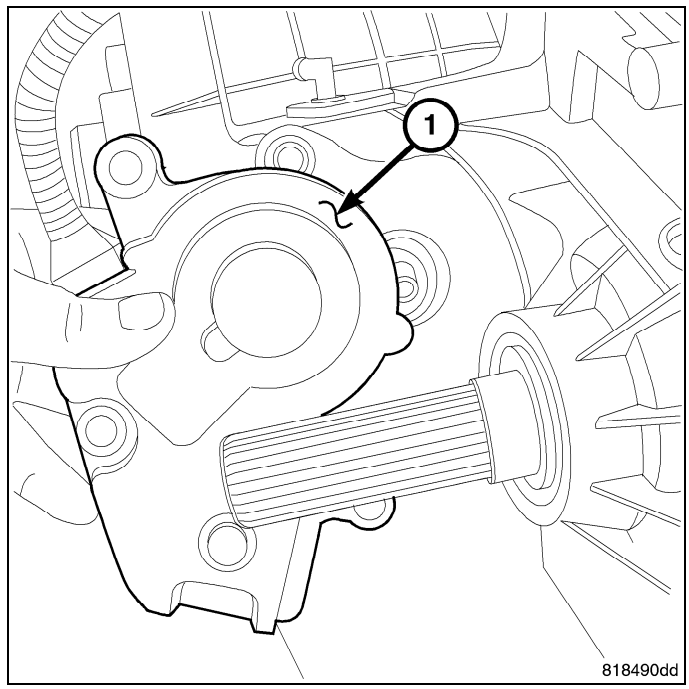

3. Install the bolts (1) holding the shift motor and mode sensor assembly (2) to the transfer case. Tighten the bolts to 23.50 N·m (17 ft.lbs.).

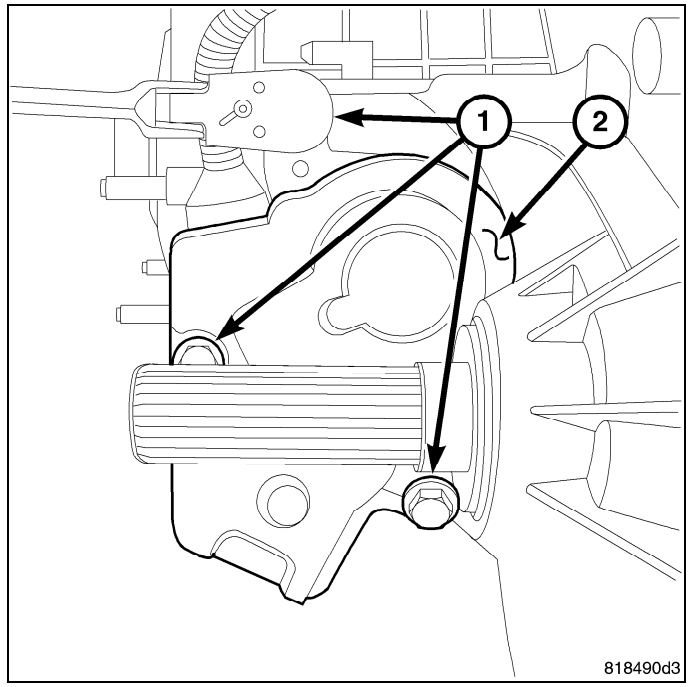

4. Install the front output shaft seal slinger with Oil Slinger Installer 8840. Install the slinger onto the shaft until the tool contacts the rear of the output shaft.
5. Install the front propeller shaft seal boot (1) and a new retaining clamp. Install a new seal boot retaining clamp with Axle Clamp Installer C-4975A.

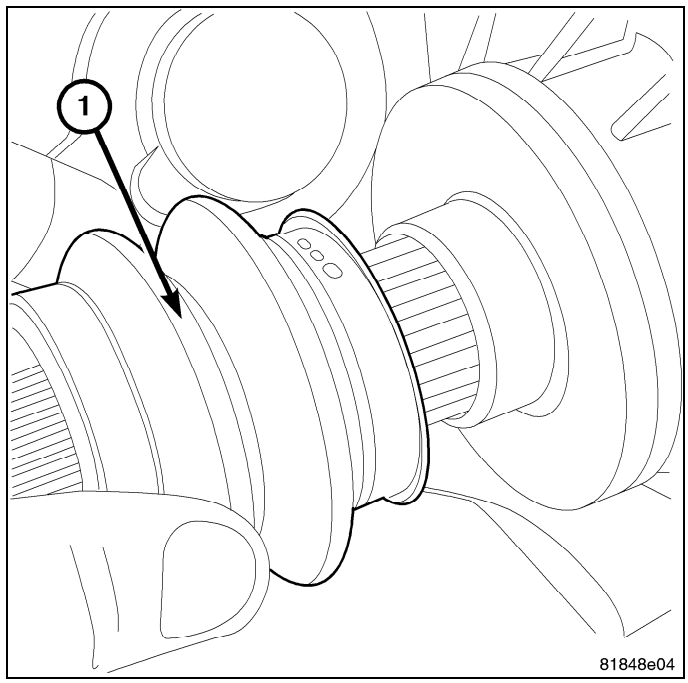

6. Install the front output shaft speed sensor (1) into the front case (2). Tighten the speed sensor to 17 N·m (12.5 ft.lbs.).

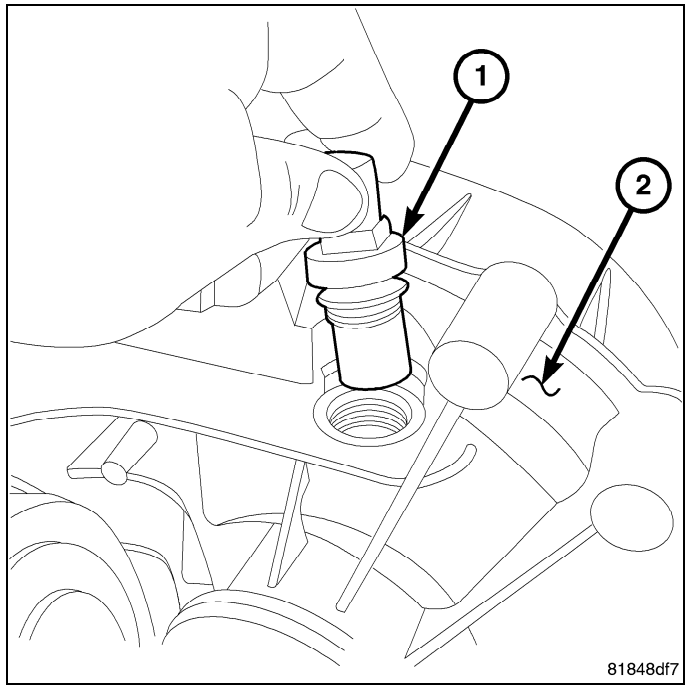

7. Install the new transfer case isolator gasket (1) onto the transfer case (2).

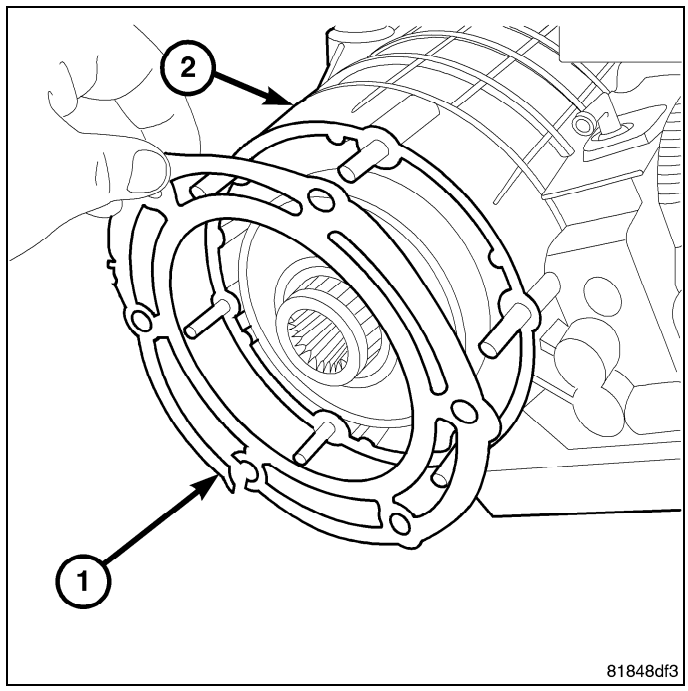

8. Install the drain plug (1) and fill the case.

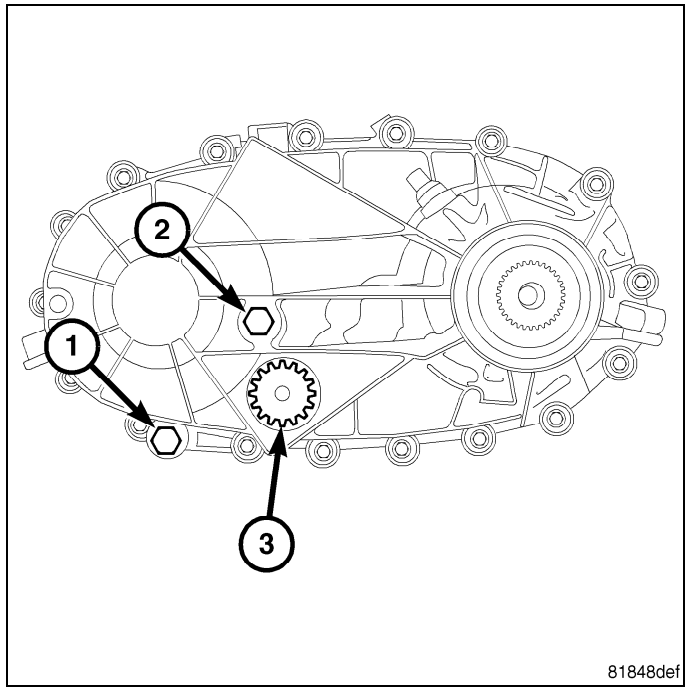

Installation

CAUTION: Make sure that a new transfer case isolator gasket is installed between the transfer case and transmission before installation. Failure to install an isolator gasket could lead to a severe corrosion issue.

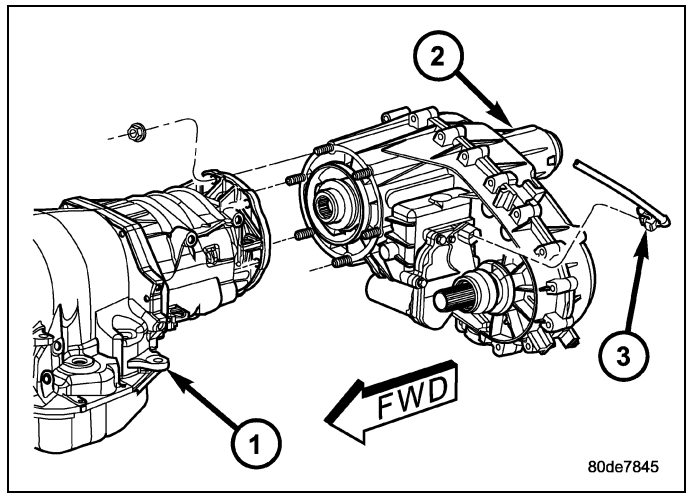

1. Mount transfer case on a transmission jack.
2. Secure transfer case to jack with chains.
3. Position transfer case under vehicle.
4. Align transfer case and transmission shafts and install transfer case onto the transmission.
5. Install and tighten transfer case attaching nuts to 27-34 N·m (20-25 ft. lbs.) torque.
6. Connect the vent hose.
7. Connect the shift motor and mode sensor wiring connectors. Secure wire harness to clips on transfer case.
8. Connect the front and rear output speed sensor wire connectors.
9. Align and connect the propeller shafts.(Refer to 03 - Differential and Driveline/Propeller Shaft/SHAFT, Drive - Installation)(Refer to 03 - Differential and Driveline/Propeller Shaft/SHAFT, Drive - Installation)
10. Fill transfer case with correct fluid. (Refer to 21 - Transmission and Transfer Case/Transfer Case/FLUID - Standard Procedure)
11. Install skid plate, if equipped.
12. Remove transmission jack and support stand.
13. Lower vehicle and verify transfer case shift operation.

Specifications

DESCRIPTION	N-m	Ft. Lbs.	In. Lbs.
Bolt, Clutch Pivot	61	45	-
Sensor, Front Output Shaft Speed	17	12.5	-
Sensor, Rear Output Shaft Speed	17	12.5	-
Plug, Drain/Fill	27	20	-
Bolt, Case Half	37	27	-
Nuts, Mounting	35.5	25	-
Bolts, Shift Motor and Mode Sensor Assembly	23.5	17	-
Bolts, Transfer Case to Transmission	27-34	20-25	

Special Tools

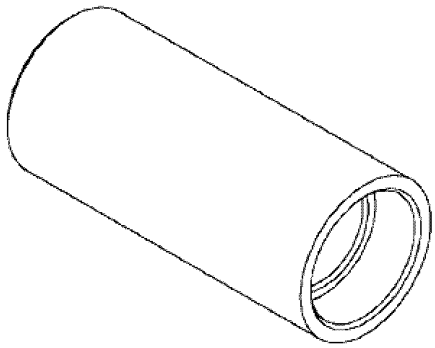

8840 - Installer, Oil Slinger

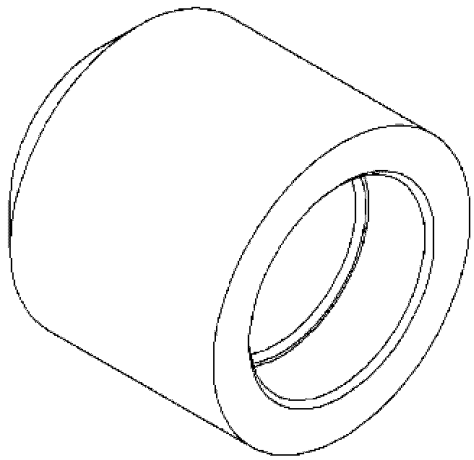

9036 - Installer, Seal

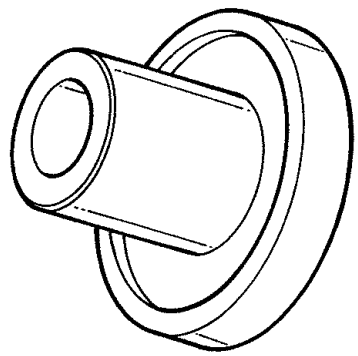

9523A - Installer, Bearing

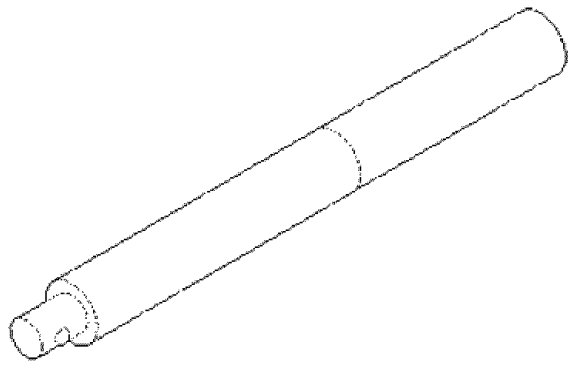

C-4171 - Driver Handle, Universal

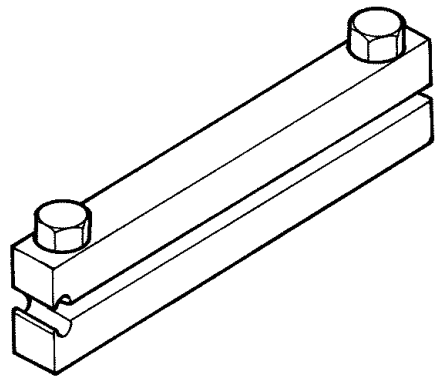

C-4975A - Installer, Axle Clamp

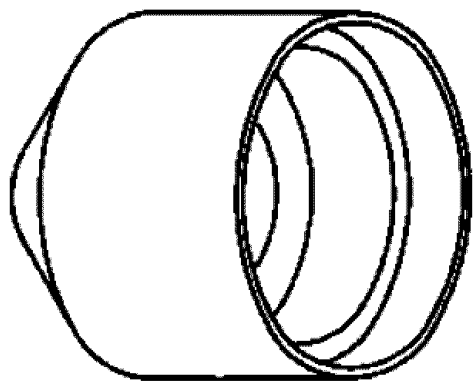

D-163 - Installer, Seal

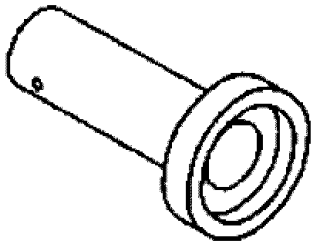

MB-991168-A - Installer, Seal

CLUTCH

Disassembly

1. While applying slight downward pressure on the bearing support, remove the “C” clip with a suitable pry tool.

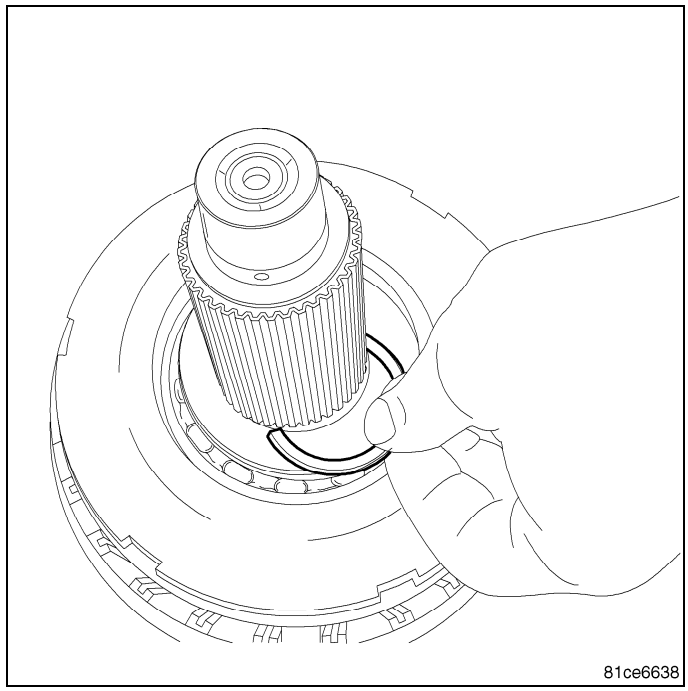

2. Remove the bearing and support.

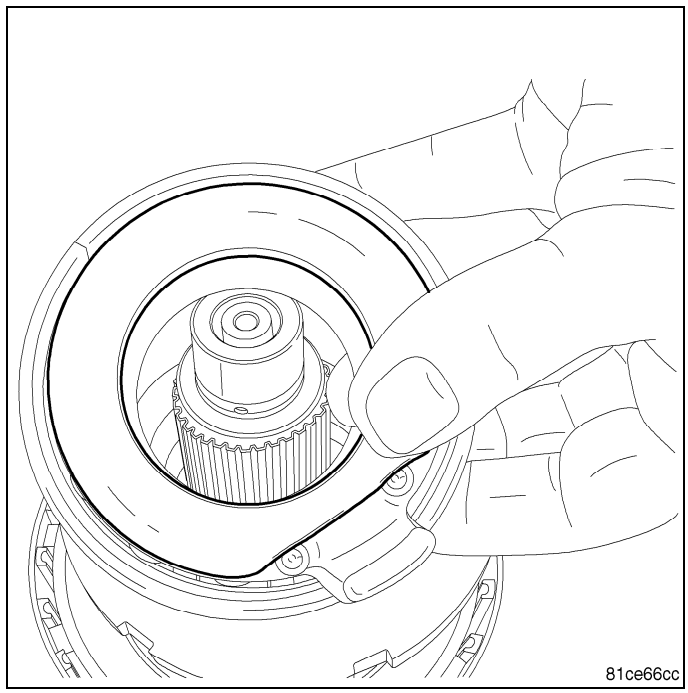

3. Remove the reaction plate.

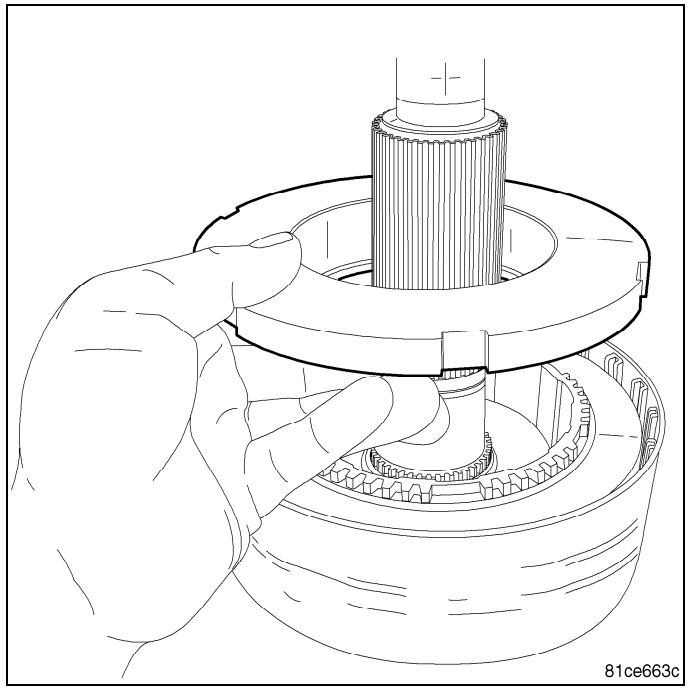

4. Remove the return spring.

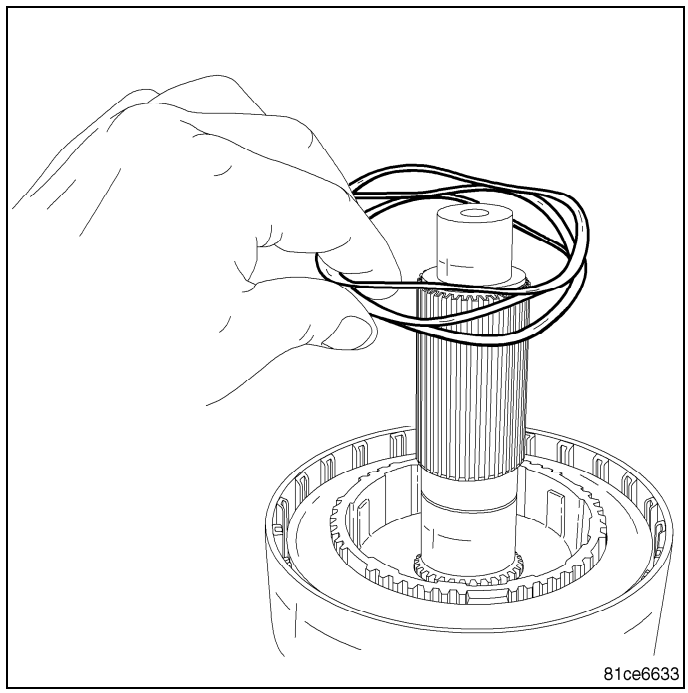

5. Remove the clutch pack spacer and clutch pack.

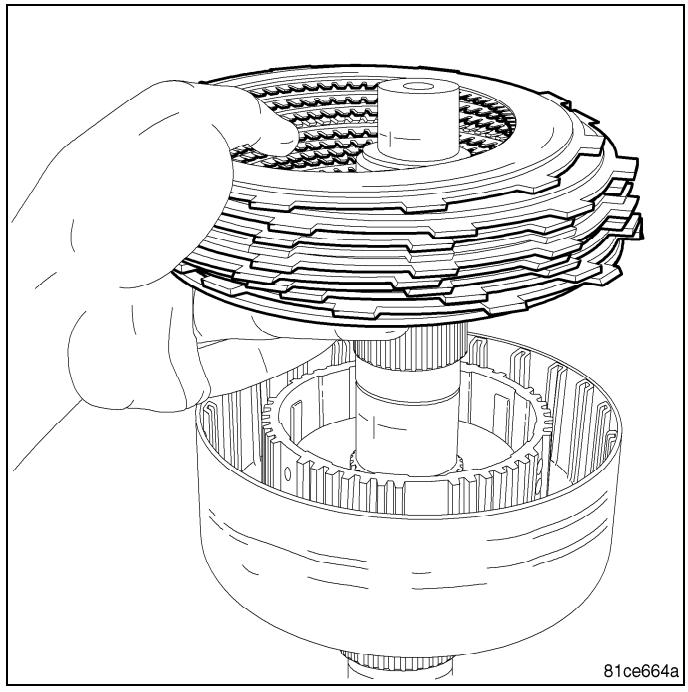

6. Remove the inner clutch hub retaining ring.

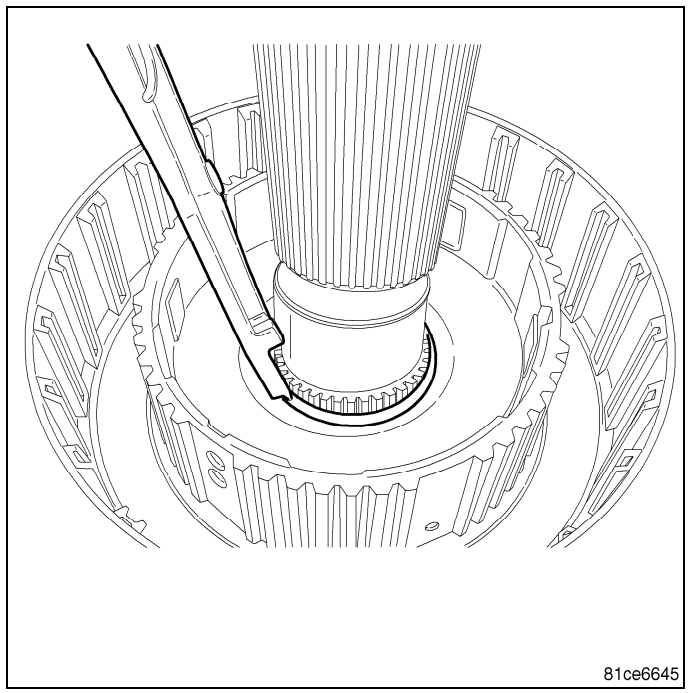

7. Remove the inner clutch hub.

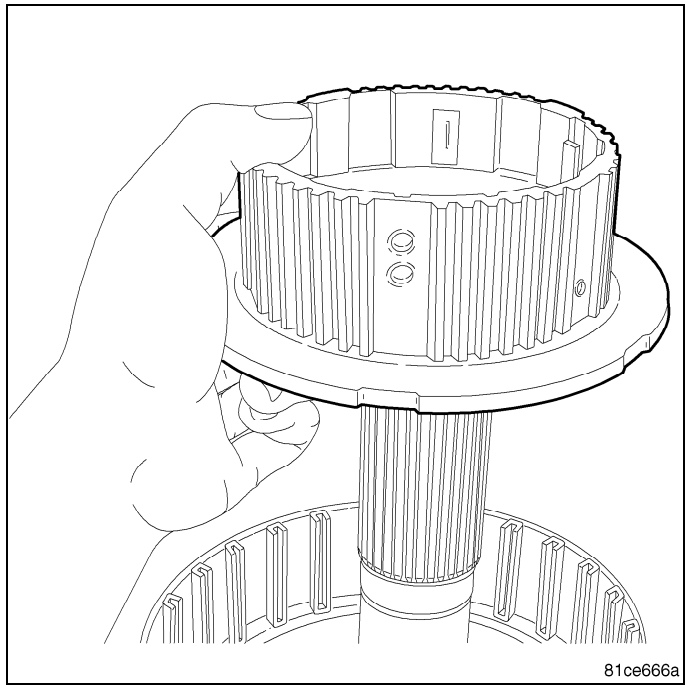

8. Remove the outer clutch hub from the mainshaft.

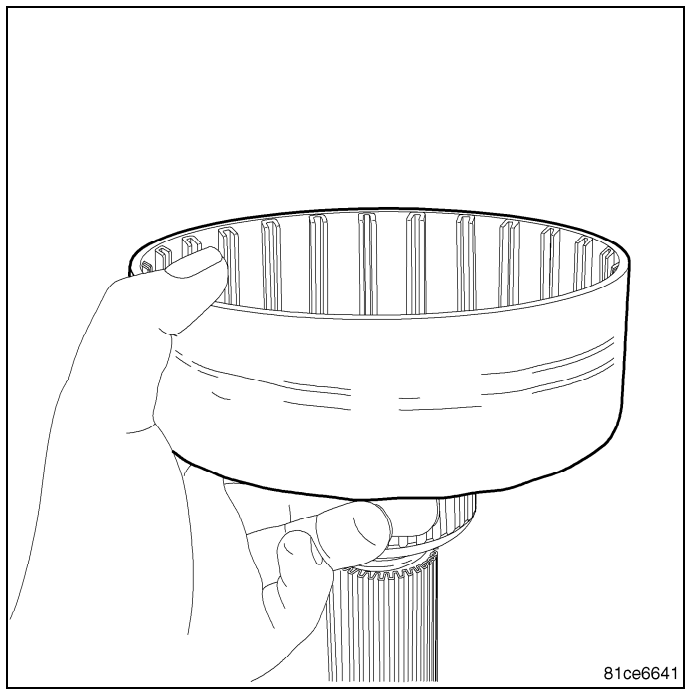

Assembly

1. Install the outer clutch hub onto the mainshaft.

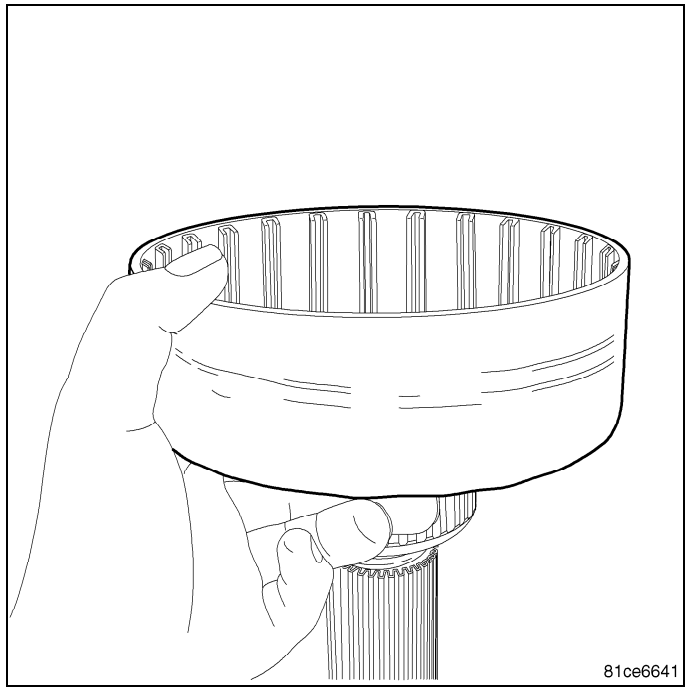

2. Install the inner clutch hub onto the mainshaft.

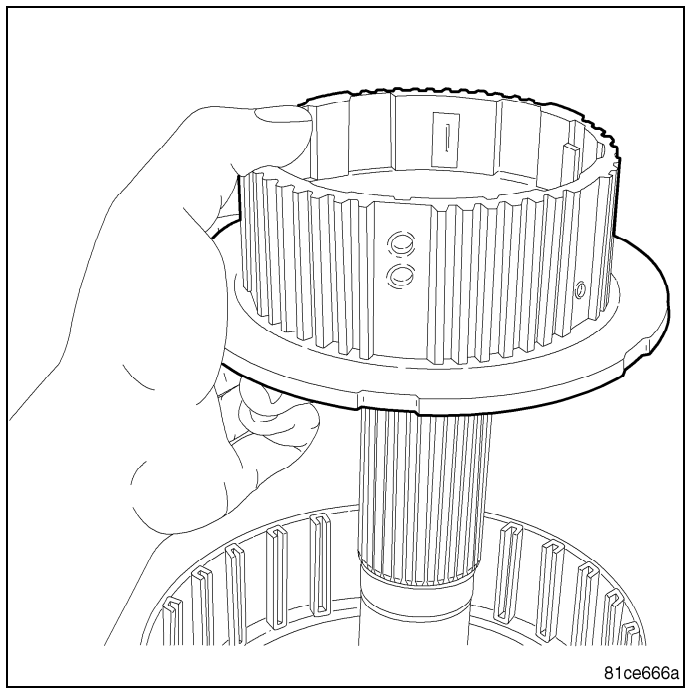

3. Install the inner clutch hub retaining ring.

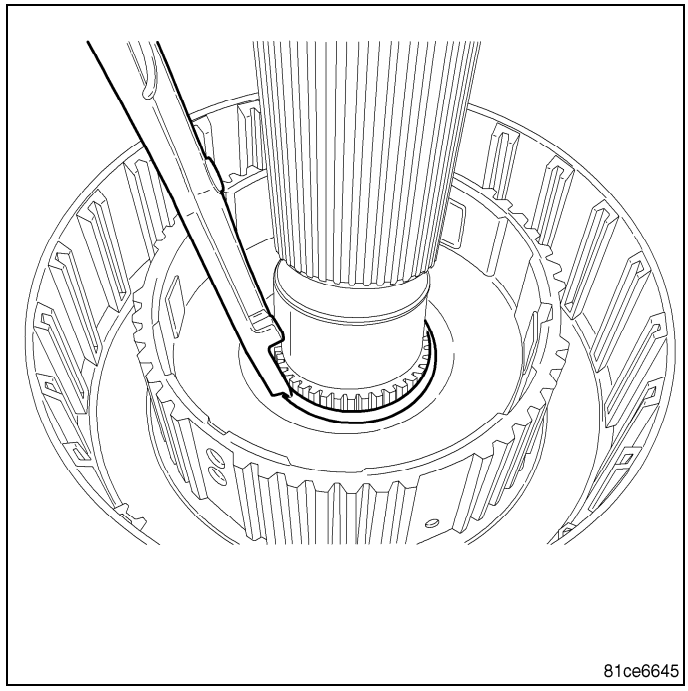

4. Starting with a friction disc and ending with the clutch spacer (no tabs), install the clutch pack.

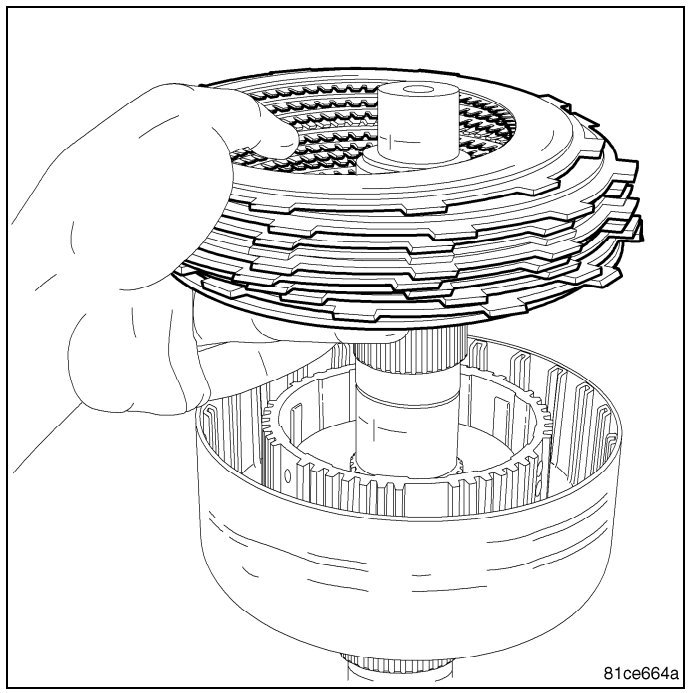

5. Install the return spring.

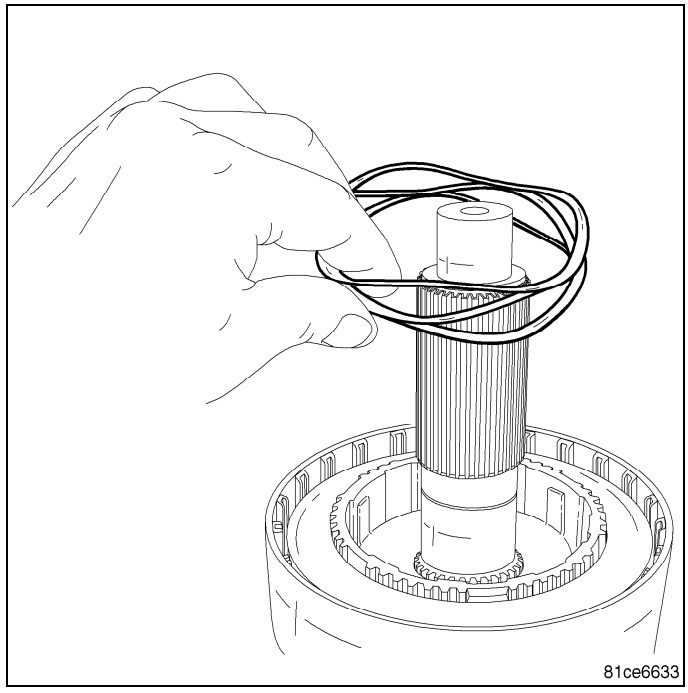

6. Install the reaction plate.

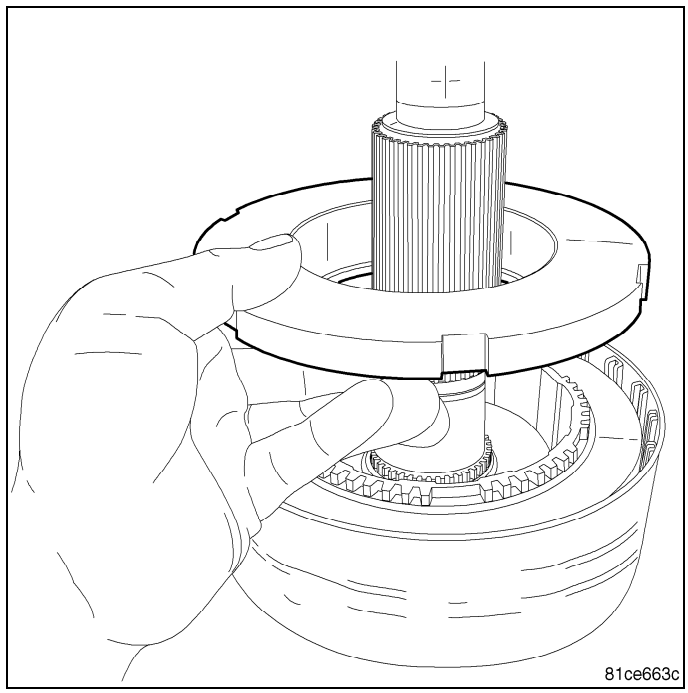

8. Place the support and bearing assembly into a shop press (1) and using a suitable spacer (2), press the bearing support (4) out of the bearing inner race (3).

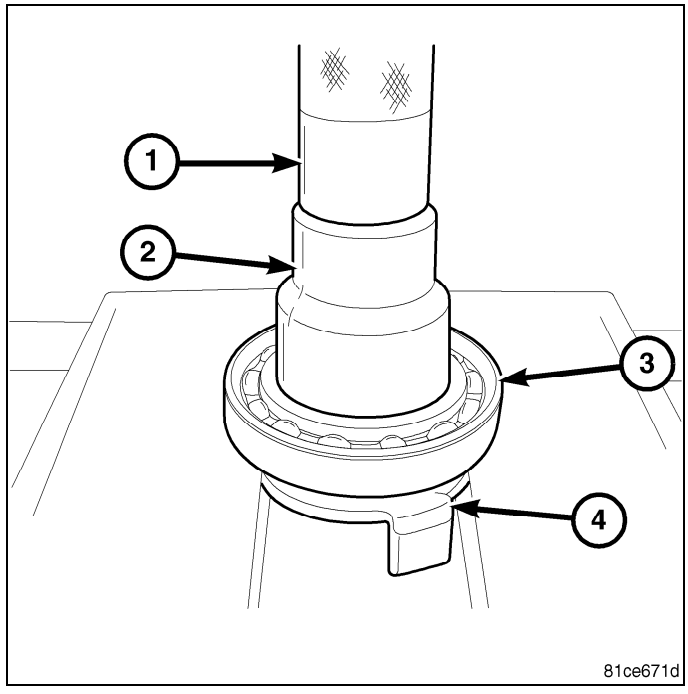

9. Place the support and bearing assembly into a shop press (1) and using a suitable spacer (2), press the bearing support (3) into the bearing inner race (4).

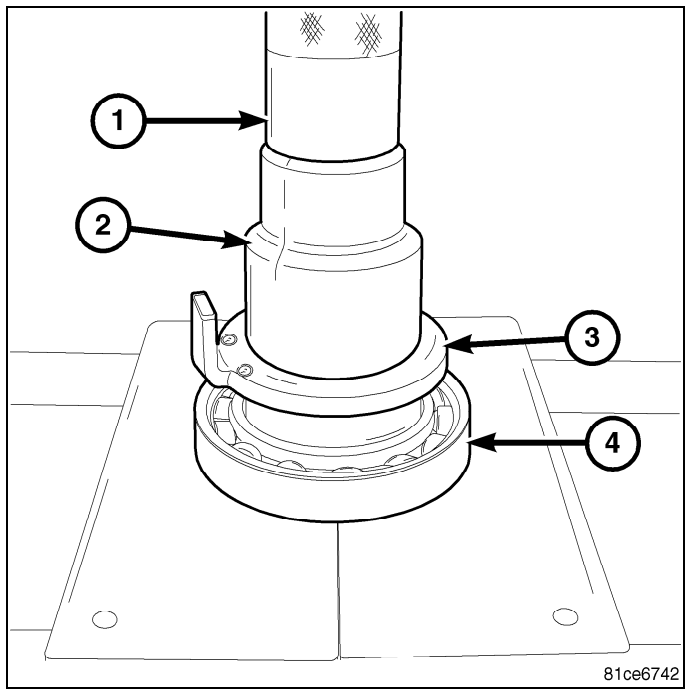

10. Install the bearing and support into the clutch assembly.

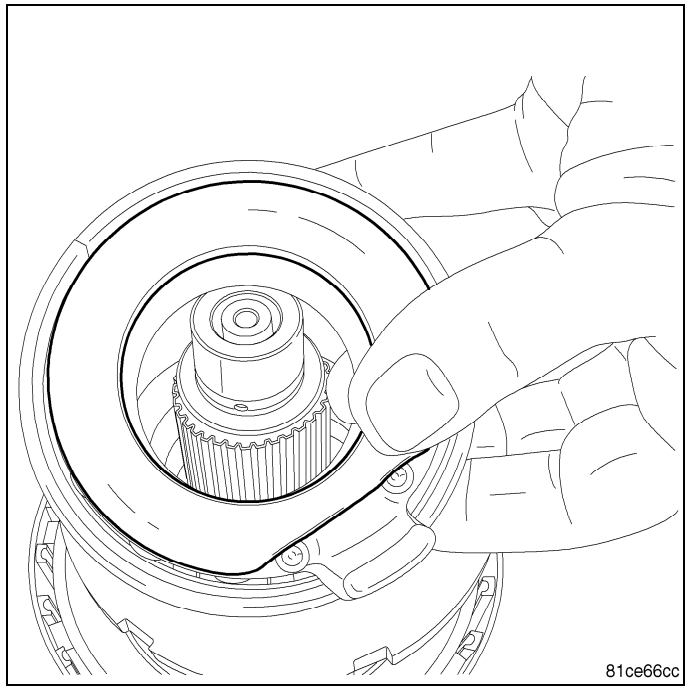

11. While applying slight downward pressure on the bearing support, install the “C” clip.

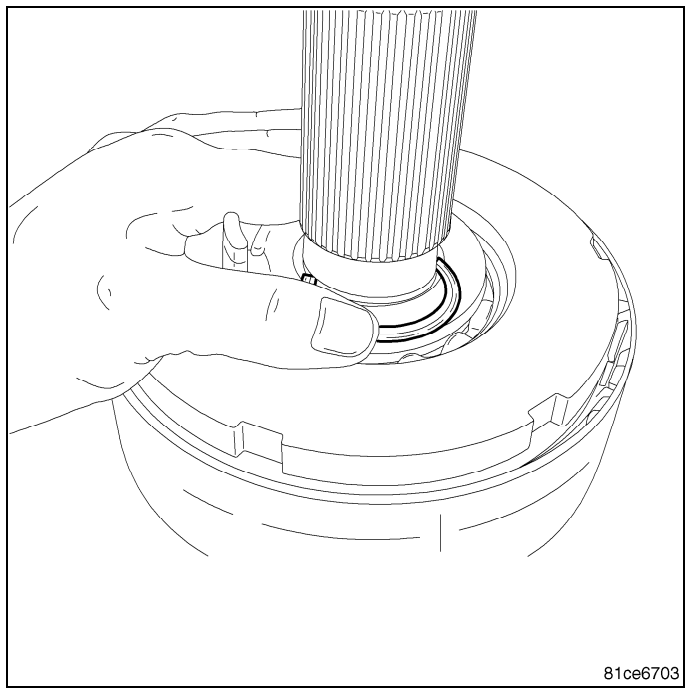

FLUID

Standard Procedure

The fill (2) and drain (1) plugs are both in the rear case.

1. Raise vehicle.
2. Position drain pan under transfer case.

NOTE: It may be necessary to remove the exhaust y-pipe at the exhaust manifold to properly access the fill and drain plugs. Lowering the exhaust will allow the plugs to be accessed for torquing during installation. (Refer to 11 - Exhaust System/PIPE, Exhaust - Removal)

3. Remove drain and fill plugs and drain lubricant completely.
4. Install drain plug. Tighten plug to 27 N·m (20 ft. lbs.).
5. Remove drain pan.
6. Fill transfer case to bottom edge of fill plug opening with the correct fluid for the application. (Refer to 04 - Vehicle Quick Reference/Capacities and Recommended Fluids - Description)
7. Install and tighten fill plug to 27 N·m (20 ft. lbs.).
8. Install the exhaust y-pipe to the exhaust manifold, if removed. (Refer to 11 - Exhaust System/PIPE, Exhaust - Installation)
9. Wipe any excess fluid that may have spilled onto the exhaust.
10. Lower vehicle.

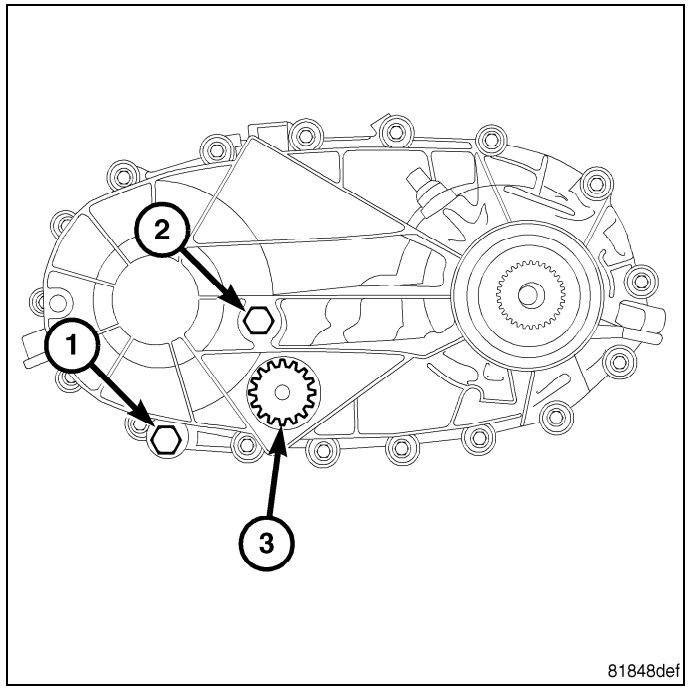

MOTOR, Shift

Description

The shift motor consists of a permanent magnet D.C. motor with gear reduction to convert a high speed-low torque device into a low speed-high torque device. The output of the device is coupled to a shaft which internally moves the mode and range forks that change the transfer case operating ranges. The motor is rated at 25 amps maximum at 23° C (72° F) with 10 volts at the motor leads.

Operation

The transfer case shift motor responds to the Drive Train Control Module (DTCM) commands to move the transfer case shift sector bi-directionally, as required, to obtain the transfer case operating mode indicated by the instrument panel mounted selector switch.

Removal

1. Raise the vehicle on a suitable hoist.
2. Remove the front propeller shaft. (Refer to 03 - Differential and Driveline/Propeller Shaft/SHAFT, Drive - Removal)
3. Disengage the wiring connectors from the shift motor and mode sensor.
4. Remove the bolts (1) holding the shift motor and mode sensor assembly (2) onto the transfer case.

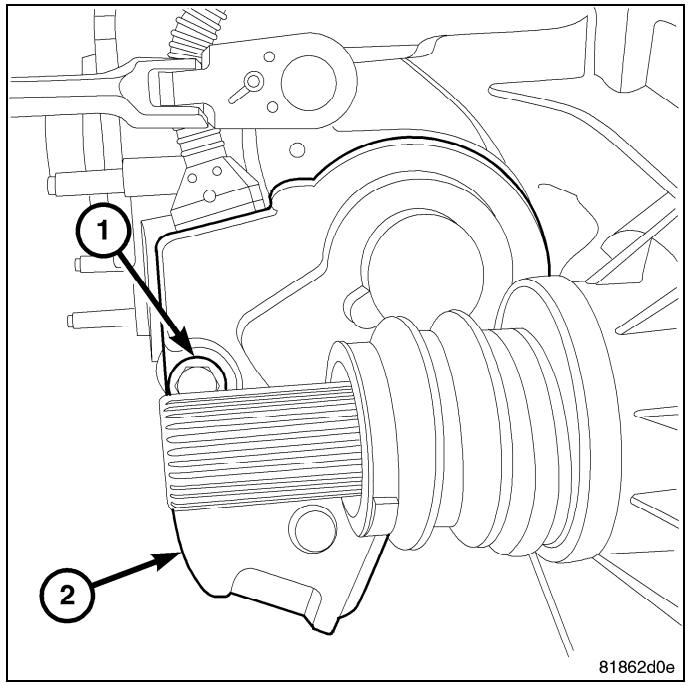

5. Separate the shift motor and mode sensor assembly (1) from the transfer case.

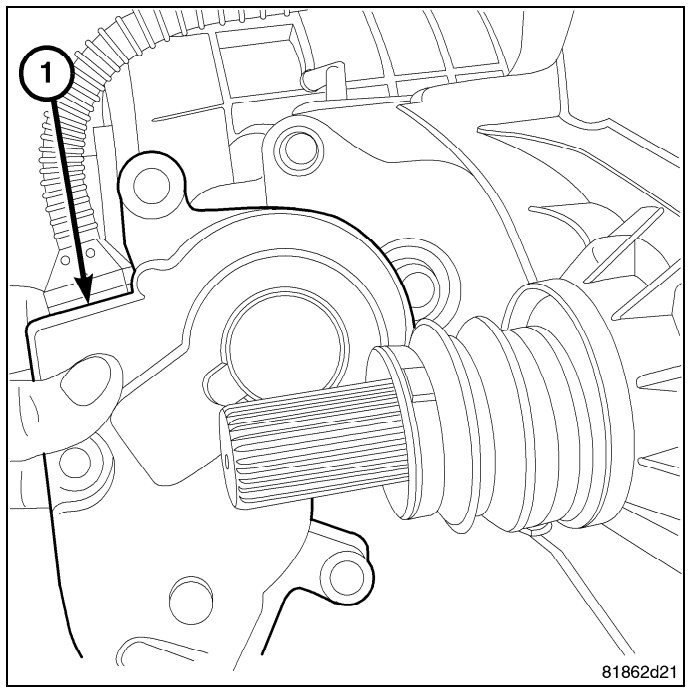

6. Remove the shift motor isolator (1) from the transfer case (2).

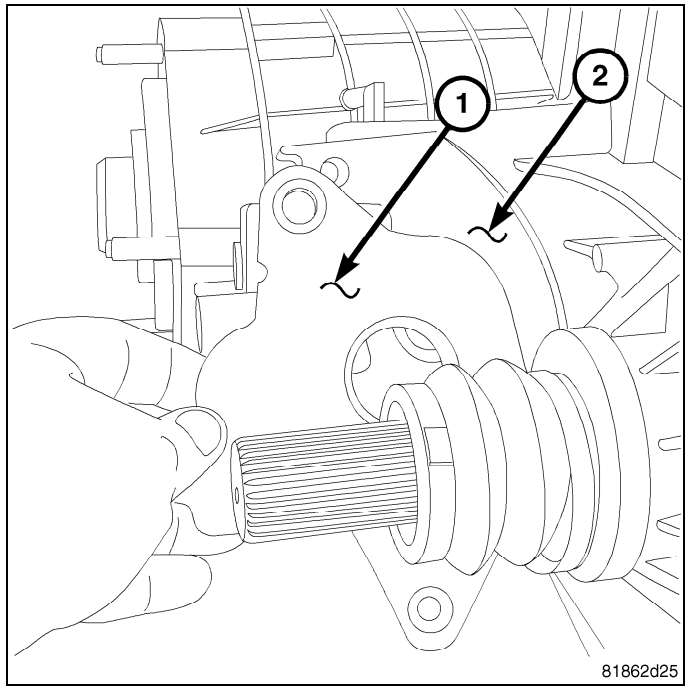

Installation

1. Install the shift motor isolator (1) onto the transfer case (2).

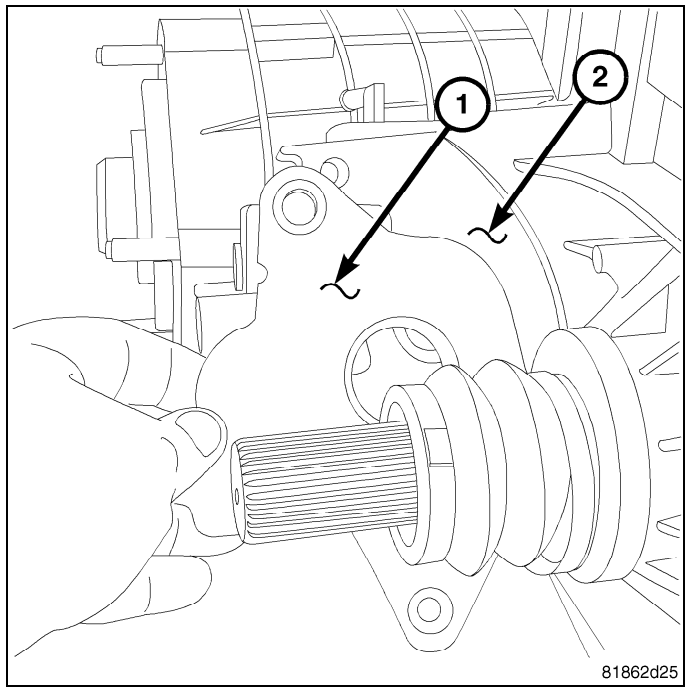

NOTE: Verify that the shift motor position and sector shaft orientation are aligned. It may be necessary to manually shift the transfer case if the shift motor and sector shaft are not aligned.

2. Install the shift motor and mode sensor assembly (1) onto the transfer case.

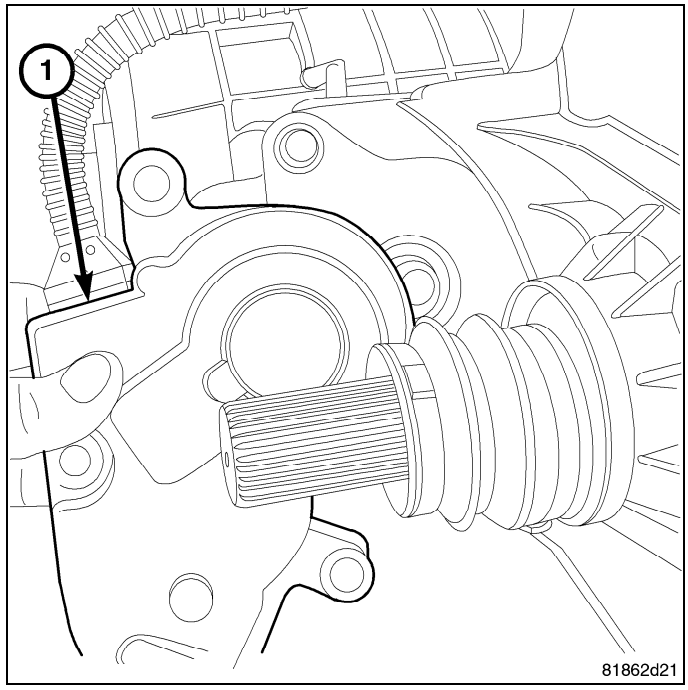

CAUTION: If the original shift motor and mode sensor assembly bolts are reused, be sure to use Mopar® Lock AND Seal or Loctite™ 242 to replenish the lock patch material originally found on the bolts

3. Install the bolts (1) to hold the shift motor and mode sensor assembly (2) onto the transfer case. Tighten the bolts to 23.5 N·m (17 ft.lbs.).
4. Engage the wiring connectors to the shift motor and mode sensor.
5. Install the front propeller shaft. (Refer to 03 - Differential and Driveline/Propeller Shaft/SHAFT, Drive - Installation)
6. Refill the transfer case as necessary with the correct fluid for the application. (Refer to 04 - Vehicle Quick Reference/Capacities and Recommended Fluids - Description)
7. Lower vehicle and verify transfer case operation.

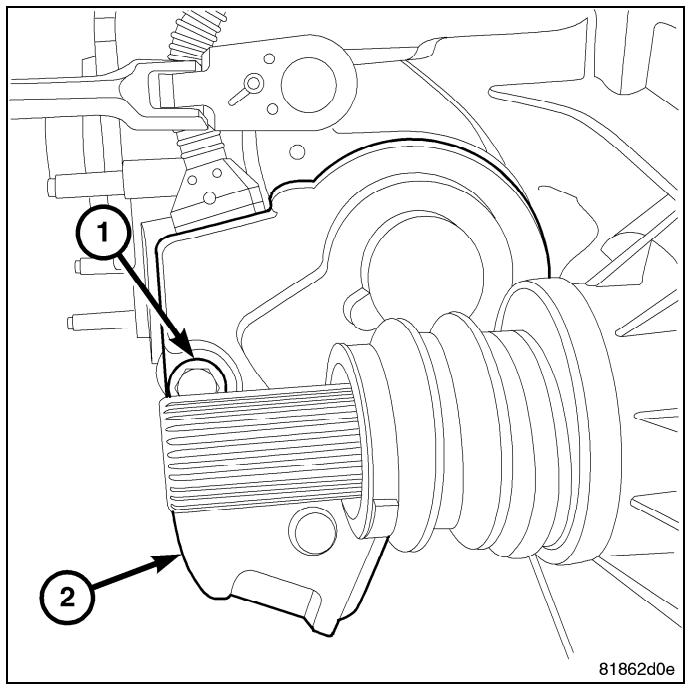

SEAL, Output Shaft, NV246 Front

Removal

1. Remove the front propeller shaft (Refer to 03 - Differential and Driveline/Propeller Shaft/SHAFT, Drive - Removal) .
2. Remove the front propeller shaft seal boot (1) retaining clamp (2) .

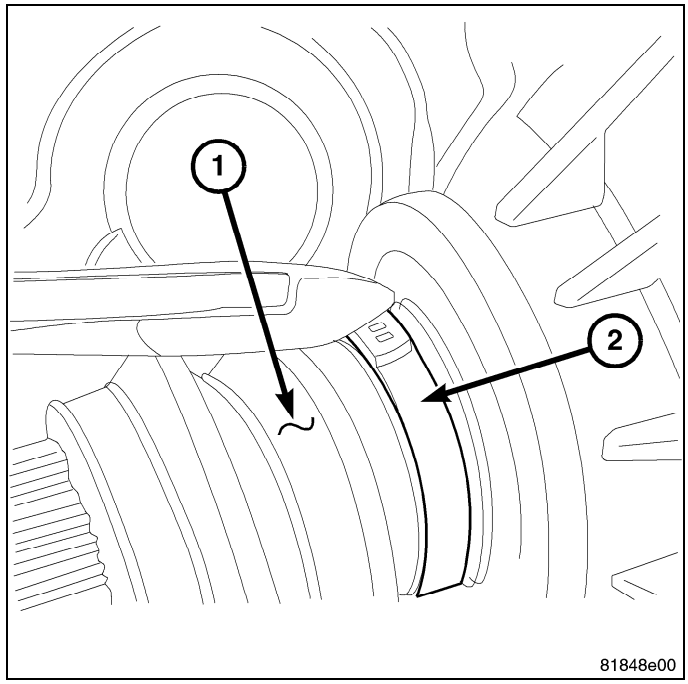

3. Remove the front propeller shaft seal boot (1) .

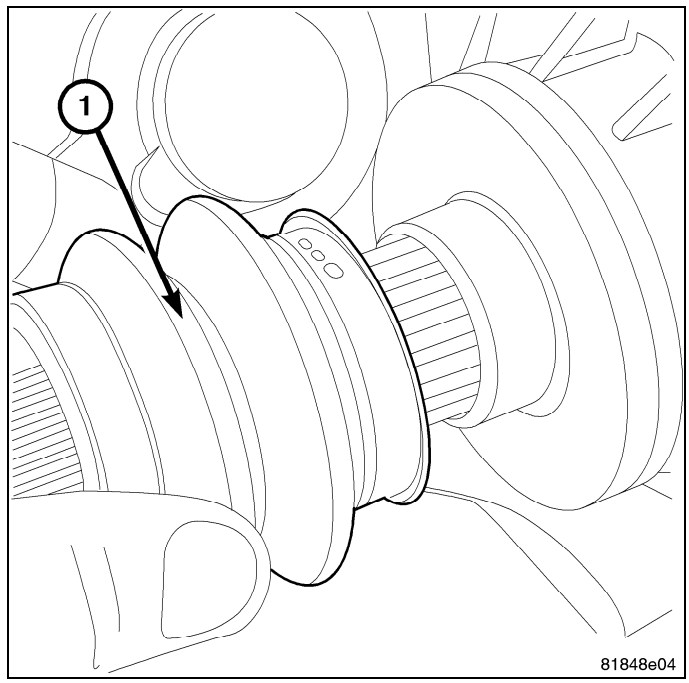

4. Remove the front output shaft seal slinger (1) by bending (2) the slinger ears away from the transfer case.

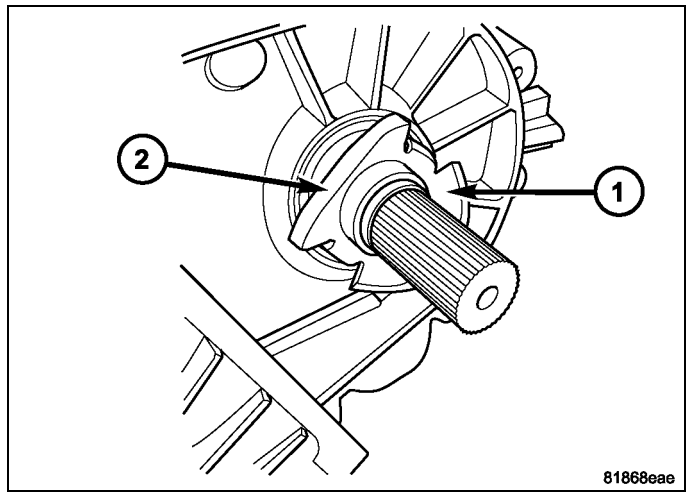

5. Using a suitable pry tool (2) , remove the slinger (1) from the output shaft using care not to damage the shaft.
6. Using a screw and a slide hammer, remove the front output shaft seal.

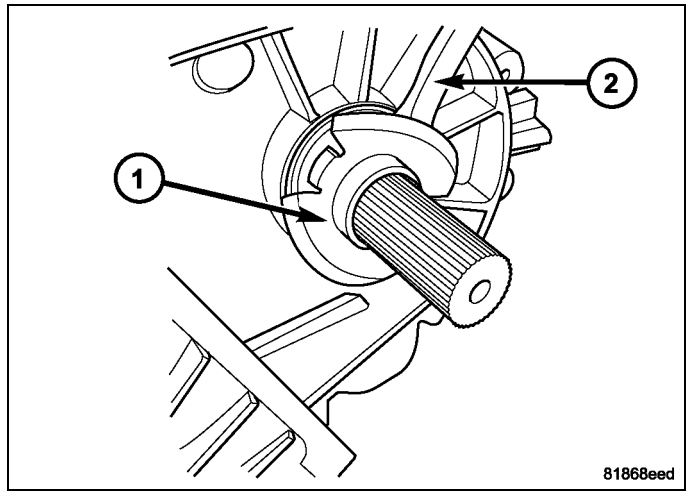

Installation

1. Install the new front output shaft seal with Seal Installer MB-991168-A.
2. Install the front output shaft seal slinger with Oil Slinger Installer 8840. Install the slinger onto the shaft until the tool contacts the rear of the output shaft.
3. Install a new seal boot clamp onto the seal boot.
4. Install the seal boot (1) and clamp onto the slinger hub and tighten the clamp with Axle Clamp Installer C-4975A.
5. Install front propeller shaft(Refer to 03 - Differential and Driveline/Propeller Shaft/SHAFT, Drive - Installation) .

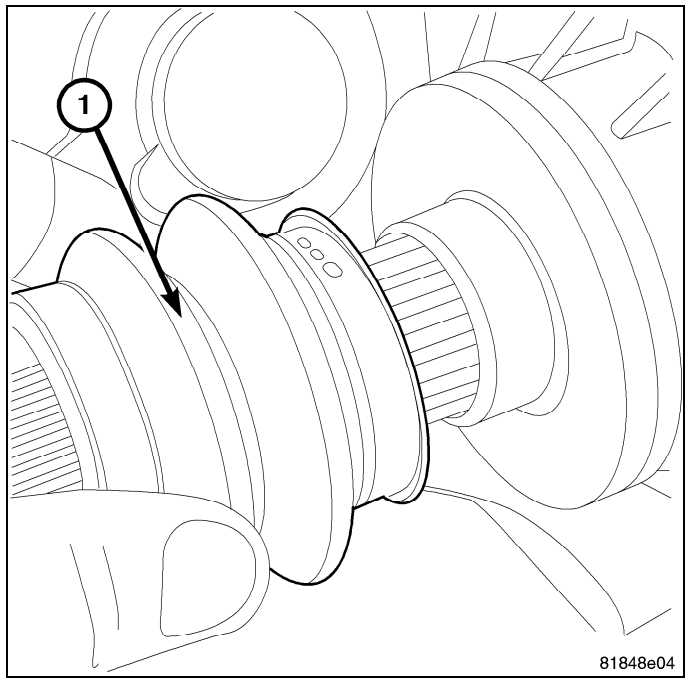

SEAL, Output Shaft, Rear

Removal

1. Raise and support vehicle.
2. Remove rear propeller shaft. (Refer to 03 - Differential and Driveline/Propeller Shaft/SHAFT, Drive - Removal)
3. Using a suitable pry tool or slide-hammer mounted screw, remove the rear output seal.

Installation

1. Clean fluid residue from sealing surface and inspect for defects.
2. Using Seal Installer D-163 (2) and Universal Handle C-4171 (1), install seal in the rear case half.
3. Install propeller shaft. (Refer to 03 - Differential and Driveline/Propeller Shaft/SHAFT, Drive - Installation)
4. Verify proper transfer case fluid level.
5. Lower vehicle.

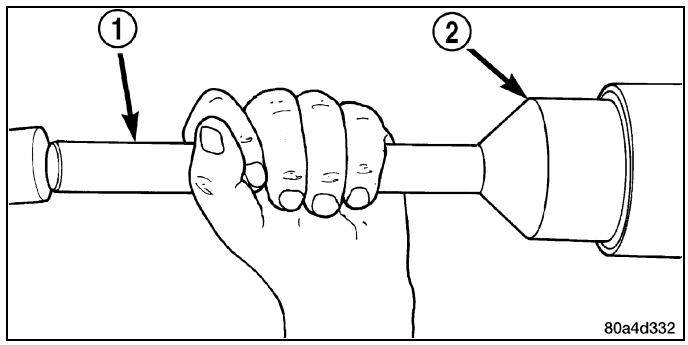

SENSOR, Mode

Description

The transfer case mode sensor is an electronic device whose output can be interpreted to indicate the shift motor shaft's rotary position. The sensor consists of a magnetic ring and four Hall Effect Transistors to create a 4 channel digital device (non-contacting) whose output converts the motor shaft position into a coded signal. The DTCM must supply 5VDC (+/- 0.5v) to the sensor and monitor the shift motor position. The four channels are denoted A, B, C, and D. The sensor is mechanically linked to the shaft of the cam which causes the transfer case shifting. The mode sensor draws less than 53 mA.

Operation

During normal vehicle operation, the Drive Train Control Module (DTCM) monitors the mode sensor outputs at least every 250 (+/-50) milliseconds when the shift motor is stationary and 400 microseconds when the shift motor is active. A mode sensor signal between 3.8 Volts and 0.8 Volts is considered to be undefined.

Refer to **SECTOR ANGLES vs. TRANSFER CASE POSITION** for the relative angles of the transfer case shift sector versus the interpreted transfer case gear operating mode. Refer to **MODE SENSOR CHANNEL STATES** for the sensor codes returned to the DTCM for each transfer case mode sensor position. The various between gears positions can also be referred as the transfer case's coarse position. These coarse positions come into play during shift attempts.

SECTOR ANGLES vs. TRANSFER CASE POSITION

Shaft Angle (Degrees)	Transfer Case Position
+40	4LO
+20	N
0	2WD/AWD
-20	4HI

MODE SENSOR CHANNEL STATES

Transfer Case Angle (degrees)	Sensor Channel A	Sensor Channel B	Sensor Channel C	Sensor Channel D
Between Gears	H	H	L	H
+40 (4LO)	H	H	L	L
Between Gears	H	H	L	H
Between Gears	H	L	L	H
+20 (NEUTRAL)	H	L	L	L
Between Gears	H	L	L	H
Between Gears	H	L	H	H
0 (2WD/AWD)	H	L	H	L
Between Gears	H	L	H	H
Between Gears	L	L	H	H
-20 (4HI)	L	L	H	L
Between Gears	L	L	H	H
Between Gears	L	H	H	H

SENSOR, Speed, Front Output

Removal

1. Raise the vehicle on a suitable hoist.
2. Disengage the wiring connector from the front output shaft speed sensor (1) .
3. Remove the front output shaft speed sensor from the transfer case.

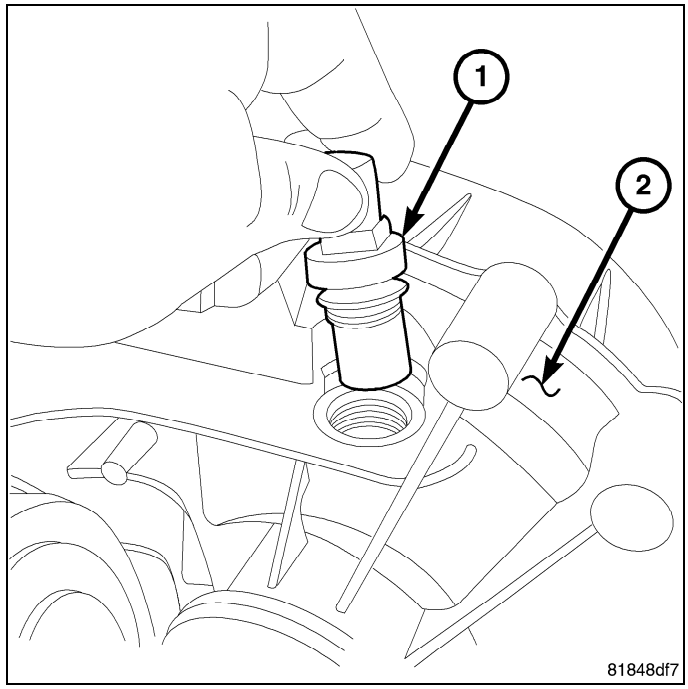

Installation

1. Install the front output shaft speed sensor (1) into the transfer case. Tighten the speed sensor to 17 N·m (12.5 ft.lbs.).
2. Engage the wiring connector to the front output shaft speed sensor.
3. Lower the vehicle.

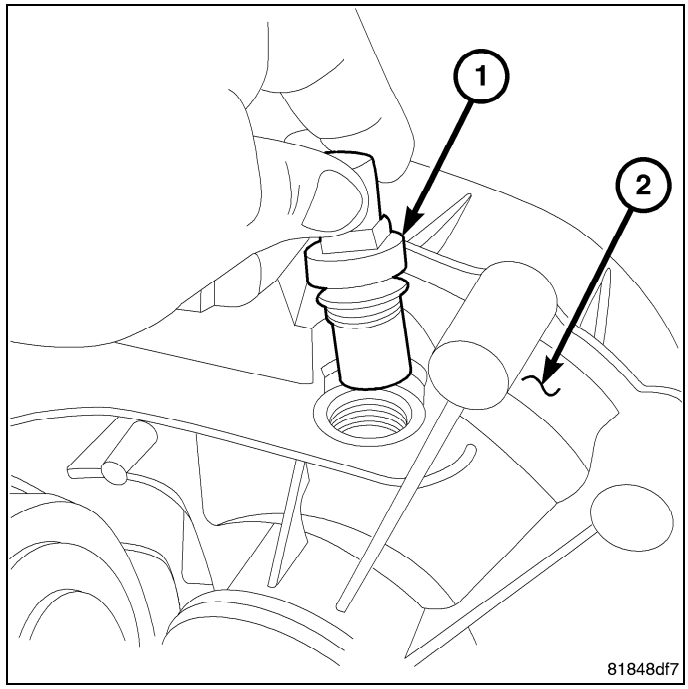

SENSOR, Speed, Rear Output

Removal

1. Raise the vehicle on a suitable hoist.
2. Disengage the wiring connector from the rear output shaft speed sensor (1) .
3. Remove the rear output shaft speed sensor from the transfer case.

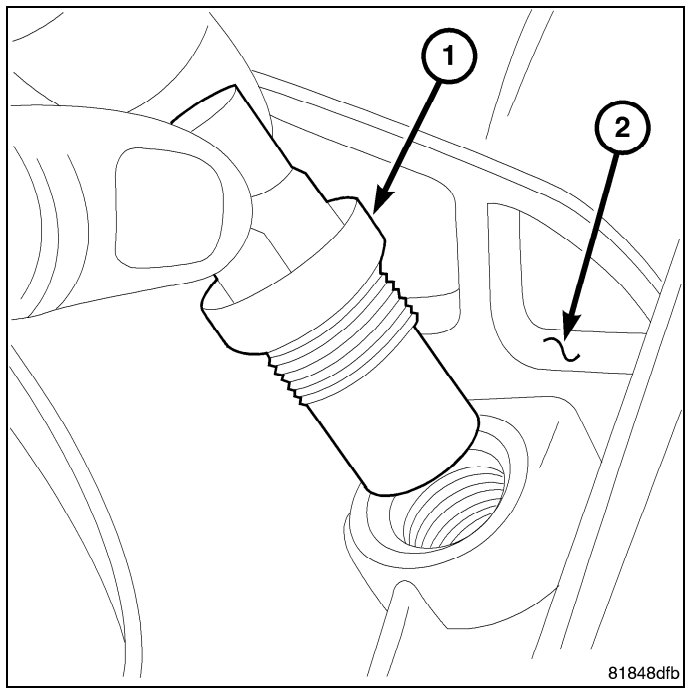

Installation

1. Install the rear output shaft speed sensor (1) into the transfer case. Tighten the speed sensor to 17 N·m (12.5 ft.lbs.).
2. Engage the wiring connector to the rear output shaft speed sensor.
3. Lower the vehicle.

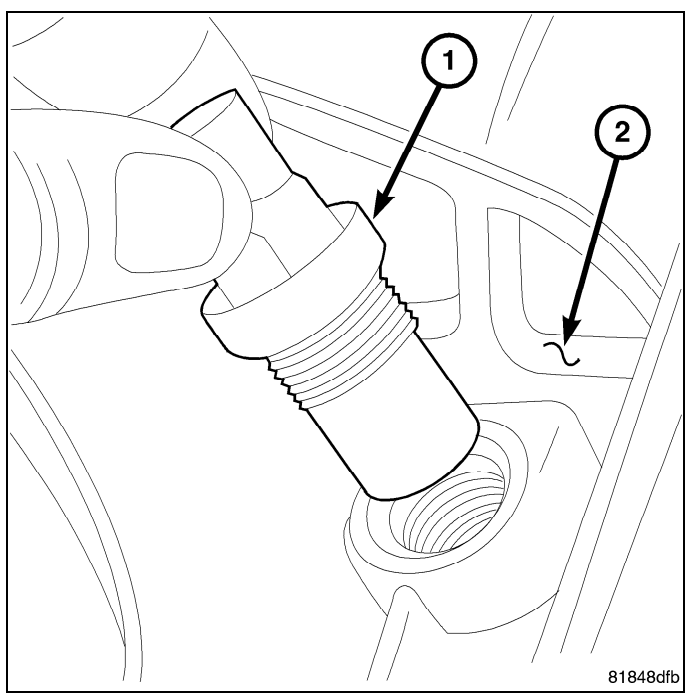

SWITCH, Transfer Case

Description

The selector switch assembly is mounted in the left side of the vehicle's Instrument Panel (IP) and consists of a rotary knob connected to a resistive network for the mode and range shift selections. Also located in this assembly is a re-

cessed, normally open momentary switch for making shifts into and out of transfer case NEUTRAL. A pen, or similar instrument, is used to make a NEUTRAL shift selection, thus reducing the likelihood of an inadvertent shift request.

The selector switch also contains light emitting diode's (LED's) to indicate the transfer case position and whether a shift is in progress.

Operation

As the position of the selector switch varies, the resistance between the Mode Sensor supply voltage pin and the Mode Sensor output will vary. Hardware, software, and calibrations within the Drive Train Control Module (DTCM) are provided that interpret the selector switch resistance as given in the table below: **SELECTOR SWITCH INTERPRETATION**

SELECTOR SWITCH INTERPRETATION

Step	Resistance Range (ohms)	Required Interpretation
A	<200	Shorted
B	400-700	NEUTRAL
C	1050-1450	4LO
D	1850-2300	4HI
E	3050-5950	AWD (Default)
F	9.5-12.5K	In between positions
G	>15.5K	Open

For resistances between the ranges B-E shown for each valid position (T-Case NEUTRAL, 4LO, 4HI, AWD), the DTCM may interpret the resistance as:

- either of the neighboring valid positions.
- as an invalid fault position.

For resistances between the ranges E and F shown for AWD and in-between positions, the DTCM may interpret the resistance as:

- the AWD position.
- an invalid fault position.
- a valid in-between position.

For resistances between the ranges F and G shown for in-between positions and fault condition (open), the DTCM may interpret the resistance as:

- a valid in-between position.
- an invalid fault position.

For resistances between the ranges A and B shown for the fault condition (short) and , T-Case NEUTRAL, the DTCM may interpret the resistance as:

- the T-Case NEUTRAL position.
- an invalid fault position.

The LED's in the selector assembly are illuminated/flashed in the following manner to indicate a particular condition or state.

- A solidly illuminated LED indicates a successfully completed shift and the current operating mode of the transfer case. While a shift has been requested but not yet completed, the LED for the desired transfer case position is flashed.
- A flashing operating mode LED for the desired gear indicates that a shift to that position has been requested, but all of the driver controllable conditions have not been met. This is in an attempt to notify the driver that the transmission needs to be put into NEUTRAL, the vehicle speed is too great, or some other condition outlined (other than a diagnostic failure that would prevent this shift) elsewhere (Refer to 08 - Electrical/8E - Electronic Control Modules/MODULE, Drivetrain Control - Operation) is not met. Note that this flashing will continue indefinitely until the conditions are eventually met, or the selector switch position is changed, or if diagnostic routines no longer allow the requested shift.
- If the driver attempts to make a shift into transfer case NEUTRAL, and any of the driver controllable conditions are not met, the request will be ignored until all of the conditions are met or until the NEUTRAL select button is released.

Additionally the neutral lamp will flash, or begin to flash while the button is depressed and operator controllable conditions are not being met. All of the LED's except the Neutral will flash if any of the operator controllable conditions for shifting are not met while the Neutral button is depressed. This "toggle" type of feature is necessary because the TCCM would interpret another request immediately after the shift into transfer case NEUTRAL has completed.

- No LED's illuminated indicate a fault in the transfer case control system.

TIRES AND WHEELS

TABLE OF CONTENTS

page

TIRES AND WHEELS
DIAGNOSIS AND TESTING 2
STANDARD PROCEDURE
TIRE AND WHEEL BALANCE 2
TIRE ROTATION 4
SPECIFICATIONS 4
SPECIAL TOOLS 5
TIRES 7
WHEELS 15
TIRE PRESSURE MONITORING 21

Tires and Wheels

Diagnosis and Testing

Tire and wheel imbalance, runout and tire road force variation can cause vehicles to exhibit steering wheel vibration and/or seat vibration.

VISUAL INSPECTION

Visual inspection of the vehicle is recommended prior to road testing or performing any other procedure. Raise and support the vehicle (Refer to 04 - Vehicle Quick Reference/Hoisting - Standard Procedure).

Inspect for the following:

- Verify correct (OEM) wheel and tire, as well as presence of wheel weights.
- Inspect tires and wheels for damage, mud packing and unusual wear; correct as necessary.
- Check and adjust tire air pressure to the pressure listed on the label attached to the driver's door opening.

ROAD TEST

NOTE: If a Noise & Vibration Analyzer is available, use it to diagnosis the issue during the road test.

NOTE: If the vehicle has been sitting for an extended period of time it is recommended to drive to warm the tires. This process could eliminate flat spots that can cause vibration.

Road test vehicle on a smooth road **at and near the designated speed** where legal speed limits allow. Lightly place hands on steering wheel at the 10:00 and 2:00 positions and observe for:

- Steering wheel oscillation: clockwise/counterclockwise
- Steering wheel high frequency movement: rapid vibration up and down
- Seat high frequency movement: rapid vibration up and down

To rule out vibrations due to brakes or powertrain:

- Lightly apply brakes at the designated speed; if vibration occurs or is enhanced, vibration is likely due to a brake concern.
- Shift transmission into neutral while vibration is occurring; if vibration is eliminated, vibration is likely due to a powertrain concern (Refer to 03 - DIFFERENTIAL AND DRIVELINE).

TIRE/WHEEL BALANCE AND ROAD FORCE VARIATION

NOTE: If wheel balance equipment is capable of testing tire road force variation and the tire/wheel assemblies are within specification, place the tires with the greater road force variation on the rear of the vehicle.

Balance the tire and wheel assemblies as necessary, and if wheel balance equipment is capable, also test for tire and wheel runout and road force variation following the wheel balancer manufacturer's instructions and using the information listed in Tire And Wheel Balance (Refer to 22 - Tires and Wheels - Standard Procedure). Repeat the road test above to verify the vibration is repaired.

Standard Procedure

TIRE AND WHEEL BALANCE

NOTE: Always verify the wheel and tire balance before removing any wheel weights. If assembly is within specification and weights are not corroded or loose, do not remove weights. The process of removing and adding weight could damage wheel protective coating.

NOTE: Balance and road force variation equipment must be calibrated and maintained per equipment manufacturer's specifications.

NOTE: If a tire sealant & inflator kit was used to temporarily repair small punctures then the tire must be removed from wheel and all the sealant must be removed with a water damped cloth before repairing & balancing the assembly.

NOTE: Some wheels may not have an outer flange. Apply adhesive weights on midplane surface to balance.

NOTE: Balance equipment could read an incorrect balance result when measuring Chrome Clad wheels. This is caused by the equipments mounting cone/collet contacting the cladding or the cone/collet is not balanced. A dual-taper collet (1) type wheel centering tool is recommended as opposed to a high-taper cone (2) type wheel centering tool. Always use the manufacturer's recommended balance equipment.

- **Dual-taper collet type (1)**
- **High-taper cone type (2)**
- **Possible obstruction (3)**
- **May not seat properly (4)**
- **No obstruction (5)**
- **Properly seated (6)**

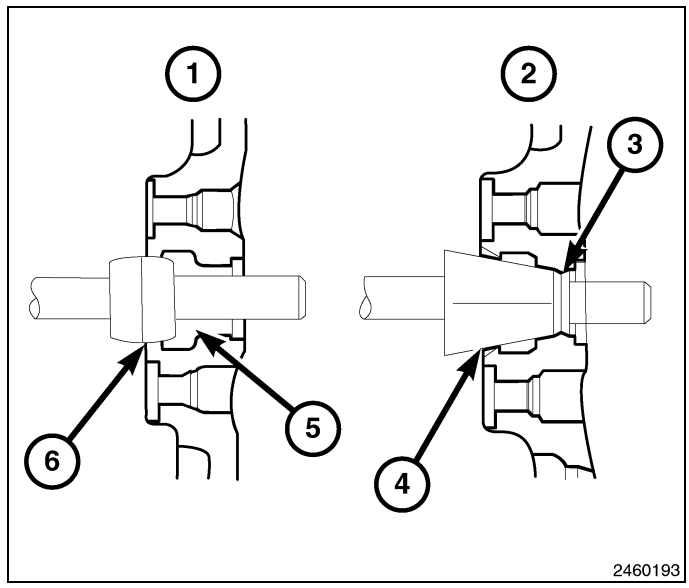

NOTE: If wheel balance equipment is capable of testing tire road force variation and the tire/wheel assemblies are within specification, place the tires with the greater road force variation on the rear of the vehicle.

For dynamic balancing (**recommended**), the balance equipment is designed to indicate the location and amount of weight to be applied to both the inner and outer rim flanges (2).

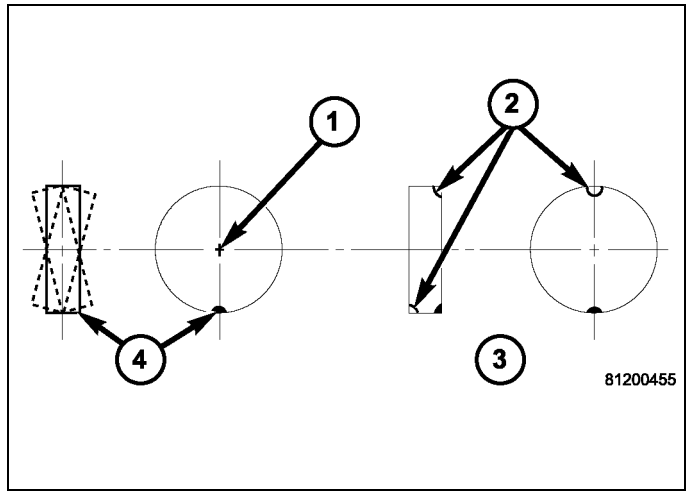

For static balancing (**not recommended**), find the location of the heavy spot causing the imbalance (1). Counter balance the wheel directly opposite the heavy spot. Determine weight required to counterbalance the area of imbalance. Place half of this weight on the **inner** rim flange and the other half on the **outer** rim flange (3) at the predetermined spots.

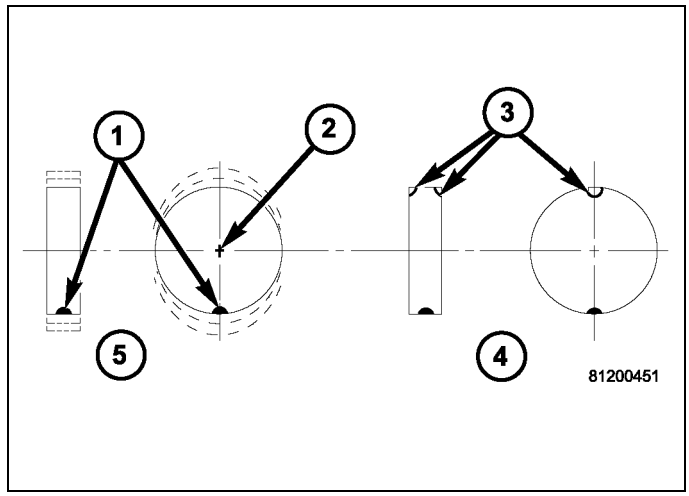

Aluminum wheels use a different type wheel weight than steel wheels. Be sure to use the correct wheel weight for the wheel type.

Always verify the balance. When using off-vehicle equipment, remount the tire and wheel assembly 180 degrees on the balancer spindle and recheck balance. Balance variation from one spot to the other should not be more than 0.125 (⅛) ounce. If variation is more than 0.125 ounce, balancing equipment could be malfunctioning, or the wrong collet/cone may have been used.

If difficult to balance, break down the tire and wheel assembly and check for loose debris inside the tire. Prior to disassembly, mark (index) the tire at the valve stem. Use this mark in order to remount the tire in its original orientation with respect to the wheel.

TIRE ROTATION

Tires on the front and rear axles operate at different loads and perform different steering, driving, and braking functions. For these reasons, the tires wear at unequal rates. They may also develop irregular wear patterns. These effects can be reduced by rotating the tires according to the maintenance schedule in the Owners Manual. This will improve tread life, traction and maintain a smooth quiet ride.

The recommended method of tire rotation is to move both rear tires straight forward and move the right front to the left rear position and move the right front to the left rear position as shown above. Other methods can be used, but may not provide the same tire longevity benefits.

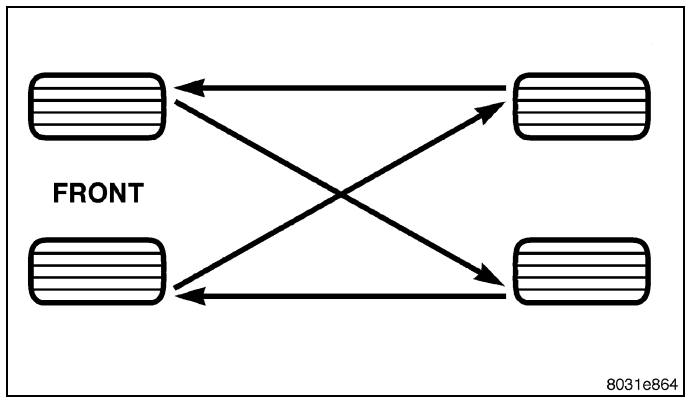

Specifications

DESCRIPTION	N·m	Ft. Lbs.	In. Lbs.
Lug Nut 9/16 X 18 with 60° Cone	176	130	—
Spare Tire Winch	20	15	177

Special Tools

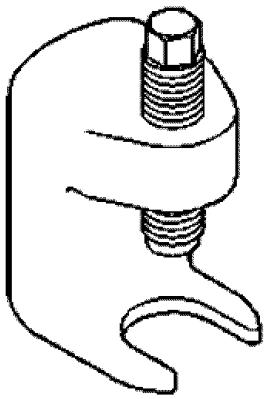

C-4150A - Press, Ball Joint

TIRES

TABLE OF CONTENTS

page

TIRES
DESCRIPTION
TIRES 8
SPARE / TEMPORARY TIRE 8
SPARE / FULL SIZE WITH MATCHING TIRE . . . 8
RADIAL - PLY TIRES 8
TIRE PRESSURE FOR HIGH SPEEDS 9
REPLACEMENT TIRES 9
TIRE INFLATION PRESSURES 9

page

DIAGNOSIS AND TESTING
PRESSURE GAUGES 10
TIRE NOISE OR VIBRATION 10
TREAD WEAR INDICATORS 10
TIRE WEAR PATTERNS 11
TIRE/VEHICLE LEAD 11
STANDARD PROCEDURE 13
CLEANING 13
SPECIFICATIONS 13
WINCH, SPARE TIRE CARRIER
REMOVAL 14
INSTALLATION 14

Tires

Description

TIRES

Tires are designed and engineered for each specific vehicle. They provide the best overall performance for normal operation. The ride and handling characteristics match the vehicle's requirements. With proper care they will give excellent reliability, traction, skid resistance, and tread life.

Driving habits have more effect on tire life than any other factor. Careful drivers will obtain in most cases, much greater mileage than severe use or careless drivers. A few of the driving habits which will shorten the life of any tire are:

- Rapid acceleration
- Severe brake applications
- High speed driving
- Excessive speeds on turns
- Striking curbs and other obstacles

Radial-ply tires are more prone to irregular tread wear. It is important to follow the tire rotation interval (Refer to 22 - Tires and Wheels - Standard Procedure). This will help to achieve a greater tread life.

TIRE IDENTIFICATION

Tire type, size, aspect ratio and speed rating are encoded in the letters and numbers imprinted on the side wall of the tire. Refer to the chart to decipher the tire identification code.

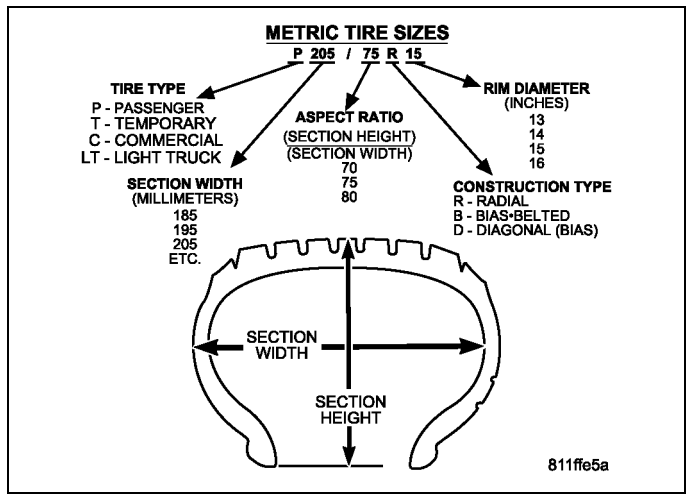

Performance tires have a speed rating letter after the aspect ratio number. The speed rating is not always printed on the tire sidewall. These ratings are:

- **Q** up to 99 mph
- **S** up to 112 mph
- **T** up to 118 mph
- **U** up to 124 mph
- **H** up to 130 mph
- **V** up to 149 mph
- **W** (consult the tire manufacturer for the specific speed rating)
- **Z** more than 149 mph (consult the tire manufacturer for the specific speed rating)

An All Season type tire will have either **M + S, M AND S or M–S** (indicating mud and snow traction) imprinted on the side wall.

TIRE CHAINS

Tire snow chains may be used on **certain** models. Refer to the Owner's Manual for more information.

SPARE / TEMPORARY TIRE

The temporary spare tire is designed for emergency use only. The original tire should be repaired or replaced at the first opportunity, then reinstalled. Do not exceed speeds of 80 KMH (50 MPH). when using the temporary spare tire. Refer to Owner's Manual for complete details.

SPARE / FULL SIZE WITH MATCHING TIRE

The spare is a full usage wheel with a matching tire, It can be used within the (posted legal) speed limits or distance limitations as of the rest of the vehicles four tires. Refer to Owner's Manual for complete details.

RADIAL - PLY TIRES

Radial-ply tires improve handling, tread life and ride quality, and decrease rolling resistance.

Radial-ply tires must always be used in sets of four. Under no circumstances should they be used on the front only. They may be mixed with temporary spare tires when necessary. A maximum speed of 80 KMH (50 MPH) is recommended while a temporary spare is in use.

Radial-ply tires have the same load-carrying capacity as other types of tires of the same size. They also use the same recommended inflation pressures.

The use of oversized tires, either in the front or rear of the vehicle, can cause vehicle drive train failure. This could also cause inaccurate wheel speed signals when the vehicle is equipped with Anti-Lock Brakes.

The use of tires from different manufactures on the same vehicle is NOT recommended. The proper tire pressure should be maintained on all four tires.

TIRE PRESSURE FOR HIGH SPEEDS

For proper tire pressure specification refer to the Owners Manual.

REPLACEMENT TIRES

The original equipment tires provide a proper balance of many characteristics such as:

- Ride
- Noise
- Handling
- Durability
- Tread life
- Traction
- Rolling resistance
- Speed capability

It is recommended that tires equivalent to the original equipment tires be used when replacement is needed.

Failure to use equivalent replacement tires may adversely affect the safety and handling of the vehicle.

The use of oversize tires may cause interference with vehicle components. Under extremes of suspension and steering travel, interference with vehicle components may cause tire damage.

WARNING: Failure to equip the vehicle with tires having adequate speed capability can result in sudden tire failure.

TIRE INFLATION PRESSURES

WARNING: Over or under inflated tires can affect vehicle handling and tread wear. This may cause the tire to fail suddenly, resulting in loss of vehicle control.

Under inflation will cause rapid shoulder wear (1), tire flexing, and possible tire failure.

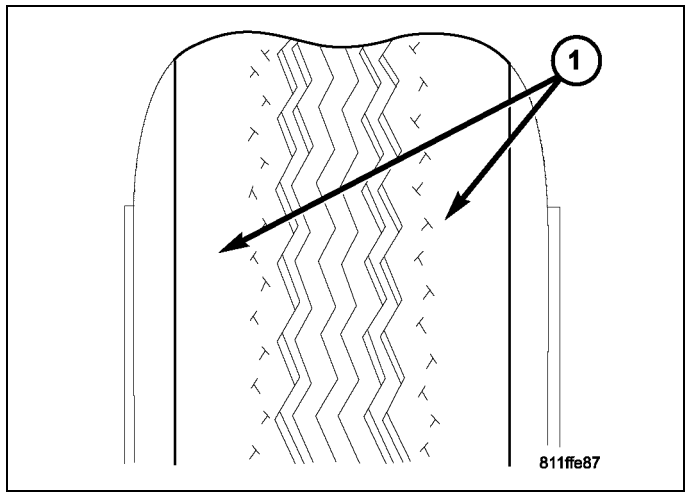

Over inflation will cause rapid center wear (1) reduction in the tire's ability to cushion shocks.

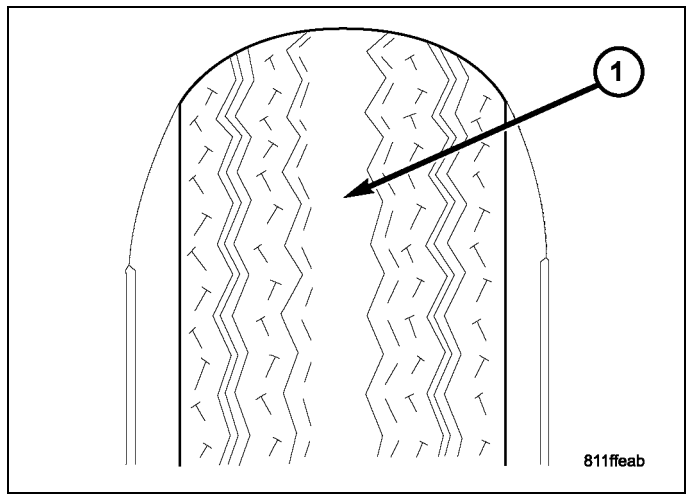

Improper inflation can cause:

- Uneven wear patterns
- Reduced tread life
- Reduced fuel economy
- Unsatisfactory ride
- Vehicle drift

For proper tire pressure specification refer to the tire label placard usually located on the drivers door latch pillar.

Diagnosis and Testing

PRESSURE GAUGES

A quality air pressure gauge is recommended to check tire pressure. After checking the air pressure, replace valve cap finger tight.

TIRE NOISE OR VIBRATION

Radial-ply tires are sensitive to force impulses caused by improper mounting, vibration, wheel defects, or possibly tire imbalance.

To find out if tires are causing the noise or vibration, drive the vehicle over a smooth road at varying speeds. Note the noise level during acceleration and deceleration. The engine, differential and exhaust noises will change as speed varies, while the tire noise will usually remain constant.

TREAD WEAR INDICATORS

Tread wear indicators (3) are molded into the bottom of the tread grooves. When tread depth is 1.6 mm (1/16 in.), the tread wear indicators (3) will appear as a 13 mm (1/2 in.) band.

Tire replacement is necessary when indicators appear in two or more grooves or if localized balding occurs.

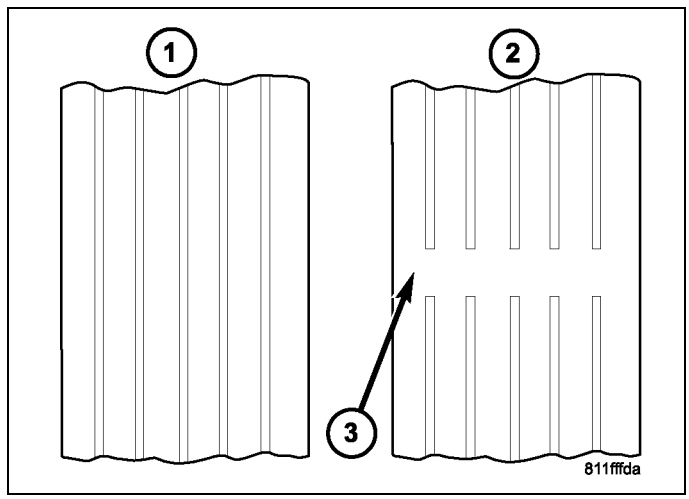

TIRE WEAR PATTERNS

CONDITION	RAPID WEAR AT SHOULDERS	RAPID WEAR AT CENTER	CRACKED TREADS	WEAR ON ONE SIDE	FEATHERED EDGE	BALD SPOTS	SCALLOPED WEAR
EFFECT	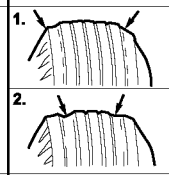	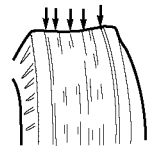	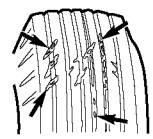	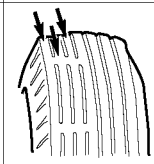	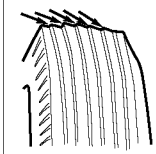	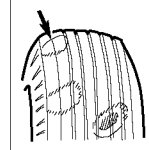	
CAUSE	UNDER-INFLATION OR LACK OF ROTATION 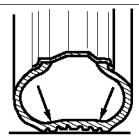	OVER-INFLATION OR LACK OF ROTATION 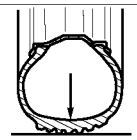	UNDER-INFLATION OR EXCESSIVE SPEED*	EXCESSIVE CAMBER 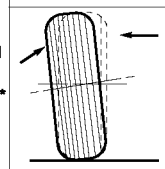	INCORRECT TOE 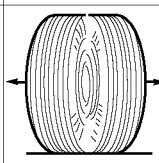	UNBALANCED WHEEL 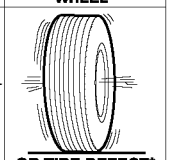 OR TIRE DEFECT*	LACK OF ROTATION OF TIRES OR WORN OR OUT-OF-ALIGNMENT SUSPENSION.
CORRECTION	ADJUST PRESSURE TO SPECIFICATIONS WHEN TIRES ARE COOL ROTATE TIRES			ADJUST CAMBER TO SPECIFICATIONS	ADJUST TOE-IN TO SPECIFICATIONS	DYNAMIC OR STATIC BALANCE WHEELS	ROTATE TIRES AND INSPECT SUSPENSION SEE GROUP 2

* HAVE TIRE INSPECTED FOR FUTURE USE.

812014d7

Under inflation will cause wear on the shoulders of tire. Over inflation will cause wear at the center of tire.

Excessive camber causes the tire to run at an angle to the road. One side of tread is then worn more than the other.

Excessive toe-in or toe-out causes wear on the tread edges and a feathered effect across the tread.

TIRE/VEHICLE LEAD

Use the following Vehicle Lead Diagnosis And Correction Chart to diagnose and correct a vehicle lead or drift problem.

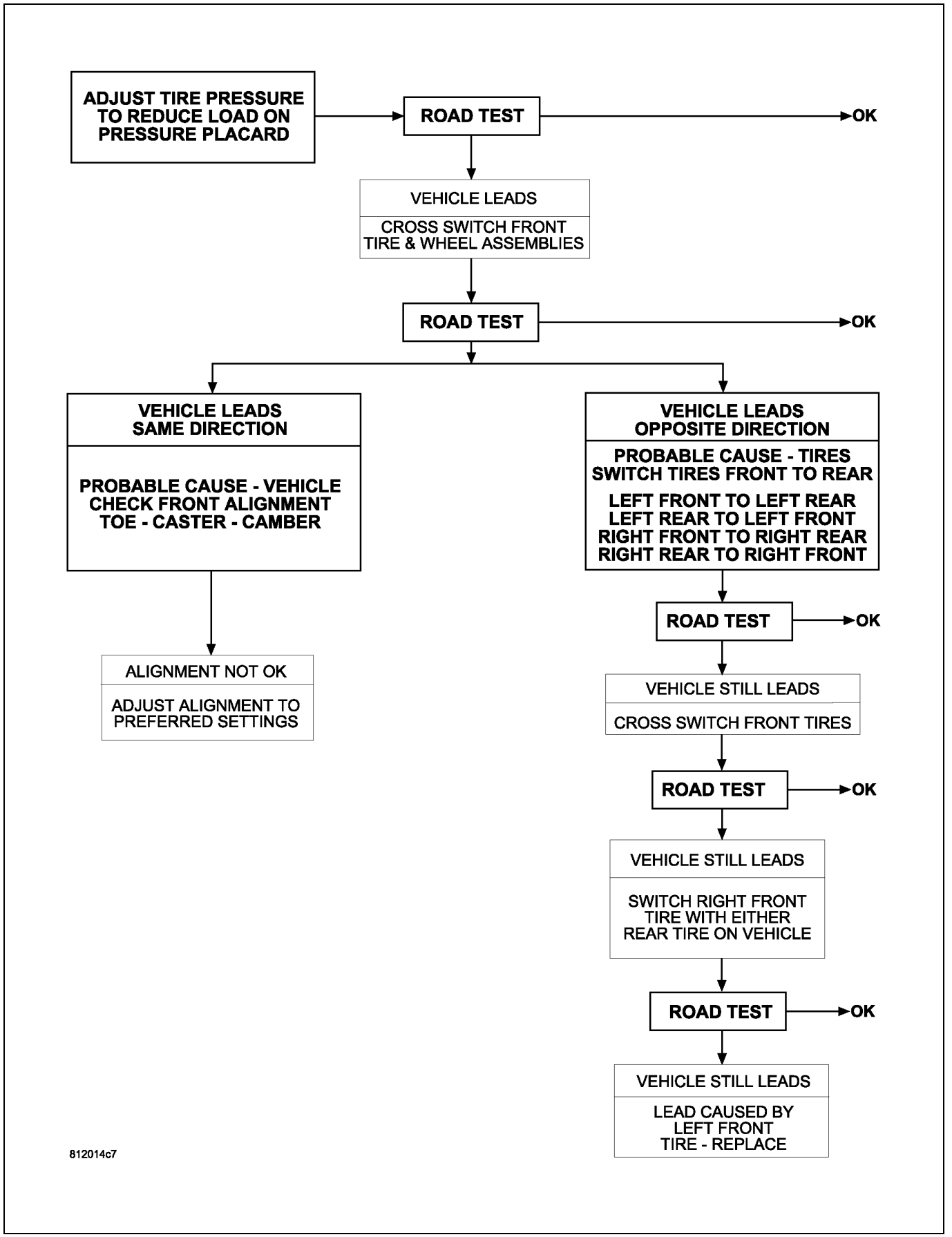
ADJUST TIRE PRESSURE TO REDUCE LOAD ON PRESSURE PLACARD
ROAD TEST
OK
VEHICLE LEADS
CROSS SWITCH FRONT TIRE & WHEEL ASSEMBLIES
ROAD TEST
OK
VEHICLE LEADS SAME DIRECTION
PROBABLE CAUSE - VEHICLE CHECK FRONT ALIGNMENT TOE - CASTER - CAMBER
ALIGNMENT NOT OK
ADJUST ALIGNMENT TO PREFERRED SETTINGS
VEHICLE LEADS OPPOSITE DIRECTION
PROBABLE CAUSE - TIRES SWITCH TIRES FRONT TO REAR
LEFT FRONT TO LEFT REAR
LEFT REAR TO LEFT FRONT
RIGHT FRONT TO RIGHT REAR
RIGHT REAR TO RIGHT FRONT
ROAD TEST
OK
VEHICLE STILL LEADS
CROSS SWITCH FRONT TIRES
ROAD TEST
OK
VEHICLE STILL LEADS
SWITCH RIGHT FRONT TIRE WITH EITHER REAR TIRE ON VEHICLE
ROAD TEST
OK
VEHICLE STILL LEADS
LEAD CAUSED BY LEFT FRONT TIRE - REPLACE
812014c7

Standard Procedure

For proper repairing, a radial tire must be removed from the wheel. Repairs should only be made if the defect, or puncture, is in the tread area (1). The tire should be replaced if the puncture is located in the sidewall.

Deflate tire completely before removing the tire from the wheel. Use lubrication such as a mild soap solution when dismounting or mounting tire. Use tools free of burrs or sharp edges which could damage the tire or wheel rim.

Before mounting tire on wheel, make sure all rust is removed from the rim bead and repaint if necessary.

Install wheel on vehicle, and tighten to proper torque specification.

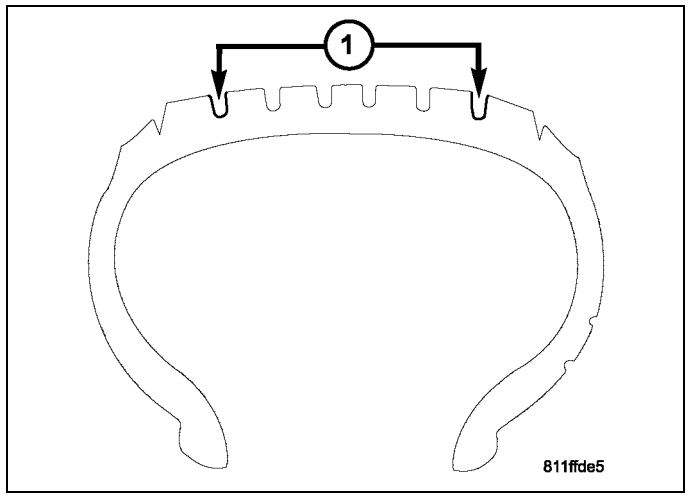

Cleaning

Remove the protective coating on the tires before delivery of a vehicle. This coating may cause deterioration of the tires.

To remove the protective coating, apply warm water and let it soak for a few minutes. Afterwards, scrub the coating away with a soft bristle brush. Steam cleaning may also be used to remove the coating.

NOTE: DO NOT use gasoline, mineral oil, oil-based solvent or a wire brush for cleaning.

Specifications

TIRE SIZE	SUPPLIER	REVOLUTIONS PER MILE
P245/70R17 WRANGLER SRA	GOODYEAR®	685
LT245/70R17 LTX A/S	MICHELIN®	675
LT265/70R17E LTX A/S	MICHELIN®	657
LT245/70R17 RUGGED TRAIL T/A	BF GOODRICH®	684
LT265/70R17E RUGGED TRAIL T/A	BF GOODRICH®	658
LT285/70R17D ALL TERRAIN T/A	BF GOODRICH®	632
P265/70R17 WRANGLER SR/A	GOODYEAR®	657
P265/70R17 WRANGLER GS/A	GOODYEAR®	661
LT275/70R17E WRANGLER AT/S	GOODYEAR®	649
LT275/70R17E TTL	GOODYEAR®	649
P275/55R20 EAGLE LS	GOODYEAR®	655
P275/60R20 WRANGLER HP	GOODYEAR®	636
P235/85R17 Spare Tire	GOODYEAR®	636
LT235/80R17E WRANGLER SRA	GOODYEAR®	649
LT235/80R17E WRANGLER GSA	GOODYEAR®	649
LT235/80R17E AMERITRAC	GENERAL®	649
LT235/80R17E AMERITRAC TR	GENERAL®	648

WINCH, Spare Tire Carrier

Removal

NOTE: "Do NOT use impact tools on the Spare Tire Winch assembly to raise or lower the Spare Tire".

1. Remove the spare tire.
2. Raise and support the vehicle. (Refer to 04 - Vehicle Quick Reference/Hoisting - Standard Procedure).
3. Remove the spare tire winch bolts (2) and then remove the winch (1).

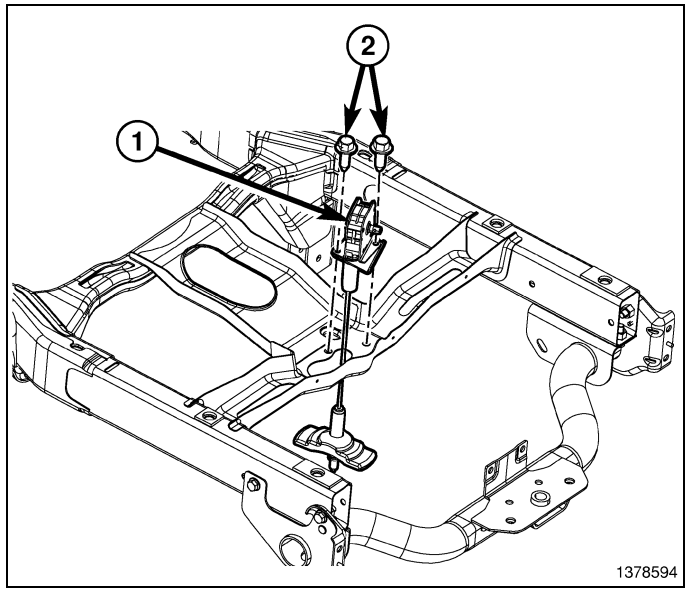

Installation

1. Position the winch (1) on the crossmember. Install the bolts (2) and tighten to 20 N·m (15 ft.lbs.).
2. Remove the supports and lower the vehicle.

NOTE: "Do NOT use impact tools on the Spare Tire Winch assembly to raise or lower the Spare Tire".

3. Install the spare tire back into position.

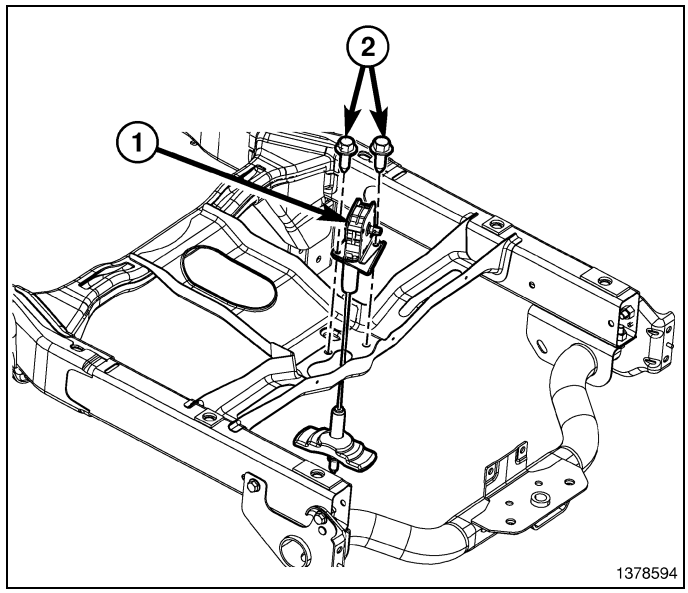

WHEELS

TABLE OF CONTENTS

page

WHEELS
- DESCRIPTION 16
- DIAGNOSIS AND TESTING 16
- STANDARD PROCEDURE 16
- **STUD, WHEEL**
  - REMOVAL
    - FRONT 17
    - REAR - 1500 ONLY. 18
  - INSTALLATION
    - FRONT 18
    - REAR - 1500 ONLY. 19

Wheels

Description

The rim size is on the vehicle safety certification label located on the drivers door shut face. Original equipment wheels/rims are designed for operation up to the specified maximum vehicle capacity.

All models use stamped steel, cast aluminum or forged aluminum wheels. Every wheel has raised sections between the rim flanges (1) and rim drop well (3) called safety humps.

Initial inflation of the tire forces the bead over these raised sections. In case of rapid loss of air pressure, the raised sections help hold the tire on the wheel.

The wheel studs and nuts are designed for specific applications. All aluminum and some steel wheels have wheel stud nuts with an enlarged nose. This enlarged nose is necessary to ensure proper retention of the wheels. Do not use replacement studs or nuts with a different design or lesser quality.

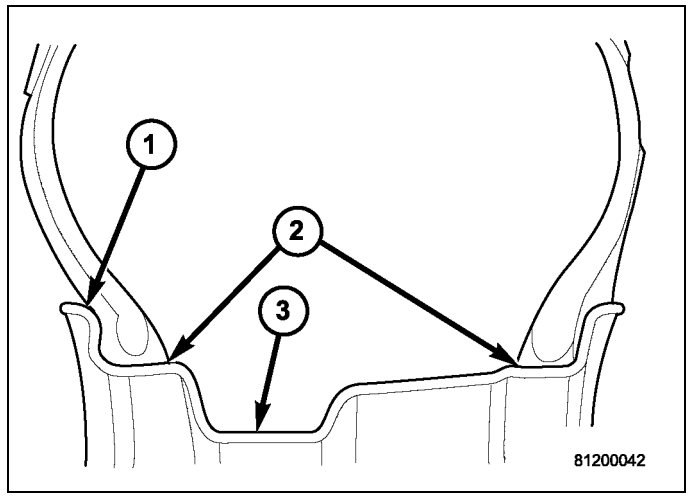

Diagnosis and Testing

Inspect wheels for:

- Excessive run out
- Dents or cracks
- Damaged wheel lug nut holes
- Air Leaks from any area or surface of the rim

NOTE: Do not attempt to repair a wheel by hammering, heating or welding.

If a wheel is damaged an original equipment replacement wheel should be used. When obtaining replacement wheels, they should be equivalent in load carrying capacity. The diameter, width, offset, pilot hole and bolt circle of the wheel should be the same as the original wheel.

WARNING: Failure to use equivalent replacement wheels may adversely affect the safety and handling of the vehicle. Used wheels are not recommended. The service history of the wheel may have included severe treatment or very high mileage. The rim could fail without warning.

WARNING: Chrysler LLC does not recommend that customers use "reconditioned" wheels (wheels that have been damaged and repaired) because they can result in a sudden catastrophic wheel failure which could cause loss of control and result in injury or death.

For Clarification:

- **Cosmetic refinishing for the purpose of repairing a superficial flaw is an acceptable procedure providing it is limited to paint or clear coat only, the wheel is not modified in any way, and there is no exposure to paint curing heat over 200 degrees Fahrenheit.**
- **Damaged wheels are those which have been bent, broken, cracked or sustained some other physical damage which may have compromised the wheel structure**
- **Repaired indicates that the wheel has been modified through bending, welding, heating, straightening, or material removal to rectify damage.**
- **Re-plating of chrome plated wheels is not an acceptable procedure nor is chrome plating of original equipment painted or polished wheels, as this may alter mechanical properties and affect fatigue life.**

Standard Procedure

The wheel studs and nuts are designed for specific applications. They must be replaced with equivalent parts. Do not use replacement parts of lesser quality or a substitute design. All aluminum and some steel wheels have wheel stud nuts which feature an enlarged nose. This enlarged nose is necessary to ensure proper retention of the aluminum wheels.

NOTE: Do not use chrome plated lug nuts with chrome plated wheels.

NOTE: All wheel nuts should then be tightened just snug. Gradually tighten them in sequence to the proper torque specification .

NOTE: Never use oil or grease on studs or nuts.

Before installing the wheel, be sure to remove any build up of corrosion on the wheel mounting surfaces. Ensure wheels are installed with good metal-to-metal contact. Improper installation could cause loosening of wheel nuts. This could affect the safety and handling of your vehicle.

To install the wheel, first position it properly on the mounting surface. Progressively tighten all wheel mounting nuts in proper sequence shown. Tighten wheel mounting nuts to specifications (Refer to 22 - Tires and Wheels - Specifications).

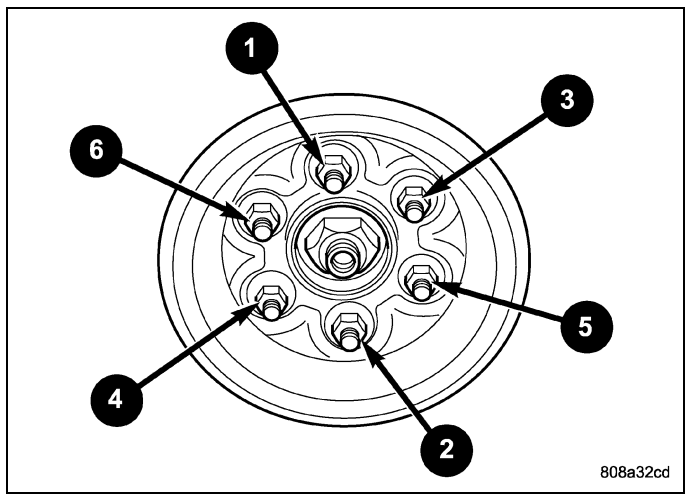

Wheel repairs employing hammering, heating, or welding are not allowed.

Wheels must be replaced if they have:

- Excessive runout
- Bent or dented
- Leak air through welds
- Have damaged bolt holes

Original equipment wheels are available through your dealer. Replacement wheels from any other source should be equivalent in:

- Load carrying capacity
- Diameter
- Width
- Offset
- Mounting configuration

Failure to use equivalent replacement wheels may affect the safety and handling of your vehicle. Replacement with **used** wheels is not recommended. Their service history may have included severe treatment.

STUD, Wheel

Removal

FRONT

1. Raise and support the vehicle.
2. Remove the wheel and tire assembly.
3. Remove the brake caliper, caliper adapter and rotor, (Refer to 05 - Brakes/Hydraulic/Mechanical/ROTOR, Brake - Removal).
4. Remove the wheel speed sensor from the hub.

NOTE: After the wheel stud is pressed from the flange, the axle shaft will not turn past the hub/bearing retaining bolt end. Before pressing the wheel stud from the flange, rotate the axle shaft so the stud that needs replacement is aligned with the wheel speed sensor opening.

5. Press the stud from the hub using remover C-4150A (1).

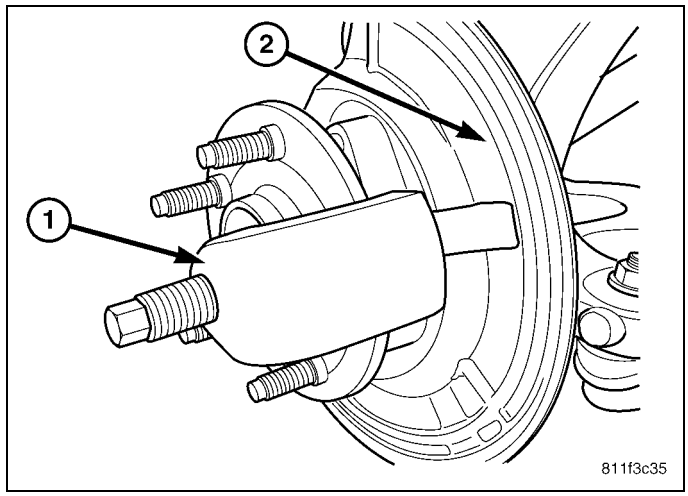

6. Remove the stud (2) from the hub (1) through the backing plate access hole (3).

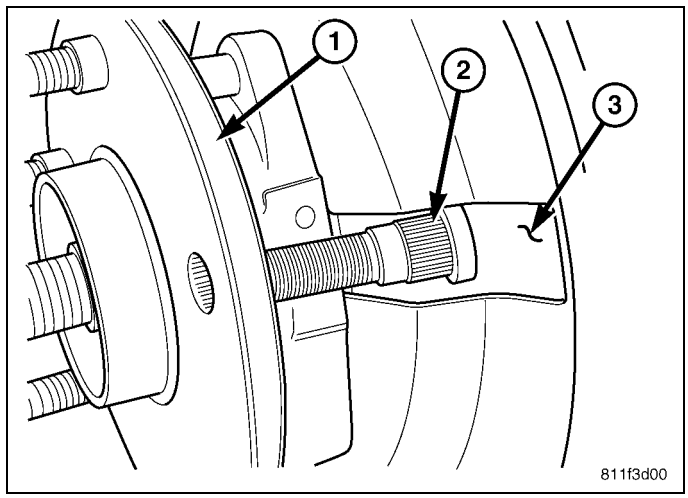

REAR - 1500 ONLY

CAUTION: Move axle shaft carefully to prevent damage to the shaft bearing and seal in the axle tube.

1. Pull the axle shaft out of the axle approximately 25mm (1 in.) for clearance to remove the wheel stud, refer to the appropriate Group 3 - Differential and Driveline.
2. Press the stud (1) from the hub using Ball Joint Press C-4150A (3).
3. Remove the stud (1) from the rear of the hub flange.

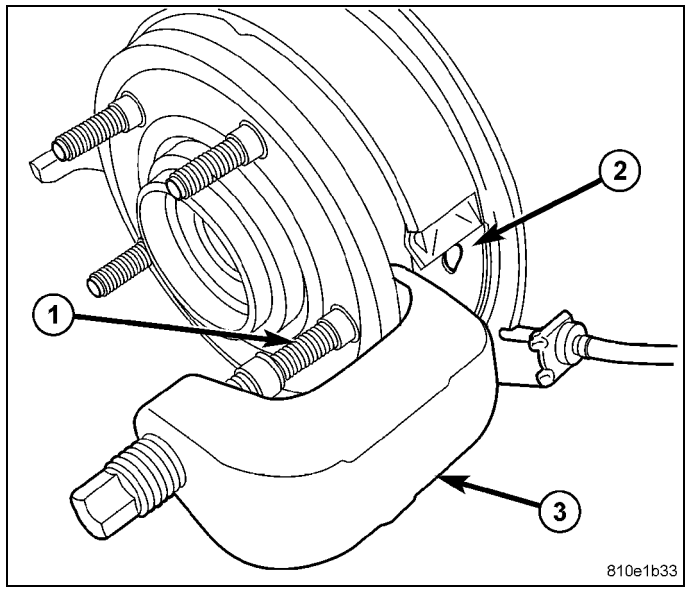

Installation

FRONT

1. Install the new stud (2) into the hub flange (1).
2. Install three proper sized washers onto the stud, then install lug nut with the flat side of the nut against the washers.
3. Tighten the lug nut until the stud is pulled into the hub flange. Verify that the stud is properly seated into the flange.
4. Remove the lug nut and washers.
5. Install the brake rotor, caliper adapter, and caliper, (Refer to 05 - Brakes/Hydraulic/Mechanical/ROTOR, Brake - Installation).

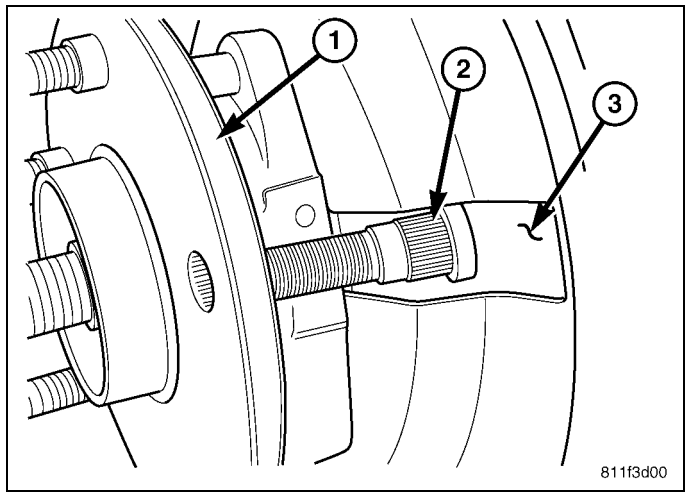

6. Install the wheel speed sensor.

7. Install the wheel and tire assembly, use new lug nut on the stud or studs that were replaced.
8. Remove the support and lower the vehicle.

REAR - 1500 ONLY

CAUTION: Move axle shaft carefully to prevent damage to the shaft bearing and seal in the axle tube.

1. Install the new stud (4) into the back of the hub flange (2) and seat as follows:
   a. Install three proper sized washers (1) onto the new stud (4), then install a lug nut (3) with the flat side of the nut against the washers.
   b. Tighten the lug nut (3) until the stud (4) is pulled into the hub flange (2). Verify that the stud is properly seated into the flange.
   c. Remove the lug nut (3) and washers (1).
2. Install the axle shaft, refer to the appropriate Group 3 - Differential and Driveline.
3. Using a new lug nut on the new stud, install the wheel and tire assembly, (Refer to 22 - Tires and Wheels/ Wheels - Standard Procedure).
4. Remove the supports and lower the vehicle.

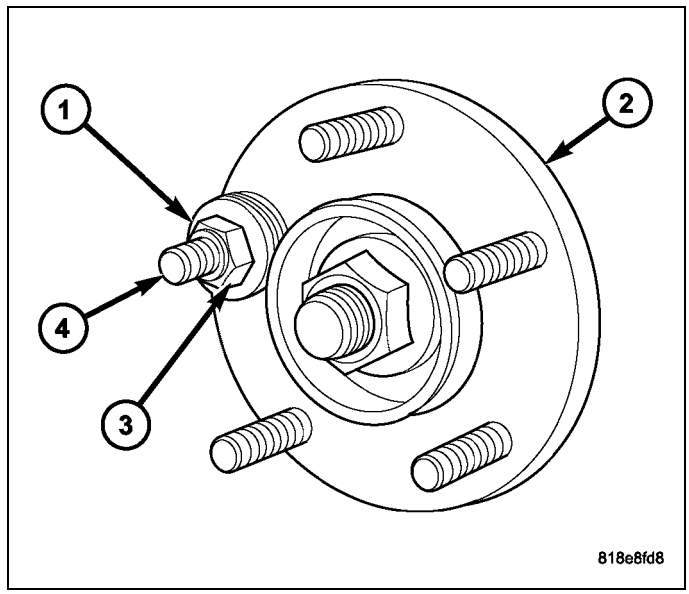

TIRE PRESSURE MONITORING

TABLE OF CONTENTS

page

TIRE PRESSURE MONITORING
- DESCRIPTION
  - BASE TIRE PRESSURE MONITORING 22
  - TIRE PRESSURE MONITORING 22
  - WIRELESS IGNITION NODE (WIN) 22
- OPERATION 22
- DIAGNOSIS AND TESTING 23
- SPECIFICATIONS 24

page

SENSOR, TIRE PRESSURE MONITORING (TPM)
- DESCRIPTION 25
- OPERATION 25
- CAUTION 26
- DIAGNOSIS AND TESTING 26
- REMOVAL 27
- INSTALLATION 28

Tire Pressure Monitoring

Description

BASE TIRE PRESSURE MONITORING

This system will consist of Tire Pressure Monitoring (TPM) sensors attached to each wheel through the valve stem mounting hole, a Wireless Ignition Node (WIN) and a yellow TPM telltale lamp.
If equipped, some vehicles will also have a ”Light Load” Reset Switch, and two wheel sensor transponders in the front wheel wells.

TIRE PRESSURE MONITORING

The Tire Pressure Monitoring System (TPMS) will warn the driver of a low tire pressure based on the vehicle recommended cold tire inflation placard pressure. The placard pressure is defined on the Tire and Loading Information label. The Tire and Loading Information label is located on the drivers side B-pillar. Vehicles equipped to be operated in either the “max load inflation pressure” condition described on the Tire and Loading Information label or the alternative “light load inflation pressure” condition described on the Supplemental Tire Pressure Information label, may also be equipped with a reset switch to choose the appropriate TPMS low pressure warning threshold levels based upon the vehicle load condition. The Supplemental Tire Pressure Information label is located on the rear face of the driver door.

WIRELESS IGNITION NODE (WIN)

This vehicle is equipped with a Wireless Ignition Node (WIN) (1). The WIN and the FOB with Integrated Key (FOBIK) are the primary components of the keyless ignition system. The only visible component of the WIN is the ignition switch (5) located on the face of the instrument panel just to the inboard side of the steering column.

The WIN housing is constructed of molded black plastic and it includes four integral mounting bosses (4), which are secured to the instrument panel structure with screws. Two connector receptacles are integral to the back of the switch housing. One (3) connects the WIN to the vehicle electrical system through a dedicated takeout and connector of the instrument panel wire harness. The other (2) is a dedicated connector for the coaxial cable input from the optional remote start system external antenna module.

The WIN is an integrated electronic receiver that replaces the ignition switch. It communicates with other electronic modules in the vehicle over the Controller Area Network (CAN) data bus.

The WIN interfaces with the Remote Keyless Entry (RKE) FOBIK and the Tire Pressure Monitor (TPM) sensors (if equipped) using Radio Frequency (RF) communication, with the Sentry Key Immobilizer System (SKIS) transponder within the FOBIK using Low Frequency (LF) communication. It also communicates with the TPM trigger transponders (if equipped) and steering column lock module (if equipped) using a Local Interface Network (LIN) data bus connection.

The WIN provides a switched 12-volt source through an isolated switch for the steering column lock module required for certain export market vehicles. It also contains a key removal inhibit solenoid, an electronic Brake Transmission Shift Interlock (BTSI) solenoid, a key-in warning contact and it serves as the real time vehicle clock by transmitting the clock information to other electronic modules over the CAN data bus.

The WIN cannot be adjusted or repaired, but is flash update capable. If ineffective or damaged, the entire WIN must be replaced. When replacing the WIN, you must also replace the steering column lock module (if equipped).

Operation

The tire pressure monitoring system (TPMS) is designed to operate without loss of function for all OEM tire construction for this vehicle. Tire Pressure Monitoring Sensors, mounted to each road wheel as part of the valve stem, transmit an RF signal indicating their individual pressure to a receiver located in the Wireless Ignition Node (WIN). These transmissions occur approximately once every minute at speeds over 15 mph (24 km/h). (Refer to 22 - TIRES/WHEELS/TIRE PRESSURE MONITORING/SENSOR - OPERATION). If the TPM system detects that the tire pressure in any road tire is going low, beyond the Low Pressure (lamp) ON threshold (see placard table below), the TPM system will continuously illuminate an indicator lamp. If a system fault is detected, the indicator lamp will flash on/off for 75 seconds and then remains on solid.

If the WIN detects a warning or fault condition at ignition key "on" it will wait ten seconds +/- 10 % before sending the first request to illuminate the yellow telltale. This will assure that the display module has concluded its bulb check period. The display module will request a chime once per ignition cycle for each "warning" or "fault" condition detected. A "warning" or "fault" condition will remain enabled until the problem causing the condition is corrected and removed/reset.

The WIN shall continuously monitor for the receipt of tire pressure RF message transmissions from the wheel sensors during both the ignition key "on" and key "off" cycles. The wheel sensor ID's and the location of each sensor (e.g. Tire 1, Tire 2 etc.) are stored in the WIN non-volatile memory during the initial Manufacturing Plant Process, or during a service procedure, as required.

The TPM System will continue to warn the driver of low tire pressure as long as the condition exists, and will not turn off the indicator lamp until the tire pressure is at or above the Low Pressure (lamp) OFF threshold (see placard table below). The system will automatically update and the TPM warning lamp will extinguish once the updated tire pressures have been received.

The tire pressure will vary with temperature by about 1 psi (6.9 kPa) for every 12°F (6.5°C). This means that when the outside temperature decreases, the tire pressure will decrease. Tire pressure should always be set based on cold inflation tire pressure (placard pressure). This is defined as the tire pressure after a vehicle has not been driven for more than 3 hours - and in outside ambient temperature. The tire pressure will also increase as the vehicle is driven - this is normal and there should be no adjustment for this increased pressure. For a system fault, the system will return to normal once the WIN receives a valid transmission from that sensor location.

For further information, refer to the Owners Manual or the Appropriate Diagnostic Information.

TPM THRESHOLD PRESSURES

NOTE: To determine the pressure thresholds for a vehicle, refer to the Tire Inflation Pressure (Placard) Label found on the Driver's B-Pillar, or the Supplemental Tire Pressure Information Label located on the rear face of the driver door. then apply the placard pressure to the following table.

Placard Pressure (Cold) (PSI)	Low Pressure ON Threshold (PSI)	Low Pressure OFF Threshold (PSI)
28	22	26
29	23	27
30	24	28
31	25	29
32	25	29
33	26	30
34	27	31
35	28	32
36	29	33
37	29	34
38	30	35
39	31	36
40	32	37
41	33	38
42	34	39

Placard Pressure (Cold) (PSI)	Low Pressure ON Threshold (PSI)	Low Pressure OFF Threshold (PSI)
43	35	40
44	36	41
45	36	41
46	37	43
47	38	44
48	38	45
49	39	45
50	40	47
51	41	48
55	44	52
60	48	57
65	52	62
70	56	67
75	60	72
80	64	77

Diagnosis and Testing

When diagnosing a tire pressure issue, first check the Tire Pressure Monitoring (TPM) indicator lamp in the instrument cluster during ignition key ON. From the OFF position, turn the key to ON and check the TPM indicator lamp to observe one of the following:

- If after 10 seconds the indicator lamp is illuminating continuously (not flashing), proceed to LOW PRESSURE below.
- If after 10 seconds the indicator lamp flashes on/off for 75 seconds, then remains on solid, there is a system fault detected. Proceed to SYSTEM FAULT below.

LOW PRESSURE

NOTE: Tire pressure may increase from 2 to 6 psi (14 to 41 kPa) during normal driving conditions. Do NOT reduce this normal pressure build up.

NOTE: Tire pressure will vary with temperature by about 1 psi (6.9 kPa) for every 12°F (6.5°C). This means that when the outside temperature decreases, the tire pressure will also decrease. Tire pressure should always be set based on cold inflation tire pressure. For details, (Refer to 22 - Tires and Wheels/Tires - Description)

Check air pressure as necessary in all tires using a known accurate air gauge and adjust to the specification listed on the Tire Inflation Pressure Label (Placard) provided with the vehicle (usually applied to the driver side B-pillar). After adjusting air pressure in a tire on the vehicle, allow approximately two minutes for the message or indicator lamp to go out.

If air pressure in any tire is low, inspect **all** the tires for leaks. A water “dunk tank” or other water test may be used to check for a leak around the sensor as long as any water at the valve core is removed once the procedure is completed. The water can be easily expelled from the core area by pushing in on the core for several seconds, allowing escaping air to drive out any moisture. Reinflate the tire as necessary. Always make sure the original (special) valve stem cap is securely installed to keep moisture out of the sensor.

If the indicator lamp is still ON continuously, refer to the appropriate diagnostic information.

SYSTEM FAULT

After an ignition key ON, if a system fault is detected, a chime will sound, and the TPM indicator (telltale) lamp will flash for 75 seconds, then remain on solid. A system fault can occur by many scenarios, including the following:

- Signal interference due to electronic devices or driving next to facilities emitting the same Radio Frequencies as the TPM sensors.
- Installing some form of aftermarket window tinting that affects radio wave signals.
- Accumulation of snow or ice around the wheels or wheel housings.
- Using tire chains on the vehicle.
- Using wheels not equipped with TPM sensors.

If a system fault is detected, (Refer to 28 - DTC-Based Diagnostics/NODE, Wireless Ignition (WIN) - Diagnosis and Testing).

Specifications

DESCRIPTION	N·m	Ft. Lbs.	In. Lbs.
Tire Pressure Sensor/Transmitter Mounting Nut	6	—	53

SENSOR, Tire Pressure Monitoring (TPM)

Description

On vehicles equipped with Tire Pressure Monitoring System, one tire pressure sensor (6) is mounted to each wheel in place of the traditional tire valve stem. Each sensor has an internal battery that lasts up to 10 years. The battery is not serviceable. At the time of battery failure, the sensor (6) must be replaced. The TPM system operates on a 315 MHz radio frequency. The 315 MHz sensors can be easily identified by a GREEN sensor body, with (an triangle insignia) (1). The 433 MHz sensors can be identified by a grey sensor body with an oval insignia. For car applications, there is a 315 MHz TPM sensor with a Black sensor body with an oval insignia.

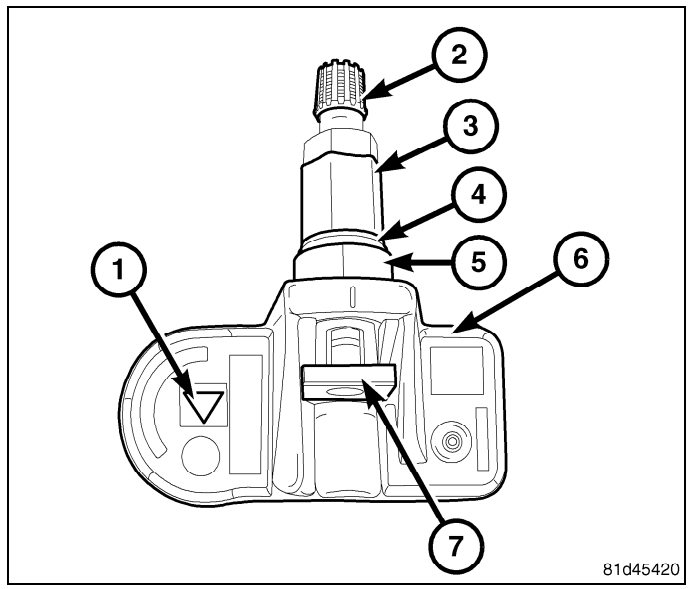

NOTE: This vehicle uses the 315 MHz TPM sensor with the GREEN sensor body. Although 315 MHz and 433 MHz sensors are identical in size and shape, they are not interchangeable. Always make sure the correct color sensor is being used. A RKE-TPM Analyzer can be used to determine the sensor's frequency without having to dismount the tire.

The TPM sensors are designed for original style factory wheels. It is not recommended to install a tire pressure sensor in an aftermarket wheel. (This could cause sealing and system performance issues.)

The serviceable components of the tire pressure sensor are:

- Sensor-To-Wheel Seal (4)
- Valve Stem Cap (2)
- Valve Stem Core
- Valve Stem Nut (3)

The valve stem caps and cores used are specifically designed for the tire pressure monitoring sensors. Although similar to standard valve stem caps and cores, they are different. The valve stem cap has a special seal inside to keep moisture and corrosion out. The valve stem core has a special nickel coating to protect from corrosion.

Operation

CAUTION: The TPMS has been optimized for the original equipment tires and wheels. TPMS pressures have been established for the tire size equipped on your vehicle. Undesirable system operation or sensor damage may result when using replacement equipment that is not of the same size, type, and/or style. After-market wheels can cause sensor damage. Do not use aftermarket tire sealants or balance beads if your vehicle is equipped with a TPMS, as damage to the sensors may result.

CAUTION: After inspecting or adjusting the tire pressure always reinstall the valve stem cap. This will prevent moisture and dirt from entering the valve stem, which could damage the Tire Pressure Monitoring Sensor.

CAUTION: Tire pressure sensor valve stem caps and cores are specially designed for the sensors. Due to risk of corrosion, do not use a standard valve stem cap or core in a tire pressure sensor in place of the original equipment style sensor cap and core.

CAUTION: Any time a sensor is to be reinstalled in a wheel, a new seal, nut, cap and valve core must be installed on the stem to ensure air tight sealing.

NOTE: TPM thresholds have been established for the original tire size equipped on the vehicle. Use original size tires only to maintain system accuracy.

The battery operated tire pressure sensor is both a transmitter and a receiver. The TPM sensor can be forced to transmit if using a special tool such as a TPM-RKE Analyzer, or from a transponder. The TPM-RKE Analyzer has the ability to change the sensor mode and to diagnose a faulty TPM sensor. Using a TPM-RKE Analyzer can take up to a minute to force a transmission from a sensor.

The High Pressure TPM sensor can be in one of the following modes:

- • **Sleep Mode** – A new TPM sensor will be in this mode. If placed on the vehicle as a road tire, the TPM sensor will transmit once every 20 seconds when the vehicle is driven at speeds over 15 mph (24 km/h). If the vehicle is not moving, the sensor will only transmit on a pressure change greater then 2 psi (13.8 kPA). Driving the vehicle continuously at speeds over 15 mph (24 km/h) for more then 4 minutes will change the sensor state into 30 BLOCK MODE. The TPM sensor will not return to SLEEP MODE. Now, if the vehicle has been stopped for 20 minutes, the TPM sensor state will change to PARK MODE.
- • **Park Mode** – This is the correct mode when the vehicle is not moving. The sensor will transmit once every 13 hours to update the WIN, or will transmit on a 2 psi (13.8 kPA) delta change. The sensors will internally take a measurement of the tire pressure every minute to determine a change in tire pressure.
- • **30 Block Mode** – If the vehicle has not been moving for more then 20 minutes, or if the sensor's mode was forced to Park Mode using a TPM-RKE Analyzer, the sensor's operating mode will transition from PARK MODE to 30 BLOCK MODE once the vehicle is driven over 15 mph. In this mode, the sensor will transmit once every 15 seconds when the vehicle is driven at speeds over 15 mph (24 km/h) for the first 30 transmissions. After 8 minutes of continuous driving above 15 mph (24 km/h), the TPM sensor will change to DRIVE MODE.
- • **Drive Mode** – In this mode, the sensor will transmit once every minute when the vehicle is driven at speeds over 15 mph (24 km/h). At any time that the vehicle speed drops below 15mph, the sensor will not transmit. The sensor mode will still be in drive mode when the sensor reaches speeds over 15 mph (24 km/h). If the vehicle has been stationary for more then 20 minutes, the TPM sensor will change to PARK MODE.

Each sensor's (transmitter) broadcast is uniquely coded so that the wireless control module (WIN) can monitor the state of each of the sensors on the four rotating road wheels. The WIN can automatically learn and store the sensor's ID while driving "within 10 minutes continuously above 15 m.p.h. (24 Km/h)" after a sensor has been replaced. The vehicle must be stationary for more then 20 minutes in order to initiate the learning sequence.

The sensor IDs can also be programmed using the TPM-RKE Analyzer Tool. Scan each TPM sensor at each road wheel, and store each Sensor ID in the correct location. (LEFT FRONT, LEFT REAR, RIGHT FRONT, and RIGHT REAR) Connect the TPM-RKE Analyzer Tool to the Scan Tool. Then follow the programming steps outlined in the diagnostic Scan Tool for "Program Tire Pressure Sensor ID w/ TPM Tool" under "MISC" for the "WIN".

Caution

CAUTION: The use of tire sealants is not recommended for vehicles equipped with the Tire Pressure Monitoring system. Tire sealants may clog tire pressure sensors.

CAUTION: Tire pressure sensor valve stem caps and cores are specially designed for the sensors. Due to risk of corrosion, do not use a standard valve stem cap or core in a tire pressure sensor in place of the original equipment style sensor cap and core.

CAUTION: It is not recommended to install a tire pressure sensor in an aftermarket wheel. Use tire pressure sensors in original style factory wheels only.

CAUTION: Any time a sensor is to be reinstalled in a wheel, a new seal, cap and valve core must be installed on the stem to ensure air tight sealing.

NOTE: TPM thresholds have been established for the original tire size equipped on the vehicle. Use original size tires only to maintain system accuracy.

Diagnosis and Testing

NOTE: Tire pressure may increase from 2 to 6 psi (14 to 41 kPa) during normal driving conditions. Do NOT reduce this normal pressure build up.

NOTE: Tire pressure will vary with temperature by about 1 psi (6.9 kPa) for every 12 F° (6.5 C). This means that when the outside temperature decreases, the tire pressure will also decrease. Tire pressure should always be set based on cold inflation tire pressure.

When diagnosing a tire pressure issue, always check air pressure in the tires first with a known accurate air gauge. Adjust air pressure as necessary to that listed on the Tire Inflation Pressure Label (Placard) provided with the vehicle (usually applied to the driver's side B-pillar). After adjusting air pressure in a tire on the vehicle, allow approximately two minutes for the message or indicator lamp to go out.

Check the tire pressure indicator lamp in the instrument cluster. If the lamp is illuminating continuously, inspect all the tires for leaks. A water "dunk tank" or other water test may be used to check for leaks around the sensor as long as any water at the valve core is removed once the procedure is completed. The water can be easily expelled from the core

area by pushing in on the core for several seconds, allowing escaping air to drive out any moisture. Reinflate the tire as necessary. Always make sure the original valve stem cap is securely installed to keep moisture out of the sensor. If the gauge-read pressure in the tires does not indicate a tire pressure issue, refer to the appropriate diagnostic information.

If the indicator lamp is flashing on/off for 75 seconds and then remains on solid, a system fault was detected. Refer to the appropriate diagnostic information.

Removal

1. Raise and support vehicle.
2. Remove tire and wheel assembly.

CAUTION: The cap used on this valve stem contains an O-ring seal to prevent contamination and moisture from entering the valve stem. Do not substitute a regular valve stem cap in its place.

CAUTION: The valve stem used on this vehicle is made of aluminum and the core is nickel plated brass. The original valve stem core must be reinstalled and not substituted with a valve stem core made of a different material. This is required to prevent corrosion in the valve stem caused by the different metals.

3. Dismount tire from wheel following tire changer manufacturers instructions while paying special attention to the following to avoid damaging the pressure sensor:
   a. When breaking the tire bead loose from the wheel rim, avoid using the Bead Breaker in the area of the sensor (1). That includes both outer and inner beads of the tire.
   b. When preparing to dismount the tire from the wheel, carefully insert the mounting/dismounting tool 280° from the valve stem ± 10°, then proceed to dismount the tire from the wheel. Use this process on both outer and inner tire beads.

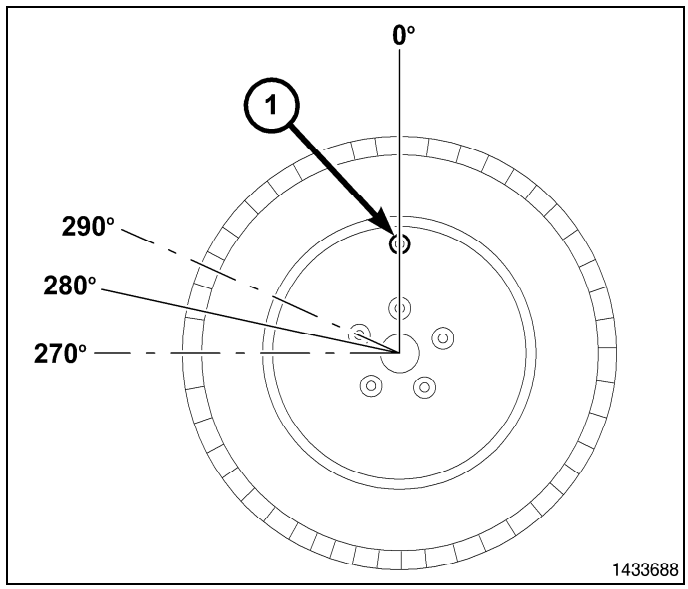

4. Remove sensor nut (3) retaining sensor to wheel. While removing nut, hold pressure against rear of metal valve stem to keep valve stem from pushing rearward, damaging antenna strap.
5. Remove sensor (1) from wheel (2).

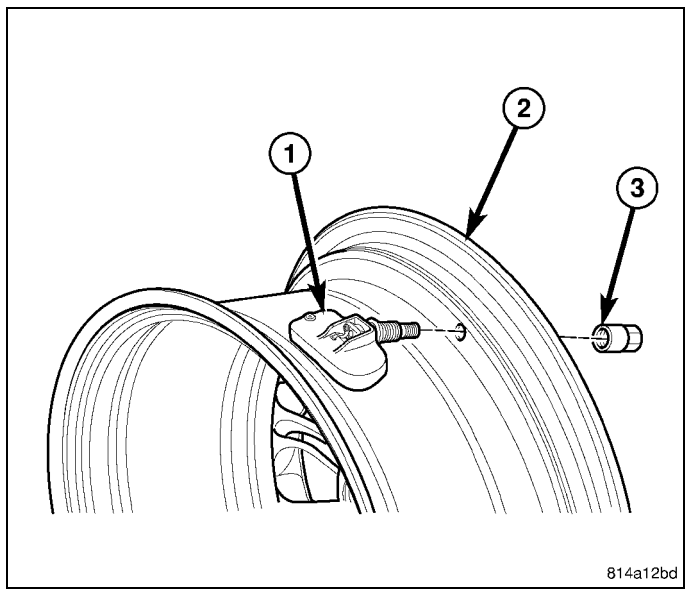

Installation

NOTE: Before reinstalling an existing tire pressure sensor, replace seal (2) and metal washer (1) at base of sensor valve stem (6) to ensure proper sealing.

1. Wipe area clean around sensor/valve stem mounting hole in wheel (5). Make sure surface of wheel is not damaged.

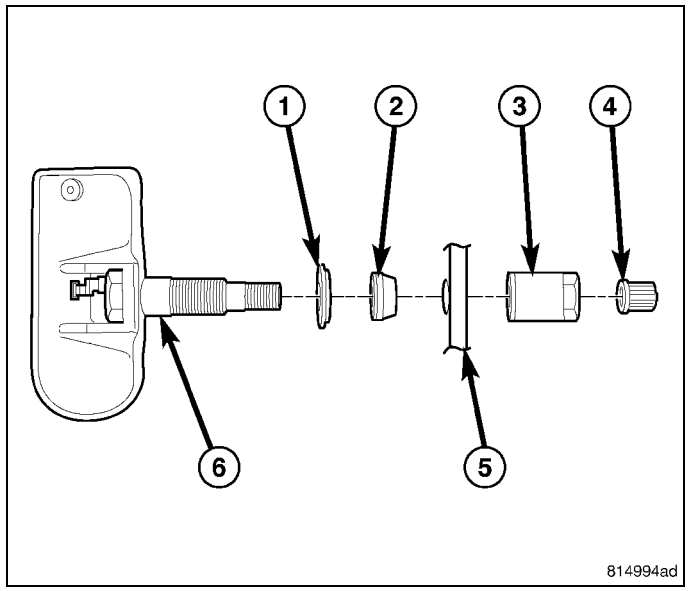

CAUTION: To avoid damaging sensor antenna strap (1), if equipped, hold pressure against rear of metal valve stem (2) while sensor is inserted through wheel mounting hole and nut is installed.

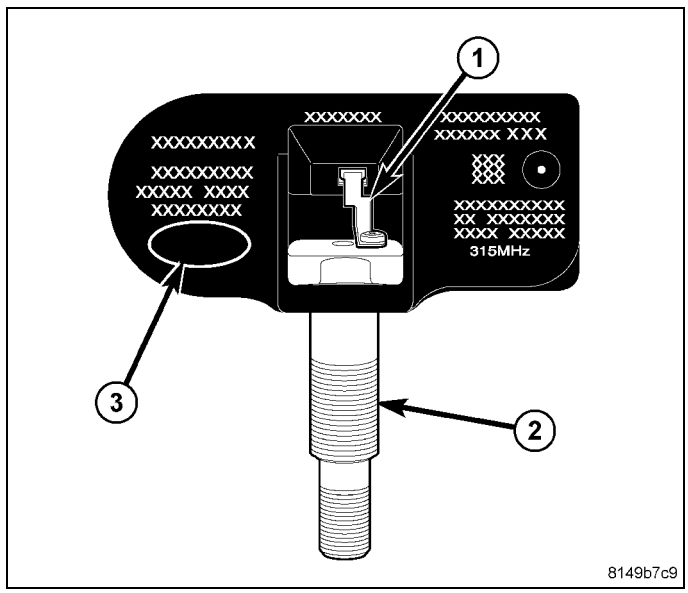

2. Insert sensor (1) through wheel (2) as shown keeping pressure against rear of metal valve stem (See Arrow). Potted side of sensor is to be positioned toward wheel. Do not attempt to mount sensor otherwise, damage may occur.
3. Install sensor nut (with pressed-in washer) (3) by hand.

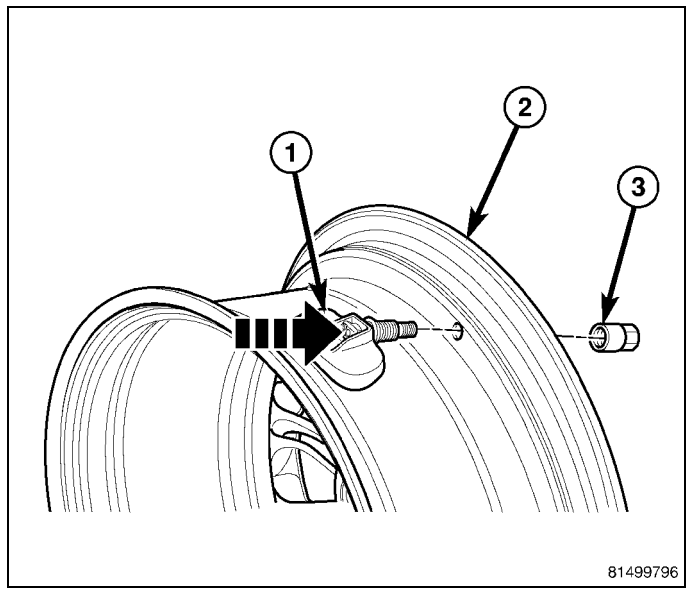

CAUTION: Over-torquing the sensor nut by as little as 12 N·m (106 in. lbs.) may result in sensor separation from the valve stem. Under this condition, the sensor may still function. However, the condition should be corrected immediately.

NOTE: Before tightening sensor nut, push downward on sensor housing (2) in an attempt to make it flush with interior contour of wheel (1).

4. While holding sensor in position, tighten sensor nut to 6 N·m (53 in. lbs.).

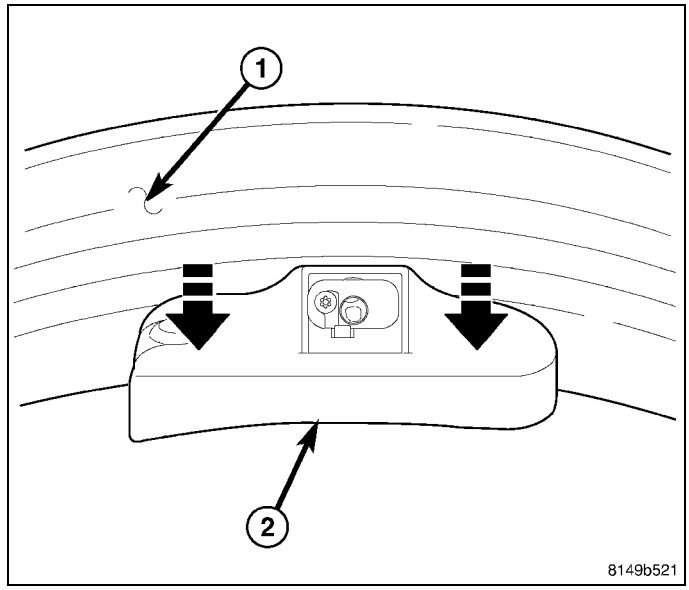

5. Mount tire on wheel following tire changer manufacturers instructions, paying special attention to the following to avoid damaging tire pressure sensor:

a. Rotating Wheel Tire Changers - Once the wheel is mounted to the changer, position the sensor valve stem (2) approximately 280° from the head of the changer (located at 1) in a clockwise direction before rotating the wheel (also in a clockwise direction) to mount the tire. Use this procedure on both the outer and inner tire beads.

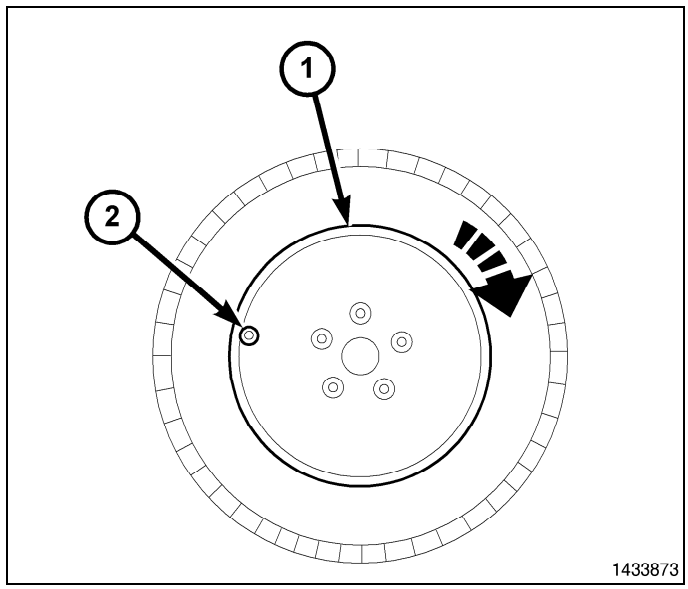

b. Rotating Tool Tire Changers - Position the wheel on the changer so that the sensor valve stem (1) is located approximately 210° clockwise from the installation end of the mounting/dismounting tool (2) once the tool is mounted for tire installation. Make sure the sensor is clear of the lower bead breaker area (3) to avoid damaging the sensor when the breaker rises. Rotate the tool (2) in a counterclockwise direction to mount the tire. Use this procedure on both the outer and inner tire beads.

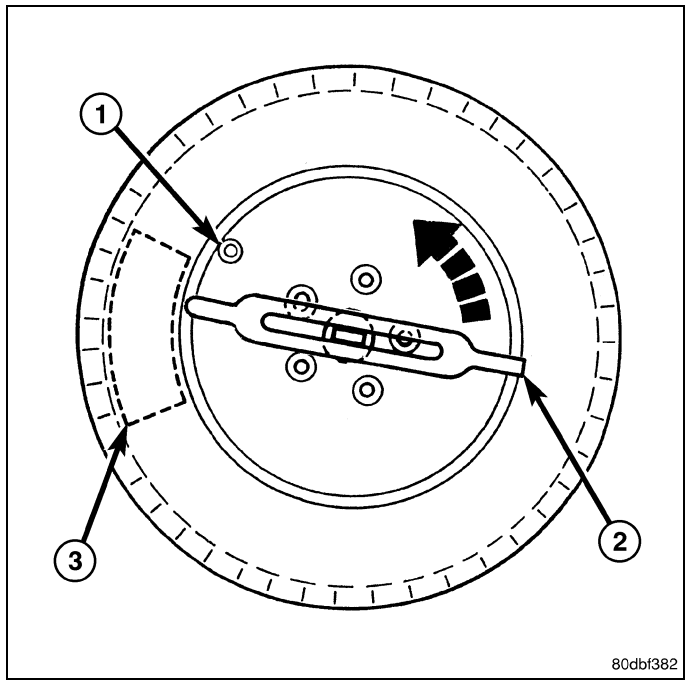

6. Adjust air pressure to that listed on Tire Inflation Pressure Label (Placard) provided with vehicle (usually applied to driver's side B-pillar). Make sure **original style** valve stem cap is securely installed to keep moisture out of sensor.
7. Install tire and wheel assembly on vehicle.
8. Remove the support and lower the vehicle.
9. Perform one of the following to make the system learn the new sensor ID.
   a. Use the TPM-RKE Analyzer, 9936, with the Scan Tool to program the WIN with the tire pressure sensor ID. This is part of the TPM Diagnostic Verification Test (Refer to 28 - DTC-Based Diagnostics/NODE, Wireless Ignition (WIN) - Standard Procedure).
   b. Once the vehicle has remained stationary for more than 20 minutes, drive vehicle for a minimum of 10 minutes while maintaining a continuous speed above 15 mph (24 km/h). During this time, the system will learn the new sensor ID. This is part of the TPM Diagnostic Verification Test (Refer to 28 - DTC-Based Diagnostics/NODE, Wireless Ignition (WIN) - Standard Procedure).

NOTE: If a sensor cannot be trained, refer to appropriate diagnostic information.

BODY

TABLE OF CONTENTS

page

BODY
- WARNING
  - SAFETY PRECAUTIONS AND WARNINGS . . . 2
  - USE OF HEAT DURING REPAIR 2
- DIAGNOSIS AND TESTING
  - GENERAL WATER LEAKS 2
  - WATER LEAKS 3
  - WIND NOISE 12
- STANDARD PROCEDURE
  - BODY LUBRICATION 13
  - BUZZ, SQUEAKS AND RATTLES 13
  - HEAT STAKING 14
  - NET, FORM AND PIERCE REPAIR 15
  - PLASTIC BODY PANEL REPAIR. 15
- SPECIFICATIONS 24
- SPECIAL TOOLS 26

DECKLID/HATCH/LIFTGATE/TAILGATE 27
DOOR - FRONT. 43
DOORS - REAR 81
EXTERIOR 117
HOOD 151
INSTRUMENT PANEL 163
INTERIOR 211
PAINT 255
SEATS 259
STATIONARY GLASS 349
SUNROOF. 365
WEATHERSTRIP/SEALS 391
BODY STRUCTURE 409

Body

Warning

SAFETY PRECAUTIONS AND WARNINGS

WARNING: Use an Occupational Safety and Health Administration (OSHA) approved breathing filter, when spraying paint or solvents in a confined area. Failure to follow these instructions may result in possible serious or fatal injury.

- **avoid prolonged skin contact with petroleum or alcohol based cleaning solvents.**
- **do not stand under a hoisted vehicle that is not properly supported on safety stands. Failure to follow these instructions may result in possible serious or fatal injury.**

CAUTION: When holes are drilled or punched in an inner body panel, verify the depth of space to the outer body panel, electrical wiring or other components. Damage to the vehicle can result.

- **do not weld exterior panels unless combustible material on the interior of vehicle is removed from the repair area. Fire or hazardous conditions, can result.**
- **always have a fire extinguisher ready for use when welding.**
- **disconnect the negative (-) cable clamp from the battery when servicing electrical components that are live when the ignition is off. Damage to electrical system can result.**
- **do not use abrasive chemicals or compounds on painted surfaces. Damage to finish can result.**
- **do not use harsh alkaline based cleaning solvents on painted or upholstered surfaces. Damage to finish or color can result.**
- **do not hammer or pound on plastic trim panel when servicing interior trim. Plastic panels can break.**

USE OF HEAT DURING REPAIR

WARNING: Chrysler Group LLC engineering's position on the use of heat during collision repair is as follows:

- **Any body panel or frame component damaged which is to be repaired and reused, must be repaired using the "cold straightening" method. No heat may be used during the straightening process.**
- **During rough straightening prior to panel replacement, damaged panels or frame components may be heated to assist in body/frame realignment. The application of heat must be constrained to the parts which will be replaced and not allowed to affect any other components.**

This "no heat" recommendation is due to the extensive use of high strength and advanced high strength steels in Chrysler Group LLC products. High-strength materials can be substantially and negatively affected from heat input which will not be obviously known to the repairer or consumer.

Ignoring these recommendations may lead to serious compromises in the ability to protect occupants in a future collision event, reduce the engineered qualities and attributes, or decrease the durability and reliability of the vehicle.

This statement supersedes any previously released information by the Chrysler Group LLC.

Failure to follow these instructions may result in serious or fatal injury.

Diagnosis and Testing

GENERAL WATER LEAKS

Water leaks can be caused by poor sealing, improper body component alignment, body seam porosity, missing plugs, or blocked drain holes. Centrifugal and gravitational force can cause water to drip from a location away from the actual leak point, making leak detection difficult. All body sealing points should be water tight in normal wet-driving conditions. Water flowing downward from the front of the vehicle should not enter the passenger or luggage compartment. Moving sealing surfaces will not always seal water tight under all conditions. At times, side glass or door seals will allow water to enter the passenger compartment during high pressure washing or hard driving rain (severe) conditions. Overcompensating on door or glass adjustments to stop a water leak that occurs under severe conditions can cause premature seal wear and excessive closing or latching effort. After completing a repair, water test vehicle to verify leak has stopped before returning vehicle to use.

VISUAL INSPECTION BEFORE WATER LEAK TESTS

Verify that floor and body plugs are in place, body drains are clear, and body components are properly aligned and sealed. If component alignment or sealing is necessary, refer to the appropriate section of this group for proper procedures.

WATER LEAK TESTS

WARNING: Do not use electric shop lights or tools in water test area. Personal injury can result.

When the conditions causing a water leak have been determined, simulate the conditions as closely as possible.

- If a leak occurs with the vehicle parked in a steady light rain, flood the leak area with an open-ended garden hose.
- If a leak occurs while driving at highway speeds in a steady rain, test the leak area with a reasonable velocity stream or fan spray of water. Direct the spray in a direction comparable to actual conditions.
- If a leak occurs when the vehicle is parked on an incline, hoist the end or side of the vehicle to simulate this condition. This method can be used when the leak occurs when the vehicle accelerates, stops or turns. If the leak occurs on acceleration, hoist the front of the vehicle. If the leak occurs when braking, hoist the back of the vehicle. If the leak occurs on left turns, hoist the left side of the vehicle. If the leak occurs on right turns, hoist the right side of the vehicle. For hoisting recommendations (Refer to 04 - Vehicle Quick Reference/Hoisting - Standard Procedure).

WATER LEAK DETECTION

To detect a water leak point-of-entry, do a water test and watch for water tracks or droplets forming on the inside of the vehicle. If necessary, remove interior trim covers or panels to gain visual access to the leak area. If the hose cannot be positioned without being held, have someone help do the water test.

Some water leaks must be tested for a considerable length of time to become apparent. When a leak appears, find the highest point of the water track or drop. The highest point usually will show the point of entry. After leak point has been found, repair the leak and water test to verify that the leak has stopped.

Locating the entry point of water that is leaking into a cavity between panels can be difficult. The trapped water may splash or run from the cavity, often at a distance from the entry point. Most water leaks of this type become apparent after accelerating, stopping, turning, or when on an incline.

MIRROR INSPECTION METHOD

When a leak point area is visually obstructed, use a suitable mirror to gain visual access. A mirror can also be used to deflect light to a limited-access area to assist in locating a leak point.

BRIGHT LIGHT LEAK TEST METHOD

Some water leaks in the luggage compartment can be detected without water testing. Position the vehicle in a brightly lit area. From inside the darkened luggage compartment inspect around seals and body seams. If necessary, have a helper direct a drop light over the suspected leak areas around the luggage compartment. If light is visible through a normally sealed location, water could enter through the opening.

PRESSURIZED LEAK TEST METHOD

When a water leak into the passenger compartment cannot be detected by water testing, pressurize the passenger compartment and soap test exterior of the vehicle. To pressurize the passenger compartment, close all doors and windows, start engine, and set heater control to high blower in HEAT position. If engine can not be started, connect a charger to the battery to ensure adequate voltage to the blower. With interior pressurized, apply dish detergent solution to suspected leak area on the exterior of the vehicle. Apply detergent solution with spray device or soft bristle brush. If soap bubbles occur at a body seam, joint, seal or gasket, the leak entry point could be at that location.

WATER LEAKS

GENERAL NOTES

NOTE:

- **This manual applies to all Ram models, 2009 MY and beyond.**
- **Each leak area can have multiple root causes, as noted in the diagnosis chart. It is important to water test each repair before starting the next.**
- **If a leak cannot be reproduced, it is due to the period of time the vehicle is under wet conditions. Some leaks may take hours before leaking.**
- **If a leak cannot be reproduced, apply all the repairs as noted in the diagnosis chart.**

- **It is important to understand where the leak ENDS up when diagnosing the vehicle. Where the leak ends up, does not always explain where the leak originates. Refer to the diagnosis chart when determining which repairs to perform.**
- **This repair procedure does NOT cover every possible water leak on the RAM. The issues identified in this document are the severe leaks that may occur in the field.**
- **Generally, a car wash is the preferred method to diagnose a vehicle.**
- **The content identifies the known areas of water leaks, the critical characteristics of each area and how to repair them.**

Diagnosis Chart -

Water Leak Conditions		
Water entering the vehicle through the grab handle or overhead console	**Water entering the vehicle at the back glass area (C-pillars)**	**Water is on the rear carpet between the rear seats**
Repair Procedure For Windshield Urethane	Repair Procedure For CHMSL (3rd Brake Light)	Repair Procedure For Cab-Back Exhauster
Repair Procedure For Roof/Body Seams	Repair Procedure For Back-Glass/Power Slider	
Repair Procedure For Sunroof Drain System	Repair Procedure For Roof/Body Seams	
Repair Procedure For Sunroof Glass System	Repair Procedure For Aperture/Cab-Back Seams	
	Repair Procedure For Sunroof Drain System	

WATER ENTERING THE VEHICLE THROUGH THE GRAB HANDLE OR OVERHEAD CONSOLE

Repair Procedure For Windshield Urethane

Required Parts:

- Mopar Glass Sealer
- Paintable Clear Seam Sealer

Potential Parts Required:

- Molding, Windshield, Right (Only replace if damage occurs during removal)
- Molding, Windshield, Left (Only replace if damage occurs during removal)

Two Methods Of Testing:

Method 1:

With a person inside the vehicle, run water around windshield starting at the lower left or right side A-Pillar slowly moving up the A-pillar and watch for water to drip inside the vehicle from A-Pillar and/or Grab Handle. Next, move across the top of the windshield. If water is seen dripping from any area, stop running water and proceed with the applicable repair procedure below.

Method 2:

Gain access to both body exhausters and tape off to block air escaping. Turn the ignition to the run position and turn the HVAC blower on High. Make sure all windows are up and close all the doors. Depending on the size of cabin area will affect the time it could take to pressurize the cabin. Next, spray soapy water or foaming window cleaner around the windshield molding. As cabin begins to pressurize inspect for air bubbles to form around windshield molding. If any air bubbles are noticed proceed with the applicable repair procedure below.

Windshield Urethane Skip Repair

1. If the leak is determined to be adjacent to the windshield, then the A-Pillar windshield molding (1) should be removed. The windshield molding can be removed pulling it away from the cab at its four attach points (2), (Refer to 23 - Body/Weatherstrip/Seals/WEATHERSTRIP, Windshield - Removal)

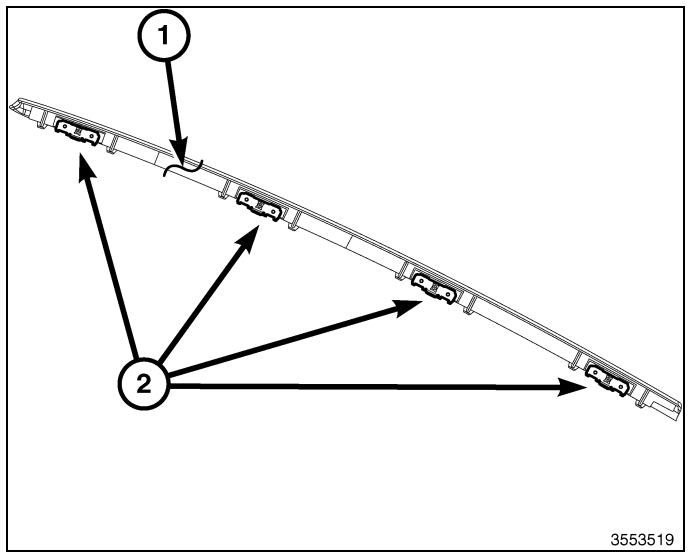

NOTE: Sealer skips or pinholes can be seen along the exposed body seams (1)

NOTE: A special area of concern is where the windshield and body seams meet at the upper a-pillar (1), which is shown

2. Once the windshield molding is removed, inspect for sealer skips. Apply Mopar Glass Sealer to any skip in the urethane around windshield.
3. For sealer skips in the A-Pillar body seam apply a Clear Hi-Flow Paintable Seam Sealer.
4. Prior to re-assembly, re-test the area to ensure it is properly sealed.
5. Carefully reinstall windshield molding. (Refer to 23 - Body/Weatherstrip/Seals/WEATHERSTRIP, Windshield - Installation)

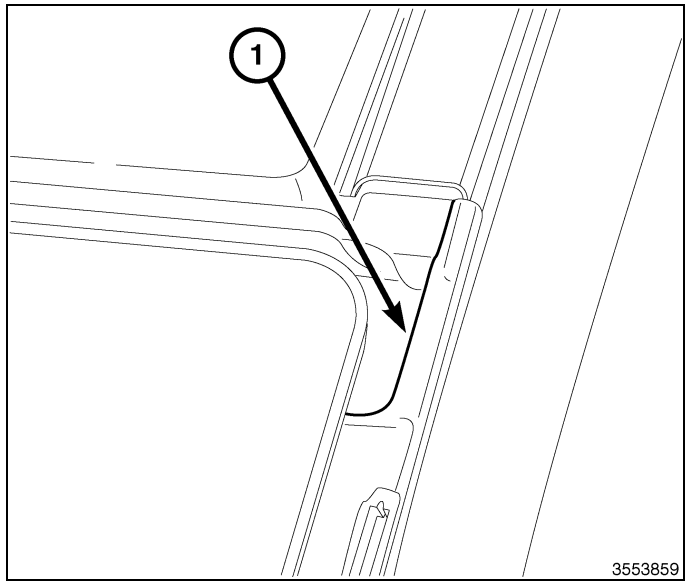

Exposed Body Seam (1)

Repair Procedure For Roof/Body Seams

Required Parts:

- Paintable Clear Seam Sealer

Potential Parts Required:

- Molding – Roof Ditch Right
- Molding – Roof Ditch Left

1. Gain access to the A-Pillar body seam and roof ditch seam by removing the windshield A-Pillar molding and roof ditch molding. (Refer to 23 - Body/Weatherstrip/Seals/WEATHERSTRIP, Windshield - Removal)

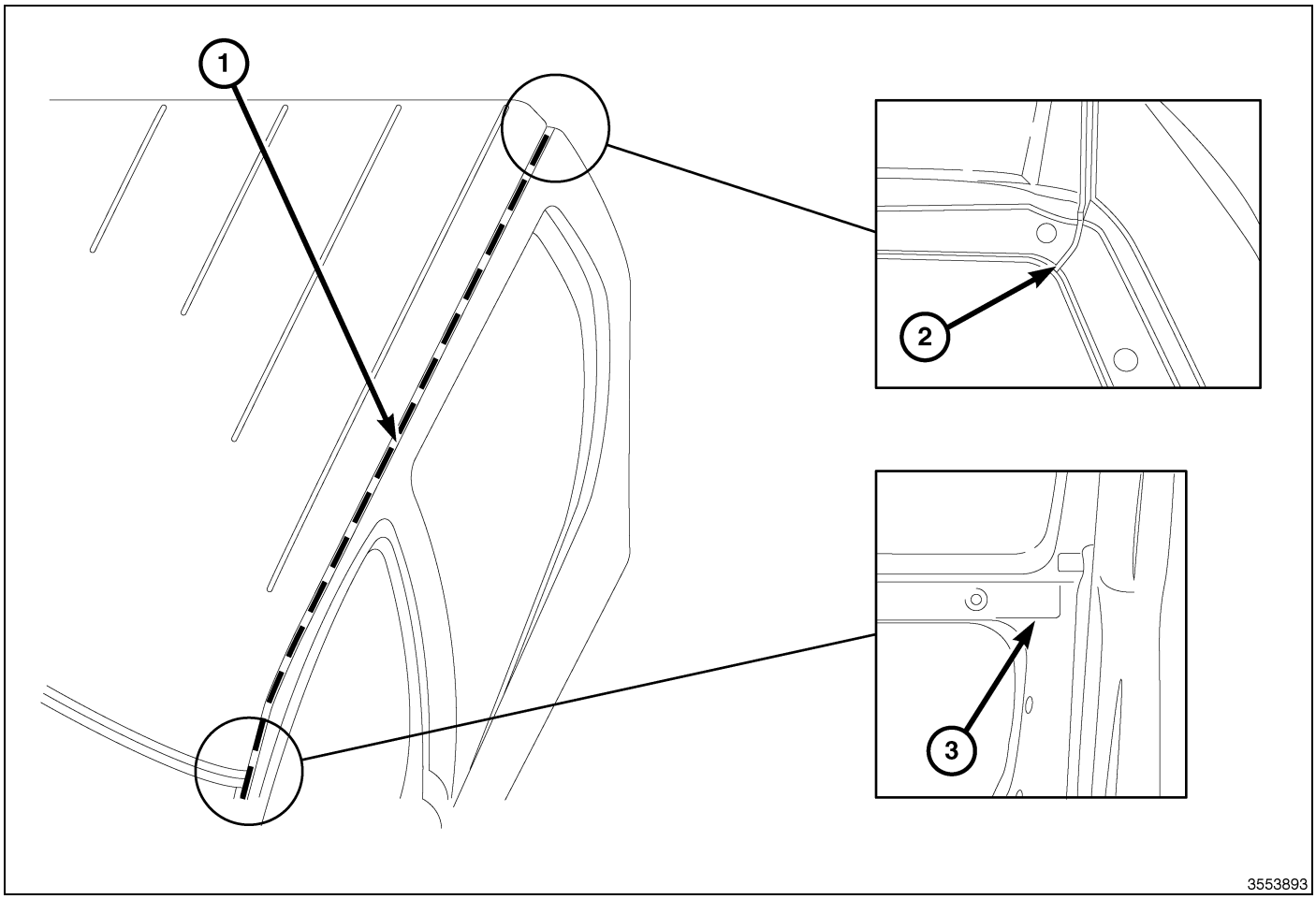

NOTE: Dashed line indicates starting and ending points (path) for clear sealer

2. Using the diagram above apply Paintable Clear Seam Sealer along the whole length of the roof ditch (1), beginning at the A-pillar (3) and ending at the Roof to Aperture/Rap Joint (2). Be certain to cover any and all pin holes.
3. Prior to re-assembly, re-test the area to be certain it is properly sealed.
4. Reinstall windshield A-Pillar molding and Roof Ditch molding. (Refer to 23 - Body/Weatherstrip/Seals/WEATHERSTRIP, Windshield - Installation)

Repair Procedure For Sunroof Drain System

1. Inspect for water dripping from Overhead Console, also inspect for water marks/stains and/or dampness on Headliner.

2. Lower the headliner.(Refer to 23 - Body/Interior/HEADLINER - Removal) Inspect all four sunroof drain tubes (2) and make certain all connections are secure to each barb (3).
3. Verify that all four drain tubes are securely fastened, prior to re-assembly. Re-test the area by opening sunroof and using a small cup of water, slowly pour water into sunroof trough (1) to make certain water flows and the drains are properly sealed.
4. Install Headliner. (Refer to 23 - Body/Interior/HEADLINER - Installation)

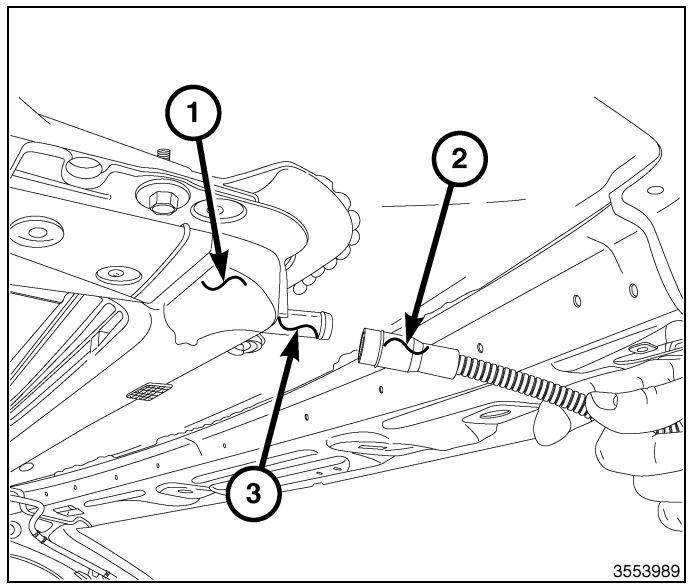

5. Inspect both rear sunroof drain tube grommets (1) behind rear seat to make sure they are fully seated into the inner rear cab (2).

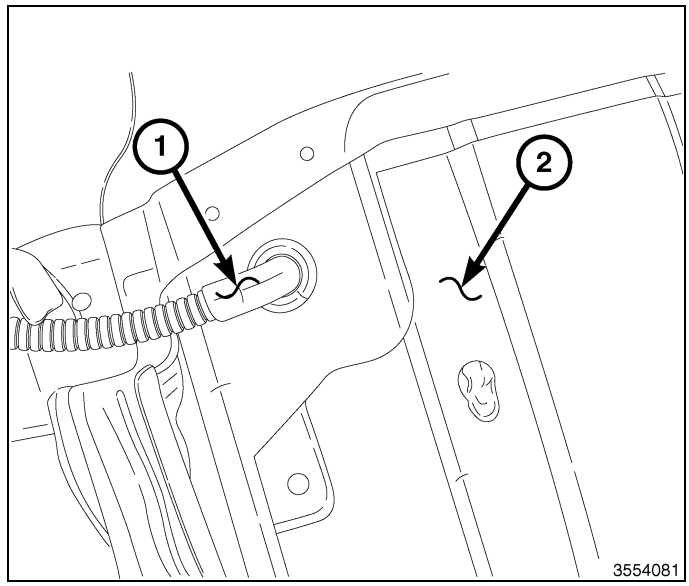

Repair Procedure For Sunroof Glass System

1. Using the specifications listed, (Refer to 23 - Body/Sunroof/GLASS, Sunroof - Adjustments)Visually inspect sunroof glass (1) flushness to roof panel (2).
2. If adjustments need to be made to the sunroof glass (1) height and gap tolerances, (Refer to 23 - Body/Sunroof/GLASS, Sunroof - Adjustments)

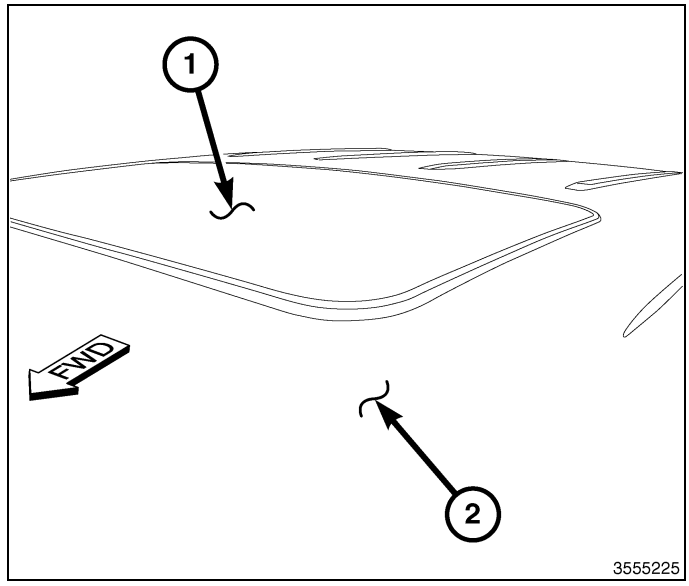

WATER ENTERING THE VEHICLE AT THE BACK GLASS AREA (C-PILLARS)

Repair Procedure For CHMSL (3rd Brake Light)

Parts Required:

- Mopar Glass Sealer

1. Remove the CHMSL (Center High Mounted Stop Lamp) assembly. (Refer to 08 - Electrical/8L - Lamps and Lighting/Lamps/Lighting - Exterior/LAMP, Center High Mounted Stop - Removal)

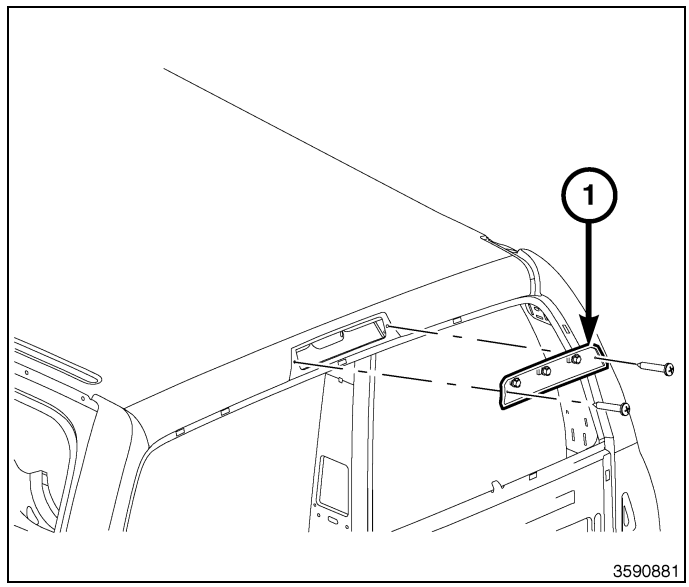

2. Apply 1/8 inch bead of Heavy Bodied Sealer (3) around the lamp (1) on the foam gasket material (2), leaving no gaps.
3. Install the CHMSL assembly. (Refer to 08 - Electrical/8L - Lamps and Lighting/Lamps/Lighting - Exterior/LAMP, Center High Mounted Stop - Installation)
4. Remove any excess sealer that squeezes out onto the painted surface or exterior lamp assembly.

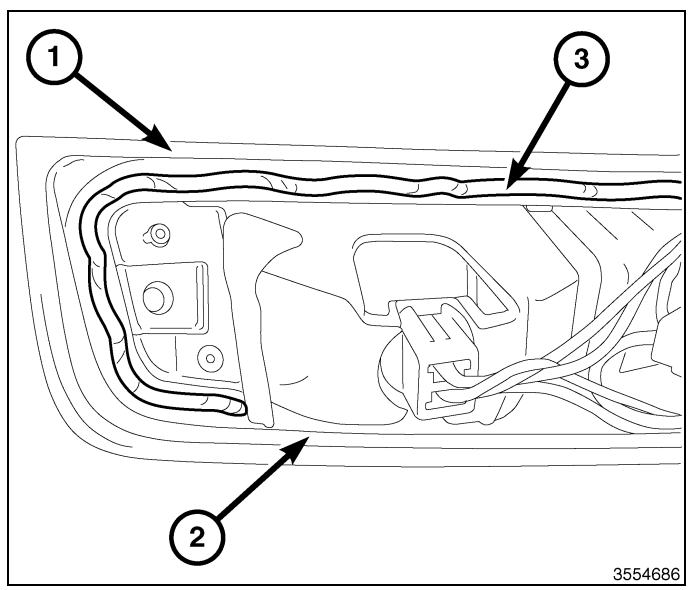

Repair Procedure For Back-Glass/Power Slider

Parts Required:

- Mopar Glass Sealer

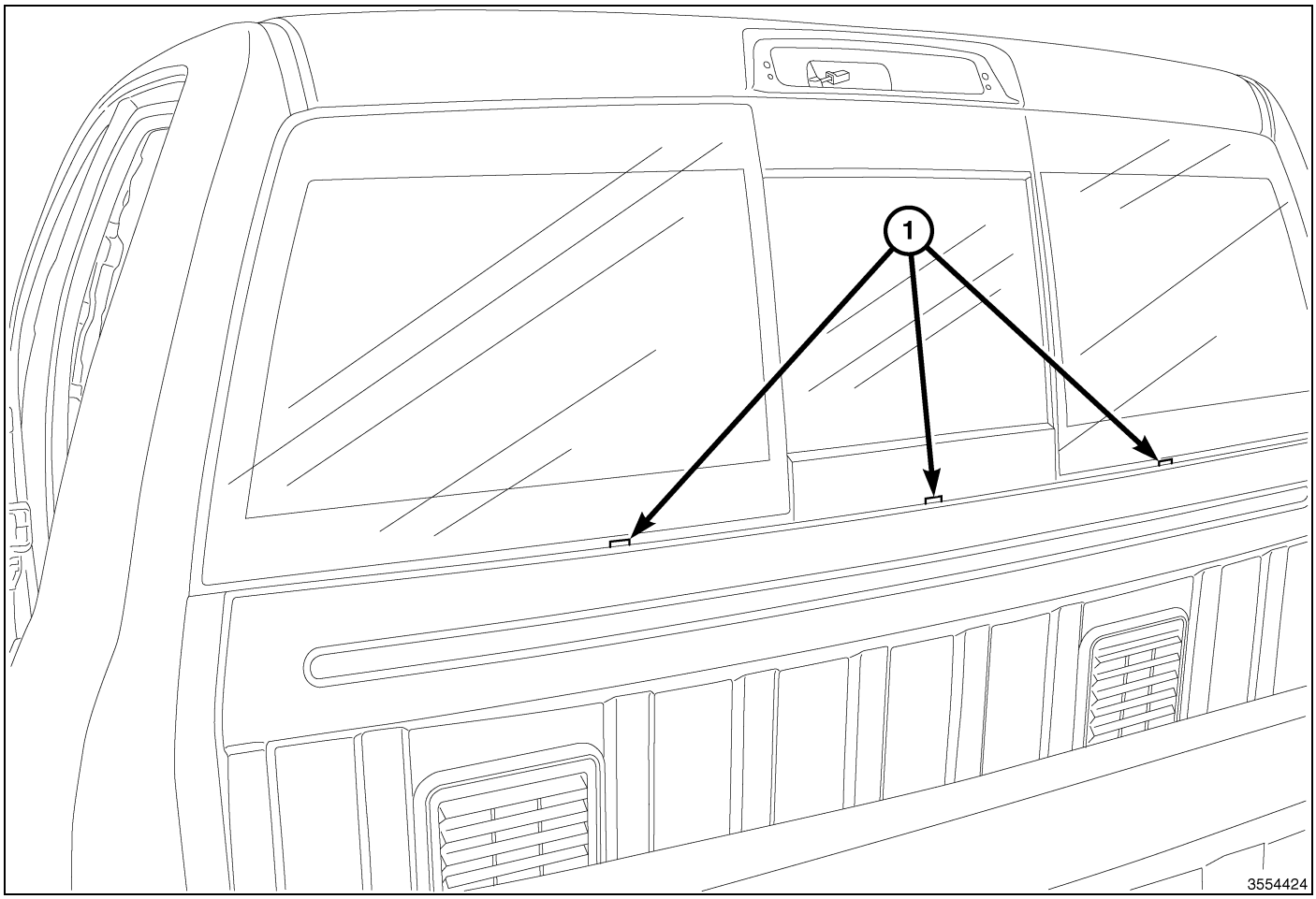

Check Back Glass Drains (1)

1. For the back-glass drains (1) being plugged or restricted the back-glass will have to be removed and replaced.
2. If the water leak is found around the parameter of the back-glass due to urethane skips it is recommended to apply Mopar Glass Sealer.
3. Water test area inspecting for water entering vehicle. If water still enters vehicle, back-glass will have to be replaced.

Repair Procedure For Aperture/Cab-Back Seams

Parts Required:

- Paintable Clear Seam Sealer

1. Inspect both areas indicated.

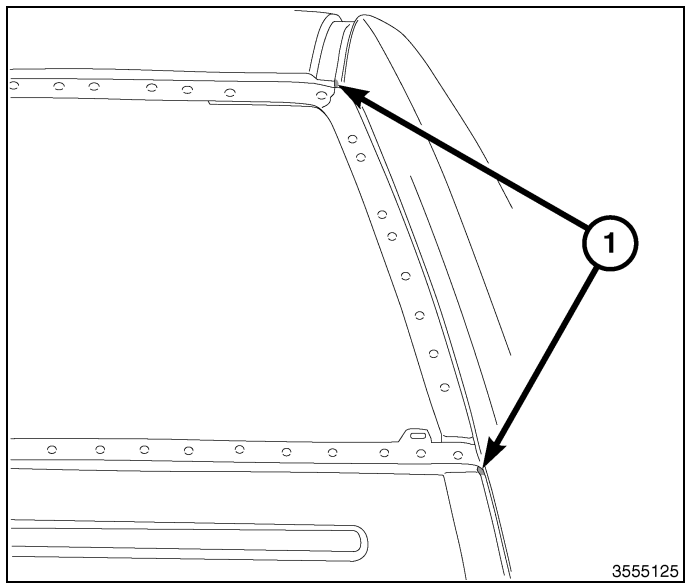

Rat Hole Locations (1)

2. If a skip crack or pinhole is found use Paintable Clear Seam Sealer . Apply sealer as indicated in illustrations below.

NOTE: It is important to fill the entire seam located within the brackets to be certain of full coverage and proper sealing of the rat hole.

3. Apply clear sealer on entire seam indicated within the bracket.

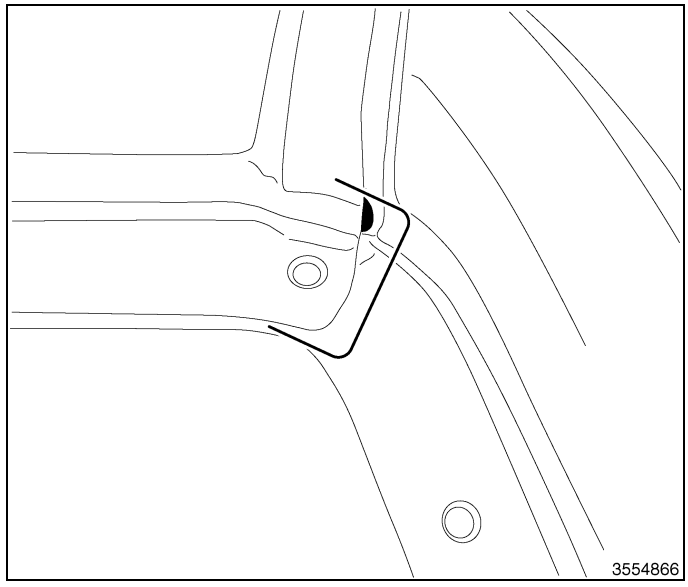

Roof/Aperture Rap Joint

4. Apply clear sealer on entire seam indicated within the bracket.

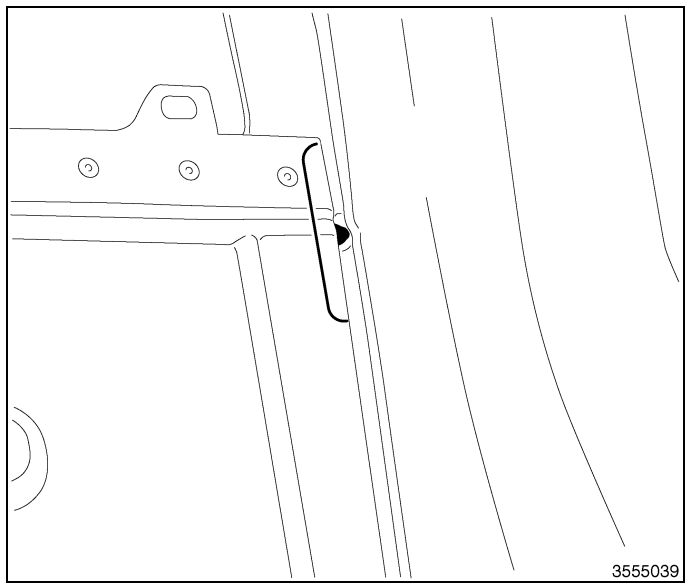

Cab Back/Body Seam

WATER IS ON THE REAR CARPET BETWEEN THE REAR SEATS

Repair Procedure For Cab-Back Exhauster

1. Review examples below of what to look for and make certain they are properly installed and seated against the body of the vehicle. Example1: Seal folded - Example 2: Exhauster not fully seated
2. If any of the conditions are found remove exhauster from vehicle inspect for tearing or ripping of the seal. If seal has no tears or rips then reinstall on to vehicle making sure it clicks in on all four corners and that the seal is not rolled.
3. If seal is damaged or torn then replace body exhauster.

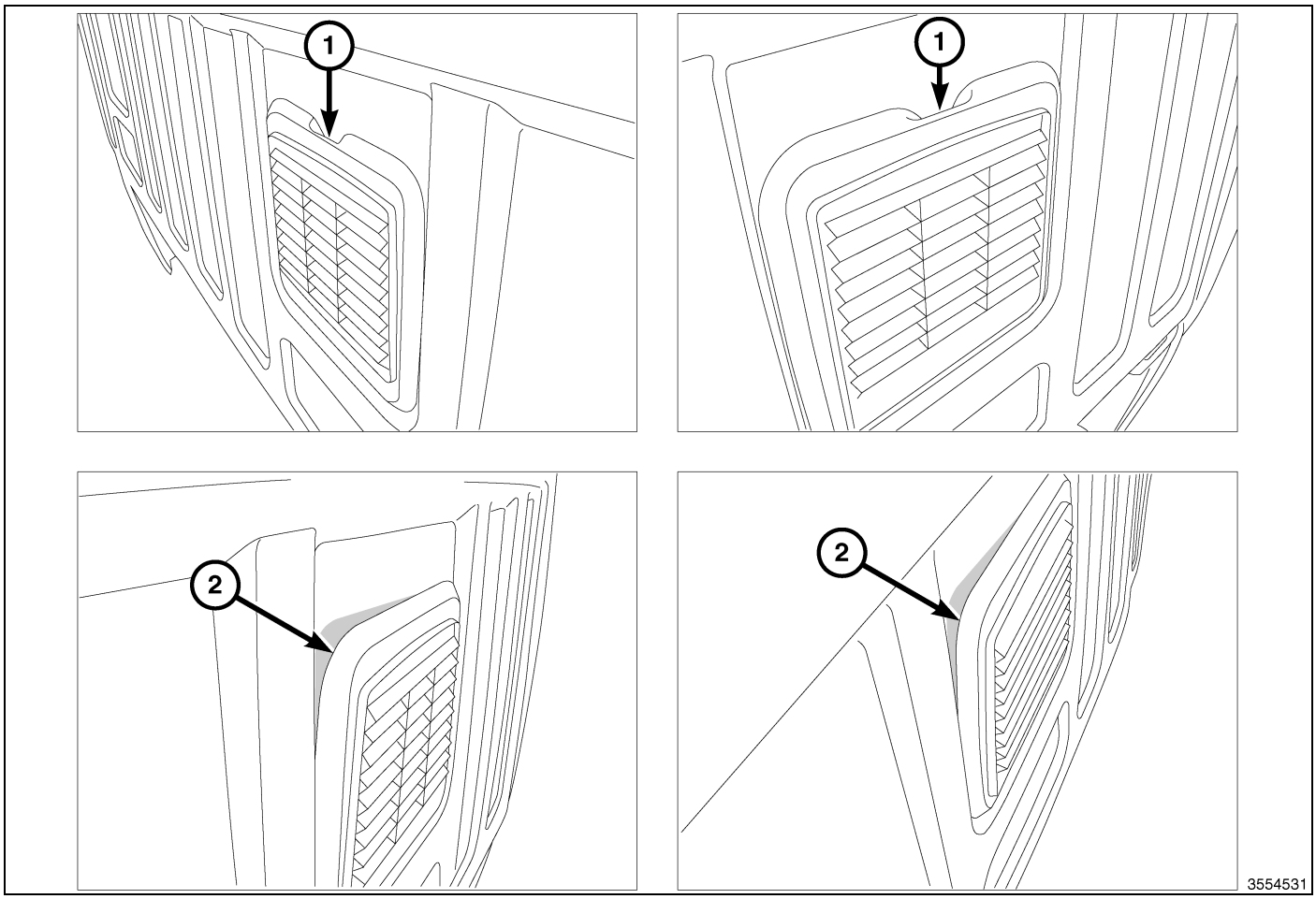

WIND NOISE

Wind noise is the result of most air leaks. Air leaks can be caused by poor sealing, improper body component alignment, body seam porosity, or missing plugs in the engine compartment or door hinge pillar areas. All body sealing points should be airtight in normal driving conditions. Moving sealing surfaces will not always seal airtight under all conditions. At times, side glass or door seals will allow wind noise to be noticed in the passenger compartment during high cross winds. Over compensating on door or glass adjustments to stop wind noise that occurs under severe conditions can cause premature seal wear and excessive closing or latching effort. After a repair procedure has been performed, test vehicle to verify noise has stopped before returning vehicle to use.

VISUAL INSPECTION BEFORE TESTS

Verify that floor and body plugs are in place and body components are aligned and sealed. If component alignment or sealing is necessary, refer to the appropriate section of this group for proper procedures.

ROAD TESTING WIND NOISE

1. Drive the vehicle to verify the general location of the wind noise.
2. Apply 50 mm (2 in.) masking tape in 150 mm (6 in.) lengths along weatherstrips, weld seams or moldings. After each length is applied, drive the vehicle. If noise goes away after a piece of tape is applied, remove tape, locate, and repair defect.

POSSIBLE CAUSE OF WIND NOISE

- Moldings standing away from body surface can catch wind and whistle.
- Gaps in sealed areas behind overhanging body flanges can cause wind-rushing sounds.
- Misaligned movable components.
- Missing or improperly installed plugs in pillars.
- Weld burn through holes.
- Improperly installed roof rack cross bars.
- Side door mirror leaks.

Standard Procedure

BODY LUBRICATION

Lubrication Requirements

Locks and all body pivot points, including such items as seat tracks, door hinge pivot points and rollers , liftgate, tailgate, sliding doors and hood hinges, should be lubricated periodically with a lithium based grease such as Mopar ® Spray White Lube to ensure quiet, easy operation and to protect against rust and wear. Prior to the application of any lubricant, wipe the parts clean, to remove dust and grit. After lubricating, excess oil and grease should be removed. Particular attention should also be given to hood latching components to make sure they function properly. When performing other underhood services, clean and lubricate the hood latch release mechanism and safety catch.

The external lock cylinders should be lubricated twice a year, preferably in the fall and spring. Apply a small amount of a high quality lubricant such as Mopar ® Lock Cylinder Lubricant directly into the lock cylinder.

Lubricant Application

Door Lock Cylinders

1. Apply a small amount of lubricant directly into the lock cylinder.
2. Apply a small amount of lubricant to the key.
3. Insert key into lock cylinder and cycle the mechanism from the locked to the unlocked position.

NOTE: Do not add more lubricant.

4. Cycle the lock cylinder mechanism several times to allow the lubricant to flow throughout the cylinder.
5. Wipe all lubricant from exterior of lock cylinder and key.

All Other Body Mechanisms

1. Clean component as described above.
2. Apply specified lubricant to all pivoting and sliding contact areas of component.

Lubricant Usage

Engine Oil

- door hinges - hinge pin and pivot contact areas
- hood hinges - pivot points
- liftgate hinges

Mopar ® Spray White Lube or Equivalent

- door check straps
- liftgate latches
- liftgate prop pivots
- ash receiver
- fuel filler door remote control latch mechanism
- parking brake mechanism
- sliding seat tracks
- liftgate latch

Mopar ® Multipurpose Grease or Equivalent

- all other hood mechanisms

Mopar ® Lock Cylinder Lubricant or Equivalent

- door lock cylinders
- liftgate lock cylinder

BUZZ, SQUEAKS AND RATTLES

Buzz, Squeaks and Rattles (BSR's) may be caused by any one or more of the following and may be corrected as indicated:

- Loose fasteners should be tightened to specifications.
- Damaged or missing clips should be replaced.
- Damaged trim panels should be replaced.

- Incorrectly installed trim panels should be reinstalled properly.

Many BSR complaints such as loose trim, can be serviced using various tapes or lubricants. Tapes including foam, flock and anti-squeak, can be used to eliminate noises caused by metal, plastic and vinyl components. Long life lubricants and greases can also be used on a variety of components. Refer to the BUZZ, SQUEAKS AND RATTLES table for materials and usage.

BUZZ, SQUEAKS AND RATTLES

ITEM	FEATURES	APPLICATIONS	SERVICE TEMP
ITCH AND SQUEAK TAPE	An abrasion resistant material thin enough to conform to most irregular surfaces. Stops most itches and squeaks.	Between metal and metal, metal and plastic, metal and vinyl, vinyl and plastic. Interior. Examples: Trim panels and bezels.	-40° to 107° C (-40° to 225° F)
BLACK NYLON FLOCK	Nylon Flock with an aggressive acrylic adhesive. Provides for cushioning and compression fit, also isolates components. Water-resistant.	Between metal and metal, metal and plastic, vinyl and plastic. Examples: Pull cups, bezels, clips, ducts, top cover to glass, cowl panel.	-40° to 82° C (-40° to 180° F)
HIGH DENSITY URETHANE FOAM	Tear resistant, highly resilient and durable.	Between metal and metal, metal and plastic. Water-resistant. Examples: I/P, heavy metal rattles, isolating brackets.	-40° to 82° C (-40° to 180° F)
OPEN CELL FOAM TAPE	Soft foam conforms to irregular surfaces.	Wire harness and connector wrap. Examples: Seals, gasket, wiring, heat ducts.	-40° to 82° C (-40° to 180° F)
CLOSED CELL LOW DENSITY FOAM TAPE	Soft, conformable. Water-resistant.	Wherever bulk is needed. Prevents closing flutters and rattles when applied to door watershield. Examples: Door, I/P.	-40° to 82° C (-40° to 180° F)
NYE® GREASE 880	Long life.	Suspensions. Examples: Strut bushings, sway bars.	-40° to 200° C (-40° to 390° F)
KRYTOX® OIL	Long life. Will not dry out or harm plastics or rubber.	When access is not possible, oil will migrate to condition. Vinyl, rubber, plastic, metal. Examples: Convertible top bushings, pull cups trim panel inserts.	-34° to 205° C (-30° to 400° F)
KRYTOX® GREASE	Long life. Will not dry out or harm plastics or rubber.	Vinyl, rubber, plastic, metal, glass. Examples: Weather-strips, backlite and windshield moldings.	-34° to 205° C (-30° to 400° F)

HEAT STAKING

1. Remove trim panel.
2. Bend or move the trim panel components at the heat staked joints. Observe the heat staked locations and/or component seams for looseness.
3. Heat stake the components.

a. If the heat staked or component seam location is loose, hold the two components tightly together and using a soldering gun with a flat tip, melt the material securing the components together. Do not over heat the affected area, damage to the exterior of the trim panel may occur.
b. If the heat staked material is broken or missing, use a hot glue gun to apply new material to the area to be repaired. The panels that are being heat staked must be held together while the applying the glue. Once the new material is in place, it may be necessary to use a soldering gun to melt the newly applied material. Do not over heat the affected area, damage to the exterior of the trim panel may occur.

4. Allow the repaired area to cool and verify the repair.
5. Install trim panel.

NET, FORM AND PIERCE REPAIR

CAUTION: Failure to follow these recommendations could result in damage or failure to the part and the related parts.

Net, form and pierce is a manufacturing process which takes place during the original build of the vehicle. The original part will have a beveled platform that will decrease toward the fastener location mounting hole. Replacement parts in these areas may not include bevel (form) and / or fastener hole (pierce) and will need to be adapted for proper fit and finish.

The primary locations which may utilize net, form and pierce are:

- Fender Reinforcement (at front end module mount)
- Fender Tower Mounts
- Hood Hinge (lower half)
- Rear Body Header (liftgate hinge mounts)
- Strut Tower (at upper control arm mount)

NOTE: Shock tower is net, pierce only.

NOTE: The thickness of shims is not to exceed the original thickness of the factory bevel. If more shims are needed damage is still present and must be repaired properly.

If the replacement part did not come with a fastener hole, one of equal size and location will have to be drilled. Body shims should be used in the fender reinforcement to front end module. The hood hinge area, fender tower mounts, and rear body header will utilize washers as spacers where a specific spacer does not exist. The shims and spacers should be sealed between each other and to the stationary surface. Care should be taken when smoothing sealer around washers to ensure undetectable repair. Refinish the repair area per the paint manufacturers recommendations for corrosion resistance and appearance purposes.

PLASTIC BODY PANEL REPAIR

There are many different types of plastics used in today's automotive environment. We group plastics in three different categories: Rigid, Semi-Rigid, and Flexible. Any of these plastics may require the use of an adhesion promoter for repair. These types of plastic are used extensively on Chrysler LLC vehicles. Always follow repair material manufacturer's plastic identification and repair procedures.

Rigid Plastics:

Examples of rigid plastic use: Fascias, Hoods, Doors, and other Body Panels, which include SMC, ABS, and Polycarbonates.

Semi-Rigid Plastics:

Examples of semi-rigid plastic use: Interior Panels, Under Hood Panels, and other Body Trim Panels.

Flexible Plastics:

Examples of flexible plastic use: Fascias, Body Moldings, and upper and lower Fascia Covers.

Repair Procedure:

The repair procedure for all three categories of plastics is basically the same. The one difference is the material used for the repair. The materials must be specific for each substrate, rigid repair material for rigid plastic repair, semi-rigid repair material for semi-rigid plastic repair and flexible repair material for flexible plastic repair.

Adhesion Promoter/Surface Modifier:

Adhesion Promoters/Surface Modifiers are required for certain plastics. All three categories may have plastics that require the use of adhesion promoter/surface modifiers. Always follow repair material manufacturer's plastic identification and repair procedures.

SAFETY PRECAUTION AND WARNINGS

WARNING:

- **Eye protection should be used when servicing components. Personal injury can result.**
- **Use an OSHA approved breathing mask when mixing epoxy, grinding, and spraying paint or solvents in a confined area. Personal injury can result.**
- **Avoid prolonged skin contact with resin, petroleum, or alcohol based solvents. Personal injury can result.**
- **Do not venture under a hoisted vehicle that is not properly supported on safety stands. Personal injury can result.**

WARNING: Failure to follow these instructions may result in serious or fatal injury.

NOTE:

- **When holes must be drilled or cut in body panels, verify locations of internal body components and electrical wiring. Damage to vehicle can result.**
- **Do not use abrasive chemicals or compounds on undamaged painted surfaces around repair areas. Damage to finish can result.**

RIGID, SEMI-RIGID, AND FLEXIBLE PLASTIC PARTS TYPES

CODE	FAMILY NAME	COMMON TRADE NAME	TYPICAL APPLICATION
ASA	ACRYLONITRILE STYRENE ACRYLITE	LURAN S	CONSOLES, GRILLES
ABS	ACRYLONITRILE BUTADIENE STYRENE	TERLURAN	"A" PILLARS, CONSOLES, GRILLES
ABS/PC	ABS/PC ALLOY	PULSE, PROLOY, BAYBLEND	DOORS, INSTRUMENT PANELS
ABS/PVC	ABS/PV ALLOY	PROLOY, PULSE, LUSTRAN, CYCLOVIN	DOOR PANELS, GRILLES, TRIM
BMC	BULK MOLDING COMPOUND	BMC	FENDER EXTENSIONS
EMA	EHTYLENE METHYL ACRYLATE/IONOMER	SURLYN, EMA, IONOMER	BUMPER GUARDS, PADS
METTON	METTON	METTON	GRILLES, KICK PANELS, RUNNING BOARDS
MPPO	MODIFIED POLYPHENY-LENE OXIDE	MPPO	SPOILER ASSEMBLY
PA	POLYAMID	ZYTEL, VYDYNE, PA, MINLON	FENDERS, QUARTER PANELS
PET	THERMOPLASTIC POLYESTER	RYNITE	TRIM
PBT/PPO	PBT/PPO ALLOY	GERMAX	CLADDINGS
PBTP	POLYBUTYLENE THEREPTHALATE	PBT, PBTP, POCAN, VALOX	WHEEL COVERS, FENDERS, GRILLES
PBTP/EEBC	POLYBUTYLENE THEREPTHALATE/EEBC ALLOY	BEXLOY, "M", PBTP/EEBC	FASCIAS, ROCKER PANEL, MOLDINGS
PC	POLYCARBONATE	LEXAN, MERLON, CALIBRE, MAKROLON PC	TAIL LIGHT LENSES, IP TRIM, VALANCE PANELS

CODE	FAMILY NAME	COMMON TRADE NAME	TYPICAL APPLICATION
PC/ABS	PC/ABS ALLOY	GERMAX, BAY BLENDS, PULSE	DOORS, INSTRUMENT PANELS
PPO	POLYPHENYLENE OXIDE	AZDEL, HOSTALEN, MARLEX, PRFAX, NORYL, GTX, PPO	INTERIOR TRIM, DOOR PANELS, SPLASH SHIELDS, STEERING COLUMN SHROUD
PPO/PA	POLYPHENYLENE/ POLYAMID	PPO/PA, GTX 910	FENDERS, QUARTER PANELS
PR/FV	FIBERGLASS REINFORCED PLASTIC	FIBERGLASS, FV, PR/FV	BODY PANELS
PS	POLYSTYRENE	LUSTREX, STYRON, PS	DOOR PANELS, DASH PANELS
RTM	RESIN TRANSFER MOLDING COMPOUND	RTM	BODY PANELS
SMC	SHEET MOLDED COMPOUND	SMC	BODY PANELS
TMC	TRANSFER MOLDING COMPOUND	TMC	GRILLES
UP	UNSATURATED POLYESTER (THERMOSETTING)	SMC, BMC, TMC, ZMC, IMC, XSMC, UP	GRILLE OPENING PANEL, LIFTGATES, FLARESIDE FENDERS, FENDER EXTENSIONS
EEBC	ETHER/ESTER BLOCKED CO-POLYMER	EEBC	BUMPERS
EEBC/PBTP	EEBC/POLYBUTYLENE TEREPTHALATE	EEBC, PBTP, BEXLOY	BUMPER, ROCKER PANELS
EMPP	ETHYLENE MODIFIED POLYPROPYLENE	EMPP	BUMPER COVERS
EPDM	ETHYLENE/PROPROPY-LENE DIENE MONOMER	EPDM, NORDEL, VISTALON	BUMPERS
EPM	ETHYLENE/PROPROPY-LENE CO-POLYMER	EPM	FENDERS
MPU	FOAM POLYURETHANE	MPU	SPOILERS
PE	POLYETHYLENE	ALATHON, DYLAN, LUPOLEN, MARLEX	"?
PP	POLYPROPYLENE (BLENDS)	NORYL, AZDEL, MARLOX, DYLON, PRAVEX	INNER FENDER, SPOILERS, KICK PANELS
PP/EPDM	PP/EPDM ALLOY	PP/EPDM	SPOILERS, GRILLES
PUR	POLYURETHANE	COLONELS, PUR, PU	FASCIAS, BUMPERS
PUR/PC	PUR/PC ALLOY	TEXIN	BUMPERS
PVC	POLYVINYL CHLORIDE	APEX, GEON, VINYLITE	BODY MOLDINGS, WIRE INSULATION, STEERING WHEELS
RIM	REACTION INJECTED MOLDED POLYURETHANE	RIM, BAYFLEX	FRONT FASCIAS, MODULAR WINDOWS
RRIM	REINFORCED REACTION INJECTED MOLDED	PUR, RRIM	FASCIAS, BODY PANELS, BODY TRIMS

CODE	FAMILY NAME	COMMON TRADE NAME	TYPICAL APPLICATION
TPE	THERMO POLYETHYLENE	TPE, HYTREL, BEXLOY-V	FASCIAS, BUMPERS, CLADDINGS
TPO	THERMOPOLYOLEFIN	POLYTROPE, RENFLEX, SANTOPRENE, VISAFLEX, ETA, APEX, TPO, SHIELDS, CLADDINGS	BUMPERS, END CAPS, TELCAR, RUBBER, STRIPS, SIGHT, INTERIOR B POST
TPP	THERMO-POLYPROPYLENE	TPP	BUMPERS
TPU	THERMOPOLYURETHANE, POLYESTER	TPU, HYTREL, TEXIN, ESTANE	BUMPERS, BODY SIDE, MOLDINGS, FENDERS, FASCIAS

PANEL SECTIONING

If it is required to section a large panel for a plastic repair, it will be necessary to reinforce the panel. To bond two plastic panels together, a reinforcement must overlap both panels. The panels must be “V'd” at a 20 degree angle. The area to be reinforced should be washed, then sanded. Be sure to wipe off any excess soap and water when finished. Lightly sand or abrade the plastic with an abrasive pad or sandpaper. Blow off any dust with compressed air or wipe with a clean dry rag.

When bonding plastic panels, follow repair material manufacturers recommendations. Be sure that enough adhesive has been applied to allow squeeze out and to fill the full bond line. Once the pieces have been brought together, do not move them until the adhesive is cured. The assembly can be held together with clamps, rivets, etc. A faster cure can be obtained by heating with a heat lamp or heat gun. After the parts have been bonded and have had time to cure, rough sand the seam and apply the final adhesive filler to the area being repaired. Smooth the filler with a spreader, wooden tongue depressor, or squeegee. For fine texturing, a small amount of water can be applied to the filler surface while smoothing. The cured filler can be sanded as necessary and, as a final step, cleanup can be done with soapy water. Wipe the surface clean with a dry cloth allowing time for the panel to dry before moving on with the repair.

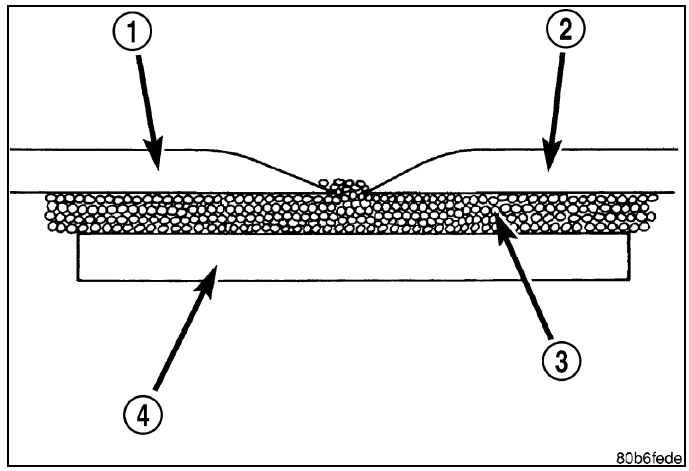

1 - EXISTING PANEL
2 - NEW PANEL
3 - PANEL ADHESIVE
4 - BONDING STRIP

PANEL REINFORCEMENT

Structural repair procedures for rigid panels with large cracks and holes will require a reinforcement backing. Reinforcements can be made with several applications of glass cloth saturated with structural adhesive. Semi-rigid or flexible repair materials should be used for semi-rigid or flexible backing reinforcement and open meshed fiberglass dry wall tape can be used to form a reinforcement. The dry wall tape allows the resin to penetrate through and make a good bond between the panel and the adhesive. Structurally, the more dry wall tape used, the stronger the repair.

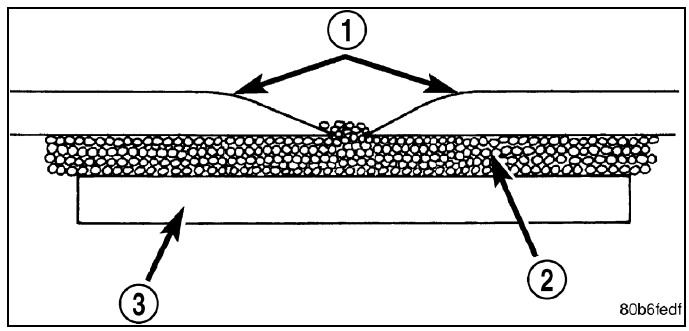

1 - SOFTENED EDGES
2 - PANEL ADHESIVE
3 - BONDING STRIP

Another kind of repair that can be done to repair large cracks and holes is to use a scrap piece of similar plastic and bond with structural adhesive. The reinforcement should cover the entire break and should have a generous amount of overlap on either side of the cracked or broken area.

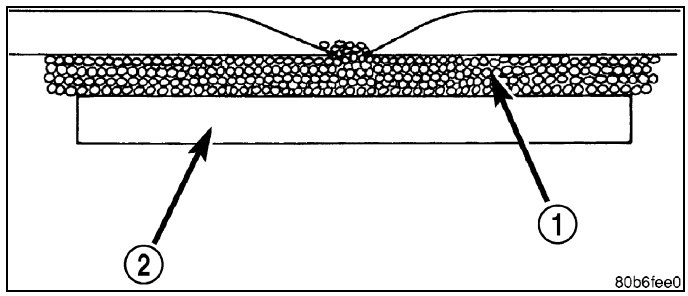

1 - PANEL ADHESIVE
2 - REINFORCEMENT

When repairing plastic, the damaged area is first “V'd” out, or beveled. Large bonding areas are desirable when repairing plastic because small repairs are less likely to hold permanently. Beveling the area around a crack at a 20° angle will increase the bonding surface for a repair. It is recommended that sharp edges be avoided because the joint may show through after the panel is refinished.

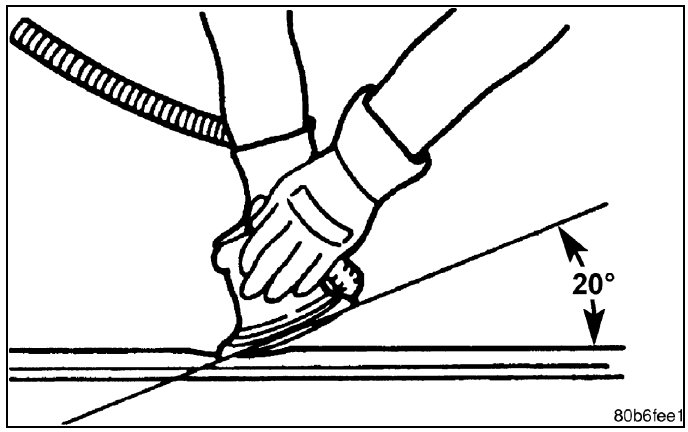

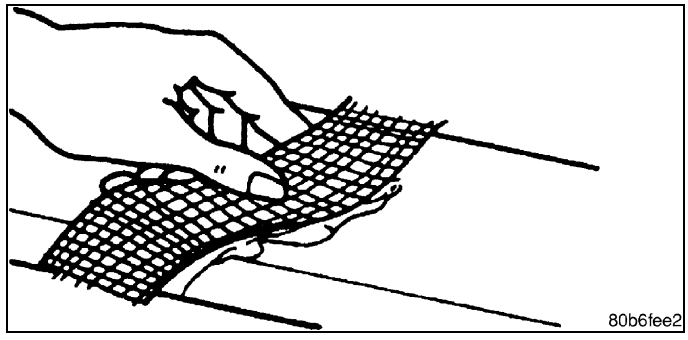

- Panel repair for both flexible and rigid panels are basically the same. The primary difference between flexible panel repair and rigid panel repair is in the adhesive materials used.
- The technician should first decide what needs to be done when working on any type of body panel. One should determine if it is possible to return the damage part to its original strength and appearance without exceeding the value of the replacement part.
- When plastic repairs are required, it is recommended that the part be left on the vehicle when ever possible. That will save time, and the panel will remain stationary during the repair. Misalignment can cause stress in the repair areas and can result in future failure.

VISUAL INSPECTION

Composite materials can mask the severity of an accident. Adhesive bond lines, interior structure of the doors, and steel structures need to be inspected carefully to get a true damage assessment. Close inspection may require partial removal of interior trim or inner panels.

Identify the type of repair: Puncture (1) or Crack - Damage that has penetrated completely through the panel. Damage is confined to one general area; a panel section is not required. However, a backer panel, open fiberglass tape, or matted material must be bonded from behind.

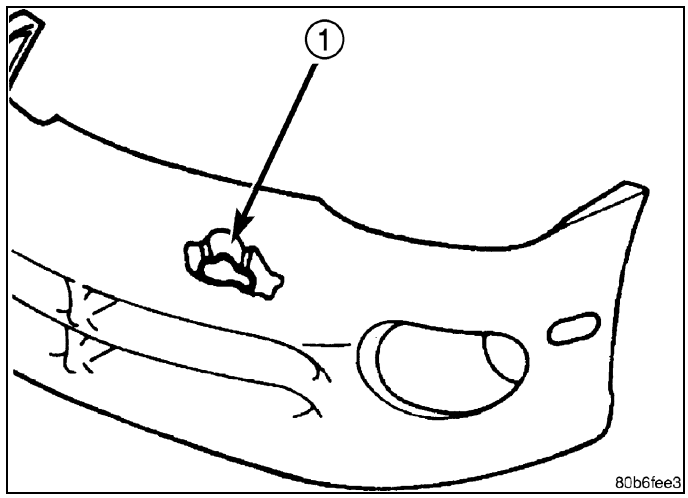

PANEL SURFACE PREPARATION

If a body panel has been punctured, cracked, or crushed, the damaged area must be removed from the panel to achieve a successful repair. All spider web cracks leading away from a damaged area must be stopped or removed. To stop a running crack in a panel, drill a 6 mm (0.250 in.) hole at the end of the crack farthest away from the damage. If spider web cracks can not be stopped, the panel would require replacement. The surfaces around the damaged area should be stripped of paint and freed from wax and oil. Sand surfaces around repair area with 80 -120 grit sandpaper, or equivalent, to assure adhesion of repair materials.

PATCHING PANELS

A panel that has extensive puncture type damage can be repaired by cutting out the damaged material. Use a suitable reciprocating saw or cut off wheel to remove the section of the panel that is damaged. The piece cut out can be used as a template to shape the new patch. It is not necessary to have access to the back of the panel to install a patch. Bevel edges of cutout at 20° to expose a larger bonding area on the outer side. This will allow for an increased reinforcement areas.

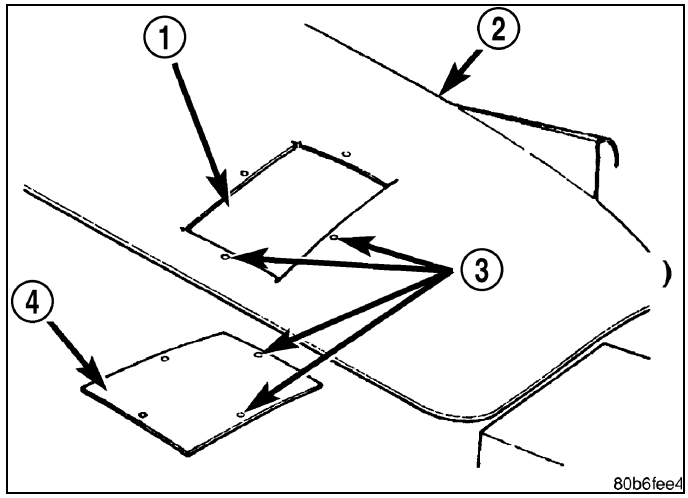

1 - CUTOUT
2 - DAMAGED BODY PANEL
3 - 4 MM (0.160 IN.) HOLES
4 - PATCH CUT TO SIZE

PANEL PATCH FABRICATIONS

A patch can be fabricated from any rigid fiberglass panel that has comparable contour with the repair area. Lift gates and fenders can be used to supply patch material. If existing material is not available or compatible, a patch can be constructed with adhesive and reinforcement mesh (dry wall tape). Perform the following operation if required:

1. Cover waxed paper or plastic with adhesive backed nylon mesh (dry wall tape) larger than the patch required.
2. Tape waxed paper or plastic sheet with mesh to a surface that has a compatible contour to the repair area.
3. Apply a liberal coat of adhesive over the reinforcement mesh. If necessary apply a second or third coat of adhesive and mesh after first coat has cured. The thickness of the patch should be the same as the repair area.
4. After patch has cured, peel waxed paper or plastic from the back of the patch.
5. If desired, a thin film coat of adhesive can be applied to the back of the patch to cover mesh for added strength.

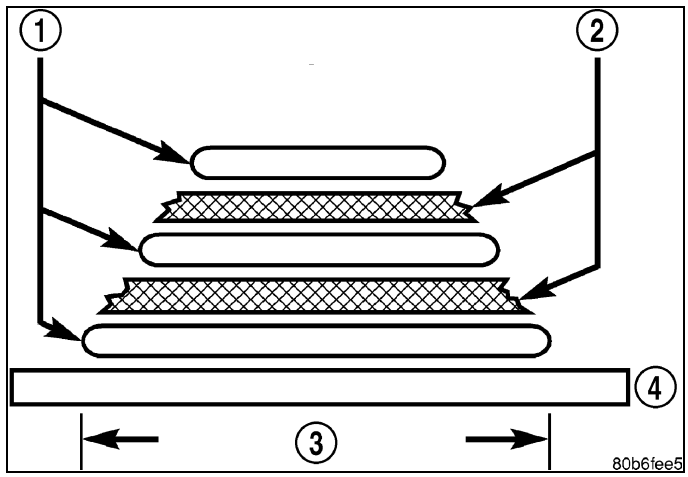

1 - STRUCTURAL ADHESIVE
2 - FIBERGLASS CLOTH OR FIBERGLASS MESH TAPE
3 - WIDTH OF V-GROOVE
4 - WAXED PAPER

PANEL PATCH INSTALLATION

1. Make a paper or cardboard pattern the size and shape of the cutout hole in the panel.
2. Trim 3 mm (0.125 in.) from edges of pattern so patch will have a gap between connecting surfaces.
3. Using the pattern as a guide, cut the patch to size.
4. Cut scrap pieces of patch material into 50 mm (2 in.) squares to use as patch supports to sustain the patch in the cutout.
5. Drill 4 mm (0.160 in.) holes 13 mm (0.5 in.) in from edge of cutout hole.
6. Drill 4 mm (0.160 in.) holes 13 mm (0.5 in.) away from edge of patch across from holes drilled around cutout.
7. Drill 3 mm (0.125 in.) holes in the support squares 13 mm (0.5 in.) from the edge in the center of one side.
8. Scuff the backside of the body panel around the cutout hole with a scuff pad or sandpaper.
9. Mix enough adhesive to cover one side of all support squares.
10. Apply adhesive to cover one side of all support squares.

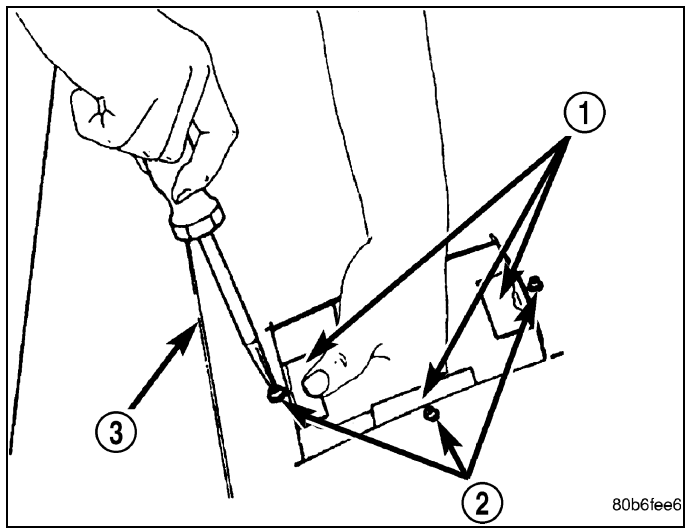

1 - SUPPORT SQUARES
2 - SCREWS
3 - DAMAGED BODY PANEL

11. Using number 8 sheet metal screws, secure support squares to back side of body panel with adhesive sandwiched between the panel and squares.

12. Position patch in cutout (1) against support squares (2) and adjust patch until the gap is equal along all sides.
13. Drill 3 mm (0.125 in.) holes in the support squares through the pre-drilled holes in the patch.

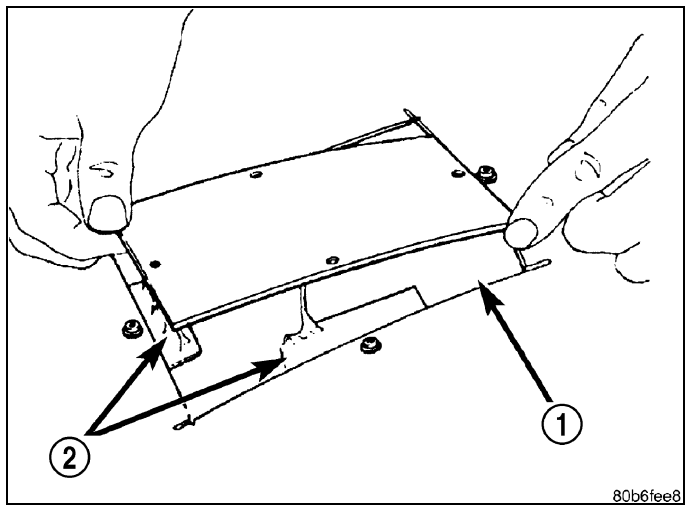

14. Apply a coat of adhesive (3) to the exposed ends of the support squares (2).

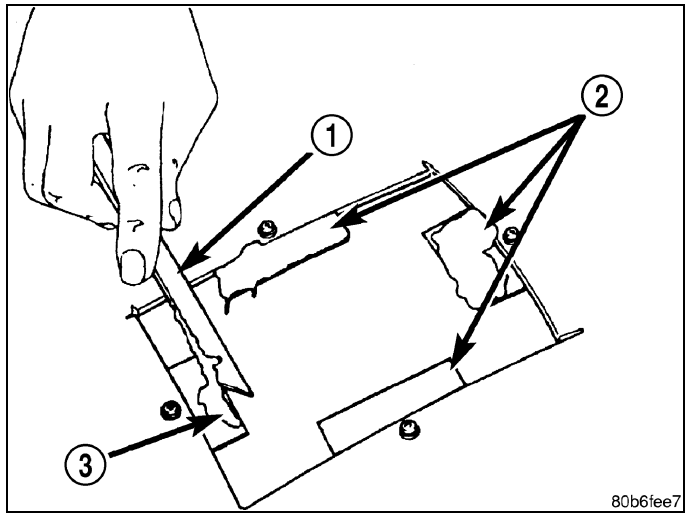

15. Install screws to hold the patch (1) to support squares. Tighten screws until patch surface is flush with panel surface.
16. Allow adhesive to cure, and remove all screws.

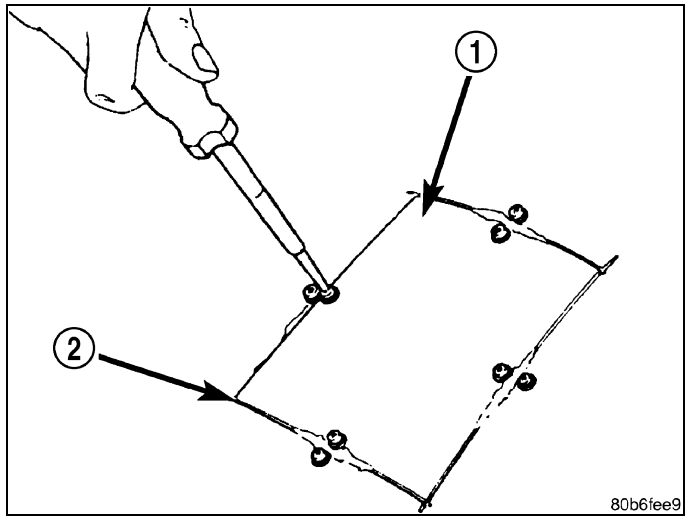

17. Using a 125 mm (5 in.) 24 grit disc grinder (3), grind a 50 mm (2 in.) to 75 mm (3 in.) wide and 75% -80% deep (original material thickness) path across the gaps (2) around the patch (1). With compressed air, blow dust from around patch.

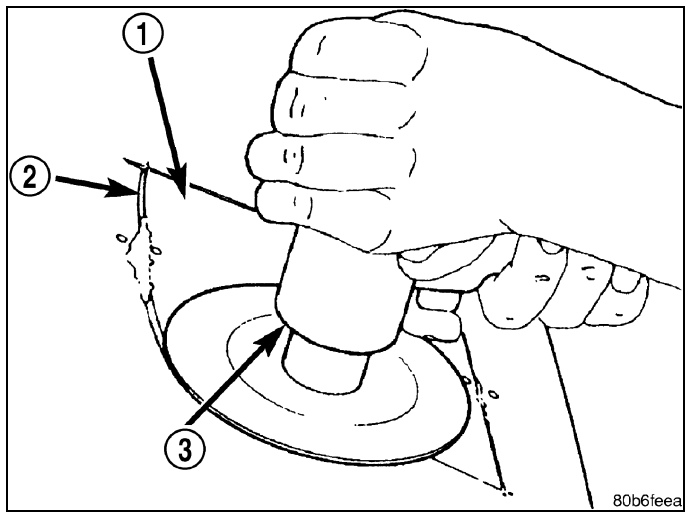

18. Apply adhesive backed nylon mesh (dry wall tape) over gaps around patch.
19. Mix enough adhesive to cover the entire patch area.

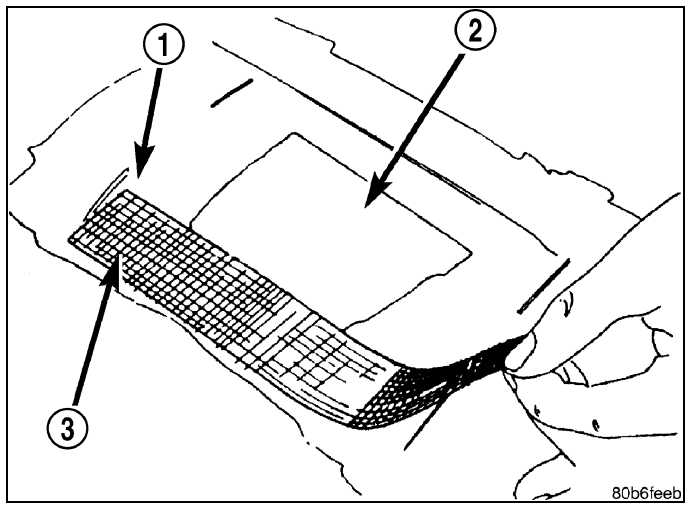

1 - GROUND DOWN AREA
2 - PATCH
3 - MESH

20. Apply adhesive over the mesh around patch, and smooth epoxy with a wide spreader to reduce finish grinding. Use two to three layers of mesh and adhesive to create a stronger repair.

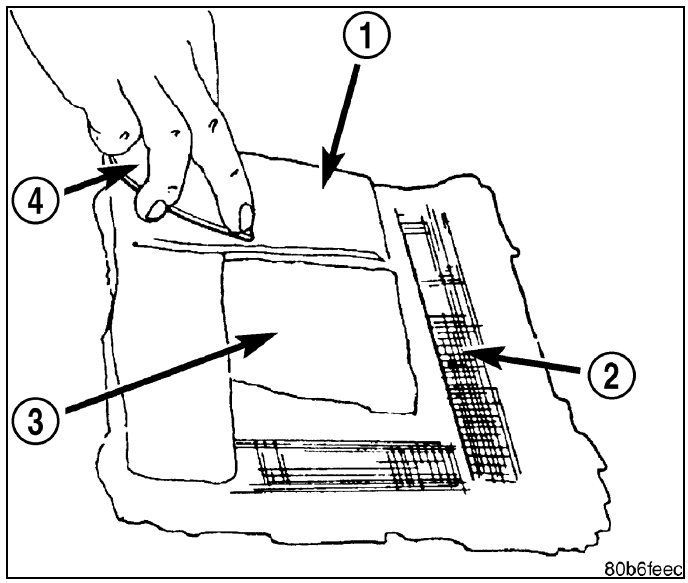

1 - ADHESIVE
2 - MESH
3 - PATCH
4 - SPREADER

PATCHED PANEL SURFACING

After patch panel is installed, the patch area can be finished using the same methods as finishing other types of body panels. If mesh material is exposed in the patched area, grind surface down, and apply a coat of high quality rigid plastic body filler. Prime, block sand, and paint as required.

Specifications

Description	N·m	Ft. Lbs	In. Lbs.
A-pillar bolts	5	—	44
Body isolator nuts	68	50	—
B-pillar grab handle bolts	5	—	44
Cab mounting bolts	108	80	—
Cargo box mounting bolts	108	80	—
Cargo tie down bolts	34	25	—
Door striker bolts	30	22	—
Floor console floor bracket screws	7	5	62.0
Front door carrier plate bolts	5.5	—	49
Front door exterior handle bolts	7	5	62.0
Front door hing to pillar bolts	24	18	—
Front door latch screws	7	5	62.0
Front door lower belt channel shut face screw	8	6	71
Front door striker bolts	30	22	—
Front door to hinge nuts	22	16	—
Front seat back bolts	40	29.5	—

Description	N·m	Ft. Lbs	In. Lbs.
Front seat belt buckle bolts	50	37	—
Front seat lumbar motor bolts	10	7	89
Front seat mounting bolts	47	35	—
Hood hinge to fender rail bolts	19	14	—
Hood hinge to hood nuts	18	13	—
Hood latch bolts	11	8	97
Hood striker bolts	17	12.5	—
Instrument panel center mounting bolts	12	9	—
Instrument panel fence line bolts	12	9	—
Instrument panel side mounting bolts	12	9	—
Lower seat belt anchor bolts rear	40	29.5	—
Ram box mounting bolts	7	5	62.0
Rear door exterior handle bolts	7	5	62.0
Rear door hinge to pillar bolts	24	18	—
Rear door striker bolts	26	19	—
Rear door to hinge bolts	22	16	—
Rear outer seat belt anchor bolts	40	29.5	—
Rear seat armrest fasteners	28	21	—
Rear seat back pivot bolts	28	21	—
Rear seat belt buckle bolts	47	35	—
Rear seat belt turning loop bolts	40	29.5	—
Rear seat cushion frame bolts	55	41	—
Rear seat storage lid bolts	28	21	—
Rear view mirror set screw	1	—	9
Seat belt turning loop bolts	40	29.5	—
Sunroof assembly screws	9	—	80
Sunroof glass screws	3.5	—	31
Tailgate handle nuts	6	—	53
Tailgate latch bolts	23	17.0	—
Tailgate striker	34	25	—

CAUTION: ** Whenever a body isolator bolts requires servicing or tightening, it is necessary to remove the bolt and install new thread locker compound to the threads.

Special Tools

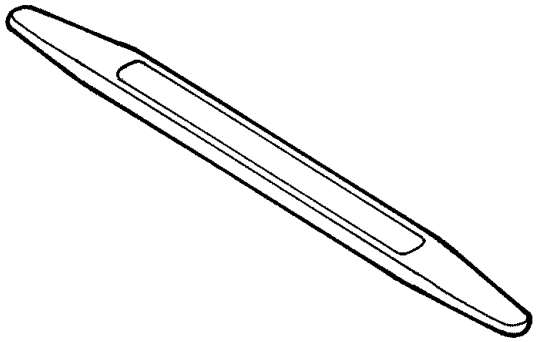

C-4755 - Trim Stick

DECKLID/HATCH/LIFTGATE/TAILGATE

TABLE OF CONTENTS

page

DECKLID/HATCH/LIFTGATE/TAILGATE
- **CABLE, TAILGATE**
  - REMOVAL 28
  - INSTALLATION 29
- **COVER, TAILGATE**
  - REMOVAL 30
  - INSTALLATION 31
- **CYLINDER, LOCK**
  - REMOVAL 32
  - INSTALLATION 32
- **HANDLE, LATCH RELEASE**
  - REMOVAL 33
  - INSTALLATION 34

page

- **LATCH**
  - REMOVAL 36
  - INSTALLATION 37
- **SPOILER**
  - REMOVAL 38
  - INSTALLATION 38
- **STRIKER, LATCH**
  - REMOVAL 39
  - INSTALLATION 39
- **TAILGATE**
  - REMOVAL 40
  - INSTALLATION 41

Decklid/Hatch/Liftgate/Tailgate

CABLE, Tailgate

Removal

1. Open the tailgate and locate the tailgate check cable (3) on the left and right of the cargo box below the tailgate striker (1) as necessary.
2. Pry the cable lock tab(s) (4) outward using a screwdriver or flat bladed tool (2) and remove the tailgate check cable(s) from the cargo box.

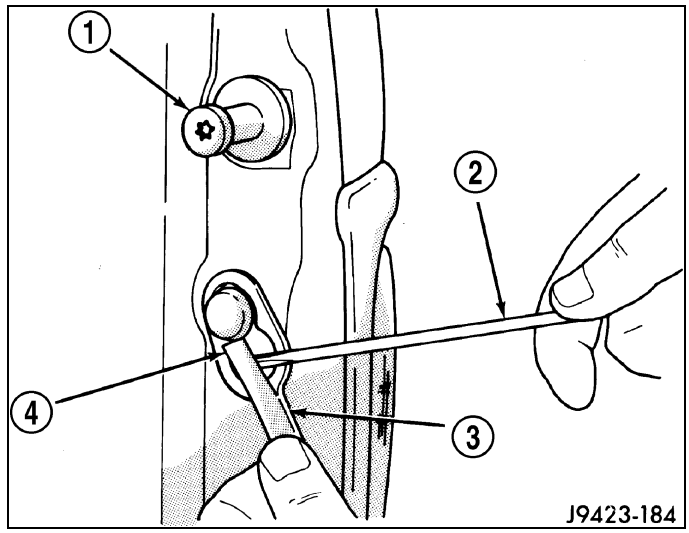

3. Remove the bolt (4) that secures the tailgate check cable (3) to the left and right side of the tailgate.
4. Remove the tailgate check cable(s) from the tailgate.

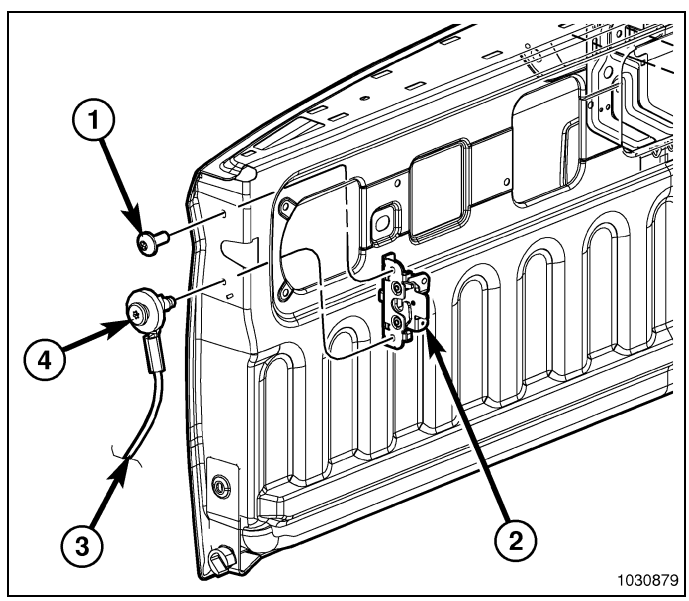

Installation

1. Position the tailgate check cable (3) onto the left and right side of the tailgate as necessary.
2. Install the bolt (4) that secures the small end of the tailgate check cable(s) to the tailgateand tighten the bolt(s) to 23 N·m (17 ft. lbs.).

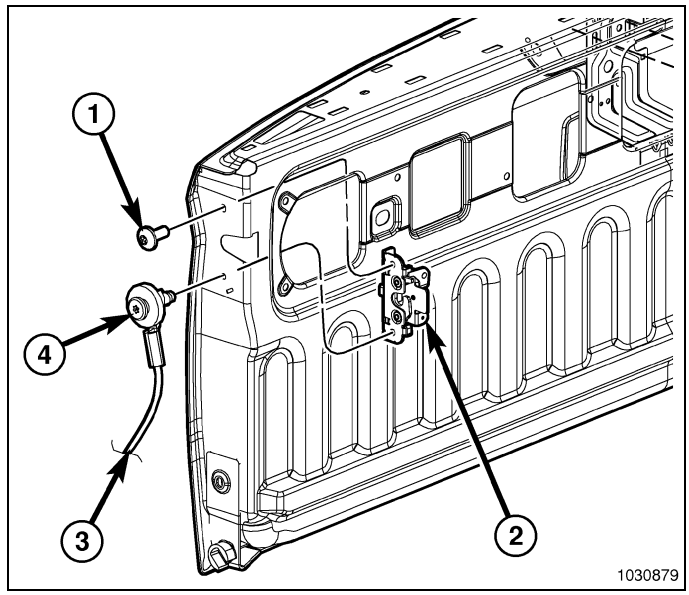

3. Position the tailgate check cable (3) to the left and right side of the cargo box below the tailgate striker (1) as necessary.
4. Install the large end of the tailgate check cable(s) onto the cargo box. Make sure that the cable lock tab(s) (4) fully engage.

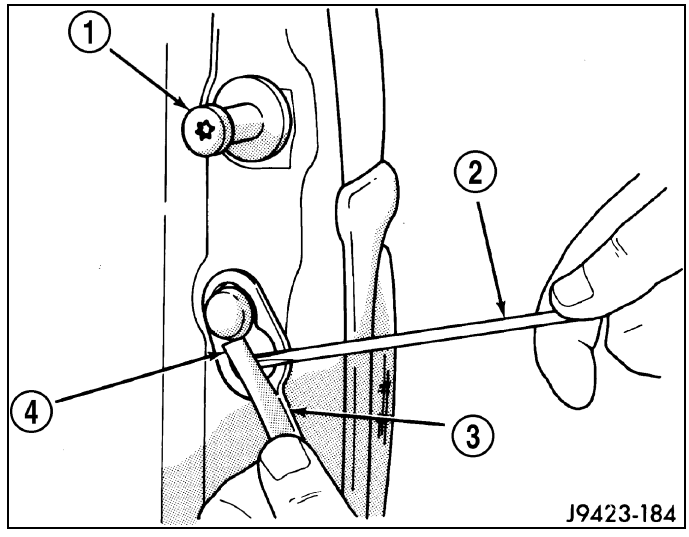

COVER, Tailgate

Removal

1. Open the tailgate (3).
2. Remove the screws (1) and remove the tailgate liner (2), if equipped.

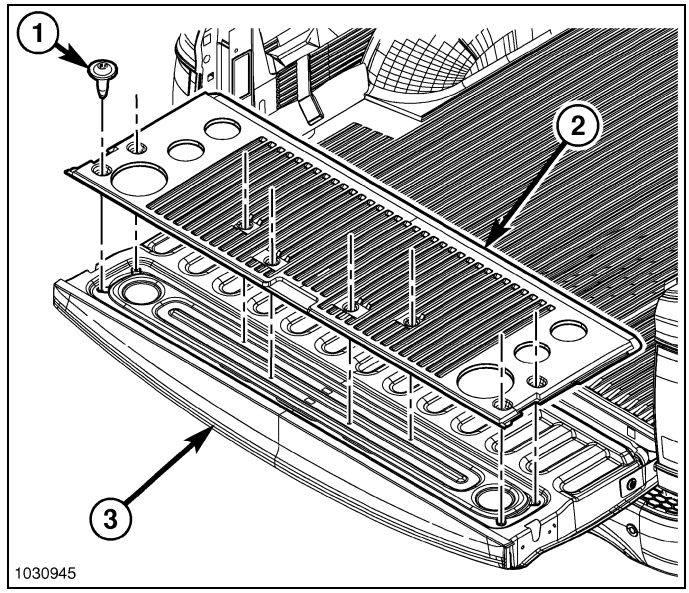

3. Remove the bolts (1) that secure the tailgate cover (2) to the inside of the tailgate and remove the cover.

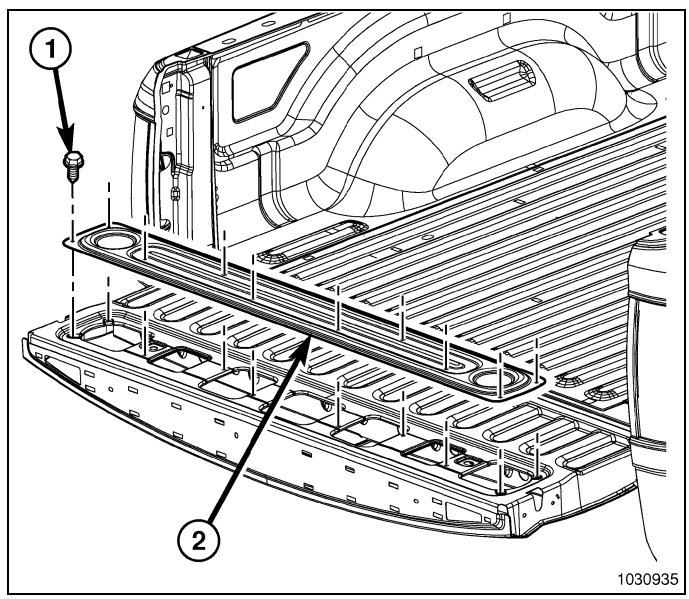

Installation

1. For vehicles without a tailgate liner, install the cover (2) onto the tailgate (1) and install the bolts (3).
2. Tighten the bolts using the sequence shown.

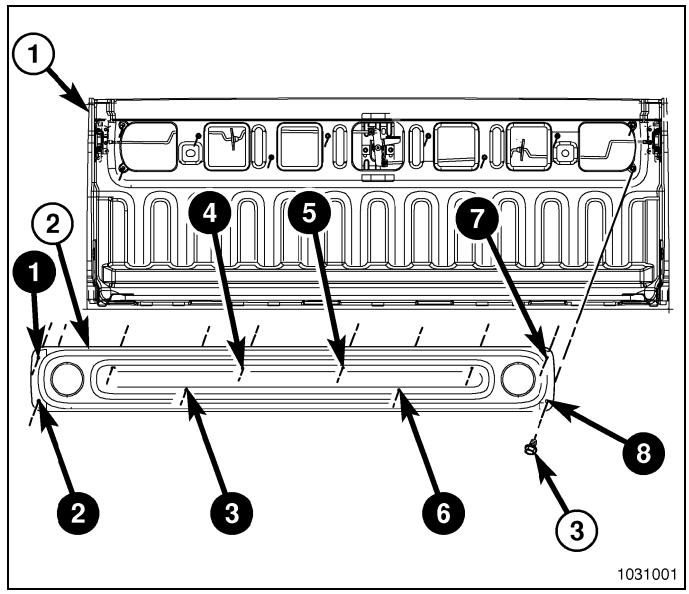

3. On vehicles with a tailgate liner, position the tailgate cover onto the inside of the tailgate (3).
4. Install the liner (2) onto the tailgate.
5. Install the screws (1) that secure the tailgate cover to the tailgate.
6. Tighten the screws using the sequence shown.

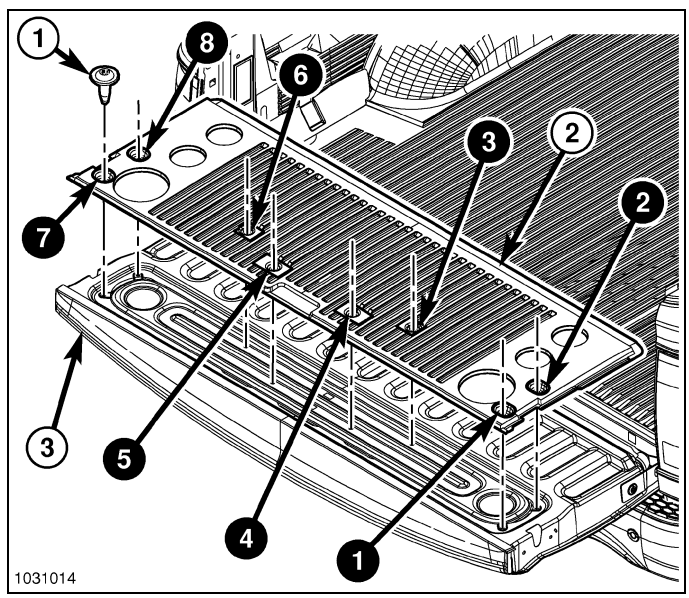

CYLINDER, Lock

Removal

1. Remove the latch release handle (3). (Refer to 23 - Body/Decklid/Hatch/Liftgate/Tailgate/HANDLE, Latch Release - Removal)
2. Remove the screws (1) and remove the lock cylinder (2).

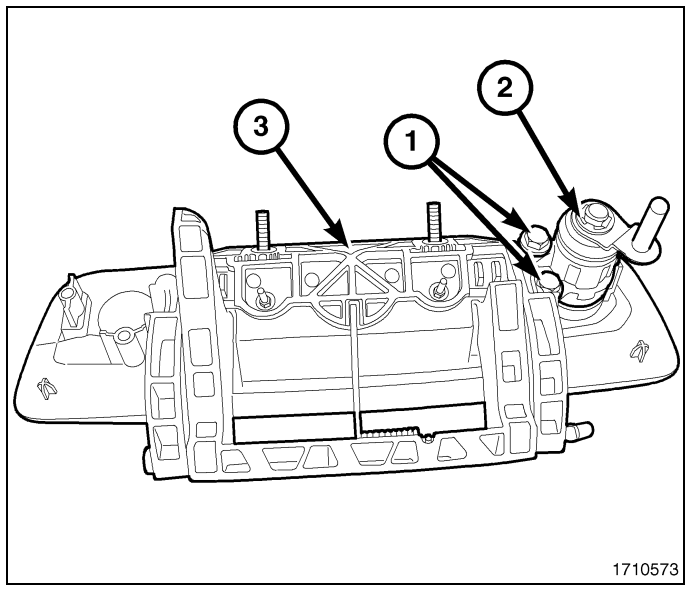

Installation

1. Install the lock cylinder (2) and install the screws (1).
2. Install the latch release handle (3). (Refer to 23 - Body/Decklid/Hatch/Liftgate/Tailgate/HANDLE, Latch Release - Installation)

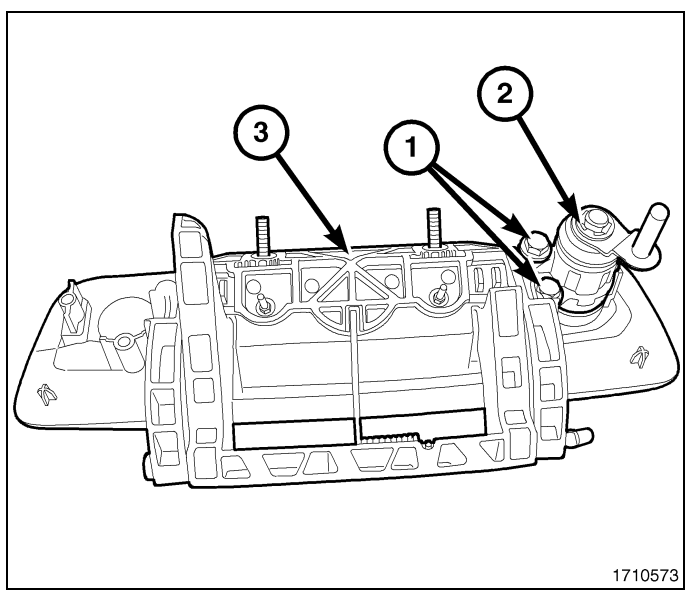

Lock Cylinder Coding Instructions

1. If present, remove the protective lable off of the new lock cylinder.
2. Insert the key that is intended for everyday use, fully into the cylinder.
3. Slowly rotate the key clockwise, while maintaining full key insertion, to 180 degrees or slightly more (6 or 7 o'clock position).

NOTE: The lock will code at 180 degrees.

4. Then rotate the key counter-clockwise to 90 degrees or 3 o'clock.
5. You will hear the lock activate, then rotate the key to vertical key-out position and remove the key.

HANDLE, Latch Release

Removal

1. Open the tailgate and remove the tailgate liner, if equipped, and cover. (Refer to 23 - Body/Deck-lid/Hatch/Liftgate/Tailgate/COVER - Installation)
2. Using a grease pencil or equivalent, mark the location of the actuator rods (2) at the control.
3. Disconnect the actuator rods from the control.

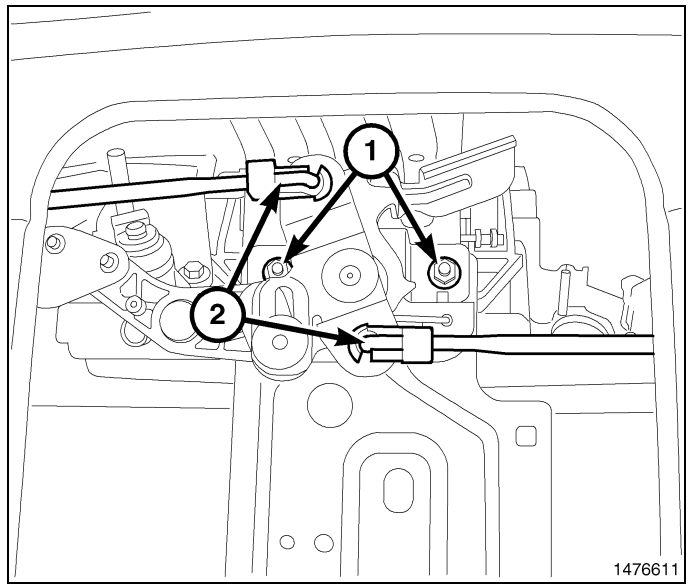

4. Disconnect the backup camera electrical connector (1), if equipped.

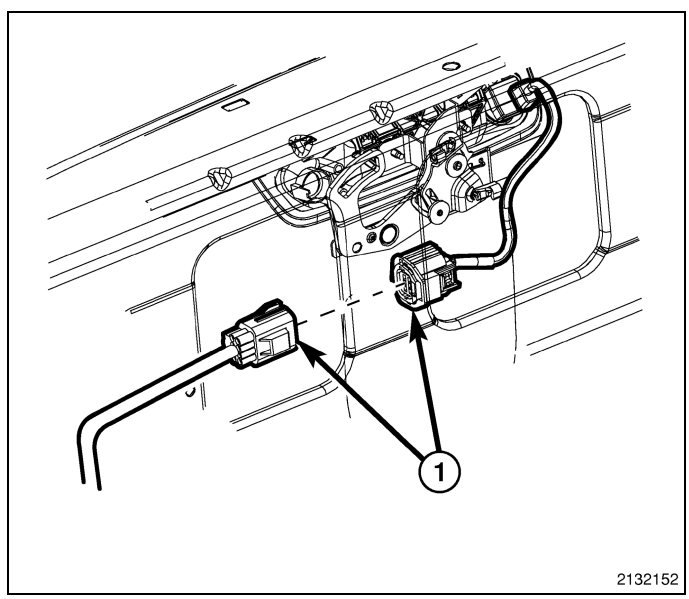

5. Remove the two nuts (3) that secure the release handle (1) and the control (2) to the tailgate.
6. Remove the control (2) and the release handle (1) from the tailgate.

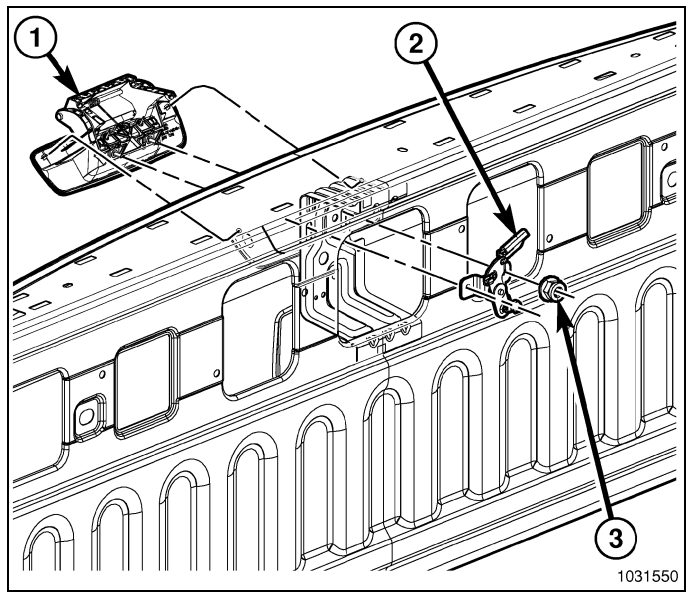

Installation

1. Position the release handle (1) and the control (2) onto the tailgate.
2. Install the two nuts (3) that secure the release handle and control to the tailgate. Tighten the nuts to 6 N·m (53 in. lbs.).

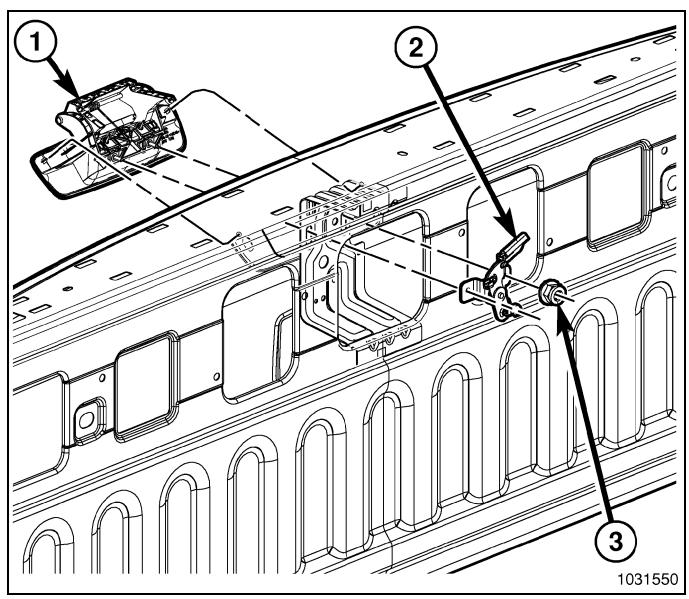

3. Connect the backup camera electrical connector (1), if equipped.

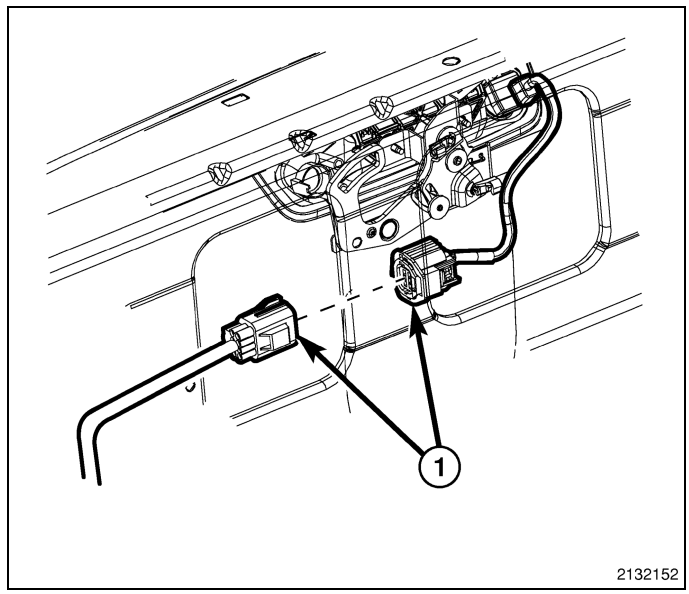

4. Locate the actuator rods (2) to the control using the reference marks made during the removal procedure and connect the rods to the control.
5. Install the tailgate cover and liner, if equipped. (Refer to 23 - Body/Decklid/Hatch/Liftgate/Tailgate/COVER - Installation).

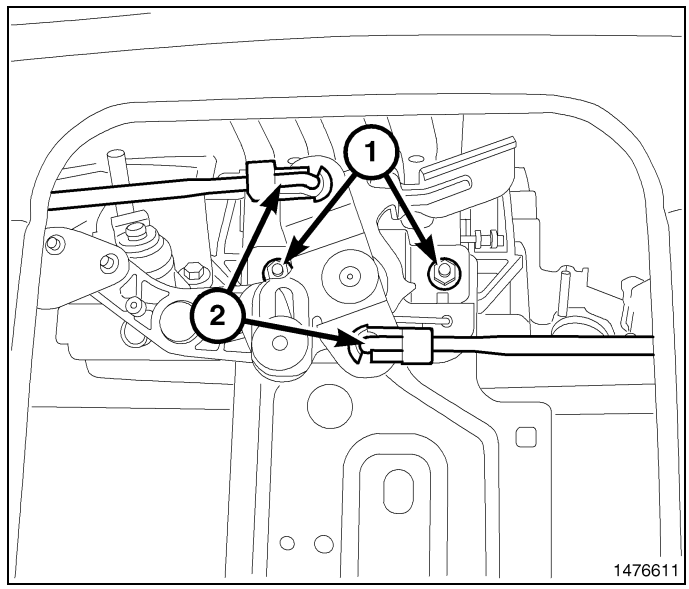

LATCH

Removal

1. Remove the tailgate cover. (Refer to 23 - Body/Decklid/Hatch/Liftgate/Tailgate/COVER - Removal)
2. Using a grease pencil or equivalent, mark the actuator rod (3) at the control (2) for the latch (1) being serviced.
3. Disconnect the actuator rod from the control.

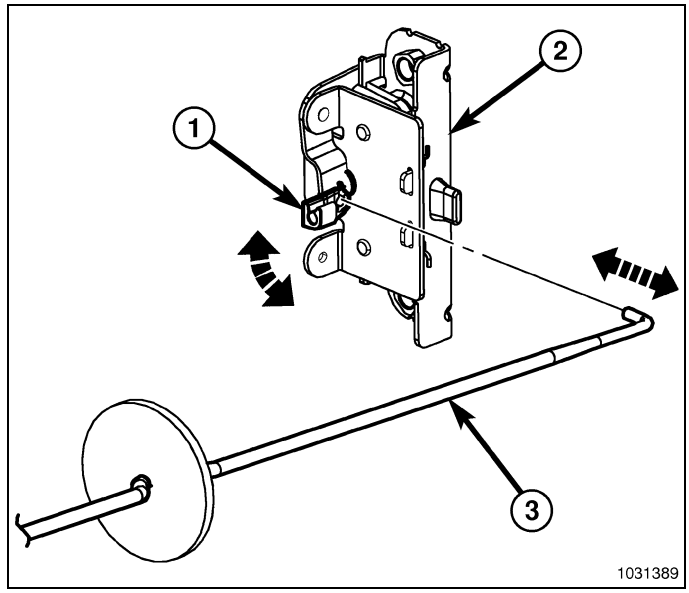

4. Remove the two bolts (1 and 4) that secure the latch (2) to the tailgate and position the tailgate check cable (6) out of the way.
5. Remove the latch from the tailgate.

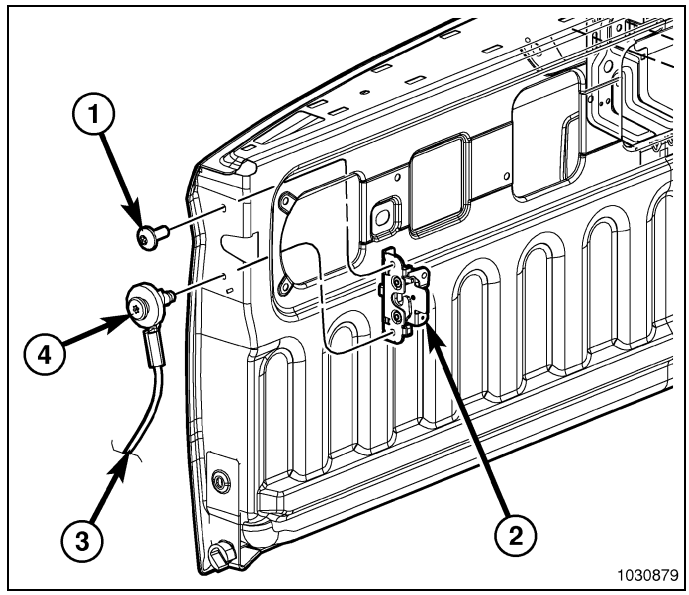

Installation

1. Loose assemble the latch (2) to the tailgate.
2. Install the cable and anchor bolt (4) to the latch.
3. Install the bolt (1) securing the latch (2).
4. Tighten the fasteners to 23 N·m (17 ft. lbs.).

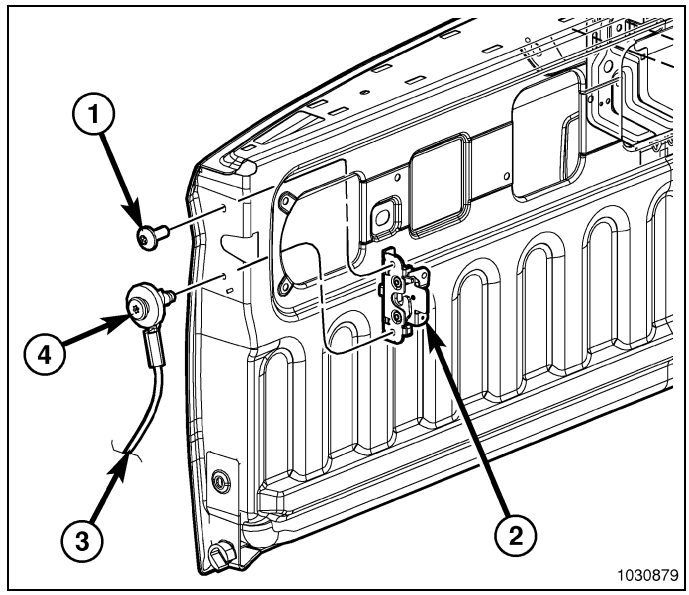

5. Install the actuator rod (3) and secure the clip (1) fully.
6. Install the tailgate cover. (Refer to 23 - Body/Decklid/Hatch/Liftgate/Tailgate/COVER - Installation)

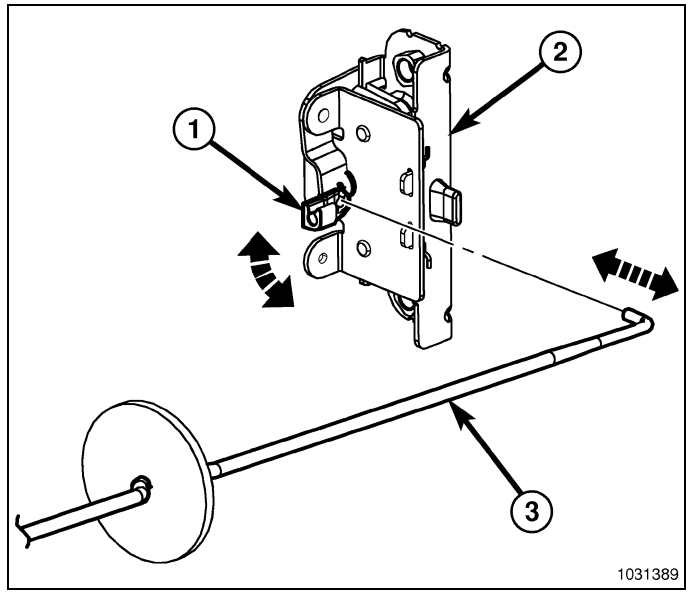

SPOILER

Removal

1. Using trim stick C-4755 or equivalent, release the retaining clips and remove the spoiler (1) from the tailgate (2).

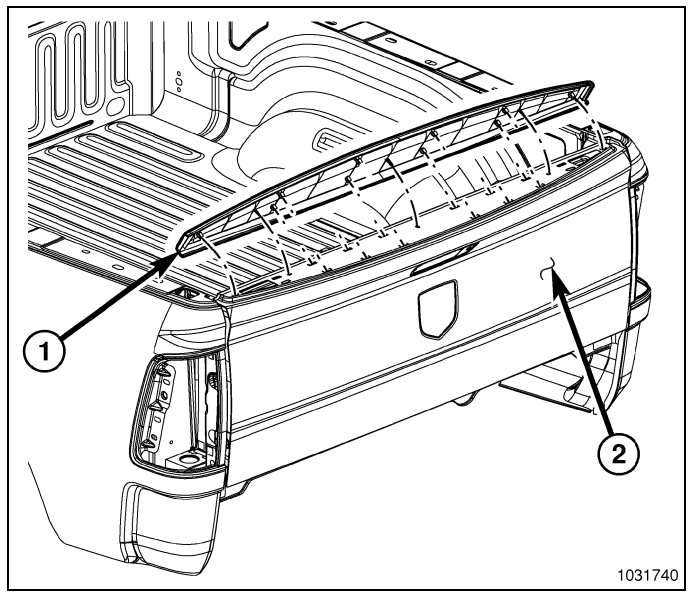

Installation

1. Position the spoiler (1) to the holes in the top of the tailgate (2).
2. Insert the locating pin into the center of the tailgate top and line up the retaining clips into the holes.
3. Working from the center out tap the retaining clips into the holes fully.

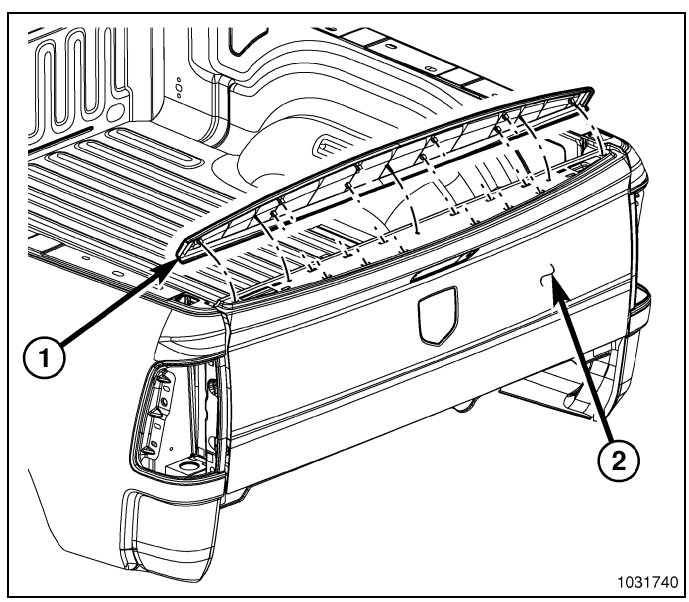

STRIKER, Latch

Removal

1. Open the tailgate and using a grease pencil or equivalent, mark the location of the tailgate striker (1) being serviced.
2. Remove the striker from the cargo box (2).

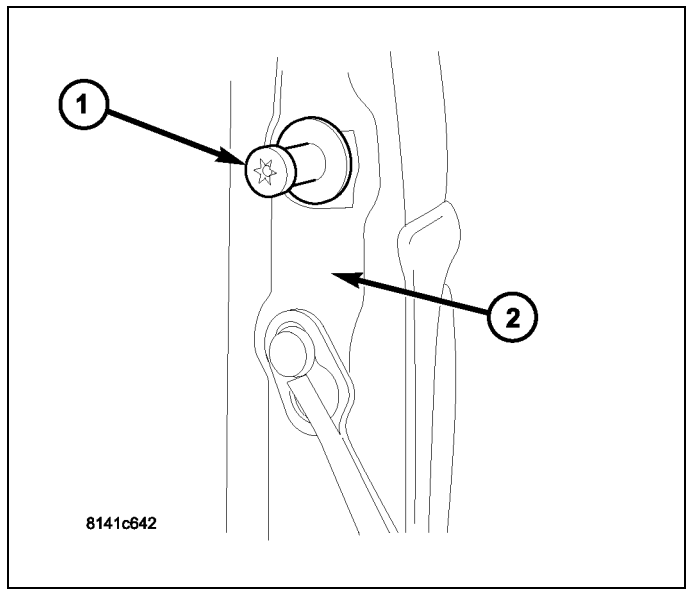

Installation

1. Position the striker (1) onto the cargo box (2) using the reference mark made during the removal procedure.
2. Tighten the striker to 34 N·m (25 ft. lbs.).

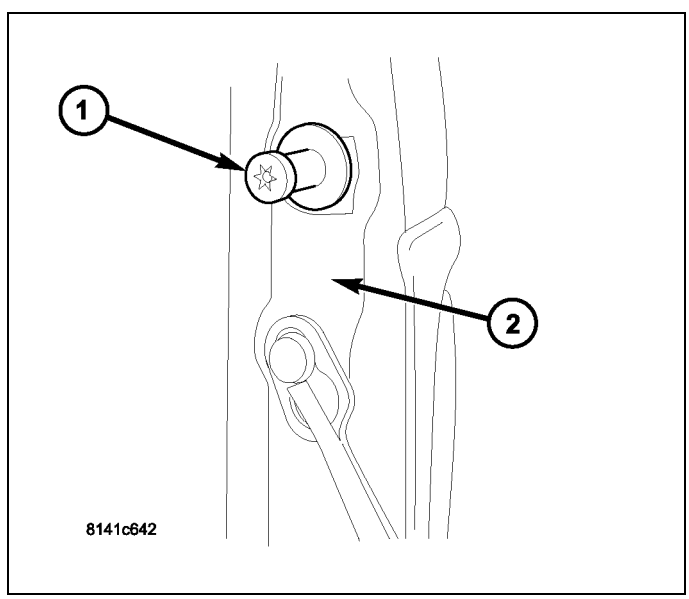

TAILGATE

Removal

1. Open the tailgate and locate the tailgate check cable (3) on the left and right of the cargo box below the tailgate striker (1) as necessary.
2. Pry the cable lock tab(s) (4) outward using a screwdriver or flat bladed tool (2) and remove the tailgate check cable(s) from the cargo box.

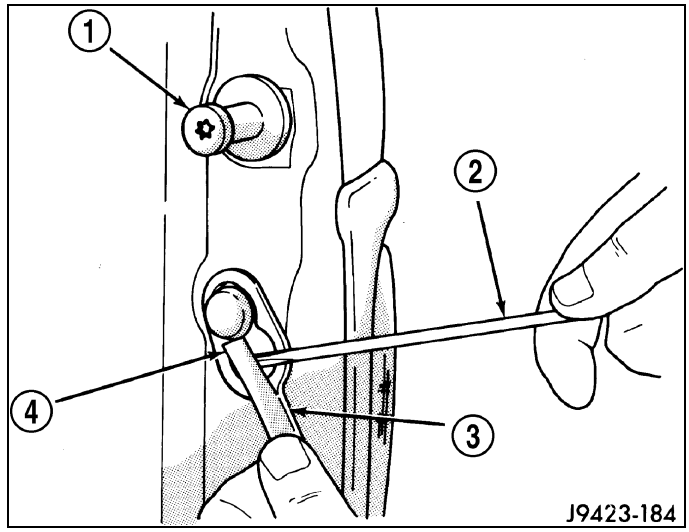

3. If equipped, disconnect the electrical connectors.
4. Partially close the tailgate so that the notch in the right side tailgate pivot pocket (2) aligns with the flats on the right side tailgate pivot pin.
5. Lift the tailgate upward far enough to disengage the tailgate pivot pocket from the right side tailgate pivot pin.
6. Carefully slide the tailgate to the right far enough to disengage it from the left side tailgate pivot pin and remove the tailgate.

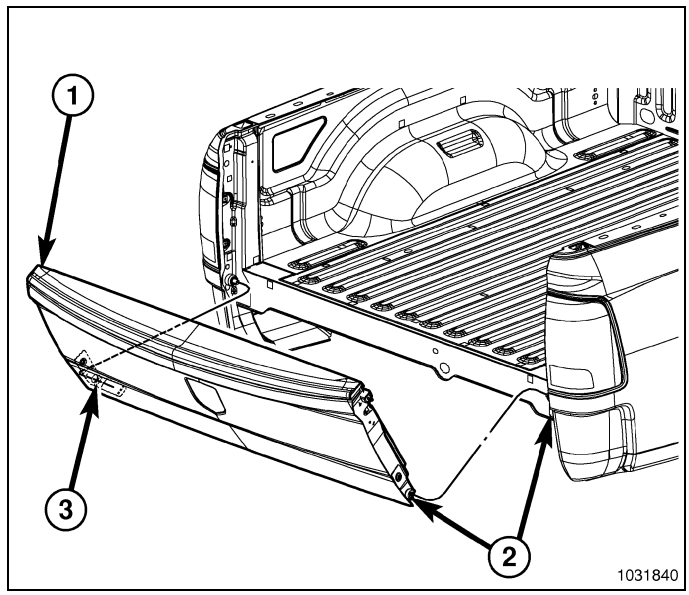

7. If required, remove the bushing (2) from each tailgate pivot pocket (3).

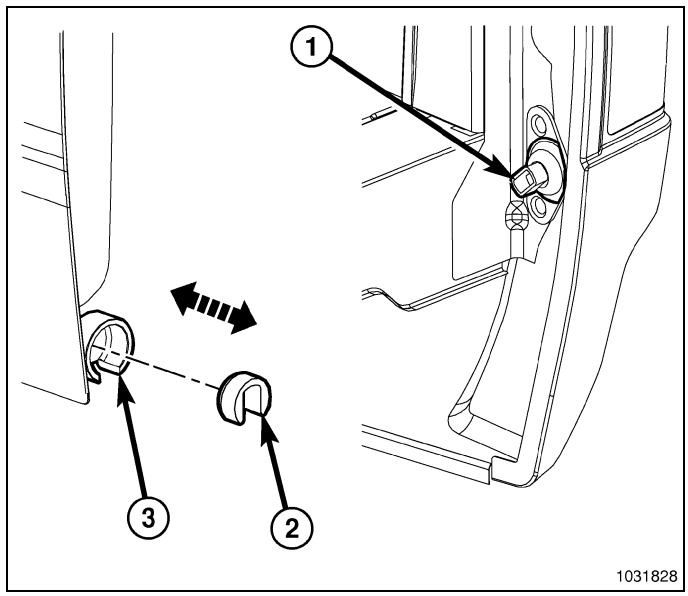

Installation

1. If removed, install the bushing (2) into each tailgate pivot pocket (3).

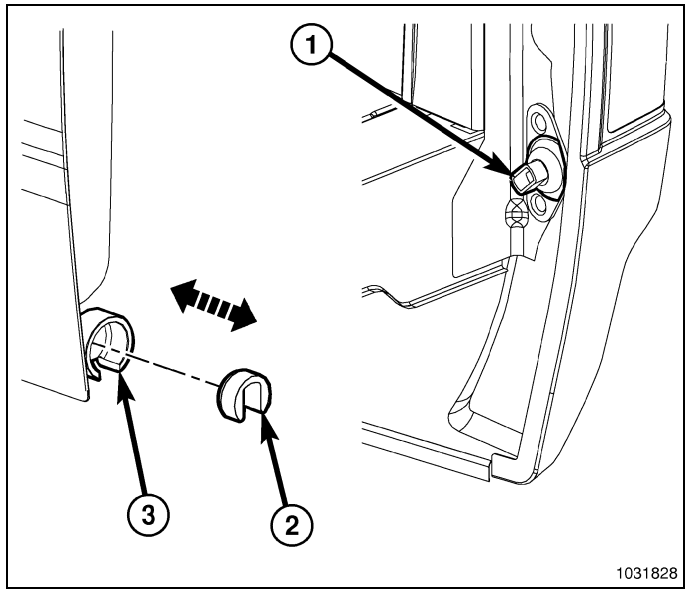

2. Position the tailgate (1) onto the left side tailgate pivot pin (3).
3. Partially close the tailgate so that the notch in the right side tailgate pivot pocket (2) aligns with the flats on the right side tailgate pivot pin.
4. Lower the tailgate onto the right side tailgate pivot pin.

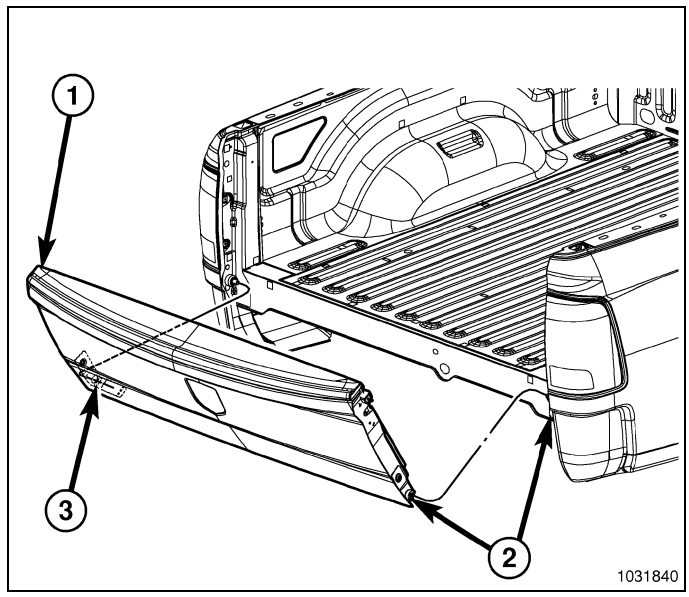

5. If equipped, connect the electrical connectors.
6. Connect the tailgate check cables (3) to the cable bolts (2) located below each tailgate striker (1) (Refer to 23 - Body/Decklid/Hatch/Liftgate/Tailgate/CABLE, Tailgate - Installation).

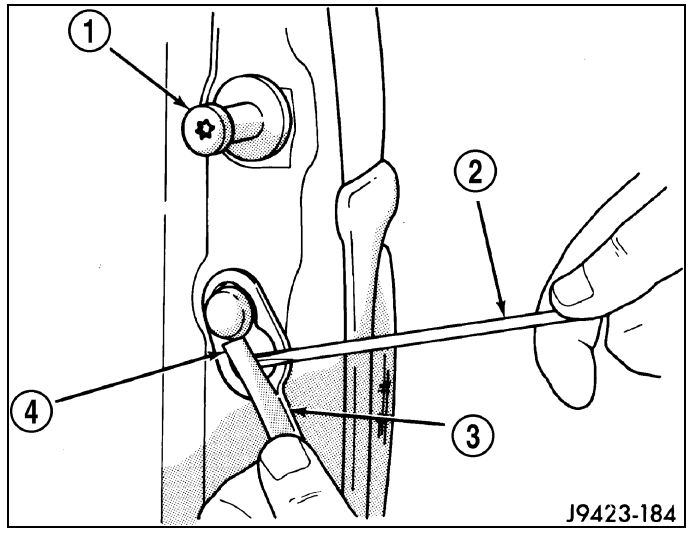

DOOR - FRONT

TABLE OF CONTENTS

page

DOOR - FRONT
- **CYLINDER, DOOR LOCK**
  - REMOVAL . . . 44
  - INSTALLATION . . . 44
- **DOOR**
  - REMOVAL . . . 44
  - INSTALLATION . . . 46
  - ADJUSTMENTS . . . 46
- **FLAG, MIRROR**
  - REMOVAL . . . 51
  - INSTALLATION . . . 51
- **GLASS, DOOR**
  - REMOVAL . . . 52
  - INSTALLATION . . . 53
- **HANDLE, INTERIOR**
  - REMOVAL . . . 55
  - INSTALLATION . . . 55
- **HANDLE, EXTERIOR**
  - REMOVAL . . . 56
  - INSTALLATION . . . 57
- **HINGE, DOOR**
  - STANDARD PROCEDURE . . . 59
  - REMOVAL . . . 59
  - INSTALLATION . . . 60

page

- **LATCH, DOOR**
  - REMOVAL . . . 61
  - INSTALLATION . . . 62
- **MOLDING, DOOR BELT, INNER**
  - REMOVAL . . . 63
  - INSTALLATION . . . 64
- **MOLDING, DOOR BELT, OUTER**
  - REMOVAL . . . 65
  - INSTALLATION . . . 66
- **PANEL, DOOR TRIM**
  - REMOVAL . . . 66
  - INSTALLATION . . . 67
- **PLATE, CARRIER**
  - REMOVAL . . . 68
  - INSTALLATION . . . 72
- **REGULATOR, WINDOW, MANUAL**
  - DESCRIPTION . . . 76
- **REGULATOR, WINDOW, POWER**
  - DESCRIPTION . . . 77
- **STRIKER, DOOR LATCH**
  - REMOVAL . . . 78
  - INSTALLATION . . . 78
  - ADJUSTMENTS . . . 79

Door - Front

CYLINDER, Door Lock

Removal

1. Remove the exterior door handle. (Refer to 23 - Body/Door - Front/HANDLE - Removal)
2. Separate the lock cylinder (1) from the handle.

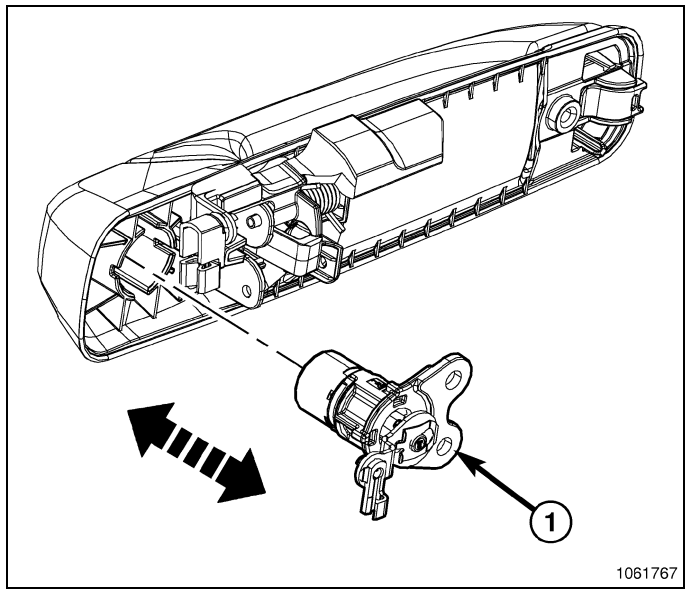

Installation

1. Position the door lock cylinder (1) into the exterior door handle.
2. Install the exterior handle. (Refer to 23 - Body/Door - Front/HANDLE - Installation)

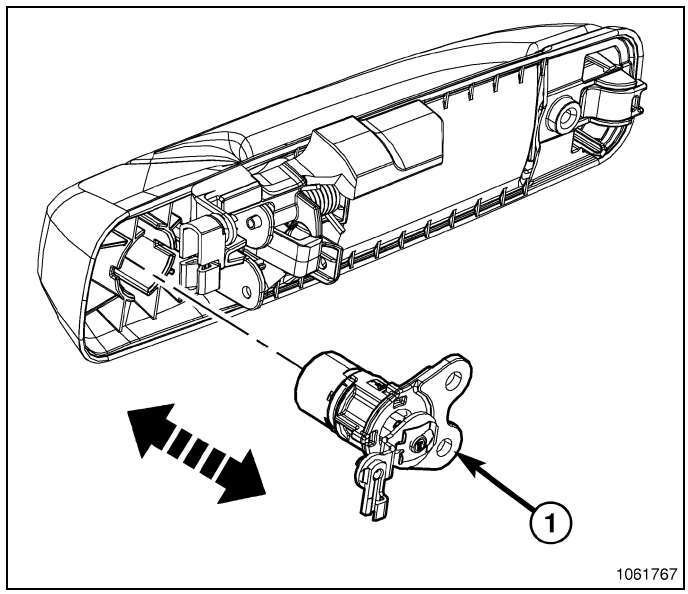

DOOR

Removal

1. Disconnect and isolate the negative battery cable.
2. Disconnect the door electrical connector.

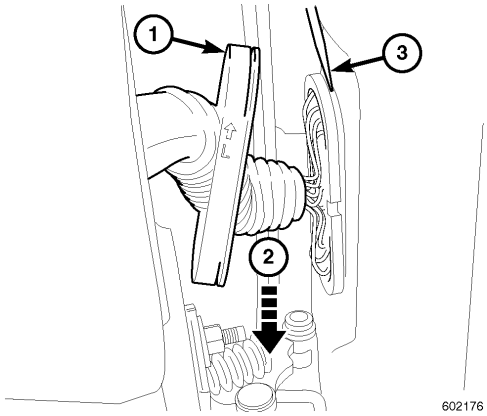

NOTE: The following illustration shows a typical door harness connector.

3. Peel the A Pillar grommet (1) off of the connector/retainer and move it up the wire harness.
4. Grasp the wire harness (2) by the convolute section of the grommet and gently pull the wire harness down towards the floor to expose the connector lock tabs.

CAUTION: Do not force the locking tab past the connector body, as damage to the connector may occur.

5. While still pulling down on the harness, use a small slotted screw driver (3) to **gently** push one of the top lock tabs until the lock feature is flush with the connector/retainer body.
6. Repeat the step 3 for the remaining top lock tab.
7. The connector should now be able to rock out of the sheet metal hole without causing any damage to the connector or sheet metal.
8. Using a grease pencil or equivalent, mark the location of the door hinges on the door.
9. Support the door with a suitable lifting device and remove the nuts (1 and 3) that secure the door to the hinges.
10. Carefully remove the door from the hinges.

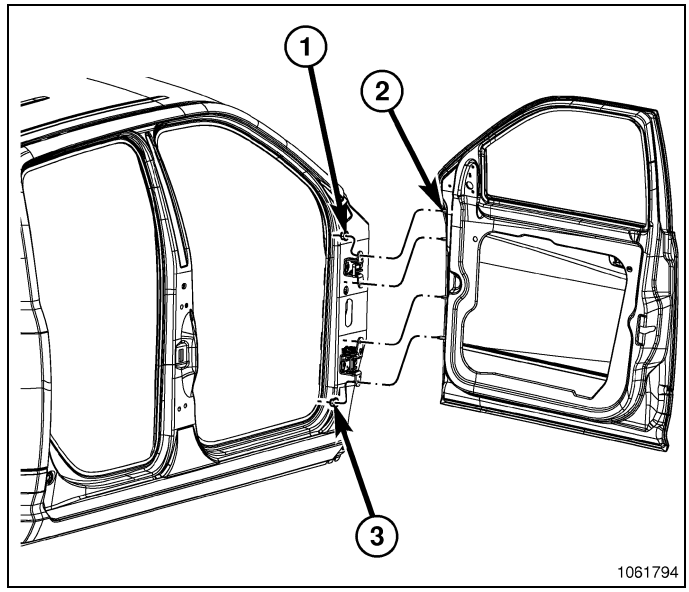

Installation

1. Carefully position the door studs (2) onto the hinges and support the door with a suitable lifting device.
2. Loosely install the nuts (1 and 3) secure the door to the hinges.
3. Align the door to the hinges using the reference marks made during the removal procedure
4. Tighten the nuts to 22 N·m (16 ft. lbs.) using the following sequence;
   1. Tighten the upper nut of the top hinge.
   2. Tighten the lower nut of the bottom hinge.
   3. Tighten the upper nut of the bottom hinge.
   4. Tighten the lower nut of the top hinge.
5. Connect the door wire harness to the body wire harness.
6. Install the grommet over the connector and seat the connector into the A-pillar fully.
7. Reconnect the negative battery cable.
8. If necessary, adjust the door. (Refer to 23 - Body/Door - Front/DOOR - Adjustments)

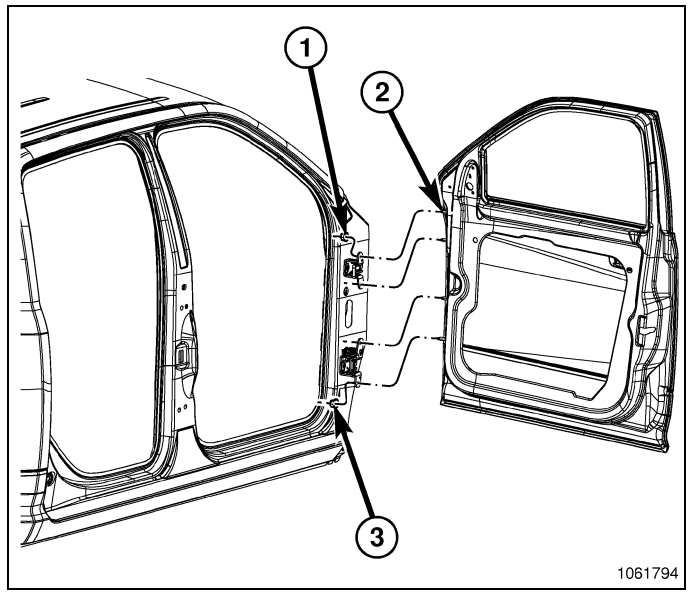

Adjustments

NOTE: For quad cab vehicles, it is recommended that you adjust the rear door before adjusting the front door. (Refer to 23 - Body/Doors - Rear/DOOR, Rear - Adjustments)

- **Door adjustment measurements should be taken from stationary or welded body panels like the roof, rocker or quarter panels.**
- **During adjustment procedures, it is recommended that all the hinge fasteners be loosened except for the upper most fasteners. Adjustments can be made using the upper bolts to hold the door with final torque of the fasteners occurring after correct door positioning is achieved.**
- **A suitable body sealant should be used when removing or moving the hinges.**

FORE/AFT

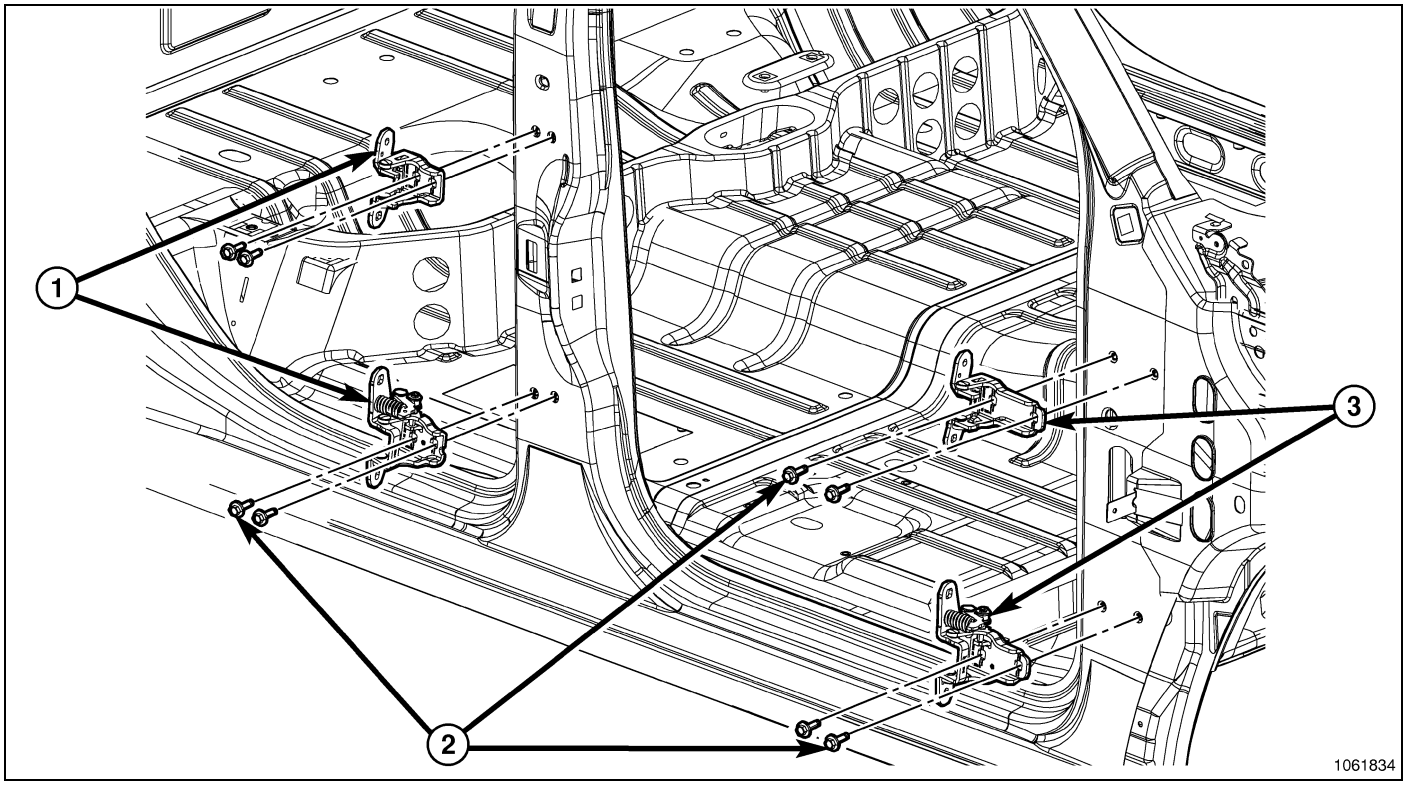

NOTE: Fore/aft (lateral) door adjustment is done by loosening the hinge to the hinge pillar fasteners one hinge at a time and moving the door to the correct position.

1. Support the door with a suitable lifting device.
2. Loosen the upper and lower hinge to hinge pillar fasteners (2). (Refer to 23 - Body/Door - Front/HINGE, Door - Removal)
3. Adjust the door to the correct position. (Refer to 23 - Body/Body Structure/Gap and Flush - Specifications)
4. Tighten the hinge to hinge pillar bolts (2) to 24 N·m (18 ft. lbs.).

UP/DOWN

NOTE: Up/down door adjustment is done by loosening either the hinge to the hinge pillar fasteners or the hinge to door fasteners and moving the door to the correct position.

NOTE: When the up/down adjustments are done correctly, the top of the door is positioned over flush to the roof. (Refer to 23 - Body/Body Structure/Gap and Flush - Specifications)

1. Support the door with a suitable lifting device.
2. Remove the latch striker (1). (Refer to 23 - Body/Door - Front/STRIKER, Door Latch - Removal)

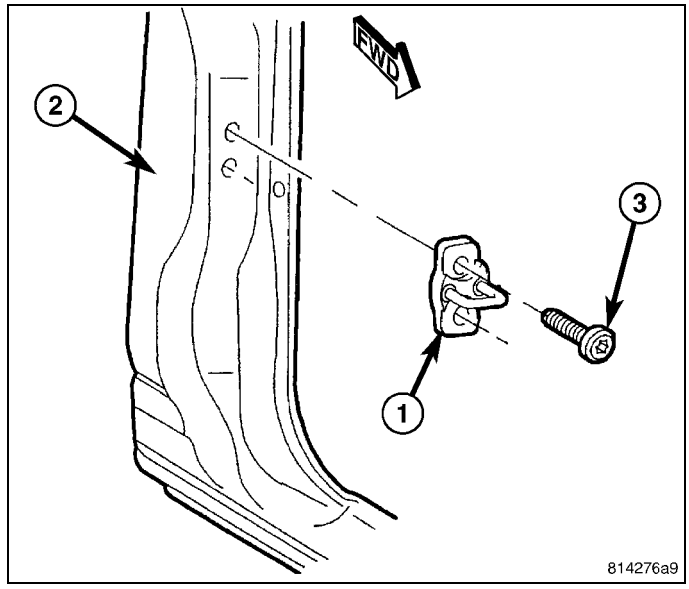

3. If necessary, loosen the hinge to door fasteners (1) and (3). (Refer to 23 - Body/Door - Front/DOOR - Removal)

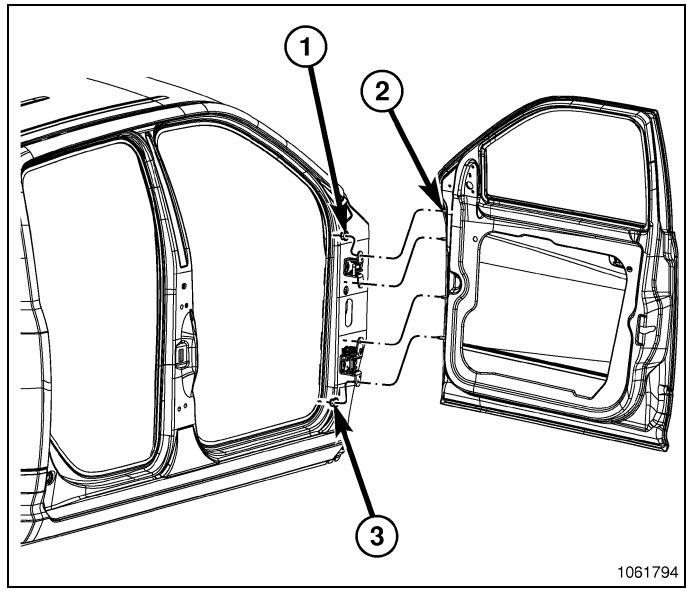

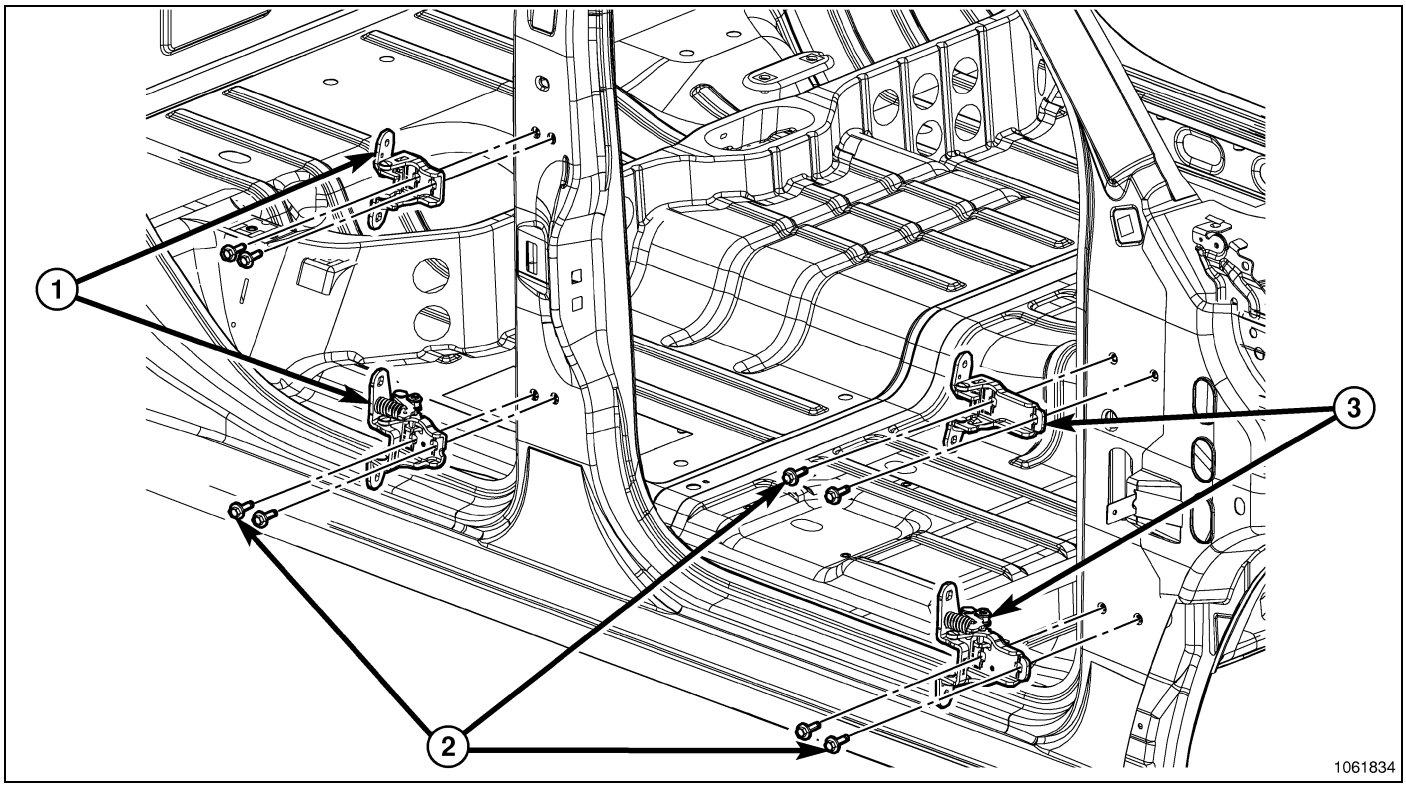

4. If necessary, loosen the hinge to hinge pillar fasteners (2). (Refer to 23 - Body/Door - Front/HINGE, Door - Removal)
5. Adjust the door to the correct position. (Refer to 23 - Body/Body Structure/Gap and Flush - Specifications)
6. Tighten the door to hinge fasteners to 22 N·m (16 ft. lbs.)

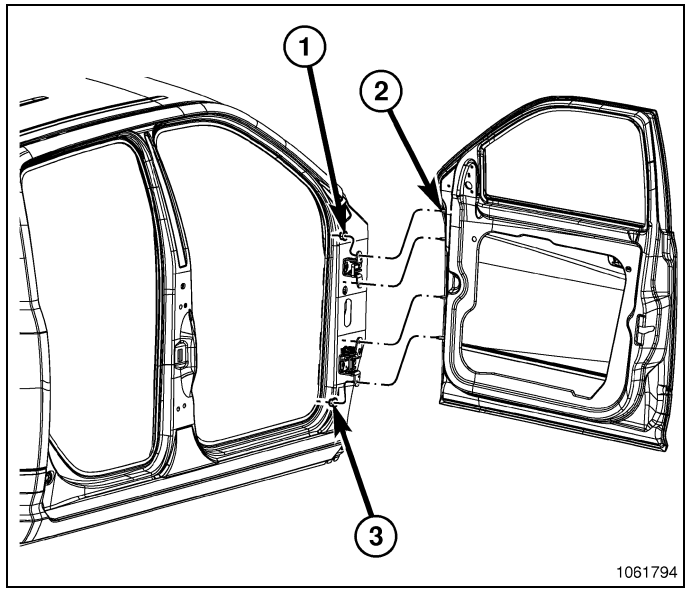

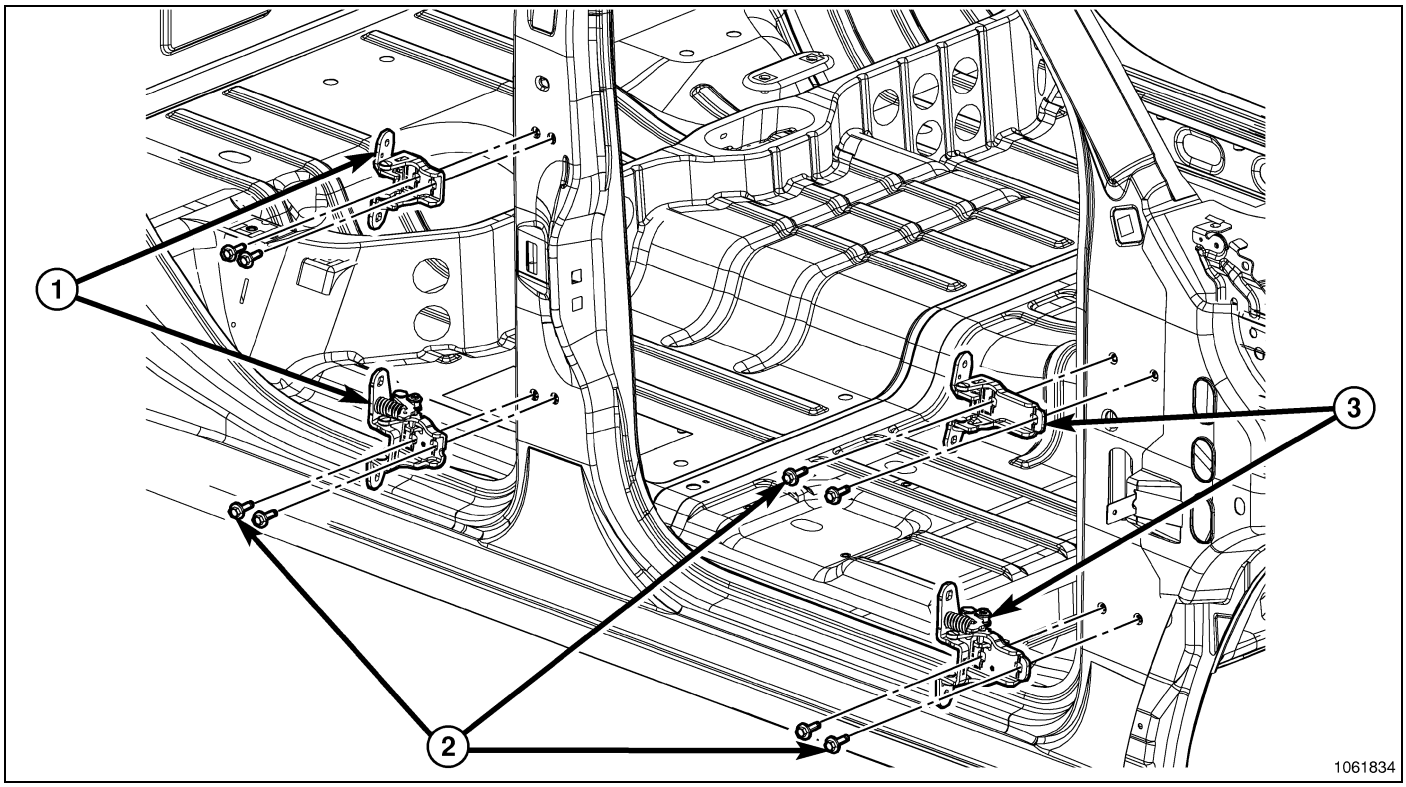

7. Tighten the hinge to hinge pillar bolts (2) to 24 N·m (18 ft. lbs.).
8. Install the latch striker(1). (Refer to 23 - Body/Door - Front/STRIKER, Door Latch - Installation)

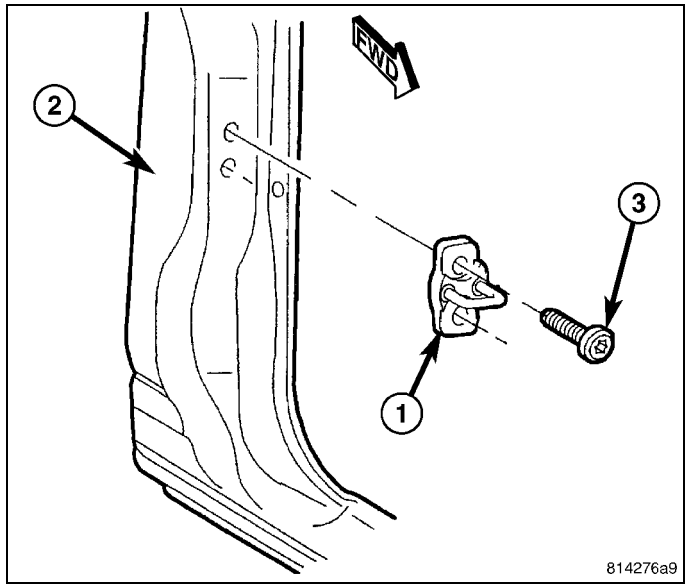

IN/OUT

NOTE: In/out door adjustment is done by loosening the hinge to door fasteners one hinge at a time and moving the door to the correct position.

NOTE: When adjustment of the door requires the loosening of the door to hinge fasteners, it will be necessary to separate the epoxy bonded washers with a chisel or other suitable tool.

1. Support the door with a suitable lifting device.
2. Remove the latch striker (1). (Refer to 23 - Body/Door - Front/STRIKER, Door Latch - Removal)

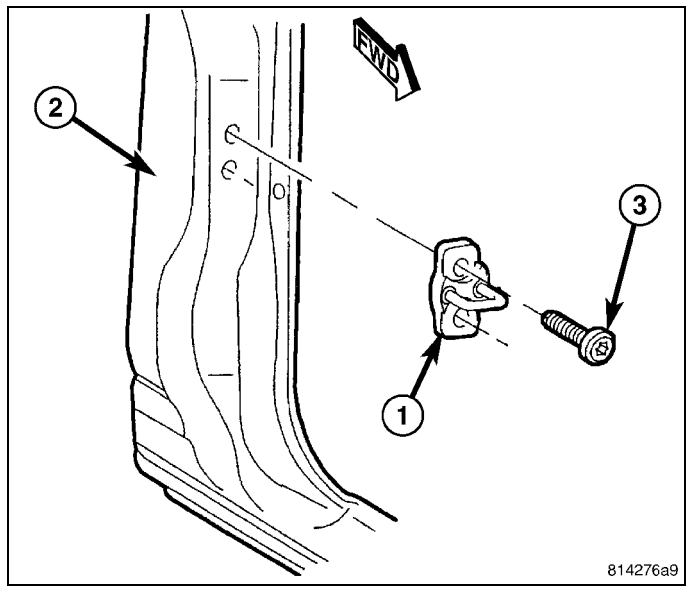

3. Loosen the hinge to door fasteners. (Refer to 23 - Body/Door - Front/DOOR - Removal)
4. Adjust the door to the correct position. (Refer to 23 - Body/Body Structure/Gap and Flush - Specifications)
5. Tighten the door to hinge fasteners to 22 N·m (16 ft. lbs.).

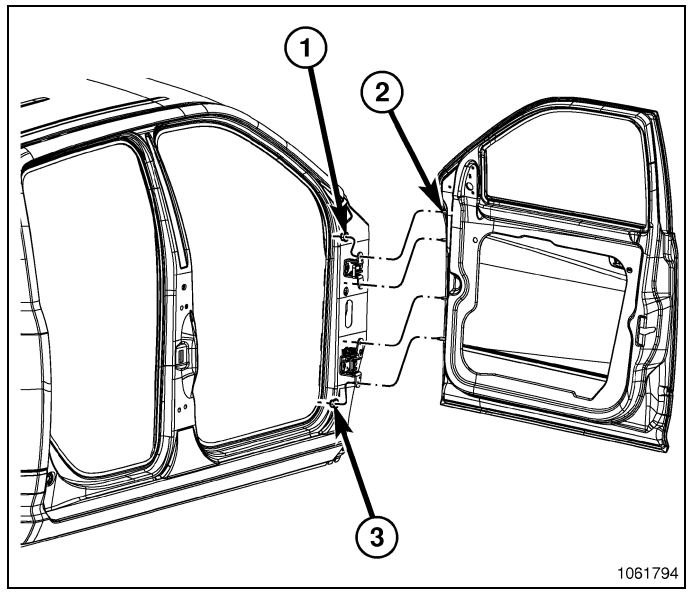

6. Install the latch striker (1). (Refer to 23 - Body/Door - Front/STRIKER, Door Latch - Installation)

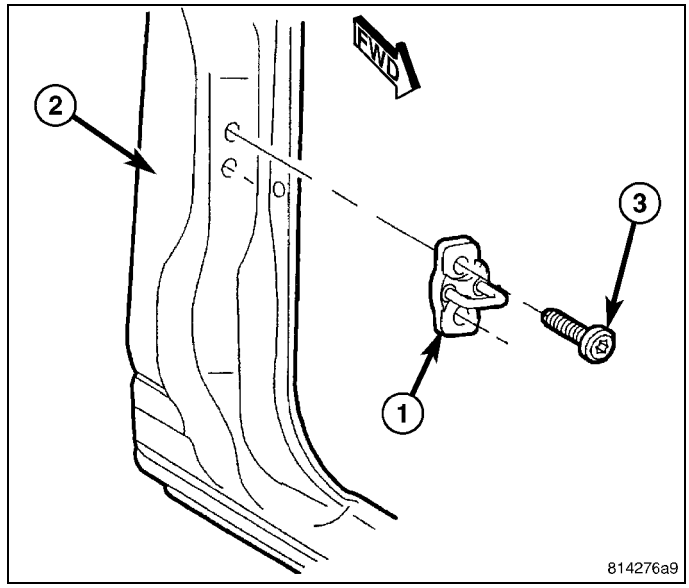

FLAG, Mirror

Removal

1. Using trim stick C-4755 or equivalent, remove the mirror flag (1).

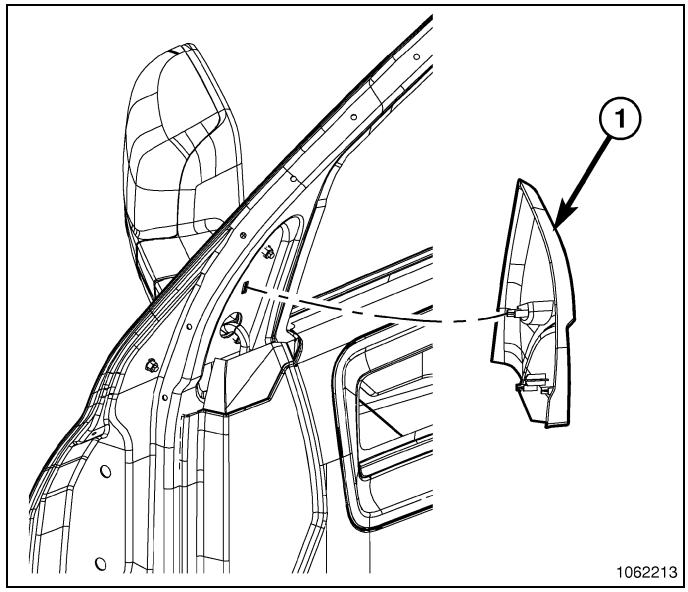

Installation

1. Position the mirror flag (1) onto the door and seat the clips fully.

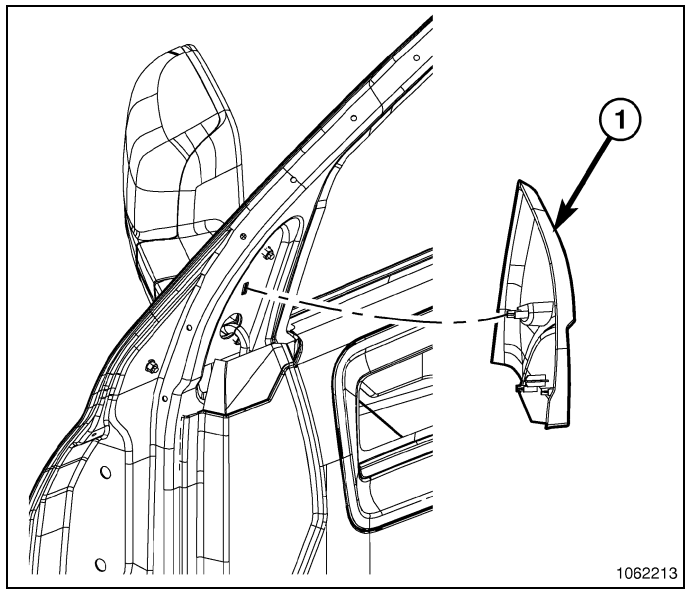

GLASS, Door

Removal

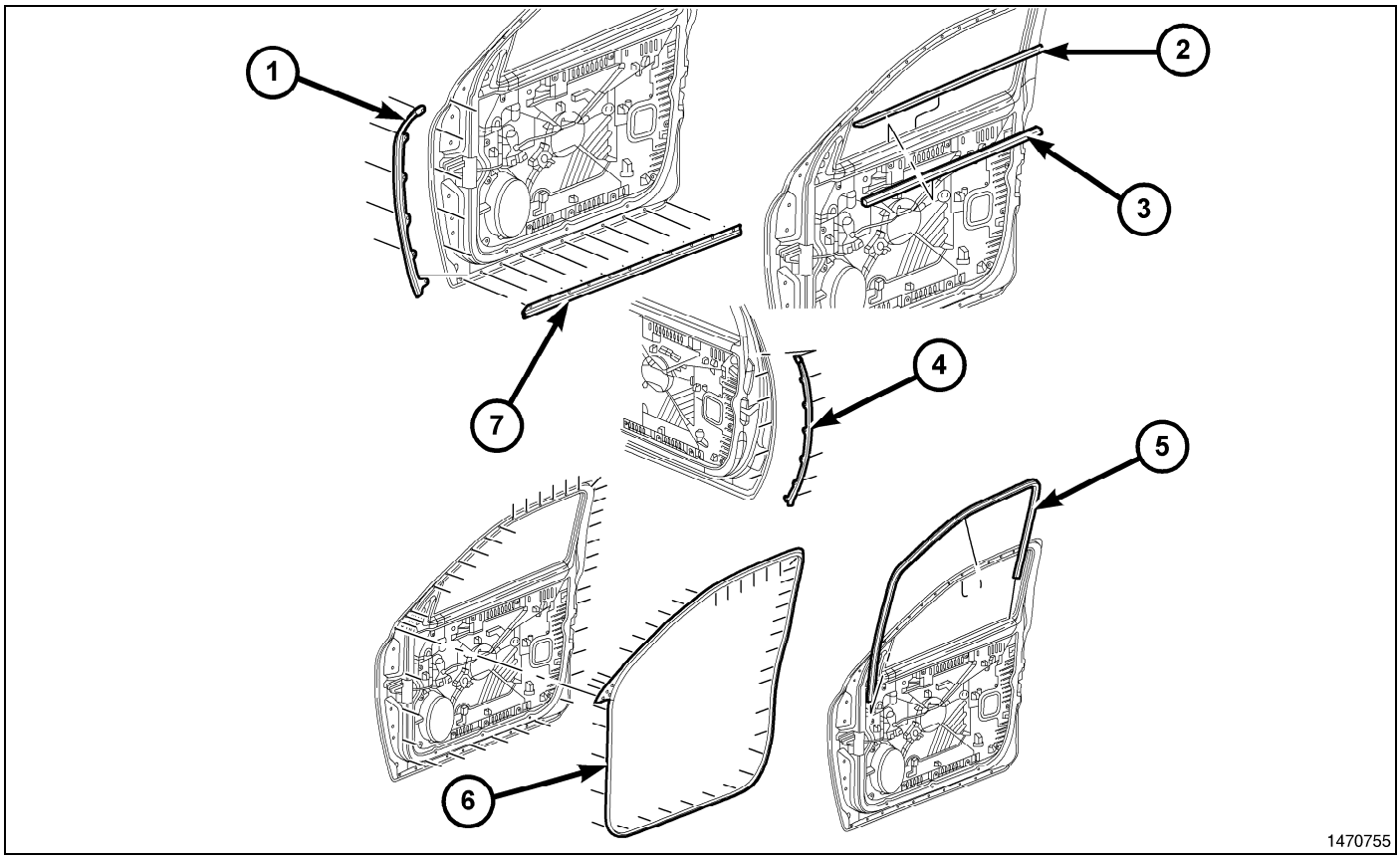

1. Remove the trim panel. (Refer to 23 - Body/Door - Front/PANEL, Door Trim - Removal)
2. Remove the door speaker. (Refer to 08 - Electrical/8A - Audio and Video/SPEAKER - Removal)
3. Remove the inner belt molding (3).
4. Install the window switch if required and lower the glass (1) down in the door to position the glass attachment clips (2) for access through the speaker opening and the service access plug.
5. Separate the glass clips (2) from the regulator lift plates (3 and 4).

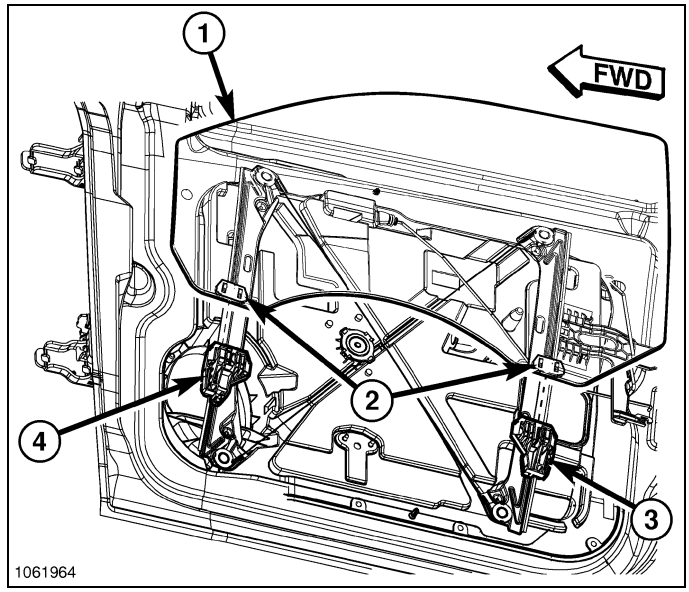

6. Rotate the top of the glass (1) forward in the door to release the glass from the run channels.
7. Remove the door glass (1) from the door (3) and separate the clips (2) if necessary.

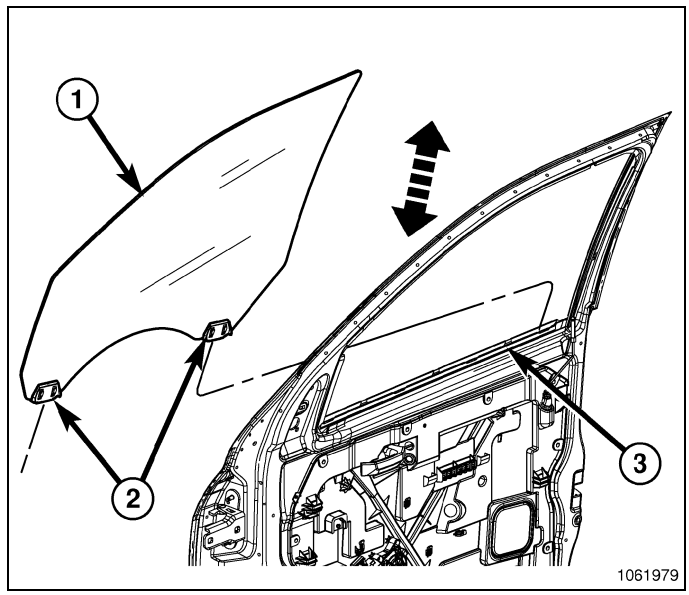

Installation

1. Install the mounting clips (2) onto the glass, if necessary.
2. Insert the narrow end of the glass (1) into the door through the opening between the inner and outer panels (3). Then engage the front edge of the glass into the front portion of the glass run weatherstrip before rotating the back edge of the glass rearward into the B-pillar portion of the weatherstrip.

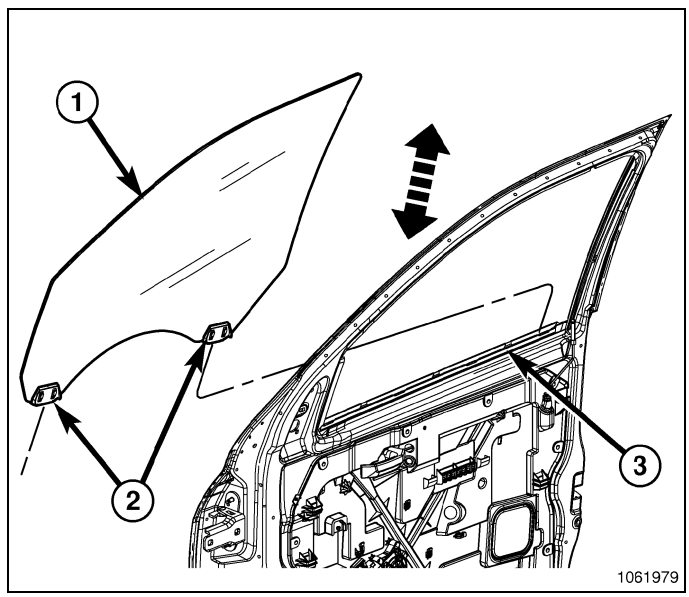

3. Pull the glass upward evenly far enough so it can be verified that the glass is seated into both glass run channels.
4. Push the glass down to seat the clips (2) into regulator lift plates (3 and 4) fully.
5. Pull up on the glass and make sure that it is secure.

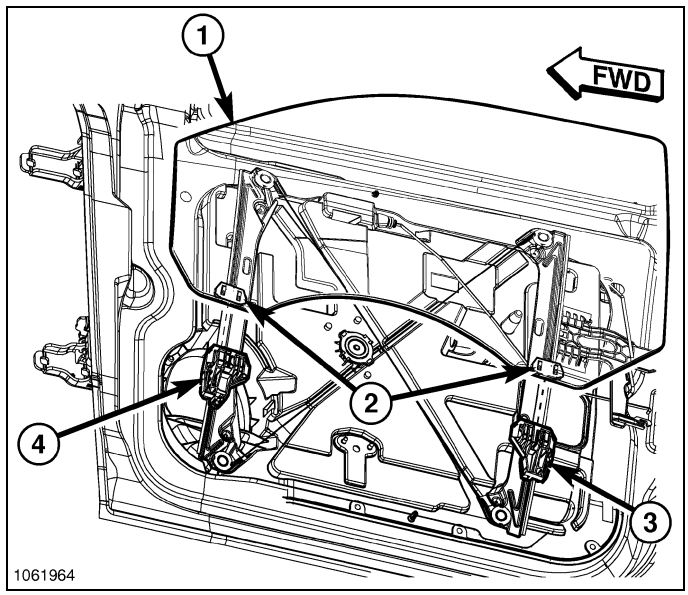

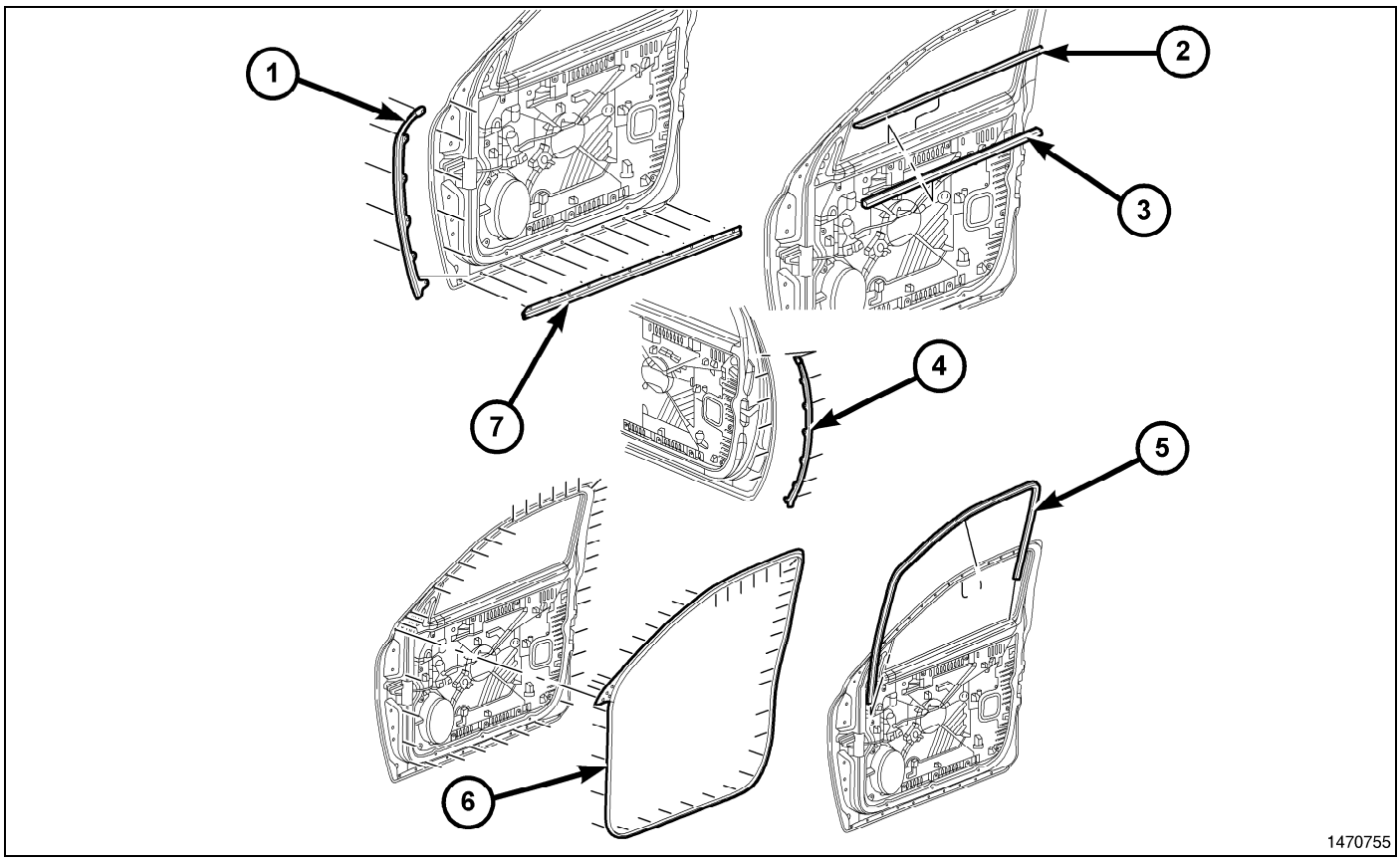

6. Install the inner belt molding (3) onto the door and seat fully.
7. Install the door speaker. (Refer to 08 - Electrical/8A - Audio and Video/SPEAKER - Installation)
8. Install the trim panel. (Refer to 23 - Body/Door - Front/PANEL, Door Trim - Installation)

HANDLE, Interior

Removal

1. Remove the door trim panel.
2. Remove the handle mounting screw (1).
3. Disconnect the control rod (3) from the handle (2).
4. Remove the handle from the door.

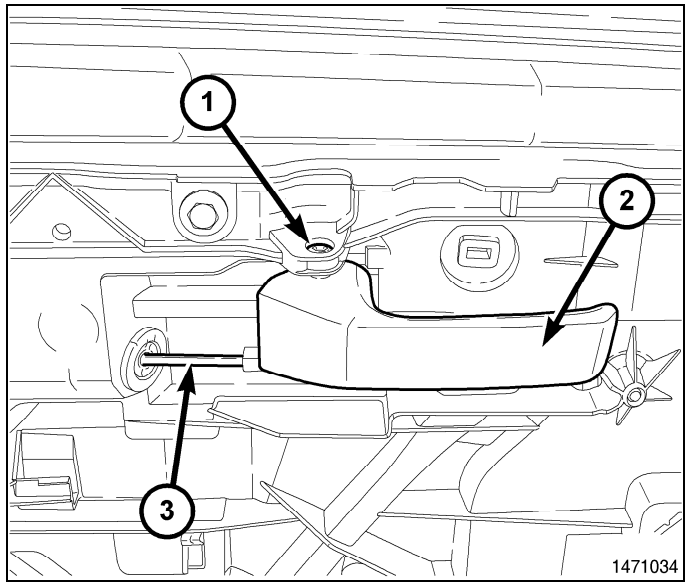

Installation

1. Place the handle (2) into position at the door.
2. Connect the control rod (3) to the handle.
3. Install the handle mounting screw (1).
4. Install the door trim panel.

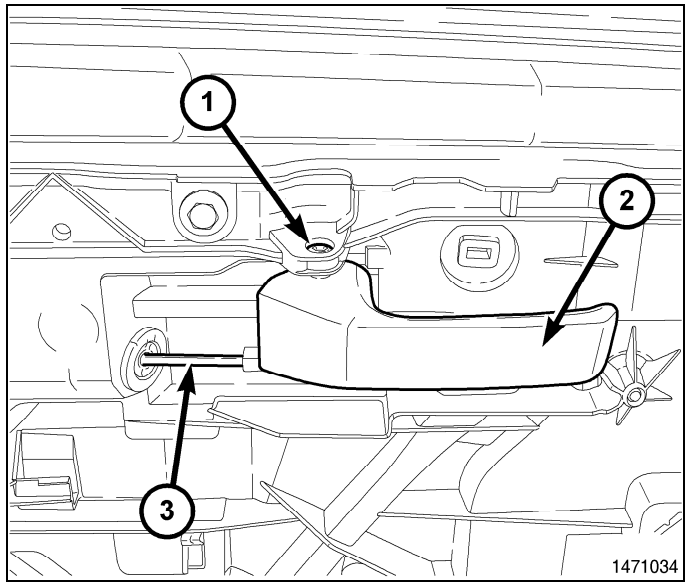

HANDLE, Exterior

Removal

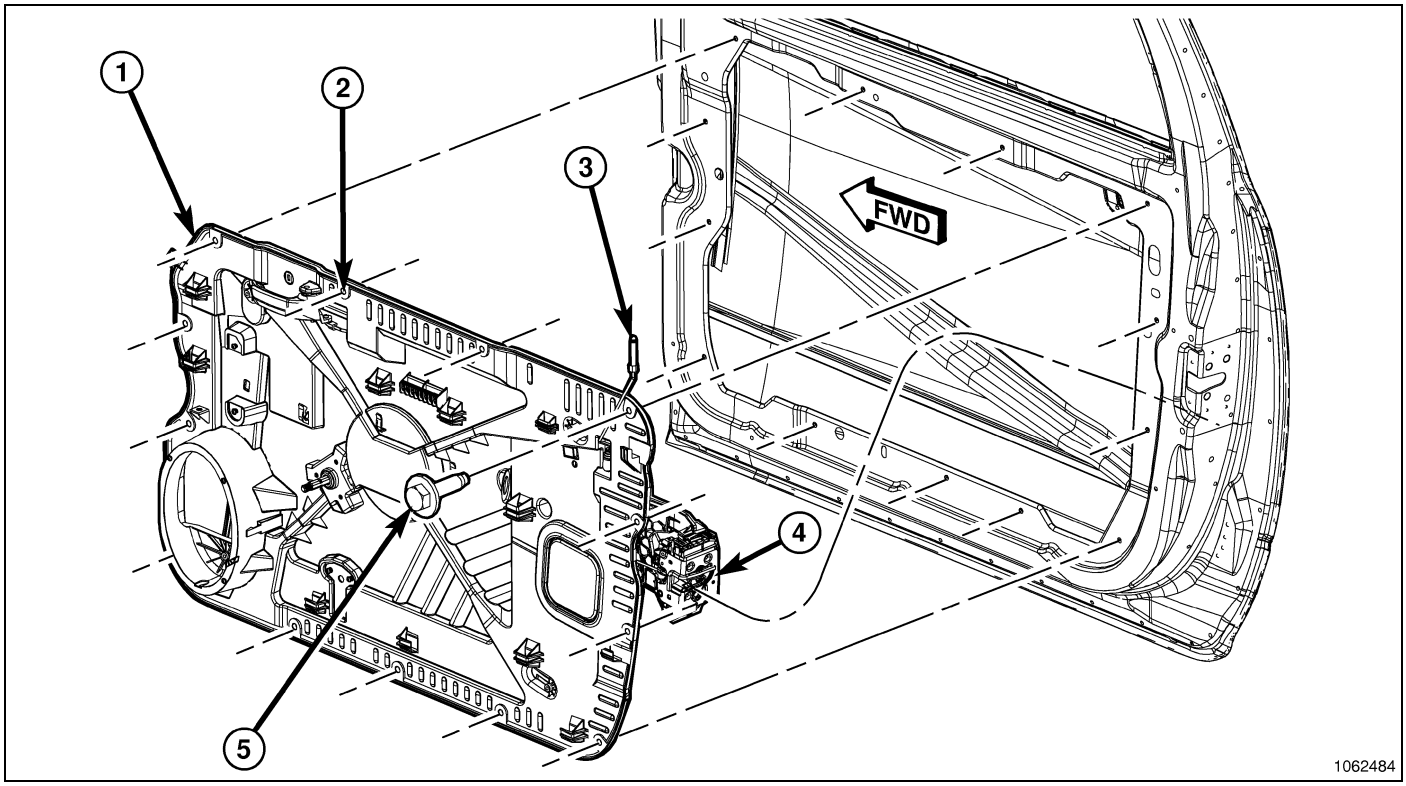

1. Disconnect and isolate the battery negative cable.
2. Remove the carrier plate (1). (Refer to 23 - Body/Door - Front/PLATE, Carrier - Removal)
3. Remove the bolts (1) and remove the exterior handle (2) from the door.

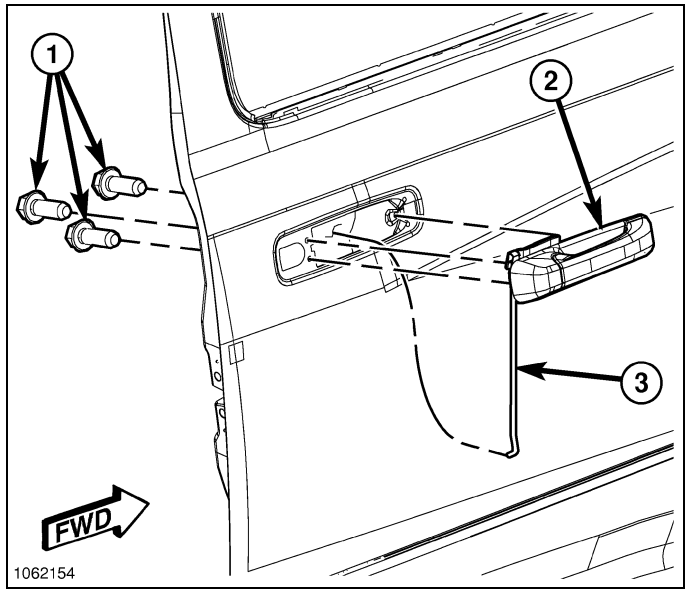

4. Release the clips (1) and disconnect the linkages (2 and 3) from the handle.

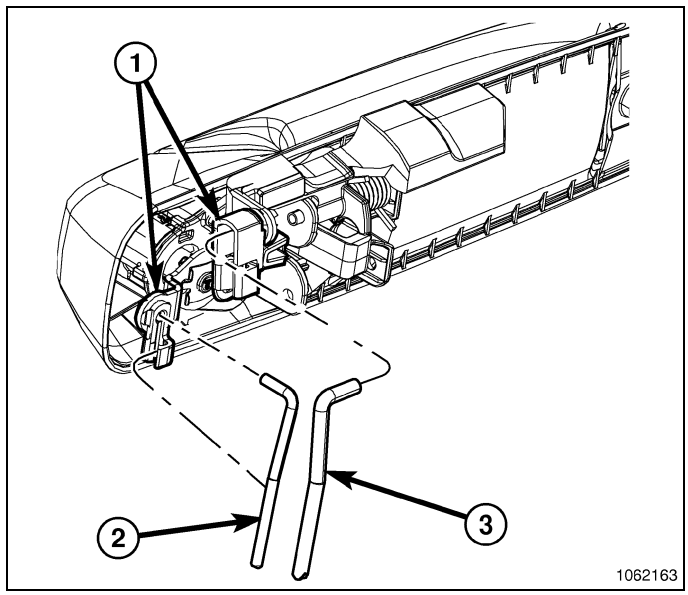

Installation

1. Install the linkages (2 and 3) onto the door handle and secure the clips (1).

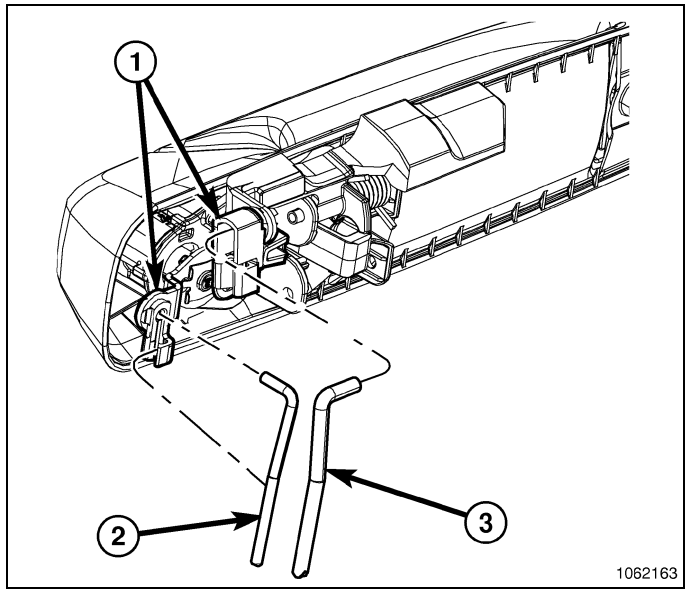

2. Position the linkages (3) into the door and install the handle (2).
3. Install the bolts (1) and tighten to 7 N·m (62 in. lbs.).

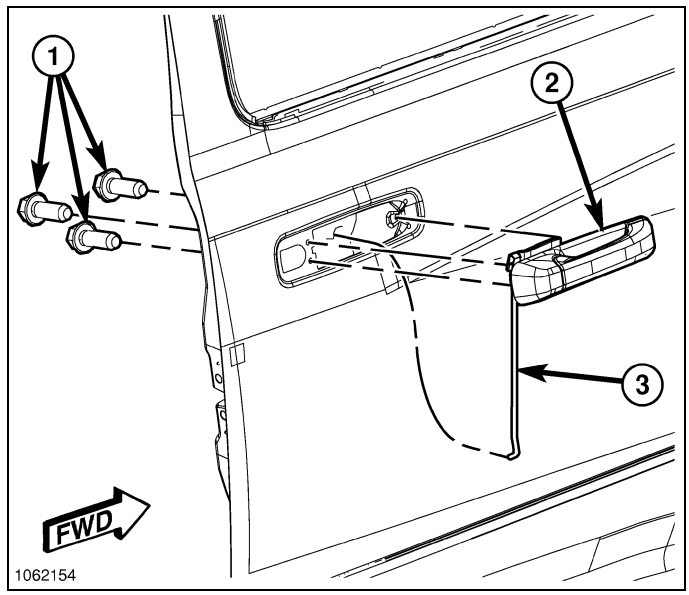

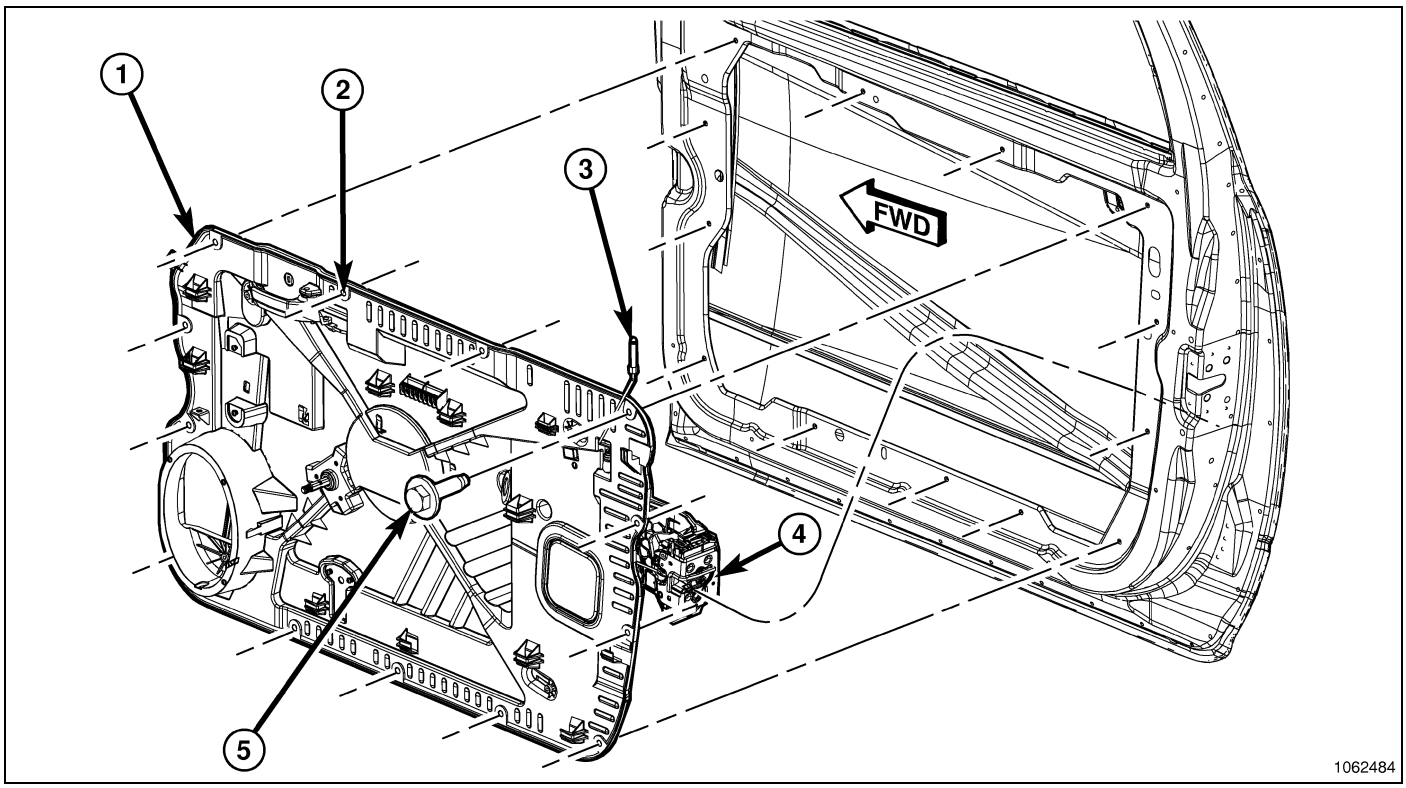

4. Install the carrier plate. (Refer to 23 - Body/Door - Front/PLATE, Carrier - Installation)
5. Connect the battery negative cable.

HINGE, Door

Standard Procedure

CAUTION: Door hinge pivot points (1) including the roller (3) and detent lever (2), should be lubricated periodically using Mopar ® Spray White Lube with Lithium or equivalent.

1. Spray parts as necessary using Mopar ® Spray White Lube with Lithium or equivalent.
2. Remove any excess grease.

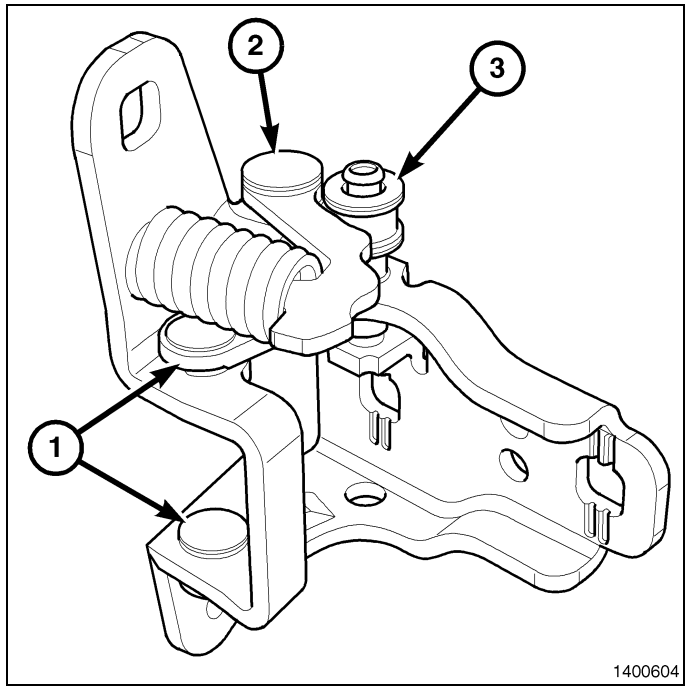

Removal

NOTE: A suitable body sealant should be used when removing or moving the hinges.

1. Remove the door. (Refer to 23 - Body/Door - Front/ DOOR - Removal)

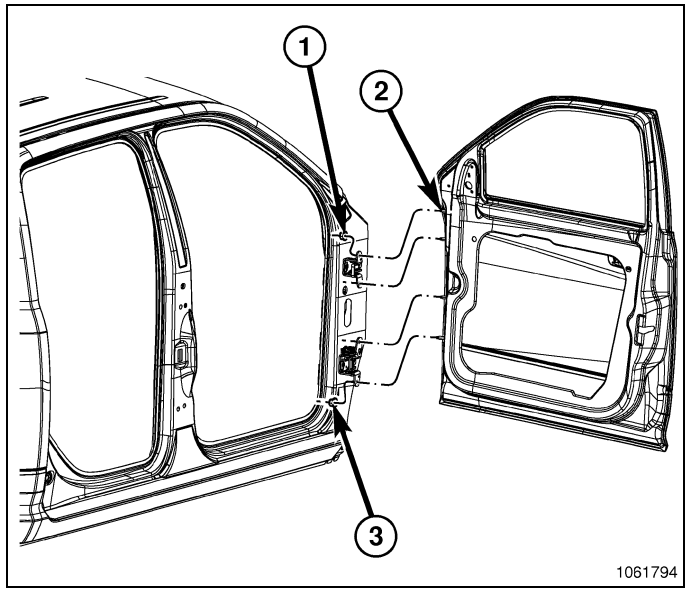

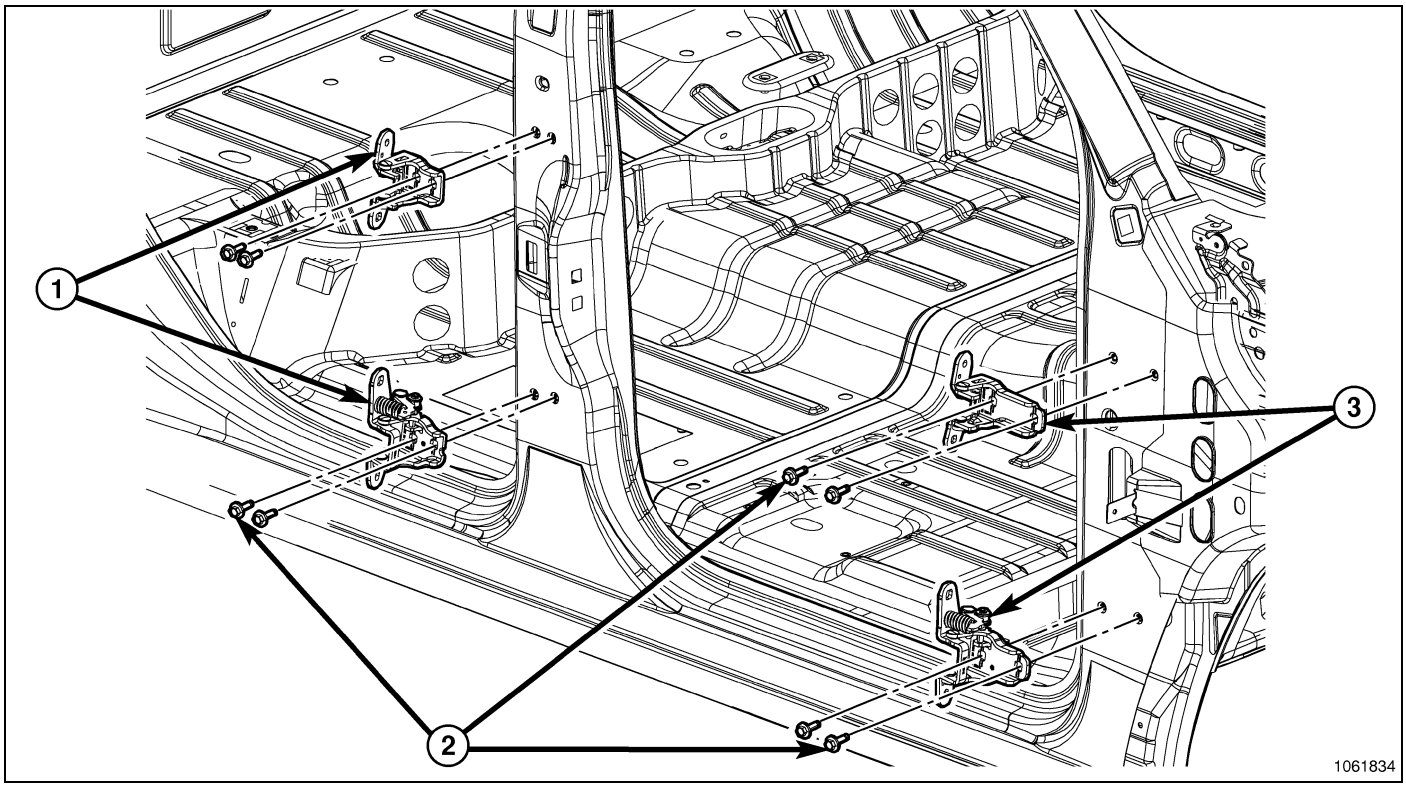

2. Using a grease pencil or equivalent, mark the hinge location and remove the bolts (2) for the hinge being serviced.

Installation

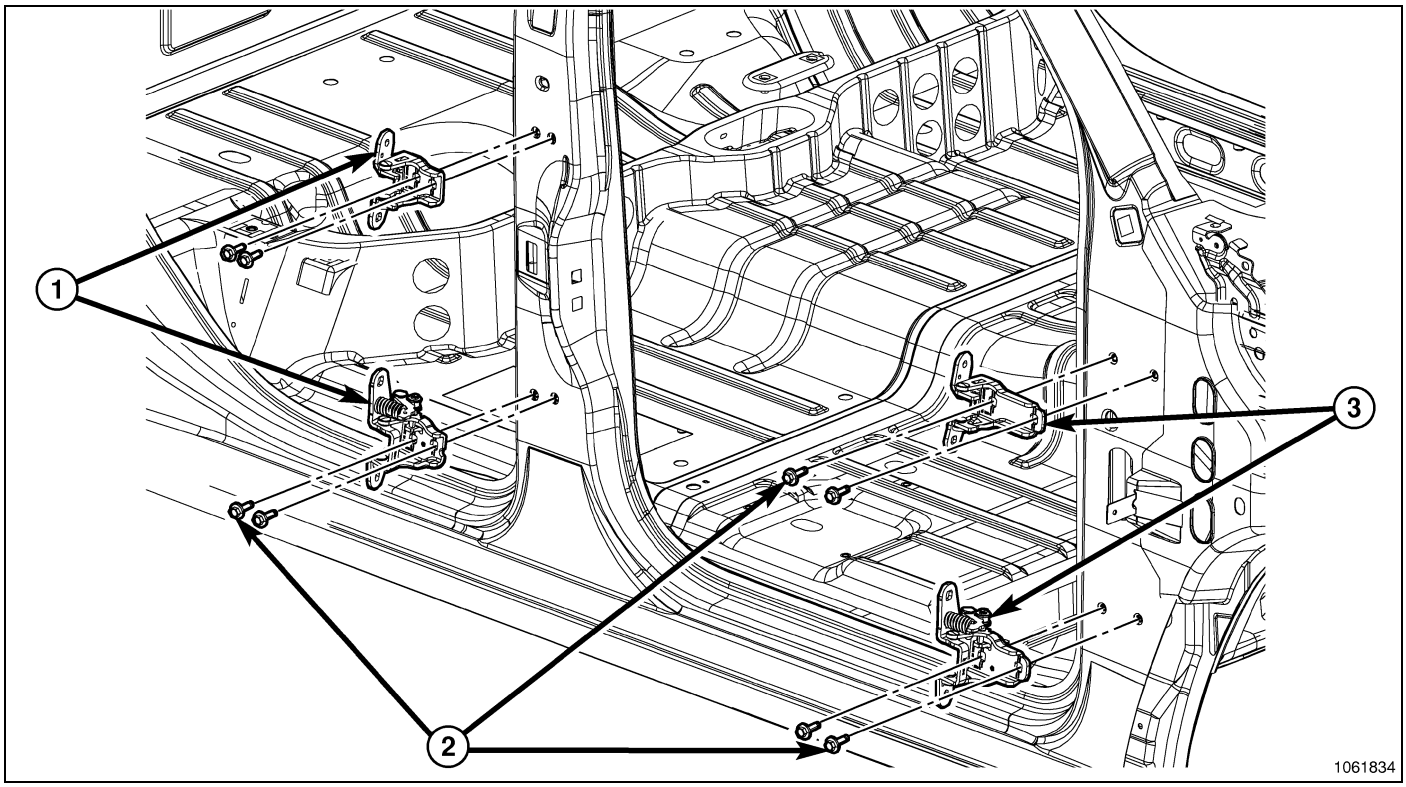

NOTE: A suitable body sealant should be used when removing or moving the hinges.

1. Install the hinges (3) and bolts (2).
2. Tighten the hinge bolts to 24 N·m (18 ft. lbs.).

3. Install the door. (Refer to 23 - Body/Door - Front/DOOR - Installation)

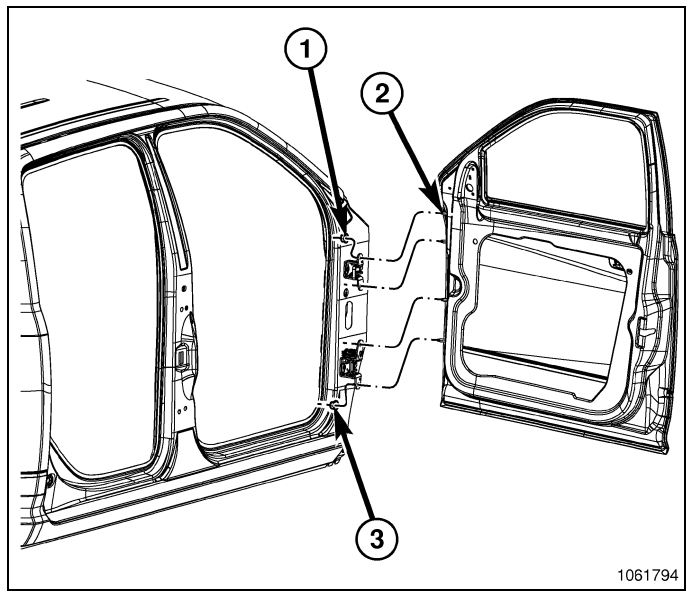

LATCH, Door

Removal

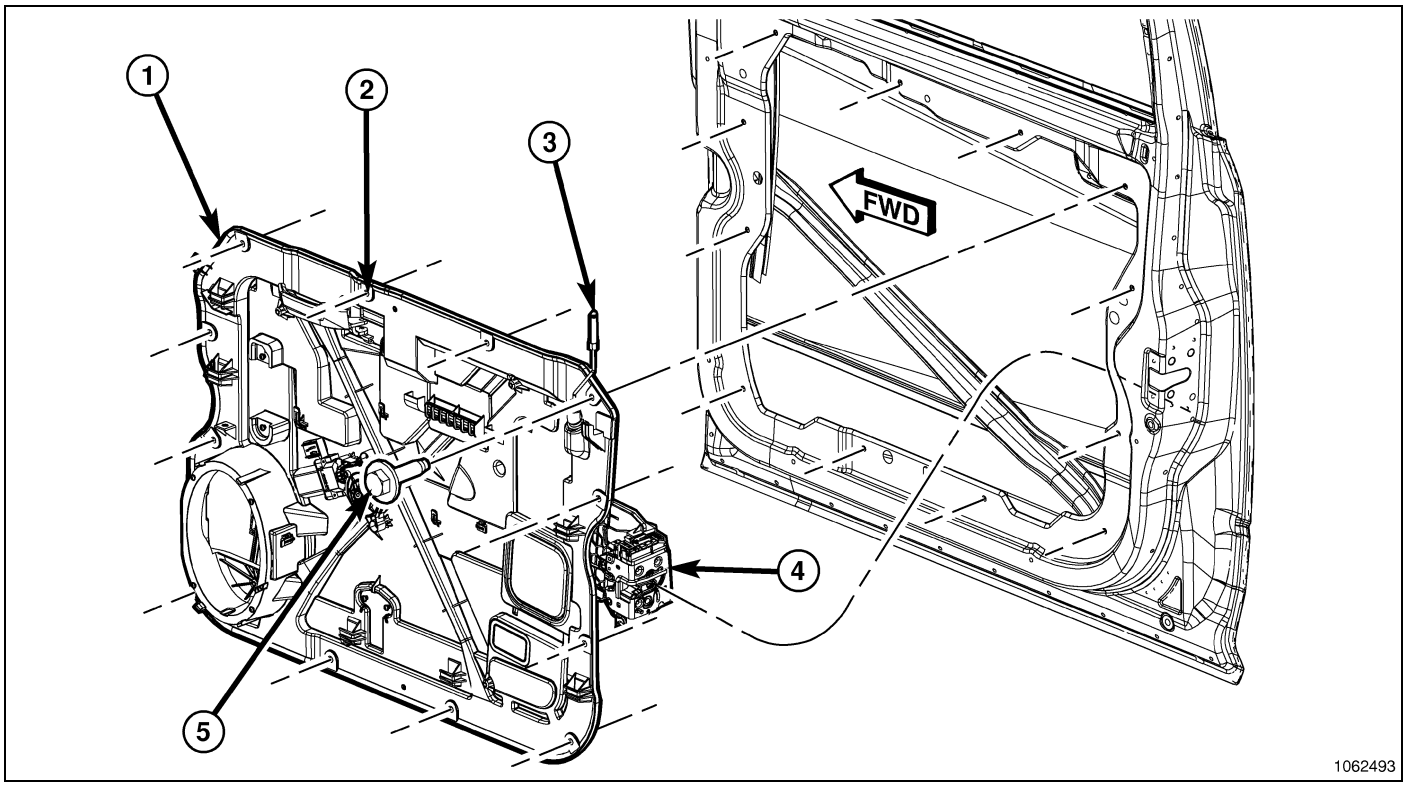

1. Remove the carrier plate (1).(Refer to 23 - Body/Door - Front/PLATE, Carrier - Removal)
2. Disconnect the door wire harness connector from the door latch (4).
3. Seperate the latch assembly from the latch presenter bracket and remove.

Installation

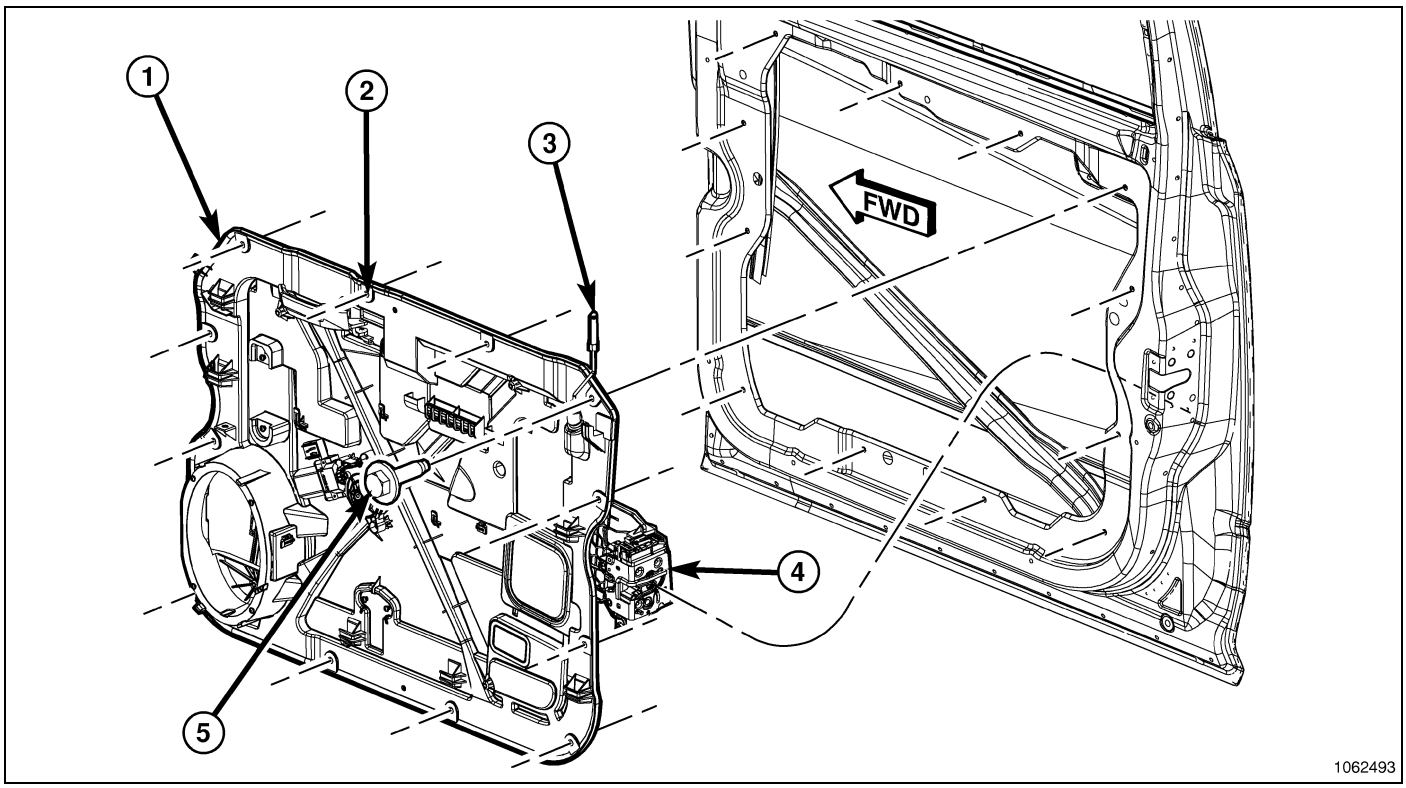

1. Seat the latch (4) onto the presenter bracket fully.
2. Connect the door wire harness electrical connector to the latch.
3. Install the carrier plate (1). (Refer to 23 - Body/Door - Front/PLATE, Carrier - Installation)

MOLDING, Door Belt, Inner

Removal

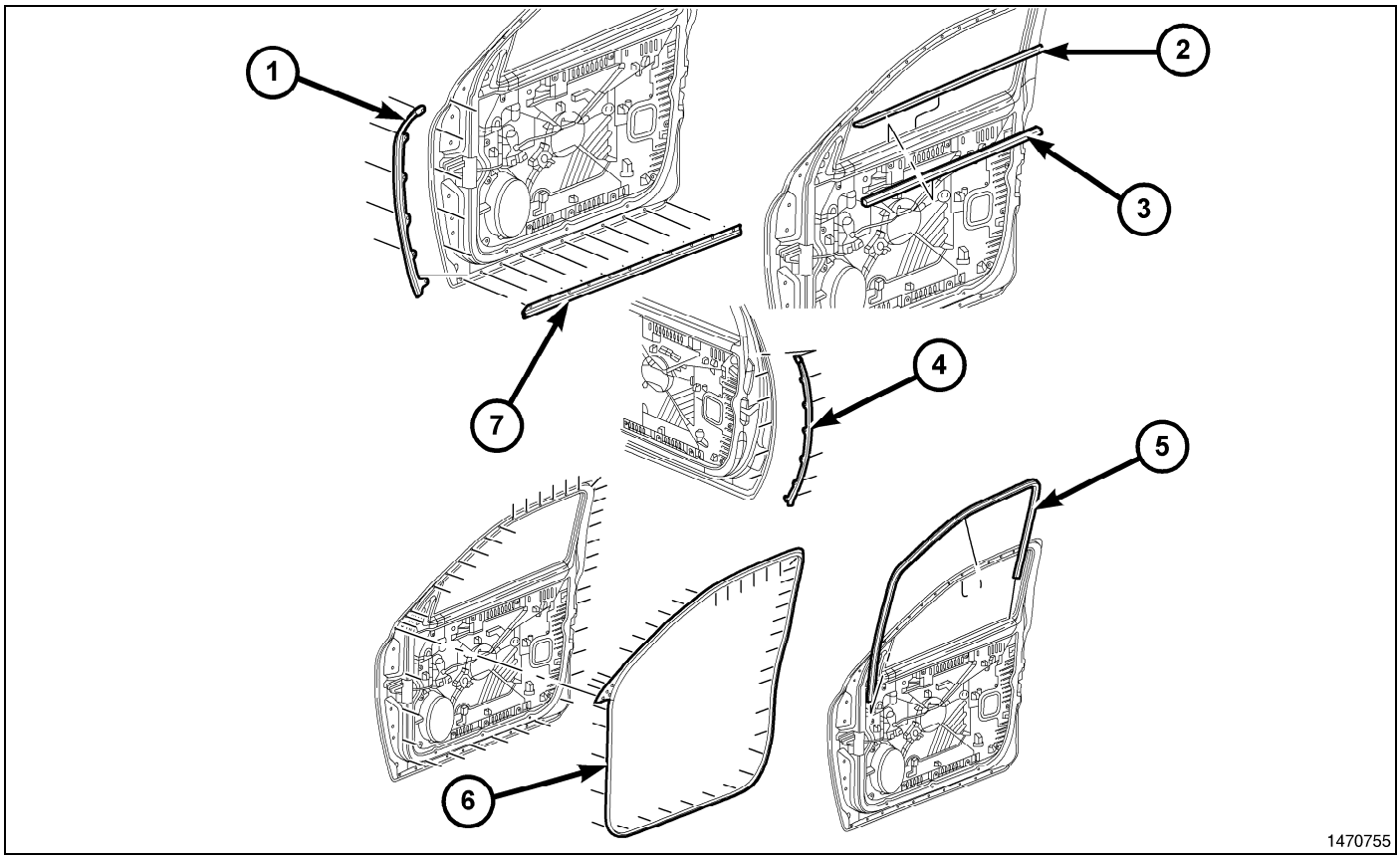

1. Remove the door trim panel. (Refer to 23 - Body/Door - Front/PANEL, Door Trim - Removal)
2. Separate the belt molding (3) from the door mounting flange from the back to the front.

Installation

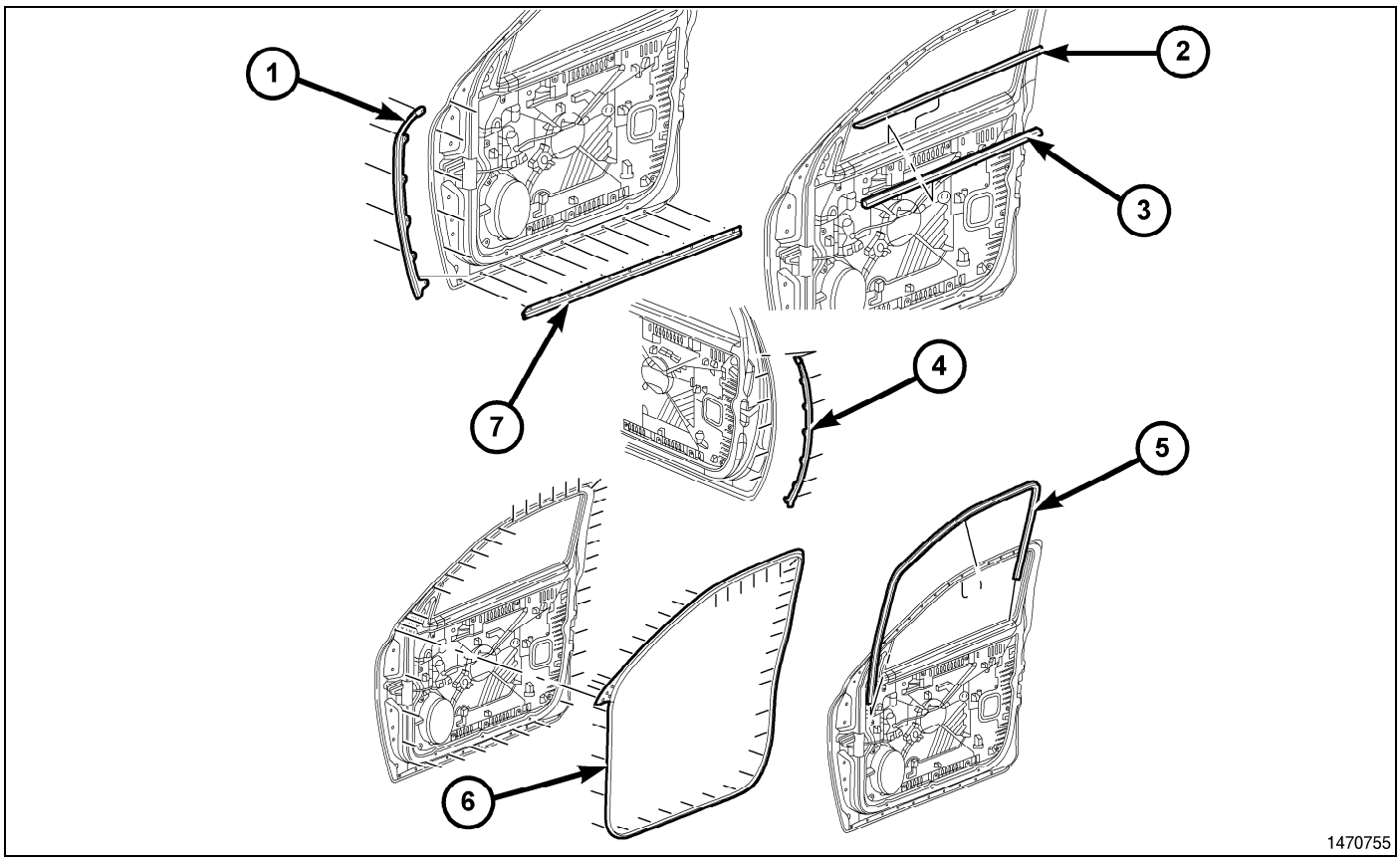

1. Position the belt molding (3) and seat onto the door mounting flange fully.
2. Install the door trim panel. (Refer to 23 - Body/Door - Front/PANEL, Door Trim - Installation).

MOLDING, Door Belt, Outer

Removal

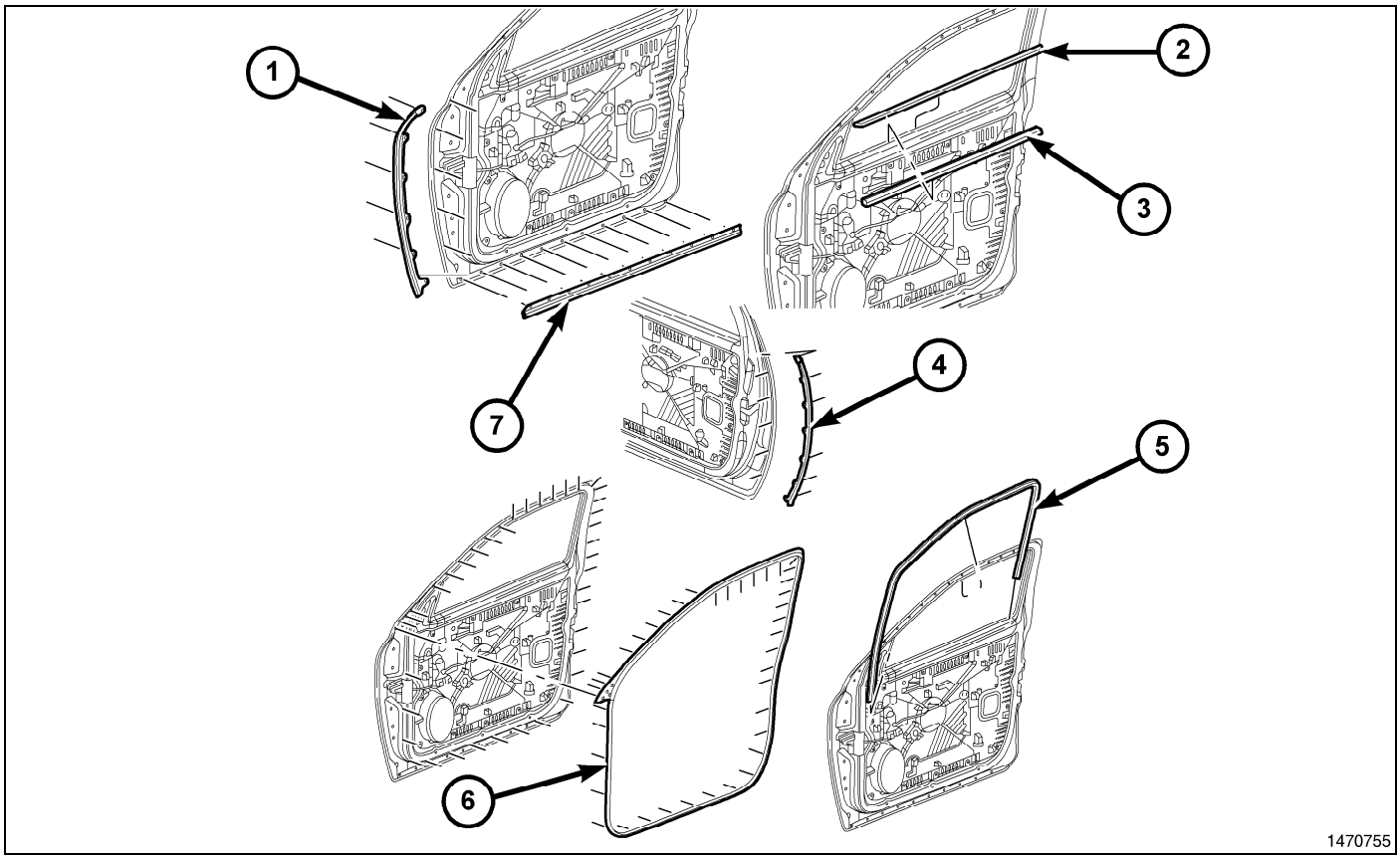

1. Remove the screw from the rear of the outer belt molding (2).
2. Starting from the rear of the door, carefully lift the belt molding upward and disengage the inner portion of the molding from the tabs on the door.
3. Pull the molding rearward to disengage the molding from the outside mirror.
4. Remove the belt molding from the door.

Installation

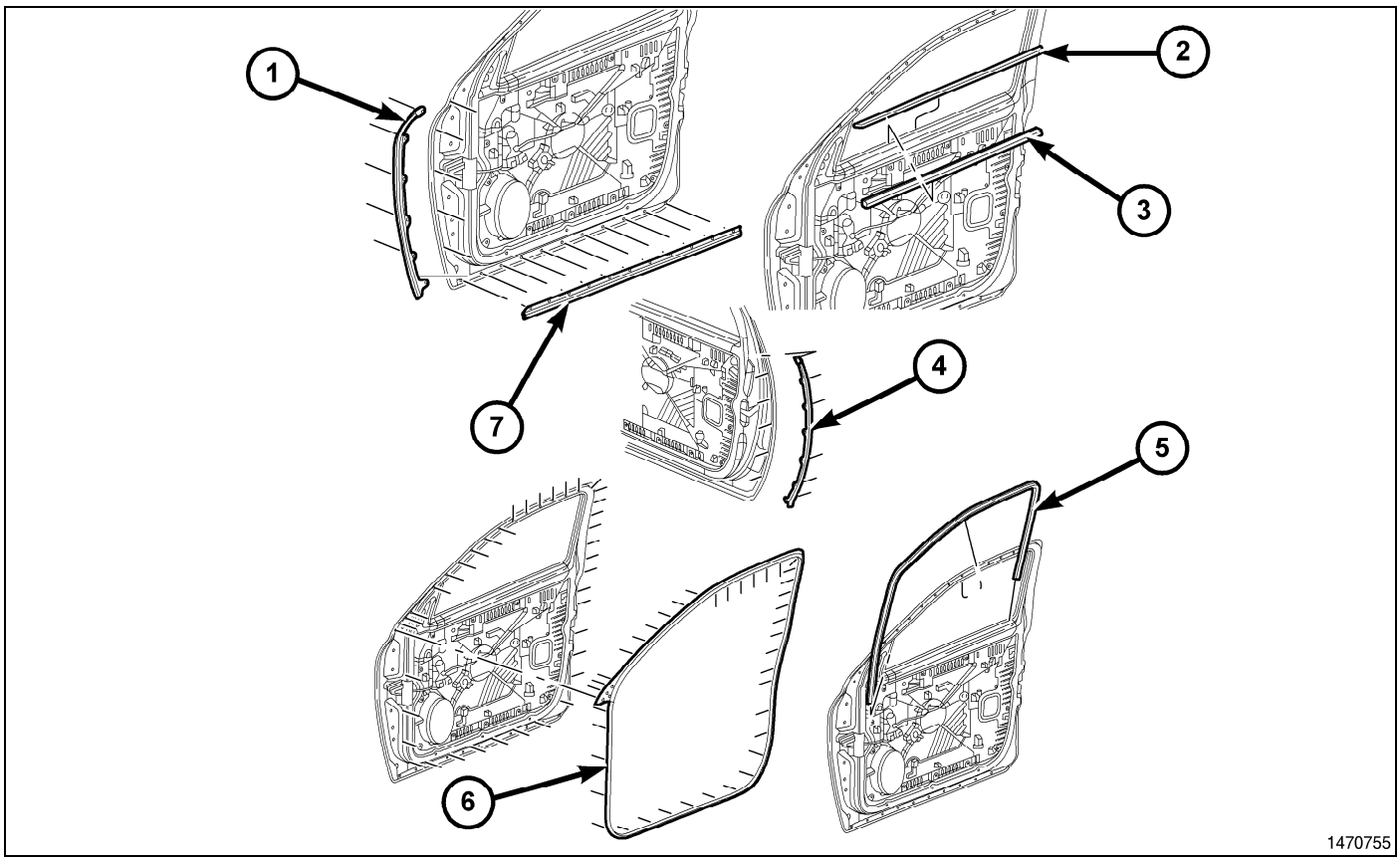

1. Place the belt molding (2) into position and insert the front portion under the outside mirror housing.
2. Working from the front of the door, press down on the molding and engage the clips to the door.
3. Install the screw at the rear of the belt molding.

PANEL, Door Trim

Removal

NOTE: Rear door switch shown, front doors are similar.

1. Using trim stick C-4755 or equivalent, release the door switch/bezel (1) from the door trim and disconnect the electrical connectors (2), if equipped.

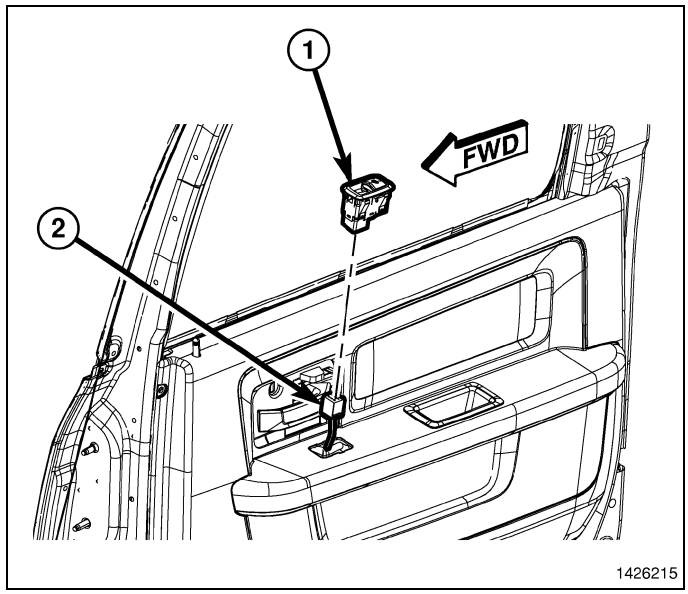

2. If equipped, remove the manual window crank (1) using a window crank removal tool (2).

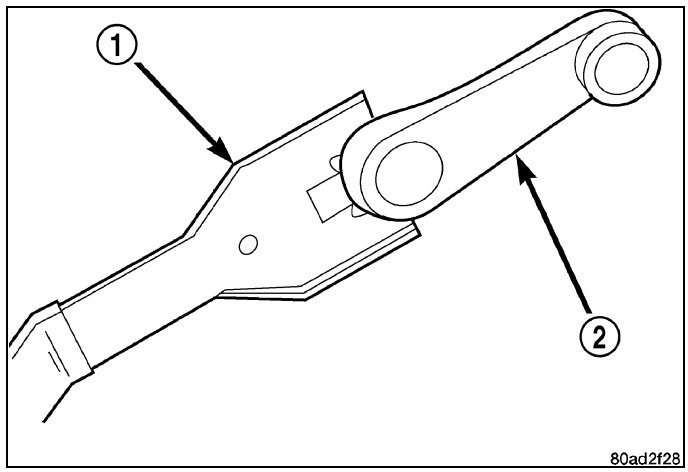

3. Using trim stick C-4755 or equivalent, remove the mirror flag (4).
4. Remove the screw (2) and remove the interior handle bezel (3).
5. Release the plastic push pins (1).
6. Raise the trim panel (6) upward far enough to disengage the hooks on the back of the panel from the inner door and the door lock knob from the top of the panel.

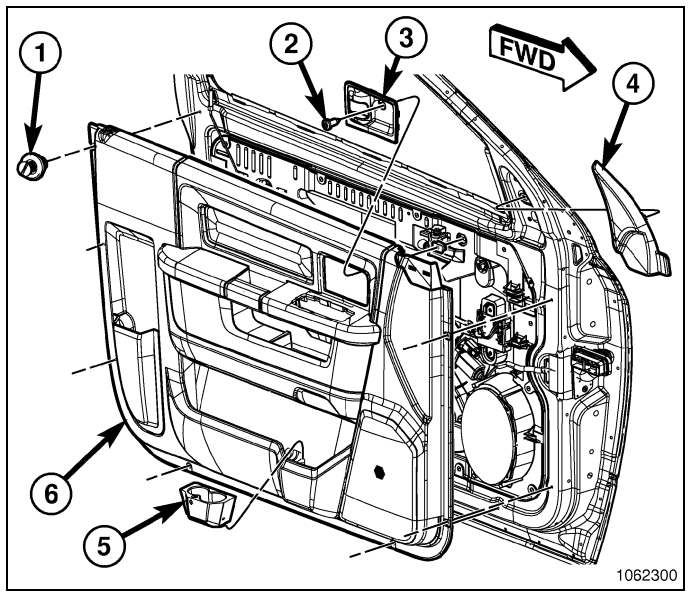

Installation

1. Position the lower end of the trim panel (6) to the carrier plate on the inner door aligning the hooks on the back of the panel to the slotted holes in the carrier. Then, using a rotating arc motion, feed the lock knob through the hole at the upper rear corner of the trim panel, and align and push down the trim panel to seat the hooks into the holes in the carrier plate.

NOTE: Make sure the upper flange of trim is fully seated into inner belt molding.

2. Install the plastic push pins (1) around the perimeter of the panel and seat fully.
3. Install the interior handle bezel (3) and install the screw (2).
4. Position the mirror flag (4) onto the door and seat the clips fully.
5. If equipped, verify that the window handle clip is installed correctly and seat the handle onto the window regulator shaft fully.

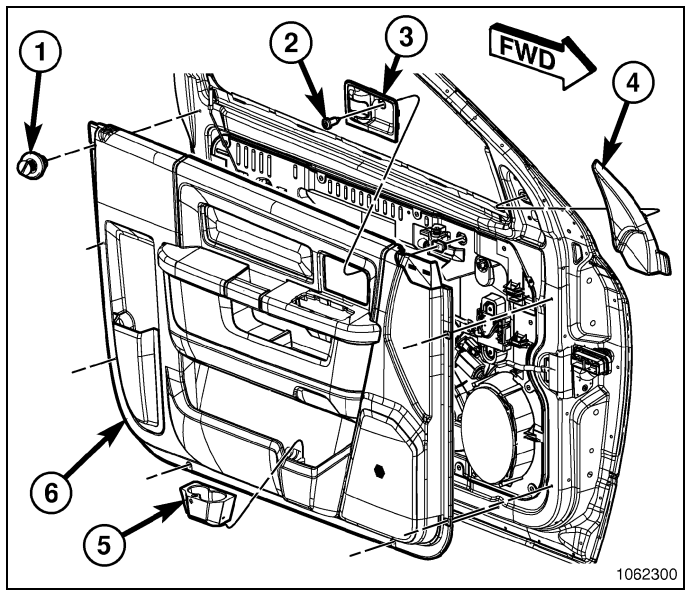

NOTE: Rear door switch shown, front doors are similar.

6. If equipped, connect the window switch electrical connectors (2) and seat the window switch/bezel into the door trim fully.

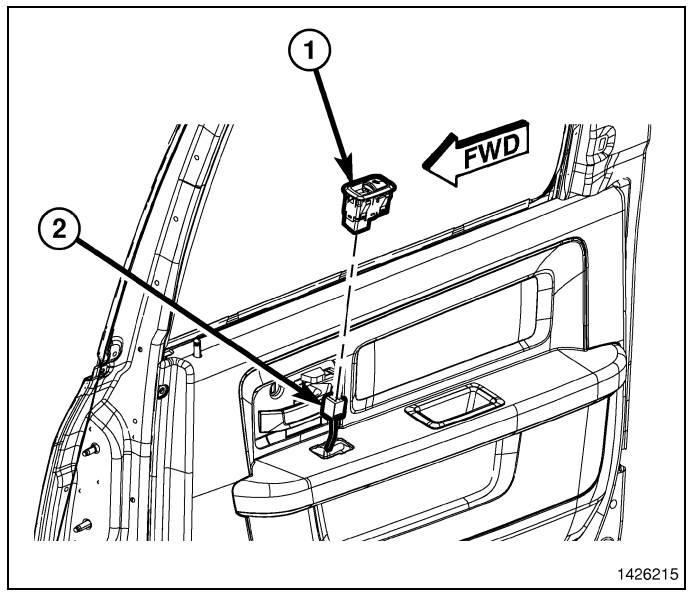

PLATE, Carrier

Removal

1. Remove the trim panel (6). (Refer to 23 - Body/Door - Front/PANEL, Door Trim - Removal)
2. Remove the door speaker. (Refer to 08 - Electrical/8A - Audio and Video/SPEAKER - Removal)

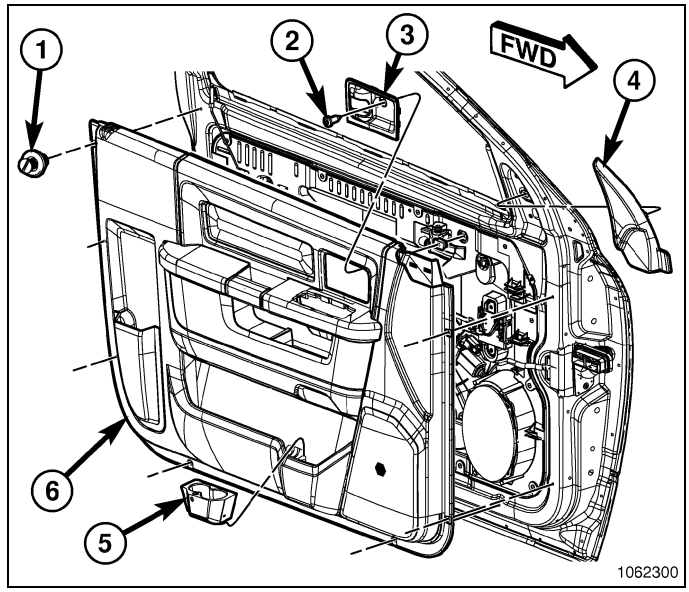

3. If required, reinstall the regulator handle or window switch to enable lowering of the glass (1) for access to the glass attachment clips (2) through the speaker opening and the service access plug.
4. Separate the glass clips (2) from the regulator lift plates (3 and 4).
5. Raise the glass (1) into the full up position and secure in place using tape or equivalent.
6. Disconnect the door electrical connector.

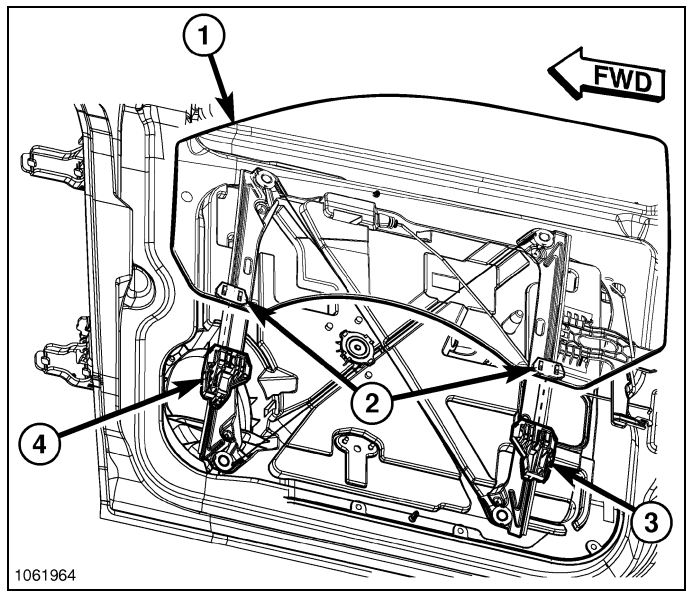

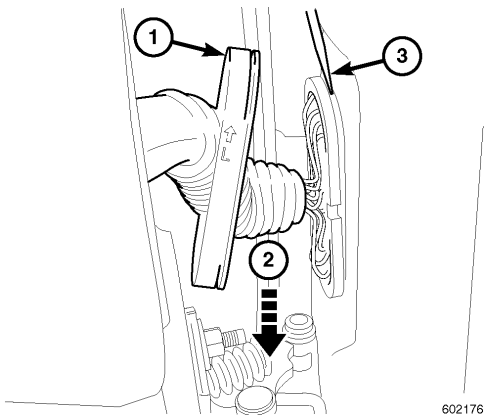

NOTE: The following illustration shows a typical door harness connector.

7. Peel the A Pillar grommet (1) off of the connector/retainer and move it up the wire harness.
8. Grasp the wire harness (2) by the convolute section of the grommet and gently pull the wire harness down towards the floor to expose the connector lock tabs.

CAUTION: Do not force the locking tab past the connector body, as damage to the connector may occur.

9. While still pulling down on the harness, use a small slotted screw driver (3) to **gently** push one of the top lock tabs until the lock feature is flush with the connector/retainer body.
10. Repeat the step 3 for the remaining top lock tab.
11. The connector should now be able to rock out of the sheet metal hole without causing any damage to the connector or sheet metal.

12. Remove the service access plug (2) and disconnect the exterior handle linkages (1).

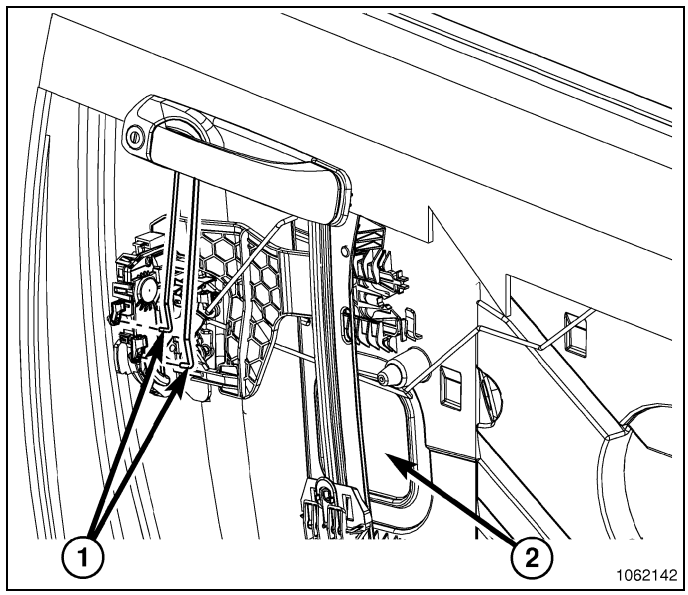

13. Remove the screws (2) and separate the wire harness (1) from the door.

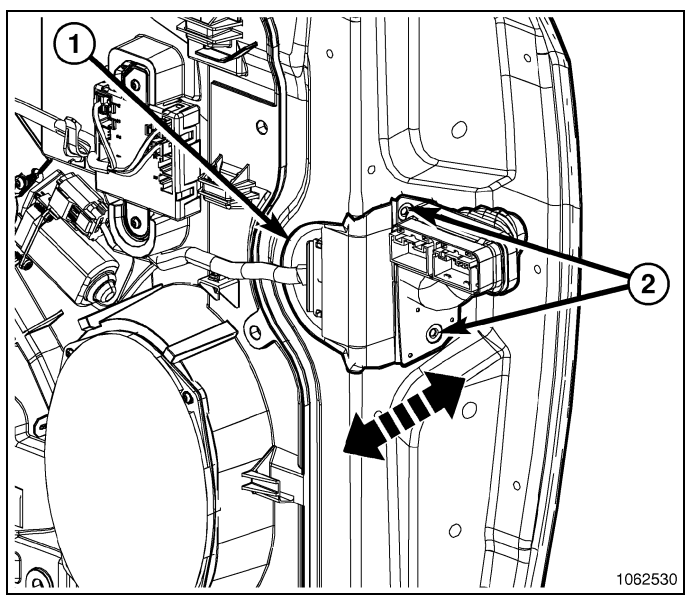

14. On standard cab models only, remove the lower belt channel (2) shut face screw (1).

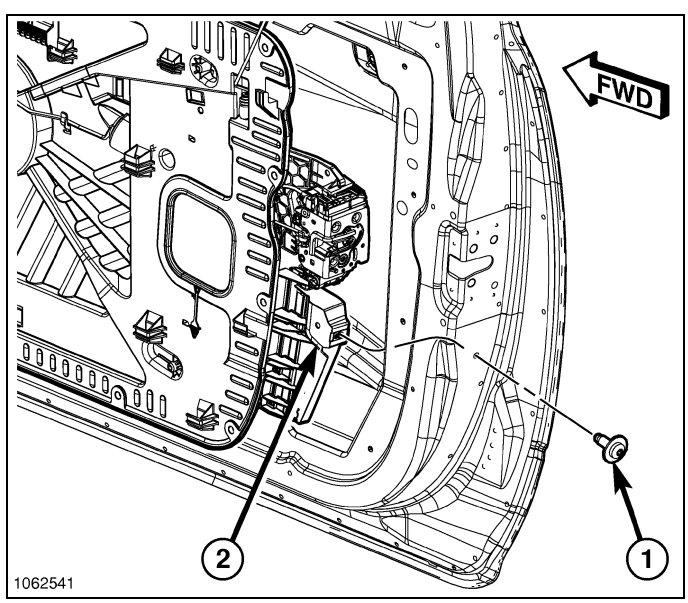

15. Remove the door latch (2) mounting screws (3).

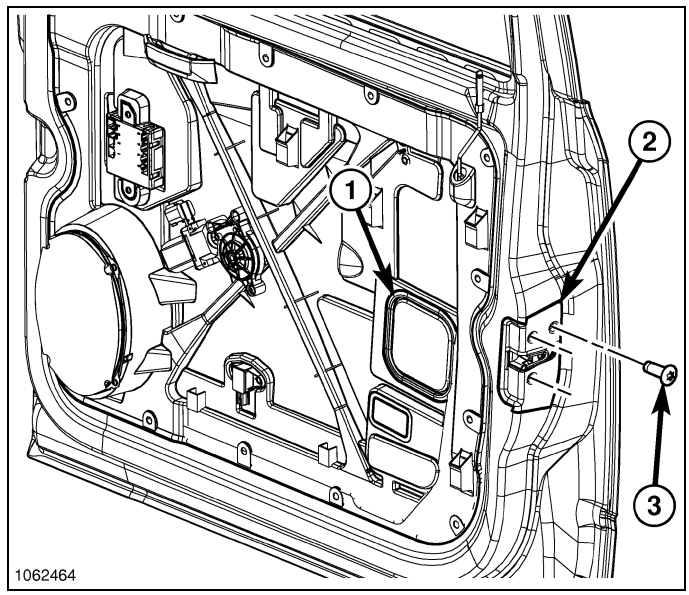

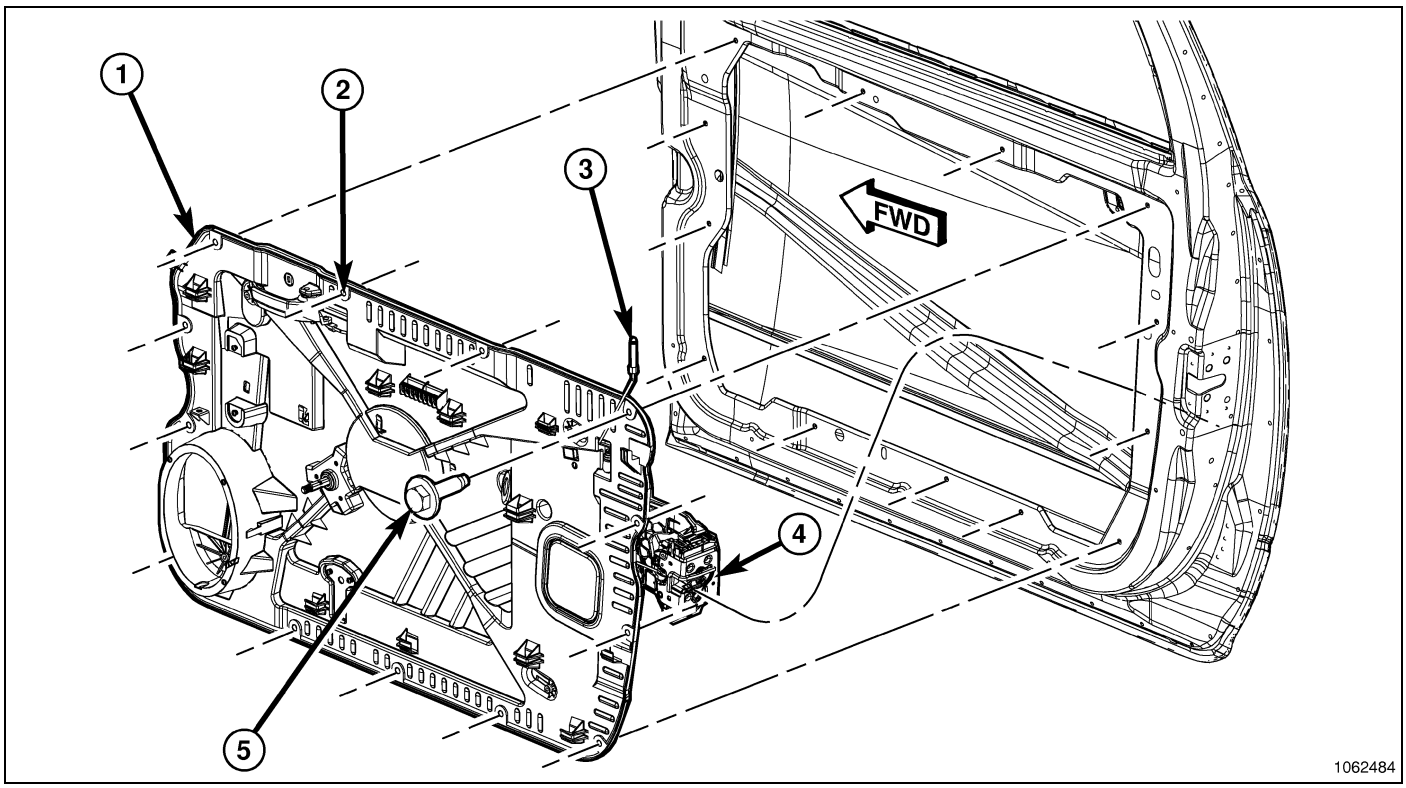

NOTE: Standard cab model shown, all others similar.

16. Remove the bolts (5) (quantity of 13 on standard cab, 12 on all other models) and remove the carrier plate assembly (1) from the door.

Installation

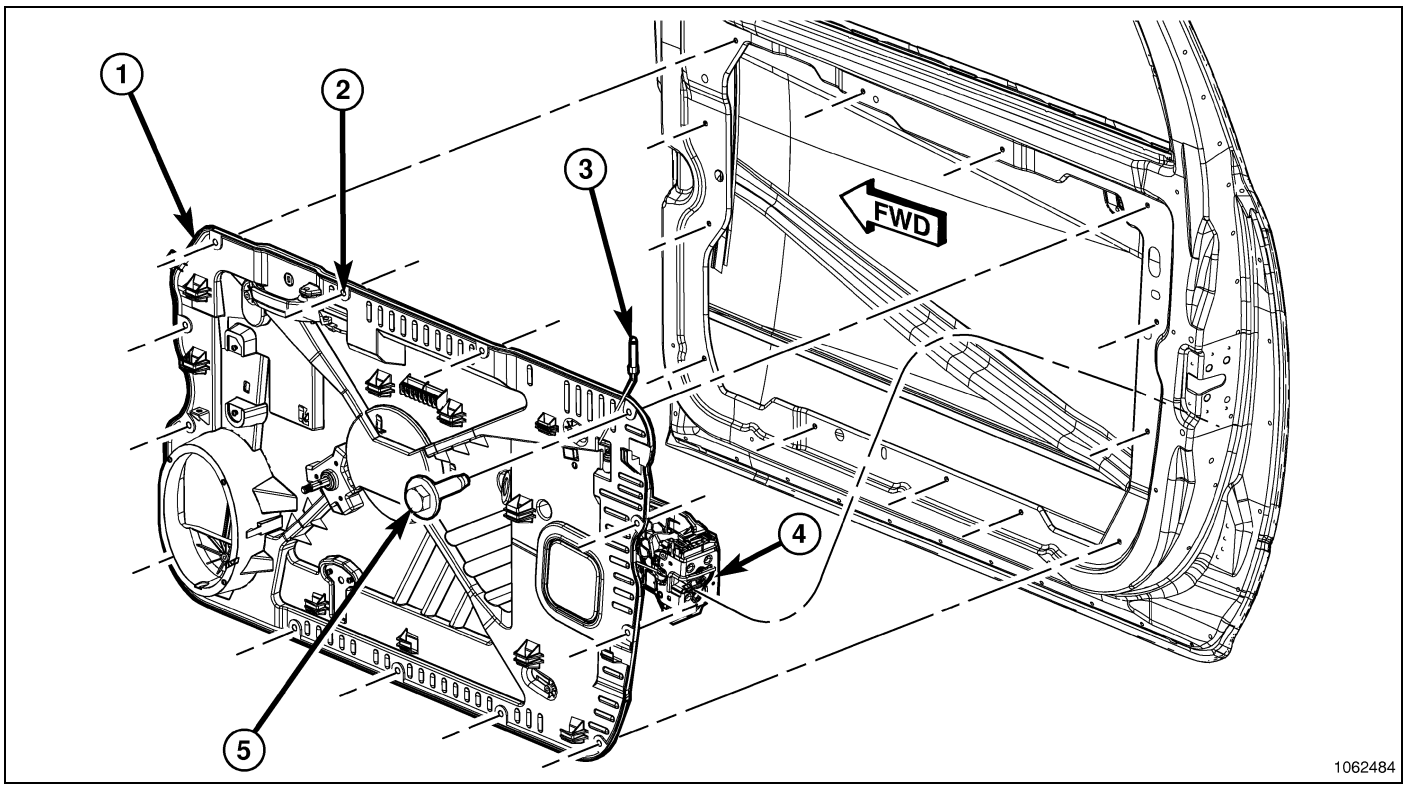

NOTE: On standard cab models perform the following steps.

1. Insert the carrier plate assembly (1) into door, latch (4) side first, and tip the regulator rails into place through the door opening.
2. Lift the carrier plate and seat the two locating pins into the locating holes.
3. Install the 13 bolts (5) and, moving clockwise starting at position (2), tighten the bolts in a clockwise direction to 5.5 N·m (49 in. lbs.).

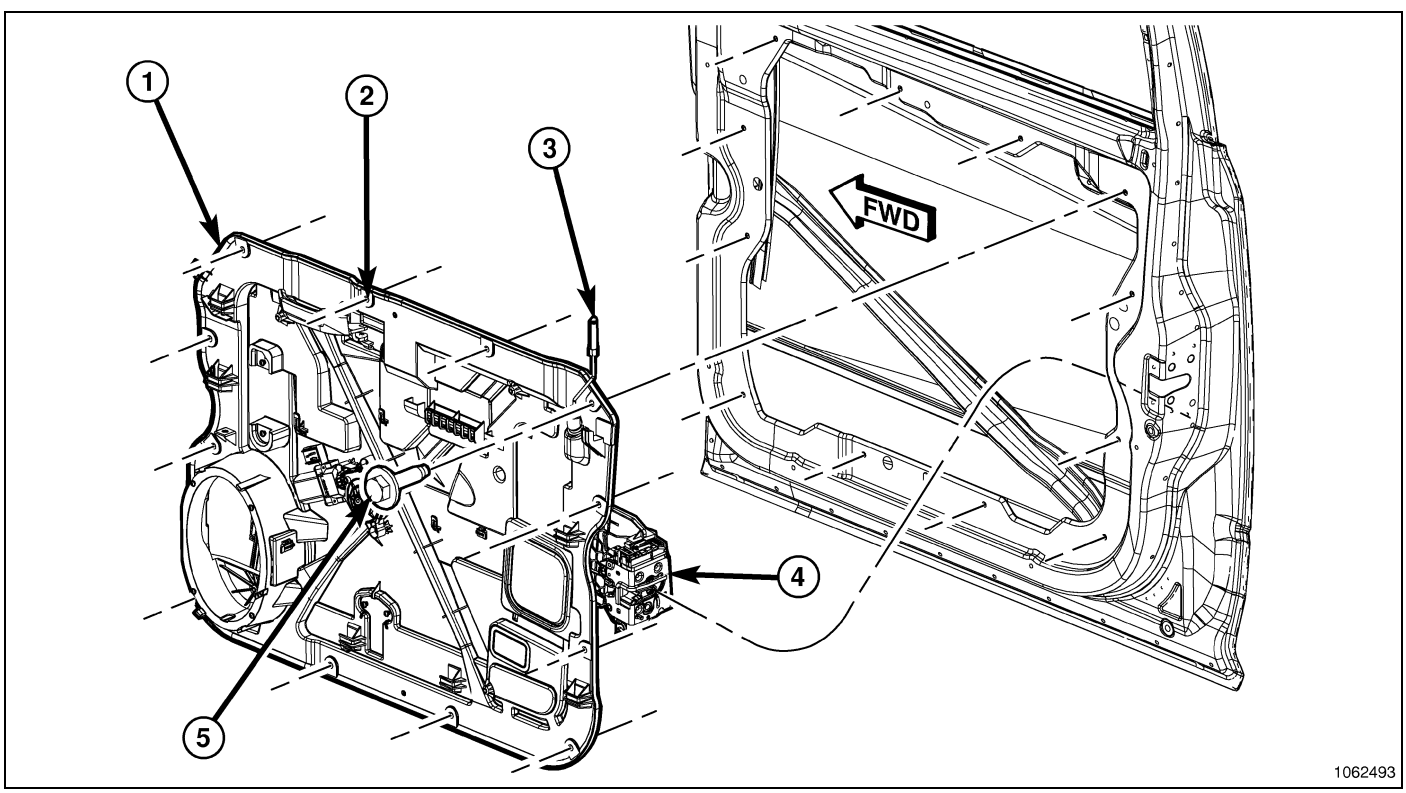

NOTE: On crew/club cab models perform the following steps.

4. Insert the carrier plate assembly (1) into door, latch (4) side first, and tip the regulator rails into place through the door opening.
5. Lift the carrier plate and seat the two locating pins into the locating holes.
6. Install the 12 bolts (5) and, moving clockwise starting at position (2), tighten the bolts in a clockwise direction to 5.5 N·m (49 in. lbs.).
7. Install the latch screws (3) and tighten to 7 N·m (62. in. lbs.)

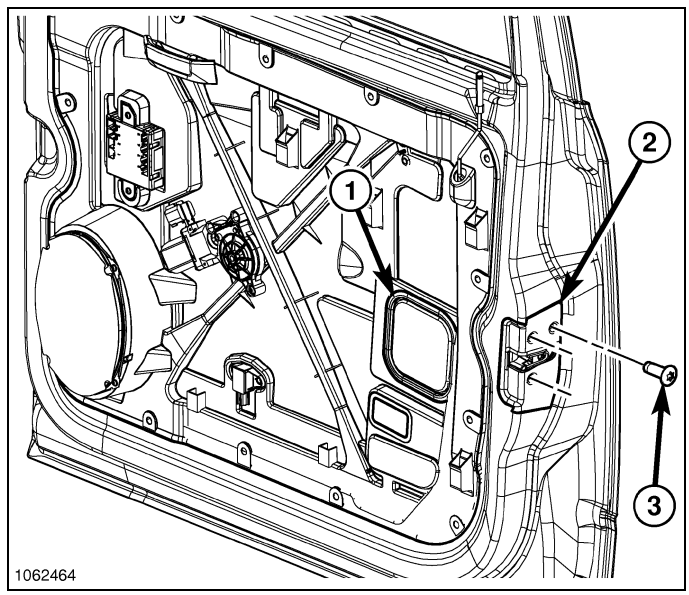

8. On standard cab models only, install the lower belt channel (2) shut face screw (1) and tighten to 8 N·m (71 in. lbs.).

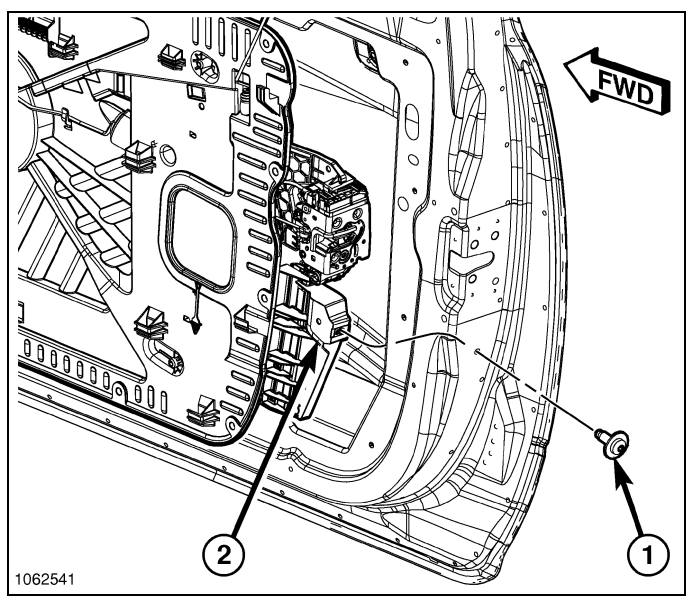

9. Install the wire harness (1) and install the screws (2).

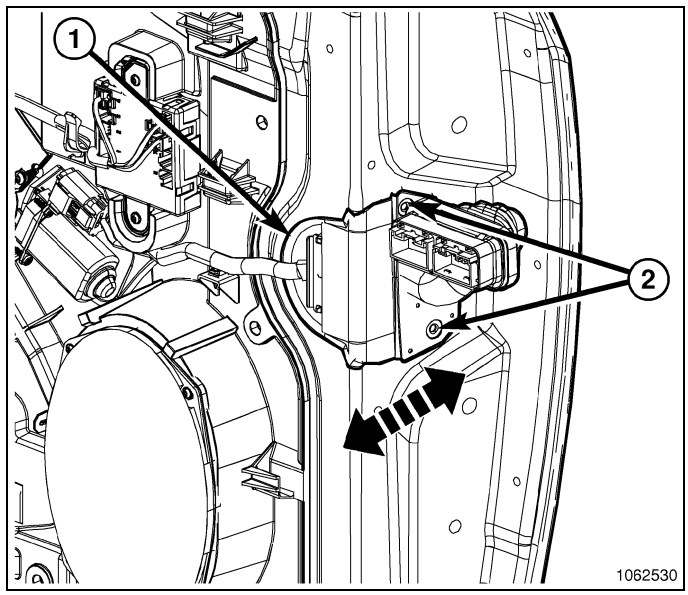

10. Connect the linkages (1) to the latch and secure the clips.

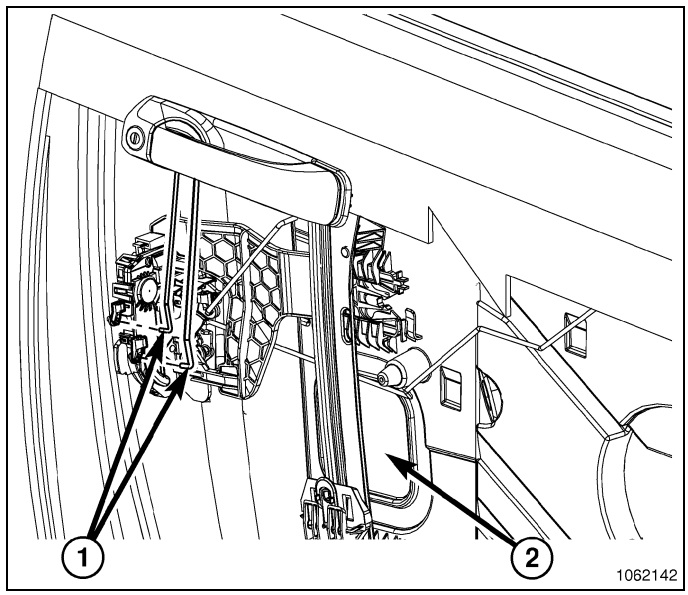

11. Pull the glass up evenly so front of glass can be verified it is seated into both glass run channels.
12. Push the glass down to seat the clips (2) into regulator liftplates (3 and 4) fully.
13. Pull up on the glass and make sure that it is secure.
14. Install the door speaker. (Refer to 08 - Electrical/8A - Audio and Video/SPEAKER - Installation)

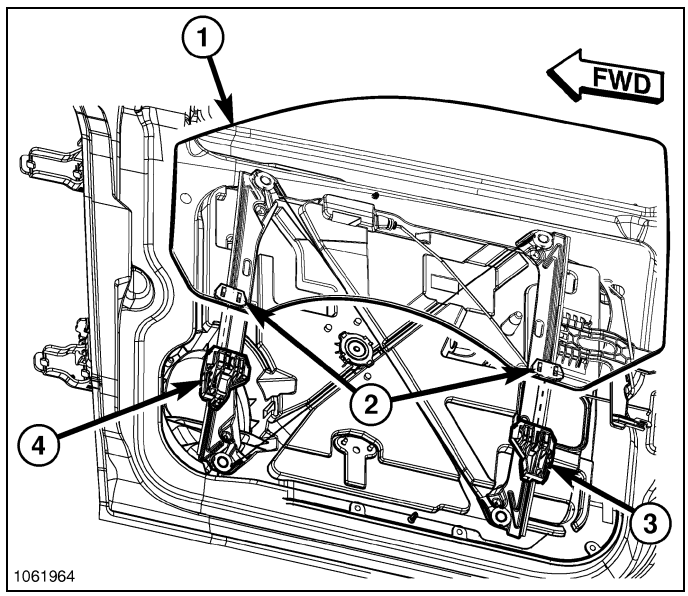

15. Install the door trim panel. (Refer to 23 - Body/Door - Front/PANEL, Door Trim - Installation)

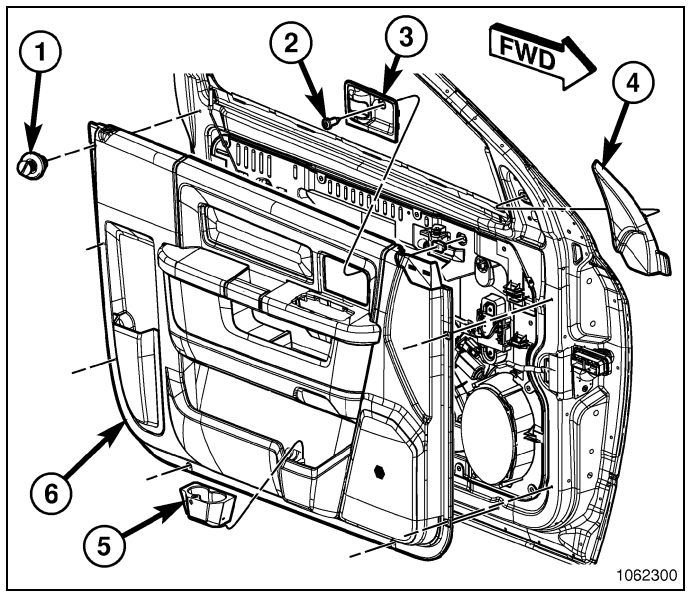

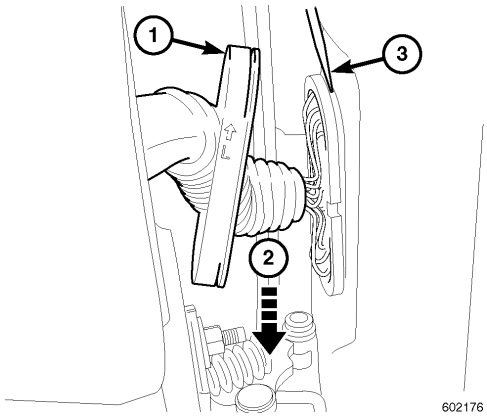

NOTE: The following illustration shows a typical door harness connector.

16. Connect the electrical connector and secure the grommet (1) back over the connector/retainer and seat the connector into the pillar fully.

REGULATOR, Window, Manual

Description

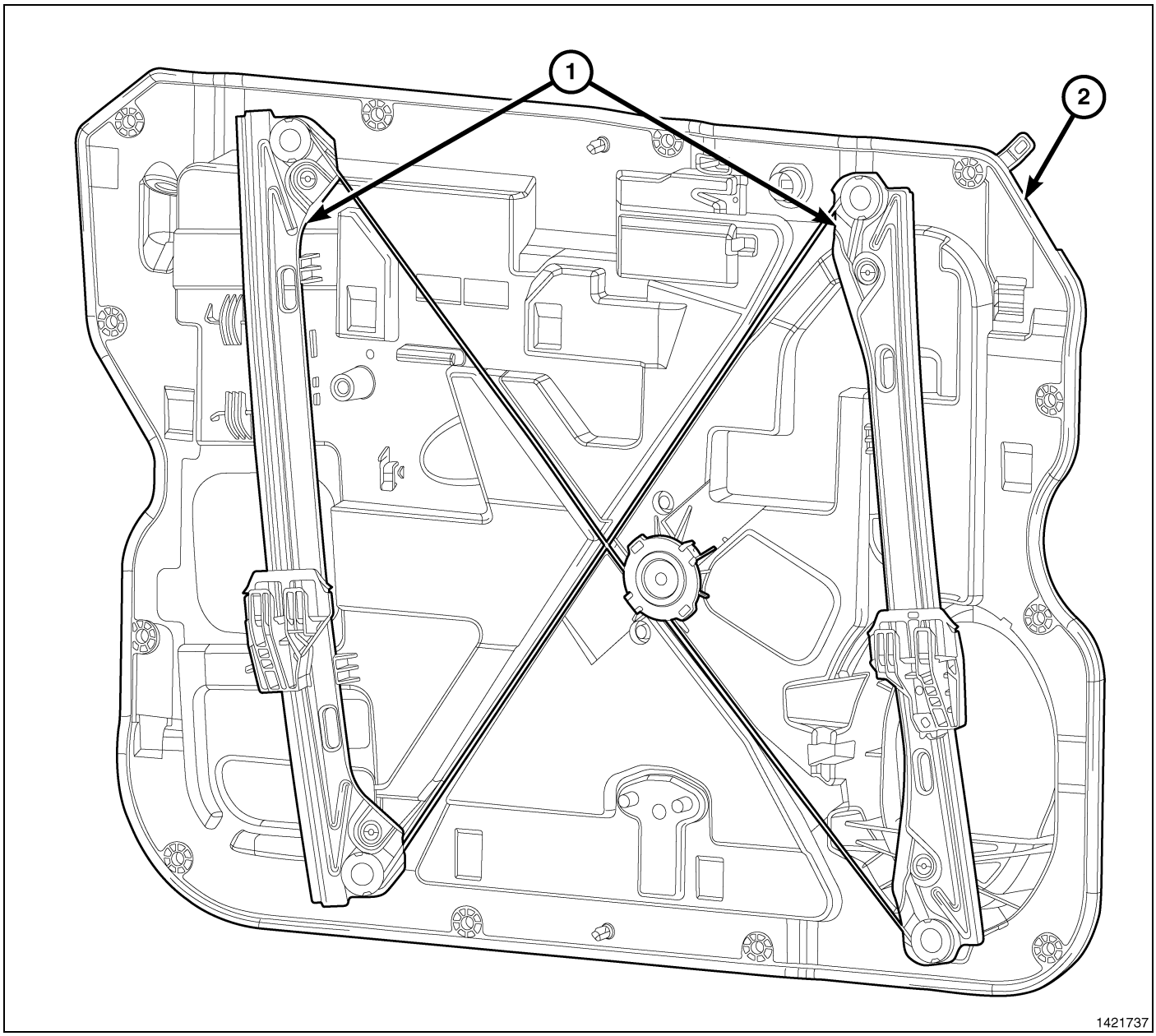

FRONT DOOR CARRIER PLATE SHOWN, REAR DOOR SIMILAR

The window regulators (1) are serviced as an assembly with the carrier plate (2) and include the following parts:

- glass bumpers
- lock grommets
- release rod grommet
- handle bumper
- service plug

(Refer to 23 - Body/Door - Front/PLATE, Carrier - Removal)

REGULATOR, Window, Power

Description

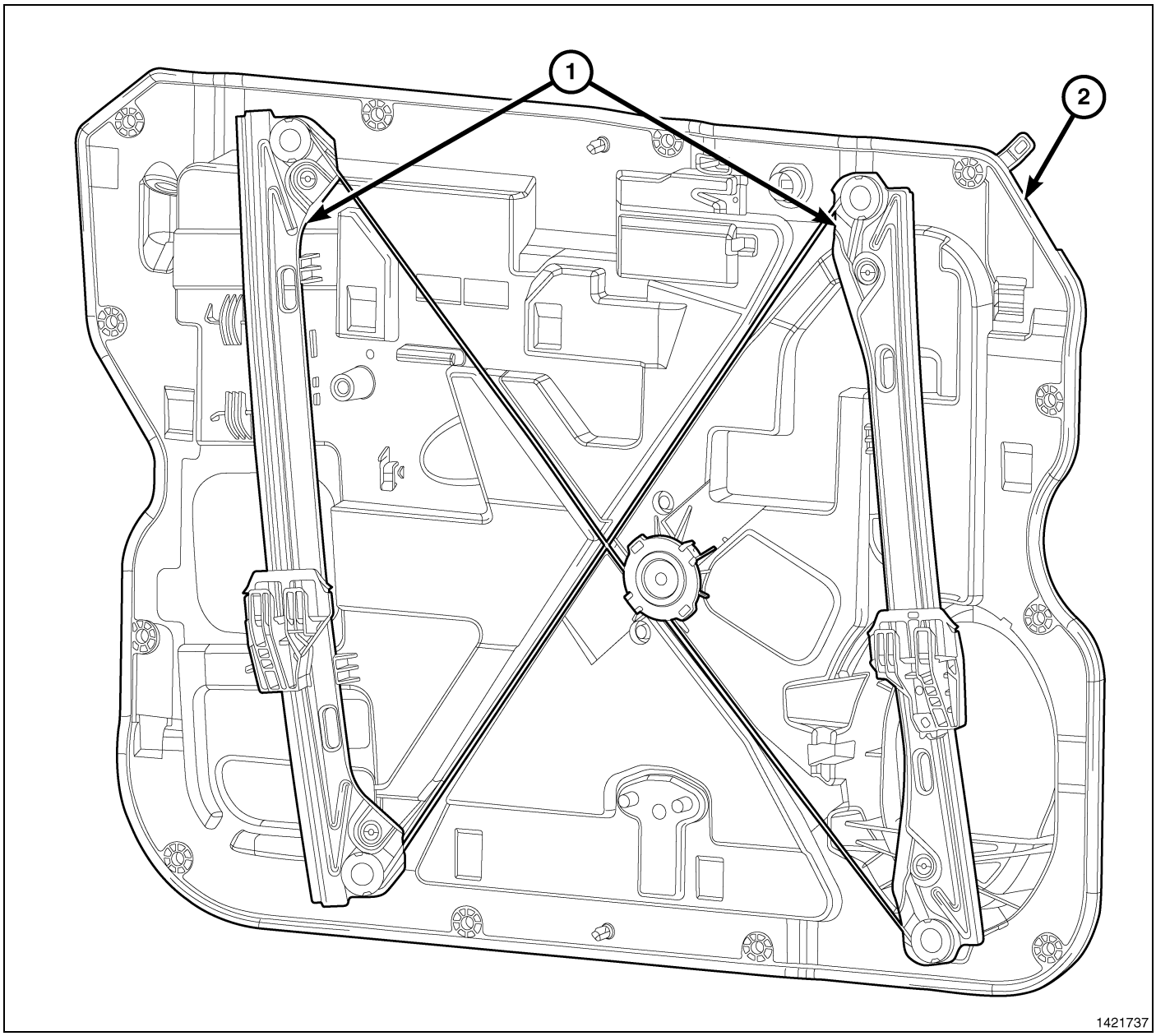

FRONT DOOR CARRIER PLATE SHOWN, REAR DOOR SIMILAR

The window regulators (1) are serviced as an assembly with the carrier plate (2) and include the following parts:

- glass bumpers
- lock grommets
- release rod grommet
- handle bumper
- service plug

(Refer to 23 - Body/Door - Front/PLATE, Carrier - Removal)

STRIKER, Door Latch

Removal

1. Using a grease pencil or equivalent, mark the location of the door latch striker (1) on the B-pillar (2).
2. Remove the two bolts (3) that secure the door latch striker to the B-pillar and remove the striker.

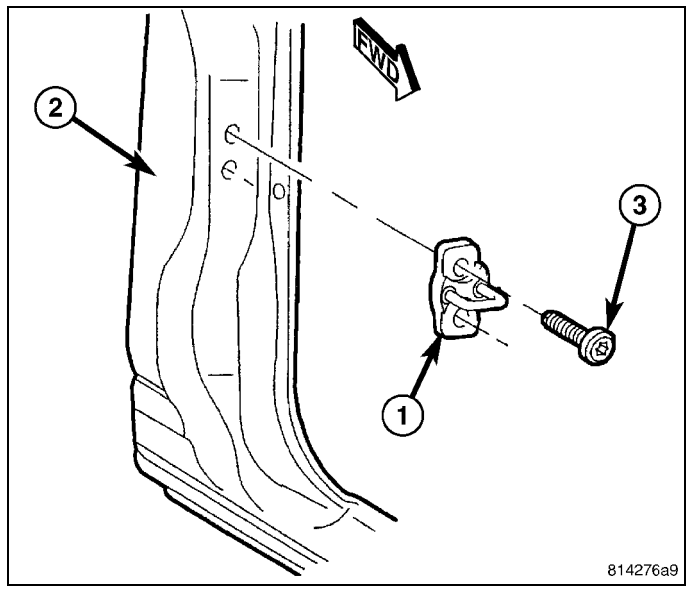

Installation

1. Position the door latch striker (1) onto the B-pillar (2) and loosely install the two bolts (3).
2. Align the door latch striker to the B-pillar using the reference marks made during the removal procedure and tighten the bolts to 30 N·m (22 ft. lbs.).
3. If necessary, adjust the door latch striker (Refer to 23 - Body/Door - Front/STRIKER, Door Latch - Adjustments).

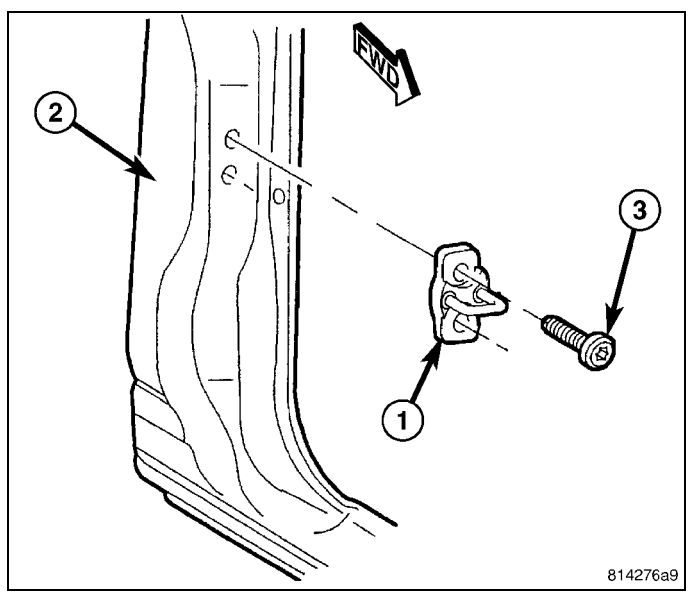

Adjustments

1. Using a grease pencil or equivalent, mark the location of the door latch striker (1) on the B-pillar (2) to aid in adjustment.
2. Loosen the two bolts (3) that secure the door latch striker to the B-pillar.
3. To adjust the rear gap and flush measurement, change the position of the door latch striker and then tighten the two bolts to 30 N·m (22 ft. lbs.) (Refer to 23 - Body/Body Structure/Gap and Flush - Specifications).
4. Verify correct door and latch position.

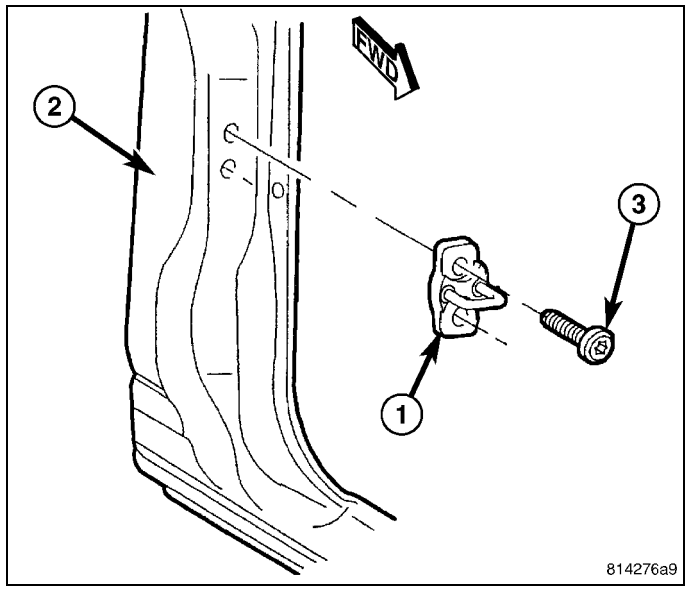

DOORS - REAR

TABLE OF CONTENTS

page

DOORS - REAR
- **DOOR, REAR**
  - REMOVAL 82
  - INSTALLATION 83
  - ADJUSTMENTS 83
- **GLASS, DOOR**
  - REMOVAL 88
  - INSTALLATION 89
- **HANDLE, INTERIOR**
  - REMOVAL 91
  - INSTALLATION 91
- **HANDLE, EXTERIOR**
  - REMOVAL 92
  - INSTALLATION 93
- **HINGE, DOOR**
  - STANDARD PROCEDURE 95
  - REMOVAL 95
  - INSTALLATION 96
- **LATCH, DOOR**
  - REMOVAL 97
  - INSTALLATION 98

page

- **MOLDING, DOOR BELT, INNER**
  - REMOVAL 98
  - INSTALLATION 99
- **MOLDING, DOOR BELT, OUTER**
  - REMOVAL 100
  - INSTALLATION 101
- **PANEL, REAR DOOR TRIM**
  - REMOVAL 101
  - INSTALLATION 103
- **PLATE, CARRIER**
  - REMOVAL 104
  - INSTALLATION 108
- **REGULATOR, WINDOW, MANUAL**
  - DESCRIPTION 113
- **REGULATOR, WINDOW, POWER**
  - DESCRIPTION 114
- **STRIKER, DOOR LATCH**
  - REMOVAL 115
  - INSTALLATION 115
  - ADJUSTMENTS 116

Doors - Rear

DOOR, Rear

Removal

1. Disconnect and isolate the negative battery cable.
2. Disconnect the door electrical connector, GROMMET - A PILLAR.

GROMMET - A PILLAR

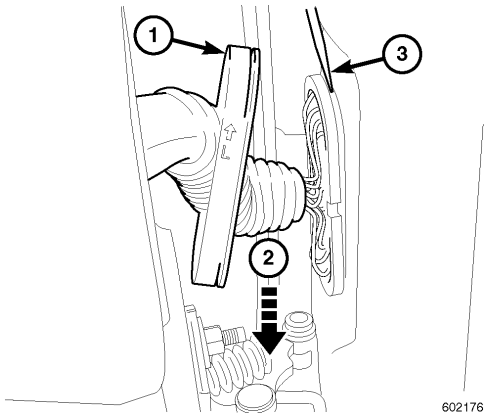

NOTE: The following illustration shows a typical door harness connector.

1. Peel the A Pillar grommet (1) off of the connector/retainer and move it up the wire harness.
2. Grasp the wire harness (2) by the convolute section of the grommet and gently pull the wire harness down towards the floor to expose the connector lock tabs.

CAUTION: Do not force the locking tab past the connector body, as damage to the connector may occur.

3. While still pulling down on the harness, use a small slotted screw driver (3) to **gently** push one of the top lock tabs until the lock feature is flush with the connector/retainer body.
4. Repeat the step 3 for the remaining top lock tab.
5. The connector should now be able to rock out of the sheet metal hole without causing any damage to the connector or sheet metal.
6. Using a grease pencil or equivalent, mark the location of the door hinges on the door (1).
7. Support the door with a suitable lifting device and remove the nuts (3) that secure the door to the hinges.
8. Carefully remove the door from the hinges.

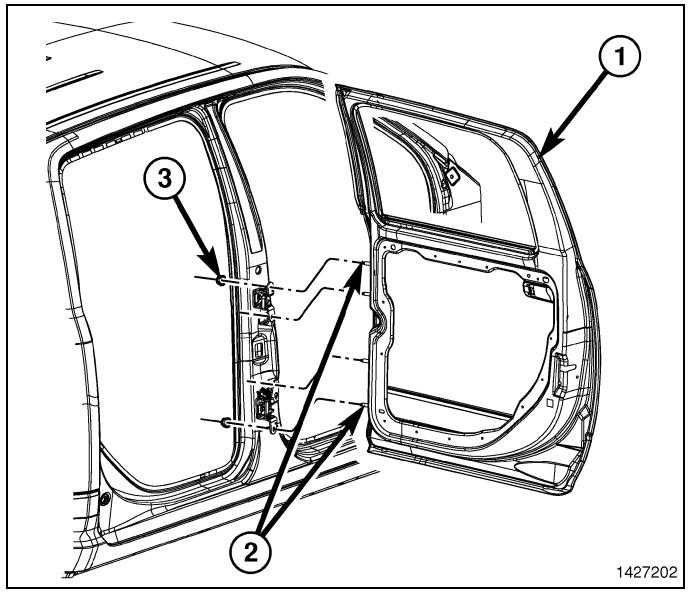

Installation

1. Carefully position the door studs (2) onto the hinges and support the door with a suitable lifting device.
2. Loosely install the nuts (3) and secure the door to the hinges.
3. Align the door to the hinges using the reference marks made during the removal procedure
4. Tighten the nuts to 22 N·m (16 ft. lbs.) using the following sequence;
   1. Tighten the upper nut of the top hinge.
   2. Tighten the lower nut of the bottom hinge.
   3. Tighten the upper nut of the bottom hinge.
   4. Tighten the lower nut of the top hinge.
5. Connect the door wire harness to the body wire harness.
6. Install the grommet over the connector and seat the connector into the A-pillar fully.
7. Reconnect the negative battery cable.
8. If necessary, adjust the door. (Refer to 23 - Body/Doors - Rear/DOOR, Rear - Adjustments)

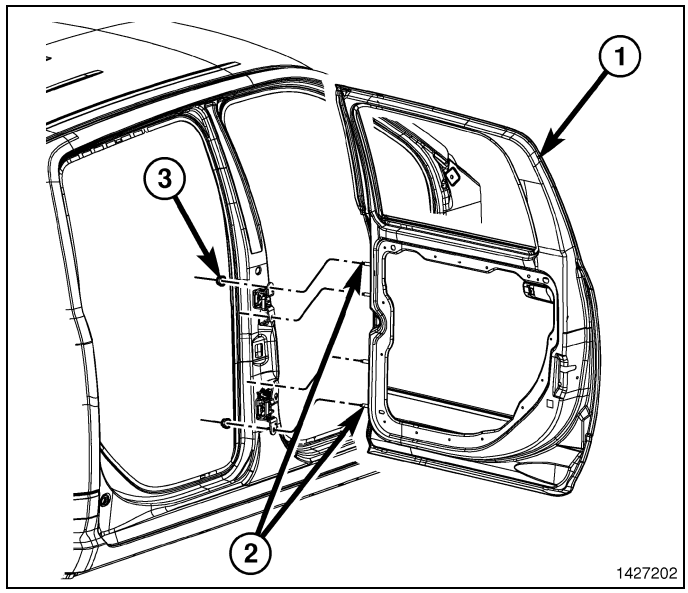

Adjustments

NOTE: For quad cab vehicles, it is recommended that you adjust the rear door before adjusting the front door.

- **Door adjustment measurements should be taken from stationary or welded body panels like the roof, rocker or quarter panels.**
- **During adjustment procedures, it is recommended that all the hinge fasteners be loosened except for the upper most fasteners. Adjustments can be made using the upper fasteners to hold the door with final torque of the fasteners occurring after correct door positioning is achieved.**
- **A suitable body sealant should be used when removing or moving the hinges.**

FORE/AFT

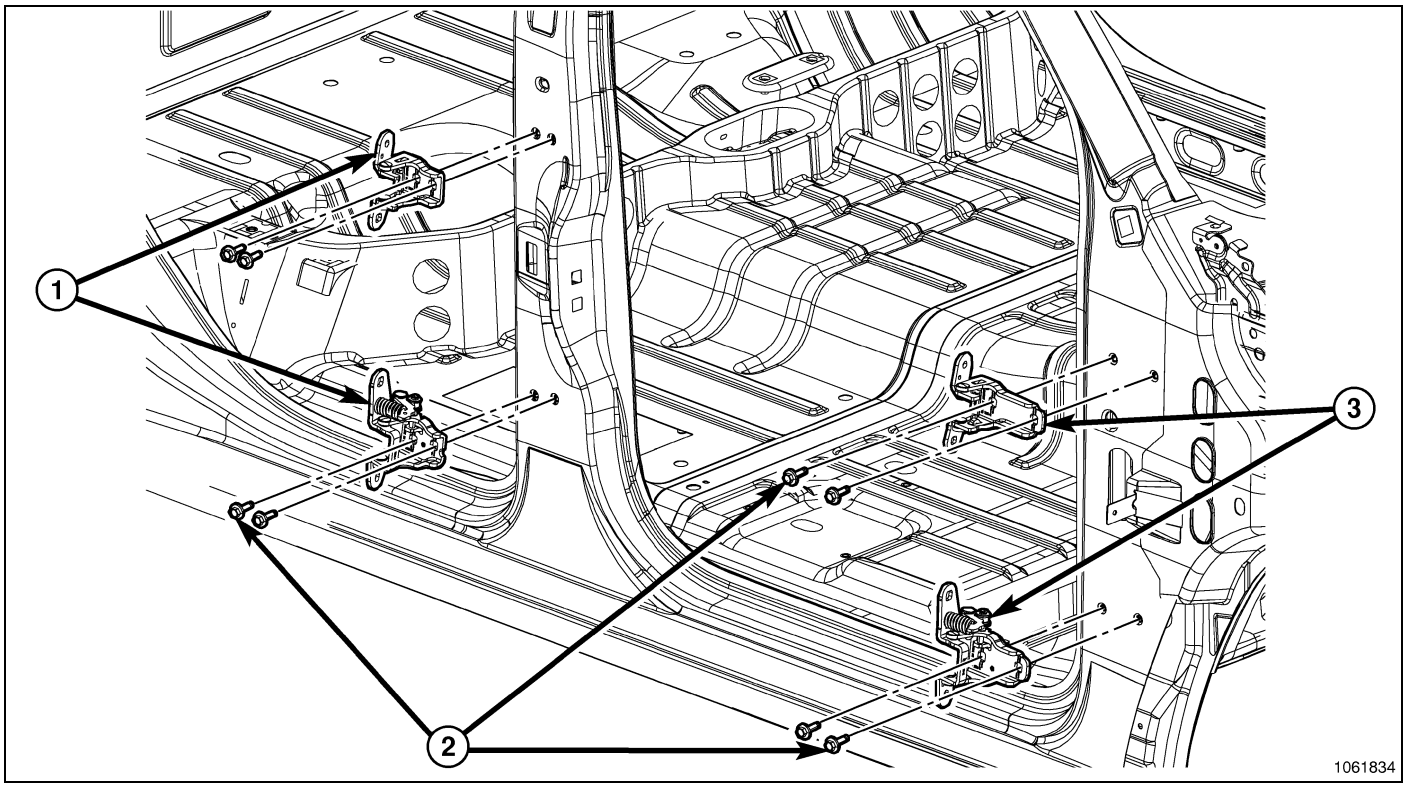

NOTE: Fore/aft (lateral) door adjustment is done by loosening the hinge to the hinge pillar fasteners one hinge at a time and moving the door to the correct position.

1. Support the door with a suitable lifting device.
2. Loosen the upper and lower (2) hinge to hinge pillar fasteners.(Refer to 23 - Body/Doors - Rear/HINGE, Door - Removal)
3. Adjust the door to the correct position. (Refer to 23 - Body/Body Structure/Gap and Flush - Specifications)
4. Tighten the remaining hinge to hinge pillar bolts (2) to 24 N·m (18 ft. lbs.).

UP/DOWN

NOTE: Up/down door adjustment is done by loosening either the hinge to the hinge pillar fasteners or the hinge to door fasteners and moving the door to the correct position.

NOTE: When the up/down adjustments are done correctly, the top of the door is positioned over flush to the roof. (Refer to 23 - Body/Body Structure/Gap and Flush - Specifications)

1. Support the door with a suitable lifting device.
2. Remove the latch striker (1). (Refer to 23 - Body/Doors - Rear/STRIKER, Door Latch - Removal)

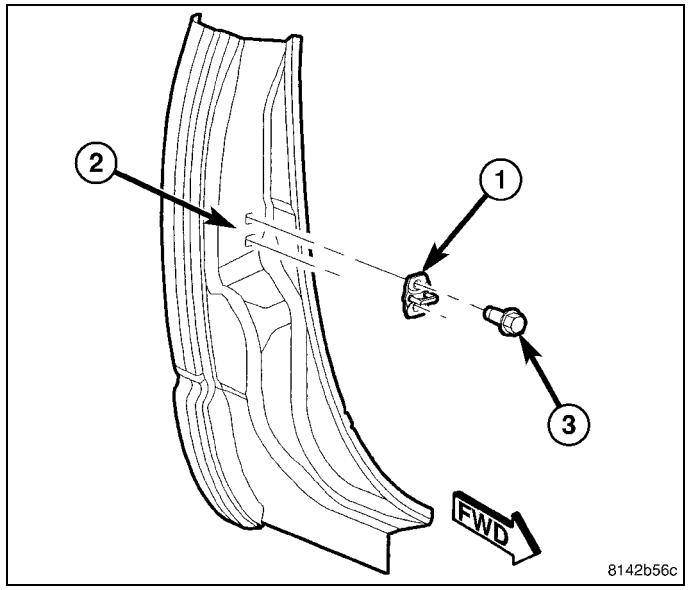

3. If necessary, loosen the hinge to door fasteners (3). (Refer to 23 - Body/Doors - Rear/HINGE, Door - Removal)

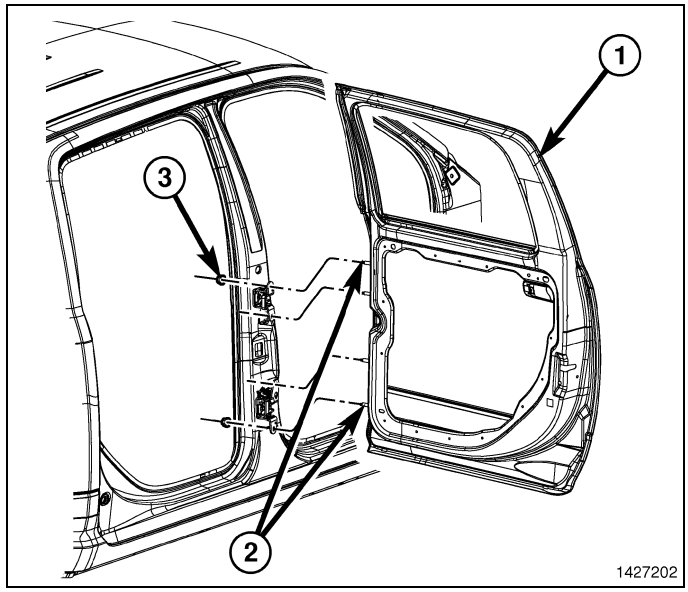

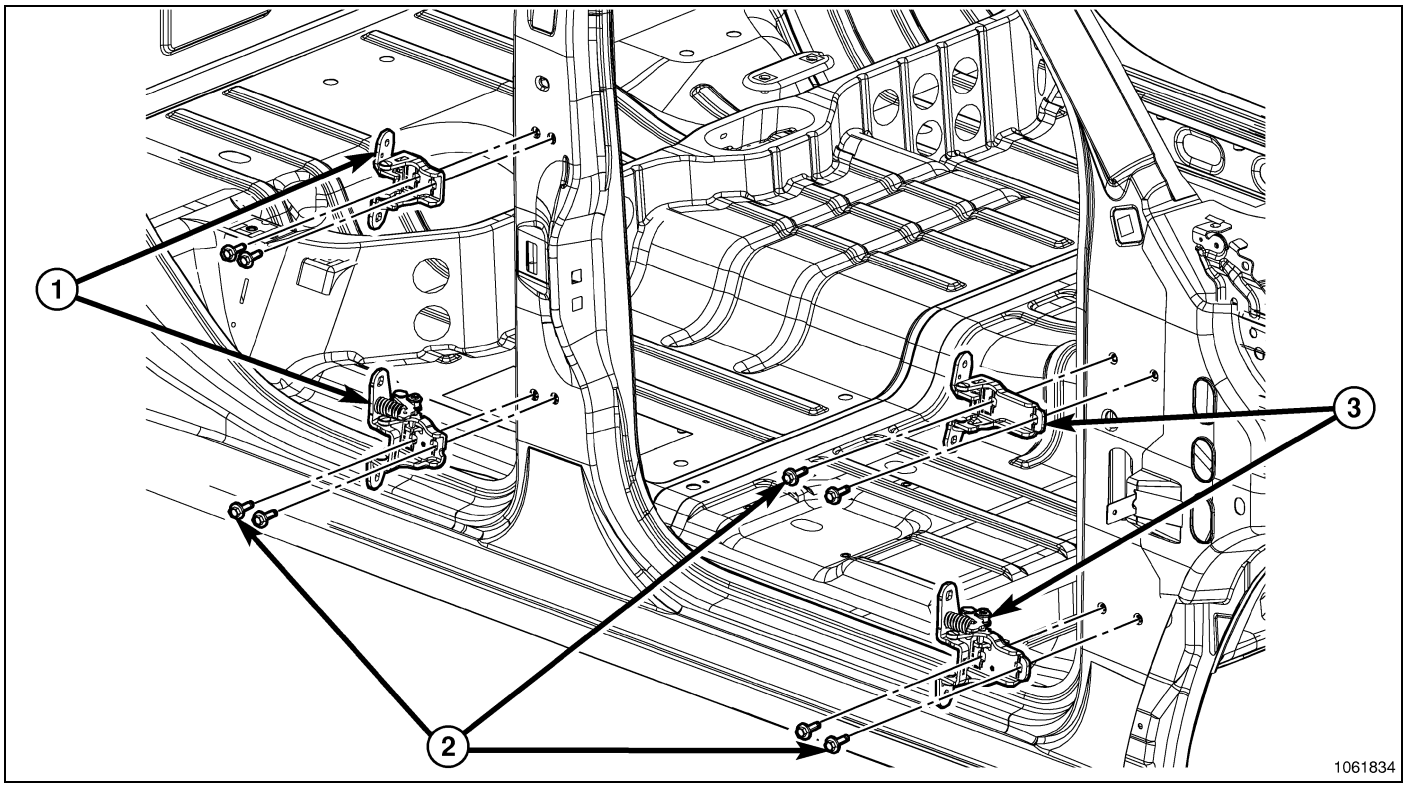

4. If necessary, loosen the hinge to hinge pillar fasteners (2).(Refer to 23 - Body/Doors - Rear/DOOR, Rear - Removal)
5. Adjust the door to the correct position. (Refer to 23 - Body/Body Structure/Gap and Flush - Specifications)
6. Tighten the door to hinges fasteners to 22 N·m (16 ft. lbs.)

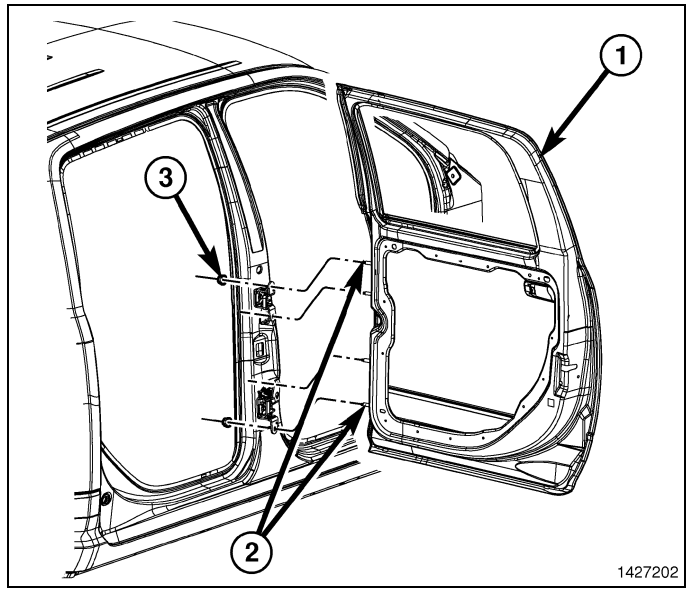

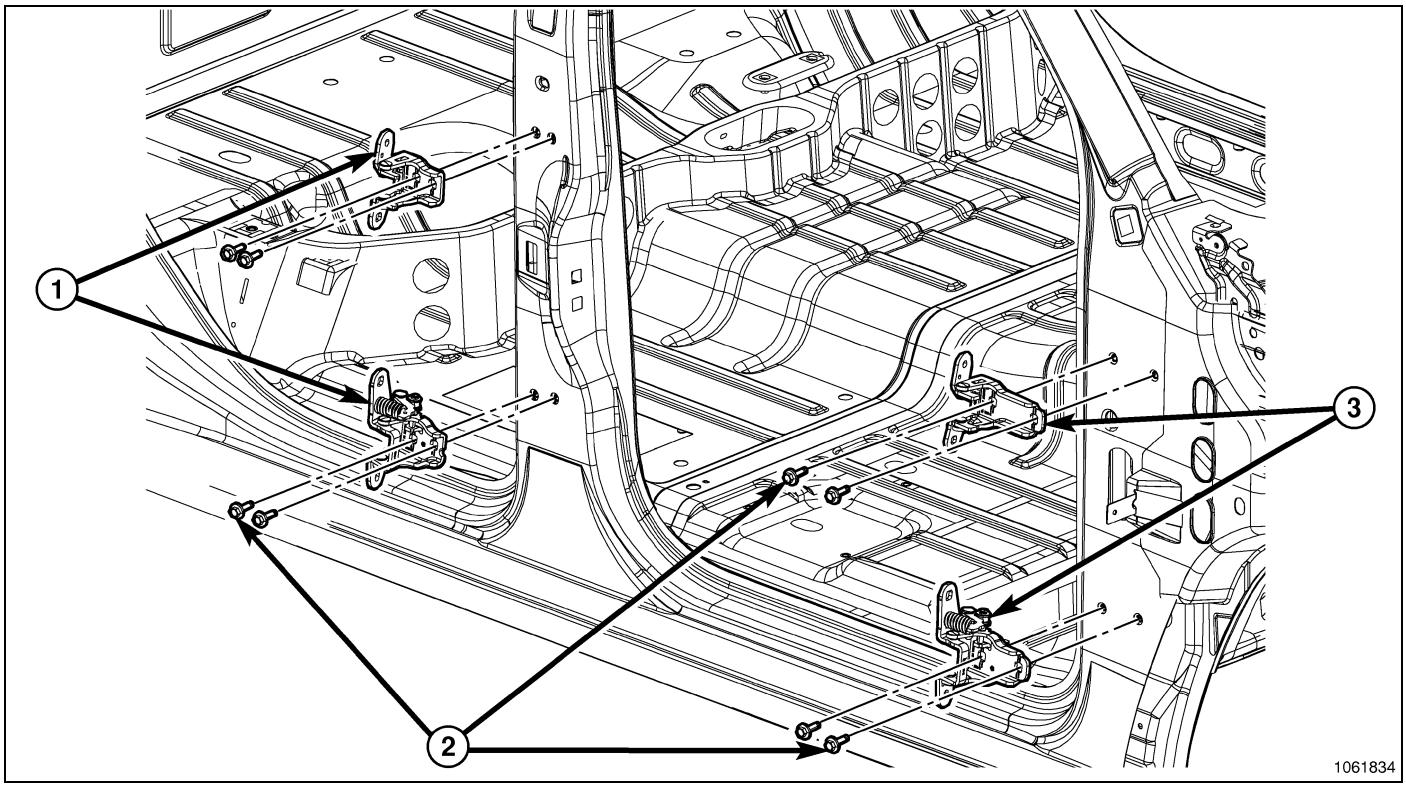

7. Tighten the hinge to hinge pillar bolts (2) to 24 N·m (18 ft. lbs.).
8. Install the latch striker. (Refer to 23 - Body/Doors - Rear/STRIKER, Door Latch - Installation)

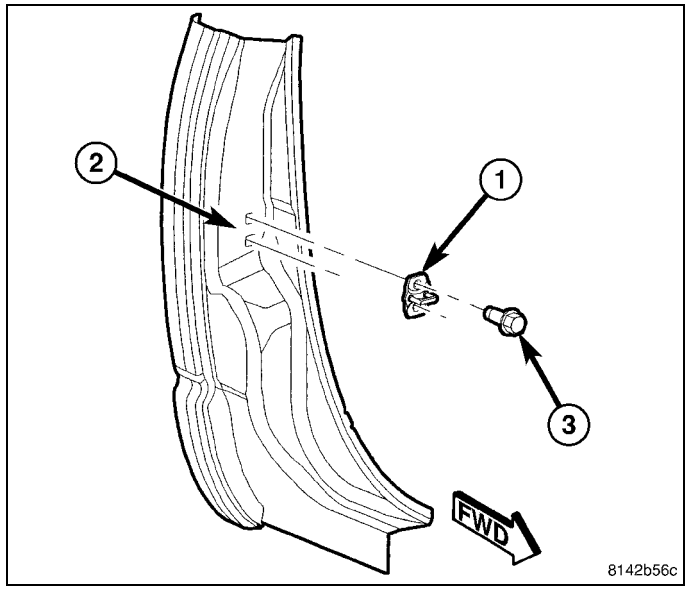

IN/OUT

NOTE: In/out door adjustment is done by loosening the hinge to door fasteners one hinge at a time and moving the door to the correct position.

NOTE: When adjustment of the door requires the loosening of the door to hinge fasteners, it will be necessary to separate the epoxy bonded washers with a chisel or other suitable tool.

1. Support the door with a suitable lifting device.
2. Remove the latch striker. (Refer to 23 - Body/Doors - Rear/STRIKER, Door Latch - Removal)

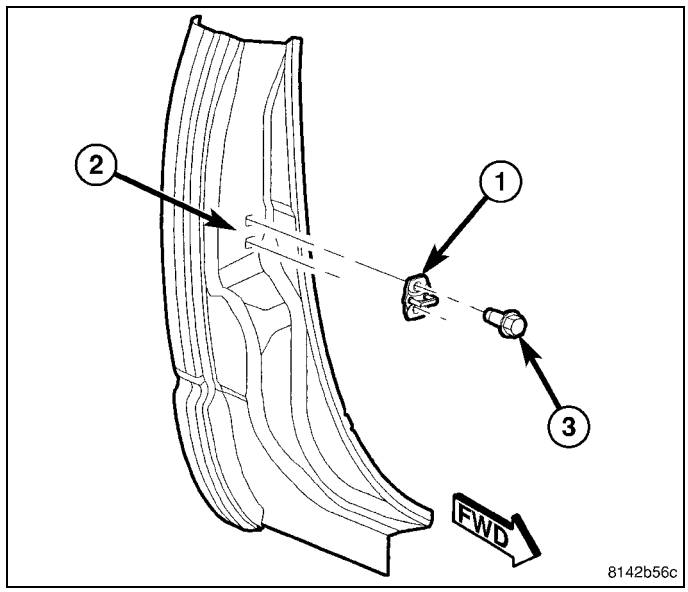

3. Loosen the hinge to door fasteners (3). (Refer to 23 - Body/Doors - Rear/DOOR, Rear - Removal)
4. Adjust the front of the door to the correct position. (Refer to 23 - Body/Body Structure/Gap and Flush - Specifications)
5. Tighten the door to hinges fasteners to 22 N·m (16 ft. lbs.).

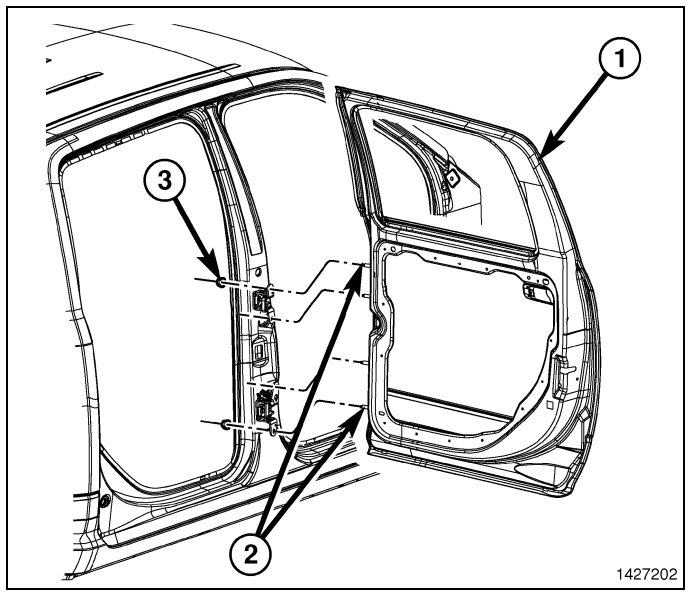

6. Install the latch striker (1). (Refer to 23 - Body/Doors - Rear/STRIKER, Door Latch - Installation)

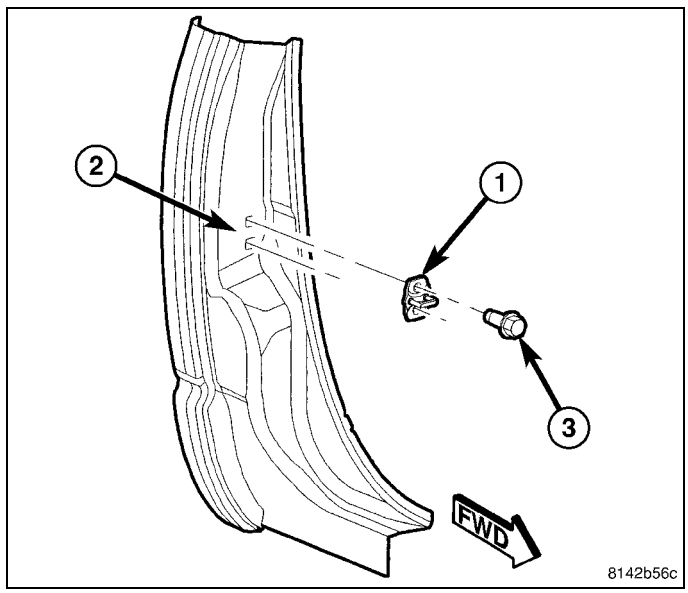

GLASS, Door

Removal

1. Remove the carrier plate (3). (Refer to 23 - Body/Doors - Rear/PLATE, Carrier - Removal)

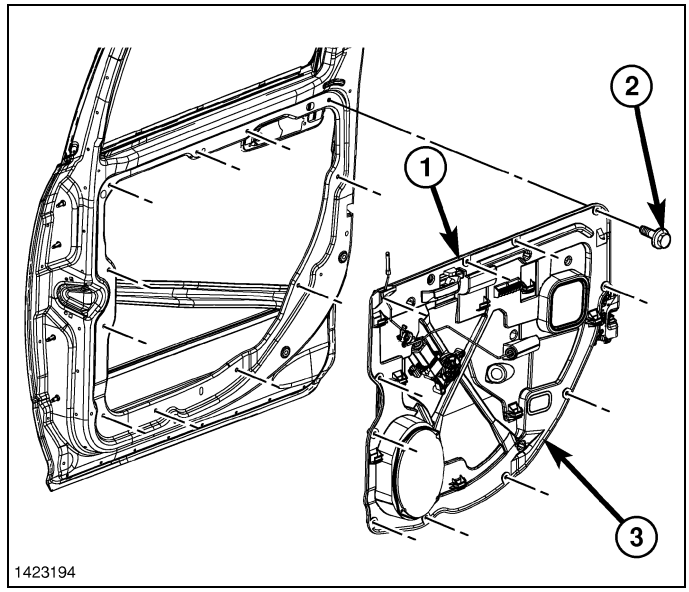

2. Lower the glass (1) and remove from the lower door opening.

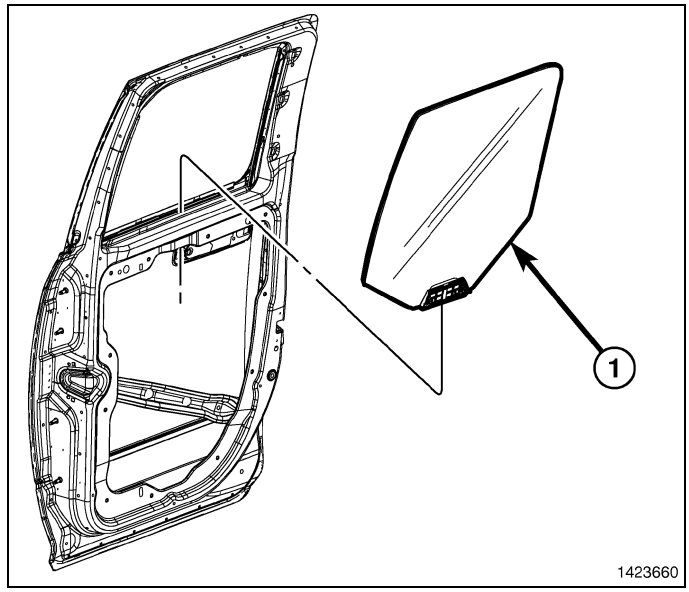

3. If necessary, remove the glass clips (3 - 4) from the glass.

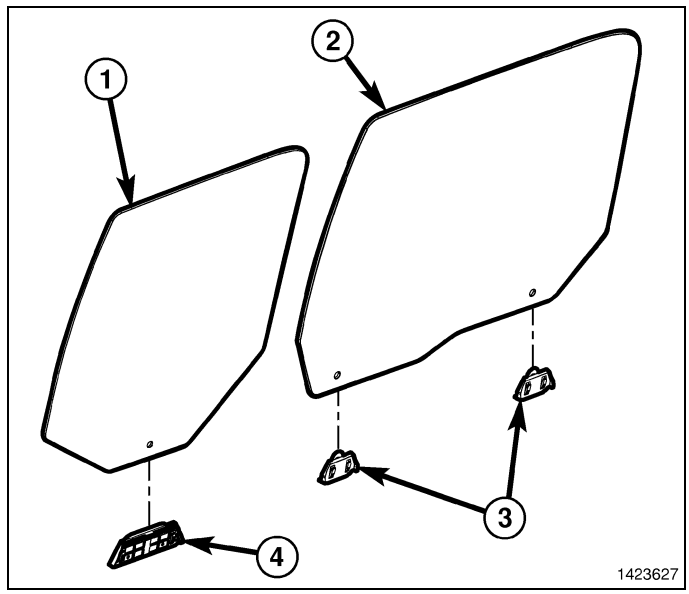

Installation

1. Install the mounting clips (3 - 4) onto the glass, if necessary.

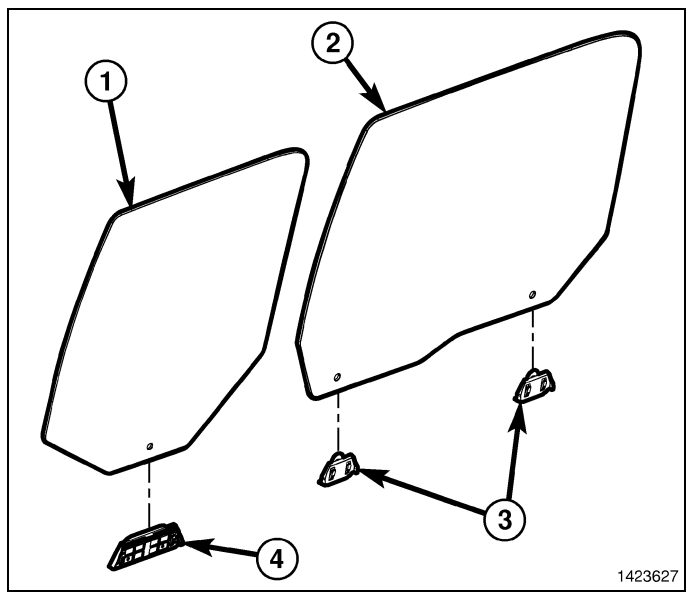

2. Install the glass (1) into the door through the lower door opening and secure in the full up position using tape or equivalient.

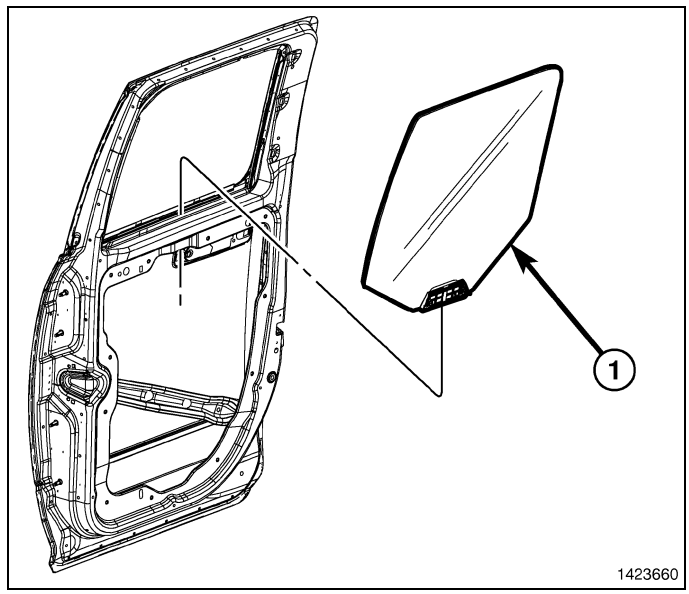

3. Install the carrier plate (3). (Refer to 23 - Body/Doors - Rear/PLATE, Carrier - Installation)

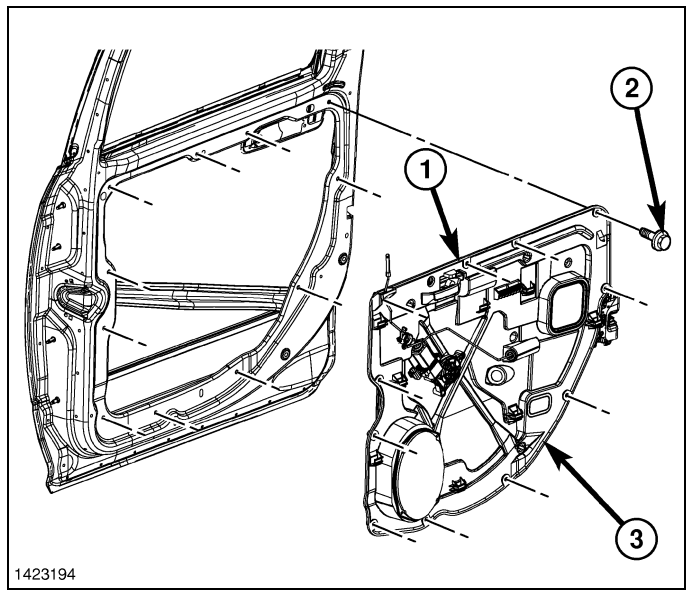

HANDLE, Interior

Removal

NOTE: Front door shown, rear door similar.

1. Remove the door trim panel.
2. Remove the handle mounting screw (1).
3. Disconnect the control rod (3) from the handle (2).
4. Remove the handle from the door.

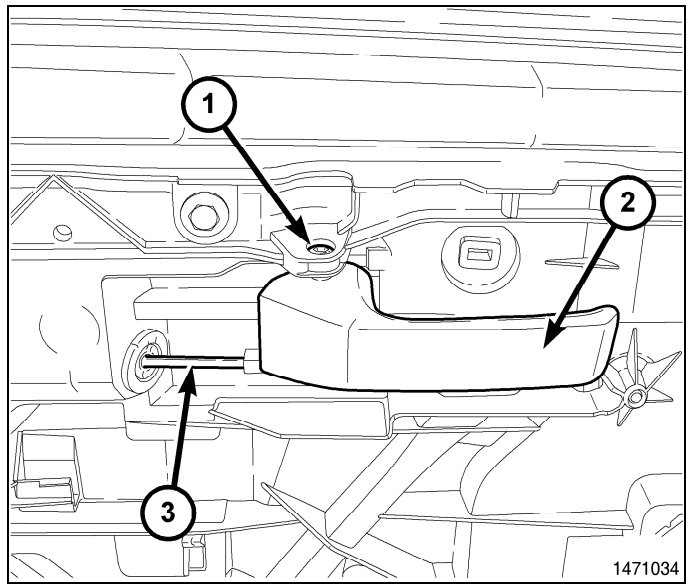

Installation

NOTE: Front door shown, rear door similar.

1. Place the handle (2) into position at the door.
2. Connect the control rod (3) to the handle.
3. Install the handle mounting screw (1).
4. Install the door trim panel.

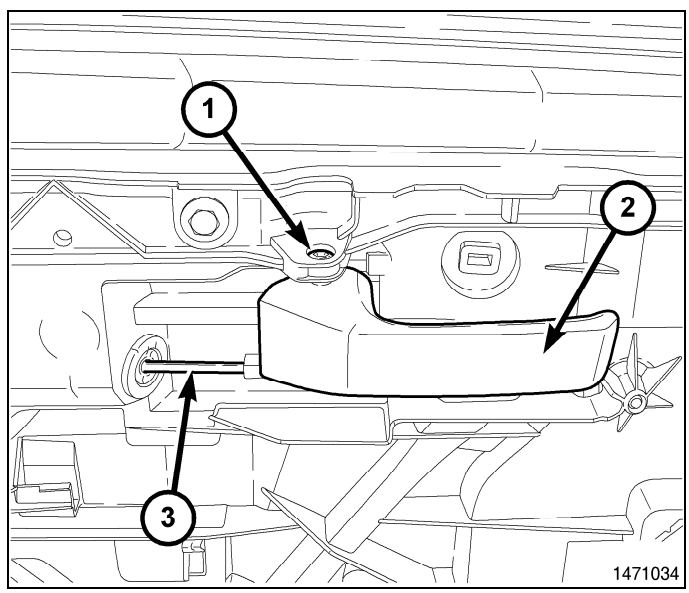

HANDLE, Exterior

Removal

1. Remove the carrier plate (3). (Refer to 23 - Body/Doors - Rear/PLATE, Carrier - Removal)

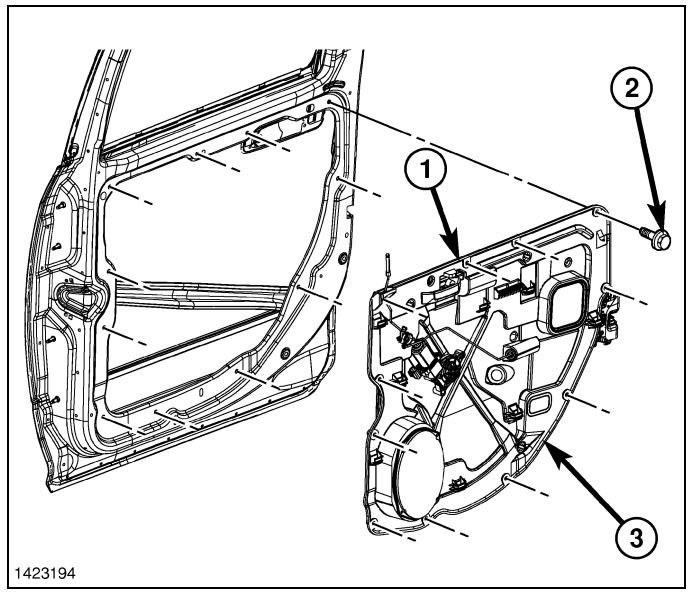

2. Remove the bolts (1) and remove the exterior handle (2) from the door.

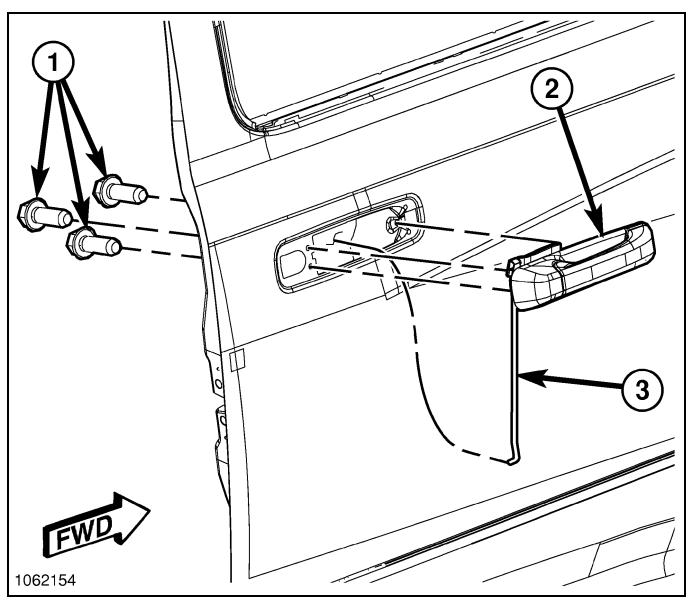

3. Release the clips (1) and disconnect the linkage (2) from the handle.

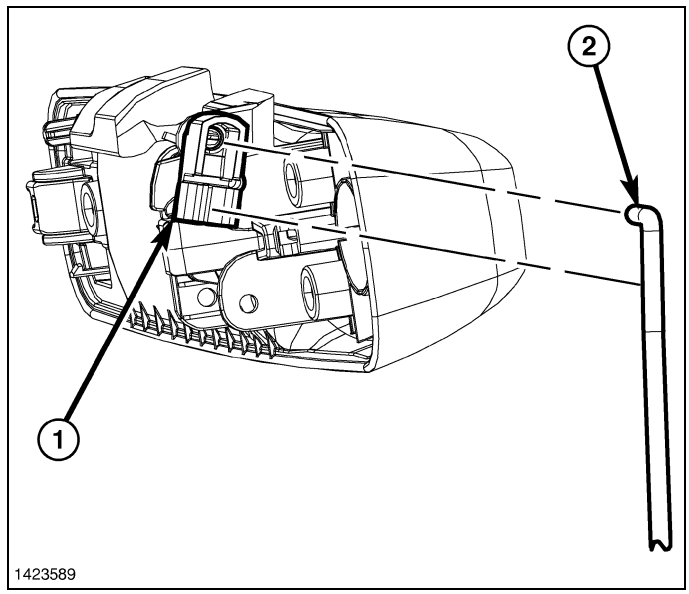

Installation

1. Install the linkage (2) onto the door handle and secure the clips (1).

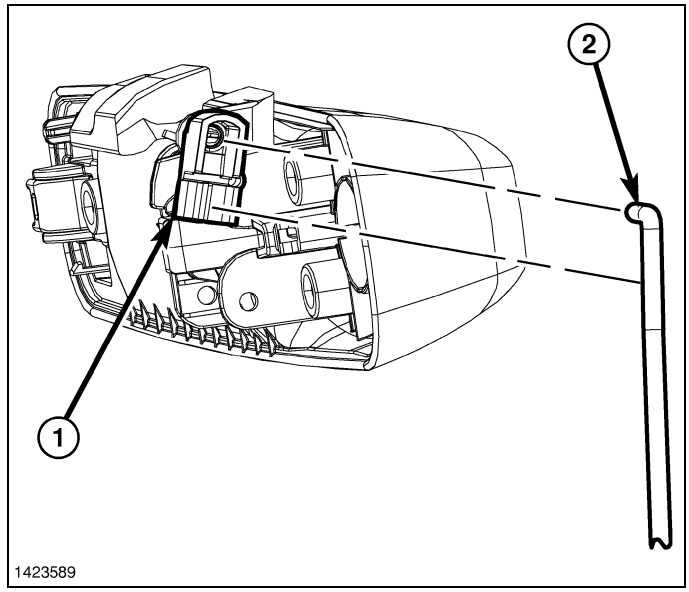

NOTE: Front door shown, rear doors are similar.

2. Position the linkages (3) into the door and install the handle (2).
3. Install the bolts (1) and tighten to 7 N·m (62 in. lbs.)

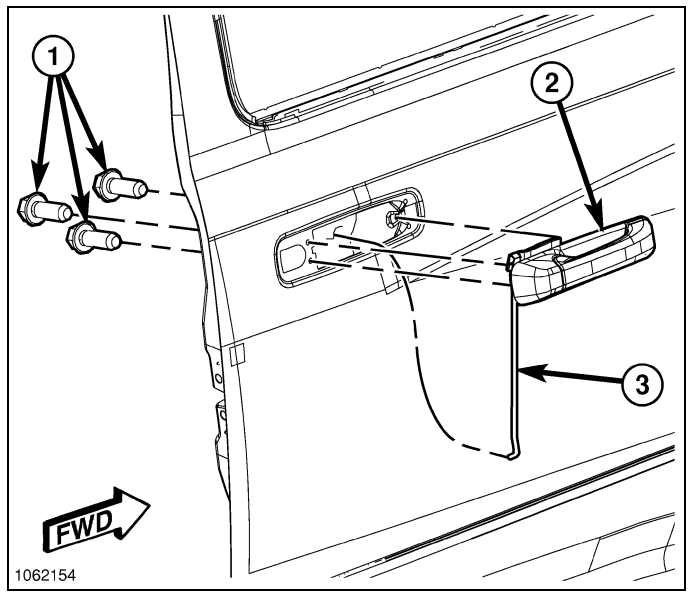

4. Install the carrier plate (3). (Refer to 23 - Body/Doors - Rear/PLATE, Carrier - Installation)

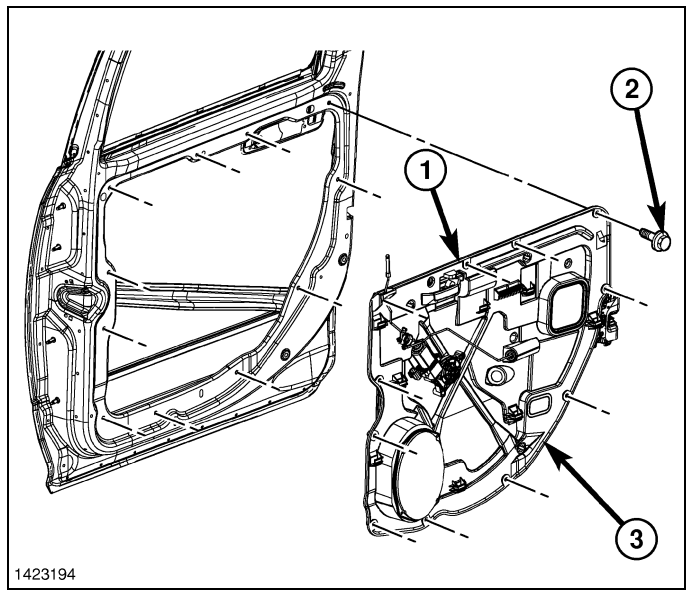

HINGE, Door

Standard Procedure

CAUTION: Door hinge pivot points (1) including the roller (3) and detent lever (2), should be lubricated periodically using Mopar ® Spray White Lube with Lithium or equivalent.

1. Spray parts as necessary using Mopar ® Spray White Lube W/Lithium or equivalent.
2. Remove any excess grease.

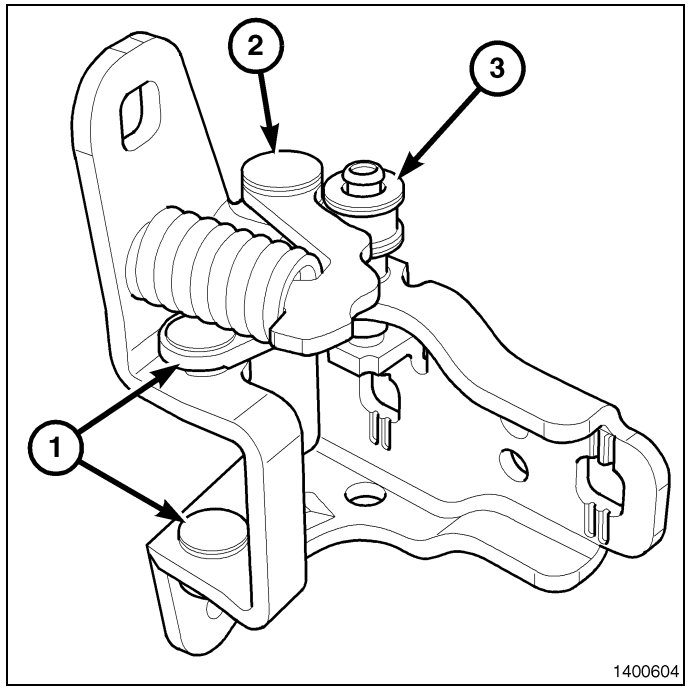

Removal

NOTE: It is not necessary to remove the door to replace the hinges if they are replaced one at a time.

NOTE: A suitable body sealant should be used when removing or moving the hinges.

1. Open the front door
2. Using a grease pencil or equivalent, mark the position of the hinge on the door and B-pillar.
3. Remove the nuts (3) attaching the hinge to the door (1).

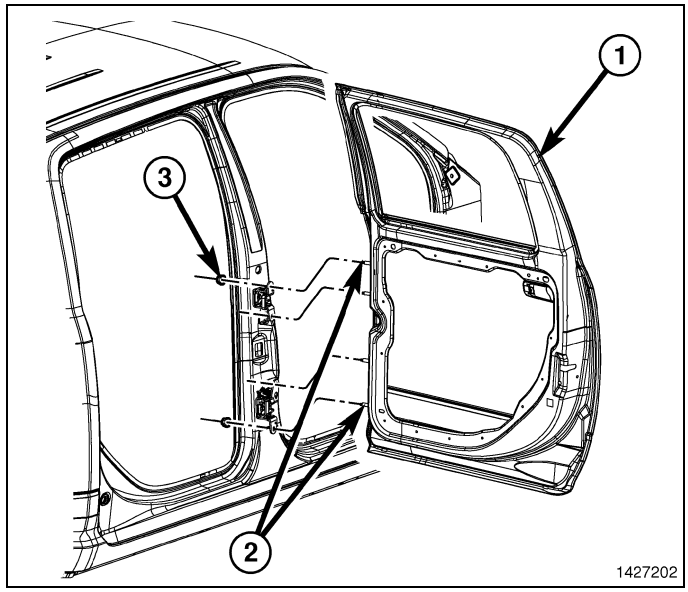

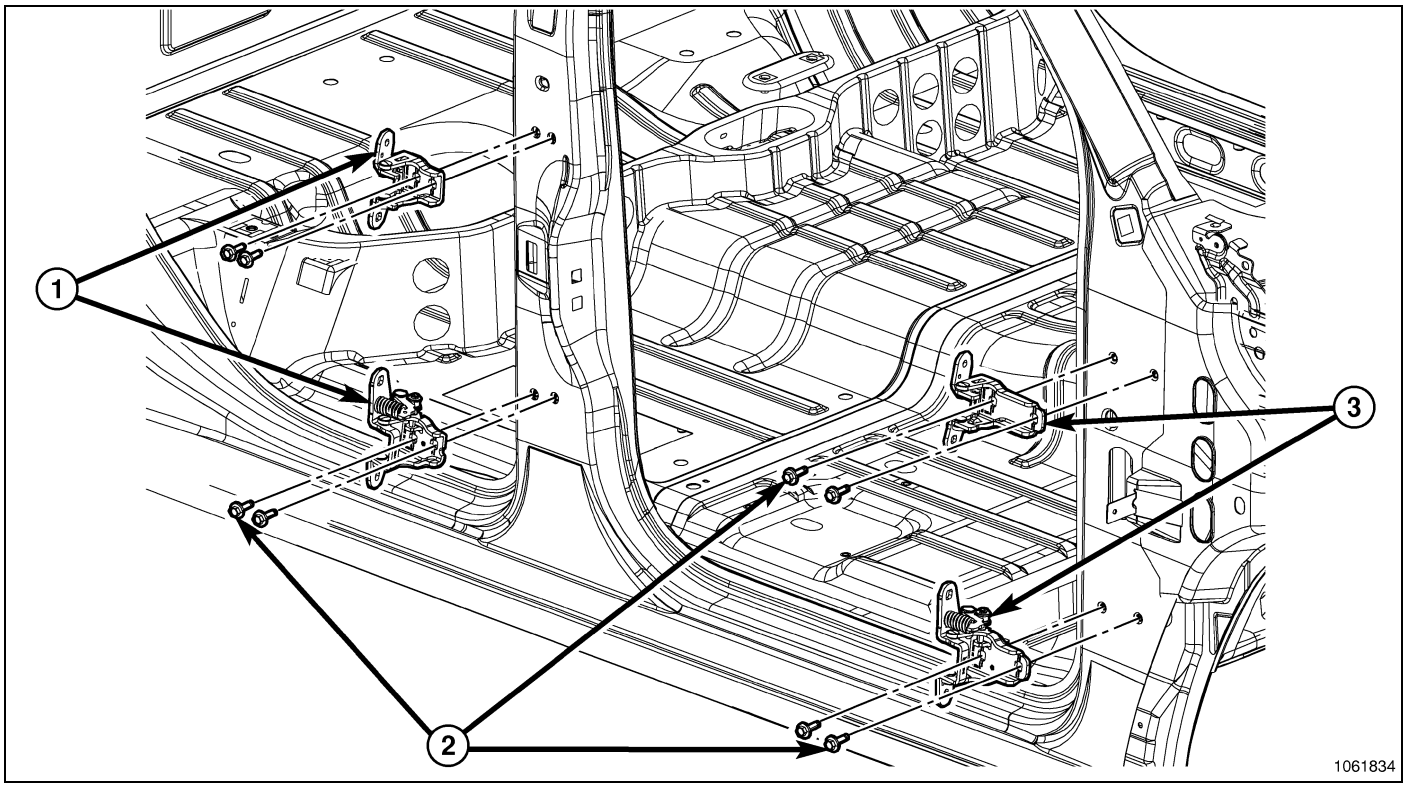

4. Remove the bolts (2) attaching the hinge (1) to the B-pillar and remove the hinge.

Installation

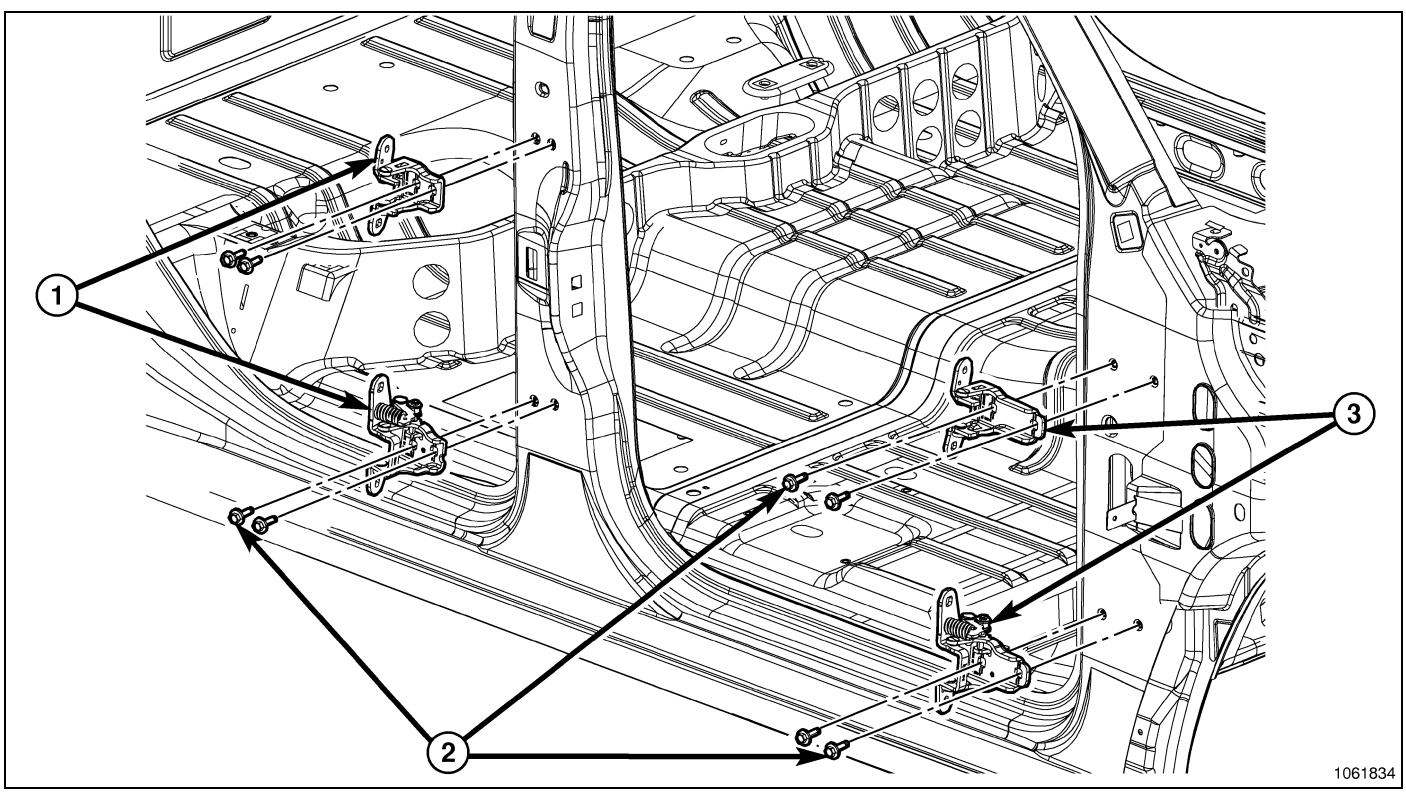

NOTE: A suitable body sealant should be used when removing or moving the hinges.

1. Install the hinge (1) and install the B-pillar bolts (2).
2. Tighten the bolts to 24 N·m (18 ft. lbs.).

3. Position rear door assy studs (2), through appropriate holes in hinge assy.

NOTE: The shoulders of the studs (2) must be fully engaged into hinges, prior to securing.

4. Install the nuts and tighten to 22 N·m (16 ft. lbs.).
5. Adjust the door if needed. (Refer to 23 - Body/Doors - Rear/DOOR, Rear - Adjustments)

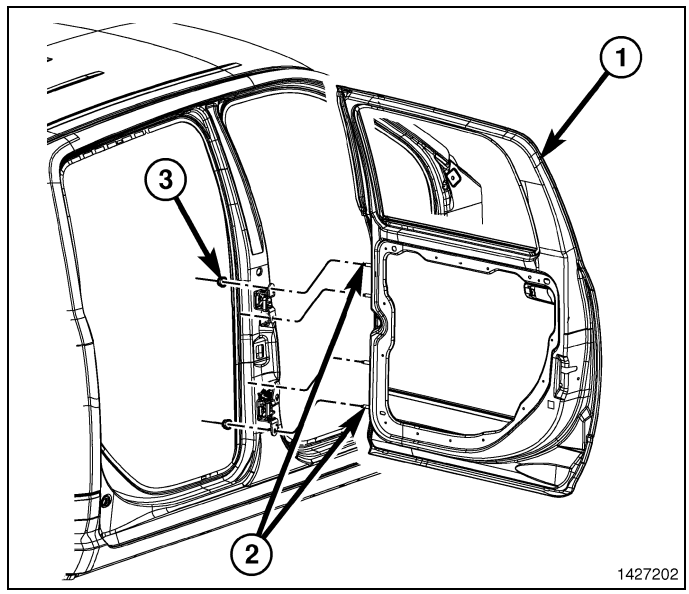

LATCH, Door

Removal

1. Remove the carrier plate (1). (Refer to 23 - Body/Doors - Rear/PLATE, Carrier - Removal)
2. Disconnect the door wire harness connector from the door latch (4).
3. Seperate the latch assembly from the latch presenter bracket and remove.

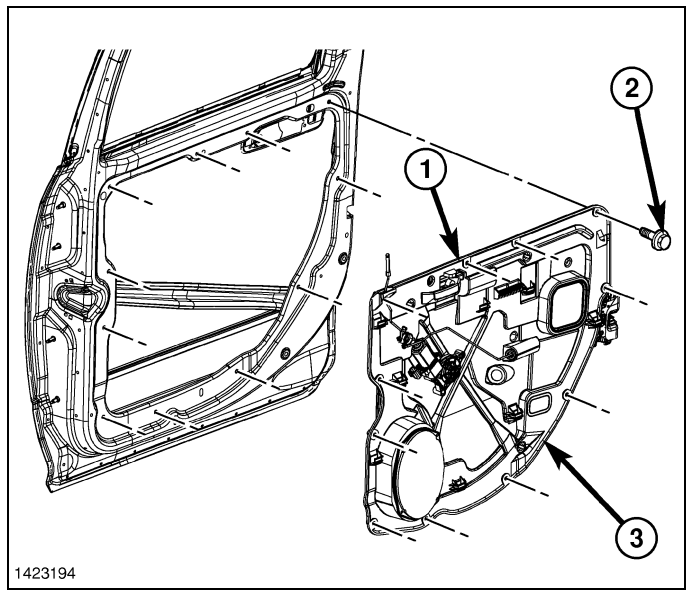

Installation

1. Seat the latch onto the presenter bracket fully.
2. Connect the electrical connector.
3. Install the carrier plate (1). (Refer to 23 - Body/Doors - Rear/PLATE, Carrier - Installation)

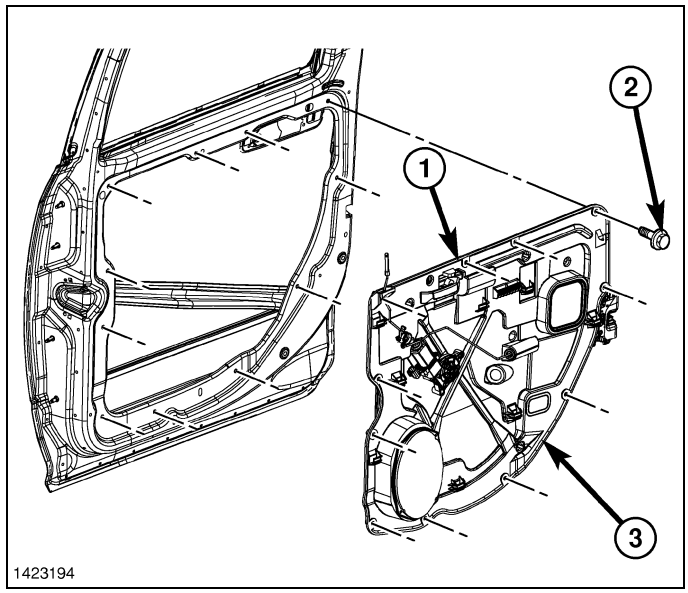

MOLDING, Door Belt, Inner

Removal

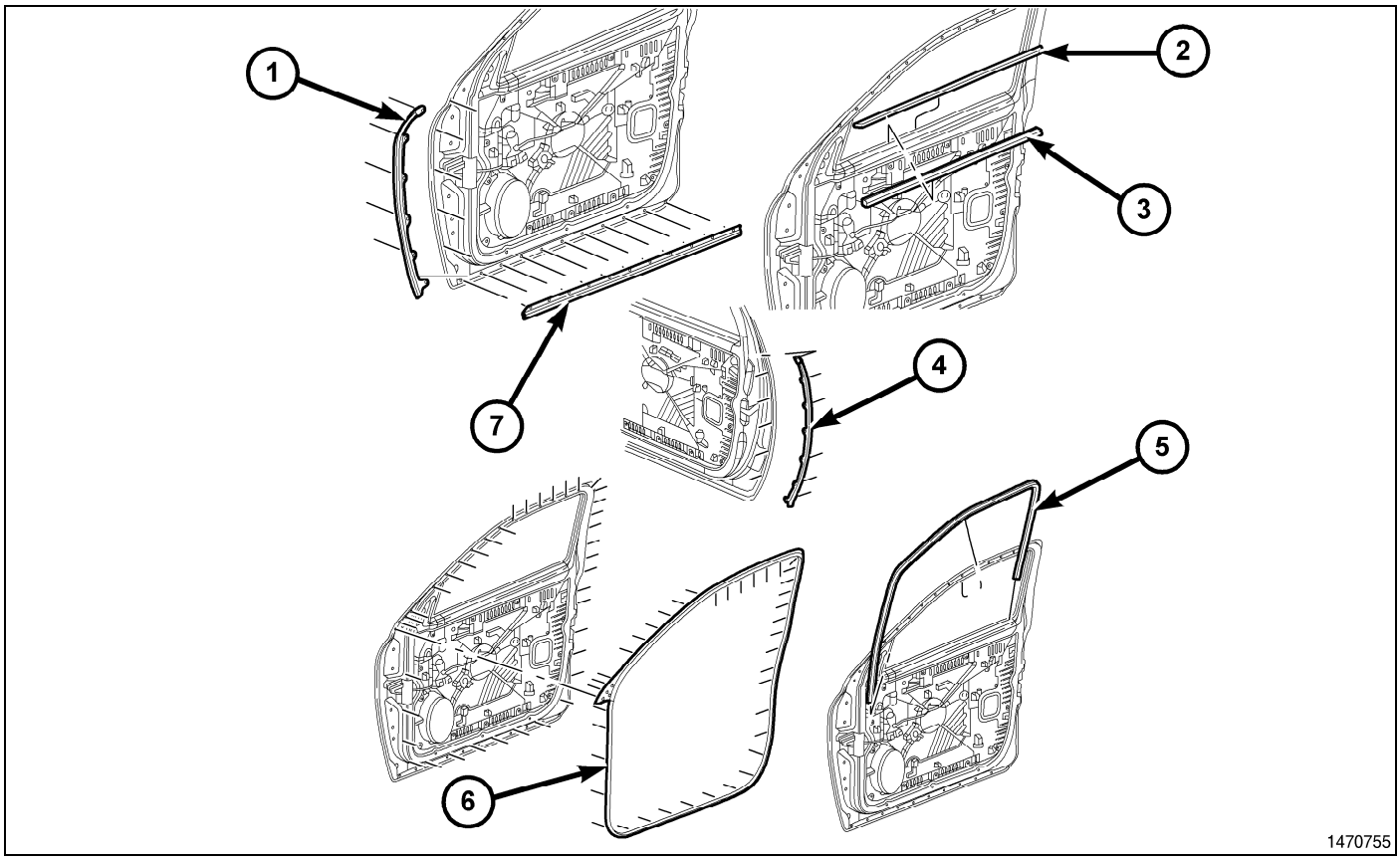

NOTE: Front door shown, rear door similar.

1. Remove the door trim panel. (Refer to 23 - Body/Door - Front/PANEL, Door Trim - Removal)
2. Separate the belt molding (3) the door mounting flange from the back to the front.

Installation

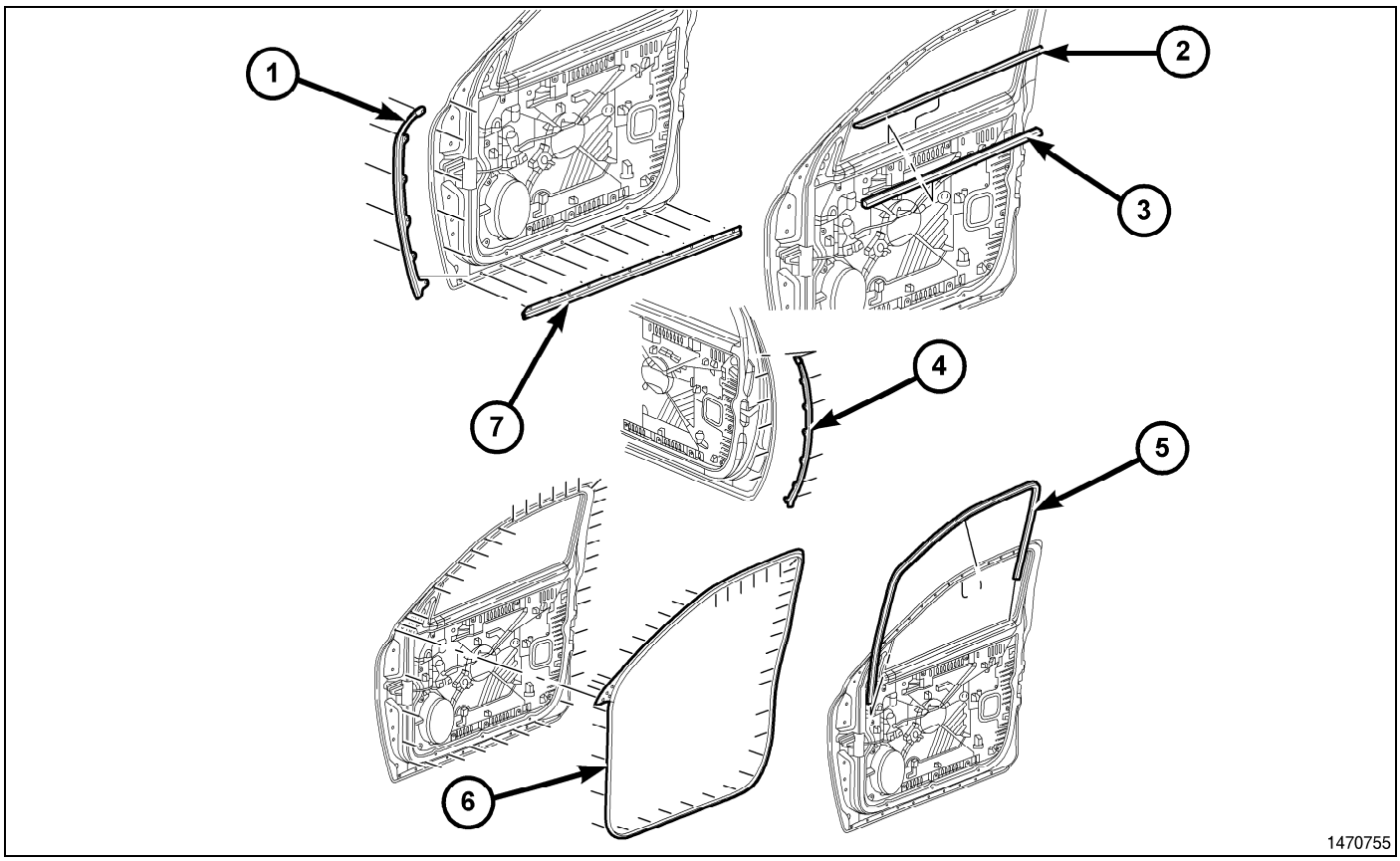

NOTE: Front door shown, rear door similar.

1. Position the belt molding (3) and seat onto the door mounting flange fully.
2. Install the door trim panel. (Refer to 23 - Body/Door - Front/PANEL, Door Trim - Installation).

MOLDING, Door Belt, Outer

Removal

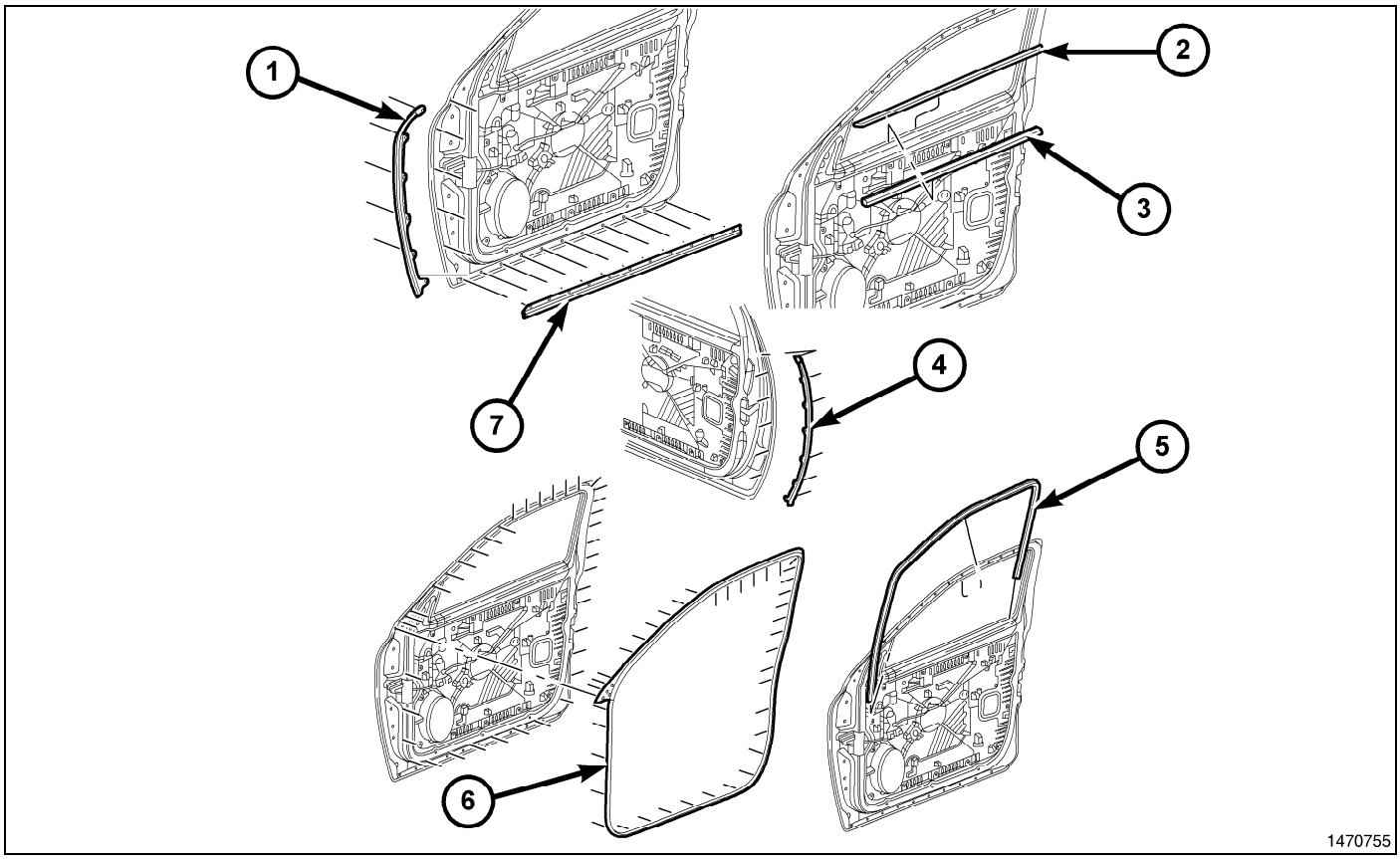

NOTE: Front door shown, rear door similar

1. Remove the screw from the rear of the outer belt molding (2).
2. Starting from the rear of the door, carefully lift the belt molding upward and disengage the inner portion of the molding from the tabs on the door.
3. Pull the molding rearward to disengage the molding from the outside mirror.
4. Remove the belt molding from the door.

Installation

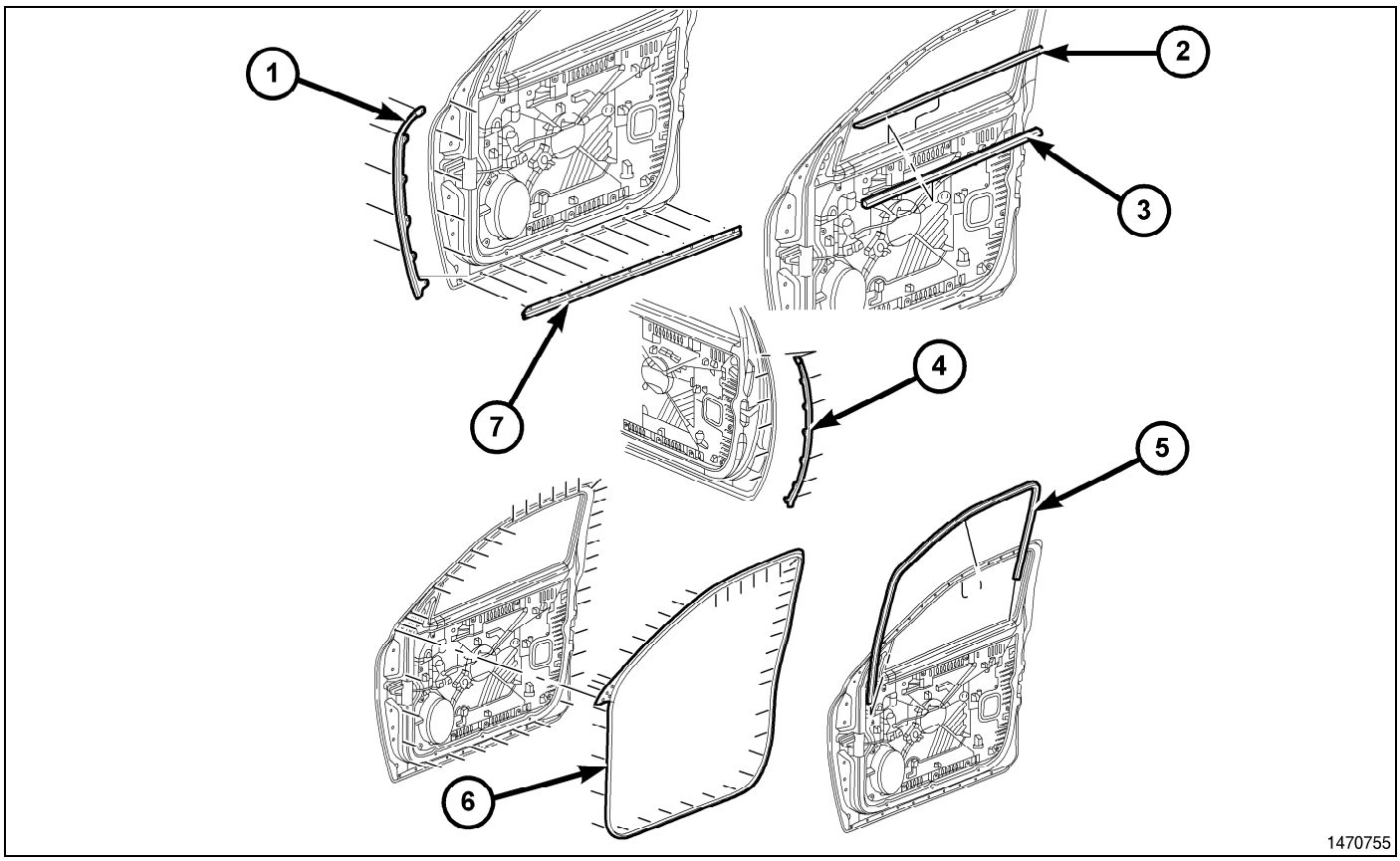

NOTE: Front door shown, rear door similar.

1. Place the belt molding (2) into position and insert the front portion under the outside mirror housing.
2. Working from the front of the door, press down on the molding and engage the clips to the door.
3. Install the screw at the rear of the belt molding.

PANEL, Rear Door Trim

Removal

1. Using trim stick C-4755 or equivalent, release the door switch/bezel (1) from the door trim and disconnect the electrical connectors (2).

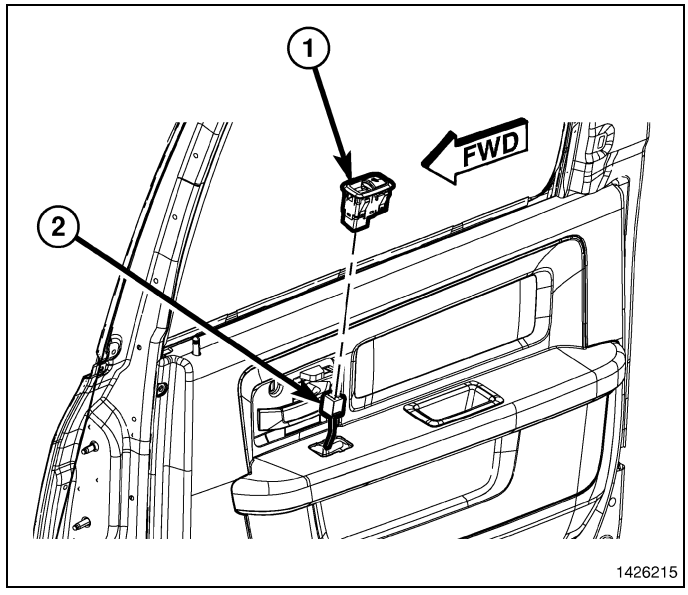

2. Using trim stick C-4755 or equivalent, release the upper trim bezel (1).

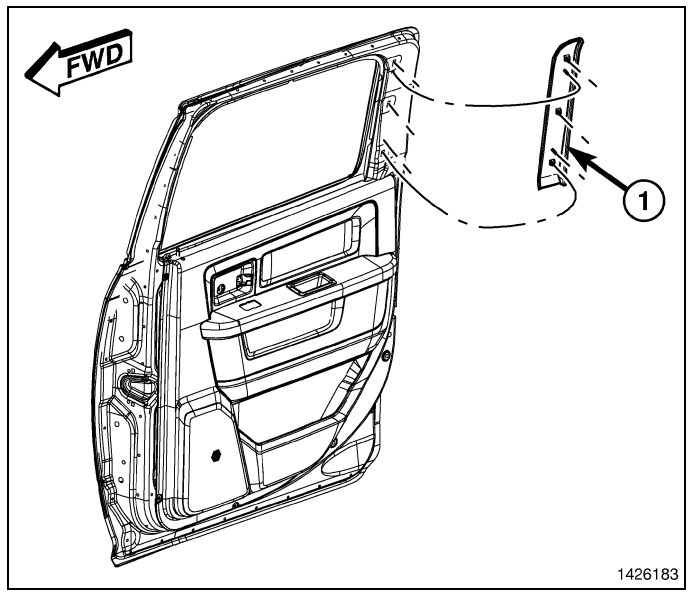

3. If equipped, remove the manual window crank (1) using a window crank removal tool (2).

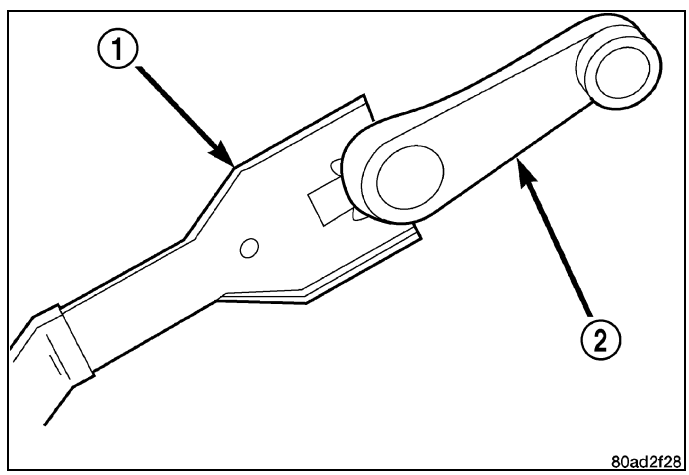

4. Remove the screw (3) and remove the interior handle bezel (5).
5. Release the plastic screw/rivets (4).
6. Raise the trim panel (2) up and off the hooks and door lock knob (1).

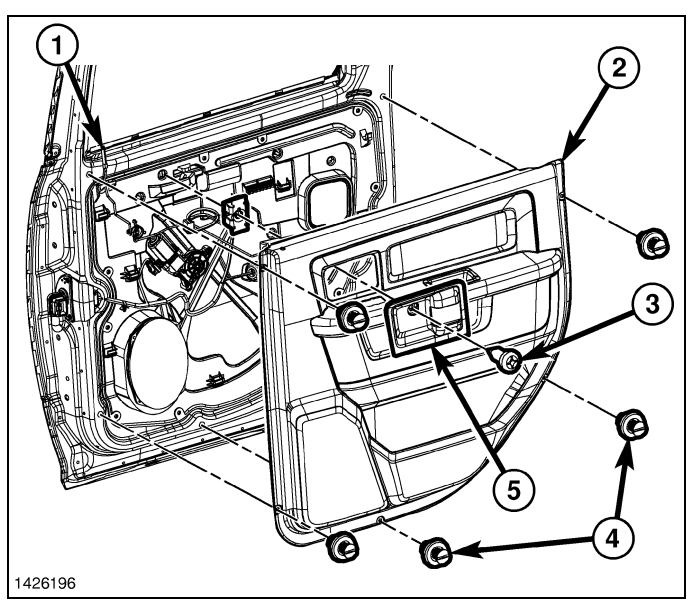

Installation

1. Load the trim panel (2) bottom first on an angle then rotate toward inner aligning window crank shaft, feed lock knob (1) through the trim panel (2), then align and push down hooks into holes in door module, (this will be an arc motion).

NOTE: Make sure the upper flange of trim is fully seated into inner belt molding.

2. Install the plastic screw/rivets (4) and seat fully.
3. Install the interior handle bezel (5) and install the screw (3).
4. If equipped, verify that the window handle clip is installed correctly and seat the handle onto the window regulator shaft fully.

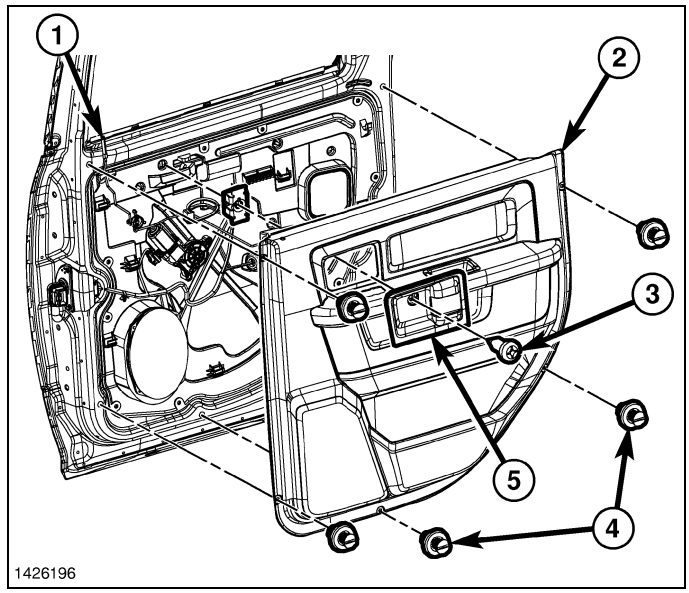

5. Position the trim bezel (1) onto the door and seat the clips fully.

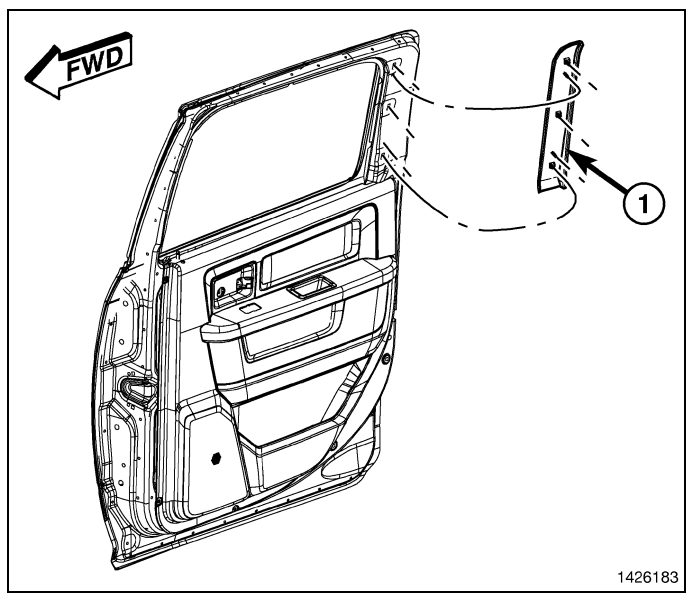

6. If equipped, connect the window switch electrical connectors (2) and seat the window switch/bezel into the door trim fully.

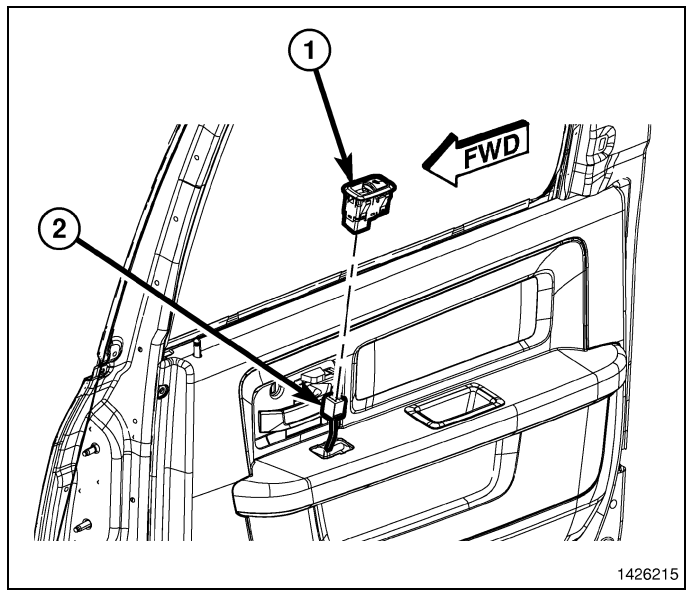

PLATE, Carrier

Removal

Club Cab

1. Remove the trim panel. (Refer to 23 - Body/Door - Front/PANEL, Door Trim - Removal)

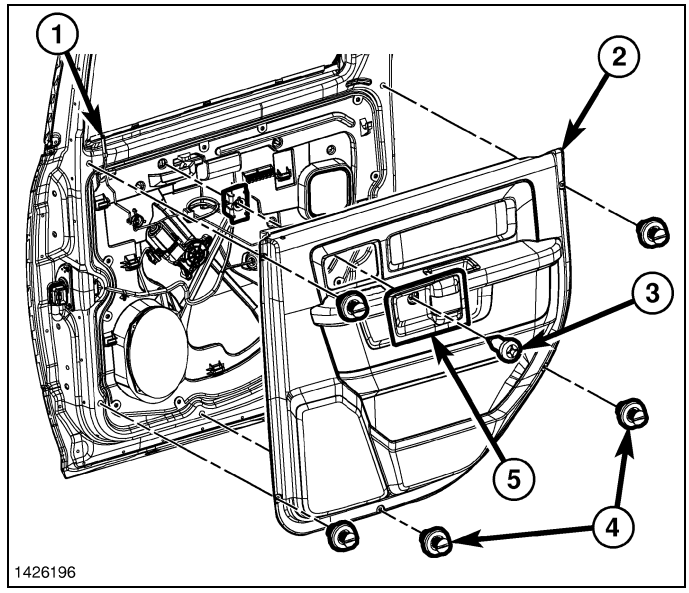

2. If equipped, using a punch or similar tool, carefully remove the glass disconnect hole plugs (1).
3. Install the window switch if required and lower the glass down in the door to position the glass attachment clip for access through the service access plug (1).
4. Release the two glass retainer tabs and separate the glass clip from the regulator lift plate.
5. Raise the glass into the full up position and secure in place using tape or equivalent.

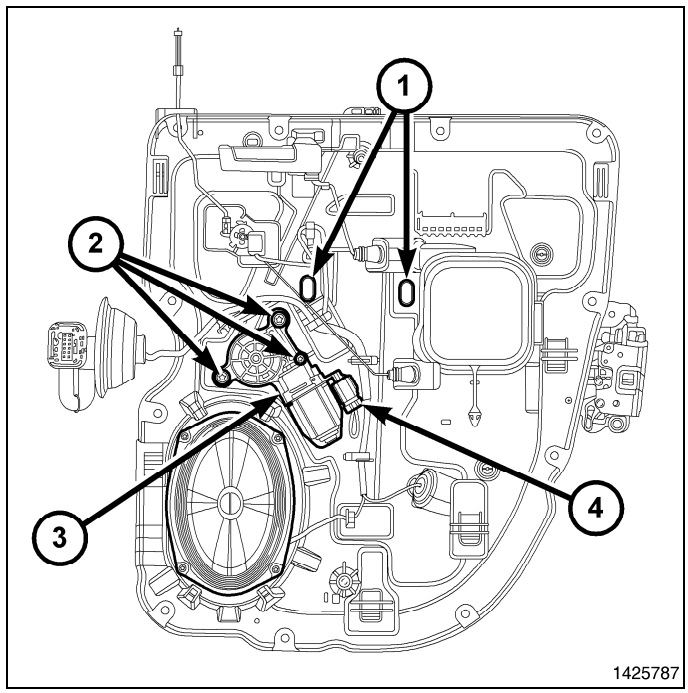

Crew Cab

1. Remove the trim panel. (Refer to 23 - Body/Door - Front/PANEL, Door Trim - Removal)
2. Remove the door speaker. (Refer to 08 - Electrical/8A - Audio and Video/SPEAKER - Removal)

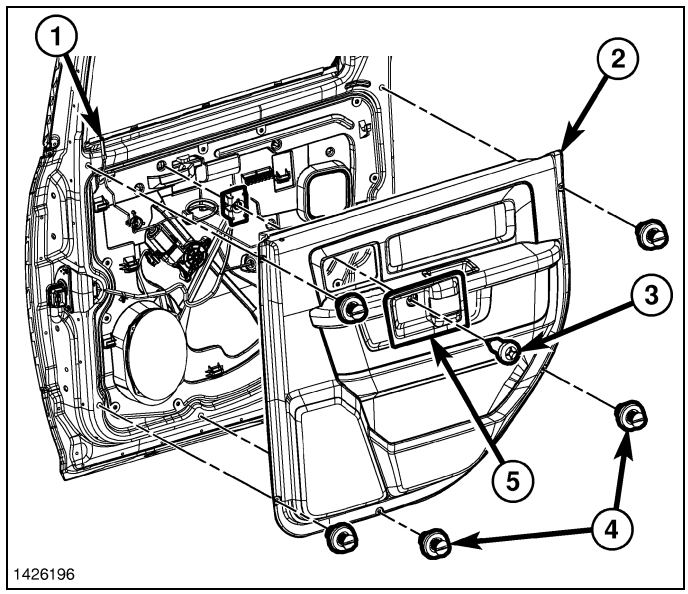

3. Install the window switch if required and lower the glass down in the door to position the glass attachment clips for access through the speaker opening (4) and the service access plug.
4. Release the two glass retainer tabs and separate the glass clip from the regulator lift plate.
5. Raise the glass into the full up position and secure in place using tape or equivalent.

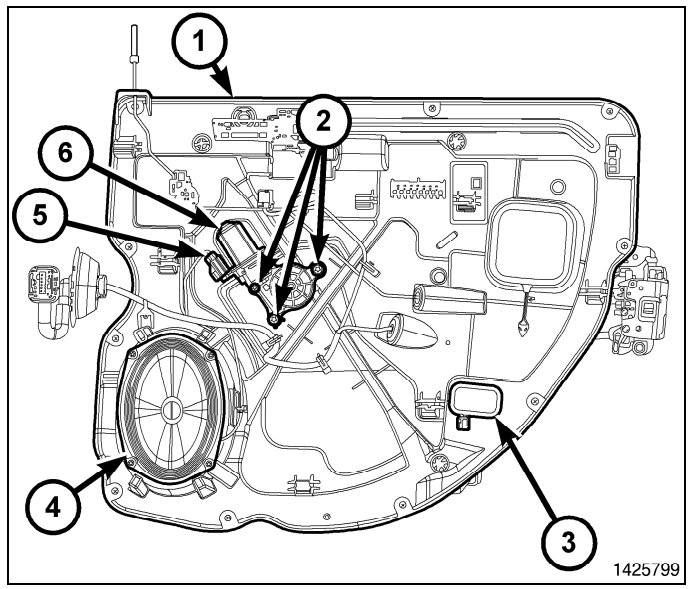

GROMMET - A PILLAR

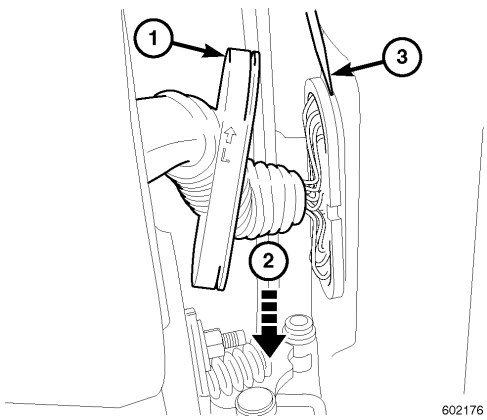

1. Disconnect the door electrical connector, GROMMET - A PILLAR.

NOTE: The following illustration shows a typical door harness connector.

2. Peel the A Pillar grommet (1) off of the connector/retainer and move it up the wire harness.
3. Grasp the wire harness (2) by the convolute section of the grommet and gently pull the wire harness down towards the floor to expose the connector lock tabs.

CAUTION: Do not force the locking tab past the connector body, as damage to the connector may occur.

4. While still pulling down on the harness, use a small slotted screw driver (3) to **gently** push one of the top lock tabs until the lock feature is flush with the connector/retainer body.
5. Repeat the step 3 for the remaining top lock tab.
6. The connector should now be able to rock out of the sheet metal hole without causing any damage to the connector or sheet metal.

NOTE: Front door shown, rear doors are similar.

7. Remove the service access plug (2) and disconnect the exterior handle linkages (1).

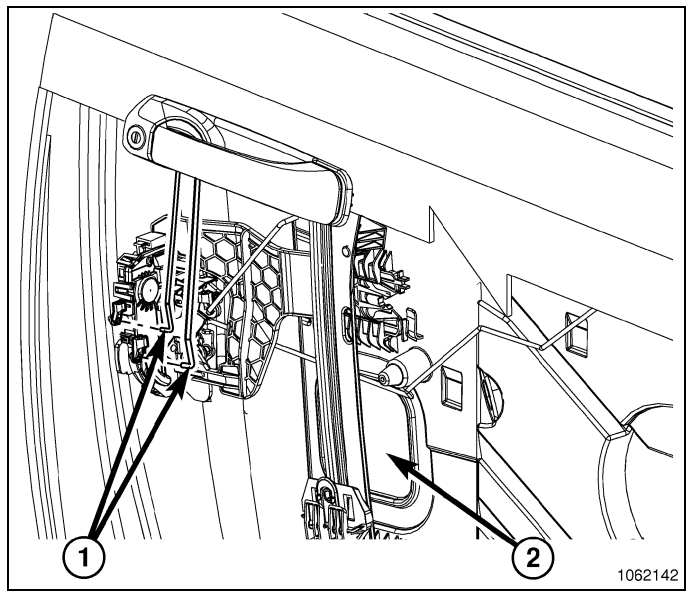

NOTE: Front door shown, rear doors are similar.

8. Remove the screws (2) and separate the wire harness (1) from the door.

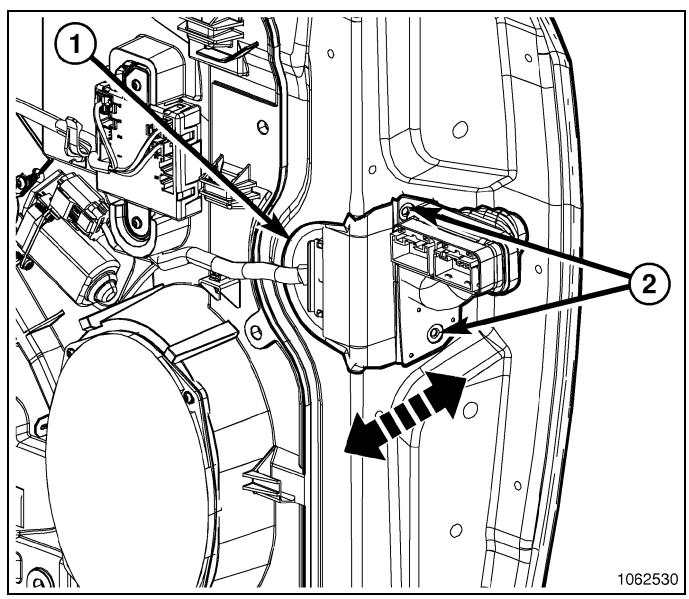

9. Remove the door latch (2) mounting screws (3).

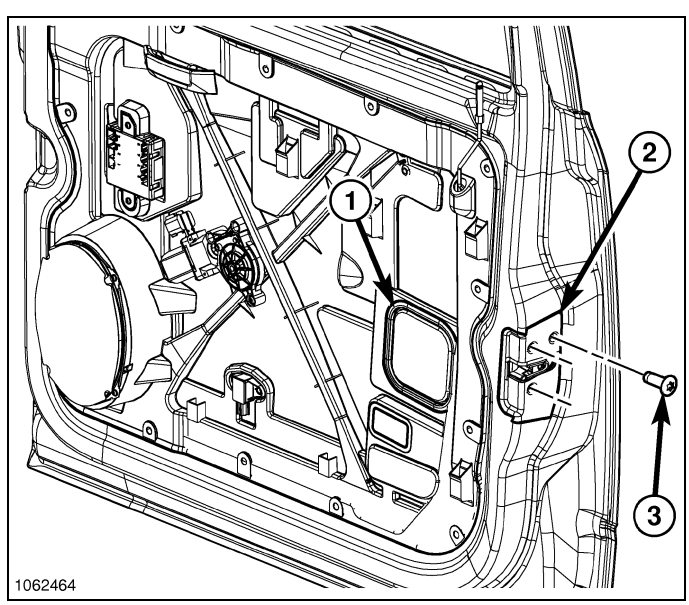

10. Remove the 11 bolts (2) on the club cab or the 12 bolts on the crew cab model and remove the carrier plate assembly (3) from the door.

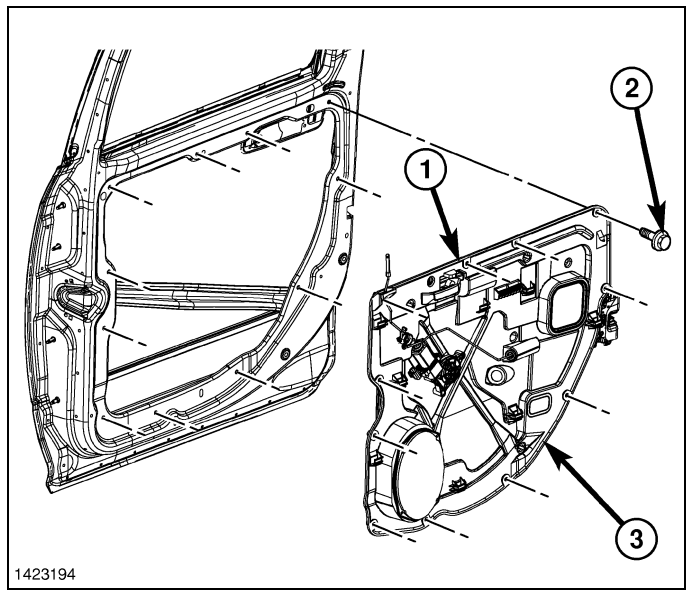

Installation

1. Insert the carrier plate assembly (3) into door, latch side first, and tip the regulator rails into place through the door opening.
2. Lift the carrier plate and seat the two locating pins into the retaining holes.
3. Install the bolts (2) and starting at position (1) tighten the bolts in a clockwise direction to 5.5 N·m (49 in. lbs.)

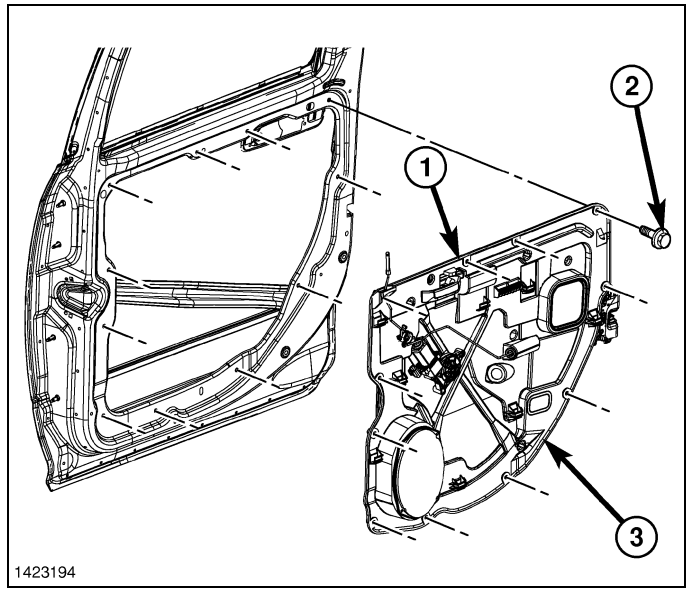

4. Install the latch screws (3) and tighten to 7 N·m (62. in. lbs.)

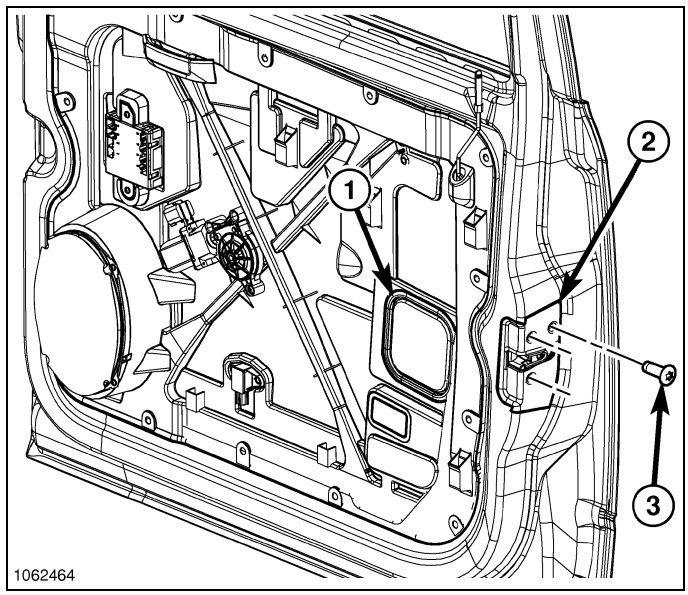

5. Install the wire harness (1) and install the screws (2).

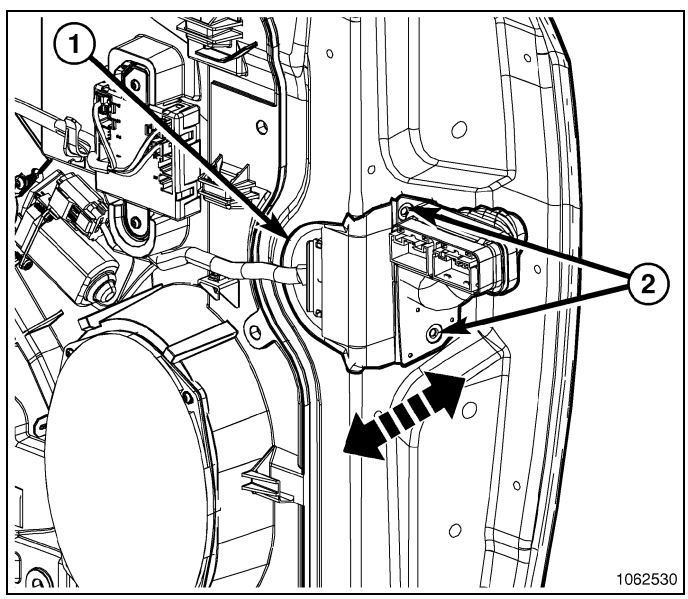

6. Connect the linkages (1) to the latch and secure the clips.

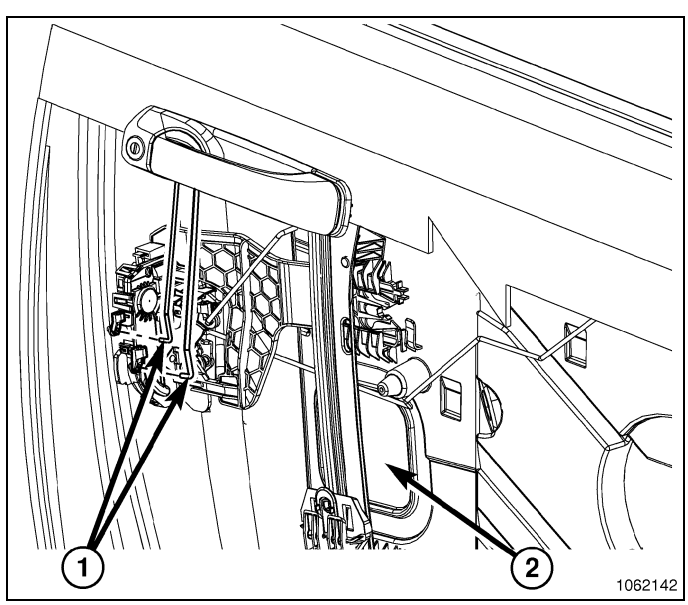

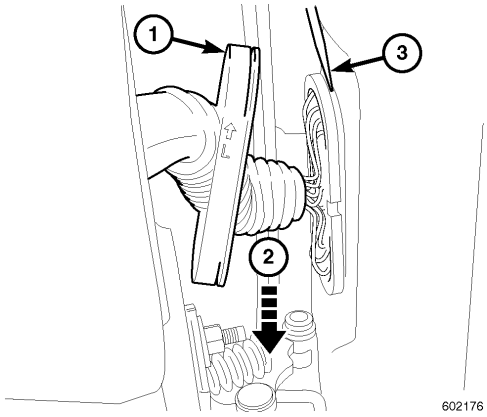

NOTE: The following illustration shows a typical door harness connector.

7. Connect the electrical connector and secure the grommet (1) back over the connector/retainer and seat the connector into the pillar fully.

Club Cab

1. Pull the glass up evenly so front of glass can be verified it is seated into both glass run channels.
2. Push the glass down to seat the clips into regulator liftplates fully.
3. Pull up on the glass and make sure that it is secure.
4. Seal the glass disconnect holes (1) with a suitable foam tape or equivalent.

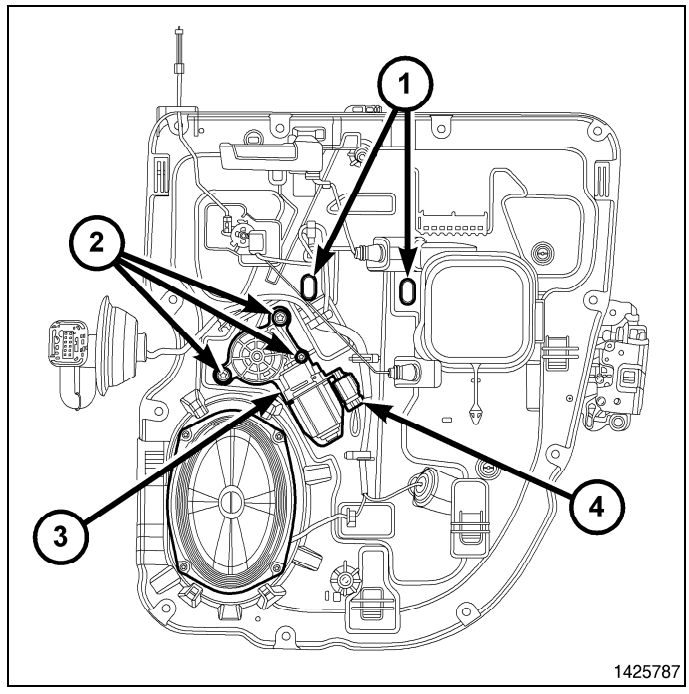

5. Install the door trim panel. (Refer to 23 - Body/Doors - Rear/PANEL, Rear Door Trim - Installation)

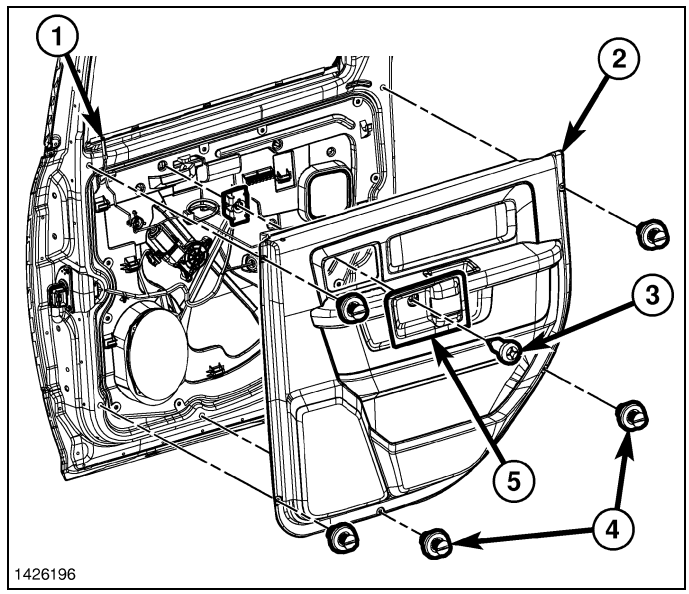

Crew Cab

1. Pull the glass up evenly so front of glass can be verified it is seated into both glass run channels.
2. Push the glass down to seat the clips into regulator liftplates fully.
3. Pull up on the glass and make sure that it is secure.
4. Seal the glass disconnect holes (3) with a suitable foam tape or equivalent.

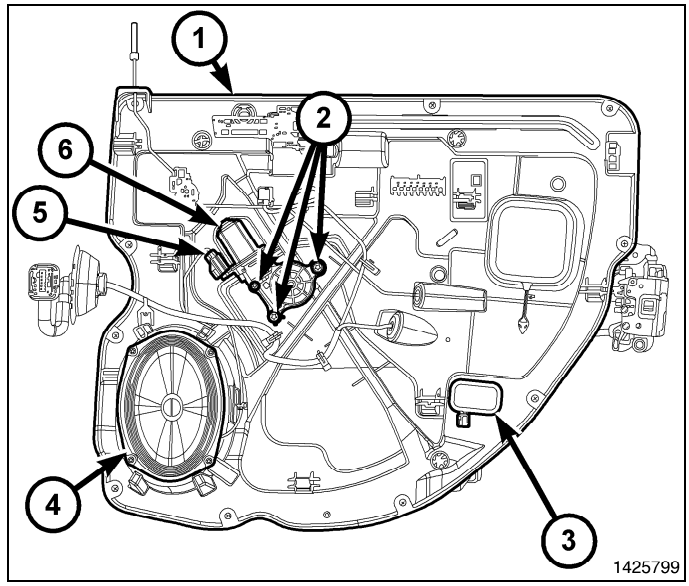

5. Install the door speaker. (Refer to 08 - Electrical/8A - Audio and Video/SPEAKER - Installation)
6. Install the door trim panel. (Refer to 23 - Body/Doors - Rear/PANEL, Rear Door Trim - Installation)

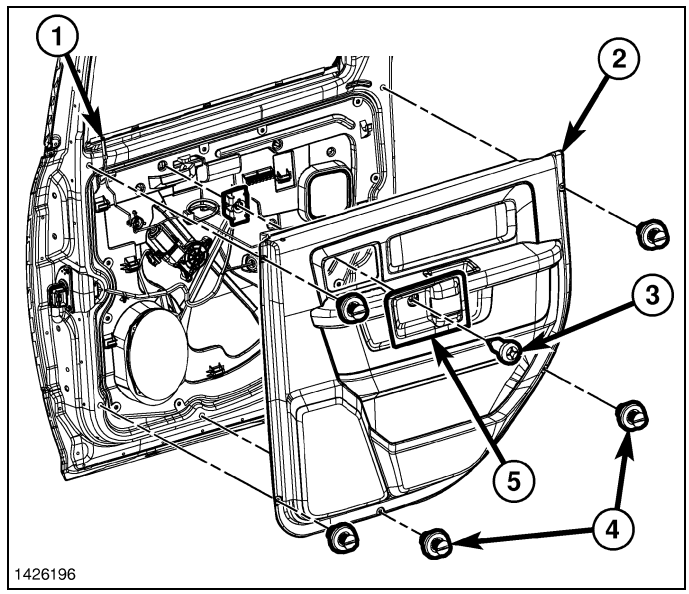

REGULATOR, Window, Manual

Description

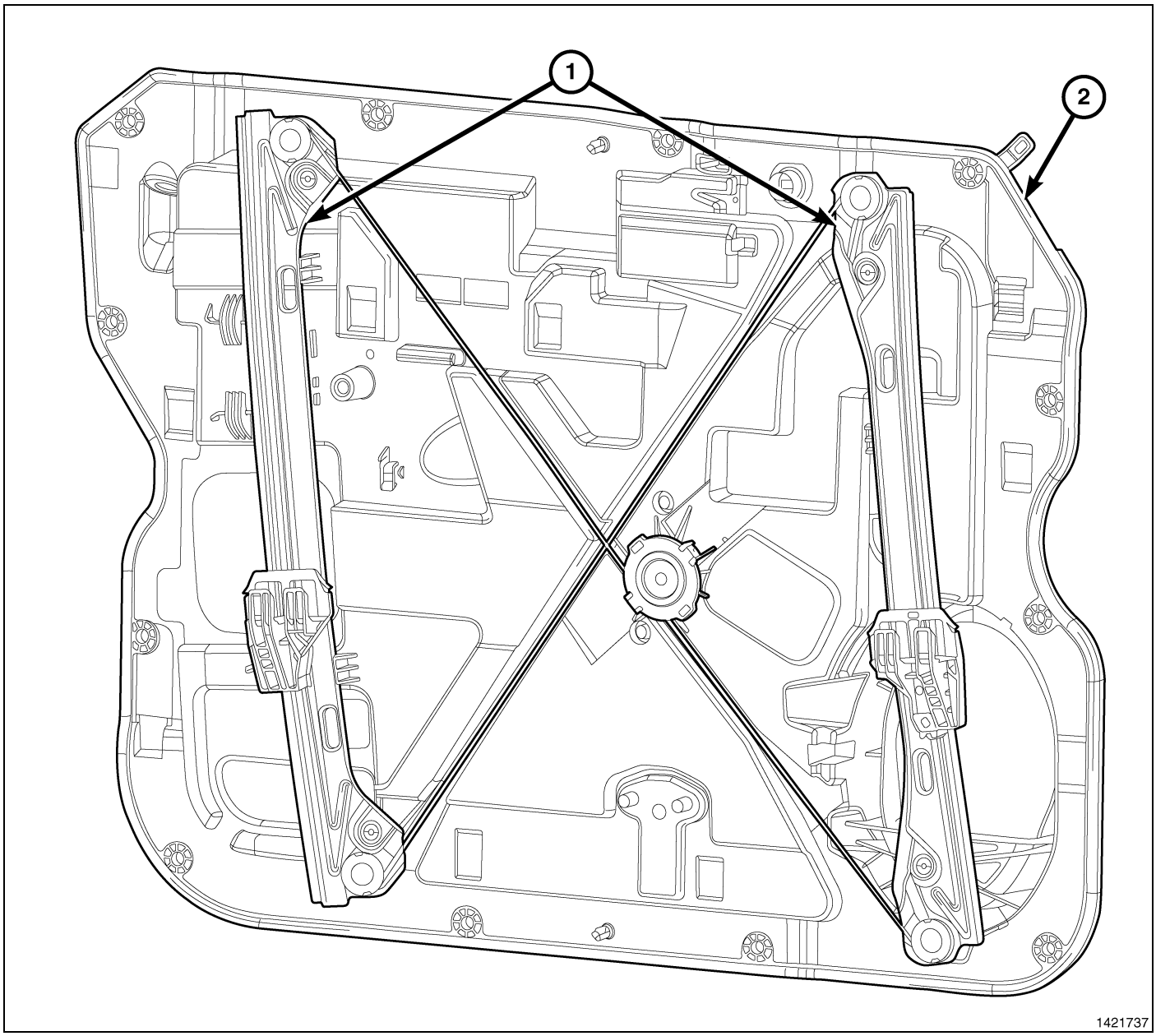

FRONT DOOR CARRIER PLATE SHOWN, REAR DOOR SIMILAR

The window regulators (1) are serviced as an assembly with the carrier plate (2) and include the following parts:

- glass bumpers
- lock grommets
- release rod grommet
- handle bumper
- service plug

(Refer to 23 - Body/Doors - Rear/PLATE, Carrier - Removal)

REGULATOR, Window, Power

Description

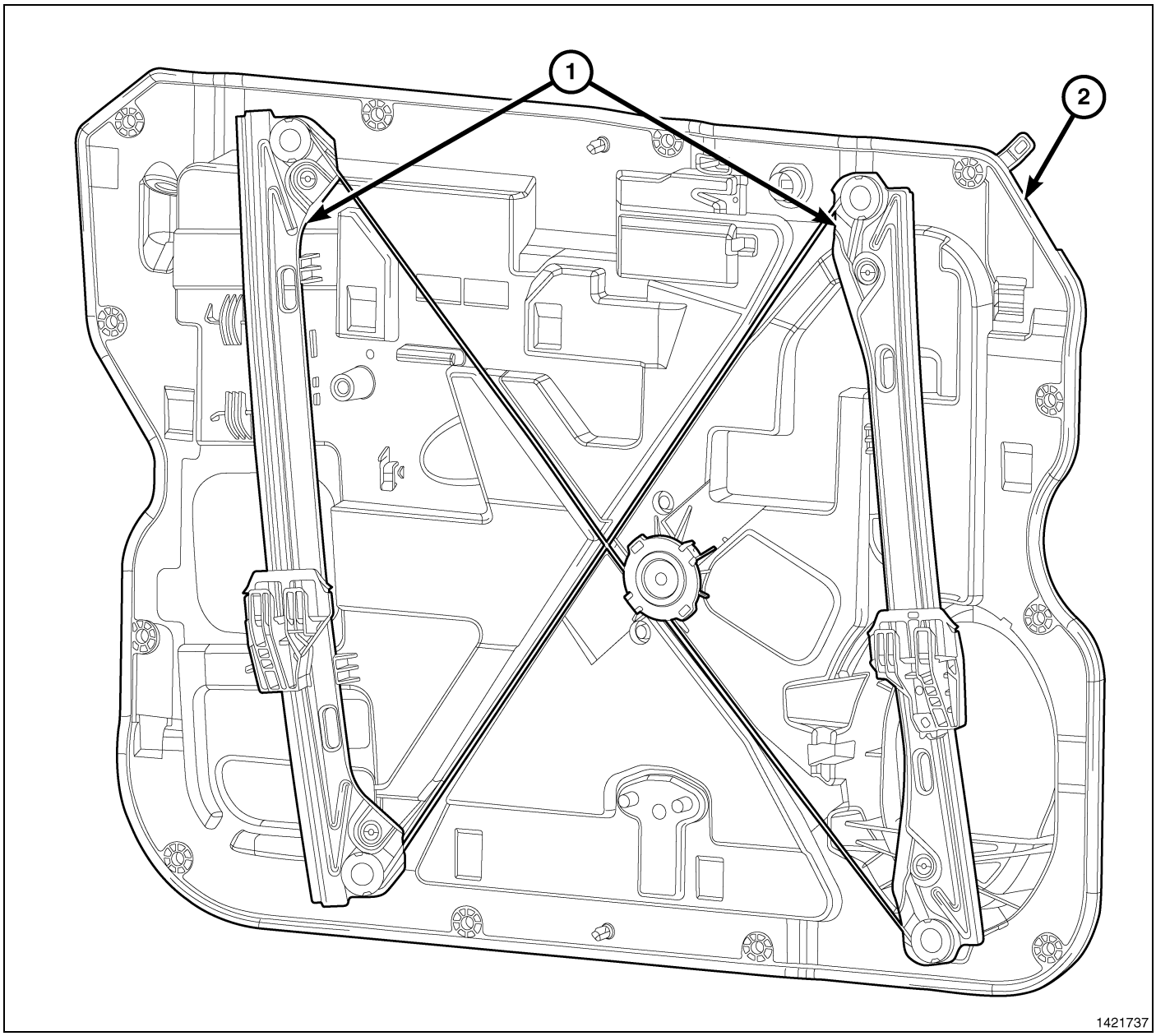

FRONT DOOR CARRIER PLATE SHOWN, REAR DOOR SIMILAR

The window regulators (1) are serviced as an assembly with the carrier plate (2) and include the following parts:

- glass bumpers
- lock grommets
- release rod grommet
- handle bumper
- service plug

(Refer to 23 - Body/Doors - Rear/PLATE, Carrier - Removal)

STRIKER, Door Latch

Removal

1. Using a grease pencil or equivalent, mark the location of the door latch striker (1) on the C-pillar (2).
2. Remove the two bolts (3) that secure the door latch striker to the C-pillar and remove the striker.

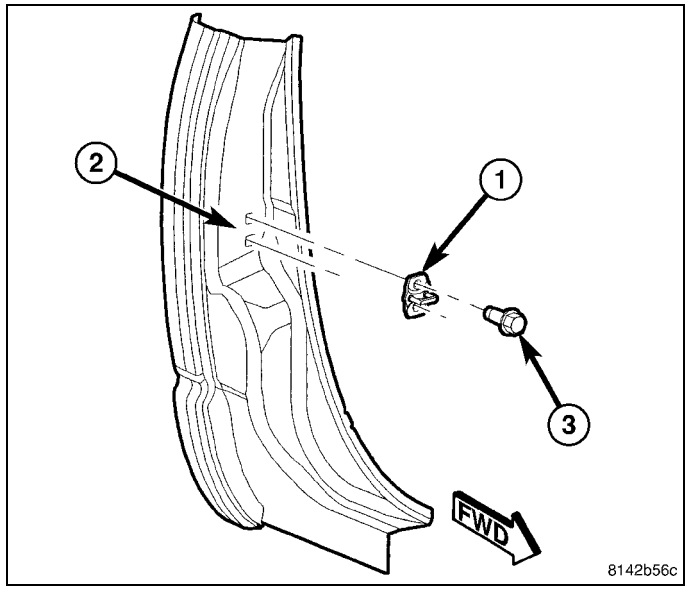

Installation

1. Position the door latch striker (1) onto the C-pillar (2) and loosely install the two bolts (3).
2. Align the door latch striker to the C-pillar using the reference marks made during the removal procedure and tighten the bolts to 28 N·m (21 ft. lbs.).
3. If necessary, adjust the door latch striker (Refer to 23 - Body/Doors - Rear/STRIKER, Door Latch - Adjustments).

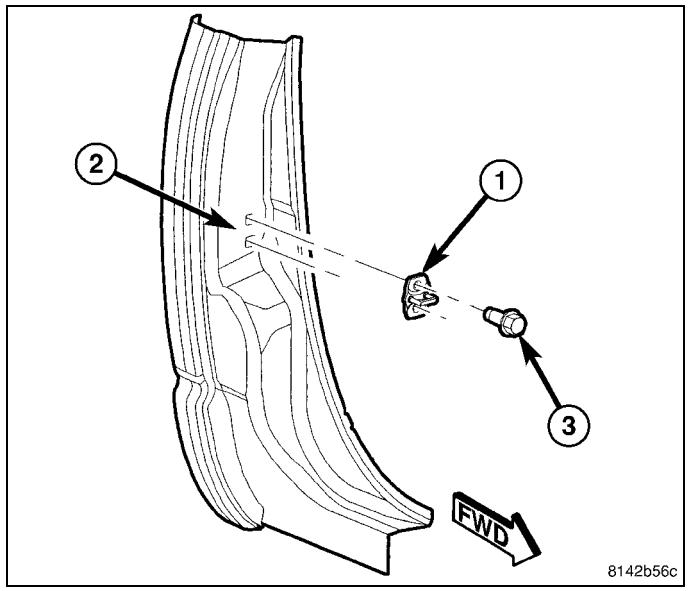

Adjustments

1. Using a grease pencil or equivalent, mark the location of the door latch striker (1) on the C-pillar (2) to aid in adjustment.
2. Loosen the two bolts (3) that secure the door latch striker to the C-pillar.
3. To adjust the rear gap and flush measurement, change the position of the door latch striker and then tighten the two bolts to 28 N·m (21 ft. lbs.) (Refer to 23 - Body/Body Structure/Gap and Flush - Specifications).
4. Verify correct door and latch position.

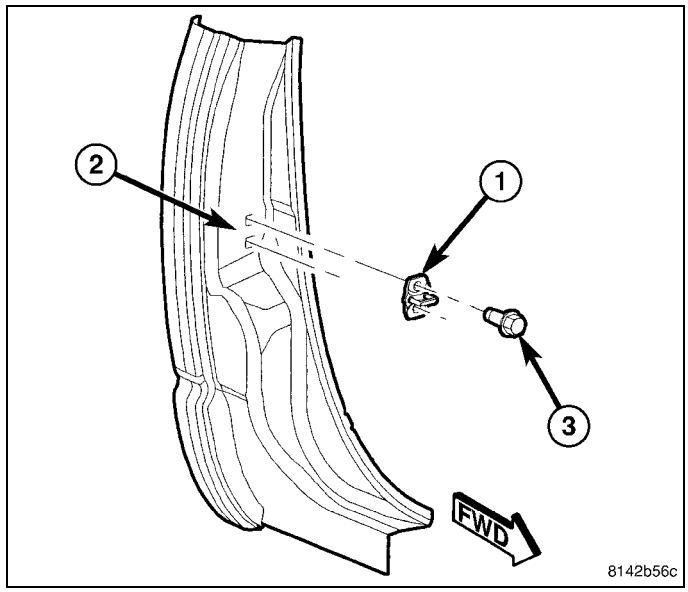

EXTERIOR

TABLE OF CONTENTS

page

EXTERIOR
- **BOX, PICKUP**
  - REMOVAL
    - PICKUP BOX 118
    - RAM BOX LOCK CYLINDER 119
    - RAM BOX STORAGE 120
    - BED LINER 120
  - INSTALLATION
    - PICKUP BOX 121
    - RAM BOX LOCK CYLINDER 122
    - RAM BOX STORAGE 123
    - BED LINER 125
- **COVER, COWL PANEL**
  - REMOVAL 125
  - INSTALLATION 126
- **DOOR, FUEL FILL**
  - REMOVAL 126
  - INSTALLATION 127
- **FENDER, FRONT**
  - REMOVAL 127
  - INSTALLATION 130
- **GRILLE**
  - REMOVAL 132
  - INSTALLATION 134
- **ISOLATOR, BODY**
  - REMOVAL 135
  - INSTALLATION 136

page

- **MIRROR, OUTSIDE REARVIEW**
  - REMOVAL 137
  - INSTALLATION 138
- **MIRROR, OUTSIDE REARVIEW, GLASS**
  - REMOVAL 139
  - INSTALLATION 140
- **MOLDING, FRONT WHEEL OPENING**
  - REMOVAL 141
  - INSTALLATION 142
- **MOLDING, REAR WHEEL OPENING**
  - REMOVAL 142
  - INSTALLATION 143
- **NAMEPLATE**
  - REMOVAL 145
  - INSTALLATION 146
- **SHIELD, SPLASH, FRONT WHEELHOUSE**
  - REMOVAL 147
  - INSTALLATION 148
- **SHIELD, SPLASH, REAR WHEELHOUSE**
  - REMOVAL 149
  - INSTALLATION 149
- **TIE DOWN, PICKUP BOX**
  - REMOVAL 150
  - INSTALLATION 150

Exterior

BOX, Pickup

Removal

PICKUP BOX

NOTE: Long cargo box shown in illustration. Short cargo box similar.

1. Disconnect the fuel filler neck from the fuel tank. (Refer to 14 - Fuel System/Fuel Delivery/TANK, Fuel - Removal)
2. Remove the fuel filler from the cargo box and position it out of the way.
3. If necessary, remove the fuel filler door from the cargo box (Refer to 23 - Body/Exterior/DOOR, Fuel Fill - Removal).

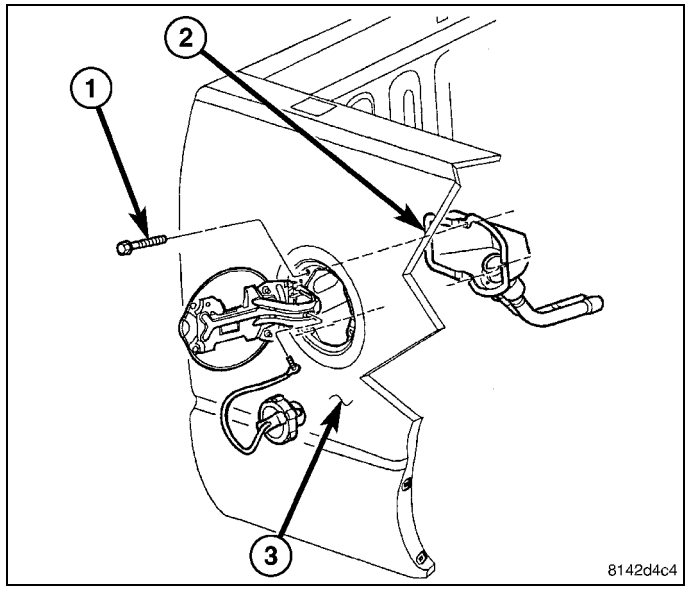

4. Disconnect the tail lamp wire harness from the underbody wire harness.
5. If necessary, remove the tail lamp units and wire harness from the cargo box (Refer to 08 - Electrical/8L - Lamps and Lighting/Lamps/Lighting - Exterior/LAMP, Tail Stop Turn - Removal).
6. If necessary, remove the tailgate. (Refer to 23 - Body/Decklid/Hatch/Liftgate/Tailgate/TAILGATE - Removal)
7. If necessary, remove the rear bumper (Refer to 13 - Frame and Bumpers/Bumpers/BUMPER, Rear - Removal).
8. Remove the bolts (3) that secure the cargo box (1) to the frame (2) (six short box, eight long box) and remove the cargo box.

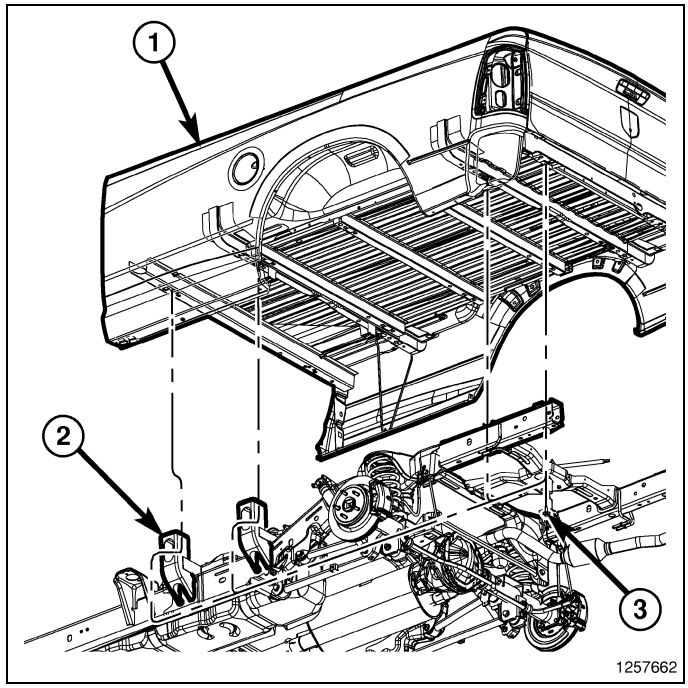

RAM BOX LOCK CYLINDER

1. Open the Ram Box lid (1).
2. Remove the two screws (2) that secure the cover (3) to the lid latch.

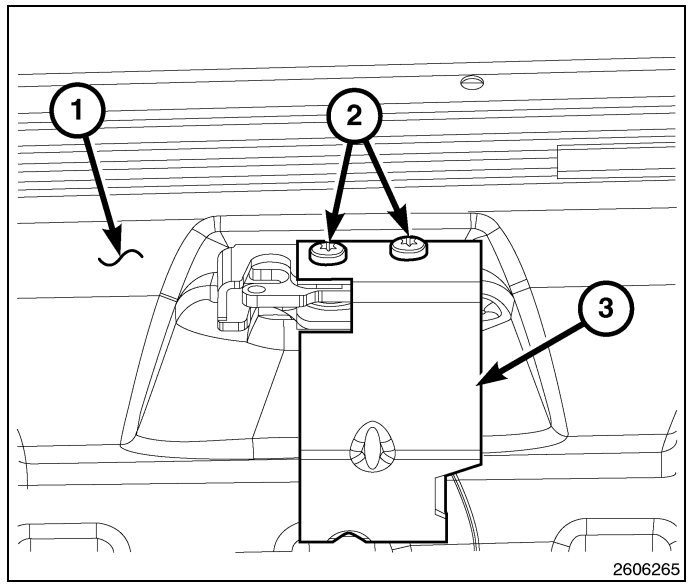

3. Remove the nut (1) that secures the lock cylinder (3) to the lid latch (2).
4. Push the lock cylinder out through the latch and remove it from the outside of the lid.

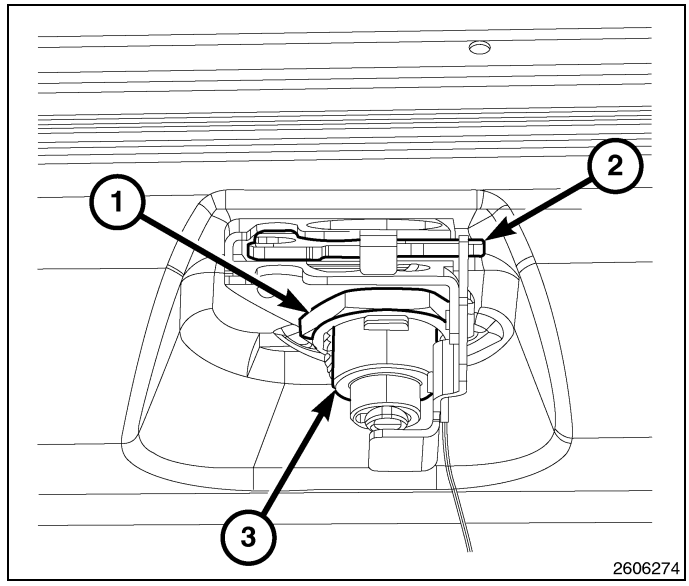

RAM BOX STORAGE

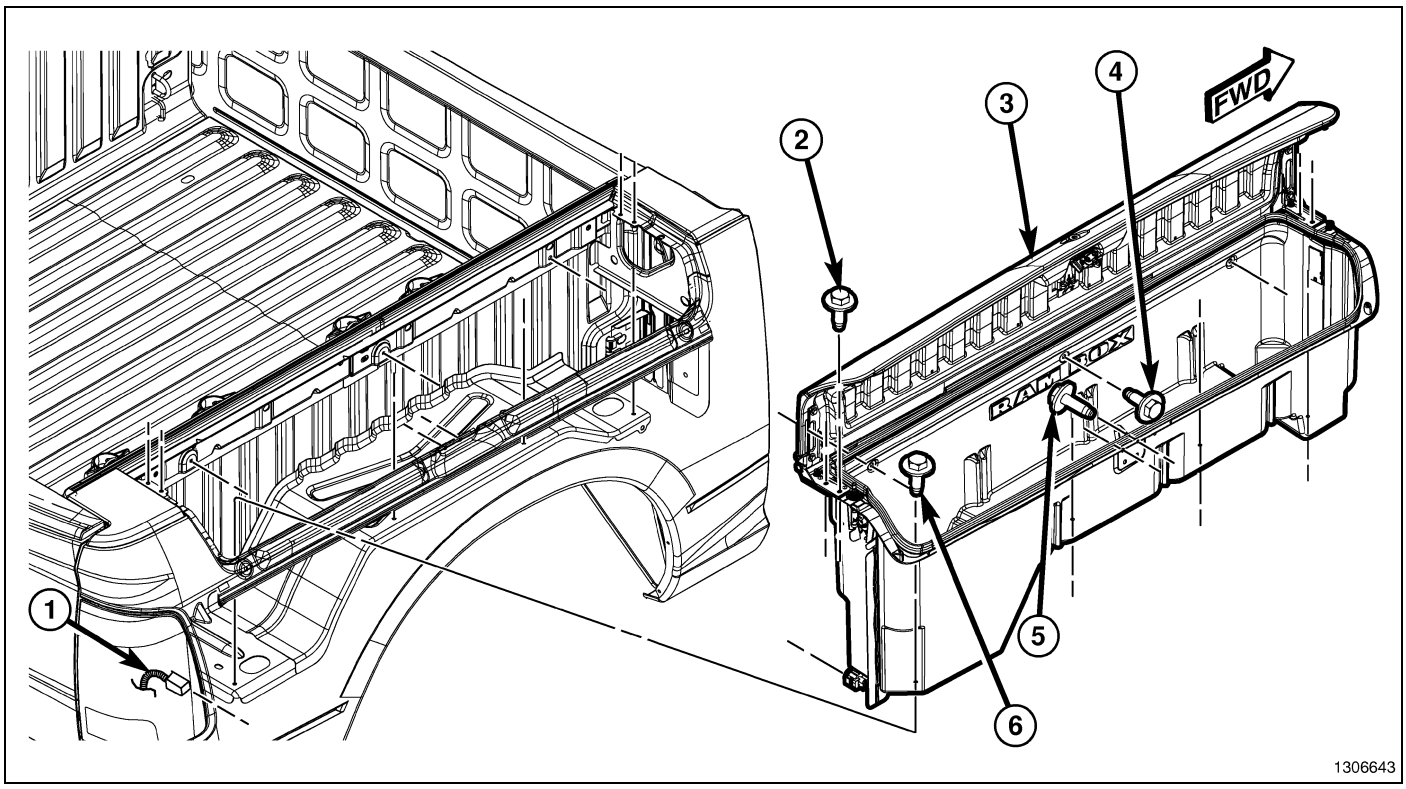

1. Open the Ram Box lid (3).
2. Remove the four hinge bolts (2).
3. Remove the four bolts from the bottom (6).
4. Remove the two outboard bolts (5).
5. Remove the three inboard bolts (4).
6. Disconnect the electrical connector (1) and remove the ram box.

BED LINER

1. Open the tailgate.
2. Remove the plastic screw type rivets (3).
3. Lift up the center of the bottom of the linger and release the sides (2) from the box rails.
4. Remove the liner (1).

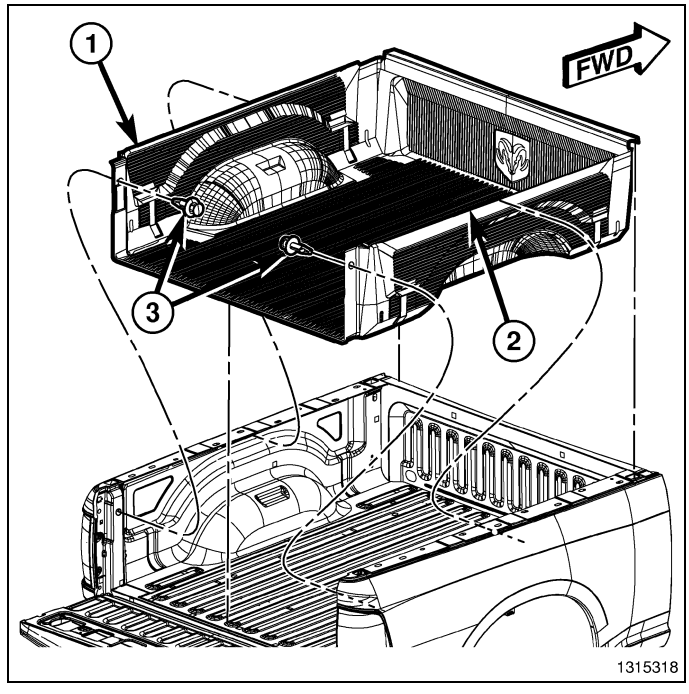

Installation

PICKUP BOX

NOTE: Long cargo box shown in illustration. Short cargo box similar.

1. Position the cargo box (1) onto the frame (2) and loosely install the bolts (3) (six short box, eight long box).
2. Align the cargo box to the cab and tighten the bolts to 108 N·m (80 ft. lbs.).
3. If removed, install tail lamp units and wire harness onto the cargo box (Refer to 08 - Electrical/8L - Lamps and Lighting/Lamps/Lighting - Exterior/LAMP, Tail Stop Turn - Installation).
4. Connect the tail lamp wire harness to the underbody wire harness.
5. If removed, install the tailgate (Refer to 23 - Body/Decklid/Hatch/Liftgate/Tailgate/TAILGATE - Installation).
6. If removed, install the rear bumper (Refer to 13 - Frame and Bumpers/Bumpers/BUMPER, Rear - Installation).

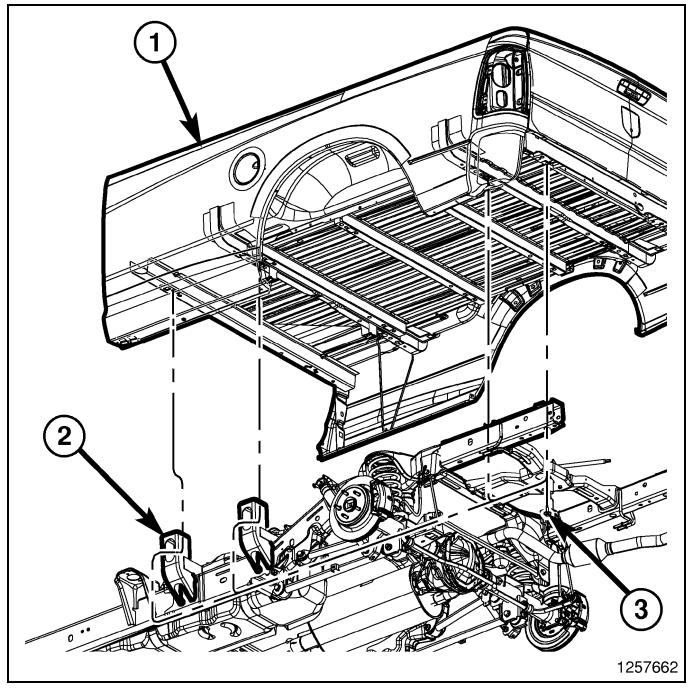

7. If removed, install the fuel filler door (Refer to 23 - Body/Exterior/DOOR, Fuel Fill - Installation).
8. Position the fuel filler (2) to the cargo box (3).
9. Connect the fuel filler neck at the fuel tank. (Refer to 14 - Fuel System/Fuel Delivery/TANK, Fuel - Installation)

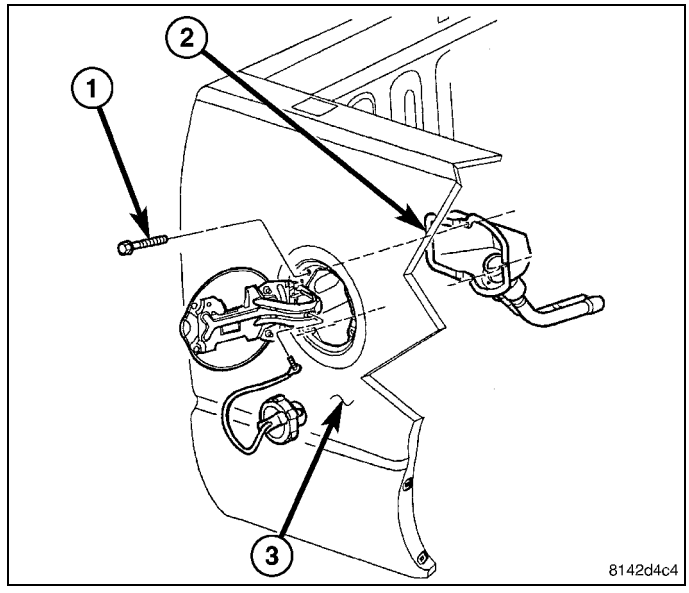

RAM BOX LOCK CYLINDER

1. Position the lock cylinder (3) to the outside of the Ram Box lid and push it through the lid latch (2).
2. Install and tighten the nut (1) that secures the lock cylinder to the lid latch. Tighten the nut to 8.6 N·m (6 ft. lbs.).

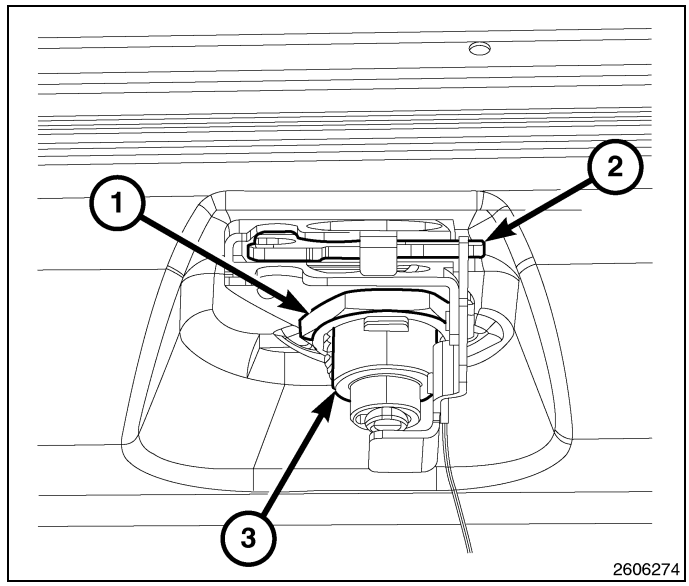

3. Position the cover (3) over the latch on the underside of the lid (1).
4. Install and tighten the two screws (2) that secure the cover to the lid latch.
5. Close the Ram Box lid.

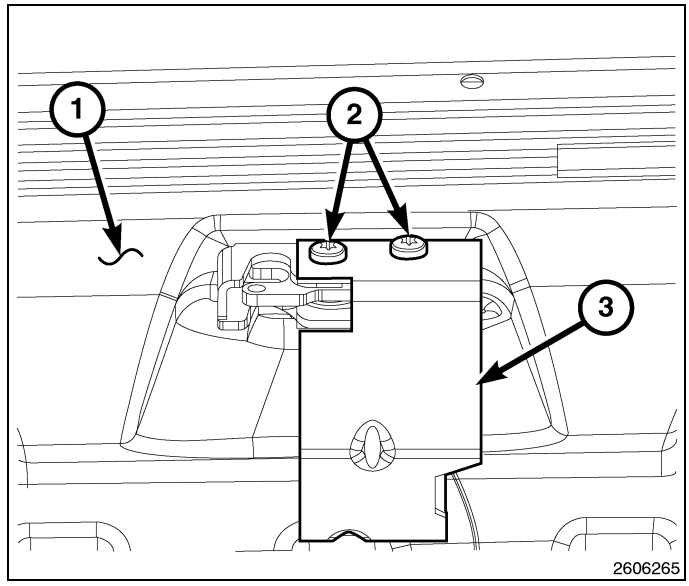

LOCK CYLINDER CODING INSTRUCTIONS

1. If present, remove the protective label from over the key slot on the face of the new lock cylinder.
2. Fully insert the key into the lock cylinder.
3. Slowly rotate the key clockwise 270 degrees.
4. Rotate the key counterclockwise back to the vertical position.
5. Remove the key from the lock cylinder.

RAM BOX STORAGE

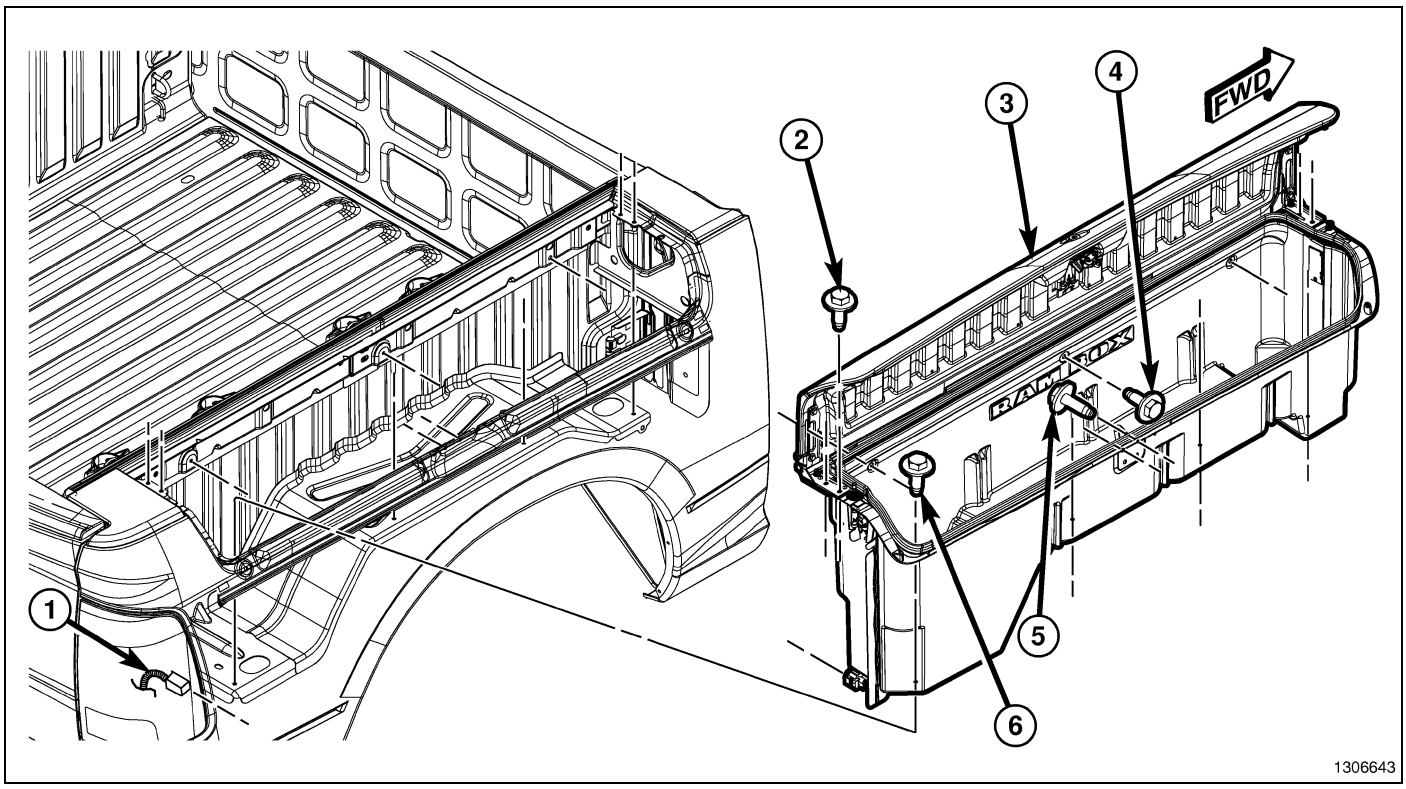

1. Install the ram box.
2. Install the three inboard bolts (4).
3. Install the two outboard bolts (5).
4. Install the four bolts from the bottom (6).
5. Install the four hinge bolts (2).
6. Connect the electrical connector (1).

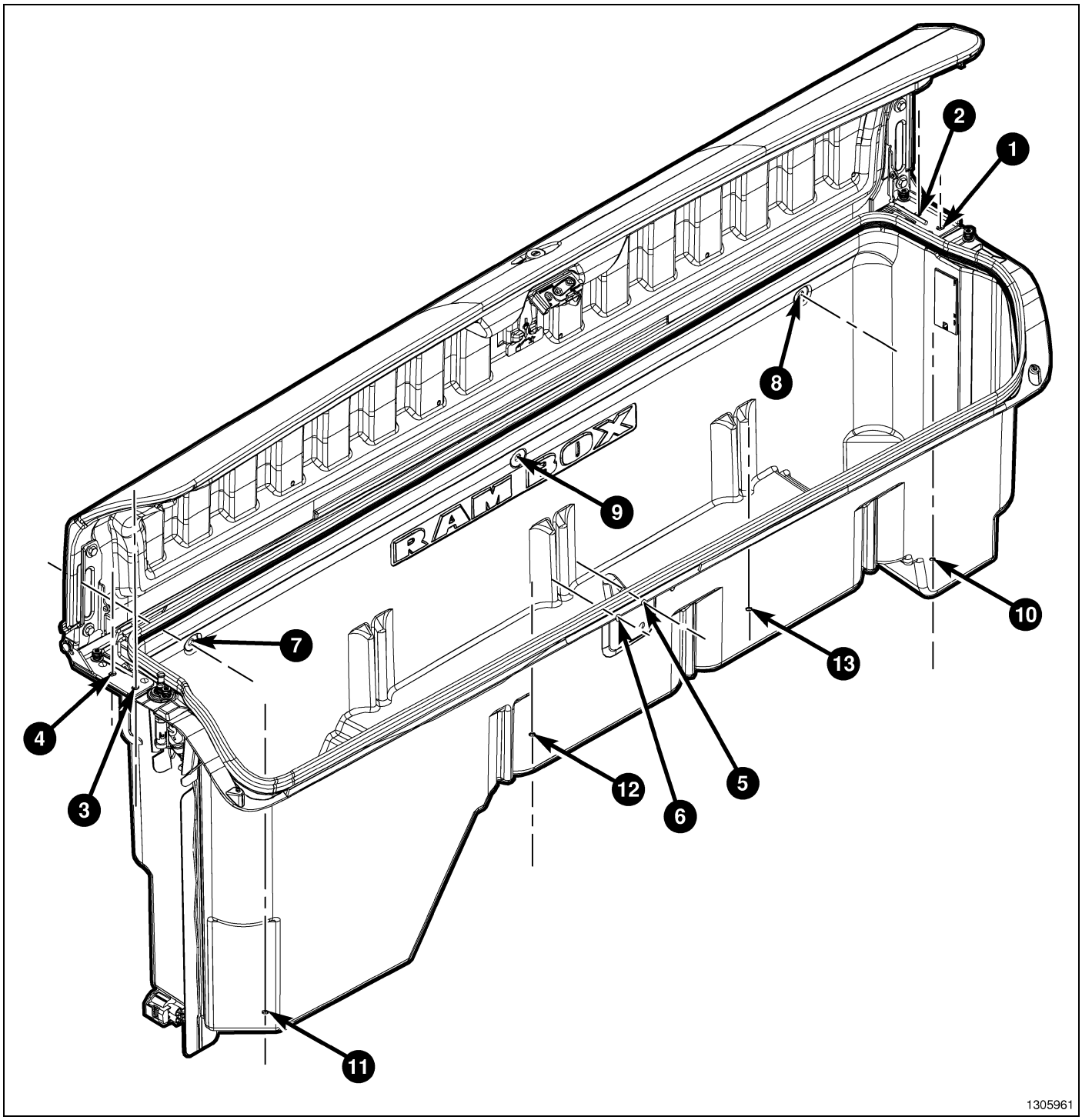

7. Tighten the bolts to 7 N·m (5 ft. lbs.) using the sequence shown in the illustration.

BED LINER

1. Place the liner (1) into the cargo box with the liner extension on top of the box front panel. Bend the liner along the middle of the floor and position the sides of the bed liner (2) under the box side rails.
2. Adjust as necessary to square the bed liner to the cargo box.
3. Drive the scrivets (3) through the holes in the liner and into the holes in the d-pillar using a rubber mallet or equivalent.

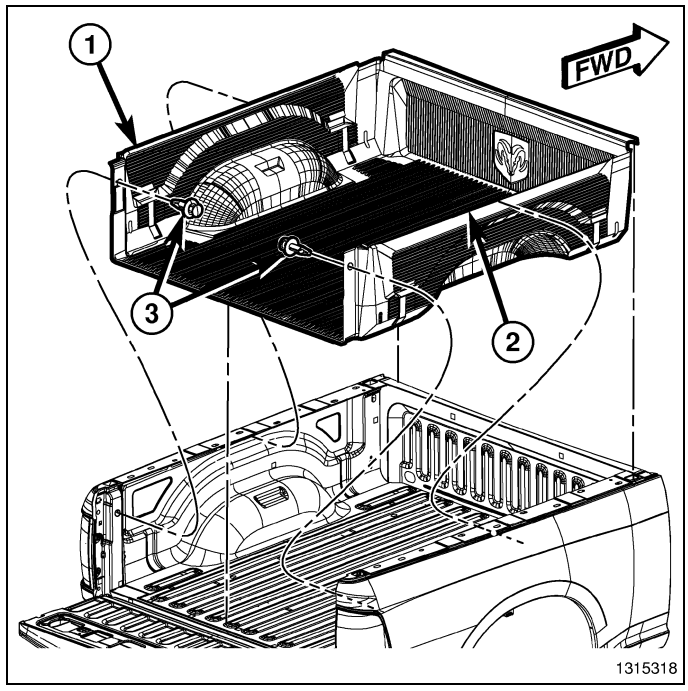

COVER, Cowl Panel

Removal

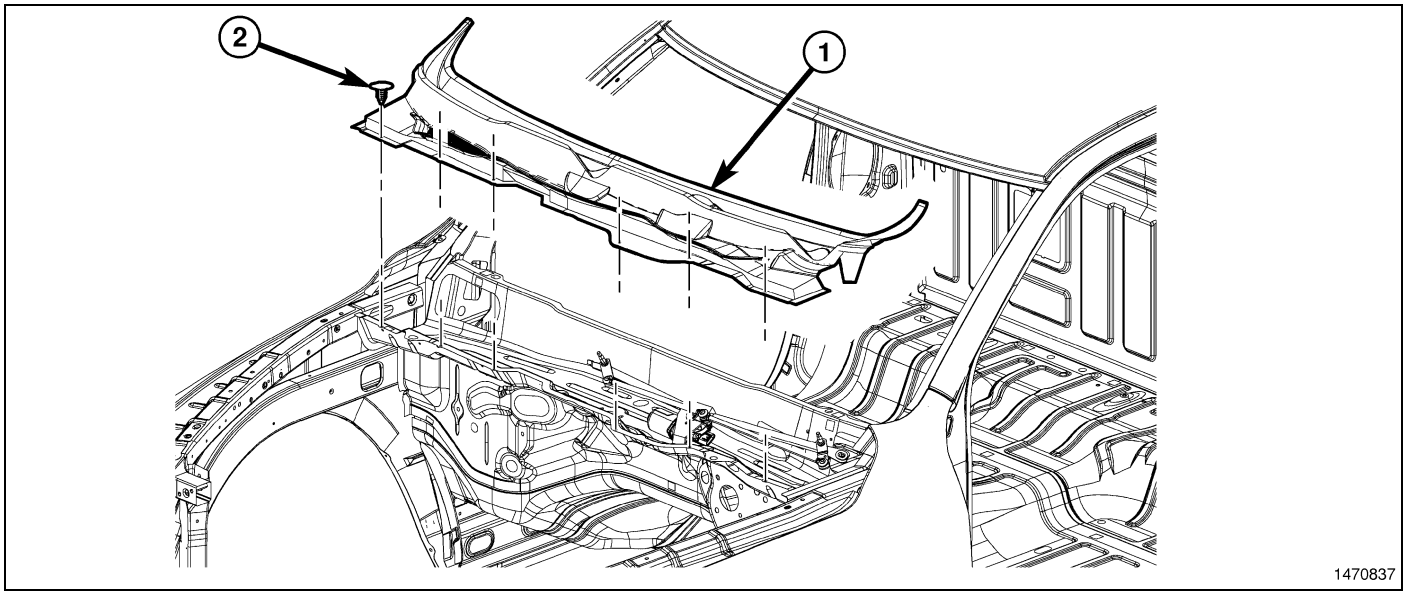

1. Remove the wiper arms (Refer to 08 - Electrical/8R - Wipers/Washers/ARM, Wiper - Removal).
2. Remove the push pins (2) that secure the front of the cowl cover (1) to the dash panel.
3. Pull the cowl cover forward to disengage the hooks from the windshield.
4. If necessary, remove the washer hose from the cowl cover.

Installation

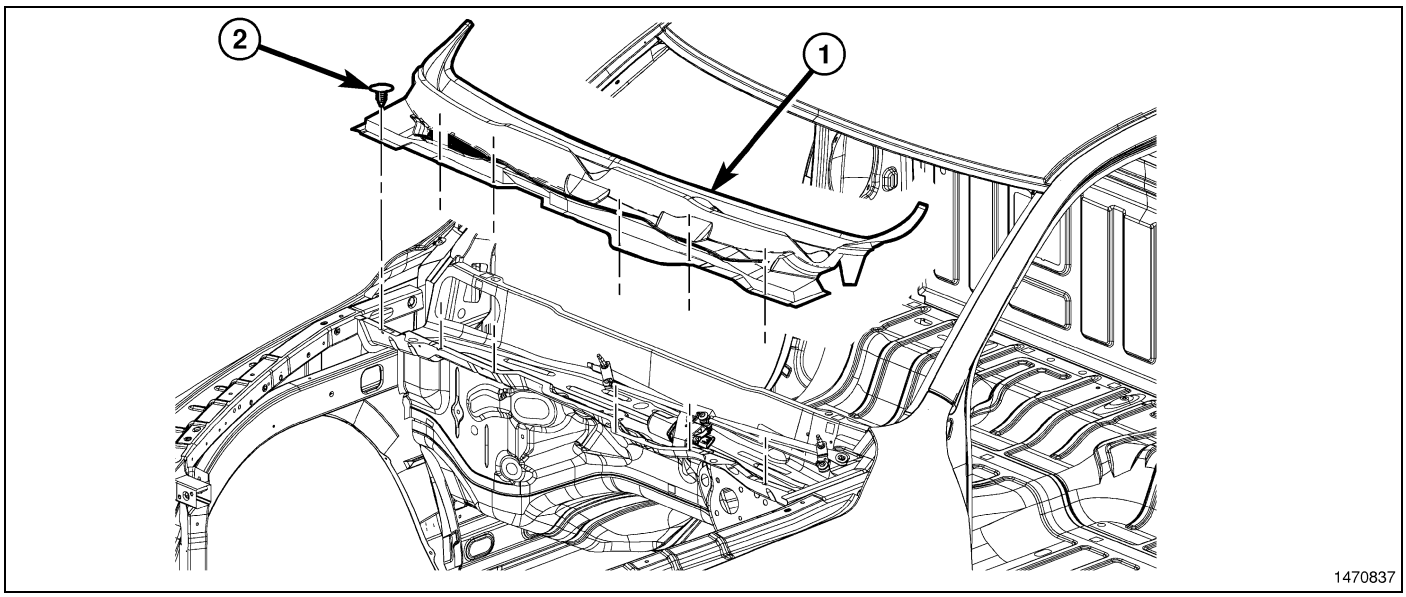

1. Position the panel assembly cowl cover (1) over the pivot shafts.
2. Push down on the cowl cover while moving it forward to make sure the six hooks are forward of the windshield edge.
3. Center cowl cover over the wiper pivot shafts, push down on the cowl cover then push rearward with both hands and slide hooks under the edge of the windshield.
4. Secure the front edge to the cowl by installing the push pins (2).
5. Fit soft rubber ends to fender by pulling up molded in feature to engage to fender flange.
6. Install the wiper arms (Refer to 08 - Electrical/8R - Wipers/Washers/ARM, Wiper - Installation).

DOOR, Fuel Fill

Removal

1. Open the fuel filler door (1).
2. Remove the two bolts (2) that secure the fuel filler door to the cargo box and remove the door.

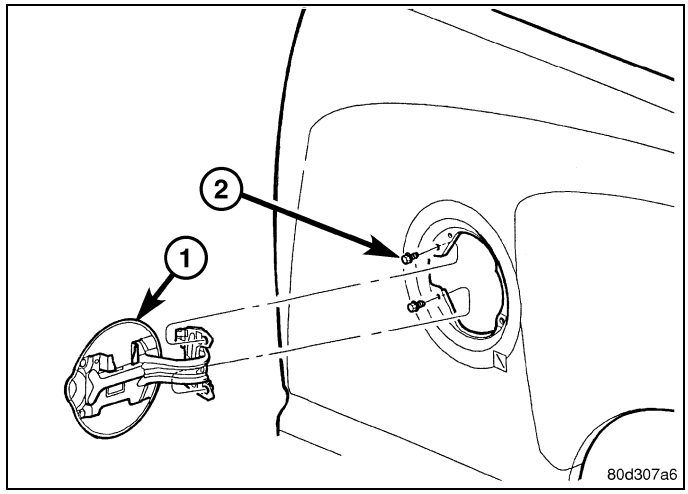

Installation

1. Position and align the fuel filler door (1) to the cargo box.
2. Install the two bolts (2) that secure the fuel filler door to the cargo box. Tighten the bolts to 9 N·m (80 in. lbs.).

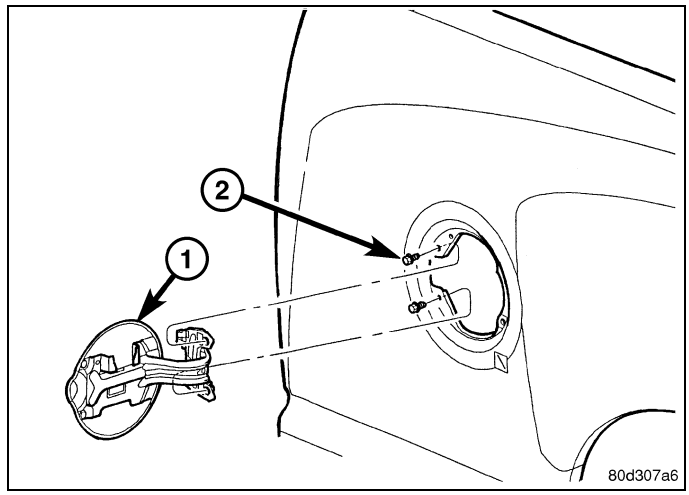

FENDER, Front

Removal

1. Remove the radio antenna if necessary. (Refer to 08 - Electrical/8A - Audio and Video/BODY AND CABLE, Antenna - Removal)

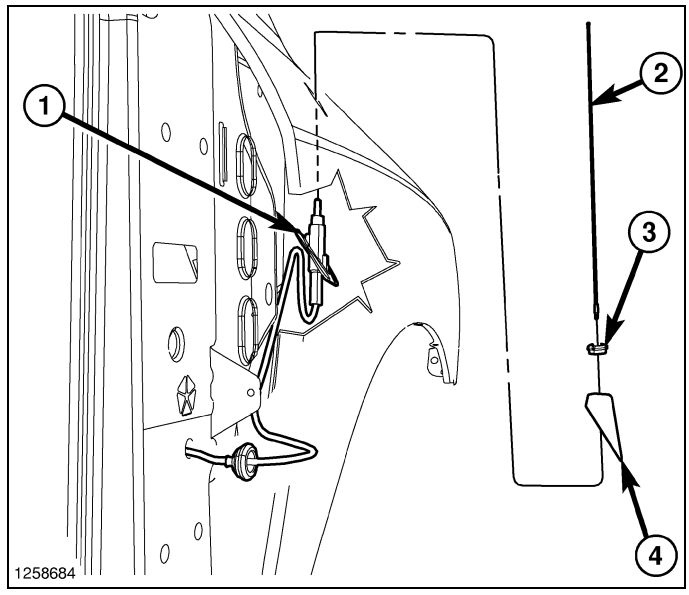

2. Remove the headlamp unit. (Refer to 08 - Electrical/8L - Lamps and Lighting/Lamps/Lighting - Exterior/UNIT, Front Lamp - Removal)
3. Open the door and remove the rear upper screw (1).

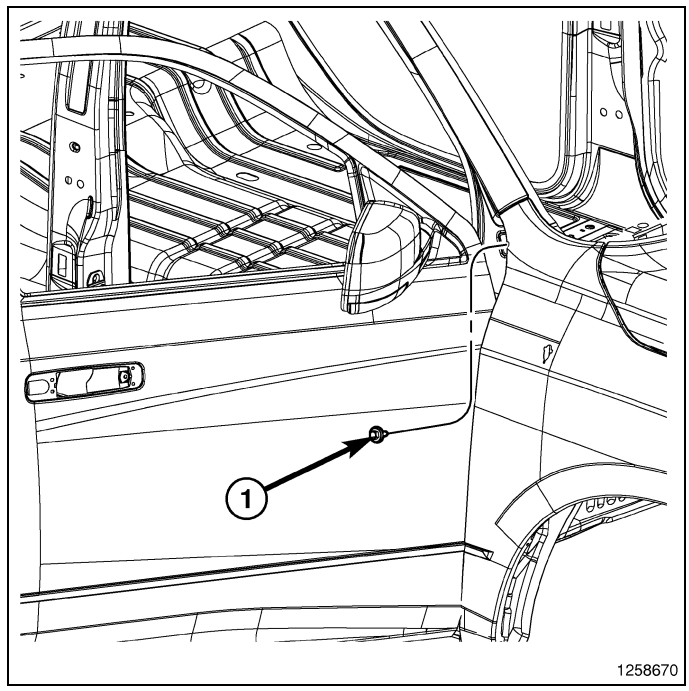

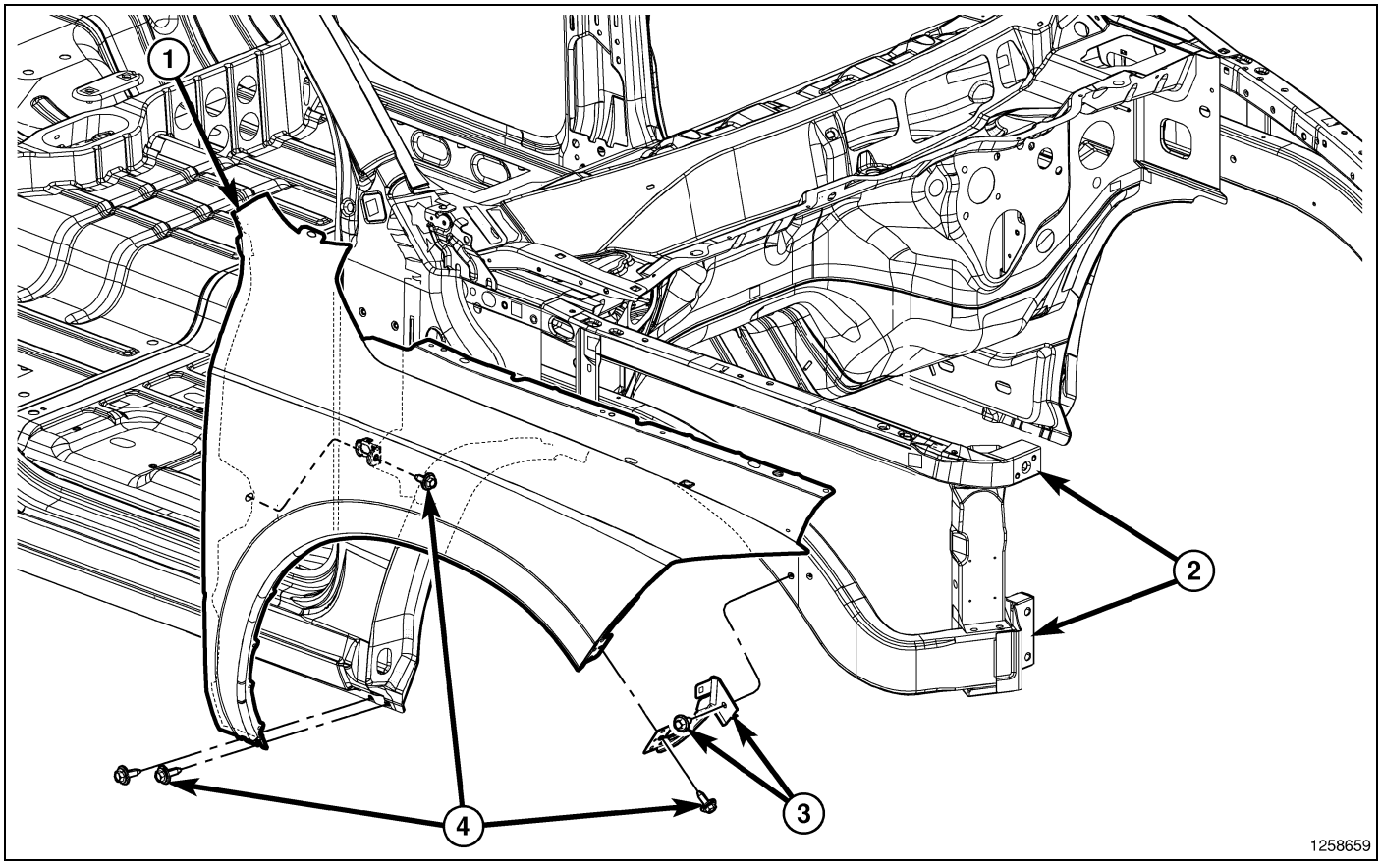

4. Remove the front fascia. (Refer to 13 - Frame and Bumpers/Bumpers/FASCIA, Front - Removal)
5. Remove the front wheel opening molding. (Refer to 23 - Body/Exterior/MOLDING - Removal)
6. Remove the wheelhouse splash shield. (Refer to 23 - Body/Exterior/SHIELD, Splash - Removal)
7. Remove the support screws (4).

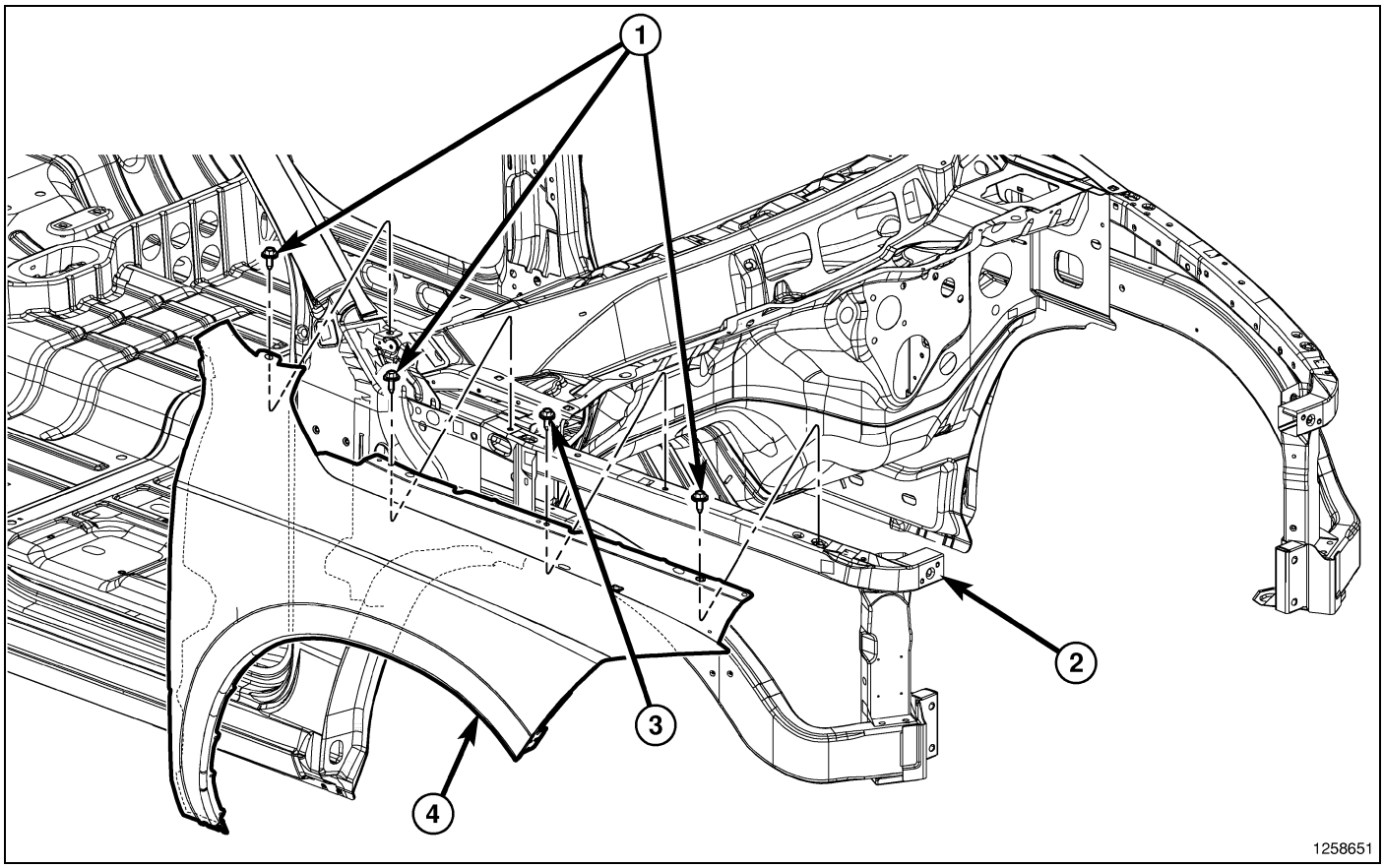

8. Remove the battery tray (depending on fender being serviced) (Refer to 08 - Electrical/8F - Engine Systems/Battery System/TRAY, Battery - Removal)
9. Remove the bolts (1) and on the right side (3) and remove the fender (4).

Installation

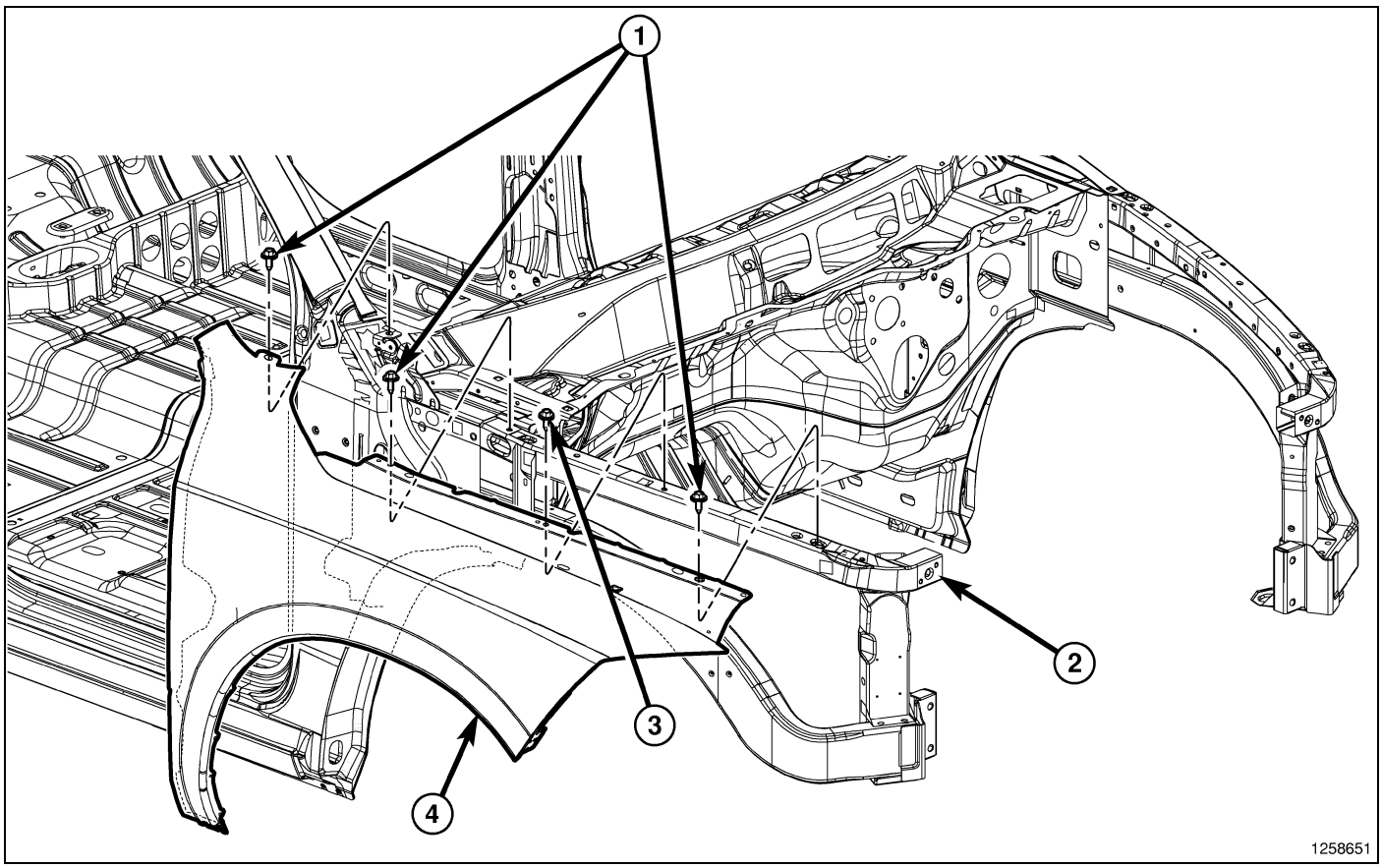

1. Position the fender (4) onto the hydroform fender supports (2).
2. Loosely install the bolts (1) and (3) for the right side.

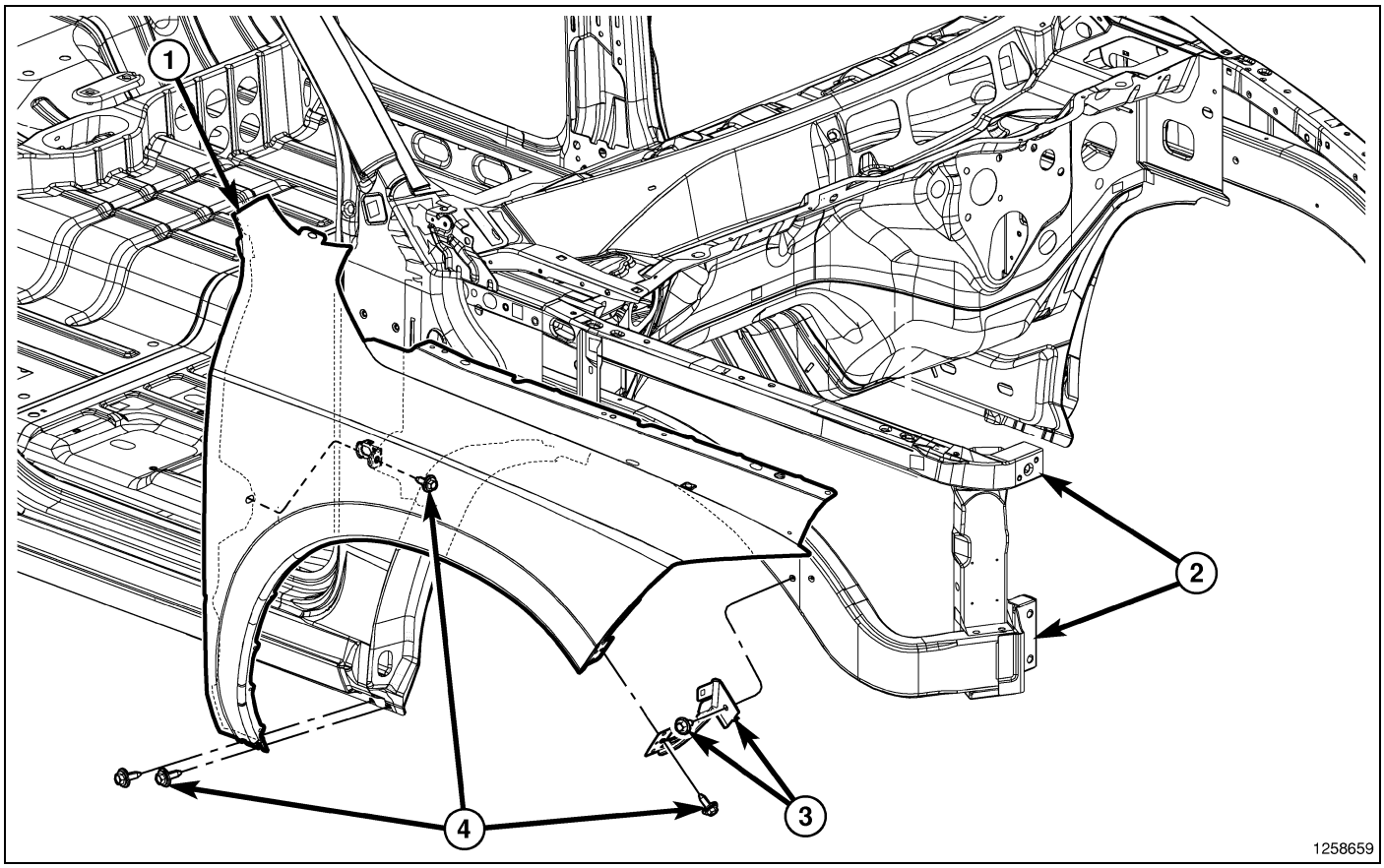

3. Loosely install the support bolts (4).
4. Check and adjust the fender gap and flush. (Refer to 23 - Body/Body Structure/Gap and Flush - Specifications)
5. Tighten all the bolts to 9 N·m (80 in. lbs.).
6. Install the bolt (1) and tighten to 9 N·m (80 in. lbs.).
7. Install the battery tray, if required (Refer to 08 - Electrical/8F - Engine Systems/Battery System/TRAY, Battery - Installation).
8. Install the wheelhouse splash shield (Refer to 23 - Body/Exterior/SHIELD, Splash - Installation).
9. Install the front wheel opening molding. (Refer to 23 - Body/Exterior/MOLDING - Installation)
10. Install the front fascia.(Refer to 13 - Frame and Bumpers/Bumpers/FASCIA, Front - Installation)
11. Install the headlamp unit. (Refer to 08 - Electrical/8L - Lamps and Lighting/Lamps/Lighting - Exterior/UNIT, Front Lamp - Installation)

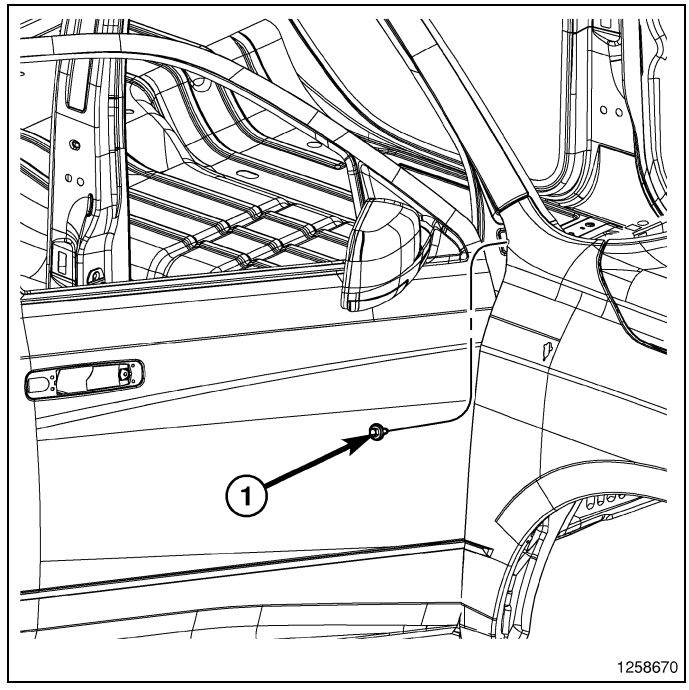

12. Install the antenna (Refer to 08 - Electrical/8A - Audio and Video/BODY AND CABLE, Antenna - Installation).

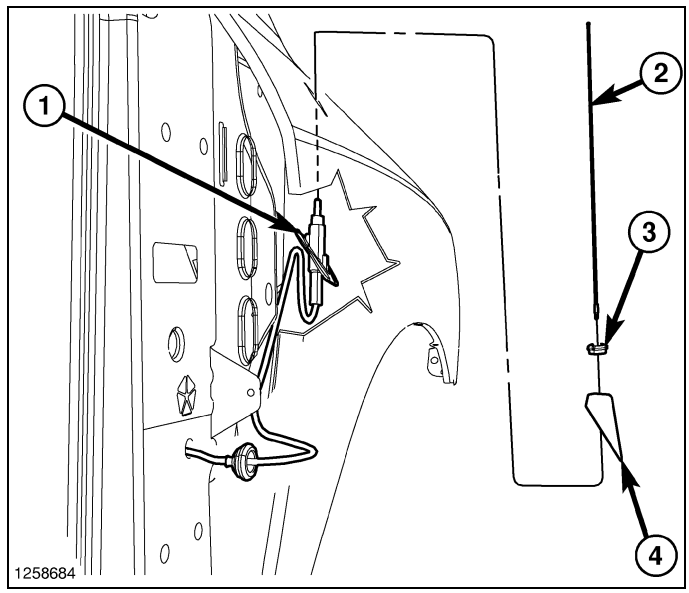

GRILLE

Removal

1. Remove the four push pins (1).
2. Remove the two plastic rivets (2) and remove the upper radiator seal.

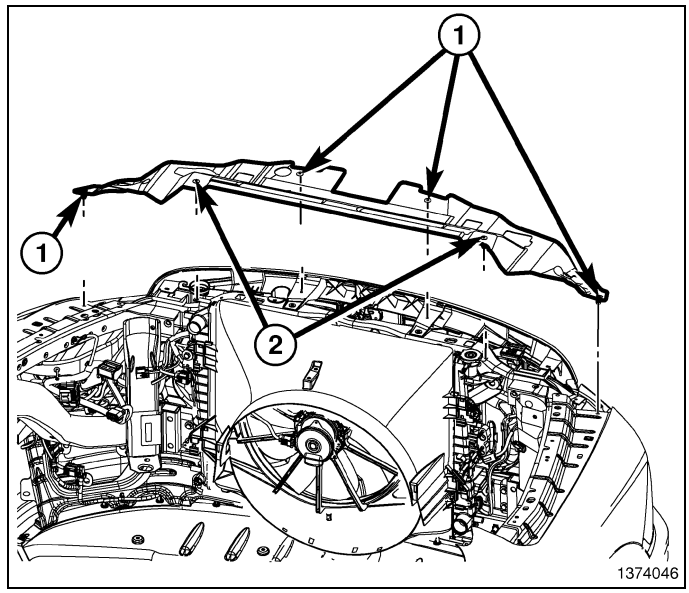

3. Remove the four upper grille support bolts (1).

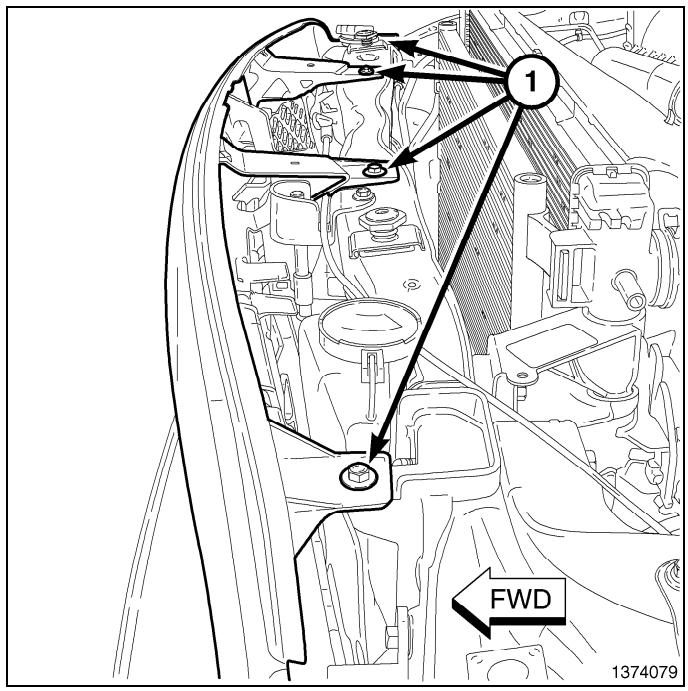

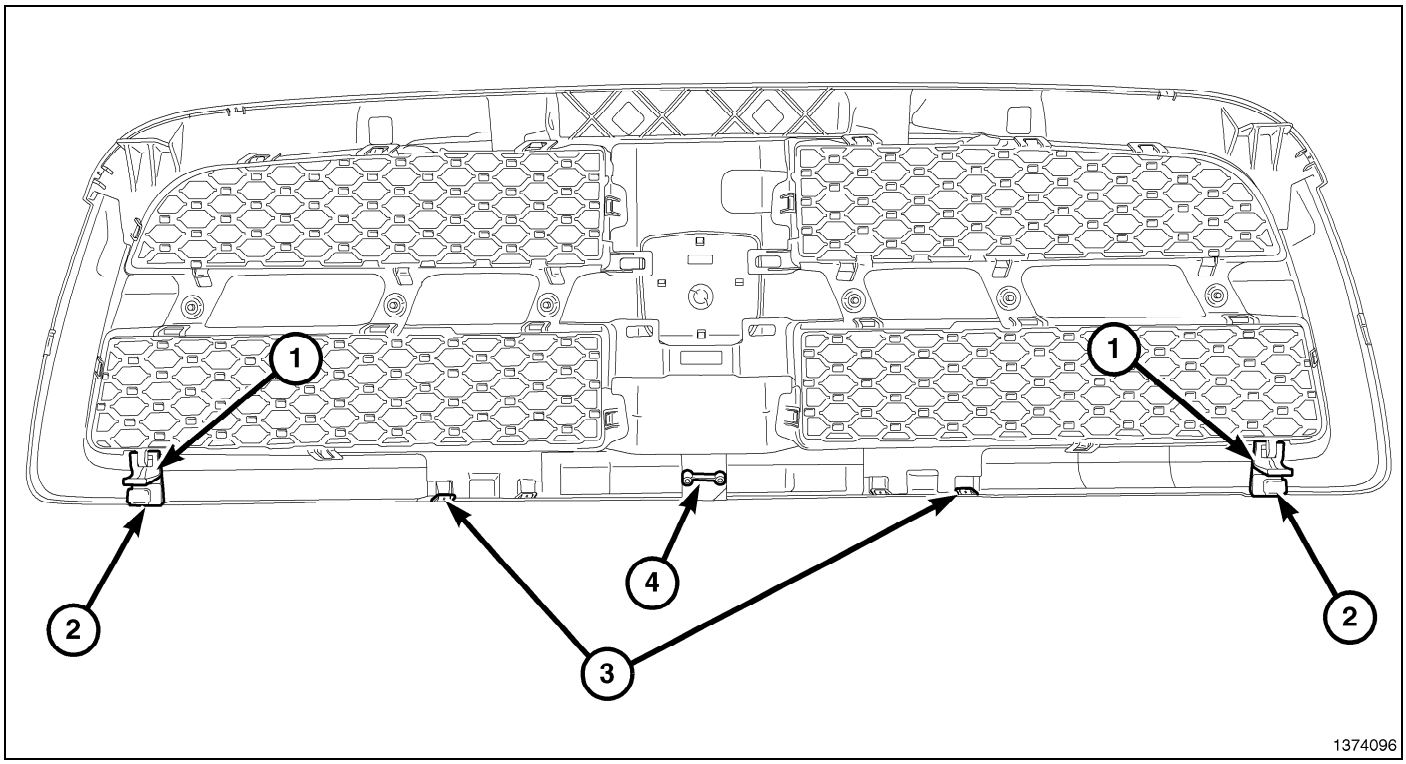

4. Using trim stick C-4755 or equivalent, separate the two lower spring clips (2).
5. Release the two lower hooks (1) and remove the grille.

Installation

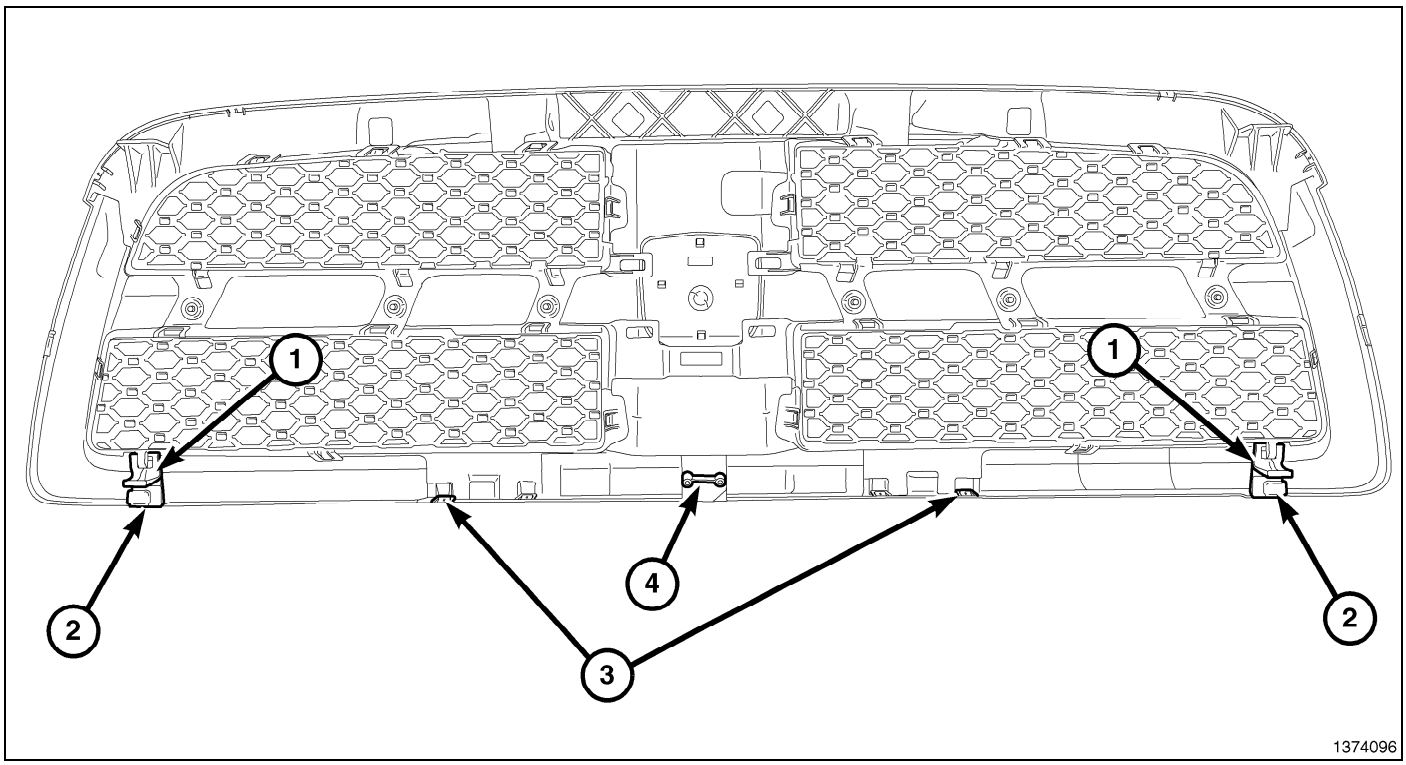

1. Position the grille onto the front of the vehicle and locate using the tab (4).
2. Working from behind the grille, make sure the lower tabs (3) are positioned through the slots in the fascia.
3. Seat the lower spring clips (2) fully.
4. Install the four upper bolts (1).

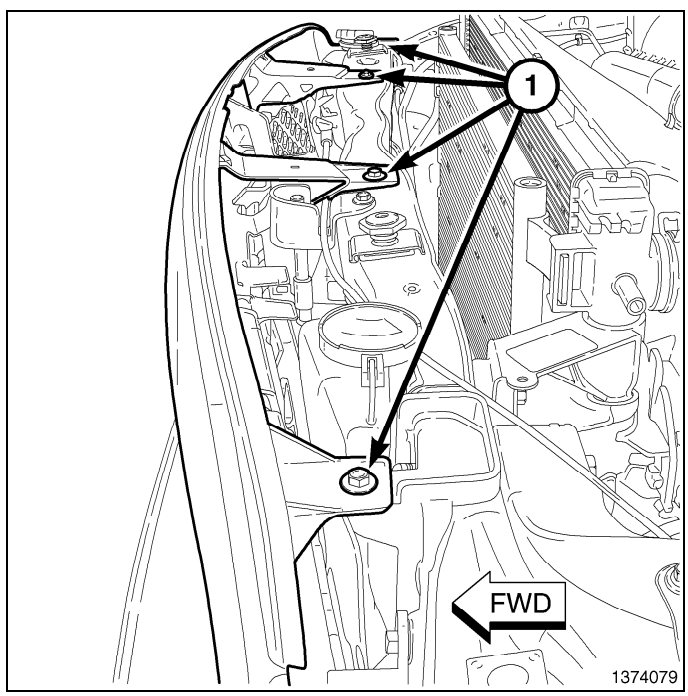

5. Position the upper radiator seal back into place over the radiator.
6. Install the four push pin fasteners (1) and seat fully.
7. Install the two plastic rivets (2) and seat fully.

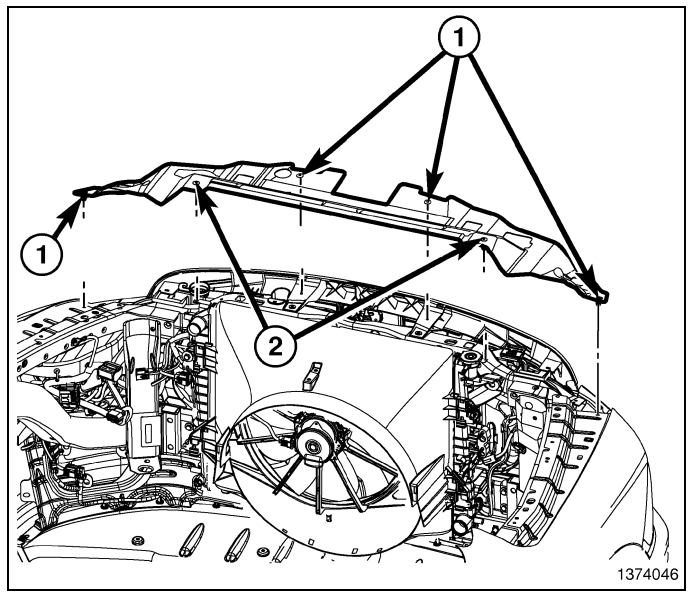

ISOLATOR, Body

Removal

NOTE: Quad and club cab model shown in the illustration. Body isolators for regular cab models are similar.

1. Loosen all cab to frame mounting bolts (2) (six regular cab, eight quad and club cab).

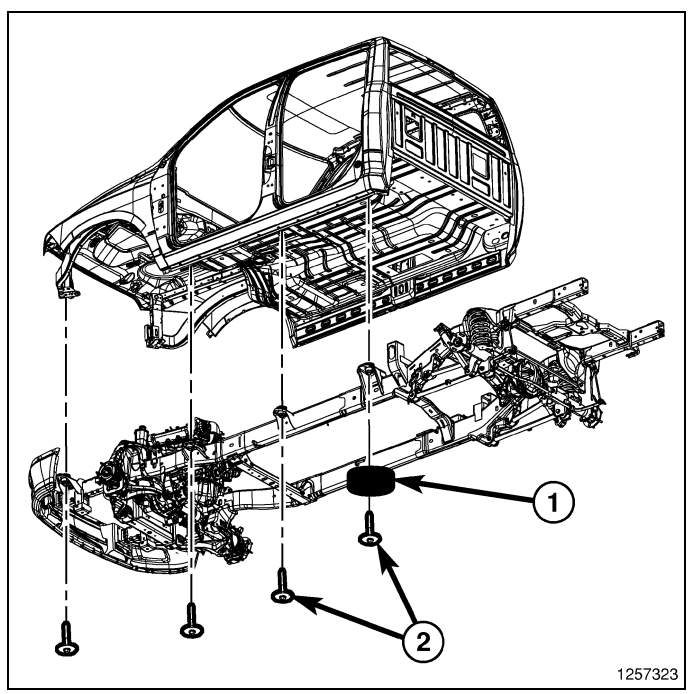

2. Using a suitable lifting device, lift the body to gain access to the isolators (1).
3. Remove the nuts (2) and remove the isolators as necessary.

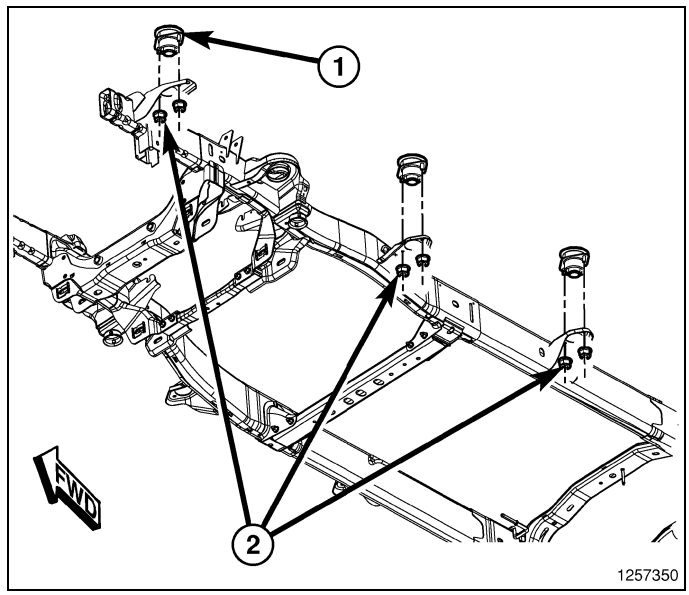

Installation

CAUTION: Whenever a body isolator bolt requires servicing or tightening, it is necessary to remove the bolt and install new thread locker compound to the threads.

NOTE: Quad cab model shown in the illustration. Body isolators for regular and club cab models are similar.

1. Position the isolators (1) under the cab as necessary.
2. Install the nuts (2).
3. Lower the cab onto the isolators (1) and install the mounting nuts (2).
4. Tighten the nuts to 68 N·m (50 ft. lbs.).

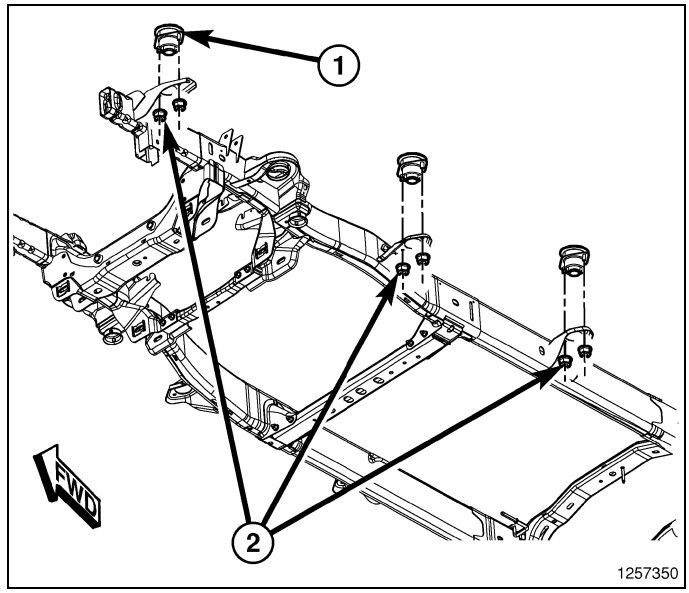

5. Lower the cab onto the isolators and install the mounting bolts (2) and mass damper (1) as necessary (six Regular cab, eight Quad Cab).
6. Tighten the mounting bolts to 108 N·m (80 ft. lbs.).

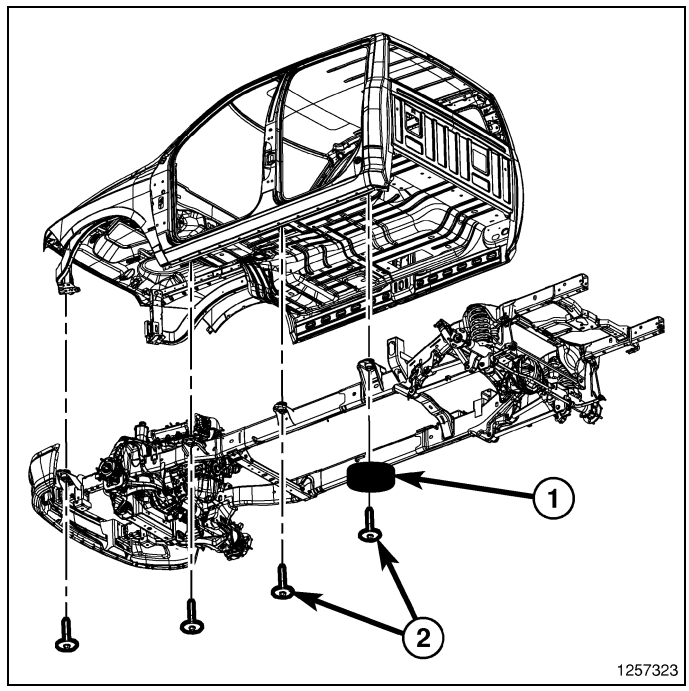

MIRROR, Outside Rearview

Removal

1. Remove the door trim panel as necessary to gain access to the mirror. (Refer to 23 - Body/Door - Front/ PANEL, Door Trim - Removal).
2. If equipped, disconnect the wire harness connector (2) from the door module (3) and separate the support clip.

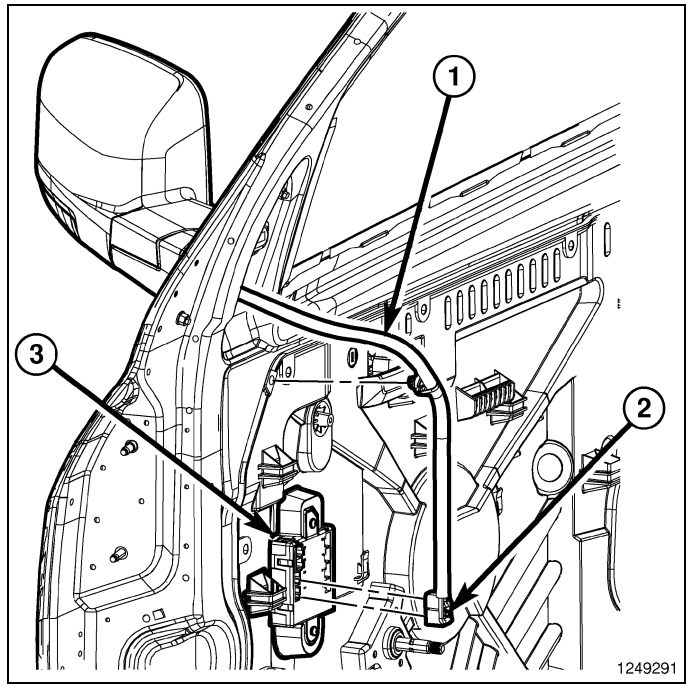

3. Remove the three nuts (2) that secure the mirror to the door and carefully remove the mirror.

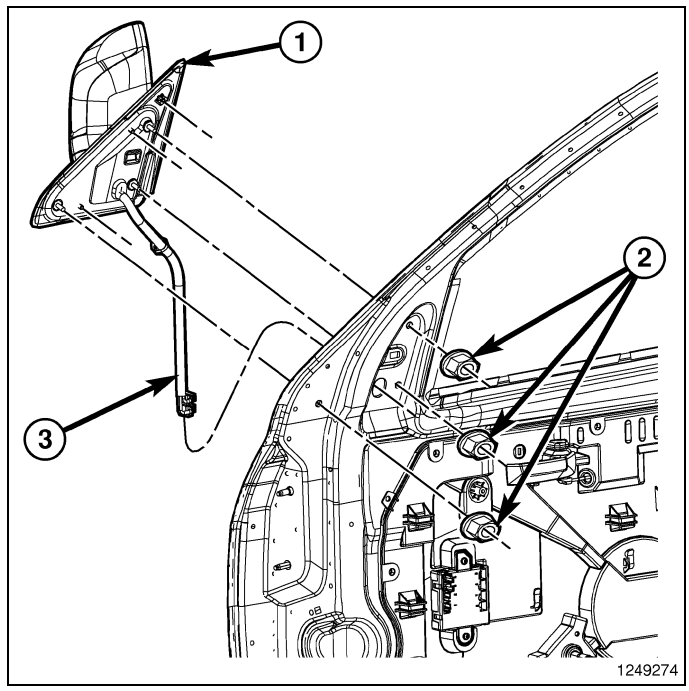

Installation

1. If equipped, position the wire harness (3) through the door.
2. Position the mirror (1) onto the door.
3. Install the three nuts (2) that secure the mirror to the door. Tighten the nuts to 7 N·m (60 in. lbs.).

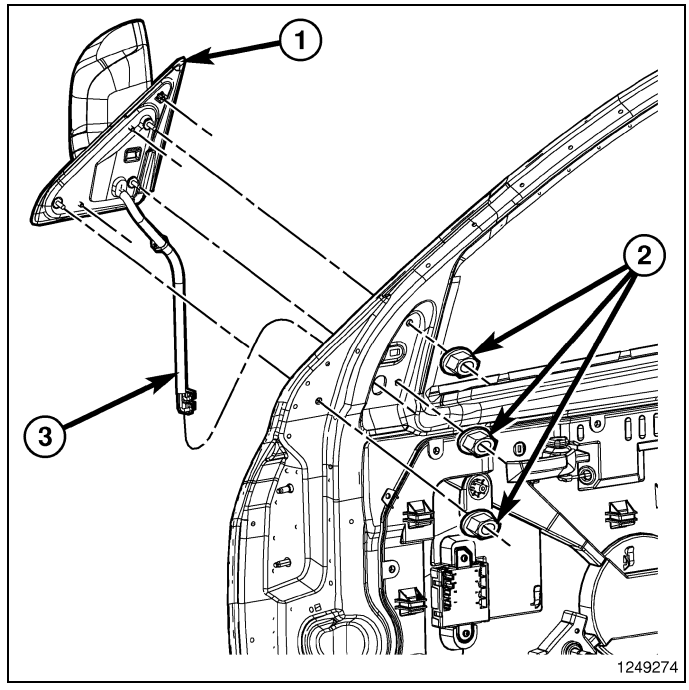

4. If equipped, connect the wire harness connector (2) to the door module (3).
5. Install the door trim panel. (Refer to 23 - Body/Door - Front/PANEL, Door Trim - Installation)

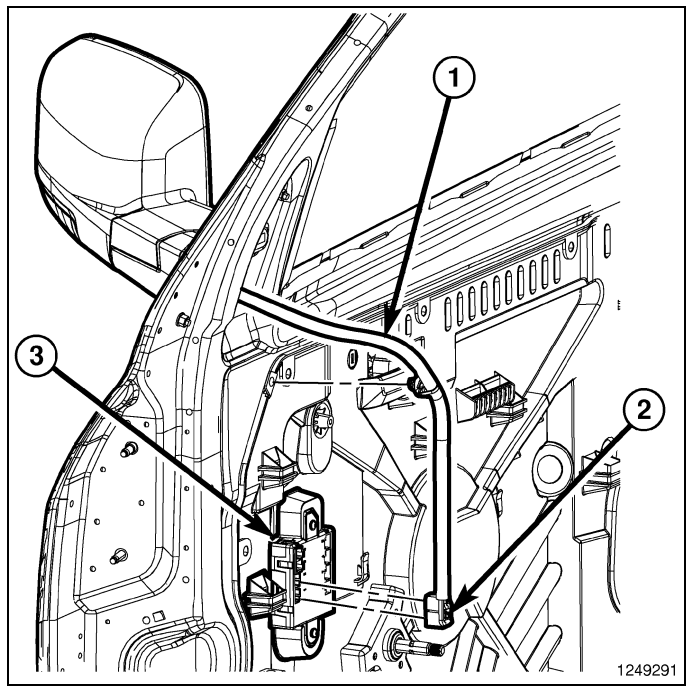

MIRROR, Outside Rearview, Glass

Removal

1. Move the mirror into the full down position.
2. Firmly and carefully grasp the mirror at the top (1) and pull out to separate the upper mounting clips.

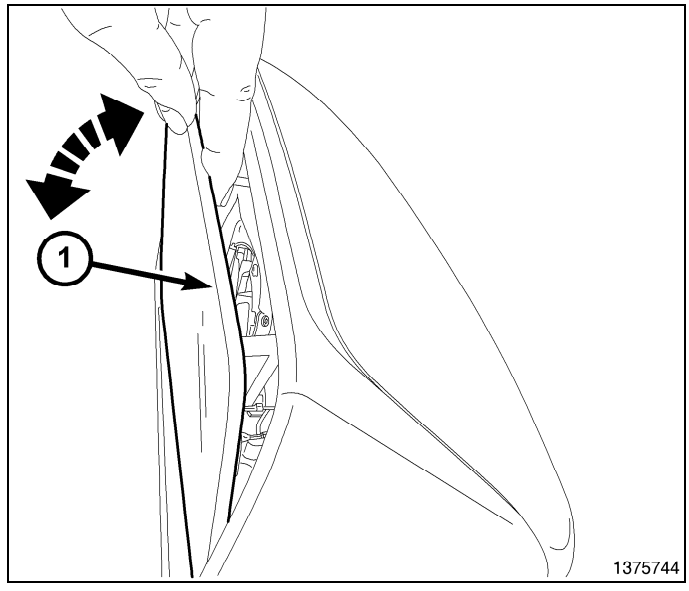

3. Separate the lower hinge type clips (1) and remove the mirror glass assembly.
4. Disconnect the electrical connectors (2), if equipped.

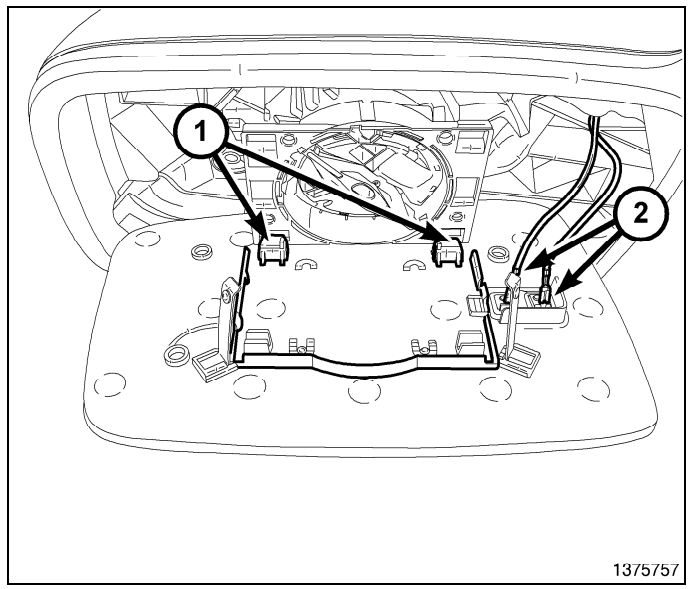

Installation

1. Connect the electrical connectors (2), if equipped.
2. Position the mirror glass assembly into the housing and seat the lower hinge type clips (1) fully.

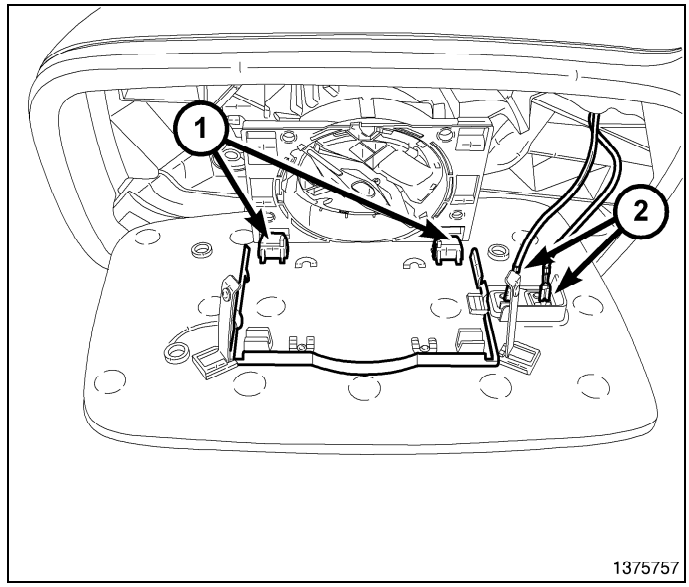

3. Push the top of the glass (1) back into the housing and seat the mounting clips fully.

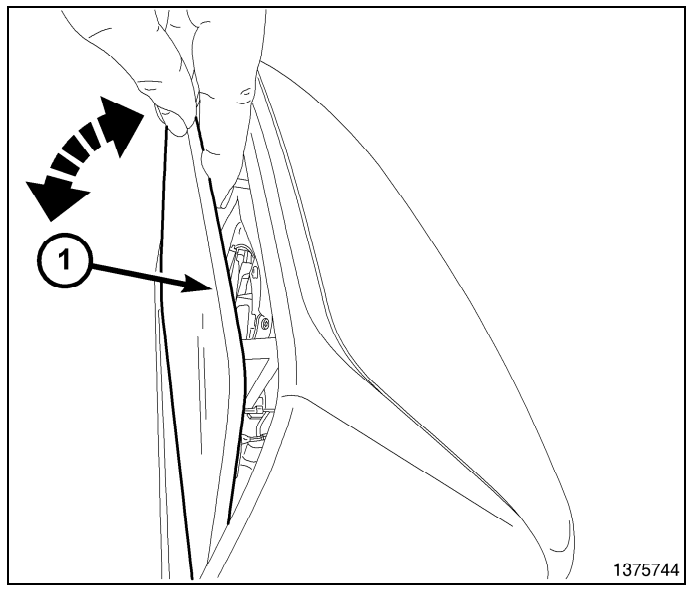

MOLDING, Front Wheel Opening

Removal

1. Remove the seven fender flare retainers (3).

NOTE: Make sure the push-pin is completely removed.

2. Cut off the alignment push-pin (2) located in the middle of the fender flare.

CAUTION: Use of a trim stick maybe necessary to remove the fender flare. Use care not to scratch the paint.

3. Remove the fender flare by starting at the bottom rear of the fender flare.

NOTE: Make sure all adhesive tape is removed.

4. Remove the adhesive tape from the fender using 3M General Purpose Adhesive Cleaner or equivalent.

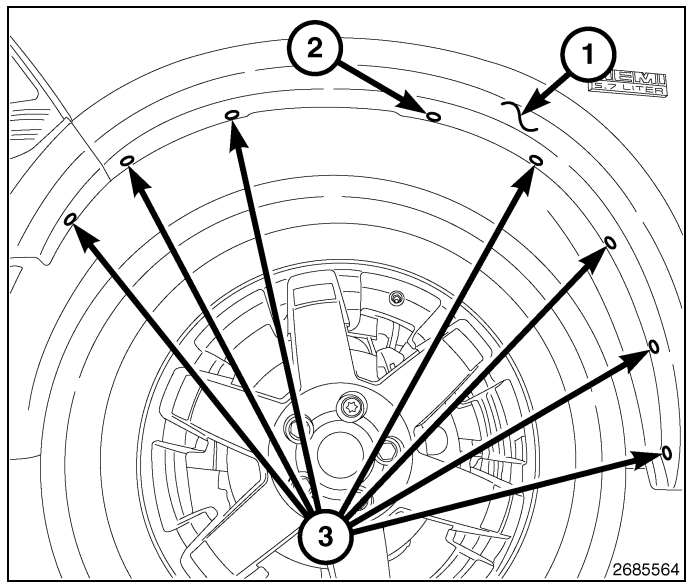

Installation

NOTE: Be sure the surface is clean and dry before installing the fender flare.

1. Wipe the fender surface with alcohol or equivalent and let dry for three minutes.
2. Align new front fender flare (1) by installing the center push-pin (2) first.

NOTE: It is important for a correct fit to hold the flare tight against the fender as the screws are tightened.

3. Loosely install the seven fender flare retainers.
4. Tighten the seven retainers (3) in sequence starting from the second from the front screw, then the most front screw, then the rest of the screws in the direction from front to rear.

   Tighten retainers to 2.8 N·m (25 In. Lbs.).
5. If any gaps are found, loosen the nearest retainers, apply pressure to the gap area and retighten the retainers. Repeat until all gaps are gone.

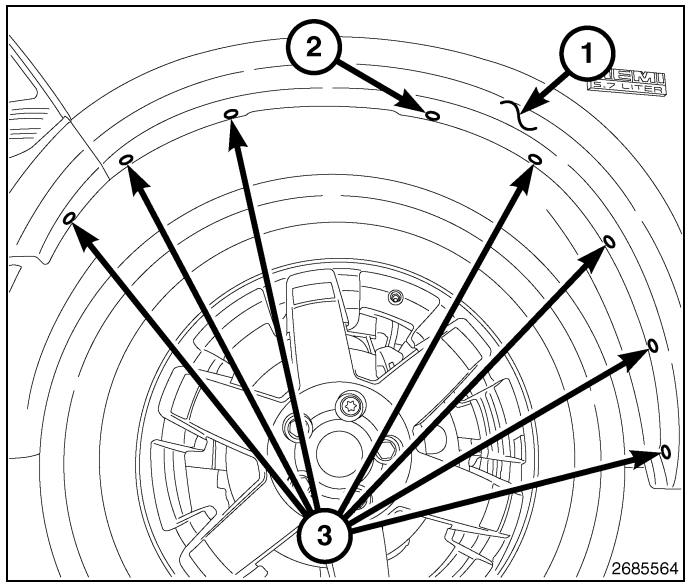

NOTE: Do not remove protective film until fender flare is secured and fits with no gaps.

6. Remove the protective film from the back of the fender flare and apply inward pressure the whole length of the fender flare.

MOLDING, Rear Wheel Opening

Removal

1. Remove the eight fender flare retainers (3).

NOTE: Make sure the push-pin is completely removed.

2. Cut off the alignment push-pin (2) located in the middle of the fender flare.

CAUTION: Use of a trim stick maybe necessary to remove the fender flare. Use care not to scratch the paint.

3. Pull the fender flare off, starting at the bottom rear of the fender flare.

NOTE: Make sure all adhesive tape is removed.

4. Remove the adhesive tape from the fender using 3M General Purpose Adhesive Cleaner or equivalent.

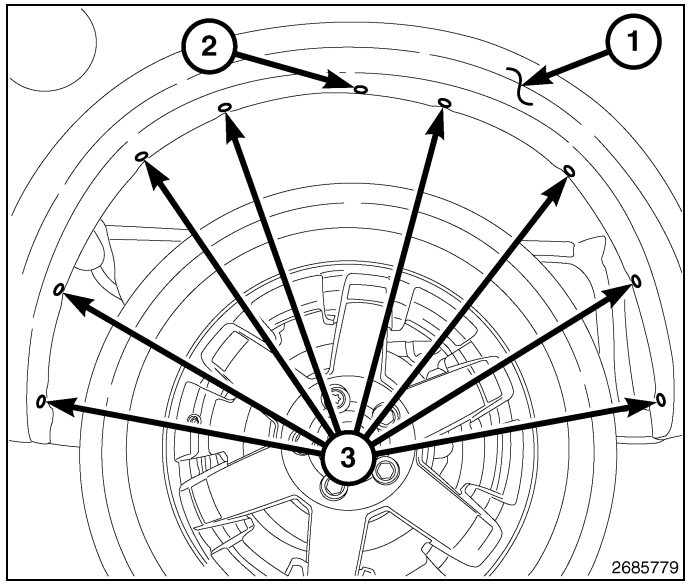

Installation

NOTE: Be sure the surface is clean and dry before installing the rear fender flare.

1. Wipe the fender surface with alcohol and let dry for three minutes.
2. Align new rear fender flare (1) by installing the center push-pin (2) first.

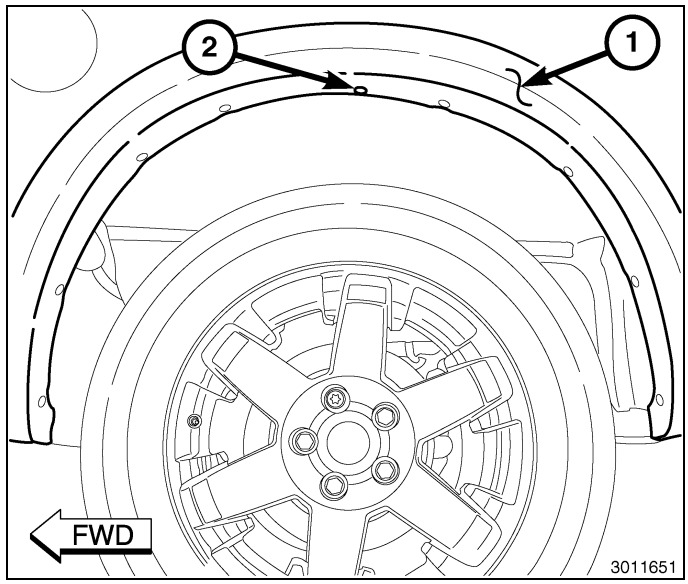

NOTE: Incorrect fender flare to fender flange installation will cause gaps between the fender and fender flare.

3. Align the fender flare so that the groove at the bottom of the fender flare (1) completely wraps around the fender flange (2).

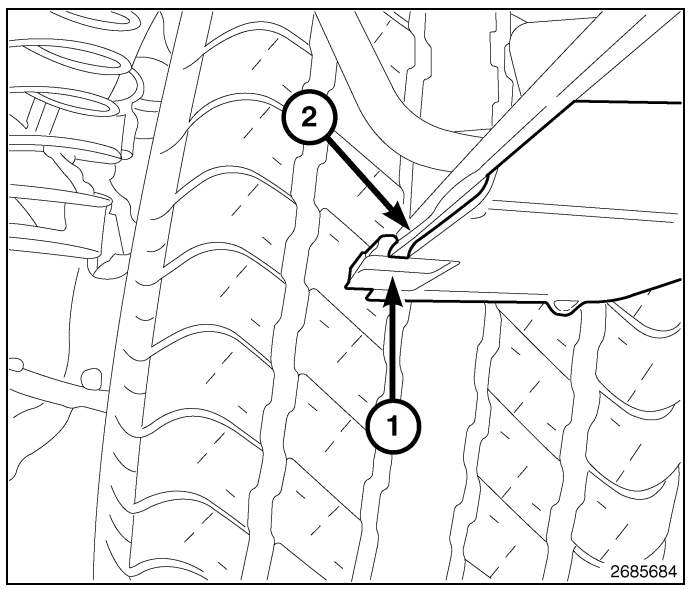

NOTE: It is important for a correct fit to hold the flare tight against the fender as the screws are tightened.

4. Loosely install the eight fender flare retainers (3).

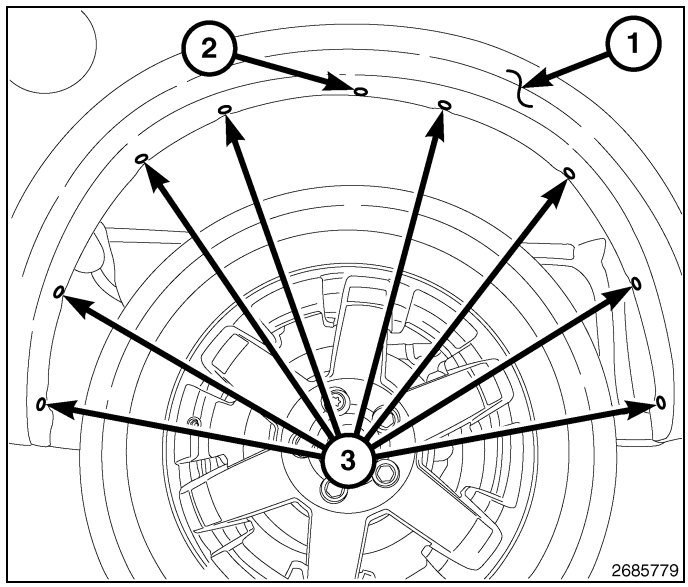

5. Tighten the retainers to 2.8 N·m (25 In. Lbs.) on fender flare (1) using the sequence shown.
6. If any gaps are found, loosen nearest retainer, apply pressure to the gap area and retighten the retainer. Repeat until all gaps are gone.

NOTE: Do not remove protective film until fender flare is secured and fits with no gaps.

7. Remove the protective film from the back of the fender flare and apply inward pressure the whole length of the fender flare.

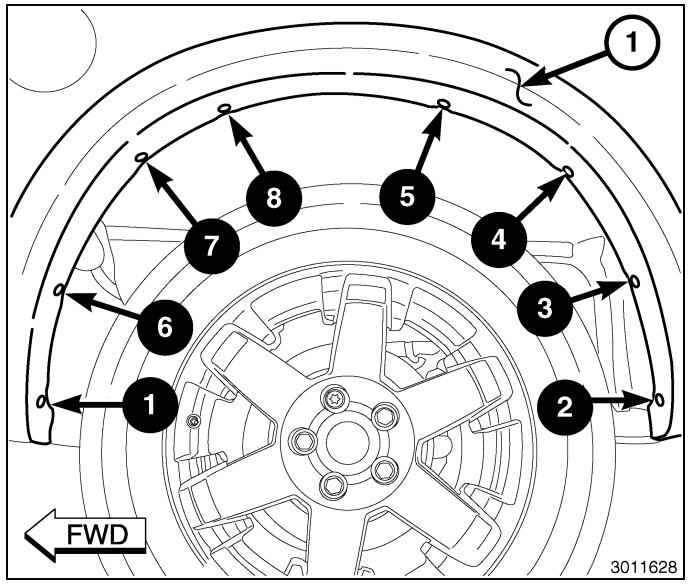

NAMEPLATE

Removal

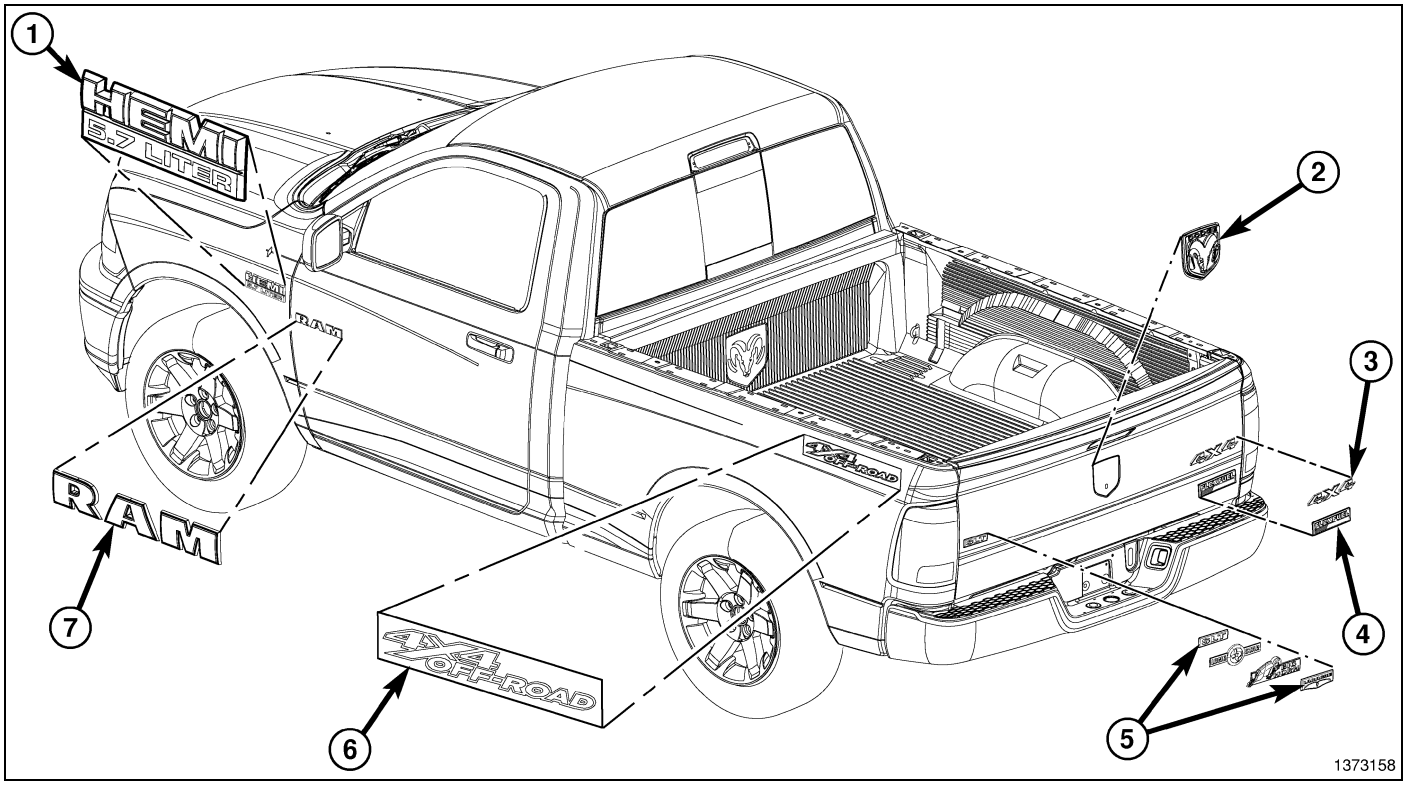

NAME PLATES

1 - "HEMI 5.7 LITER"

2 - “RAM HEAD MEDALLION”

3 - "4X4"

4 - “FLEX FUEL E85 ETHANOL”

5 - "SLT", "LONE STAR", "BIG HORN", "LARAMIE"

6 - "TRX4 OFF-ROAD"

7- “RAM”

NOTE: Standard Cab model shown in the illustration. Exterior name plates and decals for all other cab models are similar. Exterior name plate and decal usage vary by model.

1. As a guide for installation, apply a length of masking tape on the body, parallel to the top edge and, to one end of the name plate or decal being removed.

CAUTION: Do not exceed 52° C (120° F) when heating name plates, decals or body panels. Failure to follow this caution may result in damage to the name plates, decals and/or the vehicle paint finish.

2. If the temperature is below 21° C (70° F), warm the name plate or decal with a heat lamp or heat gun.

NOTE: The exterior name plates are attached to the body with adhesive tape.

3. Using a trim stick C-4755 or equivalent, carefully remove the name plate or decal from the body panel, as necessary.

Installation

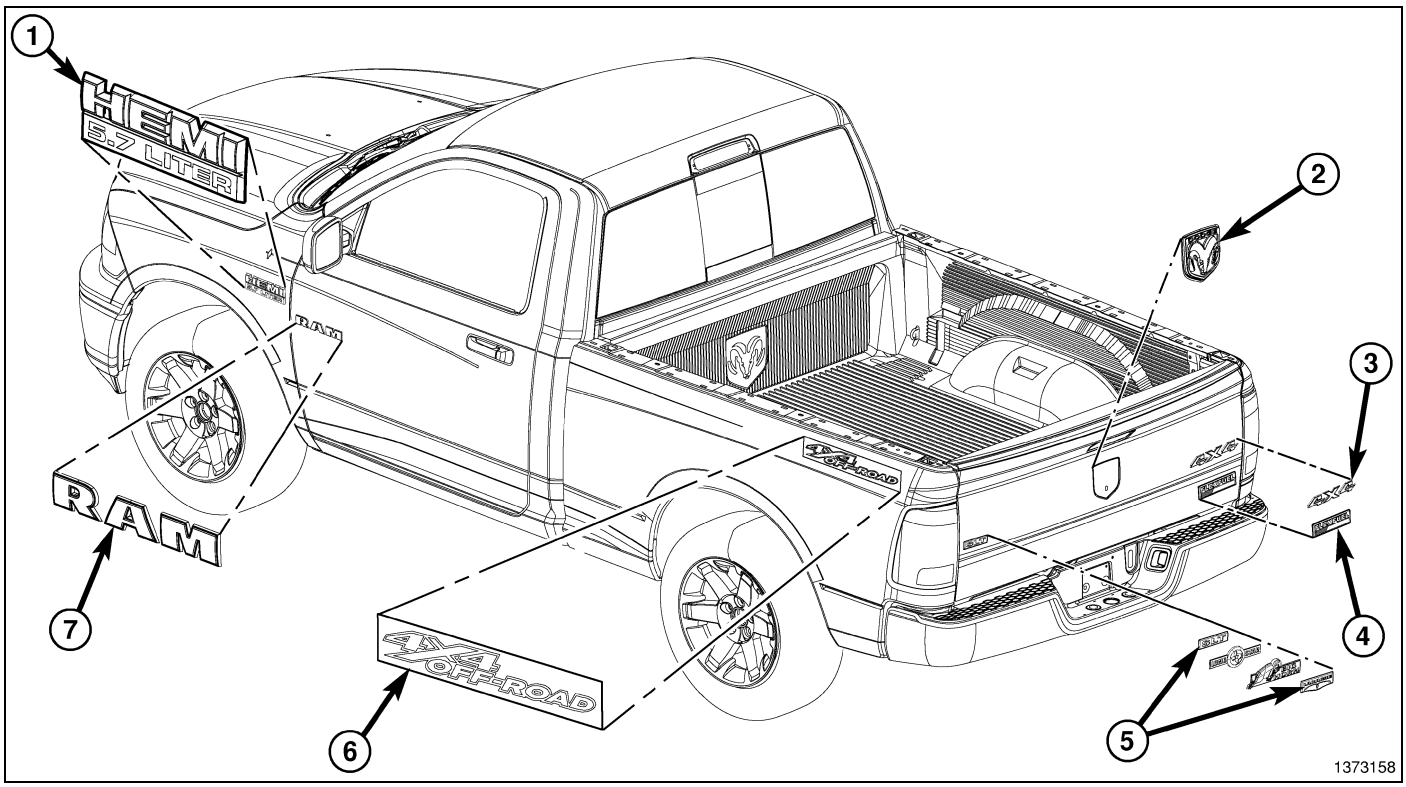

NAME PLATES

1 - “RAM”

2 - "TRX4 OFF-ROAD"

3 - “SLT”, "LONE STAR", "BIG HORN", "LARAMIE"

4 - “FLEX FUEL E85 ETHANOL”

5 - “4X4”

6 - “RAM HEAD MEDALLION”

NOTE: Standard Cab model shown in the illustration. Exterior name plates and decals for all other cab models are similar. Exterior name plate and decal usage vary by model.

1. Thoroughly clean all residue from the name plate or decal attachment areas of the body.
2. Wipe the attachment areas with a clean, lint-free cloth, moistened with a 50% solution of water and alcohol and then wipe dry the areas immediately with a dry, lint-free cloth.

CAUTION: Do not exceed 52° C (120° F) when heating name plates, decals or body panels. Failure to follow this caution may result in damage to the name plates, decals and/or the vehicle paint finish.

NOTE: If ambient temperatures are below 21° C (70° F), warm the name plate or decal and body panel with a heat lamp or gun to assure proper adhesion.

3. Remove the protective covering from the back of name plate or decal and position the name plate or decal onto the body using the previously installed guide tape.

NOTE: To ensure proper name plate or decal adhesion, apply consistent and uniform pressure of approximately 40 p.s.i. over the entire surface of each name plate or decal.

4. Install the name plate or decal onto the body.

SHIELD, Splash, Front Wheelhouse

Removal

1. Release the ABS harness push pin from the inner shield.
2. Remove the push pins (2, 3, 4).

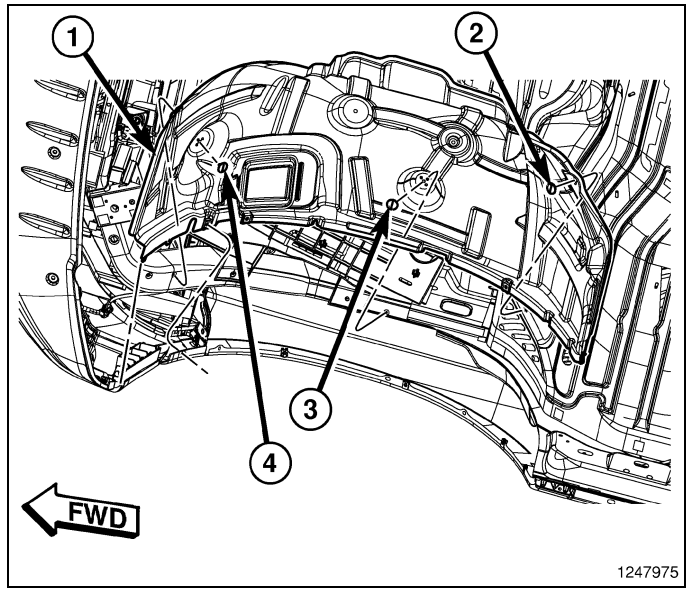

3. Remove the inner screws (3 and 4).
4. Remove the screws securing the shield to the fascia and the outer fender flange (2).
5. Release the outboard endge of the shield (1) from the fender flange and remove the shield (1).

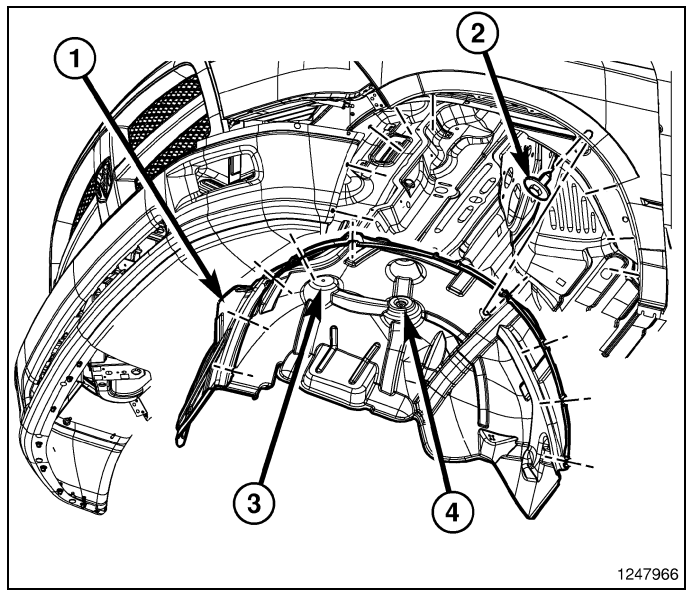

Installation

1. Position the shield (1) inside the wheelhouse opening and tuck the outboard edge of the shield behind the flange on the fender outer panel.
2. Align and secure the outboard edge of the splash shield to the outer fender. Drive the screws (2) through the fender flange and into the shield.
3. Install the screw (3) and install the screw (4).

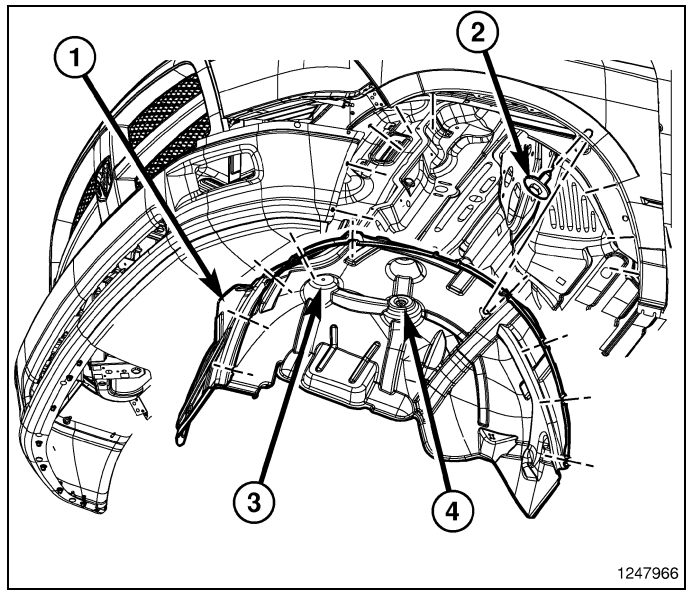

4. Install the push pin (2) and seat fully.
5. Install the push pin (4) and seat fully.
6. Install the push pin (3) and seat fully.
7. Secure the ABS harness push pin to the inner shield and seat fully.

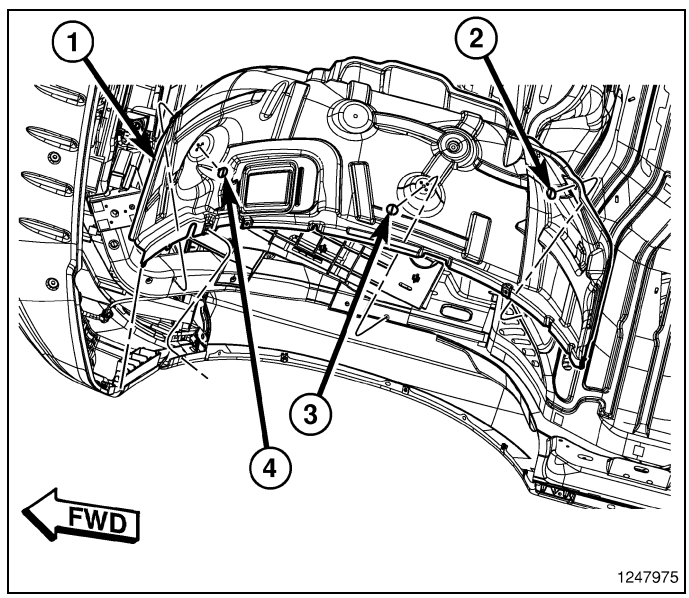

SHIELD, Splash, Rear Wheelhouse

Removal

1. Remove the inner screw (1).
2. Remove the three screws (3) and remove the splash shield (2).

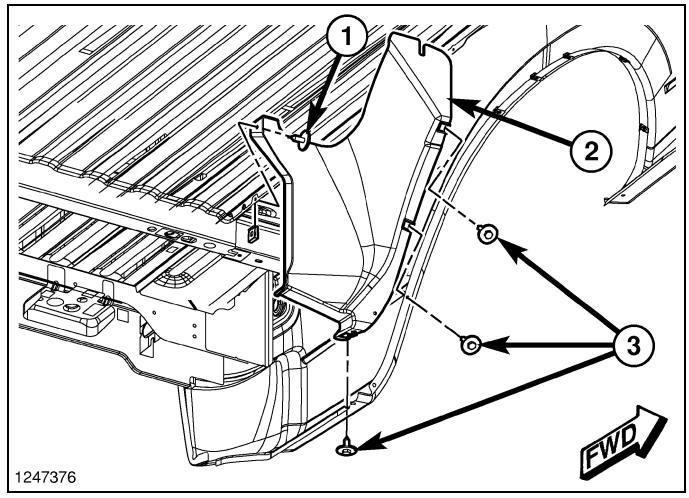

Installation

1. Position the rear splash shield (2) onto the cargo box.
2. Install the three screws (3).
3. Install the inner screw (1).

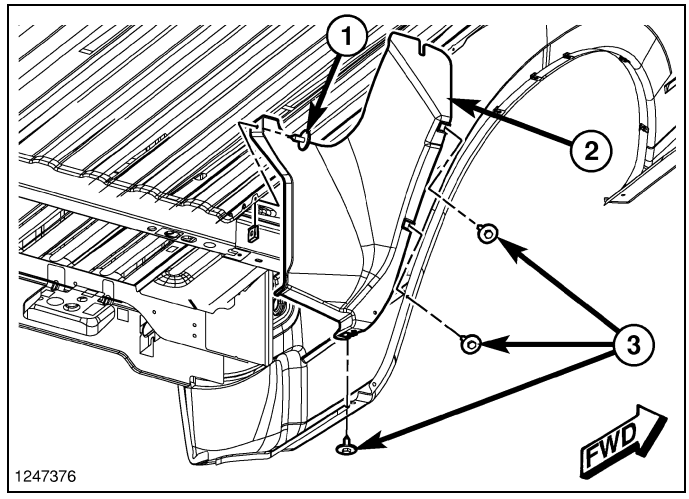

TIE DOWN, Pickup Box

Removal

1. Remove the two bolts (1) that secure each cargo box tie down (2) to the cargo bed and remove the cleats as necessary.

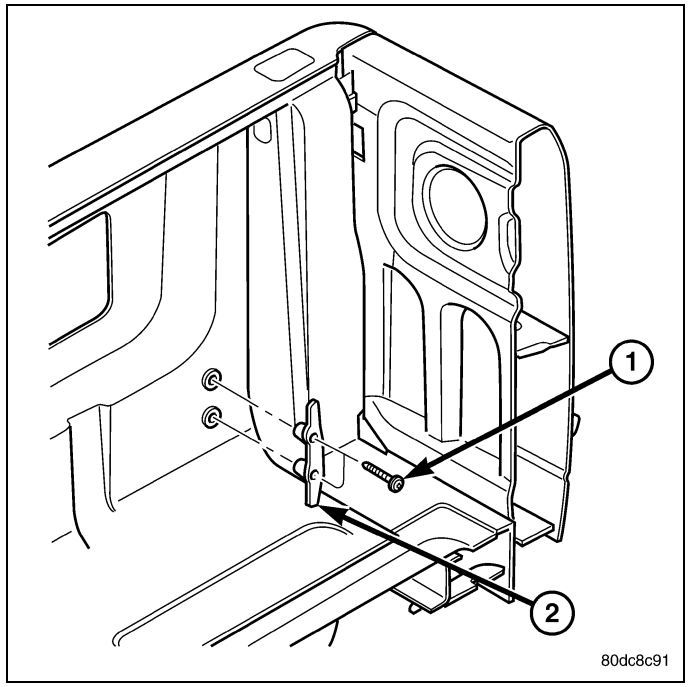

Installation

1. Position the cargo box tie downs (2) to the cargo box as necessary.
2. Install the two bolts (1) that secure each cargo box tie down to the cargo box. Tighten the bolts to 34 N·m (25 ft. lbs.).

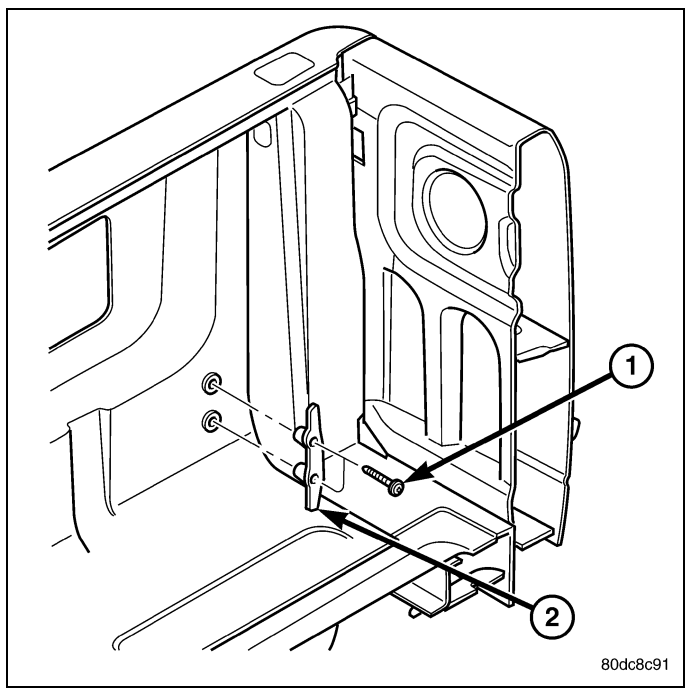

HOOD

TABLE OF CONTENTS

page

HOOD
- **CABLE, HOOD RELEASE**
  - REMOVAL 152
  - INSTALLATION 153
- **HINGE, HOOD**
  - REMOVAL 155
  - INSTALLATION 155
- **HOOD**
  - REMOVAL 156
  - INSTALLATION 157

page

- **LATCH, HOOD**
  - REMOVAL 157
  - INSTALLATION 158
- **PROP, GAS**
  - REMOVAL 159
  - INSTALLATION 161
- **STRIKER, HOOD**
  - REMOVAL 161
  - INSTALLATION 162

Hood

CABLE, Hood Release

Removal

1. Release the cable end (1) from the latch mechanism (5) and release the collar (2) from the latch.
2. Release the support clip (4).

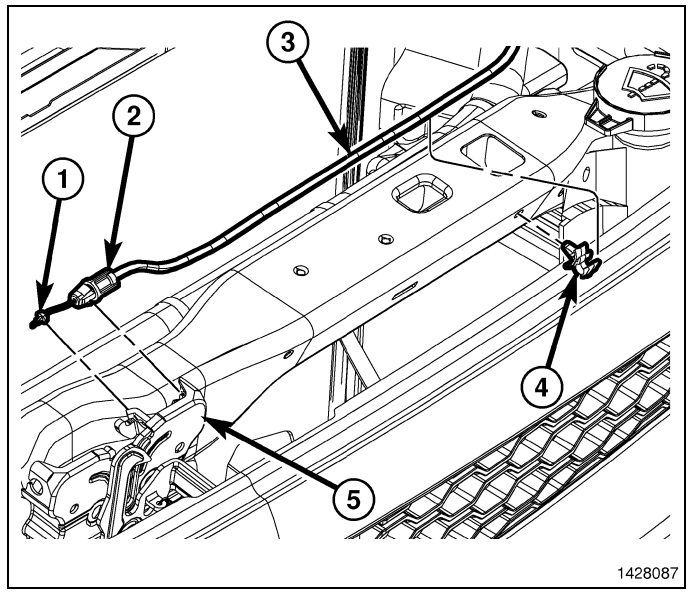

3. Remove the three hood release cable retainers (2) from the upper radiator crossmember and the left fender rail.

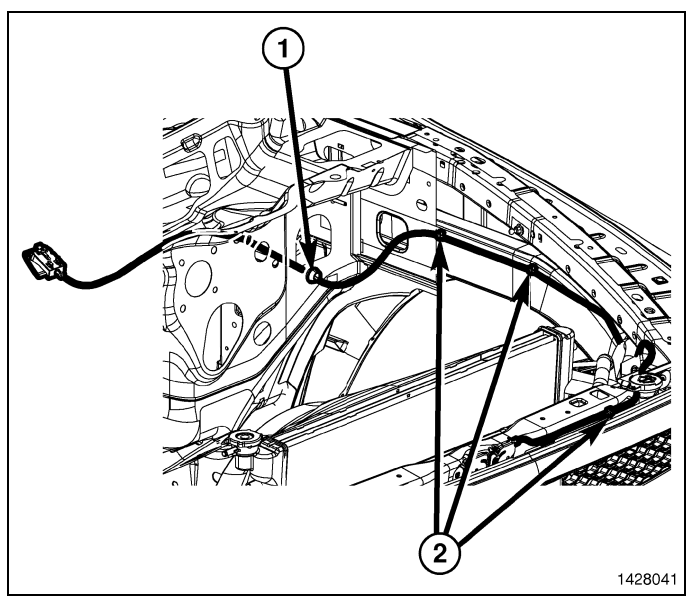

4. From inside the vehicle, release the clips attaching the hood release handle to the instrument panel.
5. Remove the grommet from the cowl panel and remove the hood release cable and handle assembly.

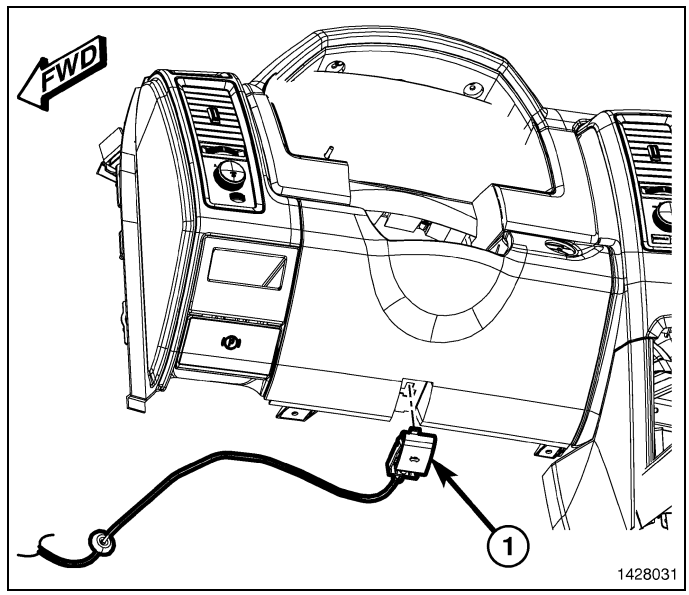

Installation

1. Position the handle (1) and align the clips to the instrument panel feature location.
2. Press handle to seat the clips to the instrument panel.

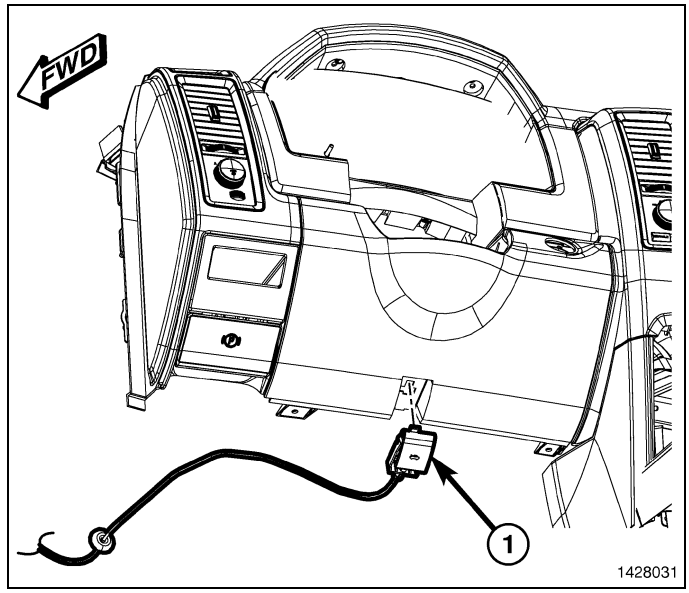

3. Route the latch end of hood latch release cable tube through the dash panel and into the engine compartment. Feed the entire length of the cable through the dash panel.
4. Press the grommet (1) into the hole in the dash panel by hand until fully seated.
5. Route the cable along the fender rail and to the outboard and front of the vertical support post and seat the mounting clips (2) fully.

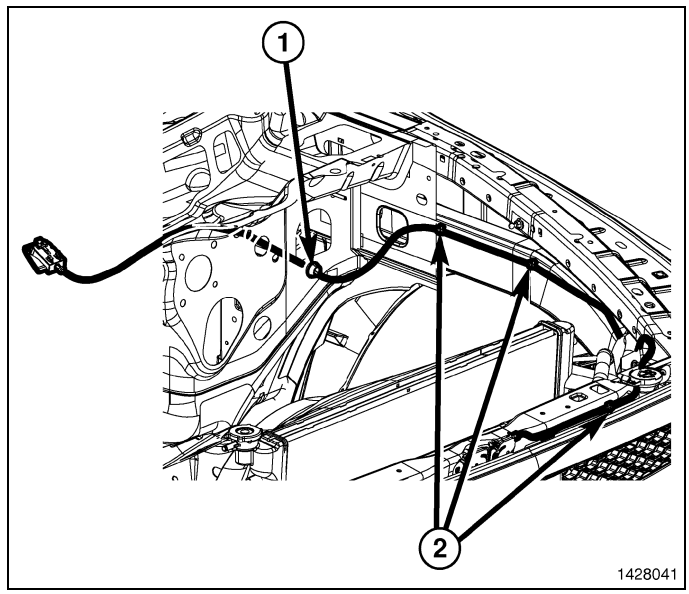

6. Route cable (3) through the front end moduleand on to the latch (5).
7. Align and insert end of cable (1) to the mechanism on the latch (5).
8. Press the collar (2) into the hole and snap into place.
9. Seat the mounting clips (4) fully.

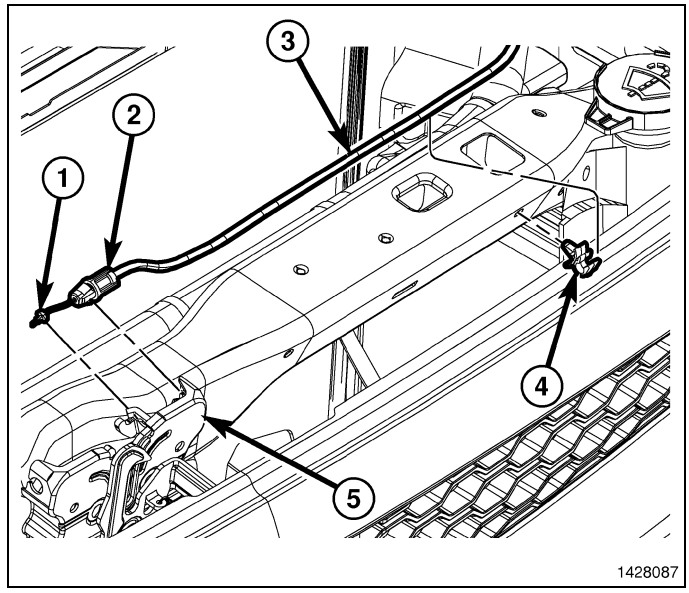

HINGE, Hood

Removal

NOTE: It is not necessary to remove the hood to replace the hood hinges. Hood hinges can be replaced one at a time.

1. Using a grease pencil or equivalent, mark the position of the hood hinge (1) on the hood for the hinge being serviced.
2. Support the hood and disconnect the gas prop from the hood (Refer to 23 - Body/Hood/PROP, Gas - Removal).
3. Remove the two nuts (2) that secure the hood to the hood hinge.
4. Remove the wheelhouse splash shield (Refer to 23 - Body/Exterior/SHIELD, Splash - Removal).
5. Remove the bolts (4) that secure the hood hinge (1) to the fender rail (3).
6. Slide the hood hinge forward and remove the hinge.

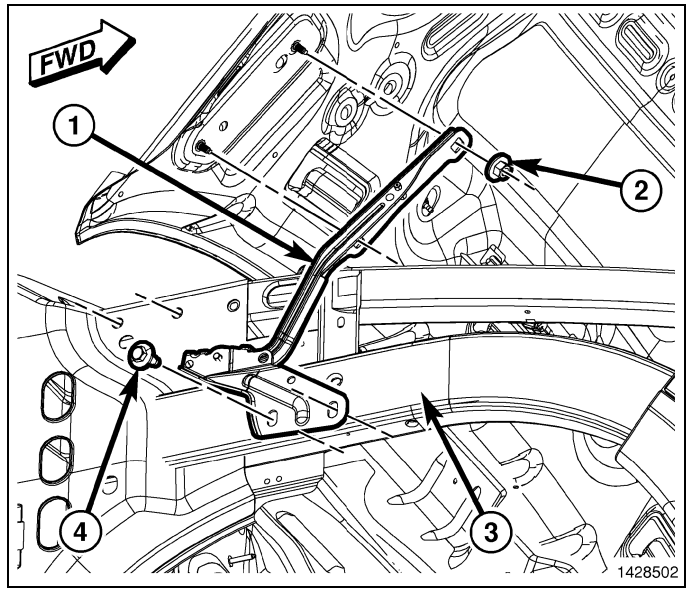

Installation

NOTE: It is not necessary to remove the hood to replace the hood hinges. Hood hinges can be replaced one at a time.

1. Position the hood hinge (2) onto the fender rail (1) and slide it rearward to its installed location.
2. Install the bolts (4) that secure the hood hinge to the fender rail and tighten to 19 N·m (14 ft. lbs.).
3. Loosely install the two nuts (2) that secure the hood to the hood hinge.
4. Align the hood to the hood hinge using the reference marks made during the Removal procedure and tighten the nuts to 18 N·m (13 ft. lbs.).
5. Install the support cylinder (Refer to 23 - Body/Hood/PROP, Gas - Installation).
6. If required, adjust the hood to the correct position(Refer to 23 - Body/Body Structure/Gap and Flush - Specifications).
7. Install the wheelhouse splash shield (Refer to 23 - Body/Exterior/SHIELD, Splash - Installation).
8. Install the cowl grille. (Refer to 23 - Body/Exterior/COVER, Cowl Panel - Installation)

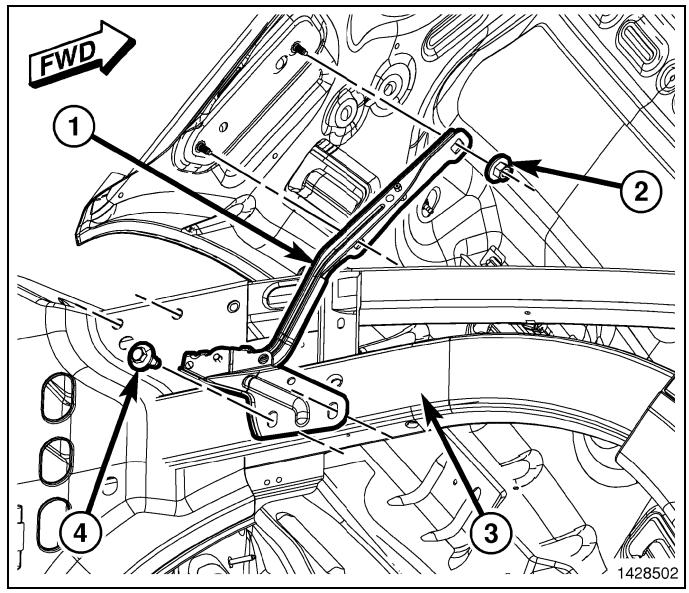

HOOD

Removal

1. Disconnect and isolate the negative battery cable.
2. Using a grease pencil or equivalent, mark the position of the hood hinges (2) on the hood.
3. Support the hood and disconnect the gas prop (2) from the hood.(Refer to 23 - Body/Hood/PROP, Gas - Removal)

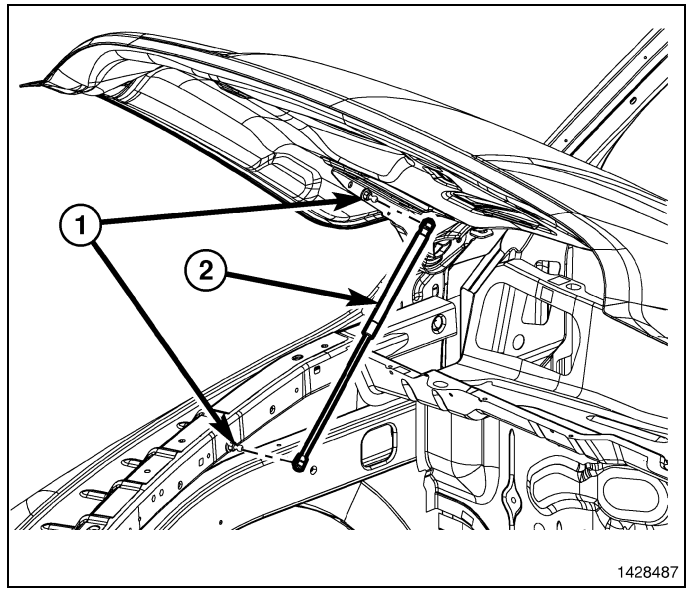

4. Remove the two nuts (2) that secure the hood to each hood hinge (1) and remove the hood.

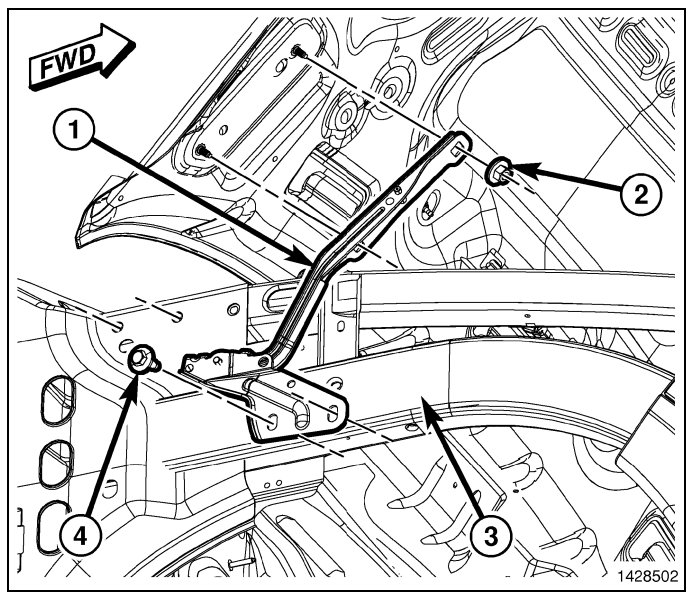

Installation

NOTE: The Vehicle Emission Control Information (VECI) label(s) must be in place for the life of the vehicle. When replacing the component in which the VECI label is adhered, a new VECI label must also be adhered to the new component.

1. Position the hood onto the hood hinges (1) and loosely install the two nuts (2) that secure the hood to each hood hinge.
2. Align the hood to the hood hinges using the reference marks made during the Removal procedure and tighten the nuts to 18 N·m (13 ft. lbs.).
3. Install the support cylinders to the hood (Refer to 23 - Body/Hood/PROP, Gas - Installation).
4. Reconnect the negative battery cable.
5. If required, adjust the hood to the correct position(Refer to 23 - Body/Body Structure/Gap and Flush - Specifications).

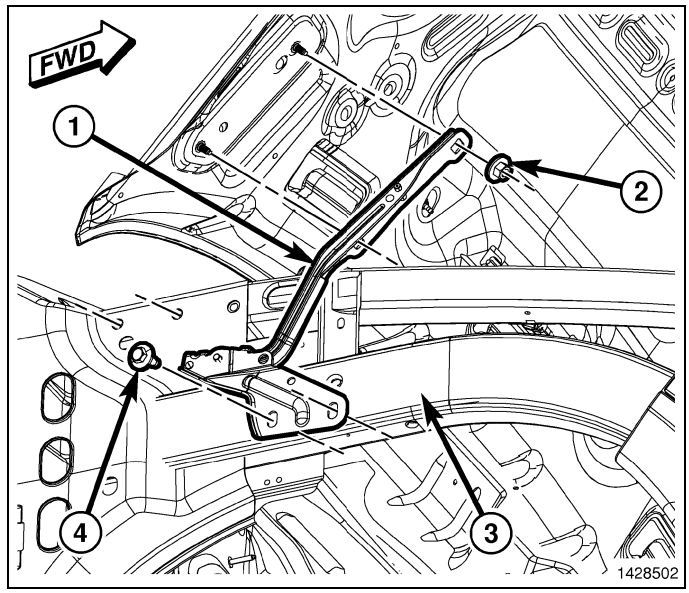

LATCH, Hood

Removal

1. Remove the grille. (Refer to 23 - Body/Exterior/GRILLE - Removal)
2. Using a grease pencil or equivalent, mark the position of the hood latch (1) on the upper radiator crossmember.
3. Remove the two bolts (3) that secure the hood latch to the upper radiator crossmember.

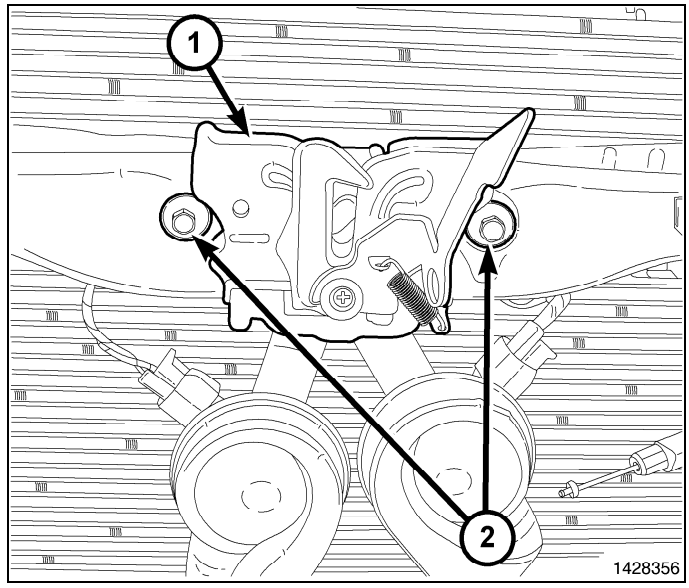

4. Disconnect the hood latch cable (1) from the hood latch and remove the latch.

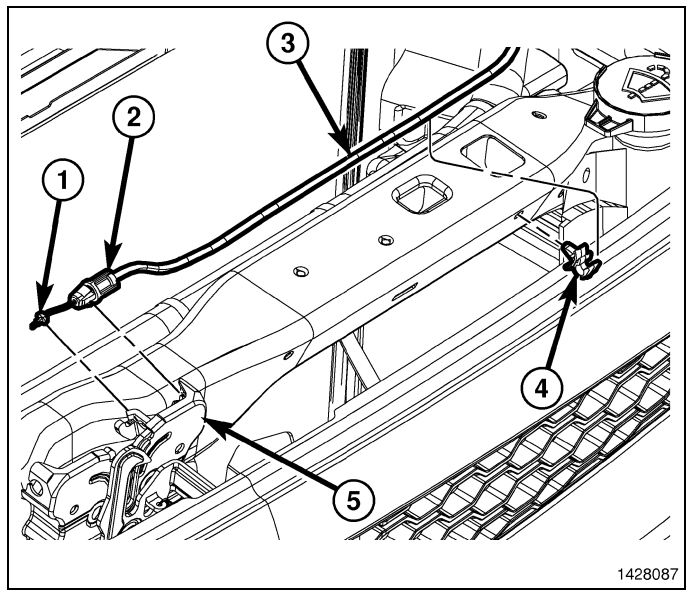

Installation

1. Connect the hood latch cable (1) to the hood latch (5).

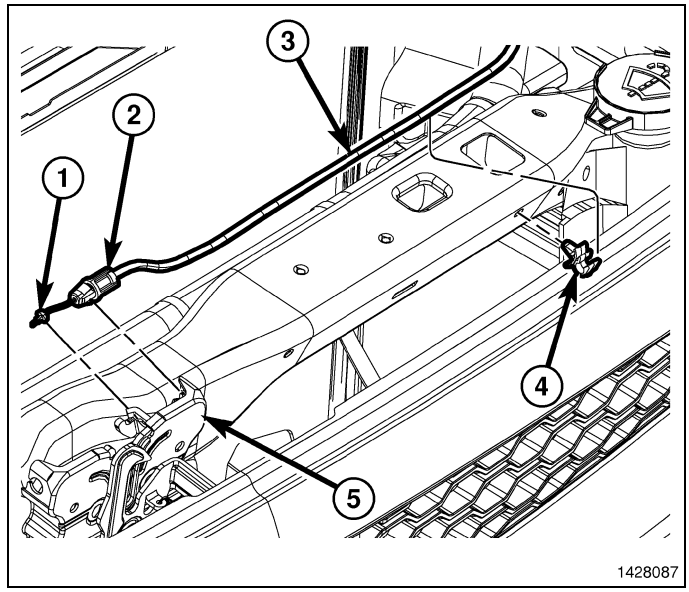

2. Position the hood latch to the upper radiator crossmember and loosely install the two bolts (2) that secure the latch to the crossmember.
3. Align the hood latch to the upper radiator crossmember using the reference marks made during the Removal procedure and tighten the bolts to 11 N·m (8 ft. lbs.).
4. If required, adjust the hood to the correct position(Refer to 23 - Body/Body Structure/Gap and Flush - Specifications).

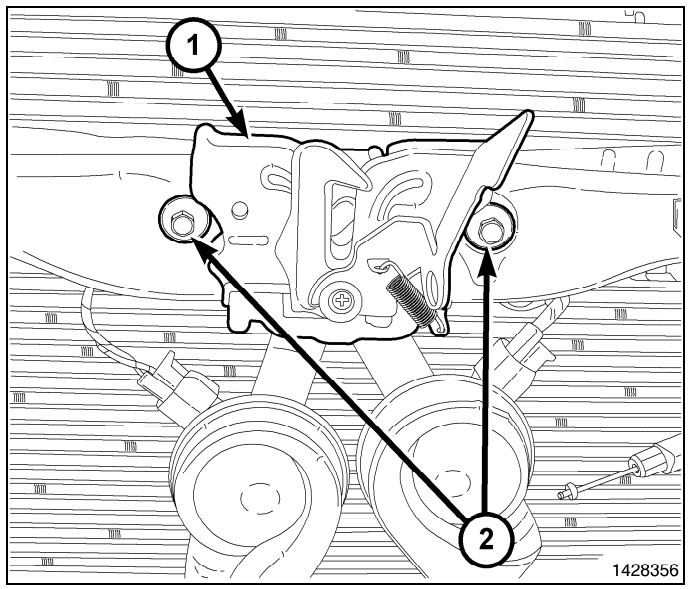

PROP, Gas

Removal

NOTE: The hood support cylinders can be replaced one at a time.

1. Open and support the hood.

CAUTION: Do not pull on the hood support cylinders at the middle of the support cylinder during removal. Failure to follow this caution can result in damage to the hood support cylinders.

2. Using a small flat bladed tool, or equivalent (3), release the retaining clip (2) at each end of the support cylinder while carefully pulling the ball socket (1) away from the ball stud (4).

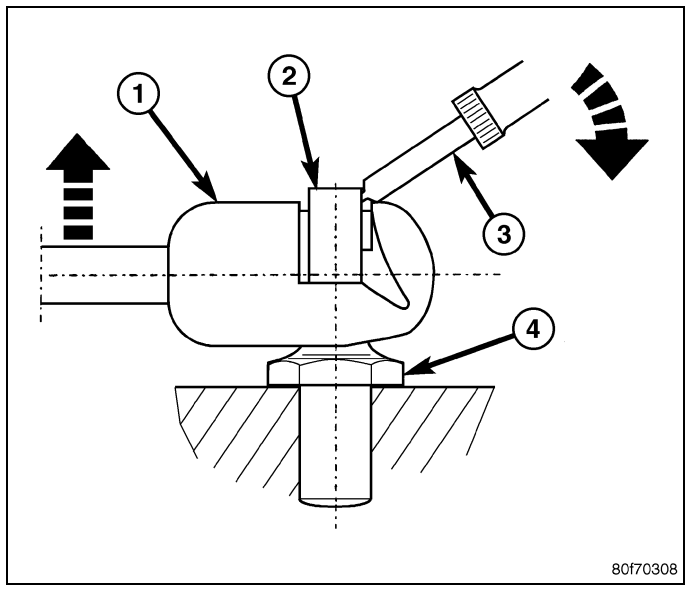

NOTE: Lift the clips (1) only enough to release the ball studs (3).

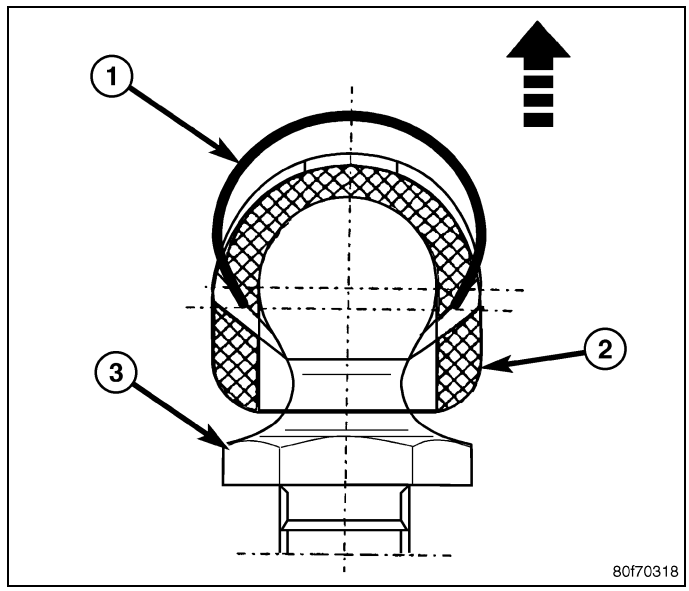

3. Disconnect the hood support cylinder (2) from the hood and the fender rail (1).

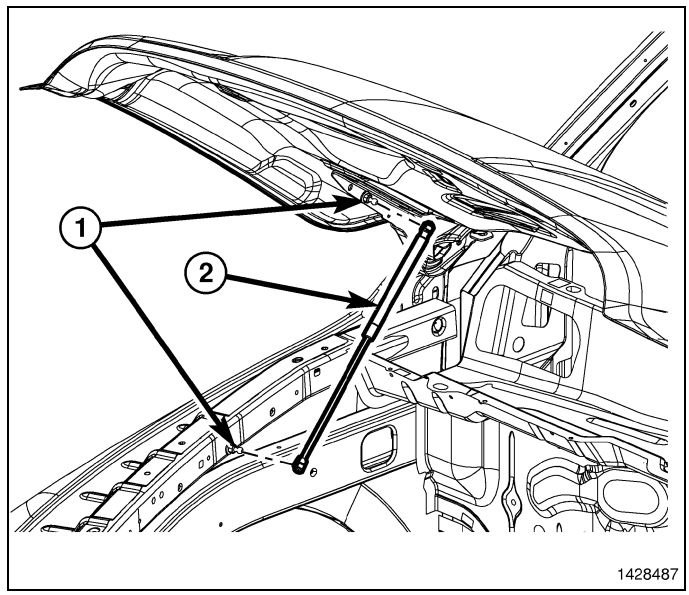

Installation

CAUTION: Do not push on the hood support cylinders at the middle of the support cylinder during installation. Failure to follow this caution can result in damage to the hood support cylinders.

NOTE: Install the hood support cylinders with the cylinder end connected to the hood as shown.

NOTE: If required, only release each retaining clip enough to install the ball socket onto the ball stud.

1. Install the hood support cylinder (2) over the upper and lower ball studs and fully engage the retaining clips.

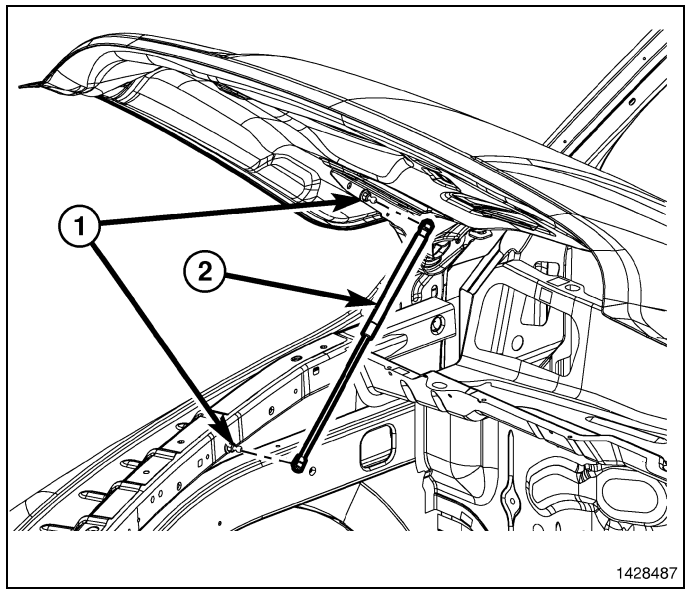

STRIKER, Hood

Removal

1. Remove the two bolts (2) that fasten the striker to the hood and remove the striker (1).

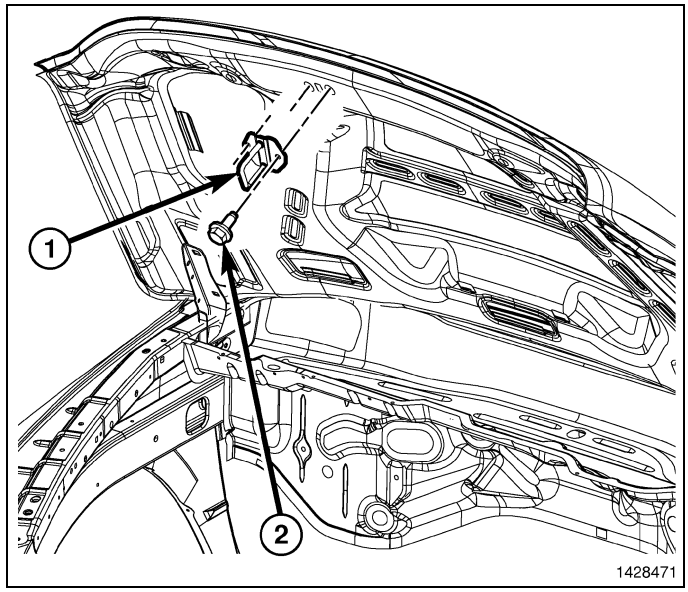

Installation

CAUTION: Make sure the striker assembly is seated into the pocket on the hood inner. If not seated correctly, the striker will damage the paint when secured.

1. Install the striker and install the bolts.
2. Tighten the bolts to 17 N·m (12.5 ft. lbs.)

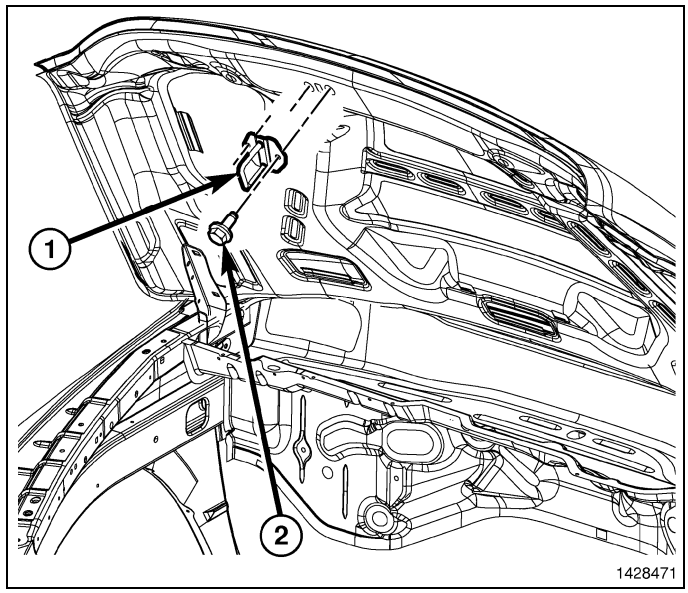

INSTRUMENT PANEL

TABLE OF CONTENTS

page

INSTRUMENT PANEL
- **BEZEL, INSTRUMENT CLUSTER**
  - REMOVAL 164
  - INSTALLATION 165
- **BEZEL, INSTRUMENT PANEL, CENTER**
  - REMOVAL 165
  - INSTALLATION 169
- **BEZEL, INSTRUMENT PANEL, DRIVER SIDE**
  - REMOVAL 171
  - INSTALLATION 172
- **BIN, INSTRUMENT PANEL**
  - REMOVAL 172
  - INSTALLATION 174
- **COVER, INSTRUMENT PANEL**
  - REMOVAL 174
  - INSTALLATION 180

page

- **COVER, STEERING COLUMN OPENING**
  - REMOVAL 186
  - INSTALLATION 187
- **CUPHOLDER, INSTRUMENT PANEL**
  - REMOVAL 189
  - INSTALLATION 190
- **GLOVE BOX, INSTRUMENT PANEL**
  - REMOVAL 192
  - INSTALLATION 193
- **PANEL, INSTRUMENT**
  - REMOVAL 193
  - INSTALLATION 201

Instrument Panel

BEZEL, Instrument Cluster

Removal

WARNING: On vehicles equipped with airbags, disable the airbag system before attempting any steering wheel, steering column, seat belt tensioner, or instrument panel component diagnosis or service. Disconnect and isolate the battery negative (ground) cable, then wait two minutes for the airbag system capacitor to discharge before performing further diagnosis or service. This is the only sure way to disable the airbag system. Failure to take the proper precautions could result in accidental airbag deployment and personal or fatal injury .

1. Disconnect and isolate the negative battery cable.
2. Remove the fastners (2) that secure the top of the instrument cluster bezel (3) to the instrument panel (1).

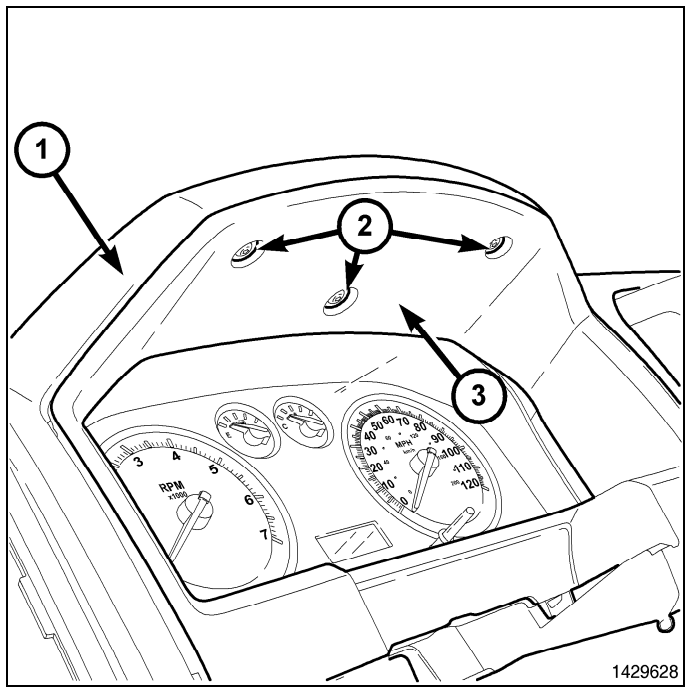

3. Using a trim stick C-4755 or equivalent, disengage the retainer clips that secure the instrument cluster bezel (2) to the instrument panel (1) and remove the bezel.

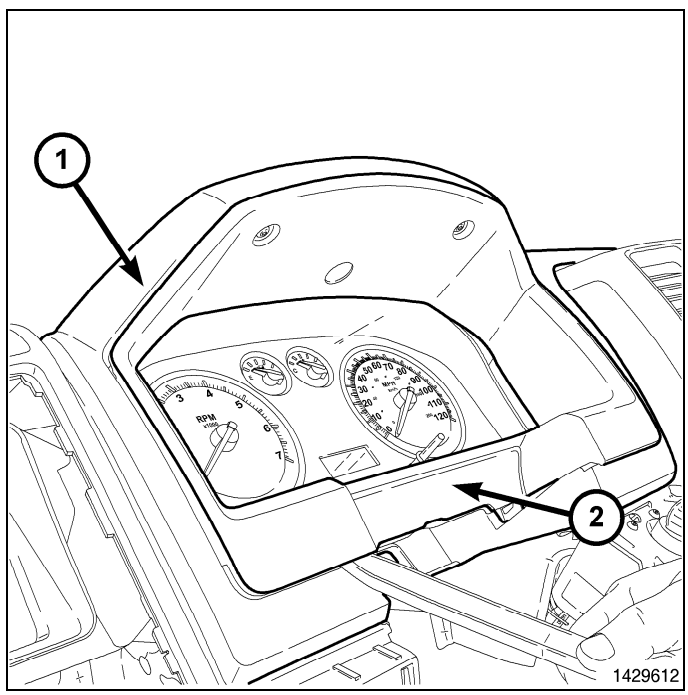

Installation

1. Install the instrument cluster bezel onto the instrument panel and fully engage the retainer clips to the instrument panel.

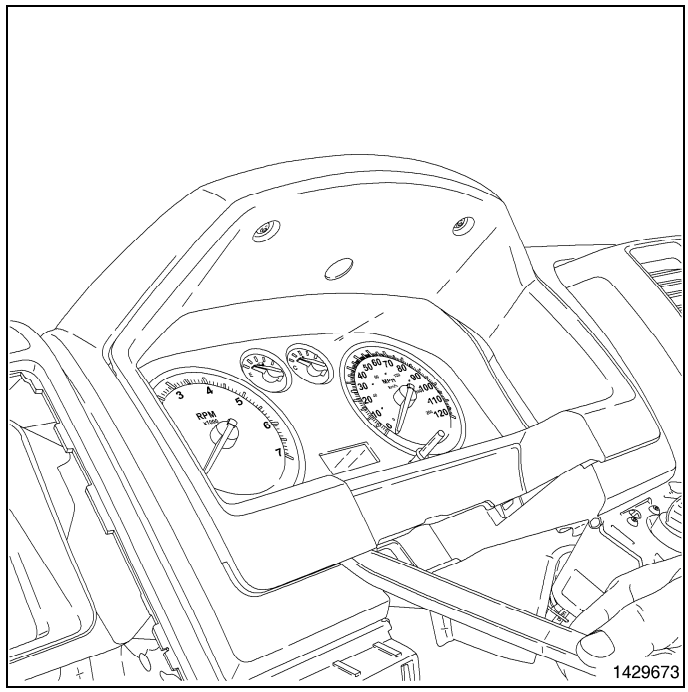

2. Install the fastners (2) that secure the instrument cluster bezel (3) to the instrument panel (1).

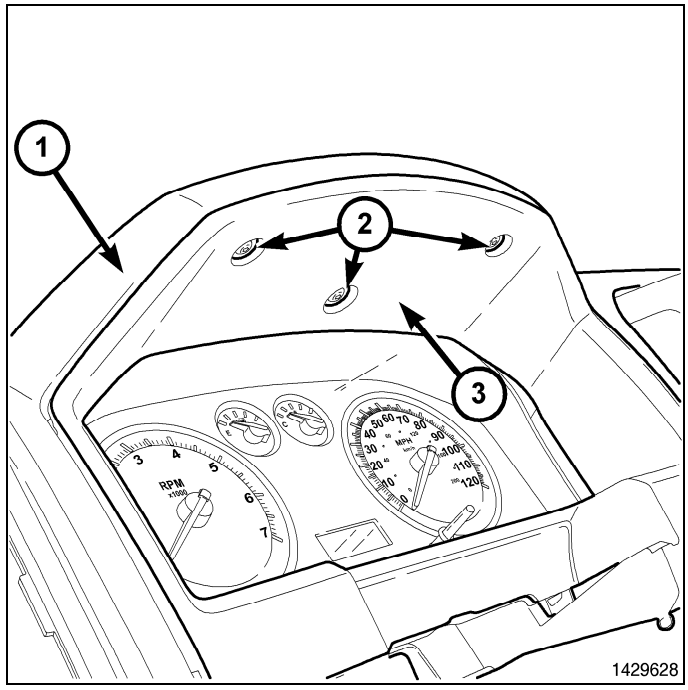

3. Connect the negative battery cable.

BEZEL, Instrument Panel, Center

Removal

WARNING: On vehicles equipped with airbags, disable the airbag system before attempting any steering wheel, steering column, seat belt tensioner, or instrument panel component diagnosis or service. Disconnect and isolate the battery negative (ground) cable, then wait two minutes for the airbag system capacitor to discharge before performing further diagnosis or service. This is the only sure way to disable the airbag system. Failure to take the proper precautions could result in accidental airbag deployment and personal or fatal injury .

1. Disconnect and isolate the negative battery cable.

2. Remove the upper and lower center bezel tray liners (1).

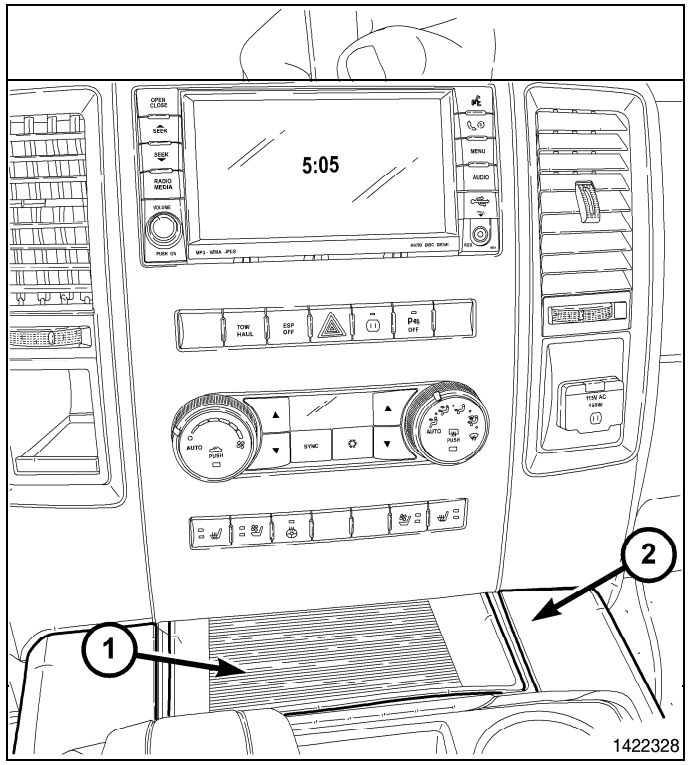

3. Using a trim stick C-4755 or equivalent, disengage the retaine clips that secure the power outlet trim bezel (1) to the center bezel (2).

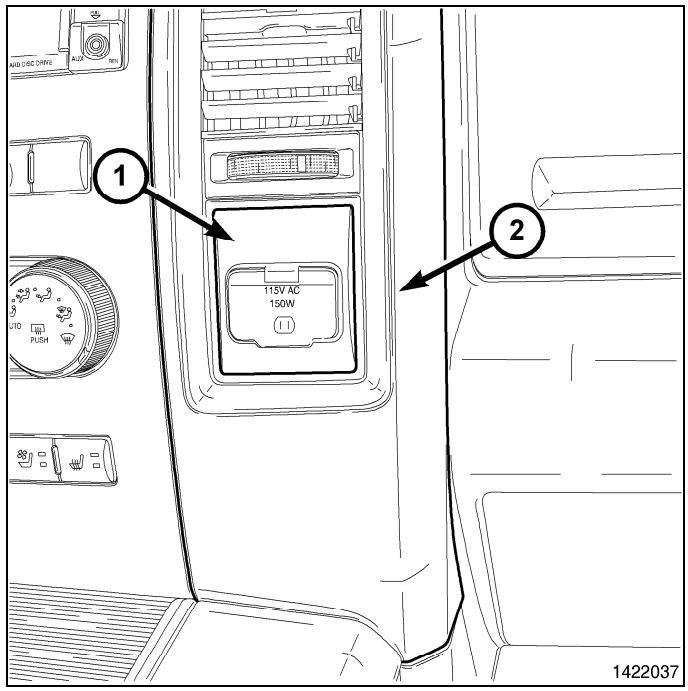

4. Remove the five center bezel fastners(1).

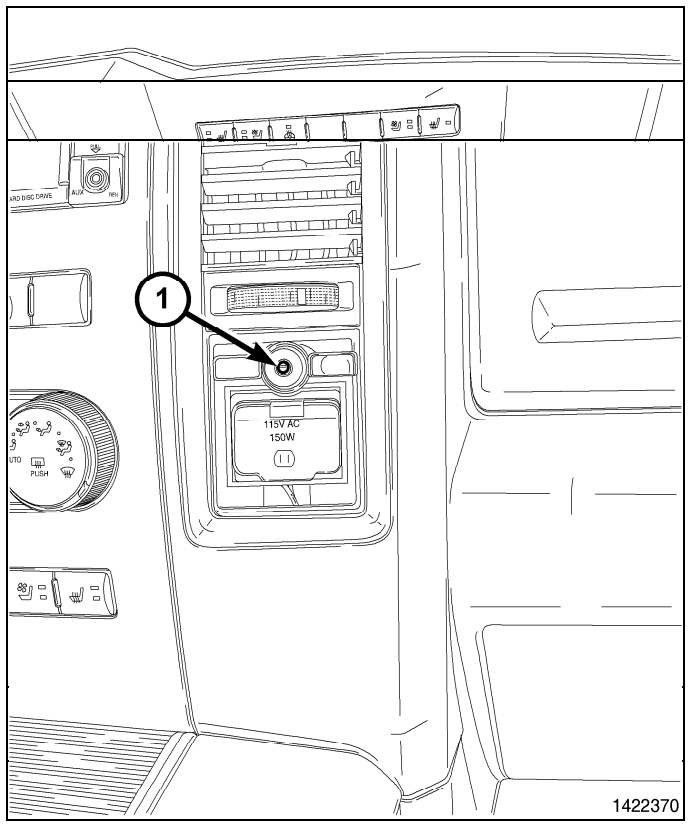

5. Using a trim stick C-4755 or equivalent, disengage the retainer clips that secure the trim ring to the floor console.

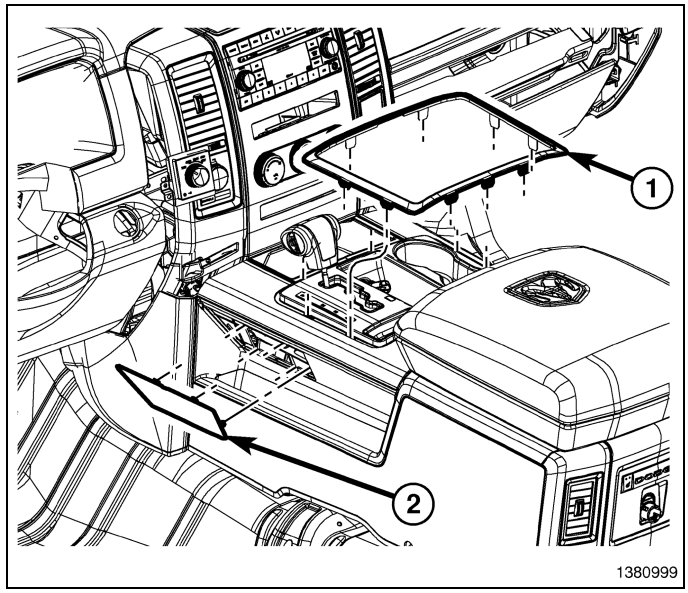

6. Using a trim stick C-4755 or equivalent, disengage the retainer clips that secure the shifter bezel to the floor console

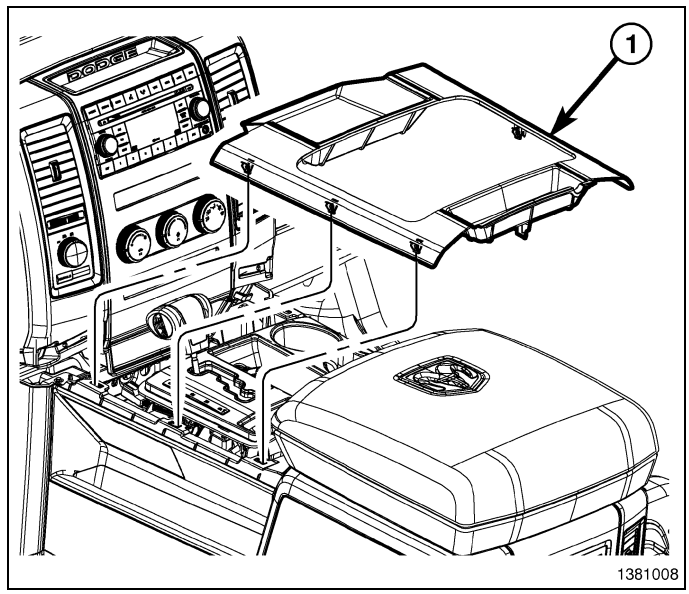

7. Using a trim stick C-4755 or equivalent, disengage the retainer clips that secure the instrument panel center bezel (1) to the instrument panel.
8. Disconnect the wire harness connectors (4) and remove the center bezel from the vehicle.

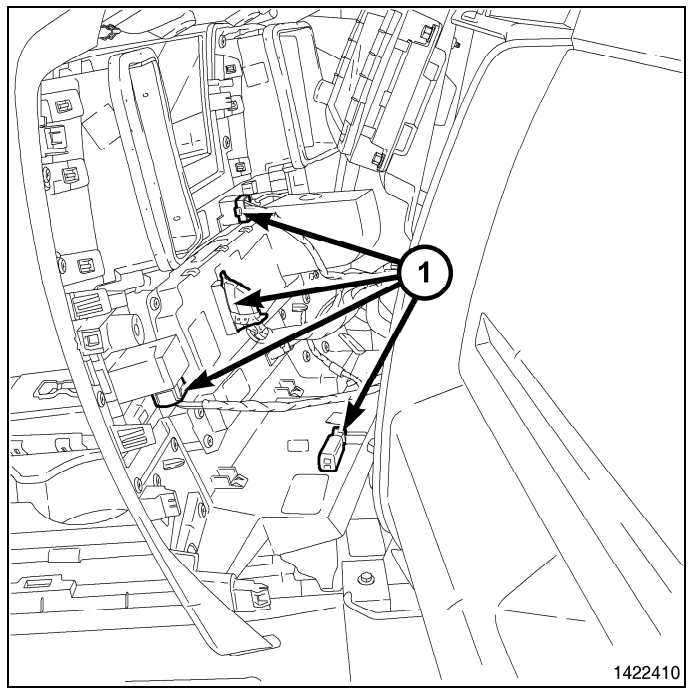

Installation

1. Position the instrument panel center bezel (1) near the instrument panel and connect the wire harness connectors (4).
2. Install the instrument panel center bezel (1) onto the instrument panel and fully engage the retainer clips.

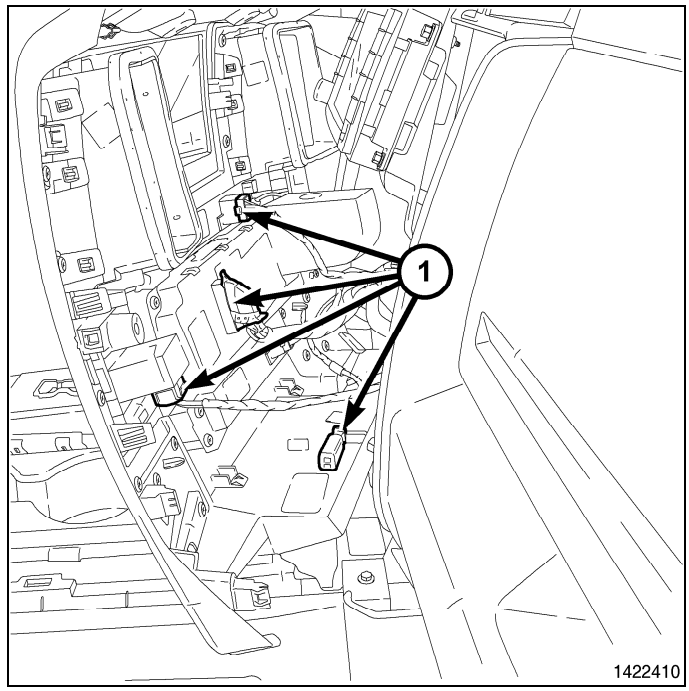

3. Install the shifter bezel to the floor console and fully engage the retainer clips.

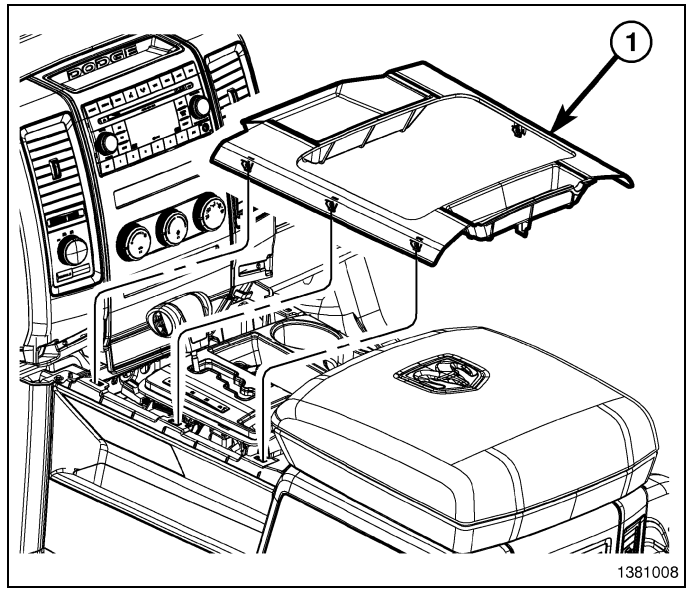

4. Install the shifter bezel trim ring and fully engage the retainer clips.

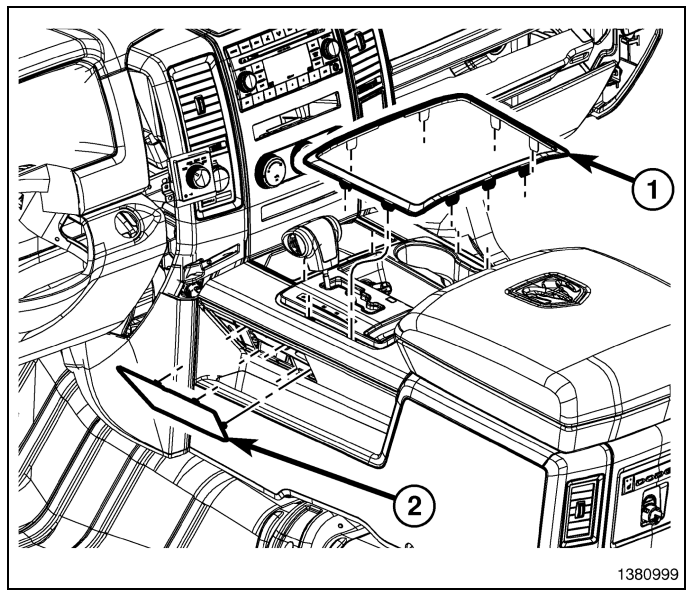

5. Install the five instrument panel fastners.

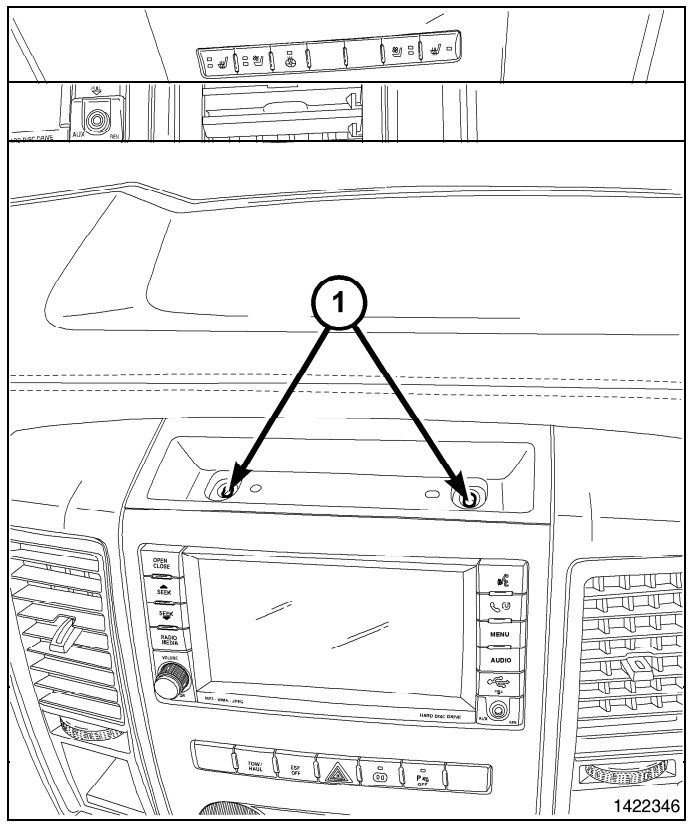

6. Install the power outlet trim bezel (1), to the center bezel (2), fully engaging the retainer clips.

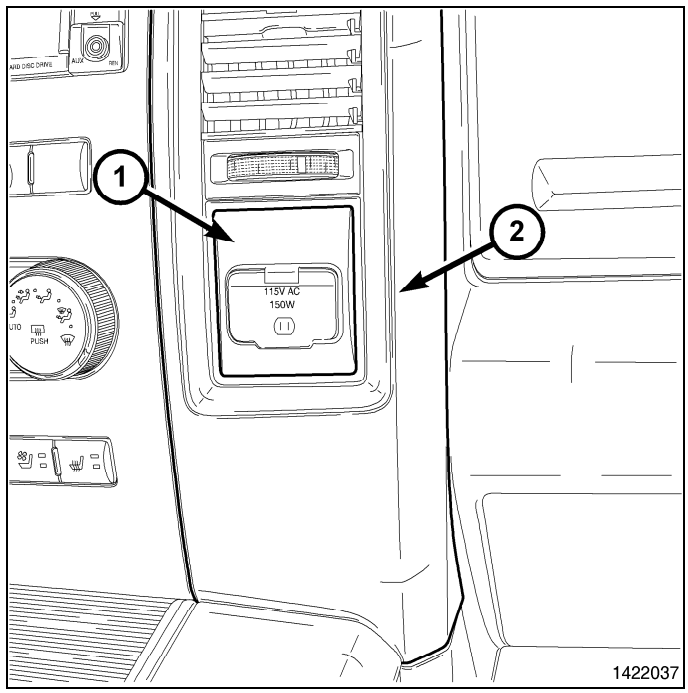

7. Install the upper and lower center bezel tray liners (1).
8. Connect the negative battery cable.

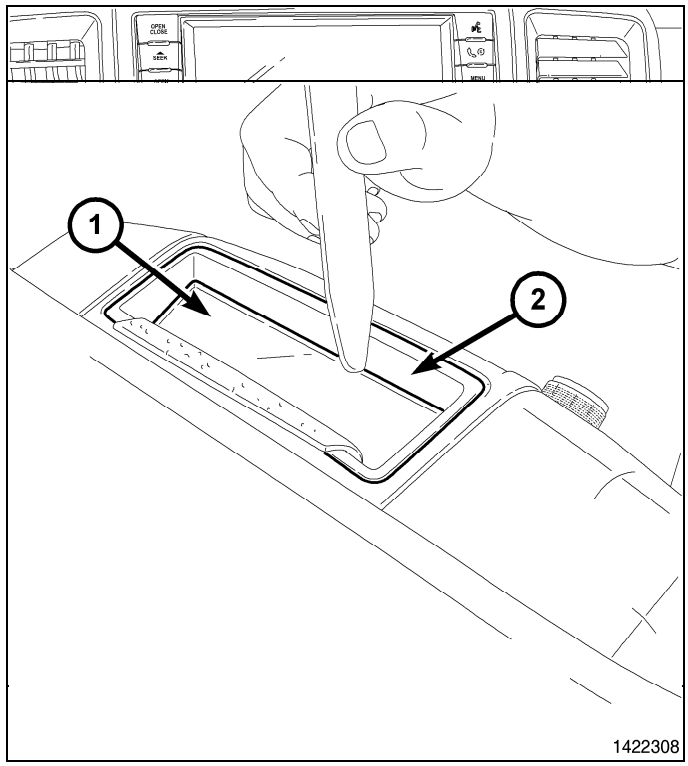

BEZEL, Instrument Panel, Driver Side

Removal

WARNING: On vehicles equipped with airbags, disable the airbag system before attempting any steering wheel, steering column, seat belt tensioner, or instrument panel component diagnosis or service. Disconnect and isolate the battery negative (ground) cable, then wait two minutes for the airbag system capacitor to discharge before performing further diagnosis or service. This is the only sure way to disable the airbag system. Failure to take the proper precautions could result in accidental airbag deployment and personal or fatal injury .

1. Disconnect and isolate the negative battery cable.
2. Using a trim stick C-4755 or equivalent, from the notch on the bottom, remove the left instrument panel side cover.
3. Remove the left cowl trim panel (Refer to 23 - Body/ Interior/PANEL, Cowl Trim - Removal).
4. Remove the two screws (1) that secure the lower driver side instrument panel bezel (4) to the instrument panel.
5. Using a trim stick C-4755 or equivalent, disengage the retaining clips that secure the top of the lower driver side instrument panel bezel to the instrument panel.
6. Tilt the top of the lower driver side instrument panel bezel downward and, If equipped, disconnect the wire harness connector (3) from the adjustable pedal switch (2).

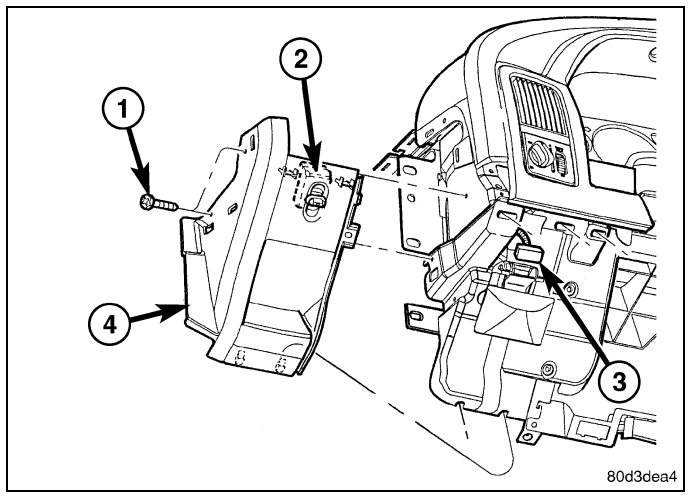

7. Remove the lower driver side instrument panel bezel from the lower retaining hooks and remove the bezel.

Installation

1. Position the lower driver side instrument panel bezel onto the lower retaining hoods located on the instrument panel.
2. If equipped, connect the wire harness connector (3) to the adjustable pedal switch (2).
3. Tilt the top of the lower driver side instrument panel bezel upward and fully engage the bezel retaining clips to the instrument panel.
4. Install the two screws (1) that secure the lower driver side instrument panel bezel to the instrument panel. Tighten the screws to 2 N·m (17 in. lbs.).
5. Install the left side cowl trim panel (Refer to 23 - Body/ Interior/PANEL, Cowl Trim - Installation).
6. Install the left instrument panel side cover.
7. Reconnect the negative battery cable.

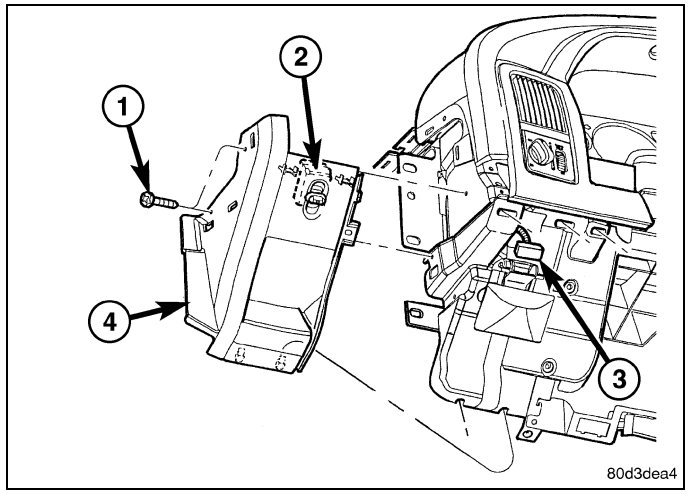

BIN, Instrument Panel

Removal

NOTE: Add graphic of Storage box fastner.

1. Remove glove box from instrument panel.(Refer to 23 - Body/Instrument Panel/GLOVE BOX, Instrument Panel - Removal)
2. Through the glove box opening remove storage bin fastener (2) located at the back of the storage bin (1).

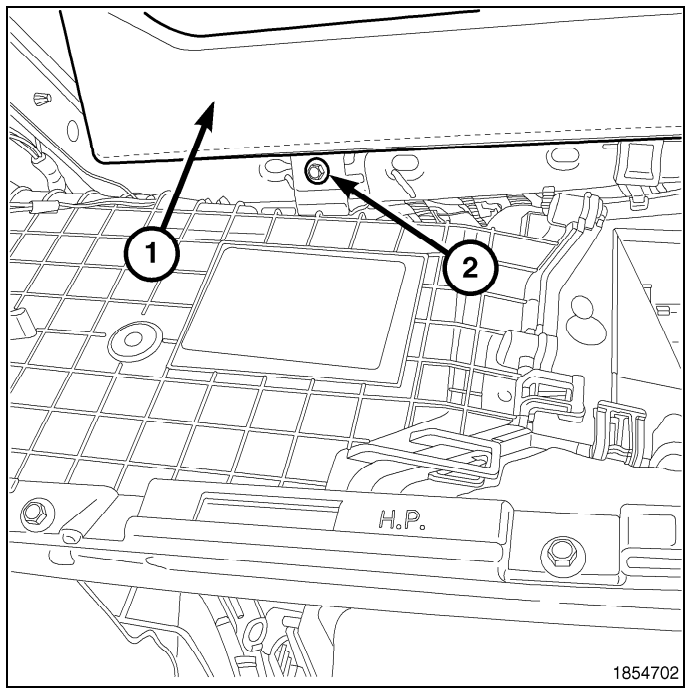

3. Open storage bin door (1).
4. Disengage the retainer clips that secure the storage bin (2) to the instrument panel (3).
5. Partial remove the storage bin and disconnect the storage bin light electrical connector.
6. Remove storage bin (2) from vehicle.

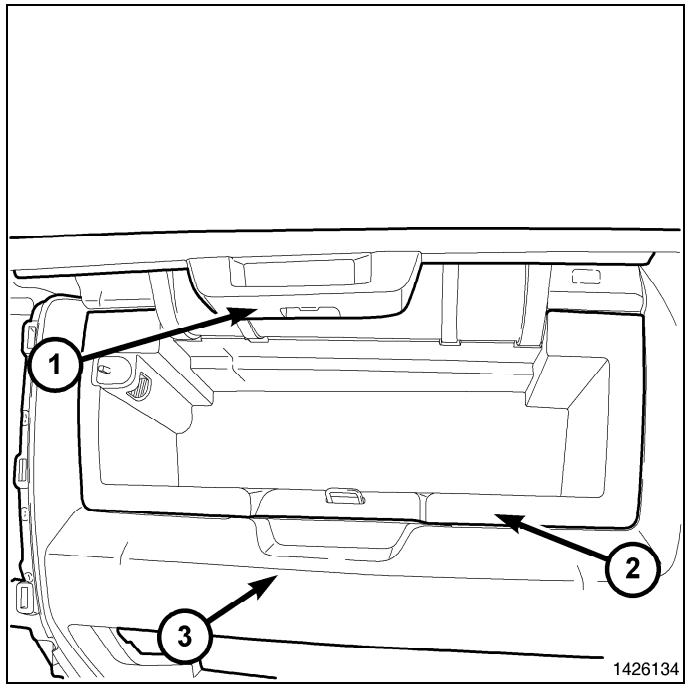

Installation

1. Partial install the storage bin and connect the storage bin light electrical connector.
2. Engage the storage bin retainer clips and fully seat the storage bin (2) to the instrument panel (3).
3. Close storage bin door (1).

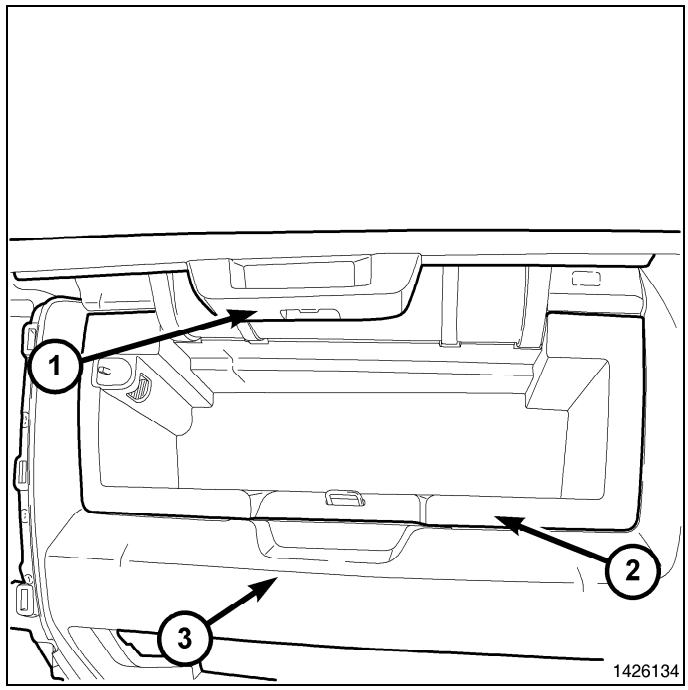

NOTE: Insert storage bin fastener graphic

4. Through the glove box opening install the storage bin fastener (2) at rear of storage bin (1).
5. Install the glove box to the instrument panel.(Refer to 23 - Body/Instrument Panel/GLOVE BOX, Instrument Panel - Installation)

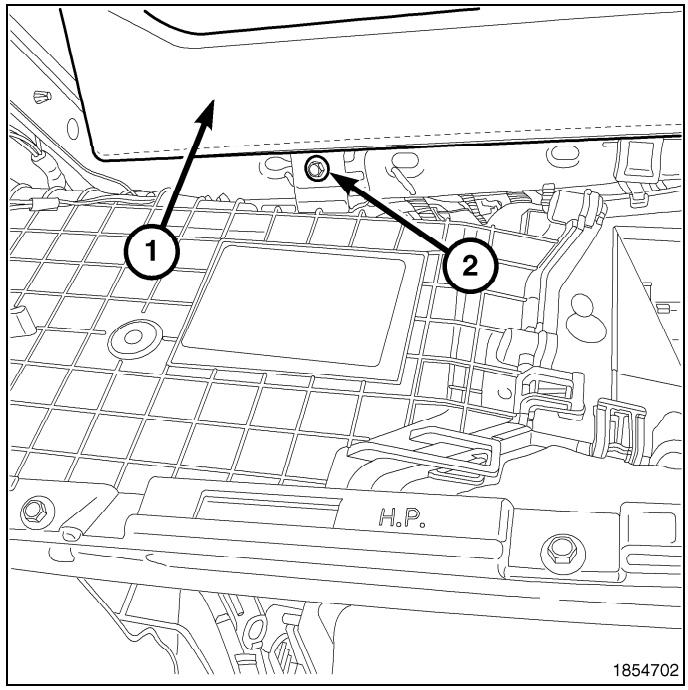

COVER, Instrument Panel

Removal

WARNING: On vehicles equipped with airbags, disable the airbag system before attempting any steering wheel, steering column, seat belt tensioner, or instrument panel component diagnosis or service. Disconnect and isolate the battery negative (ground) cable, then wait two minutes for the airbag system capacitor to discharge before performing further diagnosis or service. This is the only sure way to disable the airbag system. Failure to take the proper precautions could result in accidental airbag deployment and personal or fatal injury .

1. Disconnect and isolate the negative battery cable.
2. Remove the steering column opening cover (Refer to 23 - Body/Instrument Panel/COVER, Steering Column Opening - Removal)
3. Remove the steering column as necessary(Refer to 19 - Steering/Column - Removal).
4. Remove the Wireless Ignition Node from the vehicle.(Refer to 08 - Electrical/8E - Electronic Control Modules/RECEIVER, Wireless Ignition Node - Removal)
5. Remove the floor console, if equipped (Refer to 23 - Body/Interior/CONSOLE, Floor - Removal).

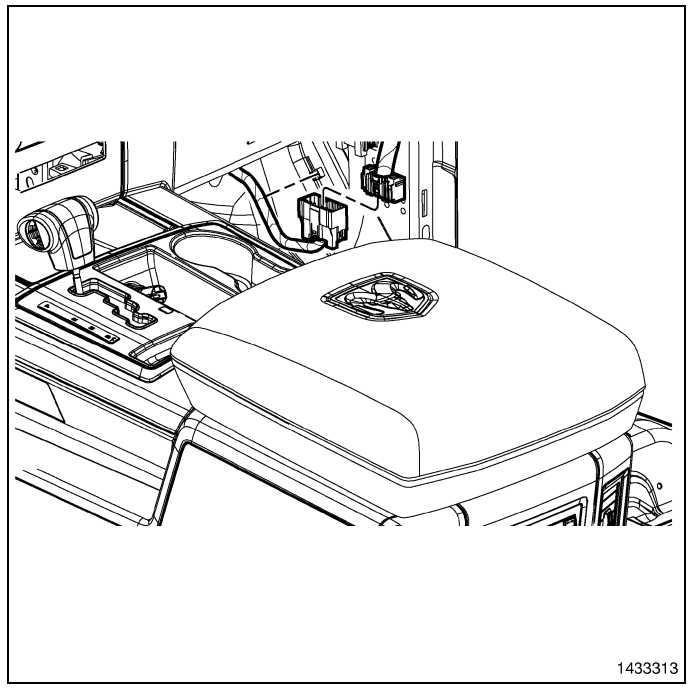

6. Using a trim stick C-4755 or equivalent remove the Lower Center Bezel.

NOTE: Right side shown left side similar.

7. Remove the left and right A-pillar trim (Refer to 23 - Body/Interior/PANEL, A-Pillar Trim - Removal).

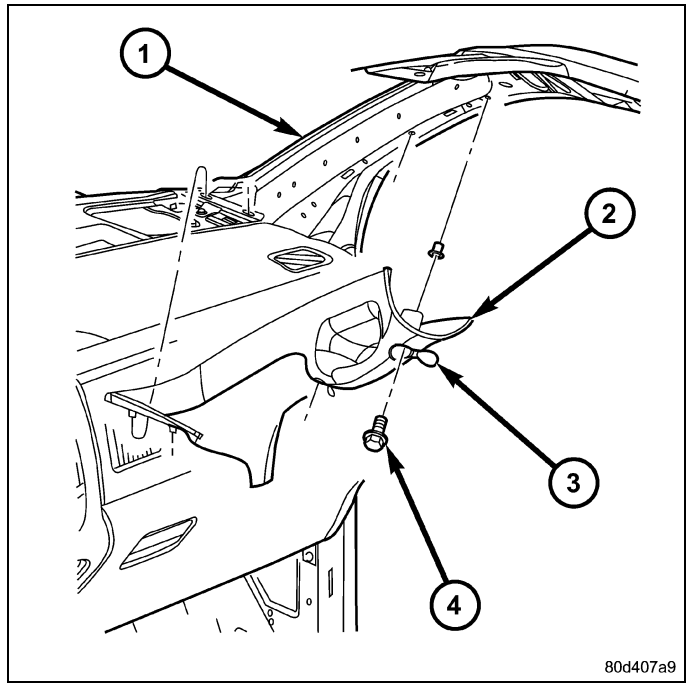

8. Remove the Defroster Grille

9. Remove fence line bolt access covers.
10. Remove fence line bolts.

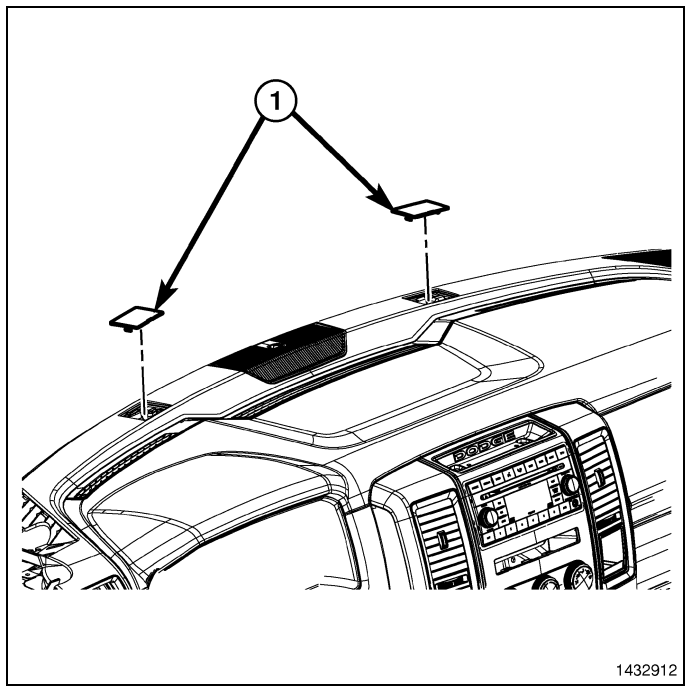

11. Remove the instrument panel center bezel. (Refer to 23 - Body/Instrument Panel/BEZEL, Instrument Panel - Removal)
12. Remove the Radio. (Refer to 08 - Electrical/8A - Audio and Video/RADIO - Removal)
13. Remove right and left power outlets and bezels.
14. Remove the instument panel cluster bezel.(Refer to 23 - Body/Instrument Panel/BEZEL, Instrument Cluster - Removal)

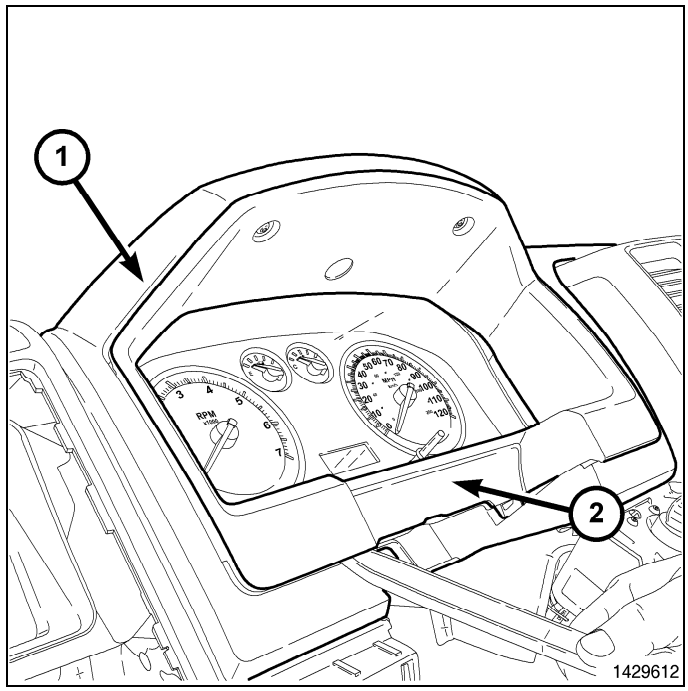

15. Remove the instrument cluster. (Refer to 08 - Electrical/8J - Instrument Cluster - Removal)

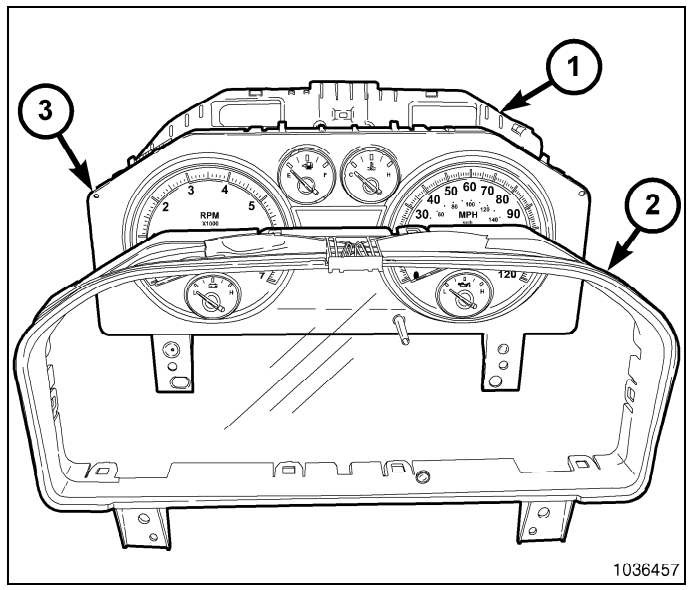

16. Remove the parking brake Lever bezel.(Refer to 05 - Brakes/Parking Brake/HANDLE, Parking Brake Release - Removal)

17. Remove the headlamp switch / left distruibution register.(Refer to 08 - Electrical/8L - Lamps and Lighting/ Lamps/Lighting - Exterior/SWITCH, Headlamp - Removal)

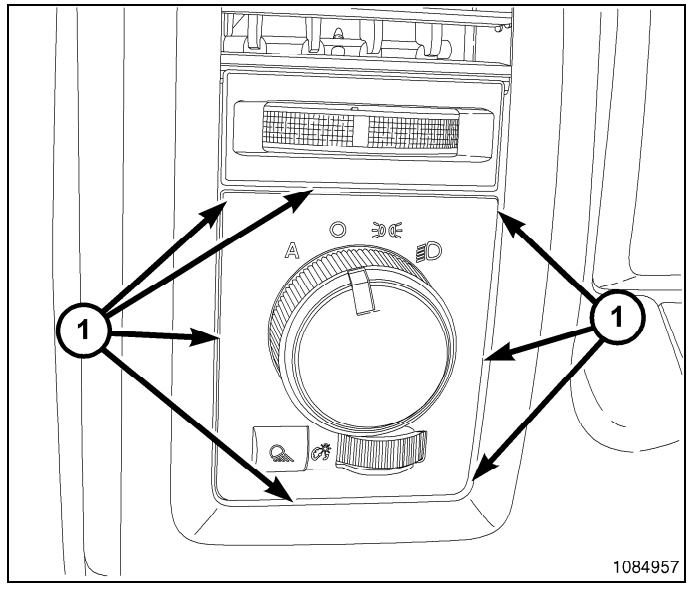

18. Remove the left and right instrument panel speakers.(Refer to 08 - Electrical/8A - Audio and Video/SPEAKER - Removal)

19. Remove the center Instrument panel speaker and sun sensor.(Refer to 08 - Electrical/8A - Audio and Video/ SPEAKER - Removal)

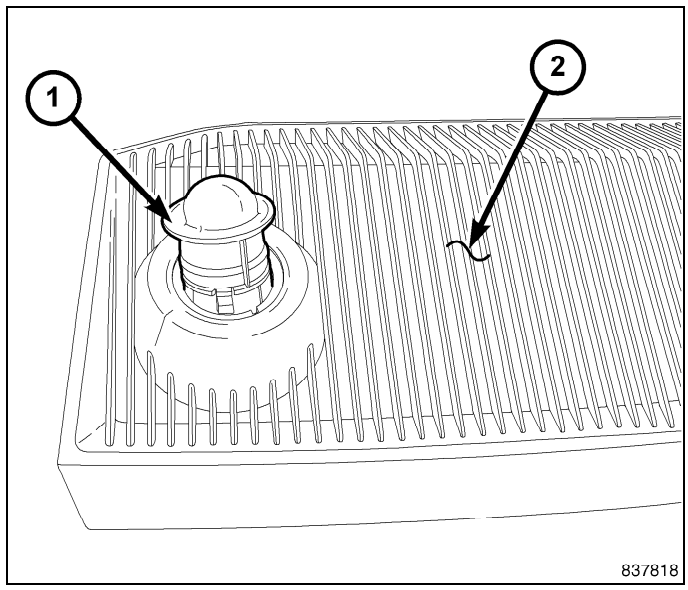

20. Remove the right distribution register.(Refer to 24 - Heating and Air Conditioning/Distribution/OUTLET, Air - Removal)

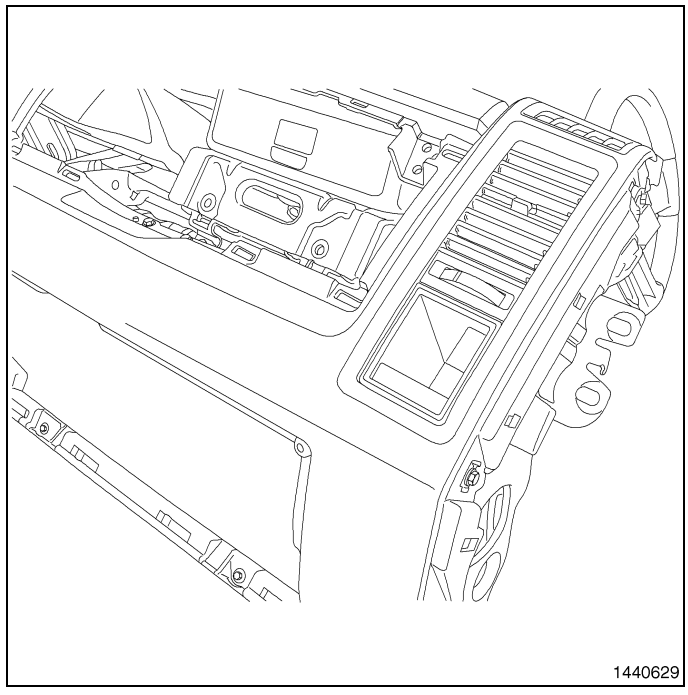

21. Remove the glove box (2) from the instrument panel (Refer to 23 - Body/Instrument Panel/GLOVE BOX, Instrument Panel - Removal).

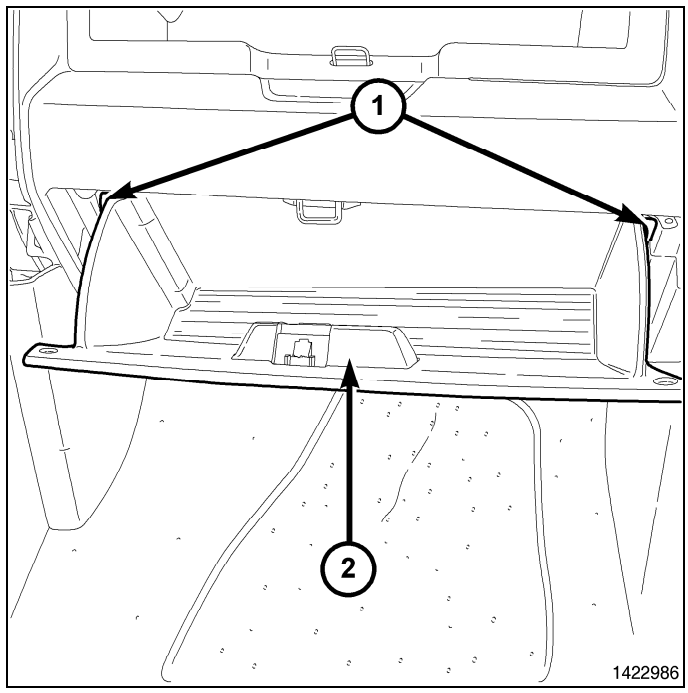

22. Remove the instrument panel storage bin. (2) (Refer to 23 - Body/Instrument Panel/BIN, Instrument Panel - Removal)

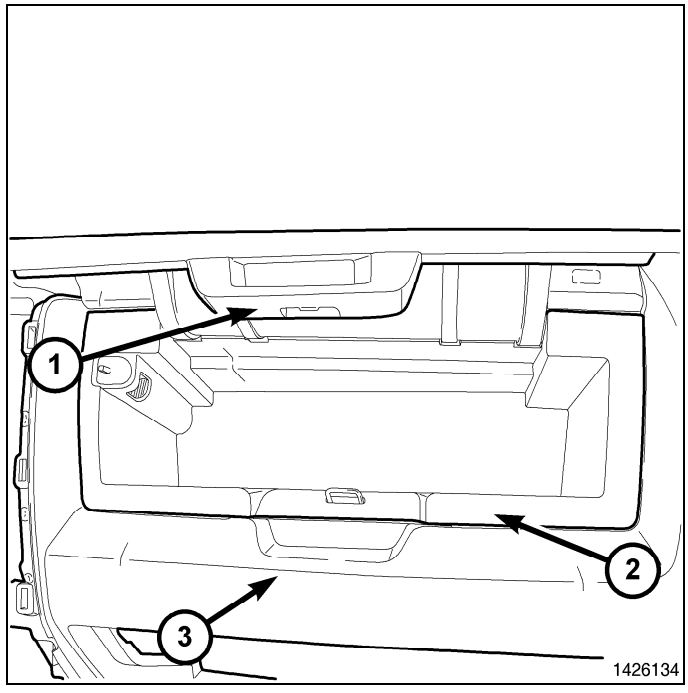

23. Remove the passenger air bag (1) .(Refer to 10 - Restraints/AIR BAG, Passenger - Removal)

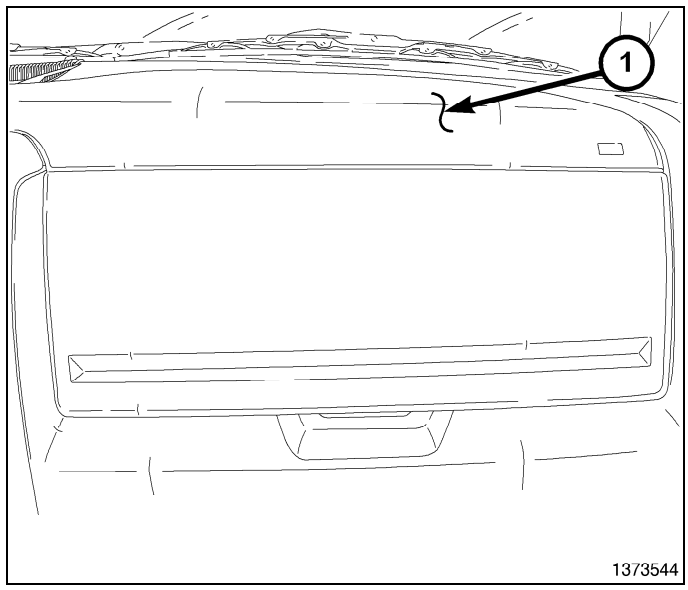

24. Remove the 23 instrument panel cover fastners.
25. Partial remove the instrument panel cover to access and disconnect the PAB harness.
26. Remove the instrument panel cover from the vehicle.

Installation

1. Partial install the instrument panel cover into the vehicle access and connect the PAB harness.
2. Install the 23 instrument panel cover fastners.
3. Install the passenger air bag.(Refer to 10 - Restraints/AIR BAG, Passenger - Installation)

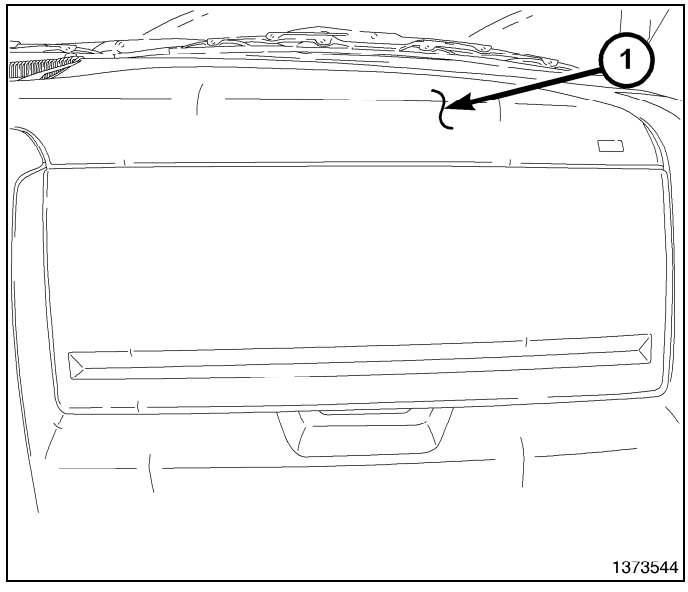

4. Installthe instrument panel storage bin. (Refer to 23 - Body/Instrument Panel/BIN, Instrument Panel - Installation)

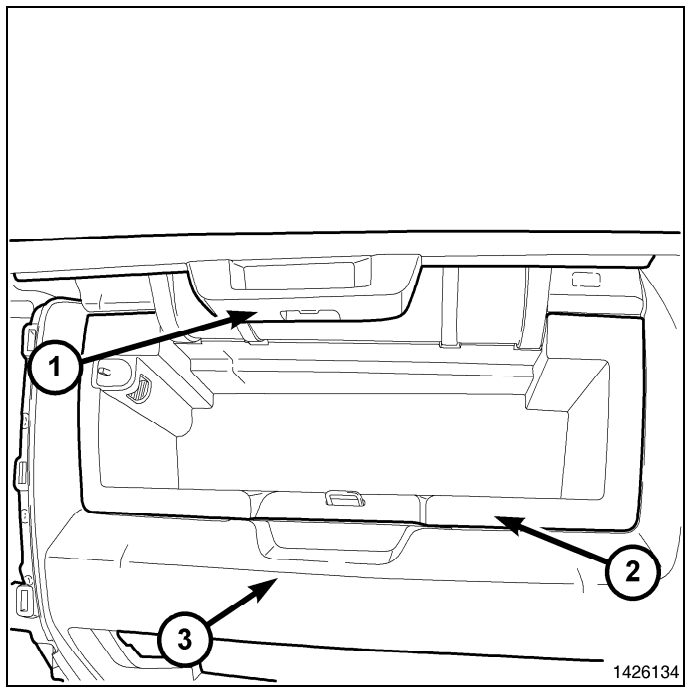

5. Install the glove box from the instrument panel (Refer to 23 - Body/Instrument Panel/GLOVE BOX, Instrument Panel - Installation).

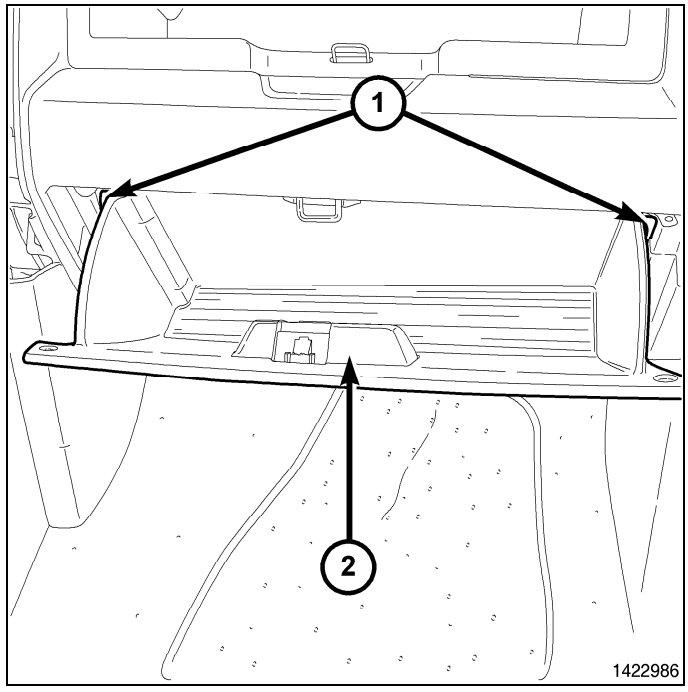

6. Install the right distribution register.(Refer to 24 - Heating and Air Conditioning/Distribution/OUTLET, Air - Installation)

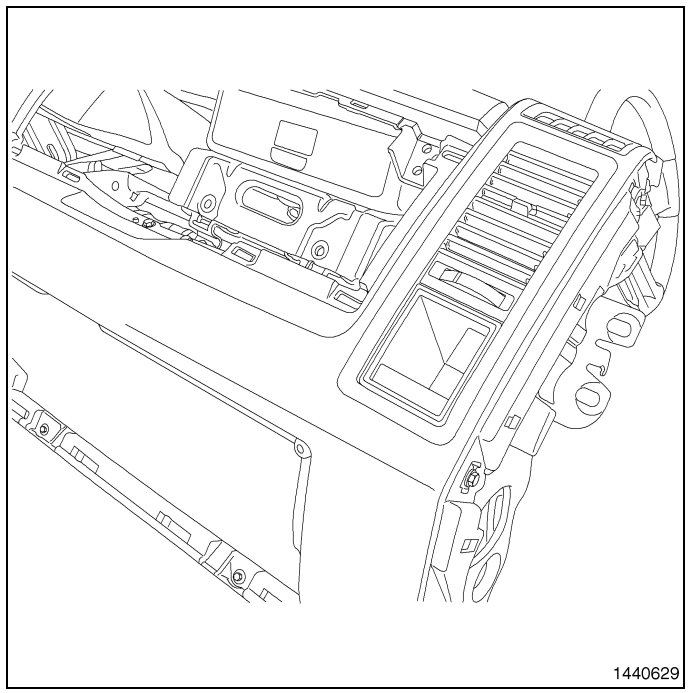

7. Install the center Instrument panel speaker and sun sensor.(Refer to 08 - Electrical/8A - Audio and Video/SPEAKER - Installation)

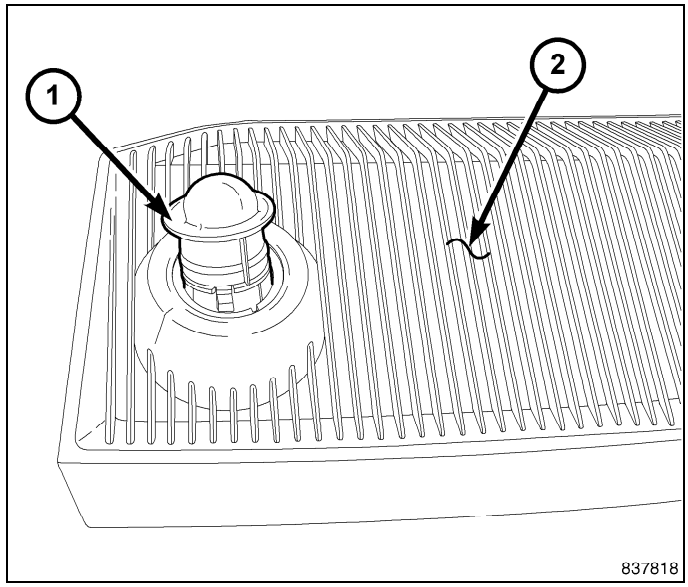

8. Install the left and right instrument panel speakers.(Refer to 08 - Electrical/8A - Audio and Video/SPEAKER - Installation)

9. Install the headlamp switch / left distruibution register.(Refer to 08 - Electrical/8L - Lamps and Lighting/Lamps/Lighting - Exterior/SWITCH, Headlamp - Installation)

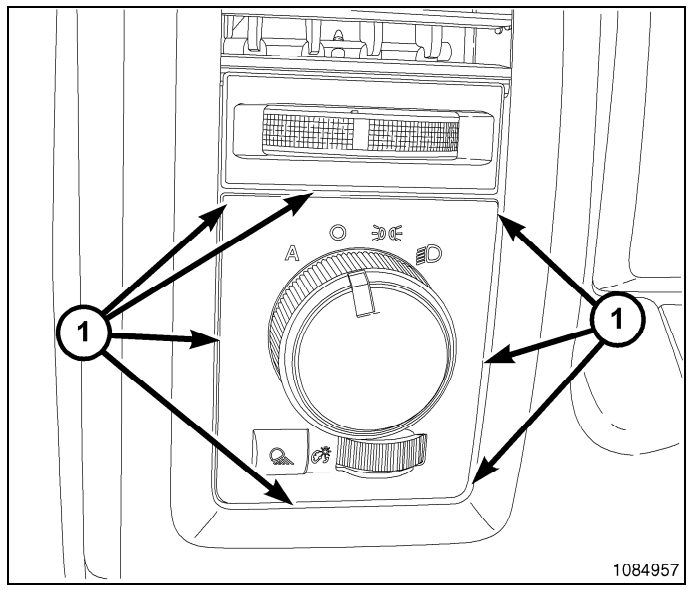

10. Install the parking brake Lever bezel.
11. Install the instrument cluster. (Refer to 08 - Electrical/8J - Instrument Cluster - Installation)

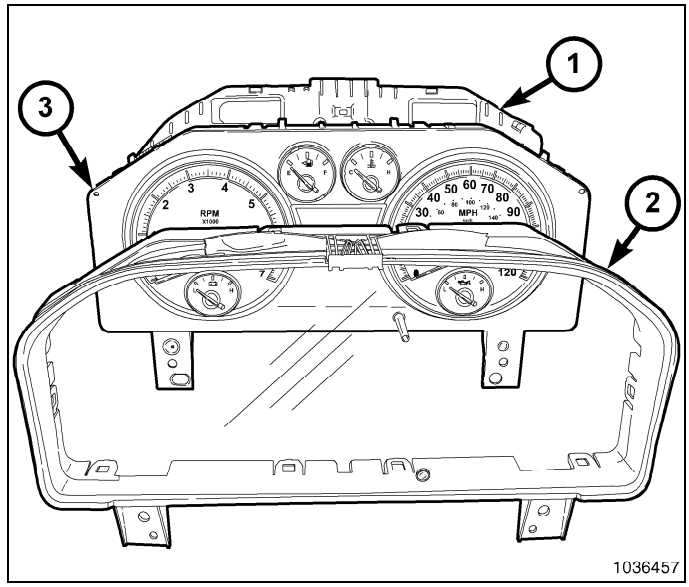

12. Install the instument panel cluster bezel.(Refer to 23 - Body/Instrument Panel/BEZEL, Instrument Cluster - Installation).

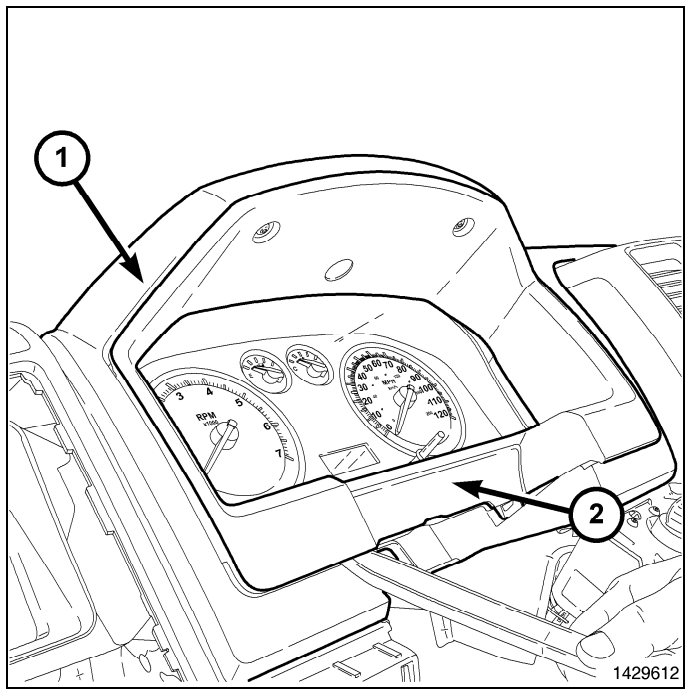

13. Install right and left power outlets and bezels.
14. Install the Radio. (Refer to 08 - Electrical/8A - Audio and Video/RADIO - Installation)
15. Install the instrument panel center bezel. (Refer to 23 - Body/Instrument Panel/BEZEL, Instrument Panel - Installation)
16. Install fence line bolt access covers.
17. Install fence line bolts.

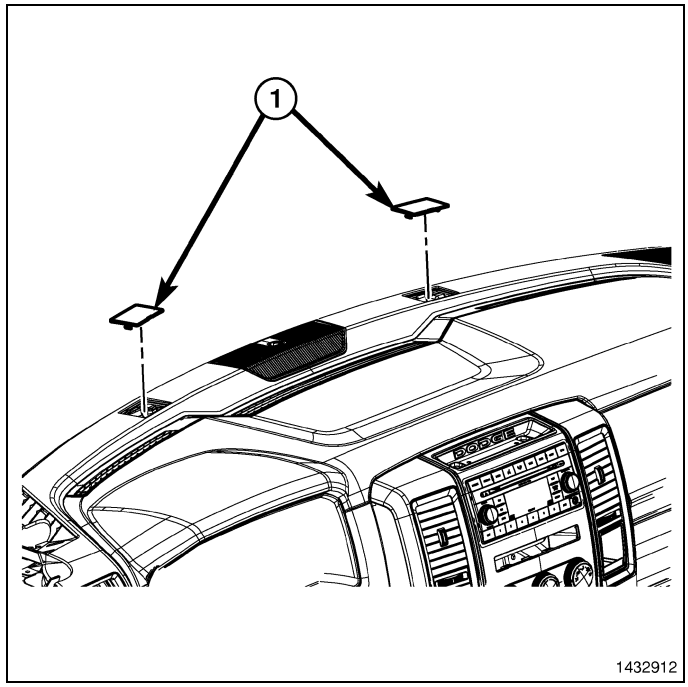

18. Install the Defroster Grille

NOTE: Right side shown left side similar.

19. Install the left and right A-pillar trim (Refer to 23 - Body/ Interior/PANEL, A-Pillar Trim - Installation).

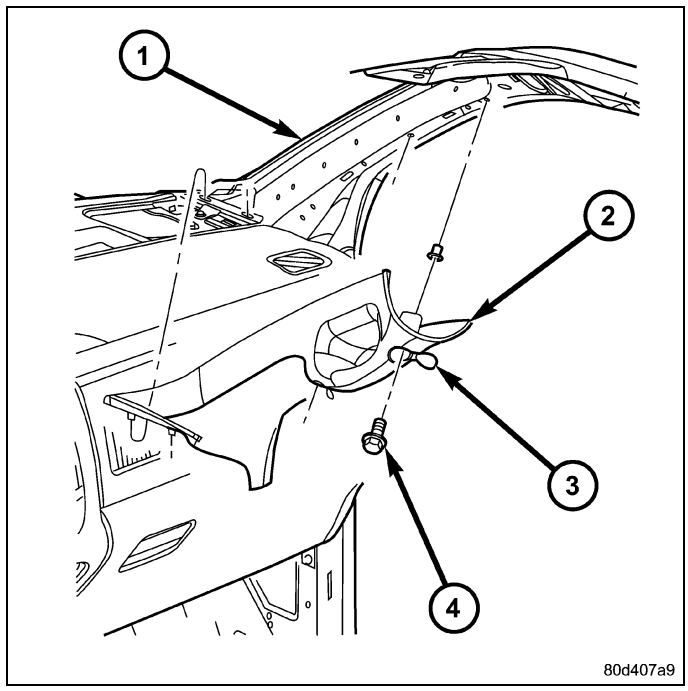

20. Install the Lower Center Bezel.
21. Install the floor console, if equipped (Refer to 23 - Body/Interior/CONSOLE, Floor - Installation).

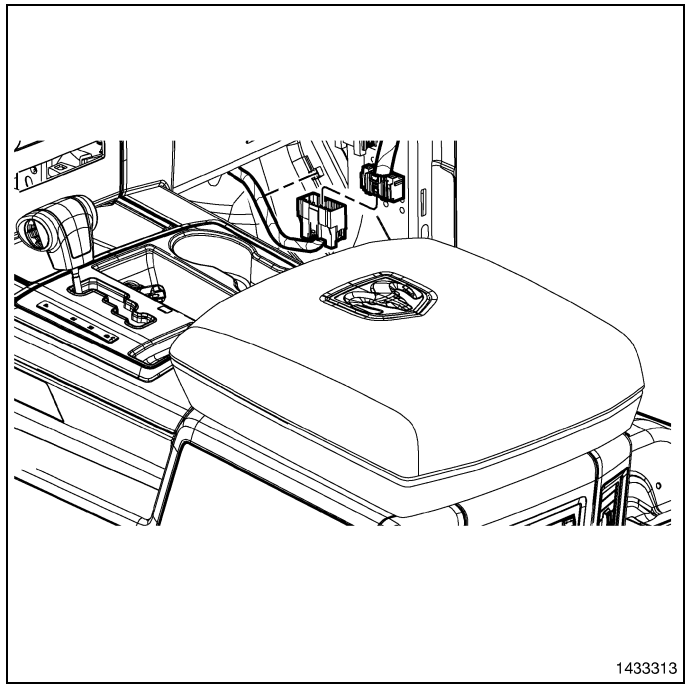

22. Install the WIC Module and install the WIC Module fastners.
23. Connect the WIC Module electrical connectors.
24. Install the steering column as necessary(Refer to 19 - Steering/Column - Installation).
25. Install the steering column opening cover (Refer to 23 - Body/Instrument Panel/COVER, Steering Column Opening - Installation)
26. Connect the negative battery cable.

COVER, Steering Column Opening

Removal

1. Using a trim stick C-4755 or equivalent, disengage the retainer clip that secures the hood release to the steering column opening cover, and remove the hood release handle from the cover.
2. Remove the two fastners (2) that secure the bottom of the steering column opening cover (1) to the instrument panel.

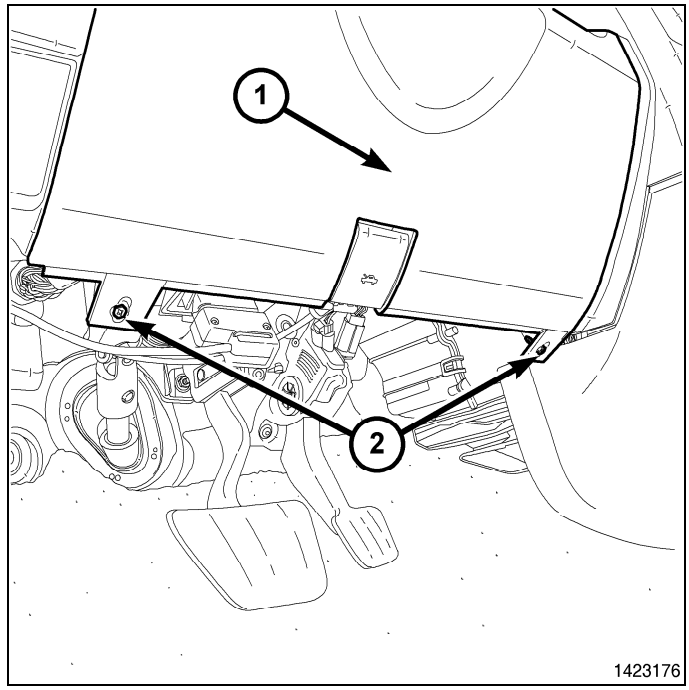

3. Remove the Data Link Connector (3) from the steering column opening cover (2) by pressing in the tabs (1) and pushing the connector through the opening on the back side of the cover.

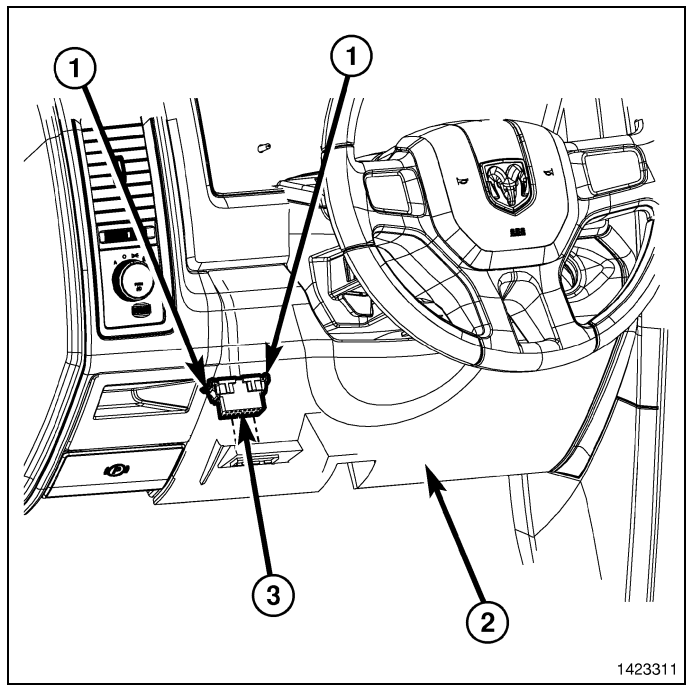

4. Using a trim stick C-4755 or equivalent, release the retainer clips that secure the steering column opening cover (1) to the instrument panel and remove the cover.

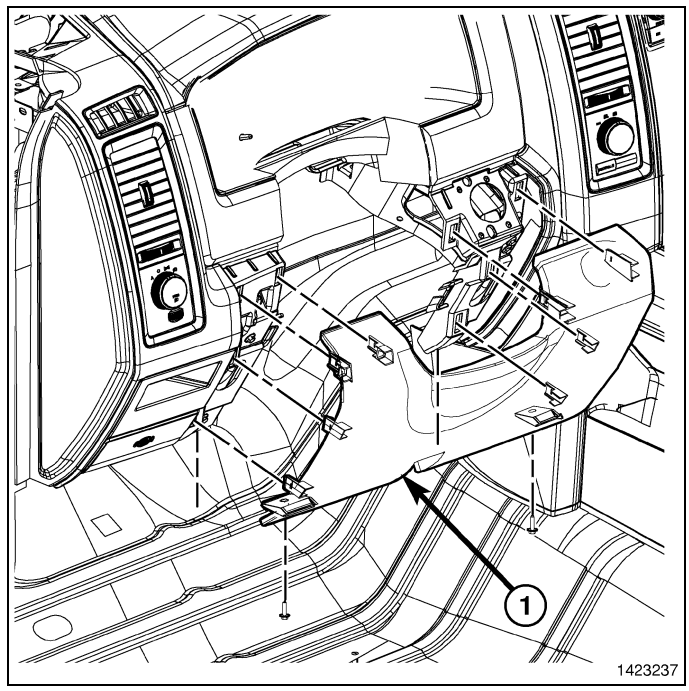

Installation

1. Position the steering column opening cover (2) to the instrument panel and fully engage the retainer clips to the instrument panel.

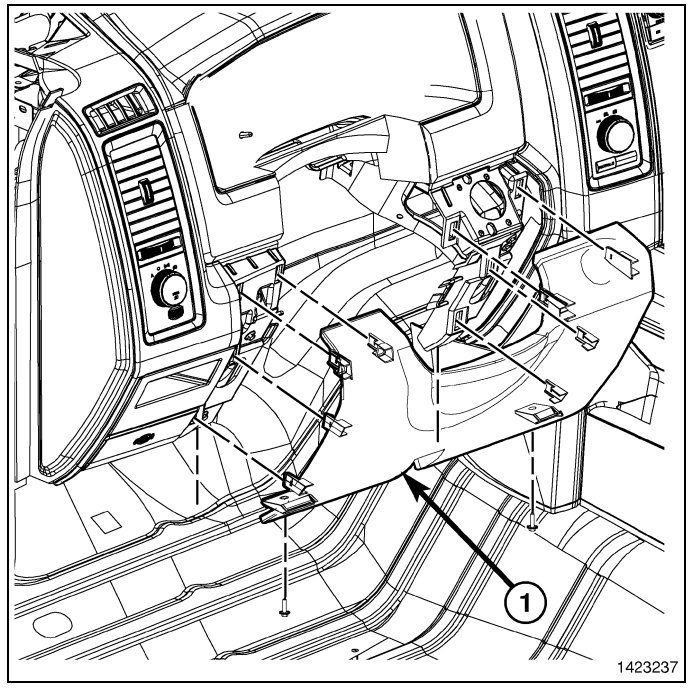

2. Install the Data Link Connector (3) to the steering column opening cover (2) by pushing the connector through the opening on the back side of the cover and fully engaging the lock tabs (1) of the connector..

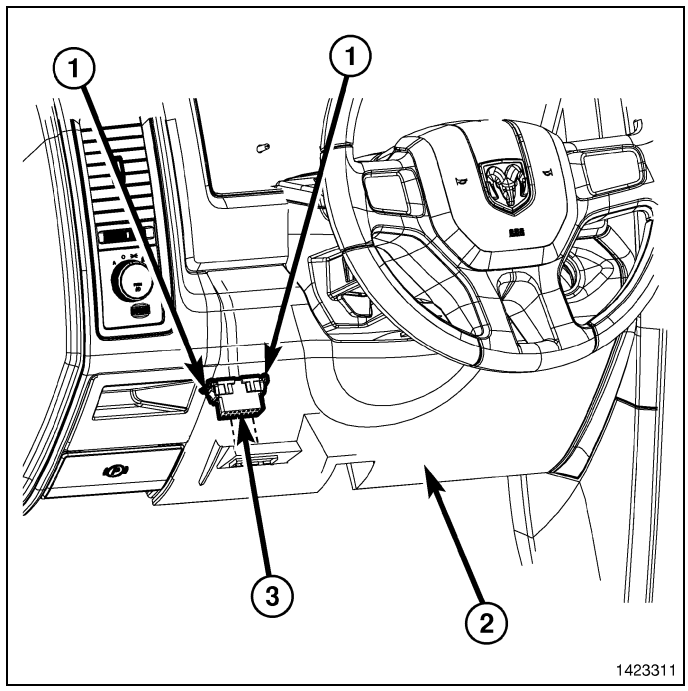

3. Install the two fastners (2) that secure the steering column opening cover (1) to the instrument panel.
4. Position the hood release hand onto the column opening cover and fully engage the retainer clip that secures the hood release handle to the steering column opening cover.

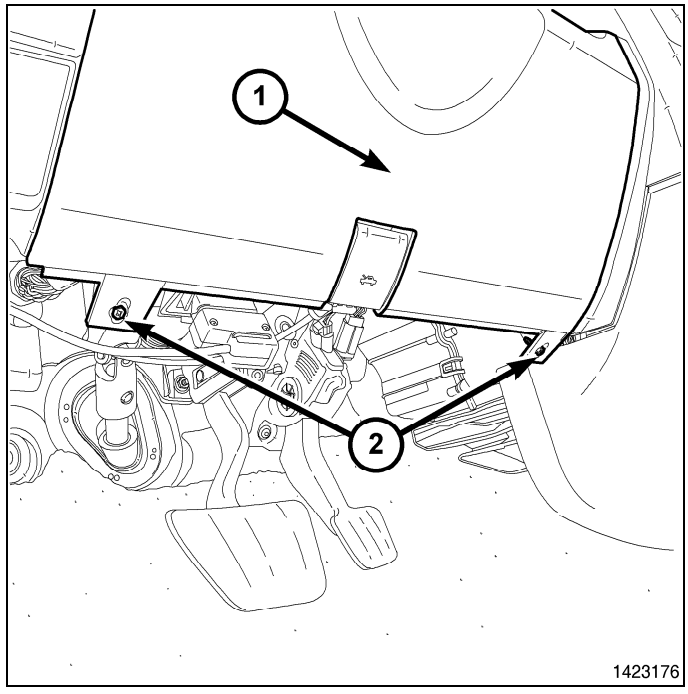

CUPHOLDER, Instrument Panel

Removal

1. Remove the center bezel. (Refer to 23 - Body/Instrument Panel/BEZEL, Instrument Panel - Removal)
2. Remove the lower closeout trim (1).

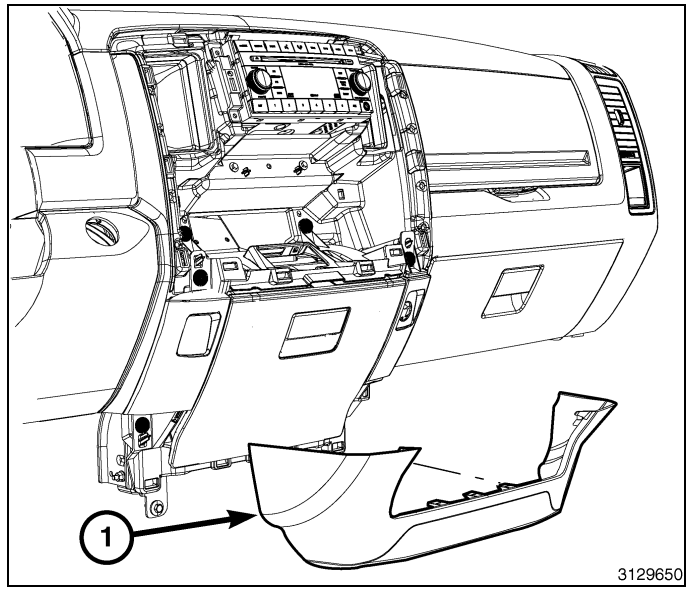

3. Remove the screws (1) and separate the side trim (2).

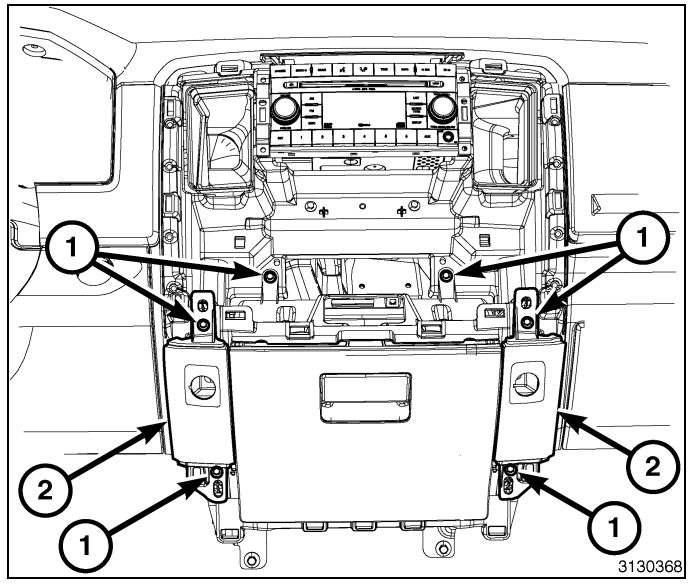

4. Remove the cup holder (1).

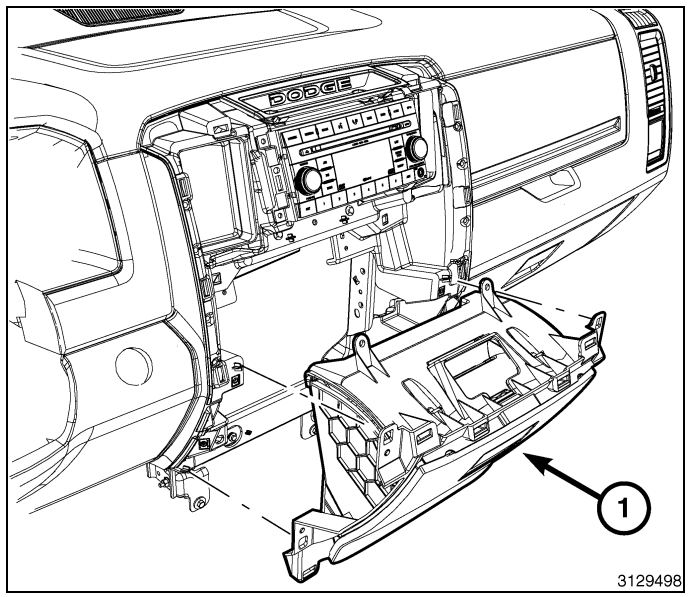

Installation

1. Position the cup holder (1) onto the alignment tabs and seat fully.

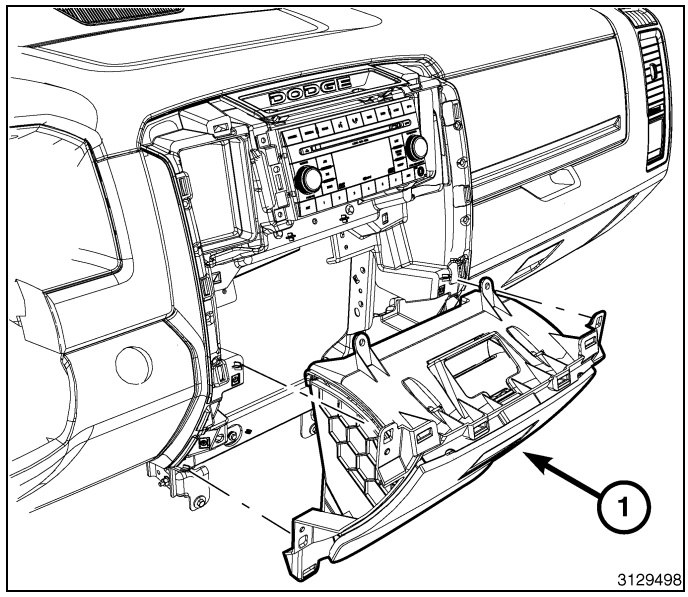

2. Install the lower side trim panels (2) and install the screws (1).

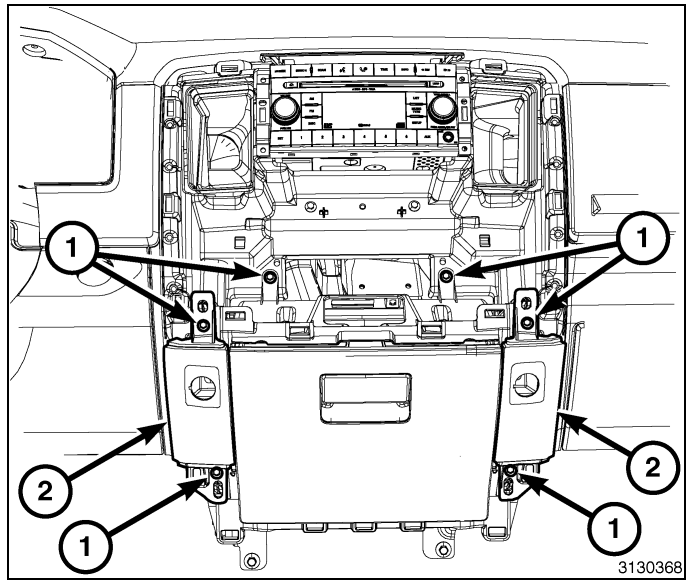

3. Position the lower closeout trim (1) back and seat the clips fully.
4. Install the center bezel. (Refer to 23 - Body/Instrument Panel/BEZEL, Instrument Panel - Installation)

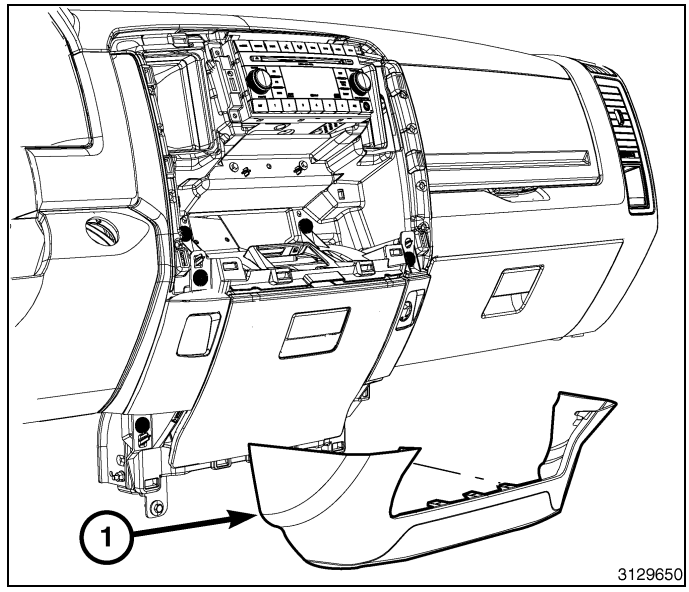

GLOVE BOX, Instrument Panel

Removal

1. Open the glove box (2).
2. Release the two glove box stops (1) and lower the glove box (2) downward past the stops.

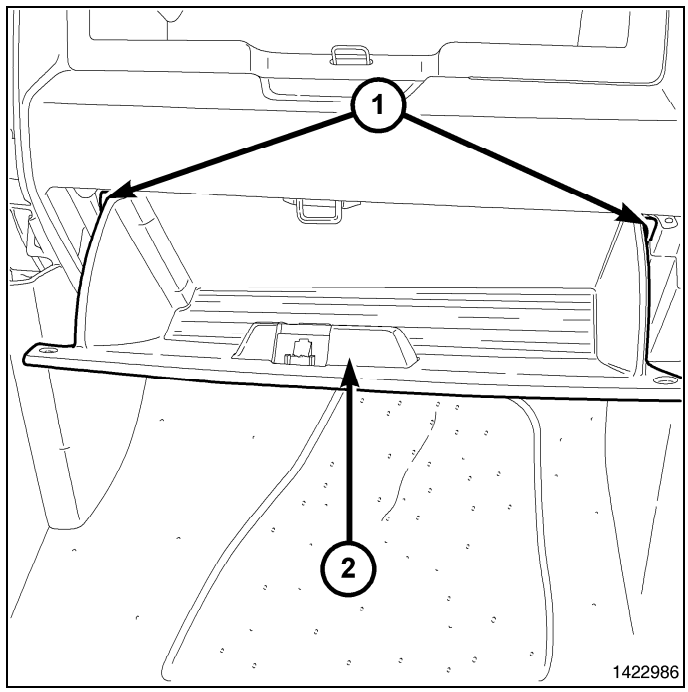

3. Disengage the glove box hinges (1) from the instrument panel and remove the glove box (2).

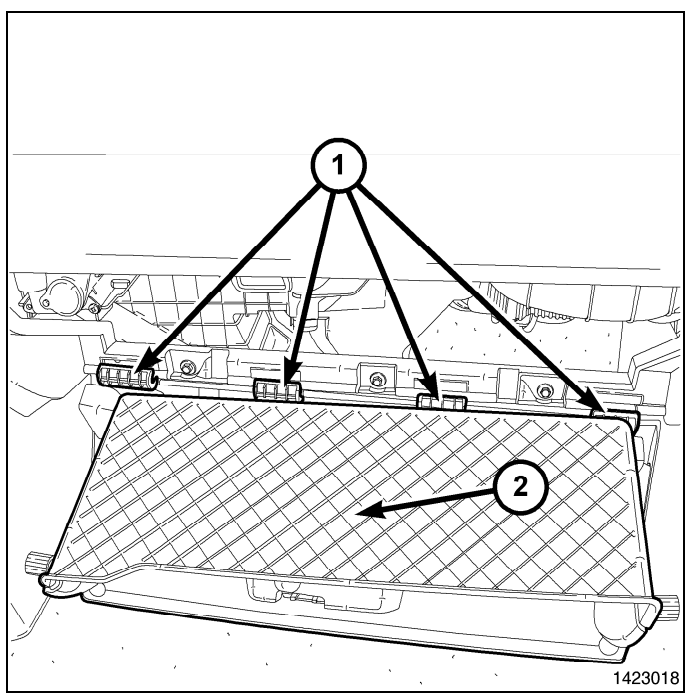

Installation

1. Engage the hinges(1) of the glove box (2) to the instrument panel.

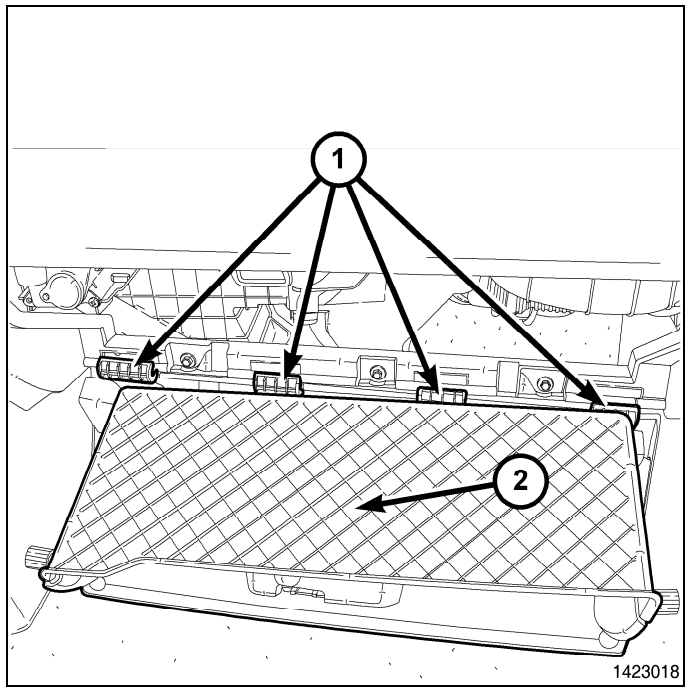

2. Press downward on the back edge of the glove box (2) and raise the glove box past the two stops (1).
3. Close the glove box.

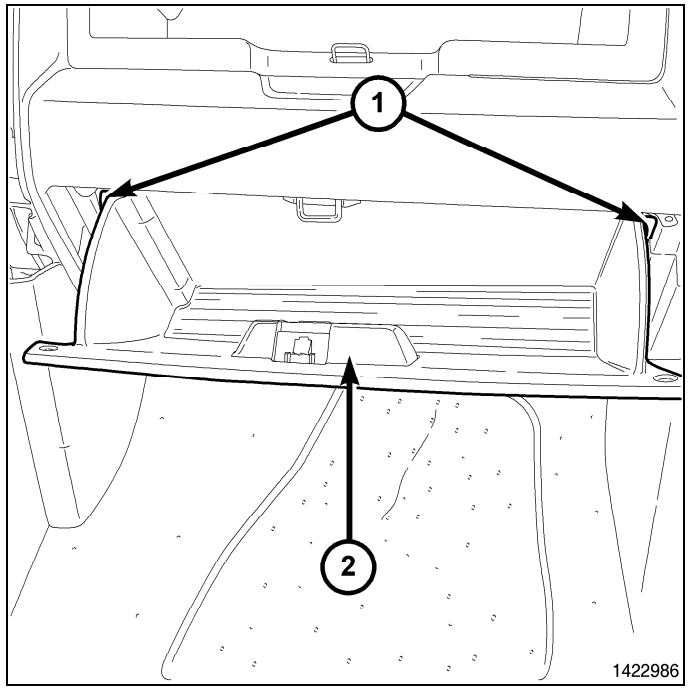

PANEL, Instrument

Removal

WARNING: On vehicles equipped with airbags, disable the airbag system before attempting any steering wheel, steering column, seat belt tensioner, or instrument panel component diagnosis or service. Disconnect and isolate the battery negative (ground) cable, then wait two minutes for the airbag system capacitor to discharge before performing further diagnosis or service. This is the only sure way to disable the airbag system. Failure to take the proper precautions could result in accidental airbag deployment and personal or fatal injury .

1. Disconnect and isolate the negative battery cable.
2. Remove the front seat assembly, (Refer to 23 - Body/Seats/SEAT - Removal).

NOTE: Right side Shown left side similar.

3. Remove the left cowl trim panel (Refer to 23 - Body/ Interior/PANEL, Cowl Trim - Removal).

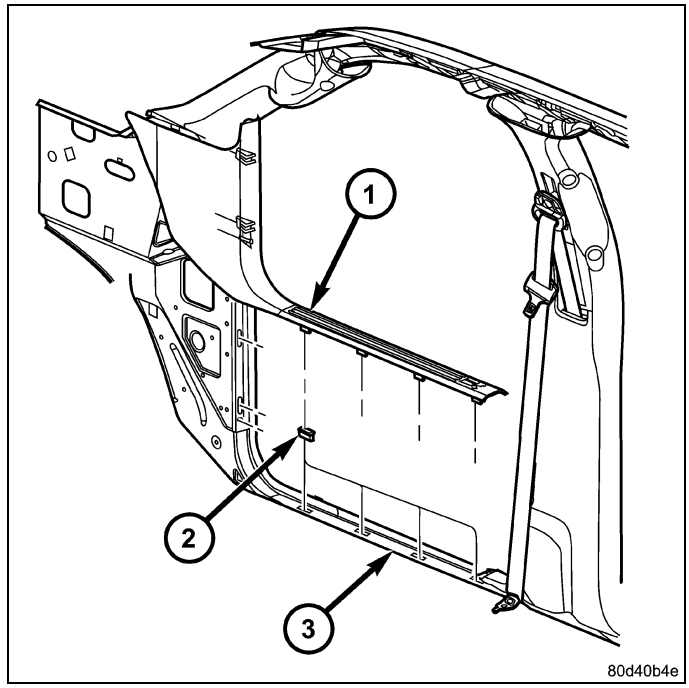

4. Remove the steering column opening cover (Refer to 23 - Body/Instrument Panel/COVER, Steering Column Opening - Removal)
5. Disconnect the instrument panel wire harness connector (2) located above the brake pedal from the bulkhead wire harness connector (1).

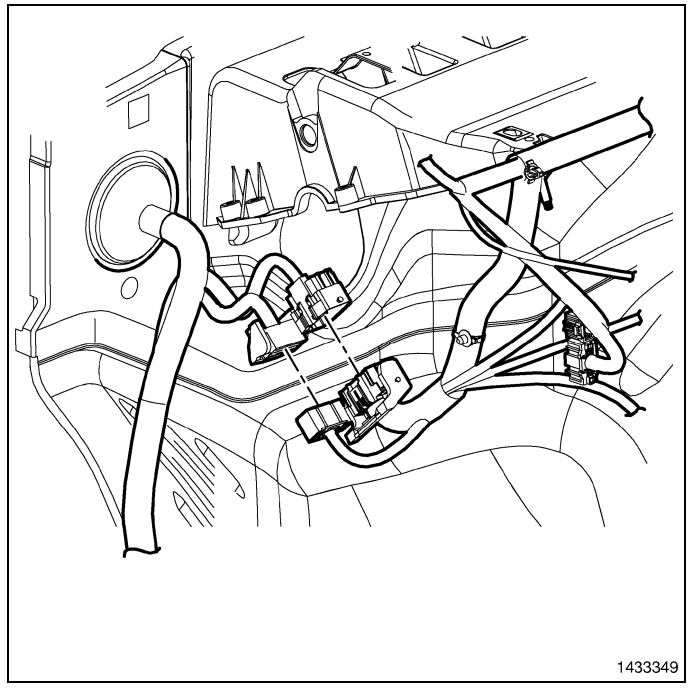

6. Remove the steering column as necessary(Refer to 19 - Steering/Column - Removal).

NOTE: Right side shown left side similar.

7. Remove the left A-pillar trim (Refer to 23 - Body/Interior/PANEL, A-Pillar Trim - Removal).

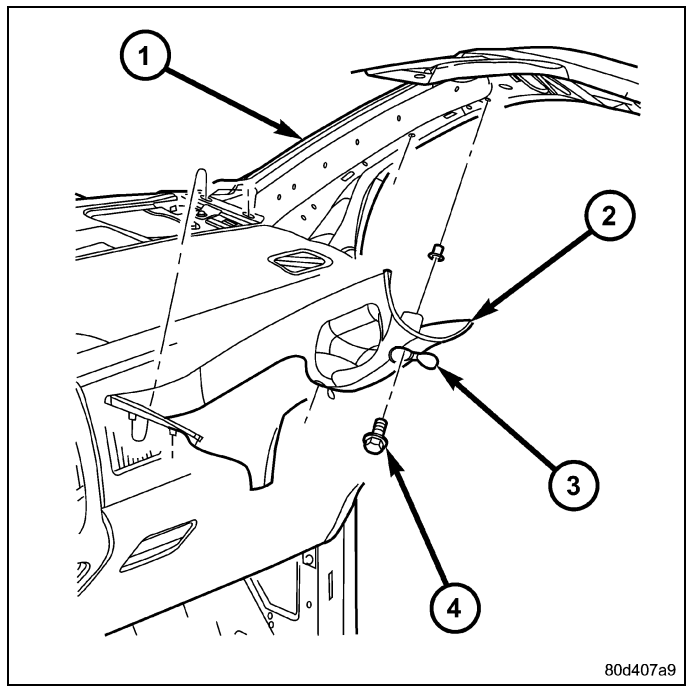

8. Using a trim stick C-4755 or equivalent, from the notch on the bottom, remove the left instrument panel side cover.

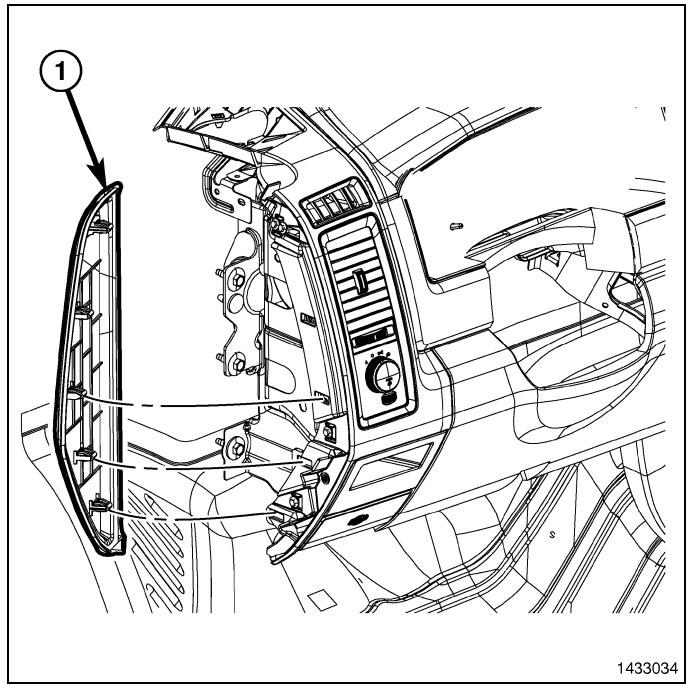

9. Remove the three bolts (1) that secure the left side of the instrument panel to the dash panel.

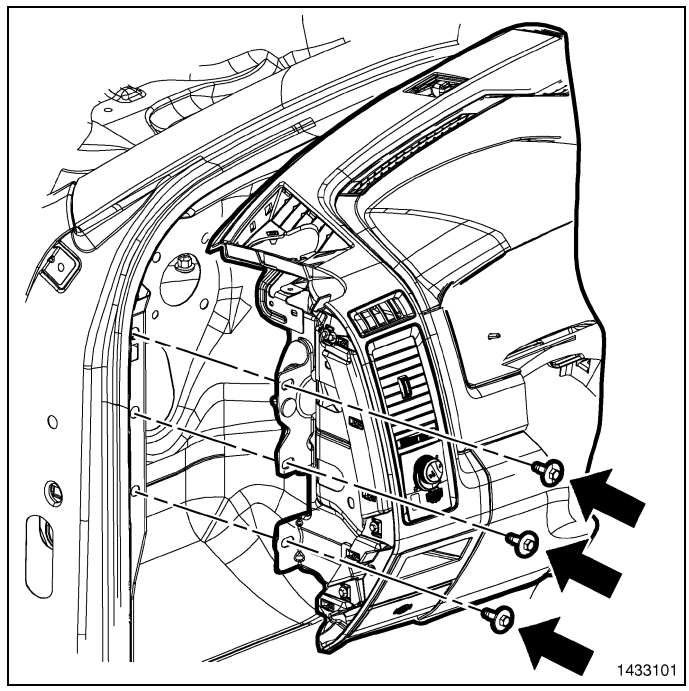

10. Remove the floor console, if equipped (Refer to 23 - Body/Interior/CONSOLE, Floor - Removal).

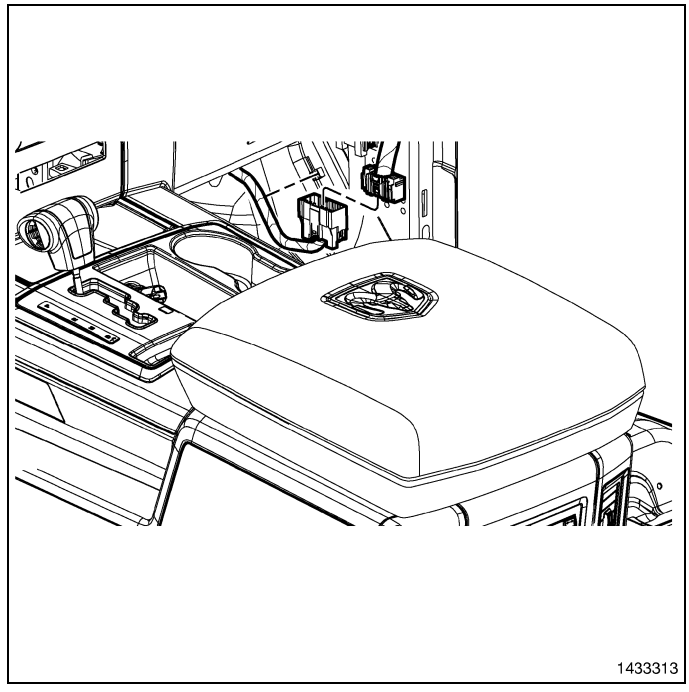

11. Remove the Brake Sled to I/P Bolts

12. Remove the two bolts (1) that secure the instrument panel to the center of the floor panel.

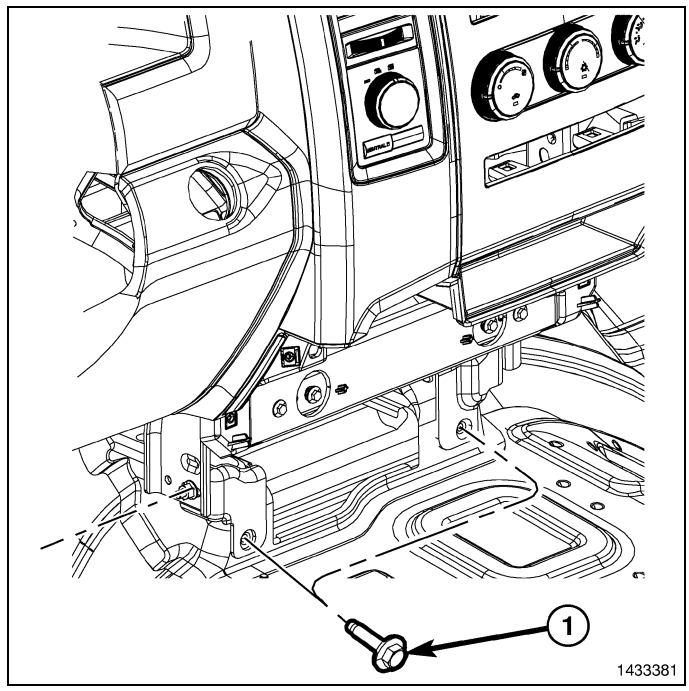

13. Remove the right A-pillar trim (Refer to 23 - Body/Interior/PANEL, A-Pillar Trim - Removal).

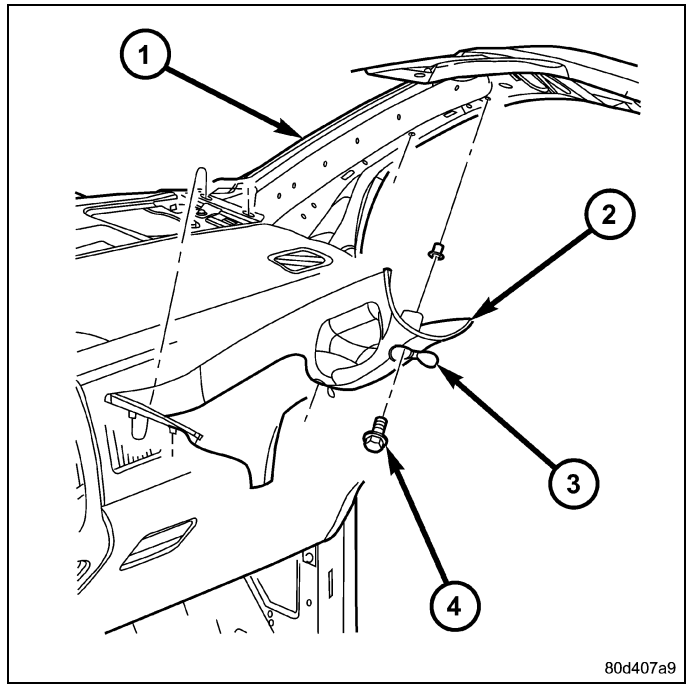

NOTE: Left side shown right side similar

14. Using a trim stick C-4755 or equivalent, from the notch on the bottom, remove the right instrument panel side cover (1) from the instrument panel.

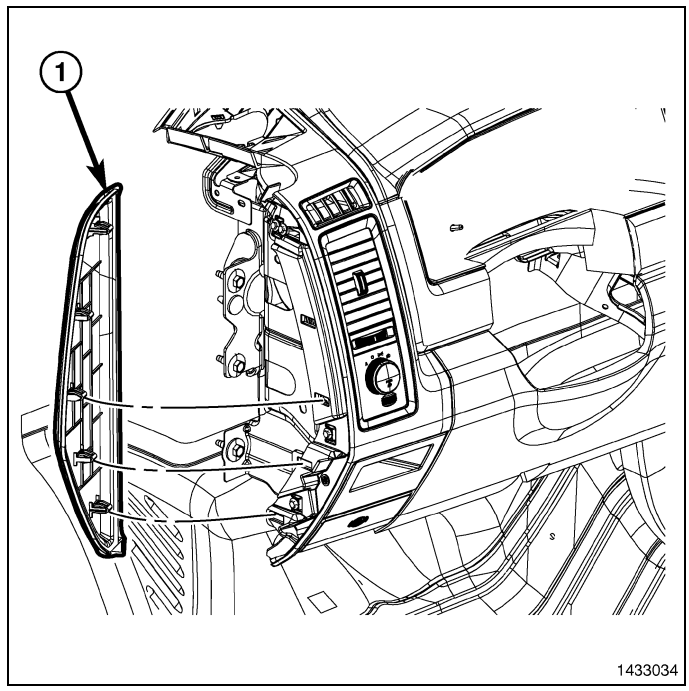

15. Disconnect the headliner wire harness connector located at the A-pillar.

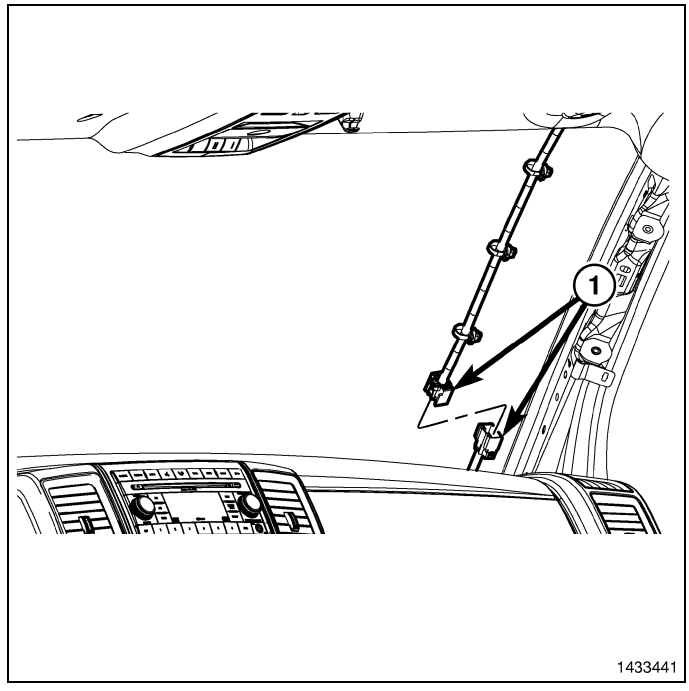

16. Remove the glove box from the instrument panel (Refer to 23 - Body/Instrument Panel/GLOVE BOX, Instrument Panel - Removal).

17. Remove the one bolt (2) that secures the instrument panel (3) to the HVAC housing (1) behind the glove box opening (4).

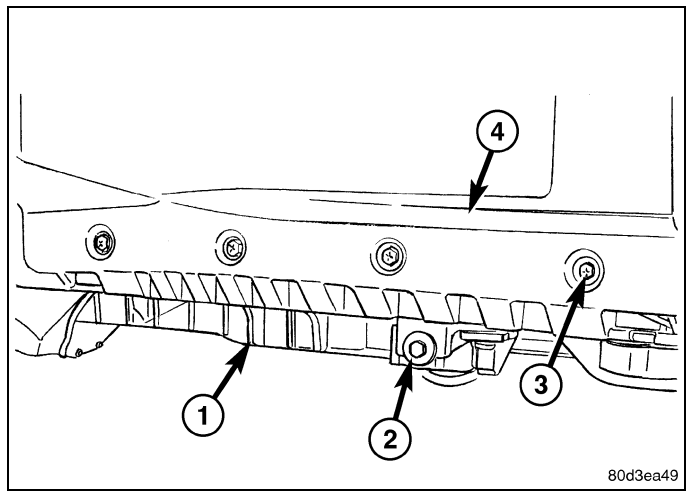

18. Remove the right cowl trim cover (Refer to 23 - Body/ Interior/PANEL, Cowl Trim - Removal).

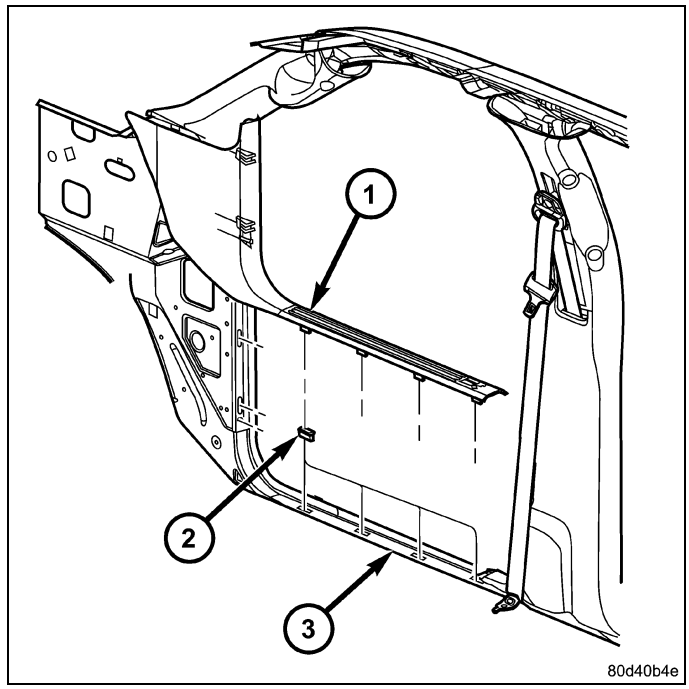

19. Disconnect the two instrument panel wire harness connectors from the two body wire harness connectors (1) located on the right side of the cowl panel (2).

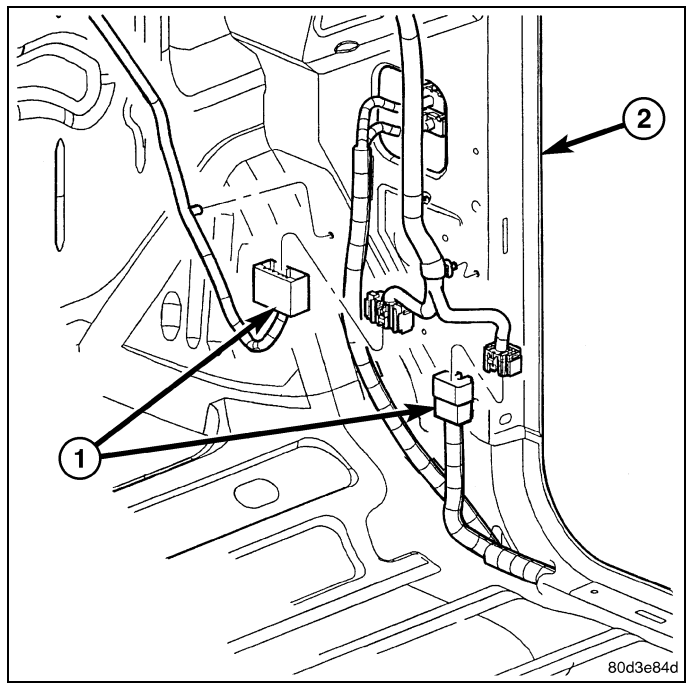

20. Disconnect the antenna coaxial cable connector (1) from the radio coaxial cable connector (2) located on the right side of the cowl panel.

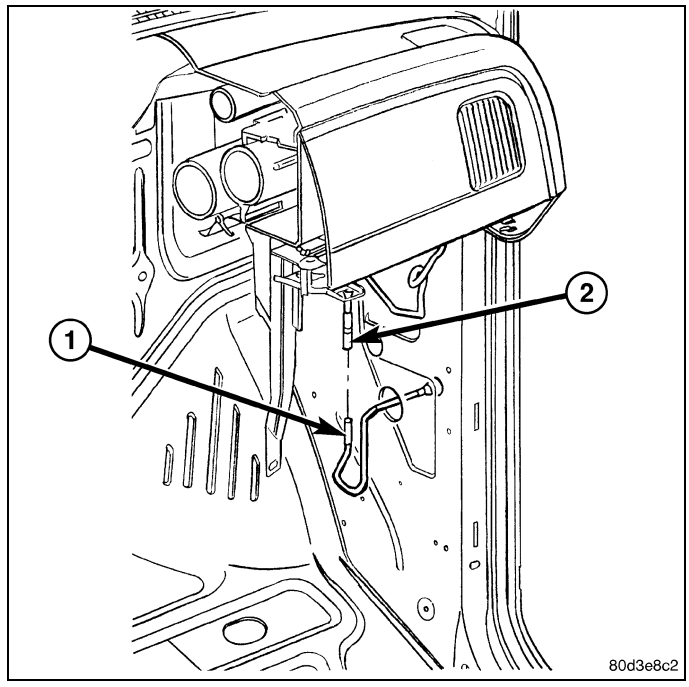

21. Remove the three bolts (1) that secure the right side instrument panel bracket to the dash panel.

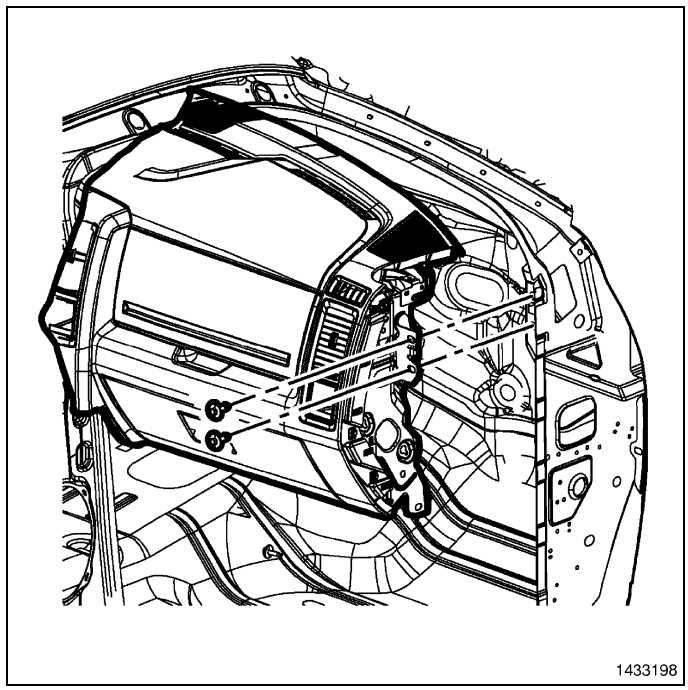

22. Remove fence line bolt access covers.
23. Remove fence line bolts.

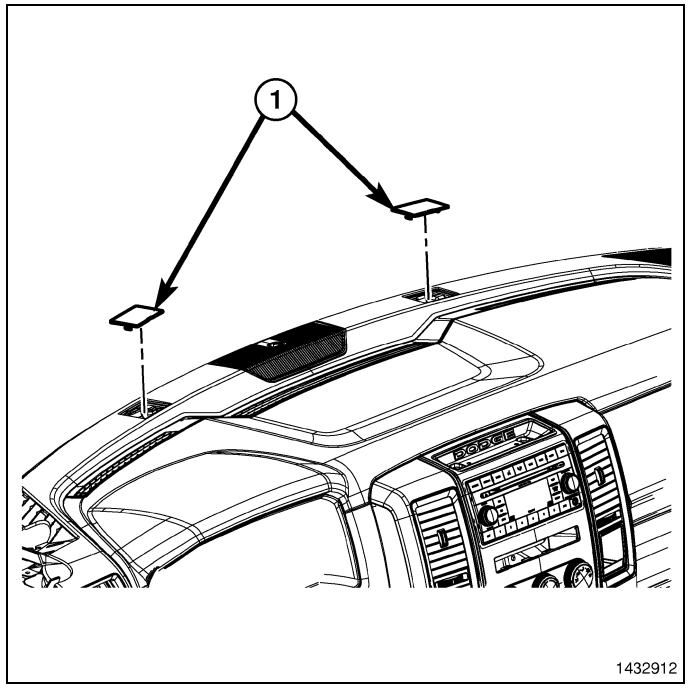

24. Pull carpet back as necessary to remove the ground eyelet fastner at ORC/YAWL Modules
25. Disconnect the ORC Module electrical connector and remove the wiring from under the carpet.
26. With the help of an assistant, lift the instrument panel up and off of the cowl panel and remove the instrument panel from the vehicle.

Installation

1. With the help of an assistant, position the instrument panel (5) into the vehicle and install the right side guide pin and the left side guide hook to the sides of the cowl panel.
2. Connect the ORC Module electrical connector and position the wiring under the carpet.
3. Install the ground eyelet fastner at ORC/YAWL Modules and position the carpet back as necessary.

4. Install the fence line bolts on top of I/P.
5. Tighten the bolts to 12 N·m (9 ft. lbs.).
6. Install the fence line bolt access covers.

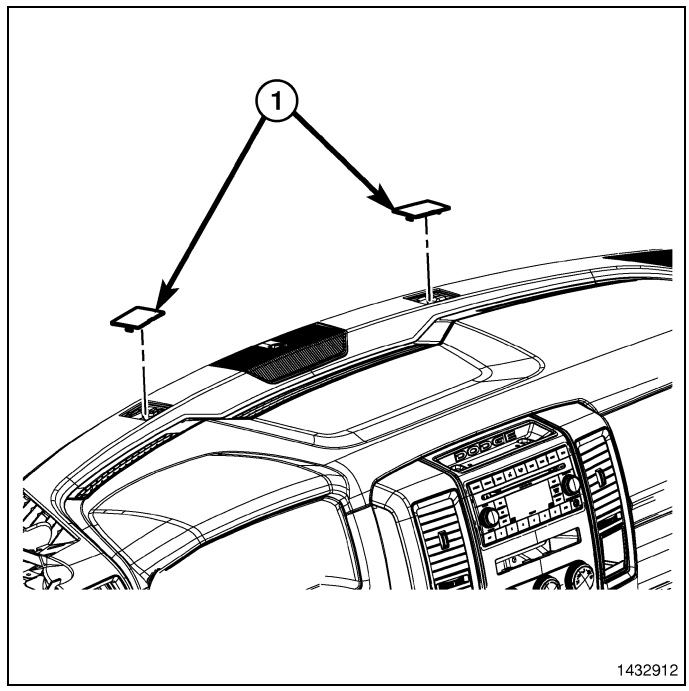

7. Install the three bolts (1) that secure the right side instrument panel bracket to the cowl panel.
8. Tighten the bolts to 12 N·m (9 ft. lbs.).

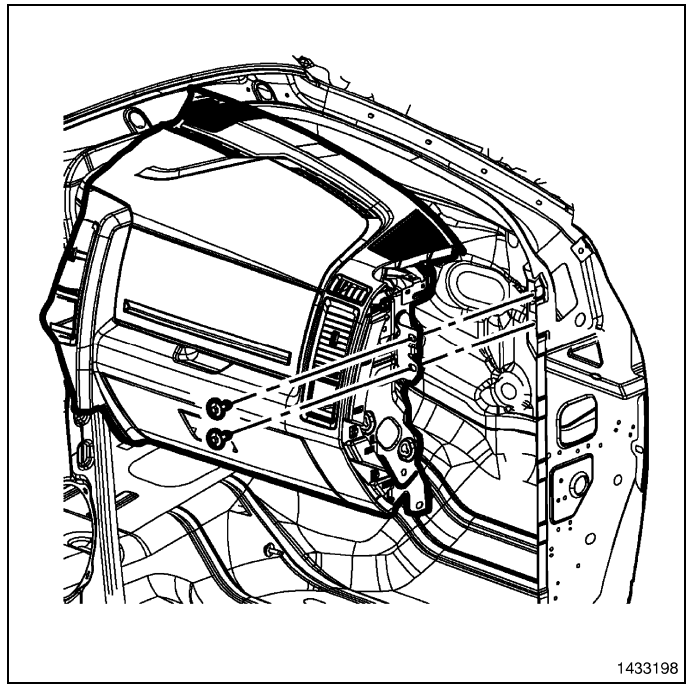

9. Connect the radio coaxial cable connector (2) to the antenna coaxial cable connector (1) located on the right side of the cowl panel.

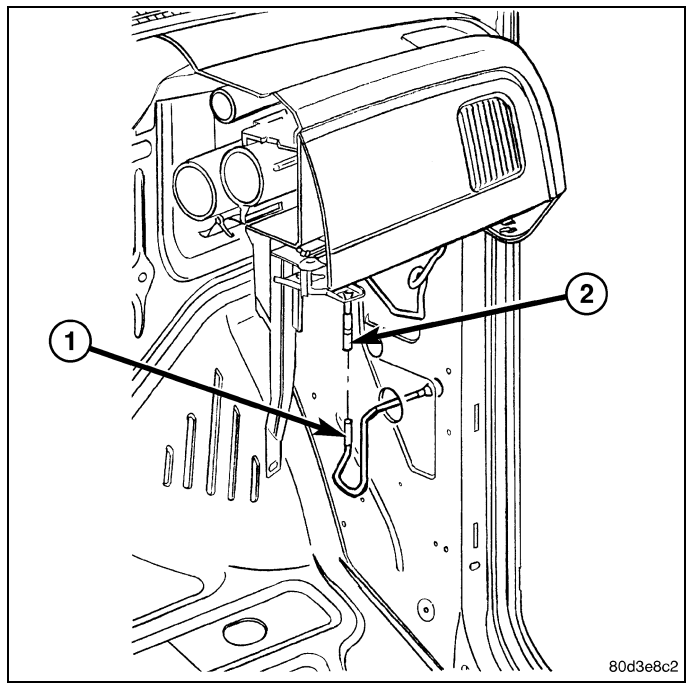

10. Connect the two instrument panel wire harness connectors to the two body wire harness connectors (1) located on the right side of the cowl panel (2).

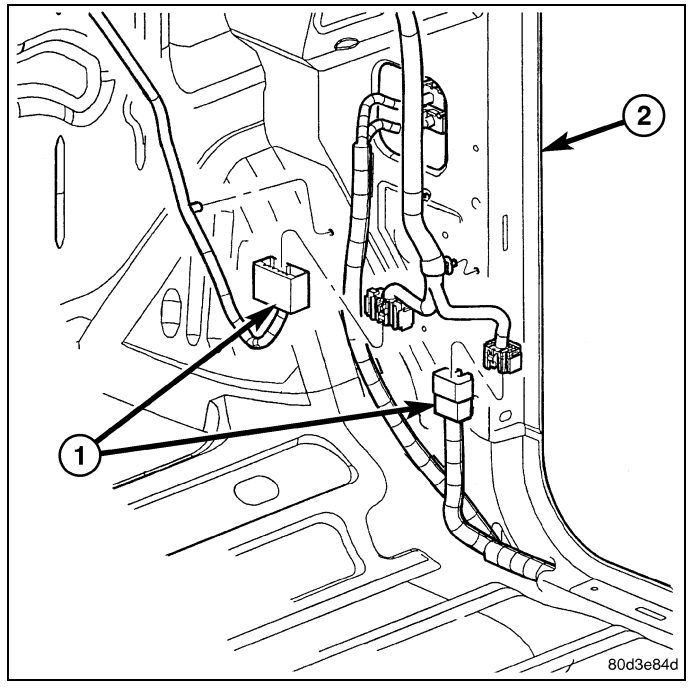

11. Install the right cowl trim panel (Refer to 23 - Body/ Interior/PANEL, Cowl Trim - Installation).

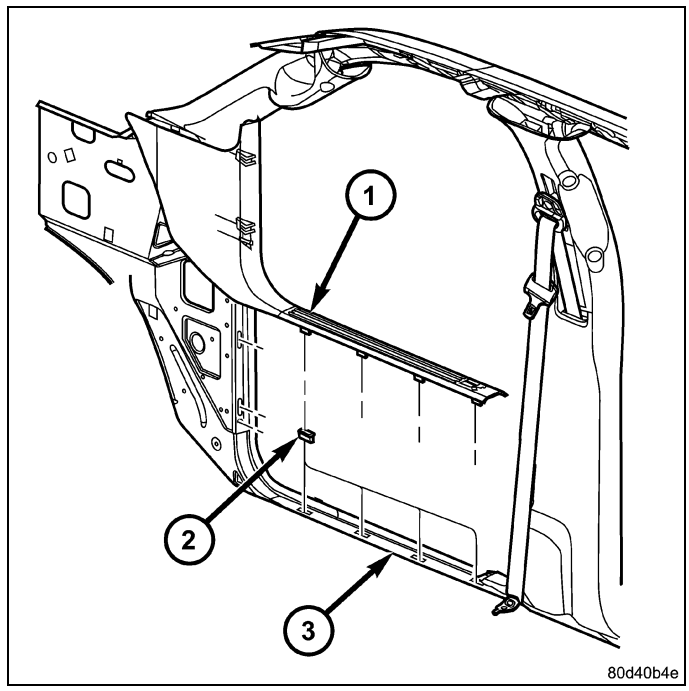

12. Install the one bolt (2) that secures the instrument panel (4) to the HVAC housing (1) below the glove box opening.

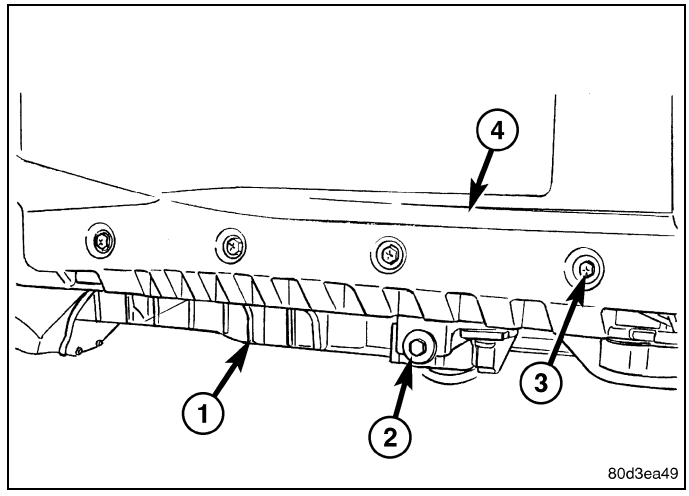

13. Install the glove box to the instrument panel (Refer to 23 - Body/Instrument Panel/GLOVE BOX, Instrument Panel - Installation).

14. Connect the headliner wire harness connector located at the A-pillar.

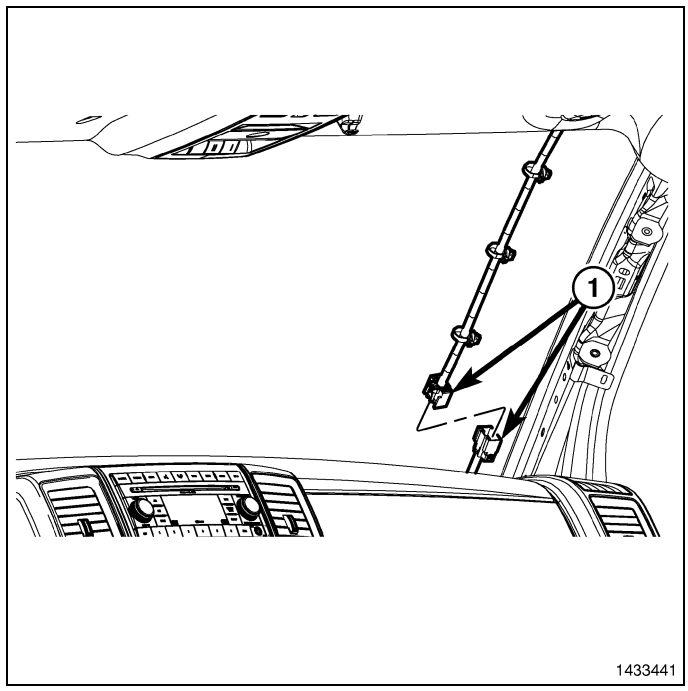

NOTE: Left side shown right side similar.

15. Install the right instrument panel side cover.

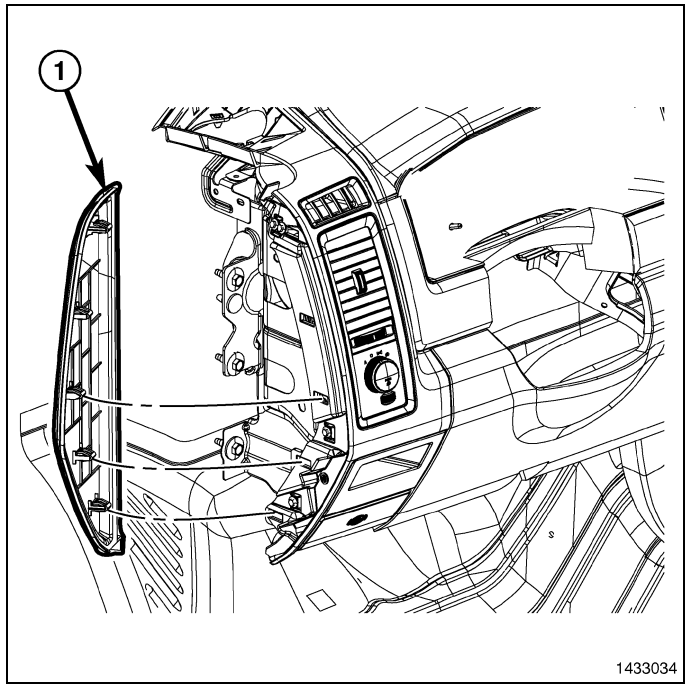

16. Install the right A-pillar trim (Refer to 23 - Body/Interior/PANEL, A-Pillar Trim - Installation).

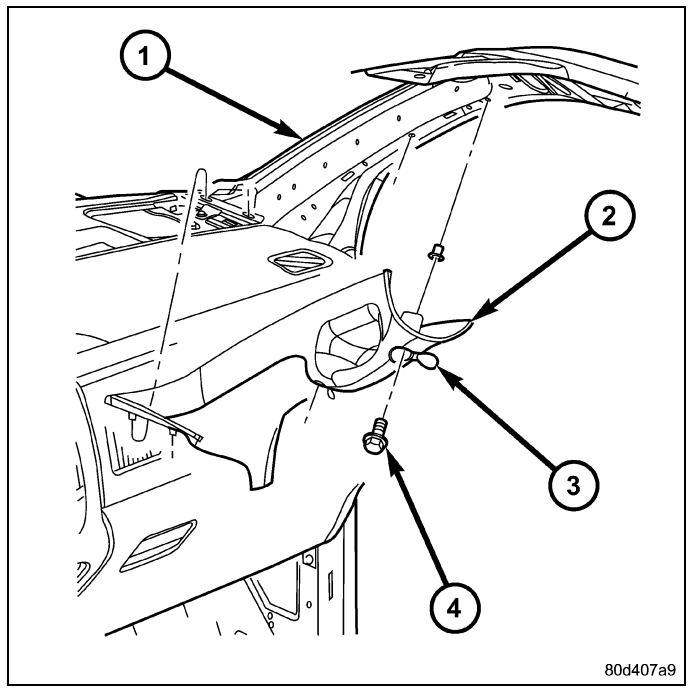

17. Install the two bolts (1) that secure the instrument panel to the center of the floor panel.
18. Tighten the bolts to 12 N·m (9 ft. lbs.).

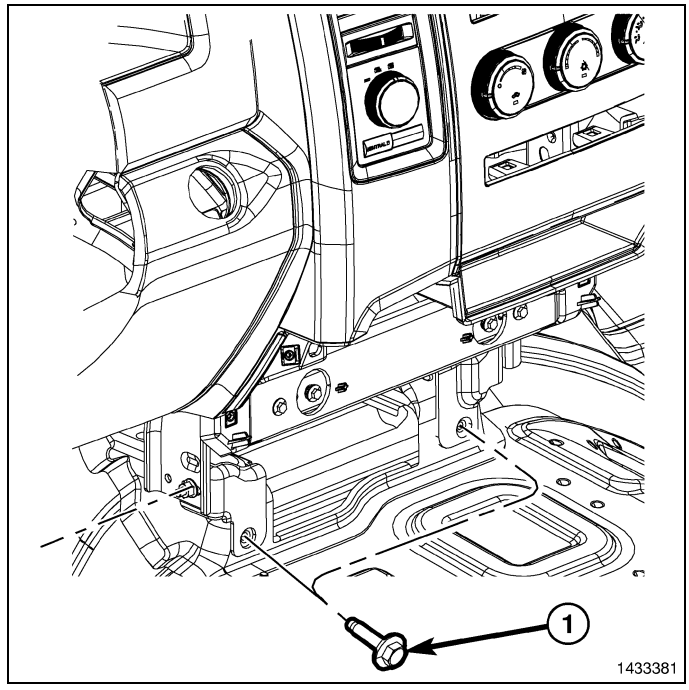

19. Install the Brake Sled to I/P Bolts

20. Install the floor console, if equipped (Refer to 23 - Body/Interior/CONSOLE, Floor - Installation).

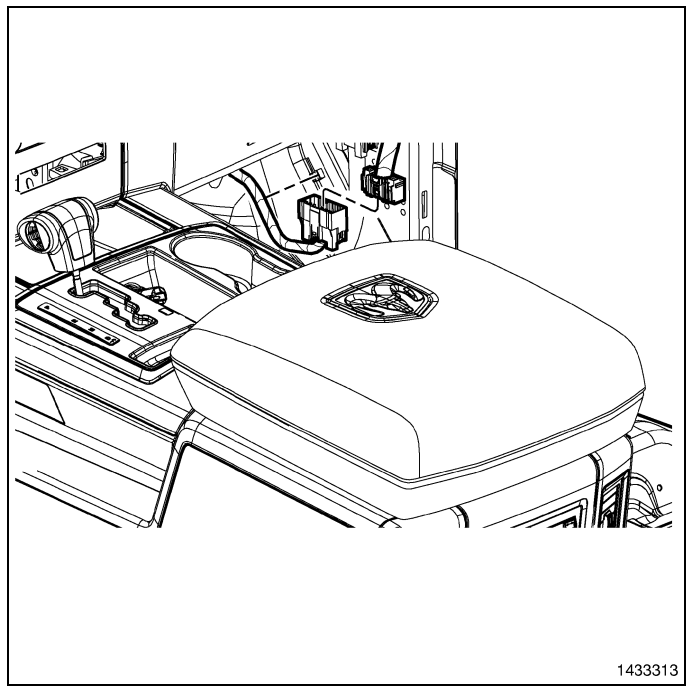

21. Install the three bolts (1) that secure the left side of the instrument panel to the dash panel.

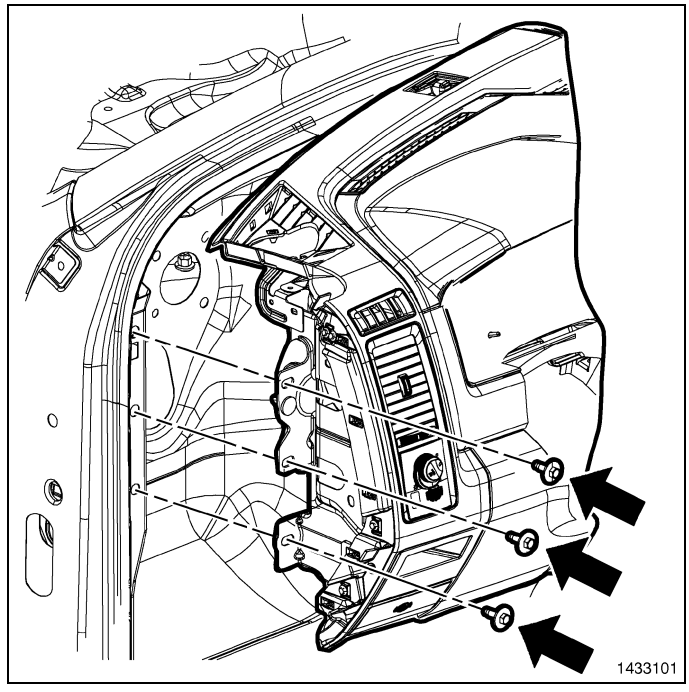

22. Install the left instrument panel side cover fully engaging the retainer clips..

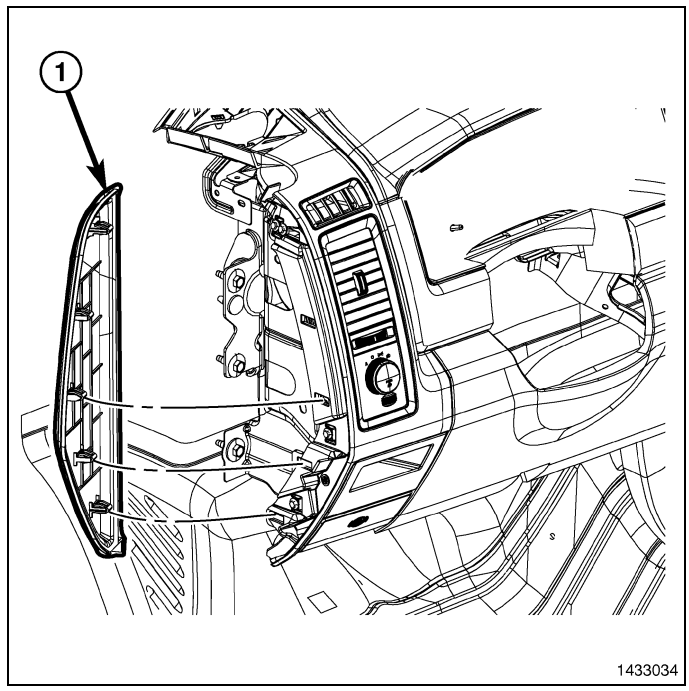

23. Install the left A-pillar trim (Refer to 23 - Body/Interior/PANEL, A-Pillar Trim - Installation).
24. Install the steering column as necessary(Refer to 19 - Steering/Column - Installation).

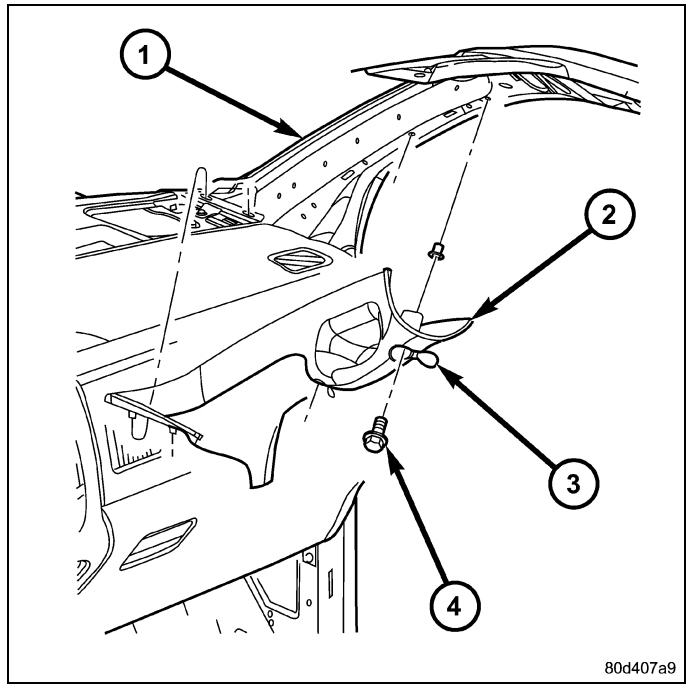

25. Connect the instrument panel wire harness connector (2) located above the brake pedal to the bulkhead wire harness connector (1).

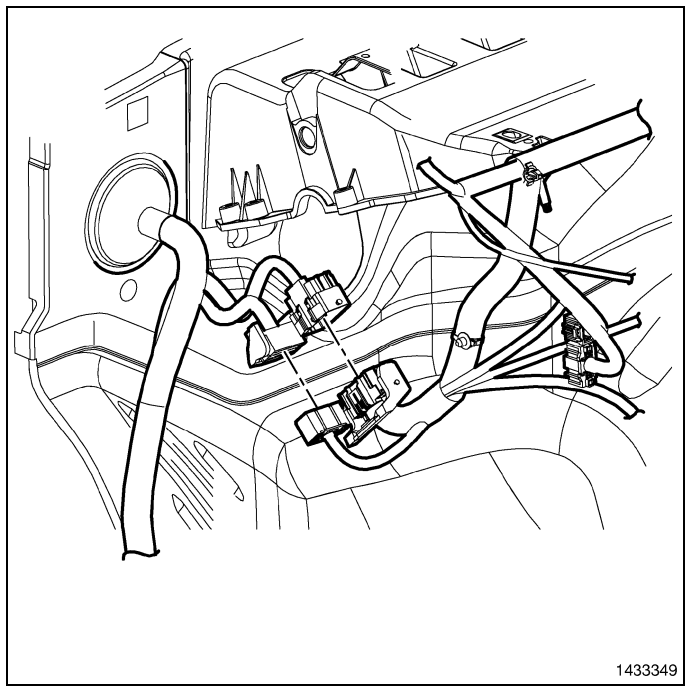

26. Install the steering column opening cover (Refer to 23 - Body/Instrument Panel/COVER, Steering Column Opening - Installation)
27. Install the left cowl trim panel (Refer to 23 - Body/Interior/PANEL, Cowl Trim - Installation).

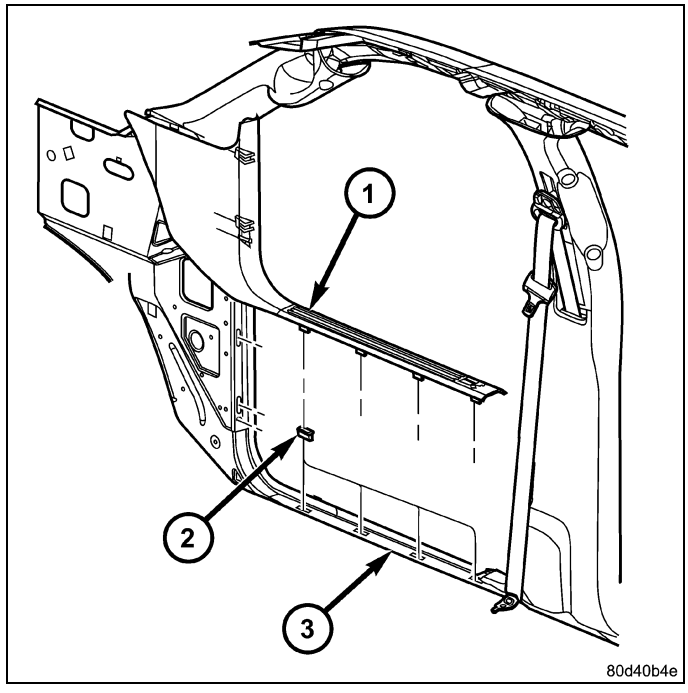

28. Install the front seat assembly, (Refer to 23 - Body/Seats/SEAT - Installation).
29. Reconnect the negative battery cable.

INTERIOR

TABLE OF CONTENTS

page

INTERIOR
CAUTION 212
BEZEL, CENTER CONSOLE
REMOVAL 212
INSTALLATION 213
BIN, STORAGE
REMOVAL 214
INSTALLATION 215
CARPET, FLOOR
REMOVAL 216
INSTALLATION 217
CONSOLE, FLOOR
REMOVAL 218
INSTALLATION 221
EXHAUSTER
REMOVAL 224
INSTALLATION 224
HEADLINER
REMOVAL 225
INSTALLATION 231
MIRROR, REARVIEW
REMOVAL 236
INSTALLATION
INSTALLATION 236
REAR VIEW MIRROR MOUNTING BRACKET 237
PANEL, A-PILLAR TRIM, WITH GRAB HANDLE
REMOVAL 238
INSTALLATION 238

page

PANEL, B-PILLAR TRIM, LOWER
REMOVAL 239
INSTALLATION 240
PANEL, B-PILLAR TRIM, UPPER
REMOVAL 241
INSTALLATION 242
PANEL, C-PILLAR TRIM, LOWER
REMOVAL 243
INSTALLATION 244
PANEL, C-PILLAR TRIM, UPPER
REMOVAL 245
INSTALLATION 246
PANEL, CAB BACK TRIM
REMOVAL 247
INSTALLATION 248
PANEL, COWL TRIM
REMOVAL 250
INSTALLATION 250
PLATE, SCUFF, REAR DOOR SILL
REMOVAL 251
INSTALLATION 251
SUPPORT, VISOR
REMOVAL 252
INSTALLATION 252
VISOR
REMOVAL 253
INSTALLATION 253

Interior

Caution

CAUTION: Do not attempt to remove interior trim panels or moldings without first removing the necessary adjacent trim panels or moldings. To avoid damaging the trim panels, ensure that all the fasteners are removed or disengaged before attempting to remove interior trim panels or moldings. Trim panels are somewhat flexible but can be damaged if handled improperly.

BEZEL, Center Console

Removal

1. Using trim stick C-4755 or equivalent, remove shift bezel trim ring (1).

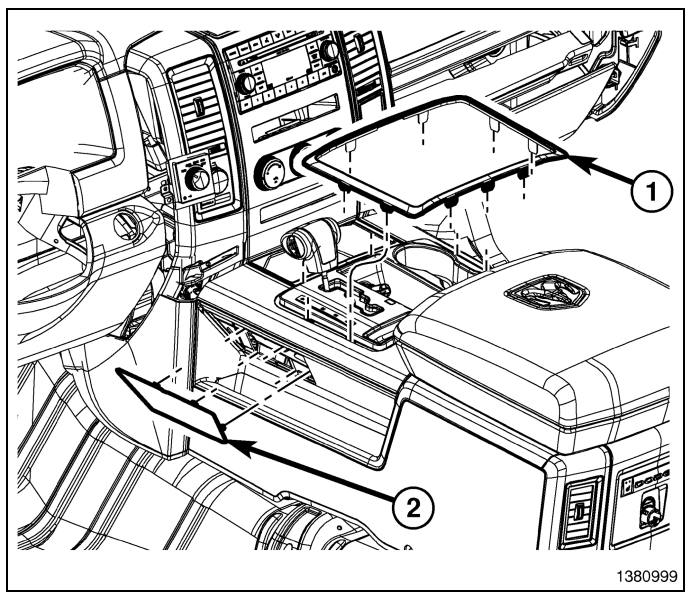

2. Remove the rubber mat and remove the screws (1).
3. Using trim stick C-4755 or equivalent, remove shift bezel (1).

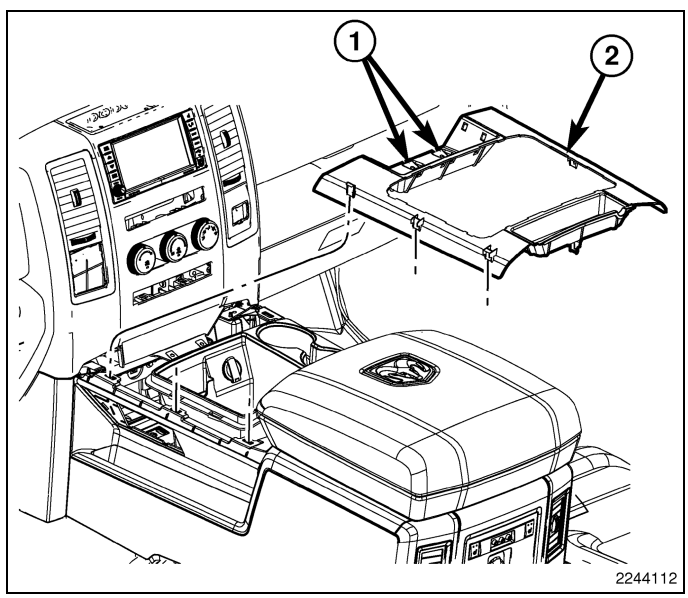

Installation

1. Position the shift bezel (2) in place and seat the retaining tabs fully.
2. Install the screws (1) and install the rubber mat.

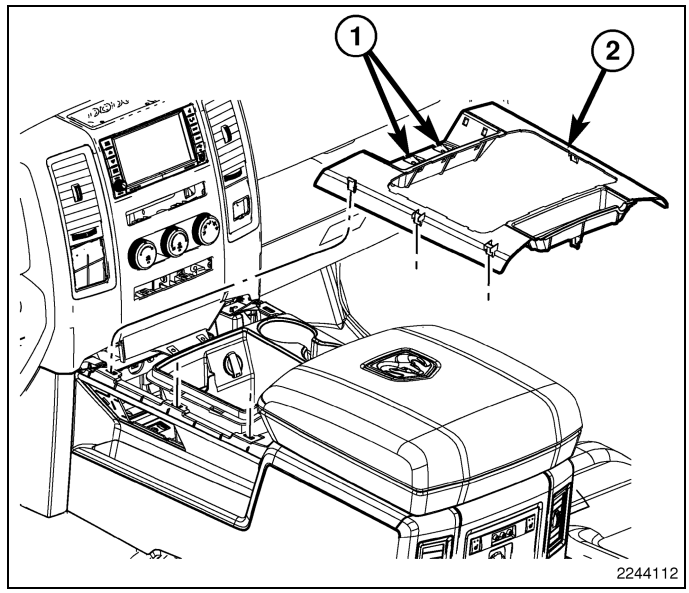

3. Position the trim ring (1) into place and seat the retaining tabs fully.

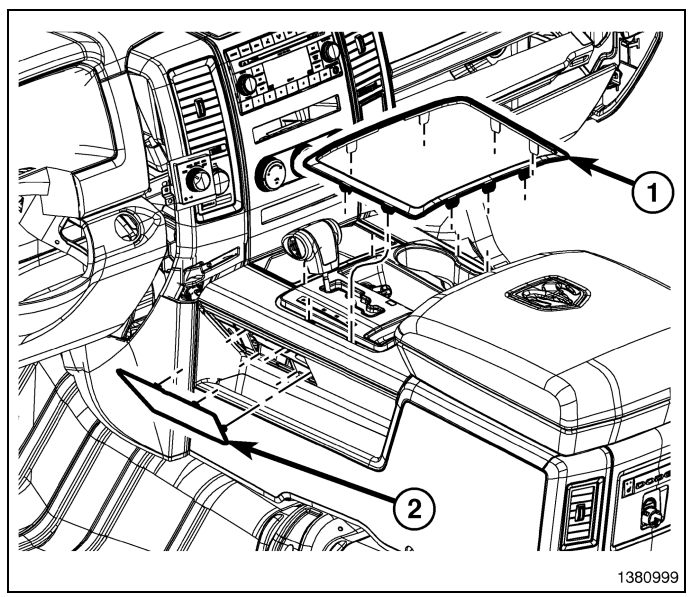

BIN, Storage

Removal

STORAGE BIN

1. Remove the six bolts (4) that secure the storage bin (3) to the floor panel and remove the storage bin.

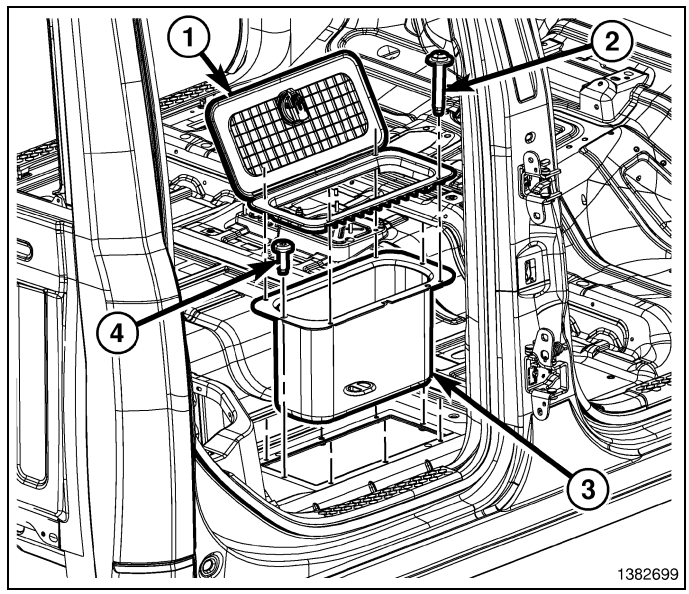

REAR STORAGE COMPARTMENT

1. Remove the three bolts (2) that secure the rear storage compartment (1) to the floor panel and remove the storage compartment from the rear cab trim panel.

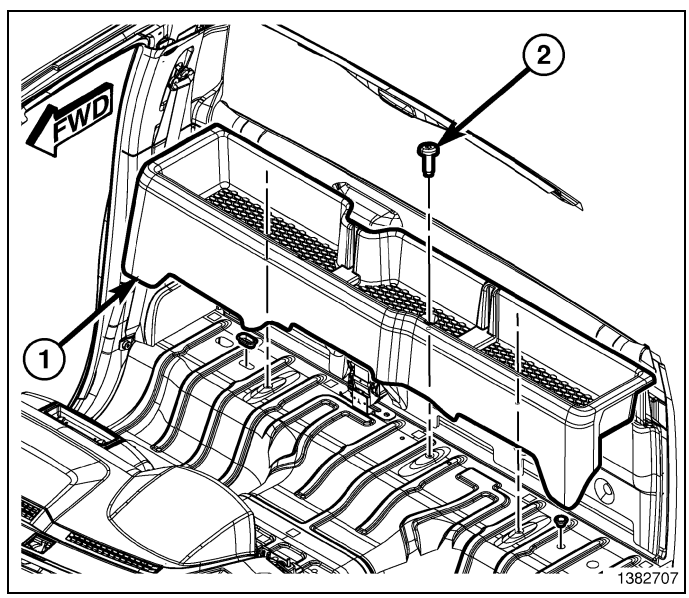

Installation

STORAGE BIN

1. Position the storage bin (3) in the floor panel and install the six bolts (4).

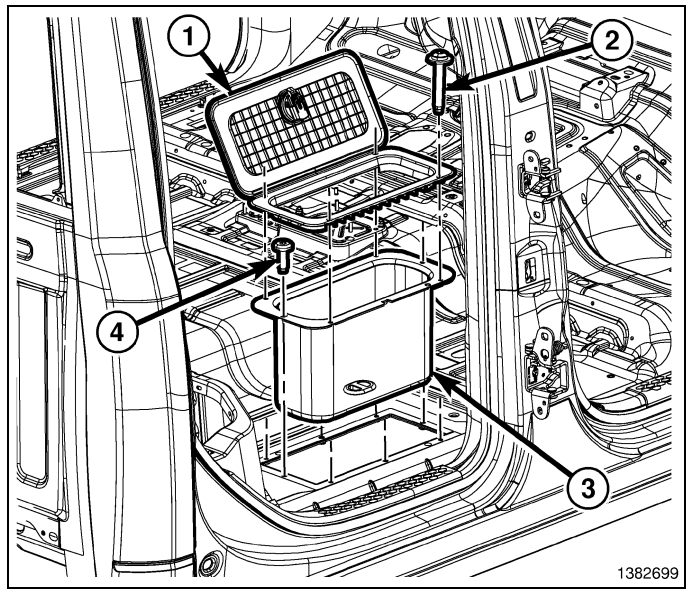

REAR STORAGE COMPARTMENT

1. Position the rear storage compartment (1) onto the rear cab trim panel and install the three bolts (2).

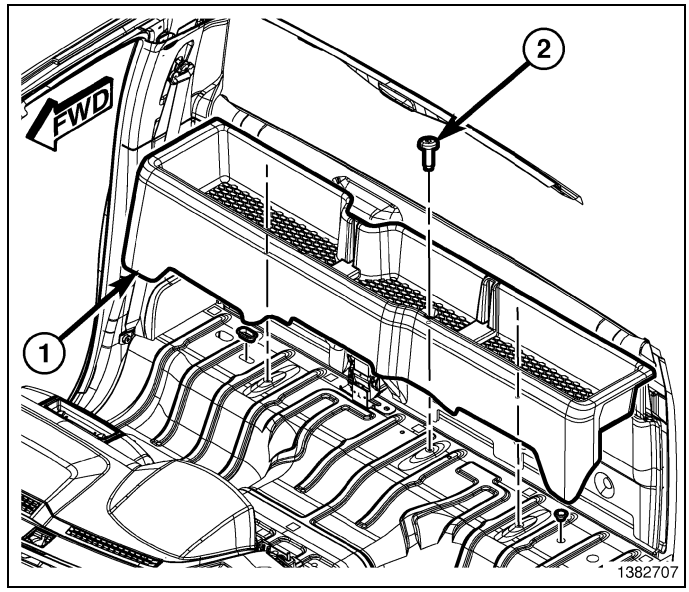

CARPET, Floor

Removal

NOTE: Carpet for quad can model shown. Regular cab similar.

NOTE: The floor mat hook is serviced separately from the carpet, do not replace the carpet do to a broken floor mat hook.

1. Remove the front seats (Refer to 23 - Body/Seats/SEAT - Removal).
2. If equipped, remove the floor console (Refer to 23 - Body/Interior/CONSOLE, Floor - Removal).
3. If equipped, remove the storage bins. (Refer to 23 - Body/Interior/BIN, Storage - Removal)
4. If equipped, remove the rear sub-woofer. (Refer to 08 - Electrical/8A - Audio and Video/SPEAKER - Removal)
5. Remove the lower B-pillar trim panels. (Refer to 23 - Body/Interior/PANEL, B-Pillar Trim - Removal)
6. Remove the jack assemblies.
7. Remove the nine push pin fasteners (2) on the quad cab models.
8. Remove the carpet (1) from the vehicle.
9. If required, separate the seat belts from the floor on both sides. (Refer to 10 - Restraints/SEAT BELT - Removal)
10. Remove the rear storage bin carpet (1), if equipped.

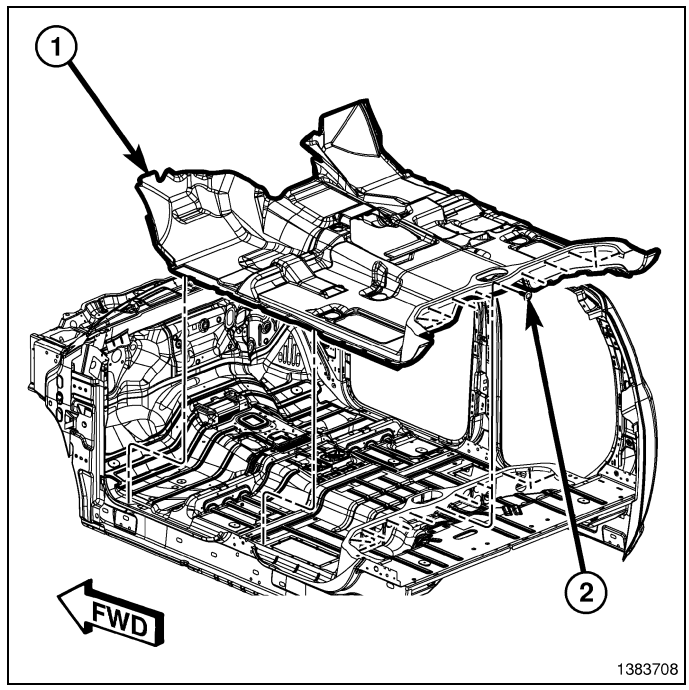

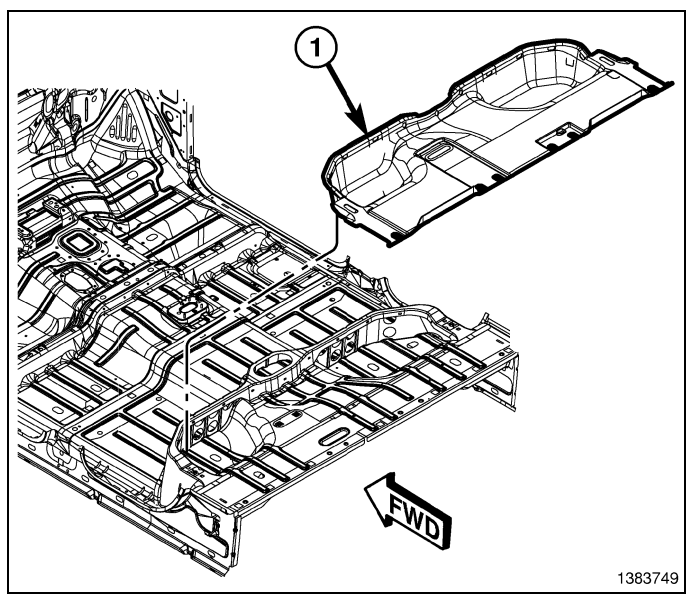

Installation

1. Install the rear storage bin carpet (1), if equipped.
2. If required, install the seatbelts to the floor. (Refer to 10 - Restraints/SEAT BELT - Installation)

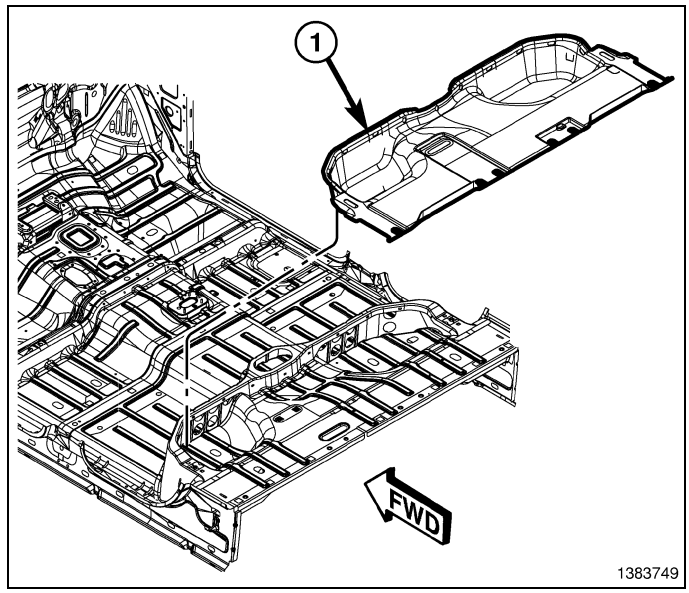

NOTE: Carpet for quad cabmodel shown. Regular cab similar.

3. Position the carpet (1) into the vehicle.
4. On quad cab models, install the nine push-pin fasteners (2) that secure the carpet to the floor panel.
5. Install the lower B-pillar trim panels. (Refer to 23 - Body/Interior/PANEL, B-Pillar Trim - Installation)
6. If equipped, install the sub-woofers. (Refer to 08 - Electrical/8A - Audio and Video/SPEAKER - Installation)
7. Install the storage bins, if equipped. (Refer to 23 - Body/Interior/BIN, Storage - Installation)
8. If equipped, install the floor console. (Refer to 23 - Body/Interior/CONSOLE, Floor - Installation)
9. Install the front seats. (Refer to 23 - Body/Seats/SEAT - Installation)

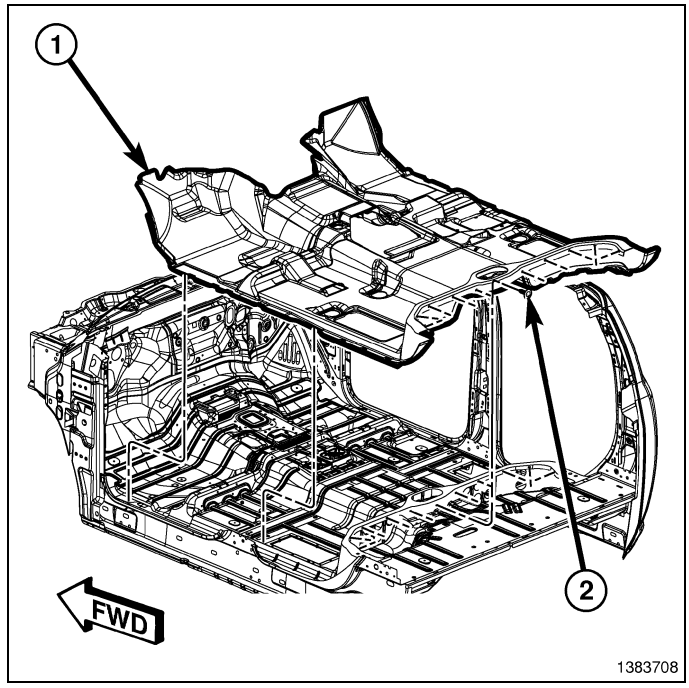

CONSOLE, Floor

Removal

1. Remove the side trim covers (1).

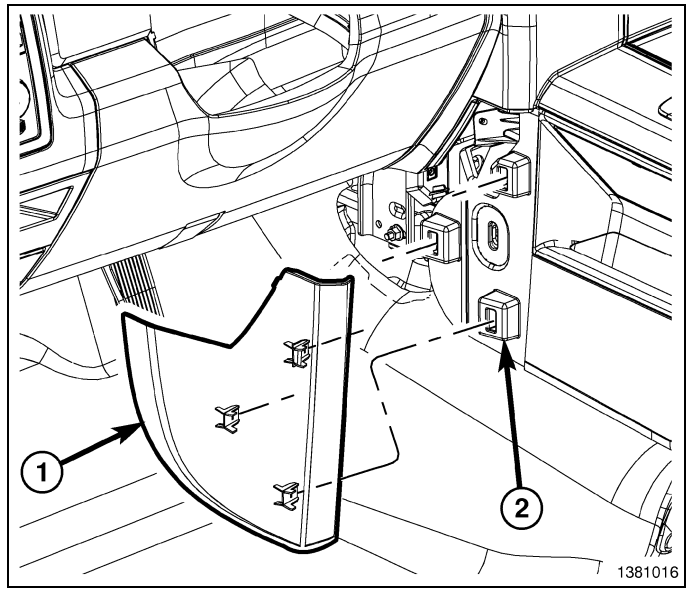

2. Using trim stick C-4755 or equivalent, remove shift bezel trim ring (1) and the shift cable cover (2).

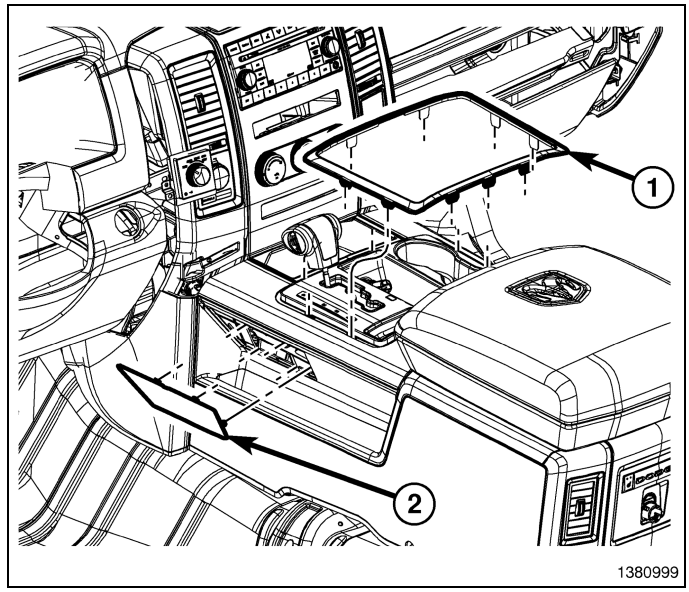

3. Remove the screws (1).
4. Using trim stick C-4755 or equivalent, remove shift bezel (1).

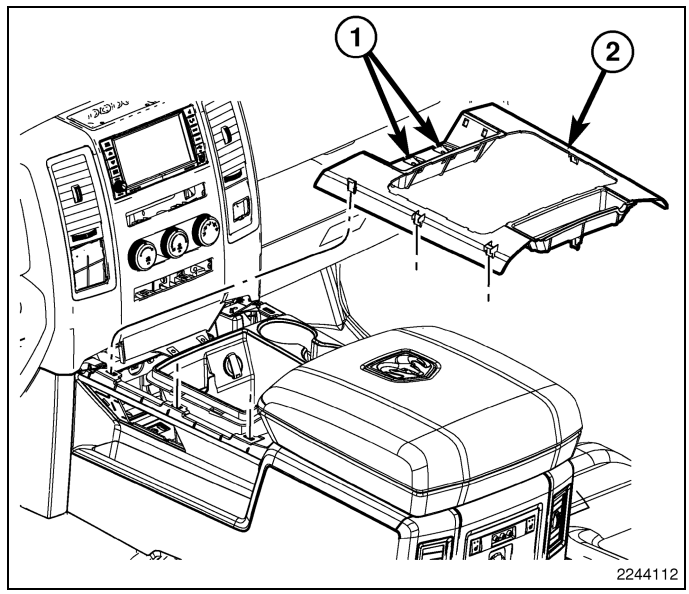

5. Separate the shift cable end (2) from the shifter.
6. Release the clip and separate the shift cable houseing (1) from the shifter assembly.

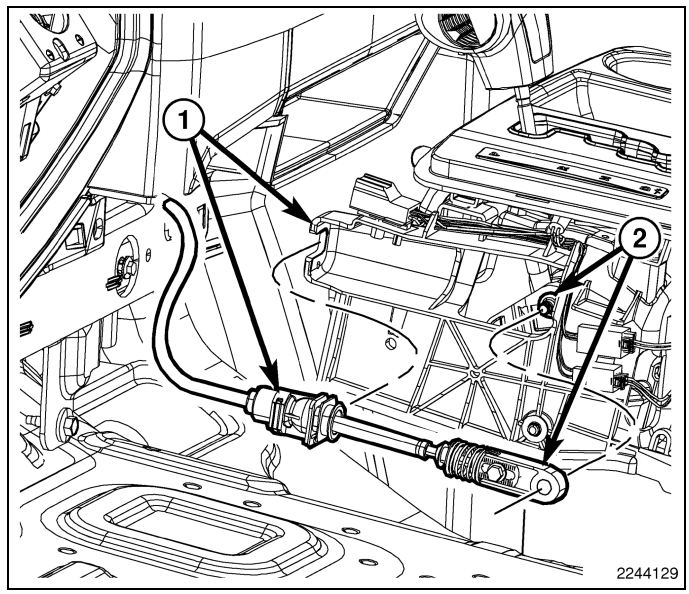

7. Remove the screws (1, 3 and 4).

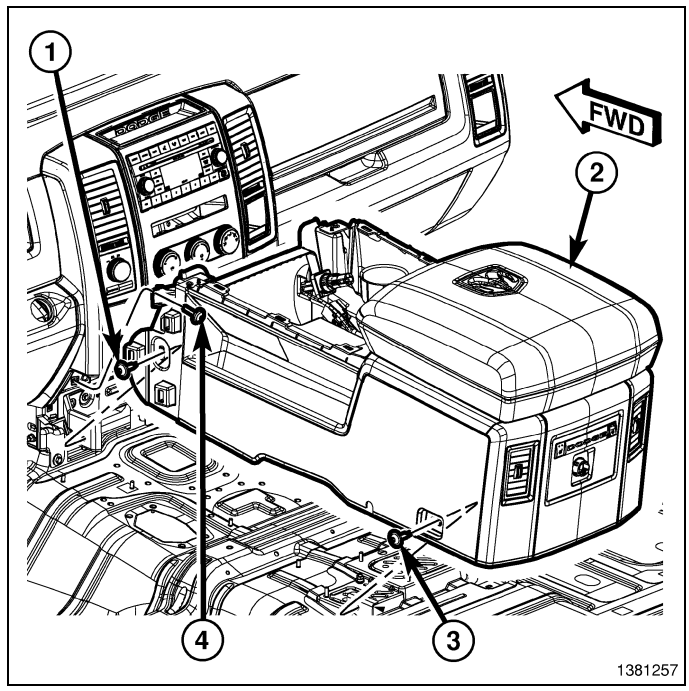

8. Disconnect the power outlet electrical connector, if equipped.
9. Disconnect the electrical connectors (1, 2 and 3) and remove the console.

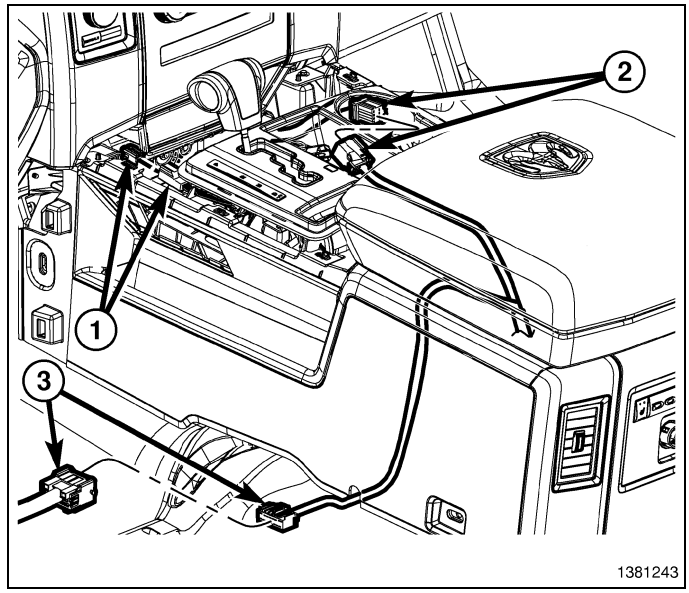

Installation

1. Position the floor console inside the vehicle and over the support brackets.

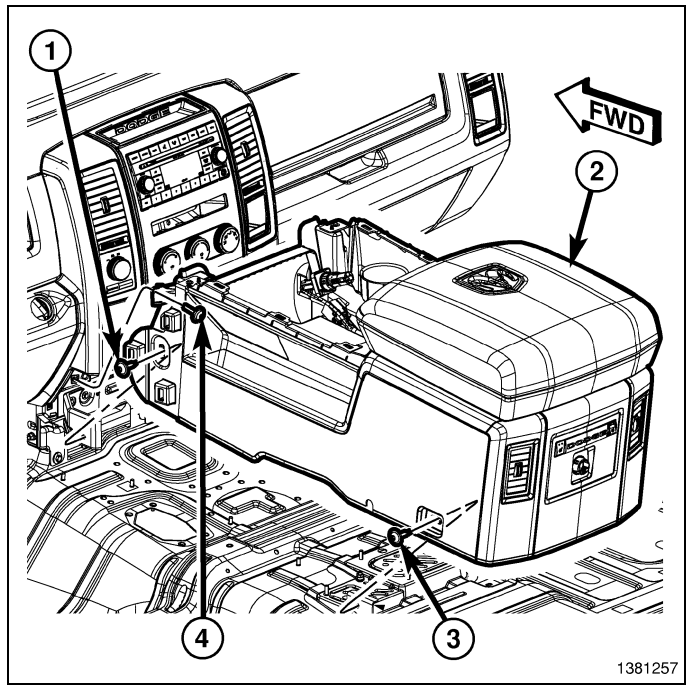

2. Connect the power outlet electrical connector, if equipped.
3. Connect the electrical connectors (1, 2 and 3).

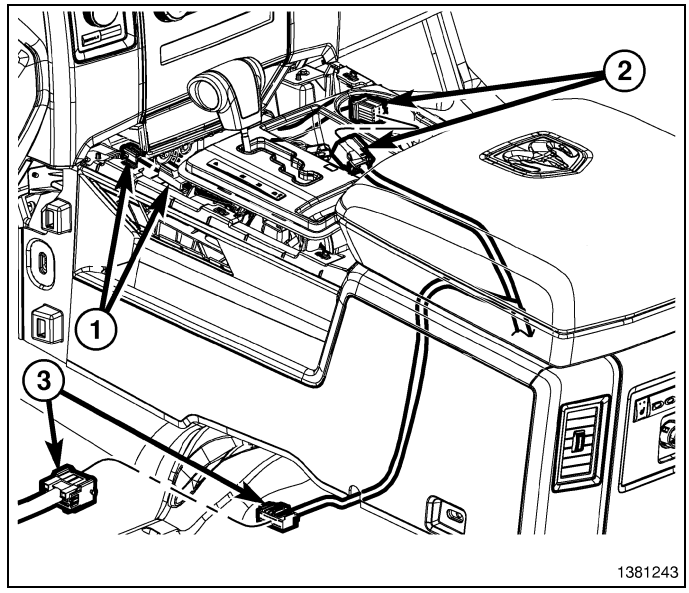

4. Position the shift cable back into place and secure the housing to the shifter assembly (1).
5. Seat the cable end onto the shifter stud (2) fully.

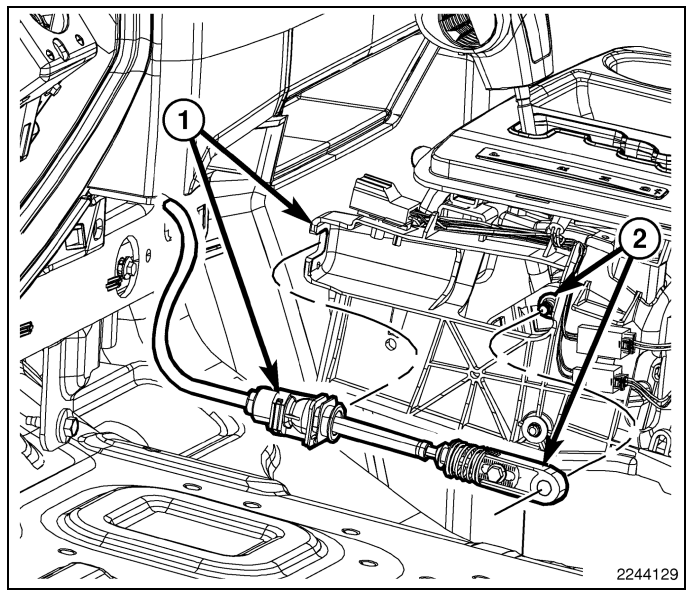

6. Position the shift bezel (2) in place and seat the retaining tabs fully.
7. Install the screws (1).

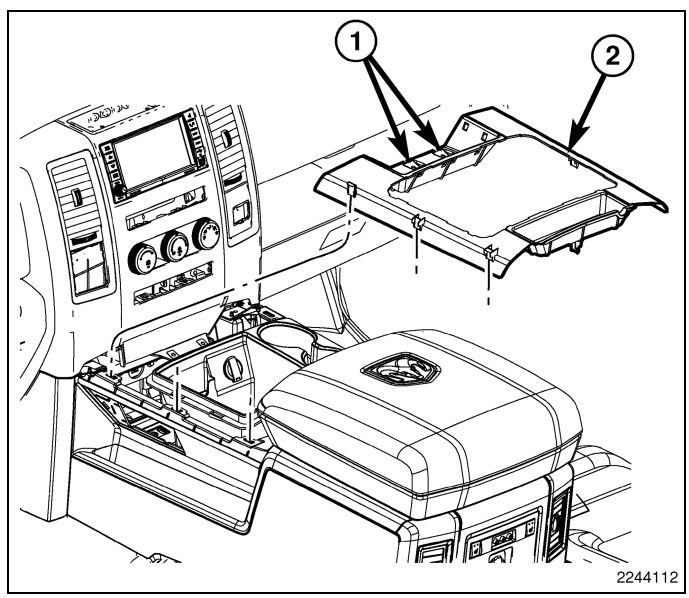

8. Install the shift cable cover (2) and seat the retaining clips fully.
9. Position the trim ring (1) into place and seat the retaining tabs fully.

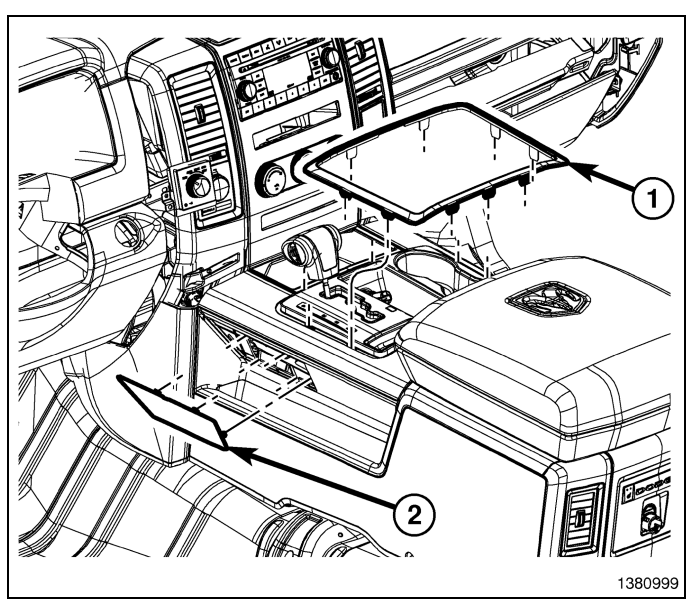

10. Install the screws (3) and tighten to 7 N·m (62 in. lbs.).
11. Install the screws (1) and tighten to 7 N·m (62 in. lbs.).
12. Install the screws (4).

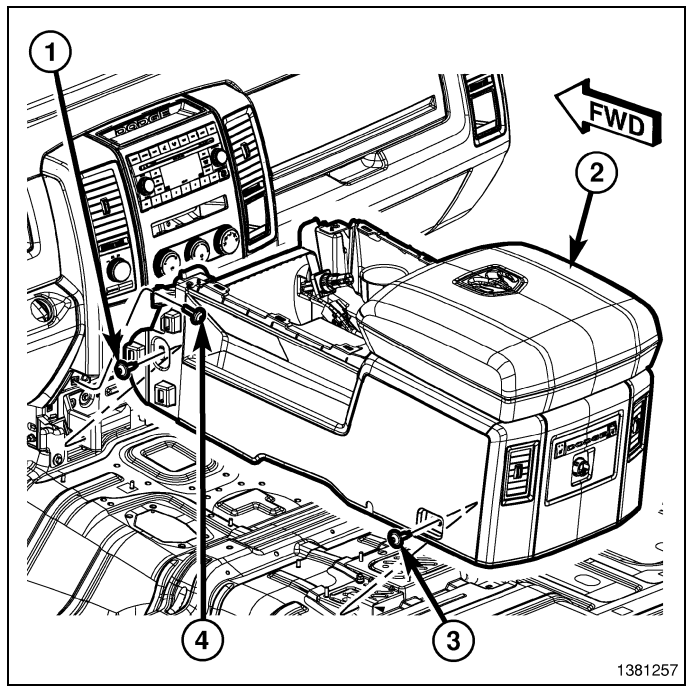

13. Position the side trim (1) into place and seat the clips fully (2).

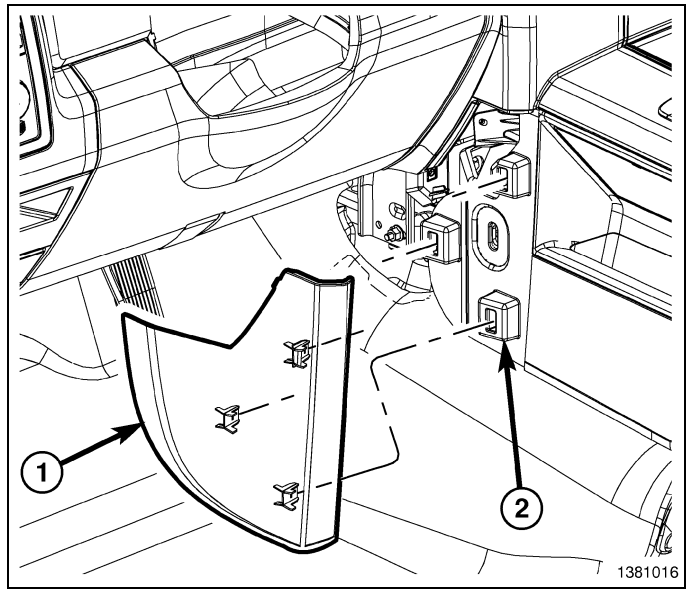

EXHAUSTER

Removal

1. Remove the rear cab trim panel (Refer to 23 - Body/Interior/PANEL, Cab Back Trim - Removal)
2. Disengage the retaining tabs (1) that secure the body vent (3) to the cab back panel (2).
3. Remove the vent through the opening in the cab back panel.

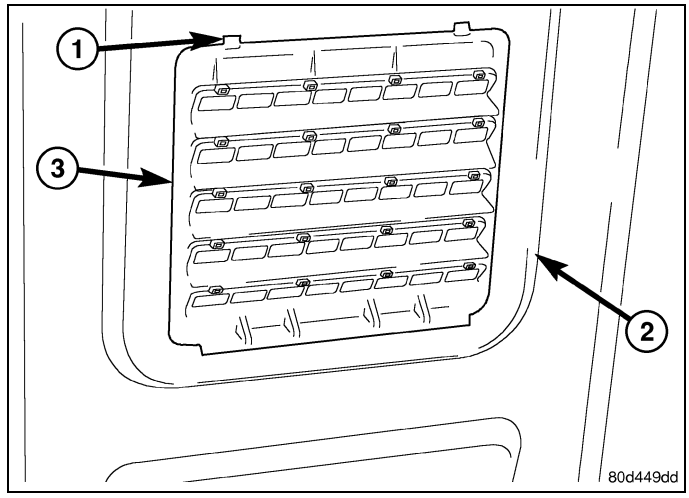

Installation

1. Position the body vent (3) into the opening of the cab back panel (2).
2. Install the body vent into the cab back panel and fully engage the retaining tabs (1).
3. Install the rear cab trim panel (Refer to 23 - Body/Interior/PANEL, Cab Back Trim - Installation).

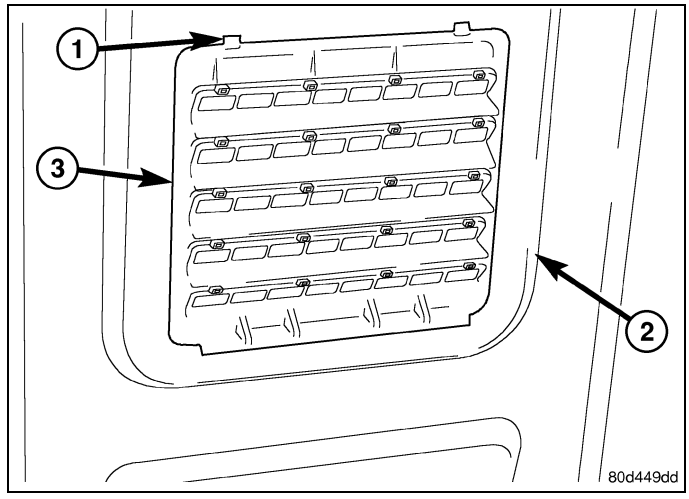

HEADLINER

Removal

Standard Cab

CAUTION: Hands should be clean or clean cloth gloves used when handling the headliner to avoid damage to the headliner.

1. Remove the A-pillar trim. (Refer to 23 - Body/Interior/PANEL, A-Pillar Trim - Removal)
2. Remove the upper B-pillar trim. (Refer to 23 - Body/Interior/PANEL, B-Pillar Trim - Removal)
3. Remove the screws and remove the visor supports.
4. Remove the screws (2) and remove the visors (1). Disconnect the electrical connectors, if equipped.

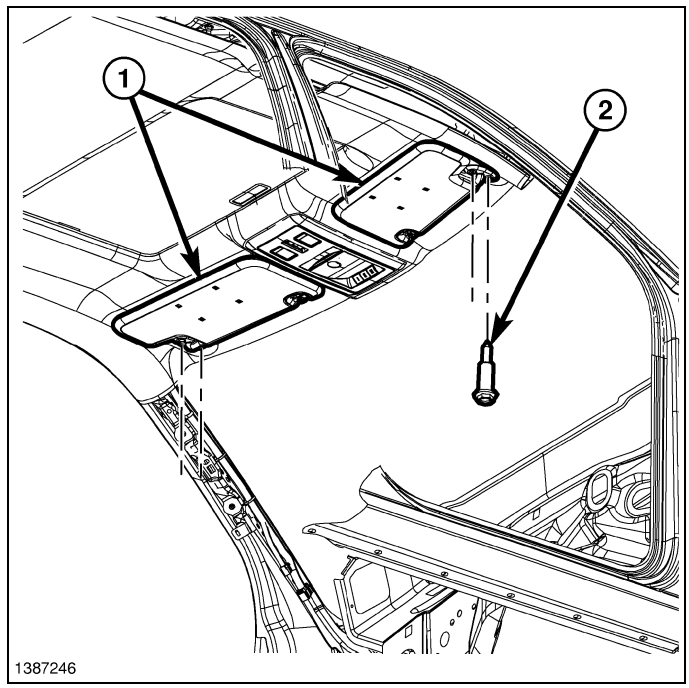

5. Using a small flat bladed tool, open the coat hook screw cover (2) and remove the screws and coat hooks.

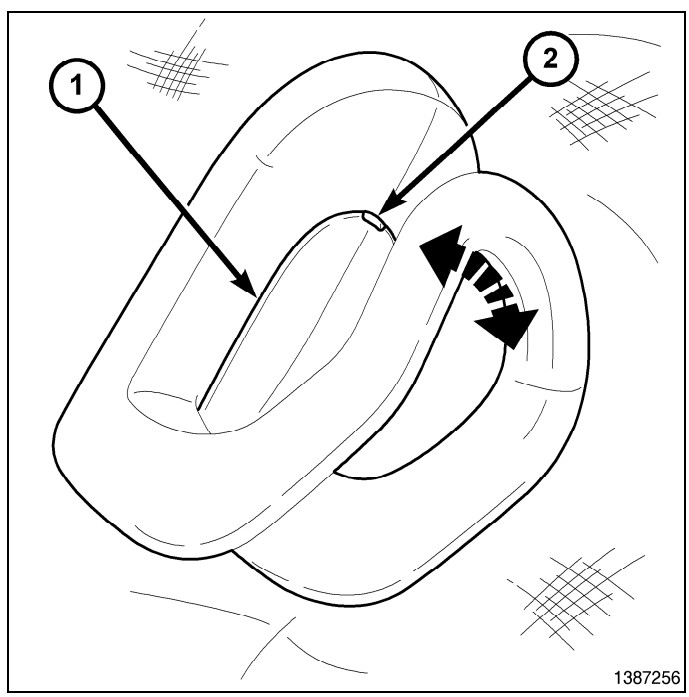

6. Disconnect the CHMSL wiring electrical connector.

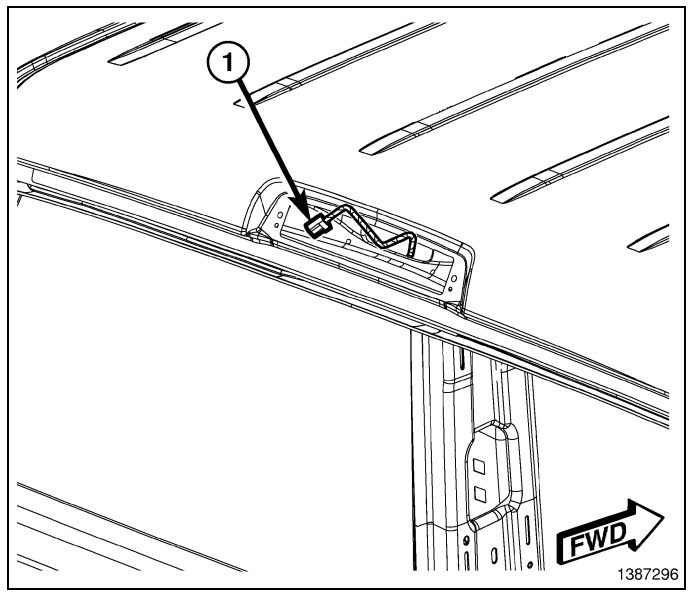

7. Remove the instrument panel side trim covers and disconnect the electrical connectors (1).
8. Separate the support push pin fasteners (2).

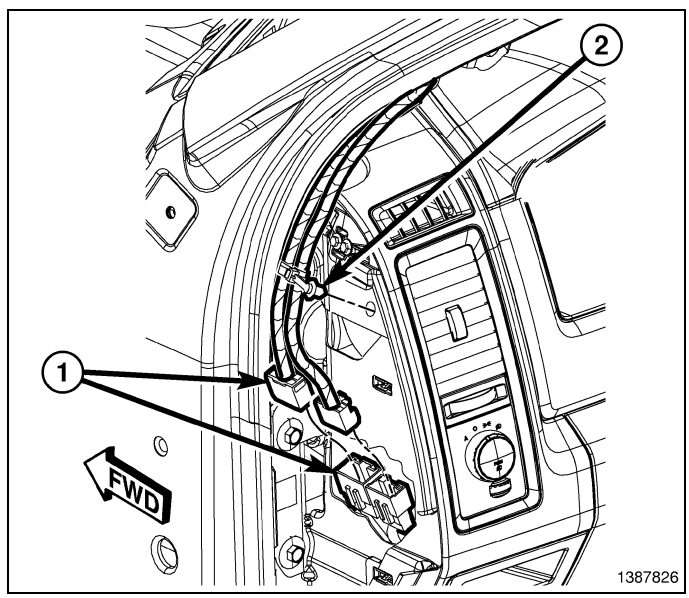

9. Disconnect the A-pillar wiring and clips (3).
10. Remove the headliner.

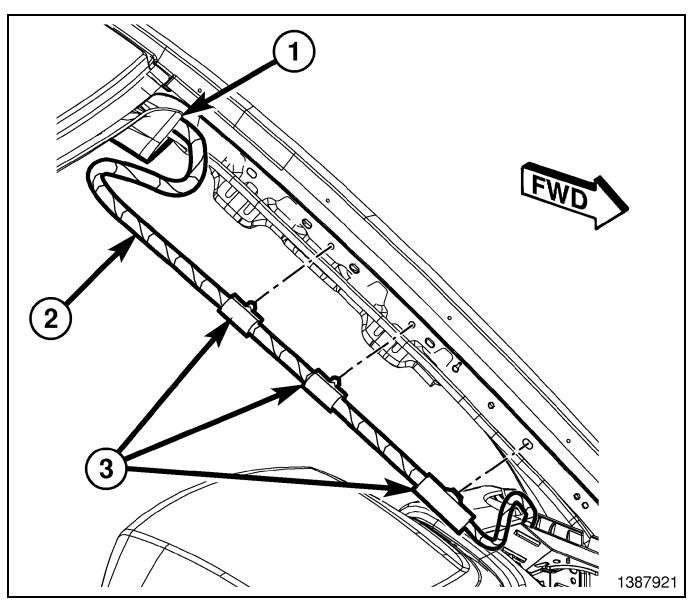

Quad/Crew Cab

CAUTION: Hands should be clean or clean cloth gloves used when handling the headliner to avoid damage to the headliner.

1. Remove the windshield. (Refer to 23 - Body/Stationary Glass/WINDSHIELD - Removal)
2. Remove the upper B-pillar trim. (Refer to 23 - Body/Interior/PANEL, B-Pillar Trim - Removal)
3. Remove the upper C-pillar trim, if equipped. (Refer to 23 - Body/Interior/PANEL, C-Pillar Trim - Removal)

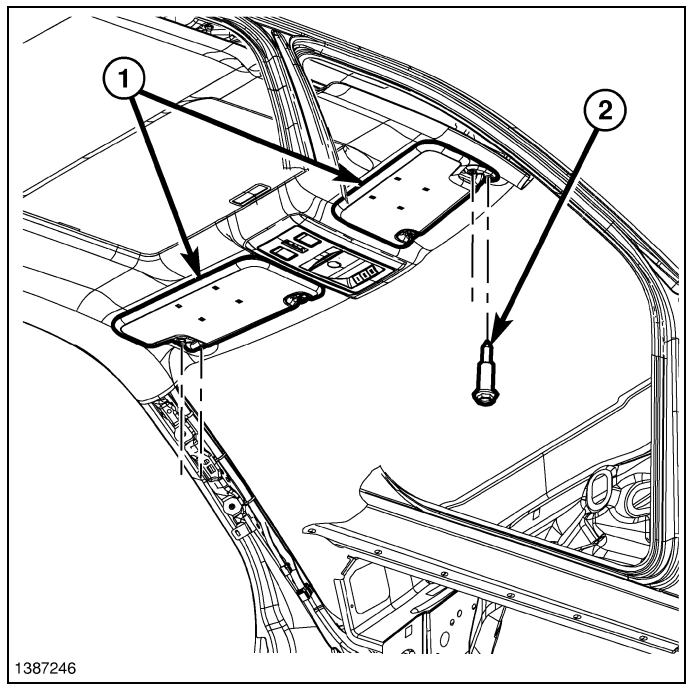

4. Disconnect the CHMSL wiring electrical connector.

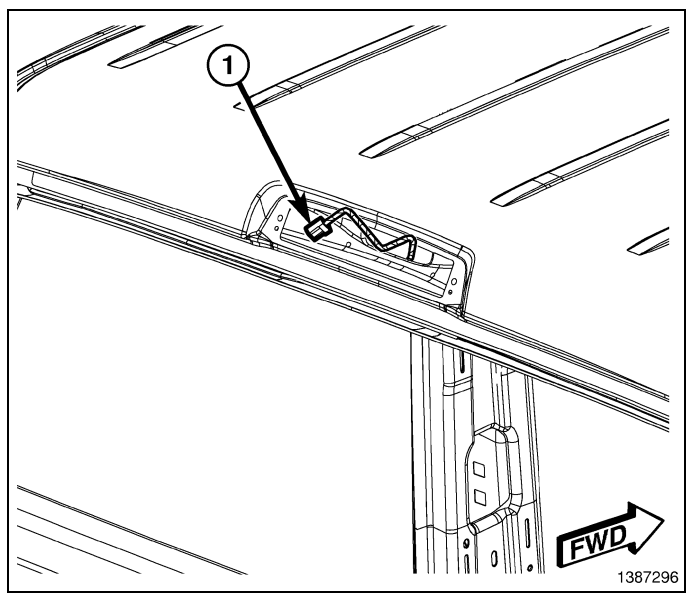

5. Remove the instrument panel side trim covers and disconnect the electrical connectors (1).
6. Separate the support push pin fasteners (2).

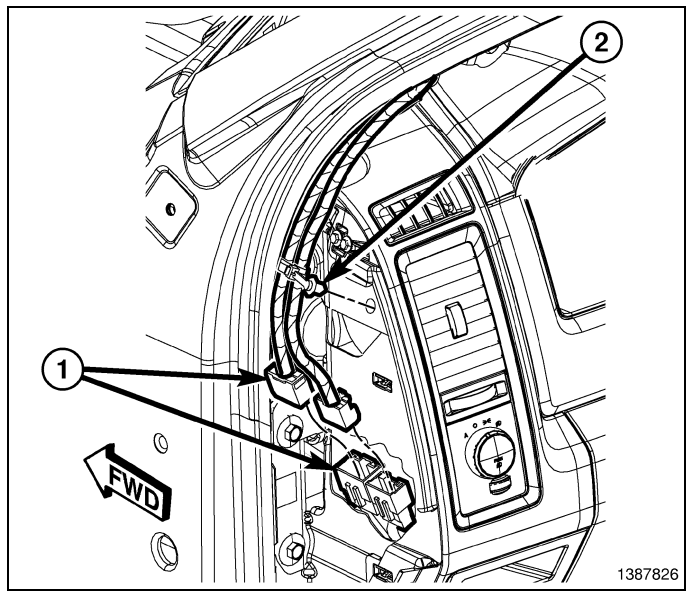

7. Disconnect the A-pillar wiring and clips (3).
8. Disengage the sunroof trim ring if equipped.

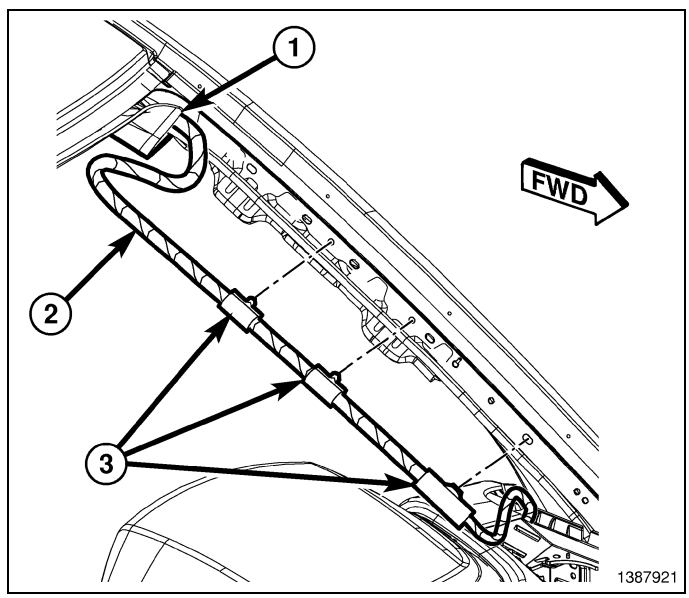

9. Remove the DVD monitor screws (2) and separate the monitor (1) from the roof, if equipped.

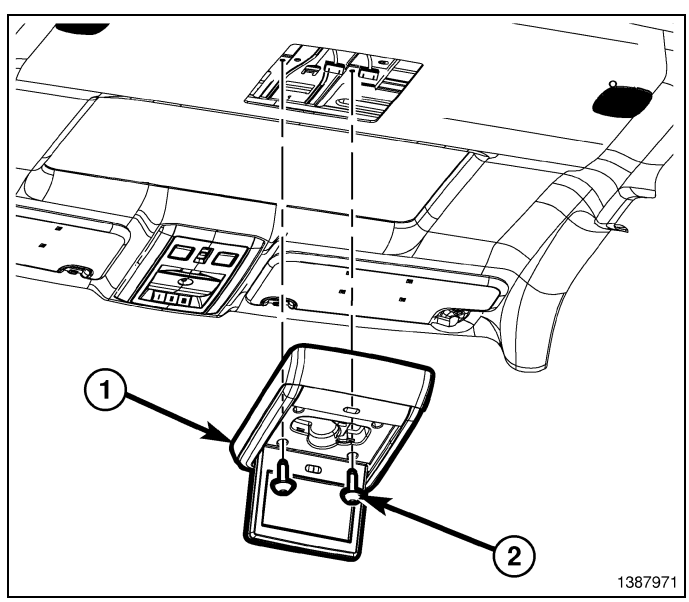

10. Disconnect the DVD housing electrical connectors (1), if equipped.
11. Remove the overhead console. (Refer to 08 - Electrical/8M - Message Systems/Overhead Console - Removal)

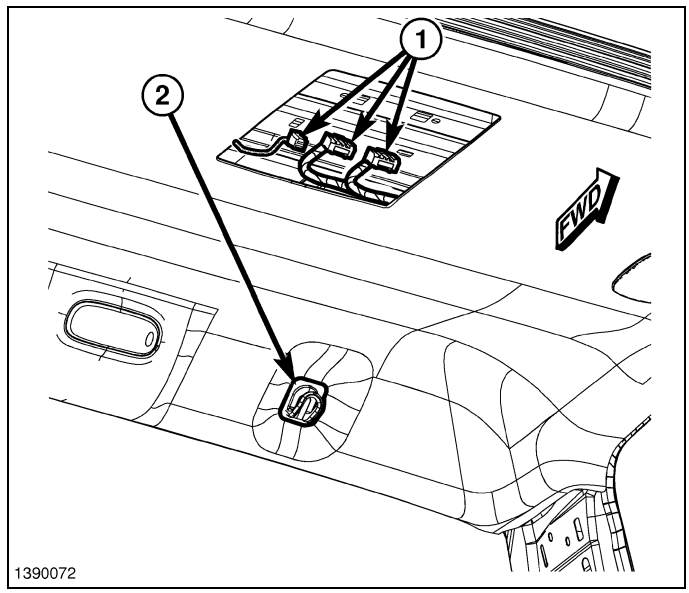

12. Disconnect the sunroof module electrical connector (1) from the sunroof module takeout, if equipped.

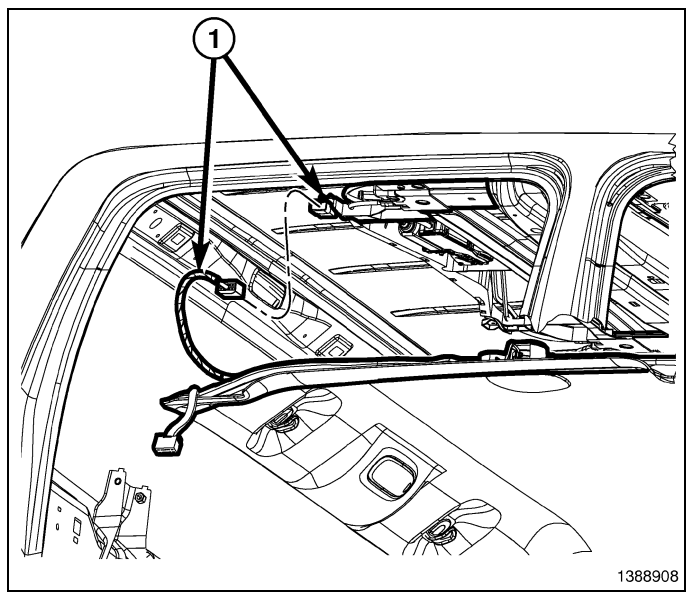

13. Disconnect the electrical connector (1) from the body harness at the C-pillar left hand side.
14. Remove the body harness clip from the C-pillar inner left hand side, if equipped.
15. Disconnect the main harness from the body harness at the C-pillar inner right hand side.

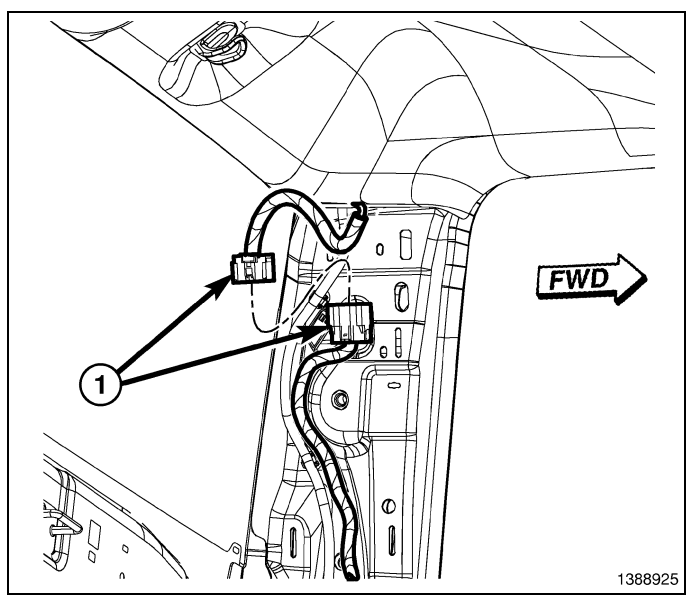

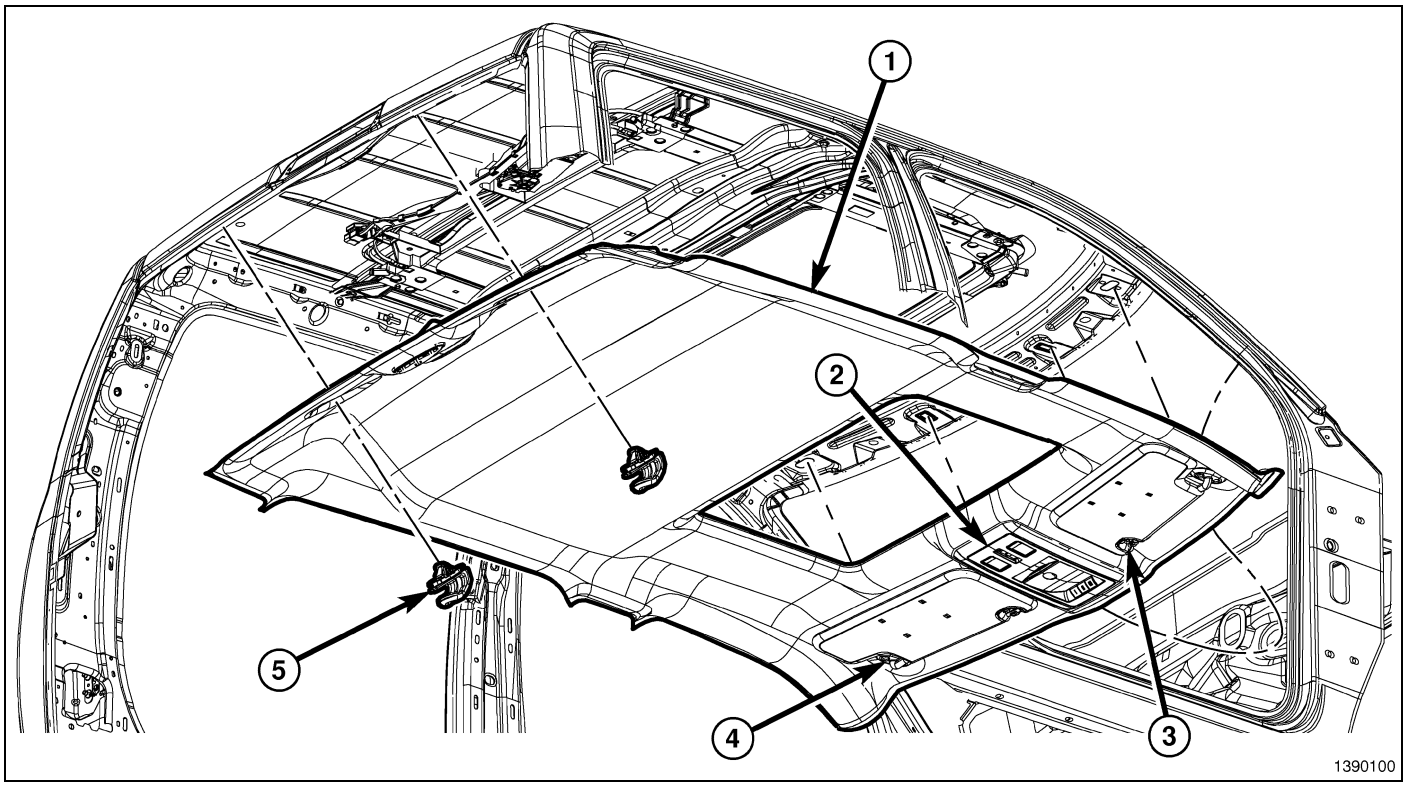

16. Remove the headliner through the windshield opening.
17. Remove the visor outboard retainer from the body.
18. Remove the overhead console backing plate from the body taking care not to break the backing plate.
19. Remove the visor center support mounting clips.
20. Remove the coat hook mounting clips.
21. Remove the DVD mounting clips.

Installation

Standard Cab

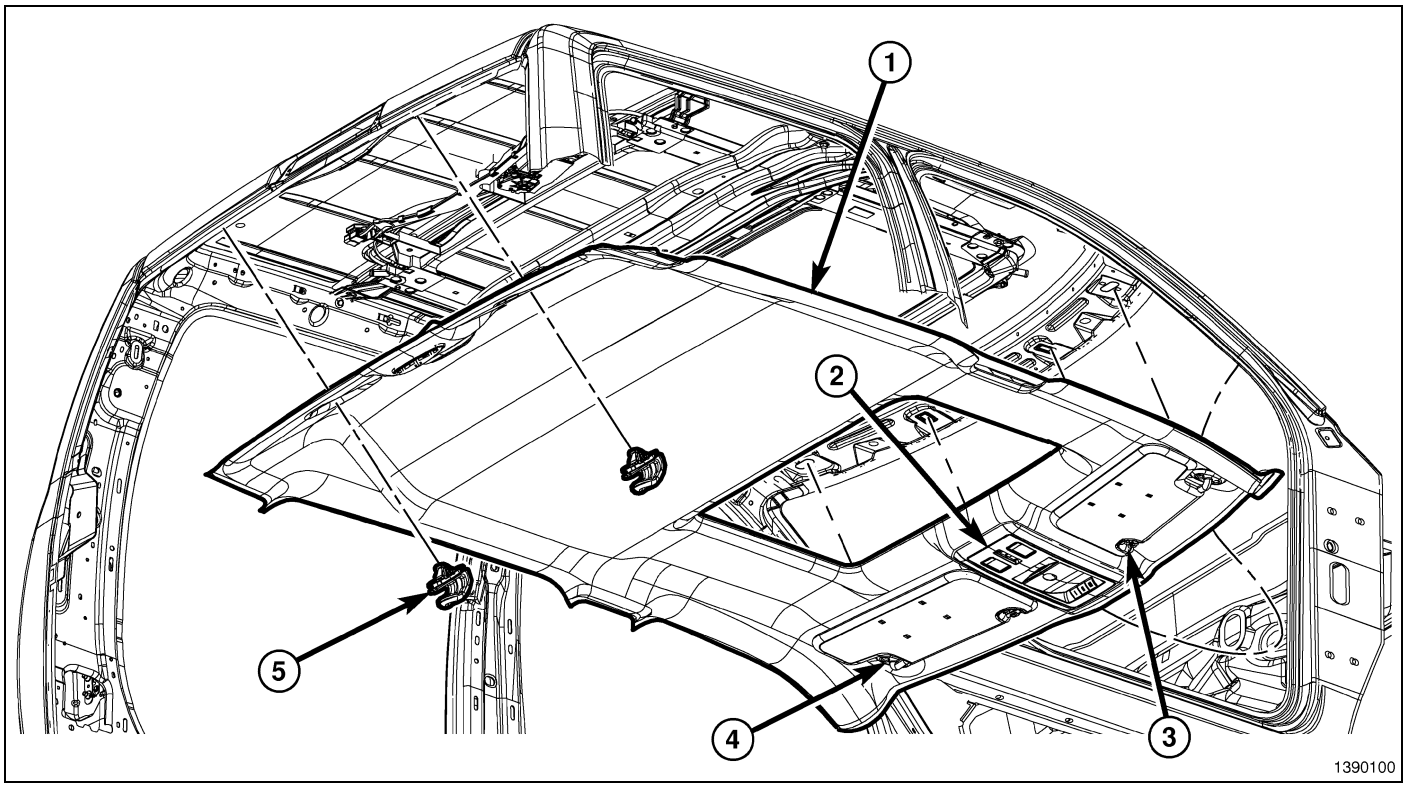

CAUTION: Hands should be clean or clean cloth gloves used when handling the headliner to avoid damage to the headliner.

NOTE: Quad cab shown, standard cab is similar.

1. Position the coat hooks (5) onto the headliner and install the screws into the mounting clips.
2. Close the screw caps fully.
3. Position the visor supports (3) onto the headliner and install the screws into the mounting clips.
4. Install the overhead console (2) to the headliner. (Refer to 08 - Electrical/8M - Message Systems/Overhead Console - Installation)
5. Position the visors onto the headliner and install the screws (4) into the mounting clips.
6. Install the headliner through the front passenger door.
7. Lift the headliner into position and engage the visor center supports.

8. Position the wire harness on the A-pillar and seat the support clips (3) fully.

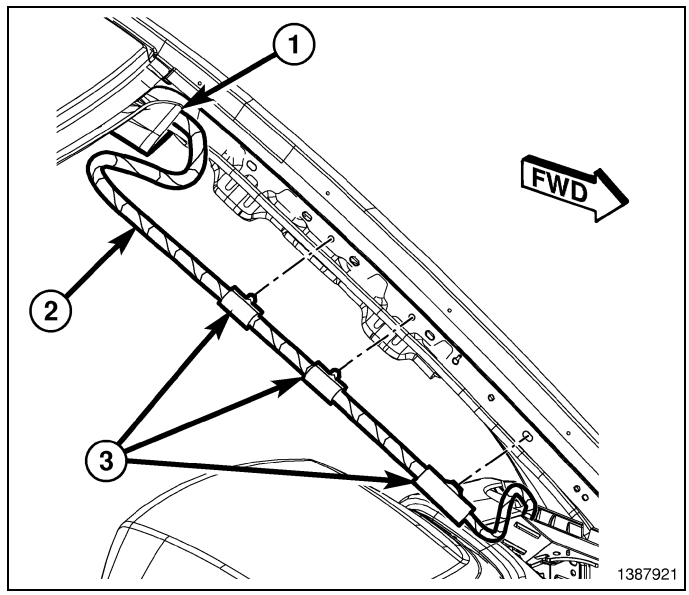

9. Connect the electrical connectors (1) and seat the support clip (2) fully.
10. Position the instrument panel side covers onto the instrument panel and seat fully.

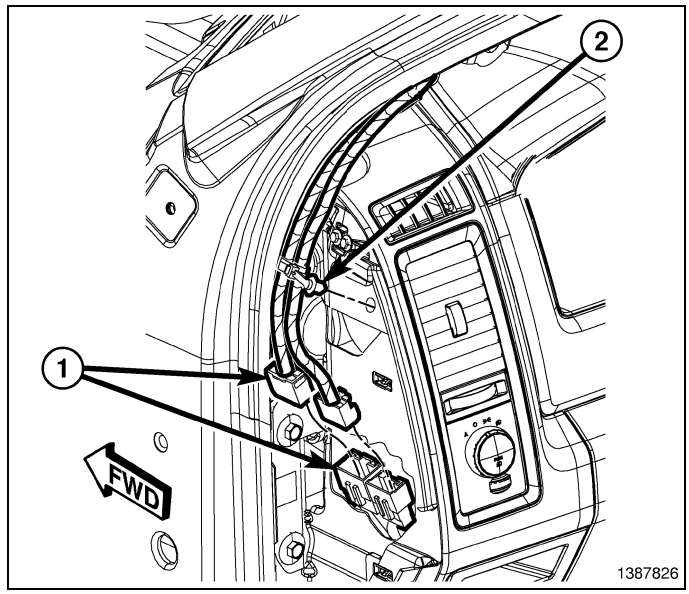

11. Connect the CHMSL wiring electrical connector.
12. Install the floor console. (Refer to 23 - Body/Interior/CONSOLE, Floor - Installation)
13. Install the upper B-pillar trim. (Refer to 23 - Body/Interior/PANEL, B-Pillar Trim - Installation)
14. Install the A-pillar trim. (Refer to 23 - Body/Interior/PANEL, A-Pillar Trim - Installation)

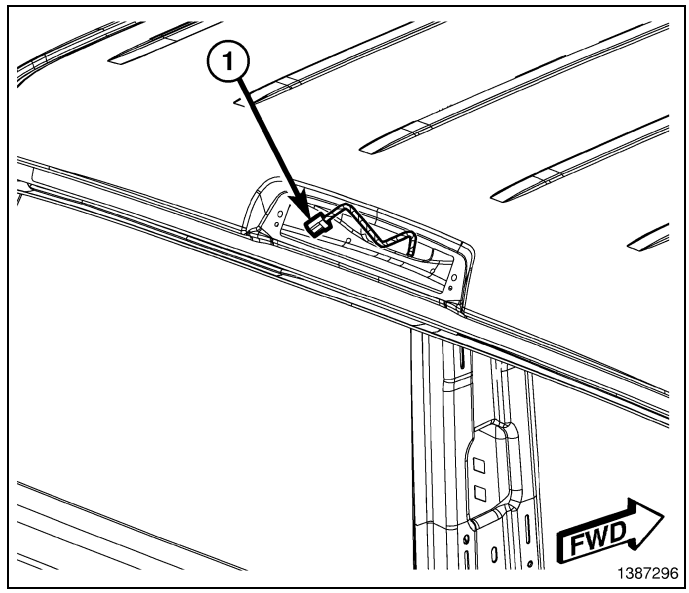

Quad/Crew Cab

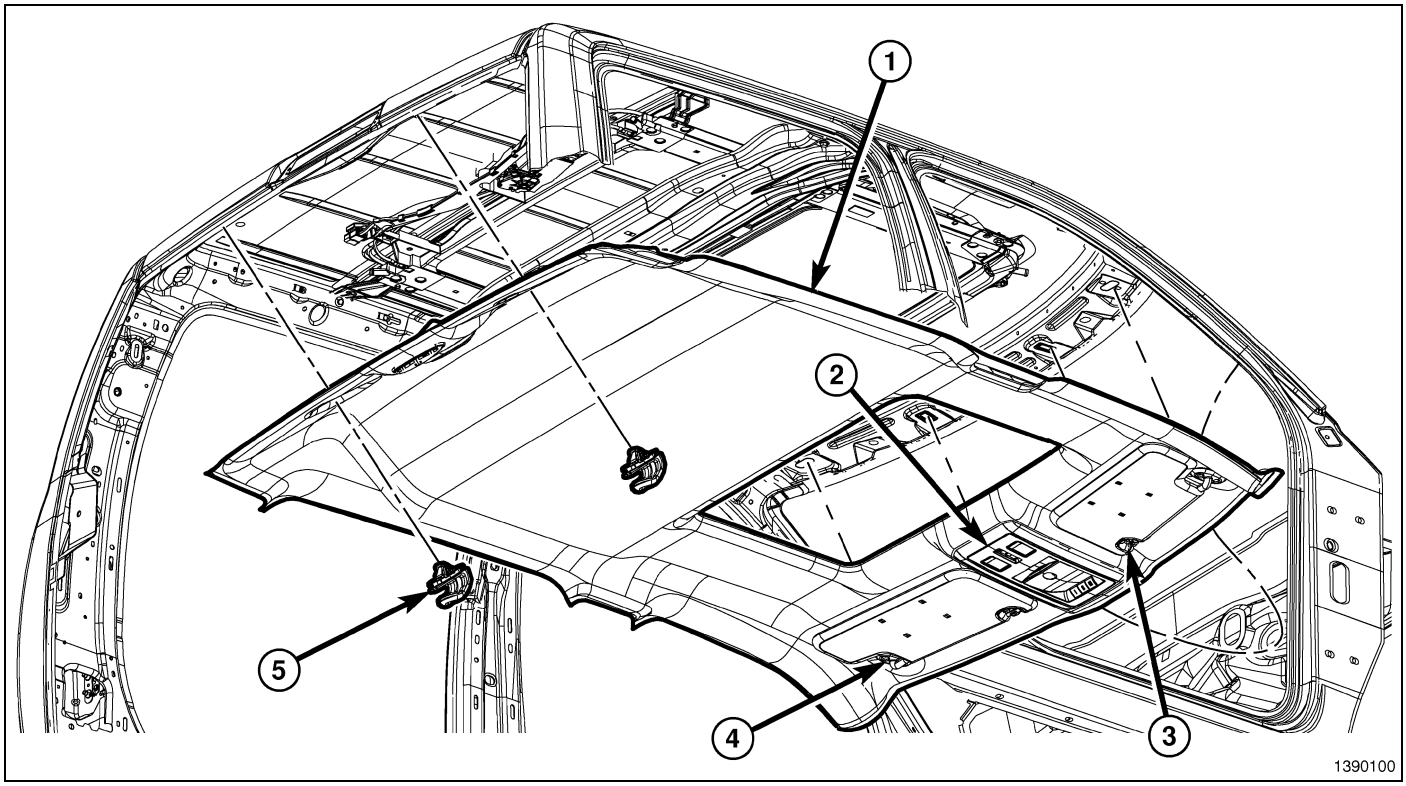

CAUTION: Hands should be clean or clean cloth gloves used when handling the headliner to avoid damage to the headliner.

1. Install the DVD monitor to the headliner, if equipped (Refer to 08 - Electrical/8A - Audio and Video/MONITOR, Media System - Installation)
2. Position the coat hooks (5) onto the headliner and install the screws into the mounting clips.
3. Close the screw caps fully.
4. Position the visor supports (3) onto the headliner and install the screws into the mounting clips.
5. Install the overhead console (2) to the headliner. (Refer to 08 - Electrical/8M - Message Systems/Overhead Console - Installation)
6. Position the visors onto the headliner and install the screws (4) into the mounting clips.
7. Install the headliner through the windshield opening.
8. Lift the headliner into position and engage the drivers side visor center support.

9. Connect the electrical connectors (1) for the sunroof module, if equipped.

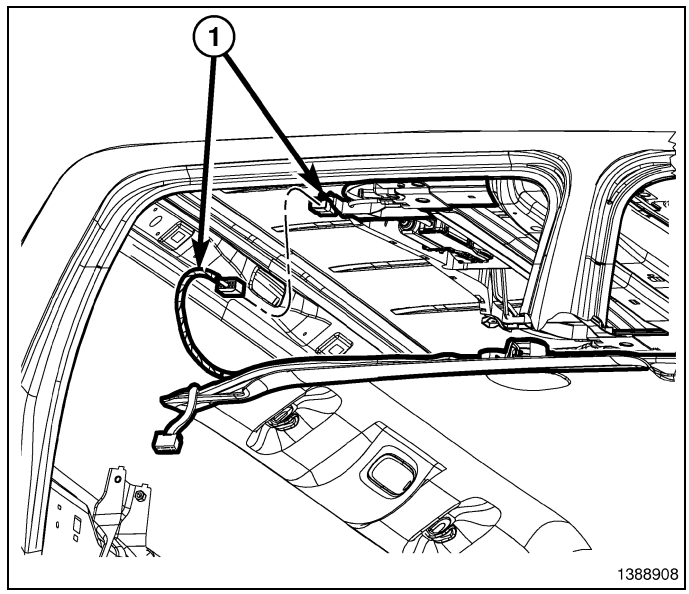

10. Connect the CHMSL electrical connector (1).

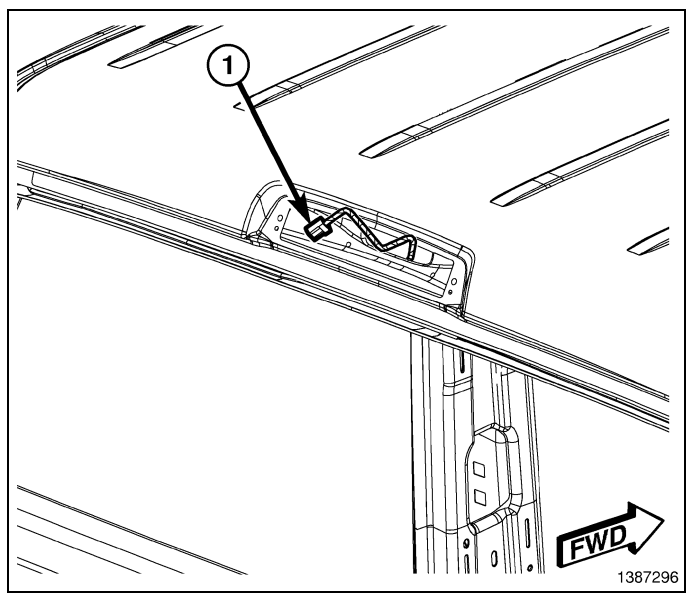

11. Connect the DVD monitor electrical connectors (1), if equipped.

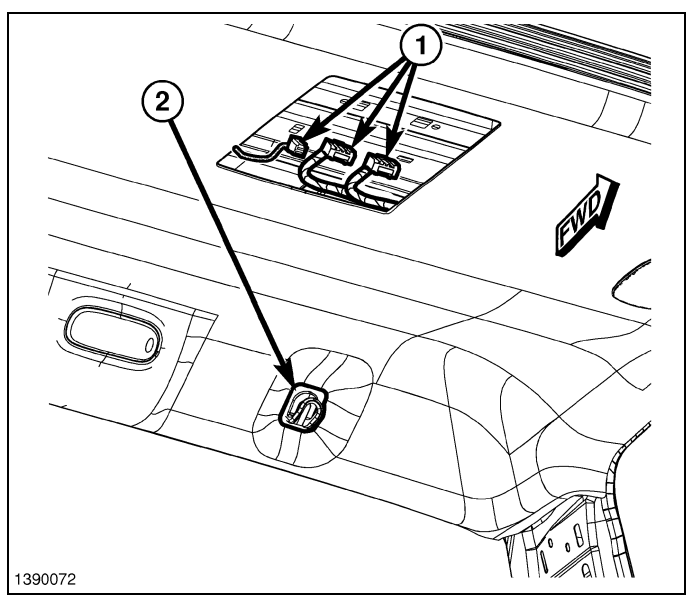

12. Connect the C-pillar electrical connectors (1).
13. Insert the passenger side coat hook.
14. Insert the passenger side visor center support.
15. Install the visor outboard screws.
16. Connect the body harness electrical connector and install the body clip right hand side.
17. Install the DVD unit mounting clips into the sheet metal.
18. Install the two remaining DVD screws.
19. Seat the sunroof trim ring if equipped.

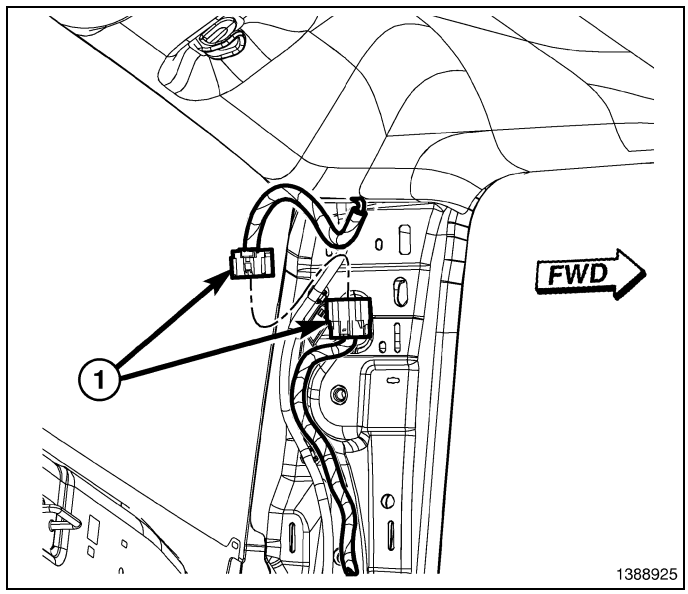

20. Position the wire harness on the A-pillar and seat the support clips (3) fully.

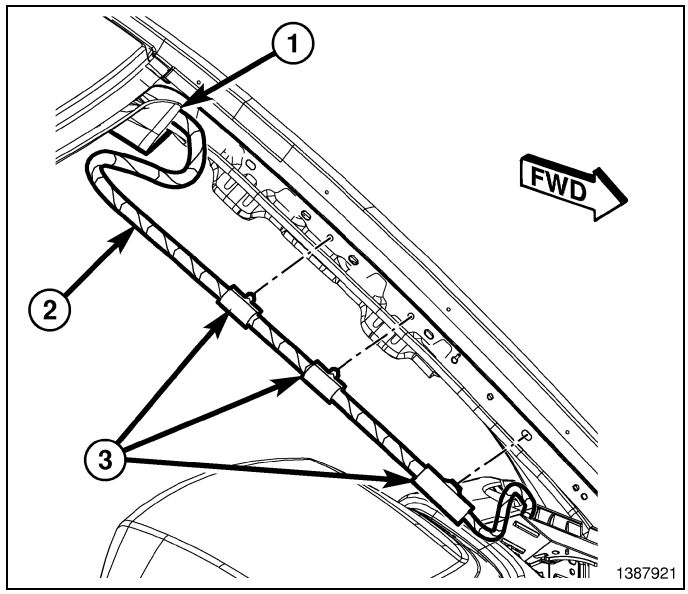

21. Connect the electrical connectors (1) and seat the support clip (2) fully.
22. Position the instrument panel side covers onto the instrument panel and seat fully.
23. Install the upper C-pillar trim. (Refer to 23 - Body/Interior/PANEL, C-Pillar Trim - Installation)
24. Install the upper B-pillar trim. (Refer to 23 - Body/Interior/PANEL, B-Pillar Trim - Installation)
25. Install the windshield. (Refer to 23 - Body/Stationary Glass/WINDSHIELD - Installation)

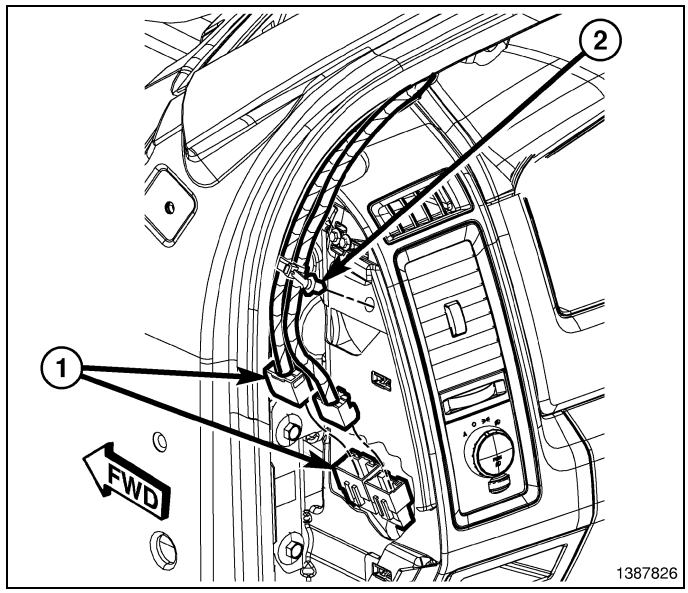

MIRROR, Rearview

Removal

1. If equipped, disconnect the wire harness connector (1) from the rear view mirror (3).
2. Loosen the set screw (2) that secures the rear view mirror to the mounting bracket (4).
3. Slide the base of the rear view mirror upward and remove the mirror from the mounting bracket.
4. If required, remove the mirror mounting bracket from the windshield (5).

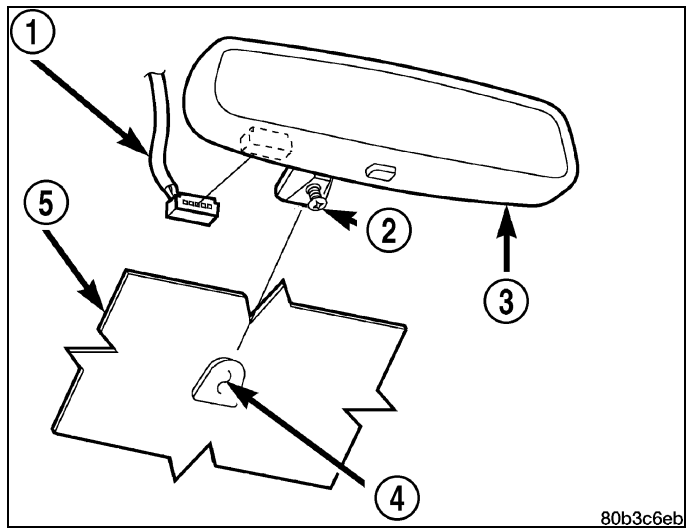

Installation

INSTALLATION

1. If required, install the mounting bracket (4) to the windshield (5) (Refer to 23 - Body/Interior/MIRROR, Rearview - Installation).
2. Position the base of the rear view mirror (3) onto the mounting bracket and slide the mirror downward until it is fully engaged on the mounting bracket.
3. Tighten the set screw (2) that secures the rear view mirror to the mounting bracket to 1 N·m (15 in. lbs.).
4. If equipped, connect the wire harness connector (1) to the rear view mirror.

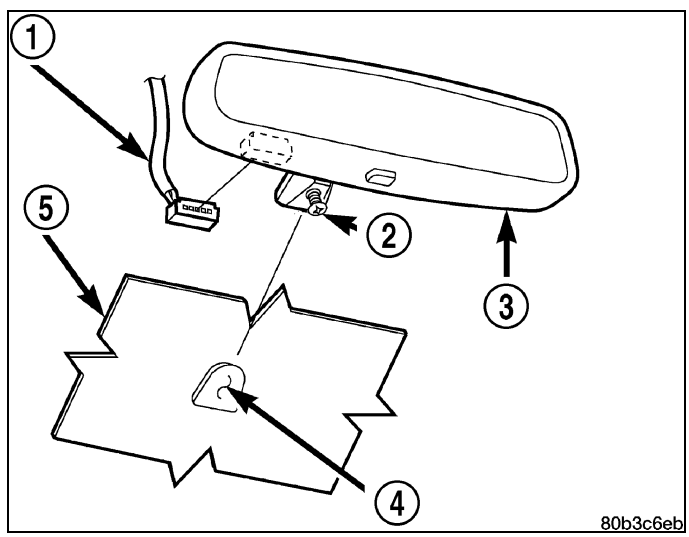

REAR VIEW MIRROR MOUNTING BRACKET

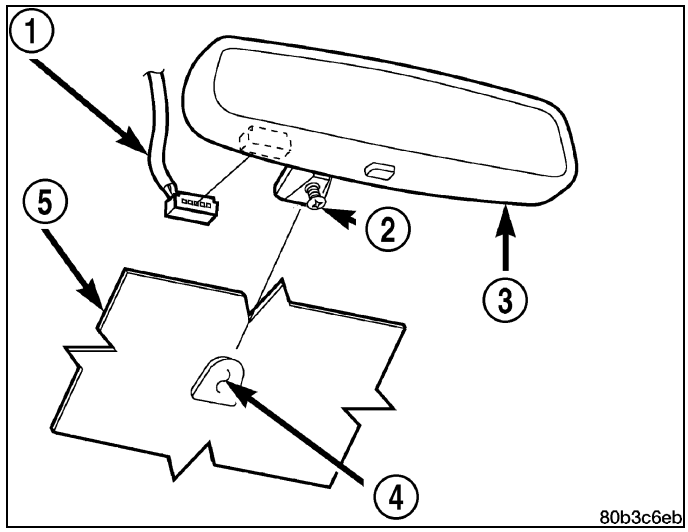

1. Mark the position for the mirror mounting bracket (4) on the outside of the windshield glass (5) with a wax pencil.
2. Clean the bracket contact area on the glass. Use a mild powdered cleanser on a cloth saturated with isopropyl (rubbing) alcohol. Finally, clean the glass with a paper towel dampened with alcohol.
3. Sand the surface on the mounting bracket with a fine grit sandpaper. Wipe the mounting bracket surface clean with a paper towel.
4. Apply accelerator to the surface on the mounting bracket according to the following instructions:
   a. Crush the vial to saturate the felt applicator.
   b. Remove the paper sleeve.
   c. Apply accelerator to the contact surface on the mounting bracket.
   d. Allow the accelerator to dry for five minutes.
   e. Do not touch the bracket contact surface after the accelerator has been applied.
5. Apply adhesive accelerator to the bracket contact surface on the windshield glass. Allow the accelerator to dry for one minute. Do not touch the glass contact surface after the accelerator has been applied.
6. Install the mounting bracket according to the following instructions:
   a. Apply one drop of adhesive at the center of the bracket contact-surface on the windshield glass.
   b. Apply an even coat of adhesive to the contact surface on the mounting bracket.
   c. Align the mounting bracket with the marked position on the windshield glass.
   d. Press and hold the mounting bracket in place for at least one minute.

NOTE: Verify that the mirror mounting bracket is correctly aligned, because the adhesive will cure rapidly.

7. Allow the adhesive to cure for 8-10 minutes. Remove any excess adhesive with an alcohol-dampened cloth.
8. Allow the adhesive to cure for an additional 8-10 minutes before installing the rear view mirror (3)(Refer to 23 - Body/Interior/MIRROR, Rearview - Installation).

PANEL, A-Pillar Trim, With Grab Handle

Removal

1. Using a small flat-bladed tool, carefully open the two fastener covers (3) located in the a-pillar trim panel (2).
2. Remove the two bolts (4) that secure the a-pillar trim panel to the a-pillar (1) and remove the trim panel.

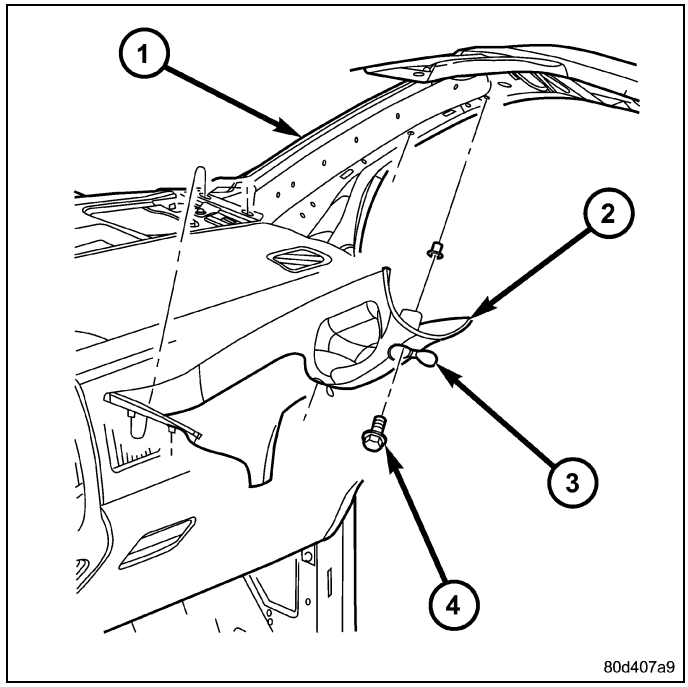

Installation

1. Position the locating tab of the A-pillar trim panel (2) into the slot located in the top of the instrument panel.
2. Install the A-pillar trim panel onto the A-pillar (1) and install the two bolts (4). Tighten the bolts to 5 N·m (44 in. lbs.).
3. Close the two fastener covers (3) located in the A-pillar trim panel.

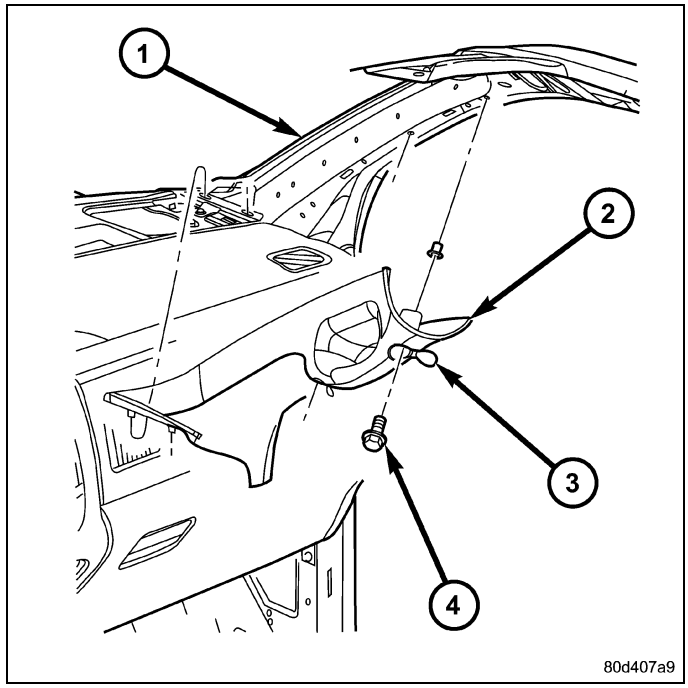

PANEL, B-Pillar Trim, Lower

Removal

Standard Cab

1. If equipped, remove the rear storage bin. (Refer to 23 - Body/Interior/BIN, Storage - Removal)
2. Remove the lower seat belt anchor bolt (3).
3. Separate the forward clip.
4. Separate the remaining retaining clips and remove the lower trim (1).

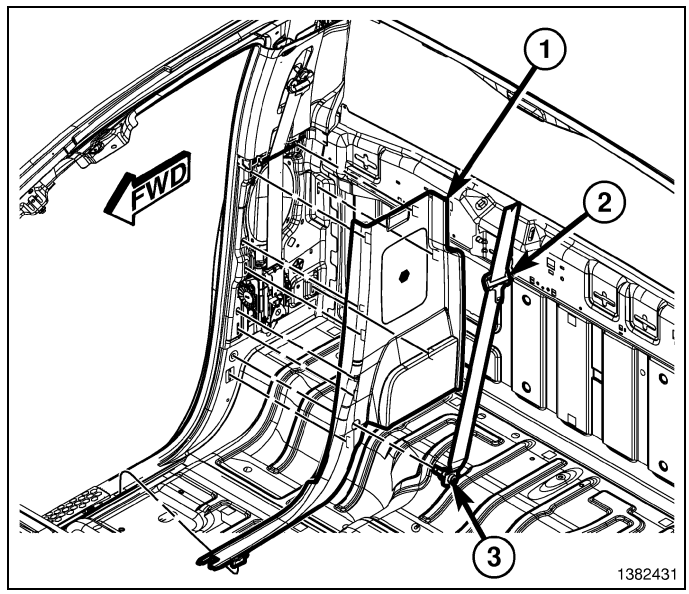

QUAD CAB

1. Remove the front door cowl trim panel. (Refer to 23 - Body/Interior/PANEL, Cowl Trim - Removal)
2. Remove the rear door scuff plate. (Refer to 23 - Body/Interior/PLATE, Scuff - Removal)
3. Release the retaining clips and remove the trim panel(1).

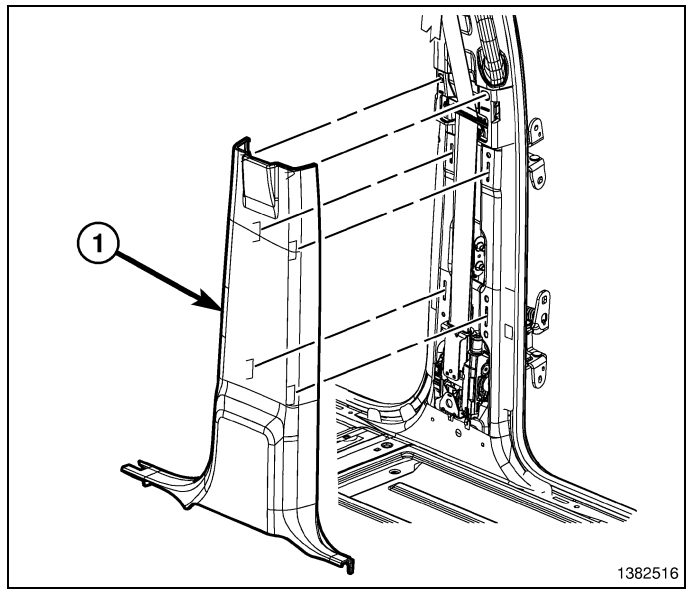

Installation

Standard Cab

1. Position the lower trim (1) back into place and line up the retaining clips.
2. Seat the upper clips fully.
3. Seat the lower clips fully
4. Clip the forward foot into the sheet metal.
5. Install the lower seat belt anchor and tighten to 40 N·m (30 ft. lbs.).
6. If equipped, install the rear storage bin. (Refer to 23 - Body/Interior/BIN, Storage - Installation)

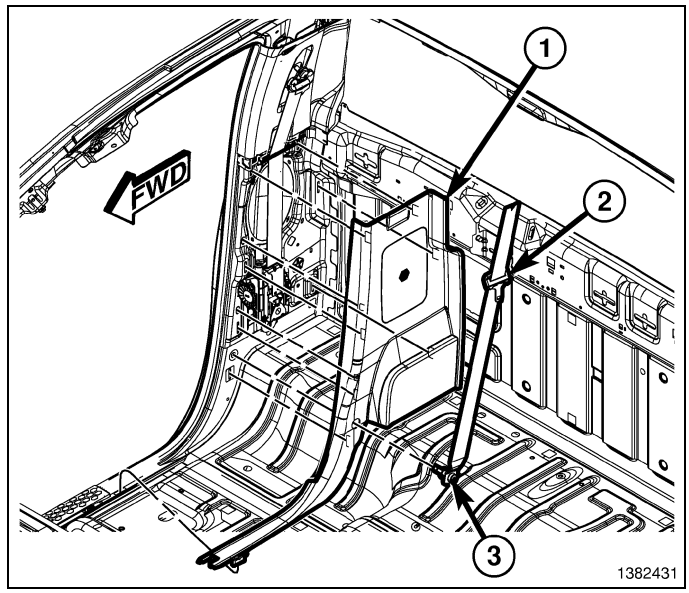

Quad Cab

1. Position the trim (1) back and seat the clips fully.
2. Install the rear door scuff plate. (Refer to 23 - Body/Interior/PLATE, Scuff - Installation)
3. Install the front door cowl trim panel. (Refer to 23 - Body/Interior/PANEL, Cowl Trim - Installation)

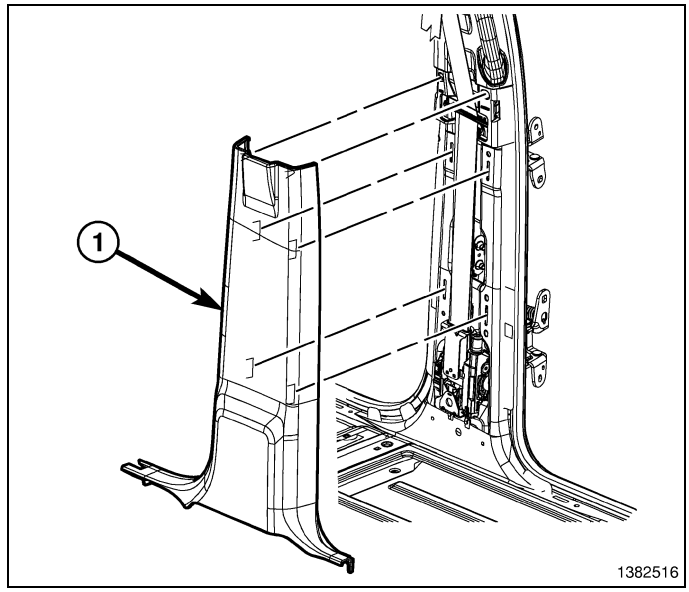

PANEL, B-Pillar Trim, Upper

Removal

Standard Cab

1. Remove the lower B-pillar trim. (Refer to 23 - Body/ Interior/PANEL, B-Pillar Trim - Removal)

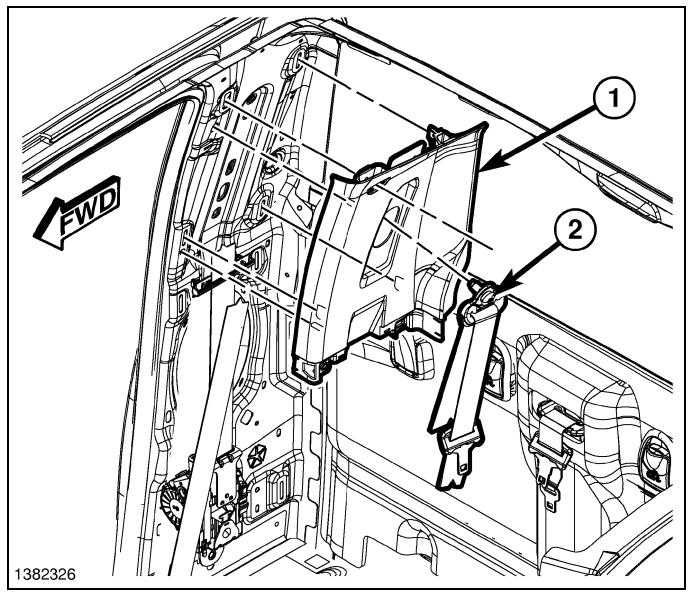

2. Separate the turning loop cover (2) and remove the turning loop bolt.
3. Pull the upper trim (1) off and release the retaining clips.

Quad Cab

1. Remove the lower B-pillar trim. (Refer to 23 - Body/ Interior/PANEL, B-Pillar Trim - Removal)

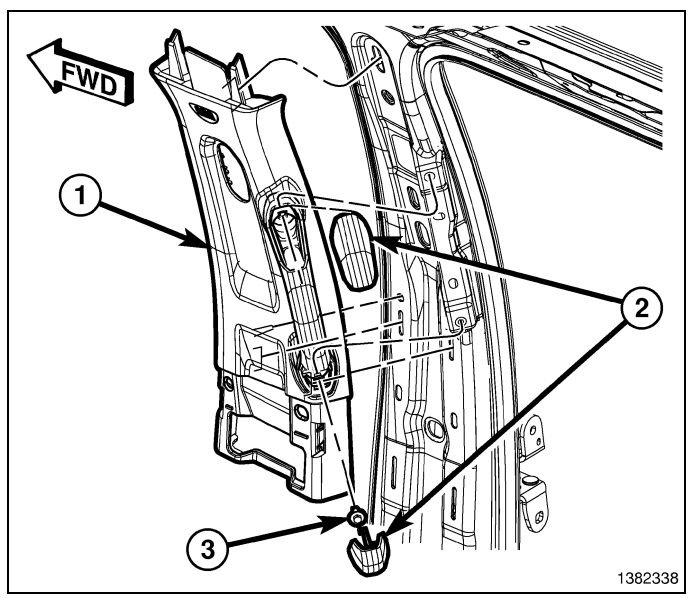

2. Using a small flat-bladed tool, carefully open the two fastener covers (2) located on the grab handle.
3. Remove the two bolts (3) that secure the grab handle to the B-pillar and remove the grab handle.
4. Separate the seat belt turning loop cover and remove the turning loop bolt.
5. Using a trim stick C-4755 or equivalent, disengage the retaining clips that secure the upper trim (1) to the pillar and remove the trim panel.
6. Remove the seat belt from the trim.

Installation

Standard Cab

1. Position the upper trim (1) back in place and seat the clips fully.
2. Install the turning loop bolt (2) and tighten to 40 N·m (30 ft. lbs.).
3. Install the turning loop cover.
4. Install the lower B-pillar trim. (Refer to 23 - Body/Interior/PANEL, B-Pillar Trim - Installation)

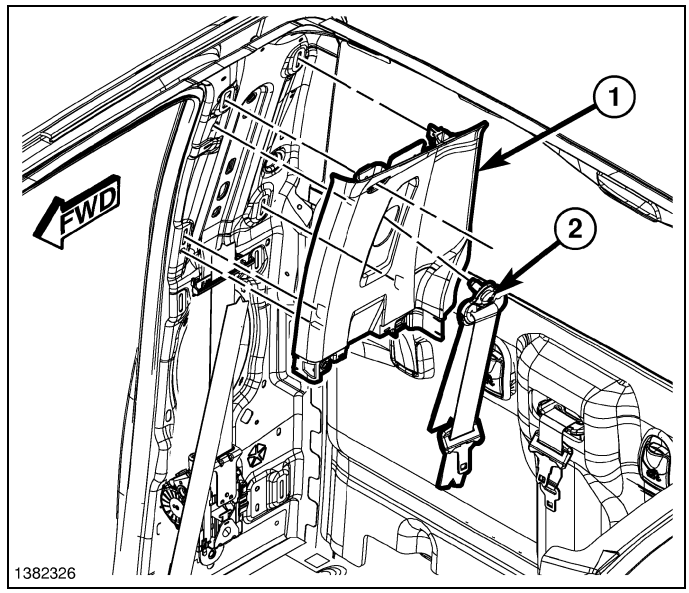

Quad Cab

1. Position the seat belt through the hole in the trim.
2. Position the upper trim (1) back in place and seat the clips fully.
3. Install the turning loop bolt (2) and tighten to 40 N·m (30 ft. lbs.).
4. Install the turning loop cover.
5. Install the grab handle bolts and tighten to 5 N·m (44 in. lbs.).
6. Seat the grab handle bolt caps fully.
7. Install the lower B-pillar trim. (Refer to 23 - Body/Interior/PANEL, B-Pillar Trim - Installation)

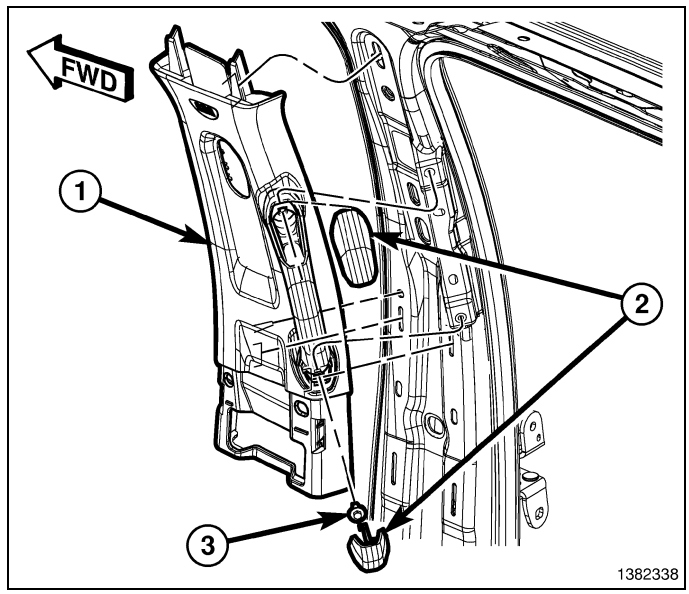

PANEL, C-Pillar Trim, Lower

Removal

Crew Cab

1. Remove the seat belt anchor (4).
2. Separate the lower trim retaining clips from the pillar and the rear door scuff plate.
3. Remove the trim (2).

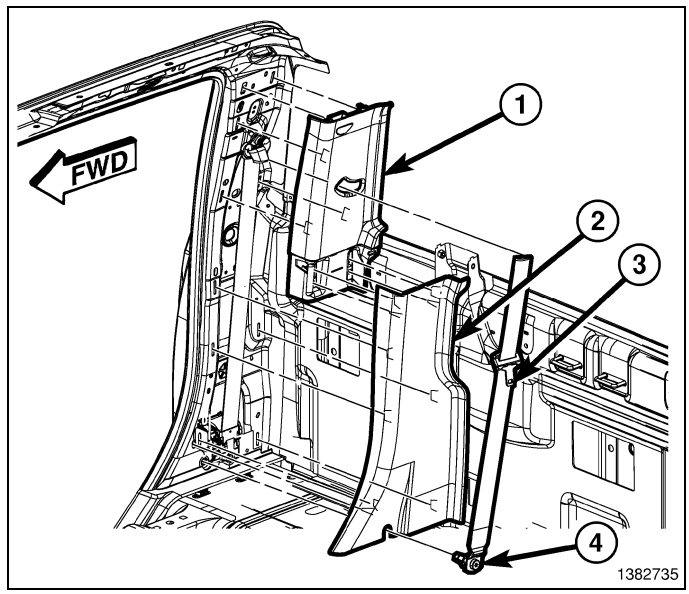

Quad Cab

1. Remove the seat belt anchor (4).
2. Separate the lower trim retaining clips from the pillar and the rear door scuff plate.
3. Remove the seat belt (2) from the hole in the trim and remove the trim.

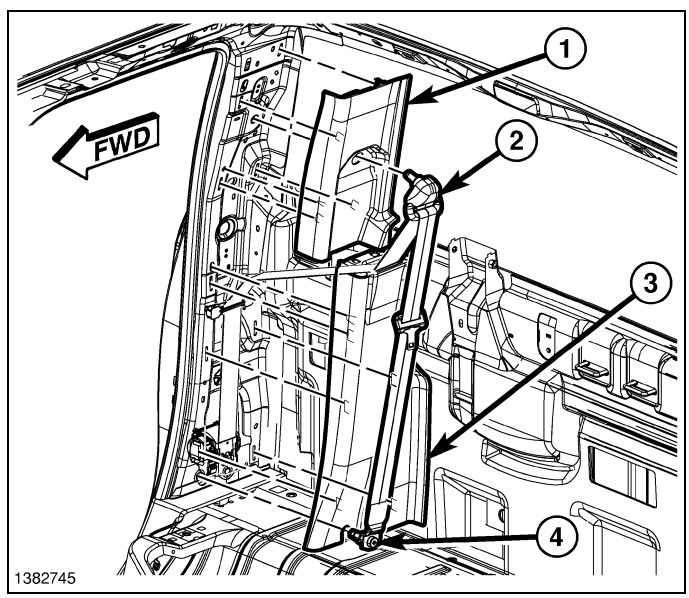

Installation

Crew Cab

1. Position the lower trim (2) into place and line up the clips to the pillar and rear door scuff plate.
2. Seat the retaining clips fully.
3. Install the lower seat belt anchor and tighten to 40 N·m (30 ft. lbs.)

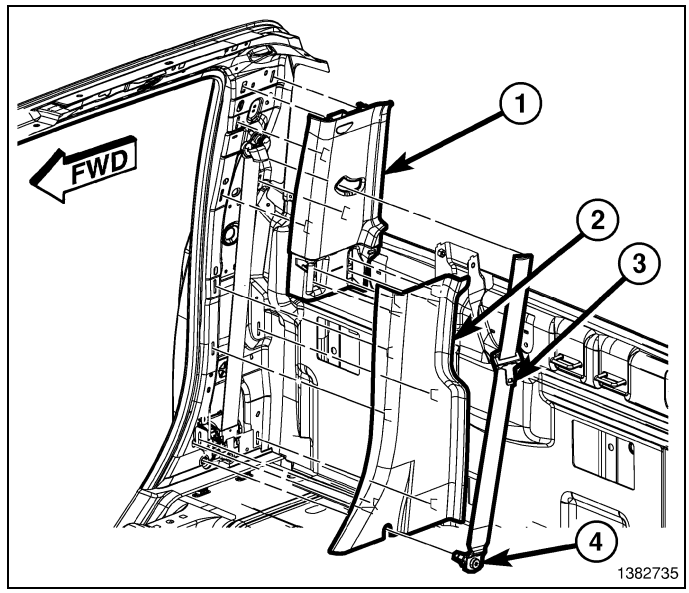

Quad Cab

1. Position the seat belt (2) through the hold in the trim (3).
2. Position the lower trim (2) into place and line up the clips to the pillar and rear door scuff plate.
3. Seat the retaining clips fully.
4. Install the lower seat belt anchor and tighten to 40 N·m (30 ft. lbs.)

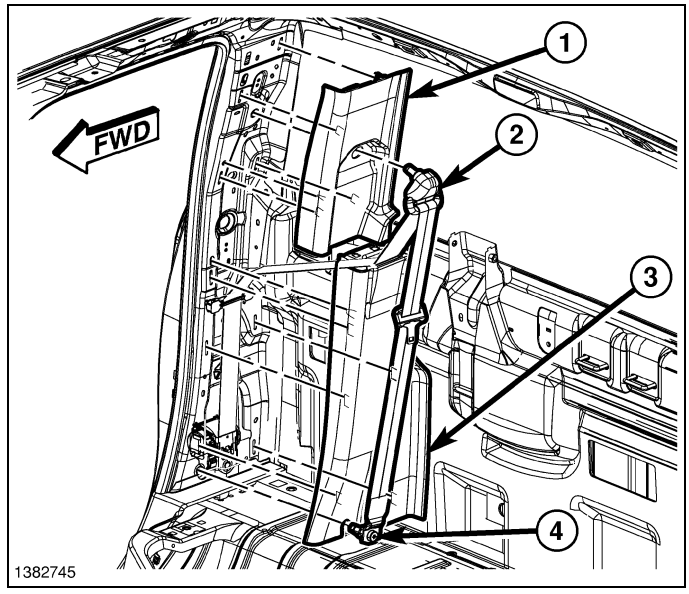

PANEL, C-Pillar Trim, Upper

Removal

Crew Cab

1. Remove the lower C-pillar trim (2). (Refer to 23 - Body/ Interior/PANEL, C-Pillar Trim - Removal)
2. Pull the upper trim (1) off and release the retaining clips.
3. Pull the seat belt (3) through the trim and remove the trim.

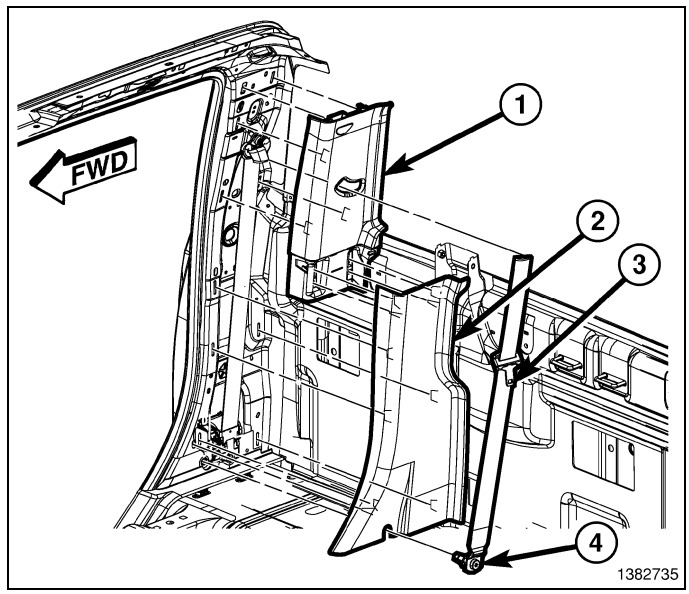

Quad Cab

1. Remove the lower C-pillar trim (3). (Refer to 23 - Body/ Interior/PANEL, C-Pillar Trim - Removal)
2. Separate the turning loop cover (2) and remove the turning loop bolt.
3. Pull the upper trim (1) off and release the retaining clips.

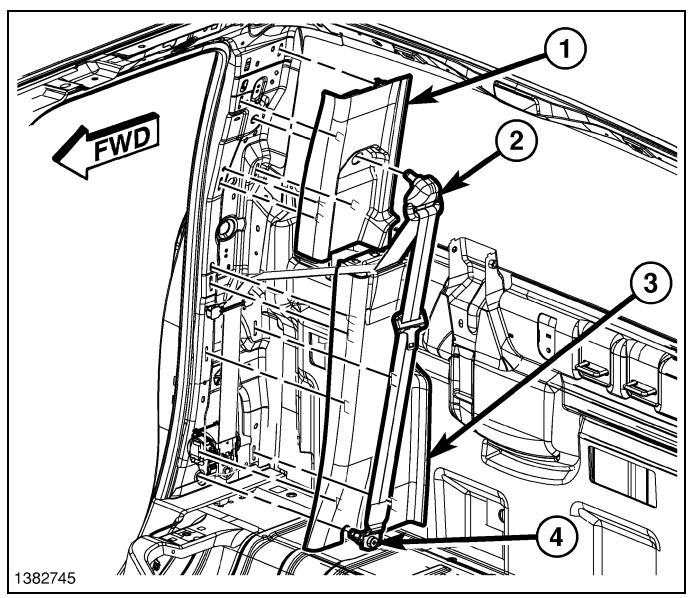

Installation

Crew Cab

1. Position the seat belt (3) through the hold in the trim (1).
2. Position the upper trim (1) back in place and seat the clips fully.
3. Install the lower C-pillar trim (2). (Refer to 23 - Body/ Interior/PANEL, C-Pillar Trim - Installation)

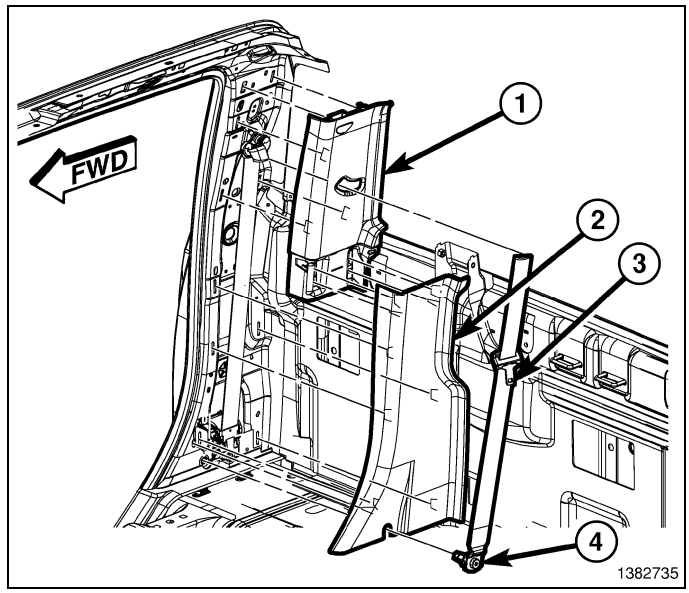

Quad Cab

1. Position the upper trim (1) back in place and seat the clips fully.
2. Install the turning loop bolt (2) and tighten to 40 N·m (30 ft. lbs.).
3. Install the turning loop cover.
4. Install the lower C-pillar trim (2). (Refer to 23 - Body/ Interior/PANEL, C-Pillar Trim - Installation)

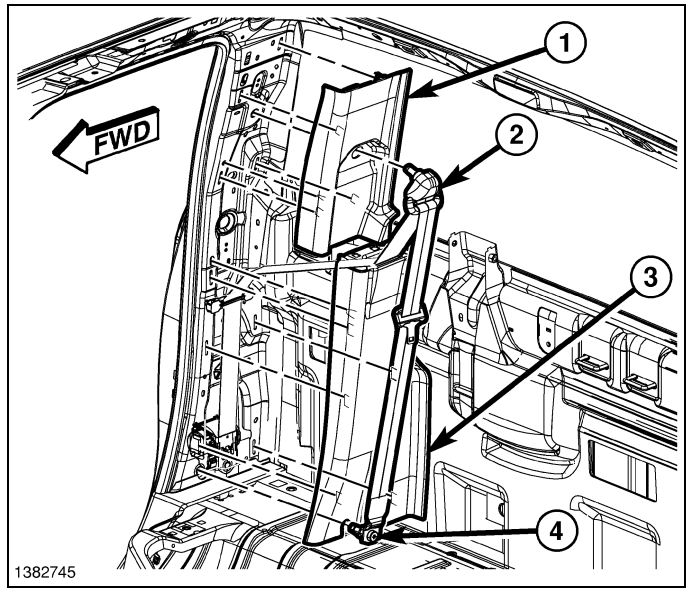

PANEL, Cab Back Trim

Removal

1. If equipped, remove the rear storage compartment. (Refer to 23 - Body/Interior/BIN, Storage - Removal)
2. If equipped, using a Trim Stick C-4755 or equivalent, disengage the latch (1) for the utility hook cover and open the cover to gain access to the screw (2) that secures the utility hook to the rear cab back panel.

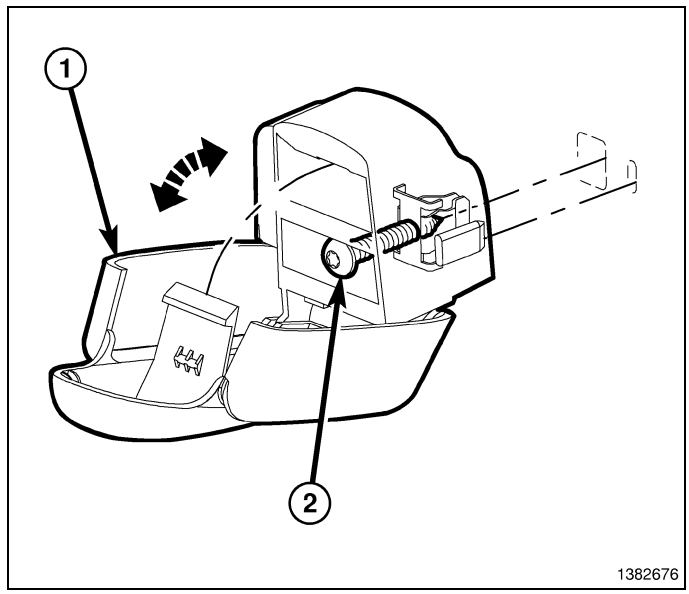

3. On two door models, remove the lower B-pillar trim panels (Refer to 23 - Body/Interior/PANEL, B-Pillar Trim - Removal).
4. On two door models, remove the lower seat belt anchor and remove the cab back panel (1).

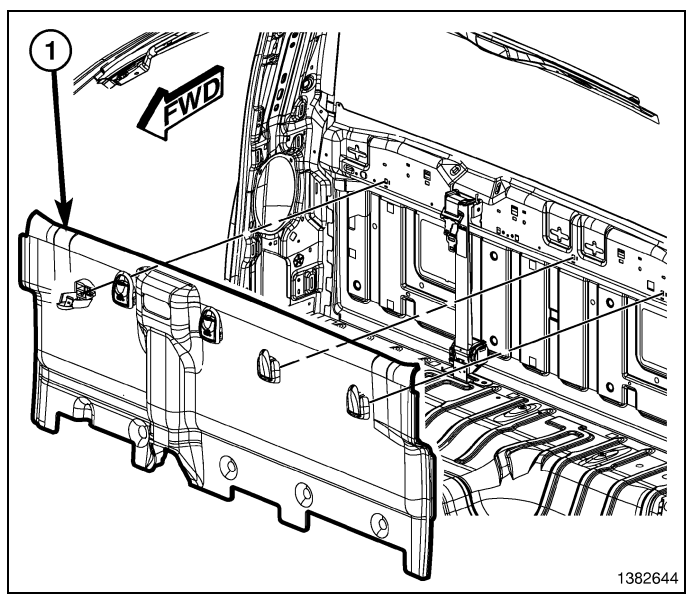

5. On four door models, remove the child seat tether straps from the rear cab back panel (2) (Refer to 10 - Restraints/ANCHOR, Child Seat - Removal).
6. On four doormodels, remove the center seat belt trim bezel (Refer to 10 - Restraints/RETRACTOR, Seat Belt - Removal).
7. On four doormodels, remove the lower C-pillar trim panels (Refer to 23 - Body/Interior/PANEL, C-Pillar Trim - Removal).
8. On four door models, remove the push-pin fasteners (1 and 3) that secure the rear cab trim panel (2) to the rear cab back panel and remove the trim panel.

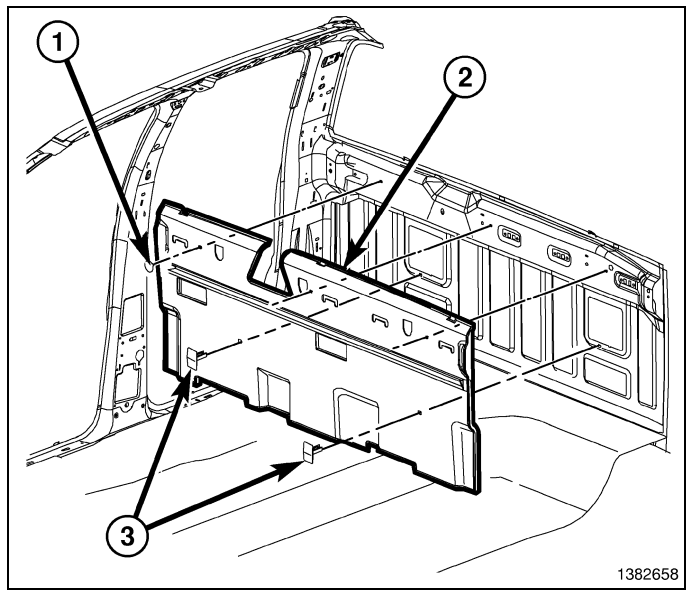

Installation

1. On four door models, position the rear cab trim panel (2) onto the rear cab back panel and install the push-pin fasteners (1 and 3).
2. On four door models, install the lower C-pillar trim panels (Refer to 23 - Body/Interior/PANEL, C-Pillar Trim - Installation).
3. On four door models, install the center seat belt trim bezel (Refer to 10 - Restraints/RETRACTOR, Seat Belt - Installation)
4. On four door models, install the child seat tether straps (Refer to 10 - Restraints/ANCHOR, Child Seat - Installation).

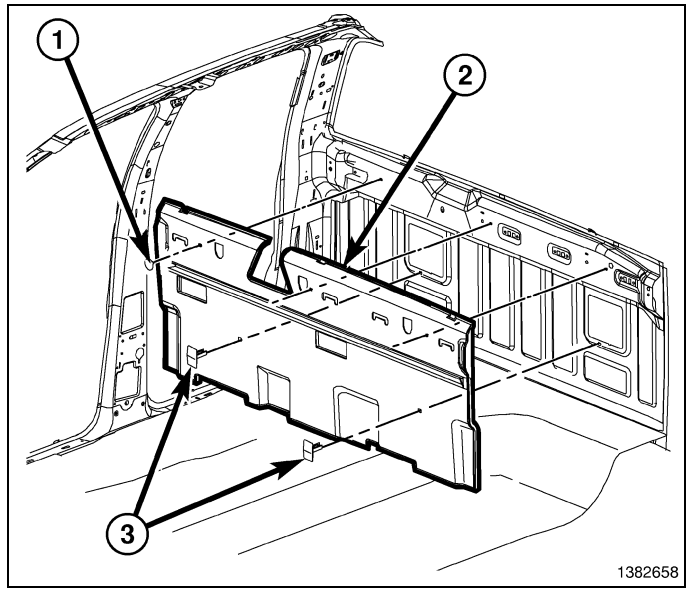

5. On two door models, position the rear cab trim panel (1) onto the rear cab back panel and install the utility hooks.

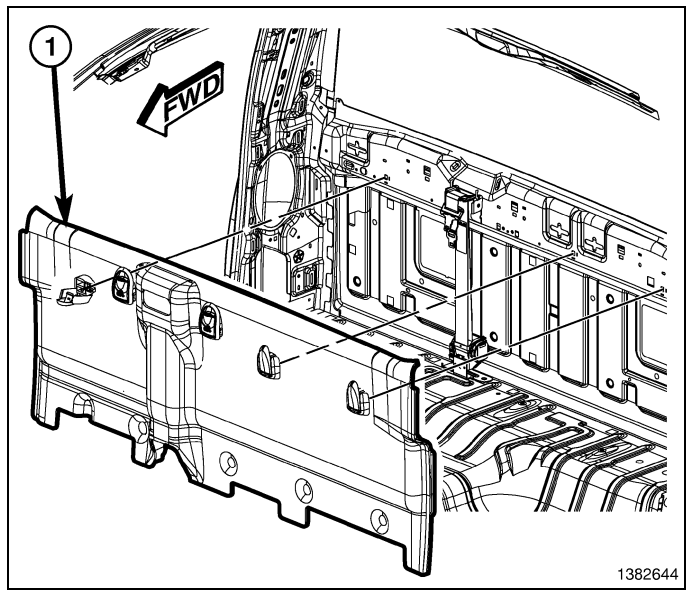

6. Install the lower seat belt anchor. (Refer to 10 - Restraints/SEAT BELT - Installation)
7. With the utility hook cover (1) open, install the screws (2) and close the utility hook covers.
8. On two door models, install the lower B-pillar trim panels. (Refer to 23 - Body/Interior/PANEL, B-Pillar Trim - Installation).
9. If equipped, install the rear storage compartment. (Refer to 23 - Body/Interior/BIN, Storage - Installation)

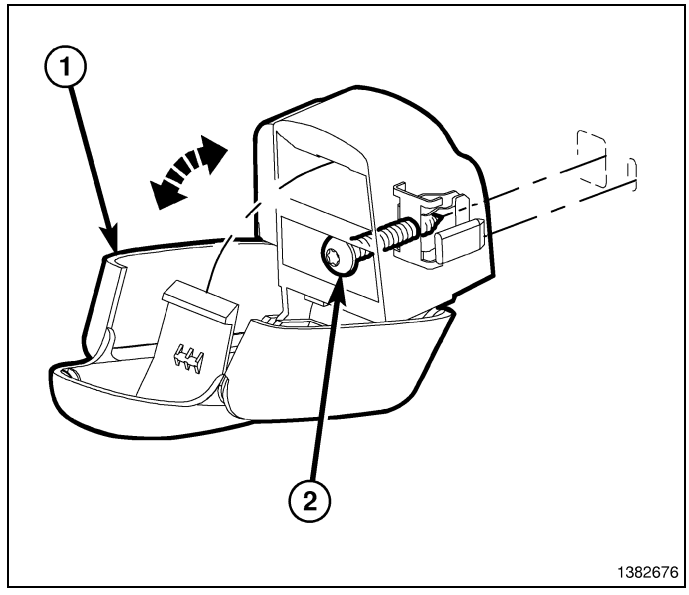

PANEL, Cowl Trim

Removal

1. Using a Trim Stick C-4755or equivalent, disengage the retaining tabs of the cowl trim panel (1) from the retainer clips in the door sill.
2. Pull the cowl trim panel rearward and remove it from the vehicle.

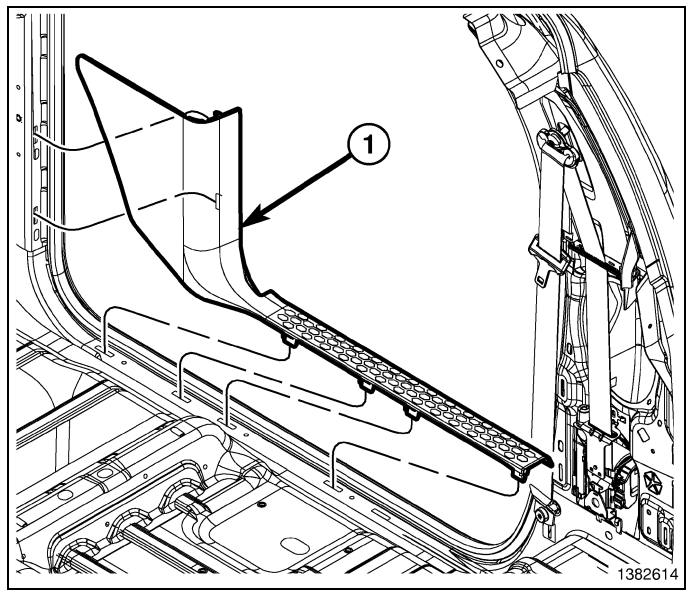

Installation

1. Position the cowl trim panel (1) onto the door sill.
2. Push the cowl trim panel forward and then engage the retaining tabs that secure the sill trim panel to the rear door sill.

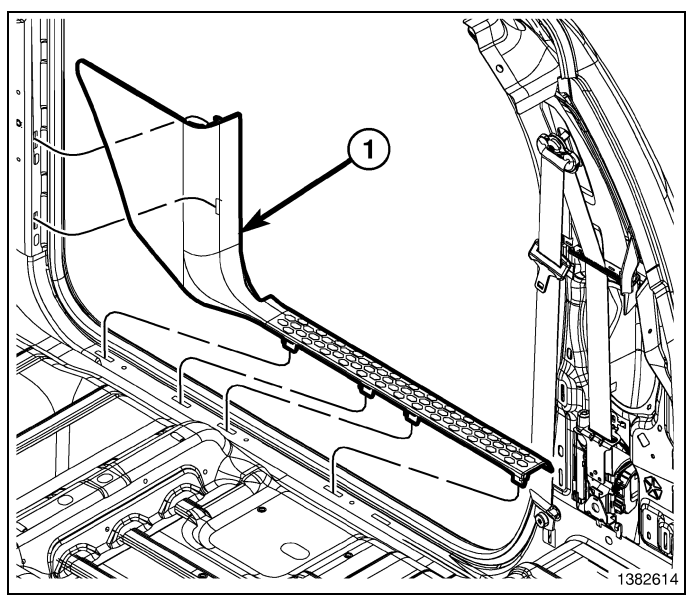

PLATE, Scuff, Rear Door Sill

Removal

1. Using a trim stick C-4755 or equivalent, disengage the retaining tabs of the sill trim panel (1) from the retainer clips in the rear door sill and remove the trim panel.

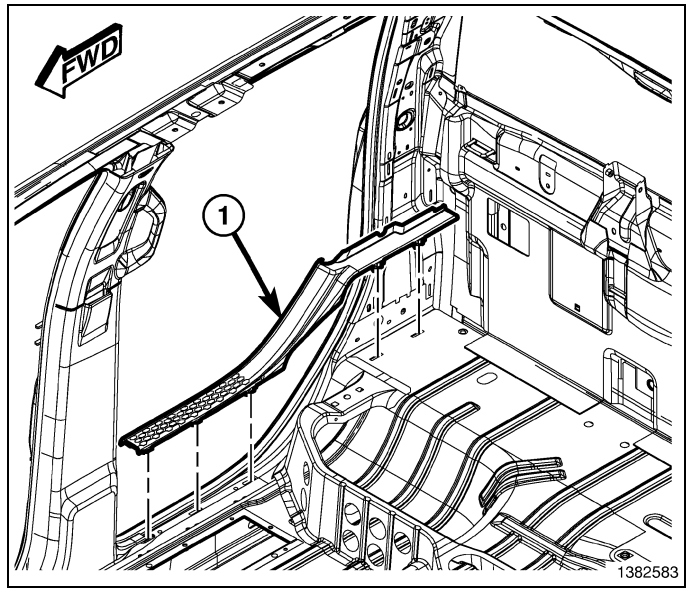

Installation

1. Position the sill trim panel (1) onto the rear door sill.
2. Seat the retaining tabs that secure the sill trim panel to the rear door sill fully.

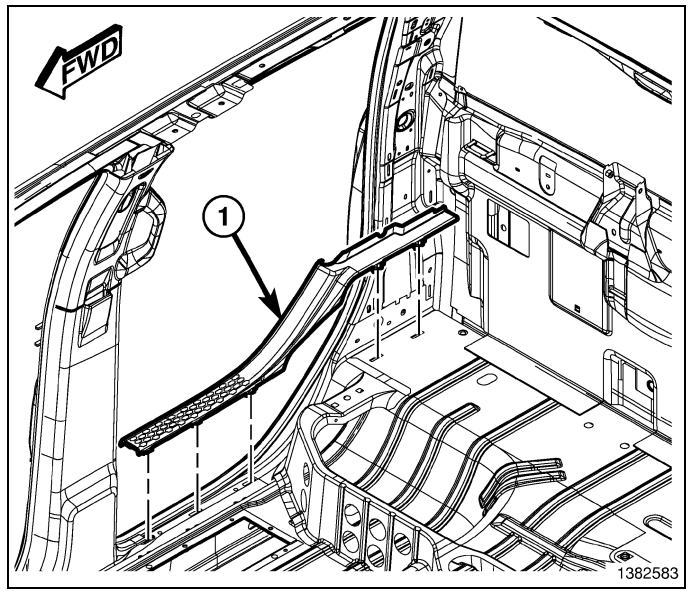

SUPPORT, Visor

Removal

1. Using a trim stick C-4755 or equivalent, disengage the release clip (3) as shown and remove the sun visor support (1) from the headliner (2)

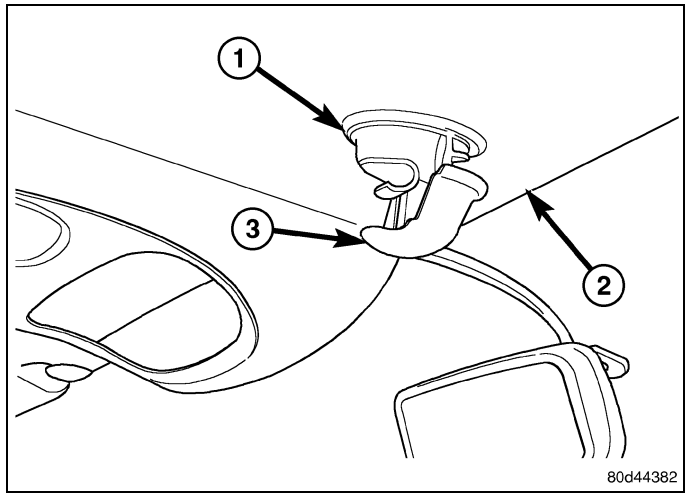

Installation

1. Position the sun visor support (1) through the headliner (2) and fully seat the base of the support to the roof panel.
2. Engage the release clip (3).

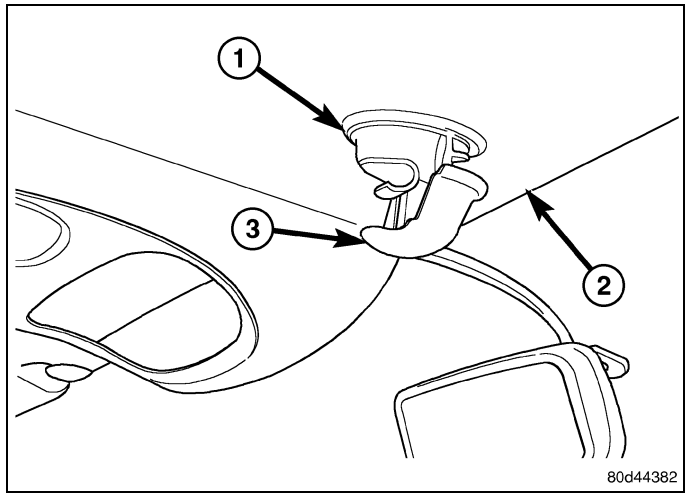

VISOR

Removal

CAUTION: When removing or installing the screws (1), be certain to avoid any wiring or drain tube interference.

1. Remove the three screws (1) that secure each sun visor (2) to the roof panel and remove the visor from the headliner (3).
2. If equipped, disconnect the wire harness connector for the illuminated vanity mirror (4).

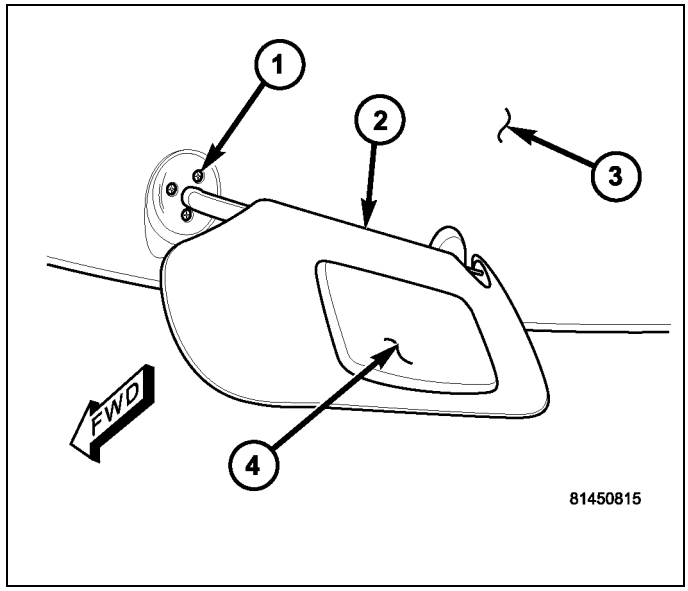

Installation

CAUTION: When removing or installing the screws (1), be certain to avoid any wiring or drain tube interference.

1. If equipped, connect the wire harness connector for the illuminated vanity mirror (4).
2. Position the sun visor (2) onto the headliner (3).
3. Install the three screws (1) that secure each sun visor to the roof panel. Tighten the screws to 2.2 N·m (20 in. lbs.).

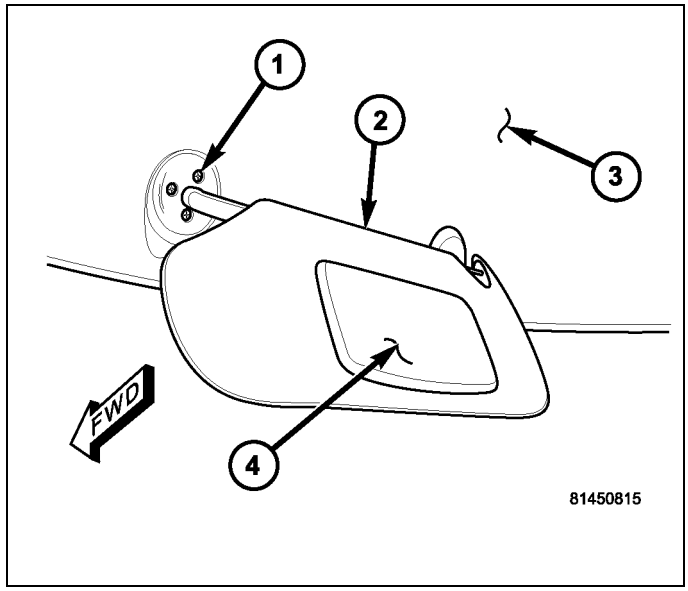

PAINT

TABLE OF CONTENTS

page

PAINT
SPECIFICATIONS 256
BASECOAT/CLEARCOAT FINISH
DESCRIPTION 256
FINESSE SANDING, BUFFING, AND POLISHING
DESCRIPTION 256

page

PAINT CODE
DESCRIPTION 257
PAINT TOUCH-UP
DESCRIPTION 257
STANDARD PROCEDURE 257

Paint

Specifications

EXTERIOR COLORS

EXTERIOR COLOR	CHRYSLER CODE
Inferno Red Crystal Pearlcoat	ARH/ARJ
Flame Red Clearcoat	PR4
Sunburst Orange Pearlcoat	DV6
Detonator Yellow Clearcoat	EDA
Lt. Graystone Pearlcoat	EDA
Austin Tan Pearlcoat	FKL

EXTERIOR COLORS, continued

EXTERIOR COLOR	CHRYSLER CODE
Deep Water Blue Pearlcoat	GBS
Bright Silver Met. Clearcoat	WS2
Mineral Gray Met. Clearcoat	CDM
Brilliant Black Crystal Pearlcoat	AXR
Stone White Clearcoat	SW1

INTERIOR COLORS

INTERIOR COLOR	CHRYSLER CODE
Dark Slate Gray	DV

INTERIOR COLORS, continued

INTERIOR COLOR	CHRYSLER CODE
Dark Slate Gray/Medium Graystone	V3
Light Pebble Beige/Bark Brown	KT

Basecoat/Clearcoat Finish

Description

The original equipment paint finish is a multi step process that involves cleaning, applying electro de-position (E-coat), anti-chip primer, basecoat, and clearcoat steps.

CAUTION: Do not use abrasive chemicals, abrasive compounds or harsh alkaline based cleaning solvents on the painted surfaces of a vehicle. Failure to follow this caution can result in damage to vehicle finish.

On most vehicles a two-part paint application (basecoat/clearcoat) is used. Color paint that is applied to primer is called basecoat. A clear coat paint is then applied to protect the basecoat from ultraviolet light and to provide a durable high-gloss finish.

Finesse Sanding, Buffing, and Polishing

Description

CAUTION: Do not remove more than 0.5 mils of clearcoat finish when sanding, hand buffing or polishing. Basecoat paint must retain clearcoat for durability.

CAUTION: If the finish has been finesse sanded in the past, it cannot be repeated. Failure to follow this caution can result in damage to vehicle finish.

NOTE: Finesse sanding should only be performed by a trained automotive paint technician.

Minor acid etching, orange peel, or smudging in a clearcoat or single-stage finish can be reduced with light finesse sanding, hand buffing and polishing. Use a Paint Thickness Gauge #PR-ETG-2X or equivalent to determine clearcoat or single-stage paint thickness before and after the repair.

Paint Code

Description

Exterior vehicle body color(s) are identified on the Vehicle Certification Label (Refer to 00 - Vehicle Data/Vehicle Information/Vehicle Certification Label - Description) or the Body Code Plate.

The first digit of the paint code listed on the vehicle indicates the sequence of application, i.e.: P = primary coat, Q = secondary coat. The color names provided in the Paint and Trim Code Description chart are the same color names used on most repair product containers (Refer to 23 - Body/Paint - Specifications).

Paint Touch-Up

Description

If the painted metal surface of a vehicle becomes scratched or chipped, it should be touched-up as soon as possible to avoid corrosion.

WARNING: Use an OSHA approved respirator and safety glasses when spraying paint or solvents. Failure to follow this warning may result in possible personal injury or death.

When repairing painted metal surfaces, for best results, use MOPAR® Scratch Filler/Primer, Touch-Up Paints and Clear Top Coat.

Standard Procedure

1. Scrape any loose paint and corrosion from inside the scratch or chip.

WARNING: Avoid prolonged skin contact with petroleum or alcohol–based cleaning solvents. Failure to follow this warning can result in possible personal injury or death.

2. Clean affected area with MOPAR® Tar/Road Oil Remover or equivalent, and allow to dry.
3. Fill the inside of the scratch or chip with a coat of filler/primer. Do not overlap primer onto good surface finish. The applicator brush should be wet enough to puddle-fill the scratch or chip without running. Do not stroke brush applicator on body surface. Allow the filler/primer to dry hard.
4. Cover the filler/primer with color touch-up paint. Do not overlap touch-up color onto the original color coat around the scratch or chip. Butt the new color to the original color, if possible. Do not stroke applicator brush on body surface. Allow touch-up paint to dry hard.
5. On vehicles without clearcoat, the touch-up color can be lightly finesse sanded (1500 grit) and polished with rubbing compound.
6. On vehicles with clearcoat, apply clear top coat to touch-up paint with the same technique as described in Step #4. Allow clear top coat to dry hard. If desired, the clearcoat can be lightly finesse sanded (1500 grit) and polished with rubbing compound.

SEATS

TABLE OF CONTENTS

page

SEATS
- WARNING 260
- **BRACKET, REAR SEAT BACK MOUNTING**
  - REMOVAL 260
  - INSTALLATION 261
- **COVER, SEAT CUSHION, FRONT**
  - REMOVAL 261
  - INSTALLATION 271
- **COVER, SEAT CUSHION, REAR**
  - REMOVAL 280
  - INSTALLATION 281
- **SEAT, FRONT**
  - DESCRIPTION 281
  - REMOVAL 286
  - INSTALLATION 289
- **SEAT, FRONT CENTER**
  - DESCRIPTION 293
  - REMOVAL 299
  - INSTALLATION 300

page

- **SEAT, REAR**
  - DESCRIPTION 300
  - REMOVAL 319
  - INSTALLATION 321
- **SEAT BACK, FRONT**
  - REMOVAL 323
  - DISASSEMBLY 327
  - ASSEMBLY 330
  - INSTALLATION 334
- **SEAT BACK, REAR**
  - REMOVAL 338
  - DISASSEMBLY 339
  - ASSEMBLY 343
  - INSTALLATION 347

Seats

Warning

WARNING: To avoid serious or fatal injury during and following any seat belt or child restraint anchor service, carefully inspect all seat belts, buckles, mounting hardware, retractors, tether straps, and anchors for proper installation, operation, or damage. Replace any belt that is cut, frayed, or torn. Straighten any belt that is twisted. Tighten any loose fasteners. Replace any belt that has a damaged or ineffective buckle or retractor. Replace any belt that has a bent or damaged latch plate or anchor plate. Replace any child restraint anchor or the unit to which the anchor is integral that has been bent or damaged. Never attempt to repair a seat belt or child restraint component. Always replace damaged or ineffective seat belt and child restraint components with the correct, new and unused replacement parts listed in the Chrysler Mopar® Parts Catalog. Failure to follow these instructions may result in possible serious or fatal injury.

WARNING: To avoid potential physical injury or damage to sensitive electronic circuits and systems, always disconnect and isolate the battery negative (ground) cable and the positive cable, then ground the positive cable to discharge the Occupant Restraint Controller (ORC) capacitor before performing any welding operations on the vehicle. Failure to take the proper precautions could result in accidental airbag deployment, possible damage to the Supplemental Restraint System (SRS) circuits and components, and possible damage to other electronic circuits and components. Whenever a welding process is being performed within 12 inches (30 centimeters) of an electronic module or wiring harness, then that module or harness should be relocated out of the way, or disconnected. Always protect against component or vehicle damage from weld spatter by using weld blankets and screens.

WARNING: To avoid serious or fatal injury when a steering column has an airbag unit attached, never place the column on the floor or any other surface with the steering wheel or airbag unit face down. Failure to follow these instructions may result in possible serious or fatal injury.

BRACKET, Rear Seat Back Mounting

Removal

1. Remove the rear seat (Refer to 23 - Body/Seats/SEAT - Removal).
2. Remove bolts (2) and remove the loop (1).

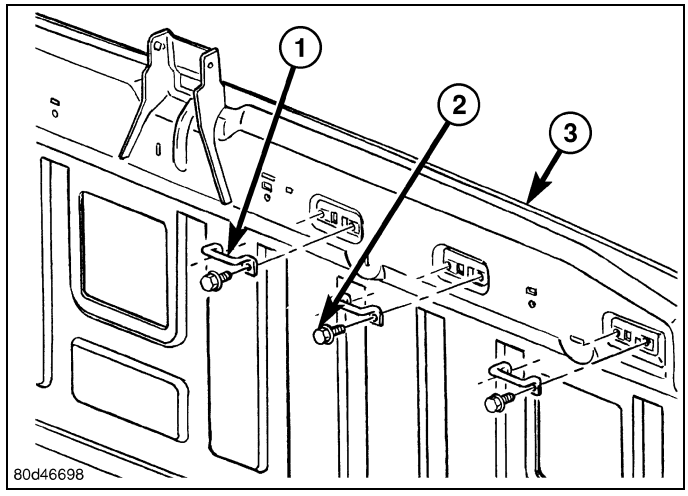

Installation

1. Install the loop (1) and install the bolts (2).
2. Tighten the bolts (2) to 12 N·m (9 ft. lbs.).
3. Install the seat (Refer to 23 - Body/Seats/SEAT - Installation).

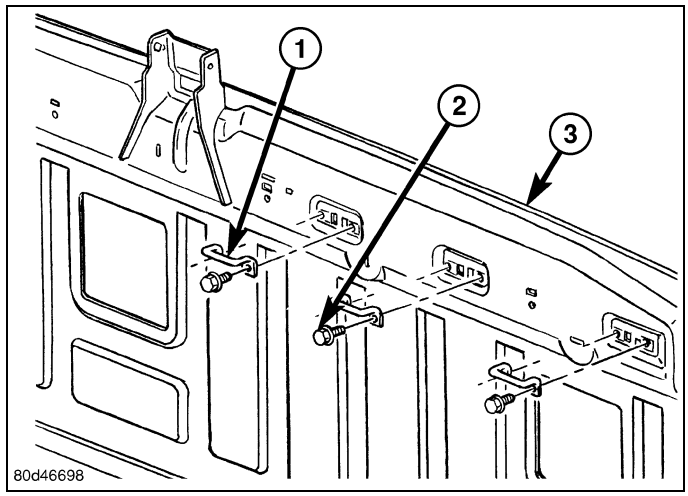

COVER, Seat Cushion, Front

Removal

NOTE: While servicing seat assemblies, (Refer to 23 - Body/Seats/SEAT - Description)

Manual

1. Separate the seat back cover straps (2) from under the seat cushion.

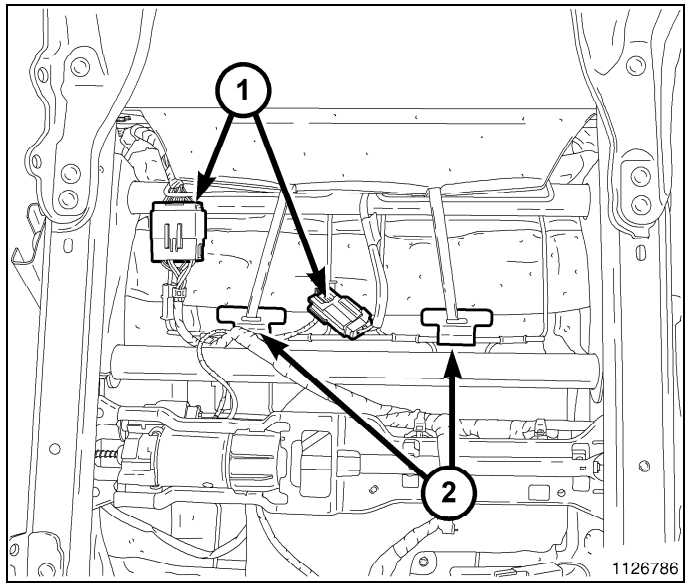

2. Remove the side shield screws (2) in the back.

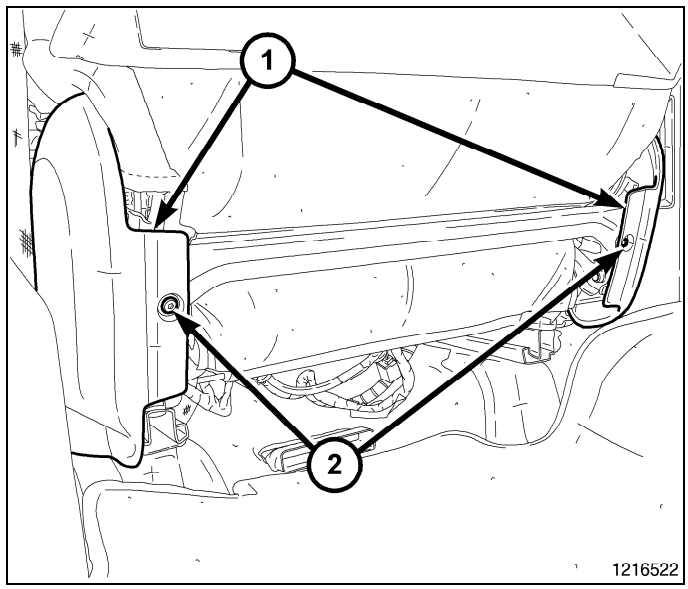

3. Remove the inboard shield screw (1).
4. Remove the inboard side shield (2).

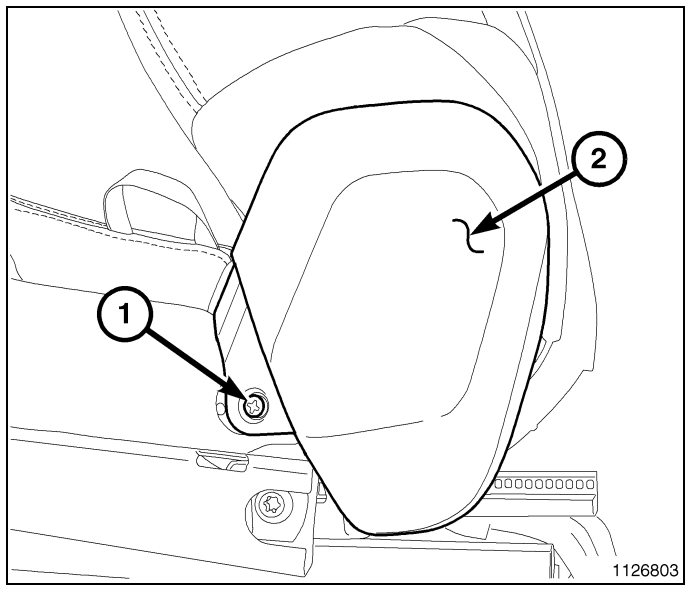

5. Using a door handle clip tool (1) or equivalent, release the clip holding the handle (2) onto the seat and remove the handle.
6. Using trim stick C-4755 or equivalent, release the seven tabs and separate the center bezel from the outboard side shield.
7. Pull the bezel rearward and release the front retaining tab.

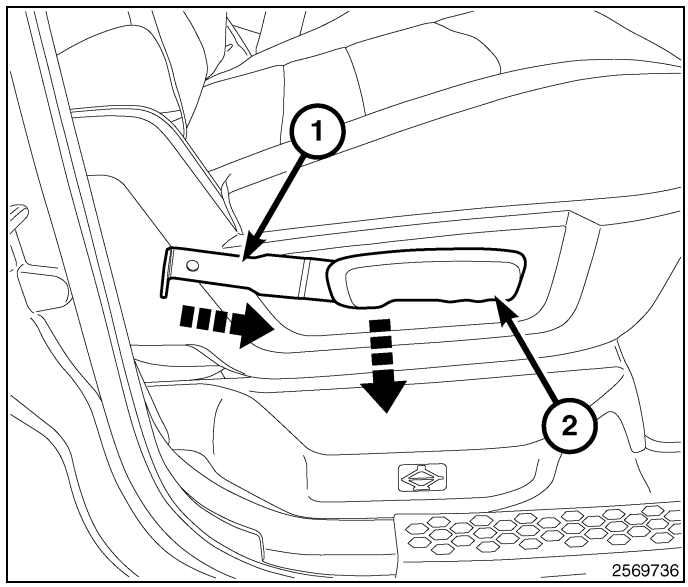

8. Remove the screw (1).
9. Release the retaining clips (2) and remove the outer side shield.

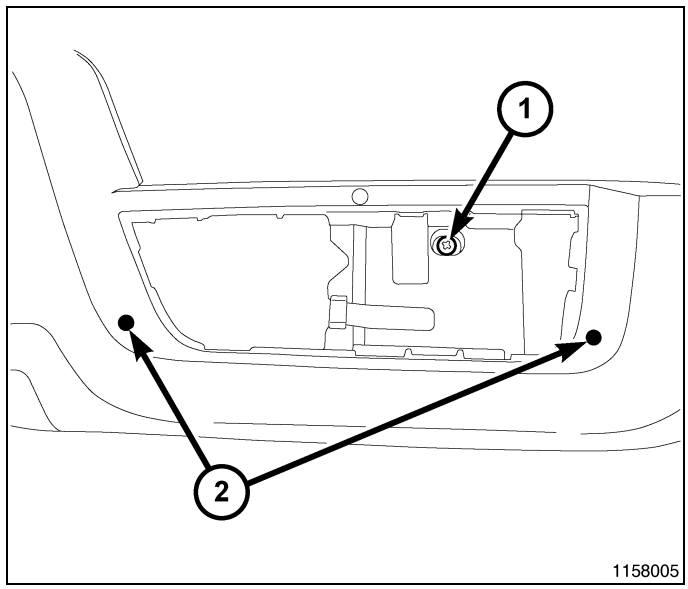

10. Separate the clip (1) and separate the recliner rod (2) from the lever.
11. Remove the push pin fastener (3).

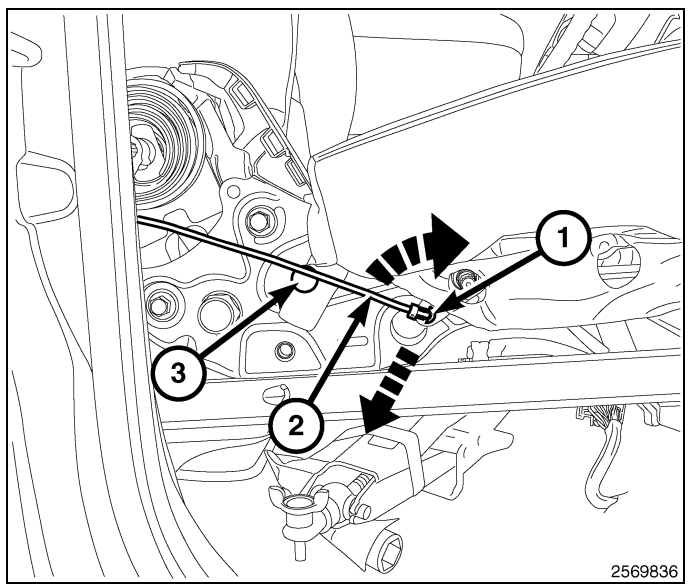

12. Separate the cover J-straps (1) from the sides and remove the foam/cover assembly.

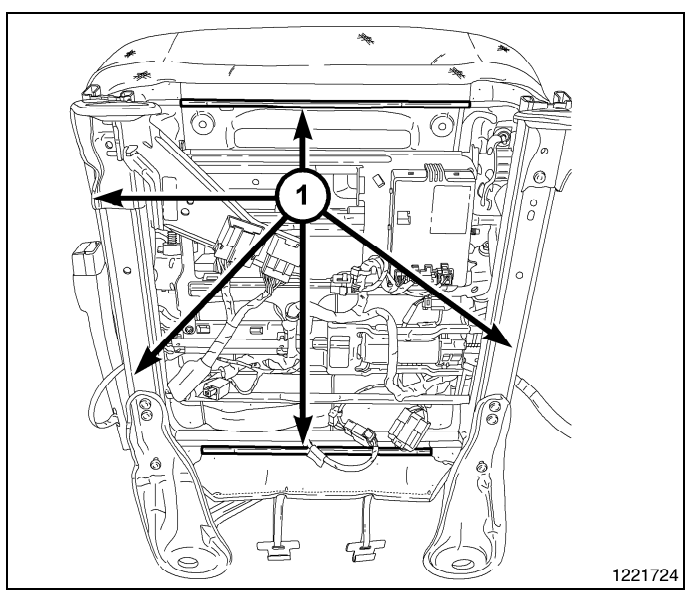

13. Remove the 10 hog rings (2) and separate the cover (1) from the foam.

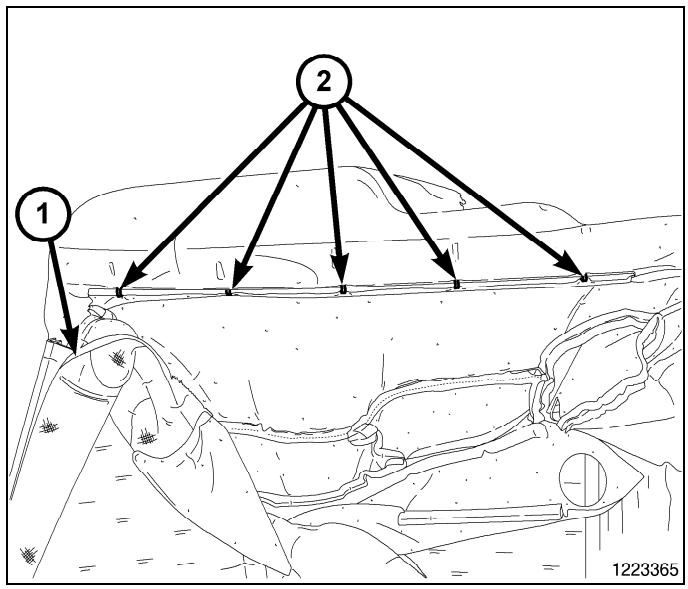

Power Without Vented Seat

1. Remove the front seat (Refer to 23 - Body/Seats/SEAT - Removal).
2. Separate the seat back cover straps (2) from under the seat cushion and disconnect the electrical connectors (1).

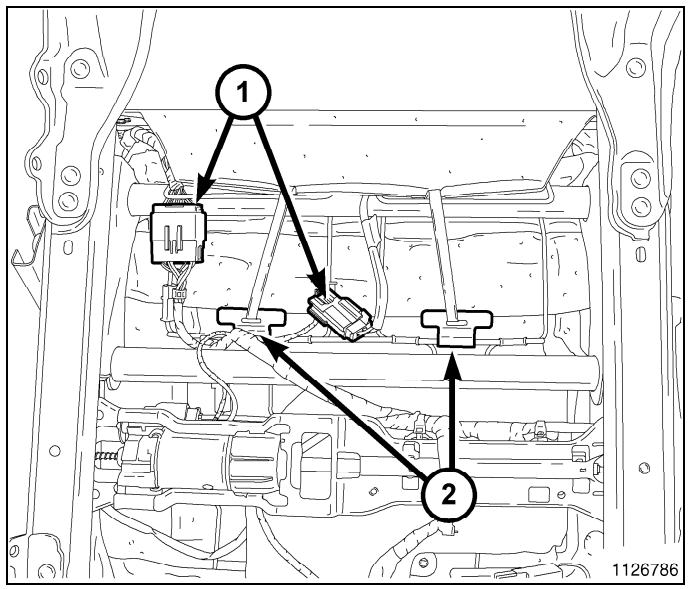

3. Remove the side shield screws (2) in the back.

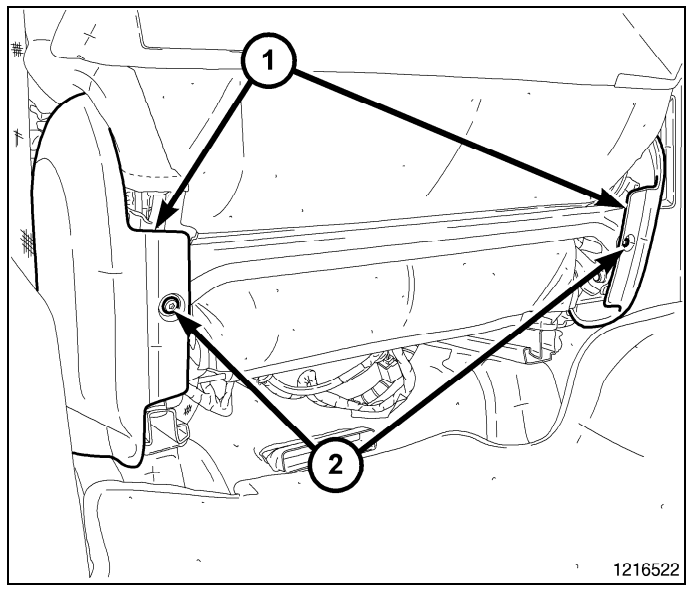

4. Remove the inboard shield screw.
5. Remove the inboard side shield.

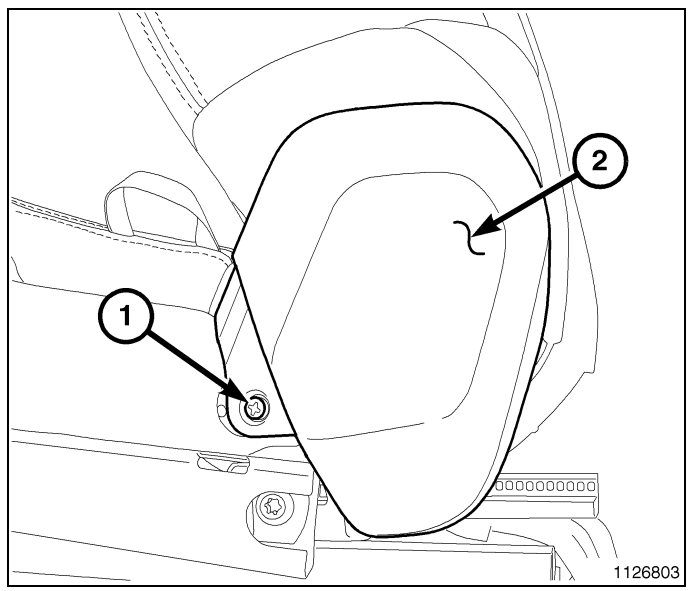

CAUTION: Disconnect the lumbar control switch electrical connector beneath the seat, prior to removing the power seat switch bezel from the seat. Failure to follow these instructions can result in damage to the lumbar control switch.

6. If equipped, disconnect the lumbar control switch electrical connector (1).

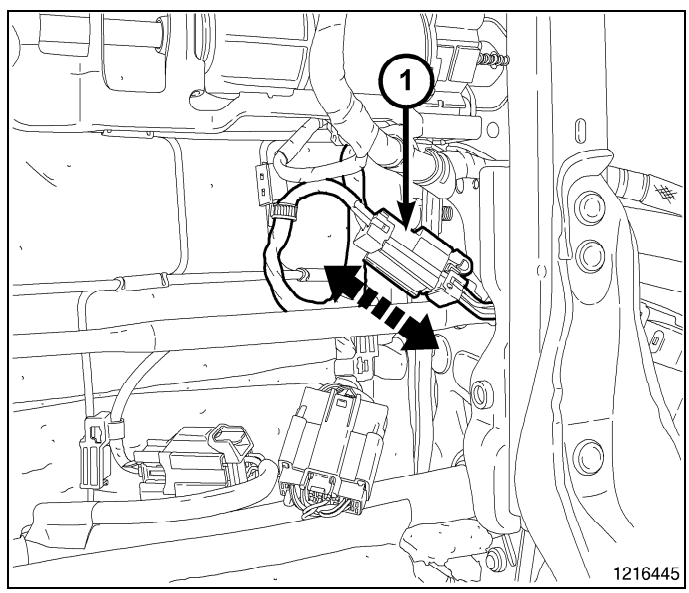

7. Using trim stick C-4755 or equivalent, release the seven tabs (3) and separate the bezel (1) from the outboard side shield.
8. Pull the bezel (1) rearward and release the front retaining tab (2).
9. Disconnect the wire harness connectors from the power seat switch and memory seat switch, if equipped.

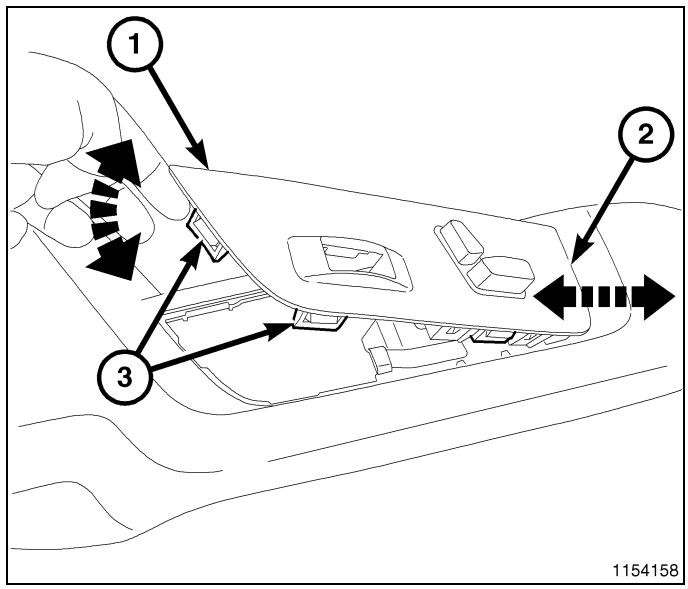

10. Remove the screw (1).
11. Release the retaining clips (2) and remove the outer side shield.

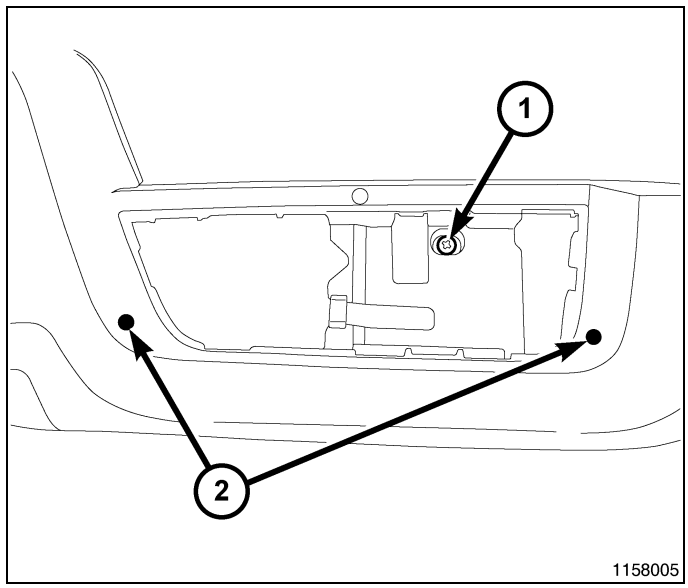

12. Separate the cover J-straps (1) from the sides and remove the foam/cover assembly.

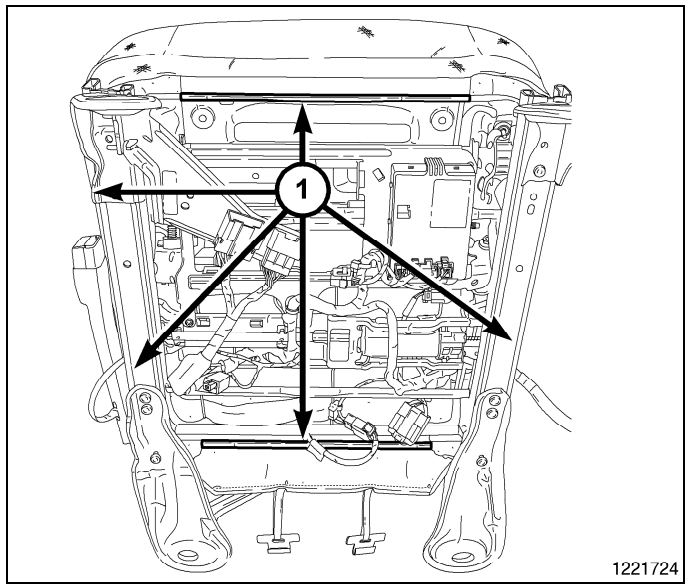

13. Remove the 10 hog rings (2) and separate the cover (1) from the foam.

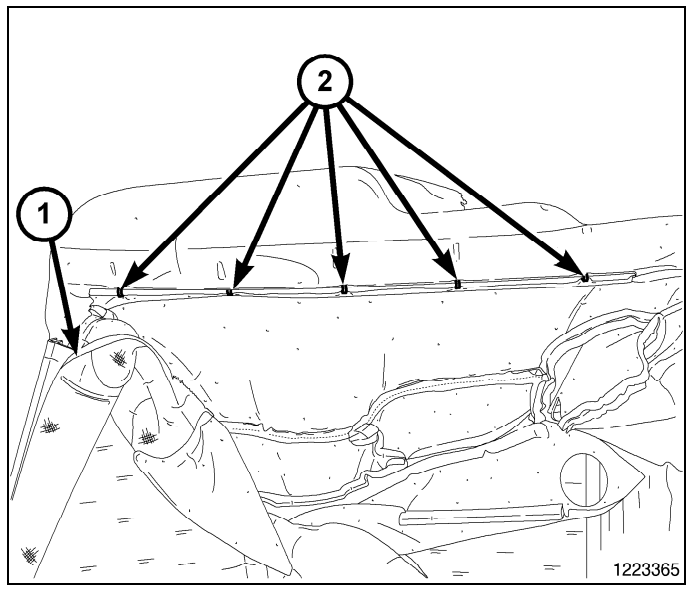

Power With Vented Seat

1. Remove the front seat (Refer to 23 - Body/Seats/SEAT - Removal).
2. Separate the seat back cover straps (2) from under the seat cushion and disconnect the electrical connectors (1).

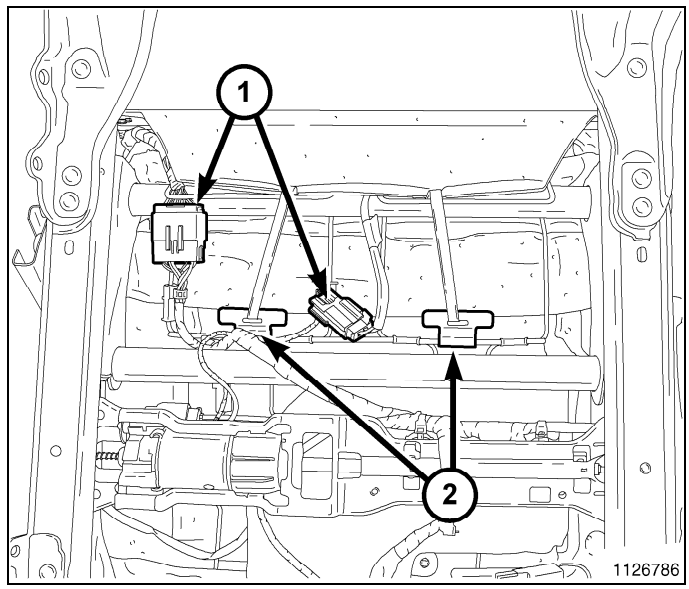

3. Remove the side shield screws (2) in the back.

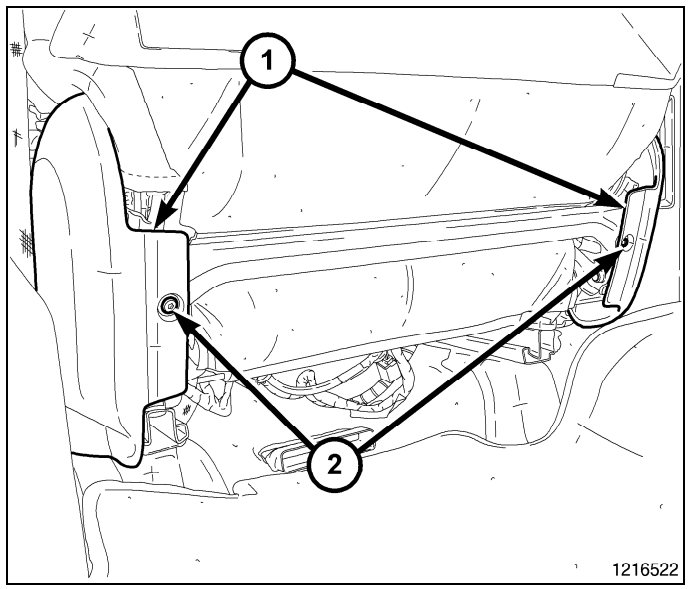

4. Remove the inboard shield screw.
5. Remove the inboard side shield.

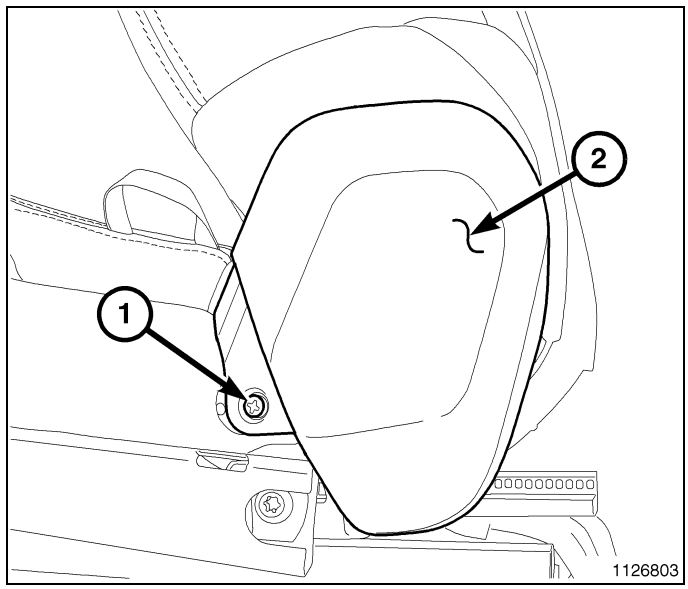

CAUTION: Disconnect the lumbar control switch electrical connector beneath the seat, prior to removing the power seat switch bezel from the seat. Failure to follow these instructions can result in damage to the lumbar control switch.

6. If equipped, disconnect the lumbar control switch electrical connector (1).

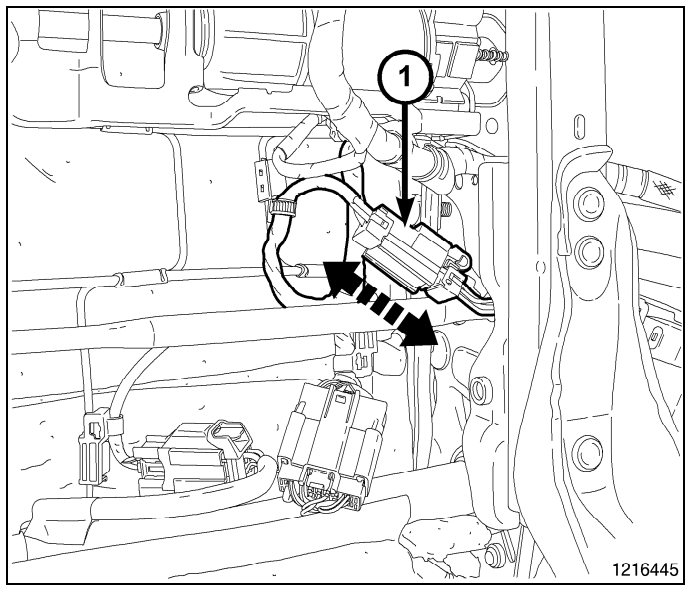

NOTE: Power seat bezel shown, manual seat bezel similar.

7. Using trim stick C-4755 or equivalent, release the seven tabs (3) and separate the bezel (1) from the outboard side shield.
8. Pull the bezel (1) rearward and release the front retaining tab (2).
9. Disconnect the wire harness connectors from the power seat switch and memory seat switch, if equipped.

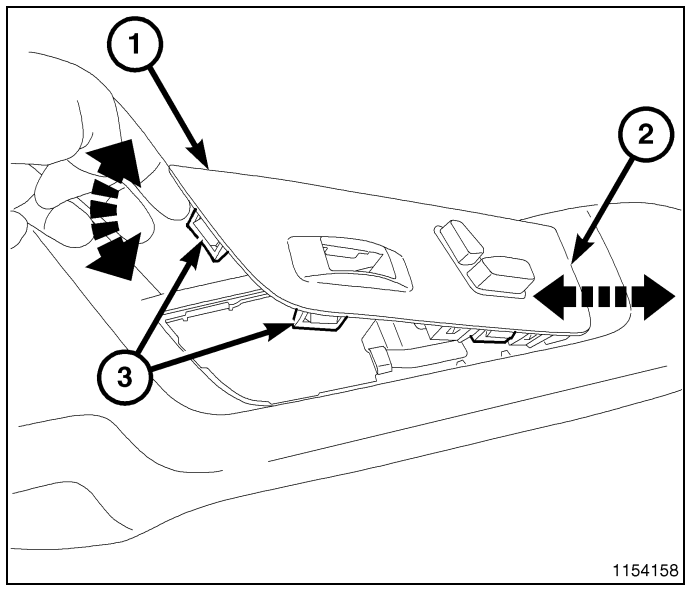

10. Remove the screw (1).
11. Release the retaining clips (2) and remove the outer side shield.

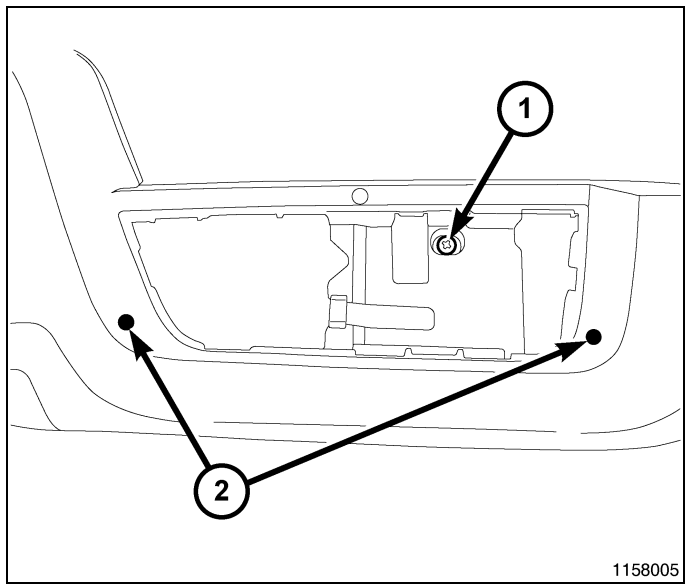

12. Disconnect the vented seat bag (1) from the motor (2).
13. Disconnect the electrical connectors, if equipped.

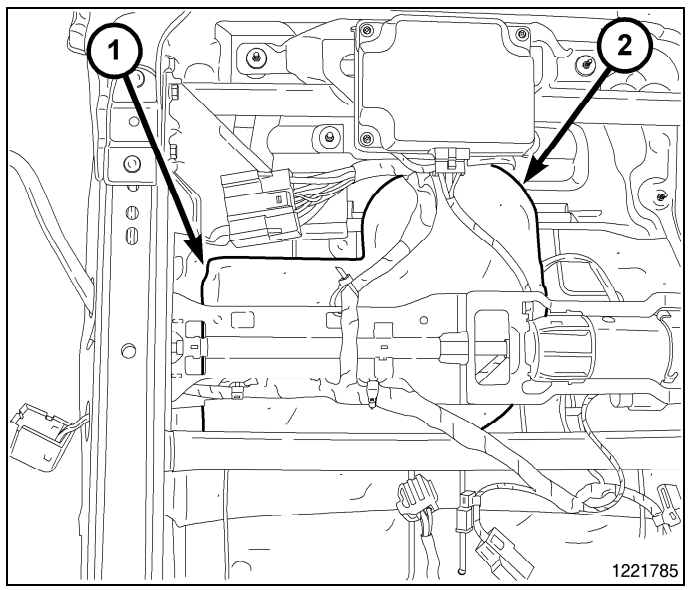

14. Separate the cover J-straps (1) from the sides and remove the foam/cover assembly.

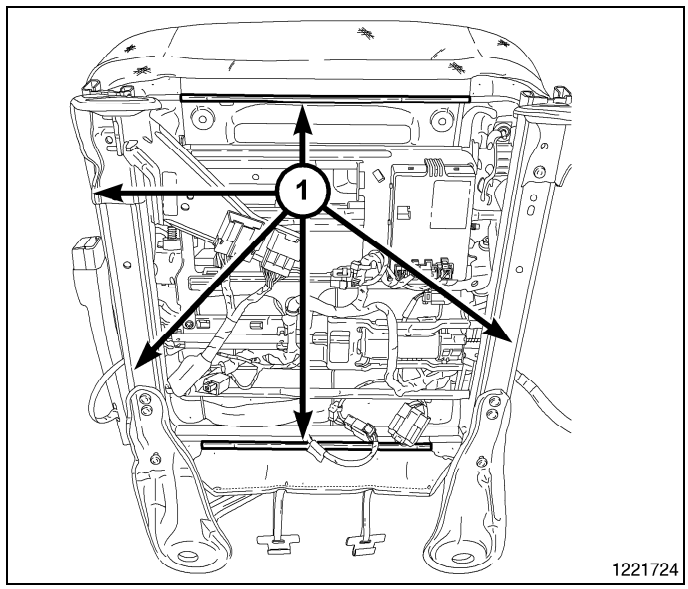

15. Remove the 10 hog rings (2) and separate the cover (1) from the foam.

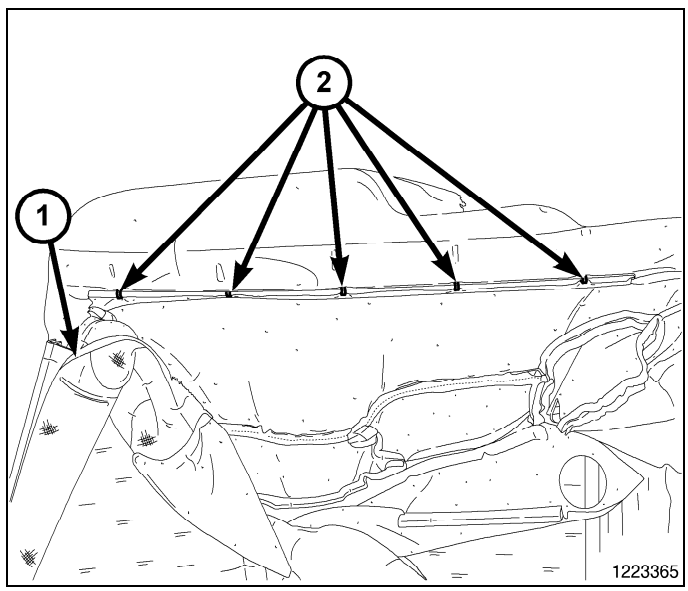

16. Pull the vent pad (1) through the foam.

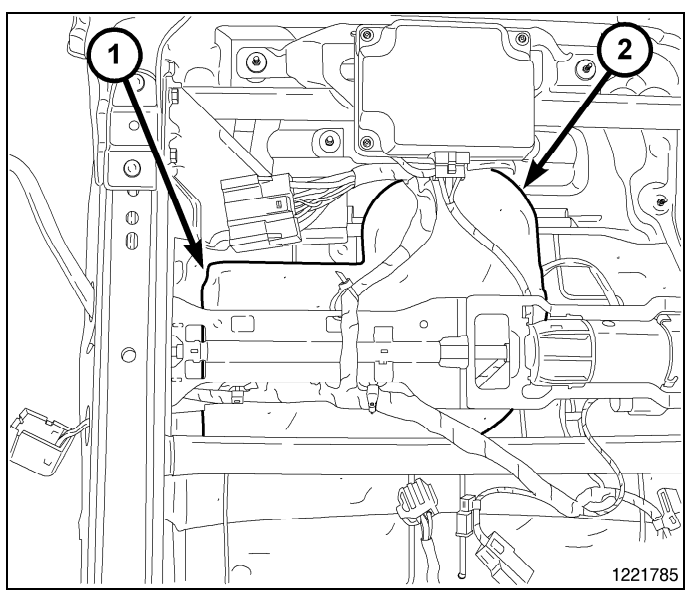

Installation

Manual

1. Position the cover (1) onto the foam and install 10 new hog rings (2).

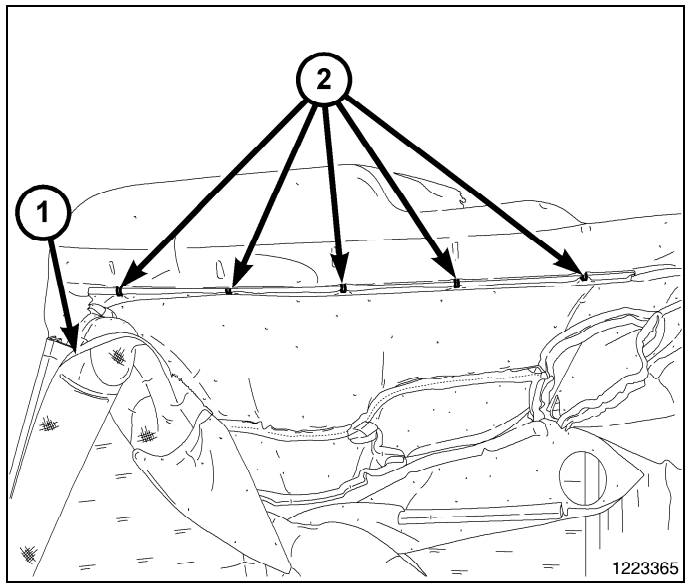

2. Position the foam/cover assembly onto the seat cushion frame and secure the J-straps (1) on the sides.

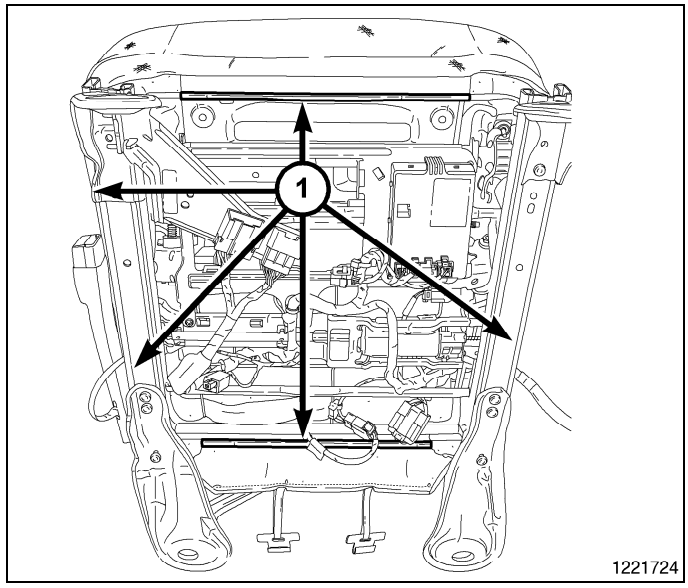

3. Install the push pin fastener (3) and seat fully.
4. Install the recliner rod (1) and seat the retaining clip (2) fully.

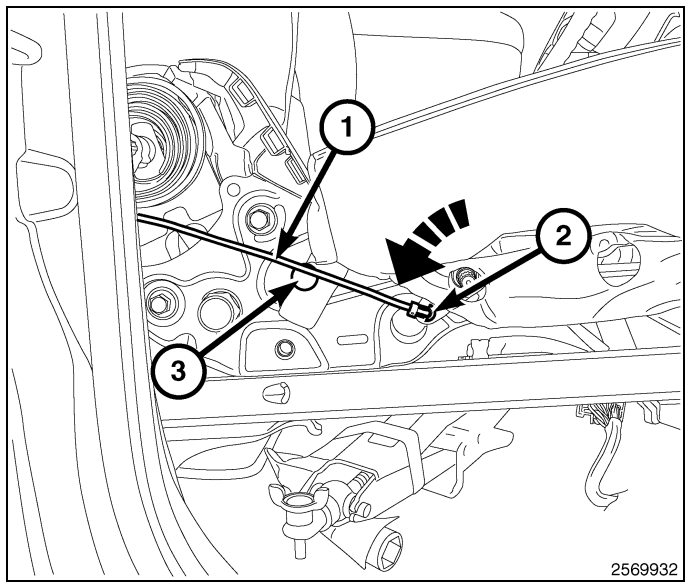

5. Install the outer side shield and seat the clips (2) fully.
6. Install the screw (1).

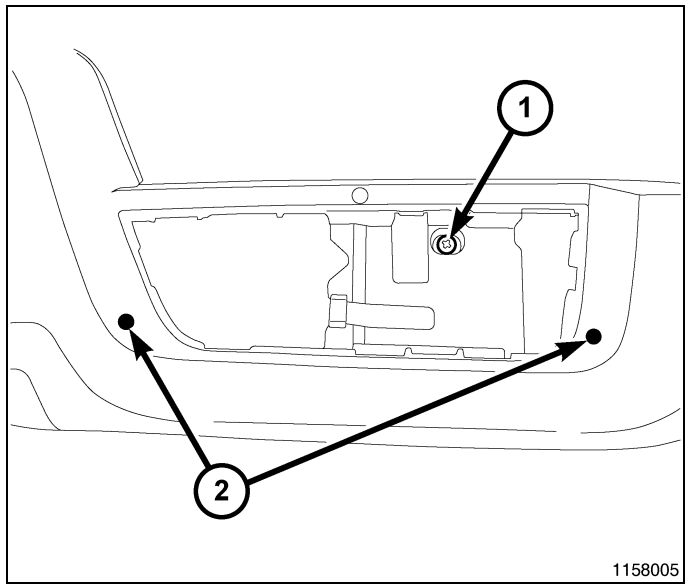

7. Position the bezel to the outboard side shield and engage the front retaining tab.
8. Seat the remaining tabs (3) fully.
9. Position the recliner handle (1) onto the splined shaft and seat fully.

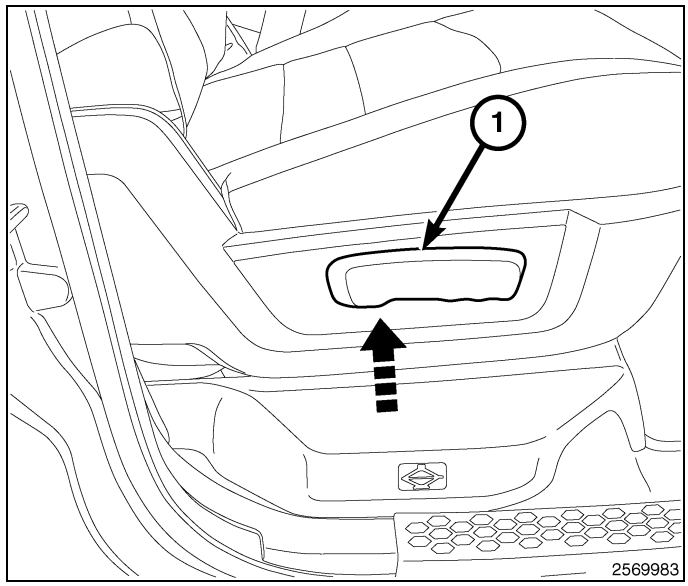

10. Install the inboard shield (2) and install the screw (1).

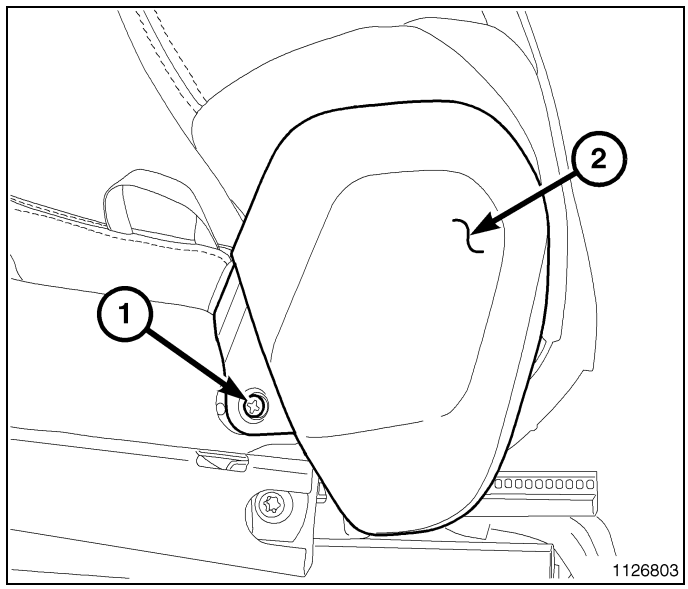

11. Install the side shield screws (2) in the back.

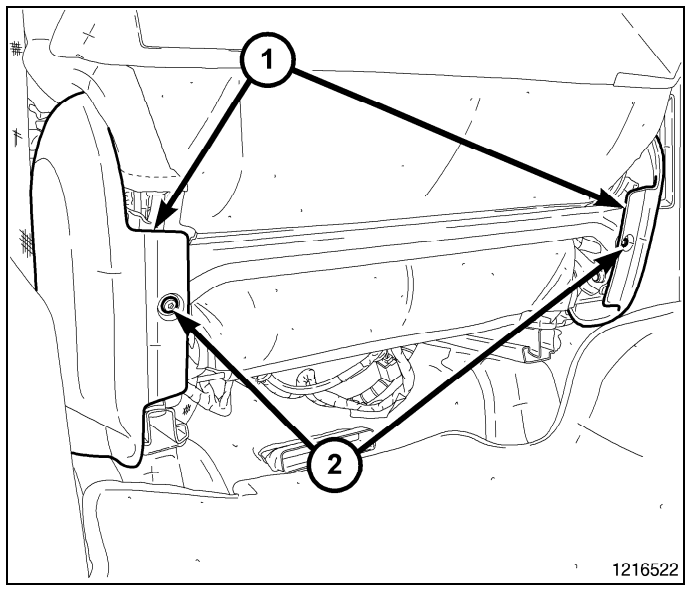

12. Secure the seat back cover straps (2) to suspension mat.

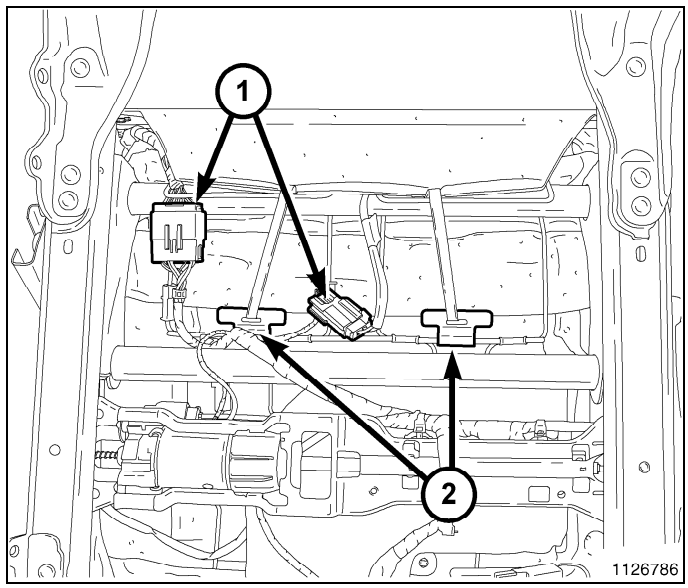

Power Without Vented Seat

1. Position the cover (1) onto the foam and install 10 new hog rings (2).

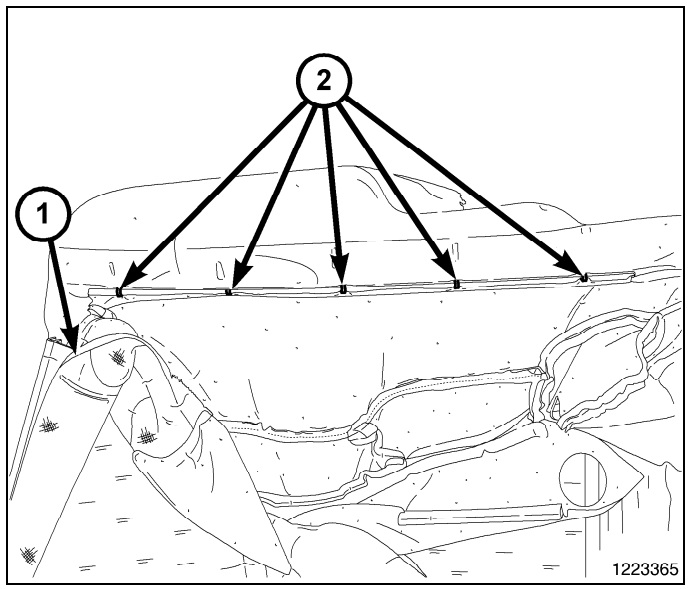

2. Position the foam/cover assembly onto the seat cushion frame and secure the J-straps (1) on the sides.

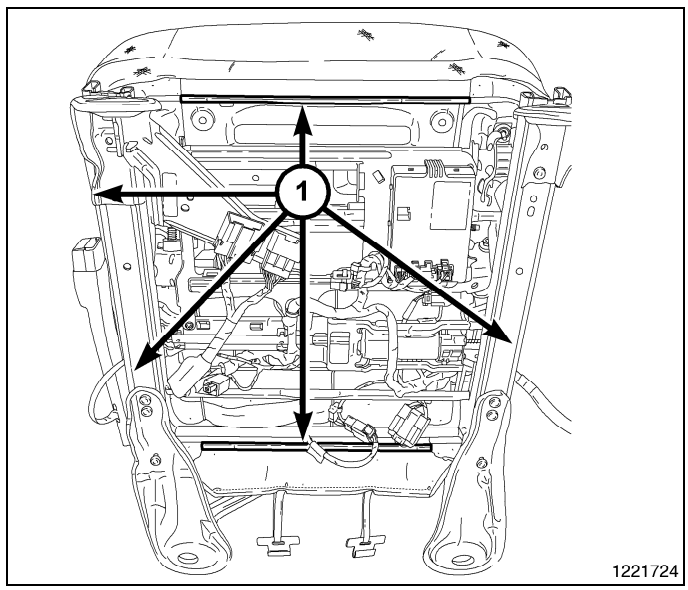

3. Install the outer side shield and seat the clips (2) fully.
4. Install the screw (1).

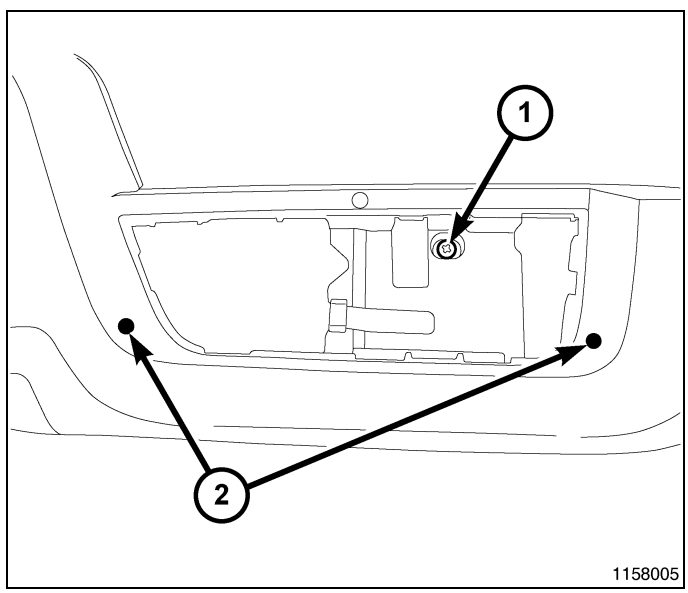

5. Connect the wire harness connectors to the power seat switch and memory seat switch, if equipped.
6. Position the bezel (1) back into place and secure the front tab (2).
7. Seat the remaining tabs (3) fully.

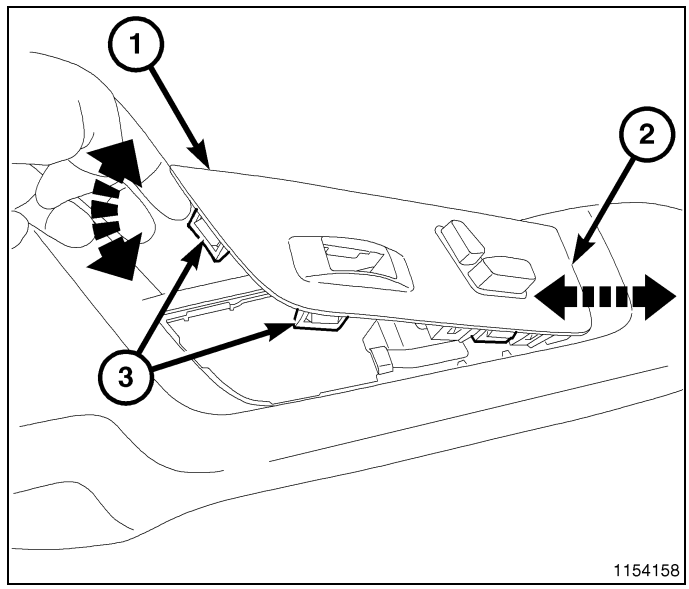

8. If equipped, connect the lumbar switch electrical connector (1).

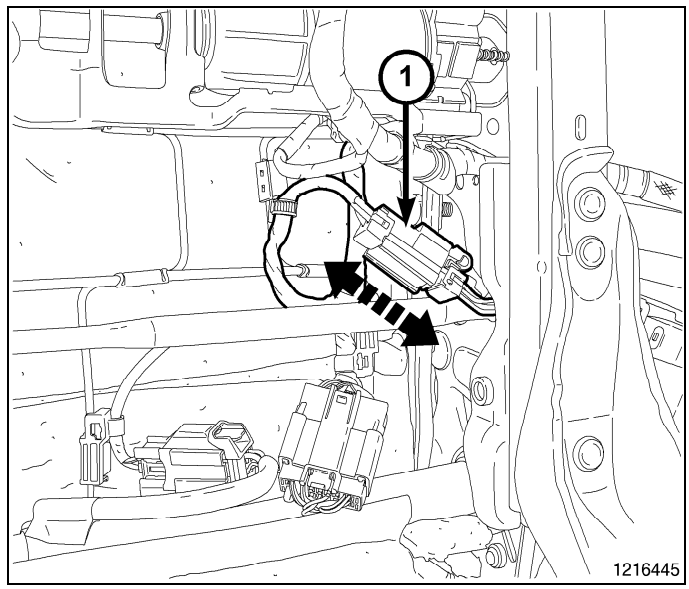

9. Install the inboard shield (2) and install the screw (1).

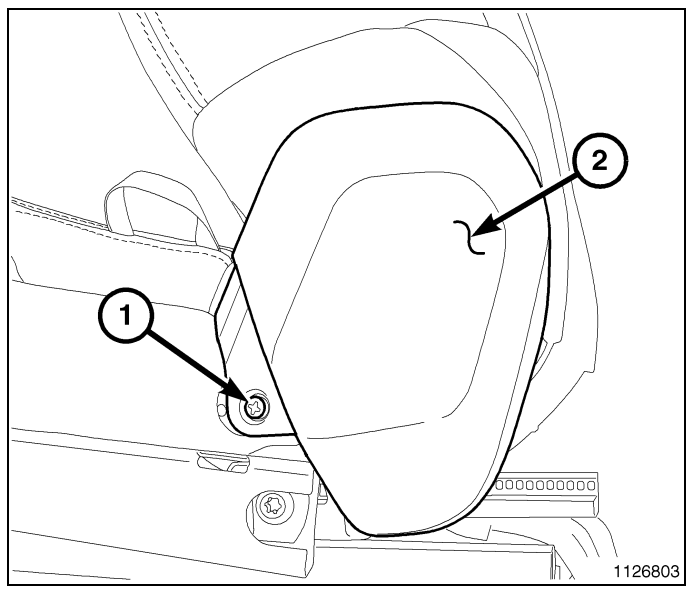

10. Install the side shield screws (2) in the back.

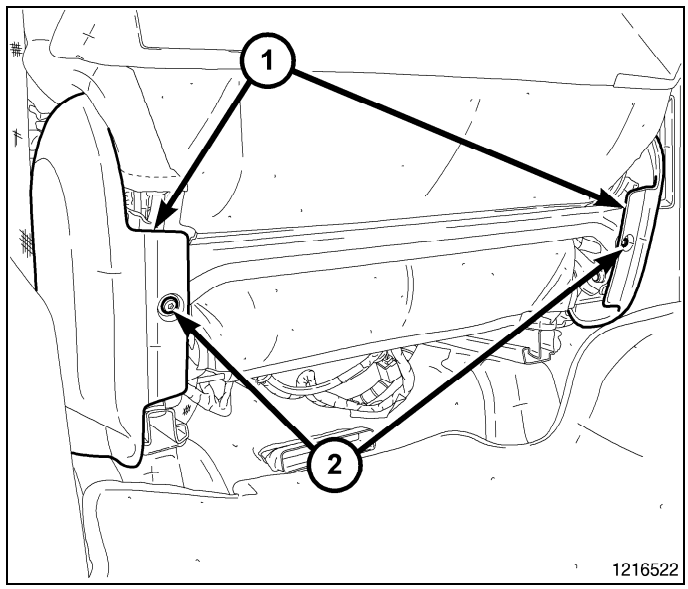

11. Secure the seat back cover straps (2).
12. Connect the electrical connectors (1).
13. Install the front seat (Refer to 23 - Body/Seats/SEAT - Installation).

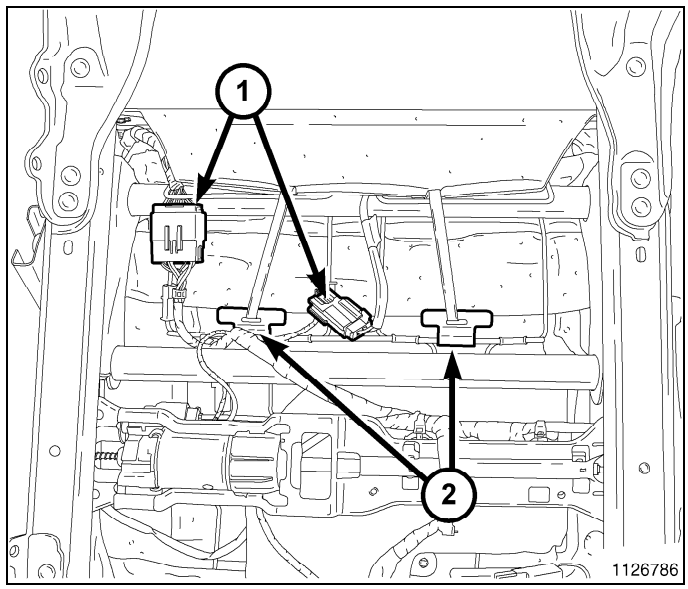

Power With Vented Seat

1. Pull the vent pad (1) through the foam.

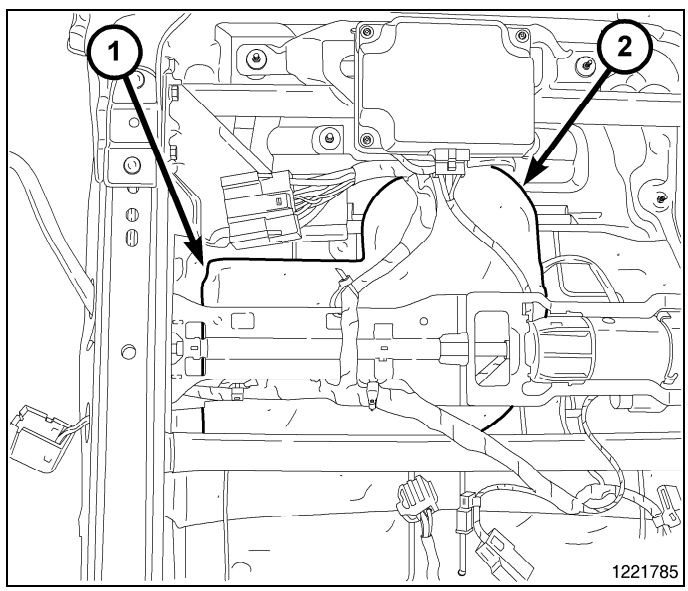

2. Position the cover (1) onto the foam and install 10 new hog rings (2).

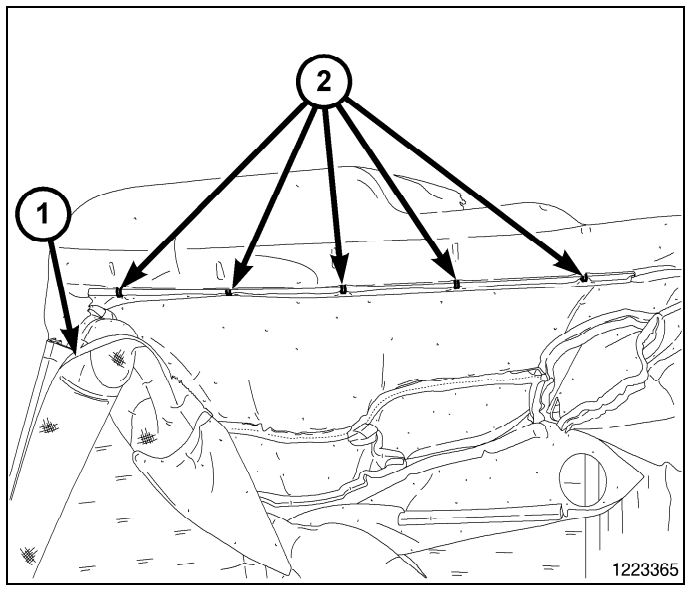

3. Position the foam/cover assembly onto the seat cushion frame and secure the J-straps (1) on the sides.

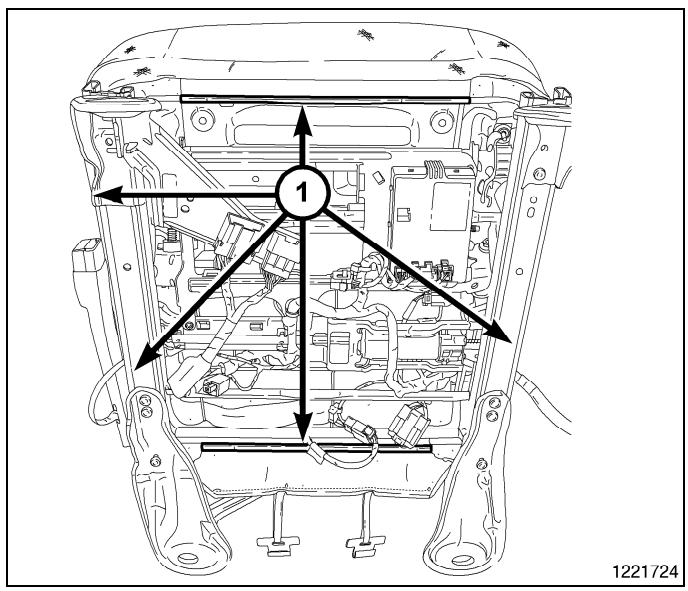

4. Position the vented seat pad (2) onto the vent motor if equipped, and seat the clips fully.
5. Connect the electrical connectors, if equipped.

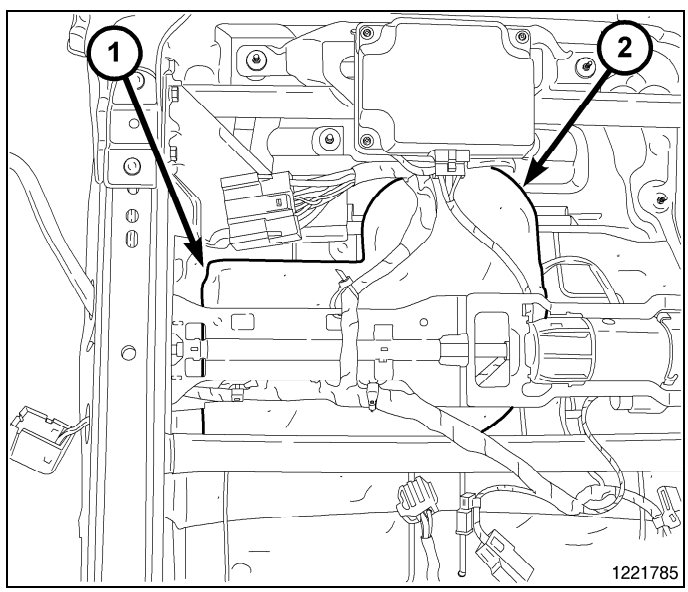

6. Install the outer side shield and seat the clips (2) fully.
7. Install the screw (1).

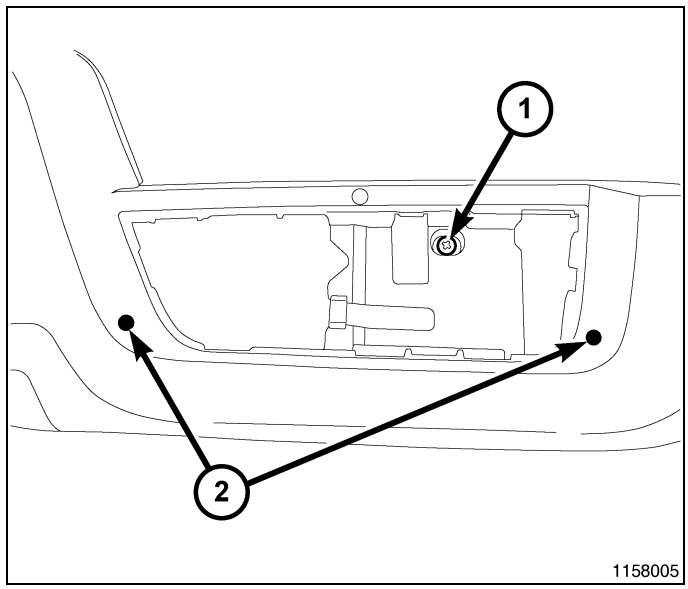

8. Connect the wire harness connectors to the power seat switch and memory seat switch, if equipped.
9. Position the bezel (1) back into place and secure the front tab (2).
10. Seat the remaining tabs (3) fully.

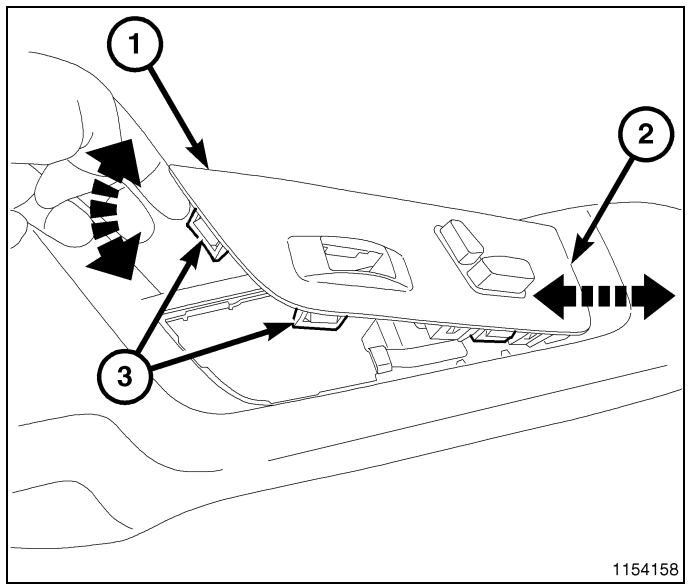

11. If equipped, connect the lumbar switch electrical connector (1).

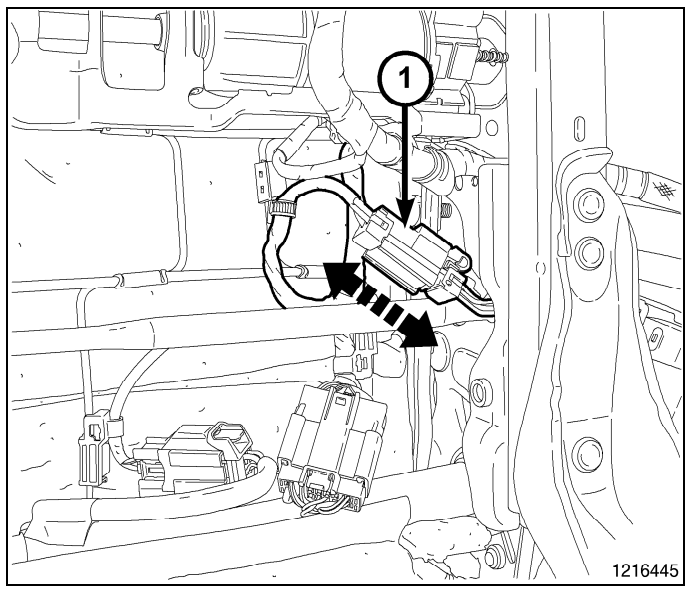

12. Install the inboard shield (2) and install the screw (1).

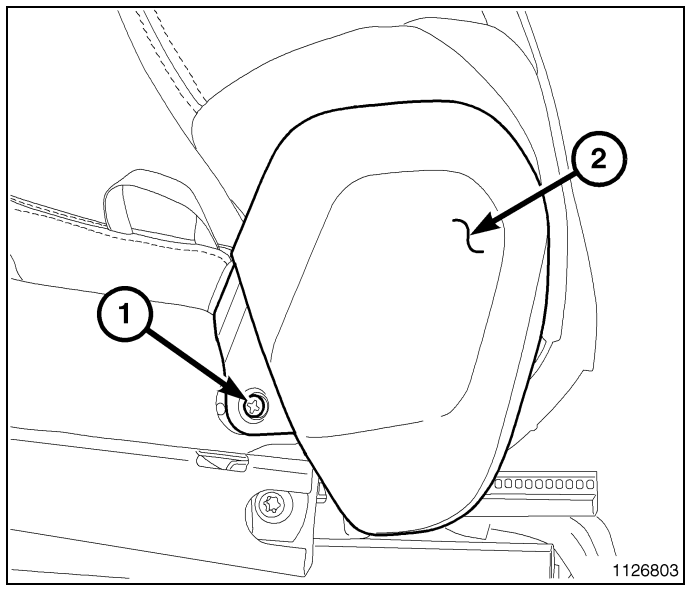

13. Install the side shield screws (2) in the back.

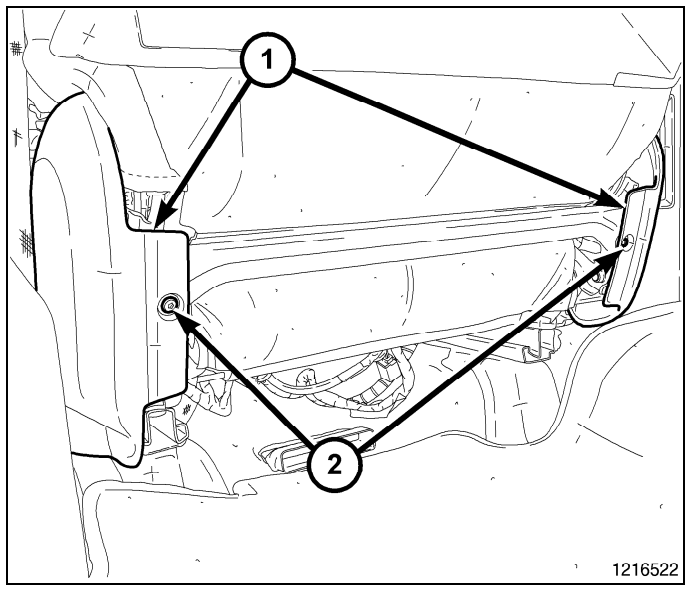

14. Secure the seat back cover straps (2).
15. Connect the electrical connectors (1).
16. Install the front seat (Refer to 23 - Body/Seats/SEAT - Installation).

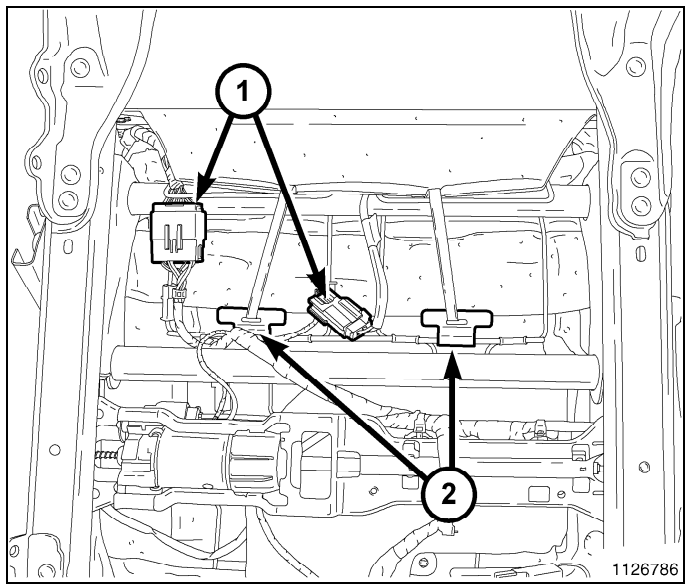

COVER, Seat Cushion, Rear

Removal

NOTE: It is not necessary to remove the rear seat assembly in order to remove the seat cushion foam and cover.

1. Place the cushion into the up position.
2. Disconnect the seat cushion heat mat electrical connector, if equipped.
3. Release the J-straps (2) and remove the foam/cover (1) from the seat cushion frame.

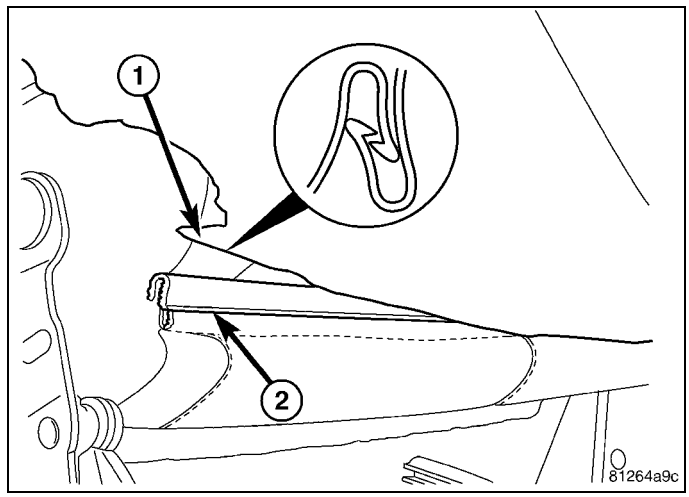

4. Roll the cover (3) off of the foam (1) and remove the hog rings (2).
5. Separate the cover from the foam.
6. Remove the seat cushion frame bolts and remove the seat cushion frame. (Refer to 23 - Body/Seats/SEAT - Description)

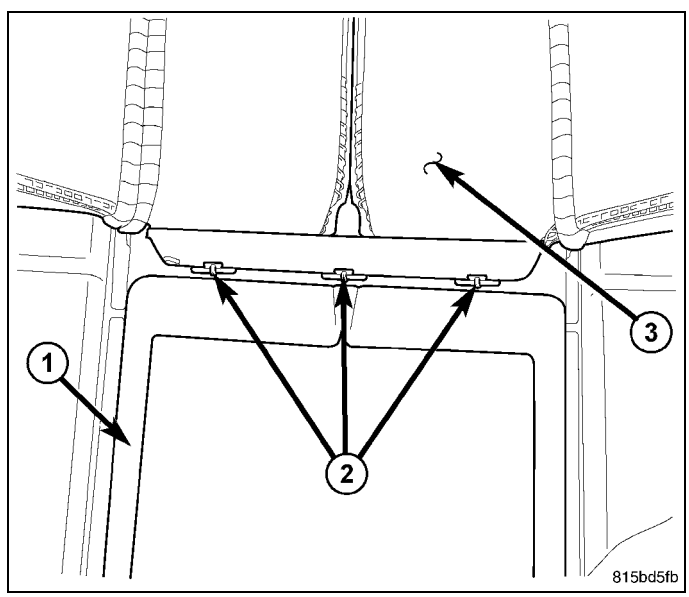

Installation

NOTE: It is not necessary to remove the rear seat assembly in order to remove the seat cushion foam and cover.

1. Install the seat cushion frame and install the seat cushion frame bolts. (Refer to 23 - Body/Seats/SEAT - Description)
2. Tighten the seat cushion frame bolts to 55 N·m (41 ft. lbs.)
3. Position the cover (3) on to the foam (1) and install three new hog rings (2).
4. Position the foam and cover assembly over the seat cushion frame.

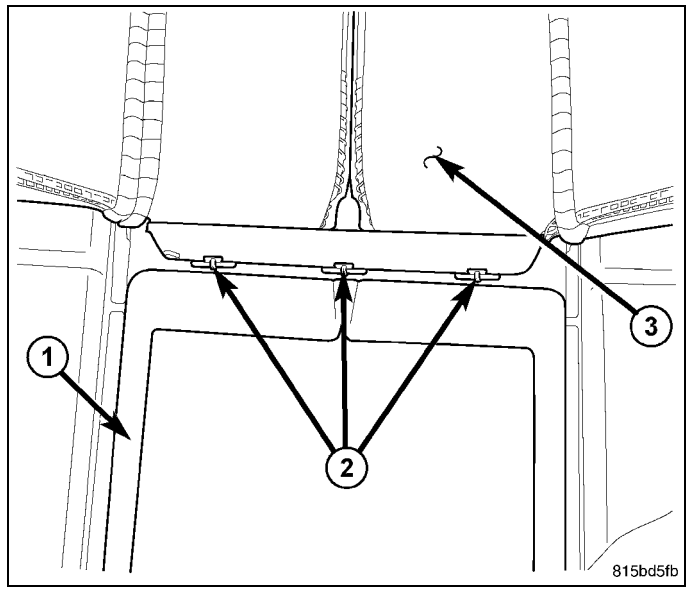

5. Install the seat cushion foam/cover (1) over the seat cushion frame and secure the J-straps (2).
6. Connect the seat cushion heat mat electrical connector, if equipped.

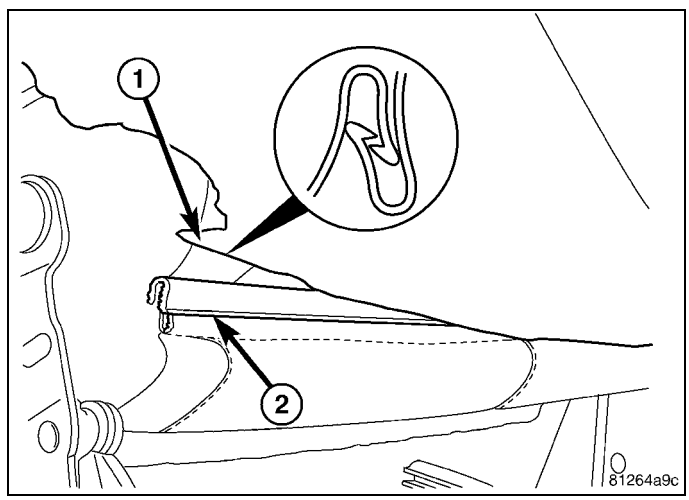

SEAT, Front

Description

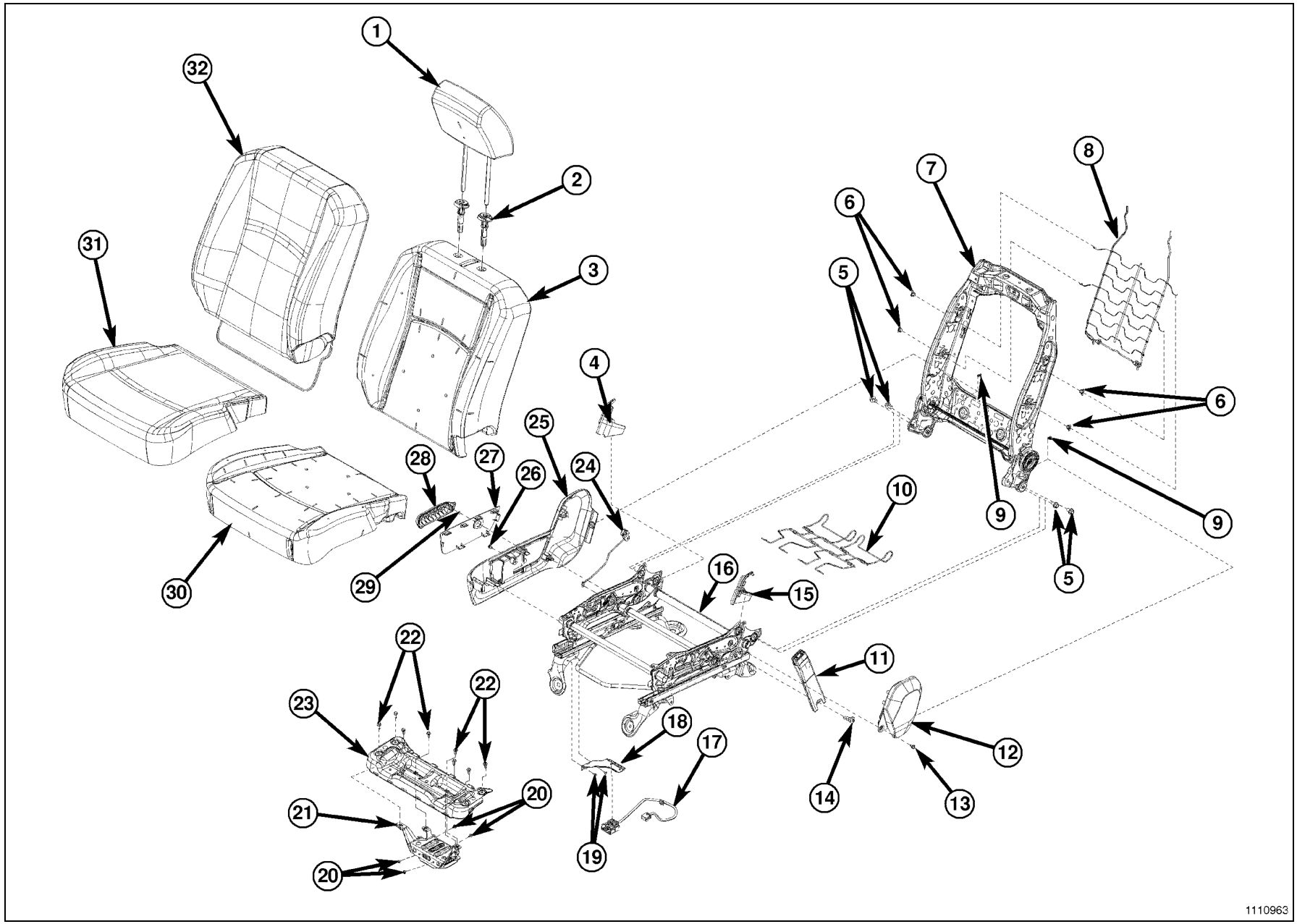

TWO WAY MANUAL SEAT - PASSENGER SIDE

1 - HEADREST
2 - HEADREST SLEEVES
3 - SEAT BACK FOAM
4 - INNER SIDE SHIELD
5 - SEAT BACK BOLTS 40 N·m (30 ft. lbs.)
6 - CLIPS (4)
7 - SEAT BACK FRAME
8 - SUPPORT SPRING
9 - SIDE CUSHION SCREWS - REAR
10 - SEAT CUSHION SUSPENSION MAT
11 - BELT BUCKLE ASSEMBLY
12 - OUTER SIDE SHIELD
13 - SIDE SHIELD SCREW
14 - BELT BUCKLE BOLT 50 N·m (37 ft. lbs.)
15 - INNER SIDE SHIELD
16 - MANUAL ADJUSTER ASSEMBLY
17 - WIRE HARNESS
18 - CONNECTOR BRACKET
19 - BRACKET SCREWS
20 - INVERTER ASSEMBLY SCREWS 10 N·m (89 in. lbs.)
21 - INVERTER ASSEMBLY
22 - CUSHION FRAME SCREWS (8)
23 - CUSHION FRAME
24 - REMOTE ACTUATION LINK
25 - OUTER SIDE SHIELD
26 - OUTER SIDE SHIELD SCREW
27 - SWITCH BEZEL
28 - MANUAL RECLINE HANDLE
29 - CLIP RECLINER LEVER RETAINING
30 - SEAT CUSHION FOAM
31 - SEAT CUSHION COVER
32 - SEAT BACK COVER

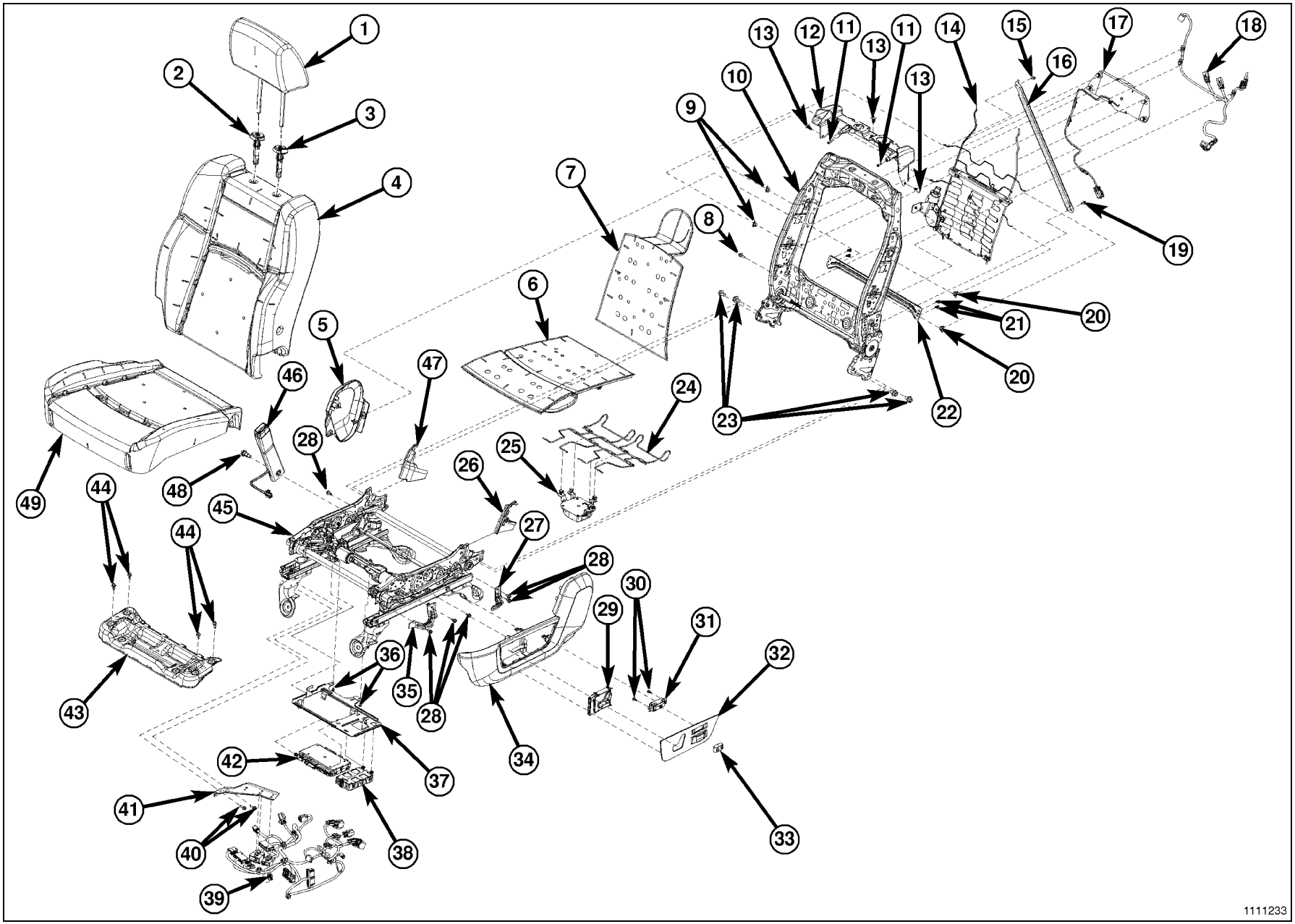

SIX WAY POWER SEAT - DRIVER SIDE

1 - HEADREST
2 - HEADREST SLEEVE - SLAVE
3 - HEADREST SLEEVE - MASTER
4 - SEAT BACK FOAM/COVER
5 - OUTER SIDE SHIELD - INBOARD
6 - SEAT CUSHION VENT BAG
7 - SEAT BACK VENT BAG
8 - LUMBAR MOTOR BOLT 10 N·m (89 in. lbs.)
9 - CLIPS (4)
10 - SEAT BACK FRAME ASSEMBLY
11 - FOAM SUPPORT SCREWS
12 - PLASTIC FOAM SUPPORT
13 - FOAM SUPPORT PUSH PINS
14 - LUMBAR ASSEMBLY
15 - DIAGONAL SUPPORT BRACE SCREWS (2)
16 - BACK FRAME DIAGONAL SUPPORT BRACE
17 - VENTED SEAT BACK BLOWER MOTOR
18 - WIRE HARNESS - BACK POWER HEAT
19 - DIAGONAL SUPPORT BRACE SCREW
20 - CLIPS
21 - LOWER BACK FRAME BRACE SCREWS (4)
22 - LOWER BACK FRAME BRACE
23 - SEAT BACK BOLTS 40 N·m (30 Ft. lbs.)
24 - SEAT CUSHION SUSPENSION MAT
25 - VENTED SEAT CUSHION BLOWER MOTOR
26 - INNER SIDE SHIELD
27 - SIDE SHIELD MOUNTING BRACKET
28 - BRACKET SCREWS
29 - SEAT POSITION SWITCH
30 - MEMORY SWITCH SCREWS
31 - MEMORY SWITCH
32 - SWITCH BEZEL
33 - LUMBAR SWITCH
34 - OUTER SIDE SHIELD
35 - SIDE SHIELD MOUNTING BRACKET
36 - MODULE BRACKET SCREWS
37 - MODULE BRACKET
38 - HEATED SEAT MODULE
39 - WIRE HARNESS - LOWER POWER HEAT/COOL
40 - BRACKET SCREWS
41 - BRACKET
42 - MEMORY MODULE
43 - CUSHION FRAME
44 - CUSHION FRAME SCREWS
45 - 6 WAY POWER ADJUSTER ASSEMBLY
46 - BELT BUCKLE ASSEMBLY
47 - INNER SIDE SHIELD
48 - BELT BUCKLE BOLT 50 N·m (37 Ft. lbs.)
49 - SEAT CUSHION FOAM/COVER

Removal

Driver Side

1. Before proceeding with the following repair procedure, review all warnings and cautions. (Refer to 23 - Body/ Seats - Warning)
2. Remove the trim cover (1).

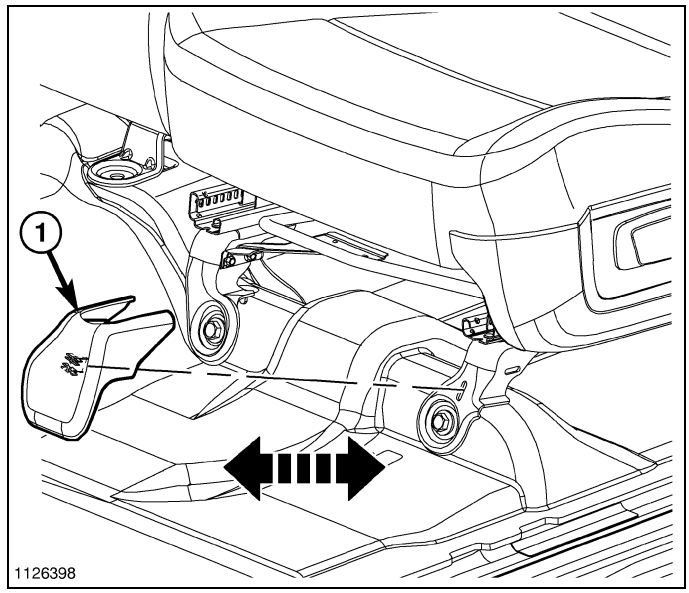

3. Disconnect the electrical connectors (1) and (2), if equipped.

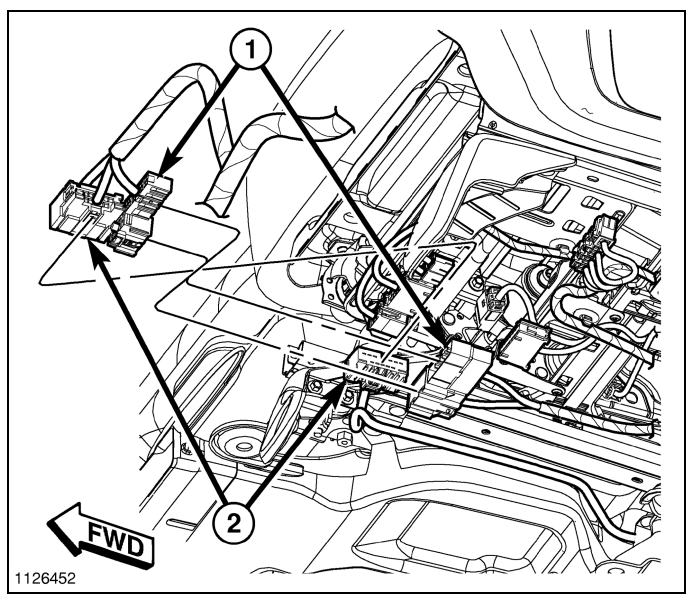

4. Remove the front mounting bolts (1) from the driver side seat.
5. Remove the rear bolts (2) and remove the diver seat.

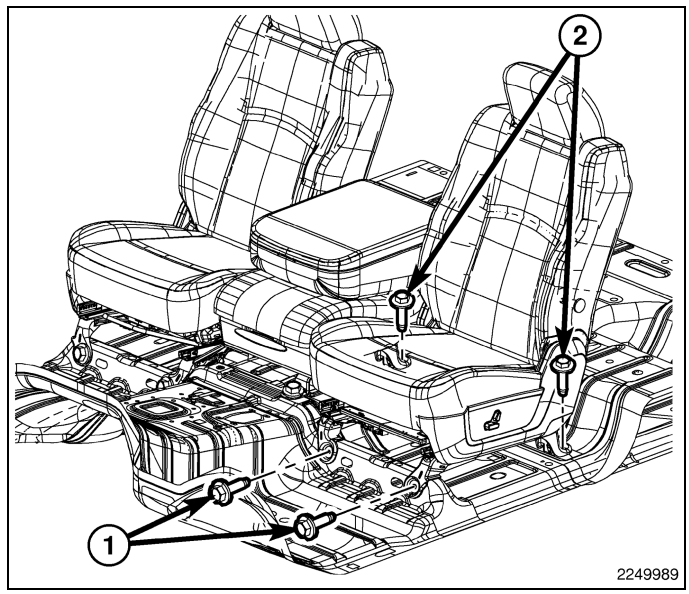

Passenger Side

1. Before proceeding with the following repair procedure, review all warnings and cautions. (Refer to 23 - Body/ Seats - Warning)
2. Carefully release the front clip and separate the jack cover (2) from the front of the riser (1).
3. Carefully pull the cover forward and release the rear hook from the rear of the riser (3).

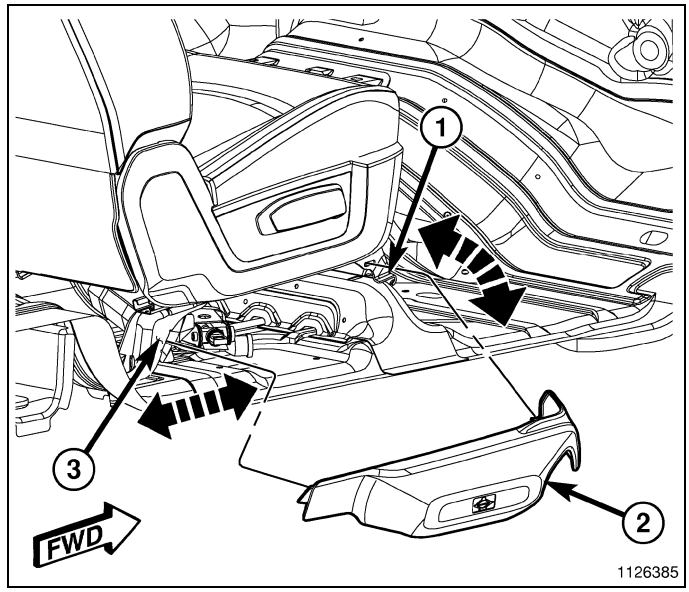

4. Disconnect the electrical connector (1), if equipped.

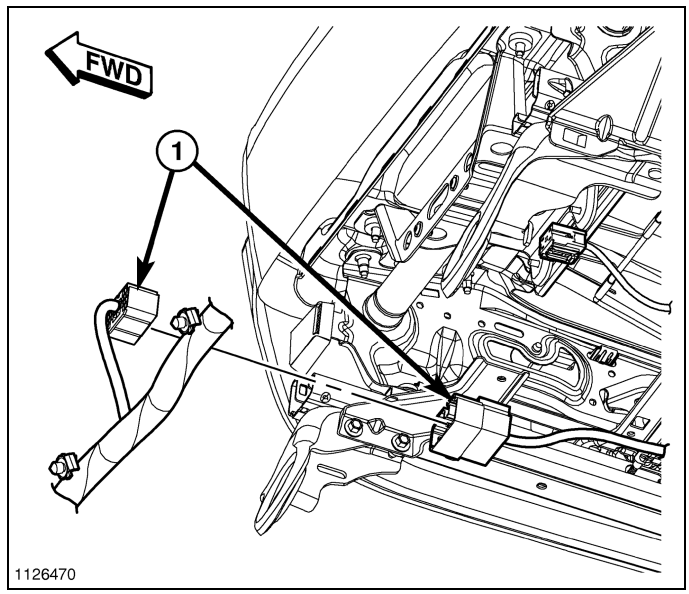

5. Remove the front pasenger seat bolts (3).
6. Remove the center seat bolts (2), if equipped with the center seat.
7. Remove the rear bolts (1) and remove the passenger seat assembly.

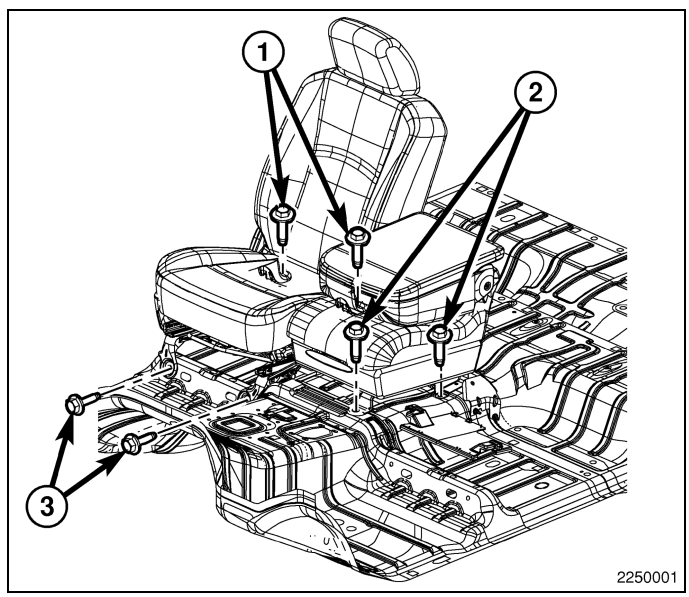

8. Disconnect the rear air duct (1) by sliding the telescoping duct section, attached to the seat, rearward.

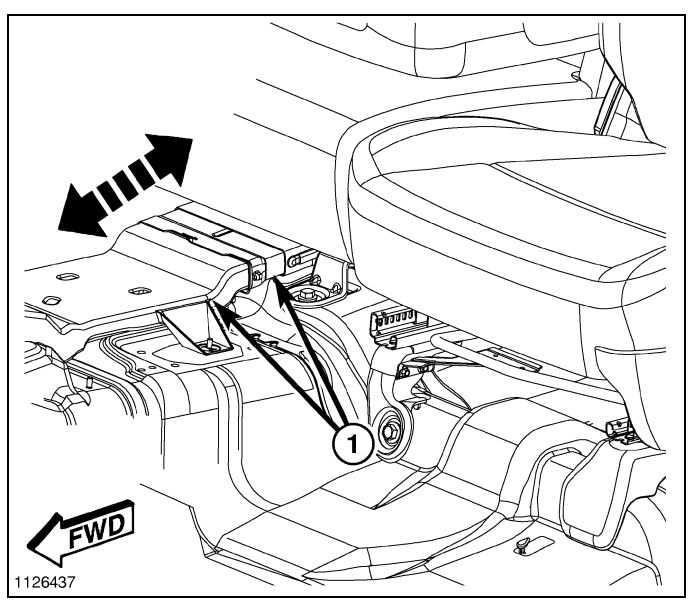

Installation

Driver Side

1. Before proceeding with the following repair procedure, review all warnings and cautions. (Refer to 23 - Body/ Seats - Warning)
2. Install the driver seat and loosely install the front bolts (1).
3. Loosely install the driver seat rear bolts (2).

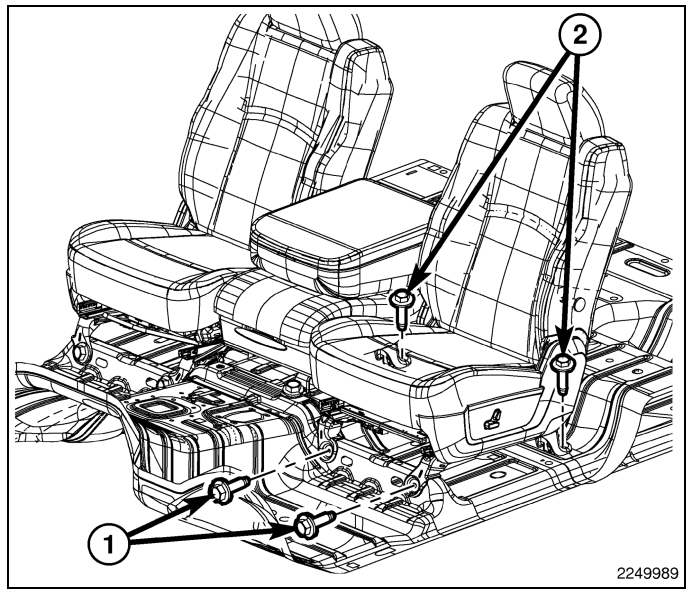

4. Tighten the driver seat bolts to 47 N·m (35 ft. lbs.) using the sequence shown.

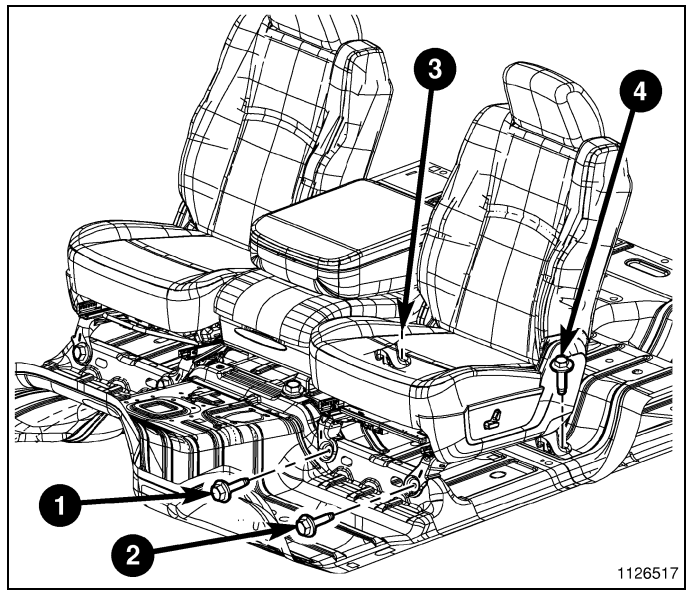

5. Connect the electrical connectors (1 and 2), if equipped.

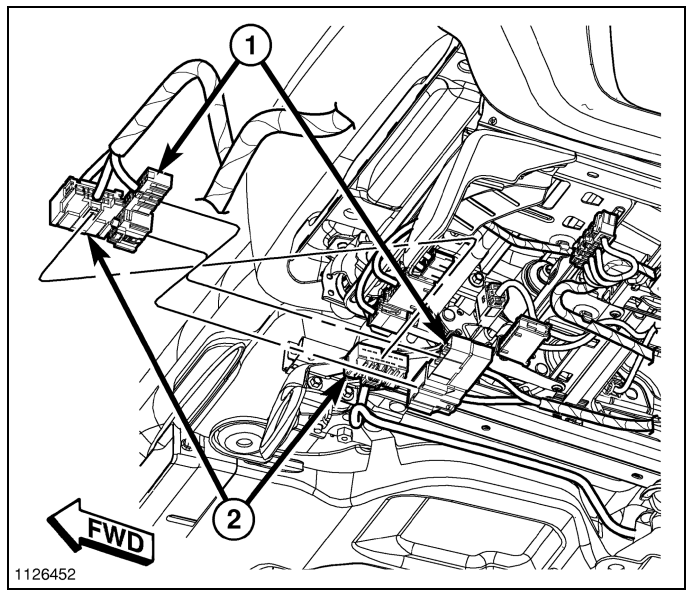

6. Install the trim cover (1) and seat the clip fully.

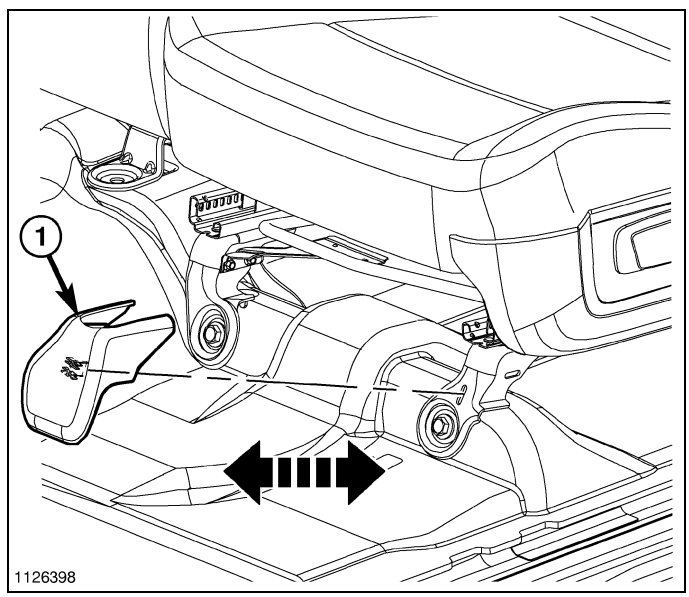

Passenger Side

1. Before proceeding with the following repair procedure, review all warnings and cautions. (Refer to 23 - Body/ Seats - Warning)
2. Position the passenger seat assembly into the vehicle and connect the air duct (1), if equipped.

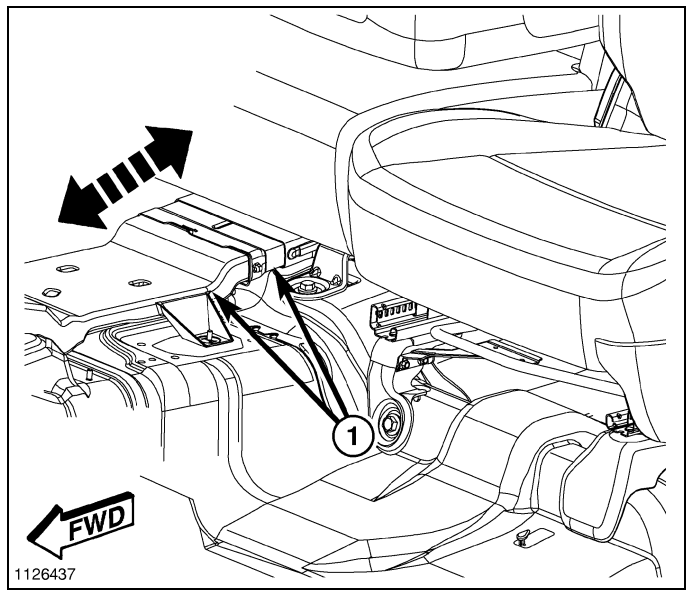

3. Loosely install the passenger seat front bolts (3).
4. If equipped with the center seat, loosely install the bolts (2).
5. Loosely install the passenger seat rear bolts (1).

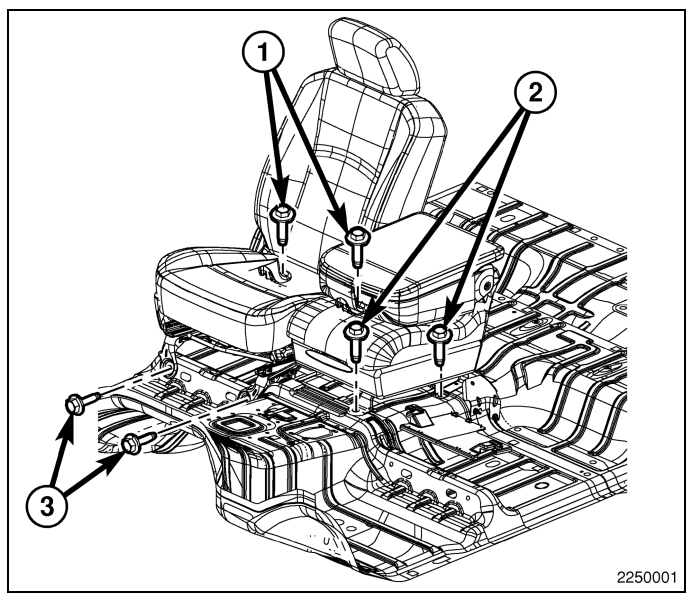

6. Tighten the passenger seat bolts to 47 N·m (35 ft. lbs.) using the sequence shown.

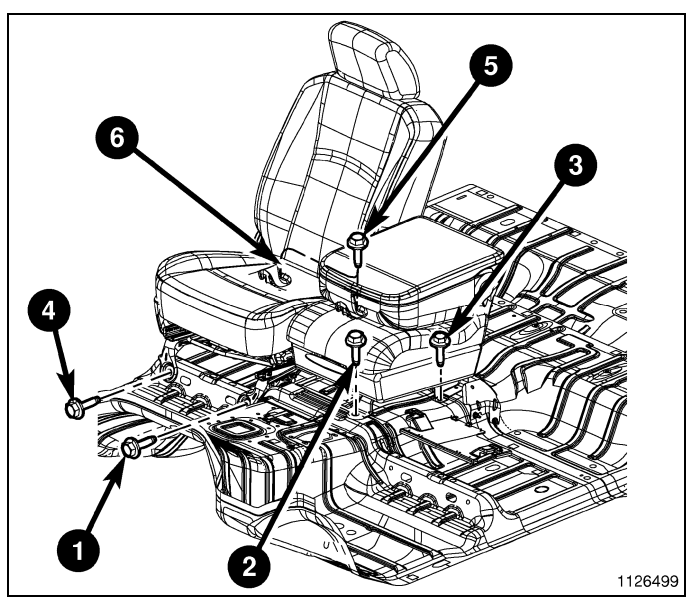

7. Connect the electrical connectors (1), if equipped.

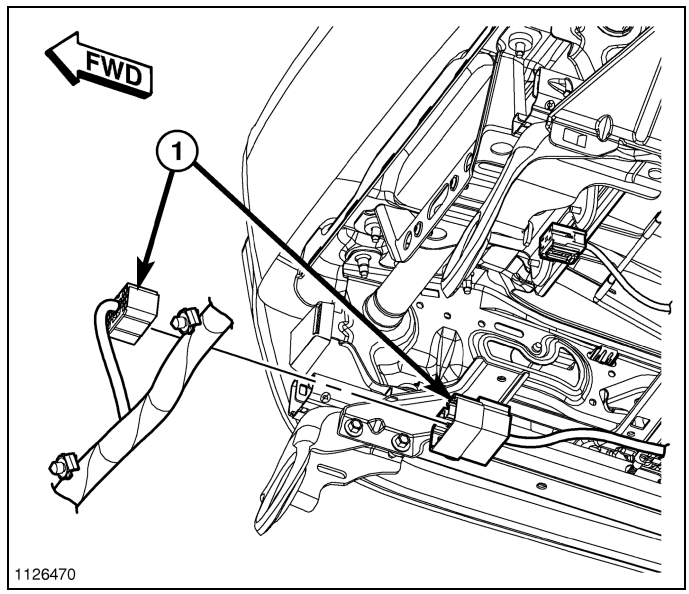

8. Secure the jack cover rear hook on the rear riser (3).
9. Position the front of the side shield (2) on the front of the riser (1) and seat the clip fully.

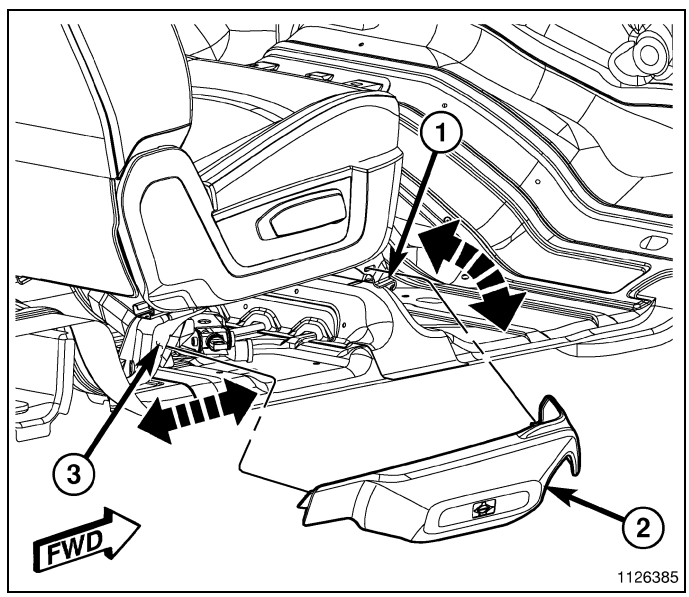

SEAT, Front Center

Description

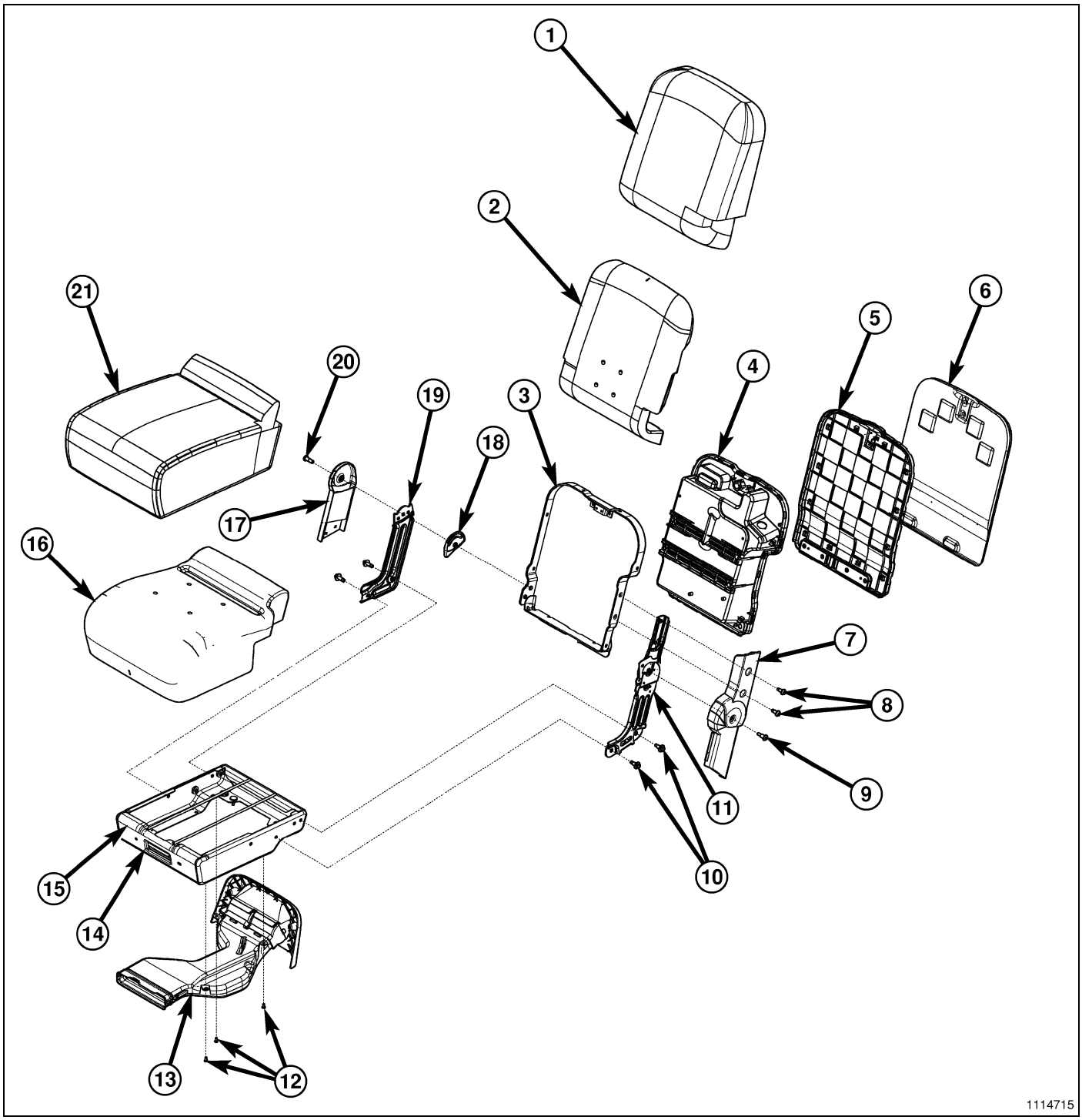

CENTER SEAT - W/O STORAGE

1 - SEAT BACK COVER
2 - SEAT BACK FOAM
3 - SEAT BACK FRAME
4 - TRAY
5 - INNER LID
6 - FOAM PAD - LID
7 - PIVOT SIDE SHIELD
8 - INERTIA LATCH BOLTS 25 N·m (18 Ft. lbs.)
9 - SCREW
10 - INERTIA LATCH BOLTS 25 N·m (18 Ft. lbs.)
11 - INERTIA LATCH ASSEMBLY
12 - HVAC DUCT SCREWS
13 - HVAC DUCT
14 - CUSHION FRAME
15 - CUSHION FRAME
16 - CUSHION FOAM
17 - PIVOT SIDE SHIELD
18 - PIVOT DETENT GUIDE
19 - PIVOT BRACKET
20 - SCREW
21 - SEAT CUSHION COVER

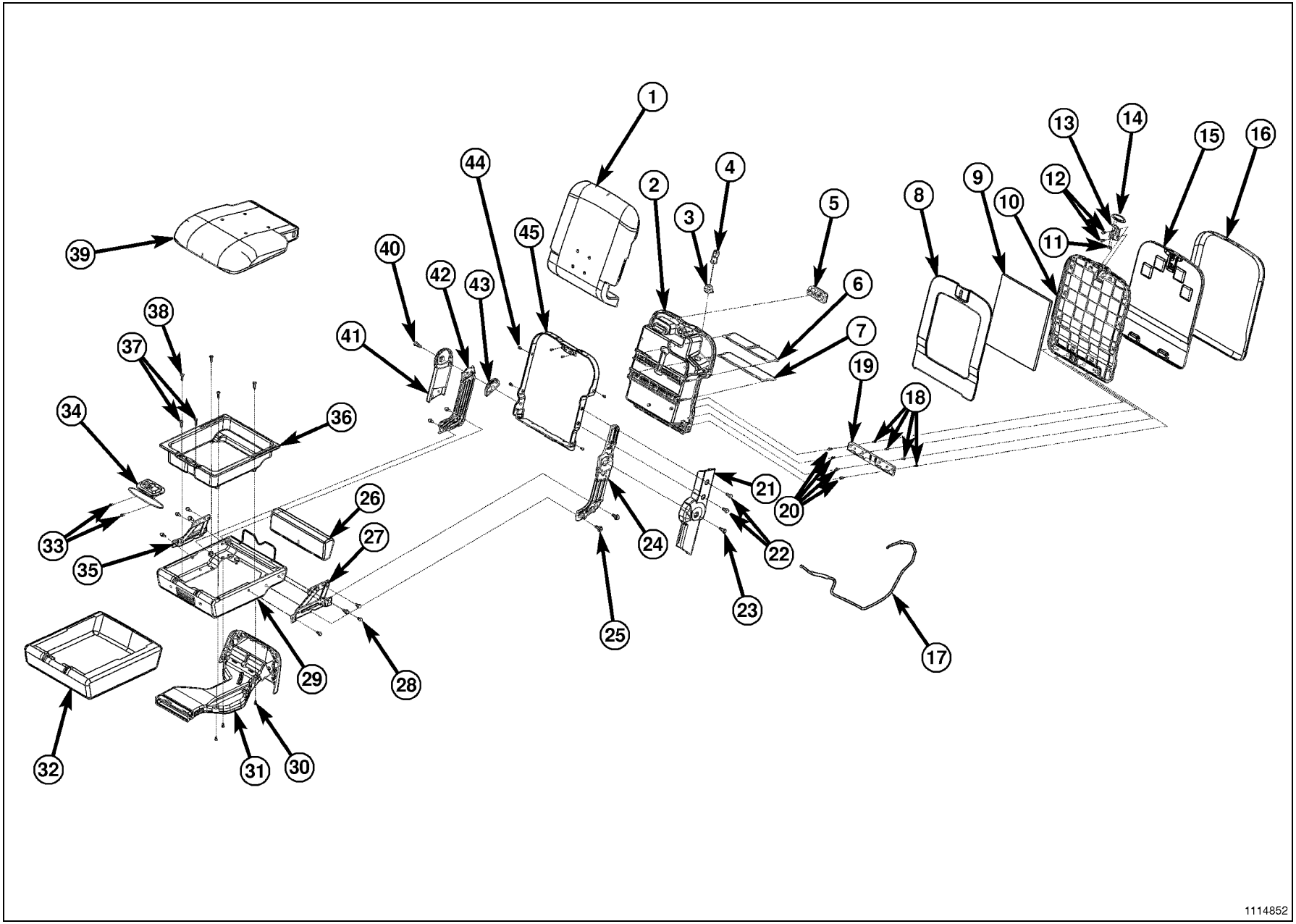

CENTER SEAT - W/STORAGE

1 - SEAT BACK FOAM/COVER
2 - TRAY
3 - POWERPOINT CAP
4 - 12V POWERPOINT
5 - COIN HOLDER
6 - DIVIDER
7 - REAR DIVIDER
8 - BACK LID BEZEL
9 - PAD INSERT
10 - INNER LID
11 - SCREWS
12 - SCREWS
13 - LID LATCH
14 - BACK HANDLE
15 - FOAM PAD - LID
16 - COVER
17 - WIRE HARNESS
18 - HINGE SCREWS
19 - HINGE
20 - HINGE SCREWS
21 - PIVOT SIDE SHIELD
22 - INERTIA LATCH BOLTS 25 N·m (18 Ft. lbs.)
23 - SCREW
24 - INERTIA LATCH ASSEMBLY
25 - INERTIA LATCH BOLTS 25 N·m (18 Ft. lbs.)
26 - FOAM PAD
27 - CUSHION LINKAGE
28 - LINKAGE SCREWS (8)
29 - CUSHION FRAME
30 - HVAC DUCT SCREWS
31 - HVAC DUCT
32 - LOWER CUSHION COVER
33 - SCREWS
34 - CUSHION LATCH/HANDLE
35 - CUSHION LINKAGE
36 - TRAY
37 - SCREWS
38 - SCREWS
39 - SEAT CUSHION FOAM/COVER
40 - SCREW
41 - PIVOT SIDE SHIELD
42 - PIVOT BRACKET
43 - PIVOT DETENT GUIDE
44 - SCREWS (6)
45 - SEAT BACK FRAME

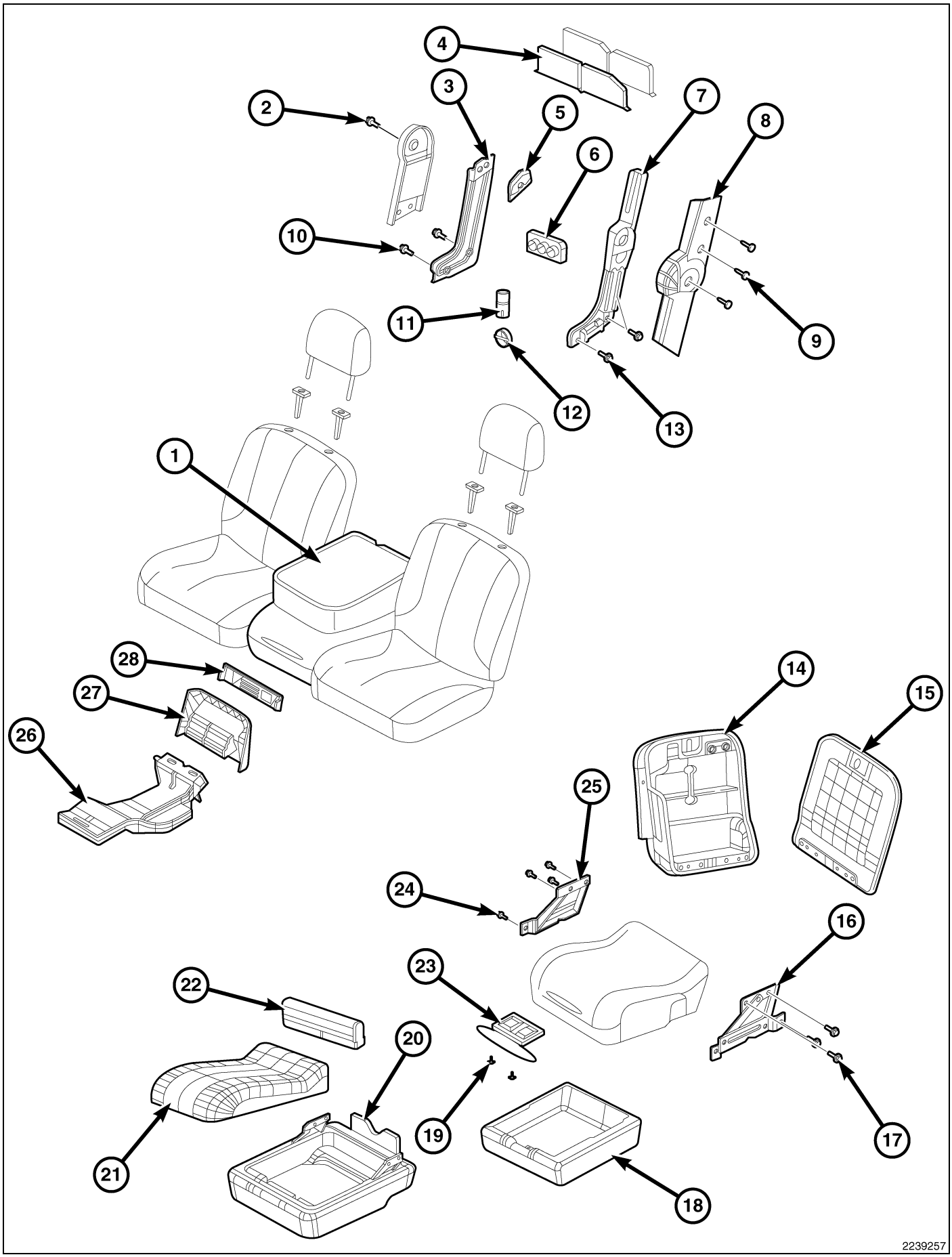

CENTER SEAT - W/STORAGE

1 - CENTER SEAT ASSEMBLY
2 - SHIELD PIVOT SCREWS (2)
3 - PIVOT BRACKET
4 - STORAGE BIN DEVIDERS
5 - PIVOT DETENT GUIDE
6 - COIN HOLDER
7 - INERTIA LATCH ASSEMBLY
8 - PIVOT SIDE SHIELD
9 - INERTIA LATCH BOLTS 25 N·m (18 Ft. lbs.)
10 - INERTIA LATCH BOLTS 25 N·m (18 Ft. lbs.)
11 - POWER OUTLET
12 - POWER OUTLET CAP
13 - INERTIA LATCH BOLTS 25 N·m (18 Ft. lbs.)
14 - ARMREST
15 - STORAGE BIN LID
16 - STORAGE COMPARTMENT HINGE
17 - LINKAGE SCREWS (6)
18 - ARMREST BIN LID
19 - BIN LATCH SCREWS (2)
20 - STORAGE BIN
21 - BIN LATCH
22 - BOLSTER
23 - BIN LATCH
24 - LINKAGE SCREWS (2)
25 - STORAGE COMPARTMENT HINGE
26 - VENT
27 - ARMREST BEZEL
28 - ARMREST BEZEL

Removal

1. Remove the front passenger seat assembly. (Refer to 23 - Body/Seats/SEAT - Removal)
2. Remove the fasteners (2) attaching the center seat assembly to the seat adjuster (1) and separate the center seat.

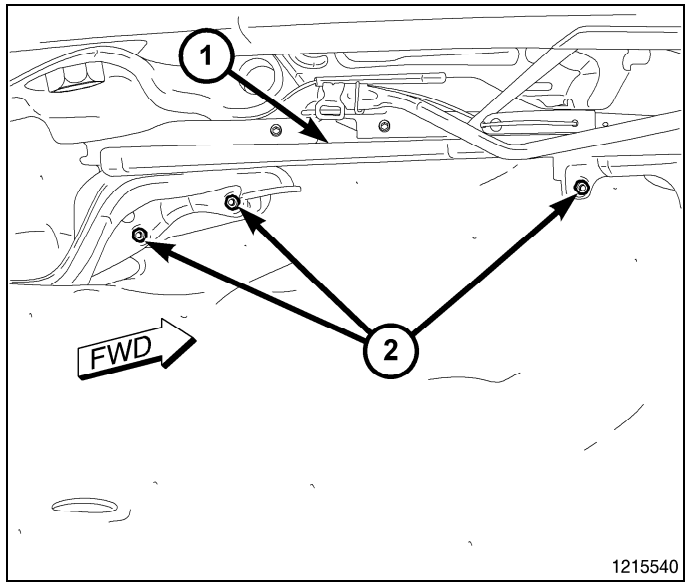

Installation

1. Position the center seat assembly onto the passenger seat.
2. Install and tighten the fasteners (2).
3. Install the passenger seat assembly. (Refer to 23 - Body/Seats/SEAT - Installation)

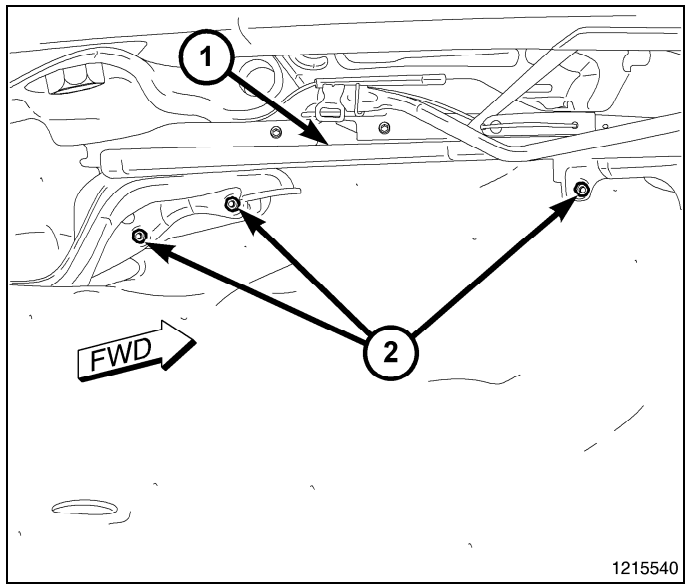

SEAT, Rear

Description

INDEX

DESCRIPTION	FIGURE
CREW CAB	
REAR BENCH SEAT - CREW CAB	(Fig. 1)
REAR 60% SEAT - CREW CAB	(Fig. 2)
REAR 40% SEAT - CREW CAB	(Fig. 3)
QUAD CAB	
REAR BENCH SEAT - QUAD CAB	(Fig. 4)
REAR 60% SEAT - QUAD CAB	(Fig. 5)
REAR 40% SEAT - QUAD CAB	(Fig. 6)
MEGA CAB	
REAR 60% SEAT - MEGA CAB	(Fig. 7)
REAR 40% SEAT - MEGA CAB	(Fig. 8)
REAR SEAT MOUNTING BRACKETS - MEGA CAB	(Fig. 9)

CREW CAB

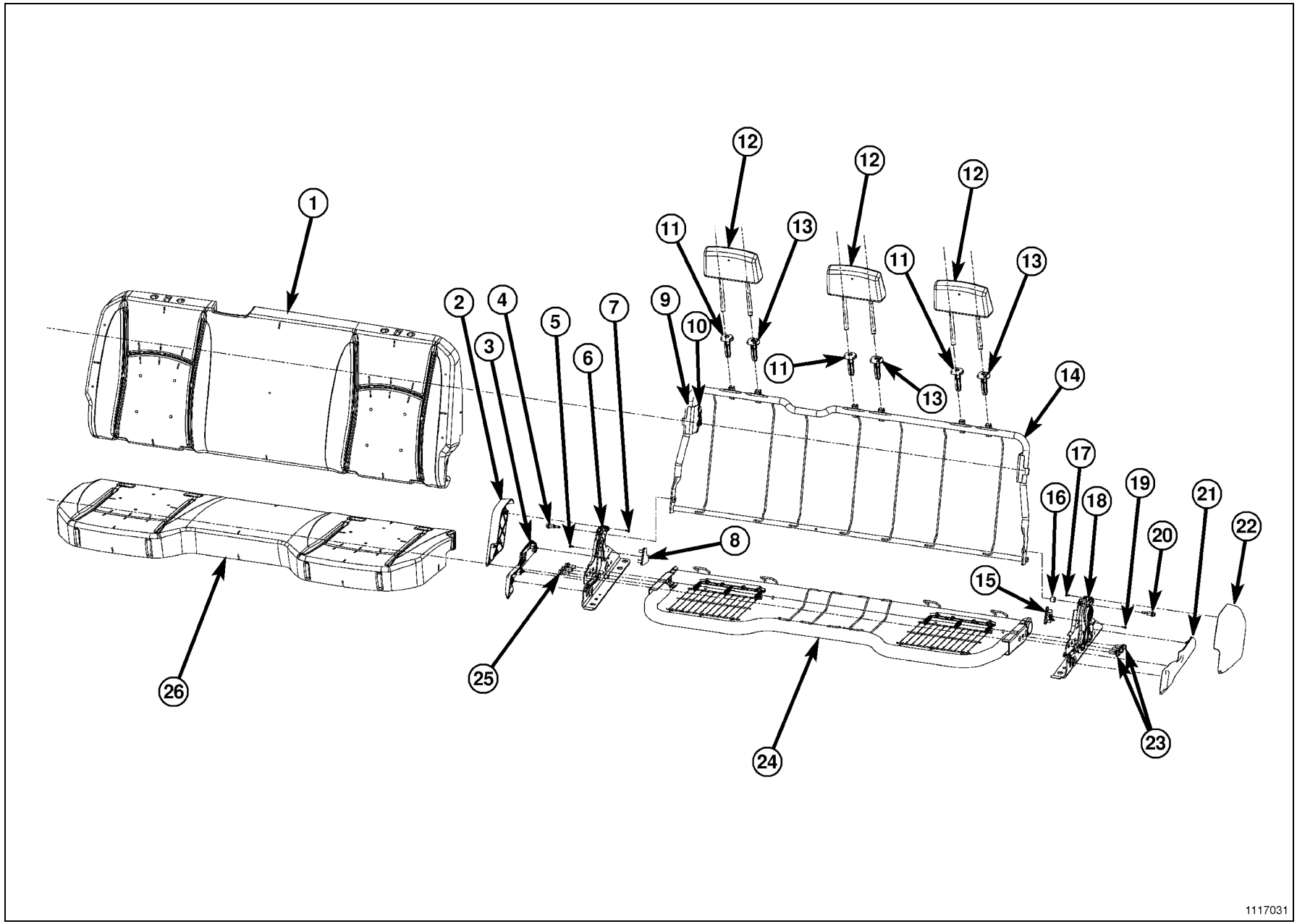

Fig. 1 REAR BENCH SEAT - CREW CAB

1 - SEAT BACK FOAM/COVER
2 - OUTER PIVOT COVER
3 - RISER COVER
4 - SEAT BACK PIVOT BOLT 28 N·m (21 ft. lbs.)
5 - INNER COVER SCREW
6 - LATCH ASSEMBLY
7 - OUTER PIVOT COVER SCREW
8 - INNER COVER
9 - CAB HOOK ISOLATOR
10 - PUSH PIN
11 - HEADREST SLEEVE - SLAVE
12 - HEADREST
13 - HEADREST SLEEVE - MASTER
14 - SEAT BACK FRAME
15 - INNER COVER
16 - BACK PIVOT SPACER
17 - OUTER PIVOT COVER SCREW
18 - LATCH ASSEMBLY
19 - INNER COVER SCREW
20 - SEAT BACK PIVOT BOLT 28 N·m (21 ft. lbs.)
21 - RISER COVER
22 - OUTER PIVOT COVER
23 - SEAT CUSHION FRAME BOLTS 55 N·m (41 ft. lbs.)
24 - SEAT CUSHION FRAME
25 - SEAT CUSHION FRAME BOLTS 55 N·m (41 ft. lbs.)
26 - SEAT CUSHION FOAM/COVER

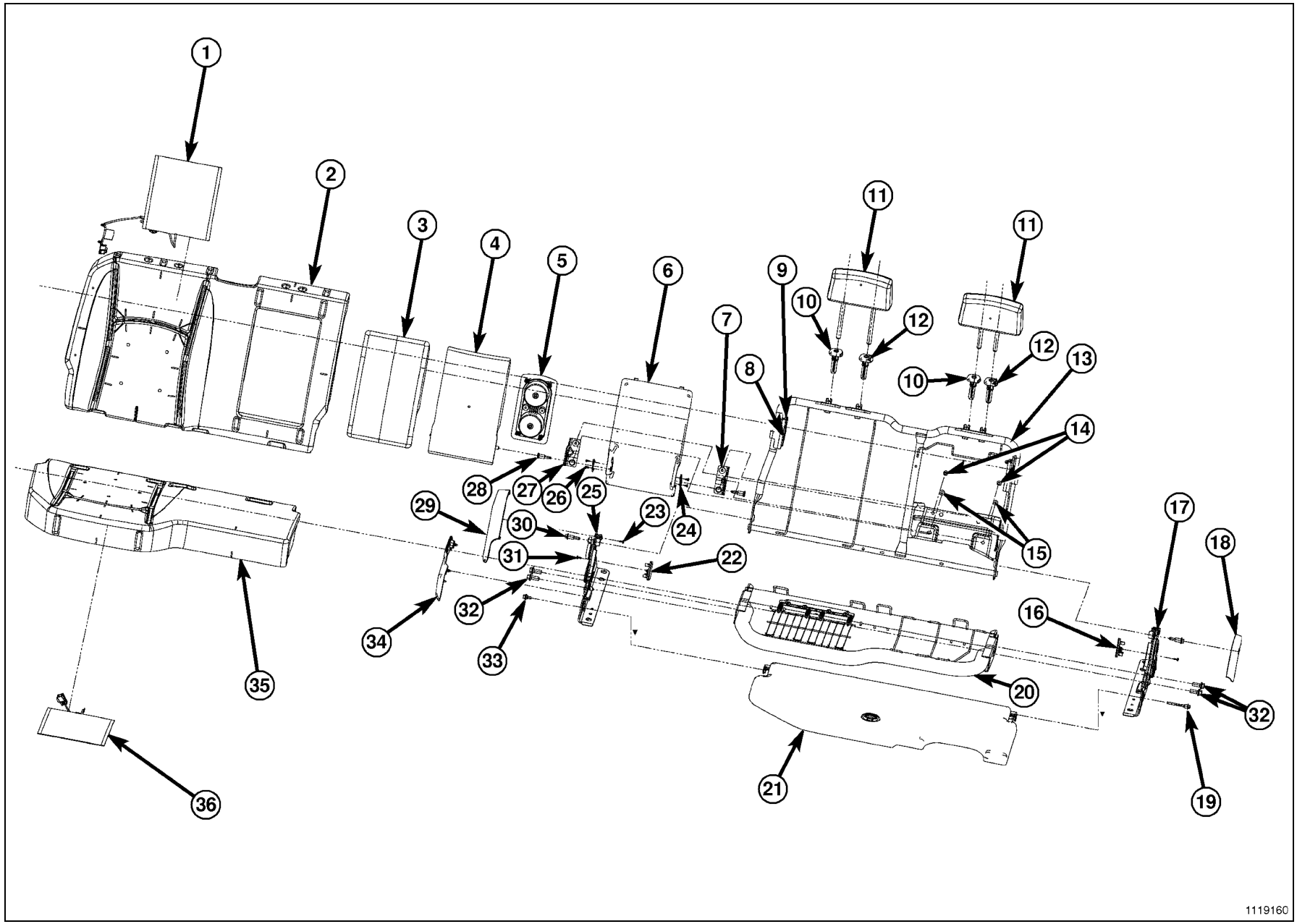

Fig. 2 REAR 60% SEAT - CREW CAB

1 - HEAT MAT - BACK
2 - SEAT BACK FOAM/COVER
3 - ARMREST COVER
4 - ARMREST FOAM
5 - CUPHOLDER
6 - ARMREST CLOSE-OUT PANEL
7 - PIVOT ASSEMBLY
8 - CAB HOOK ISOLATOR
9 - PUSH PIN
10 - HEADREST SLEEVE - SLAVE
11 - HEADREST
12 - HEADREST SLEEVE - MASTER
13 - SEAT BACK FRAME
14 - ARMEST SCREWS 28 N·m (21 ft. lbs.)
15 - ARMEST NUTS 28 N·m (21 ft. lbs.)
16 - INNER COVER
17 - LATCH ASSEMBLY
18 - OUTER PIVOT COVER
19 - STORAGE LID BOLT 18 N·m (13 ft. lbs.)
20 - SEAT CUSHION FRAME
21 - STORAGE BIN LID
22 - INNER COVER
23 - OUTER PIVOT COVER SCREW
24 - ARMREST DETENT ISOLATOR
25 - LATCH ASSEMBLY
26 - ARMREST DETENT ISOLATOR
27 - PIVOT ASSEMBLY
28 - ARMREST PIVOT BOLTS (2)
29 - OUTER PIVOT COVER
30 - SEAT BACK PIVOT BOLTS (2) 18 N·m (13 ft. lbs.)
31 - INNER COVER SCREWS (2)
32 - SEAT CUSHION FRAME BOLTS (4) 55 N·m (41 ft. lbs.)
33 - STORAGE LID BOLT 28 N·m (21 ft. lbs.)
34 - RISER COVER
35 - SEAT CUSHION FOAM/COVER
36 - HEAT MAT - CUSHION

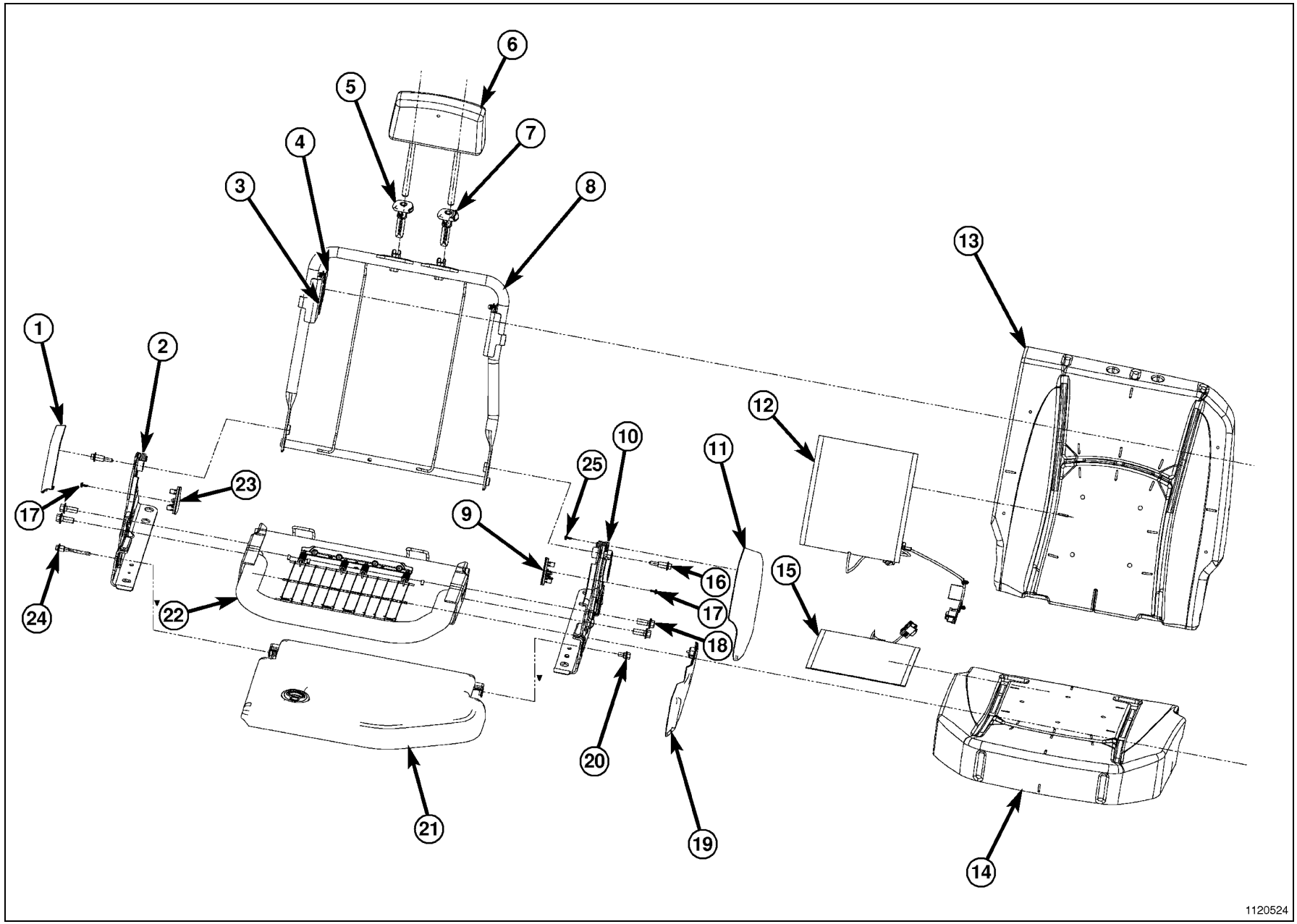

Fig. 3 REAR 40% SEAT - CREW CAB

1 - OUTER PIVOT COVER - INBOARD
2 - LATCH ASSEMBLY
3 - CAB HOOK ISOLATOR
4 - PUSH PIN
5 - HEADREST SLEEVE - SLAVE
6 - HEADREST
7 - HEADREST SLEEVE - MASTER
8 - SEAT BACK FRAME
9 - INNER COVER
10 - LATCH ASSEMBLY
11 - OUTER PIVOT COVER
12 - HEAT MAT - BACK
13 - SEAT BACK - FOAM/COVER
14 - SEAT CUSHION - FOAM/COVER
15 - HEAT MAT - CUSHION
16 - SEAT BACK PIVOT BOLTS (2) 28 N·m (21 ft. lbs.)
17 - INNER COVER SCREW
18 - SEAT CUSHION FRAME BOLTS (4) 55 N·m (41 ft. lbs.)
19 - RISER COVER
20 - STORAGE LID BOLT 18 N·m (13 ft. lbs.)
21 - STORAGE BIN LID
22 - SEAT CUSHION FRAME
23 - INNER COVER
24 - STORAGE LID BOLT 18 N·m (13 ft. lbs.)
25 - OUTER PIVOT COVER SCREW

QUAD CAB

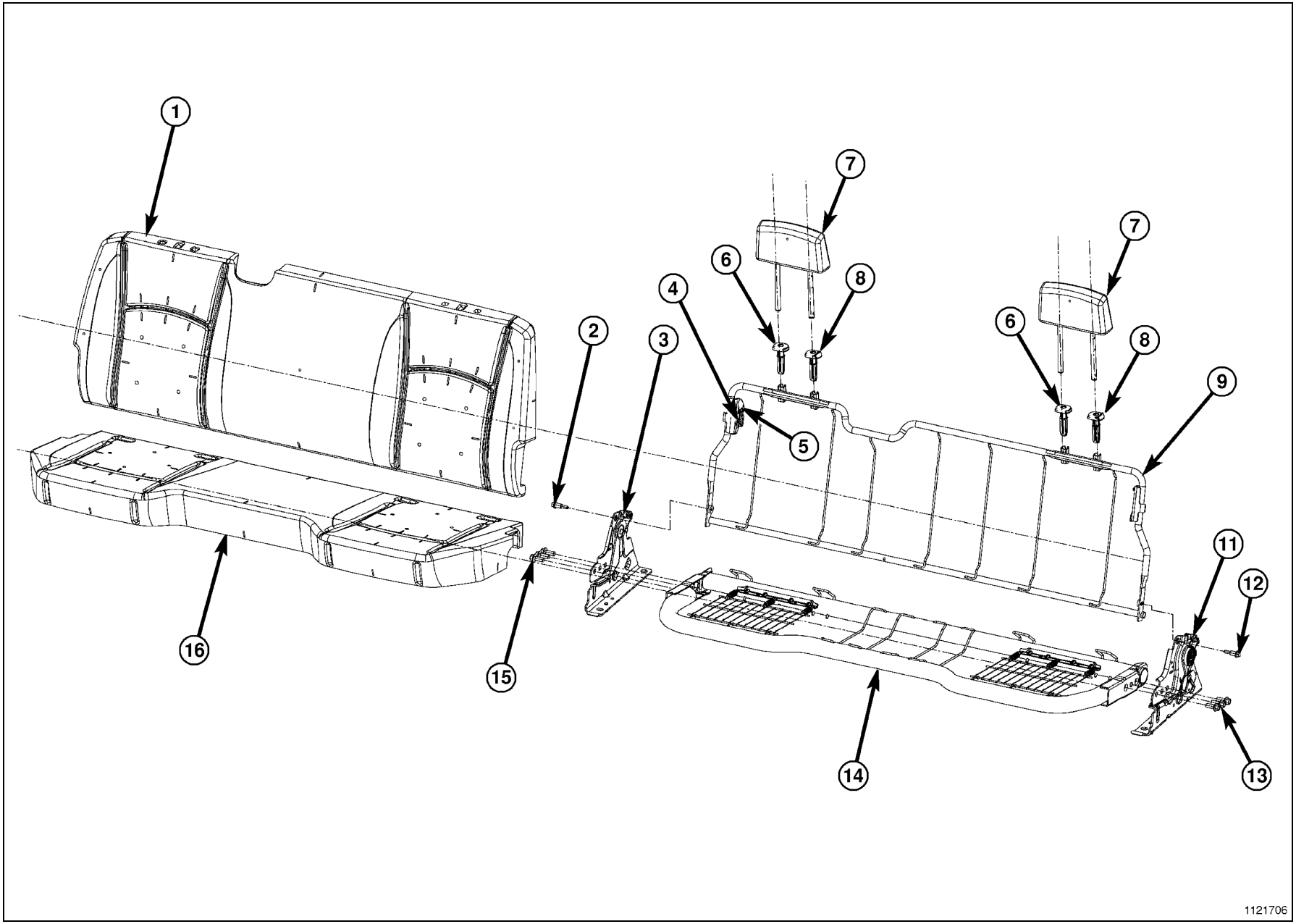

Fig. 4 REAR BENCH SEAT - QUAD CAB

1 - SEAT BACK - FOAM/COVER
2 - SEAT BACK PIVOT BOLT 28 N·m (21 ft. lbs.)
3 - LATCH ASSEMBLY
4 - CAB HOOK ISOLATOR (2)
5 - CAB HOOK ISOLATOR PUSH PIN (4)
6 - HEADREST SLEEVE - SLAVE
7 - HEADREST
8 - HEADREST SLEEVE - MASTER
9 - SEAT BACK FRAME
11 - LATCH ASSEMBLY
12 - SEAT BACK PIVOT BOLT 28 N·m (21 ft. lbs.)
13 - SEAT CUSHION FRAME BOLTS 55 N·m (41 ft. lbs.)
14 - SEAT CUSHION FRAME
15 - SEAT CUSHION FRAME BOLTS 55 N·m (41 ft. lbs.)
16 - SEAT CUSHION FOAM/COVER

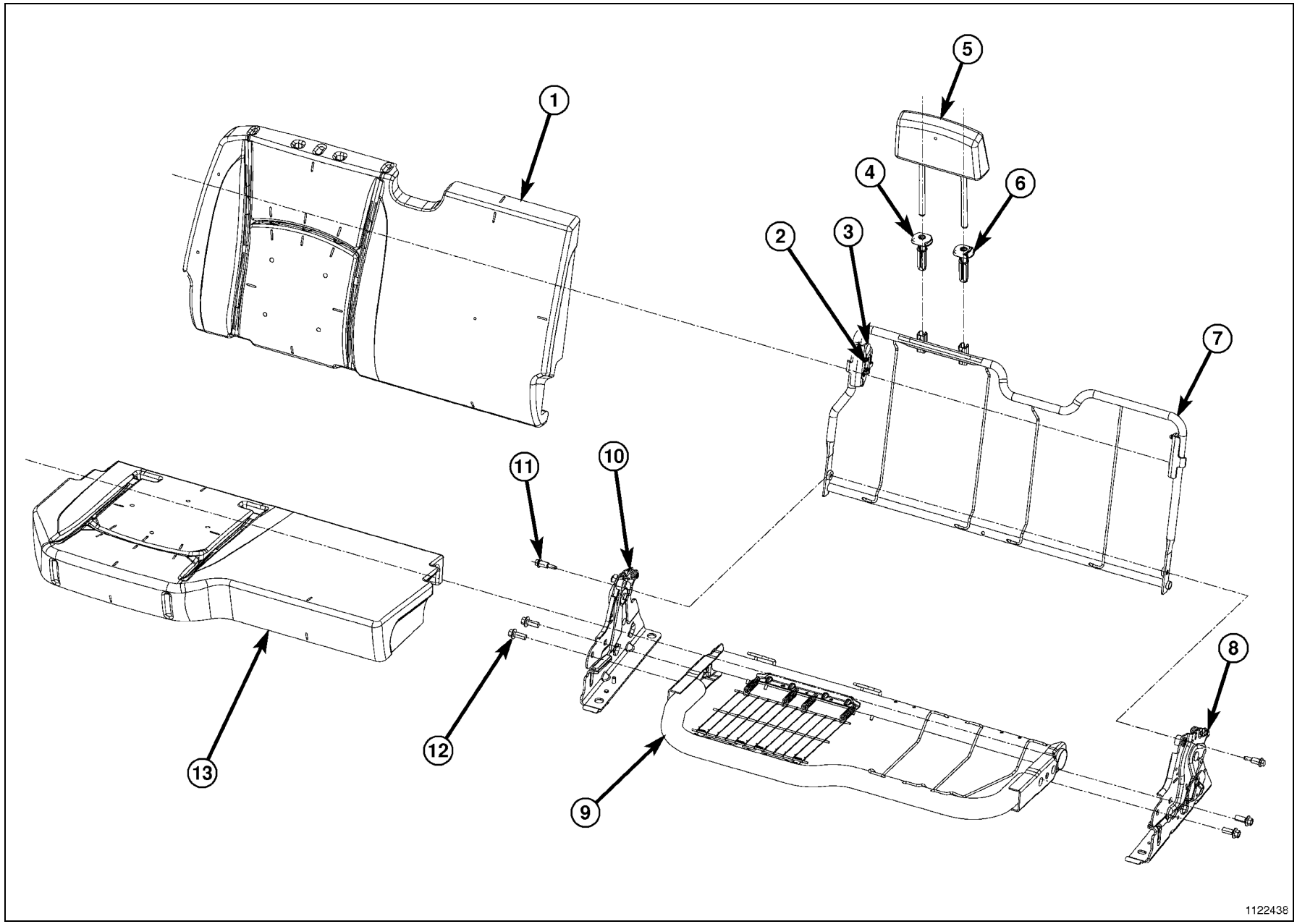

Fig. 5 REAR 60% SEAT - QUAD CAB

1 - SEAT BACK FOAM/COVER
2 - CAB HOOK ISOLATOR
3 - PUSH PIN
4 - HEADREST SLEEVE - SLAVE
5 - HEADREST
6 - HEADREST SLEEVE - MASTER
7 - SEAT BACK FRAME
8 - LATCH ASSEMBLY
9 - SEAT CUSHION FRAME
10 - LATCH ASSEMBLY
11 - SEAT BACK PIVOT BOLTS (2) 28 N·m (21 ft. lbs.)
12 - SEAT CUSHION FRAME BOLTS (4) 55 N·m (41 ft. lbs.)
13 - SEAT CUSHION FOAM/COVER

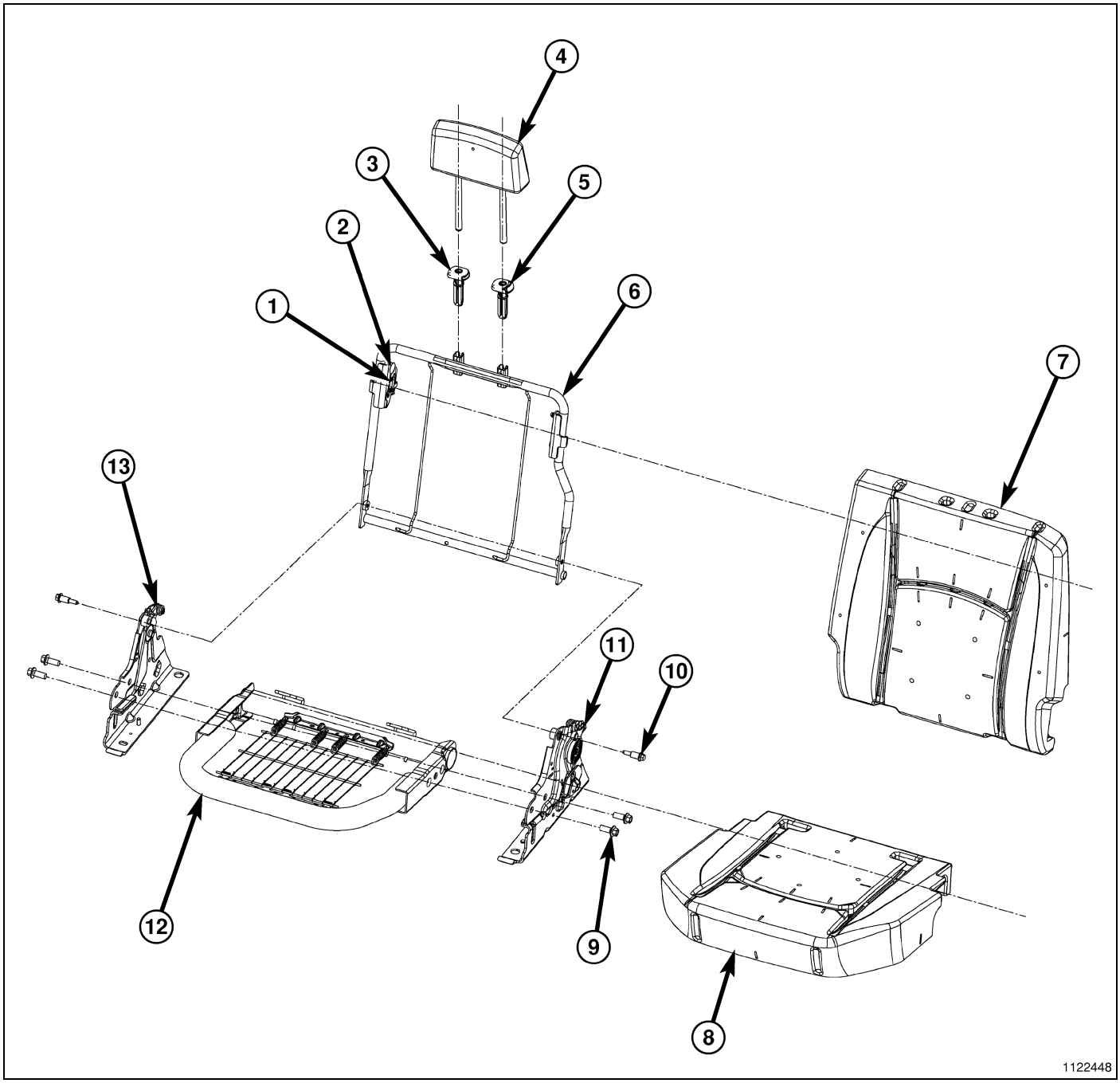

Fig. 6 REAR 40% SEAT - QUAD CAB

1 - CAB HOOK ISOLATOR
2 - PUSH PIN
3 - HEADREST SLEEVE - SLAVE
4 - HEADREST
5 - HEADREST SLEEVE - MASTER
6 - SEAT BACK FRAME
7 - SEAT BACK FOAM/COVER
8 - SEAT CUSHION FOAM/COVER
9 - SEAT CUSHION FRAME BOLTS (4) 55 N·m (41 ft. lbs.)
10 - SEAT BACK PIVOT BOLTS (2) 28 N·m (21 ft. lbs.)
11 - LATCH ASSEMBLY
12 - SEAT CUSHION FRAME
13 - LATCH ASSEMBLY

MEGA CAB

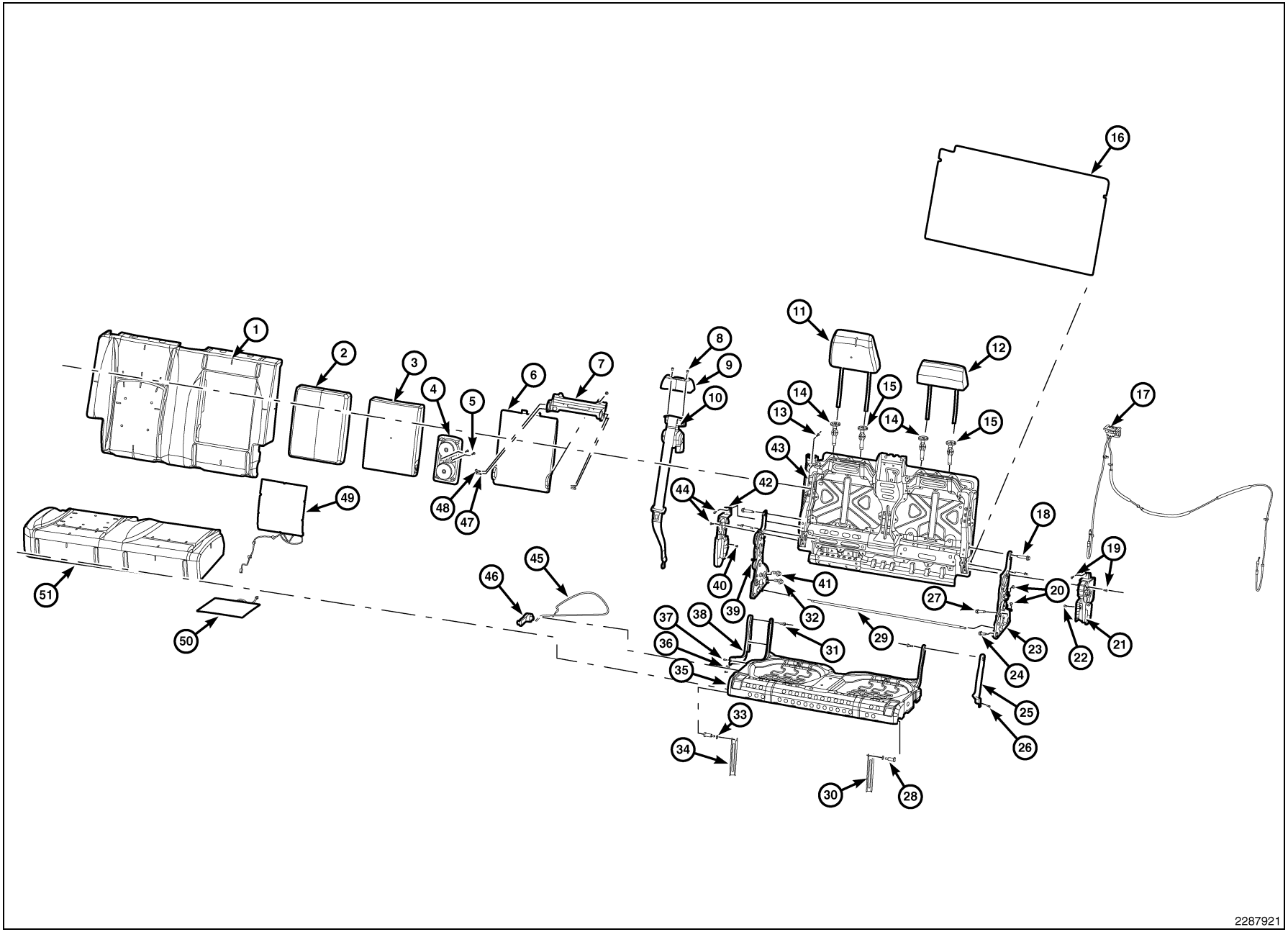

Fig. 7 REAR 60% SEAT - MEGA CAB

1 - SEAT BACK CUSHION/COVER ASSEMBLY
2 - ARMREST COVER
3 - ARMREST FOAM
4 - CUPHOLDER
5 - CUPHOLDER SCREWS (2)
6 - ARMREST BACK PANEL
7 - ARMEST PIVOT ASSEMBLY
8 - RETRACTOR COVER SCREWS (2)
9 - RETRACTOR COVER
10 - RETRACTOR
11 - HEADREST
12 - CENTER HEADREST
13 - SCREWS (2)
14 - HEADREST SLEEVE - SLAVE
15 - HEADREST SLEEVE - MASTER
16 - SEAT BACK PANEL
17 - FOLD-TABLE CABLE ASSEMBLY
18 - SEAT BACK TO RECLINER BOLTS (4) 48 N·m (35 ft. lbs.)
19 - RECLINER COVER SCREWS
20 - SCREWS
21 - RECLINER COVER
22 - SCREW
23 - RECLINER - INBOARD
24 - REAR MOUNTING BRACKET BOLTS (2) 48 N·m (35 ft. lbs.)
25 - SEAT CUSHION FRAME SIDE COVER
26 - SIDE COVER SCREW
27 - REAR MOUNTING BRACKET BOLT 28 N·m (21 ft. lbs.)
28 - PIVOT LEG TO CUSHION BOLTS (2) 28 N·m (21 ft. lbs.)
29 - CONNECTING ROD
30 - FRONT PIVOT MOUNTING LEG BRACKET
31 - STOW PIVOT BOLTS (2) 28 N·m (21 ft. lbs.)
32 - REAR MOUNTING BRACKET BOLTS (2) 28 N·m (21 ft. lbs.)
33 - PIVOT LEG TO CUSHION WASHERS (2)
34 - FRONT PIVOT MOUNTING LEG BRACKET
35 - SEAT CUSHION FRAME ASSEMBLY
36 - RECLINER HANDLE BRACKET SCREWS (2)
37 - SIDE COVER SCREW
38 - SEAT CUSHION FRAME SIDE COVER
39 - RECLINER - OUTBOARD
40 - RETRACTOR BEZEL SCREW
41 - REAR MOUNTING BRACKET BOLT 28 N·m (21 ft. lbs.)
42 - RECLINER COVER
43 - SEAT BACK FRAME ASSEMBLY
44 - RECLINER COVER SCREWS
45 - RECLINER CABLE ASSEMBLY
46 - RECLINER HANDLE
47 - ARMREST FRAME PIVOT BOLTS (2) 8 N·m (71 in. lbs.)
48 - ARMREST PIVOT TO FRAME BOLTS (2) 8 N·m (71 in. lbs.)
49 - SEAT BACK HEAT MAT
50 - SEAT CUSHION HEAT MAT
51 - SEAT CUSHION/COVER ASSEMBLY

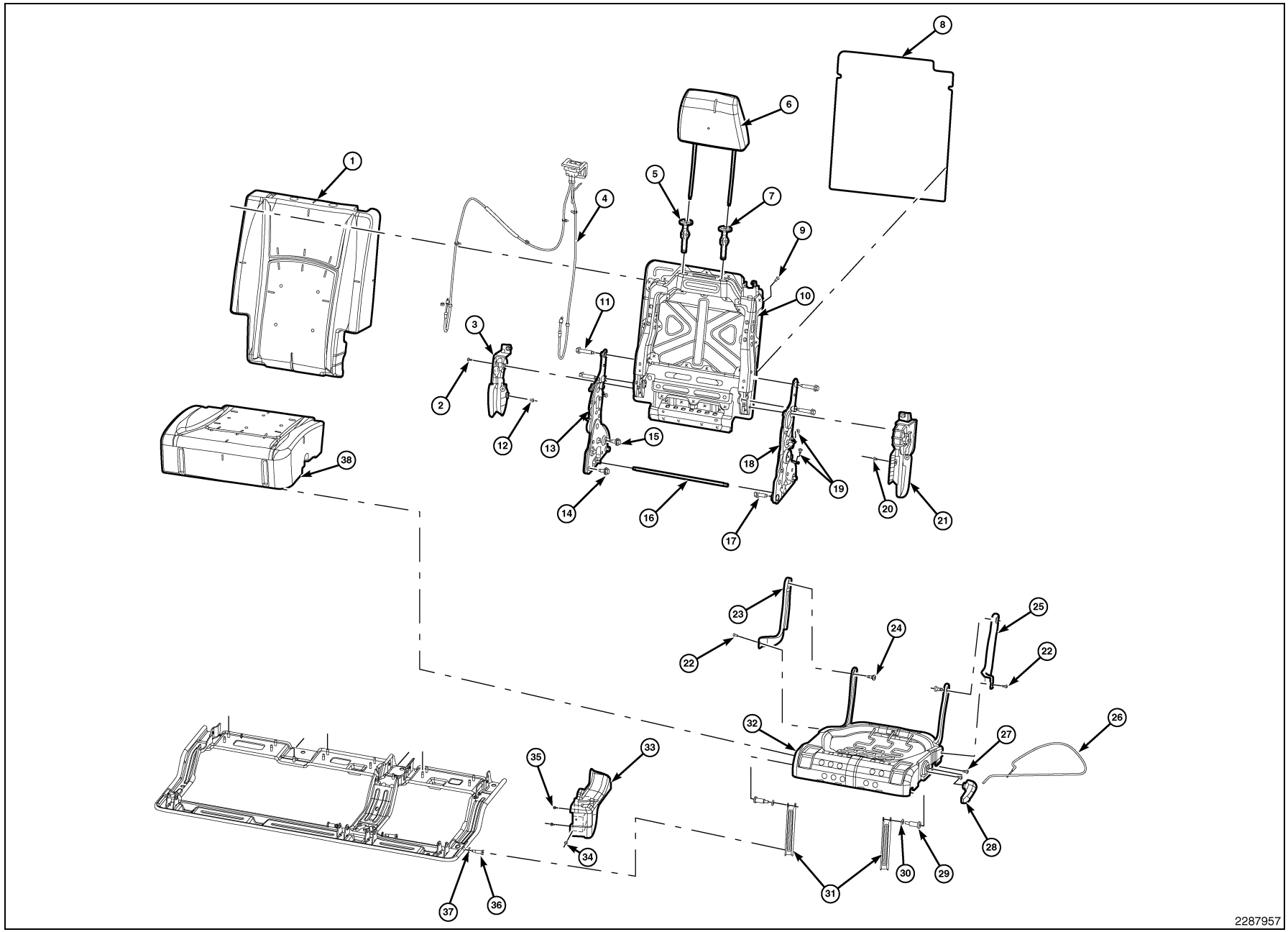

Fig. 8 REAR 40% SEAT - MEGA CAB

1 - SEAT BACK CUSHION/COVER ASSEMBLY
2 - RECLINER COVER SCREWS
3 - RECLINER COVER
4 - FOLD-TABLE CABLE ASSEMBLY
5 - HEADREST SLEEVE - SLAVE
6 - HEADREST
7 - HEADREST SLEEVE - MASTER
8 - SEAT BACK PANEL
9 - SCREWS (2)
10 - SEAT BACK FRAME ASSEMBLY
11 - SEAT BACK TO RECLINER BOLTS (4) 48 N·m (35 ft. lbs.)
12 - RETRACTOR BEZEL SCREW
13 - RECLINER - INBOARD
14 - REAR MOUNTING BRACKET BOLTS (2) 28 N·m (21 ft. lbs.)
15 - REAR MOUNTING BRACKET BOLTS (2) 48 N·m (35 ft. lbs.)
16 - CONNECTING ROD
17 - REAR MOUNTING BRACKET BOLT 28 N·m (21 ft. lbs.)
18 - RECLINER - OUTBOARD
19 - SCREWS
20 - SCREW
21 - RECLINER COVER
22 - SIDE COVER SCREW
23 - SEAT CUSHION FRAME SIDE COVER
24 - STOW PIVOT BOLTS (2) 28 N·m (21 ft. lbs.)
25 - SEAT CUSHION FRAME SIDE COVER
26 - RECLINER CABLE ASSEMBLY
27 - RECLINER HANDLE BRACKET SCREWS (2)
28 - RECLINER HANDLE
29 - PIVOT LEG TO CUSHION BOLTS (2) 28 N·m (21 ft. lbs.)
30 - FRONT PIVOT MOUNTING LEG BRACKET
31 - SEAT CUSHION FRAME ASSEMBLY
32 - RISER COVER ASSEMBLY
33 - RISER COVER SCREW
34 - RISER COVER SCREWS (2)
35 - PIVOT LEG TO BRACKET BOLTS (2) 28 N·m (21 ft. lbs.)
36 - PIVOT LEG TO BRACKET WASHERS (2)
37 - SEAT CUSHION/COVER ASSEMBLY

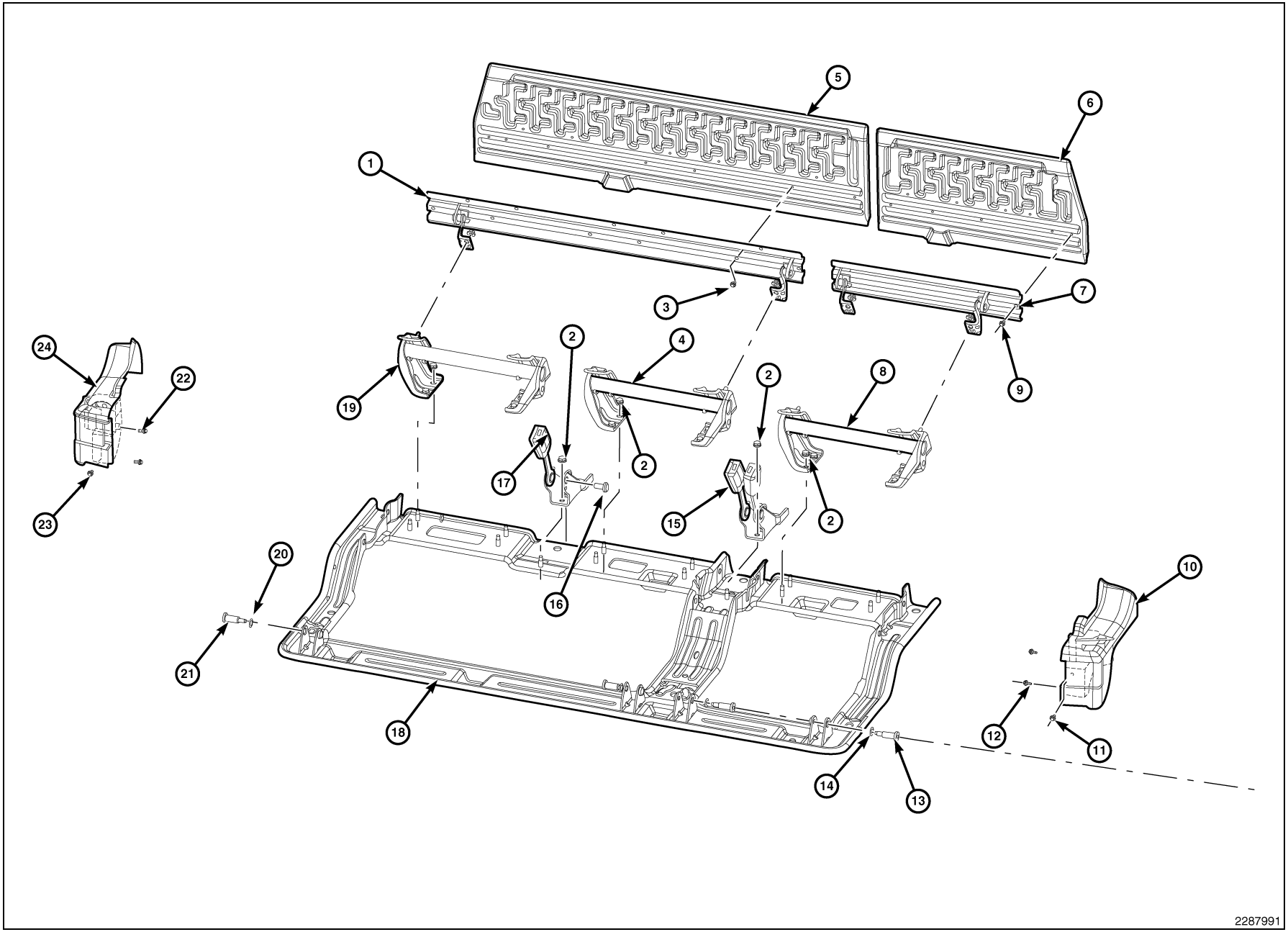

Fig. 9 REAR SEAT MOUNTING BRACKETS - MEGA CAB

1 - FLIPPER PANEL BRACKET ASSEMBLY - 60
2 - MOUNTING NUTS (16) 28 N·m (21 ft. lbs.)
3 - FLIPPER PANEL SCREWS - 60 (11)
4 - CENTER ISOFIX TUBE ASSEMBLY
5 - FLIPPER PANEL - 60
6 - FLIPPER PANEL - 40
7 - FLIPPER PANEL BRACKET ASSEMBLY - 40
8 - OUTBOARD ISOFIX TUBE ASSEMBLY - 40
9 - FLIPPER PANEL SCREWS - 40 (9)
10 - RISER COVER ASSEMBLY
11 - RISER COVER SCREW
12 - RISER COVER SCREWS (2)
13 - PIVOT LEG TO BRACKET BOLTS - 40 (2) 28 N·m (21 ft. lbs.)
14 - PIVOT LEG TO BRACKET WASHERS - 40 (2)
15 - SEAT BUCKLE ASSEMBLY INBOARD - 40
16 - BELT BUCKLE BOLT ?? N·m (?? ft. lbs.)
17 - SEAT BUCKLE ASSEMBLY CENTER
18 - FLOOR MOUNTING BRACKET ASSEMBLY
19 - OUTBOARD ISOFIX TUBE ASSEMBLY - 40
20 - PIVOT LEG TO BRACKET WASHERS - 60 (2)
21 - PIVOT LEG TO BRACKET BOLTS - 60 (2) 28 N·m (21 ft. lbs.)
22 - RISER COVER SCREWS (2)
23 - RISER COVER SCREW
24 - RISER COVER ASSEMBLY

Removal

NOTE: 60/40 bench seat shown, solid bench seat similar.

1. Disconnect the electrical connector (1), if equipped.

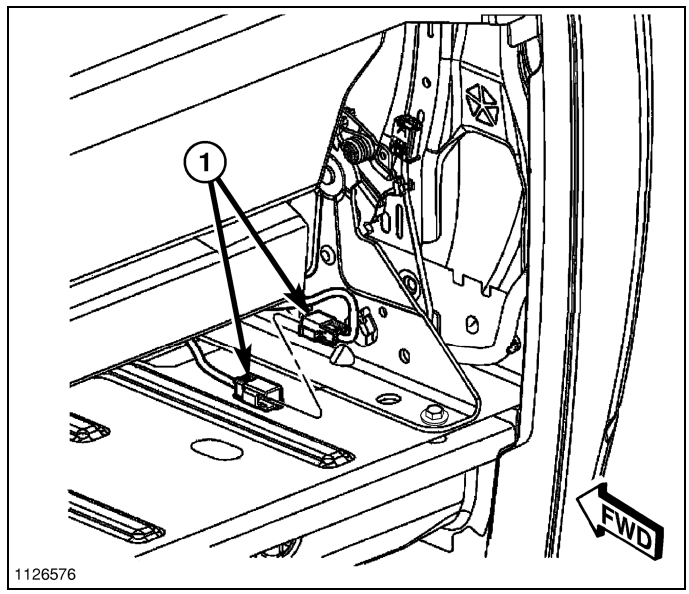

2. Remove the bolt (1) attaching the center sholder belt (2) to the retractor and position the sholder belt out of the way.

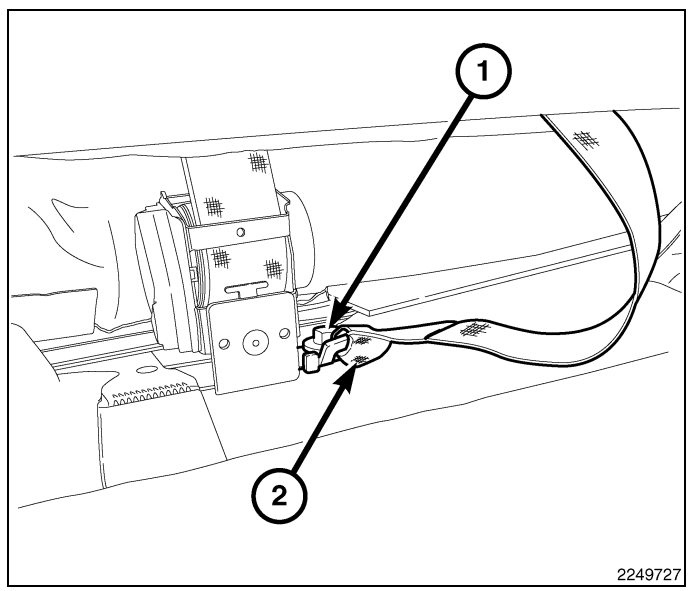

3. Remove the rear outer bolts.
4. Remove the rear inner bolts (3) and buckles (2) as necessary.

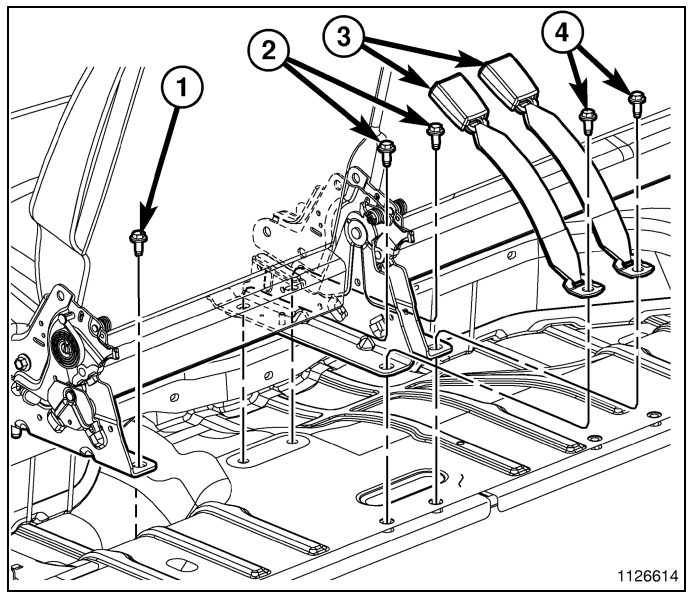

5. Remove the front fasteners (1).

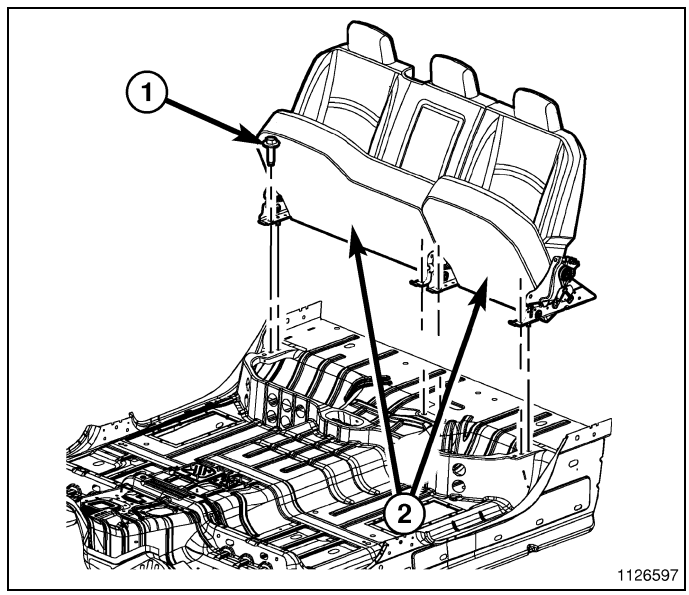

6. Lift the seat assemblies up and separate the cab hooks (3) from the loops (1 and 2).
7. Remove the seat assemly from the vehicle.

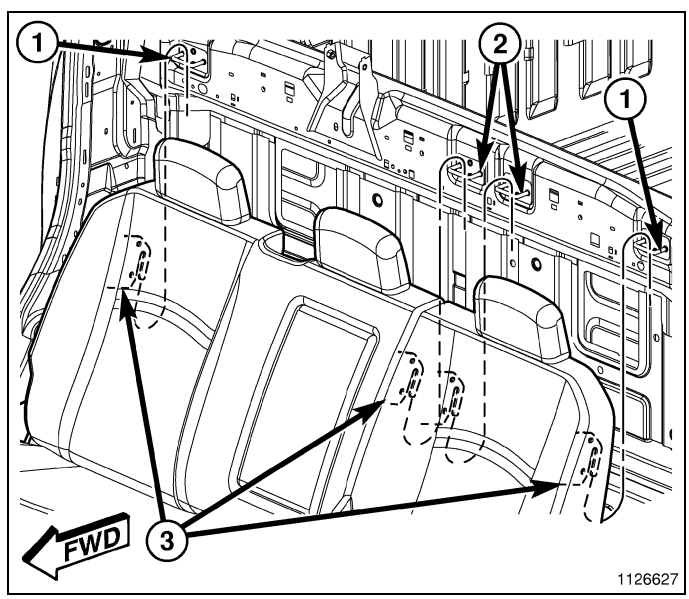

Installation

NOTE: 60/40 bench seat shown, solid bench seat similar.

1. Position the rear seat assembly into the vehicle and secure the hooks (3) to the loops (1 and 2).

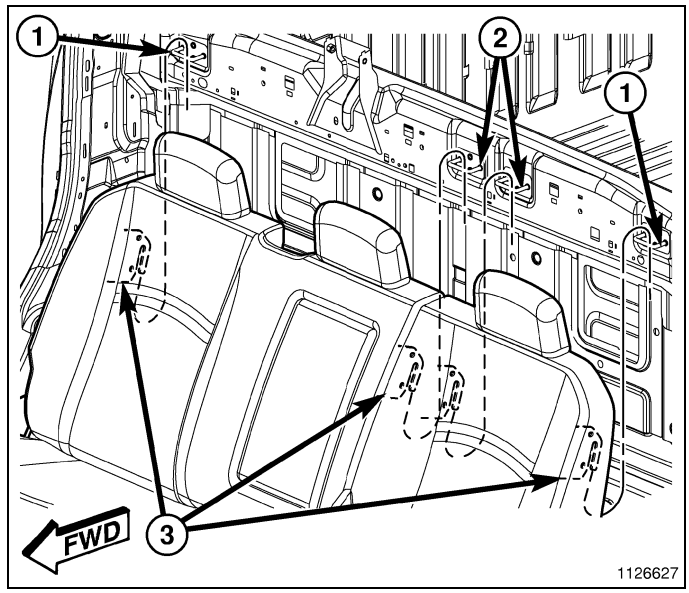

2. Install the front mounting bolts (1).

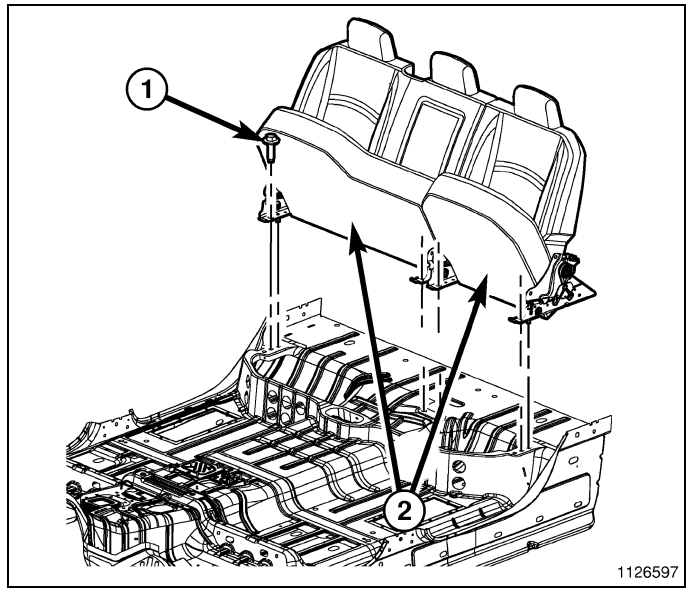

3. Install the remaining bolts (1, 4) and tighten all bolts to 47 N·m (35 ft. lbs.).

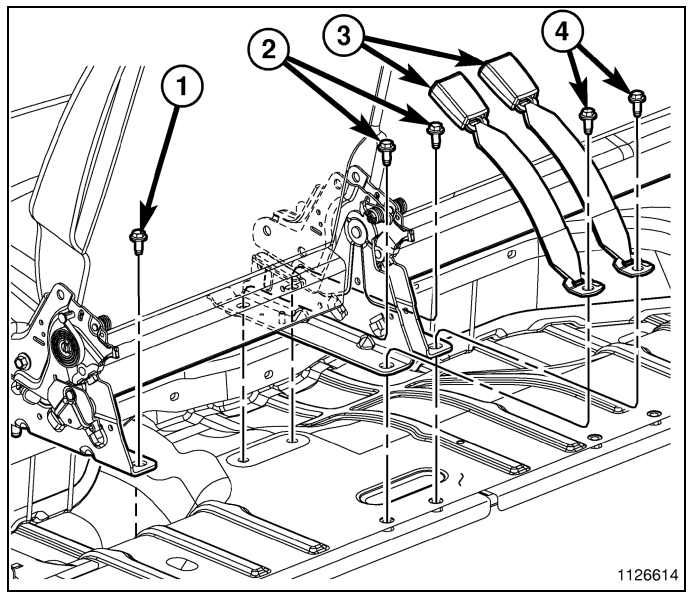

4. Position the sholder belt (2) back into place and install the bolt (1).
5. Tighten the bolt to 23 N·m (17 ft. lbs.).

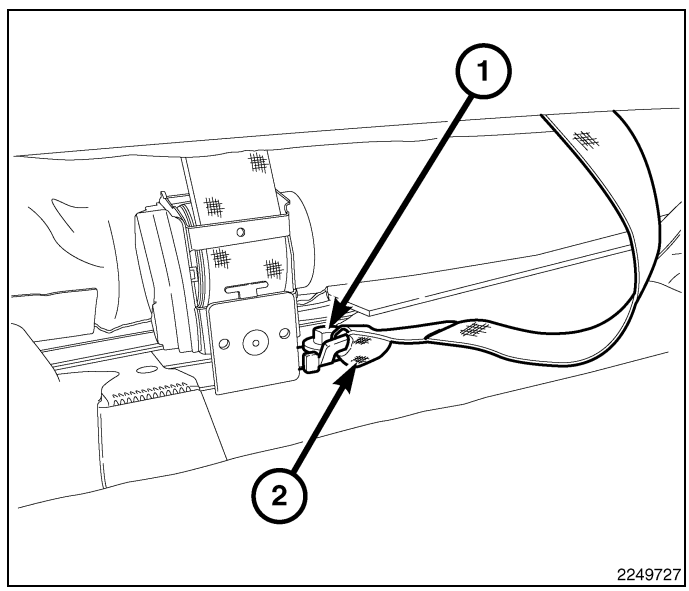

6. Connect the electrical connectors (1), if equipped.

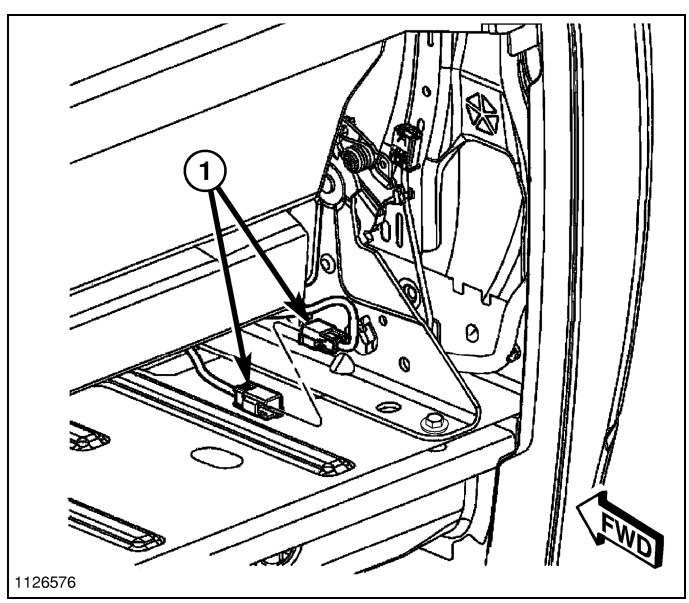

SEAT BACK, Front

Removal

NOTE: While servicing seat assemblies, (Refer to 23 - Body/Seats/SEAT - Description)

1. Remove the front seat (Refer to 23 - Body/Seats/SEAT - Removal).
2. Separate the seat back cover straps (2) from under the seat cushion and disconnect the electrical connectors (1).

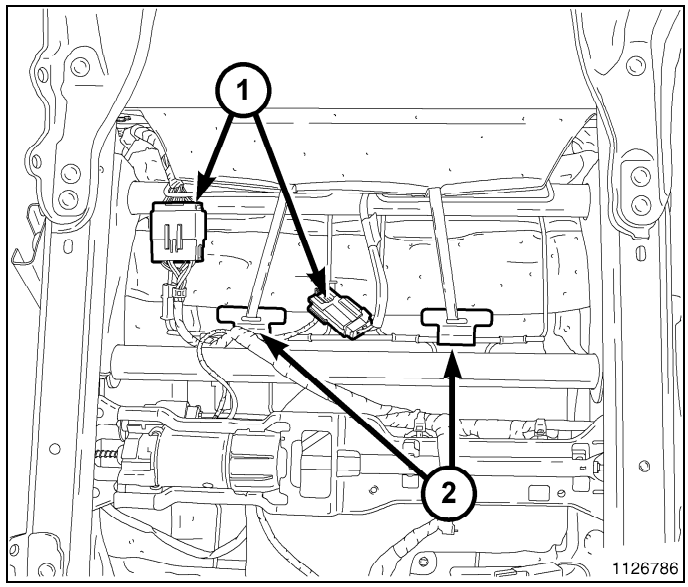

3. Remove the side shield screws (2) in the back.

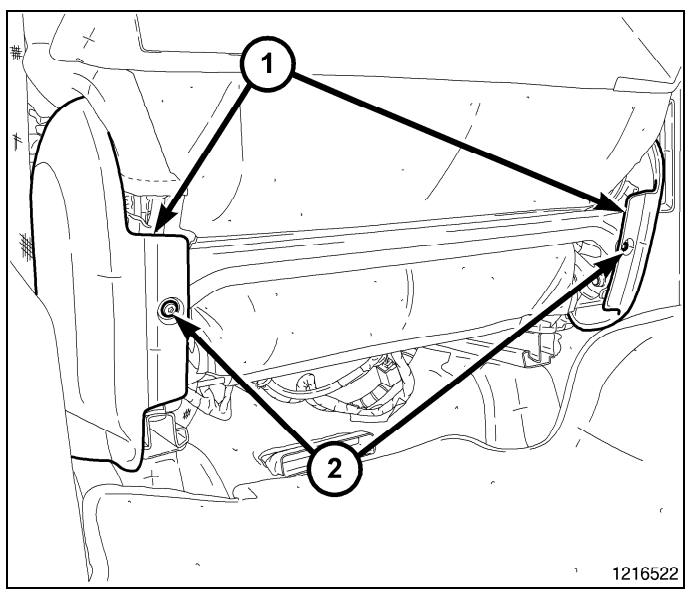

4. Remove the inboard shield screw.
5. Remove the inboard side shield.

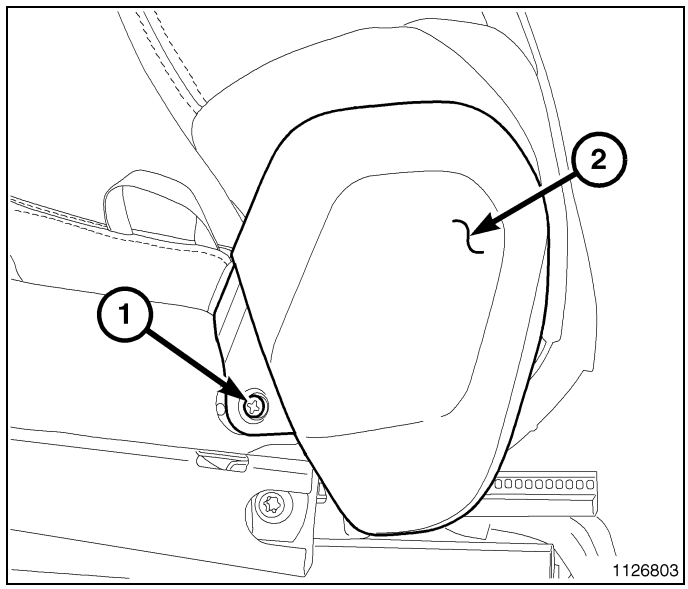

6. If equipped with manual seat, using a door handle clip tool (1) or equivalent, release the clip holding the handle (2) onto the seat and remove the handle.

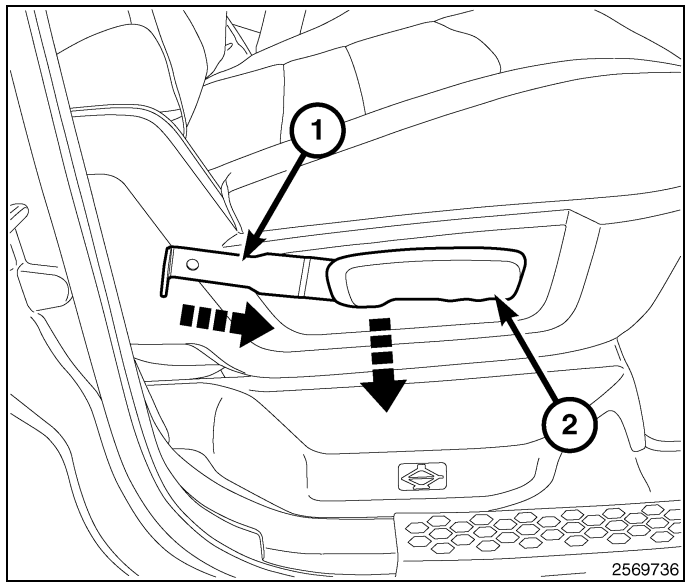

CAUTION: Disconnect the lumbar control switch electrical connector beneath the seat, prior to removing the power seat switch bezel from the seat. Failure to follow these instructions can result in damage to the lumbar control switch.

7. If equipped, disconnect the lumbar control switch electrical connector (1).

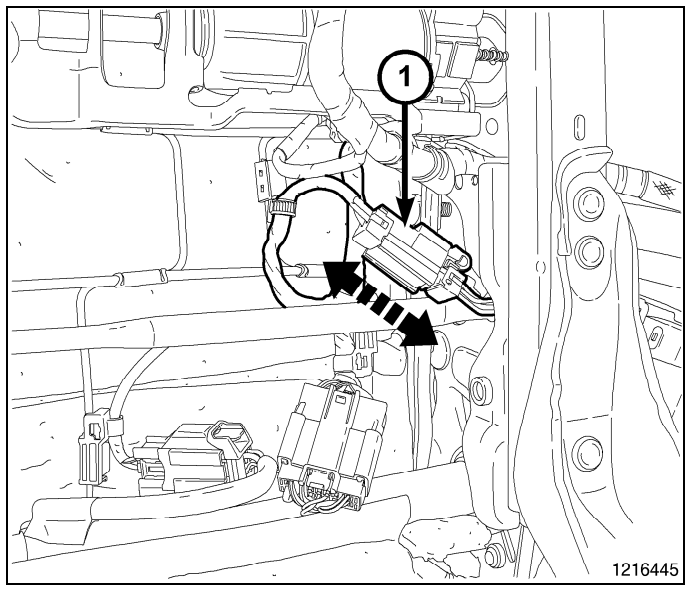

NOTE: Power seat bezel shown, manual seat bezel similar.

8. Using trim stick C-4755 or equivalent, release the seven tabs (3) and separate the bezel (1) from the outboard side shield.
9. Pull the bezel (1) rearward and release the front retaining tab (2).
10. Disconnect the wire harness connectors from the power seat switch and memory seat switch, if equipped.

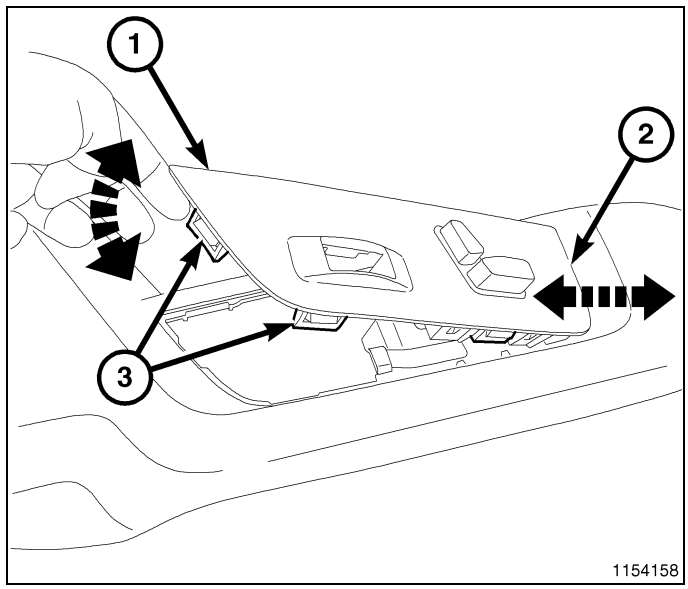

11. Remove the screw (1).
12. Release the retaining clips (2) and remove the outer side shield.

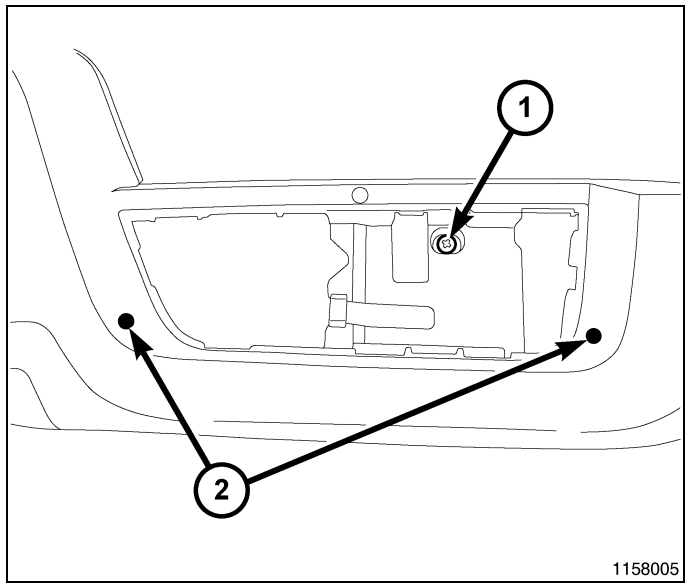

13. Release the seat cushion suspension mat (2) from the cross brace and separate the electrical connector (1).

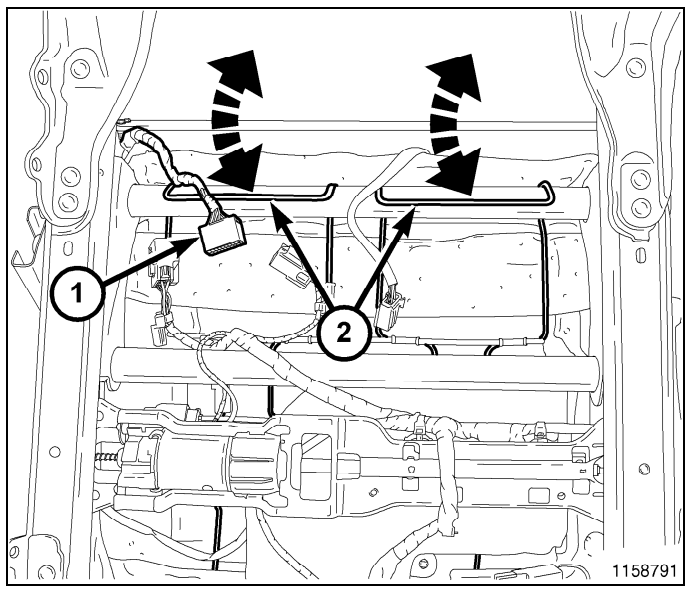

14. On manual reclining seats, remove the clip (1) and separate the recliner rod (2) from the lever.

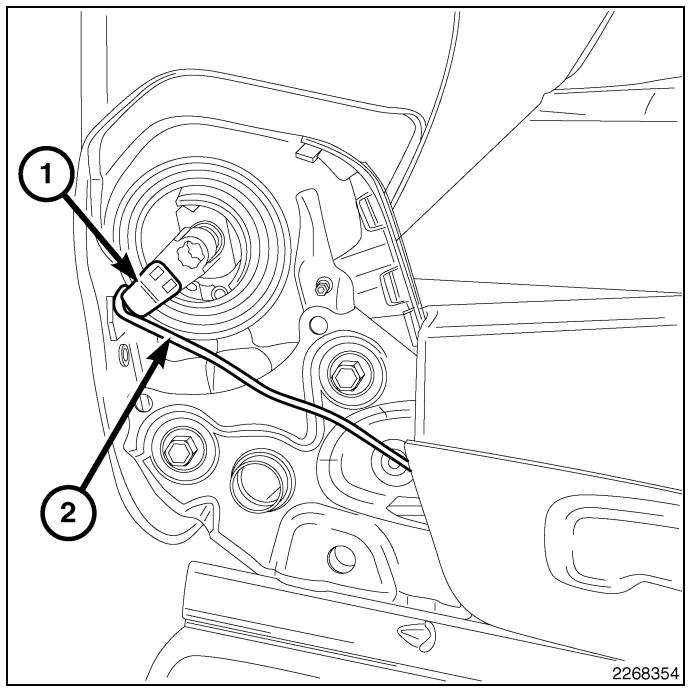

15. Remove the bolts (2) and remove the seat back assembly (1).

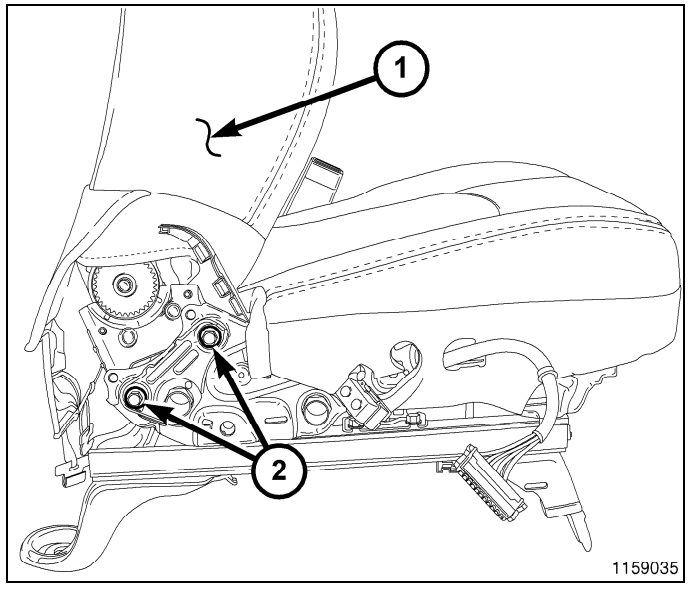

Disassembly

NOTE: While servicing seat assemblies, (Refer to 23 - Body/Seats/SEAT - Description)

1. Remove the seat back. (Refer to 23 - Body/Seats/SEAT BACK - Removal)
2. Separate the side shield from the seat back (2) and remove the side shields (1).

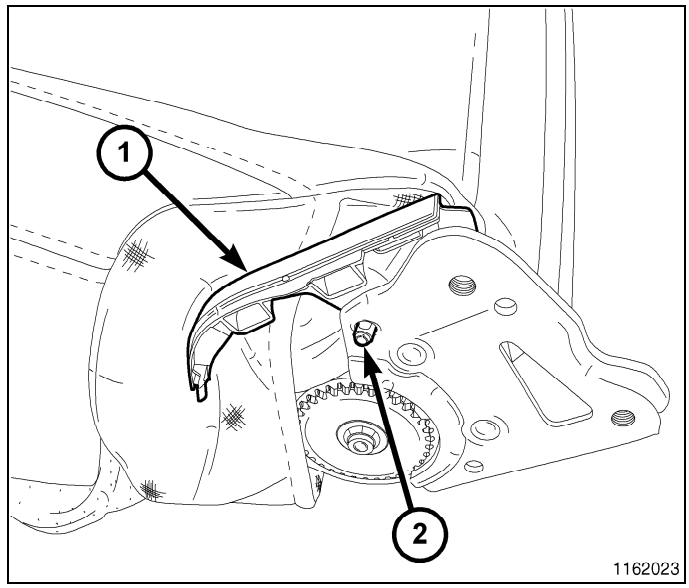

3. Remove the two screws (1) and remove the brace (2).

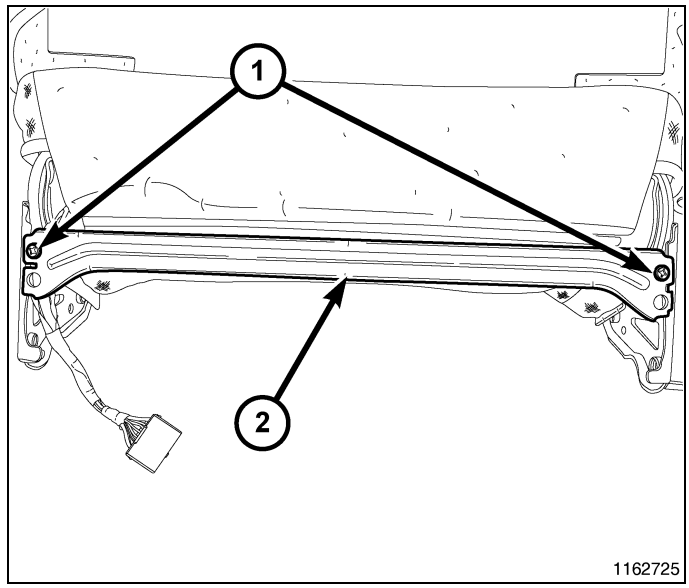

4. Push in the buttons on both headrest sleeves, pull the headrest up and remove.

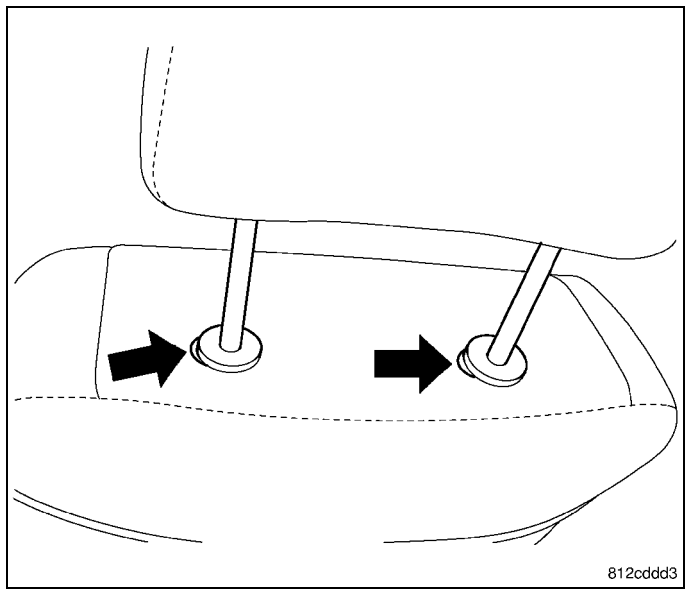

5. Separate the J-straps (1 and 2) and pull cover up over frame.

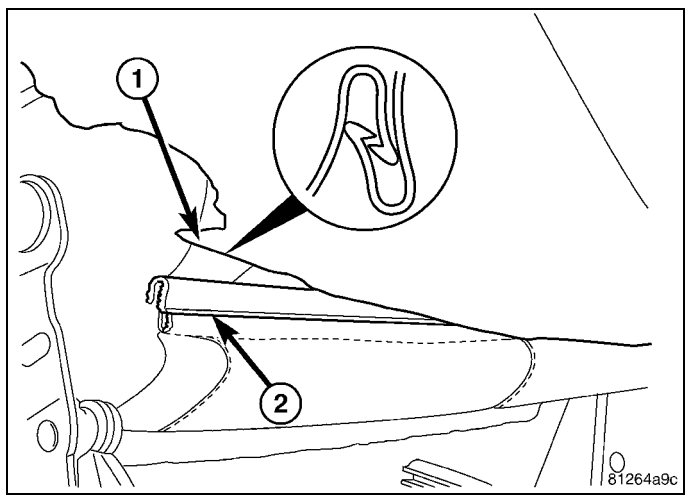

6. Position the foam aside and strike the bottom of the headrest sleeves (1) with a rubber mallet or equivalent, and remove.
7. Remove the cover.

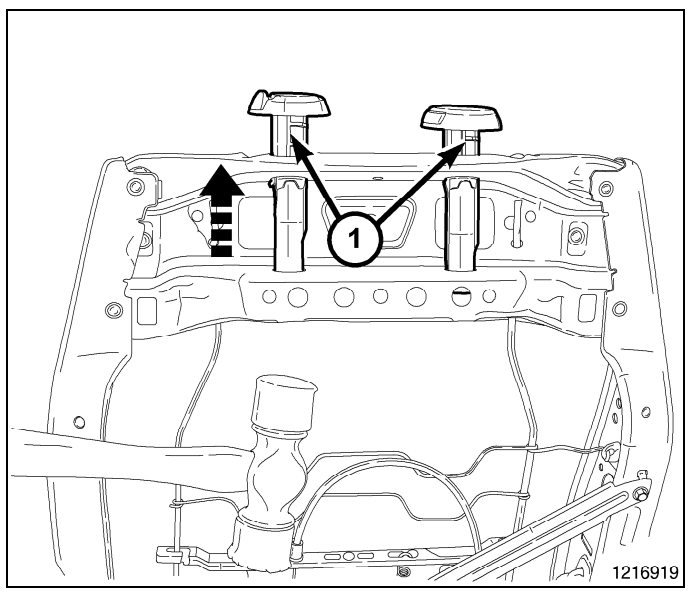

8. Release the vented seat bag (1) from the vent motor (2) clips.
9. Remove the foam cushion from the seat back frame.

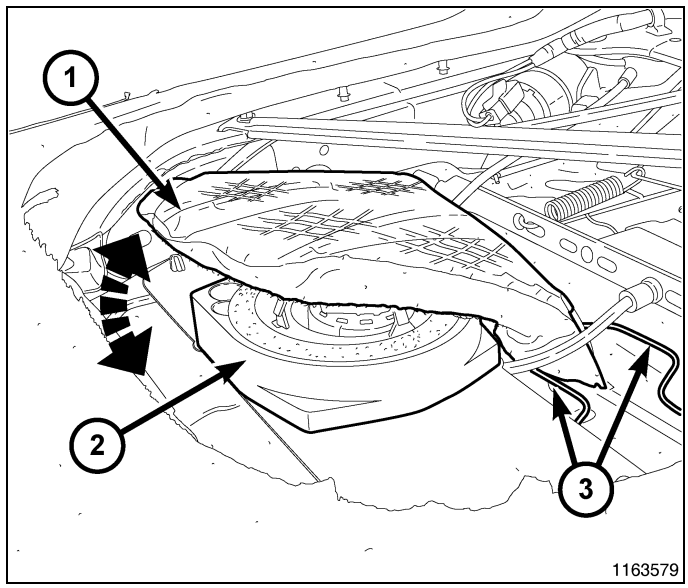

10. Disconnect the lumbar motor electrical connector (1) and remove the bolt (3).

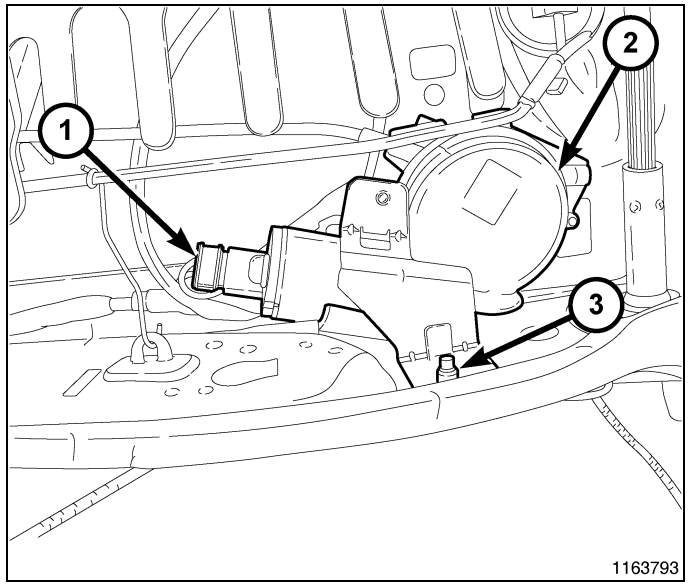

11. Separate the lower lumbar mat (1) from the clips (2).

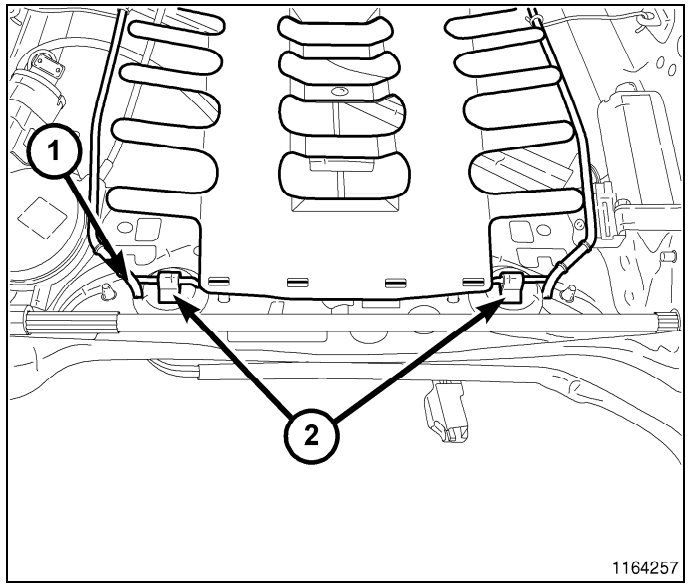

12. Release the lumbar mat side wires (3) by pulling out on the wire supports and then pulling them in.
13. Release the clips (2) and separate the vented seat motor from the lumbar support, if equipped.
14. Pull the upper support wires (1) down and release the lumbar mat from the seat back frame.

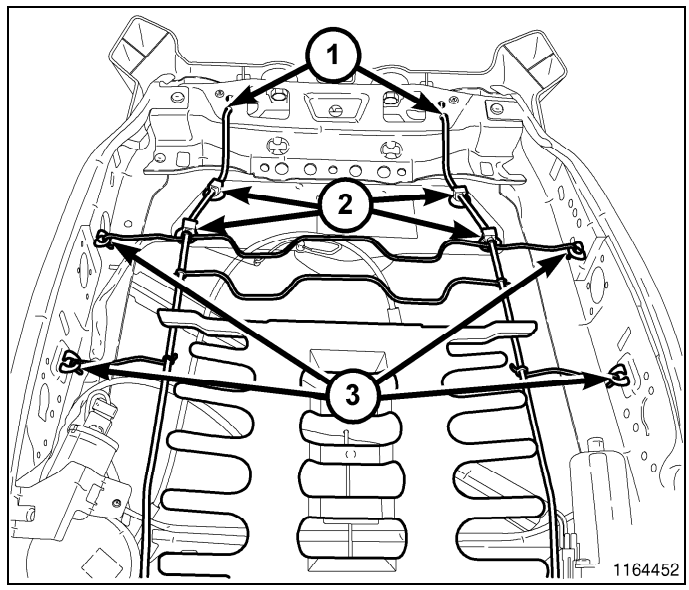

Assembly

NOTE: While servicing seat assemblies, (Refer to 23 - Body/Seats/SEAT - Description)

1. Connect the upper support wires (1) to the seat back frame.
2. Secure the lumbar mat side wires (3).
3. Secure the vented seat motorclips (2) to the lumbar support, if equipped.

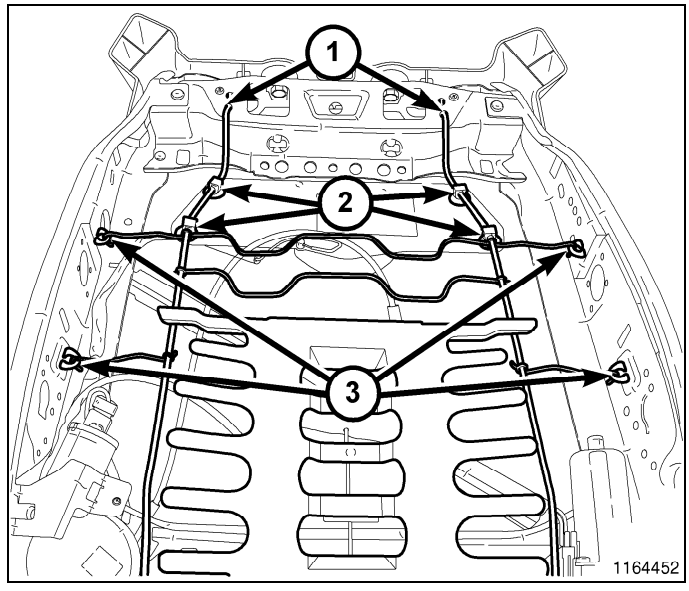

4. Secure the lower lumbar mat (1) to the clips (2).

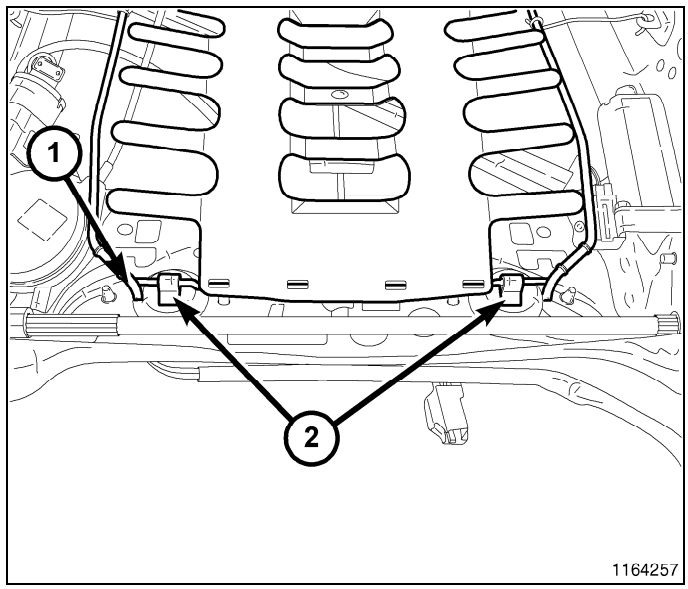

5. If equipped, position the lumbar motor (2) onto the seat back frame and install the bolt (3).
6. Tighten the bolt (3) to 10 N·m (89 in. lbs.).
7. Connect the electrical connector (1).

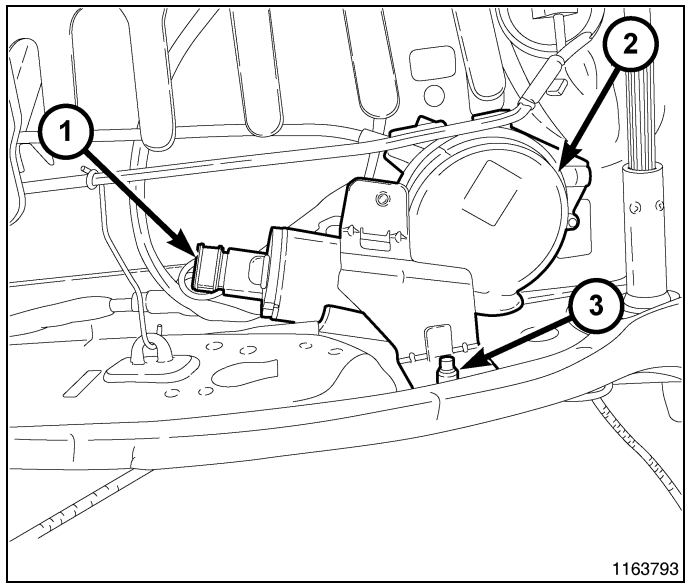

8. Position the vented seat bag (1) through the seat back support spring (3).
9. Position the vented seat bag (1) onto the vent motor (2) and seat the clips fully.

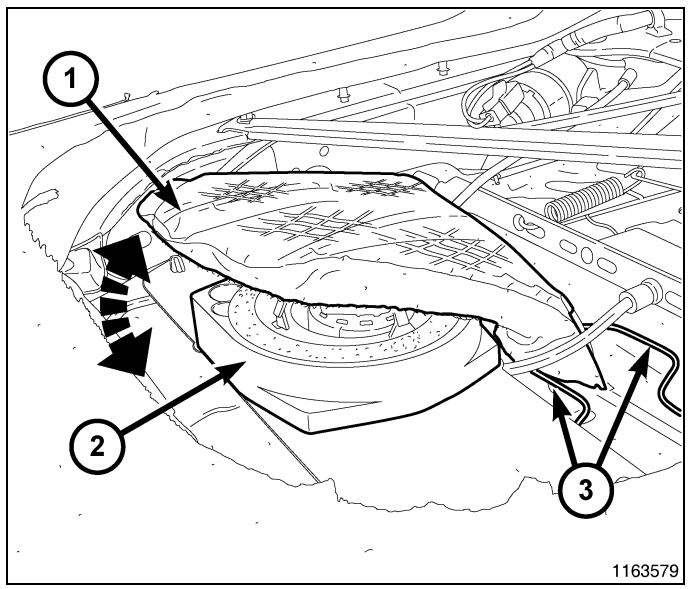

10. Seat the foam and cover assembly over the seat back frame fully and secure the J-straps (1 and 2).

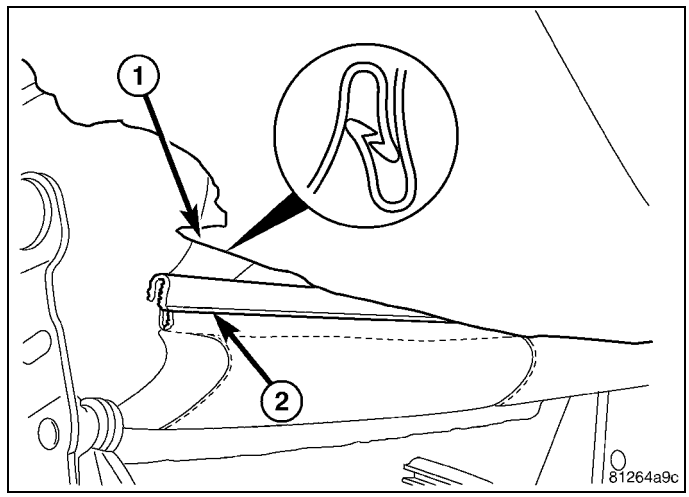

11. Install the new head restraint sleeves with slave sleeve (4) in the right position and master sleeve (3) in the left position.
12. Press the lock buttons (2) on the sleeves and insert the head restraint tubes (1) into the head restraint guide sleeves, ensuring proper forward facing orientation of the head restraint.

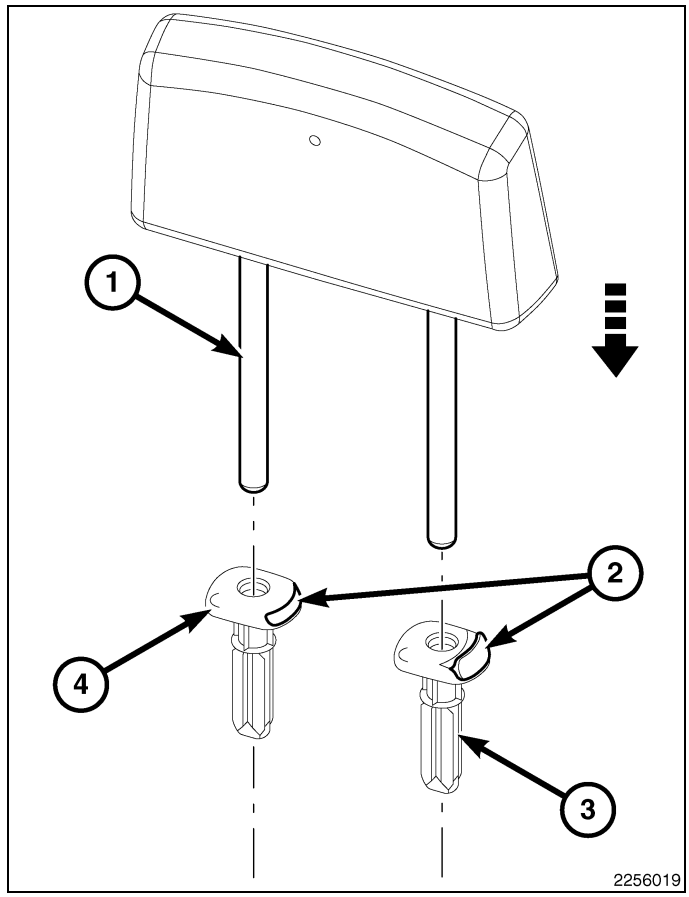

13. Install the brace (2) and install the screws (1).

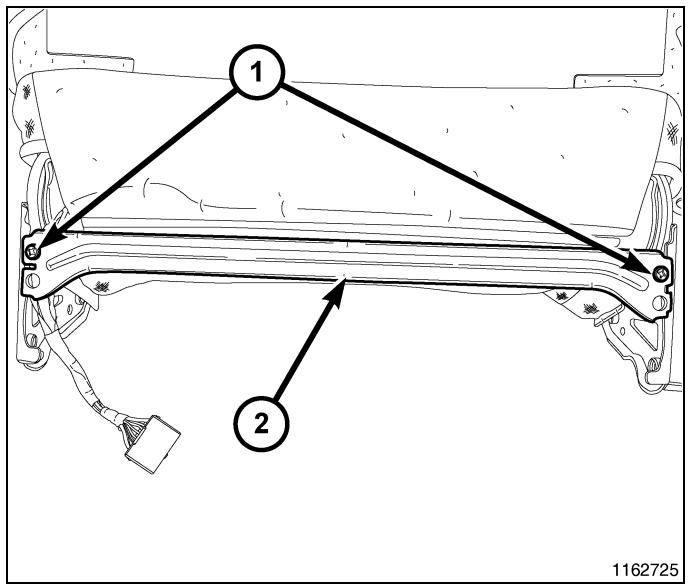

14. Position the inner shields (1) back and seat the locator pin (2) fully.
15. Install the seat back. (Refer to 23 - Body/Seats/SEAT BACK - Installation)

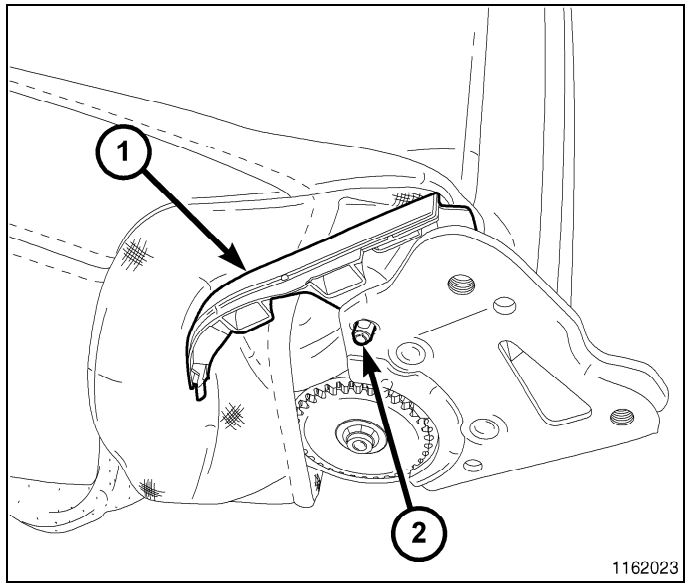

Installation

1. Install the seat back (1) onto the seat cushion assembly and install the four bolts (2).
2. Tighten the bolts (2) to 40 N·m (30 ft. lbs.).

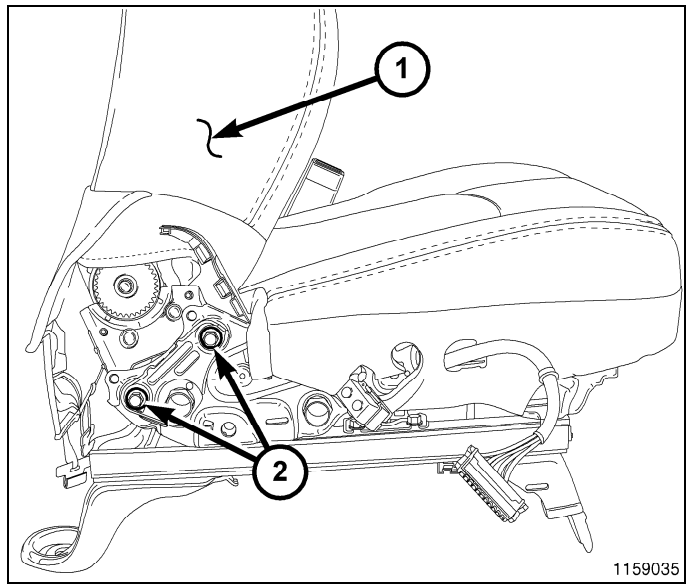

3. On manual reclining seats, install the recliner rod (2) onto the recliner lever and fully seat the clip (1).

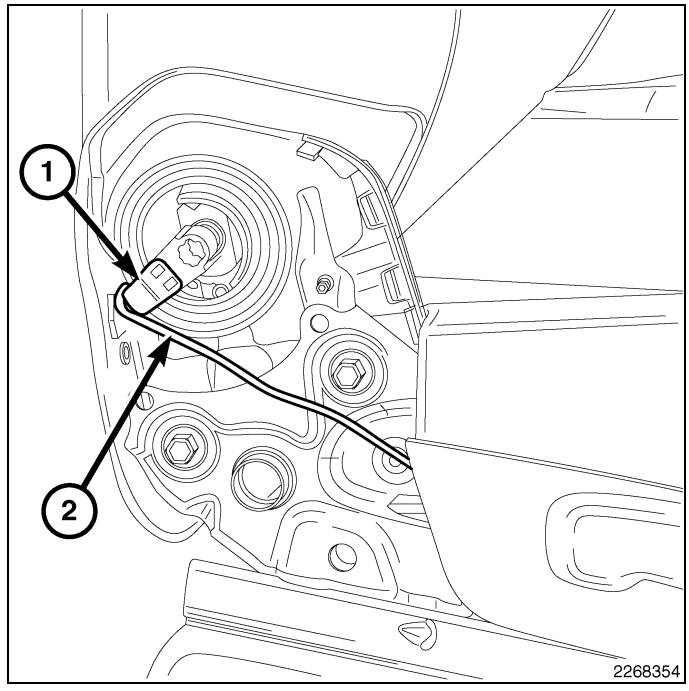

4. Position the wire harness (1) through the suspension mat (2).
5. Secure the suspension mat (2) to the cross brace.

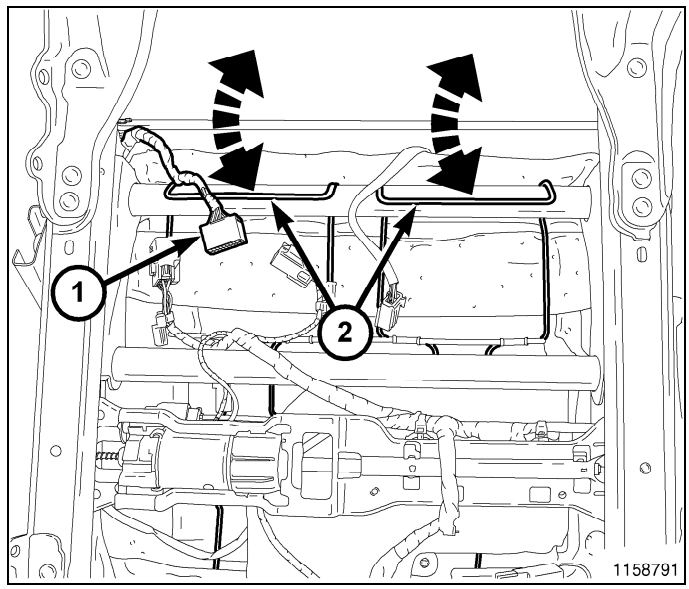

6. Install the outer side shield and seat the clips (2) fully.
7. Install the screw (1).

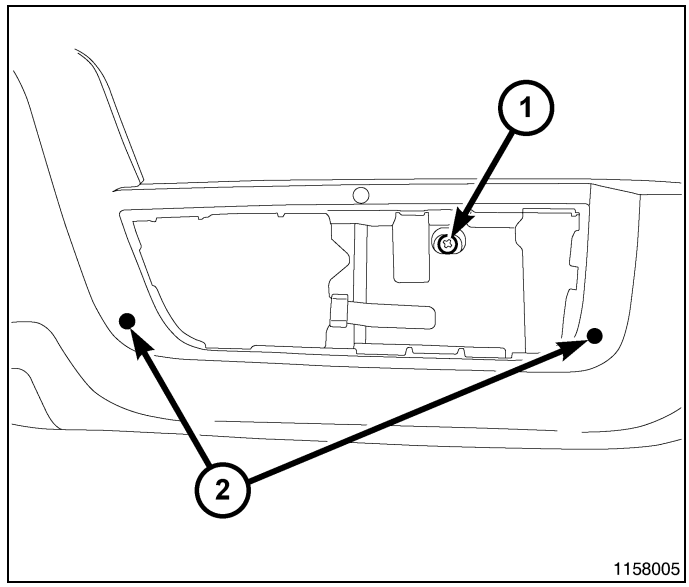

NOTE: Power seat bezel shown, manual seat bezel similar.

8. Connect the wire harness connectors to the power seat switch and memory seat switch, if equipped.
9. Position the bezel (1) back into place and secure the front tab (2).
10. Seat the remaining tabs (3) fully.

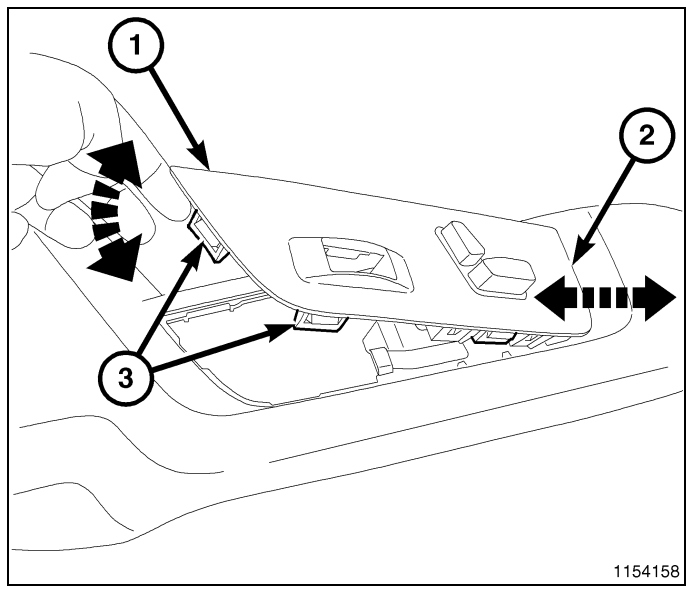

11. If equipped, connect the lumbar switch electrical connector (1).

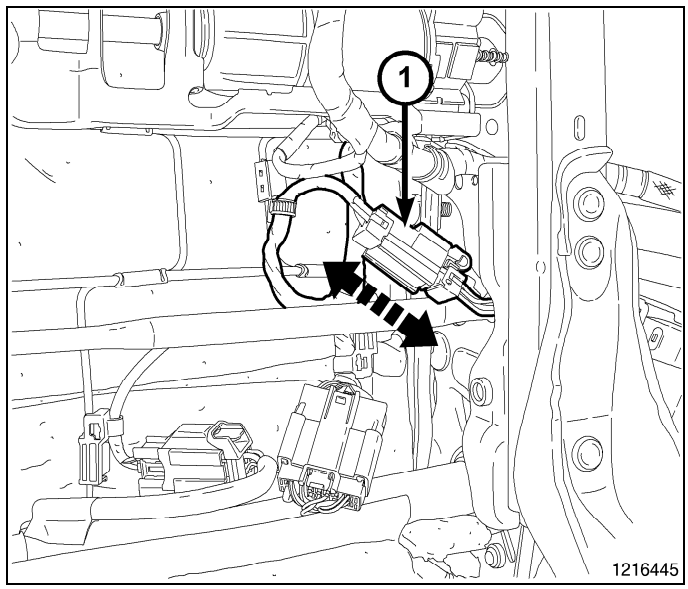

12. If equipped with manual seat, install the seat recline handle. Make sure the clip holding the handle is fully engaged.

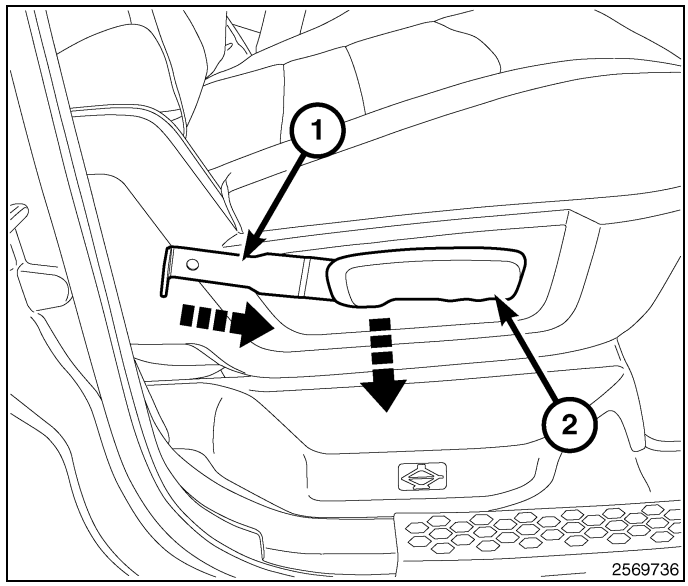

13. Install the inboard shield (2) and install the screw (1).

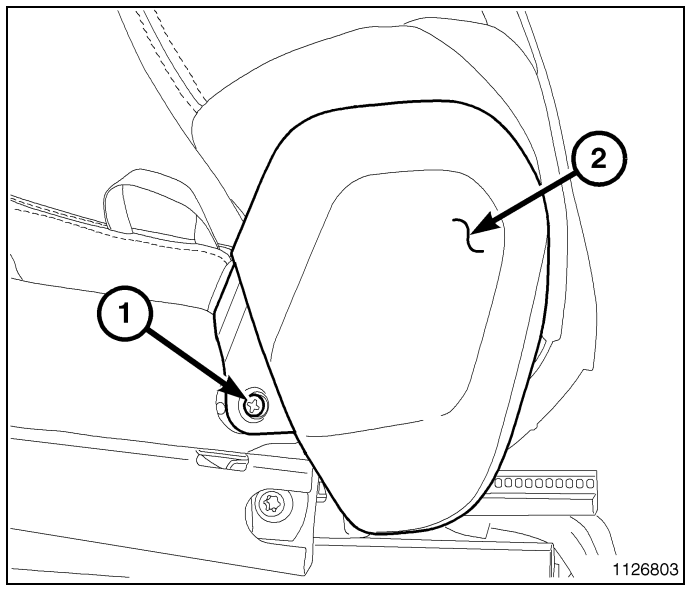

14. Install the side shield screws (2).

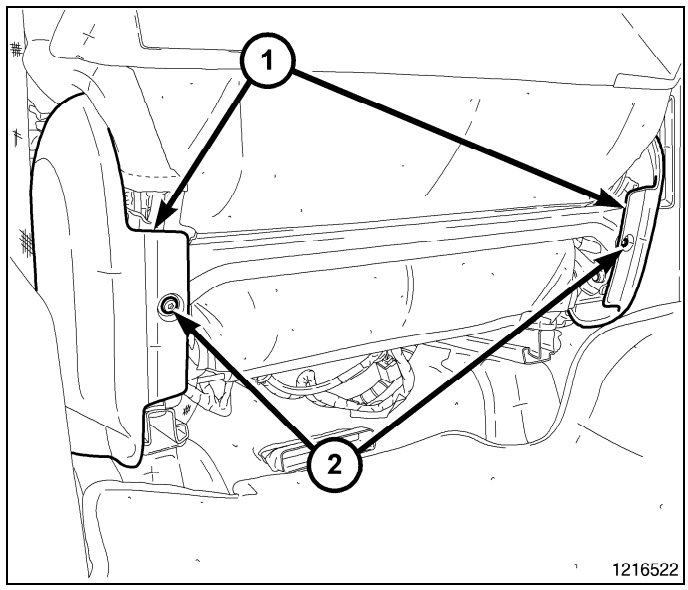

15. Secure the seat back cover straps (2).
16. Connect the electrical connectors (1).
17. Install the front seat (Refer to 23 - Body/Seats/SEAT - Installation).

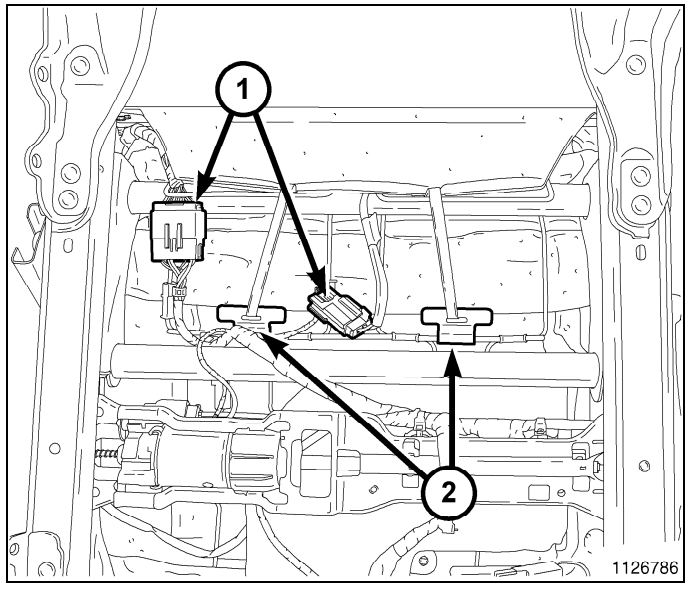

SEAT BACK, Rear

Removal

1. Remove the rear seat assembly. (Refer to 23 - Body/ Seats/SEAT - Removal)
2. Remove the screws (1) and remove the side shields (2).

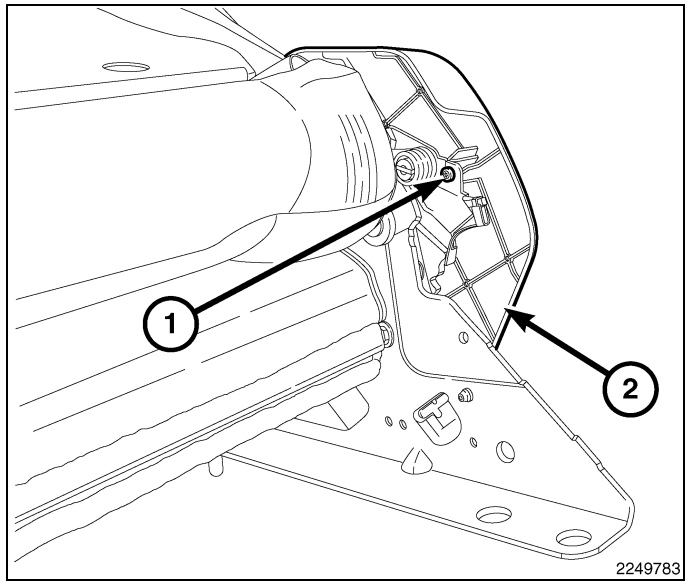

3. Remove the bolts (1).
4. Remove the seat back assembly (2).

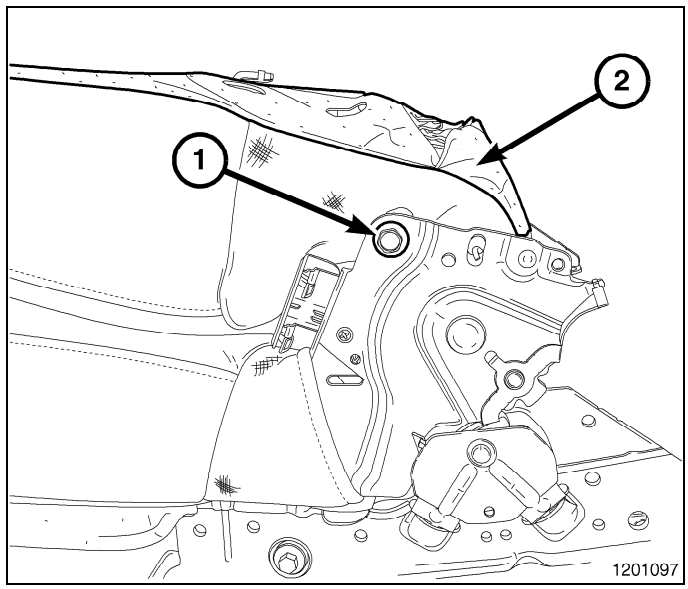

Disassembly

1. Remove the seat back. (Refer to 23 - Body/Seats/ SEAT BACK - Removal)
2. Press master and slave buttons on head restraint guides simultaneously and remove the headrests.

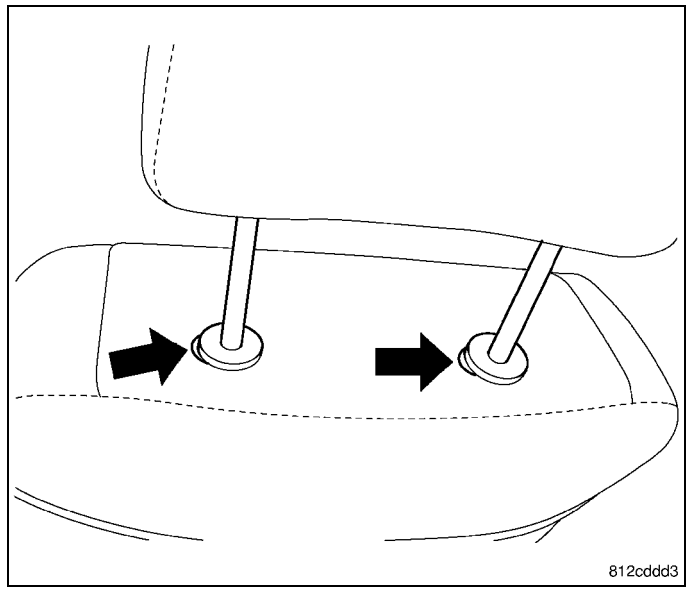

3. Separate the J-straps (2).

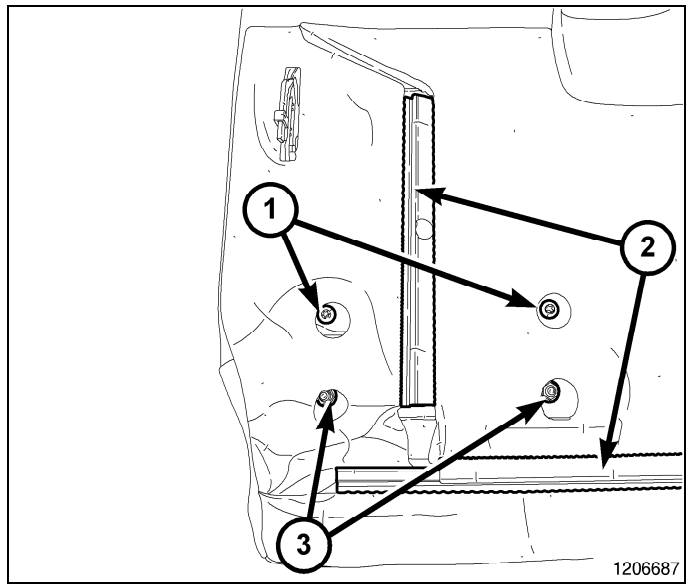

4. Separate the J-strap (1).
5. Remove the two rear hog rings (2).

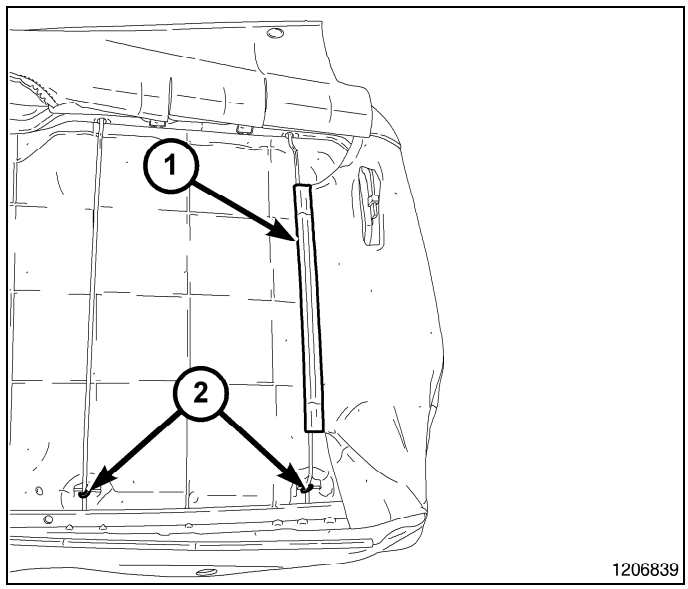

6. Remove the two bolts (3).
7. Remove the two nuts (4).
8. Pull the bottom of the armrest out and away from the seat back.
9. Release the two top hooks (2) and remove the armrest.
10. Separate the remaining J-straps (1 and 5).

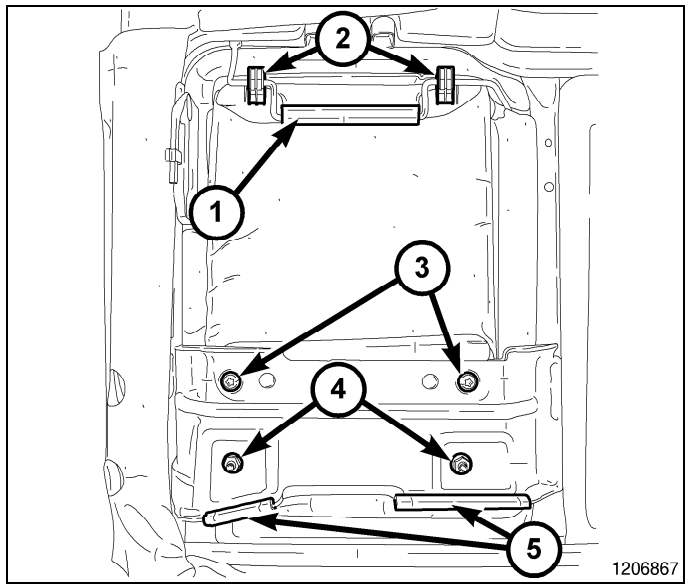

11. Using pliers or equivalent, squeeze the locking tabs and remove the headrest sleeves.

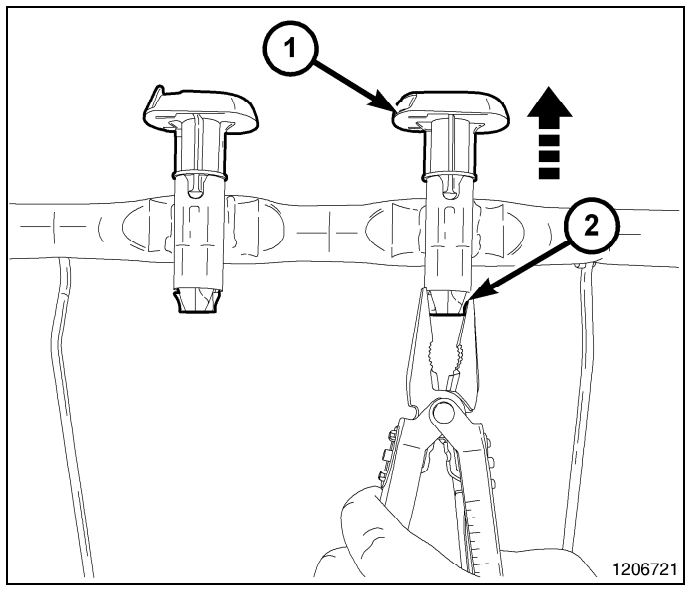

12. Remove the foam and cover assembly.
13. Remove the hog rings (2) attaching the cover (3) to the foam (1).

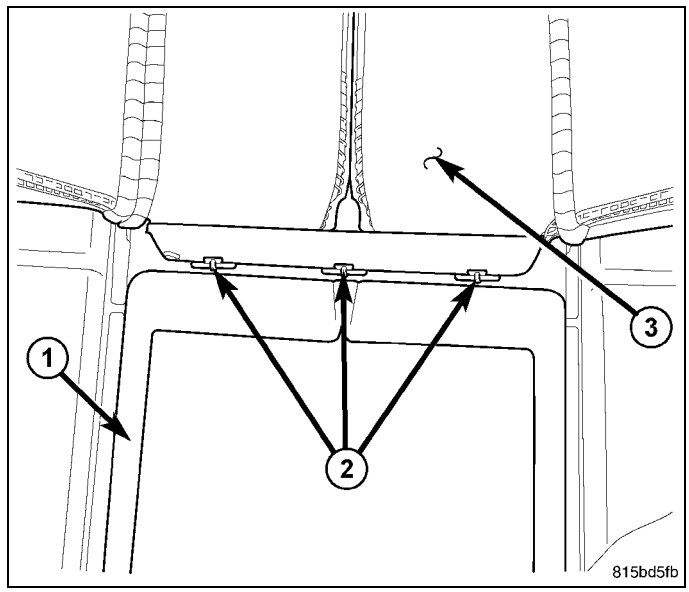

Center Arm Rest

1. Remove the pivot bolts (2) and separate the armrest (1) from the tray (3).

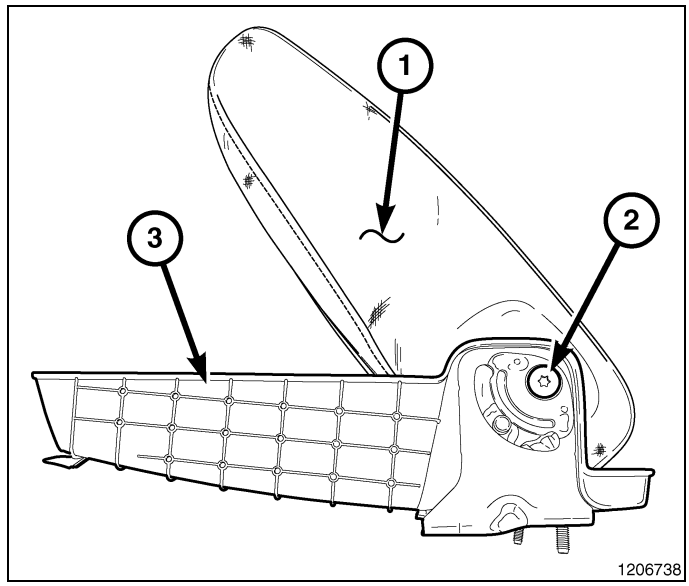

2. Using trim stick C-4755 or equivalent, disengage the clips (1) and remove the cup holder (2).

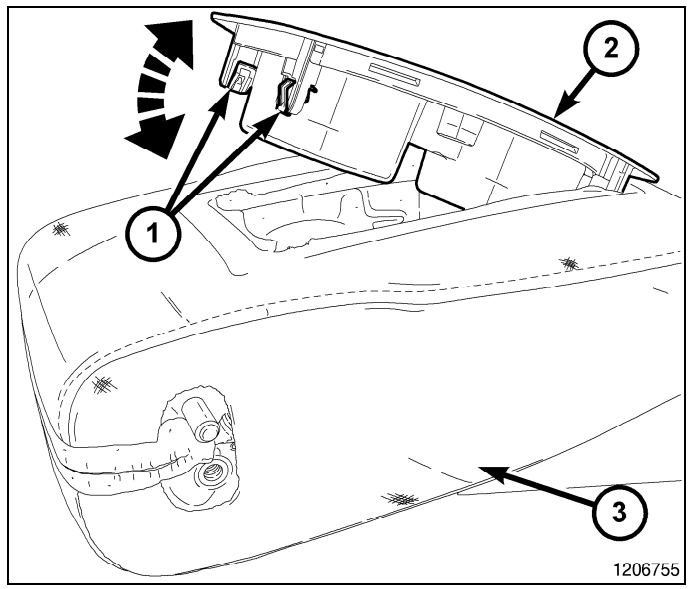

3. Unzip the cover (1) and separate the foam and cover (2) from the armrest frame.

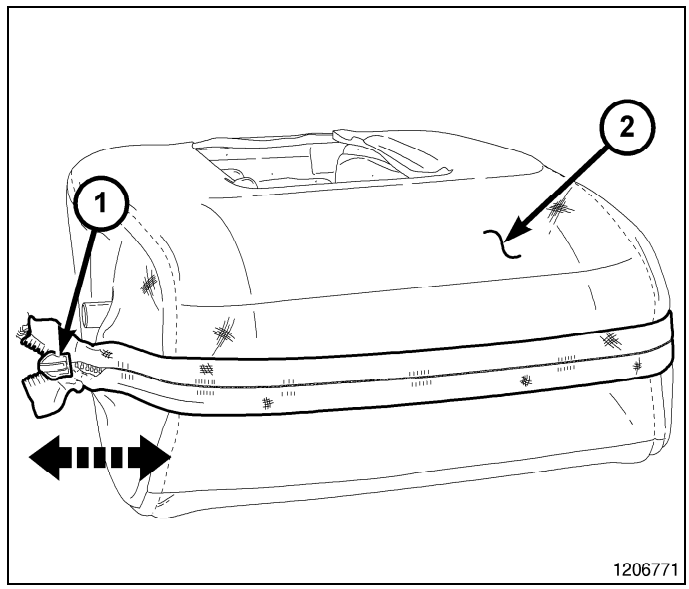

Assembly

1. Position the cover (3) on to the foam (1) and install three new hog rings (2).
2. Position the foam and cover assembly over the seat back frame.

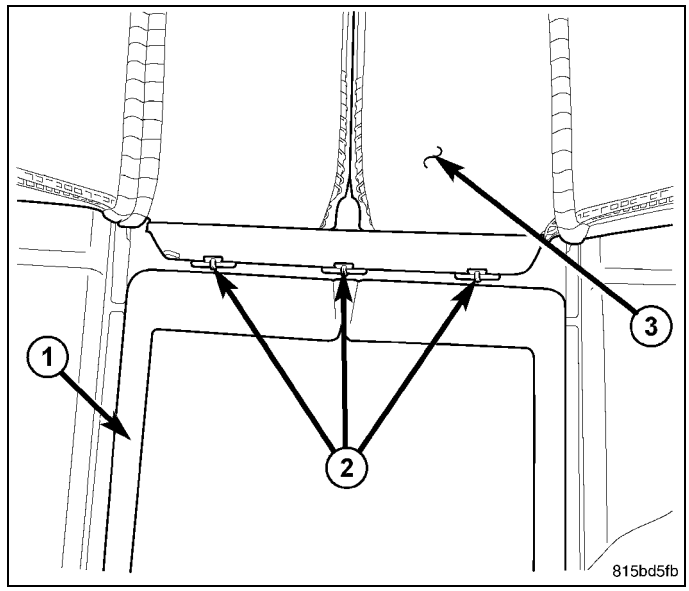

3. Secure the J-straps (1 and 5)
4. Position the armrest into the seat cavity and secure the upper hooks (2).
5. Seat the armrest fully into the seat cavity and install the screws (3) and nuts (4).
6. Tighten the screws and nuts to 28 N·m (21 ft. lbs.)

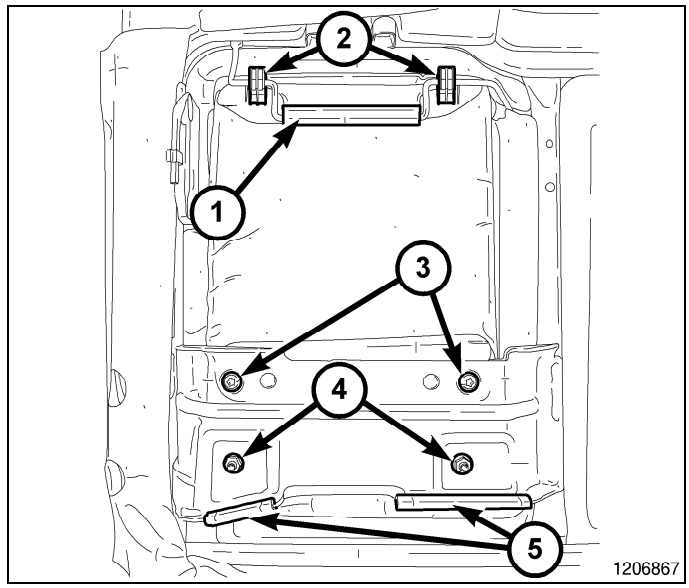

7. Secure the J-strap (1).
8. Install two new rear hog rings (2).

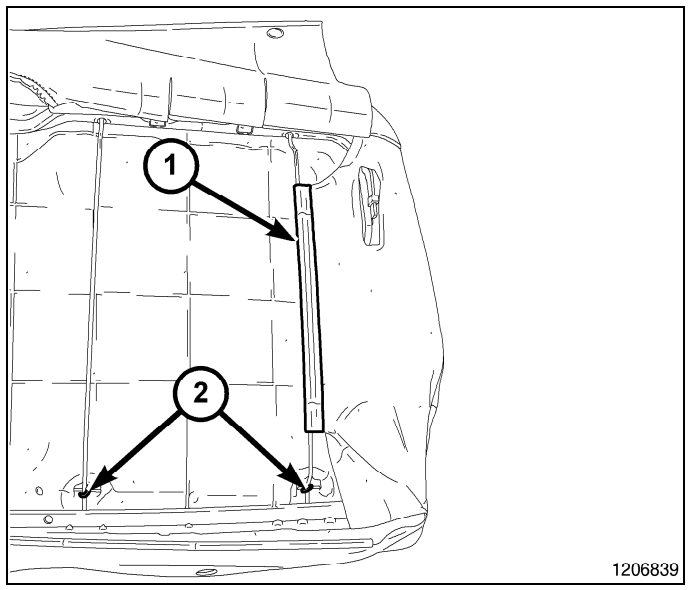

9. Secure the J-straps (2).

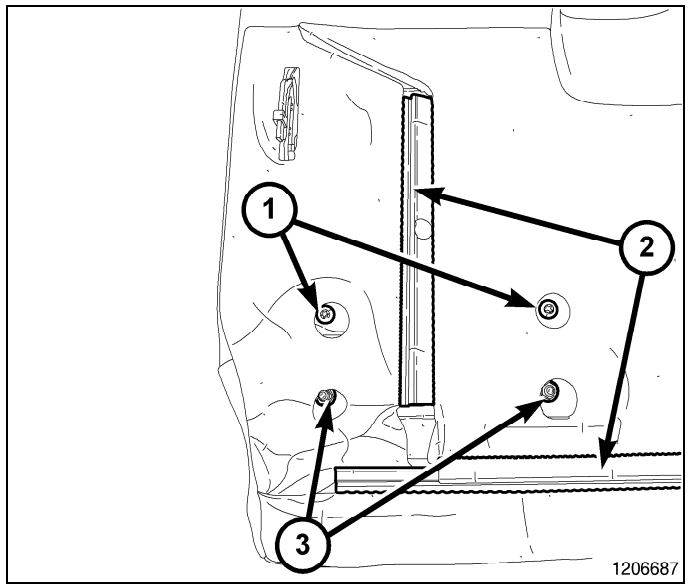

10. Install the new head restraint sleeves with slave sleeve (4) in the right position and master sleeve (3) in the left position.
11. Press the lock buttons (2) on the sleeves and insert the head restraint tubes (1) into the head restraint guide sleeves, ensuring proper forward facing orientation of the head restraint.
12. Install the seat back. (Refer to 23 - Body/Seats/SEAT BACK - Installation)

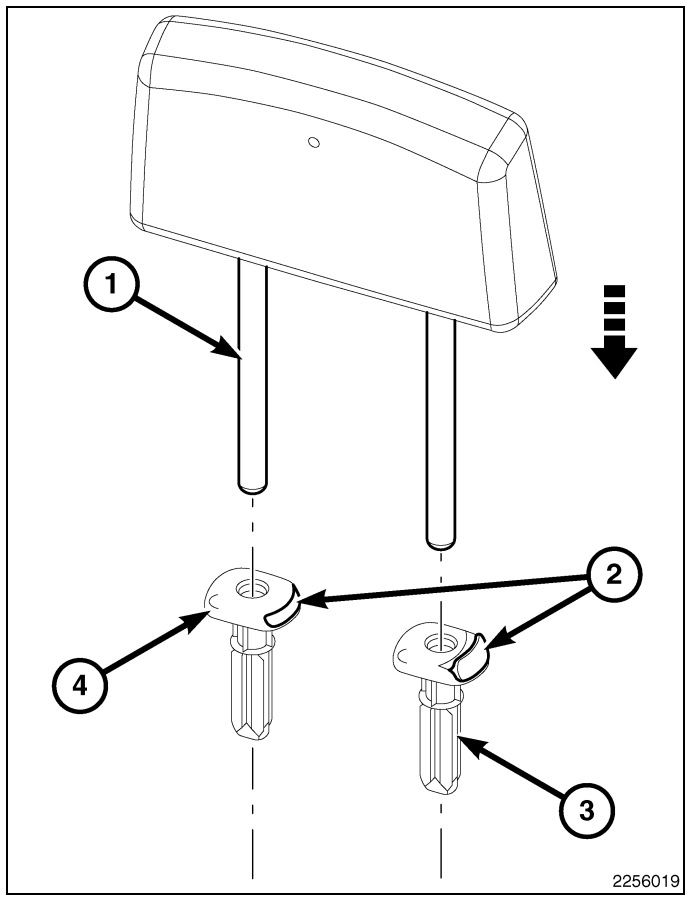

Center Arm Rest

1. Position the foam and cover (2) over the armrest frame and secure the zipper (1).

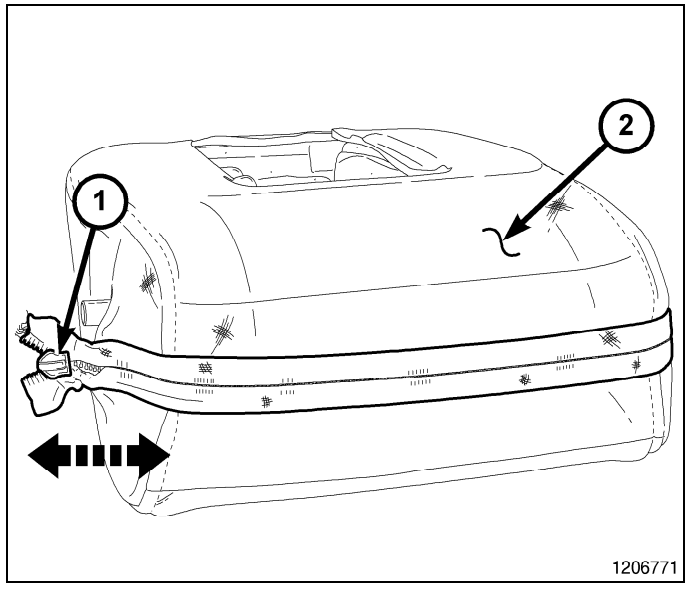

2. Position the cupholder (2) onto the armrest (3) and seat the four clips (1) fully.

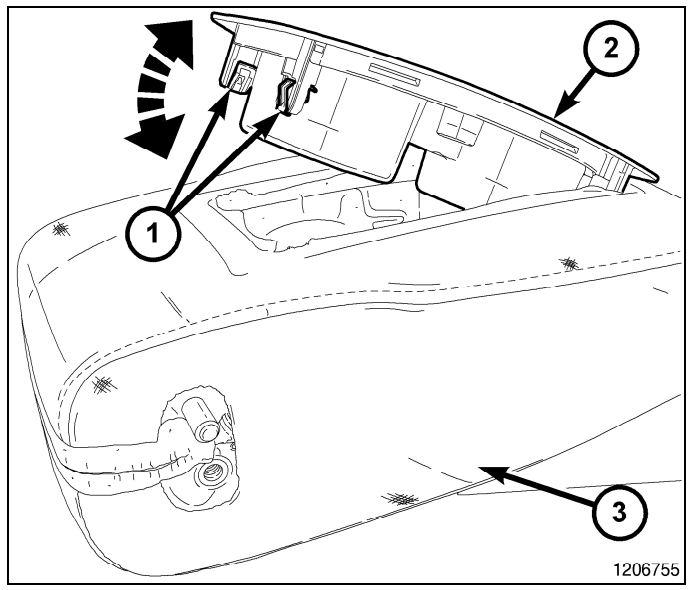

3. Install the armrest assembly (1) onto the tray (3) and install the pivot brackets.
4. Install the pivot bolts and tighten to 28 N·m (21 ft. lbs.).

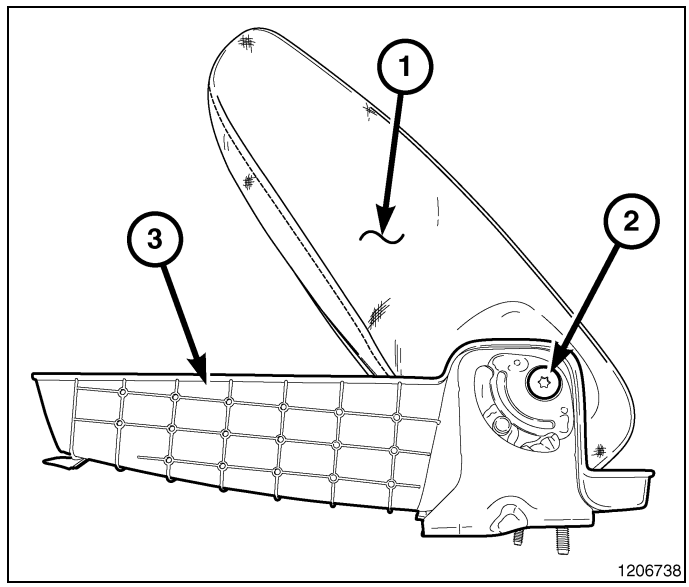

Installation

1. Position the seat back assembly (2) onto the seat latches and install the pivot bolts (1).
2. Tighten the bolts (1) to 28 N·m (21 ft. lbs.).

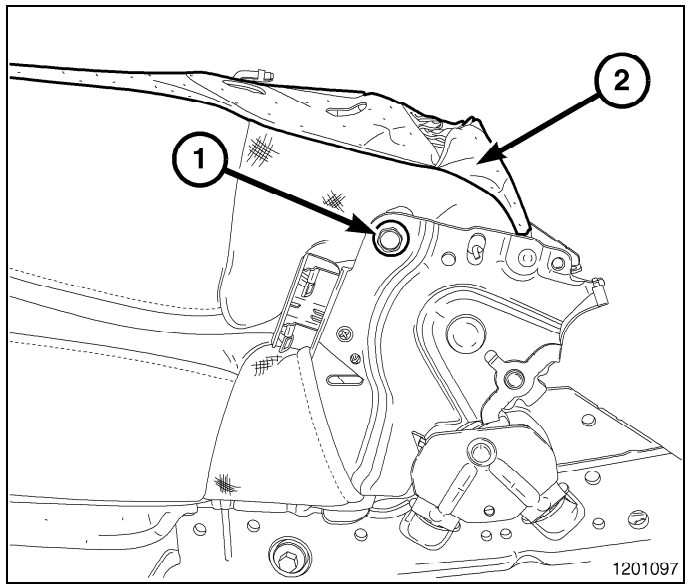

3. Install the side shields (2) and install the screws (1).
4. Install the rear seat assembly. (Refer to 23 - Body/ Seats/SEAT - Installation)

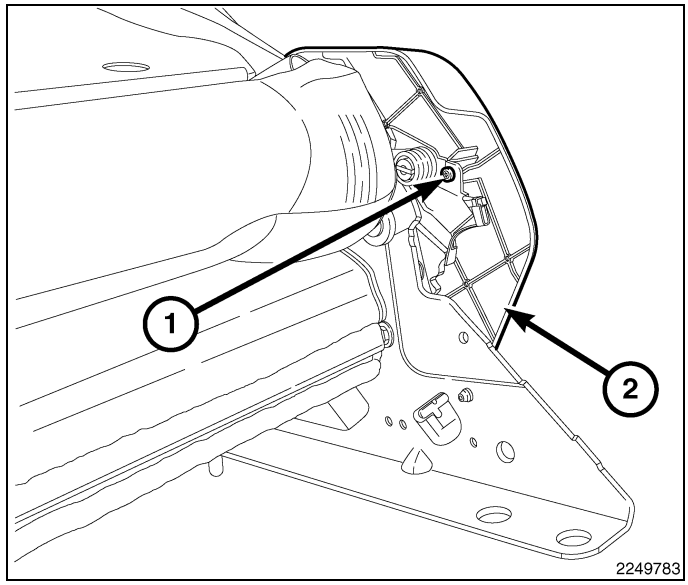

STATIONARY GLASS

TABLE OF CONTENTS

page

STATIONARY GLASS
BACKLITE
REMOVAL 350
INSTALLATION 351
BACKLITE, SLIDING
REMOVAL 353
INSTALLATION 354

page

REGULATOR, BACKLITE GLASS
REMOVAL 354
INSTALLATION 355
WINDSHIELD
WARNING 356
REMOVAL 357
INSTALLATION 359

Stationary Glass

BACKLITE

Removal

CAUTION: It is difficult to salvage the backlite during the removal operation. The urethane bonding used to secure the glass to the fence is difficult to cut or clean from any surface. Since the molding is set in urethane, it is unlikely it would be salvaged. Before removing the backlite, check the availability from the parts supplier.

NOTE: The backlite is attached to the window frame with urethane adhesive. The urethane adhesive is applied cold and seals the surface area between the window opening and the glass. The primer adheres the urethane adhesive to the backlite.

1. Roll down door glass.
2. Remove headliner (9) (Refer to 23 - Body/Interior/HEADLINER - Removal).

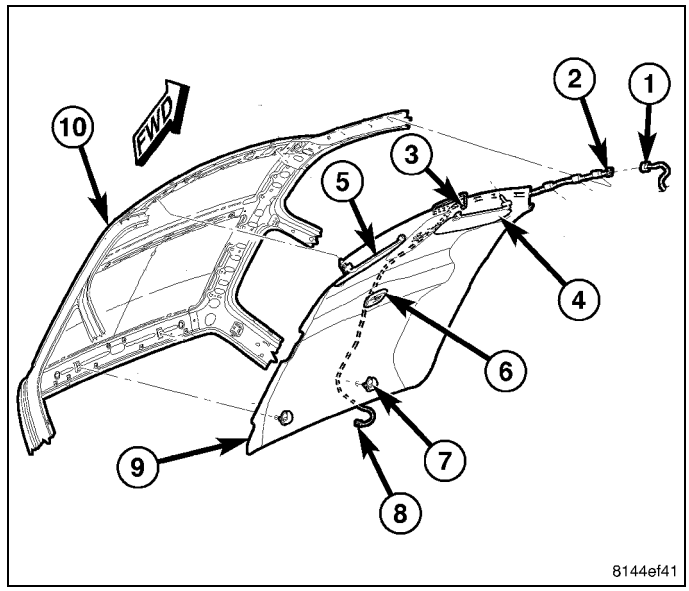

3. On standard cab models remove the upper B-pillar trim (5) (Refer to 23 - Body/Interior/PANEL, B-Pillar Trim - Removal).

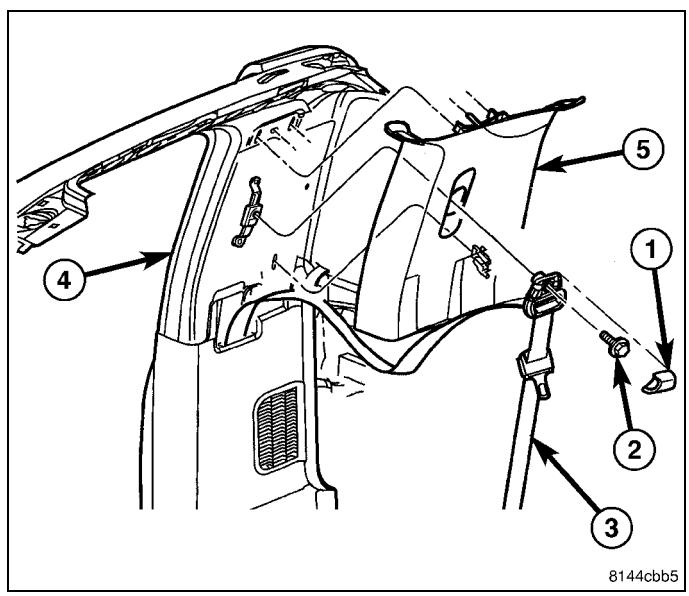

4. On quad cab models remove the upper C-pillar trim (5) (Refer to 23 - Body/Interior/PANEL, C-Pillar Trim - Removal).

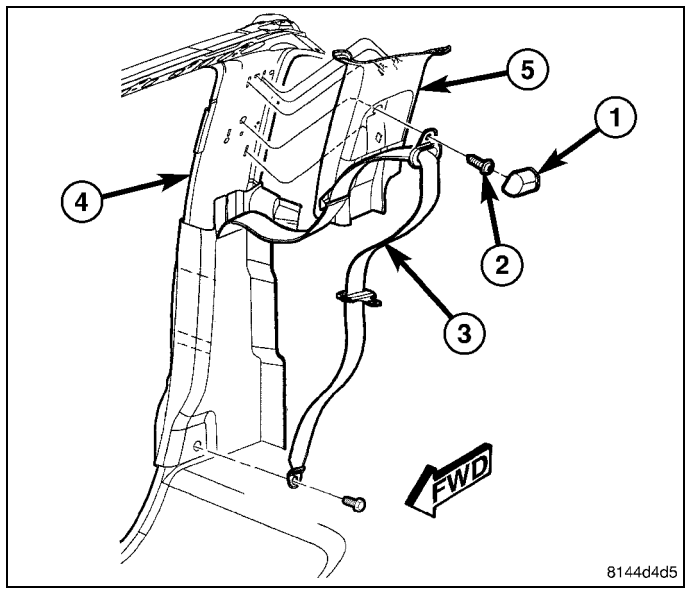

5. Bend backlite retaining tab (2) inward against glass.
6. Disconnect the rear window defogger electrical connector (if equipped).
7. Using a suitable pneumatic knife from inside the vehicle, cut urethane holding backlite frame to opening fence.
8. Separate glass (1) from vehicle.

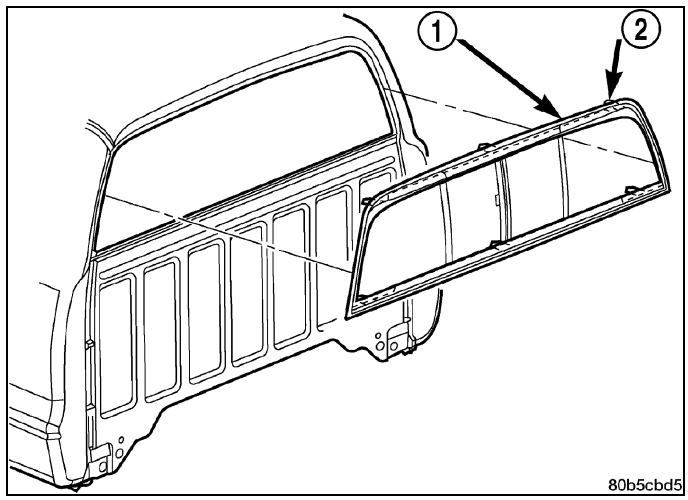

Installation

1. Clean urethane adhesive from around backlite opening fence.
2. If necessary, apply black-out primer to outer edge of replacement backlite frame (1).
3. If black-out primer was pre-applied on backlite, clean bonding surface with Isopropyl alcohol and clean lint free cloth. Allow 3 minutes for drying time.
4. Apply black-out primer to backlite opening fence.
5. Apply a 13 mm (0.5 in.) bead of urethane (4) around the perimeter of the window frame bonding surface (1).

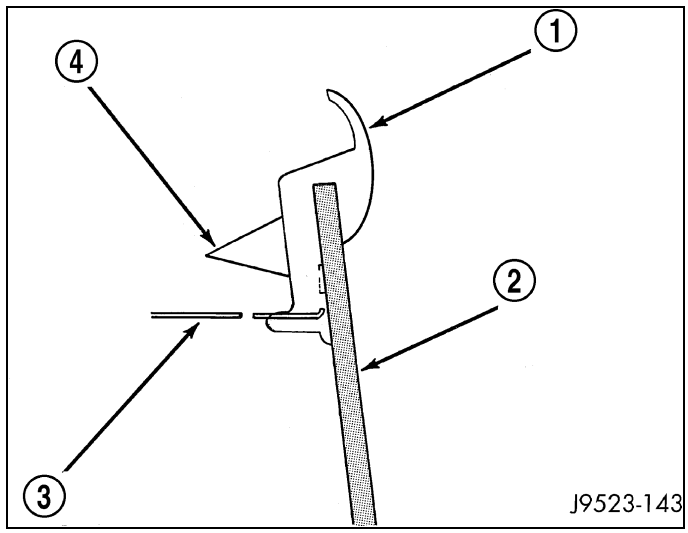

6. Set glass (1) on lower fence and move glass forward into opening.
7. Firmly push glass (1) against rear window glass opening fence.
8. Bend tabs around edges of backlite opening fence to retain glass.
9. Clean excess urethane from exterior with MOPAR®, Super Clean or equivalent.
10. Allow urethane to cure at least 24 hours (full cure is 72 hours).
11. Water test to verify repair before returning vehicle to service.
12. Connect the rear window defogger electrical connector, if equipped.

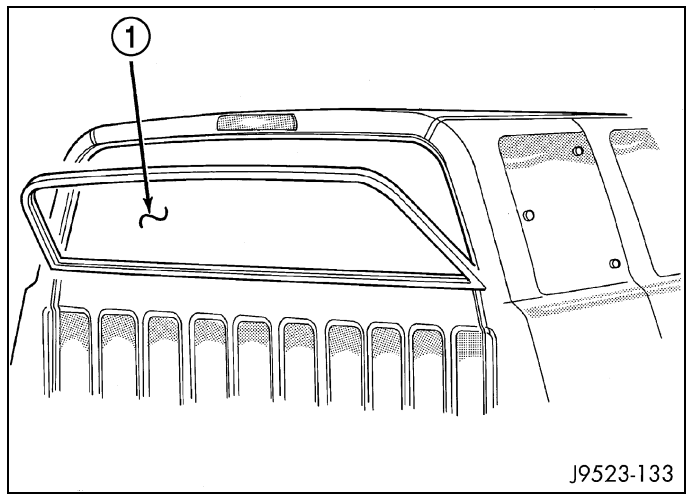

13. On standard cab models, install the upper B-pillar trim (5) (Refer to 23 - Body/Interior/PANEL, B-Pillar Trim - Installation).

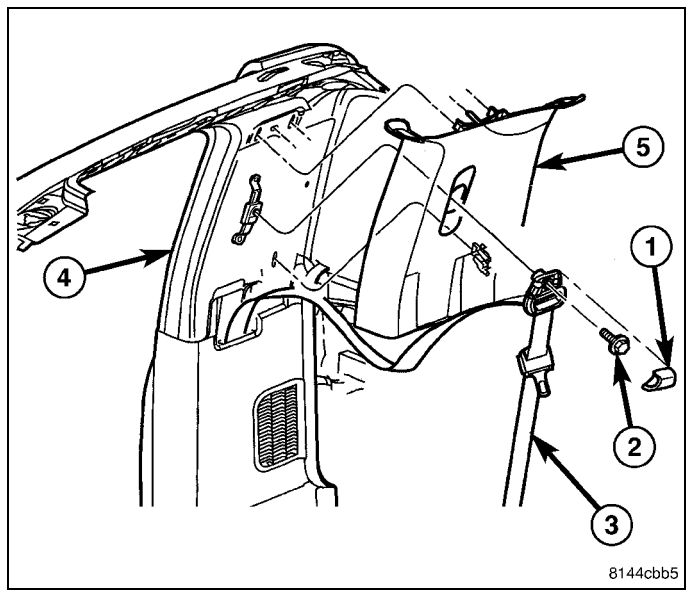

14. On quad cab models, install the upper C-pillar trim (5) (Refer to 23 - Body/Interior/PANEL, C-Pillar Trim - Installation).

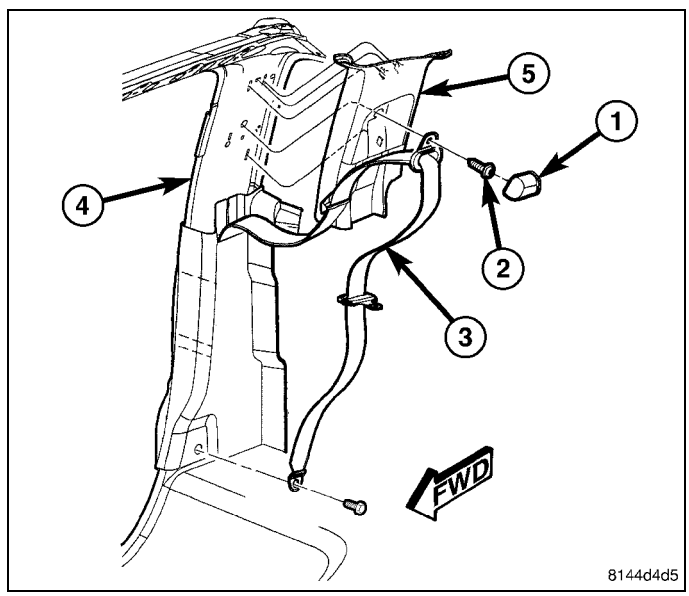

15. Install the headliner (9) (Refer to 23 - Body/Interior/ HEADLINER - Installation).

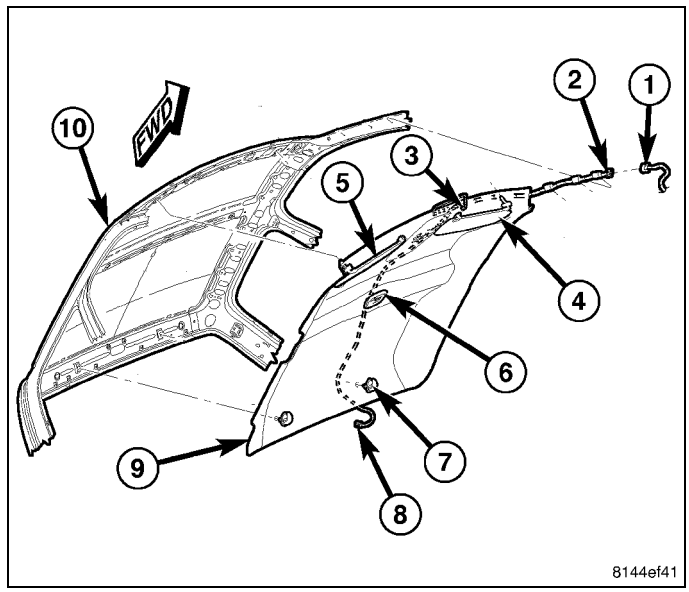

BACKLITE, Sliding

Removal

1. Slide the upper run channel (1) out of the window frame (2).
2. Slide the vent glass (3) upward to remove from the lower window frame (2).
3. Lower the glass (3) out of the upper window frame (2) and remove.

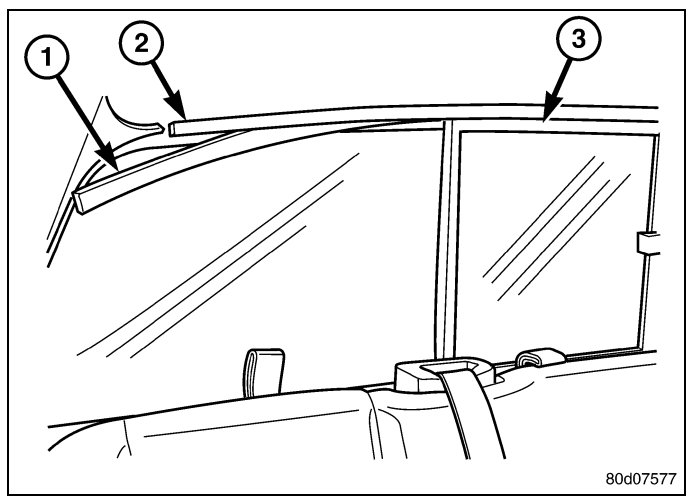

Installation

1. Slide the vent glass (3) upper edge into window frame (2) and insert the lower edge into the lower molding.
2. Position the upper run channel (1) into the window frame (2) and slide it into place.
3. Verify vent glass (3) operation.

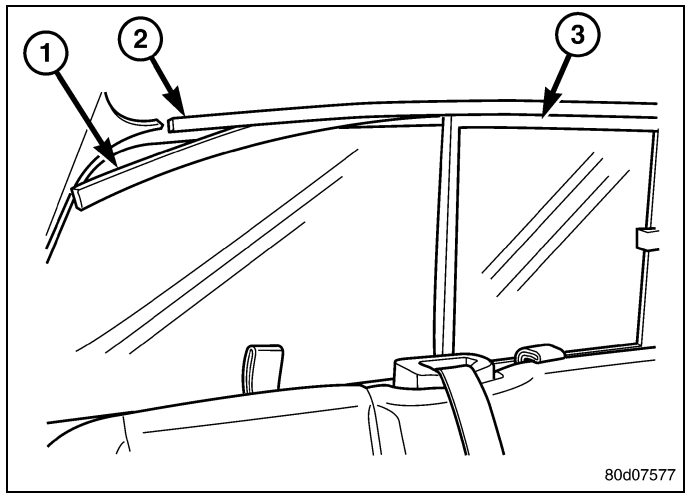

REGULATOR, Backlite Glass

Removal

1. Disconnect and isolate the battery negative cable.
2. Remove the rear cab back panel (Refer to 23 - Body/Interior/PANEL, Cab Back Trim - Removal).
3. Remove the two mounting bolts (1).
4. Disconnect the electrical connector to the power motor.

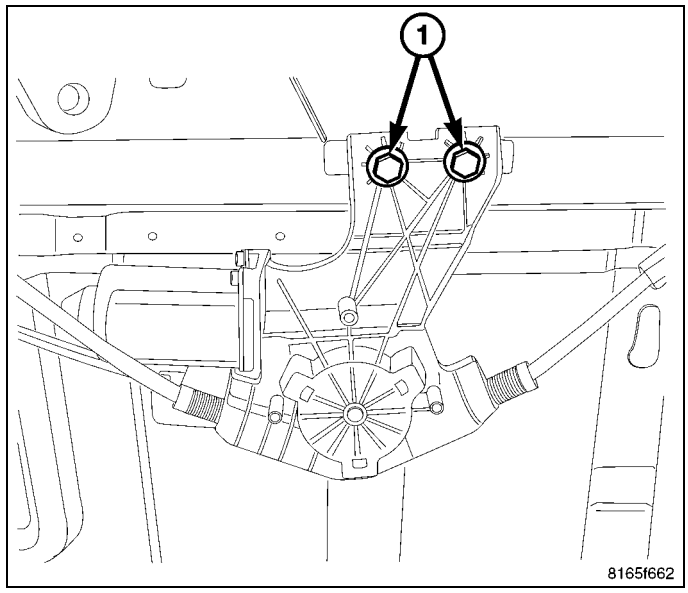

5. Separate the cable housings from the glass track (1).
6. Disconnect the cable ends from the vent glass (2).
7. Separate the support clips (5) and remove the regulator assembly (3).

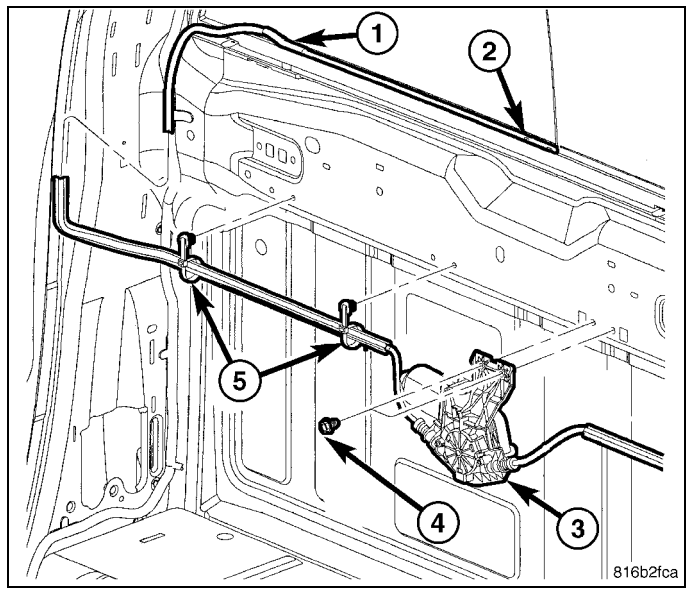

Installation

1. Connect the cable ends to the vent glass (2).
2. Install the cable housings into the glass tracks (1).
3. Fasten the support clips (5).

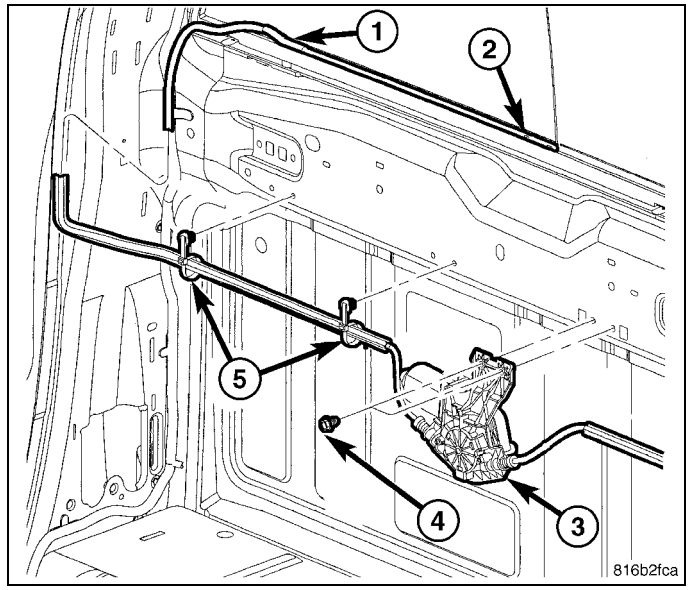

4. Install the 2 mounting bolts (1).
5. Install the rear cab back panel (Refer to 23 - Body/ Interior/PANEL, Cab Back Trim - Installation).
6. Connect the battery negative cable.

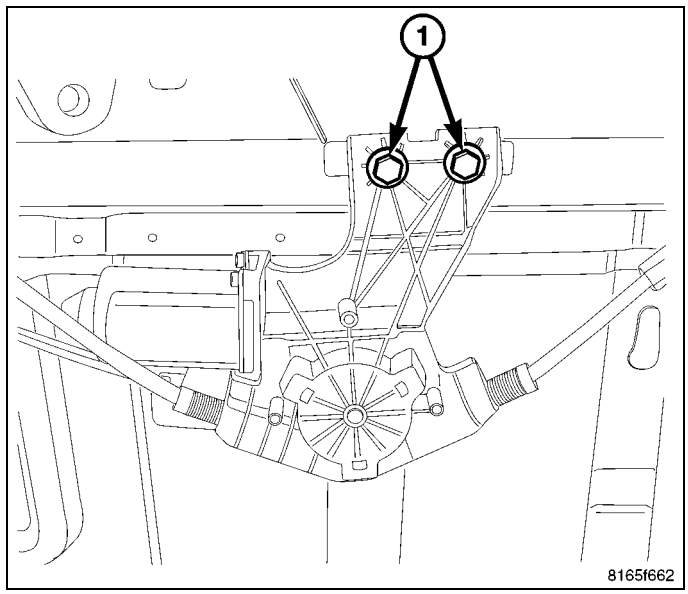

WINDSHIELD

Warning

WARNING: Do not operate the vehicle within 24 hours of windshield installation. It takes at least 24 hours for urethane adhesive to cure. If it is not cured, the windshield may not perform properly in an accident. Failure to follow these instructions may result in serious or fatal injury.

- **Urethane adhesives are applied as a system. Use glass cleaner, glass prep solvent, glass primer, PVC (vinyl) primer and pinch weld (fence) primer provided by the adhesive manufacturer. If not, structural integrity could be compromised.**
- **Chrysler LLC does not recommend glass adhesive by brand. Technicians should review product labels and technical data sheets, and use only adhesives that their manufactures warranty and will restore a vehicle to the requirements of fmvss 212. Technicians should also insure that primers and cleaners are compatible with the particular adhesive used.**
- **Be sure to refer to the urethane manufacturer's directions for curing time specifications and do not use adhesive after its expiration date.**
- **Vapors that are emitted from the urethane adhesive or primer could cause personal injury or death. Use them in a well-ventilated area.**
- **Skin contact with urethane adhesive should be avoided. Personal injury or death may result.**
- **Always wear eye and hand protection when working with glass.**

CAUTION: Protect all painted and trimmed surfaces from coming in contact with urethane or primers. Be careful not to damage painted surfaces when removing moldings or cutting urethane around windshield.

Removal

1. Remove inside rear view mirror (3). (Refer to 23 - Body/Interior/MIRROR, Rearview - Removal)

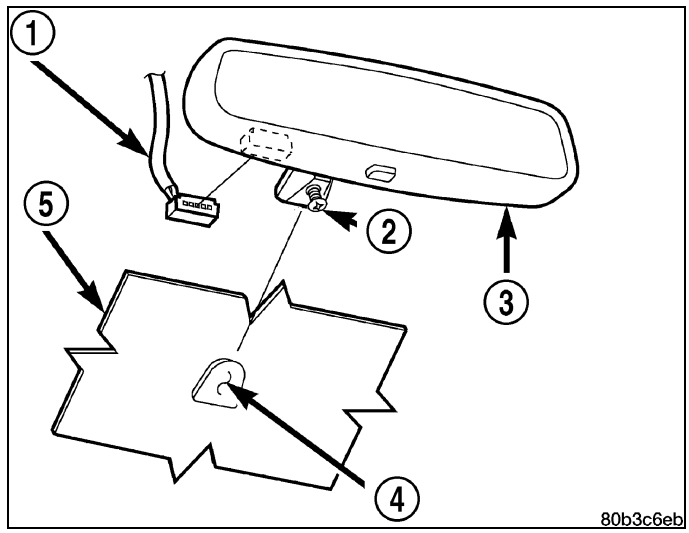

2. Remove cowl grille (2). (Refer to 23 - Body/Exterior/ COVER, Cowl Panel - Removal)

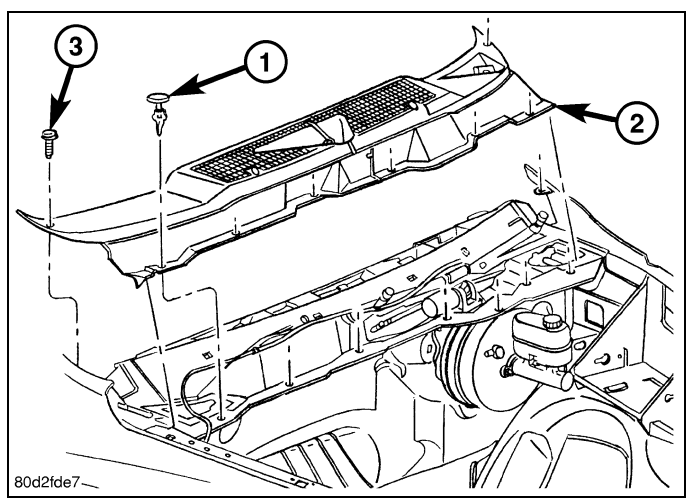

3. Remove the A-pillar weatherstrip retainer (1).

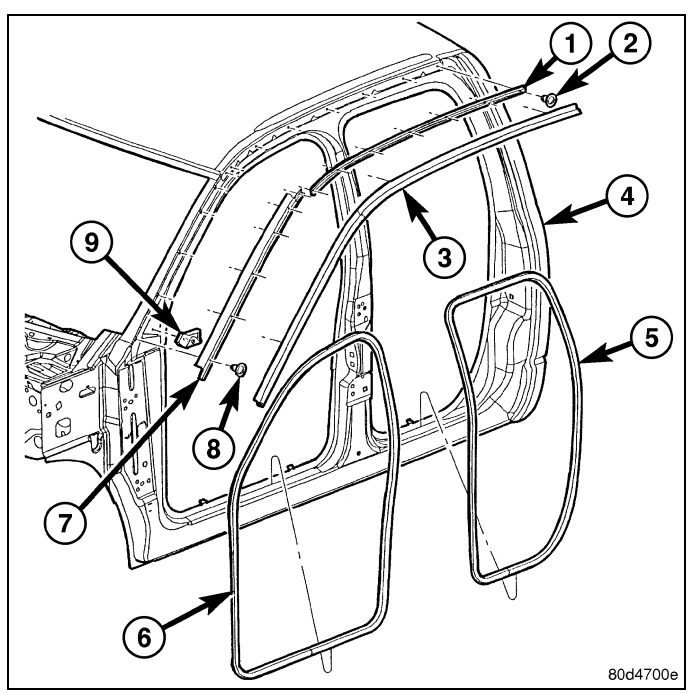

4. Remove the A-pillar trim panels (2). (Refer to 23 - Body/Interior/PANEL, A-Pillar Trim - Removal)

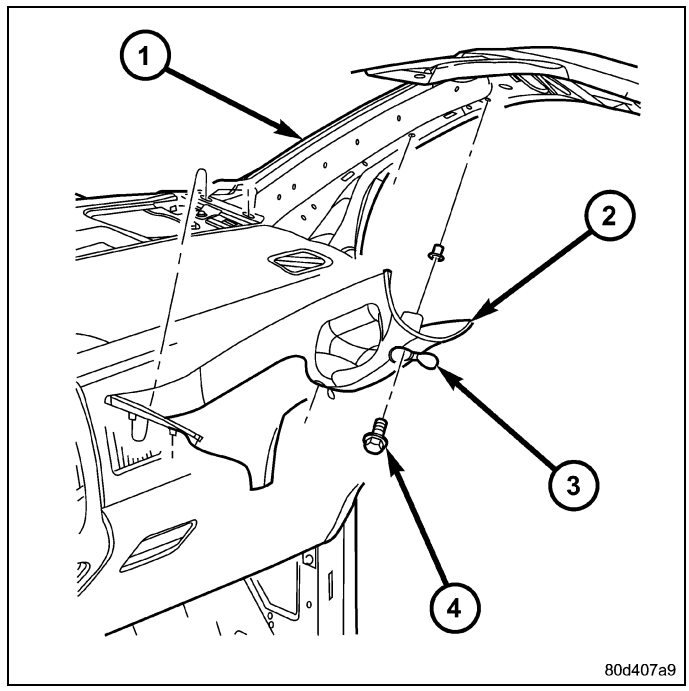

5. Lower the headliner (9) as needed and using windshield removal tool such as an extractor or equivalent, start at the rear section of the glass and work around the parameter to remove urethane. A pneumatic cutting device can be used but is not recommended. (Refer to 23 - Body/Interior/HEADLINER - Removal)
6. Separate windshield from vehicle.

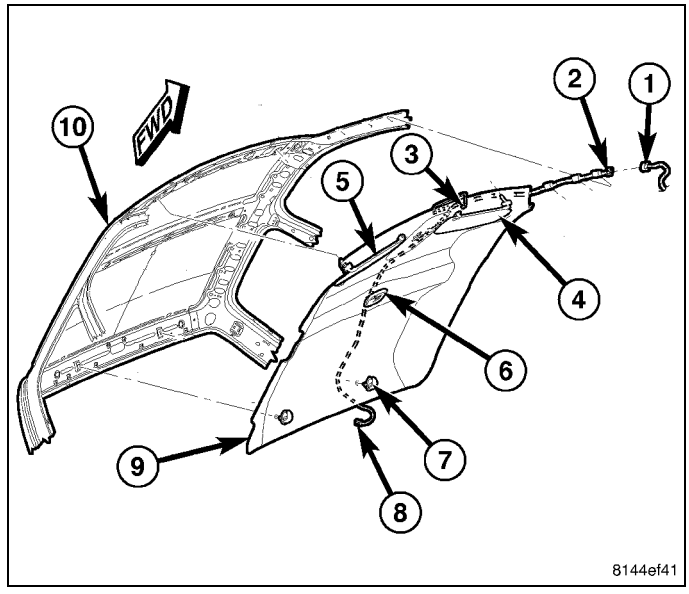

Installation

WARNING: Allow the urethane at least 24 hours to cure before returning the vehicle to use.

CAUTION: Roll down the left and right front door glass and open the rear glass slider (if available) before installing windshield. This is to avoid pressurizing the passenger compartment if a door is slammed before the urethane is cured. The potential for water leaks can result.

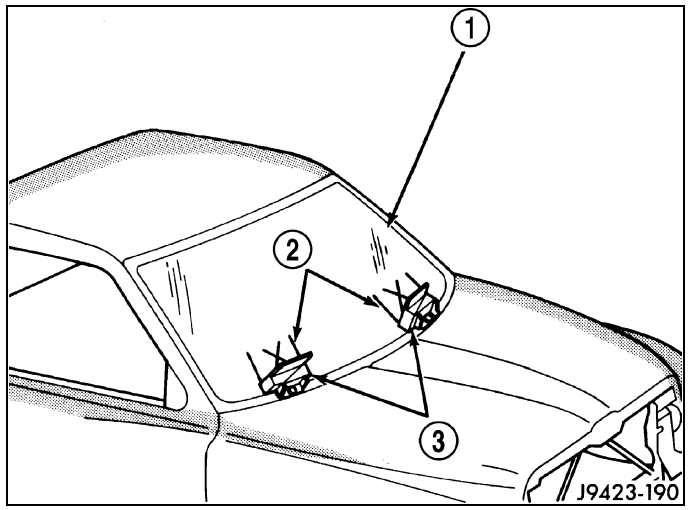

The windshield fence should be cleaned of most of its old urethane bonding material. A small amount of old urethane, approximately 1-2 mm in height, should remain on the fence. Do not grind off or completely remove all old urethane from the fence, the paint finish and bonding strength will be adversely affected.

1. Place replacement windshield (1) into windshield opening and position glass in the center of the opening against the support spacers (3). Mark the outside surface of the glass at the support spacers (3) with a grease pencil or pieces of masking tape and ink pen to use as a reference (2) for installation. Remove replacement windshield from windshield opening.

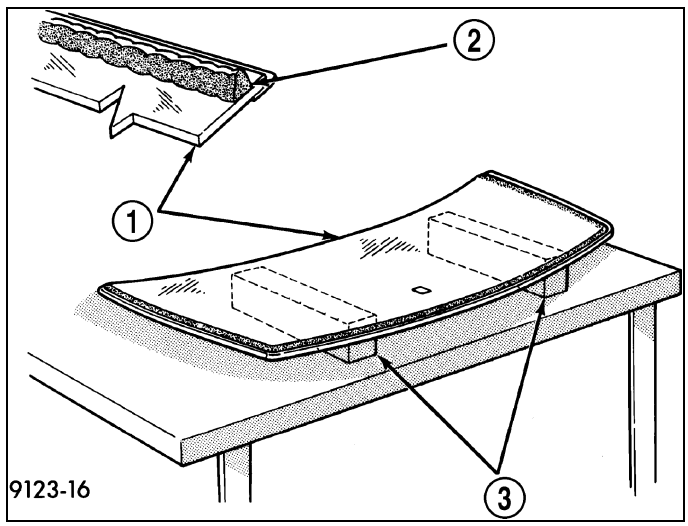

2. Position the windshield (1) inside up on a suitable work surface with two padded, wood 10 cm by 10 cm by 50 cm (4 in. by 4 in. by 20 in.) blocks (3), placed parallel 75 cm (2.5 ft.) apart.
3. Clean inside of windshield with MOPAR® Glass Cleaner and lint-free cloth.
4. Apply clear glass primer 25 mm (1 in.) wide around perimeter of windshield and wipe with a new clean and dry lint- free cloth.
5. Apply black-out primer onto the glass using the windshield molding as a guide. The primer should be 15 mm (5/8 in.) wide on the top and sides of the glass and 25 mm (1 in.) on the bottom of windshield. Allow at least three minutes drying time.

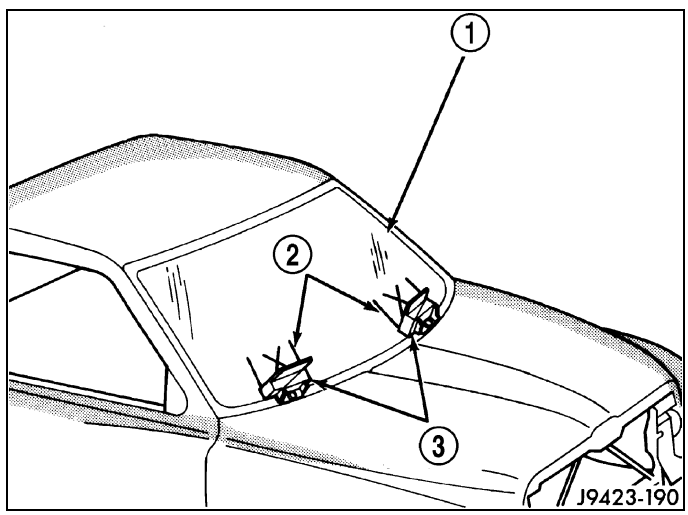

6. Locate **NEW** support spacers (3) on support brackets and adjust to lowest height.

7. Position seven new foam spacers (4 and 3) on the inside surface of the windshield, flush with the lower and side edges.
8. Position three new foam spacers (1) on the inside surface of the windshield, at a minimum distance of 3 mm (0.12 in.) from the top edge of the windshield.

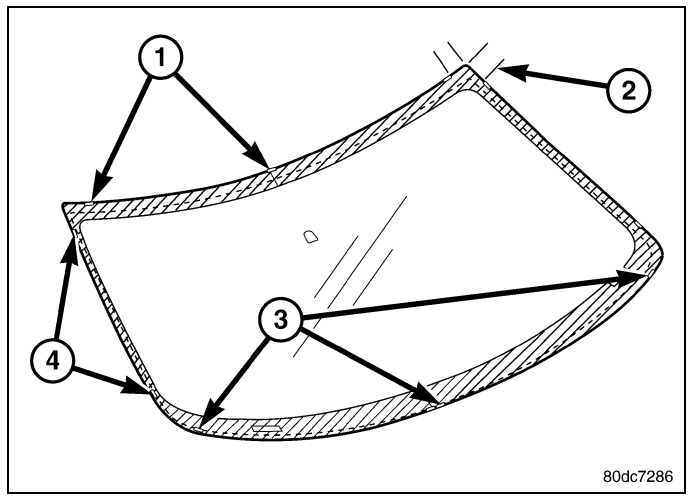

9. The urethane bead should be shaped in a triangular cross-section, this can be achieved by notching the tip of the applicator.

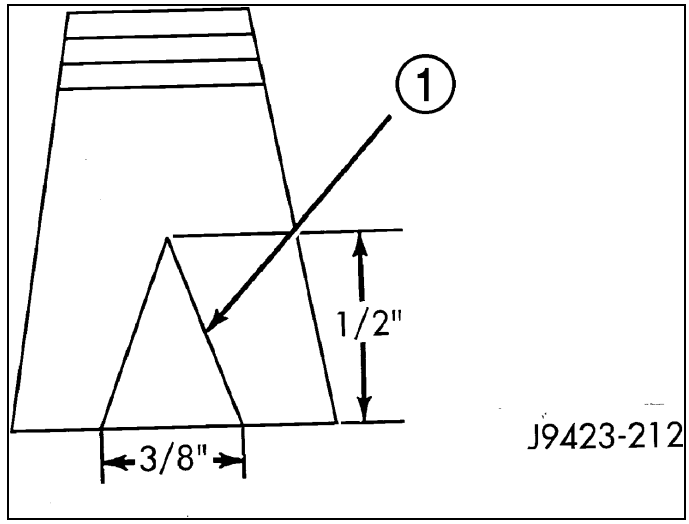

10. Apply a 13 mm (1/2 in.) high and 10 mm (3/8 in.) wide bead of urethane around the perimeter of windshield (2). At the top, apply the bead 7 mm (1/4 in.) inboard from the glass edge. On the other three sides apply the bead 14 mm (0.55 in.) inboard from the glass edge.

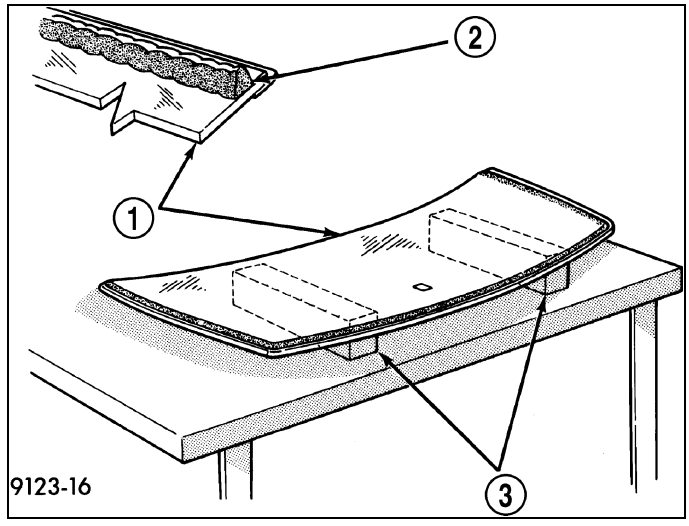

11. With the aid of a helper, position the windshield (2) over the windshield opening. Align the reference marks at the bottom of the windshield to the support spacers (3).
12. Slowly lower windshield glass (2) to the fence opening guiding the lower corners into proper position. Beginning at the bottom and continuing to the top, push glass (2) onto fence along the A-Pillars. Push windshield (2) inward to the fence at the bottom corners.
13. Push windshield (2) upward, setting the windshield to roof gap to 1.5 mm (0.06 in.) to 3 mm (0.12 in.) and ratchet up the adjustable support brackets.
14. Using clean water, lightly mist the support spacers (3).
15. Clean excess urethane from exterior with MOPAR® Super Clean or equivalent.

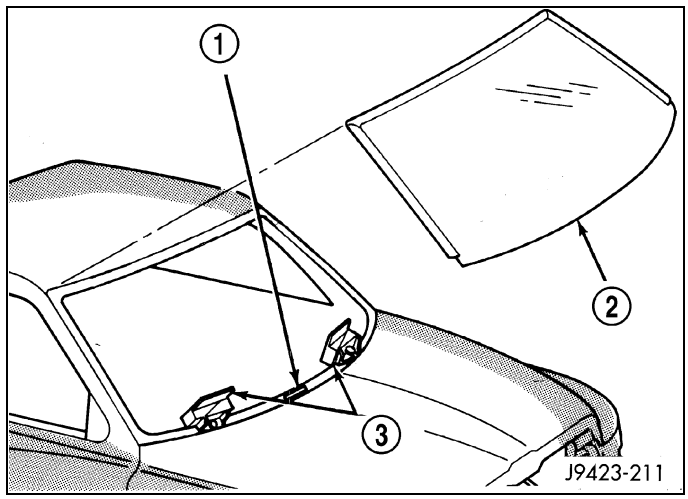

16. Install cowl grille (2). (Refer to 23 - Body/Exterior/COVER, Cowl Panel - Installation)

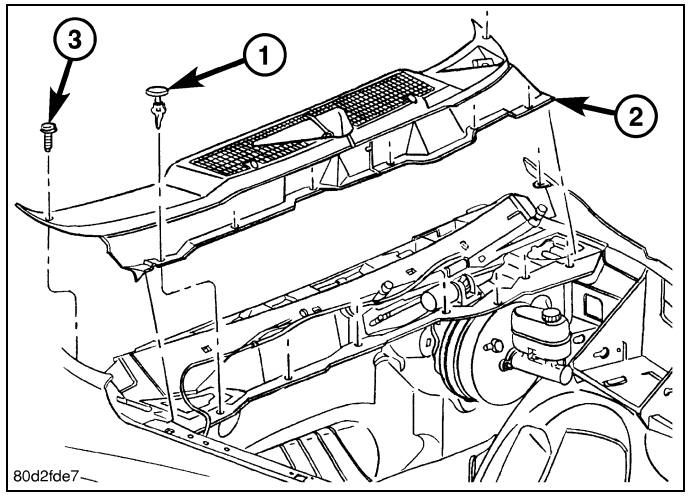

17. Install rear view mirror support bracket (4). (Refer to 23 - Body/Interior/MIRROR, Rearview - Installation)
18. Install rear view mirror (3). (Refer to 23 - Body/Interior/MIRROR, Rearview - Installation)

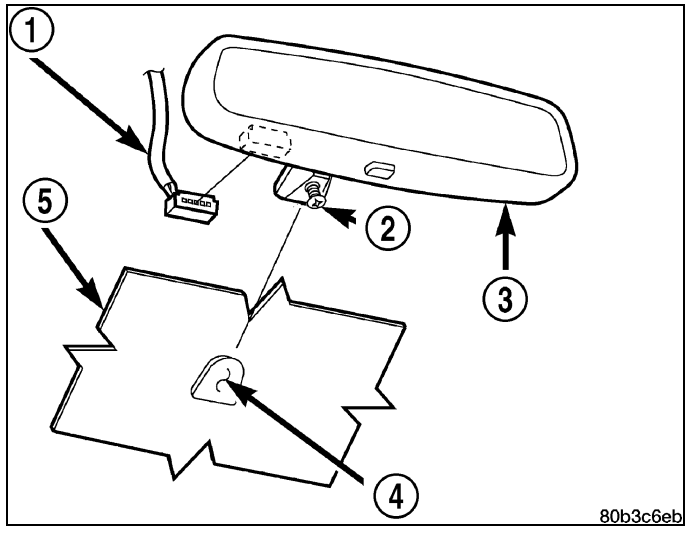

19. Install the A-pillar trim (2). (Refer to 23 - Body/Interior/ PANEL, A-Pillar Trim - Installation)

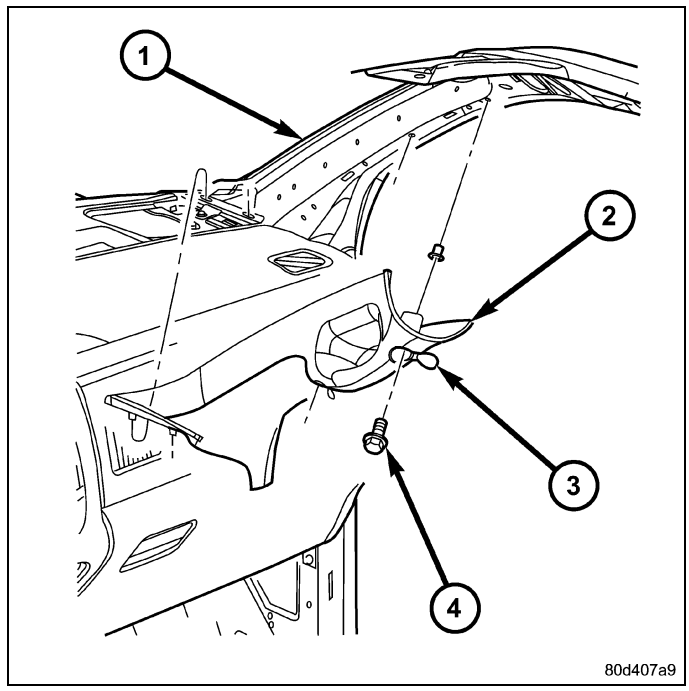

20. Install the headliner (6). (Refer to 23 - Body/Interior/ HEADLINER - Installation)

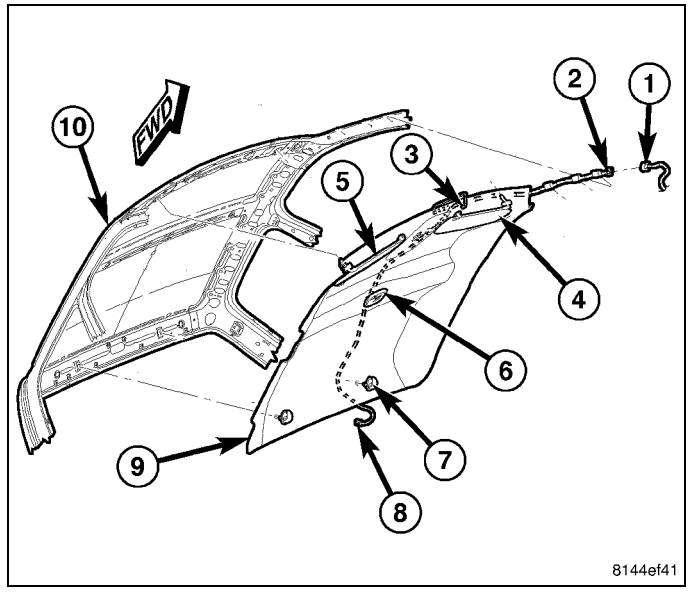

21. Install the A-pillar weatherstrip retainer (1).
22. After urethane has cured, remove tape strips and water test windshield to verify repair.

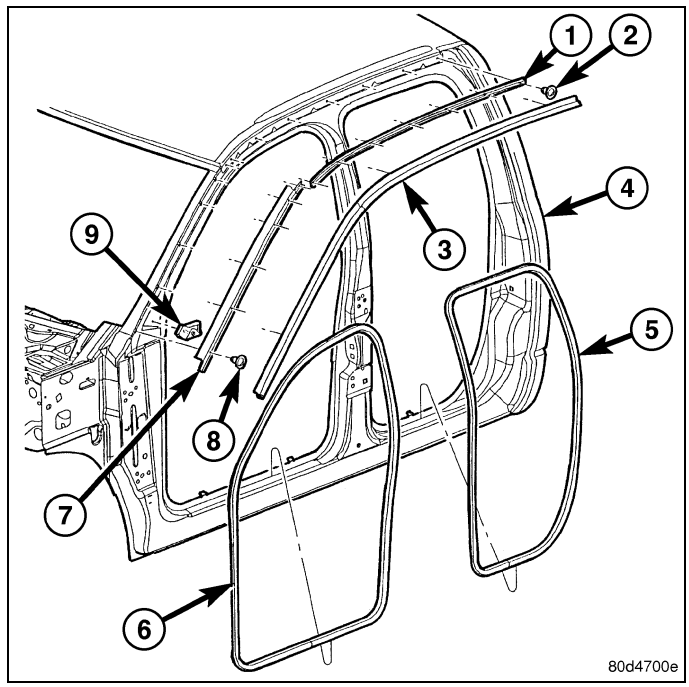

SUNROOF

TABLE OF CONTENTS

page

SUNROOF
- DESCRIPTION 366
- OPERATION 367
- DIAGNOSIS AND TESTING 368
- **CHANNEL, SUNROOF DRAIN**
  - REMOVAL 368
  - INSTALLATION 369
- **COVER, SUNROOF MECHANISM**
  - REMOVAL 370
  - INSTALLATION 371
- **DEFLECTOR, WIND**
  - REMOVAL 372
  - INSTALLATION 373
- **GLASS, SUNROOF**
  - REMOVAL 374
  - INSTALLATION 375
  - ADJUSTMENTS 375

page

GUIDE, SUNROOF, GLASS
- REMOVAL 377
- INSTALLATION 379

SUNROOF
- REMOVAL 381
- INSTALLATION 383

SUNSHADE, SUNROOF
- REMOVAL 384
- INSTALLATION 385

TRIM RING, SUNROOF
- REMOVAL 386
- INSTALLATION 387

TUBE, SUNROOF DRAIN
- REMOVAL 387
- INSTALLATION 388

Sunroof

Description

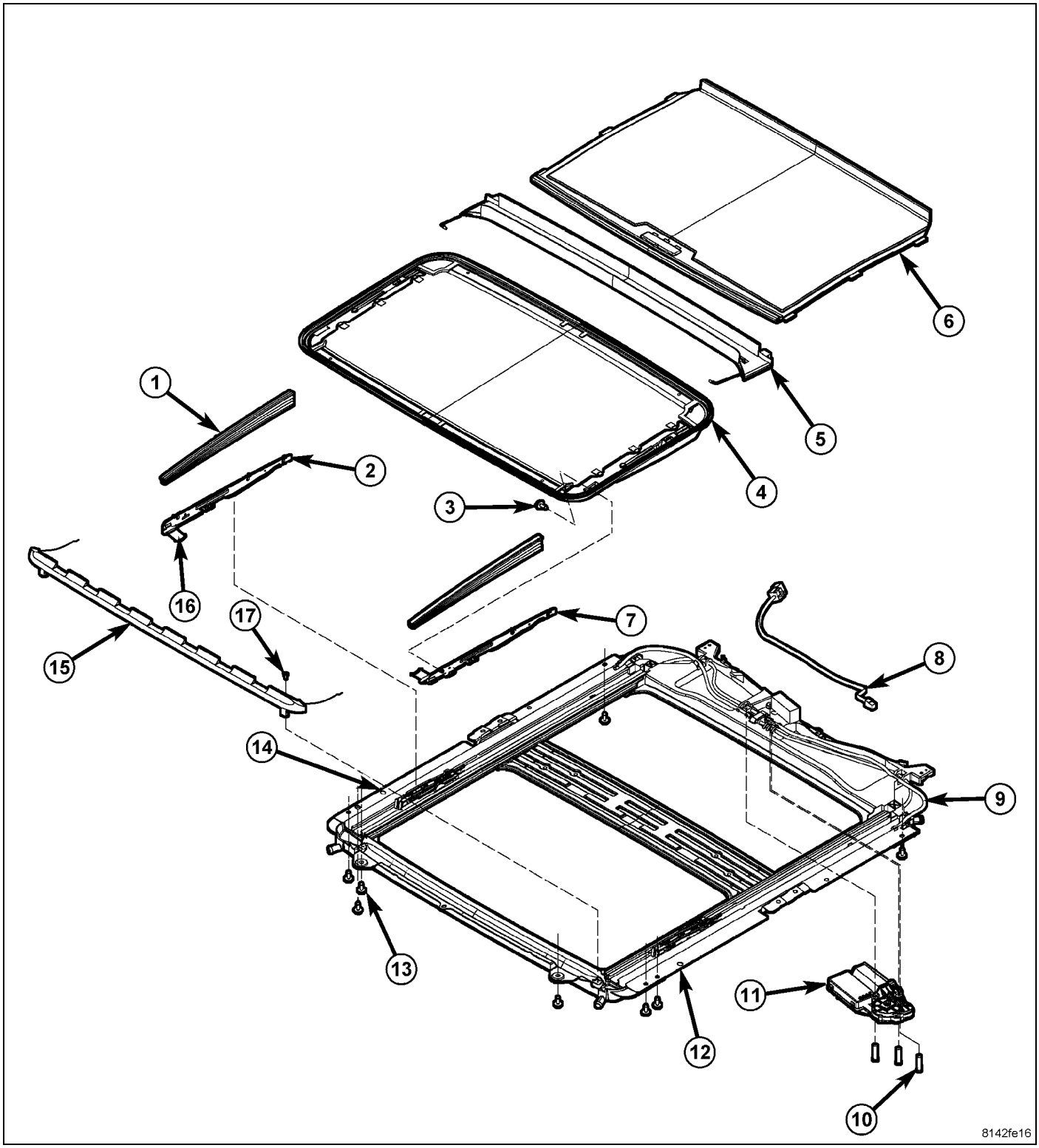

EXPLODED VIEW

1 - MECHANISM COVERS (2)
2 - RIGHT HAND GLASS GUIDE
3 - GLASS FASTENERS (4)
4 - GLASS ASSEMBLY
5 - DRAIN CHANNEL
6 - SUNSHADE
7 - LEFT SUNROOF GLASS GUIDE
8 - WIRE HARNESS
9 - SUNROOF ASSEMBLY
10 - MOTOR FASTENERS (3)
11 - SUNROOF MOTOR/MODULE ASSEMBLY
12 - ALIGNMENT HOLE
13 - ASSEMBLY FASTENERS (8)
14 - ALIGNMENT HOLE
15 - WIND DEFLECTOR
16 - GLASS GUIDE FOOT
17 - WIND DEFLECTOR STRAP SCREWS (2)

The power sunroof system allows the sunroof to be opened, closed or placed in the vent position electrically by actuating a switch in the overhead console. The sunroof will operate normally with the key in any position, while the Accessory Delay system is active.

The sunroof glass panel tilts upward at the rear for ventilation and slides rearward under the roof when open. The glass panel seals flush with the roof in the closed position to eliminate wind noise. The sunroof includes a manual-sliding sunshade to cover the deep-tinted glass panel.

In addition to the standard power sunroof operation, this vehicle offers several additional features. There is an express (one-touch) opening and closing feature as well as Excessive Force Limitation (EFL). The EFL function detects obstacles trapped between the glass and the vehicle roof during a closing motion. Upon sensing an obstacle the EFL function will reverse direction of the glass to allow removal of the obstacle.

The main components of the power sunroof system are:

- The motor/module assembly
- The power sunroof glass and frame assembly
- The power sunroof switch
- The manual-sliding sunshade

Operation

This vehicle has a vent, tilt and slide power sunroof system with express (one-touch) open and closing feature. The sunroof system receives constant battery feed through a fuse in the Power Distribution Center (PDC). The sunroof will operate normally with the key in the “RUN” or “ACCESSORY” position. If the sunroof is moving when the key is turned to the START position (crank engine), all motions will stop. The sunroof will also stop a requested motion if the key is turned “OFF”.

A combination push-button and rocker switch module mounted in the overhead console controls sunroof operation. The sunroof switch is a rocker design with a push button in the center of the two halves of the rocker. Pressing the rocker towards the front of the car commands the sunroof closed. Pressing the rocker towards the rear of the car commands the sunroof open. Pressing the center push button commands the sunroof up into the vent position (Rear of sunroof glass raises above the vehicle roof with glass still covering the sunroof opening). All switch commands operate with the glass starting in any position. (Refer to 08 - Electrical/8N - Power Systems/Power Top/SWITCH, Sunroof - Operation) for additional information.

An electronic control system, integral to the motor/module assembly, provides the express open and close functions. During express opening, the sunroof glass panel will first open to the “Comfort Stop” position. A second press of the “OPEN” button on the rocker switch will move the glass panel to the full open position. Pressing the "close" end of the rocker switch moves the sunroof glass panel to the full closed position. During express closing, anytime an obstacle is detected in the way of the glass, the motor will stop and reverse travel to avoid pinching an occupant's finger, ice in the track, etc. This function is called Excessive Force Limitation (EFL). There are two methods of overriding the EFL function.

1. When three EFL events occur without the glass being allowed to fully close, the next close attempt will only move while the close switch is continuously actuated. This allows the sunroof to be forced closed if multiple close attempts fail.
2. If the sunroof close switch is continuously actuated during an EFL event, through the reversal, and during a two second wait time, then continuing to hold the close switch will cause the roof to move towards close with the EFL protection disabled. This allows the sunroof to be forced closed if it is known that a reversal will occur. This sec-

ondary EFL override may be necessary when known debris (ice blockage for example) is preventing the glass panel from closing.

While in EFL override, the closing motion will cease if the sunroof switch is released at any time.

Diagnosis and Testing

For sunroof electrical system diagnosis and testing procedures, (Refer to 08 - Electrical/8N - Power Systems/Power Top - Diagnosis and Testing).

WATER DRAINAGE AND WIND NOISE DIAGNOSIS

The sliding glass panel is designed to seal water entry with a snug fit between the roof and the seal. The fit can be checked by inserting a business card or equivalent, between the roof and the seal. The piece of paper should have some resistance when pulled out when the glass panel is in the closed position. The sunroof housing will drain off a minimum amount of water. Excessive wind noise could result if the gap clearances are exceeded. The sunroof glass panel may need to be adjusted. (Refer to 23 - Body/Sunroof/GLASS, Sunroof - Adjustments)

Adequate drainage is provided by a drain trough in the sunroof housing which encircles the sliding glass panel and leads to drain hoses. If a wet headliner or other water leak complaints are encountered, before performing any adjustments, first ensure that the drainage system is not plugged or disconnected. Use a pint container to pour water into the sunroof housing drain trough. If water flow is restricted, use compressed air to blow out any material plugging the drain system. Retest system again.

To further check for a disconnected drain hose:

NOTE: Care must be taken not to fold or kink the headliner upon removal.

1. Lower headliner as necessary to gain access to sunroof housing drain tubes. (Refer to 23 - Body/Interior/HEADLINER - Removal)
2. Repair as necessary.

CHANNEL, Sunroof Drain

Removal

NOTE: Left side shown, right side typical.

1. Remove glass panel.(Refer to 23 - Body/Sunroof/GLASS, Sunroof - Removal)
2. Using pliers, disengage the drain channel arm (1) from the guide mechanisms (2) one at a time by pushing the drain channel arm retaining tab through the retention hole located in the guide mechanism.**Do not use excessive force to remove.**

CAUTION: Disengage the drain channel arms one at a time. Do not disengage both sides at the same time.

CAUTION: Do not pull or pry the channel arms. Doing so will result in breaking the channel arms. Only disengage the channel arms as shown.

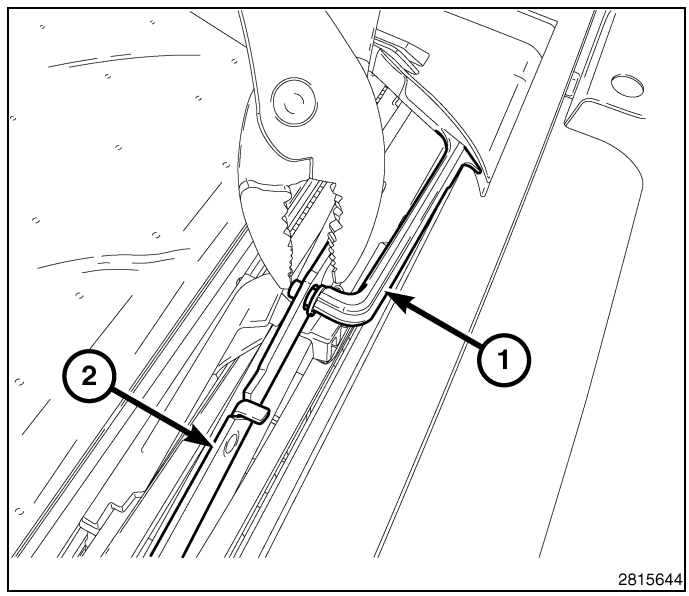

3. Carefully slide the drain channel (1) forward to the notches (2) in the track asy. Pull up on one side to disengage, repeat on the opposite side and remove the drain channel.

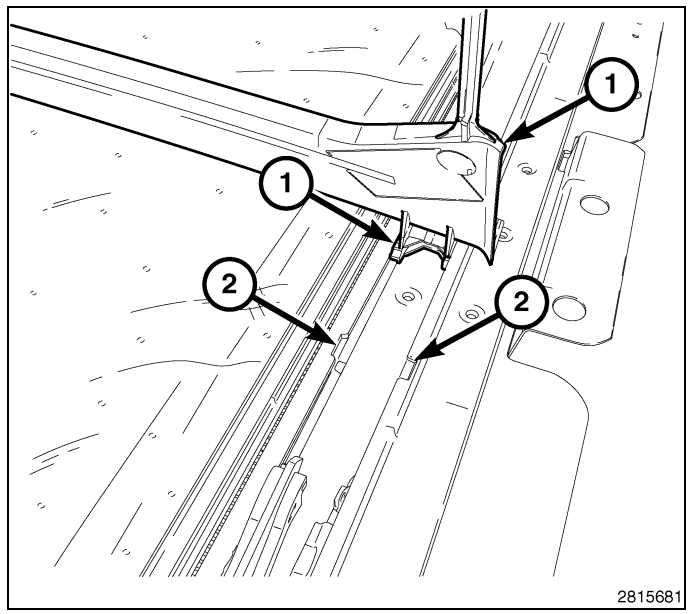

Installation

NOTE: Left side shown, right side typical.

1. Carefully position the drain channel (1) one side at a time into the notches (2) in the track assembly. Once positioned, push down until it engages into the track assembly. Repeat steps on the opposite side and slide the drain channel assembly rearward.

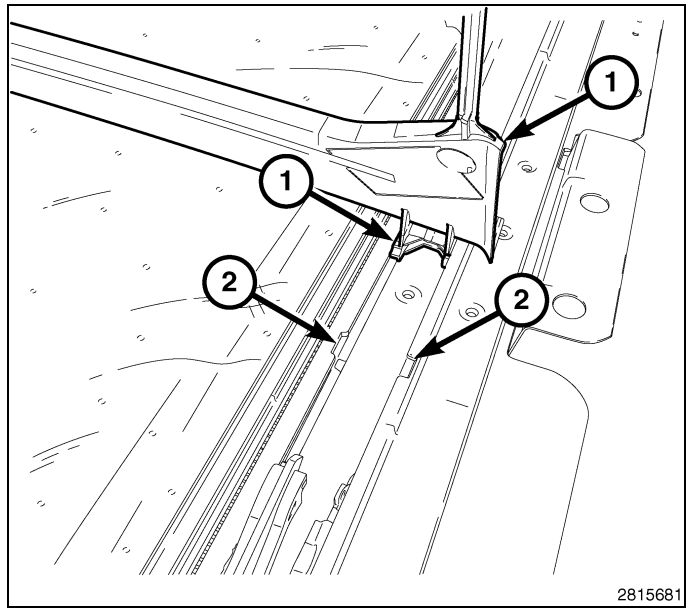

2. Install the drain channel arms (2) into the mechanism holes (1) one at a time.

CAUTION: Do not push the guide arms at the same time or you could break the guide mechanism. Do not use excessive force to install.

3. Install the sunroof glass. (Refer to 23 - Body/Sunroof/ GLASS, Sunroof - Installation)

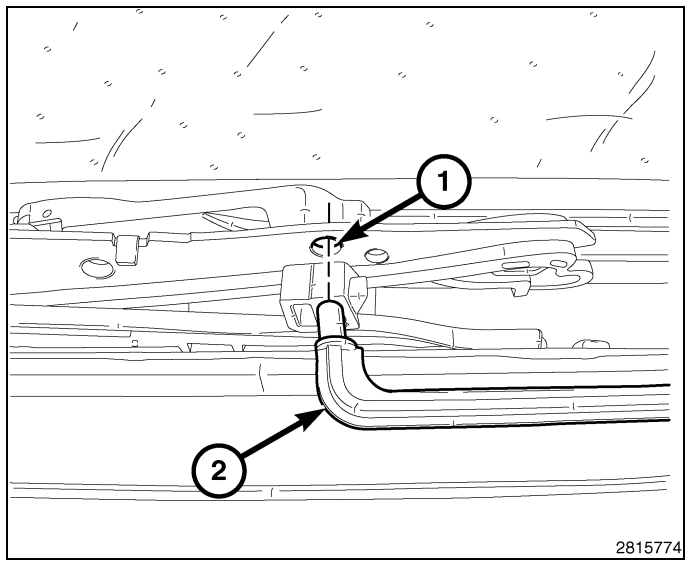

COVER, Sunroof Mechanism

Removal

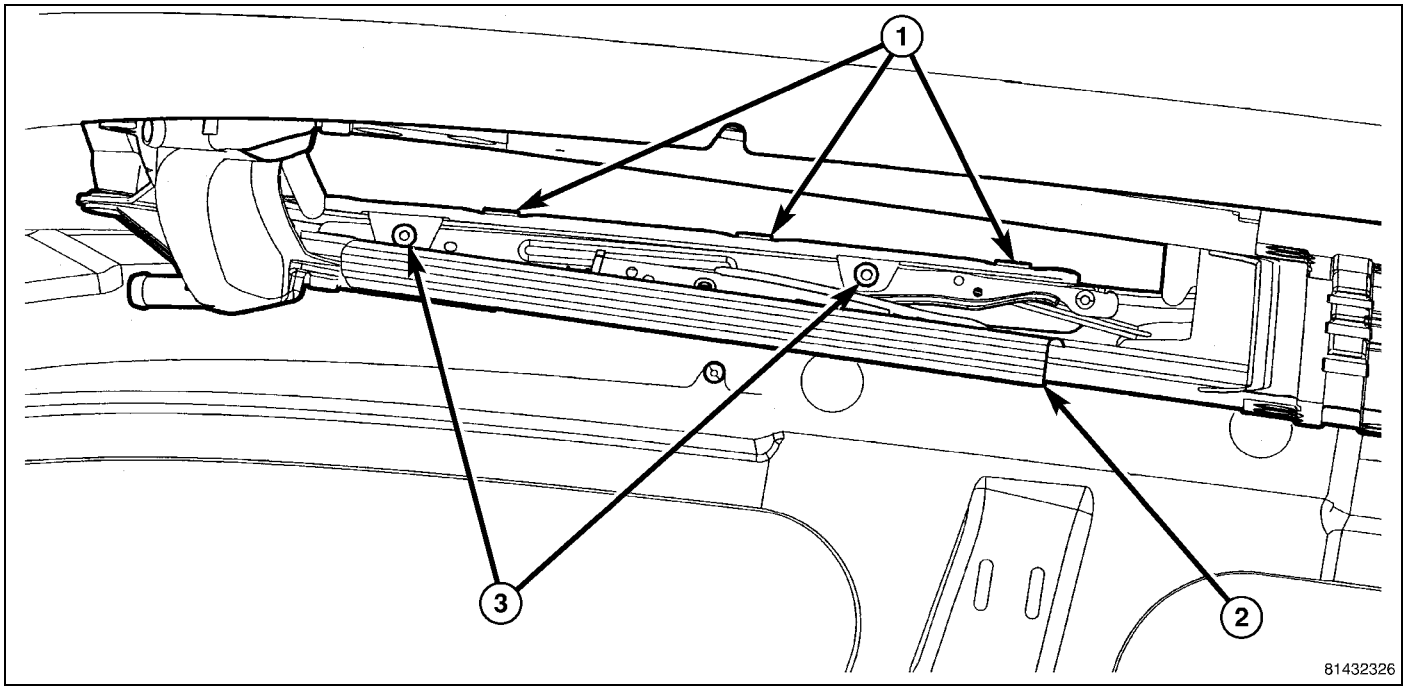

1. Move the glass panel to the full closed position.
2. Slide sunshade rearward to the open position.
3. Separate the mechanism covers (2) from the tabs (1) on the glass panel.

4. Hold both mechanism covers down and open the sunroof fully.
5. Slide the mechanism covers (1) out the front of the guide in the frame (2).

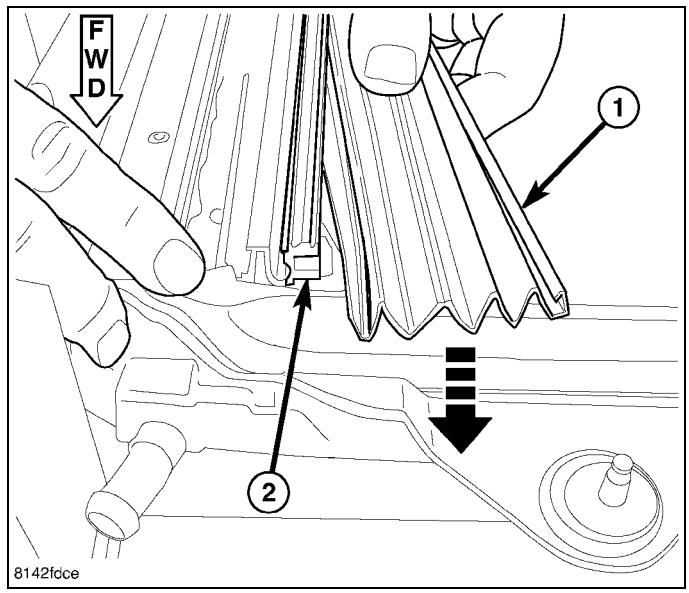

Installation

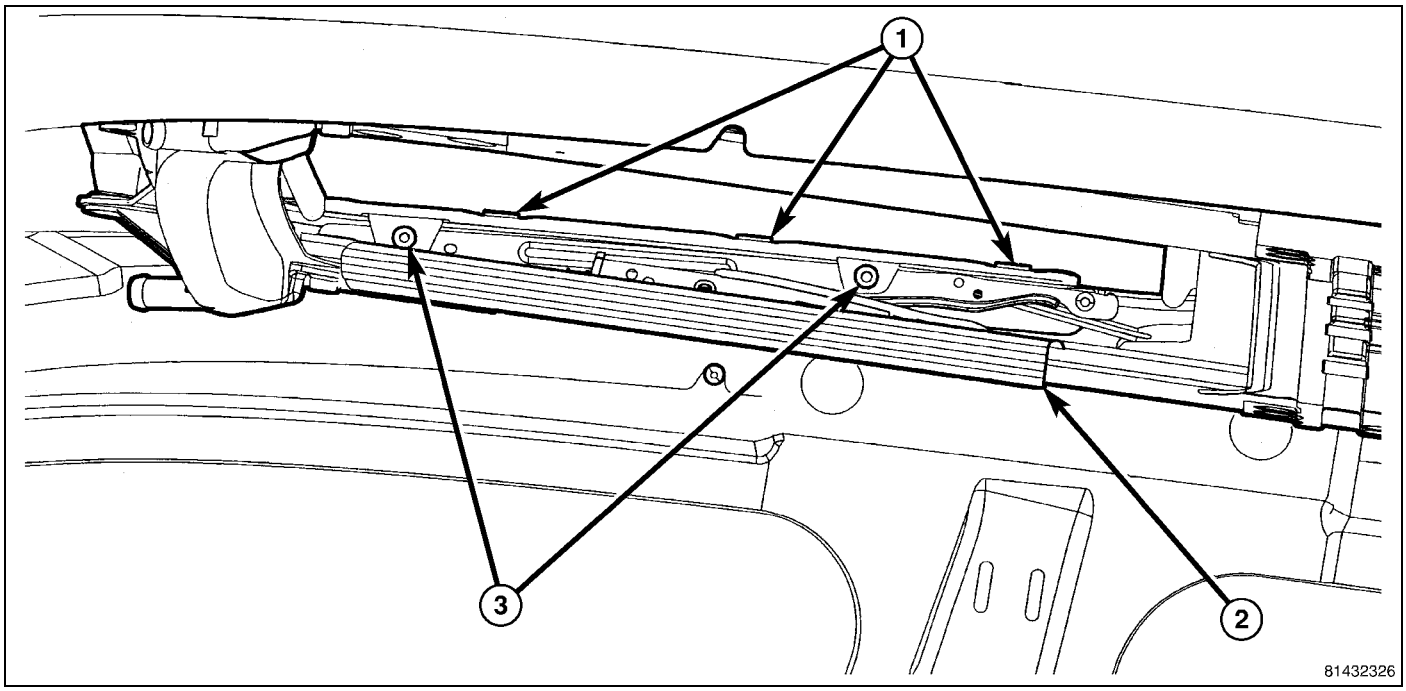

1. With the sunroof in the open position, snap the mechanism cover (2) into the lower guide channel.
2. Hold down each cover and close the sunroof.
3. Snap the upper portion of the cover (2) into the retaining clips (1) on the glass panel between the locating features.

DEFLECTOR, Wind

Removal

1. Open the sunroof fully.
2. Remove the strap screws (3) from the beam area (1) and release the strap (2).

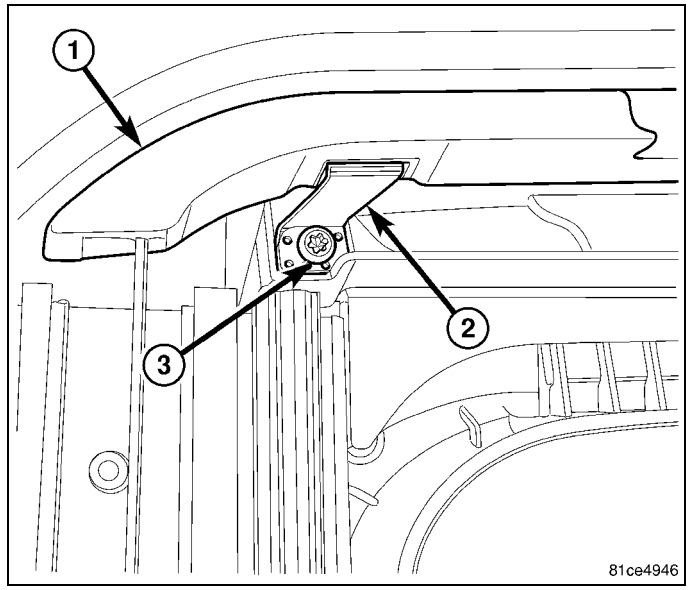

3. Rotate the deflector up and remove springs (2) from the holes in the frame (1).

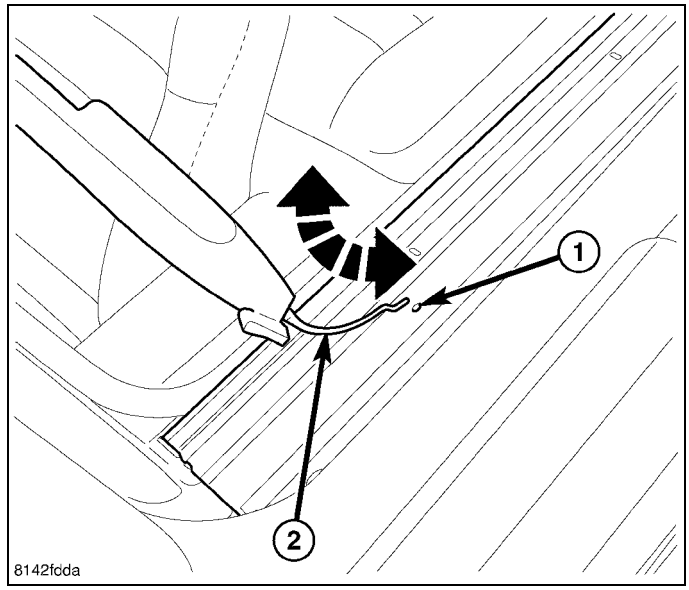

Installation

1. Position the deflector spring arms (2) into the holes of the frame (1).

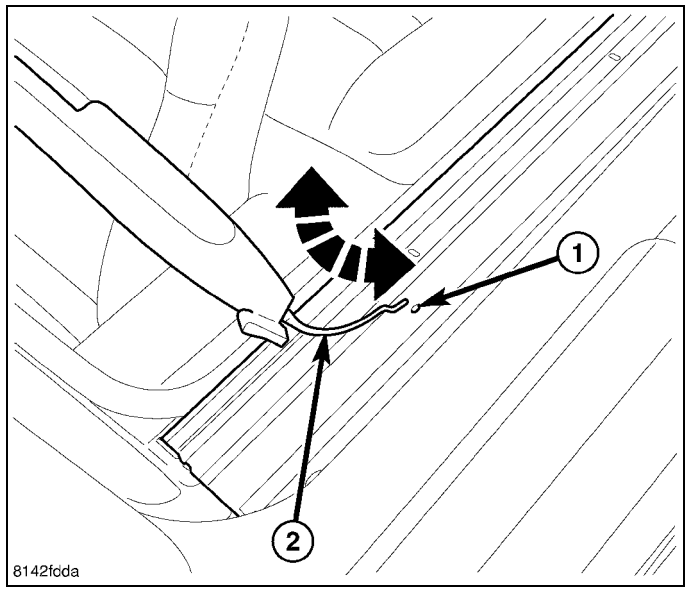

2. Rotate the deflector down, attach the straps (2) and install the strap screws (1).
3. Verify sunroof operation and alignment.

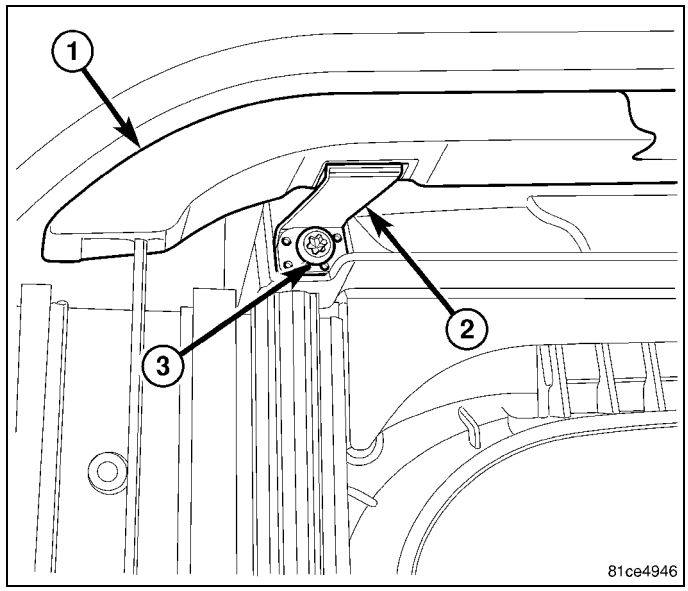

GLASS, Sunroof

Removal

1. Move the glass panel to the full closed position.
2. Slide sunshade rearward to the open position.
3. Separate the mechanism covers (2) from the tabs (1) on the glass panel.

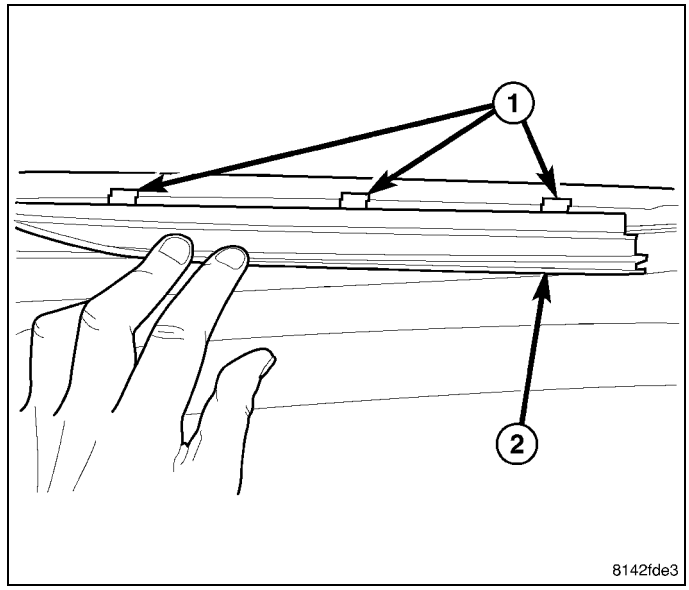

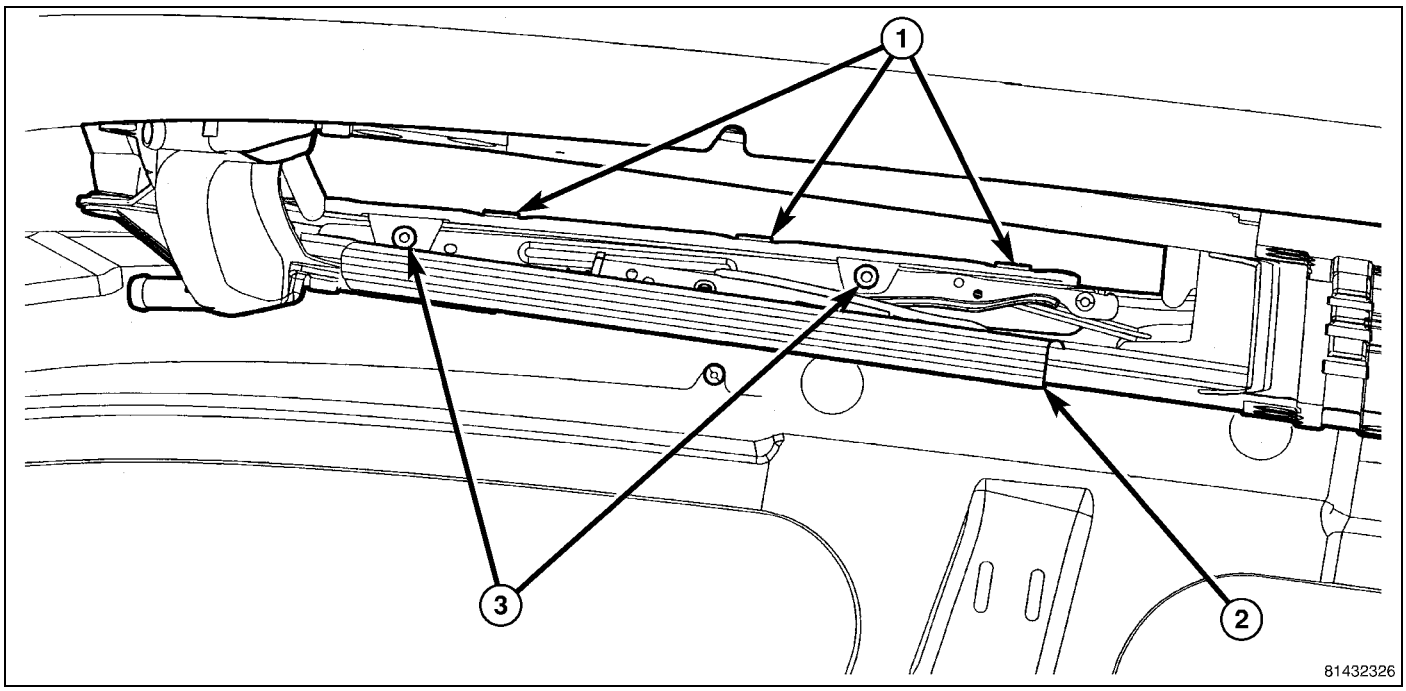

4. Remove the glass panel screws (3).
5. Lift off glass panel and remove from vehicle.

Installation

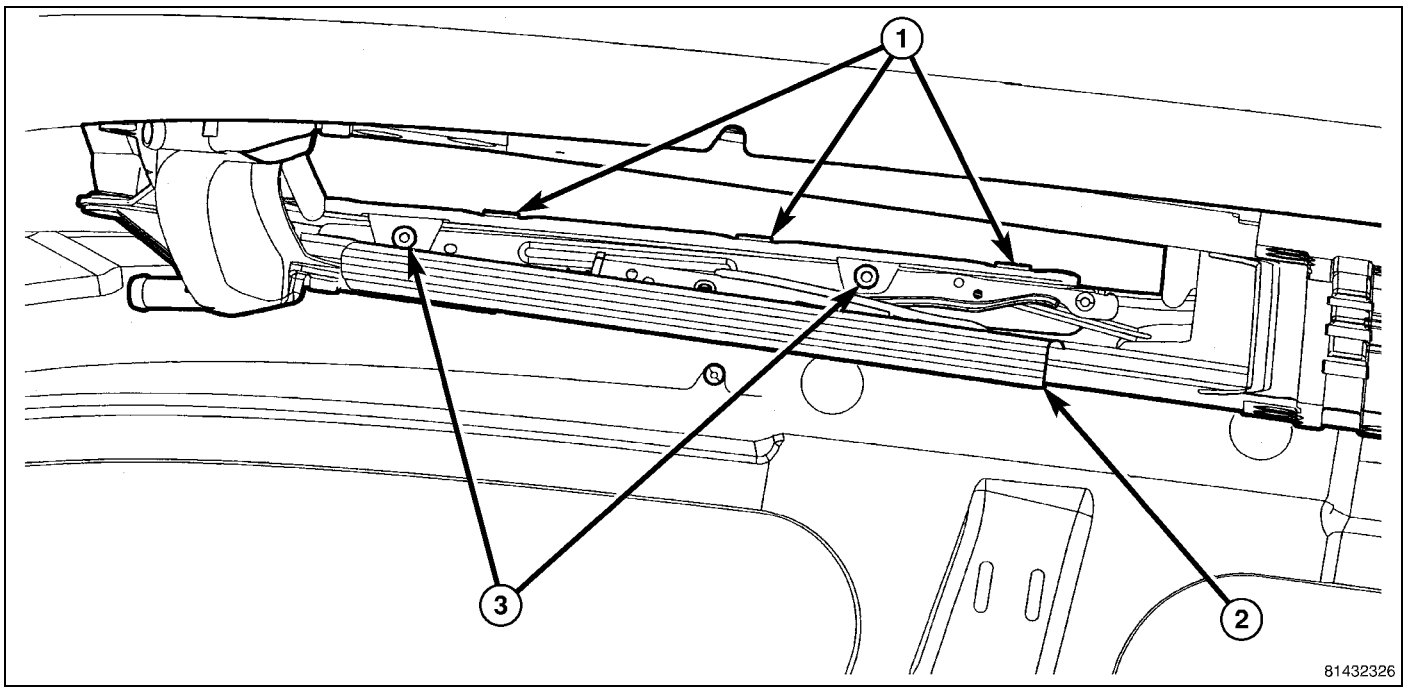

1. Position glass panel on to mechanism lift arms.

CAUTION: Verify that the retaining tabs are located on the INSIDE of the guide mechanism arms.

2. Start the attaching screws (3).
3. Connect a 12v power supply and verify that the sunroof is in the closed position.
4. Adjust sunroof glass to fit flush with roof line (Refer to 23 - Body/Sunroof/GLASS, Sunroof - Adjustments).
5. Tighten the screws (3) to 3.5 N·m (30 in. lbs.).
6. Position the mechanism covers (2) over the glass tabs (1) between the locating features and seat fully.
7. Verify sunroof operation and alignment.

Adjustments

1. Move the sunshade rearward to the open position.
2. Separate the mechanism covers (1) from the tabs on the glass panel by pulling the top edge of the cover inboard from both sides.

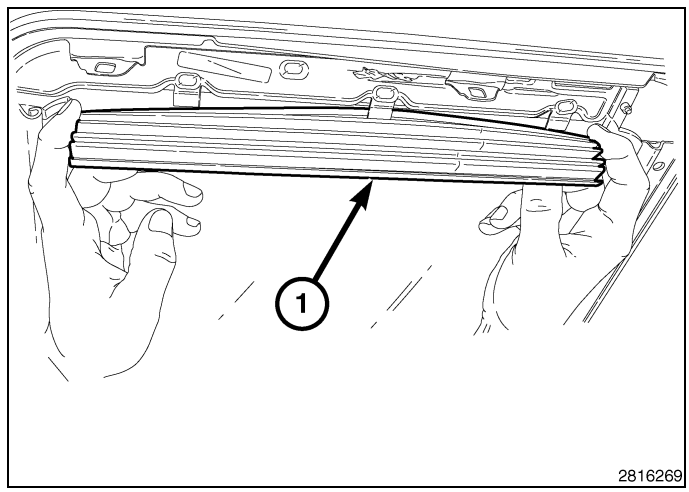

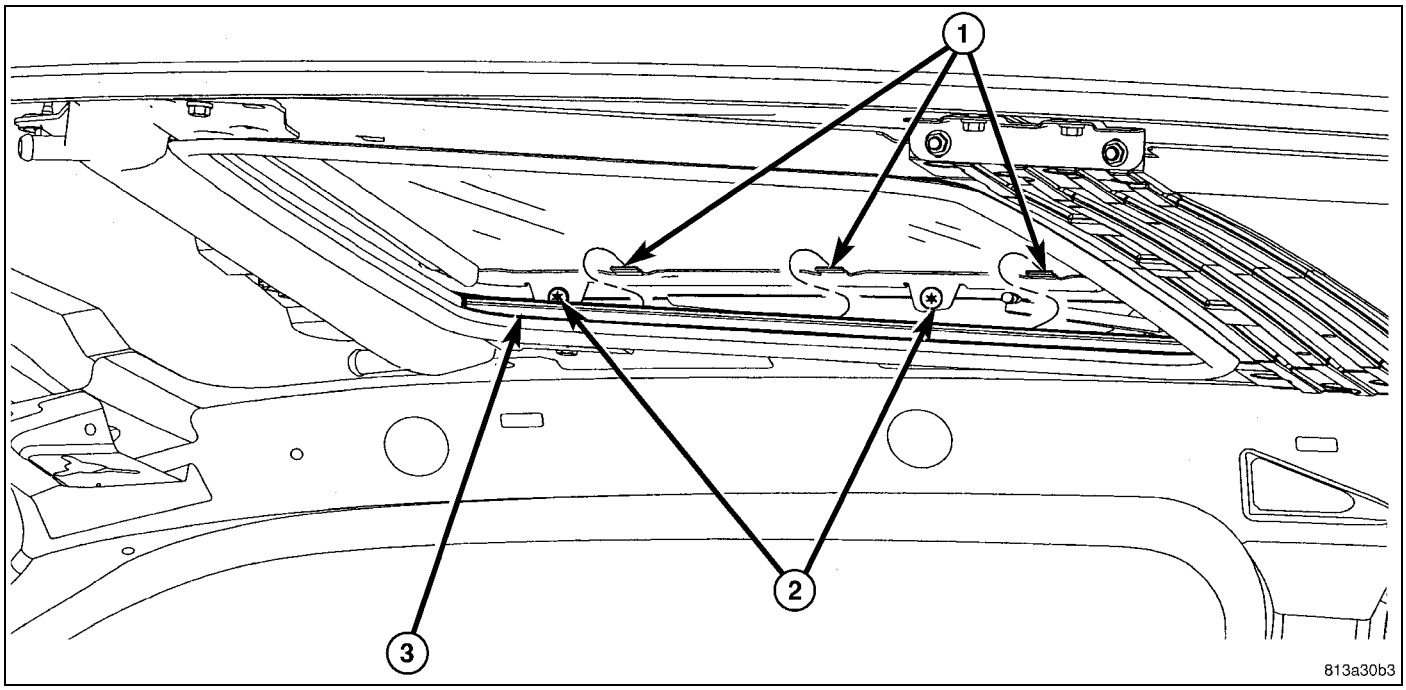

3. Verify the sunroof glass panel is in the fully closed position.
4. Loosen the forward attaching screws (2) on each side enough to permit the front of the glass to adjust up or down.
5. Adjust the front surface of the sunroof glass panel 0.00 mm to 2 mm (0.00 in. to 0.08 in.) **below** the top surface of the roof.
6. Tighten the front glass panel attaching screws to 5.5 N·m (49 in. lbs.).
7. Loosen the rear screws (2) on each side enough to make the rear adjustment.
8. Adjust the rear surface of the sunroof glass panel 0.00 mm to 2 mm (0.00 in. to 0.08 in.) **above** the top surface of the roof.
9. Tighten the rear glass panel attaching screws to 5.5 N·m (49 in. lbs.).
10. Check for proper fit by inserting a business card between the glass seal and roof. Slide the card around the the entire perimeter of the glass. The effort to slide the card should be uniform through the the entire perimeter. If the effort is not uniform, repeat the glass panel adjustment.
11. Locate the top of the mechanism cover by printed text (1).

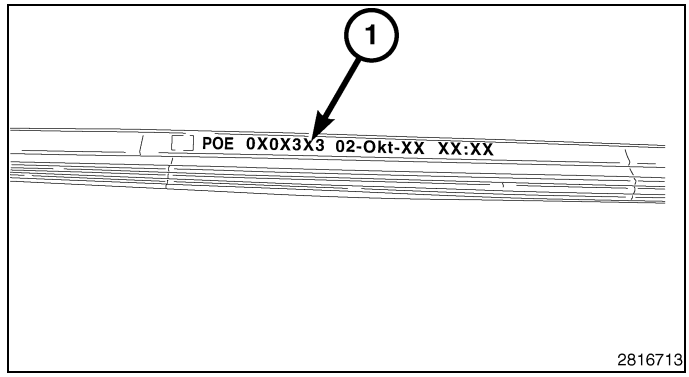

12. Position the mechanism covers (1) over the glass tabs between the locating features and seat fully by pushing the top edges of the cover outboard.
13. Verify sunroof operation and alignment.

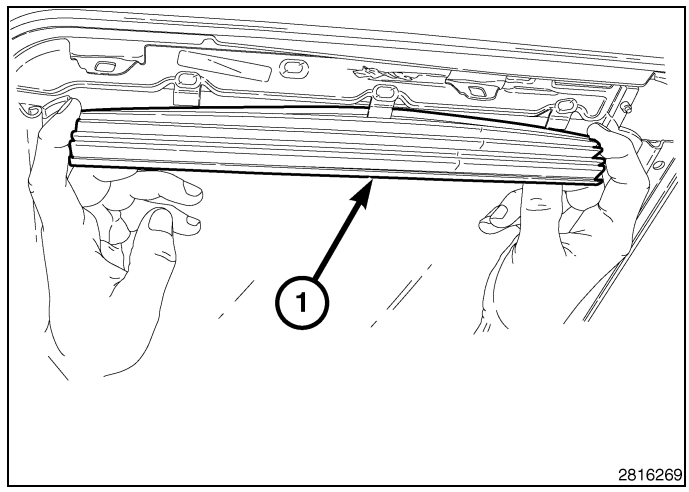

GUIDE, Sunroof, Glass

Removal

NOTE: Left side shown, right side typical.

1. Open the sunroof into the "vent" position.
2. Turn off the ignition and disconnect the negative battery cable to disable the sunroof operation.
3. Remove the glass panel. (Refer to 23 - Body/Sunroof/GLASS, Sunroof - Removal)
4. Separate the drain channel arms (1) from the guide mechanisms (2) one at a time.

CAUTION: Disengage the drain channel arms one at a time. Do not disengage both sides at the same time.

CAUTION: Do not pry the guide arms apart at the same time, damage to the guide mechanism may occur.

5. Slide the drain channel rearward out of the way.

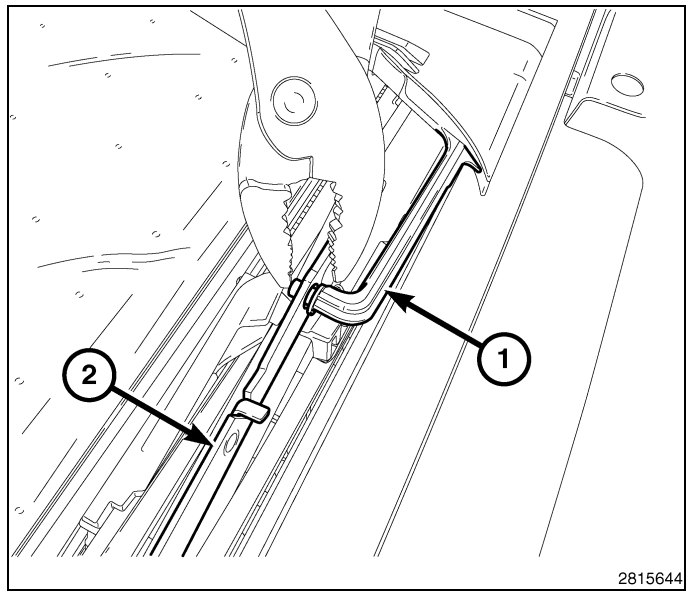

6. Using a small flat blade screwdriver, slightly lift and hold the the locking lever (1) out of the notch (3) in the track assembly.
7. Slide the glass guide/guide carriage assembly (2) rearward approximately 25-30 mm.

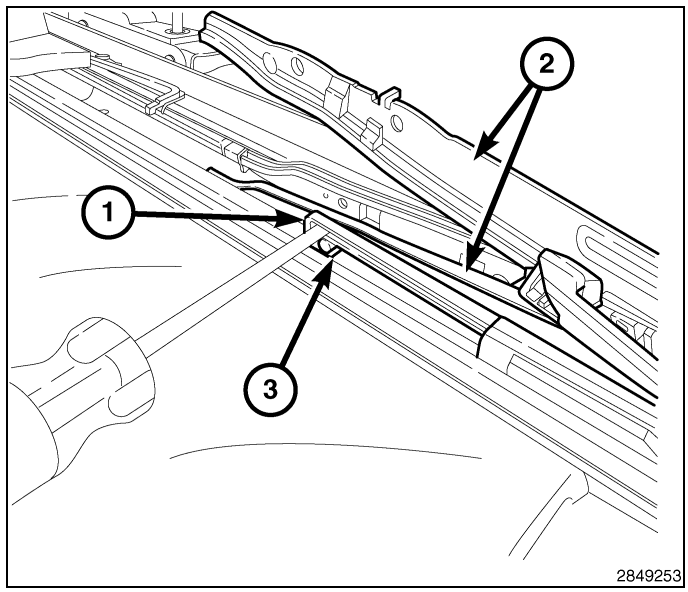

8. Push rearward at the front of the glass guide (2). The locking lever (1) can be released after 12mm of rearward movement.

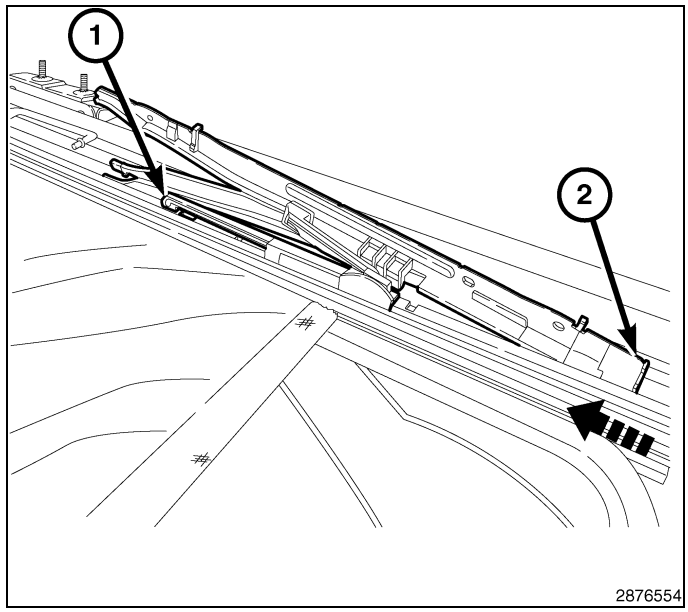

9. Make sure the driving wedge (1) is not forward of the position shown in order to remain engaged with the guide carriage (2).

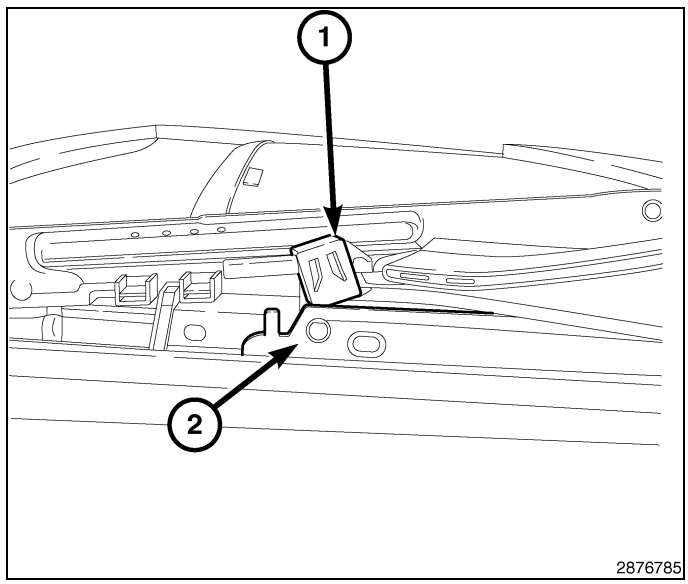

10. Lift and rotate the glass guide out to release the glass guide foot (1) from the track assembly (2).
11. If necessary, repeat steps for the opposite side.

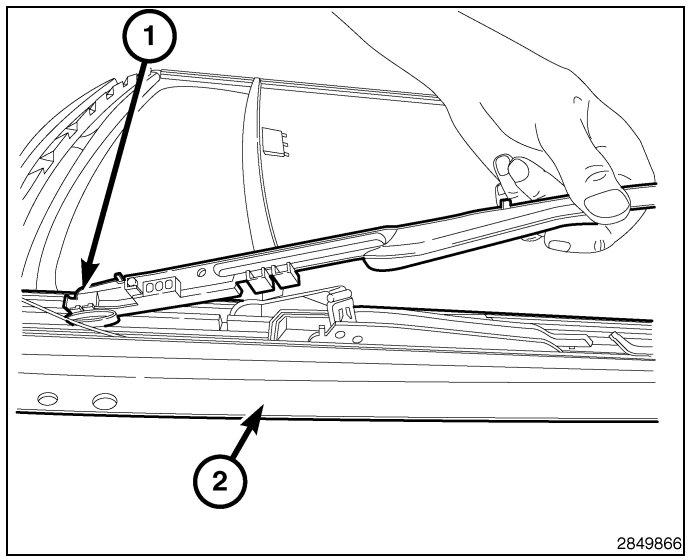

Installation

1. Insert the front foot (1) into the track assembly (2) and rotate inboard to engage.

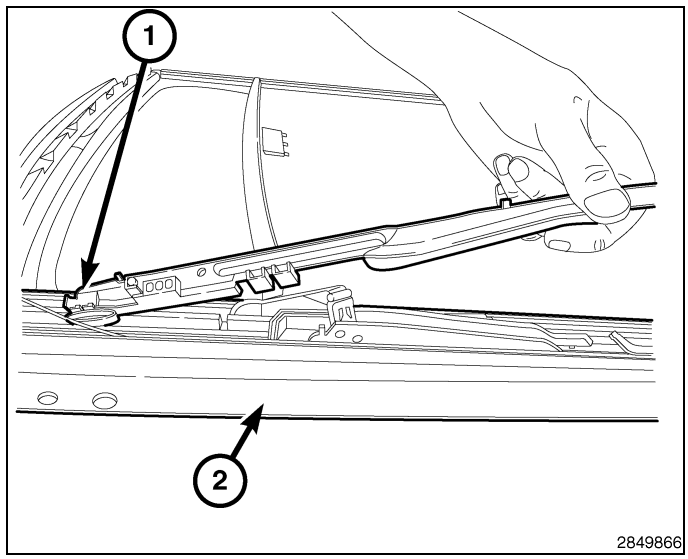

2. Align the opening between the glass guide bosses (1) with the guide carriage foot (2) and lower the glass guide to engage.

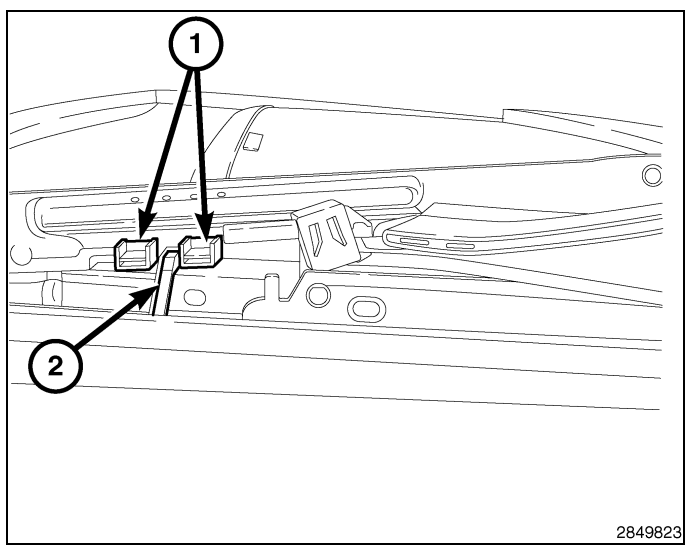

3. Push the glass guide (1) forward and engage into the driving wedge (2).

NOTE: The guide carriage assembly should move together with the glass guide. If the guide carriage assembly does not move with the glass guide, repeat the alignment procedure in step 2.

4. Continue pushing the guide carriage and glass guide forward until the locking lever (4) engages into the track assembly notch (3).

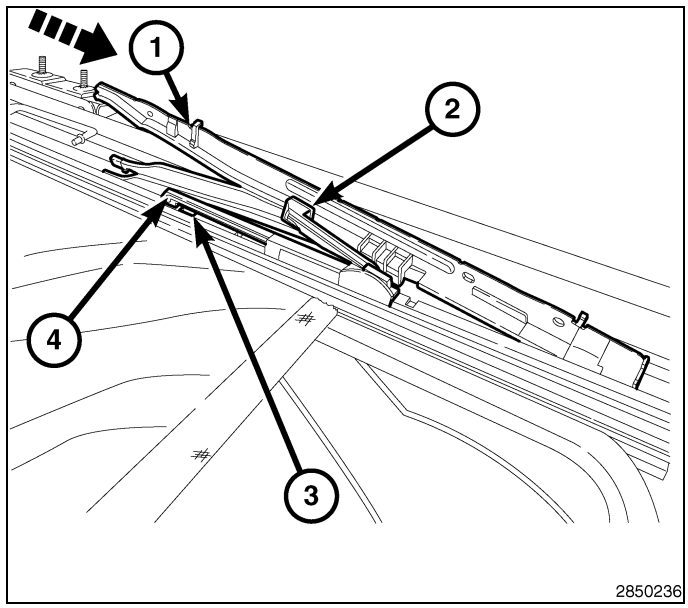

5. Install the drain channel arms (2) into the mechanism holes (1) one at a time.
6. If necessary, repeat steps for the opposite side.

CAUTION: Do not push the guide arms at the same time or you could break the guide mechanism. Do not use excessive force to install.

7. Re-connect the negative battery cable and turn the key to the accessory run position.
8. Cycle the mechanism through all of it's functions to verify proper operation.
9. Cycle the mechanism to the closed postion.
10. Install the glass as necessary. (Refer to 23 - Body/Sunroof/GLASS, Sunroof - Installation)
11. Adjust the sunroof glass to fit flush with the roof line (Refer to 23 - Body/Sunroof/GLASS, Sunroof - Adjustments).
12. Verify proper operation of the power sunroof system.

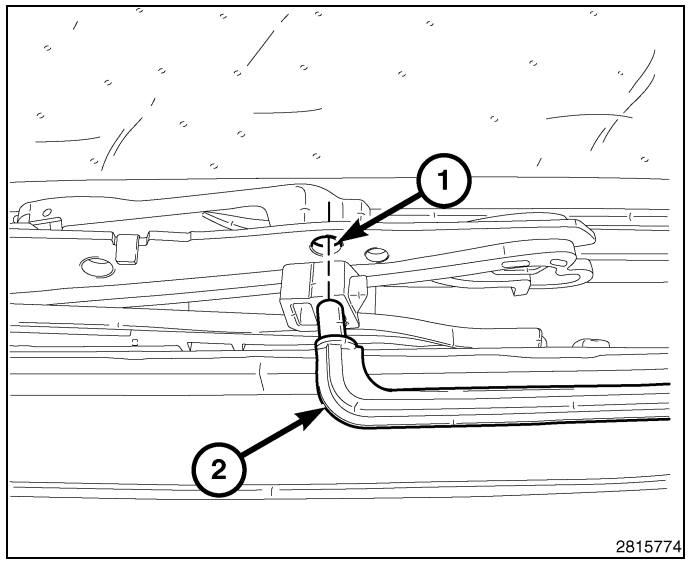

SUNROOF

Removal

WARNING: The Excessive Force Limitation (EFL) feature must be calibrated any time a sunroof motor/module is replaced with a new component. Failure to perform this procedure could result in vehicle damage and/or personal injury. (Refer to 08 - Electrical/8N - Power Systems/Power Top/MOTOR, Sunroof - Standard Procedure) CALIBRATION) for the appropriate procedure.

1. Remove the glass, (Refer to 23 - Body/Sunroof/GLASS, Sunroof - Removal).
2. Disconnect and isolate the battery negative cable.
3. Remove headliner (Refer to 23 - Body/Interior/HEADLINER - Removal) .
4. Disconnect the sunroof wire harness electrical connector (1).

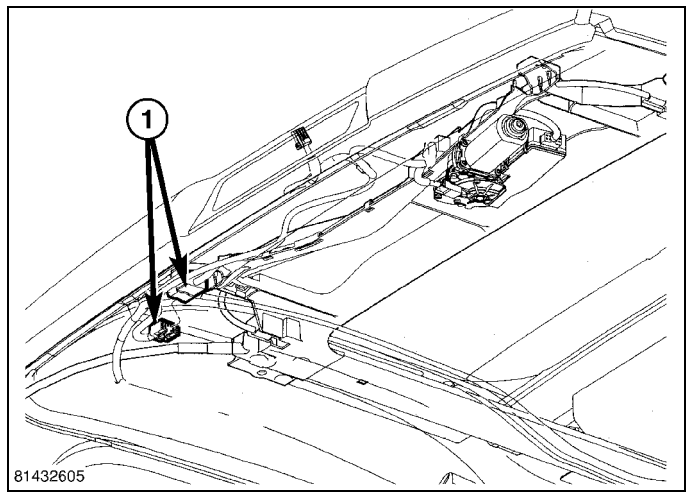

5. Disconnect the four drain tubes (1) from sunroof housing.

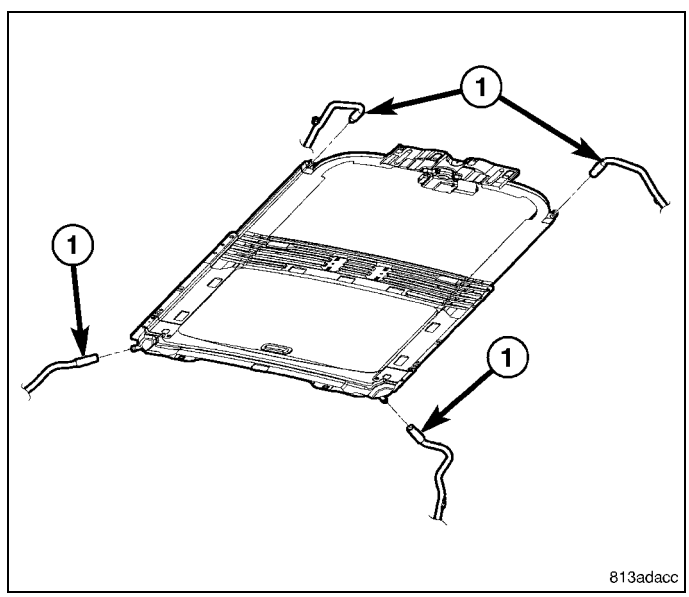

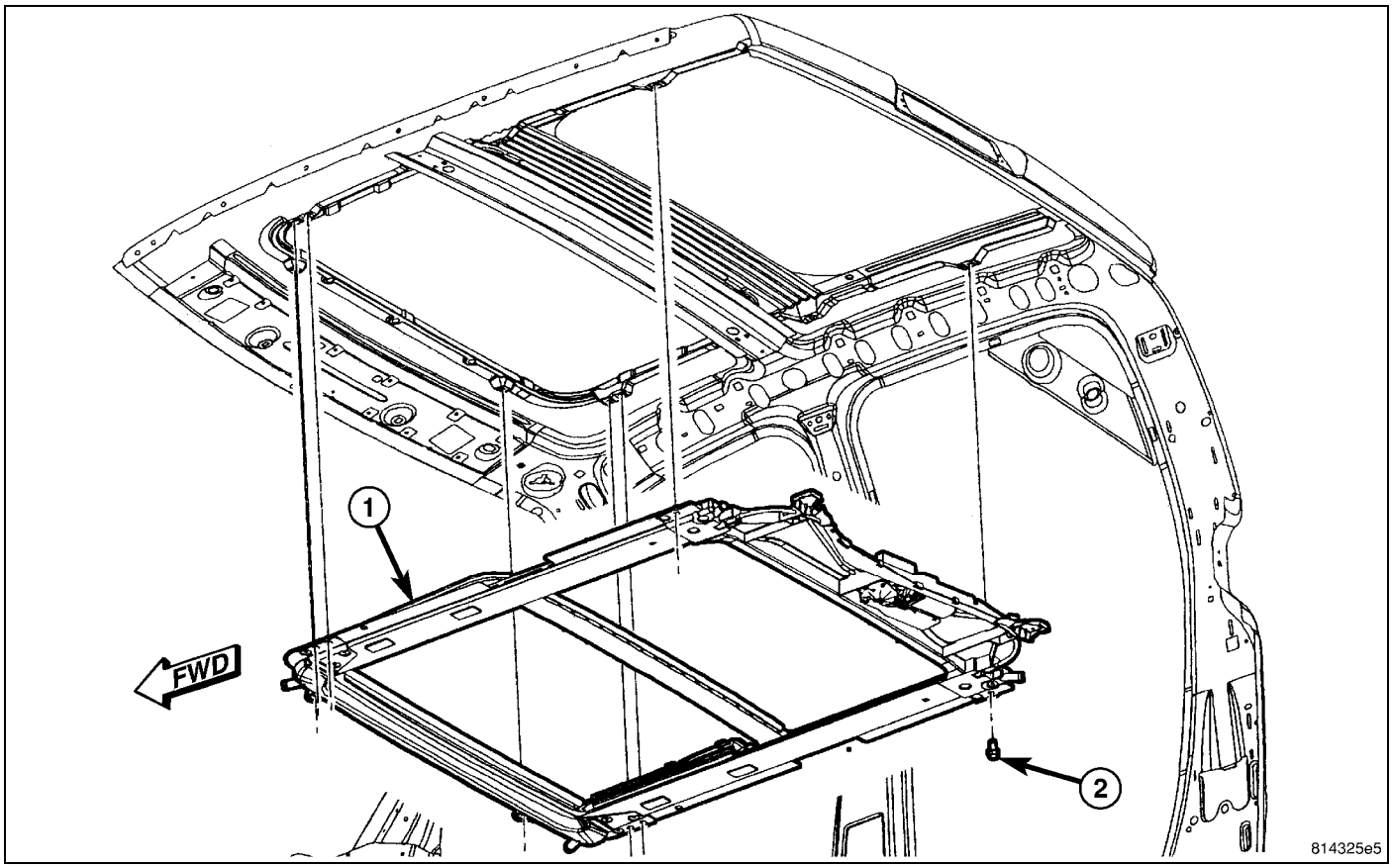

6. With the aid of a helper, support the sunroof and remove the eight fasteners (2) attaching sunroof assembly (1) to roof panel.
7. Remove the sunroof (1) from vehicle.

Installation

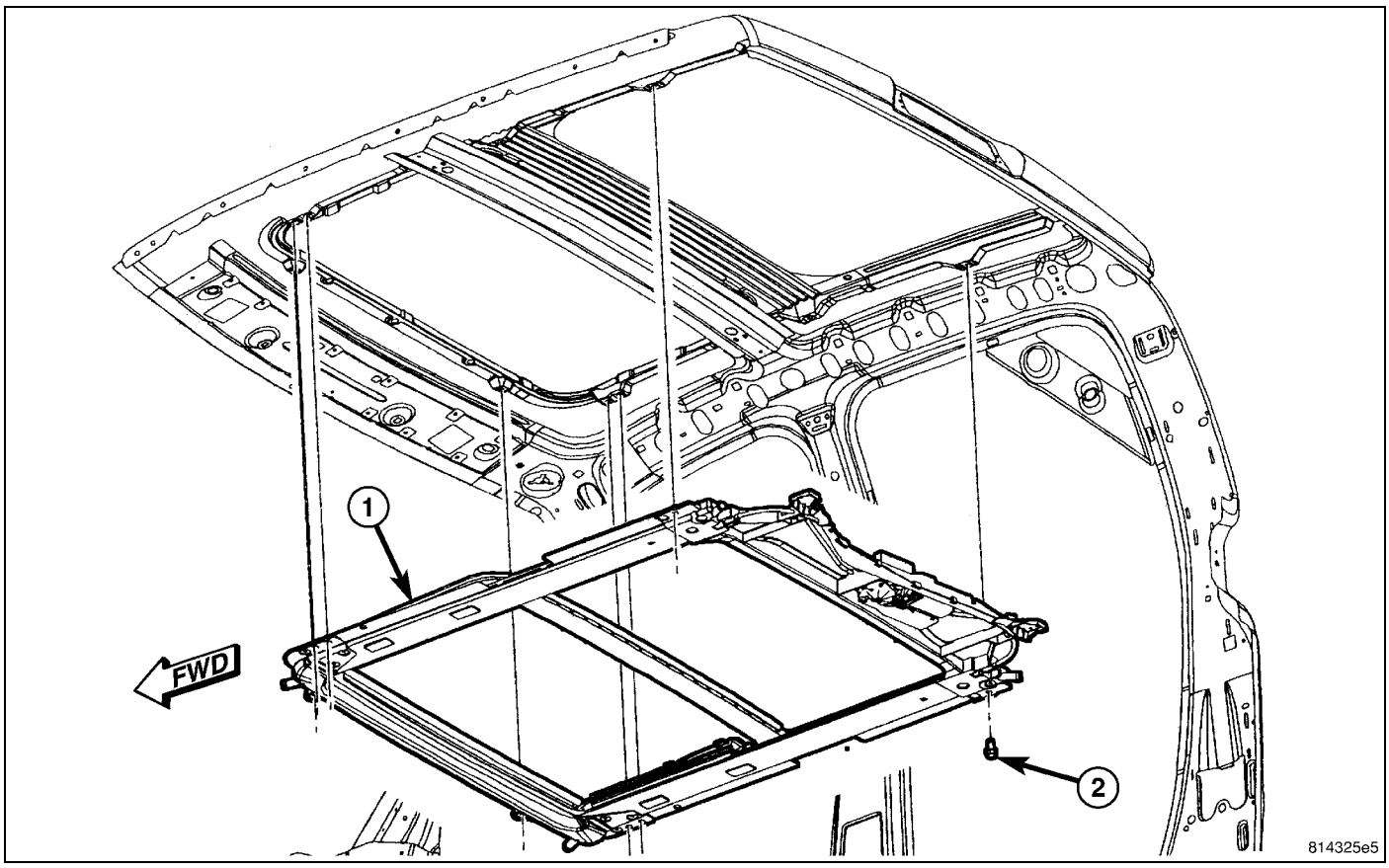

WARNING: The Excessive Force Limitation (EFL) feature must be calibrated any time a sunroof motor/module is replaced with a new component. Failure to perform this procedure could result in vehicle damage and/or personal injury. (Refer to 08 - Electrical/8N - Power Systems/Power Top/MOTOR, Sunroof - Standard Procedure) CALIBRATION) for the appropriate procedure.

1. Raise sunroof module assembly (1) and guide it carefully into position.
2. Hand start the eight screws (2).
3. Line up the locating holes and tighten the attaching screws (2) to 9 N·m (80 in. lbs.).
4. Connect the electrical connector (1).

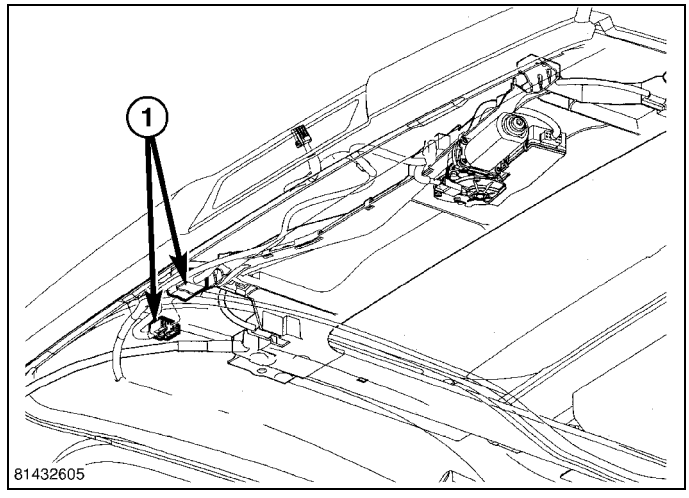

5. Connect the drain tubes (1) to the sunroof.
6. Connect battery negative cable.
7. Install the glass, (Refer to 23 - Body/Sunroof/GLASS, Sunroof - Installation).
8. Install the vehicle headliner, (Refer to 23 - Body/Interior/HEADLINER - Installation).
9. Perform the sunroof position calibration, (Refer to 08 - Electrical/8N - Power Systems/Power Top/MOTOR, Sunroof - Standard Procedure).
10. Verify proper operation of the power sunroof system.

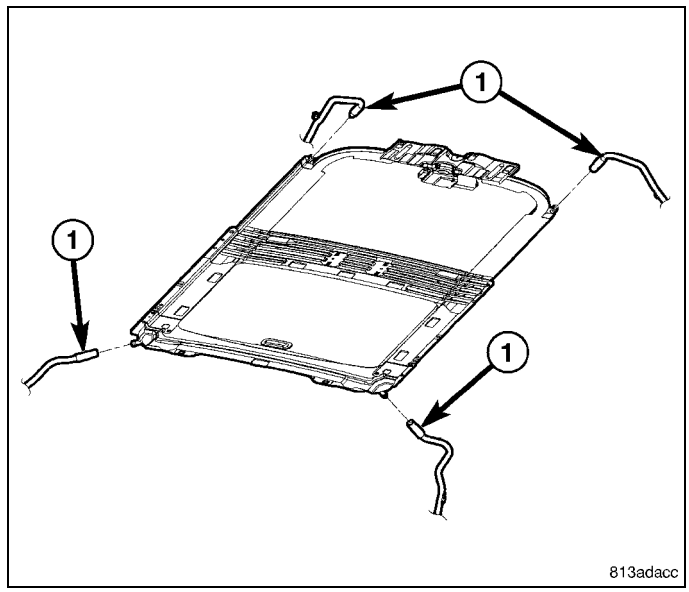

SUNSHADE, Sunroof

Removal

1. Remove the drain channel. (Refer to 23 - Body/Sunroof/TUBE, Sunroof Drain - Removal).
2. Push up the front center of the sunshade (1) to pop out the front two feet.

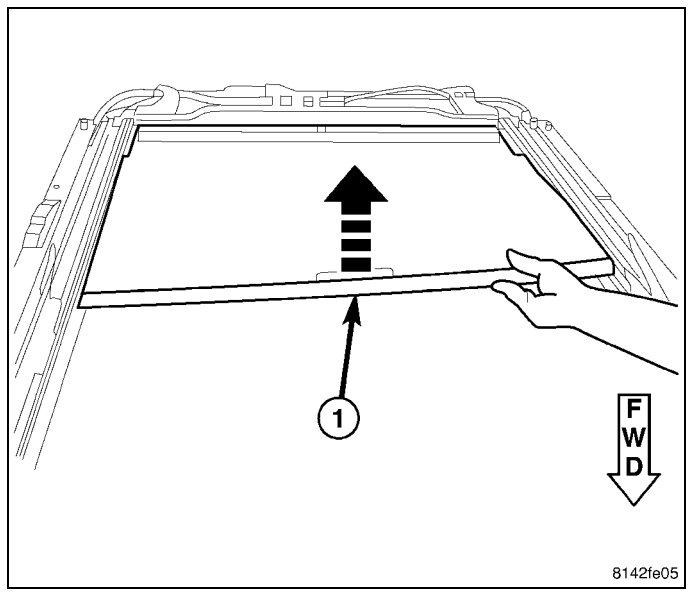

3. Rotate the sunshade (2) so that the other feet (1) are removed from the guide track.

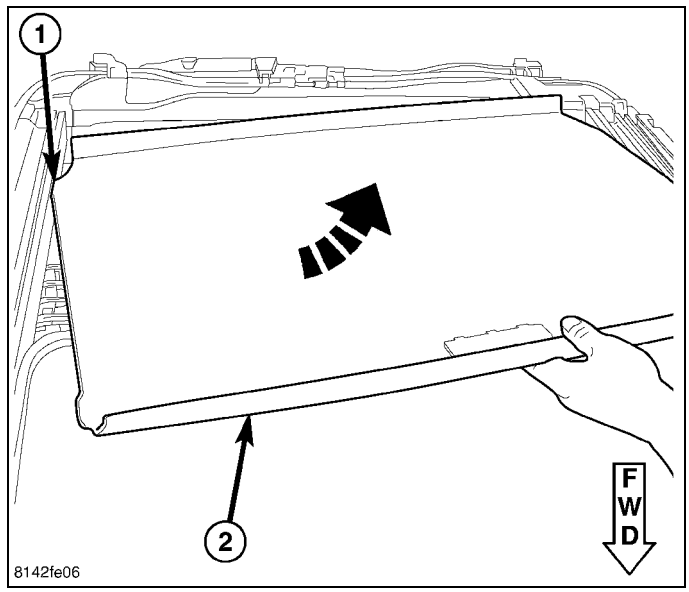

Installation

1. Verify the sunshade track is free of obstructions like the trim lace/ring.
2. Start with sunshade (2) at an angle with one foot (1) in the track.
3. Rotate the sunshade so the other rear foot is in the track as well as the 2 other feet (3) on the same side as the first foot.

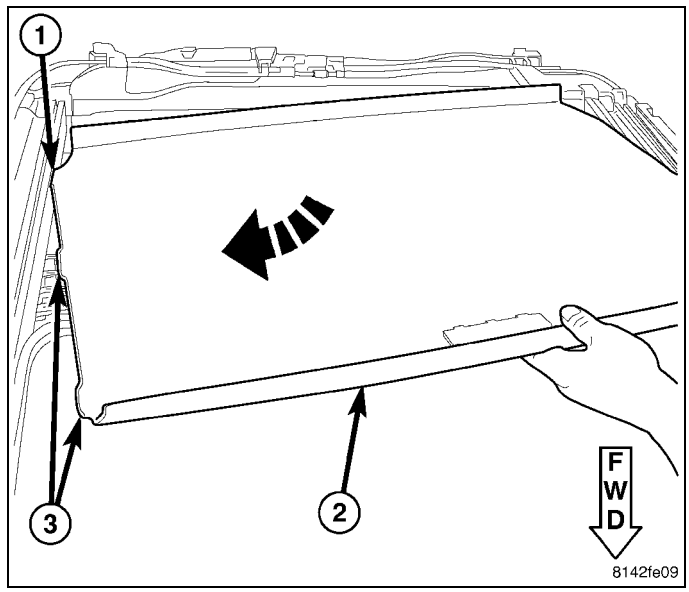

4. To insert the remaining two feet (2) apply force to the middle front of sunshade (3) and guide them into the track.
5. Check that all the feet are in the right track and verify sunshade operation.
6. Install the drain channel. (Refer to 23 - Body/Sunroof/ CHANNEL, Sunroof Drain - Installation)

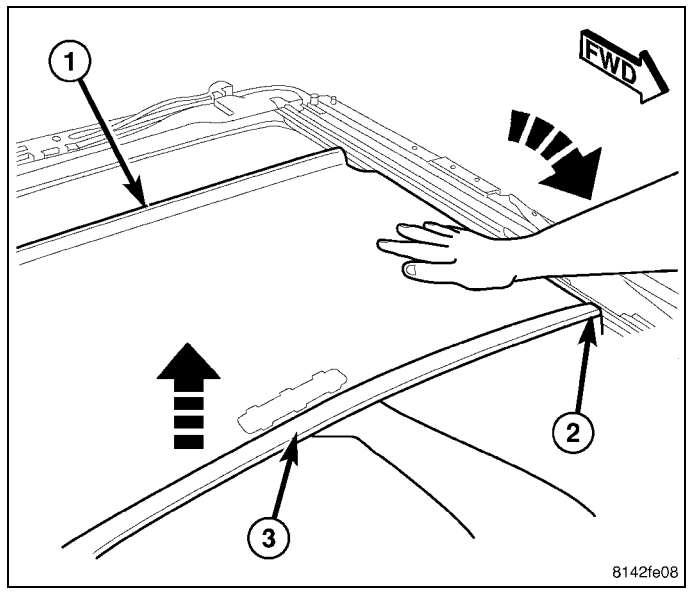

TRIM RING, Sunroof

Removal

1. Remove the headliner. (Refer to 23 - Body/Interior/ HEADLINER - Removal)
2. Remove the 12 nuts (1) and roll the trim ring off the headliner off the retaining flanges (2).

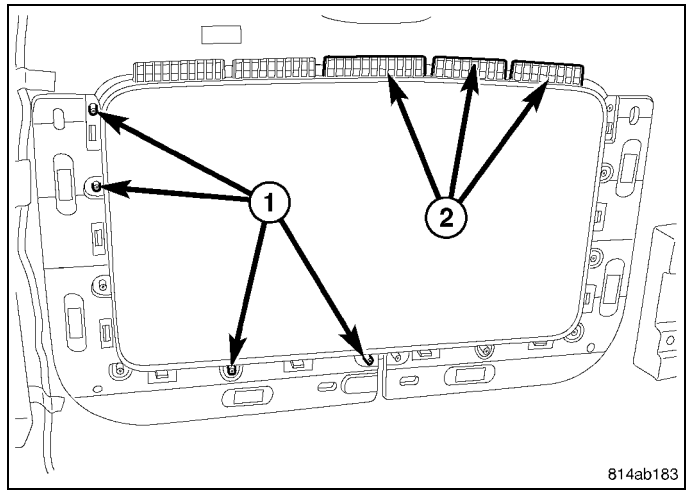

Installation

1. Position trim ring support flanges (2) over the headliner and seat the trim ring fully.
2. Install the 12 nuts (1) onto the support studs.

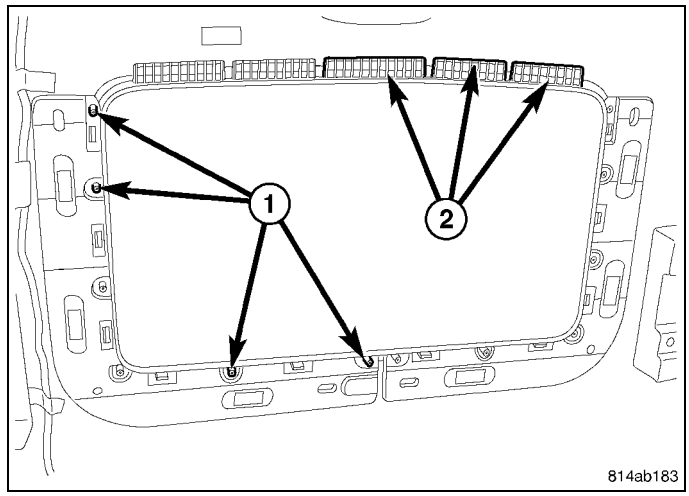

TUBE, Sunroof Drain

Removal

FRONT HOSES

1. Remove headliner (Refer to 23 - Body/Interior/HEADLINER - Removal).
2. Disconnect the drain hose from the sunroof housing (1).
3. Separate the lower tube from the grommet in the body (3).
4. Drain any liquid from hose connection, if necessary.
5. Release the clips (2) and remove the tube.

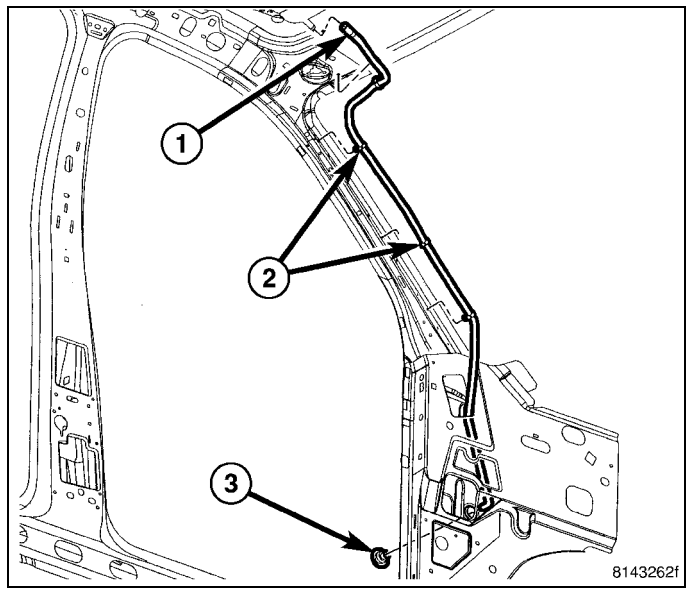

REAR HOUSING HOSE

1. Remove headliner (Refer to 23 - Body/Interior/HEADLINER - Removal).
2. Disconnect the drain hose from the sunroof housing (1).
   * Front tube shown, rear tube similar.
3. Drain any liquid from hose connection, if necessary.
4. Release the push pin fasteners (2) and separate the lower tube from the grommet in the body (3).

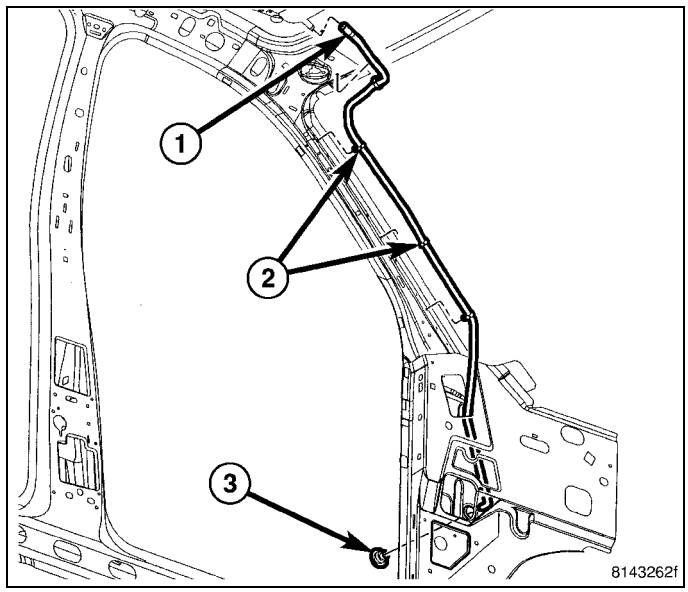

Installation

FRONT HOSES

1. Position the lower portion through the grommet in the body (3).
2. Connect the new drain tube to the sunroof housing (1) and test drainage.
3. Position the tube support clips (2) and seat fully.
4. Install headliner (Refer to 23 - Body/Interior/HEADLINER - Installation).

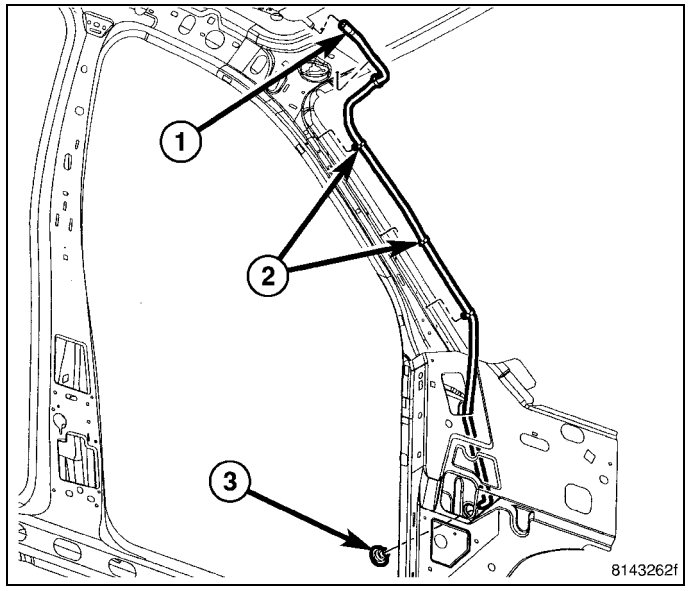

REAR HOUSING HOSE

1. Install the rear tube and seat the push pin fasteners (2) fully.
   Front tube shown, rear similar.
2. Position the lower portion through the grommet in the body (3).
3. Connect the new drain tube to the sunroof housing (1) and test drainage.
4. Install headliner(Refer to 23 - Body/Interior/HEADLINER - Installation).

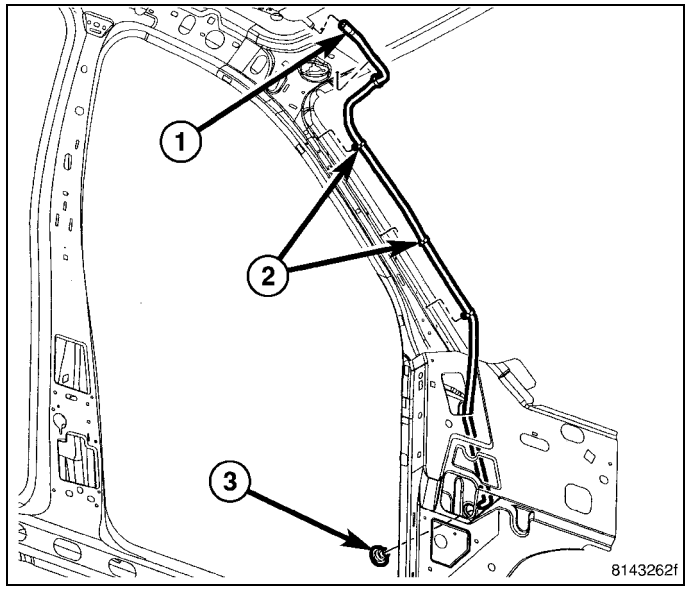

WEATHERSTRIP/SEALS

TABLE OF CONTENTS

page

WEATHERSTRIP/SEALS
SEAL, A-PILLAR
REMOVAL 392
INSTALLATION 393
SEAL, B-PILLAR, LOWER
REMOVAL 394
INSTALLATION 395
SEAL, DOOR OPENING
REMOVAL 396
INSTALLATION 398
WEATHERSTRIP, DOOR
REMOVAL 400
INSTALLATION 401

page

WEATHERSTRIP, GLASS RUN
REMOVAL 402
INSTALLATION 403
WEATHERSTRIP, HEADER, ROOF
REMOVAL 404
INSTALLATION 405
WEATHERSTRIP, WINDSHIELD, A-PILLAR
REMOVAL 406
INSTALLATION 407

Weatherstrip/Seals

SEAL, A-Pillar

Removal

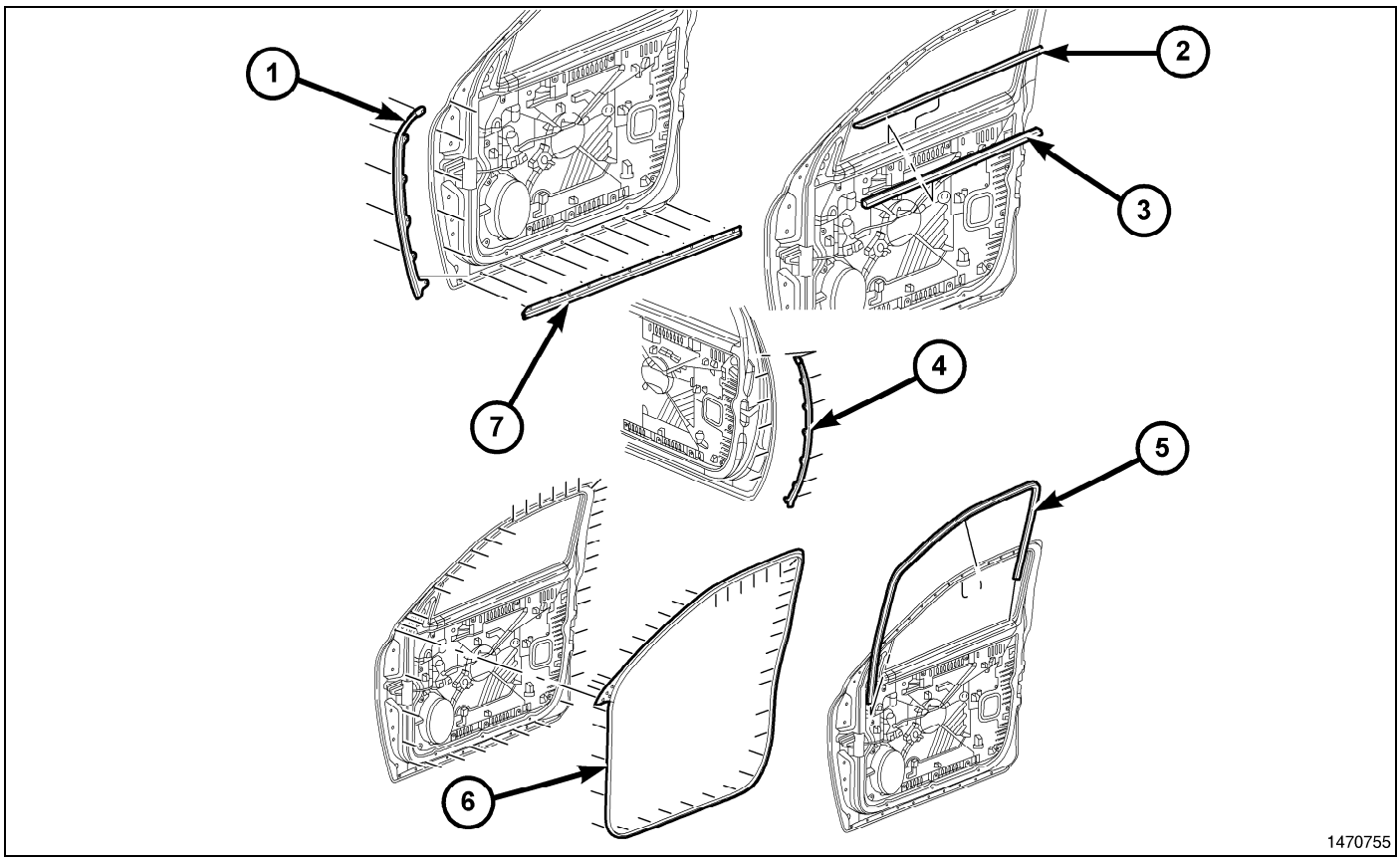

1. Open the appropriate door.
2. Carefully remove the A-pillar seal (1) from the retainers on the door sheet metal.
3. Remove the seal from the door.

Installation

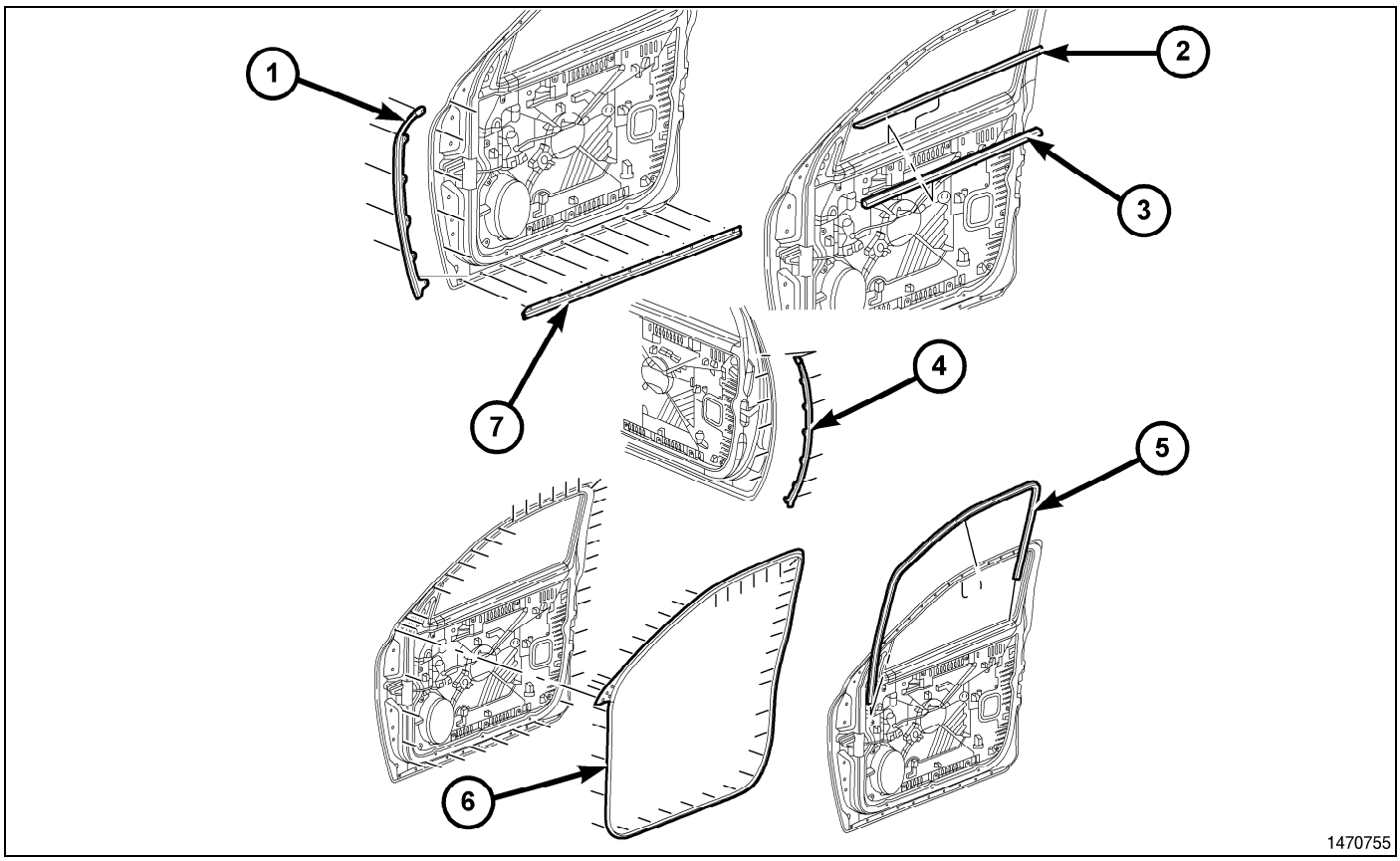

1. Place the A-pillar seal (1) into position to the door.
2. Install the seal to the seal retainers on the door.
3. Close the door and verify a proper seal.

SEAL, B-Pillar, Lower

Removal

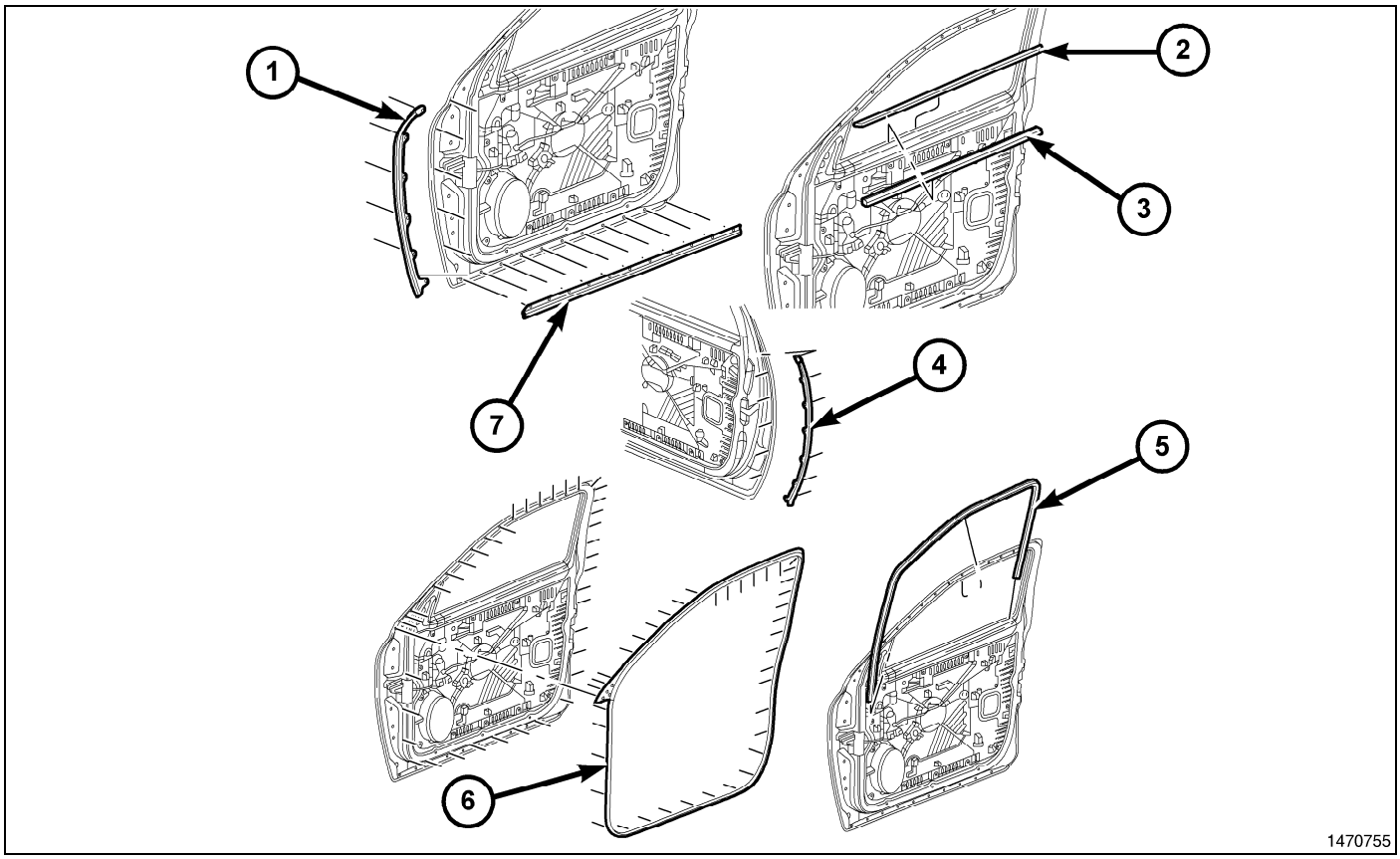

1. Open the appropriate door.
2. Carefully pry off the B-pillar seal (4) and remove from the retainers in the door.
3. Remove the seal from the door.

Installation

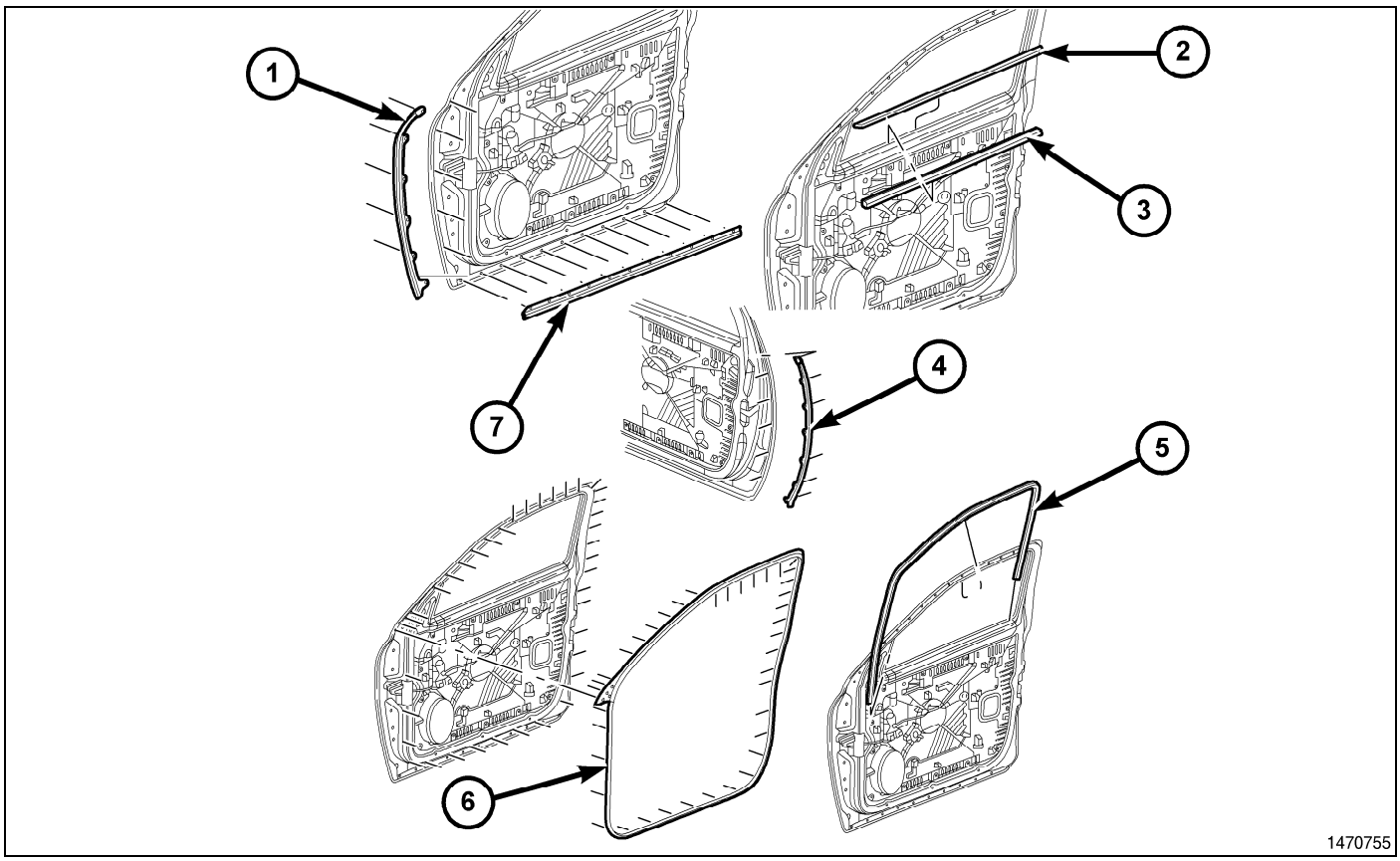

1. Place the B-pillar seal (4) into position to the door.
2. Install the seal to the door engaging the retainers.
3. Close the door and verify proper seal.

SEAL, Door Opening

Removal

FRONT DOOR SEAL

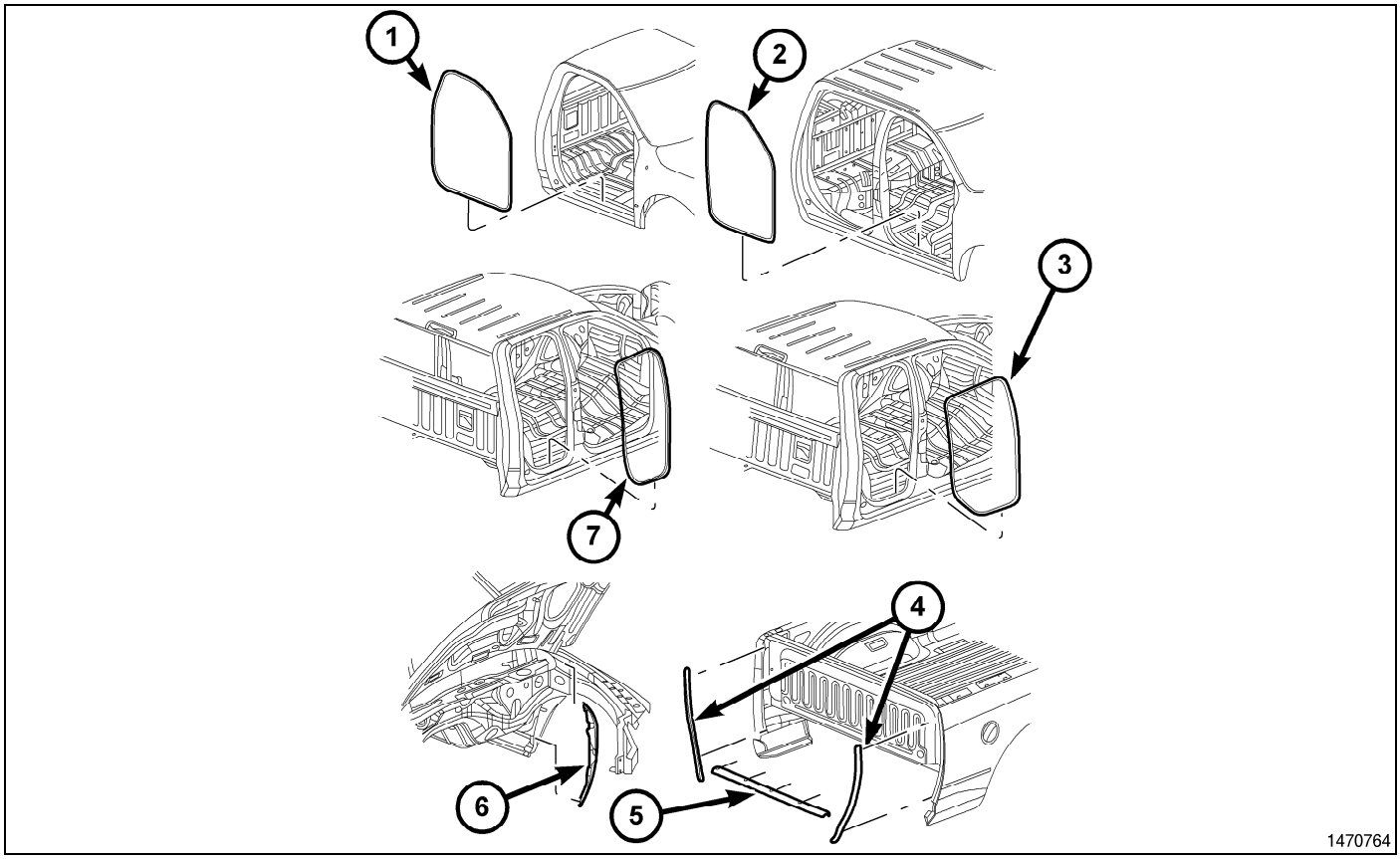

1. Remove the cowl trim panel. (Refer to 23 - Body/Interior/PANEL, Cowl Trim - Removal).
2. Remove the lower B-pillar trim panel. (Refer to 23 - Body/Interior/PANEL, B-Pillar Trim - Removal).
3. Separate the front door opening seal (2and 3) from the door opening flange.

REAR DOOR SEAL

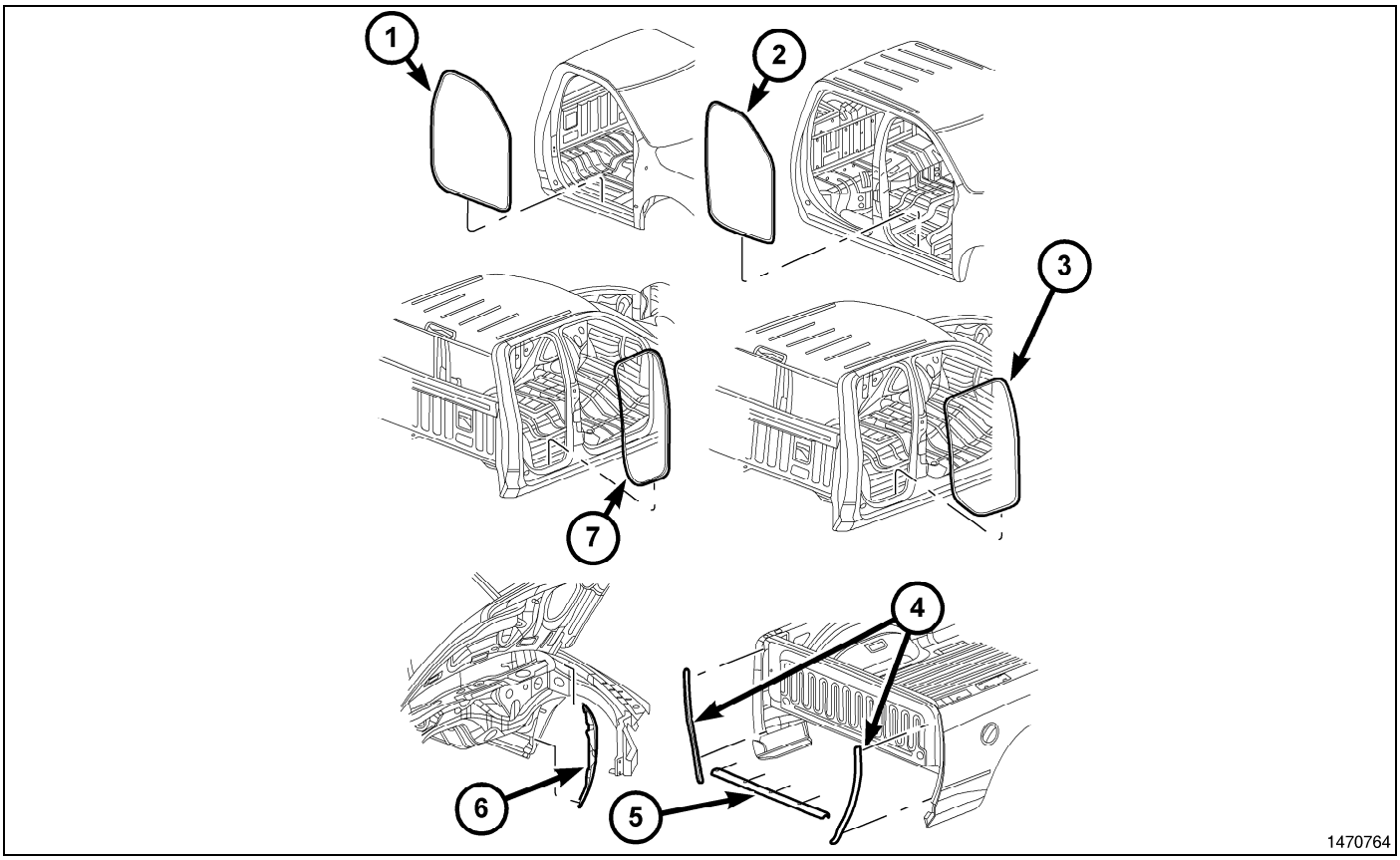

1. Remove the lower B-pillar trim panel. (Refer to 23 - Body/Interior/PANEL, B-Pillar Trim - Removal).
2. Remove the lower C-pillar trim. (Refer to 23 - Body/Interior/PANEL, C-Pillar Trim - Removal).
3. Separate the rear door opening seal (1 and 7) from the door opening flange.

Installation

FRONT DOOR SEAL

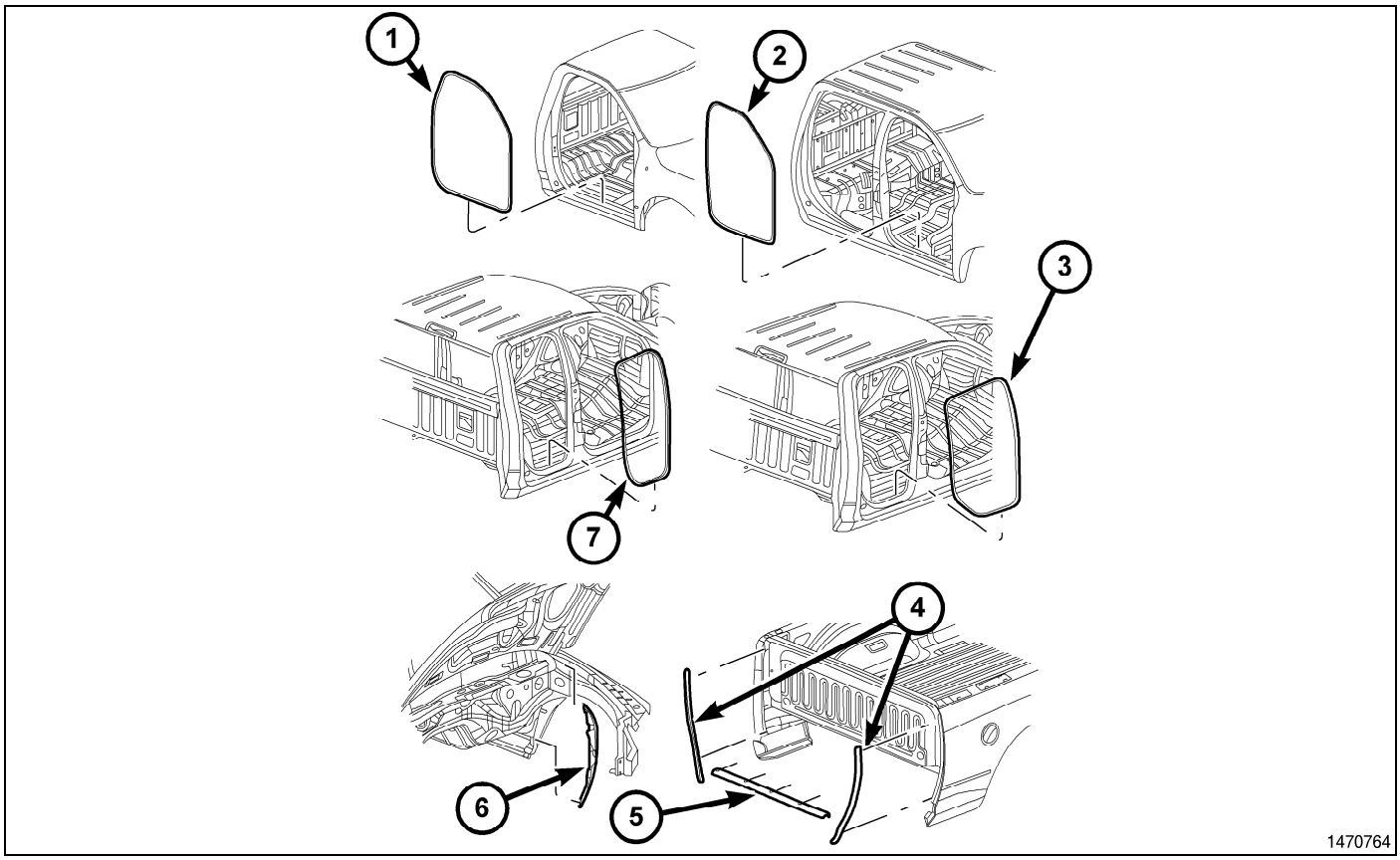

1. Position the front door seal (2 and 3) to the bottom of the door opening, with bulb facing outboard, starting the installation at the center of the lower flange. Press the seal onto the sill flange and work around the perimeter of the door opening until fully seated. Work in one direction, smoothing the seal to avoid puckers or wrinkles.
2. Install the lower B-pillar trim. (Refer to 23 - Body/Interior/PANEL, B-Pillar Trim - Installation).
3. Install the cowl trim panel. (Refer to 23 - Body/Interior/PANEL, Cowl Trim - Installation)

NOTE: When installing a new weatherstrip on the front door opening, remove the tear strip starting at the splice and moving around the front of the door to the back of the opening.

REAR DOOR SEAL

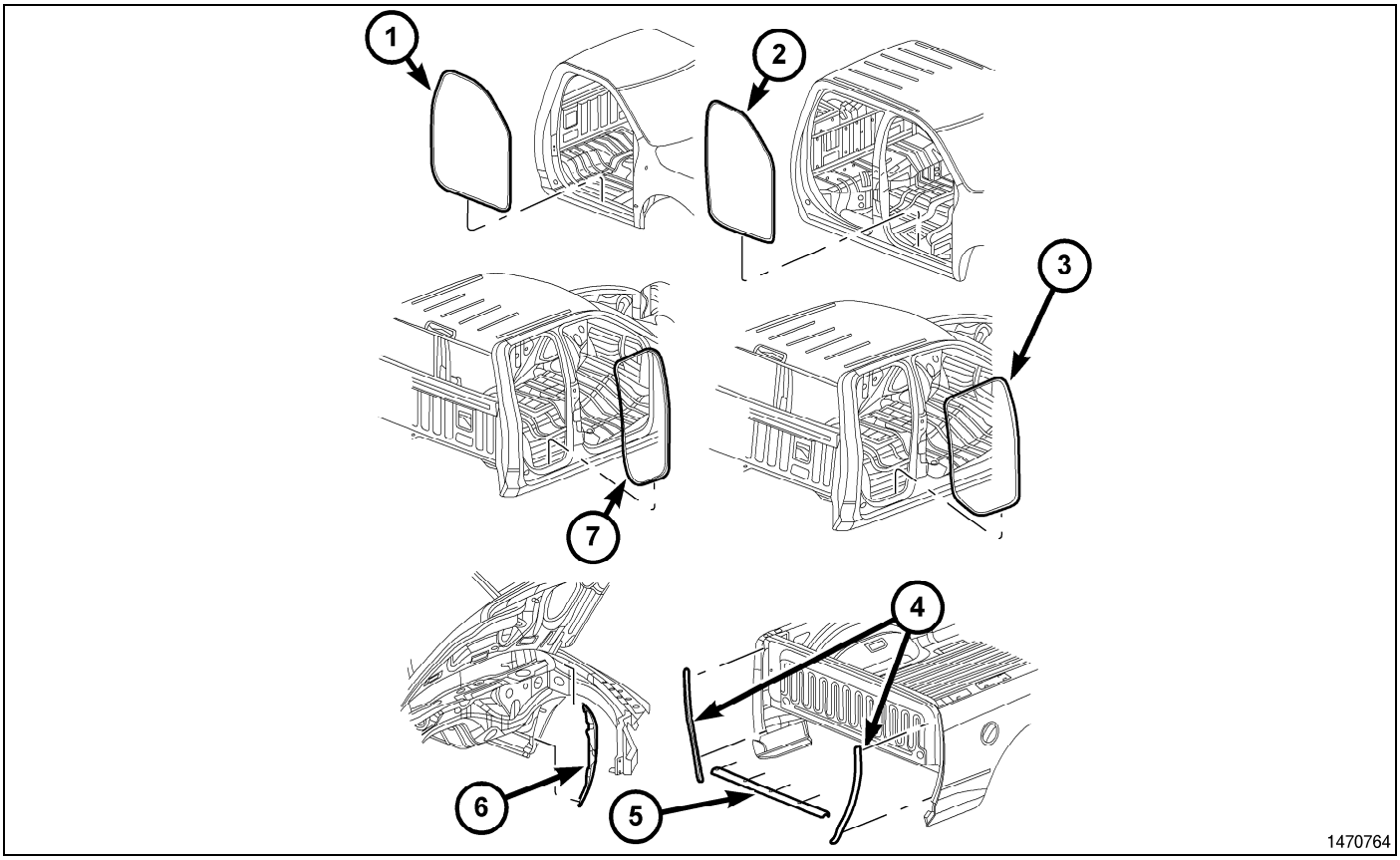

1. Position the rear door seal (1 and 7) to the bottom of the door opening, with bulb facing outboard, starting the installation at the center of the lower flange. Press the seal onto the sill flange and work around the perimeter of the door opening until fully seated. Work in one direction, smoothing the seal to avoid puckers or wrinkles.
2. Install the lower C-pillar trim. (Refer to 23 - Body/Interior/PANEL, C-Pillar Trim - Installation).
3. Install the lower B-pillar trim. (Refer to 23 - Body/Interior/PANEL, B-Pillar Trim - Installation).

NOTE: When installing a new weatherstrip on the rear door opening, remove the tear strip starting at the splice and moving around the back of the door to the front of the opening.

WEATHERSTRIP, Door

Removal

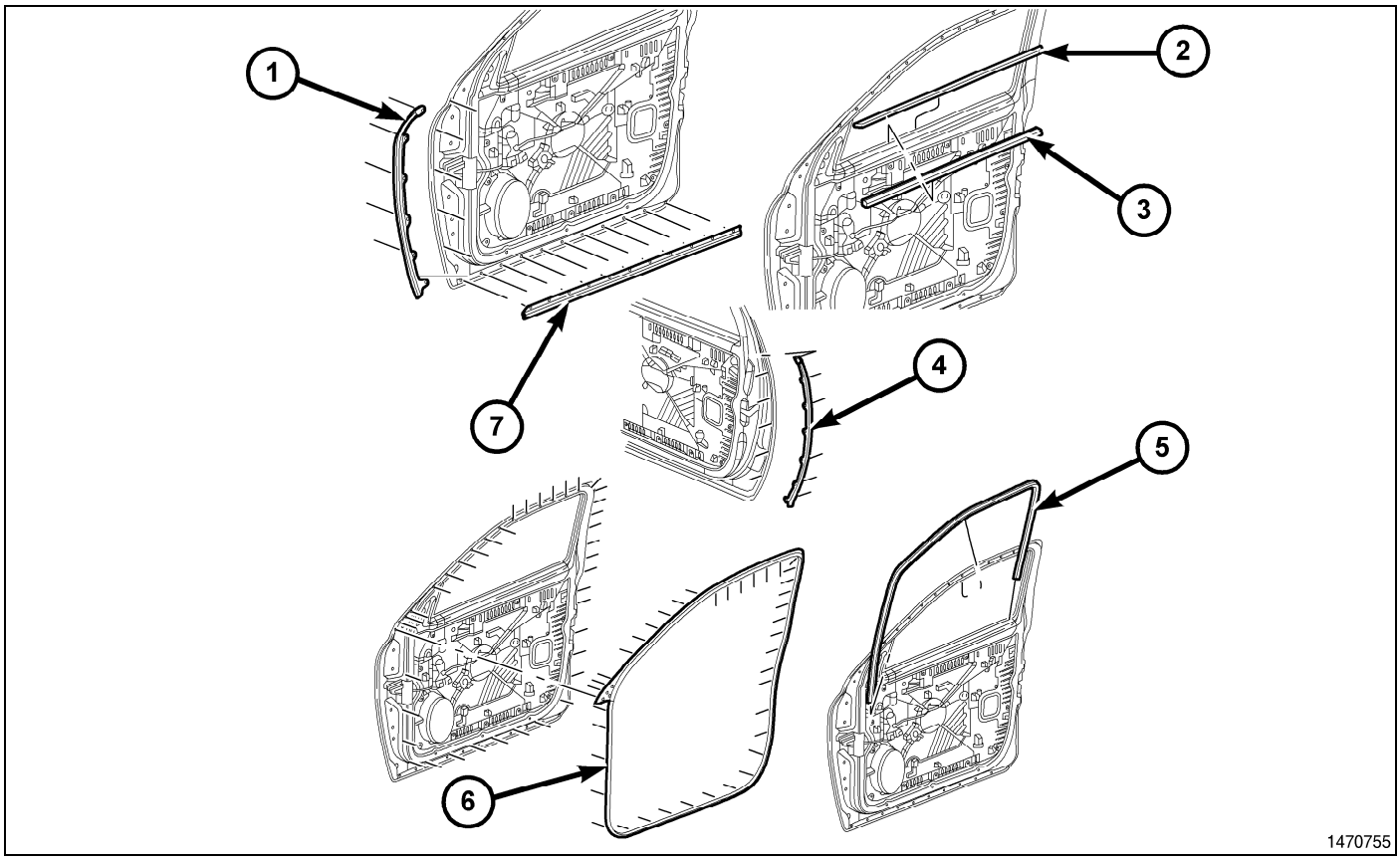

1. Open the appropriate door.
2. If removing the rear door seal, using a trim stick or equivalent, remove the rear trim from the rear door.
3. Carefully remove the door seal (6) from the door retainers.
4. Remove the seal from the door.

Installation

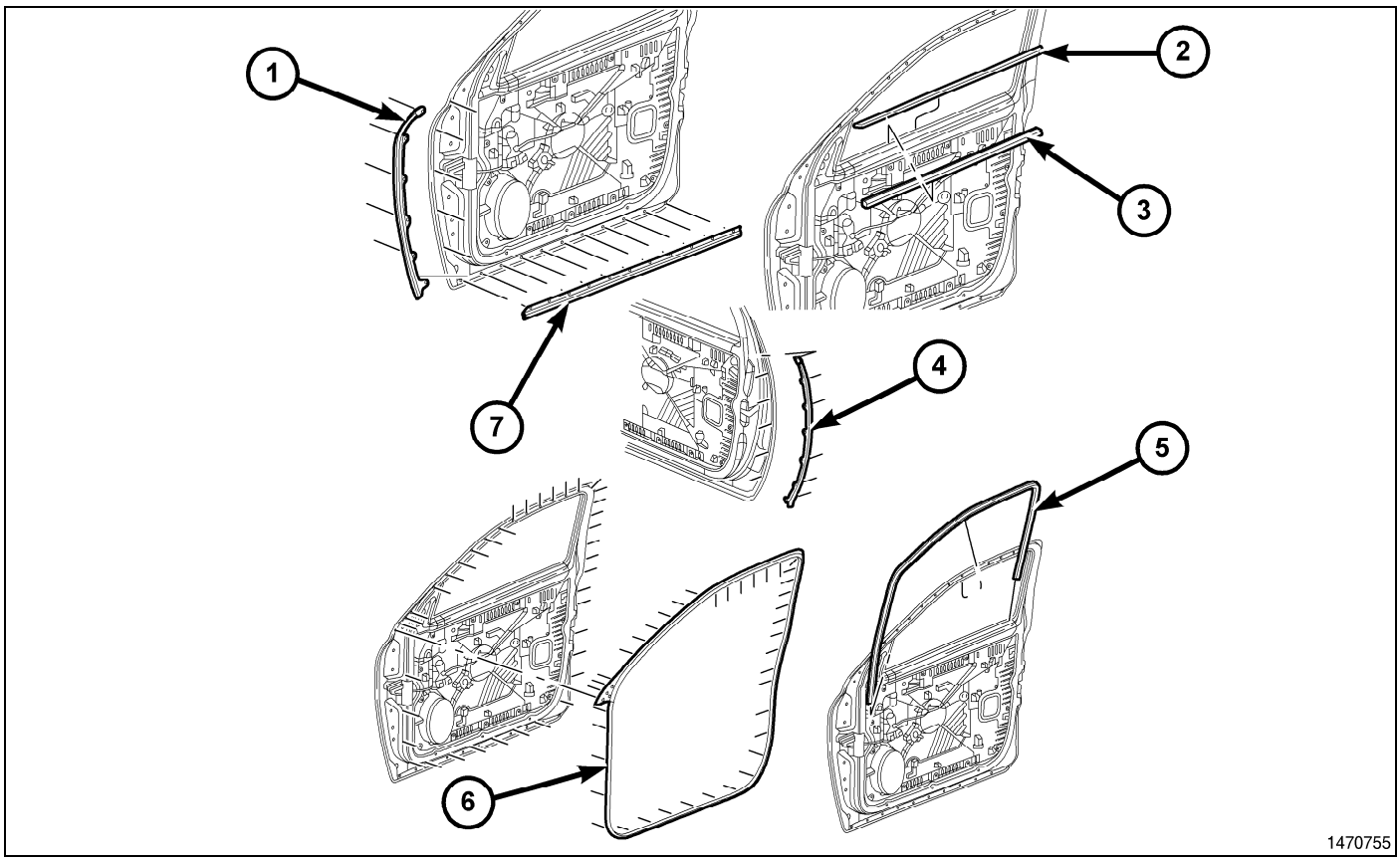

1. Position the door seal (6) to the door.
2. Install the door seal being sure to engage the retainers into the seal.
3. Secure the seal around the perimeter of the door.
4. If required, install the rear trim to the rear door.
5. Shut the door and verify proper seal.

WEATHERSTRIP, Glass Run

Removal

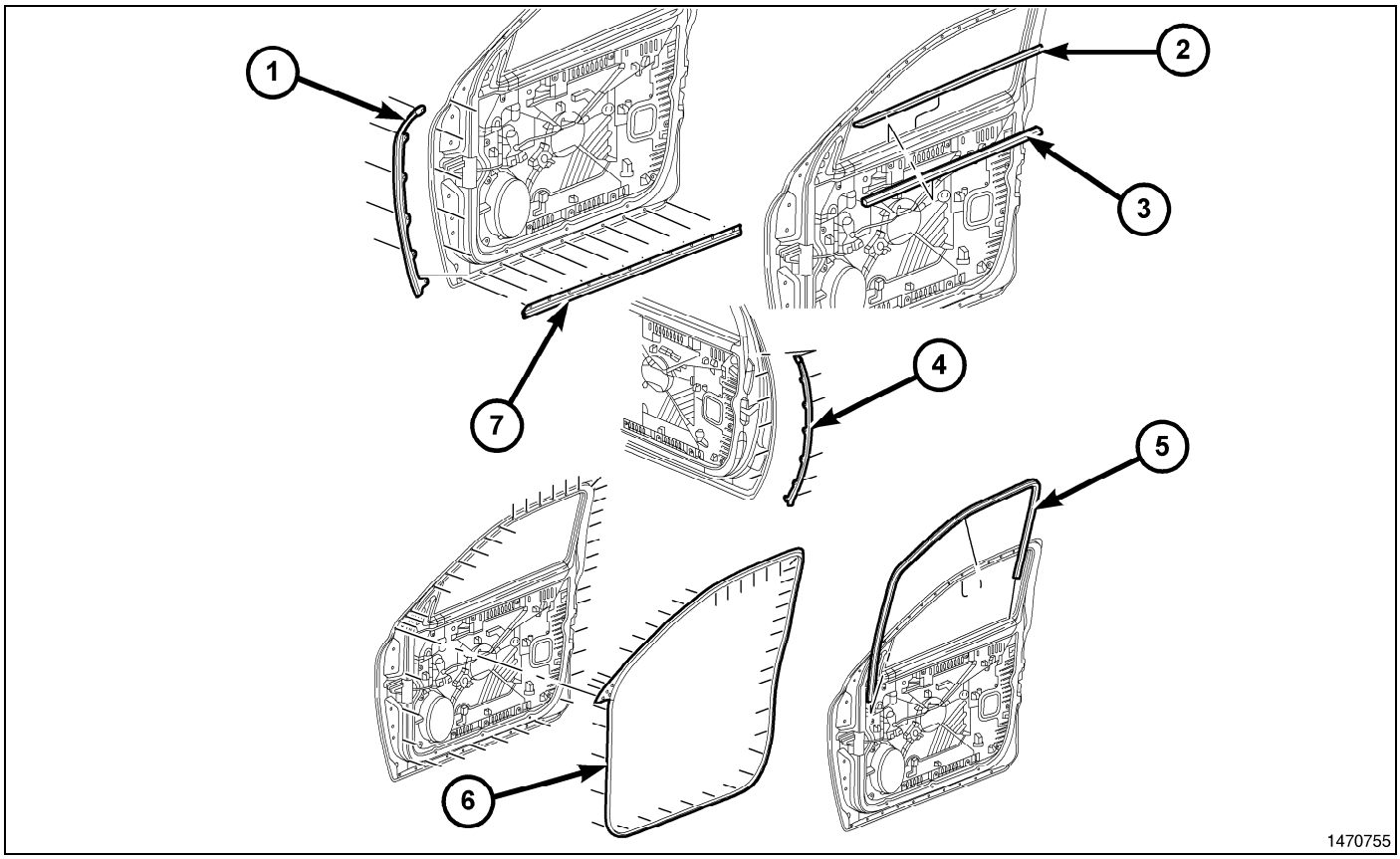

1. Remove the door glass. (Refer to 23 - Body/Door - Front/GLASS, Door - Removal) (Refer to 23 - Body/Doors - Rear/GLASS, Door - Removal)
2. Remove the inner belt molding (3).
3. Carefully pull the top of the window run seal (5) down and remove from the top of the door.
4. Pull the sides of the seal upward out of the door.

Installation

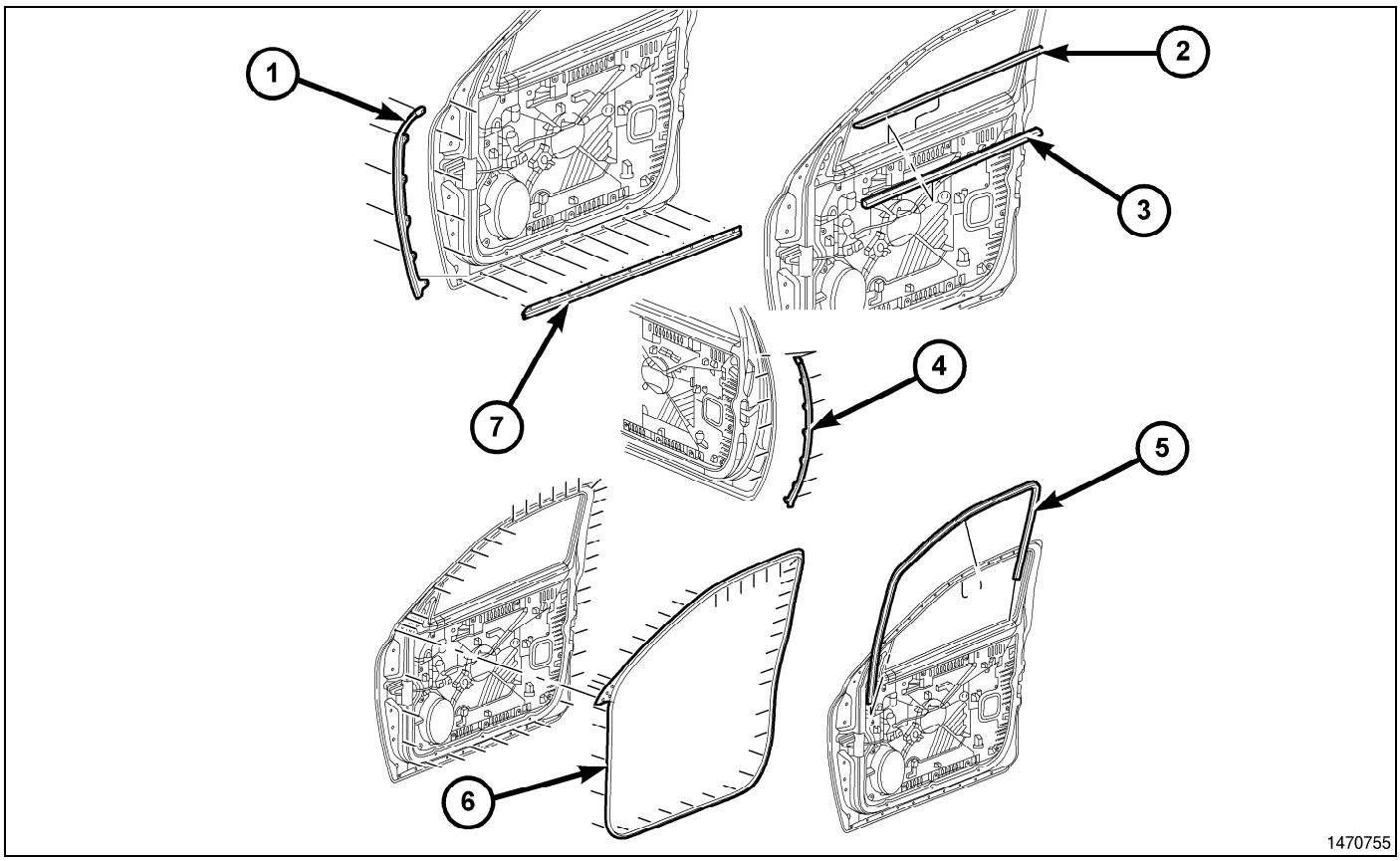

1. Insert the sides of the window run seal (5) into the door.
2. Firmly seat the top of the seal to the top of the door.
3. Install the door glass. (Refer to 23 - Body/Door - Front/GLASS, Door - Installation) (Refer to 23 - Body/Doors - Rear/GLASS, Door - Installation)

WEATHERSTRIP, Header, Roof

Removal

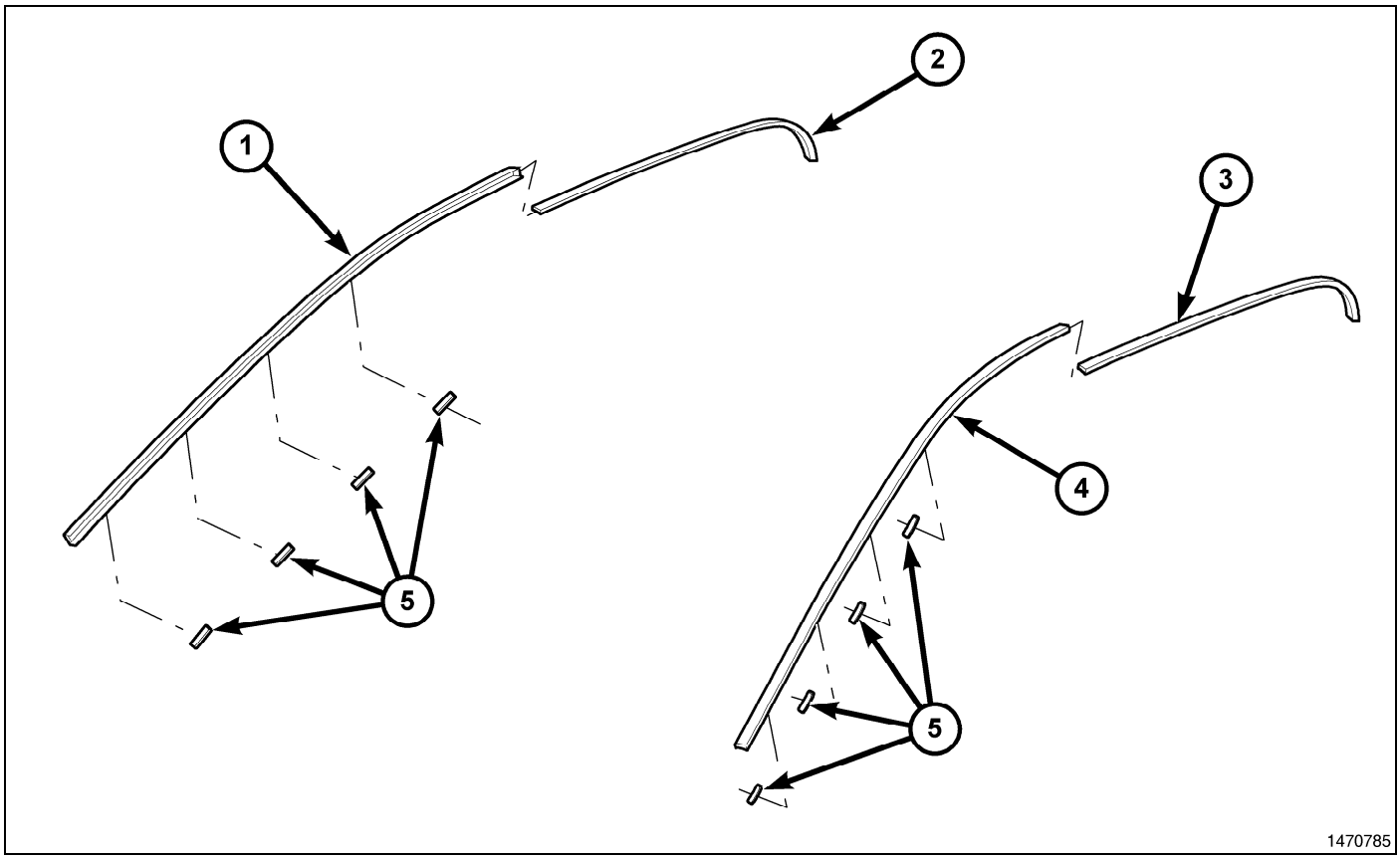

1. Carefully peel the roof header seal (2) from the roof.
2. Clean any access adhesive off of the seal trough.

Installation

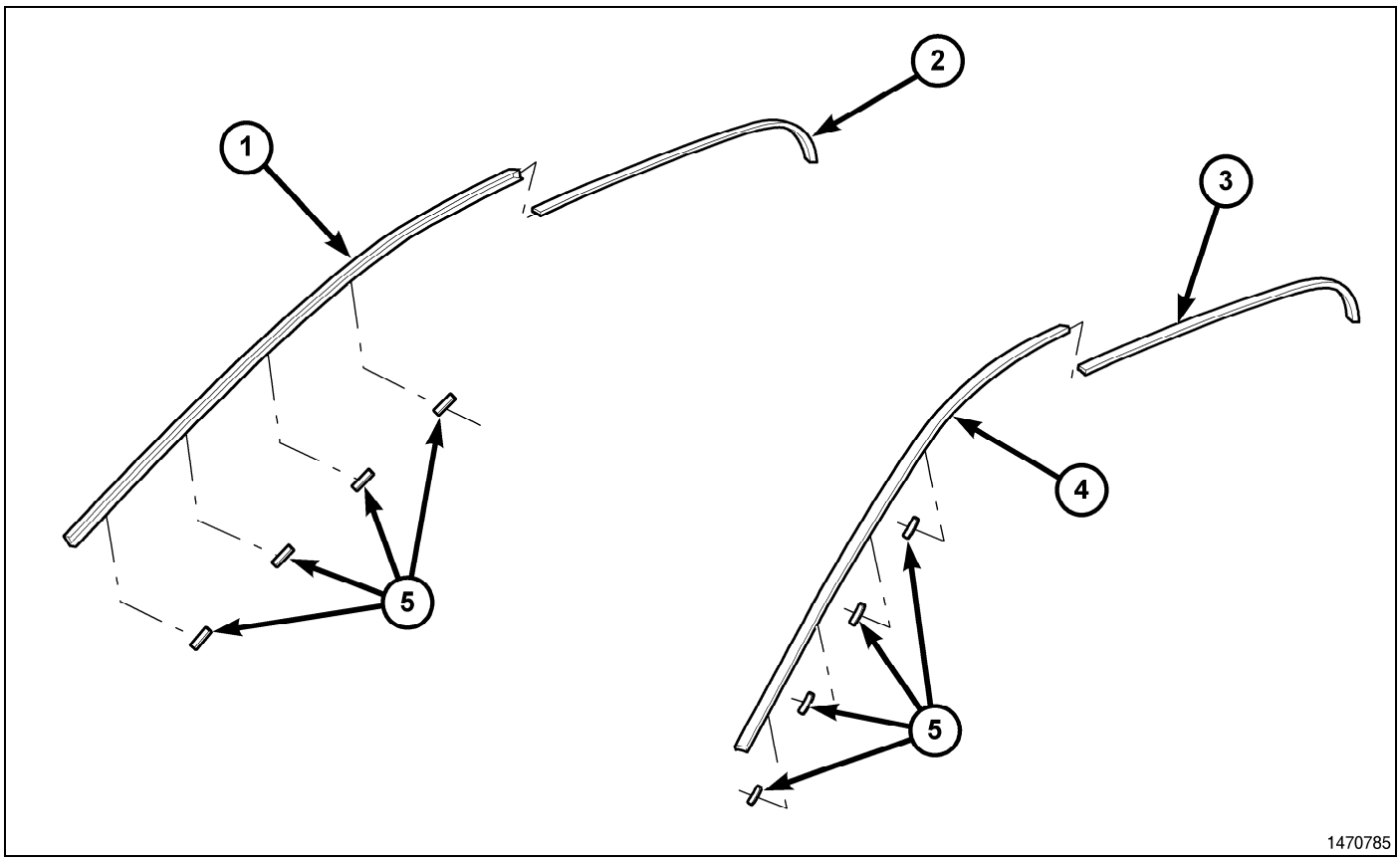

1. Ensure that the roof header seal (2) trough is clean and free of debris.
2. Starting at the front firmly seat the seal into the trough and press down firmly to ensure proper adhesion to the sheet metal.

WEATHERSTRIP, Windshield, A-pillar

Removal

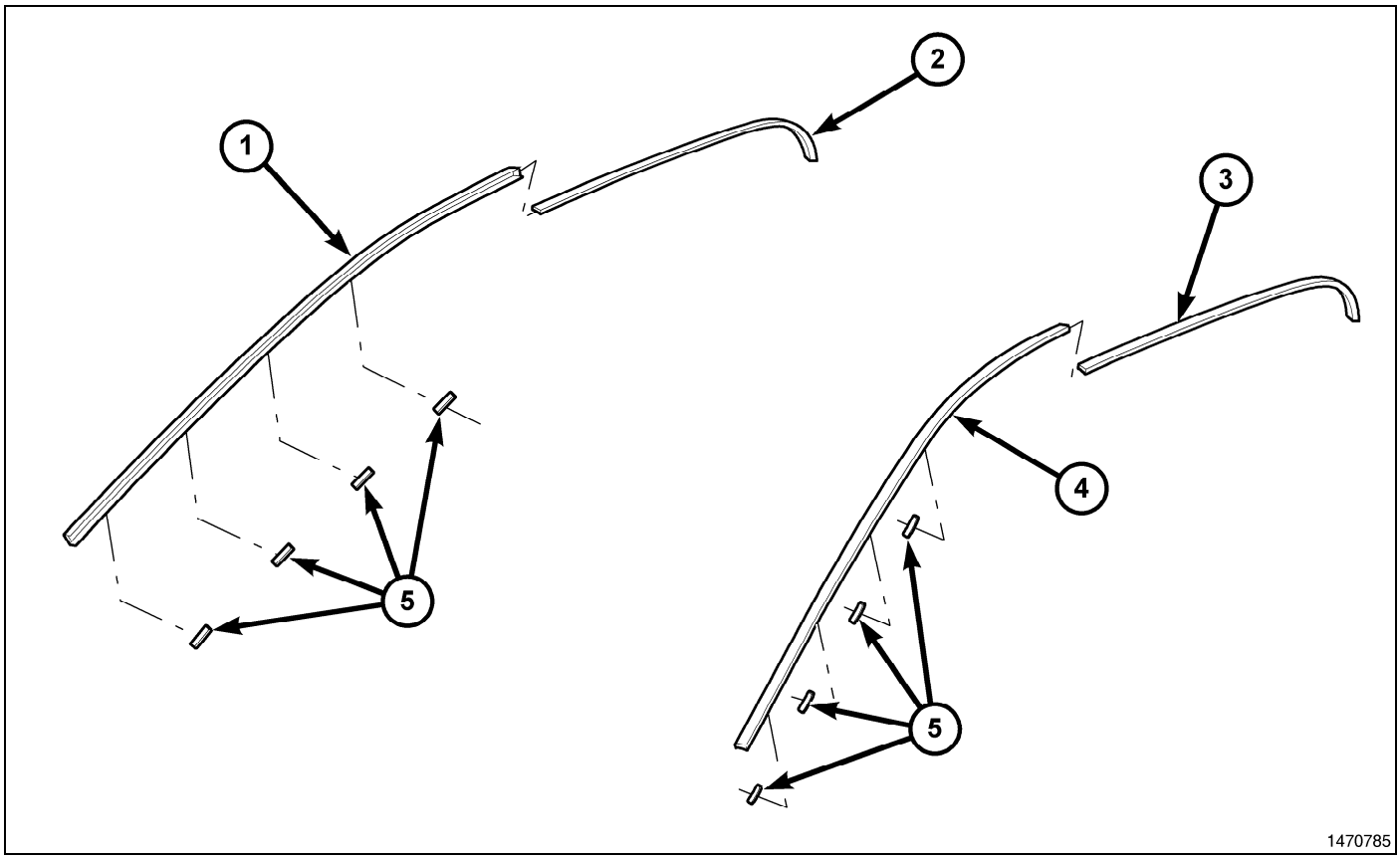

1. Starting at the rear of the windshield weatherstrip (1) carefully peel the seal away from the sheet metal working towards the front of the vehicle.
2. Remove the weatherstrip from the retainers along the side of the windshield.
3. Clean any access adhesive from the sheet metal.

Installation

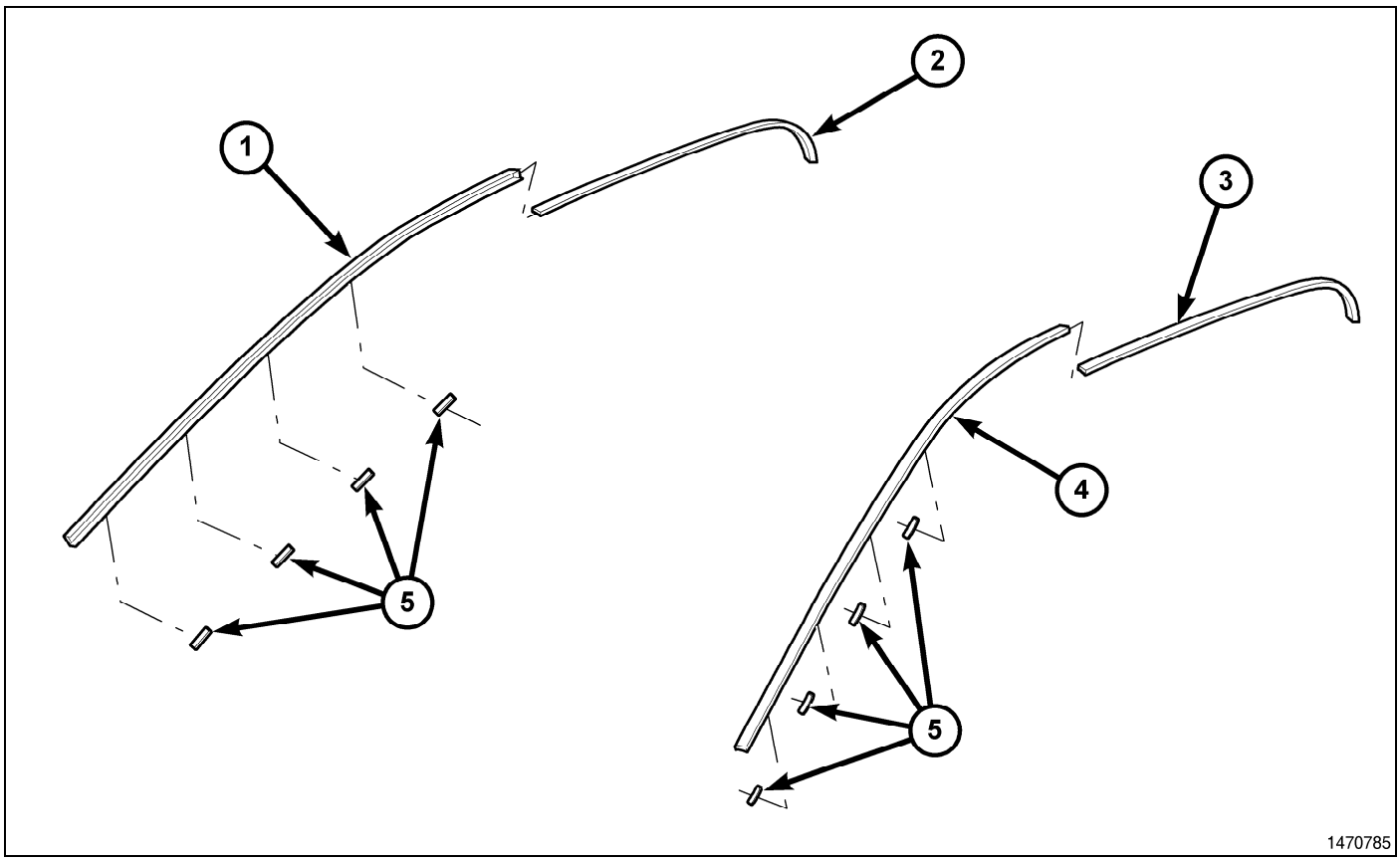

1. Ensure the sheet metal is clean and free of debris.
2. Starting at the front of the windshield, install the windshield weatherstrip (1) to the vehicle.
3. Ensure to engage the retainers along the side of the windshield.
4. Continue to install the weatherstrip pressing down firmly to ensure proper adhesion.

BODY STRUCTURE

TABLE OF CONTENTS

page

BODY STRUCTURE
GAP AND FLUSH
SPECIFICATIONS 410
OPENING DIMENSIONS
SPECIFICATIONS 421
SEALER LOCATIONS
SPECIFICATIONS 428

page

STRUCTURAL ADHESIVE LOCATIONS
SPECIFICATIONS 439
WELD LOCATIONS
SPECIFICATIONS 460

Body Structure

Gap and Flush

Specifications

GAP AND FLUSH DIMENSIONS INDEX

DESCRIPTION	FIGURE
REGULAR CAB	(Fig. 10)
QUAD CAB	(Fig. 11)
CREW CAB	(Fig. 12)

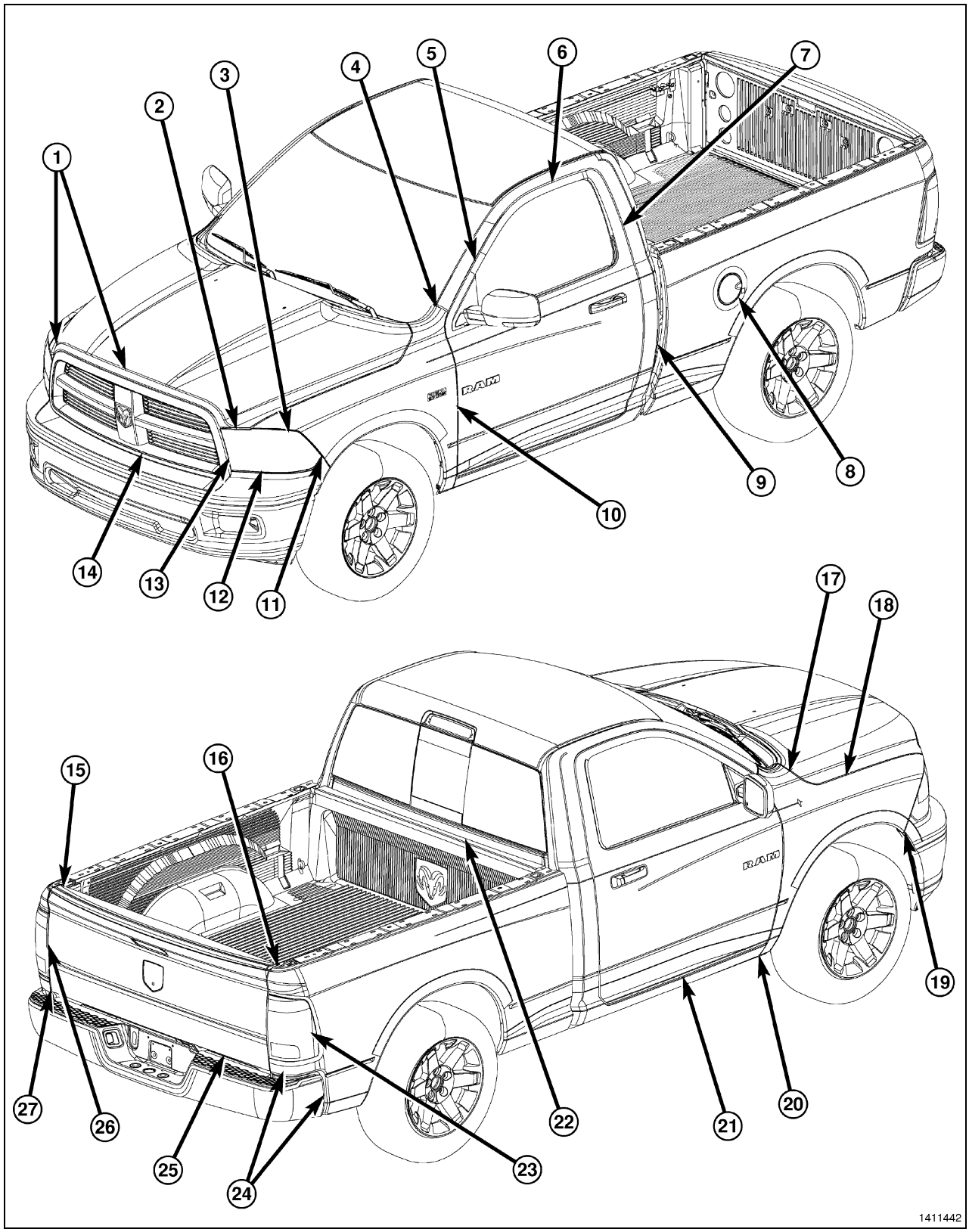

Fig. 10 REGULAR CAB

NOTE: All measurements are in millimeters.			
O/F = Over Flush		U/F = Under Flush	
U/D = Up/Down		F/A = Fore/Aft	
DIMENSION	**DESCRIPTION**	**GAP**	**FLUSH**
1	Hood to grille (along top)	7.0 +/- 2.0 transition to 4.5 after corner	Hood O/F 7.0 @ center to 5.5 @ corner to 1.0 around corner +/- 2.0
2	Headlamp to hood	7.0 +/- 2.0 Parallel within 2.0 Side to side within 3.0	Headlamp O/F 4.0 +/- 2.0 Parallel within 2.0 Side to side within 2.0
3	Fender to headlamp	2.5 +/- 2.0 Parallel within 2.0 Side to side within 3.0	Fender O/F 2.0 +/- 2.0 Parallel within 2.0 Side to side within 3.0
4	Fender to a-pillar	3.0 +/- 1.5 Parallel within 1.5 Side to side within 2.0	Fender O/F 0.75 +/- 1.5 Parallel within 1.5 Side to side within 2.0
5	Aperture to front door @ a-pillar	4.5 +/- 1.5 Parallel within 1.5 Front to back within 1.5	Aperture O/F 1.5 +/- 1.5 Parallel within 1.5 Front to back within 1.5
6	Aperture to front door @ roof	4.5 +/- 1.5 Parallel within 1.5 Front to back within 1.5	Aperture O/F 1.5 +/- 1.5 Parallel within 1.5 Front to back within 1.5
7	Aperture to rear door @ roof	4.5 +/- 1.5 Parallel within 1.5 Front to back within 1.5	Aperture O/F 1.5 +/- 1.5 Parallel within 1.5
8	Box outer to fuel filler door	4.5 +/- 1.5 Parallel within 1.5	0.0 +/- 1.5 Parallel within 1.5
9	Cab to box	35.0 +/- 4.0 Parallel within 3.0	Cab O/F 6.0 +/- 4.0 Parallel within 3.0
10	Fender to front door	4.5 +/- 1.5 Parallel within 1.5 Top to bottom within 1.5	Box outer O/F 0.5 +/- 1.5 Parallel within 1.5 Top to bottom within 1.5
11	Fascia to fender	Net to 2.0 Parallel within 2.0	0.0 +/- 2.0 Parallel within 2.0
12	Headlamp to fascia	4.5 +/- 2.0 Parallel within 2.0 Side to side within 3.0	0.0 +/- 2.0 Parallel within 2.0 Side to side within 2.0
13	Grille to headlamp	3.7 +/- 2.0 Parallel within 2.0 Side to side within 3.0	—
14	Grille to fascia	3.5 +/- 2.0	—

NOTE: All measurements are in millimeters.

O/F = Over Flush **U/F = Under Flush**

U/D = Up/Down **F/A = Fore/Aft**

DIMENSION	DESCRIPTION	GAP	FLUSH
		Parallel within 2.0 Side to side within 2.0	
15	Deflector to tailgate inner	F/A 0.0 +2.0/- 0.0 Parallel within 2.0	—
16	Box cab to tailgate deflector	—	U/D 0.0 +/- 2.0
17	Fender to hood @ cowl	4.5 +/- 1.5 Parallel within 1.5 Side to side within 2.0	Fender U/D-U/F 0.75 +/-1.5 Cross/car 0.0 +/- 1.5
18	Fender to hood	4.5 +/- 1.5 Parallel within 1.5 Side to side within 2.0	Fender O/F 0.5 +/- 1.5
19	Wheel flare to fascia	1.0 +2.0/- 1.0 Parallel within 2.0	0.0 +/- 2.0 Parallel within 2.0
20	Fender to sill	4.5 +/- 1.5 Parallel within 1.5 Side to side within 2.0	Fender O/F 1.0 +/- 1.5
21	Sill to front door	6.0 +/- 1.5 Parallel within 1.5 Front to back within 1.5	Sill O/F 4.5 +/- 1.5 Parallel within 1.5 Front to back within 1.5
22	Cab to box	32.0 +/- 3.5 Parallel within 3.0	—
23	Box outer to tail lamp	2.5 +/- 2.0 Parallel within 2.0	0.0 +/- 2.0
24	Rear bumper to box outer	F/A 30.4 +/- 5.0 Parallel within 5.0 U/D 26.0 +/- 3.0 Parallel within 4.0	+/- 1.5 Parallel within 1.5
25	Bumper to tailgate	33.4 +/- 3.0 Parallel within 4.0	—
26	Tail lamp to tailgate	5.0 +/- 2.0 Parallel within 2.0 Side to side within 2.0	Tail lamp O/F 1.5 +/- 2.0
27	Box outer to tailgate	5.0 +/- 1.5 Parallel within 1.5 Side to side within 1.5	Box outer O/F 1.5 +/- 1.5 Parallel within 1.5 Side to side within 1.5

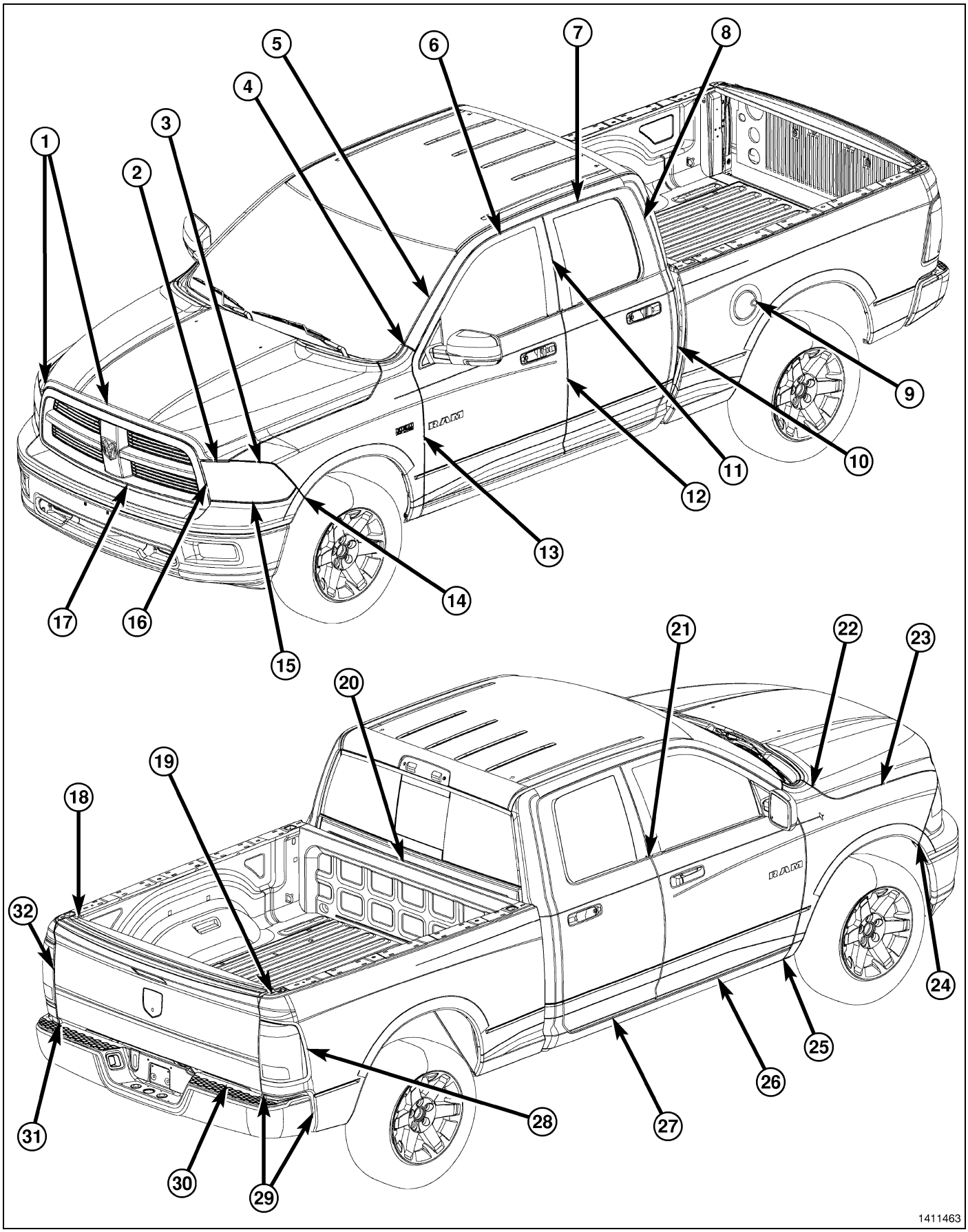

Fig. 11 QUAD CAB

NOTE: All measurements are in millimeters.

O/F = Over Flush **U/D = Up/Down**

U/F = Under Flush **F/A = Fore/Aft**

DIMENSION	DESCRIPTION	GAP	FLUSH
1	Hood to grille (along top)	7.0 +/- 2.0 transition to 4.5 after corner	Hood O/F 7.0 @ center to 5.5 @ corner to 1.0 around corner +/- 2.0
2	Headlamp to hood	7.0 +/- 2.0 Parallel within 2.0 Side to side within 3.0	Headlamp O/F 4.0 +/- 2.0 Parallel within 2.0 Side to side within 2.0
3	Fender to headlamp	2.5 +/- 2.0 Parallel within 2.0 Side to side within 3.0	Fender O/F 2.0 +/- 2.0 Parallel within 2.0 Side to side within 3.0
4	Fender to a-pillar	3.0 +/- 1.5 Parallel within 1.5 Side to side within 2.0	Fender O/F 0.75 +/- 1.5 Parallel within 1.5 Side to side within 2.0
5	Aperture to front door @ a-pillar	4.5 +/- 1.5 Parallel within 1.5 Front to back within 1.5	Aperture O/F 1.5 +/- 1.5 Parallel within 1.5 Front to back within 1.5
6	Aperture to front door @ roof	4.5 +/- 1.5 Parallel within 1.5 Front to back within 1.5	Aperture O/F 1.5 +/- 1.5 Parallel within 1.5 Front to back within 1.5
7	Aperture to rear door @ roof	4.5 +/- 1.5 Parallel within 1.5 Front to back within 1.5	Aperture O/F 1.5 +/- 1.5 Parallel within 1.5
8	Quarter panel to rear door	4.5 +/- 1.5 Parallel within 1.5 Top to bottom within 1.5	0.0 +/- 1.5 Parallel within 1.5
9	Box outer to fuel filler door	4.5 +/- 1.5 Parallel within 1.5	Box outer O/F 0.5 +/- 1.5 Parallel within 1.5
10	Cab to box	35.0 +/- 4.0 Parallel within 3.0	Cab O/F 6.0+/- 4.0 Parallel within 3.0
11	Front door to rear door above belt	4.5 +/- 1.5 Parallel within 1.5 Top to bottom within 1.5	0.0 +/- 1.5 Parallel within 1.5
12	Front door to rear door below belt	4.5 +/- 1.5 Parallel within 1.5 Top to bottom within 1.5	Front door O/F 1.0 Between belt and character line +/- 1.5 Parallel within 1.5 1.0 to 0.0 below character line +/- 1.5

NOTE: All measurements are in millimeters.			
O/F = Over Flush		U/D = Up/Down	
U/F = Under Flush		F/A = Fore/Aft	
DIMENSION	**DESCRIPTION**	**GAP**	**FLUSH**
13	Fender to front door	4.5 +/- 1.5 Parallel within 1.5 Top to bottom within 1.5	Fender O/F 1.0 +/- 1.5 Parallel within 1.5 Top to bottom within 1.5
14	Fascia to fender	Net to 2.0 Parallel within 2.0	0.0 +/- 2.0 Parallel within 2.0
15	Headlamp to fascia	4.5 +/- 2.0 Parallel within 2.0 Side to side within 3.0	0.0 +/- 2.0 Parallel within 2.0 Side to side within 2.0
16	Grille to headlamp	3.7 +/- 2.0 Parallel within 2.0 Side to side within 3.0	—
17	Grille to fascia	3.5 +/- 2.0 Parallel within 2.0 Side to side within 2.0	—
18	Deflector to tailgate inner	F/A 0.0 +2.0/- 0.0 Parallel within 2.0	—
19	Box cab to tailgate deflector	—	U/D 0.0 +/- 2.0
20	Cab to box	32.0 +/- 3.5 Parallel within 3.0	—
21	Front door belt to rear door belt	U/D alignment: 0 +/- 2.0	—
22	Fender to hood @ cowl	4.5 +/- 1.5 Parallel within 1.5 Side to side within 2.0	Fender U/D-U/F 0.75 +/-1.5 Cross/car 0.0 +/- 1.5
23	Fender to hood	4.5 +/- 1.5 Parallel within 1.5 Side to side within 2.0	Fender O/F 0.5 +/- 1.5
24	Wheel flare to fascia	1.0 +2.0/- 1.0 Parallel within 2.0	0.0 +/- 2.0 Parallel within 2.0
25	Fender to sill	4.5 +/- 1.5 Parallel within 1.5 Side to side within 2.0	Fender O/F 1.0 +/- 1.5
26	Sill to front door	6.0 +/- 1.5 Parallel within 1.5 Front to back within 1.5	Sill O/F 4.5 +/- 1.5 Parallel within 1.5 Front to back within 1.5
27	Sill to rear door	6.0 +/- 1.5 Parallel within 1.5	Sill O/F 4.5 +/- 1.5 Parallel within 1.5

NOTE: All measurements are in millimeters.

O/F = Over Flush **U/D = Up/Down**

U/F = Under Flush **F/A = Fore/Aft**

DIMENSION	DESCRIPTION	GAP	FLUSH
		Front to back within 1.5	Front to back within 1.5
28	Box outer to tail lamp	2.5 +/- 2.0 Parallel within 2.0	0.0 +/- 2.0
29	Rear bumper to box outer	F/A 30.4 +/- 5.0 Parallel within 5.0 U/D 26.0 +/- 3.0 Parallel within 4.0	+/- 1.5 Parallel within 1.5
30	Bumper to tailgate	33.4 +/- 3.0 Parallel within 4.0	—
31	Box outer to tailgate	5.0 +/- 1.5 Parallel within 1.5 Side to side within 1.5	Box outer O/F 1.5 +/- 1.5 Parallel within 1.5 Side to side within 1.5
32	Tail lamp to tailgate	5.0 +/- 2.0 Parallel within 2.0 Side to side within 2.0	Tail lamp O/F 1.5 +/- 2.0

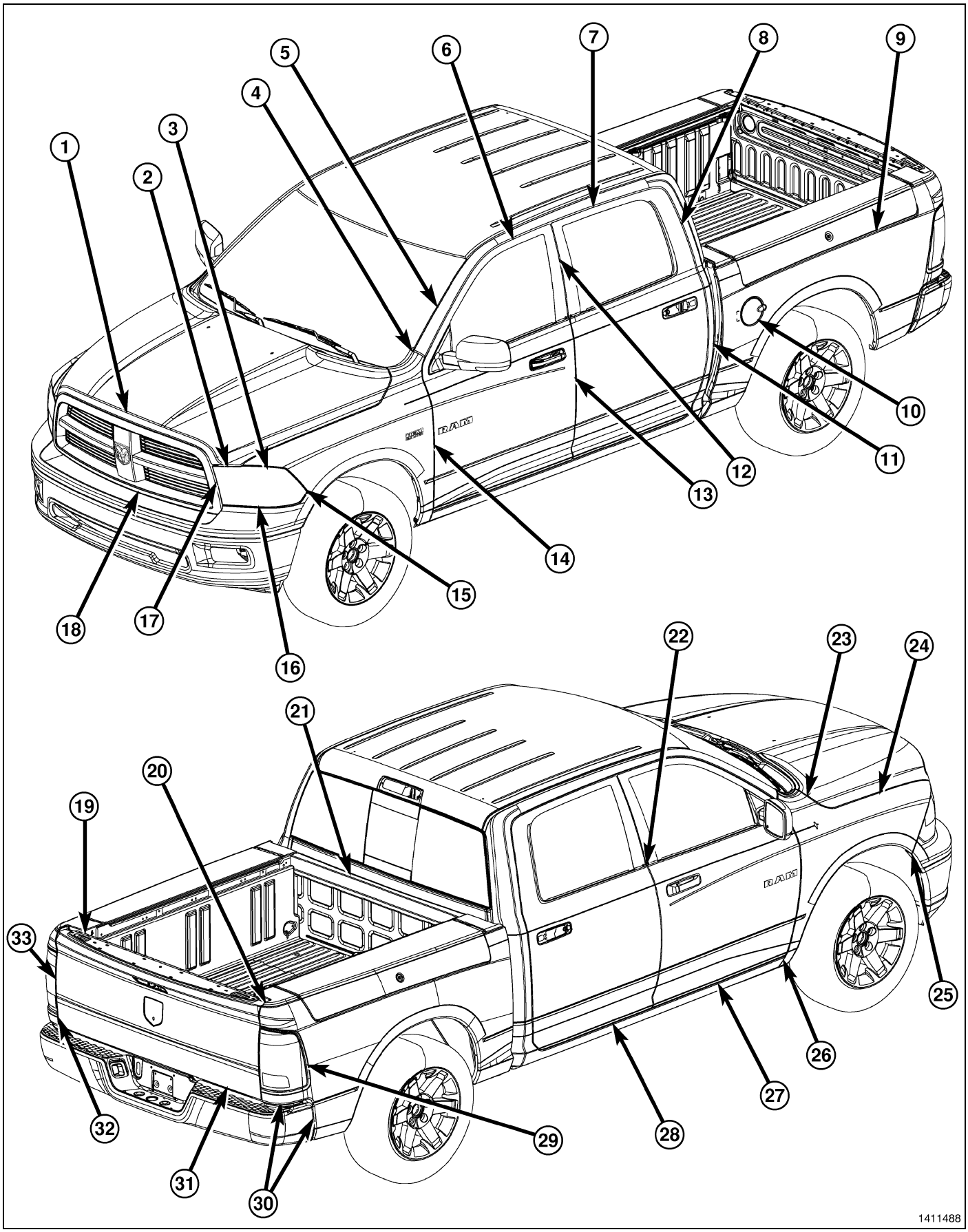

Fig. 12 CREW CAB

NOTE: All measurements are in millimeters.

O/F = Over Flush **U/D = Up/Down**

U/F = Under Flush **F/A = Fore/Aft**

DIMENSION	DESCRIPTION	GAP	FLUSH
1	Hood to grille (along top)	7.0 +/- 2.0 transition to 4.5 after corner	Hood O/F 7.0 @ center to 5.5 @ corner to 1.0 around corner +/- 2.0
2	Headlamp to hood	7.0 +/- 2.0 Parallel within 2.0 Side to side within 3.0	Headlamp O/F 4.0 +/- 2.0 Parallel within 2.0 Side to side within 2.0
3	Fender to headlamp	2.5 +/- 2.0 Parallel within 2.0 Side to side within 3.0	Fender O/F 2.0 +/- 2.0 Parallel within 2.0 Side to side within 3.0
4	Fender to a-pillar	3.0 +/- 1.5 Parallel within 1.5 Side to side within 2.0	Fender O/F 0.75 +/- 1.5 Parallel within 1.5 Side to side within 2.0
5	Aperture to front door @ a-pillar	4.5 +/- 1.5 Parallel within 1.5 Front to back within 1.5	Aperture O/F 1.5 +/- 1.5 Parallel within 1.5 Front to back within 1.5
6	Aperture to front door @ roof	4.5 +/- 1.5 Parallel within 1.5 Front to back within 1.5	Aperture O/F 1.5 +/- 1.5 Parallel within 1.5 Front to back within 1.5
7	Aperture to rear door @ roof	4.5 +/- 1.5 Parallel within 1.5 Front to back within 1.5	Aperture O/F 1.5 +/- 1.5 Parallel within 1.5
8	Quarter panel to rear door	4.5 +/- 1.5 Parallel within 1.5 Top to bottom within 1.5	0.0 +/- 1.5 Parallel within 1.5
9	Ram box to box outer	5.0 +/- 2.0	Flush +/- 2.0
10	Box outer to fuel filler door	4.5 +/- 1.5 Parallel within 1.5	Box Outer O/F 0.5 +/- 1.5 Parallel within 1.5
11	Cab to box	35.0 +/- 4.0 Parallel within 3.0	Cab O/F 6.0 +/- 4.0 Parallel within 3.0
12	Front door to rear door above belt	4.5 +/- 1.5 Parallel within 1.5 Top to bottom within 1.5	0.0 +/- 1.5 Parallel within 1.5
13	Front door to rear door below belt	4.5 +/- 1.5 Parallel within 1.5 Top to bottom within 1.5	Front Door O/F 1.0 Between belt and Character line +/- 1.5 Parallel within 1.5 1.0 to 0.0 below Character line +/- 1.5

NOTE: All measurements are in millimeters.

O/F = Over Flush **U/D = Up/Down**

U/F = Under Flush **F/A = Fore/Aft**

DIMENSION	DESCRIPTION	GAP	FLUSH
14	Fender to front door	4.5 +/- 1.5 Parallel within 1.5 Top to bottom within 1.5	Fender O/F 1.0 +/- 1.5 Parallel within 1.5 Top to bottom within 1.5
15	Fascia to fender	Net to 2.0 Parallel within 2.0	0.0 +/- 2.0 Parallel within 2.0
16	Headlamp to fascia	4.5 +/- 2.0 Parallel within 2.0 Side to side within 3.0	0.0 +/- 2.0 Parallel within 2.0 Side to side within 2.0
17	Grille to headlamp	3.7 +/- 2.0 Parallel within 2.0 Side to side within 3.0	—
18	Grille to fascia	3.5 +/- 2.0 Parallel within 2.0 Side to side within 2.0	—
19	Deflector to tailgate inner	F/A 0.0 +2.0/- 0.0 Parallel within 2.0	—
20	Box cab to tailgate deflector	—	U/D 0.0 +/- 2.0
21	Cab to box	32.0 +/- 3.5 Parallel within 3.0	—
22	Front door belt to rear door belt	U/D Alignment: 0 +/- 2.0	—
23	Fender to hood @ cowl	4.5 +/- 1.5 Parallel within 1.5 Side to side within 2.0	Fender U/D-U/F 0.75 +/-1.5 Cross/Car 0.0 +/- 1.5
24	Fender to hood	4.5 +/- 1.5 Parallel within 1.5 Side to side within 2.0	Fender O/F 0.5 +/- 1.5
25	Wheel flare to fascia	1.0 +2.0/- 1.0 Parallel within 2.0	0.0 +/- 2.0 Parallel within 2.0
26	Fender to sill	4.5 +/- 1.5 Parallel within 1.5 Side to side within 2.0	Fender O/F 1.0 +/- 1.5
27	Sill to front door	6.0 +/- 1.5 Parallel within 1.5 Front to back within 1.5	Sill O/F 4.5 +/- 1.5 Parallel within 1.5 Front to back within 1.5

NOTE: All measurements are in millimeters.			
O/F = Over Flush		U/D = Up/Down	
U/F = Under Flush		F/A = Fore/Aft	
DIMENSION	**DESCRIPTION**	**GAP**	**FLUSH**
28	Sill to rear door	6.0 +/- 1.5 Parallel within 1.5 Front to back within 1.5	Sill O/F 4.5 +/- 1.5 Parallel within 1.5 Front to back within 1.5
29	Box outer to tail lamp	2.5 +/- 2.0 Parallel within 2.0	0.0 +/- 2.0
30	Rear bumper to box outer	F/A 30.4 +/- 5.0 Parallel within 5.0 U/D 26.0 +/- 3.0 Parallel within 4.0	+/- 1.5 Parallel within 1.5
31	Bumper to tailgate	33.4 +/- 3.0 Parallel within 4.0	—
32	Box outer to tailgate	5.0 +/- 1.5 Parallel within 1.5 Side to side within 1.5	Box Outer O/F 1.5 +/- 1.5 Parallel within 1.5 Side to side within 1.5
33	Tail lamp to tailgate	5.0 +/- 2.0 Parallel within 2.0 Side to side within 2.0	Tail Lamp O/F 1.5 +/- 2.0

Opening Dimensions

Specifications

BODY OPENING DIMENSIONS INDEX

DESCRIPTION	FIGURE
Engine Compartment/Body Structure	(Fig. 13)
Windshield Opening - All	(Fig. 14)
Door Openings – Standard Cab	(Fig. 15)
Door Openings – Quad Cab	(Fig. 16)
Door Openings – Crew Cab	(Fig. 17)
Rear Window Opening - All	(Fig. 18)
Pickup Box – 5.7’ Ram Box (Plan View)	(Fig. 19)
Pickup Box – 5.7’ Box (Plan View)	(Fig. 20)
Pickup Box – 6.3’ Box (Plan View)	(Fig. 21)
Pickup Box – 8.0’ Box (Plan View)	(Fig. 22)
Pickup Box – Tail Gate Opening - All	(Fig. 23)

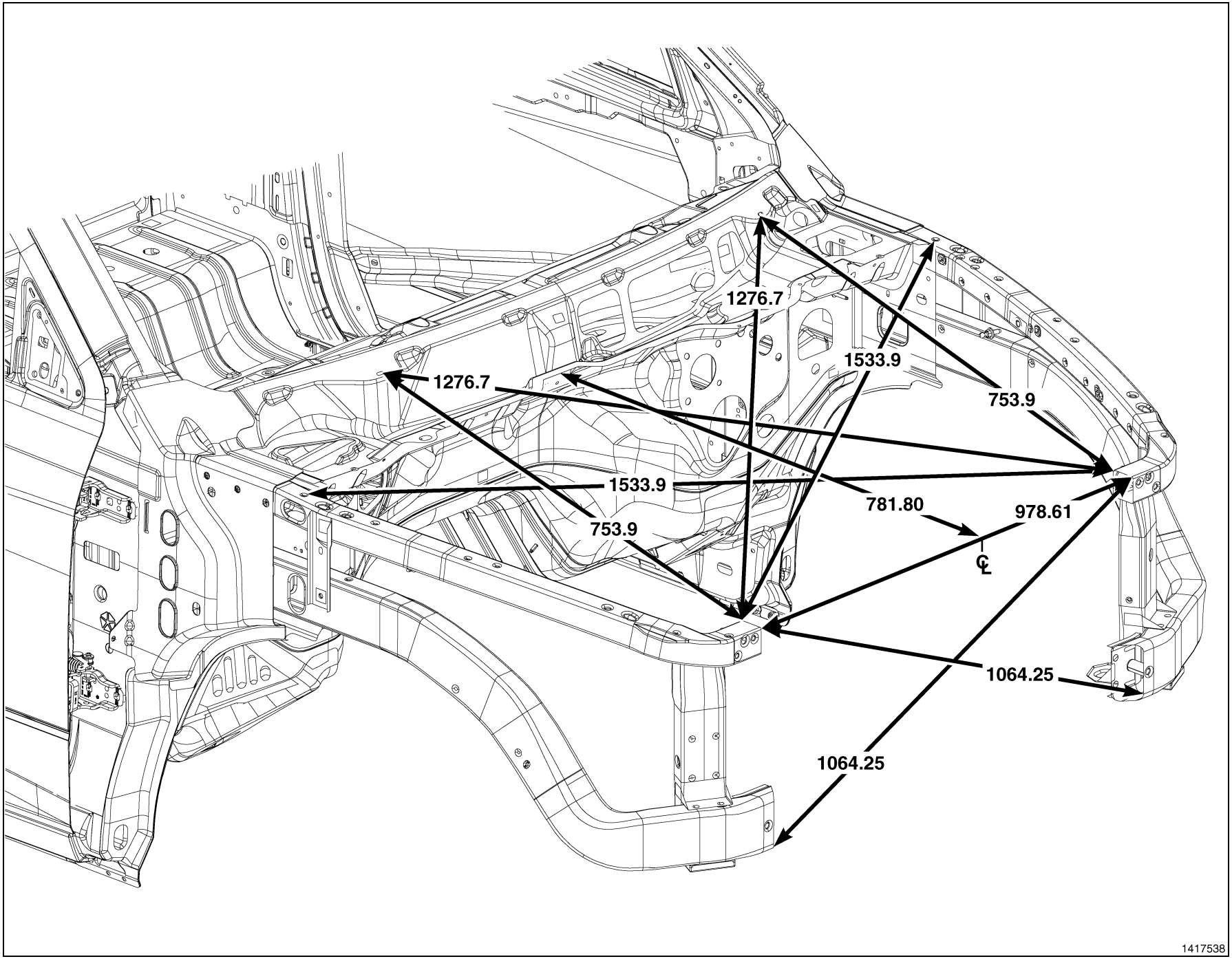

Fig. 13 Engine Compartment/Body Structure

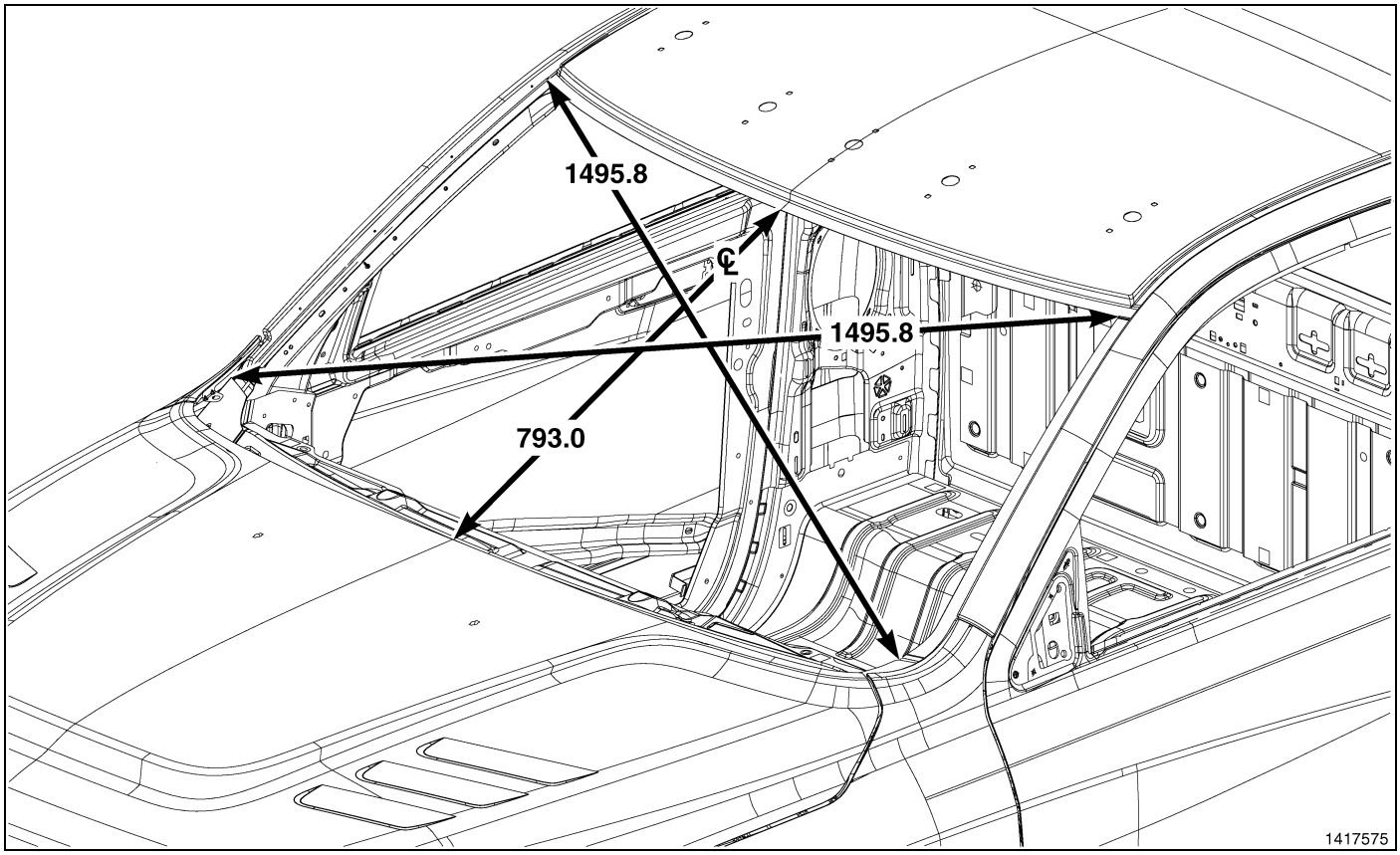

Fig. 14 Windshield Opening - All

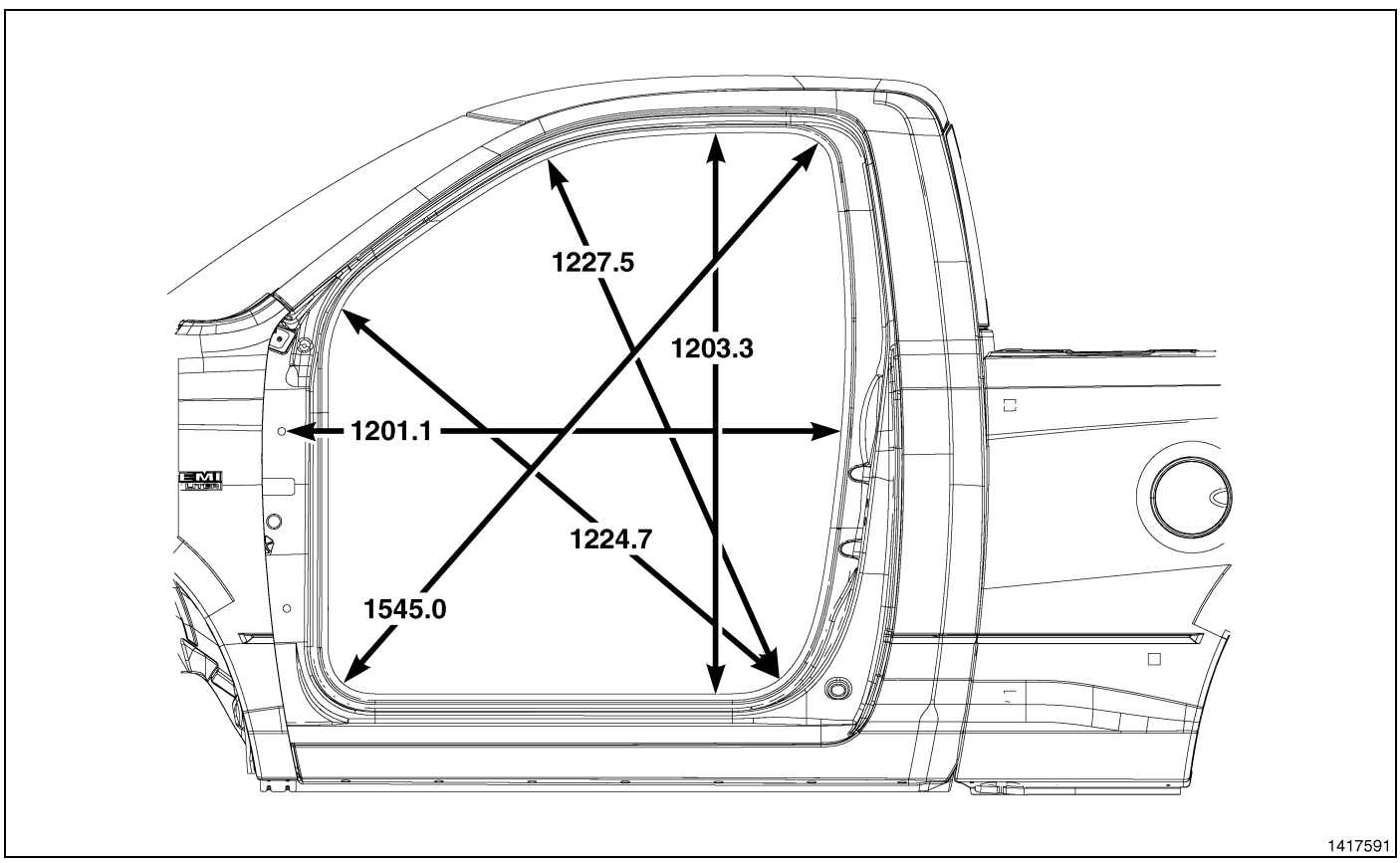

Fig. 15 Door Openings – Standard Cab

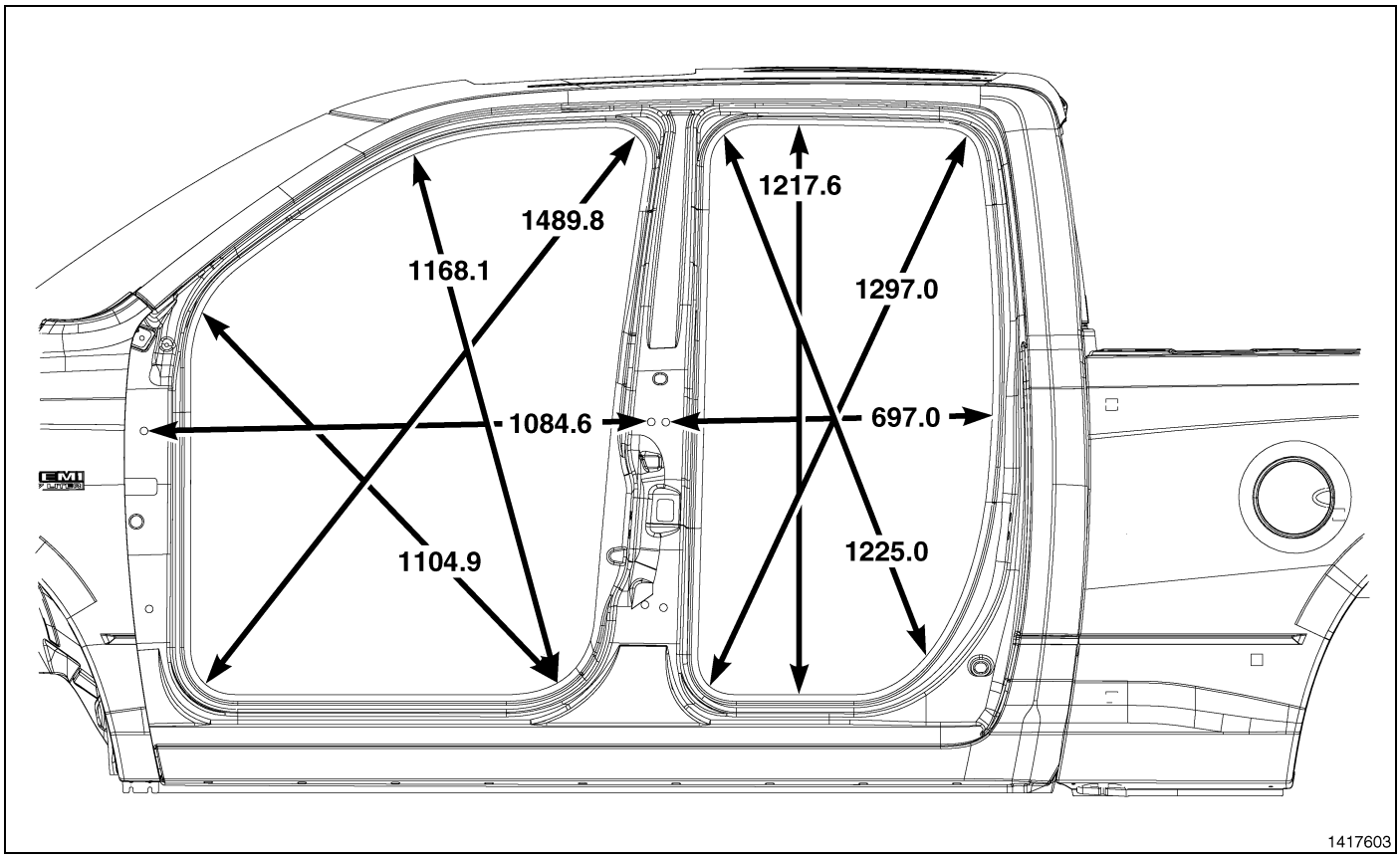

Fig. 16 Door Openings – Quad Cab

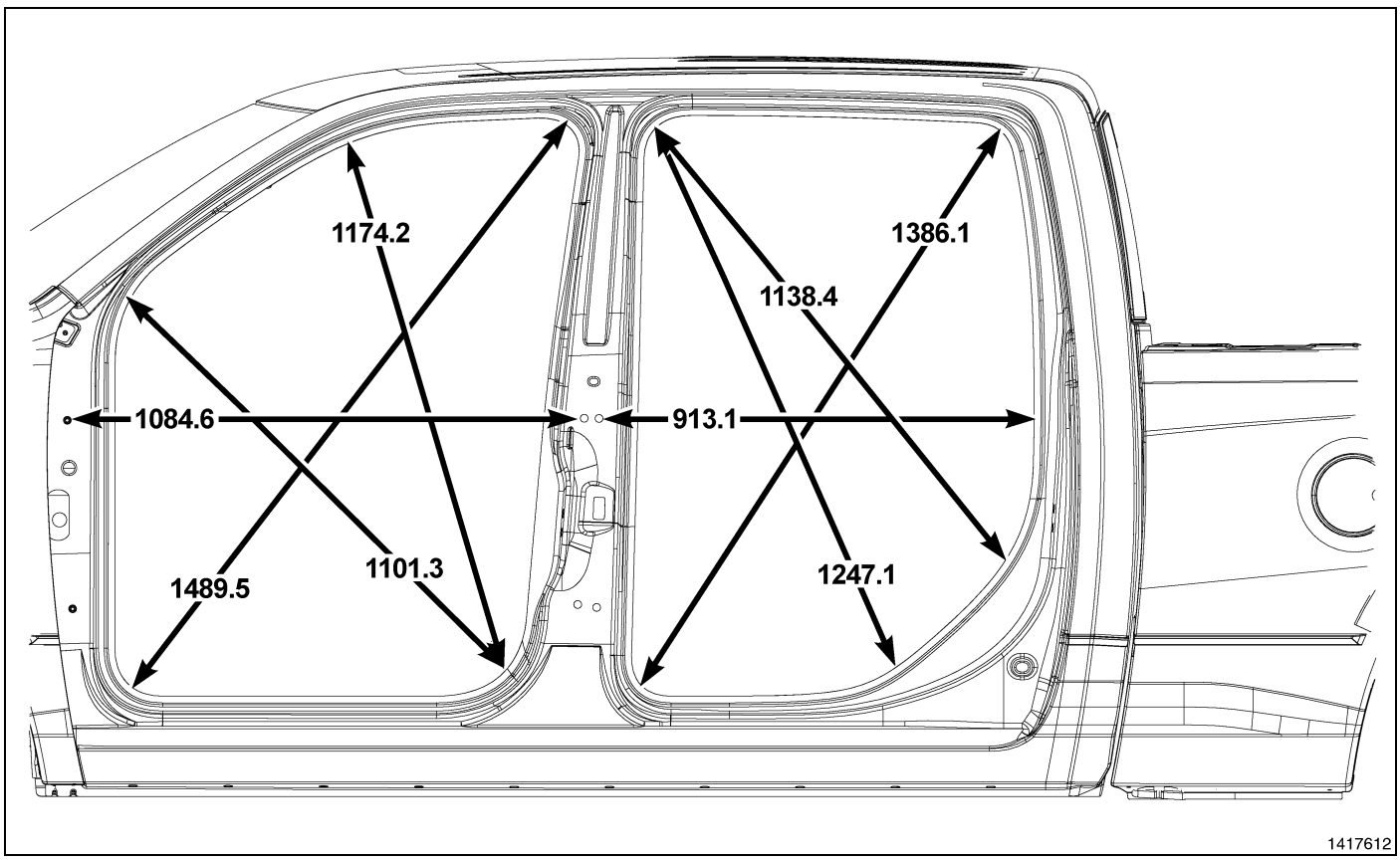

Fig. 17 Door Openings – Crew Cab

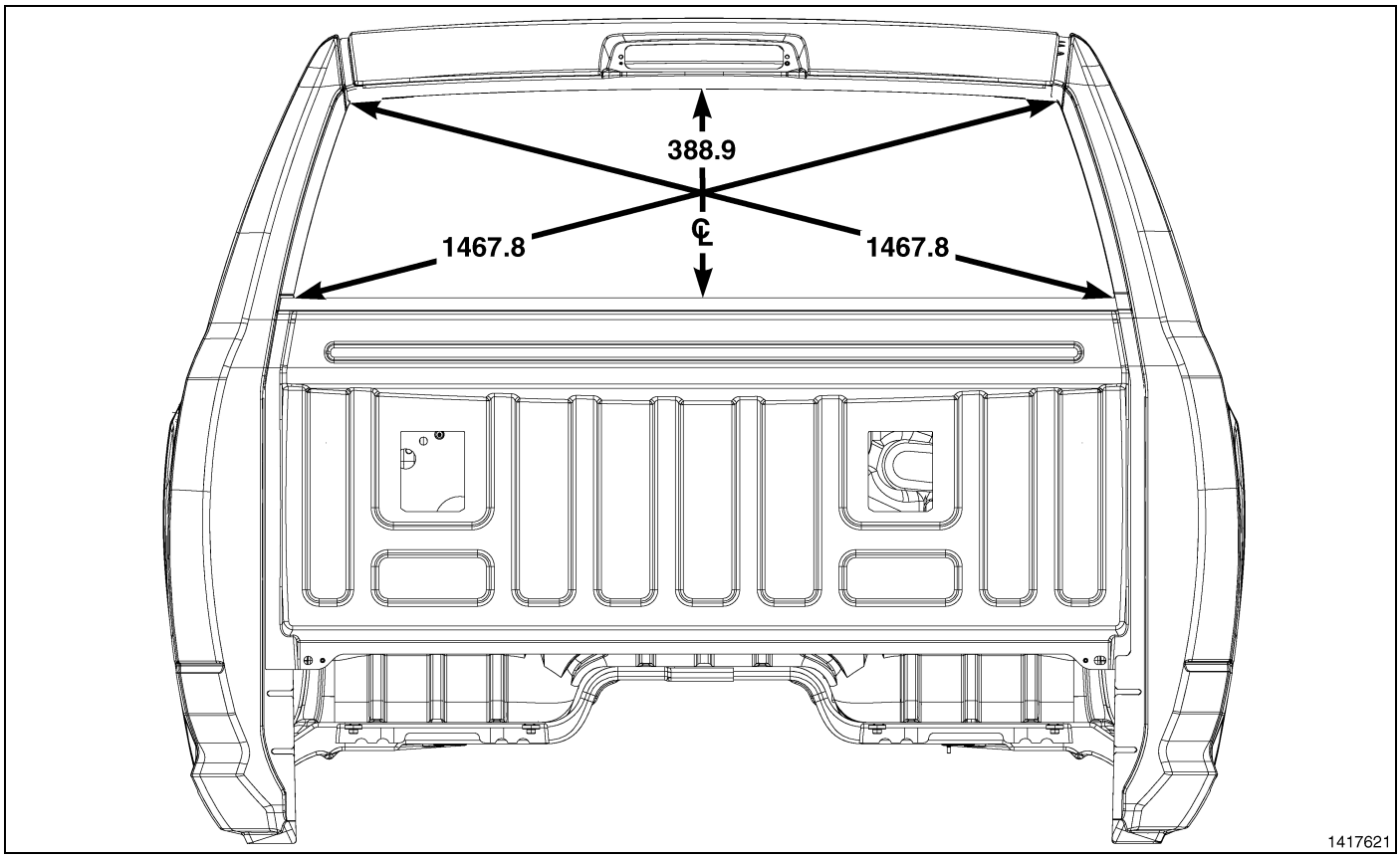

Fig. 18 Rear Window Opening - All

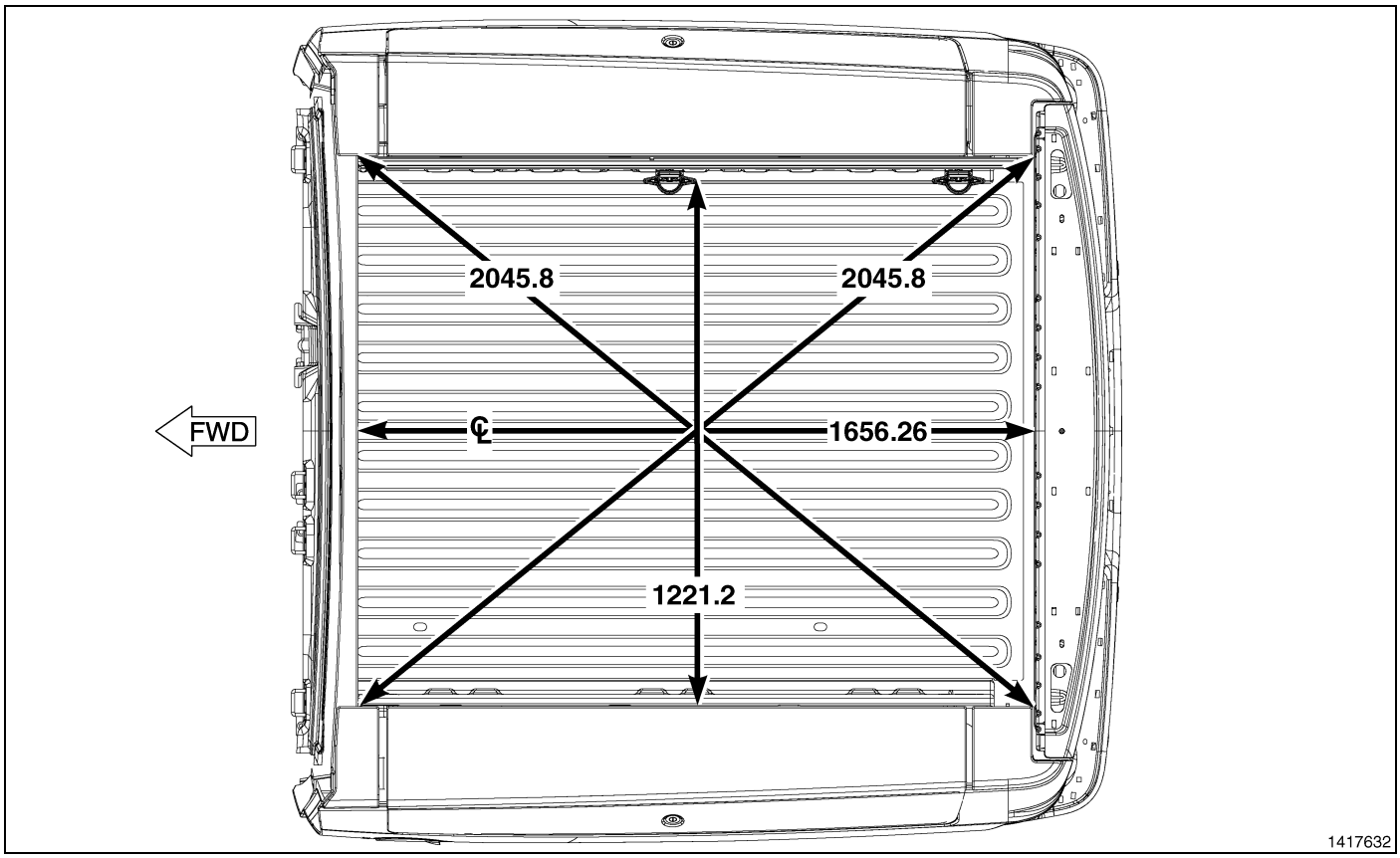

Fig. 19 Pickup Box – 5.7' Ram Box (Plan View)

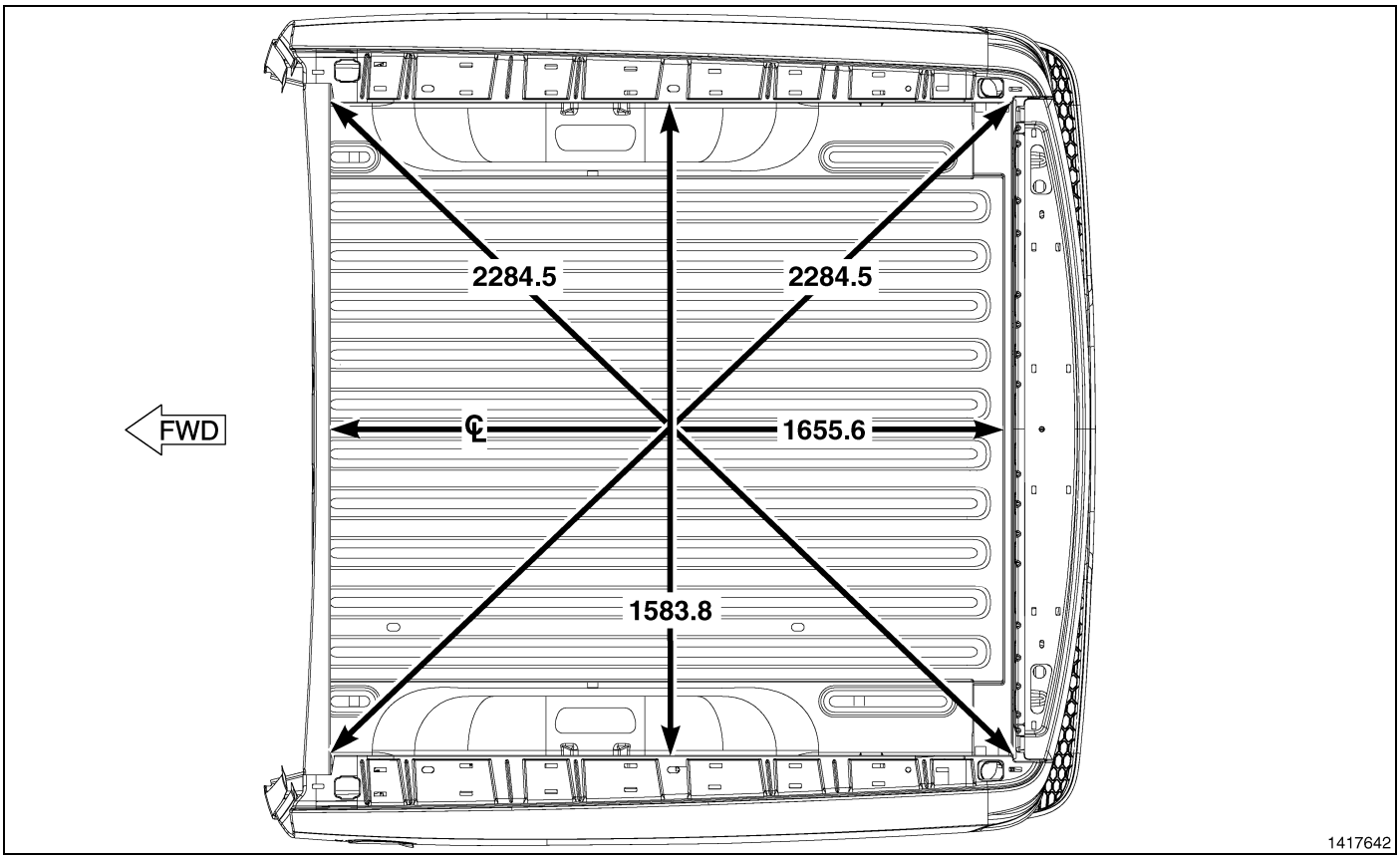

Fig. 20 Pickup Box – 5.7' Box (Plan View)

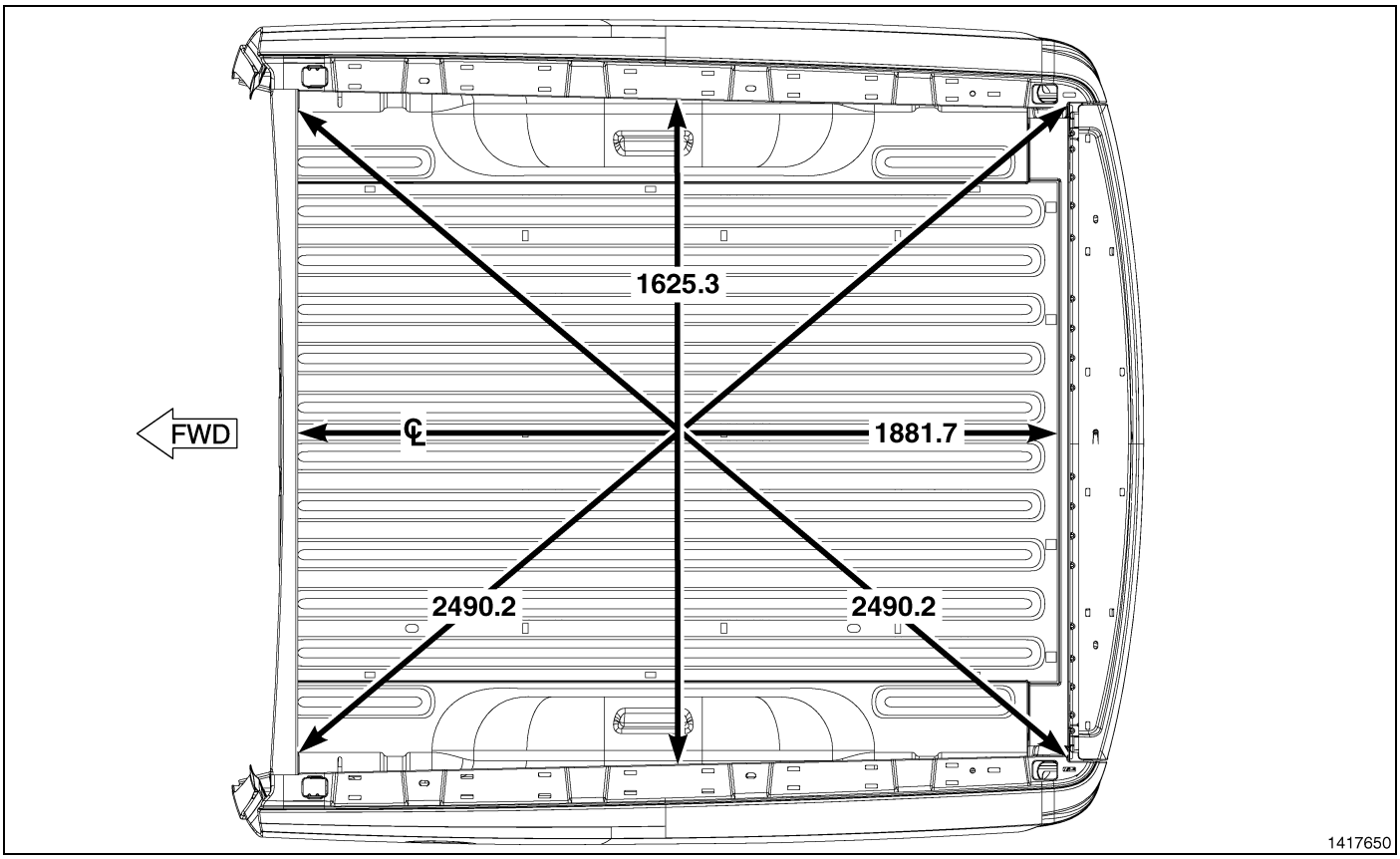

Fig. 21 Pickup Box – 6.3' Box (Plan View)

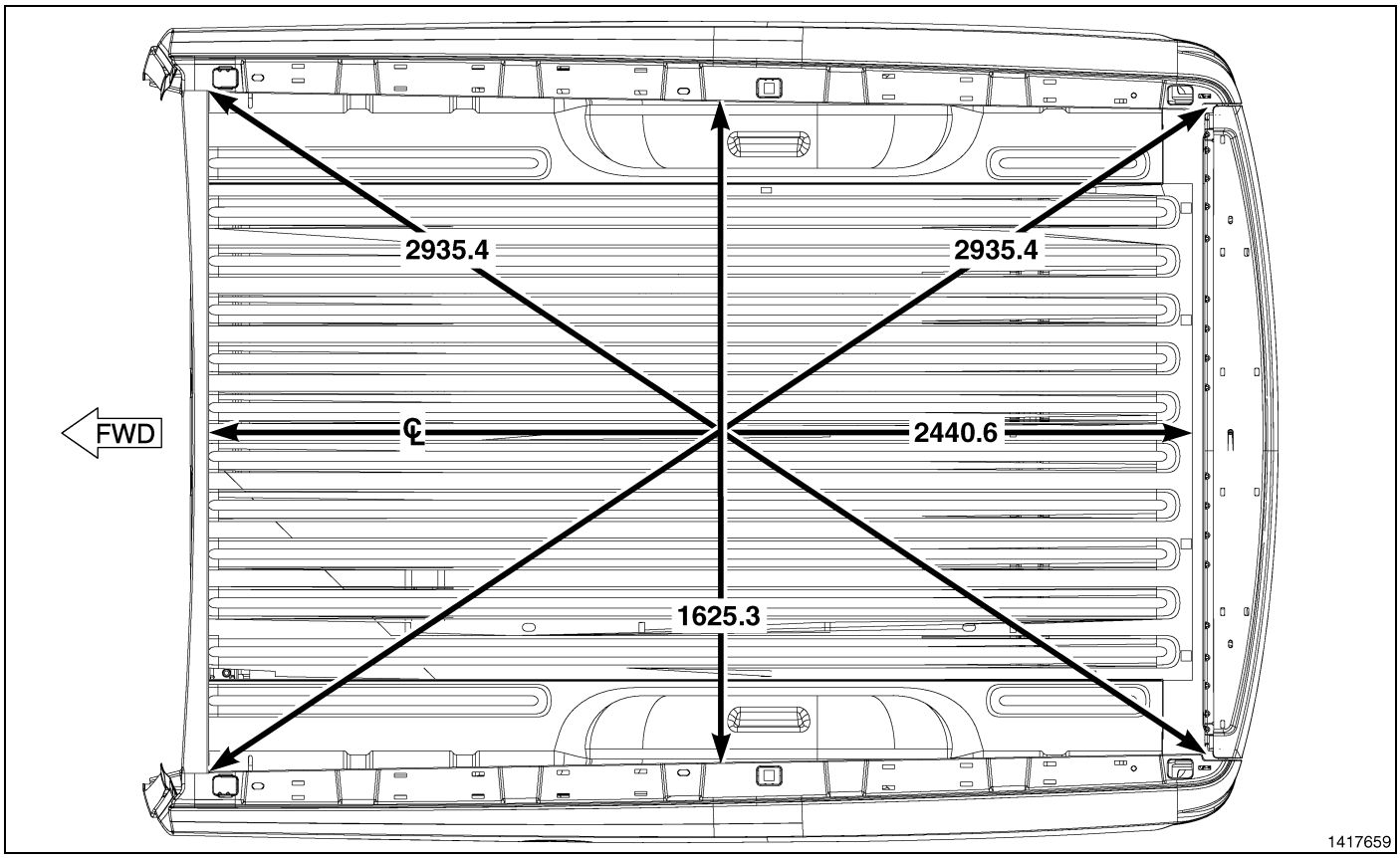

Fig. 22 Pickup Box – 8.0' Box (Plan View)

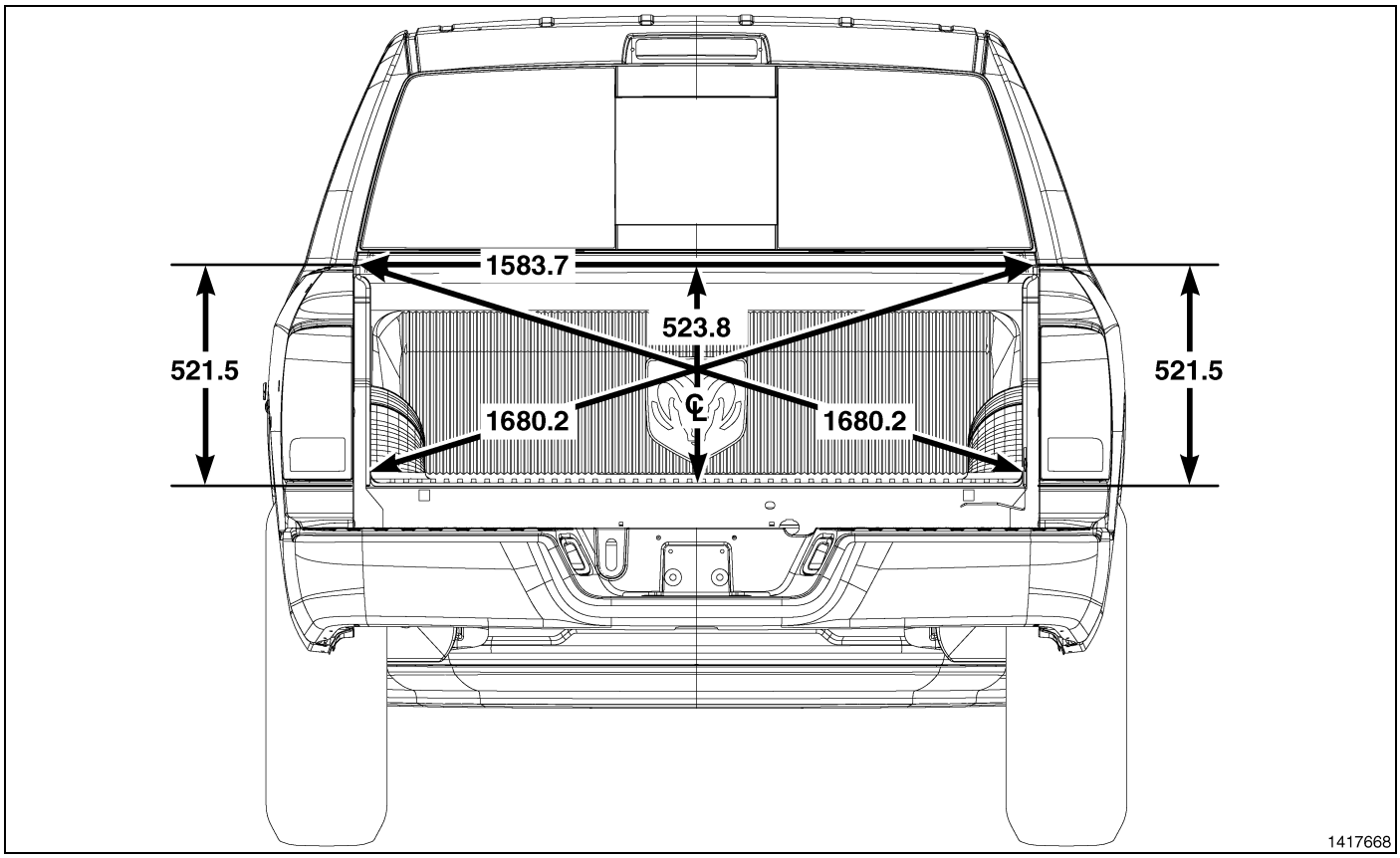

Fig. 23 Pickup Box – Tail Gate Opening - All

Sealer Locations

Specifications

DESCRIPTION	FIGURE
Inner Body Side Panel/Cowl Side Panel	(Fig. 24)
Lower Plenum/Inner Body Side Panel/Cowl Side Panel	(Fig. 25)
Dash Panel/Cowl Side Panel (1 of 2)	(Fig. 26)
Dash Panel/Cowl Side Panel (2 of 2)	(Fig. 27)
Dash Panel/Front Floor Pan/Cowl Side Panel	(Fig. 28)
Dash Panel/Front Floor Pan	(Fig. 29)
Front Floor Pan/Rear Floor Pan	(Fig. 30)
Rear Floor Pan/Cab Back Panel	(Fig. 31)
Inner Body Side Panel/Outer Body Side Panel (Above “C” Pillar)	(Fig. 32)
Cab Back Panel/Outer Body Side Panel	(Fig. 33)
Roof Panel/Outer Body Side Panel	(Fig. 34)
Box Floor Panel/Box Front Panel	(Fig. 35)
Box Floor Panel/Box Floor Extension	(Fig. 36)
Hood	(Fig. 37)
Front Door – Standard Cab	(Fig. 38)
Front Door – Quad, Crew Cab	(Fig. 38)
Rear Door	(Fig. 40)
Tailgate	(Fig. 41)

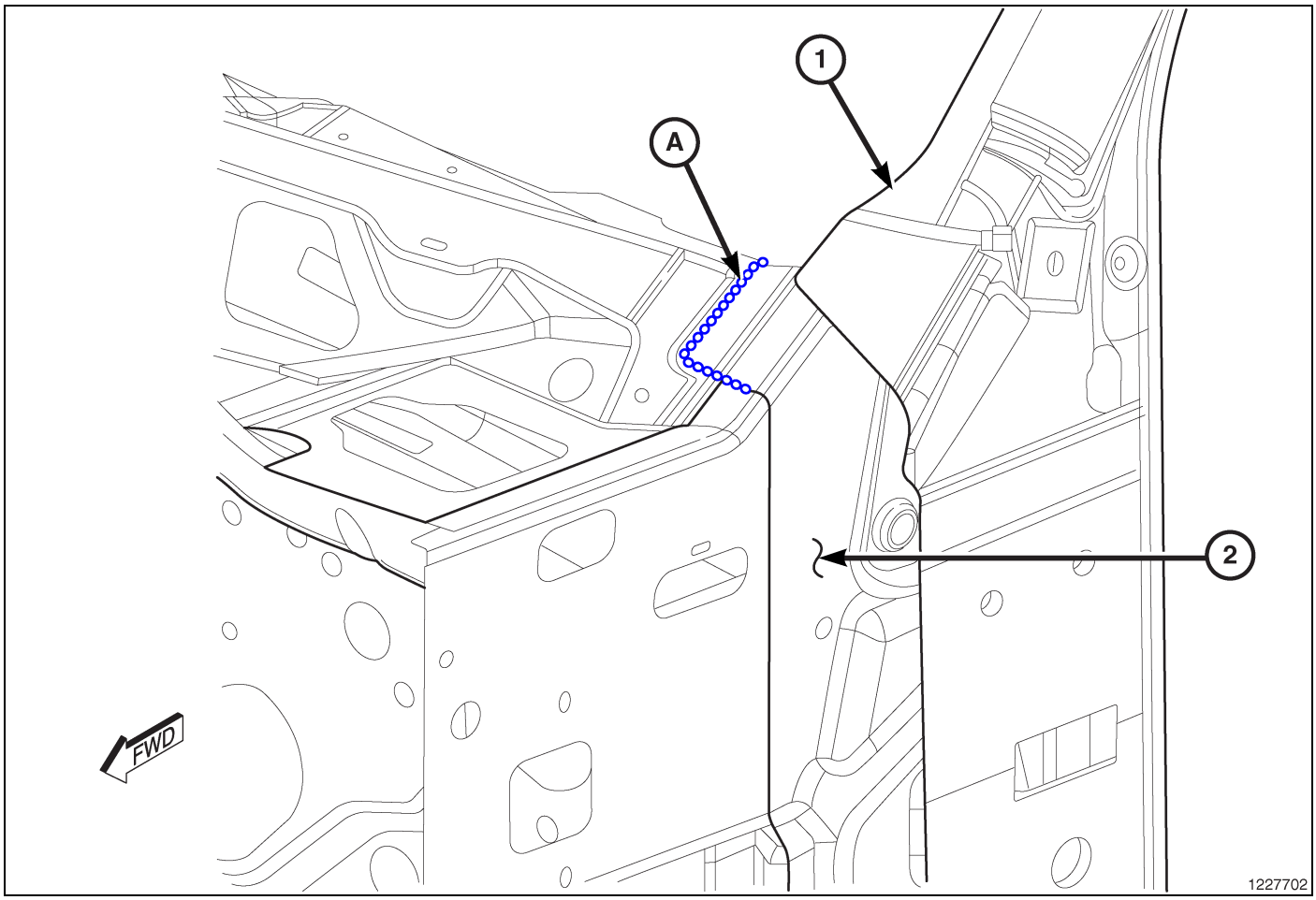

Fig. 24 Inner Body Side Panel/Cowl Side Panel

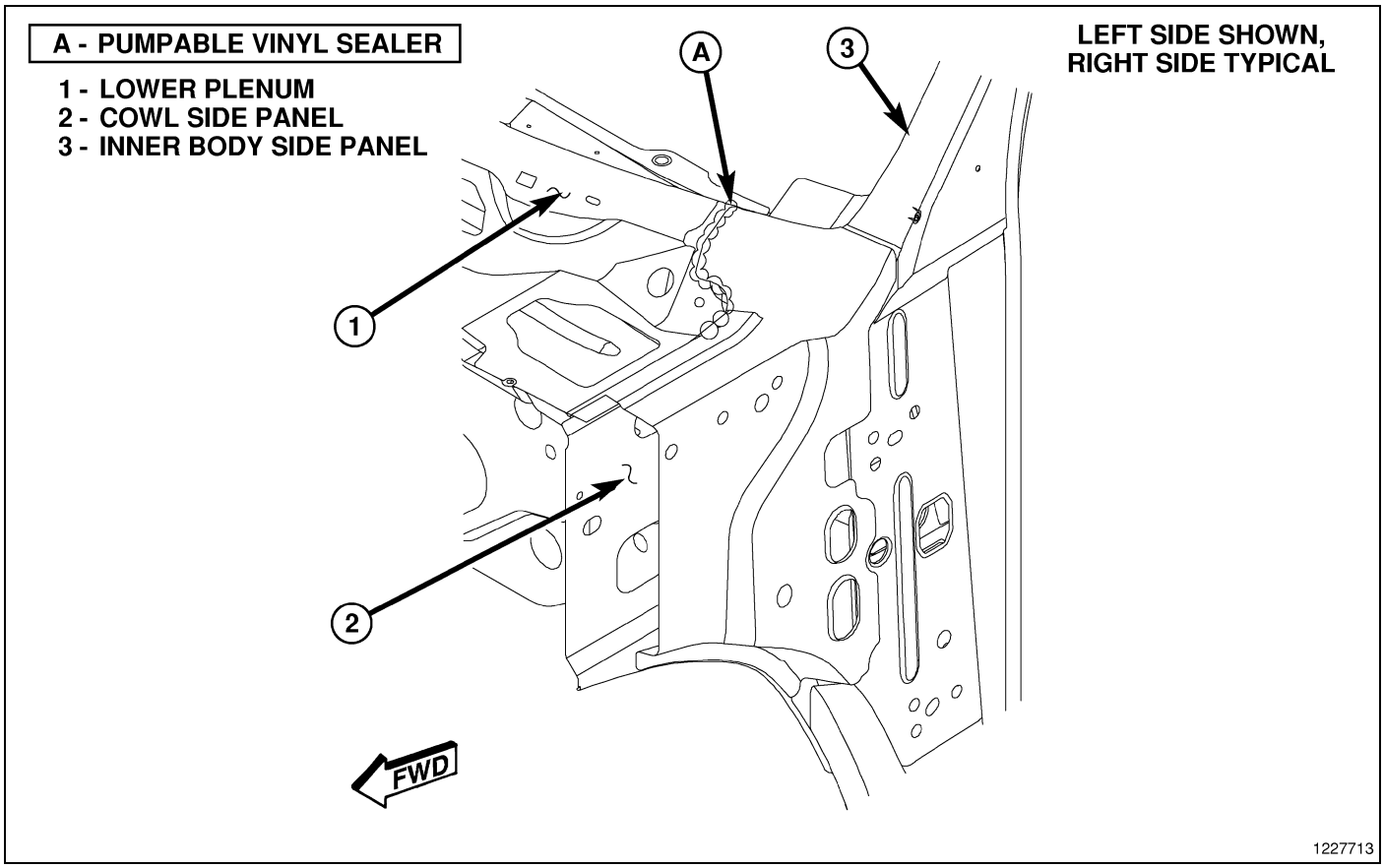

Fig. 25 Lower Plenum/Inner Body Side Panel/Cowl Side Panel

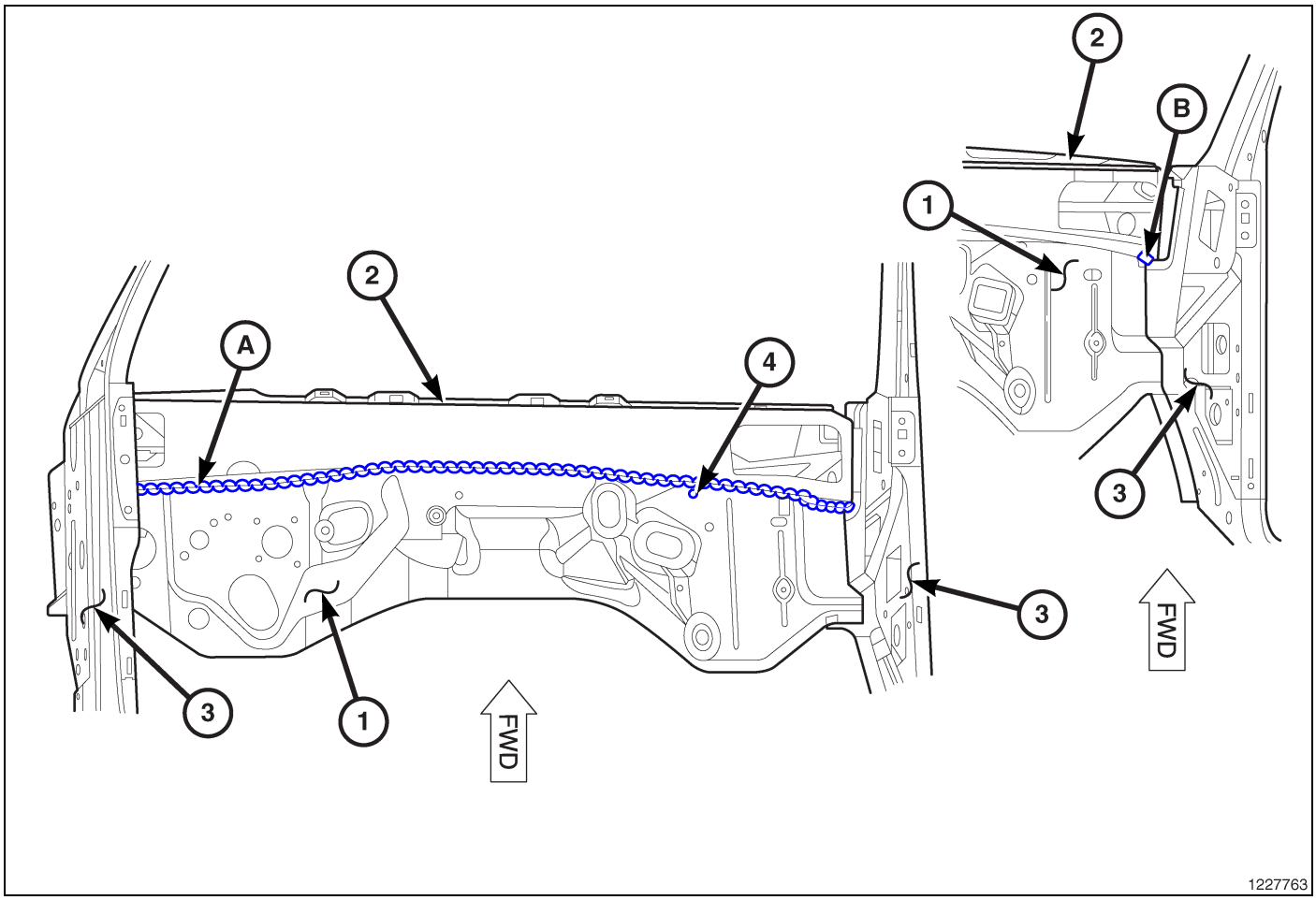

Fig. 26 Dash Panel/Cowl Side Panel (1 of 2)

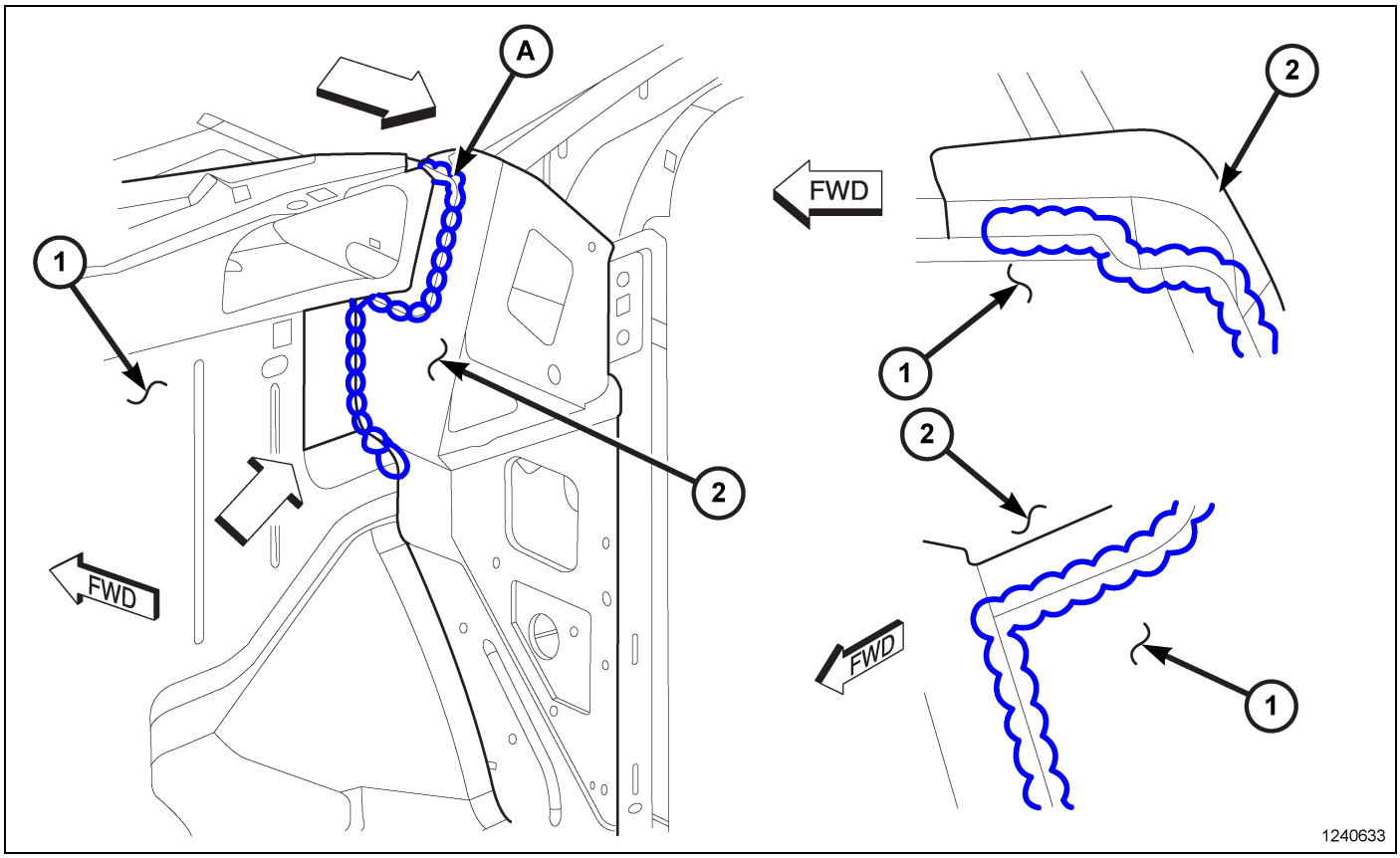

Fig. 27 Dash Panel/Cowl Side Panel (2 of 2)

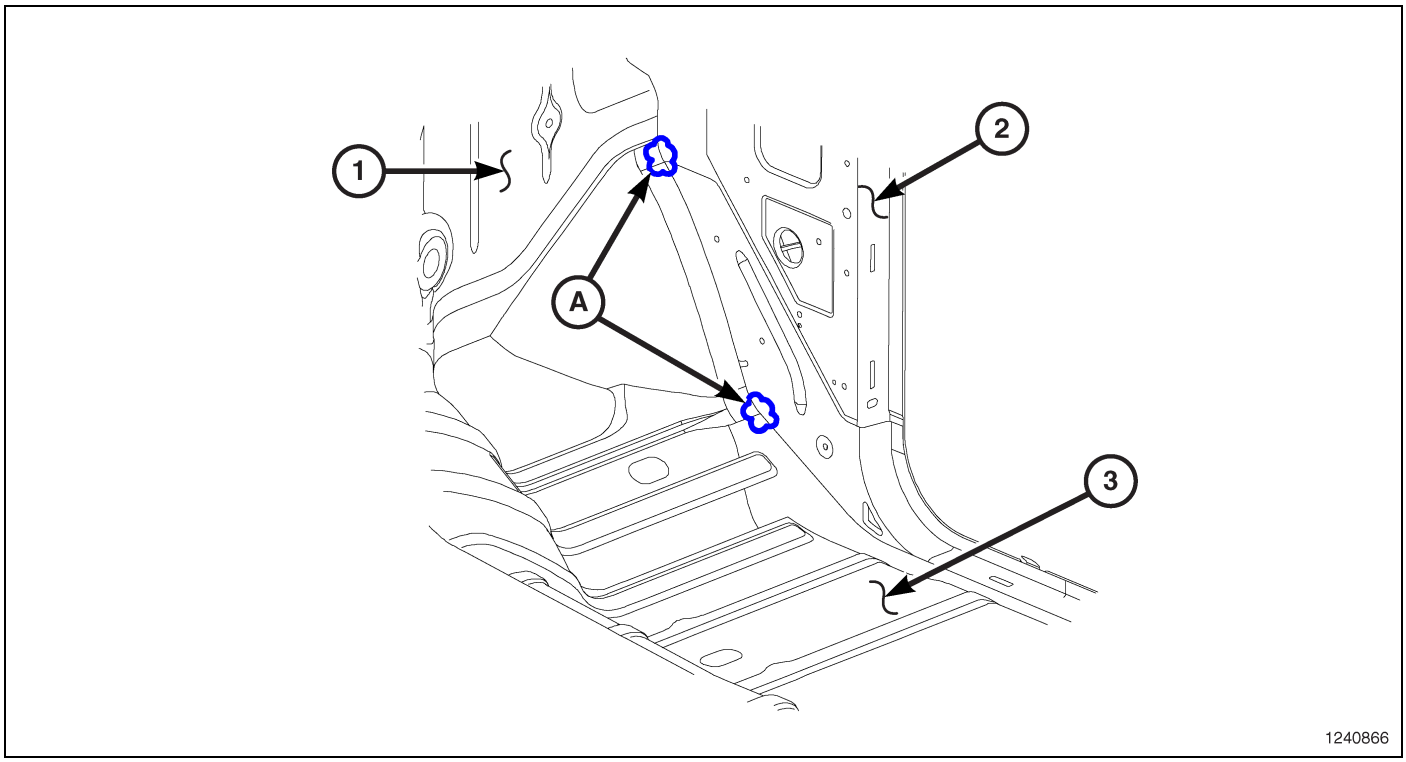

Fig. 28 Dash Panel/Front Floor Pan/Cowl Side Panel

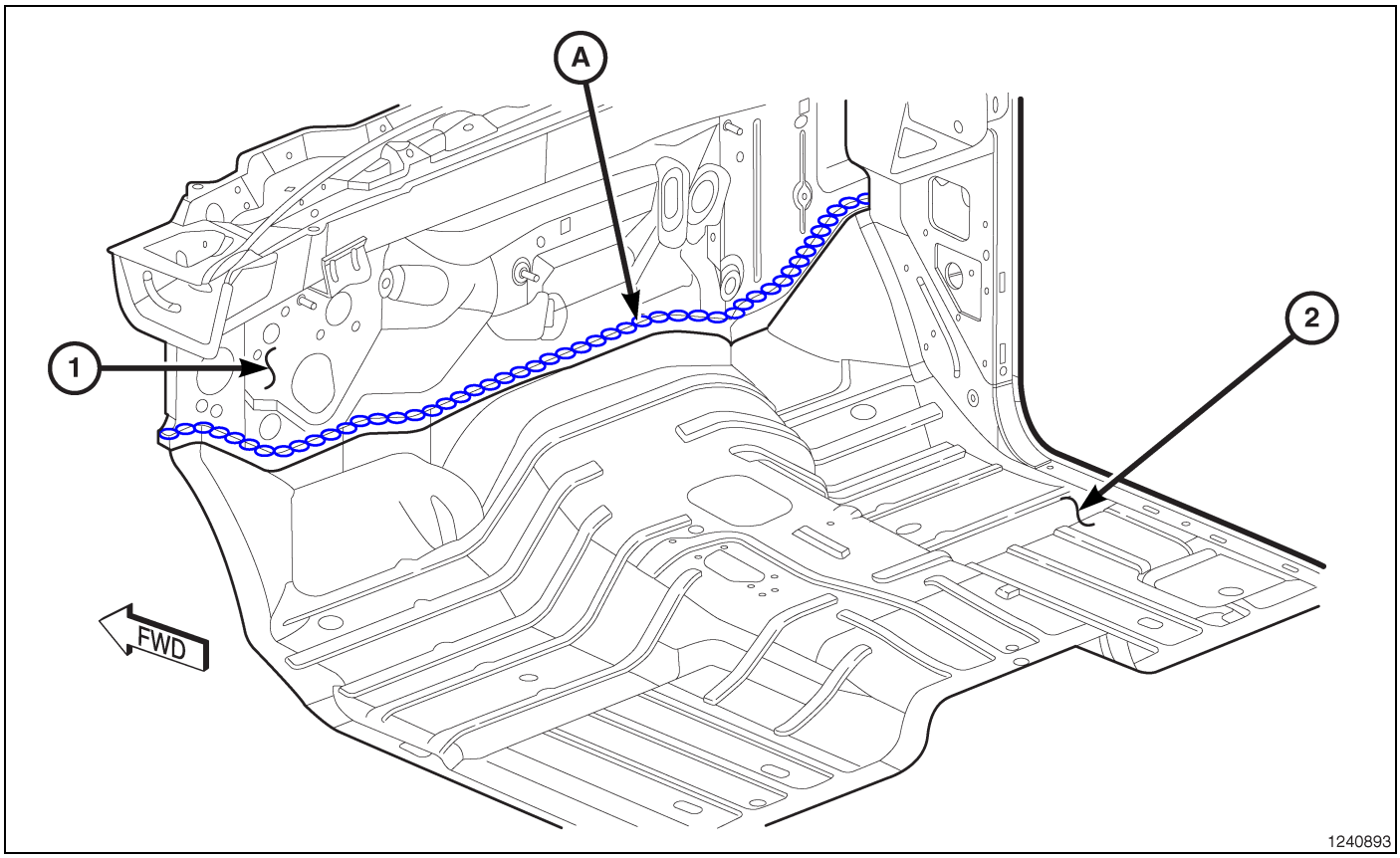

Fig. 29 Dash Panel/Front Floor Pan

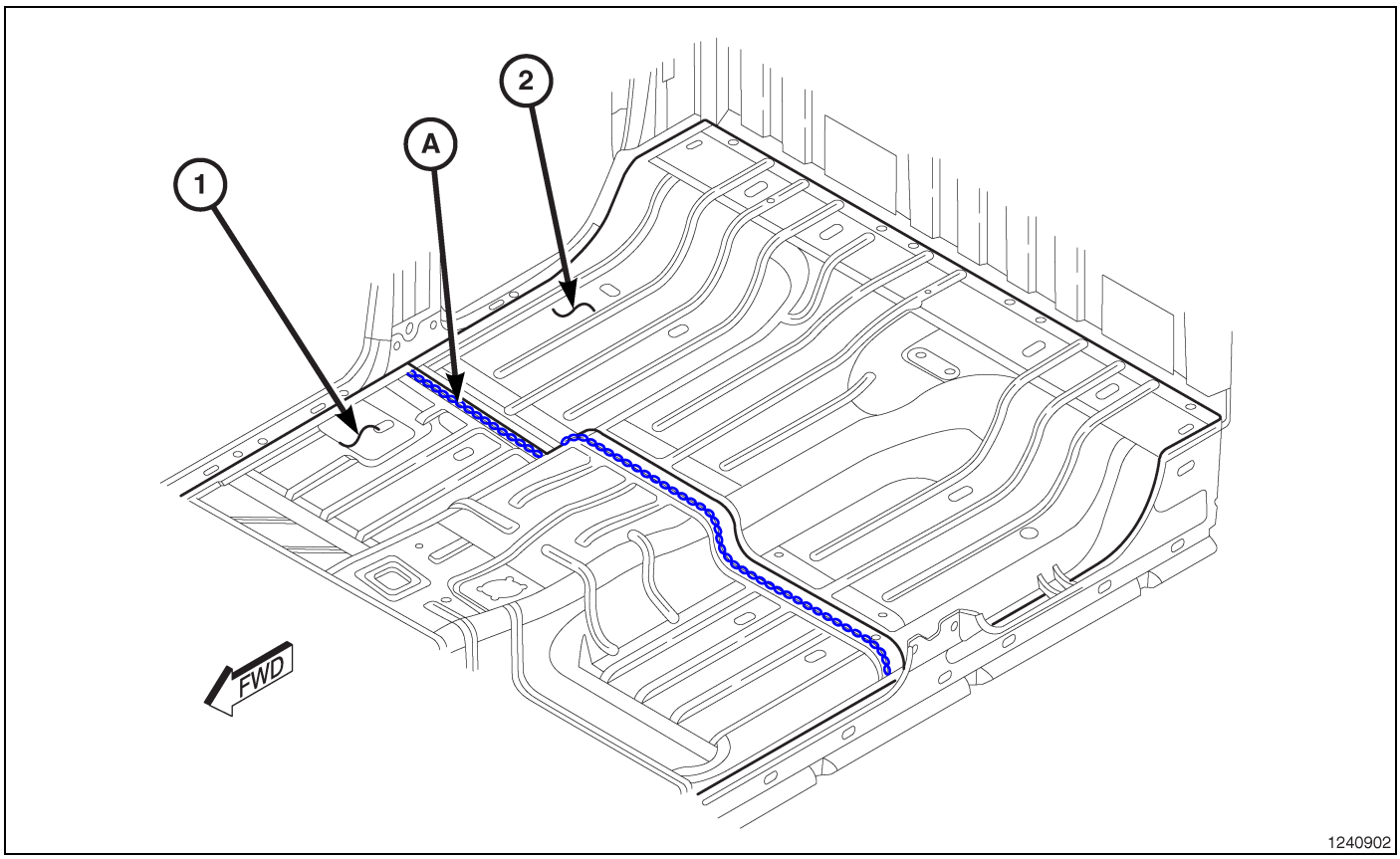

Fig. 30 Front Floor Pan/Rear Floor Pan

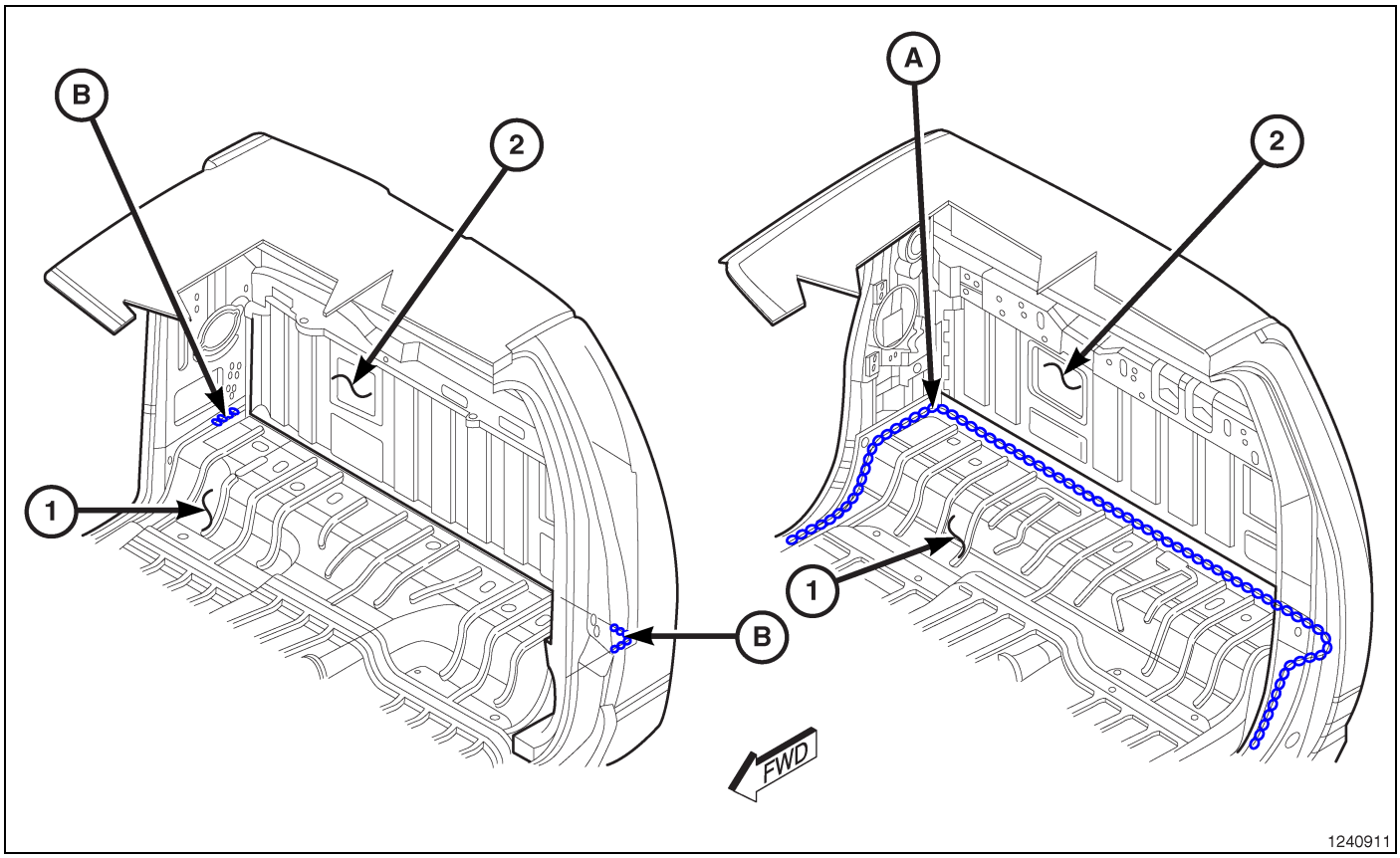

Fig. 31 Rear Floor Pan/Cab Back Panel

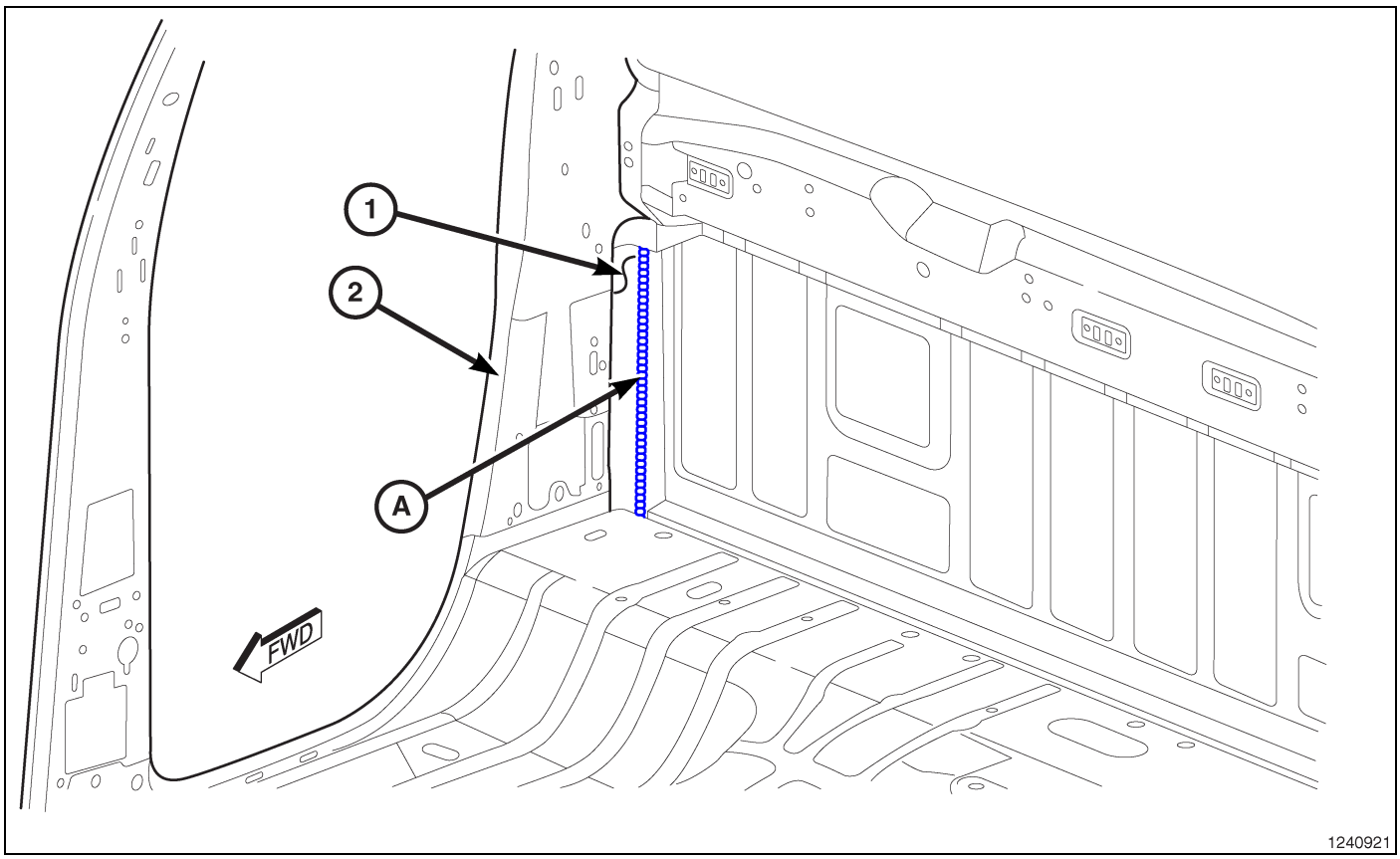

Fig. 32 Inner Body Side Panel/Outer Body Side Panel (Above "C" Pillar)

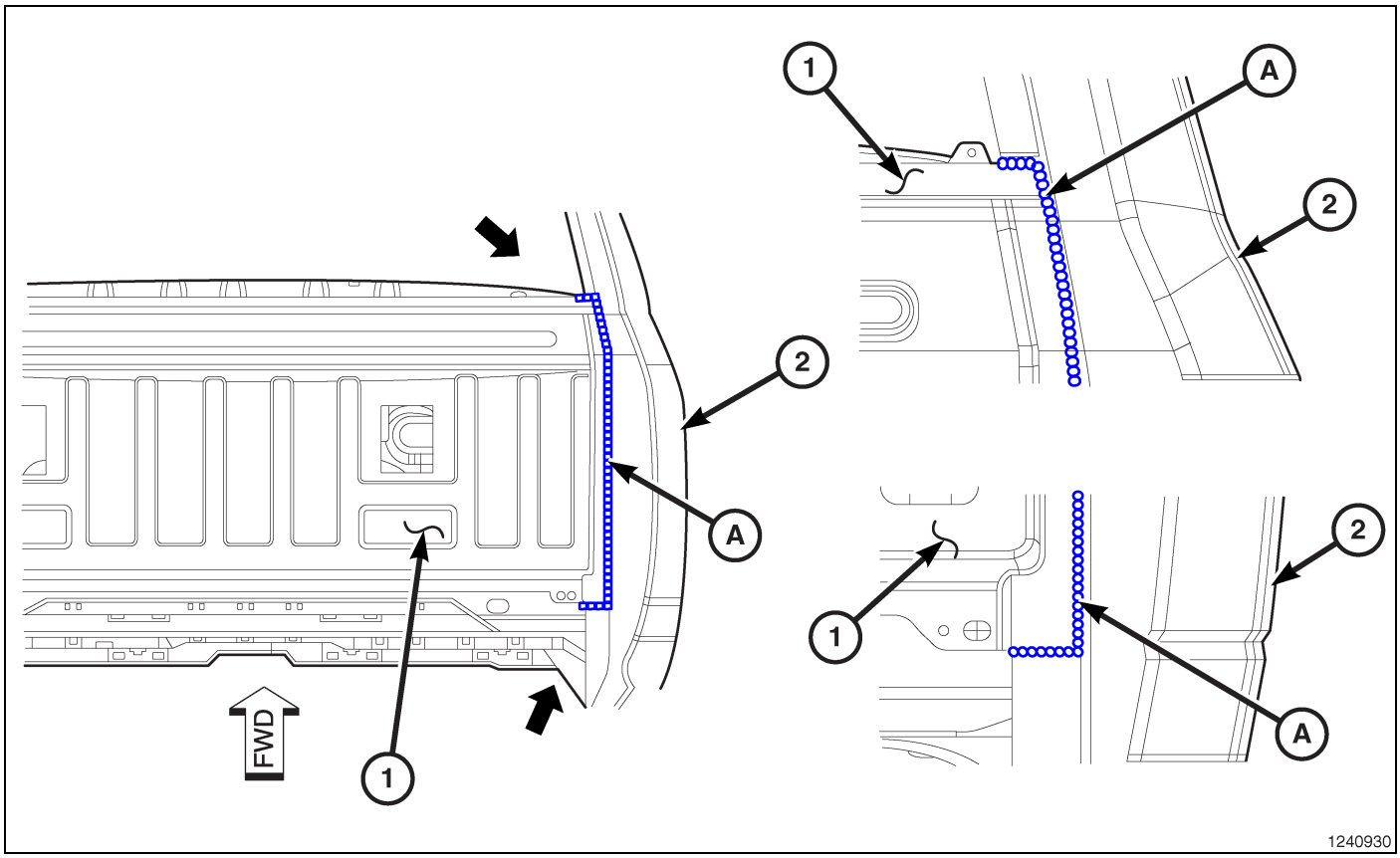

Fig. 33 Cab Back Panel/Outer Body Side Panel

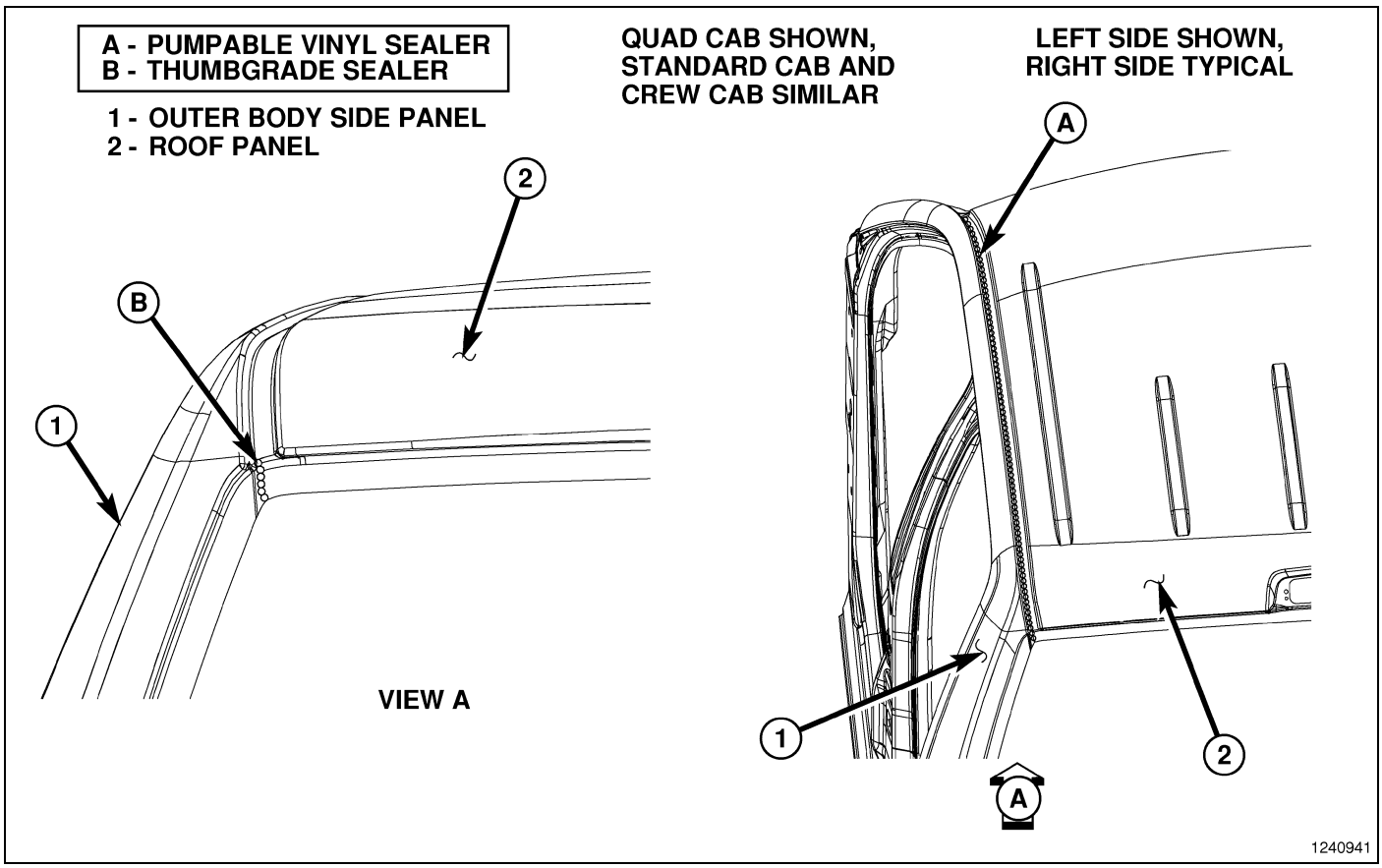

Fig. 34 Roof Panel/Outer Body Side Panel

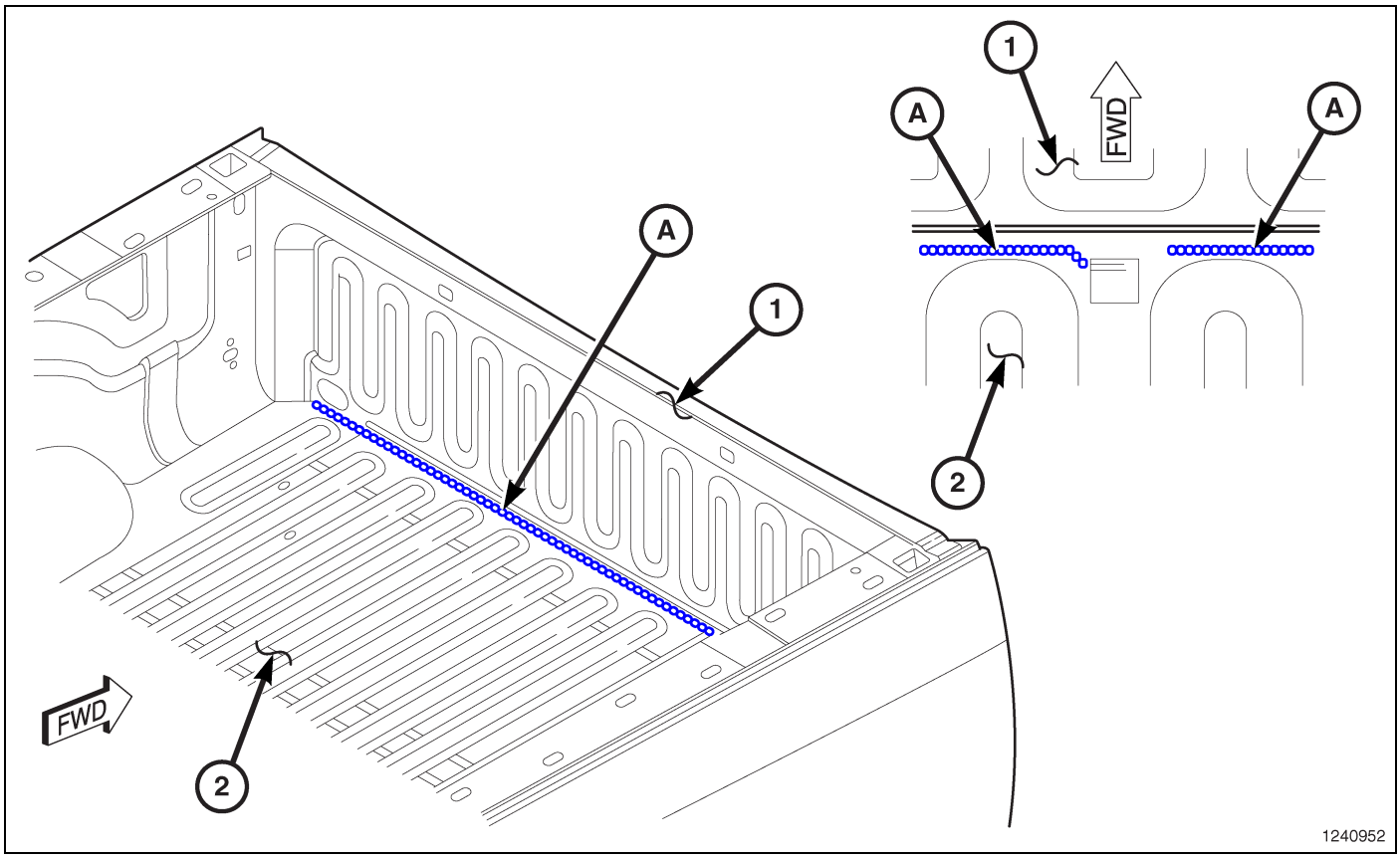

Fig. 35 Box Floor Panel/Box Front Panel

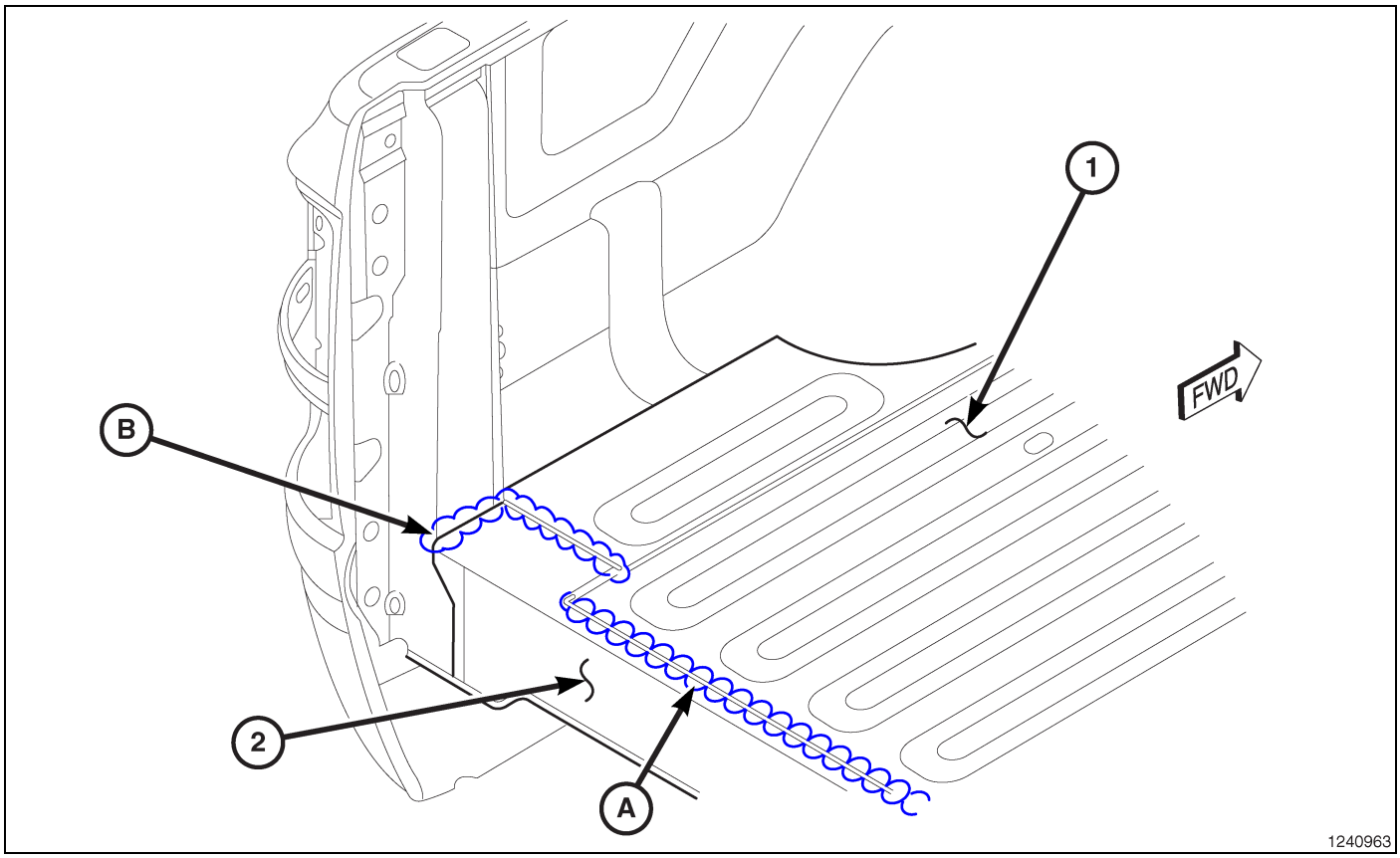

Fig. 36 Box Floor Panel/Box Floor Extension

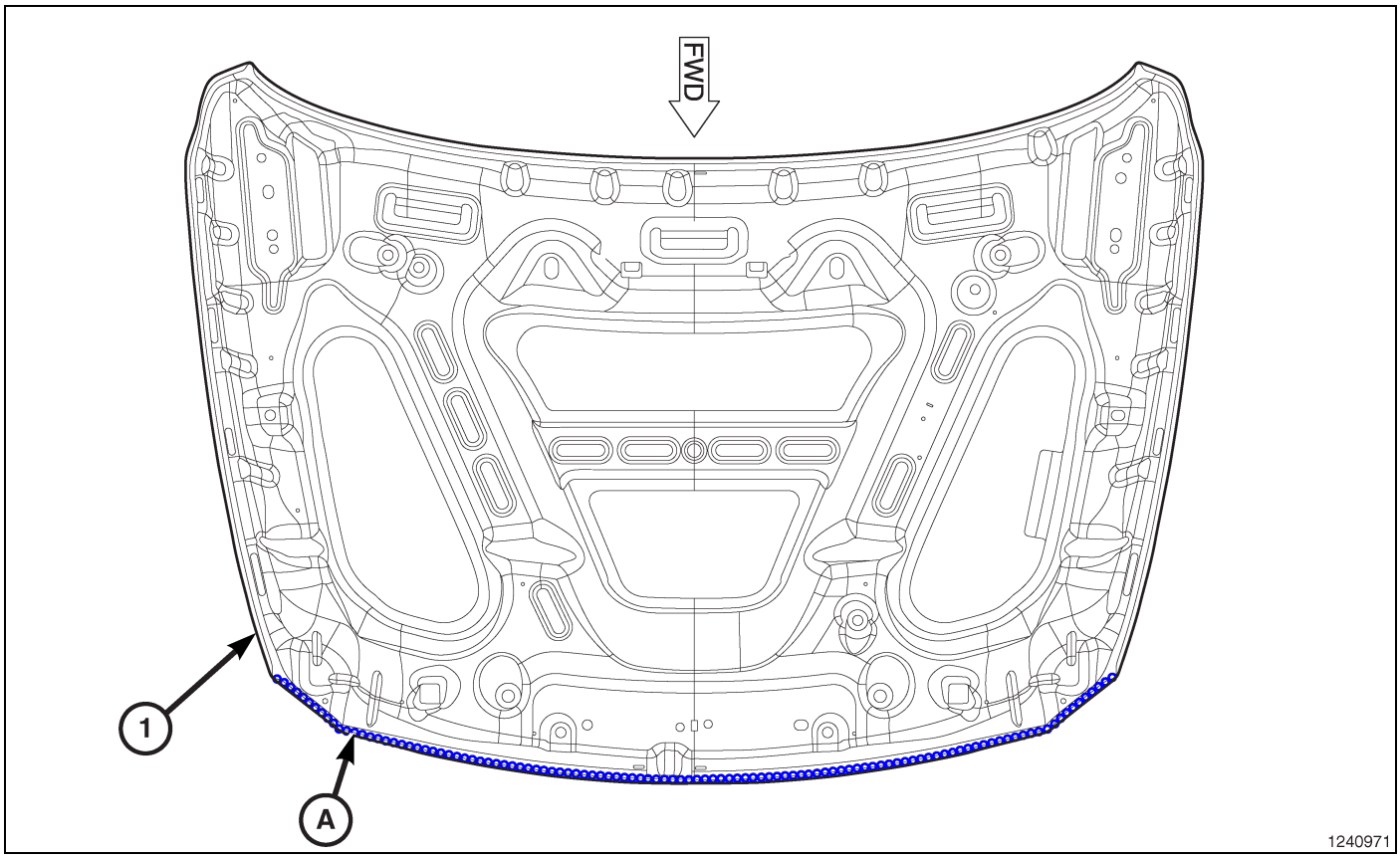

Fig. 37 Hood

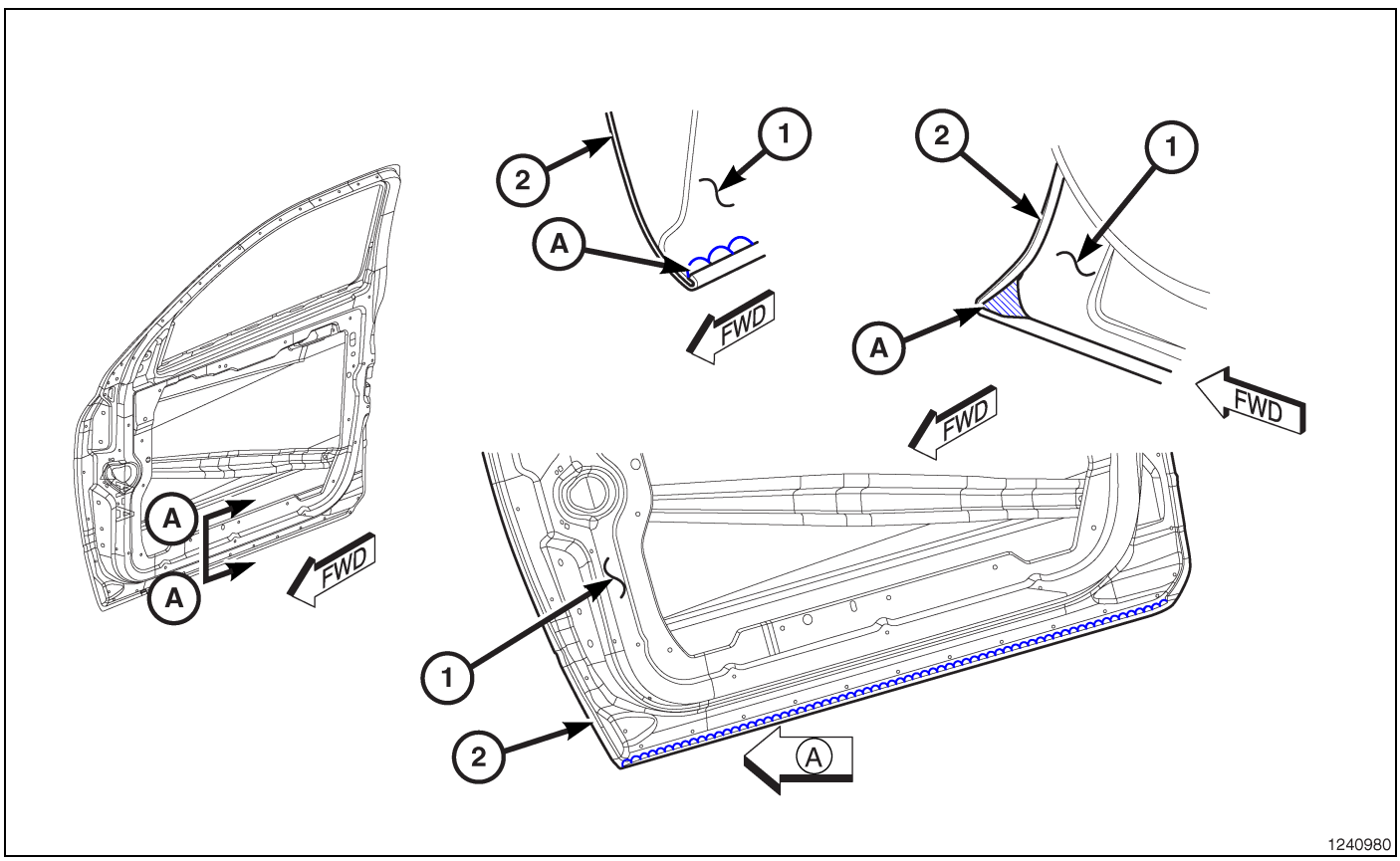

Fig. 38 Front Door – Standard Cab

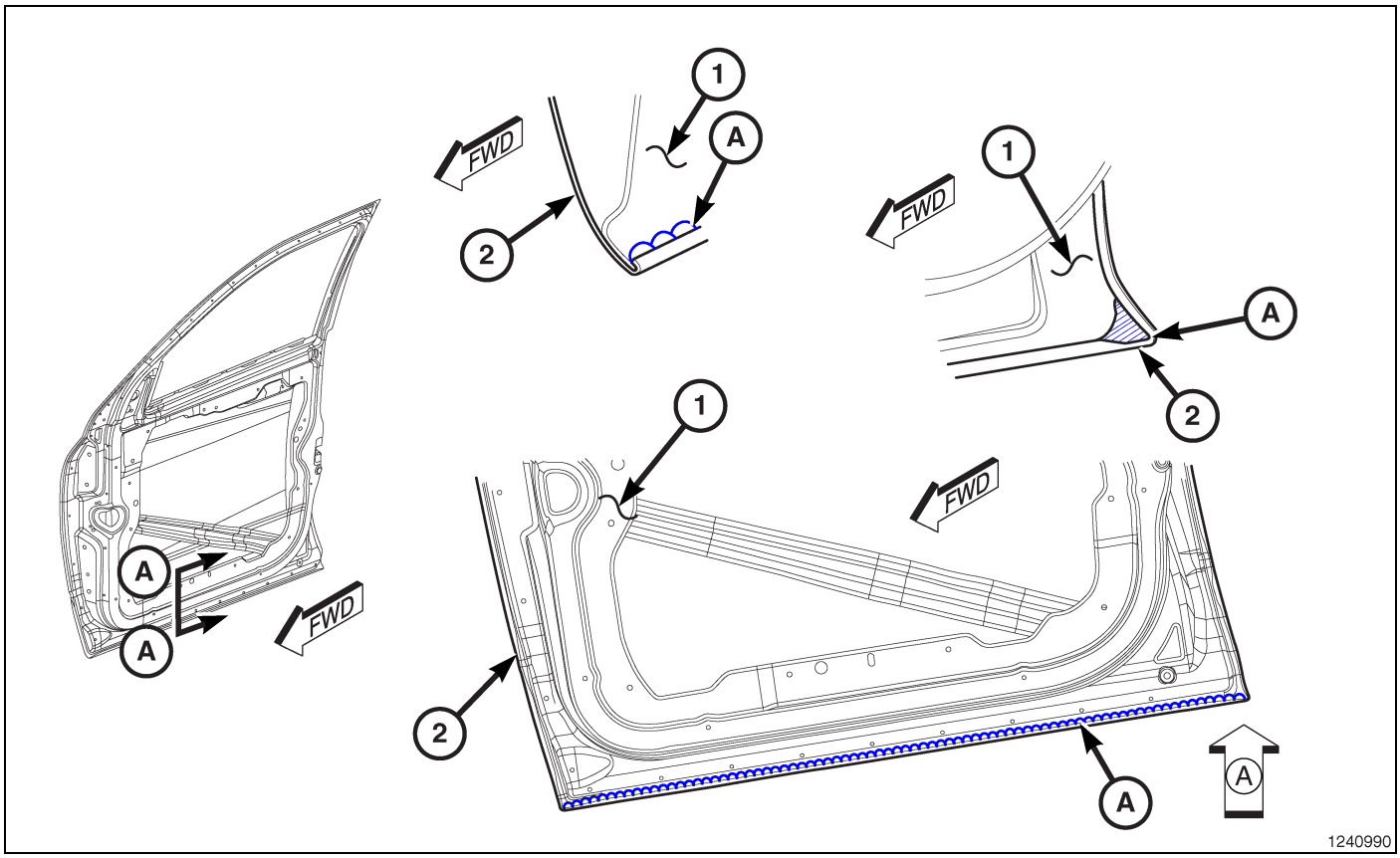

Fig. 39 Front Door – Quad, Crew Cab

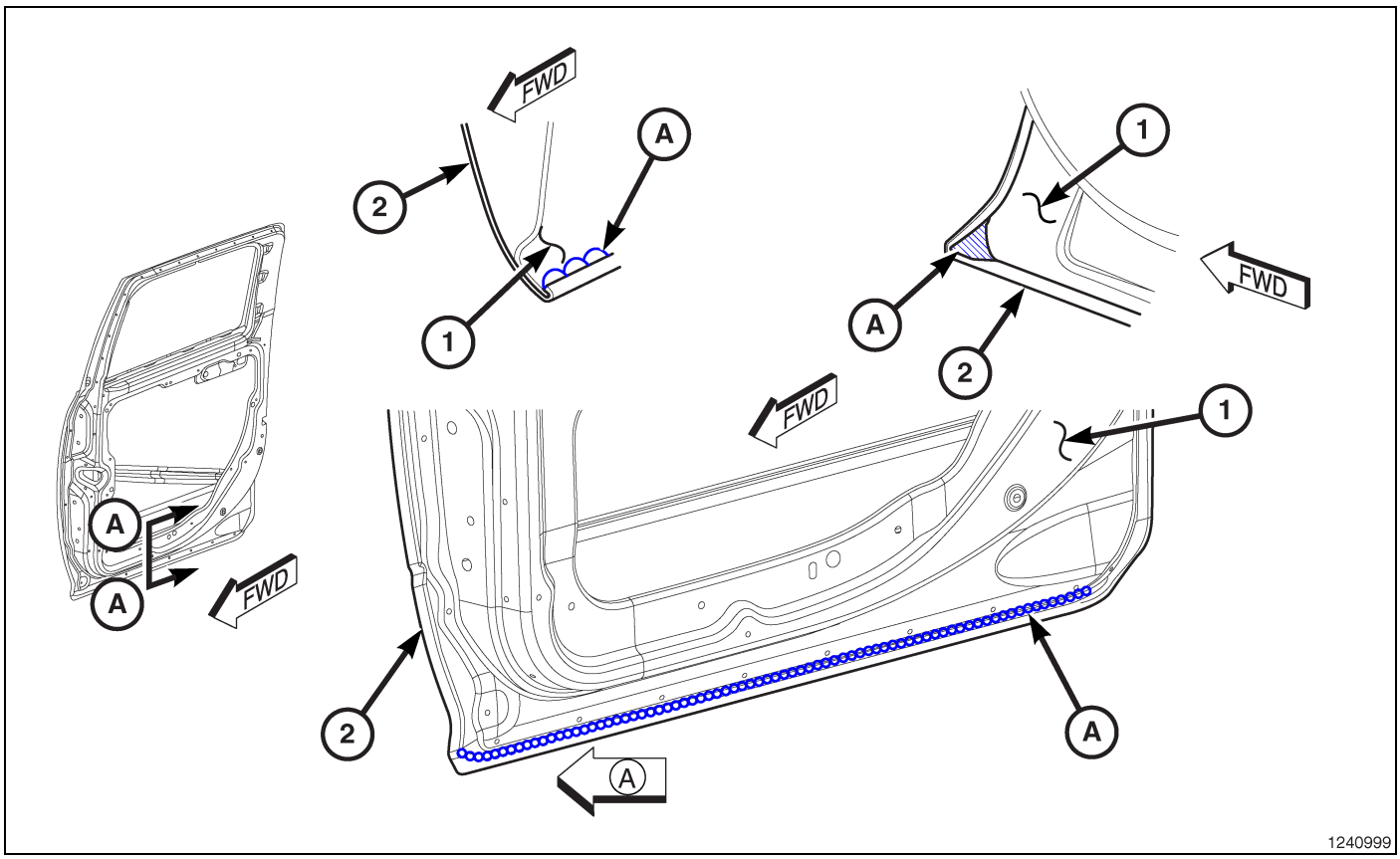

Fig. 40 Rear Door

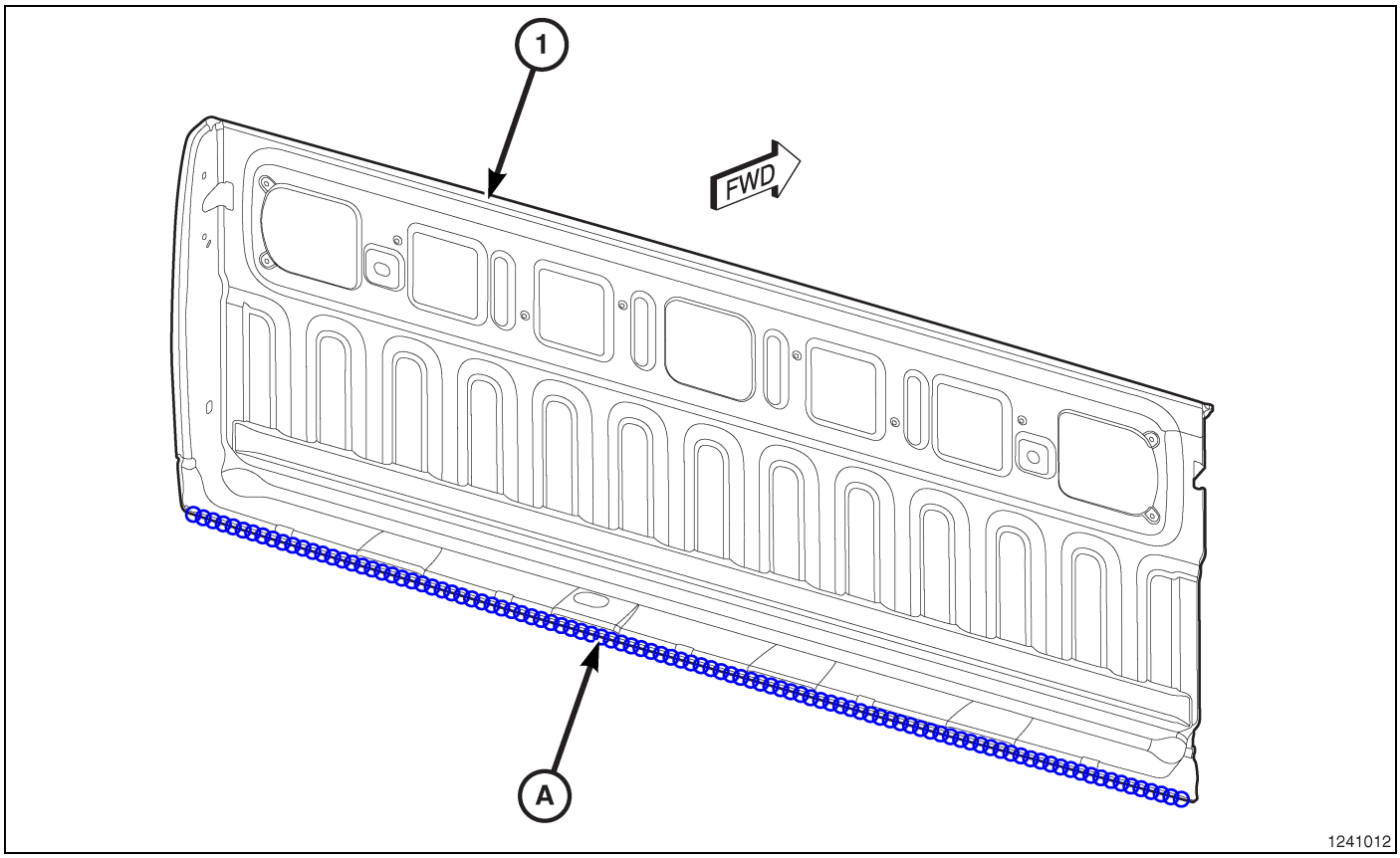

Fig. 41 Tailgate

Structural Adhesive Locations

Specifications

Explanation of Abbreviations

Adhesives

STRUCT ADH (ORD) = Ordinary Structural Adhesive

ADH (ORD) = Ordinary Adhesive

Examples

BB TO AZ 1/SD STRUC ADH= PART BB BONDED TO PART AZ 1 PER SIDE ORDINARY STRUCTURAL ADHESIVE

DESCRIPTION	FIGURE
Miscellaneous Components	(Fig. 42)
Front Floor – Quad Cab	(Fig. 43)
Front Floor – Crew Cab	(Fig. 44)
Underbody Complete – Quad Cab	(Fig. 45)
Underbody Complete – Crew Cab	(Fig. 46)
Body Side Aperture Complete – Standard Cab	(Fig. 47)
Body Side Aperture Outer – Crew Cab (1 of 2)	(Fig. 48)
Body Side Aperture Outer – Crew Cab (2 of 2)	(Fig. 49)
Cab Complete – Standard (1 of 2)	(Fig. 50)
Cab Complete – Standard (2 of 2)	(Fig. 51)
Cab Complete – Quad (1 of 4)	(Fig. 52)

DESCRIPTION	FIGURE
Cab Complete – Quad (2 of 4)	(Fig. 53)
Cab Complete – Quad (3 of 4)	(Fig. 54)
Cab Complete – Quad (4 of 4)	(Fig. 55)
Cab Complete – Crew (1 of 5)	(Fig. 56)
Cab Complete – Crew (2 of 5)	(Fig. 57)
Cab Complete – Crew (3 of 5)	(Fig. 58)
Cab Complete – Crew (4 of 5)	(Fig. 59)
Cab Complete – Crew (5 of 5)	(Fig. 60)
5.7’ Ram Box Floor	(Fig. 61)
6.3’ Box Tub	(Fig. 62)
6.3’ Box Floor	(Fig. 63)
8.0’ Box Body in White	(Fig. 64)
8.0’ Box Tub	(Fig. 65)
8.0’ Box Floor	(Fig. 66)
Hood (1 of 2)	(Fig. 67)
Hood (2 of 2)	(Fig. 68)
Front Doors - Short	(Fig. 69)
Front Doors - Long	(Fig. 70)
Rear Doors - Half	(Fig. 71)
Rear Doors - Full	(Fig. 72)
Tailgate	(Fig. 73)

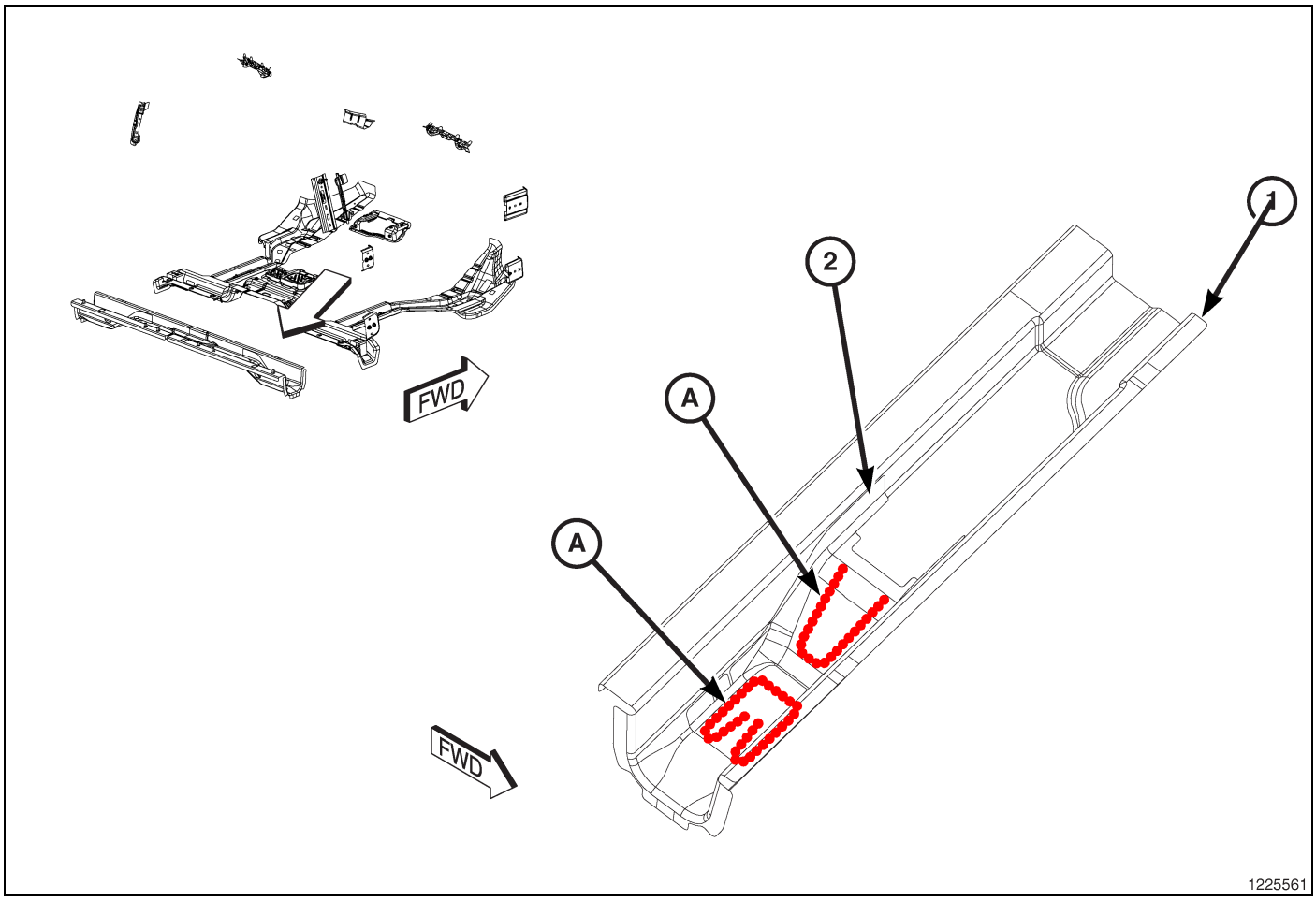

Fig. 42 MISCELLANEOUS COMPONENTS - STANDARD AND QUAD CAB ONLY

1 - A TO B 1/SD STRUC ADH (ORD)

2 - A TO B 1/SD STRUC ADH (ORD)

A - REINFORCEMENT - UNDERBODY HOLD-DOWN

B - CROSSMEMBER - FLOOR RR LEFT/RIGHT

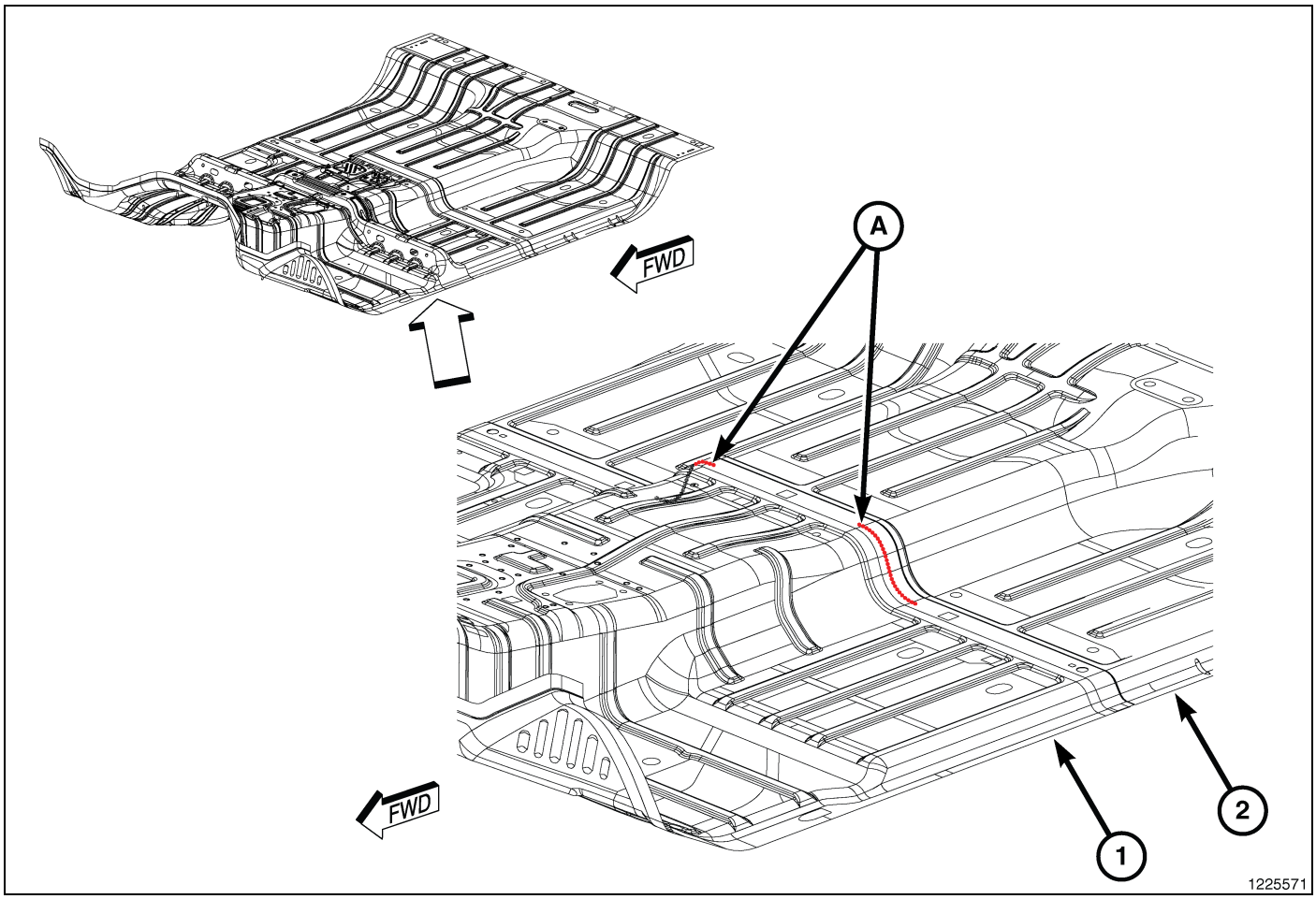

Fig. 43 Front Floor – Quad Cab

1 - A TO B 2 STRUC ADH (ORD)

A - PAN - FLOOR FRONT

B - PAN - FLOOR QUAD CAB REAR

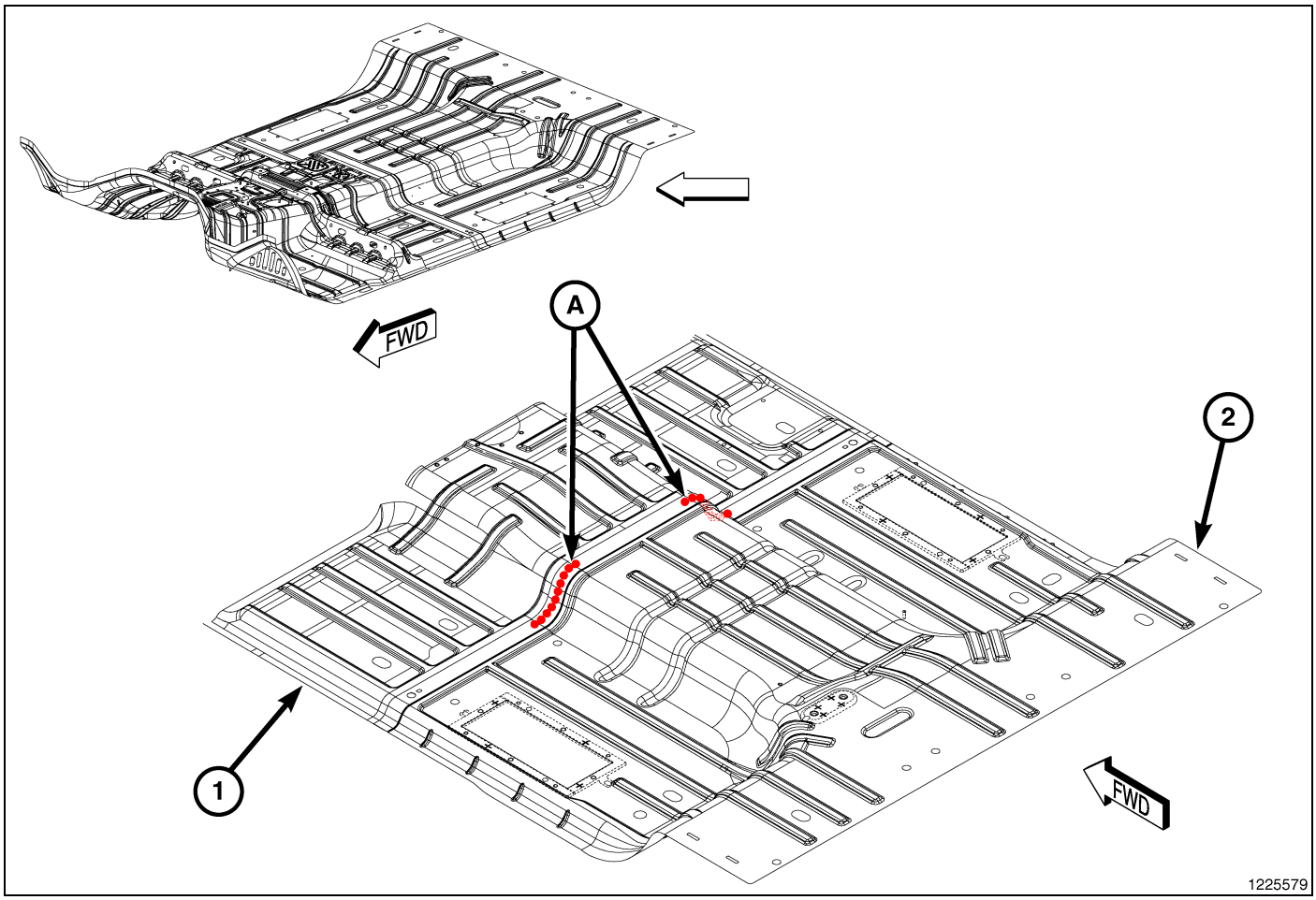

Fig. 44 Front Floor – Crew Cab

1 - A TO B 2 STRUC ADH (ORD)

A - PAN - FLOOR FRONT

B - PAN - FLOOR CREW CAB REAR

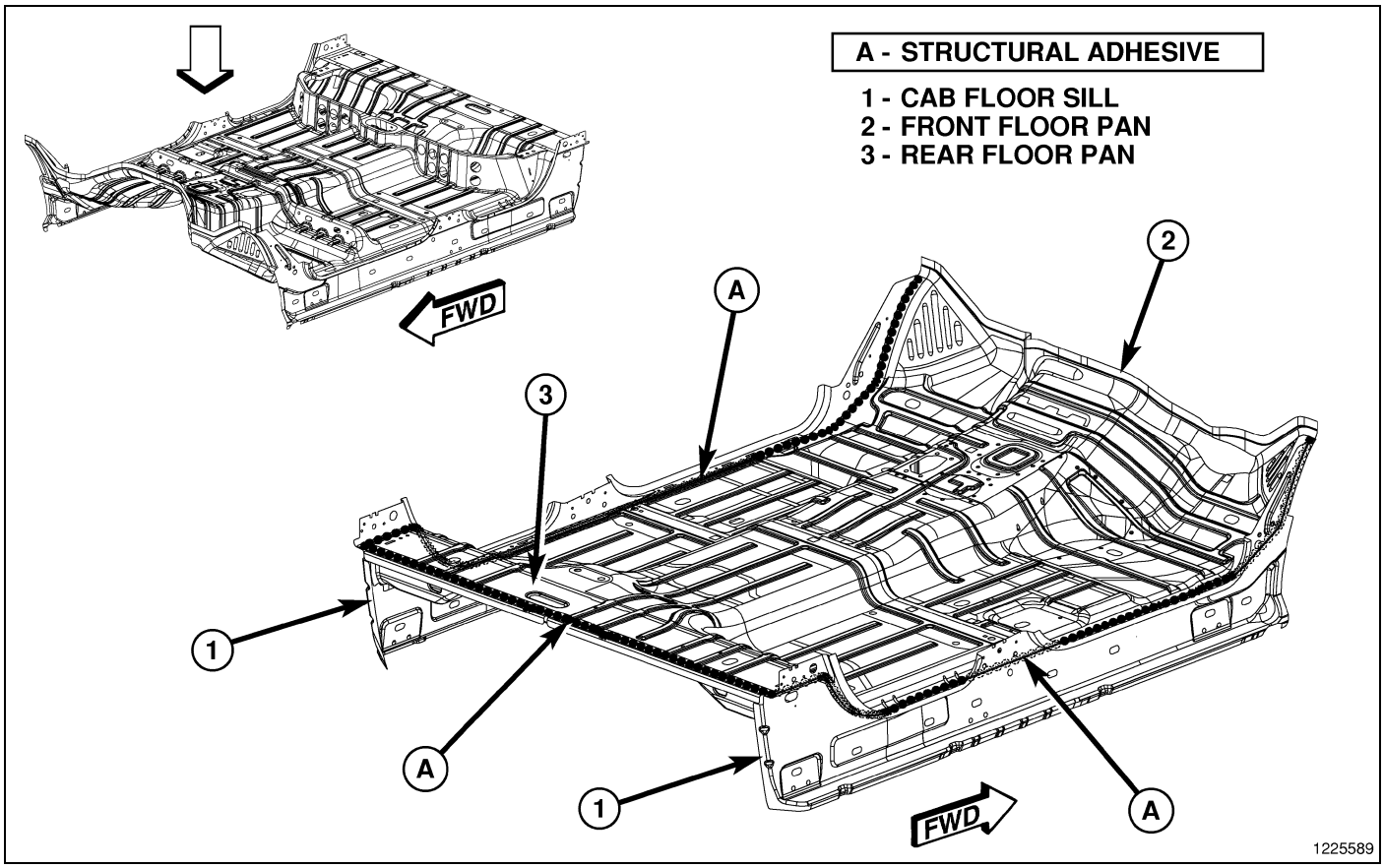

Fig. 45 Underbody Complete – Quad Cab

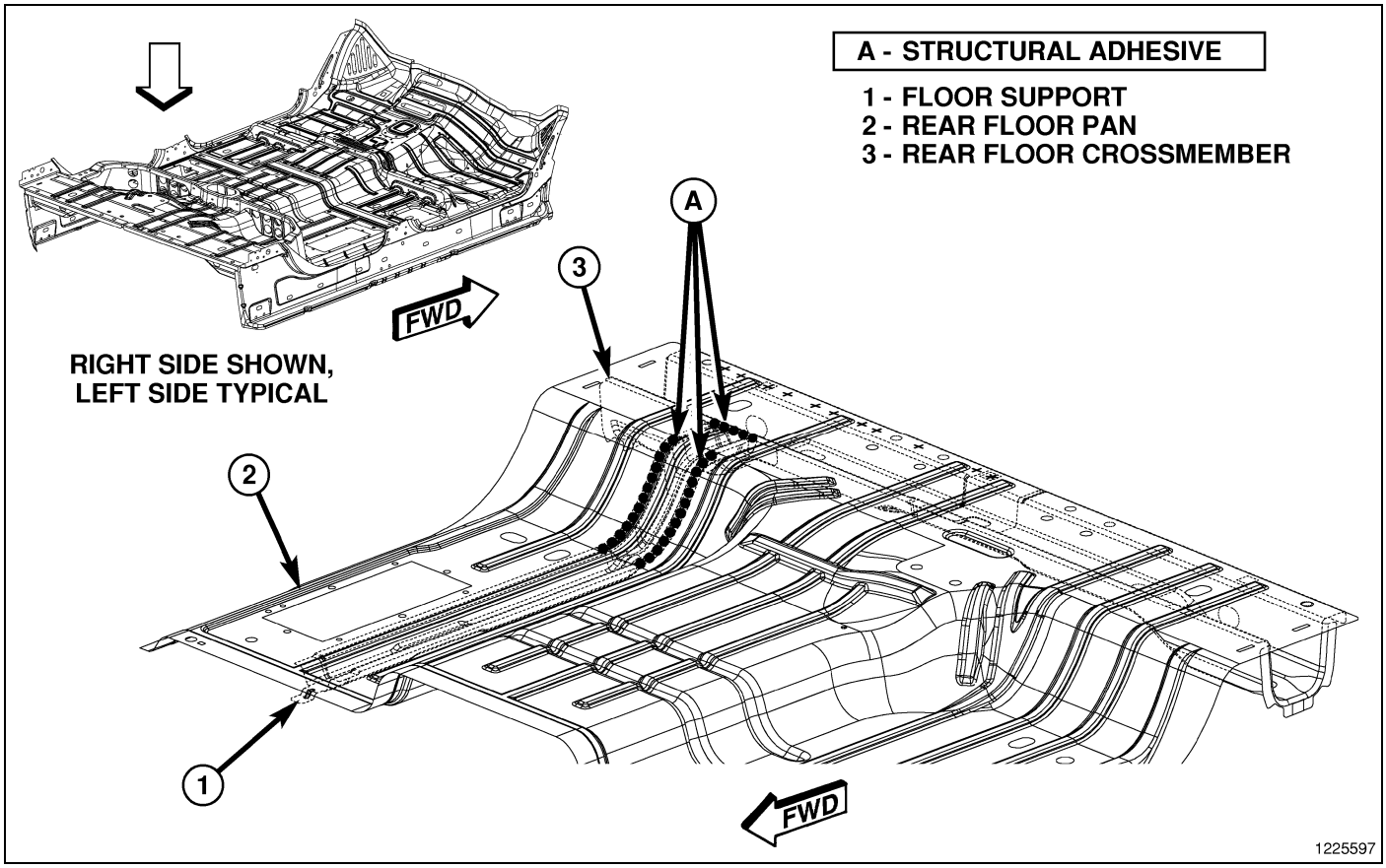

Fig. 46 Underbody Complete – Crew Cab

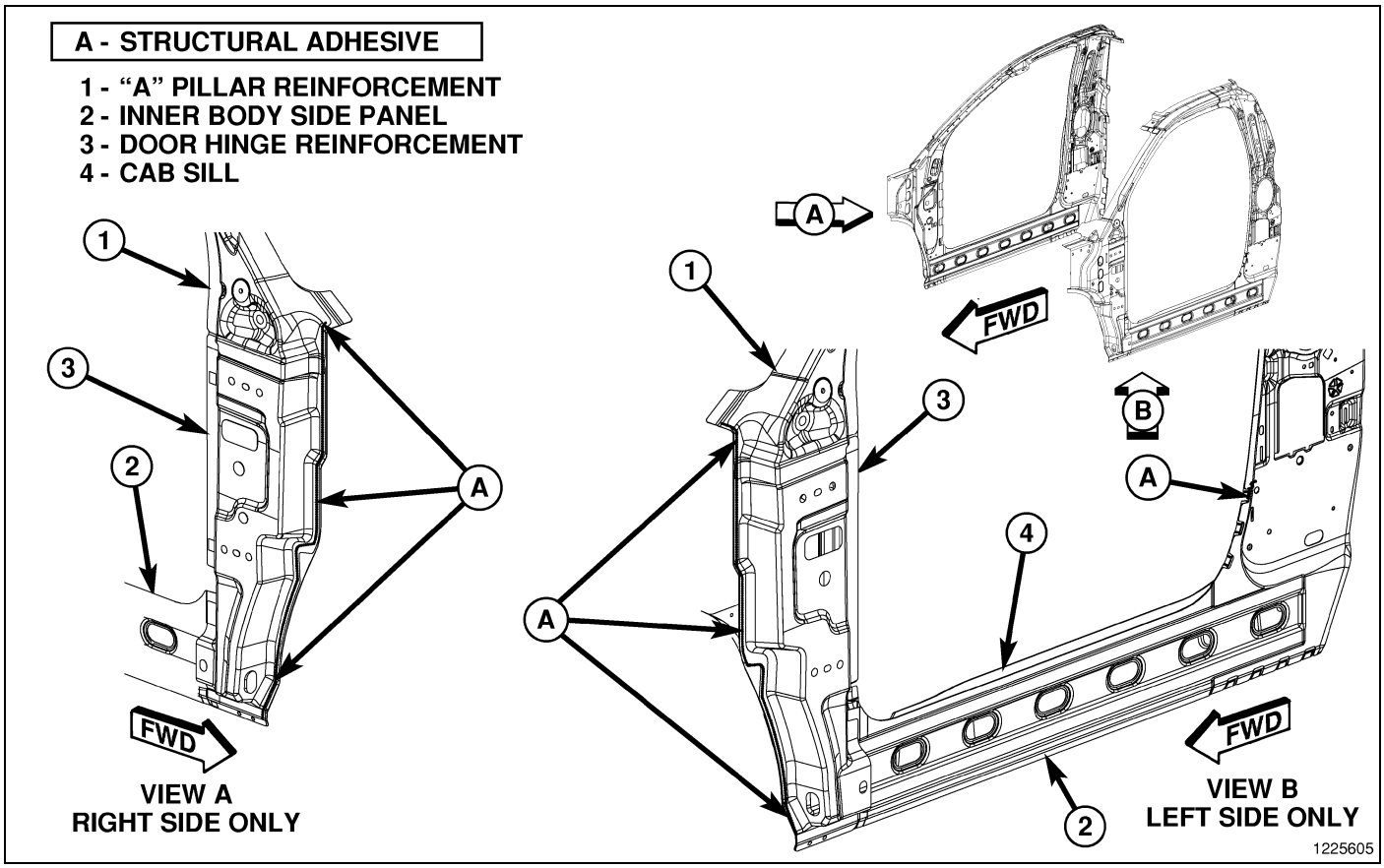

Fig. 47 Body Side Aperture Complete – Standard Cab

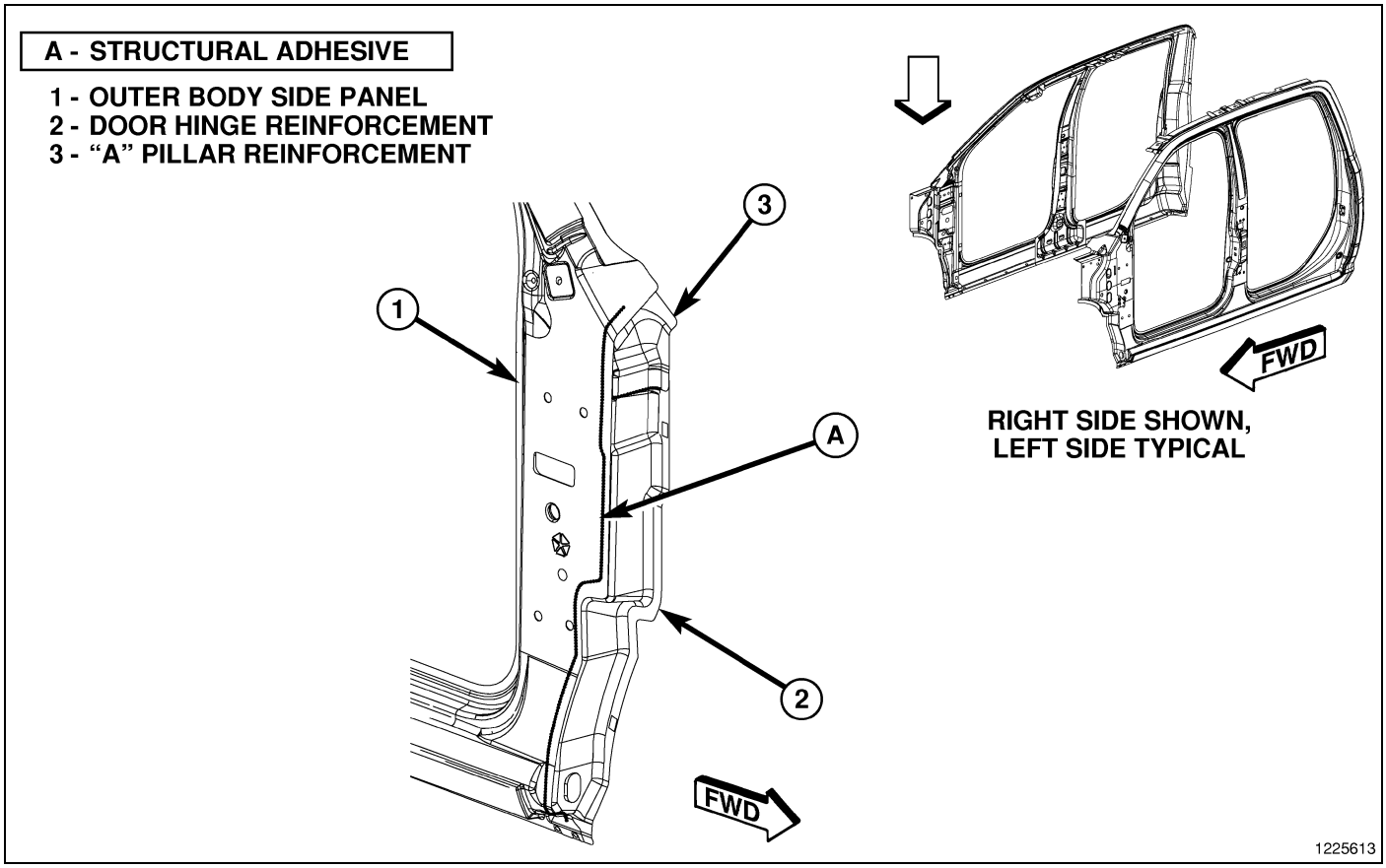

Fig. 48 Body Side Aperture Outer – Crew Cab (1 of 2)

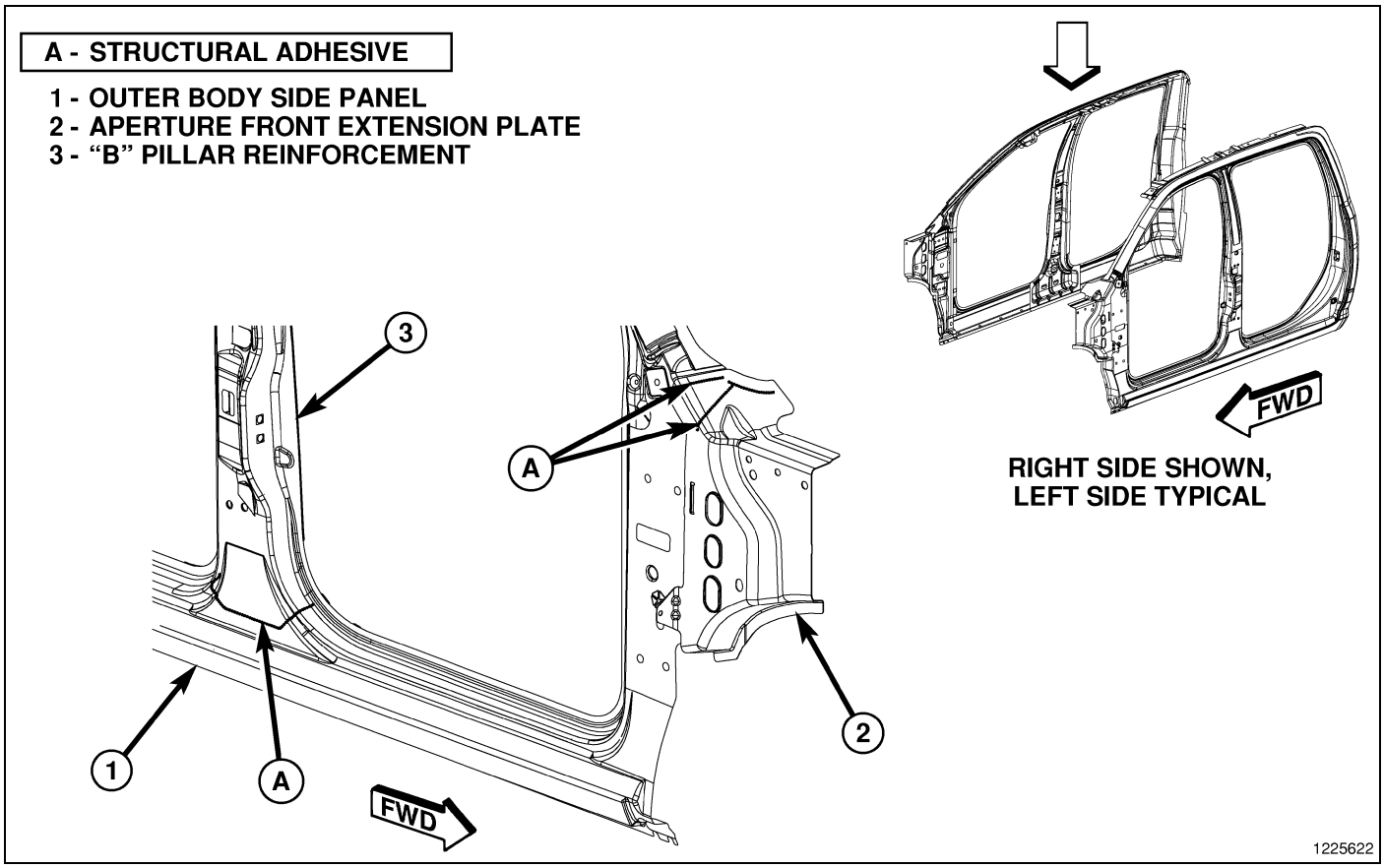

Fig. 49 Body Side Aperture Outer – Crew Cab (2 of 2)

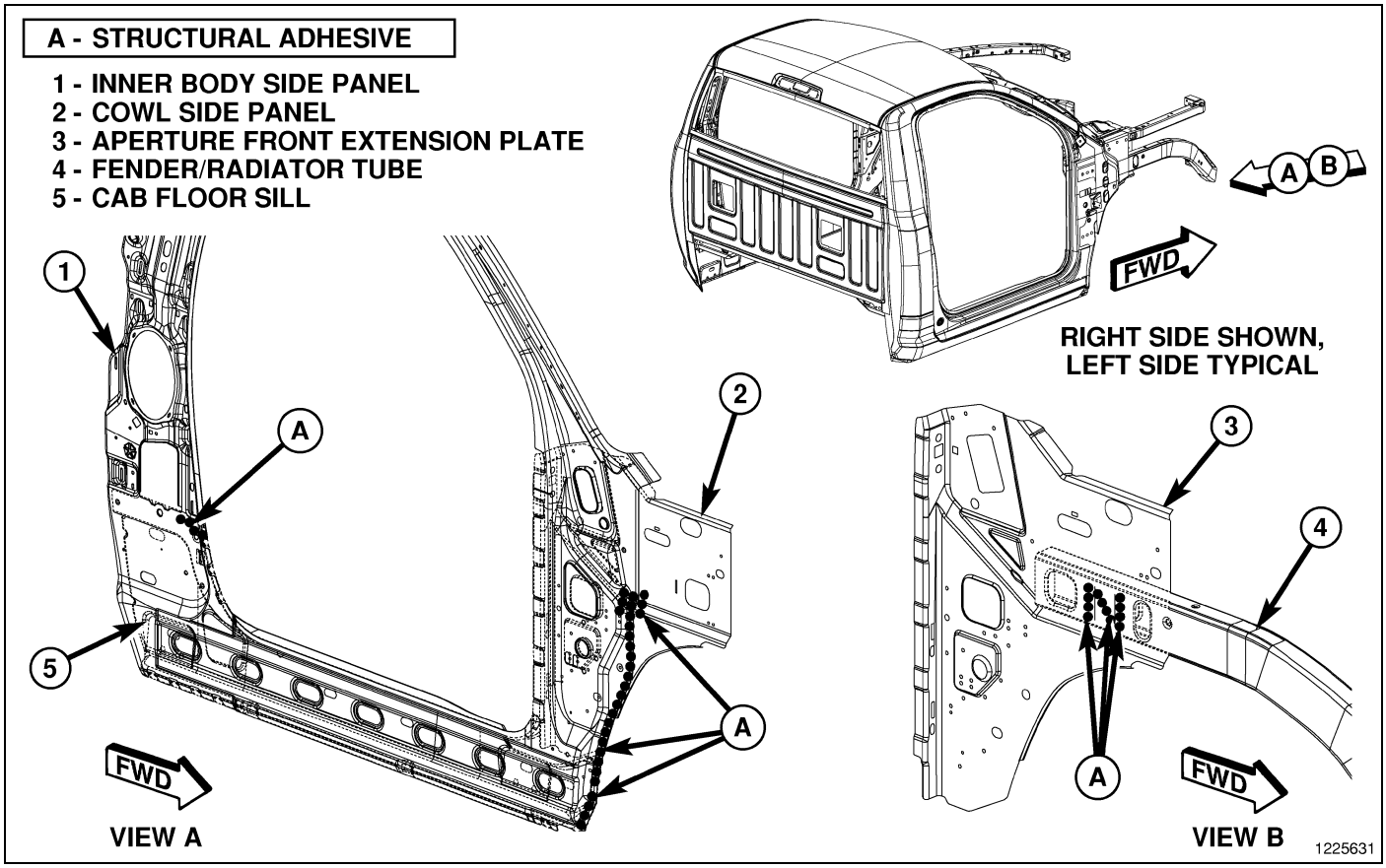

Fig. 50 Cab Complete – Standard (1 of 2)

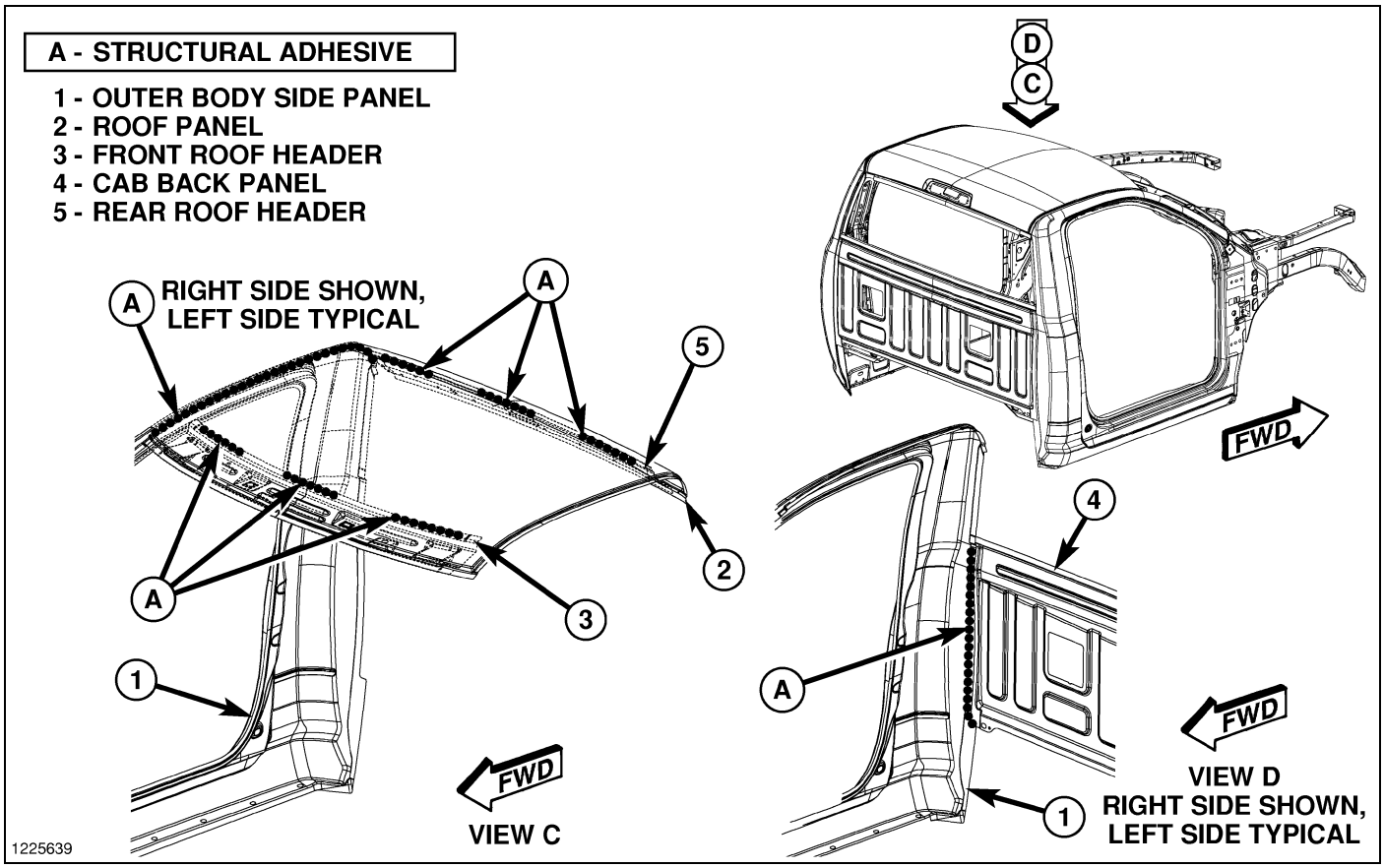

Fig. 51 Cab Complete – Standard (2 of 2)

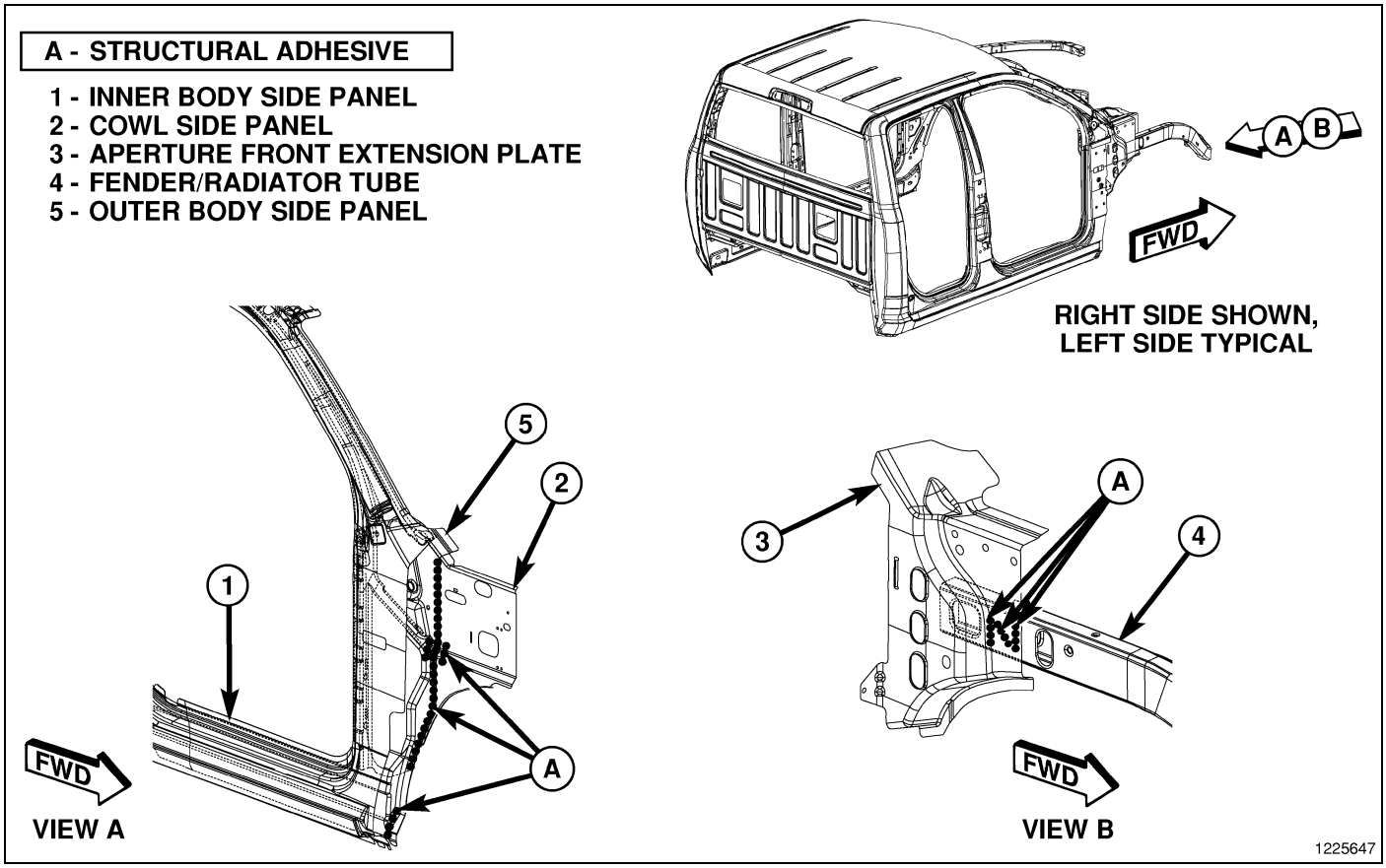

Fig. 52 Cab Complete – Quad (1 of 4)

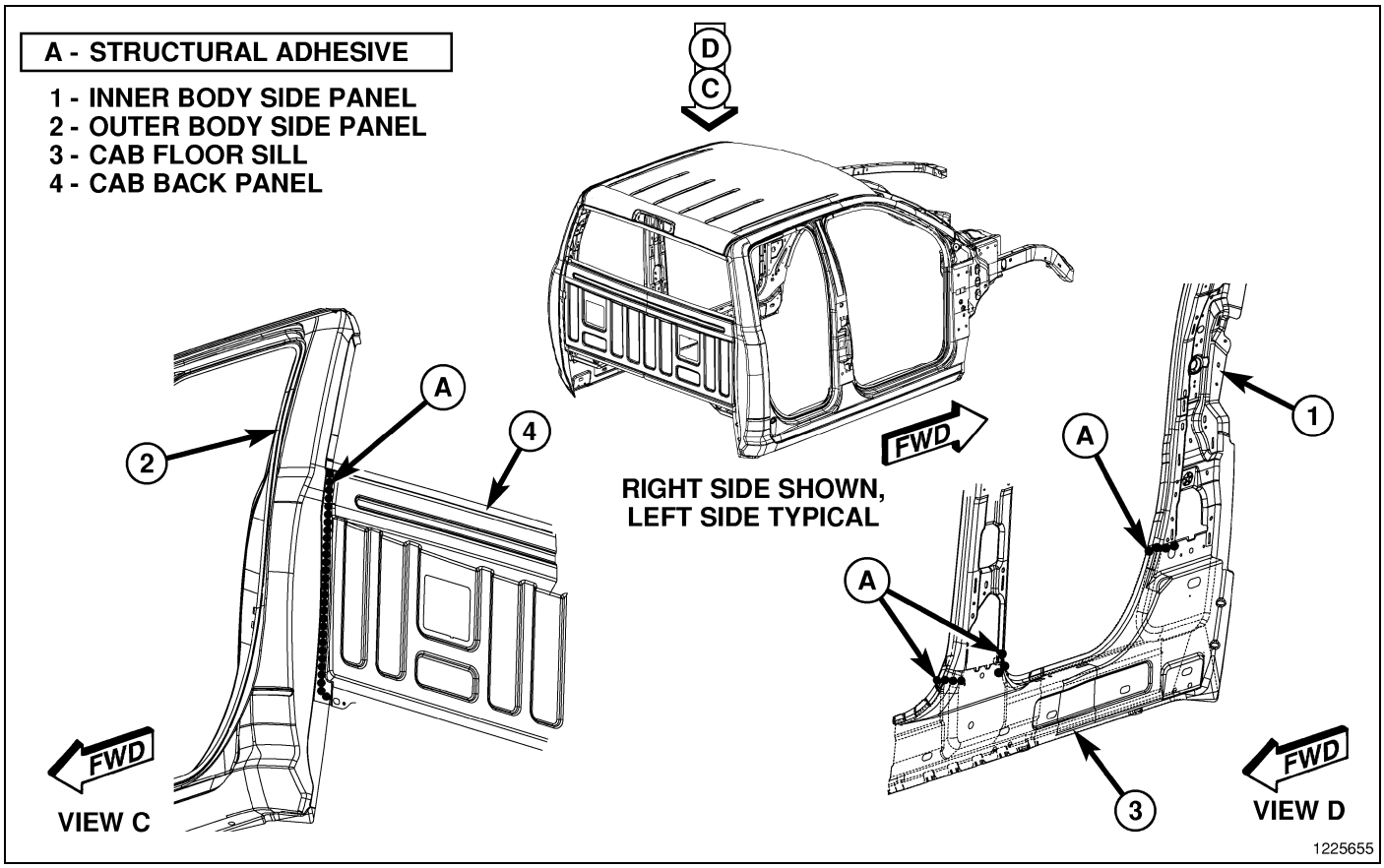

Fig. 53 Cab Complete – Quad (2 of 4)

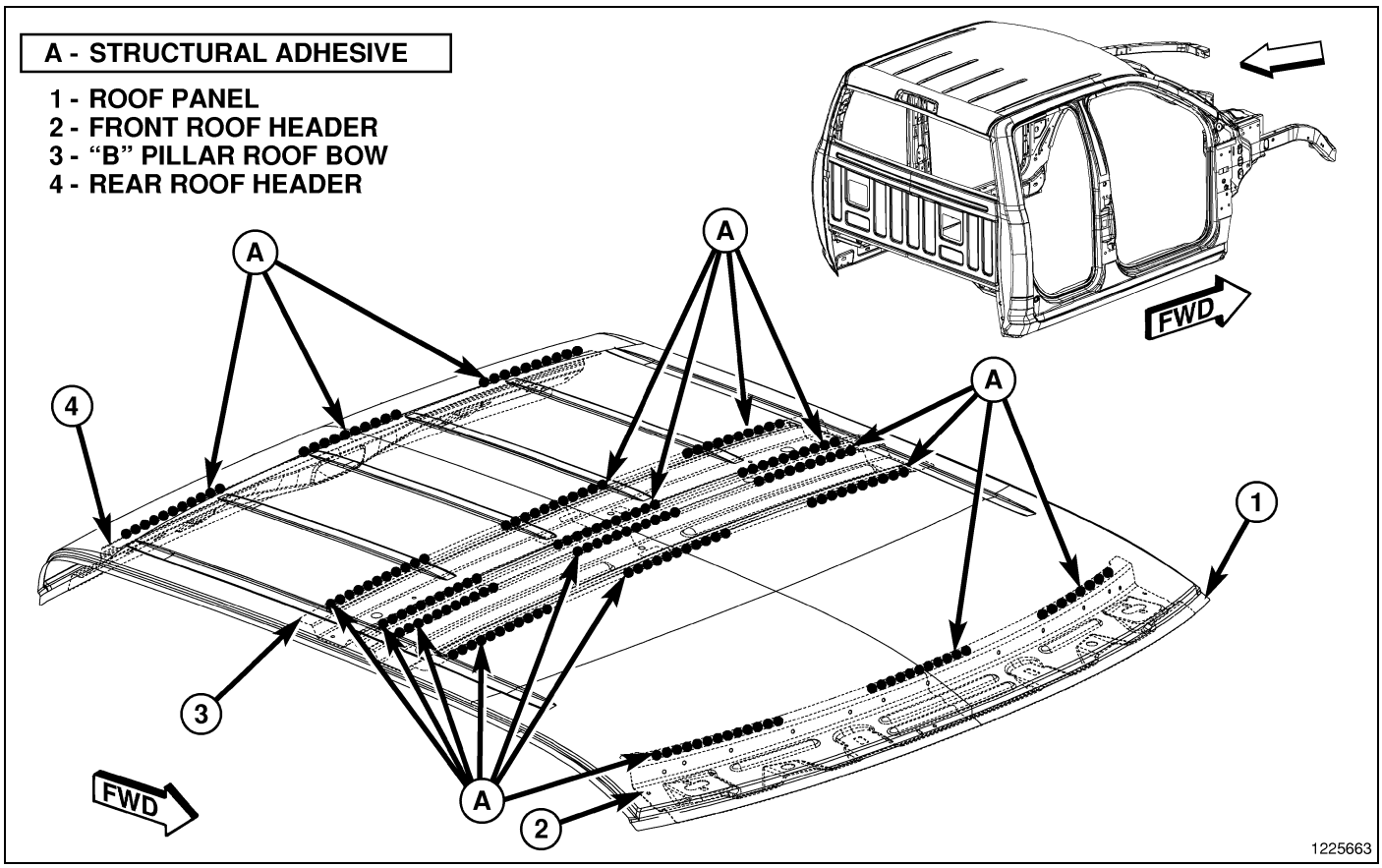

Fig. 54 Cab Complete – Quad (3 of 4)

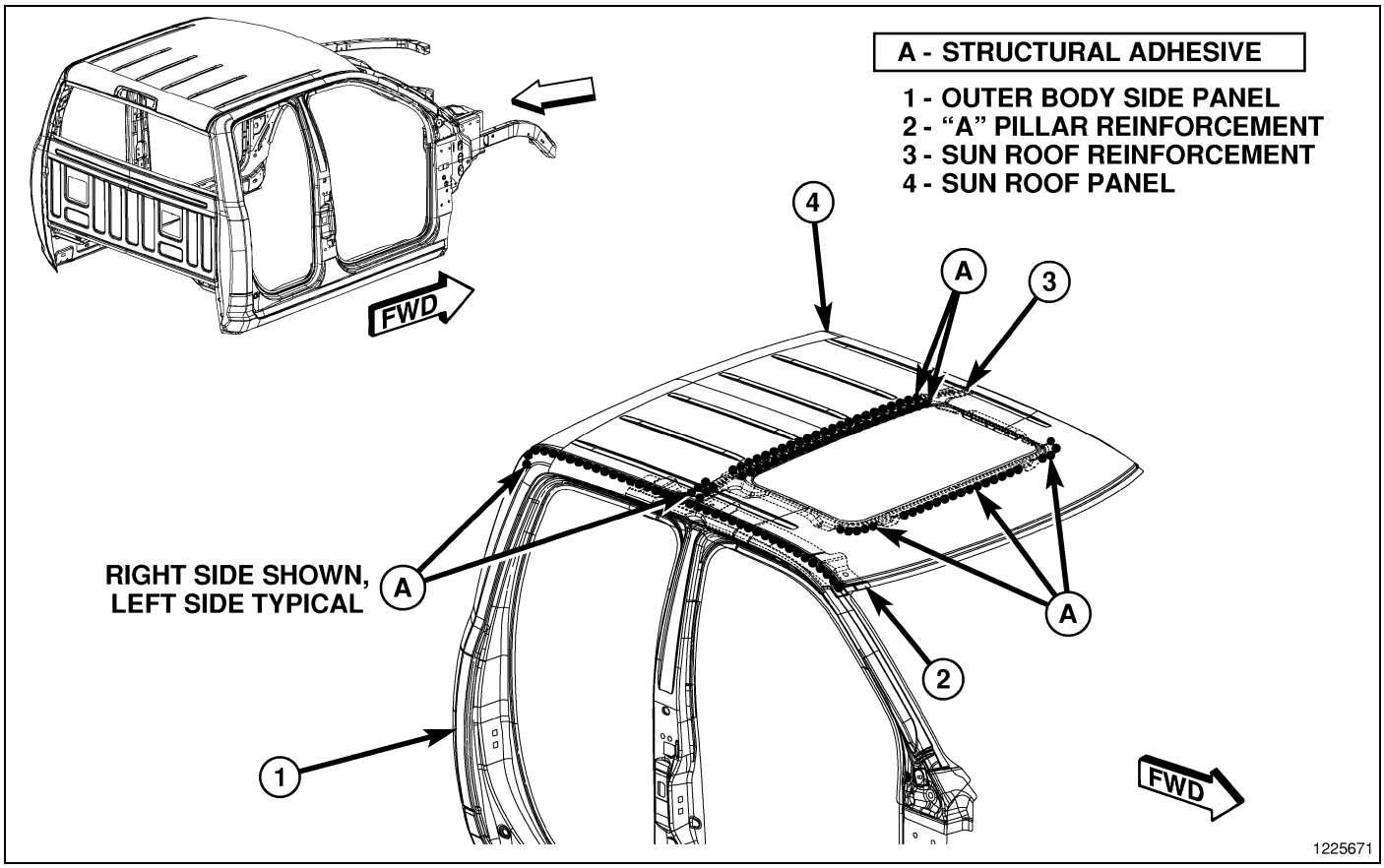

Fig. 55 Cab Complete – Quad (4 of 4)

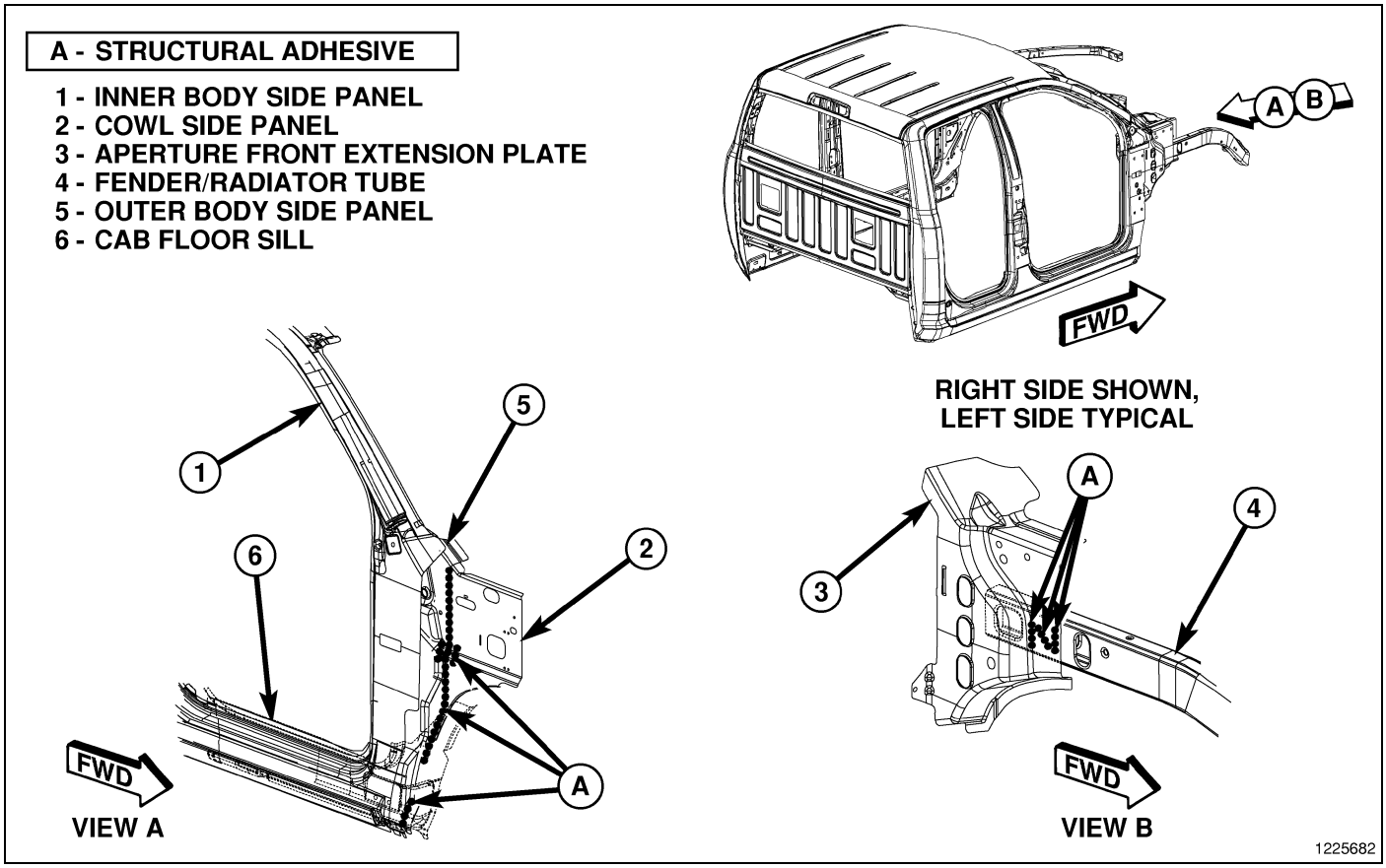

Fig. 56 Cab Complete – Crew (1 of 5)

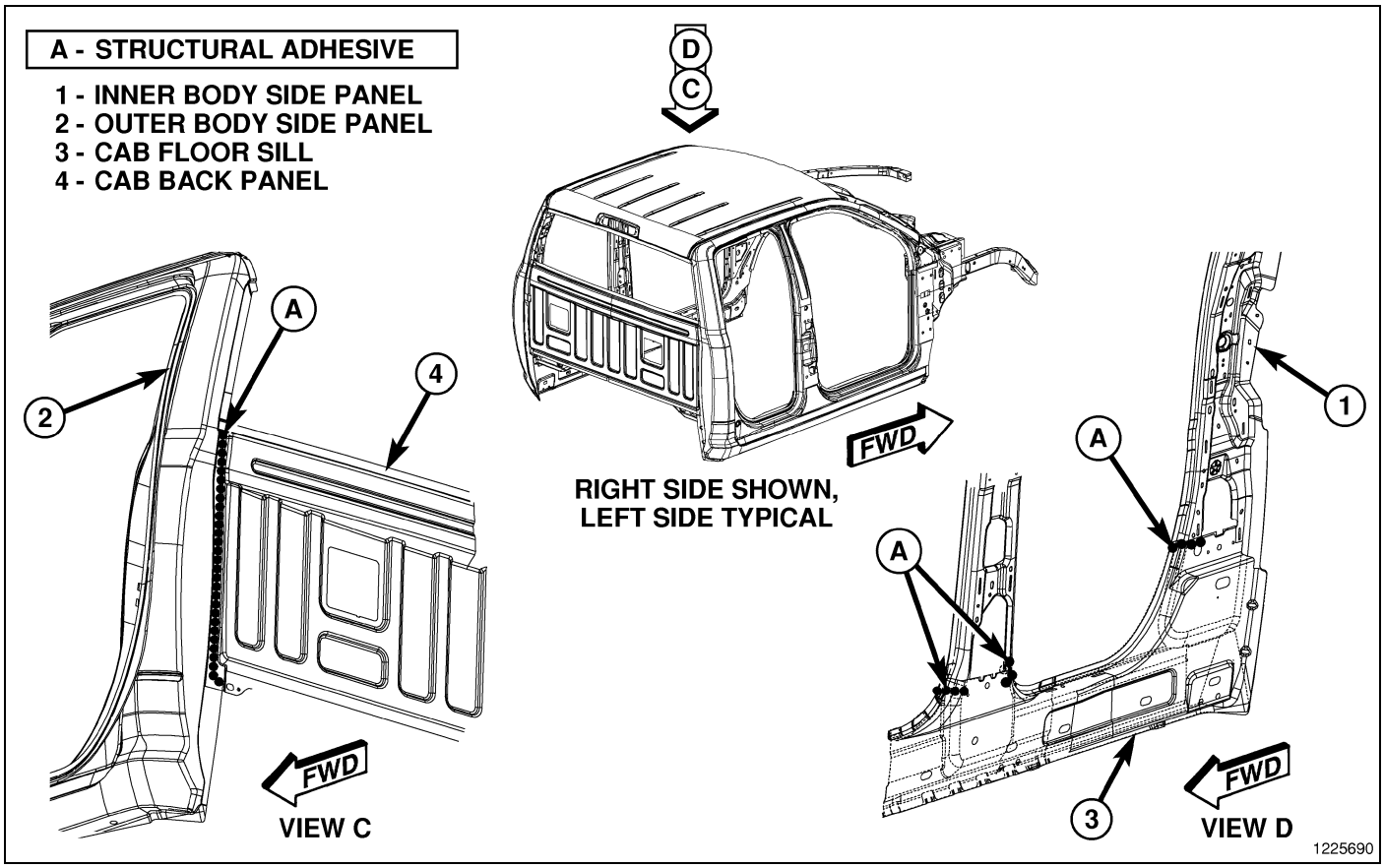

Fig. 57 Cab Complete – Crew (2 of 5)

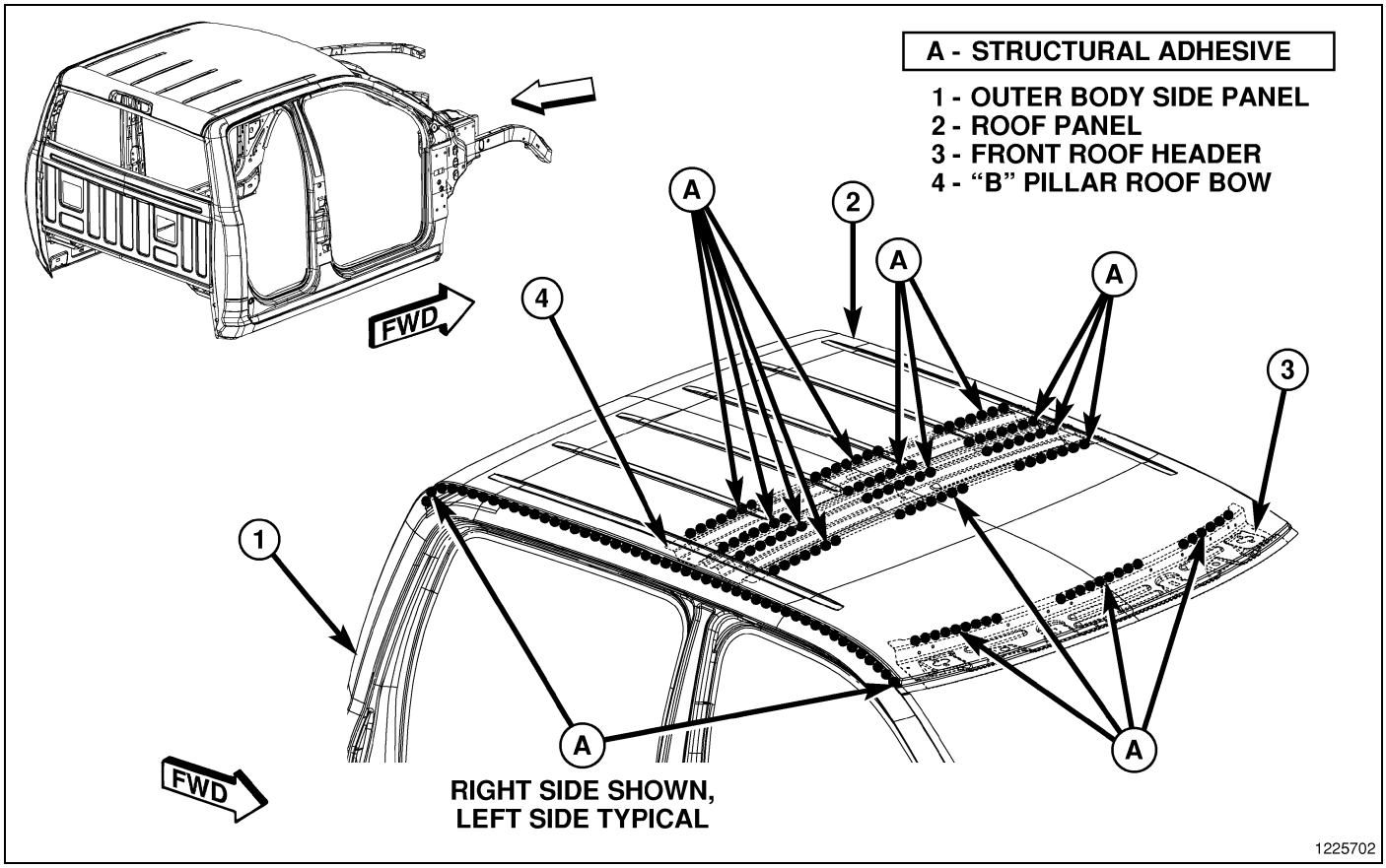

Fig. 58 Cab Complete – Crew (3 of 5)

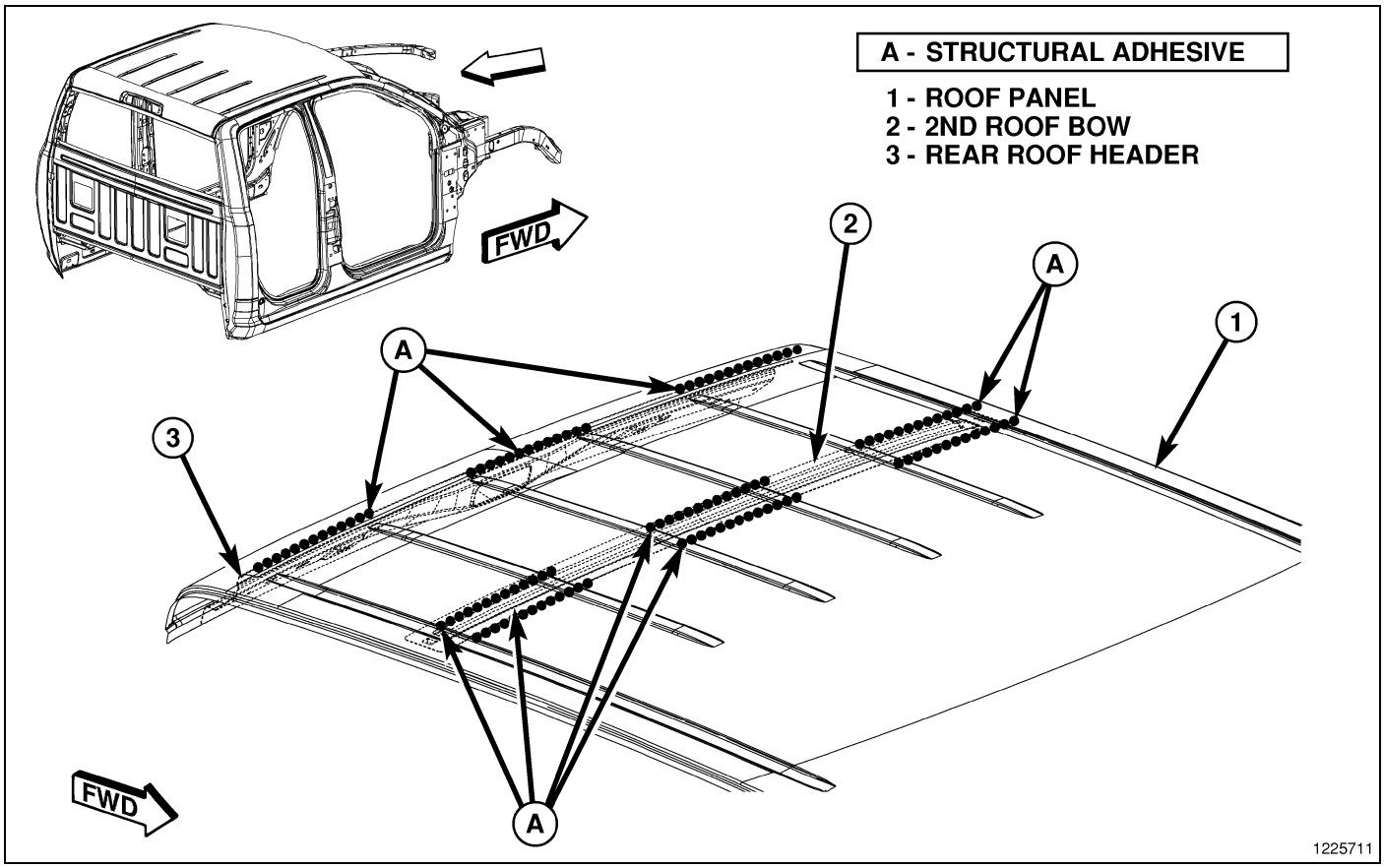

Fig. 59 Cab Complete – Crew (4 of 5)

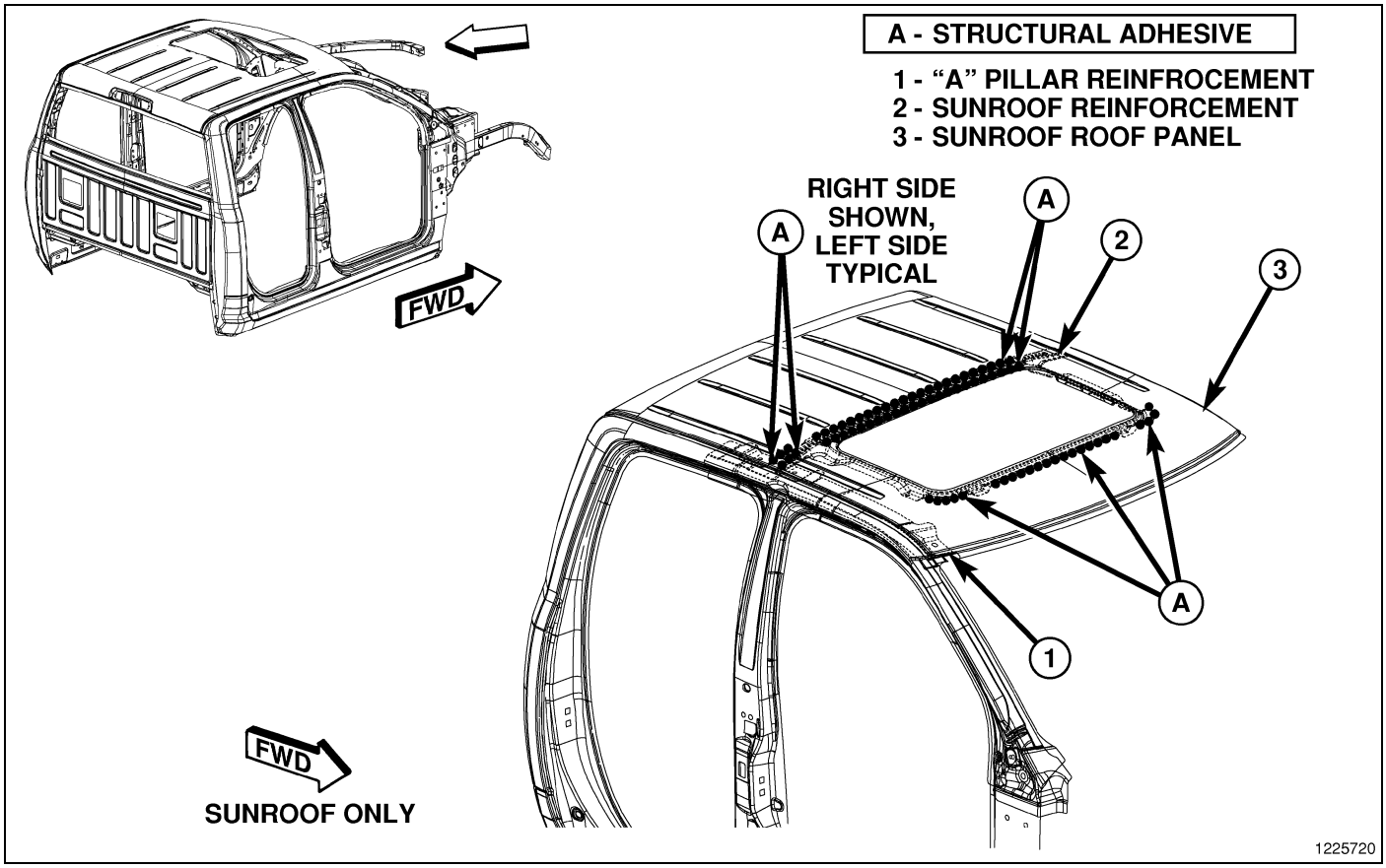

Fig. 60 Cab Complete – Crew (5 of 5)

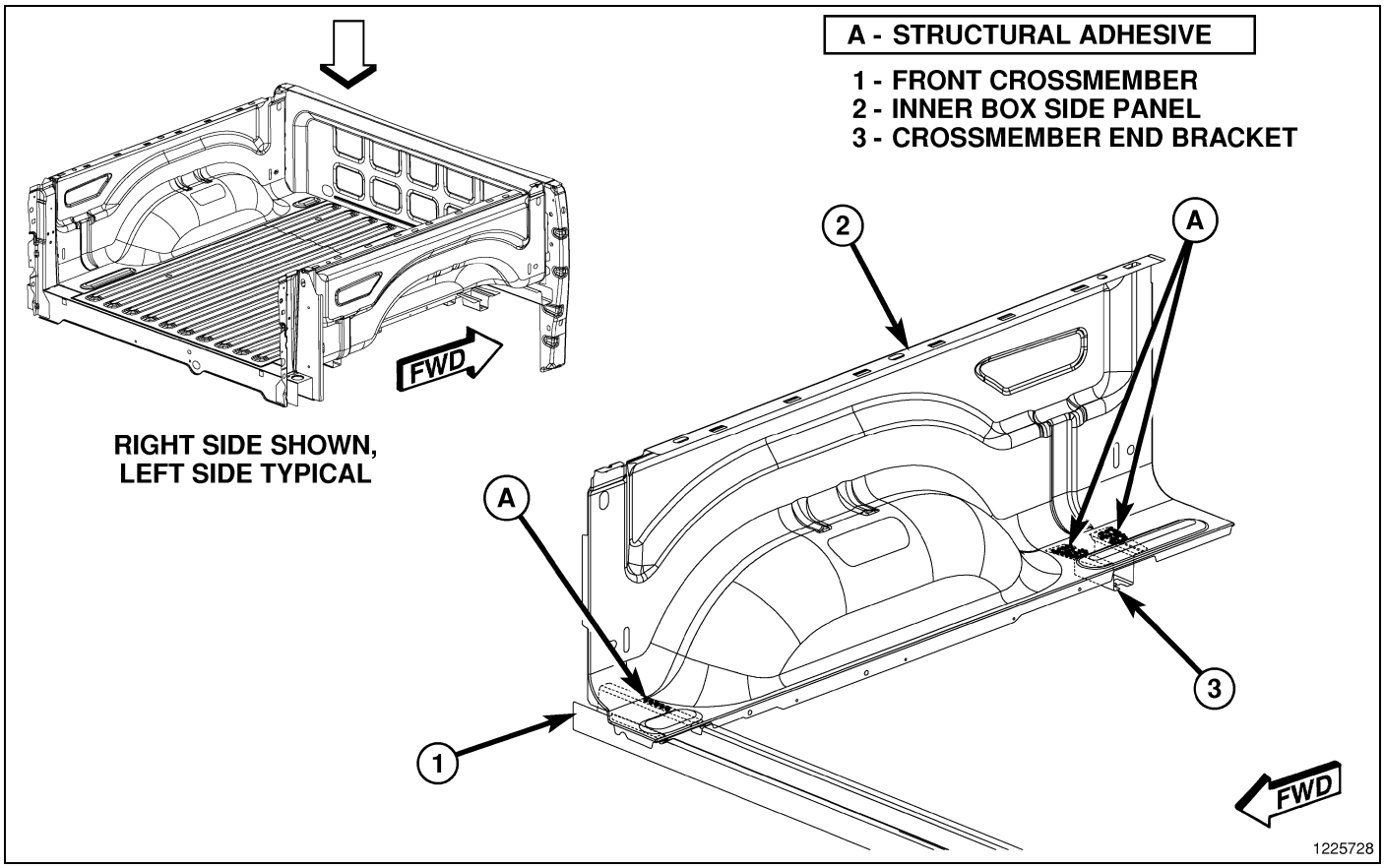

Fig. 61 5.7' Ram Box Floor

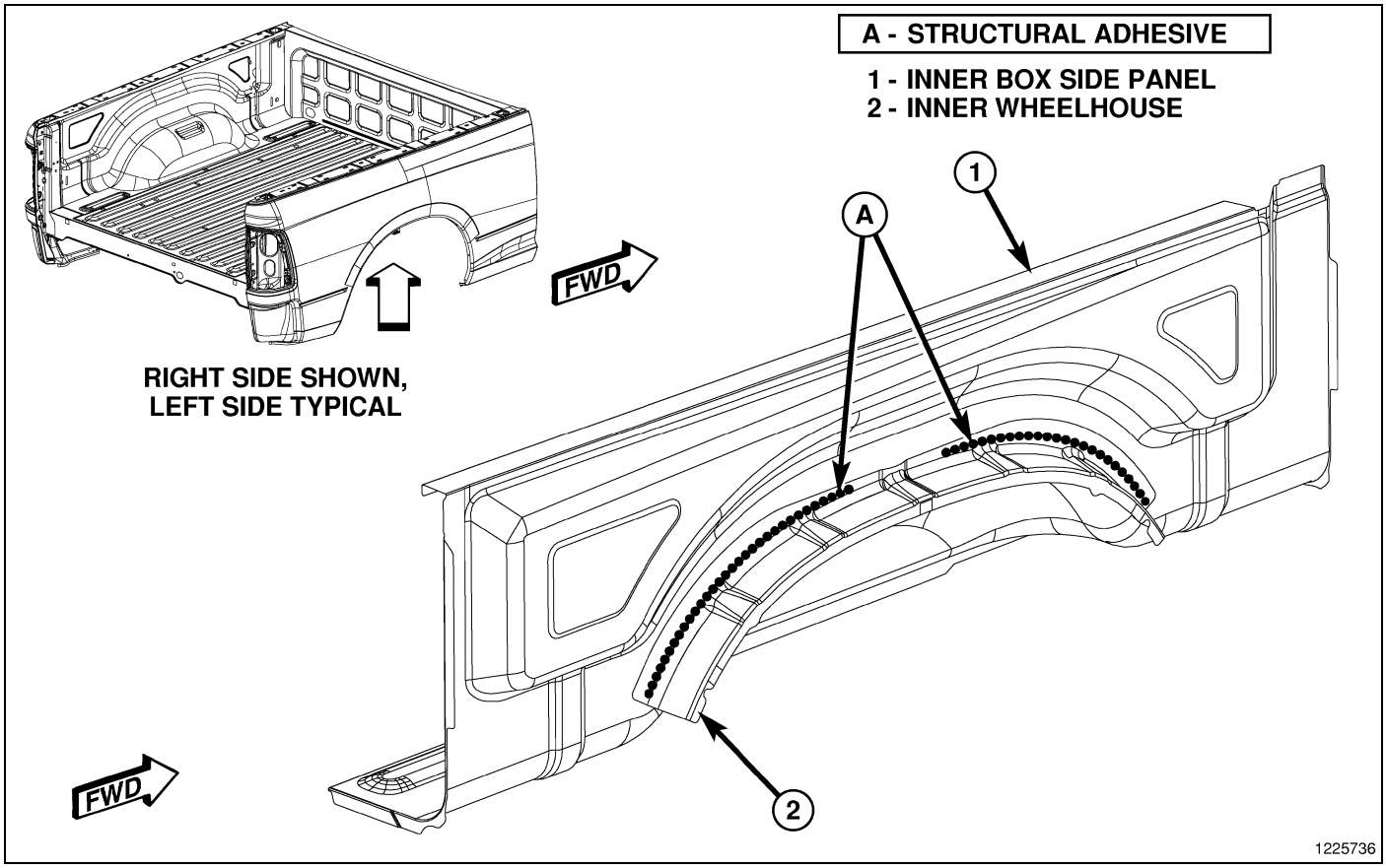

Fig. 62 6.3' Box Tub

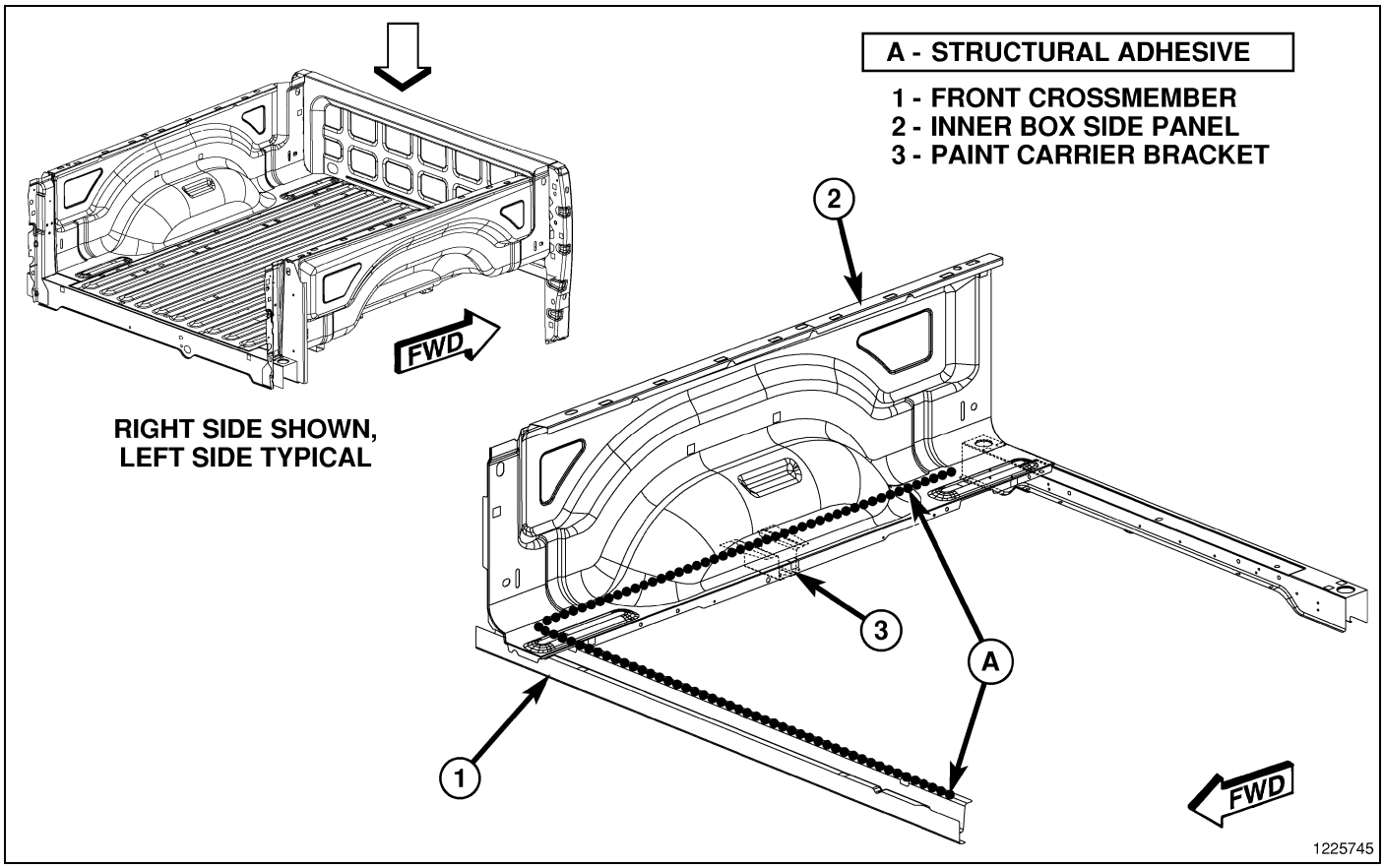

Fig. 63 6.3' Box Floor

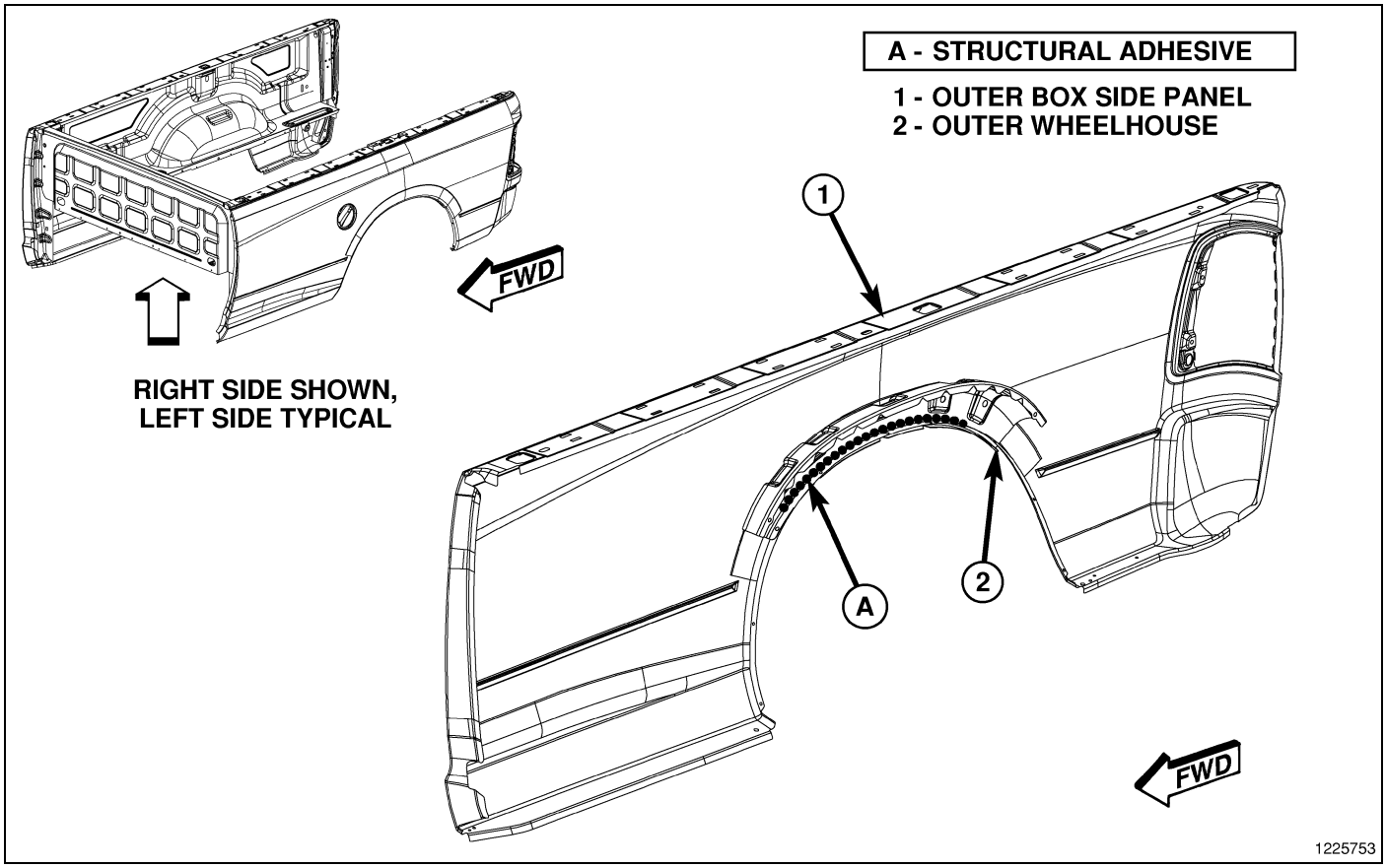

Fig. 64 8.0' Box Body in White

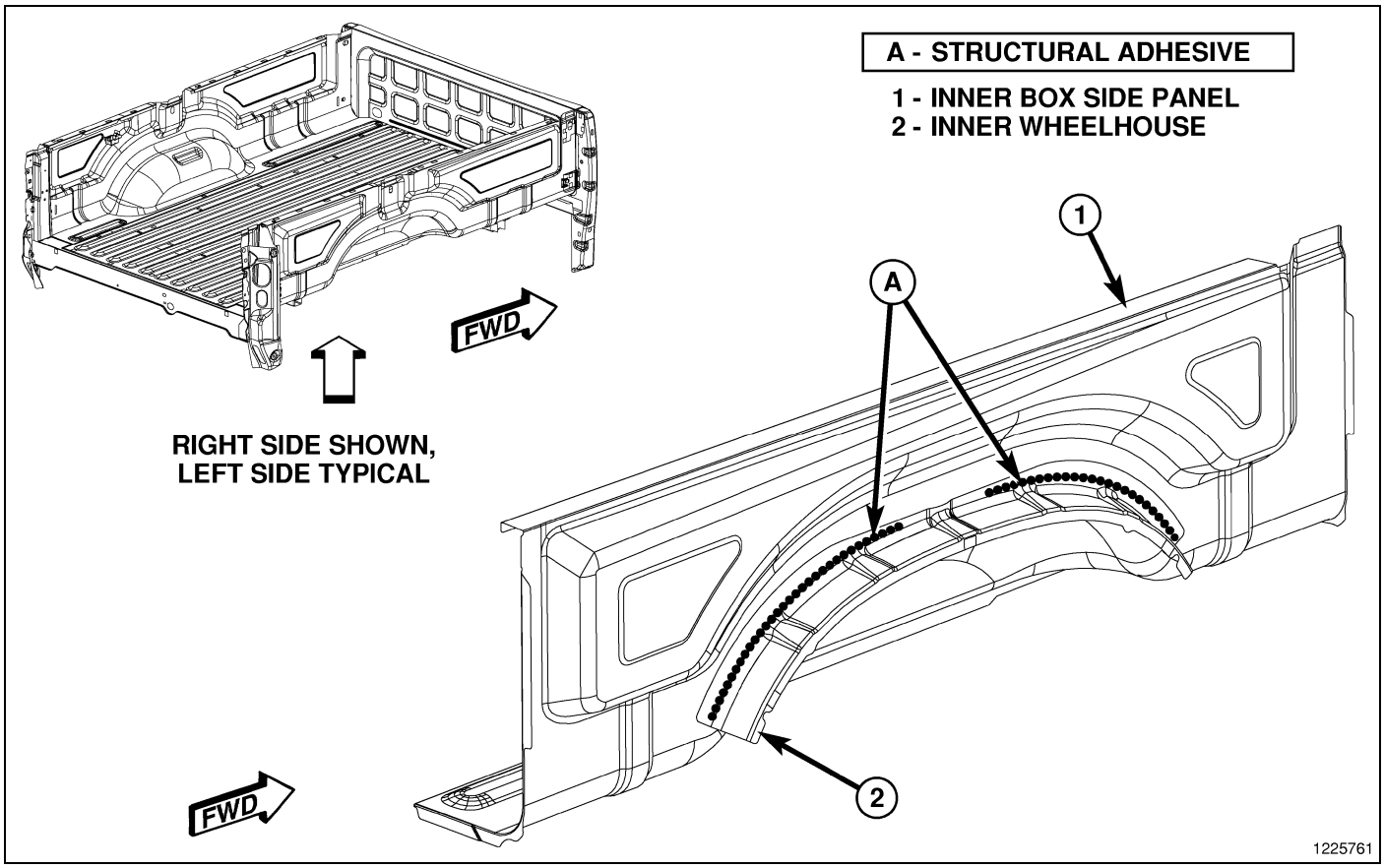

Fig. 65 8.0' Box Tub

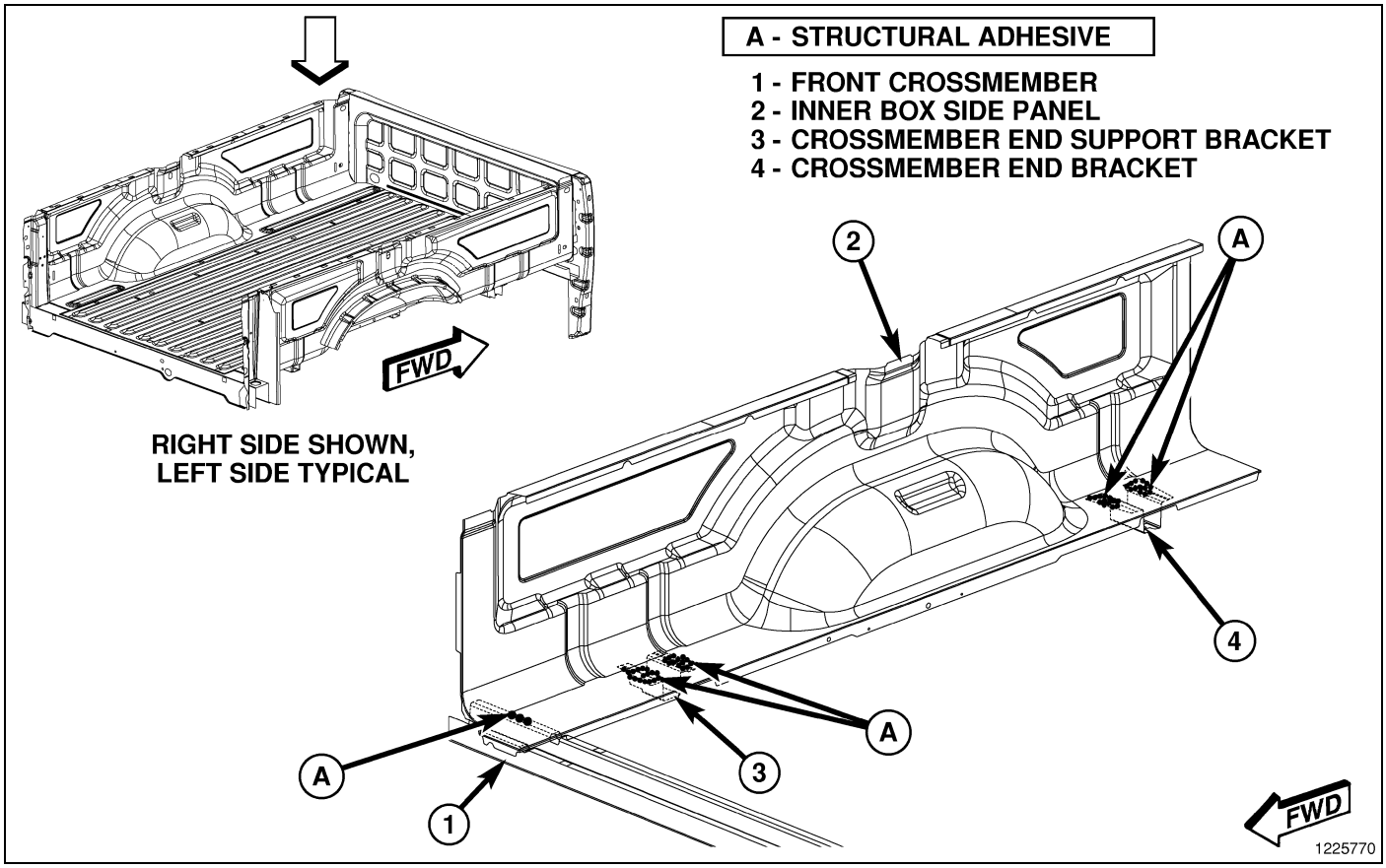

Fig. 66 8.0' Box Floor

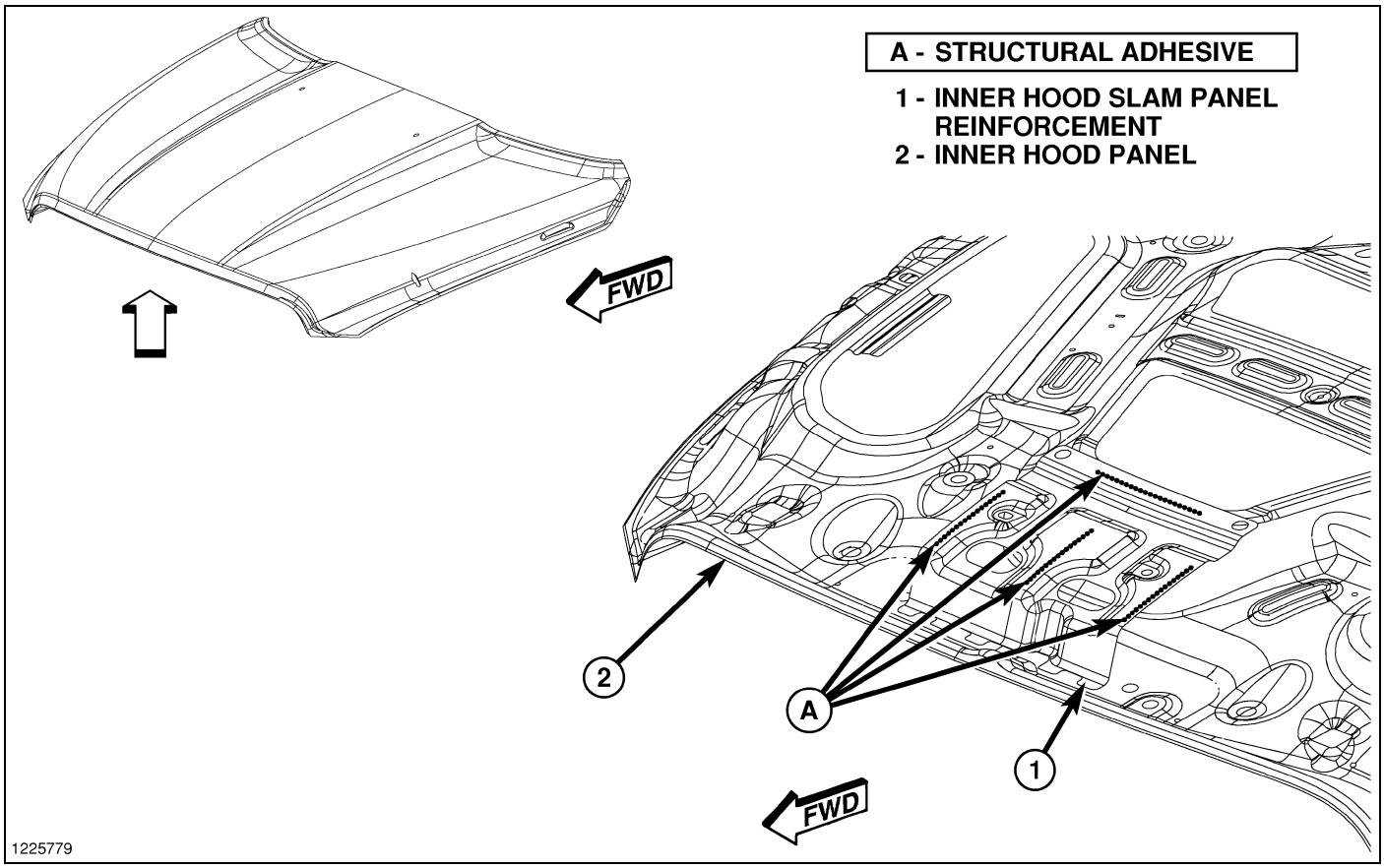

Fig. 67 Hood (1 of 2)

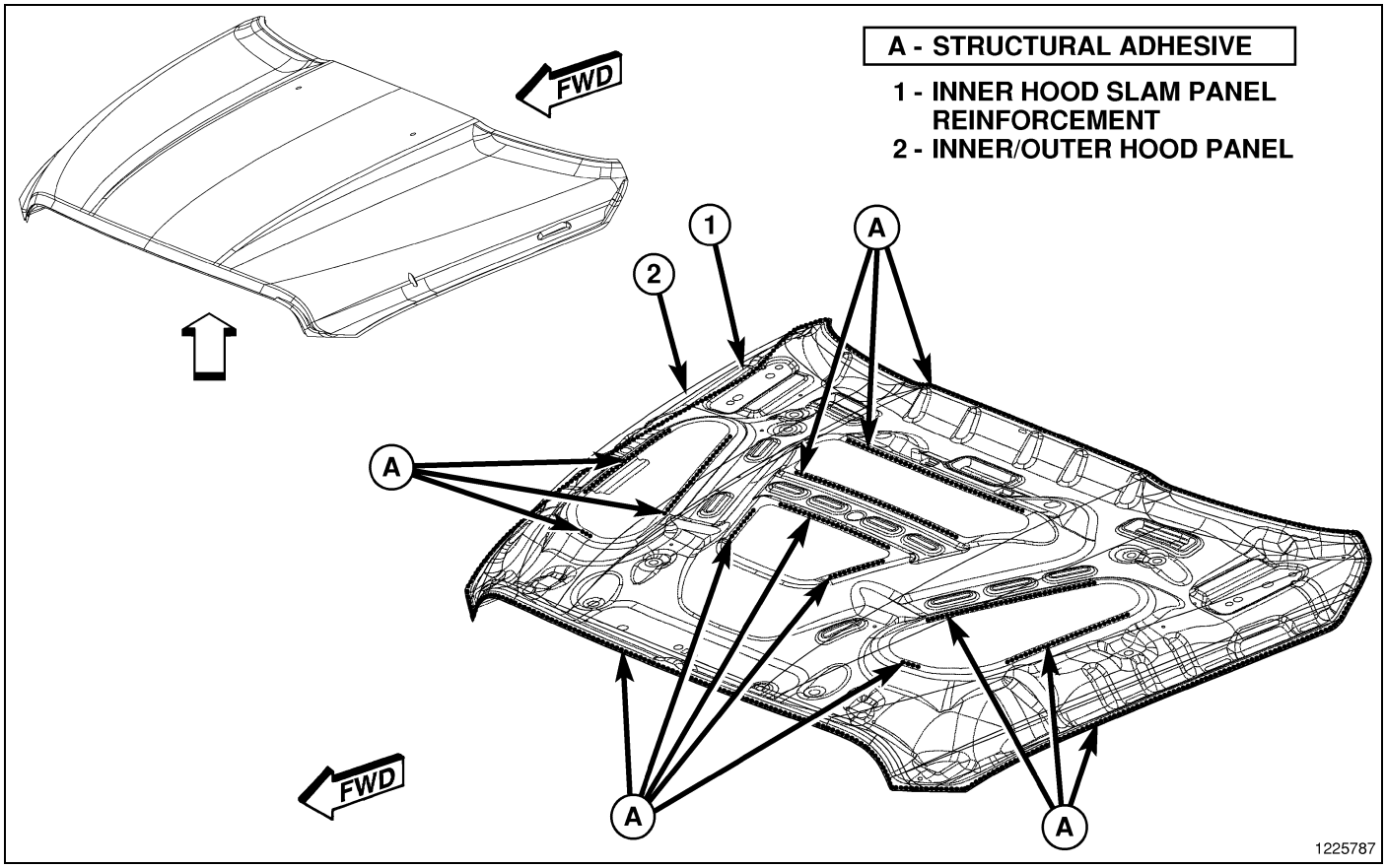

Fig. 68 Hood (2 of 2)

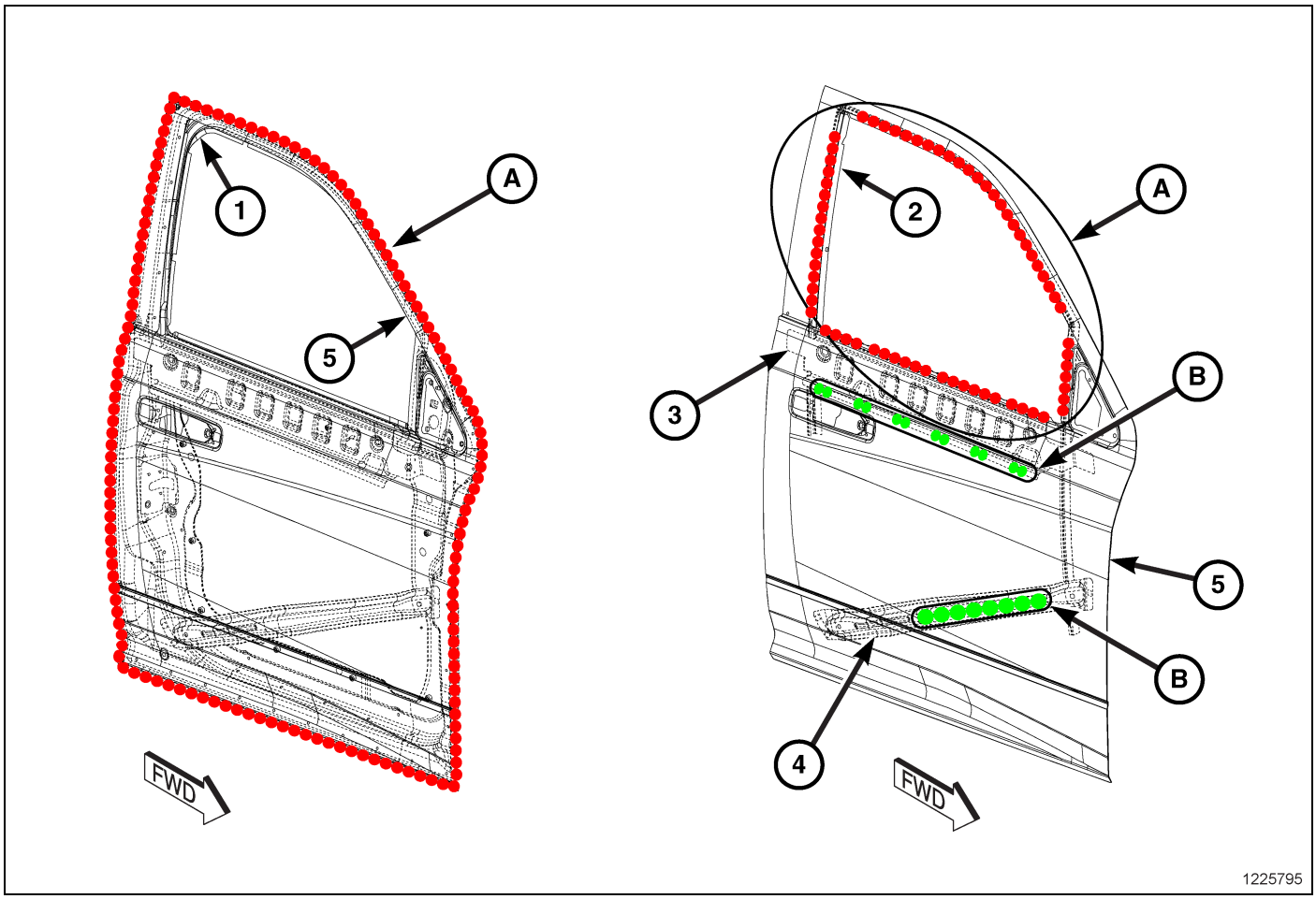

Fig. 69 Front Doors - Short

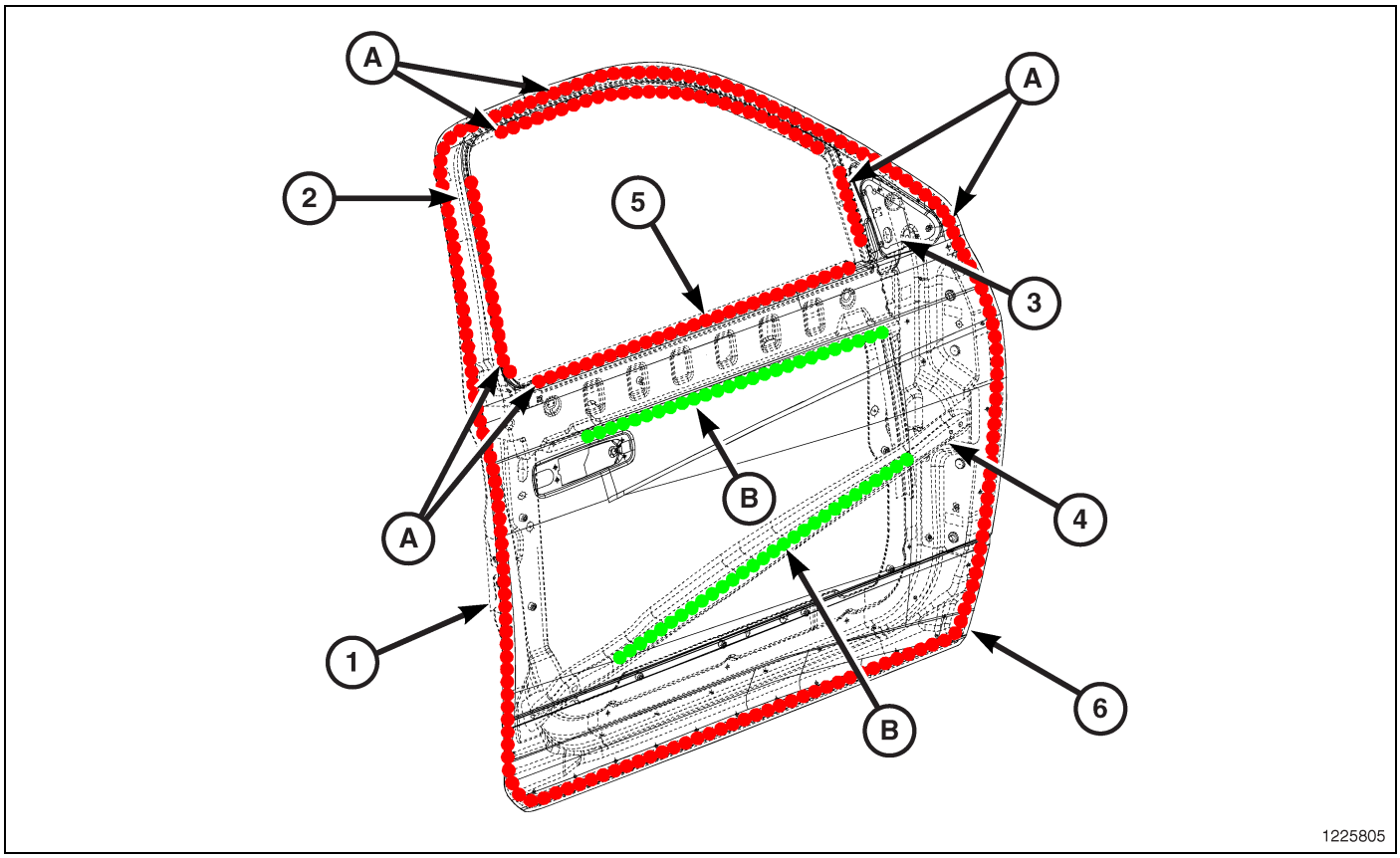

Fig. 70 Front Doors - Long

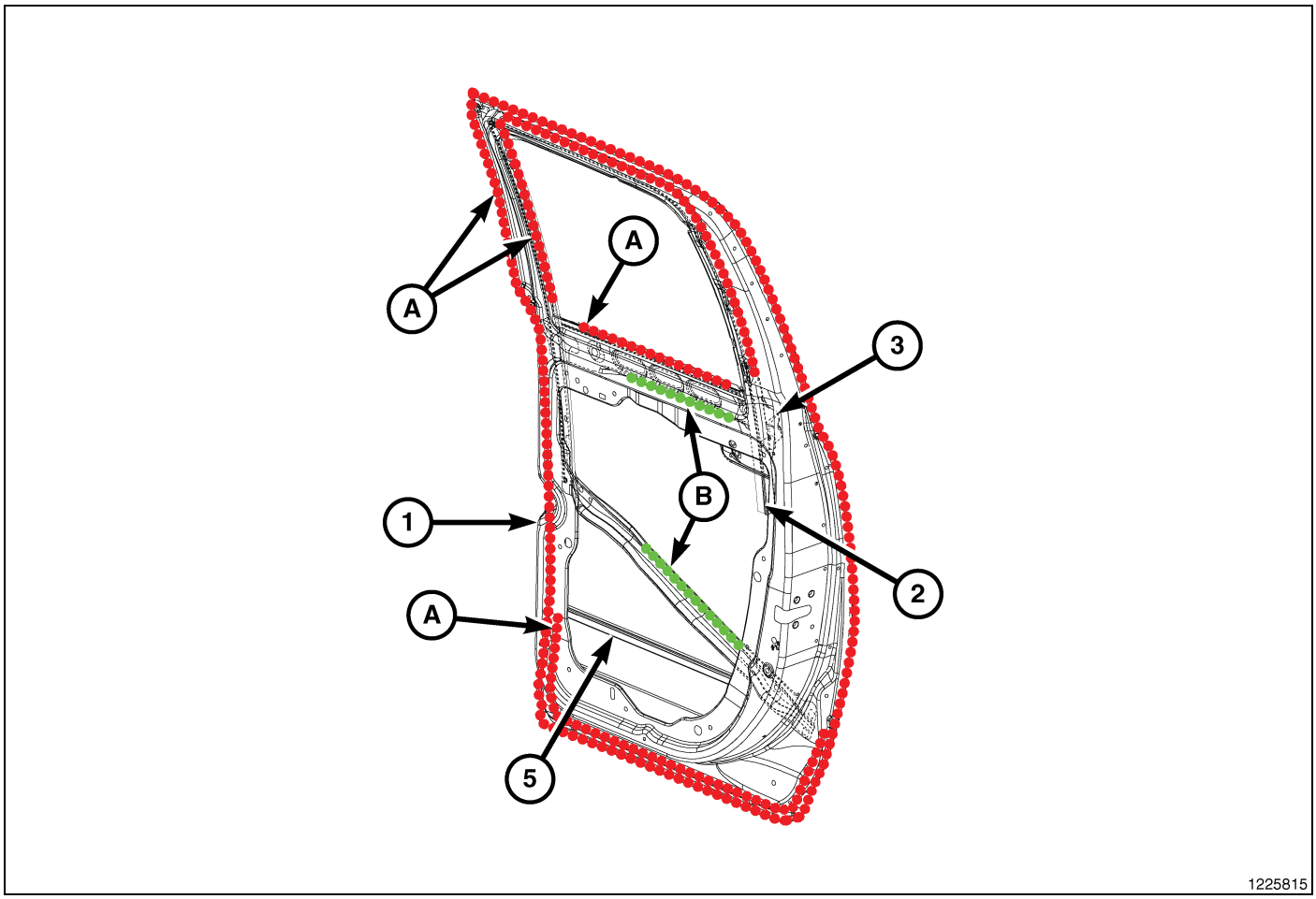

Fig. 71 Rear Doors - Half

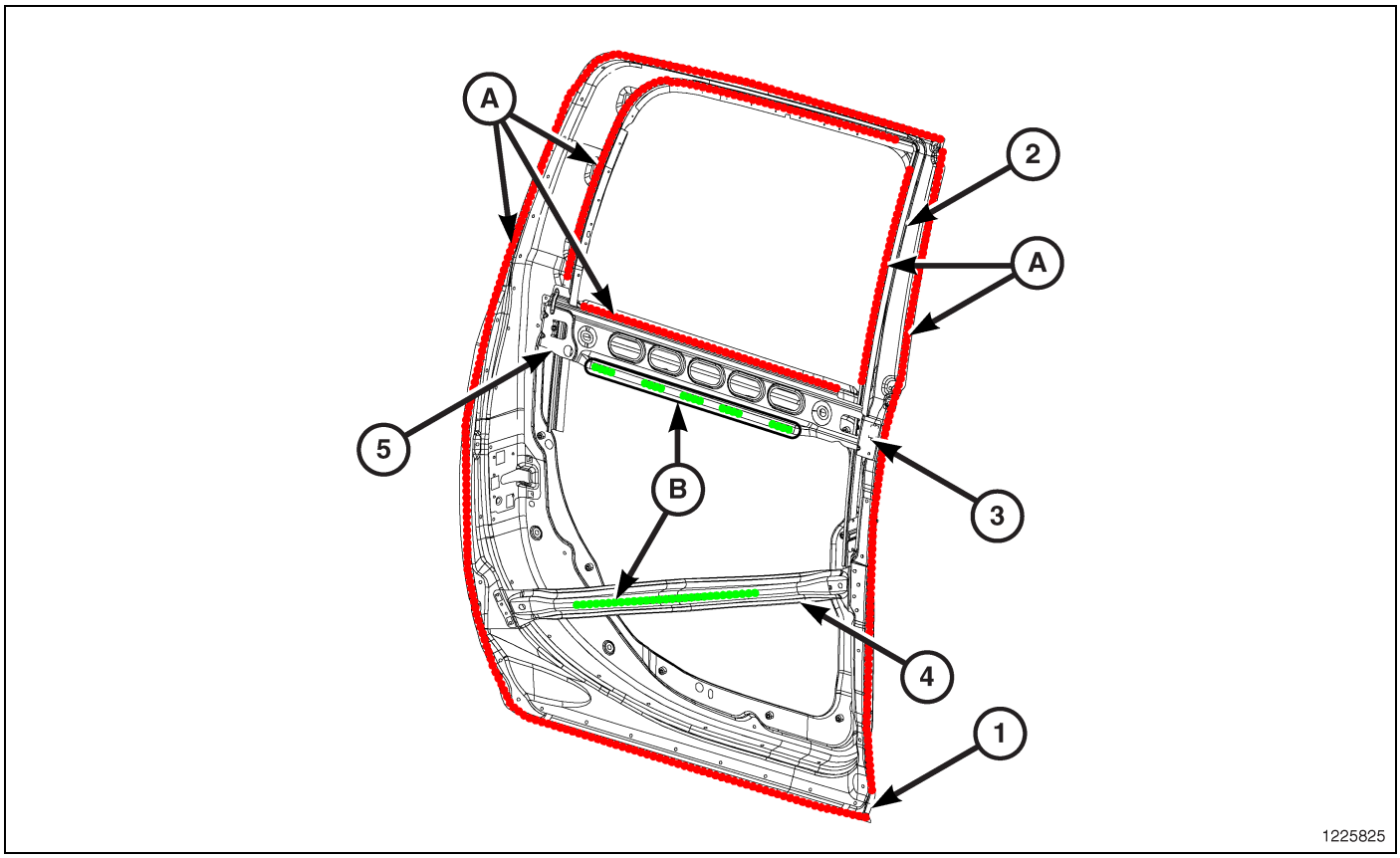

Fig. 72 Rear Doors - Full

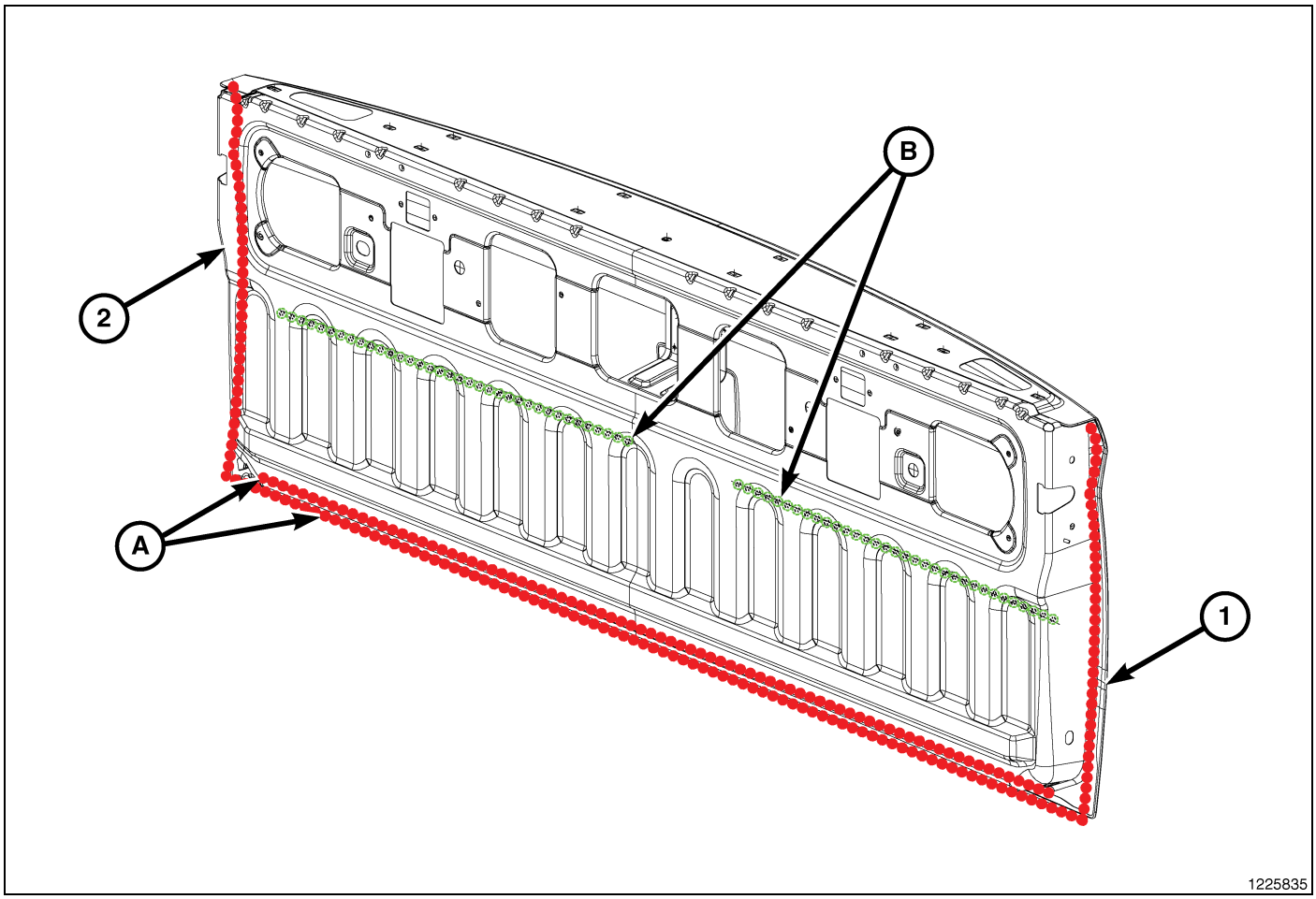

Fig. 73 Tailgate

Weld Locations

Specifications

Explanation of Welding Abbreviations

Definitions

Weld Type

- **(ORD)** = Ordinary Weld or Standard
- **(CRT)** = Critical Weld or Diamond
- **(SAF)** = Safety Weld
- **PROJ** = Projection Weld
- **FCAW** = Flex Core Arc Weld
- **MFG** = Manufacturing Weld
- **S/WELD** = Spot Welds
- **/SD** = Per Side

Examples

AA TO AB 5/SD S/WELDS (ORD) = PART AA WELDED TO PART AB 5 PER SIDE (5 RIGHT/5 LEFT) SPOT WELDS STANDARD

AA TO AB 12 PROJ WELDS (CRT) = PART AA WELDED TO PART AB 12 PROJECTION WELDS CRITICAL OR DIAMOND

Adhesives

STRUCT ADH (ORD) = Ordinary Structural Adhesive

ADH (ORD) = Ordinary Adhesive

WELD LOCATION INDEX

DESCRIPTION	FIGURE
Plenum/Dash/Cowl (1 of 3)	(Fig. 74)
Plenum/Dash/Cowl (2 of 3)	(Fig. 75)
Plenum/Dash/Cowl (3 of 3)	(Fig. 76)
Miscellaneous Components (1 of 8)	(Fig. 77)
Miscellaneous Components (2 of 8)	(Fig. 78)
Miscellaneous Components (3 of 8)	(Fig. 79)
Miscellaneous Components (4 of 8)	(Fig. 80)
Miscellaneous Components (5 of 8)	(Fig. 81)
Miscellaneous Components (6 of 8)	(Fig. 82)
Miscellaneous Components (7 of 8)	(Fig. 83)
Miscellaneous Components (8 of 8)	(Fig. 84)
Front Floor – Standard Cab (1 of 5)	(Fig. 85)
Front Floor – Standard Cab (2 of 5)	(Fig. 86)
Front Floor – Standard Cab (3 of 5)	(Fig. 87)
Front Floor – Standard Cab (4 of 5)	(Fig. 88)
Front Floor – Standard Cab (5 of 5)	(Fig. 89)
Front Floor – Quad Cab (1 of 5)	(Fig. 90)
Front Floor – Quad Cab (2 of 5)	(Fig. 91)
Front Floor – Quad Cab (3 of 5)	(Fig. 92)
Front Floor – Quad Cab (4 of 5)	(Fig. 93)
Front Floor – Quad Cab (5 of 5)	(Fig. 94)
Front Floor – Crew Cab (1 of 6)	(Fig. 95)
Front Floor – Crew Cab (2 of 6)	(Fig. 96)
Front Floor – Crew Cab (3 of 6)	(Fig. 97)
Front Floor – Crew Cab (4 of 6)	(Fig. 98)
Front Floor – Crew Cab (5 of 6)	(Fig. 99)
Front Floor – Crew Cab (6 of 6)	(Fig. 100)
Underbody Complete – Standard Cab (1 of 8)	(Fig. 101)
Underbody Complete – Standard Cab (2 of 8)	(Fig. 102)
Underbody Complete – Standard Cab (3 of 8)	(Fig. 103)
Underbody Complete – Standard Cab (4 of 8)	(Fig. 104)
Underbody Complete – Standard Cab (5 of 8)	(Fig. 105)
Underbody Complete – Standard Cab (6 of 8)	(Fig. 106)
Underbody Complete – Standard Cab (7 of 8)	(Fig. 107)
Underbody Complete – Standard Cab (8 of 8)	(Fig. 108)
Underbody Complete – Quad Cab (1 of 12)	(Fig. 109)
Underbody Complete – Quad Cab (2 of 12)	(Fig. 110)
Underbody Complete – Quad Cab (3 of 12)	(Fig. 111)

WELD LOCATION INDEX, continued

DESCRIPTION	FIGURE
Underbody Complete – Quad Cab (4 of 12)	(Fig. 112)
Underbody Complete – Quad Cab (5 of 12)	(Fig. 113)
Underbody Complete – Quad Cab (6 of 12)	(Fig. 114)
Underbody Complete – Quad Cab (7 of 12)	(Fig. 115)
Underbody Complete – Quad Cab (8 of 12)	(Fig. 116)
Underbody Complete – Quad Cab (9 of 12)	(Fig. 117)
Underbody Complete – Quad Cab (10 of 12)	(Fig. 118)
Underbody Complete – Quad Cab (11 of 12)	(Fig. 119)
Underbody Complete – Quad Cab (12 of 12)	(Fig. 120)
Underbody Complete – Crew Cab (1 of 11)	(Fig. 121)
Underbody Complete – Crew Cab (2 of 11)	(Fig. 122)
Underbody Complete – Crew Cab (3 of 11)	(Fig. 123)
Underbody Complete – Crew Cab (4 of 11)	(Fig. 124)
Underbody Complete – Crew Cab (5 of 11)	(Fig. 125)
Underbody Complete – Crew Cab (6 of 11)	(Fig. 126)
Underbody Complete – Crew Cab (7 of 11)	(Fig. 127)
Underbody Complete – Crew Cab (8 of 11)	(Fig. 128)
Underbody Complete – Crew Cab (9 of 11)	(Fig. 129)
Underbody Complete – Crew Cab (10 of 11)	(Fig. 130)
Underbody Complete – Crew Cab (11 of 11)	(Fig. 131)
Body Side Aperture Inner – Standard Cab (1 of 4)	(Fig. 132)
Body Side Aperture Inner – Standard Cab (2 of 4)	(Fig. 133)
Body Side Aperture Inner – Standard Cab (3 of 4)	(Fig. 134)
Body Side Aperture Inner – Standard Cab (4 of 4)	(Fig. 135)
Body Side Aperture Inner – Quad Cab (1 of 5)	(Fig. 136)
Body Side Aperture Inner – Quad Cab (2 of 5)	(Fig. 137)
Body Side Aperture Inner – Quad Cab (3 of 5)	(Fig. 138)
Body Side Aperture Inner – Quad Cab (4 of 5)	(Fig. 139)
Body Side Aperture Inner – Quad Cab (5 of 5)	(Fig. 140)
Body Side Aperture Inner – Crew Cab (1 of 4)	(Fig. 141)
Body Side Aperture Inner – Crew Cab (2 of 4)	(Fig. 142)
Body Side Aperture Inner – Crew Cab (3 of 4)	(Fig. 143)
Body Side Aperture Inner – Crew Cab (4 of 4)	(Fig. 144)
Body Side Aperture Outer – Standard Cab (1 of 3)	(Fig. 145)
Body Side Aperture Outer – Standard Cab (2 of 3)	(Fig. 146)
Body Side Aperture Outer – Standard Cab (3 of 3)	(Fig. 147)
Body Side Aperture Outer – Quad Cab (1 of 5)	(Fig. 148)
Body Side Aperture Outer – Quad Cab (2 of 5)	(Fig. 149)

WELD LOCATION INDEX, continued

DESCRIPTION	FIGURE
Body Side Aperture Outer – Quad Cab (3 of 5)	(Fig. 150)
Body Side Aperture Outer – Quad Cab (4 of 5)	(Fig. 151)
Body Side Aperture Outer – Quad Cab (5 of 5)	(Fig. 152)
Body Side Aperture Outer – Crew Cab (1 of 5)	(Fig. 153)
Body Side Aperture Outer – Crew Cab (2 of 5)	(Fig. 154)
Body Side Aperture Outer – Crew Cab (3 of 5)	(Fig. 155)
Body Side Aperture Outer – Crew Cab (4 of 5)	(Fig. 156)
Body Side Aperture Outer – Crew Cab (5 of 5)	(Fig. 157)
Body Side Aperture Outer Complete – Standard Cab (1 of 6)	(Fig. 158)
Body Side Aperture Outer Complete – Standard Cab (2 of 6)	(Fig. 159)
Body Side Aperture Outer Complete – Standard Cab (3 of 6)	(Fig. 160)
Body Side Aperture Outer Complete – Standard Cab (4 of 6)	(Fig. 161)
Body Side Aperture Outer Complete – Standard Cab (5 of 6)	(Fig. 162)
Body Side Aperture Outer Complete – Standard Cab (6 of 6)	(Fig. 163)
Body Side Aperture Outer Complete – Quad Cab (1 of 8)	(Fig. 164)
Body Side Aperture Outer Complete – Quad Cab (2 of 8)	(Fig. 165)
Body Side Aperture Outer Complete – Quad Cab (3 of 8)	(Fig. 166)
Body Side Aperture Outer Complete – Quad Cab (4 of 8)	(Fig. 167)
Body Side Aperture Outer Complete – Quad Cab (5 of 8)	(Fig. 168)
Body Side Aperture Outer Complete – Quad Cab (6 of 8)	(Fig. 169)
Body Side Aperture Outer Complete – Quad Cab (7 of 8)	(Fig. 170)
Body Side Aperture Outer Complete – Quad Cab (8 of 8)	(Fig. 171)
Body Side Aperture Outer Complete – Crew Cab (1 of 9)	(Fig. 172)
Body Side Aperture Outer Complete – Crew Cab (2 of 9)	(Fig. 173)
Body Side Aperture Outer Complete – Crew Cab (3 of 9)	(Fig. 174)
Body Side Aperture Outer Complete – Crew Cab (4 of 9)	(Fig. 175)
Body Side Aperture Outer Complete – Crew Cab (5 of 9)	(Fig. 176)
Body Side Aperture Outer Complete – Crew Cab (6 of 9)	(Fig. 177)
Body Side Aperture Outer Complete – Crew Cab (7 of 9)	(Fig. 178)
Body Side Aperture Outer Complete – Crew Cab (8 of 9)	(Fig. 179)
Body Side Aperture Outer Complete – Crew Cab (9 of 9)	(Fig. 180)
Cab Complete – Standard (1 of 11)	(Fig. 181)
Cab Complete – Standard (2 of 11)	(Fig. 182)
Cab Complete – Standard (3 of 11)	(Fig. 183)
Cab Complete – Standard (4 of 11)	(Fig. 184)
Cab Complete – Standard (5 of 11)	(Fig. 185)
Cab Complete – Standard (6 of 11)	(Fig. 186)
Cab Complete – Standard (7 of 11)	(Fig. 187)

WELD LOCATION INDEX, continued

DESCRIPTION	FIGURE
Cab Complete – Standard (8 of 11)	(Fig. 188)
Cab Complete – Standard (9 of 11)	(Fig. 189)
Cab Complete – Standard (10 of 11)	(Fig. 190)
Cab Complete – Standard (11 of 11)	(Fig. 191)
Cab Complete – Quad (1 of 16)	(Fig. 192)
Cab Complete – Quad (2 of 16)	(Fig. 193)
Cab Complete – Quad (3 of 16)	(Fig. 194)
Cab Complete – Quad (4 of 16)	(Fig. 195)
Cab Complete – Quad (5 of 16)	(Fig. 196)
Cab Complete – Quad (6 of 16)	(Fig. 197)
Cab Complete – Quad (7 of 16)	(Fig. 198)
Cab Complete – Quad (8 of 16)	(Fig. 199)
Cab Complete – Quad (9 of 16)	(Fig. 200)
Cab Complete – Quad (10 of 16)	(Fig. 201)
Cab Complete – Quad (11 of 16)	(Fig. 202)
Cab Complete – Quad (12 of 16)	(Fig. 203)
Cab Complete – Quad (13 of 16)	(Fig. 204)
Cab Complete – Quad (14 of 16)	(Fig. 205)
Cab Complete – Quad (15 of 16)	(Fig. 206)
Cab Complete – Quad (16 of 16)	(Fig. 207)
Cab Complete – Crew (1 of 16)	(Fig. 208)
Cab Complete – Crew (2 of 16)	(Fig. 209)
Cab Complete – Crew (3 of 16)	(Fig. 210)
Cab Complete – Crew (4 of 16)	(Fig. 211)
Cab Complete – Crew (5 of 16)	(Fig. 212)
Cab Complete – Crew (6 of 16)	(Fig. 213)
Cab Complete – Crew (7 of 16)	(Fig. 214)
Cab Complete – Crew (8 of 16)	(Fig. 215)
Cab Complete – Crew (9 of 16)	(Fig. 216)
Cab Complete – Crew (10 of 16)	(Fig. 217)
Cab Complete – Crew (11 of 16)	(Fig. 218)
Cab Complete – Crew (12 of 16)	(Fig. 219)
Cab Complete – Crew (13 of 16)	(Fig. 220)
Cab Complete – Crew (14 of 16)	(Fig. 221)
Cab Complete – Crew (15 of 16)	(Fig. 222)
Cab Complete – Crew (16 of 16)	(Fig. 223)
5.7’ Ram Box (1 of 9)	(Fig. 224)
5.7’ Ram Box (2 of 9)	(Fig. 225)

WELD LOCATION INDEX, continued

DESCRIPTION	FIGURE
5.7’ Ram Box (3 of 9)	(Fig. 226)
5.7’ Ram Box (4 of 9)	(Fig. 227)
5.7’ Ram Box (5 of 9)	(Fig. 228)
5.7’ Ram Box (6 of 9)	(Fig. 229)
5.7’ Ram Box (7 of 9)	(Fig. 230)
5.7’ Ram Box (8 of 9)	(Fig. 231)
5.7’ Ram Box (9 of 9)	(Fig. 232)
5.7’ Ram Box Body in White (1 of 3)	(Fig. 233)
5.7’ Ram Box Body in White (2 of 3)	(Fig. 234)
5.7’ Ram Box Body in White (3 of 3)	(Fig. 235)
5.7’ Ram Box Tub (1 of 6)	(Fig. 236)
5.7’ Ram Box Tub (2 of 6)	(Fig. 237)
5.7’ Ram Box Tub (3 of 6)	(Fig. 238)
5.7’ Ram Box Tub (4 of 6)	(Fig. 239)
5.7’ Ram Box Tub (5 of 6)	(Fig. 240)
5.7’ Ram Box Tub (6 of 6)	(Fig. 241)
5.7’ Ram Box Floor (1 of 6)	(Fig. 242)
5.7’ Ram Box Floor (2 of 6)	(Fig. 243)
5.7’ Ram Box Floor (3 of 6)	(Fig. 244)
5.7’ Ram Box Floor (4 of 6)	(Fig. 245)
5.7’ Ram Box Floor (5 of 6)	(Fig. 246)
5.7’ Ram Box Floor (6 of 6)	(Fig. 247)
5.7’ Box (1 of 6)	(Fig. 248)
5.7’ Box (2 of 6)	(Fig. 249)
5.7’ Box (3 of 6)	(Fig. 250)
5.7’ Box (4 of 6)	(Fig. 251)
5.7’ Box (5 of 6)	(Fig. 252)
5.7’ Box (6 of 6)	(Fig. 253)
5.7’ Box Body in White (1 of 6)	(Fig. 254)
5.7’ Box Body in White (2 of 6)	(Fig. 255)
5.7’ Box Body in White (3 of 6)	(Fig. 92)
5.7’ Box Body in White (4 of 6)	(Fig. 257)
5.7’ Box Body in White (5 of 6)	(Fig. 258)
5.7’ Box Body in White (6 of 6)	(Fig. 259)
5.7’ Box Tub (1 of 5)	(Fig. 260)
5.7’ Box Tub (2 of 5)	(Fig. 261)
5.7’ Box Tub (3 of 5)	(Fig. 262)
5.7’ Box Tub (4 of 5)	(Fig. 263)

WELD LOCATION INDEX, continued

DESCRIPTION	FIGURE
5.7’ Box Tub (5 of 5)	(Fig. 264)
5.7’ Box Floor (1 of 5)	(Fig. 265)
5.7’ Box Floor (2 of 5)	(Fig. 266)
5.7’ Box Floor (3 of 5)	(Fig. 267)
5.7’ Box Floor (4 of 5)	(Fig. 268)
5.7’ Box Floor (5 of 5)	(Fig. 269)
6.3’ Box (1 of 6)	(Fig. 270)
6.3’ Box (2 of 6)	(Fig. 271)
6.3’ Box (3 of 6)	(Fig. 272)
6.3’ Box (4 of 6)	(Fig. 273)
6.3’ Box (5 of 6)	(Fig. 274)
6.3’ Box (6 of 6)	(Fig. 275)
6.3’ Box Body in White (1 of 4)	(Fig. 276)
6.3’ Box Body in White (2 of 4)	(Fig. 277)
6.3’ Box Body in White (3 of 4)	(Fig. 278)
6.3’ Box Body in White (4 of 4)	(Fig. 279)
6.3’ Box Tub (1 of 6)	(Fig. 280)
6.3’ Box Tub (2 of 6)	(Fig. 281)
6.3’ Box Tub (3 of 6)	(Fig. 282)
6.3’ Box Tub (4 of 6)	(Fig. 283)
6.3’ Box Tub (5 of 6)	(Fig. 284)
6.3’ Box Tub (6 of 6)	(Fig. 285)
6.3’ Box Floor (1 of 3)	(Fig. 286)
6.3’ Box Floor (2 of 3)	(Fig. 287)
6.3’ Box Floor (3 of 3)	(Fig. 288)
8.0’ Box (1 of 7)	(Fig. 289)
8.0’ Box (2 of 7)	(Fig. 290)
8.0’ Box (3 of 7)	(Fig. 291)
8.0’ Box (4 of 7)	(Fig. 292)
8.0’ Box (5 of 7)	(Fig. 293)
8.0’ Box (6 of 7)	(Fig. 294)
8.0’ Box (7 of 7)	(Fig. 295)
8.0’ Box Body in White (1 of 7)	(Fig. 296)
8.0’ Box Body in White (2 of 7)	(Fig. 297)
8.0’ Box Body in White (3 of 7)	(Fig. 298)
8.0’ Box Body in White (4 of 7)	(Fig. 299)
8.0’ Box Body in White (5 of 7)	(Fig. 300)
8.0’ Box Body in White (6 of 7)	(Fig. 301)

WELD LOCATION INDEX, continued

DESCRIPTION	FIGURE
8.0’ Box Body in White (7 of 7)	(Fig. 302)
8.0’ Box Tub (1 of 7)	(Fig. 303)
8.0’ Box Tub (2 of 7)	(Fig. 304)
8.0’ Box Tub (3 of 7)	(Fig. 305)
8.0’ Box Tub (4 of 7)	(Fig. 306)
8.0’ Box Tub (5 of 7)	(Fig. 307)
8.0’ Box Tub (6 of 7)	(Fig. 308)
8.0’ Box Tub (7 of 7)	(Fig. 309)
8.0’ Box Floor (1 of 7)	(Fig. 310)
8.0’ Box Floor (2 of 7)	(Fig. 311)
8.0’ Box Floor (3 of 7)	(Fig. 312)
8.0’ Box Floor (4 of 7)	(Fig. 313)
8.0’ Box Floor (5 of 7)	(Fig. 314)
8.0’ Box Floor (6 of 7)	(Fig. 315)
8.0’ Box Floor (7 of 7)	(Fig. 316)
Hood (1 of 2)	(Fig. 317)
Hood (2 of 2)	(Fig. 318)
Front Doors – Short (1 of 3)	(Fig. 319)
Front Doors – Short (2 of 3)	(Fig. 320)
Front Doors – Short (3 of 3)	(Fig. 321)
Front Doors – Long (1 of 4)	(Fig. 322)
Front Doors – Long (2 of 4)	(Fig. 323)
Front Doors – Long (3 of 4)	(Fig. 324)
Front Doors – Long (4 of 4)	(Fig. 325)
Rear Doors – Half (1 of 4)	(Fig. 326)
Rear Doors – Half (2 of 4)	(Fig. 327)
Rear Doors – Half (3 of 4)	(Fig. 328)
Rear Doors – Half (4 of 4)	(Fig. 329)
Rear Doors – Full (1 of 4)	(Fig. 330)
Rear Doors – Full (2 of 4)	(Fig. 331)
Rear Doors – Full (3 of 4)	(Fig. 332)
Rear Doors – Full (4 of 4)	(Fig. 333)
Tailgate (1 of 3)	(Fig. 334)
Tailgate (2 of 3)	(Fig. 335)
Tailgate (3 of 3)	(Fig. 336)

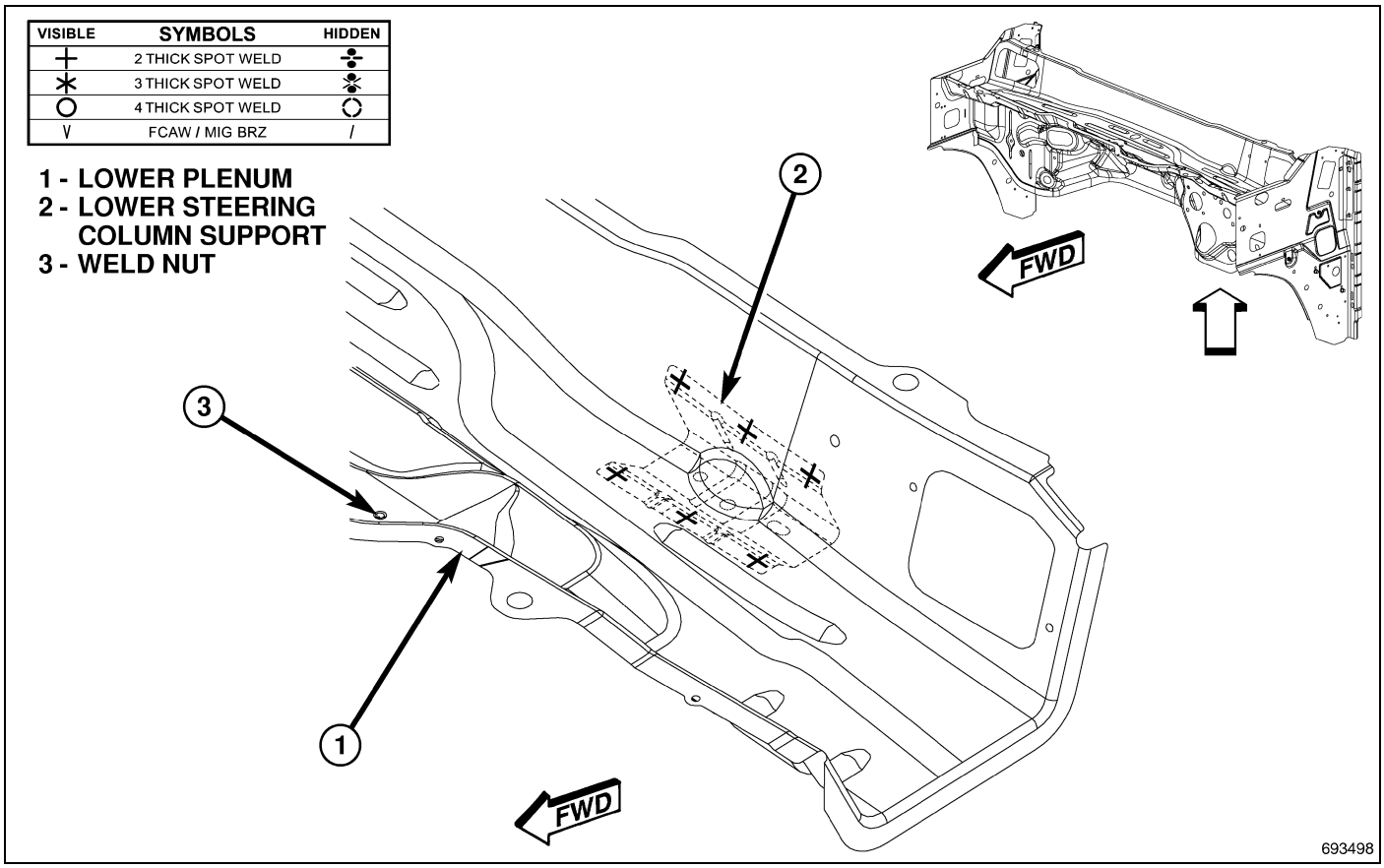

Fig. 74 Plenum/Dash/Cowl (1 of 3)

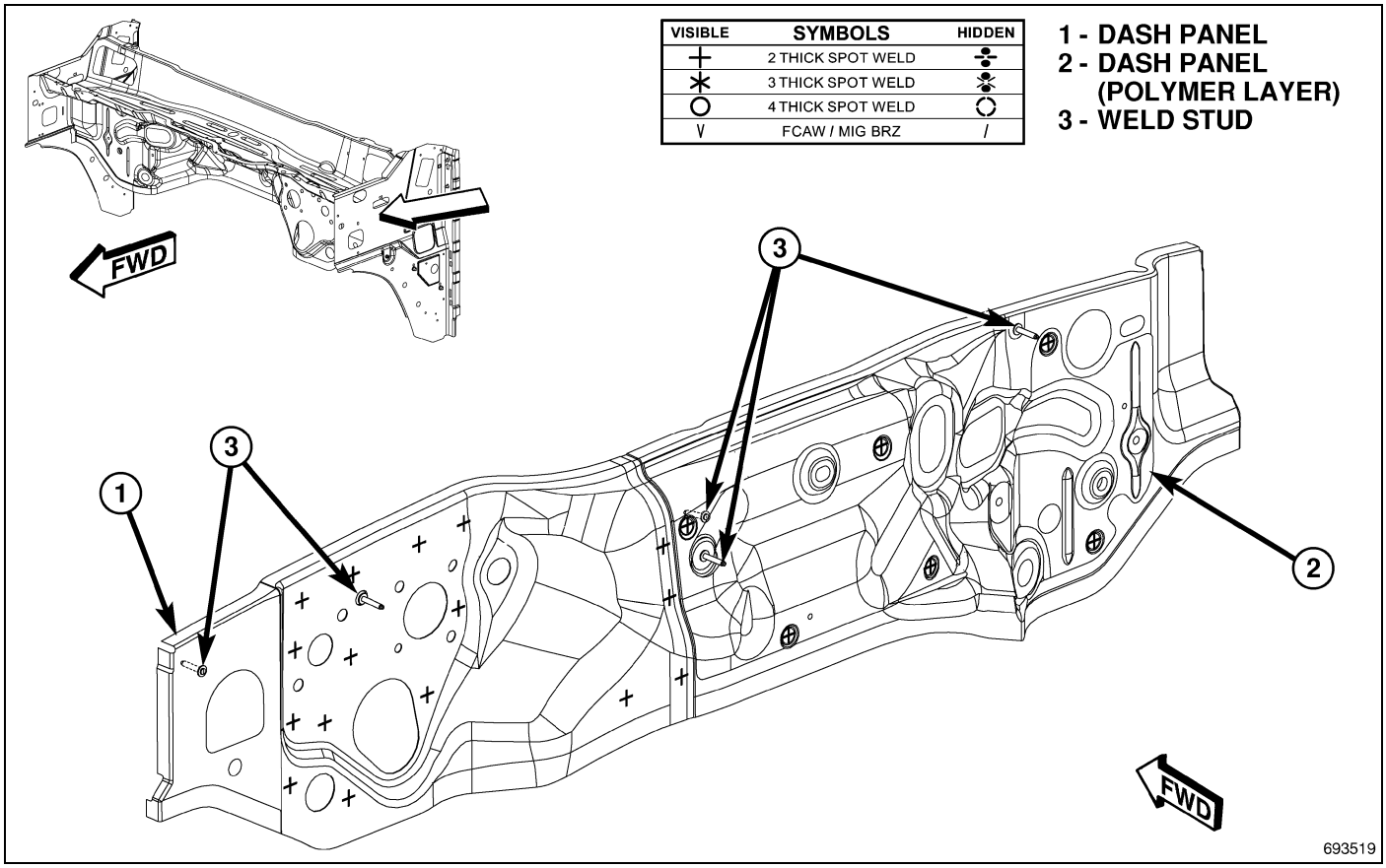

Fig. 75 Plenum/Dash/Cowl (2 of 3)

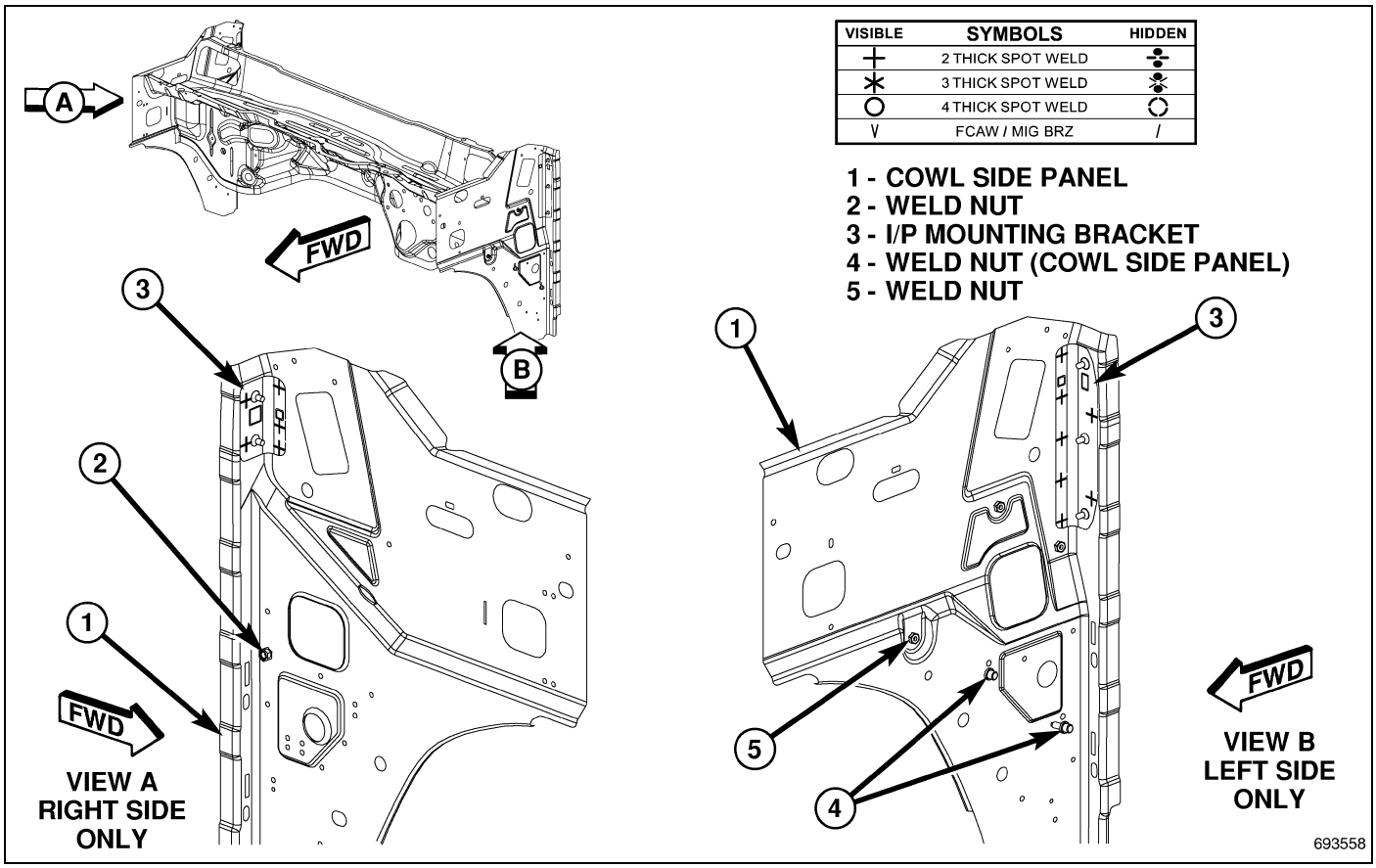

Fig. 76 Plenum/Dash/Cowl (3 of 3)

MISCELLANEOUS COMPONENT - PARTS IDENTIFICATION LEGEND

ITEM	DESCRIPTION
1	AB TO AA 1 PROJ WELD (ORD)
2	AD TO AC 2/SD PROJ WELDS (ORD)
3	AF TO AE 2/SD PROJ WELDS (ORD)
4	AF TO AG 2/SD PROJ WELDS (ORD)
5	AJ TO AH 6 PROJ WELDS (ORD)
6	AL TO AK 1R PROJ WELD (ORD)
7	AM TO AK 10/SD S/WELDS (ORD)
8	AP TO AN 6 PROJ WELDS (ORD)
9	AR TO AN 2 PROJ WELDS
10	AS TO AT 1 PROJ WELDS (ORD)
11	AF TO AU 2 PROJ WELDS (ORD)
12	AX TO AU 2R PROJ WELDS (ORD)
13	AV TO AU 16 S/WELDS (ORD)
14	AW TO AV 4 PROJ WELDS (ORD)
15	AY TO AU 9/SD S/WELDS (ORD)
16	BA TO AZ 12 S/WELDS (ORD)
17	BB TO AZ 23/SD S/WELDS (CRT)
18	AD TO BC 2/SD PROJ WELDS (ORD)

MISCELLANEOUS COMPONENT - PARTS IDENTIFICATION LEGEND, continued

ITEM	DESCRIPTION
19	AF TO BD 2/SD PROJ WELDS (ORD)
20	AF TO BE 2/SD PROJ WELDS (ORD)
21	BB TO AZ 1/SD STRUC ADH
22	BB TO AZ 1/SD STRUC ADH
AA	BRACKET - I/P MOUNTING RIGHT
AA	BRACKET - I/P MOUNTING LEFT
AB	NUT/WELD.HEX - NO.FIN - MAG BRACKET
AC	BRACKET - A-PILLAR W/GRAB HANDLE RIGHT
AC	BRACKET - A-PILLAR W/GRAB HANDLE LEFT
AD	NUT/WELD.RD - NO.FIN.SPECIAL.PF-SAFETY - GRAB HANDLE TO B-PILLAR
AD	NUT/WELD.RD - NO.FIN.SPECIAL.PF-SAFETY - GRAB HANDLE TO B-PILLAR
AD	NUT/WELD.RD - NO.FIN.SPECIAL.PF-SAFETY - GRAB HANDLE TO B-PILLAR
AD	NUT/WELD.RD - NO.FIN.SPECIAL.PF-SAFETY - GRAB HANDLE TO B-PILLAR
AE	REINFORCEMENT - FRONT DOOR HINGE LOWER
AE	REINFORCEMENT - FRONT DOOR HINGE LOWER
AF	NUT/WELD.HEX.FLG - NO.FIN.PILOT.PT - 20% SEAT/CONSOLE TO FLOOR
AF	NUT/WELD.HEX.FLG - NO.FIN.PILOT.PT - FRONT DOOR HINGE TO BODY
AF	NUT/WELD.HEX.FLG - NO.FIN.PILOT.PT - FRONT DOOR HINGE TO BODY
AG	REINFORCEMENT - FRONT DOOR HINGE UPPER
AG	REINFORCEMENT - FRONT DOOR HINGE UPPER
AH	BRACKET - I/P SUPPORT
AH	BRACKET - I/P SUPPORT
AJ	NUT/WELD.HEX - NO.FIN - AECM BRACKET TO I/P SUPPORT BRACKET
AK	SUPPORT - UNDERBODY HOLD-DOWN FRONT RIGHT
AK	SUPPORT - UNDERBODY HOLD-DOWN FRONT LEFT
AL	STUD.WELD/HDLESS - HEADER.PT.SPECIAL - FRONT UNDERBODY HOLD-DOWN BRACKET
AM	REINFORCEMENT - UNDERBODY HOLD-DOWN
AM	REINFORCEMENT - UNDERBODY HOLD-DOWN
AN	BRACKET - ORC/ESP
AN	BRACKET - ORC/ESP
AP	STUD.WELD/INTERNAL - HEADER.PT.NIBS.NO.FIN - ORC & ESP TO BRACKET
AR	STUD.WELD/EXTERNAL - FREE.HEADER.PT.SPECIAL - ORC ELECTRICAL GROUND
AS	NUT/WELD.HEX.FLG - FREE.PILOT.PT.SPECIAL - REAR SHOLDER BELT REINFORCEMENT
AS	NUT/WELD.HEX.FLG - FREE.PILOT.PT.SPECIAL - REAR SHOLDER BELT REINFORCEMENT
AT	REINFORCEMENT - SHOULDER BELT MOUNTING FRONT SEAT RIGHT
AT	REINFORCEMENT - SHOULDER BELT MOUNTING FRONT SEAT RIGHT
AU	CROSSMEMBER - FRONT SEAT MOUNTING REAR RIGHT
AU	CROSSMEMBER - FRONT SEAT MOUNTING REAR LEFT

MISCELLANEOUS COMPONENT - PARTS IDENTIFICATION LEGEND, continued

ITEM	DESCRIPTION
AV	BRACKET - FRONT SEAT MOUNTING REAR
AV	BRACKET - FRONT SEAT MOUNTING REAR
AW	NUT/WELD.RD - NO.FIN.ROUND - FRONT SEAT CROSSMEMBER REAR
AW	NUT/WELD.RD - NO.FIN.ROUND - FRONT SEAT CROSSMEMBER REAR
AX	NUT/WELD.HEX - NO.FIN - HEAT SHIELD TO CROSSMEMBER
AY	TAPPING PLATE - CAB MOUNTING MIDDLE
AY	TAPPING PLATE - CAB MOUNTING MIDDLE
AZ	CROSSMEMBER - FLOOR REAR RIGHT
AZ	CROSSMEMBER - FLOOR REAR LEFT
BA	TAPPING PLATE - FLAT 1 EXTRUSION
BA	TAPPING PLATE - FLAT 1 EXTRUSION
BB	REINFORCEMENT - UNDERBODY HOLD-DOWN
BB	REINFORCEMENT - UNDERBODY HOLD-DOWN
BC	BRACKET - GRAB HANDLE B PILLAR RIGHT
BC	BRACKET - GRAB HANDLE B PILLAR LEFT
BD	REINFORCEMENT - B-PILLAR OUTER REAR DOOR UPPER RIGHT
BE	REINFORCEMENT - B-PILLAR OUTER REAR DOOR LOWER RIGHT

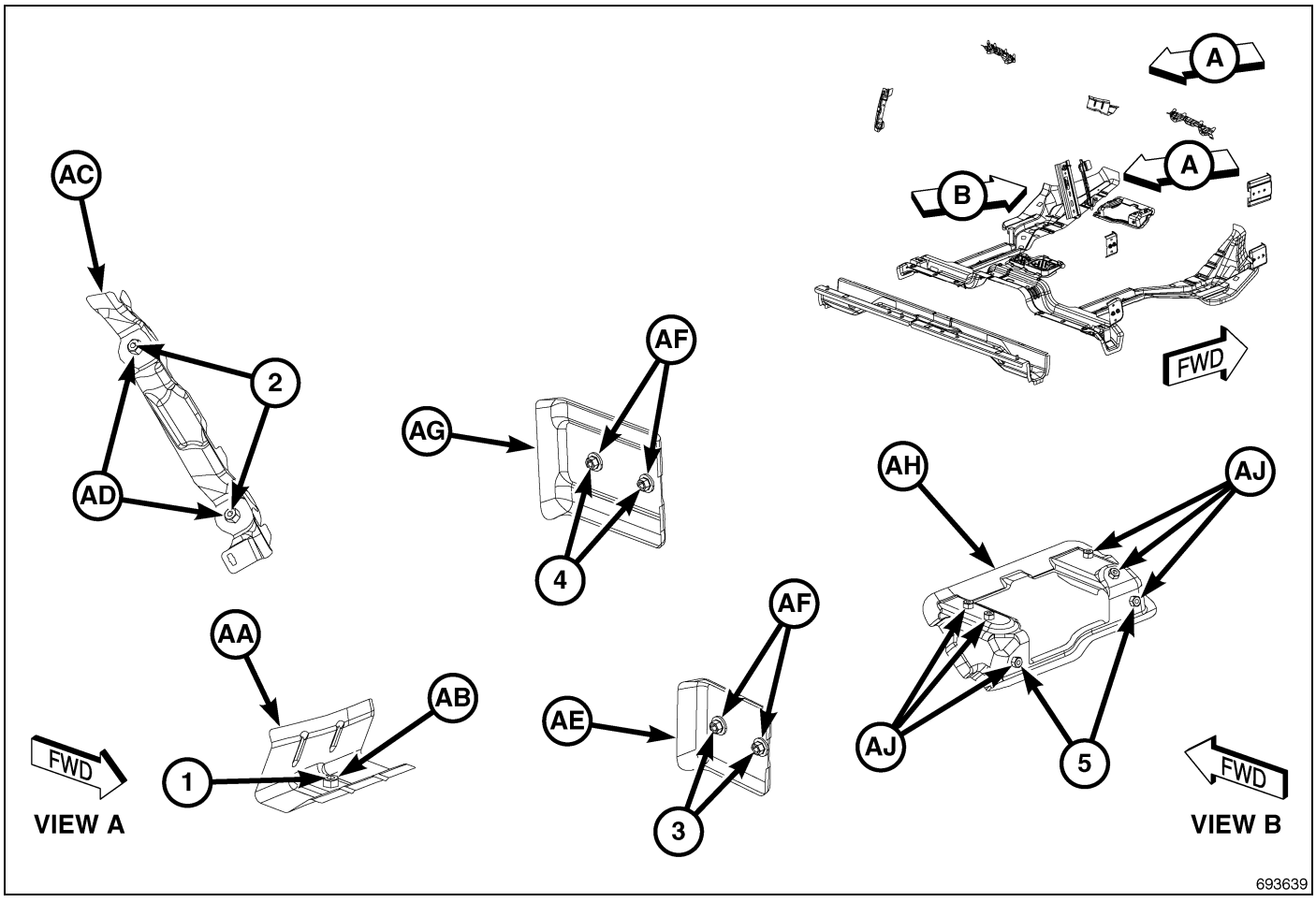

Fig. 77 Miscellaneous Components (1 of 8)

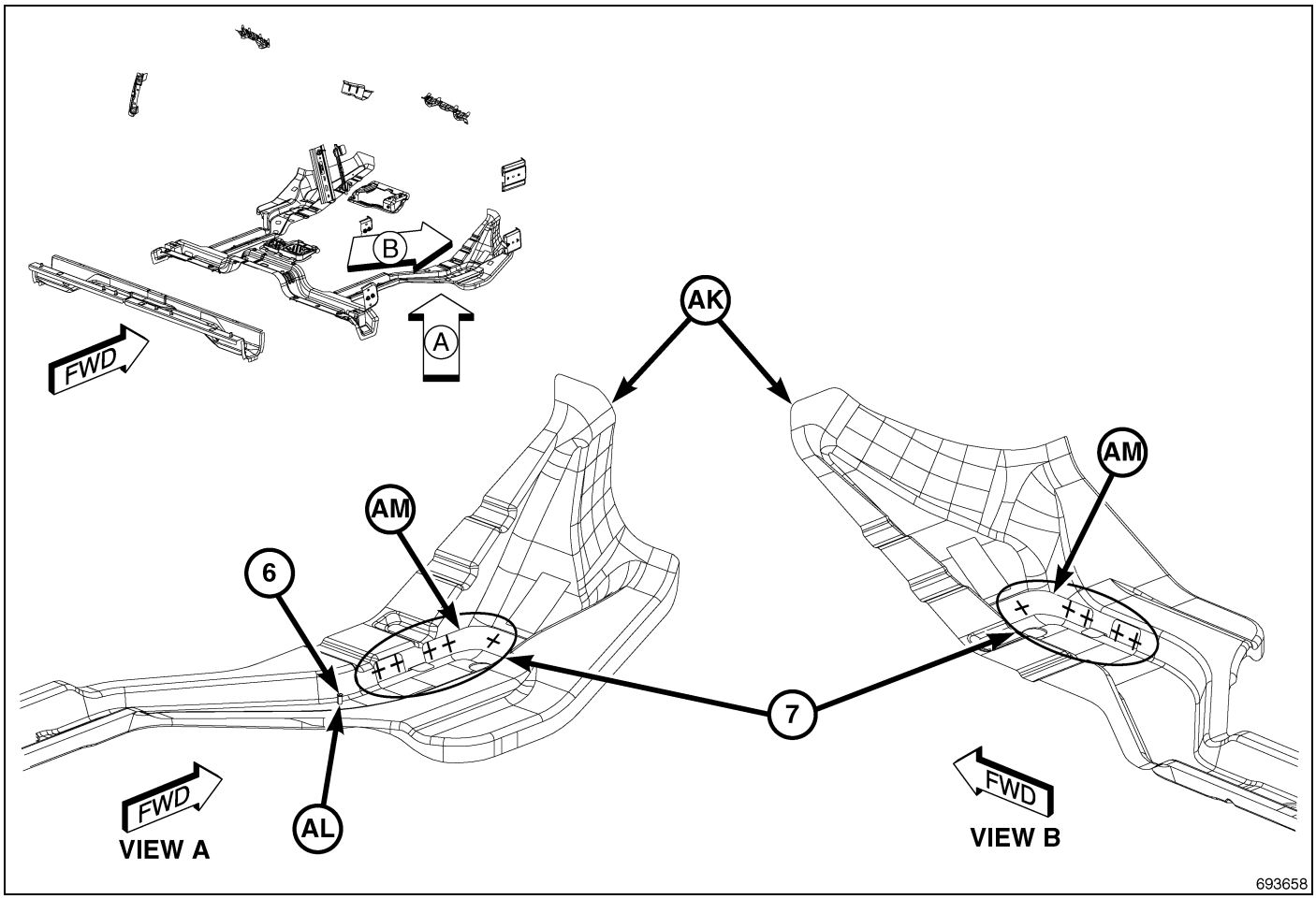

Fig. 78 Miscellaneous Components (2 of 8)

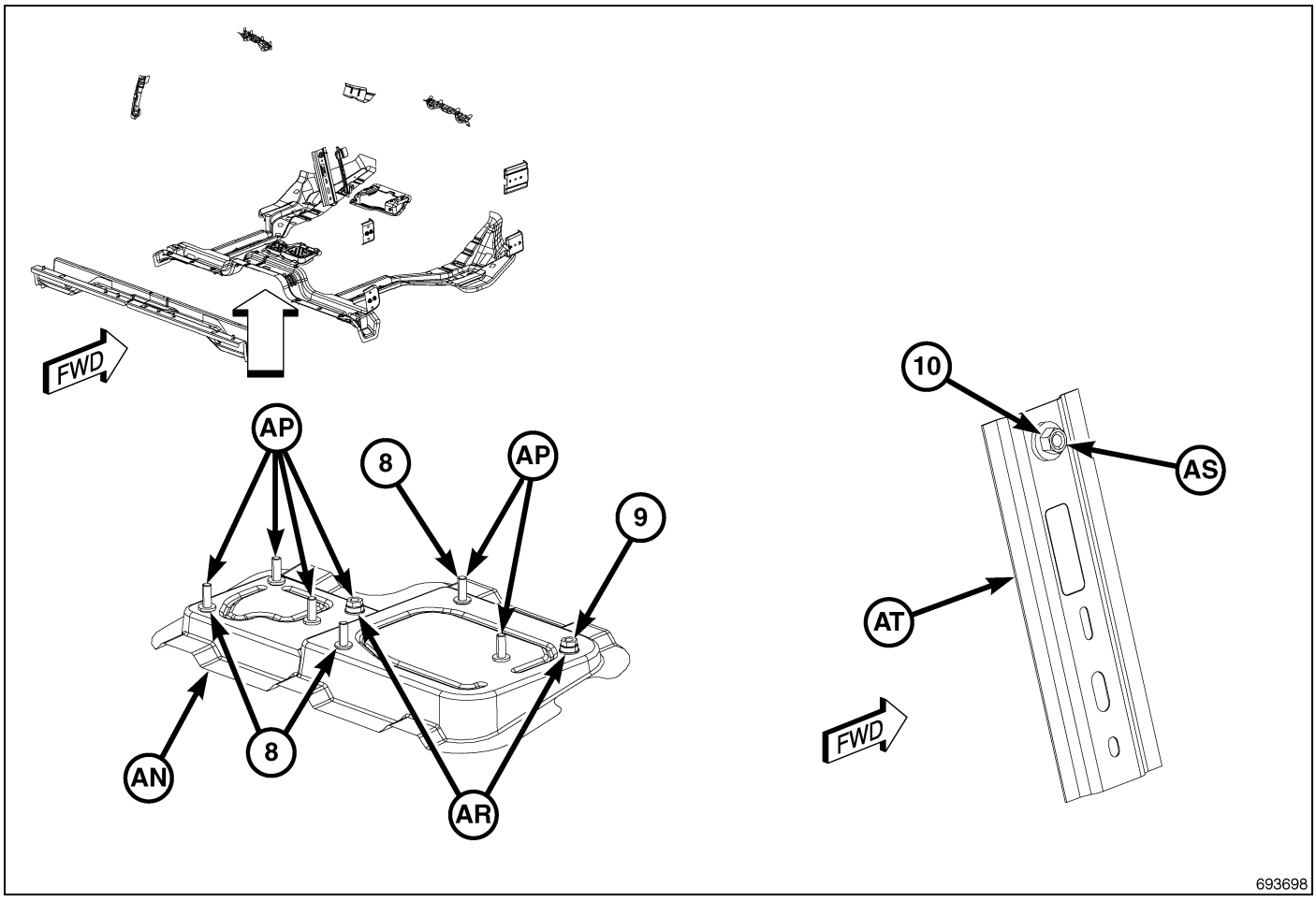

Fig. 79 Miscellaneous Components (3 of 8)

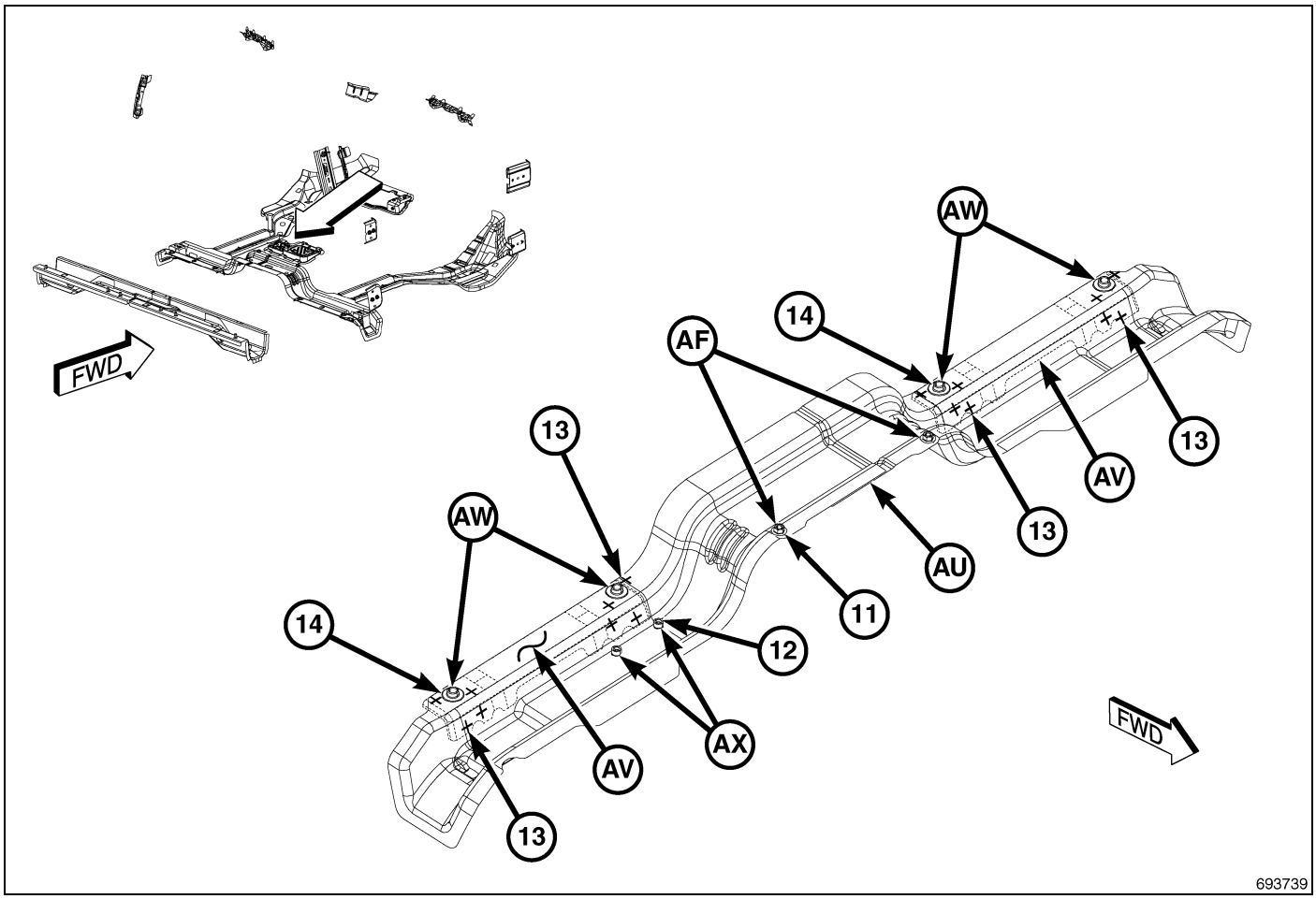

Fig. 80 Miscellaneous Components (4 of 8)

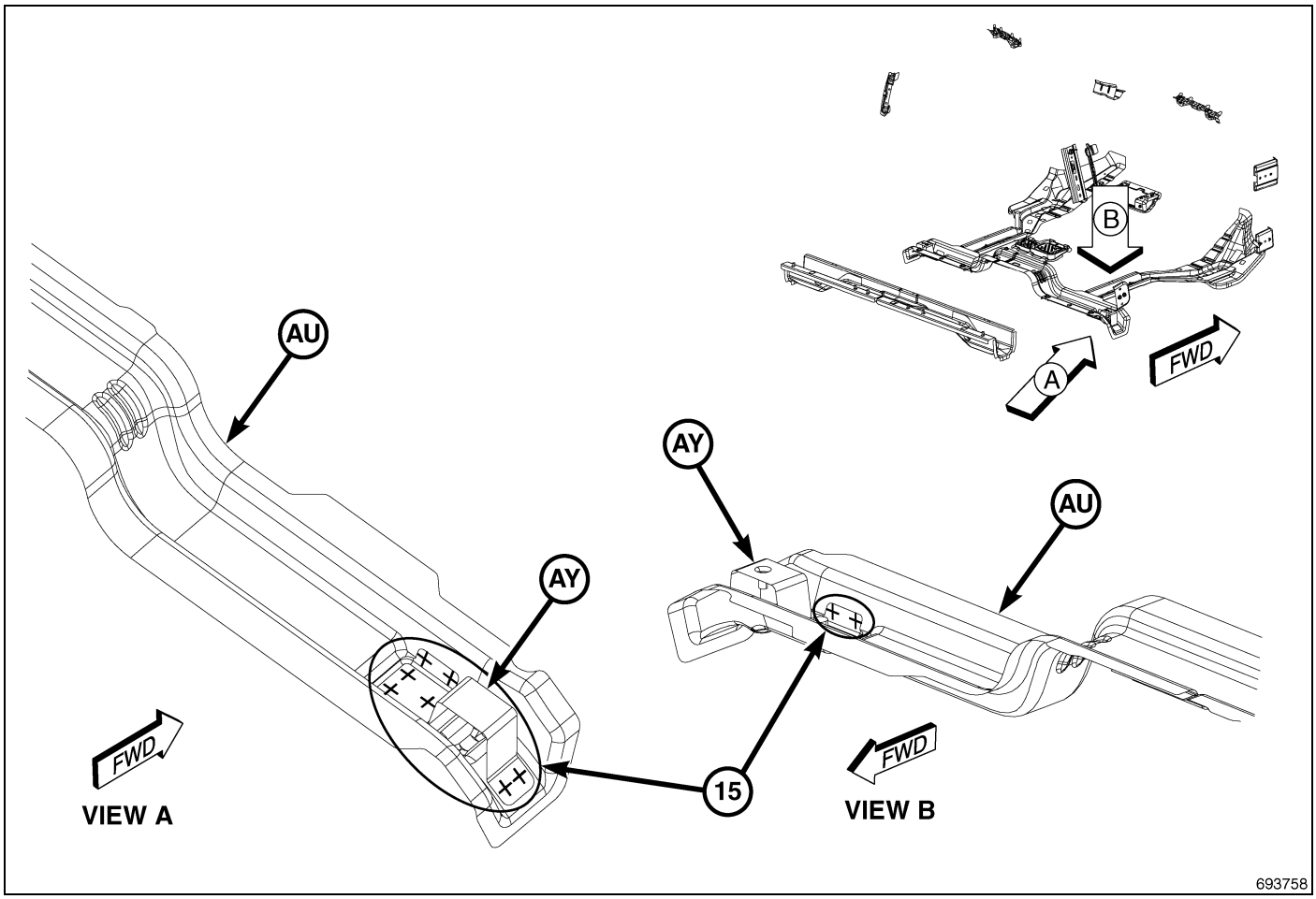

Fig. 81 Miscellaneous Components (5 of 8)

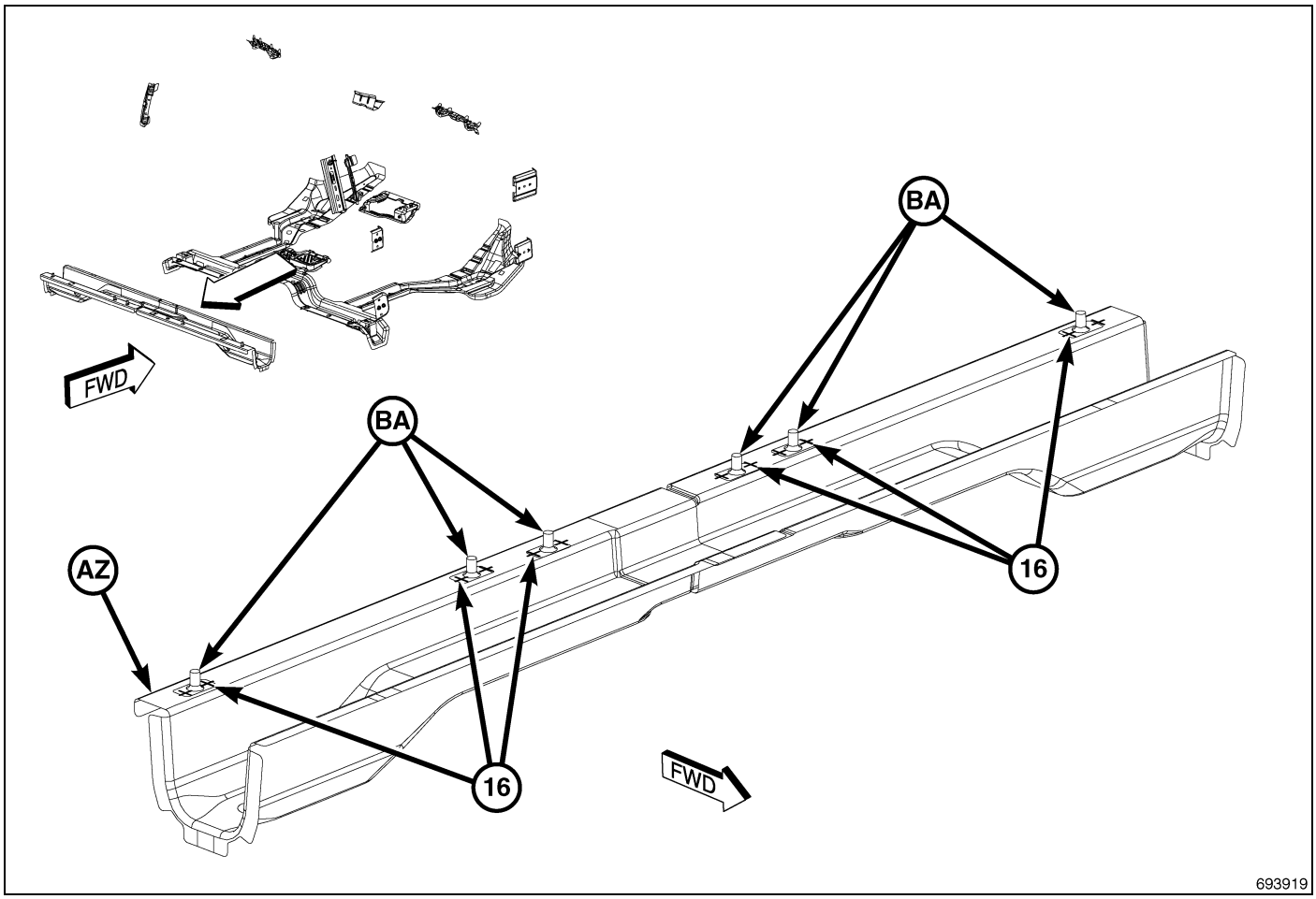

Fig. 82 Miscellaneous Components (6 of 8) - STANDARD/QUAD CAB ONLY

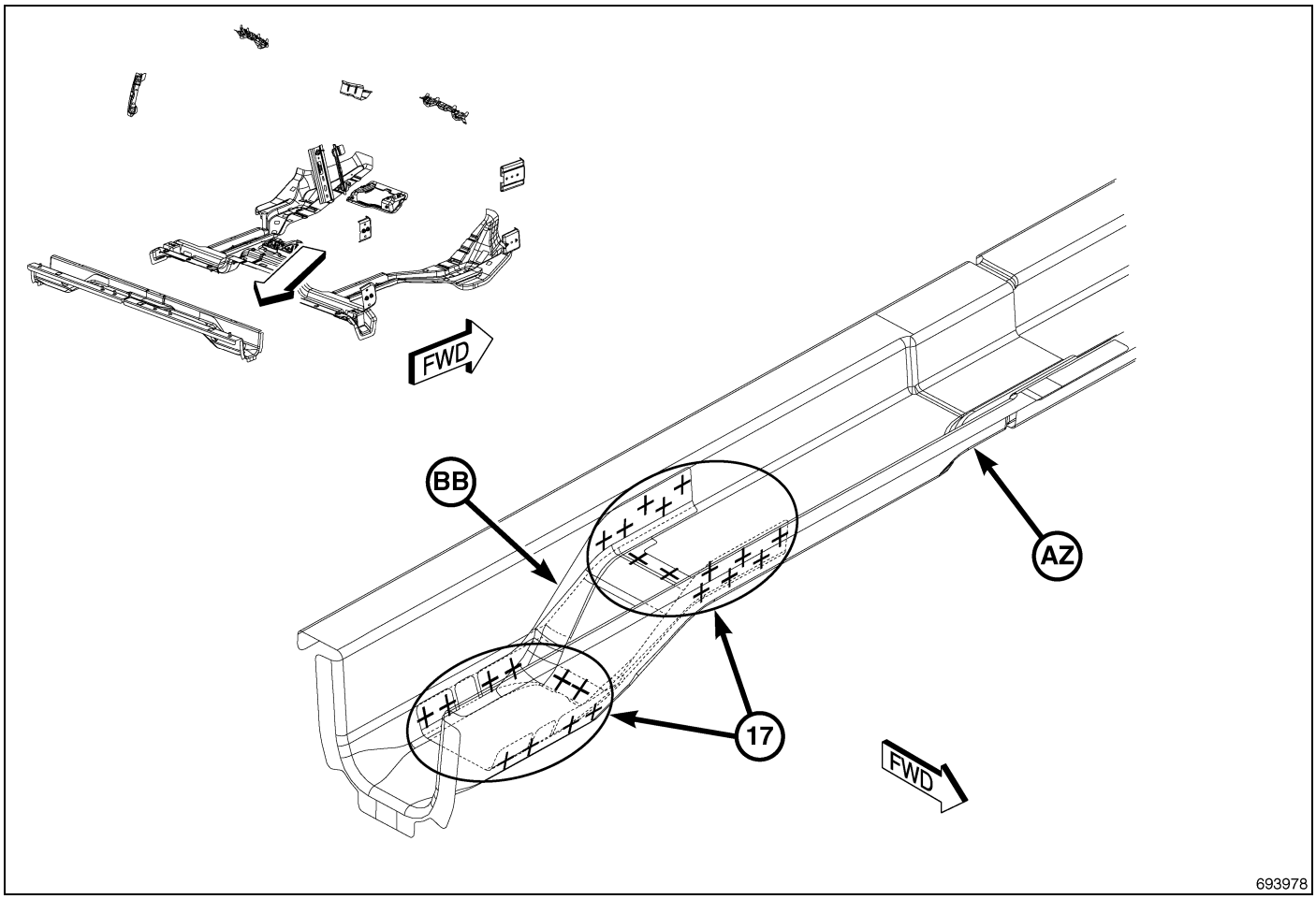

Fig. 83 Miscellaneous Components (7 of 8) - STANDARD/QUAD CAB ONLY

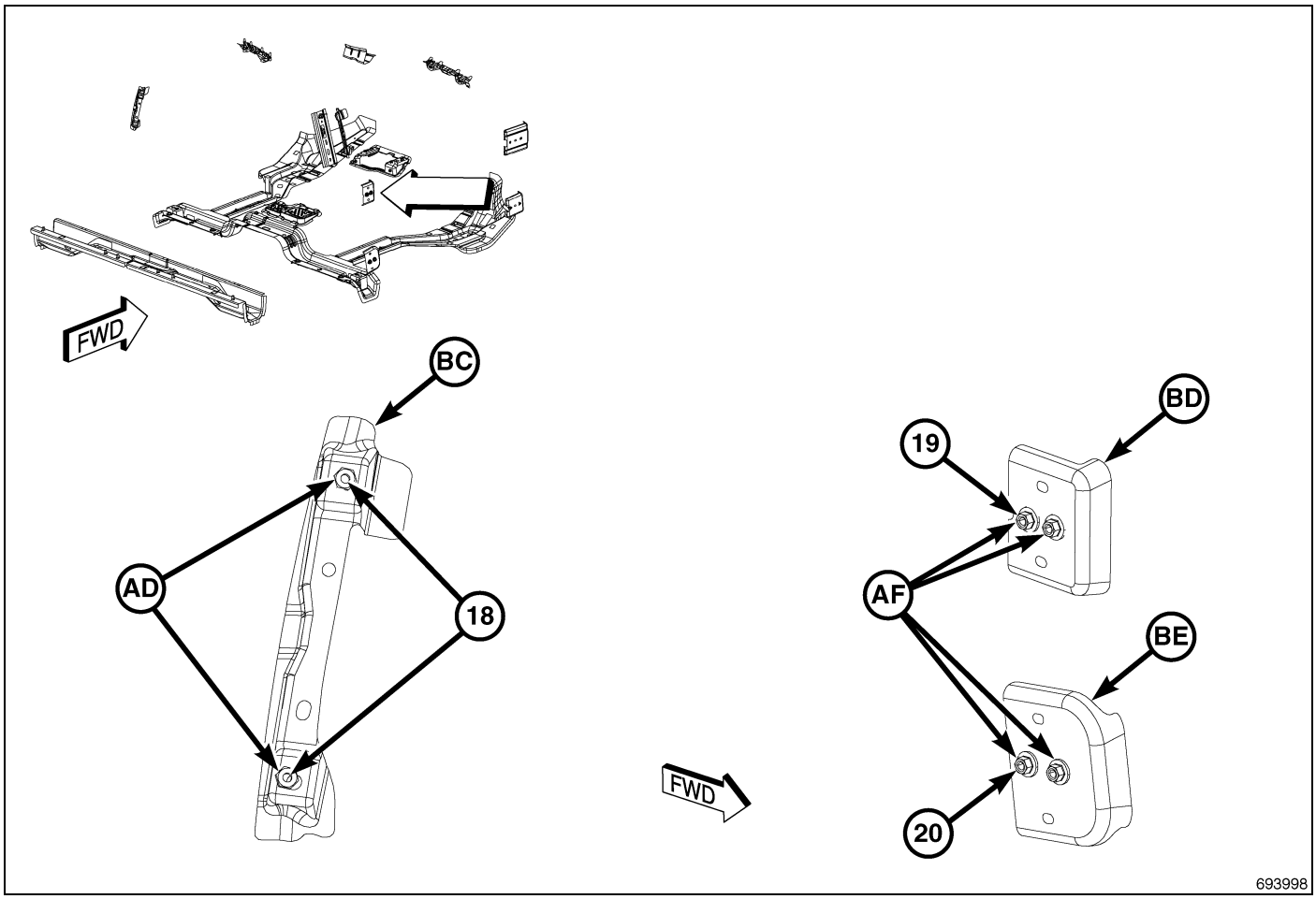

Fig. 84 Miscellaneous Components (8 of 8)

FRONT FLOOR, STANDARD CAB - PARTS IDENTIFICATION LEGEND

ITEM	DESCRIPTION
1	AB TO AA 11 PROJ WELDS (ORD)
2	AC TO AA 4 PROJ WELDS (ORD)
3	AE TO AA 15 S/WELDS (ORD)
4	AD TO AA 4 S/WELDS (ORD)
5	AF TO AA 35 S/WELDS (ORD)
6	AG TO AA 15 S/WELDS (ORD)
7	AH TO AA 3 PROJ WELDS (ORD)
8	AJ TO AA 28 S/WELDS (ORD)
AA	PAN - FLOOR FRT -
AB	STUD.WELD/EXTERNAL - HEADER.PT.PNT.CUTTER.SPECIAL - HEAT SHIELD
AB	STUD.WELD/EXTERNAL - HEADER.PT.PNT.CUTTER.SPECIAL - HEAT SHIELD TO FLR PAN STD
AC	STUD.WELD/HDLESS - HEADER.PT.SPECIAL - I/P HARNESS TO FLOOR
AD	55276223AA TAPPING PLATE SHIFTER MOUNTING
AE	BRACKET - I/P SUPPORT -
AF	CROSSMEMBER - FRT SEAT MOUNTING FRT -

FRONT FLOOR, STANDARD CAB - PARTS IDENTIFICATION LEGEND, continued

ITEM	DESCRIPTION
AG	BRACKET - ORC/ESP -
AH	NUT/WELD.RD - NO.FIN.SPECIAL - JACK TO FLOOR PAN
AJ	PAN - FLOOR STD CAB RR -

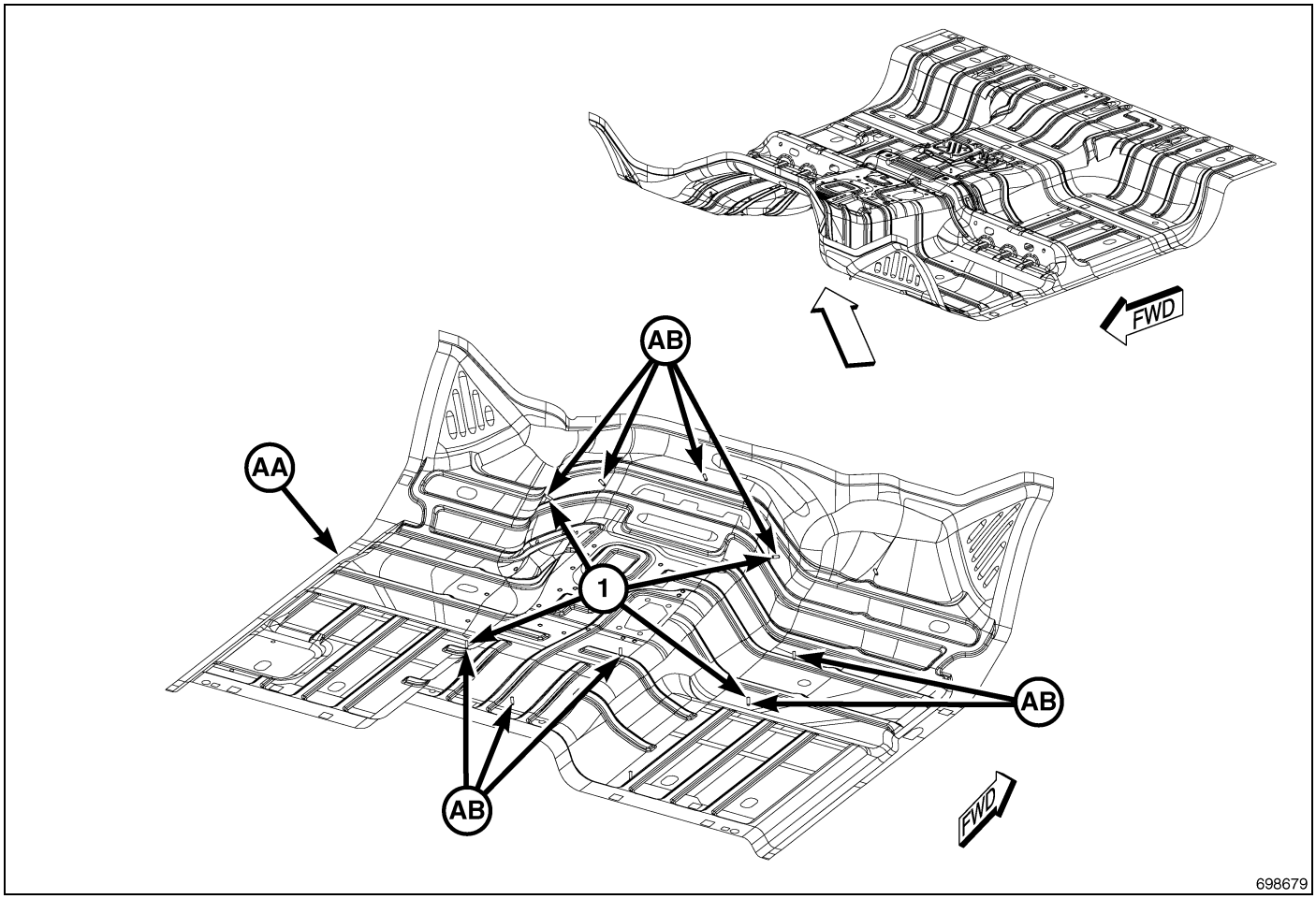

Fig. 85 Front Floor – Standard Cab (1 of 5)

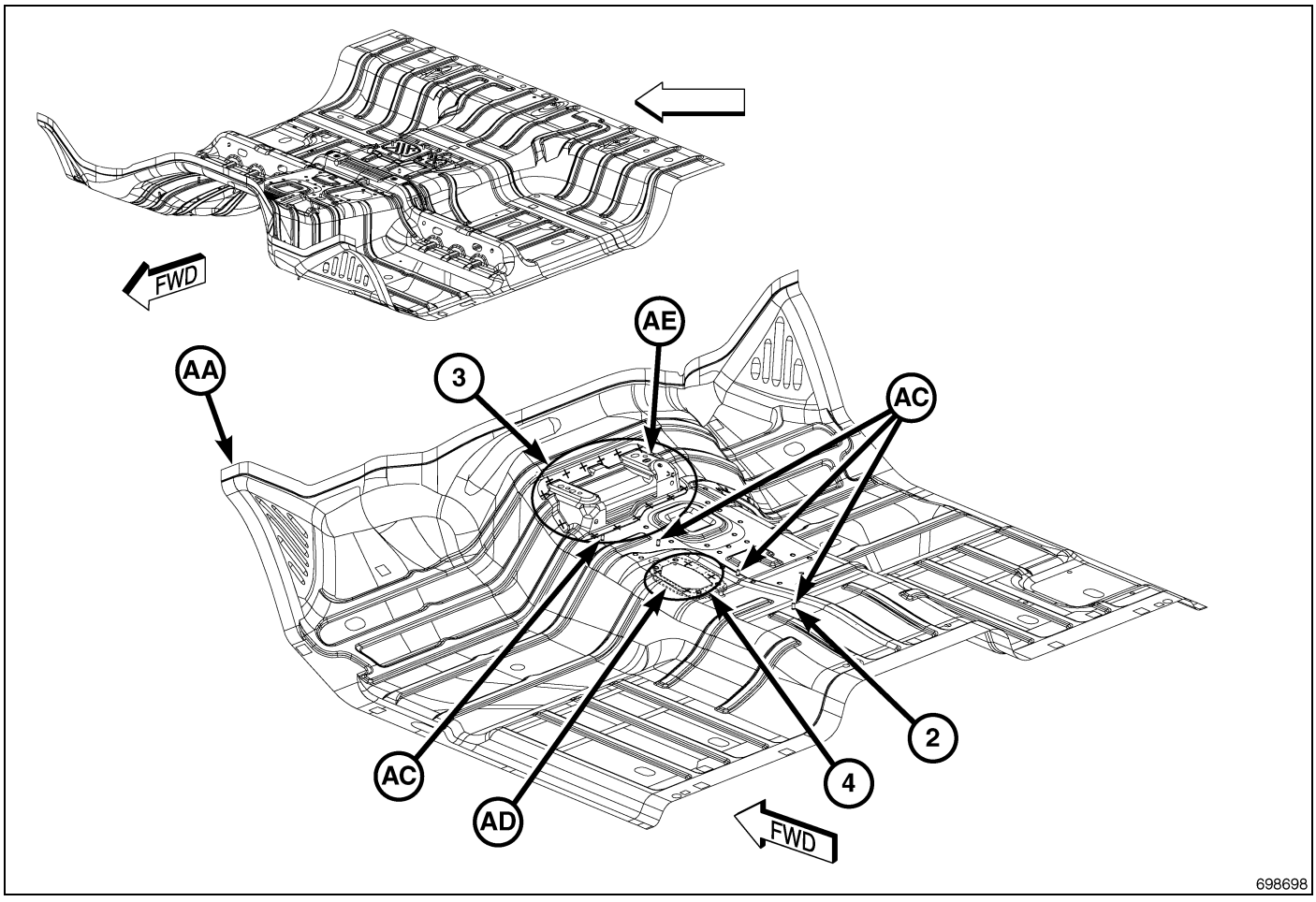

Fig. 86 Front Floor – Standard Cab (2 of 5)

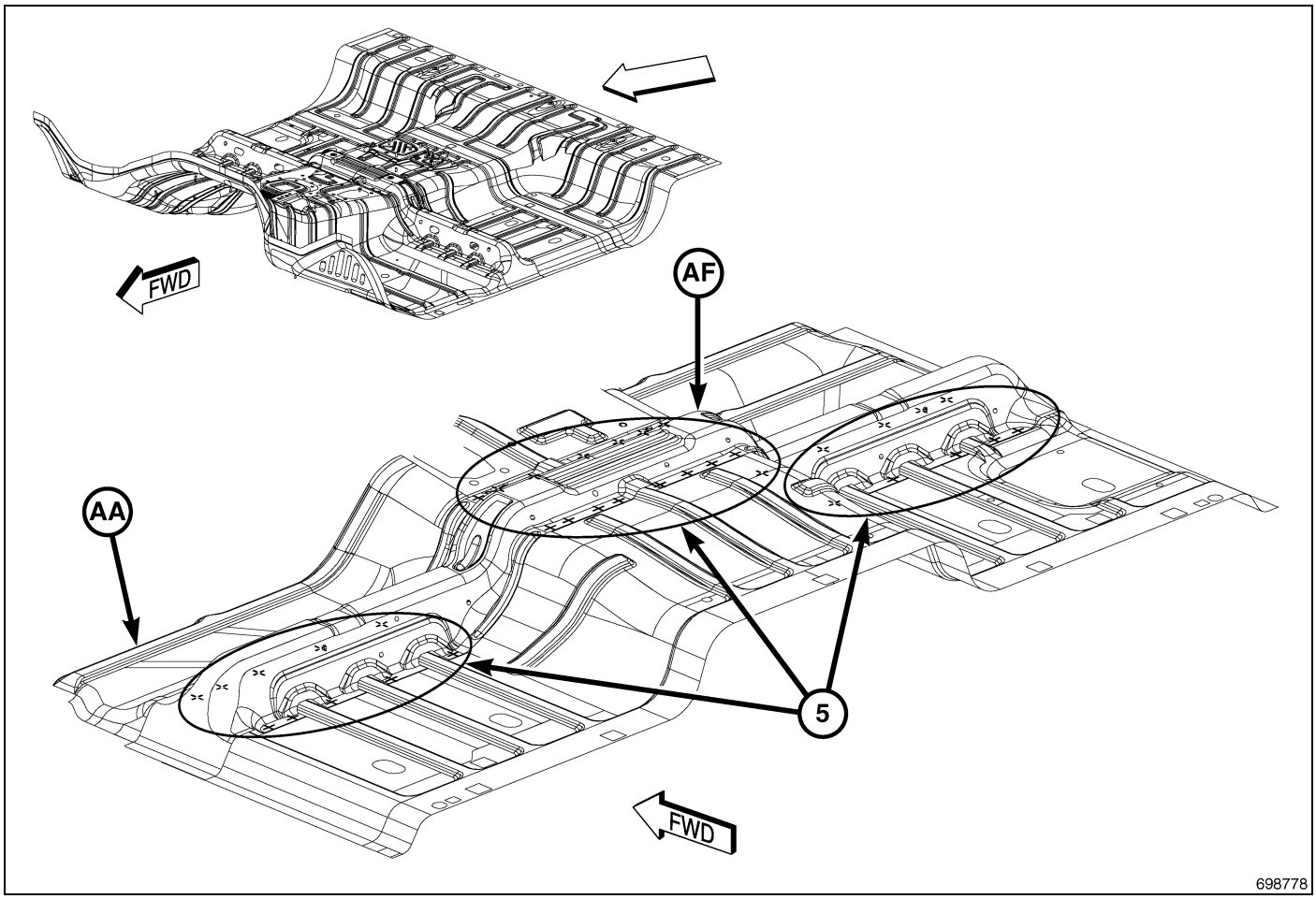

Fig. 87 Front Floor – Standard Cab (3 of 5)

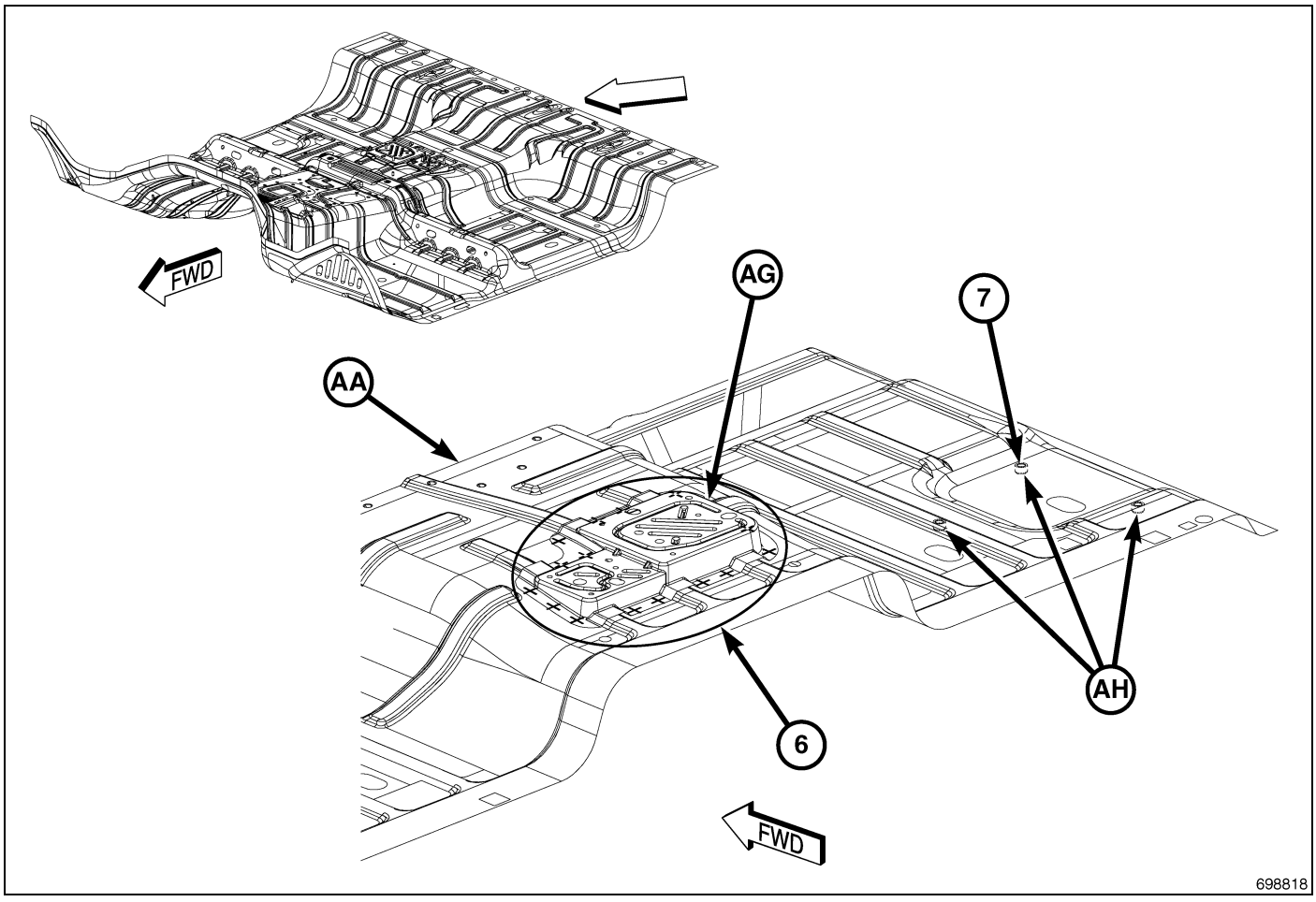

Fig. 88 Front Floor – Standard Cab (4 of 5)

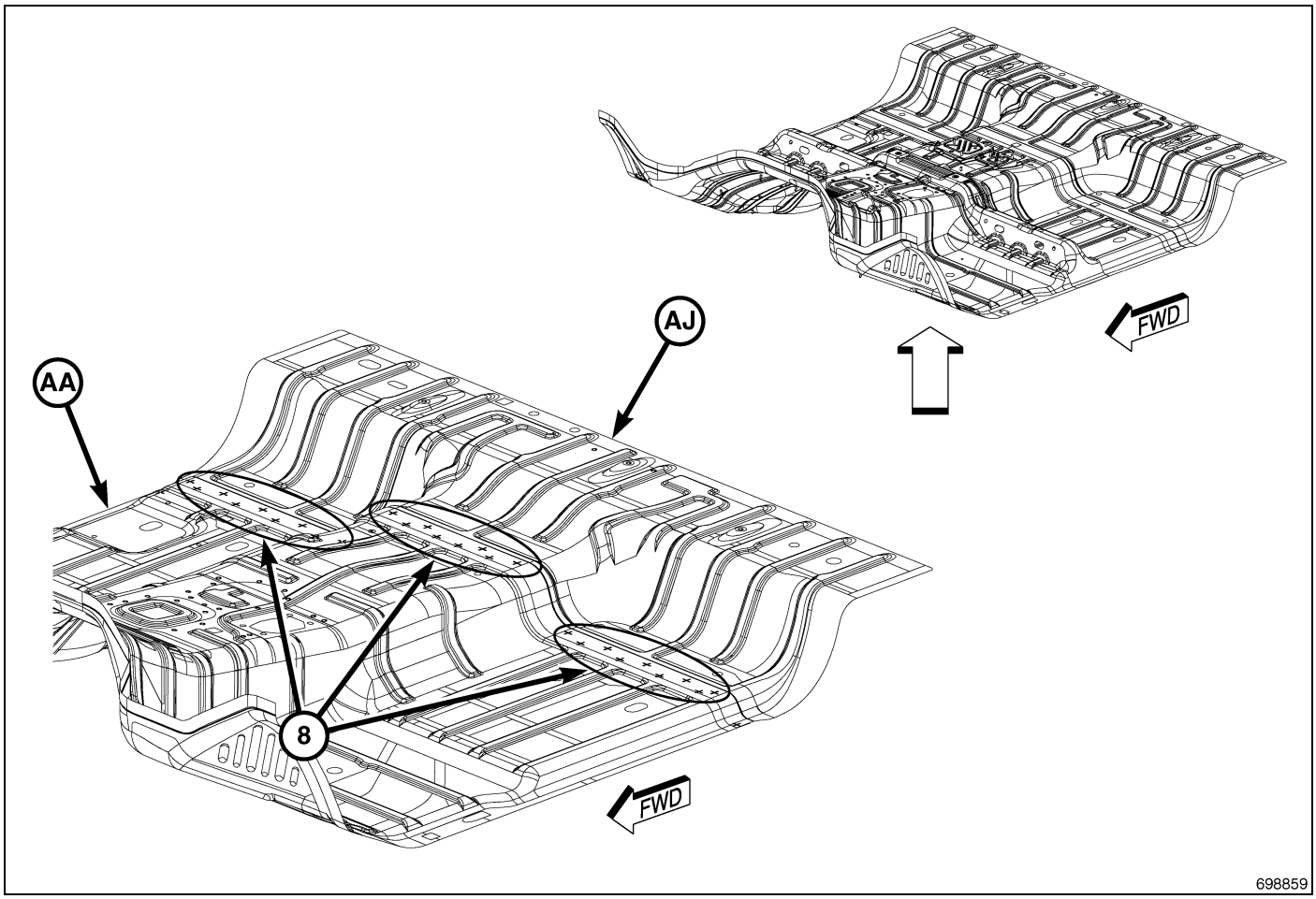

Fig. 89 Front Floor – Standard Cab (5 of 5)

FRONT FLOOR, QUAD CAB - PARTS IDENTIFICATION LEGEND

ITEM	DESCRIPTION
1	AB TO AA 11 PROJ WELDS (ORD)
2	AC TO AA 4 PROJ WELDS (ORD)
3	AE TO AA 15 S/WELDS (ORD)
4	AD TO AA 4 S/WELDS (ORD)
5	AF TO AA 35 S/WELDS (ORD)
6	AG TO AA 15 S/WELDS (ORD)
7	AH TO AA 3 PROJ WELDS (ORD)
8	AJ TO AA 28 S/WELDS (ORD)
9	AB TO AJ 1 PROJ WELD (ORD)
10	AK TO AJ 4 S/WELDS (ORD)
11	AJ TO AA 2 STRUC ADH
AA	PAN - FLOOR FRT -
AB	STUD.WELD/EXTERNAL - HEADER.PT.PNT.CUTTER.SPECIAL - HEAT SHIELD
AB	STUD.WELD/EXTERNAL - HEADER.PT.PNT.CUTTER.SPECIAL - HEAT SHIELD TO FLR PAN QUAD
AC	STUD.WELD/HDLESS - HEADER.PT.SPECIAL - I/P HARNESS TO FLOOR

FRONT FLOOR, QUAD CAB - PARTS IDENTIFICATION LEGEND, continued

ITEM	DESCRIPTION
AD	55276223AA TAPPING PLATE SHIFTER MOUNTING
AE	BRACKET - I/P SUPPORT -
AF	CROSSMEMBER - FRT SEAT MOUNTING FRT -
AG	BRACKET - ORC/ESP -
AH	NUT/WELD.RD - NO.FIN.SPECIAL - JACK TO FLOOR PAN
AJ	PAN - FLOOR QUAD CAB RR -
AK	TAPPING PLATE - RR SEAT MIDDLE MOUNTING -

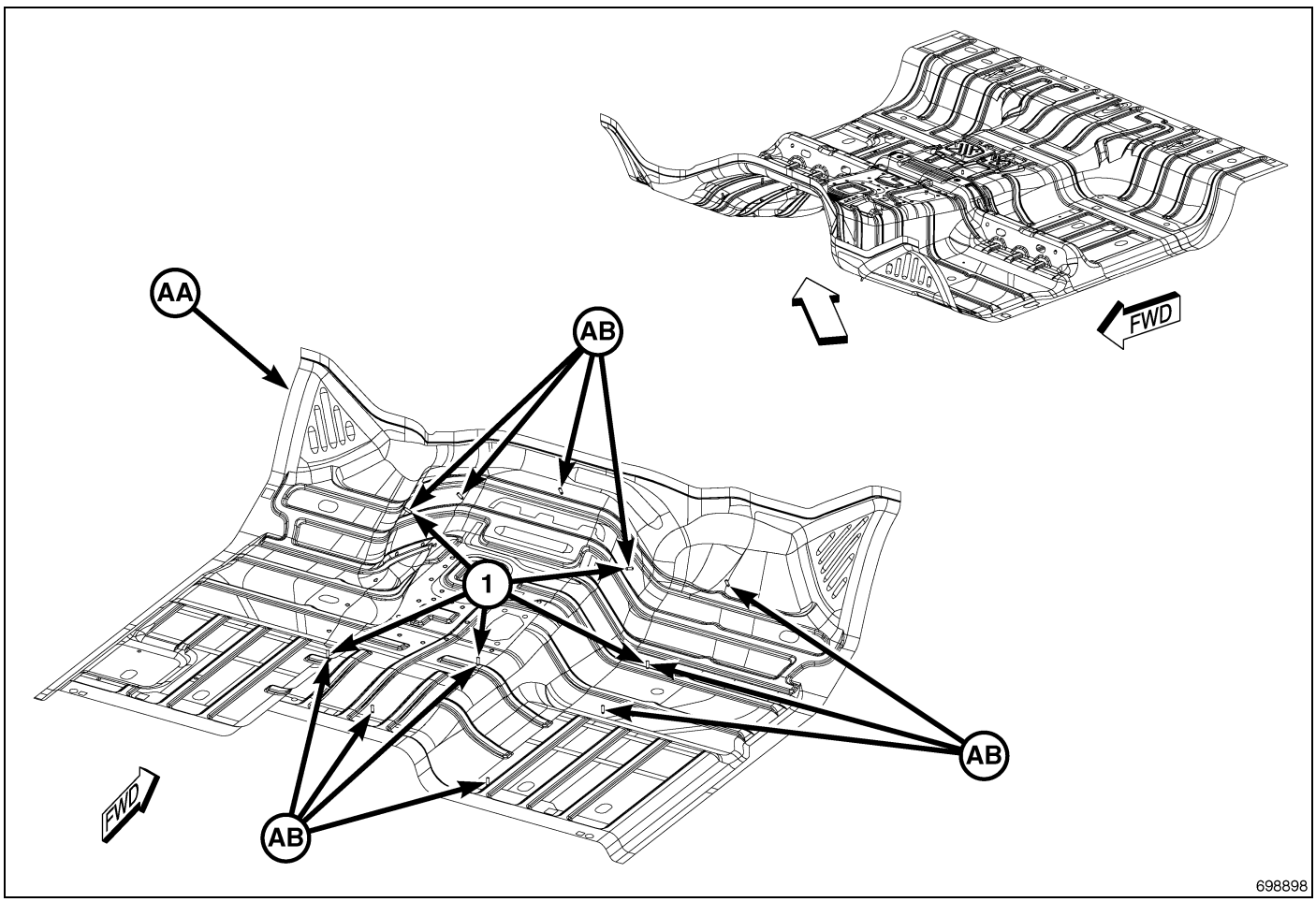

Fig. 90 Front Floor – Quad Cab (1 of 5)

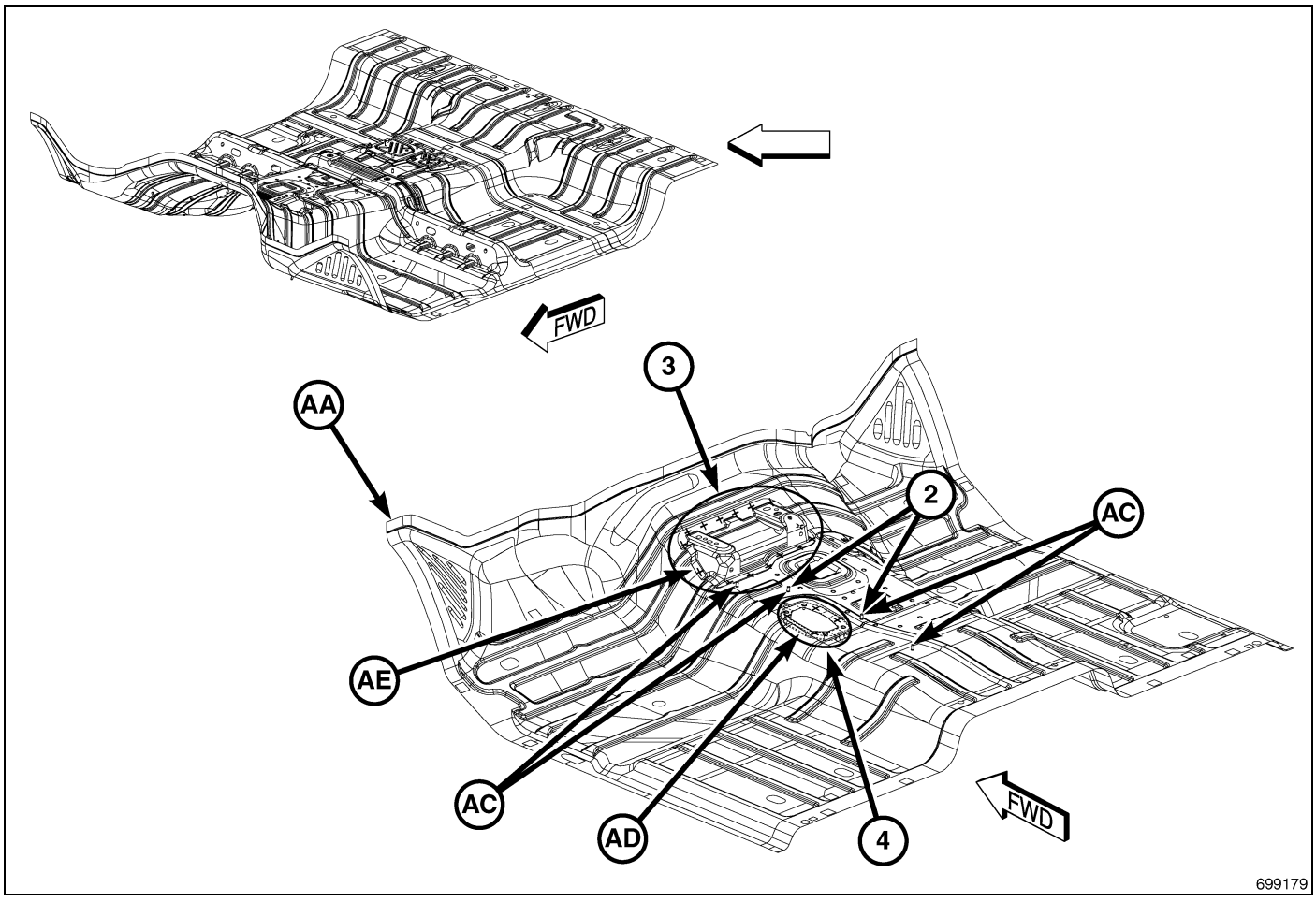

Fig. 91 Front Floor – Quad Cab (2 of 5)

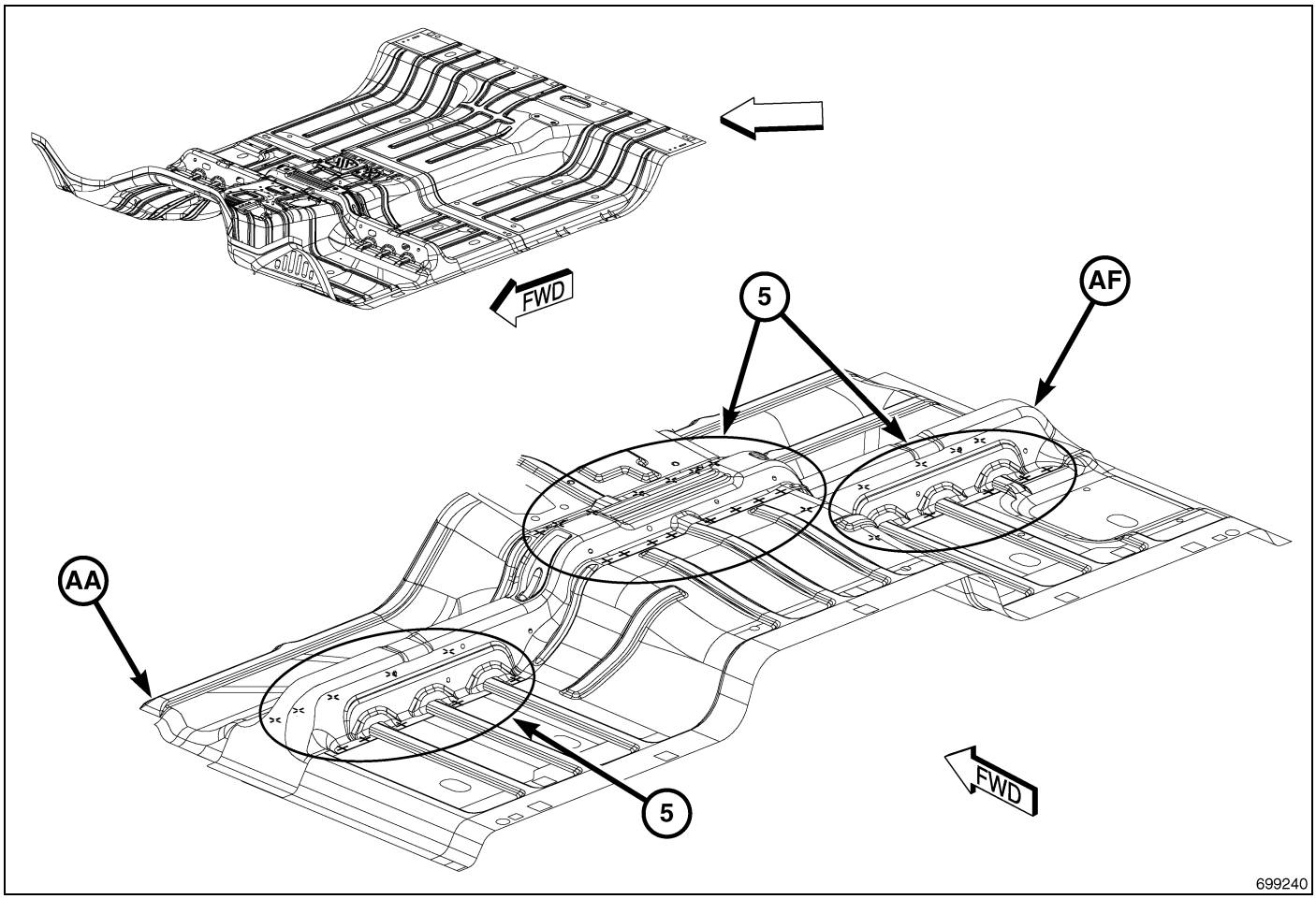

Fig. 92 Front Floor – Quad Cab (3 of 5)

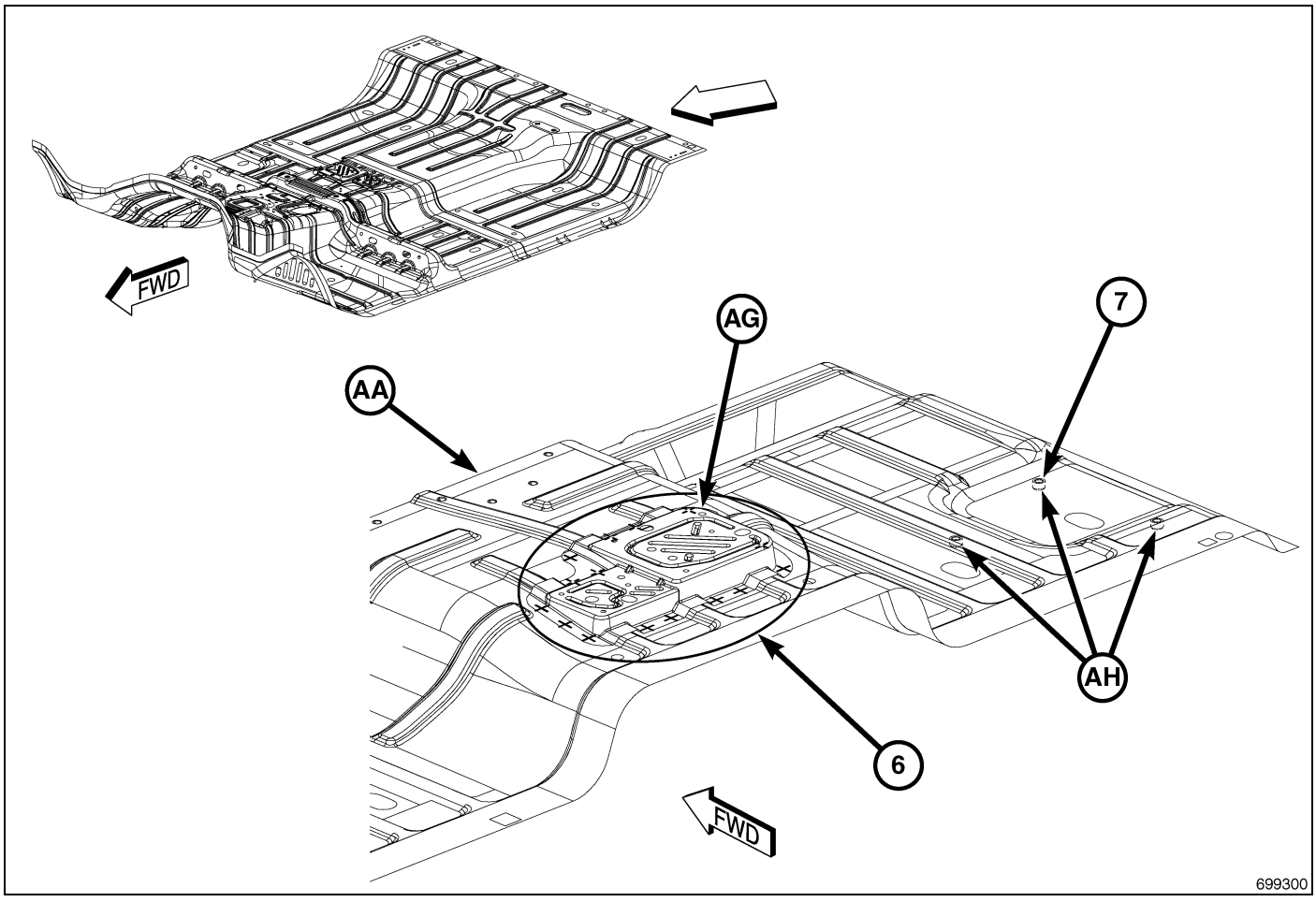

Fig. 93 Front Floor – Quad Cab (4 of 5)

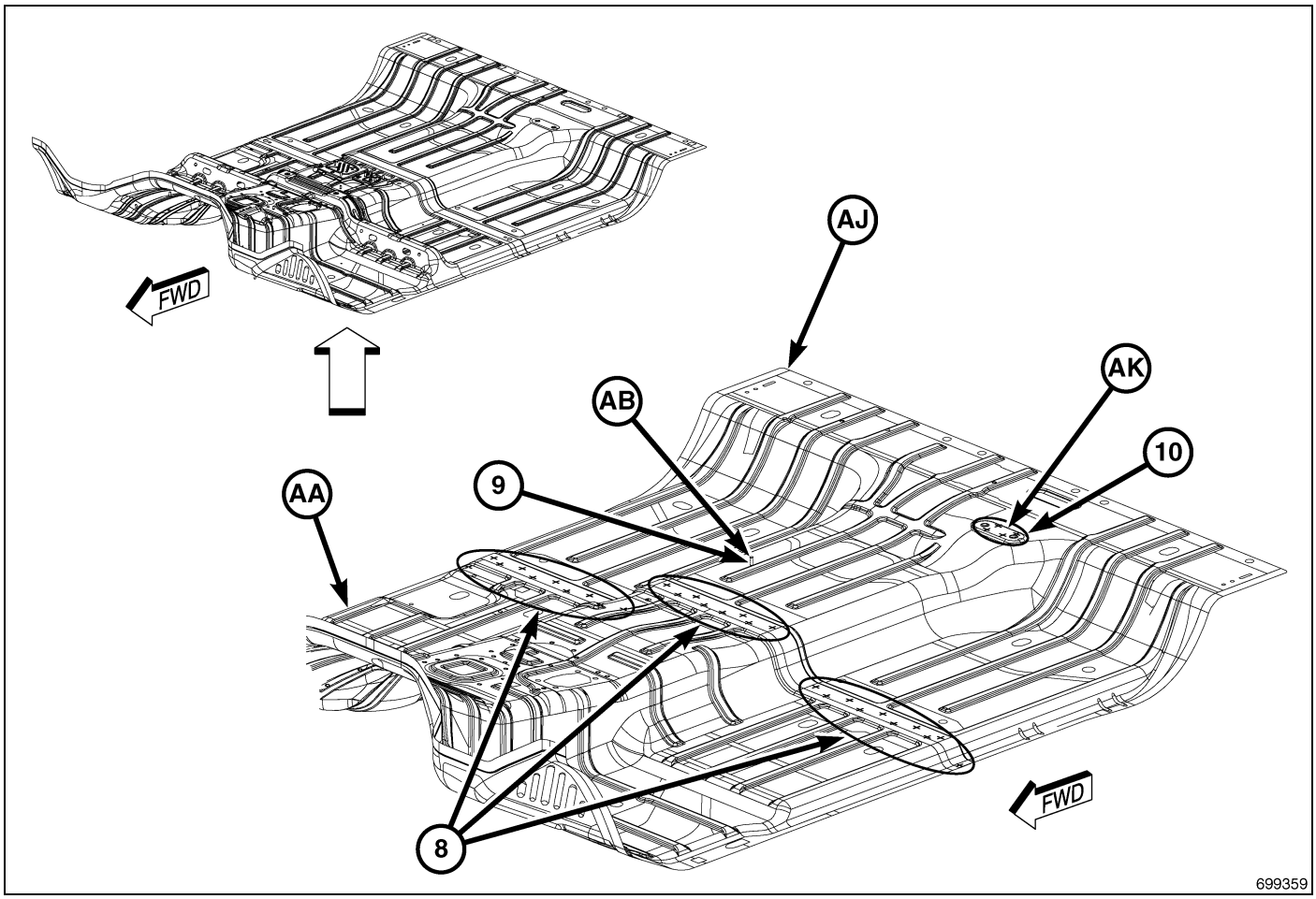

Fig. 94 Front Floor – Quad Cab (5 of 5)

FRONT FLOOR, CREW CAB - PARTS IDENTIFICATION LEGEND

ITEM	DESCRIPTION
1	AB TO AA 11 PROJ WELDS (ORD)
2	AC TO AA 15 S/WELDS (ORD)
3	AD TO AA 8 PROJ WELDS (ORD)
4	AE TO AA 35 S/WELDS (ORD)
5	AG TO AA 4 S/WELDS (ORD)
6	AH TO AA 3 PROJ WELDS (ORD)
7	AF TO AA 15 S/WELDS (ORD)
8	AJ TO AA 28 S/WELDS (ORD)
9	AK TO AJ 8 S/WELDS (ORD)
10	AJ TO AA 2 STRUC ADH (ORD)
11	AB TO AJ 1 PROJ WELD (ORD)
12	AL TO AJ 4 S/WELDS (ORD)
AA	PAN - FLOOR FRT -
AB	06015007 STUD.WELD QNTY 12
AC	BRACKET - I/P SUPPORT -
AD	STUD.WELD/HDLESS - HEADER.PT.SPECIAL - I/P HARNESS TO FLOOR

FRONT FLOOR, CREW CAB - PARTS IDENTIFICATION LEGEND, continued

ITEM	DESCRIPTION
AD	STUD.WELD/HDLESS - HEADER.PT.SPECIAL - DUCTS TO FLOOR
AE	CROSSMEMBER - FRT SEAT MOUNTING FRT -
AF	BRACKET - ORC/ESP -
AG	55276223 TAPPING PLATE - SHIFTER MOUNTING
AH	NUT/WELD.RD - NO.FIN.SPECIAL - JACK TO FLOOR PAN
AJ	PAN - FLOOR CREW CAB RR -
AK	REINF - FLOOR W/STORAGE BIN -
AL	TAPPING PLATE - RR SEAT MIDDLE MOUNTING -

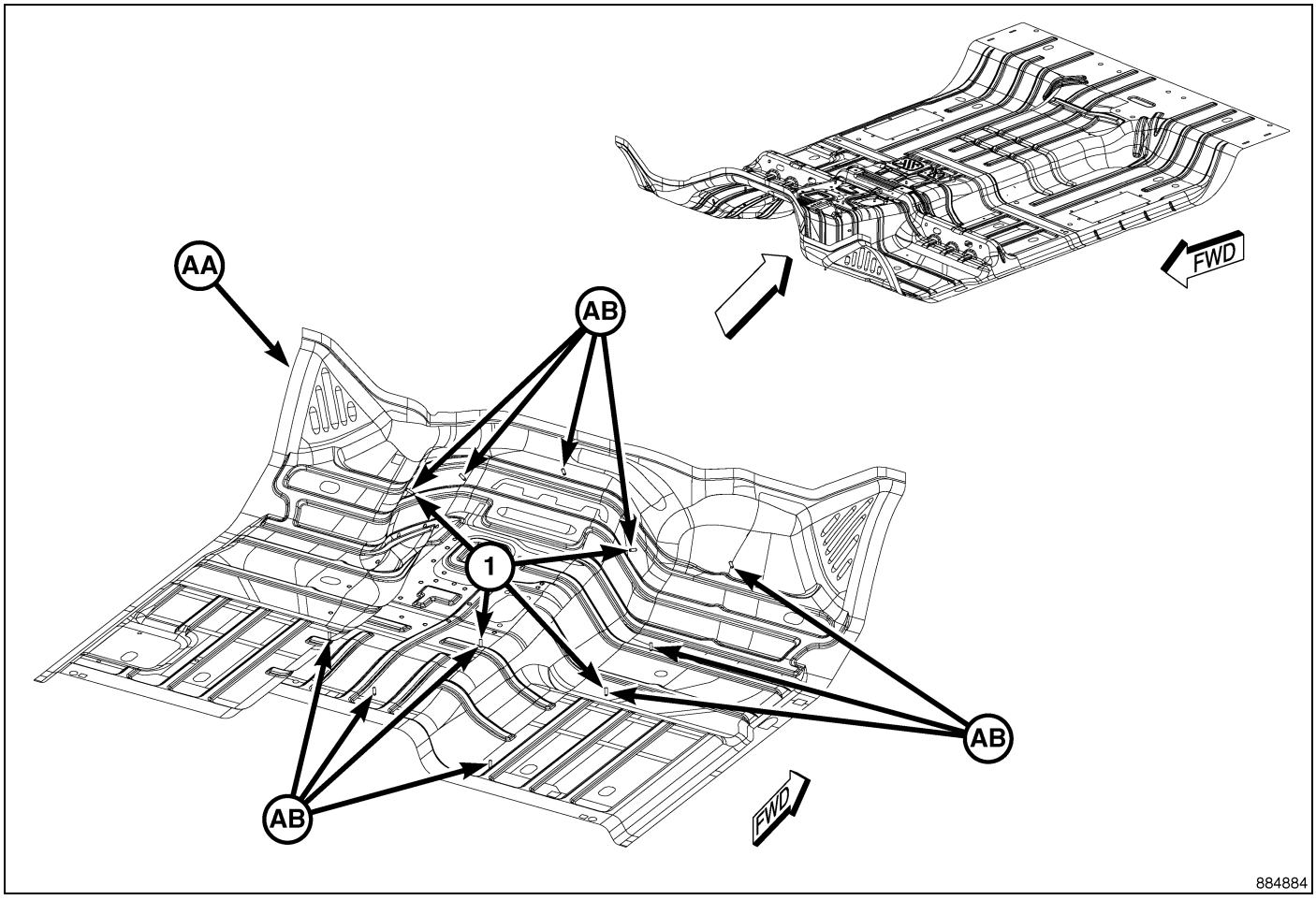

Fig. 95 Front Floor – Crew Cab (1 of 6)

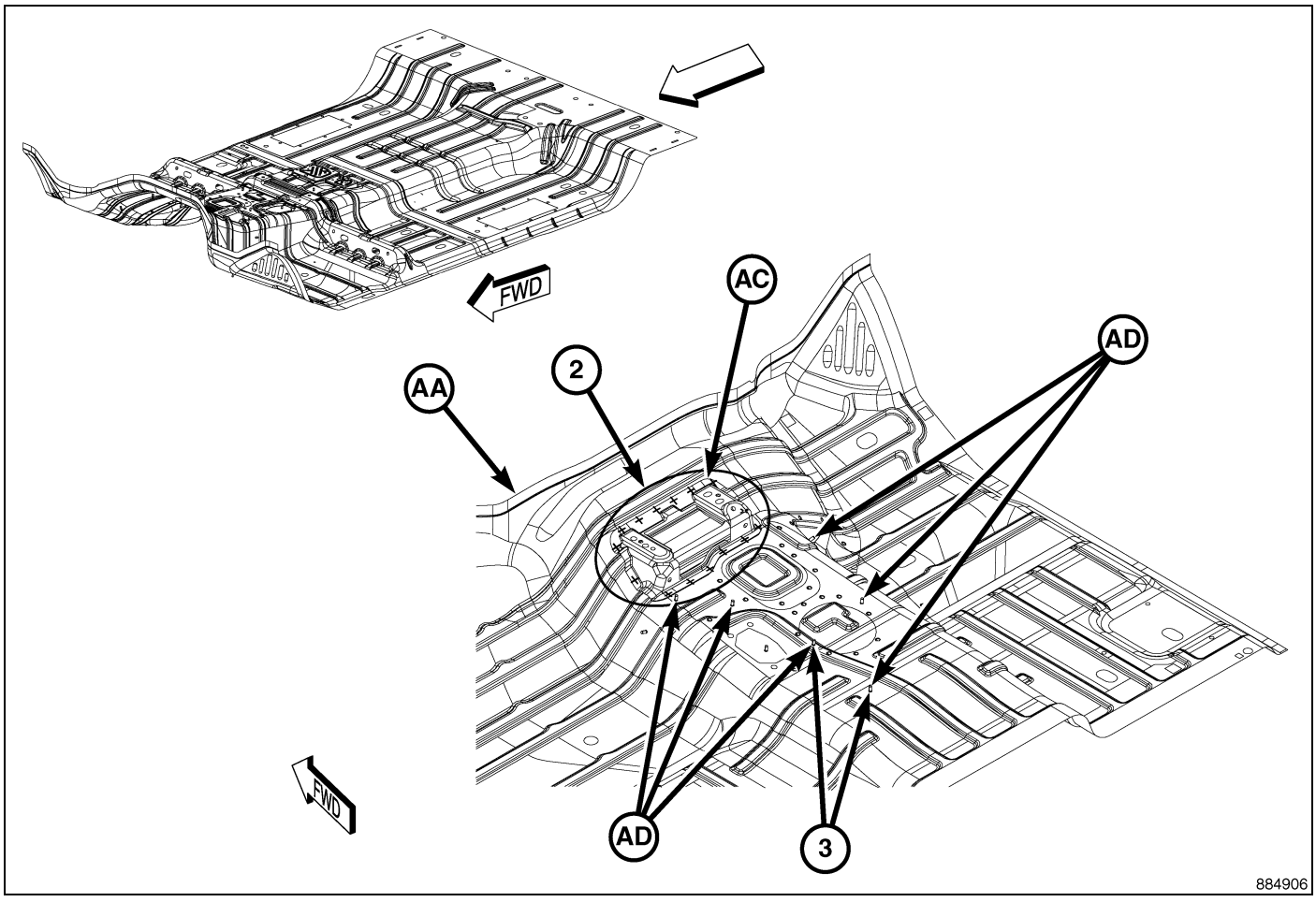

Fig. 96 Front Floor – Crew Cab (2 of 6)

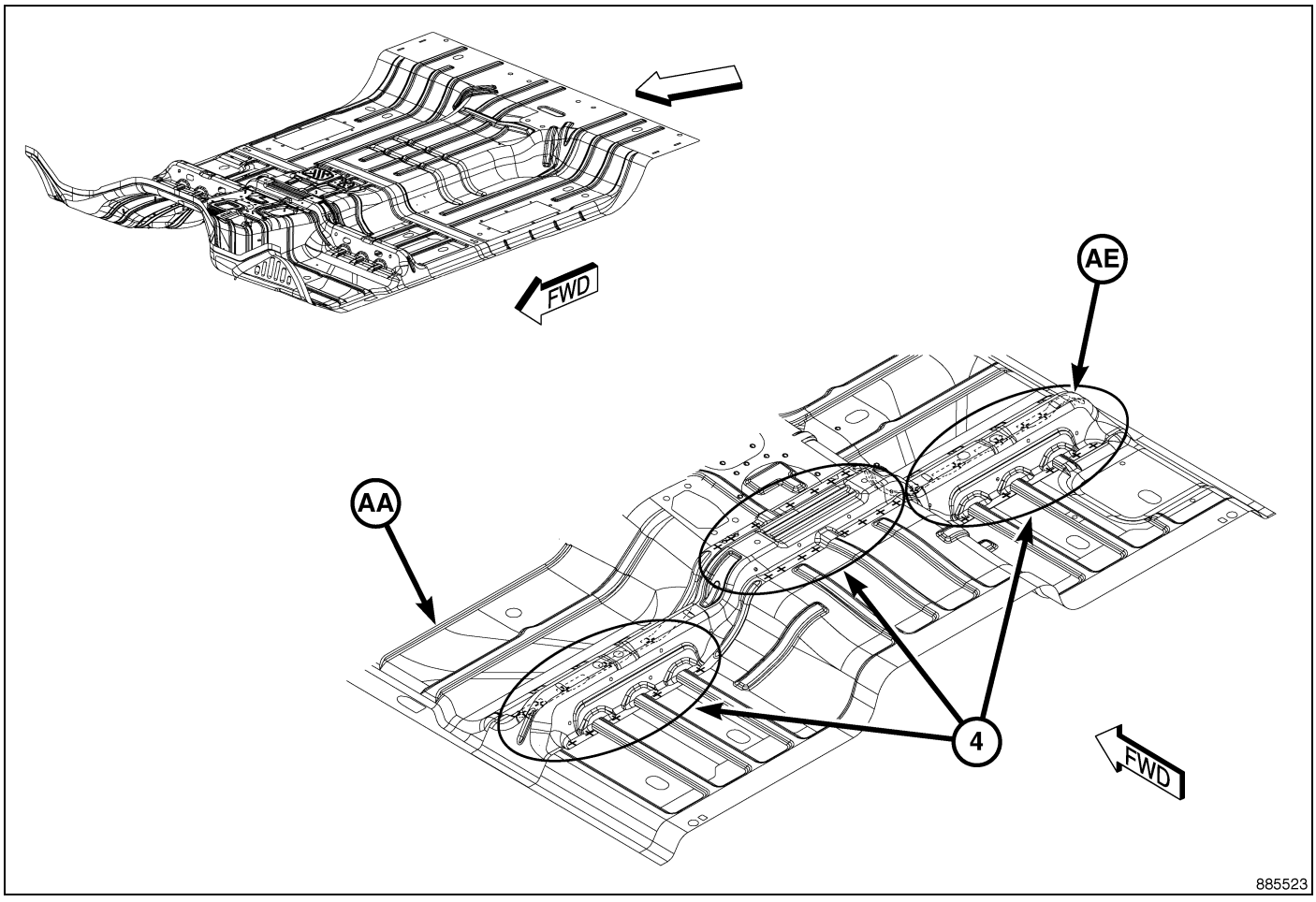

Fig. 97 Front Floor – Crew Cab (3 of 6)

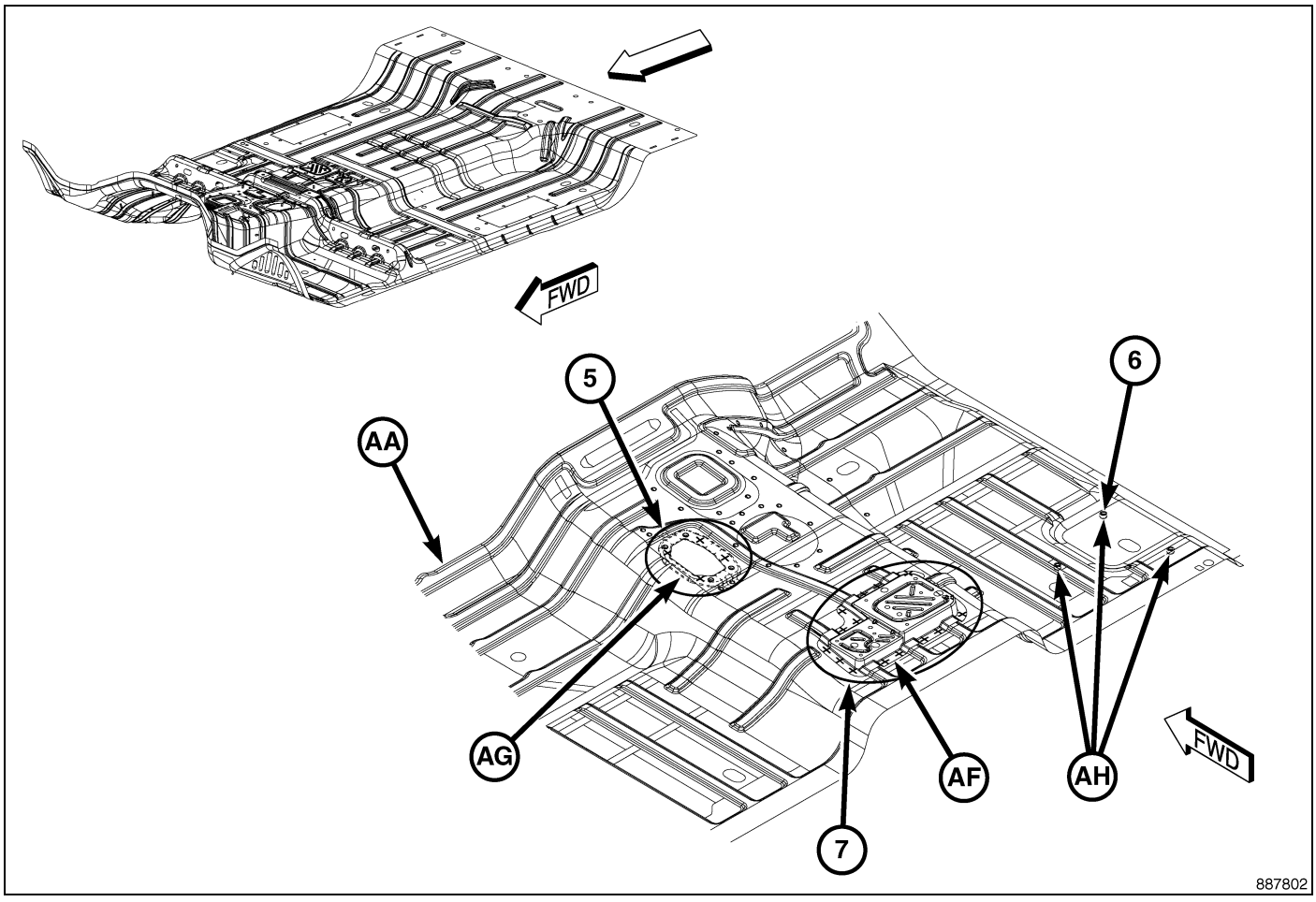

Fig. 98 Front Floor – Crew Cab (4 of 6)

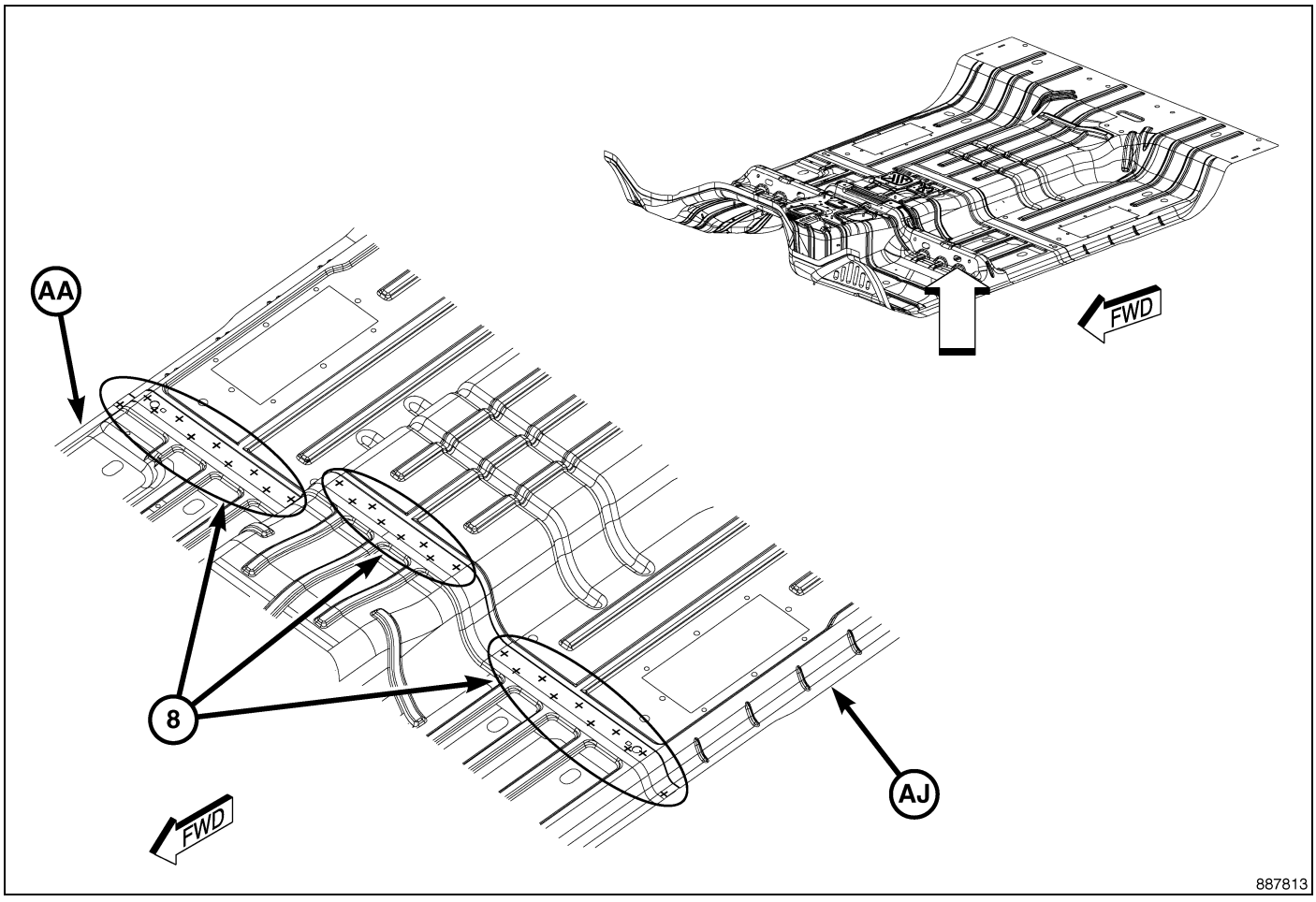

Fig. 99 Front Floor – Crew Cab (5 of 6)

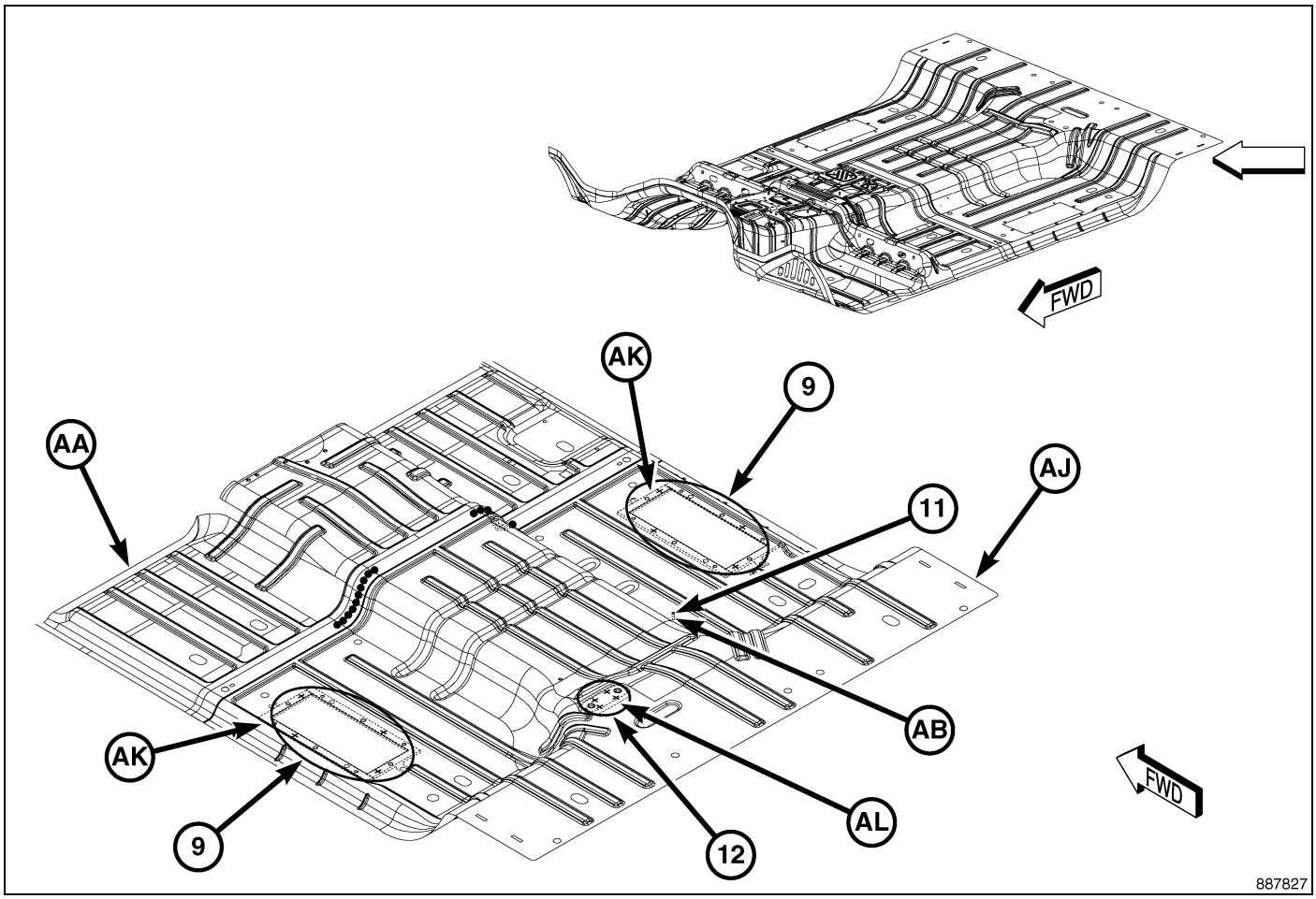

Fig. 100 Front Floor – Crew Cab (6 of 6)

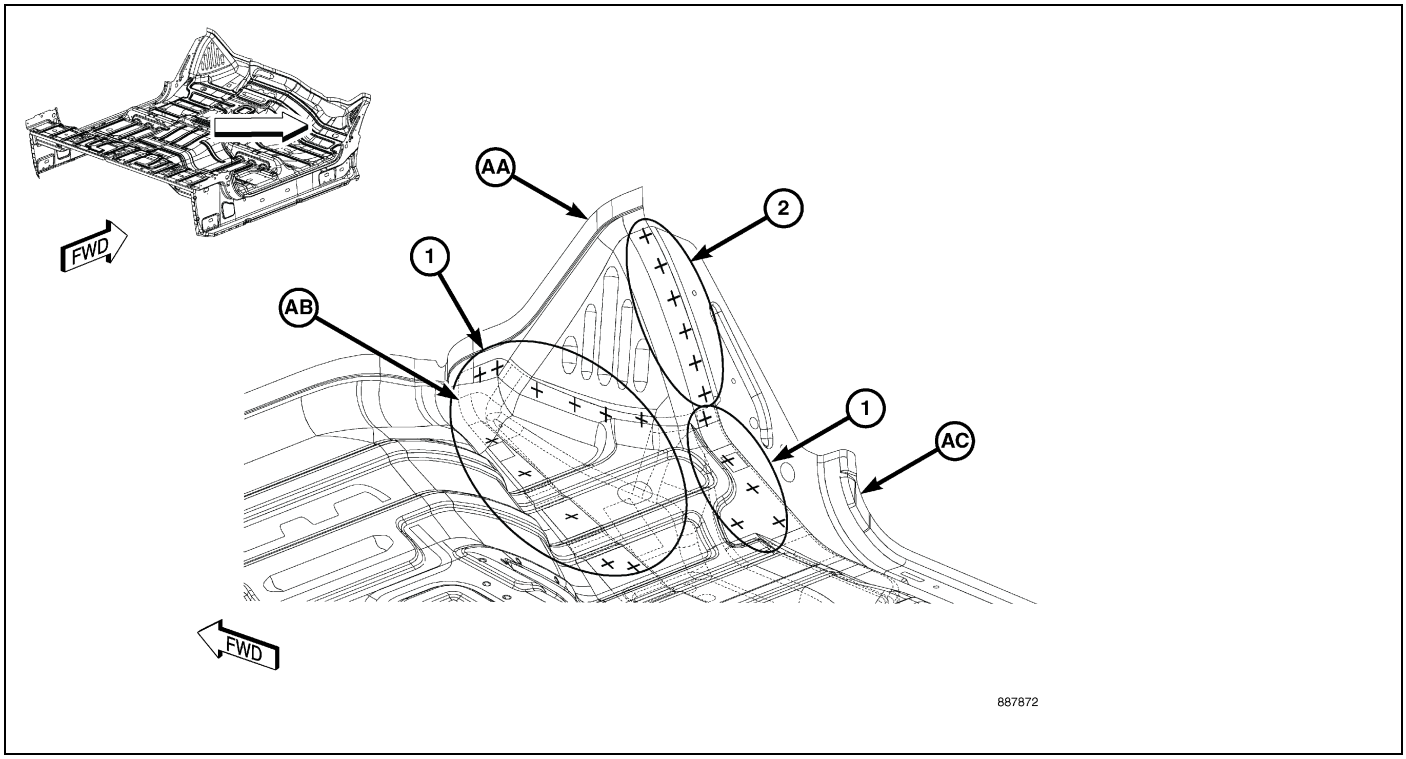

Fig. 101 Underbody Complete – Standard Cab (1 of 8)

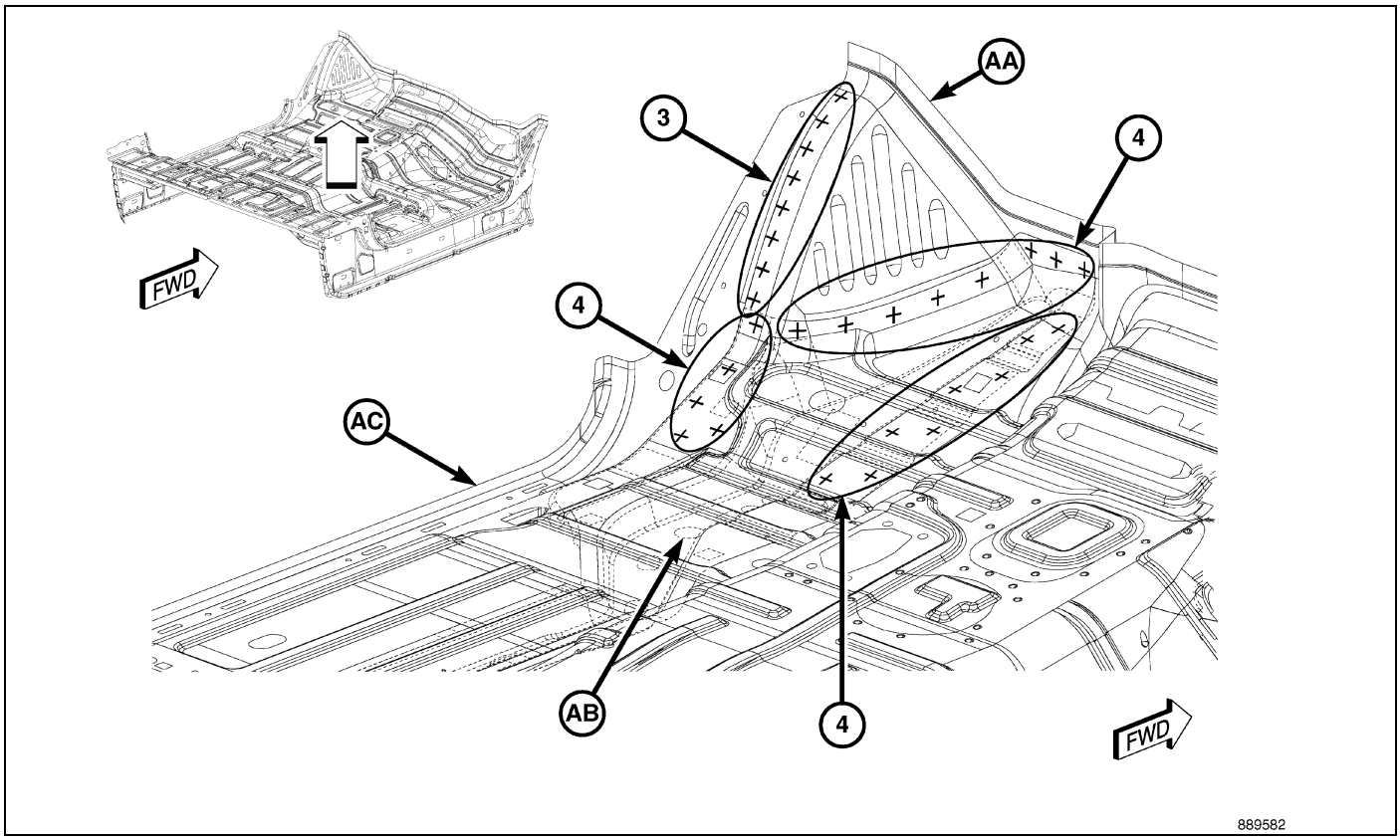

Fig. 102 Underbody Complete – Standard Cab (2 of 8)

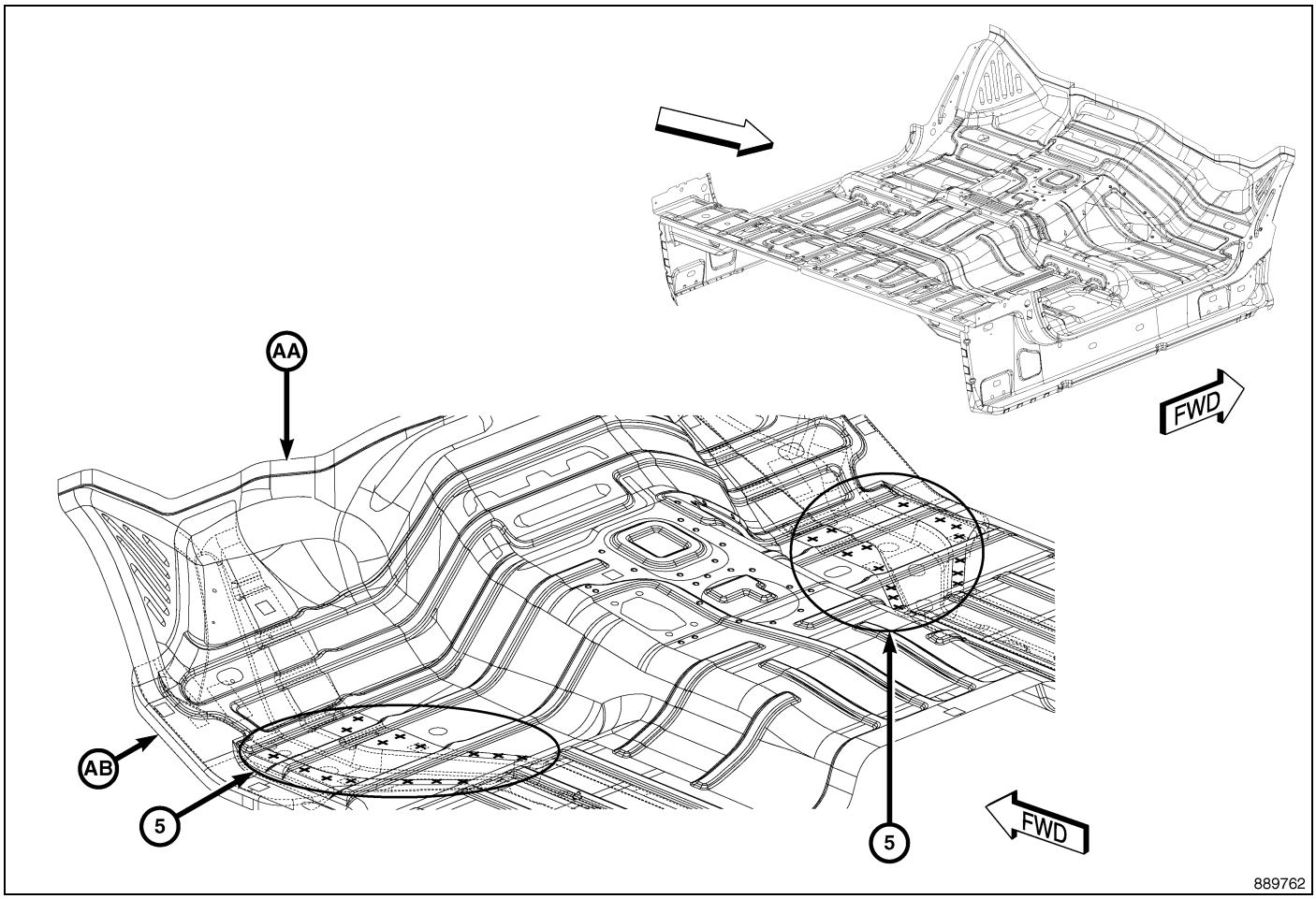

Fig. 103 Underbody Complete – Standard Cab (3 of 8)

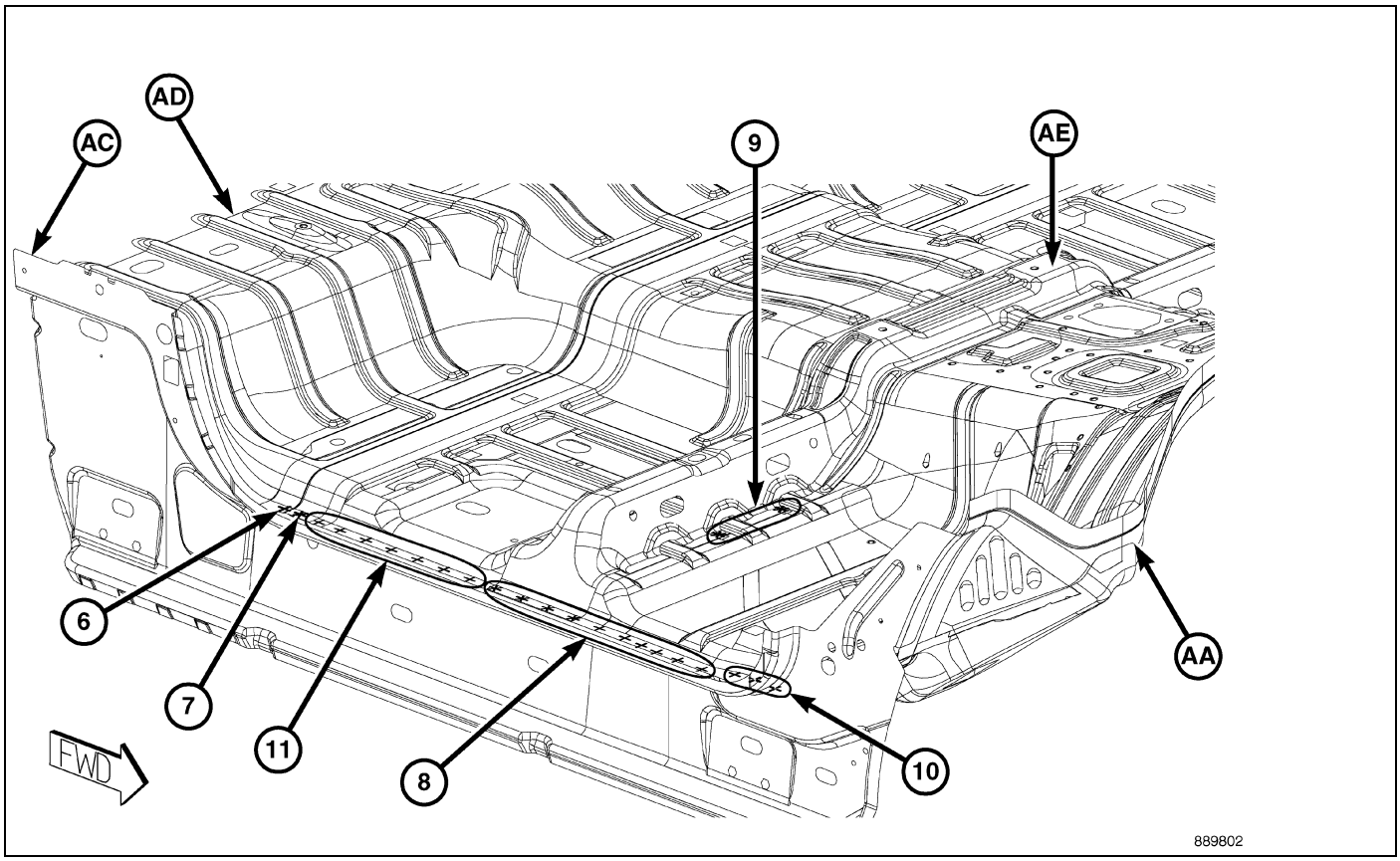

Fig. 104 Underbody Complete – Standard Cab (4 of 8)

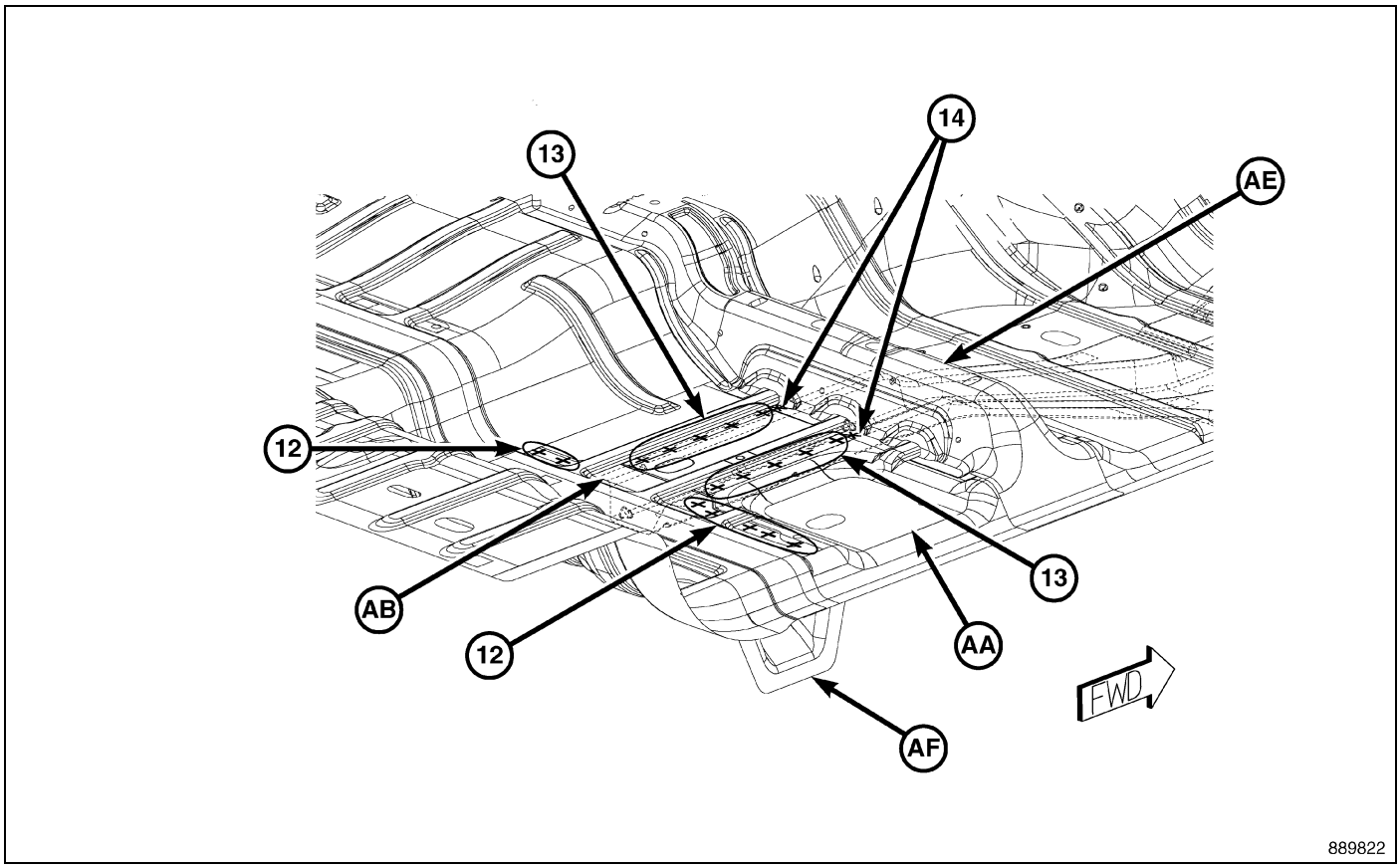

Fig. 105 Underbody Complete – Standard Cab (5 of 8)

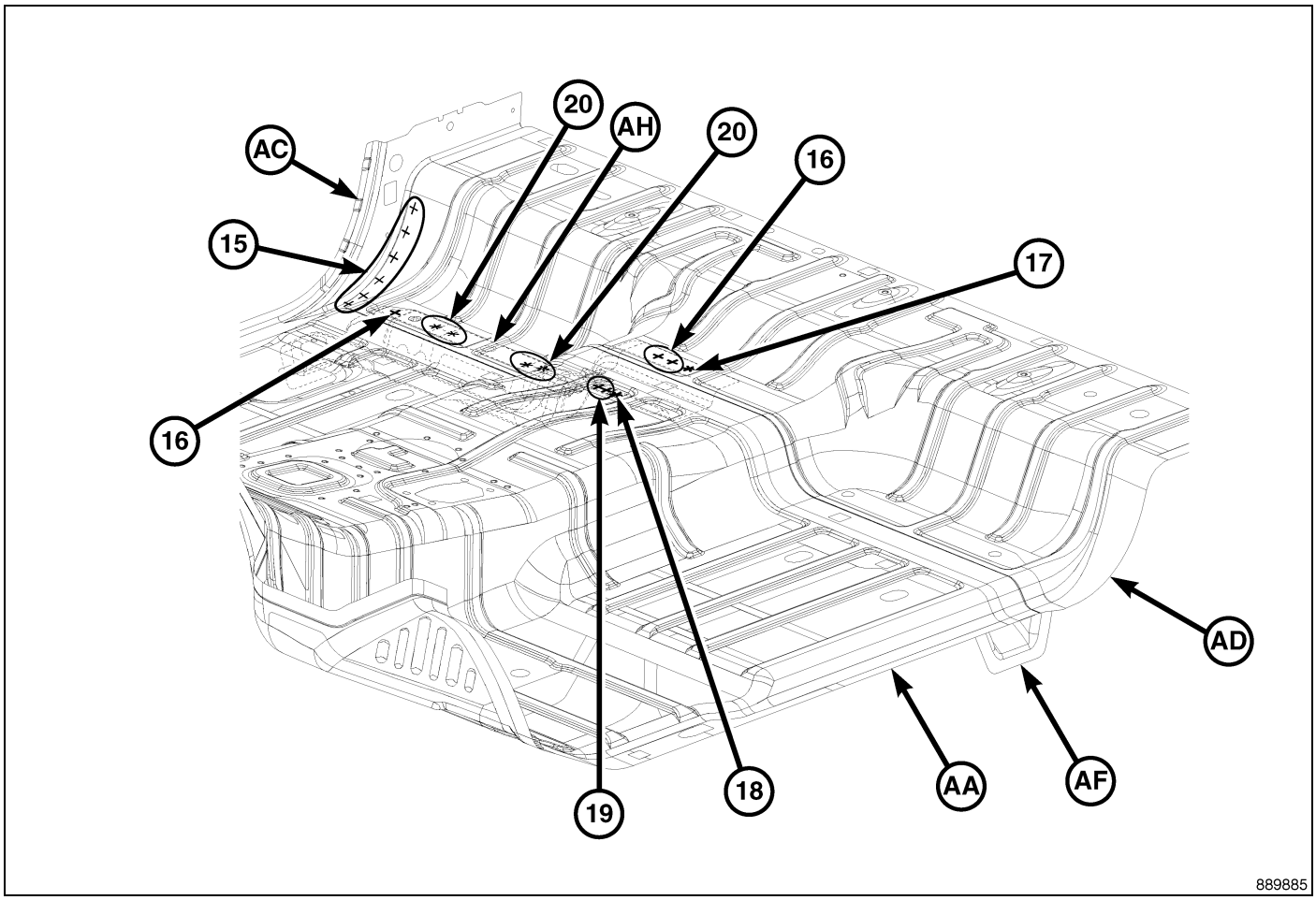

Fig. 106 Underbody Complete – Standard Cab (6 of 8)

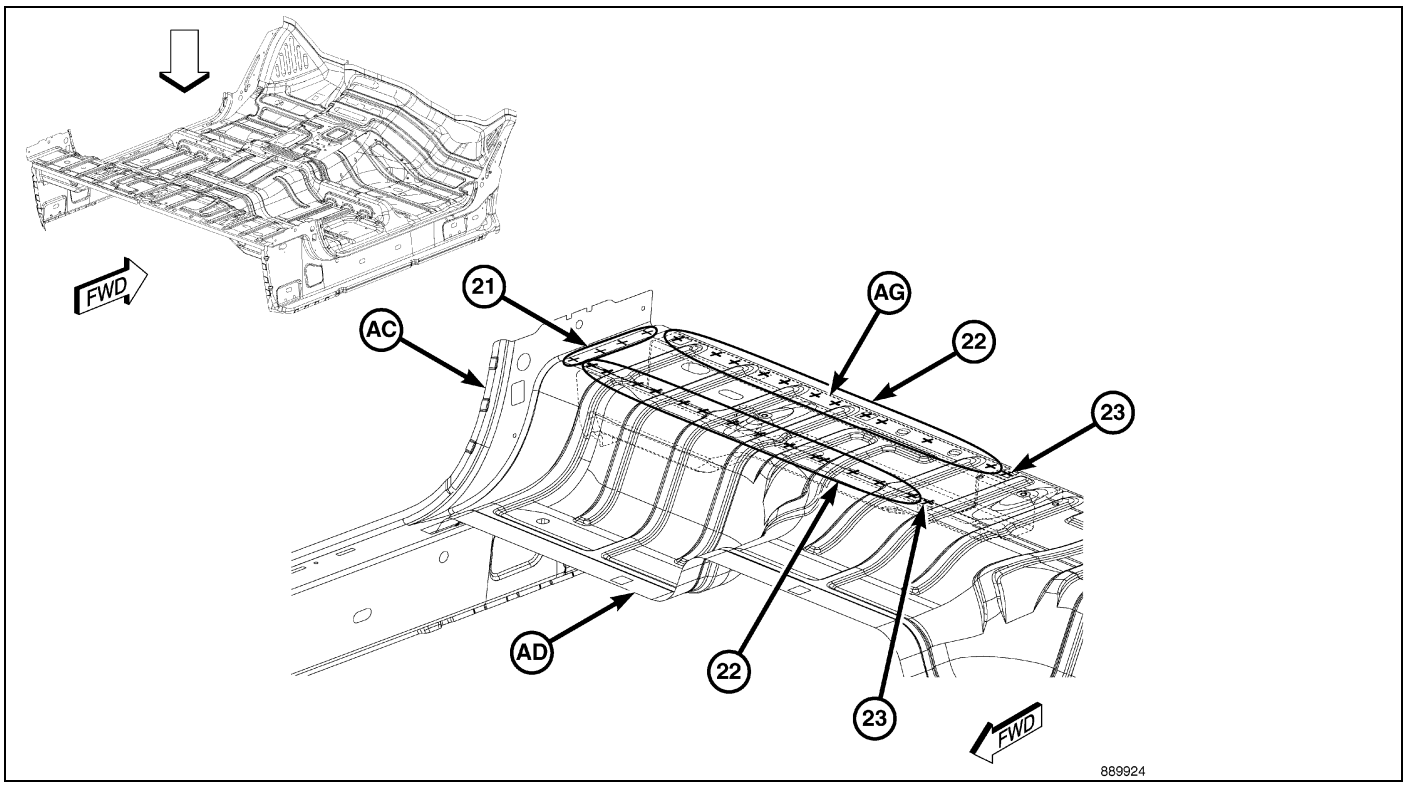

Fig. 107 Underbody Complete – Standard Cab (7 of 8)

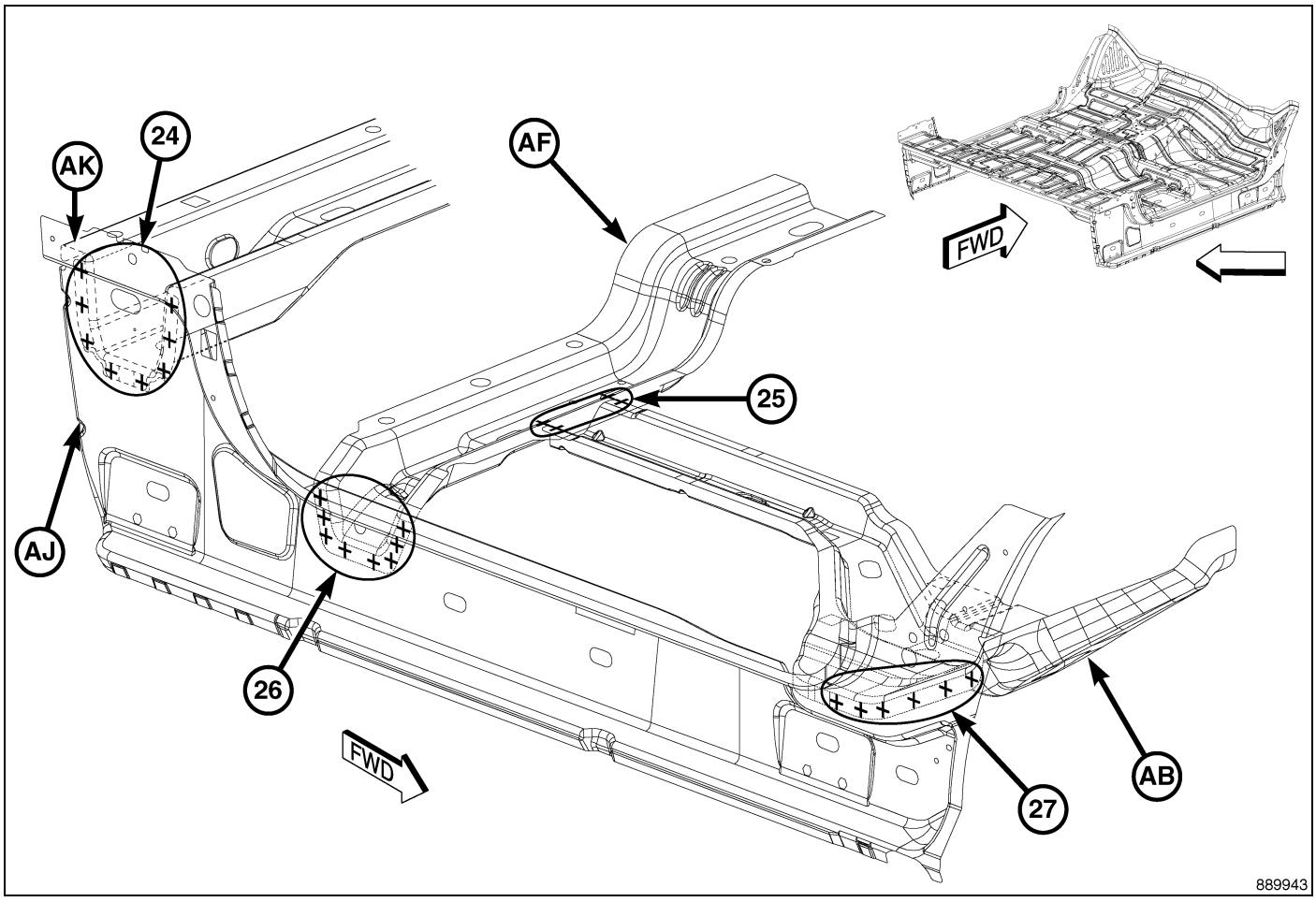

Fig. 108 Underbody Complete – Standard Cab (8 of 8)

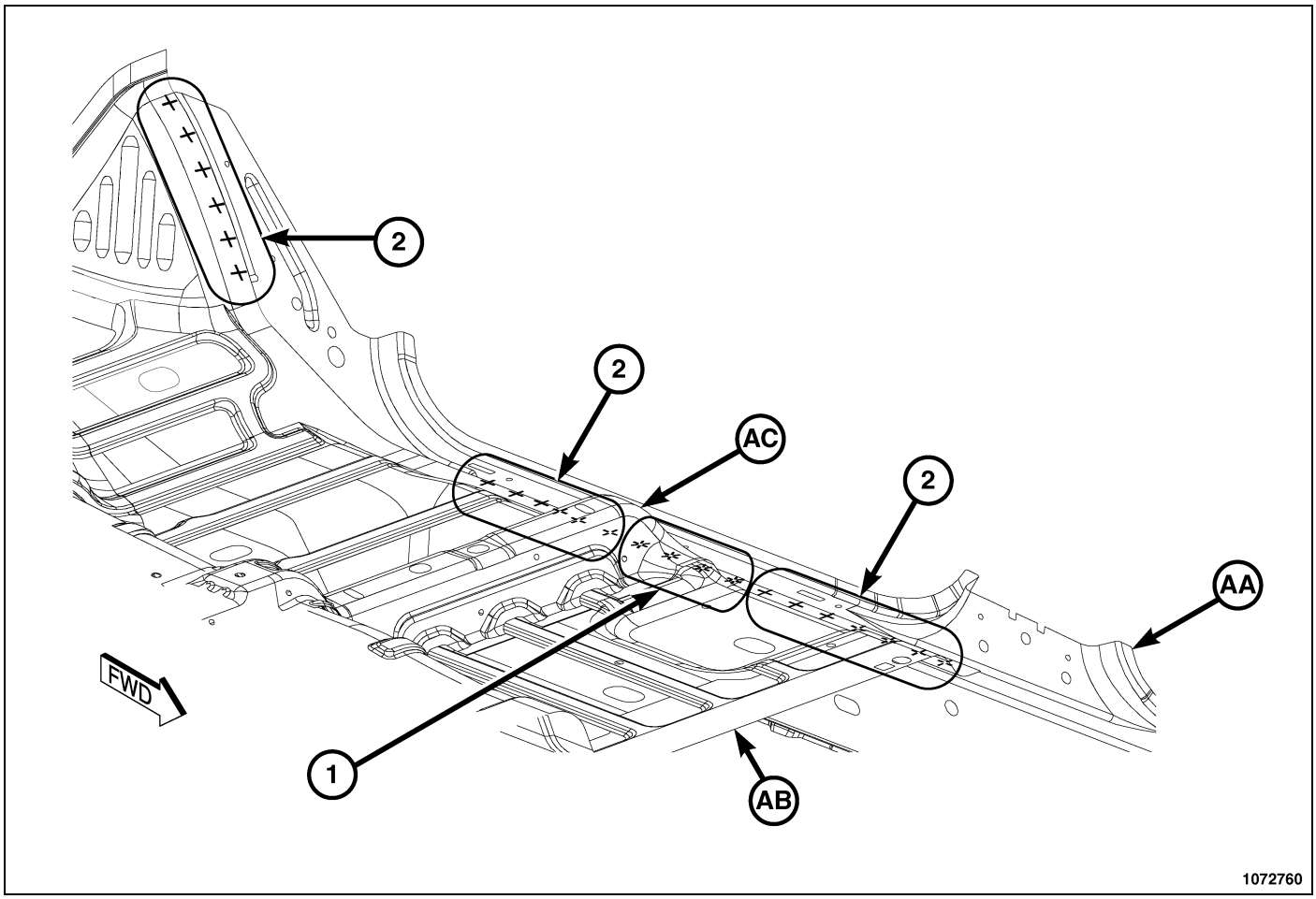

Fig. 109 Underbody Complete – Quad Cab (1 of 12)

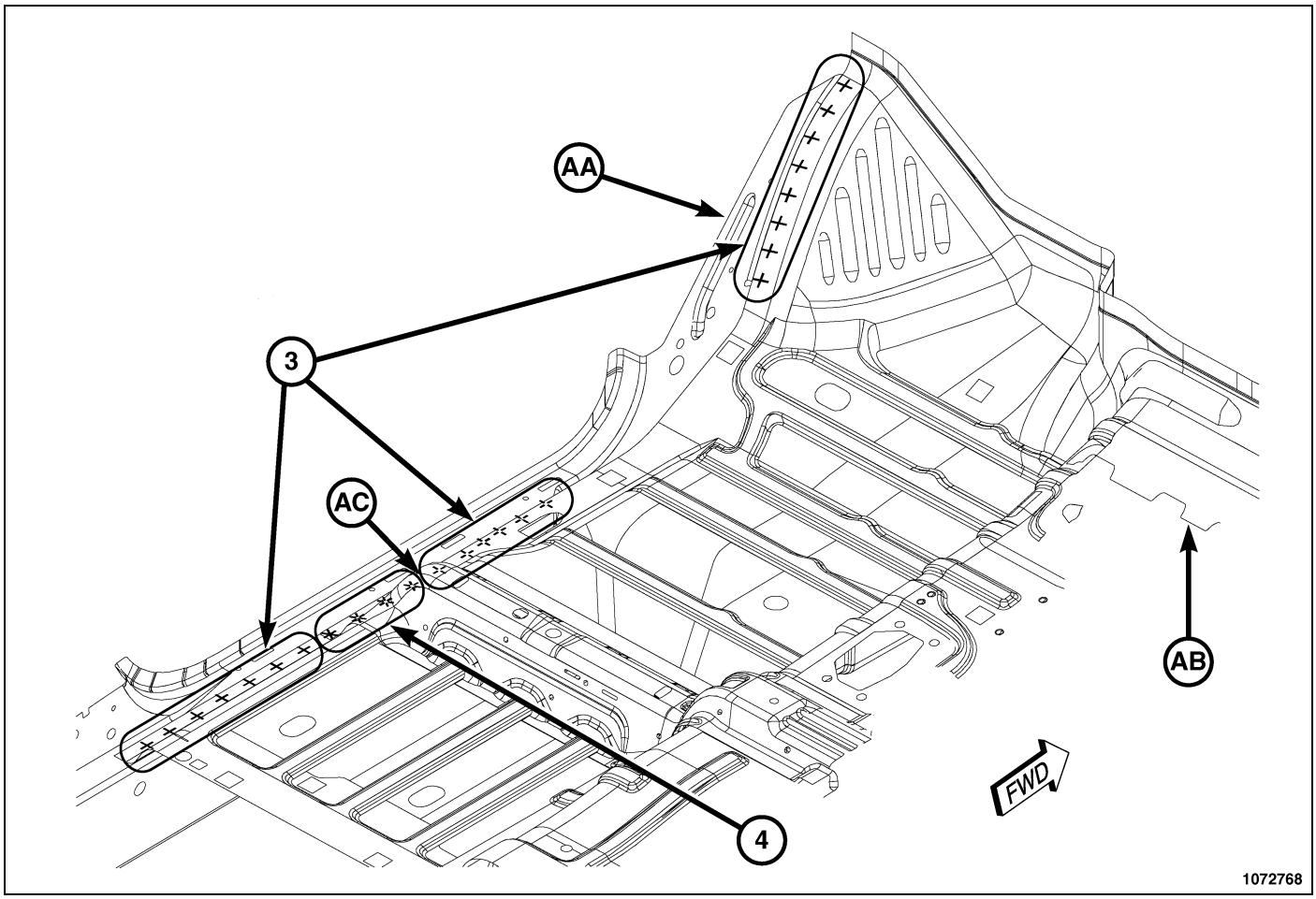

Fig. 110 Underbody Complete – Quad Cab (2 of 12)

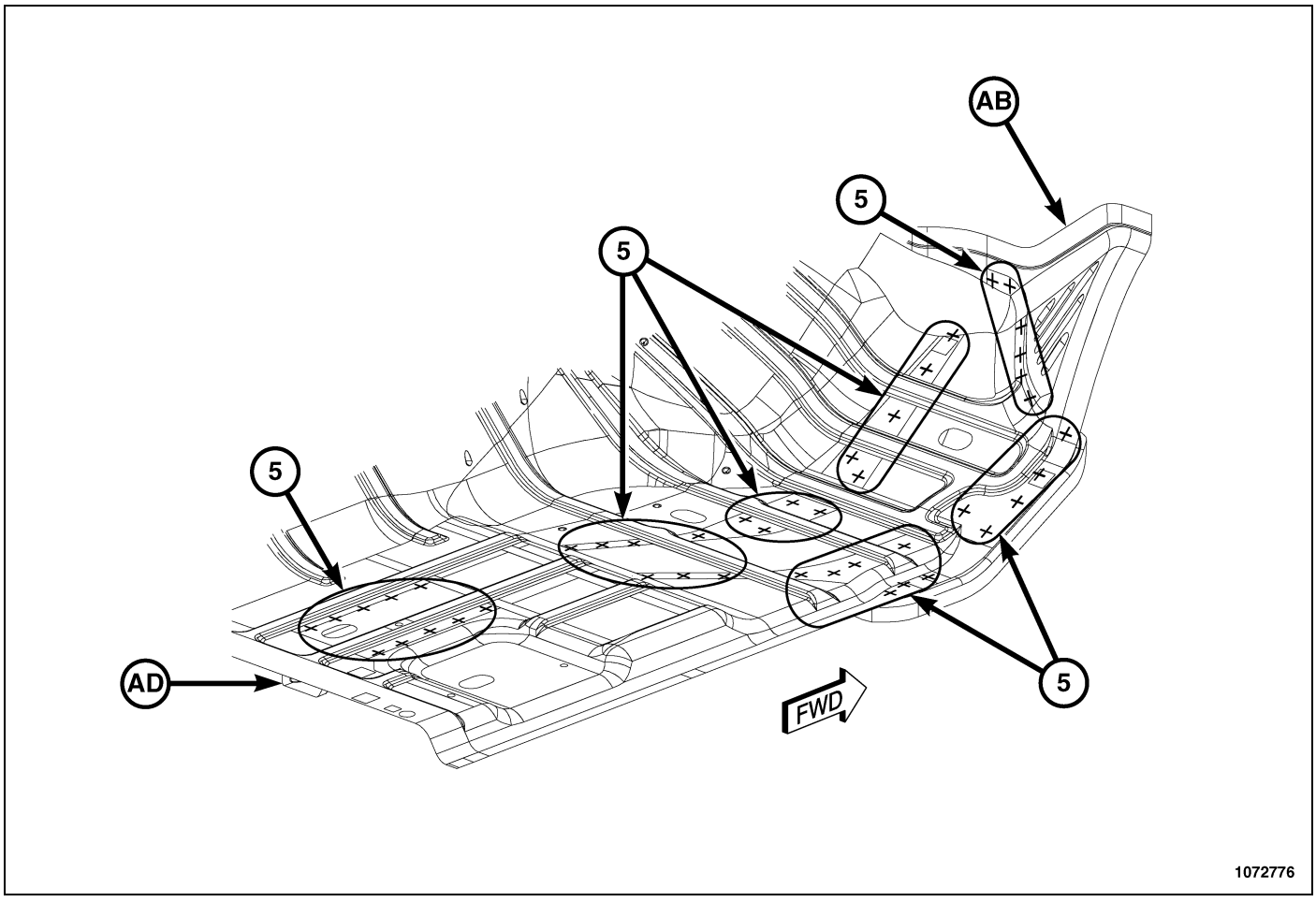

Fig. 111 Underbody Complete – Quad Cab (3 of 12)

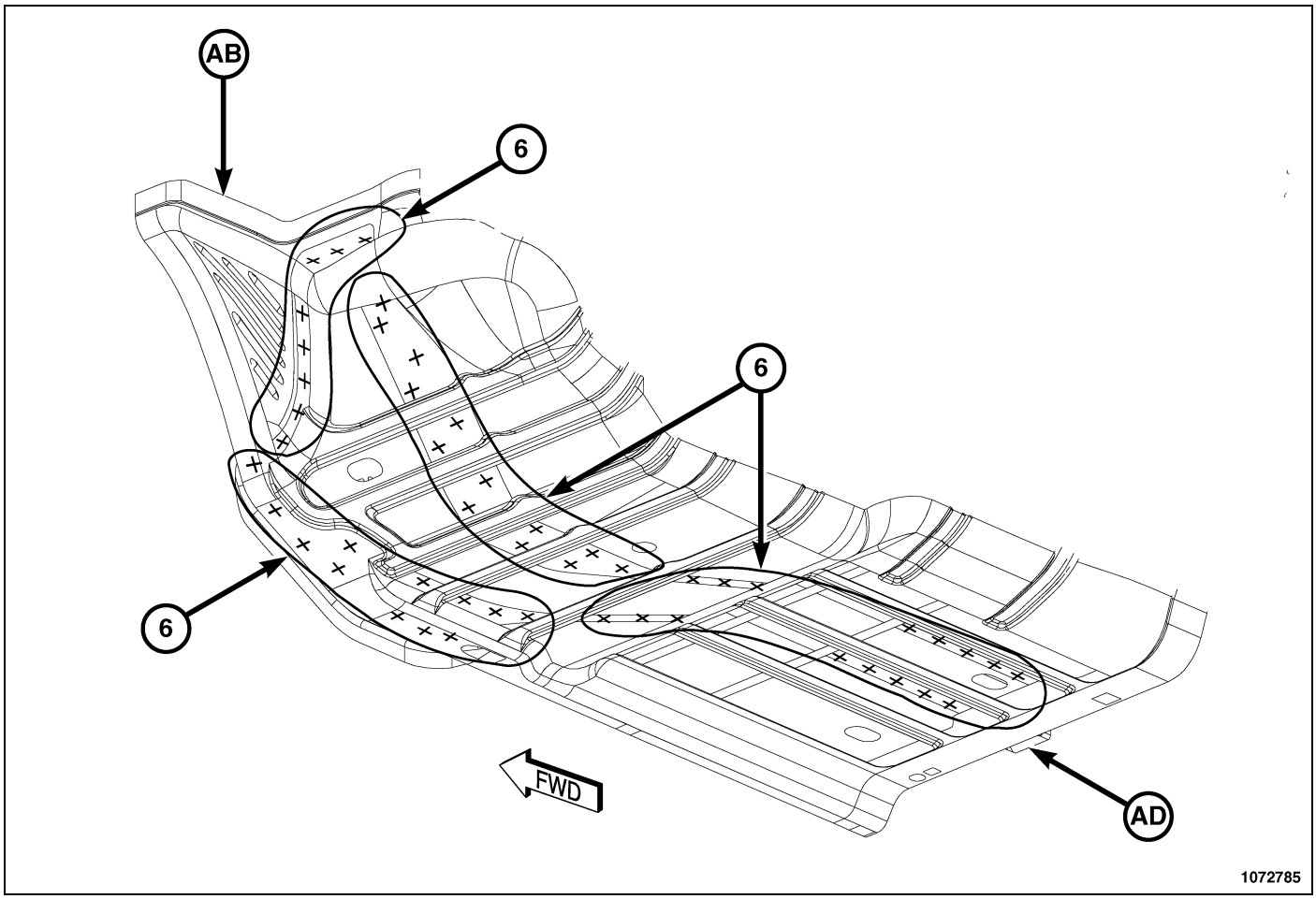

Fig. 112 Underbody Complete – Quad Cab (4 of 12)

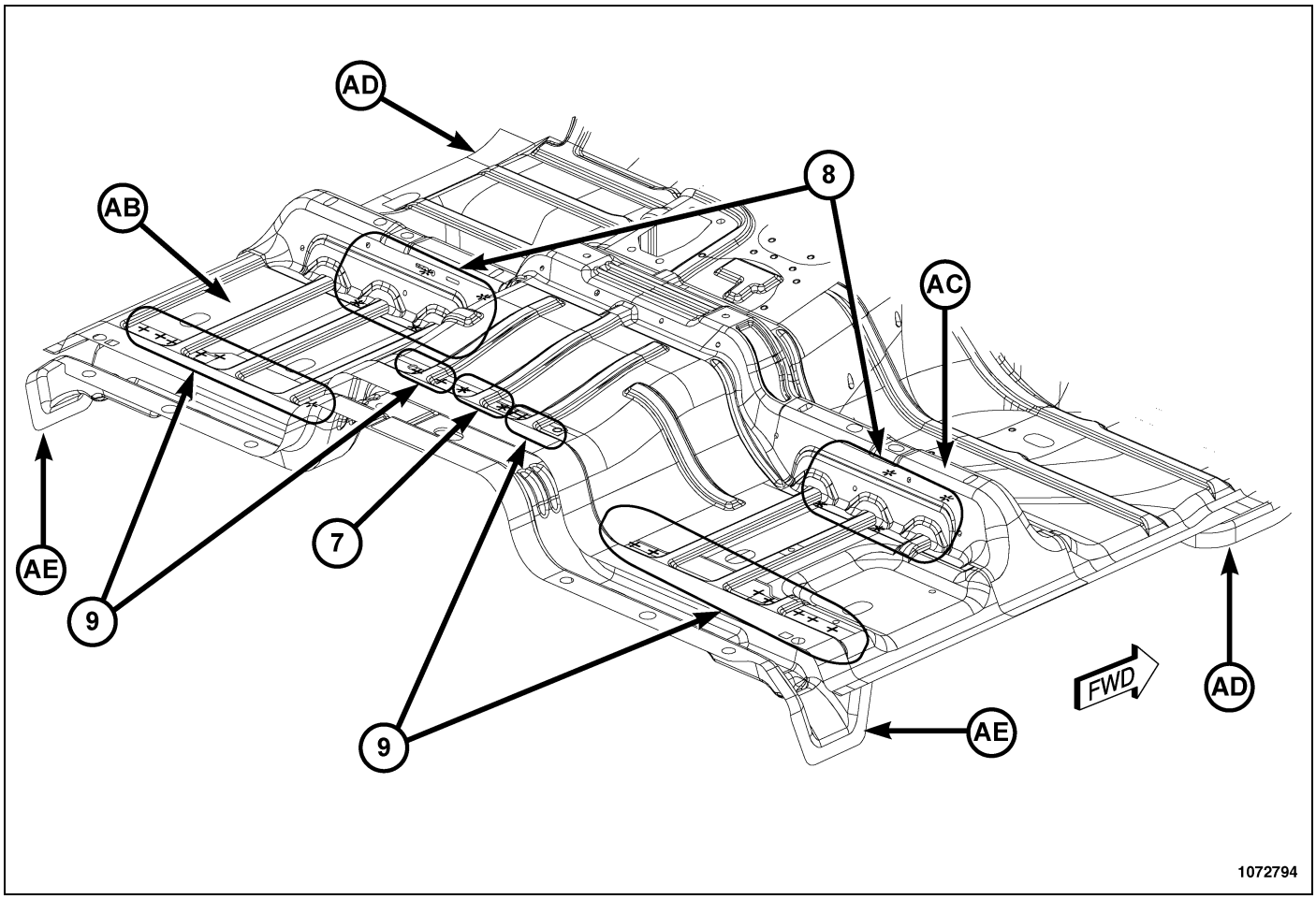

Fig. 113 Underbody Complete – Quad Cab (5 of 12)

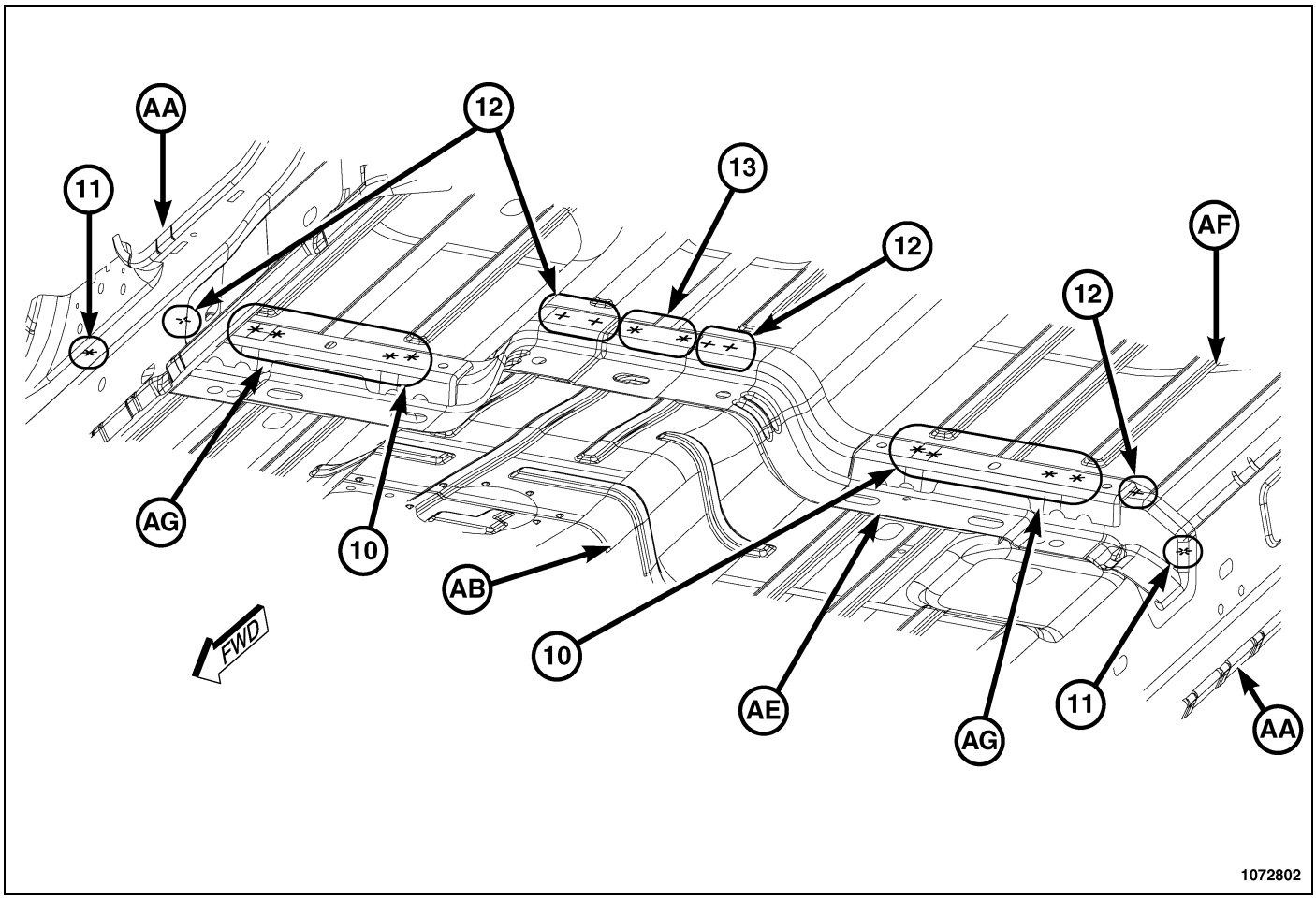

Fig. 114 Underbody Complete – Quad Cab (6 of 12)

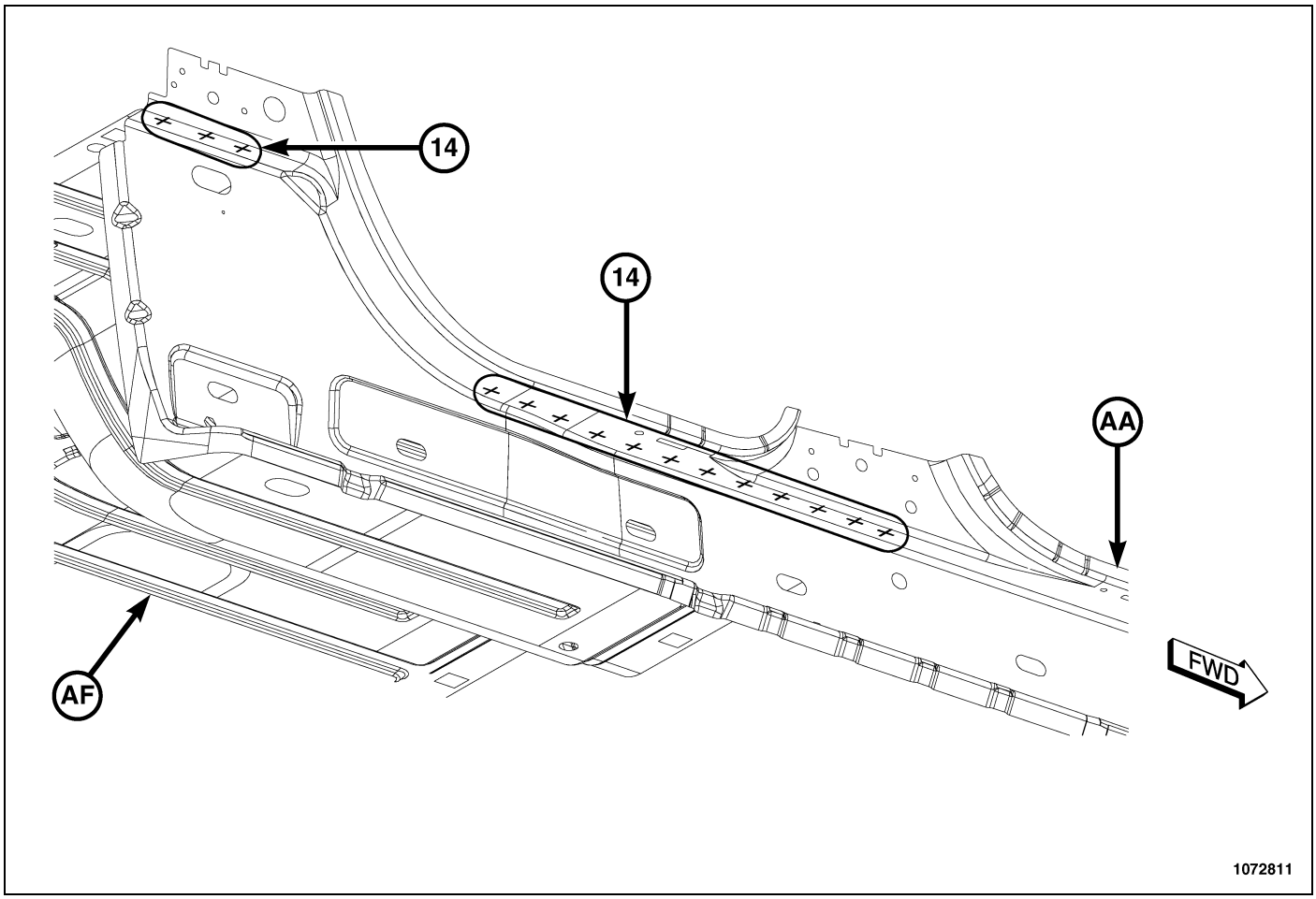

Fig. 115 Underbody Complete – Quad Cab (7 of 12)

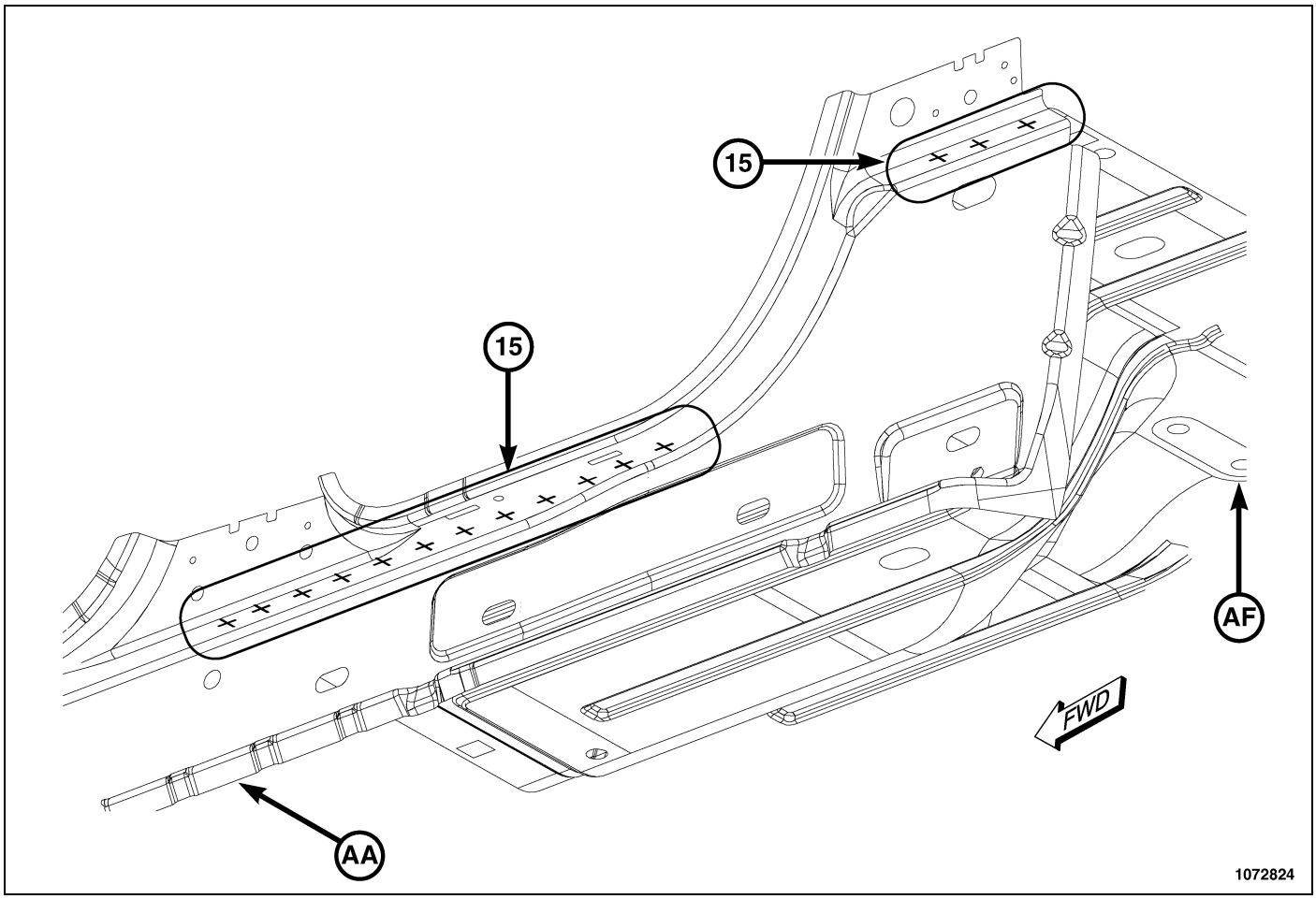

Fig. 116 Underbody Complete – Quad Cab (8 of 12)

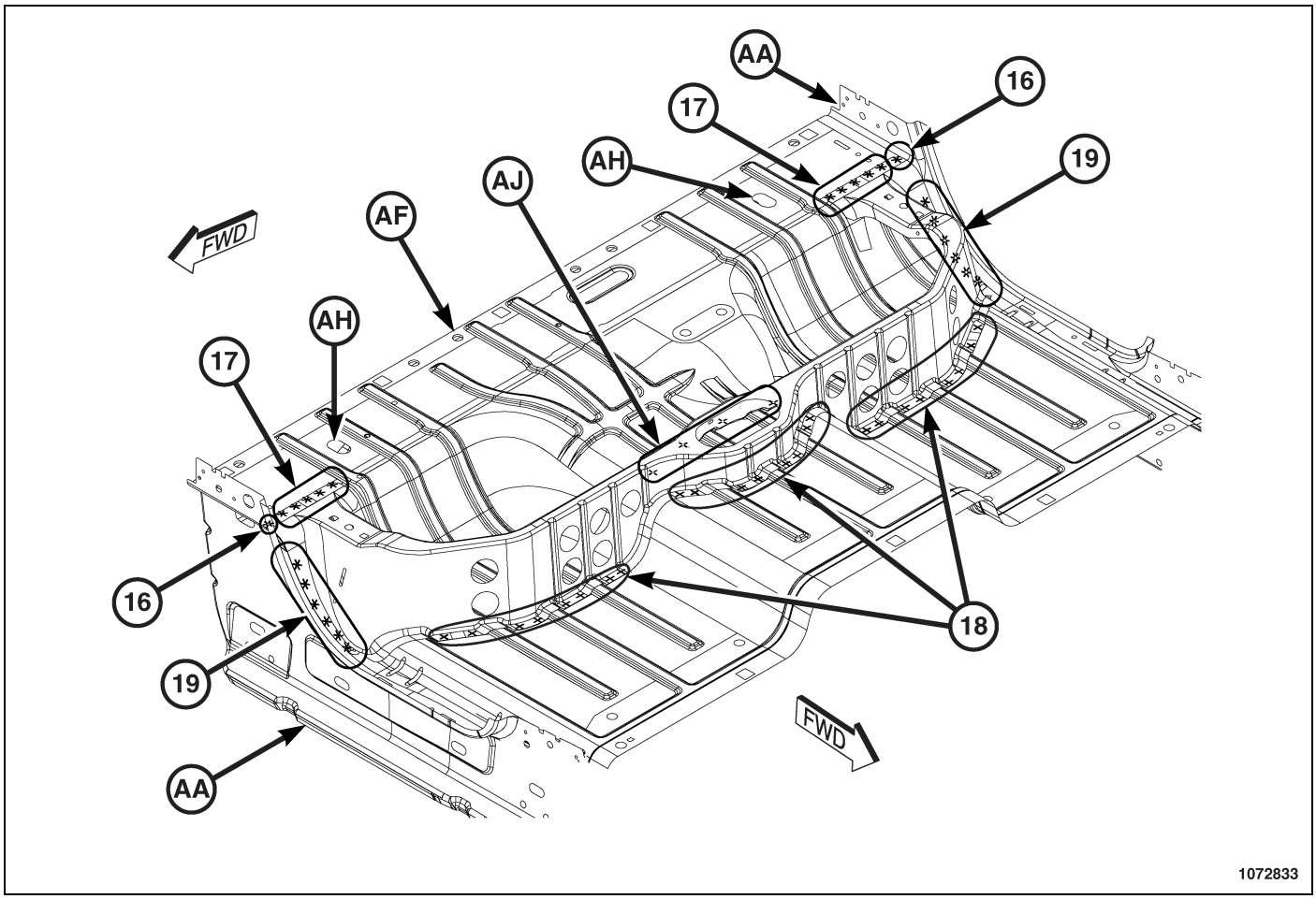

Fig. 117 Underbody Complete – Quad Cab (9 of 12)

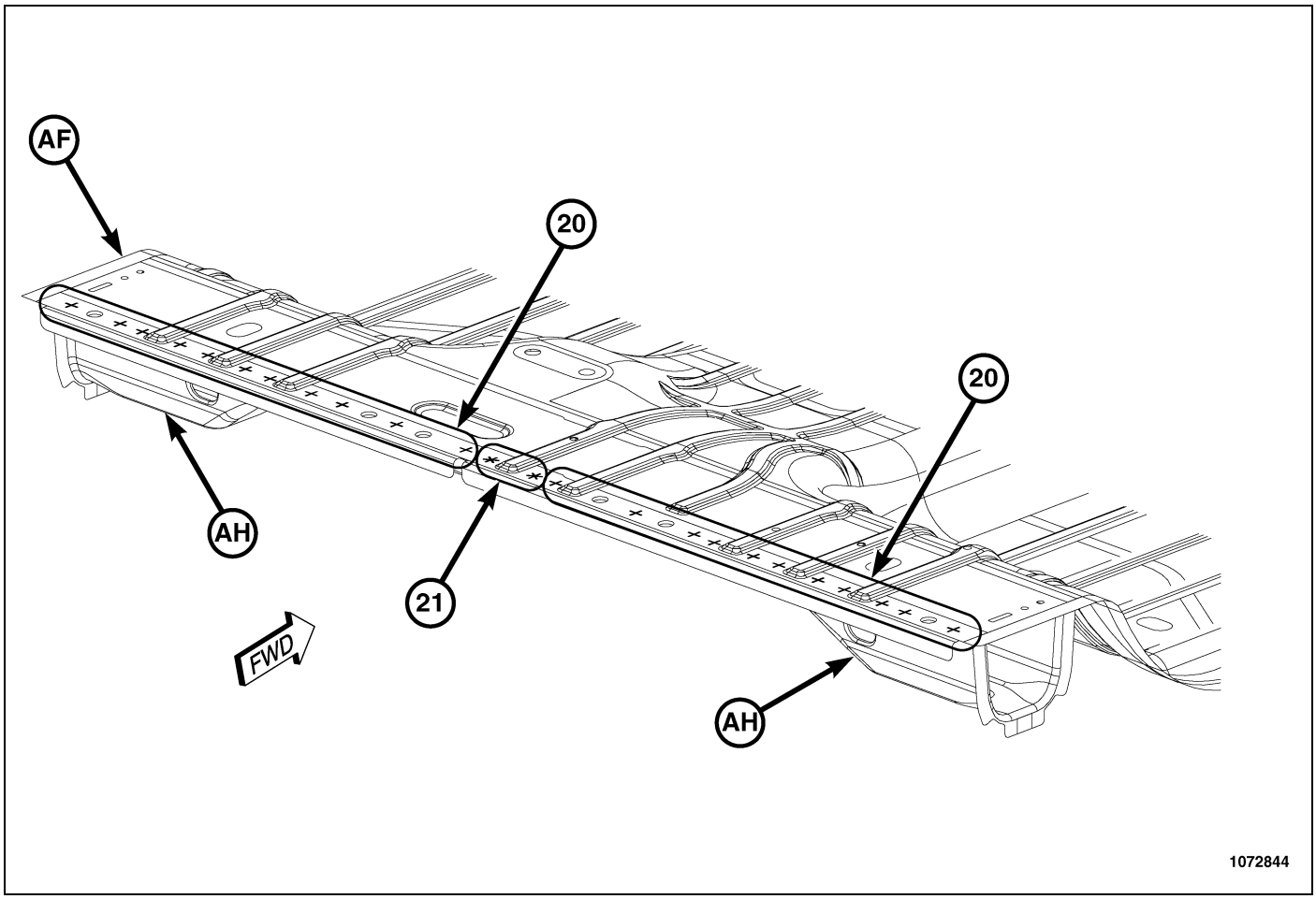

Fig. 118 Underbody Complete – Quad Cab (10 of 12)

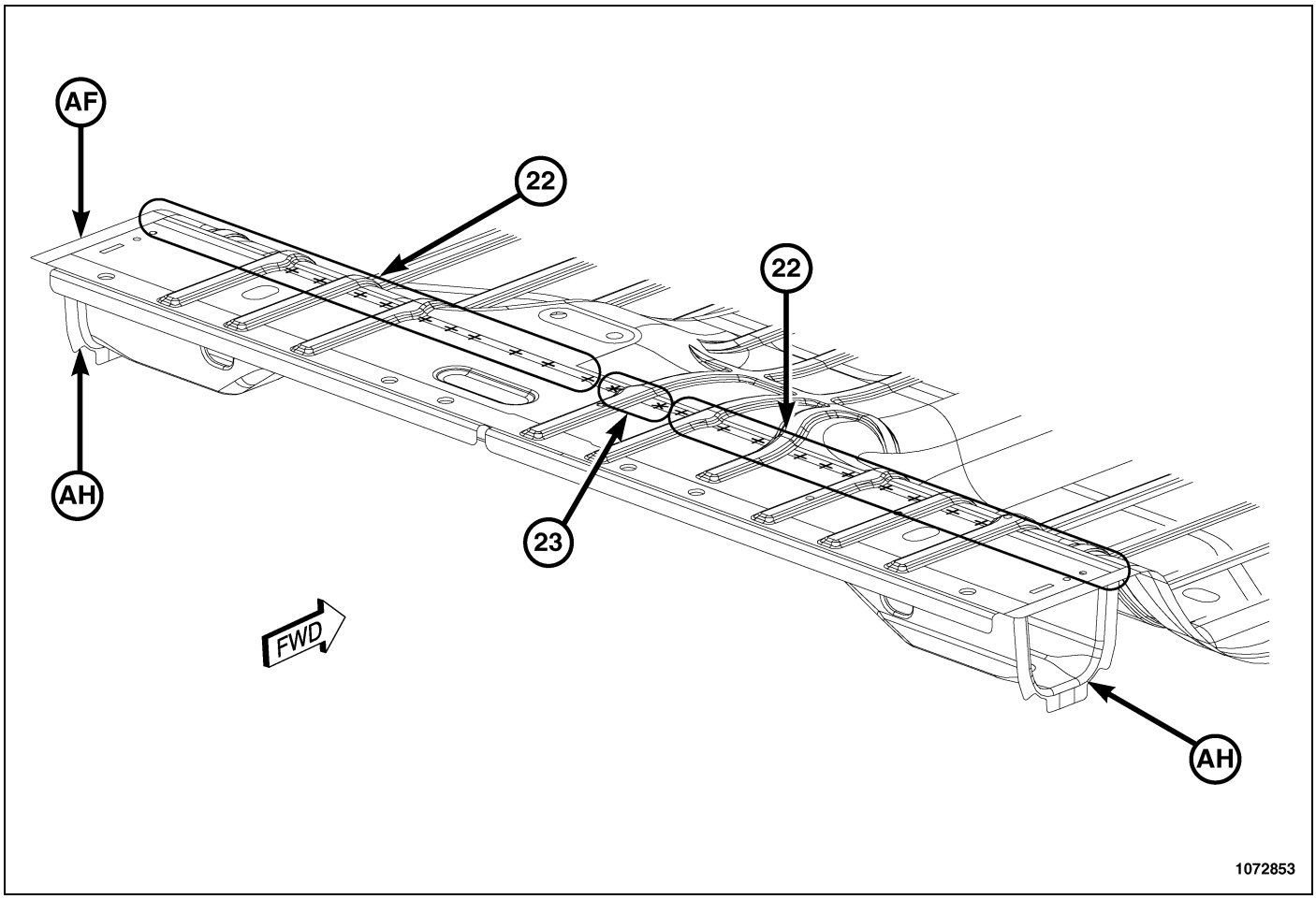

Fig. 119 Underbody Complete – Quad Cab (11 of 12)

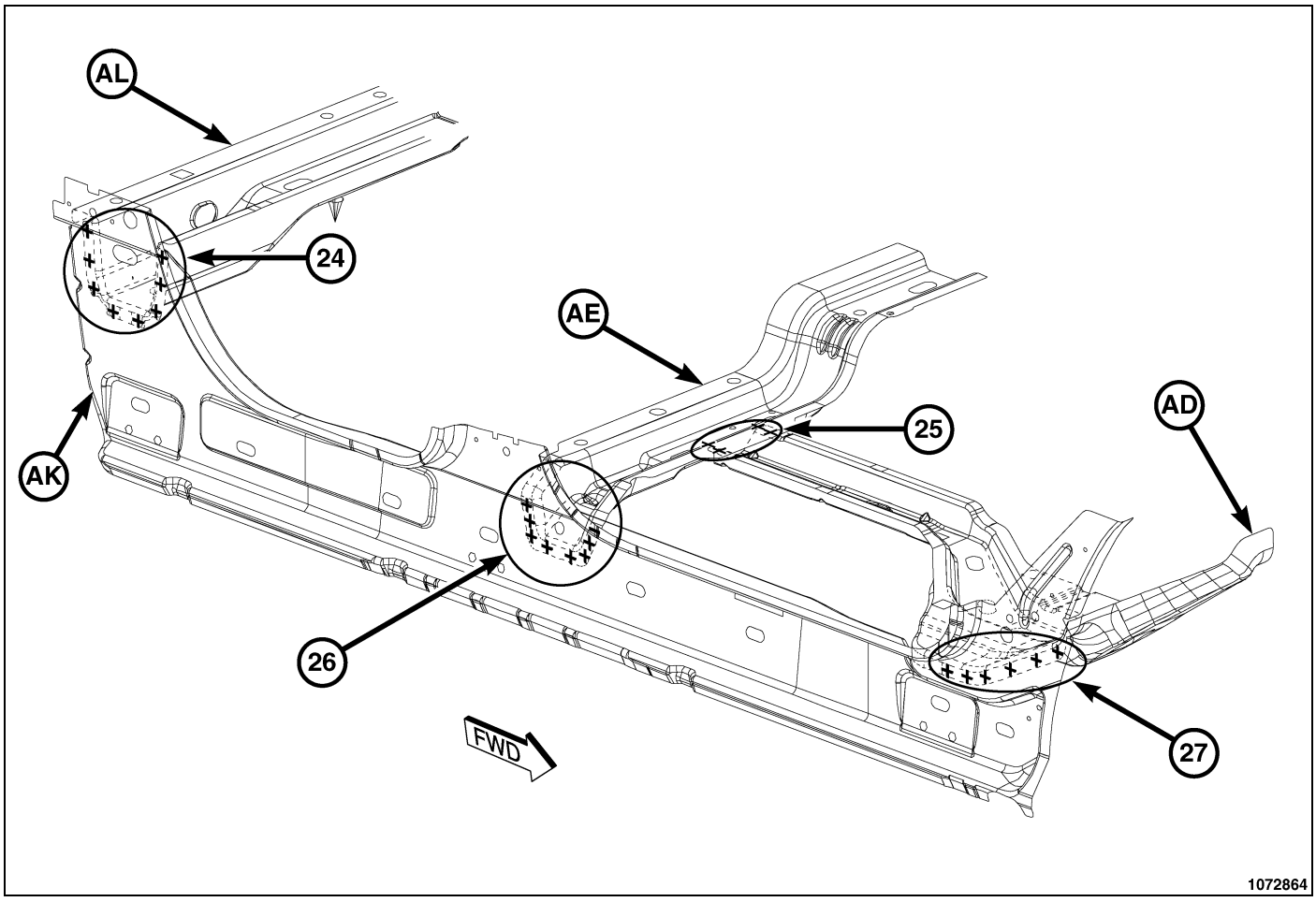

Fig. 120 Underbody Complete – Quad Cab (12 of 12)

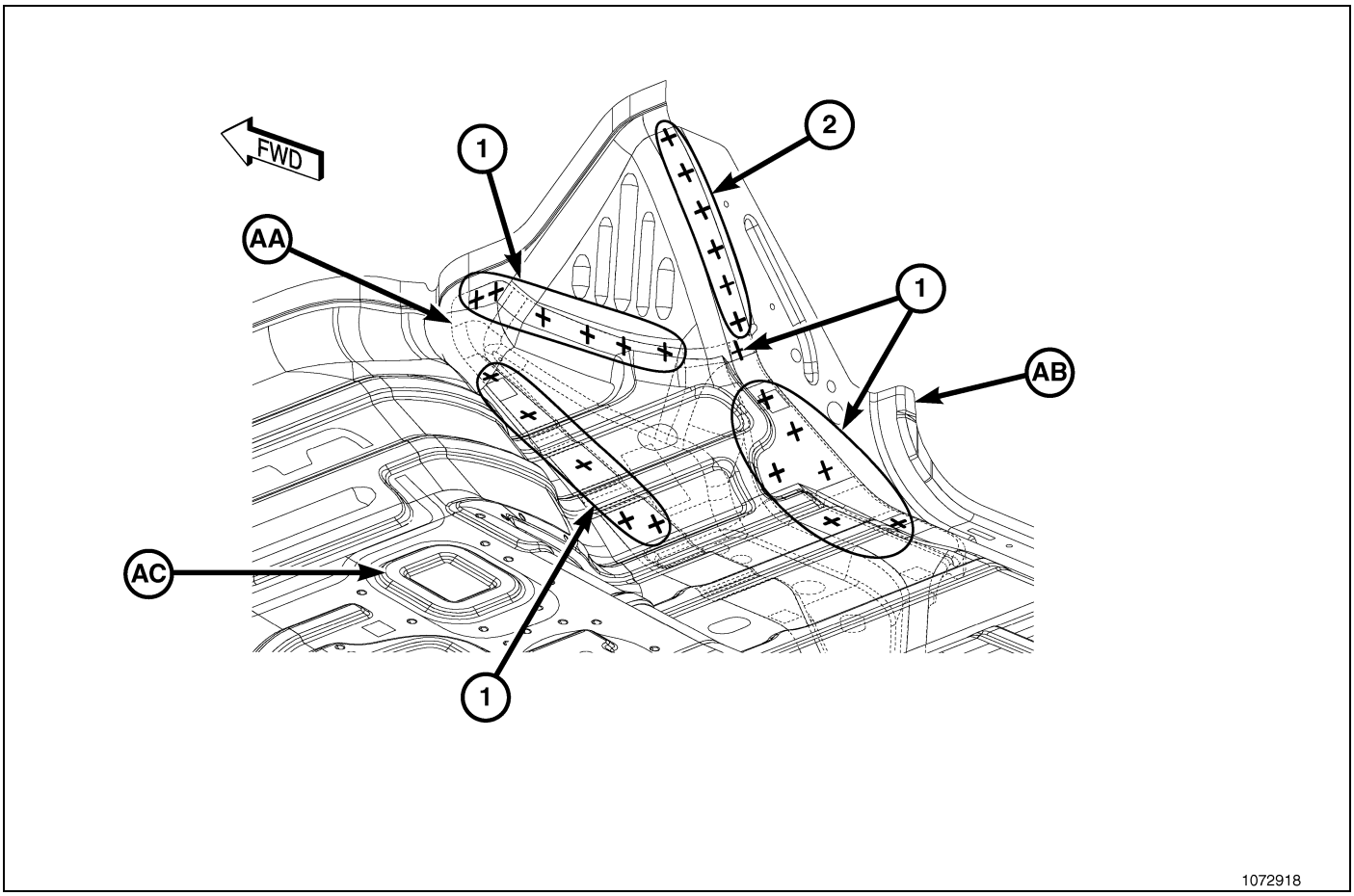

Fig. 121 Underbody Complete – Crew Cab (1 of 11)

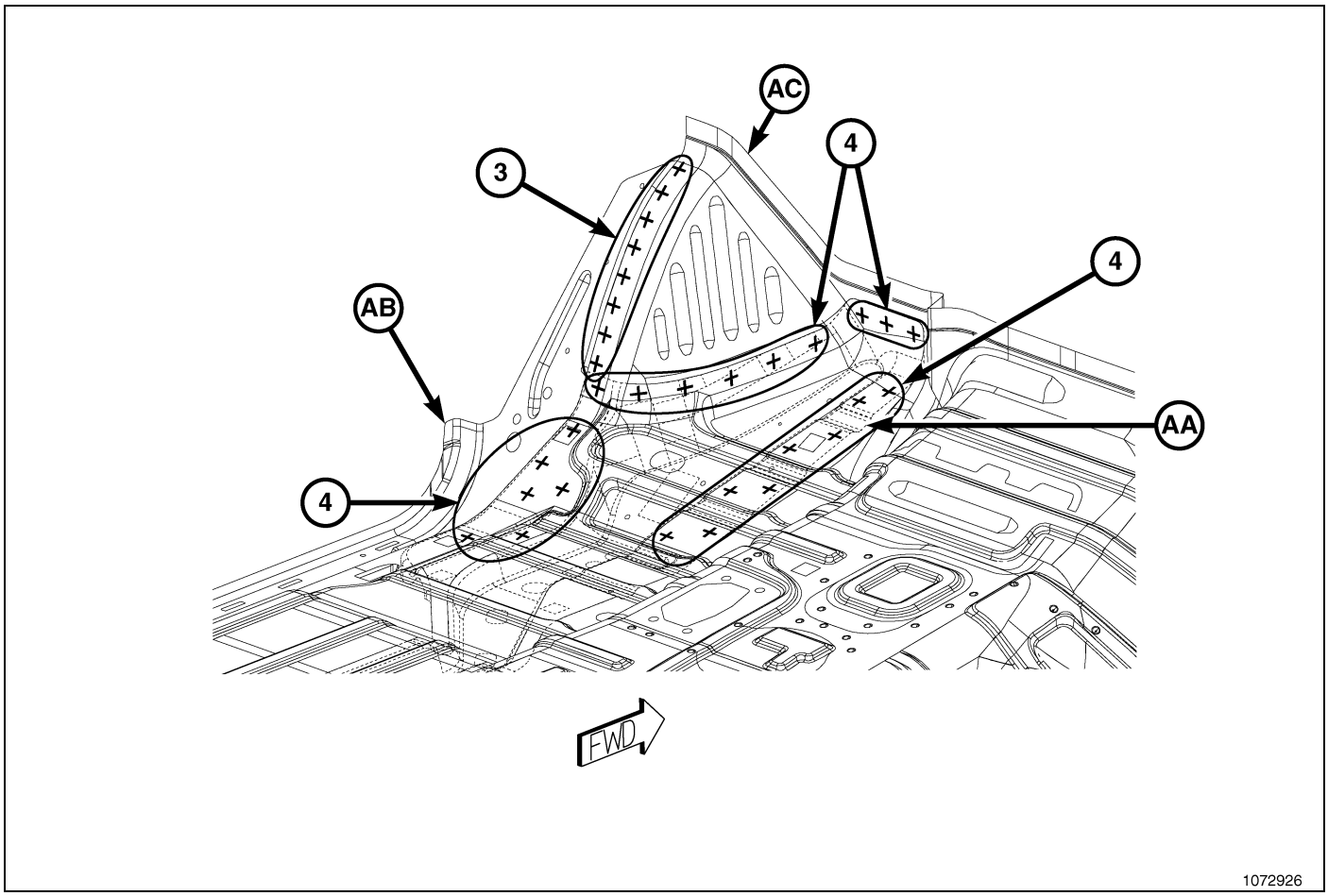

Fig. 122 Underbody Complete – Crew Cab (2 of 11)

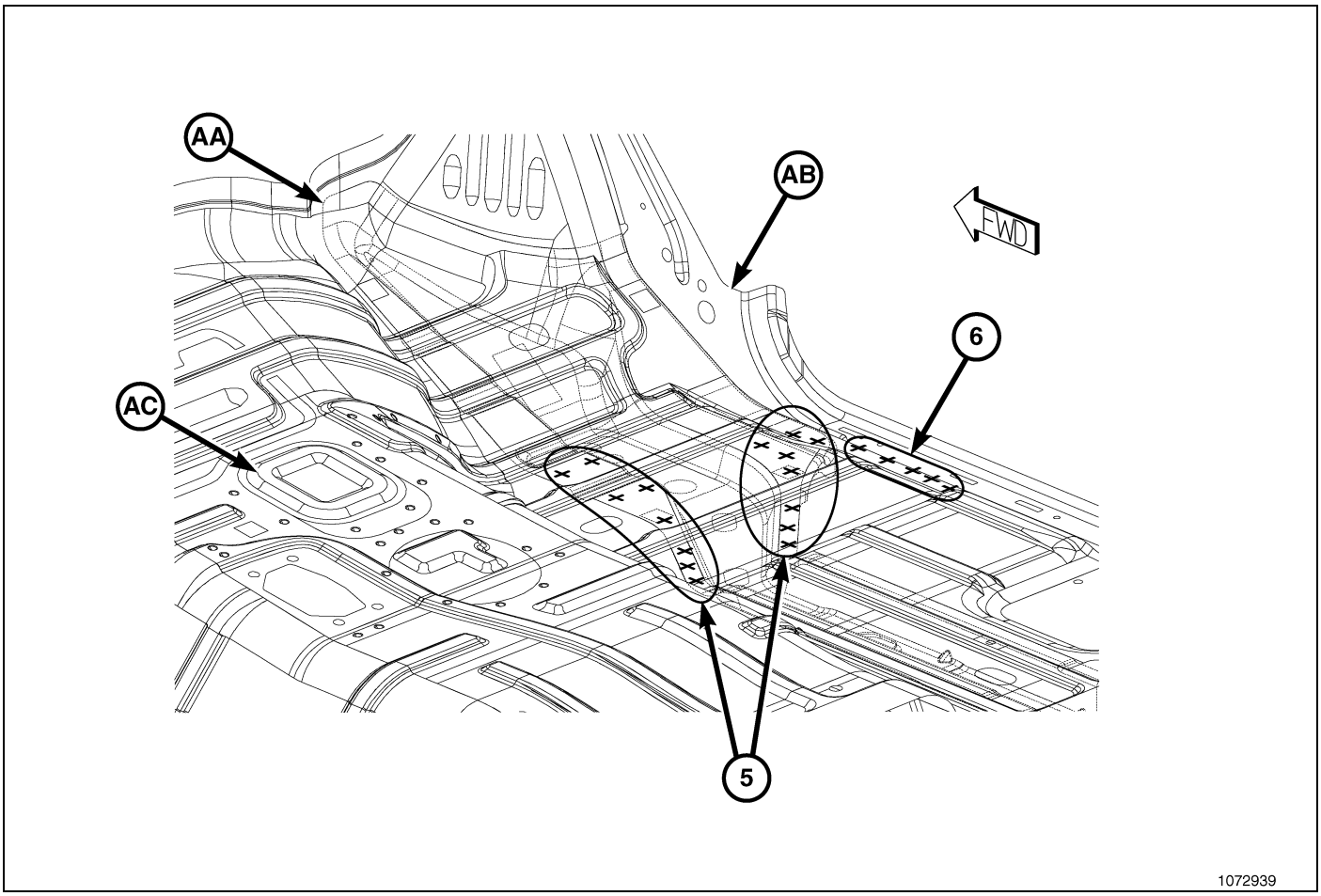

Fig. 123 Underbody Complete – Crew Cab (3 of 11)

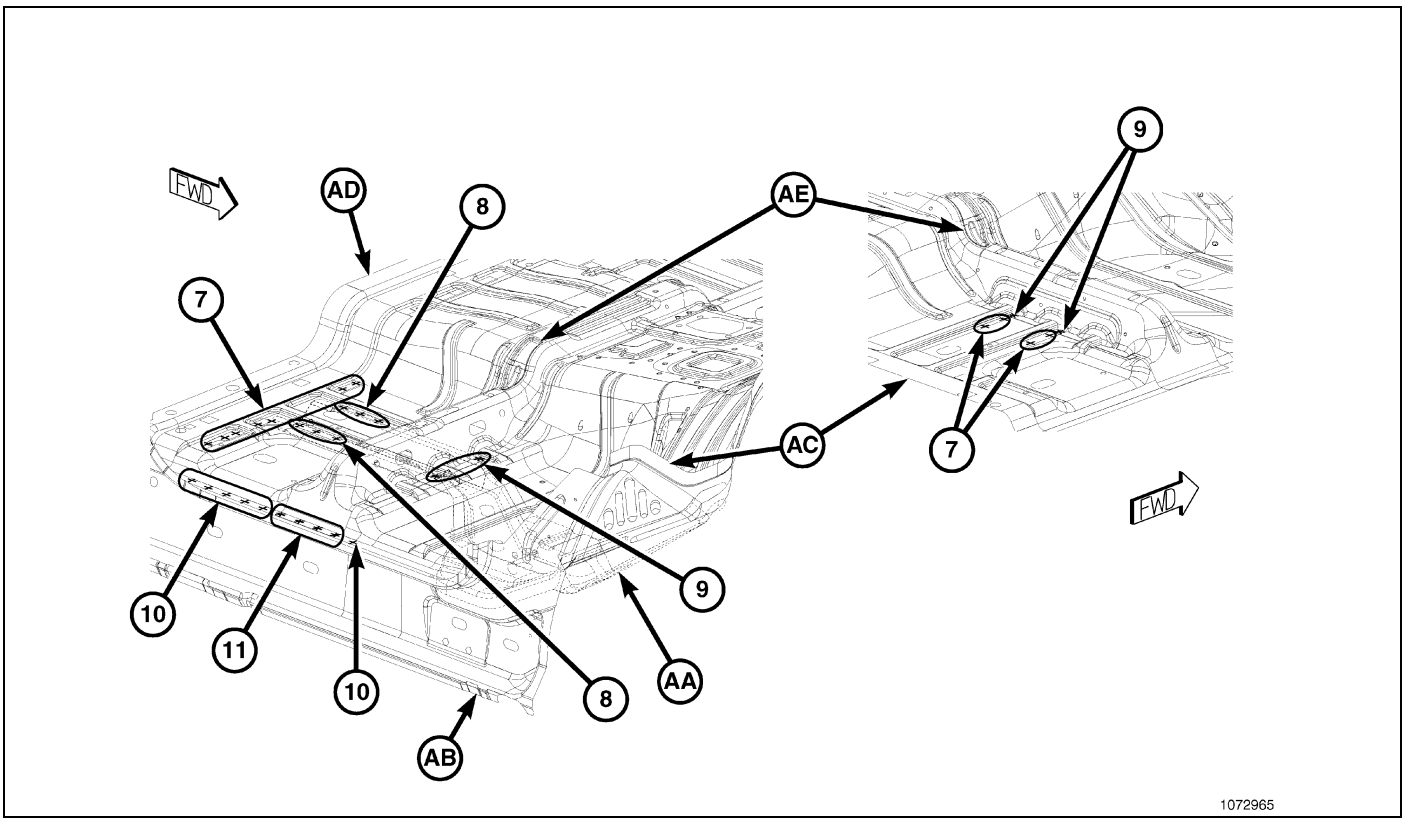

Fig. 124 Underbody Complete – Crew Cab (4 of 11)

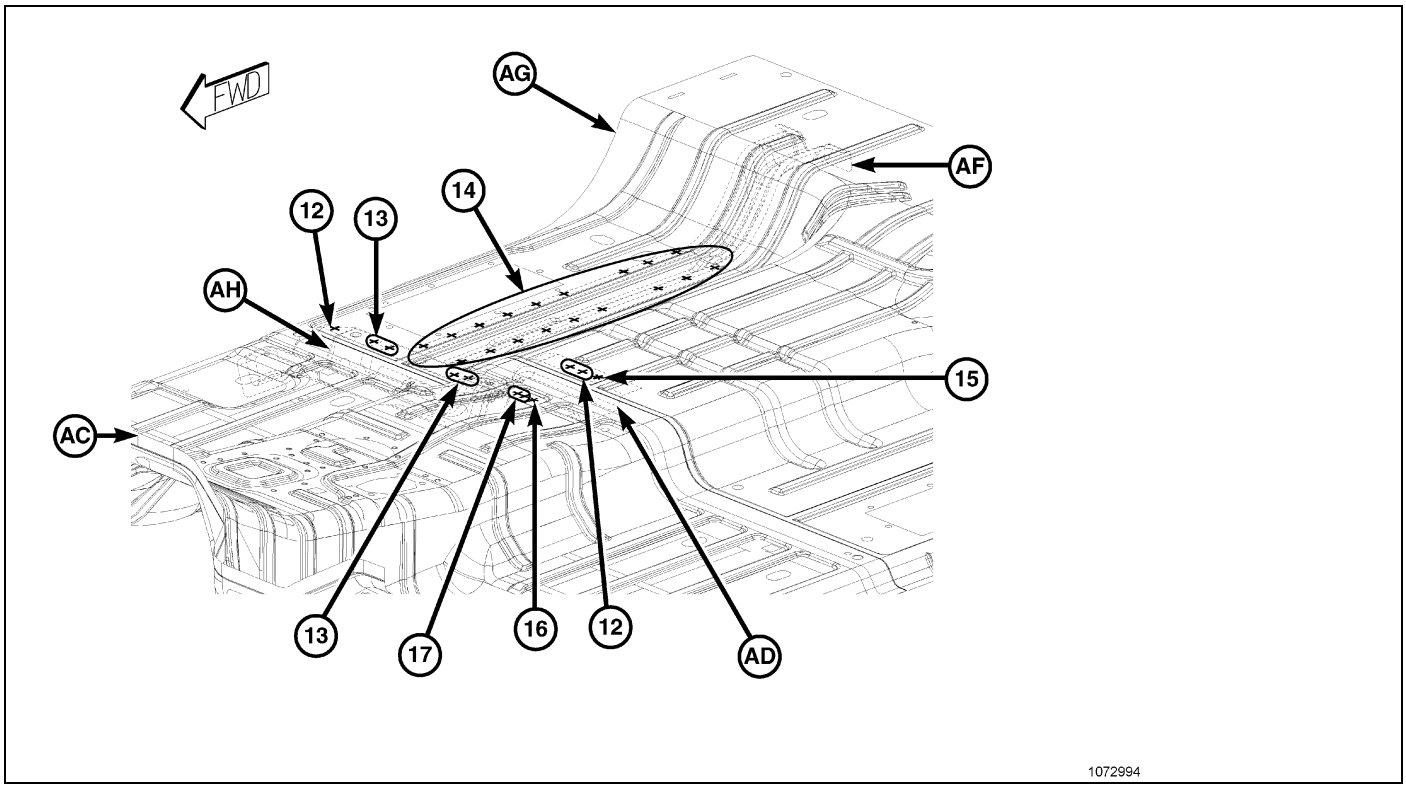

Fig. 125 Underbody Complete – Crew Cab (5 of 11)

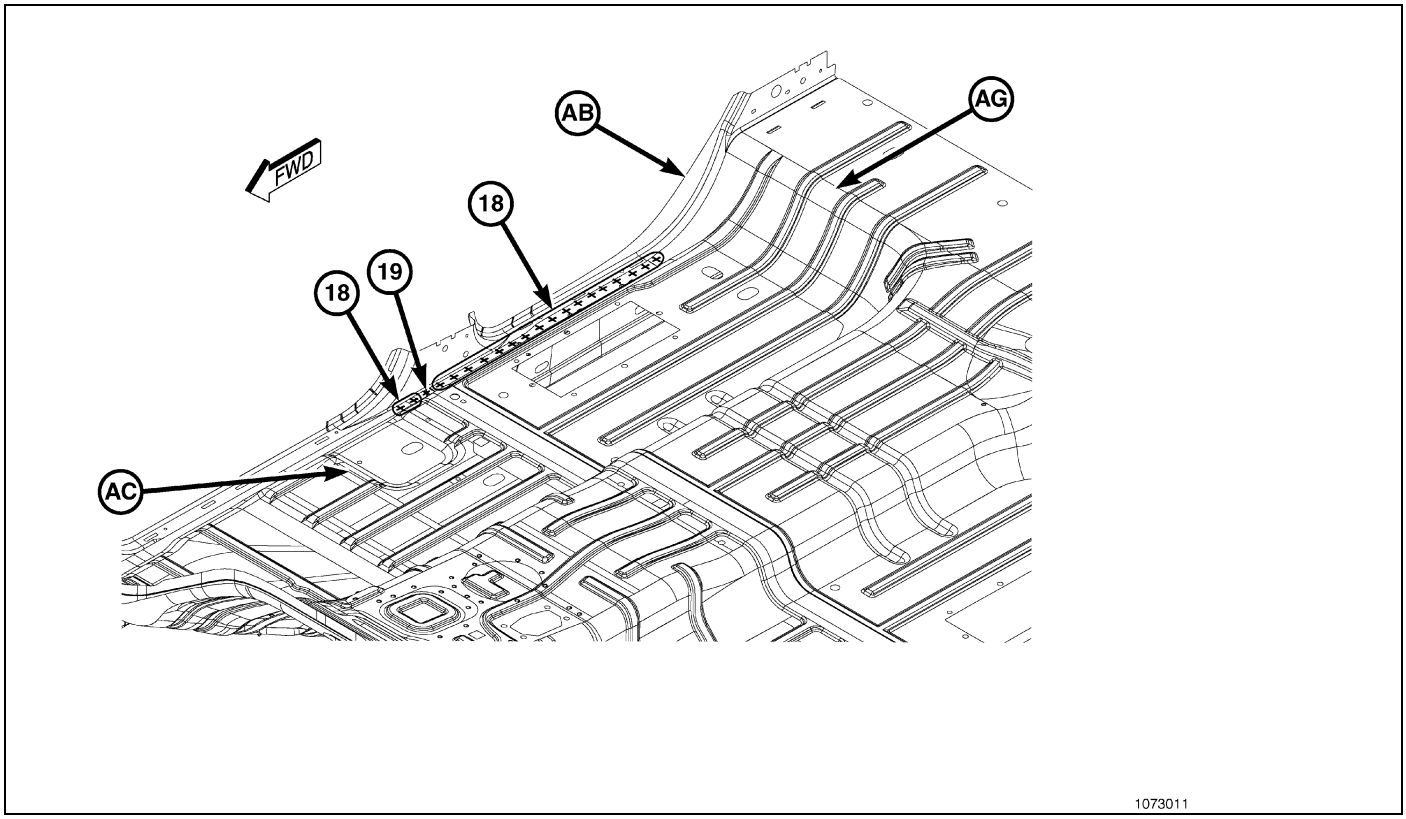

Fig. 126 Underbody Complete – Crew Cab (6 of 11)

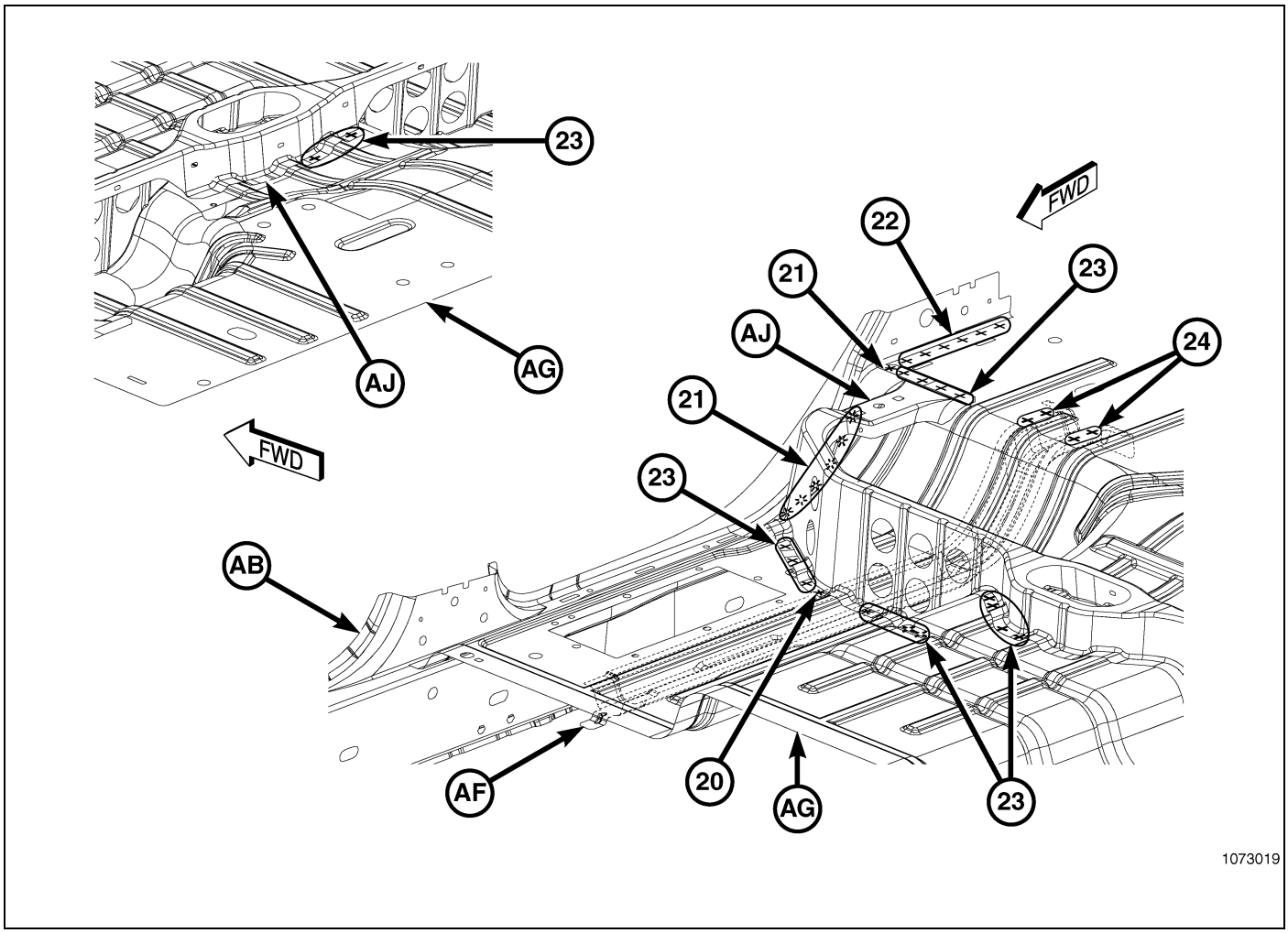

Fig. 127 Underbody Complete – Crew Cab (7 of 11)

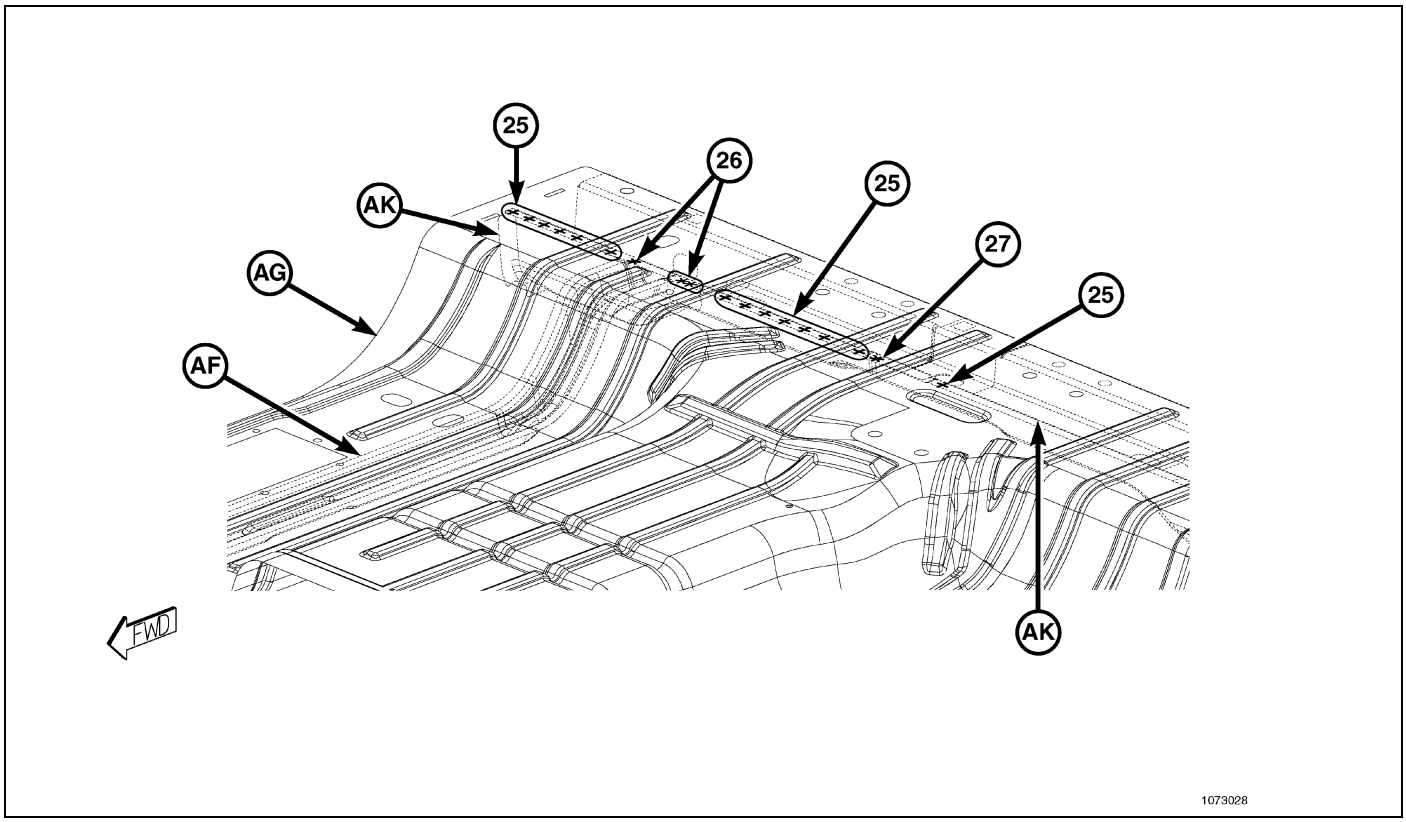

Fig. 128 Underbody Complete – Crew Cab (8 of 11)

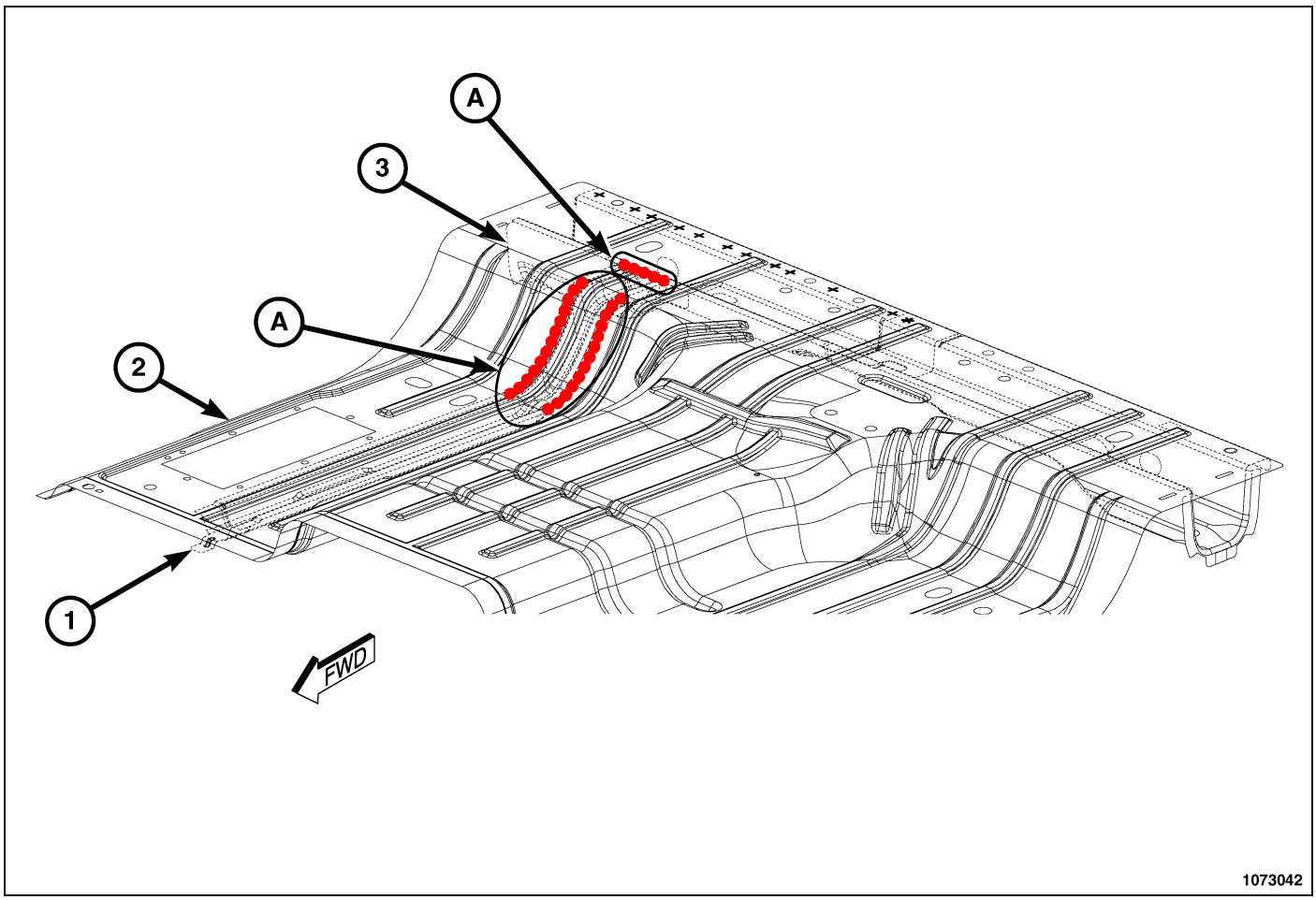

Fig. 129 Underbody Complete – Crew Cab (9 of 11)

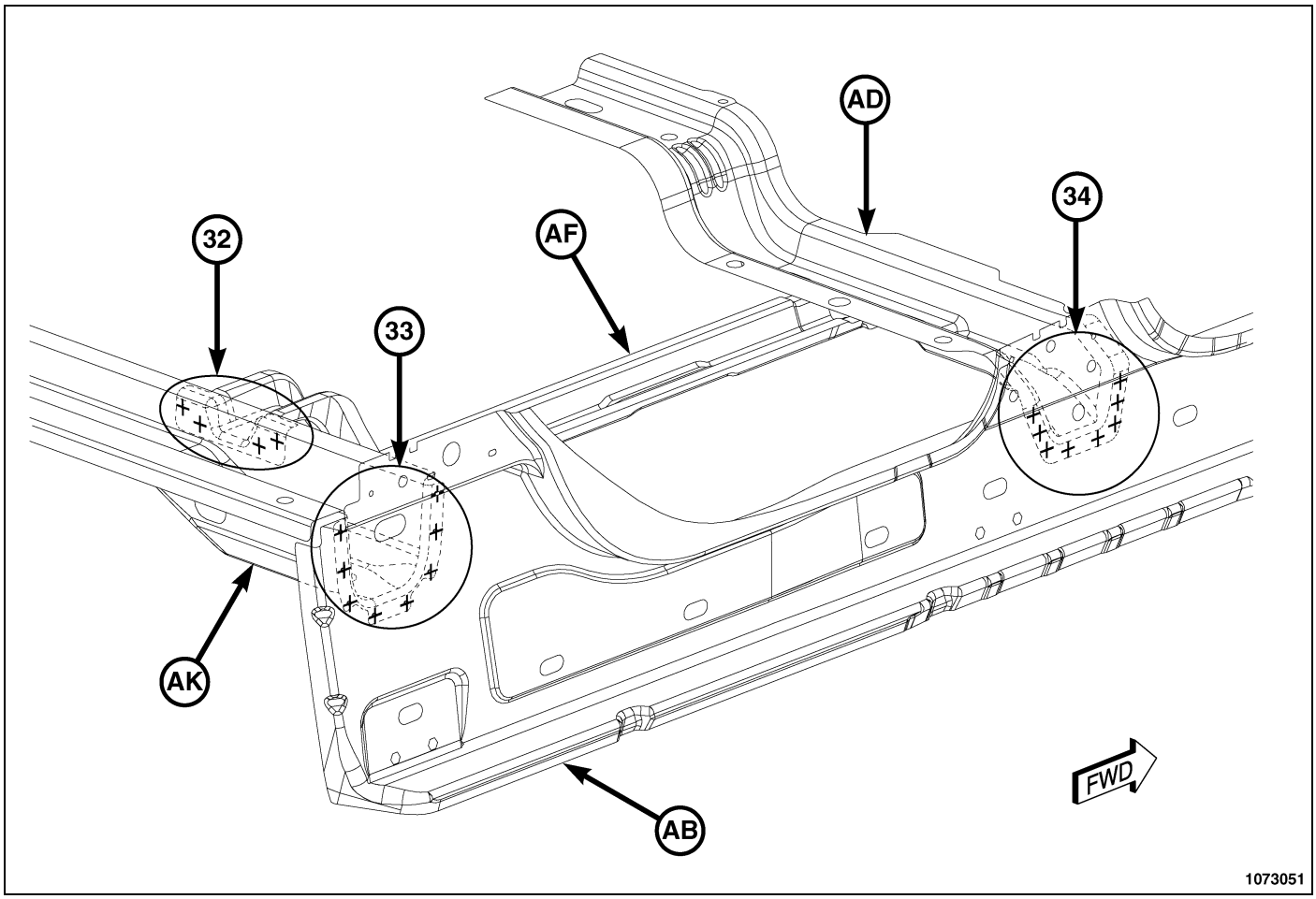

Fig. 130 Underbody Complete – Crew Cab (10 of 11)

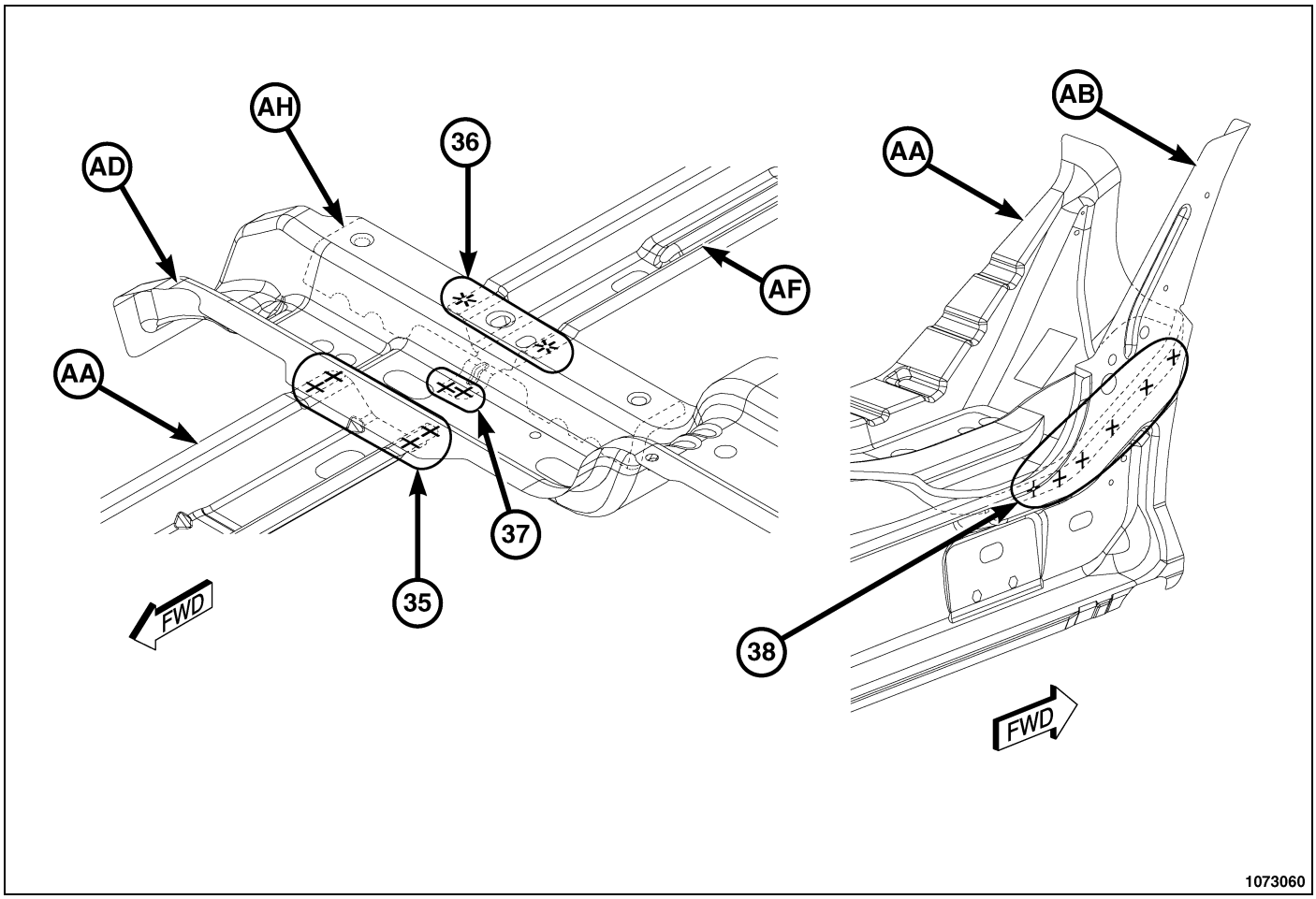

Fig. 131 Underbody Complete – Crew Cab (11 of 11)

BODY SIDE APERTURE INNER, STANDARD CAB - PARTS IDENTIFICATION LEGEND

ITEM	DESCRIPTION
1	AC TO AA 2/SD S/WELDS (ORD)
2	AD TO AB 1/SD PROJ WELDS (ORD)
3	AE TO AA 4/SD PROJ WELDS (ORD)
4	AF TO AA 7/SD S/WELDS (ORD)
5	AB TO AA 12/SD S/ WELDS (ORD)
6	AB TO AA 5/SD S/WELDS (SAF)
7	AG TO AA 32/SD S/WELDS (ORD)
8	AG TO AA 32/SD S/WELDS (ORD)
AA	PANEL - BODY SIDE INR STD CAB RT -
AA	PANEL - BODY SIDE INR STD CAB LT -
AB	REINF - SHOULDER BELT MTG FRT SEAT RT -
AB	REINF - SHOULDER BELT MTG FRT SEAT RT -
AC	NUT/PLATE.EXTRUDED - SPECIAL.PF-SAFETY - RR SEAT BELT ANCHOR
AC	NUT/PLATE.EXTRUDED - SPECIAL.PF-SAFETY - RR SEAT BELT ANCHOR
AD	NUT/WELD.HEX.FLG - FREE.PILOT.PT.SPECIAL - FRT SHLDR BELT REINF
AD	NUT/WELD.HEX.FLG - FREE.PILOT.PT.SPECIAL - FRT SHLDR BELT REINF

BODY SIDE APERTURE INNER, STANDARD CAB - PARTS IDENTIFICATION LEGEND, continued

ITEM	DESCRIPTION
AE	NUT/WELD.RD - NO.FIN.SPECIAL - INTERIOR TO BODY
AE	NUT/WELD.RD - NO.FIN.SPECIAL - INTERIOR TO BODY
AF	BRACKET - A-PILLAR W/GRAB HANDLE RT -
AF	BRACKET - A-PILLAR W/GRAB HANDLE LT -
AG	REINF - SILL STANDARD CAB RT -
AG	REINF - SILL STANDARD CAB RT -

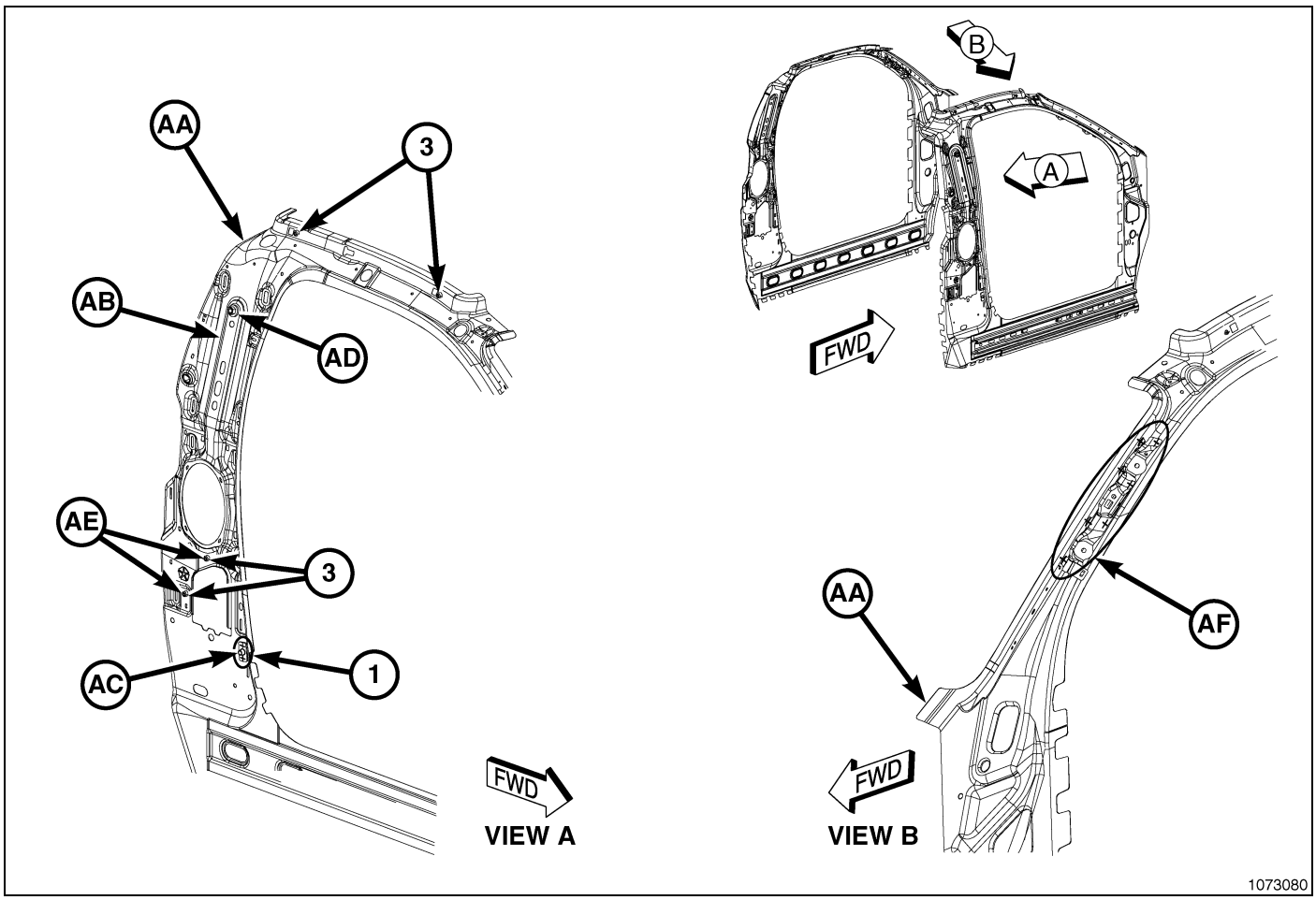

Fig. 132 Body Side Aperture Inner – Standard Cab (1 of 4)

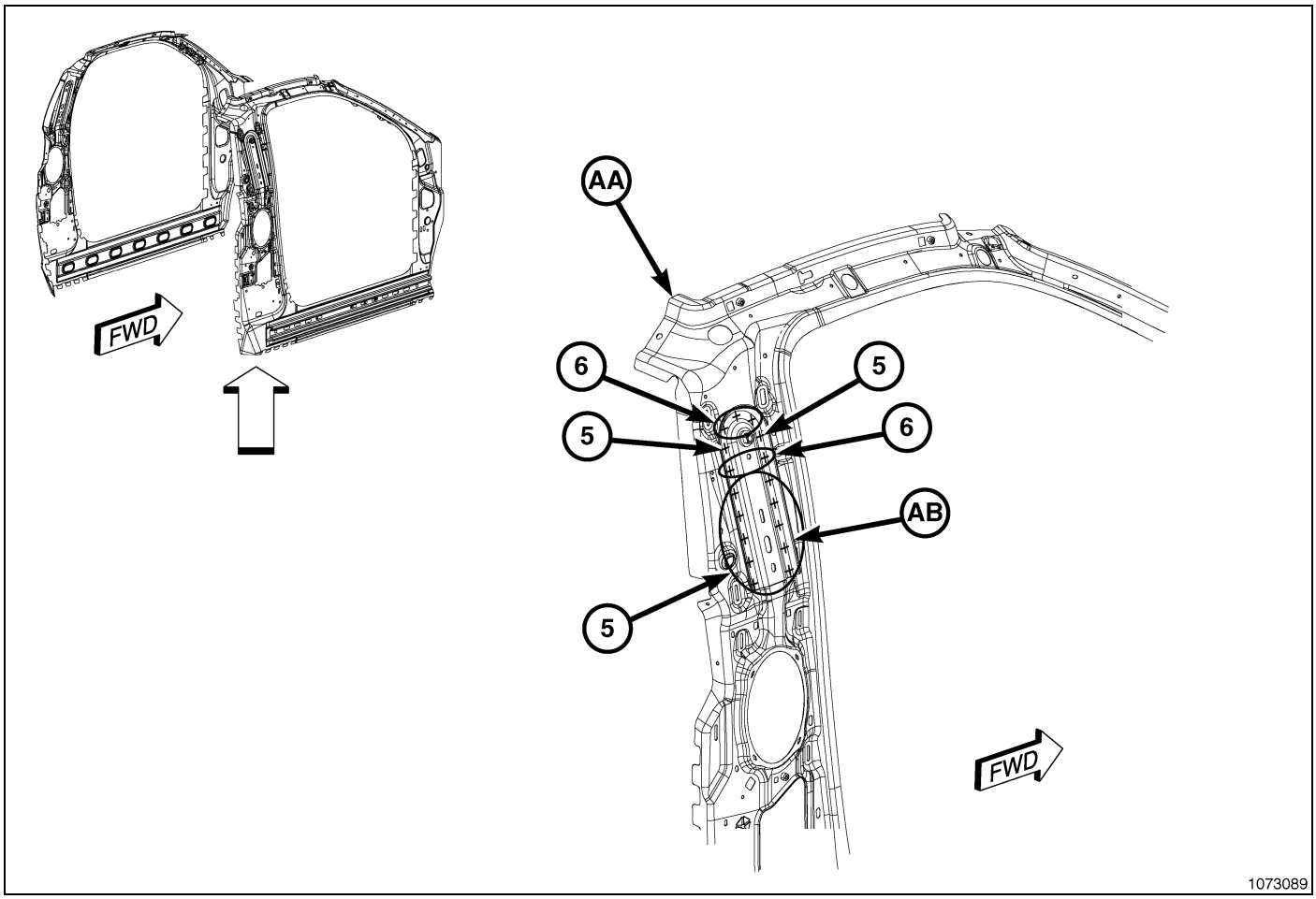

Fig. 133 Body Side Aperture Inner – Standard Cab (2 of 4)

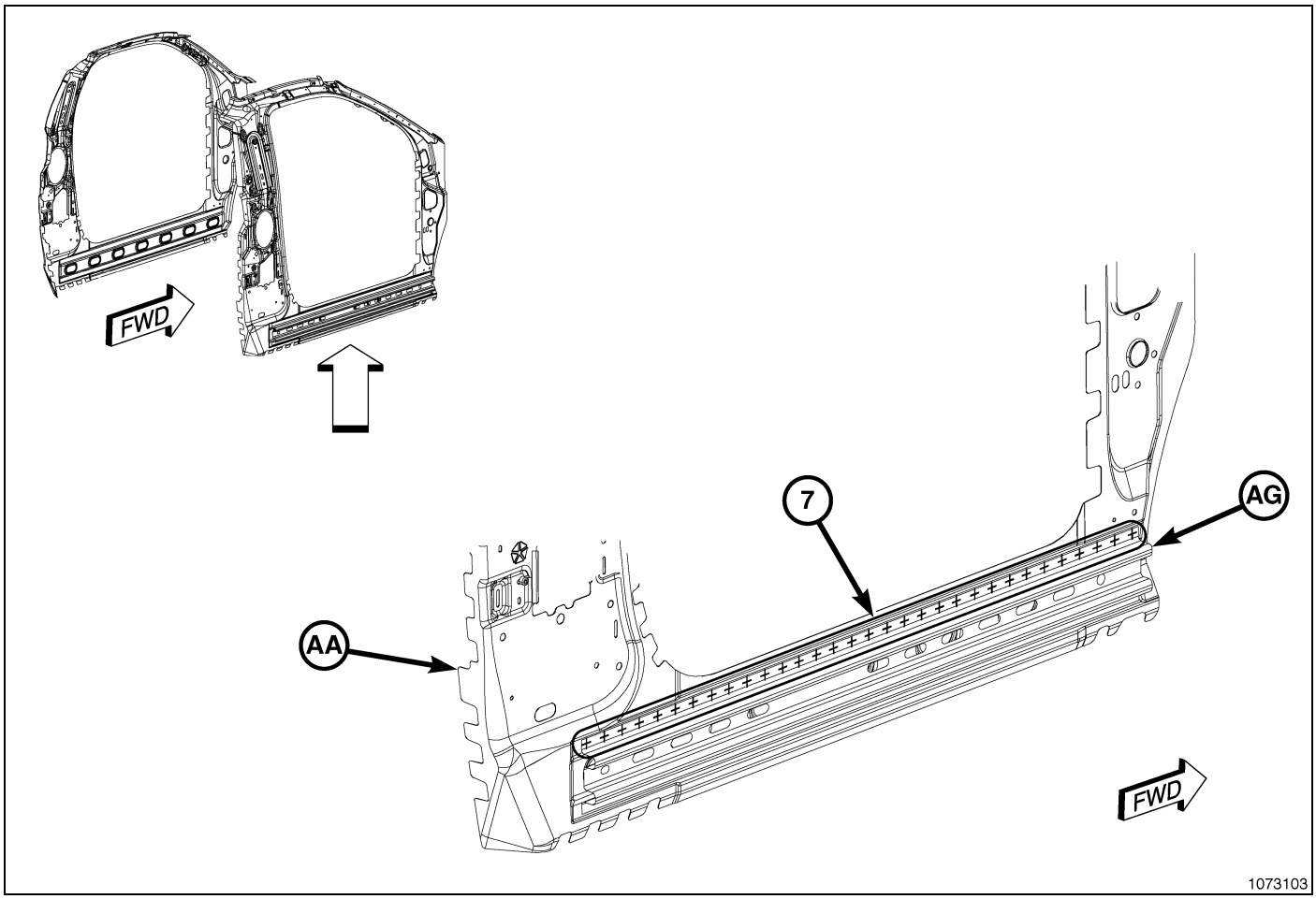

Fig. 134 Body Side Aperture Inner – Standard Cab (3 of 4)

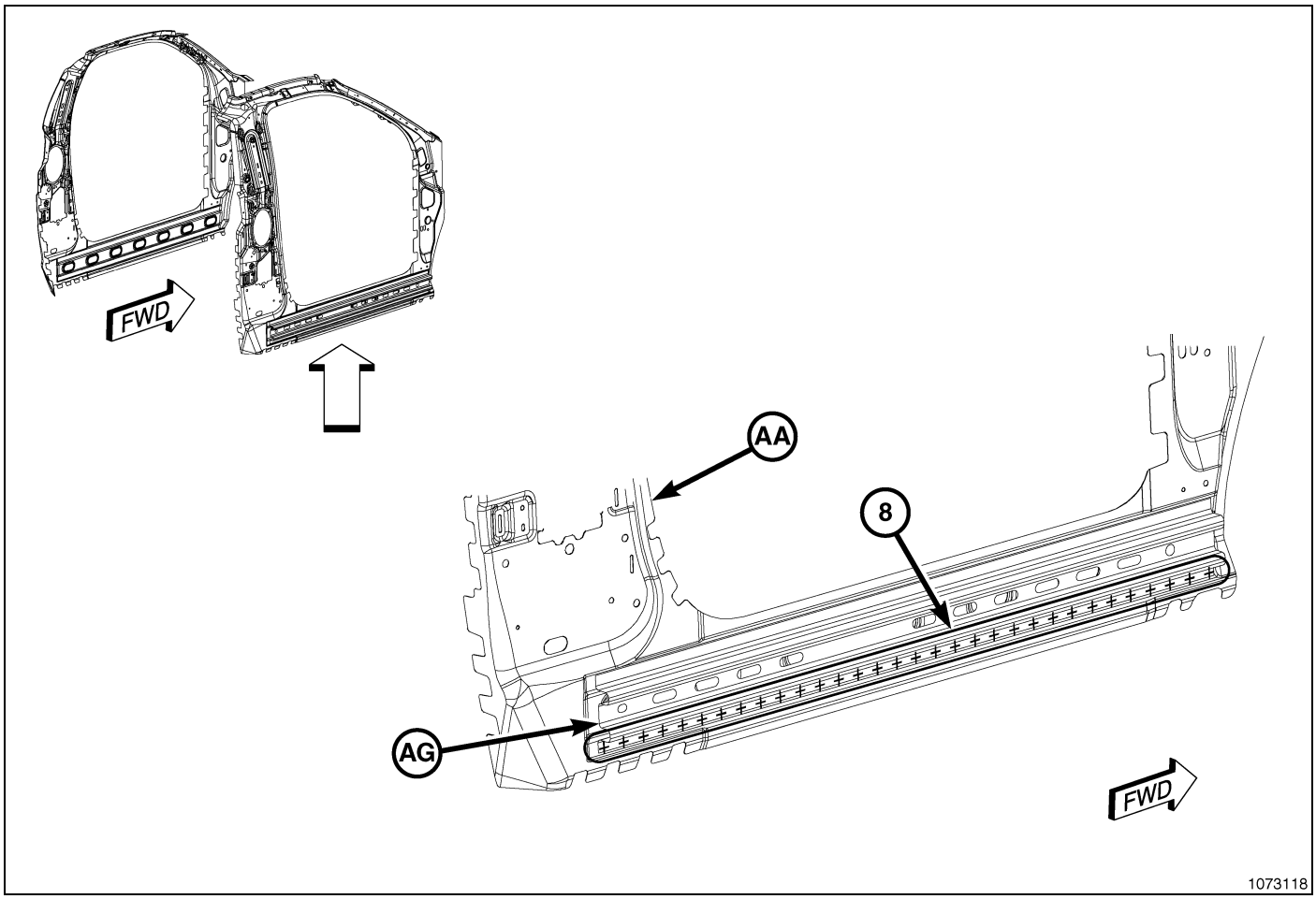

Fig. 135 Body Side Aperture Inner – Standard Cab (4 of 4)

BODY SIDE APERTURE INNER, QUAD CAB - PARTS IDENTIFICATION LEGEND

ITEM	DESCRIPTION
1	AD TO AA 3/SD S WELDS (ORD)
2	AC TO TO AD AA 1/SD S/WELDS (ORD)
3	AC TO AA 4/SD S/WELDS (ORD)
4	AB TO AA 6/SD S/WELDS (ORD)
5	AD TO AA 9/SD S/WELDS (ORD)
6	AD TO AA 4/SD S/WELDS(SAF)
7	AE TO AA 40/SD S/WELDS (ORD)
8	AF TO AA 2/SD S/WELDS (SAF)
9	AF TO AA 12/SD S/WELDS (ORD)
10	AG TO AA 2/SD PROJ WELDS (ORD)
11	AJ TO AF 1/SD PROJ WELDS (SAF)
12	AH TO AA 6/SD PROJ WELDS (ORD)
13	AJ TO AD 1/SD PROJ WELDS (SAF)
AA	PANEL - BODY SIDE INR QUAD CAB RT -
AA	PANEL - BODY SIDE INR QUAD CAB LT -
AB	BRACKET - A-PILLAR W/GRAB HANDLE RT -

BODY SIDE APERTURE INNER, QUAD CAB - PARTS IDENTIFICATION LEGEND, continued

ITEM	DESCRIPTION
AB	BRACKET - A-PILLAR W/GRAB HANDLE LT -
AC	BRACKET - GRAB HANDLE B PILLAR RT -
AC	BRACKET - GRAB HANDLE B PILLAR LT -
AD	REINF - SHOULDER BELT MTG FRT SEAT RT -
AD	REINF - SHOULDER BELT MTG FRT SEAT LT -
AE	REINF - SILL -
AE	REINF - SILL -
AF	REINF - SHOULDER BELT MOUNTING QUAD CAB RT RR -
AF	REINF - SHOULDER BELT MOUNTING QUAD CAB RT RR -
AG	NUT/PLATE.EXTRUDED - SPECIAL.PF-SAFETY - RR SEAT BELT ANCHOR
AG	NUT/PLATE.EXTRUDED - SPECIAL.PF-SAFETY - RR SEAT BELT ANCHOR
AH	NUT/WELD.RD - NO.FIN.SPECIAL - INTERIOR TO BODY
AH	NUT/WELD.RD - NO.FIN.SPECIAL - INTERIOR TO BODY
AJ	NUT/WELD.HEX.FLG - FREE.PILOT.PT.SPECIAL - FRT SHLDR BELT REINF
AJ	NUT/WELD.HEX.FLG - FREE.PILOT.PT.SPECIAL - FRT SHLDR BELT REINF
AJ	NUT/WELD.HEX.FLG - FREE.PILOT.PT.SPECIAL - RR SHLDR BELT REINF
AJ	NUT/WELD.HEX.FLG - FREE.PILOT.PT.SPECIAL - RR SHLDR BELT REINF

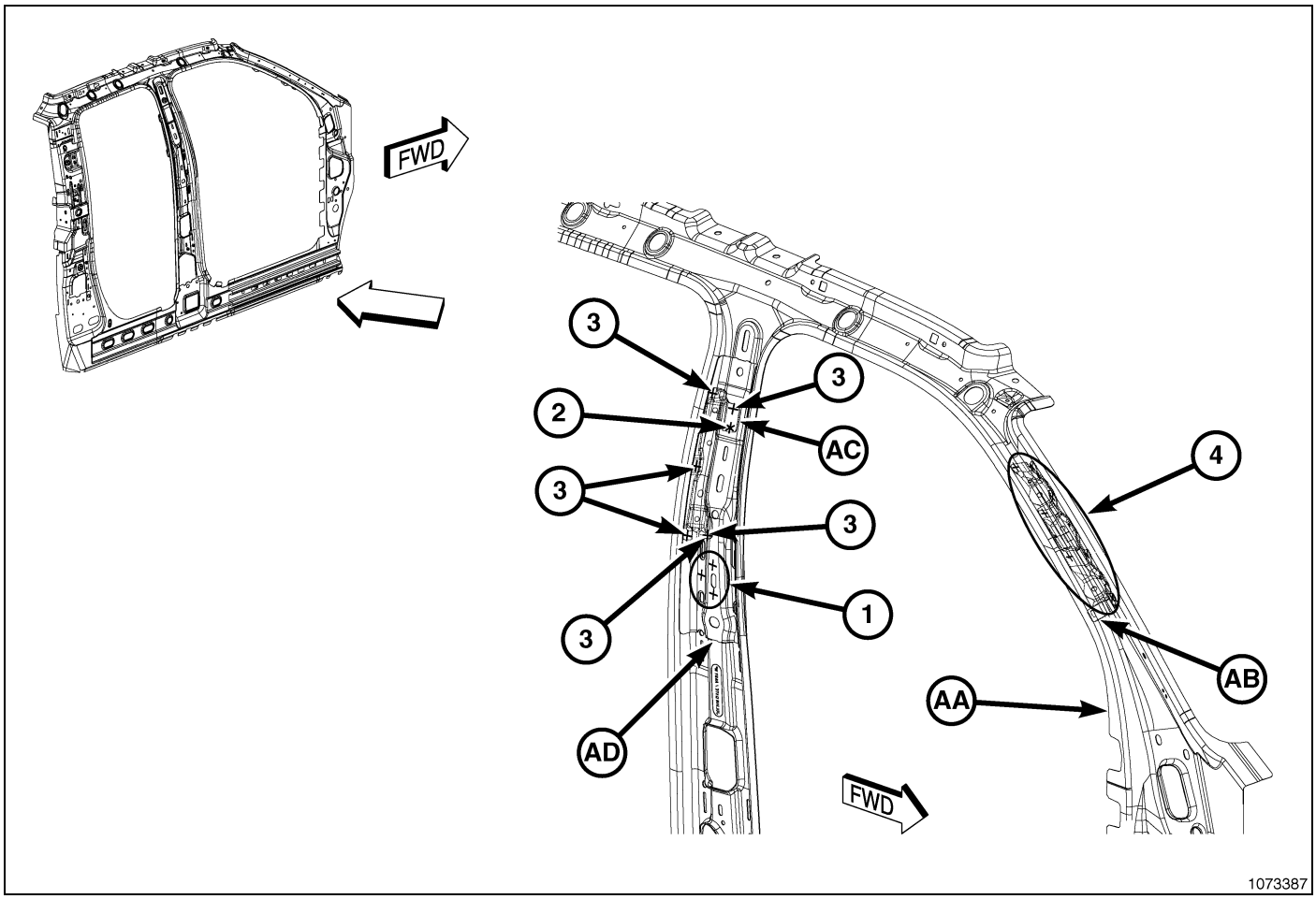

Fig. 136 Body Side Aperture Inner – Quad Cab (1 of 5)

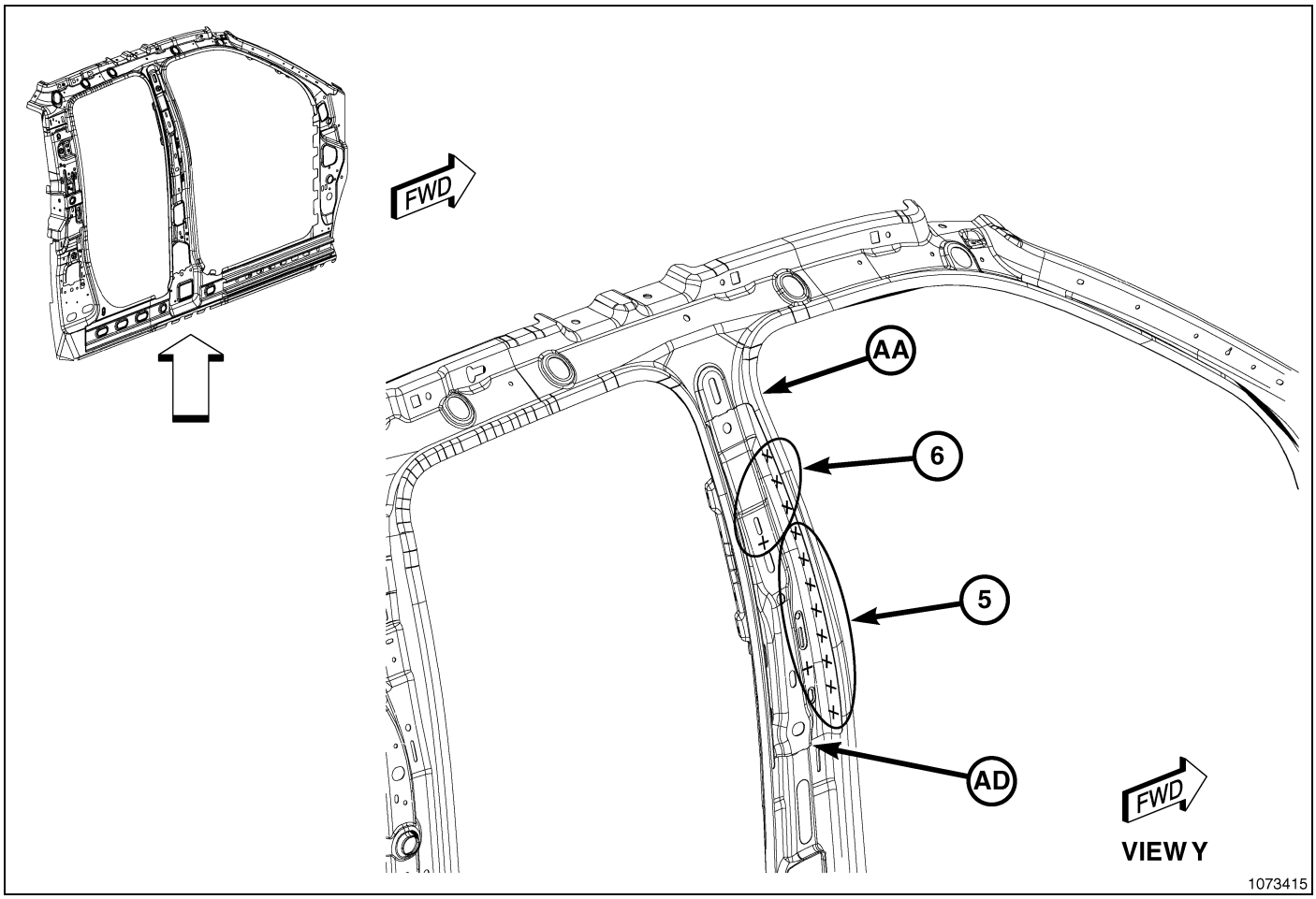

Fig. 137 Body Side Aperture Inner – Quad Cab (2 of 5)

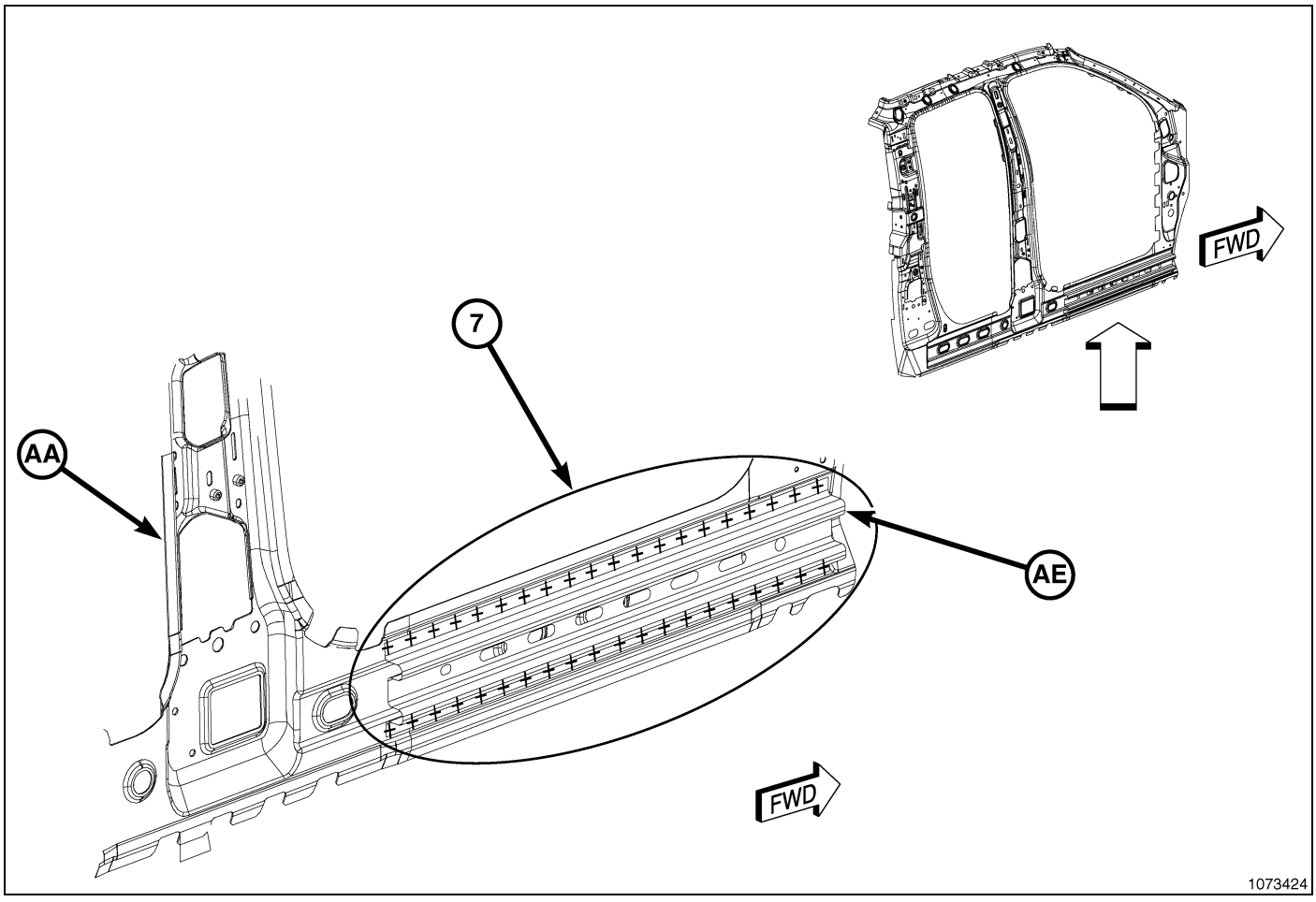

Fig. 138 Body Side Aperture Inner – Quad Cab (3 of 5)

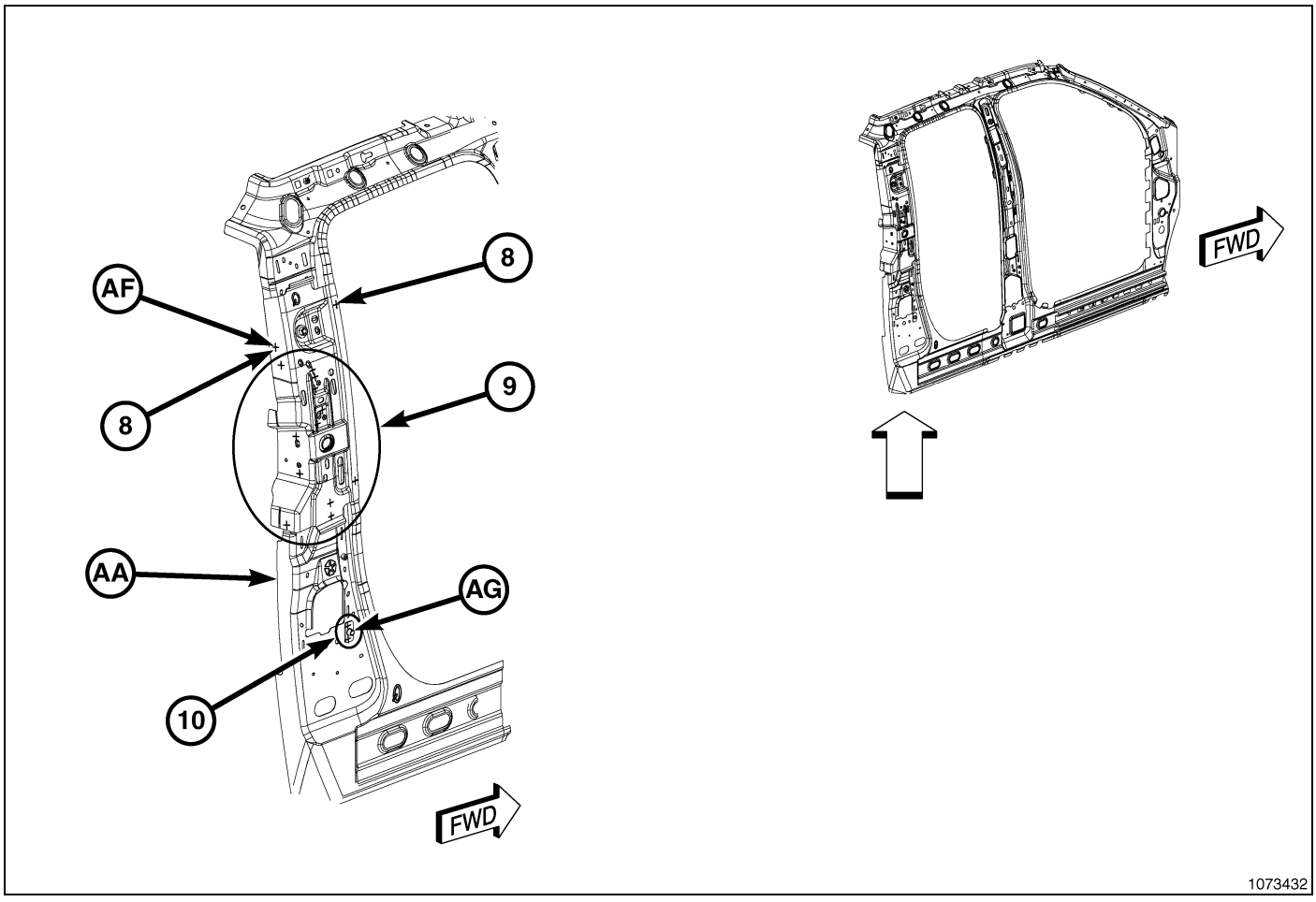

Fig. 139 Body Side Aperture Inner – Quad Cab (4 of 5)

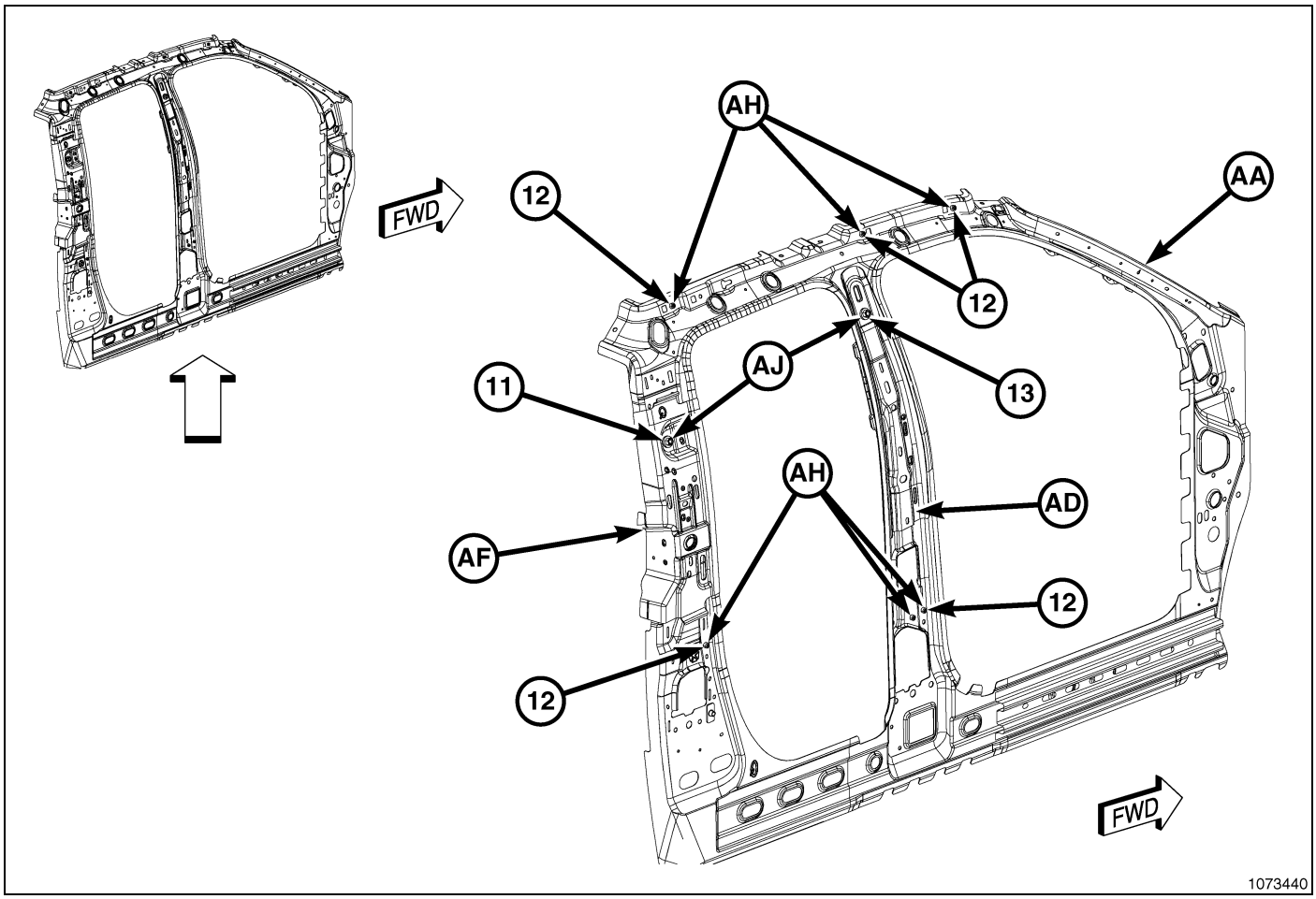

Fig. 140 Body Side Aperture Inner – Quad Cab (5 of 5)

BODY SIDE APERTURE INNER, CREW CAB - PARTS IDENTIFICATION LEGEND

ITEM	DESCRIPTION
1	AB TO AA 7/SD S/WELDS (ORD)
2	AE TO AA 3/SD S/WELDS (ORD)
3	AF TO AE TO AA 1/SD S/ WELDS (ORD)
4	AF TO AA 4/SD S/WELDS (ORD)
5	AH TO AA 2/SD S/WELDS (SAF)
6	AC TO AA 7/SD PROJ WELDS (ORD)
7	AE TO AA 9/SD S/WELDS (ORD)
8	AJ TO AG 1/SD PROJ WELDS (ORD)
9	AJ TO AE 1/SD PROJ WELDS (ORD)
10	AE TO AA 4/SD S/WELDS (SAF)
11	AG TO AA 15/SD S/WELDS (ORD)
12	AG TO AA 2/SD S/WELDS (SAF)
13	AD TO AA 40/SD S/WELDS (ORD)
AA	PANEL - BODY SIDE INR CREW CAB RT -
AA	PANEL - BODY SIDE INR CREW CAB LT -
AB	BRACKET - A-PILLAR W/GRAB HANDLE RT -

BODY SIDE APERTURE INNER, CREW CAB - PARTS IDENTIFICATION LEGEND, continued

ITEM	DESCRIPTION
AB	BRACKET - A-PILLAR W/GRAB HANDLE LT -
AC	NUT/WELD.RD - NO.FIN.SPECIAL - INTERIOR TO BODY
AC	NUT/WELD.RD - NO.FIN.SPECIAL - INTERIOR TO BODY
AD	REINF - SILL -
AE	REINF - SHOULDER BELT MTG FRT SEAT RT -
AE	REINF - SHOULDER BELT MTG FRT SEAT LT -
AF	BRACKET - GRAB HANDLE B PILLAR RT -
AF	BRACKET - GRAB HANDLE B PILLAR LT -
AG	REINF - SHOULDER BELT MOUNTING CREW CAB RT RR -
AG	REINF - SHOULDER BELT MOUNTING CREW CAB LT RR -
AH	NUT/PLATE.EXTRUDED - SPECIAL.PF-SAFETY - FRT SEAT BELT ANCHOR
AH	NUT/PLATE.EXTRUDED - SPECIAL.PF-SAFETY - RR SEAT BELT ANCHOR
AJ	NUT/WELD.HEX.FLG - FREE.PILOT.PT.SPECIAL - RR SHLDR BELT REINF
AJ	NUT/WELD.HEX.FLG - FREE.PILOT.PT.SPECIAL - RR SHLDR BELT REINF
AJ	NUT/WELD.HEX.FLG - FREE.PILOT.PT.SPECIAL - FRT SHLDR BELT REINF
AJ	NUT/WELD.HEX.FLG - FREE.PILOT.PT.SPECIAL - FRT SHLDR BELT REINF

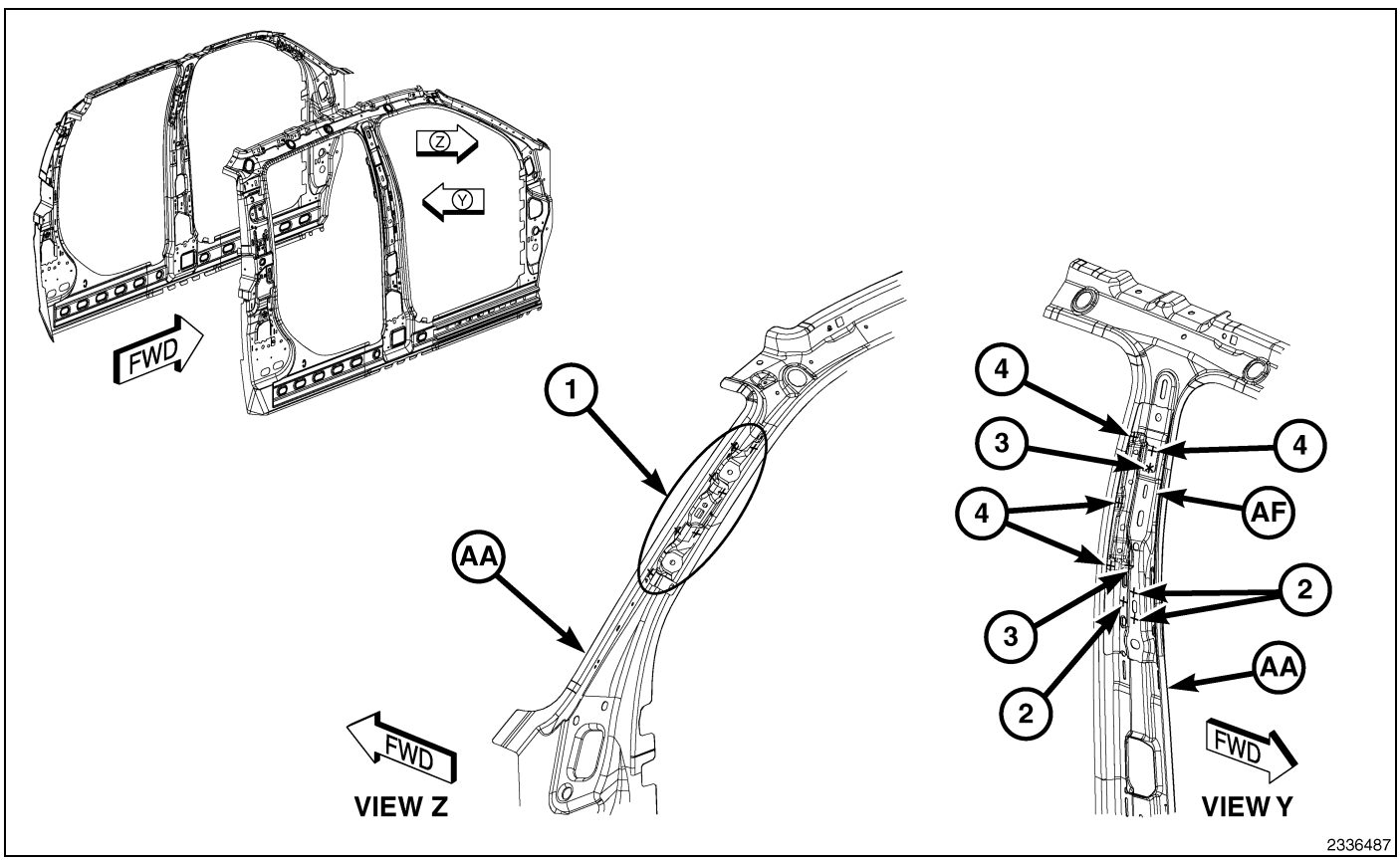

Fig. 141 Body Side Aperture Inner – Crew Cab (1 of 4)

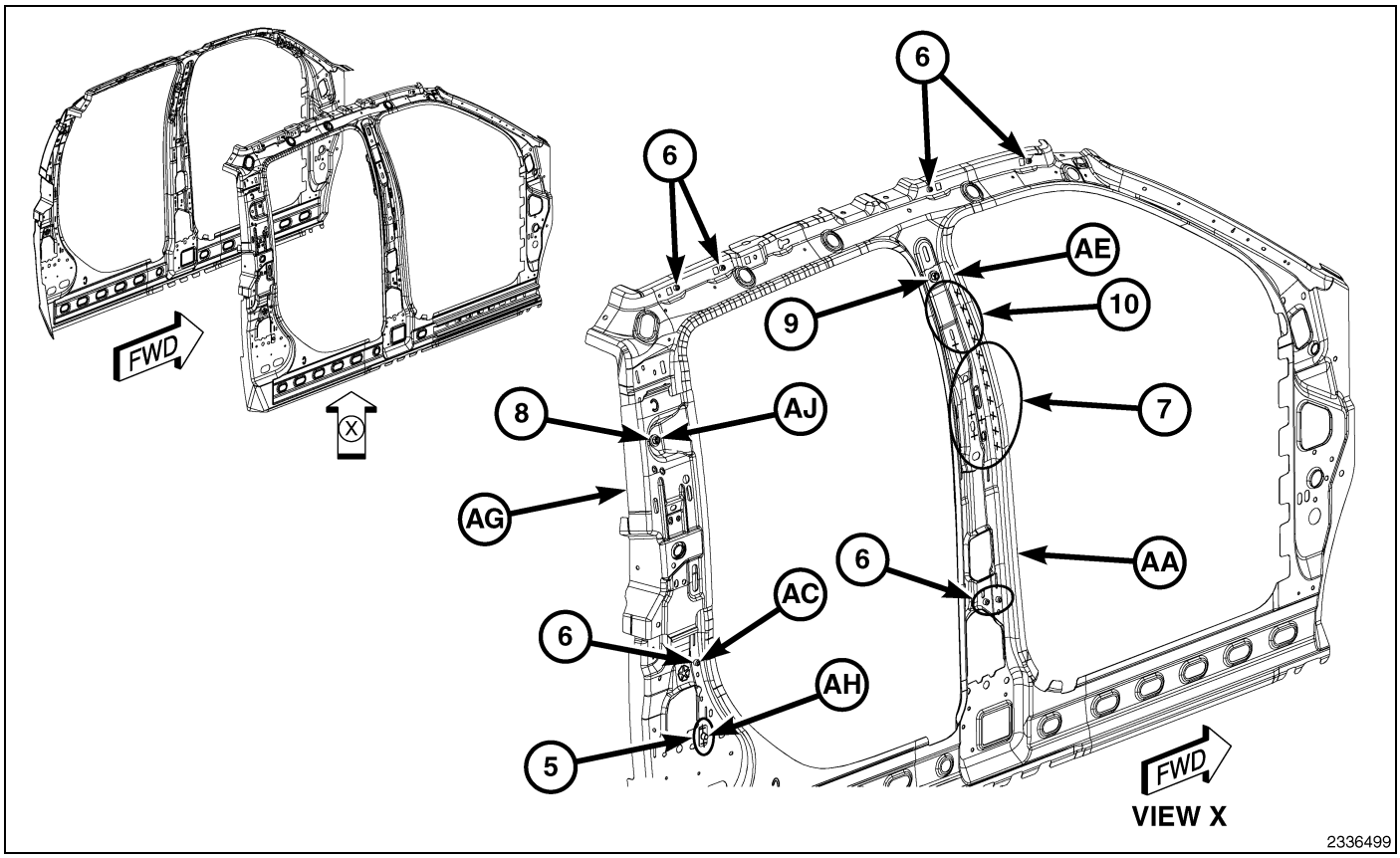

Fig. 142 Body Side Aperture Inner – Crew Cab (2 of 4)

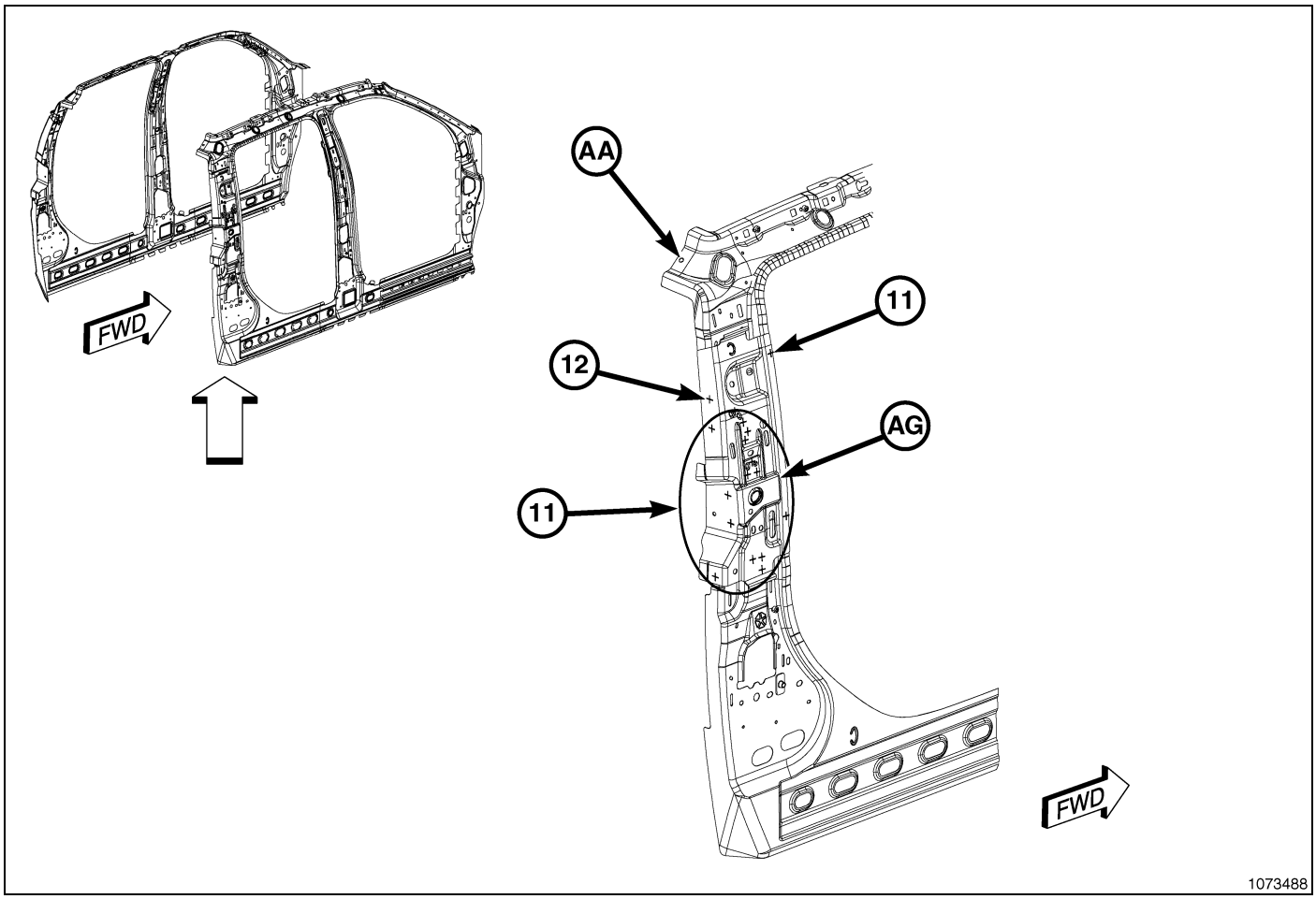

Fig. 143 Body Side Aperture Inner – Crew Cab (3 of 4)

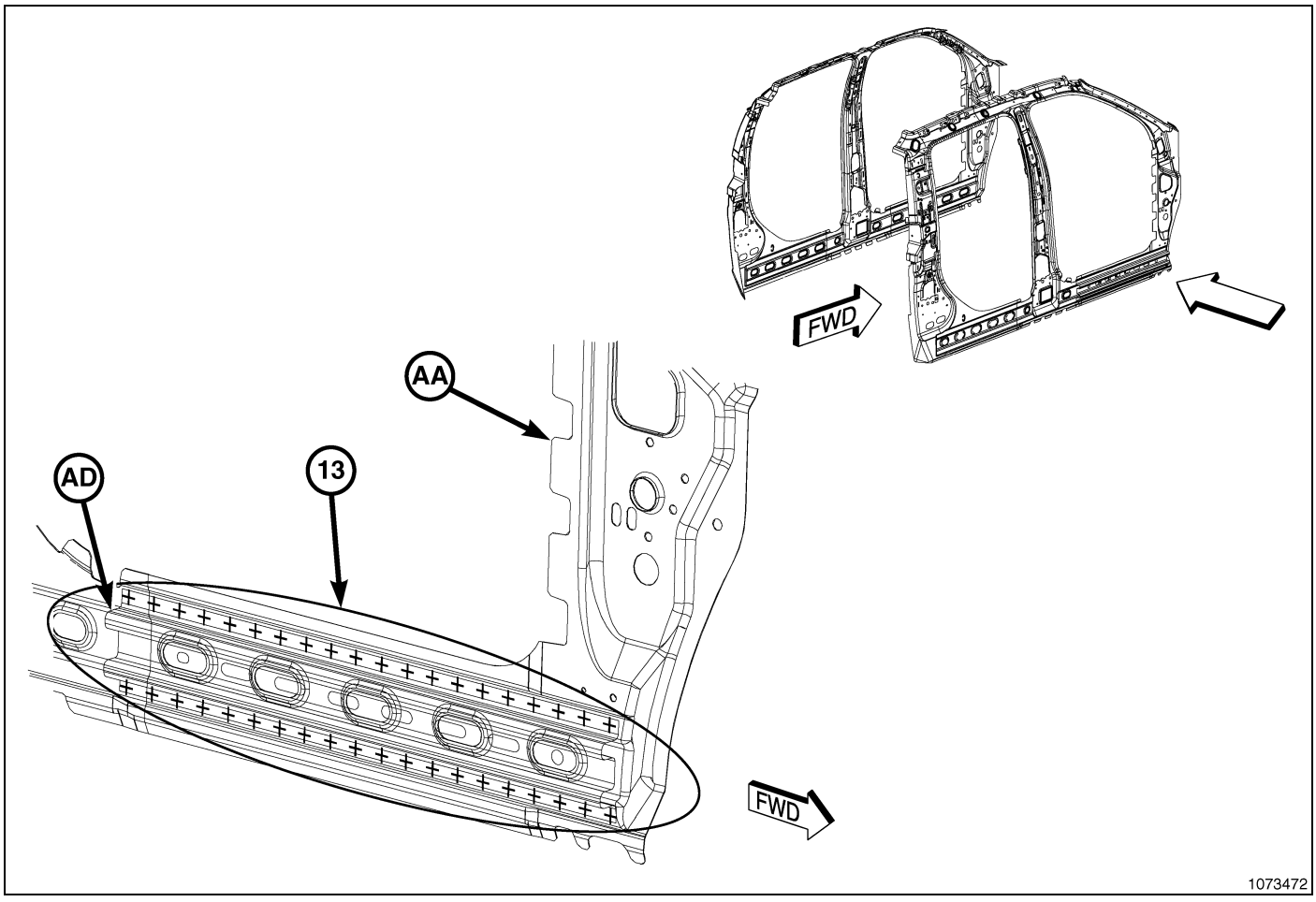

Fig. 144 Body Side Aperture Inner – Crew Cab (4 of 4)

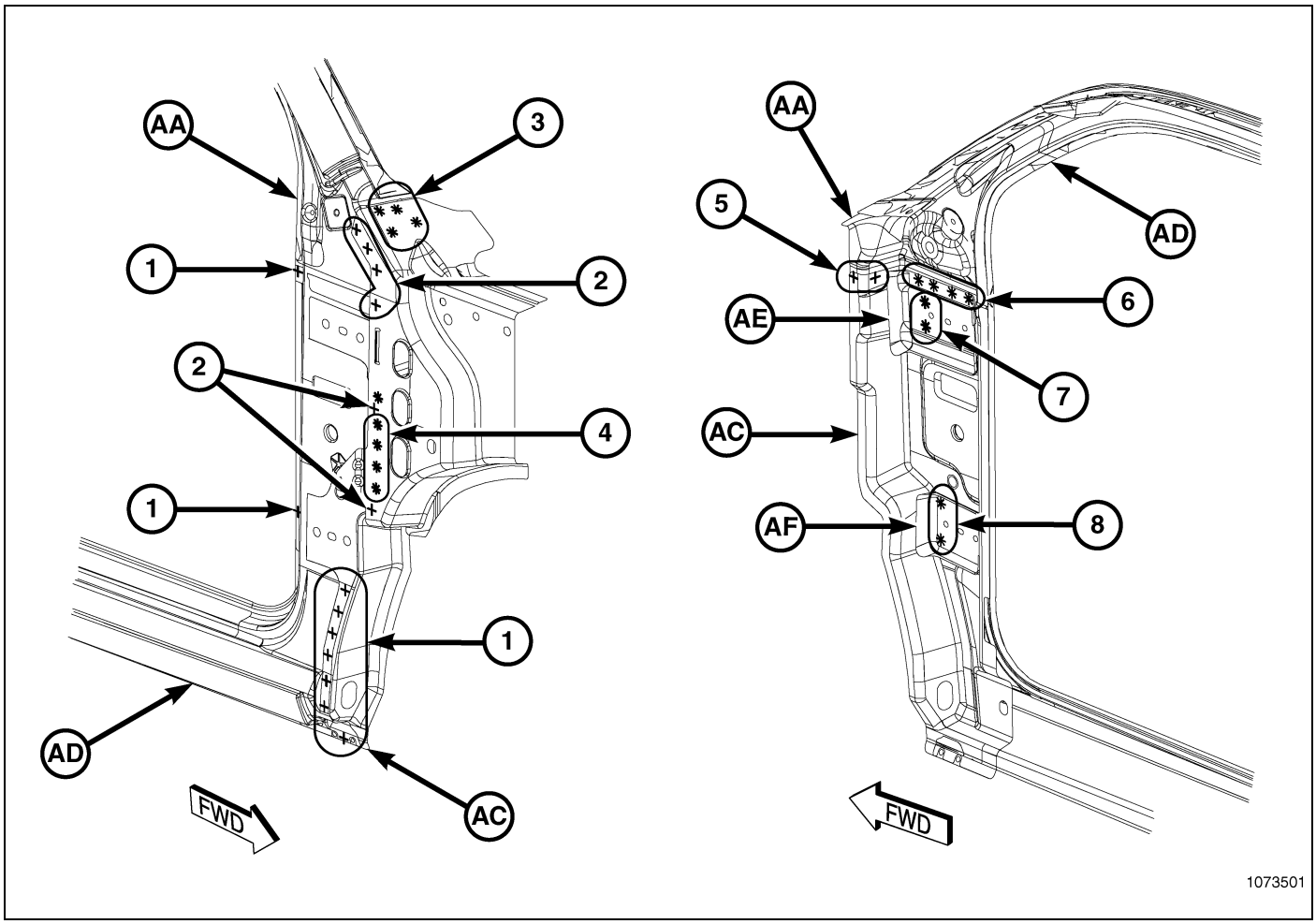

Fig. 145 Body Side Aperture Outer – Standard Cab (1 of 3)

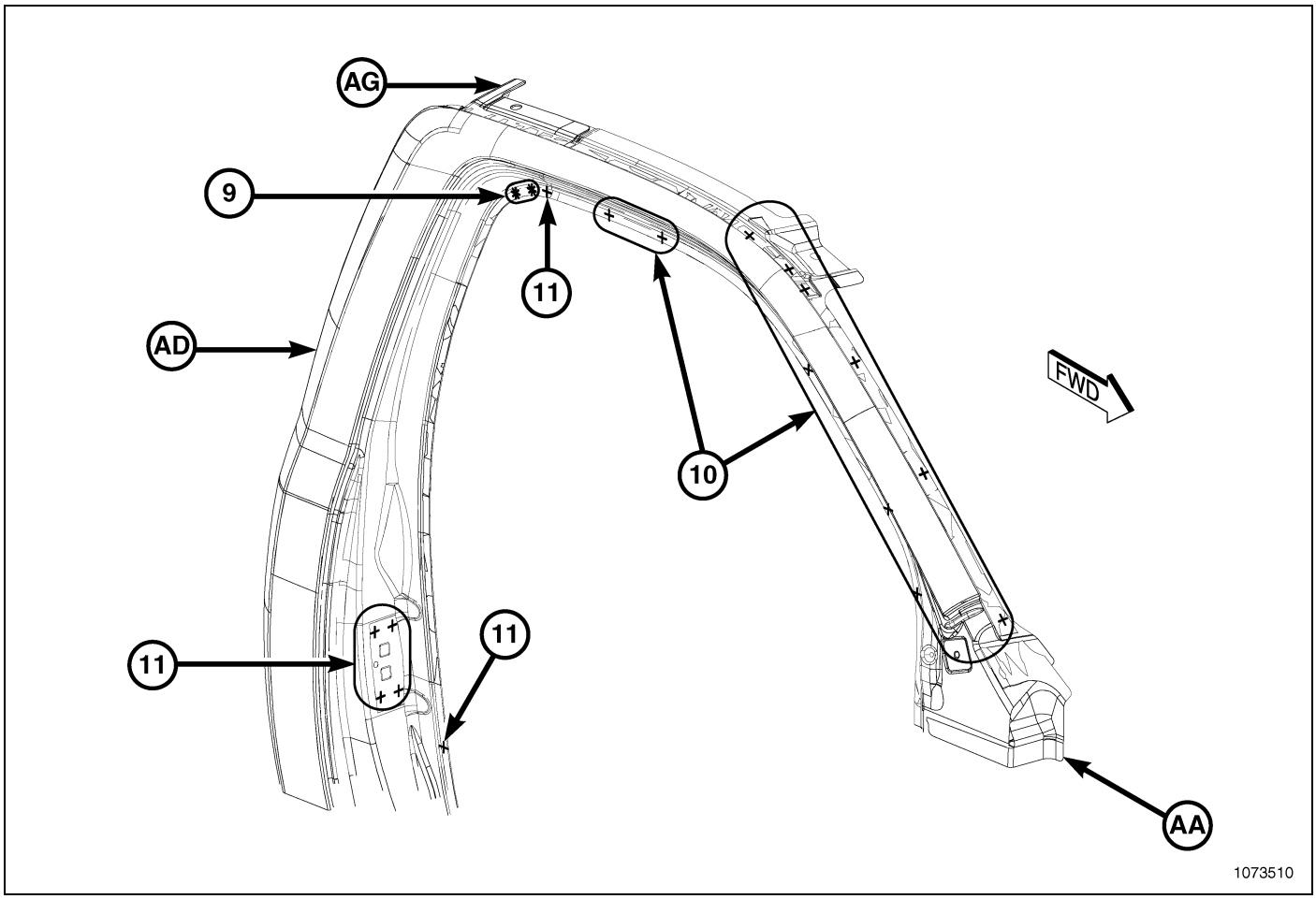

Fig. 146 Body Side Aperture Outer – Standard Cab (2 of 3)

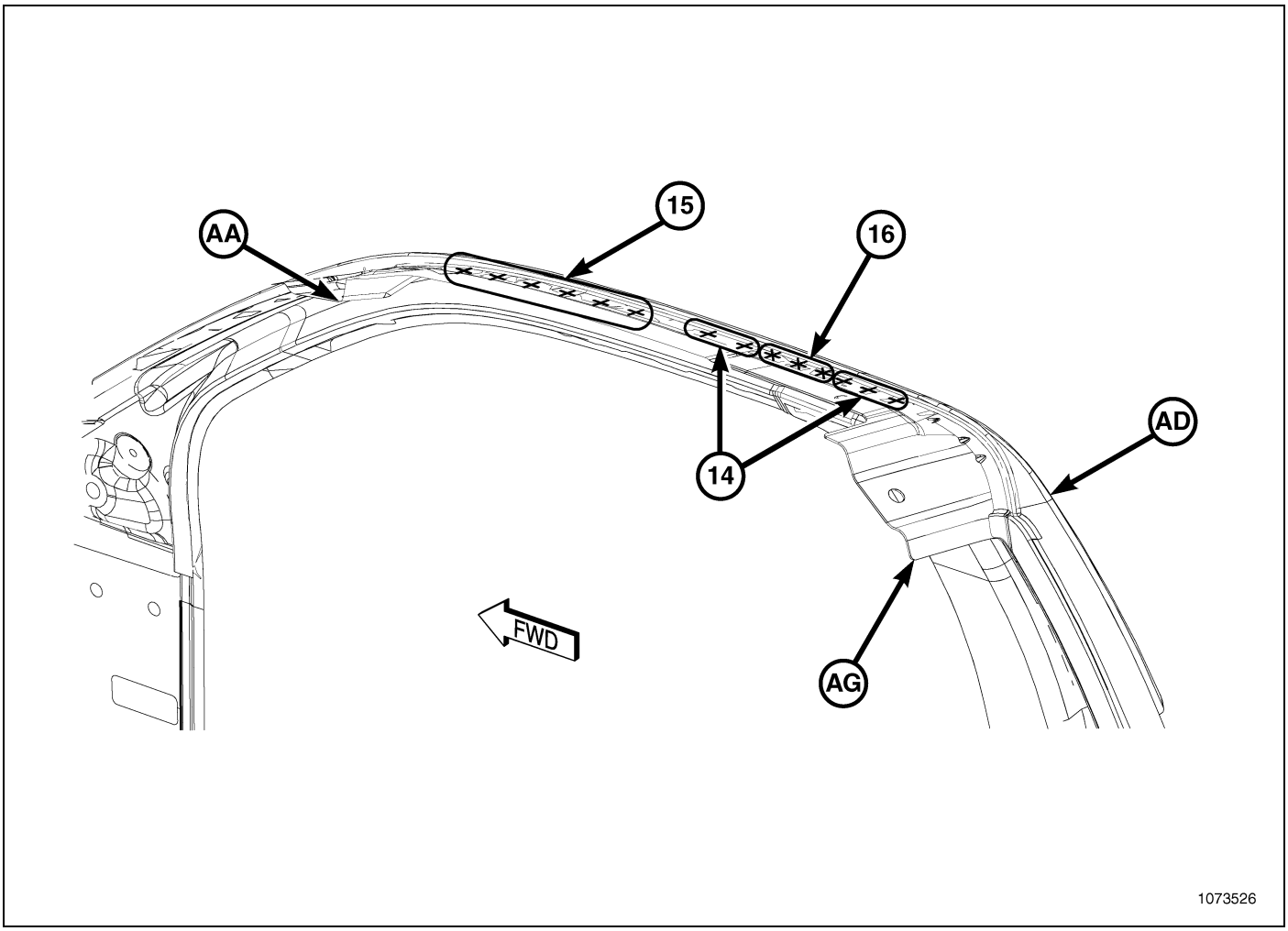

Fig. 147 Body Side Aperture Outer – Standard Cab (3 of 3)

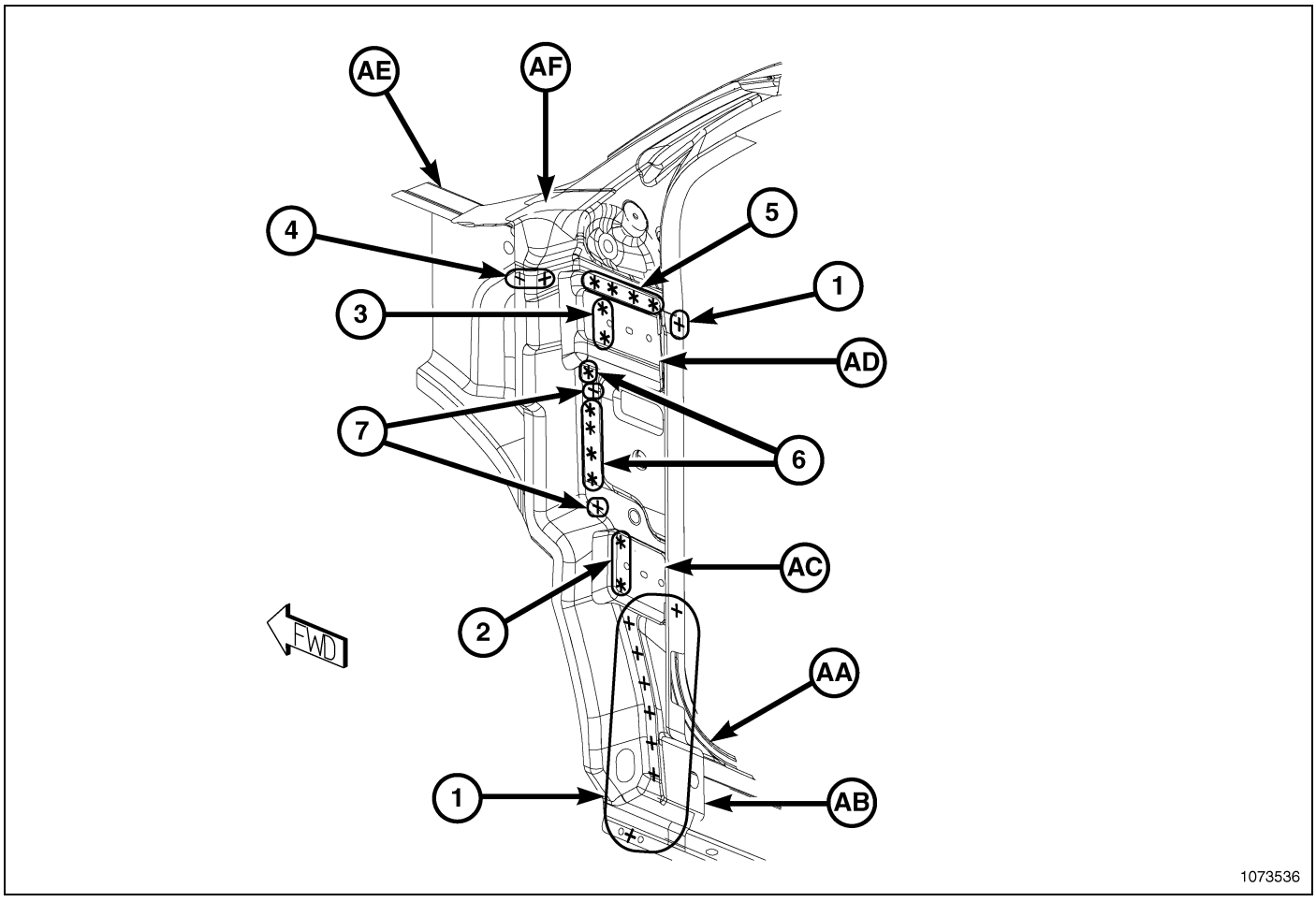

Fig. 148 Body Side Aperture Outer – Quad Cab (1 of 5)

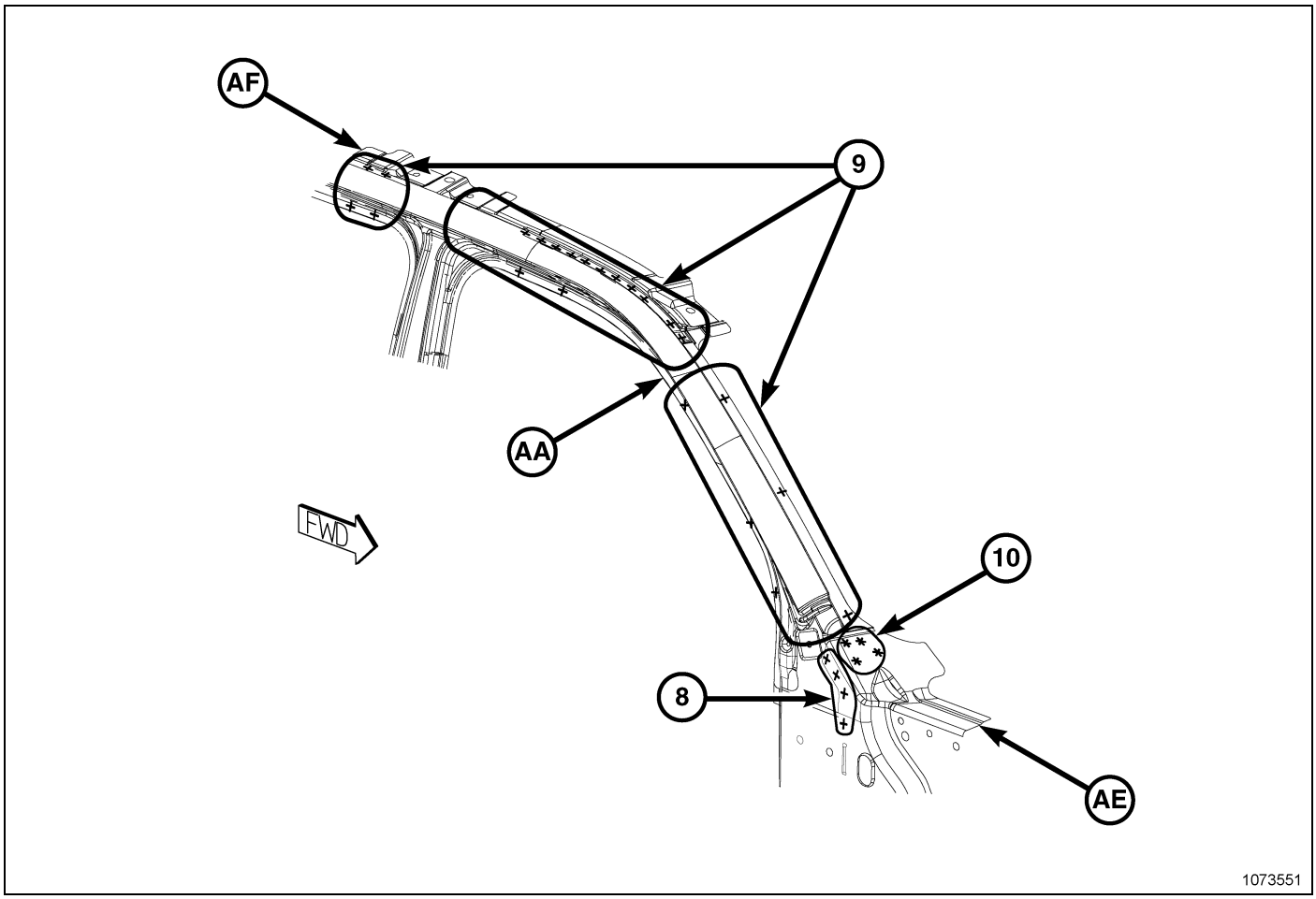

Fig. 149 Body Side Aperture Outer – Quad Cab (2 of 5)

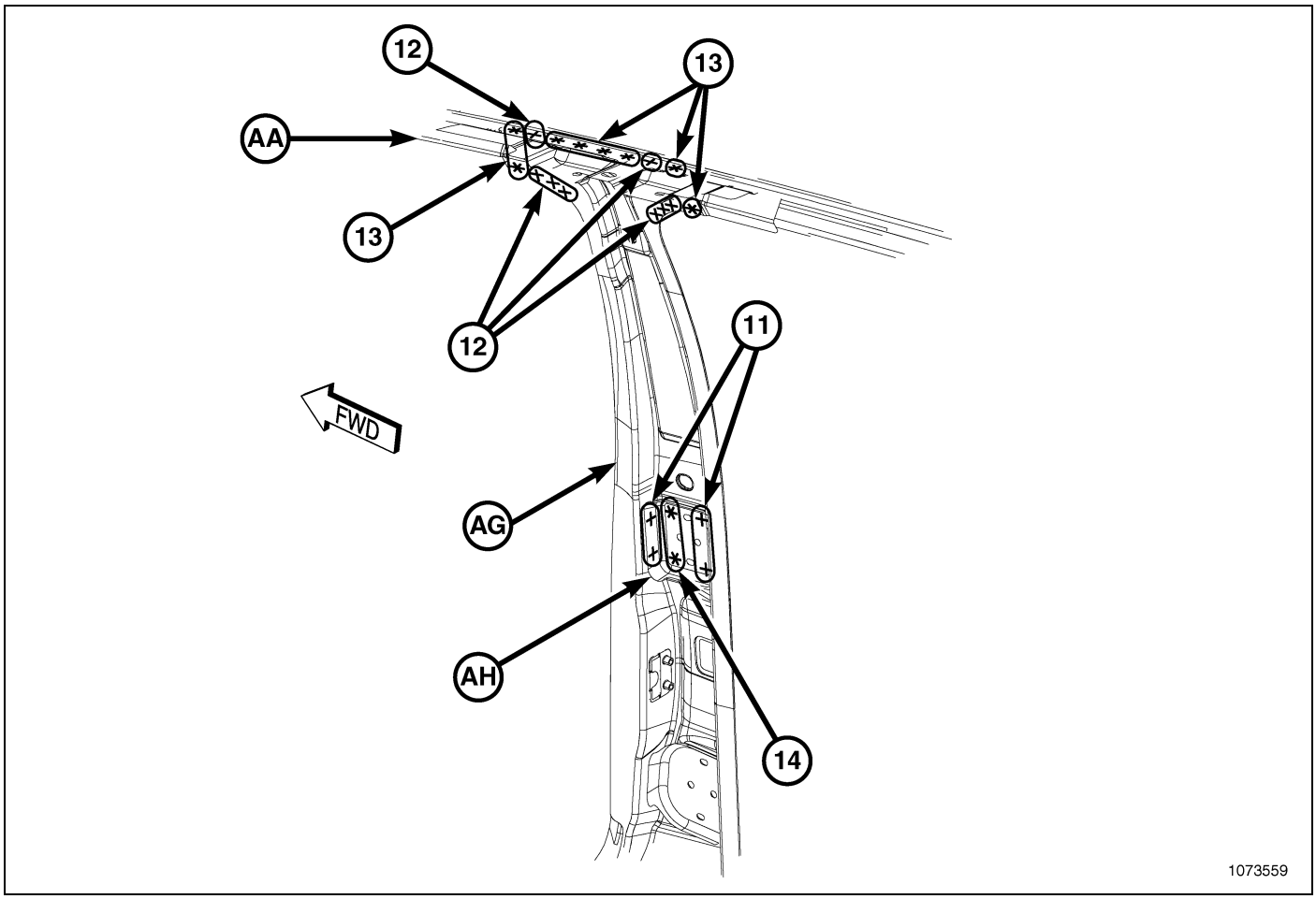

Fig. 150 Body Side Aperture Outer – Quad Cab (3 of 5)

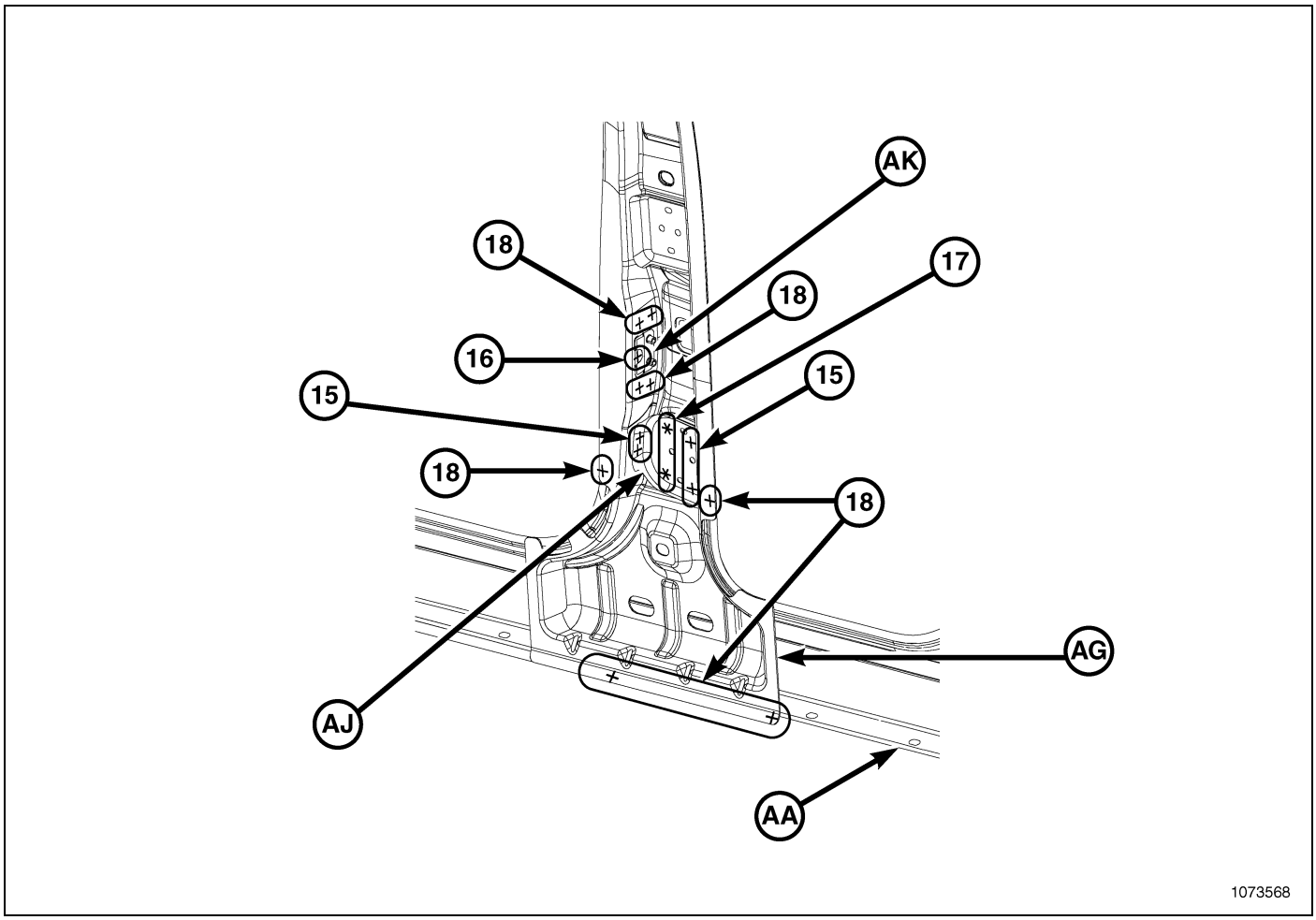

Fig. 151 Body Side Aperture Outer – Quad Cab (4 of 5)

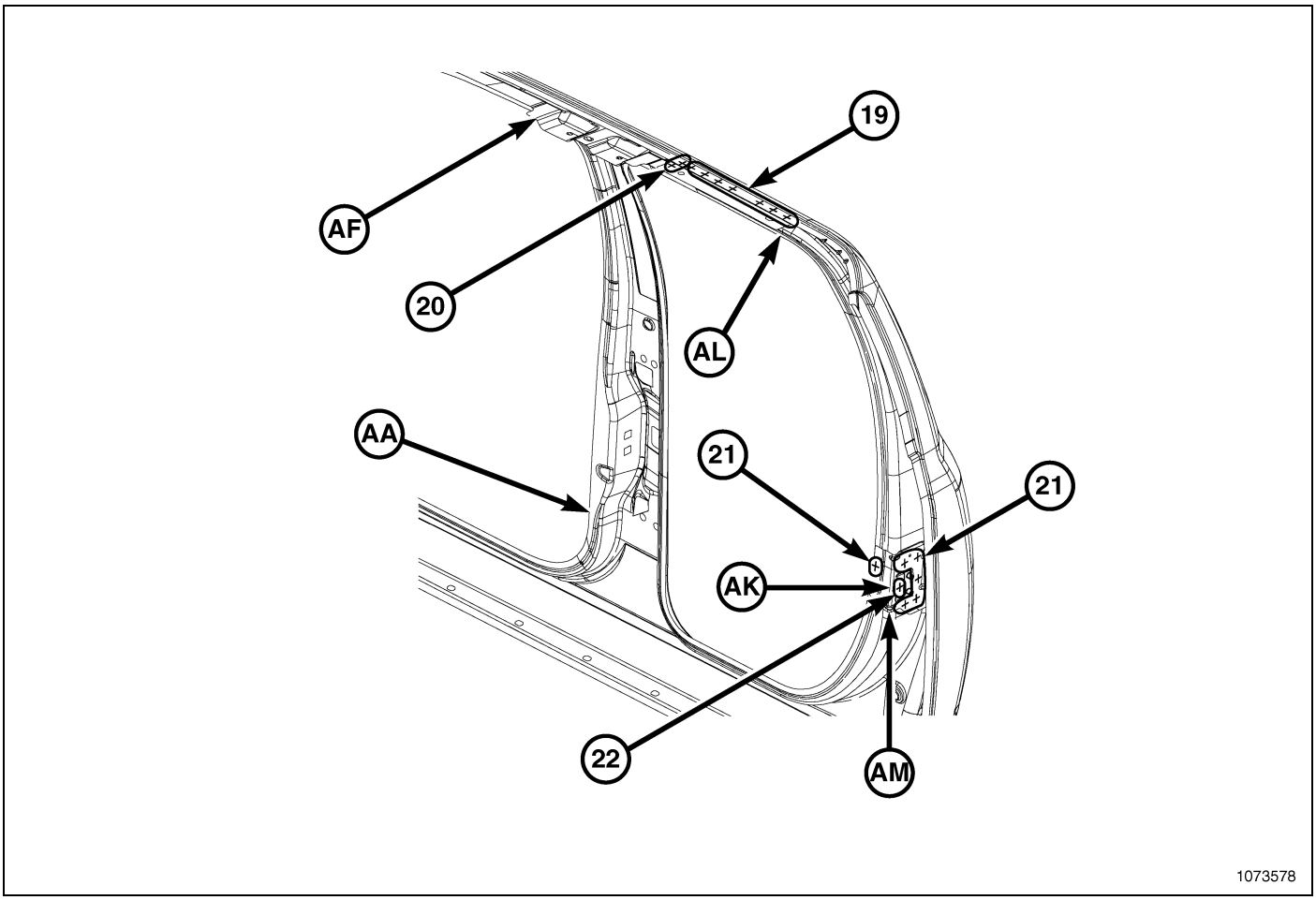

Fig. 152 Body Side Aperture Outer – Quad Cab (5 of 5)

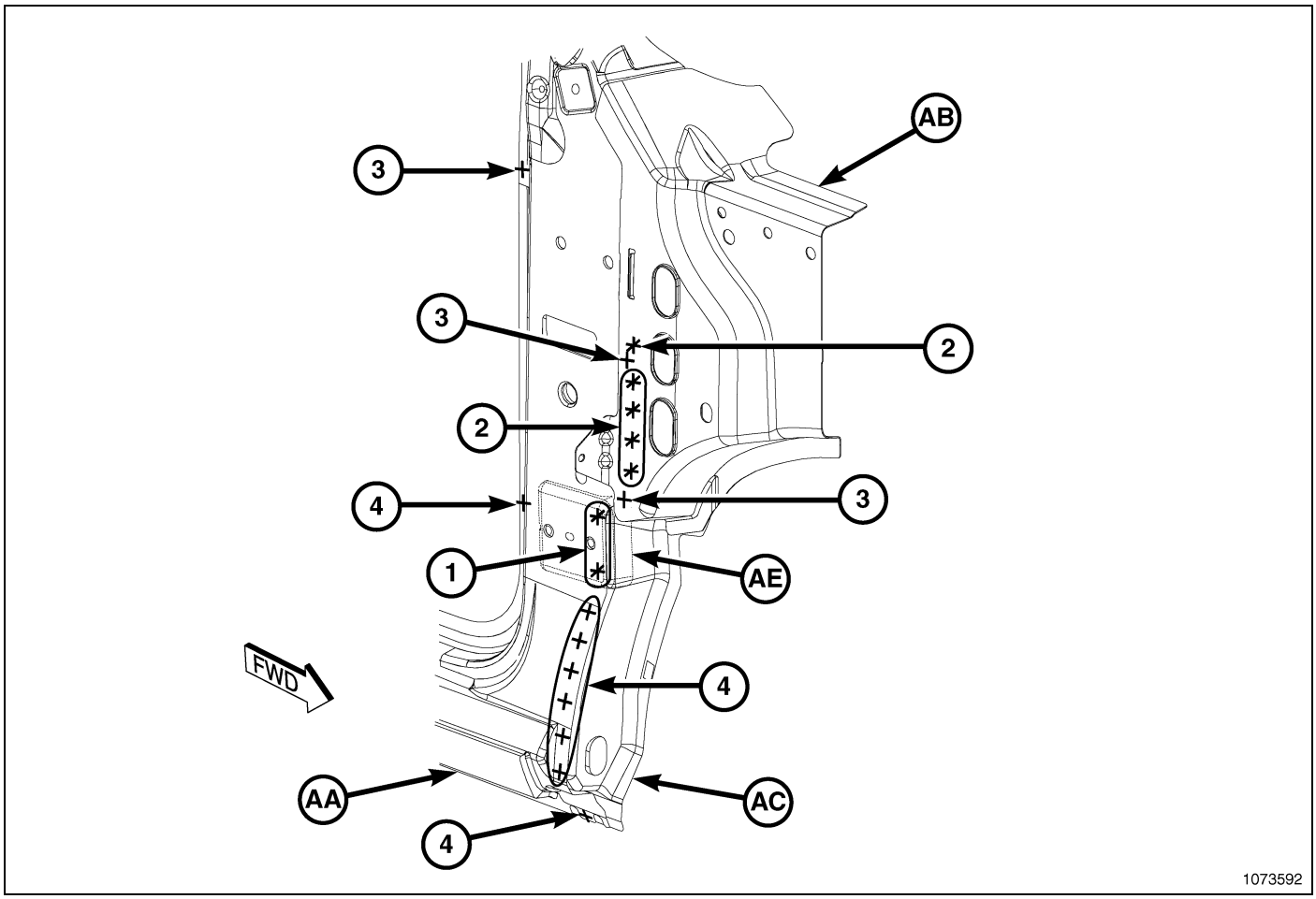

Fig. 153 Body Side Aperture Outer – Crew Cab (1 of 5)

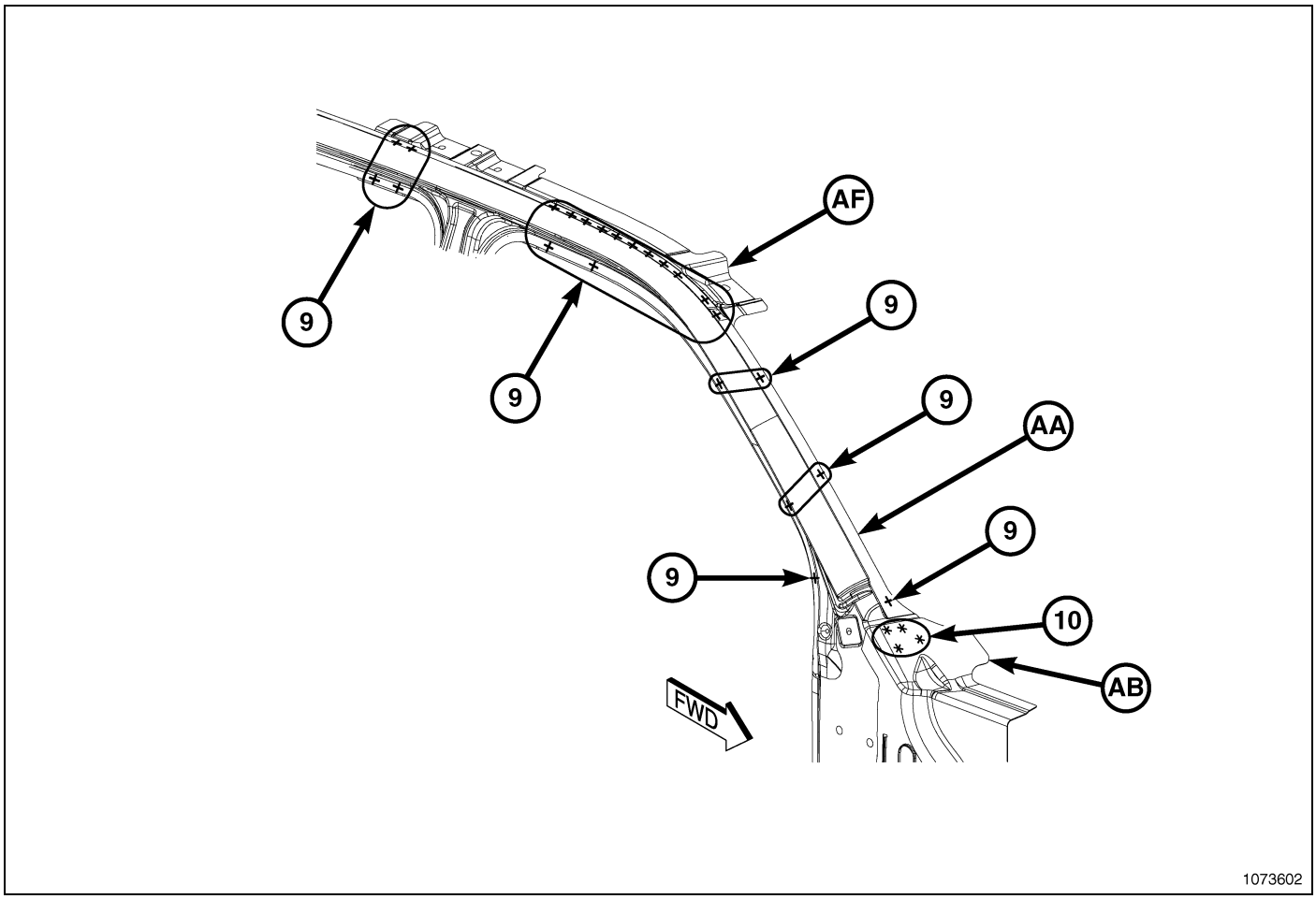

Fig. 154 Body Side Aperture Outer – Crew Cab (2 of 5)

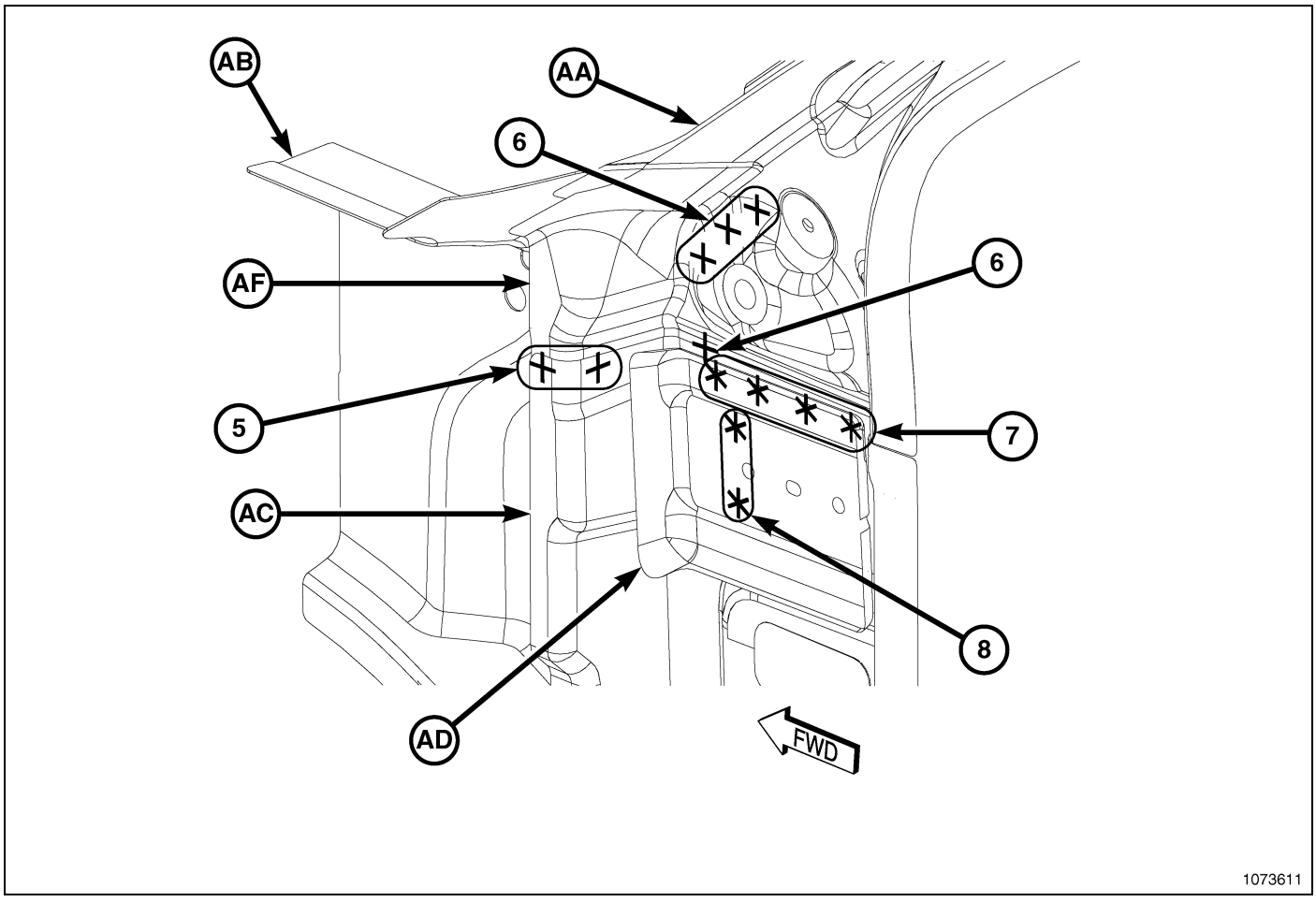

Fig. 155 Body Side Aperture Outer – Crew Cab (3 of 5)

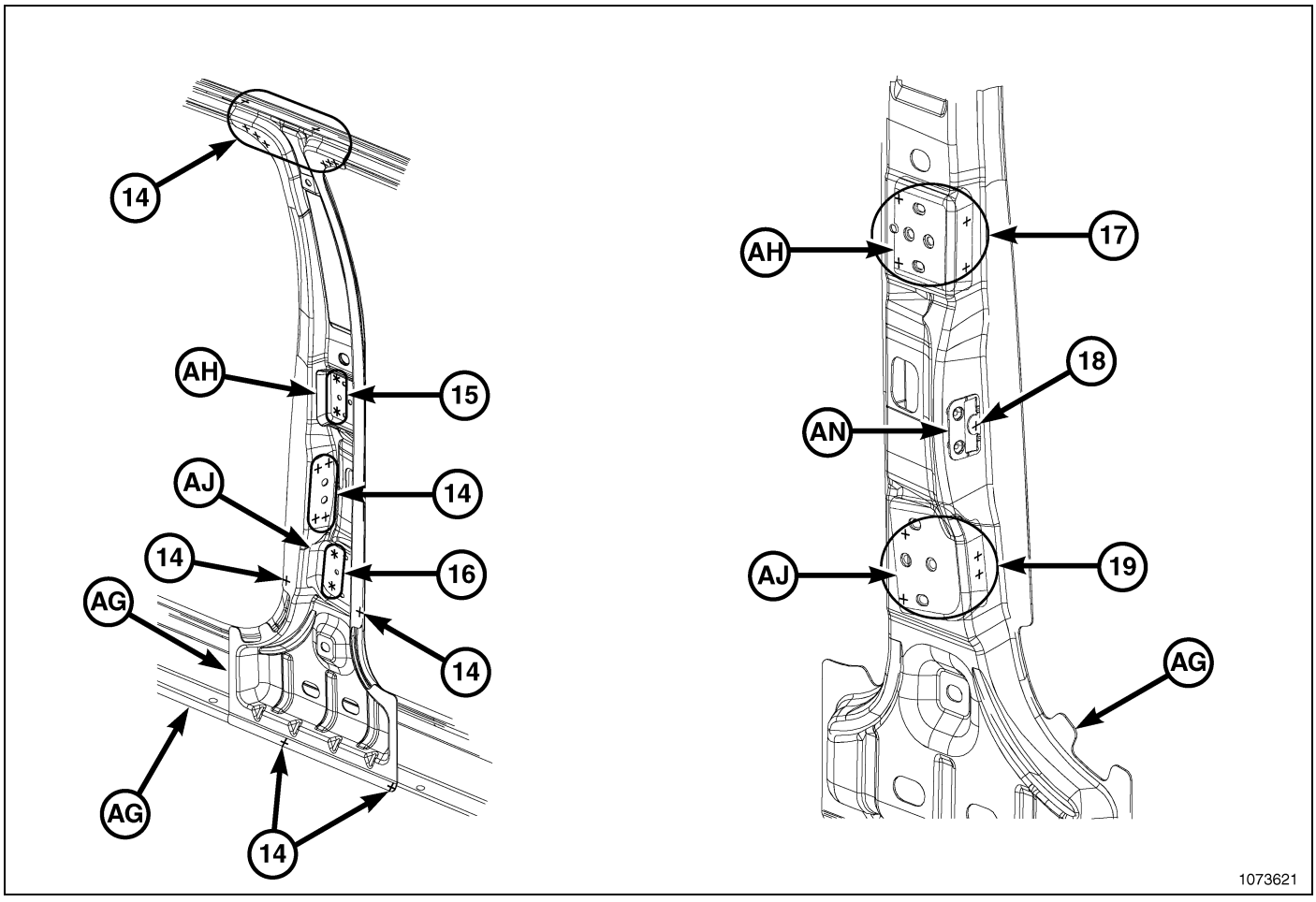

Fig. 156 Body Side Aperture Outer – Crew Cab (4 of 5)

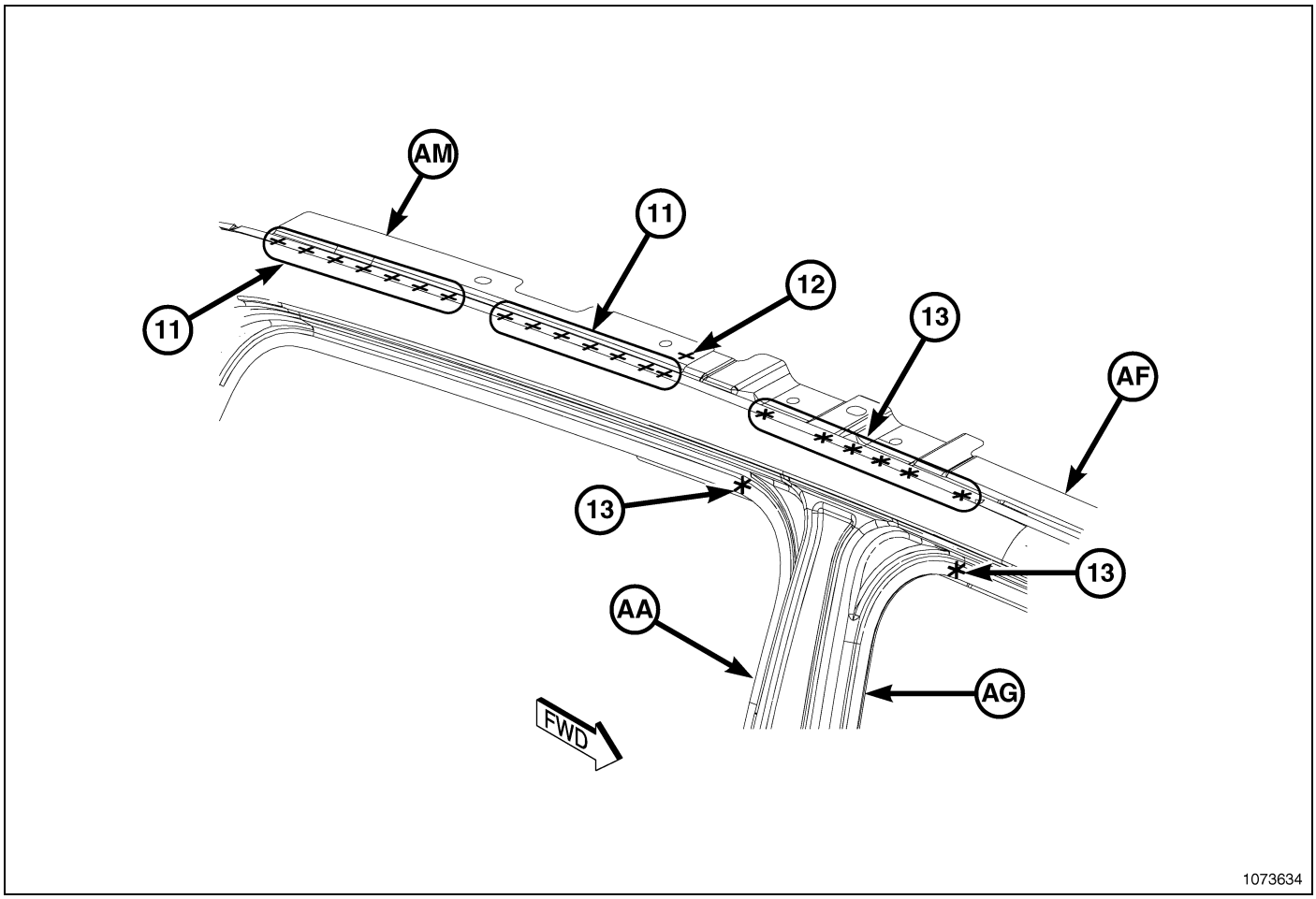

Fig. 157 Body Side Aperture Outer – Crew Cab (5 of 5)

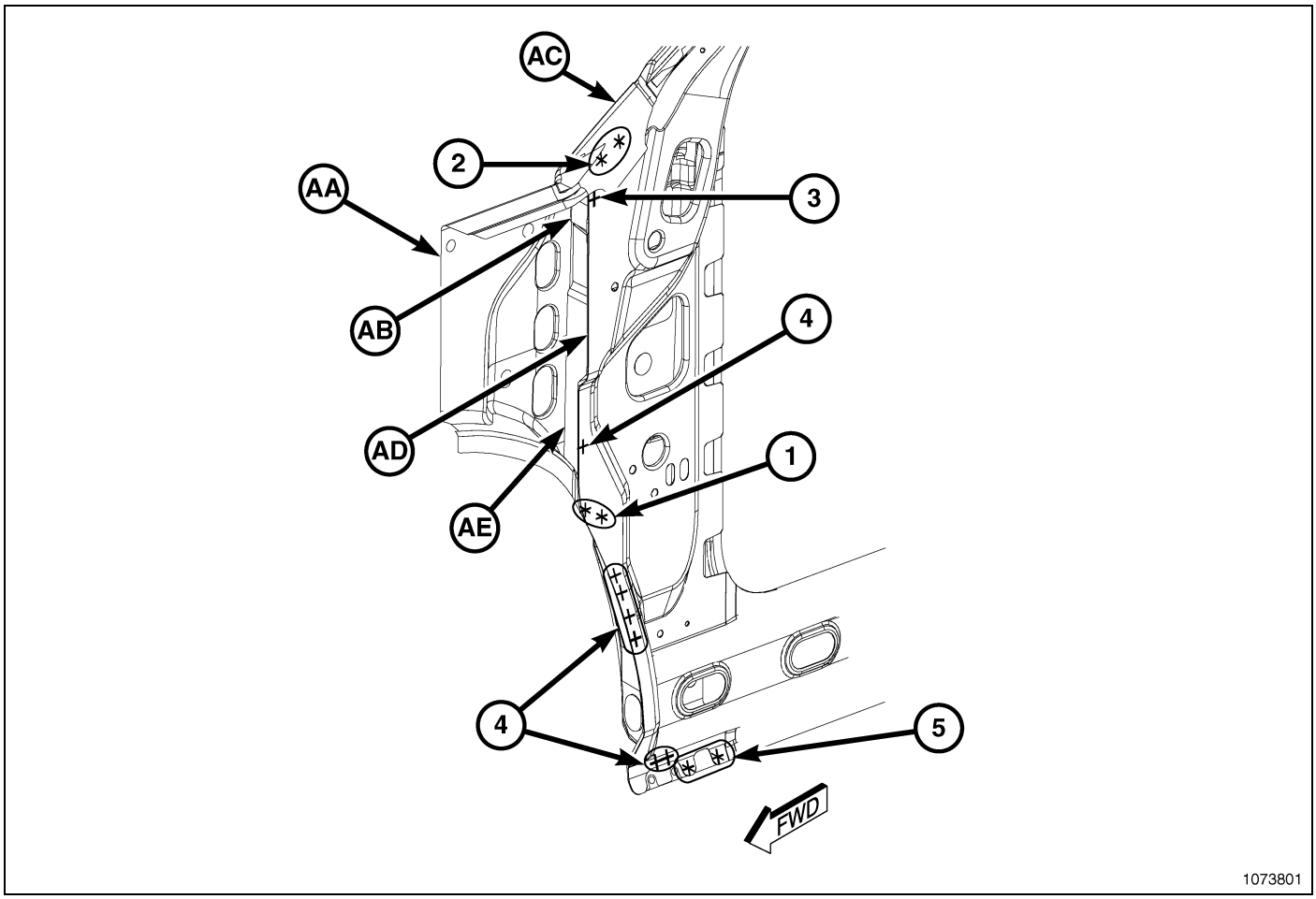

Fig. 158 Body Side Aperture Outer Complete – Standard Cab (1 of 6)

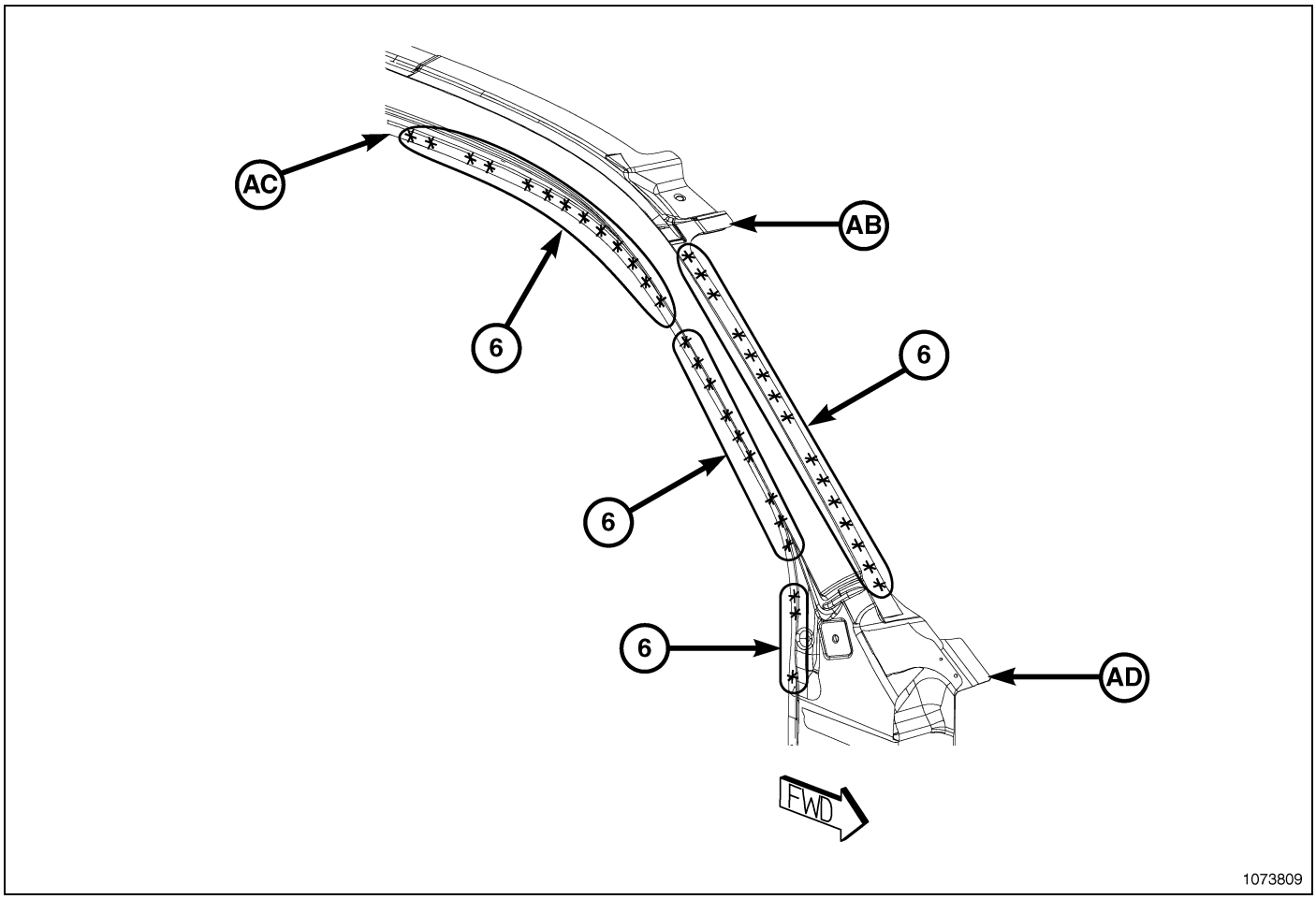

Fig. 159 Body Side Aperture Outer Complete – Standard Cab (2 of 6)

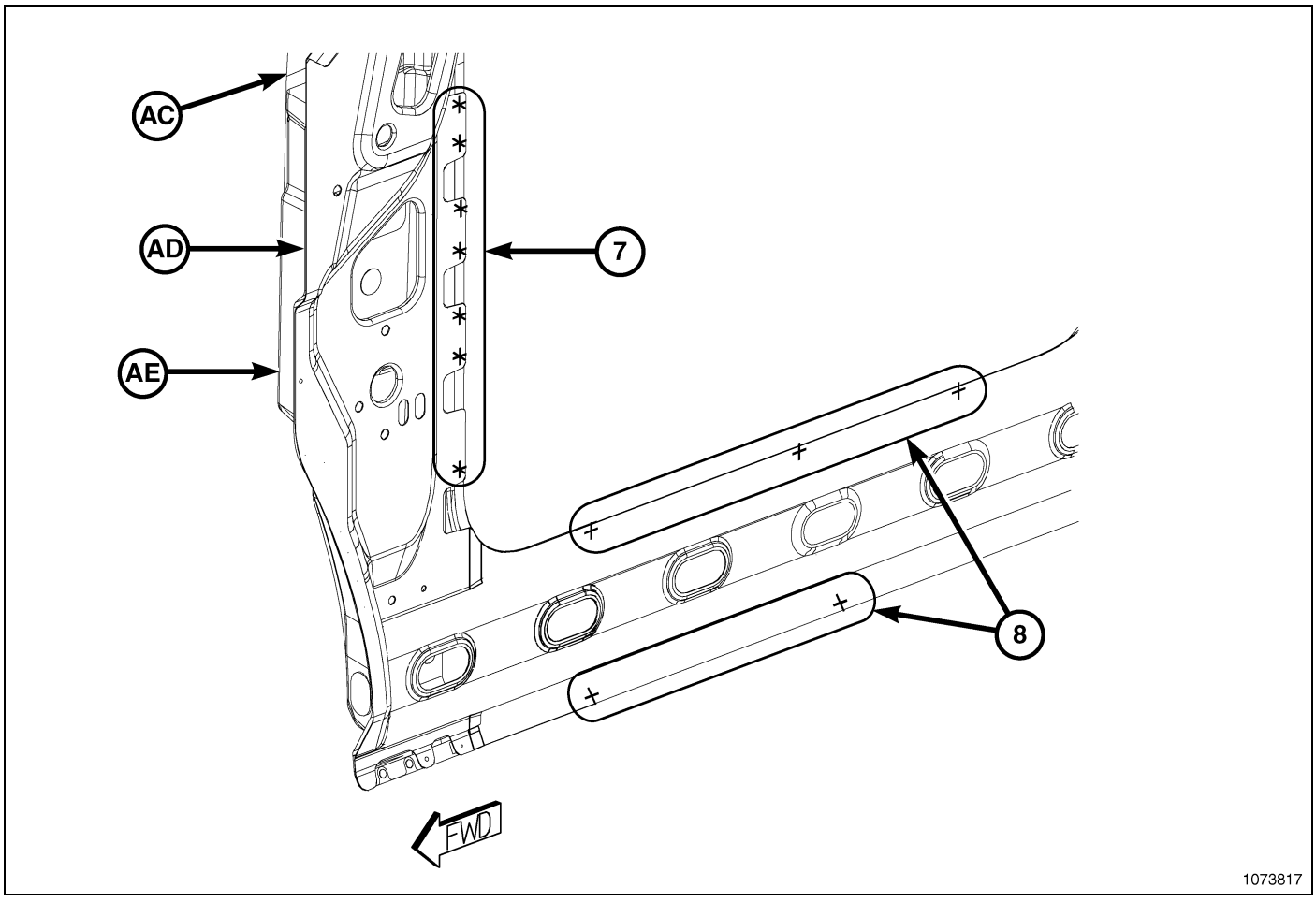

Fig. 160 Body Side Aperture Outer Complete – Standard Cab (3 of 6)

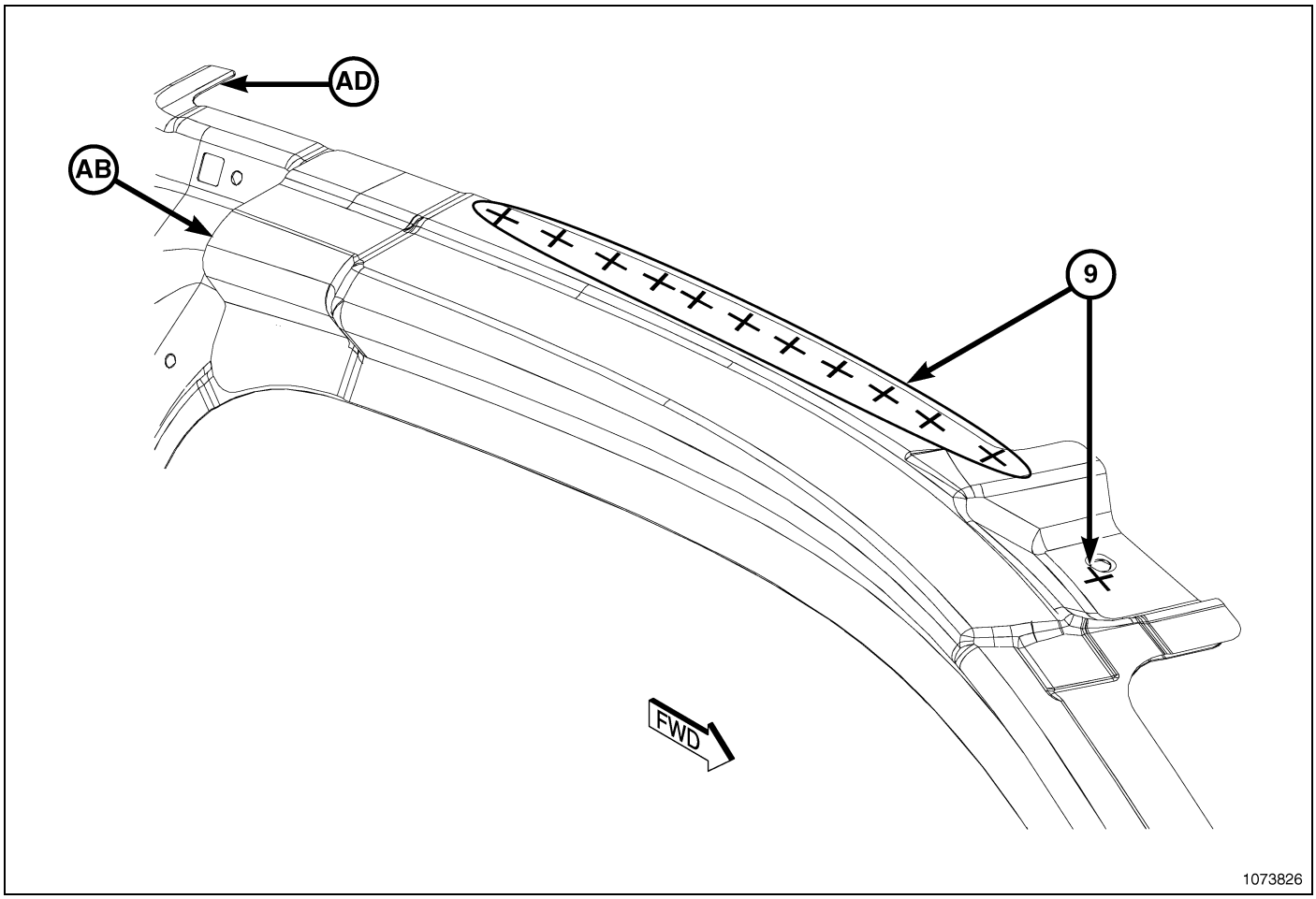

Fig. 161 Body Side Aperture Outer Complete – Standard Cab (4 of 6)

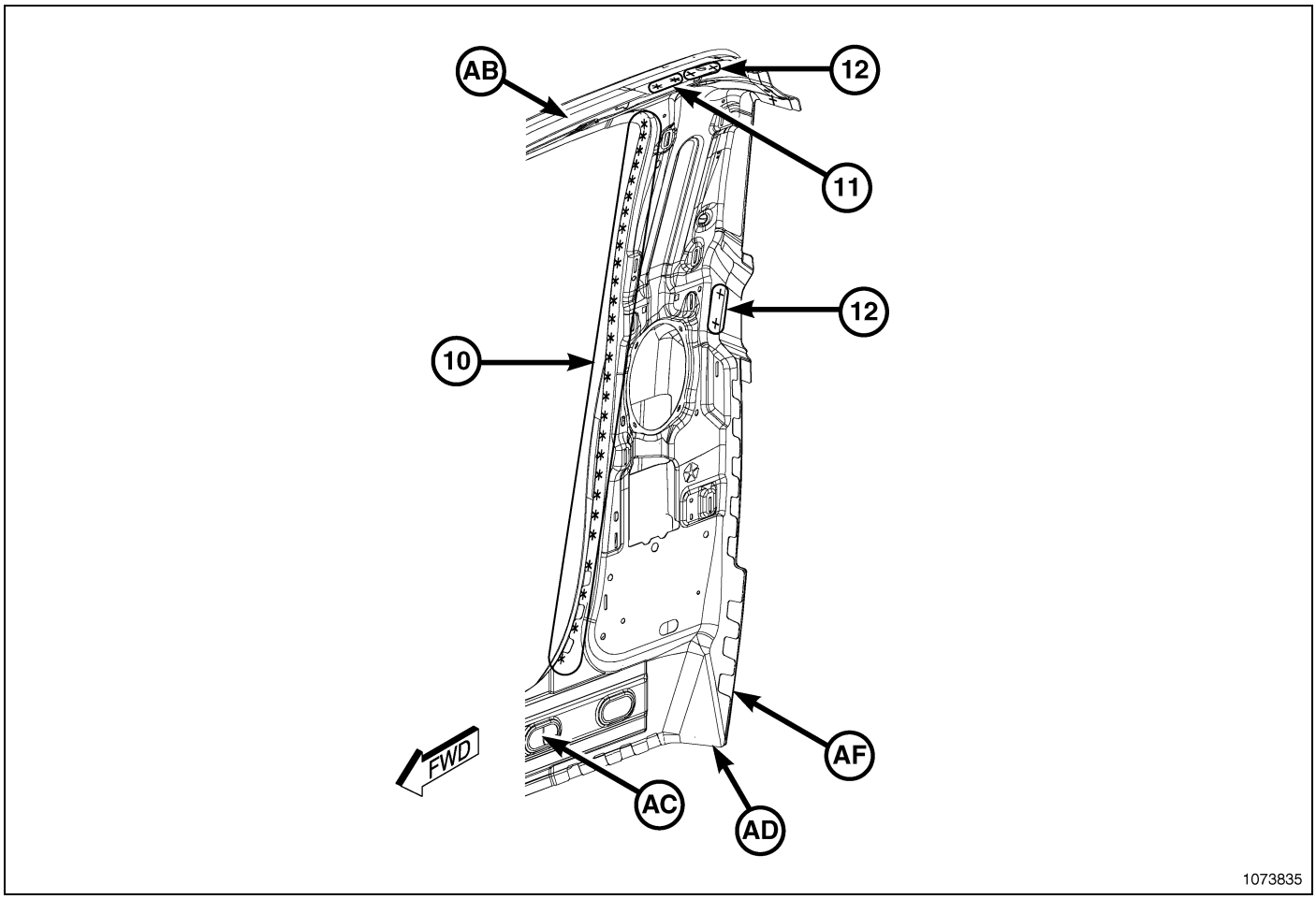

Fig. 162 Body Side Aperture Outer Complete – Standard Cab (5 of 6)

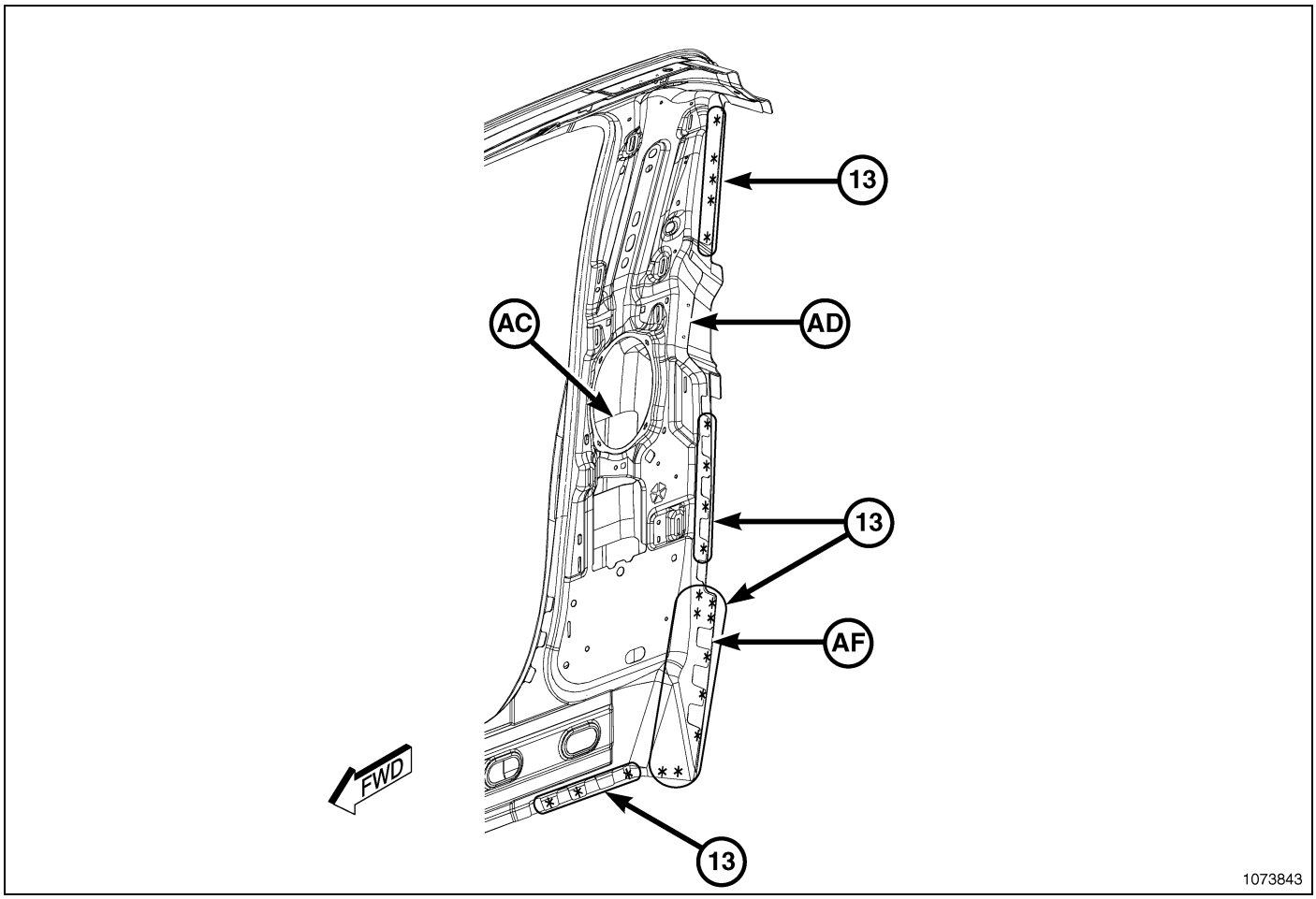

Fig. 163 Body Side Aperture Outer Complete – Standard Cab (6 of 6)

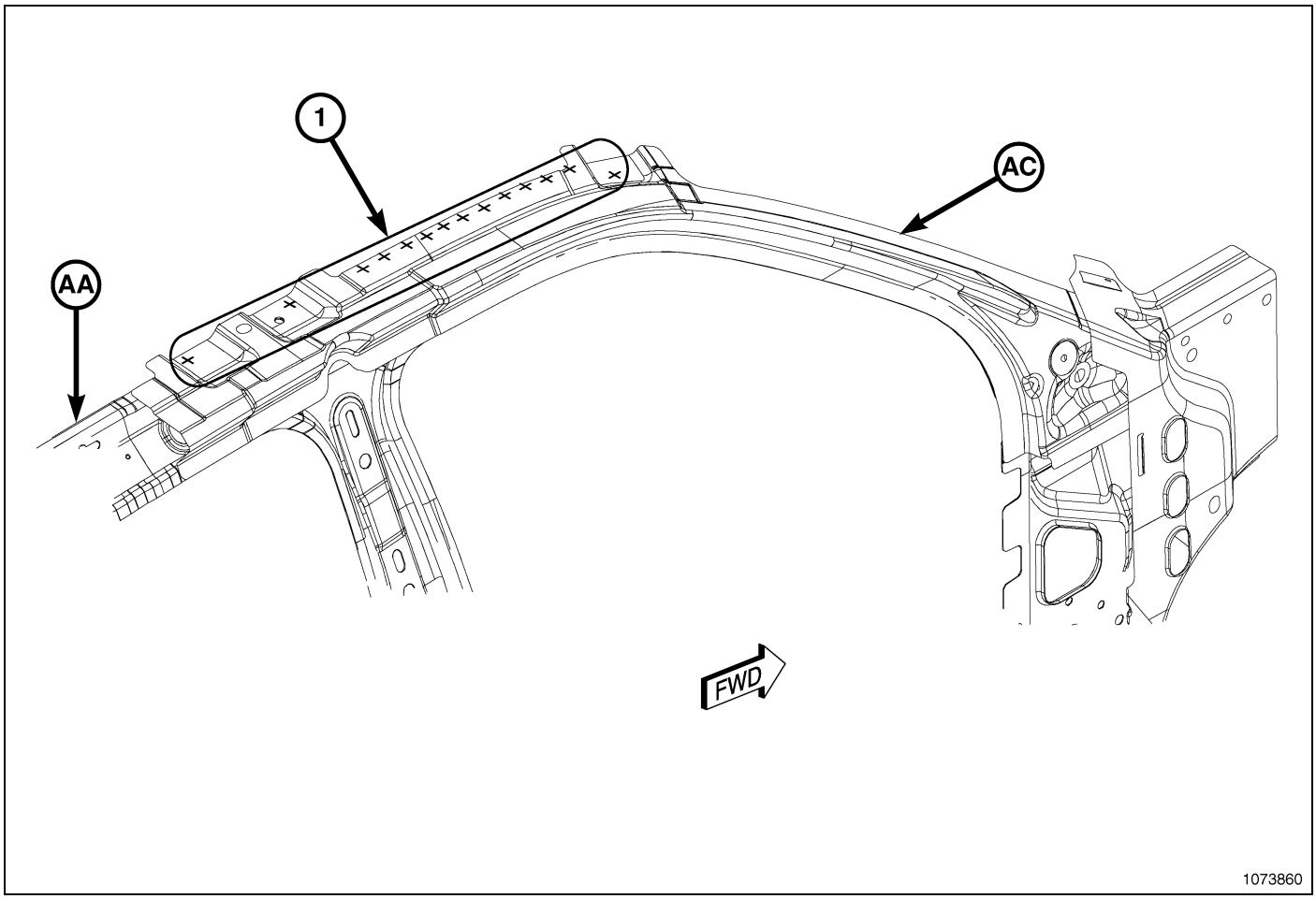

Fig. 164 Body Side Aperture Outer Complete – Quad Cab (1 of 8)

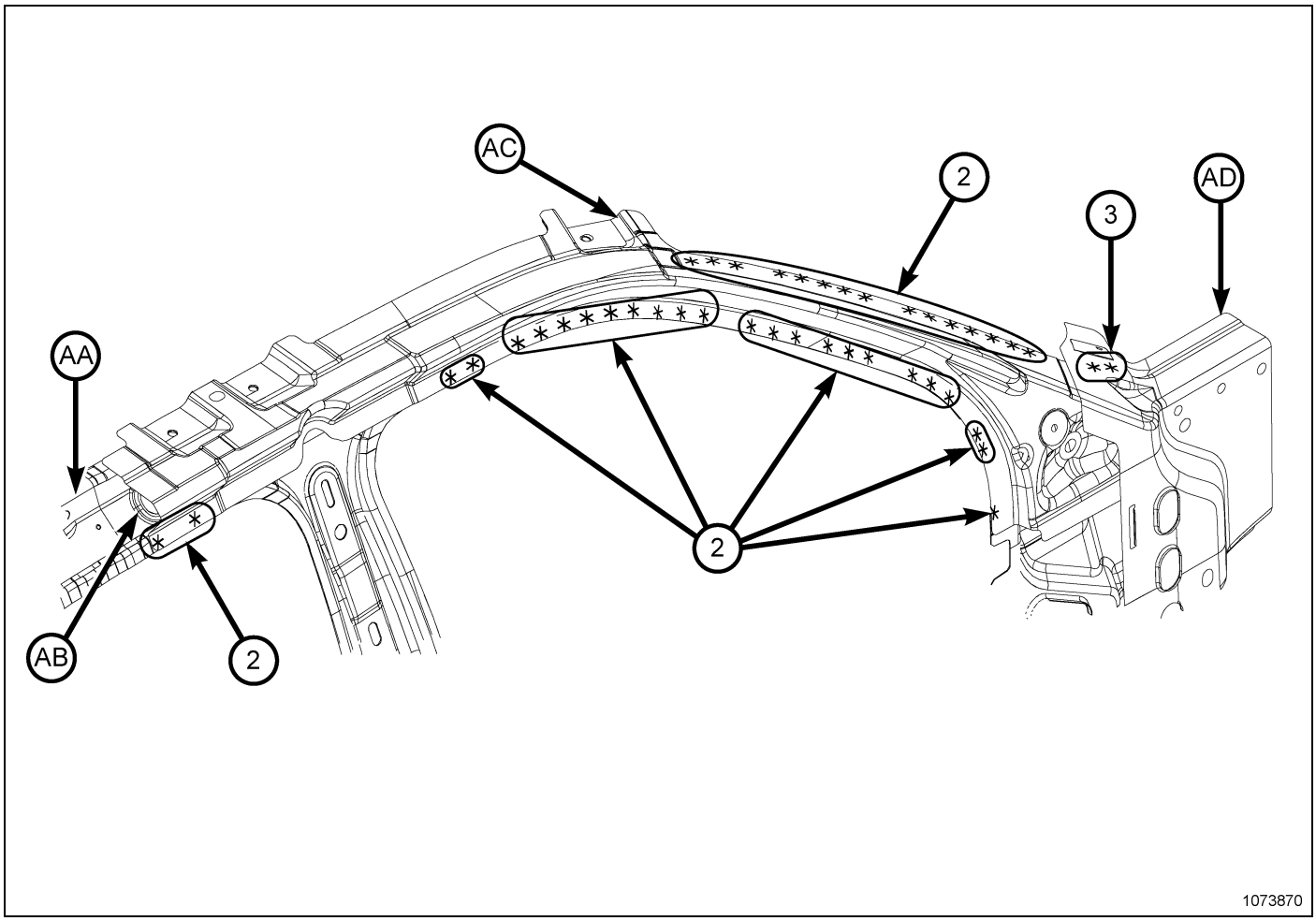

Fig. 165 Body Side Aperture Outer Complete – Quad Cab (2 of 8)

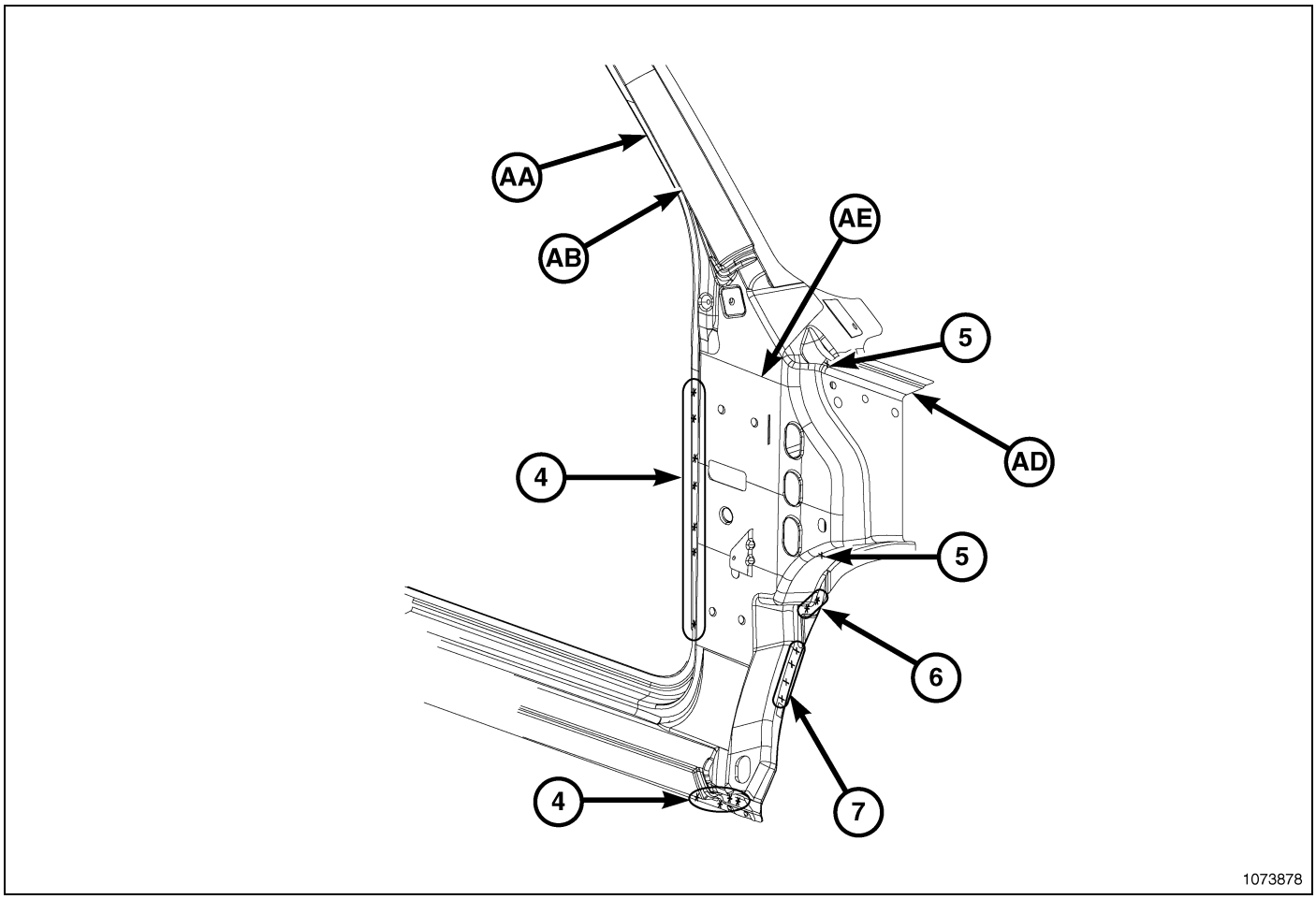

Fig. 166 Body Side Aperture Outer Complete – Quad Cab (3 of 8)

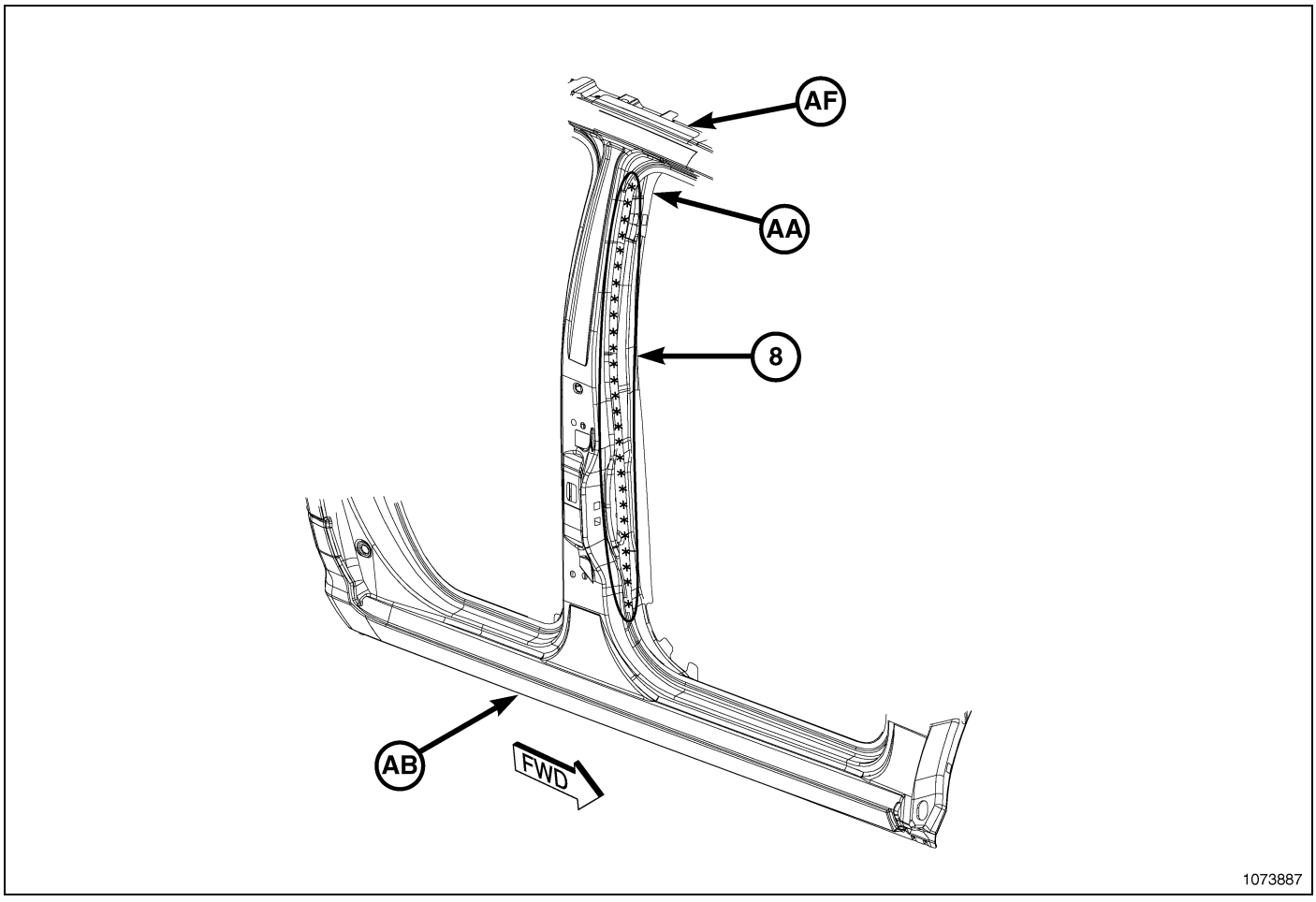

Fig. 167 Body Side Aperture Outer Complete – Quad Cab (4 of 8)

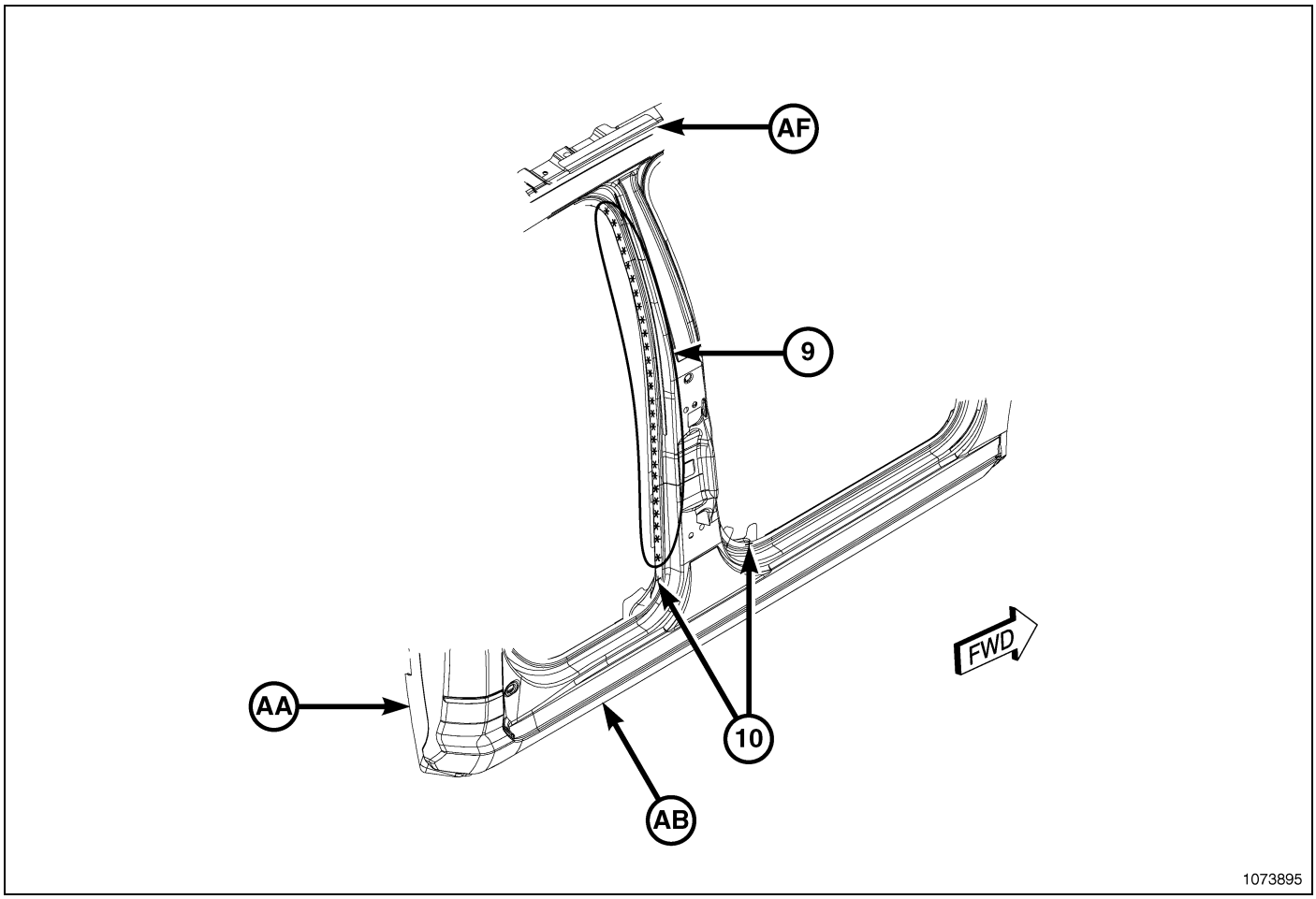

Fig. 168 Body Side Aperture Outer Complete – Quad Cab (5 of 8)

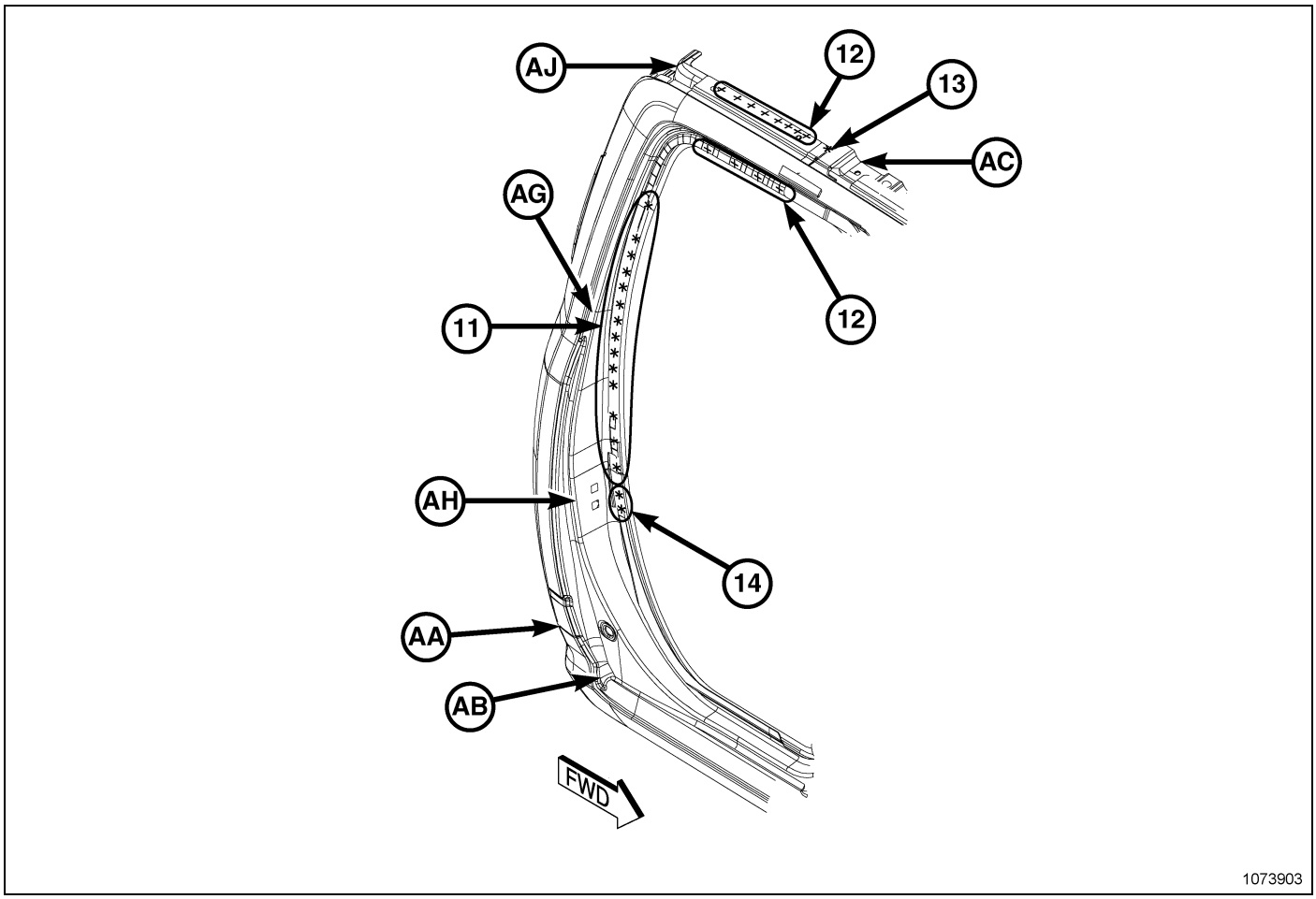

Fig. 169 Body Side Aperture Outer Complete – Quad Cab (6 of 8)

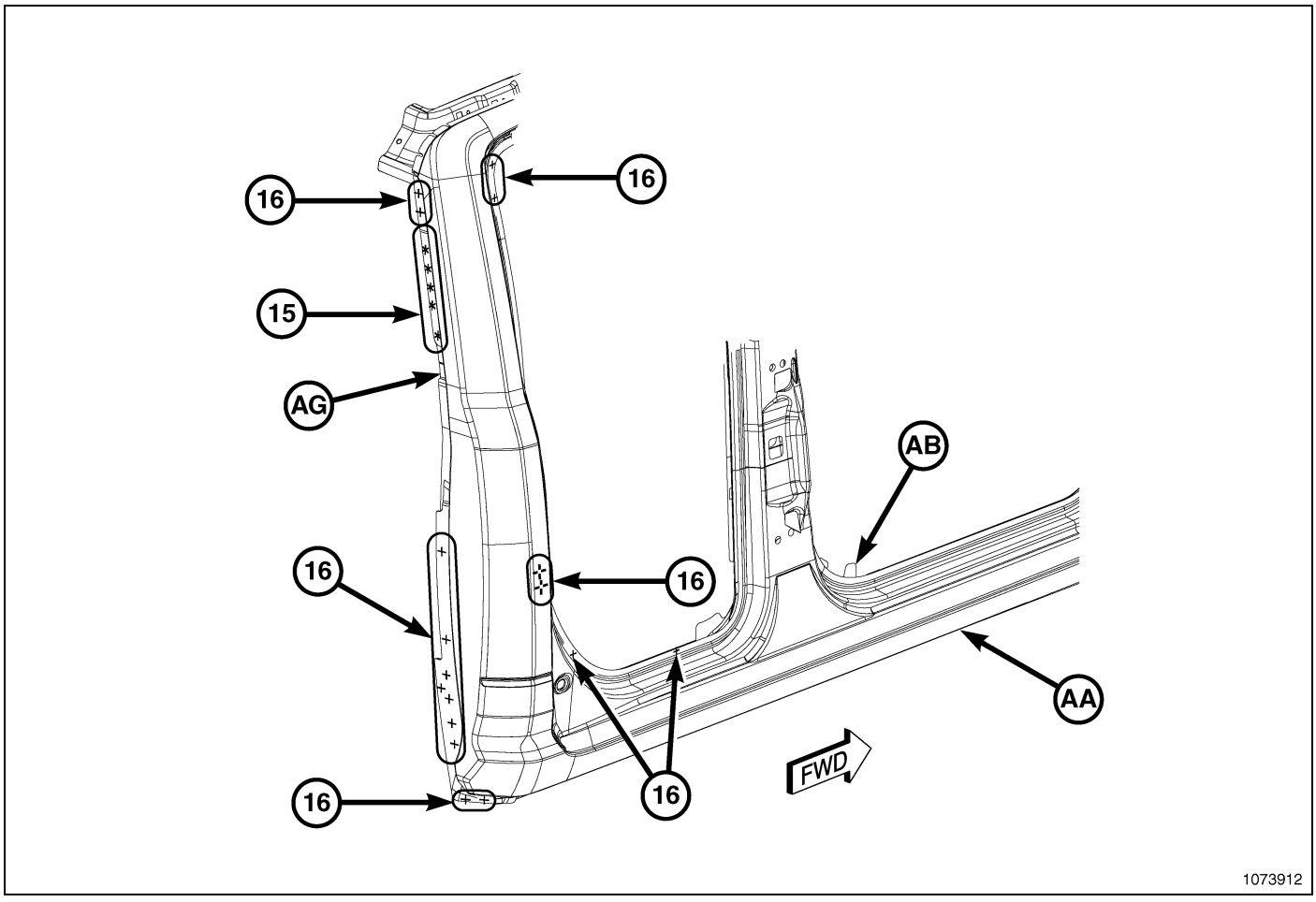

Fig. 170 Body Side Aperture Outer Complete – Quad Cab (7 of 8)

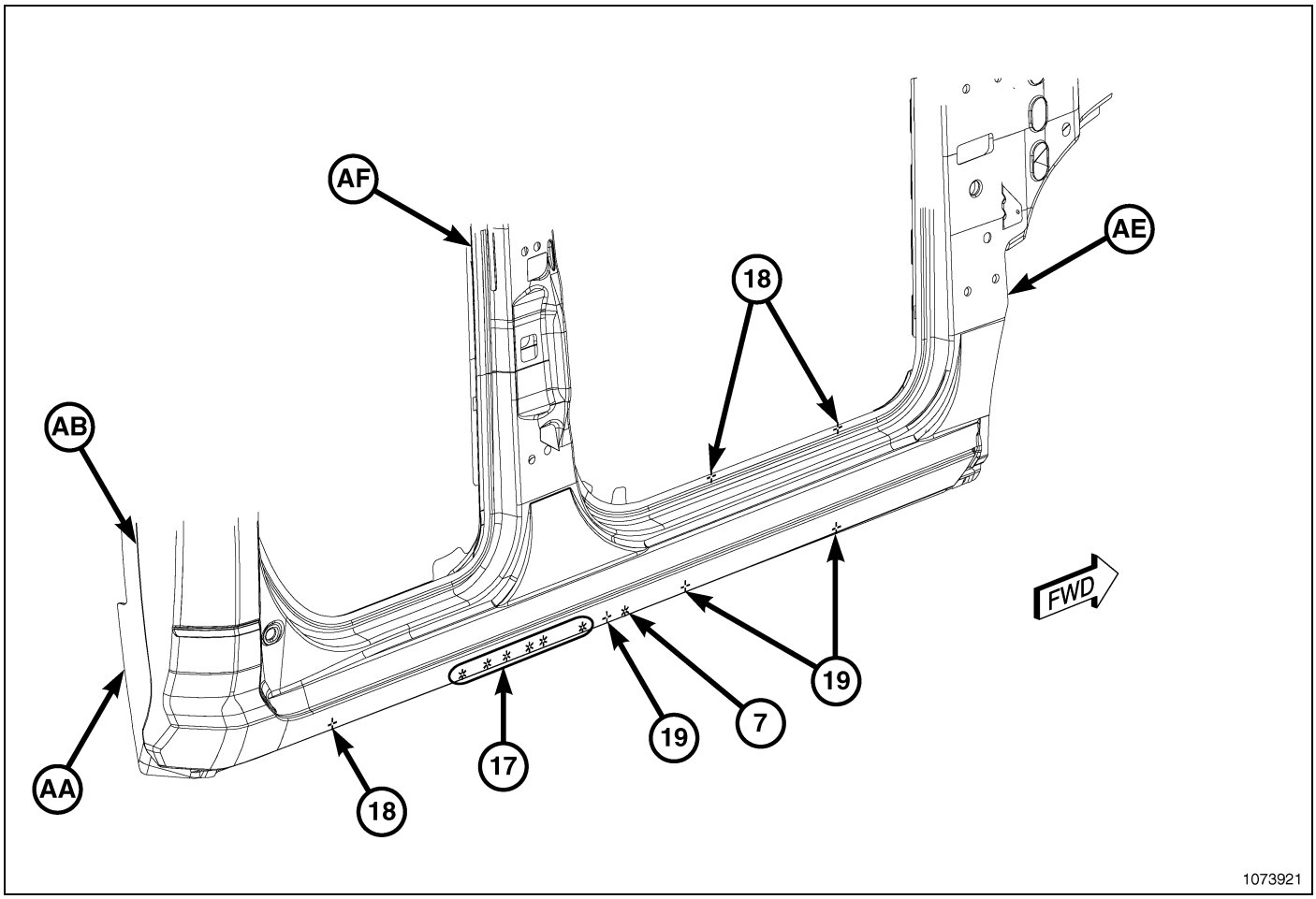

Fig. 171 Body Side Aperture Outer Complete – Quad Cab (8 of 8)

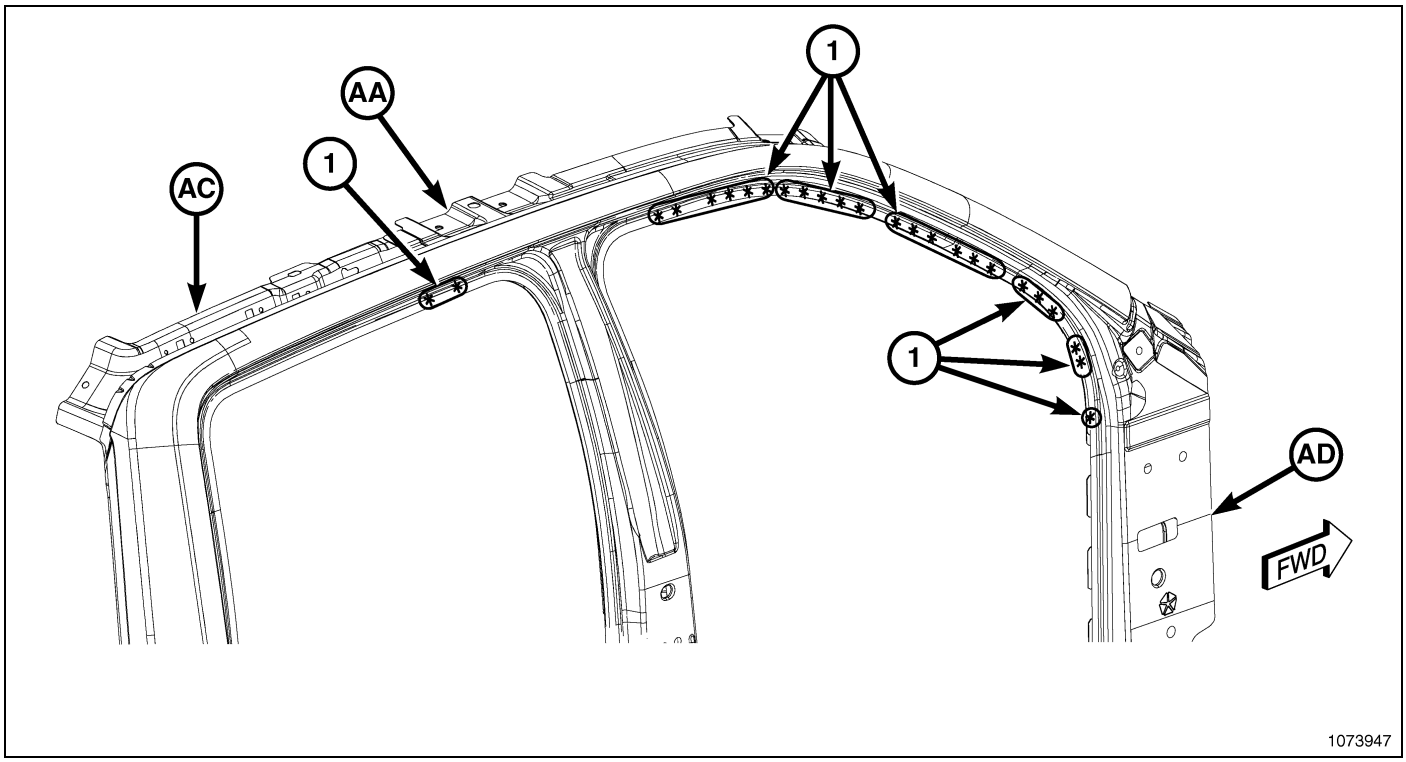

Fig. 172 Body Side Aperture Outer Complete – Crew Cab (1 of 9)

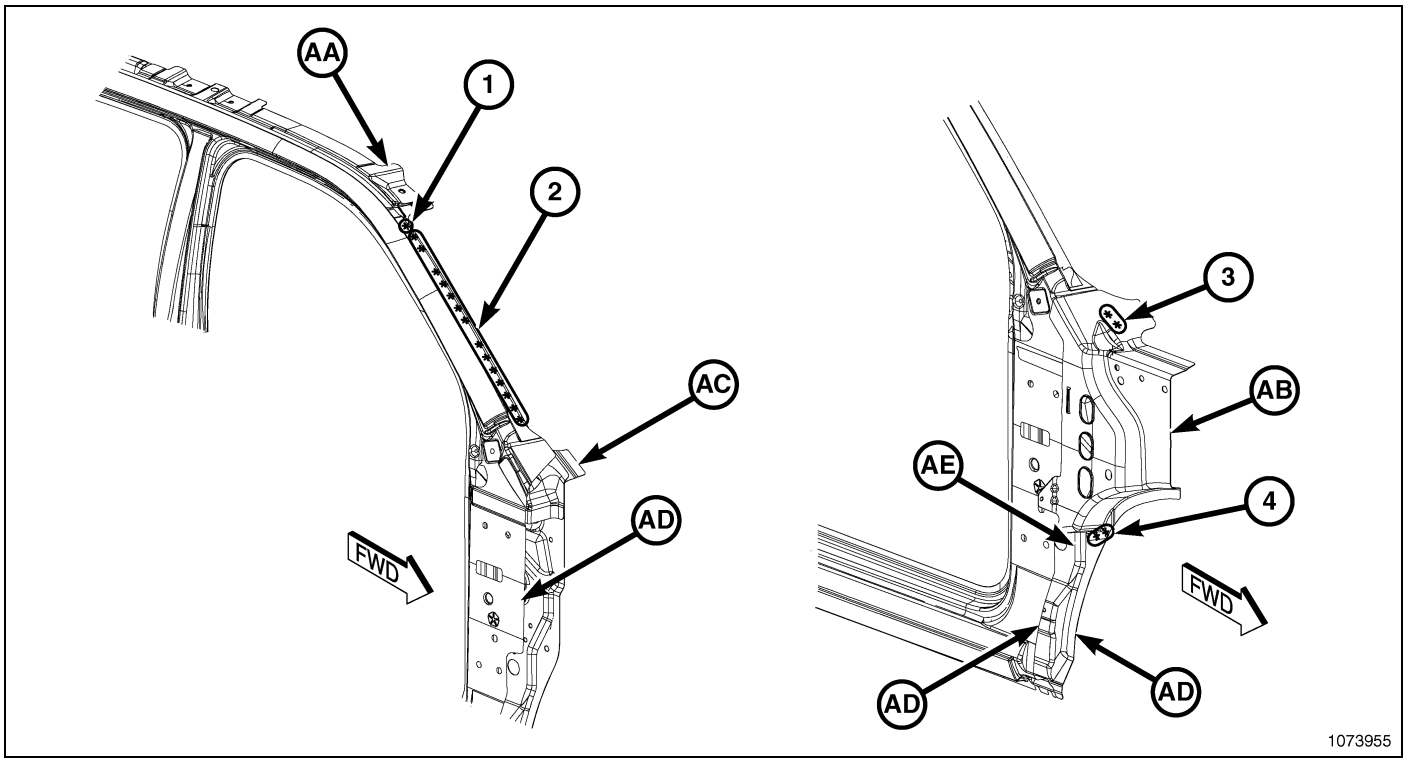

Fig. 173 Body Side Aperture Outer Complete – Crew Cab (2 of 9)

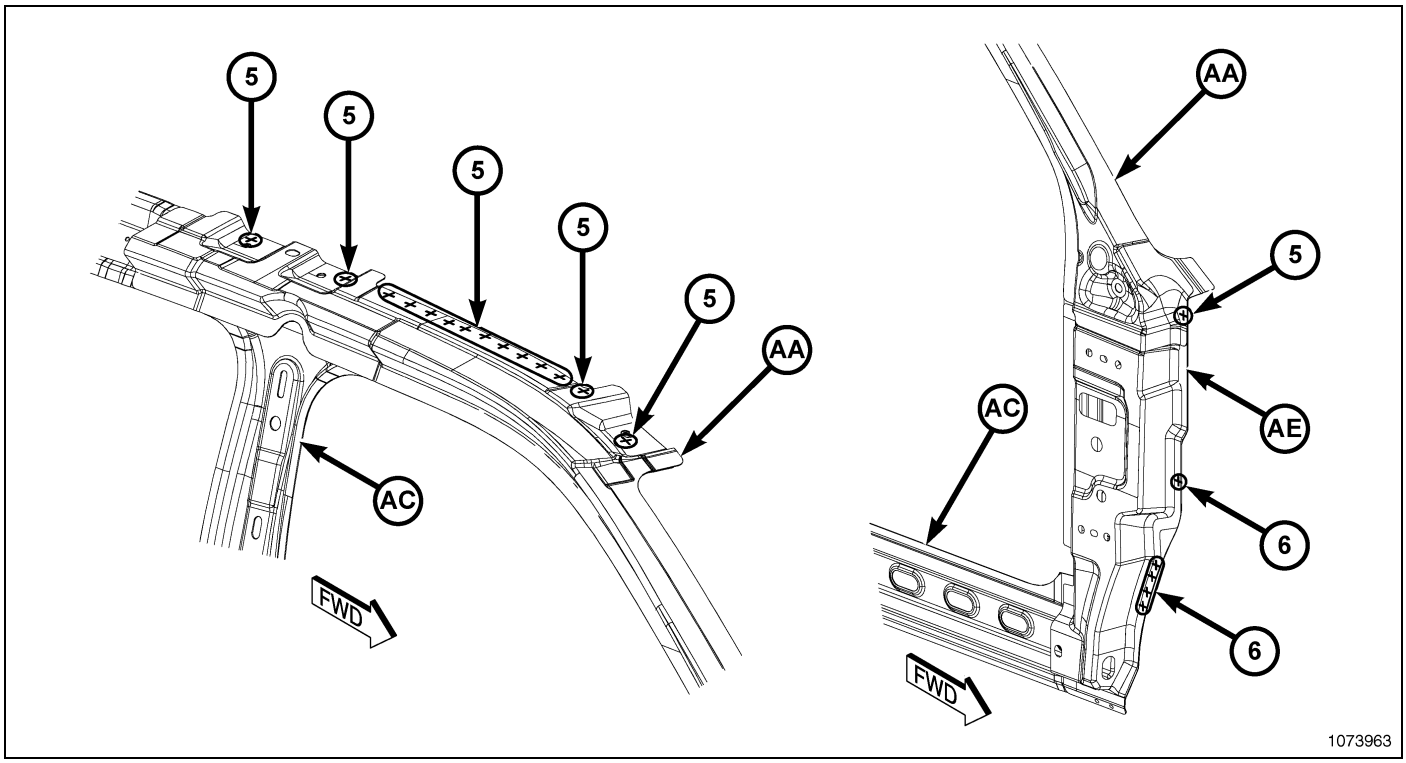

Fig. 174 Body Side Aperture Outer Complete – Crew Cab (3 of 9)

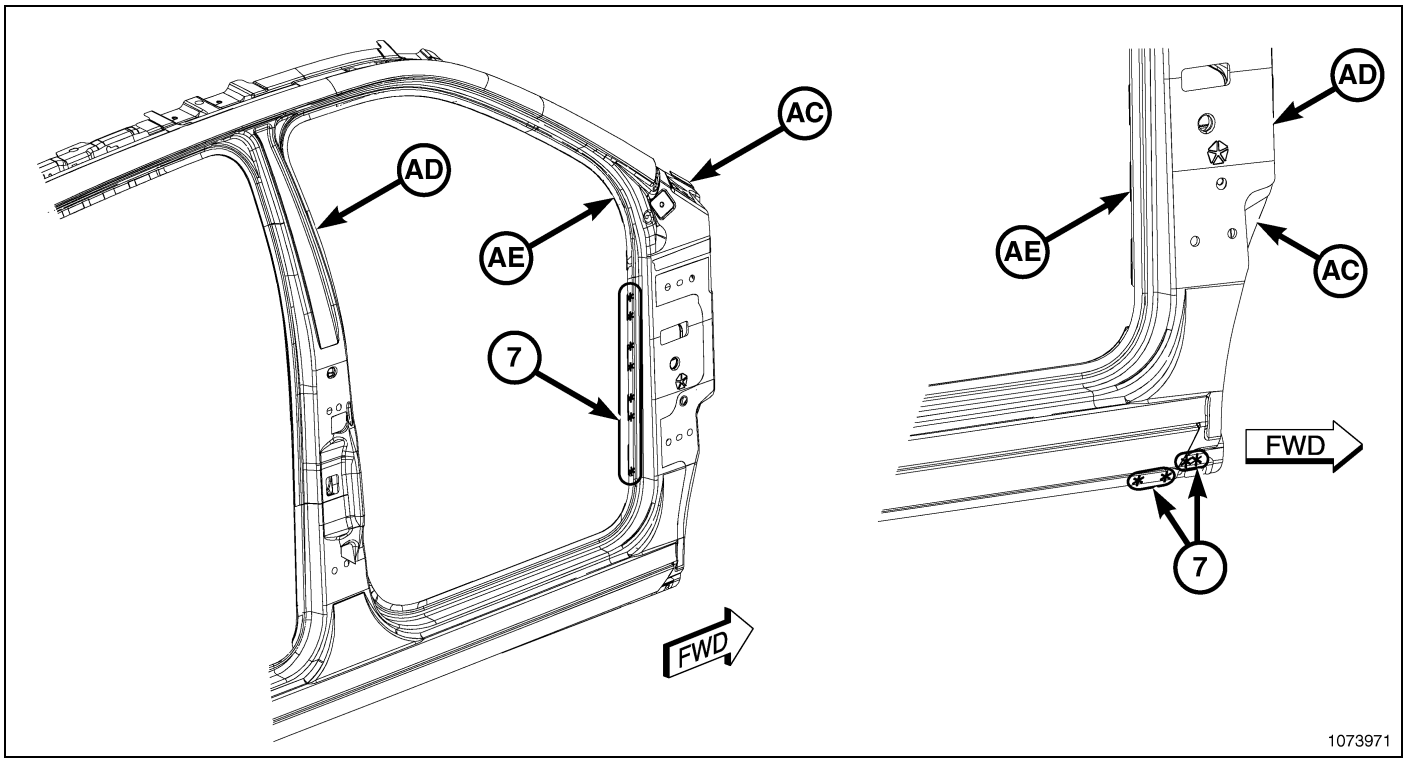

Fig. 175 Body Side Aperture Outer Complete – Crew Cab (4 of 9)

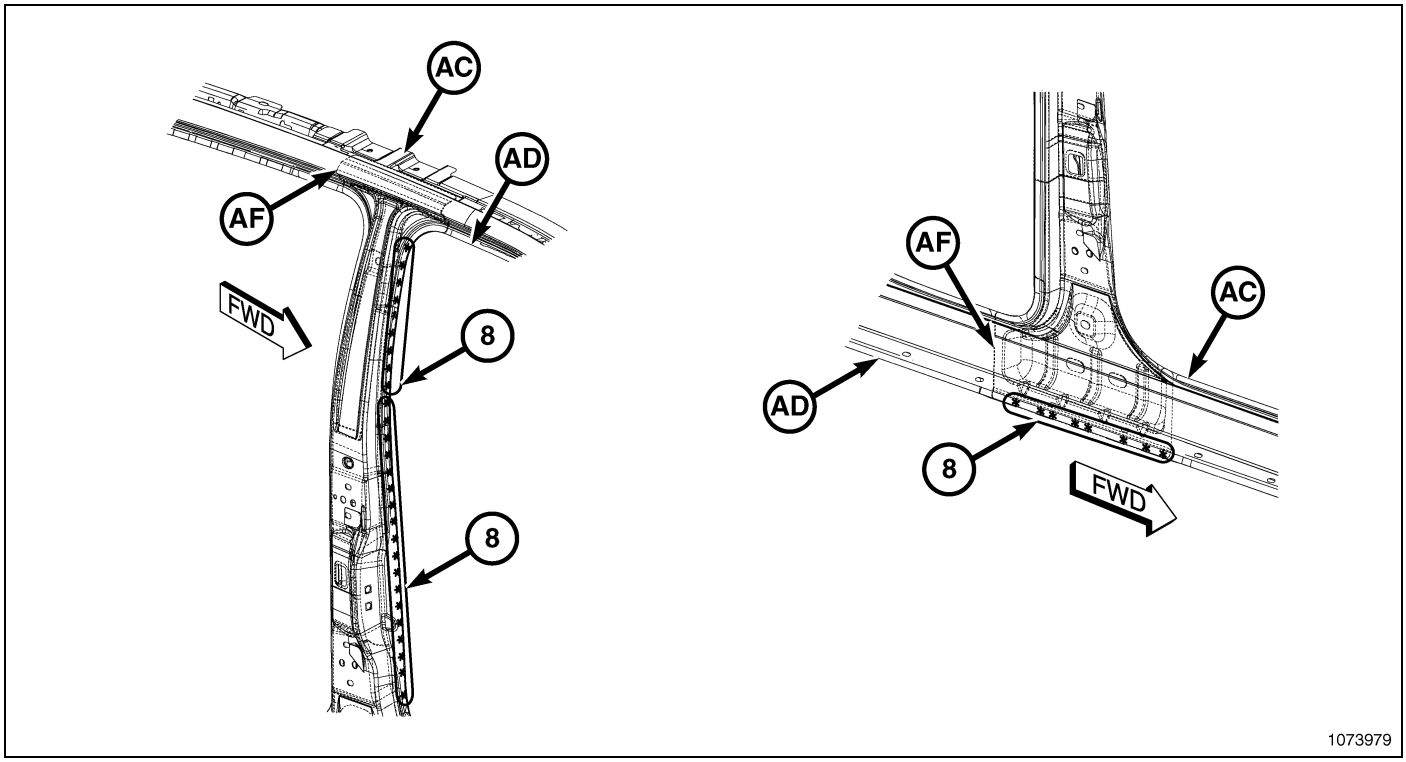

Fig. 176 Body Side Aperture Outer Complete – Crew Cab (5 of 9)

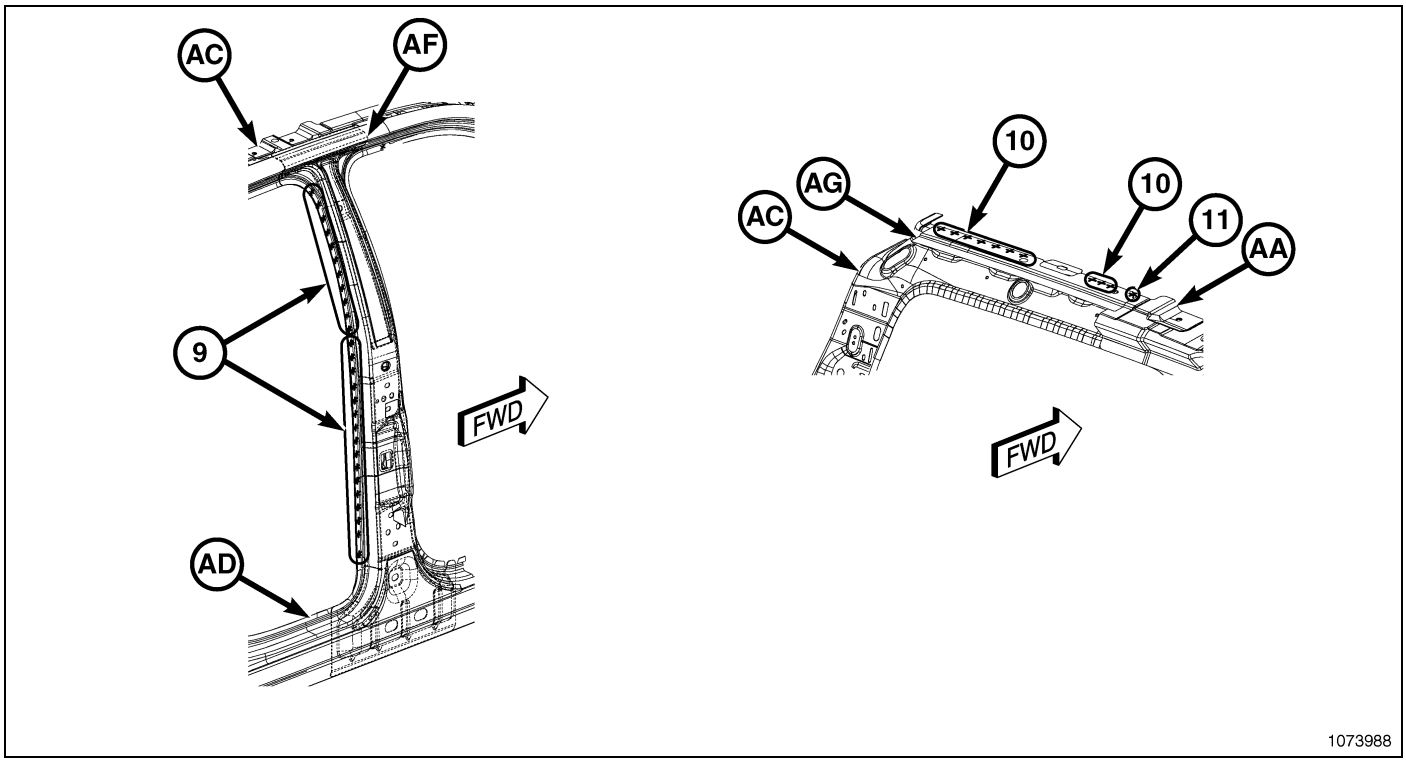

Fig. 177 Body Side Aperture Outer Complete – Crew Cab (6 of 9)

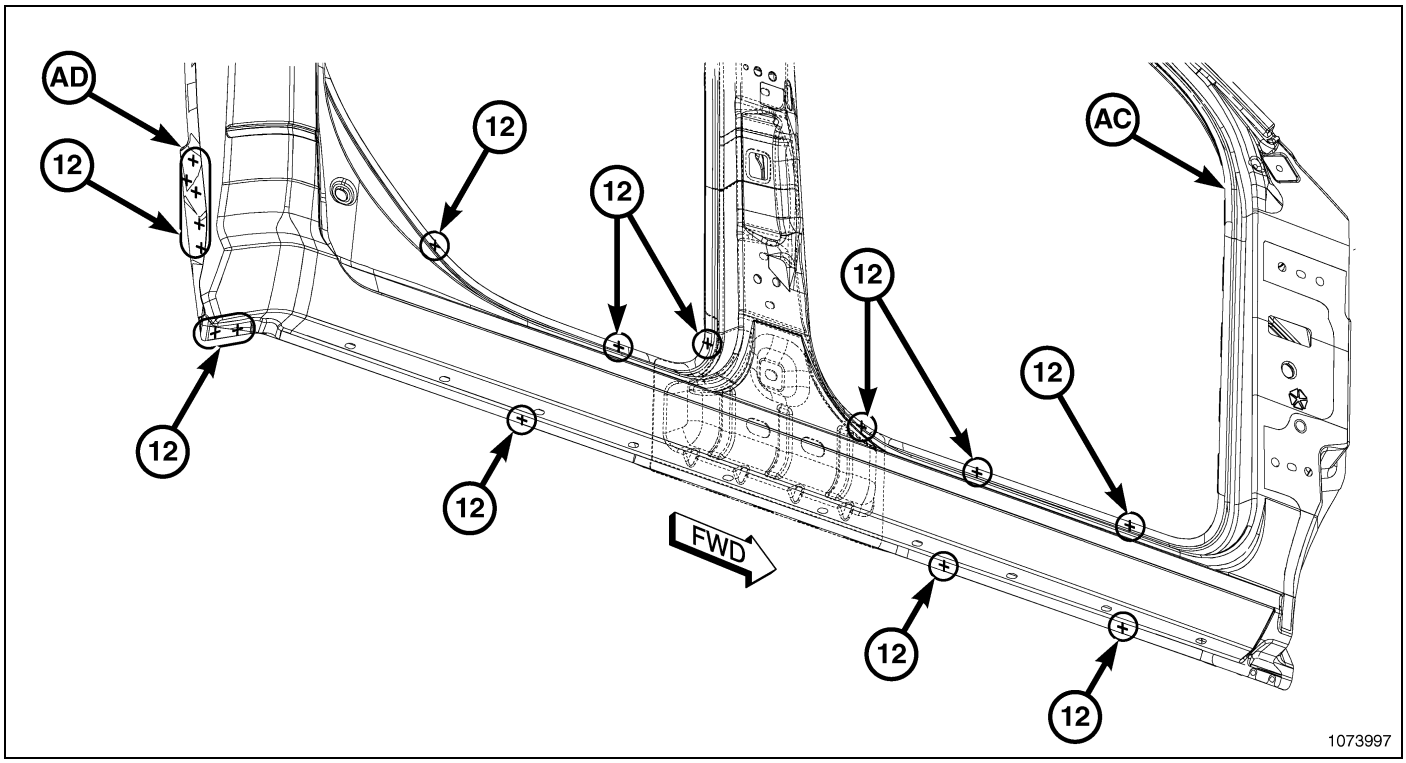

Fig. 178 Body Side Aperture Outer Complete – Crew Cab (7 of 9)

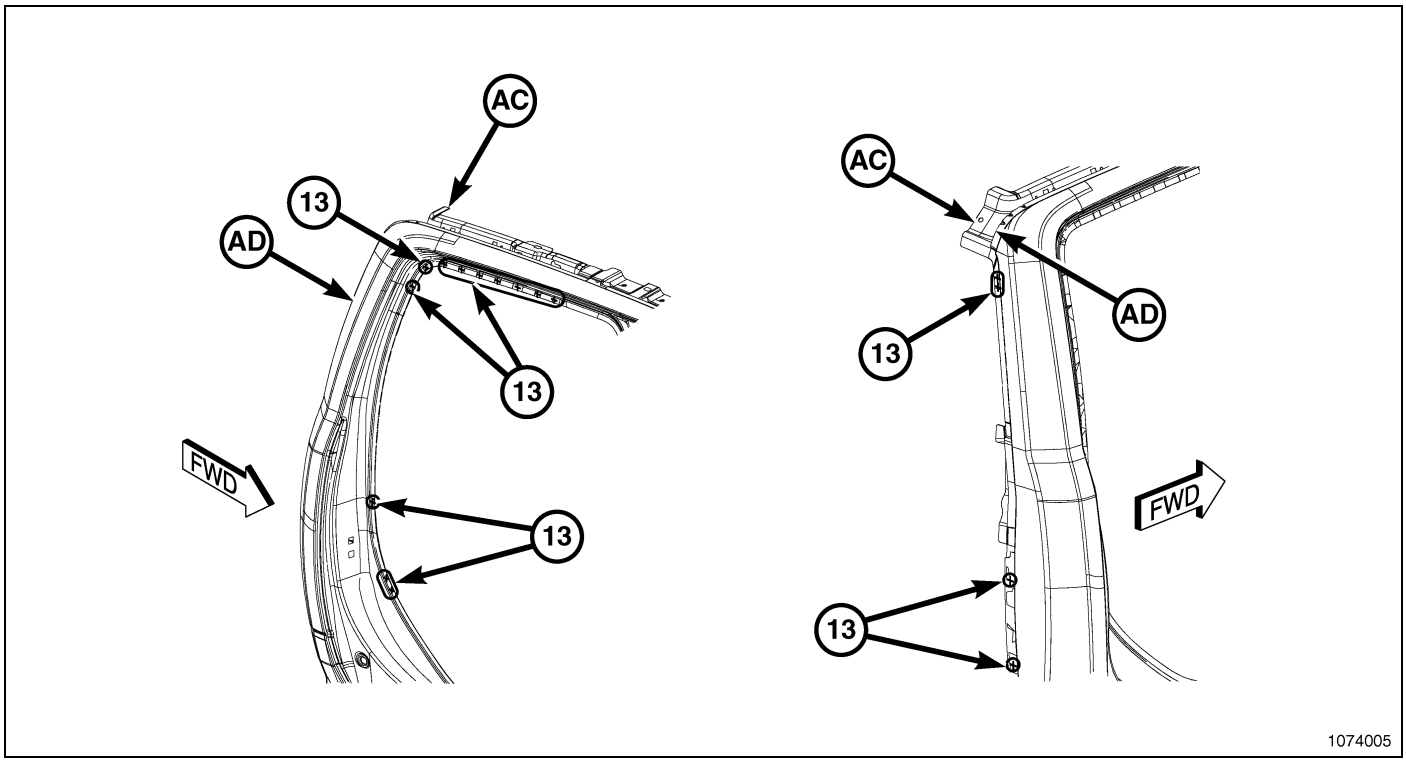

Fig. 179 Body Side Aperture Outer Complete – Crew Cab (8 of 9)

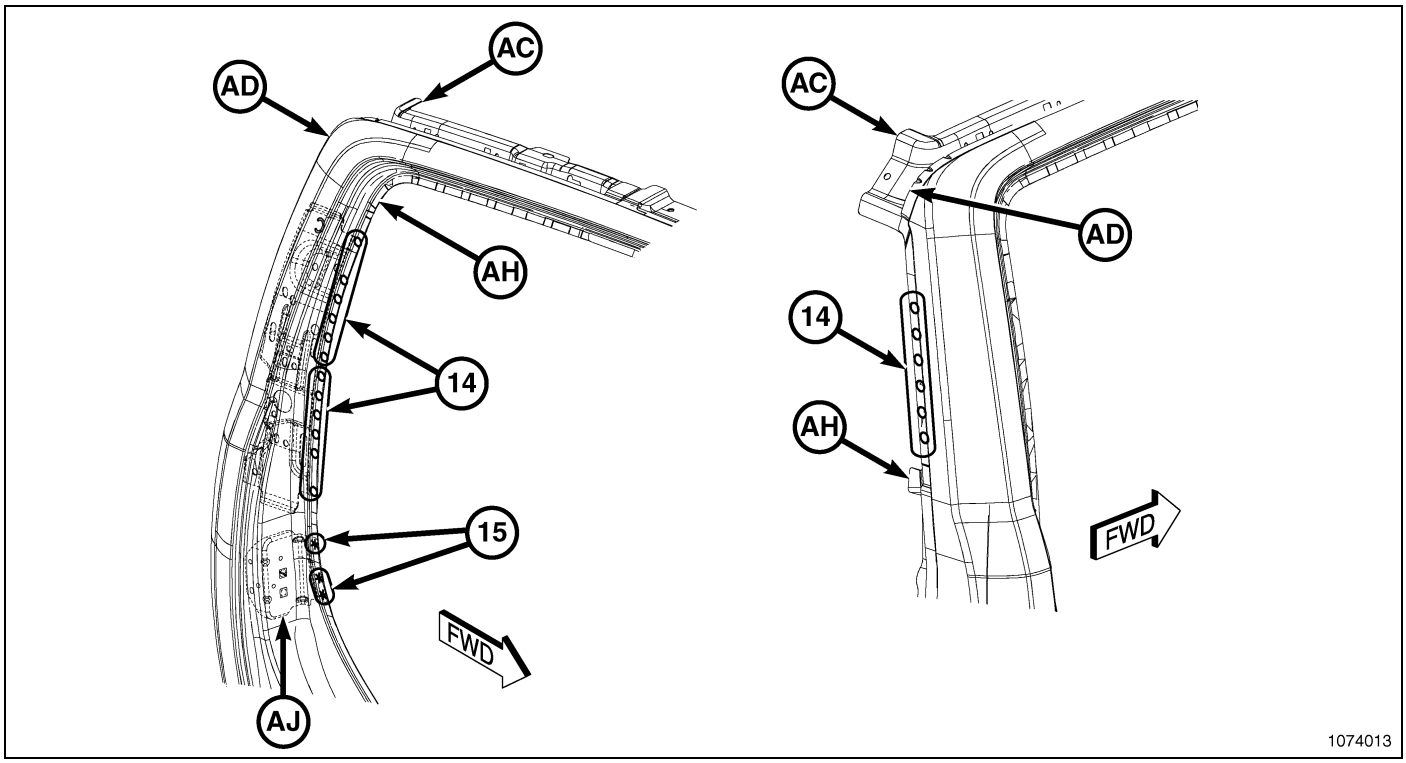

Fig. 180 Body Side Aperture Outer Complete – Crew Cab (9 of 9)

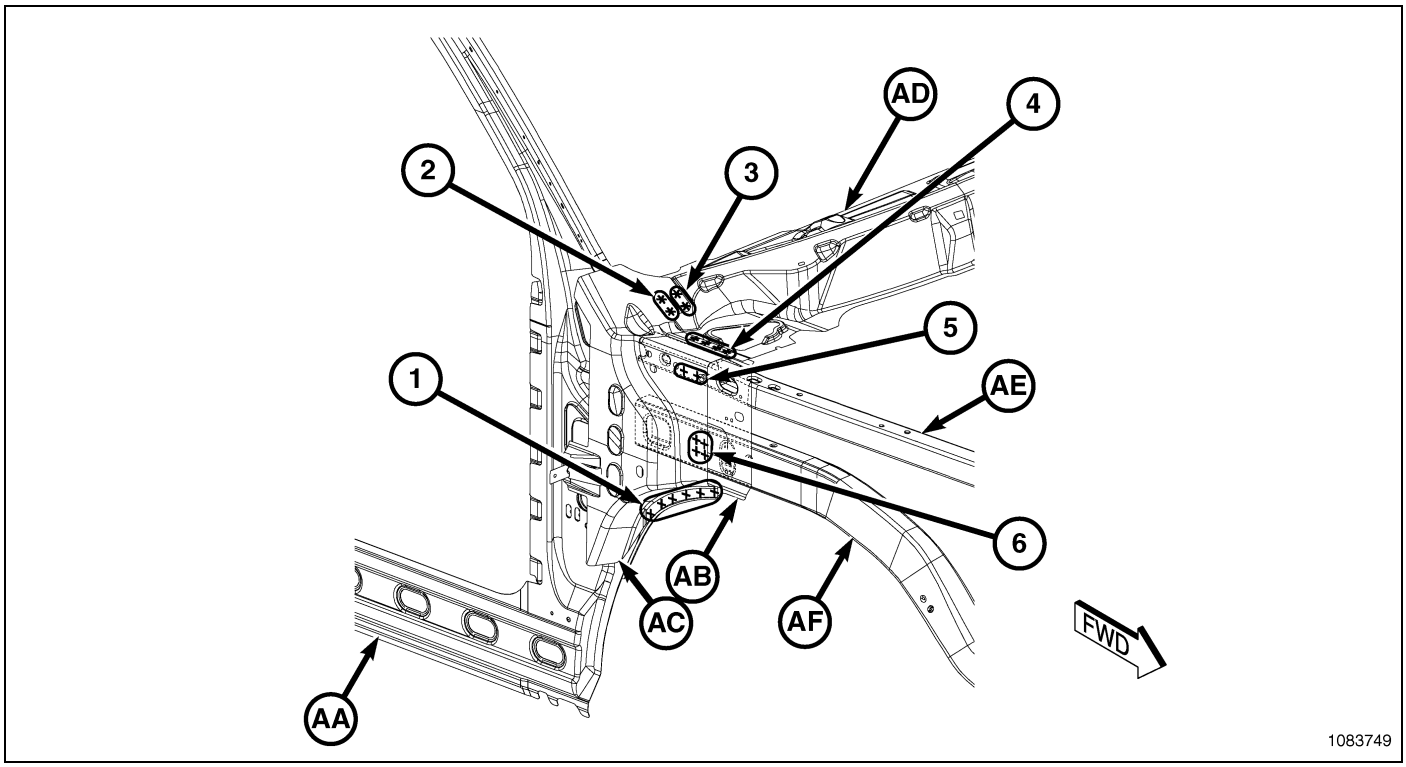

Fig. 181 Cab Complete – Standard (1 of 11)

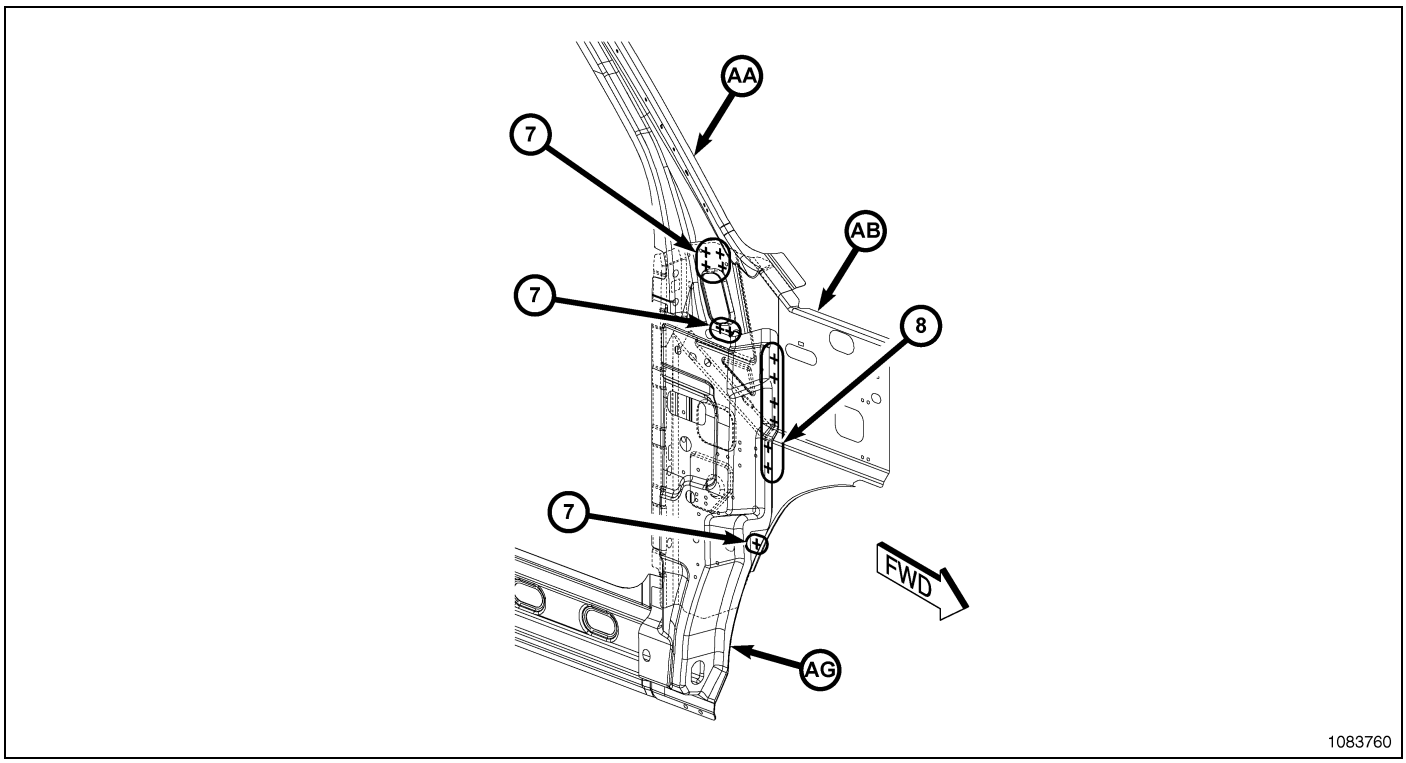

Fig. 182 Cab Complete – Standard (2 of 11)

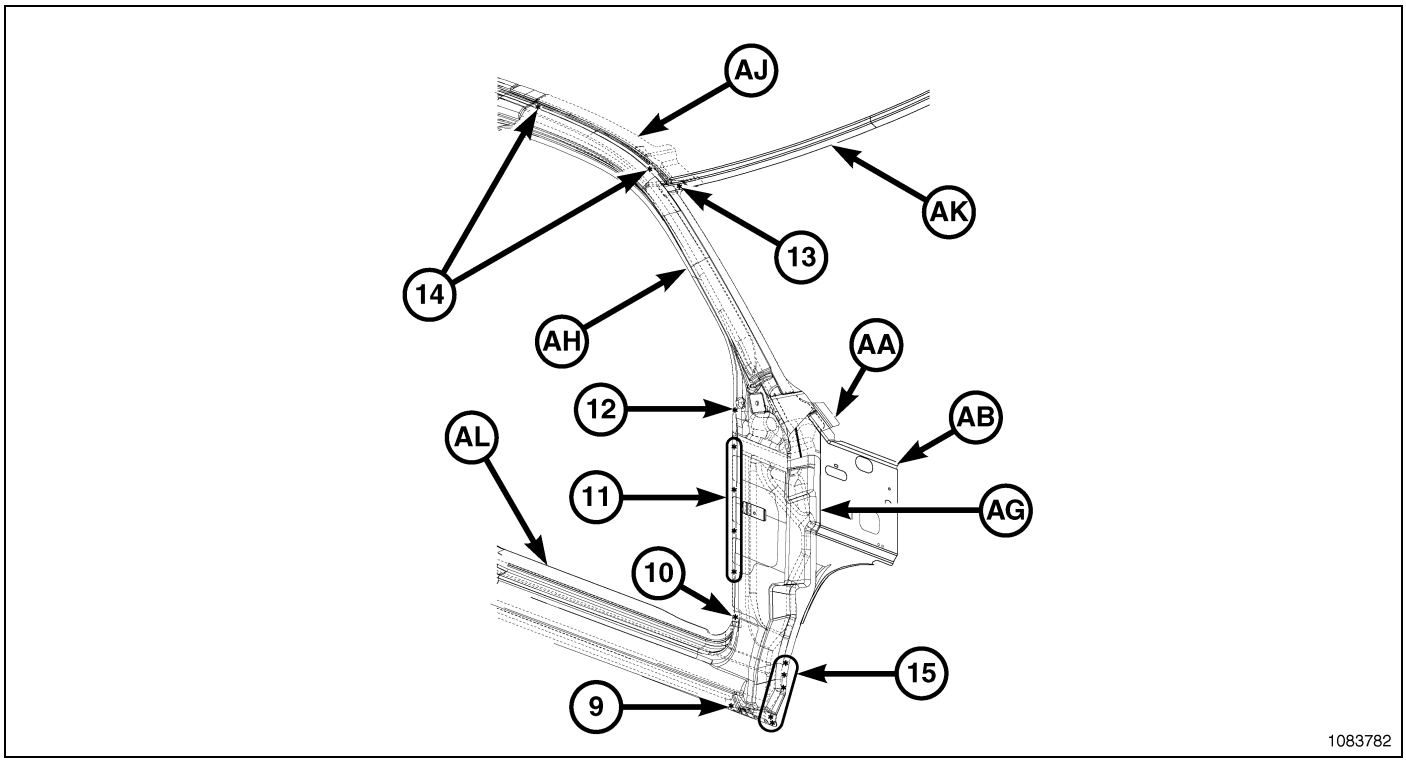

Fig. 183 Cab Complete – Standard (3 of 11)

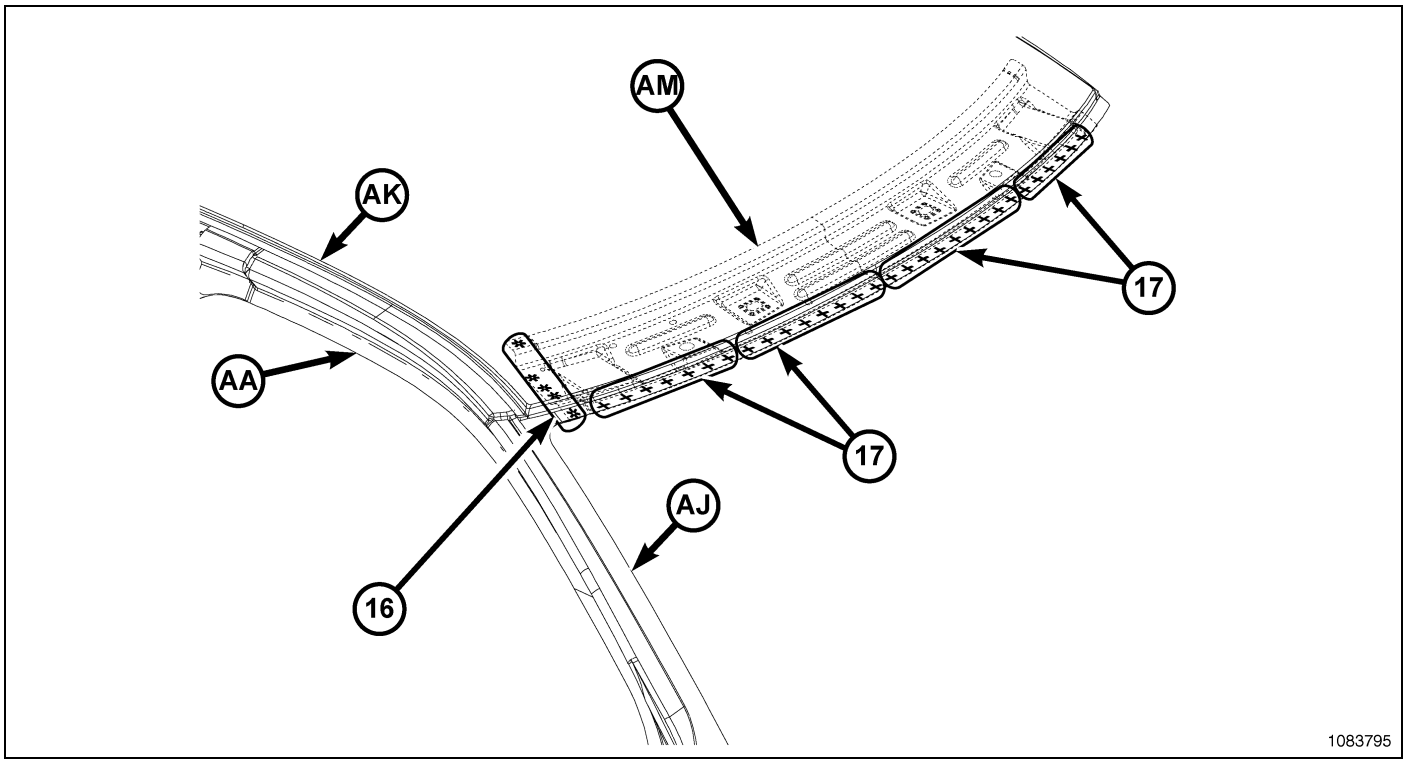

Fig. 184 Cab Complete – Standard (4 of 11)

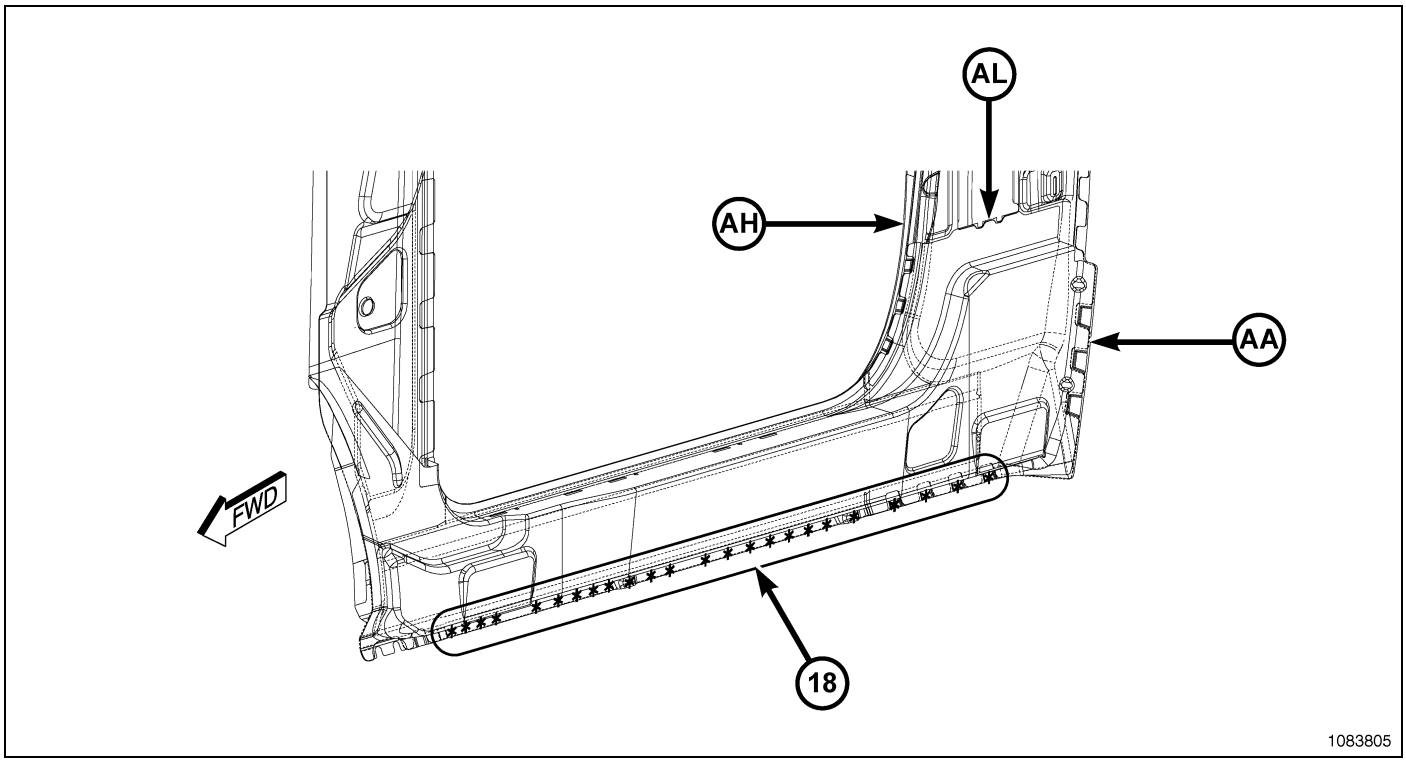

Fig. 185 Cab Complete – Standard (5 of 11)

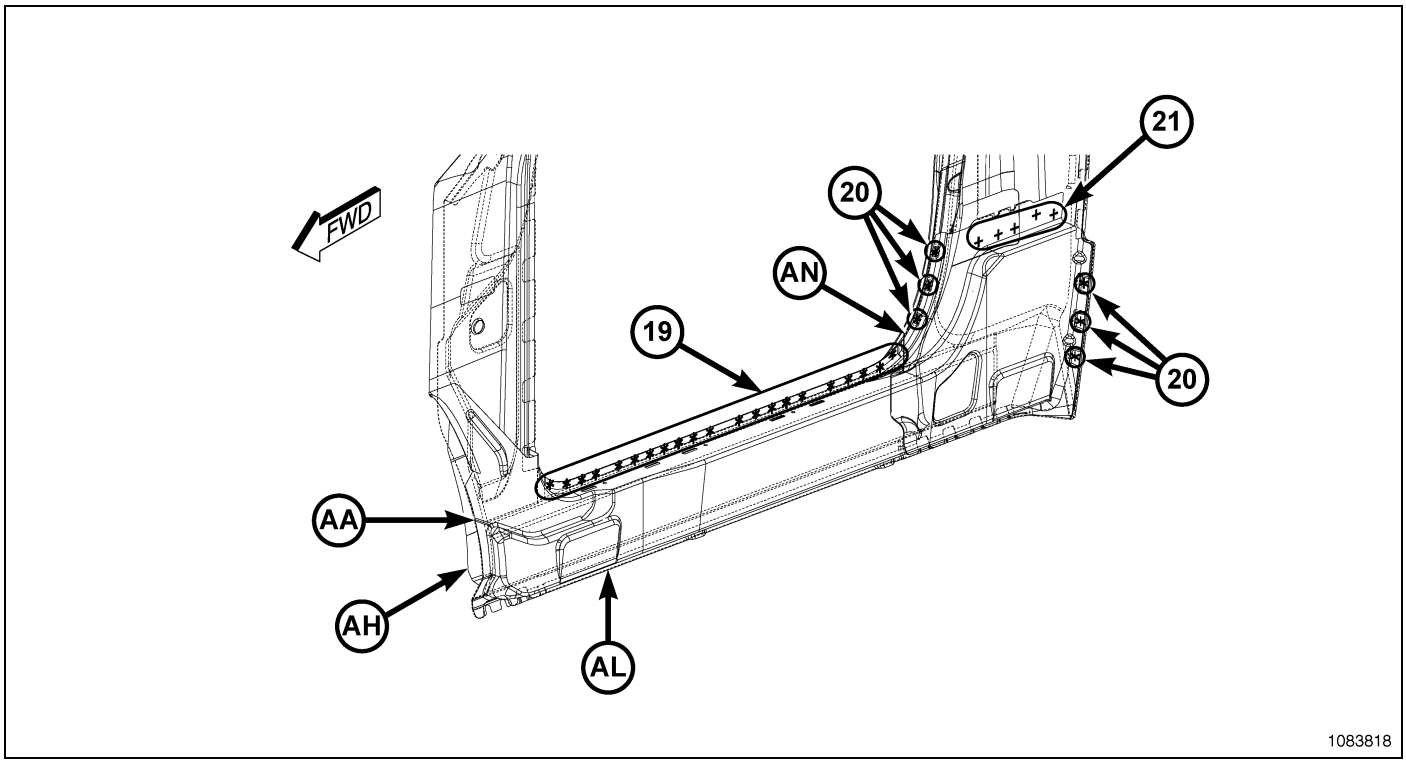

Fig. 186 Cab Complete – Standard (6 of 11)

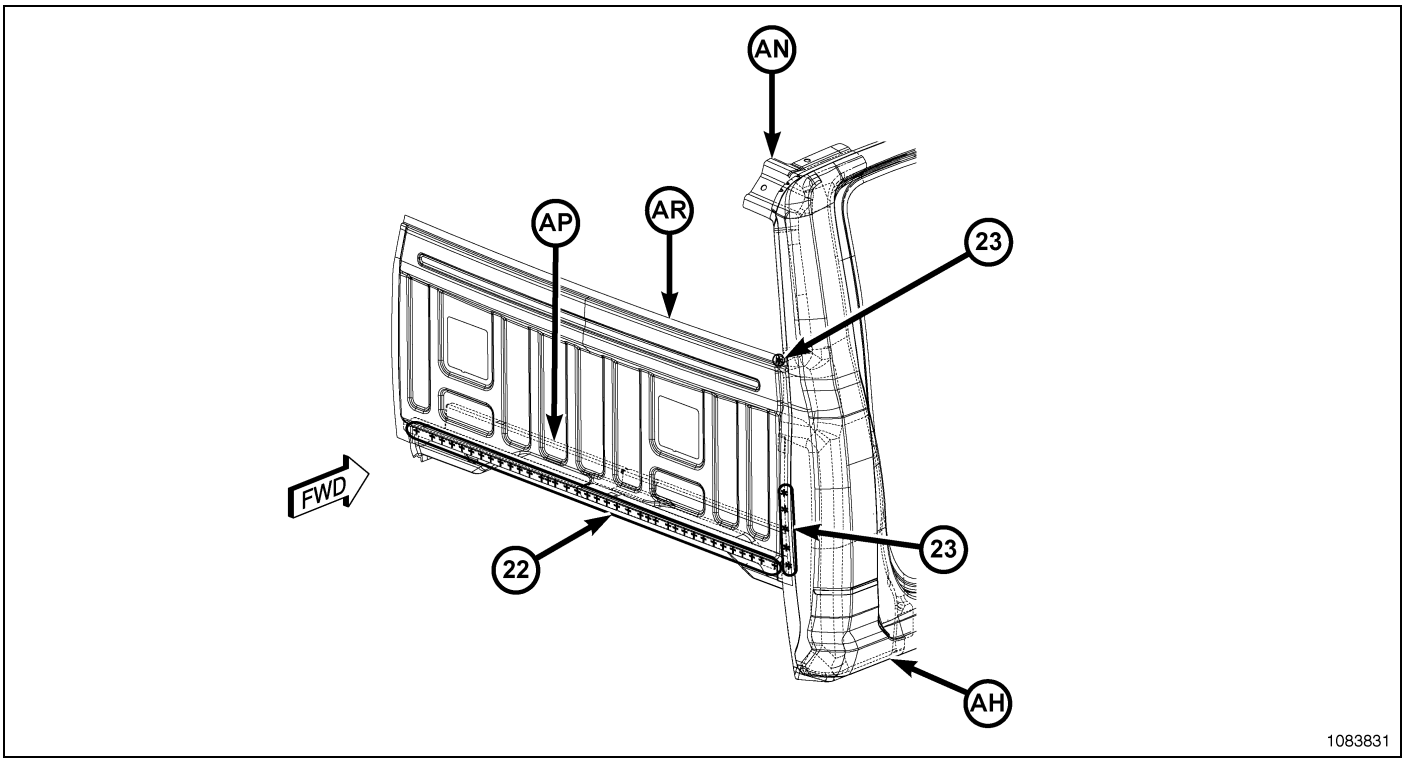

Fig. 187 Cab Complete – Standard (7 of 11)

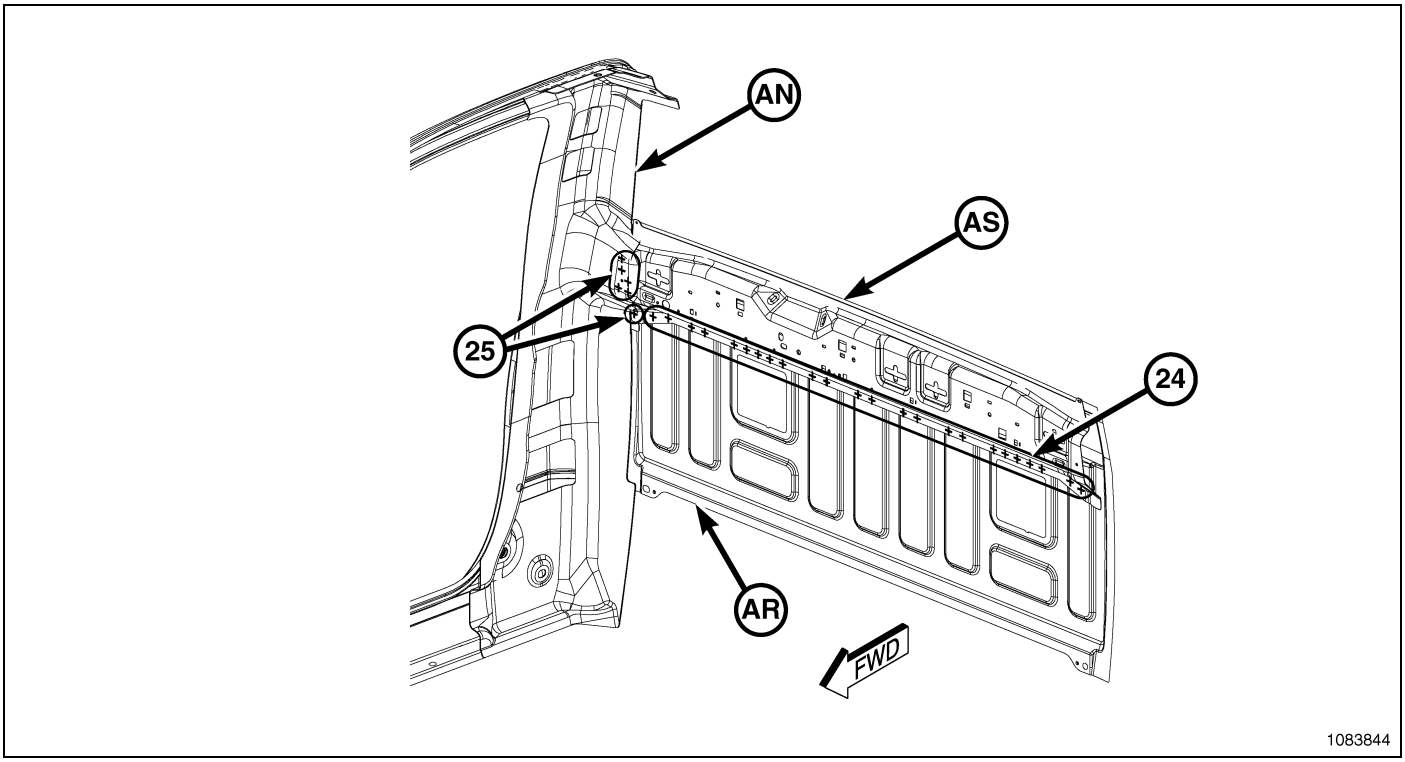

Fig. 188 Cab Complete – Standard (8 of 11)

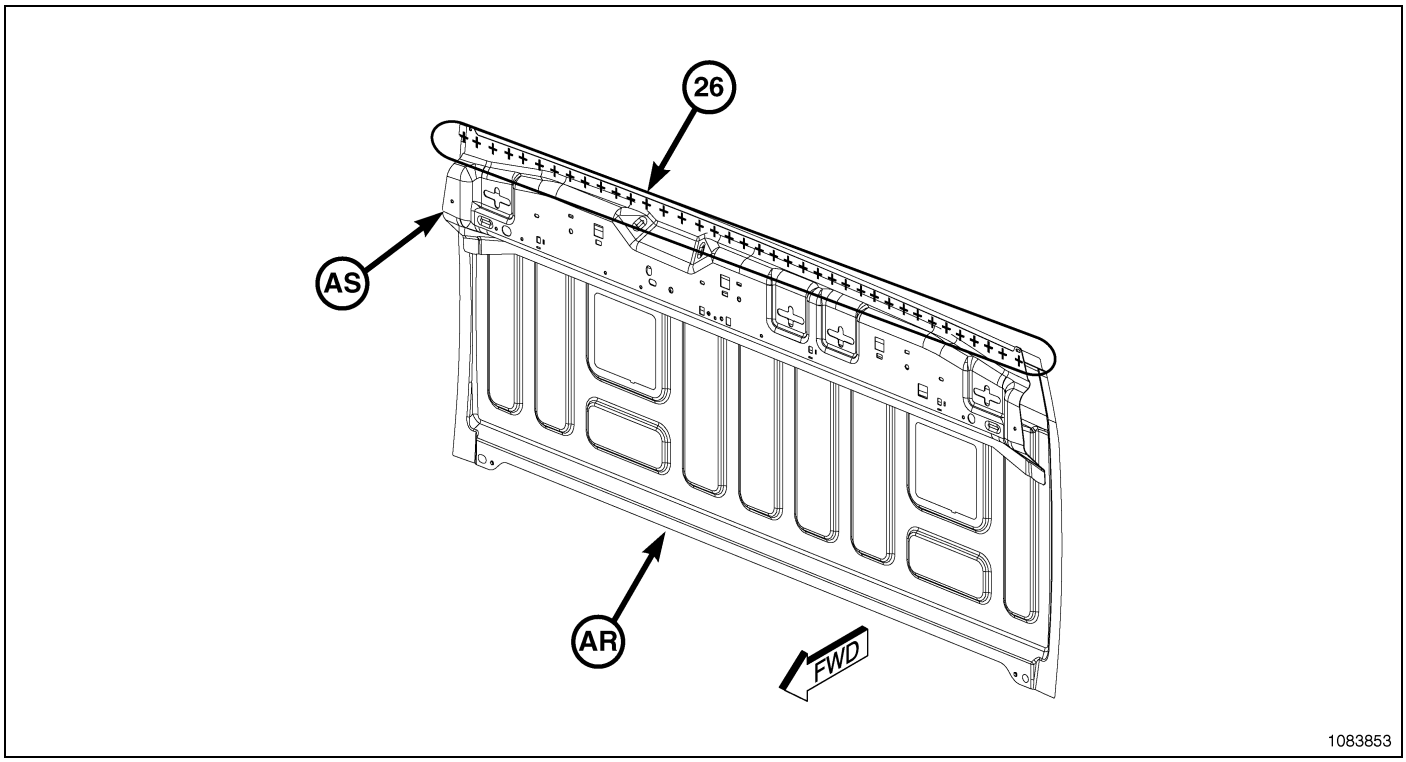

Fig. 189 Cab Complete – Standard (9 of 11)

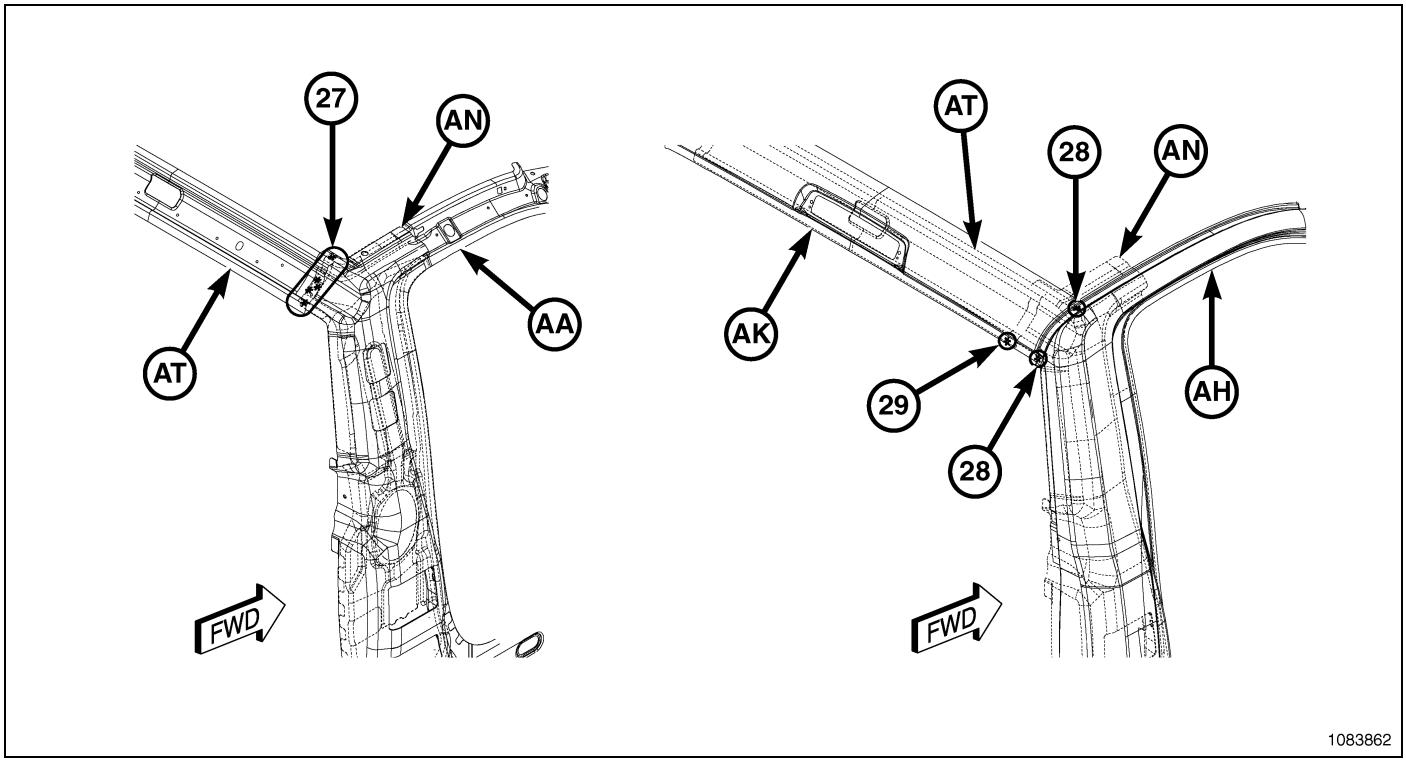

Fig. 190 Cab Complete – Standard (10 of 11)

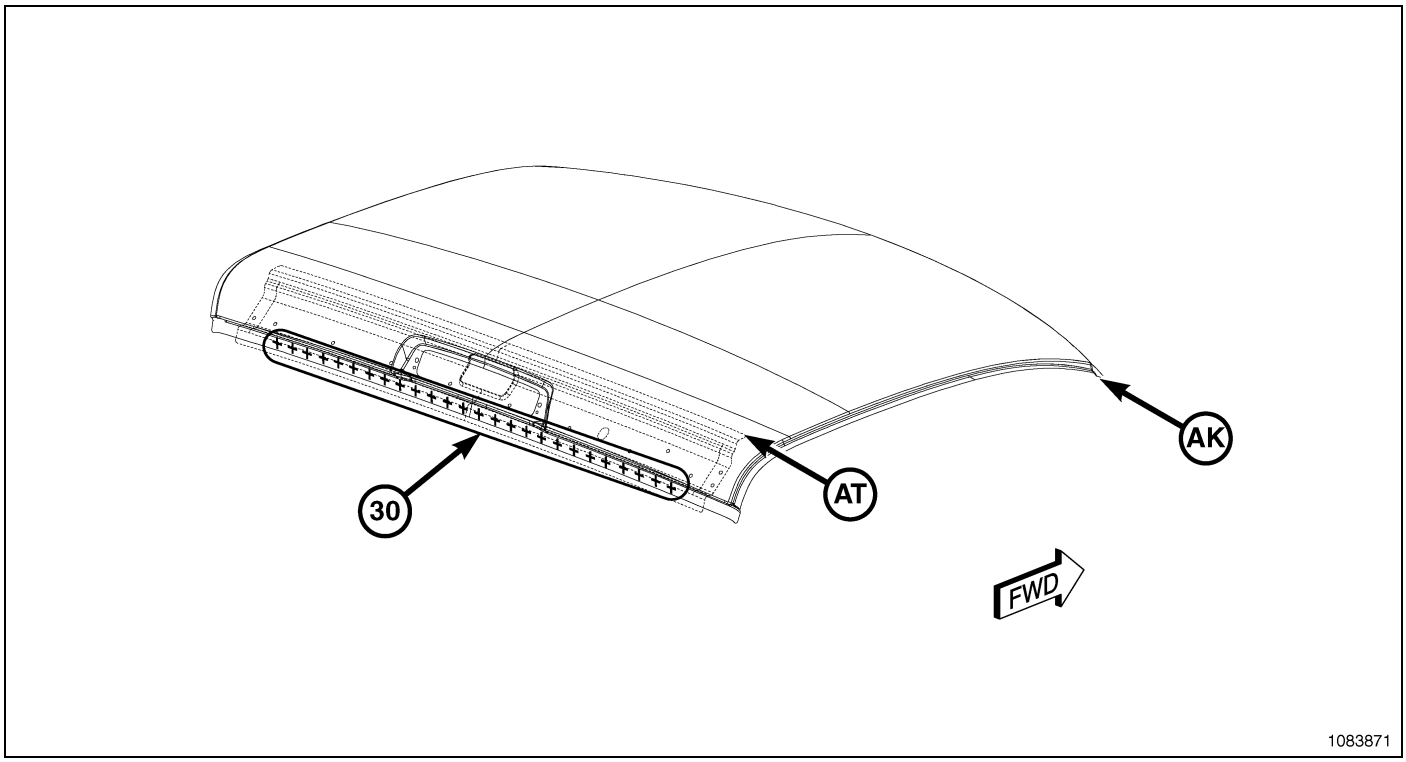

Fig. 191 Cab Complete – Standard (11 of 11)

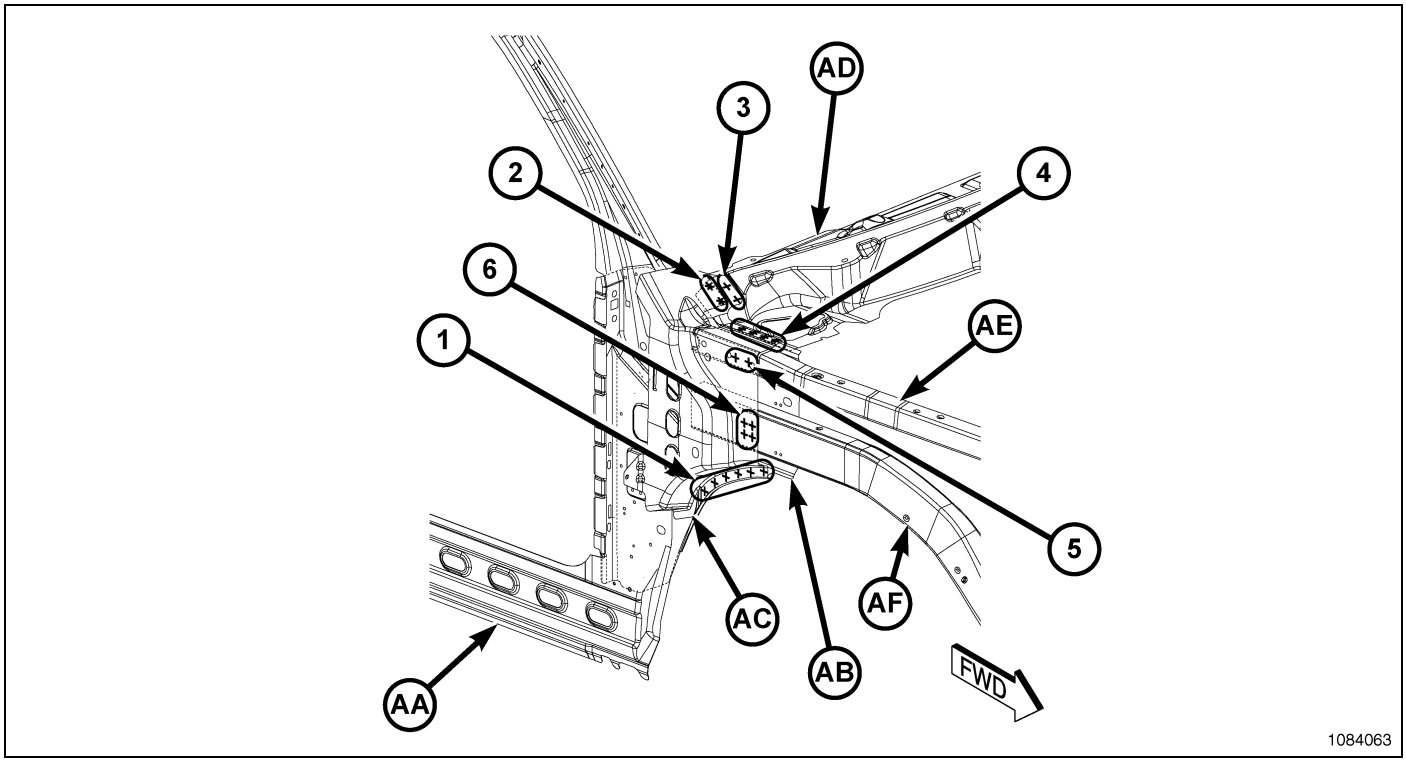

Fig. 192 Cab Complete – Quad (1 of 16)

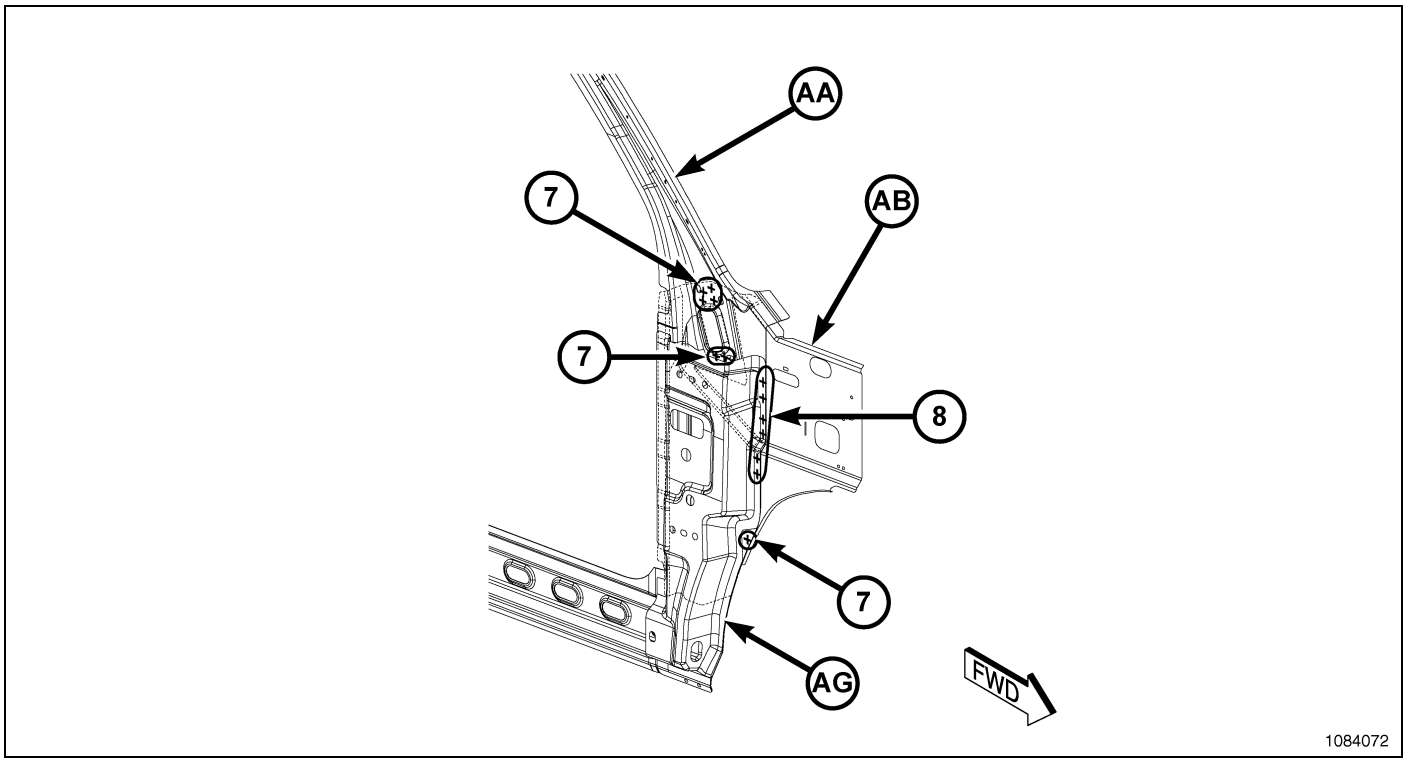

Fig. 193 Cab Complete – Quad (2 of 16)

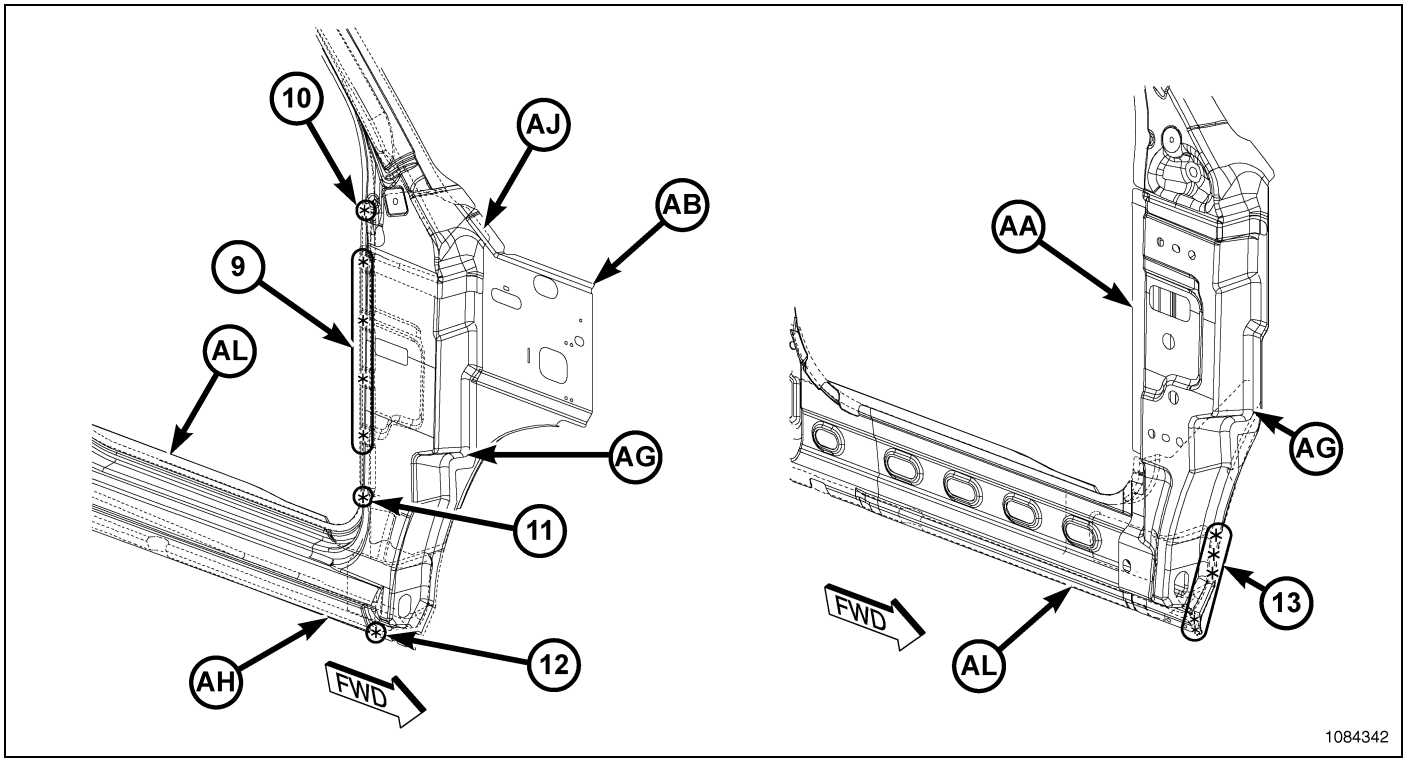

Fig. 194 Cab Complete – Quad (3 of 16)

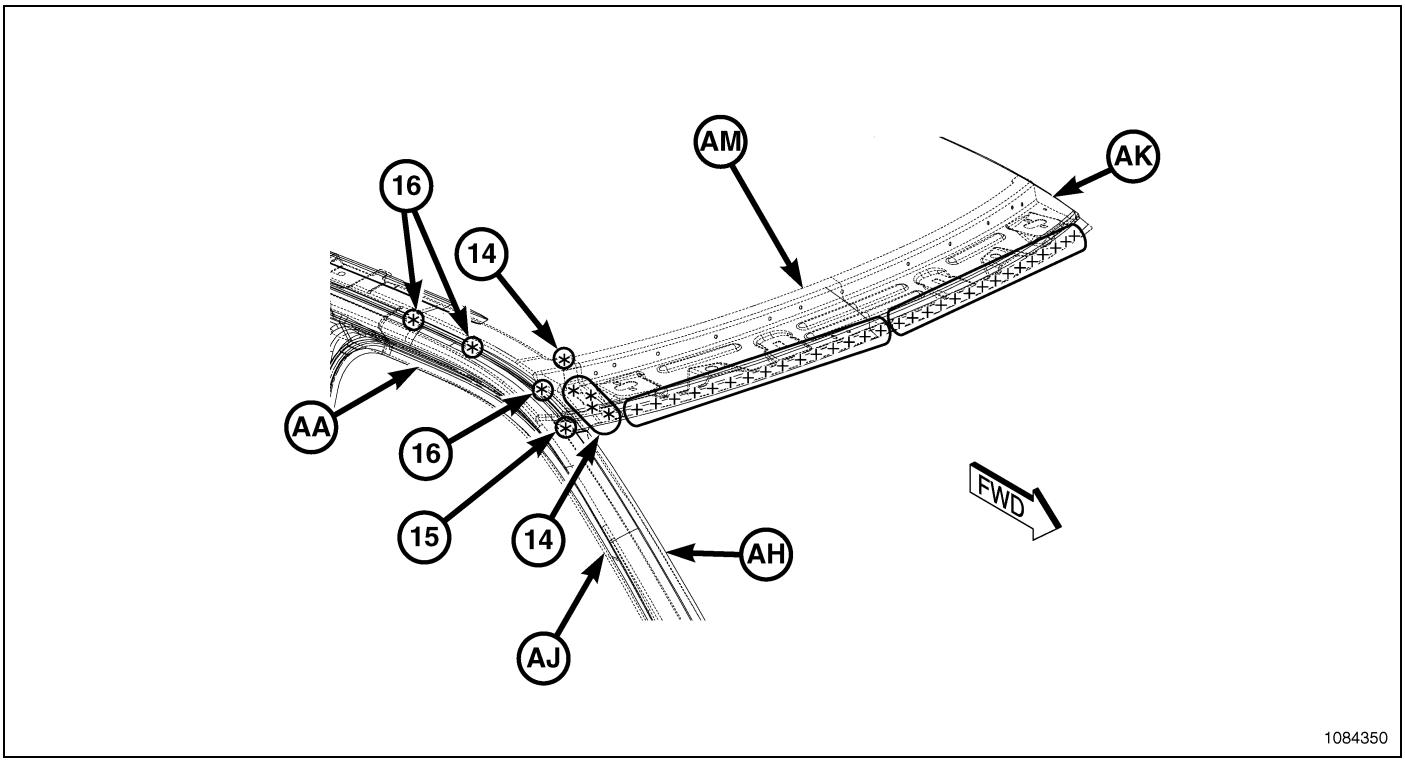

Fig. 195 Cab Complete – Quad (4 of 16)

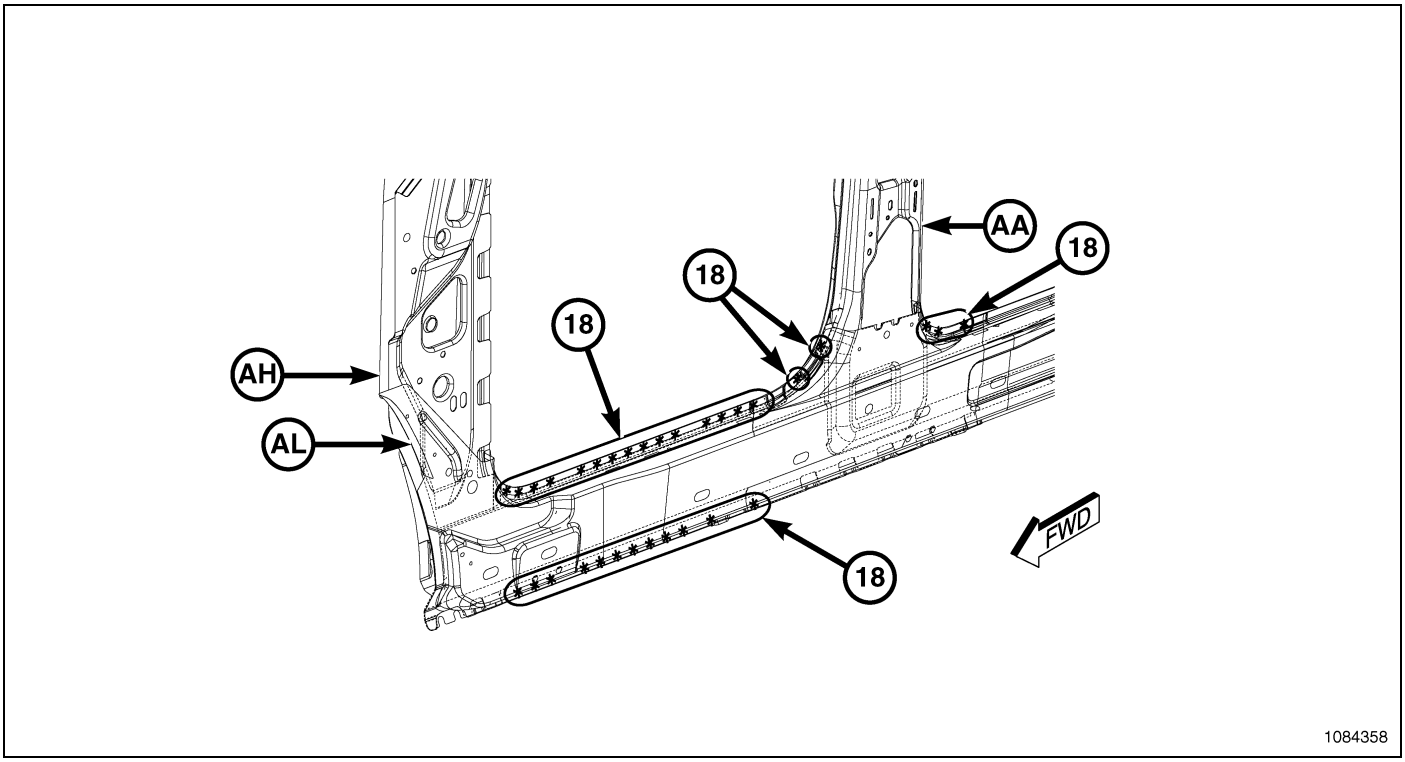

Fig. 196 Cab Complete – Quad (5 of 16)

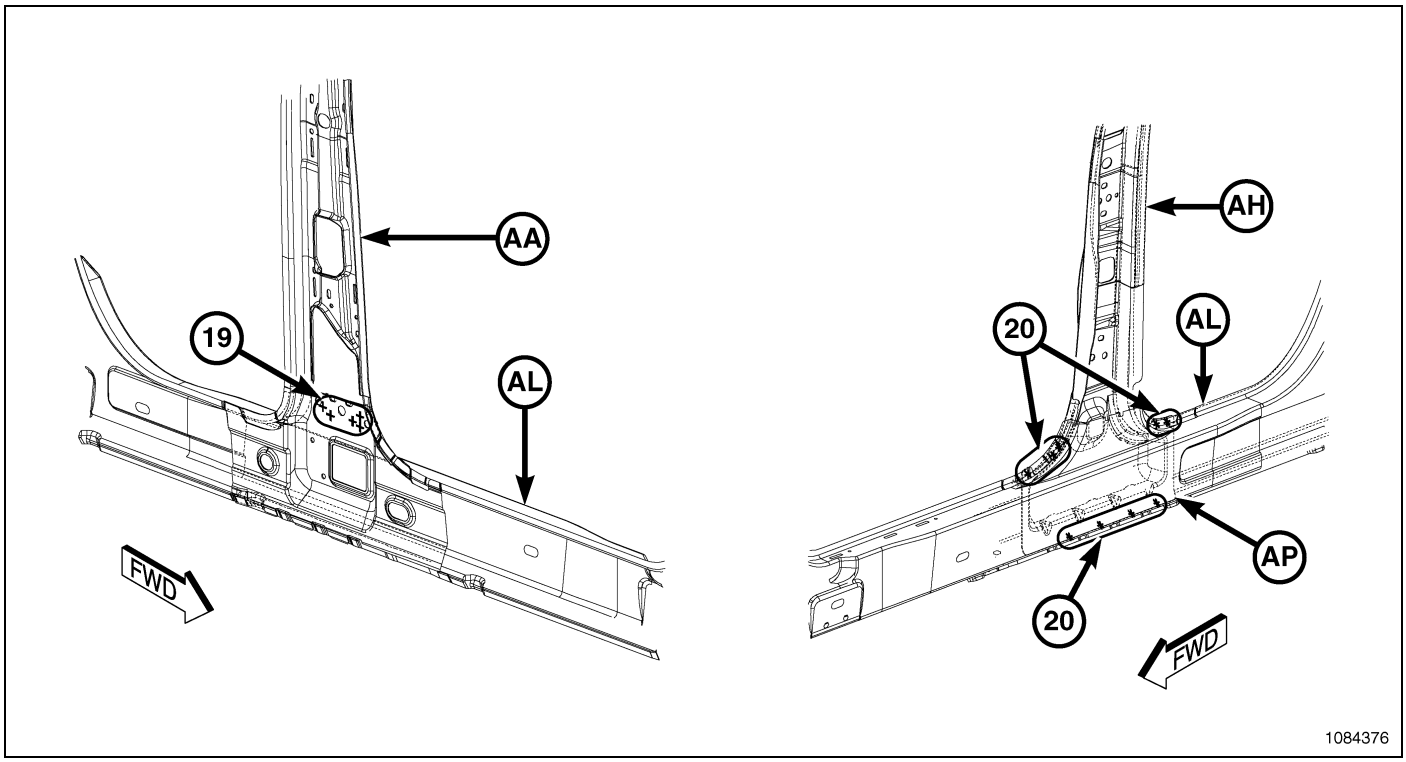

Fig. 197 Cab Complete – Quad (6 of 16)

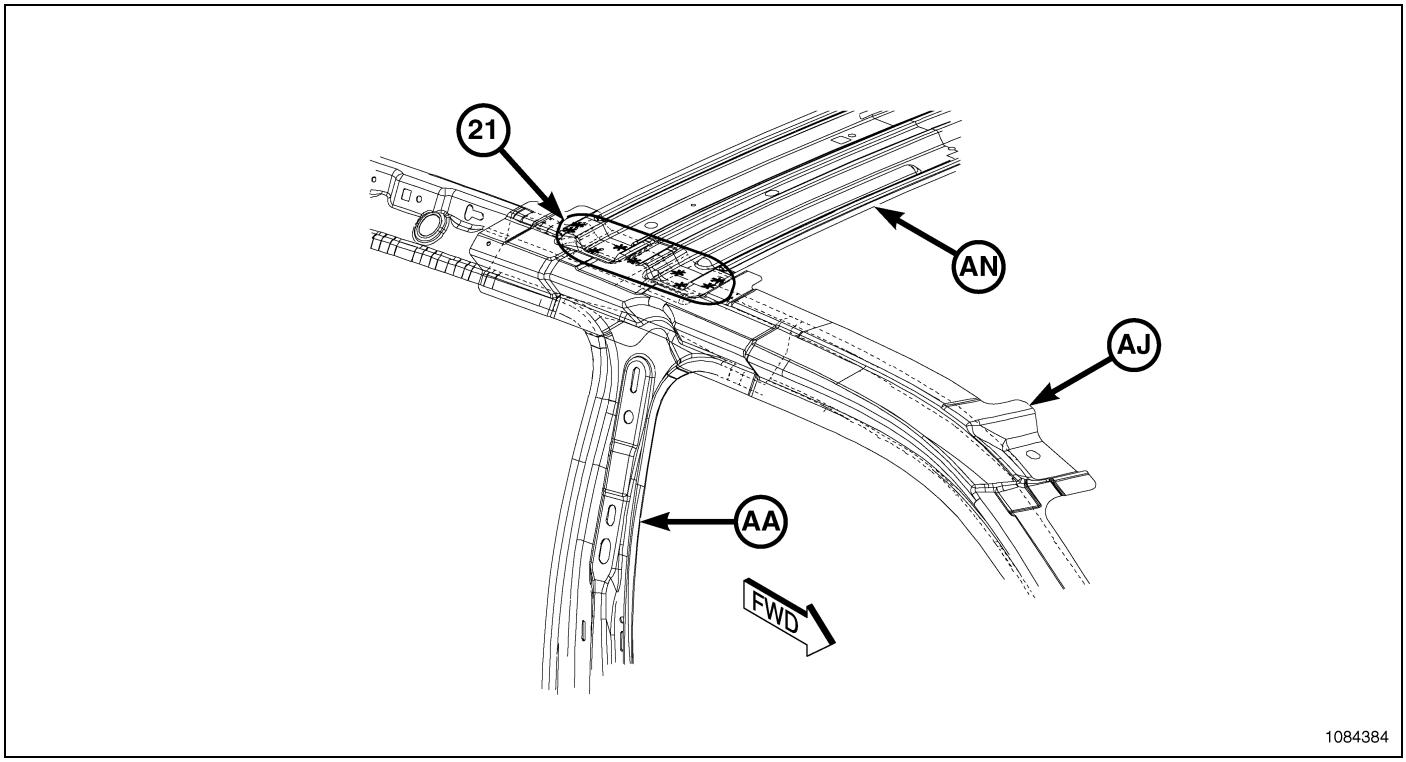

Fig. 198 Cab Complete – Quad (7 of 16)

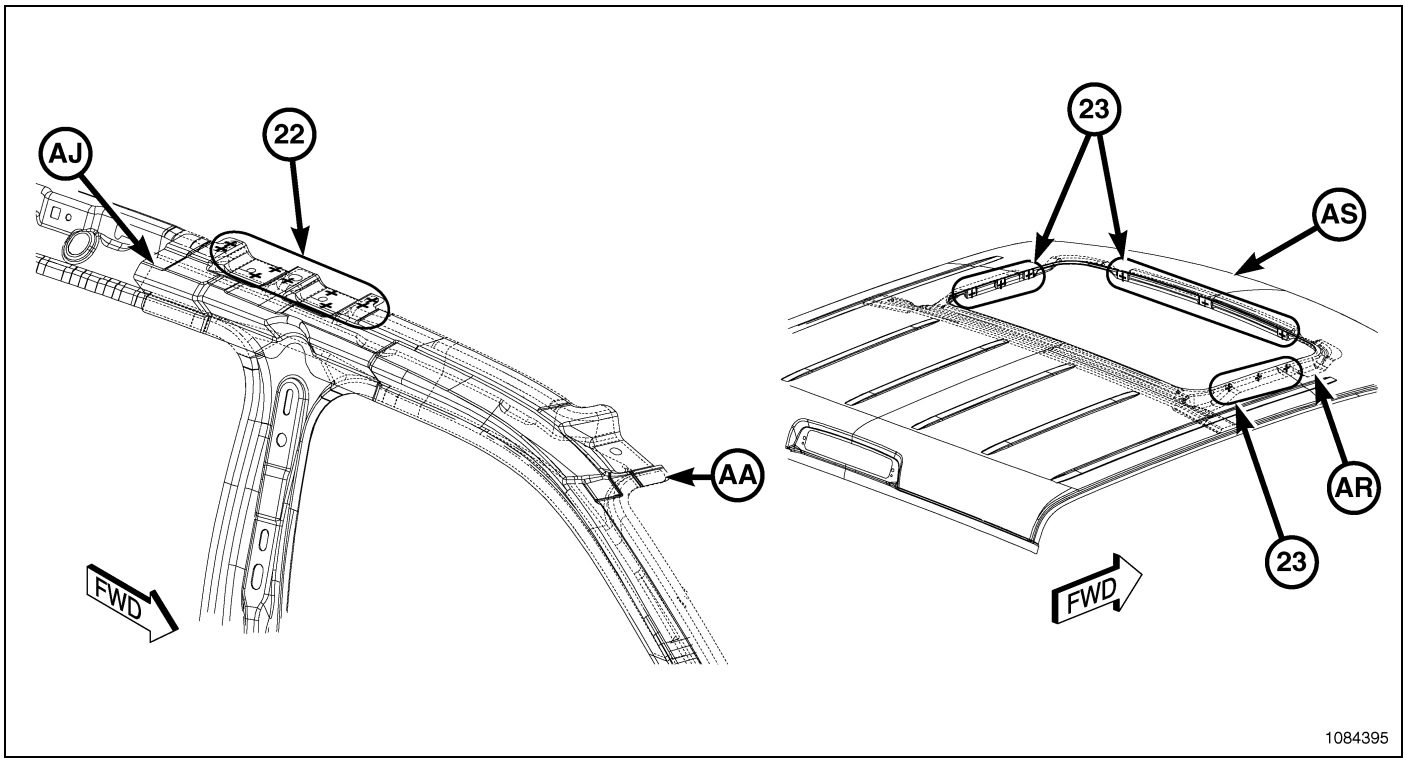

Fig. 199 Cab Complete – Quad (8 of 16)

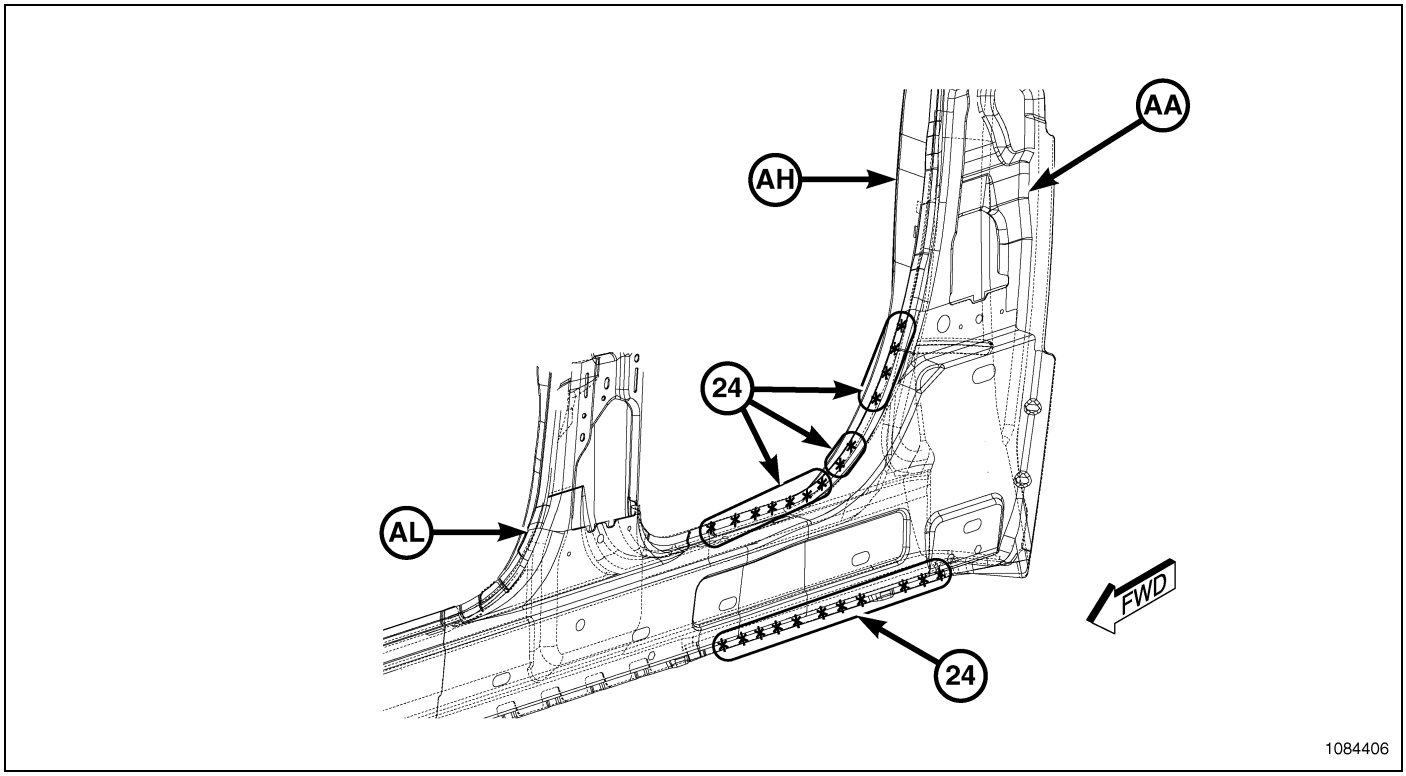

Fig. 200 Cab Complete – Quad (9 of 16)

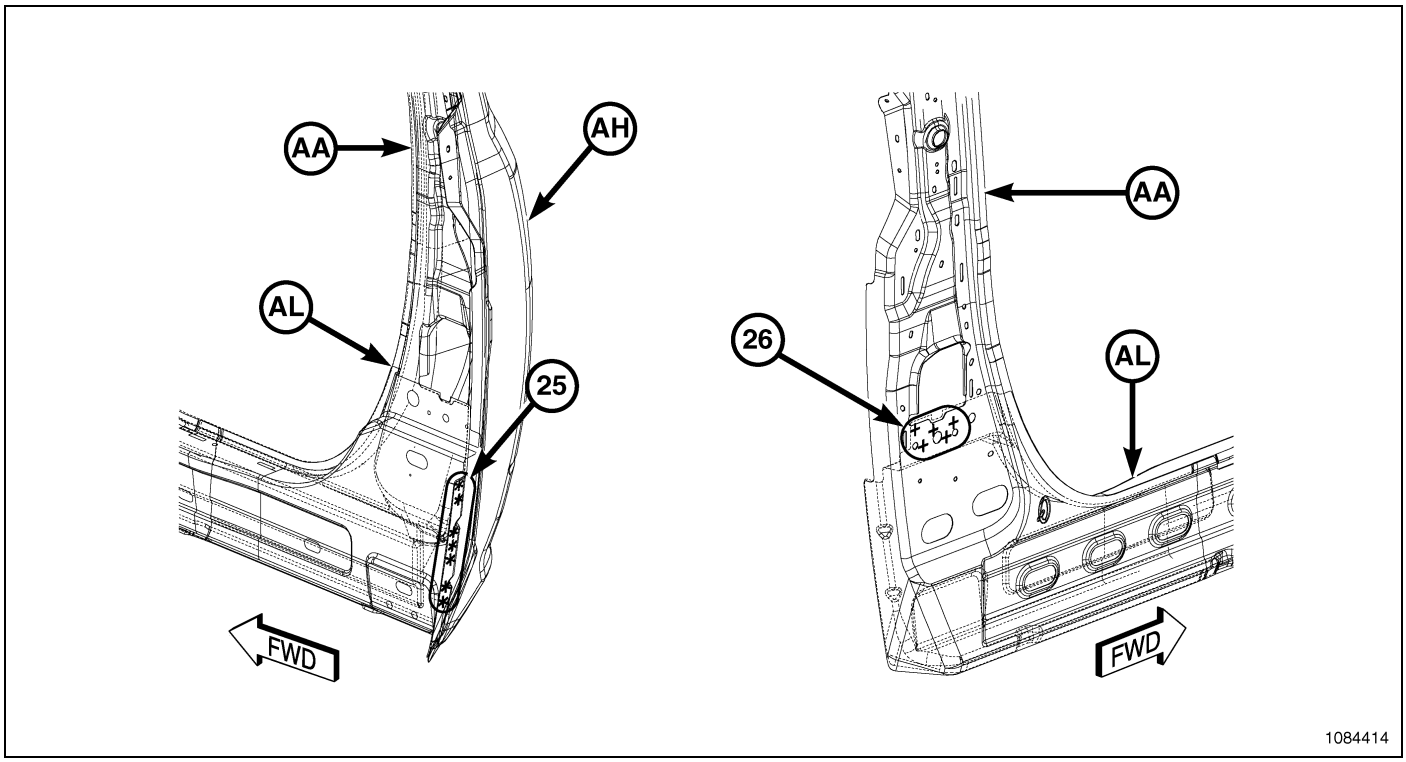

Fig. 201 Cab Complete – Quad (10 of 16)

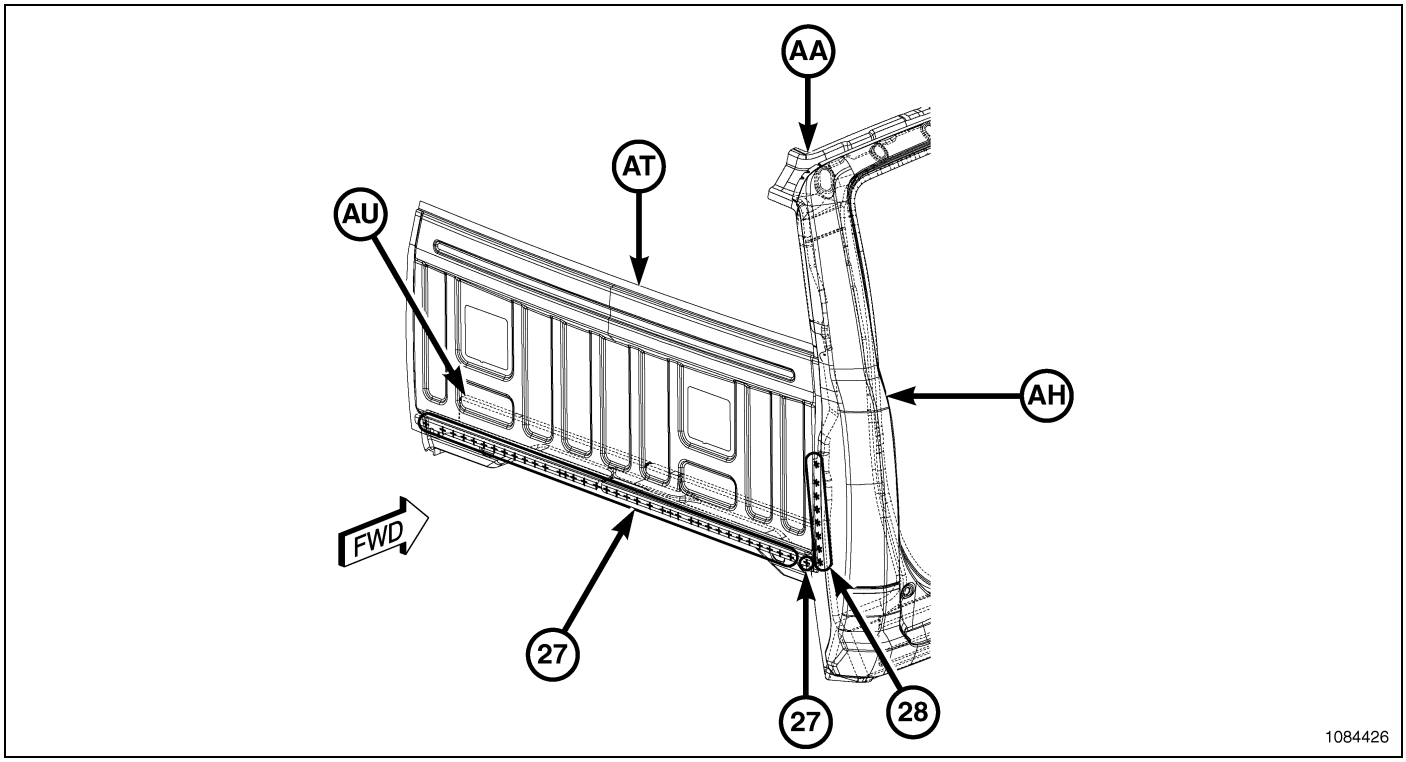

Fig. 202 Cab Complete – Quad (11 of 16)

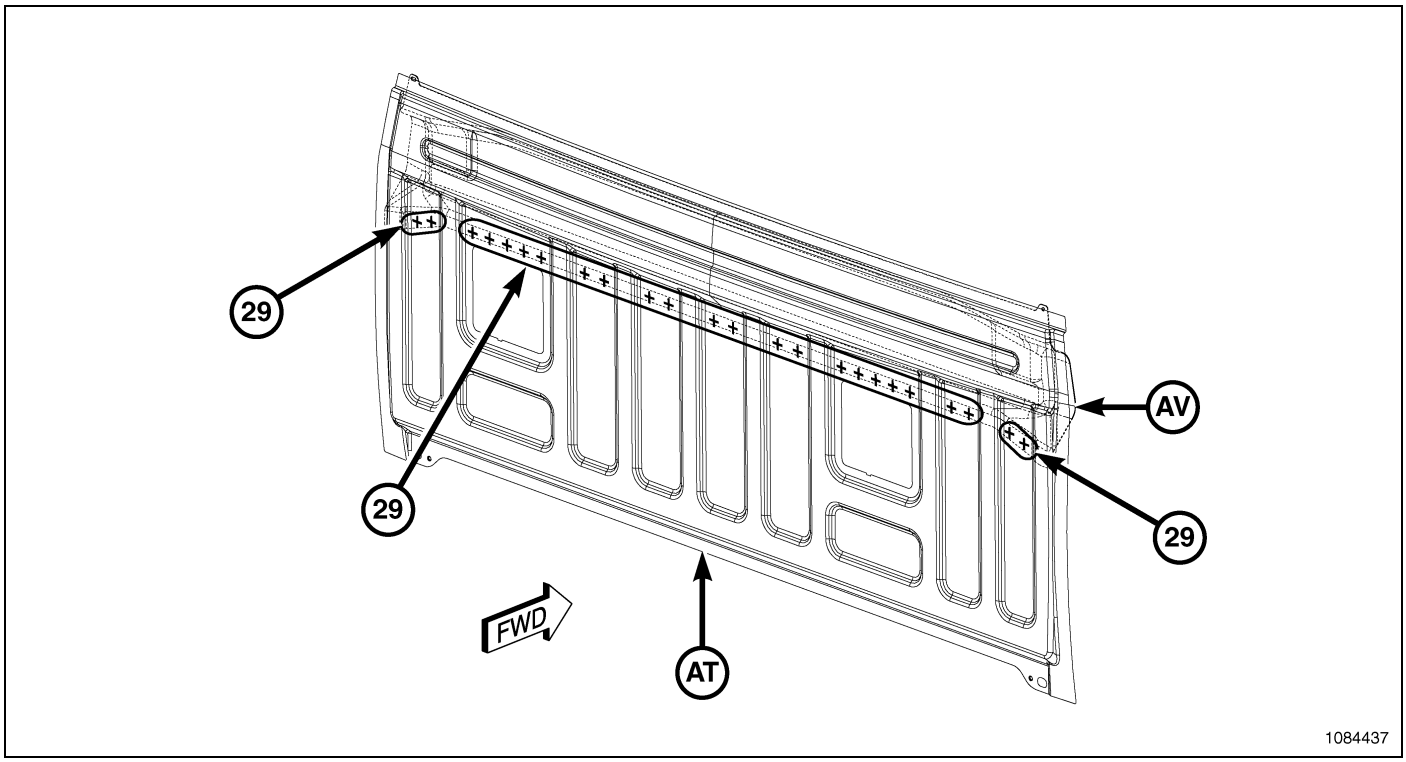

Fig. 203 Cab Complete – Quad (12 of 16)

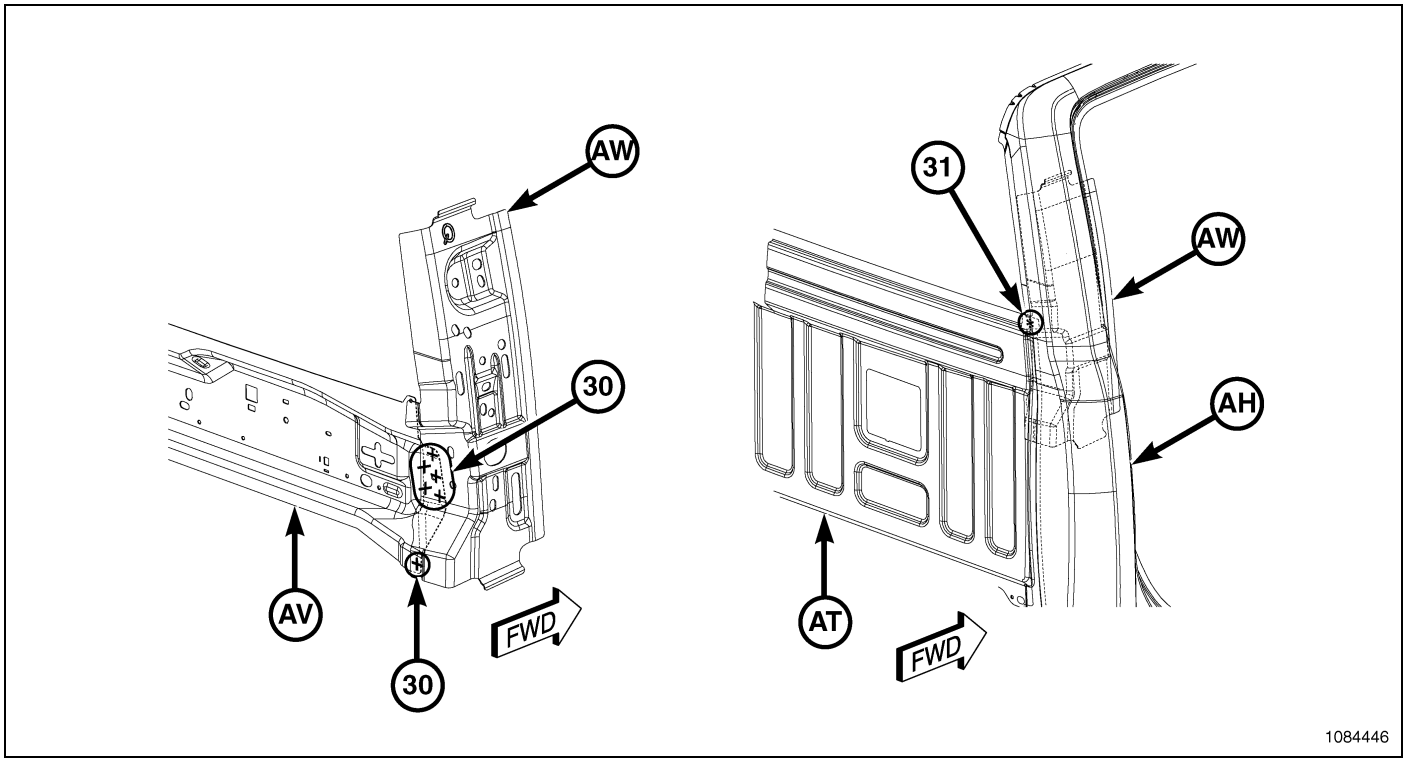

Fig. 204 Cab Complete – Quad (13 of 16)

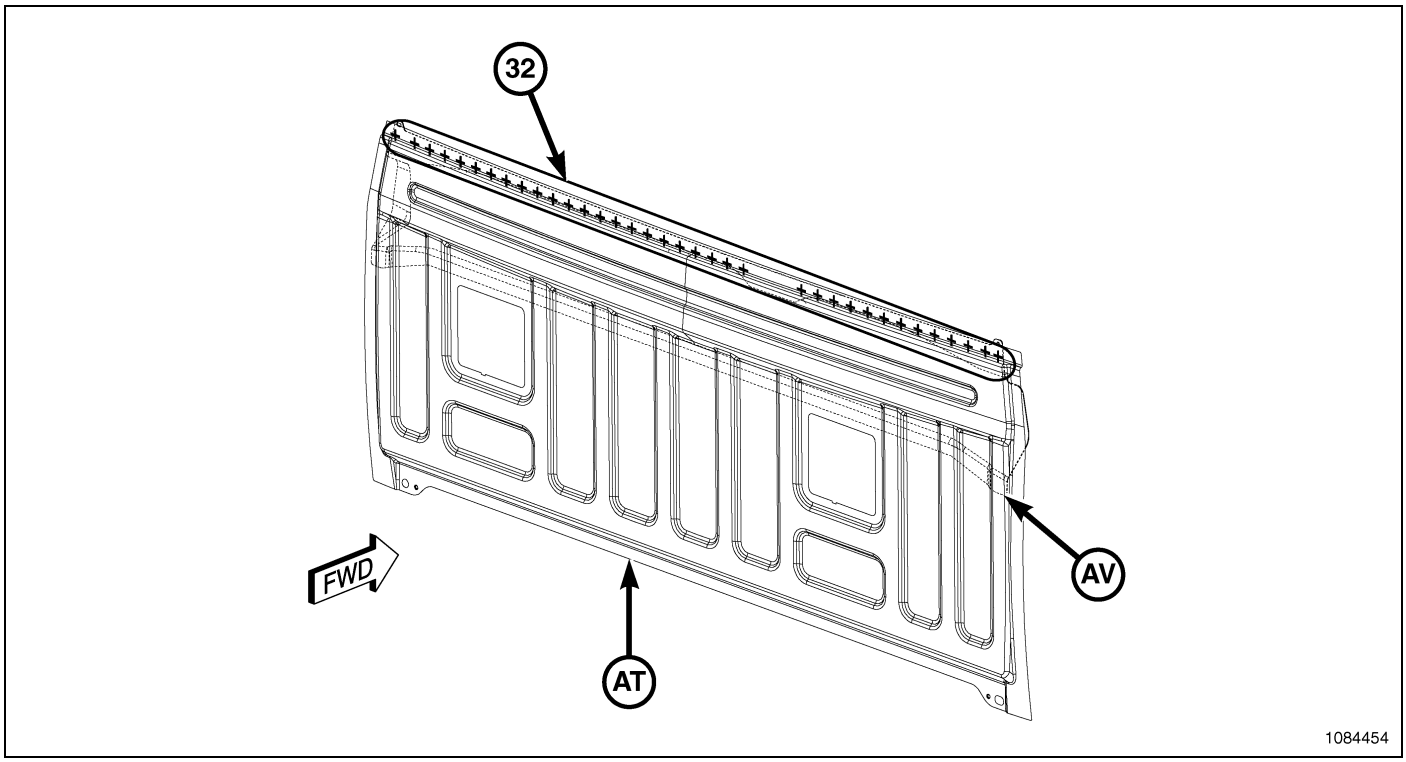

Fig. 205 Cab Complete – Quad (14 of 16)

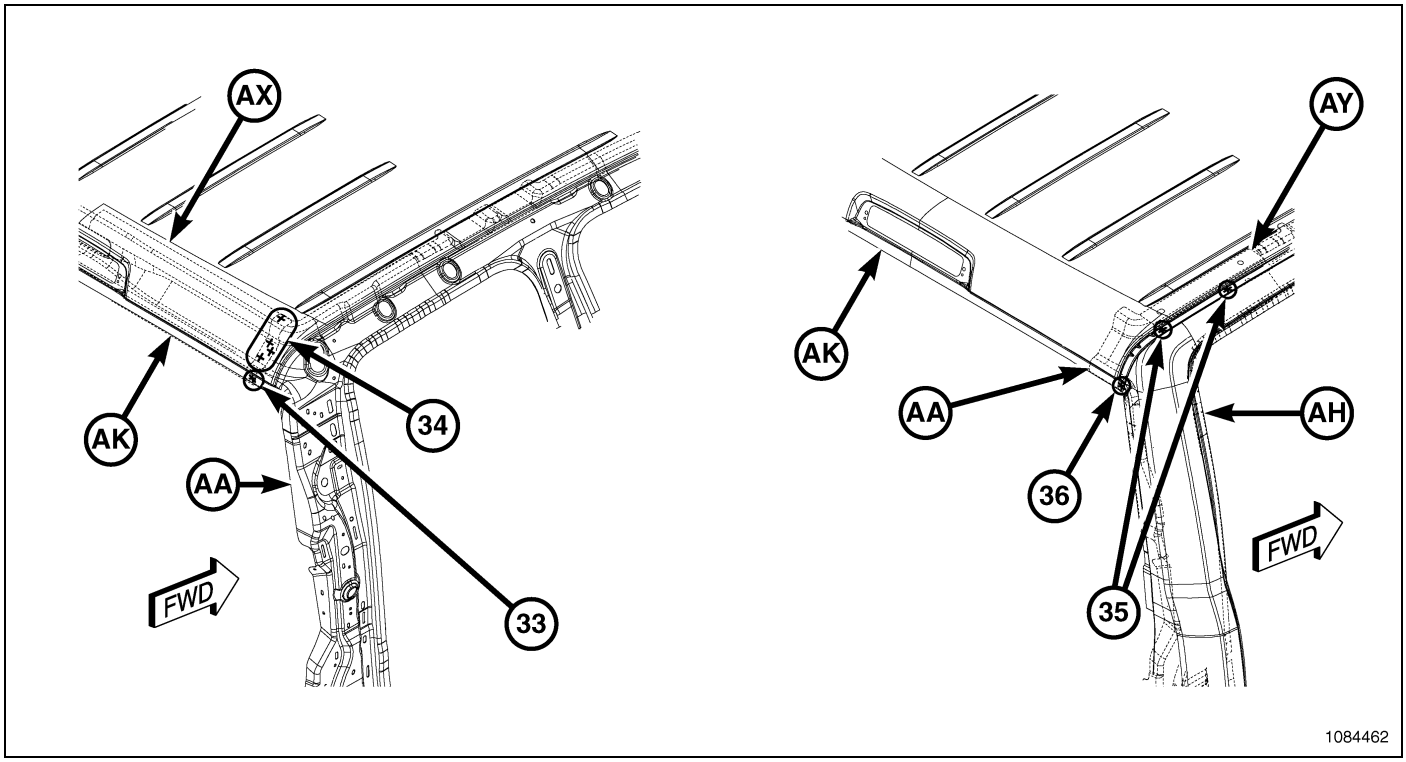

Fig. 206 Cab Complete – Quad (15 of 16)

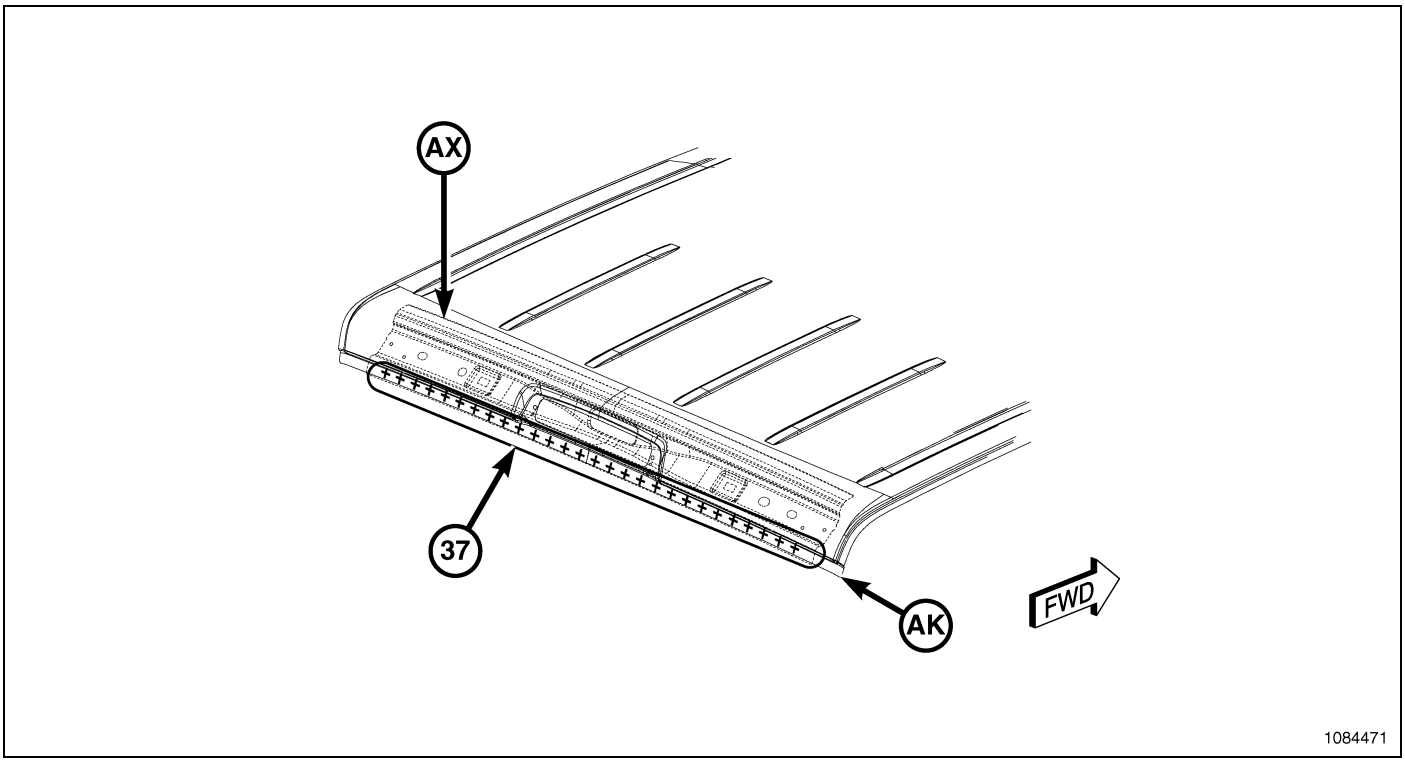

Fig. 207 Cab Complete – Quad (16 of 16)

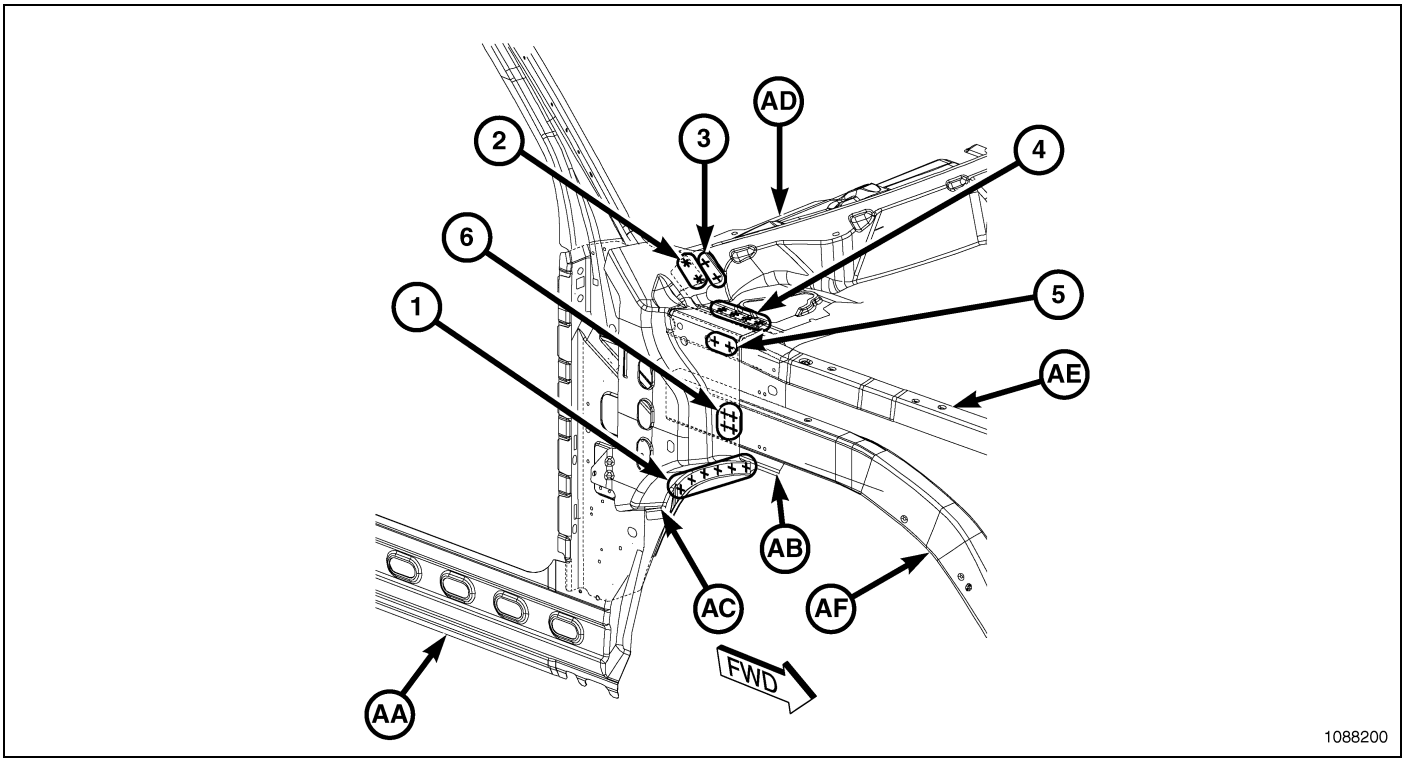

Fig. 208 Cab Complete – Crew (1 of 16)

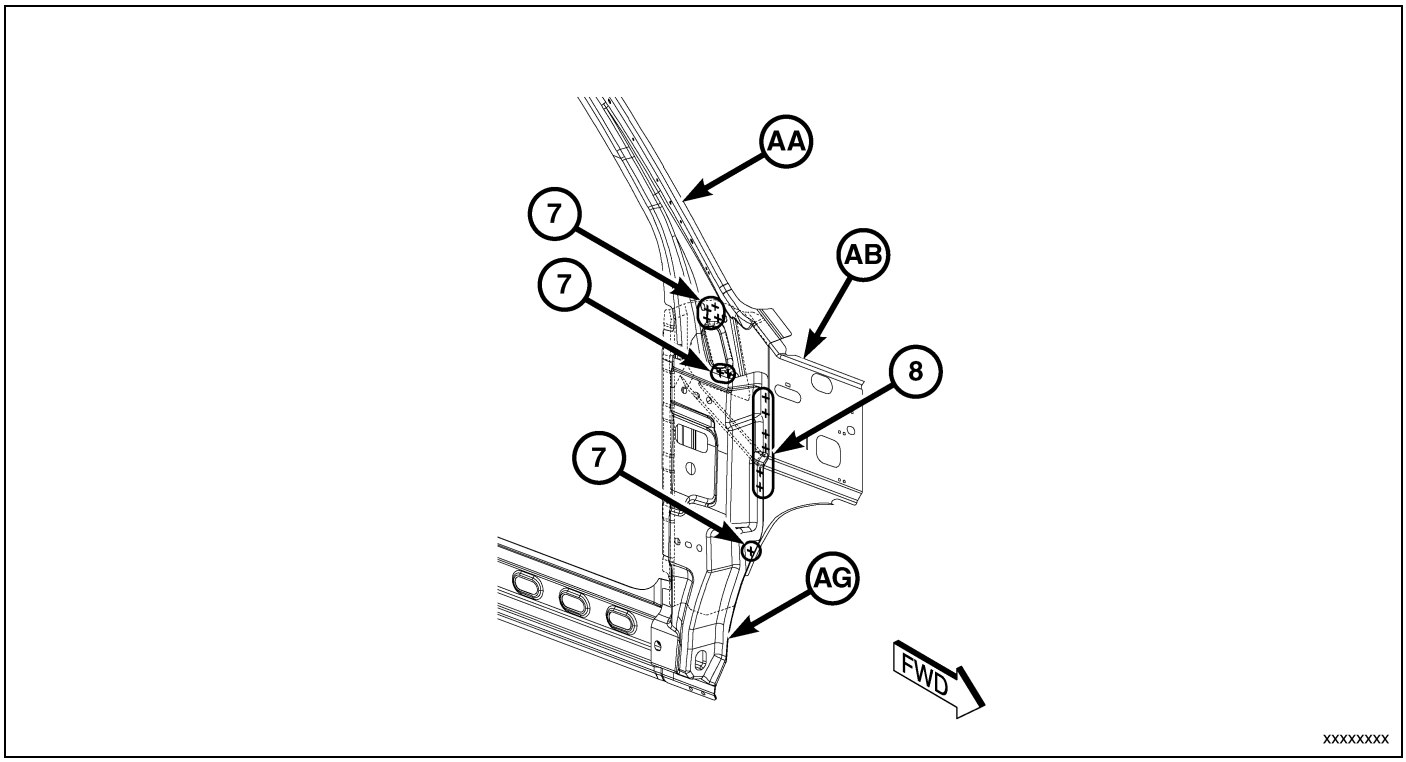

Fig. 209 Cab Complete – Crew (2 of 16)

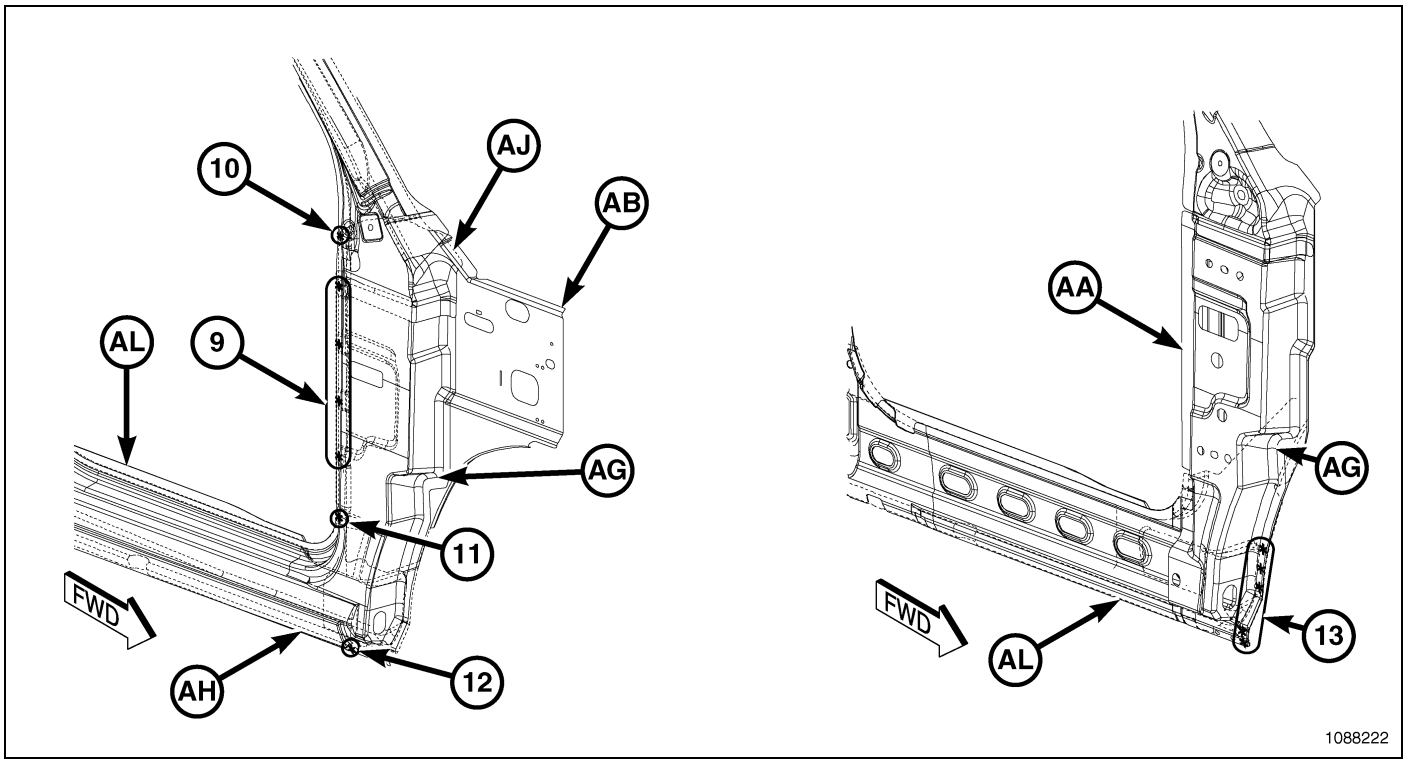

Fig. 210 Cab Complete – Crew (3 of 16)

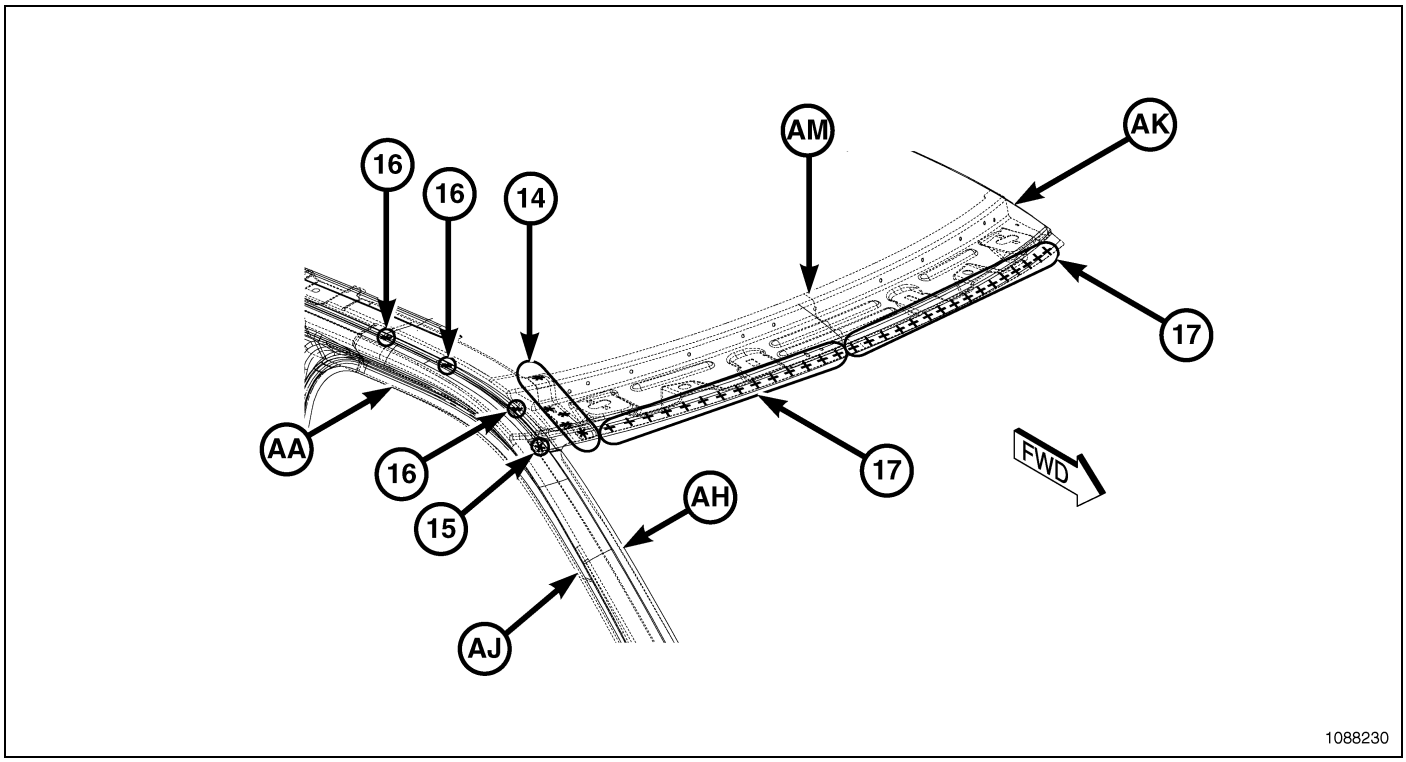

Fig. 211 Cab Complete – Crew (4 of 16)

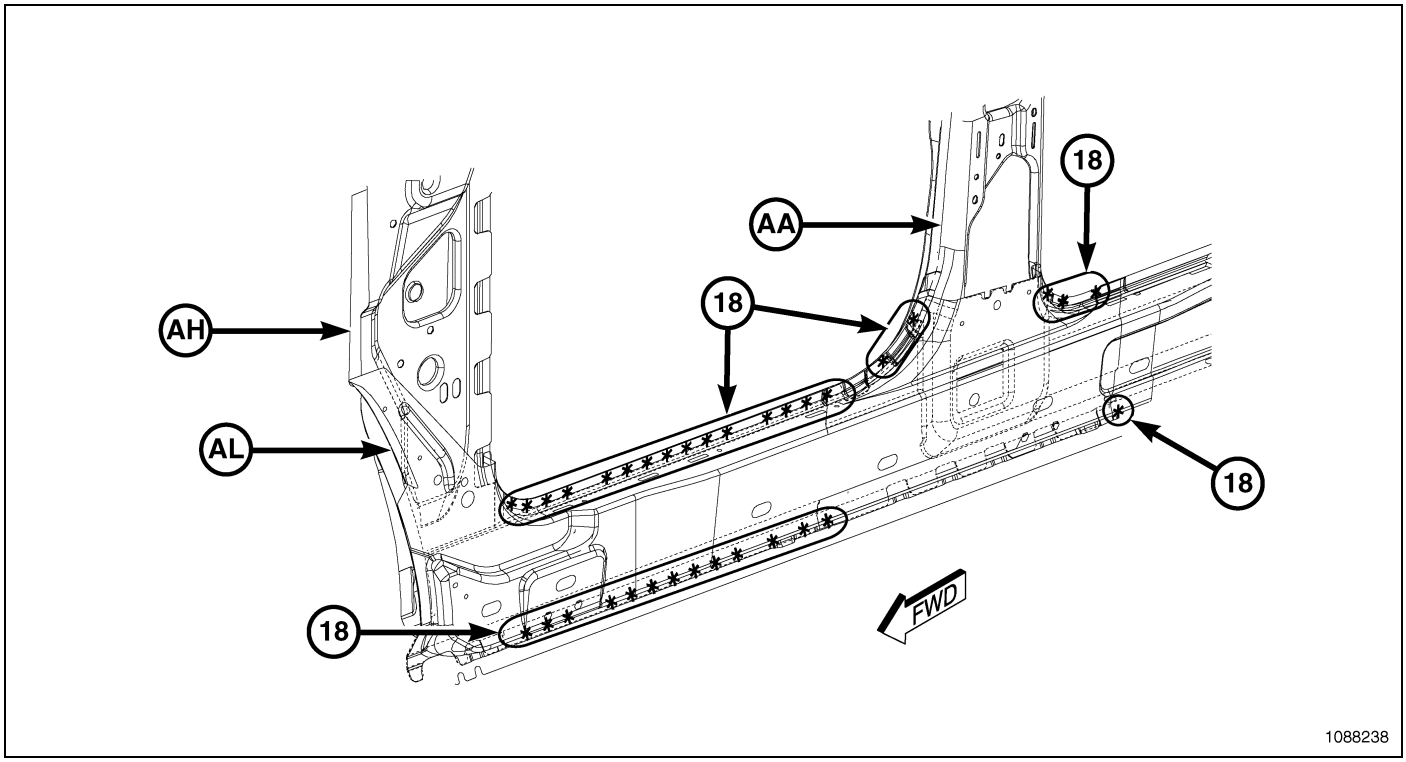

Fig. 212 Cab Complete – Crew (5 of 16)

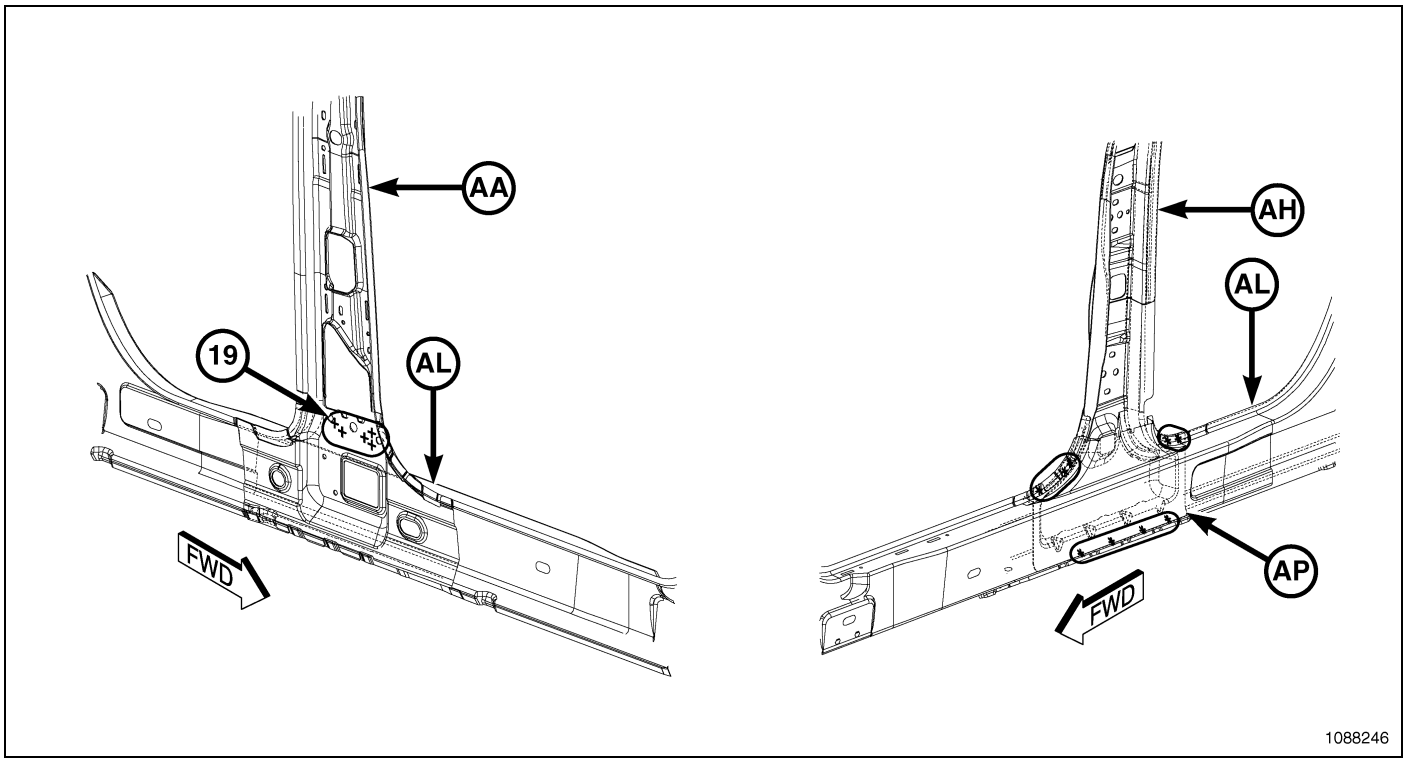

Fig. 213 Cab Complete – Crew (6 of 16)

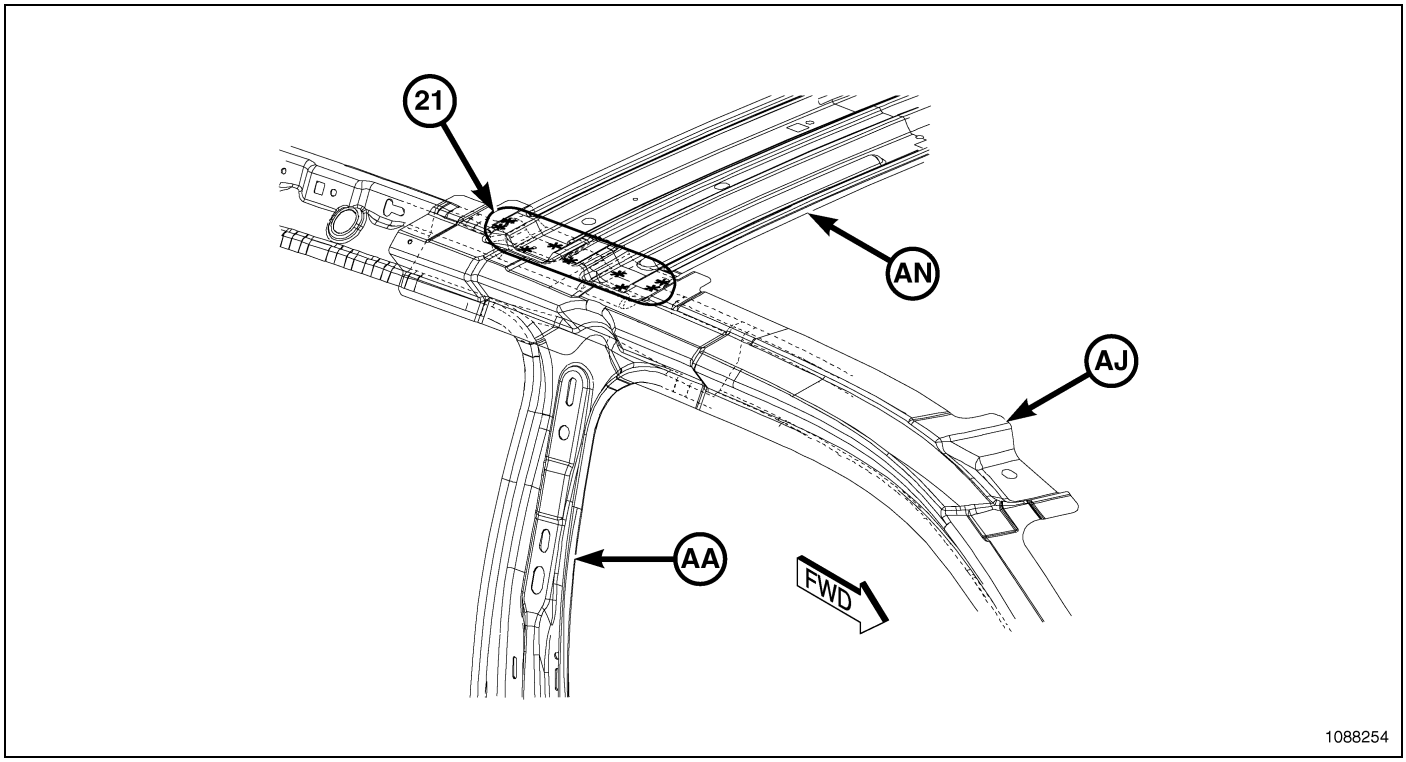

Fig. 214 Cab Complete – Crew (7 of 16)

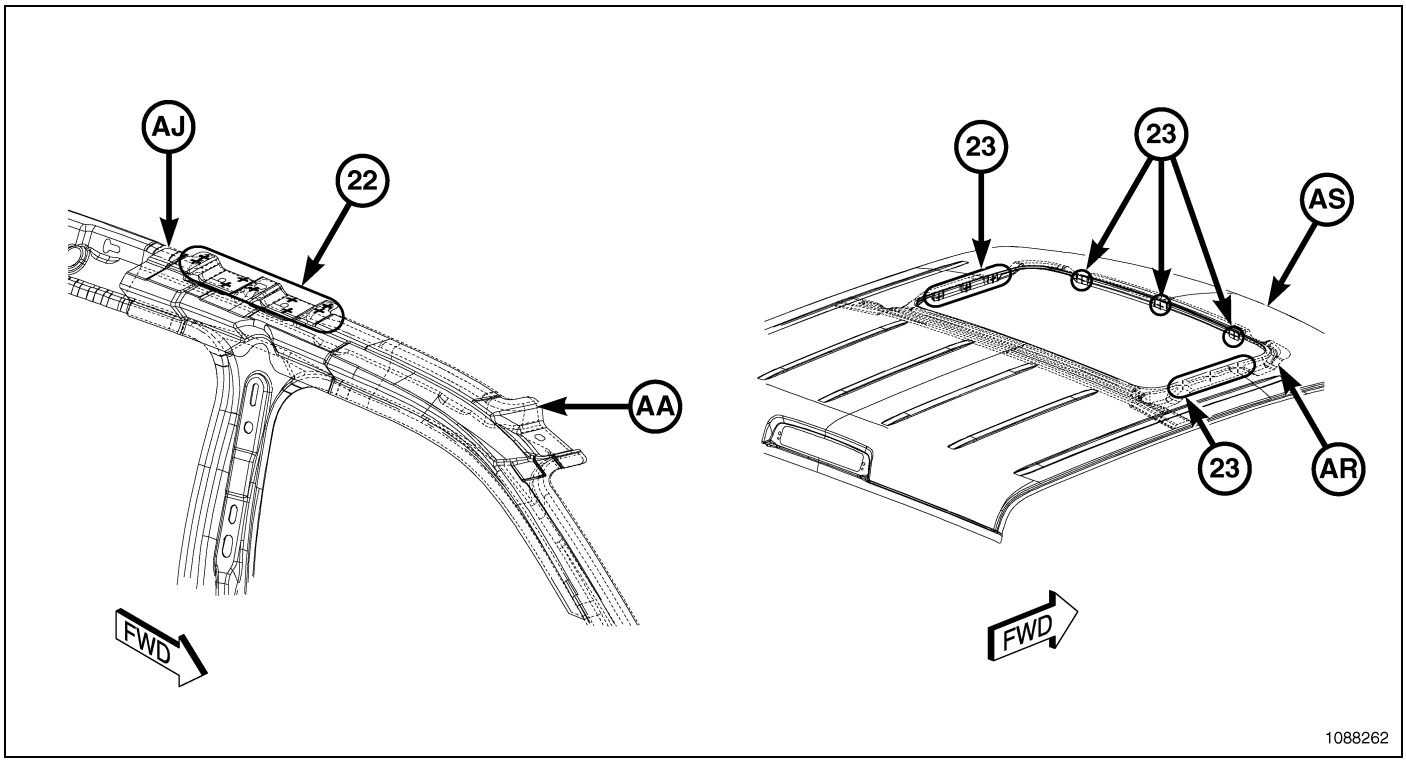

Fig. 215 Cab Complete – Crew (8 of 16)

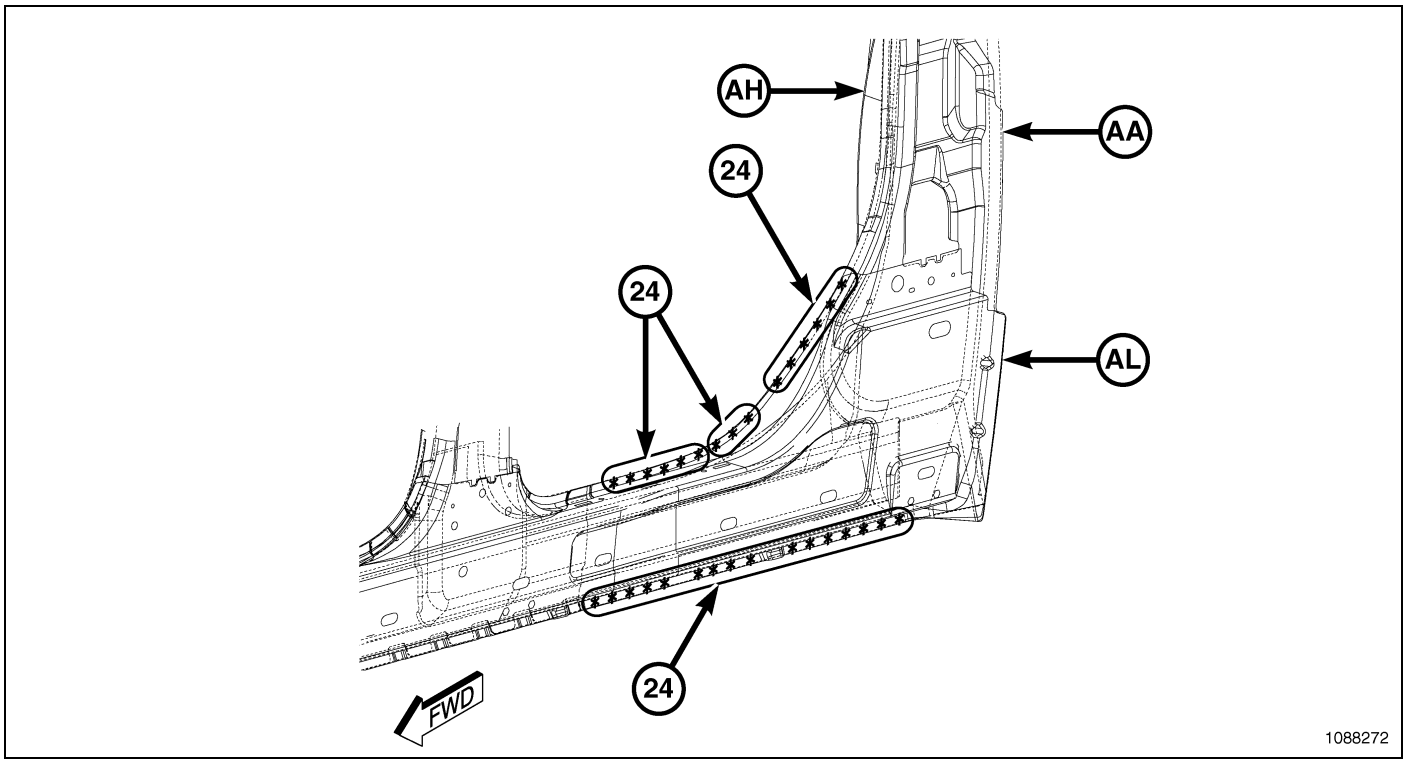

Fig. 216 Cab Complete – Crew (9 of 16)

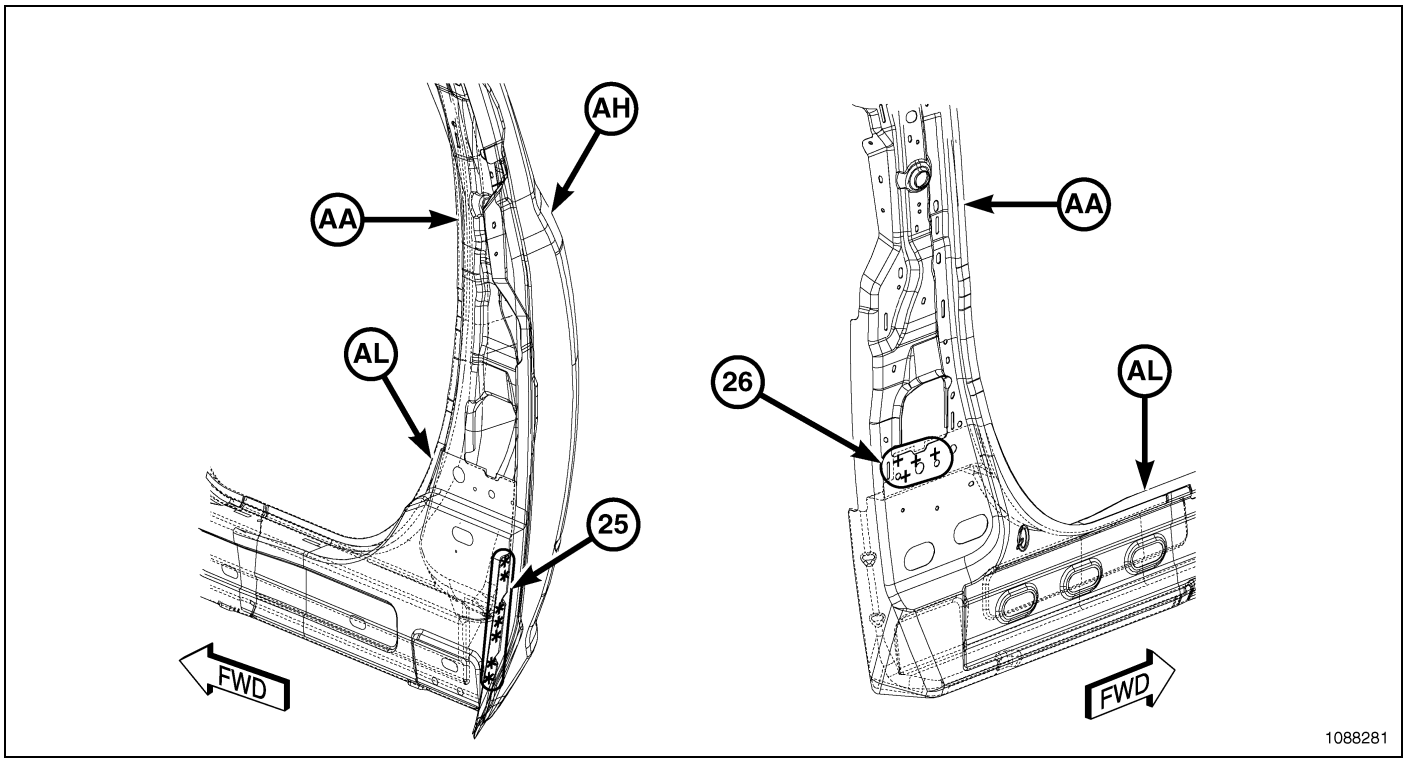

Fig. 217 Cab Complete – Crew (10 of 16)

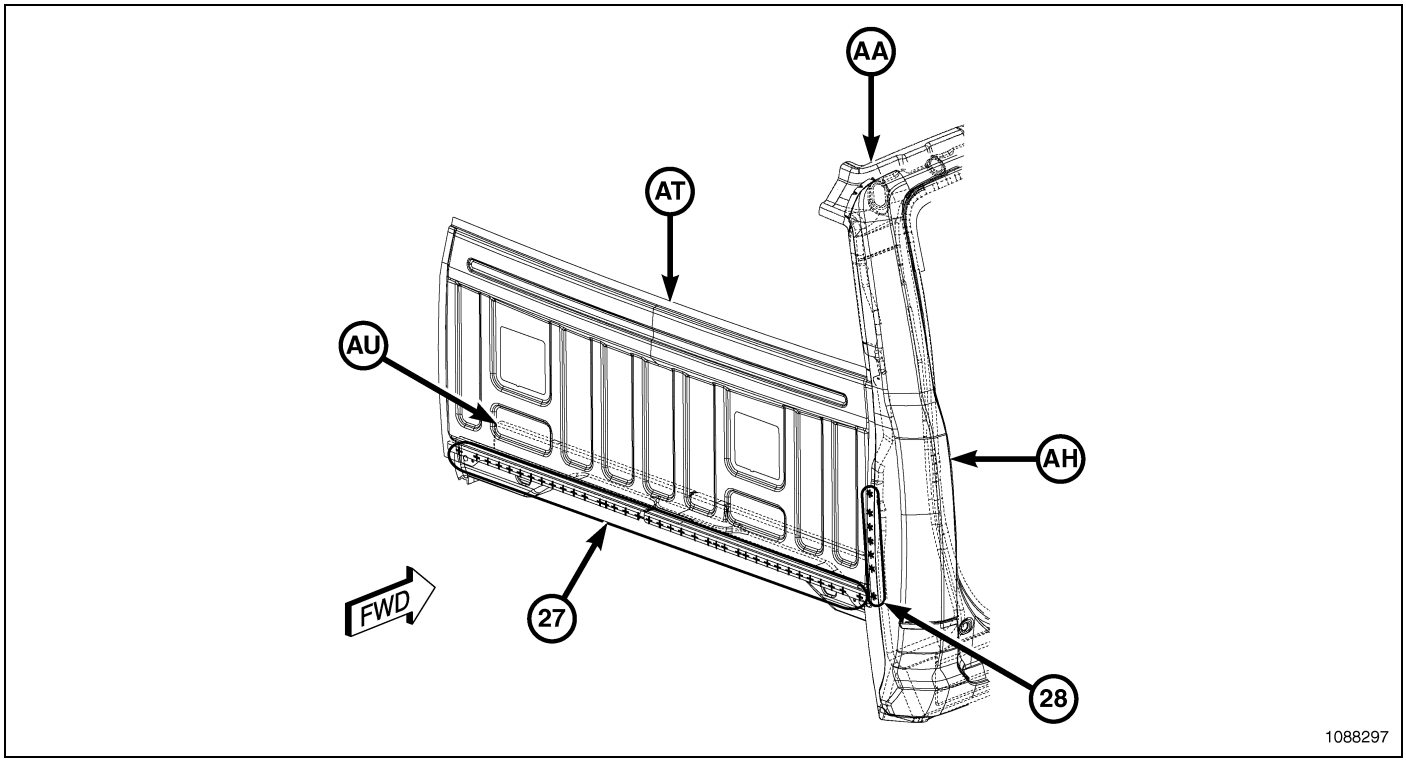

Fig. 218 Cab Complete – Crew (11 of 16)

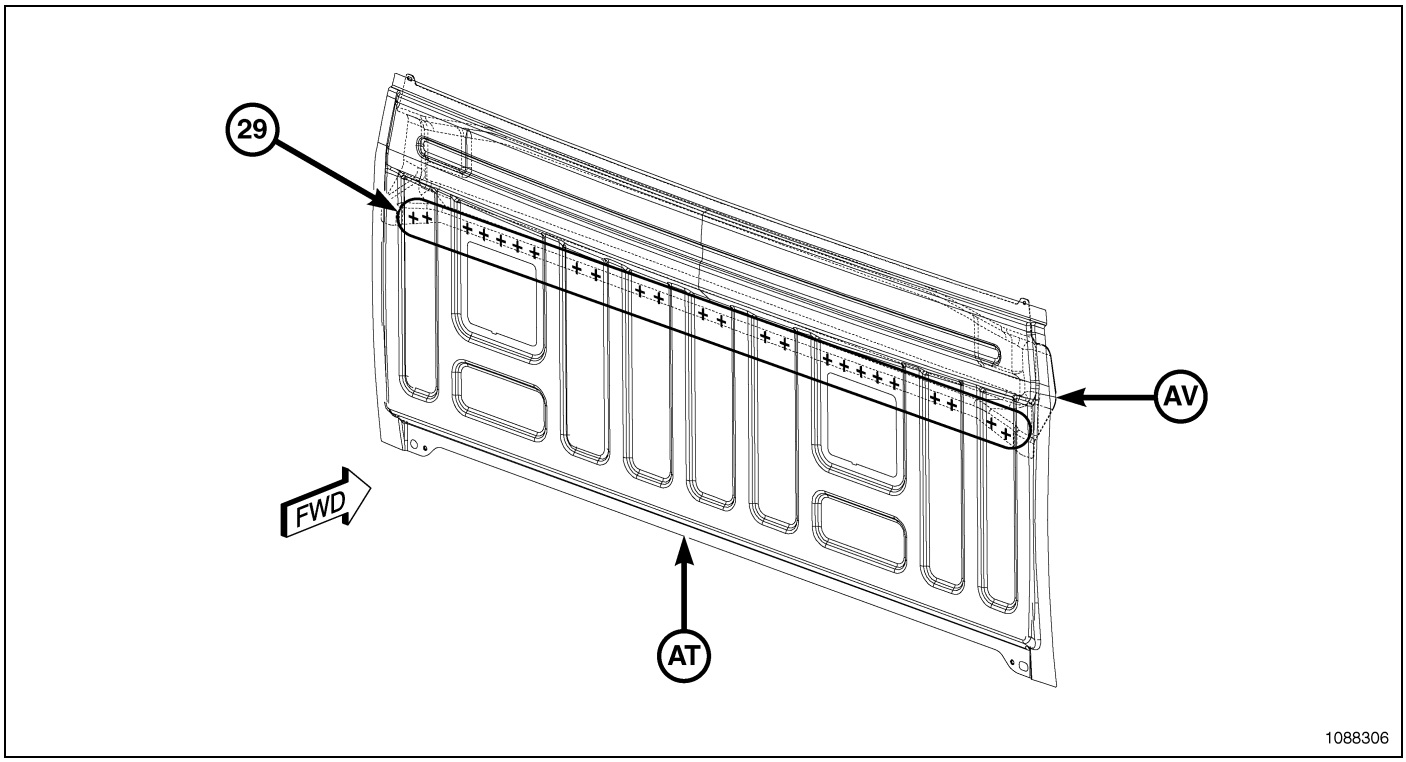

Fig. 219 Cab Complete – Crew (12 of 16)

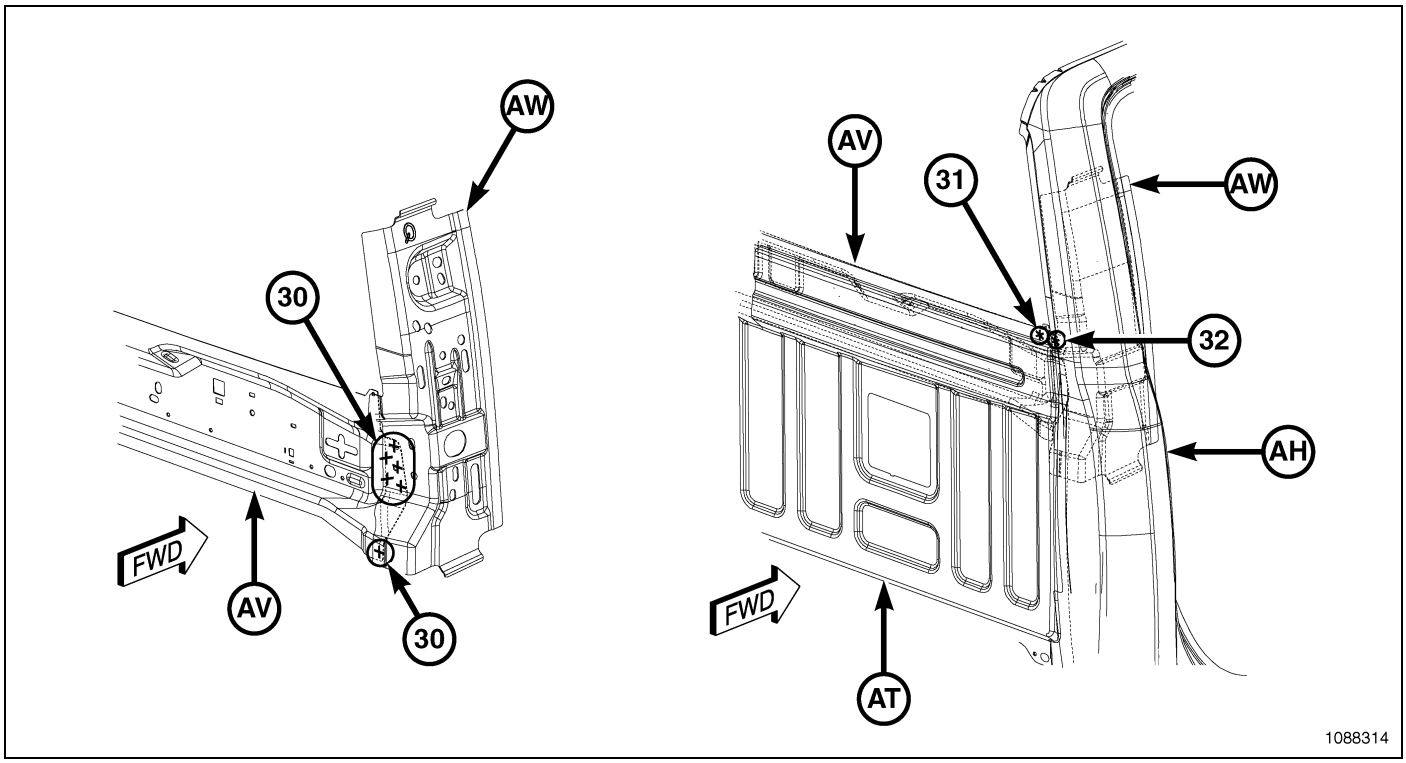

Fig. 220 Cab Complete – Crew (13 of 16)

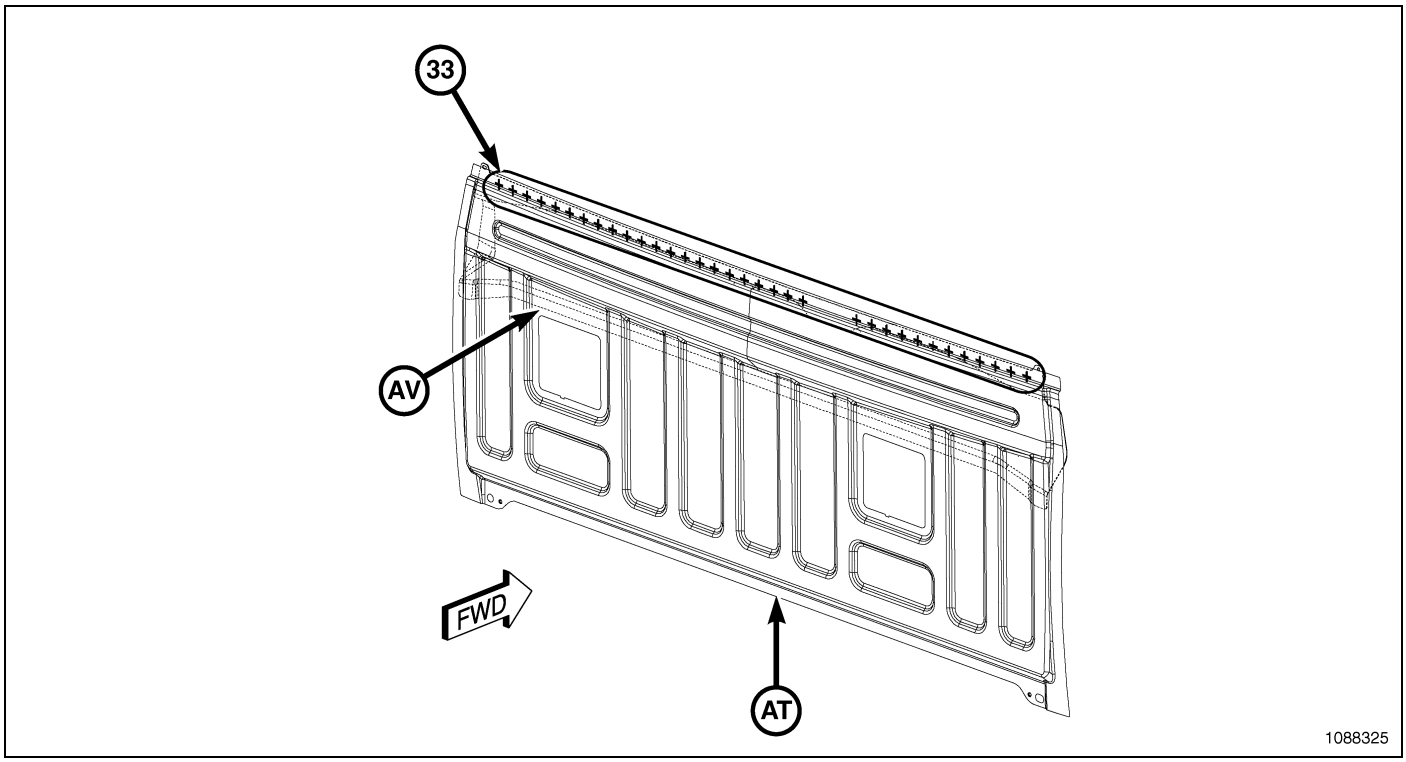

Fig. 221 Cab Complete – Crew (14 of 16)

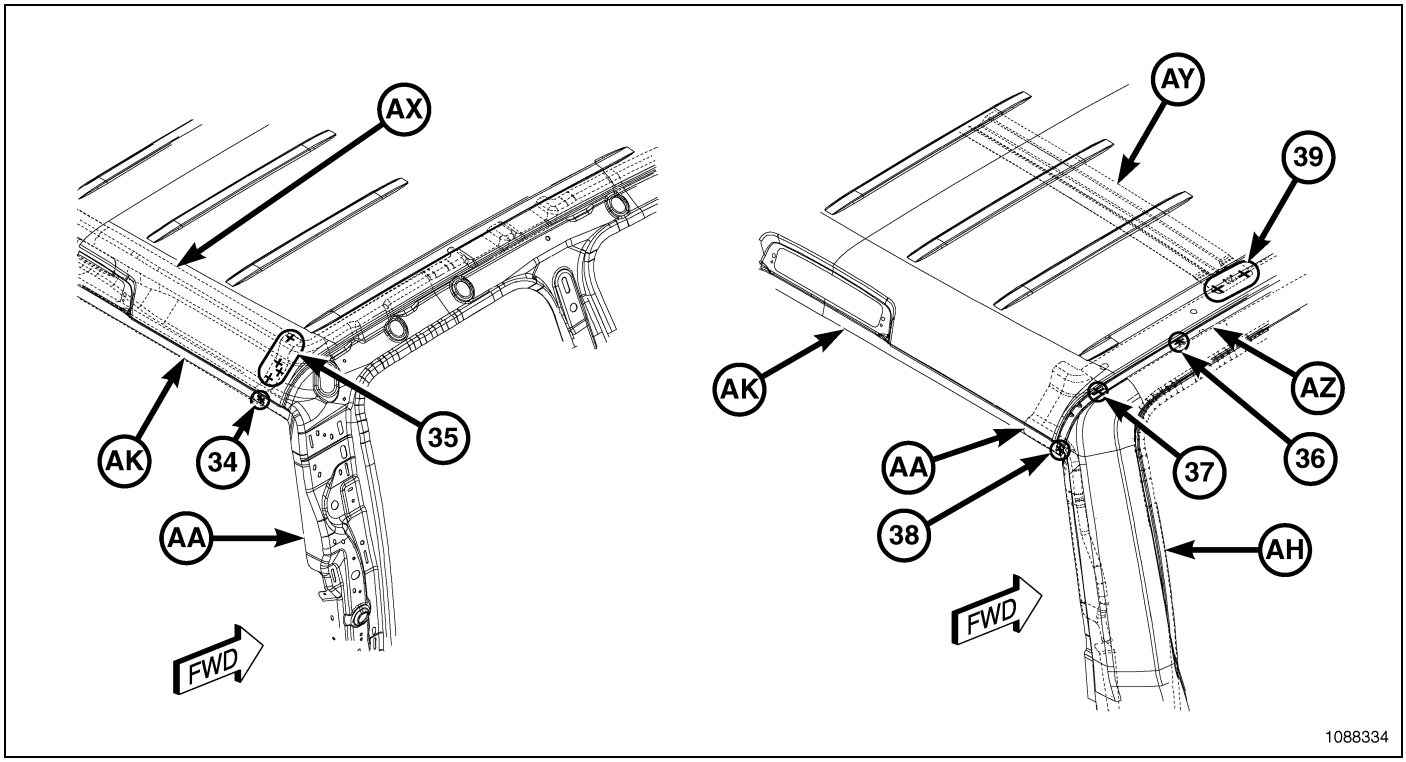

Fig. 222 Cab Complete – Crew (15 of 16)

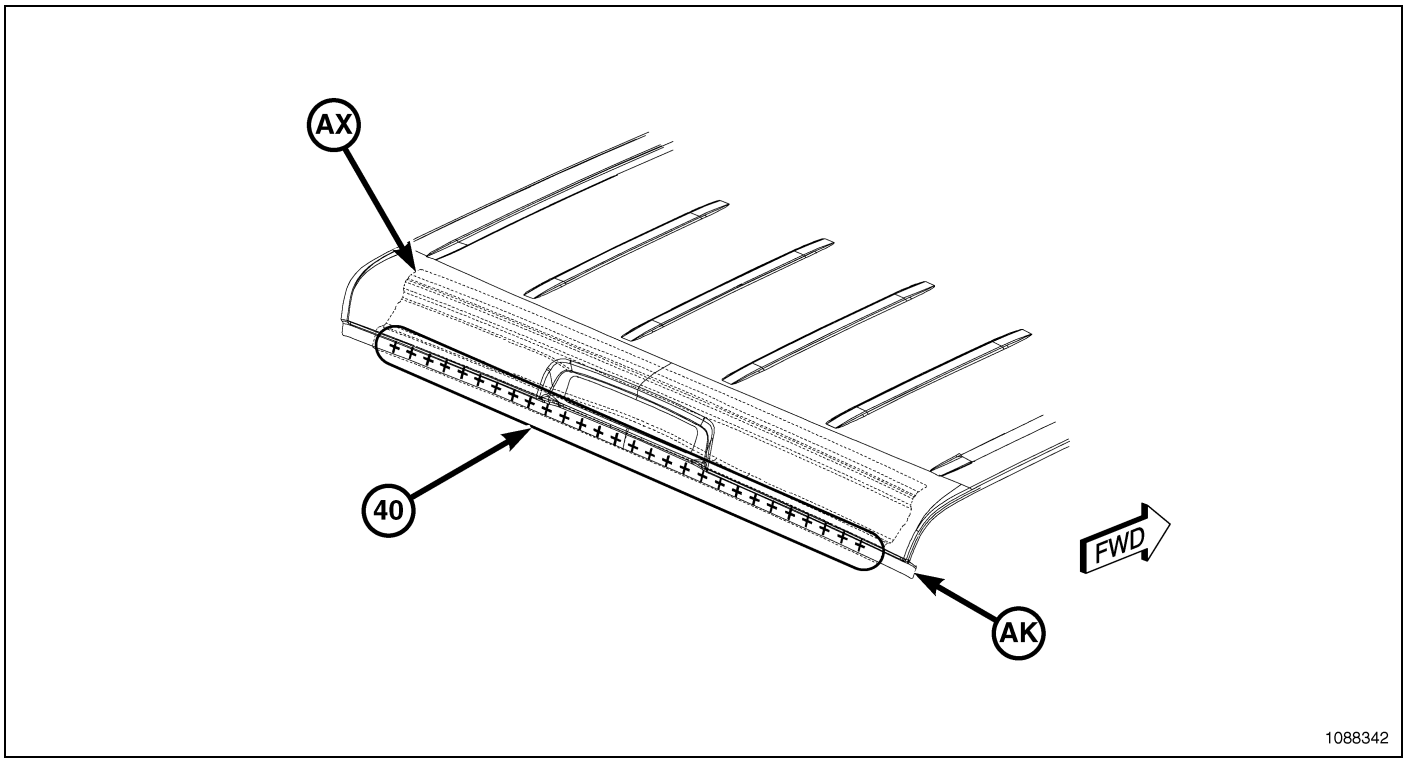

Fig. 223 Cab Complete – Crew (16 of 16)

5.7' RAM BOX - PARTS IDENTIFICATION LEGEND

ITEM	DESCRIPTION
1	AD TO AE 1/SD S/WELDS (ORD)
2	AC TO AD 1/SD S/WELDS (ORD)
3	AA TO AC 3/SD S/WELDS (ORD)
4	AB TO AD 1/SD S/WELDS (ORD)
5	AA TO AB TO AD 1/SD S/WELDS (ORD)
6	AA TO AD 2/SD S/WELDS (ORD)
7	AA TO AH 5/SD S/WELDS (ORD)
8	AA TO AB 19/SD S/WELDS (ORD)
9	AB TO AE 2/SD PROJ WELDS (ORD)
10	AA TO AB TO AF 2/SD S/WELDS (ORD)
11	AA TO AF 13/SD S/WELDS (ORD)
12	AE TO AF 2/SD PROJ WELDS (ORD)
13	AF TO AG 18/SD S/WELDS (ORD)
14	AP TO AG 6/SD S/WELDS (ORD)
15	AJ TO AK 5/SD S/WELDS (ORD)
16	AA TO AJ 3/SD S/WELDS (ORD)
17	AK TO AJ TO AA 1/SD S/WELDS (ORD)
18	AA TO AK 16/SD S/WELDS (ORD)
19	AA TO AH 2/SD S//WELDS (ORD)
20	AA TO AM 2/SD S/WELDS (ORD)

5.7’ RAM BOX - PARTS IDENTIFICATION LEGEND, continued

ITEM	DESCRIPTION
21	AM TO AF TO AA 2/SD S/WELDS(ORD)
22	AF TO AM 1/SD S/WELDS (ORD)
23	AF TO AL TO AA 1/SD S/WELDS (ORD)
24	AL TO AM 2/SD S/WELDS (ORD)
25	AN TO AL 1/SD S/WELDS (ORD)
26	AM TO AE 1/SD PROJ WELDS (ORD)
27	AA TO AN TO AH 2/SD S/WELDS (ORD)
28	AN TO AL 2/SD S/WELDS (ORD)
29	AF TO AL TO AA 2/SD W/SELDS (ORD)
30	AN TO AA 5/SD S/WELDS (ORD)
31	BA TO AZ 8/SD S/WELDS (ORD)
32	AY TO AZ 8 S/WELDS (ORD)
33	AW TO AV 7 S/WELDS (ORD)
34	AU TO AV 8 S/WELDS (ORD)
35	AV TO AU TO AW 8 S/WELDS (ORD)
36	AU TO AV 12 S/WELDS (ORD)
37	AS TO AR 16 S/WELDS (ORD)
38	AR TO AT 8 S/WELDS (ORD)
AA	PANEL - BOX SIDE INNER RAMBOX RIGHT -
AA	PANEL - BOX SIDE INNER RAMBOX LEFT -
AB	REINFORCEMENT - RAIL REAR RIGHT -
AB	REINFORCEMENT - RAIL REAR LEFT -
AC	PANEL - EXTENSION REAR RIGHT -
AC	PANEL - EXTENSION REAR LEFT -
AD	PANEL - REAR STORAGE BULKHEAD RIGHT -
AD	PANEL - REAR STORAGE BULKHEAD LEFT -
AE	NUT/WELD.HEX - NO.FIN - BIN ASSEMBLY TO SHEET METAL
AE	NUT/WELD.HEX - NO.FIN - BIN ASSEMBLY TO SHEET METAL
AF	REINFORCEMENT - RAIL FRONT RIGHT -
AF	REINFORCEMENT - RAIL FRONT LEFT -
AG	TAPPING PLATE - RAIL -
AG	TAPPING PLATE - RAIL -
AH	REINFORCEMENT - TIE DOWN MOUNTING -
AJ	REINFORCEMENT - BOX SIDE INNER TO CROSSMEMBER RIGHT -
AJ	REINFORCEMENT - BOX SIDE INNER TO CROSSMEMBER RIGHT -
AK	PANEL - WHEELHOUSE INNER RIGHT -
AK	PANEL - WHEELHOUSE INNER LEFT -
AL	PANEL - EXTENSION RIGHT -

5.7’ RAM BOX - PARTS IDENTIFICATION LEGEND, continued

ITEM	DESCRIPTION
AL	PANEL - EXTENSION LEFT -
AM	PANEL - FRONT STORAGE BULKHEAD RIGHT -
AM	PANEL - FRONT STORAGE BULKHEAD LEFT -
AN	PANEL - CORNER FRONT RIGHT -
AN	PANEL - CORNER FRONT LEFT -
AP	NUT/PLATE.EXTRUDED - BATTERY HOLD-DOWN - CARGO RAIL ATTACHMENT TO INNER ASSEMBLY
AP	NUT/PLATE.EXTRUDED - BATTERY HOLD-DOWN - CARGO RAIL ATTACHMENT TO INNER ASSEMBLY
AR	CROSSMEMBER - LONG -
AS	BRACKET - CROSSMEMBER END SUPPORT -
AT	REINFORCEMENT - FRONT CROSSMEMBER -
AU	BRACKET - CROSSMEMBER SUPPORT -
AV	CROSSMEMBER - WHEELHOUSE -
AW	BRACKET - PAINT CARRIER -
AX	55276080AA
AY	REINFORCEMENT - FRONT CROSSMEMBER -
AZ	CROSSMEMBER - FRONT -
BA	REINFORCEMENT - FRONT CROSSMEMBER -
BB	55276156AAA

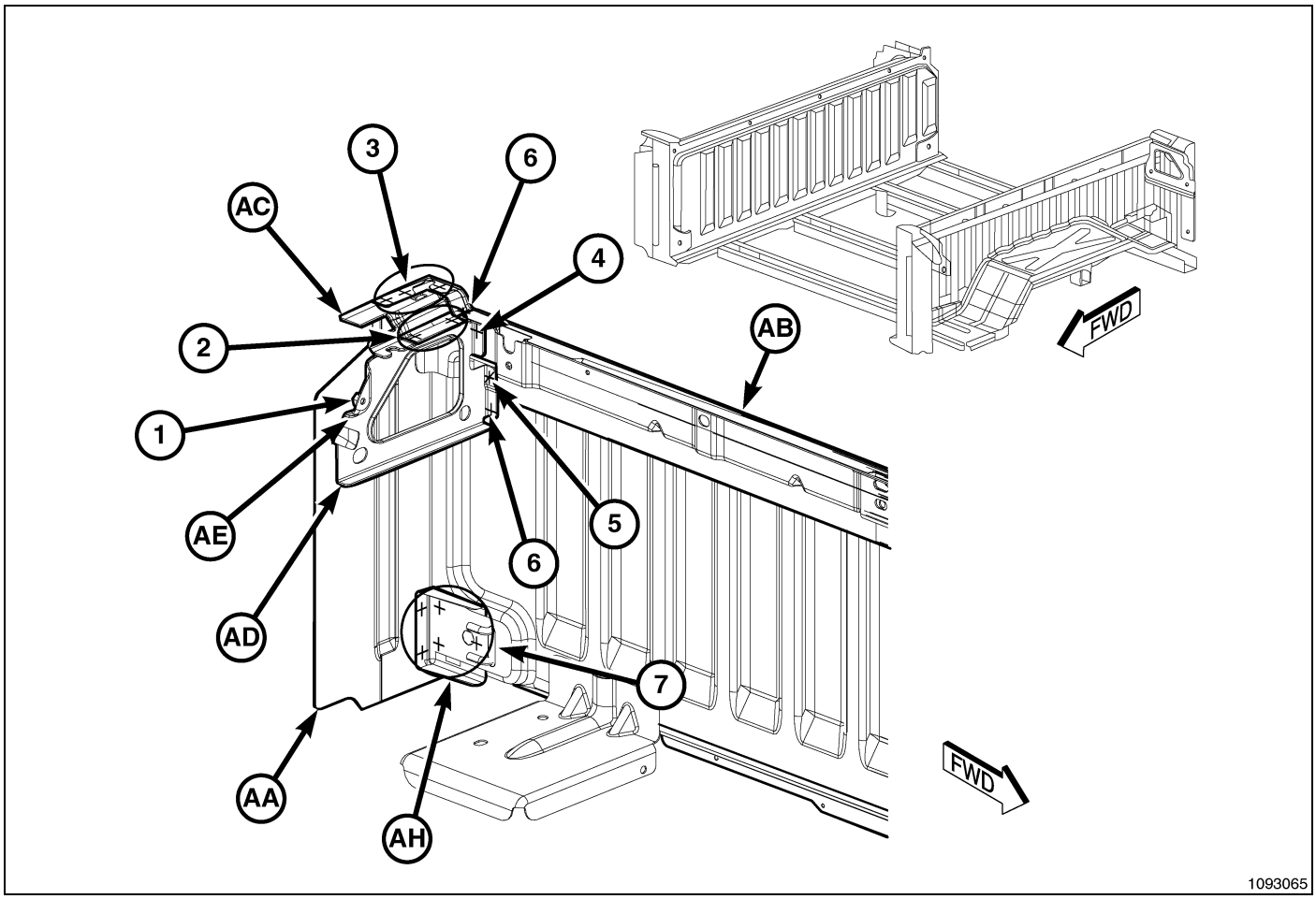

Fig. 224 5.7' Ram Box (1 of 9)

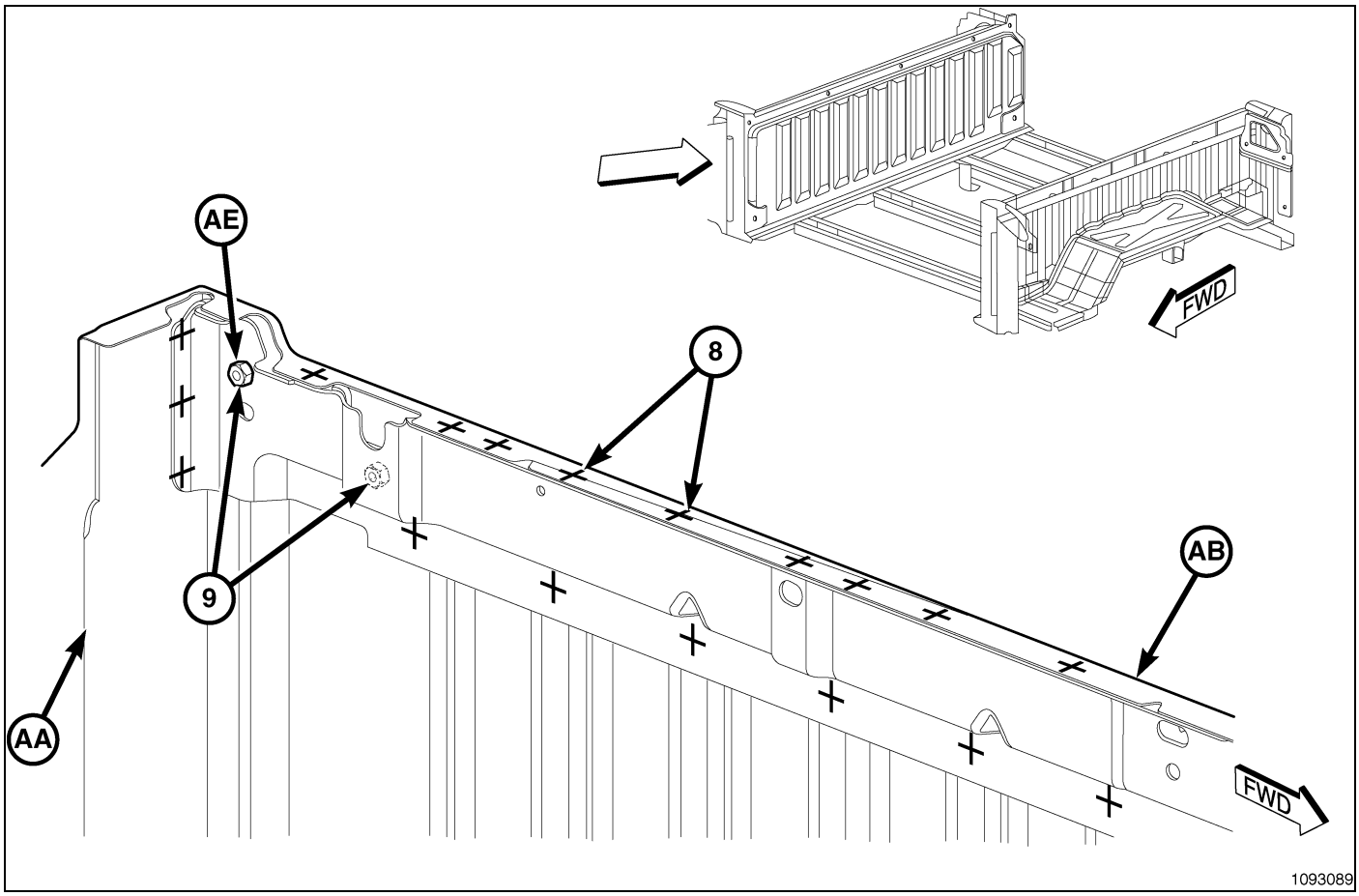

Fig. 225 5.7' Ram Box (2 of 9)

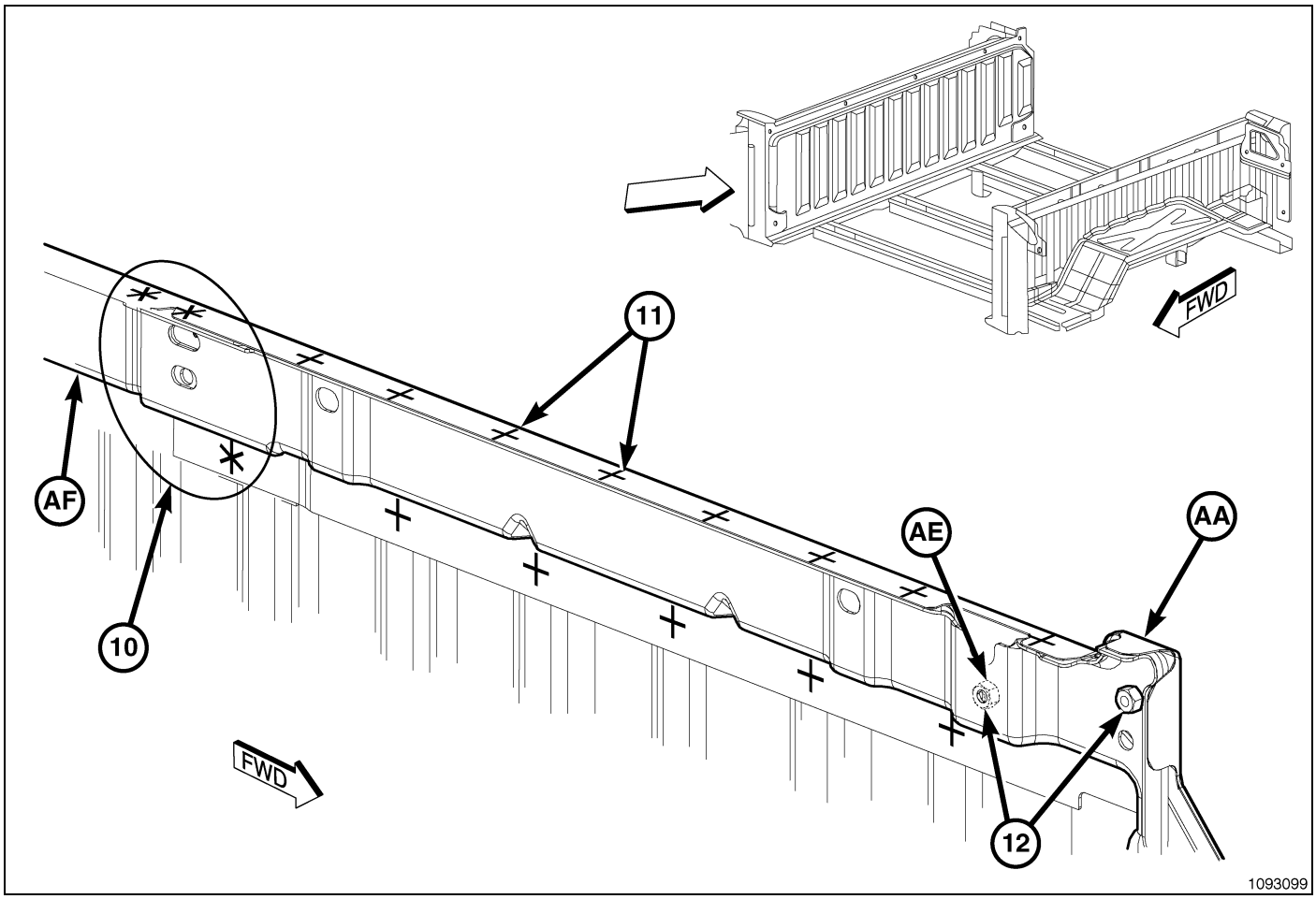

Fig. 226 5.7' Ram Box (3 of 9)

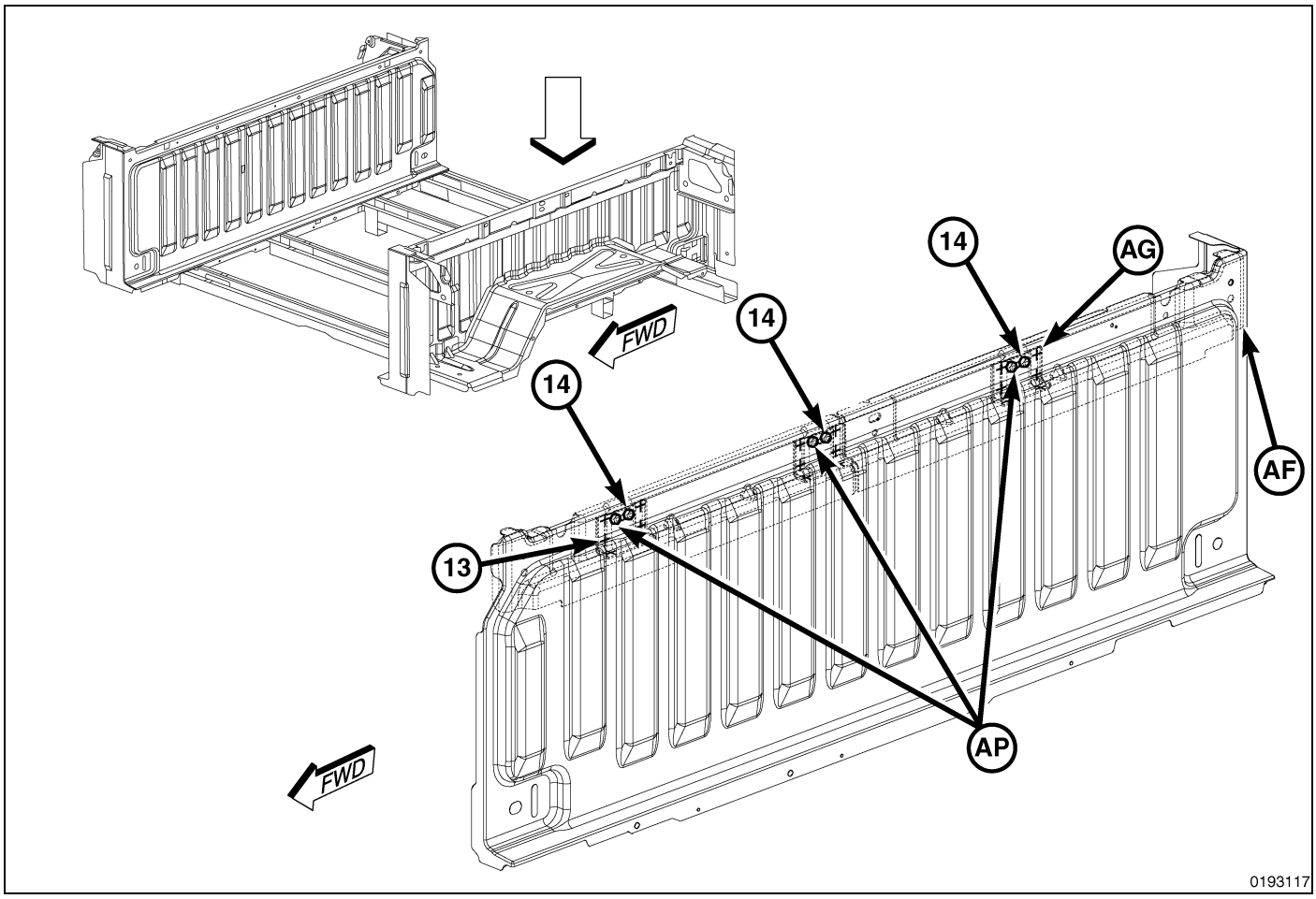

Fig. 227 5.7' Ram Box (4 of 9)

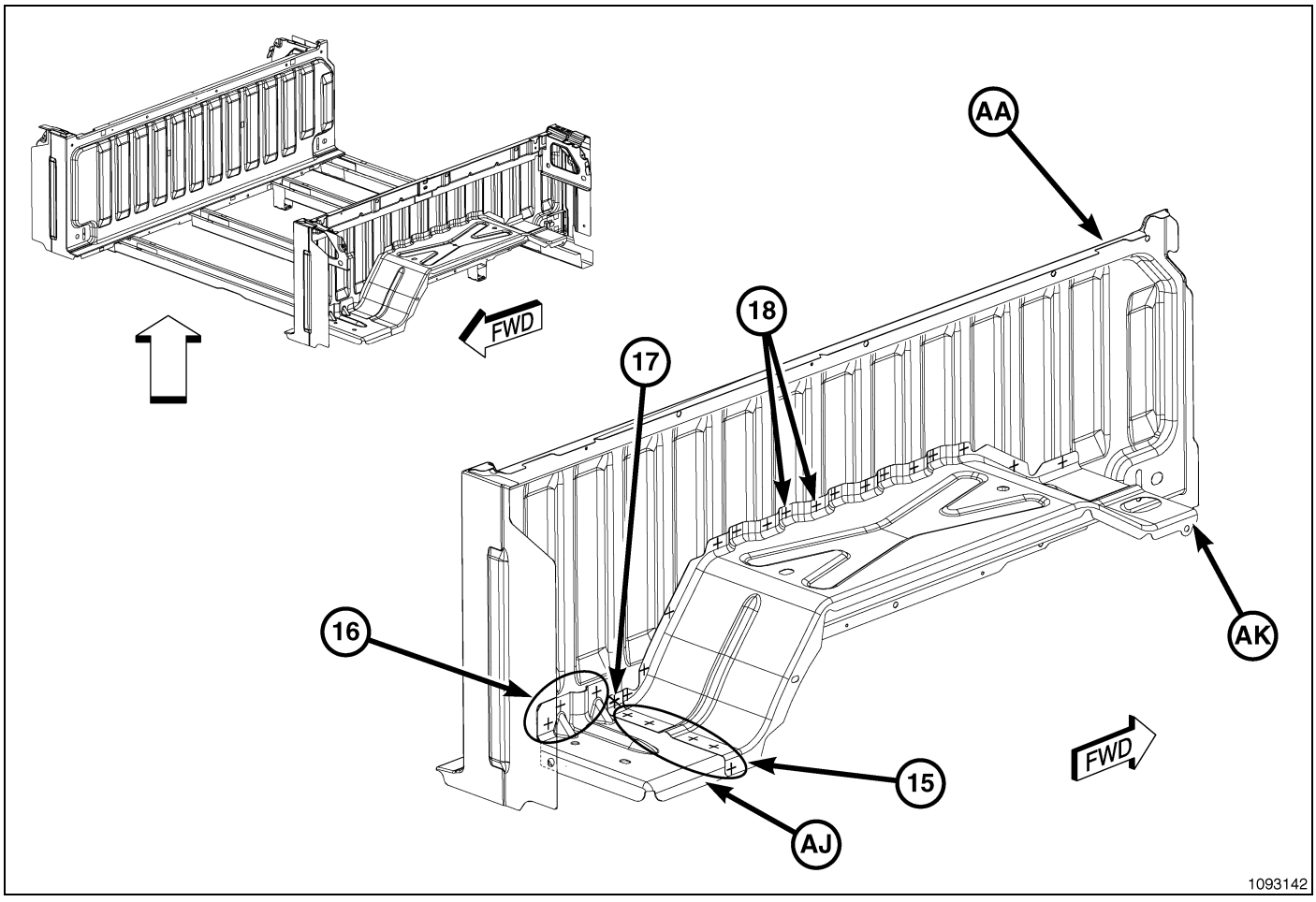

Fig. 228 5.7' Ram Box (5 of 9)

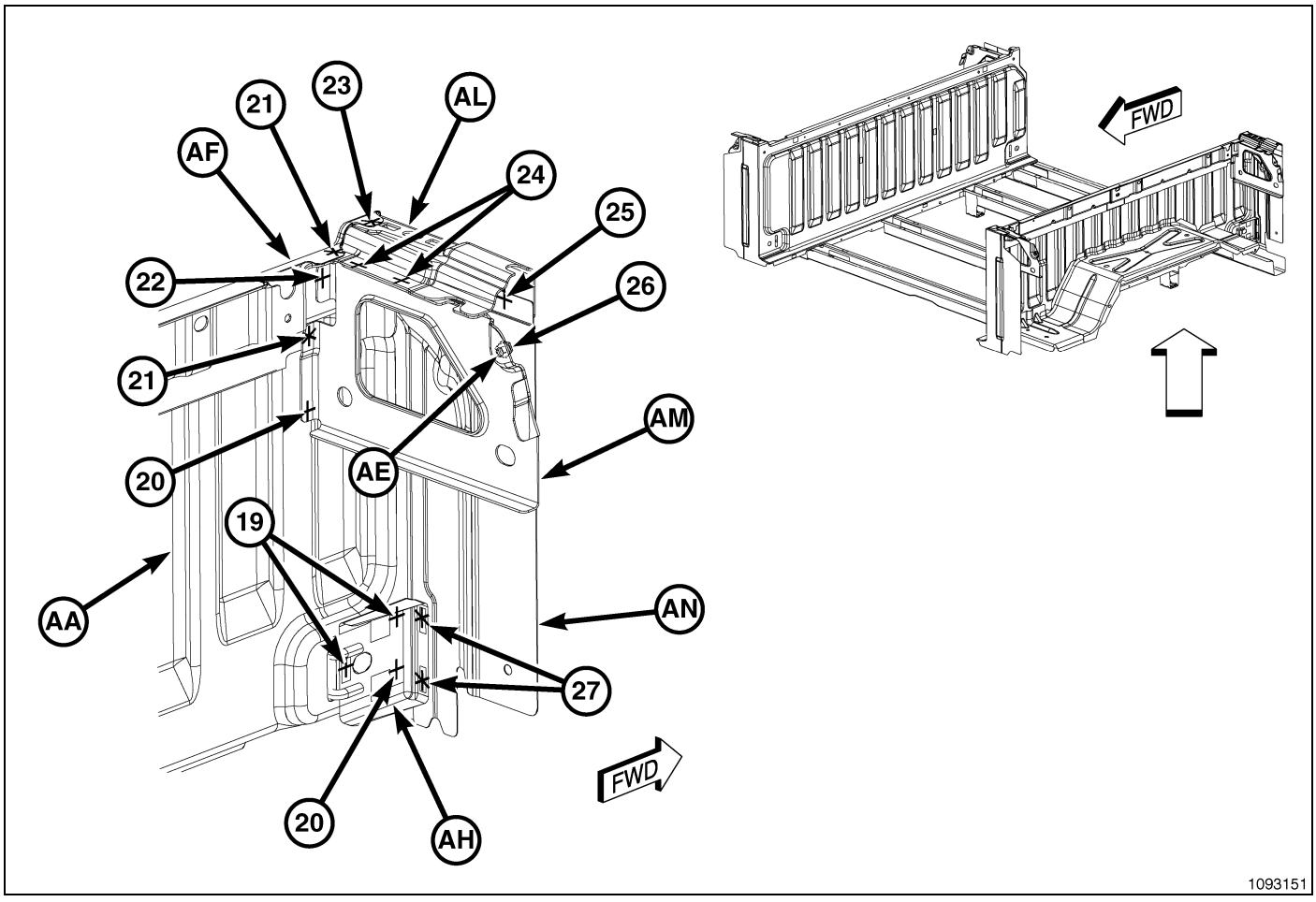

Fig. 229 5.7' Ram Box (6 of 9)

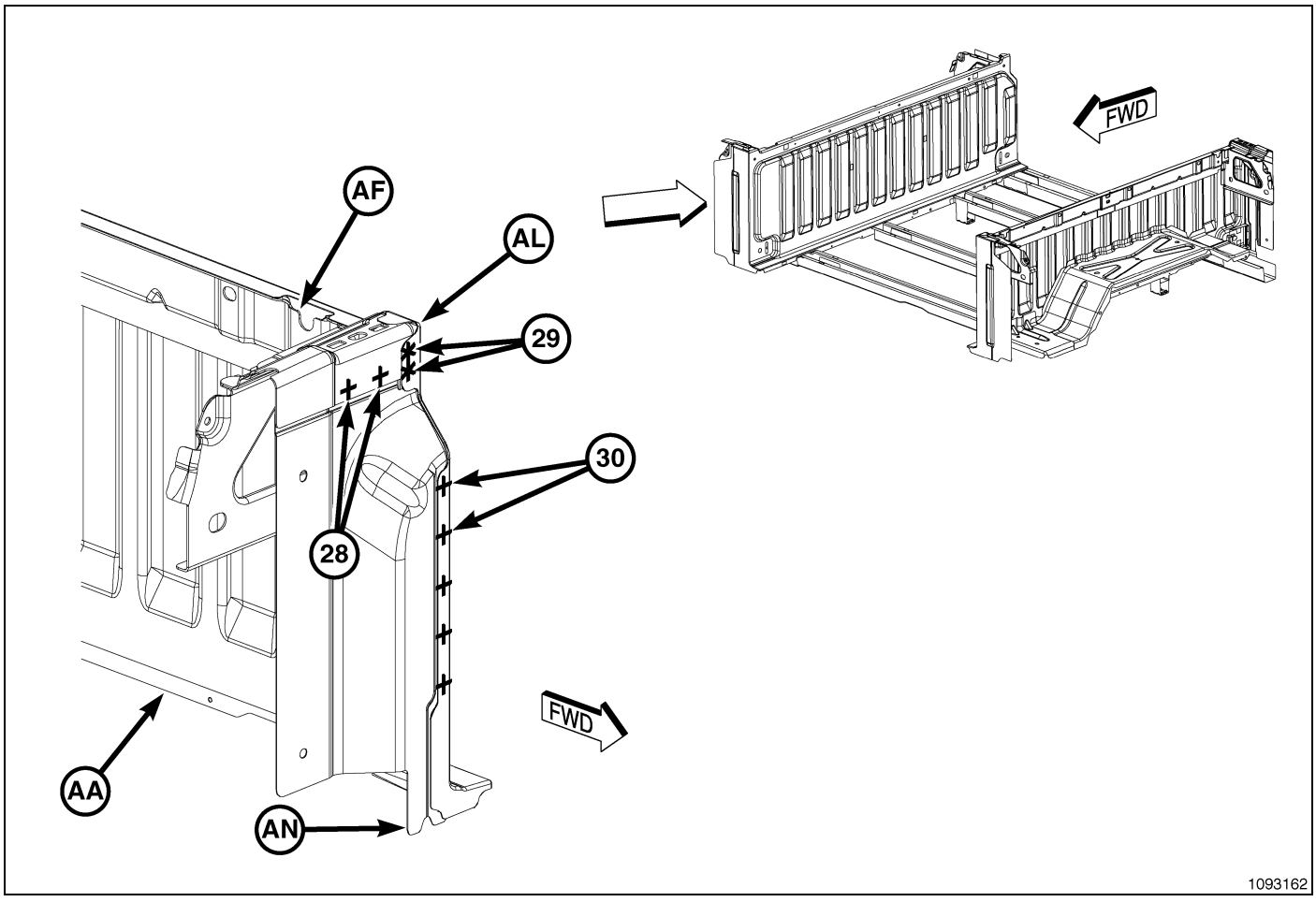

Fig. 230 5.7' Ram Box (7 of 9)

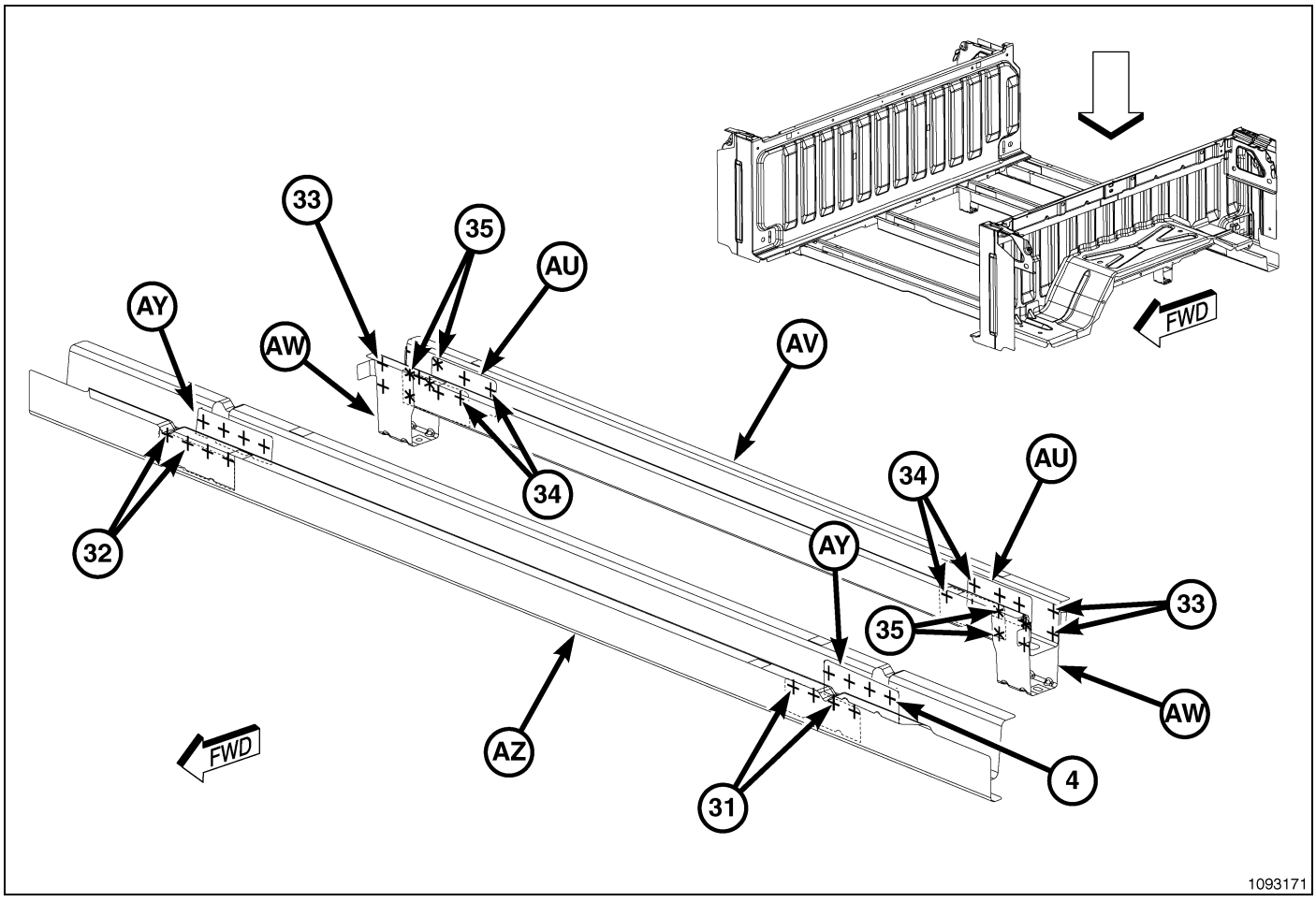

Fig. 231 5.7' Ram Box (8 of 9)

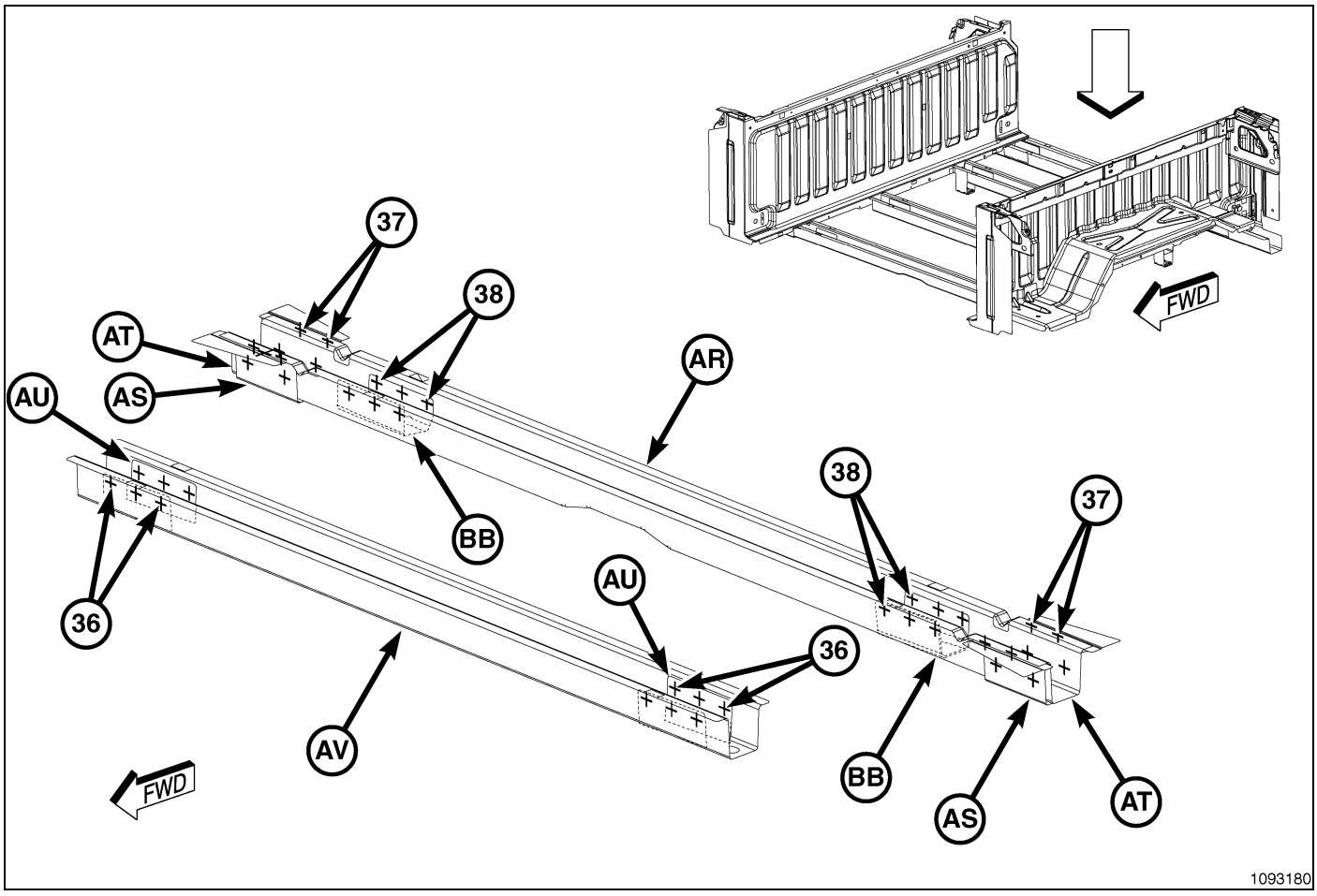

Fig. 232 5.7' Ram Box (9 of 9)

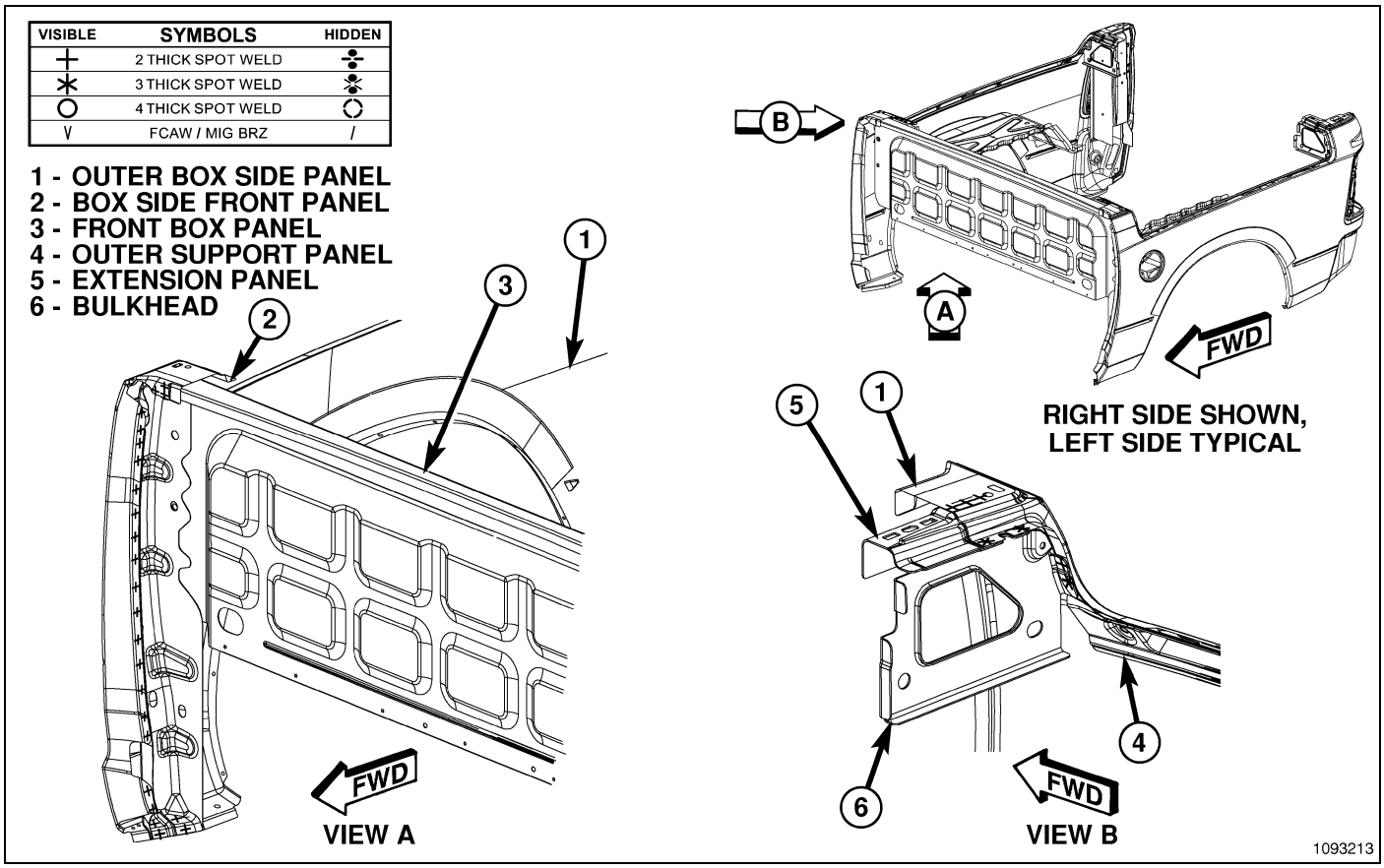

Fig. 233 5.7' Ram Box Body in White (1 of 3)

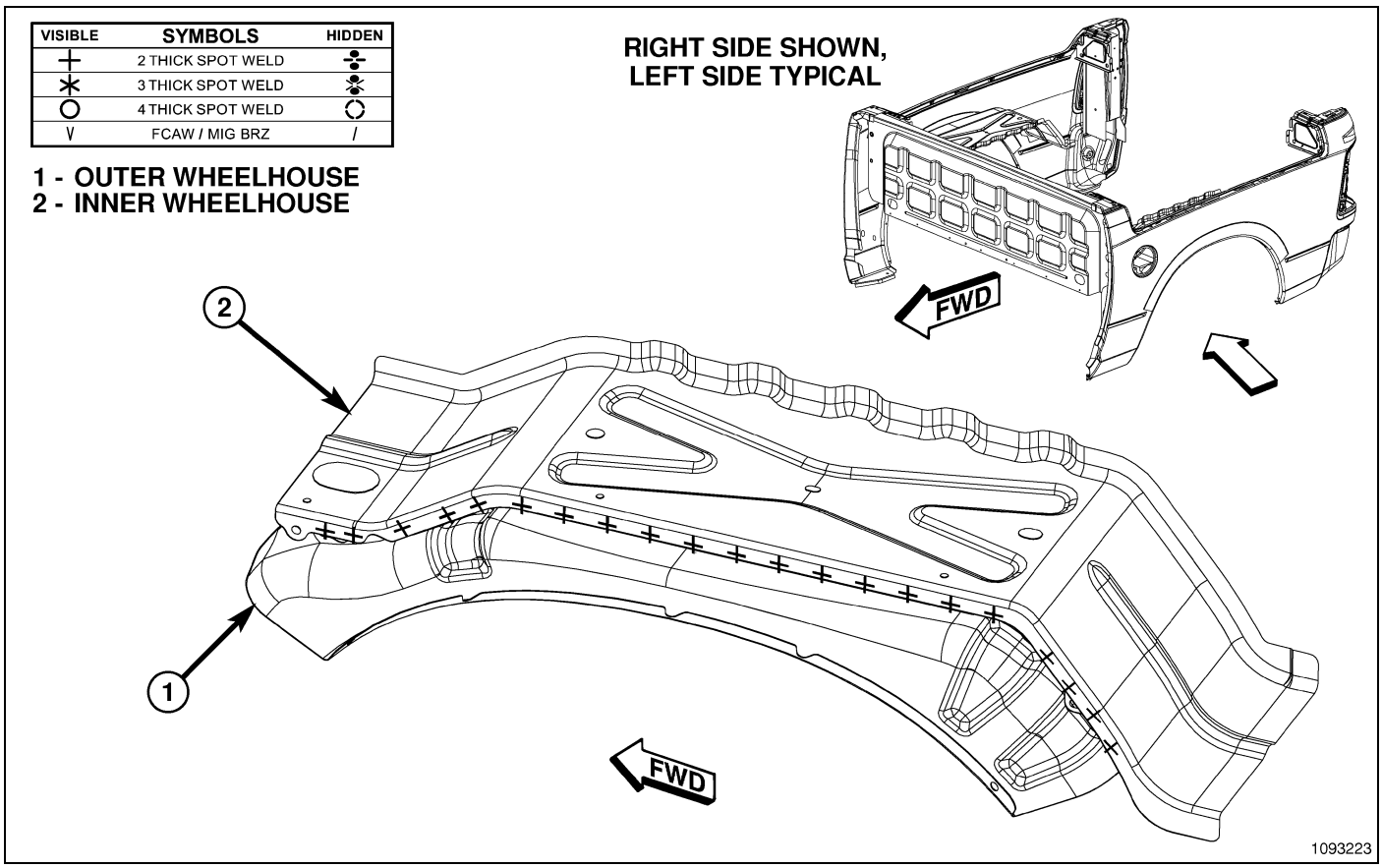

Fig. 234 5.7' Ram Box Body in White (2 of 3)

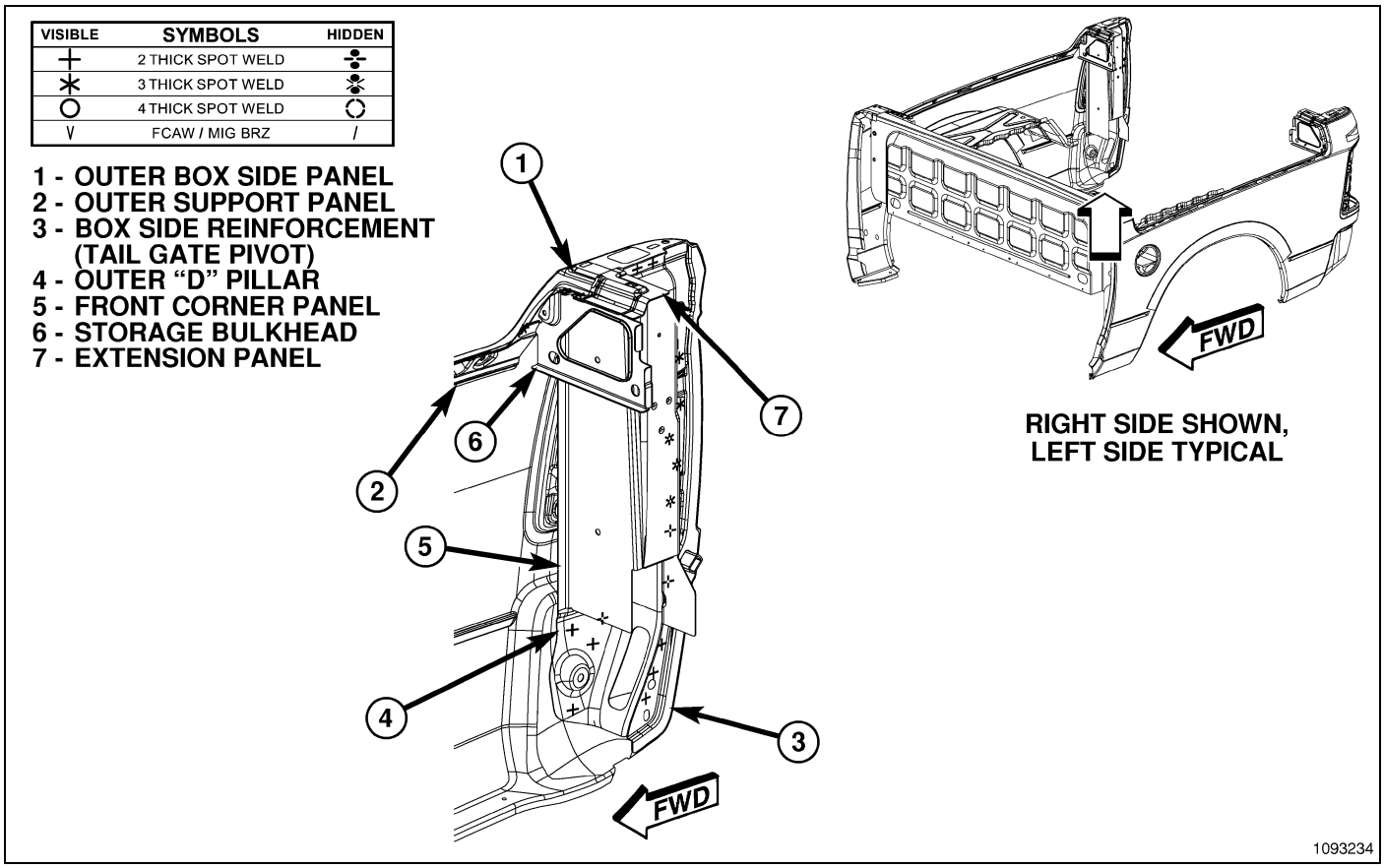

Fig. 235 5.7’ Ram Box Body in White (3 of 3)

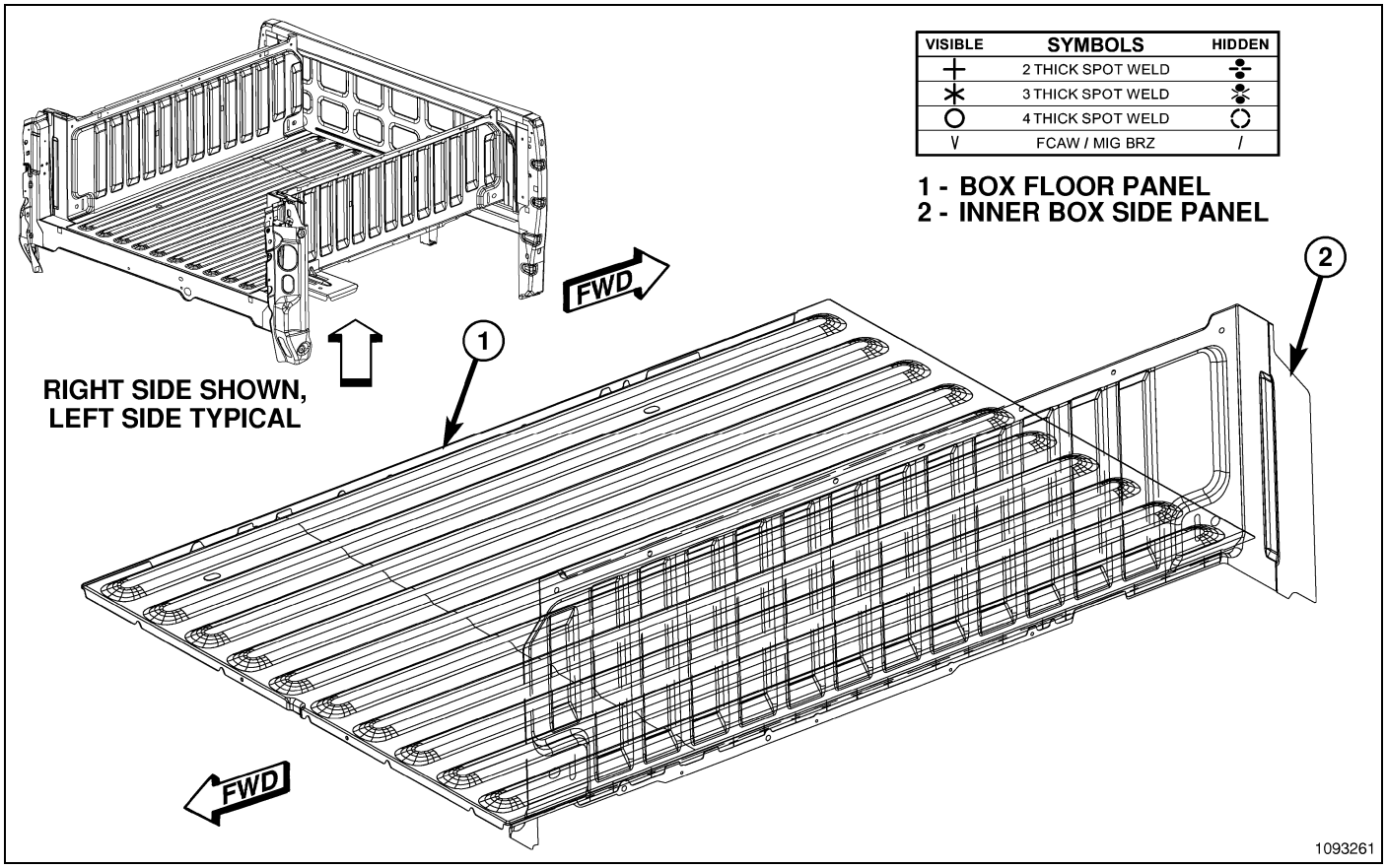

Fig. 236 5.7’ Ram Box Tub (1 of 6)

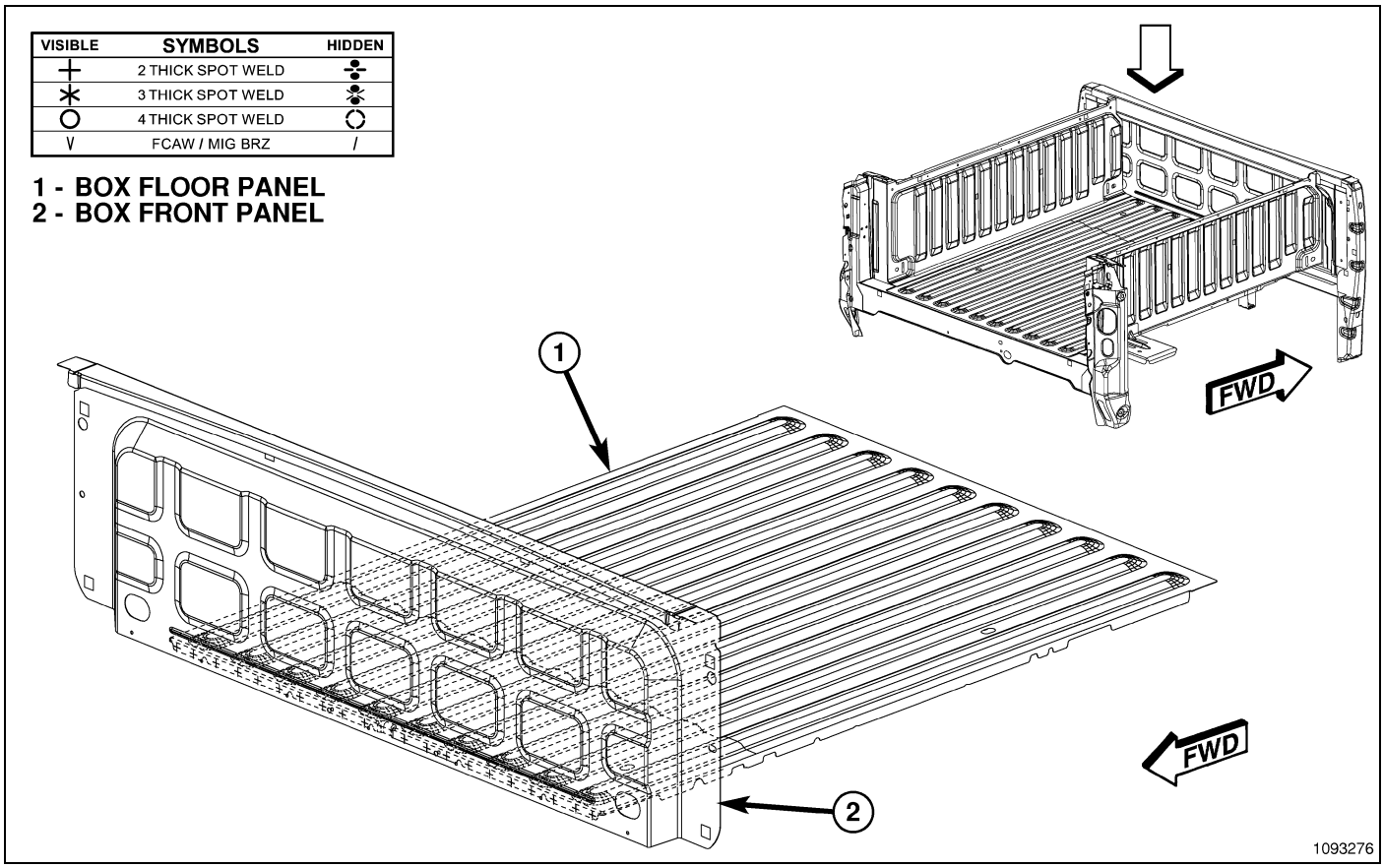

Fig. 237 5.7' Ram Box Tub (2 of 6)

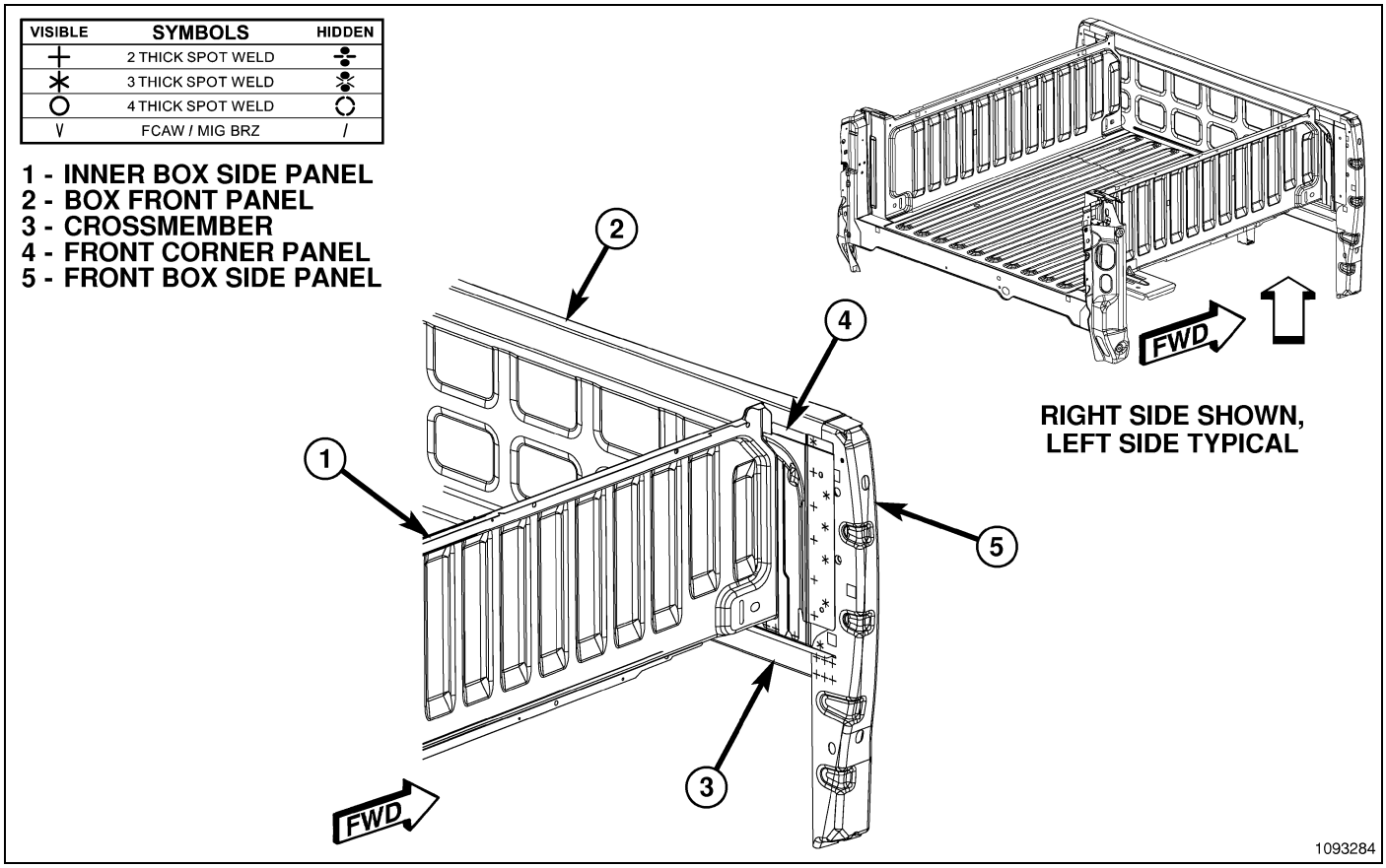

Fig. 238 5.7' Ram Box Tub (3 of 6)

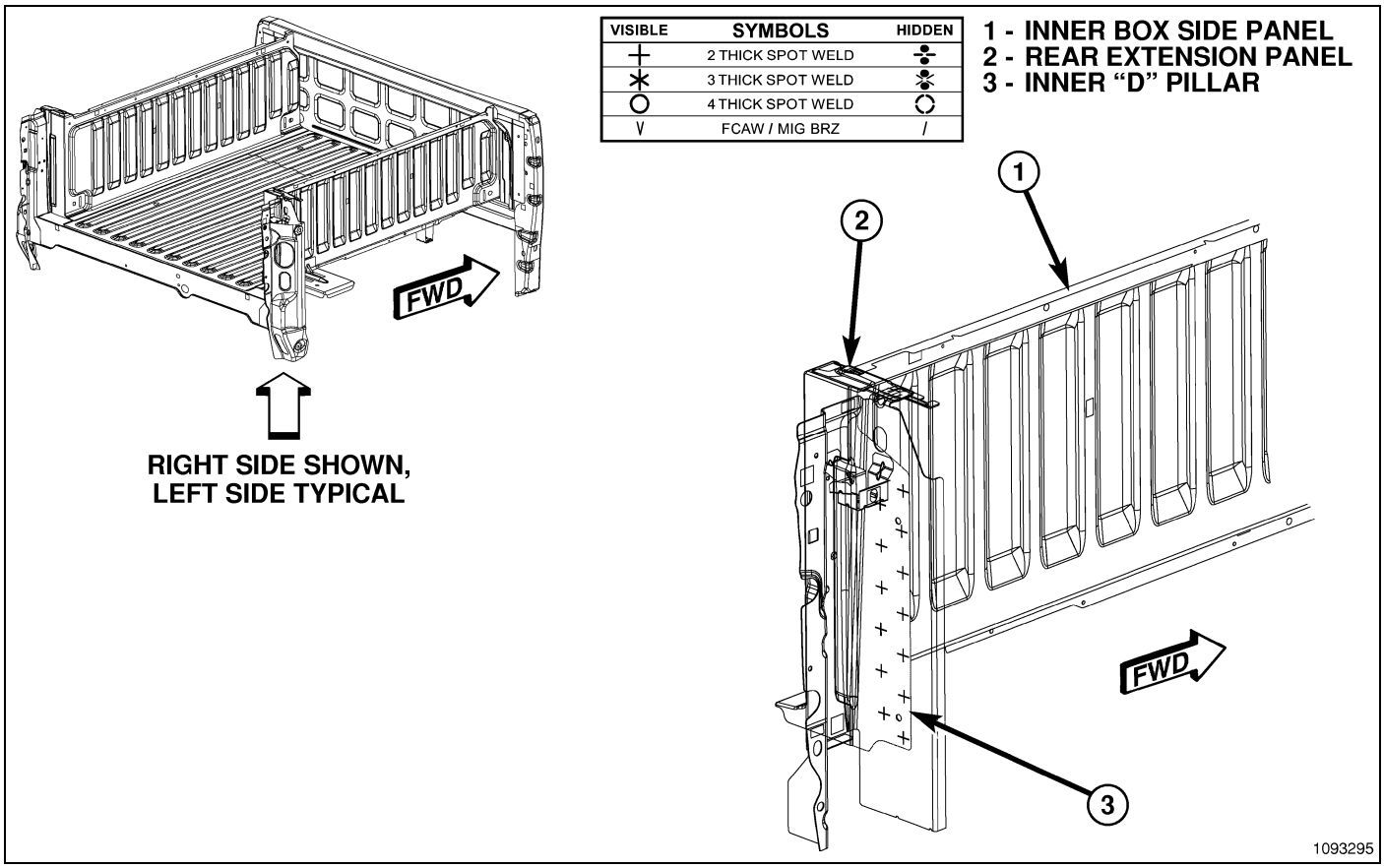

Fig. 239 5.7’ Ram Box Tub (4 of 6)

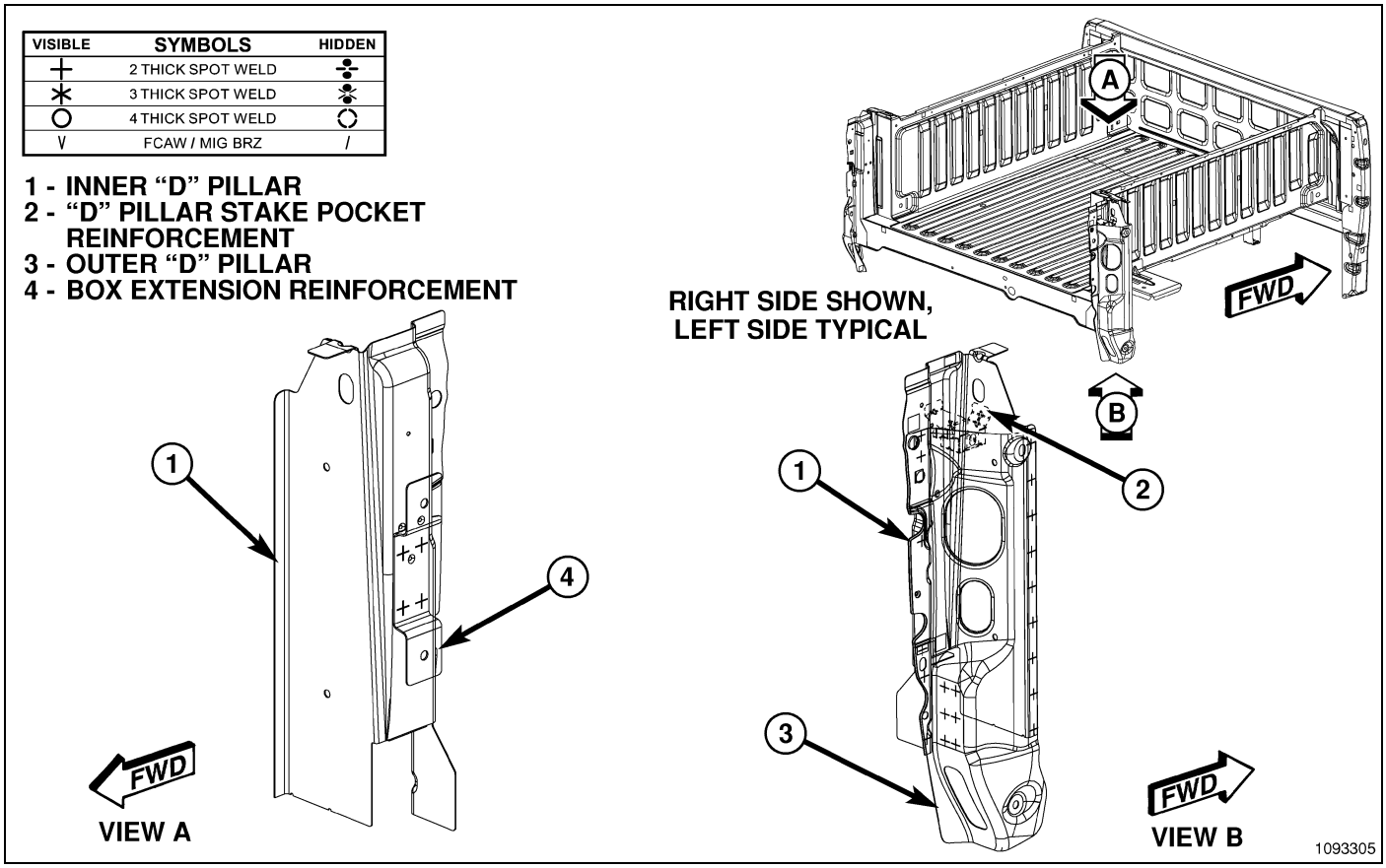

Fig. 240 5.7’ Ram Box Tub (5 of 6)

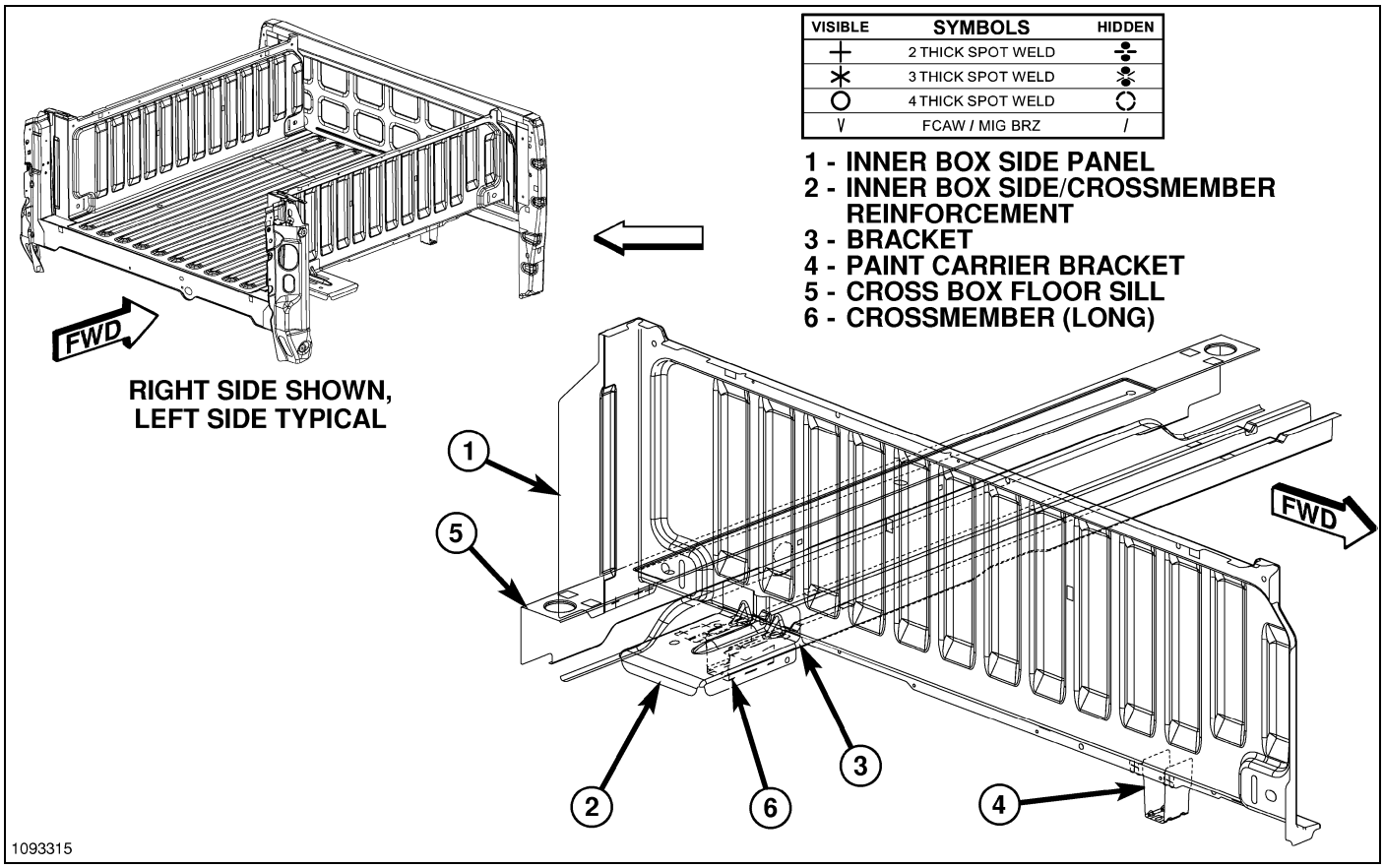

Fig. 241 5.7' Ram Box Tub (6 of 6)

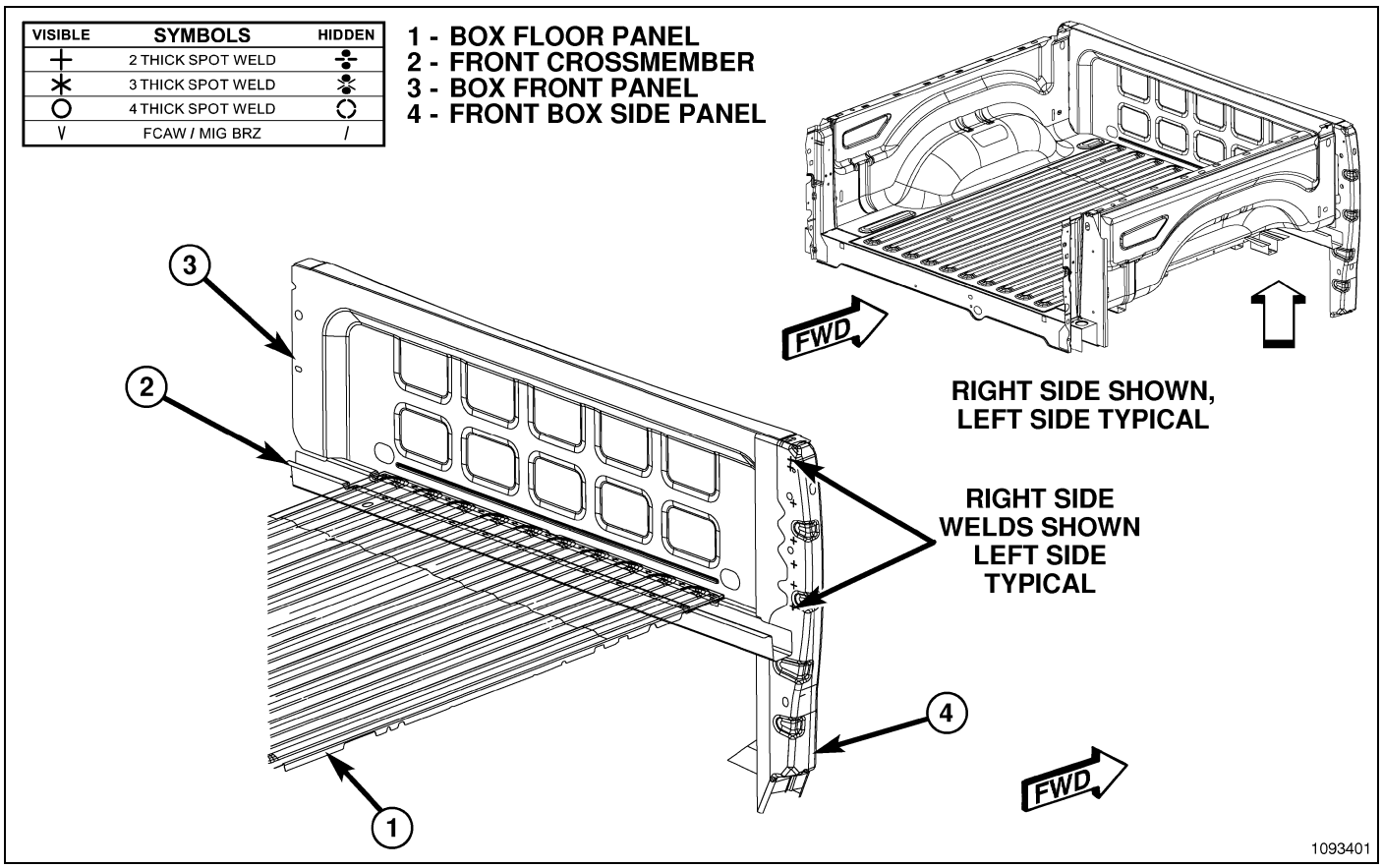

Fig. 242 5.7' Ram Box Floor (1 of 6)

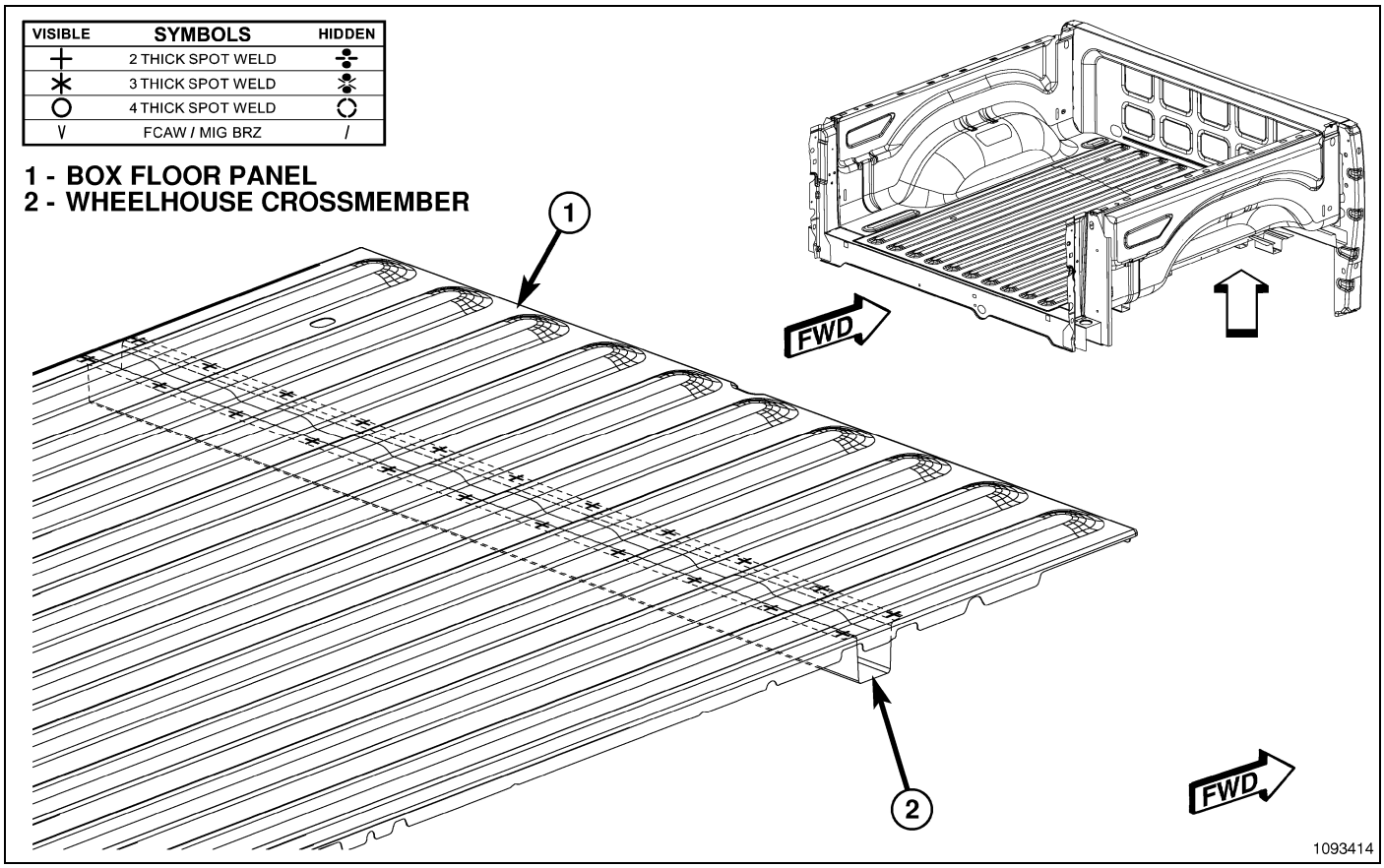

Fig. 243 5.7' Ram Box Floor (2 of 6)

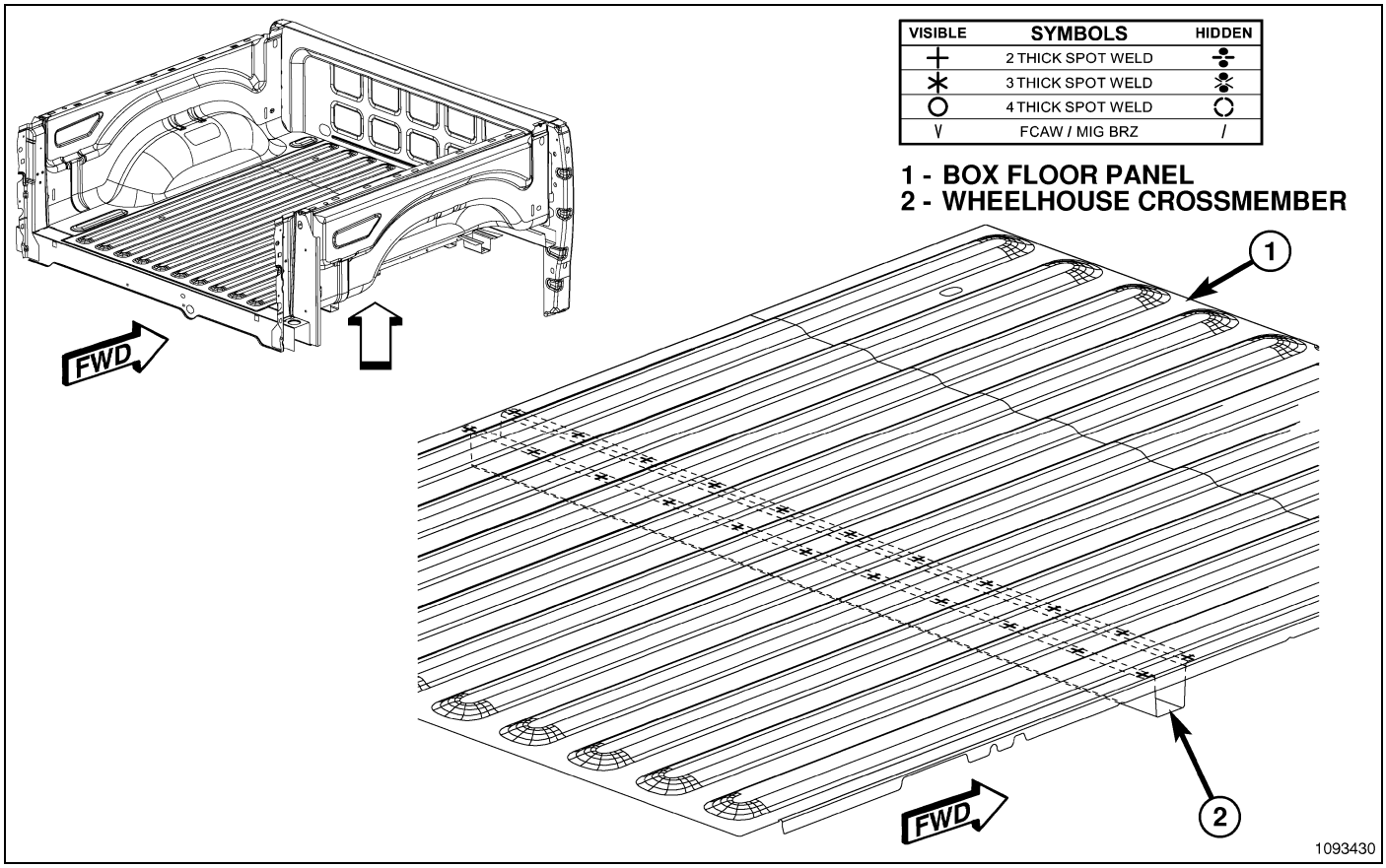

Fig. 244 5.7' Ram Box Floor (3 of 6)

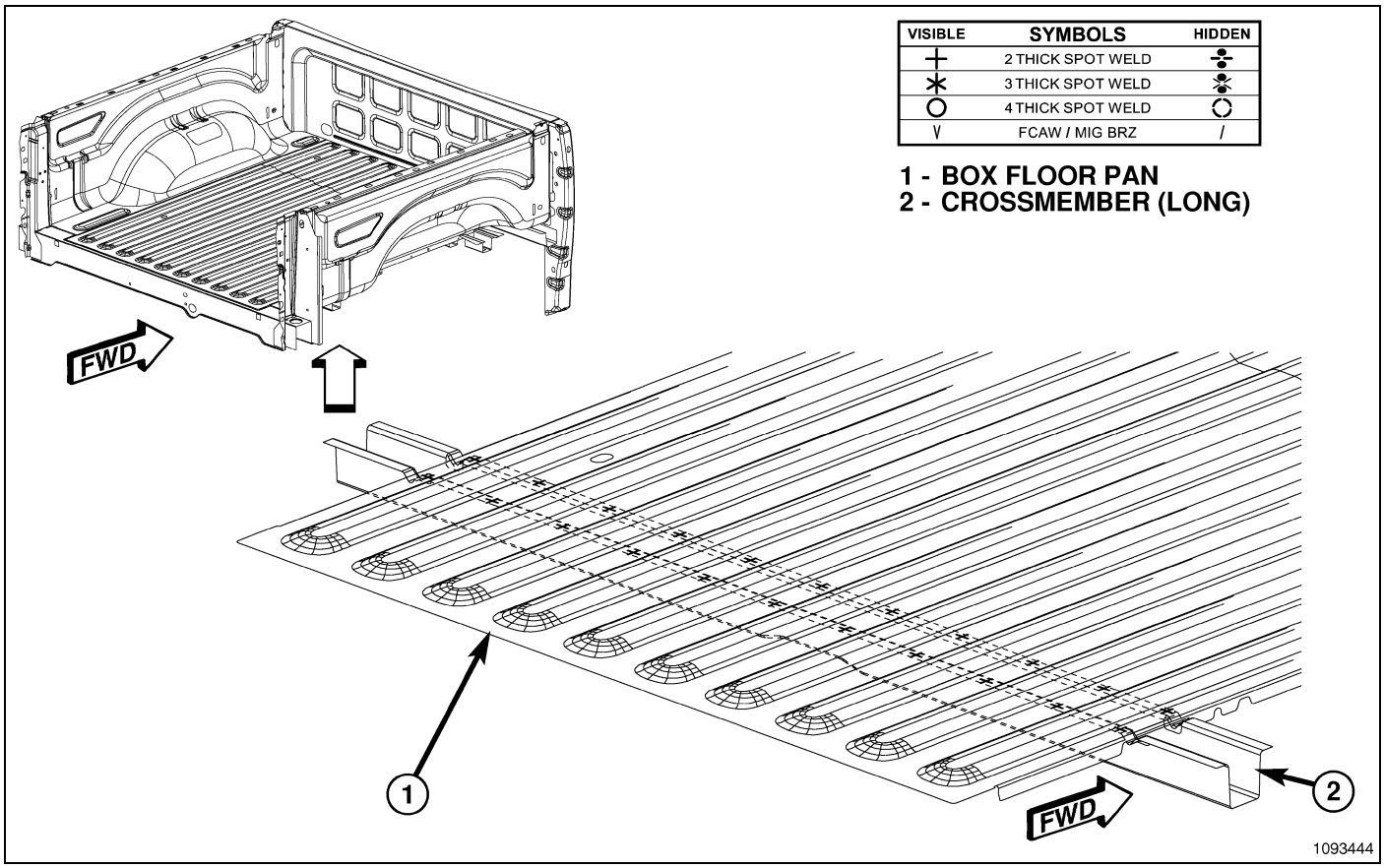

Fig. 245 5.7' Ram Box Floor (4 of 6)

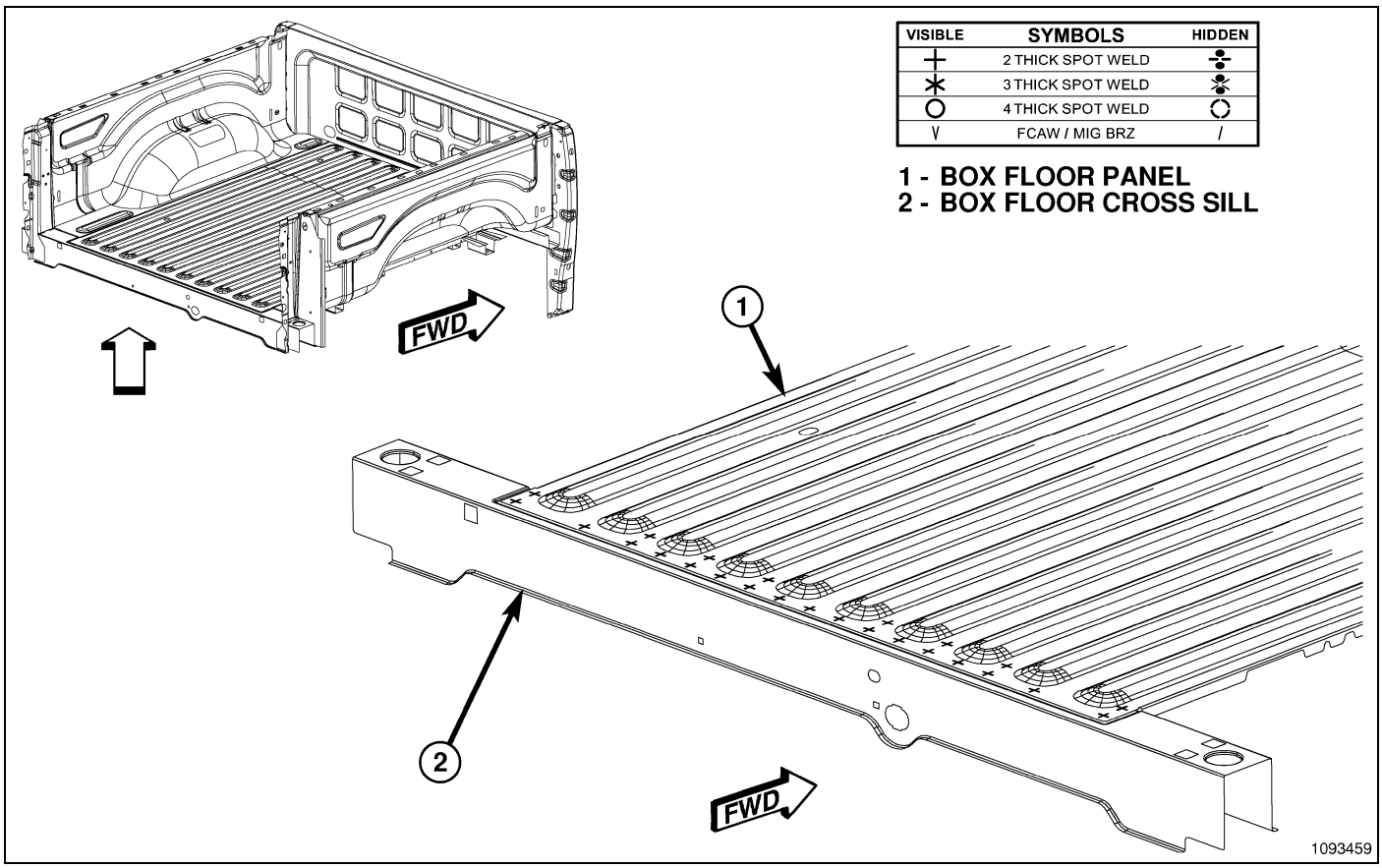

Fig. 246 5.7' Ram Box Floor (5 of 6)

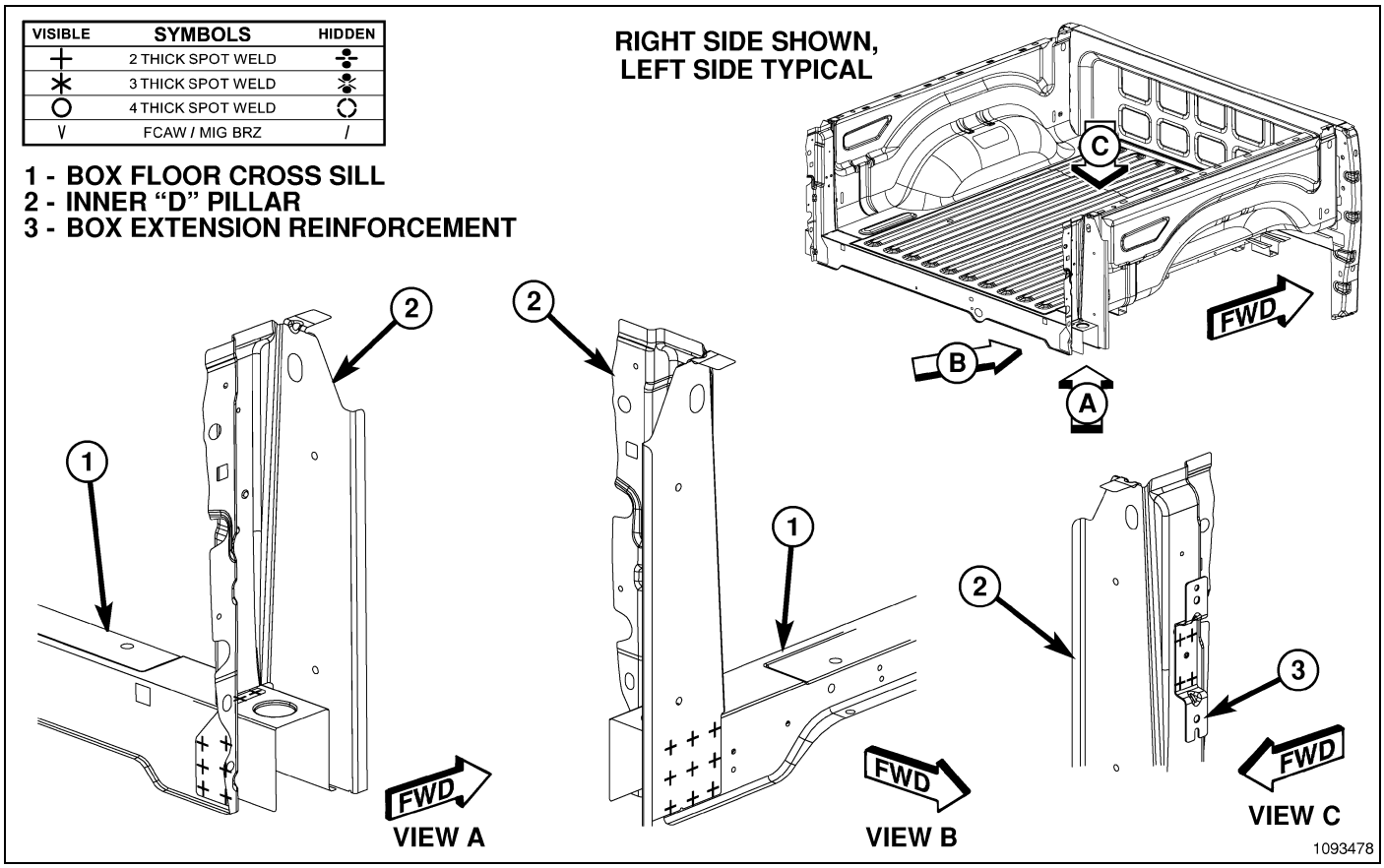

Fig. 247 5.7' Ram Box Floor (6 of 6)

5.7' STANDARD BOX - PARTS IDENTIFICATION LEGEND

ITEM	DESCRIPTION
1	AA TO AB 5/SD S/WELDS (ORD)
2	AD TO AC 4/SD S/WELDS (ORD)
3	AD TO AB 3/SD S/WELDS (ORD)
4	AD TO AA 5/SD S/WELDS (ORD)
5	AD TO AC 4/SD S/WELDS (ORD)
6	AE TO AF 4/SD S/WELDS (ORD)
7	AG TO AH 16 S/WELDS (ORD)
8	AK TO AL 8/SD S/WELDS (ORD)
9	AJ TO AK 4/SD S/WELDS (ORD)
10	AN TO AM 8/SD S/WELDS (ORD)
11	AM TO AP 6/SD S/WELDS (ORD)
12	AR TO AT 4/SD S/WELDS (ORD)
13	AR TO AS TO AT 4/SD S/WELDS (ORD)
14	AR TO AS 4/SD S/WELDS (ORD)
AA	REINFORCEMENT - STAKE POCKET FRONT INNER RIGHT -
AA	REINFORCEMENT - STAKE POCKET FRONT INNER LEFT -
AB	REINFORCEMENT - STAKE POCKET FRONT OUTER RIGHT -
AB	REINFORCEMENT - STAKE POCKET FRONT OUTER LEFT -

5.7’ STANDARD BOX - PARTS IDENTIFICATION LEGEND, continued

ITEM	DESCRIPTION
AC	REINFORCEMENT - TIE DOWN MOUNTING -
AD	PANEL - BOX SIDE INNER 5.7 FRONT RIGHT -
AD	PANEL - BOX SIDE INNER 5.7 FRONT LEFT -
AE	REINFORCEMENT - STAKE POCKET D-PILLAR RIGHT -
AE	REINFORCEMENT - STAKE POCKET D-PILLAR LEFT -
AF	PANEL - D-PILLAR INNER RIGHT -
AF	PANEL - D-PILLAR INNER LEFT -
AG	REINFORCEMENT - FRONT CROSSMEMBER -
AG	REINFORCEMENT - FRONT CROSSMEMBER -
AH	CROSSMEMBER - FRONT -
AJ	55275534AA - GUSSET-CROSS SILL BOX FLOOR-
AK	SILL - CROSS BOX FLOOR REAR -
AL	TAPPING PLATE - MISCELLANEOUS SHAPE 1 EXTRUSION -
AL	TAPPING PLATE - MISCELLANEOUS SHAPE 1 EXTRUSION -
AM	CROSSMEMBER - LONG -
AN	55276510AA - BRACKET - CROSSMEMBER -
AP	55276156AA - TAPPING PLATE - U-CHANNEL -
AR	CROSSMEMBER - WHEELHOUSE -
AS	BRACKET - CROSSMEMBER SUPPORT -
AT	BRACKET - PAINT CARRIER -

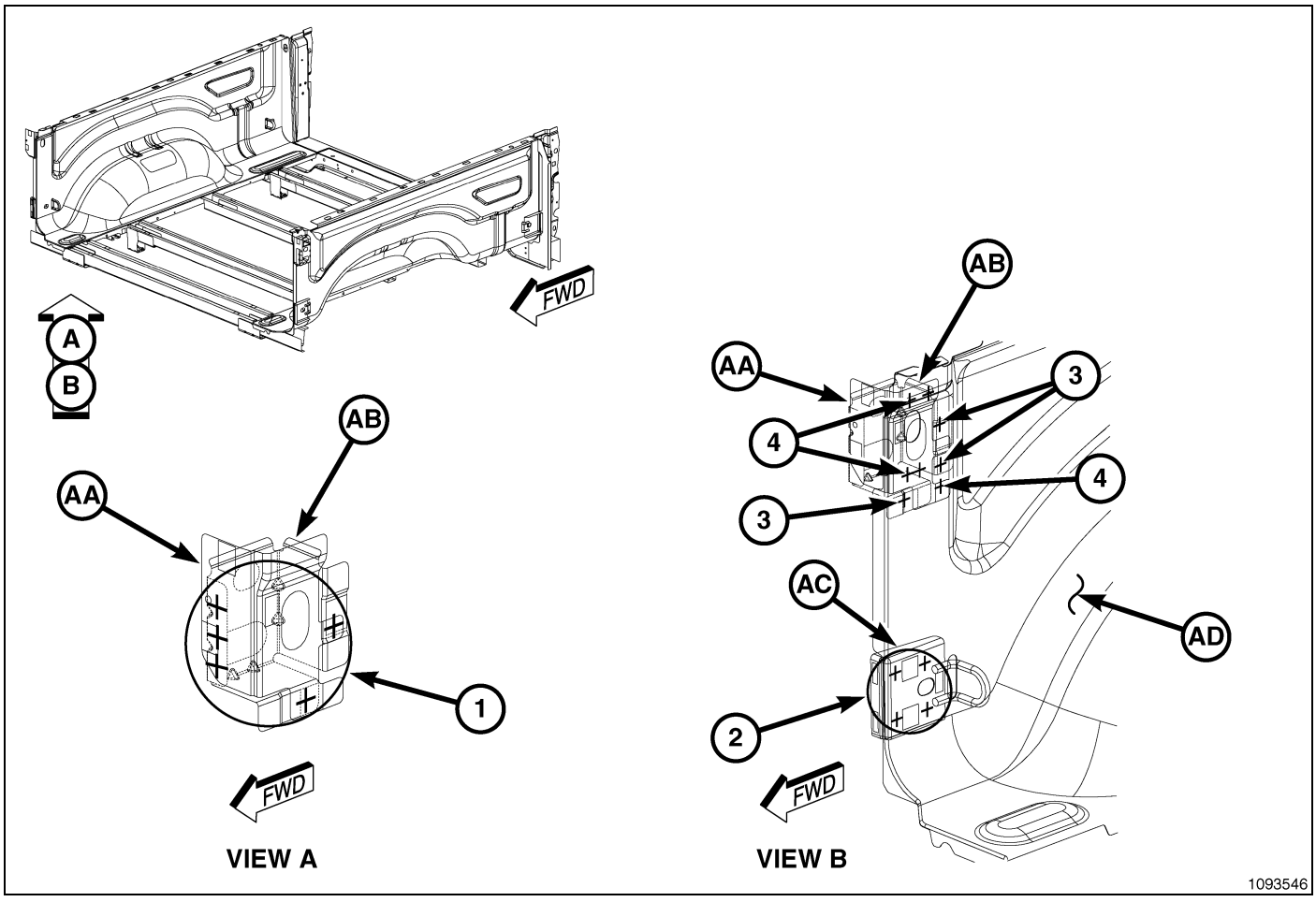

Fig. 248 5.7' Box (1 of 6)

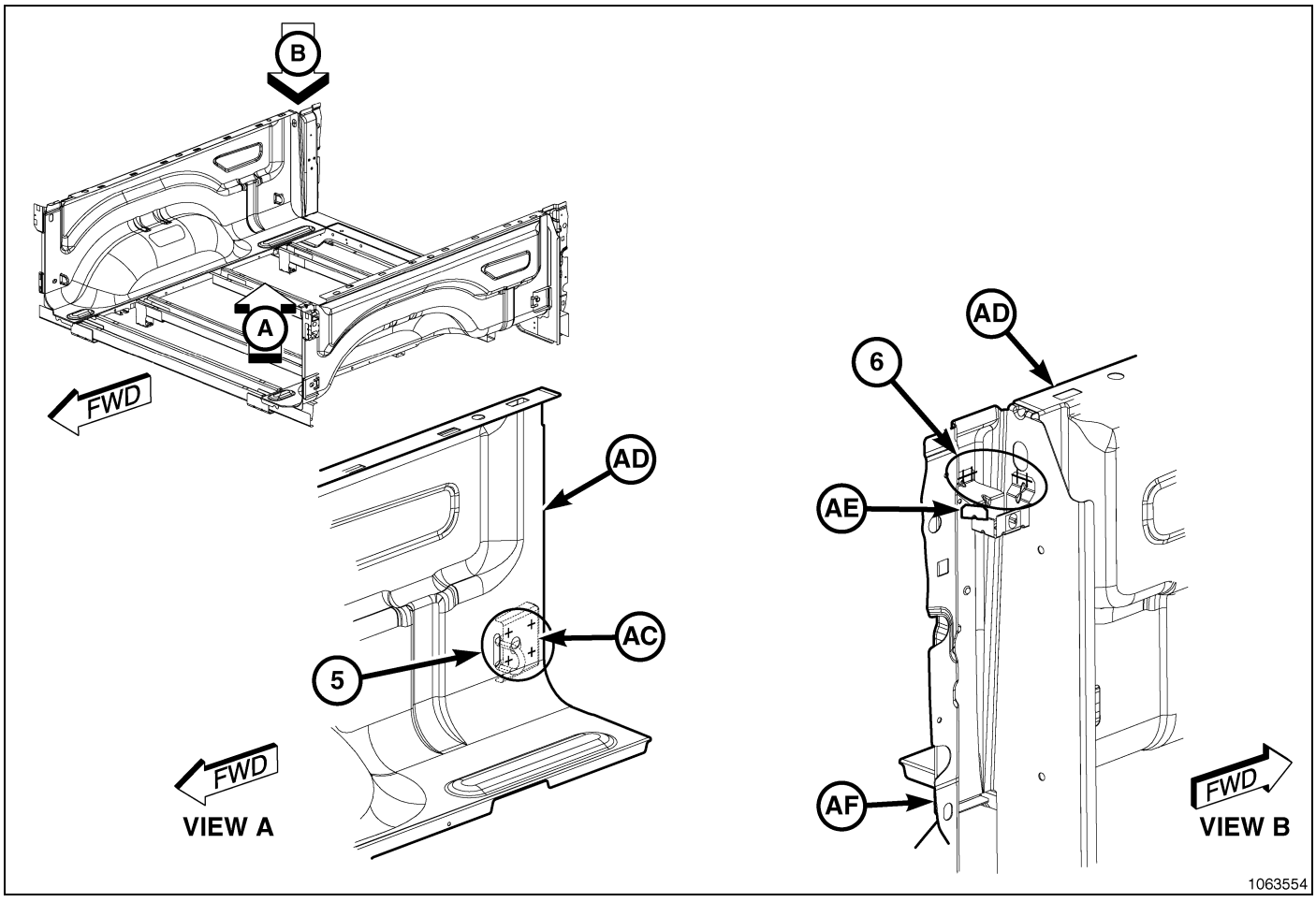

Fig. 249 5.7' Box (2 of 6)

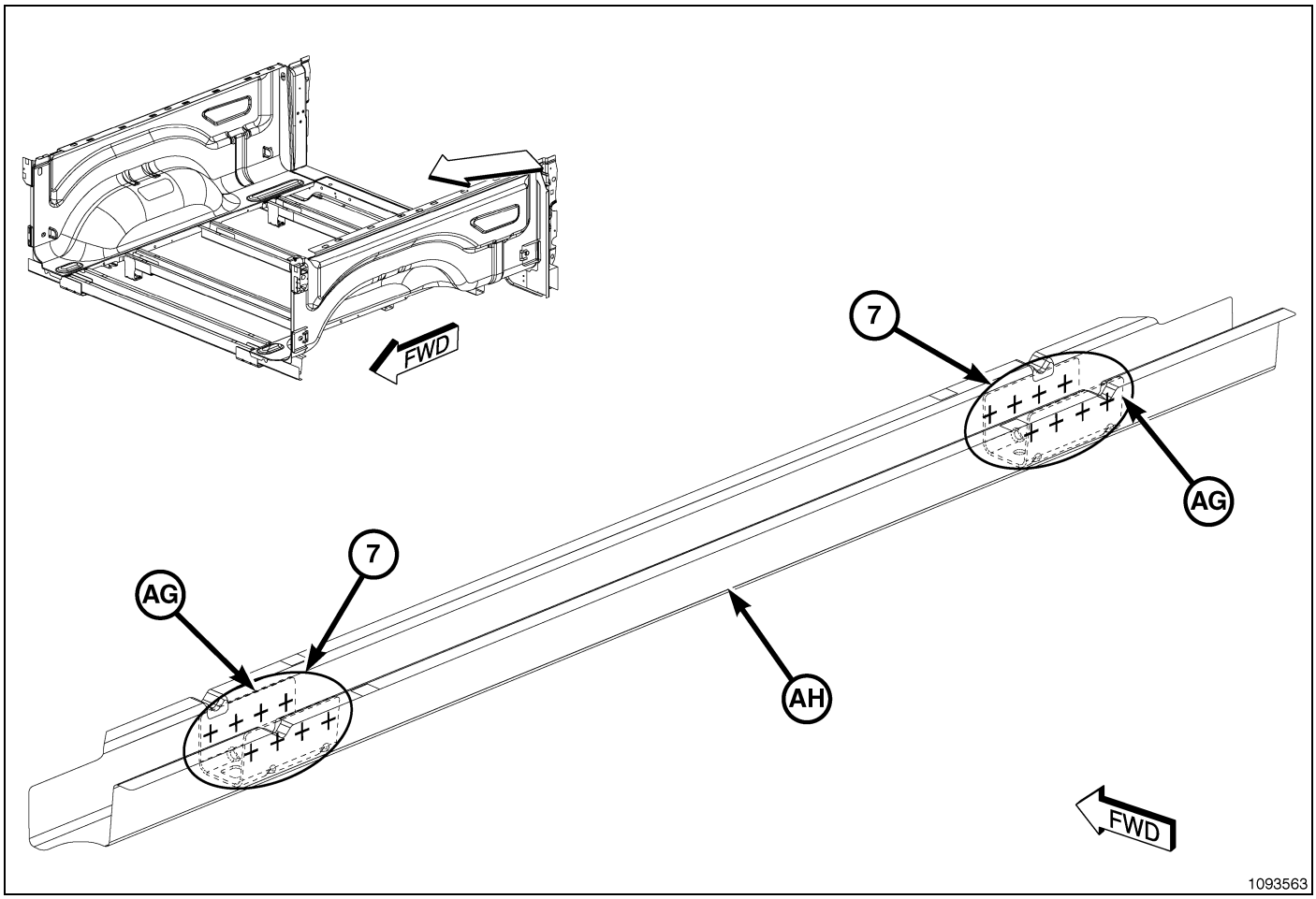

Fig. 250 5.7' Box (3 of 6)

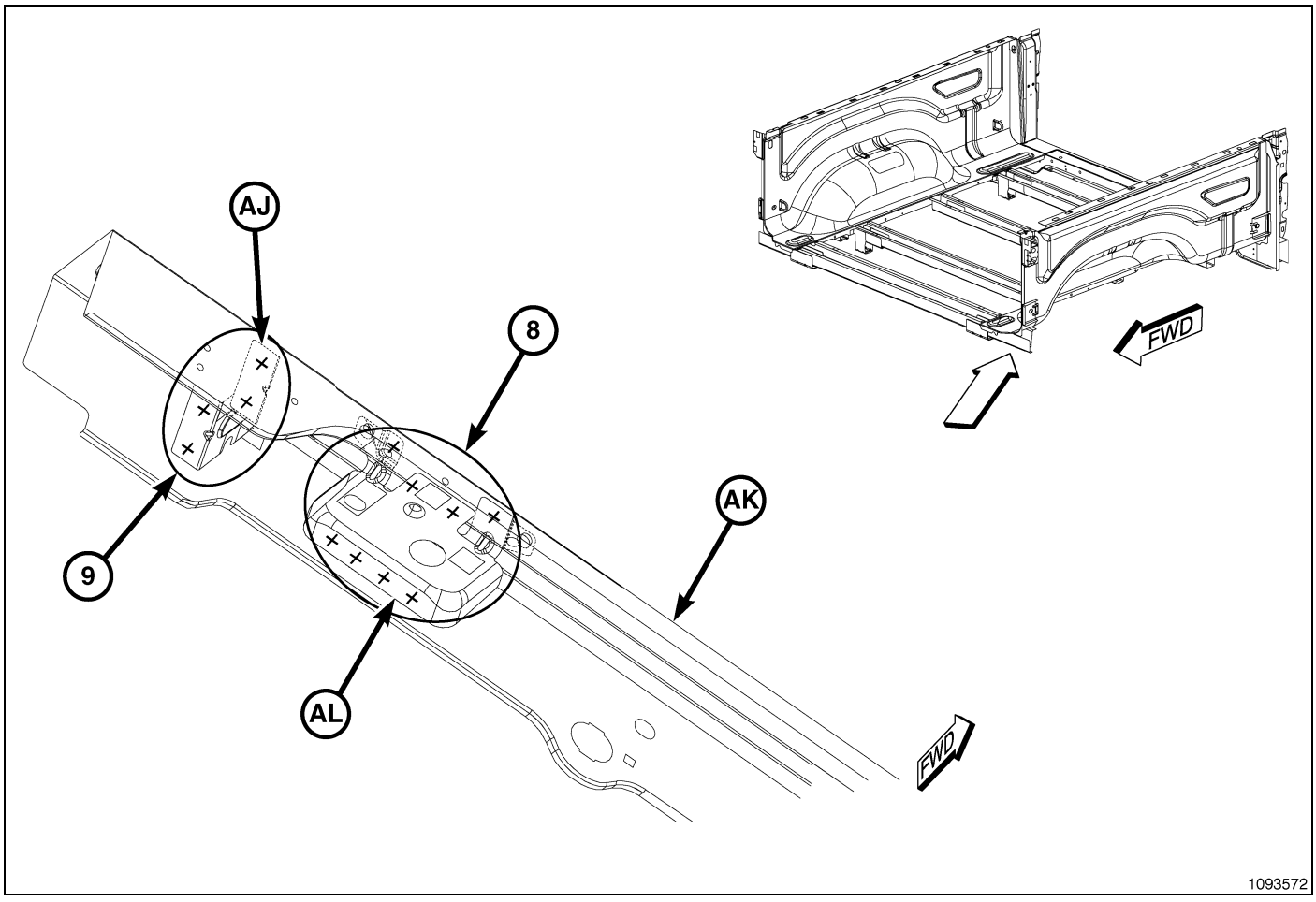

Fig. 251 5.7' Box (4 of 6)

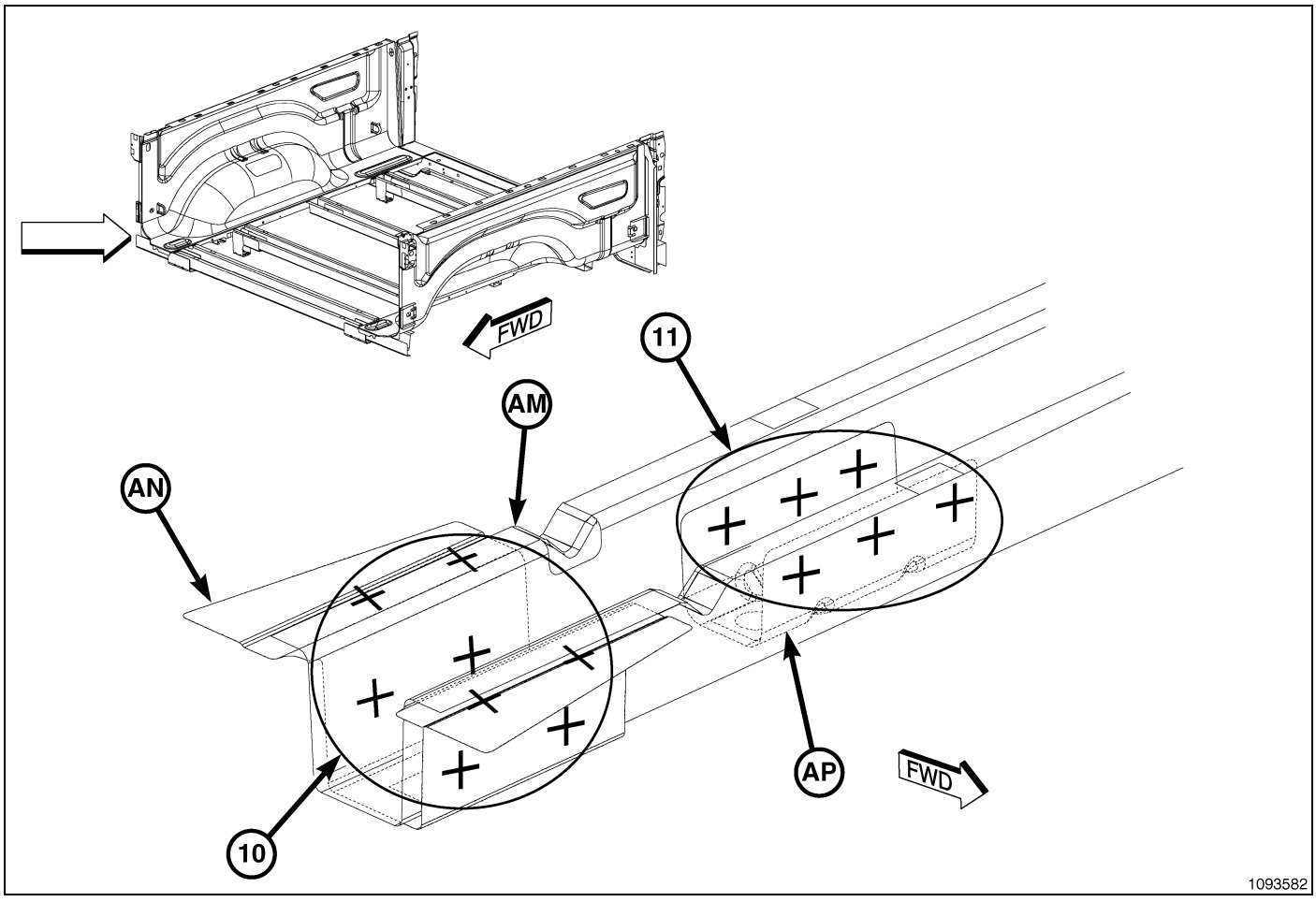

Fig. 252 5.7' Box (5 of 6)

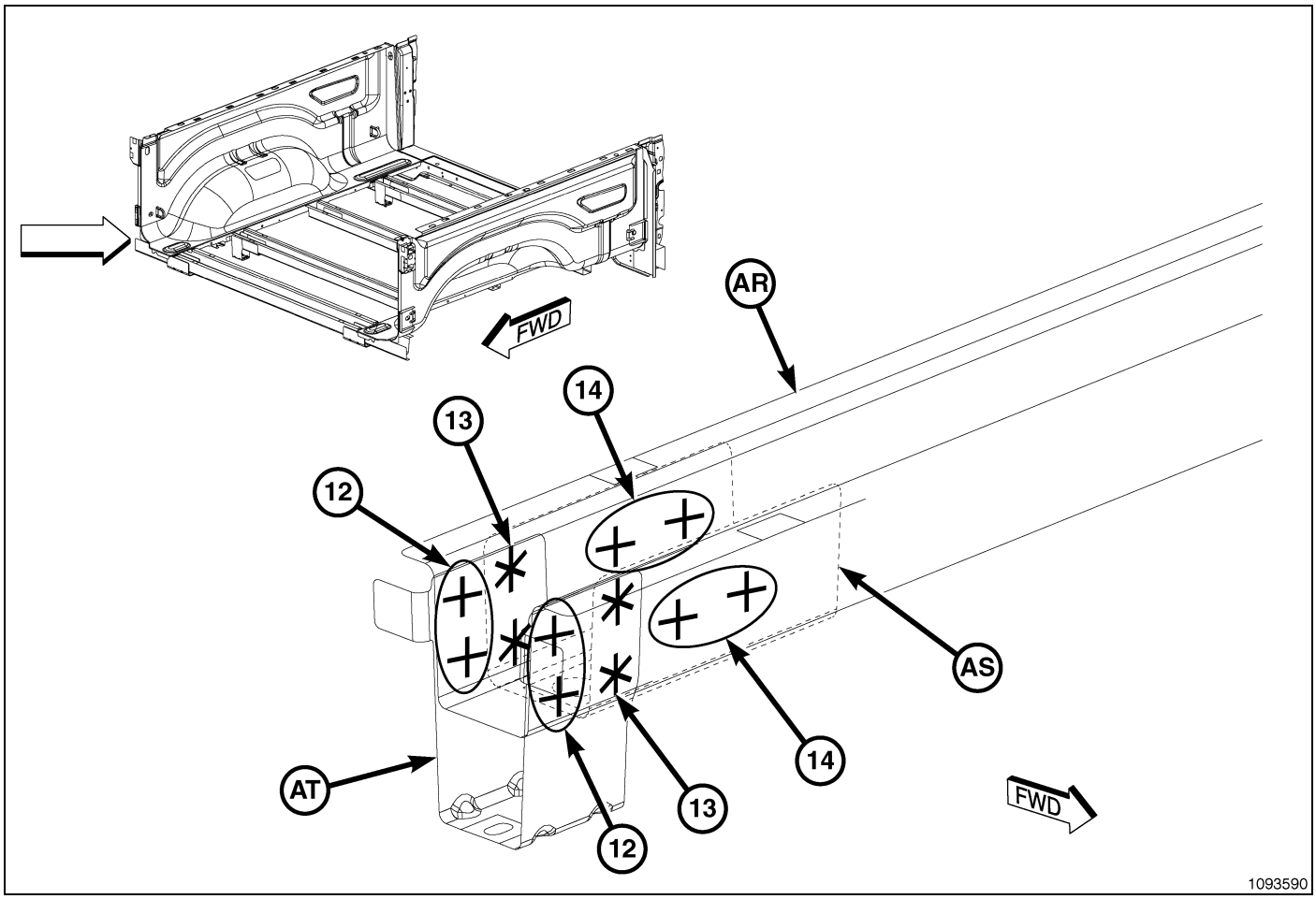

Fig. 253 5.7' Box (6 of 6)

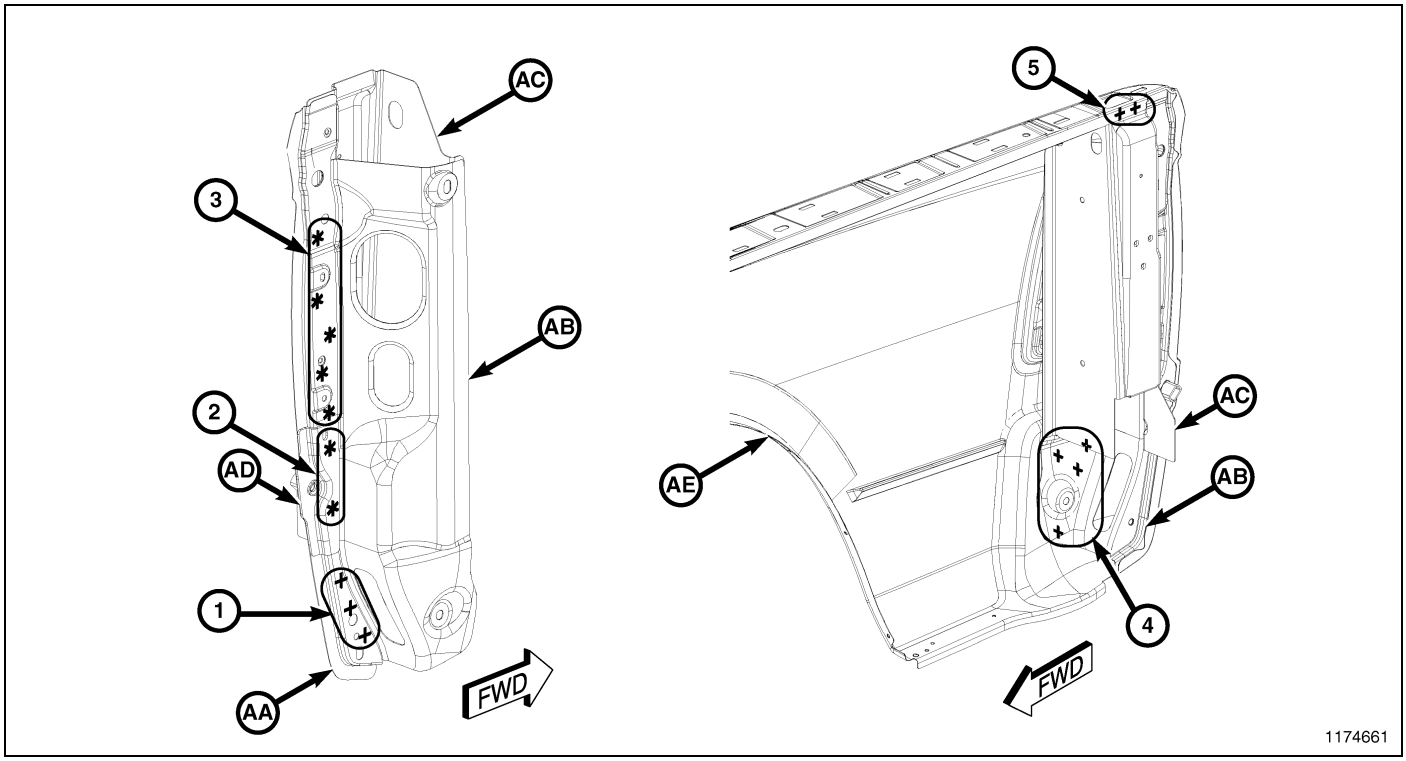

Fig. 254 5.7' Box Body in White (1 of 6)

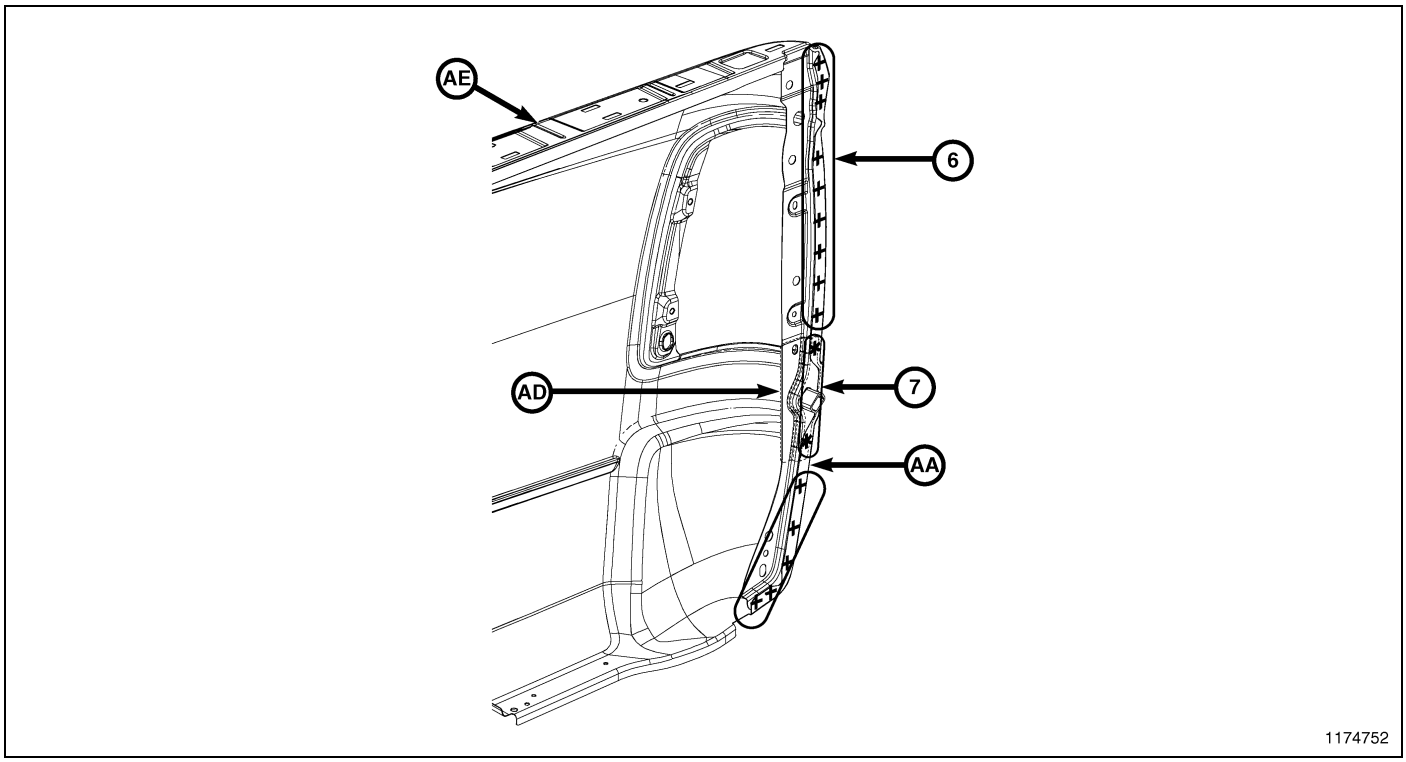

Fig. 255 5.7' Box Body in White (2 of 6)

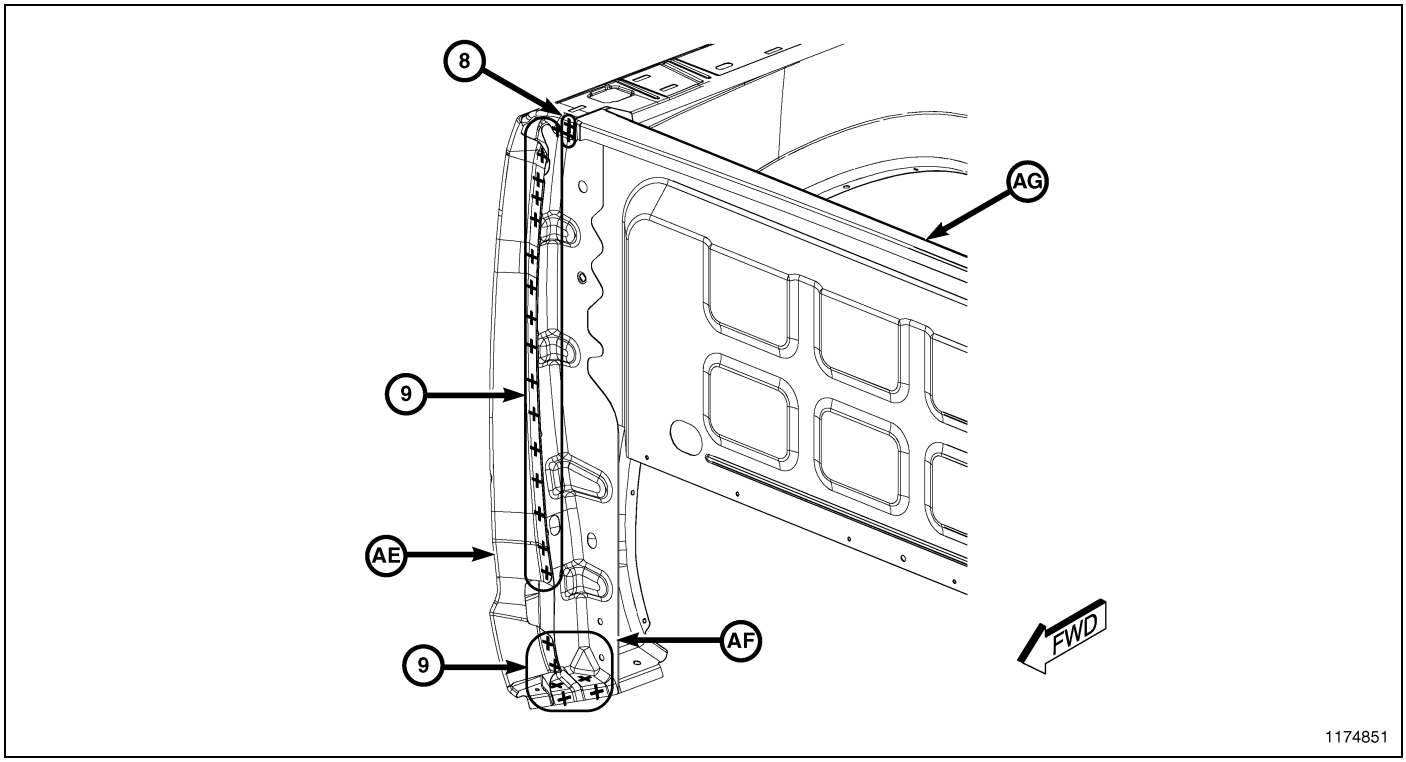

Fig. 256 5.7' Box Body in White (3 of 6)

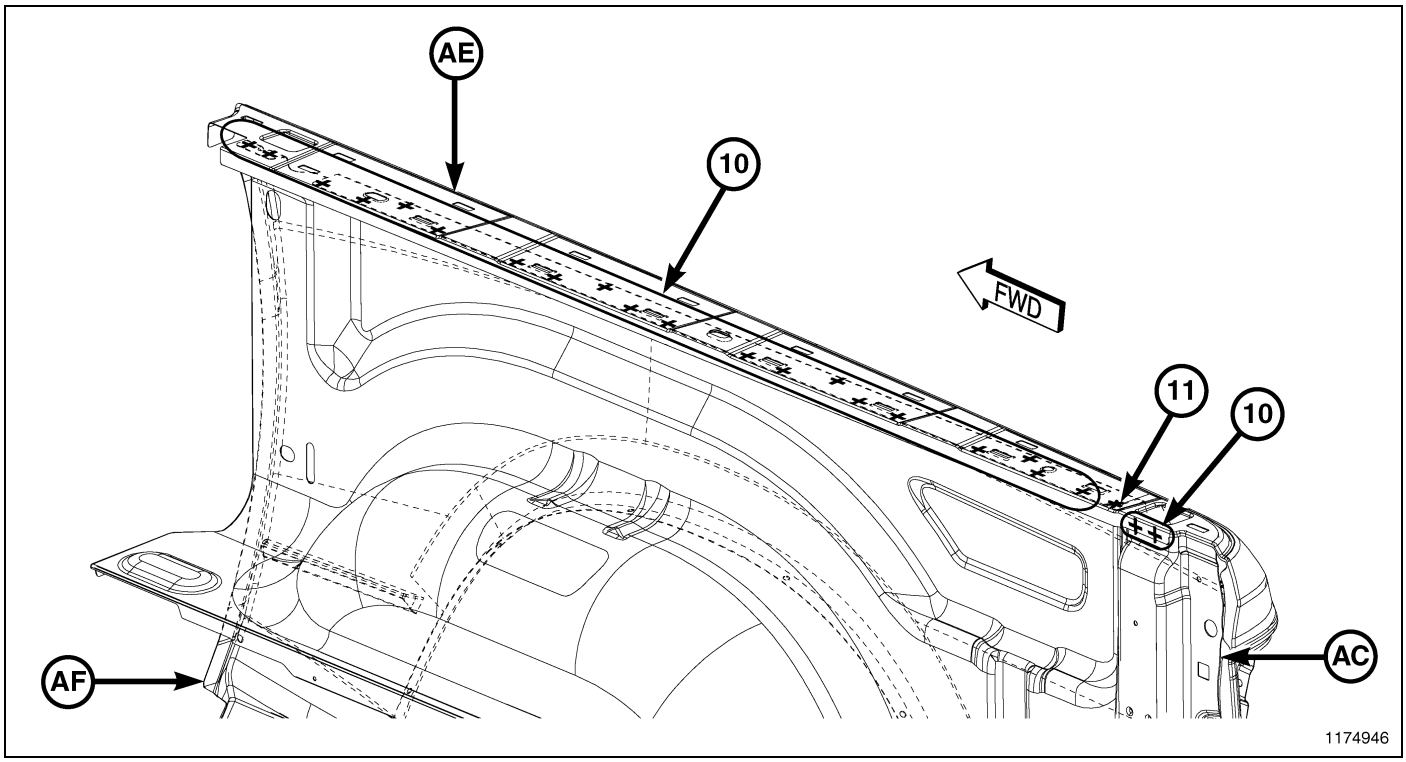

Fig. 257 5.7' Box Body in White (4 of 6)

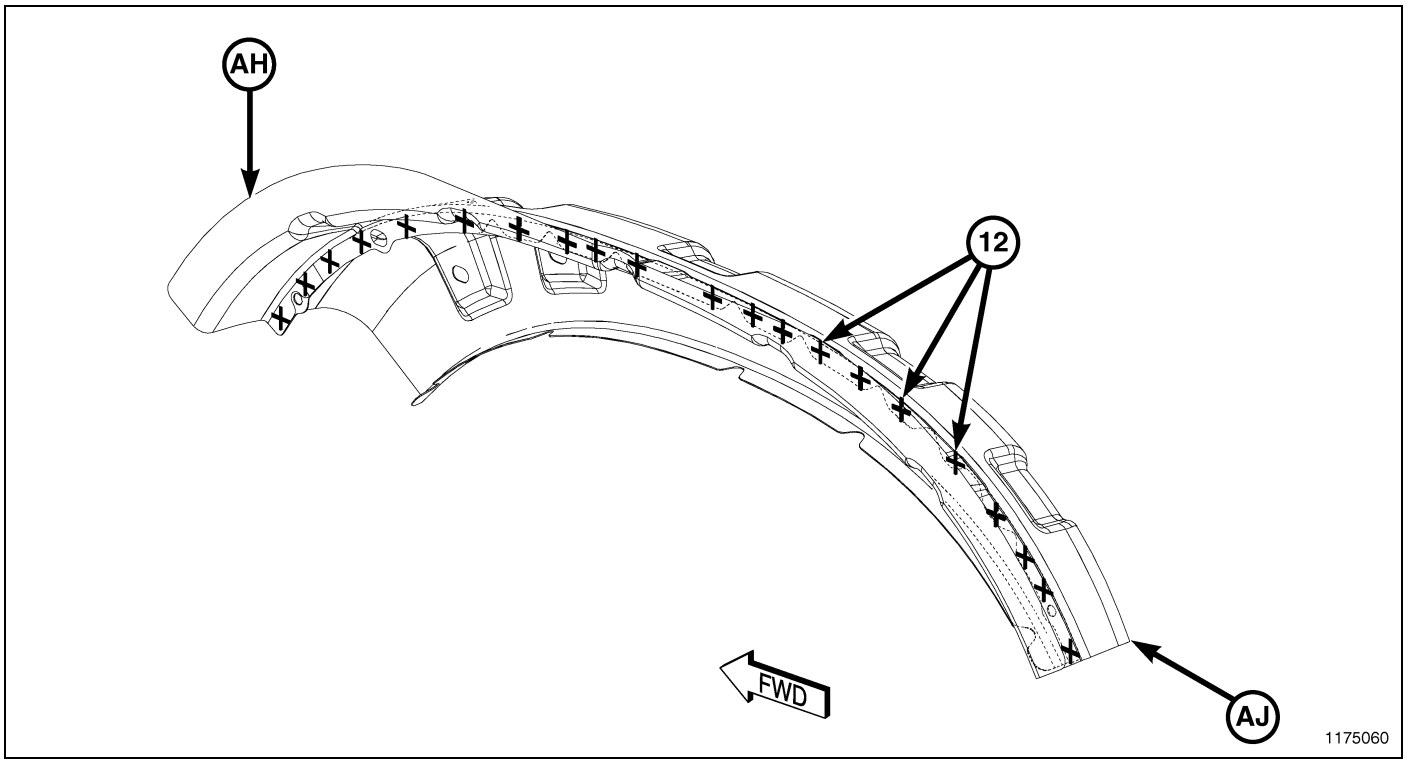

Fig. 258 5.7' Box Body in White (5 of 6)

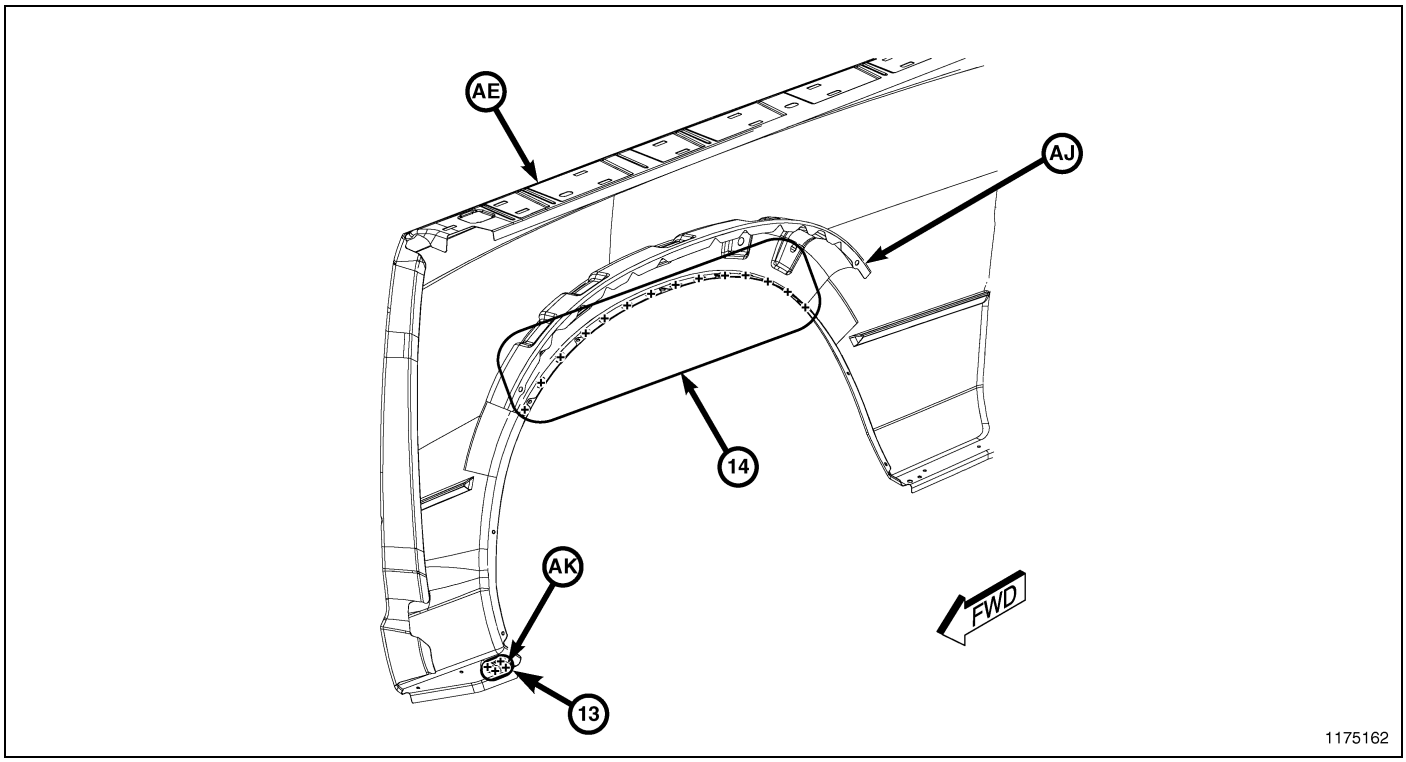

Fig. 259 5.7' Box Body in White (6 of 6)

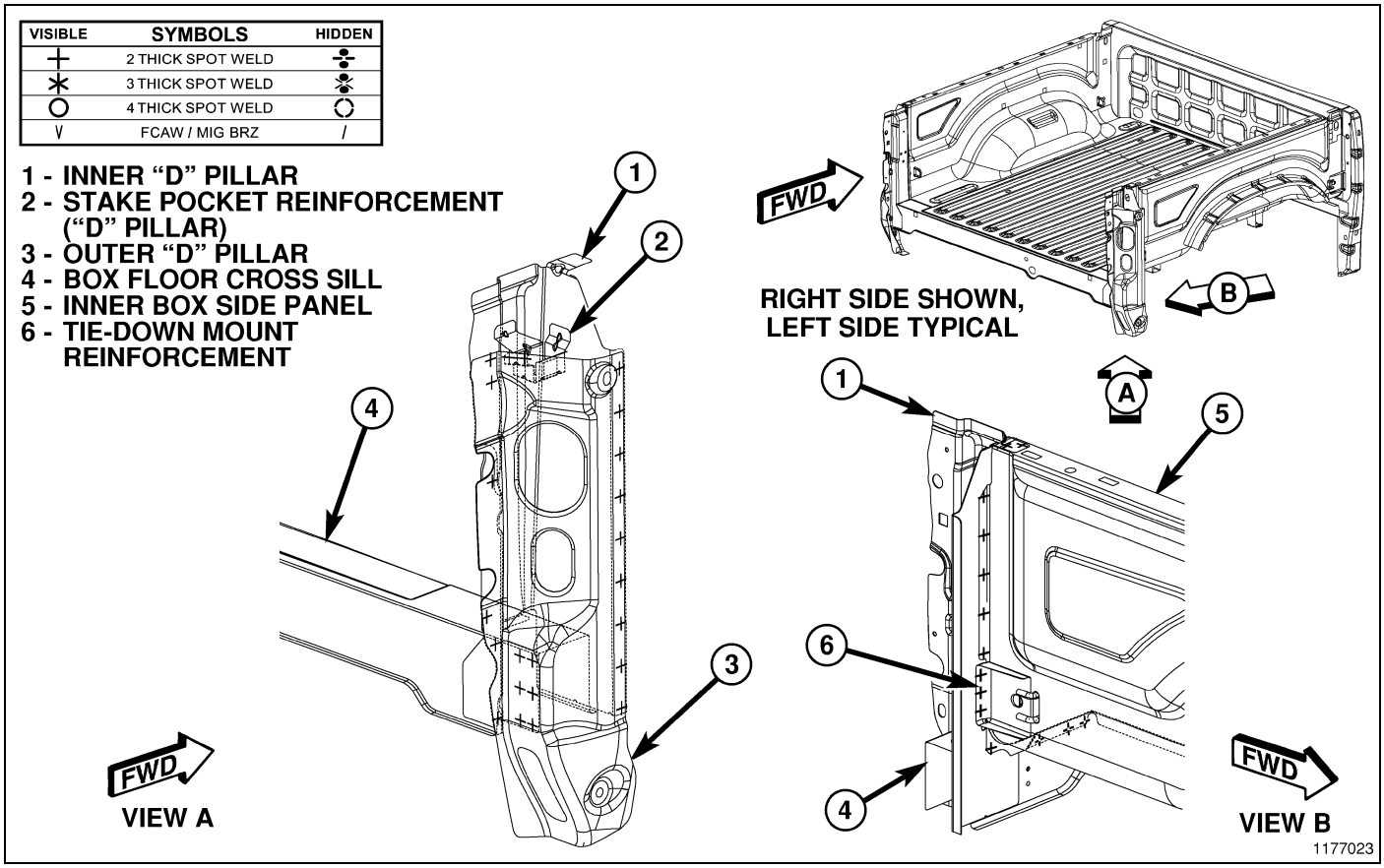

Fig. 260 5.7' Box Tub (1 of 5)

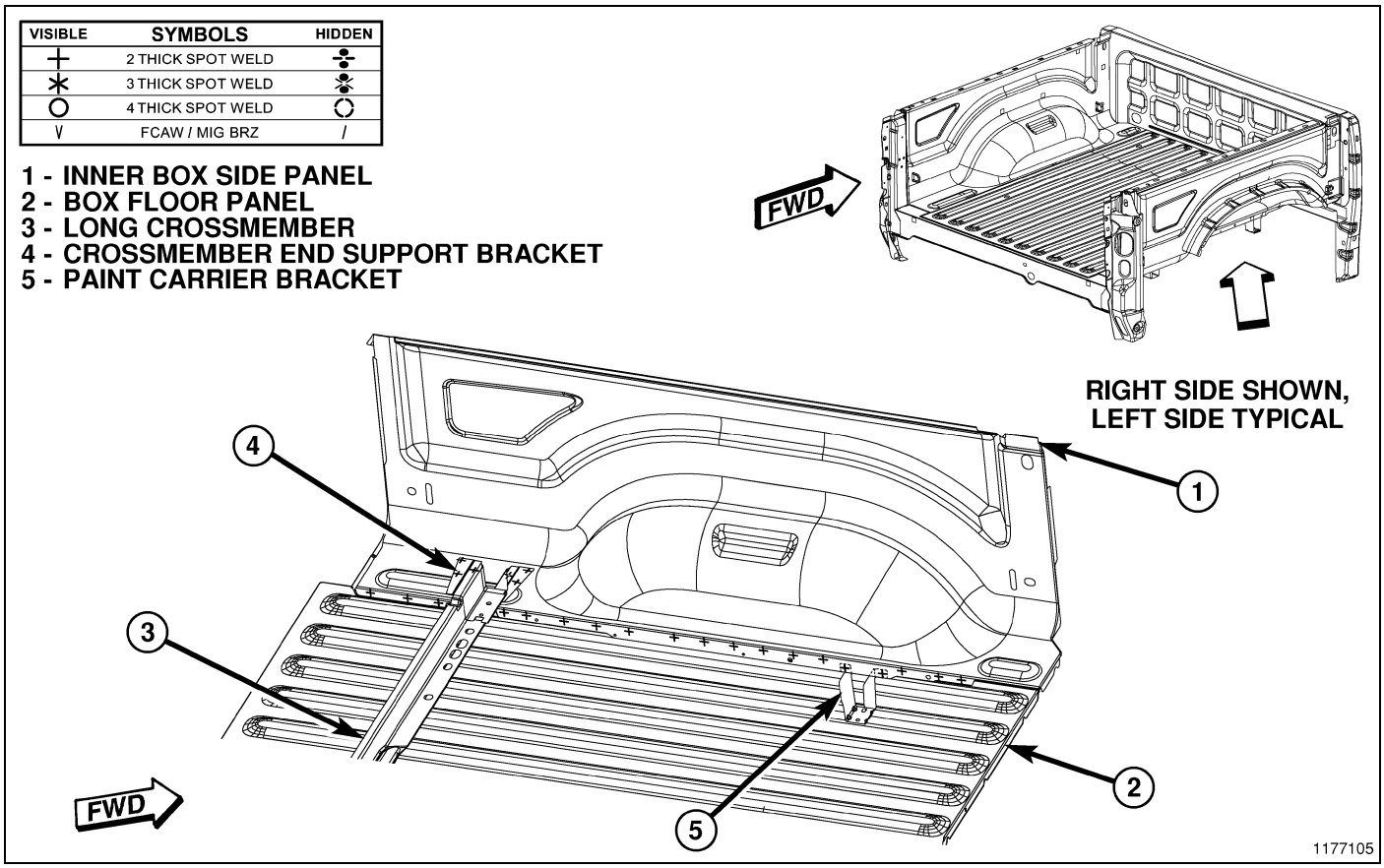

Fig. 261 5.7' Box Tub (2 of 5)

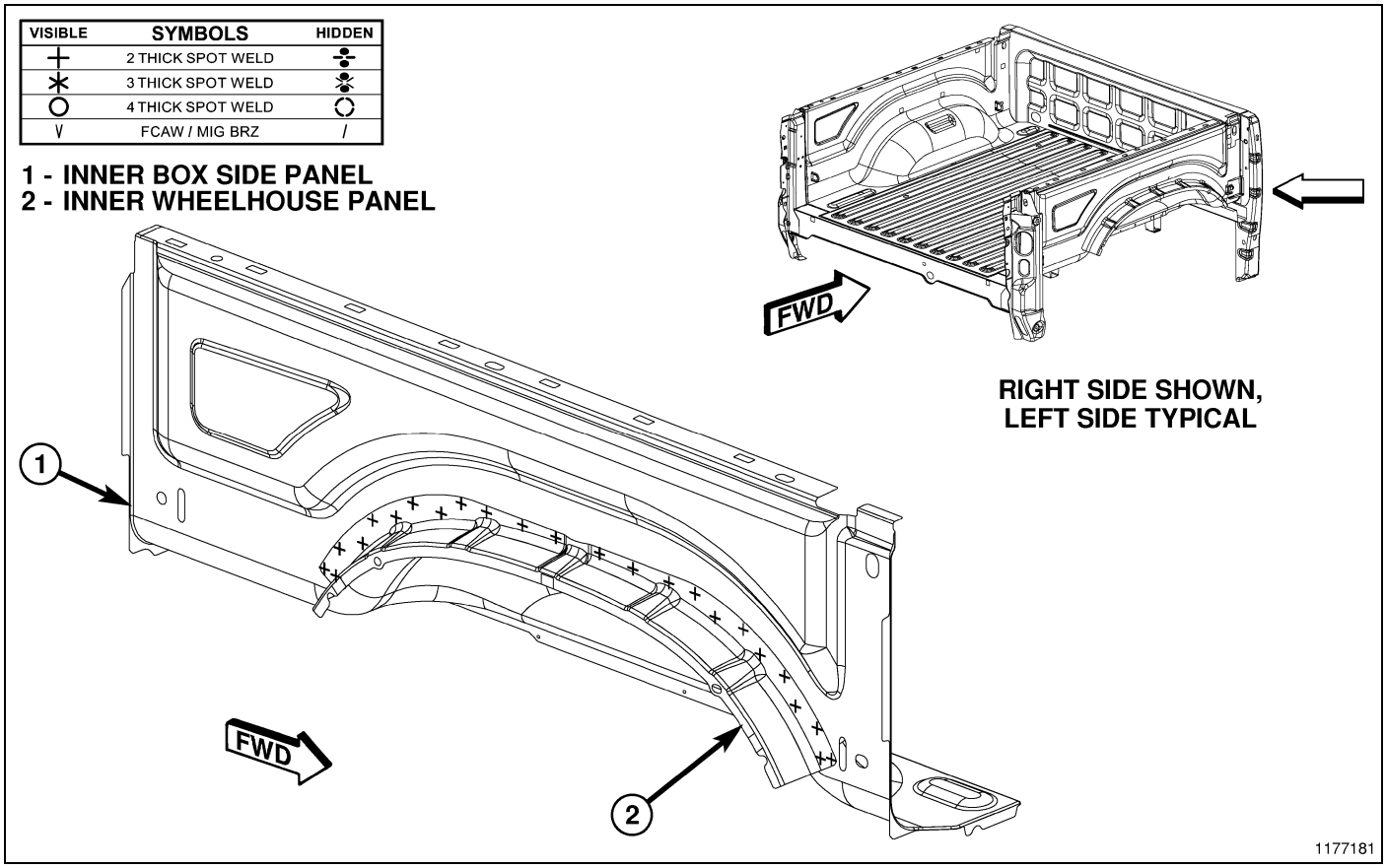

Fig. 262 5.7' Box Tub (3 of 5)

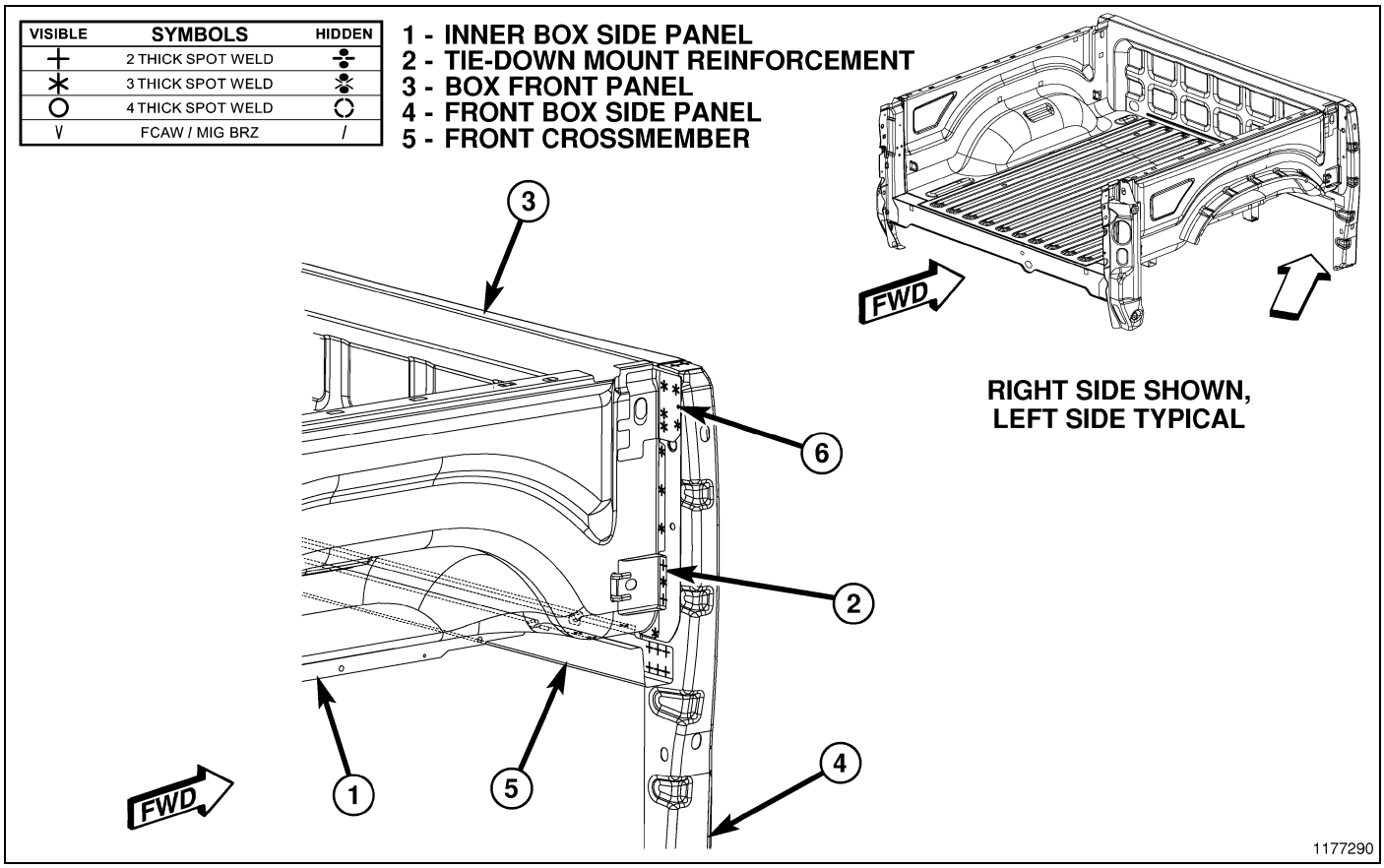

Fig. 263 5.7' Box Tub (4 of 5)

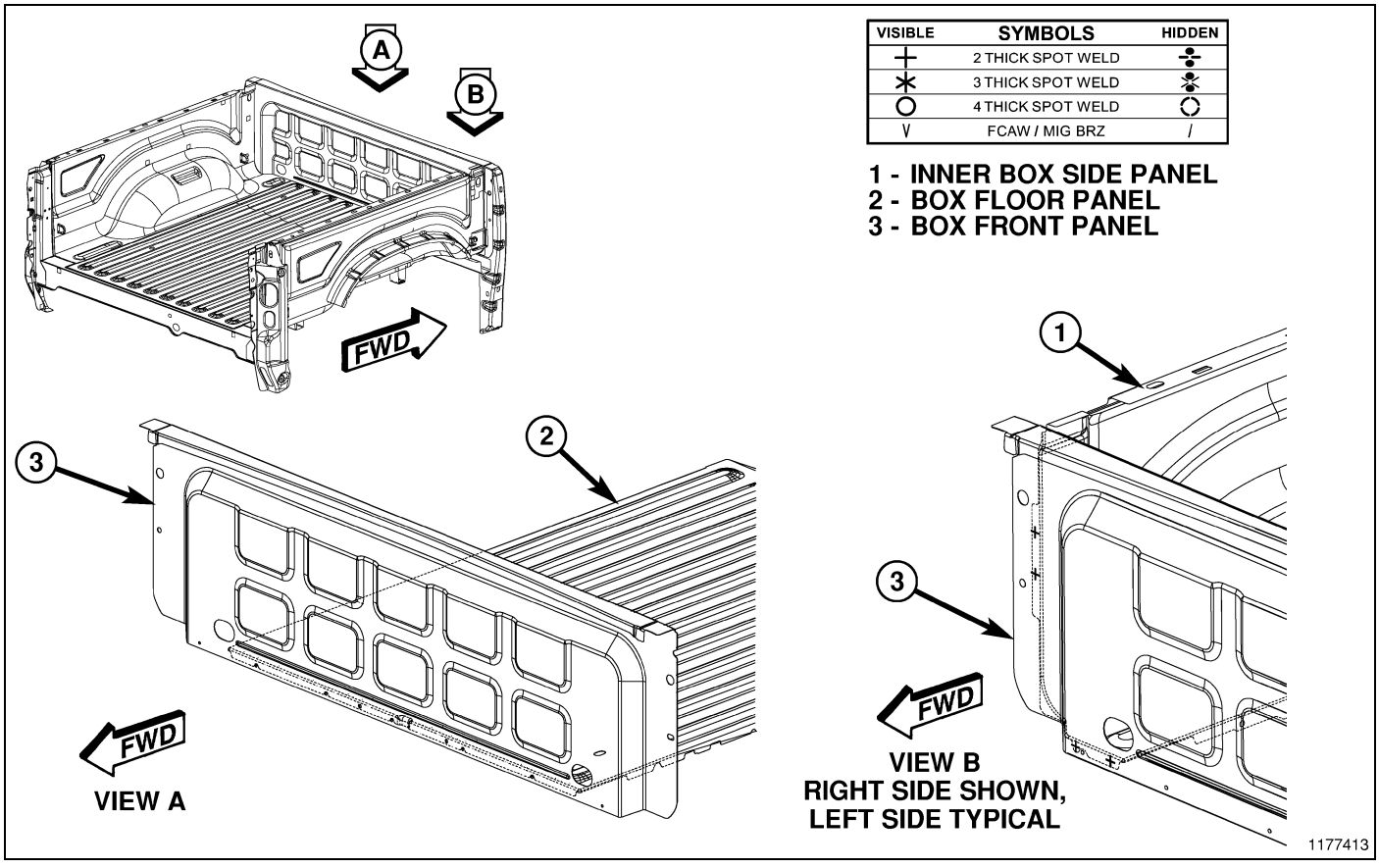

Fig. 264 5.7' Box Tub (5 of 5)

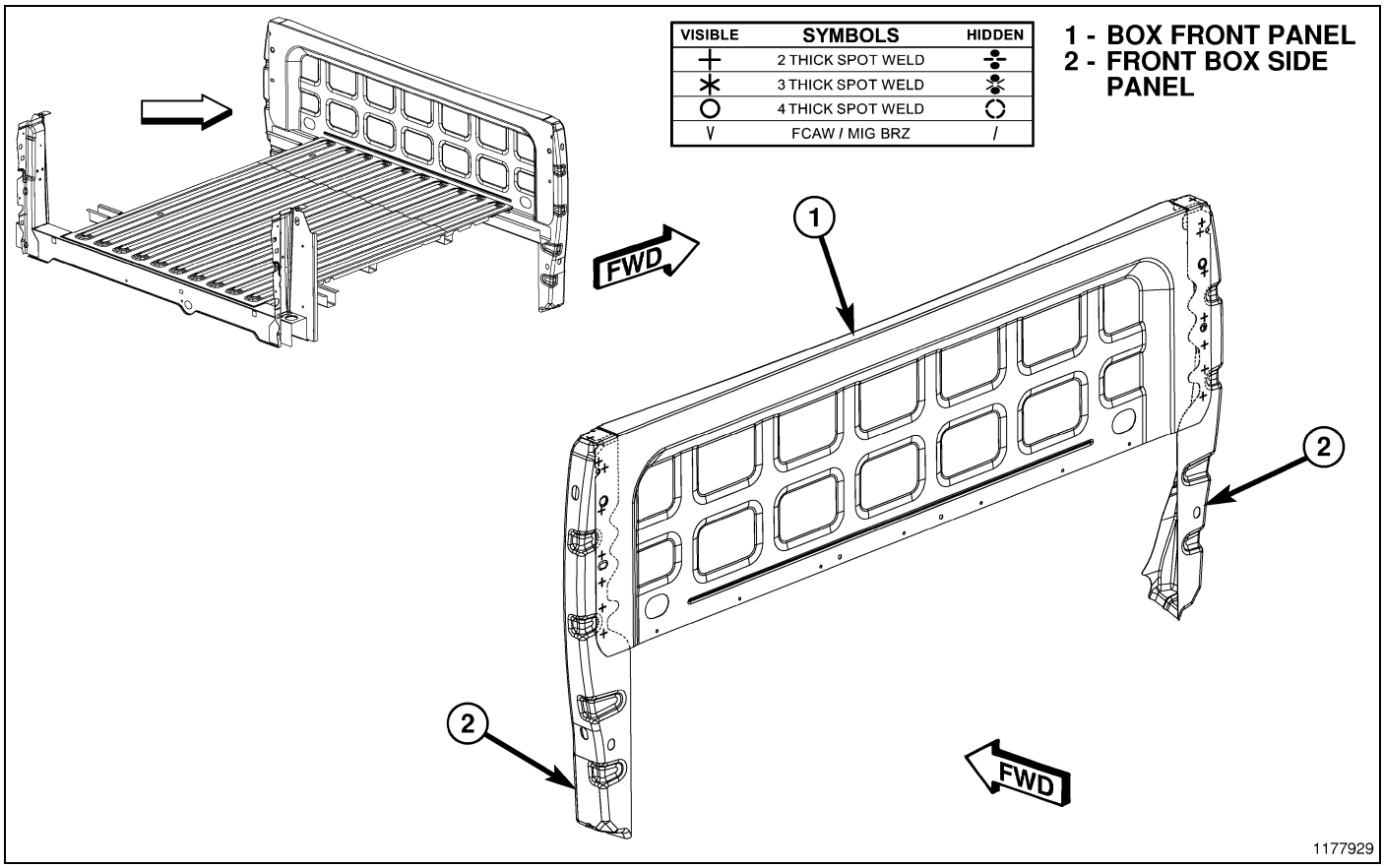

Fig. 265 5.7' Box Floor (1 of 5)

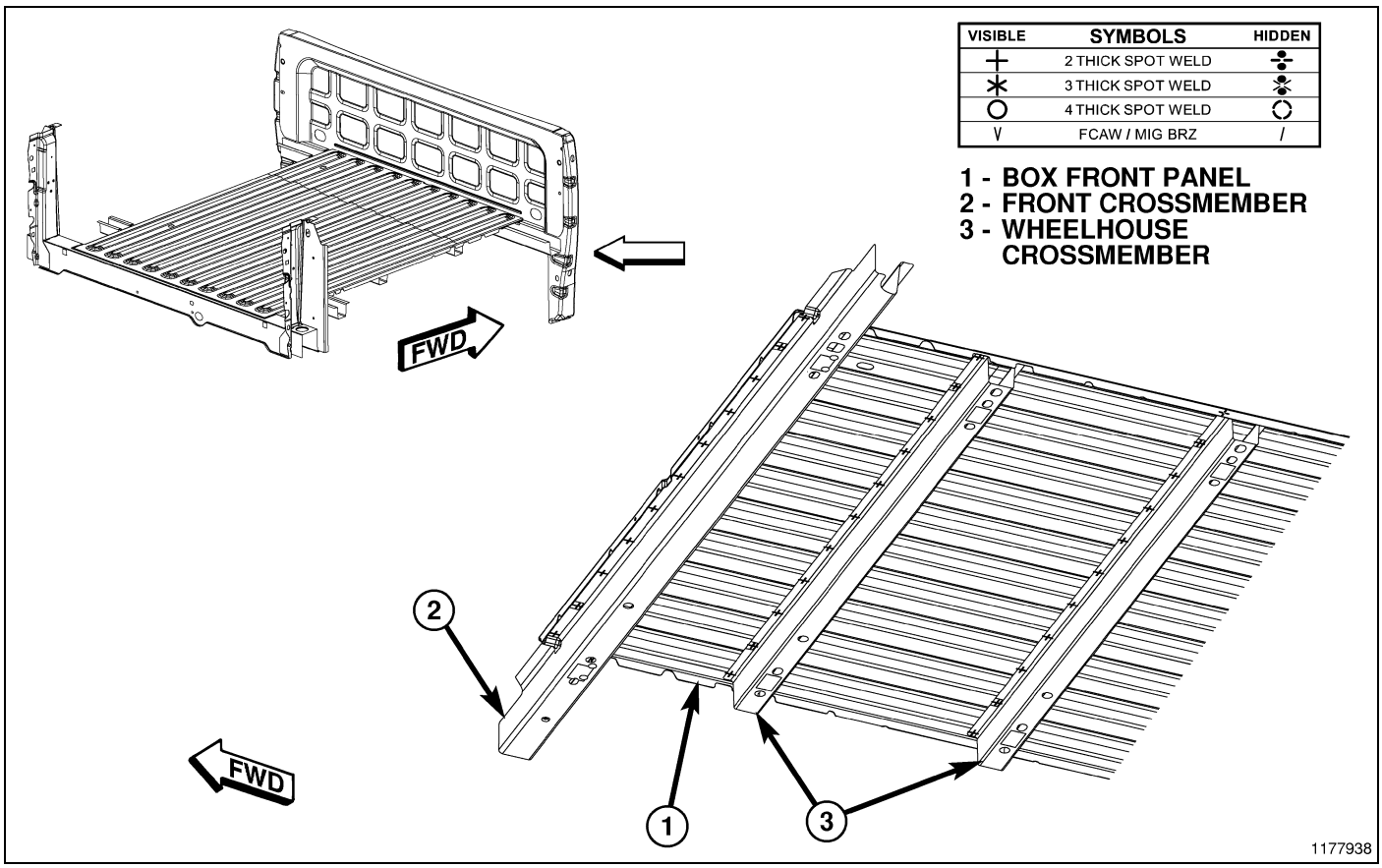

Fig. 266 5.7' Box Floor (2 of 5)

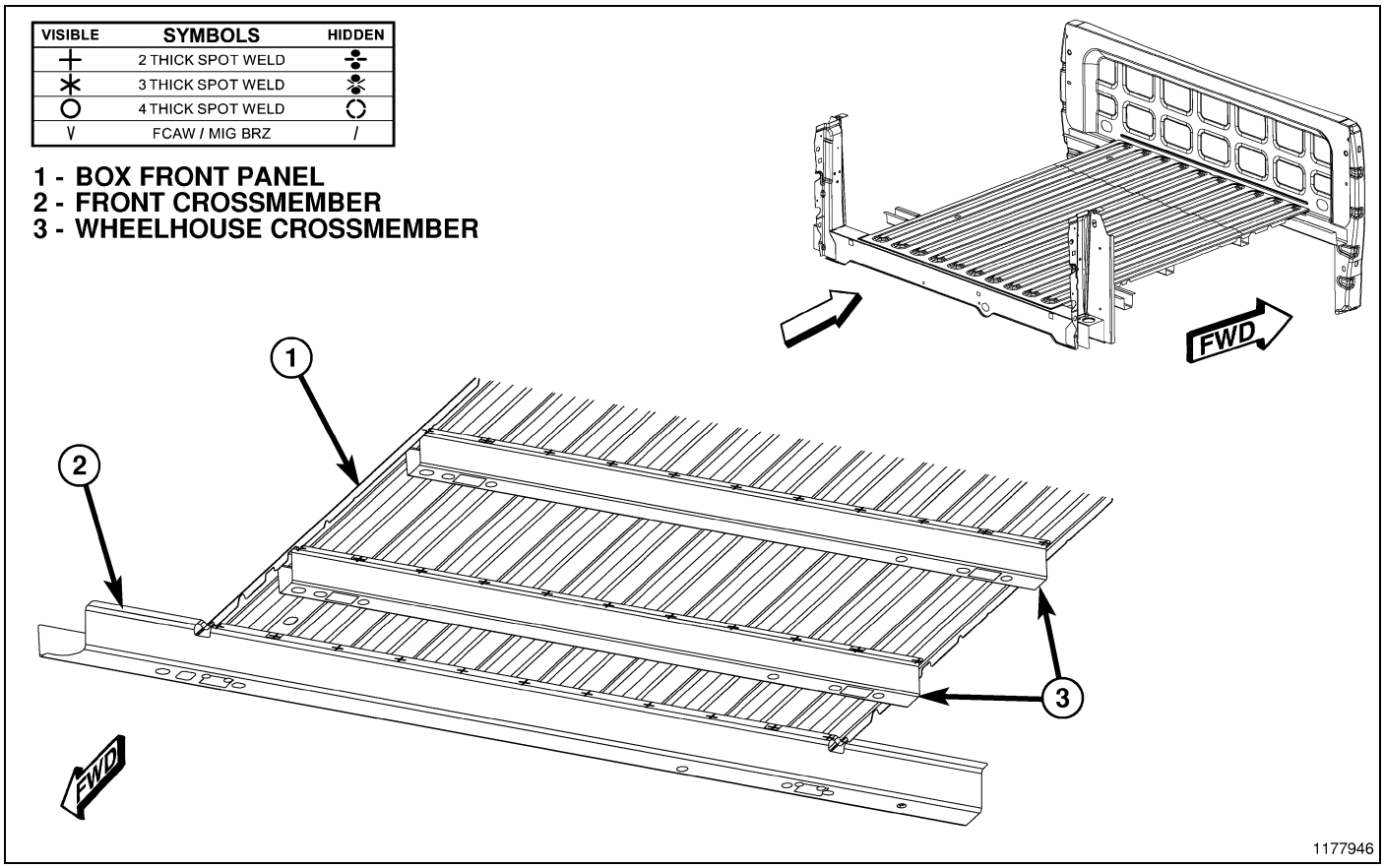

Fig. 267 5.7' Box Floor (3 of 5)

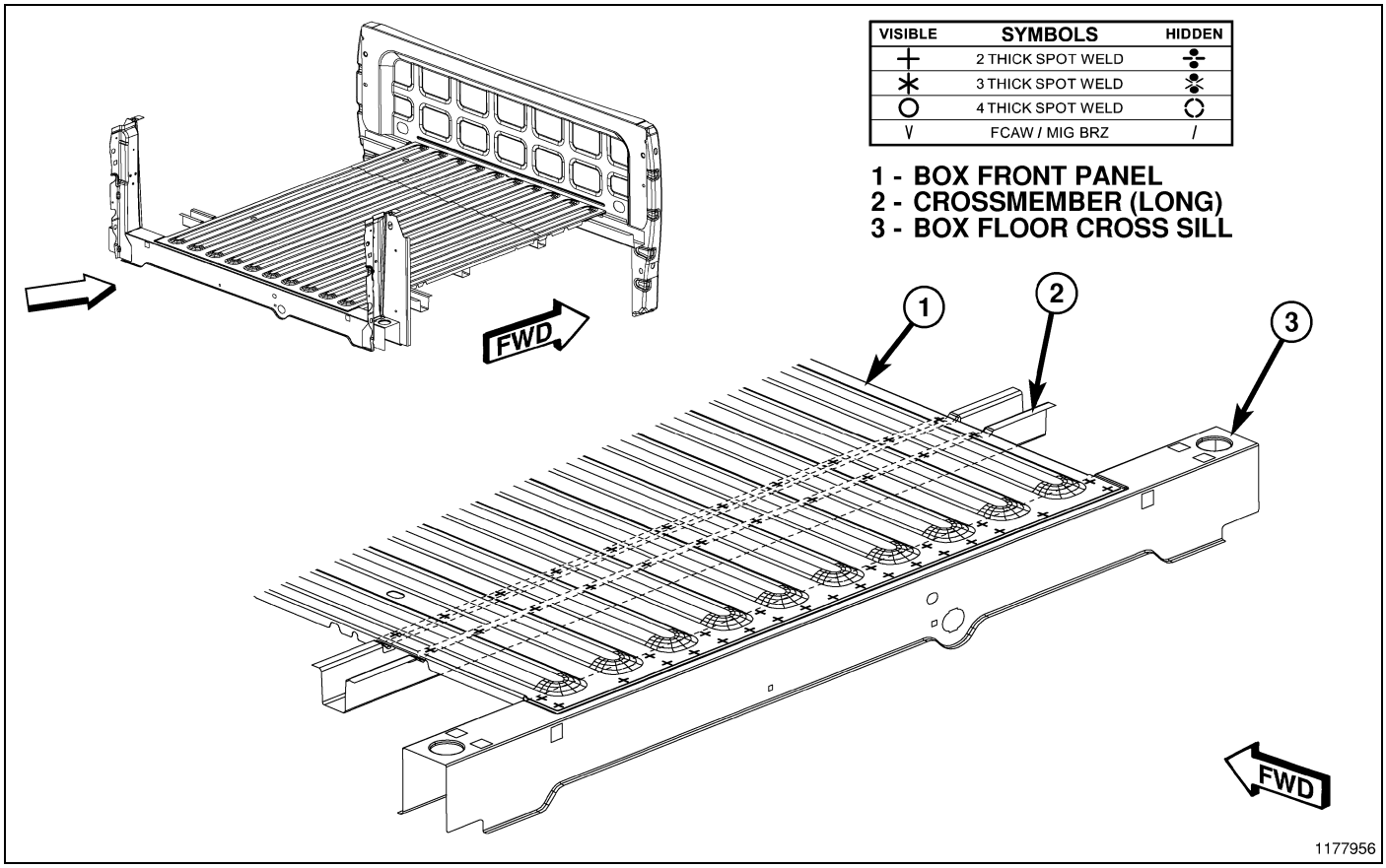

Fig. 268 5.7' Box Floor (4 of 5)

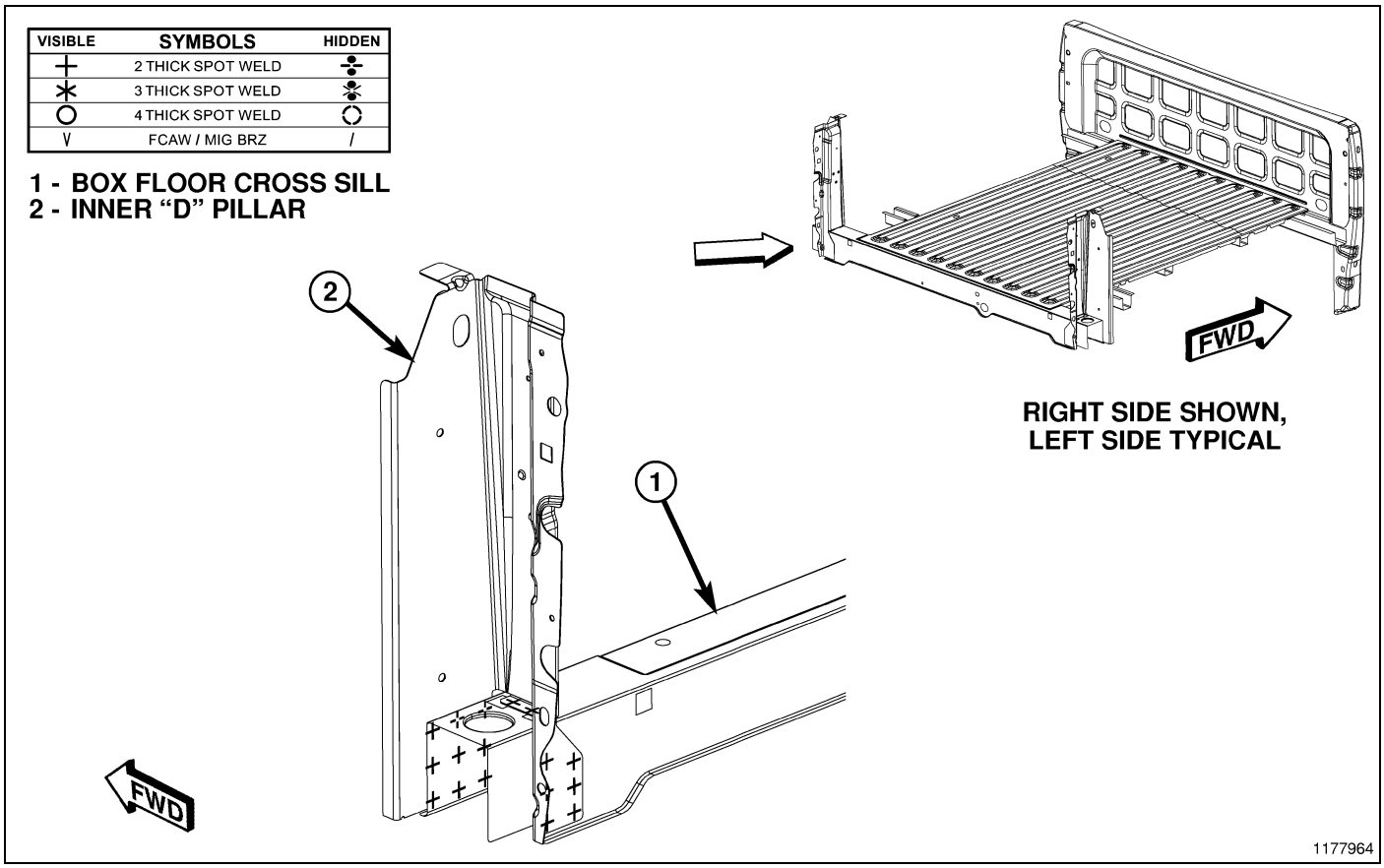

Fig. 269 5.7’ Box Floor (5 of 5)

6.3’ BOX- PARTS IDENTIFICATION LEGEND

ITEM	DESCRIPTION
1	AC TO AA 3/SD S/WELDS (ORD)
2	AB TO AA 4/SD S/WELDS ORD)
3	AD TO AA 4/SD S/WELDS (ORD)
4	AC TO AB 5/SD S/WELDS (ORD)
5	AF TO AE 16 S/WELDS (ORD)
6	AH TO AG 4/SD S/WELDS (ORD)
7	AH TO AJ TO AG 4/SD S/WELDS (ORD)
8	AJ TO AG 4/SD S/WELDS (ORD)
9	AL TO AK 8/SD S/WELDS (ORD)
10	AM TO AK 6/SD S/WELDS (ORD)
11	AP TO AN 4/SD S/WELDS (ORD)
12	AR TO AN 8/SD S/WELDS (ORD)
13	AT TO AS 4/SD S/WELDS (ORD)
14	AU TO AV 4/SD S/WELDS (ORD)
15	AW TO AS 2/SD S/WELDS (ORD)
16	AX TO AS 1/SD PROJ WELDS (ORD)
17	AD TO AA 4/SD S/WELDS (ORD)
AA	PANEL - BOX SIDE INNER 6.5 FRONT RIGHT -

6.3' BOX- PARTS IDENTIFICATION LEGEND, continued

ITEM	DESCRIPTION
AA	PANEL - BOX SIDE INNER 6.5 FRONT LEFT -
AB	REINFORCEMENT - STAKE POCKET FRONT INNER RIGHT -
AB	REINFORCEMENT - STAKE POCKET FRONT INNER LEFT -
AC	REINFORCEMENT - STAKE POCKET FRONT OUTER RIGHT -
AC	REINFORCEMENT - STAKE POCKET FRONT OUTER LEFT -
AD	REINFORCEMENT ASSEMBLY - TIE DOWN MOUNTING -
AE	CROSSMEMBER - FRONT -
AF	REINFORCEMENT - FRONT CROSSMEMBER -
AG	SILL - CROSS BOX FLOOR REAR -
AK	CROSSMEMBER - LONG -
AL	55276510AA-BRACKET-CROSSMEMBER END SUPPORT
AM	55276456AA-TAPPING PLATE WHEELHOUSE REAR
AP	55275534AA-GUSSET-CROSSMEMBER SILL BOX FLOOR REAR
AR	TAPPING PLATE - MISCELLANEOUS SHAPE 1 EXTRUSION -

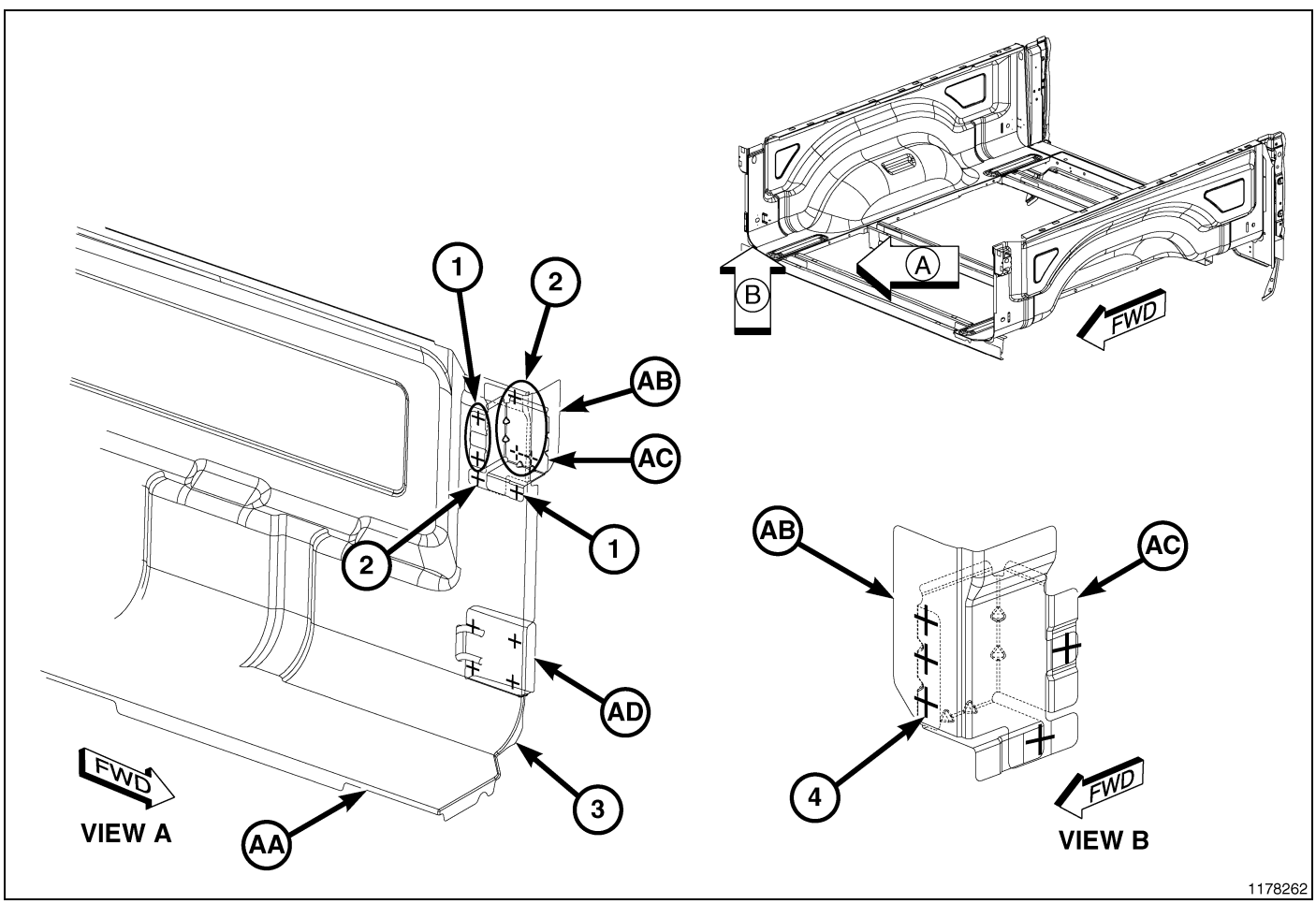

Fig. 270 6.3' Box (1 of 6)

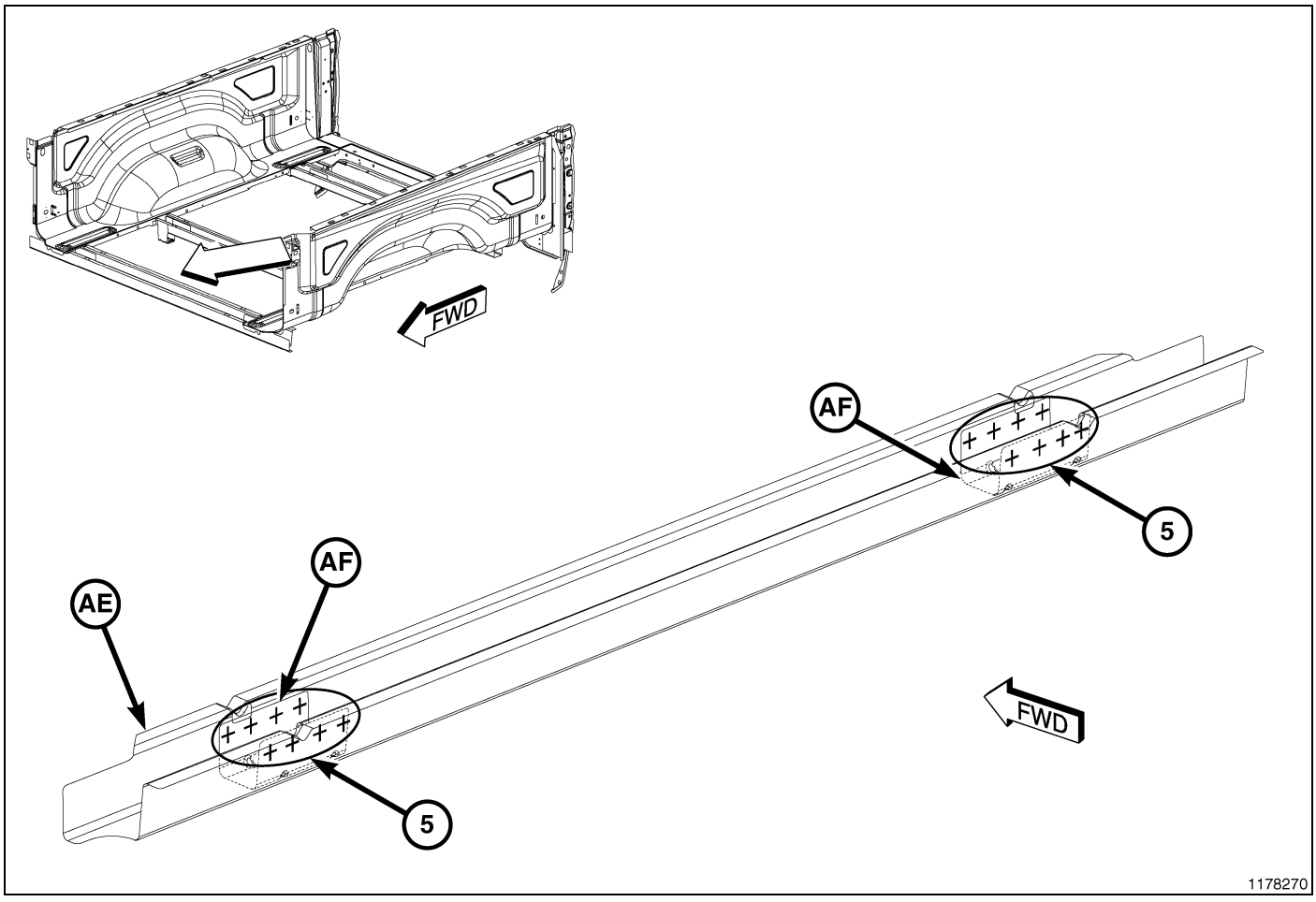

Fig. 271 6.3' Box (2 of 6)

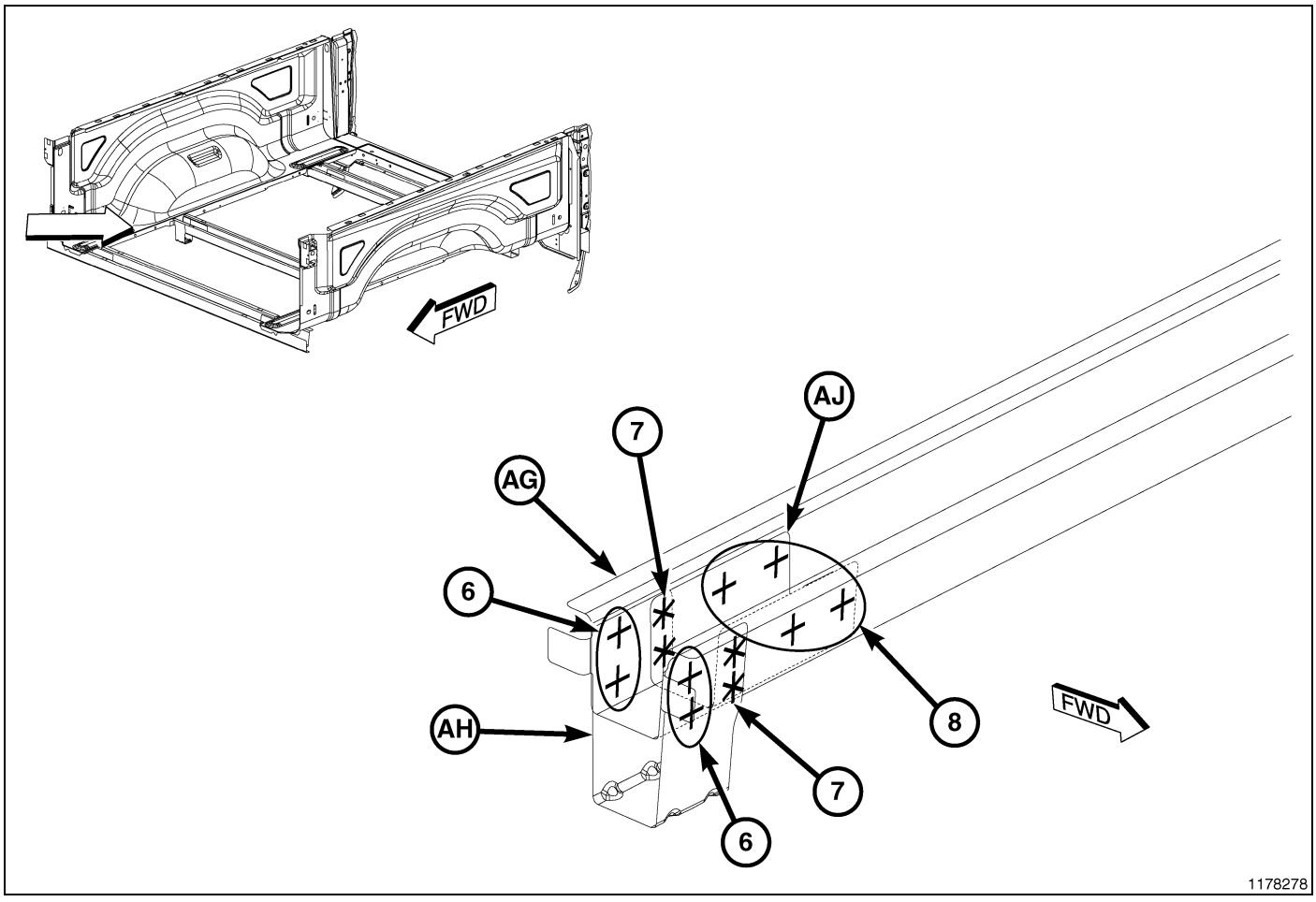

Fig. 272 6.3' Box (3 of 6)

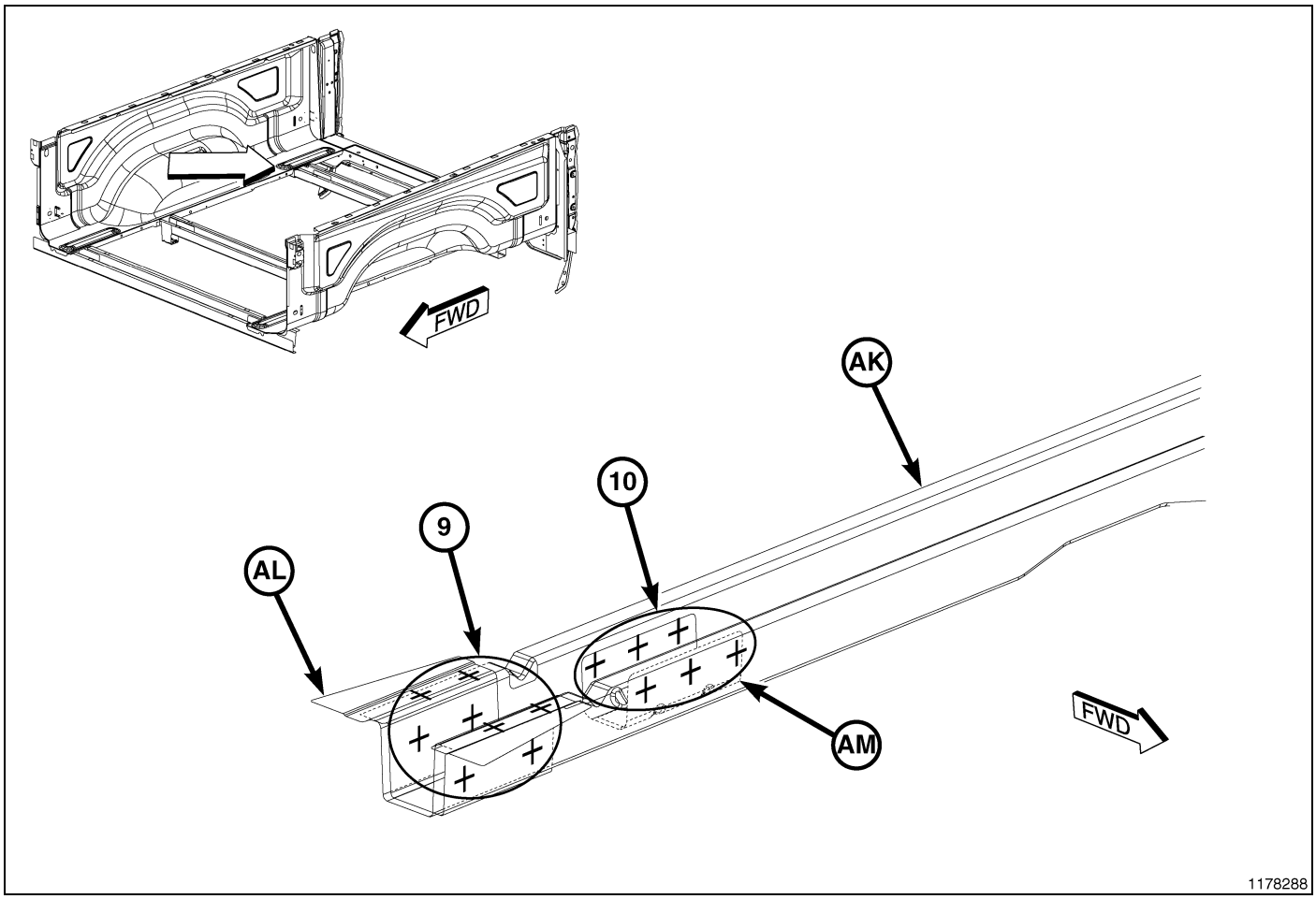

Fig. 273 6.3' Box (4 of 6)

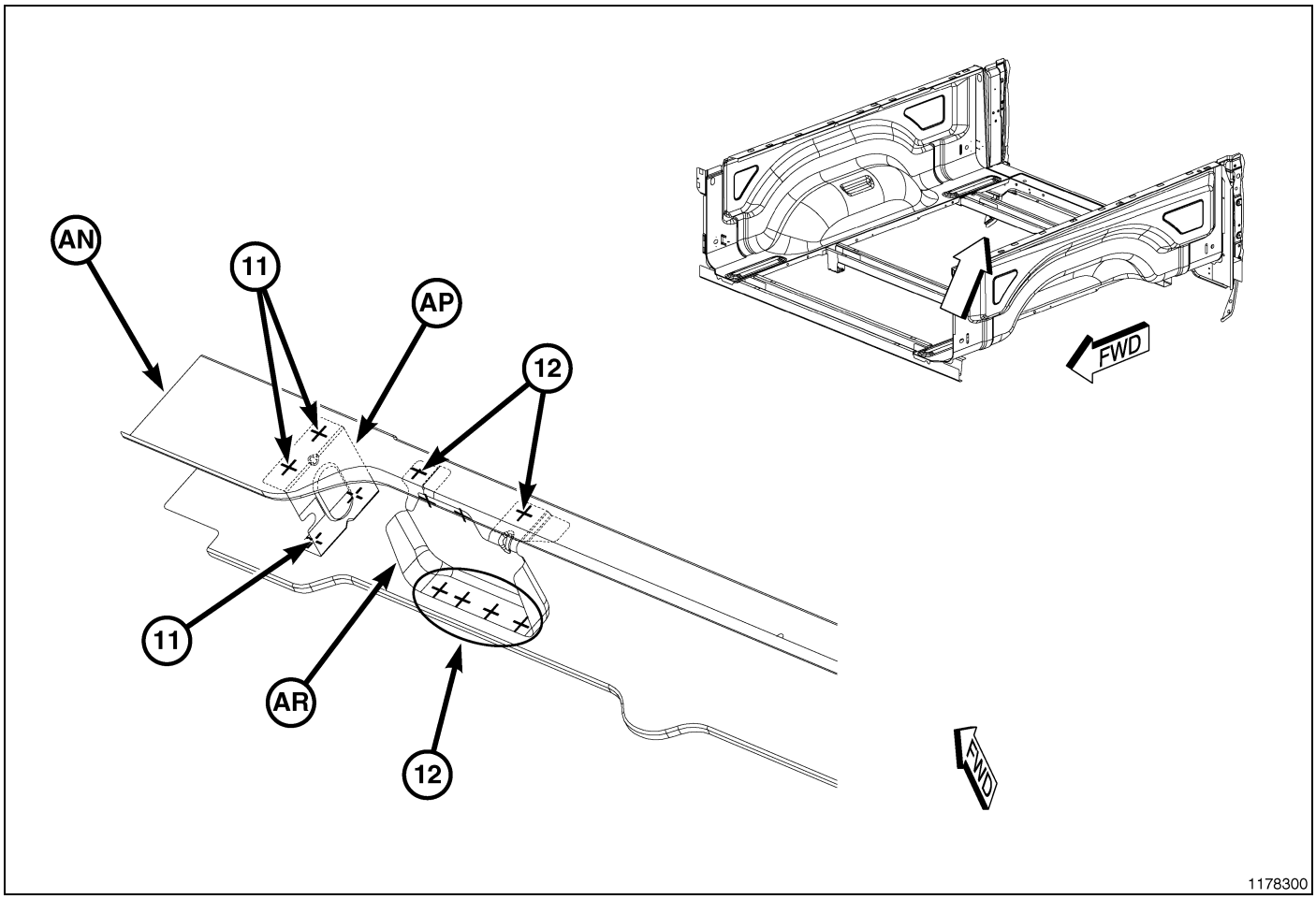

Fig. 274 6.3' Box (5 of 6)

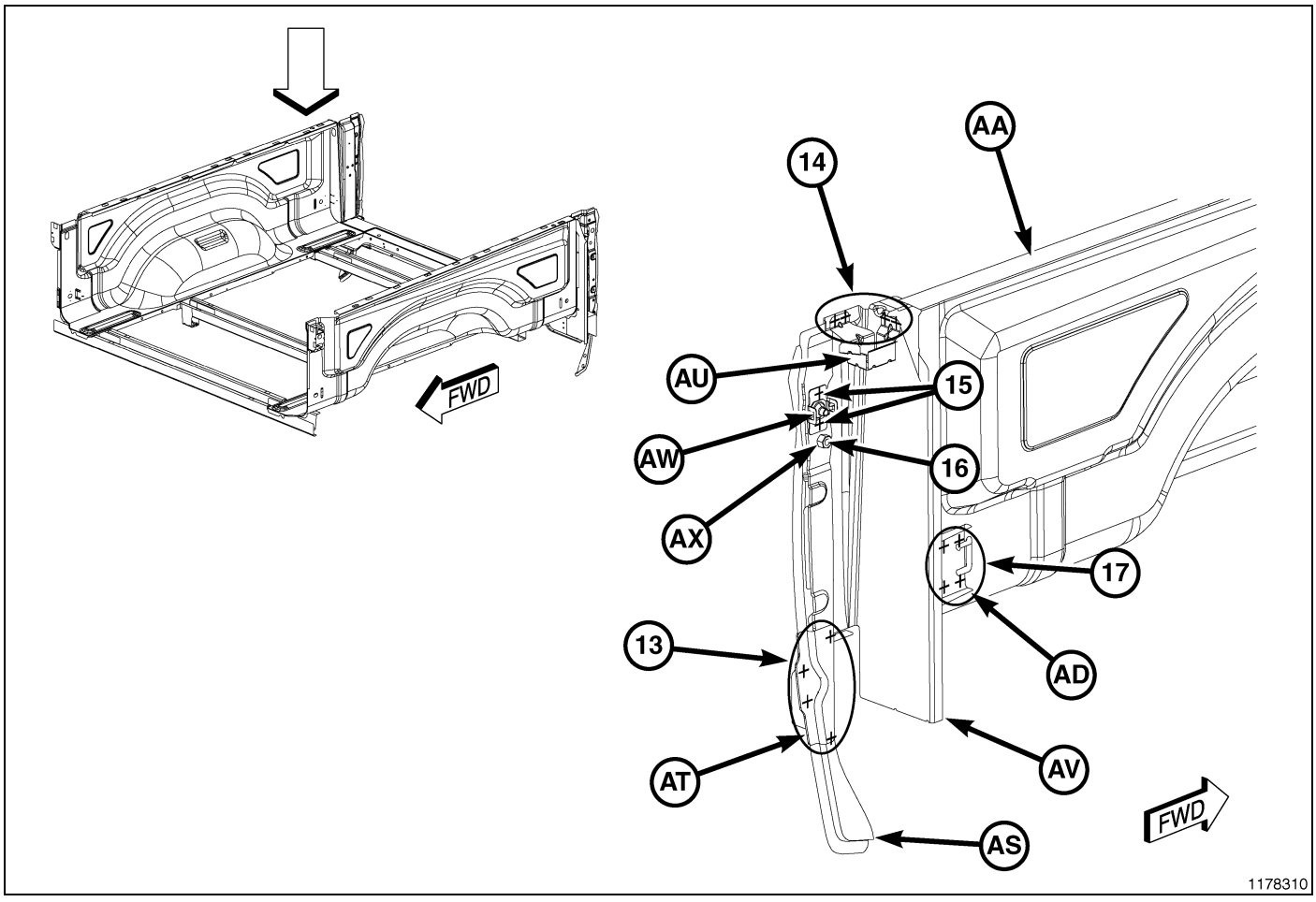

Fig. 275 6.3' Box (6 of 6)

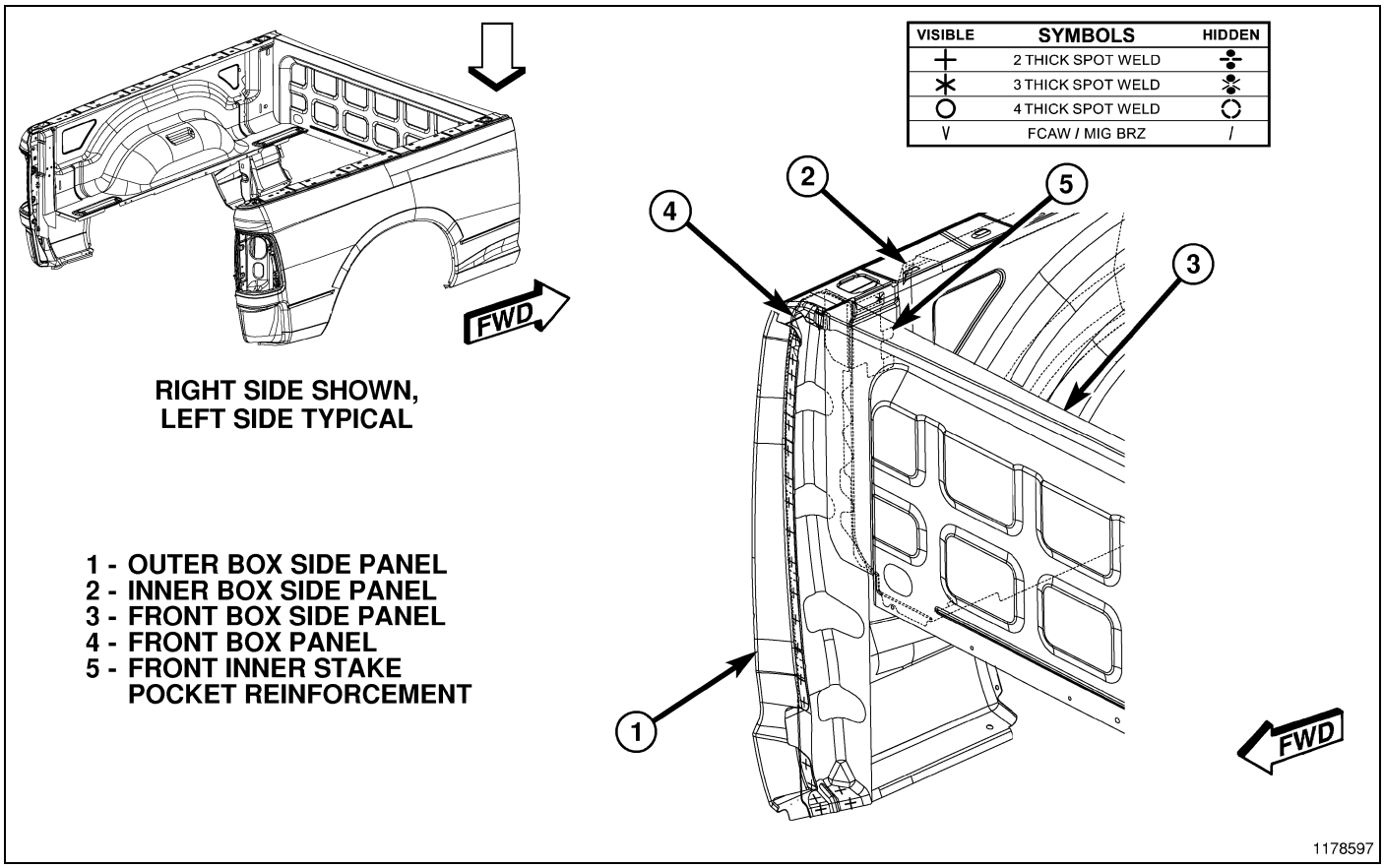

Fig. 276 6.3' Box Body in White (1 of 4)

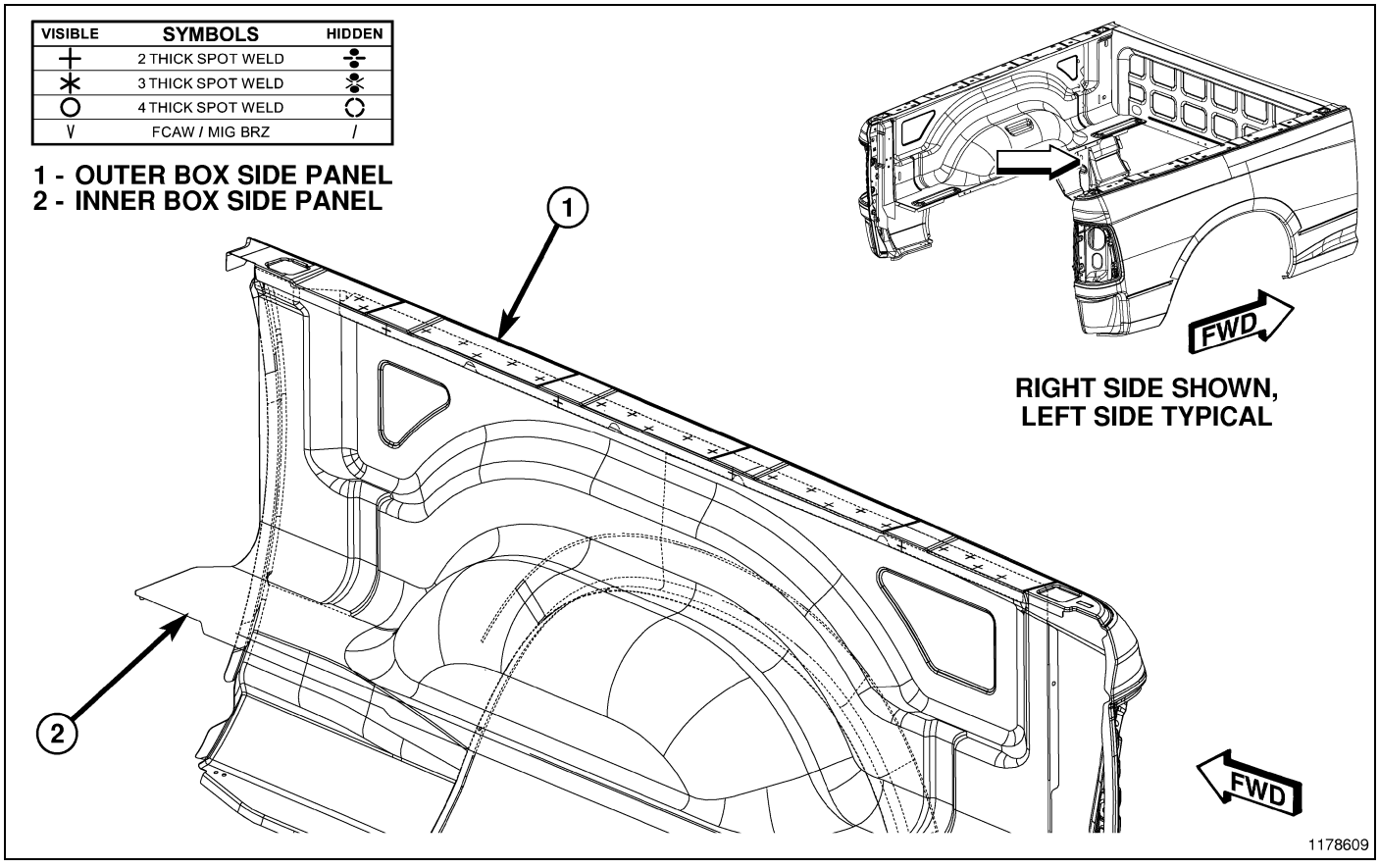

Fig. 277 6.3' Box Body in White (2 of 4)

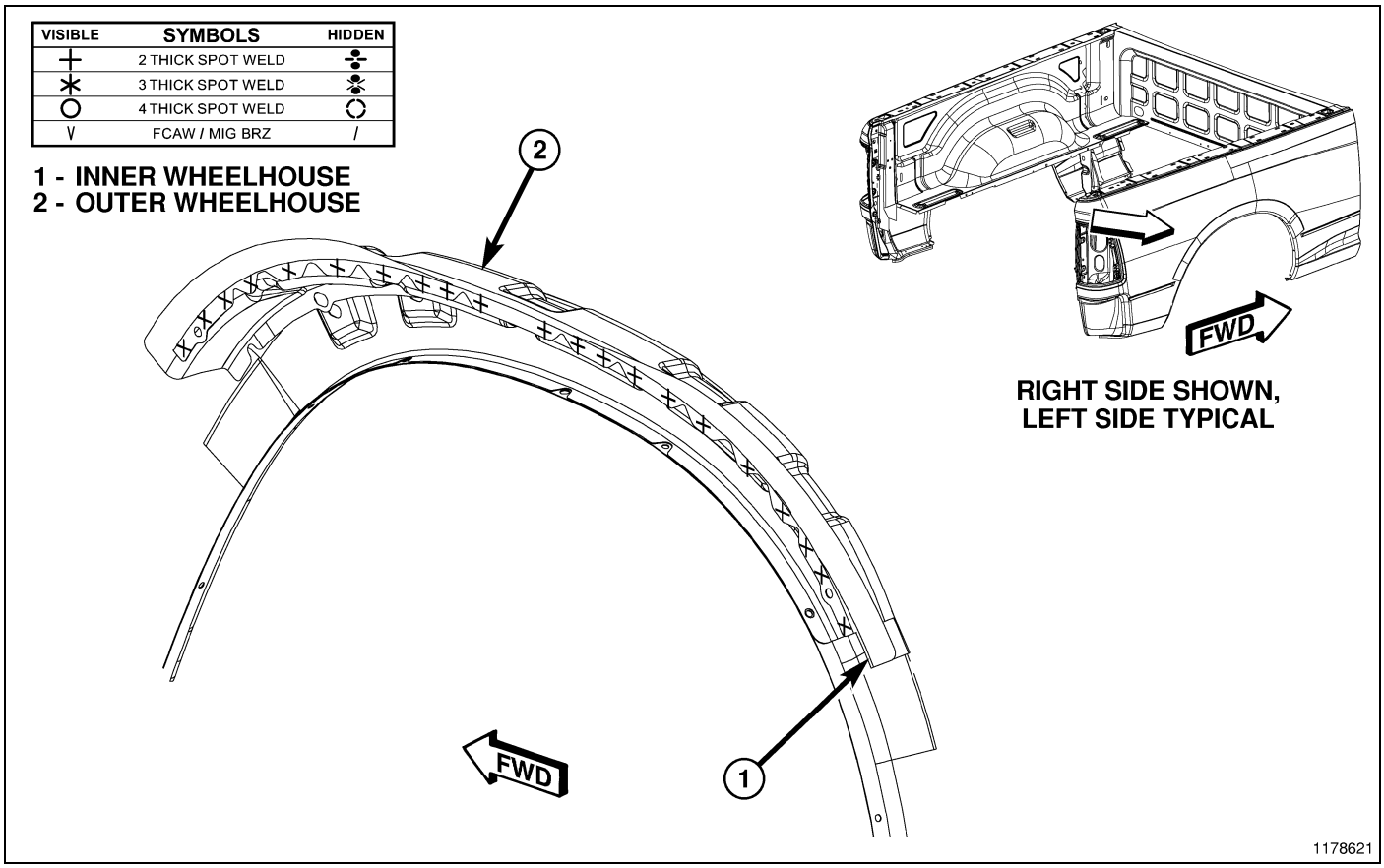

Fig. 278 6.3' Box Body in White (3 of 4)

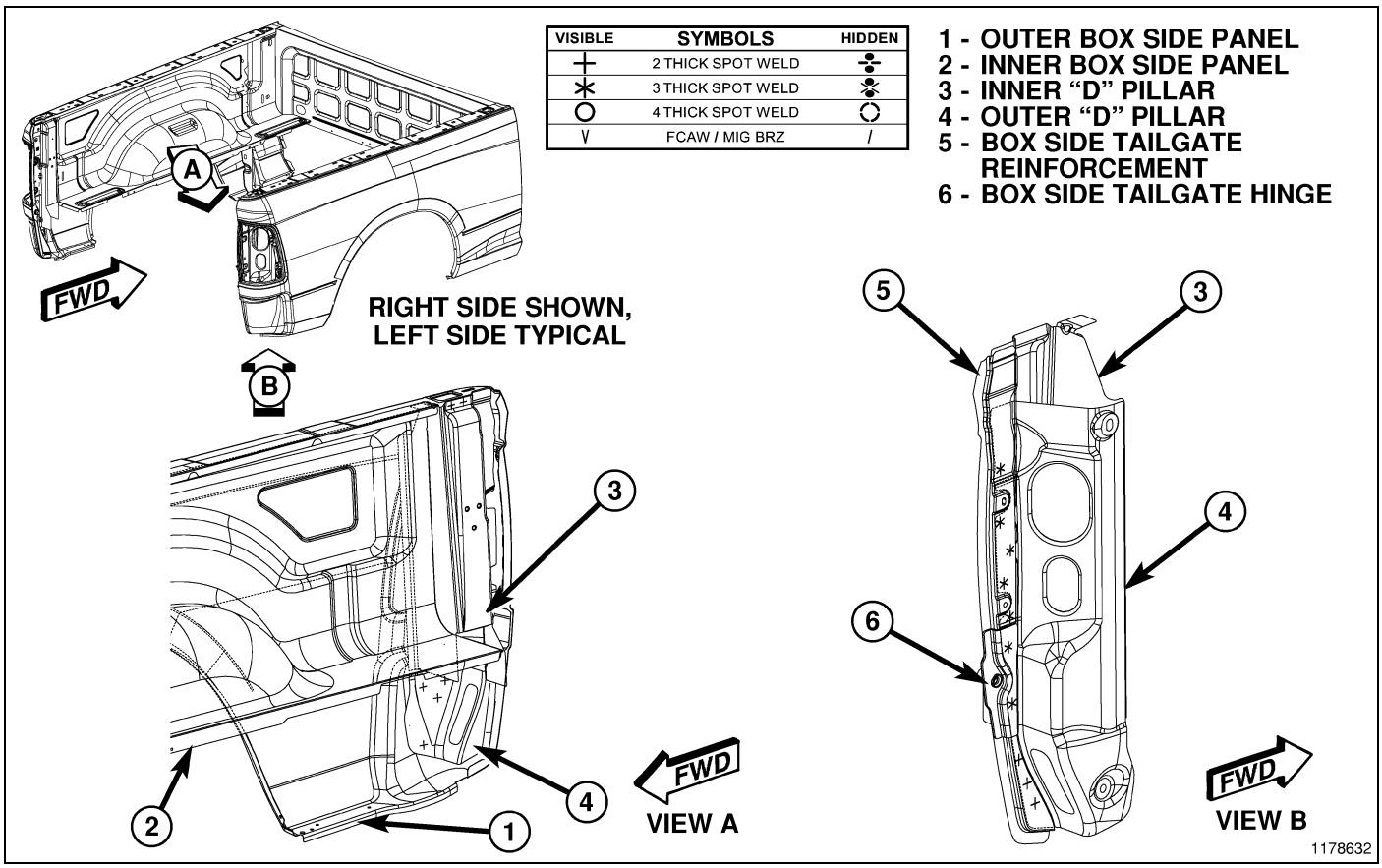

Fig. 279 6.3' Box Body in White (4 of 4)

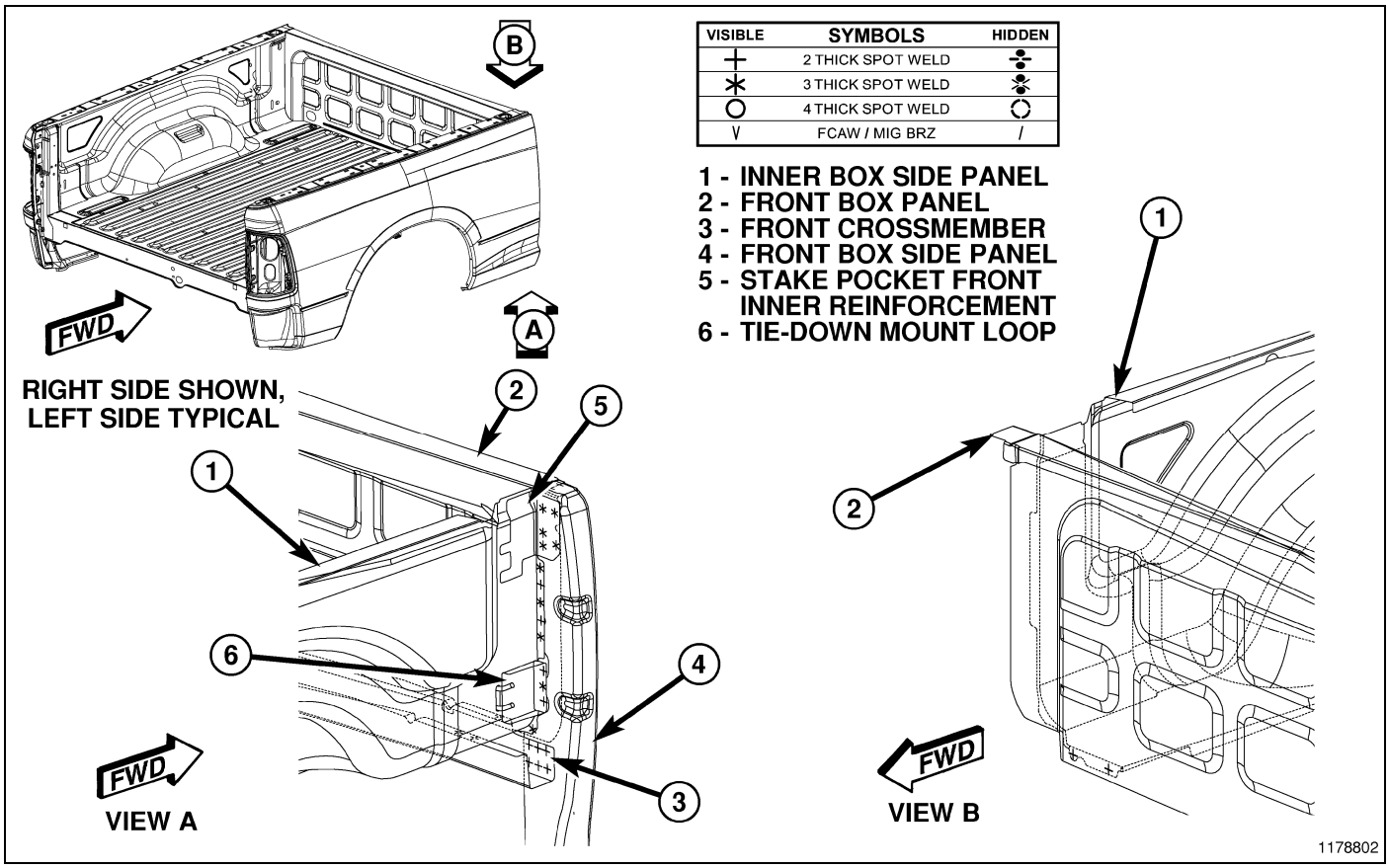

Fig. 280 6.3' Box Tub (1 of 6)

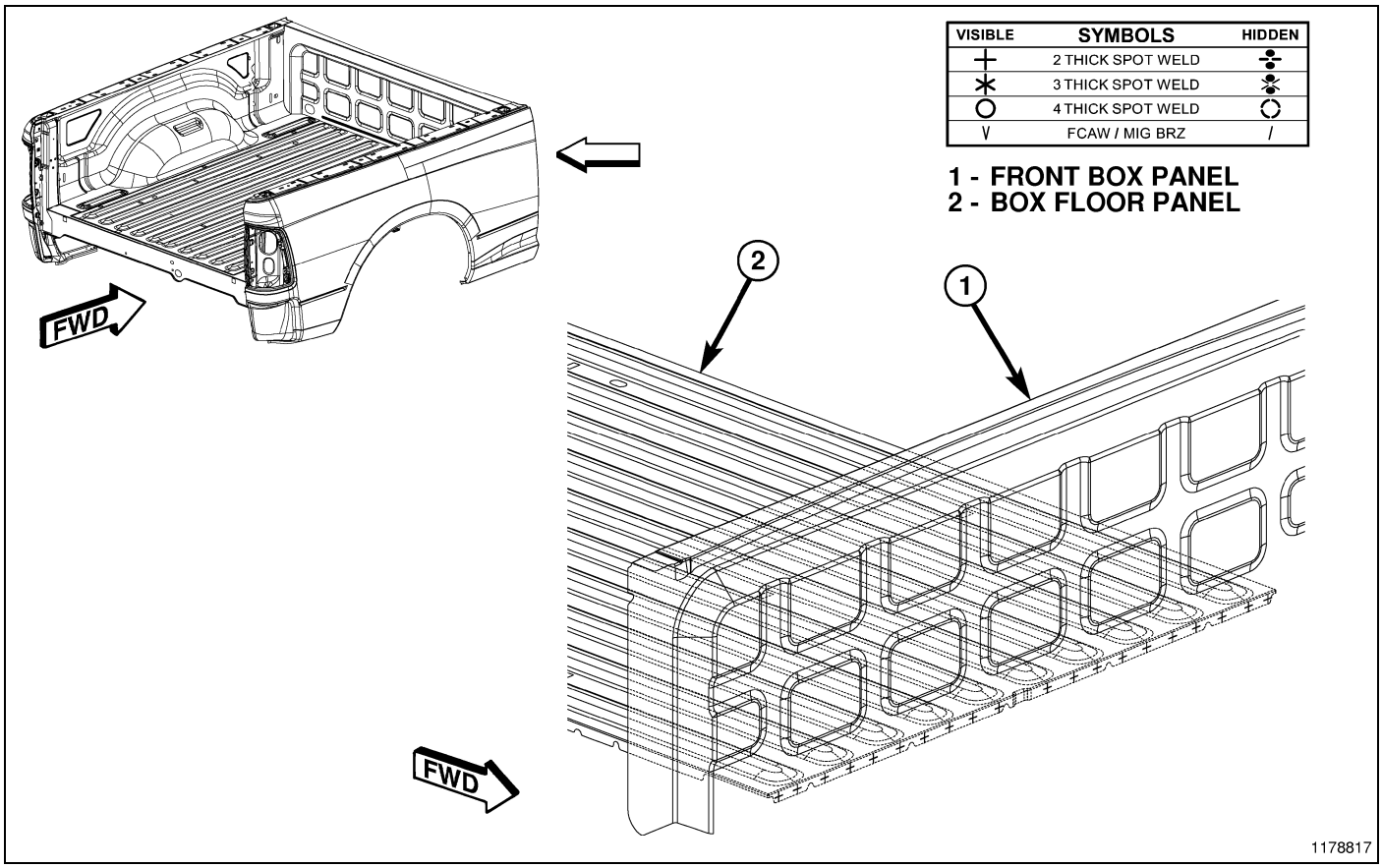

Fig. 281 6.3' Box Tub (2 of 6)

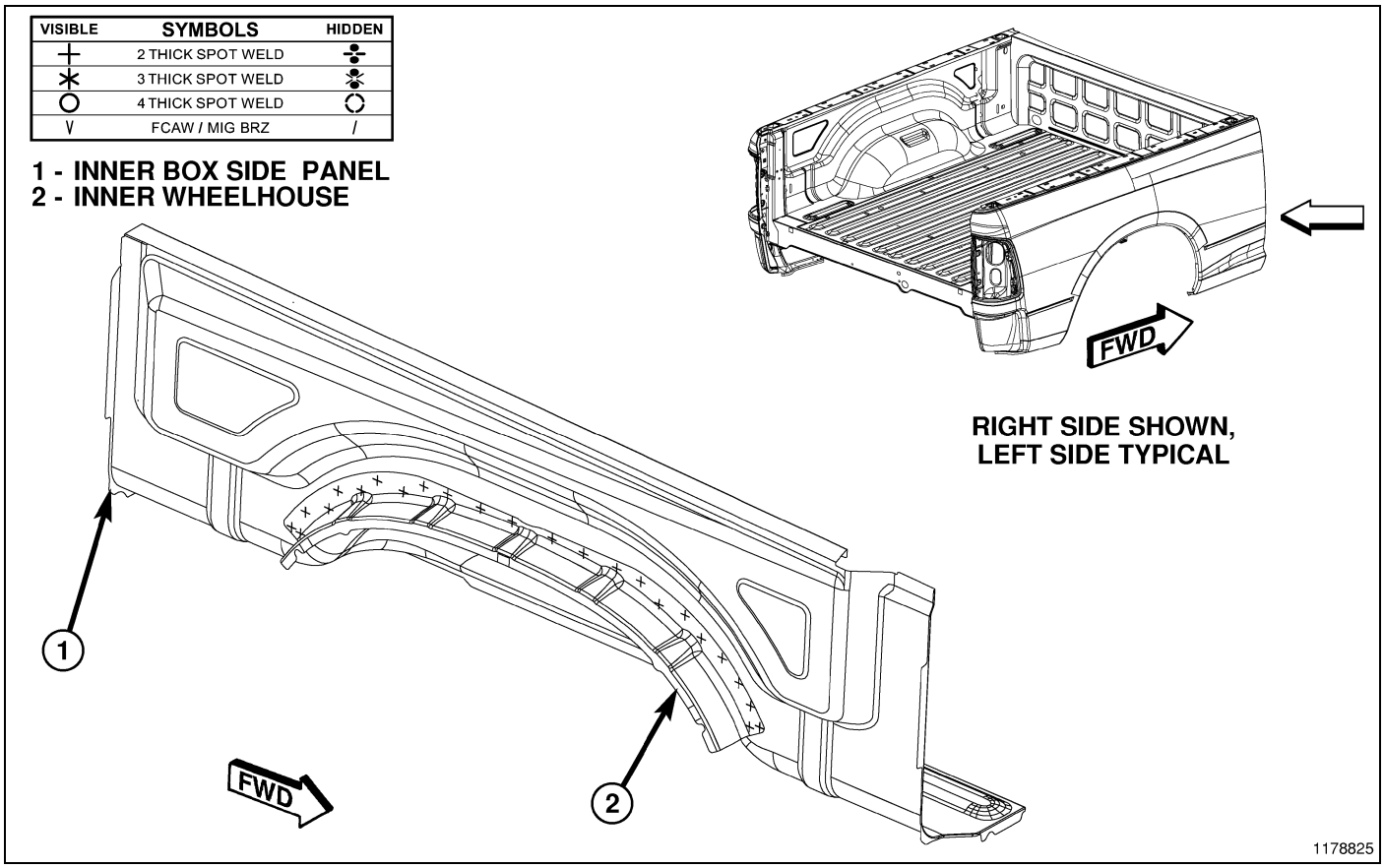

Fig. 282 6.3' Box Tub (3 of 6)

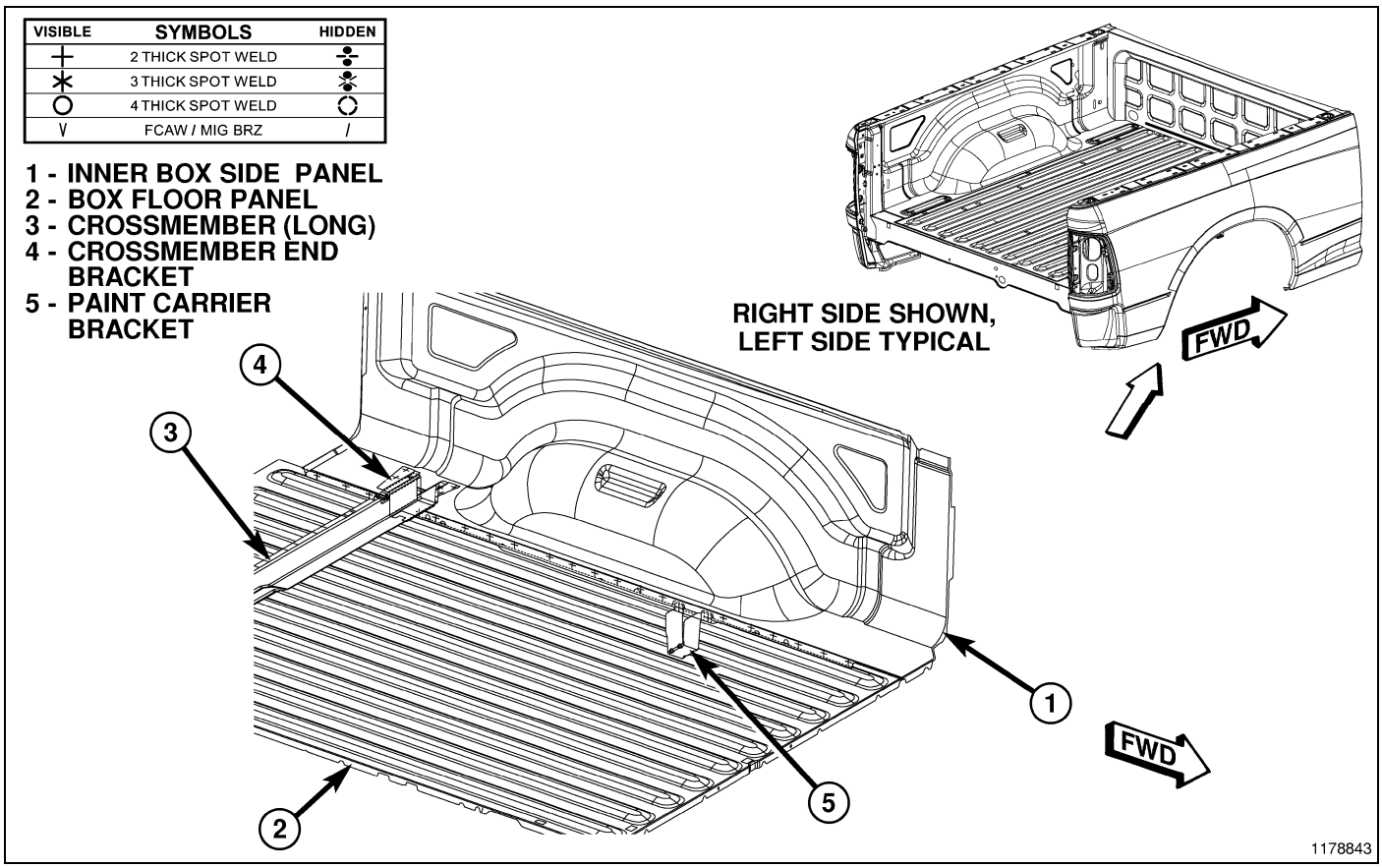

Fig. 283 6.3' Box Tub (4 of 6)

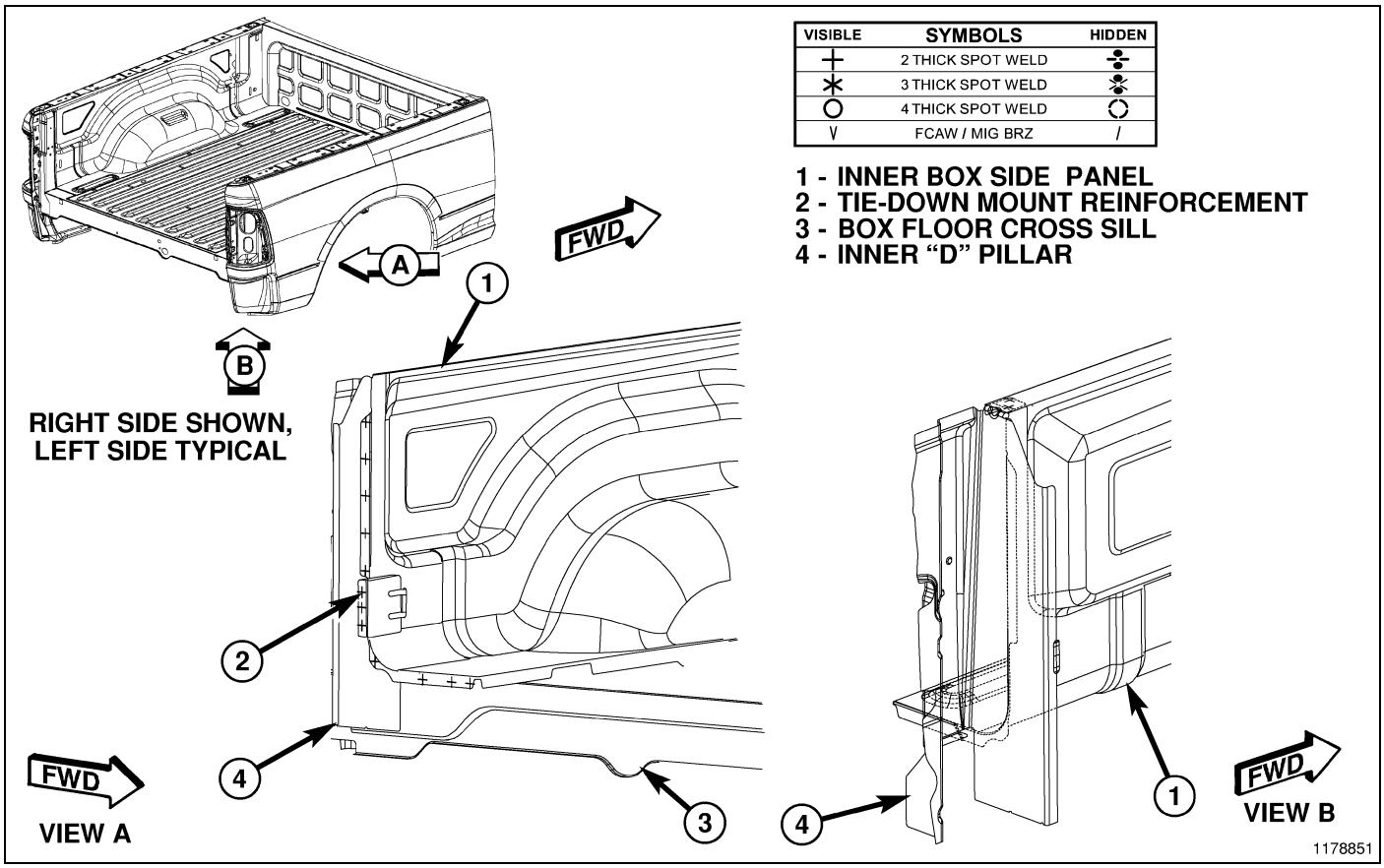

Fig. 284 6.3’ Box Tub (5 of 6)

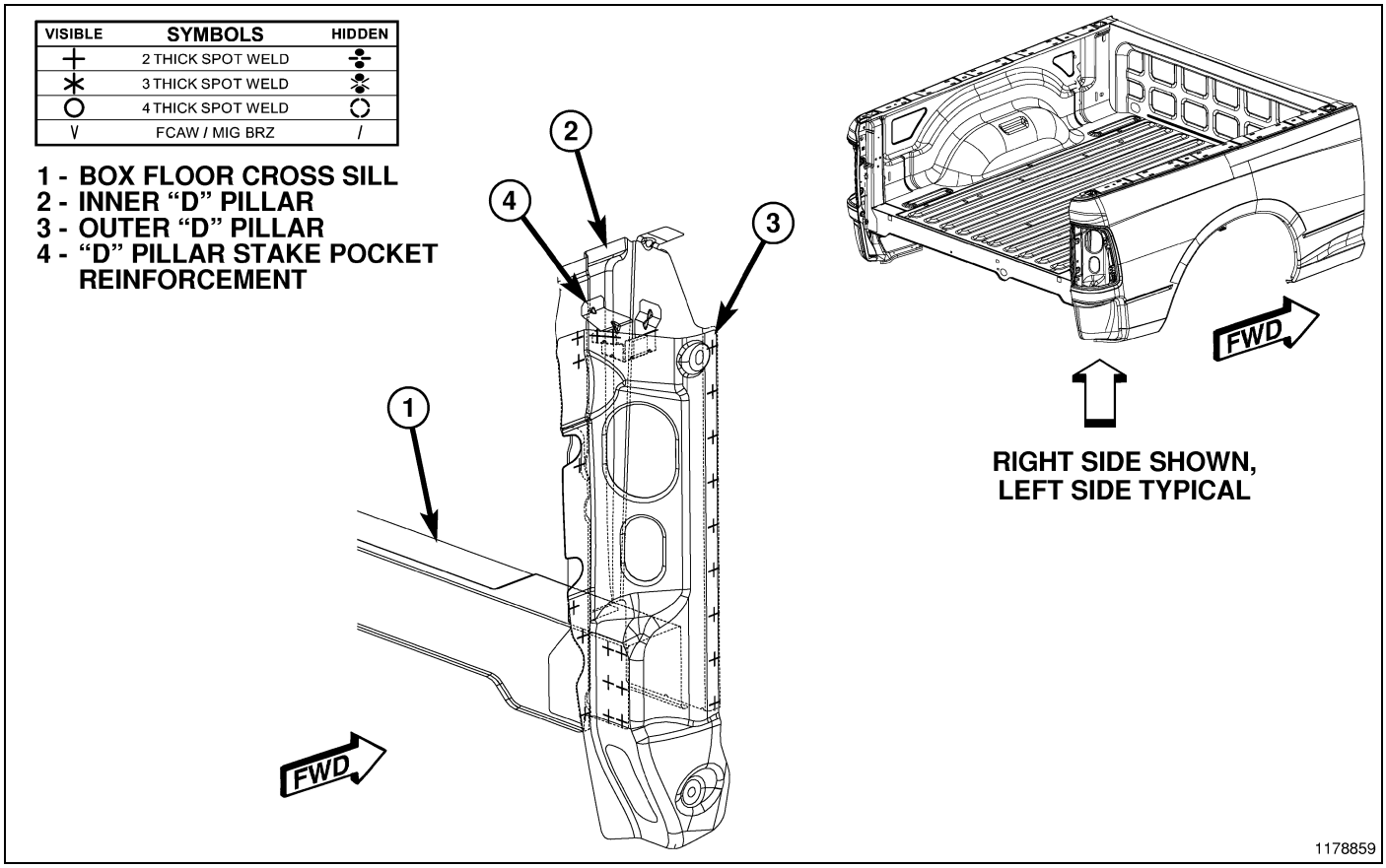

Fig. 285 6.3’ Box Tub (6 of 6)

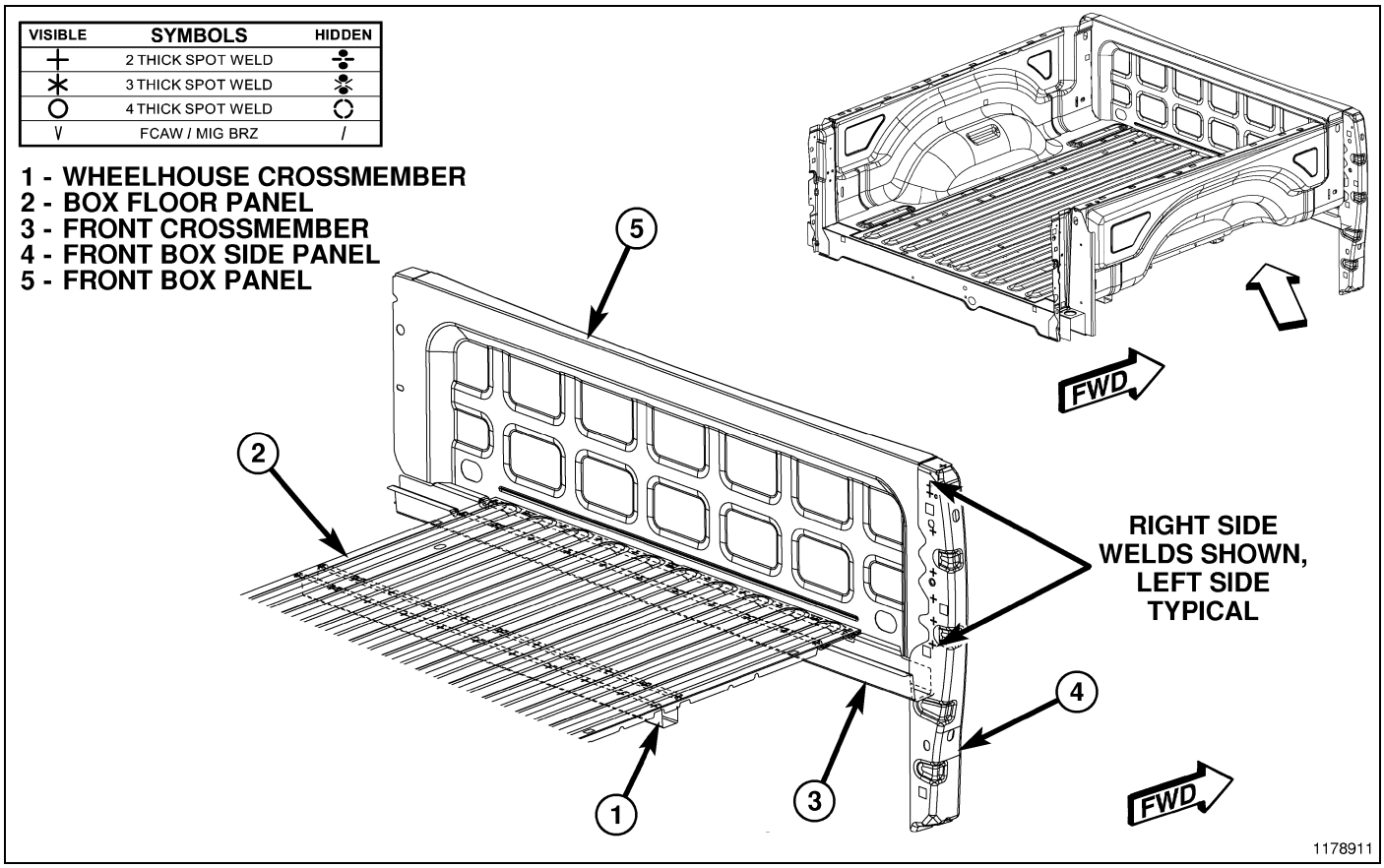

Fig. 286 6.3' Box Floor (1 of 3)

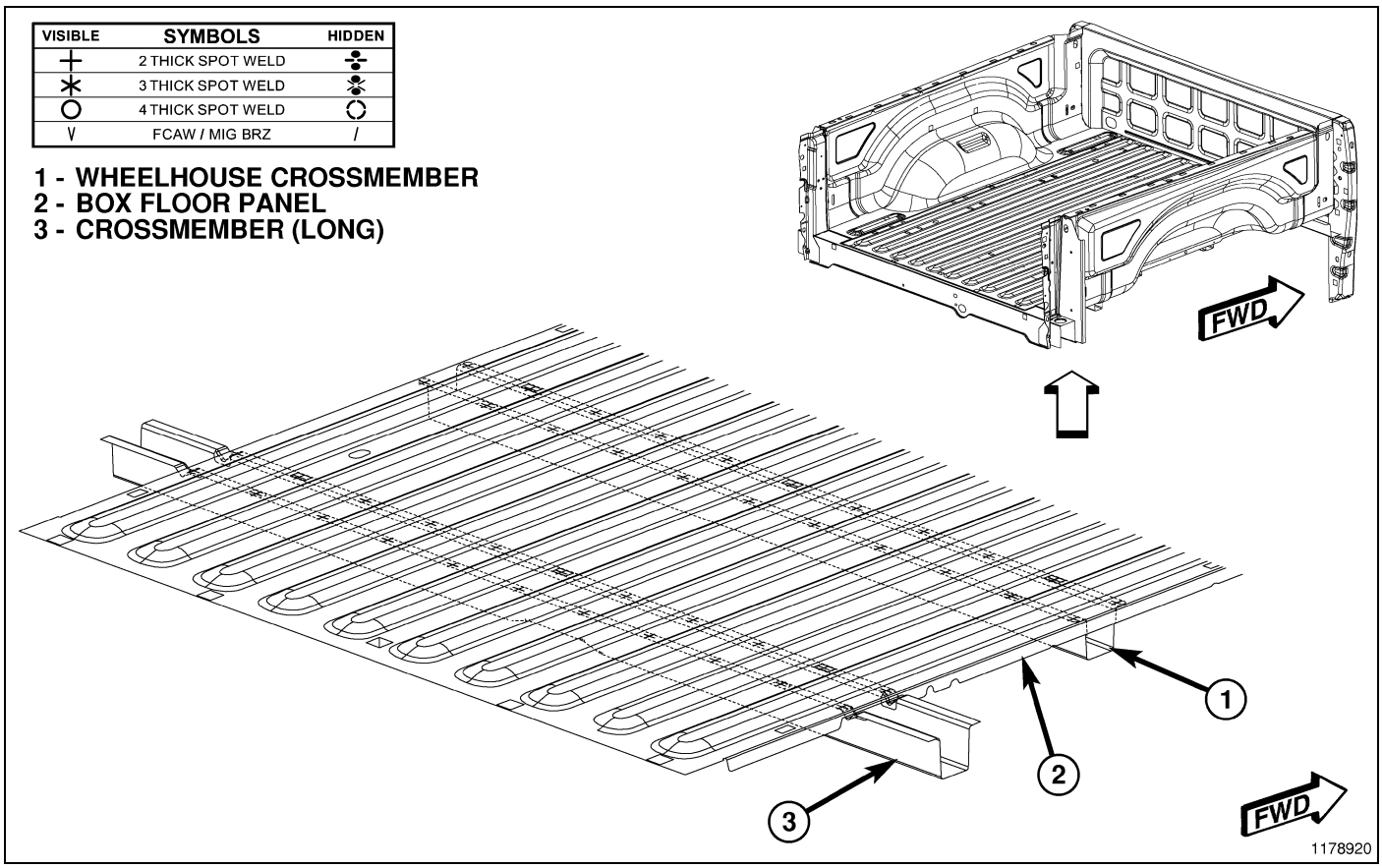

Fig. 287 6.3' Box Floor (2 of 3)

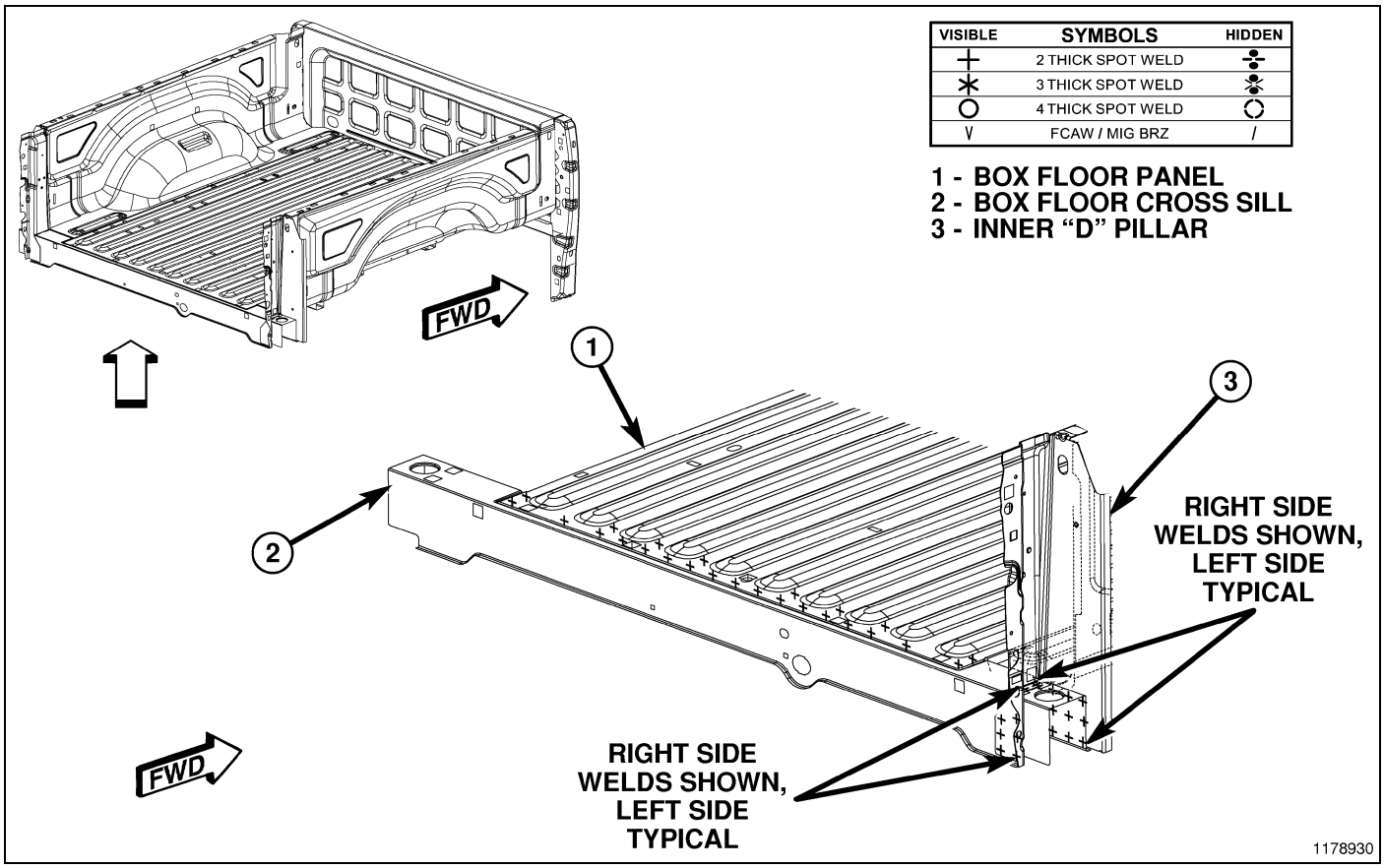

Fig. 288 6.3' Box Floor (3 of 3)

8.0' BOX- PARTS IDENTIFICATION LEGEND

ITEM	DESCRIPTION
1	AC TO AA 3/SD S/WELDS (ORD)
2	AB TO AA 4/SD S/WELDS (ORD)
3	AD TO AA 4/SD S/WELDS (ORD)
4	AC TO AB 5/SD S/WELDS (ORD)
5	AF TO AE 16 S/WELDS (ORD)
6	AH TO AG 8/SD S/WELDS (ORD)
7	AJ TO AG 6/SD S/WELDS (ORD)
8	AK TO AG 10/SD S/WELDS (ORD)
9	AM TO AL 6/SD S/WELDS (ORD)
10	AP TO AA 5/SD S/WELDS (ORD)
11	AN TO AA 6/SD S/WELDS (ORD)
12	AR TO AG 8/SD S/WELDS (ORD)
13	AS TO AG 6/SD S/WELDS (ORD)
14	AU TO AT 4/SD S/WELDS (ORD)
15	AV TO AT 8/SD S/WELDS (ORD)
16	AX TO AW 4/SD S/WELDS (ORD)
17	AY TO AZ 4/SD S/WELDS (ORD)
18	BA TO AW 2/SD S/WELDS (ORD)

8.0’ BOX- PARTS IDENTIFICATION LEGEND, continued

ITEM	DESCRIPTION
19	BB TO AW 1/SD PROJ WELDS (ORD)
20	AD TO AA 4/SD S/WELDS (ORD)
AA	PANEL - BOX SIDE INNER 8.0 FRONT RIGHT -
AA	PANEL - BOX SIDE INNER 8.0 FRONT LEFT -
AB	REINFORCEMENT - STAKE POCKET FRONT INNER RIGHT -
AB	REINFORCEMENT - STAKE POCKET FRONT INNER LEFT -
AC	REINFORCEMENT - STAKE POCKET FRONT OUTER RIGHT -
AC	REINFORCEMENT - STAKE POCKET FRONT OUTER LEFT -
AD	REINFORCEMENT ASSEMBLY - TIE DOWN MOUNTING -
AD	REINFORCEMENT ASSEMBLY - TIE DOWN MOUNTING -
AE	CROSSMEMBER - FRONT -
AF	REINFORCEMENT - FRONT CROSSMEMBER -
AF	REINFORCEMENT - FRONT CROSSMEMBER -
AG	CROSSMEMBER - LONG -
AH	BRACKET - CROSSMEMBER END SUPPORT -
AJ	BRACKET - PAINT CARRIER -
AK	REINFORCEMENT - FRONT CROSSMEMBER -
AL	CROSSMEMBER - WHEELHOUSE -
AM	BRACKET - CROSSMEMBER SUPPORT -
AN	55275537-REINFORCEMENT. STAKE POCKET
AP	55276081-REINFORCEMENT. STAKE POCKET OUTER
AR	BRACKET-CROSSMEMBER END SUPPORT
AS	TAPPING PLATE-WHEELHOUSE REAR
AT	SILL - CROSS BOX FLOOR REAR -
AU	GUSSET-CROSSMEMBER SILL BOX FLOOR REAR
AV	TAPPING PLATE - MISCELLANEOUS SHAPE 1 EXTRUSION -
AV	TAPPING PLATE - MISCELLANEOUS SHAPE 1 EXTRUSION -
AW	REINFORCEMENT - BOX SIDE TAILGATE PIVOT RIGHT -
AW	REINFORCEMENT - BOX SIDE TAILGATE PIVOT LEFT -
AX	HINGE ASSEMBLY - TAILGATE BODY SIDE RIGHT -
AX	HINGE ASSEMBLY - TAILGATE BODY SIDE LEFT -
AY	REINFORCEMENT - STAKE POCKET D-PILLAR RIGHT -
AY	REINFORCEMENT - STAKE POCKET D-PILLAR LEFT -
AZ	PANEL - D-PILLAR INNER RIGHT -
AZ	PANEL - D-PILLAR INNER LEFT -
BA	NUT - CAGE TYPE - T/GATE PIVOT TO P/U BOX
BB	NUT/WELD.HEX - THICK - T/GATE CABLE TO P/U BOX

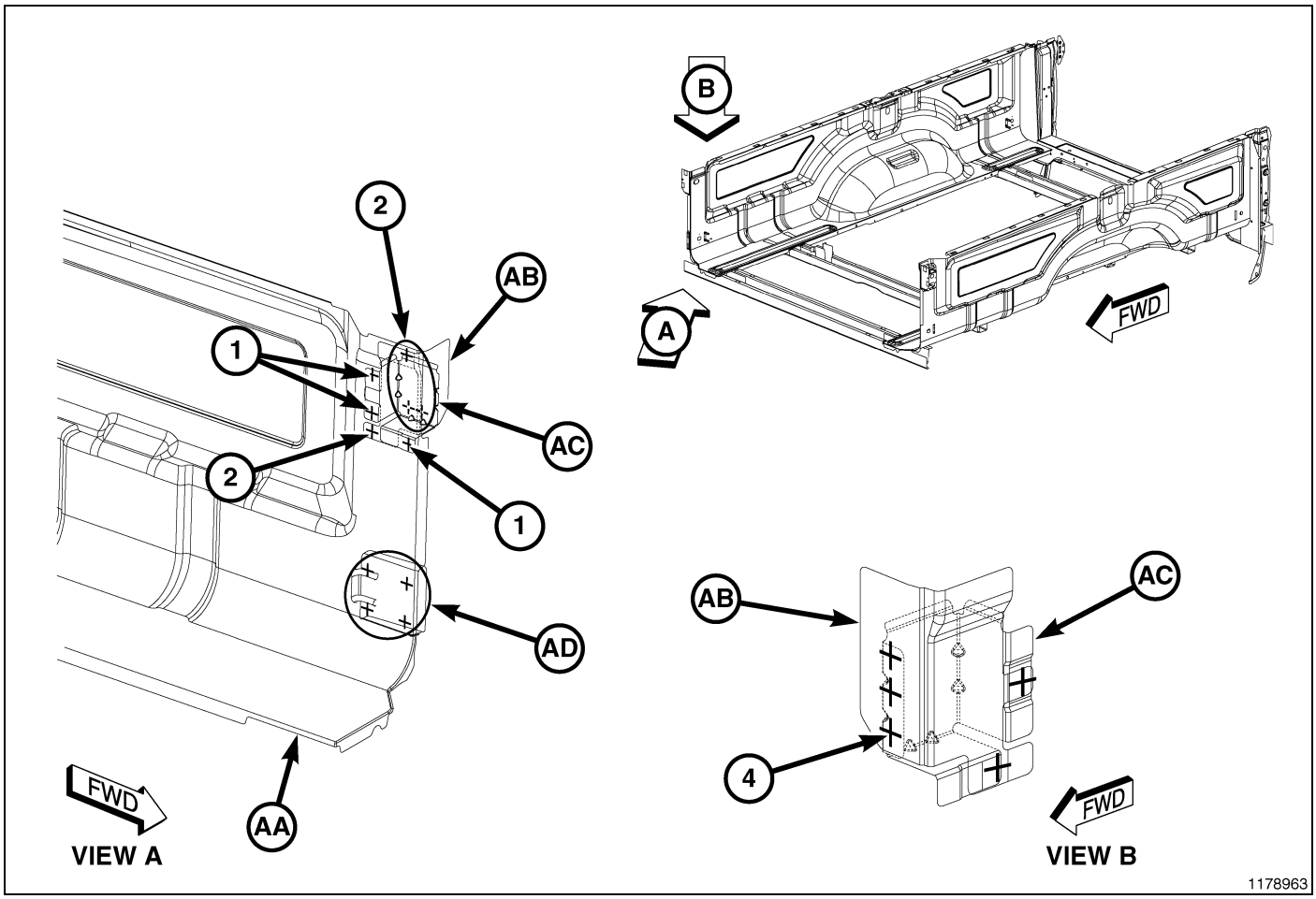

Fig. 289 8.0' Box (1 of 7)

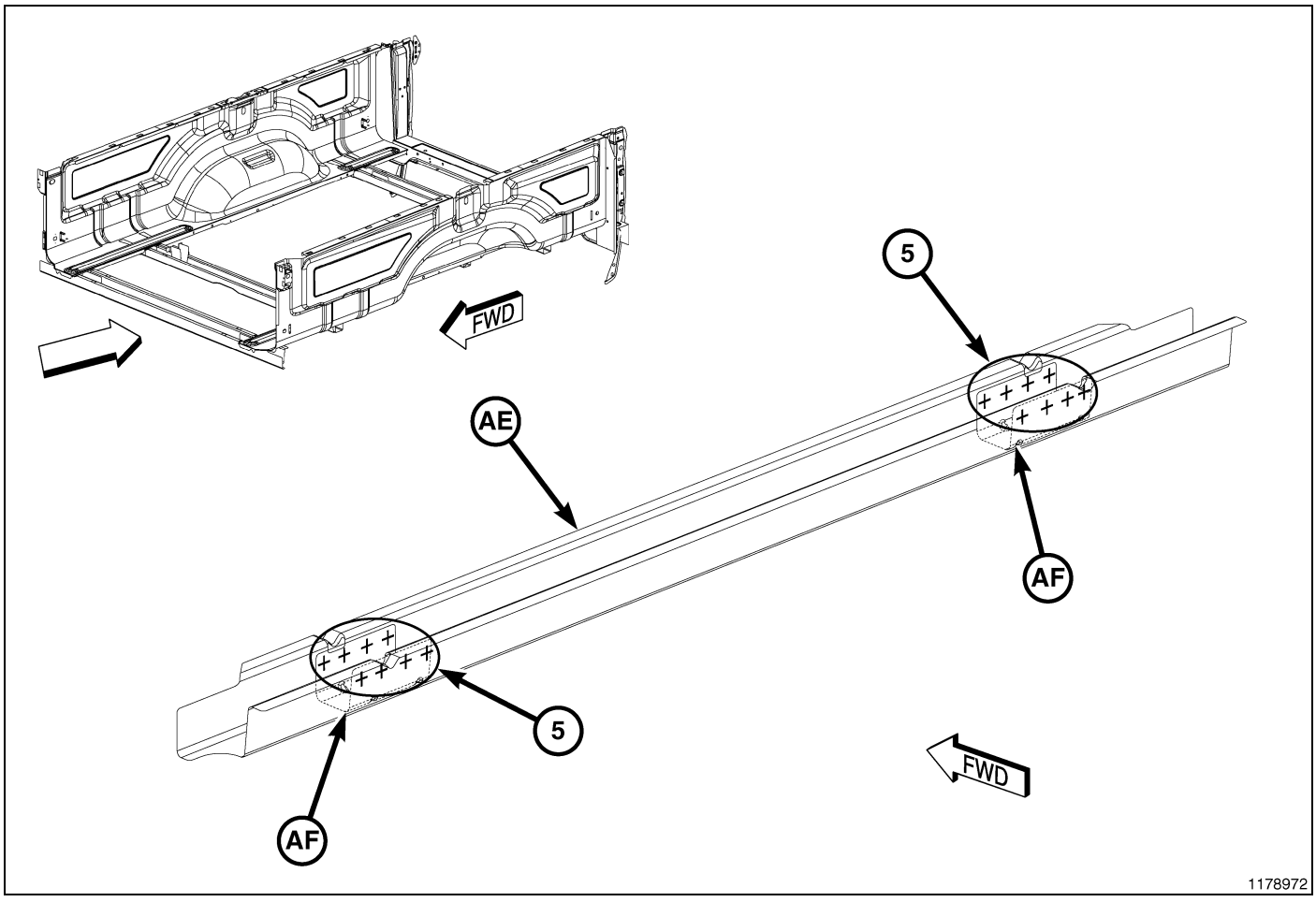

Fig. 290 8.0' Box (2 of 7)

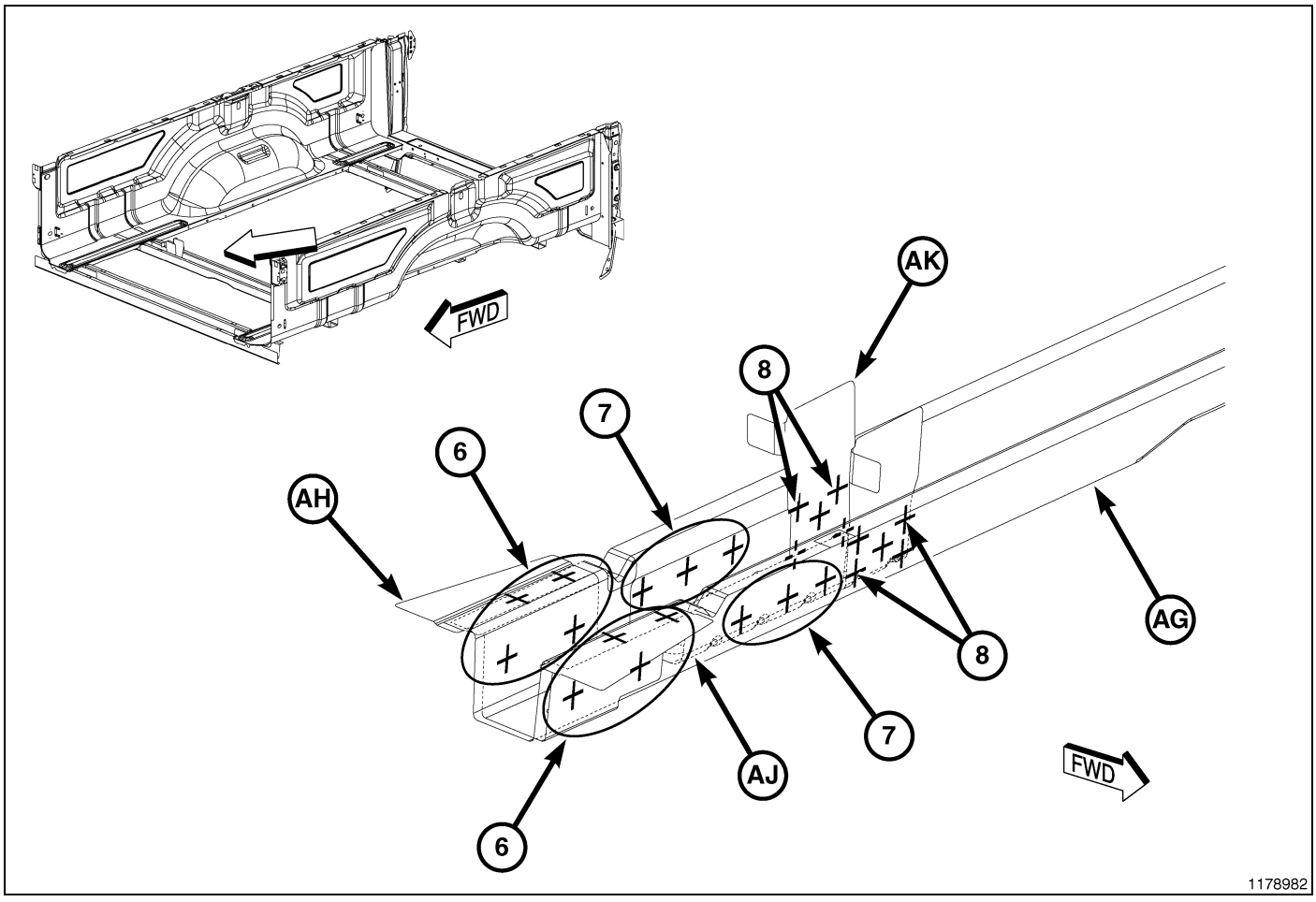

Fig. 291 8.0' Box (3 of 7)

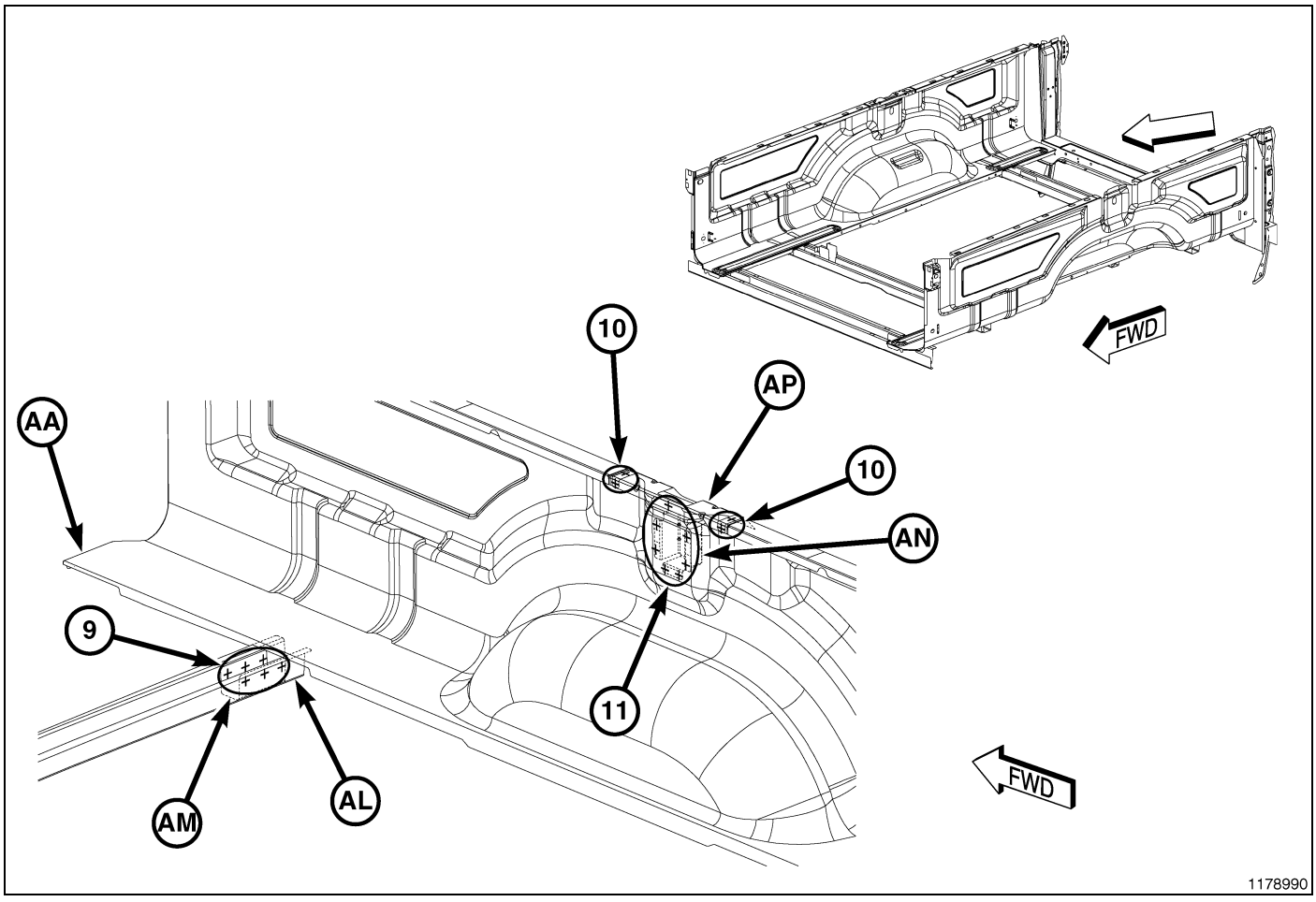

Fig. 292 8.0' Box (4 of 7)

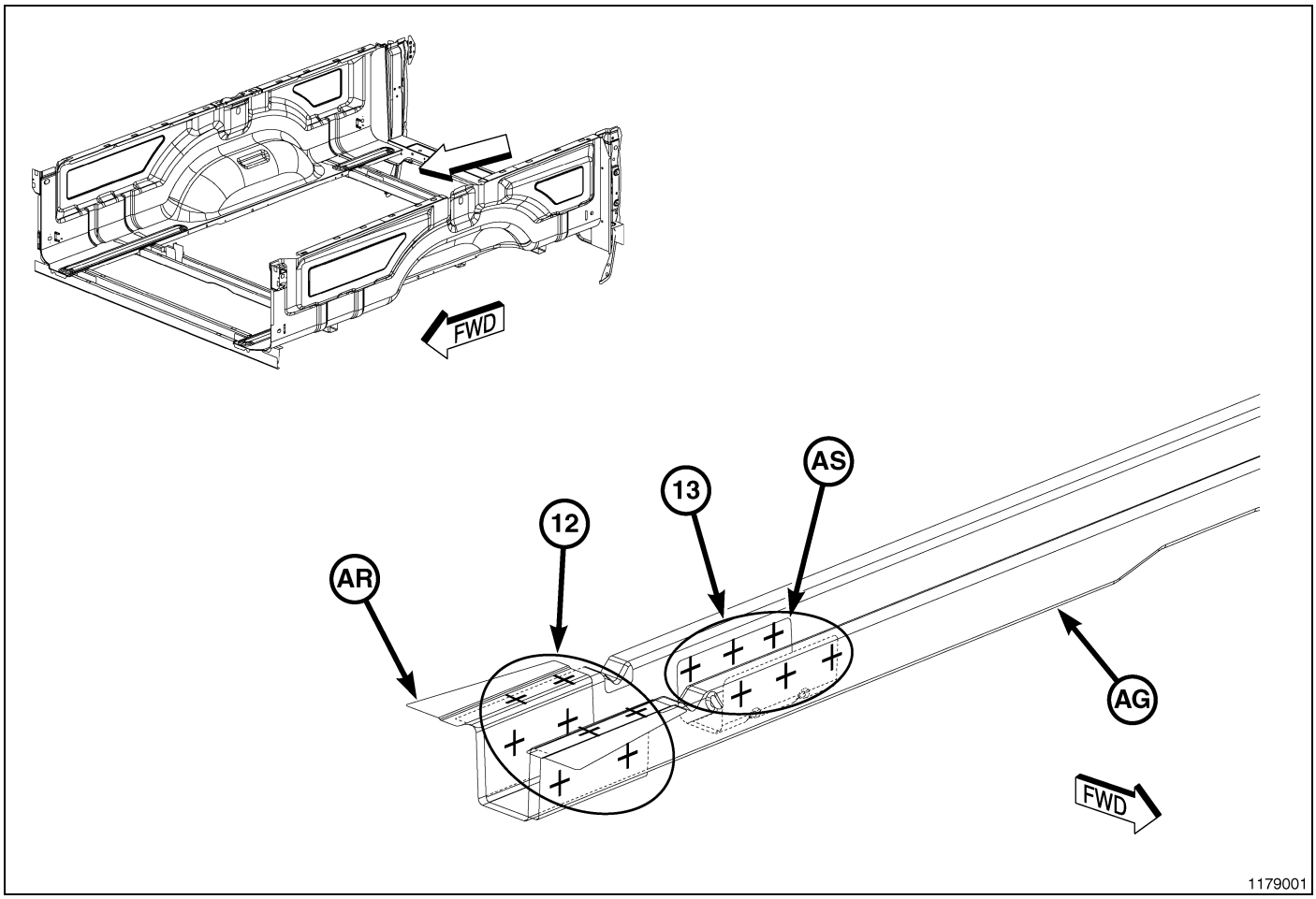

Fig. 293 8.0' Box (5 of 7)

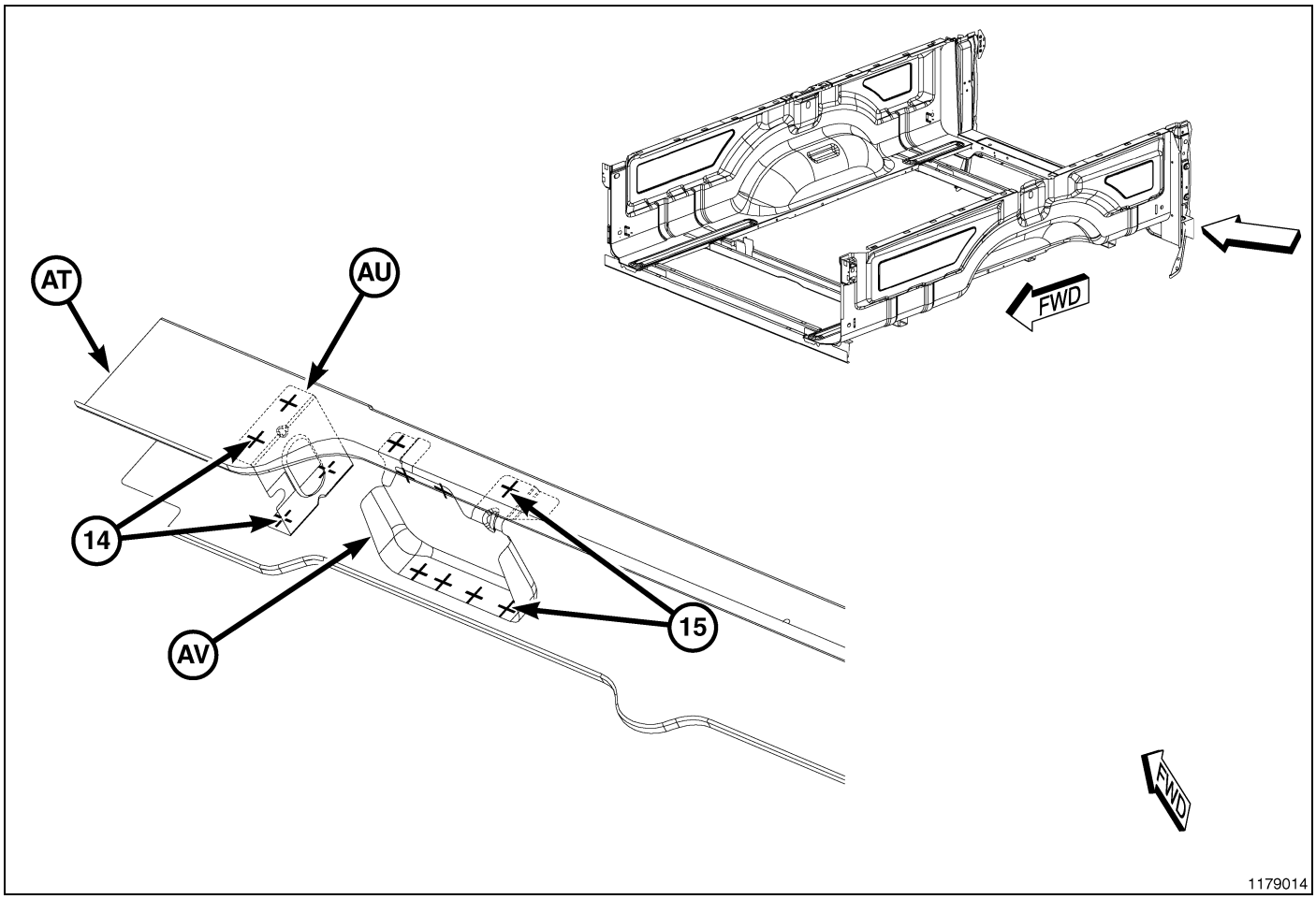

Fig. 294 8.0' Box (6 of 7)

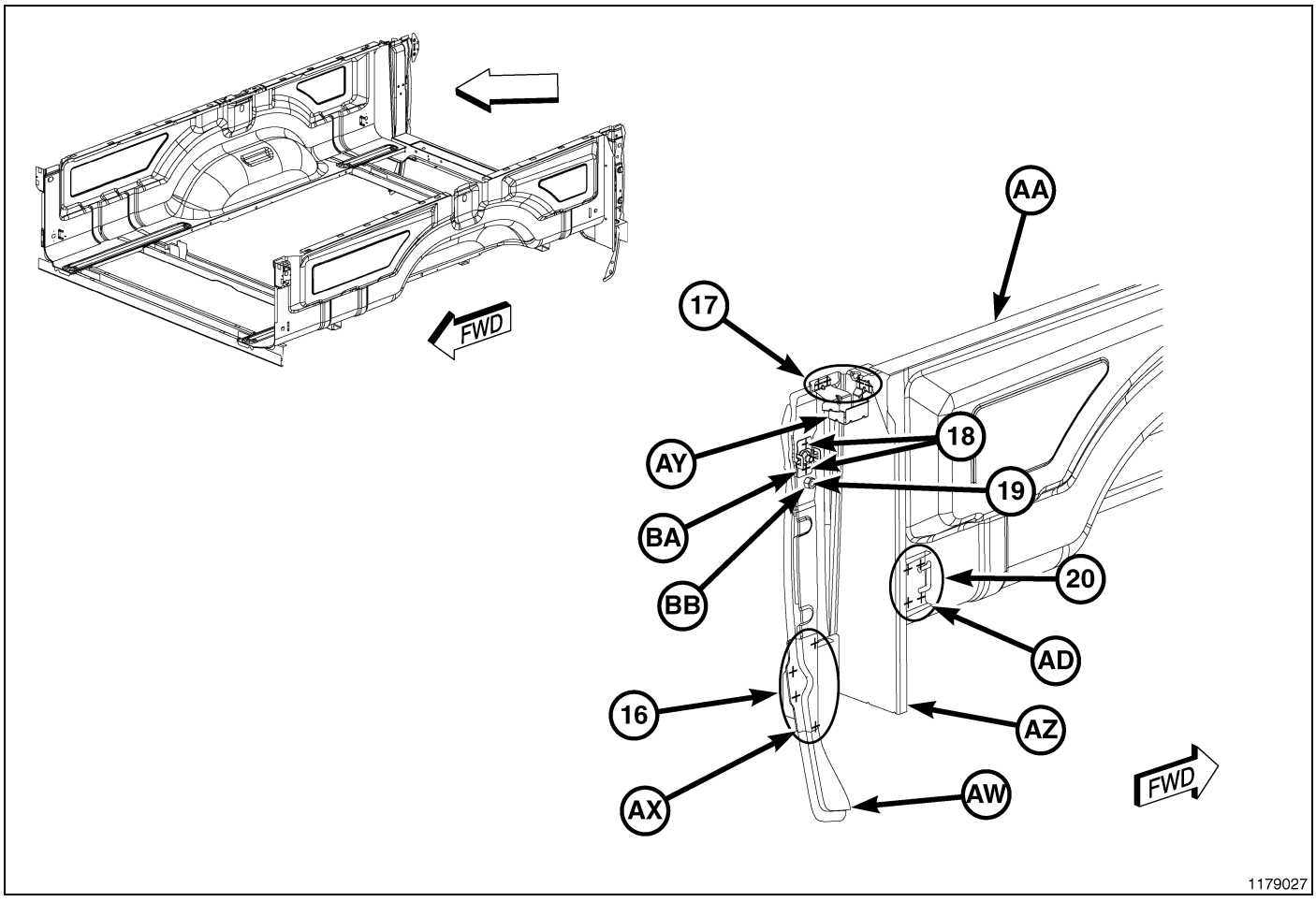

Fig. 295 8.0' Box (7 of 7)

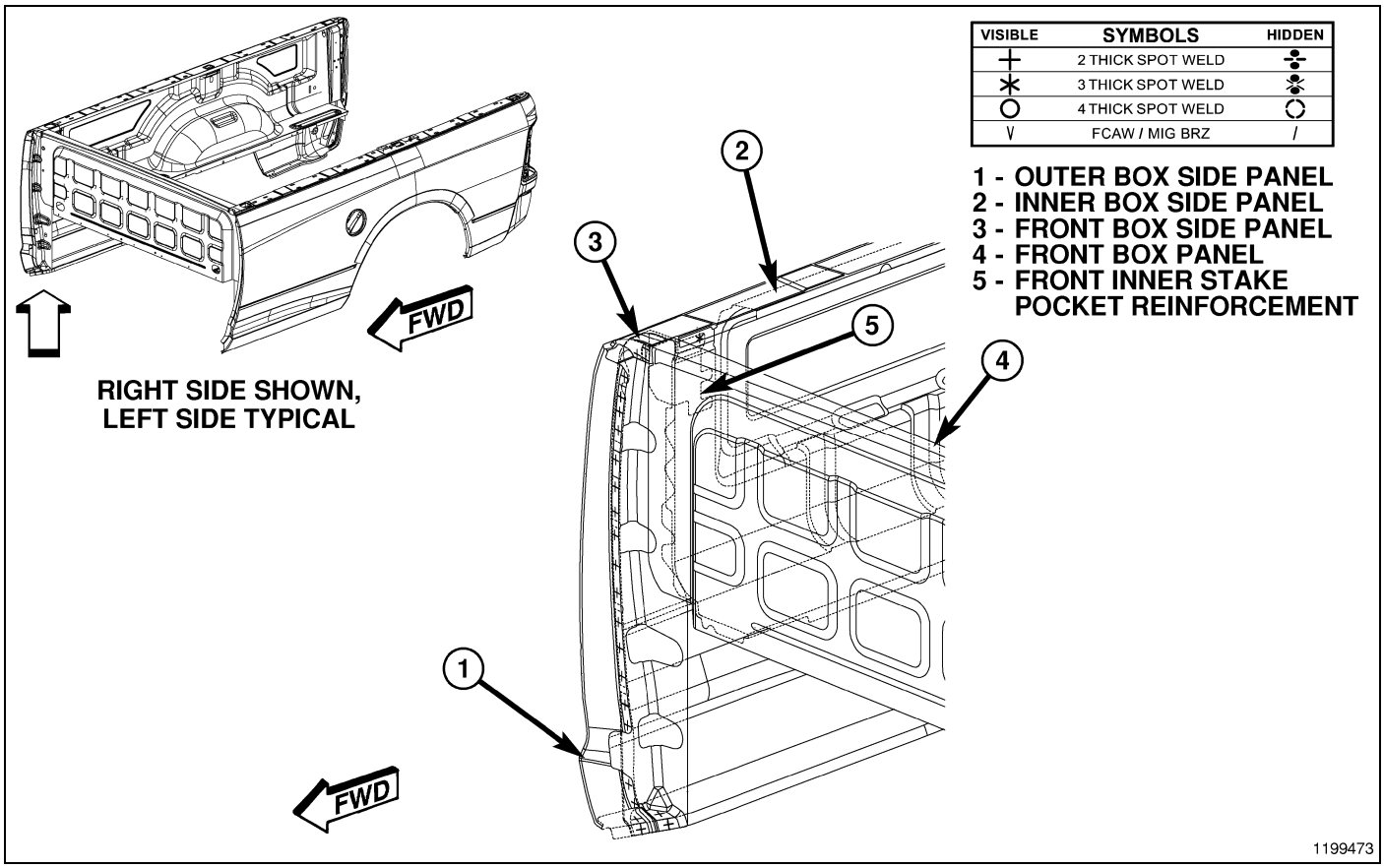

Fig. 296 8.0' Box Body in White (1 of 7)

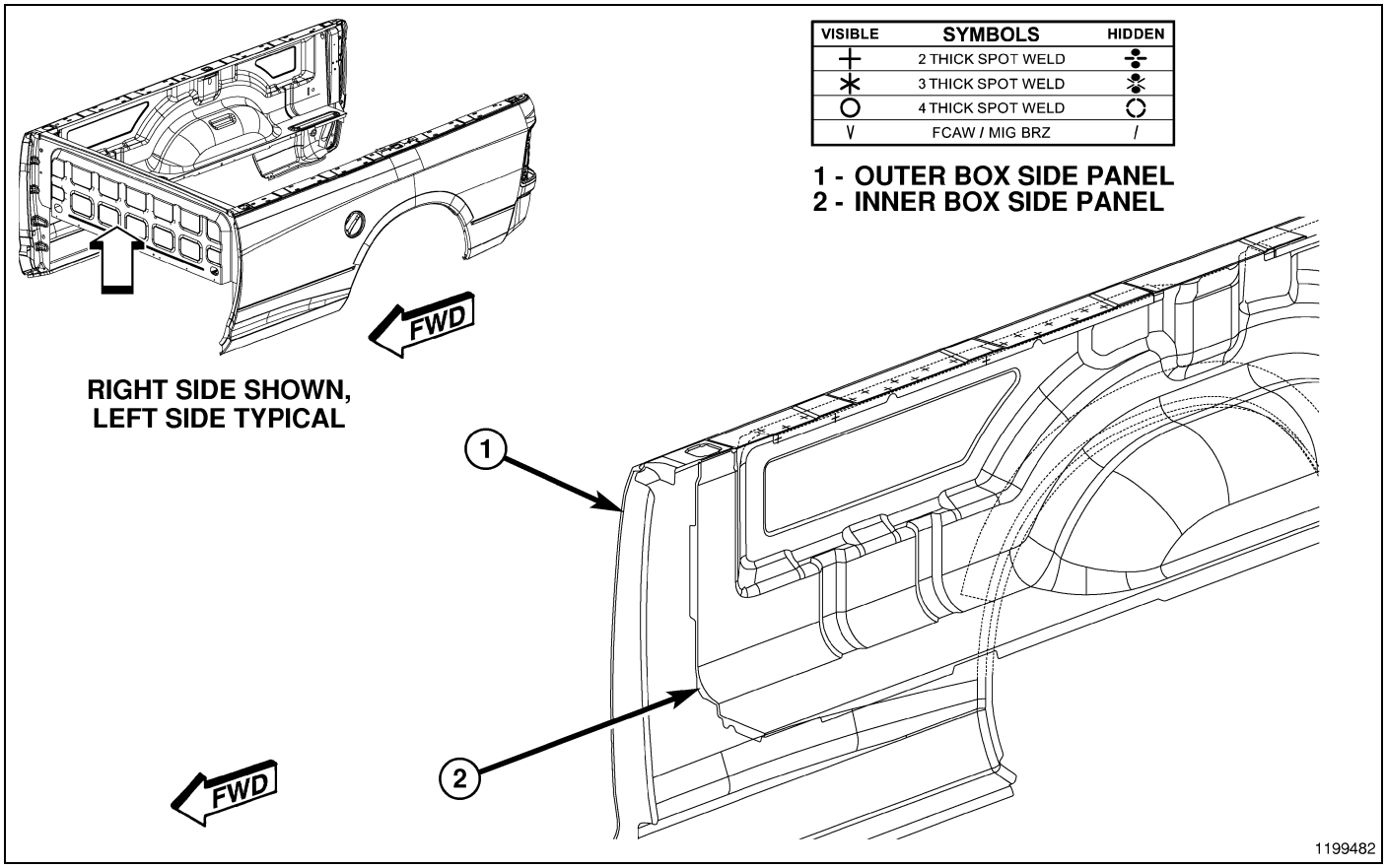

Fig. 297 8.0' Box Body in White (2 of 7)

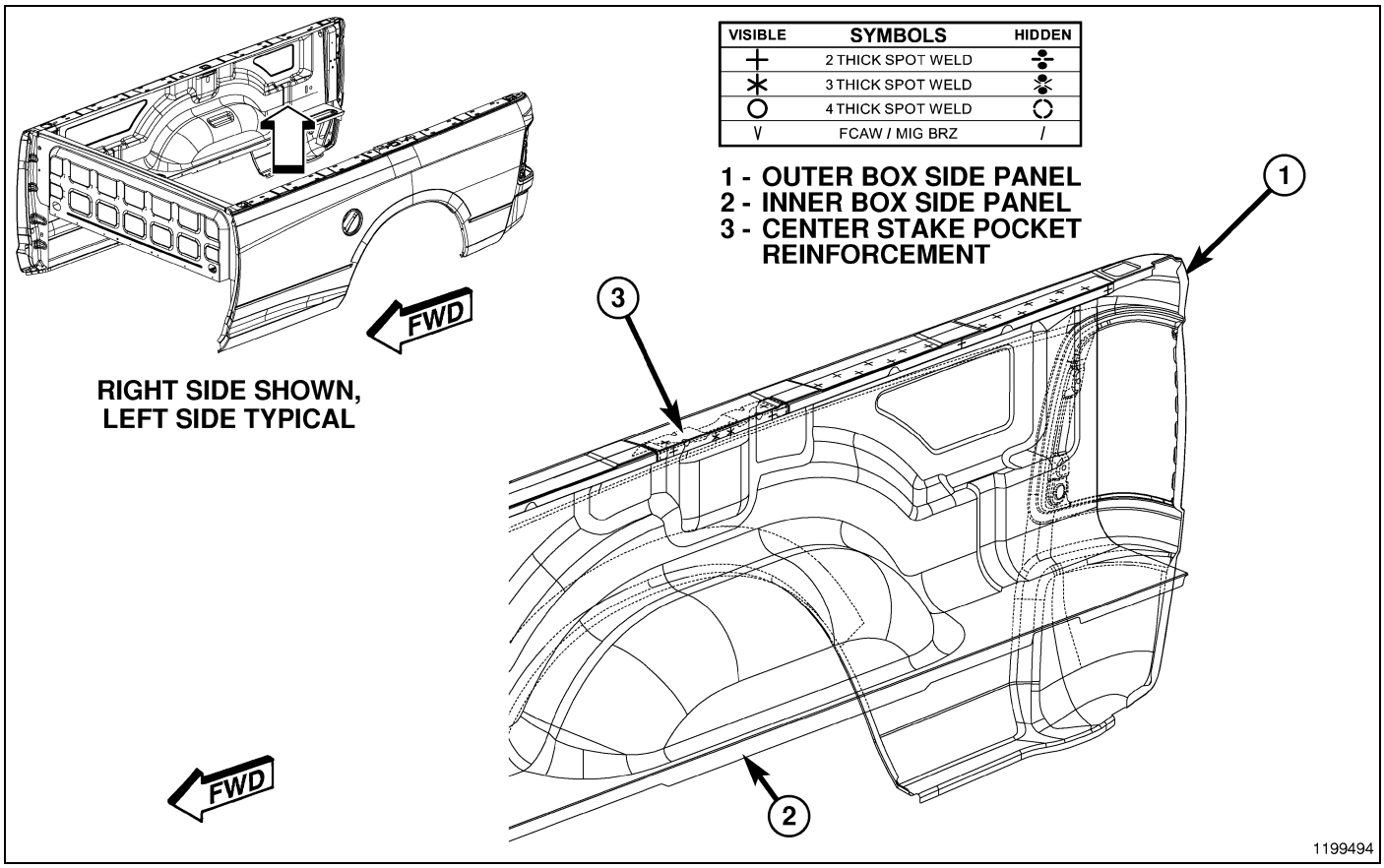

Fig. 298 8.0' Box Body in White (3 of 7)

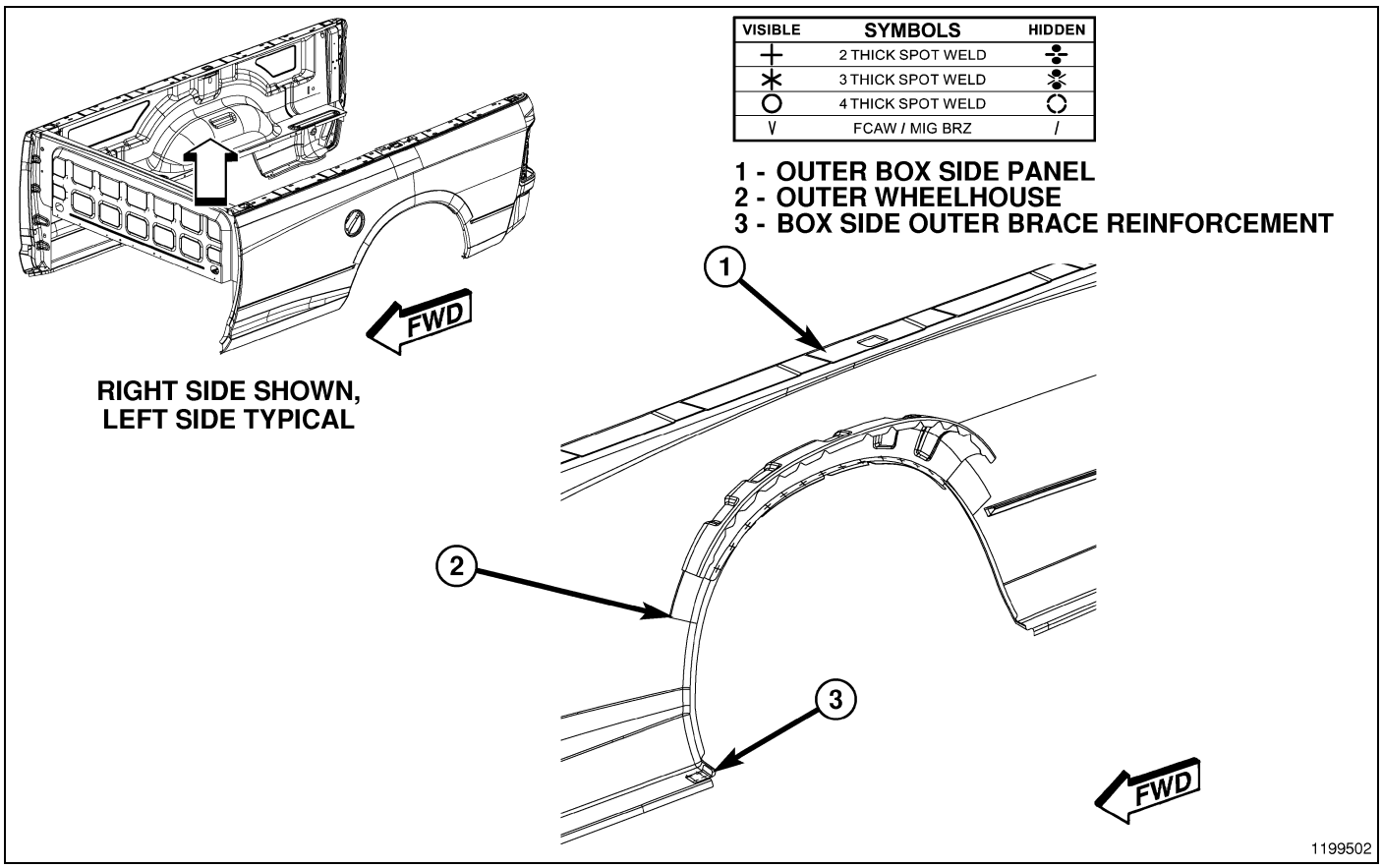

Fig. 299 8.0' Box Body in White (4 of 7)

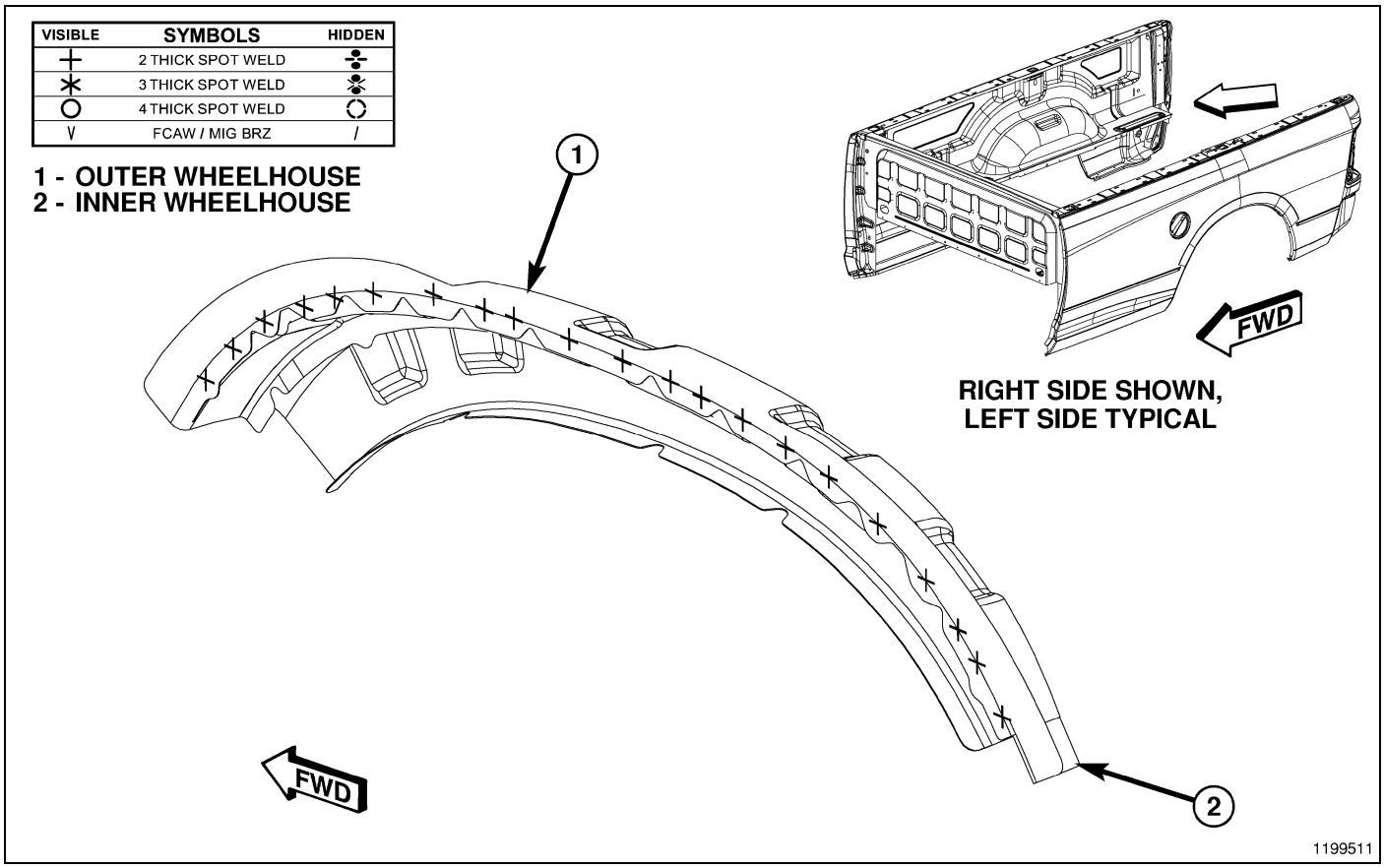

Fig. 300 8.0' Box Body in White (5 of 7)

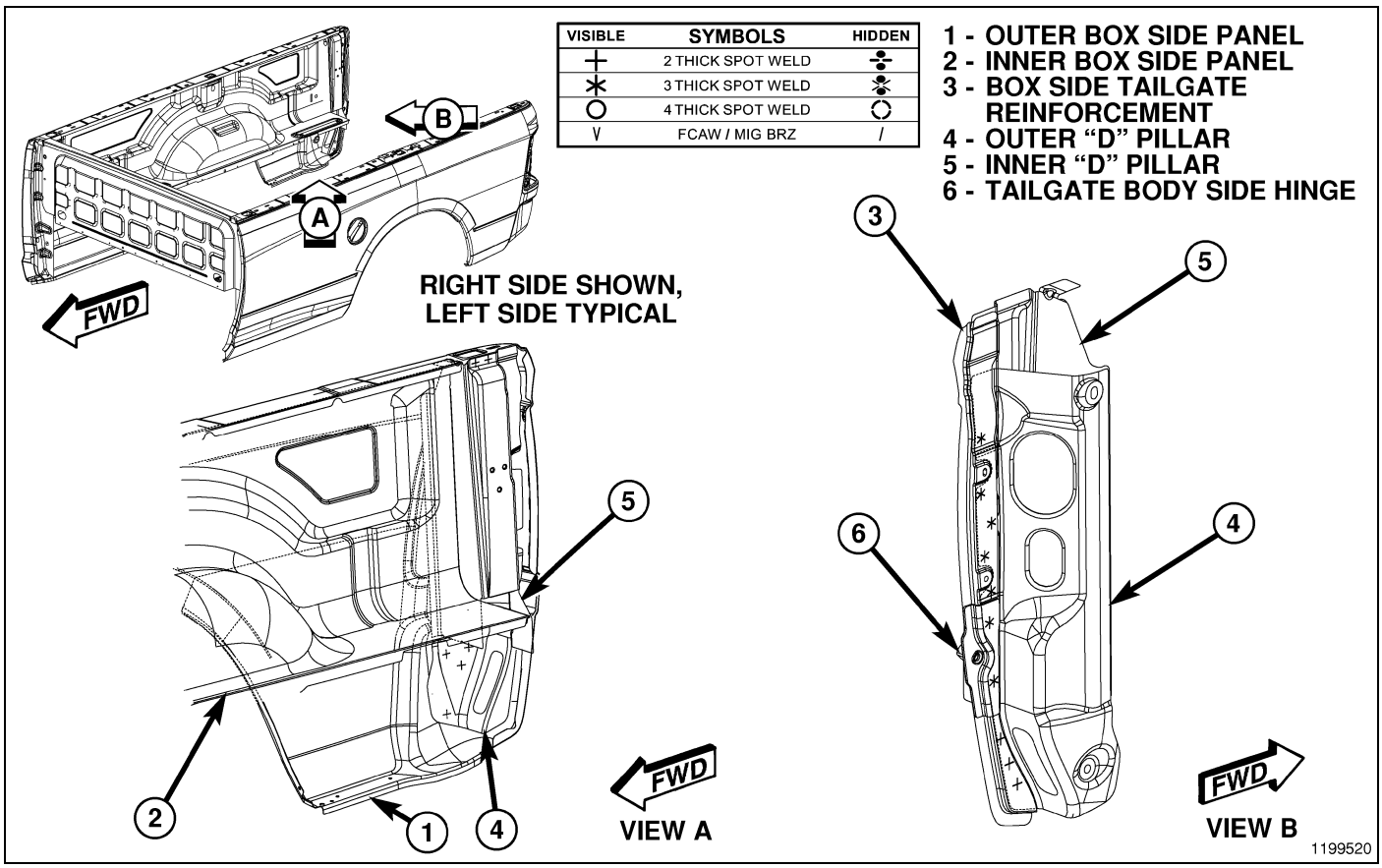

Fig. 301 8.0' Box Body in White (6 of 7)

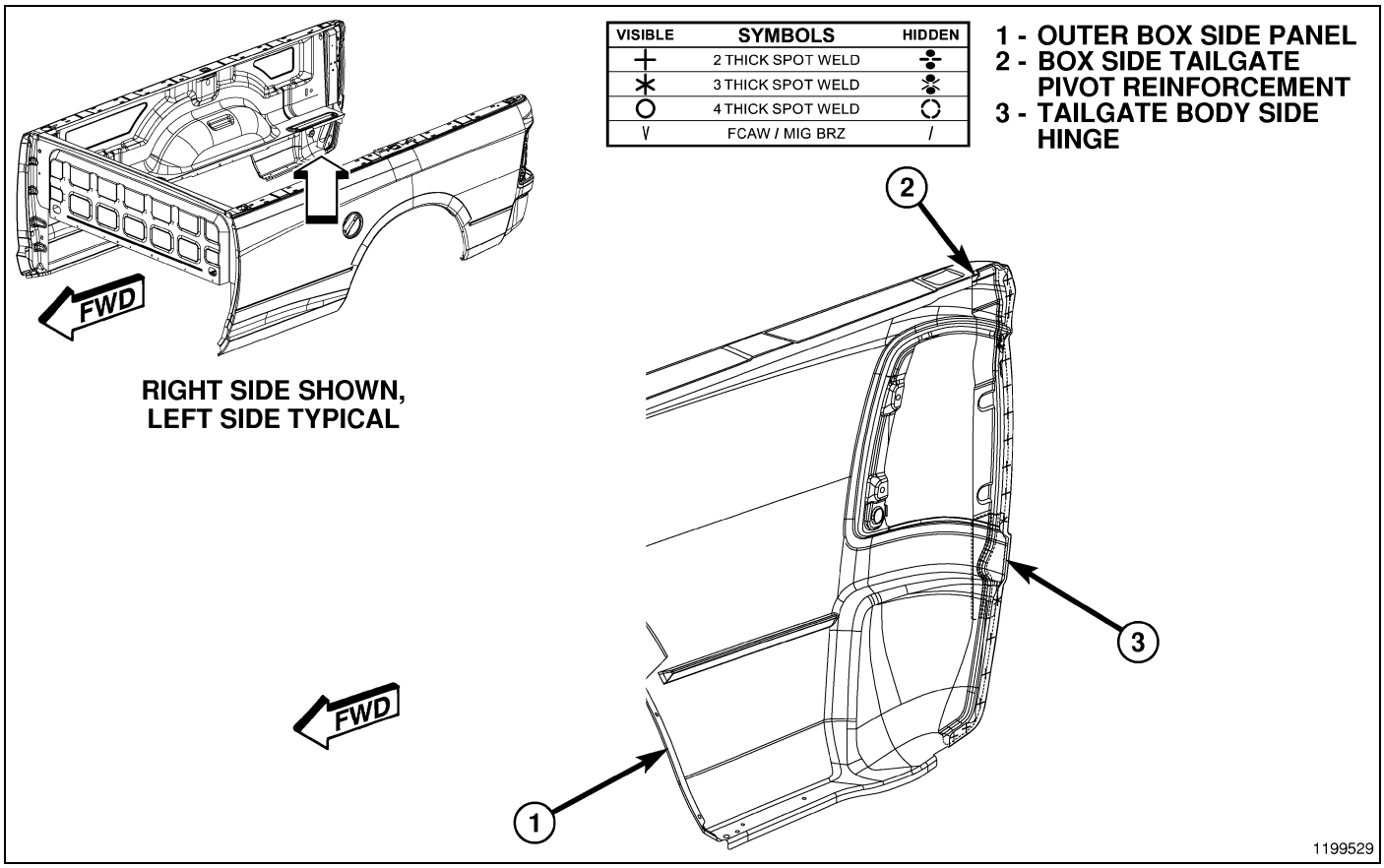

Fig. 302 8.0' Box Body in White (7 of 7)

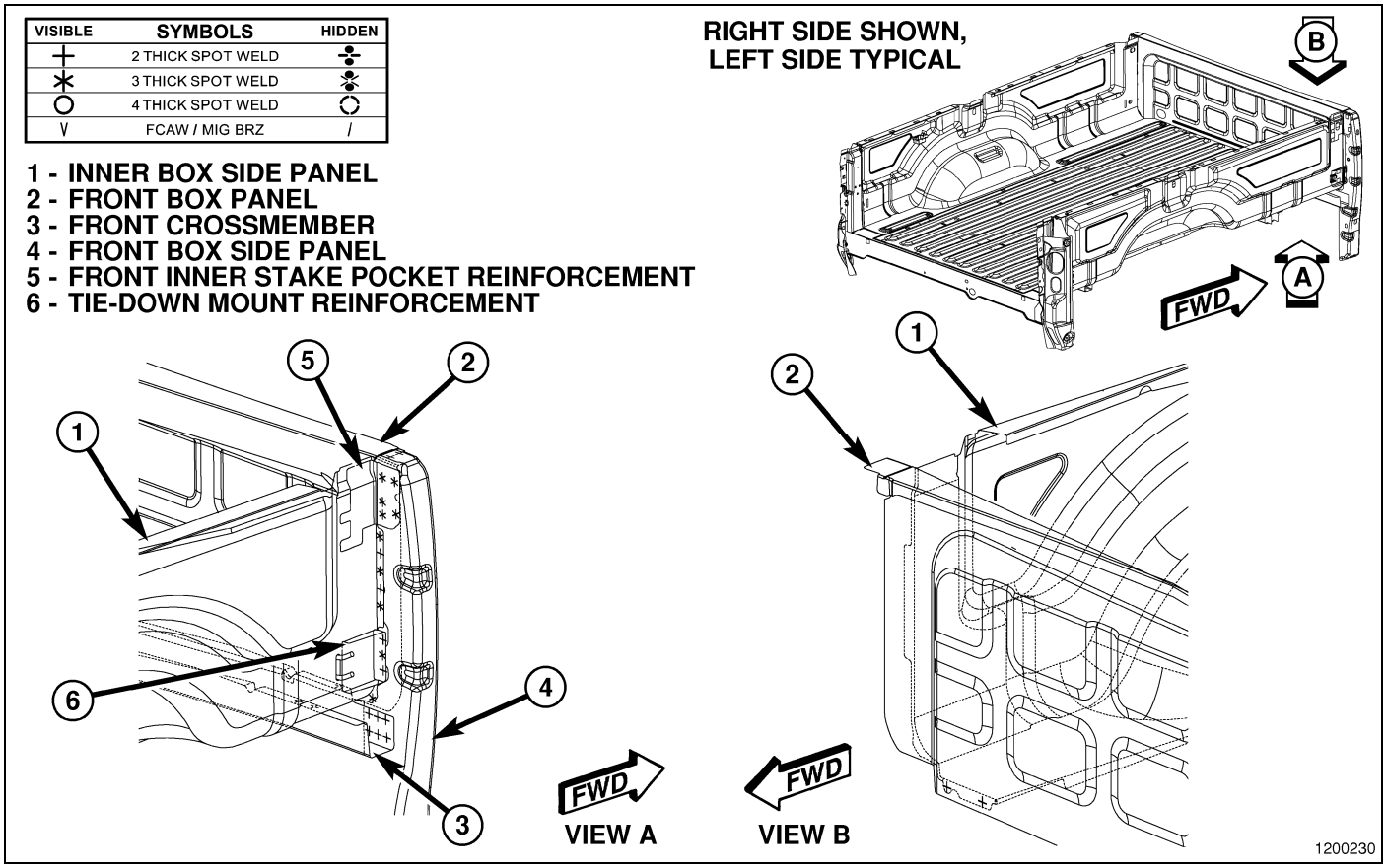

Fig. 303 8.0' Box Tub (1 of 7)

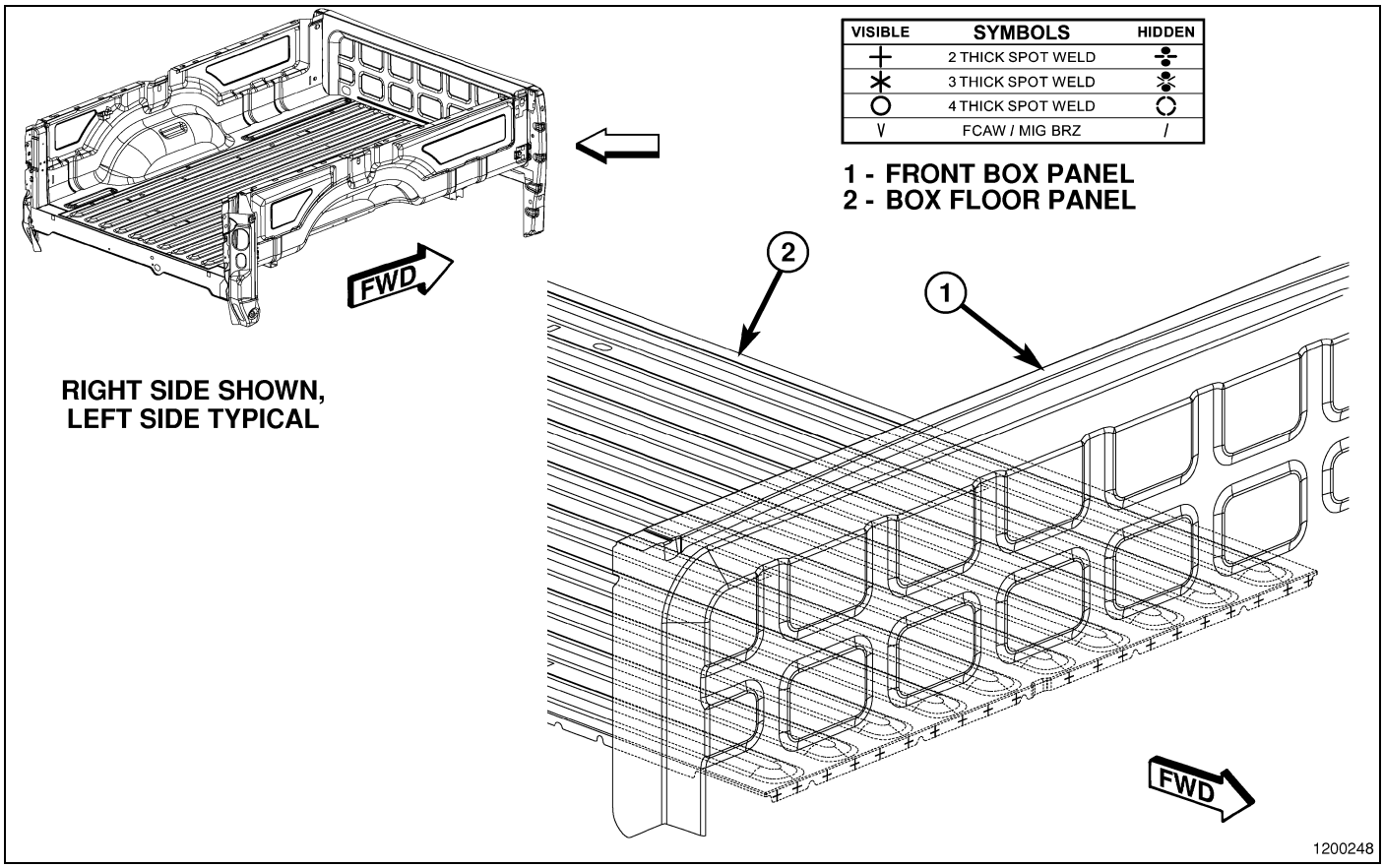

Fig. 304 8.0' Box Tub (2 of 7)

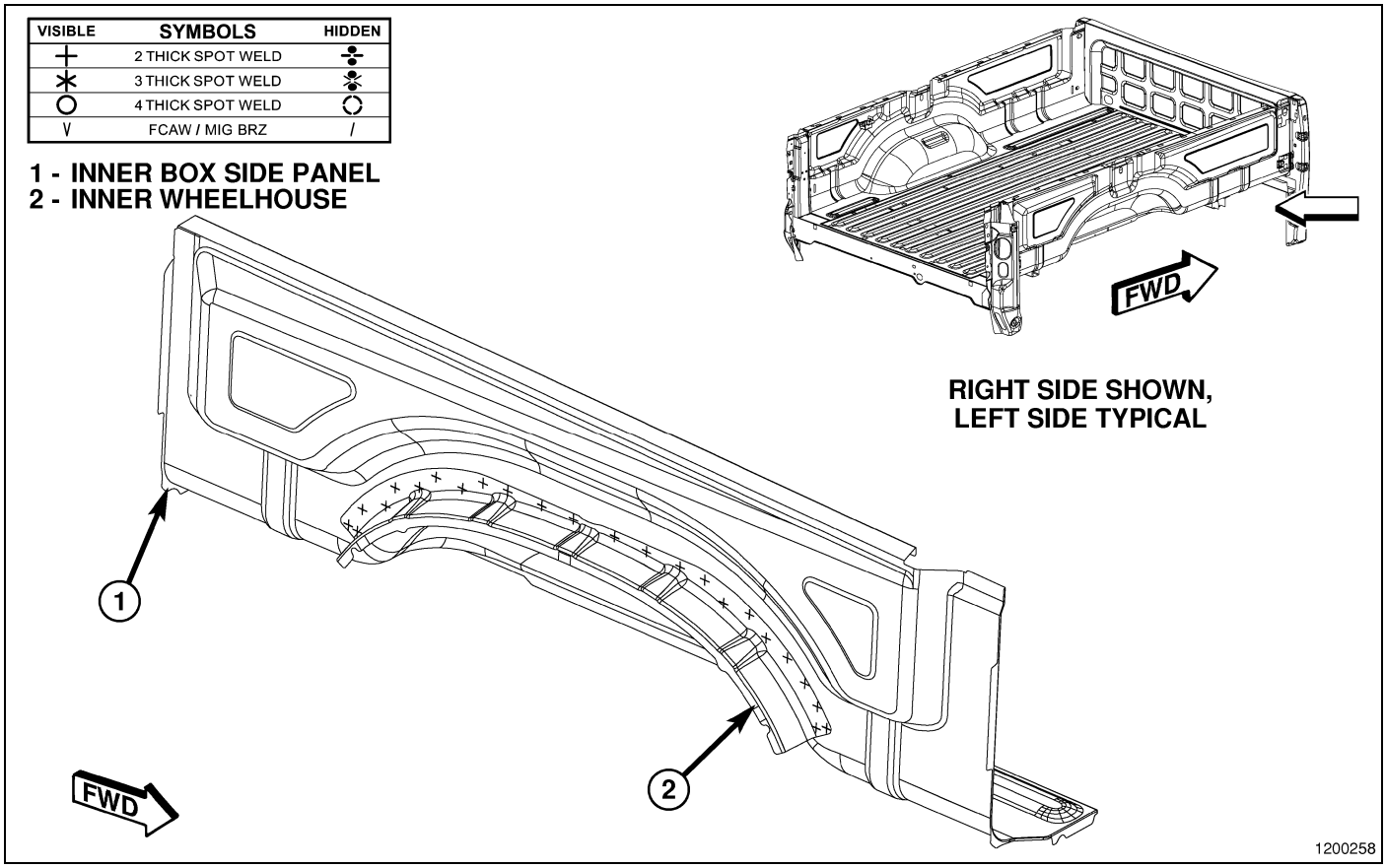

Fig. 305 8.0' Box Tub (3 of 7)

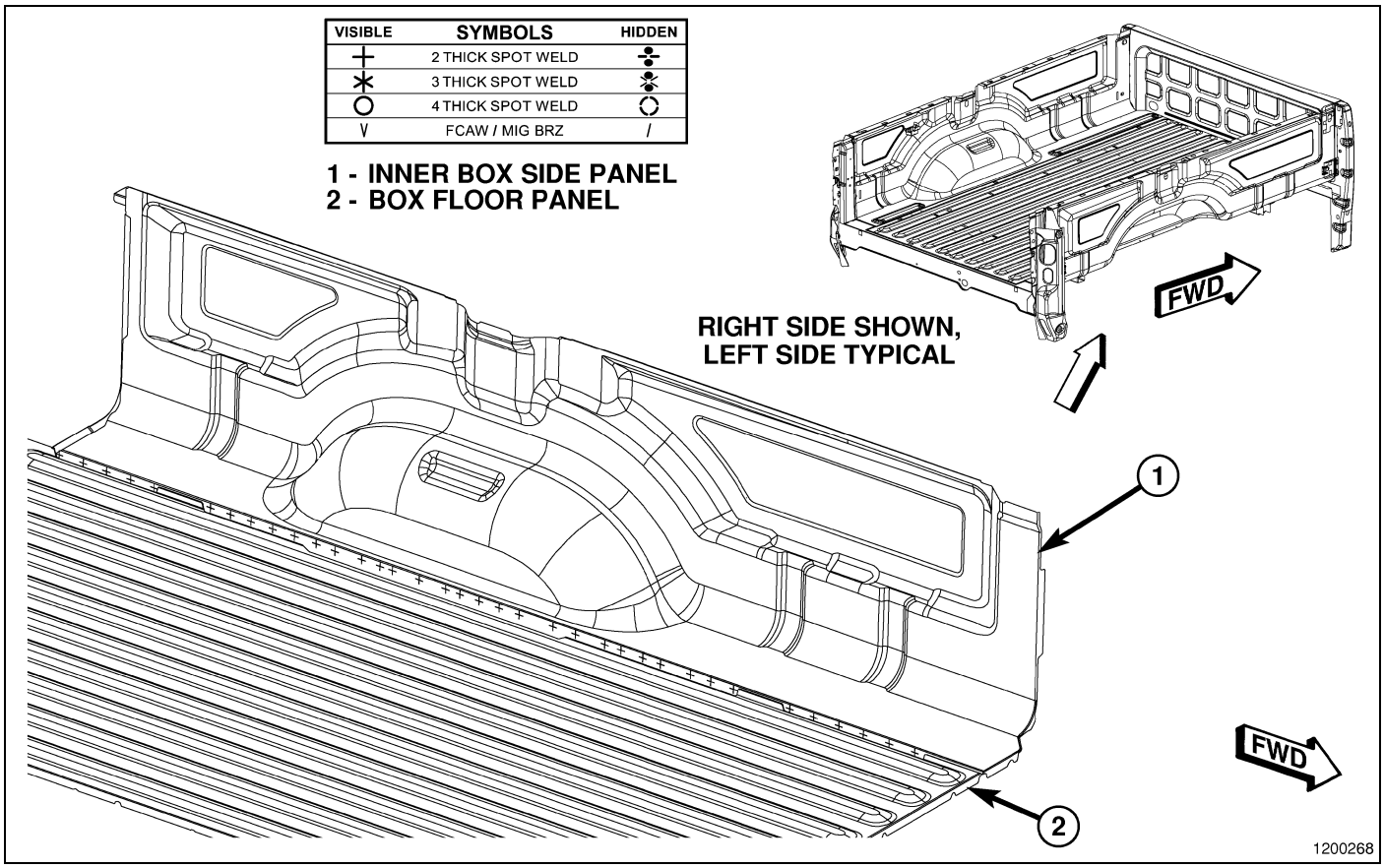

Fig. 306 8.0' Box Tub (4 of 7)

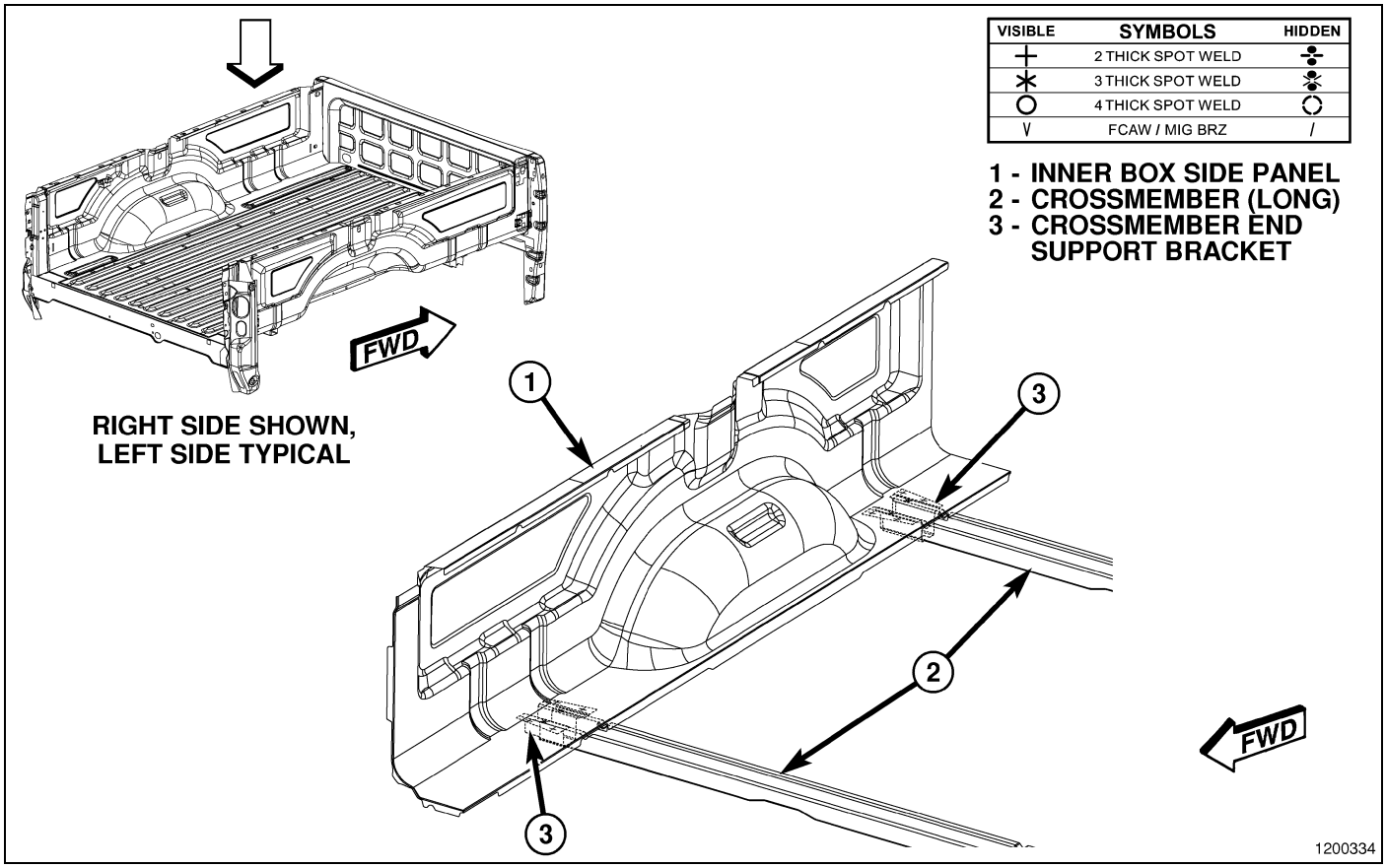

Fig. 307 8.0' Box Tub (5 of 7)

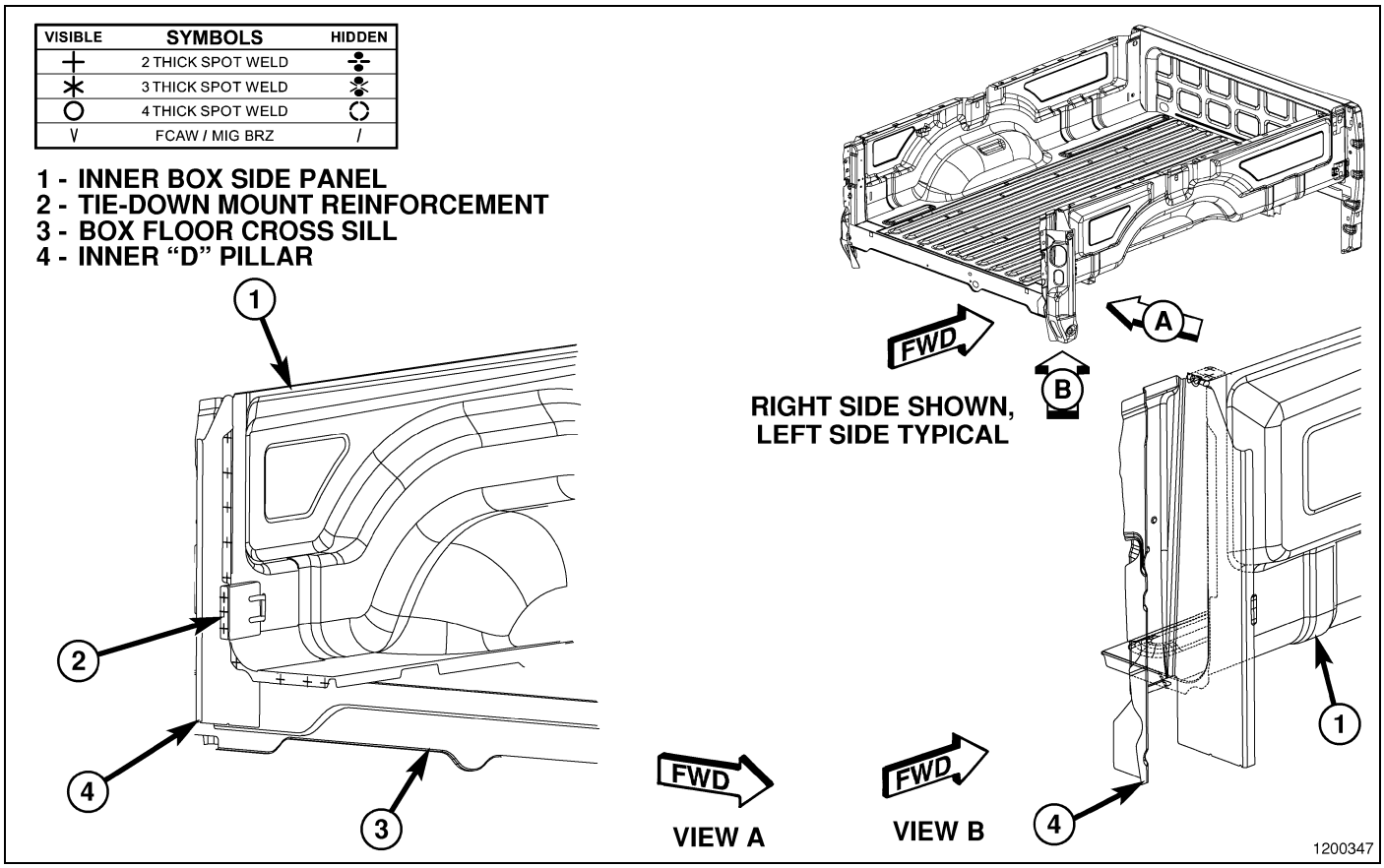

Fig. 308 8.0’ Box Tub (6 of 7)

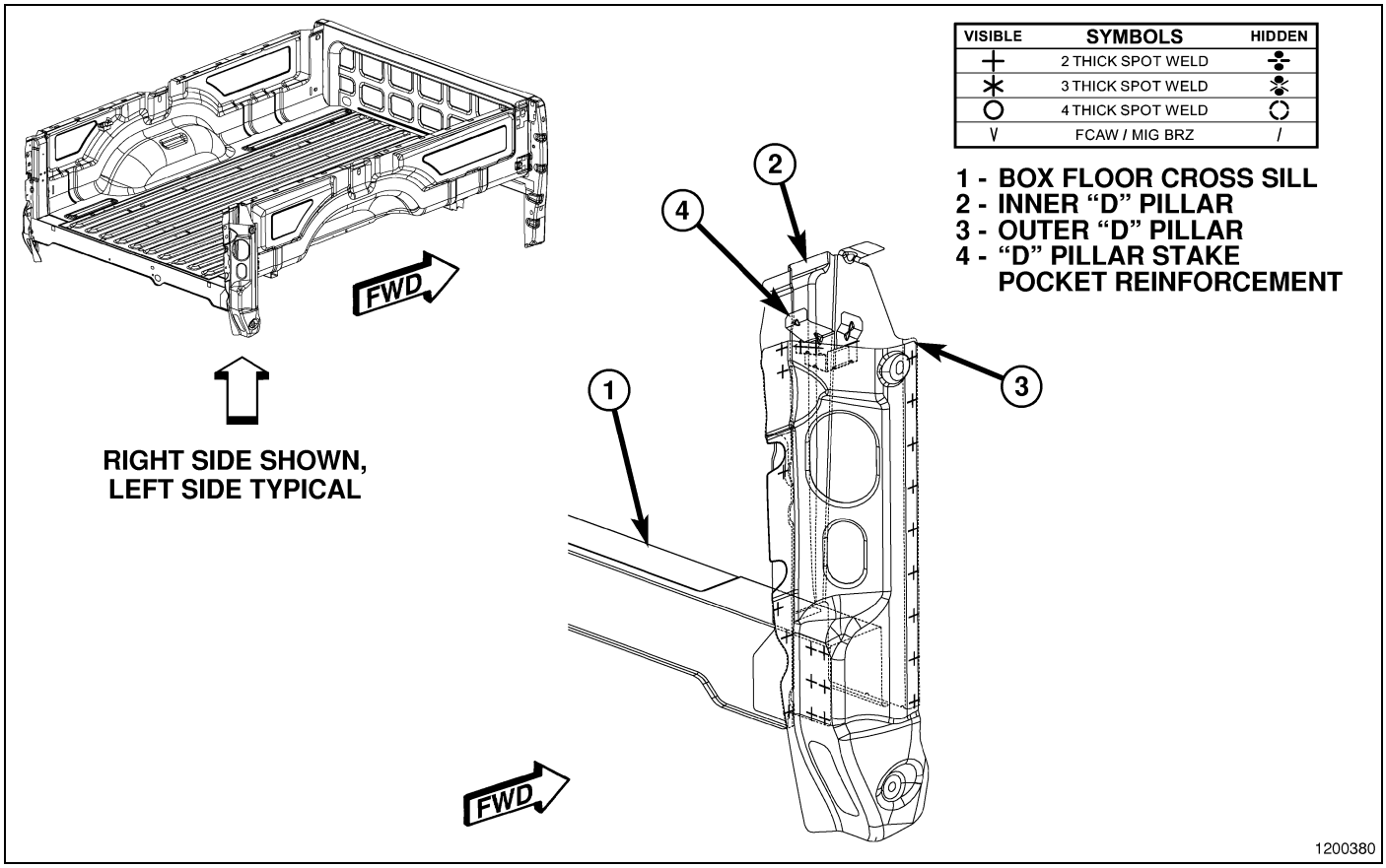

Fig. 309 8.0’ Box Tub (7 of 7)

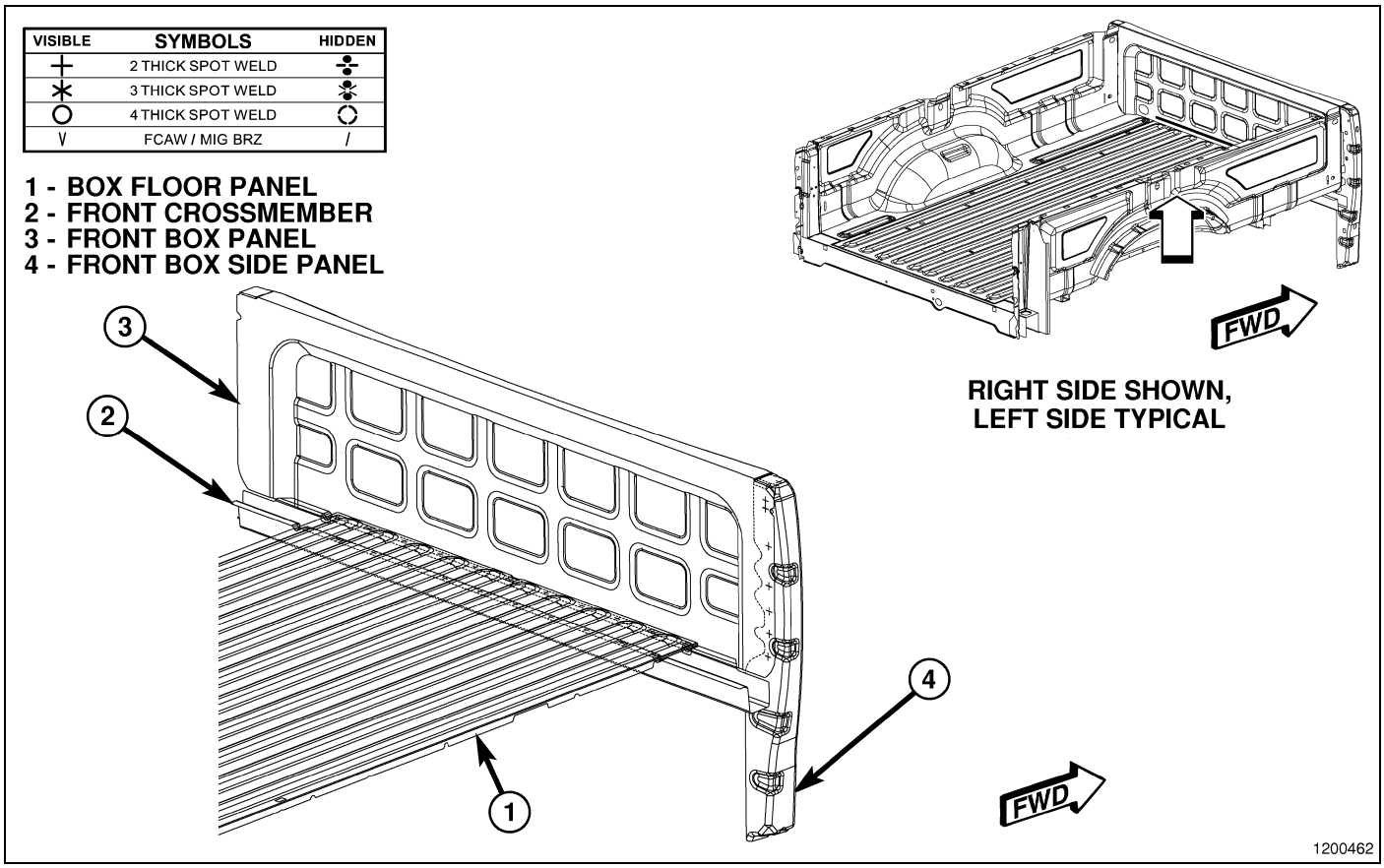

Fig. 310 8.0' Box Floor (1 of 7)

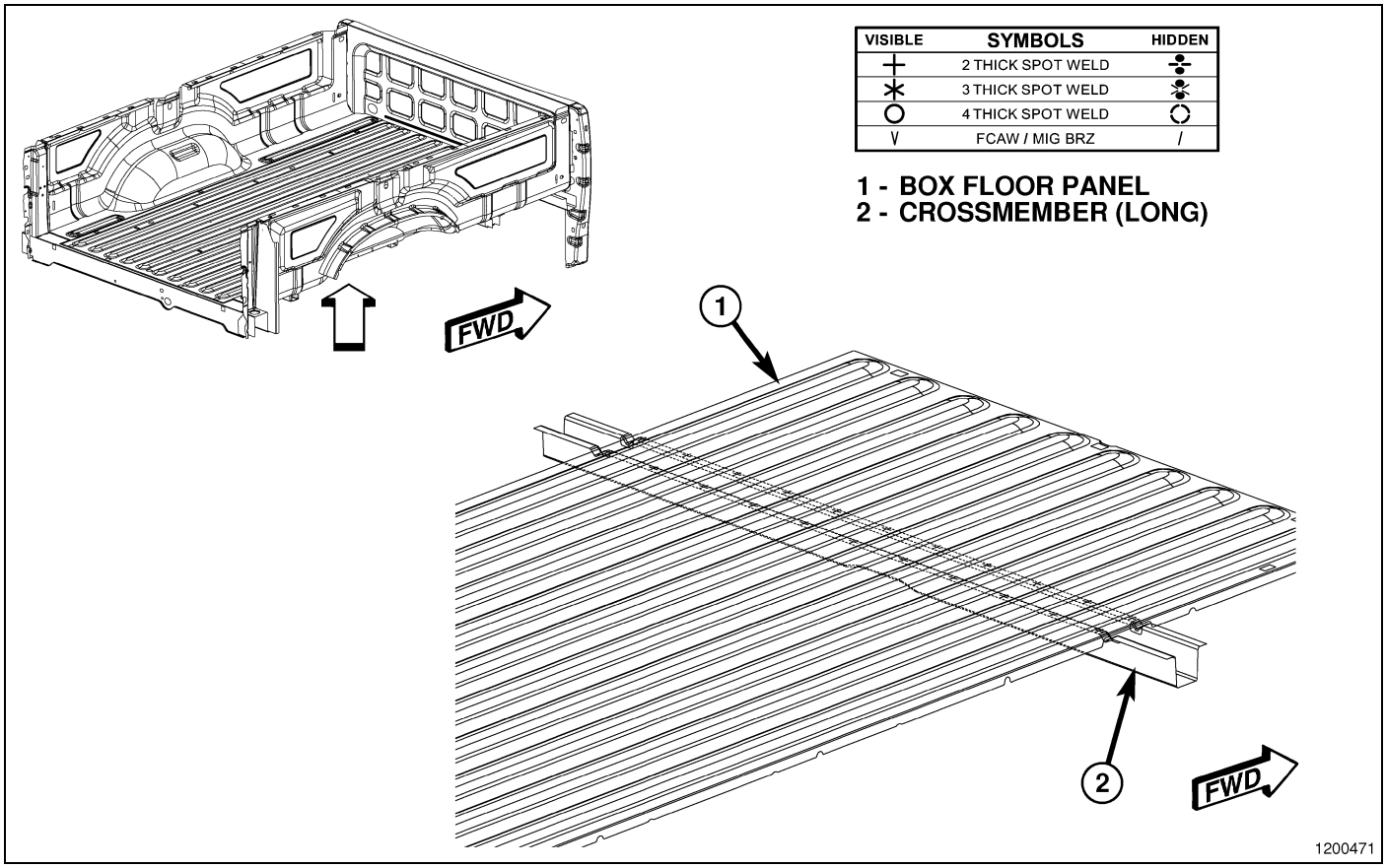

Fig. 311 8.0' Box Floor (2 of 7)

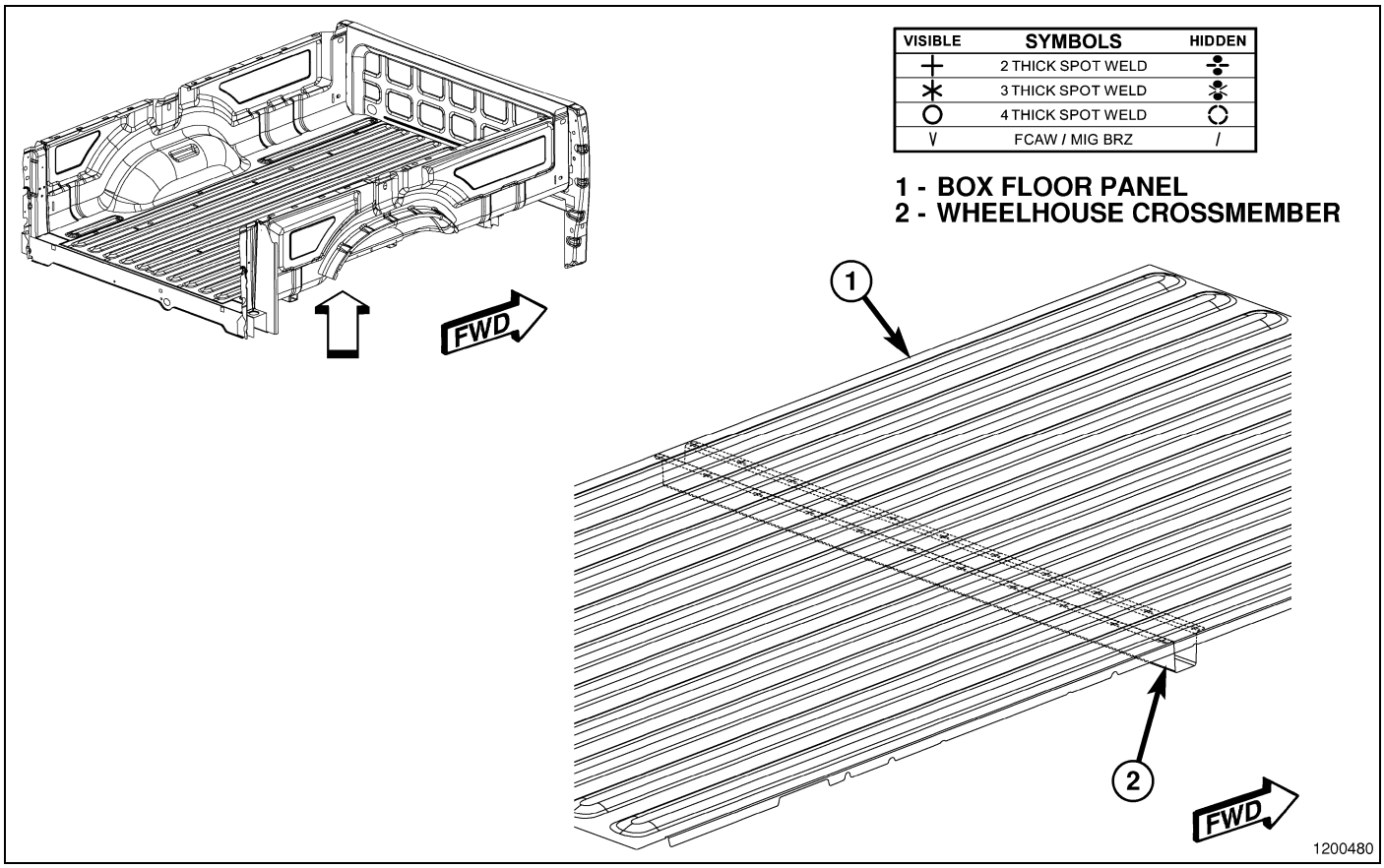

Fig. 312 8.0' Box Floor (3 of 7)

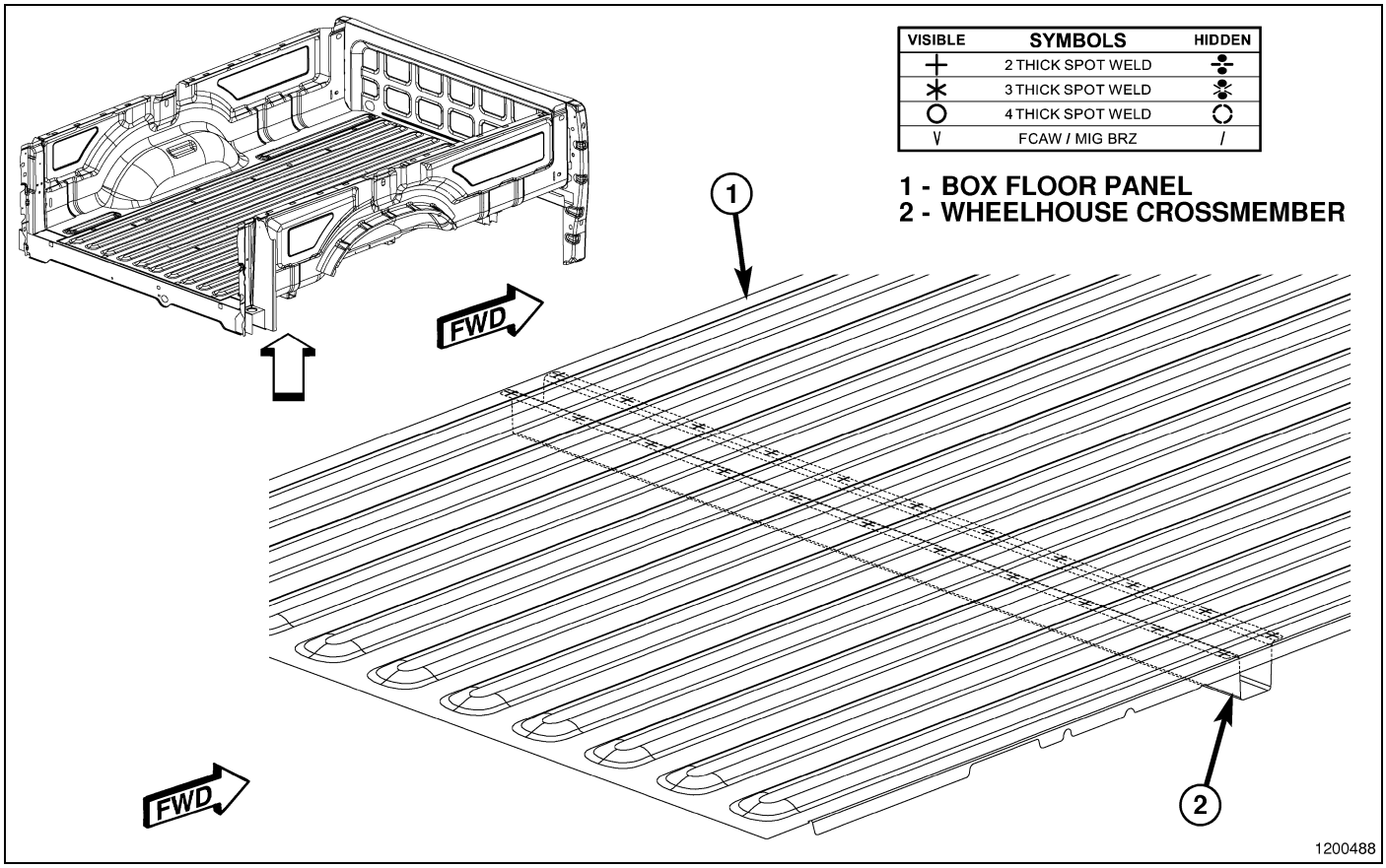

Fig. 313 8.0' Box Floor (4 of 7)

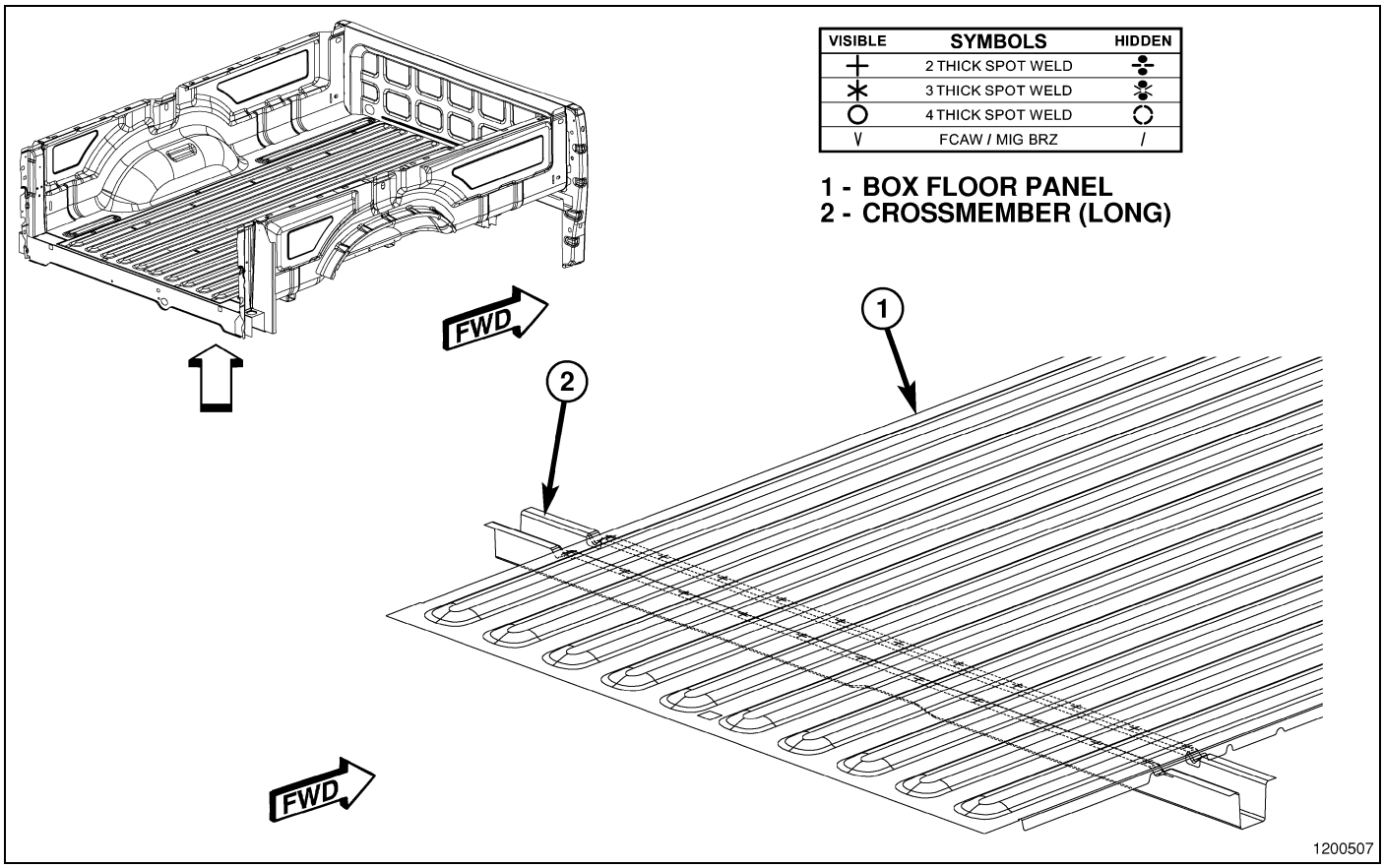

Fig. 314 8.0' Box Floor (5 of 7)

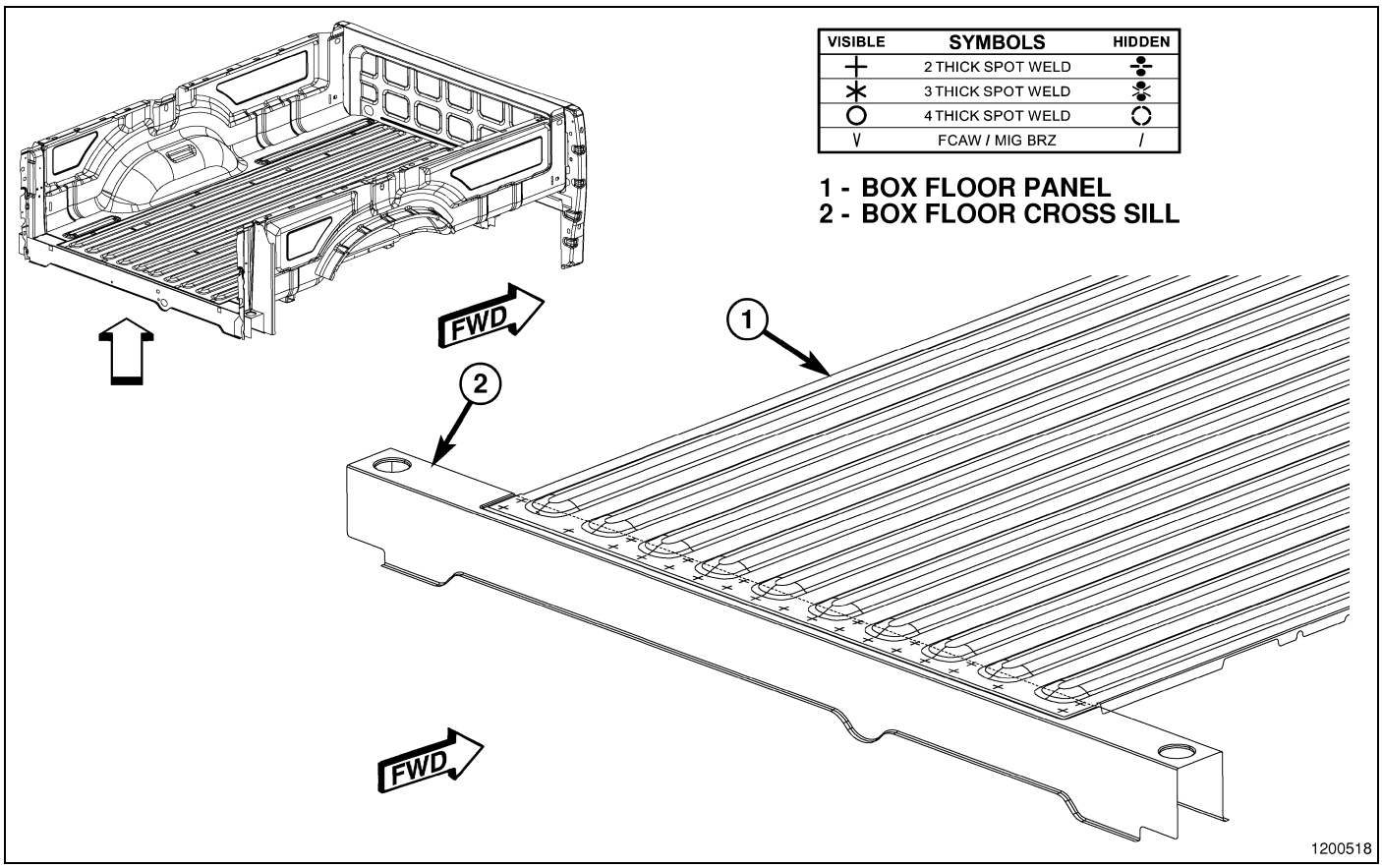

Fig. 315 8.0' Box Floor (6 of 7)

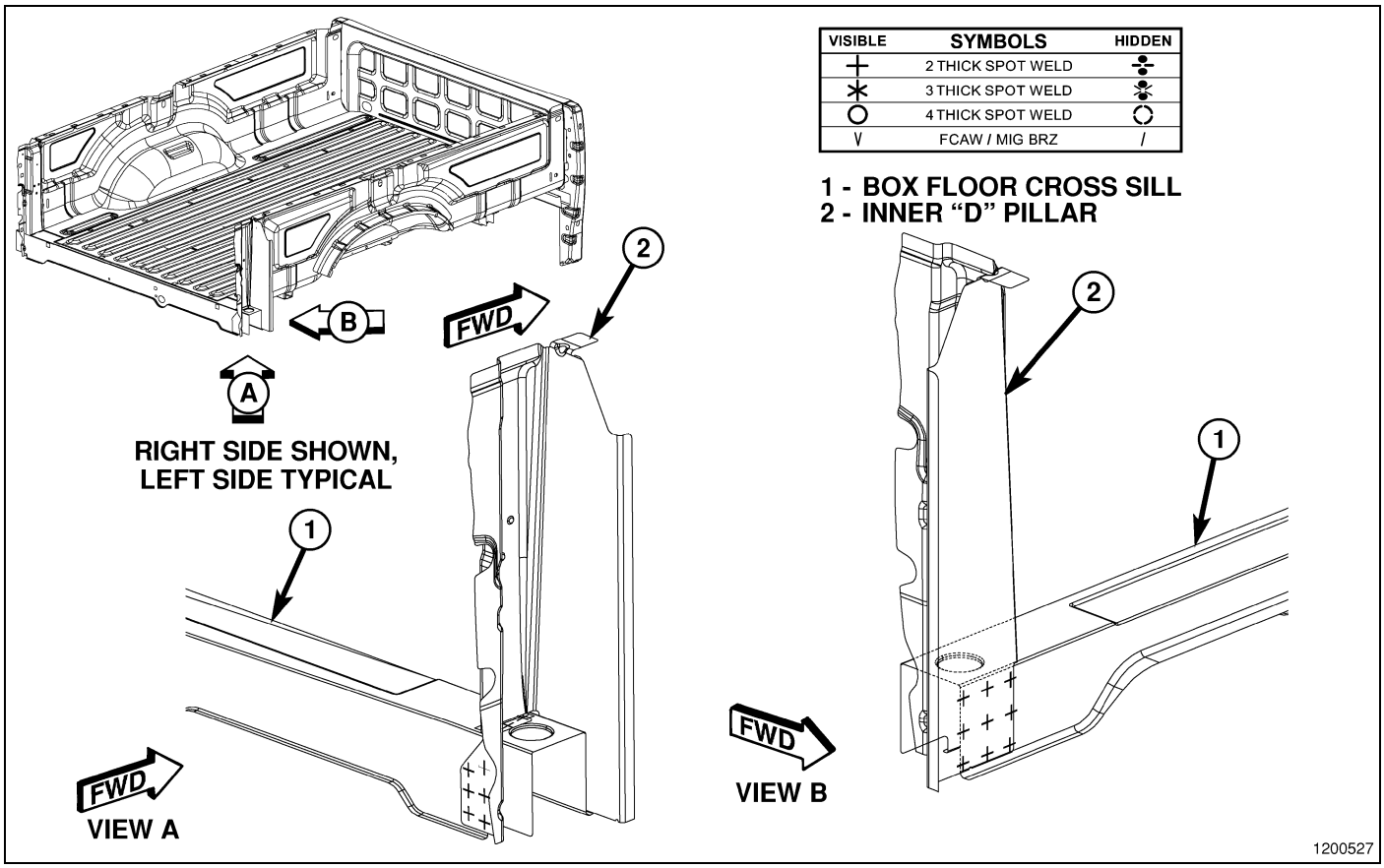

Fig. 316 8.0’ Box Floor (7 of 7)

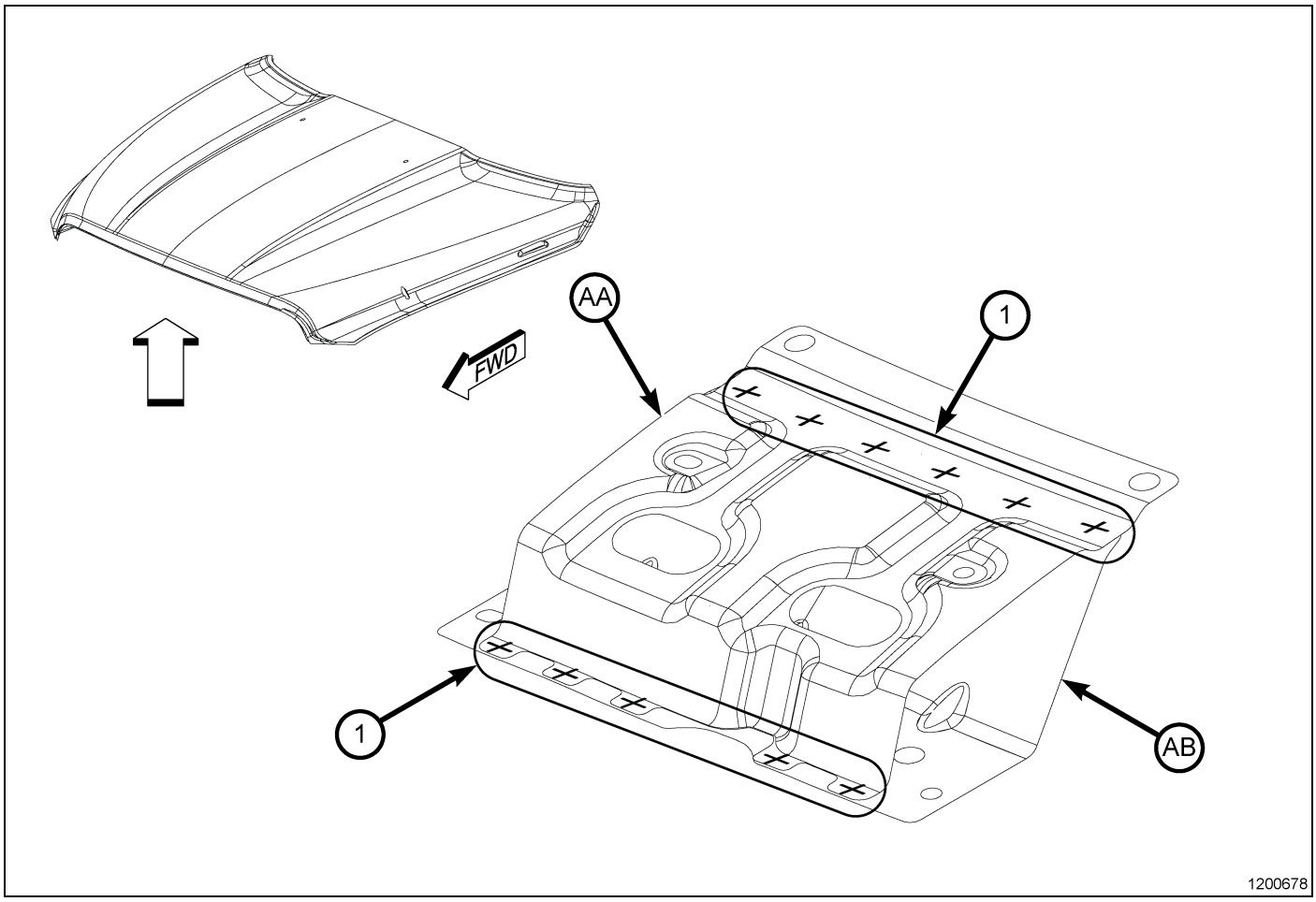

Fig. 317 Hood (1 of 2)

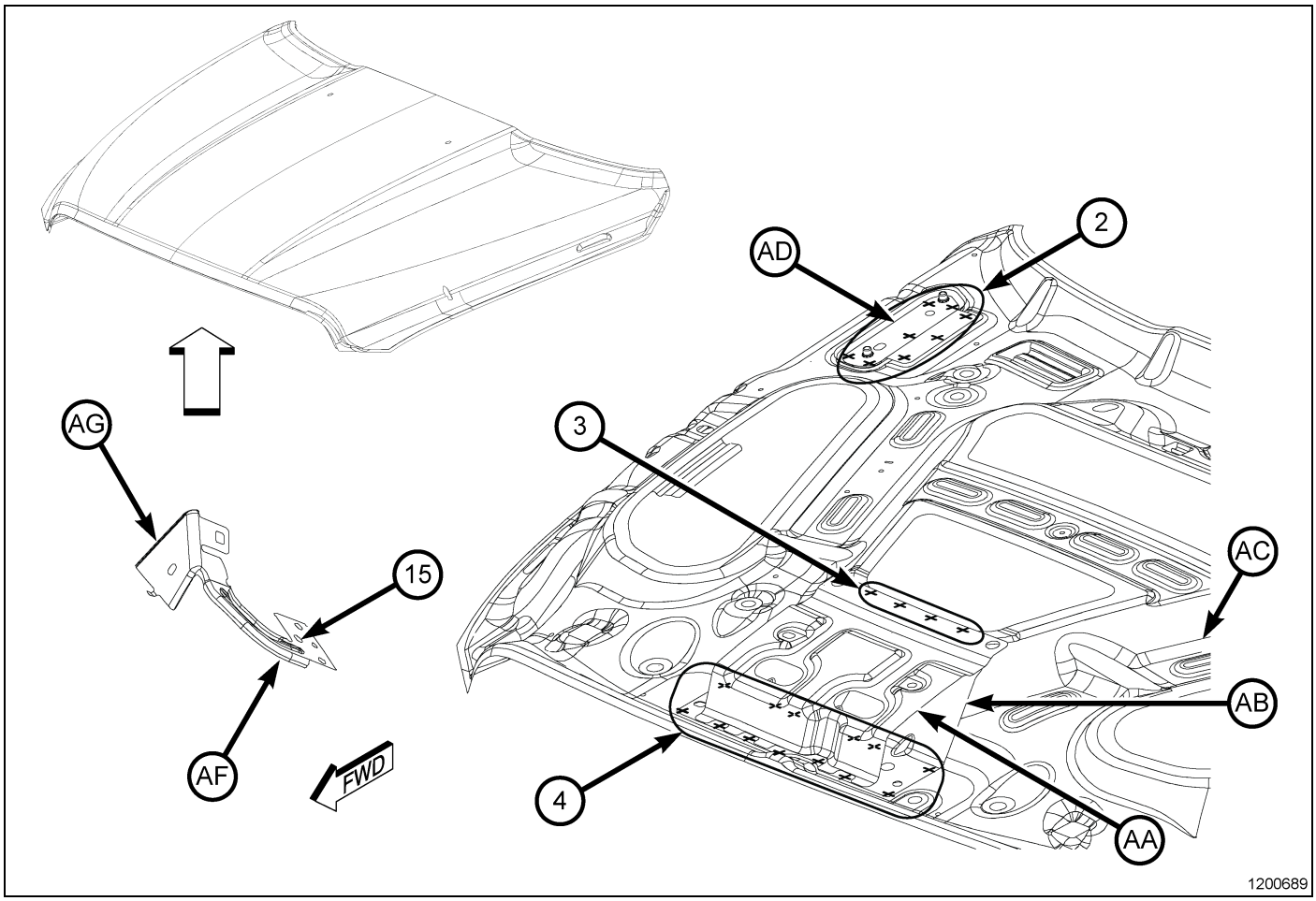

Fig. 318 Hood (2 of 2)

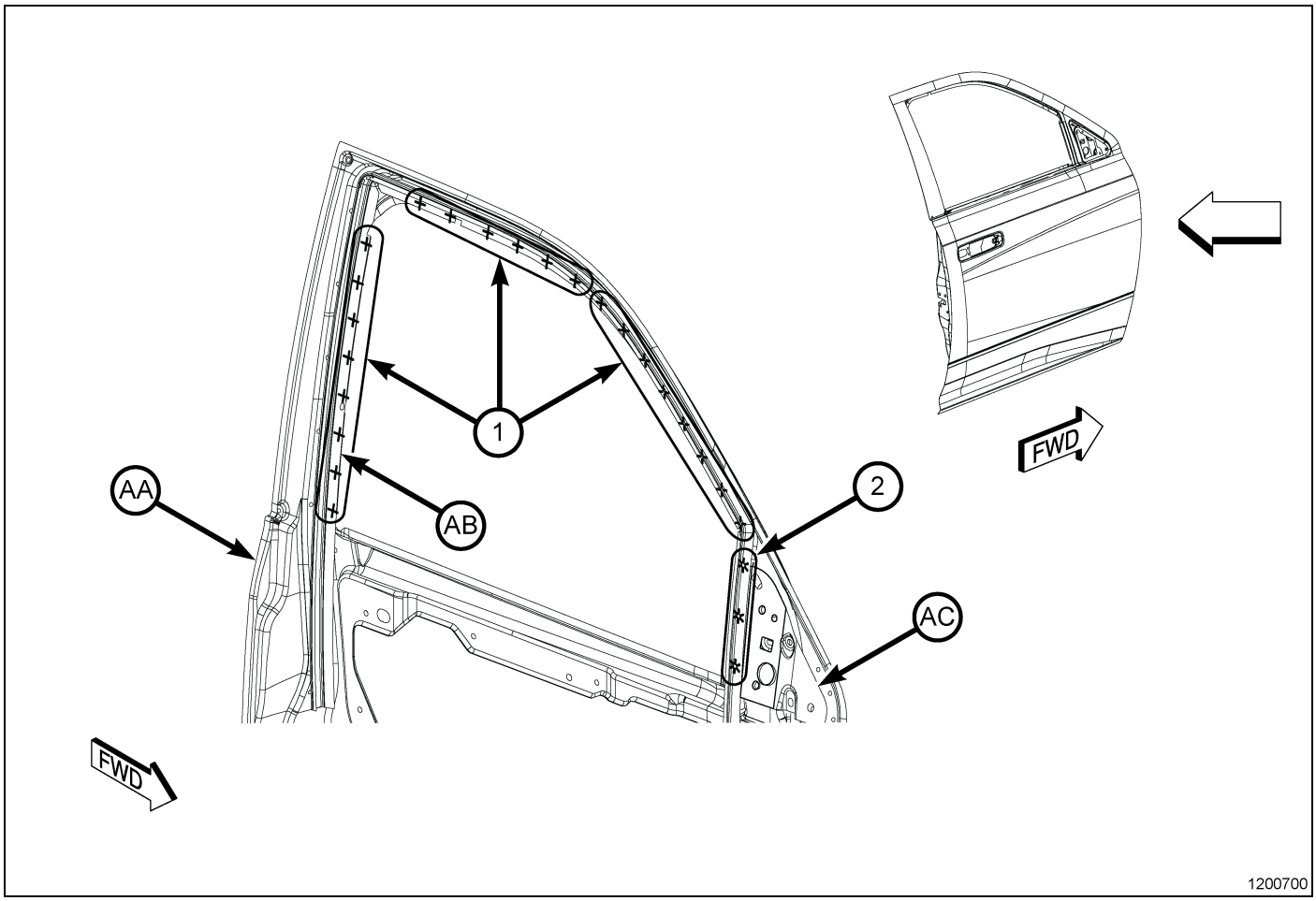

Fig. 319 Front Doors – Short (1 of 3)

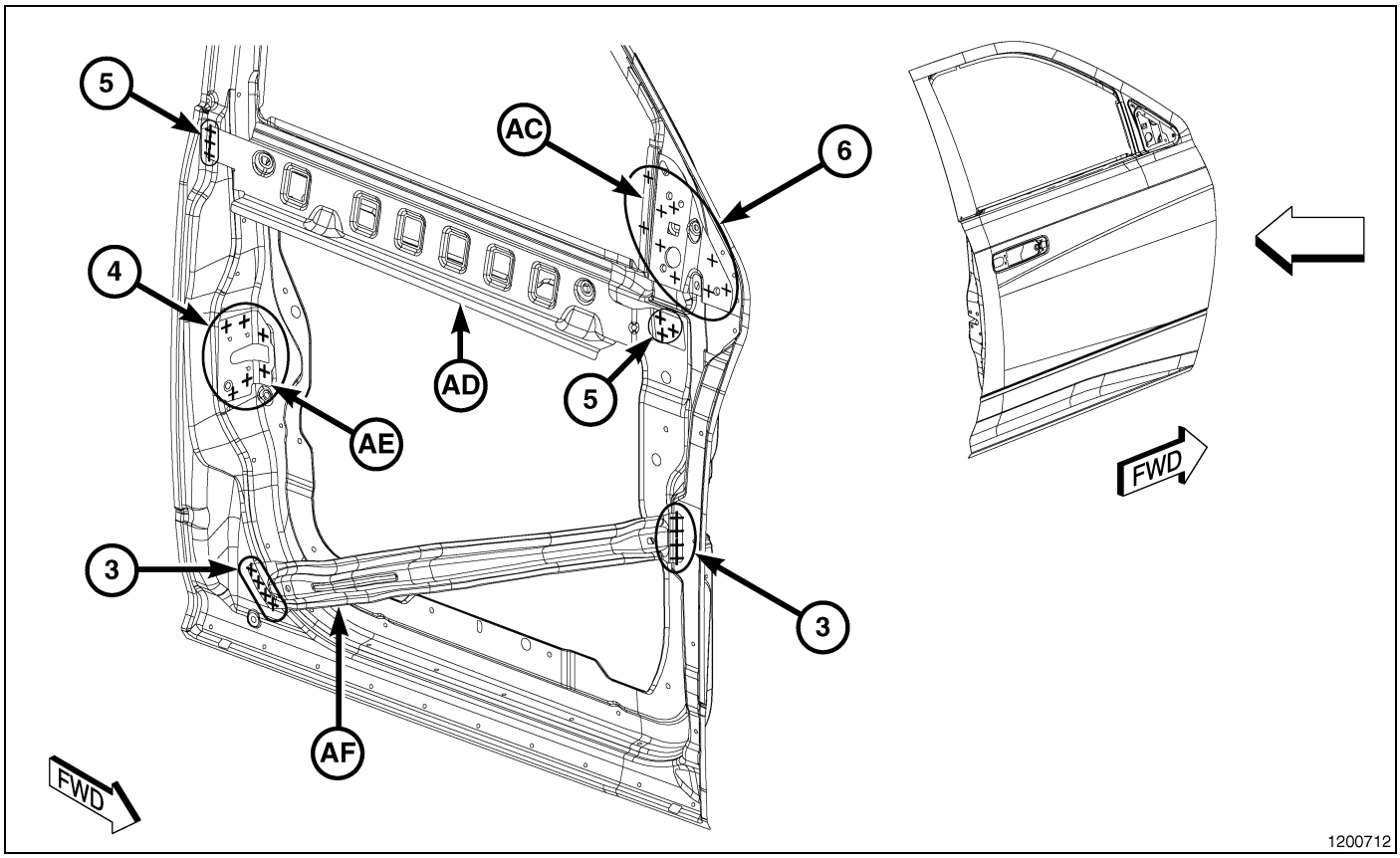

Fig. 320 Front Doors – Short (2 of 3)

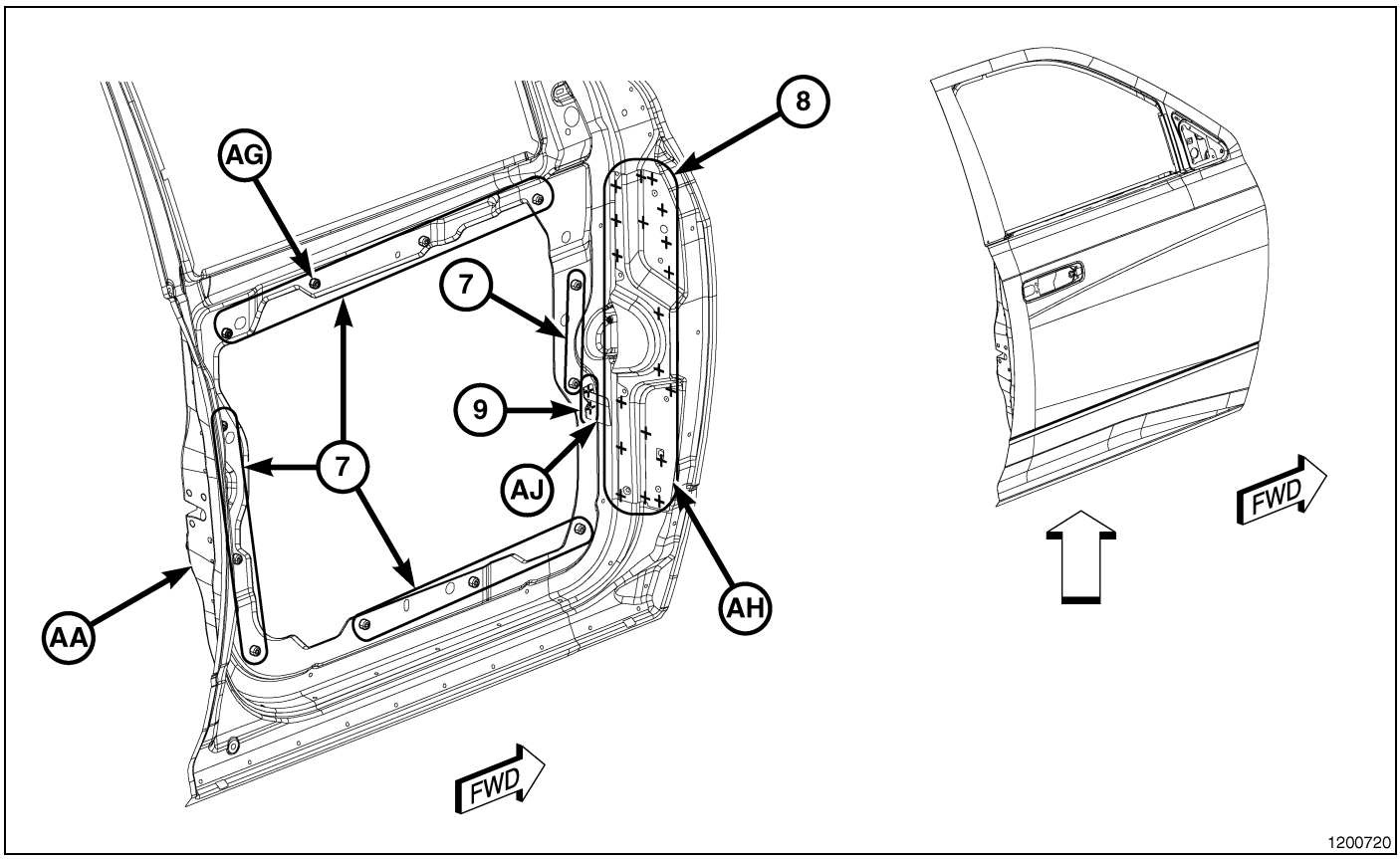

Fig. 321 Front Doors – Short (3 of 3)

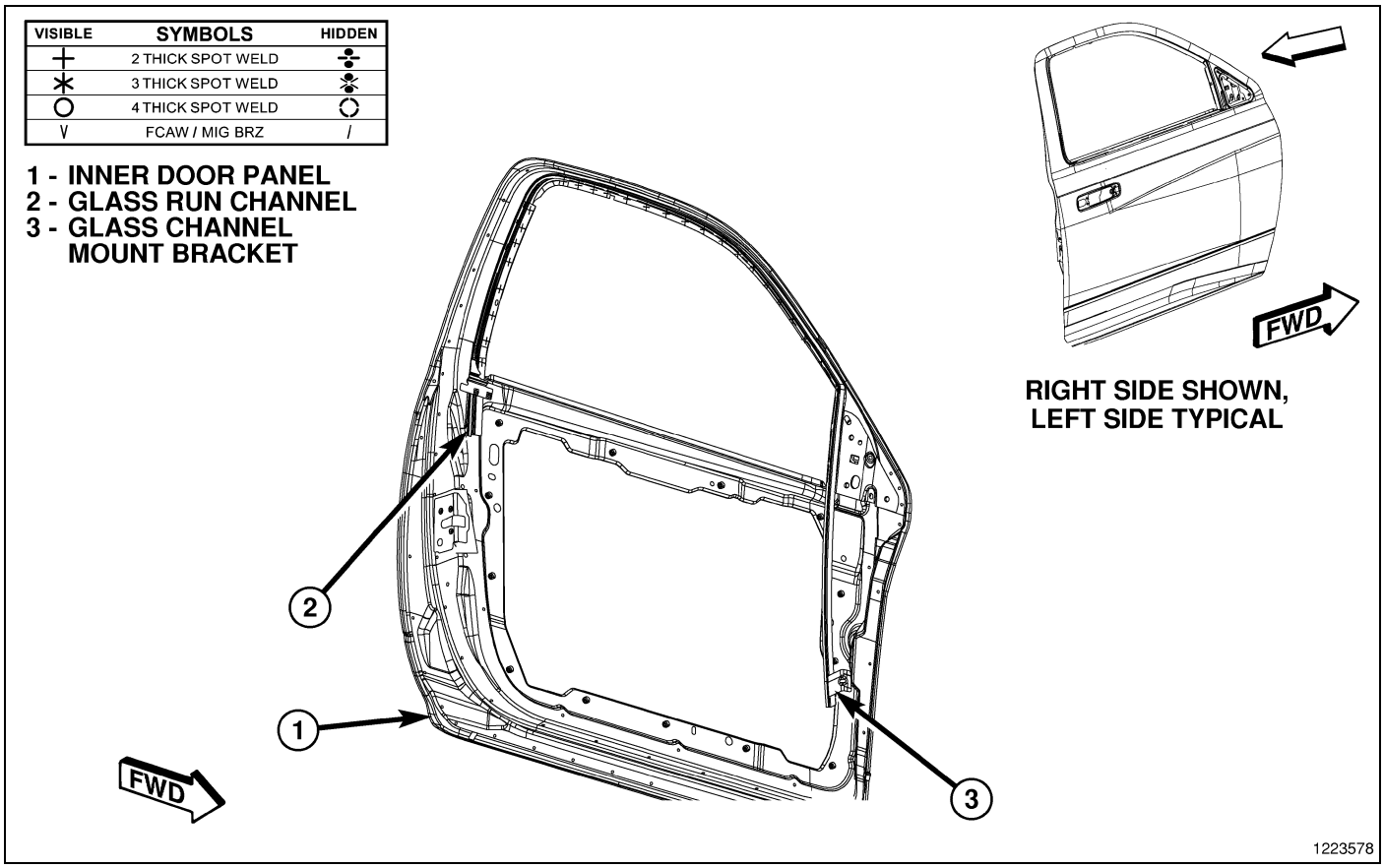

Fig. 322 Front Doors – Long (1 of 4)

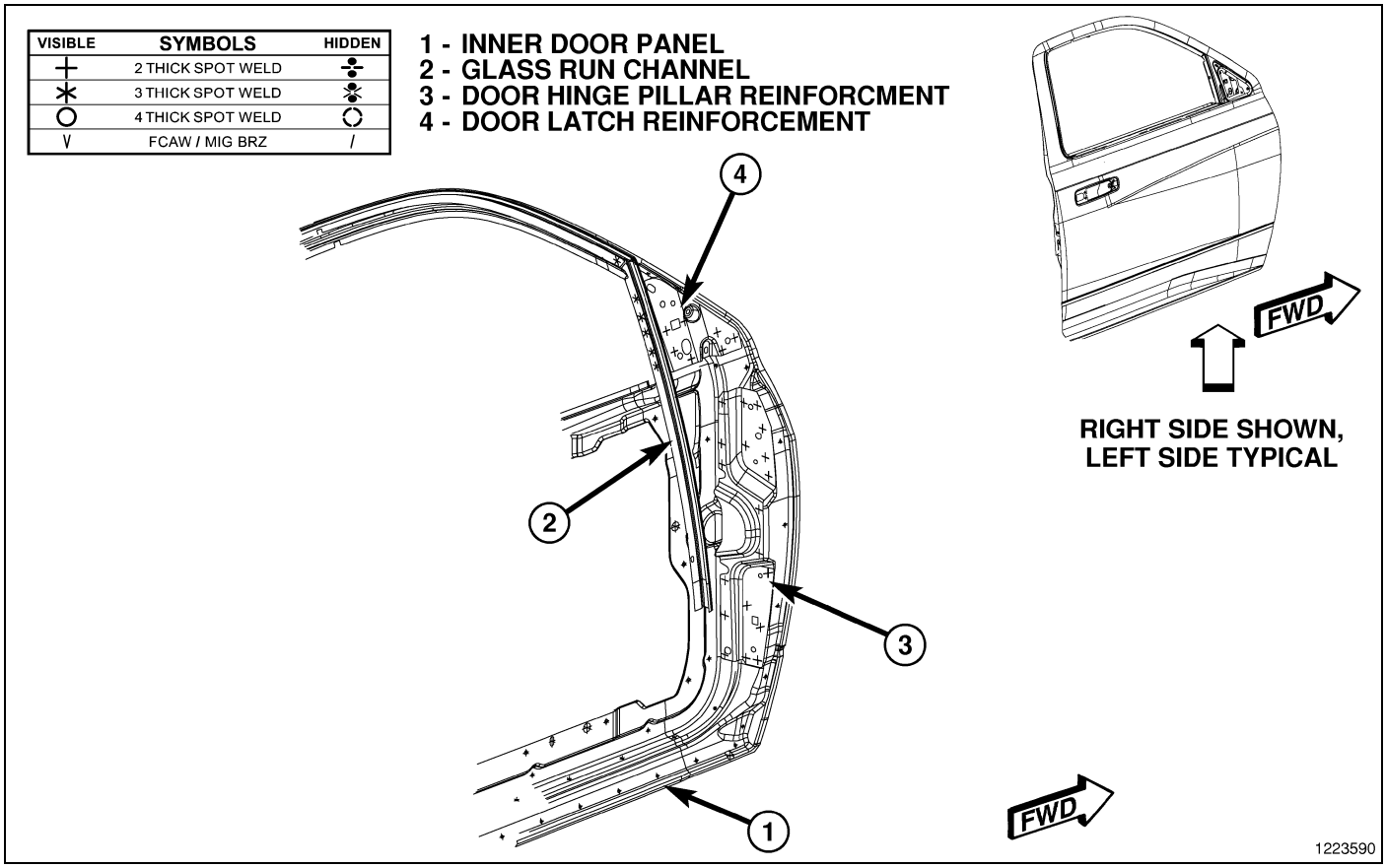

Fig. 323 Front Doors – Long (2 of 4)

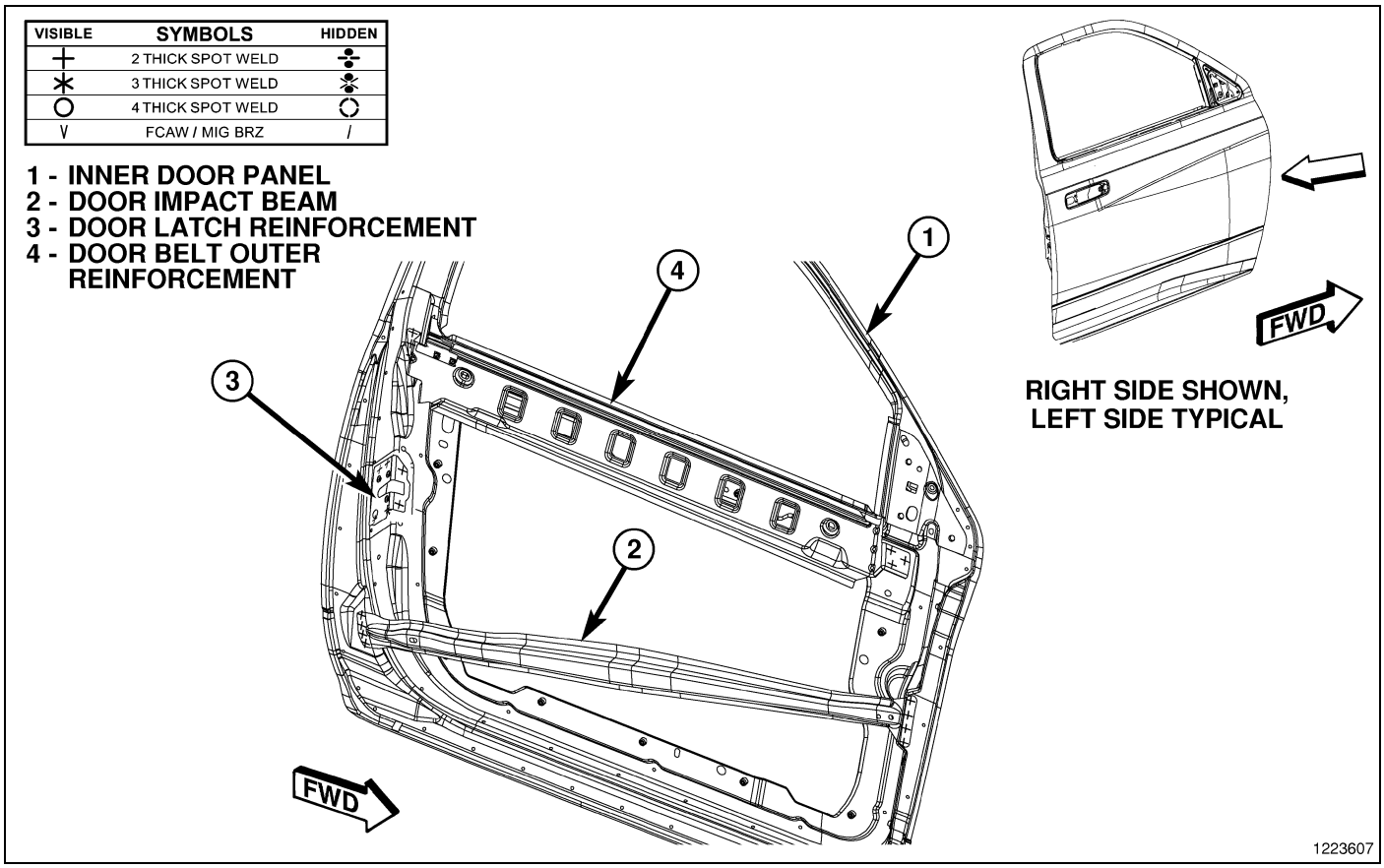

Fig. 324 Front Doors – Long (3 of 4)

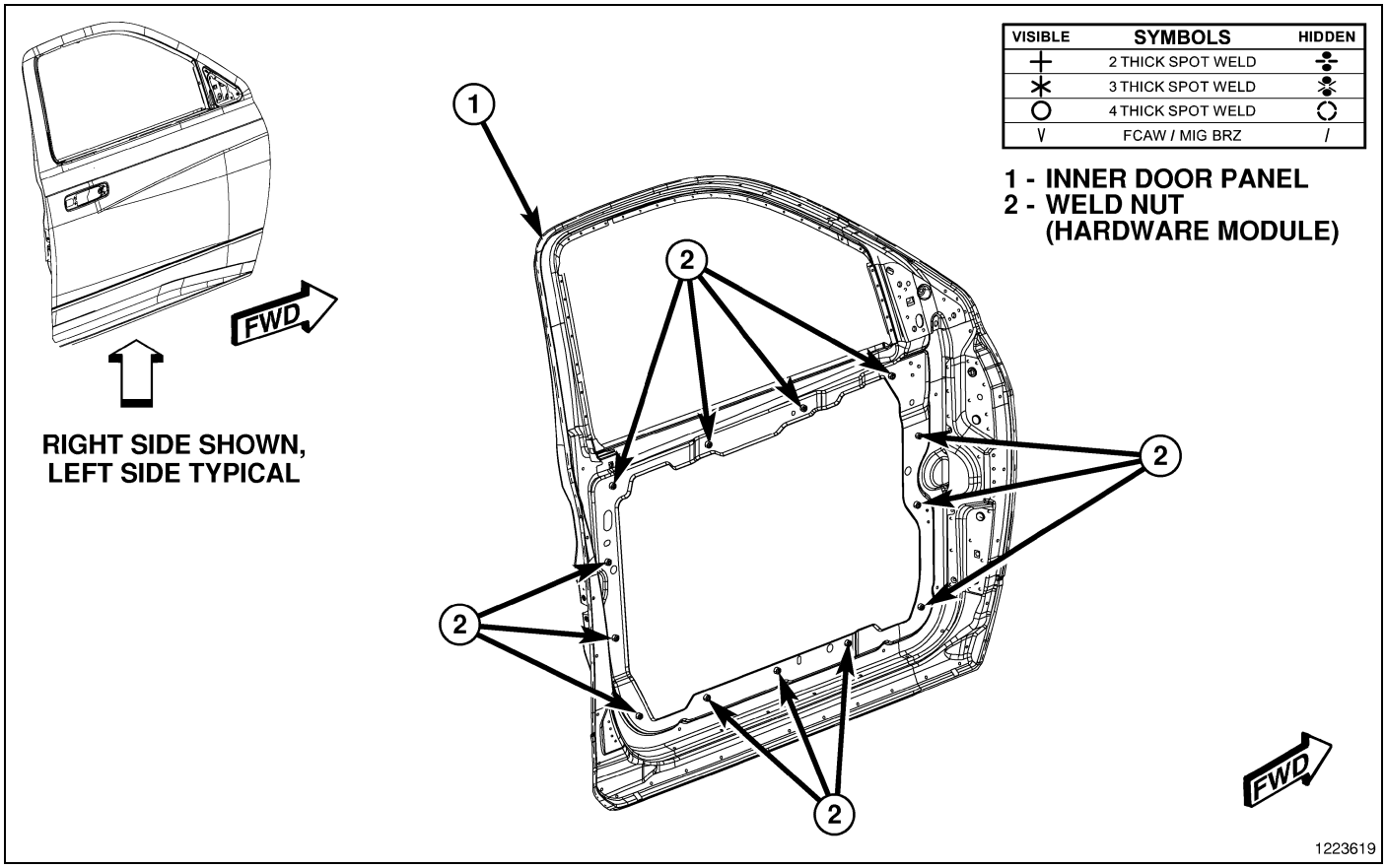

Fig. 325 Front Doors – Long (4 of 4)

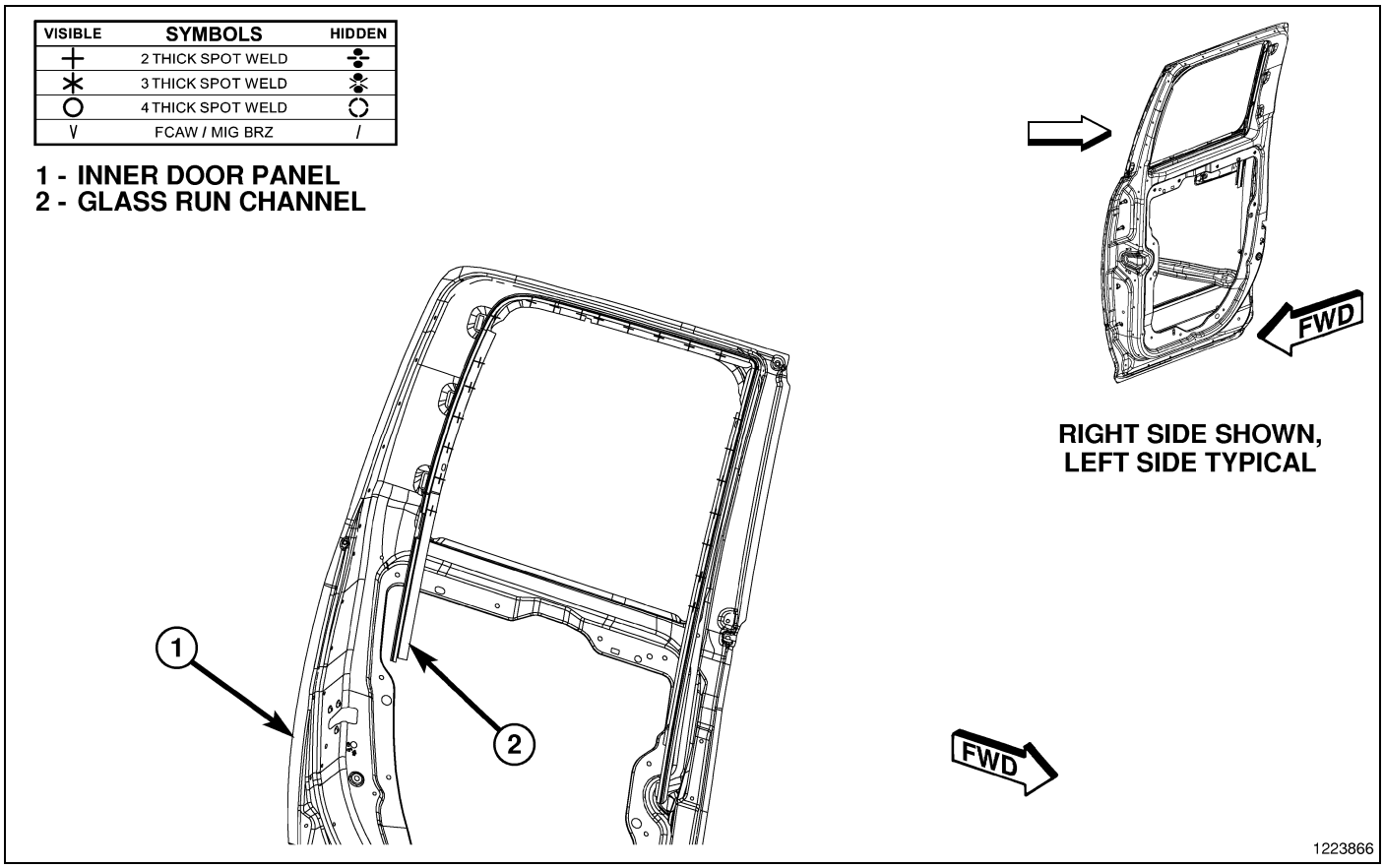

Fig. 326 Rear Doors – Half (1 of 4)

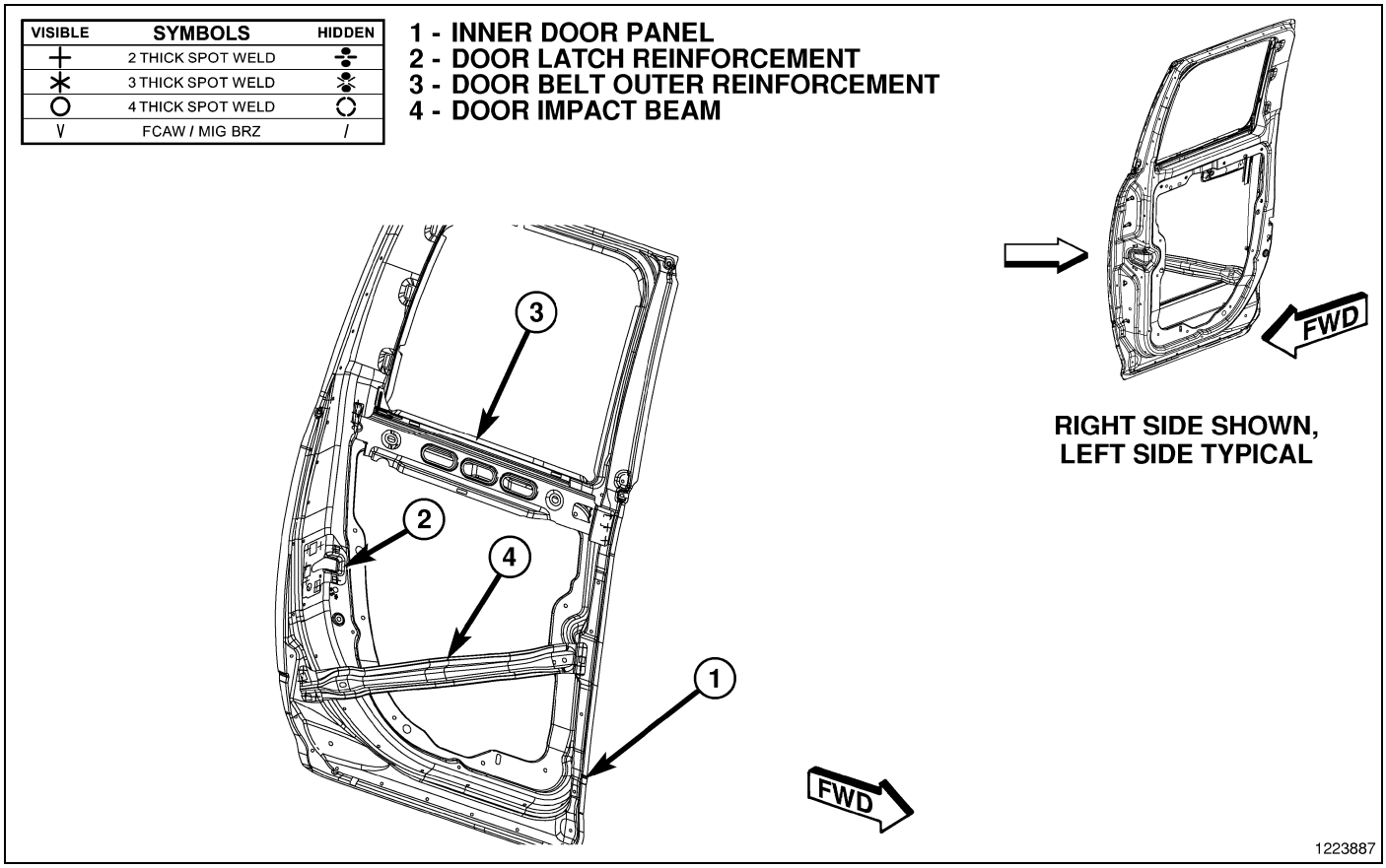

Fig. 327 Rear Doors – Half (2 of 4)

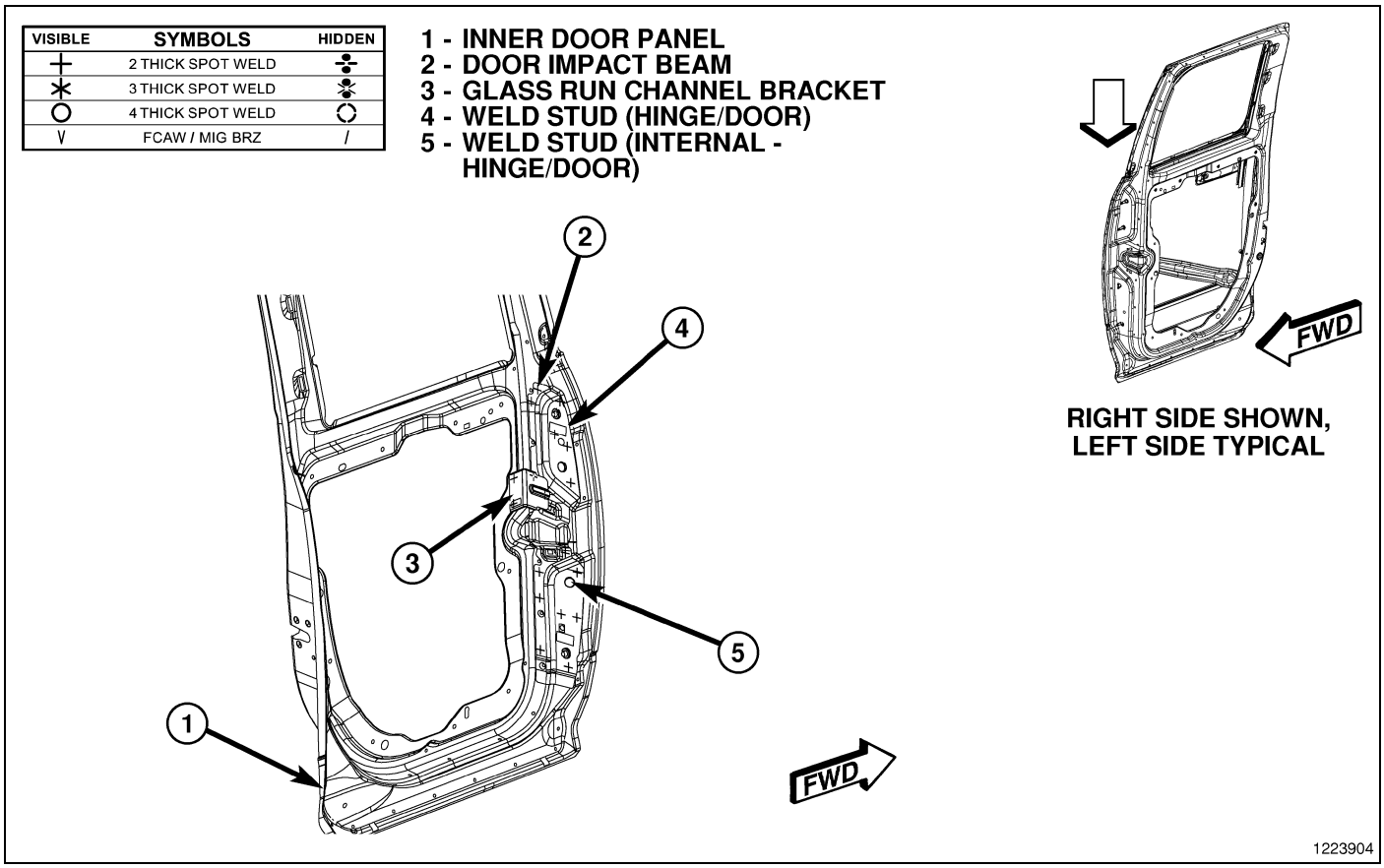

Fig. 328 Rear Doors – Half (3 of 4)

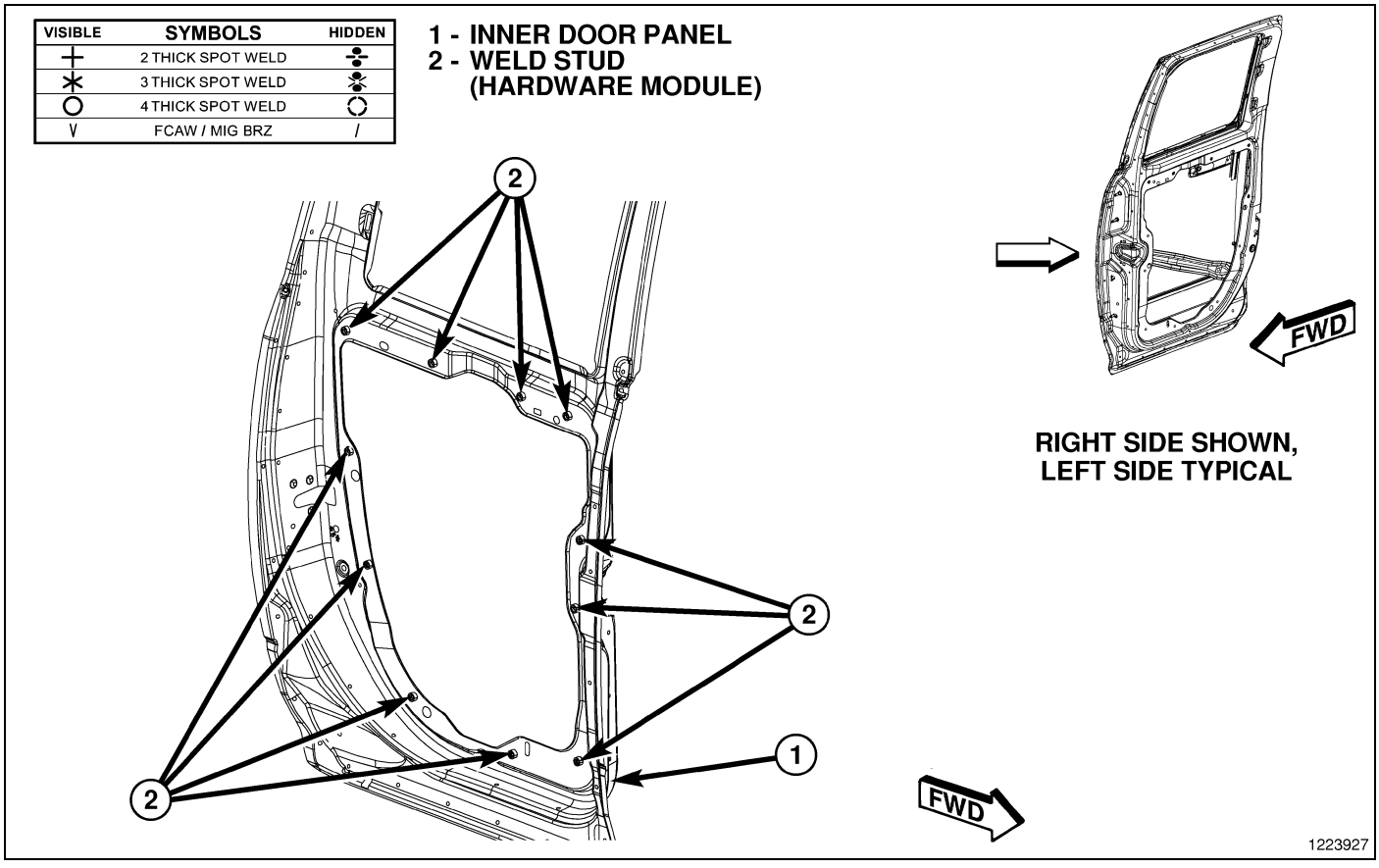

Fig. 329 Rear Doors – Half (4 of 4)

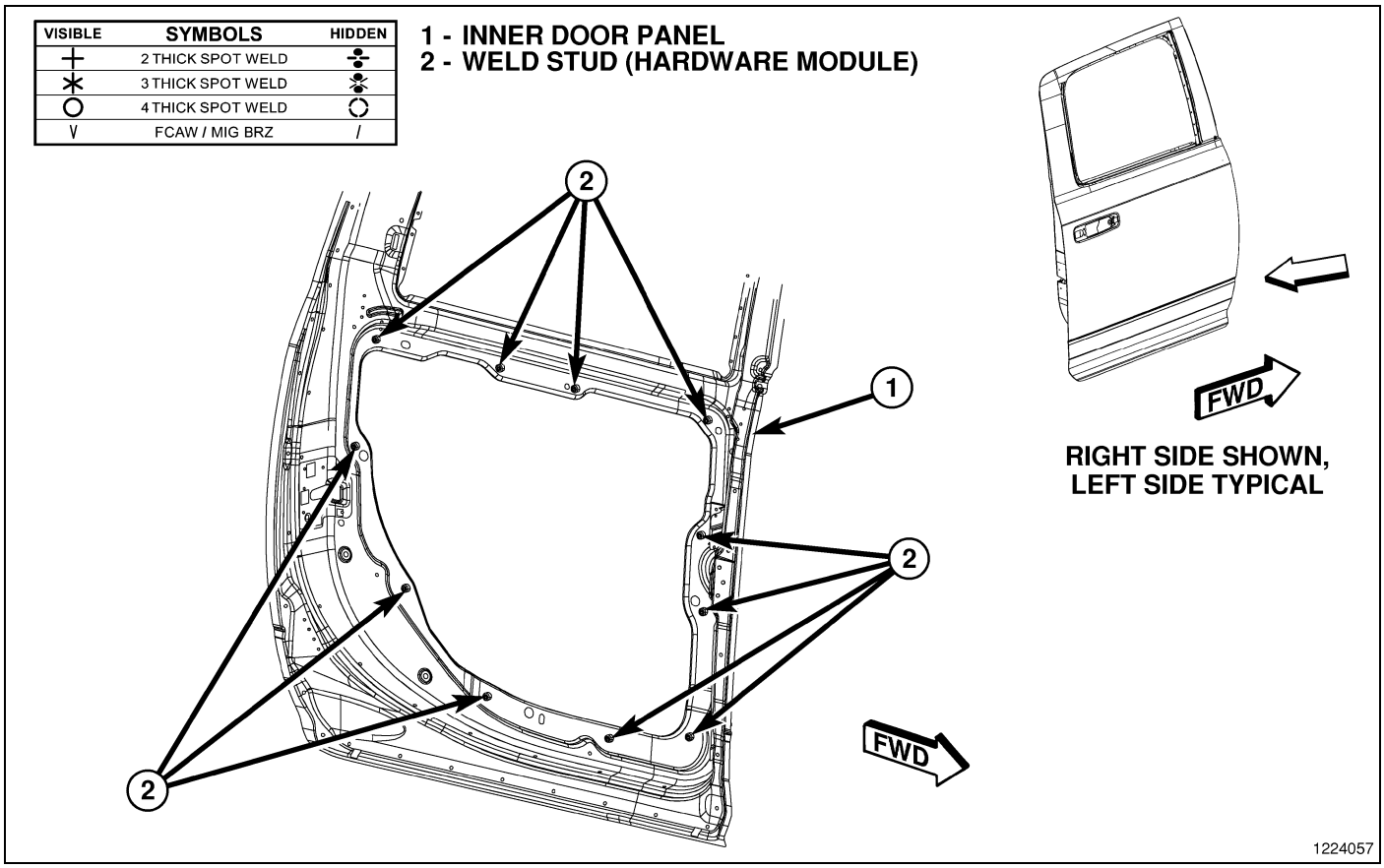

Fig. 330 Rear Doors – Full (1 of 4)

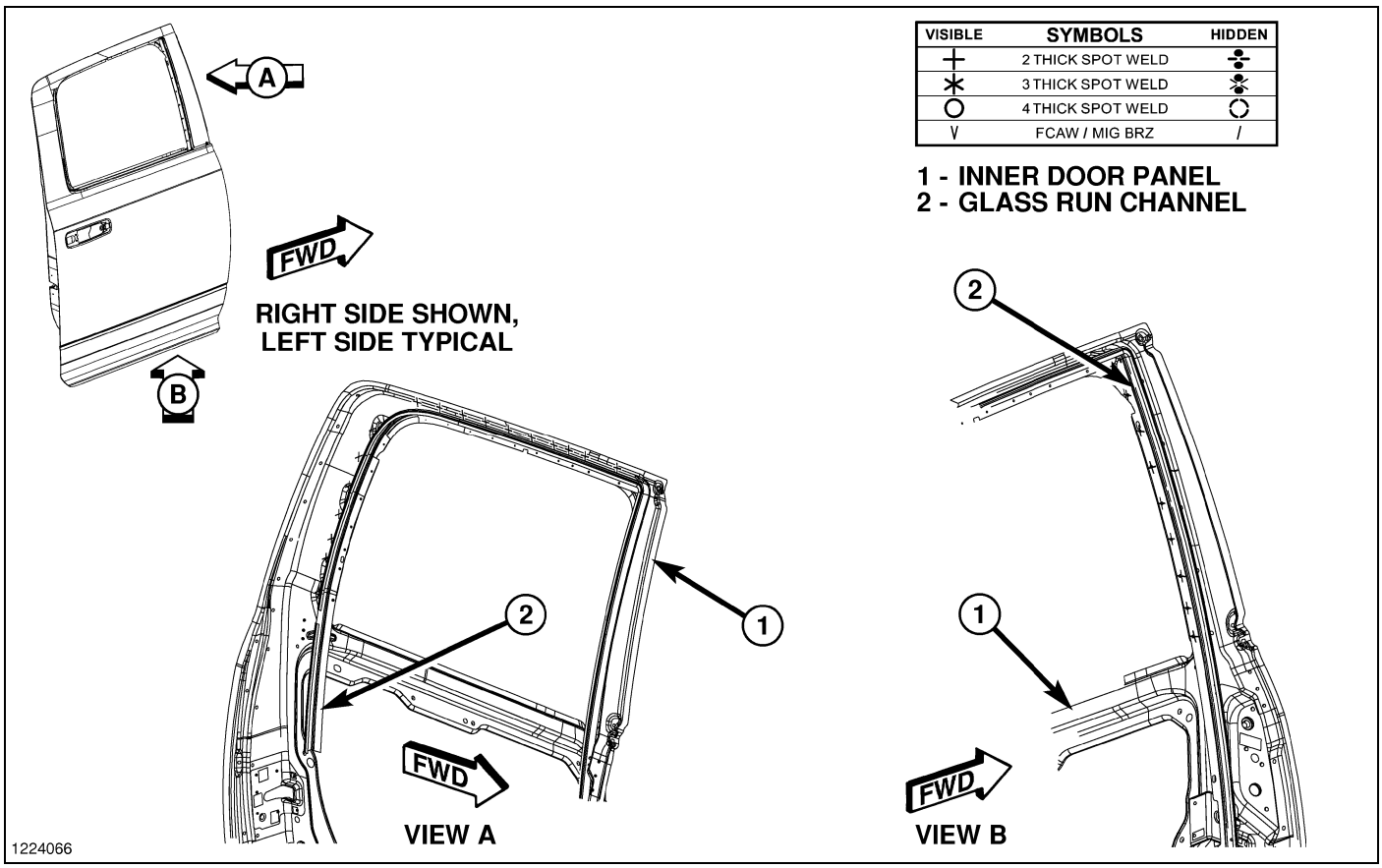

Fig. 331 Rear Doors – Full (2 of 4)

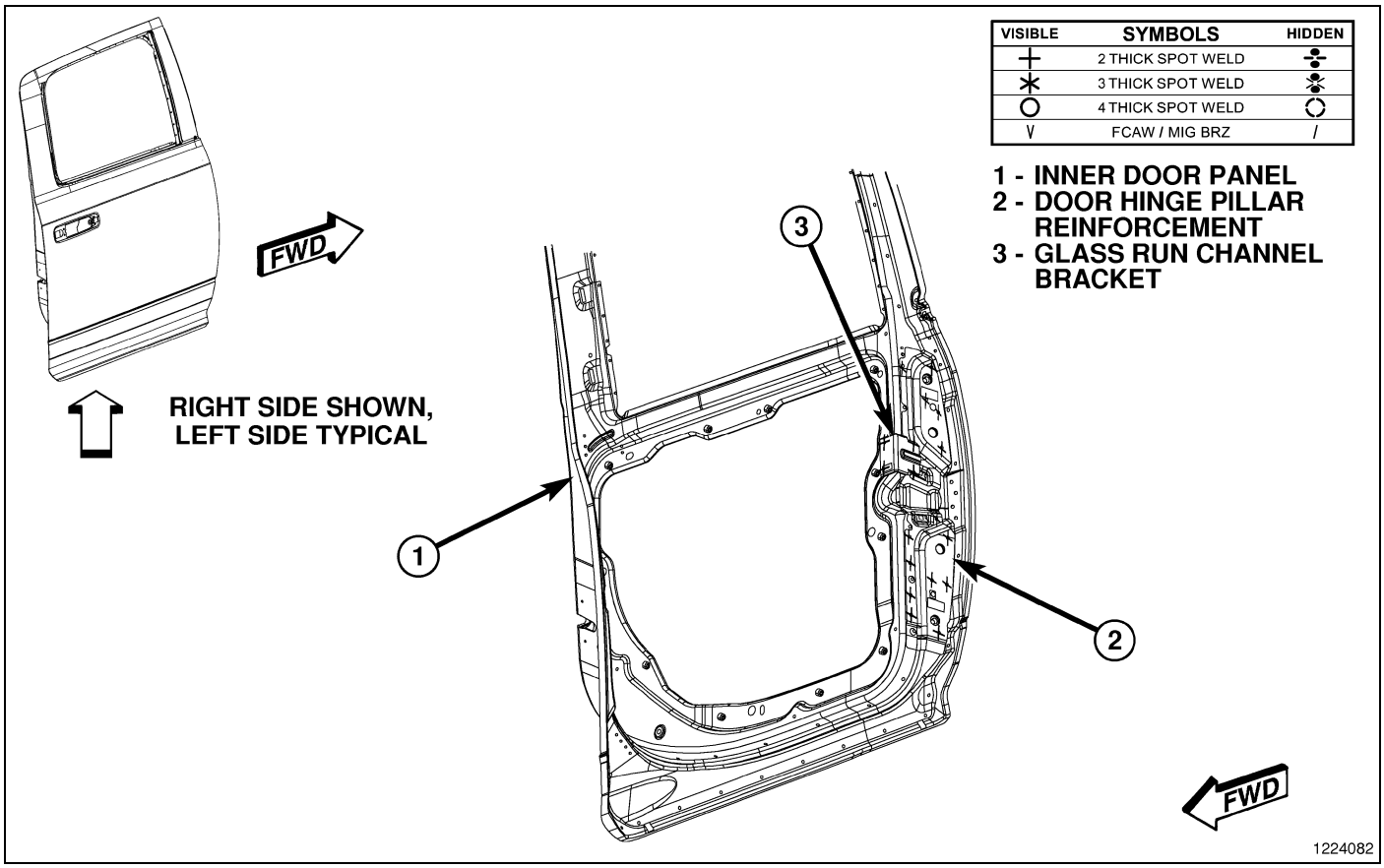

Fig. 332 Rear Doors – Full (3 of 4)

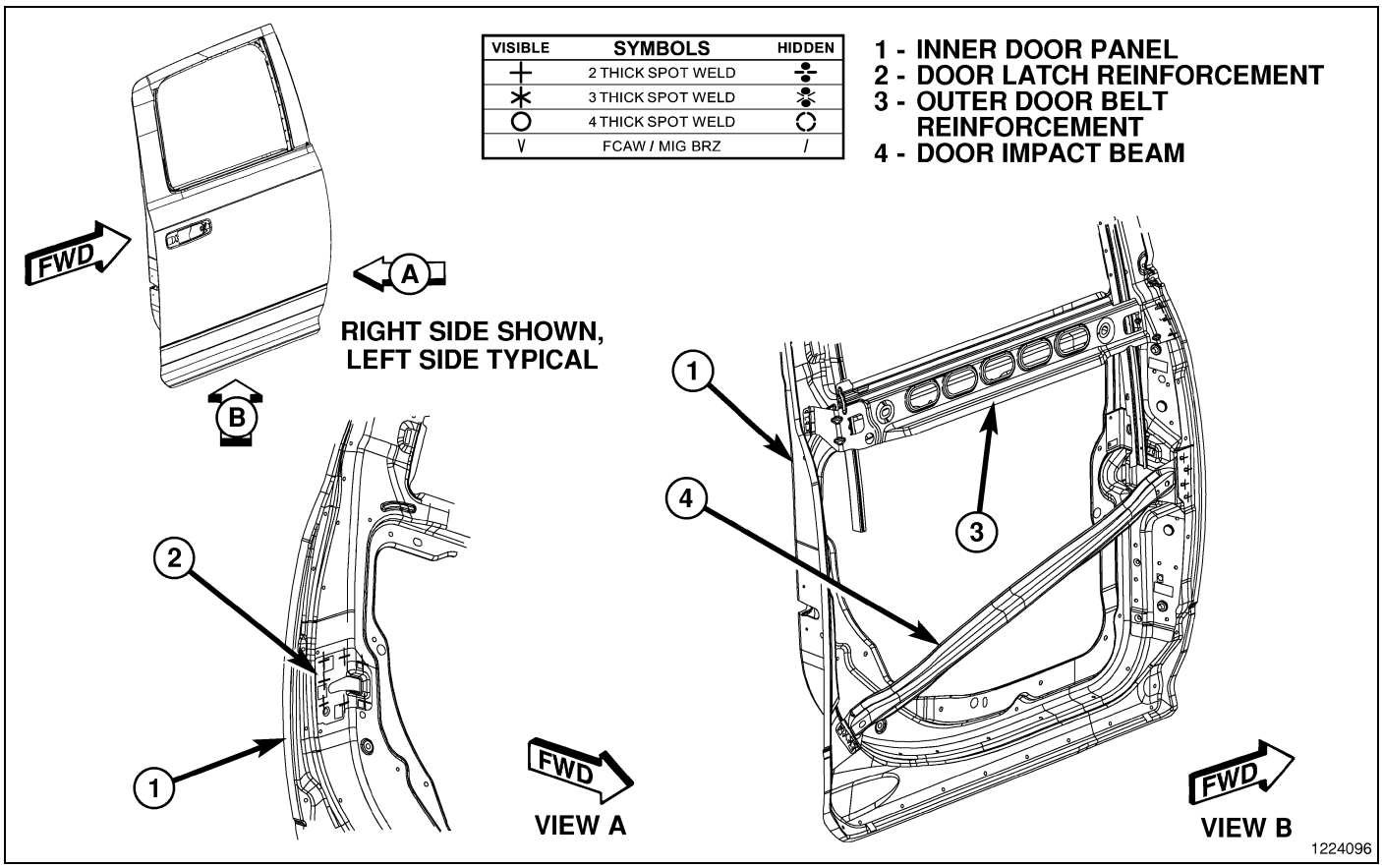

Fig. 333 Rear Doors – Full (4 of 4)

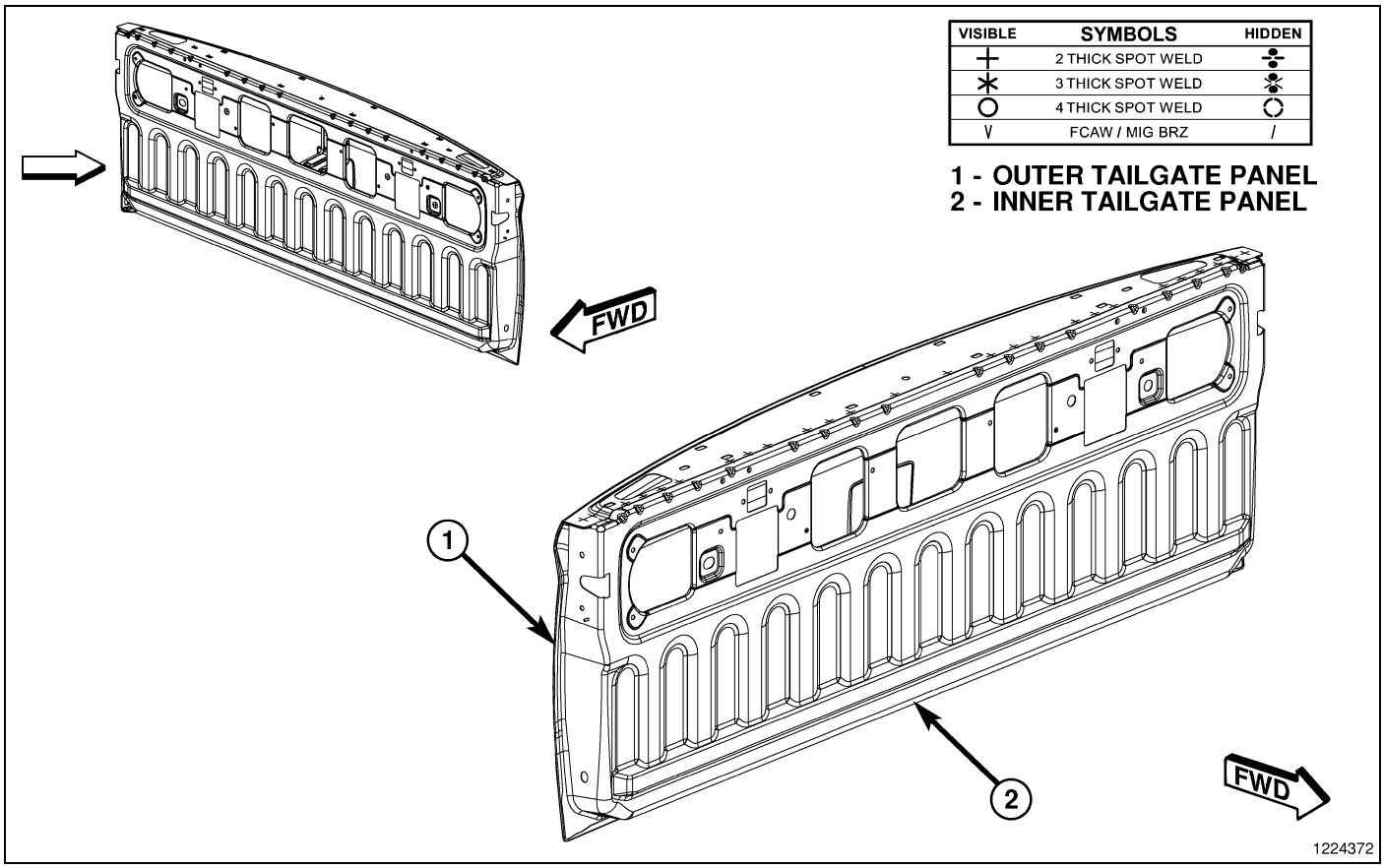

Fig. 334 Tailgate (1 of 3)

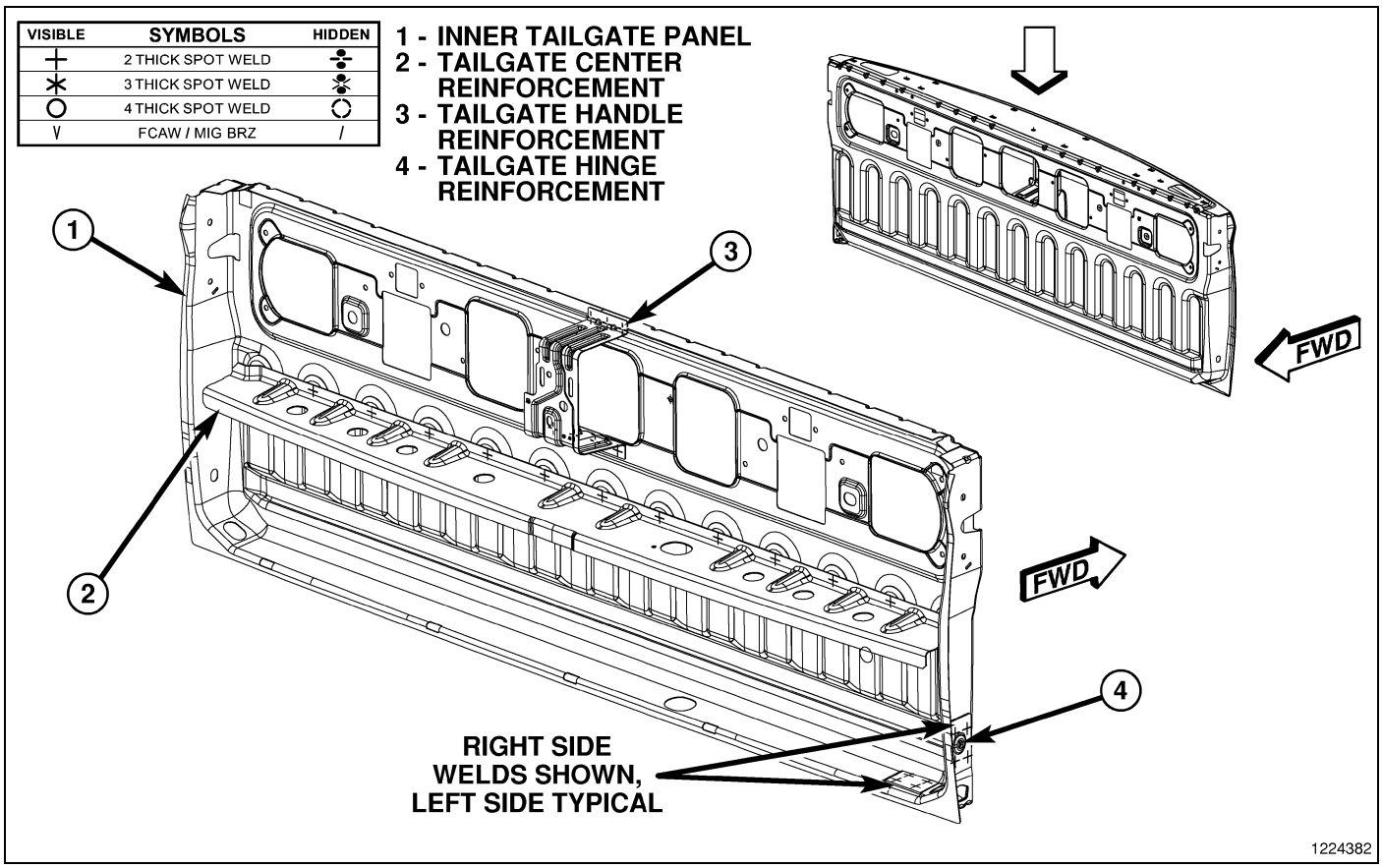

Fig. 335 Tailgate (2 of 3)

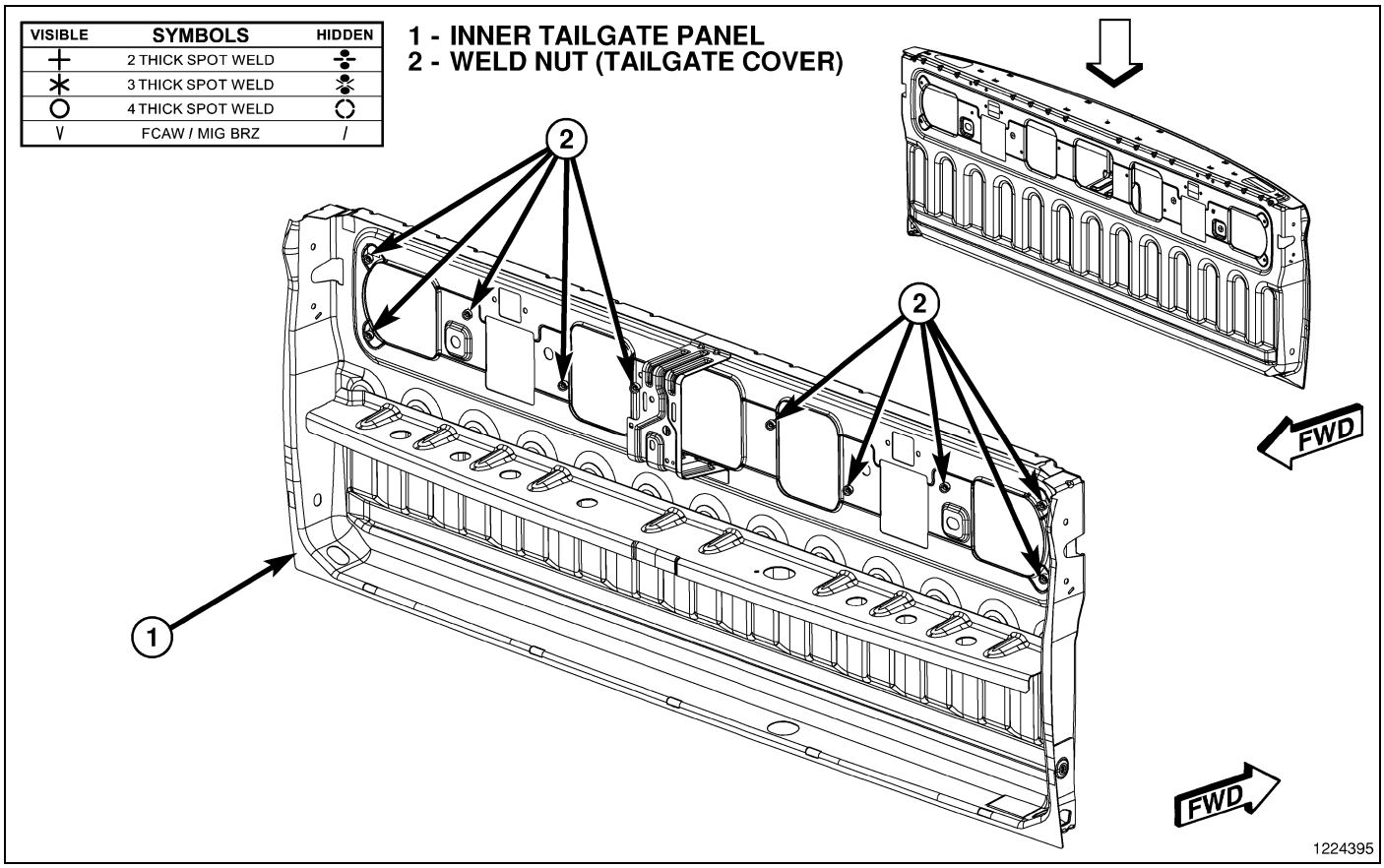

Fig. 336 Tailgate (3 of 3)

HEATING AND AIR CONDITIONING

TABLE OF CONTENTS

page

HEATING AND AIR CONDITIONING
DESCRIPTION 2
OPERATION 2
DIAGNOSIS AND TESTING
A/C PERFORMANCE 4
HEATER PERFORMANCE 7
SPECIFICATIONS
A/C SYSTEM 8
FASTENER TORQUE 8
SPECIAL TOOLS 10
CONTROLS 11
DISTRIBUTION 37
PLUMBING 75

Heating and Air Conditioning

Description

A Manual Temperature Control (MTC) single zone or an Automatical Temperature Control (ATC) dual zone heating-air conditioning system is available on this model.

To maintain the performance level of the Heating, Ventilation and Air Conditioning (HVAC) system, the engine cooling system must be properly maintained. The use of a bug screen is not recommended. Any obstructions in front of the radiator or A/C condenser will reduce the performance of the A/C and engine cooling systems.

The engine cooling system includes the radiator, thermostat, radiator hoses and the engine coolant pump. See Group 7 - Cooling for more information before opening or attempting any service to the engine cooling system.

NOTE: Dual zone system shown. Single zone system similar.

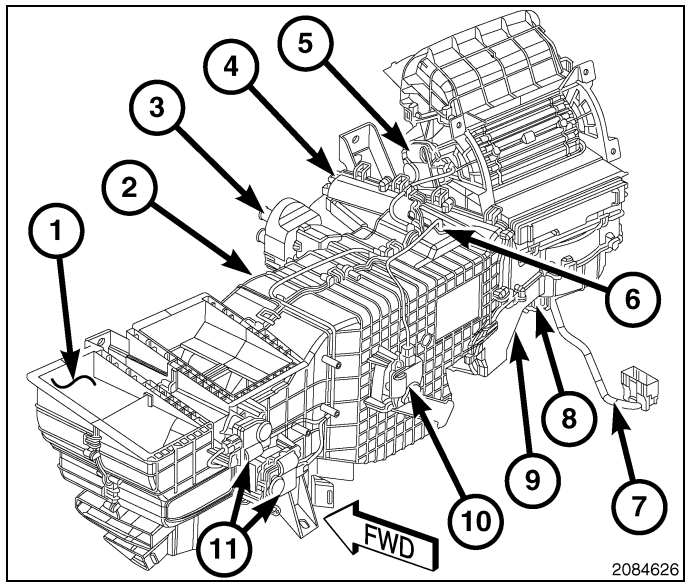

All vehicles are equipped with a common HVAC housing (1). The system combines air conditioning, heating, and ventilating capabilities in a single unit housing mounted within the passenger compartment under the instrument panel. The HVAC housing includes:

- Blend-air door(s) and actuator(s) (2 and 10)
- Heater core (3)
- A/C evaporator (4)
- Recirculation-air door and actuator (5)
- Evaporator temperature sensor (6)
- HVAC wire harness (7)
- Blower motor (8)
- Blower motor resistor or power module (9)
- Mode-air doors and actuators (11)

Based upon the system and mode selected, conditioned air can exit the HVAC housing through one or a combination of the three main housing outlets: defrost, panel or floor. The defrost and the panel outlets are located on the top of the housing and, the floor outlet is located on the bottom of the housing. Once the conditioned air exits the HVAC housing, it is further directed through molded plastic ducts to the various outlets within the vehicle interior. These outlets and their locations are as follows:

- **Defroster Outlet** - Four defroster outlets are located in the instrument panel top cover, near the base of the windshield.
- **Side Window Demister Outlets** - There are two side window demister outlets, one is located at each outboard end of the instrument panel top cover, near the belt line at the A-pillars.
- **Panel Outlets** - There are four panel outlets in the instrument panel, one located near each outboard end of the instrument panel facing the rear of the vehicle and two located near the top of the instrument panel center bezel.
- **Front Floor Outlets** - There are two front floor outlets, one located above each side of the floor panel center tunnel near the dash panel.
- **Rear Outlets** - On Crew Cab models there are two outlets located at the rear of the center front seat.

Operation

Both the Manual Temperature Control (MTC) single zone heating-A/C system and the Automatic Temperature Control (ATC) dual zone heating-A/C system are blend-air type systems. In a blend-air heating-A/C system, a blend-air door controls the amount of conditioned air that is allowed to flow through, or around the heater core. In the available dual zone system, two blend-air doors are used to provide completely independent side-to-side temperature control of the discharge air. The temperature control(s) determines the discharge air temperature(s) by operating the blend door actuator(s), which move the blend-air door(s). This design allows almost immediate control of output air temperature(s).

NOTE: Typical blend-air type HVAC system shown.

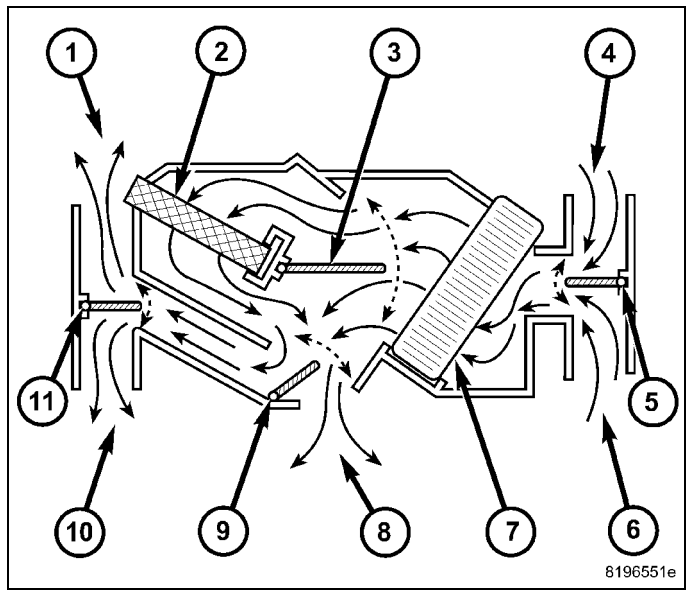

The heating-A/C system pulls outside (ambient) air through the fresh air intake (4) located at the cowl panel at the base of the windshield and into the air inlet housing above the Heating, Ventilation and Air Conditioning (HVAC) housing and passes through the A/C evaporator (7). Air flow is then directed either through or around the heater core (2). This is done by adjusting the position of the blend-air door(s) (3) with the temperature control(s) located on the A/C-heater control in the instrument panel. Air flow is then directed out the floor outlet (8), instrument panel outlet (10) or the defroster outlet (1) in various combinations by adjusting the position of the mode-air doors (9 and 11) using the mode control located on the A/C-heater control. The temperature and mode control uses electrical actuators to operate the air doors.

The velocity of the air flow out of the outlets can be adjusted with the blower speed control located on the A/C-heater control.

The fresh air intake can be shut off by pressing the Recirculation button on the A/C-heater control. This will operate the electrically actuated recirculation-air door (5), which closes off the fresh air intake. With the fresh air intake closed, the conditioned air within the vehicle is pulled back into the HVAC housing through the recirculation air intake (6) located within the passenger compartment.

The A/C compressor can be engaged by pressing the A/C (snowflake) button on the A/C-heater control. It will automatically engage when the mode control is set in any Mix to Defrost position. This will remove heat and humidity from the air before it is directed through or around the heater core. The mode control on the A/C-heater control is used to direct the conditioned air to the selected system outlets.

The defroster outlet receives airflow from the HVAC housing through the molded plastic defroster duct, which connects to the HVAC housing defroster outlet. The airflow from the defroster outlets is directed by fixed vanes in the defroster outlet grilles and cannot be adjusted. The defroster outlet grilles are integral to the instrument panel top cover.

The side window demister outlets receive airflow from the HVAC housing through the molded plastic defroster duct and two molded plastic demister ducts. The airflow from the side window demister outlets is directed by fixed vanes in the demister outlet grilles and cannot be adjusted. The side window demister outlet grilles are integral to the instrument panel. The demisters direct air from the HVAC housing through the outlets located on the top corners of the instrument panel. The demisters operate when the mode control knob is positioned in the floor-defrost and defrost-only settings. Some air may be noticeable from the demister outlets when the mode control is in the bi-level to floor positions.

The panel outlets receive airflow from the HVAC housing through a molded plastic main panel duct, center panel duct and two end panel ducts. The two end panel ducts direct airflow to the left and right instrument panel outlets, while the center panel duct directs airflow to the two center panel outlets. Each of these outlets can be individually adjusted to direct the flow of air.

The floor outlets receive airflow from the HVAC housing through the floor distribution duct. The front floor outlets are integral to the molded plastic floor distribution duct, which is secured to the bottom of the housing. The floor outlets cannot be adjusted.

NOTE: It is important to keep the air intake opening clear of debris. Leaf particles and other debris that is small enough to pass through the cowl opening screen can accumulate within the HVAC housing. The closed, warm, damp and dark environment created within the housing is ideal for the growth of certain molds, mildews and other fungi. Any accumulation of decaying plant matter provides an additional food source for fungal spores, which enter the housing with the fresh intake-air. Excess debris, as well as objectionable odors created by decaying plant matter and growing fungi can be discharged into the passenger compartment during heater-A/C operation if the air intake opening is not kept clear of debris.

The A/C system on models so equipped is designed for the use of non-CFC, R-134a refrigerant and uses an A/C expansion valve to meter the flow of refrigerant to the A/C evaporator. The A/C evaporator cools and dehumidifies the incoming air prior to blending it with the heated air. To maintain minimum evaporator temperature and prevent evaporator freezing, an evaporator temperature sensor is used to supply evaporator temperature input to the A/C-heater control. The

powertrain control module (PCM) cycles the A/C compressor clutch off and on as necessary to protect the A/C system from evaporator freezing and optimize A/C system performance.

Diagnosis and Testing

A/C PERFORMANCE

The A/C system is designed to provide the passenger compartment with low temperature and low humidity air. The A/C evaporator, located in the HVAC housing is cooled to temperatures near the freezing point. As warm damp air passes over the fins of the A/C evaporator, the air transfers its heat to the refrigerant in the evaporator coils and the moisture in the air condenses on the evaporator fins. During periods of high heat and humidity, an A/C system will be more effective in the Recirculation mode (max-A/C). With the system in the Recirculation mode, only air from the passenger compartment passes through the A/C evaporator. As the passenger compartment air dehumidifies, the A/C system performance levels rise.

Humidity has an important bearing on the temperature of the air delivered to the interior of the vehicle. It is important to understand the effect that humidity has on the performance of the A/C system. When humidity is high, the A/C evaporator has to perform a double duty. It must lower the air temperature, and it must lower the temperature of the moisture in the air that condenses on the evaporator fins. Condensing the moisture in the air transfers heat energy into the evaporator fins and coils. This reduces the amount of heat the A/C evaporator can absorb from the air. High humidity greatly reduces the ability of the A/C evaporator to lower the temperature of the air.

However, evaporator capacity used to reduce the amount of moisture in the air is not wasted. Wringing some of the moisture out of the air entering the vehicle adds to the comfort of the passengers. Although, an owner may expect too much from their A/C system on humid days. A performance test is the best way to determine whether the system is performing up to design standards. This test also provides valuable clues as to the possible cause of trouble with the A/C system. The ambient air temperature in the location where the vehicle will be tested must be a minimum of 21° C (70° F) for this test.

A/C PERFORMANCE TEST

WARNING: Refer to the applicable warnings and cautions for this system before performing the following operation (Refer to 24 - Heating and Air Conditioning/Plumbing - Warning) and (Refer to 24 - Heating and Air Conditioning/Plumbing - Caution). Failure to follow the warnings and cautions may result in serious or fatal injury.

CAUTION: The use of an A/C recycling/charging station for purposes of determining the actual charge level of an A/C system is not recommend. Service recycling/charging stations do not reflect the correct amount of refrigerant charge in the A/C system after a single "reclaim" cycle. Tests have shown that it takes up to two or more "reclaim" cycles to remove all of the refrigerant charge, depending on the equipment being used. Use only the following procedure for determining the proper A/C system charge level.

NOTE: When connecting the service equipment coupling to the line fitting, verify that the valve of the coupling is fully closed. This will reduce the amount of effort required to make the connection.

NOTE: The work area ambient temperature must be above 21° C (70° F) and the evaporator temperature must be above 13° C (55° F) prior to conducting the A/C Performance Test.

1. Conduct the A/C System Performance Test (Cooldown Test) found within the HVAC System Test (Refer to 28 - DTC-Based Diagnostics/HVAC - Standard Procedure). If no Diagnostic Trouble Codes (DTCs) are found in the A/C-heater control, Powertrain Control Module (PCM) or the Totally Integrated Power Module (TIPM), go to Step #2. If any DTCs are found, repair as required, then proceed to Step #2.
2. Connect a tachometer and a manifold gauge set or an A/C recycling/charging station.
3. Operate the heating-A/C system under the following conditions.
   - Engine at 1,000 rpm at operating temperature
   - Door and windows closed
   - Transmission in Park or Neutral with parking brake set (depending on transmission application)
   - A/C-heater controls set to recirculation mode (max A/C), full cool, panel mode, high blower and with A/C compressor engaged. If the A/C compressor does not engage, see the A/C System Diagnosis table.
4. Insert a thermometer in the driver side center panel air outlet and operate the A/C system until the thermometer temperature stabilizes.

NOTE: This procedure requires the technician to know what the temperature and relative humidity is at the time of the test. This information can be obtained from multiple sources, such as the internet or local news

media. When the temperature is above 21° C (70° F), it must be combined with humidity to calculate the apparent ambient air temperature. Use the current ambient temperature and the relative humidity in your location.

5. With the A/C compressor clutch engaged, compare the air temperature at the center panel outlet and the A/C compressor discharge pressure (high side) to the A/C Performance Temperature and Pressure chart. The compressor clutch may cycle, depending upon the ambient temperature and humidity. If the clutch cycles, use the readings obtained before the clutch disengaged (coldest temperature).

A/C PERFORMANCE TEMPERATURE AND PRESSURE

Ambient Air Temperature (Apparent)	**21° C (70° F)**	**27° C (80° F)**	**32° C (90° F)**	**38° C (100° F)**	**43° C (110° F)**
Air Temperature at Center Panel Outlet	7° C (45° F)	7° C (45° F)	13° C (55° F)	13° C (55° F)	18° C (64° F)
Compressor Inlet Pressure at Service Port (low Side)	138 to 207 kPa (20 to 30 psi)	172 to 241 kPa (25 to 35 psi)	207 to 276 kPa (30 to 40 psi)	241 to 310 kPa (35 to 45 psi)	276 to 345 kPa (40 to 50 psi)
Compressor Discharge Pressure at Service Port (High Side)	1034 to 1724 kPa (150 to 250 psi)	1379 to 2068 kPa (200 to 300 psi)	1724 to 2413 kPa (250 to 350 psi)	1999 to 2689 kPa (290 to 390 psi)	2413 to 2965 kPa (350 to 430 psi)

6. See the A/C System Diagnosis table if the air outlet temperature fails to meet the specifications in the A/C Performance Temperature and Pressure chart, or if the A/C compressor discharge pressure is high.

A/C SYSTEM DIAGNOSIS

Condition	Possible Causes	Correction
Constant compressor engagement and warm air from passenger vents	1. Low refrigerant system charge	1. See Refrigerant System Leaks in this group. Test the refrigerant system for leaks. Repair, evacuate and charge the refrigerant system as required.
Equal pressures, but the compressor clutch does not engage	1. No refrigerant in the refrigerant system	1. See Refrigerant System Leaks in this group. Test the refrigerant system for leaks. Repair, evacuate and charge the refrigerant system as required.
	2. Open fuse	2. See Wiring Information. Check the fuse in the junction block. Repair the shorted circuit or component and replace the fuse as required.
	3. Inoperative A/C compressor clutch coil	3. See A/C Compressor Clutch Coil in this group. Test the compressor clutch coil and replace as required.
	4. Improperly installed or inoperative Evaporator Temperature Sensor	4. See Evaporator Temperature Sensor in this group. Correctly install or test and replace the sensor as required.
	5. Improperly installed or inoperative A/C pressure transducer	5. See A/C pressure transducer in this group. Correctly install or test and replace the sensor as required.
	6. Inoperative A/C-heater control, TIPM or PCM	6. See the appropriate Electrical Diagnostic Procedures for testing of the A/C-heater control, TIPM or PCM. Test the module and replace as required.

A/C SYSTEM DIAGNOSIS, continued

Condition	Possible Causes	Correction
Normal pressures, but A/C Performance Test air temperatures at center panel outlet are too high	1. Excessive refrigerant oil in system	1. See Refrigerant Oil Level in this group. Recover the refrigerant from the refrigerant system and inspect the refrigerant oil content. Restore the refrigerant oil to the proper level as required.
	2. Blend door inoperative or sealing improperly	2. See Blend Door in this group. Inspect the blend door for proper operation and sealing and correct as required.
	3. Blend door actuator inoperative	3. See Blend Door Actuator in this group. See the appropriate Electrical Diagnostic Procedures for blend door actuator diagnosis. Repair or replace as required.
The low side pressure is normal or slightly low, and the high side pressure is too low	1. Low refrigerant system charge	1. See Refrigerant System Leaks in this group. Test the refrigerant system for leaks. Repair, evacuate and charge the refrigerant system as required.
	2. Refrigerant flow through the A/C evaporator is restricted	2. See A/C Evaporator in this group. Replace the restricted evaporator as required.
	3. Inoperative A/C compressor	3. See A/C Compressor in this group. Replace the compressor as required.
The low side pressure is normal or slightly high, and the high side pressure is too high	1. A/C Condenser air flow restricted	1. See A/C Condenser in this group. Check the A/C condenser for damaged fins, foreign objects obstructing air flow through the condenser fins, and missing or improperly installed air seals. Clean, repair, or replace components as required.
	2. Refrigerant flow through the A/C receiver/drier is restricted	2. See A/C Receiver/Drier in this group. Replace the restricted A/C receiver/drier, if required.
	3. Inoperative cooling fan	3. See Group 7 - Cooling. Test the cooling fan and replace as required.
	4. Refrigerant system overcharged	4. See Refrigerant System Charge in this group. Recover the refrigerant from the refrigerant system. Charge the refrigerant system to the proper level as required.
	5. Air in the refrigerant system	5. See Refrigerant System Leaks in this group. Test the refrigerant system for leaks. Repair, evacuate and charge the refrigerant system as required.
	6. Engine overheating	6. See Group 7 - Cooling. Test the cooling system and repair as required.
The low side pressure is too high, and the high side pressure is too low	1. Accessory drive belt slipping	1. See Group 7 - Cooling. Inspect the accessory drive belt condition and tension. Tighten or replace the accessory drive belt as required.
	2. Inoperative A/C expansion valve	2. See A/C Expansion Valve in this group. Test and replace the valve, if required.
	3. Inoperative A/C compressor	3. See A/C Compressor in this group. Replace the compressor as required.

A/C SYSTEM DIAGNOSIS, continued

Condition	Possible Causes	Correction
The low side pressure is too low, and the high side pressure is too high	1. Restricted refrigerant flow through the refrigerant lines	1. See Liquid, Suction, and Discharge Line in this group. Inspect the refrigerant lines for kinks, tight bends or improper routing. Correct the routing or replace the refrigerant line as required.
	2. Inoperative A/C expansion valve	2. See A/C Expansion Valve in this group. Test and replace the valve as required.
	3. Restricted refrigerant flow through the A/C condenser	3. See A/C Condenser in this group. Replace the restricted condenser as required.

HEATER PERFORMANCE

Before performing the following tests, see Group 7 - Cooling for the procedures to check the engine coolant level and flow, engine coolant reserve/recovery system operation, accessory drive belt condition and tension, radiator air flow and the fan drive operation. Using a scan tool, check for any Diagnostic Trouble Codes (DTCs) in the A/C-heater control, Powertrain Control Module (PCM) and the Totally Integrated Power Module (TIPM). Repair as necessary (Refer to 28 - DTC-Based Diagnostics/HVAC - Diagnosis and Testing).

MAXIMUM HEATER OUTPUT: TEST AND ACTION

Engine coolant is provided to the heater system through two heater hoses. With the engine idling at normal operating temperature, set the temperature control to maximum heat position, the mode control to the floor position, and the blower motor control to the highest speed position. Using a test thermometer, check the temperature of the air being discharged from the floor outlets. Compare the test thermometer reading to the Heater Temperature Reference chart.

HEATER TEMPERATURE REFERENCE

Ambient Air Temperature	16° C (60° F)	21° C (70° F)	26° C (80° F)	32° C (90° F)
Minimum Air Temperature at Floor Outlet	62° C (144° F)	64° C (147° F)	65° C (150° F)	67° C (153° F)

See Group -7 Cooling if the heater outlet air temperature is below the minimum specification. Both of the heater hoses should be hot to the touch. The coolant return heater hose should be slightly cooler than the coolant supply heater hose. If the return hose is much cooler than the supply hose, locate and repair the engine coolant flow obstruction in the cooling system.

OBSTRUCTED COOLANT FLOW

Possible locations or causes of obstructed coolant flow are as follows:

- Inoperative water pump.
- Inoperative thermostat.
- Pinched or kinked heater hoses.
- Improper heater hose routing.
- Plugged heater hoses or supply and return ports at the cooling system connections.
- Plugged heater core.

If proper coolant flow through the cooling system is verified, and heater outlet air temperature is low, a mechanical problem may exist.

MECHANICAL PROBLEMS

Possible locations or causes of insufficient heat due to mechanical problems are as follows:

- Obstructed cowl air intake.
- Obstructed heater system outlets.
- Blend-air door(s) or actuator(s) not functioning properly.

- Faulty blower motor system
- Inoperative A/C-heater control

TEMPERATURE CONTROL

If the heater outlet air temperature cannot be adjusted with the temperature control on the A/C-heater control, the following could require service:

- Inoperative A/C-heater control.
- Inoperative blend door actuator(s).
- Inoperative, obstructed or improperly installed blend-air door.
- Inoperative related wiring harness or connectors.
- Improper engine coolant temperature.

Specifications

A/C SYSTEM

Item	Description	Notes
A/C Compressor	Denso 10SRE15 (3.7L/4.7L engines)	ND-8 PAG oil
	Denso 10SRE18 (5.7L engine)	
Freeze-up Control	Evaporator Temperature Sensor	HVAC housing mounted
High psi Control	A/C pressure transducer	A/C discharge line mounted
R-134a Refrigerant Charge Capacity	All models - 0.728 kg (1.604 lbs.)	Also see A/C Underhood Specification Label located in the engine compartment
A/C Clutch Field Coil Draw	3.2 - 3.3 amps	@ 12V ± 0.5V @ 21° C (70° F)
A/C Clutch Coil Resistance	3.6 ± 0.2 ohms	When measured across coil lead connector
A/C Clutch Air Gap	0.35 - 0.60 mm (0.014 - 0.024 in.)	

FASTENER TORQUE

Description	N·m	Ft. Lbs.	In. Lbs.
All Screws NOT Listed Below	1.1	–	10
A/C Compressor to Engine	Specific fastener placement and torque pattern is required. See A/C Compressor Installation for more information.		
A/C Condenser Bolts	2.2	–	20
A/C Compressor Clutch Plate Bolt	19	–	168
A/C Expansion Valve Bolts	11	–	97
A/C Heater Control Screws	2.2	–	20
Air Ducts to Instrument Panel Screws	2.2	–	20
Blower Motor Screws	1.7	–	15
HVAC Housing to Engine Side of Dash Panel Nuts	6.8	–	60
HVAC Housing to Floor Bracket Bolt	6.8	–	60

Description	N·m	Ft. Lbs.	In. Lbs.
HVAC Housing to Passenger Side of Dash Panel Nuts	6.8	–	60
Refrigerant Lines Nuts/Bolts	23	17	–

Special Tools



6801 - Terminal Probe

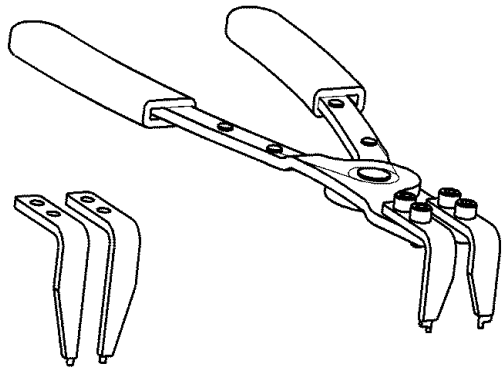

9764 - Pliers, A/C Snap Ring

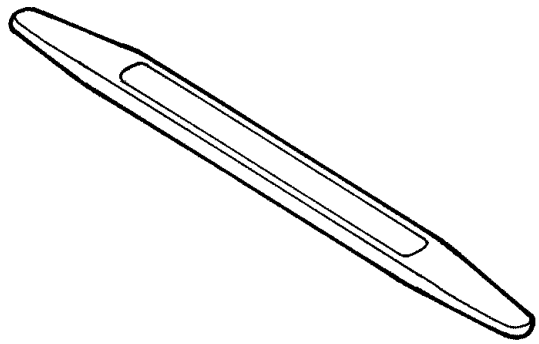

C-4755 - Trim Stick

CONTROLS

TABLE OF CONTENTS

page

CONTROLS
- **ACTUATOR, BLEND DOOR**
  - DESCRIPTION . . . 12
  - OPERATION . . . 12
  - REMOVAL . . . 13
  - INSTALLATION . . . 14
- **ACTUATOR, MODE DOOR**
  - DESCRIPTION . . . 16
  - OPERATION . . . 16
  - REMOVAL . . . 17
  - INSTALLATION . . . 17
- **ACTUATOR, RECIRCULATION DOOR**
  - DESCRIPTION . . . 20
  - OPERATION . . . 20
  - REMOVAL . . . 21
  - INSTALLATION . . . 21
- **CONTROL, A/C AND HEATER**
  - DESCRIPTION
    - AUTOMATIC DUAL ZONE . . . 22
    - MANUAL SINGLE ZONE . . . 23
  - REMOVAL . . . 23
  - INSTALLATION . . . 24
- **MODULE, POWER, BLOWER MOTOR**
  - DESCRIPTION . . . 25
  - OPERATION . . . 25
  - REMOVAL . . . 25
  - INSTALLATION . . . 26

page

- **RESISTOR, BLOWER MOTOR**
  - DESCRIPTION . . . 27
  - OPERATION . . . 27
  - DIAGNOSIS AND TESTING . . . 27
  - REMOVAL . . . 27
  - INSTALLATION . . . 28
- **SENSOR, EVAPORATOR TEMPERATURE**
  - DESCRIPTION . . . 29
  - OPERATION . . . 29
  - REMOVAL . . . 30
  - INSTALLATION . . . 30
- **SENSOR, INFRARED TEMPERATURE**
  - DESCRIPTION . . . 31
  - OPERATION . . . 31
  - REMOVAL . . . 32
  - INSTALLATION . . . 32
- **SENSOR, SUN**
  - DESCRIPTION . . . 33
  - OPERATION . . . 33
  - REMOVAL . . . 33
  - INSTALLATION . . . 34
- **TRANSDUCER, A/C PRESSURE**
  - DESCRIPTION . . . 35
  - OPERATION . . . 35
  - REMOVAL . . . 35
  - INSTALLATION . . . 36

Controls

ACTUATOR, Blend Door

Description

The blend door actuators are reversible, 12-volt direct current (DC), servo motors. Models with the single zone heating-A/C system have a single blend-air door, which is controlled by a single blend door actuator. Models with the dual zone system have two blend-air doors, which are controlled by two blend door actuators.

The blend door actuator (1) for the single zone heating-A/C system is located near the center of the HVAC housing (2), close to the instrument panel.

For the dual zone heating-A/C system, the same blend door actuator used for the single zone system becomes the driver side blend door actuator, which is mechanically connected to only the driver side blend-air door. A second separate blend door actuator (3) located at the front of the HVAC housing is mechanically connected to the passenger side blend-air door.

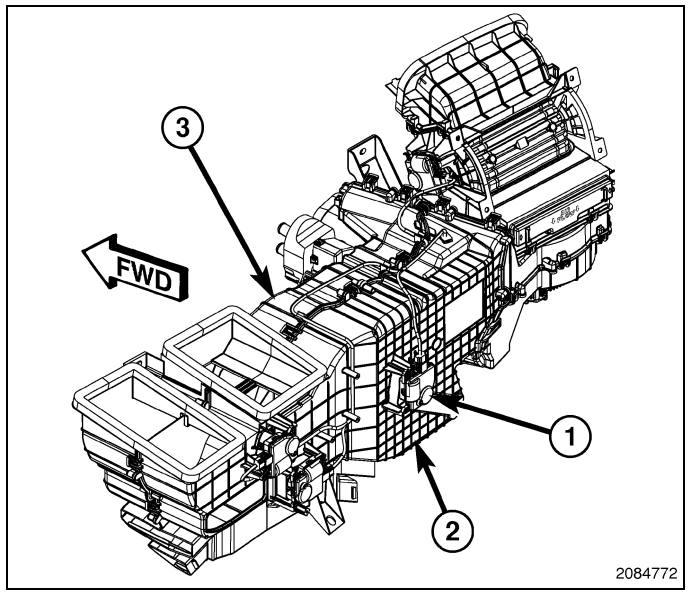

All actuators (1) are interchangeable with each other. Each actuator is contained within an identical black molded plastic housing with an integral wire connector receptacle (2). Each actuator also has an identical output shaft with splines (3) that connect it to the respective door linkage and three integral mounting tabs (4) that allow the actuator to be secured to the HVAC housing. The blend door actuators do not require mechanical indexing to the blend-air doors, as they are electronically calibrated by the A/C-heater control.

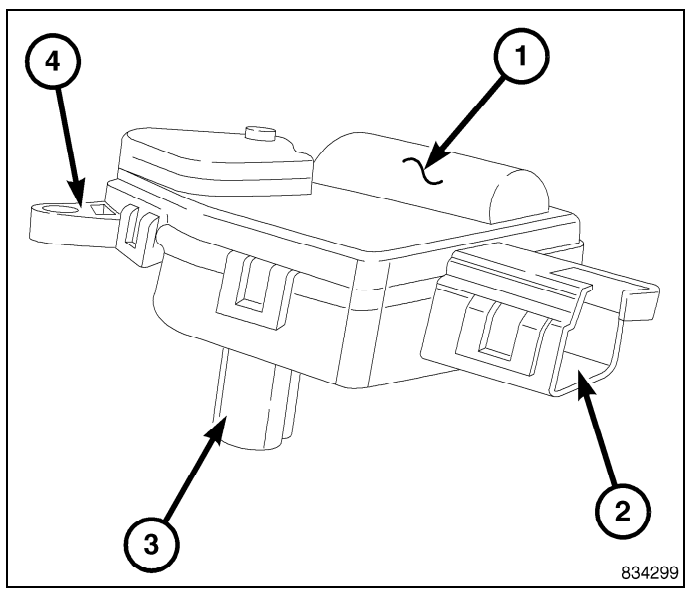

Operation

The blend door actuators are connected to the A/C-heater control through the vehicle electrical system by a dedicated two-wire lead and connector of the HVAC wire harness. The blend door actuator(s) can move the blend-air door(s) in two directions. When the A/C-heater control pulls the voltage on one side of the motor connection high and the other connection low, the blend-air door will move in one direction. When the A/C-heater control reverses the polarity of the voltage to the motor, the blend-air door moves in the opposite direction.

When the A/C-heater control makes the voltage to both connections high or both connections low, the blend-air door stops and will not move. The A/C-heater control uses a pulse-count positioning system to monitor the operation and relative position of the blend door actuator(s) and the blend-air door(s). The A/C-heater control learns the blend-air door stop positions during the calibration procedure and will store a diagnostic trouble code (DTC) for any problems it detects in the blend door actuator circuits.

The blend door actuators are diagnosed using a scan tool (Refer to 28 - DTC-Based Diagnostics/HVAC - Diagnosis and Testing).

The blend door actuators cannot be adjusted or repaired and must be replaced if inoperative or damaged.

Removal

WARNING: Disable the airbag system before attempting any steering wheel, steering column or instrument panel component diagnosis or service. Disconnect and isolate the negative battery (ground) cable and wait two minutes for the airbag system capacitor to discharge before performing further diagnosis or service. This is the only sure way to disable the airbag system. Failure to follow these instructions may result in accidental airbag deployment and possible serious or fatal injury.

NOTE: The single zone heating-A/C system is equipped with a single blend door actuator. The dual zone system has two blend door actuators, one for the driver side blend-air door and one for the passenger side blend-air door.

SINGLE ZONE/DUAL ZONE DRIVER SIDE

1. Disconnect and isolate the negative battery cable.
2. Remove the glove box (Refer to 23 - Body/Instrument Panel/GLOVE BOX, Instrument Panel - Removal).
3. Disconnect the HVAC wire harness connector (1) from the blend door actuator (2) located at the rear of the HVAC housing (3).
4. Remove the two screws (4) that secure the blend door actuator to the HVAC housing and remove the actuator.

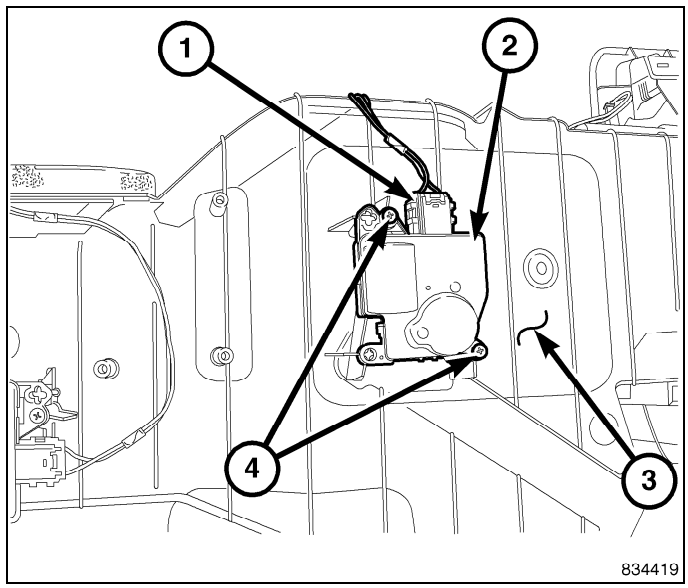

DUAL ZONE PASSENGER SIDE

1. Disconnect and isolate the negative battery cable.
2. Remove the HVAC housing (1) from the vehicle and place it on a workbench (Refer to 24 - Heating and Air Conditioning/Distribution/HOUSING, HVAC - Removal).
3. Disconnect the HVAC wire harness connector (2) from the blend door actuator (3) located at the front of the HVAC housing.
4. Remove the two screws (4) that secure the blend door actuator to the HVAC housing and remove the actuator.

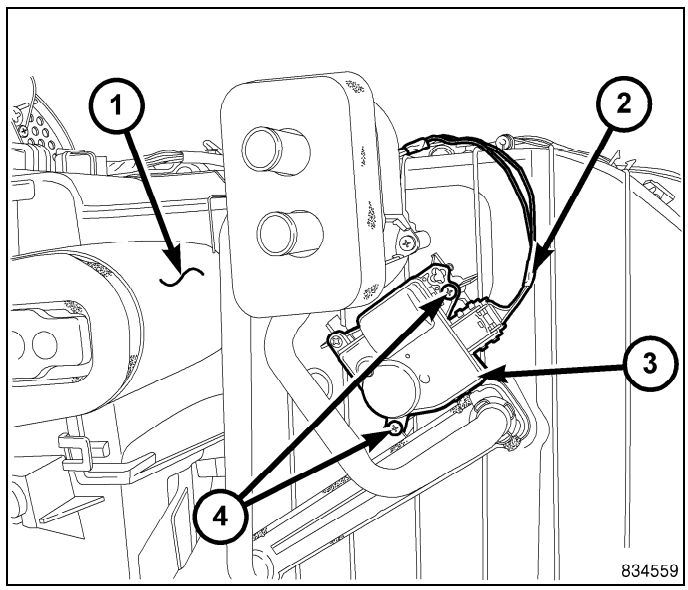

Installation

NOTE: The single zone heating-A/C system is equipped with a single blend door actuator. The dual zone system has two blend door actuators, one for the driver side blend-air door and one for the passenger side blend-air door.

SINGLE ZONE/DUAL ZONE DRIVER SIDE

1. Position the blend door actuator (1) to the back of the HVAC housing (4). If necessary, rotate the actuator slightly to align the splines on the actuator output shaft (2) with those on the actuator coupler (3).

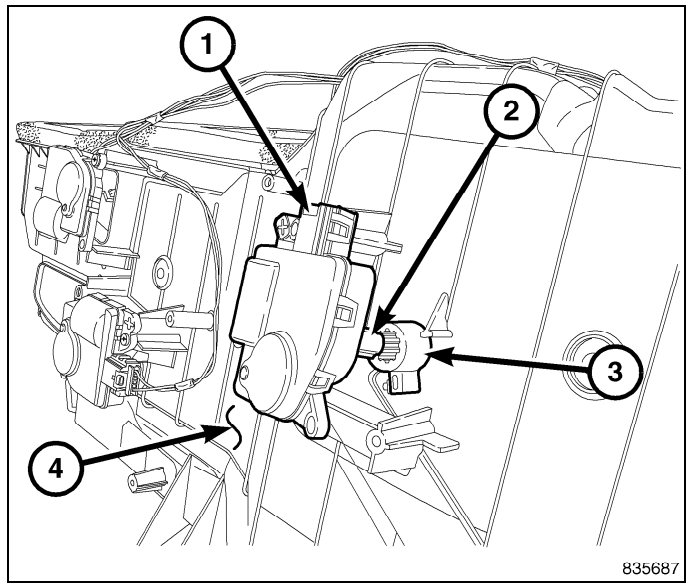

2. Install the two screws (4) that secure the blend door actuator (2) to the HVAC housing (3). Tighten the screws to 1.1 N·m (10 in. lbs.).
3. Connect the HVAC wire harness connector (1) to the blend door actuator.
4. Install the glove box (Refer to 23 - Body/Instrument Panel/GLOVE BOX, Instrument Panel - Installation).
5. Reconnect the negative battery cable.
6. Initiate the Actuator Calibration function using a scan tool (Refer to 28 - DTC-Based Diagnostics/HVAC - Standard Procedure).

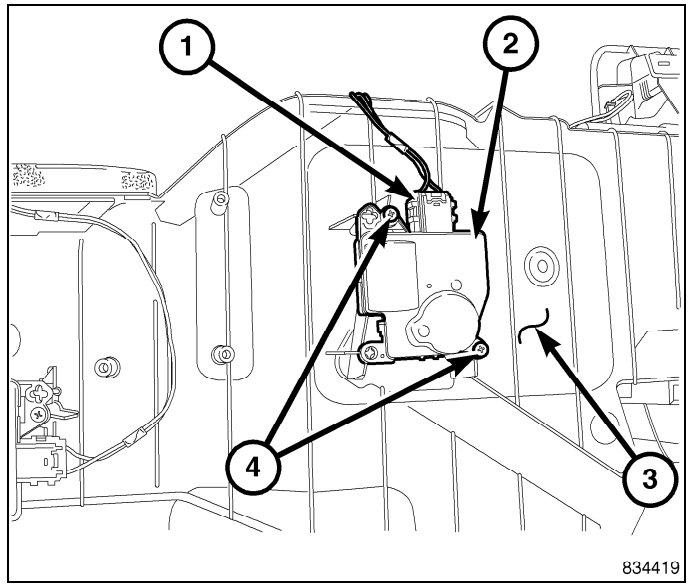

DUAL ZONE PASSENGER SIDE

1. Position the blend door actuator (1) to the front of the HVAC housing (4). If necessary, rotate the actuator slightly to align the splines on the actuator output shaft (2) with those on the actuator coupler (3).

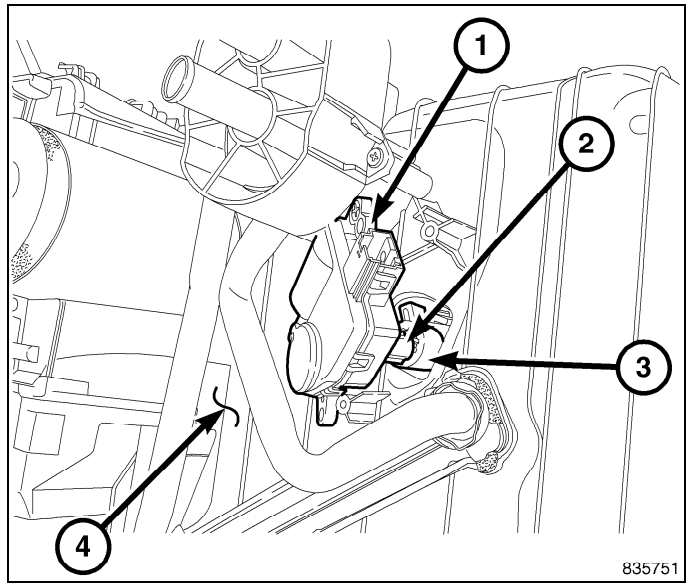

2. Install the two screws (4) that secure the blend door actuator (3) to the HVAC housing (1). Tighten the screws to 1.1 N·m (10 in. lbs.).
3. Connect the HVAC wire harness connector (2) to the blend door actuator.
4. Install the HVAC housing (Refer to 24 - Heating and Air Conditioning/Distribution/HOUSING, HVAC - Installation).
5. Reconnect the negative battery cable.
6. Initiate the Actuator Calibration function using a scan tool (Refer to 28 - DTC-Based Diagnostics/HVAC - Standard Procedure).

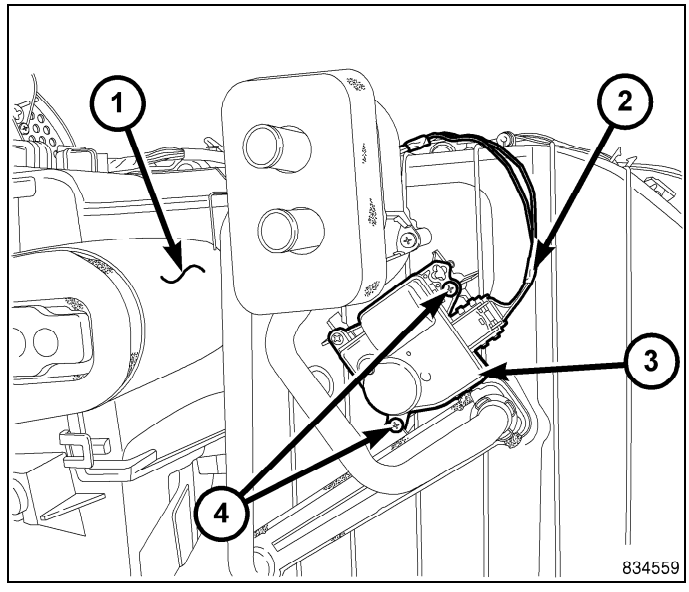

ACTUATOR, Mode Door

Description

The mode door actuators are reversible, 12-volt direct current (DC) servo motors. The heating-A/C systems on this vehicle use two mode door actuators. One for the defrost-air door and one for the panel/floor-air door.

Both the defrost door actuator (1) and the panel/floor door actuator (3) are located on the driver side end of the HVAC housing (2), close to the instrument panel.

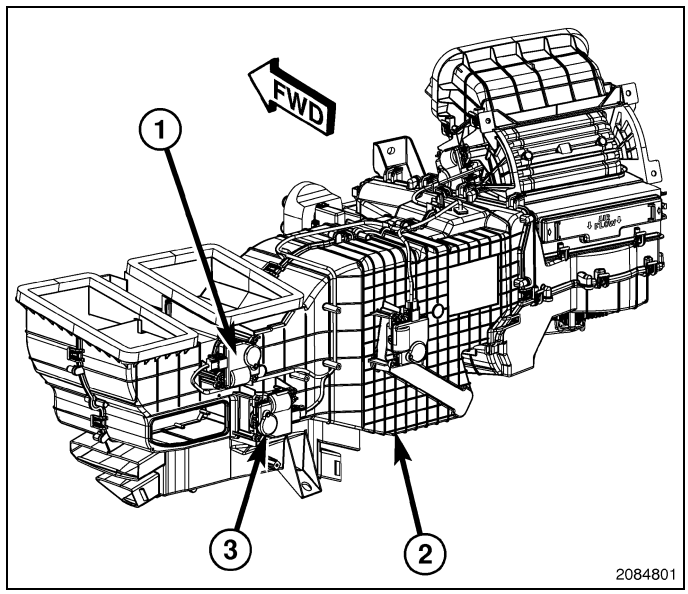

All actuators (1) are interchangeable with each other. Each actuator is contained within an identical black molded plastic housing with an integral wire connector receptacle (2). Each actuator also has an identical output shaft with splines (3) that connects it to its respective door linkage and three integral mounting tabs (4) that allow the actuator to be secured to the HVAC housing. The mode door actuators do not require mechanical indexing to the mode-air doors, as they are electronically calibrated by the A/C-heater control.

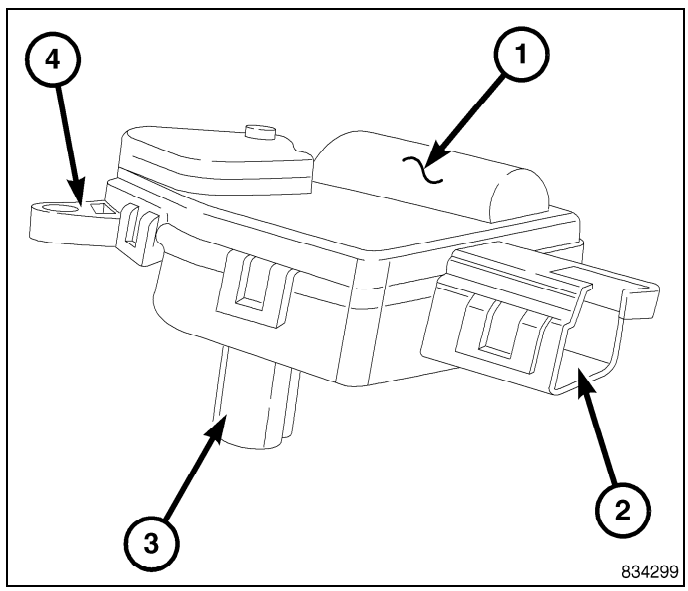

Operation

The mode door actuators are connected to the A/C-heater control through the vehicle electrical system by dedicated two-wire leads and connectors of the HVAC wire harness. The mode door actuators can move the defrost-air door and the panel/floor-air door in two directions. When the A/C-heater control pulls the voltage on one side of the motor connection high and the other connection low, the mode-air door will move in one direction. When the A/C-heater control reverses the polarity of the voltage to the motor, the mode-air door moves in the opposite direction.

When the A/C-heater control makes the voltage to both connections high or both connections low, the mode-air door stops and will not move. The A/C-heater control uses a pulse-count positioning system to monitor the operation and relative position of the mode door actuators and the mode-air doors. The A/C-heater control learns the mode-air door stop positions during the Actuator Calibration procedure and will store a Diagnostic Trouble Code (DTC) for any problems it detects in the mode door actuator circuits.

The mode door actuators are diagnosed using a scan tool (Refer to 28 - DTC-Based Diagnostics/HVAC - Diagnosis and Testing).

The mode door actuators cannot be adjusted or repaired and must be replaced if inoperative or damaged.

Removal

WARNING: Disable the airbag system before attempting any steering wheel, steering column or instrument panel component diagnosis or service. Disconnect and isolate the negative battery (ground) cable. Wait two minutes for the airbag system capacitor to discharge before performing further diagnosis or service. This is the only sure way to disable the airbag system. Failure to follow these instructions may result in possible serious or fatal injury.

NOTE: The heating-A/C system is equipped with two mode door actuators, one for the panel/floor-air door and one for the defrost-air door.

NOTE: Illustrations shown with instrument panel removed for clarity.

PANEL/FLOOR DOOR ACTUATOR

1. Disconnect and isolate the negative battery cable.
2. Remove the instrument panel center bezel (Refer to 23 - Body/Instrument Panel/BEZEL, Instrument Panel - Removal).
3. When equipped with center floor console, remove radio (Refer to 08 - Electrical/8A - Audio and Video/RADIO - Removal).
4. When not equipped with center floor console, remove cupholder (Refer to 23 - Body/Instrument Panel/CUPHOLDER, Instrument Panel - Removal).
5. Disconnect the HVAC wire harness (2) from the panel/floor door actuator (3).
6. Remove the two screws (4) that secure the panel/floor door actuator to the back of the HVAC housing (1) and remove the actuator.

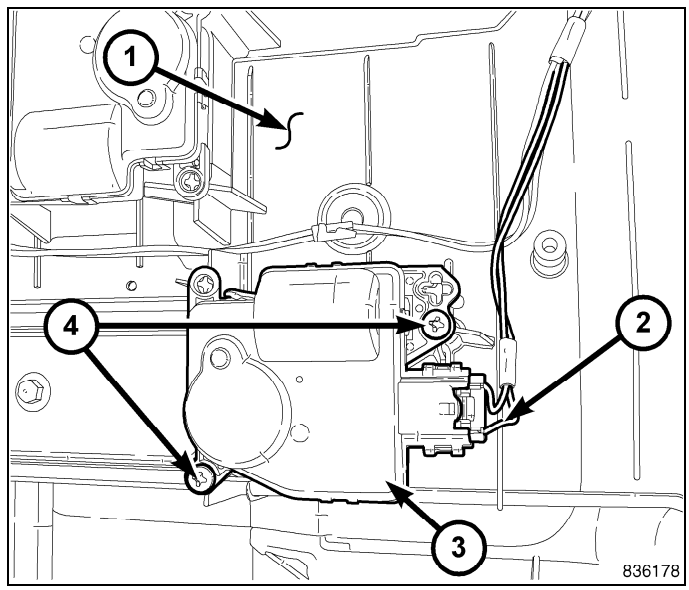

DEFROST DOOR ACTUATOR

1. Disconnect and isolate the negative battery cable.
2. Remove the instrument panel center bezel (Refer to 23 - Body/Instrument Panel/BEZEL, Instrument Panel - Removal).
3. When equipped with center floor console, remove radio (Refer to 08 - Electrical/8A - Audio and Video/RADIO - Removal).
4. When not equipped with center floor console, remove cupholder (Refer to 23 - Body/Instrument Panel/CUPHOLDER, Instrument Panel - Removal).
5. Disconnect the HVAC wire harness (1) from the defrost door actuator (2).
6. Remove the two screws (3) that secure the defrost door actuator to the back of the HVAC housing (4) and remove the actuator.

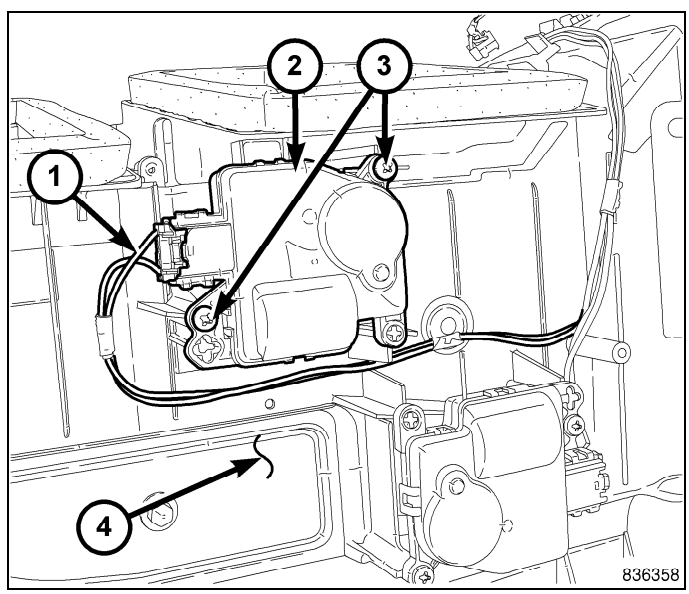

Installation

NOTE: The heating-A/C system is equipped with two mode door actuators, one for the panel/floor-air door and one for the defrost-air door.

NOTE: Illustrations shown with instrument panel removed for clarity.

PANEL/FLOOR DOOR ACTUATOR

1. Position the panel/floor door actuator (1) to the back of the HVAC housing (4). If necessary, rotate the actuator slightly to align the splines on the actuator output shaft (3) with those on the panel/floor door actuator coupler (2).

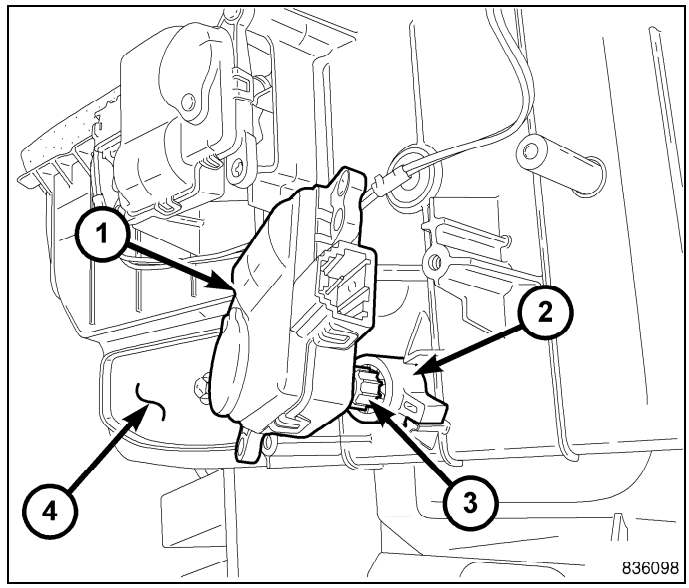

2. Install the two screws (4) that secure the panel/floor door actuator (3) to the HVAC housing (1). Tighten the screws to 1.1 N·m (10 in. lbs.).
3. Connect the HVAC wire harness connector (2) to the panel/floor door actuator.
4. When equipped with center floor console, install the radio (Refer to 08 - Electrical/8A - Audio and Video/ RADIO - Installation).
5. When not equipped with center floor console, install the cupholder (Refer to 23 - Body/Instrument Panel/ CUPHOLDER, Instrument Panel - Installation).
6. Install the instrument panel center bezel (Refer to 23 - Body/Instrument Panel/BEZEL, Instrument Panel - Installation).
7. Reconnect the negative battery cable.
8. Initiate the Actuator Calibration function using a scan tool (Refer to 28 - DTC-Based Diagnostics/HVAC - Standard Procedure).

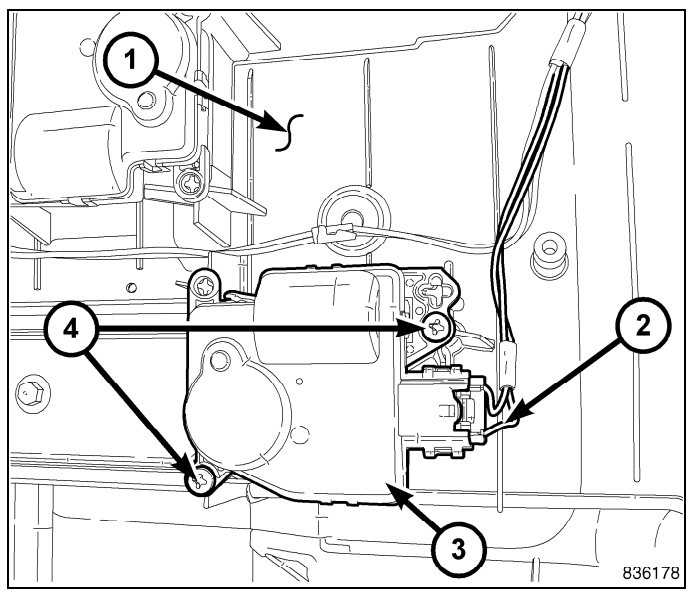

DEFROST DOOR ACTUATOR

1. Position the defrost door actuator (1) to the back of the HVAC housing (2). If necessary, rotate the actuator slightly to align the splines on the actuator output shaft (3) with those on the defrost door actuator coupler (4).

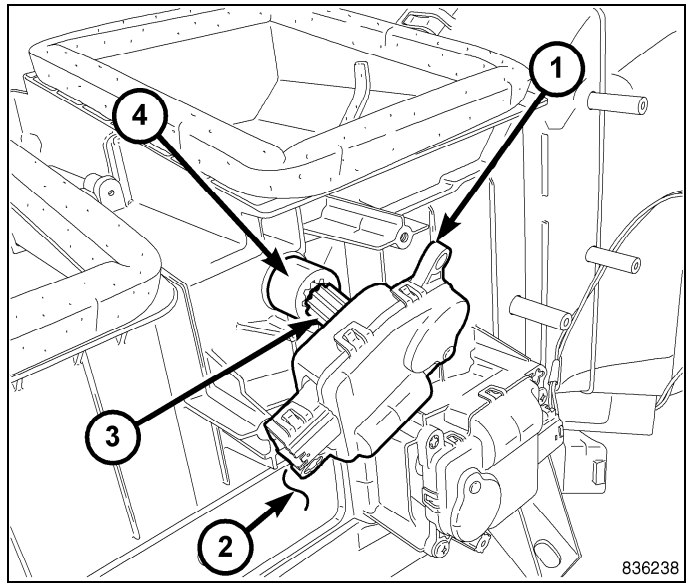

2. Install the two screws (3) that secure the defrost door actuator (2) to the HVAC housing (4). Tighten the screws to 1.1 N·m (10 in. lbs.).
3. Connect the HVAC wire harness connector (1) to the defrost door actuator.
4. When equipped with center floor console, install the radio (Refer to 08 - Electrical/8A - Audio and Video/ RADIO - Installation).
5. When not equipped with center floor console, install the cupholder (Refer to 23 - Body/Instrument Panel/ CUPHOLDER, Instrument Panel - Installation).
6. Install the instrument panel center bezel (Refer to 23 - Body/Instrument Panel/BEZEL, Instrument Panel - Installation).
7. Reconnect the negative battery cable.
8. Initiate the Actuator Calibration function using a scan tool (Refer to 28 - DTC-Based Diagnostics/HVAC - Standard Procedure).

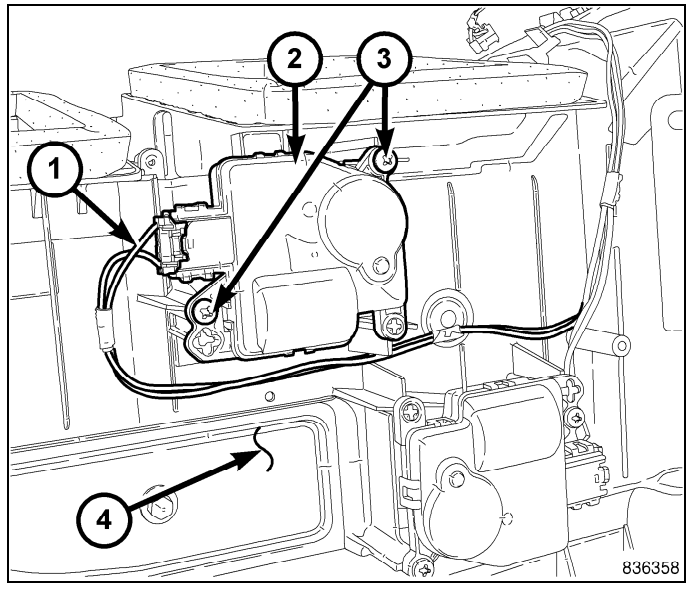

ACTUATOR, Recirculation Door

Description

The recirculation door actuator (1) is a reversible 12-volt direct current (DC) servo motor. The single recirculation door actuator is located on the inboard side of the air inlet housing (2).

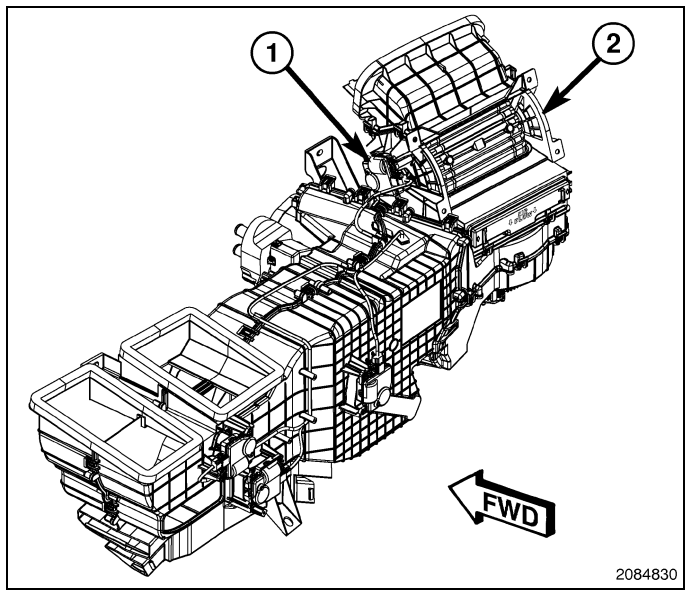

All actuators (1) are interchangeable with each other. Each actuator is contained within an identical black molded plastic housing with an integral wire connector receptacle (2). Each actuator also has an identical output shaft with splines (3) that connects it to its respective door linkage and three integral mounting tabs (4) that allow the actuator to be secured to the HVAC housing. The recirculation door actuator does not require mechanical indexing to the recirculation-air door, as it is electronically calibrated by the A/C-heater control.

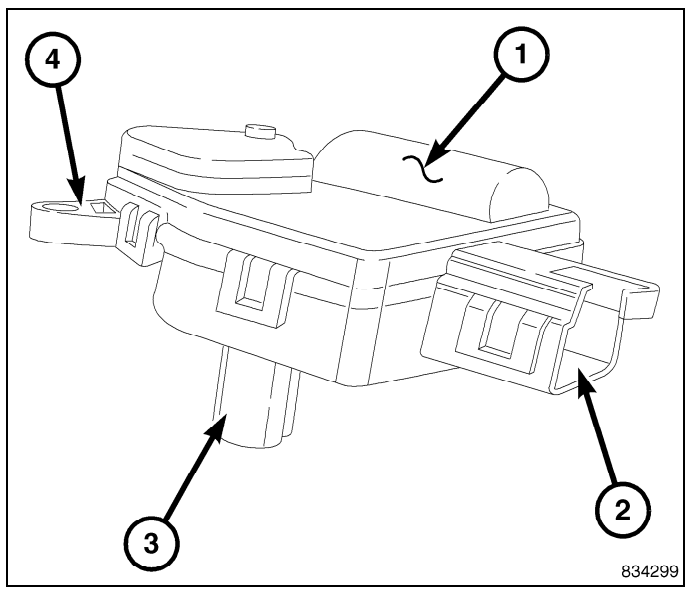

Operation

The recirculation door actuator is connected to the heater-A/C control module through the vehicle electrical system by a dedicated two-wire lead and connector of the HVAC wire harness. The recirculation door actuator can move the re-circulation-air door in two directions. When the A/C-heater control pulls the voltage on one side of the motor connection high and the other connection low, the recirculation-air door will move in one direction.

When the A/C-heater control makes the voltage to both connections high or both connections low, the recirculation-air door stops and will not move. The A/C-heater control uses a pulse-count positioning system to monitor the operation and relative position of the recirculation door actuator and the recirculation-air door. The A/C-heater control learns the recirculation-air door stop positions during the Actuator Calibration procedure and will store a Diagnostic Trouble Code (DTC) for any problems it detects in the recirculation door actuator circuits.

The recirculation door actuator is diagnosed using a scan tool (Refer to 28 - DTC-Based Diagnostics/HVAC - Diagnosis and Testing).

The recirculation door actuator cannot be adjusted or repaired and must be replaced if inoperative or damaged.

Removal

WARNING: Disable the airbag system before attempting any steering wheel, steering column, or instrument panel component diagnosis or service. Disconnect and isolate the battery negative (ground) cable, then wait two minutes for the airbag system capacitor to discharge before performing further diagnosis or service. This is the only sure way to disable the airbag system. Failure to follow these instructions may result in accidental airbag deployment and possible serious or fatal injury.

1. Remove the HVAC housing assembly (Refer to 24 - Heating and Air Conditioning/Distribution/HOUSING, HVAC - Removal).
2. Remove the air inlet housing (1) and place it on a workbench (Refer to 24 - Heating and Air Conditioning/Distribution/HOUSING, HVAC - Removal).
3. Remove the two screws (2) that secure the recirculation door actuator (3) to the air inlet housing and remove the actuator.

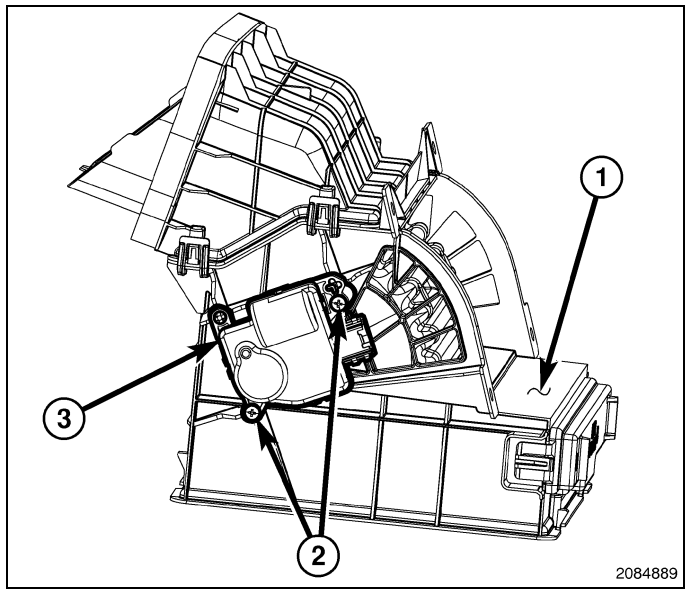

Installation

1. Install the recirculation door actuator (1) onto the side of the air inlet housing (2). If necessary, rotate the actuator slightly to align the splines on the actuator output shaft (4) with those in the recirculation door actuator coupler (3).

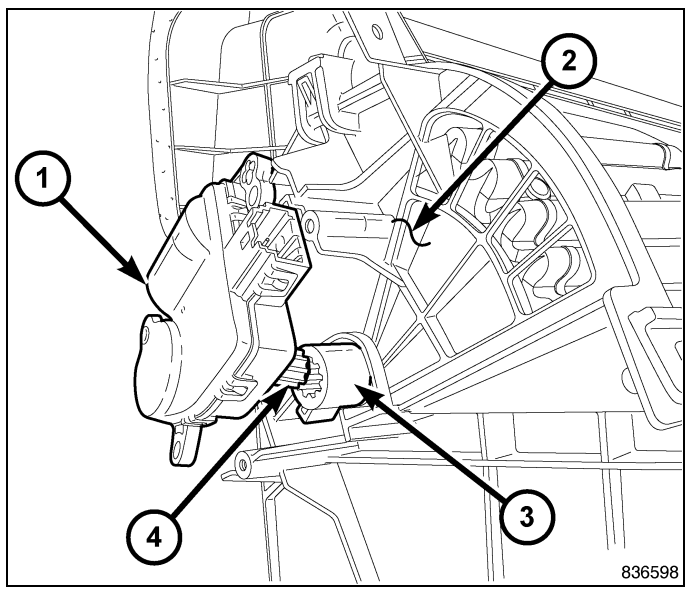

2. Install the two screws (2) that secure the recirculation door actuator (3) to the air inlet housing (1). Tighten the screws to 1.1 N·m (10 in. lbs.).
3. Install the air inlet housing (Refer to 24 - Heating and Air Conditioning/Distribution/HOUSING, HVAC - Installation).
4. Install the HVAC housing assembly (Refer to 24 - Heating and Air Conditioning/Distribution/HOUSING, HVAC - Installation).
5. Initiate the Actuator Calibration function using a scan tool (Refer to 28 - DTC-Based Diagnostics/HVAC - Standard Procedure).

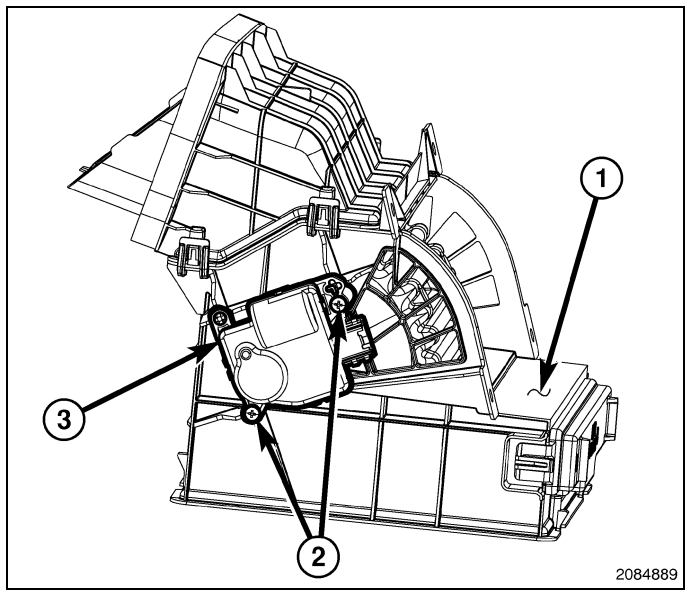

CONTROL, A/C and Heater

Description

AUTOMATIC DUAL ZONE

The A/C-heater control (1) for the automatic temperature control (ATC) dual zone heating-A/C system allows both the driver and the front seat passenger the ability to individually regulate air temperature for their side of the vehicle. All controls are identified by ISO graphic symbols.

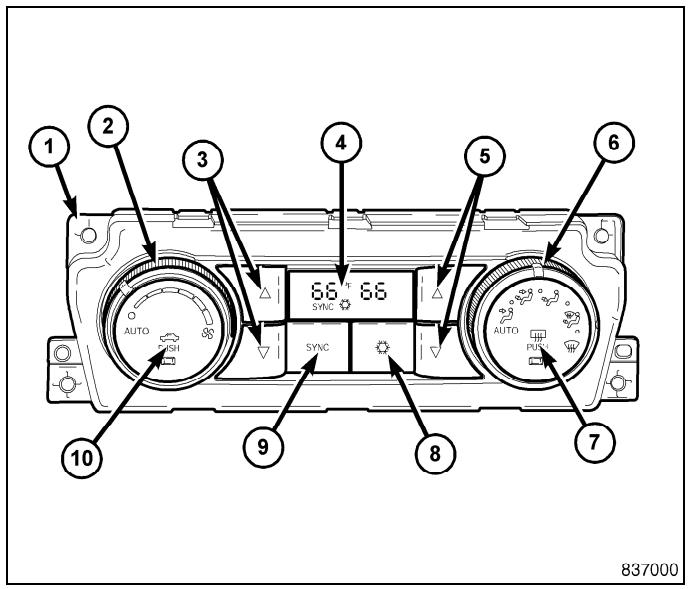

The dual zone A/C-heater control and integral computer is located in the instrument panel and contains:

- a rotary control for manual and automatic fan speed selection and turning the heating-A/C system off (2).
- push button controls for driver and front seat passenger temperature control of the discharged air (3 and 5).
- a vacuum-flourescent (VF) digital display (4).
- a rotary control for manual and automatic mode control of the discharged air (6).
- a push button rear window defogger/heated mirror on/off control (7). The push button contains an LED that illuminates when the rear window defogger/heated mirror system is in operation.
- a push button A/C on/off control (8). A Snowflake icon appears in the VF display when the A/C system is in operation.
- a push button synchronize control (9) that synchronizes the temperature of the driver and passenger comfort zones. SYNC appears in the VF display when the system is synchronized, whether under manual or automatic mode.
- a push button air recirculation control (10). The push button contains an LED that illuminates when the recirculation function is manually activated.

The A/C-heater control utilizes integrated circuitry and information carried on the controller area network (CAN) bus to monitor many sensors and switch inputs throughout the vehicle. In response to those inputs, the internal circuitry and programming of the A/C-heater control allows it to control the electronic functions and features of the ATC heating-A/C system.

Some of the inputs received by the A/C-heater control of the ATC heating-A/C system on the CAN bus are as follows:

- Dimming
- Refrigerant Pressure

- A/C Clutch Engage
- Vehicle Identification Number
- Vehicle Odometer
- Engine Coolant Temperature
- Ambient Air Temperature
- System Voltage
- Vehicle Speed
- Engine Speed

Some of the messages broadcasted by the A/C-heater control of the ATC heating-A/C system on the CAN bus are as follows:

- A/C Request
- A/C Select
- EBL Status
- Auto Headlamp Signal

The A/C-heater control for the ATC system is diagnosed using a scan tool (Refer to 28 - DTC-Based Diagnostics/HVAC - Diagnosis and Testing).

The A/C-heater control cannot be adjusted or repaired and must be replaced if inoperative or damaged.

MANUAL SINGLE ZONE

The A/C-heater control (1) for the manual temperature control (MTC) single zone heating-A/C system allows one temperature setting for the entire vehicle. All controls are identified by ISO graphic symbols.

The A/C-heater control and integral computer is located in the instrument panel and contains:

- a rotary control for fan speed selection and turning the heating-A/C system off (2).
- a rotary control for temperature control of the discharged air (3).
- a rotary control for recirculation and mode control of the discharged air (4).
- a push button A/C on/off control (5). An LED in the button illuminates when the A/C system is in operation.
- a push button rear window/side mirror defogger on/off control (6) when equipped with optional rear heated window and/or heated mirrors. An LED in the button illuminates when the rear window/mirror defogger (EBL) system is in operation.

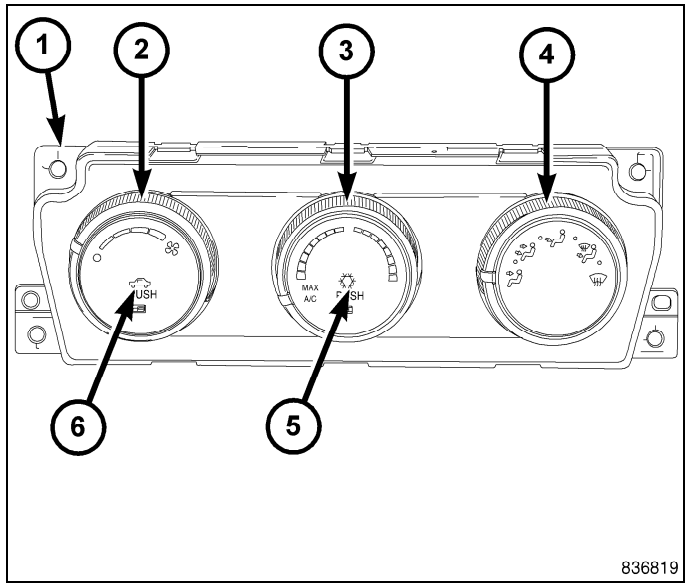

The A/C-heater control for the MTC system is diagnosed using a scan tool (Refer to 28 - DTC-Based Diagnostics/HVAC - Diagnosis and Testing).

The A/C-heater control cannot be adjusted or repaired and must be replaced if inoperative or damaged.

Removal

WARNING: Disable the airbag system before attempting any steering wheel, steering column or instrument panel component diagnosis or service. Disconnect and isolate the negative battery (ground) cable and wait two minutes for the airbag system capacitor to discharge before performing further diagnosis or service. This is the only sure way to disable the airbag system. Failure to follow these instructions may result in accidental airbag deployment and possible serious or fatal injury.

NOTE: Typical A/C-heater control shown.

1. Disconnect and isolate the negative battery cable.
2. Remove the center bezel (1) from the instrument panel and disconnect the wire harness connectors (4 and 5) from the back of the A/C-heater control (2) (Refer to 23 - Body/Instrument Panel/BEZEL, Instrument Panel - Removal).

NOTE: Take the proper precautions to protect the front face of the center bezel from cosmetic damage.

3. Place the center bezel on a workbench and remove the four screws (3) that secure the A/C-heater control to the center bezel and remove the control.

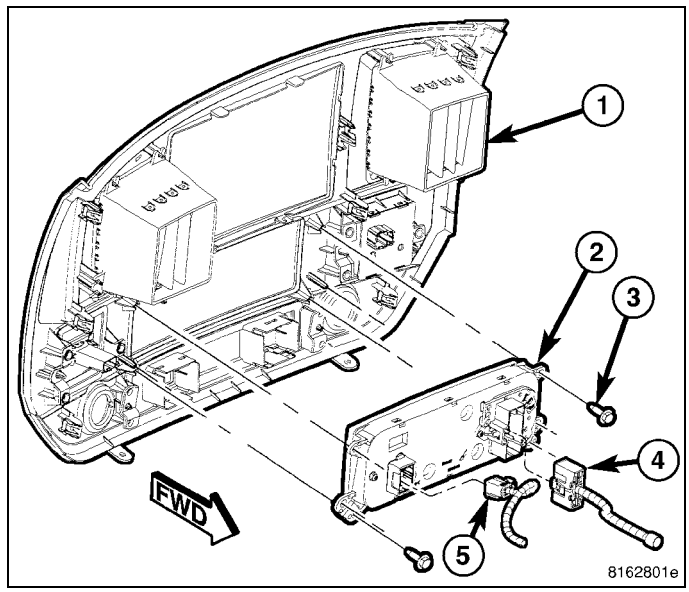

Installation

NOTE: Typical A/C-heater control shown.

1. Position the A/C-heater control (2) onto the back of the instrument panel center bezel (1).
2. Install the four screws (3) that secure the A/C-heater control to the center bezel. Tighten the screws to 2.2 N·m (20 in. lbs.).
3. Connect the wire harness connectors (4 and 5) to the back of the A/C-heater control and install the instrument panel center bezel (Refer to 23 - Body/Instrument Panel/BEZEL, Instrument Panel - Installation).
4. Reconnect the negative battery cable.
5. Initiate the Actuator Calibration function using a scan tool (Refer to 28 - DTC-Based Diagnostics/HVAC - Standard Procedure).

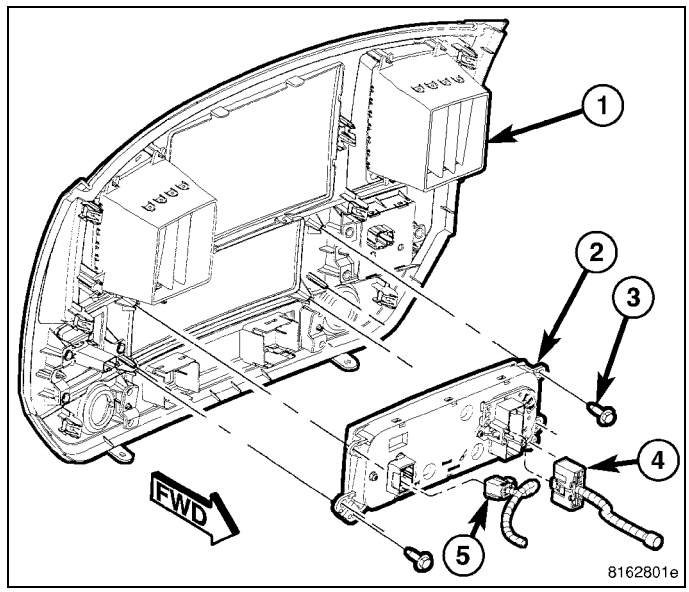

MODULE, Power, Blower Motor

Description

A blower motor power module is used on this model when equipped with the automatic temperature control (ATC) heating-A/C system. Models equipped with the manual temperature control (MTC) heating-A/C system use a blower motor resistor, instead of the blower motor power module (Refer to 24 - Heating and Air Conditioning/Controls/RESISTOR, Blower Motor - Description).

The blower motor power module is mounted to the bottom of the HVAC housing, on the passenger side of the vehicle. The blower motor power module consists of a molded plastic mounting plate (1) with an integral connector receptacle (2). Concealed behind the mounting plate is the power module electronic circuitry (3) and a finned aluminum heat sink (4). The blower motor power module is accessed for service from under the instrument panel.

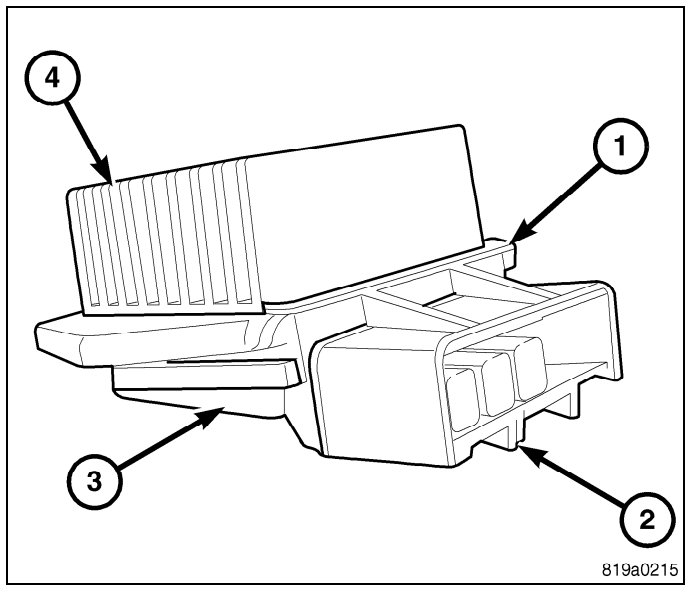

Operation

The blower motor power module is connected to the vehicle electrical system through a dedicated lead and connector of the HVAC wire harness. A second lead and connector of the HVAC wire harness is connected to the blower motor. The blower motor power module allows the microprocessor-based automatic temperature control (ATC) A/C-heater control to calculate and provide infinitely variable blower motor speeds based upon either manual blower switch input or the ATC programming using a pulse width modulated (PWM) circuit strategy.

The PWM voltage is applied to a comparator circuit which compares the PWM signal voltage to the blower motor feedback voltage. The resulting output drives the power module circuitry, which provides a linear output voltage to change or maintain the desired blower speed.

The blower motor power module is diagnosed using a scan tool (Refer to 28 - DTC-Based Diagnostics/HVAC - Diagnosis and Testing).

The blower motor power module cannot be adjusted or repaired must be replaced if inoperative or damaged.

Removal

WARNING: Disable the airbag system before attempting any steering wheel, steering column or instrument panel component diagnosis or service. Disconnect and isolate the negative battery (ground) cable, then wait two minutes for the airbag system capacitor to discharge before performing further diagnosis or service. This is the only sure way to disable the airbag system. Failure to follow these instructions may result in accidental airbag deployment and possible serious or fatal injury.

WARNING: The heat sink for the blower motor power module may get very hot during normal operation. If the blower motor was turned on prior to servicing the blower motor power module, wait five minutes to allow the heat sink to cool before performing diagnosis or service. Failure to follow these instructions may result in possible serious injury.

1. Disconnect and isolate the negative battery cable.
2. Disconnect the wire harness connector (1) from the blower motor power module (2) located at the bottom of the HVAC housing (3) on the passenger side of the vehicle.
3. Remove the two screws (4) that secure the blower motor power module to the HVAC housing and remove the power module.

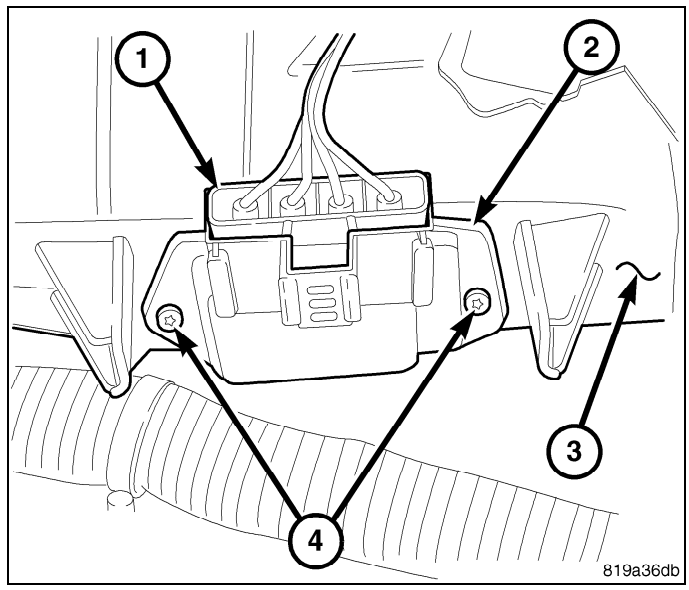

Installation

1. Position the blower motor power module (2) onto the bottom of the HVAC housing (3).
2. Install the two screws (4) that secure the blower motor power module to the HVAC housing. Tighten the screws to 1.1 N·m (10 in. lbs.).
3. Connect the wire harness connector (1) to the blower motor power module.
4. Reconnect the negative battery cable.

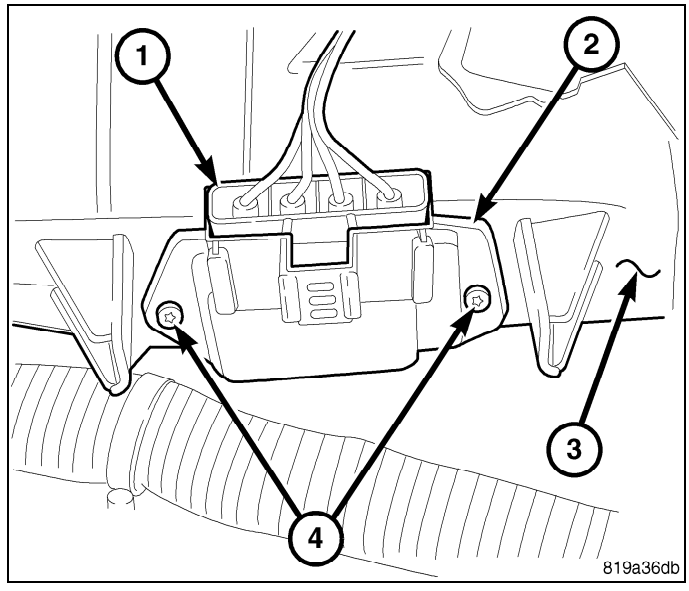

RESISTOR, Blower Motor

Description

The blower motor resistor is mounted to the bottom of the HVAC housing, below the glove box. The blower motor resistor consists of a molded plastic mounting plate (1) with an integral wire connector receptacle (2). Behind the mounting plate are resistors contained within a metal heat sink (3).

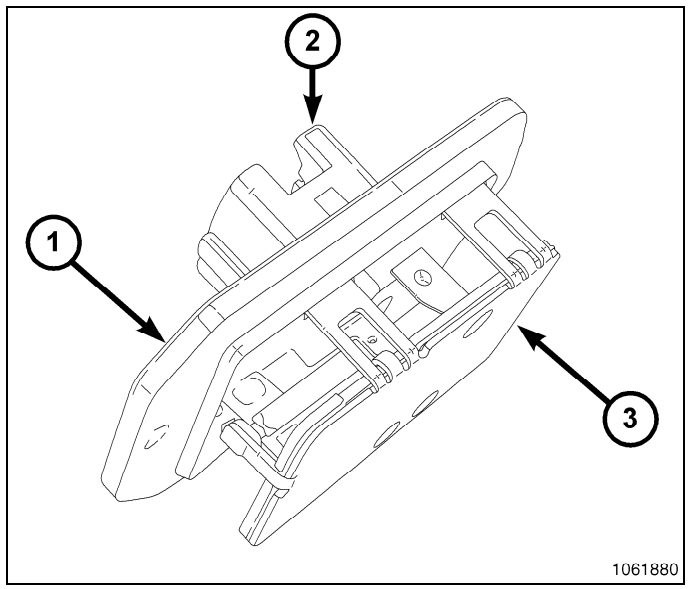

Operation

The blower motor resistor is connected to the vehicle electrical system through a dedicated wire lead and connector of the HVAC wire harness. The blower motor resistor has multiple resistor wires, each of which will reduce the current flow through the blower motor to change the blower motor speed.

The blower motor control for the heating-A/C system directs the ground path for the blower motor through the correct resistor wire to obtain the selected speed. With the blower motor control in the lowest speed position, the ground path for the blower motor is applied through all of the resistor wires. Each higher speed selected with the blower motor control applies the blower motor ground path through fewer of the resistor wires, increasing the blower motor speed.

The blower motor resistor cannot be adjusted or repaired and must be replaced if inoperative or damaged.

Diagnosis and Testing

WARNING: Disable the airbag system before attempting any steering wheel, steering column, or instrument panel component diagnosis or service. Disconnect and isolate the negative battery (ground) cable, then wait two minutes for the airbag system capacitor to discharge before performing further diagnosis or service. This is the only sure way to disable the airbag system. Failure to take the proper precautions may result in accidental airbag deployment and possible serious or fatal injury.

NOTE: See Wiring Information for circuit descriptions and diagrams. Wiring Information includes wiring diagrams, proper wire and connector repair procedures, further details on wire harness routing and retention, as well as pin-out and location views for the various wire harness connectors, splices and grounds.

1. Disconnect and isolate the negative battery cable.
2. Disconnect the wire harness connector from the blower motor resistor (Refer to 24 - Heating and Air Conditioning/ Controls/RESISTOR, Blower Motor - Removal).
3. Using an ohmmeter, check for continuity between all of the blower motor resistor terminals. In each case there should be continuity. If OK, repair the wire harness circuits between the blower motor speed control and the blower motor resistor or blower motor as required. If not OK, replace the inoperative blower motor resistor.

Removal

WARNING: Disable the airbag system before attempting any steering wheel, steering column or instrument panel component diagnosis or service. Disconnect and isolate the negative battery (ground) cable. Wait two minutes for the airbag system capacitor to discharge before performing further diagnosis or service. This is the

only sure way to disable the airbag system. Failure to follow these instructions may result in possible serious or fatal injury.

WARNING: The blower motor resistor may get very hot during normal operation. If the blower motor was turned on prior to servicing the blower motor resistor, wait five minutes to allow the blower motor resistors to cool before performing diagnosis or service. Failure to take this precaution may result in possible serious injury.

1. Disconnect and isolate the negative battery cable.
2. Reach under the passenger side of the instrument panel and disconnect the HVAC wire harness connector (4) from the blower motor resistor (3).
3. Remove the two screws (1) that secure the blower motor resistor to the HVAC housing (2) and remove the resistor.

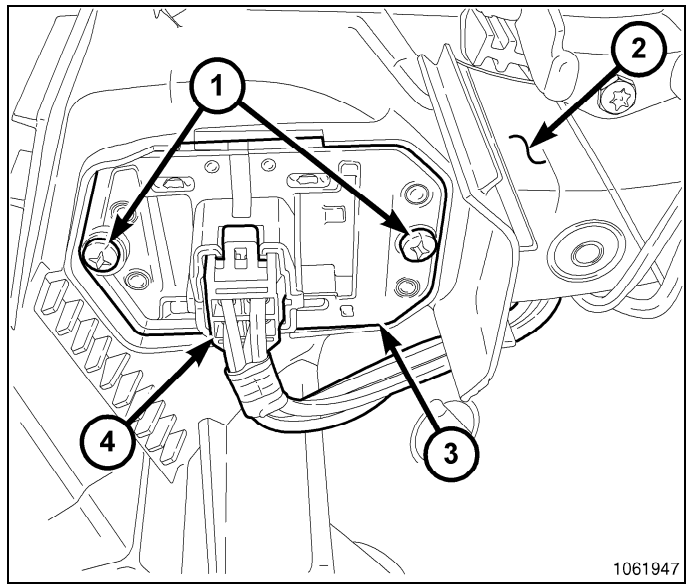

Installation

1. Position the blower motor resistor (3) into the HVAC housing (2).
2. Install the two screws (1) that secure the blower motor resistor to the HVAC housing. Tighten the screws to 1.1 N·m (10 in. lbs.).
3. Connect the HVAC wire harness connector (4) to the blower motor resistor.
4. Reconnect the negative battery cable.

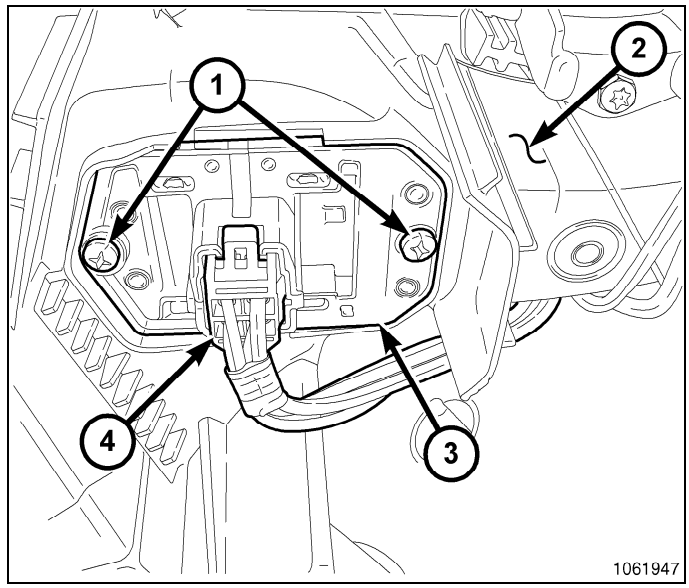

SENSOR, Evaporator Temperature

Description

NOTE: Cutaway of HVAC housing shown for clarity.

The evaporator temperature sensor (1) is an electrical thermistor located within a molded plastic case that is inserted into the top of the HVAC housing (2) to measure the temperature of the conditioned air downstream of the A/C evaporator (3). Two terminals within the connector receptacle connect the sensor to the vehicle electrical system through a wire lead and connector of the HVAC wire harness.

The external location of the evaporator temperature sensor allows the sensor to be removed or installed without disturbing the refrigerant in the A/C system.

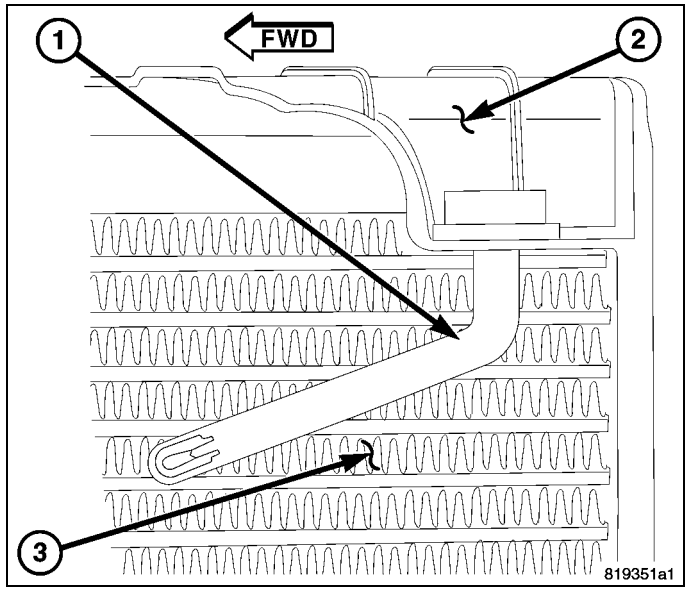

Operation

The evaporator temperature sensor monitors the temperature of the conditioned air downstream of the A/C evaporator and supplies an input signal to the A/C-heater control. The A/C-heater control uses the evaporator temperature sensor input signal to optimize A/C system performance and to protect the A/C system from evaporator freezing. The evaporator temperature sensor will change its internal resistance in response to the temperatures it monitors and is connected to the A/C-heater control through sensor ground circuit and a 5-volt reference signal circuit. As the temperature of the A/C evaporator decreases, the internal resistance of the evaporator temperature sensor decreases.

The A/C-heater control uses the monitored voltage reading as an indication of evaporator temperature. The A/C-heater control is programmed to respond to this input by requesting the Powertrain Control Module (PCM) to cycle the A/C clutch as necessary to optimize A/C system performance and to protect the A/C system from evaporator freezing.

The evaporator temperature sensor is diagnosed using a scan tool (Refer to 28 - DTC-Based Diagnostics/HVAC - Diagnosis and Testing).

The evaporator temperature sensor cannot be adjusted or repaired and must be replaced if inoperative or damaged.

Removal

NOTE: Illustration shown with instrument panel removed for clarity.

1. Disconnect and isolate the negative battery cable.
2. Remove the glove box from the instrument panel (Refer to 23 - Body/Instrument Panel/GLOVE BOX, Instrument Panel - Removal).
3. Remove the storage bin from the instrument panel (Refer to 23 - Body/Instrument Panel/BIN, Instrument Panel - Removal).
4. Disconnect the HVAC wire harness (2) from the evaporator temperature sensor (1) located on top of the HVAC housing (3).
5. Pull the evaporator temperature sensor upward and forward and remove the sensor from the HVAC housing.

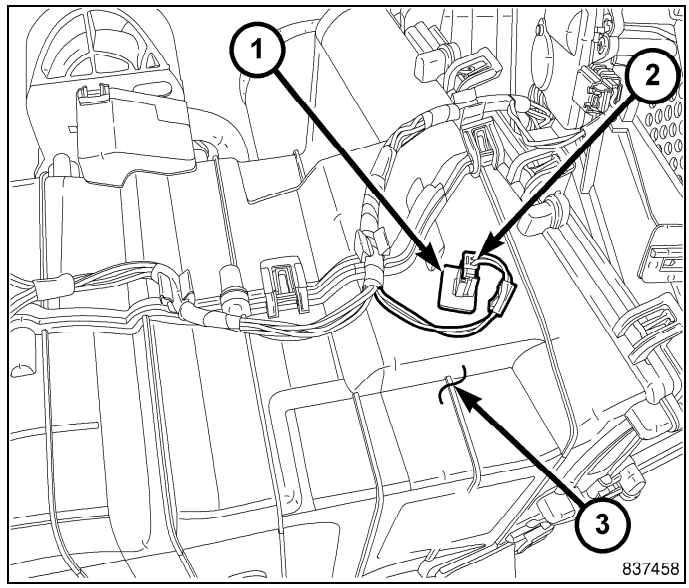

Installation

NOTE: Illustration shown with instrument panel removed for clarity.

1. Install the evaporator temperature sensor (1) into the top of the HVAC housing (3). Make sure the sensor is fully engage to the housing.
2. Connect the HVAC wire harness (2) to the evaporator temperature sensor.
3. Install the storage bin (Refer to 23 - Body/Instrument Panel/BIN, Instrument Panel - Installation).
4. Install the glove box (Refer to 23 - Body/Instrument Panel/GLOVE BOX, Instrument Panel - Installation).
5. Reconnect the negative battery cable.

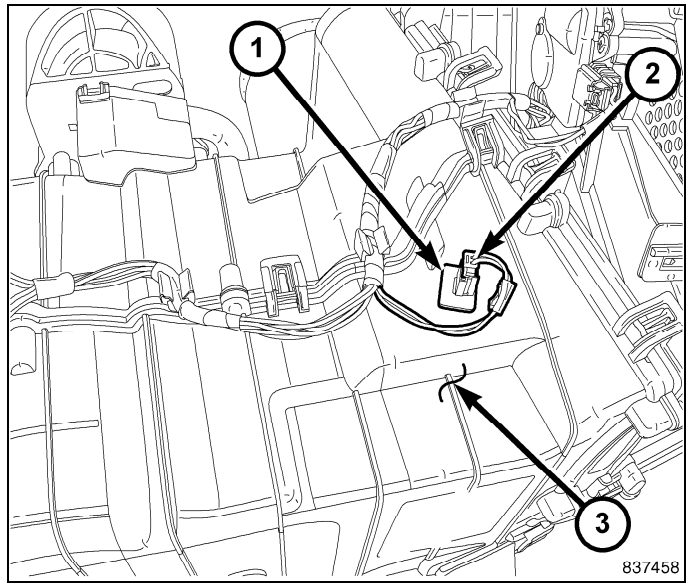

SENSOR, Infrared Temperature

Description

NOTE: Typical infrared sensor shown.

The infrared temperature sensor is located in the overhead console and consists of an infrared transducer concealed behind a clear lens (2) in a molded plastic housing with an integral mounting tab (3) and wire connector receptacle (1).

The infrared sensor is used only on models equipped with the automatic temperature control (ATC) heating-A/C system.

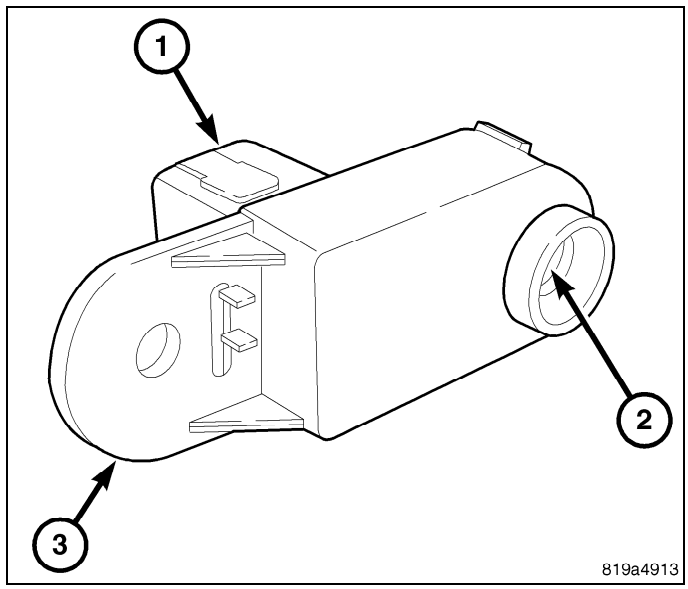

Operation

The infrared sensor detects thermal radiation emitted by the driver and front passenger seat occupants and surroundings and converts its data into a linear pulse width modulated (PWM) output signal which is read by the automatic temperature control (ATC) A/C-heater control. The ATC A/C-heater control uses the infrared sensor data as one of the inputs necessary to automatically control the interior cabin temperature levels. By using thermal radiation (surface temperature) measurement, rather than an air temperature measurement, the ATC heating-A/C system is able to adjust itself to the comfort level as perceived by the occupants. This allows the ATC system to compensate for other ambient conditions affecting comfort levels, such as solar heat gain or evaporative heat loss.

The ATC system logic responds to the infrared sensor message by calculating and adjusting the air flow temperature and air flow rate needed to properly obtain and maintain the selected comfort level temperature of the occupants. The A/C-heater control continually monitors the infrared sensor circuits, and will store diagnostic trouble codes (DTCs) for any problem it detects.

The infrared sensor is diagnosed using a scan tool (Refer to 28 - DTC-Based Diagnostics/HVAC - Diagnosis and Testing).

The infrared sensor cannot be adjusted or repaired and must be replaced if inoperative or damaged.

Removal

1. Disconnect and isolate the negative battery cable.
2. Remove the overhead console (1) and place it on a workbench (Refer to 08 - Electrical/8M - Message Systems/Overhead Console - Removal).
3. Remove the screw (3) that secures the infrared sensor (2) to the overhead console and remove the sensor.

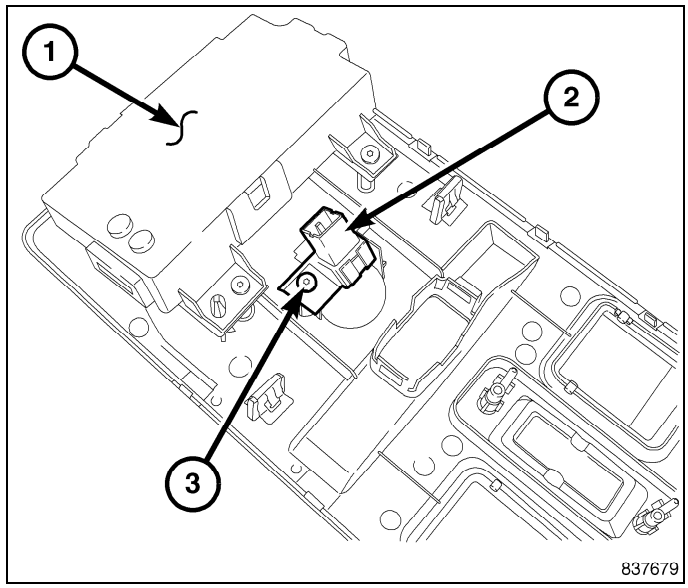

Installation

1. Position the infrared sensor (2) onto the overhead console (1).
2. Install the screw (3) that secures the infrared sensor to the overhead console. Tighten the screw to 1.1 N·m (10 in. lbs.).
3. Install the overhead console (Refer to 08 - Electrical/8M - Message Systems/Overhead Console - Installation).
4. Reconnect the negative battery cable.

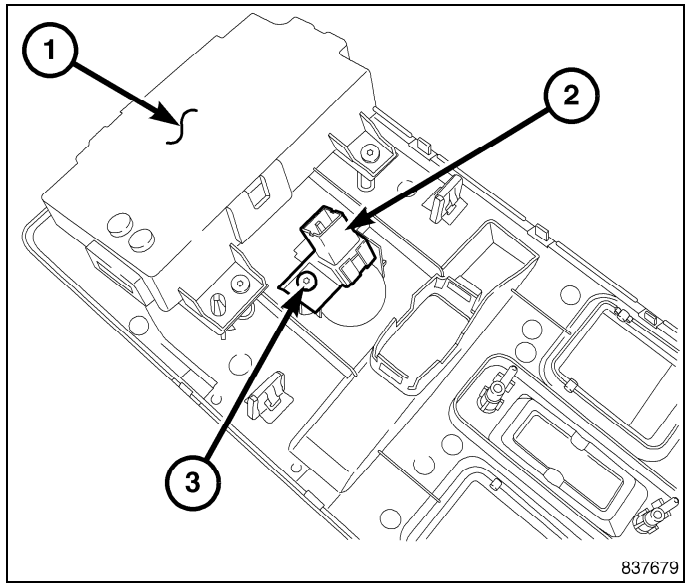

SENSOR, Sun

Description

NOTE: Typical sun sensor assembly shown.

The automatic temperature control (ATC) heating-A/C system uses a sun sensor assembly (1) to measure sun light intensity. The sun sensor assembly incorporates two sun sensors (2) within a molded plastic case which is mounted to the instrument panel and a clear lens (3) that protrudes through a trim panel located at the top of the instrument panel. The wire harness receptacle (4) connects the sun sensors to the vehicle electrical system through a wire lead and connector of the instrument panel wire harness.

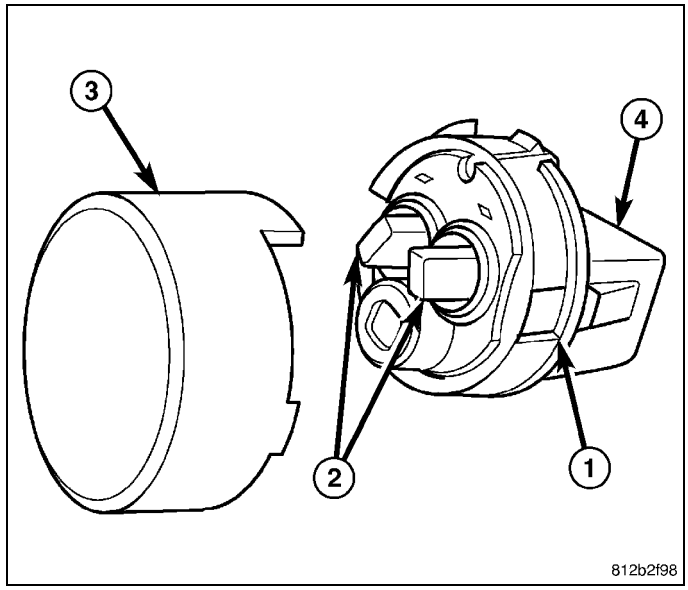

Operation

The ATC dual-zone heating-A/C system uses two sun sensors to balance the system in response to side-to-side variations in sun light intensity. Passengers in sun and shadow require different functional settings because they experience very different temperatures. The sun sensor assembly provides data to the A/C heater control to help determine proper mode and blend-air door positions and blower motor speeds. The sun sensors are not thermistor type sensors, but rather photo diodes. For this reason the sun sensors responds to sun light intensity rather than temperature. The sun sensor assembly is also used to sense day and night conditions for automatic headlight control, if equipped.

The sun sensor is diagnosed using a scan tool (Refer to 28 - DTC-Based Diagnostics/HVAC - Diagnosis and Testing).

The sun sensor assembly cannot be adjusted or repaired and must be replaced if inoperative or damaged.

Removal

WARNING: Disable the airbag system before attempting any steering wheel, steering column or instrument panel component diagnosis or service. Disconnect and isolate the negative battery (ground) cable, then wait two minutes for the airbag system capacitor to discharge before performing further diagnosis or service. This is the only sure way to disable the airbag system. Failure to follow these instructions may result in accidental airbag deployment and possible serious or fatal injury.

1. Disconnect and isolate the negative battery cable.
2. Remove the trim panel (2) that contains the sun sensor (1) from the top of the instrument panel using Trim Stick C-4755 or equivalent and disconnect the instrument panel wire harness connector from the sensor.
3. Using Trim Stick C-4755 or equivalent, gently pry on both sides of the sun sensor assembly and remove the sun sensor from the panel.

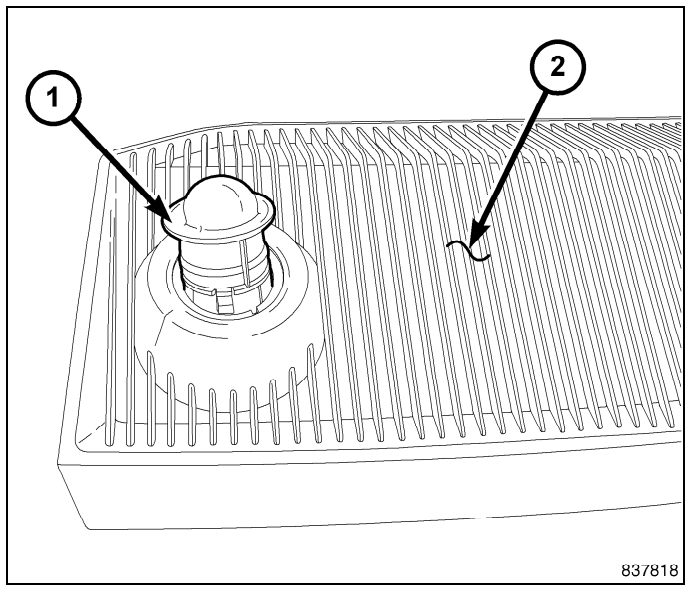

Installation

1. Align the tab on the sun sensor (1) with the opening in the panel (2).
2. Gently push the sun sensor into the panel until the sensor snap retainers are securely engaged.
3. Connect the instrument panel wire harness to the sun sensor and install the panel onto the instrument panel. Make sure the panel snap retainers are fully engaged.
4. Reconnect the negative battery cable.

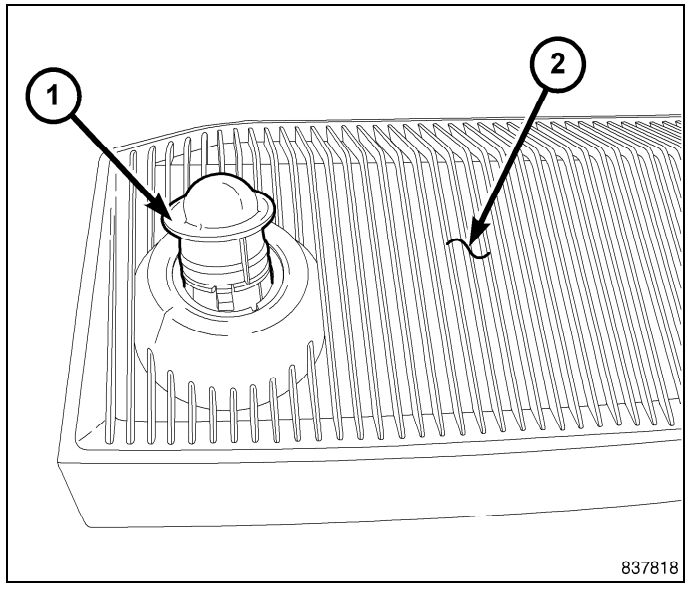

TRANSDUCER, A/C Pressure

Description

The A/C pressure transducer (1) is a switch that is installed on a fitting located on the A/C discharge line. An internally threaded fitting on the A/C pressure transducer connects it to the externally threaded Schrader-type fitting on the A/C discharge line. A rubber O-ring seals the connection between the A/C pressure transducer and the discharge line fitting. The A/C pressure transducer is connected to the vehicle electrical system by a molded plastic connector with three terminals.

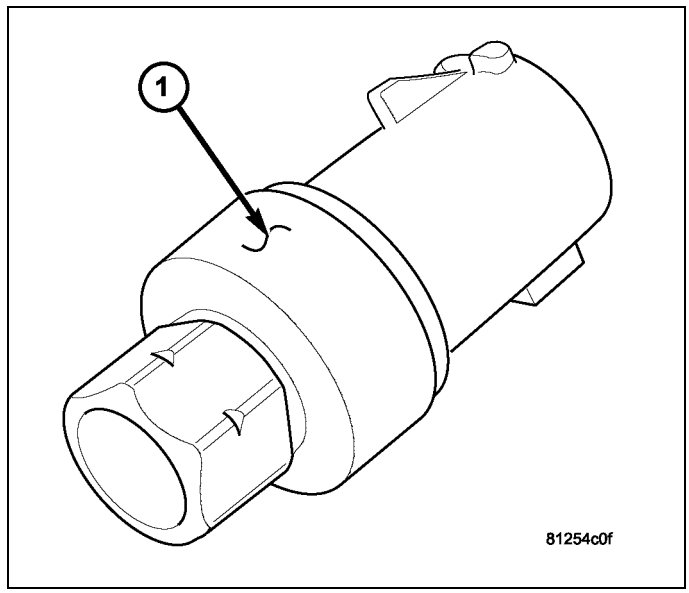

Operation

The A/C pressure transducer monitors the pressures in the high side of the refrigerant system through its connection to a fitting on the A/C discharge line and its internal resistance changes in response to the pressures it monitors. The Powertrain Control Module (PCM) provides a five volt reference signal and a sensor ground to the A/C pressure transducer, then monitors the output voltage of the transducer on a sensor return circuit to determine refrigerant pressure. The PCM is programmed to respond to this and other sensor inputs by controlling the operation of the A/C clutch and the radiator cooling fan to help optimize A/C system performance and to protect the system components from damage. The PCM will disengage the A/C clutch when high side pressure rises above 3172 kPa (460 psi) and re-engage the clutch when high side pressure drops below 1999 kPa (290 psi). The A/C pressure transducer will also disengage the A/C clutch if the high side pressure drops below 193 kPa (28 psi) and will re-engage the clutch when the high side pressure rises above 234 kPa (34 psi). If the refrigerant pressure rises above 1655 kPa (240 psi), the PCM will actuate the cooling fan. The A/C pressure transducer signal to the PCM also prevents the A/C clutch from engaging when ambient temperatures are below about 10° C (50° F) due to the pressure/temperature relationship of the refrigerant.

A Schrader-type valve in the A/C discharge line fitting permits the A/C pressure transducer to be removed or installed without disturbing the refrigerant in the A/C system.

The A/C pressure transducer is diagnosed using a scan tool (Refer to 28 - DTC-Based Diagnostics/MODULE, Powertrain Control (PCM) - Diagnosis and Testing).

The A/C pressure transducer cannot be adjusted or repaired and must be replaced if inoperative or damaged.

Removal

NOTE: It is not necessary to discharge the refrigerant system to replace the A/C pressure transducer.

NOTE: Typical A/C pressure transducer and refrigerant line shown.

1. Disconnect and isolate the negative battery cable.
2. Disconnect the wire harness connector (1) from the A/C pressure transducer (2) located on the A/C discharge line (3).
3. Remove the A/C pressure transducer from the fitting on the A/C discharge line and remove and discard the O-ring seal.

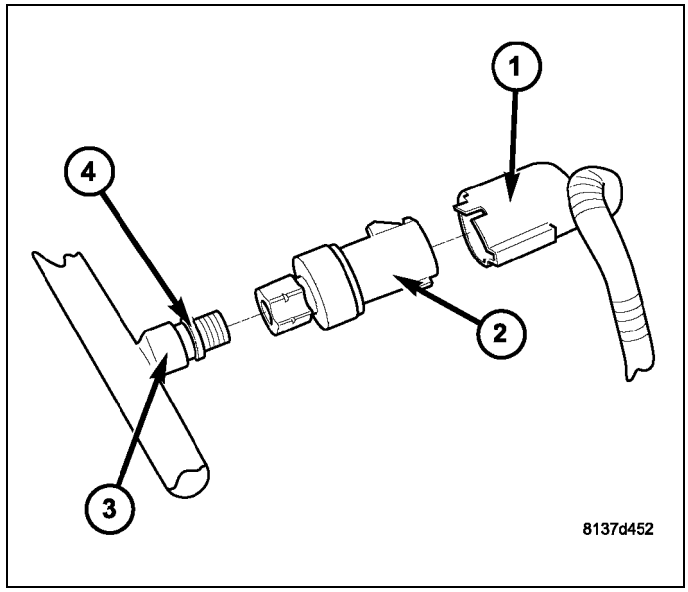

Installation

NOTE: Use only the specified O-ring as it is made of special material for R-134a. Use only refrigerant oil of the type required for the A/C compressor.

NOTE: Typical A/C pressure transducer and refrigerant line shown.

1. Lubricate a new rubber O-ring seal (4) with clean refrigerant oil and install it onto the discharge line fitting (3).
2. Install the A/C pressure transducer (2) onto the A/C discharge line. Tighten the A/C pressure transducer to 5.1 N·m (45 in. lbs.).
3. Connect the wire harness connector (1) to the A/C pressure transducer.
4. Reconnect the negative battery cable.

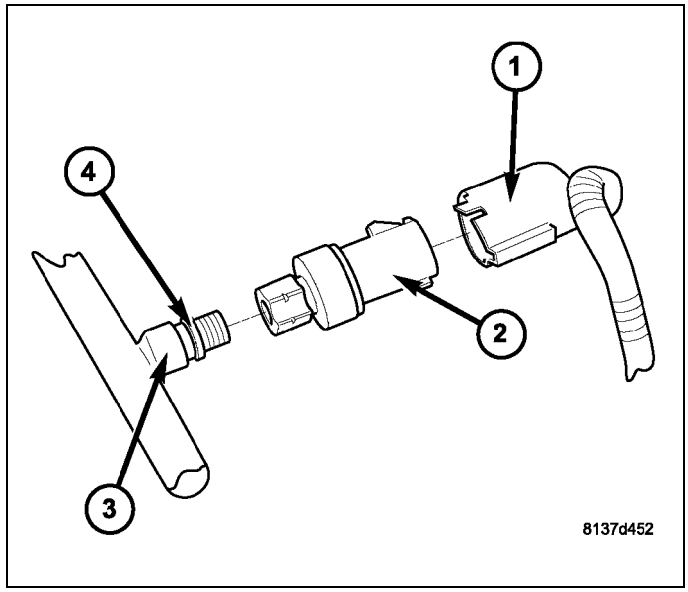

DISTRIBUTION

TABLE OF CONTENTS

page

DISTRIBUTION
- **DUCT, DEFROSTER**
  - REMOVAL . . . 38
  - INSTALLATION . . . 38
- **DUCT, FLOOR CONSOLE**
  - REMOVAL . . . 39
  - INSTALLATION . . . 40
- **DUCT, FLOOR DISTRIBUTION, REAR**
  - REMOVAL . . . 41
  - INSTALLATION . . . 41
- **DUCT, INSTRUMENT PANEL**
  - REMOVAL . . . 41
  - INSTALLATION . . . 45
- **DUCT, INSTRUMENT PANEL DEMISTER**
  - REMOVAL . . . 48
  - INSTALLATION . . . 49
- **HOUSING, HVAC**
  - DESCRIPTION . . . 50
  - REMOVAL
    - AIR INLET HOUSING . . . 50
    - HVAC HOUSING ASSEMBLY . . . 51
  - DISASSEMBLY
    - AIR INLET HOUSING . . . 52
    - HVAC HOUSING . . . 54

page

  - ASSEMBLY
    - AIR INLET HOUSING . . . 59
    - HVAC HOUSING . . . 61
  - INSTALLATION
    - AIR INLET HOUSING . . . 65
    - HVAC HOUSING ASSEMBLY . . . 66
- **MOTOR, BLOWER**
  - DESCRIPTION . . . 67
  - OPERATION . . . 67
  - DIAGNOSIS AND TESTING . . . 68
  - REMOVAL . . . 69
  - INSTALLATION . . . 69
- **OUTLET, AIR**
  - REMOVAL
    - FRONT CENTER AIR OUTLETS . . . 69
    - FRONT OUTER AIR OUTLETS . . . 70
    - REAR SEAT AIR OUTLETS . . . 71
  - INSTALLATION
    - FRONT CENTER AIR OUTLETS . . . 72
    - FRONT OUTER AIR OUTLETS . . . 73
    - REAR SEAT AIR OUTLETS . . . 73

Distribution

DUCT, Defroster

Removal

WARNING: Disable the airbag system before attempting any steering wheel, steering column or instrument panel component diagnosis or service. Disconnect and isolate the negative battery (ground) cable and wait two minutes for the airbag system capacitor to discharge before performing further diagnosis or service. This is the only sure way to disable the airbag system. Failure to follow these instructions may result in accidental airbag deployment and possible serious or fatal injury.

NOTE: Take the proper precautions to protect the instrument panel from cosmetic damage.

1. Remove the instrument panel and place it on a workbench (Refer to 23 - Body/Instrument Panel/PANEL, Instrument - Removal).
2. Remove the instrument panel cover (Refer to 23 - Body/Instrument Panel/COVER, Instrument Panel - Removal).
3. Remove the instrument panel ducts and place the center distribution duct on a workbench (Refer to 24 - Heating and Air Conditioning/Distribution/DUCT, Instrument Panel - Removal).
4. Remove the three retainers (3 and 4) that secure the defroster duct (1) to the center distribution duct (2) and remove the defroster duct.

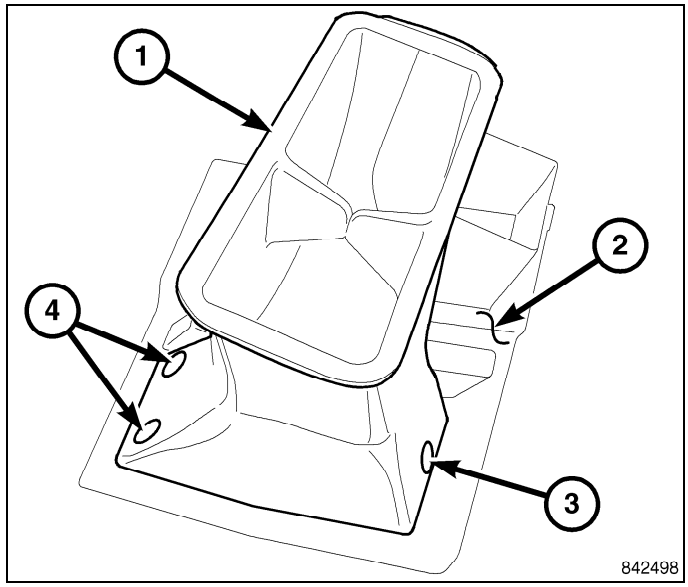

Installation

1. Position the defroster duct (1) onto the center distribution duct (2).
2. Install the three retainers (3 and 4) that secure the defroster duct to the center distribution duct.
3. Install the instrument panel ducts onto the instrument panel support (Refer to 24 - Heating and Air Conditioning/Distribution/DUCT, Instrument Panel - Installation).
4. Install the instrument panel cover (Refer to 23 - Body/Instrument Panel/COVER, Instrument Panel - Installation)
5. Install the instrument panel (Refer to 23 - Body/Instrument Panel/PANEL, Instrument - Installation).

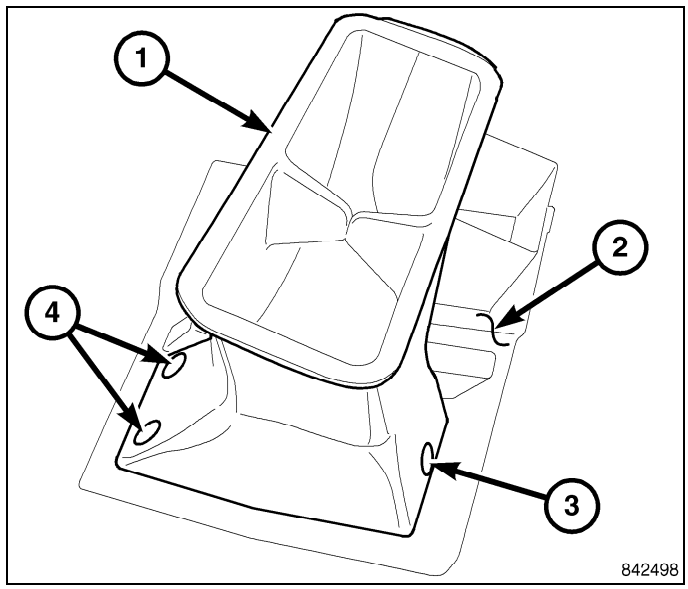

DUCT, Floor Console

Removal

NOTE: Illustration shown with seat cushions removed for clarity.

NOTE: Automatic transmission model shown. Manual transmission model similar.

1. Remove the floor console (Refer to 23 - Body/Interior/CONSOLE, Floor - Removal).
2. Disengage the floor console duct (1) from the rear duct adapter (3) and slide the adapter rearward into the rear duct (2).
3. Disengage the floor console duct from the stud (4) on the floor panel.
4. Disengage the floor console duct from the rear floor distribution duct (5) and remove the console duct.

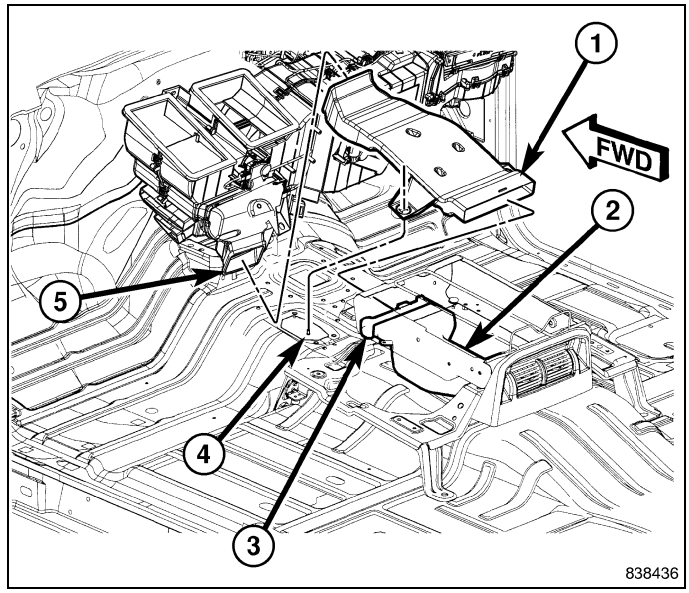

NOTE: Illustration shown with center front seat removed for clarity.

5. If required, remove the front seat (Refer to 23 - Body/Seats/SEAT - Removal) .
6. Remove the three push-pin retainers (1) that secure the rear duct (2) to the bottom of the center seat support (3).
7. Disengage the rear duct from the rear outlet (4) and remove the rear duct.

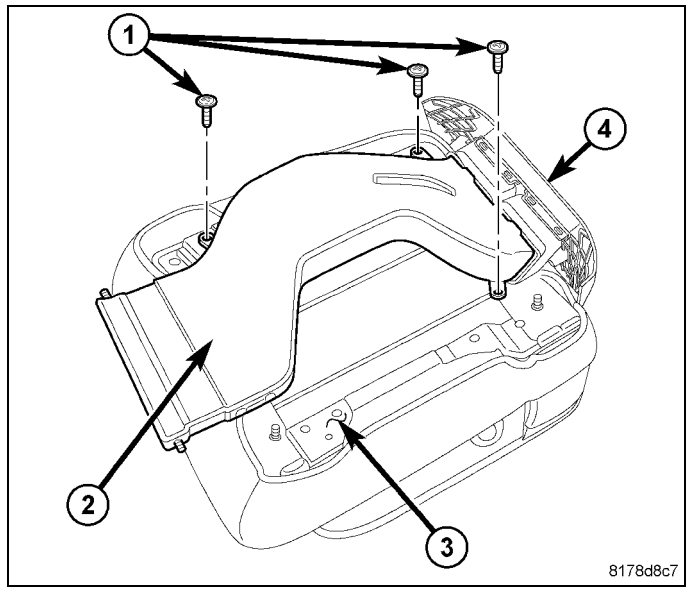

Installation

NOTE: Illustration shown with center front seat removed for clarity.

1. If removed, install the rear duct (2) onto the rear outlet (4). Make sure the duct is fully engaged to the outlet.
2. Install the three push-pin retainers (1) that secure the rear duct to the front seat support (3) and install the front seat (Refer to 23 - Body/Seats/SEAT - Installation).

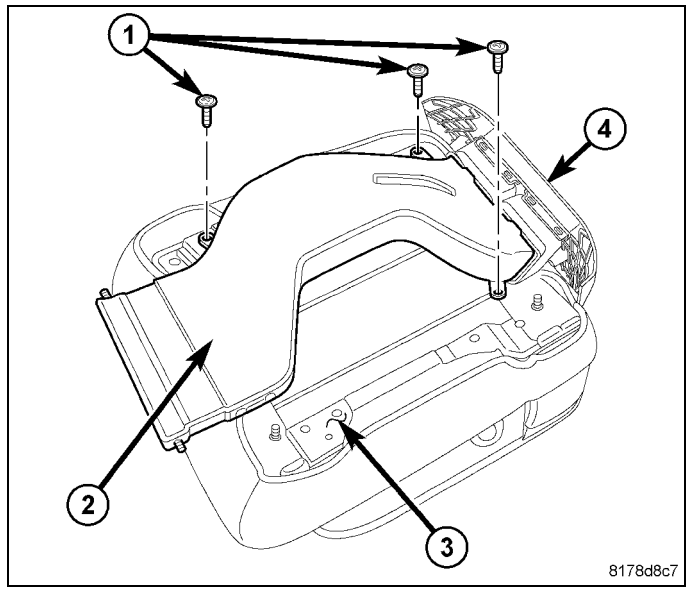

NOTE: Illustration shown with seat cushions removed for clarity.

NOTE: Automatic transmission models shown. Manual transmission model similar.

3. Install the floor console duct (1) onto the rear floor distribution duct (5). Make sure the ducts are fully engaged to each other.
4. Engage the floor console duct onto the stud (4).
5. Slide the rear duct adapter (3) forward and install the floor console duct onto the rear duct (2). Make sure the ducts are fully engaged to each other.
6. Install the floor console (Refer to 23 - Body/Interior/CONSOLE, Floor - Installation).

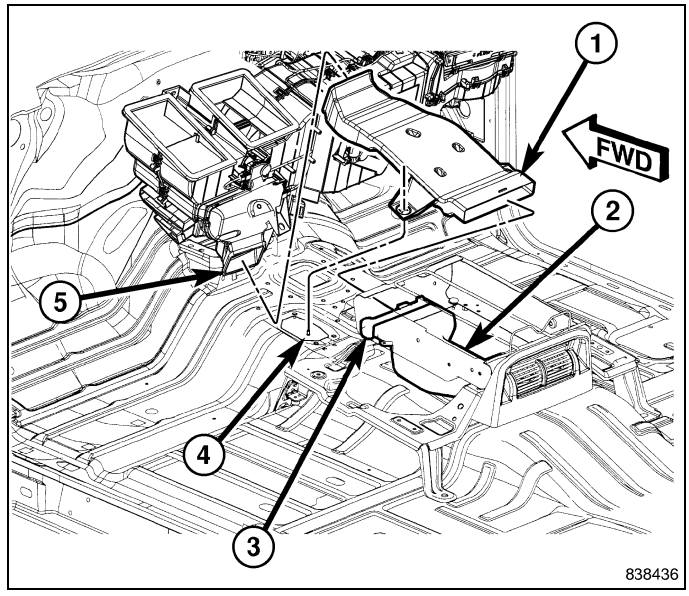

DUCT, Floor Distribution, Rear

Removal

1. Remove the front seats (Refer to 23 - Body/Seats/SEAT - Removal).
2. Roll back the front carpet from under the instrument panel toward the rear of the vehicle (Refer to 23 - Body/Interior/CARPET - Removal).
3. Disengage the rear floor ducts (2 and 5) from the floor support bracket (3) and from the studs (4) located on the floor panel.
4. Disconnect the rear floor ducts from the HVAC housing (1) and remove the ducts

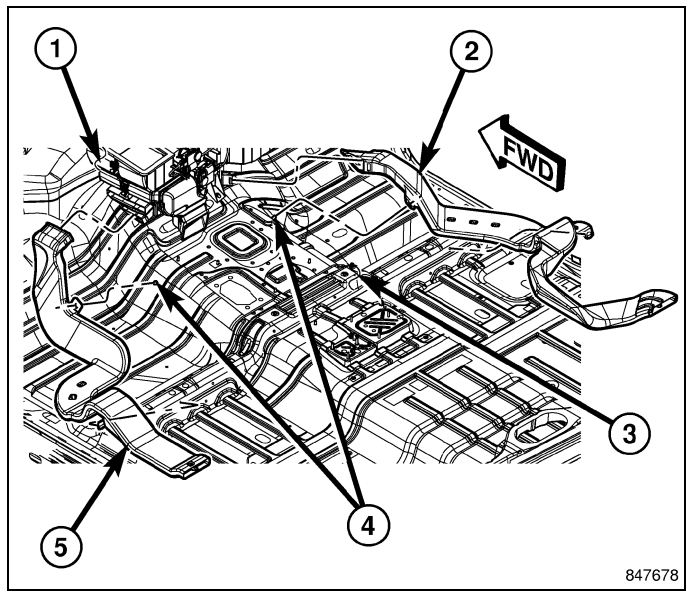

.

Installation

1. Connect the rear floor ducts (2 and 5) to the HVAC housing (1).
2. Engage the rear floor ducts to the studs (4) and the floor support bracket (3).
3. Reposition the front carpet (Refer to 23 - Body/Interior/CARPET - Installation).
4. Install the front seats (Refer to 23 - Body/Seats/SEAT - Installation).

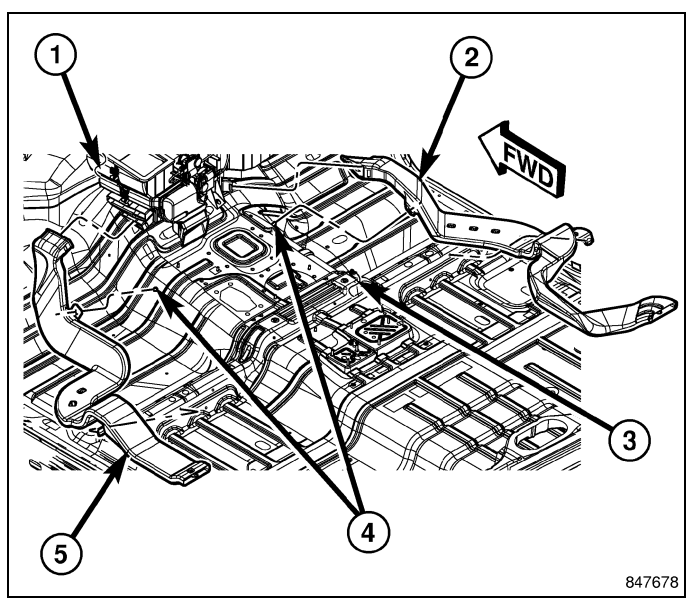

DUCT, Instrument Panel

Removal

WARNING: Disable the airbag system before attempting any steering wheel, steering column or instrument panel component diagnosis or service. Disconnect and isolate the negative battery (ground) cable and wait two minutes for the airbag system capacitor to discharge before performing further diagnosis or service. This is the only sure way to disable the airbag system. Failure to follow these instructions may result in accidental airbag deployment and possible serious or fatal injury.

NOTE: Take the proper precautions to protect the instrument panel from cosmetic damage.

1. Remove the instrument panel and place it on a workbench (Refer to 23 - Body/Instrument Panel/PANEL, Instrument - Removal).
2. Remove the instrument panel cover (Refer to 23 - Body/Instrument Panel/COVER, Instrument Panel - Removal).
3. Remove the retainer (1) that secures the driver side demister duct (2) to the end of the instrument panel support (4).
4. Disconnect the driver side demister duct from the center distribution duct (3) and remove the demister duct.

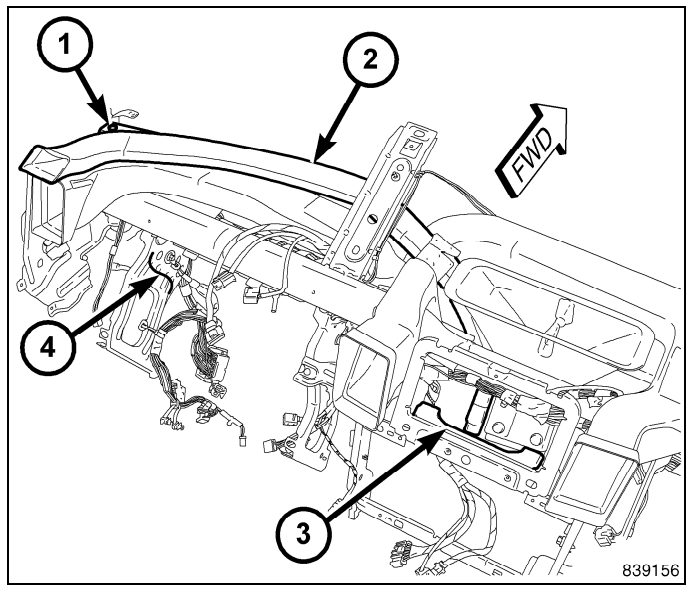

5. Remove the retainer (1) that secures the passenger side demister duct (5) to the end instrument panel support (6).
6. Remove the retainer (2) that secures the passenger side demister duct to the passenger side instrument panel duct (3).
7. Disconnect the passenger side demister duct from the center distribution duct (4) and remove the demister duct.

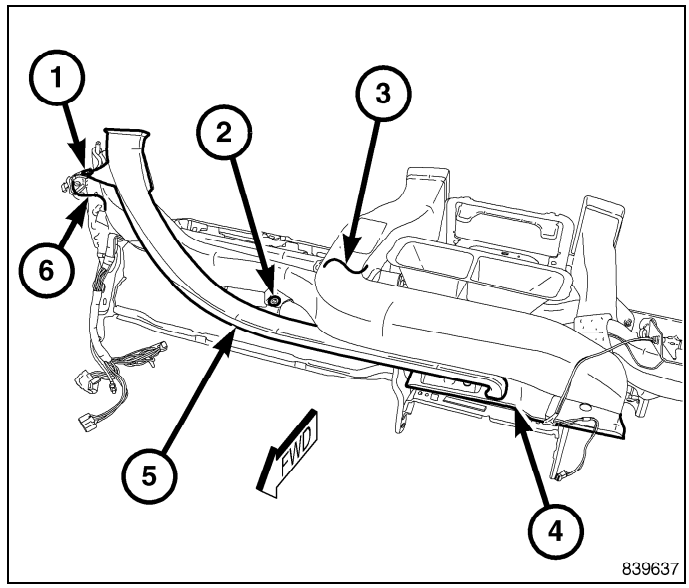

8. Remove the retainer (3) that secures the passenger side instrument panel duct (2) to the end of the instrument panel support (1).

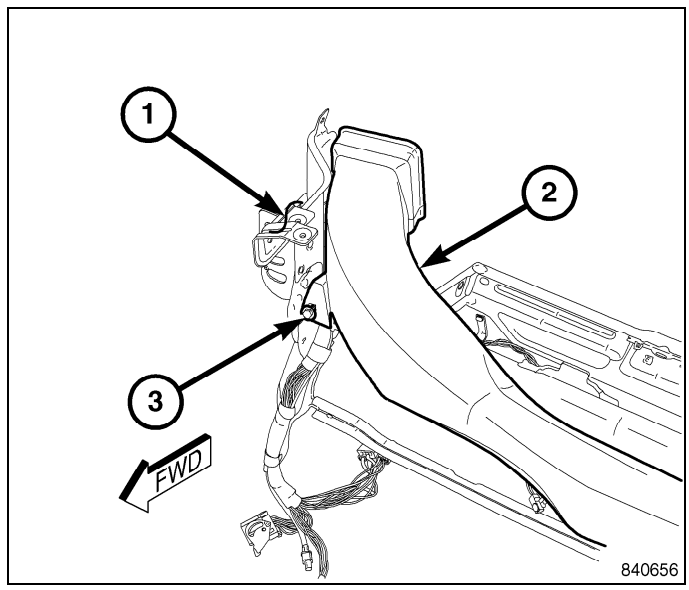

9. Remove the retainer (2) that secures the passenger side instrument panel duct (3) to the middle of the instrument panel support (3).

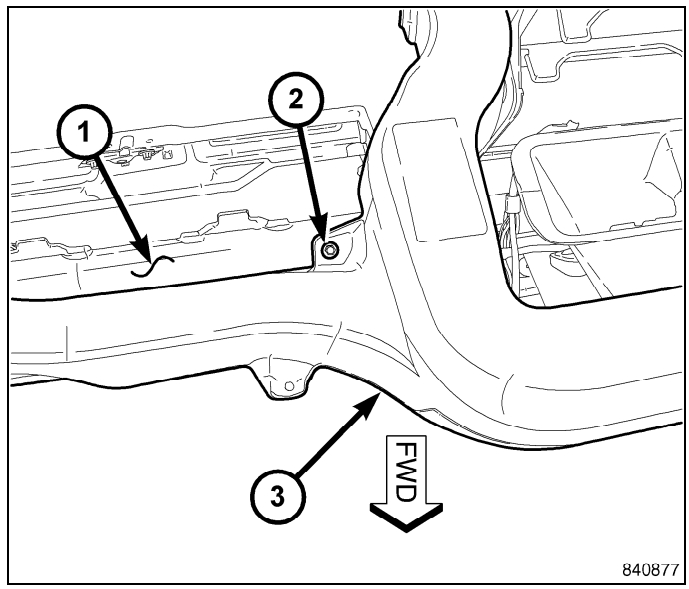

10. Remove the retainer (1) that secures the driver side instrument panel duct (3) to the middle of the instrument panel support (2).
11. Remove the retainer (4) that secures the passenger side instrument panel duct (6) to the middle of the center distribution duct (5).

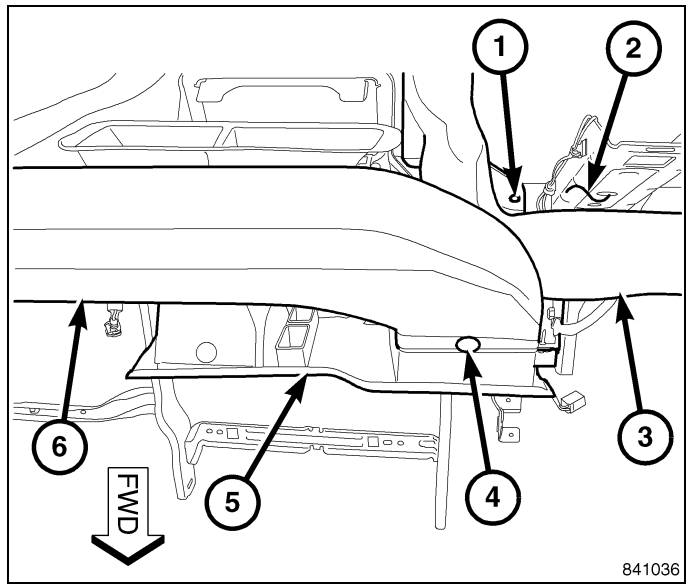

12. Remove the retainer (3) that secures the driver side instrument panel duct (1) to the end of the instrument panel support (2).

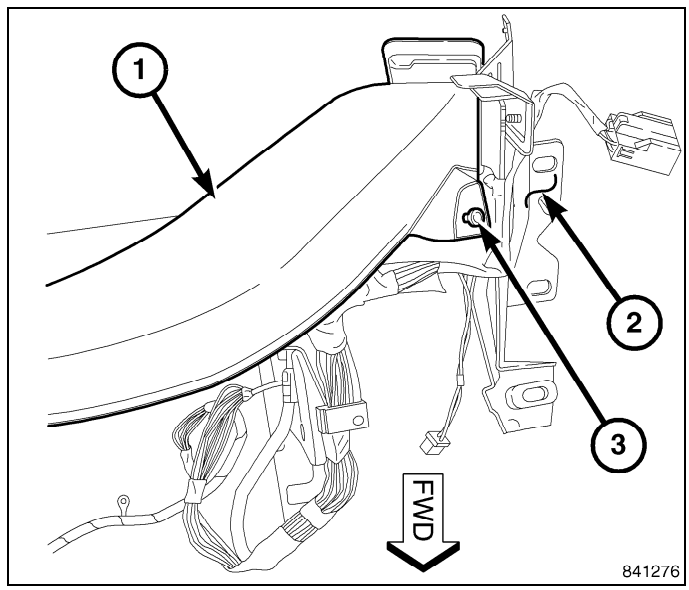

13. Remove the two retainers (1) that secure the passenger side instrument panel duct (2) and the driver side instrument panel duct (4) to the middle of the instrument panel support (3).
14. Remove the passenger side instrument panel duct.

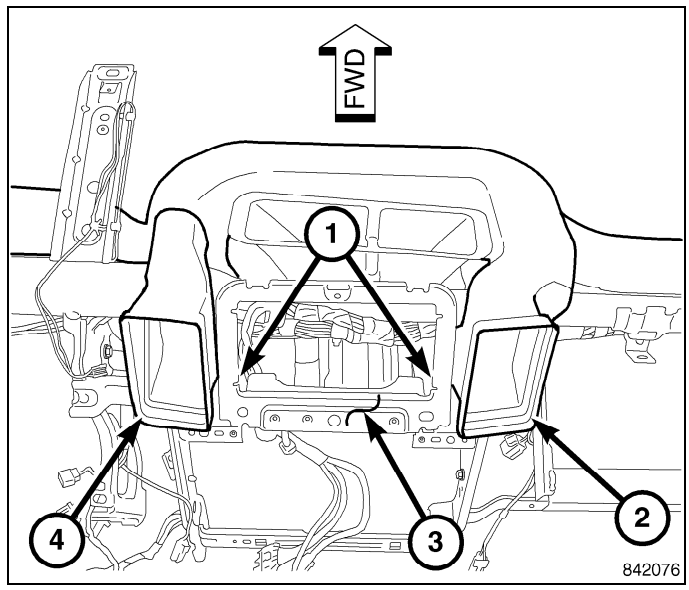

15. Remove the two retainers (1 and 3) that secure the center distribution duct (4) to the middle of the instrument panel support (5).
16. Remove the driver side instrument panel duct (2) and the center distribution duct.

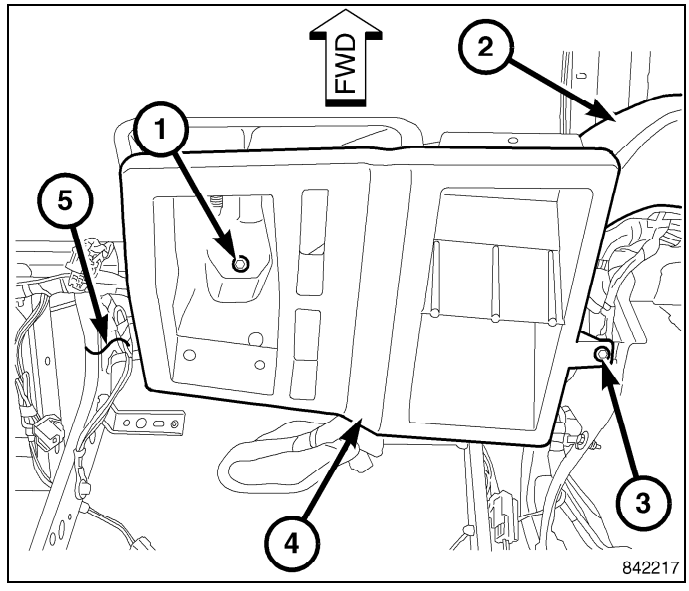

Installation

1. Position the driver side instrument panel duct (2) and the center distribution duct (4) to the instrument panel support (5).
2. Install the two retainers (1 and 3) that secure the center distribution duct (4) to the middle of the instrument panel support.

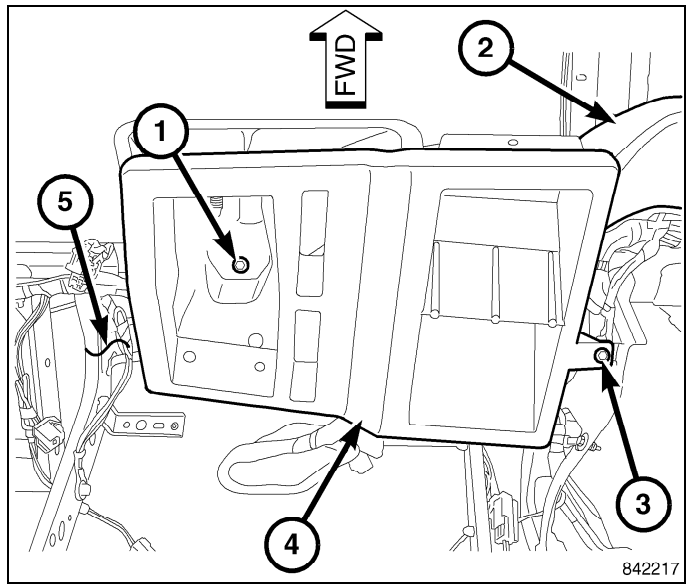

3. Position the passenger side instrument panel duct (2) the instrument panel support (3) and connect it to the center distribution duct.
4. Install the two retainers (1) that secure the passenger side instrument panel duct and the driver side instrument panel duct (4) to the middle of the instrument panel support.

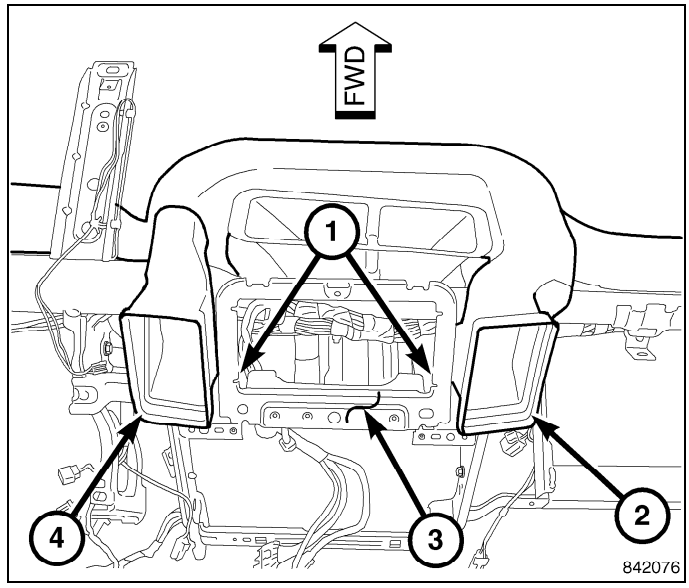

5. Install the retainer (3) that secures the driver side instrument panel duct (1) to the end of the instrument panel support (2).

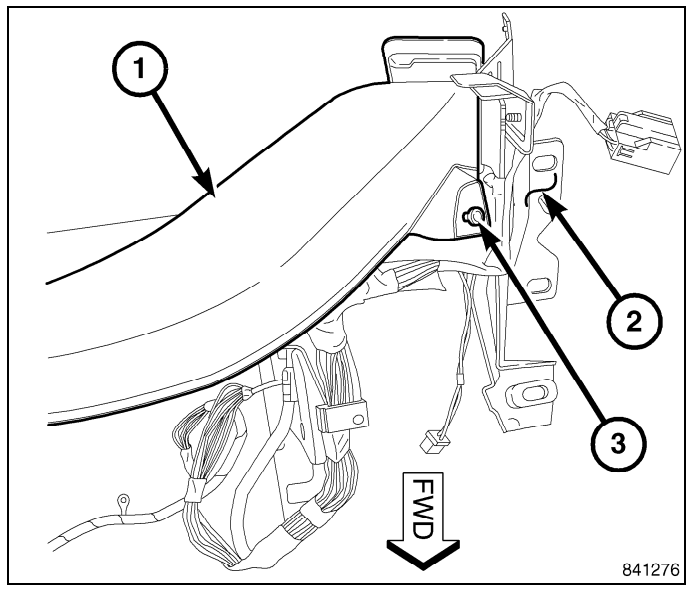

6. Install the retainer (1) that secures the driver side instrument panel duct (3) to the middle of the instrument panel support (2).
7. Install the retainer (4) that secures the passenger side instrument panel duct (6) to the middle of the center distribution duct (5).

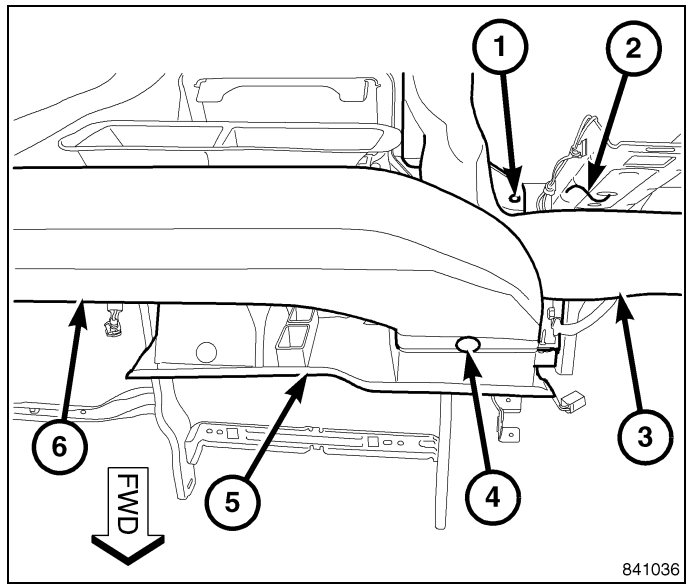

8. Install the retainer (2) that secures the passenger side instrument panel duct (3) to the middle of the instrument panel support (3).

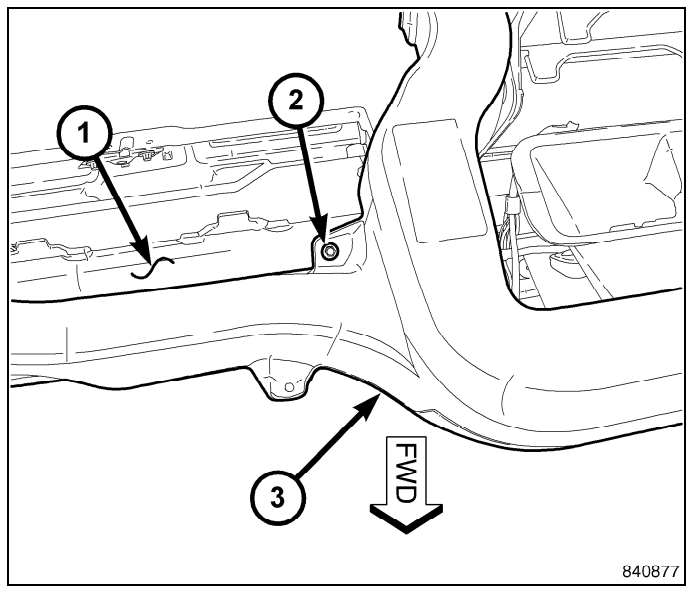

9. Install the retainer (3) that secures the passenger side instrument panel duct (2) to the end of the instrument panel support (1).

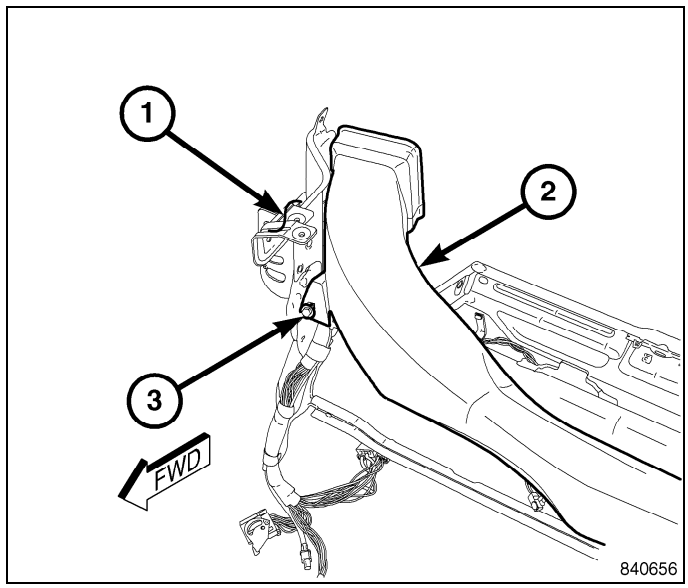

10. Position the driver side demister duct (2) to the instrument panel support (4) and connect it to the distribution duct (3).
11. Install the retainer (1) that secures the driver side demister duct to the instrument panel support.

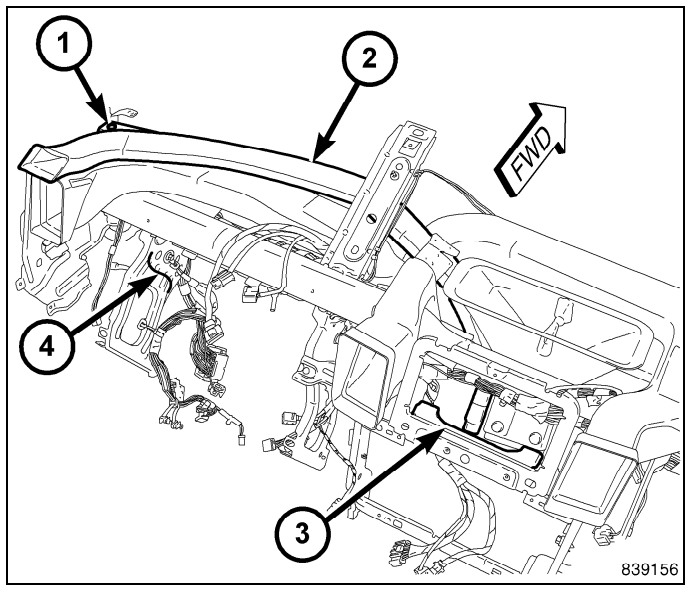

12. Position the passenger side demister duct (5) to the instrument panel support (6) and connect it to the distribution duct (4).
13. Install the retainer (2) that secures the passenger side demister duct to the passenger side instrument panel duct (3).
14. Install the retainer (1) that secures the passenger side demister duct to the instrument panel support.
15. Install the instrument panel cover (Refer to 23 - Body/Instrument Panel/COVER, Instrument Panel - Installation).
16. Install the instrument panel (Refer to 23 - Body/Instrument Panel/PANEL, Instrument - Installation).

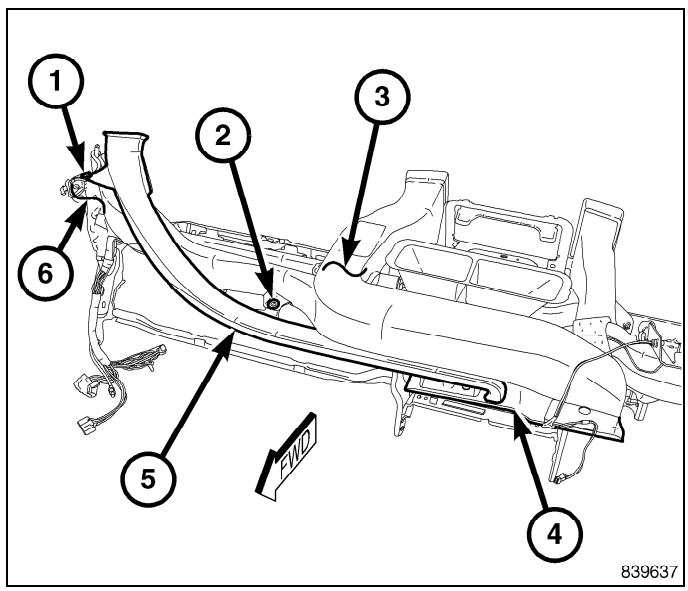

DUCT, Instrument Panel Demister

Removal

WARNING: Disable the airbag system before attempting any steering wheel, steering column or instrument panel component diagnosis or service. Disconnect and isolate the negative battery (ground) cable and wait two minutes for the airbag system capacitor to discharge before performing further diagnosis or service. This is the only sure way to disable the airbag system. Failure to follow these instructions may result in accidental airbag deployment and possible serious or fatal injury.

NOTE: Take the proper precautions to protect the instrument panel from cosmetic damage.

1. Remove the instrument panel and place it on a workbench (Refer to 23 - Body/Instrument Panel/PANEL, Instrument - Removal).
2. Remove the instrument panel cover (Refer to 23 - Body/Instrument Panel/COVER, Instrument Panel - Removal).
3. Remove the retainer (1) that secures the driver side demister duct (2) to the instrument panel support (4).
4. Disconnect the driver side demister duct from the center distribution duct (3) and remove the duct.

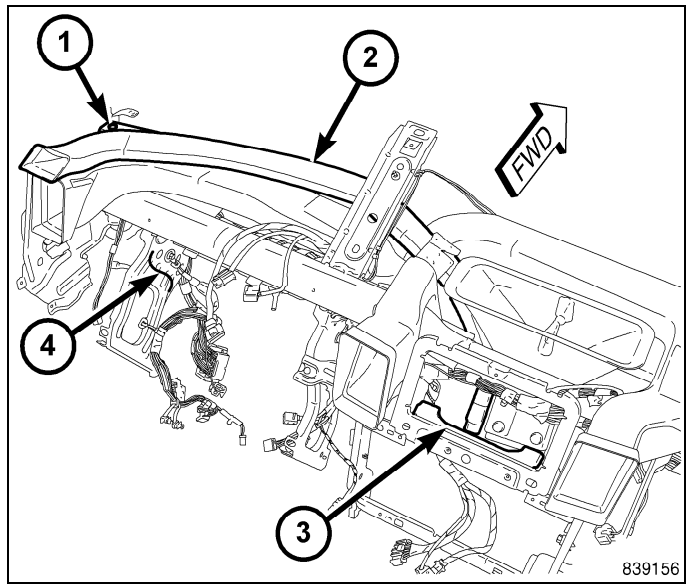

5. Remove the retainer (1) that secures the passenger side demister duct (5) to the instrument panel support (6).
6. Remove the retainer (2) that secures the passenger side demister duct to the passenger side instrument panel duct (3).
7. Disconnect the passenger side demister duct from the center distribution duct (4) and remove the demister duct.

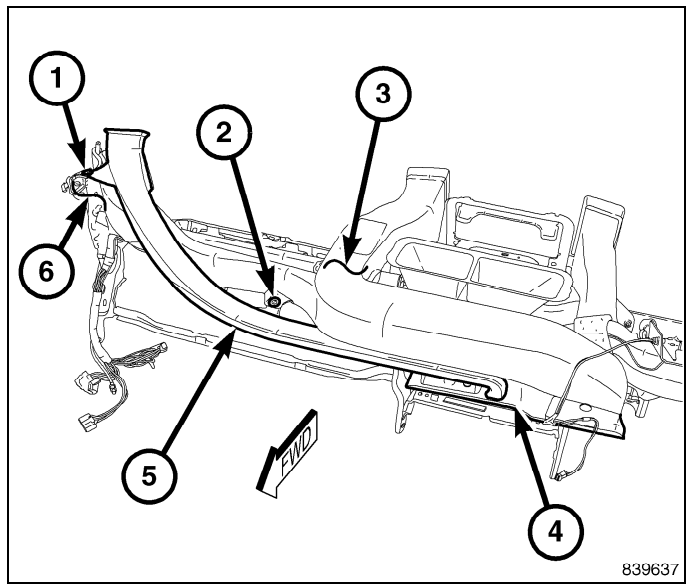

Installation

1. Position the driver side demister duct (2) to the instrument panel support (4) and connect it to the distribution duct (3).
2. Install the retainer (1) that secures the driver side demister duct to the instrument panel support.

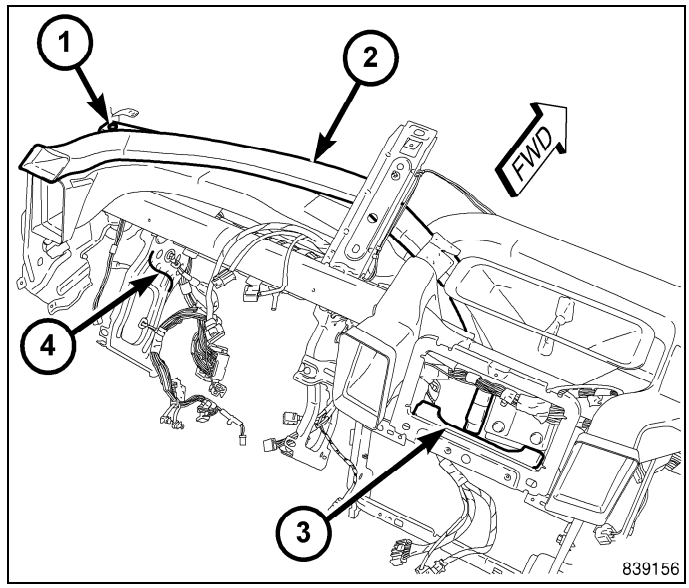

3. Position the passenger side demister duct (5) to the instrument panel support (6) and connect it to the distribution duct (4).
4. Install the retainer (2) that secures the passenger side demister duct to the passenger side instrument panel duct (3).
5. Install the retainer (1) that secures the passenger side demister duct to the instrument panel support.
6. Install the instrument panel cover (Refer to 23 - Body/Instrument Panel/COVER, Instrument Panel - Installation).
7. Install the instrument panel (Refer to 23 - Body/Instrument Panel/PANEL, Instrument - Installation).

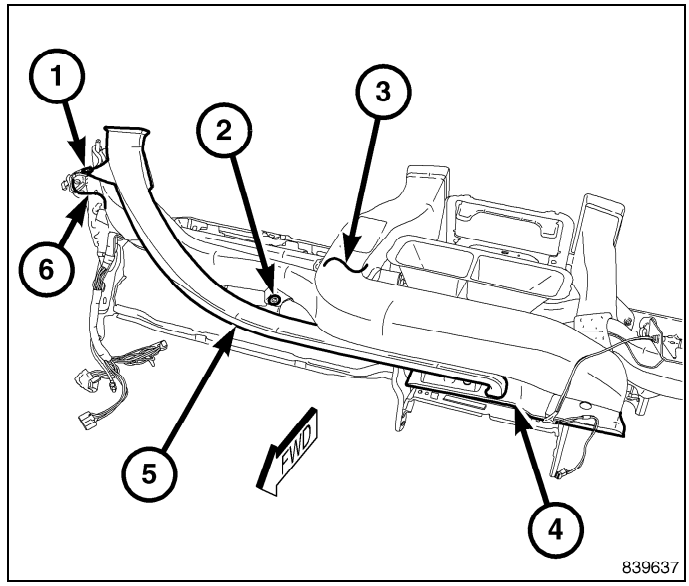

HOUSING, HVAC

Description

All models are equipped with a common HVAC housing assembly that combines A/C and heating capabilities into a single unit mounted behind the instrument panel in the passenger compartment. The HVAC housing assembly consists of the following:

- **HVAC housing** — The HVAC housing (1) consists of three pieces that are attached together by molded plastic retaining clips and screws. The HVAC housing contains the heater core, A/C evaporator and blend-air and mode-air doors, and has mounting provisions for the air-door actuators, floor console duct (when equipped with center floor console), blower motor, blower motor resistor or power module (depending on the control application), foam seals and the HVAC wire harness.
- **Air inlet housing** — The air inlet housing (2) is mounted to the right end of the HVAC housing and contains the recirculation-air door and has mounting provisions for the recirculation door actuator.

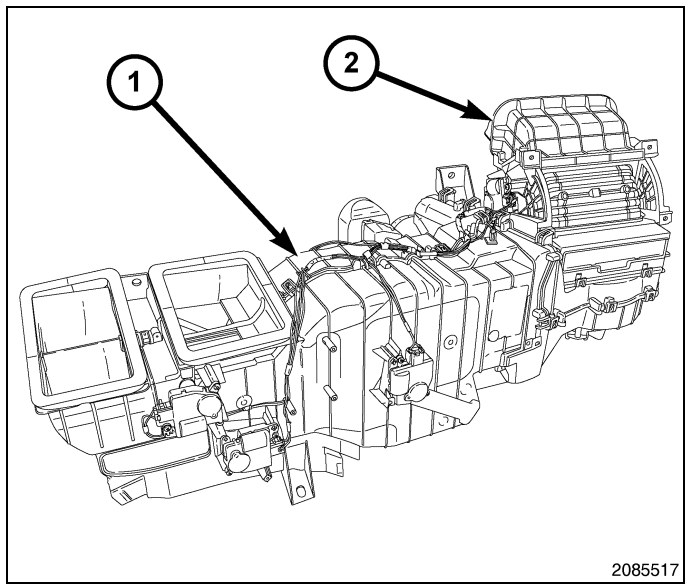

The heating-A/C system is a blend-air type system. The blend-air doors control the amount of conditioned air that is allowed to flow through or around the heater core. The dual zone heating A/C system uses two blend door actuators while the single zone system uses only one blend door actuator.

The A/C system is designed for the use of a non-CFC, R-134a refrigerant and uses an H-block type A/C expansion valve, evaporator and evaporator temperature sensor to cool and dehumidify the incoming air prior to blending it with the heated air. The temperature control(s) determines the discharge air temperature by operating the blend door actuator(s), which moves the blend-air door(s). This allows an almost immediate control of the output air temperature of the system. The mode door actuators operate the mode-air doors which direct the flow of the conditioned air out the various air outlets, depending on the mode selected. The recirculation door actuator operates the recirculation-air door which closes off the fresh air intake and recirculates the air already inside the vehicle. The blower motor controls the velocity of air flowing through the HVAC housing assembly by spinning the blower wheel within the HVAC housing at the selected speed by use of the blower motor resistor or power module (depending on application), which is located at the bottom of the HVAC housing. The electric door actuators, blower motor resistor or power module, blower motor and evaporator temperature sensor are connected to the vehicle electrical system by the HVAC wire harness.

The HVAC housing must be removed from the vehicle for service of the air inlet housing and disassembled for service of the heater core, A/C evaporator and the blend-air and mode-air doors.

Removal

AIR INLET HOUSING

WARNING: Refer to the applicable warnings and cautions for this system before performing the following operation (Refer to 24 - Heating and Air Conditioning/Plumbing - Warning) and (Refer to 24 - Heating and Air Conditioning/Plumbing - Caution). Failure to follow these instructions may result in possible serious or fatal injury.

WARNING: Disable the airbag system before attempting any steering wheel, steering column or instrument panel component diagnosis or service. Disconnect and isolate the negative battery (ground) cable, then wait two minutes for the airbag system capacitor to discharge before performing further diagnosis or service. This is the only sure way to disable the airbag system. Failure to follow these instructions may result in accidental airbag deployment and possible serious or fatal injury.

1. Remove the HVAC housing assembly (Refer to 24 - Heating and Air Conditioning/Distribution/HOUSING, HVAC - Removal).
2. Disconnect the HVAC wire harness (1) from the recirculation door actuator (2).
3. Carefully disengage the two retaining tabs (4) that secure the rear of the air inlet housing (3) to the top of the HVAC housing (5).

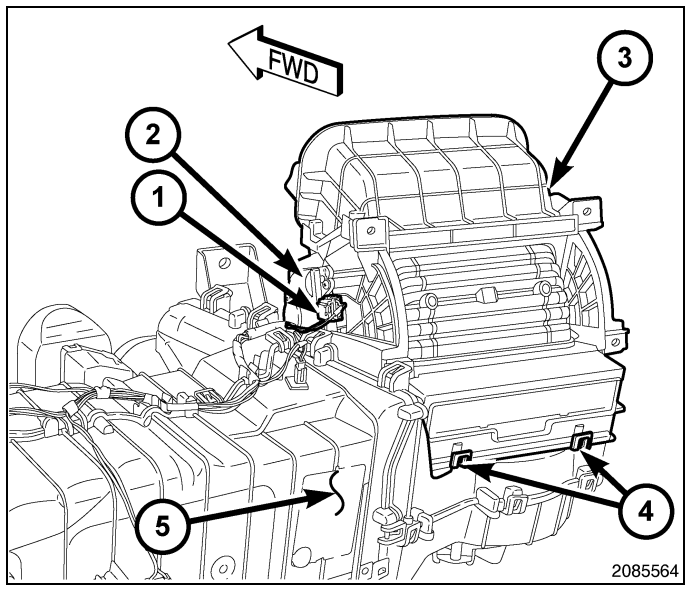

4. Carefully disengage the two retaining tabs (3) that secure the front of the air inlet housing (1) to the top of the HVAC housing (2) and remove the inlet housing.

NOTE: If the foam seal on the air inlet housing is deformed or damaged, it must be replaced.

5. If required, disassemble the air inlet housing (Refer to 24 - Heating and Air Conditioning/Distribution/HOUSING, HVAC - Disassembly).

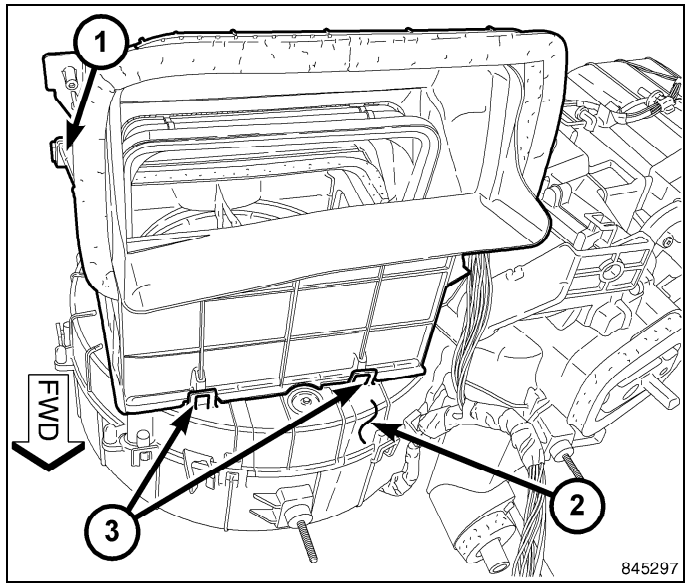

HVAC HOUSING ASSEMBLY

WARNING: Refer to the applicable warnings and cautions for this system before performing the following operation (Refer to 24 - Heating and Air Conditioning/Plumbing - Warning) and (Refer to 24 - Heating and Air Conditioning/Plumbing - Caution). Failure to follow these instructions may result in possible serious or fatal injury.

WARNING: Disable the airbag system before attempting any steering wheel, steering column or instrument panel component diagnosis or service. Disconnect and isolate the negative battery (ground) cable, then wait two minutes for the airbag system capacitor to discharge before performing further diagnosis or service. This is the only sure way to disable the airbag system. Failure to follow these instructions may result in accidental airbag deployment and possible serious or fatal injury.

NOTE: The HVAC housing must be removed from the vehicle for service of the A/C evaporator, heater core, mode-air and blend-air doors and air inlet housing.

1. Disconnect and isolate the negative battery cable.
2. Recover the refrigerant from the refrigerant system (Refer to 24 - Heating and Air Conditioning/Plumbing - Standard Procedure).
3. Drain the engine cooling system (Refer to 07 - Cooling - Standard Procedure).
4. Disconnect the A/C liquid line and the A/C suction line from the A/C expansion valve(Refer to 24 - Heating and Air Conditioning/Plumbing/LINE, A/C Liquid - Removal) .
5. Disconnect the heater hoses from the heater core tubes.
6. If required, remove the Powertrain Control Module (PCM) to gain access to the two nuts (2) that secure the HVAC housing to the engine compartment side of the dash panel (Refer to 08 - Electrical/8E - Electronic Control Modules/MODULE, Powertrain Control - Removal).

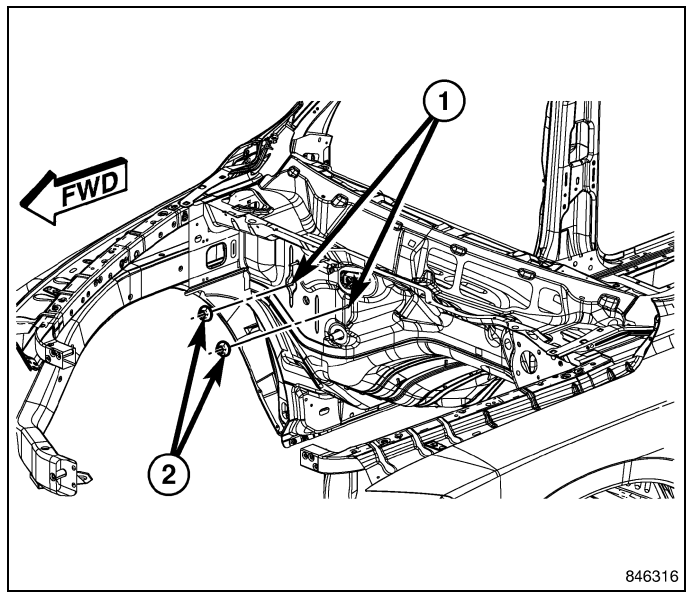

7. Remove the two nuts from the studs (1) that secure the HVAC housing to the engine compartment side of the dash panel.
8. If equipped with center floor console, remove the floor console duct (Refer to 24 - Heating and Air Conditioning/Distribution/DUCT, Floor Console - Removal).
9. Remove the instrument panel from the passenger compartment (Refer to 23 - Body/Instrument Panel/PANEL, Instrument - Removal).
10. If equipped, remove the rear floor ducts (Refer to 24 - Heating and Air Conditioning/Distribution/DUCT, Floor Distribution - Removal).
11. Remove the bolt (3) that secures the HVAC housing (2) to the floor bracket.
12. Remove the two nuts (1) that secure the HVAC housing to the passenger compartment side of the dash panel.
13. Pull the HVAC housing assembly rearward and remove the housing assembly from the passenger compartment.

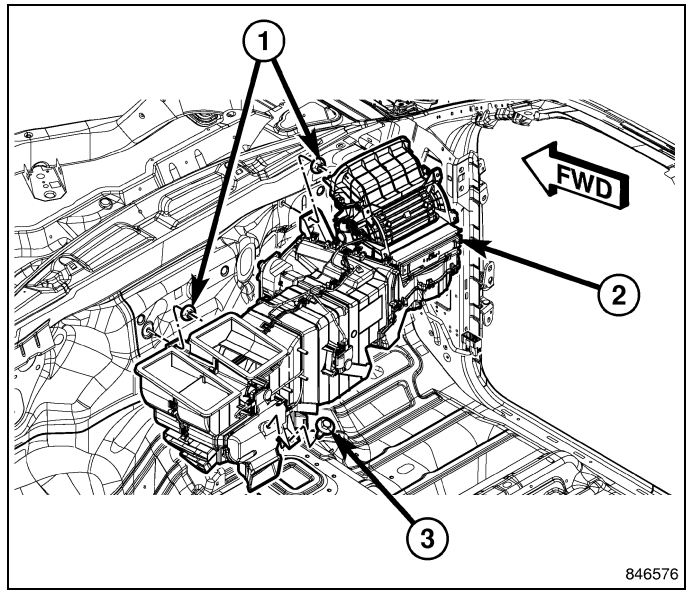

Disassembly

AIR INLET HOUSING

WARNING: Disable the airbag system before attempting any steering wheel, steering column, or instrument panel component diagnosis or service. Disconnect and isolate the battery negative (ground) cable, then wait two minutes for the airbag system capacitor to discharge before performing further diagnosis or service. This is the only sure way to disable the airbag system. Failure to follow these instructions may result in accidental airbag deployment and possible serious or fatal injury.

1. Remove the HVAC housing assembly (Refer to 24 - Heating and Air Conditioning/Distribution/HOUSING, HVAC - Removal).
2. Remove the air inlet housing (1) and place it on a workbench (Refer to 24 - Heating and Air Conditioning/Distribution/HOUSING, HVAC - Removal).
3. Remove the two screws (2) that secure the recirculation door actuator (3) to the air inlet housing and remove the actuator.

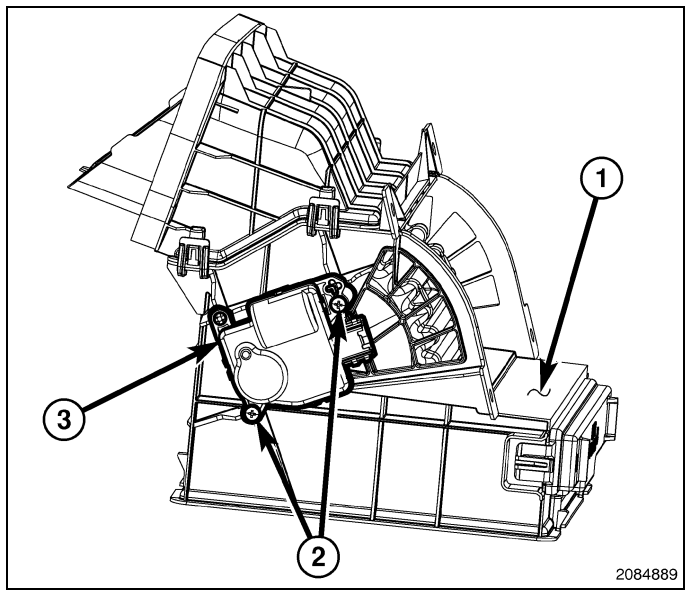

NOTE: If the seal on the air inlet is deformed or damaged, the seal must be replaced.

4. Carefully disengage the four retaining tabs (1 and 2) that secure the air inlet (3) to the top of the air inlet housing (4) and remove the air inlet.

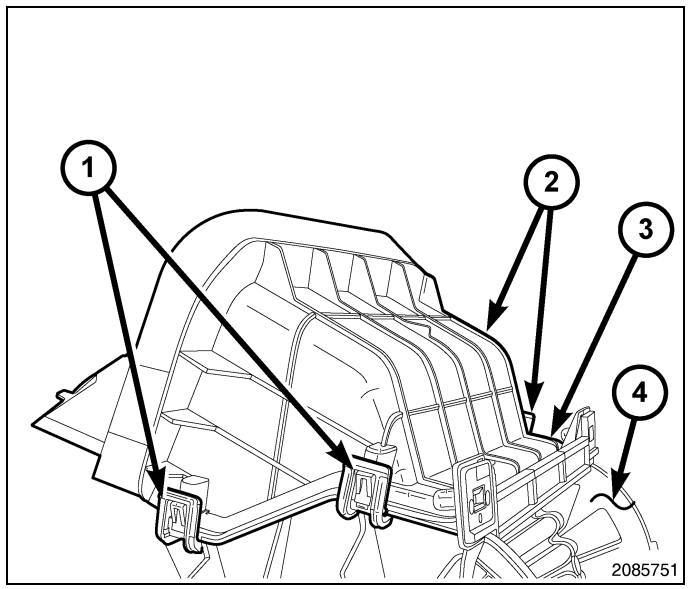

5. To remove the recirculation-air door (2) from the air inlet housing (3), first carefully release the actuator coupler retaining tab (1) located on the inside of the air inlet housing.

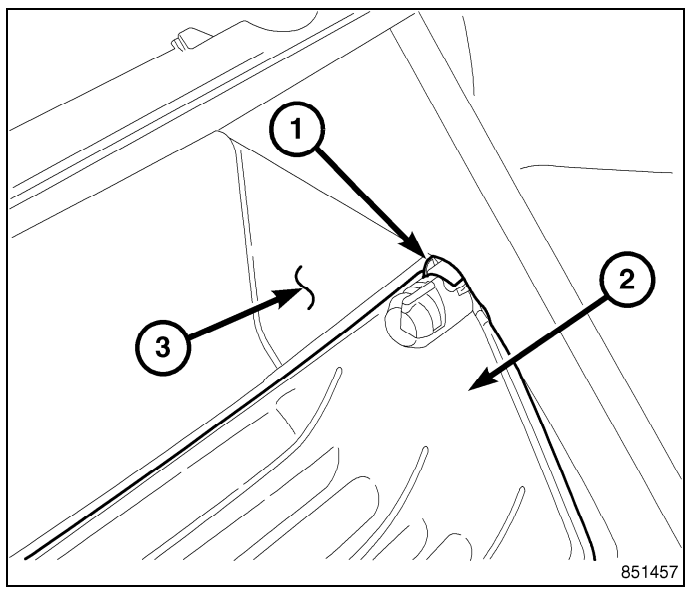

6. With the actuator coupler retaining tabs released, pull the actuator coupler (1) out of the recirculation-air door (2).

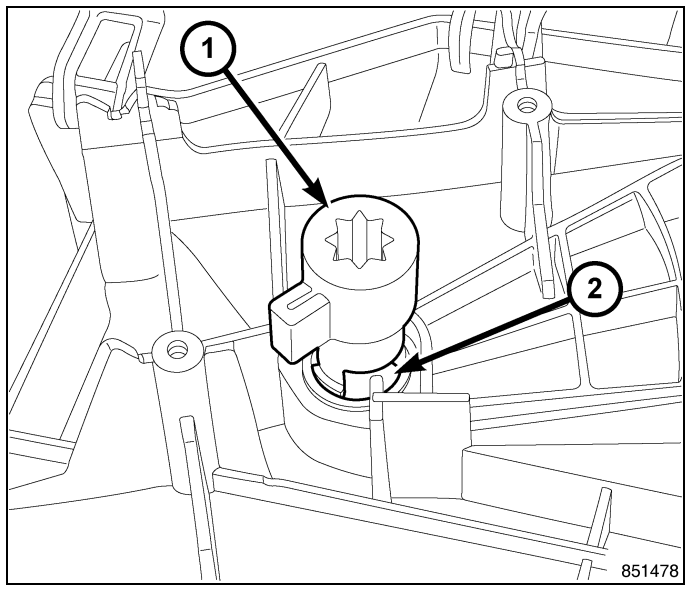

NOTE: If the seals on the air door or air inlet housing are deformed or damaged, the air door or housing seal must be replaced.

7. Disengage the door pivot shaft (3) from the air inlet housing (2) and carefully remove the recirculation-air door (1) from the housing.

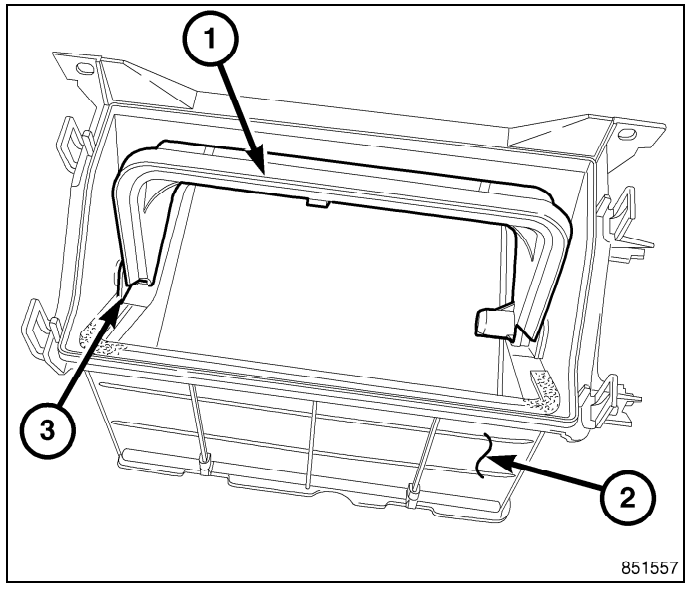

HVAC HOUSING

NOTE: The HVAC housing must be removed from the vehicle and disassembled for service of the A/C evaporator and the mode and blend-air doors.

1. Remove the HVAC housing and place it on a workbench (Refer to 24 - Heating and Air Conditioning/Distribution/HOUSING, HVAC - Removal).
2. Disconnect the HVAC wiring harness (1) from the recirculation door actuator (2), power module or blower resister (3) (depending on application) and the blower motor (4).
3. Disengage the HVAC wiring harness from the two retaining clips (5) and position the harness out of the way.

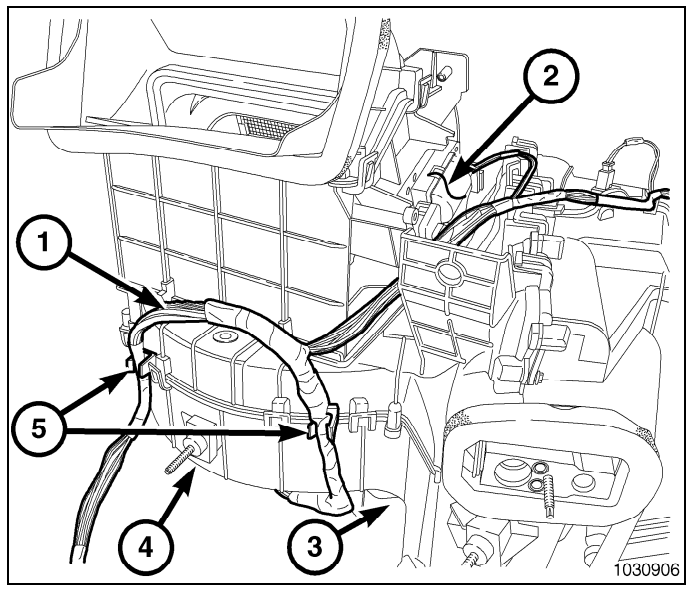

NOTE: If the foam seal is deformed or damaged, the seal must be replaced.

4. Remove the foam seal (1) from the front of the HVAC housing (2).
5. If required, remove the two bolts (4) that secure the A/C expansion valve (5) to the evaporator tube tapping block (3) and remove the valve.

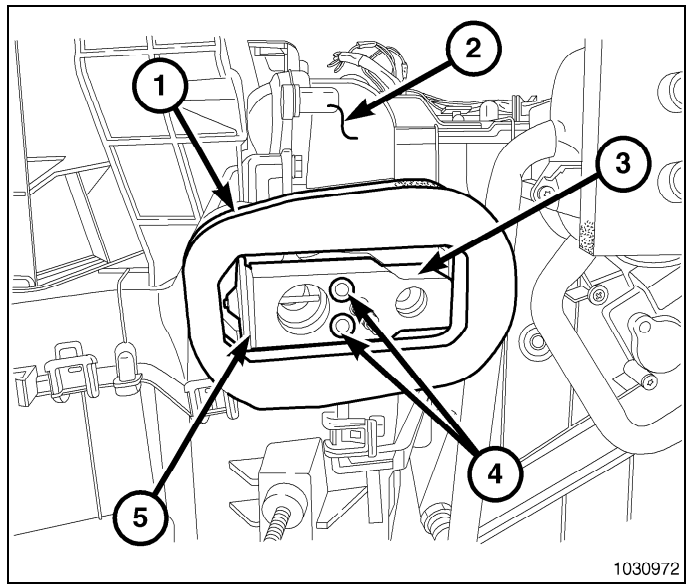

6. Remove the three screws (2 and 5) that secure the blower motor and evaporator housing (6) to the HVAC housing (3).
7. Carefully disengage the nine retaining tabs (1 and 4) that secure the blower motor and evaporator housing the HVAC housing.
8. Carefully separate the blower motor and evaporator housing from the HVAC housing

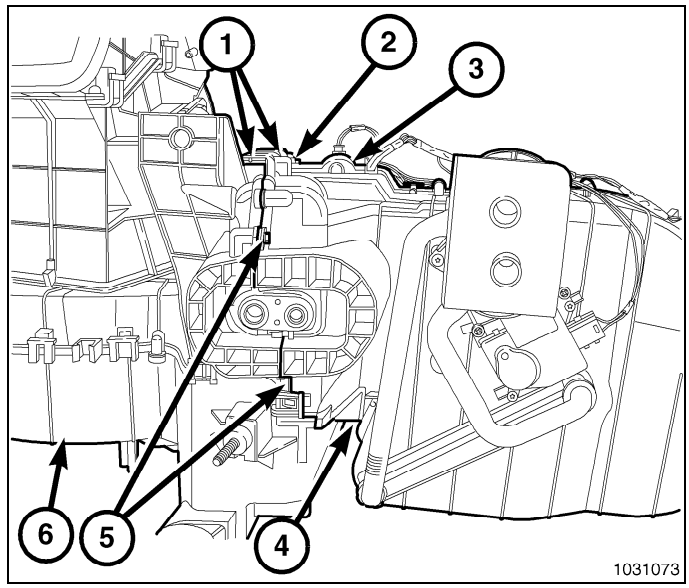

NOTE: If the foam insulator around the A/C evaporator is deformed or damaged, the insulator must be replaced.

9. If required, remove the A/C evaporator (1) from the blower motor and evaporator housing (2).
10. If the A/C evaporator is going to be reused, remove and discard the O-ring seals from the evaporator fittings and install plugs into, or tape over the evaporator ports.

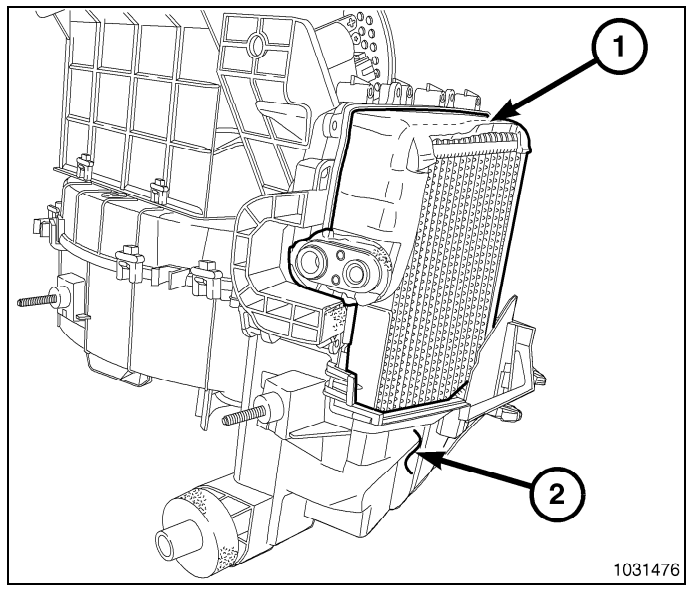

11. If equipped with dual zone system, disconnect the HVAC wire harness connector (2) and remove the two screws (4) that secure the blend door actuator (3) to the front of the HVAC housing (1) and remove the actuator.

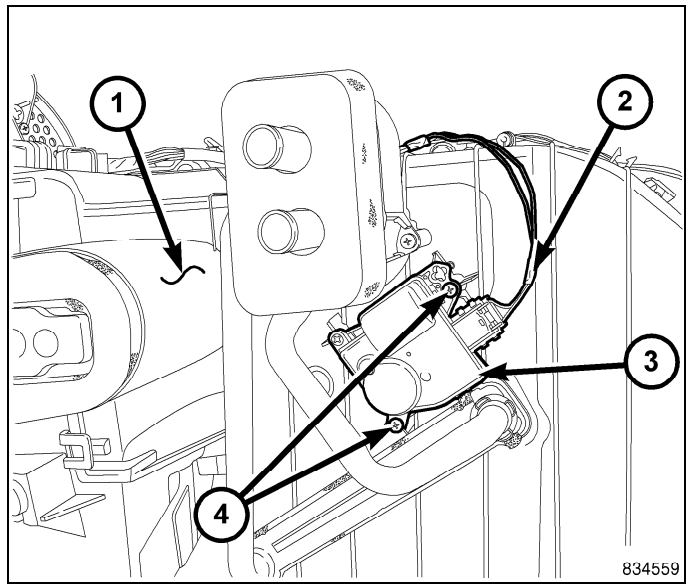

NOTE: If the foam seal is deformed or damaged, the seal must be replaced.

12. Remove the seal (1) from the flange (2) at the front of the HVAC housing.

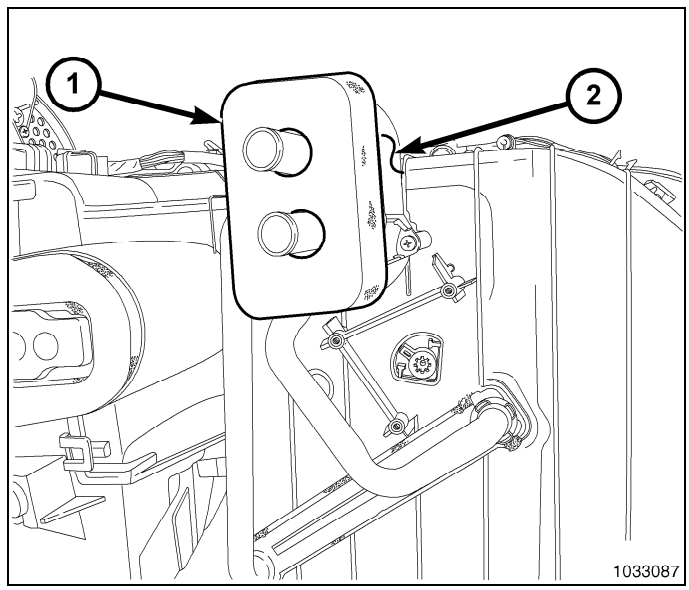

13. Remove the two screws (3) that secure the flange (1) to the front of the HVAC housing (2).
14. Carefully disengage the retaining tab that secures the flange to the HVAC housing and remove the flange.

NOTE: If the foam insulator around the A/C evaporator is deformed or damaged, the insulator must be replaced.

15. Carefully pull the heater core (4) out of the HVAC housing.
16. Inspect all foam seals and replace as required.

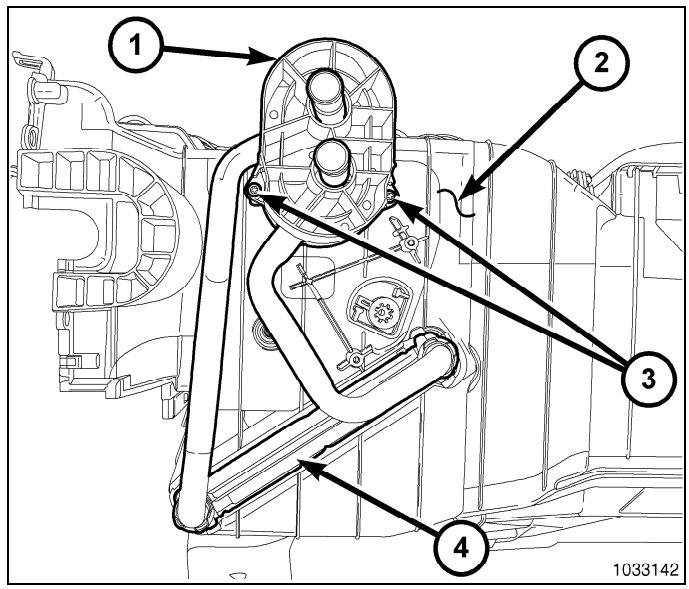

17. Disconnect the HVAC wire harness (1) from the evaporator temperature sensor (2), blend door actuator (3) and mode door actuators (4 and 6).
18. Remove the HVAC wire harness from the HVAC housing (5).
19. Remove the evaporator temperature sensor from the HVAC housing.
20. Remove the screws that secure the blend and mode door actuators to the HVAC housing and remove the actuators.

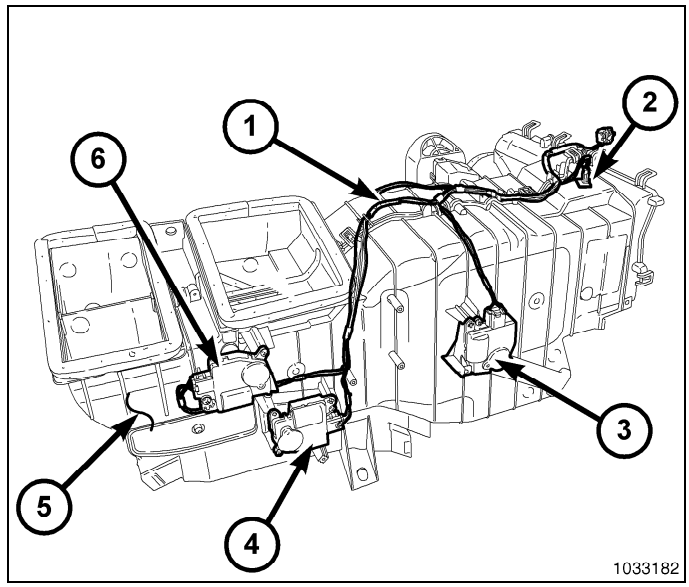

NOTE: If the foam seals on top of the HVAC housing are deformed or damaged, they must be replaced.

21. Carefully cut the foam seals (1) along the parting line (5) of the two halves of the HVAC housing (2 and 4).
22. Release the fourteen retaining tabs (3) that secure the two halves of the HVAC housing together and carefully separate the housing.

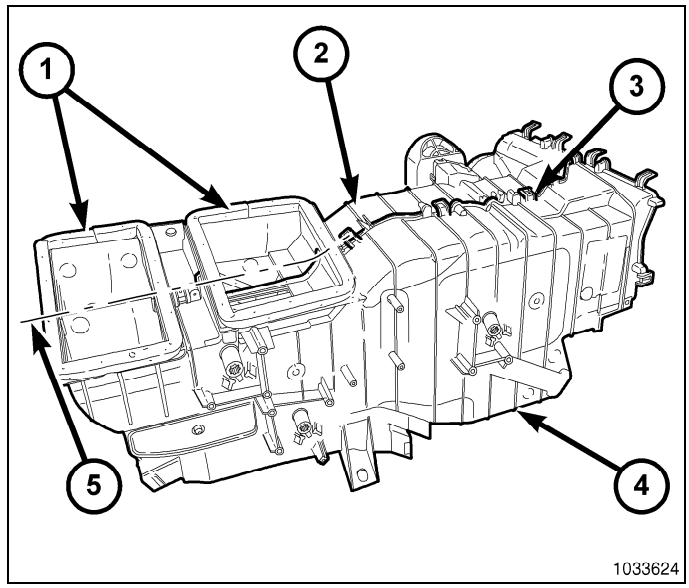

23. Carefully disengage the mode air doors (1 and 2) from the actuator couplers (5) by pulling the doors straight upward.

NOTE: If a seal on an air door is deformed or damaged, the air door must be replaced.

24. Remove the mode air doors and the center partition (3), if equipped, from the rear half of the HVAC housing (4).

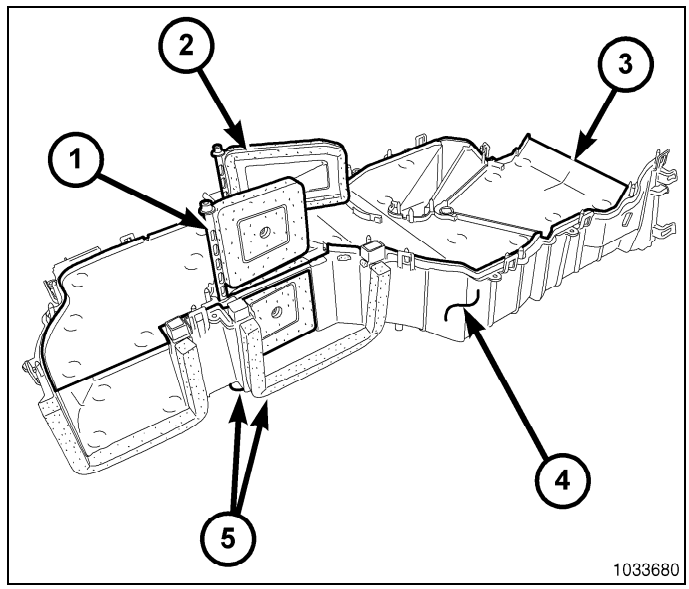

NOTE: Dual zone system with two blend doors shown. Single zone system with one blend door similar.

25. Carefully disengage the blend air door(s) (2), as equipped, from the actuator coupler(s) (3) by pulling the door(s) straight upward.

NOTE: If a seal on an air door is deformed or damaged, the air door must be replaced.

26. Remove the blend air door(s) from the HVAC housing (1).

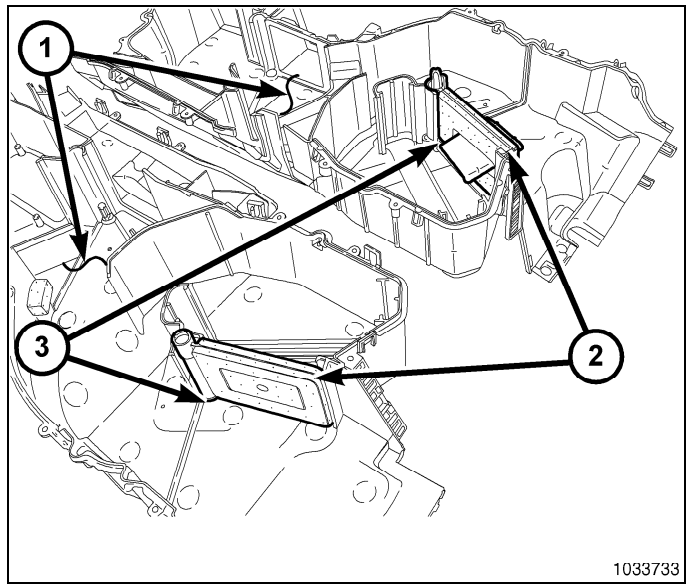

NOTE: Typical actuator coupler shown.

27. Remove the actuator coupler(s) (1) from the HVAC housing (2), as required. Carefully release the three retaining tabs (3) on each actuator coupler from the inside surface of the HVAC housing and push the coupler(s) out of the housing.

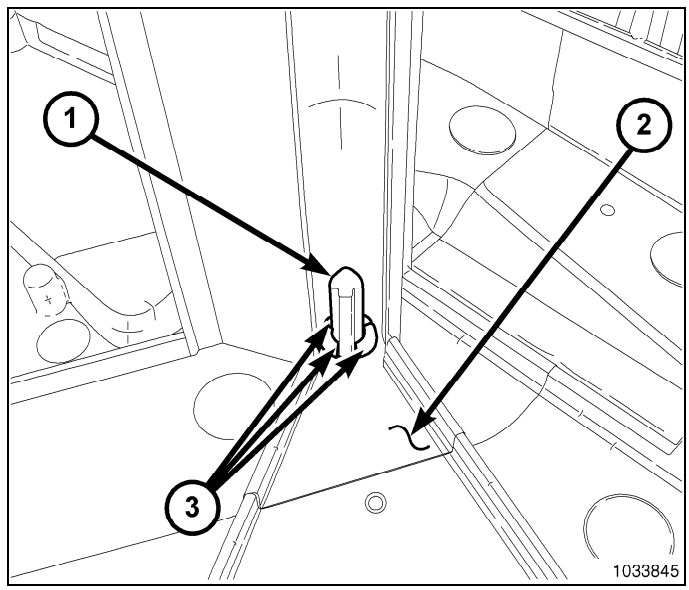

Assembly

AIR INLET HOUSING

NOTE: If the seals on the air door or air inlet housing are deformed or damaged, the air door or housing seal must be replaced.

1. Position the recirculation-air door (1) into the air inlet housing (2).
2. Engage the door pivot shaft (3) to the opening in the air inlet housing.

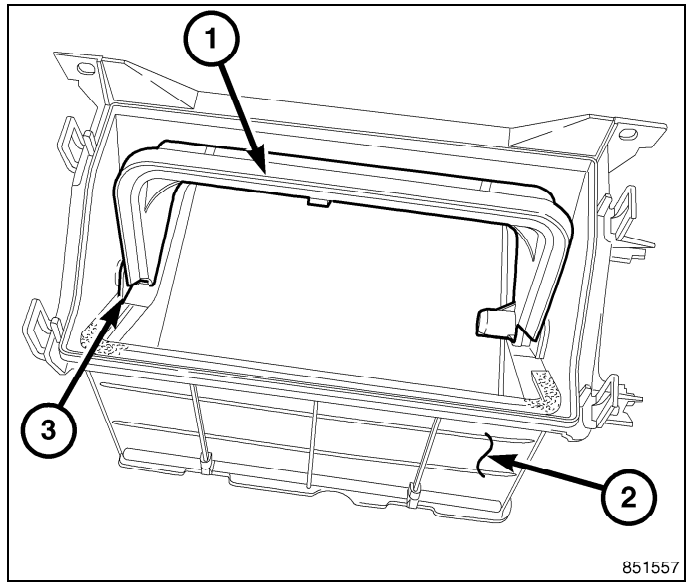

CAUTION: Make sure that the recirculation-air door pivot shaft is properly seated in the pivot seat located in the air inlet housing.

3. Align the actuator coupler (1) with the recirculation door pivot shaft (2) and install the coupler until the coupler retaining tab is fully engaged to the recirculation door. Be sure to install the coupler with the coupler arm located between the two stop tabs on the air inlet housing.

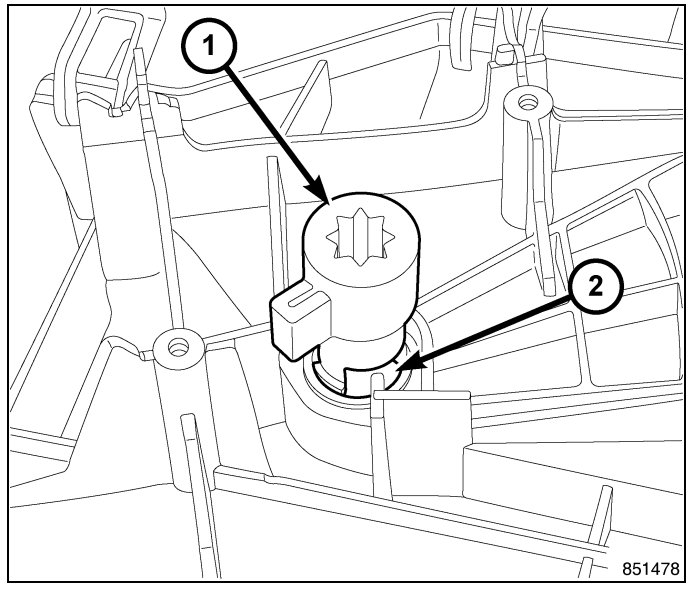

NOTE: If the seal on the air inlet is deformed or damaged, the seal must be replaced.

4. Position the air inlet (3) to the top of the air inlet housing (4) and engage the four retaining tabs (1 and 2). Make sure the retaining tabs are fully engaged.

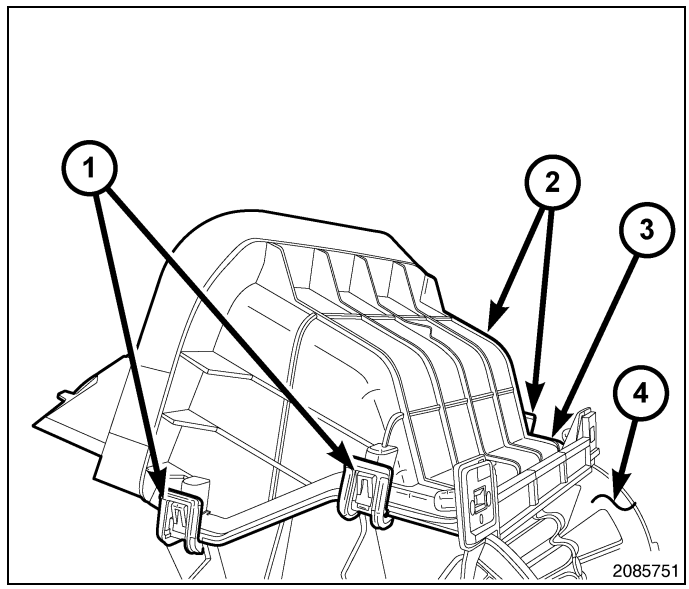

5. Install the recirculation door actuator (1) onto the side of the air inlet housing (2). If necessary, rotate the actuator slightly to align the splines on the actuator output shaft (4) with those in the recirculation door actuator coupler (3).

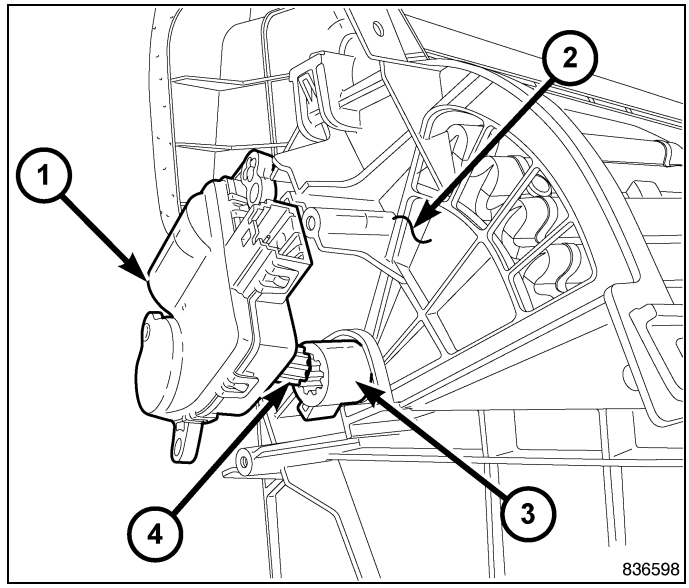

6. Install the two screws (2) that secure the recirculation door actuator (3) to the air inlet housing (1). Tighten the screws to 1.1 N·m (10 in. lbs.).
7. Install the air inlet housing (Refer to 24 - Heating and Air Conditioning/Distribution/HOUSING, HVAC - Installation).
8. Install the HVAC housing assembly(Refer to 24 - Heating and Air Conditioning/Distribution/HOUSING, HVAC - Installation).

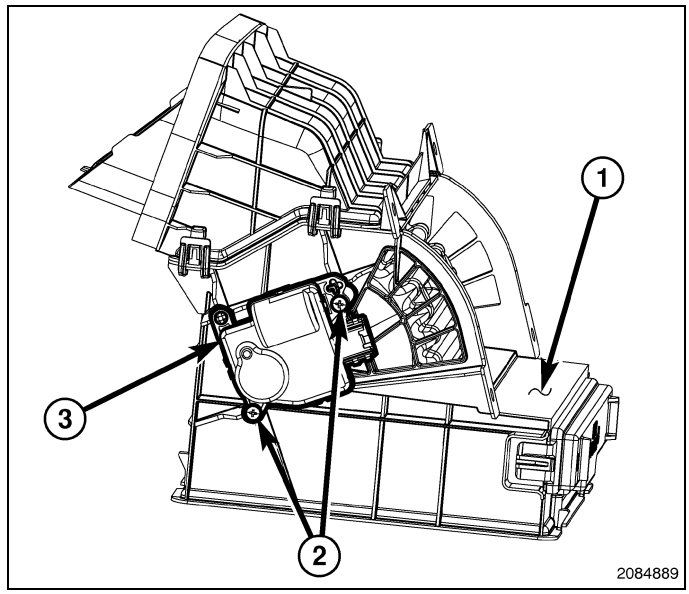

HVAC HOUSING

CAUTION: Be certain to adjust the refrigerant oil level when servicing the A/C refrigerant system (Refer to 24 - Heating and Air Conditioning/Plumbing/OIL, Refrigerant - Standard Procedure). Failure to properly adjust the refrigerant oil level will prevent the A/C system from operating as designed and can cause serious A/C compressor damage.

NOTE: When replacing multiple A/C system components, refer to the Refrigerant Oil Capacities chart to determine how much oil should be added to the refrigerant system(Refer to 24 - Heating and Air Conditioning/Plumbing/OIL, Refrigerant - Standard Procedure).

NOTE: If the A/C evaporator is being replaced, add 60 milliliters (2 fluid ounces) of refrigerant oil to the refrigerant system. Use only refrigerant oil of the type recommended for the A/C compressor in the vehicle.

NOTE: Replacement of the O-ring seals is required anytime the A/C expansion valve is removed from the A/C evaporator. Failure to replace the rubber O-ring seals may result in a refrigerant system leak.

NOTE: Typical actuator coupler shown.

1. Install the actuator coupler(s) (1) into the HVAC housing (3), as required. Make sure the arm (2) on the coupler is positioned between the two stops (4) on the HVAC housing. Make sure the three retaining tabs on each actuator coupler are fully engaged to the inside surface of the HVAC housing.

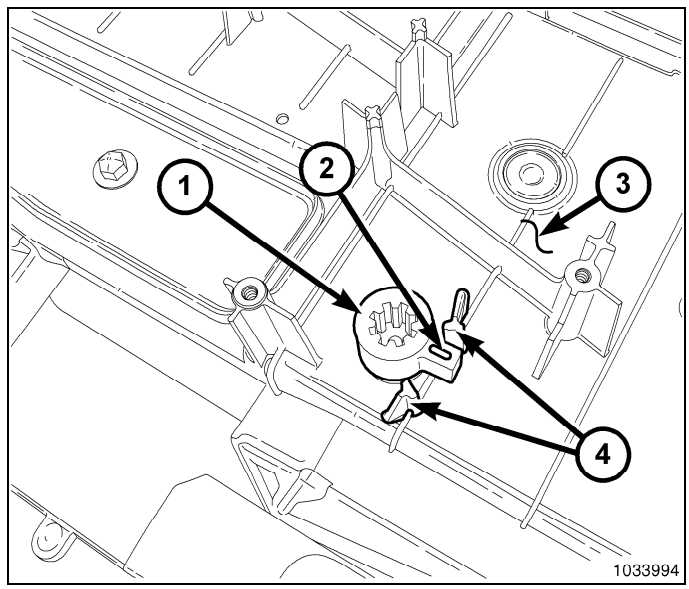

NOTE: Dual zone system with two blend doors shown. Single zone system with one blend door similar.

NOTE: If a seal on an air door is deformed or damaged, the air door must be replaced.

2. Install the blend air door(s) (2), as equipped, onto the actuator coupler(s) (3). Align the keyway in the blend air door pivot shaft with the key on the actuator coupler.

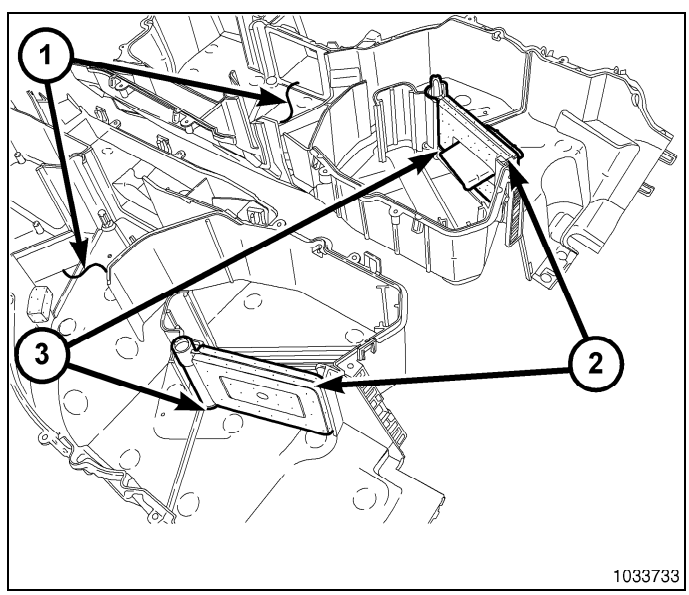

NOTE: If a seal on an air door is deformed or damaged, the air door must be replaced.

3. Install the mode air doors (1 and 2) and the center partition (3), if equipped, to the rear half of the HVAC housing (4). Align the keyways in the mode air door pivot shafts with the keys on the actuator couplers (5). Align the dowel pins on the center partition to the holes in the HVAC housing.

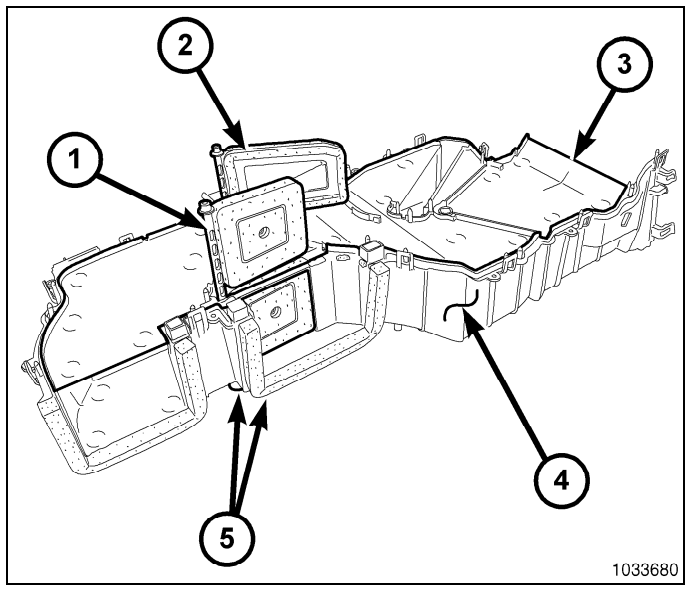

4. Align the pivot shafts of the air doors to the holes in the HVAC housing halves (2 and 4).
5. Align the dowel pins on the rear half of the HVAC housing to the holes in the front half of the HVAC housing and install the two halves of the housing together.
6. Carefully engage the fourteen retaining tabs (3). Make sure the retaining tabs are fully engaged.

NOTE: If the foam seals on top of the HVAC housing are deformed or damaged, they must be replaced.

7. Inspect the foam seals (1), especially along the parting line (5) and replace as required.

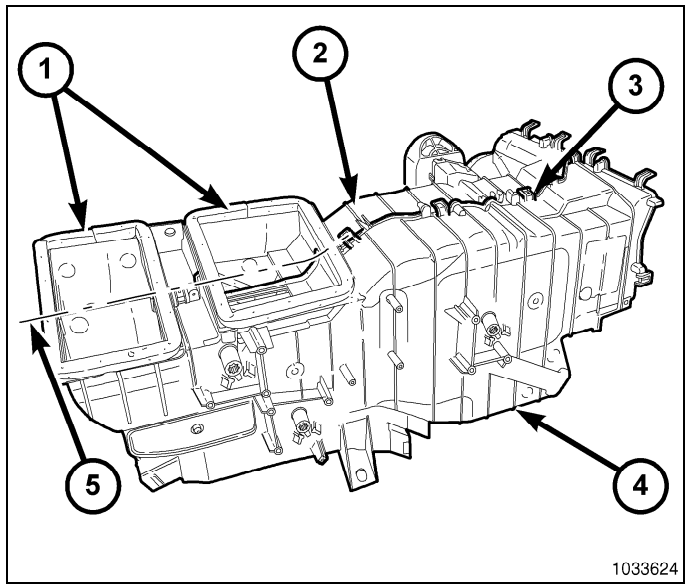

8. Install the blend and mode door actuators (3, 4 and 6) onto the HVAC housing (5). If necessary, rotate the actuators slightly to align the splines on the actuator output shaft with those on the actuator coupler.
9. Install the screws that secure the blend and mode door actuators to the HVAC housing. Tighten the screws to 1.1 N·m (10 in. lbs.).
10. Install the evaporator temperature sensor (2) onto the HVAC housing.
11. Connect the HVAC wire harness (1) to the evaporator temperature sensor and the blend and mode door actuators.
12. Install the HVAC wire harness onto the HVAC housing. Make sure the wiring harness is routed correctly and is fully engaged to the retaining clips.

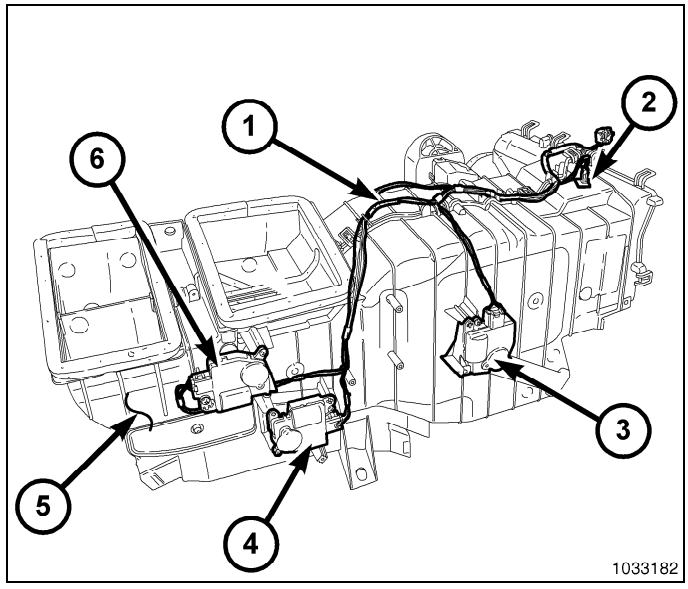

NOTE: If the foam seals on the heater core are deformed or damaged, they must be replaced.

13. Inspect the foam seals on the heater core (4) and replace as required.
14. Carefully install the heater core into the front of the HVAC housing (2).
15. Position the flange (1) onto the front of the HVAC housing. Make sure the retaining tab is fully engaged.
16. Install the two screws (3) that secure the flange to the HVAC housing. Tighten the screws to 1.1 N·m (10 in. lbs.).

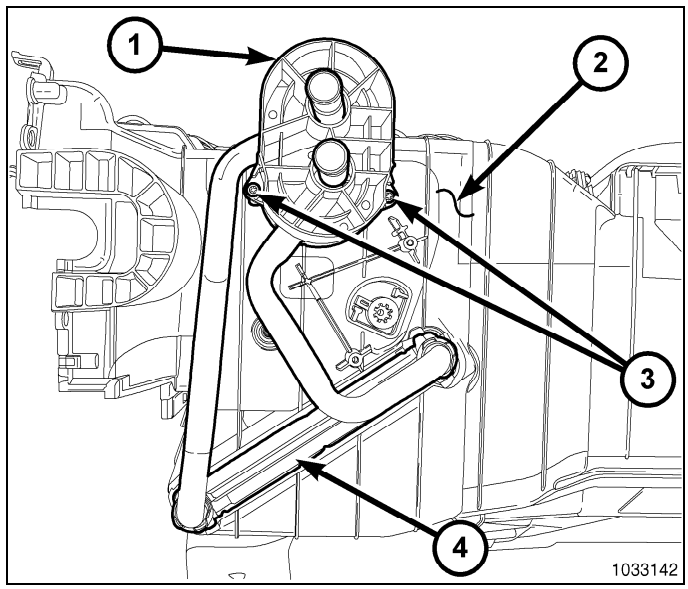

NOTE: If the foam seal is deformed or damaged, the seal must be replaced.

17. Install the foam seal (1) onto the flange (2) at the front of the HVAC housing.

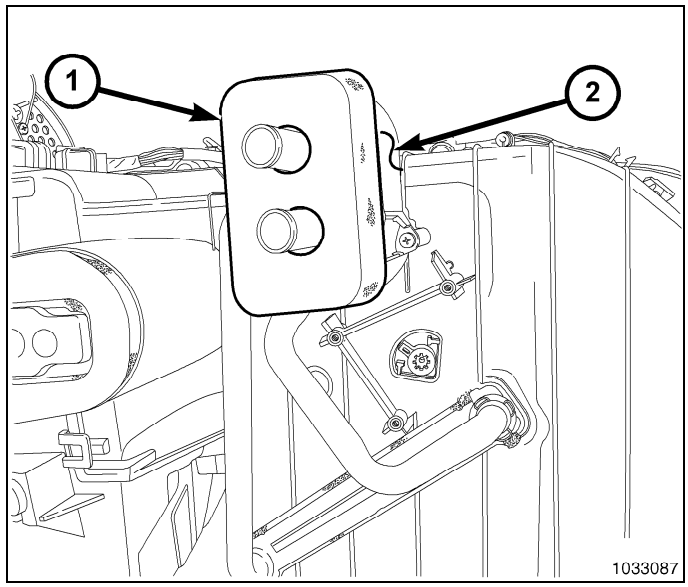

18. If equipped with dual zone system, install the blend door actuator (3) onto the front of the HVAC housing (1). If necessary, rotate the actuator slightly to align the splines on the actuator output shaft with those on the actuator coupler.
19. Install the screws (4) that secure the blend door actuator to the HVAC housing. Tighten the screws to 1.1 N·m (10 in. lbs.).
20. Connect the HVAC wire harness connector (2) to the blend door actuator.

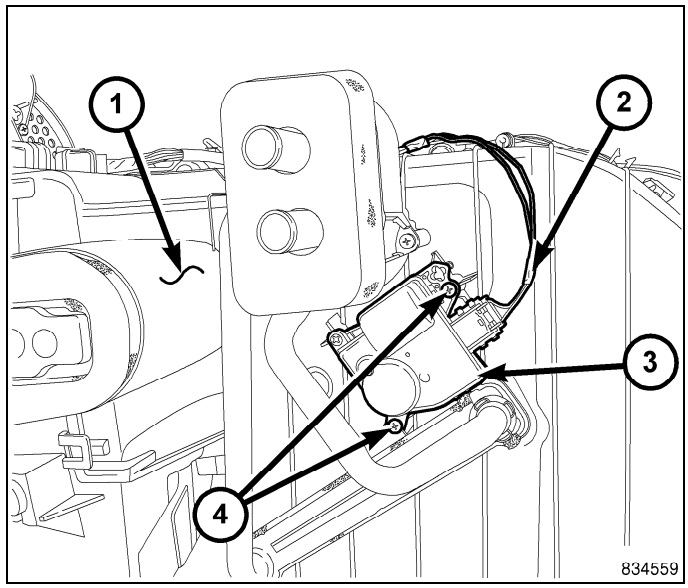

NOTE: If the foam insulator around the A/C evaporator is deformed or damaged, the insulator must be replaced.

21. Inspect the foam insulator on the A/C evaporator (1) and replace as required.
22. Carefully install the A/C evaporator into the blower motor and evaporator housing (2).

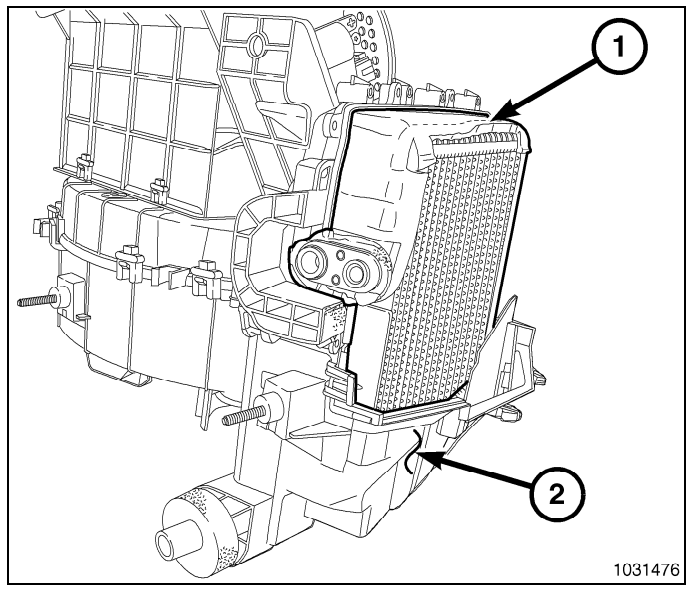

23. Carefully install the blower motor and evaporator housing (6) onto the HVAC housing (3). Align the dowel pins to the holes in the housing.
24. Carefully engage the nine retaining tabs (1 and 4). Make sure the retaining tabs are fully engaged.
25. Install the three screws (2 and 5) that secure the blower motor and evaporator housing to the HVAC housing. Tighten the screws to 1.1 N·m (10 in. lbs.).

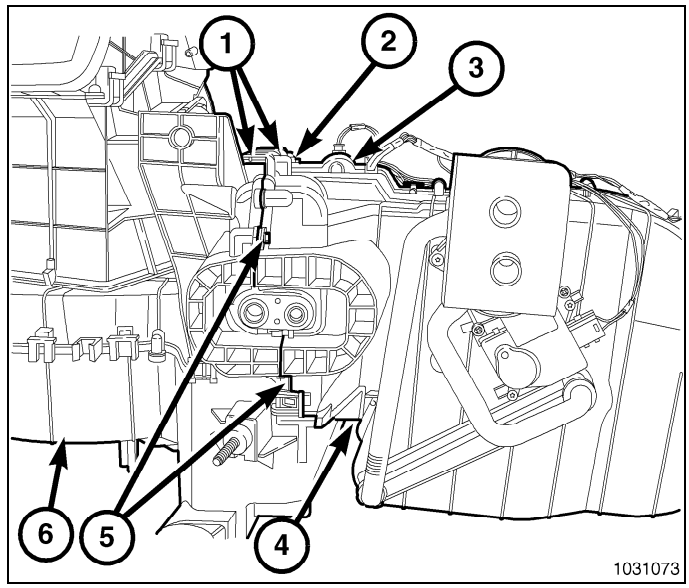

26. Remove the tape or plugs from the evaporator tube fittings.
27. Lubricate new O-ring seals with clean refrigerant oil and install them onto the evaporator tube fittings. Use only the specified O-ring seals as they are made of a special material for the R-134a system. Use only refrigerant oil of the type recommended for the A/C compressor in the vehicle.
28. Install the A/C expansion valve (5) onto the evaporator tube tapping block (3).
29. Install the two bolts (4) that secure the A/C expansion valve to the evaporator tube tapping block. Tighten the bolts to 11 N·m (97 in. lbs.).

NOTE: If the foam seal is deformed or damaged, the seal must be replaced.

30. Install the foam seal (1) onto the HVAC housing (2).

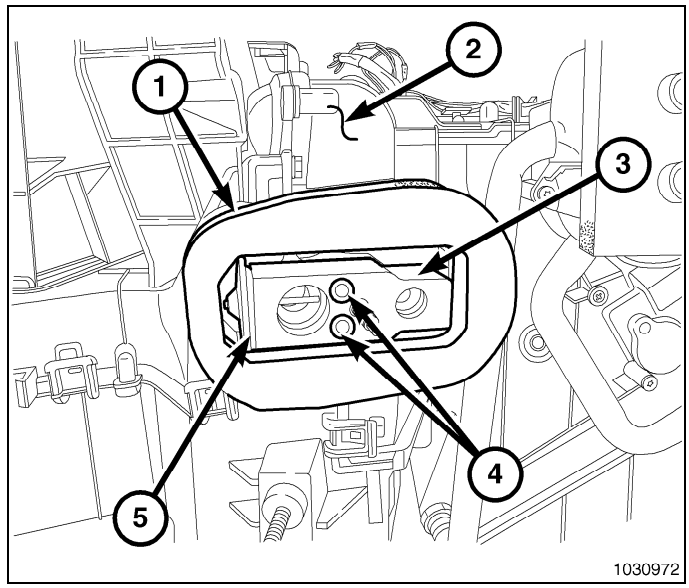

31. Connect the HVAC wiring harness (1) to the recirculation door actuator (2), power module or blower resister (3) (depending on application) and the blower motor (4).
32. Engage the HVAC wiring harness to the two retaining clips (5). Make sure the wire harness is fully engaged to the retaining clips.
33. Install the HVAC housing (Refer to 24 - Heating and Air Conditioning/Distribution/HOUSING, HVAC - Installation).

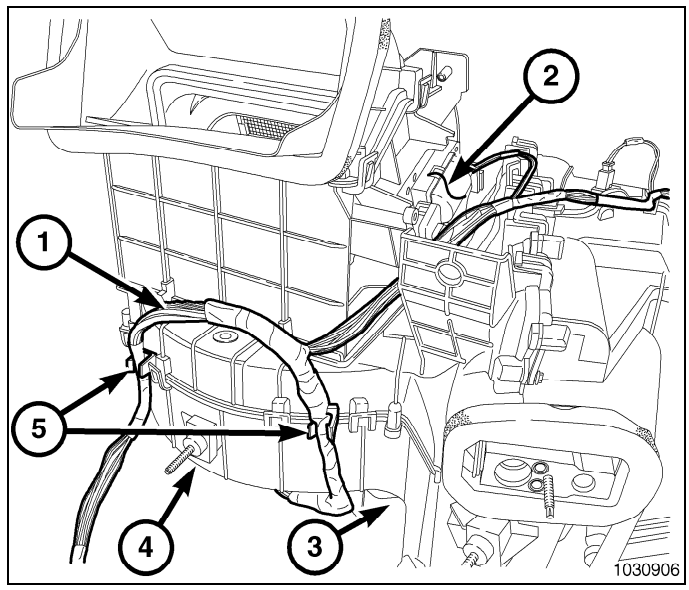

NOTE: If the heater core is being replaced, flush the cooling system (Refer to 07 - Cooling - Standard Procedure).

34. If the A/C evaporator is being replaced, add 60 milliliters (2 fluid ounces) of refrigerant oil to the refrigerant system. When replacing multiple A/C system components, refer to the Refrigerant Oil Capacities chart to determine how much oil should be added to the refrigerant system (Refer to 24 - Heating and Air Conditioning/Plumbing/OIL, Refrigerant - Standard Procedure). Use only refrigerant oil of the type recommended for the A/C compressor in the vehicle.

Installation

AIR INLET HOUSING

NOTE: If the foam seal on the air inlet housing is deformed or damaged, it must be replaced.

1. Position the air inlet housing (1) onto the top of the HVAC housing (2).
2. Engage the two retaining tabs (3) that secure the front of the air inlet housing to the HVAC housing.

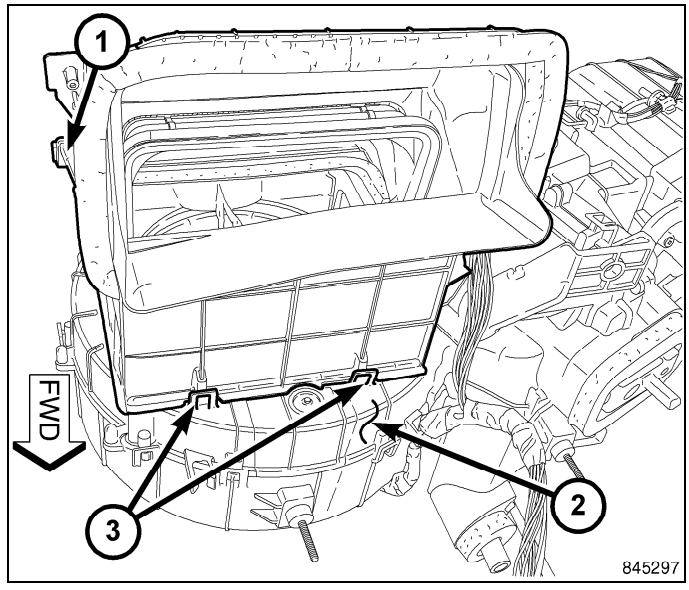

3. Engage the two retaining tabs (4) that secure the rear of the air inlet housing (3) to the HVAC housing (5).
4. Connect the HVAC wire harness (1) to the recirculation door actuator (2).
5. Install the HVAC housing assembly (Refer to 24 - Heating and Air Conditioning/Distribution/HOUSING, HVAC - Installation).

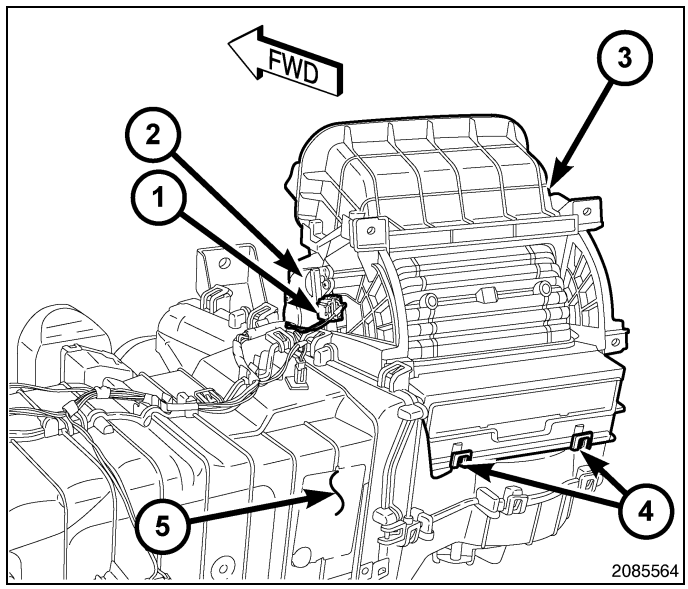

HVAC HOUSING ASSEMBLY

CAUTION: Be certain to adjust the refrigerant oil level when servicing the A/C refrigerant system (Refer to 24 - Heating and Air Conditioning/Plumbing/OIL, Refrigerant - Standard Procedure). Failure to properly adjust the refrigerant oil level will prevent the A/C system from operating as designed and can cause serious A/C compressor damage.

NOTE: When replacing multiple A/C system components, see the Refrigerant Oil Capacities chart to determine how much oil should be added to the refrigerant system (Refer to 24 - Heating and Air Conditioning/Plumbing/OIL, Refrigerant - Standard Procedure).

NOTE: If the A/C evaporator is being replaced, add 60 milliliters (2 fluid ounces) of refrigerant oil to the refrigerant system. Use only refrigerant oil of the type recommended for the A/C compressor in the vehicle.

NOTE: Replacement of the refrigerant line O-ring seals and gaskets is required anytime a refrigerant line is disconnected. Failure to replace the rubber O-ring seals and metal gaskets could result in a refrigerant system leak.

1. Position the HVAC housing assembly (2) into the passenger compartment and over the studs on the dash panel, with the condensate drain tube in its proper location.
2. Install the two nuts (1) that secure the HVAC housing to the passenger compartment side of the dash panel. Tighten the nuts to 6.8 N·m (60 in. lbs.).
3. Install the bolt (3) that secures the HVAC housing to the floor bracket. Tighten the bolt to 6.8 N·m (60 in. lbs.).
4. If equipped, install the rear floor ducts (Refer to 24 - Heating and Air Conditioning/Distribution/DUCT, Floor Distribution - Installation).
5. Install the instrument panel assembly (Refer to 23 - Body/Instrument Panel/PANEL, Instrument - Installation).
6. If equipped with center floor console, install the floor console duct(Refer to 24 - Heating and Air Conditioning/Distribution/DUCT, Floor Console - Installation).

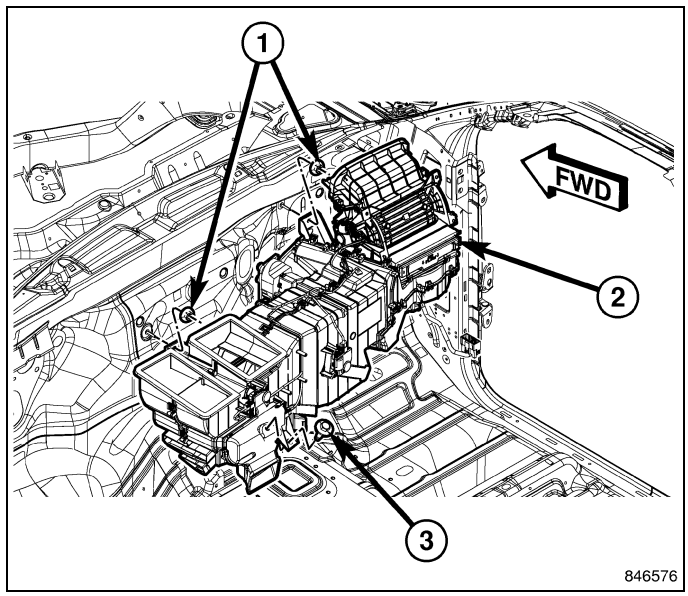

7. Install the two nuts (2) onto the two studs (1) that secure the HVAC housing to the engine compartment side of the dash panel. Tighten the nuts to 6.8 N·m (60 in. lbs.).
8. If removed, install the powertrain control module (PCM) (Refer to 08 - Electrical/8E - Electronic Control Modules/MODULE, Powertrain Control - Installation).
9. Connect the heater hoses to the heater core tubes.
10. Connect the A/C liquid line and the A/C suction line to the A/C expansion valve (Refer to 24 - Heating and Air Conditioning/Plumbing/LINE, A/C Liquid - Installation).
11. Reconnect the negative battery cable.
12. If the heater core is being replaced, flush the cooling system (Refer to 07 - Cooling - Standard Procedure).
13. Refill the engine cooling system (Refer to 07 - Cooling - Standard Procedure).
14. Evacuate the refrigerant system (Refer to 24 - Heating and Air Conditioning/Plumbing - Standard Procedure).

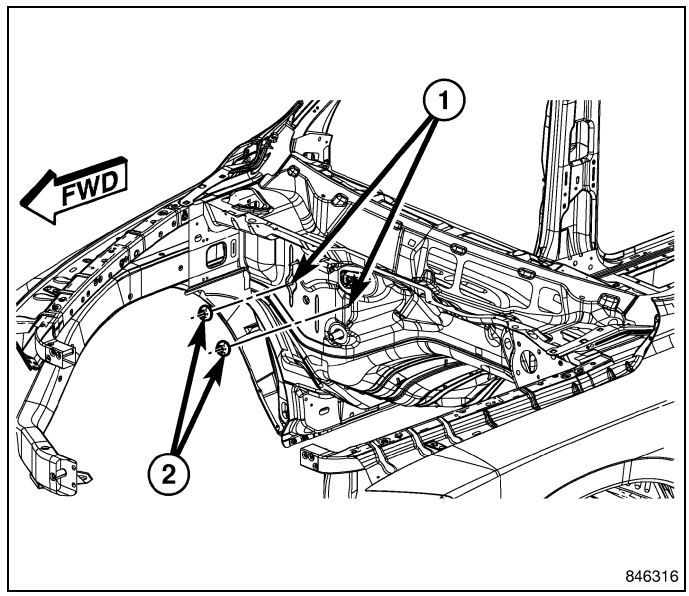

15. If the A/C evaporator is being replaced, add 60 milliliters (2 fluid ounces) of refrigerant oil to the refrigerant system. When replacing multiple A/C system components, see the Refrigerant Oil Capacities chart to determine how much oil should be added to the refrigerant system (Refer to 24 - Heating and Air Conditioning/Plumbing/OIL, Refrigerant - Standard Procedure). Use only refrigerant oil of the type recommended for the A/C compressor in the vehicle.
16. Charge the refrigerant system (Refer to 24 - Heating and Air Conditioning/Plumbing - Standard Procedure).
17. Initiate the Actuator Calibration function using a scan tool (Refer to 28 - DTC-Based Diagnostics/HVAC - Standard Procedure).

MOTOR, Blower

Description

The blower motor (1) is used to control the velocity of air moving through the HVAC housing assembly by spinning the blower wheel (2) at the selected or programmed speed (depending on control system application).

The blower motor is a 12-volt, direct current (DC) motor that is mounted within a plastic housing that has integral wire harness connector (3), integral mounting tabs (4) and the squirrel cage-type blower wheel secured to the blower motor shaft. The blower wheel is positioned within the air inlet housing on the passenger side end of the HVAC housing assembly.

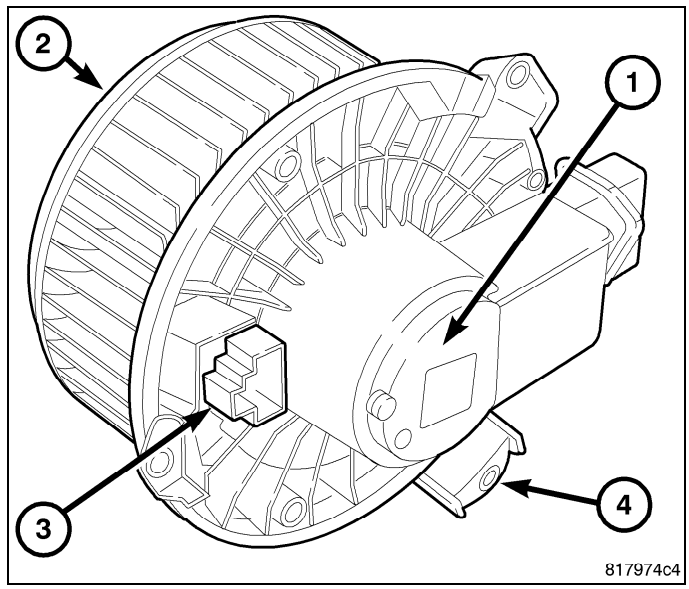

Operation

The blower motor is used to control the velocity of air moving through the HVAC housing assembly by spinning the blower wheel within the air inlet housing at the selected or programmed speed (depending on control system application).

On the Manual Temperature Control (MTC) heating-A/C system, blower motor speed is controlled by regulating the path to ground through the blower control switch and the blower motor resistor. With the Automatic Temperature Control

(ATC) heating-A/C system, blower motor speed is controlled by an electronic blower motor power module, which uses a pulse width modulated input from the A/C-heater control and a feedback signal from the blower motor to regulate the blower motor ground path. On both systems, the blower motor will operate whenever the ignition switch is in RUN and the blower motor control is in any position except Off. The blower motor receives battery current through the Totally Integrated Power Module (TIPM) whenever the ignition switch is in RUN.

The blower motor can be accessed for service from underneath the instrument panel.

NOTE: The blower motor is supplied with a 12V feed from the TIPM whenever the ignition switch is in RUN. Due to an open circuit condition within the blower motor control switch the TIPM is UNABLE to detect an OPEN circuit for the blower motor.

The blower motor control system is diagnosed using a scan tool (Refer to 28 - DTC-Based Diagnostics/HVAC - Standard Procedure)

The blower motor and blower motor wheel are factory balanced as an assembly and cannot be adjusted or repaired and must be replaced if inoperative or damaged.

Diagnosis and Testing

WARNING: Disable the airbag system before attempting any steering wheel, steering column or instrument panel component diagnosis or service. Disconnect and isolate the negative battery (ground) cable and wait two minutes for the airbag system capacitor to discharge before performing further diagnosis or service. This is the only sure way to disable the airbag system. Failure to follow these instructions may result in accidental airbag deployment and possible serious or fatal injury.

NOTE: The blower motor is supplied with a 12V fused feed from the TIPM, whenever the ignition switch is in the RUN position. Due to an open circuit condition within the blower motor control switch the TIPM is UNABLE to detect an OPEN circuit for the blower motor.

To determine if an open condition exists within the blower motor circuit wiring, it is necessary to disconnect the negative battery cable and check for continuity within the blower motor circuits using an ohmmeter. See Wiring Information for circuit descriptions and diagrams.

OPERATION

Possible causes of an inoperative blower motor include:

- Open fuse
- Inoperative blower motor resistor
- Inoperative blower motor switch
- Inoperative blower motor
- Inoperative blower motor circuit wiring or wire harness connectors

NOISE

To determine if the blower motor is the source of the noise, simply switch the blower motor from Off to On. To verify that the blower motor is the source of the noise, unplug the blower motor wire harness connector and operate the heater-A/C system. If the noise goes away, possible causes include:

- Foreign material on fresh air inlet screen
- Foreign material in blower wheel
- Foreign material in HVAC housing
- Improper blower motor mounting
- Deformed or damaged blower wheel
- Worn blower motor bearings or brushes

VIBRATION

Possible causes of a blower motor vibration include:

- Improper blower motor mounting
- Foreign material in blower wheel
- Deformed or damaged blower wheel
- Worn blower motor bearings

Removal

NOTE: The blower motor is located on the passenger side of the vehicle under the instrument panel. The blower motor can be removed from the vehicle without having to remove the HVAC housing assembly.

1. Disconnect and isolate the negative battery cable.
2. Disconnect the HVAC wire harness lead (3) from the blower motor (2).
3. Remove the three screws (1) that secure the blower motor to the bottom of the HVAC housing (4) and remove the blower motor.

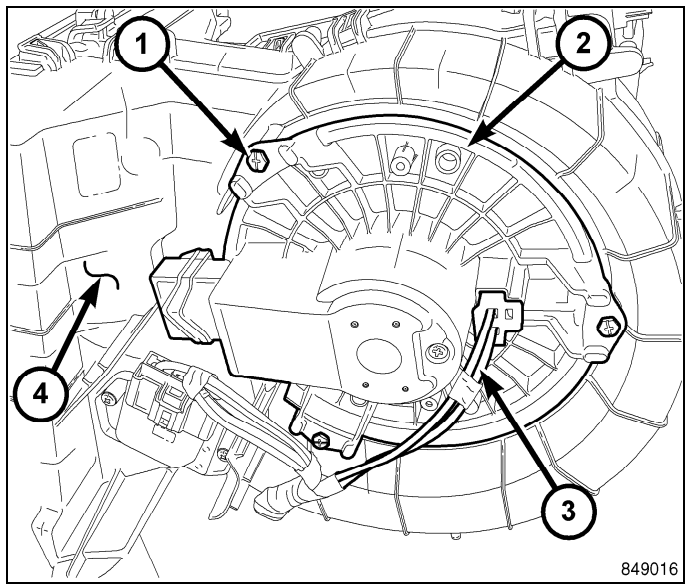

Installation

1. Position the blower motor (2) into the bottom of the HVAC housing (4).
2. Install the three screws (1) that secure the blower motor to the HVAC housing. Tighten the screws to 1.7 N·m (15 in. lbs.).
3. Connect the HVAC wire harness lead (3) to the blower motor.
4. Reconnect the negative battery cable.

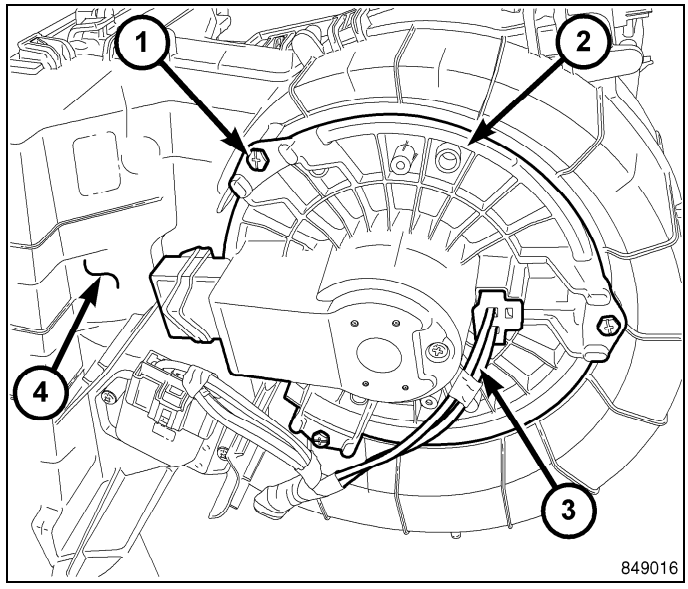

OUTLET, Air

Removal

FRONT CENTER AIR OUTLETS

WARNING: Disable the airbag system before attempting any steering wheel, steering column or instrument panel component diagnosis or service. Disconnect and isolate the negative battery (ground) cable and wait two minutes for the airbag system capacitor to discharge before performing further diagnosis or service. This is the only sure way to disable the airbag system. Failure to follow these instructions may result in accidental airbag deployment and possible serious or fatal injury.

NOTE: Take the proper precautions to protect the front face of the center bezel from cosmetic damage during this procedure.

1. Disconnect and isolate the negative battery cable.
2. Remove the center bezel (1) from the instrument panel and place it on a workbench (Refer to 23 - Body/Instrument Panel/BEZEL, Instrument Panel - Removal).
3. Using Trim Stck C-4755 (2) or equivalent, carefully disengage the eight plastic retaining clips (4) that secure each air outlet (3) to the center bezel.

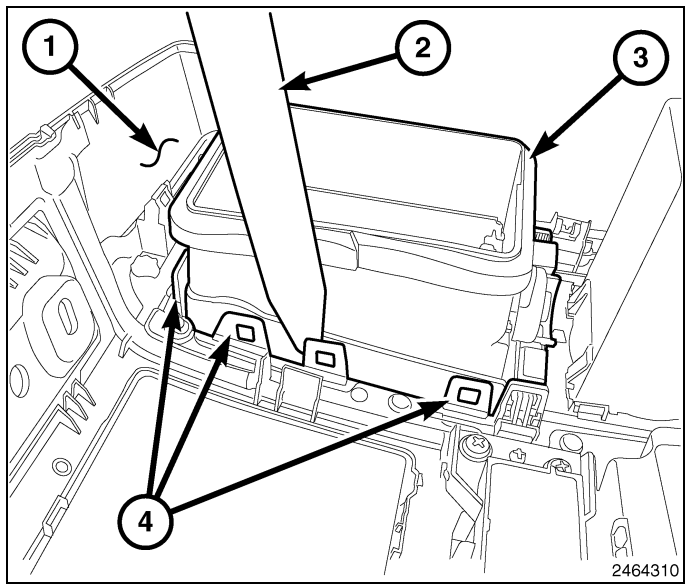

4. Lift the top of each air outlet (1) rearward and upward to disengage the bottom of each outlet from the center bezel (2) and remove the outlet(s).

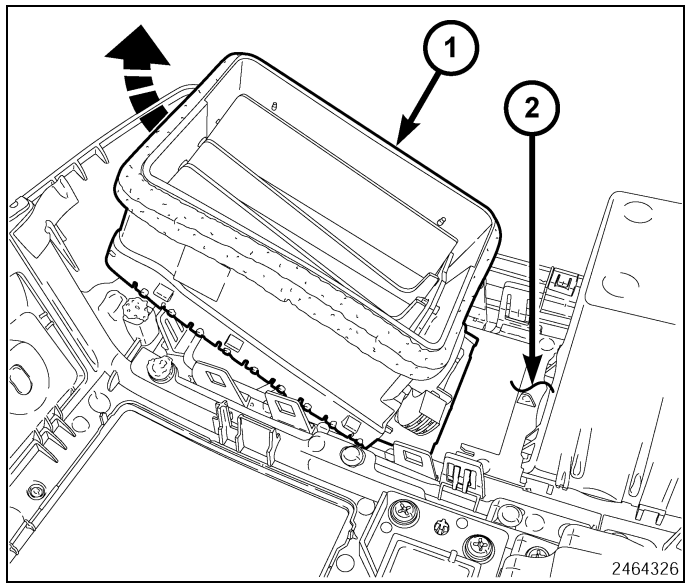

FRONT OUTER AIR OUTLETS

WARNING: Disable the airbag system before attempting any steering wheel, steering column or instrument panel component diagnosis or service. Disconnect and isolate the negative battery (ground) cable and wait two minutes for the airbag system capacitor to discharge before performing further diagnosis or service. This is the only sure way to disable the airbag system. Failure to follow these instructions may result in accidental airbag deployment and possible serious or fatal injury.

NOTE: The front outer instrument panel air outlets can be serviced separately. The center instrument panel air outlets are serviced with the instrument panel center bezel (Refer to 23 - Body/Instrument Panel/BEZEL, Instrument Panel - Removal)

NOTE: Driver side air outlet shown. Passenger side outlet similar.

1. Using Trim Stick C-4755 (1) or equivalent, carefully disengage the retaining tabs that secure each outer instrument panel air outlet (2) to the instrument panel cover (3) and remove the outlet.
2. If servicing the driver side air outlet, disconnect the head lamp switch wiring harness from the head lamp switch (4) and if required, remove the switch from the outlet bezel (Refer to 08 - Electrical/8L - Lamps and Lighting/Lamps/Lighting - Exterior/SWITCH, Headlamp - Removal).

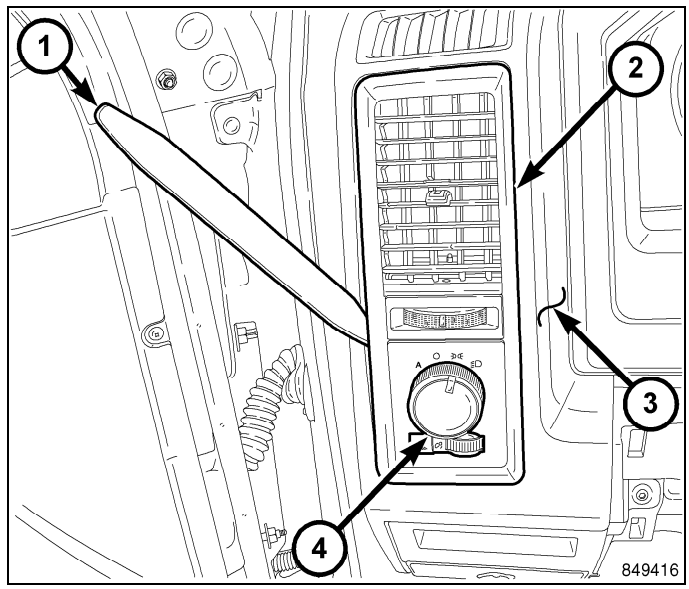

REAR SEAT AIR OUTLETS

NOTE: Illustration shown with front seat cushions removed for clarity.

1. Remove the two screws (1) that secure the rear air outlet housing (2) to the rear of the front center seat support (3).
2. Remove the rear air outlet housing and place it on a workbench.

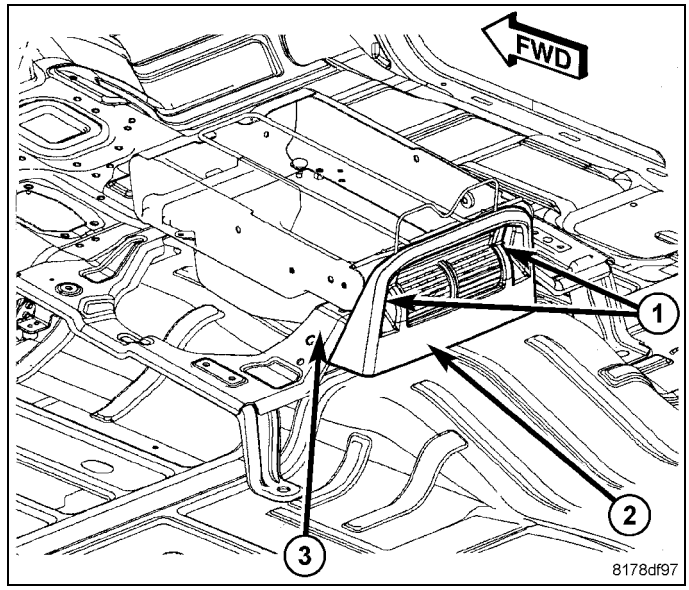

3. Using Tim Stick C-4755 or equivalent (1), disengage the retaining tabs that secure the rear air outlets (2) to the rear air outlet housing (3) and gently pry the outlets from the housing (3).

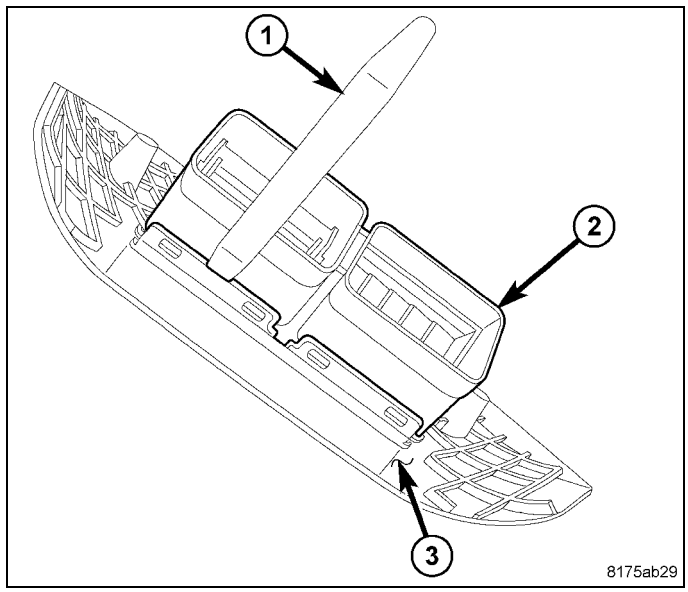

Installation

FRONT CENTER AIR OUTLETS

NOTE: Take the proper precautions to protect the front face of the center bezel from cosmetic damage during this procedure.

1. Position the center air oultet(s) (1) to the back of the instrument panel center bezel (2) and engage the bottom of each outlet to the center bezel.

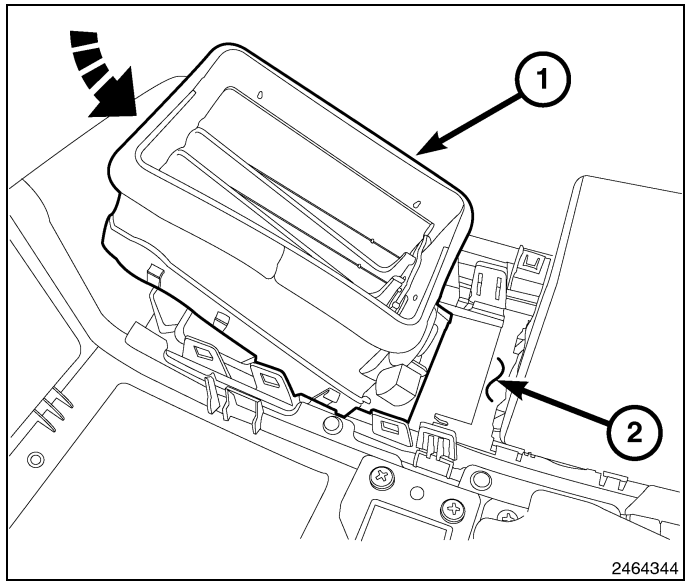

2. Carefully engage the eight plastic retaining clips (2) that secure each air outlet (1) to the center bezel (3). Make sure the retaining clips are fully engaged.
3. Install the instrument panel center bezel (Refer to 23 - Body/Instrument Panel/BEZEL, Instrument Panel - Installation).
4. Reconnect the negative battery cable.

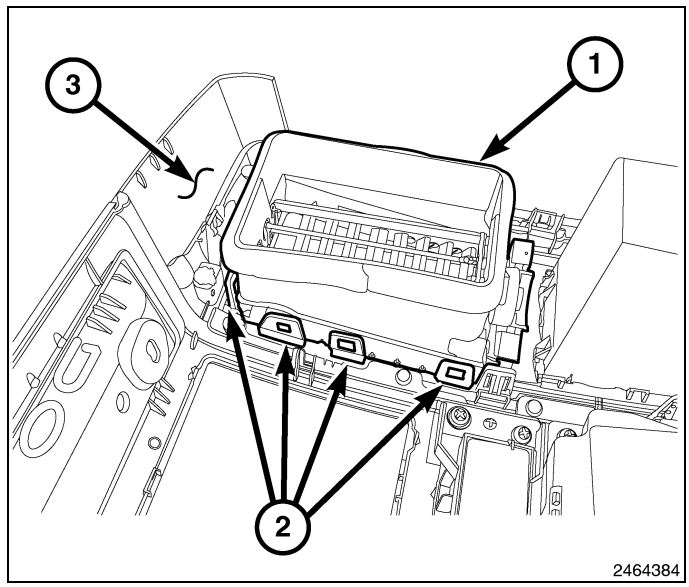

FRONT OUTER AIR OUTLETS

NOTE: Driver side air outlet shown. Passenger side outlet similar.

1. If required, install the head lamp switch (1) onto the air outlet (2)(Refer to 08 - Electrical/8L - Lamps and Lighting/Lamps/Lighting - Exterior/SWITCH, Headlamp - Installation).
2. If servicing the driver side air outlet, connect the head lamp switch wiring harness to the head lamp switch (Refer to 08 - Electrical/8L - Lamps and Lighting/Lamps/Lighting - Exterior/SWITCH, Headlamp - Installation).
3. Position the air outlet to the opening in the instrument panel cover (3) and align the outlet to the instrument panel duct.
4. Engage the retaining tabs that secure each air outlet to the instrument panel cover. Make sure the retaining tabs are fully engaged.

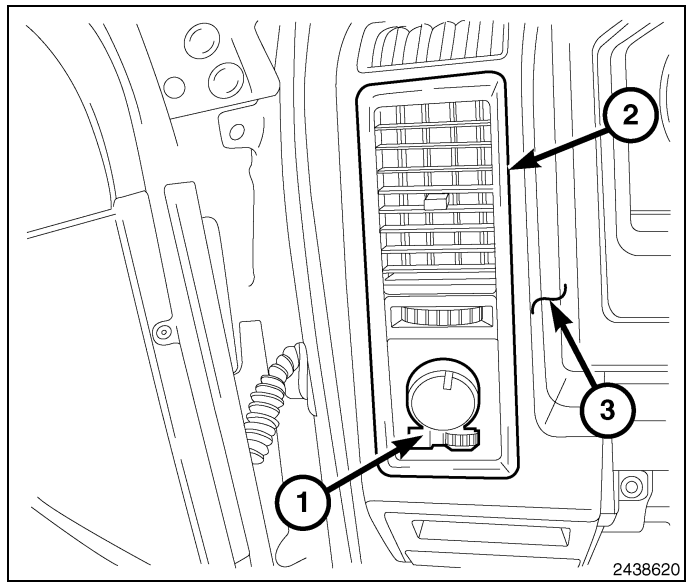

REAR SEAT AIR OUTLETS

NOTE: The air outlets are retained into the air outlet housing by eight retaining tabs. The air outlets must be first installed onto the bottom set of retaining tabs, then the upper set of tabs can be engaged.

1. Position the rear air outlets (1) to the back of the rear air outlet housing (2) and engage the lower set of retaining tabs (3).
2. Gently engage the upper set of retaining tabs (4). Make sure all of the retaining tabs are fully seated.

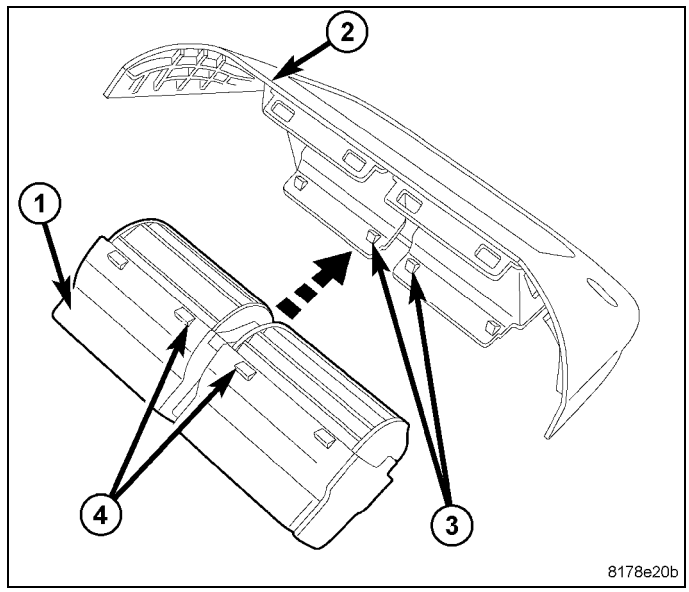

NOTE: Illustration shown with front seat cushions removed for clarity.

3. Position the rear air outlet housing (2) to the rear of the front center seat support (3).
4. Install the two screws (1) that secure the rear air outlet housing to the center seat support. Tighten the screws to 2.2 N·m (20 in. lbs.).

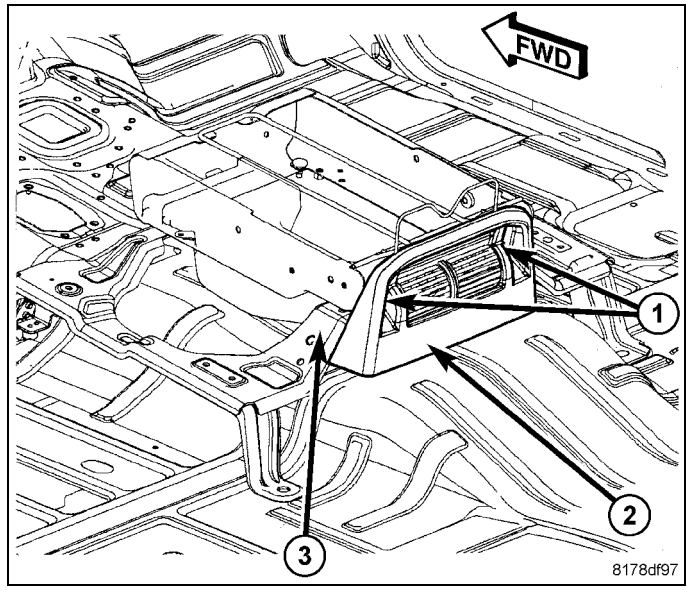

PLUMBING

TABLE OF CONTENTS

page

PLUMBING
- DESCRIPTION . . . 76
- OPERATION . . . 76
- WARNING . . . 76
- CAUTION . . . 76
- DIAGNOSIS AND TESTING . . . 77
- STANDARD PROCEDURE
  - REFRIGERANT SYSTEM SERVICE EQUIPMENT . . . 78
  - REFRIGERANT SYSTEM RECOVERY . . . 79
  - REFRIGERANT SYSTEM EVACUATE . . . 80
  - REFRIGERANT SYSTEM CHARGE . . . 80

COMPRESSOR, A/C
- DESCRIPTION
  - A/C CLUTCH . . . 82
  - A/C COMPRESSOR . . . 82
  - HIGH PRESSURE RELIEF VALVE . . . 82
- OPERATION
  - A/C CLUTCH . . . 82
  - A/C COMPRESSOR . . . 83
  - HIGH PRESSURE RELIEF VALVE . . . 83
- DIAGNOSIS AND TESTING
  - A/C CLUTCH COIL . . . 83
  - A/C SYSTEM NOISE . . . 84
- STANDARD PROCEDURE . . . 85
- REMOVAL
  - A/C CLUTCH . . . 85
  - 3.7L/4.7L ENGINES . . . 87
  - 5.7L ENGINE . . . 88
- INSTALLATION
  - A/C CLUTCH . . . 89
  - 3.7L/4.7L ENGINES . . . 92
  - 5.7L ENGINE . . . 93

CONDENSER, A/C
- DESCRIPTION . . . 95
- OPERATION . . . 95
- REMOVAL . . . 95
- INSTALLATION . . . 97

CORE, HEATER
- DESCRIPTION . . . 99
- OPERATION . . . 99
- REMOVAL . . . 99
- INSTALLATION . . . 101

CORE, SERVICE PORT VALVE
- DESCRIPTION . . . 101
- REMOVAL . . . 102
- INSTALLATION . . . 102

page

DRIER, A/C RECEIVER
- DESCRIPTION . . . 103
- OPERATION . . . 103

EVAPORATOR, A/C
- DESCRIPTION . . . 104
- OPERATION . . . 104
- REMOVAL . . . 105
- INSTALLATION . . . 106

LINE, A/C DISCHARGE
- DESCRIPTION . . . 108
- REMOVAL
  - 3.7L/4.7L ENGINES . . . 108
  - 5.7L ENGINE . . . 109
- INSTALLATION
  - 3.7L/4.7L ENGINES . . . 110
  - 5.7L ENGINE . . . 111

LINE, A/C LIQUID
- DESCRIPTION . . . 113
- REMOVAL . . . 113
- INSTALLATION . . . 114

LINE, A/C SUCTION
- DESCRIPTION . . . 116
- REMOVAL
  - 3.7L/4.7L ENGINES . . . 116
  - 5.7L ENGINE . . . 116
- INSTALLATION
  - 3.7L/4.7L ENGINES . . . 118
  - 5.7L ENGINE . . . 118

OIL, REFRIGERANT
- DESCRIPTION . . . 120
- OPERATION . . . 120
- STANDARD PROCEDURE . . . 120

REFRIGERANT
- DESCRIPTION . . . 121
- OPERATION . . . 121
- SPECIFICATIONS . . . 121

VALVE, A/C EXPANSION
- DESCRIPTION . . . 122
- OPERATION . . . 122
- DIAGNOSIS AND TESTING . . . 122
- REMOVAL . . . 123
- INSTALLATION . . . 124

Plumbing

Description

The A/C refrigerant lines and hoses are used to carry the refrigerant between the various A/C system components. The refrigerant lines and hoses for the R-134a A/C system consist of a barrier-hose design with a nylon tube sandwiched between rubber layers. The nylon tube helps to contain the R-134a refrigerant, which has a small molecular structure. The ends of the refrigerant lines are made from lightweight aluminum with brazed fittings.

Any kinks or sharp bends in the refrigerant lines and hoses will reduce the capacity of the entire A/C system and can reduce the flow of refrigerant within the system.

Operation

High pressures are produced in the refrigerant system when the A/C compressor is operating. Extreme care must be exercised to make sure that each of the refrigerant system connections is pressure-tight and leak free. It is a good practice to inspect all flexible refrigerant hoses at least once a year to make sure they are in good condition.

The refrigerant lines and hoses are coupled to other A/C system components with block-type fittings. An O-ring seal, or a flat steel gasket with an integral O-ring (dual plane seal), is used to mate the refrigerant line fittings with A/C system components to ensure the integrity of the refrigerant system.

The refrigerant lines and hoses cannot be repaired and must be replaced if leaking or damaged.

Warning

WARNING: The A/C system contains refrigerant under high pressure. Repairs should only be performed by qualified service personnel. Serious or fatal injury may result from improper service procedures.

WARNING: Avoid breathing the refrigerant and refrigerant oil vapor or mist. Exposure may irritate the eyes, nose, and/or throat. Wear eye protection when servicing the A/C refrigerant system. Serious eye injury can result from direct contact with the refrigerant. If eye contact occurs, seek medical attention immediately.

WARNING: Do not expose the refrigerant to open flame. Poisonous gas is created when refrigerant is burned. An electronic leak detector is recommended. Serious or fatal injury may result from improper service procedures.

WARNING: If accidental A/C system discharge occurs, ventilate the work area before resuming service. Large amounts of refrigerant released in a closed work area will displace the oxygen and cause suffocation and serious or fatal injury.

WARNING: The evaporation rate of R-134a refrigerant at average temperature and altitude is extremely high. As a result, anything that comes in contact with the refrigerant will freeze. Always protect the skin or delicate objects from direct contact with the refrigerant.

WARNING: The R-134a service equipment or the vehicle refrigerant system should not be pressure tested or leak tested with compressed air. Some mixtures of air and R-134a have been shown to be combustible at elevated pressures. These mixtures are potentially dangerous, and may result in fire or explosion causing property damage and serious or fatal injury.

WARNING: The engine cooling system is designed to develop internal pressures up to 145 kPa (21 psi). Do not remove or loosen the coolant pressure cap, cylinder block drain plugs, radiator drain, radiator hoses, heater hoses, or hose clamps while the engine cooling system is hot and under pressure. Allow the vehicle to cool for a minimum of 15 minutes before opening the cooling system for service. Failure to observe this warning can result in serious burns from the heated engine coolant.

Caution

CAUTION: Never add R-12 to a refrigerant system designed to use R-134a. Do not use R-12 equipment or parts on an R-134a A/C system. These refrigerants are not compatible and damage to the A/C system will result.

CAUTION: Never use R-12 refrigerant oil in an A/C system designed to use R-134a refrigerant oil. These refrigerant oils are not compatible and damage to the A/C system will result.

CAUTION: The use of A/C system sealers may result in damage to A/C refrigerant recovery/evacuation/recharging equipment and/or A/C system. Many federal, state/provincial and local regulations prohibit the recharge

of A/C systems with known leaks. Chrysler LLC recommends the detection of A/C system leaks through the use of approved leak detectors and fluorescent leak detection dyes. Vehicles found with A/C system sealers should be treated as contaminated and replacement of the entire A/C refrigerant system is recommended. A/C systems found to be contaminated with A/C system sealers, A/C stop-leak products or seal conditioners voids the warranty for the A/C system.

CAUTION: Recover the refrigerant before opening any fitting or connection. Open the fittings with caution, even after the system has been discharged. Never open or loosen a connection before recovering the refrigerant.

CAUTION: If equipped, do not remove the secondary retention clip from any spring-lock coupler connection while the refrigerant system is under pressure. Recover the refrigerant before removing the secondary retention clip. Open the fittings with caution, even after the system has been discharged. Never open or loosen a connection before recovering the refrigerant.

CAUTION: The internal parts of the A/C system will remain stable as long as moisture-free refrigerant and refrigerant oil is used. Abnormal amounts of dirt, moisture or air can upset the chemical stability. This may cause operational troubles or even serious damage if present in more than very small quantities. Before disconnecting a component, clean the outside of the fittings thoroughly to prevent contamination from entering the refrigerant system. Keep service tools and the work area clean. Do not open the refrigerant system or uncap a replacement component until you are ready to service the system. Immediately after disconnecting a component from the refrigerant system, seal the open fittings with a cap or plug. This will prevent contamination from entering the A/C system.

CAUTION: Refrigerant oil will absorb moisture from the atmosphere if left uncapped. Do not open a container of refrigerant oil until you are ready to use it. Replace the cap on the oil container immediately after using. Store refrigerant oil only in a clean, airtight, and moisture-free container.

CAUTION: Do not overcharge the refrigerant system. Overcharging will cause excessive compressor head pressure and can cause compressor noise and A/C system failure.

Diagnosis and Testing

WARNING: R-134a service equipment or vehicle A/C system should not be pressure tested or leak tested with compressed air. Mixture of air and R-134a can be combustible at elevated pressures. These mixtures are potentially dangerous and may result in fire or explosion causing property damage and possible serious or fatal injury.
Avoid breathing A/C refrigerant and lubricant vapor or mist. Exposure may irritate eyes, nose and throat. Use only approved service equipment meeting SAE requirements to discharge an R-134a system. If accidental system discharge occurs, ventilate work area before resuming service.

NOTE: If the A/C system refrigerant charge is empty or low, a leak in the A/C system is likely. Visually inspect all A/C lines, fittings and components for an oily residue. Oil residue can be an indicator of an A/C system leak location.

NOTE: The only way to correctly determine if the A/C system is fully charged with refrigerant to perform the A/C Performance Test (Refer to 24 - Heating and Air Conditioning - Diagnosis and Testing).

Connect a suitable manifold gauge set and determine if the static A/C system pressure is above or below 345 kPa (50 psi) (Refer to 24 - Heating and Air Conditioning/Plumbing - Standard Procedure). If less than 345 kPa (50 psi), proceed to SYSTEM EMPTY. If greater than 345 kPa (50 psi), go to SYSTEM LOW.

SYSTEM EMPTY

1. Evacuate the refrigerant system to the lowest degree of vacuum possible (approximately -88 kPa (- 26 in. Hg) or greater vacuum) (Refer to 24 - Heating and Air Conditioning/Plumbing - Standard Procedure). Determine if the system holds a vacuum for 15 minutes. If vacuum is held, a leak is probably not present. If system will not maintain vacuum level, proceed to Step #2.
2. Prepare and dispense 0.284 kilograms (10 ounces) of R-134a refrigerant into the evacuated refrigerant system (Refer to 24 - Heating and Air Conditioning/Plumbing - Standard Procedure) and proceed to Step #1 of the System Low procedure.

SYSTEM LOW

1. Position the vehicle in a wind-free work area. This will aid in detecting small leaks.
2. Operate the heating-A/C system with the engine at idle under the following conditions for at least 5 minutes.
   - Doors or windows open

- Transmission in Park or Neutral with the parking brake set (depending on transmission application)
- A/C-heater controls set to outside air, full cool, panel mode, high blower and with A/C compressor engaged

CAUTION: Use only an electronic leak detector designed for R-134a refrigerant. It is important to use only high-quality refrigerant leak detection equipment. Small leaks may not be found using budget equipment. Failure to follow these instructions may result in an incomplete diagnosis and possible remaining refrigerant leaks.

3. Shut the vehicle Off and wait 2-7 minutes. Then use an electronic leak detector that is designed to detect R-134a refrigerant and search for leaks. Fittings, lines or components that appear to be oily usually indicate a refrigerant leak. To inspect the A/C evaporator for leaks, insert the leak detector probe into the drain tube opening or an air outlet. A dye for R-134a is available to aid in leak detection. Use only Chrysler LLC approved refrigerant dye.

Standard Procedure

REFRIGERANT SYSTEM SERVICE EQUIPMENT

WARNING: Eye protection must be worn when servicing an A/C refrigerant system. Turn all valves off (rotate clockwise) on the equipment being used before connecting or disconnecting service equipment from the refrigerant system. Failure to follow these instructions may result in serious or fatal injury.

WARNING: Refer to the applicable warnings and cautions for this system before performing the following operation (Refer to 24 - Heating and Air Conditioning/Plumbing - Warning) and (Refer to 24 - Heating and Air Conditioning/Plumbing - Caution). Failure to follow these instructions may result in possible serious or fatal injury.

WARNING: Eye protection must be worn when servicing an air conditioning refrigerant system. Turn off all valves on the equipment being used, before connecting to or disconnecting from the refrigerant system. Failure to observe these warnings may result in possible serious or fatal injury.

When servicing the A/C system, an R-134a refrigerant recovery/recycling/charging station that meets SAE standard J2788 must be used (1). Per SAE standard J2788, refrigerant recovery stations must recover 95% of the refrigerant system within 30 minutes at 21.1° C (70° F) and be able to measure the amount of refrigerant removed from the system to an accuracy of 28 grams (1 oz.). When charging, the refrigerant recovery station must charge the system to an accuracy of 14 grams (0.5 oz.). Contact an automotive service equipment supplier for refrigerant recovery/recycling/charging equipment. See the operating instructions supplied by the equipment manufacturer for proper care and use of this equipment.

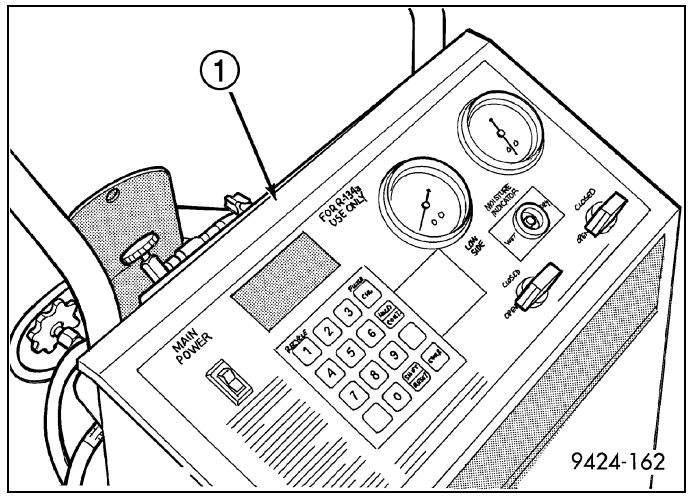

A manifold gauge set (1) may be needed with some recovery/recycling/charging equipment. The manifold gauge set should have manual shut-off valves (2 and 6), or automatic back-flow valves located at the service port connector end of the manifold gauge set hoses (4 and 5). This will prevent refrigerant from being released into the atmosphere.

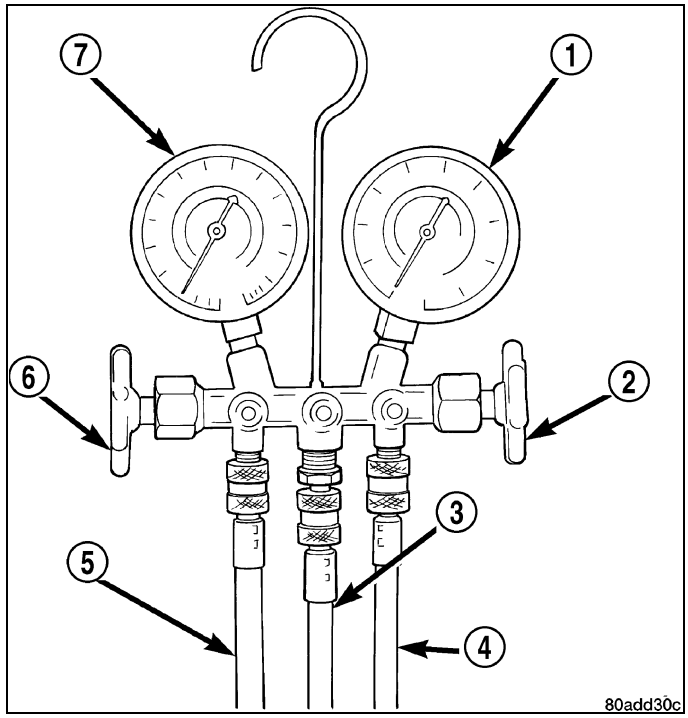

MANIFOLD GAUGE SET CONNECTIONS

CAUTION: Do not use an R-12 manifold gauge set on an R-134a system. The refrigerants are not compatible and A/C system damage will result.

RECOVERY/RECYCLING/EVACUATION/CHARGING HOSE – The center manifold hose (Yellow, or White, with Black stripe) (3) is used to recover, evacuate, and charge the refrigerant system. When the low or high pressure valves on the manifold gauge set are opened, the refrigerant in the system will escape through this hose.

HIGH PRESSURE GAUGE HOSE – The high pressure hose (Red with Black stripe) (4) attaches to the high side service port. This service port is located on the A/C liquid line. On this model, an A/C pressure transducer is used and A/C high-side pressures can be read using a scan tool (Refer to 28 - DTC-Based Diagnostics/MODULE, Powertrain Control (PCM) - Diagnosis and Testing).

LOW PRESSURE GAUGE HOSE – The low pressure hose (Blue with Black stripe) (5) attaches to the low side service port. This service port is located on the A/C suction line.

REFRIGERANT SYSTEM RECOVERY

WARNING: Refer to the applicable warnings and cautions for this system before performing the following operation (Refer to 24 - Heating and Air Conditioning/Plumbing - Warning) and (Refer to 24 - Heating and Air Conditioning/Plumbing - Caution). Failure to follow the warnings and cautions may result in serious or fatal injury.

When servicing the A/C system, an R-134a refrigerant recovery/recycling/charging station that meets SAE standard J2788 must be used (1). Per SAE standard J2788, refrigerant recovery stations must recover 95% of the refrigerant system within 30 minutes at 21.1° C (70° F) and be able to measure the amount of refrigerant removed from the system to an accuracy of 28 grams (1 oz.). See the operating instructions supplied by the equipment manufacturer for proper care and use of this equipment.

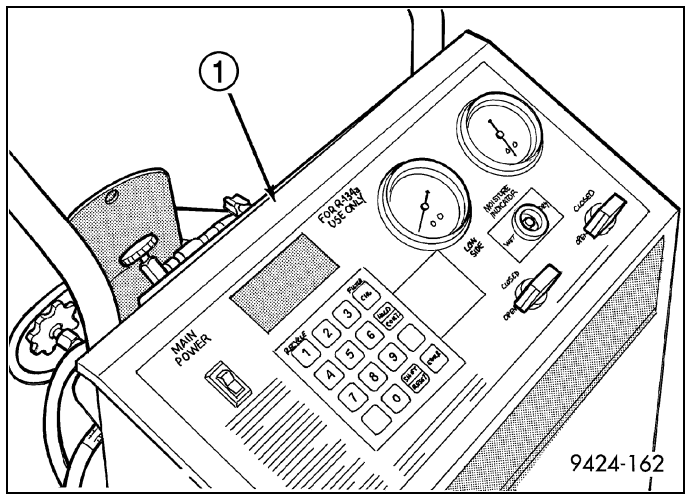

REFRIGERANT SYSTEM EVACUATE

NOTE: Special effort must be used to prevent moisture from entering the A/C system oil. Moisture in the oil is very difficult to remove and will cause a reliability problem with the A/C compressor.

If an A/C compressor designed to use R-134a refrigerant is left open to the atmosphere for an extended period of time, it is recommended that the refrigerant oil be drained and replaced with new oil, or a new A/C compressor be used. This will eliminate the possibility of contaminating the refrigerant system.

If the refrigerant system has been open to the atmosphere, it must be evacuated before the system can be filled. Moisture and air mixed with the refrigerant will raise the compressor head pressure above acceptable operating levels. This will reduce the performance of the A/C system and damage the A/C compressor. Moisture will boil at near room temperature when exposed to vacuum. Use the following procedure to evacuate the refrigerant system:

NOTE: When connecting the service equipment coupling to the line fitting, verify that the valve of the coupling is fully closed. This will reduce the amount of effort required to make the connection.

1. Recover the refrigerant system (Refer to 24 - Heating and Air Conditioning/Plumbing - Standard Procedure).
2. Connect a suitable charging station, refrigerant recovery machine or a manifold gauge set with vacuum pump and refrigerant recovery equipment (Refer to 24 - Heating and Air Conditioning/Plumbing - Standard Procedure).
3. Open the suction and discharge valves and start the vacuum pump. The vacuum pump should run a minimum of 45 minutes prior to charge to eliminate all moisture in system. When the suction gauge reads to the lowest degree of vacuum possible (approximately -88 kPa (- 26 in. Hg) or greater) for 30 minutes, close all valves and turn off vacuum pump. If the system fails to reach specified vacuum, the refrigerant system likely has a leak that must be corrected. If the refrigerant system maintains specified vacuum for at least 30 minutes, start the vacuum pump, open the suction and discharge valves. Then allow the system to evacuate an additional 10 minutes.
4. Close all valves. Turn off and disconnect the vacuum pump.
5. Charge the refrigerant system (Refer to 24 - Heating and Air Conditioning/Plumbing - Standard Procedure).

REFRIGERANT SYSTEM CHARGE

WARNING: Refer to the applicable warnings and cautions for this system before performing the following operation (Refer to 24 - Heating and Air Conditioning/Plumbing - Warning) and (Refer to 24 - Heating and Air Conditioning/Plumbing - Caution). Failure to follow these instructions may result in possible serious or fatal injury.

NOTE: The Underhood HVAC Specification Label contains the refrigerant fill specification of the vehicle being serviced.

After all refrigerant system leaks have been repaired and the refrigerant system has been evacuated, a refrigerant charge can be injected into the system. When charging the A/C system, an R-134a refrigerant recovery/recycling/charging station that meets SAE standard J2788 must be used (1). Per SAE standard J2788, refrigerant recovery stations must charge the system to an accuracy of 14 grams (0.5 oz.). See the operating instructions supplied by the equipment manufacturer for proper care and use of this equipment.

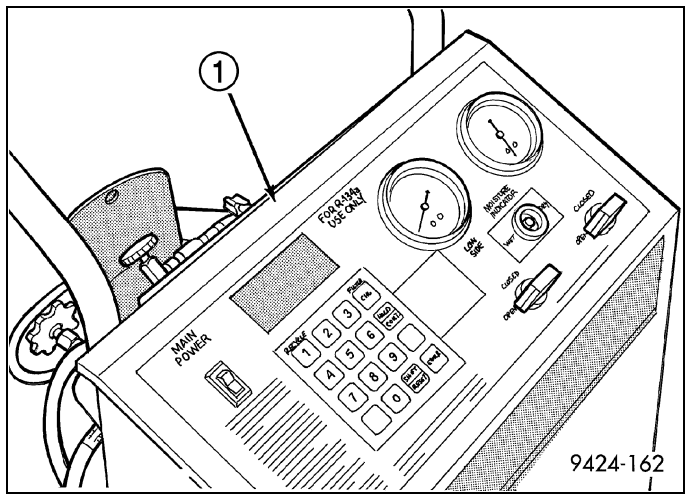

CHARGING PROCEDURE

CAUTION: A small amount of refrigerant oil is removed from the A/C system each time the refrigerant system is recovered and evacuated. Before charging the A/C system, you MUST replenish any oil lost during the recovery process. See the equipment manufacturer instructions for more information.

1. Evacuate the refrigerant system (Refer to 24 - Heating and Air Conditioning/Plumbing - Standard Procedure).
2. Connect an R-134a refrigerant recovery/recycling/charging station that meets SAE standard J2788 to the refrigerant system.
3. Measure the proper amount of refrigerant and heat it to 52° C (125° F) with the charging station (Refer to 24 - Heating and Air Conditioning/Plumbing/REFRIGERANT - Specifications). See the operating instructions supplied by the equipment manufacturer for proper use of this equipment.
4. Open both the suction and discharge valves, then open the charge valve to allow the heated refrigerant to flow into the system.
5. When the transfer of refrigerant has stopped, close both the suction and discharge valves.
6. If all of the refrigerant charge did not transfer from the dispensing device, open all of the windows in the vehicle and set the heating-A/C system controls so that the A/C compressor is engaged and the blower motor is operating at its lowest speed setting. Run the engine at a steady high idle (about 1400 rpm). If the A/C compressor does not engage, test the compressor clutch circuits and repair as required.

WARNING: Take care not to open the discharge (high pressure) valve at this time. Failure to follow these instructions may result in possible serious or fatal injury.

7. Open the low-side valve to allow the remaining refrigerant to transfer to the refrigerant system.
8. Disconnect the charging station from the refrigerant system service ports.
9. Reinstall the caps onto the refrigerant system service ports.

COMPRESSOR, A/C

Description

A/C CLUTCH

NOTE: Typical A/C clutch assembly shown.

The A/C compressor clutch assembly consists of a stationary electromagnetic field coil (4), bearing and pulley assembly (3), shims (7) and a clutch plate (2) that is splined to the compressor shaft and secured by a bolt (1). These components provide the means to engage and disengage the A/C compressor from the engine accessory drive belt.

The A/C clutch bearing and pulley assembly is retained to the front of the compressor with a snap ring (6). The A/C clutch field coil is also retained to the front of the compressor using a snap ring (5).

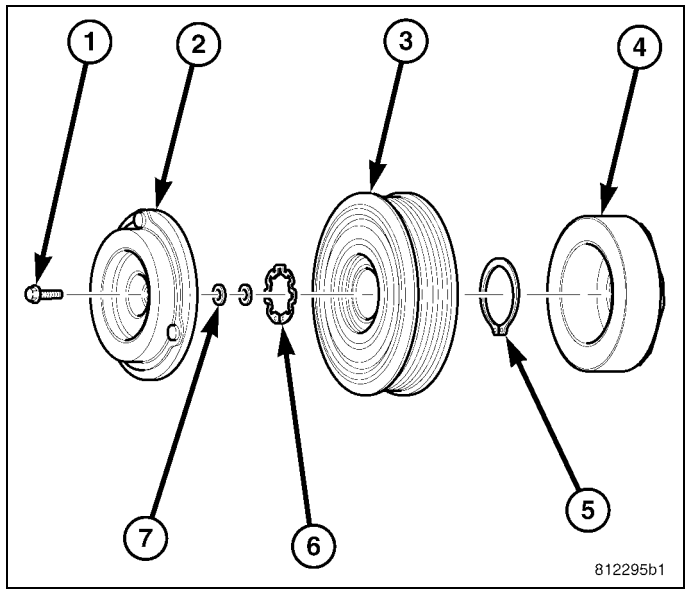

A/C COMPRESSOR

NOTE: Typical A/C compressor shown.

The A/C system on models equipped with the 3.7L and 4.7L engine use the Denso 10SRE15 A/C compressor (1). This A/C compressor has a fixed displacement of 150 cubic centimeters (9.2 cubic inches).

The A/C system on models equipped with the 5.7L engine use the Denso 10SRE18 A/C compressor. This A/C compressor has a fixed displacement of 180 cubic centimeters (11 cubic inches).

Both A/C compressors are ten cylinder, reciprocating swash plate type compressors with the suction and discharge ports (2) located on the compressor cylinder head (3) at the rear of the compressor.

Both A/C compressors have a label identifying the use of R-134a refrigerant.

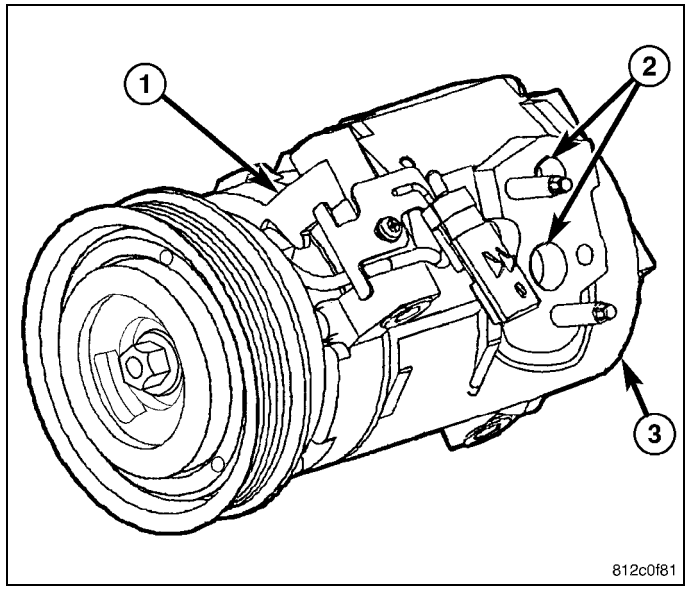

HIGH PRESSURE RELIEF VALVE

A high pressure relief valve is located on the A/C compressor. This mechanical valve is designed to vent refrigerant from the A/C system to protect against damage to the A/C compressor and other A/C system components, caused by condenser air flow restriction or an overcharge of refrigerant.

Operation

A/C CLUTCH

The A/C compressor clutch components provide the means to engage and disengage the A/C compressor from the engine accessory drive belt. When the electromagnetic A/C clutch field coil is energized, it magnetically draws the

clutch plate into contact with the clutch pulley and drives the compressor shaft. When the coil is not energized, the pulley freewheels on the clutch hub bearing, which is part of the pulley assembly.

A/C compressor clutch engagement is controlled by the Powertrain Control Module (PCM). When the A/C-heater control is set to any A/C position, it sends a request signal on the CAN-B bus to the Totally Integrated Power Module (TIPM), which then transfers the request on the CAN-C Bus to the PCM, which determines if operating conditions are correct for A/C clutch engagement. When all operating conditions have been met, the PCM sends a signal on a dedicated hard-wired circuit back to the TIPM to energize the internal A/C clutch high side driver. When energized, the A/C clutch high side driver provides battery current to the A/C clutch coil.

The A/C clutch control system is diagnosed using a scan tool (Refer to 28 - DTC-Based Diagnostics/MODULE, Powertrain Control (PCM) - Diagnosis and Testing).

The A/C clutch components cannot be repaired and must be replaced if inoperative or damaged.

A/C COMPRESSOR

The A/C compressor is driven by the engine through an electric clutch, drive pulley and belt arrangement. The A/C compressor is lubricated by refrigerant oil that is circulated throughout the refrigerant system with the refrigerant.

The A/C compressor draws in low-pressure refrigerant vapor from the A/C evaporator through its suction port. It then compresses the refrigerant into a high-pressure, high-temperature refrigerant vapor, which is then pumped to the A/C condenser through the compressor discharge port.

CAUTION: Be certain to adjust the refrigerant system oil level when replacing an A/C compressor (Refer to 24 - Heating and Air Conditioning/Plumbing/OIL, Refrigerant - Standard Procedure). Failure to properly adjust the refrigerant oil level can prevent the A/C system from operating as designed and can cause serious A/C compressor damage.

The A/C compressor cannot be repaired and must be replaced if inoperative or damaged. The compressor clutch, pulley and bearing assembly, and clutch field coil are available for service. If an internal failure of the A/C compressor has occurred, the A/C condenser must also be replaced (Refer to 24 - Heating and Air Conditioning/Plumbing/CONDENSER, A/C - Removal).

HIGH PRESSURE RELIEF VALVE

The high pressure relief valve vents refrigerant from the A/C system when a discharge pressure of 3445 to 4135 kPa (500 to 600 psi) or above is reached. The high pressure relief valve closes with a minimum discharge pressure of 2756 kPa (400 psi) is reached.

The high pressure relief valve should not open when the A/C system is operating correctly. If the high pressure relief valve vents refrigerant, there is most likely a problem within the A/C refrigerant system. The high pressure relief valve vents only enough refrigerant to reduce the A/C system pressure, and then re-seats itself. If the high pressure relief valve vents refrigerant, see the A/C System Diagnosis chart (Refer to 24 - Heating and Air Conditioning - Diagnosis and Testing).

The high pressure relief valve is factory-calibrated and cannot be adjusted or repaired, and must not be removed or otherwise disturbed. The valve is only serviced as a part of the A/C compressor.

Diagnosis and Testing

A/C CLUTCH COIL

The A/C clutch coil electrical circuit is controlled by the Powertrain Control Module (PCM) through the Totally Integrated Power Module (TIPM). See Wiring Information for complete HVAC wiring diagrams. Begin testing of a suspected A/C clutch coil problem by performing the preliminary checks.

PRELIMINARY CHECKS

1. Using a scan tool, check for Diagnostic Trouble Codes (DTCs) in the A/C-heater control, TIPM and PCM. If no DTCs are found, go to Step #2. If any DTCs are found, repair as required.
2. If the A/C clutch still will not engage, verify the refrigerant charge level by conducting the A/C Performance test (Refer to 24 - Heating and Air Conditioning - Diagnosis and Testing). If the refrigerant charge level is OK, go to COIL RESISTANCE TEST and COIL CURRENT DRAW TEST. If the refrigerant charge level is not OK, adjust the refrigerant charge as required.

COIL RESISTANCE TEST

1. Disconnect and isolate the negative battery cable.
2. Disconnect the wire harness connector from the A/C clutch coil connector.
3. Use an ohm meter and Back Probe Tool 6801 and measure the resistance of the clutch coil at the coil connector terminals.
4. See A/C Clutch Coil Specifications table for acceptable A/C clutch coil resistance. Specifications apply for a work area temperature of 21° C (70° F).
   a. If the A/C clutch coil reading is below specifications, the coil is shorted and must be replaced.
   b. If the A/C clutch coil reading is above specifications, the coil is open and must be replaced.

COIL CURRENT DRAW TEST

1. Verify the battery state of charge (Refer to 08 - Electrical/8F - Engine Systems/Battery System/BATTERY - Diagnosis and Testing).
2. Connect an ammeter (0 to 10 ampere scale selected) in series with the clutch coil feed terminal using Back Probe Tool 6801. Connect a voltmeter (0 to 20 volt scale selected) to measure voltage across the battery and the clutch coil.
3. With the A/C-heater control in the A/C mode and the blower motor at low speed, start the engine and allow it to run at a normal idle speed.
4. The A/C clutch should engage immediately and the clutch coil supply voltage should be within two volts of the battery voltage. If the coil supply voltage is OK, go to Step #5. If the coil supply voltage is not within two volts of battery voltage, test the clutch coil feed circuit for excessive voltage drop and repair as necessary.
5. See A/C Clutch Coil Specifications table for acceptable A/C clutch coil current draw. Specifications apply for a work area temperature of 21° C (70° F). If voltage is more than 12.5 volts, add electrical loads by turning on electrical accessories until voltage reads below 12.5 volts.
   a. If the A/C clutch coil current reading is zero, the coil is open and must be replaced.
   b. If the A/C clutch coil current reading is above specifications, the coil is shorted and must be replaced.

A/C CLUTCH COIL SPECIFICATIONS

Coil Resistance	Coil Current Draw
3.6 ± 0.2 ohms	3.2 - 3.3 amps @ 12V ± 0.5V @ 21° C (70° F)

A/C SYSTEM NOISE

When investigating an A/C system related noise, you must first know the conditions under which the noise occurs. These conditions include: weather, vehicle speed, transmission in gear or neutral, engine speed, engine temperature, and any other special conditions. Noises that develop during A/C operation can often be misleading. For example: What sounds like a failed front engine bearing or connecting rod, may be caused by loose bolts, nuts, mounting brackets or a loose compressor clutch assembly.

Drive belts are speed sensitive. At different engine speeds and depending upon drive belt tension, drive belts can develop noises that are mistaken for an A/C compressor noise. Improper drive belt tension can cause a misleading noise when the compressor clutch is engaged, which may not occur when the compressor clutch is disengaged. Check the accessory drive belt condition and tension before beginning this procedure (see Group 7 - Cooling).

1. Select a quiet area for testing. Duplicate the complaint conditions as much as possible. Turn the A/C compressor On and Off several times to clearly identify the compressor noise. Listen to the A/C compressor while the clutch is engaged and disengaged. Probe the A/C compressor with an engine stethoscope or a long screwdriver with the handle held to your ear to better localize the source of the noise.
2. Loosen all of the compressor mounting hardware and retighten. Check the compressor clutch retainer. Be certain that the A/C clutch coil is mounted securely to the A/C compressor, and that the clutch plate and pulley are properly aligned and have the correct air gap (Refer to 24 - Heating and Air Conditioning/Plumbing/COMPRESSOR, A/C - Standard Procedure).
3. To duplicate high-ambient temperature conditions (high head pressure), restrict the air flow through the A/C condenser. Install a manifold gauge set or a scan tool to be certain that the discharge pressure does not exceed 2760 kPa (400 psi).

4. Check the refrigerant system plumbing for incorrect routing, rubbing or interference, which can cause unusual noises. Also check the refrigerant lines and hoses for kinks or sharp bends that will restrict refrigerant flow, which can cause noises.
5. If the noise is from opening and closing of the high pressure relief valve, recover, evacuate and recharge the refrigerant system (Refer to 24 - Heating and Air Conditioning/Plumbing - Standard Procedure).
6. If the high pressure relief valve still does not seat properly, replace the A/C compressor (Refer to 24 - Heating and Air Conditioning/Plumbing/COMPRESSOR, A/C - Removal).

Standard Procedure

NOTE: The A/C clutch can be serviced in the vehicle. The refrigerant system can remain fully-charged during compressor clutch, pulley and bearing assembly, or coil replacement.

Examine the friction surfaces of the pulley and the clutch plate (2) for wear. The pulley and clutch plate should be replaced if there is excessive wear or scoring.

If the friction surfaces are oily, inspect the shaft and nose area of the A/C compressor (1) for refrigerant oil. If refrigerant oil is found, the compressor shaft seal is leaking and the A/C compressor must be replaced.

Check the pulley bearing for roughness or excessive leakage of grease. Replace the pulley and bearing assembly, if required.

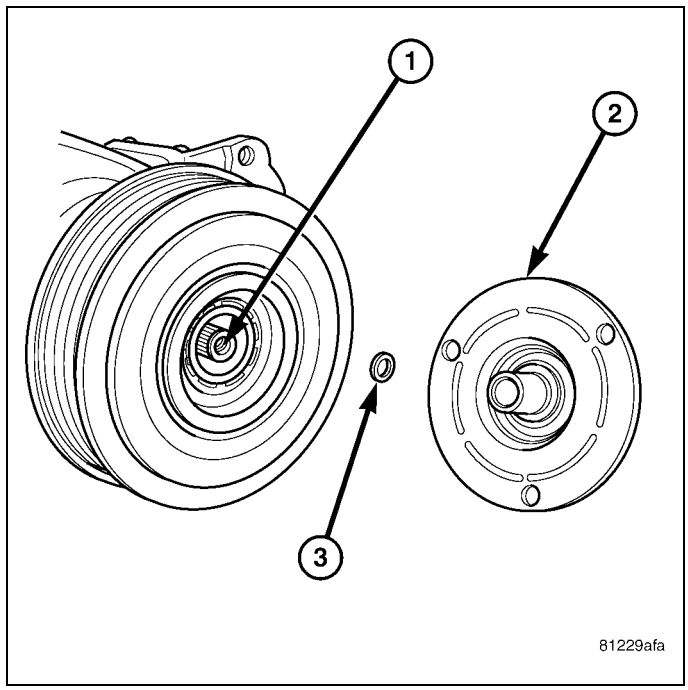

Removal

A/C CLUTCH

NOTE: The compressor clutch assembly can be serviced with the refrigerant system fully-charged.

NOTE: Typical A/C compressor and clutch assembly shown in illustrations.

1. Disconnect and isolate the negative battery cable.
2. Remove the accessory drive belt (Refer to 07 - Cooling/Accessory Drive/BELT, Serpentine - Removal).
3. Disconnect the engine wire harness from the compressor clutch field coil connector (1) located on the top of the A/C compressor (5).
4. Remove the fasteners that secure the A/C compressor to the engine and support the A/C compressor (Refer to 24 - Heating and Air Conditioning/Plumbing/COMPRESSOR, A/C - Removal).
5. Carefully remove the compressor clutch coil connector and wire lead from the connector bracket (2).
6. Remove the compressor shaft bolt (3). A band-type oil filter wrench or a strap wrench may be used to hold the clutch plate (4) from rotating during bolt removal.

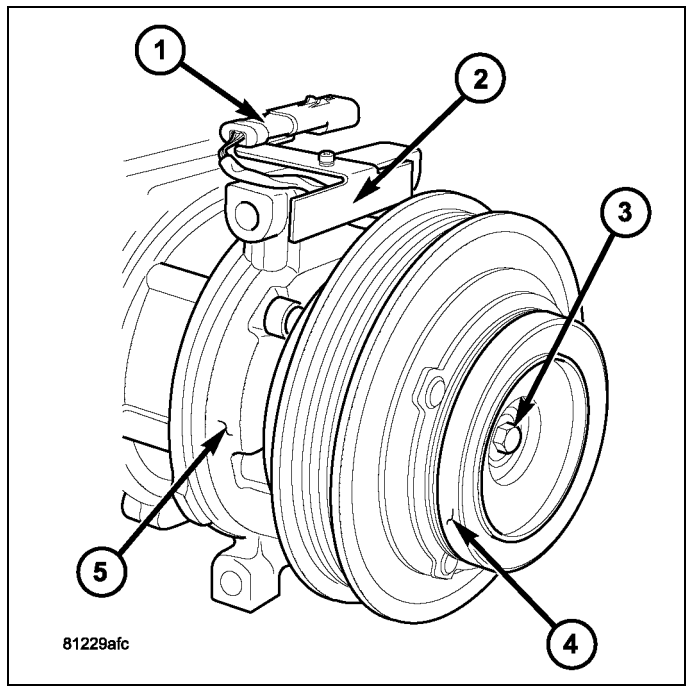

CAUTION: Do not pry between the clutch plate and the pulley and bearing assembly to remove the clutch plate from the compressor shaft as this may damage the clutch plate.

NOTE: Use care not to lose any clutch shim(s) during removal of the clutch plate, as they may be reused during the clutch plate installation process.

7. Tap the clutch plate (2) lightly with a plastic mallet to release it from the splines on the compressor shaft (1) and remove the clutch plate and shim(s) (3).

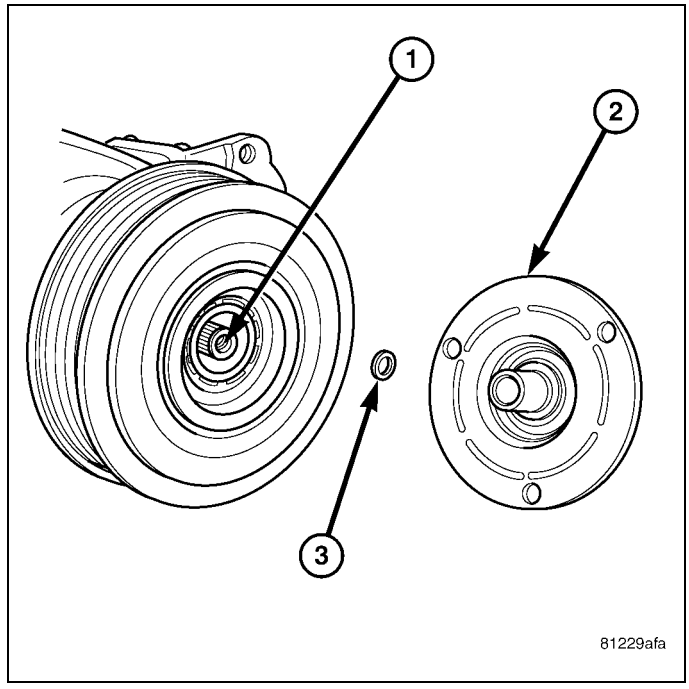

8. Using A/C Snap Ring Pliers 9764 (1) or equivalent, remove the snap ring (2) that secures the pulley and bearing assembly (3) to the front of the A/C compressor and remove the pulley and bearing assembly.

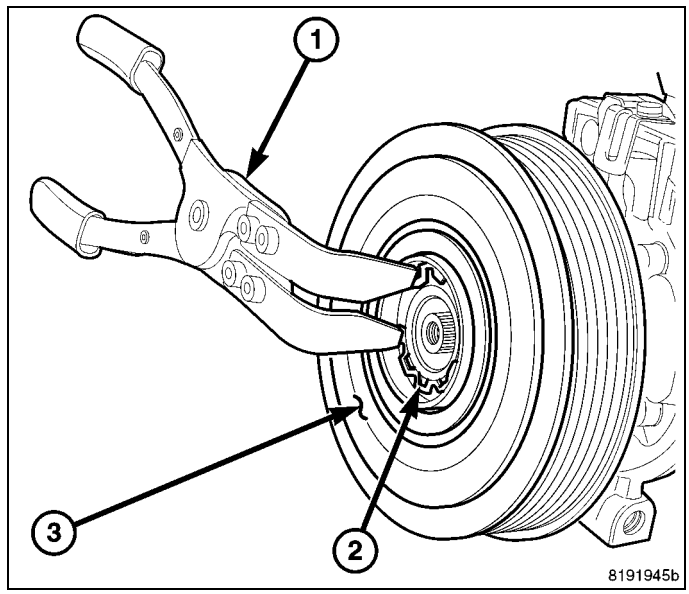

9. Using A/C Snap Ring Pliers 9764 (1) or equivalent, remove the snap ring (4) that secures the compressor clutch coil (2) to the front of the A/C compressor (3) and remove the field coil.

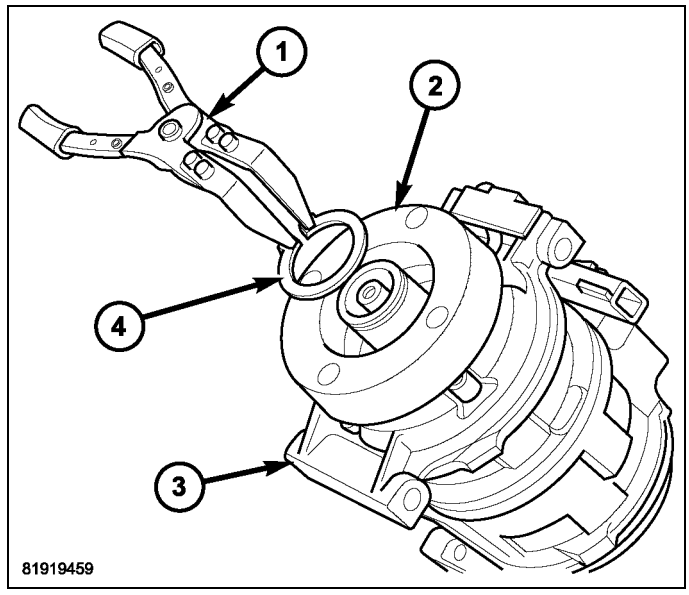

3.7L/4.7L ENGINES

WARNING: Refer to the applicable Warnings and Cautions for this system before performing the following operation (Refer to 24 - Heating and Air Conditioning/Plumbing - Warning) and (Refer to 24 - Heating and Air Conditioning/Plumbing - Caution). Failure to follow these instructions may result in possible serious or fatal injury.

NOTE: The A/C compressor may be removed and repositioned without disconnecting the refrigerant lines or discharging the refrigerant system. Discharging is not necessary if servicing the compressor clutch, clutch coil, engine, engine cylinder head or the generator.

NOTE: 4.7L engine shown in illustrations. 3.7L engine similar.

1. Disconnect and isolate the negative battery cable.
2. Recover the refrigerant from the refrigerant system (Refer to 24 - Heating and Air Conditioning/Plumbing - Standard Procedure).
3. Remove the resonator (Refer to 09 - Engine/Air Intake System/BODY, Air Cleaner - Removal).
4. Remove the accessory drive belt (3) (Refer to 07 - Cooling/Accessory Drive/BELT, Serpentine - Removal).
5. Remove the nuts (5) that secure the A/C discharge line (2) and the A/C suction line (4) to the A/C compressor (1).
6. Disconnect the A/C discharge and suction lines from the A/C compressor and remove and discard the O-ring seals and gaskets.
7. Install plugs in, or tape over the opened refrigerant line fittings and the compressor ports.

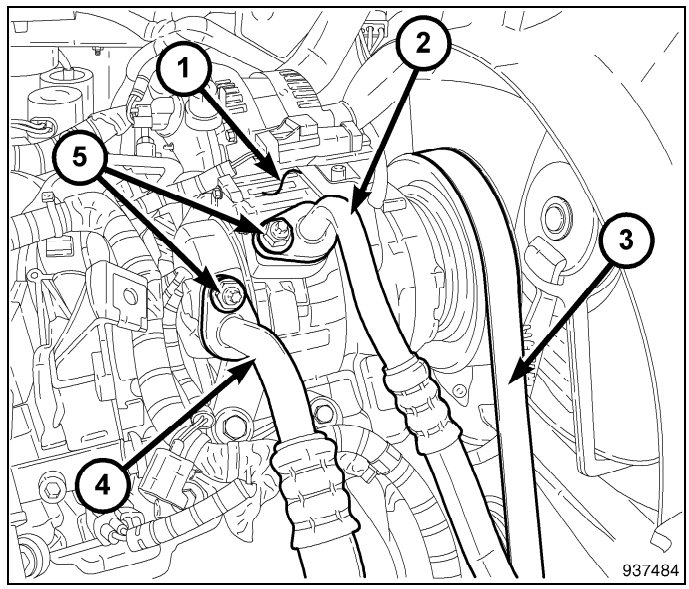

8. Disconnect the engine wire harness connector (1) from the A/C compressor (7).
9. Loosen the bolt (3) that secures the support bracket (4) to the front of the engine.
10. Remove the three bolts (2, 5 and 6) that secure the A/C compressor to the engine and remove the compressor

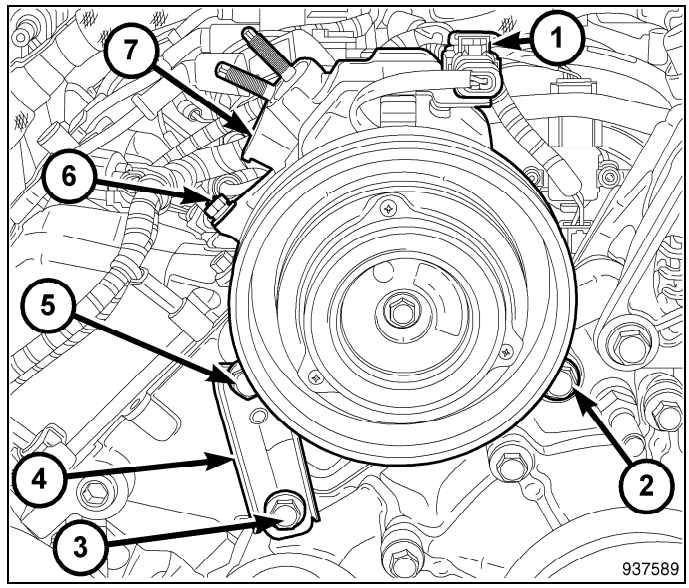

5.7L ENGINE

WARNING: Refer to the applicable Warnings and Cautions for this system before performing the following operation (Refer to 24 - Heating and Air Conditioning/Plumbing - Warning) and (Refer to 24 - Heating and Air Conditioning/Plumbing - Caution). Failure to follow these instructions may result in possible serious or fatal injury.

NOTE: The A/C compressor may be removed and repositioned without disconnecting the refrigerant lines or discharging the refrigerant system.

1. Disconnect and isolate the negative battery cable.
2. Recover the refrigerant from the refrigerant system (Refer to 24 - Heating and Air Conditioning/Plumbing - Standard Procedure).
3. Remove the accessory drive belt (5) (Refer to 07 - Cooling/Accessory Drive/BELT, Serpentine - Removal).
4. Disengage the plastic refrigerant line bracket from the upper front of the engine (Refer to 24 - Heating and Air Conditioning/Plumbing/LINE, A/C Discharge - Removal).
5. Raise and support the vehicle.
6. Disconnect the engine wire harness connector from the A/C compressor (4).
7. Remove the nuts (2) that secure the A/C suction line (1) and the A/C discharge line (3) to the A/C compressor.

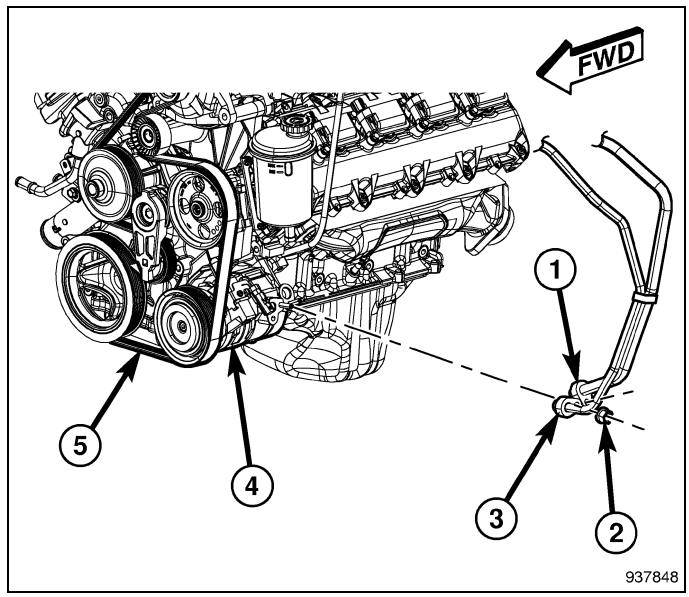

8. Disconnect the A/C suction and discharge lines from the A/C compressor and remove and discard the O-ring seals and gaskets.
9. Install plugs in, or tape over the opened refrigerant line fittings and compressor ports.
10. Remove the three bolt (1 and 2) that secure the A/C compressor (3) to the engine and remove the compressor.

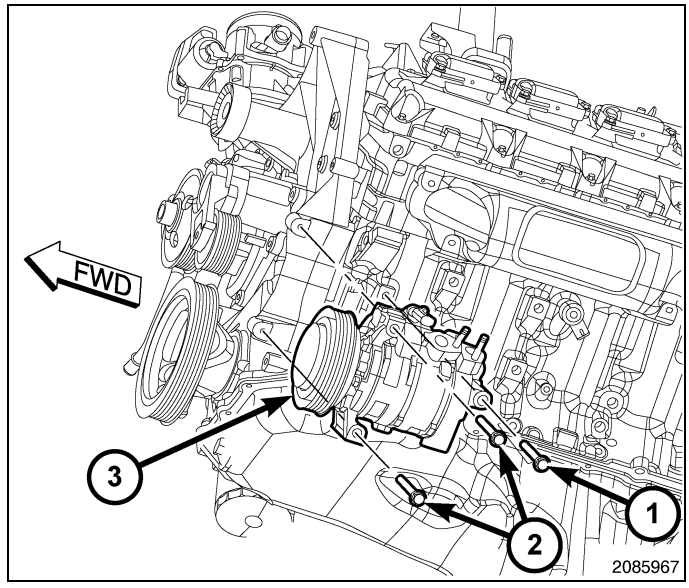

Installation

A/C CLUTCH

NOTE: Typical A/C compressor and clutch assembly shown in illustrations.

1. Align the dowel pin on the back of the compressor clutch coil (2) with the hole in the front of the A/C compressor (3) and position the coil onto the compressor. Be certain that the compressor clutch coil wire lead is properly routed so that it is not pinched between the A/C compressor and the coil.

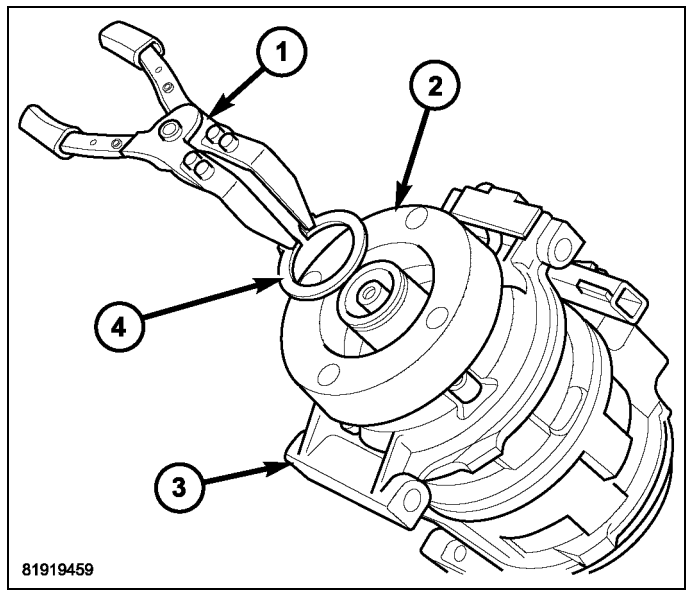

CAUTION: The snap ring must be fully and properly seated in the groove or it will vibrate out, resulting in a clutch failure and severe damage to the A/C compressor.

NOTE: A new snap ring must be used to secure the compressor clutch field coil to the A/C compressor. The bevel side of the snap ring must face outward and both snap ring eyelets must be oriented to the right or to the left of the field coil dowel pin location on the A/C compressor.

2. Using A/C Snap Ring Pliers 9764 (1) or equivalent, install the snap ring (4) that secures the compressor clutch coil to the front of the A/C compressor. Be certain that the snap ring is fully and properly seated in the groove and oriented correctly.

CAUTION: Be certain to position the A/C clutch coil wire lead so that it is not damaged during A/C compressor pulley and bearing installation.

CAUTION: When installing the pulley and bearing assembly, DO NOT mar the friction surfaces of the pulley or premature failure of the A/C clutch will result.

3. Install the pulley and bearing assembly (1) onto the front of the A/C compressor. If necessary, tap the pulley gently with a block of wood (2) placed on the pulley friction surface.

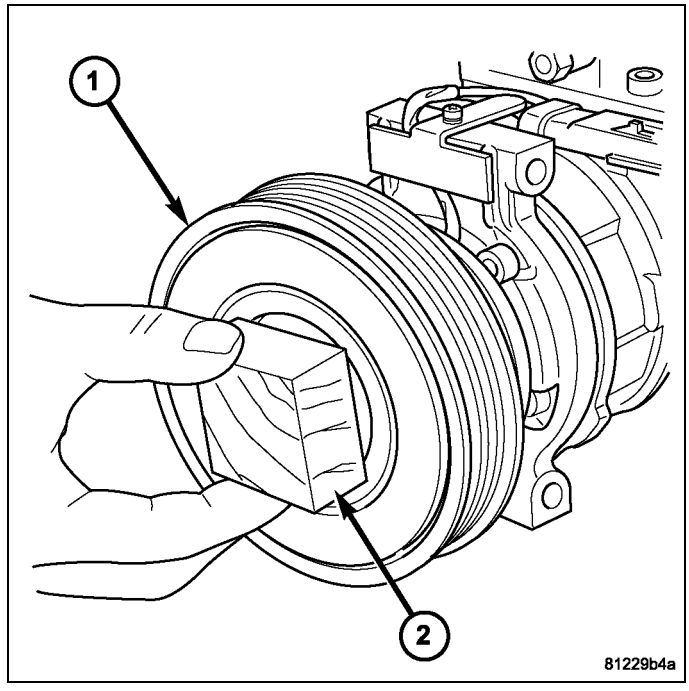

CAUTION: The snap ring must be fully and properly seated in the groove or it will vibrate out, resulting in a clutch failure and severe damage to the A/C compressor.

NOTE: A new snap ring must be used to secure the pulley and bearing assembly to the A/C compressor. The bevel side of the snap ring must face outward.

4. Using A/C Snap Ring Pliers 9764 (1) or equivalent, install the snap ring (2) that secures the pulley and bearing assembly (3) to the front of the A/C compressor. Be certain that the snap ring is fully and properly seated in the groove.

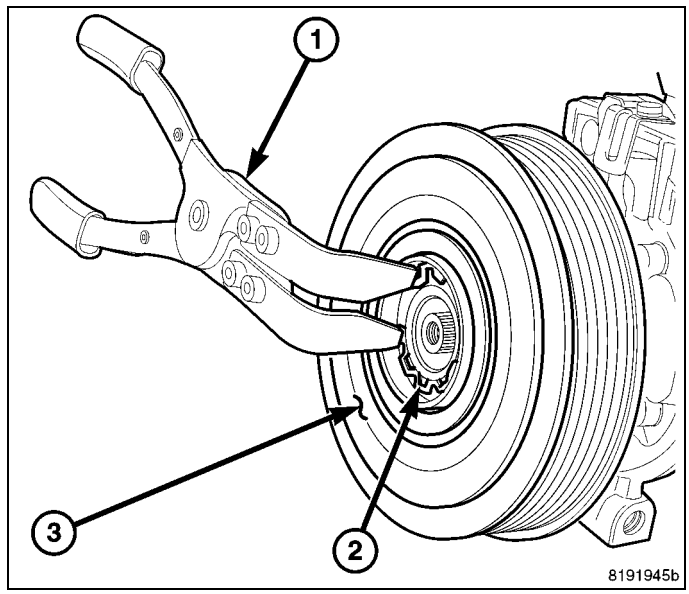

5. If the original clutch plate (2) and pulley and bearing assembly are to be reused, reinstall the original shim(s) (3) onto the compressor shaft (1). If a new clutch plate and pulley and bearing assembly are being used, install a trial stack of shims 2.54 mm (0.010 in.) thick onto the compressor shaft.

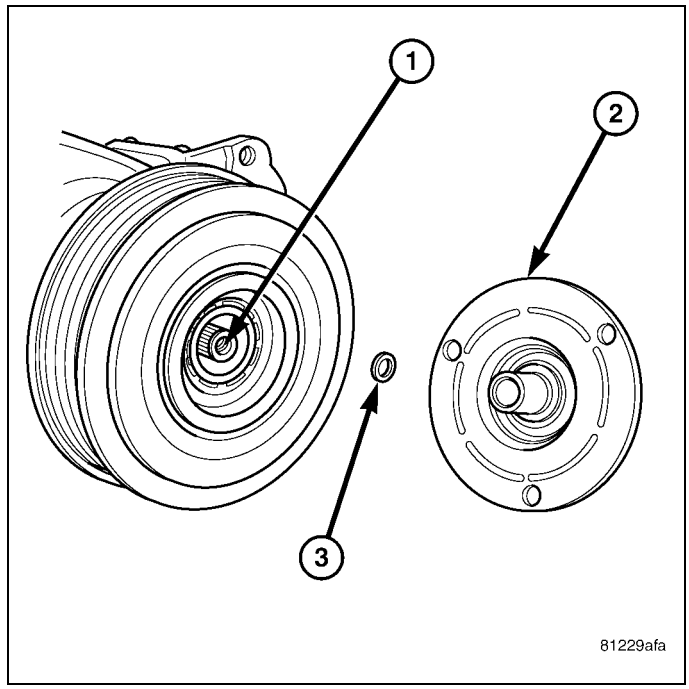

6. Install the clutch plate (4) onto the front of the A/C compressor (5).
7. Install the compressor shaft bolt (3). Tighten the bolt to 19 N·m (168 in. lbs.).

NOTE: The shims may compress after tightening the shaft bolt. Check the air gap in four or more places to verify the air gap is correct. Spin the pulley before performing a final check of the air gap.

NOTE: On models with the clutch plate recessed into the pulley, use a 90° wire gap gauge to measure the clutch air gap. On other models, use a blade type feeler gauge to measure the air gap.

8. With the clutch plate assembled tight against the shim(s), measure the air gap between the clutch plate and the pulley and bearing assembly. The air gap should be between 0.35 - 0.60 mm (0.014 - 0.024 in.). If the air gap is not between specifications, add or subtract shims as needed until the correct air gap is obtained.

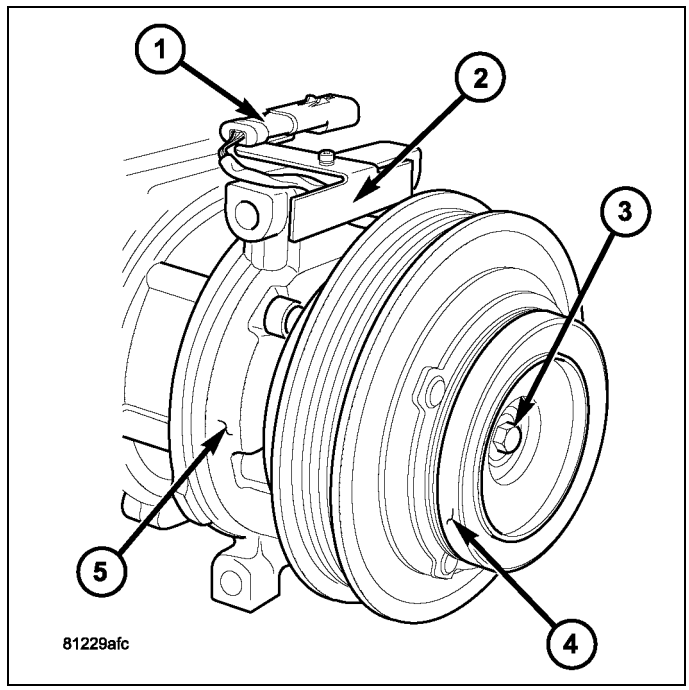

CAUTION: Be certain that the A/C clutch coil wire harness is properly routed so that it is not pinched between the A/C compressor and the coil connector bracket.

9. Carefully route the compressor clutch coil wire lead behind the connector bracket (2).
10. Install the compressor clutch coil connector (1) onto the connector bracket.
11. Position the A/C compressor to the engine and install the fasteners (Refer to 24 - Heating and Air Conditioning/Plumbing/COMPRESSOR, A/C - Installation).
12. Connect the engine wire harness to the compressor clutch coil connector.
13. Install the accessory drive belt (Refer to 07 - Cooling/Accessory Drive/BELT, Serpentine - Installation).
14. Reconnect the negative battery cable.

3.7L/4.7L ENGINES

CAUTION: If the A/C compressor is being replaced, be certain to adjust the refrigerant system oil level (Refer to 24 - Heating and Air Conditioning/Plumbing/OIL, Refrigerant - Standard Procedure). Failure to properly adjust the refrigerant oil level will prevent the A/C system from operating as designed and can cause serious A/C compressor damage.

CAUTION: The A/C condenser must be replaced if an internal failure of the A/C compressor has occurred. Failure to replace the A/C condenser can cause serious damage to the replacement A/C compressor (Refer to 24 - Heating and Air Conditioning/Plumbing/CONDENSER, A/C - Removal).

NOTE: When replacing multiple A/C system components, see the Refrigerant Oil Capacities chart to determine how much oil should be removed from the new A/C compressor (Refer to 24 - Heating and Air Conditioning/Plumbing/OIL, Refrigerant - Standard Procedure).

NOTE: Replacement of the refrigerant line O-ring seals and gaskets is required anytime a refrigerant line is disconnected. Failure to replace the rubber O-ring seals and metal gaskets could result in a refrigerant system leak.

NOTE: 4.7L engine shown in illustrations. 3.7L engine similar.

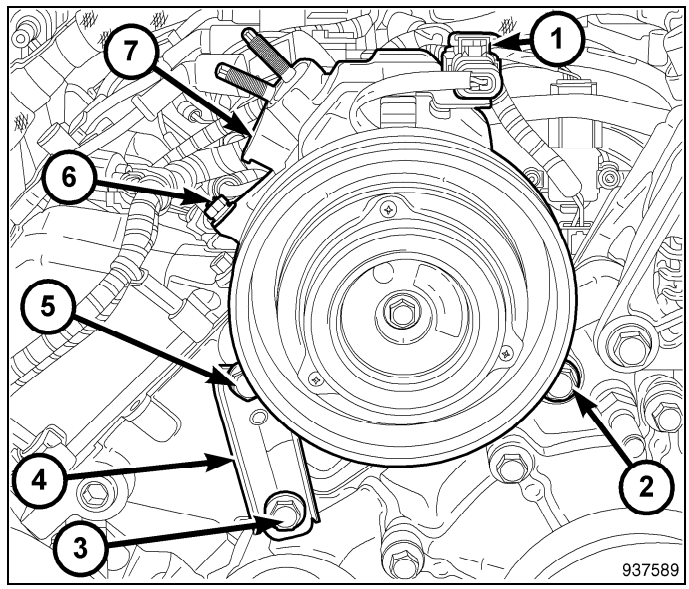

1. If the A/C compressor (7) is being replaced, the refrigerant oil in the old compressor must be first drained and measured. Then the oil in the new A/C compressor must be drained. Finally, the new compressor must be refilled with the same amount of new refrigerant oil that was drained out of the old compressor. When replacing multiple A/C system components, refer to the Refrigerant Oil Capacities chart to determine how much oil should be added to the refrigerant system (Refer to 24 - Heating and Air Conditioning/Plumbing/OIL, Refrigerant - Standard Procedure). Use only refrigerant oil of the type recommended for the A/C compressor in the vehicle.
2. Position the A/C compressor onto the engine.
3. Install and tighten the bolts in the following sequence:
   - Install bolt (2) and hand tighten.
   - Install bolt (5) and hand tighten.
   - Install bolt (6) and hand tighten.
   - Tighten bolt (2) to 40 N·m (30 ft. lbs.).
   - Tighten bolt (5) to 55 N·m (41 ft. lbs.).
   - Tighten bolt (6) to 55 N·m (41 ft. lbs.).
   - Tighten bolt (4) to 55 N·m (41 ft. lbs.).
4. Connect the engine wire harness connector (1) to the A/C compressor.

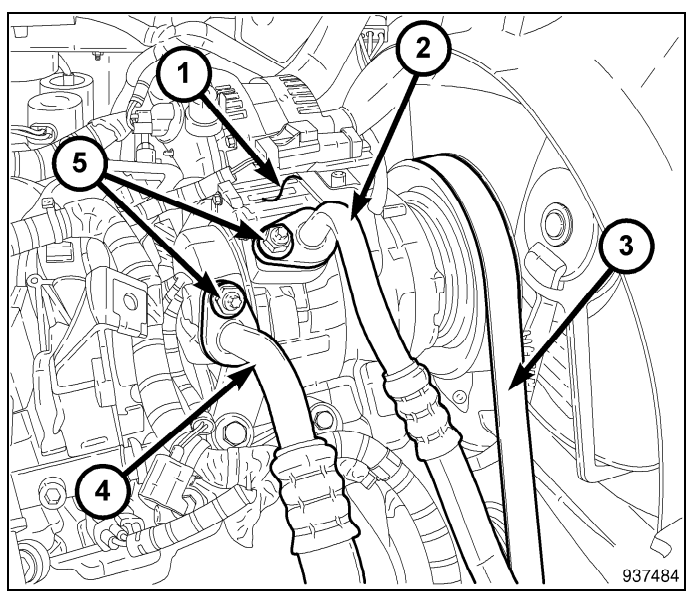

5. Remove the tape or plugs from the opened refrigerant line fittings and the compressor ports.
6. Lubricate new O-ring seals with clean refrigerant oil and install them and new gaskets onto the refrigerant line fittings. Use only the specified O-ring seals as they are made of a special material for the R-134a system. Use only refrigerant oil of the type recommended for the A/C compressor in the vehicle.
7. Install the A/C discharge line (2) and the A/C suction line (4) onto the A/C compressor (1).
8. Install the nuts (5) that secure the refrigerant lines to the A/C compressor. Tighten the nuts to 23 N·m (17 ft. lbs.).
9. Install the accessory drive belt (3) (Refer to 07 - Cooling/Accessory Drive/BELT, Serpentine - Installation).
10. Install the resonator (Refer to 09 - Engine/Air Intake System/BODY, Air Cleaner - Installation).
11. Reconnect the negative battery cable.
12. Evacuate and charge the refrigerant system (Refer to 24 - Heating and Air Conditioning/Plumbing - Standard Procedure).

5.7L ENGINE

CAUTION: If the A/C compressor is being replaced, be certain to adjust the refrigerant system oil level (Refer to 24 - Heating and Air Conditioning/Plumbing/OIL, Refrigerant - Standard Procedure). Failure to properly adjust the refrigerant oil level will prevent the A/C system from operating as designed and can cause serious A/C compressor damage.

CAUTION: The A/C condenser must be replaced if an internal failure of the A/C compressor has occurred. Failure to replace the A/C condenser can cause serious damage to the replacement A/C compressor (Refer to 24 - Heating and Air Conditioning/Plumbing/CONDENSER, A/C - Removal).

NOTE: When replacing multiple A/C system components, see the Refrigerant Oil Capacities chart to determine how much oil should be removed from the new A/C compressor (Refer to 24 - Heating and Air Conditioning/ Plumbing/OIL, Refrigerant - Standard Procedure).

NOTE: Replacement of the refrigerant line O-ring seals and gaskets is required anytime a refrigerant line is disconnected. Failure to replace the rubber O-ring seals and metal gaskets could result in a refrigerant system leak.

1. If the A/C compressor (3) is being replaced, the refrigerant oil in the old compressor must be first drained and measured. Then the oil in the new A/C compressor must be drained. Finally, the new compressor must be refilled with the same amount of new refrigerant oil that was drained out of the old compressor. When replacing multiple A/C system components, refer to the Refrigerant Oil Capacities chart to determine how much oil should be added to the refrigerant system(Refer to 24 - Heating and Air Conditioning/Plumbing/OIL, Refrigerant - Standard Procedure). Use only refrigerant oil of the type recommended for the A/C compressor in the vehicle.
2. Position the A/C compressor to the engine.
3. If removed, install and securely tighten the two studs (3) that secure the A/C compressor to the engine.
4. Loosely install the three bolts (1 and 2) that secure the A/C compressor to the engine.

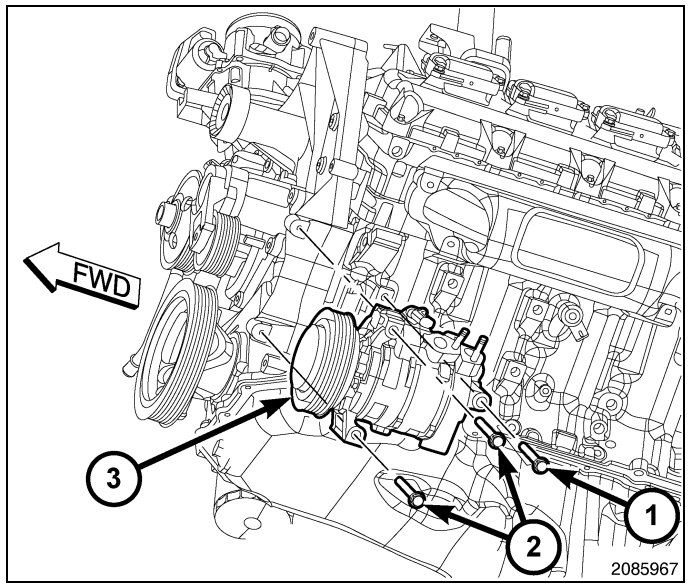

5. Tighten each of the bolts to 28 N·m (21 ft. lbs.) using the following sequence:
   - Upper bolt at front of compressor.
   - Lower bolt at front of compressor.
   - Bolt at rear of compressor.
6. Connect the engine wire harness connector to the A/C compressor.
7. Remove the tape or plugs from the opened refrigerant line fittings and the compressor ports.
8. Lubricate new O-rings with clean refrigerant oil and install them and new gaskets onto the refrigerant line fittings. Use only the specified O-ring seals as they are made of a special material for the R-134a system. Use only refrigerant oil of the type recommended for the A/C compressor in the vehicle.
9. Install the A/C discharge line (3) and the A/C suction line (1) onto the A/C compressor (4).
10. Install the nuts (2) that secure the A/C discharge and suction lines to the A/C compressor. Tighten the nuts to 23 N·m (17 ft. lbs.).
11. Lower the vehicle.
12. Engage the plastic refrigerant line bracket to the upper front of the engine (Refer to 24 - Heating and Air Conditioning/Plumbing/LINE, A/C Discharge - Installation).

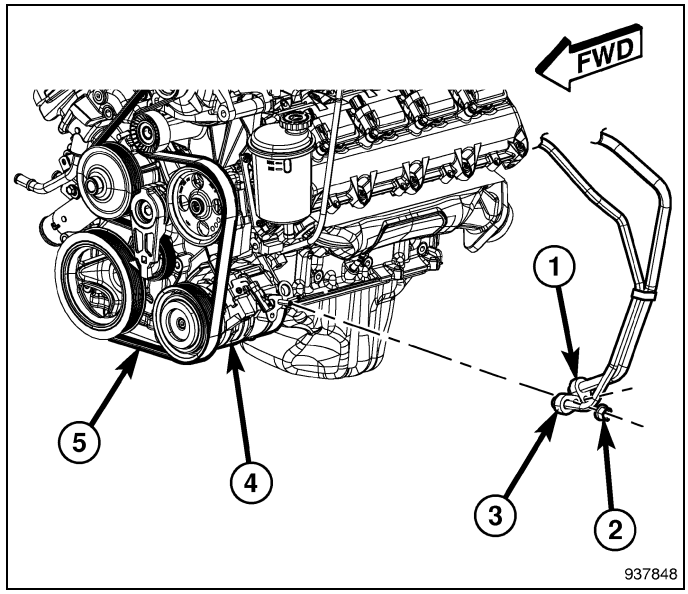

13. Install the accessory drive belt (5) (Refer to 07 - Cooling/Accessory Drive/BELT, Serpentine - Installation).
14. Reconnect the negative battery cable.
15. Evacuate and charge the refrigerant system (Refer to 24 - Heating and Air Conditioning/Plumbing - Standard Procedure).

CONDENSER, A/C

Description

The A/C condenser (1) is located at the front of the engine compartment, behind the grille. The A/C condenser is a heat exchanger that allows the high-pressure refrigerant gas being discharged by the A/C compressor to give up its heat to the air passing over the condenser fins, which causes the refrigerant to cool and change to a liquid state.

CAUTION: The A/C condenser must be replaced if an internal failure of the A/C compressor has occurred. Failure to replace the A/C condenser can cause serious damage to the replacement A/C compressor (Refer to 24 - Heating and Air Conditioning/Plumbing/CONDENSER, A/C - Removal).

The A/C condenser has integral mounting tabs, integral A/C receiver/drier (2), tapping blocks for the A/C refrigerant lines (3 and 4) and a tapping block for the integral automatic transmission cooler (5), when equipped.

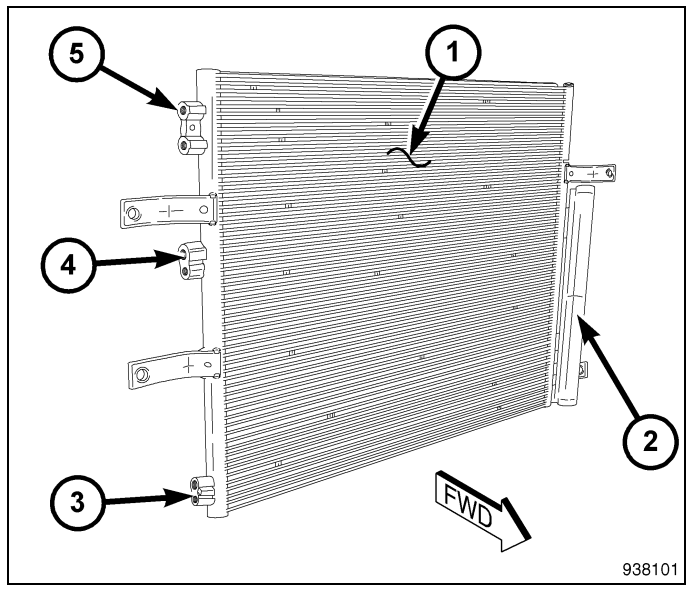

Operation

When air passes through the fins of the A/C condenser, the high-pressure refrigerant gas within the A/C condenser gives up its heat. The refrigerant then condenses as it leaves the A/C condenser and becomes a high-pressure liquid. The volume of air flowing over the condenser fins is critical to the proper cooling performance of the A/C system. Therefore, it is important that there are no objects placed in front of the radiator grille openings at the front of the vehicle or foreign material on the condenser fins that might obstruct proper air flow. Also, any factory-installed air seals or shrouds must be properly reinstalled following radiator or A/C condenser service.

NOTE: Replacement of the refrigerant line O-ring seals and gaskets is required anytime a refrigerant line is disconnected. Failure to replace the rubber O-ring seals and metal gaskets could result in a refrigerant system leak.

The A/C condenser has no serviceable parts except for the O-ring seals and gaskets. The O-ring seals used on the connections are made from a special type of rubber not affected by R-134a refrigerant. The O-ring seals and gaskets must be replaced whenever a refrigerant line is disconnected from the A/C condenser.

The A/C condenser cannot be repaired and must be replaced if leaking or damaged.

Removal

WARNING: Refer to the applicable Warnings and Cautions for this system before performing the following operation (Refer to 24 - Heating and Air Conditioning/Plumbing - Warning) and (Refer to 24 - Heating and Air Conditioning/Plumbing - Caution). Failure to follow these instructions may result in possible serious or fatal injury.

NOTE: 4.7L model shown. 3.7L and 5.7L models similar.

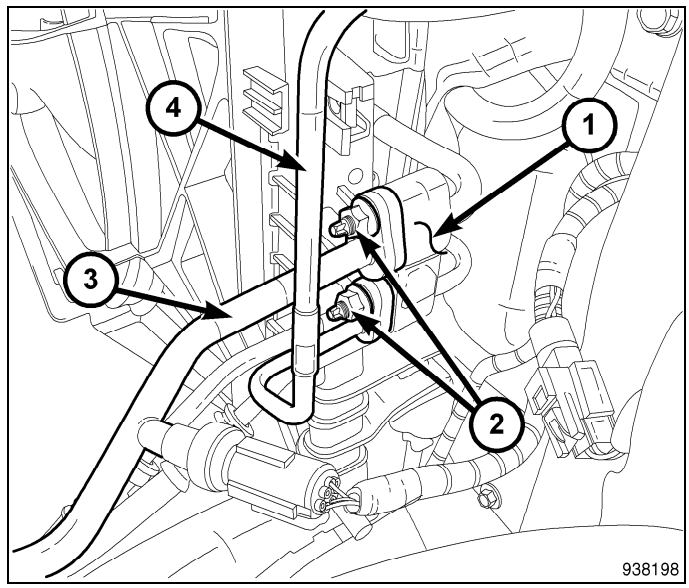

1. Disconnect and isolate the negative battery cable.
2. Recover the refrigerant from the refrigerant system (Refer to 24 - Heating and Air Conditioning/Plumbing - Standard Procedure).
3. Drain the engine cooling system (Refer to 07 - Cooling - Standard Procedure).
4. If equipped, disconnect the automatic transmission cooler lines from the transmission cooler jumper lines located near the right side of the radiator (Refer to 07 - Cooling/Transmission/TUBES AND HOSES, Transmission Oil Cooler - Standard Procedure).
5. Remove the nuts (2) that secure the A/C discharge line (3) and the A/C liquid line (4) to the condenser jumper line tapping block (1).
6. Disconnect the A/C discharge and liquid lines from the condenser jumper line tapping block and remove and discard the O-ring seals and gaskets.
7. Install plugs in, or tape over the opened refrigerant line fittings and jumper line ports.

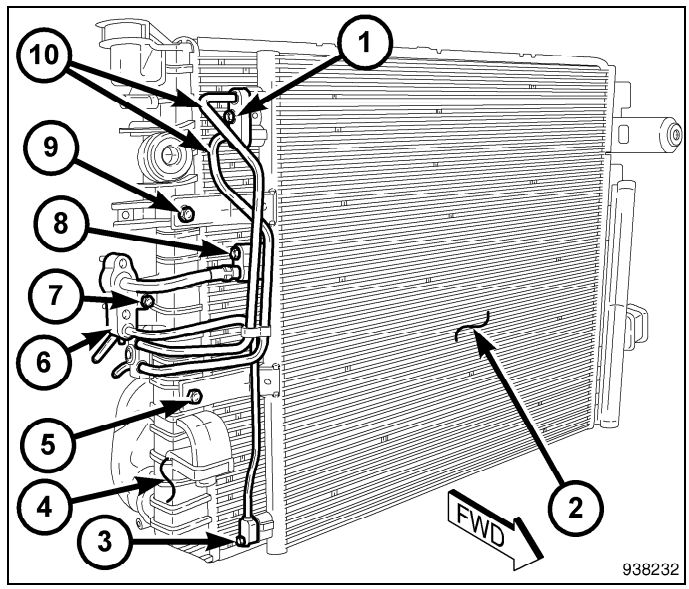

8. Remove the radiator (4) and A/C condenser (2) as an assembly from the vehicle and place them on a workbench (Refer to 07 - Cooling/Engine/RADIATOR, Engine Cooling - Removal).
9. If equipped, remove the bolt (1) that secures the automatic transmission cooler jumper lines (10) to the transmission cooler tapping block and disconnect the jumper lines. Remove and discard the O-ring seals and install plugs in the transmission cooler ports.
10. Remove the bolt (7) that secures the condenser jumper line tapping block (6) to the radiator.
11. Remove the bolts (3 and 8) that secure the discharge jumper line and liquid jumper line to the A/C condenser.
12. Disconnect the discharge and liquid jumper lines from the A/C condenser and remove and discard the O-ring seals and gaskets.
13. Install plugs in, or tape over the opened jumper line fittings and condenser ports.
14. Remove the two bolts (5 and 9) that secure the A/C condenser to the right side of the radiator.

15. Disengage the two condenser mounting brackets (2) from the left side of the radiator (1) and remove the A/C condenser (3).

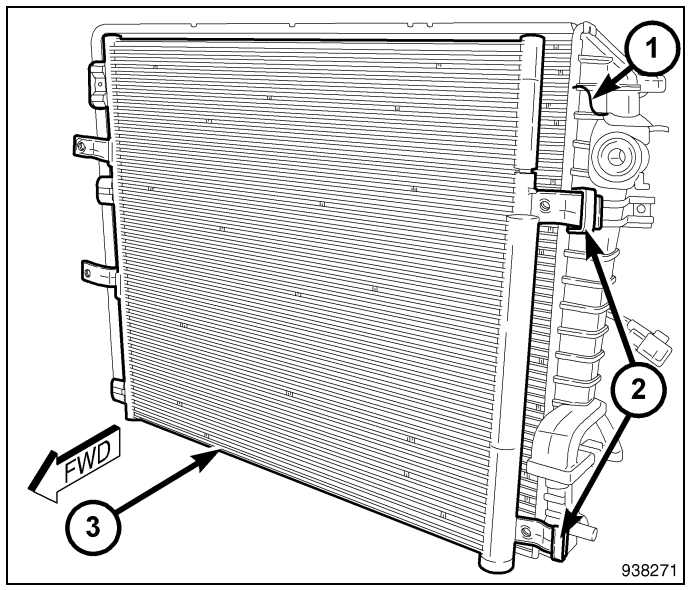

Installation

CAUTION: Be certain to adjust the refrigerant oil level when servicing the A/C refrigerant system (Refer to 24 - Heating and Air Conditioning/Plumbing/OIL, Refrigerant - Standard Procedure). Failure to properly adjust the refrigerant oil level will prevent the A/C system from operating as designed and can cause serious A/C compressor damage.

NOTE: When replacing multiple A/C system components, refer to the Refrigerant Oil Capacities chart to determine how much oil should be added to the refrigerant system(Refer to 24 - Heating and Air Conditioning/Plumbing/OIL, Refrigerant - Standard Procedure).

NOTE: If the A/C condenser is being replaced, add 30 milliliters (1 fluid ounce) of refrigerant oil to the refrigerant system. Use only refrigerant oil of the type recommended for the A/C compressor in the vehicle.

NOTE: Replacement of the refrigerant line O-ring seals and gaskets is required anytime a refrigerant line is disconnected. Failure to replace the rubber O-ring seals and metal gaskets could result in a refrigerant system leak.

NOTE: Be certain that each of the radiator and condenser air seals are installed in their proper locations. These air seals are required for the A/C and engine cooling systems to perform as designed.

1. Position the A/C condenser (3) to the front of the radiator (1) and engage the two condenser mounting brackets (2) to the radiator.

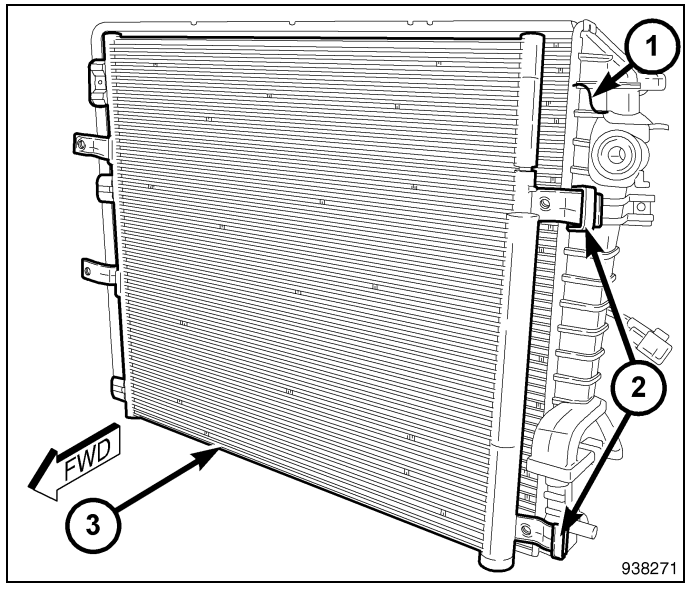

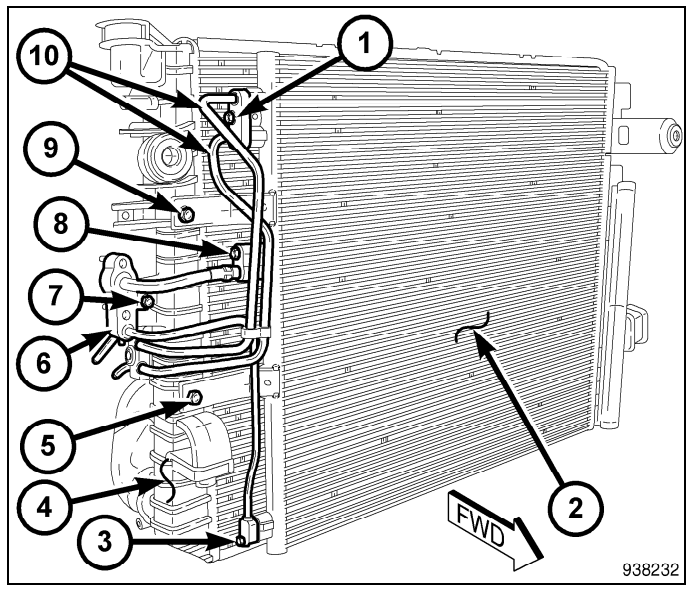

2. Install the two bolts (5 and 9) that secure the A/C condenser (2) to the right side of the radiator (4). Tighten the bolts to 2.2 N·m (20 in. lbs.).
3. Remove the plugs or tape from the opened jumper line fittings and condenser ports.
4. Lubricate new O-ring seals with clean refrigerant oil and install them and new gaskets onto the jumper line fittings. Use only the specified O-ring seals as they are made of a special material for the R-134a system. Use only refrigerant oil of the type recommended for the A/C compressor in the vehicle.
5. Connect the discharge and liquid jumper lines to the A/C condenser and install the bolts (3 and 8). Tighten the bolts to 23 N·m (17 ft. lbs.).
6. Install the bolt (7) that secures the condenser jumper line tapping block (6) to the radiator. Tighten the bolt securely.
7. If equipped, remove the plugs from the transmission cooler ports and using new O-ring seals, install the automatic transmission cooler jumper lines (10) to the transmission cooler tapping block and install the bolt (1). Tighten the bolt securely.

NOTE: 4.7L model shown. 3.7L and 5.7L models similar.

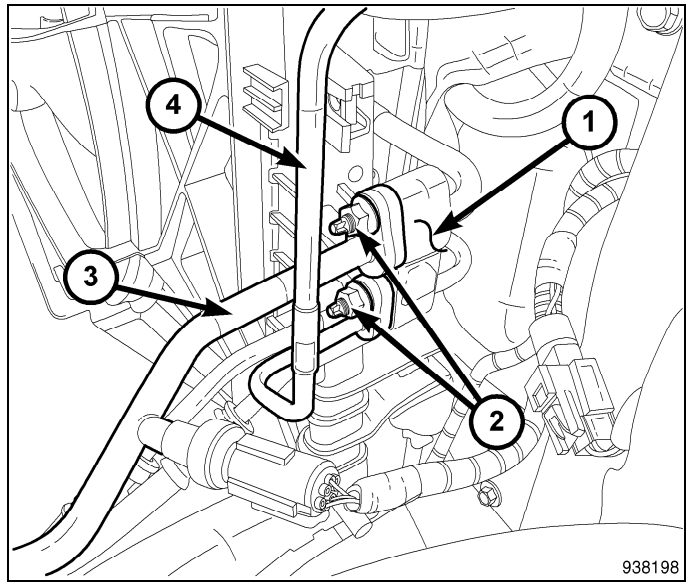

8. Install the radiator and A/C condenser as an assembly (Refer to 07 - Cooling/Engine/RADIATOR, Engine Cooling - Installation).
9. If equipped, connect the automatic transmission cooler lines to the transmission cooler jumper lines (Refer to 07 - Cooling/Transmission/TUBES AND HOSES, Transmission Oil Cooler - Standard Procedure).
10. Remove the plugs or tape from the opened refrigerant line fittings and condenser jumper line ports.
11. Lubricate new O-ring seals with clean refrigerant oil and install them and new gaskets onto the refrigerant line fittings. Use only the specified O-ring seals as they are made of a special material for the R-134a system. Use only refrigerant oil of the type recommended for the A/C compressor in the vehicle.
12. Connect the A/C discharge line (3) and A/C liquid line (4) to the condenser jumper line tapping block (1) and install the nuts (2). Tighten the nuts to 23 N·m (17 ft. lbs.).
13. Reconnect the negative battery cable.
14. Refill the engine cooling system (Refer to 07 - Cooling - Standard Procedure).
15. If equipped, check and adjust the automatic transmission fluid level (Refer to 21 - Transmission and Transfer Case/ Automatic - 42RLE/FLUID and FILTER - Standard Procedure) or (Refer to 21 - Transmission and Transfer Case/ Automatic - 545RFE/FLUID and FILTER - Standard Procedure).
16. Evacuate the refrigerant system (Refer to 24 - Heating and Air Conditioning/Plumbing - Standard Procedure).
17. If the A/C condenser is being replaced, add 30 milliliters (1 fluid ounce) of refrigerant oil to the refrigerant system. When replacing multiple A/C system components, refer to the Refrigerant Oil Capacities chart to determine how much oil should be added to the refrigerant system (Refer to 24 - Heating and Air Conditioning/Plumbing/OIL, Refrigerant - Standard Procedure). Use only refrigerant oil of the type recommended for the A/C compressor in the vehicle.
18. Charge the refrigerant system (Refer to 24 - Heating and Air Conditioning/Plumbing - Standard Procedure).

CORE, Heater

Description

The heater core (1) is a heat exchanger made of rows of tubes and fins and is located at the front of the HVAC housing. The heater core tubes (2) are attached to the front of the heater core and are secured to the HVAC housing by a flange.

The heater core can be serviced by removing the HVAC housing assembly from the vehicle.

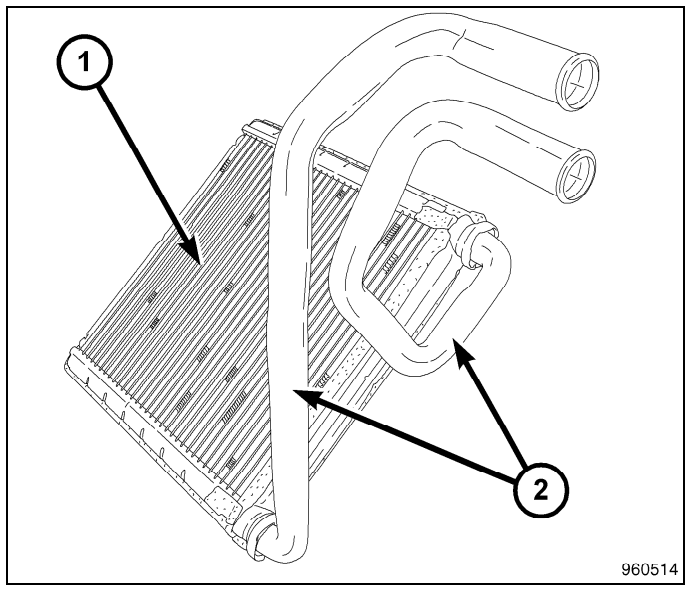

Operation

Engine coolant is circulated through the heater hoses to the heater core at all times. As the coolant flows through the heater core, heat is removed from the engine and is transferred to the heater core tubes and fins. Air directed through the heater core picks up the heat from the heater core fins. The blend-air door(s) allows control of the heater output air temperature by regulating the amount of air flowing through the heater core. The blower motor speed controls the volume of air flowing through the HVAC housing.

The heater core cannot be repaired and must be replaced if restricted, leaking or damaged.

Removal

WARNING: Disable the airbag system before attempting any steering wheel, steering column or instrument panel component diagnosis or service. Disconnect and isolate the negative battery (ground) cable, then wait two minutes for the airbag system capacitor to discharge before performing further diagnosis or service. This is the only sure way to disable the airbag system. Failure to follow these instructions may result in accidental airbag deployment and possible serious or fatal injury.

NOTE: Disassembly of the HVAC housing is not required to remove heater core.

1. Remove the HVAC housing (4) and place it on a workbench (Refer to 24 - Heating and Air Conditioning/Distribution/HOUSING, HVAC - Removal).
2. Remove the foam seal (1) from the flange (2).
3. Remove the two screws (3) that secure the flange to the front of the HVAC housing.
4. Carefully disengage the retaining tab that secures the flange to the HVAC housing and remove the flange.

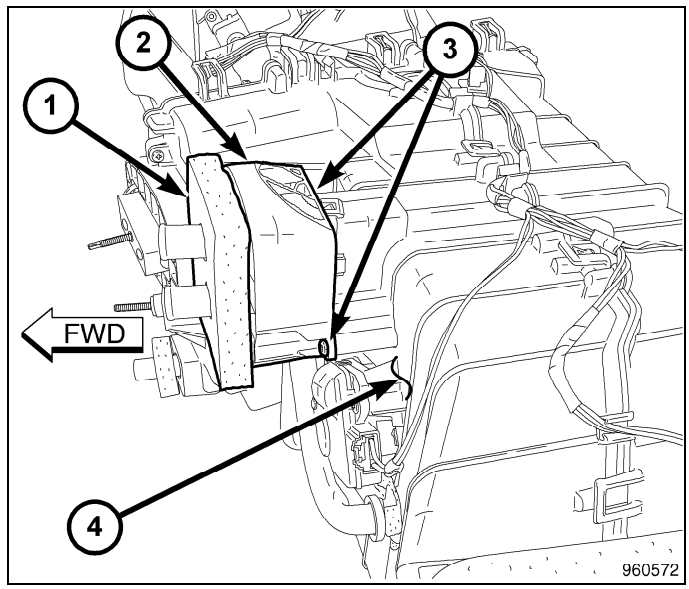

5. Carefully pull the heater core (2) out of the front of the HVAC housing (1).
6. Inspect all foam seals and replace as required.

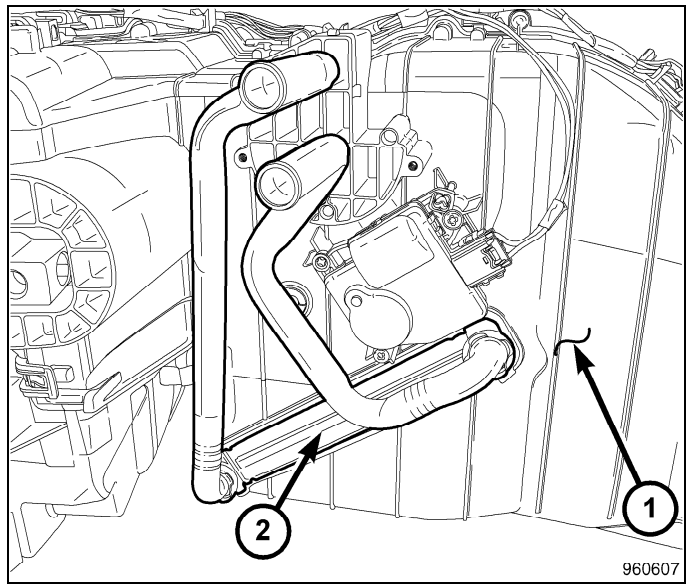

Installation

NOTE: If the foam seals on the heater core are deformed or damaged, they must be replaced.

1. Inspect the foam seals on the heater core (2) and replace as required.
2. Carefully install the heater core into the front of the HVAC housing (1).

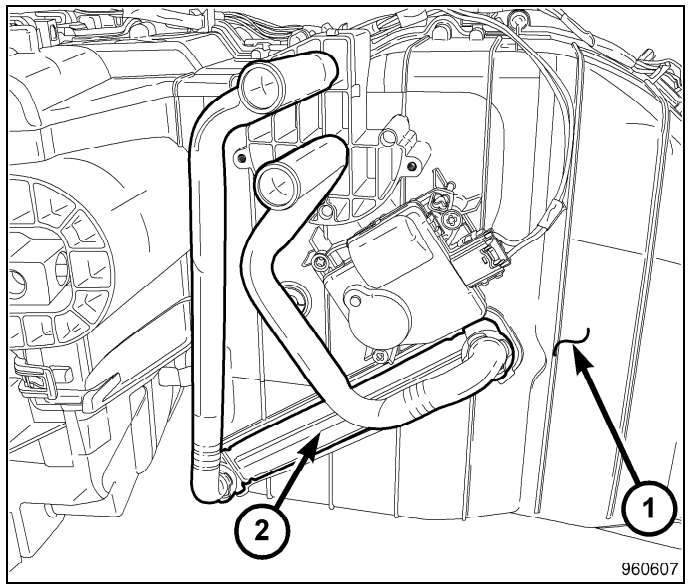

3. Position the flange (2) onto the front of the HVAC housing (4). Make sure the retaining tab is fully engaged.
4. Install the two screws (3) that secure the flange to the HVAC housing. Tighten the screws to 1.1 N·m (10 in. lbs.).
5. Install the foam seal (1) onto the flange.

NOTE: If the heater core is being replaced, flush the cooling system (Refer to 07 - Cooling - Standard Procedure).

6. Install the HVAC housing (Refer to 24 - Heating and Air Conditioning/Distribution/HOUSING, HVAC - Installation).

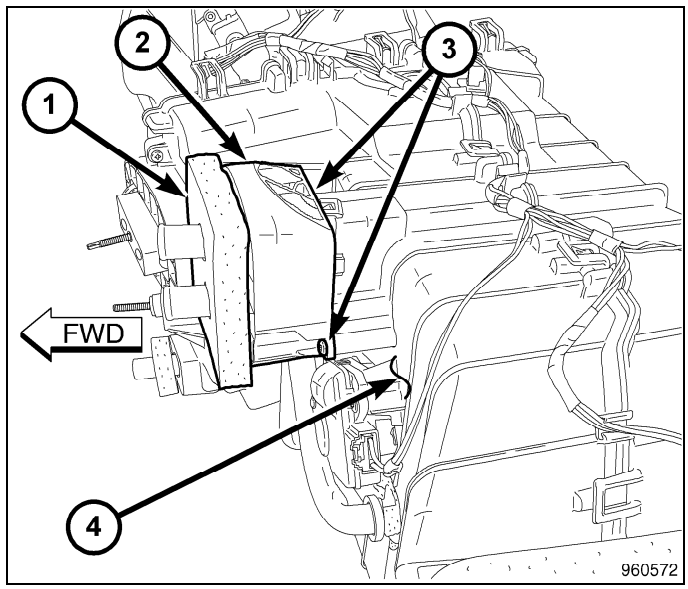

CORE, Service Port Valve

Description

Two refrigerant system service ports are used to recover/recycle/evacuate/charge and test the A/C refrigerant system. Unique sizes are used on the service ports for the R-134a refrigerant system to ensure the system is not accidentally contaminated with R-12 refrigerant or service equipment used for R-12 refrigerant.

The high side service port is located on the A/C liquid line. The low side service port is located on the A/C suction line. Both the high side and low side A/C service port valve cores are serviceable.

Each of the service ports has a threaded plastic protective cap installed over it from the factory. After servicing the refrigerant system, always reinstall both of the service port caps.

An A/C pressure transducer is mounted on the A/C discharge line to monitor the high side A/C system pressures (Refer to 24 - Heating and Air Conditioning/Controls/TRANSDUCER, A/C Pressure - Description).

Removal

WARNING: Refer to the applicable warnings and cautions for this system before performing the following operation (Refer to 24 - Heating and Air Conditioning/Plumbing - Warning) and (Refer to 24 - Heating and Air Conditioning/Plumbing - Caution). Failure to follow these instructions may result in serious or fatal injury.

NOTE: Typical A/C service port shown.

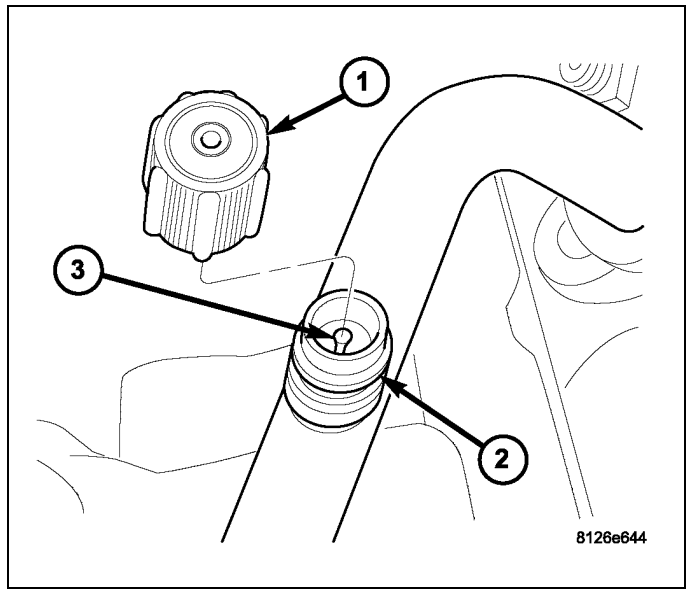

1. Remove the protective cap (1) from the service port (2).
2. Recover the refrigerant from the refrigerant system (Refer to 24 - Heating and Air Conditioning/Plumbing - Standard Procedure).
3. Using a Schrader-type valve core tool, remove the valve core (3) from the service port.
4. Install a plug in, or tape over the opened service port(s).

Installation

NOTE: Typical A/C service port shown.

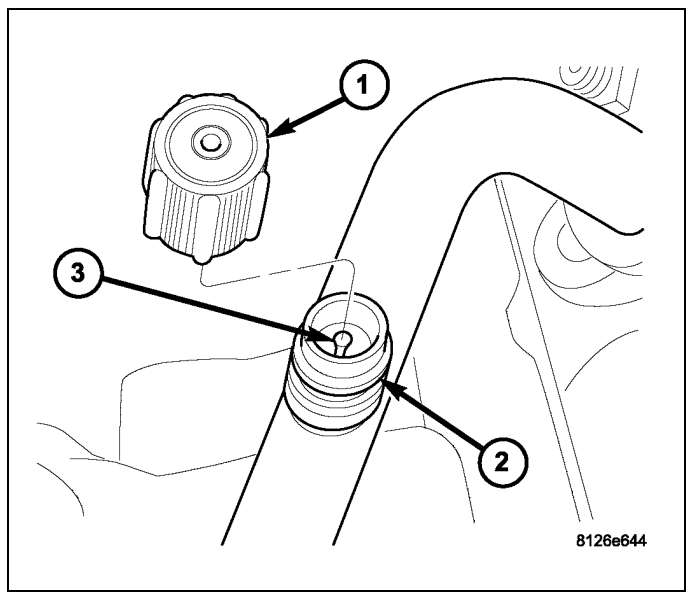

1. Lubricate the valve core (3) with clean refrigerant oil prior to installation. Use only refrigerant oil of the type recommended for the A/C compressor in the vehicle.
2. Remove the tape or plug from the service port (2).

CAUTION: Damage may result to a service port valve core if the valve core is not fully seated in the A/C service port. Such damage can result in a loss of refrigerant.

3. Install and tighten the valve core into the service port(s) using a Schrader type valve core tool.
4. Evacuate and charge the refrigerant system (Refer to 24 - Heating and Air Conditioning/Plumbing - Standard Procedure).

NOTE: The protective cap helps aid in service port sealing and helps protect the refrigerant system from contamination. Remember to always reinstall the protective cap onto the service port when refrigerant system service is complete.

5. Install the protective cap (1) onto the service port.

DRIER, A/C Receiver

Description

The A/C receiver/drier (1) stores unnecessary refrigerant, filters the refrigerant, helps remove moisture from the refrigerant and retains any refrigerant vapor that may leave the A/C condenser (2) until it becomes a liquid. The A/C receiver/drier is on the high-side of the A/C system and is located on the left side of the A/C condenser. The A/C receiver/drier is integral to the A/C condenser and must be replaced with the condenser as an assembly.

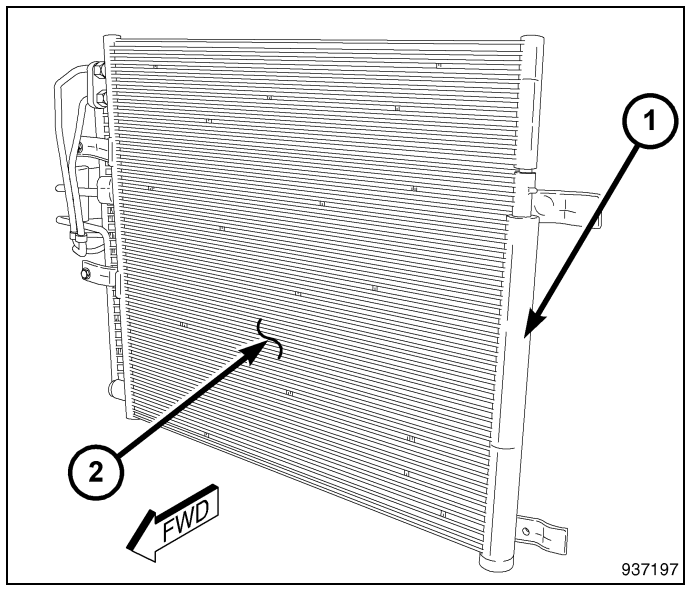

Operation

The A/C receiver/drier performs a filtering action to prevent foreign material that may be in the refrigerant from contaminating the A/C expansion valve and the A/C compressor. Refrigerant enters the A/C receiver/drier as a high-pressure, low temperature liquid. Desiccant inside the A/C receiver/drier absorbs any moisture which may have entered and become trapped within the refrigerant system. In addition, during periods of high demand operation of the A/C system, the A/C receiver/drier acts as a reservoir to store surplus refrigerant.

The A/C receiver/drier is integral to the A/C condenser and has no serviceable parts.

The A/C receiver/drier cannot be repaired and the A/C condenser must be replaced if the receiver/drier is leaking or damaged, or if an internal failure of the A/C compressor has occurred (Refer to 24 - Heating and Air Conditioning/Plumbing/CONDENSER, A/C - Removal).

EVAPORATOR, A/C

Description

The A/C evaporator (1) for the heating-A/C system is located within the HVAC housing, behind the instrument panel. The A/C evaporator and insulator (2) are positioned in the HVAC housing so that all air entering the housing must pass over the evaporator fins before it is distributed through the heating-A/C system ducts and outlets. However, air passing over the evaporator fins will only be conditioned when the A/C compressor is engaged and circulating refrigerant through the A/C evaporator. The A/C expansion valve is attached directly to the evaporator inlet and outlet ports (3) and the connections are sealed by O-rings.

The A/C evaporator can be serviced by removing and partially disassembling the HVAC housing.

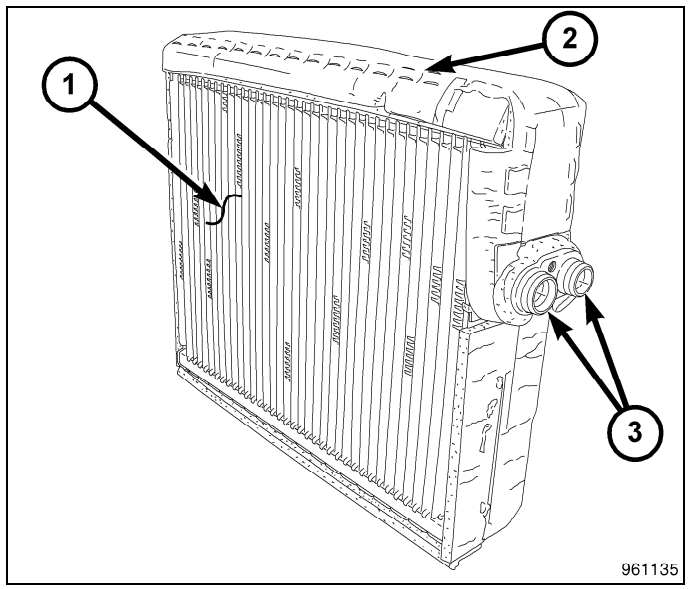

Operation

Refrigerant enters the A/C evaporator from the A/C expansion valve as a low-temperature, low-pressure mixture of liquid and gas. As air flows over the fins of the A/C evaporator, the humidity in the air condenses on the fins, and the heat from the air is absorbed by the refrigerant. Heat absorption causes the refrigerant to boil and vaporize. The refrigerant becomes a low-pressure gas when it leaves the A/C evaporator.

NOTE: Replacement of the refrigerant line O-ring seals and gaskets is required anytime a refrigerant line or expansion valve is disconnected. Failure to replace the rubber O-ring seals and metal gaskets could result in a refrigerant system leak.

The A/C evaporator has no serviceable parts except for the O-ring seals. The O-ring seals used on the connections are made from a special type of rubber not affected by R-134a refrigerant. The O-ring seals must be replaced whenever the A/C expansion valve is removed from the A/C evaporator.

The A/C evaporator cannot be repaired and must be replaced if leaking or damaged.

Removal

1. Remove the HVAC housing and place it on a workbench (Refer to 24 - Heating and Air Conditioning/Distribution/HOUSING, HVAC - Removal).
2. Disconnect the HVAC wiring harness (1) from the recirculation door actuator (2), power module or blower resister (3) (depending on application) and the blower motor (4).
3. Disengage the HVAC wiring harness from the two retaining clips (5) and position the harness out of the way.

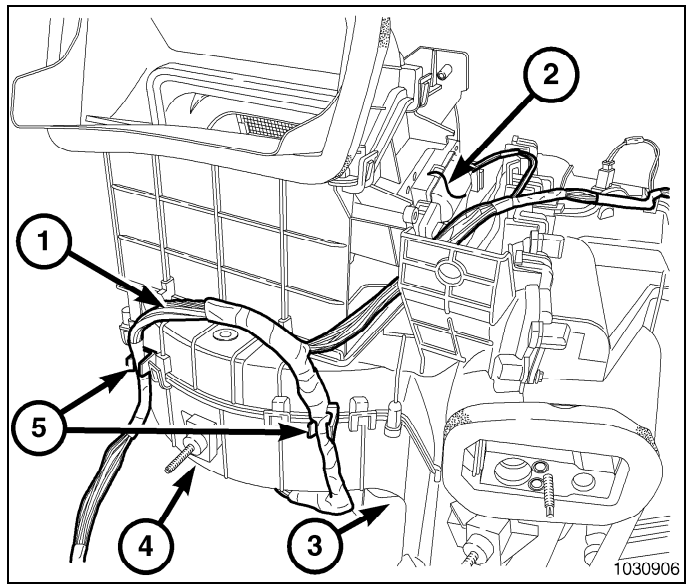

NOTE: If the foam seal is deformed or damaged, the seal must be replaced.

4. Remove the foam seal (1) from the front of the HVAC housing (2).
5. Remove the two bolts (4) that secure the A/C expansion valve (5) to the evaporator tube tapping block (3) and remove the valve.

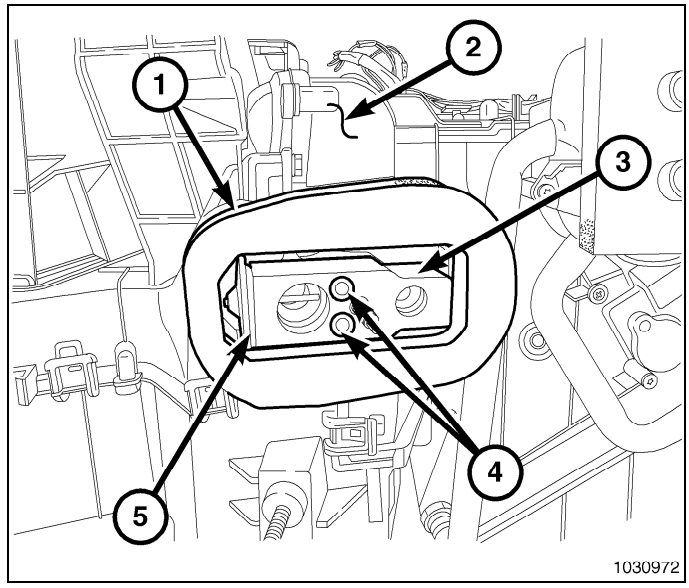

6. Remove the three screws (2 and 5) that secure the blower motor and evaporator housing (6) to the HVAC housing (3).
7. Carefully disengage the nine retaining tabs (1 and 4) that secure the blower motor and evaporator housing the HVAC housing.
8. Carefully separate the blower motor and evaporator housing from the HVAC housing

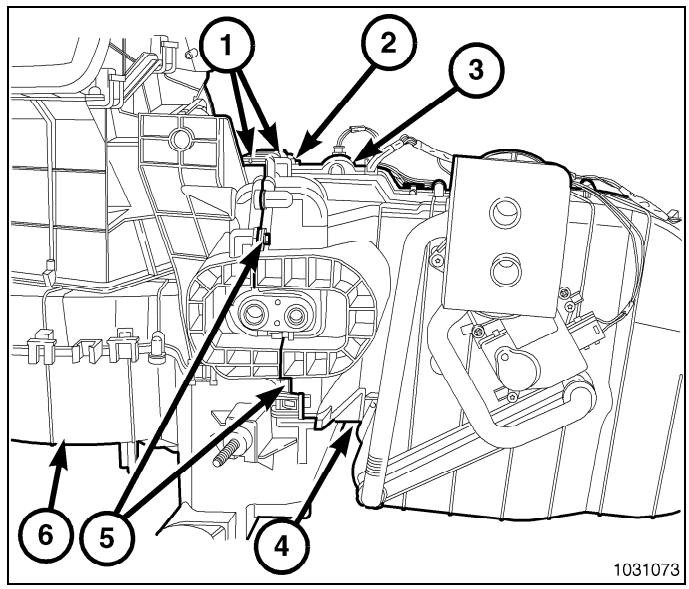

NOTE: If the foam insulator around the A/C evaporator is deformed or damaged, the insulator must be replaced.

9. Remove the A/C evaporator (1) from the blower motor and evaporator housing (2).
10. If the A/C evaporator is going to be reused, remove and discard the O-ring seals from the evaporator fittings and install plugs into, or tape over the evaporator ports.

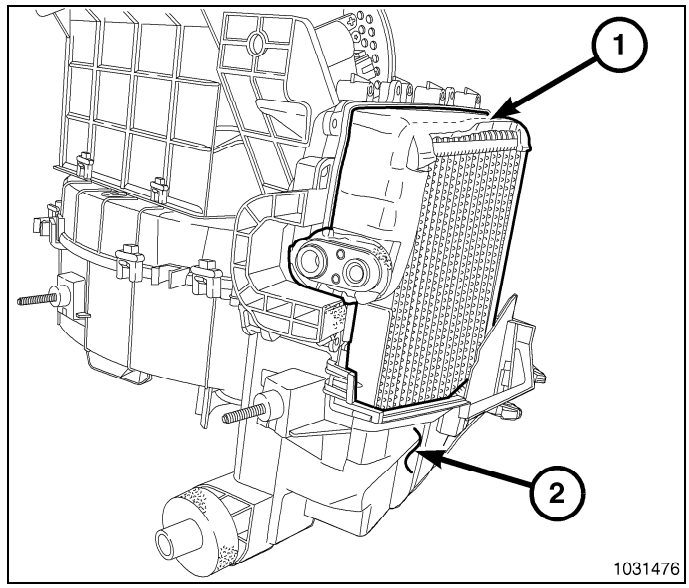

Installation

CAUTION: Be certain to adjust the refrigerant oil level when servicing the A/C refrigerant system (Refer to 24 - Heating and Air Conditioning/Plumbing/OIL, Refrigerant - Standard Procedure). Failure to properly adjust the refrigerant oil level will prevent the A/C system from operating as designed and can cause serious A/C compressor damage.

NOTE: When replacing multiple A/C system components, refer to the Refrigerant Oil Capacities chart to determine how much oil should be added to the refrigerant system(Refer to 24 - Heating and Air Conditioning/Plumbing/OIL, Refrigerant - Standard Procedure).

NOTE: If the A/C evaporator is being replaced, add 60 milliliters (2 fluid ounces) of refrigerant oil to the refrigerant system. Use only refrigerant oil of the type recommended for the A/C compressor in the vehicle.

NOTE: Replacement of the O-ring seals is required anytime the A/C expansion valve is removed from the A/C evaporator. Failure to replace the rubber O-ring seals may result in a refrigerant system leak.

NOTE: If the foam insulator around the A/C evaporator is deformed or damaged, the insulator must be replaced.

1. Carefully install the A/C evaporator (1) into the blower motor and evaporator housing (2).

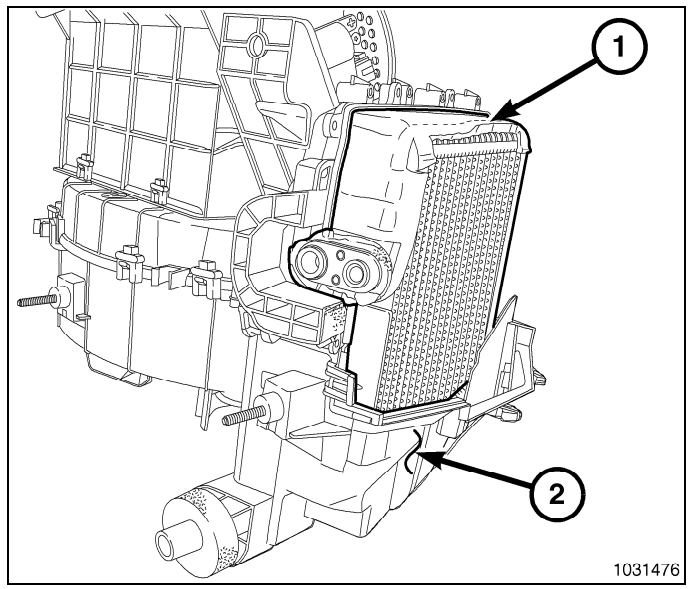

2. Carefully install the blower motor and evaporator housing (6) onto the HVAC housing (3). Align the dowel pins to the holes in the housing.
3. Carefully engage the nine retaining tabs (1 and 4). Make sure the retaining tabs are fully engaged.
4. Install the three screws (2 and 5) that secure the blower motor and evaporator housing to the HVAC housing. Tighten the screws to 1.1 N·m (10 in. lbs.).

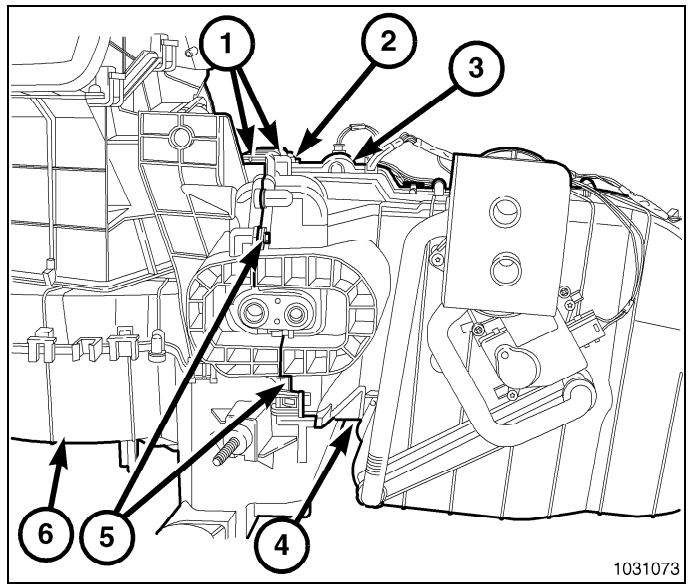

5. Remove the tape or plugs from the evaporator tube fittings.
6. Lubricate new O-ring seals with clean refrigerant oil and install them onto the evaporator tube fittings. Use only the specified O-ring seals as they are made of a special material for the R-134a system. Use only refrigerant oil of the type recommended for the A/C compressor in the vehicle.
7. Install the A/C expansion valve (5) onto the evaporator tube tapping block (3).
8. Install the two bolts (4) that secure the A/C expansion valve to the evaporator tube tapping block. Tighten the bolts to 11 N·m (97 in. lbs.).

NOTE: If the foam seal is deformed or damaged, the seal must be replaced.

9. Install the foam seal (1) onto the HVAC housing (2).

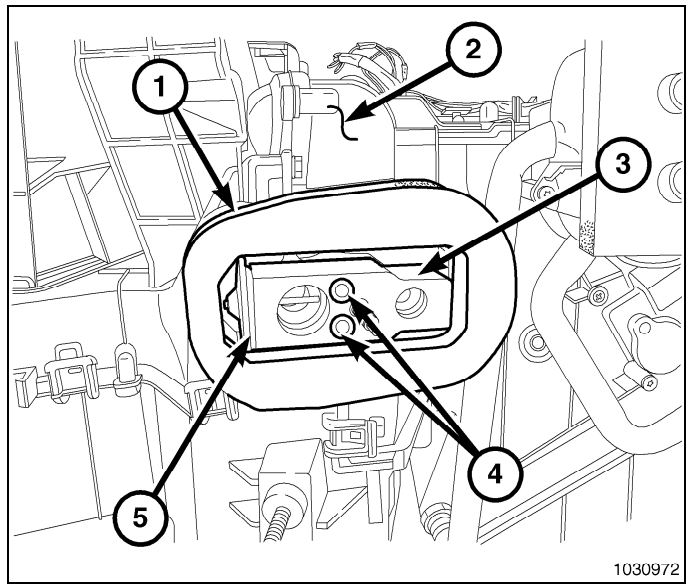

10. Connect the HVAC wiring harness (1) to the recirculation door actuator (2), power module or blower resister (3) (depending on application) and the blower motor (4).
11. Engage the HVAC wiring harness to the two retaining clips (5). Make sure the wire harness is fully engaged to the retaining clips.
12. Install the HVAC housing (Refer to 24 - Heating and Air Conditioning/Distribution/HOUSING, HVAC - Installation).
13. If the A/C evaporator is being replaced, add 60 milliliters (2 fluid ounces) of refrigerant oil to the refrigerant system. When replacing multiple A/C system components, refer to the Refrigerant Oil Capacities chart to determine how much oil should be added to the refrigerant system (Refer to 24 - Heating and Air Conditioning/Plumbing/OIL, Refrigerant - Standard Procedure). Use only refrigerant oil of the type recommended for the A/C compressor in the vehicle.

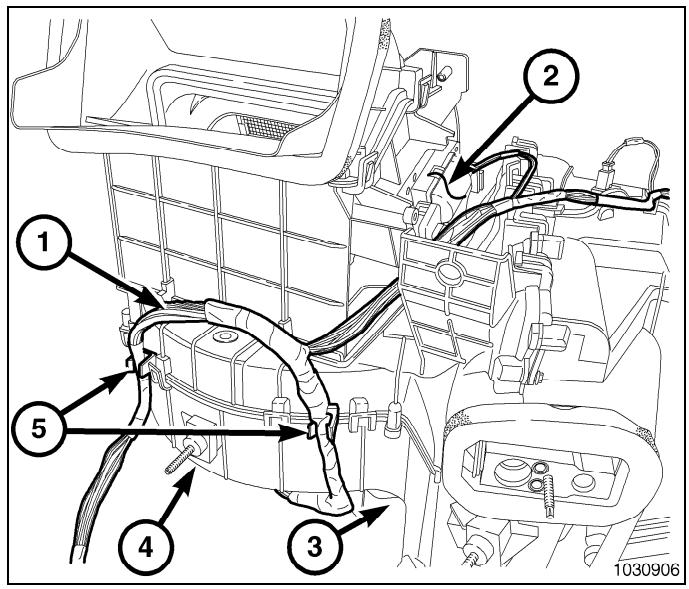

LINE, A/C Discharge

Description

The A/C discharge line carries refrigerant vapor from the A/C compressor to the A/C condenser. The A/C discharge line is made from light-weight aluminum tubing with braze-less fittings and a nylon tube with a rubber barrier hose and crimp type fittings (Refer to 24 - Heating and Air Conditioning/Plumbing - Description). The A/C discharge line has an integral fitting for the A/C pressure transducer (Refer to 24 - Heating and Air Conditioning/Controls/TRANSDUCER, A/C Pressure - Description).

NOTE: Replacement of the refrigerant line O-ring seals and gaskets is required anytime a refrigerant line is disconnected. Failure to replace the rubber O-ring seals and metal gaskets may result in a refrigerant system leak.

The A/C discharge line has no serviceable parts except the O-ring seals and gaskets. The O-ring seals used on the connections are made from a special type of rubber not affected by R-134a refrigerant. The O-ring seals and gaskets must be replaced whenever the A/C discharge line is disconnected.

The A/C discharge line cannot be repaired and must be replaced if leaking or damaged.

Removal

3.7L/4.7L ENGINES

WARNING: Refer to the applicable Warnings and Cautions for this system before performing the following operation (Refer to 24 - Heating and Air Conditioning/Plumbing - Warning) and (Refer to 24 - Heating and Air Conditioning/Plumbing - Caution). Failure to follow these instructions may result in possible serious or fatal injury.

NOTE: 4.7L engine shown. 3.7L engine similar.

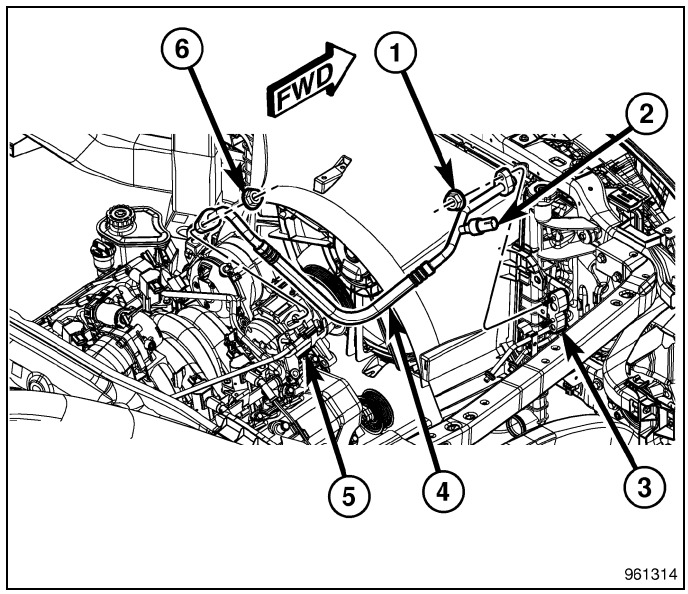

1. Disconnect and isolate the negative battery cable.
2. Recover the refrigerant from the refrigerant system (Refer to 24 - Heating and Air Conditioning/Plumbing - Standard Procedure).
3. Disconnect the wire harness connector from the A/C pressure transducer (2).
4. Remove the nut (1) that secures the A/C discharge line (4) to the condenser jumper line tapping block (3).
5. Disconnect the A/C discharge line from the A/C condenser and remove and discard the O-ring seal and gasket.
6. Remove the nut (6) that secures the A/C discharge line to the A/C compressor (5).
7. Disconnect the A/C discharge line from the A/C compressor and remove and discard the O-ring seal and gasket.
8. Install plugs in, or tape over the opened refrigerant line fittings and the compressor and condenser jumper line ports.
9. If necessary, remove the A/C pressure transducer from the A/C discharge line (Refer to 24 - Heating and Air Conditioning/Controls/TRANSDUCER, A/C Pressure - Removal).

5.7L ENGINE

WARNING: Refer to the applicable Warnings and Cautions for this system before performing the following operation (Refer to 24 - Heating and Air Conditioning/Plumbing - Warning) and (Refer to 24 - Heating and Air Conditioning/Plumbing - Caution). Failure to follow these instructions may result in possible serious or fatal injury.

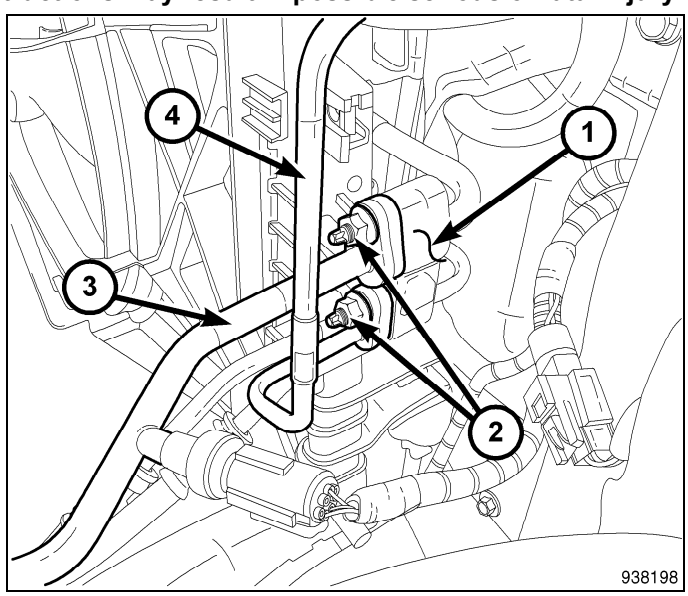

1. Disconnect and isolate the negative battery cable.
2. Recover the refrigerant from the refrigerant system (Refer to 24 - Heating and Air Conditioning/Plumbing - Standard Procedure).
3. Remove the nut (2) that secures the A/C discharge line (3) to the condenser jumper line tapping block (1).
4. Disconnect the A/C discharge line from the condenser jumper line tapping block.

5. Remove the nut (2) that secures the A/C discharge line (3) to the A/C compressor (4).
6. Disconnect the A/C discharge line from the A/C compressor.

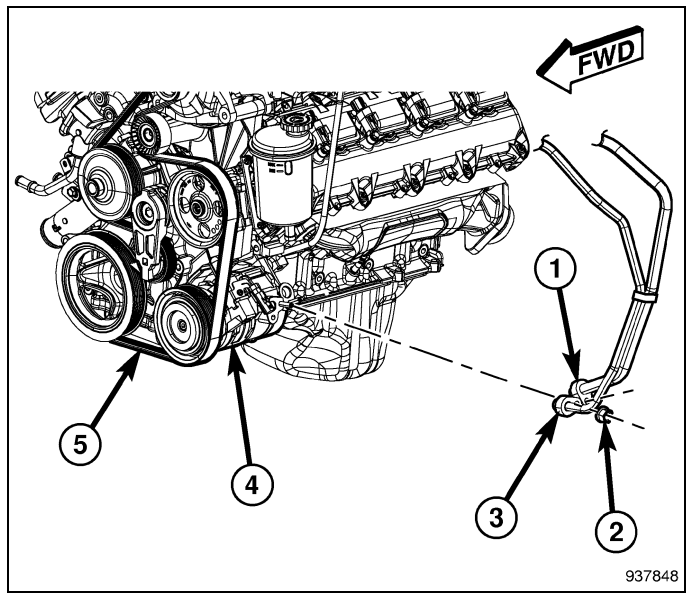

NOTE: Illustration shown with refrigerant lines removed for clarity.

7. Disconnect the wire harness connector from the A/C pressure transducer (4).
8. Remove the two plastic retaining brackets (2 and 3) that secure the A/C discharge line (5) to the A/C suction line (1) and to the upper front of the engine.
9. Remove the A/C discharge line from the engine compartment.
10. Remove and discard the O-ring seals and gaskets from the A/C discharge line and install plugs in, or tape over the opened discharge line fittings and the jumper line and compressor ports.
11. If necessary, remove the A/C pressure transducer from the A/C discharge line (Refer to 24 - Heating and Air Conditioning/Controls/TRANSDUCER, A/C Pressure - Removal).

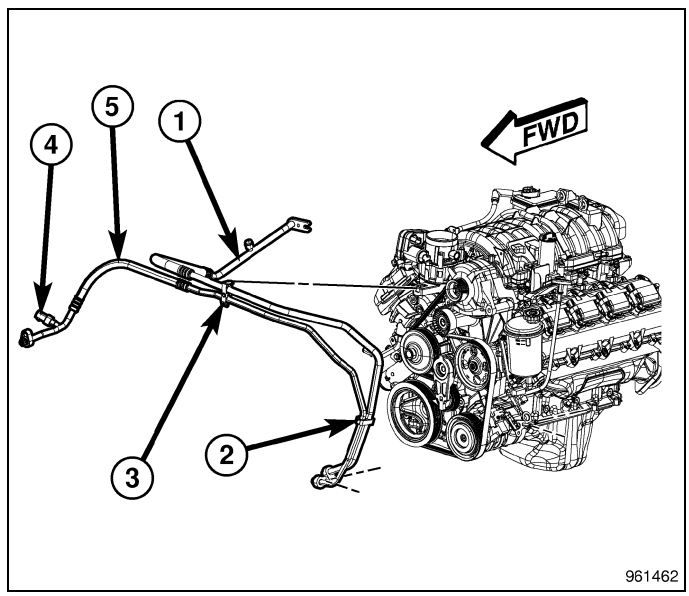

Installation

3.7L/4.7L ENGINES

CAUTION: Be certain to adjust the refrigerant oil level when servicing the A/C refrigerant system (Refer to 24 - Heating and Air Conditioning/Plumbing/OIL, Refrigerant - Standard Procedure). Failure to properly adjust the refrigerant oil level will prevent the A/C system from operating as designed and can cause serious A/C compressor damage.

NOTE: When replacing multiple A/C system components, refer to the Refrigerant Oil Capacities chart to determine how much oil should be added to the refrigerant system(Refer to 24 - Heating and Air Conditioning/Plumbing/OIL, Refrigerant - Standard Procedure).

NOTE: Replacement of the refrigerant line O-ring seals and gaskets is required anytime a refrigerant line is disconnected. Failure to replace the rubber O-ring seals and metal gaskets could result in a refrigerant system leak.

NOTE: 4.7L engine shown. 3.7L engine similar.

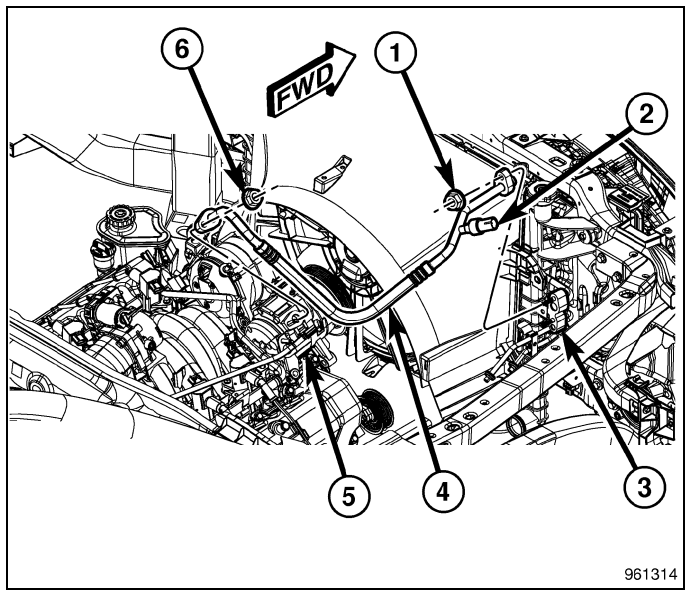

1. If removed, install the A/C pressure transducer (2) onto the A/C discharge line (4) (Refer to 24 - Heating and Air Conditioning/Controls/TRANSDUCER, A/C Pressure - Installation).
2. Remove the tape or plugs from the opened discharge line fitting and the compressor and condenser jumper line ports.
3. Lubricate new O-ring seals with clean refrigerant oil and install them and new gaskets onto the discharge line fitting. Use only the specified O-ring seals as they are made of a special material for the R-134a system. Use only refrigerant oil of the type recommended for the A/C compressor in the vehicle.
4. Connect the A/C discharge line to the condenser jumper line tapping block (3) and install the nut (1). Tighten the nut to 23 N·m (17 ft. lbs.).
5. Connect the A/C discharge line to the A/C compressor (5) and install the nut (6). Tighten the nut to 23 N·m (17 ft. lbs.).
6. Connect the wire harness connector to the A/C pressure transducer.
7. Reconnect the negative battery cable.
8. Evacuate the refrigerant system (Refer to 24 - Heating and Air Conditioning/Plumbing - Standard Procedure).
9. Adjust the refrigerant oil level (Refer to 24 - Heating and Air Conditioning/Plumbing/OIL, Refrigerant - Standard Procedure).
10. Charge the refrigerant system (Refer to 24 - Heating and Air Conditioning/Plumbing - Standard Procedure).

5.7L ENGINE

CAUTION: Be certain to adjust the refrigerant oil level when servicing the A/C refrigerant system (Refer to 24 - Heating and Air Conditioning/Plumbing/OIL, Refrigerant - Standard Procedure). Failure to properly adjust the refrigerant oil level will prevent the A/C system from operating as designed and can cause serious A/C compressor damage.

NOTE: When replacing multiple A/C system components, refer to the Refrigerant Oil Capacities chart to determine how much oil should be added to the refrigerant system (Refer to 24 - Heating and Air Conditioning/Plumbing/OIL, Refrigerant - Standard Procedure).

NOTE: Replacement of the refrigerant line O-ring seals and gaskets is required anytime a refrigerant line is disconnected. Failure to replace the rubber O-ring seals and metal gaskets could result in a refrigerant system leak.

NOTE: Illustration shown with refrigerant lines removed for clarity.

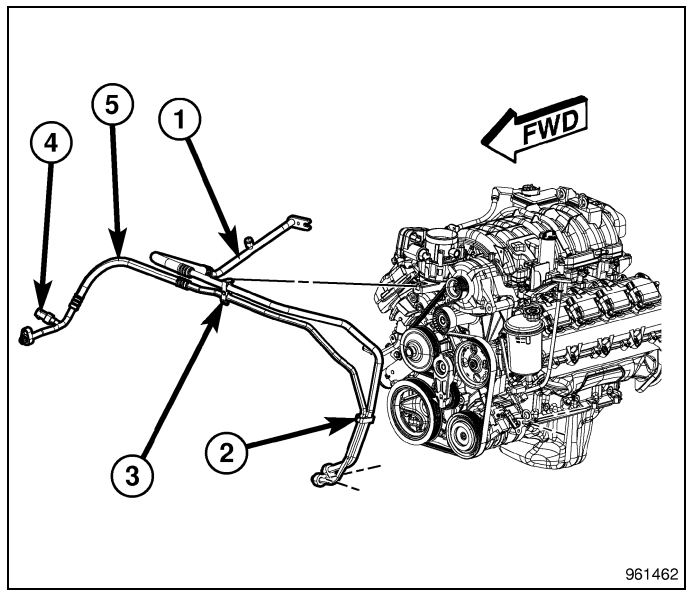

1. If removed, install the A/C pressure transducer (4) onto the A/C discharge line (3) (Refer to 24 - Heating and Air Conditioning/Controls/TRANSDUCER, A/C Pressure - Installation).
2. Remove the plugs or tape from the opened discharge line fittings and compressor and jumper line ports.
3. Lubricate new O-ring seals with clean refrigerant oil and install them and new gaskets onto the discharge line fittings. Use only the specified O-ring seals as they are made of a special material for the R-134a system. Use only refrigerant oil of the type recommended for the A/C compressor in the vehicle.
4. Position the A/C discharge line (5) into the engine compartment.
5. Install the two retaining brackets (2 and 3) that secure the A/C discharge line to the A/C suction line (1) and to the upper front of the engine.
6. Connect the wire harness connector to the A/C pressure transducer.
7. Connect the A/C discharge line (3) to the A/C compressor (4).
8. Install the nut (2) that secures the A/C discharge line to the A/C compressor. Tighten the nut to 23 N·m (17 ft. lbs.).

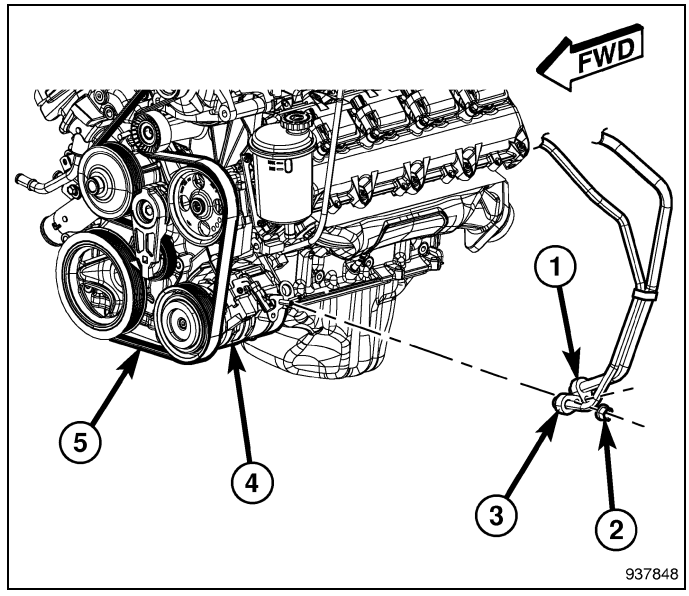

9. Connect the A/C discharge line to the condenser jumper line tapping block (1) and install the nut (2). Tighten the nut to 23 N·m (17 ft. lbs.).
10. Reconnect the negative battery cable.
11. Evacuate the refrigerant system (Refer to 24 - Heating and Air Conditioning/Plumbing - Standard Procedure).
12. Adjust the refrigerant oil level (Refer to 24 - Heating and Air Conditioning/Plumbing/OIL, Refrigerant - Standard Procedure).
13. Charge the refrigerant system (Refer to 24 - Heating and Air Conditioning/Plumbing - Standard Procedure).

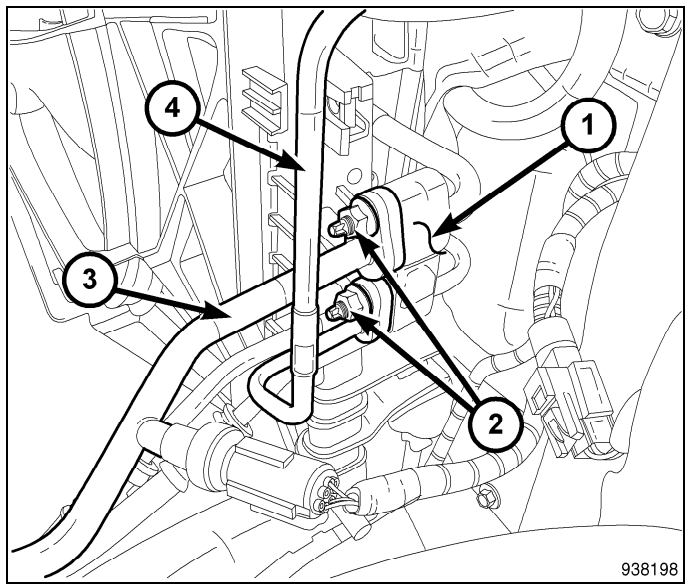

LINE, A/C Liquid

Description

The A/C liquid line carries refrigerant from the A/C condenser to the A/C expansion valve. The A/C liquid line is made from light-weight aluminum tubing with braze-less and crimp type fittings and includes the high-side service port.

NOTE: Replacement of the refrigerant line O-ring seals and gaskets is required anytime a refrigerant line is disconnected. Failure to replace the rubber O-ring seals and metal gaskets may result in a refrigerant system leak.

The A/C liquid line has no serviceable parts except for the O-ring seals, gaskets and high-side service port valve and cap. The O-ring seals used on the connections are made from a special type of rubber not affected by R-134a refrigerant. The O-ring seals and gaskets must be replaced whenever the A/C liquid line is disconnected.

The A/C liquid line cannot be repaired and must be replaced if leaking or damaged.

Removal

WARNING: Refer to the applicable warnings and cautions for this system before performing the following operation, (Refer to 24 - Heating and Air Conditioning/Plumbing - Warning) and (Refer to 24 - Heating and Air Conditioning/Plumbing - Caution). Failure to follow these instructions may result in serious or fatal injury.

1. Disconnect and isolate the negative battery cable.
2. Recover the refrigerant from the refrigerant system (Refer to 24 - Heating and Air Conditioning/Plumbing - Standard Procedure).
3. Remove the air filter housing and mounting bracket from the right side of the engine compartment (Refer to 09 - Engine/Air Intake System/BODY, Air Cleaner - Removal).
4. Remove the nut (2) that secures the A/C liquid line (4) from the condenser jumper line tapping block (1).
5. Disconnect the A/C liquid line from the condenser jumper line tapping block and remove and discard the O-ring seal and gasket.
6. Install plugs in, or tape over the opened refrigerant line fitting and jumper line port.

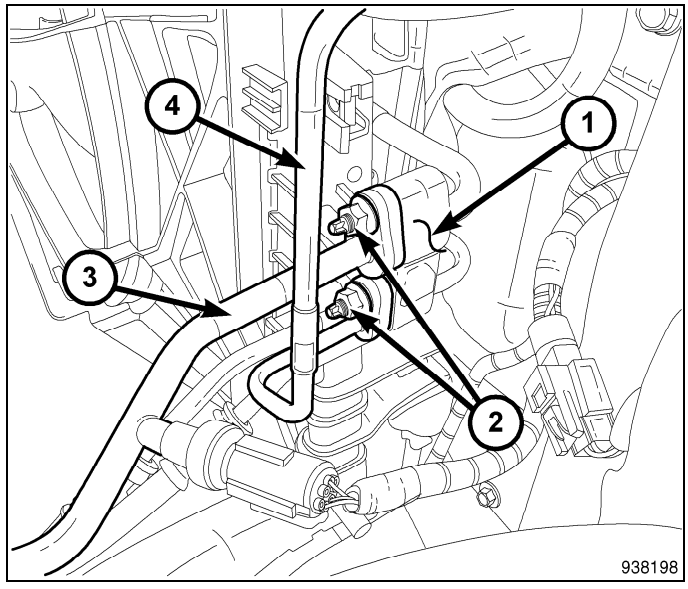

7. Remove the nut (1) that secures the A/C liquid line (2) and A/C suction line (3) to the A/C expansion valve (4).
8. Disconnect the A/C liquid and suction lines from the A/C expansion valve and remove and discard the O-ring seals.
9. Separate the A/C liquid line from the A/C suction line and install plugs in, or tape over the opened refrigerant line fittings and expansion valve ports.

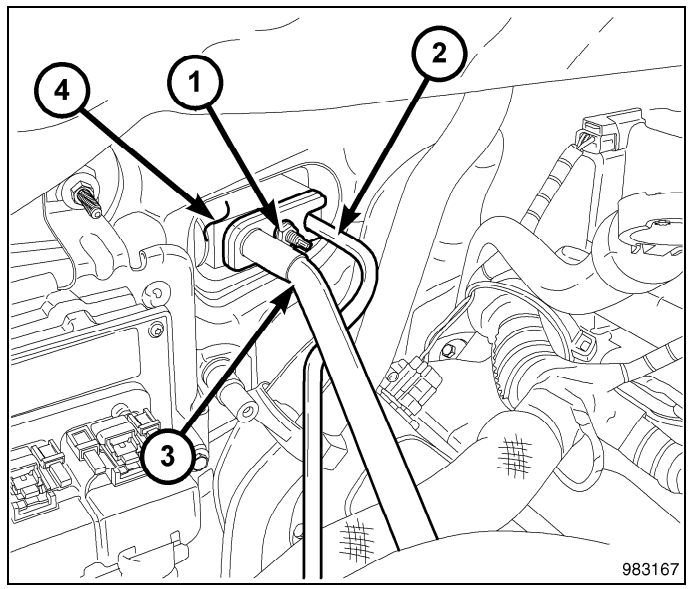

10. Disengage the A/C liquid line (2) from the two retaining clips (1) and remove the liquid line.
11. If required, replace the two liquid line retaining clips.

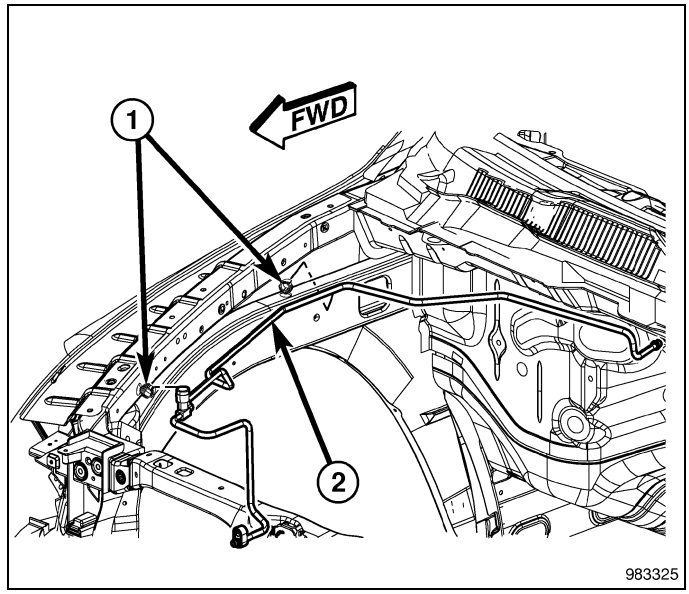

Installation

CAUTION: Be certain to adjust the refrigerant oil level when servicing the A/C refrigerant system (Refer to 24 - Heating and Air Conditioning/Plumbing/OIL, Refrigerant - Standard Procedure). Failure to properly adjust the refrigerant oil level will prevent the A/C system from operating as designed and can cause serious A/C compressor damage.

NOTE: When replacing multiple A/C system components, refer to the Refrigerant Oil Capacities chart to determine how much oil should be added to the refrigerant system(Refer to 24 - Heating and Air Conditioning/Plumbing/OIL, Refrigerant - Standard Procedure).

NOTE: Replacement of the refrigerant line O-ring seals and gaskets is required anytime a refrigerant line is disconnected. Failure to replace the rubber O-ring seals and metal gaskets could result in a refrigerant system leak.

1. Position the A/C liquid line (2) into the engine compartment and engage the liquid line to the two retaining clips (1). Make sure the retaining clips are fully engaged.

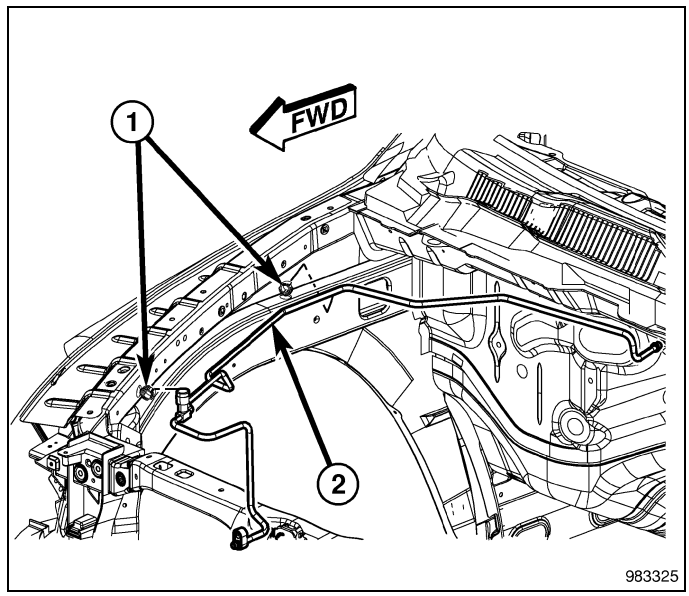

2. Remove the tape or plugs from the opened refrigerant line fittings and expansion valve ports.
3. Lubricate new O-ring seals with clean refrigerant oil and install them onto the refrigerant line fittings. Use only the specified O-ring seals as they are made of a special material for the R-134a system. Use only refrigerant oil of the type recommended for the A/C compressor in the vehicle.
4. Connect the A/C liquid line (2) and A/C suction line (3) onto the A/C expansion valve (4).
5. Install the nut (1) that secures the A/C liquid and suction lines to the A/C expansion valve. Tighten the nut to 23 N·m (17 ft. lbs.).

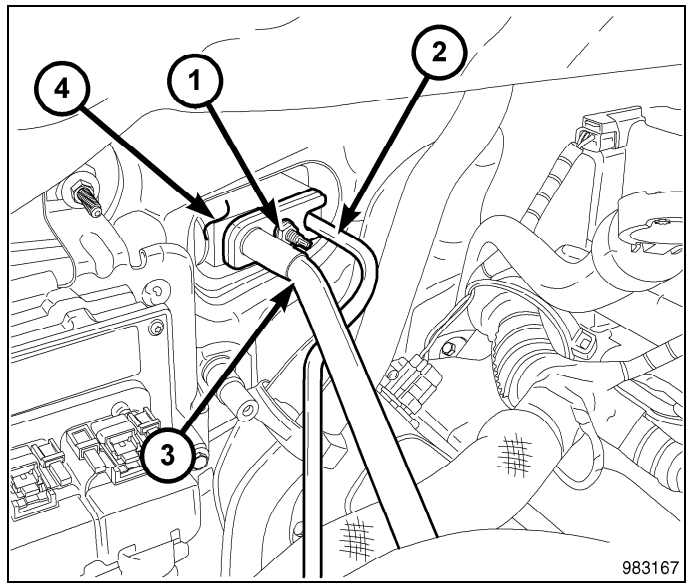

6. Remove the tape or plugs from the opened liquid line fitting and condenser jumper line port.
7. Lubricate a new O-ring seal with clean refrigerant oil and install it and a new gasket onto the liquid line fitting. Use only the specified O-ring seal as it is made of a special material for the R-134a system. Use only refrigerant oil of the type recommended for the A/C compressor in the vehicle.
8. Connect the A/C liquid line (4) to the condenser jumper line tapping block (1).
9. Install the nut (2) that secures the A/C liquid line to the condenser jumper line tapping block. Tighten the nut to 23 N·m (17 ft. lbs.).
10. Install the air filter housing mounting bracket and air filter housing (Refer to 09 - Engine/Air Intake System/ BODY, Air Cleaner - Installation).
11. Reconnect the negative battery cable.
12. Evacuate the refrigerant system (Refer to 24 - Heating and Air Conditioning/Plumbing - Standard Procedure).

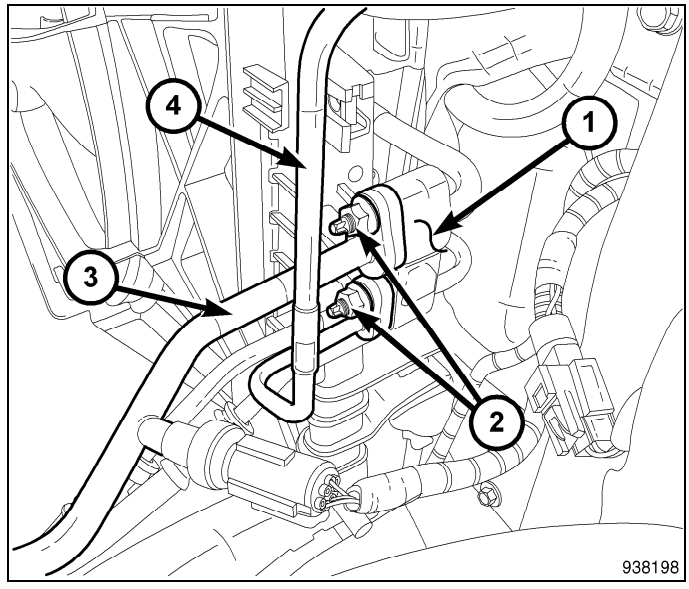

13. Adjust the refrigerant oil level (Refer to 24 - Heating and Air Conditioning/Plumbing/OIL, Refrigerant - Standard Procedure).
14. Charge the refrigerant system (Refer to 24 - Heating and Air Conditioning/Plumbing - Standard Procedure).

LINE, A/C Suction

Description

The A/C suction line carries refrigerant vapor from the A/C expansion valve to the A/C compressor. The A/C suction line is made from light-weight aluminum tubing with braze-less fittings and a nylon tube with a rubber barrier hose and crimp type fittings (Refer to 24 - Heating and Air Conditioning/Plumbing - Description).

NOTE: Replacement of the refrigerant line O-ring seals and gaskets is required anytime a refrigerant line is disconnected. Failure to replace the rubber O-ring seals and metal gaskets could result in a refrigerant system leak.

The A/C suction line has no serviceable parts except for the O-ring seals and gaskets. The O-ring seals used on the connections are made from a special type of rubber not affected by R-134a refrigerant. The O-ring seals and gaskets must be replaced whenever the A/C suction line is disconnected.

The A/C suction line cannot be repaired and must be replaced if leaking or damaged.

Removal

3.7L/4.7L ENGINES

WARNING: Refer to the applicable warnings and cautions for this system before performing the following operation, (Refer to 24 - Heating and Air Conditioning/Plumbing - Warning) and (Refer to 24 - Heating and Air Conditioning/Plumbing - Caution). Failure to follow these instructions may result in serious or fatal injury.

NOTE: 4.7L engine shown. 3.7L engine similar.

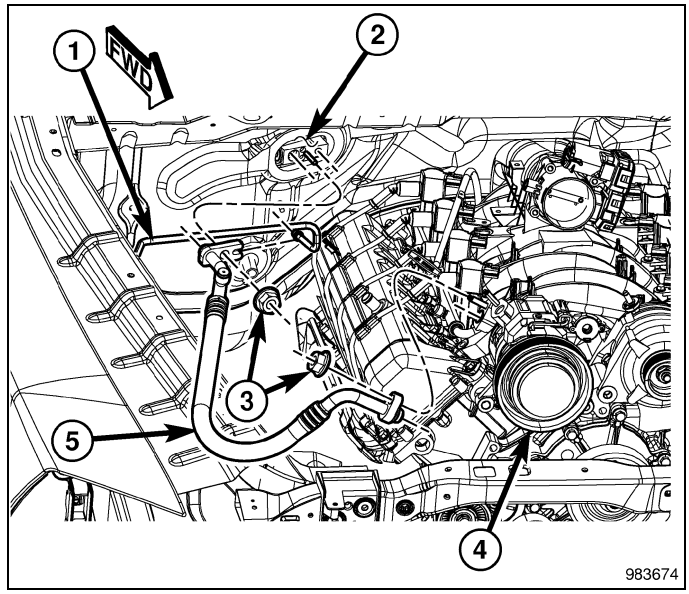

1. Disconnect and isolate the negative battery cable.
2. Recover the refrigerant from the refrigerant system (Refer to 24 - Heating and Air Conditioning/Plumbing - Standard Procedure).
3. Remove the air filter housing cover and resonator inlet tube(Refer to 09 - Engine/Air Intake System/BODY, Air Cleaner - Removal).
4. Remove the nuts (3) that secures the A/C liquid line (1) and the A/C suction line (5) to the A/C expansion valve (2) and to the A/C compressor (4).
5. Disconnect the A/C suction line and the A/C liquid line from the A/C expansion valve and the A/C compressor.
6. Separate the A/C liquid line from the A/C suction line and remove and discard the O-ring seals and gaskets.
7. Install plugs in, or tape over the opened refrigerant line fittings and the expansion valve and compressor ports.

5.7L ENGINE

WARNING: Refer to the applicable warnings and cautions for this system before performing the following operation, (Refer to 24 - Heating and Air Conditioning/Plumbing - Warning) and (Refer to 24 - Heating and Air Conditioning/Plumbing - Caution). Failure to follow these instructions may result in serious or fatal injury.

1. Disconnect and isolate the negative battery cable.
2. Recover the refrigerant from the refrigerant system (Refer to 24 - Heating and Air Conditioning/Plumbing - Standard Procedure).
3. Remove the air filter housing cover and engine air inlet tube(Refer to 09 - Engine/Air Intake System/BODY, Air Cleaner - Removal).
4. Remove the nut (1) that secures the A/C liquid line (2) and A/C suction line (3) to the A/C expansion valve (4).
5. Disconnect the A/C liquid and suction lines from the A/C expansion valve and separate the lines from each other.

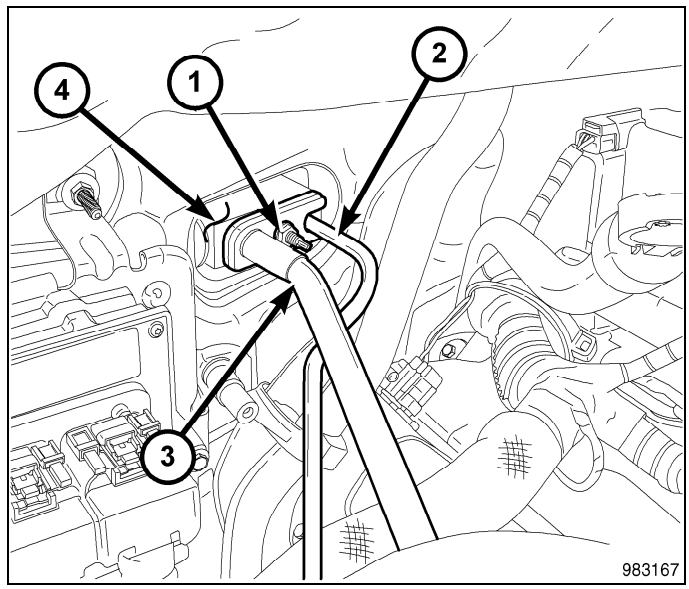

6. Remove the nut (2) that secures the A/C suction line (1) to the A/C compressor (4).
7. Disconnect the A/C suction line from the A/C compressor.

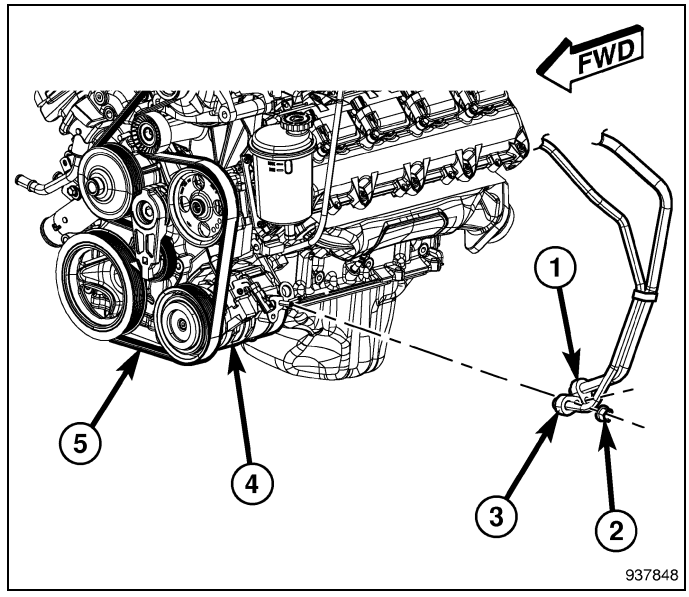

NOTE: Illustration shown with refrigerant lines removed for clarity.

8. Remove the two plastic retaining brackets (2 and 3) that secure the A/C suction line (1) to the A/C discharge line (5) and to the upper front of the engine.
9. Remove the A/C suction line from the engine compartment.
10. Remove and discard the O-ring seals and gaskets from the A/C suction line and install plugs in, or tape over the opened suction line fittings and the expansion valve and compressor ports.

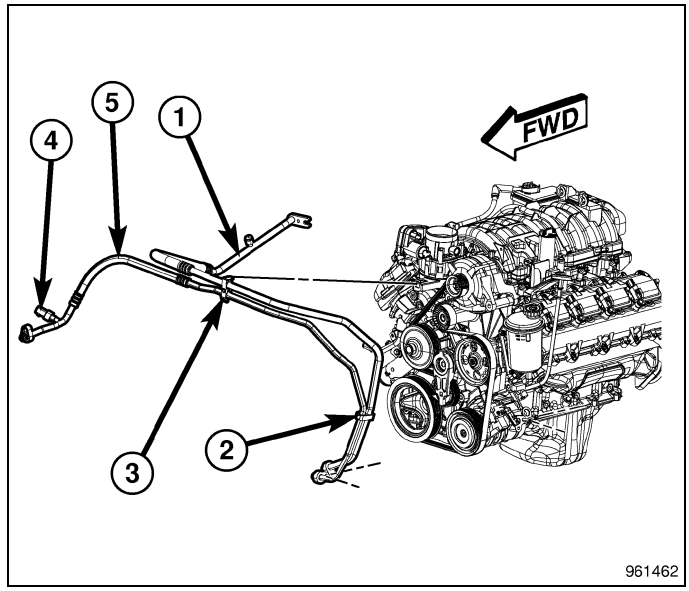

Installation

3.7L/4.7L ENGINES

CAUTION: Be certain to adjust the refrigerant oil level when servicing the A/C refrigerant system (Refer to 24 - Heating and Air Conditioning/Plumbing/OIL, Refrigerant - Standard Procedure). Failure to properly adjust the refrigerant oil level will prevent the A/C system from operating as designed and can cause serious A/C compressor damage.

NOTE: When replacing multiple A/C system components, refer to the Refrigerant Oil Capacities chart to determine how much oil should be added to the refrigerant system(Refer to 24 - Heating and Air Conditioning/Plumbing/OIL, Refrigerant - Standard Procedure).

NOTE: Replacement of the refrigerant line O-ring seals and gaskets is required anytime a refrigerant line is disconnected. Failure to replace the rubber O-ring seals and metal gaskets could result in a refrigerant system leak.

NOTE: 4.7L engine shown. 3.7L engine similar.

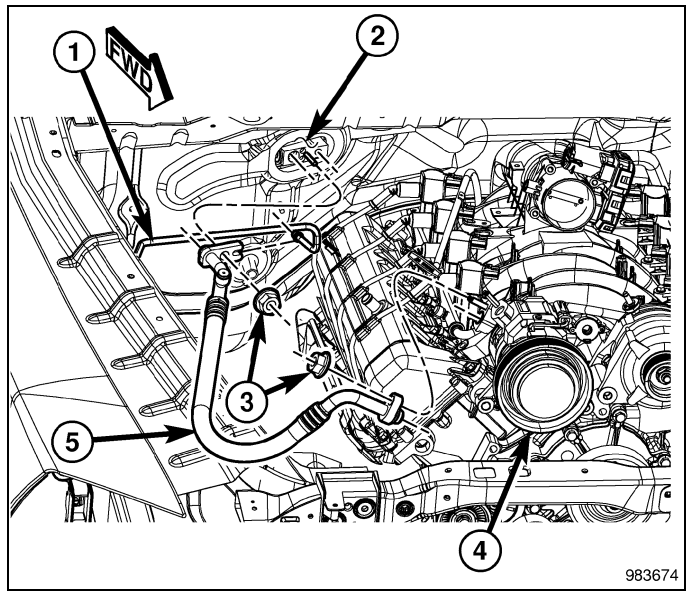

1. Remove the tape or plugs from the opened refrigerant line fittings and the expansion valve and compressor ports.
2. Lubricate new O-ring seals with clean refrigerant oil and install them and new gaskets onto the refrigerant line fitting. Use only the specified O-ring seals as they are made of a special material for the R-134a system. Use only refrigerant oil of the type recommended for the A/C compressor in the vehicle.
3. Connect the A/C liquid line (1) and the A/C suction line (5) to the A/C expansion valve (2).
4. Install the nut (3) that secures the A/C liquid and suction lines to the A/C expansion valve. Tighten the nut to 23 N·m (17 ft. lbs.).
5. Connect the A/C suction line to the A/C compressor (4).
6. Install the nut that secures the A/C suction line to the compressor. Tighten the nut to 23 N·m (17 ft. lbs.).
7. Install the air filter housing cover and resonator inlet tube(Refer to 09 - Engine/Air Intake System/BODY, Air Cleaner - Installation).
8. Reconnect the negative battery cable.
9. Evacuate the refrigerant system (Refer to 24 - Heating and Air Conditioning/Plumbing - Standard Procedure).
10. Adjust the refrigerant oil level (Refer to 24 - Heating and Air Conditioning/Plumbing/OIL, Refrigerant - Standard Procedure).
11. Charge the refrigerant system (Refer to 24 - Heating and Air Conditioning/Plumbing - Standard Procedure).

5.7L ENGINE

CAUTION: Be certain to adjust the refrigerant oil level when servicing the A/C refrigerant system (Refer to 24 - Heating and Air Conditioning/Plumbing/OIL, Refrigerant - Standard Procedure). Failure to properly adjust the refrigerant oil level will prevent the A/C system from operating as designed and can cause serious A/C compressor damage.

NOTE: When replacing multiple A/C system components, refer to the Refrigerant Oil Capacities chart to determine how much oil should be added to the refrigerant system(Refer to 24 - Heating and Air Conditioning/Plumbing/OIL, Refrigerant - Standard Procedure).

NOTE: Replacement of the refrigerant line O-ring seals and gaskets is required anytime a refrigerant line is disconnected. Failure to replace the rubber O-ring seals and metal gaskets could result in a refrigerant system leak.

NOTE: Illustration shown with refrigerant lines removed for clarity.

1. Remove the plugs or tape from the opened suction line fittings and the expansion valve and compressor ports.
2. Lubricate new O-ring seals with clean refrigerant oil and install them and new gaskets onto the suction line fittings. Use only the specified O-ring seals as they are made of a special material for the R-134a system. Use only refrigerant oil of the type recommended for the A/C compressor in the vehicle.
3. Position the A/C suction line (1) into the engine compartment.
4. Install the two retaining brackets (2 and 3) that secure the A/C suction line (1) to the A/C discharge line (5) and to the upper front of the engine.

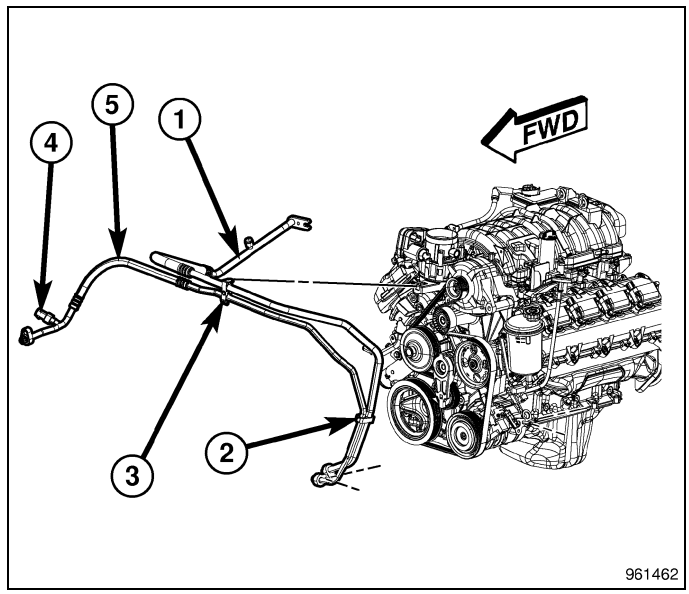

5. Connect the A/C suction line (1) to the A/C compressor (4).
6. Install the nut (2) that secures the A/C suction line to the A/C compressor. Tighten the nut to 23 N·m (17 ft. lbs.).

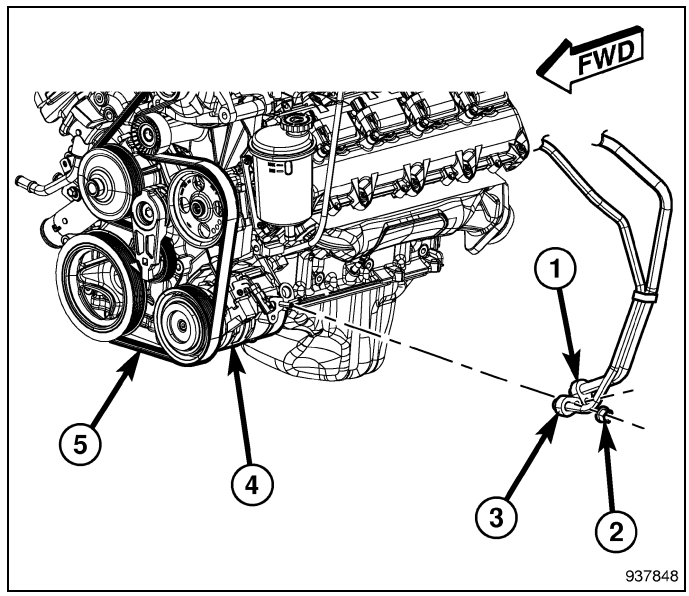

7. Connect the A/C liquid line (2) and the A/C suction line (3) to the A/C expansion valve (4).
8. Install the nut (1) that secures the A/C liquid and suction lines the A/C expansion valve. Tighten the nut to 23 N·m (17 ft. lbs.).
9. Install the air filter housing cover and engine air inlet tube (Refer to 09 - Engine/Air Intake System/BODY, Air Cleaner - Installation).
10. Reconnect the negative battery cable.
11. Evacuate the refrigerant system (Refer to 24 - Heating and Air Conditioning/Plumbing - Standard Procedure).
12. Adjust the refrigerant oil level (Refer to 24 - Heating and Air Conditioning/Plumbing/OIL, Refrigerant - Standard Procedure).
13. Charge the refrigerant system (Refer to 24 - Heating and Air Conditioning/Plumbing - Standard Procedure).

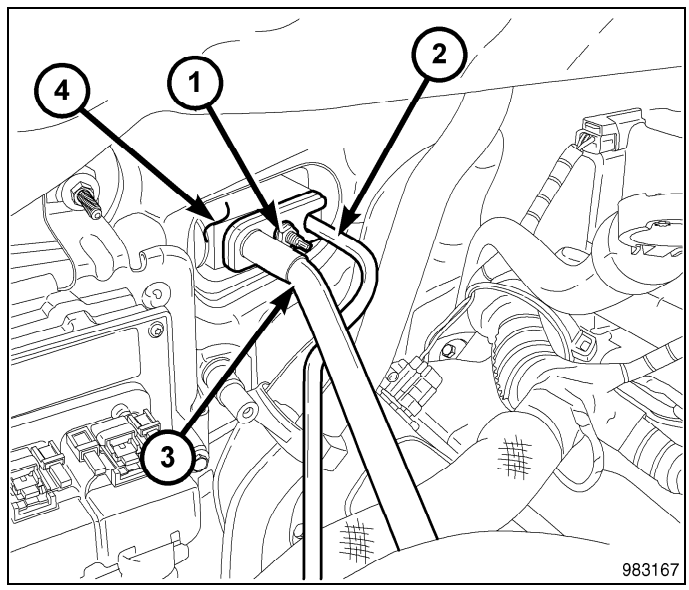

OIL, Refrigerant

Description

The refrigerant oil used in R-134a refrigerant systems is a synthetic-based, Poly Alkylene Glycol (PAG), wax-free lubricant. Mineral-based R-12 refrigerant oils are not compatible with PAG oils and should never be introduced to an R-134a refrigerant system.

There are different PAG oils available, and each contains a different additive package. Use **only** refrigerant oil of the same type as recommended to service the refrigerant system (**always refer to the specification tag** included with the replacement A/C compressor or the A/C Underhood Specification Label located in the engine compartment).

The A/C compressors in this vehicle are designed to use ND-8 PAG refrigerant oil. Use only this type of refrigerant oil when servicing the A/C compressor.

Operation

After performing any refrigerant recovery or recycling operation, always replenish the refrigerant system with the same amount of the recommended refrigerant oil as was removed. Too little refrigerant oil can cause A/C compressor damage, and too much can reduce A/C system performance.

PAG refrigerant oil is more hygroscopic than mineral oil, and will absorb any moisture it comes into contact with, even moisture in the air. The PAG oil container should always be kept tightly capped until it is ready to be used. After use, recap the oil container immediately to prevent moisture contamination.

Standard Procedure

When an A/C system is assembled at the factory, all components except the A/C compressor are refrigerant oil free. After the refrigerant system has been charged and operated, the refrigerant oil in the A/C compressor is dispersed throughout the refrigerant system. The A/C compressor, A/C condenser, A/C evaporator and A/C receiver/drier will each retain a significant amount of the needed refrigerant oil.

It is important to have the correct amount of refrigerant oil in the A/C system. This ensures proper lubrication of the A/C compressor. Too little oil will result in damage to the A/C compressor, while too much oil will reduce the cooling capacity of the A/C system and consequently result in higher discharge air temperatures.

CAUTION: Use only ND-8 PAG oil designed to work with R-134a refrigerant. The oil container should be kept tightly capped until ready for use and then tightly capped after use to prevent contamination from dirt and moisture. Refrigerant oil quickly absorbs moisture it comes in contact with. Special effort must be used to keep all R-134a system components moisture-free. Moisture in the refrigerant oil is very difficult to remove and will cause a reliability problem with the A/C compressor.

NOTE: Most reclaim/recycling equipment will measure the lubricant being removed during recovery. This amount of lubricant should be added back into the system. See the reclaim/recycling equipment manufacturers instructions.

It will not be necessary to check the oil level in the A/C compressor or to add oil, unless there has been an oil loss. An oil loss may occur due to a rupture or leak from a refrigerant line, a connector fitting, a component, or a component seal. If a leak occurs, add 30 milliliters (1 fluid ounce) of refrigerant oil to the refrigerant system after the repair has been made. Refrigerant oil loss will be evident at the leak point by the presence of a wet, shiny surface around the leak.

Refrigerant oil must be added when an A/C compressor, A/C condenser or an A/C evaporator is replaced. See the Refrigerant Oil Capacities chart.

The refrigerant oil level in a new A/C compressor must first be adjusted prior to compressor installation (refer to COMPRESSOR OIL DRAIN PROCEDURE).

REFRIGERANT OIL CAPACITIES

Component Name	ml.	oz.
Total A/C System Fill	180	6
A/C Condenser	30	1

REFRIGERANT OIL CAPACITIES, continued

Component Name	ml.	oz.
A/C Evaporator	60	2
A/C Compressor	Drain and measure the oil from the old compressor. See Compressor Oil Drain Procedure.	

COMPRESSOR OIL DRAIN PROCEDURE

CAUTION: Be certain to adjust the refrigerant system oil level when replacing an A/C compressor. Failure to properly drain and measure the refrigerant oil from the A/C compressor can prevent the A/C system from operating as designed and cause serious compressor damage.

The A/C compressor is filled with refrigerant oil from the factory. Use the following procedure to drain and measure refrigerant oil from the A/C compressor.

1. Drain all of the refrigerant oil from the old A/C compressor into a clean measured container.
2. Drain all of the refrigerant oil from the new A/C compressor into a clean measured container.
3. Refill the new A/C compressor with the same amount of refrigerant oil that was drained out of the old compressor. Use only clean refrigerant oil of the type recommended for the A/C compressor in the vehicle.
4. Install the new A/C compressor onto the engine (Refer to 24 - Heating and Air Conditioning/Plumbing/COMPRESSOR, A/C - Installation).

REFRIGERANT

Description

The refrigerant used in this air conditioning system is a HydroFluoroCarbon (HFC), type R-134a. Unlike R-12, which is a ChloroFluoroCarbon (CFC), R-134a refrigerant does not contain ozone-depleting chlorine. R-134a refrigerant is a non-toxic, non-flammable, clear, and colorless liquefied gas.

Even though R-134a does not contain chlorine, it must be reclaimed and recycled just like CFC-type refrigerants. This is because R-134a is a greenhouse gas and can contribute to global warming (Refer to 24 - Heating and Air Conditioning/Plumbing - Standard Procedure).

Operation

R-134a refrigerant is not compatible with R-12 refrigerant in an A/C system. Even a small amount of R-12 refrigerant added to an R-134a refrigerant system will cause A/C compressor failure, refrigerant oil sludge or poor A/C system performance. In addition, the polyalkylene glycol (PAG) synthetic refrigerant oils used in an R-134a refrigerant system are not compatible with the mineral-based refrigerant oils used in an R-12 refrigerant system.

R-134a refrigerant system service ports, service tool couplers and refrigerant dispensing bottles have all been designed with unique fittings to ensure that an R-134a refrigerant system is not accidentally contaminated with the wrong refrigerant (R-12). There are also labels posted in the engine compartment of the vehicle and on the A/C compressor to identify that the A/C system is equipped with R-134a refrigerant.

Specifications

REFRIGERANT CHARGE CAPACITY

Application	Capacity
All models	0.737 kg (1.624 lbs.)

VALVE, A/C Expansion

Description

The A/C expansion valve controls the amount of refrigerant entering the A/C evaporator. The A/C expansion valve is of a thermostatic expansion valve (TXV) design and consists of an aluminum H-valve type body (1) with an inlet port (2), outlet port (3) and an integral thermal sensor (4).

The A/C expansion valve is located in the engine compartment at the dash panel, between the A/C refrigerant lines and the A/C evaporator.

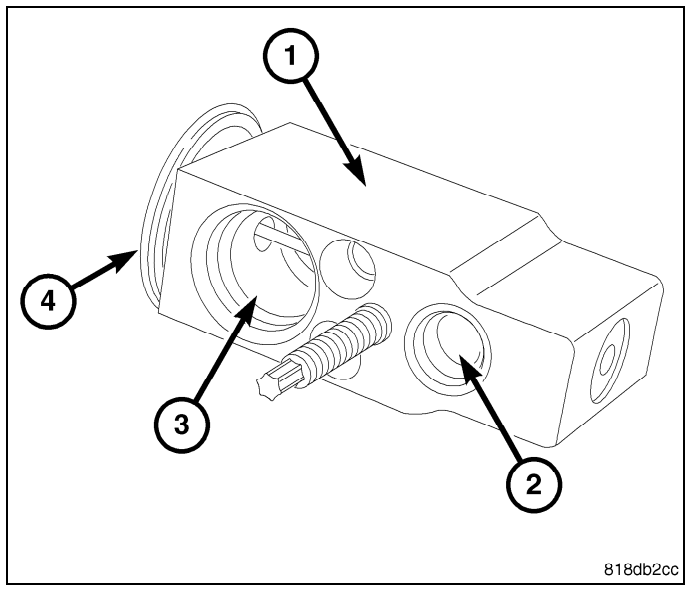

Operation

The A/C expansion valve controls the high-pressure, low temperature liquid refrigerant from the A/C liquid line and converts it into a low-pressure, low-temperature mixture of liquid and gas before it enters the A/C evaporator. A mechanical sensor in the A/C expansion valve monitors the temperature and pressure of the refrigerant leaving the A/C evaporator through the A/C suction line, and adjusts the orifice size at the liquid line port to let the proper amount of refrigerant into the evaporator to meet the vehicle A/C cooling requirements. Controlling the refrigerant flow through the A/C evaporator ensures that none of the refrigerant leaving the A/C evaporator is still in a liquid state, which could damage the A/C compressor.

NOTE: Replacement of the refrigerant line O-ring seals is required anytime a refrigerant line is disconnected from the expansion valve, or if the expansion valve is removed. Failure to replace the rubber O-ring seals may result in a refrigerant system leak.

The A/C expansion valve is factory calibrated and cannot be adjusted or repaired and must be replaced if inoperative or damaged.

Diagnosis and Testing

WARNING: Refer to the applicable warnings and cautions for this system before performing the following operation (Refer to 24 - Heating and Air Conditioning/Plumbing - Warning) and (Refer to 24 - Heating and Air Conditioning/Plumbing - Caution). Failure to follow these instructions may result in serious or fatal injury.

NOTE: The A/C expansion valve should only be tested following testing of the A/C compressor.

NOTE: Liquid CO^2 is required to test the A/C expansion valve. This material is available from most welding supply facilities. Liquid CO^2 is also available from companies which service and sell fire extinguishers.

When testing the A/C expansion valve, the work area and the vehicle temperature must be 21° to 27°C (70° to 85°F). To test the expansion valve:

1. Connect a charging station or manifold gauge set to the refrigerant system service ports (Refer to 24 - Heating and Air Conditioning/Plumbing - Standard Procedure).
2. Verify the refrigerant system charge level by conducting the A/C Performance Test (Refer to 24 - Heating and Air Conditioning - Diagnosis and Testing).
3. Close all doors, windows and vents to the passenger compartment.
4. Set the A/C-heater controls so that the A/C compressor is operating, the temperature control is in the highest temperature position, the mode-air doors is directing air output to the floor and the blower motor operating is operating at the highest speed.

5. Start the engine and allow it to idle. After the engine has reached normal operating temperature, allow the passenger compartment to heat up. This will create the need for maximum refrigerant flow into the A/C evaporator.
6. If the refrigerant charge is sufficient, the discharge (high pressure) gauge should read 827 kPa to 1655 kPa (120 psi to 240 psi). The suction (low pressure) gauge should read 207 kPa to 345 kPa (30 psi to 50 psi). If OK, go to Step #7. If not OK, replace the inoperative A/C expansion valve.

WARNING:
Protect the skin and eyes from exposure to liquid CO^2 or personal injury can result.

7. If the suction (low pressure) gauge reads within the specified range, freeze the A/C expansion valve for 30 seconds using liquid CO^2 or another suitable super-cold material. **Do not spray R-134a or R-12 refrigerant on the A/C expansion valve for this test.** The suction (low pressure) gauge reading should drop by 69 kPa (10 psi). If OK, go to Step #8. If not OK, replace the inoperative A/C expansion valve (Refer to 24 - Heating and Air Conditioning/Plumbing/VALVE, A/C Expansion - Removal).
8. Allow the A/C expansion valve to thaw. The suction (low pressure) gauge reading should stabilize at 207 kPa to 345 kPa (30 psi to 50 psi). If not OK, replace the inoperative A/C expansion valve (Refer to 24 - Heating and Air Conditioning/Plumbing/VALVE, A/C Expansion - Removal).

Removal

WARNING: Refer to the applicable warnings and cautions for this system before performing the following operation (Refer to 24 - Heating and Air Conditioning/Plumbing - Warning) and (Refer to 24 - Heating and Air Conditioning/Plumbing - Caution). Failure to follow these instructions may result in serious or fatal injury.

1. Disconnect and isolate the negative battery cable.
2. Recover the refrigerant from the refrigerant system (Refer to 24 - Heating and Air Conditioning/Plumbing - Standard Procedure).
3. Remove the nut (1) that secures the A/C liquid line (2) and A/C suction line (3) to the A/C expansion valve (4).
4. Disconnect the A/C liquid and suction lines and from the A/C expansion valve and position the refrigerant lines out of the way.
5. Remove the O-ring seals from the liquid and suction line fittings and discard.
6. Install plugs in, or tape over the opened liquid and suction line fittings.

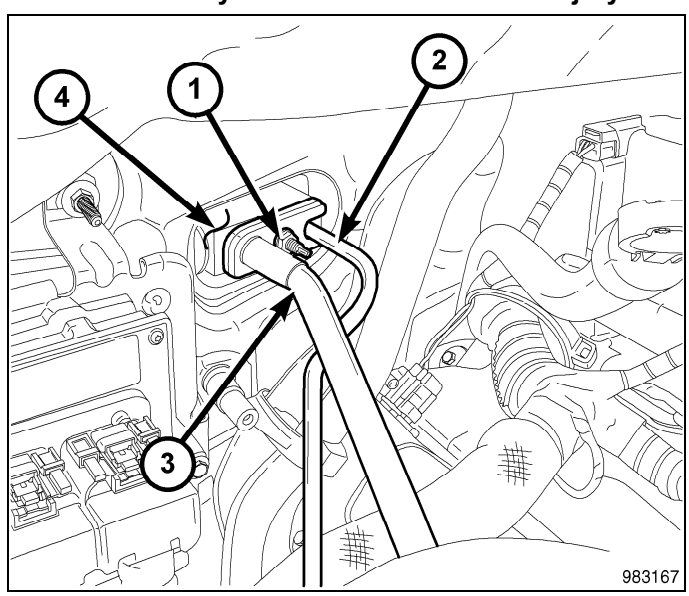

7. Remove the two bolts (1) that secure the A/C expansion valve (2) to the evaporator tube tapping block (3).
8. Remove the A/C expansion valve from the evaporator tube tapping block and remove and discard the O-ring seals.
9. Install plugs in, or tape over the opened evaporator tube fittings and all expansion valve ports.

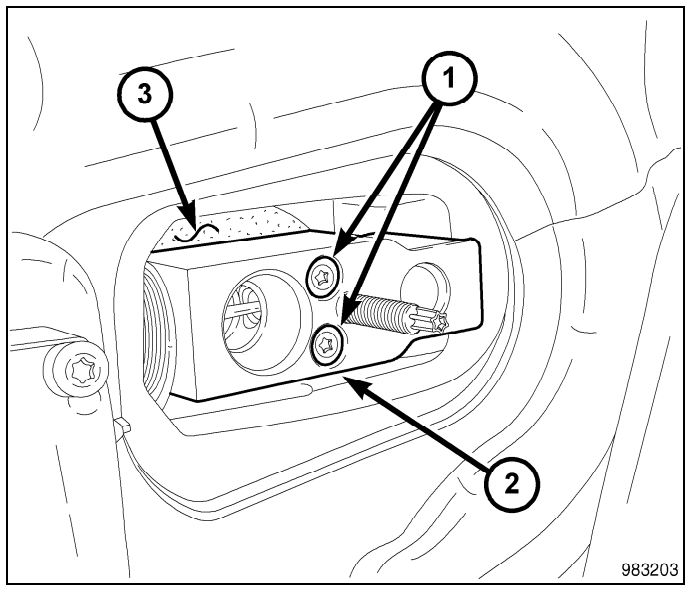

Installation

CAUTION: Be certain to adjust the refrigerant oil level when servicing the A/C refrigerant system (Refer to 24 - Heating and Air Conditioning/Plumbing/OIL, Refrigerant - Standard Procedure). Failure to properly adjust the refrigerant oil level will prevent the A/C system from operating as designed and can cause serious A/C compressor damage.

NOTE: When replacing multiple A/C system components, refer to the Refrigerant Oil Capacities chart to determine how much oil should be added to the refrigerant system(Refer to 24 - Heating and Air Conditioning/Plumbing/OIL, Refrigerant - Standard Procedure).

NOTE: Replacement of the refrigerant line O-ring seals and gaskets is required anytime a refrigerant line is disconnected. Failure to replace the rubber O-ring seals and metal gaskets could result in a refrigerant system leak.

1. Remove the tape or plugs from the evaporator tube fittings and all of the expansion valve ports.
2. Lubricate new O-ring seals with clean refrigerant oil and install them onto the evaporator tube fittings. Use only the specified O-ring seals as they are made of a special material for the R-134a system. Use only refrigerant oil of the type recommended for the A/C compressor in the vehicle.
3. Install the A/C expansion valve (2) onto the evaporator tube tapping block (3).
4. Install the two bolts (1) that secure the A/C expansion valve to the evaporator tube tapping block. Tighten the bolts to 11 N·m (97 in. lbs.).

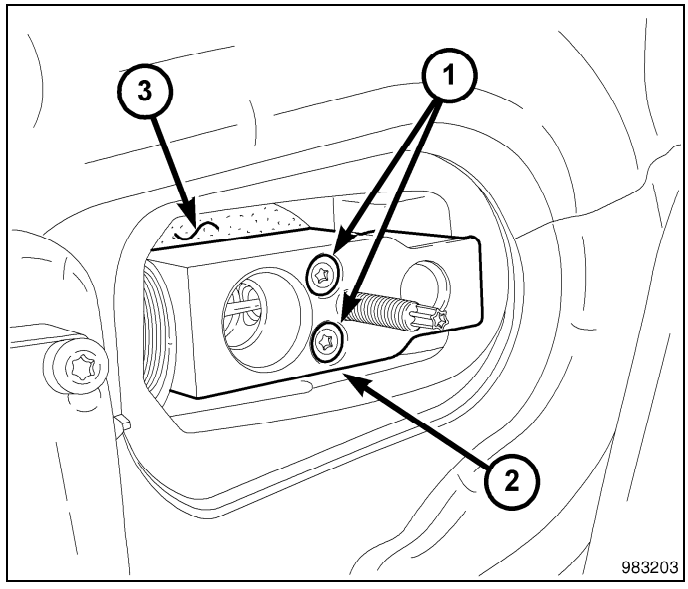

5. Remove the tape or plugs from the liquid and suction line fittings.
6. Lubricate new O-ring seals with clean refrigerant oil and install them onto the liquid and suction line fittings. Use only the specified O-ring seals as they are made of a special material for the R-134a system. Use only refrigerant oil of the type recommended for the A/C compressor in the vehicle.
7. Connect the A/C liquid line (2) and the A/C suction line (3) to the A/C expansion valve (4).
8. Install the nut (1) that secures the A/C liquid and suction lines the A/C expansion valve. Tighten the nut to 23 N·m (17 ft. lbs.).
9. Reconnect the negative battery cable.
10. Evacuate the refrigerant system (Refer to 24 - Heating and Air Conditioning/Plumbing - Standard Procedure).

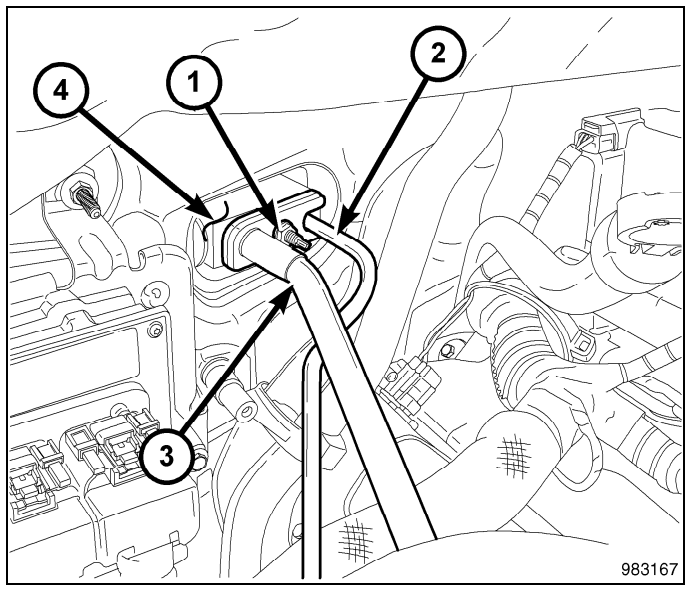

11. Adjust the refrigerant oil level (Refer to 24 - Heating and Air Conditioning/Plumbing/OIL, Refrigerant - Standard Procedure).
12. Charge the refrigerant system (Refer to 24 - Heating and Air Conditioning/Plumbing - Standard Procedure).

EMISSIONS CONTROL

TABLE OF CONTENTS

page

EMISSIONS CONTROL
- **EVAPORATIVE EMISSIONS 3**
- **EXHAUST GAS RECIRCULATION 23**
- **ON-BOARD DIAGNOSTICS 35**

EVAPORATIVE EMISSIONS

TABLE OF CONTENTS

page

EVAPORATIVE EMISSIONS
CANISTER, VAPOR
OPERATION 4
REMOVAL 4
INSTALLATION 6
CAP, FUEL FILLER
DESCRIPTION 8
OPERATION 8
REMOVAL 8
ONBOARD REFUEL VAPOR RECOVERY (ORVR)
DESCRIPTION 8
OPERATION 8
SOLENOID, EVAPORATIVE EMISSIONS PURGE
REMOVAL 9
INSTALLATION 10

page

SWITCH, EVAPORATIVE EMISSIONS SYSTEM MONITOR
OPERATION 11
REMOVAL 14
INSTALLATION 16
VALVE, POSITIVE CRANKCASE VENTILATION (PCV), 3.7L
REMOVAL 17
INSTALLATION 18
VALVE, POSITIVE CRANKCASE VENTILATION (PCV), 4.7L
REMOVAL 20
INSTALLATION 20
VALVE, POSITIVE CRANKCASE VENTILATION (PCV), 5.7L
REMOVAL 21
INSTALLATION 21

Evaporative Emissions

CANISTER, Vapor

Operation

Depending on engine displacement, either one or two EVAP canisters may be used. Also depending on vehicle model and fuel tank size, the canisters may be mounted either vertically or horizontally.

The ESIM (Emission System Integrity Monitor) switch is mounted to the EVAP canister. The NVLD system is no longer used on any engine.

The EVAP canister(s) are filled with granules of an activated carbon mixture. Fuel vapors entering the EVAP canisters are absorbed by the charcoal granules.

Fuel tank pressure vents into the EVAP canisters. Fuel vapors are temporarily held in the canisters until they can be drawn into the intake manifold. The duty cycle EVAP canister purge solenoid allows the EVAP canisters to be purged at predetermined times and at certain engine operating conditions.

Removal

Type-1 Canisters

A single, vertically mounted EVAP canister (1) is used with Type 1. The ESIM (Emission System Integrity Monitor) switch (3) is mounted to the canister.

1. Raise and support vehicle.
2. If equipped, remove necessary skid plates. Certain models, equipped with a certain fuel tank size, may require the removal of the fuel tank skid plate and/or the transfer case skid plate to gain access to the EVAP canister(s).
3. Disconnect electrical wiring connector from ESIM switch (3).
4. Disconnect vapor line (6) from ESIM switch.
5. Disconnect quick-connect vapor line (5) from canister.
6. Remove canister mounting bracket bolt. This is located below and near the ESIM switch.
7. Pull canister from mounting bracket while guiding two canister locating pins from mounting bracket.

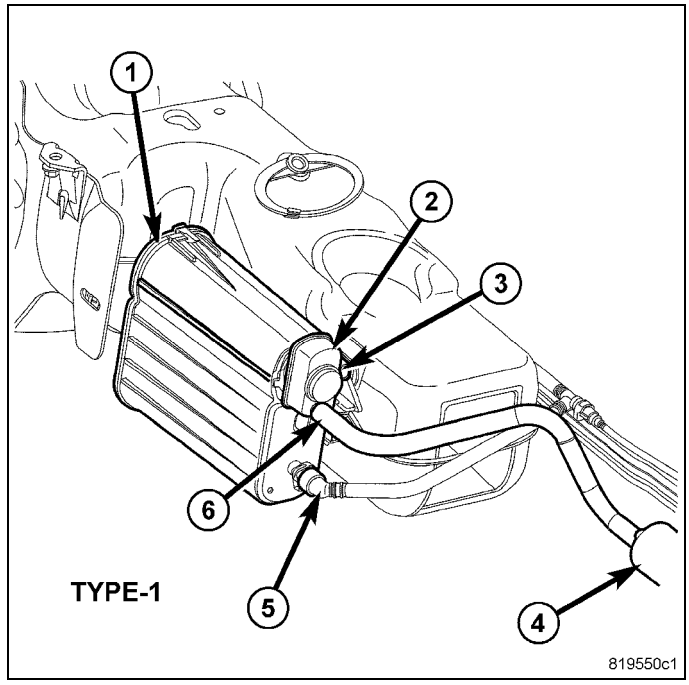

Type-2 Canisters

A single, vertically mounted EVAP canister (1) is used with Type 2. The ESIM (Emission System Integrity Monitor) switch (2) is mounted to the canister.

1. Raise and support vehicle.
2. If equipped, remove necessary skid plates. Certain models, equipped with a certain fuel tank size, may require the removal of the fuel tank skid plate and/or the transfer case skid plate to gain access to the EVAP canister(s).
3. Disconnect electrical wiring connector from ESIM switch (3).
4. Disconnect vapor line (7) from ESIM switch.
5. Disconnect quick-connect vapor line (5) at canister.
6. Remove canister mounting bracket bolt (6).
7. Pull canister from mounting bracket while guiding two canister locating pins from mounting bracket.

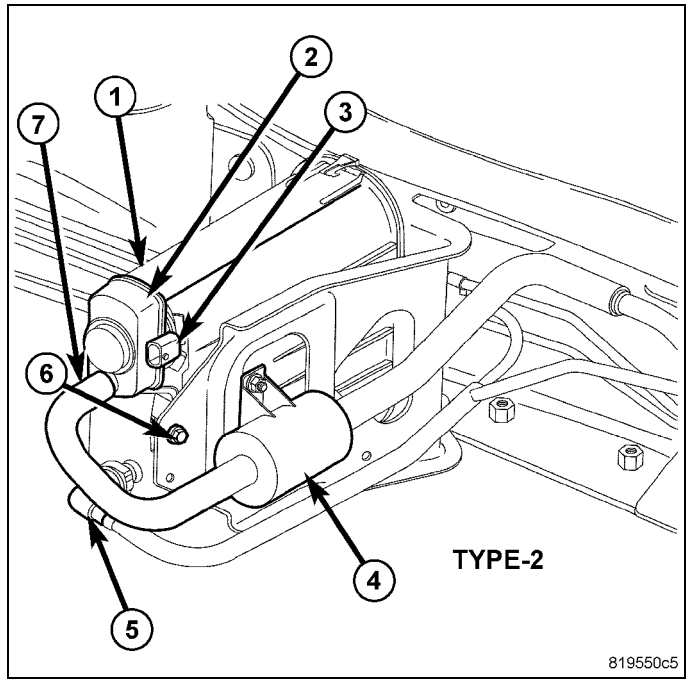

Type-3 Canisters

Dual, vertically mounted EVAP canisters (1) and (4) are used with Type 3. The ESIM (Emission System Integrity Monitor) switch (2) is mounted to the main canister (1). Canister (4) is considered a secondary canister.

1. Raise and support vehicle.
2. If equipped, remove necessary skid plates. Certain models, equipped with a certain fuel tank size, may require the removal of the fuel tank skid plate and/or the transfer case skid plate to gain access to the EVAP canister(s).
3. Disconnect electrical wiring connector from ESIM switch (3).
4. Disconnect vapor line (9) from ESIM switch.
5. Disconnect quick-connect vapor line (7) at main canister.
6. Remove canister mounting bracket bolt (8).
7. Pull canister from mounting bracket while guiding two canister locating pins from mounting bracket.
8. To remove the secondary canister (4), remove mounting bolt. Pull canister from mounting bracket while guiding two canister locating pins (6) from mounting bracket.

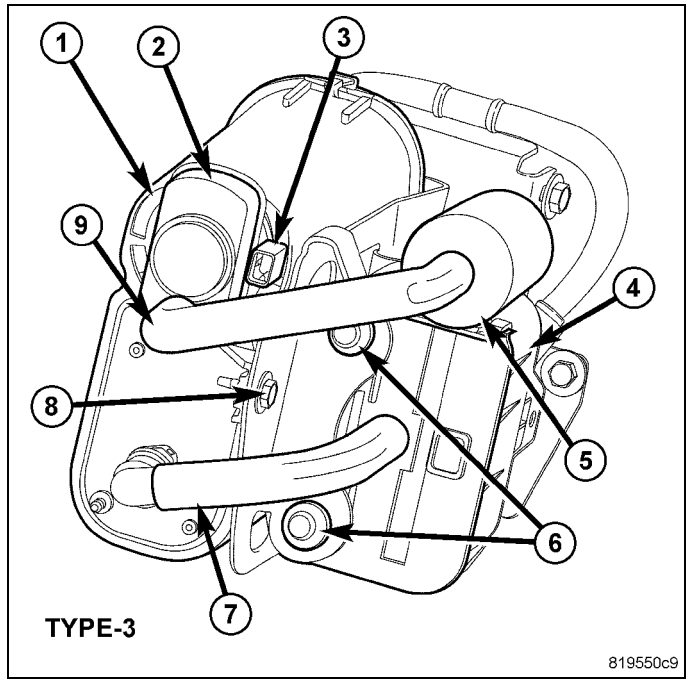

Type-4 Canisters

Dual, horizontally mounted EVAP canisters (1) and (7) are used with Type 4. The ESIM (Emission System Integrity Monitor) switch (3) is mounted to the main, primary canister (1). Canister (7) is considered a secondary canister.

1. Raise and support vehicle.
2. If equipped, remove necessary skid plates. Certain models, equipped with a certain fuel tank size, may require the removal of the fuel tank skid plate and/or the transfer case skid plate to gain access to the EVAP canister(s).
3. Disconnect electrical wiring connector from ESIM switch (4).
4. Disconnect vapor line (5) from ESIM switch.
5. Disconnect quick-connect vapor line (8) at main canister.
6. Remove primary canister mounting bracket nut (9).
7. Pull canister from mounting bracket while guiding two canister locating pins from mounting bracket.
8. To remove the secondary canister (7), remove mounting nut (6). Pull canister from mounting bracket while guiding two canister locating pins from mounting bracket.

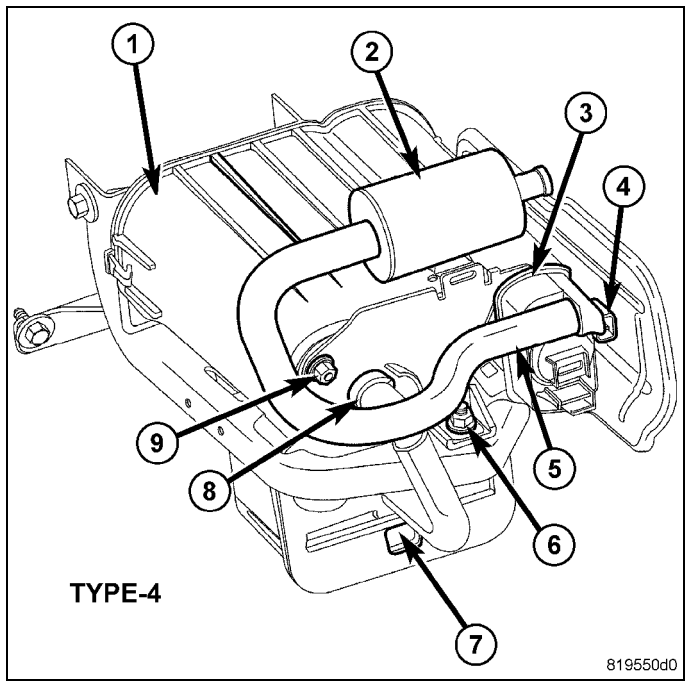

Installation

Type-1 Canisters

CAUTION: After installing any EVAP canister or ESIM switch, the electrical connector on the switch MUST be in the 3 O'clock position (as viewed from front). This step must be done for proper ESIM switch operation.

A single, vertically mounted EVAP canister (1) is used with Type 1. The ESIM (Emission System Integrity Monitor) switch (3) is mounted to the canister.

1. Two locating pins are located at rear of canister. Push these two pins into canister mounting bracket.
2. Install canister mounting bracket bolt. This is located below and near the ESIM switch.
3. Connect quick-connect vapor line (5) to canister.
4. Connect vapor line (6) to ESIM switch.
5. Connect electrical wiring connector to ESIM switch (3).
6. If equipped, install necessary skid plates.
7. **All vapor/vacuum lines and hoses must be firmly connected. Also check the vapor/vacuum lines at the EVAP canister purge solenoid for damage or leaks. If a leak is present, a Diagnostic Trouble Code (DTC) may be set.**
8. Lower vehicle.

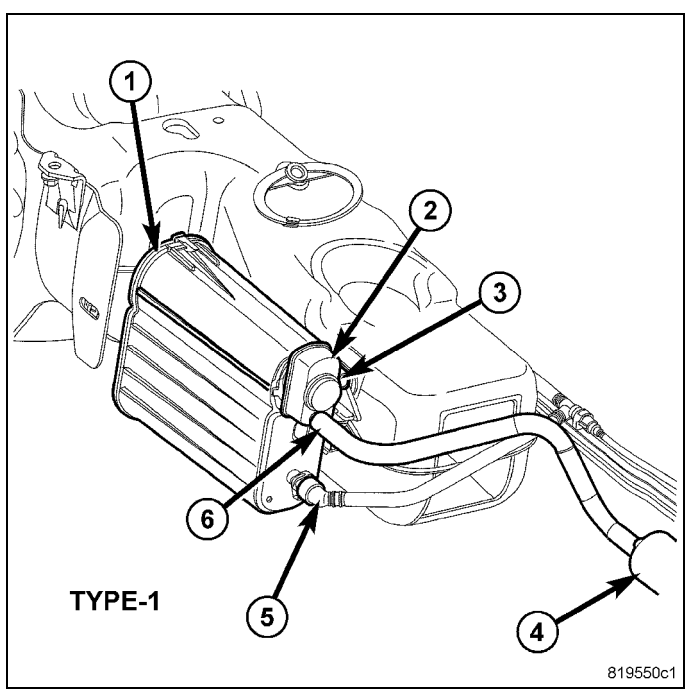

Type-2 Canisters

CAUTION: After installing any EVAP canister or ESIM switch, the electrical connector on the switch MUST be in the 3 O'clock position (as viewed from front). This step must be done for proper ESIM switch operation.

A single, vertically mounted EVAP canister (1) is used with Type 2. The ESIM (Emission System Integrity Monitor) switch (2) is mounted to the canister.

1. Two locating pins are located at rear of canister. Push these two pins into canister mounting bracket.
2. Install canister mounting bracket bolt (6).
3. Connect quick-connect vapor line (5) to canister.
4. Connect vapor line (7) to ESIM switch.
5. Connect electrical wiring connector to ESIM switch (3).
6. If equipped, install necessary skid plates.
7. **All vapor/vacuum lines and hoses must be firmly connected. Also check the vapor/vacuum lines at the EVAP canister purge solenoid for damage or leaks. If a leak is present, a Diagnostic Trouble Code (DTC) may be set.**
8. Lower vehicle.

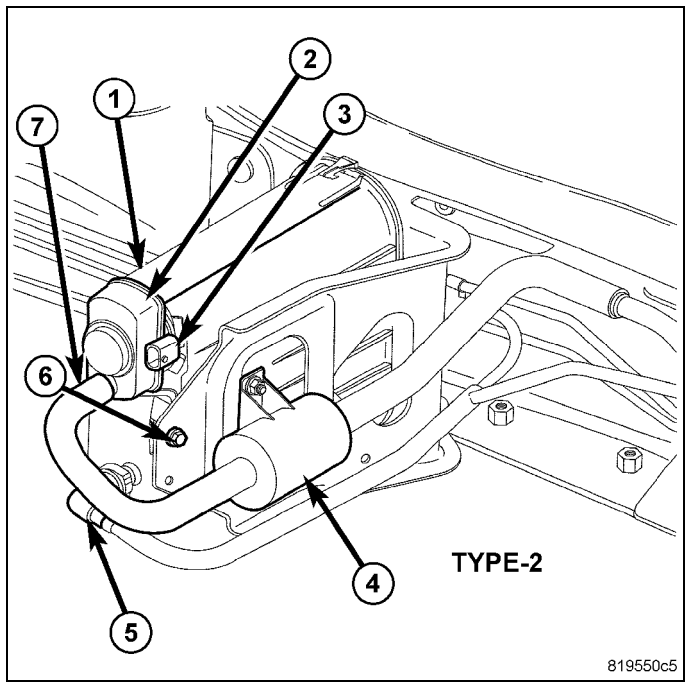

Type-3 Canisters

CAUTION: After installing any EVAP canister or ESIM switch, the electrical connector on the switch MUST be in the 3 O'clock position (as viewed from front). This step must be done for proper ESIM switch operation.

Dual, vertically mounted EVAP canisters (1) and (4) are used with Type 3. The ESIM (Emission System Integrity Monitor) switch (2) is mounted to the main canister (1). Canister (4) is considered a secondary canister.

1. Push secondary canister (4) into mounting bracket while guiding two canister locating pins (6) into mounting bracket. Install mounting bolt.
2. Push main, primary canister (1) into mounting bracket while guiding two canister locating pins into mounting bracket.
3. Install main canister mounting bracket bolt (8).
4. Connect quick-connect vapor line (7) to main canister.
5. Connect vapor line (9) to ESIM switch.
6. Connect electrical wiring connector to ESIM switch (3).
7. If equipped, install necessary skid plates.
8. **All vapor/vacuum lines and hoses must be firmly connected. Also check the vapor/vacuum lines at the EVAP canister purge solenoid for damage or leaks. If a leak is present, a Diagnostic Trouble Code (DTC) may be set.**
9. Lower vehicle.

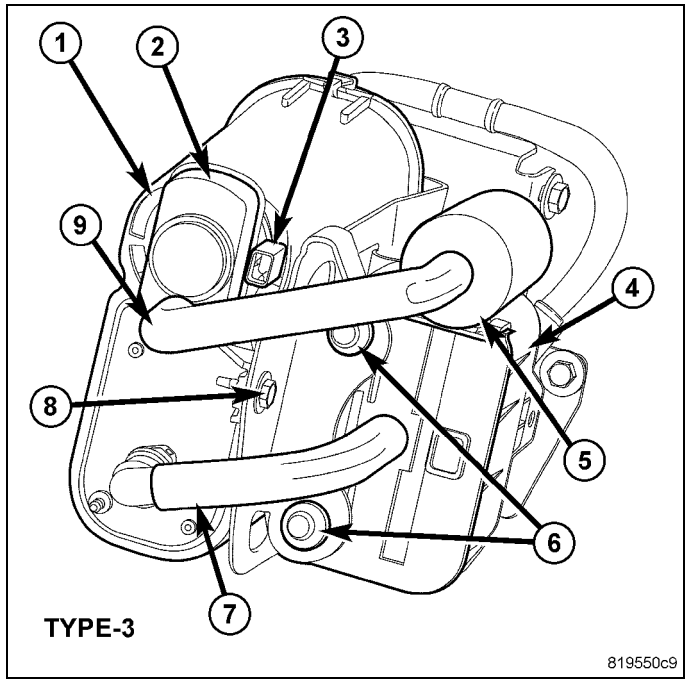

Type-4 Canisters

CAUTION: After installing any EVAP canister or ESIM switch, the electrical connector on the switch MUST be in the 3 O'clock position (as viewed from front). This step must be done for proper ESIM switch operation.

Dual, horizontally mounted EVAP canisters (1) and (7) are used with Type 4. The ESIM (Emission System Integrity Monitor) switch (3) is mounted to the main, primary canister (1). Canister (7) is considered a secondary canister.

1. Position two secondary canister locating pins into mounting bracket. Install mounting nut (6).
2. Position two primary canister locating pins into mounting bracket.
3. Install primary canister mounting bracket nut (9).
4. Connect quick-connect vapor line (8) to main canister.
5. Connect vapor line (5) to ESIM switch.
6. Connect electrical wiring connector to ESIM switch (4).
7. If equipped, install necessary skid plates.
8. **All vapor/vacuum lines and hoses must be firmly connected. Also check the vapor/vacuum lines at the EVAP canister purge solenoid for damage or leaks. If a leak is present, a Diagnostic Trouble Code (DTC) may be set.**
9. Lower vehicle.

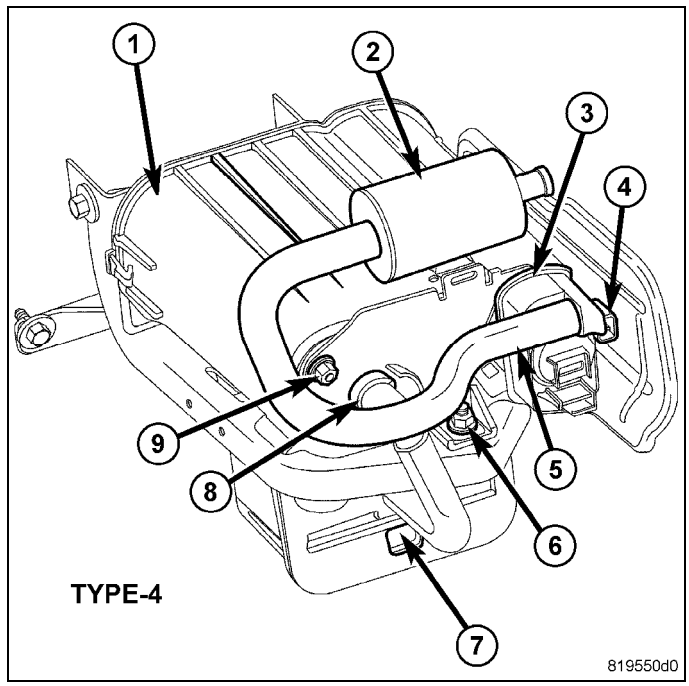

CAP, Fuel Filler

Description

The plastic fuel fill cap is a threaded/quarter turn onto the end of the fuel filler tube. Its purpose is to retain vapors and fuel in the fuel tank.

Operation

The loss of any fuel vapor out of fuel filler tube is prevented by the use of pressure-vacuum fuel fill cap. Relief valves inside the cap will release fuel tank pressure at predetermined pressures. Fuel tank vacuum will also be released at predetermined values. This cap must be replaced by a similar unit if replacement is necessary. This is in order for the system to remain effective.

CAUTION: Remove the fill cap before servicing any fuel system component to relieve fuel tank pressure. If the cap is left off or loose, a Diagnostic Trouble Code (DTC) may be set.

Removal

If replacement of the 1/4 turn fuel tank filler tube cap is necessary, it must be replaced with an identical cap to be sure of correct system operation.

CAUTION: Remove the fuel tank filler tube cap to relieve fuel tank pressure. The cap must be removed prior to disconnecting any fuel system component or before draining the fuel tank.

Onboard Refuel Vapor Recovery (ORVR)

Description

The ORVR (On-Board Refueling Vapor Recovery) system consists of a unique fuel tank, flow management valve, fluid control valve, one-way check valve and vapor canister.

Operation

The ORVR (On-Board Refueling Vapor Recovery) system is used to remove excess fuel tank vapors. This is done while the vehicle is being refueled.

Fuel flowing into the fuel filler tube (approx. 1” I.D.) creates an aspiration effect drawing air into the fuel fill tube. During refueling, the fuel tank is vented to the EVAP canister to capture escaping vapors. With air flowing into the filler tube,

there are no fuel vapors escaping to the atmosphere. Once the refueling vapors are captured by the EVAP canister, the vehicle's computer controlled purge system draws vapor out of the canister for the engine to burn. The vapor flow is metered by the purge solenoid so that there is no, or minimal impact on driveability or tailpipe emissions.

As fuel starts to flow through the fuel fill tube, it opens the normally closed check valve and enters the fuel tank. Vapor or air is expelled from the tank through the control valve and on to the vapor canister. Vapor is absorbed in the EVAP canister until vapor flow in the lines stops. This stoppage occurs following fuel shut-off, or by having the fuel level in the tank rise high enough to close the control valve. This control valve contains a float that rises to seal the large diameter vent path to the EVAP canister. At this point in the refueling process, fuel tank pressure increases, the check valve closes (preventing liquid fuel from spiting back at the operator), and fuel then rises up the fuel filler tube to shut off the dispensing nozzle.

SOLENOID, Evaporative Emissions Purge

Removal

The duty cycle EVAP canister purge solenoid (1) is located in the engine compartment below and near the battery.

1. Carefully pull the solenoid assembly straight up from the tongue-type bracket without bending the two vapor lines.
2. Disconnect electrical wiring connector (2) at solenoid.
3. Disconnect vapor line quick-connect fitting (3) at solenoid.
4. Disconnect vapor line quick-connect fitting (4) at solenoid.

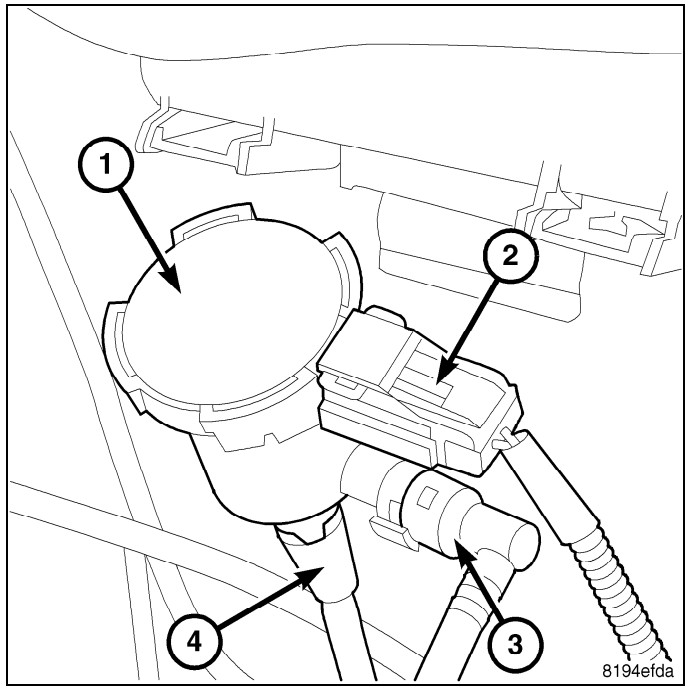

Installation

1. Connect vapor line quick-connect fitting (3) to solenoid.
2. Connect vapor line quick-connect fitting (4) to solenoid.
3. Connect electrical wiring connector (2) to solenoid.
4. Carefully push the solenoid assembly (1) straight down onto the tongue-type bracket without bending the two vapor lines.

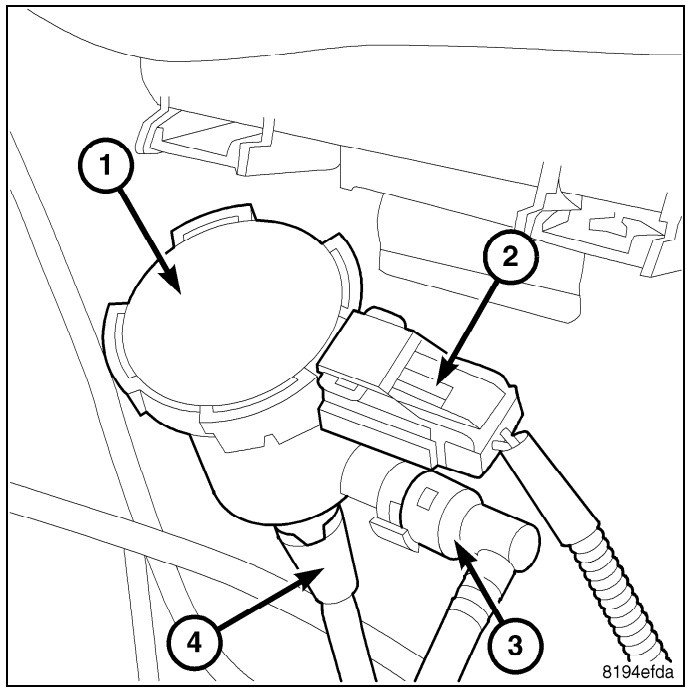

SWITCH, Evaporative Emissions System Monitor

Operation

The ESIM (Evaporative System Integrity Monitor) is very similar to the NVLD. However, the design of the ESIM has been simplified and unlike the NVLD the ESIM does not require a solenoid. The ESIM mounts directly to the canister, eliminating the need for a mounting bracket. It is critical that the ESIM is mounted vertically. On vehicles where the canister is mounted on an angle, the ESIM requires an adaptor to maintain a vertical position. When the ESIM is installed vertically, the electrical connector is in the 3 o'clock position.

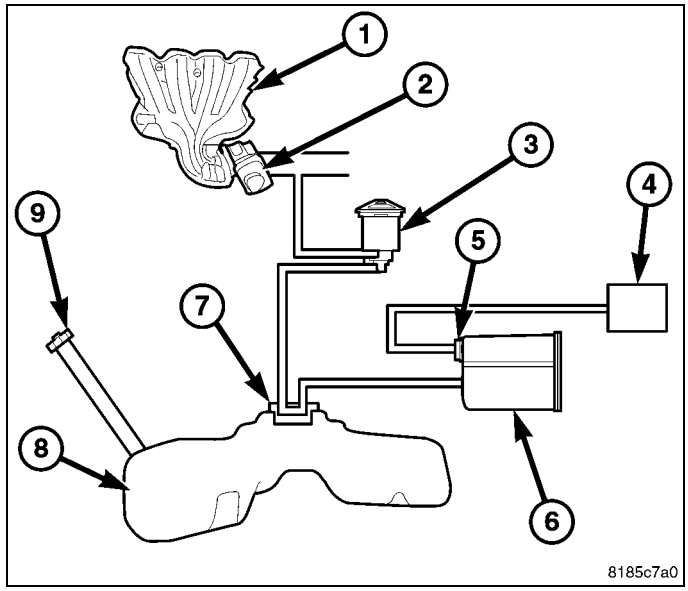

SYSTEM

1 - Intake Manifold
2 - Throttle Body
3 - Purge Solenoid
4 - Filter
5 - ESIM
6 - Vapor Canister
7 - Control Valve
8 - Fuel Tank
9 - Gas Cap

The ESIM assembly consists of a housing, a small weight and a large weight that serve as check valves, a diaphragm, a switch and a cover. There is one large weight and one small weight check valve in the ESIM assembly. A seal is attached at the end of each weighted check valve. The large weight check valve seals for pressure. The small weight check valve seals for vacuum. The weighted check valves are contained within the ESIM housing.

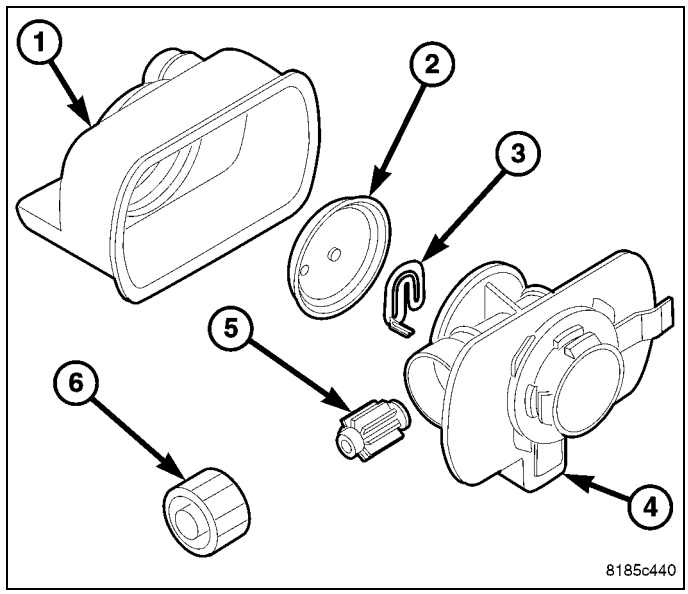

EXPLODED VIEW

1 - ESIM Housing
2 - Diaphragm
3 - Switch
4 - Cover
5 - Small Check Valve
6 - Large Check Valve

The ESIM (Evaporative System Integrity Monitor), while physically different than the NVLD system, performs the same basic function as the NVLD does – controlling evaporative emissions. The ESIM has been simplified because the solenoid used on the NVLD is not used on the ESIM.

The ESIM consists of housing, two check valves (sometimes referred to as weights), a diaphragm, a switch and a cover. The larger check valve seals for pressure and the smaller one seals for vacuum.

During refueling, pressure is built up in the evaporative system. When pressure reaches approximately .5 inches of water, the large check valve unseats and pressure vents to the fresh air filter.

Conversely, when the system cools, and the resulting vacuum lifts the small check valve from its seat and allows fresh air to enter the system and relieves the vacuum condition. When a calibrated amount of vacuum is achieved in the evaporative system, the diaphragm is pulled inward, pushing on the spring and closing the contacts.

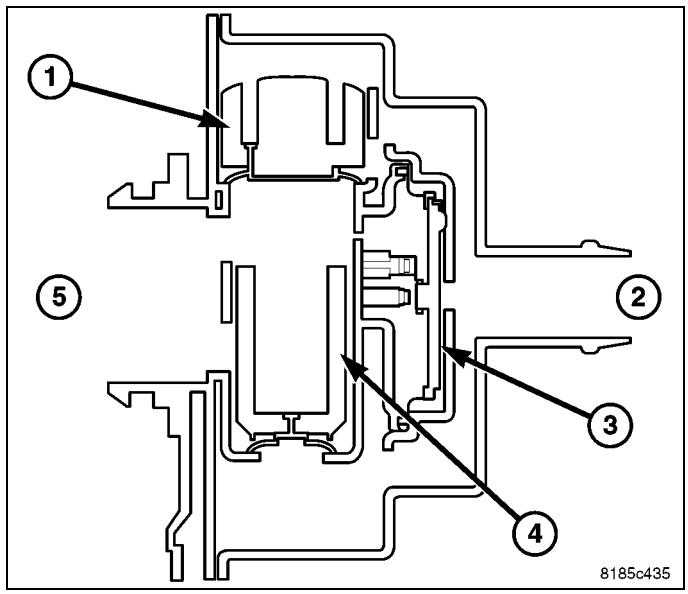

CUT AWAY OF MODULE

1 - Large Check Valve
2 - Fresh Air Inlet
3 - Diagram
4 - Small Check Valve
5 - Vapor Canister

The ESIM conducts test on the evaporative system as follows: An engine off, non-intrusive test for small leaks and an engine running, intrusive test for medium/large leaks.

The ESIM weights seal the evap. system during engine off conditions. If the evap. system is sealed, it will be pulled into a vacuum, either due to the cool down from operating temperature or diurnal ambient temperature cycling. When the vacuum in the system exceeds about 1" H20, the vacuum switch closes. The switch closure sends a signal to the PCM. In order to pass the non-intrusive small leak test, the ESIM switch must close within a calculated amount of time and within a specified amount of key-off events.

If the ESIM switch does not close as specified, the test is considered inconclusive and the intrusive engine running test will be run during the next key-on cycle. This intrusive test will run on the next cold engine running condition.

Conditions for running the intrusive test are:

- After the vehicle is started, the engine coolant temperature must be within 50°F (10°C) of ambient to indicate a cold start.
- The fuel level must be between 12% and 88%.
- The engine must be in closed loop.
- Manifold vacuum must be greater than a minimum specified value.
- Ambient temperature must be between 39°F and 98°F (4°C and 37°C) and the elevation level must be below 8500 feet (2591 meters).

The test is accomplished by the PCM activating the purge solenoid to create a vacuum in the evaporative system. The PCM then measures the amount of time it takes for the vacuum to dissipate. This is known as the vacuum decay method. If the switch opens quickly a large leak is recorded. If the switch opens after a predetermined amount of time, then the small leak matures. If the switch does not close, then a general evaporative failure is recorded. The purge monitor tests the integrity of the hose attached between the purge valve and throttle body/intake. The purge monitor is a two stage test and it runs only after the evaporative system passes the small leak test.

Even when all of the thresholds are met, a small leak won't be recorded until after the medium/large leak monitor has been run. This is accomplished by the PCM activating the purge solenoid to create a vacuum in the evaporative system. The PCM then measures the amount of time it takes for the vacuum to dissipate. This is known as the vacuum decay method. If the switch opens quickly a large leak is recorded. If the switch opens after a predetermined amount of time, then the small leak matures. If the medium/large leak test runs and the ESIM switch doesn't close, a general evaporative test is run. The purge solenoid is activated for approximately 10 seconds, increasing the amount of vacuum in the system. If the ESIM switch closes after the extended purge activation, a large leak fault is generated. If the switch doesn't close, a general evaporative system fault is generated.

The purge monitor tests the integrity of the hose attached between the purge valve and throttle body/intake. The purge monitor is a two stage test and it runs only after the evaporative system passes the small leak test.

Stage one of the purge monitor is non-intrusive. The PCM monitors the purge vapor ratio. If the ratio is above a calibrated specification, the monitor passes. Stage two is an intrusive test and it runs only if stage one fails. During the stage two test, the PCM commands the purge solenoid to flow at a specified rate to force the purge vapor ratio to update. The vapor ratio is compared to a calibrated specification and if it is less than specified, a one-trip failure is recorded.

The ESIM switch stuck closed monitor checks to see if the switch is stuck closed. This is a power down test that runs at key-off; when the PCM sees 0 rpm's, the purge solenoid is energized for a maximum of 30 seconds, venting any vacuum trapped in the evaporative system. If the switch opens or was open before the test began, the monitor passes. If the switch doesn't open, the monitor fails. This is a two-trip MIL. The star scan tool can be used to force the ESIM switch stick closed monitor to run.

The PCM also uses the ESIM to detect a loose or missing gas cap. The PCM controller looks for a change in the fuel level (25% minimum) and then gas cap is loose or missing. If a medium/large leak is detected, a loose gas cap light illuminates and a pending one-trip fault code is set. On the PCM, this is a three-trip fault before the code matures

Removal

The ESIM (EVAP System Integrity Monitor) switch is attached to the Evap canister and is usually not serviceable. Replace the switch by replacing the Evap canister. See Evap canister removal/installation.

If servicing separately, refer to the following:

The ESIM switch (2) is located on the Evap canister (1) **The picture displays a typical Evap Canister and a typical ESIM switch.**

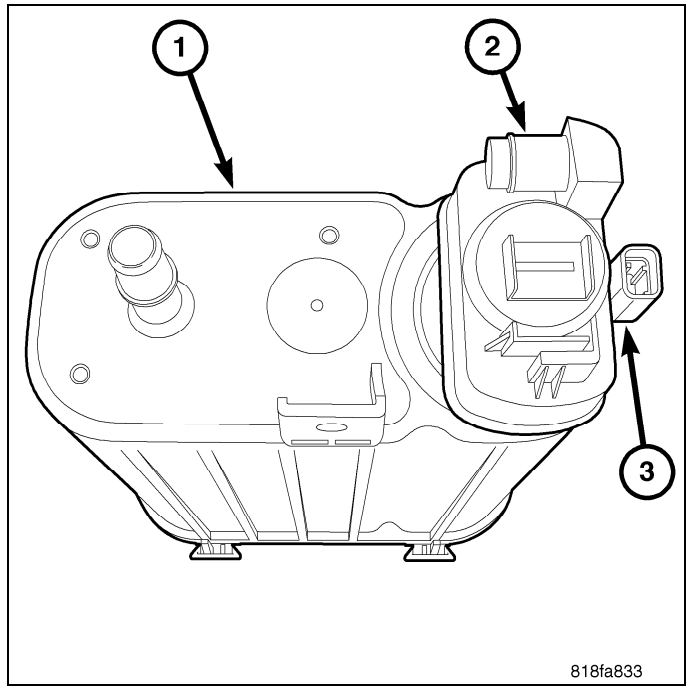

1. Remove both plastic lines from switch by folding line tabs (2).

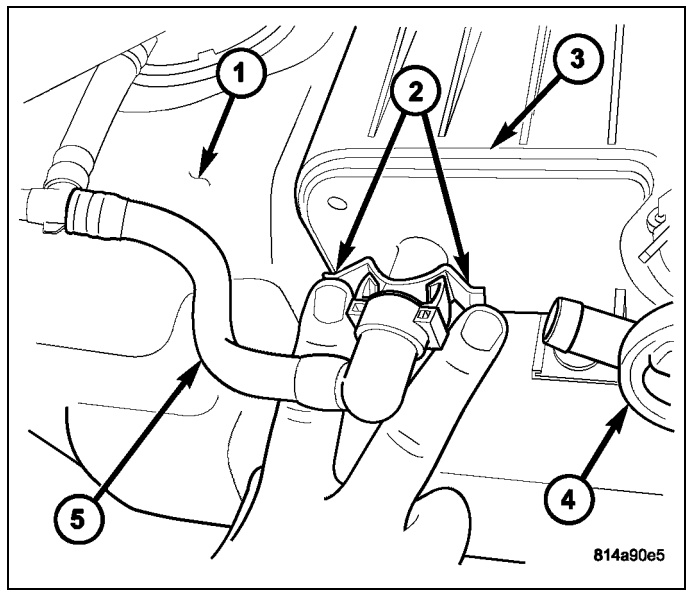

2. Disconnect electrical connector at switch.
3. Clean any dirt from ESIM switch and its lines.

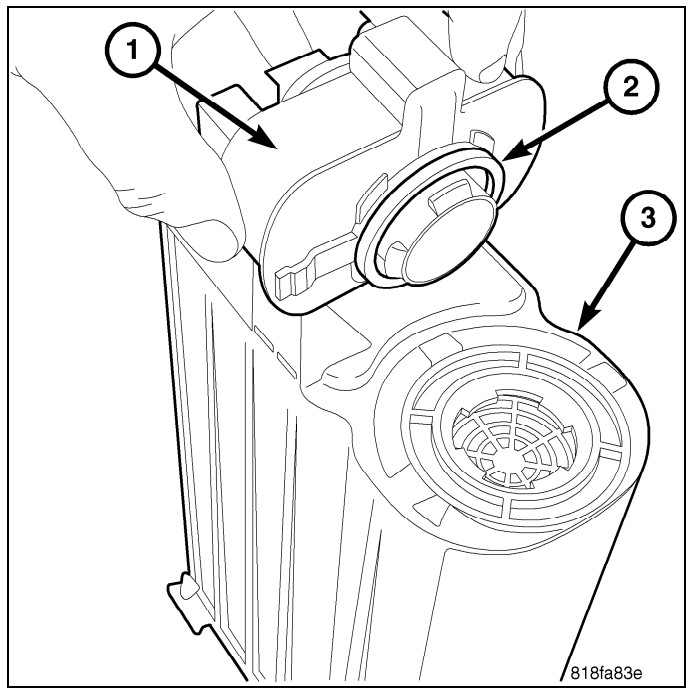

4. A lock tab (see arrow) is used on the back of the switch. Push lock tab towards switch while rotating switch counterclockwise 1/4 turn for removal.
5. The fresh air lines and hoses from the ESIM must have a clear opening to the atmosphere. Check the fresh air lines, including the fresh air filter, for obstructions or restrictions at the ESIM. Also check the routing to the exit to atmosphere. If a restriction is present, the system will not allow free flow passage of clean air, and an early shut off of the fuel fill nozzle may occur during fuel fill.

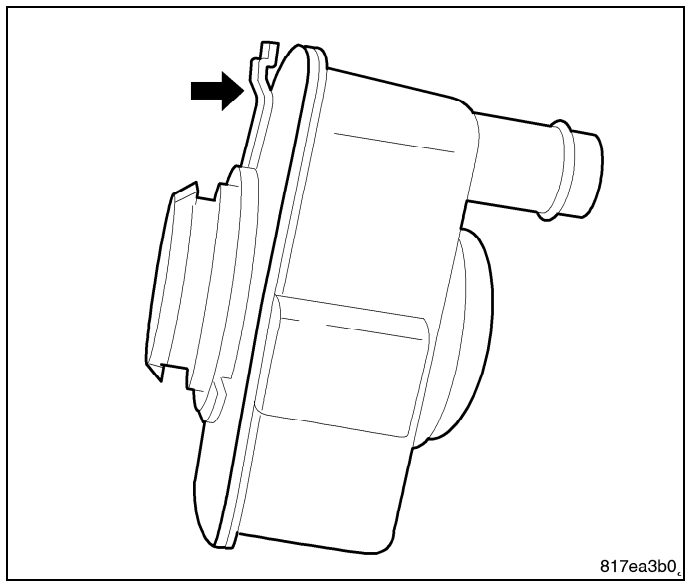

Installation

The following pictures display a TYPICAL EVAP Canister and a typical ESIM switch. After installing any ESIM switch, the electrical connector on the switch must be in the 3 O'clock position. This step must be done for proper ESIM switch operation.

1. The fresh air lines and hoses from the ESIM must have a clear opening to the atmosphere. Check the fresh air lines, including the fresh air filter, for obstructions or restrictions at the ESIM. Also check the routing to the exit to atmosphere. If a restriction is present, the system will not allow free flow passage of clean air, and an early shut off of the fuel fill nozzle may occur during fuel fill.
2. Be sure O-ring (2) and EVAP canister opening are clean.

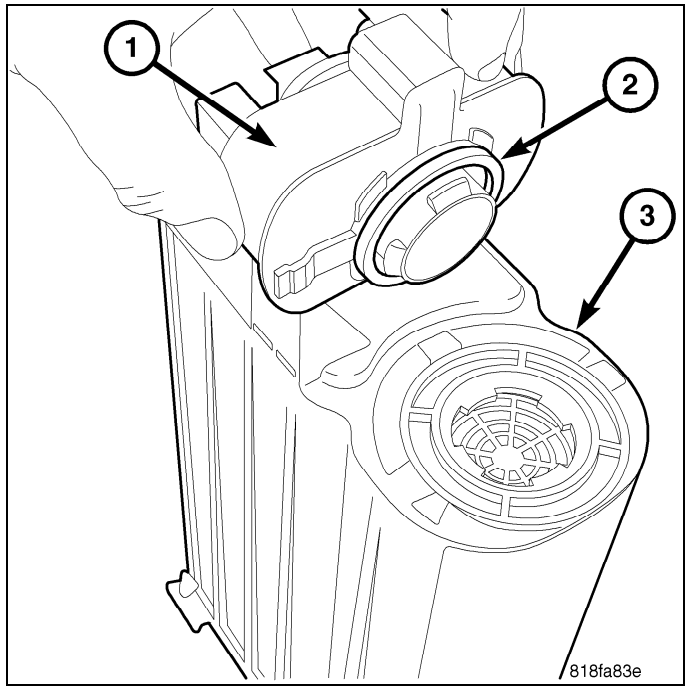

CAUTION: The electrical connector (4) on the ESIM switch must be in 3 O'clock position after installation. This step must be done for proper switch operation.

3. Position ESIM switch (2) into EVAP canister (1) and rotate until electrical connector is in 3 O'clock position (3).
4. Connect electrical connector.
5. Connect plastic lines to ESIM switch.

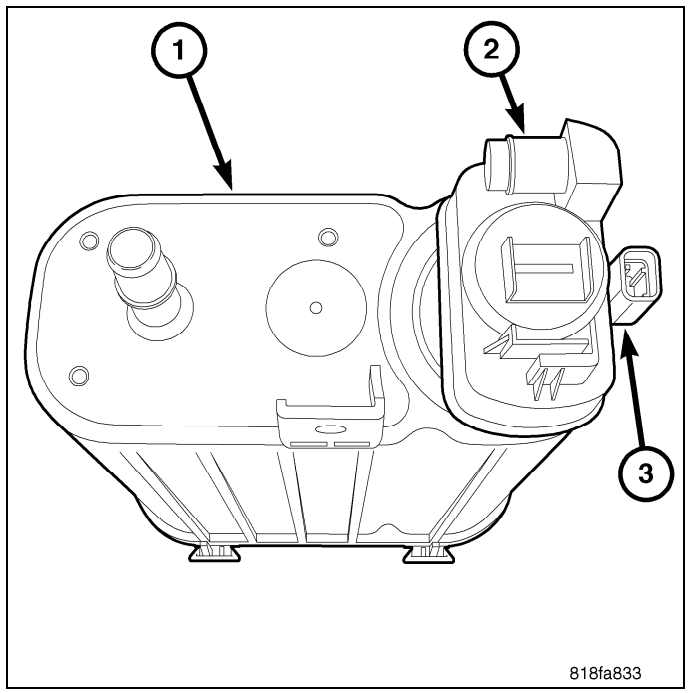

VALVE, Positive Crankcase Ventilation (PCV), 3.7L

Removal

The PCV valve is located at the rear of the left cylinder head.

1. Remove line (1) and rubber connector hose from PCV valve.

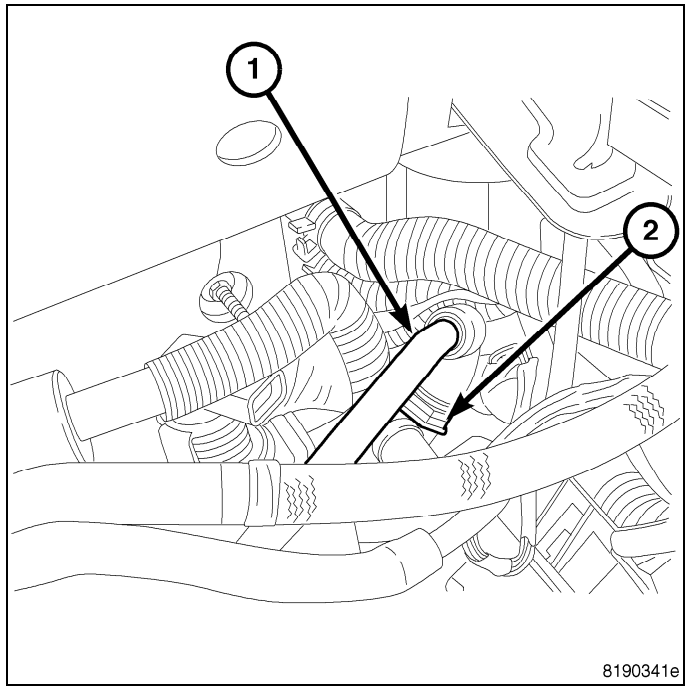

2. Unthread PCV valve (3) from metal fitting (2).

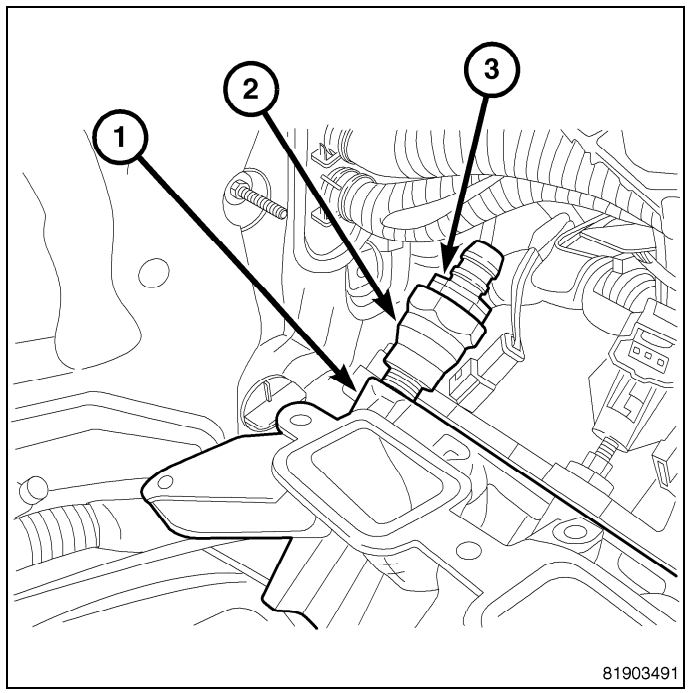

Installation

1. Check condition of PCV valve rubber O-ring (2).

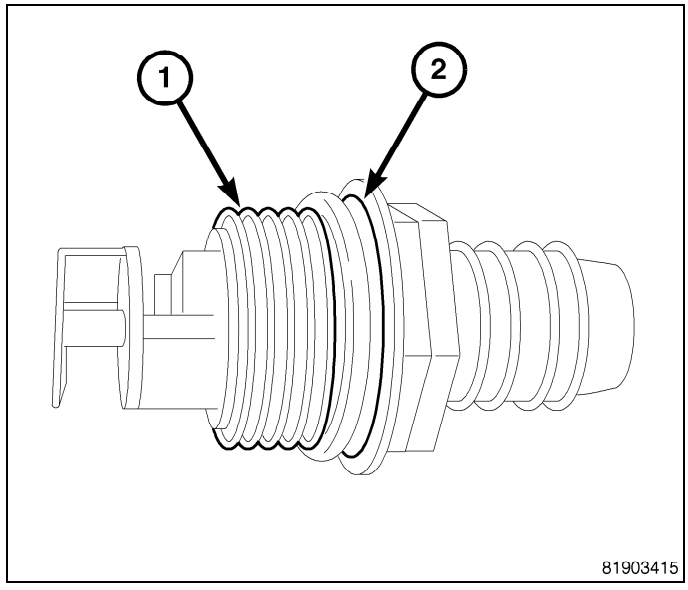

2. Clean fitting (2).
3. Install PCV valve (3) into fitting (2).

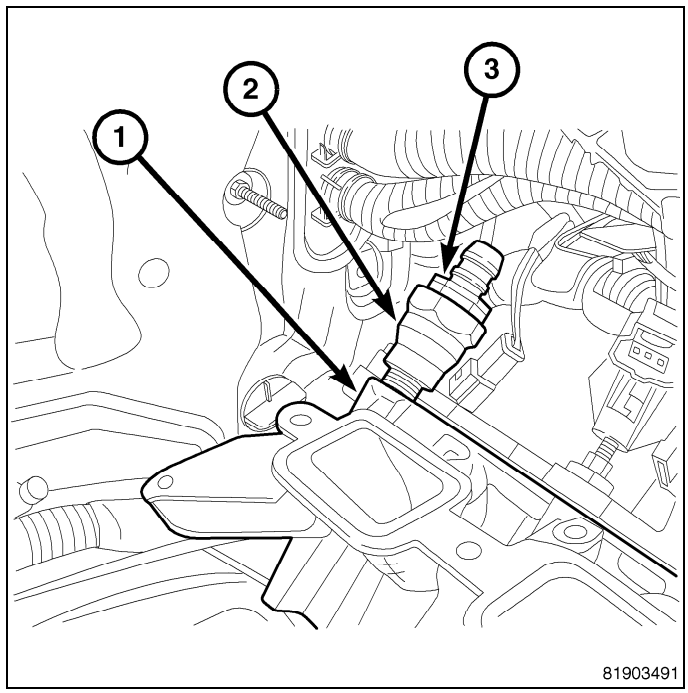

4. Install PCV line (1) and rubber connector to valve.

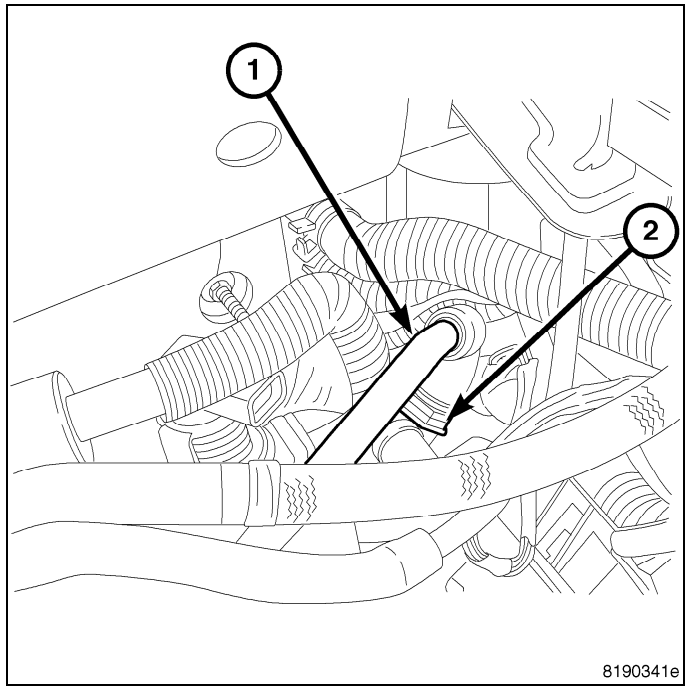

VALVE, Positive Crankcase Ventilation (PCV), 4.7L

Removal

The PCV valve (2) is mounted into the top/rear of the left valve cover.

1. Disconnect plastic line (1) from end of PCV valve.
2. Use a small screwdriver to disengage PCV valve from valve cover.

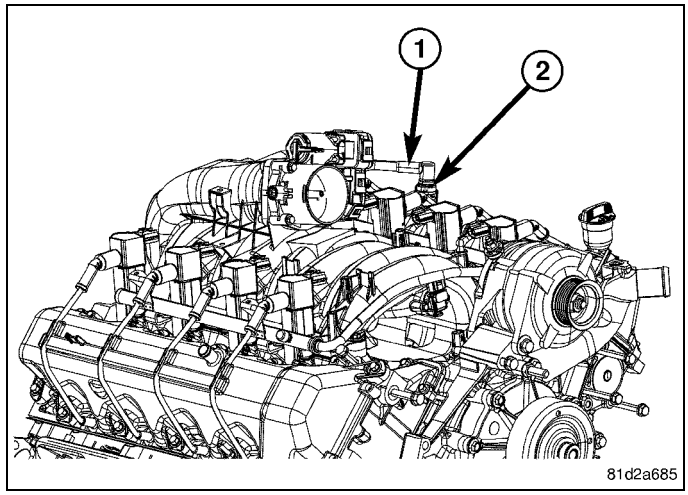

Installation

1. Clean out PCV valve opening at valve cover.
2. Check condition of PCV valve o-ring.
3. Apply engine oil to o-ring.
4. Place PCV valve (2) into valve cover.
5. Attach plastic line (1) to valve.

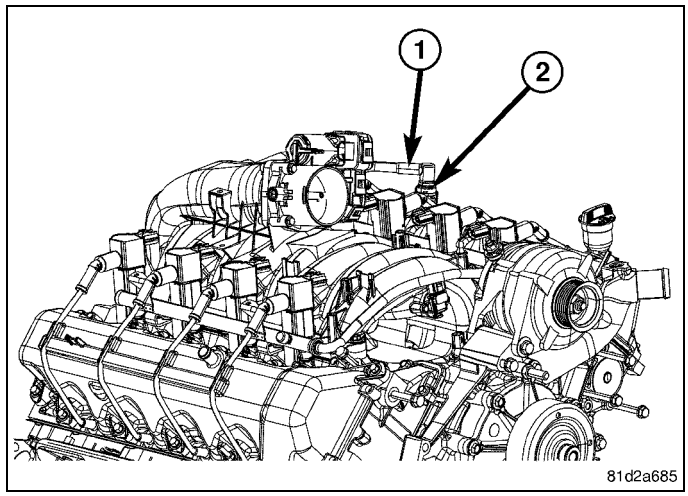

VALVE, Positive Crankcase Ventilation (PCV), 5.7L

Removal

The PCV valve (4) is mounted into the top of the intake manifold (1). This is located to the right / rear of the throttle body (2).

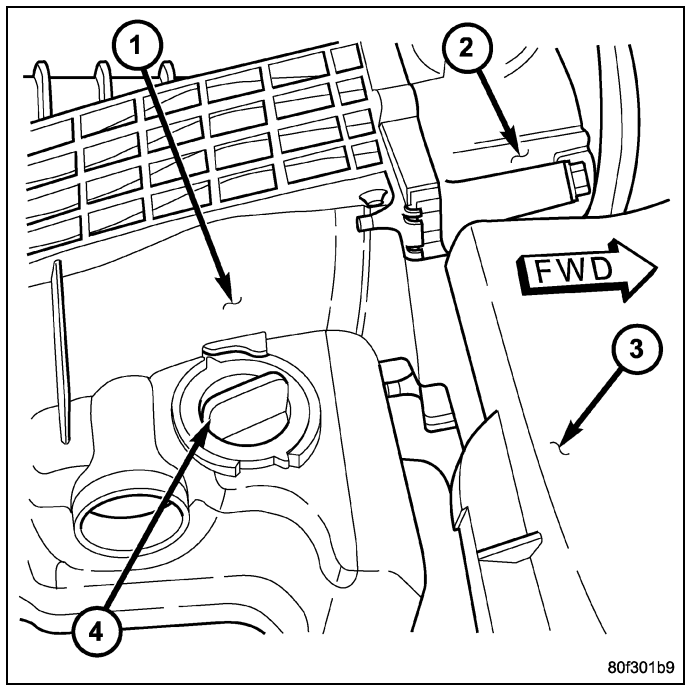

1. The PCV valve is sealed to the intake manifold with 2 O-rings (2).
2. Remove PCV valve by rotating counter-clockwise 90 degrees until locating tabs (3) have been freed. After tabs have cleared, pull valve straight up from intake manifold.
3. After valve is removed, check condition of 2 valve O-rings (2).

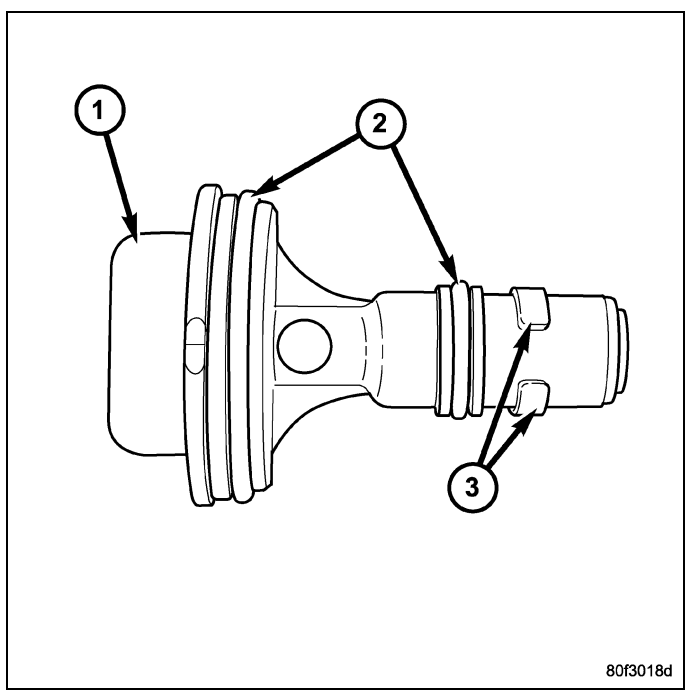

Installation

1. Clean out intake manifold opening.
2. Check condition of two o-rings on PCV valve.
3. Apply engine oil to two o-rings.
4. Place PCV valve into intake manifold and rotate 90 degrees clockwise for installation.

EXHAUST GAS RECIRCULATION

TABLE OF CONTENTS

page

EXHAUST GAS RECIRCULATION
SPECIFICATIONS 24
VALVE, EXHAUST GAS RECIRCULATION (EGR), 3.7L
REMOVAL 24
INSTALLATION 26
VALVE, EXHAUST GAS RECIRCULATION (EGR), 4.7L
REMOVAL 28
INSTALLATION 30

page

VALVE, EXHAUST GAS RECIRCULATION (EGR), 5.7L
REMOVAL 32
INSTALLATION 33

Exhaust Gas Recirculation

Specifications

DESCRIPTION	N·m	Ft. lbs.	Inch lbs.
EGR Valve-to-Cyl. Head 3.7L/4.7L	28	21	248
ERG Tube-to-EGR Valve Bolts	13	9.6	115
EGR Valve-to-Cyl. Head 5.7L	28	21	248

VALVE, Exhaust Gas Recirculation (EGR), 3.7L

Removal

The electronic EGR valve and solenoid assembly (1) is attached to the rear of the left cylinder head.

1. Use a diagnostic scan tool to record any DTC's (Diagnostic Trouble Codes).
2. Disconnect and isolate the negative battery cable.

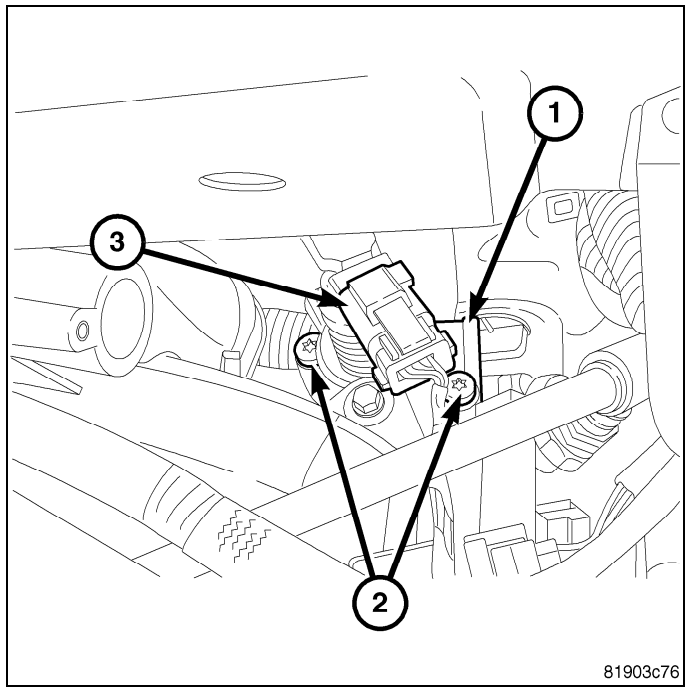

An exhaust gas routing tube (1) connects the EGR valve (4) to the intake manifold.

3. Remove two tube mounting bolts (2).
4. Remove tube (1) from solenoid (4). Slip opposite end of tube (6) from intake manifold.
5. Remove gasket (3) located between EGR valve solenoid and tube flange.

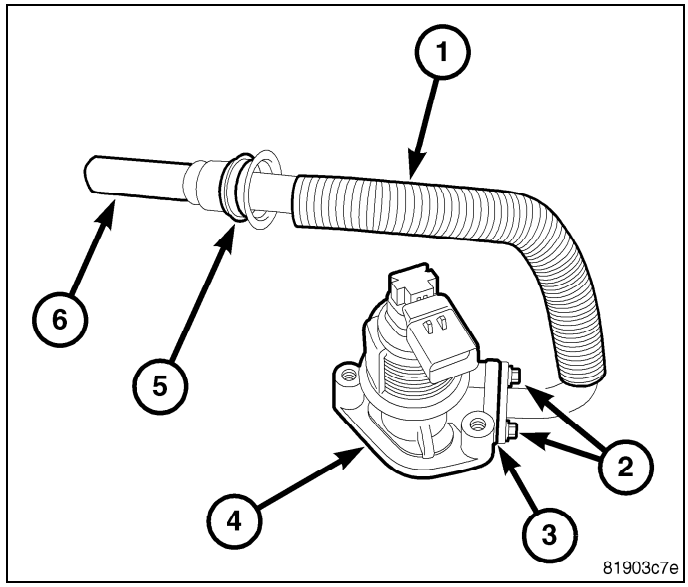

6. Disconnect electrical connector (3) at solenoid (1).
7. Remove two EGR valve solenoid mounting bolts (2).
8. Remove solenoid (1) from engine.

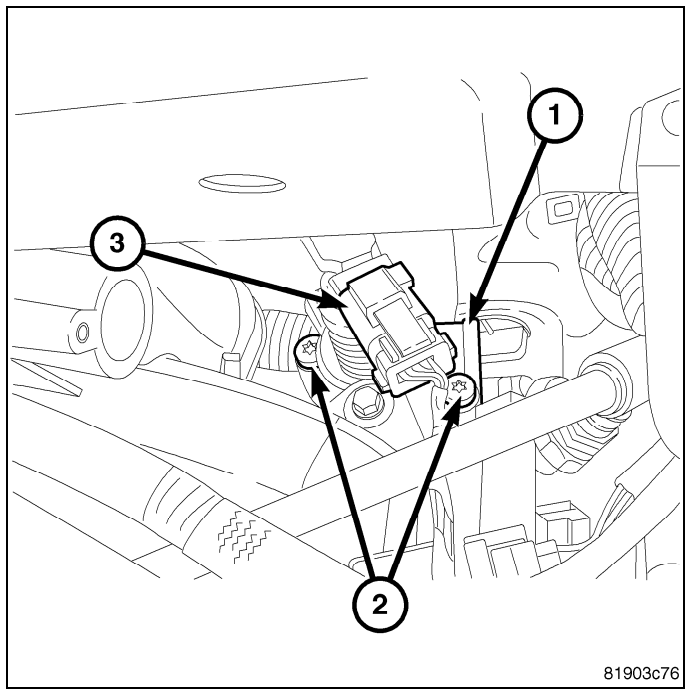

9. Remove and discard gasket (1) located under EGR solenoid.

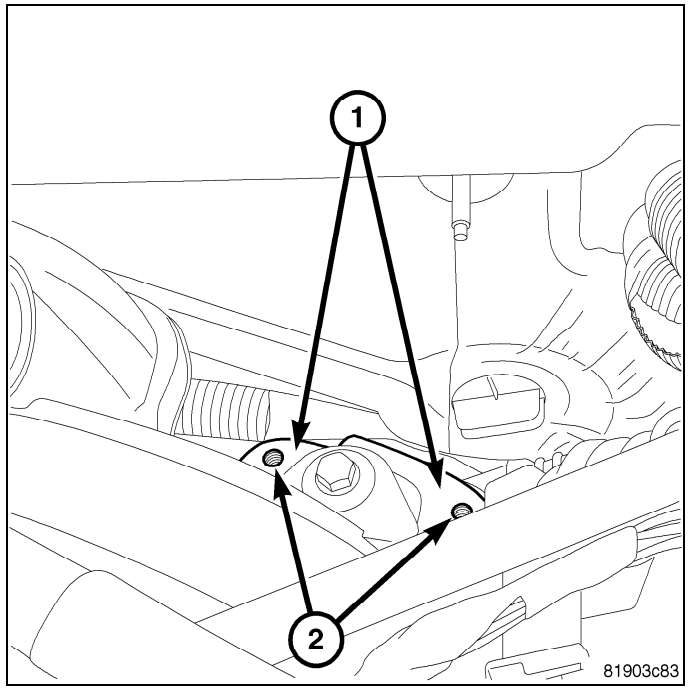

Installation

1. Clean gasket area (1) at rear of left cylinder head where it joins base of EGR valve.
2. Clean EGR tube where it joins EGR valve.
3. Position new gasket between EGR valve and cylinder head.

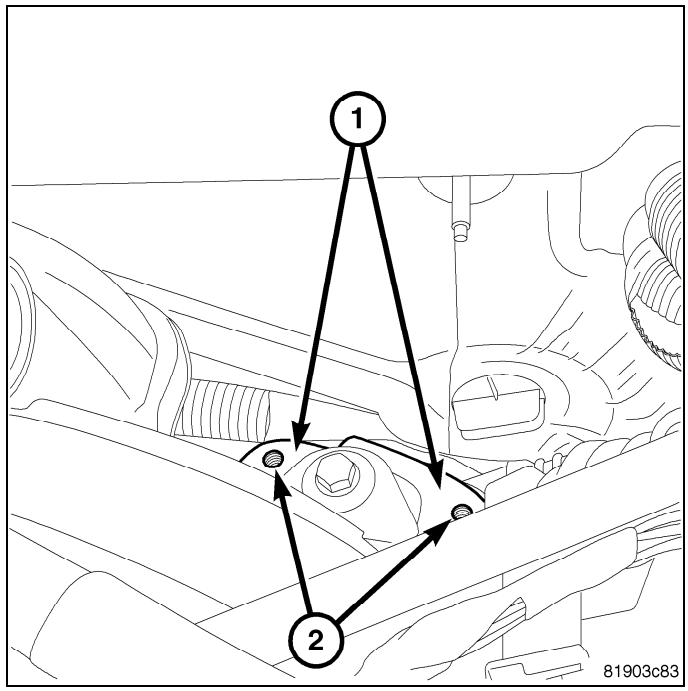

4. Position EGR valve to cylinder head. Install and tighten two bolts (2). Torque to 9 N·m (80 in. lbs.).

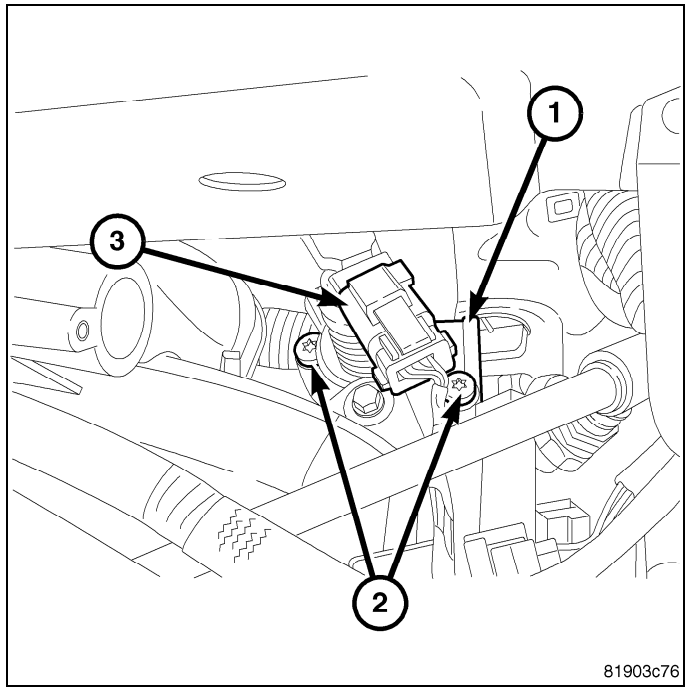

5. Position new gasket (3) between EGR tube flange and EGR valve assembly.
6. Position EGR tube (1) to side of EGR valve. Position end of tube (6) into intake manifold. Install two bolts (2). Torque to 11 N·m (8.5 ft. lbs.).

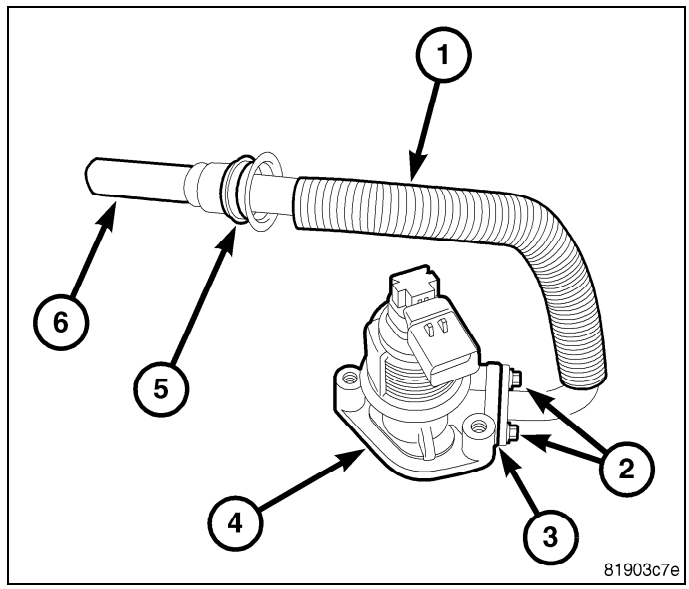

7. Connect electrical connector (3) to top of EGR valve solenoid (1).
8. Connect negative battery cable.
9. Using a diagnostic scan tool, erase any previously recorded DTC's (Diagnostic Trouble Codes).

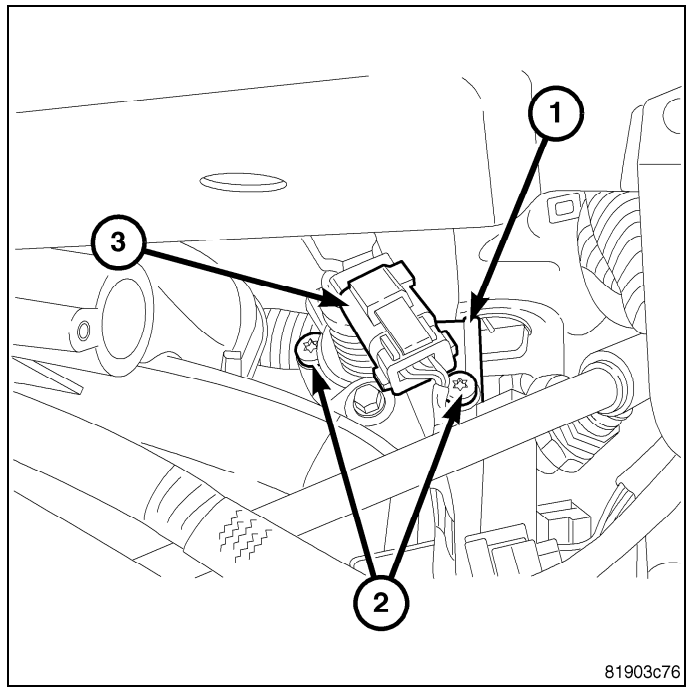

VALVE, Exhaust Gas Recirculation (EGR), 4.7L

Removal

The electronic EGR valve and solenoid assembly is attached to the rear of the left cylinder head. An exhaust gas routing tube connects the EGR valve to the intake manifold.

1. Use a diagnostic scan tool to record any Diagnostic Trouble Codes (DTC).
2. Remove the throttle body resonator.
3. Perform the fuel system pressure release procedure (Refer to 14 - Fuel System/Fuel Delivery - Standard Procedure)
4. Disconnect and isolate the negative battery cable.

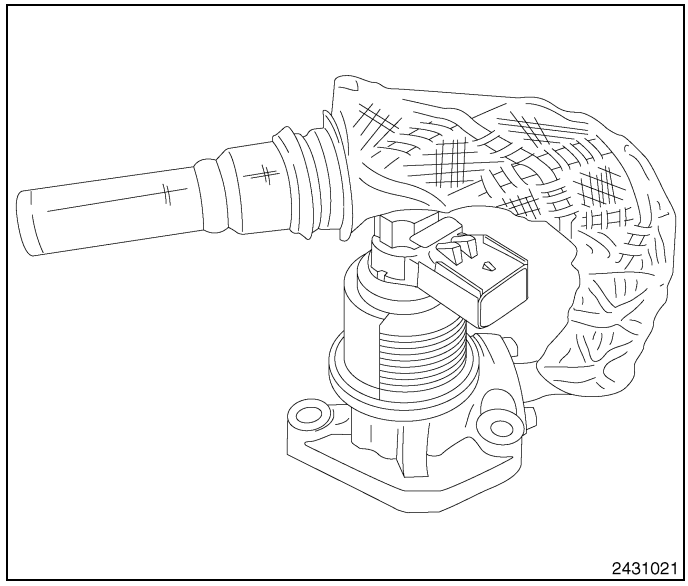

5. Disconnect the power brake booster vacuum hose (1) and the vapor canister purge hose (2) at the intake manifold.

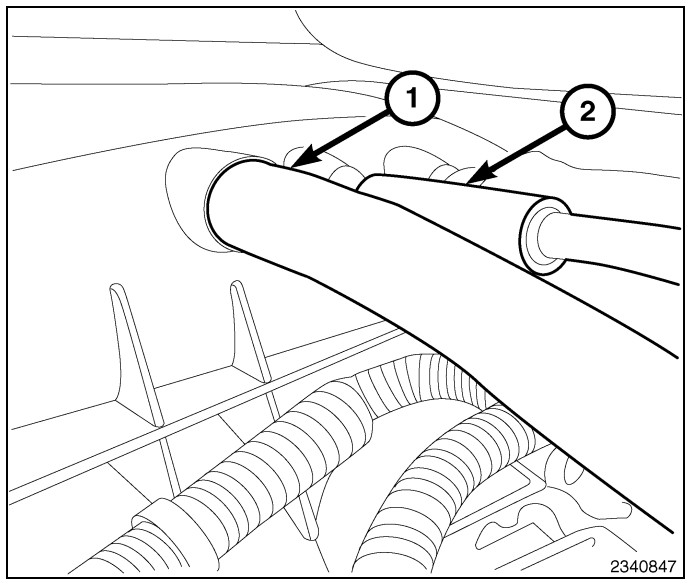

6. Disconnect the EGR valve solenoid electrical connector (1).

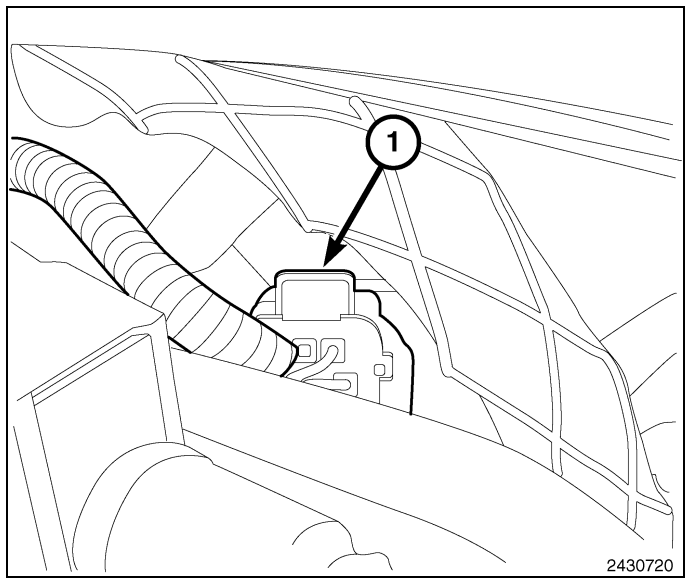

7. Remove the EGR valve assembly retaining bolts (1).
8. Remove the EGR valve and the EGR routing tube from the engine as an assembly.
9. Remove and discard the metal gasket located between the cylinder head and the EGR valve assembly.

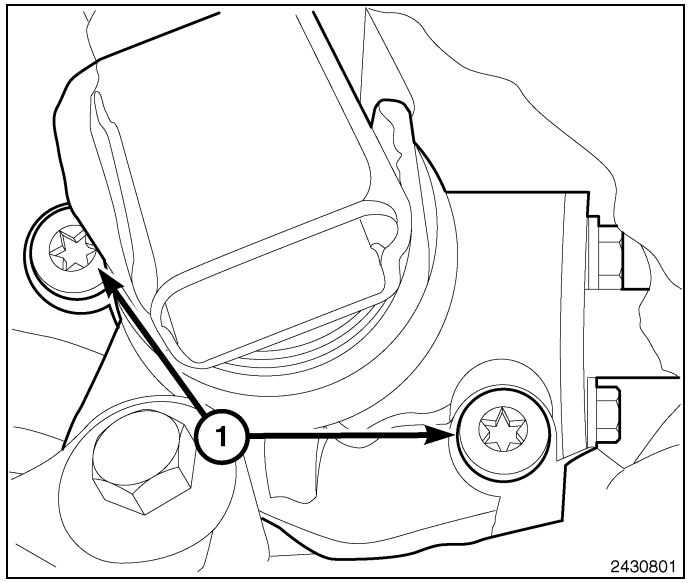

10. Remove the EGR valve routing tube retaining bolts (1) at the EGR valve assembly
11. Remove the EGR valve routing tube and discard the gasket.

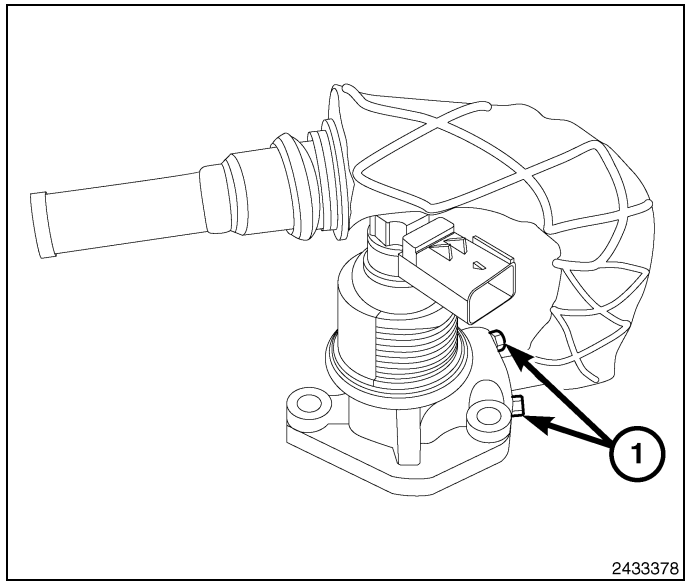

Installation

1. Clean the EGR valve mounting surface of the left cylinder head.
2. Clean the EGR valve surface where it joins the left cylinder head.
3. Clean the EGR valve surface where it joins the EGR valve routing tube.
4. Clean the EGR valve routing tube surface where it joins the EGR valve.
5. Install a new O-ring gasket on the EGR vale routing tube.
6. Position a new gasket between the EGR valve routing tube flange and the EGR valve assembly.
7. Position the EGR valve routing tube to the EGR valve assembly, install retaining bolts (1) and tighten to 11 N·m (8 ft. lbs.).
8. Position the new EGR valve gasket on the cylinder head.

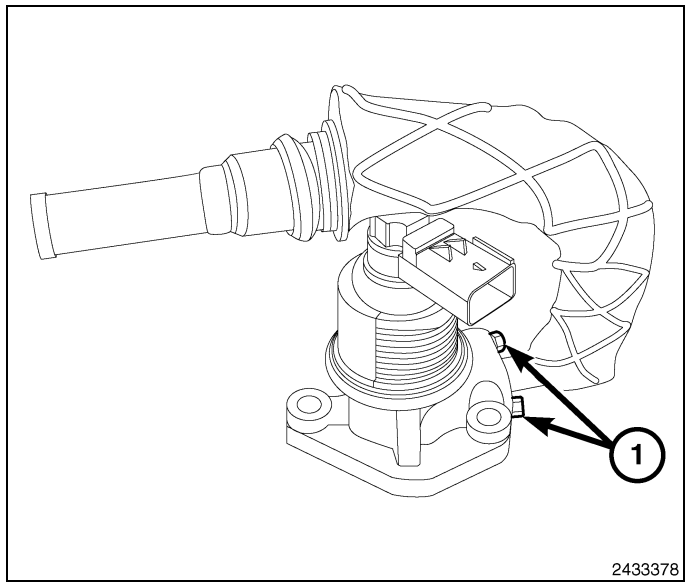

9. Position the EGR valve routing tube into the intake manifold until the EGR valve routing tube flange (1) is flush with the intake manifold.
10. Align the EGR valve to the cylinder head while holding the EGR valve gasket in place.

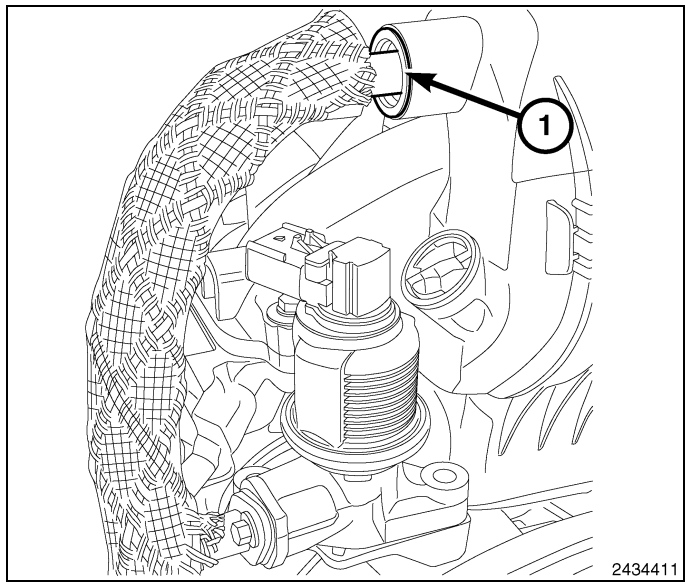

11. Install the EGR valve assembly retaining bolts (1) and tighten to 9 N·m (80 in. lbs.).

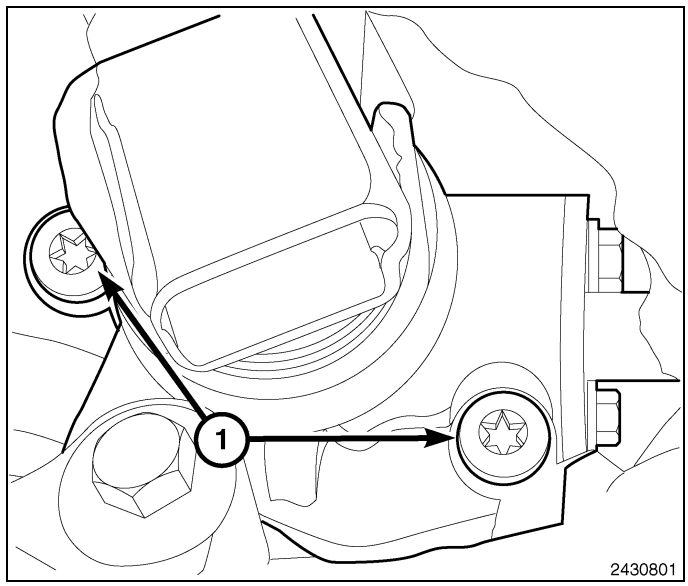

12. Connect the EGR valve solenoid electrical connector (1).
13. Connect the fuel line to the fuel rail.

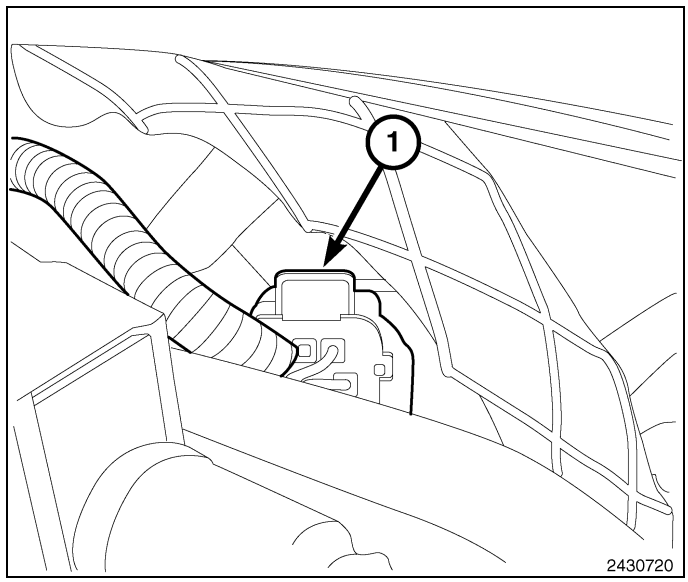

14. Connect the power brake booster vacuum hose (1) and the vapor canister purge hose (2) at the intake manifold.
15. Install the throttle body resonator.
16. Connect the negative battery cable.
17. Using a diagnostic scan tool, erase any previously recorded DTC's.

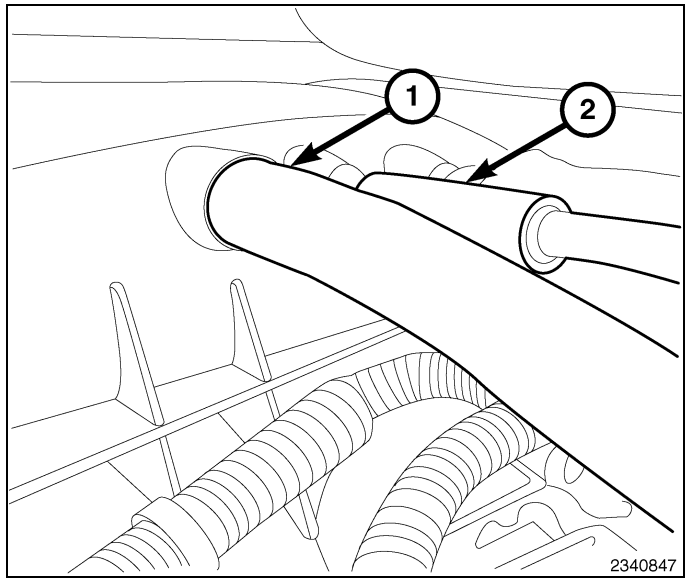

VALVE, Exhaust Gas Recirculation (EGR), 5.7L

Removal

The electronic EGR valve and solenoid assembly (3) is attached to the front of the right cylinder head (1). An exhaust gas routing tube connects the EGR valve to the intake manifold.

1. Use a diagnostic scan tool to record any DTC's (Diagnostic Trouble Codes).
2. Disconnect and isolate the negative battery cable.

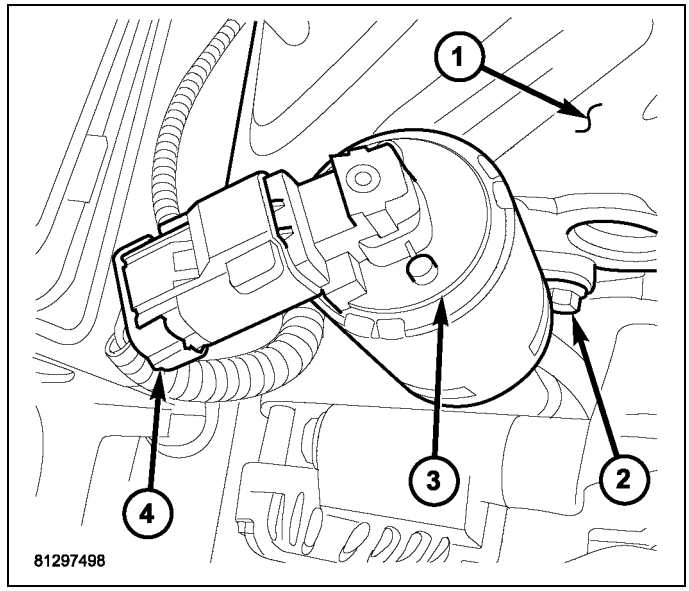

3. Disconnect electrical connector (1) from EGR solenoid (2).
4. Remove two bolts (3) connecting EGR tube (4) to valve assembly.
5. Remove gasket located between EGR tube flange and EGR valve assembly.

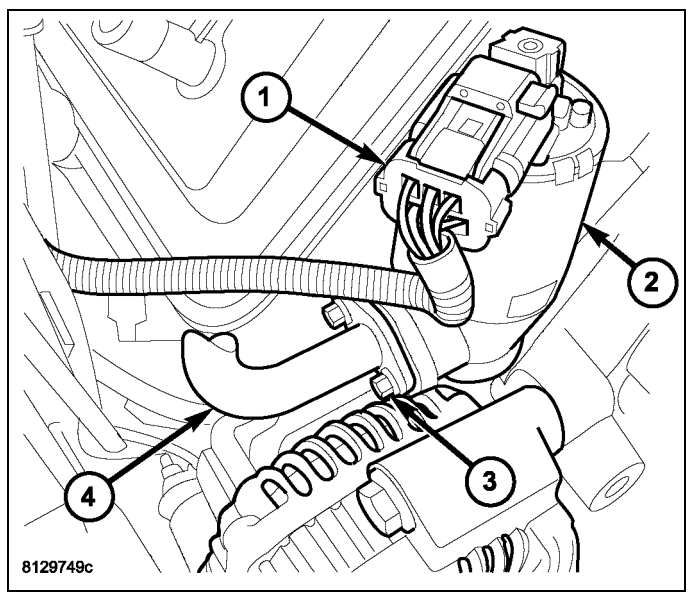

6. Remove two mounting bolts (2).
7. Separate valve assembly (3) from cylinder head (1).
8. Remove and discard metal gasket located between cylinder head and valve assembly.

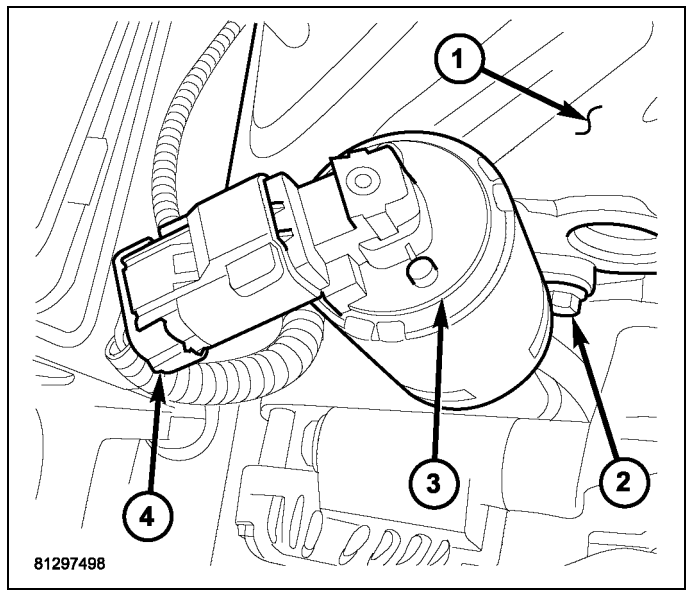

Installation

1. Position a new metal gasket between cylinder head (1) and valve assembly (3).
2. Install two mounting bolts (2) and tighten to 20 ft. lbs. (27 N·m).

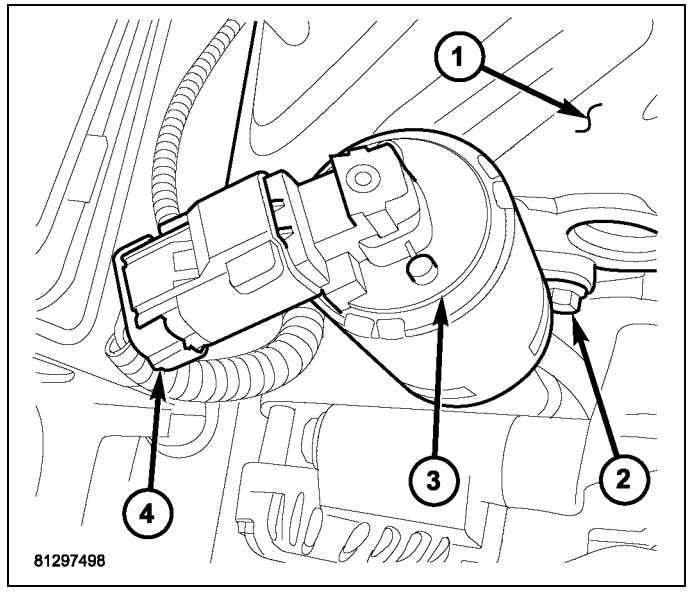

3. Clean EGR tube where it joins EGR valve.
4. Position new gasket between EGR tube flange and EGR valve assembly.
5. Install two bolts (3) connecting EGR tube (4) to valve assembly (2). Tighten bolts to 20 ft. lbs. (27 N·m).
6. Connect electrical connector (1) to EGR solenoid (2).
7. Connect negative battery cable.
8. Using a diagnostic scan tool, erase any previously recorded DTC's (Diagnostic Trouble Codes).

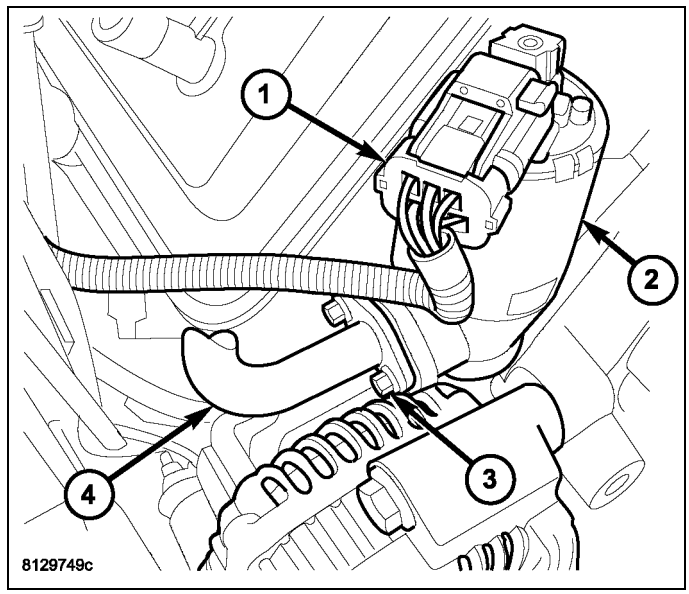

ON-BOARD DIAGNOSTICS

TABLE OF CONTENTS

page

ON-BOARD DIAGNOSTICS
DESCRIPTION 36
OPERATION 37

page

TASK MANAGER
DESCRIPTION 39
OPERATION 39

On-Board Diagnostics

Description

Acronym	Description
APPS	Accelerator Pedal Position Sensor
AAT	Ambient Air Temperature
ABS	Anti-Lock Brake System
ASD	Auto Shut Down
BARO	Barometric
CGW	Central Gateway
CKP	Crankshaft Position Sensor
CMP	Camshaft Position Sensor
CMTC	Compass/Mini-Trip Computer
DLC	Data Link Connector
DTC	Diagnostic Trouble Code
EATX	Electronic Automatic Transaxle
ECT	Engine Coolant Temperature
ECM	Engine Control Module
EGR	Exhaust Gas Recirculation
ETC	Electronic Throttle Control
GEN	Generator
GPEC	Global Powertrain Engine Controller
FCM	Front Control Module
FDCM	Final Drive Control Module
IAT	Intake/Inlet Air Temperature
IAC	Idle Air Control
IOD	Ignition Off-Draw
IPM	Integrated Power Module
JTEC	Jeep Truck Engine Controller
KS	Knock Sensor
LDP	Leak Detection Pump
MAP	Manifold Air Pressure
MDS	Multi-DisplacementSystem
MIC	Mechanical Instrument Cluster
MIL	Malfunction Indicator Lamp
MTV	Manifold Tuning Valve
NGC	Next Generation Controller
NVLD	Natural Vacuum Leak Detection
O2S	Oxygen Sensor
OBD	On Board Diagnostic
PDC	Power Distribution Center

PCI	Programmable Communication Interface
PCM	Powertrain Control Module
PCV	Positive Crankcase Ventilation
PEP	Peripheral Expansion Port
SBEC	Single Board Engine Controller
SCM	Steering Control Module
S/C	Speed Control
SKIM	Sentry Key Immobilizer Module
SKIS	Sentry Key Immobilizer System
SOL	Solenoid
SRV	Short Runner Valve
TCM	Transmission Control Module
TCC	Torque Converter Clutch
TIP	Throttle Inlet Pressure
TIPM	Totally Integrated Power Module
TP	Throttle Position
TPMS	Tire Pressure Monitor System
TRS	Transmission Range Sensor
VSS	Vehicle Speed Sensor/Signal
WIN	Wireless Ignition Node

Operation

The following procedure has been established to assist technicians in the field with enabling and running OBD II Monitors. The order listed in the following procedure is intended to allow the technician to effectively complete each monitor and to set the CARB Readiness Status in the least time possible.

NOTE:

Once the monitor run process has begun, do not turn off the ignition. By turning the ignition key off, monitor enabling conditions will be lost. EVAP Monitor runs after key off. By performing a Battery Disconnect, or Selecting Erase DTCs, the CARB Readiness and all additional OBD II information will be cleared.

Monitor Preliminary Checks:

1. Plug a scan tool into the vehicle's Data Link Connector (DLC).
2. Turn the ignition, KEY ON - ENGINE OFF. Watch for the MIL lamp illumination during the bulb check. MIL lamp must illuminate, if not, repair MIL lamp.
3. Using a scan tool check for Powertrain related DTCs.

- Verify that No Emissions Related DTCs are Present. If an Emissions DTC is Present, the OBD II Monitors may not run and the CARB Readiness will not update.
- The Emissions related DTC, will need to be repaired, then cleared. By clearing DTCs, the OBD Monitors will need to be run and completed to set the CARB Readiness Status.

Using the scan tool check the CARB Readiness Status.

Do all the CARB Readiness Status Locations read YES?

- YES - all monitors have been completed and this vehicle is ready to be I/M or Emission Tested.
- NO - then the following procedure needs to be followed to run/complete all available monitors.

NOTE:

Only the monitors, which are not YES in the CARB Readiness Status, need to be completed. Specific criteria need to be met for each monitor. The most efficient order to run the monitors has been outlined below, including suggestions to aid the process.

Evaporative Emission System Leak Detection with Purge Monitor

This monitor requires a cool down cycle, usually an overnight soak for at least 8 hours without the engine running. The ambient temperature must decrease overnight - parking the vehicle outside is advised. To run this test the fuel level must be between 15-85% full. Criteria for EVAP monitor:

- Engine off time greater than one hour .
- Fuel Level between 15% and 85%.
- Start Up ECT and IAT within 10°C (18°F).
- Vehicle started and run until Purge Monitor reports a result.

NOTE: If the vehicle does not report a result and the conditions where correct. It may take up to two weeks to fail the small leak monitor. DO NOT use this test to attempt to determine a fault. Use the appropriate service information procedure for finding a small leak. If there are no faults and the conditions are correct this test will run and report a pass. Note the Small leak test can find leaks less than 10 thousands of an inch. If a small leak is present it takes approximately one week of normal driving to report a failure.

Catalyst / O2 Monitor

The Catalyst and O2 Monitor information are acquired and processed at the same time. Most vehicles will need to be driven at highway speed (less than 50 mph) (73km/h) for a few minutes. Some vehicles run the monitor at idle in drive. If the vehicle is equipped with a manual transmission, using 4th gear may assist in meeting the monitor running criteria.

- Engine RPM between 1200 to 3000.
- Enginetemperature greater than 70°C (158°F)
- Engine run time greater than 92 seconds
- MAP between 10 - 20 kPa (7.5 - 15 Hg)
- Vehicle speed between 20 - 70 mph (29–103 km/h)

EGR Monitor

After the vehicle has reached the below conditions and during a throttle decel the EGR monitor will run.

- Engine RPM between 1375 - 2500
- Engine temperature greater than 70°C (158°F)
- Engine run time greater than 125 seconds
- Vehicle speed between 25 - 70 mph (37–103 km/h)

O2 Sensor Heater Monitor

This monitor is now continuously running once the heaters are energized. Pass information will be processed at power down.

Mis-Fire Monitor

The Misfire Monitor is a continuous two-trip monitor. The monitor uses two different tests/counters:

NOTE: The Adaptive Numerator must be learned before the PCM will run the Mis-Fire Monitor. The PCM updates the Adaptive Numerator at every key-ON, and is relearned after battery disconnect. The Misfire Monitor will not run until the Adaptive Numerator has updated since the last battery disconnect. If the Adaptive Numerator is equal to the default value then the PCM knows that the Adaptive Numerator has not been learned and does not permit the Misfire Monitor to run. If the Adaptive Numerator exceeds a calibrated percentage, the PCM sets a DTC for CKP NOT LEARNED and illuminates the MIL.

- 200 Revolution Counter - Looks for misfire that can cause immediate catalyst damage.
- 1000 Revolution Counter - Looks for misfire that can cause emissions to increase 1.5 times the Federal Test Procedure (FTP) standards. This test must also identify misfire percentages that might cause a “durability demonstration vehicle” to fail an Inspection and Maintenance Program tailpipe emissions test.

TASK MANAGER

Description

The PCM is responsible for efficiently coordinating the operation of all the emissions-related components. The PCM is also responsible for determining if the diagnostic systems are operating properly. The software designed to carry out these responsibilities is call the “Task Manager”.

Operation

The Task Manager determines when tests happen and when functions occur. Many of the diagnostic steps required by OBD II must be performed under specific operating conditions. The Task Manager software organizes and prioritizes the diagnostic procedures. The job of the Task Manager is to determine if conditions are appropriate for tests to be run, monitor the parameters for a trip for each test, and record the results of the test. Following are the responsibilities of the Task Manager software:

- Test Sequence
- MIL Illumination
- Diagnostic Trouble Codes (DTCs)
- Trip Indicator
- Freeze Frame Data Storage
- Similar Conditions Window

Test Sequence

In many instances, emissions systems must fail diagnostic tests more than once before the PCM illuminates the MIL. These tests are known as 'two trip monitors.' Other tests that turn the MIL lamp on after a single failure are known as 'one trip monitors.' A trip is defined as 'start the vehicle and operate it to meet the criteria necessary to run the given monitor.'

Many of the diagnostic tests must be performed under certain operating conditions. However, there are times when tests cannot be run because another test is in progress (conflict), another test has failed (pending) or the Task Manager has set a fault that may cause a failure of the test (suspend).

Pending

Under some situations the Task Manager will not run a monitor if the MIL is illuminated and a fault is stored from another monitor. In these situations, the Task Manager postpones monitors **pending** resolution of the original fault. The Task Manager does not run the test until the problem is remedied.

For example, when the MIL is illuminated for an Oxygen Sensor fault, the Task Manager does not run the Catalyst Monitor until the Oxygen Sensor fault is remedied. Since the Catalyst Monitor is based on signals from the Oxygen Sensor, running the test would produce inaccurate results.

Conflict

There are situations when the Task Manager does not run a test if another monitor is in progress. In these situations, the effects of another monitor running could result in an erroneous failure. If this **conflict** is present, the monitor is not run until the conflicting condition passes. Most likely the monitor will run later after the conflicting monitor has passed.

For example, if the Fuel System Monitor is in progress, the Task Manager does not run the catalyst Monitor. Since both tests monitor changes in air/fuel ratio and adaptive fuel compensation, the monitors will conflict with each other.

Suspend

Occasionally the Task Manager may not allow a two trip fault to mature. The Task Manager will **suspend** the maturing of a fault if a condition exists that may induce an erroneous failure. This prevents illuminating the MIL for the wrong fault and allows more precise diagnosis.

For example, if the PCM is storing a one trip fault for the Oxygen Sensor and the catalyst monitor, the Task Manager may still run the catalyst Monitor but will suspend the results until the Oxygen Sensor Monitor either passes or fails. At that point the Task Manager can determine if the catalyst system is actually failing or if an Oxygen Sensor is failing.

MIL Illumination

The PCM Task Manager carries out the illumination of the MIL. The Task Manager triggers MIL illumination upon test failure, depending on monitor failure criteria.

The Task Manager Screen shows both a Requested MIL state and an Actual MIL state. When the MIL is illuminated upon completion of a test for a good trip, the Requested MIL state changes to OFF. However, the MIL remains illuminated until the next key cycle. (On some vehicles, the MIL will actually turn OFF during the thirdgood trip) During the key cycle for the third good trip, the Requested MIL state is OFF, while the Actual MIL state is ON. After the next key cycle, the MIL is not illuminated and both MIL states read OFF.

Diagnostic Trouble Codes (DTCs)

With OBD II, different DTC faults have different priorities according to regulations. As a result, the priorities determine MIL illumination and DTC erasure. DTCs are entered according to individual priority. DTCs with a higher priority overwrite lower priority DTCs.

Priorities

- Priority 1 One-Trip Failure of Non-Fuel or Non-Mis-Fire Fault (e.g., Cat Mon Failure)
- Priority 3 Matured Fault (either One-Trip or Two-Trip) Non-Fuel AND Non-Mis-Fire
- Priority 4 One-Trip Failure of Fuel System or Mis-Fire Fault
- Priority 6 Matured Fault for Fuel System or Mis-Fire (either One-Trip or Two-Trip)

Non-emissions related failures have no priority. One trip failures of two trip faults have low priority. Two trip failures or matured faults have higher priority. One and two trip failures of fuel system and misfire monitor take precedence over non-fuel system and non-misfire failures.

DTC Self Erasure

With one trip components or systems, the MIL is illuminated upon test failure and DTCs are stored.

Two trip monitors are components requiring failure in two consecutive trips for MIL illumination. Upon failure of the first test, the Task Manager enters a maturing code. If the component fails the test for a second time the code matures and a DTC is set.

After three good trips the MIL is extinguished and the Task Manager automatically switches the trip counter to a warm-up cycle counter. DTCs are automatically erased following 40 warm-up cycles if the component does not fail again.

For misfire and fuel system monitors, the component must pass the test under a Similar Conditions Window in order to record a good trip. A Similar Conditions Window is when engine RPM is within ±375 RPM and load is within ±20% of when the fault occurred.

NOTE: It is important to understand that a component does not have to fail under a similar window of operation to mature. It must pass the test under a Similar Conditions Window when it failed to record a Good Trip for DTC erasure for misfire and fuel system monitors.

DTCs can be erased anytime with a scan tool. Erasing the DTC with the scan tool erases all OBD II information. The scan tool automatically displays a warning that erasing the DTC will also erase all OBD II monitor data. This includes all counter information for warm-up cycles, trips and Freeze Frame.

Trip Indicator

The **Trip** is essential for running monitors and extinguishing the MIL. In OBD II terms, a trip is a set of vehicle operating conditions that must be met for a specific monitor to run. All trips begin with a key cycle.

Good Trip

The Good Trip counters are as follows:

- Global Good Trip
- Fuel System Good Trip
- Misfire Good Trip
- Alternate Good Trip (appears as a Global Good Trip on scan tool)
  a. Comprehensive Components
  b. Major Monitor
- Warm-Up Cycles

Global Good Trip

To increment a Global Good Trip, the Oxygen sensor and Catalyst efficiency monitors must have run and passed, and 2 minutes of engine run time.

Fuel System Good Trip

To count a good trip (three required) and turn off the MIL, the following conditions must occur:

- Engine in closed loop
- Operating in Similar Conditions Window
- Short Term multiplied by Long Term less than threshold
- Less than threshold for a predetermined time

If all of the previous criteria are met, the PCM will count a good trip (three required) and turn off the MIL.

Misfire Good Trip

If the following conditions are met the PCM will count one good trip (three required) in order to turn off the MIL:

- Operating in Similar Condition Window
- 1000 engine revolutions with no misfire

Alternate Good Trip

Alternate Good Trips are used in place of Global Good Trips for Comprehensive Components and Major Monitors. If the Task Manager cannot run a Global Good Trip because a component fault is stopping the monitor from running, it will attempt to count an Alternate Good Trip.

The Task Manager counts an Alternate Good Trip for Comprehensive components when the following conditions are met:

- Two minutes of engine run time, idle or driving
- No other faults occur

The Task Manager counts an Alternate Good Trip for a Major Monitor when the monitor runs and passes. Only the Major Monitor that failed needs to pass to count an Alternate Good Trip.

Warm-Up Cycles

Once the MIL has been extinguished by the Good Trip Counter, the PCM automatically switches to a Warm-Up Cycle Counter that can be viewed on the scan tool. Warm-Up Cycles are used to erase DTCs and Freeze Frames. Forty Warm-Up cycles must occur in order for the PCM to self-erase a DTC and Freeze Frame. A Warm-Up Cycle is defined as follows:

- Engine coolant temperature must start below and rise above 160° F (71° C)
- Engine coolant temperature must rise by 40° F (4.5° C)
- No further faults occur

Freeze Frame Data Storage

Once a failure occurs, the Task Manager records several engine operating conditions and stores it in a Freeze Frame. The Freeze Frame is considered one frame of information taken by an on-board data recorder. When a fault occurs, the PCM stores the input data from various sensors so that technicians can determine under what vehicle operating conditions the failure occurred.

The data stored in Freeze Frame is usually recorded when a system fails the first time for two trip faults. Freeze Frame data will only be overwritten by a different fault with a higher priority.

CAUTION: Erasing DTCs, either with the scan tool, or by disconnecting the battery, also clears all Freeze Frame data.

Similar Conditions Window

The Similar Conditions Window displays information about engine operation during a monitor. Absolute MAP (engine load) and Engine RPM are stored in this window when a failure occurs. There are two different Similar conditions Windows: Fuel System and Misfire.

FUEL SYSTEM

- **Fuel System Similar Conditions Window** — An indicator that 'Absolute MAP When Fuel Sys Fail' and 'RPM When Fuel Sys Failed' are all in the same range when the failure occurred. Indicated by switching from 'NO' to 'YES'.
- **Absolute MAP When Fuel Sys Fail** — The stored MAP reading at the time of failure. Informs the user at what engine load the failure occurred.
- **Absolute MAP** — A live reading of engine load to aid the user in accessing the Similar Conditions Window.
- **RPM When Fuel Sys Fail** — The stored RPM reading at the time of failure. Informs the user at what engine RPM the failure occurred.
- **Engine RPM** — A live reading of engine RPM to aid the user in accessing the Similar Conditions Window.

- **Adaptive Memory Factor** — The PCM utilizes both Short Term Compensation and Long Term Adaptive to calculate the Adaptive Memory Factor for total fuel correction.
- **Upstream O2S Volts** — A live reading of the Oxygen Sensor to indicate its performance. For example, stuck lean, stuck rich, etc.
- **SCW Time in Window (Similar Conditions Window Time in Window)** - A timer used by the PCM that indicates that, after all Similar Conditions have been met, if there has been enough good engine running time in the SCW without failure detected. This timer is used to increment a Good Trip.
- **Fuel System Good Trip Counter** — A Trip Counter used to turn OFF the MIL for Fuel System DTCs. To increment a Fuel System Good Trip, the engine must be in the Similar Conditions Window, Adaptive Memory Factor must be less than calibrated threshold and the Adaptive Memory Factor must stay below that threshold for a calibrated amount of time.
- **Test Done This Trip** — Indicates that the monitor has already been run and completed during the current trip.

MISFIRE

- **Same Misfire Warm-Up State** — Indicates if the misfire occurred when the engine was warmed up (above 160° F).
- **In Similar Misfire Window** — An indicator that 'Absolute MAP When Misfire Occurred' and 'RPM When Misfire Occurred' are all in the same range when the failure occurred. Indicated by switching from 'NO' to 'YES'.
- **Absolute MAP When Misfire Occurred** — The stored MAP reading at the time of failure. Informs the user at what engine load the failure occurred.
- **Absolute MAP** — A live reading of engine load to aid the user in accessing the Similar Conditions Window.
- **RPM When Misfire Occurred** — The stored RPM reading at the time of failure. Informs the user at what engine RPM the failure occurred.
- **Engine RPM** — A live reading of engine RPM to aid the user in accessing the Similar Conditions Window.
- **Adaptive Memory Factor** — The PCM utilizes both Short Term Compensation and Long Term Adaptive to calculate the Adaptive Memory Factor for total fuel correction.
- **200 Rev Counter** — Counts 0–100 720 degree cycles.
- **SCW Cat 200 Rev Counter** — Counts when in similar conditions.
- **SCW FTP 1000 Rev Counter** — Counts 0–4 when in similar conditions.
- **Misfire Good Trip Counter** — Counts up to three to turn OFF the MIL.

DTC-BASED DIAGNOSTICS

TABLE OF CONTENTS

page

DTC-BASED DIAGNOSTICS
SPECIAL TOOLS 25
AMPLIFIER (AMP)
DIAGNOSIS AND TESTING
B1460-CHANNEL 1 AUDIO SPEAKER OUTPUT CIRCUIT PERFORMANCE . . . 30
B1461-CHANNEL 1 AUDIO SPEAKER OUTPUT CIRCUIT LOW 31
B1462-CHANNEL 1 AUDIO SPEAKER OUTPUT CIRCUIT HIGH 34
B1463-CHANNEL 1 AUDIO SPEAKER OUTPUT CIRCUIT OPEN 37
B1464-CHANNEL 1 AUDIO SPEAKER OUTPUT CIRCUIT SHORTED TOGETHER 40
B1465-CHANNEL 2 AUDIO SPEAKER OUTPUT CIRCUIT PERFORMANCE . . . 42
B1466-CHANNEL 2 AUDIO SPEAKER OUTPUT CIRCUIT LOW 43
B1467-CHANNEL 2 AUDIO SPEAKER OUTPUT CIRCUIT HIGH 46
B1468-CHANNEL 2 AUDIO SPEAKER OUTPUT CIRCUIT OPEN 49
B1469-CHANNEL 2 AUDIO SPEAKER OUTPUT CIRCUIT SHORTED TOGETHER 52
B146A-CHANNEL 3 AUDIO SPEAKER OUTPUT CIRCUIT PERFORMANCE . . . 54
B146B-CHANNEL 3 AUDIO SPEAKER OUTPUT CIRCUIT LOW 55
B146C-CHANNEL 3 AUDIO SPEAKER OUTPUT CIRCUIT HIGH 58
B146D-CHANNEL 3 AUDIO SPEAKER OUTPUT CIRCUIT OPEN 61
B146E-CHANNEL 3 AUDIO SPEAKER OUTPUT CIRCUIT SHORTED TOGETHER 64
B146F-CHANNEL 4 AUDIO SPEAKER OUTPUT CIRCUIT PERFORMANCE . . . 66
B1470-CHANNEL 4 AUDIO SPEAKER OUTPUT CIRCUIT LOW 68
B1471-CHANNEL 4 AUDIO SPEAKER OUTPUT CIRCUIT HIGH 71
B1472-CHANNEL 4 AUDIO SPEAKER OUTPUT CIRCUIT OPEN 74

page

B1473-CHANNEL 4 AUDIO SPEAKER OUTPUT CIRCUIT SHORTED TOGETHER 77
B1474-CHANNEL 5 AUDIO SPEAKER OUTPUT CIRCUIT PERFORMANCE . . . 79
B1475-CHANNEL 5 AUDIO SPEAKER OUTPUT CIRCUIT LOW 81
B1476-CHANNEL 5 AUDIO SPEAKER OUTPUT CIRCUIT HIGH 84
B1477-CHANNEL 5 AUDIO SPEAKER OUTPUT CIRCUIT OPEN 87
B1478-CHANNEL 5 AUDIO SPEAKER OUTPUT CIRCUIT SHORTED TOGETHER 90
B1479-CHANNEL 6 AUDIO SPEAKER OUTPUT CIRCUIT PERFORMANCE . . . 92
B147A-CHANNEL 6 AUDIO SPEAKER OUTPUT CIRCUIT LOW 94
B147B-CHANNEL 6 AUDIO SPEAKER OUTPUT CIRCUIT HIGH 97
B147C-CHANNEL 6 AUDIO SPEAKER OUTPUT CIRCUIT OPEN 100
B147D-CHANNEL 6 AUDIO SPEAKER OUTPUT CIRCUIT SHORTED TOGETHER 103
B147E-CHANNEL 7 AUDIO SPEAKER OUTPUT CIRCUIT PERFORMANCE . . .105
B147F-CHANNEL 7 AUDIO SPEAKER OUTPUT CIRCUIT LOW 107
B1480-CHANNEL 7 AUDIO SPEAKER OUTPUT CIRCUIT HIGH 110
B1481-CHANNEL 7 AUDIO SPEAKER OUTPUT CIRCUIT OPEN 113
B1482-CHANNEL 7 AUDIO SPEAKER OUTPUT CIRCUIT SHORTED TOGETHER 116
B1483-CHANNEL 8 AUDIO SPEAKER OUTPUT CIRCUIT/PERFORMANCE . . .118
B1484-CHANNEL 8 AUDIO SPEAKER OUTPUT CIRCUIT LOW 120
B1485-CHANNEL 8 AUDIO SPEAKER OUTPUT CIRCUIT HIGH 123
B1486-CHANNEL 8 AUDIO SPEAKER OUTPUT CIRCUIT OPEN 126
B1487-CHANNEL 8 AUDIO SPEAKER OUTPUT CIRCUIT SHORTED TOGETHER 129

continued..

page

B1488-CABIN EQ MISMATCH PERFORMANCE 131
B14B9-CHANNEL 9 AUDIO SPEAKER OUTPUT CIRCUIT PERFORMANCE . . .133
B14BA-CHANNEL 9 AUDIO SPEAKER OUTPUT CIRCUIT LOW 134
B14BB-CHANNEL 9 AUDIO SPEAKER OUTPUT CIRCUIT HIGH 137
B14BC-CHANNEL 9 AUDIO SPEAKER OUTPUT CIRCUIT OPEN 140
B14BD-CHANNEL 9 AUDIO SPEAKER OUTPUT CIRCUIT SHORTED TOGETHER 143
B14BE-CHANNEL 10 AUDIO SPEAKER OUTPUT CIRCUIT PERFORMANCE . . .145
B14BF-CHANNEL 10 AUDIO SPEAKER OUTPUT CIRCUIT LOW 147
B14C0-CHANNEL 10 AUDIO SPEAKER OUTPUT CIRCUIT HIGH 150
B14C1-CHANNEL 10 AUDIO SPEAKER OUTPUT CIRCUIT OPEN 153
B14C2-CHANNEL 10 AUDIO SPEAKER OUTPUT CIRCUIT SHORTED TOGETHER 156
B14C3-CHANNEL 11 AUDIO SPEAKER OUTPUT CIRCUIT PERFORMANCE . . .158
B14C4-CHANNEL 11 AUDIO SPEAKER OUTPUT CIRCUIT LOW 160
B14C6-CHANNEL 11 AUDIO SPEAKER OUTPUT CIRCUIT OPEN 163
B14C5-CHANNEL 11 AUDIO SPEAKER OUTPUT CIRCUIT HIGH 166
B14C7-CHANNEL 11 AUDIO SPEAKER OUTPUT CIRCUIT SHORTED TOGETHER 169
B210D-BATTERY VOLTAGE LOW 171
B210E-BATTERY VOLTAGE HIGH 172
B221F-AMPLIFIER INTERNAL 173
B222C-VEHICLE CONFIGURATION NOT PROGRAMMED 173
U0010-CAN INTERIOR BUS 176
U0141-LOST COMMUNICATION WITH IPM (FCM/TIPM). 178
U0184-LOST COMMUNICATION WITH RADIO 180
CONTROLLER, OCCUPANT RESTRAINT (ORC)
DIAGNOSIS AND TESTING
B0001-11-DRIVER FRONTAL SQUIB 1 CONTROL - CIRCUIT SHORT TO GROUND. 182
B0001-12-DRIVER FRONTAL SQUIB 1 CONTROL - CIRCUIT SHORT TO BATTERY. 187
B0001-13-DRIVER FRONTAL SQUIB 1 CONTROL - CIRCUIT OPEN. 192
B0001-2B-DRIVER FRONTAL SQUIB 1 CONTROL - WIRES SHORTED TOGETHER 197
B0002-11-DRIVER FRONTAL SQUIB 2 CONTROL - CIRCUIT SHORT TO GROUND. 202
B0002-12-DRIVER FRONTAL SQUIB 2 CONTROL - CIRCUIT SHORT TO BATTERY. 207
B0002-13-DRIVER FRONTAL SQUIB 2 CONTROL - CIRCUIT OPEN. 212
B0002-2B-DRIVER FRONTAL SQUIB 2 CONTROL - WIRES SHORTED TOGETHER 217
B0010-11-PASSENGER FRONTAL SQUIB 1 CONTROL - CIRCUIT SHORT TO GROUND. 221
B0010-12-PASSENGER FRONTAL SQUIB 1 CONTROL - CIRCUIT SHORT TO BATTERY. 225
B0010-13-PASSENGER FRONTAL SQUIB 1 CONTROL - CIRCUIT OPEN . .229
B0010-2B-PASSENGER FRONTAL SQUIB 1 CONTROL - WIRES SHORTED TOGETHER. 233
B0011-11-PASSENGER FRONTAL SQUIB 2 CONTROL - CIRCUIT SHORT TO GROUND. 237
B0011-12-PASSENGER FRONTAL SQUIB 2 CONTROL - CIRCUIT SHORT TO BATTERY. 241
B0011-13-PASSENGER FRONTAL SQUIB 2 CONTROL - CIRCUIT OPEN . .245
B0011-2B-PASSENGER FRONTAL SQUIB 2 CONTROL - WIRES SHORTED TOGETHER. 249
B0021-11-LEFT CURTAIN DEPLOYMENT SQUIB 1 - CIRCUIT SHORT TO GROUND. 253
B0021-12-LEFT CURTAIN DEPLOYMENT SQUIB 1 - CIRCUIT SHORT TO BATTERY. 257
B0021-13-LEFT CURTAIN DEPLOYMENT SQUIB 1 - CIRCUIT OPEN. 261
B0021-2B-LEFT CURTAIN DEPLOYMENT SQUIB 1 - WIRES SHORTED TOGETHER. 265
B0029-11-RIGHT CURTAIN DEPLOYMENT SQUIB 1 - CIRCUIT SHORT TO GROUND. 269
B0029-12-RIGHT CURTAIN DEPLOYMENT SQUIB 1 - CIRCUIT SHORT TO BATTERY. 273

continued..

page

B0029-13-RIGHT CURTAIN DEPLOYMENT SQUIB 1 - CIRCUIT OPEN 277
B0029-2B-RIGHT CURTAIN DEPLOYMENT SQUIB 1 - WIRES SHORTED TOGETHER. 281
B0050-11-DRIVER SEATBELT SENSOR - CIRCUIT SHORT TO GROUND 285
B0050-12-DRIVER SEATBELT SENSOR - CIRCUIT SHORT TO BATTERY 289
B0050-13-DRIVER SEATBELT SENSOR - CIRCUIT OPEN 293
B0090-49-LEFT FRONTAL RESTRAINTS SENSOR - INTERNAL ELECTRONIC FAILURE 297
B0095-49-RIGHT FRONTAL ACCELERATION SENSOR - INTERNAL ELECTRONIC FAILURE. . . .299
B0091-49-LEFT SIDE ACCELERATION SENSOR 1 - INTERNAL ELECTRONIC FAILURE 301
B0092-49-LEFT SIDE ACCELERATION SENSOR 2 - INTERNAL ELECTRONIC FAILURE 303
B009A-49-LEFT SIDE SATELLITE SENSOR 4 - INTERNAL ELECTRONIC FAILURE 305
B0096-49-RIGHT SIDE ACCELERATION SENSOR 1 - INTERNAL ELECTRONIC FAILURE 307
B0097-49-RIGHT SIDE ACCELERATION SENSOR 2 - INTERNAL ELECTRONIC FAILURE 309
B009D-49-RIGHT SIDE SATELLITE SENSOR 4 - INTERNAL ELECTRONIC FAILURE 311
B00B5-11-DRIVER SEAT TRACK POSITION RESTRAINTS SENSOR - CIRCUIT SHORT TO GROUND 313
B00B5-12-DRIVER SEAT TRACK POSITION RESTRAINTS SENSOR - CIRCUIT SHORT TO BATTERY 316
B00B5-13-DRIVER SEAT TRACK POSITION RESTRAINTS SENSOR - CIRCUIT OPEN 320
B1BA5-00-AIRBAG SQUIB CONFIGURATION MISMATCH - 323
B1BC7-00-DEPLOYMENT DATA RECORD FULL - 325
B007E-11-DRIVER SEATBELT RETRACTOR PRETENSIONER DEPLOYMENT CONTROL - CIRCUIT SHORT TO GROUND. 326

page

B007E-12-DRIVER SEATBELT RETRACTOR PRETENSIONER DEPLOYMENT CONTROL - CIRCUIT SHORT TO BATTERY. 330
B007E-13-DRIVER SEATBELT RETRACTOR PRETENSIONER DEPLOYMENT CONTROL - CIRCUIT OPEN. 334
B007E-2B-DRIVER SEATBELT RETRACTOR PRETENSIONER DEPLOYMENT CONTROL - WIRES SHORTED TOGETHER. 338
B007F-11-PASSENGER SEATBELT RETRACTOR PRETENSIONER DEPLOYMENT CONTROL - CIRCUIT SHORT TO GROUND. 342
B007F-12-PASSENGER SEATBELT RETRACTOR PRETENSIONER DEPLOYMENT CONTROL - CIRCUIT SHORT TO BATTERY. 346
B007F-13-PASSENGER SEATBELT RETRACTOR PRETENSIONER DEPLOYMENT CONTROL - CIRCUIT OPEN. 350
B007F-2B-PASSENGER SEATBELT RETRACTOR PRETENSIONER DEPLOYMENT CONTROL - WIRES SHORTED TOGETHER. 354
B2199-16-BATTERY VOLTAGE - CIRCUIT VOLTAGE BELOW THRESHOLD 358
B2199-17-BATTERY VOLTAGE - CIRCUIT VOLTAGE ABOVE THRESHOLD 361
B212C-13-IGNITION RUN/START INPUT - CIRCUIT OPEN 363
B212D-13-IGNITION RUN ONLY INPUT-CIRCUIT OPEN 369
B210F-00-LOSS OF BATTERY VOLTAGE 374
B2207-00-OCCUPANT RESTRAINT CONTROLLER INTERNAL 1 377
B2208-00-OCCUPANT RESTRAINT CONTROLLER INTERNAL 2 378
B2209-00-OCCUPANT RESTRAINT CONTROLLER INTERNAL 3 379
B220A-00-OCCUPANT RESTRAINT CONTROLLER INTERNAL 4 379
B220B-00-OCCUPANT RESTRAINT CONTROLLER FIRING STORED ENERGY 380
B223B-00-VEHICLE CONFIGURATION MISMATCH - 381
B222A-00-VEHICLE LINE MISMATCH - . . .384
U0001-00-CAN C BUS 386

continued..

page

U0002-00-CAN C BUS OFF PERFORMANCE 388
U0141-00-LOST COMMUNICATION WITH IPM (FCM/TIPM) 390
U0170-00-LOST COMMUNICATION W/ UP-FRONT LEFT SATELLITE SENSOR 392
U0171-00-LOST COMMUNICATION W/ UP-FRONT RIGHT SATELLITE SENSOR 398
U0172-00-LOST COMMUNICATION W/ LEFT SIDE SATELLITE SENSOR 1 404
U0173-00-LOST COMMUNICATION W/ LEFT SIDE SATELLITE SENSOR 2 410
U0175-00-LOST COMMUNICATION W/ RIGHT SIDE SATELLITE SENSOR 1 . . .416
U0176-00-LOST COMMUNICATION W/ RIGHT SIDE SATELLITE SENSOR 2 . . .422
U11AD-00-LOST COMMUNICATION W/ LEFT SIDE SATELLITE SENSOR 4 428
U11B0-00-LOST COMMUNICATION W/ RIGHT SIDE SATELLITE SENSOR 4 . . .435
U1414-00-IMPLAUSIBLE/MISSING ECU NETWORK CONFIGURATION DATA - . .442
U1415-00-IMPLAUSIBLE/MISSING VEHICLE CONFIGURATION DATA - . . .444
STANDARD PROCEDURE
RESTRAINTS SYSTEM INTERMITTENT TEST 445
RESTRAINTS SYSTEM PRE-DIAGNOSTIC PROCEDURE 447
RESTRAINTS SYSTEM VERIFICATION TEST 448

HVAC, MTC

DIAGNOSIS AND TESTING
B1000-92-A/C SWITCH REQUEST INPUT - PERFORMANCE OR INCORRECT OPERATION 448
B1009-92-RECIRCULATION SWITCH REQUEST INPUT - PERFORMANCE OR INCORRECT OPERATION. 449
B1015-12-REAR DEFROST SWITCH REQUEST INPUT CIRCUIT/PERFORMANCE 450
B1030-11-EVAPORATOR TEMPERATURE SENSOR - CIRCUIT SHORT TO GROUND 452
B1030-12-EVAPORATOR TEMPERATURE SENSOR - CIRCUIT SHORT TO BATTERY. 456
B1058-13-RECIRCULATION DOOR CONTROL - CIRCUIT OPEN 461
B1058-92-RECIRCULATION DOOR CONTROL - PERFORMANCE OR INCORRECT OPERATION 465

page

B105C-00-RECIRCULATION DOOR TRAVEL RANGE TOO SMALL 469
B105D-00-RECIRCULATION DOOR TRAVEL RANGE TOO LARGE 471
B10B2-00-A/C COOL DOWN TEST PERFORMANCE 473
B11C2-13-FRONT MODE DOOR 1 CONTROL - CIRCUIT OPEN. 475
B11C2-92-FRONT MODE DOOR 1 CONTROL - PERFORMANCE OR INCORRECT OPERATION 479
B11C3-00-FRONT MODE DOOR 1 TRAVEL RANGE TOO SMALL 483
B11C4-00-FRONT MODE DOOR 1 TRAVEL RANGE TOO LARGE 485
B11CB-13-MAIN/LEFT TEMPERATURE DOOR 1 CONTROL - CIRCUIT OPEN . .488
B11CB-92-MAIN/LEFT TEMPERATURE DOOR 1 CONTROL - PERFORMANCE OR INCORRECT OPERATION. 492
B11CC-00-MAIN/LEFT TEMPERATURE DOOR 1 TRAVEL TOO SMALL 496
B11CD-00-MAIN/LEFT TEMPERATURE DOOR 1 TRAVEL TOO LARGE 498
B160F-11-TWILIGHT/AMBIENT LIGHT SENSOR INPUT - CIRCUIT SHORT TO GROUND 501
B160F-12-TWILIGHT/AMBIENT LIGHT SENSOR INPUT - CIRCUIT SHORT TO BATTERY 504
B210A-84-SYSTEM VOLTAGE LOW - SIGNAL BELOW ALLOWABLE RANGE 507
B210B-85-SYSTEM VOLTAGE HIGH - SIGNAL ABOVE ALLOWABLE RANGE 509
B210D-84-BATTERY VOLTAGE LOW - SIGNAL BELOW ALLOWABLE RANGE 512
B210E-85-BATTERY VOLTAGE HIGH - SIGNAL ABOVE ALLOWABLE RANGE 516
B2214-00-(HVAC) CLIMATE CONTROL INTERNAL 519
B222A-00-VEHICLE LINE MISMATCH 519
U0010-00-CAN INTERIOR BUS. 521
U0141-00-LOST COMMUNICATION WITH IPM (FCM/TIPM) 526
U0155-00-LOST COMMUNICATION WITH CLUSTER/CCN 528

continued..

page

STANDARD PROCEDURE
STANDARD PROCEDURE - HVAC SYSTEM TEST 529
HVAC PRE-DIAGNOSTIC TROUBLESHOOTING PROCEDURE . . .531
HVAC VERIFICATION TEST 532
HVAC, ATC
DIAGNOSIS AND TESTING
B1000-A/C SWITCH REQUEST INPUT CIRCUIT/PERFORMANCE 532
B1009-RECIRCULATION SWITCH REQUEST INPUT CIRCUIT/ PERFORMANCE 533
B1015-REAR DEFROST SWITCH REQUEST INPUT CIRCUIT/ PERFORMANCE 534
B1031-EVAPORATOR TEMPERATURE SENSOR CIRCUIT LOW 536
B1032-EVAPORATOR TEMPERATURE SENSOR CIRCUIT HIGH 539
B1034-INFRARED TEMPERATURE SENSOR CIRCUIT LOW 543
B1035-INFRARED TEMPERATURE SENSOR CIRCUIT HIGH 547
B1040-PANEL MODE DOOR 1 CONTROL CIRCUIT/PERFORMANCE 551
B1043-PANEL MODE DOOR 1 CONTROL CIRCUIT OPEN 556
B1044-PANEL MODE DOOR 1 TRAVEL RANGE TOO SMALL 559
B1045-PANEL MODE DOOR 1 TRAVEL RANGE TOO LARGE 561
B1058-RECIRCULATION DOOR CONTROL CIRCUIT/PERFORMANCE 564
B105B-RECIRCULATION DOOR CONTROL CIRCUIT OPEN 569
B105C-RECIRCULATION DOOR TRAVEL RANGE TOO SMALL 572
B105D-RECIRCULATION DOOR TRAVEL RANGE TOO LARGE 574
B109B-PANEL MODE DOOR 2 CONTROL CIRCUIT/ PERFORMANCE 577
B109E-PANEL MODE DOOR 2 CONTROL CIRCUIT OPEN 582
B109F-PANEL MODE DOOR 2 TRAVEL RANGE TOO SMALL 585
B10A0-PANEL MODE DOOR 2 TRAVEL RANGE TOO LARGE 587
B10A5-LEFT BLEND DOOR 1 CONTROL CIRCUIT OPEN 590
B10A6-LEFT BLEND DOOR 1 TRAVEL TOO SMALL 593
B10A7-LEFT BLEND DOOR 1 TRAVEL TOO LARGE 595
B10A8-LEFT BLEND DOOR ACTUATOR PERFORMANCE 598
B10AC-RIGHT BLEND DOOR CONTROL CIRCUIT OPEN 603
B10AD-RIGHT BLEND DOOR TRAVEL TOO SMALL 606
B10AE-RIGHT BLEND DOOR TRAVEL TOO LARGE 608
B10AF-RIGHT BLEND DOOR ACTUATOR PERFORMANCE 611
B10B2-A/C COOL DOWN TEST PERFORMANCE 615
B10E9-BLOWER MOTOR CONTROL CIRCUIT LOW 617
B10EA-BLOWER MOTOR CONTROL CIRCUIT HIGH. 621
B1141-CLIMATE SYNC SWITCH PERFORMANCE 624
B1184-LEFT TEMP UP SWITCH REQUEST INPUT CIRCUIT/ PERFORMANCE 625
B1185-LEFT TEMP DOWN SWITCH REQUEST INPUT CIRCUIT/PERFORMANCE 626
B1186-RIGHT TEMP UP SWITCH REQUEST INPUT CIRCUIT/ PERFORMANCE 627
B1187-RIGHT TEMP DOWN SWITCH REQUEST INPUT CIRCUIT/PERFORMANCE 628
B1601-LEFT SOLAR SENSOR CIRCUIT LOW 630
B1602-LEFT SOLAR SENSOR CIRCUIT HIGH 633
B1604-RIGHT SOLAR SENSOR CIRCUIT LOW 637
B1605-RIGHT SOLAR SENSOR CIRCUIT HIGH 640
B1610-AMBIENT LIGHT SENSOR 1 INPUT CIRCUIT LOW. 644
B1611-AMBIENT LIGHT SENSOR 1 INPUT CIRCUIT HIGH 647
B2214-00-(HVAC) CLIMATE CONTROL INTERNAL 650
B222A-VEHICLE LINE MISMATCH 650
U0010-CAN INTERIOR BUS 652
U0141-LOST COMMUNICATION WITH IPM (FCM/TIPM). 656
U0155-LOST COMMUNICATION WITH CLUSTER/CCN 659

continued..

page

STANDARD PROCEDURE
STANDARD PROCEDURE - HVAC SYSTEM TEST 660
HVAC PRE-DIAGNOSTIC TROUBLESHOOTING PROCEDURE . . .662
HVAC VERIFICATION TEST 663
MODULE, ANTILOCK BRAKE (ABS)
DIAGNOSIS AND TESTING
C1000-BRAKE PEDAL SWITCH 1 CIRCUIT PERFORMANCE 664
C1008-BRAKE FLUID LEVEL CIRCUIT HIGH 669
C1009-BRAKE FLUID LEVEL LOW 673
C100A-LEFT FRONT WHEEL SPEED SENSOR CIRCUIT 676
C1011-LEFT FRONT WHEEL SPEED SENSOR SIGNAL ERRATIC PERFORMANCE 683
C1014-LEFT FRONT WHEEL SPEED COMPARATIVE PERFORMANCE 690
C1015-RIGHT FRONT WHEEL SPEED SENSOR CIRCUIT 697
C101C-RIGHT FRONT WHEEL SPEED SENSOR SIGNAL ERRATIC PERFORMANCE 704
C101F-RIGHT FRONT WHEEL SPEED COMPARATIVE PERFORMANCE 711
C1020-LEFT REAR WHEEL SPEED SENSOR CIRCUIT 718
C1027-LEFT REAR WHEEL SPEED SENSOR SIGNAL ERRATIC PERFORMANCE 725
C102A-LEFT REAR WHEEL SPEED COMPARATIVE PERFORMANCE 732
C102B-RIGHT REAR WHEEL SPEED SENSOR CIRCUIT 739
C1032-RIGHT REAR WHEEL SPEED SENSOR SIGNAL ERRATIC PERFORMANCE 746
C1035-RIGHT REAR WHEEL SPEED COMPARATIVE PERFORMANCE 753
C104C-LEFT FRONT INLET VALVE CONTROL CIRCUIT LOW 759
C1050-RIGHT FRONT INLET VALVE CONTROL CIRCUIT LOW 760
C1054-LEFT REAR INLET VALVE CONTROL CIRCUIT LOW 761
C1058-RIGHT REAR INLET VALVE CONTROL CIRCUIT LOW 761
C1060-LEFT FRONT OUTLET VALVE CONTROL CIRCUIT LOW 762
C1064-RIGHT FRONT OUTLET VALVE CONTROL CIRCUIT LOW 763
C1068-LEFT REAR OUTLET VALVE CONTROL CIRCUIT LOW 763

page

C106C-RIGHT REAR OUTLET VALVE CONTROL CIRCUIT LOW 764
C1073-ABS MOTOR CONTROL CIRCUIT 766
C1078-TIRE REVOLUTIONS RANGE PERFORMANCE 769
C1079-TONE WHEEL TEETH COUNT RANGE PERFORMANCE 772
C107B-WHEEL SPEED COMPARATIVE PERFORMANCE 772
C107D-BRAKE PEDAL SWITCH 1/2 CORRELATION 776
C1086-ABS SYSTEM CONTROL TOO LONG 780
C1090-ABS BRAKE LAMP CONTROL CIRCUIT LOW 782
C1091-ABS BRAKE LAMP CONTROL CIRCUIT HIGH. 786
C1201-FRONT TRACTION CONTROL INLET VALVE CONTROL CIRCUIT LOW 789
C1205-REAR TRACTION CONTROL INLET VALVE CONTROL CIRCUIT LOW 792
C1209-FRONT TRACTION CONTROL PRIME VALVE CONTROL CIRCUIT LOW 795
C120D-REAR TRACTION CONTROL PRIME VALVE CONTROL CIRCUIT LOW 798
C1213-G SENSOR INPUT SIGNAL STUCK 801
C1219-STEERING ANGLE SENSOR ERRATIC PERFORMANCE 808
C121C-TORQUE REQUEST SIGNAL DENIED 811
C121D-BRAKE PRESSURE SENSOR CIRCUIT 812
C121E-BRAKE PRESSURE SENSOR COMPARATIVE PERFORMANCE 813
C1231-DRIVE TEST: STEERING ANGLE SENSOR 816
C1232-DRIVE TEST: PRESSURE SENSOR 818
C1234-DRIVE TEST: SENSOR CLUSTER INSTALLATION 819
C1235 DRIVE TEST: TEST ACTIVE 821
C1238-DRIVE TEST: UNSUCCESSFUL . . .822
C1239-EMISSION ROLLS TEST ACTIVE. 822
C123A-ESP SYSTEM SENSORS CALIBRATION 823
C123B-ESP SYSTEM CONTROL TOO LONG. 824

continued..

page

C123F-STEERING ANGLE SENSOR COMPARATIVE PERFORMANCE 825
C1240-STEERING ANGLE SENSOR OVERTRAVEL PERFORMANCE 828
C1242-G SENSOR INPUT SIGNAL PERFORMANCE 830
C1243-G SENSOR NOT INITIALIZED 831
C2100-BATTERY VOLTAGE LOW 833
C2101-BATTERY VOLTAGE HIGH 836
C2105-ABS VALVE SUPPLY VOLTAGE CIRCUIT LOW 837
C2200-ANTI-LOCK BRAKE MODULE INTERNAL 838
C2202-ORIGINAL VIN MISMATCH / MISSING 838
C2204-DYNAMICS SENSOR INTERNAL . .840
C2205-STEERING ANGLE SENSOR INTERNAL 842
C2206-VEHICLE CONFIGURATION MISMATCH. 844
U0002-CAN C BUS OFF PERFORMANCE 846
U0100-LOST COMMUNICATION WITH ECM/PCM 849
U0101-LOST COMMUNICATION WITH TCM. 849
U0102-00-LOST COMMUNICATION WITH TRANSFER CASE CONTROL MODULE / AWD 851
U0125-LOST COMMUNICATION WITH DYNAMICS SENSOR 853
U0126-LOST COMMUNICATION WITH STEERING ANGLE SENSOR 859
U0141-LOST COMMUNICATION WITH FRONT CONTROL MODULE 860
U0401-IMPLAUSIBLE DATA RECEIVED FROM ECM/PCM 860
U0429-IMPLAUSIBLE DATA RECEIVED FROM STEERING CONTROL MODULE 861
U1003-ESP CAN C BUS PERFORMANCE 863
U1004-CAN C BUS TRANSMIT PERFORMANCE 867
STANDARD PROCEDURE
ABS VERIFICATION TEST 871
ABS INTERMITTENT CONDITION 871
MODULE, DRIVER DOOR (DDM), (DMFL)
DIAGNOSIS AND TESTING
B164A-11-DRIVER MIRROR SIGNAL LAMP CONTROL - CIRCUIT SHORT TO GROUND 873
B164A-15-DRIVER MIRROR SIGNAL LAMP CONTROL - CIRCUIT SHORT TO BATTERY OR OPEN 879
B1800-2A-DRIVER DOOR LOCK/UNLOCK SWITCH - SIGNAL STUCK IN RANGE 883
B1853-11-DRIVER WINDOW CONTROL - CIRCUIT SHORT TO GROUND 885
B1853-13-DRIVER WINDOW CONTROL - CIRCUIT OPEN 888
B1857-11-DRIVER WINDOW POSITION SENSOR POWER SUPPLY - CIRCUIT SHORT TO GROUND. 891
B1857-15-DRIVER WINDOW POSITION SENSOR POWER SUPPLY - CIRCUIT SHORT TO BATTERY OR OPEN - EXPRESS MOTOR ONLY 894
B185A-31-DRIVER WINDOW POSITION SENSOR - NO SIGNAL 898
B18B5-00-MASTER SWITCH - FRONT LEFT WINDOW SWITCH 901
B1D04-2A-MIRROR ADJUST SWITCH INPUT - SIGNAL STUCK IN RANGE . . .903
B1D08-11-DRIVER MIRROR POSITION SENSOR POWER SUPPLY - CIRCUIT SHORT TO GROUND. 906
B1D0B-11-DRIVER MIRROR VERTICAL POSITION SENSOR INPUT - CIRCUIT SHORT TO GROUND. 911
B1D0B-12-DRIVER MIRROR VERTICAL POSITION SENSOR INPUT - CIRCUIT SHORT TO BATTERY. 916
B1D0E-11-DRIVER MIRROR HORIZONTAL POSITION SENSOR INPUT - CIRCUIT SHORT TO GROUND. 924
B1D0E-12-DRIVER MIRROR HORIZONTAL POSITION SENSOR INPUT - CIRCUIT SHORT TO BATTERY. 929
B1D1E-11-DRIVER MIRROR VERTICAL MOTOR CONTROL - CIRCUIT SHORT TO GROUND 937
B1D22-11-DRIVER MIRROR HORIZONTAL MOTOR CONTROL - CIRCUIT SHORT TO GROUND 942
B1D32-11-DRIVER MIRROR HEATER CONTROL - CIRCUIT SHORT TO GROUND. 947
B1D32-15-DRIVER MIRROR HEATER CONTROL - CIRCUIT SHORT TO BATTERY OR OPEN 953
B1D4A-2A-MEMORY SWITCH INPUT - SIGNAL STUCK IN RANGE 958
B1E64-00-LEFT MIRROR SELECT SWITCH STUCK. 962
B1E65-00-RIGHT MIRROR SELECT SWITCH STUCK. 965

continued..

page

B210C-16-BATTERY VOLTAGE INPUT - CIRCUIT VOLTAGE BELOW THRESHOLD 968
B210C-17-BATTERY VOLTAGE INPUT - CIRCUIT VOLTAGE ABOVE THRESHOLD 971
B21A1-00-ECU RESET/RECOVERY OCCURRED 972
B21DD-84-SYSTEM VOLTAGE - SIGNAL BELOW ALLOWABLE RANGE. 973
B21DD-85-SYSTEM VOLTAGE - SIGNAL ABOVE ALLOWABLE RANGE 973
B2598-54-DOOR MODULE FRONT LEFT - MISSING CALIBRATION - QUAD/CREW CAB ONLY. 973
B2598-96-DOOR MODULE FRONT LEFT - COMPONENT INTERNAL FAILURE . .975
B282E-11-DRIVER PUDDLE LAMP CONTROL - CIRCUIT SHORT TO GROUND. 976
B282E-15-DRIVER PUDDLE LAMP CONTROL - CIRCUIT SHORT TO BATTERY OR OPEN 981
U0037-11-LIN BUS - CIRCUIT SHORT TO GROUND 986
U0141-00-LOST COMMUNICATION WITH IPM (FCM/TIPM) 989
U0155-00-LOST COMMUNICATION WITH CLUSTER/CCN. 991
U0164-00-LOST COMMUNICATION WITH HVAC CONTROL MODULE 993
U0203-00-LOST COMMUNICATION WITH DOOR MODULE FRONT LEFT. . .995
U0204-00-LOST COMMUNICATION WITH DOOR MODULE FRONT RIGHT 997
U0209-00-LOST COMMUNICATION WITH MEMORY SEAT CONTROL MODULE 999
U113D-LOST COMMUNICATION WITH MASTER POWER WINDOW SWITCH 1001
MODULE, DRIVETRAIN CONTROL (DTCM)
DIAGNOSIS AND TESTING
C1403-TRANSFER CASE RANGE POSITION SENSOR PERFORMANCE 1006
C1404-TRANSFER CASE RANGE POSITION SENSOR CIRCUIT LOW. . .1010
C1405-TRANSFER CASE RANGE POSITION SENSOR CIRCUIT HIGH . .1015
C1406-TRANSFER CASE BRAKE PERFORMANCE 1019
C1407-TRANSFER CASE BRAKE CONTROL CIRCUIT LOW 1022
C1408-TRANSFER CASE BRAKE CONTROL CIRCUIT HIGH 1025
C140A-TRANSFER CASE MOTOR PERFORMANCE 1029
C140D-TRANSFER CASE MOTOR CONTROL CIRCUIT OPEN 1033
C140E-TRANSFER CASE MOTOR BLOCKED 1037
C140F-TRANSFER CASE RANGE POSITION SENSOR ERRATIC PERFORMANCE 1040
C1415-TRANSFER CASE MOTOR CURRENT PERFORMANCE. 1048
C1438-TRANSFER CASE DIFFERENTIAL CLUTCH WORN 1051
C1444-TRANSFER CASE MOTOR OVERUSE 1055
C1464-FRONT AXLE DISCONNECT CONTROL CIRCUIT LOW 1058
C1465-FRONT AXLE DISCONNECT CONTROL CIRCUIT HIGH 1062
C1472-TRANSFER CASE CLUTCH CONTROL CIRCUIT PERFORMANCE 1065
C1477-TRANSFER CASE CLUTCH OVER TEMPERATURE. 1068
C147B-FRONT AXLE DISCONNECT SENSOR CIRCUIT PERFORMANCE . .1071
C2100-BATTERY VOLTAGE LOW 1077
C2101-BATTERY VOLTAGE HIGH 1080
C2111-SENSOR SUPPLY 1 VOLTAGE CIRCUIT LOW 1082
C2112-SENSOR SUPPLY 1 VOLTAGE CIRCUIT HIGH. 1085
C2201-FDCM/DTCM INTERNAL 1087
U0001-CAN C BUS. 1088
U0100-LOST COMMUNICATION WITH ECM/PCM 1090
U0101-LOST COMMUNICATION WITH TCM. 1092
U0121-LOST COMMUNICATION WITH ABS 1094
U0212-LOST COMMUNICATION WITH SCM (SAS). 1096
U0401-IMPLAUSIBLE DATA RECEIVED FROM ECM 1097
U0402-IMPLAUSIBLE DATA RECEIVED FROM TCM 1099
U0415-IMPLAUSIBLE DATA RECEIVED FROM ABS. 1100
U0429-IMPLAUSIBLE DATA RECEIVED FROM SCM (SAS). 1101

continued..

page

STANDARD PROCEDURE
DTCM VERIFICATION TEST 1103
TRANSFER CASE VERIFICATION TEST 1104
MODULE, HANDS FREE (HFM)
DIAGNOSIS AND TESTING
B1438-VOICE RECOGNITION SWITCH STUCK 1104
B1439-PHONE SWITCH STUCK 1105
B143B-MICROPHONE 1 CIRCUIT LOW 1106
B143C-MICROPHONE 1 CIRCUIT HIGH 1109
B143E-MICROPHONE 2 CIRCUIT LOW . . 1112
B143F-MICROPHONE 2 CIRCUIT HIGH 1115
B1459-TELEMATICS MIRROR CONTROL CIRCUIT LOW 1118
U0019-CAN B BUS 1122
U0141-LOST COMMUNICATION WITH IPM (FCM/TIPM). 1126
U0151-LOST COMMUNICATION WITH OCCUPANT RESTRAINT CONTROLLER (ORC) 1128
U0155-LOST COMMUNICATION WITH CLUSTER/CCN 1130
U0164-LOST COMMUNICATION WITH HVAC CONTROL MODULE 1132
U0168-LOST COMMUNICATION WITH VEHICLE SECURITY CONTROL MODULE (WIRELESS IGNITION NODE) 1134
U0184-LOST COMMUNICATION WITH RADIO 1136
U0186-LOST COMMUNICATION WITH AUDIO AMPLIFIER (AMP) 1138
U0196-LOST COMMUNICATION WITH VEHICLE ENTERTAINMENT CONTROL MODULE 1140
U0203-LOST COMMUNICATION WITH LEFT FRONT DOOR MODULE (DMLF) (DRIVER DOOR MODULE). 1142
U0204-LOST COMMUNICATION WITH RIGHT FRONT DOOR MODULE (DMRF) (PASSENGER DOOR MODULE) 1144
U0208-LOST COMMUNICATION WITH HEATED SEAT CONTROL MODULE . . 1146
U0209-LOST COMMUNICATION WITH MEMORY SEAT CONTROL MODULE 1148
U1158-LOST COMMUNICATION WITH SATELLITE VIDEO RECEIVER (SDARV) 1150

page

MODULE, HEATED SEAT (HSM)
DIAGNOSIS AND TESTING
B10C4-11-HEATED STEERING WHEEL CONTROL - CIRCUIT SHORT TO GROUND. 1152
B10C4-12-HEATED STEERING WHEEL CONTROL - CIRCUIT SHORT TO BATTERY. 1156
B10C4-13-HEATED STEERING WHEEL CONTROL - CIRCUIT OPEN. 1160
B10C4-1E-HEATED STEERING WHEEL CONTROL - CIRCUIT RESISTANCE OUT OF RANGE. 1165
B11C1-13-STEERING WHEEL HEATER POWER SUPPLY - CIRCUIT OPEN . . . 1170
B11DC-13-REAR HEATED SEATS POWER SUPPLY - CIRCUIT OPEN . . . 1172
B1E99-11-FRONT LEFT HEATER CONTROL CIRCUIT - CIRCUIT SHORT TO GROUND. 1178
B1E99-12-FRONT LEFT HEATER CONTROL CIRCUIT - CIRCUIT SHORT TO BATTERY. 1182
B1E99-13-FRONT LEFT HEATER CONTROL CIRCUIT - CIRCUIT OPEN. 1186
B1E99-1E-FRONT LEFT HEATER CONTROL CIRCUIT - CIRCUIT RESISTANCE OUT OF RANGE 1191
B1E9A-11-FRONT RIGHT HEATER CONTROL CIRCUIT - CIRCUIT SHORT TO GROUND. 1196
B1E9A-12-FRONT RIGHT HEATER CONTROL CIRCUIT - CIRCUIT SHORT TO BATTERY. 1200
B1E9A-13-FRONT RIGHT HEATER CONTROL CIRCUIT - CIRCUIT OPEN. 1204
B1E9A-1E-FRONT RIGHT HEATER CONTROL CIRCUIT - CIRCUIT RESISTANCE OUT OF RANGE 1209
B1E9B-11-REAR LEFT HEATER CONTROL CIRCUIT - CIRCUIT SHORT TO GROUND. 1214
B1E9B-12-REAR LEFT HEATER CONTROL CIRCUIT - CIRCUIT SHORT TO BATTERY. 1218
B1E9B-13-REAR LEFT HEATER CONTROL CIRCUIT - CIRCUIT OPEN. 1222
B1E9B-1E-REAR LEFT HEATER CONTROL CIRCUIT - CIRCUIT RESISTANCE OUT OF RANGE 1226

continued..

page

B1E9C-11-REAR RIGHT HEATER CONTROL CIRCUIT - CIRCUIT SHORT TO GROUND 1230
B1E9C-12-REAR RIGHT HEATER CONTROL CIRCUIT - CIRCUIT SHORT TO BATTERY 1234
B1E9C-13-REAR RIGHT HEATER CONTROL CIRCUIT - CIRCUIT OPEN 1238
B1E9C-1E-REAR RIGHT HEATER CONTROL CIRCUIT - CIRCUIT RESISTANCE OUT OF RANGE 1242
B1E9D-11-FRONT LEFT VENT CONTROL CIRCUIT - CIRCUIT SHORT TO GROUND 1246
B1E9D-12-FRONT LEFT VENT CONTROL CIRCUIT - CIRCUIT SHORT TO BATTERY 1250
B1E9D-13-FRONT LEFT VENT CONTROL CIRCUIT - CIRCUIT OPEN 1253
B1E9E-11-FRONT RIGHT VENT CONTROL CIRCUIT - CIRCUIT SHORT TO GROUND 1257
B1E9E-12-FRONT RIGHT VENT CONTROL CIRCUIT - CIRCUIT SHORT TO BATTERY 1261
B1E9E-13-FRONT RIGHT VENT CONTROL CIRCUIT - CIRCUIT OPEN 1264
B1EB1-1A-FRONT LEFT SEAT HEATER SENSOR - CIRCUIT RESISTANCE BELOW THRESHOLD 1268
B1EB1-1B-FRONT LEFT SEAT HEATER SENSOR - CIRCUIT RESISTANCE ABOVE THRESHOLD 1272
B1EB2-1A-FRONT RIGHT SEAT HEATER SENSOR - CIRCUIT RESISTANCE BELOW THRESHOLD 1278
B1EB2-1B-FRONT RIGHT SEAT HEATER SENSOR - CIRCUIT RESISTANCE ABOVE THRESHOLD 1282
B1EB3-1A-REAR LEFT SEAT HEATER SENSOR - CIRCUIT RESISTANCE BELOW THRESHOLD 1288
B1EB3-1B-REAR LEFT SEAT HEATER SENSOR - CIRCUIT RESISTANCE ABOVE THRESHOLD 1292
B1EB4-1A-REAR RIGHT SEAT HEATER SENSOR - CIRCUIT RESISTANCE BELOW THRESHOLD 1298
B1EB4-1B-REAR RIGHT SEAT HEATER SENSOR - CIRCUIT RESISTANCE ABOVE THRESHOLD 1302

page

B210C-17-BATTERY VOLTAGE INPUT - CIRCUIT VOLTAGE ABOVE THRESHOLD 1308
B210C-18-BATTERY VOLTAGE INPUT - CIRCUIT BELOW THRESHOLD 1311
B21DD-84-SYSTEM VOLTAGE - SIGNAL BELOW ALLOWABLE RANGE 1313
B21DD-85-SYSTEM VOLTAGE - SIGNAL ABOVE ALLOWABLE RANGE 1314
B221A-00-(HSM) HEATED SEAT MODULE INTERNAL 1316
U0011-00-CAN B BUS PERFORMANCE 1317
U0141-00-LOST COMMUNICATION WITH IPM (FCM/TIPM) 1318
U0155-00-LOST COMMUNICATION WITH CLUSTER/CCN 1320
U1446-00-IMPLAUSIBLE HEATED STEERING WHEEL TEMPERATURE MESSAGE RECEIVED (CCN) 1322

MODULE, MEMORY SEAT (MSMD)

DIAGNOSIS AND TESTING

B1D56-ADJUSTABLE PEDAL SENSOR CIRCUIT LOW 1327
B1D57-ADJUSTABLE PEDAL SENSOR CIRCUIT HIGH 1331
B1D5B-ADJUSTABLE PEDAL SWITCH CIRCUIT PERFORMANCE 1337
B1D5C-ADJUSTABLE PEDAL SWITCH CIRCUIT STUCK FORWARD 1340
B1D5D-ADJUSTABLE PEDAL SWITCH CIRCUIT STUCK REARWARD 1344
B1D62-POWER SEAT SWITCH STUCK . . 1347
B1D63-POWER SEAT SWITCH OPEN . . . 1349
B1D67-ADJUSTABLE PEDAL CONTROL CIRCUIT PERFORMANCE 1353
B1D6D-SEAT HORIZONTAL POSITION SENSOR CIRCUIT LOW 1360
B1D6E-SEAT HORIZONTAL POSITION SENSOR CIRCUIT HIGH 1364
B1D71-SEAT FRONT VERTICAL POSITION SENSOR CIRCUIT LOW . . . 1369
B1D72-SEAT FRONT VERTICAL POSITION SENSOR CIRCUIT HIGH . . 1373
B1D75-SEAT REAR VERTICAL POSITION SENSOR CIRCUIT LOW . . . 1378
B1D76-SEAT REAR VERTICAL POSITION SENSOR CIRCUIT HIGH . . 1382
B1D79-SEAT RECLINER POSITION SENSOR CIRCUIT LOW 1387
B1D7A-SEAT RECLINER POSITION SENSOR CIRCUIT HIGH 1391
B1D7B-SEAT HORIZONTAL MOTOR CONTROL CIRCUIT PERFORMANCE 1395

continued..

page

B1D7F-SEAT FRONT VERTICAL MOTOR CONTROL CIRCUIT PERFORMANCE 1405
B1D83-SEAT REAR VERTICAL MOTOR CONTROL CIRCUIT PERFORMANCE 1415
B1D87-SEAT BACKREST MOTOR CONTROL CIRCUIT PERFORMANCE 1425
B1D9B-SEAT HORIZONTAL FRONT STOP NOT LEARNED 1434
B210D-BATTERY VOLTAGE LOW 1436
B210E-BATTERY VOLTAGE HIGH 1439
B221C-MEMORY SEAT MODULE INTERNAL 1441
U0011-CAN INTERIOR BUS OFF PERFORMANCE 1442
U0014-CAN INTERIOR BUS (+) CIRCUIT HIGH 1444
U0016-CAN INTERIOR BUS (-) CIRCUIT LOW 1446
U0141-LOST COMMUNICATION WITH IPM (FCM/TIPM). 1448
U0155-LOST COMMUNICATION WITH CLUSTER/CCN 1450
U0203-LOST COMMUNICATION WITH DOOR MODULE FRONT LEFT 1452
U0204-LOST COMMUNICATION WITH DOOR MODULE FRONT RIGHT 1454
STANDARD PROCEDURE
APS INTERMITTENT CONDITION TEST 1455
APS VERIFICATION TEST 1456
POWER SEAT SYSTEM VERIFICATION TEST 1457
MODULE, PARK ASSIST (PAM)
DIAGNOSIS AND TESTING
B1295-11-PTS SENSOR 8 - CIRCUIT SHORT TO GROUND. 1458
B1295-12-PTS SENSOR 8 - CIRCUIT SHORT TO BATTERY. 1464
B1295-25-PTS SENSOR 8 - SIGNAL SHAPE / WAVEFORM FAILURE 1467
B1295-92-PTS SENSOR 8 - PERFORMANCE OR INCORRECT OPERATION 1469
B1296-11-PTS SENSOR 9 - CIRCUIT SHORT TO GROUND. 1473
B1296-12-PTS SENSOR 9 - CIRCUIT SHORT TO BATTERY. 1479
B1296-25-PTS SENSOR 9 - SIGNAL SHAPE / WAVEFORM FAILURE 1482
B1296-92-PTS SENSOR 9 - PERFORMANCE OR INCORRECT OPERATION 1484
B1297-11-PTS SENSOR 10 - CIRCUIT SHORT TO GROUND. 1488
B1297-12-PTS SENSOR 10 - CIRCUIT SHORT TO BATTERY. 1494
B1297-25-PTS SENSOR 10 - SIGNAL SHAPE / WAVEFORM FAILURE 1497
B1297-92-PTS SENSOR 10 - PERFORMANCE OR INCORRECT OPERATION 1499
B1298-11-PTS SENSOR 11 - CIRCUIT SHORT TO GROUND. 1503
B1298-12-PTS SENSOR 11 - CIRCUIT SHORT TO BATTERY. 1509
B1298-25-PTS SENSOR 11 - SIGNAL SHAPE / WAVEFORM FAILURE 1512
B1298-92-PTS SENSOR 11 - PERFORMANCE OR INCORRECT OPERATION 1514
B210C-16-BATTERY VOLTAGE INPUT-CIRCUIT VOLTAGE BELOW THRESHOLD 1517
B210C-17-BATTERY VOLTAGE INPUT-CIRCUIT VOLTAGE ABOVE THRESHOLD 1518
B2128-16-SENSOR SUPPLY VOLTAGE-CIRCUIT VOLTAGE BELOW THRESHOLD 1520
B2128-17-SENSOR SUPPLY VOLTAGE-CIRCUIT VOLTAGE ABOVE THRESHOLD. 1525
B2129-16-PTS DISPLAY SUPPLY VOLTAGE-CIRCUIT VOLTAGE BELOW THRESHOLD 1527
B222A-00-VEHICLE LINE MISMATCH . . . 1529
B2232-00-(PTS) PARKTRONICS INTERNAL 1529
B2234-00-(PTS) PARKTRONICS REAR DISPLAY INTERNAL 1530
U0010-00-CAN INTERIOR BUS. 1531
U0423-00-IMPLAUSIBLE DATA RECEIVED FROM CLUSTER/CCN . . . 1532
U1101-00-LOST COMMUNICATION WITH PTS DISPLAY-REAR 1 1534
U0141-00-LOST COMMUNICATION WITH IPM (FCM/TIPM) 1538
U0155-00-LOST COMMUNICATION WITH CLUSTER/CCN. 1540
MODULE, PASSENGER DOOR (PDM), (DMFR)
DIAGNOSIS AND TESTING
B164E-11-PASSENGER MIRROR SIGNAL LAMP CONTROL - CIRCUIT SHORT TO GROUND. 1542
B164E-15-PASSENGER MIRROR SIGNAL LAMP CONTROL - CIRCUIT SHORT TO BATTERY OR OPEN 1548

continued..

page

B16A3-11-PASSENGER WINDOW SWITCH BACKLIGHTING - CIRCUIT SHORT TO GROUND 1553
B16A3-15-PASSENGER WINDOW SWITCH BACKLIGHTING - CIRCUIT SHORT TO BATTERY OR OPEN 1557
B1805-2A-PASSENGER DOOR LOCK/UNLOCK SWITCH - SIGNAL STUCK IN RANGE 1560
B185E-11-PASSENGER WINDOW CONTROL - CIRCUIT SHORT TO GROUND 1562
B185E-13-PASSENGER WINDOW CONTROL - CIRCUIT OPEN 1565
B1862-11-PASSENGER WINDOW POSITION SENSOR POWER SUPPLY - CIRCUIT SHORT TO GROUND 1568
B1862-15-PASSENGER WINDOW POSITION SENSOR POWER SUPPLY - CIRCUIT SHORT TO BATTERY OR OPEN - EXPRESS MOTOR ONLY. . . . 1571
B1865-31-PASSENGER WINDOW POSITION SENSOR - NO SIGNAL . . . 1575
B1910-2A-PASSENGER WINDOW SWITCH - SIGNAL STUCK IN RANGE 1578
B1D11-11-PASSENGER MIRROR POSITION SENSOR POWER SUPPLY - CIRCUIT SHORT TO GROUND 1580
B1D14-11-PASSENGER MIRROR VERTICAL POSITION SENSOR INPUT - CIRCUIT SHORT TO GROUND. 1585
B1D14-12-PASSENGER MIRROR VERTICAL POSITION SENSOR INPUT - CIRCUIT SHORT TO BATTERY. 1590
B1D17-11-PASSENGER MIRROR HORIZONTAL POSITION SENSOR INPUT - CIRCUIT SHORT TO GROUND. 1598
B1D17-12-PASSENGER MIRROR HORIZONTAL POSITION SENSOR INPUT - CIRCUIT SHORT TO BATTERY. 1603
B1D2A-11-PASSENGER MIRROR VERTICAL MOTOR CONTROL - CIRCUIT SHORT TO GROUND 1611
B1D2E-11-PASSENGER MIRROR HORIZONTAL MOTOR CONTROL - CIRCUIT SHORT TO GROUND 1616
B1D36-11-PASSENGER MIRROR HEATER CONTROL - CIRCUIT SHORT TO GROUND. 1621

page

B1D36-15-PASSENGER MIRROR HEATER CONTROL - CIRCUIT SHORT TO BATTERY OR OPEN 1627
B210C-16-BATTERY VOLTAGE INPUT - CIRCUIT VOLTAGE BELOW THRESHOLD 1632
B210C-17-BATTERY VOLTAGE INPUT - CIRCUIT VOLTAGE ABOVE THRESHOLD 1635
B21A1-00-ECU RESET/RECOVERY OCCURRED 1636
B21DD-84-SYSTEM VOLTAGE - SIGNAL BELOW ALLOWABLE RANGE. 1637
B21DD-85-SYSTEM VOLTAGE - SIGNAL ABOVE ALLOWABLE RANGE 1637
B2599-54-DOOR MODULE FRONT RIGHT - MISSING CALIBRATION - QUAD/CREW CAB ONLY. 1637
B2599-96-DOOR MODULE FRONT RIGHT - COMPONENT INTERNAL FAILURE 1639
B282F-11-PASSENGER PUDDLE LAMP CONTROL - CIRCUIT SHORT TO GROUND. 1640
B282F-15-PASSENGER PUDDLE LAMP CONTROL - CIRCUIT SHORT TO BATTERY OR OPEN 1646
U0141-00-LOST COMMUNICATION WITH IPM (FCM/TIPM) 1651
U0155-00-LOST COMMUNICATION WITH CLUSTER/CCN. 1653
U0164-00-LOST COMMUNICATION WITH HVAC CONTROL MODULE 1655
U0203-00-LOST COMMUNICATION WITH DOOR MODULE FRONT LEFT 1657
U0204-00-LOST COMMUNICATION WITH DOOR MODULE FRONT RIGHT 1659
U0209-00-LOST COMMUNICATION WITH MEMORY SEAT CONTROL MODULE 1661

MODULE, POWERTRAIN CONTROL (PCM), 42RLE

DIAGNOSIS AND TESTING
P0122-TPS/APP CIRCUIT LOW 1662
P0123-TPS/APP CIRCUIT HIGH 1664
P0124-TPS/APP INTERMITTENT. 1665
P0218-HIGH TEMPERATURE OPERATION ACTIVATED 1667
P0562-BATTERY VOLTAGE LOW 1669
P0602-CONTROL MODULE PROGRAMMING ERROR/NOT PROGRAMMED 1672
P0604-INTERNAL CONTROL MODULE RAM 1673

continued..

page

P0605-INTERNAL CONTROL MODULE ROM 1674
P0613-INTERNAL TRANSMISSION PROCESSOR 1674
P0706-TRANSMISSION RANGE SENSOR RATIONALITY 1676
P0711-TRANSMISSION TEMPERATURE SENSOR PERFORMANCE. 1681
P0712-TRANSMISSION TEMPERATURE SENSOR LOW. 1684
P0713-TRANSMISSION TEMPERATURE SENSOR HIGH 1688
P0714-TRANSMISSION TEMPERATURE SENSOR INTERMITTENT 1693
P0716-INPUT SPEED SENSOR 1 CIRCUIT PERFORMANCE 1696
P0721-OUTPUT SPEED SENSOR CIRCUIT PERFORMANCE 1702
P0726-ENGINE SPEED INPUT CIRCUIT RANGE/PERFORMANCE 1706
P0731-GEAR RATIO ERROR IN 1ST. . . . 1708
P0732-GEAR RATIO ERROR IN 2ND . . . 1709
P0733-GEAR RATIO ERROR IN 3RD . . . 1711
P0734-GEAR RATIO ERROR IN 4TH . . . 1713
P0736-GEAR RATIO ERROR IN REVERSE 1715
P0740-TCC OUT OF RANGE 1717
P0750-LR SOLENOID CIRCUIT. 1720
P0755-2/4 SOLENOID CIRCUIT 1725
P0760-OD SOLENOID CIRCUIT 1730
P0765-UD SOLENOID CIRCUIT 1735
P0841-LR PRESSURE SWITCH RATIONALITY 1740
P0845-2/4 HYDRAULIC PRESSURE TEST 1745
P0846-2/4 PRESSURE SWITCH RATIONALITY 1751
P0868-LINE PRESSURE LOW 1756
P0869-LINE PRESSURE HIGH 1762
P0870-OD HYDRAULIC PRESSURE TEST 1768
P0871-OD PRESSURE SWITCH RATIONALITY 1774
P0882-TCM POWER INPUT LOW 1779
P0883-TCM POWER INPUT HIGH 1783
P0884-POWER UP AT SPEED 1786
P0890-SWITCHED BATTERY. 1788
P0897-TRANSMISSION FLUID DETERIORATED 1791
P0933-HYDRAULIC PRESSURE SENSOR RANGE/PERFORMANCE. . . 1793
P0934-LINE PRESSURE SENSOR CIRCUIT LOW 1797
P0935-LINE PRESSURE SENSOR CIRCUIT HIGH. 1802
P0944-LOSS OF HYDRAULIC PUMP PRIME 1806
P0957-AUTOSTICK CIRCUIT LOW (ERS) 1809
P0958-AUTOSTICK CIRCUIT HIGH (ERS) 1813
P0992-2/4/OD HYDRAULIC PRESSURE TEST 1817
P1684-BATTERY WAS DISCONNECTED 1819
P1713-RESTRICTED MANUAL VALVE IN T2 RANGE 1822
P1745-TRANSMISSION LINE PRESSURE TOO HIGH FOR TOO LONG. 1823
P1775-SOLENOID SWITCH VALVE LATCHED IN TCC POSITION 1824
P1776-SOLENOID SWITCH VALVE LATCHED IN LR POSITION 1829
P1790-FAULT IMMEDIATELY AFTER SHIFT. 1834
P1794-SPEED SENSOR GROUND ERROR. 1835
P1797-MANUAL SHIFT OVERHEAT 1837
U0002-CAN C BUS OFF PERFORMANCE 1838
U0100-LOST COMMUNICATION WITH THE ECM/PCM 1839
U0121-LOST COMMUNICATION WITH ABS 1839
U0141-LOST COMMUNICATION WITH IPM (FCM/TIPM). 1841
STANDARD PROCEDURE
PRNDL FAULT CLEARING PROCEDURE 1842
42RLE TRANSMISSION VERIFICATION TEST 1842
42RLE - PRE-DIAGNOSTIC TROUBLESHOOTING PROCEDURE 1843
MODULE, POWERTRAIN CONTROL (PCM), 545RFE
DIAGNOSIS AND TESTING
P0122-TPS/APP CIRCUIT LOW 1844
P0123-TPS/APP CIRCUIT HIGH 1846
P0124-TPS/APP INTERMITTENT. 1847
P0218-HIGH TEMPERATURE OPERATION ACTIVATED 1849
P0562-BATTERY VOLTAGE LOW 1851
P0602-CONTROL MODULE PROGRAMMING ERROR/NOT PROGRAMMED 1855
P0604-INTERNAL CONTROL MODULE RAM 1855
P0605-INTERNAL CONTROL MODULE ROM 1856

continued..

page

P0613-INTERNAL TRANSMISSION PROCESSOR 1857
P0706-TRANSMISSION RANGE SENSOR RATIONALITY 1859
P0711-TRANSMISSION TEMPERATURE SENSOR PERFORMANCE. 1864
P0712-TRANSMISSION TEMPERATURE SENSOR LOW. 1867
P0713-TRANSMISSION TEMPERATURE SENSOR HIGH 1871
P0714-TRANSMISSION TEMPERATURE SENSOR INTERMITTENT 1875
P0716-INPUT SPEED SENSOR 1 CIRCUIT PERFORMANCE 1878
P0721-OUTPUT SPEED SENSOR CIRCUIT PERFORMANCE 1886
P0726-ENGINE SPEED INPUT CIRCUIT RANGE/PERFORMANCE 1893
P0731-GEAR RATIO ERROR IN 1ST. . . . 1895
P0732-GEAR RATIO ERROR IN 2ND . . . 1899
P0733-GEAR RATIO ERROR IN 3RD . . . 1906
P0734-GEAR RATIO ERROR IN 4TH . . . 1914
P0735-GEAR RATIO ERROR IN 5TH . . . 1918
P0736-GEAR RATIO ERROR IN REVERSE 1922
P0740-TCC OUT OF RANGE 1926
P0750-LR SOLENOID CIRCUIT. 1929
P0755-2C SOLENOID CIRCUIT. 1934
P0760-OD SOLENOID CIRCUIT 1939
P0765-UD SOLENOID CIRCUIT 1944
P0770-4C SOLENOID CIRCUIT. 1949
P0841-LR PRESSURE SWITCH RATIONALITY 1954
P0845-2C HYDRAULIC PRESSURE TEST 1963
P0846-2C PRESSURE SWITCH RATIONALITY 1972
P0868-LINE PRESSURE LOW 1980
P0869-LINE PRESSURE HIGH 1987
P0870-OD HYDRAULIC PRESSURE TEST 1994
P0871-OD PRESSURE SWITCH RATIONALITY 2003
P0875-UD HYDRAULIC PRESSURE TEST 2013
P0876-UD PRESSURE SWITCH RATIONALITY 2023
P0882-TCM POWER INPUT LOW 2031
P0883-TCM POWER INPUT HIGH 2035
P0884-POWER UP AT SPEED 2039
P0890-SWITCHED BATTERY. 2041
P0933-HYDRAULIC PRESSURE SENSOR RANGE/PERFORMANCE. . . 2045
P0934-LINE PRESSURE SENSOR CIRCUIT LOW 2049

page

P0935-LINE PRESSURE SENSOR CIRCUIT HIGH. 2055
P0944-LOSS OF HYDRAULIC PUMP PRIME 2059
P0957-AUTOSTICK CIRCUIT LOW (ERS) 2062
P0958-AUTOSTICK CIRCUIT HIGH (ERS) 2066
P0987-4C HYDRAULIC PRESSURE TEST 2071
P0988-4C PRESSURE SWITCH RATIONALITY 2081
P1684-BATTERY WAS DISCONNECTED 2088
P1715-RESTRICTED MANUAL VALVE IN T3 RANGE 2089
P1736-GEAR RATIO ERROR IN 2ND PRIME 2090
P1775-SOLENOID SWITCH VALVE LATCHED IN TCC POSITION 2097
P1776-SOLENOID SWITCH VALVE LATCHED IN LR POSITION 2101
P1794-SPEED SENSOR GROUND ERROR. 2106
P2700-INADEQUATE ELEMENT VOLUME LR 2110
P2701-INADEQUATE ELEMENT VOLUME 2C 2113
P2702-INADEQUATE ELEMENT VOLUME OD. 2115
P2703-INADEQUATE ELEMENT VOLUME UD 2118
P2704-INADEQUATE ELEMENT VOLUME 4C 2120
P2706-MS SOLENOID CIRCUIT 2123
U0002-CAN C BUS OFF PERFORMANCE 2127
U0100-LOST COMMUNICATION WITH THE ECM/PCM 2128
U0121-LOST COMMUNICATION WITH ABS 2128
U0141-LOST COMMUNICATION WITH IPM (FCM/TIPM). 2130
STANDARD PROCEDURE
545RFE TRANSMISSION VERIFICATION TEST 2131
545RFE PRE-DIAGNOSTIC TROUBLESHOOTING PROCEDURE 2132
MODULE, POWERTRAIN CONTROL (PCM), NGC
DIAGNOSIS AND TESTING
P000B-BANK 1 CAMSHAFT 2 POSITION SLOW RESPONSE 2134
P0013-BANK 1 CAMSHAFT 2 POSITION ACTUATOR CIRCUIT OPEN 2141

continued..

page

P0014-EXHAUST TARGET ERROR BANK 1 2146
P0016-CRANKSHAFT/CAMSHAFT TIMING MISALIGNMENT 2152
P0031-O2 SENSOR 1/1 HEATER CIRCUIT LOW 2158
P0032-O2 SENSOR 1/1 HEATER CIRCUIT HIGH. 2162
P0037-O2 SENSOR 1/2 HEATER CIRCUIT LOW 2167
P0038-O2 SENSOR 1/2 HEATER CIRCUIT HIGH. 2171
P0051-O2 SENSOR 2/1 HEATER CIRCUIT LOW 2176
P0052-O2 SENSOR 2/1 HEATER CIRCUIT HIGH. 2180
P0057-O2 SENSOR 2/2 HEATER CIRCUIT LOW 2185
P0058-O2 SENSOR 2/2 HEATER CIRCUIT HIGH. 2189
P0071-AMBIENT AIR TEMPERATURE SENSOR PERFORMANCE. 2194
P0072-AMBIENT AIR TEMPERATURE SENSOR CIRCUIT LOW 2200
P0073-AMBIENT AIR TEMPERATURE SENSOR CIRCUIT HIGH 2204
P0107-MANIFOLD ABSOLUTE PRESSURE SENSOR CIRCUIT LOW 2209
P0108-MANIFOLD ABSOLUTE PRESSURE SENSOR CIRCUIT HIGH 2215
P0111-INTAKE AIR TEMPERATURE SENSOR RATIONALITY 2220
P0112-INTAKE AIR TEMPERATURE SENSOR CIRCUIT LOW 2226
P0113-INTAKE AIR TEMPERATURE SENSOR CIRCUIT HIGH 2230
P0116-ENGINE COOLANT TEMPERATURE SENSOR CIRCUIT PERFORMANCE 2235
P0117-ENGINE COOLANT TEMPERATURE SENSOR CIRCUIT LOW 2241
P0118-ENGINE COOLANT TEMPERATURE SENSOR CIRCUIT HIGH 2245
P0121-THROTTLE POSITION SENSOR 1 PERFORMANCE 2250
P0122-THROTTLE POSITION SENSOR 1 CIRCUIT LOW 2256
P0123-THROTTLE POSITION SENSOR 1 CIRCUIT HIGH 2263
P0125-INSUFFICIENT COOLANT TEMP FOR CLOSED-LOOP FUEL CONTROL 2269
P0128-THERMOSTAT RATIONALITY . . . 2272
P0129-BAROMETRIC PRESSURE OUT-OF-RANGE LOW 2283
P0131-O2 SENSOR 1/1 CIRCUIT LOW . . 2289
P0132-O2 SENSOR 1/1 CIRCUIT HIGH . . 2293
P0133-O2 SENSOR 1/1 SLOW RESPONSE 2298
P0135-O2 SENSOR 1/1 HEATER PERFORMANCE 2303
P0137-O2 SENSOR 1/2 CIRCUIT LOW . . 2307
P0138-O2 SENSOR 1/2 CIRCUIT HIGH . . 2311
P0139-O2 SENSOR 1/2 SLOW RESPONSE 2316
P013A-O2 SENSOR 1/2 SLOW RESPONSE - RICH TO LEAN 2321
P013C-O2 SENSOR 2/2 SLOW RESPONSE - RICH TO LEAN 2326
P0141-O2 SENSOR 1/2 HEATER PERFORMANCE 2331
P0151-O2 SENSOR 2/1 CIRCUIT LOW . . 2335
P0152-O2 SENSOR 2/1 CIRCUIT HIGH . . 2339
P0153-O2 SENSOR 2/1 SLOW RESPONSE 2344
P0155-O2 SENSOR 2/1 HEATER PERFORMANCE 2349
P0157-O2 SENSOR 2/2 CIRCUIT LOW . . 2353
P0158-O2 SENSOR 2/2 CIRCUIT HIGH . . 2357
P0159-O2 SENSOR 2/2 SLOW RESPONSE 2362
P0161-O2 SENSOR 2/2 HEATER PERFORMANCE 2367
P0171-FUEL SYSTEM 1/1 LEAN 2371
P0172-FUEL SYSTEM 1/1 RICH 2382
P0174-FUEL SYSTEM 2/1 LEAN 2390
P0175-FUEL SYSTEM 2/1 RICH 2401
P0196-ENGINE OIL TEMPERATURE SENSOR PERFORMANCE. 2408
P0197-ENGINE OIL TEMPERATURE SENSOR CIRCUIT LOW 2414
P0198-ENGINE OIL TEMPERATURE SENSOR CIRCUIT HIGH 2418
P0201-FUEL INJECTOR 1 CIRCUIT 2423
P0202-FUEL INJECTOR 2 CIRCUIT 2429
P0203-FUEL INJECTOR 3 CIRCUIT 2435
P0204-FUEL INJECTOR 4 CIRCUIT 2441
P0205-FUEL INJECTOR 5 CIRCUIT 2447
P0206-FUEL INJECTOR 6 CIRCUIT 2453
P0207-FUEL INJECTOR 7 CIRCUIT 2459
P0208-FUEL INJECTOR 8 CIRCUIT 2465
P0221-THROTTLE POSITION SENSOR 2 PERFORMANCE 2471

continued..

page

P0222-THROTTLE POSITION SENSOR 2 CIRCUIT LOW 2477
P0223-THROTTLE POSITION SENSOR 2 CIRCUIT HIGH 2484
P0298-ENGINE OIL TEMPERATURE TOO HIGH 2489
P0300-MULTIPLE CYLINDER MISFIRE . . 2493
P0301-CYLINDER 1 MISFIRE. 2502
P0302-CYLINDER 2 MISFIRE. 2511
P0303-CYLINDER 3 MISFIRE. 2521
P0304-CYLINDER 4 MISFIRE. 2531
P0305-CYLINDER 5 MISFIRE. 2541
P0306-CYLINDER 6 MISFIRE. 2551
P0307-CYLINDER 7 MISFIRE. 2561
P0308-CYLINDER 8 MISFIRE. 2571
P0315-NO CRANK SENSOR LEARNED 2583
P0325-KNOCK SENSOR 1 CIRCUIT 2586
P0330-KNOCK SENSOR 2 CIRCUIT 2592
P0335-CRANKSHAFT POSITION SENSOR CIRCUIT 2598
P0339-CRANKSHAFT POSITION SENSOR INTERMITTENT 2607
P0340-CAMSHAFT POSITION SENSOR CIRCUIT 2614
P0344-CAMSHAFT POSITION SENSOR INTERMITTENT 2622
P0401-EGR SYSTEM PERFORMANCE 2629
P0403-EGR SOLENOID CIRCUIT 2635
P0404-EGR POSITION SENSOR PERFORMANCE 2640
P0405-EGR POSITION SENSOR CIRCUIT LOW 2645
P0406-EGR POSITION SENSOR CIRCUIT HIGH. 2651
P0420-CATALYST EFFICIENCY (BANK 1) 2656
P0430-CATALYST EFFICIENCY (BANK 2) 2663
P0440-GENERAL EVAP SYSTEM FAILURE 2670
P0441-EVAP PURGE SYSTEM PERFORMANCE 2679
P0443-EVAP PURGE SOLENOID CIRCUIT 2684
P0452-EVAP PRESSURE SWITCH STUCK CLOSED 2689
P0455-EVAP PURGE SYSTEM LARGE LEAK 2694
P0456-EVAP PURGE SYSTEM SMALL LEAK 2701
P0457-LOOSE FUEL CAP. 2708
P0461-FUEL LEVEL SENSOR 1 PERFORMANCE 2711

page

P0462-FUEL LEVEL SENSOR 1 CIRCUIT LOW 2715
P0463-FUEL LEVEL SENSOR 1 CIRCUIT HIGH 2719
P0480-COOLING FAN 1 CONTROL CIRCUIT 2724
P0501-VEHICLE SPEED SENSOR 1 PERFORMANCE 2727
P0503-VEHICLE SPEED SENSOR 1 ERRATIC 2730
P0506-IDLE SPEED PERFORMANCE LOWER THAN EXCEPTED 2732
P0507-IDLE SPEED PERFORMANCE HIGHER THAN EXCEPTED 2734
P050B-COLD START IGNITION TIMING PERFORMANCE 2738
P050D-COLD START ROUGH IDLE 2742
P0513-INVALID SKIM KEY 2748
P0520-ENGINE OIL PRESSURE SENSOR CIRCUIT 2752
P0521-ENGINE OIL PRESSURE SENSOR PERFORMANCE. 2758
P0522-ENGINE OIL PRESSURE SENSOR CIRCUIT LOW 5.7L 2763
P0522-OIL PRESSURE TOO LOW 3.7L, 4.7L 2768
P0523-ENGINE OIL PRESSURE SENSOR CIRCUIT HIGH 2773
P0524-ENGINE OIL PRESSURE TOO LOW 2778
P0532-A/C PRESSURE SENSOR CIRCUIT LOW 2784
P0533-A/C PRESSURE SENSOR CIRCUIT HIGH. 2790
P0562-BATTERY VOLTAGE LOW 2795
P0563-BATTERY VOLTAGE HIGH 2800
P0571-BRAKE SWITCH 1 PERFORMANCE 2804
P0572-BRAKE SWITCH 1 STUCK ON . . . 2808
P0573-BRAKE SWITCH 1 STUCK OFF . . 2812
P0579-SPEED CONTROL SWITCH 1 PERFORMANCE 2816
P0580-SPEED CONTROL SWITCH 1 CIRCUIT LOW 2824
P0581-SPEED CONTROL SWITCH 1 CIRCUIT HIGH. 2830
P0585-SPEED CONTROL SWITCH 1/2 CORRELATION 2837
P0591-SPEED CONTROL SWITCH 2 PERFORMANCE 2847
P0592-SPEED CONTROL SWITCH 2 CIRCUIT LOW 2855
P0593-SPEED CONTROL SWITCH 2 CIRCUIT HIGH. 2861

continued..

page

P0600-SERIAL COMMUNICATION LINK 2867
P0601-INTERNAL MEMORY CHECKSUM INVALID 2867
P0606-INTERNAL ECM PROCESSOR . . . 2867
P060B-ETC A/D GROUND PERFORMANCE 2868
P060D-ETC LEVEL 2 APP PERFORMANCE 2869
P060E-ETC LEVEL 2 TPS PERFORMANCE 2870
P060F-ETC LEVEL 2 ECT PERFORMANCE 2871
P061A-ETC LEVEL 2 TORQUE PERFORMANCE 2872
P061C-ETC LEVEL 2 RPM PERFORMANCE 2873
P062C-ETC LEVEL 2 MPH PERFORMANCE 2874
P0622-GENERATOR FIELD CONTROL CIRCUIT 2876
P0627-FUEL PUMP CONTROL CIRCUIT 2881
P0630-VIN NOT PROGRAMMED IN PCM 2884
P0632-ODOMETER NOT PROGRAMMED IN PCM 2885
P0633-SKIM KEY NOT PROGRAMMED IN PCM 2886
P063A-GENERATOR VOLTAGE SENSE CIRCUIT 2888
P0642-SENSOR REFERENCE VOLTAGE 1 CIRCUIT LOW 2892
P0643-PRIMARY 5-VOLT SUPPLY CIRCUIT HIGH. 2896
P0645-A/C CLUTCH CONTROL CIRCUIT 2899
P0652-SENSOR REFERENCE VOLTAGE 2 CIRCUIT LOW 2903
P0653-SENSOR REFERENCE VOLTAGE 2 CIRCUIT HIGH 2907
P0685-AUTO SHUTDOWN CONTROL CIRCUIT 2910
P0688-AUTO SHUTDOWN SENSE CIRCUIT LOW 2914
P0700-TRANSMISSION CONTROL SYSTEM (MIL REQUEST) 2917
P0703-BRAKE SWITCH 2 PERFORMANCE 2918
P0850-PARK/NEUTRAL SWITCH PERFORMANCE 2923
P1004-SHORT RUNNER VALVE CONTROL PERFORMANCE 2927
P1115-GENERAL TEMPERATURE RATIONALITY 2933
P1128-CLOSED LOOP FUELING NOT ACHIEVED - BANK 1 2942
P1129-CLOSED LOOP FUELING NOT ACHIEVED - BANK 2 2948
P1239-ENGINE OIL TEMPERATURE TOO LOW 2956
P1404-EGR POSITION SENSOR RATIONALITY CLOSED 2961
P1411-CYLINDER 1 REACTIVATION CONTROL PERFORMANCE 2967
P1414-CYLINDER 4 REACTIVATION CONTROL PERFORMANCE 2973
P1416-CYLINDER 6 REACTIVATION CONTROL PERFORMANCE 2979
P1417-CYLINDER 7 REACTIVATION CONTROL PERFORMANCE 2985
P1521-INCORRECT ENGINE OIL TYPE 2990
P1524-OIL PRESSURE OUT OF RANGE - CAMSHAFT ADVANCE/RETARD DISABLED 2992
P1572-BRAKE PEDAL STUCK ON 2998
P1573-BRAKE PEDAL STUCK OFF 3002
P1593-SPEED CONTROL SWITCH 1 STUCK 3006
P1607-PCM INTERNAL SHUTDOWN TIMER SLOW RATIONALITY 3015
P1618-SENSOR REFERENCE VOLTAGE 1 CIRCUIT ERRATIC 3018
P1628-SENSOR REFERENCE VOLTAGE 2 CIRCUIT ERRATIC 3023
P1696-EEPROM MEMORY WRITE DENIED/INVALID 3027
P1697-EMR (SRI) MILEAGE NOT STORED 3029
P2008-SHORT RUNNER VALVE (SRV) CONTROL CIRCUIT 3030
P2016-SHORT RUNNER VALVE (SRV) POSITION SENSOR CIRCUIT LOW. . . 3036
P2017-SHORT RUNNER VALVE (SRV) POSITION SENSOR CIRCUIT HIGH . . 3040
P2072-ELECTRONIC THROTTLE CONTROL SYSTEM - ICE BLOCKAGE 3044
P2096-DOWNSTREAM FUEL TRIM SYSTEM 1 LEAN 3046
P2097-DOWNSTREAM FUEL TRIM SYSTEM 1 RICH 3051
P2098-DOWNSTREAM FUEL TRIM SYSTEM 2 LEAN 3056
P2099-DOWNSTREAM FUEL TRIM SYSTEM 2 RICH 3061
P2100-ELECTRONIC THROTTLE CONTROL MOTOR CIRCUIT 3066

continued..

page

P2101-ELECTRONIC THROTTLE CONTROL MOTOR PERFORMANCE 3072
P2107-ELECTRONIC THROTTLE CONTROL MODULE PROCESSOR. . . 3073
P2110-ELECTRONIC THROTTLE CONTROL - FORCED LIMITED RPM 3075
P2111-ELECTRONIC THROTTLE CONTROL - UNABLE TO CLOSE 3081
P2112-ELECTRONIC THROTTLE CONTROL - UNABLE TO OPEN. 3087
P2115-ACCELERATOR PEDAL POSITION SENSOR 1 MINIMUM STOP PERFORMANCE 3092
P2116-ACCELERATOR PEDAL POSITION SENSOR 2 MINIMUM STOP PERFORMANCE 3093
P2118-ELECTRONIC THROTTLE CONTROL MOTOR CIRCUIT 3095
P2122-ACCELERATOR PEDAL POSITION SENSOR 1 CIRCUIT LOW 3102
P2123-ACCELERATOR PEDAL POSITION SENSOR 1 CIRCUIT HIGH 3109
P2127-ACCELERATOR PEDAL POSITION SENSOR 2 CIRCUIT LOW 3114
P2128-ACCELERATOR PEDAL POSITION SENSOR 2 CIRCUIT HIGH 3121
P2135-THROTTLE POSITION SENSOR 1/2 CORRELATION 3126
P2138-ACCELERATOR PEDAL POSITION SENSOR 1/2 CORRELATION 3131
P2161-VEHICLE SPEED SENSOR 2 ERRATIC 3137
P2166-ACCELERATOR PEDAL POSITION SENSOR 1 MAXIMUM STOP PERFORMANCE 3140
P2167-ACCELERATOR PEDAL POSITION SENSOR 2 MAXIMUM STOP PERFORMANCE 3141
P2172-HIGH AIRFLOW/VACUUM LEAK DETECTED (INSTANTANEOUS ACCUMULATION). 3142
P2173-HIGH AIRFLOW/VACUUM LEAK DETECTED (SLOW ACCUMULATION). 3152
P2174-LOW AIRFLOW/RESTRICTION DETECTED (INSTANTANEOUS ACCUMULATION). 3161
P2175-LOW AIRFLOW/RESTRICTION DETECTED (SLOW ACCUMULATION). 3171
P2181-COOLING SYSTEM PERFORMANCE 3181
P2271-O2 SENSOR 1/2 SIGNAL STUCK RICH 3187
P2273-O2 SENSOR 2/2 SIGNAL STUCK RICH 3190
P2299-BRAKE PEDAL POSITION/ ACCELERATOR PEDAL POSITION INCOMPATIBLE 3193
P2302-IGNITION COIL 1 SECONDARY CIRCUIT- INSUFFICIENT IONIZATION 3196
P2305-IGNITION COIL 2 SECONDARY CIRCUIT- INSUFFICIENT IONIZATION 3201
P2308-IGNITION COIL 3 SECONDARY CIRCUIT- INSUFFICIENT IONIZATION 3206
P2311-IGNITION COIL 4 SECONDARY CIRCUIT- INSUFFICIENT IONIZATION 3211
P2314-IGNITION COIL 5 SECONDARY CIRCUIT- INSUFFICIENT IONIZATION 3216
P2317-IGNITION COIL 6 SECONDARY CIRCUIT- INSUFFICIENT IONIZATION 3221
P2320-IGNITION COIL 7 SECONDARY CIRCUIT- INSUFFICIENT IONIZATION 3226
P2323-IGNITION COIL 8 SECONDARY CIRCUIT- INSUFFICIENT IONIZATION 3231
P2503-CHARGING SYSTEM OUTPUT LOW 3236
P2504-CHARGING SYSTEM OUTPUT HIGH 3240
P2610-PCM INTERNAL SHUTDOWN TIMER FAST RATIONALITY 3242
P3400-MDS RATIONALITY BANK 1 3245
P3401-MDS SOLENOID 1 CIRCUIT 3248
P3402-CYLINDER 1 DEACTIVATION CONTROL PERFORMANCE. 3253
P3425-MDS SOLENOID 4 CIRCUIT 3260
P3426-CYLINDER 4 DEACTIVATION CONTROL PERFORMANCE. 3265
P3441-MDS SOLENOID 6 CIRCUIT 3272
P3442-CYLINDER 6 DEACTIVATION CONTROL PERFORMANCE. 3277
P3449-MDS SOLENOID 7 CIRCUIT 3284
P3450-CYLINDER 7 DEACTIVATION CONTROL PERFORMANCE. 3289

continued..

page

P3497-MDS RATIONALITY BANK 2 3296
U0001-CAN C BUS 3300
U0101-LOST COMMUNICATION WITH TCM. 3302
U0121-LOST COMMUNICATION WITH ANTI-LOCK BRAKE MODULE 3304
U0141-LOST COMMUNICATION WITH IPM (FCM/TIPM). 3306
U0168-LOST COMMUNICATION WITH VEHICLE SECURITY CONTROL MODULE (WIN) 3308
U110C-NO FUEL LEVEL BUS MESSAGE RECEIVED 3310
U110E-LOST AMBIENT TEMPERATURE MESSAGE 3312
U1110-LOST VEHICLE SPEED MESSAGE 3314
U1113-LOST A/C PRESSURE MESSAGE 3316
U1120-LOST WHEEL DISTANCE MESSAGE 3318
U1403-IMPLAUSIBLE FUEL LEVEL SIGNAL RECEIVED 3320
U1412-IMPLAUSIBLE VEHICLE SPEED SIGNAL RECEIVED 3324
U1417-IMPLAUSIBLE LEFT WHEEL DISTANCE SIGNAL RECEIVED 3327
U1418-IMPLAUSIBLE RIGHT WHEEL DISTANCE SIGNAL RECEIVED 3330
STANDARD PROCEDURE
INTERMITTENT CONDITION 3332
PRE-DIAGNOSTIC TROUBLESHOOTING PROCEDURE 3333
PCM / TCM PROGRAMMING 3334
POWERTRAIN VERIFICATION TEST . . . 3340

MODULE, TOTALLY INTEGRATED POWER (TIPM)
DIAGNOSIS AND TESTING
B107C-A/C REFRIGERANT PRESSURE SENSOR CIRCUIT HIGH 3345
B10E9-BLOWER MOTOR CONTROL CIRCUIT LOW 3347
B10ED-REAR DEFROST CONTROL CIRCUIT OVERCURRENT 3350
B162B-LEFT LOW BEAM CONTROL CIRCUIT LOW 3353
B162D-LEFT LOW BEAM CONTROL CIRCUIT OPEN 3355
B162F-RIGHT LOW BEAM CONTROL CIRCUIT LOW 3358
B1631-RIGHT LOW BEAM CONTROL CIRCUIT OPEN 3360
B1633-LEFT HI BEAM CONTROL CIRCUIT LOW 3363

page

B1635-LEFT HI BEAM CONTROL CIRCUIT OPEN 3365
B1637-RIGHT HI BEAM CONTROL CIRCUIT LOW 3368
B1639-RIGHT HI BEAM CONTROL CIRCUIT OPEN 3370
B163B-FRONT LEFT TURN LAMP CONTROL CIRCUIT LOW 3373
B163D-FRONT LEFT TURN LAMP CONTROL CIRCUIT OPEN 3375
B163F-FRONT RIGHT TURN LAMP CONTROL CIRCUIT LOW 3378
B1641-FRONT RIGHT TURN LAMP CONTROL CIRCUIT OPEN 3381
B1643-REAR LEFT TURN CONTROL CIRCUIT LOW 3384
B1645-REAR LEFT TURN CONTROL CIRCUIT OPEN 3386
B1647-REAR RIGHT TURN CONTROL CIRCUIT LOW 3389
B1649-REAR RIGHT TURN CONTROL CIRCUIT OPEN 3391
B165C-PARK LAMP CONTROL CIRCUIT LOW 3394
B165D-PARK LAMP CONTROL CIRCUIT HIGH 3396
B165E-PARK LAMP CONTROL CIRCUIT OPEN. 3398
B1659-FRONT FOG LAMP CONTROL CIRCUIT LOW 3401
B1660-FRONT FOG LAMP CONTROL CIRCUIT HIGH. 3404
B1661-FRONT FOG LAMP CONTROL CIRCUIT OPEN 3408
B1667-REVERSE LAMP CONTROL CIRCUIT LOW 3411
B1669-REVERSE LAMP CONTROL CIRCUIT OPEN 3413
B17AE-LEFT TRAILER TOW LAMP CONTROL CIRCUIT LOW 3416
B17B2-RIGHT TRAILER TOW LAMP CONTROL CIRCUIT LOW 3418
B16B0-LEFT STOP LAMP CONTROL CIRCUIT LOW 3420
B16B2-LEFT STOP LAMP CONTROL CIRCUIT OPEN 3422
B16B4-RIGHT STOP LAMP CONTROL CIRCUIT LOW 3425
B16B6-RIGHT STOP LAMP CONTROL CIRCUIT OPEN 3427
B1820-HOOD AJAR INPUT CIRCUIT HIGH 3430
B1D68-ADJUSTABLE PEDAL CONTROL CIRCUIT LOW 3434

continued..

page

B2104-IGNITION RUN/START CONTROL CIRCUIT LOW 3438
B210D-BATTERY VOLTAGE LOW 3441
B210E-BATTERY VOLTAGE HIGH 3442
B2112-5-VOLT SUPPLY CIRCUIT LOW . . 3443
B2113-5 VOLT SUPPLY CIRCUIT HIGH . . 3446
B2122-IGNITION RUN CONTROL 1 CIRCUIT LOW 3450
B2142-IGNITION OFF DRAW (IOD) FUSE NOT PRESENT 3452
B2148-IGNITION RUN CONTROL 2 CIRCUIT LOW 3454
B2184-IGNITION UNLOCK/RUN/START CONTROL CIRCUIT LOW 3457
B21A1-ECU RESET/RECOVERY OCCURRED 3459
B2202-EEPROM CHECKSUM PERFORMANCE 3460
B2206-CURRENT VIN MISSING/ MISMATCH. 3460
B2215-FRONT CONTROL MODULE INTERNAL (TOTALLY INTEGRATED POWER MODULE) 3461
B222C-VEHICLE CONFIGURATION NOT PROGRAMMED 3463
B2304-WIPER PARK SWITCH INPUT CIRCUIT LOW 3465
B2305-WIPER PARK SWITCH INPUT CIRCUIT HIGH. 3468
B2313-WIPER ON/OFF CONTROL CIRCUIT LOW 3471
B2315-WIPER ON/OFF CONTROL CIRCUIT OPEN 3474
B2318-WIPER HIGH/LOW CONTROL CIRCUIT HIGH. 3476
C1000-BRAKE PEDAL SWITCH 1 CIRCUIT PERFORMANCE 3479
C1008-BRAKE FLUID LEVEL CIRCUIT HIGH 3484
P0072-AMBIENT AIR TEMPERATURE SENSOR CIRCUIT LOW 3488
P0073-AMBIENT AIR TEMPERATURE SENSOR CIRCUIT HIGH 3492
P0462-FUEL LEVEL SENSOR 1 CIRCUIT LOW 3497
P0463-FUEL LEVEL SENSOR 1 CIRCUIT HIGH 3501
P0606-INTERNAL CONTROL PROCESSOR 3505
P0615-STARTER RELAY CONTROL CIRCUIT OPEN - NGC 3506
P0627-FUEL PUMP CONTROL CIRCUIT 3510
P0691-COOLING FAN 1 CONTROL CIRCUIT LOW 3514
P0692-COOLING FAN 1 CONTROL CIRCUIT HIGH. 3517
P0693-COOLING FAN 2 CONTROL CIRCUIT LOW 3520
P0694-COOLING FAN 2 CONTROL CIRCUIT HIGH. 3523
P1272-A/C CLUTCH CONTROL CIRCUIT 2 LOW 3526
P1273-A/C CLUTCH CONTROL CIRCUIT 2 HIGH 3529
P127C-FUEL PUMP CONTROL CIRCUIT 2 LOW - NGC 3533
P127E-FUEL PUMP CONTROL CIRCUIT 2 OPEN - NGC. 3537
P128B-TCM POWER CONTROL CIRCUIT 2 LOW - 42RLE. 3541
P128B-TCM POWER CONTROL CIRCUIT 2 LOW - 45/545RFE 3545
P128C-TCM POWER CONTROL CIRCUIT 2 HIGH - 42RLE 3548
P128C-TCM POWER CONTROL CIRCUIT 2 HIGH - 45/545RFE 3551
P128D-TCM POWER CONTROL CIRCUIT 2 OPEN - 42RLE 3554
P128D-TCM POWER CONTROL CIRCUIT 2 OPEN - 45/545RFE 3557
P128E-TCM POWER CONTROL CIRCUIT 2 OVERCURRENT - 42RLE 3560
P128E-TCM POWER CONTROL CIRCUIT 2 OVERCURRENT - 45/545RFE 3564
P129C-INVERTER CONTROL CIRCUIT HIGH 3568
P129E-INVERTER CONTROL CIRCUIT OVERCURRENT 3571
U0001-CAN C BUS CIRCUIT 3574
U0010-CAN INTERIOR BUS 3585
U0100-LOST COMMUNICATION WITH ECM/PCM 3589
U0101-LOST COMMUNICATION WITH TCM. 3595
U0102-LOST COMMUNICATION WITH TRANSFER CASE CONTROL MODULE / AWD 3601
U0114-LOST COMMUNICATION WITH FINAL DRIVE CONTROL MODULE (DRIVETRAIN CONTROL MODULE) . . 3607
U0121-LOST COMMUNICATION WITH ABS 3613
U0126-LOST COMMUNICATION WITH SAS 3619
U0141-LOST COMMUNICATION WITH IPM (FCM/TIPM). 3625

continued..

page

U0151-LOST COMMUNICATION WITH ORC 3628
U0155-LOST COMMUNICATION WITH CLUSTER/CCN 3634
U0159-LOST COMMUNICATION WITH PARKING ASSIST CONTROL MODULE (PTS) 3639
U0164-LOST COMMUNICATION WITH HVAC CONTROL MODULE 3644
U0168-LOST COMMUNICATION WITH VEHICLE SECURITY CONTROL MODULE (WIRELESS IGNITION NODE OR WIN) 3649
U0184-LOST COMMUNICATION WITH RADIO 3655
U0186-LOST COMMUNICATION WITH AUDIO AMPLIFIER (AMP) 3660
U0197-LOST COMMUNICATION WITH HANDS FREE PHONE MODULE (HFM). 3665
U0203-LOST COMMUNICATION WITH LEFT FRONT DOOR MODULE (DMFL) (DRIVER DOOR MODULE). 3670
U0204-LOST COMMUNICATION WITH RIGHT FRONT DOOR MODULE (DMFR) (PASSENGER DOOR MODULE) 3675
U0208-LOST COMMUNICATION WITH HEATED SEAT MODULE (HSM). 3680
U0209-LOST COMMUNICATION WITH MEMORY SEAT CONTROL MODULE (MSMD). 3685
U0249-LOST COMMUNICATION WITH VEHICLE ENTERTAINMENT CONTROL MODULE - LAST ROW (VES3) 3690
U1147-ADDITIONAL CAN INTERIOR BUS ECU DETECTED 3695
U1148-ADDITIONAL CAN C BUS ECU DETECTED 3697
U1158-LOST COMMUNICATION WITH SATELLITE VIDEO RECEIVER (SDARV) 3699
STANDARD PROCEDURE
APS INTERMITTENT CONDITION TEST 3704
APS VERIFICATION TEST 3705
INTERMITTENT CONDITION 3706
BODY VERIFICATION TEST 3707
NODE, CABIN COMPARTMENT (CCN)
DIAGNOSIS AND TESTING
B10BB-LEFT HEATED SEAT SWITCH INPUT CIRCUIT STUCK 3708
B10BC-RIGHT HEATED SEAT SWITCH INPUT CIRCUIT STUCK 3710

page

B114C-LEFT REAR HEATED SEAT SWITCH STUCK. 3712
B1151-RIGHT REAR HEATED SEAT SWITCH STUCK. 3715
B123F-MENU SWITCH STUCK 3717
B127A-COMPASS PERFORMACE 3718
B1285-PARK ASSIST DISABLE SWITCH PERFORMANCE 3718
B1286-COMPASS / TEMP BUTTON PERFORMANCE 3719
B1287-RESET SWITCH PERFORMANCE 3719
B1288-TRIP / TOGGLE SWITCH PERFORMANCE 3720
B1427-REMOTE RADIO SWITCH INPUT CIRCUIT HIGH - WITHOUT EVIC 3721
B1427-REMOTE RADIO SWITCH INPUT CIRCUIT HIGH - WITH EVIC 3726
B1428-REMOTE RADIO SWITCH INPUT CIRCUIT STUCK - WITHOUT EVIC . . . 3730
B1428-REMOTE RADIO SWITCH INPUT CIRCUIT STUCK - WITH EVIC. 3733
B1502-STEERING WHEEL CONTROL DOWN SWITCH PERFORMANCE . . . 3735
B1503-STEERING WHEEL CONTROL RIGHT SWITCH PERFORMANCE. . . . 3736
B1607-HEADLAMP SWITCH INPUT CIRCUIT LOW 3737
B1608-HEADLAMP SWITCH INPUT CIRCUIT HIGH. 3740
B160A-PANEL DIMMER INPUT CIRCUIT LOW 3743
B160B-PANEL DIMMER INPUT CIRCUIT HIGH 3746
B168F-FRONT FOG LAMP SWITCH CIRCUIT STUCK 3748
B169C-CARGO LAMP SWITCH STUCK 3750
B17E3-TURN SIGNAL SWITCH PERFORMANCE 3753
B2301-WIPER MODE SWITCH INPUT CIRCUIT LOW 3754
B2307-WASHER SWITCH INPUT CIRCUIT LOW 3754
B2339-HORN SWITCH STUCK - WITH EVIC 3756
B2339-HORN SWITCH STUCK - WITHOUT EVIC 3759
B238E-HI BEAM SWITCH CIRCUIT LOW 3762
B2390-MIST SWITCH CIRCUIT LOW . . . 3762
B2394-FLASH TO PASS / OPTICAL HORN SWITCH CIRCUIT STUCK 3763
C1401-TRANSFER CASE RANGE SELECT SWITCH CIRCUIT LOW 3765

continued..

page

C1402- TRANSFER CASE RANGE SELECT SWITCH CIRCUIT HIGH 3770
C230A-NEUTRAL INDICATOR CONTROL CIRCUIT LOW 3775
C230B-NEUTRAL INDICATOR CONTROL CIRCUIT HIGH 3779
C2312-TRAC/ESP OFF SWITCH STUCK 3782
P0838-FOUR WHEEL DRIVE (4WD) SWITCH CIRCUIT LOW 3783
P0839-FOUR WHEEL DRIVE (4WD) SWITCH CIRCUIT HIGH 3786
P0853-OVERDRIVE / TOW SWITCH INPUT CIRCUIT STUCK 3788
P1103-DC TO AC CONVERTER SWITCH STUCK 3789
U0010-CAN INTERIOR BUS 3790
U0141-LOST COMMUNICATION WITH IPM (FCM/TIPM). 3791
U0159-LOST COMMUNICATION WITH PARKING ASSIST CONTROL MODULE 3792
U0161-LOST COMMUNICATION WITH COMPASS MODULE 3794
U0164-LOST COMMUNICATION WITH HVAC CONTROL MODULE 3798
U0184-LOST COMMUNICATION WITH RADIO 3800
U0197-LOST COMMUNICATION WITH HANDS FREE PHONE MODULE 3802
U0208-LOST COMMUNICATION WITH HEATED SEAT CONTROL MODULE . . 3804
U0209-LOST COMMUNICATION WITH MEMORY SEAT CONTROL MODULE 3806
U1008-LIN 1 BUS. 3808
U1109-LOST COMMUNICATION WITH LIN STEERING WHEEL CONTROLS . . 3811
U1149-LOST COMMUNICATION WITH MULTI-FUNCTION SWITCH 3816
U1191-LOST COMMUNICATION WITH UPPER SWITCH BANK. 3820
U1192-LOST COMMUNICATION WITH LOWER SWITCH BANK 3824

page

NODE, WIRELESS IGNITION (WIN)

DIAGNOSIS AND TESTING
B1A10-RKE FOB 1 BATTERY LOW 3827
B1A11-RKE FOB 2 BATTERY LOW. 3828
B1A12-RKE FOB 3 BATTERY LOW 3828
B1A13-RKE FOB 4 BATTERY LOW 3829
B1A14-RKE FOB 5 BATTERY LOW 3829
B1A15-RKE FOB 6 BATTERY LOW 3830
B1A16-RKE FOB 7 BATTERY LOW 3831
B1A17-RKE FOB 8 BATTERY LOW 3831
B1A24-KEY NOT PROGRAMMED 3832
B1A25-INVALID KEY 3833
B1A26-MAXIMUM NUMBER OF KEYS PROGRAMMED 3835
B1A27-SKREEM PROGRAMMING PERFORMANCE 3836
B1A28-ECM MISMATCH WITH SKIM . . . 3837
B1A29-SKIM BASESTATION MISMATCH. 3839
B1A35-UNIDENTIFIED KEY COMMUNICATION ERROR 3840
B1A6C-SECRET KEY MISMATCH 3842
B1A77- REMOTE START ANTENNA CIRCUIT LOW 3843
B1A79- REMOTE START ANTENNA CIRCUIT OPEN OR NOT CONNECTED 3844
B210D-BATTERY VOLTAGE LOW 3845
B210E-BATTERY VOLTAGE HIGH 3849
B2204-ECU CONFIGURATION MISMATCH. 3851
B2205-ORIGINAL VIN MISSING/ MISMATCH. 3853
C0077-LOW TIRE PRESSURE 3854
C1501-TIRE PRESSURE SENSOR 1 INTERNAL 3858
C1502-TIRE PRESSURE SENSOR 2 INTERNAL 3862
C1503-TIRE PRESSURE SENSOR 3 INTERNAL 3865
C1504-TIRE PRESSURE SENSOR 4 INTERNAL 3869
C151C-TIRE PRESSURE MONITORING (TPM) SENSORS MISSING 3872
P0928-BTSI CONTROL CIRCUIT. 3876
U0100-LOST COMMUNICATION WITH ECM/PCM 3881
U0121-LOST COMMUNICATION WITH ANTI-LOCK BRAKE MODULE 3883
U0141-LOST COMMUNICATION WITH IPM (FCM/TIPM). 3885
U1197-SECURITY SEED RESPONSE NOT RECEIVED FROM ECM/PCM . . . 3886

continued..

page

STANDARD PROCEDURE
WIRELESS IGNITION NODE (WIN) INTERMITTENT TEST 3887
WIRELESS IGNITION NODE (WIN) PRE-DIAGNOSTIC PROCEDURE 3888
WIRELESS IGNITION NODE (WIN) VERIFICATION 3889
TPM VERIFICATION 3890

RADIO

DIAGNOSIS AND TESTING
B1401-FRONT LEFT AUDIO SPEAKER OUTPUT CIRCUIT LOW 3891
B1402-FRONT LEFT AUDIO SPEAKER OUTPUT CIRCUIT HIGH 3896
B1403-FRONT LEFT AUDIO SPEAKER OUTPUT CIRCUIT OPEN 3900
B1405-FRONT RIGHT AUDIO SPEAKER OUTPUT CIRCUIT LOW 3905
B1406-FRONT RIGHT AUDIO SPEAKER OUTPUT CIRCUIT HIGH 3910
B1407-FRONT RIGHT AUDIO SPEAKER OUTPUT CIRCUIT OPEN 3914
B1409-REAR LEFT AUDIO SPEAKER OUTPUT CIRCUIT LOW - BASE 3919
B1409-REAR LEFT AUDIO SPEAKER OUTPUT CIRCUIT LOW - PREMIUM . . 3923
B140A-REAR LEFT AUDIO SPEAKER OUTPUT CIRCUIT HIGH - BASE 3927
B140A-REAR LEFT AUDIO SPEAKER OUTPUT CIRCUIT HIGH - PREMIUM 3930
B140B-REAR LEFT AUDIO SPEAKER OUTPUT CIRCUIT OPEN - BASE 3934
B140B-REAR LEFT AUDIO SPEAKER OUTPUT CIRCUIT OPEN - PREMIUM 3938
B140D-REAR RIGHT AUDIO SPEAKER OUTPUT CIRCUIT LOW - BASE 3942
B140D-REAR RIGHT AUDIO SPEAKER OUTPUT CIRCUIT LOW - PREMIUM 3946
B140E-REAR RIGHT AUDIO SPEAKER OUTPUT CIRCUIT HIGH - BASE 3950
B140E-REAR RIGHT AUDIO SPEAKER OUTPUT CIRCUIT HIGH - PREMIUM 3953
B140F-REAR RIGHT AUDIO SPEAKER OUTPUT CIRCUIT OPEN - BASE 3957
B140F-REAR RIGHT AUDIO SPEAKER OUTPUT CIRCUIT OPEN - PREMIUM 3961
B1420-AUDIO CASSETTE ERROR/INOPERABLE CASSETTE . . . 3964
B1421-AUDIO CD READ ERROR/INOPERABLE DISC 3964

page

B1422-AUDIO DVD READ ERROR/INOPERABLE DISC 3965
B1424-IMPROPER DVD-WRONG REGION 3965
B1429-RADIO DISPLAY HIGH TEMPERATURE 3966
B142A-RADIO UNIT HIGH TEMPERATURE 3967
B142D-AUDIO ANTENNA NOT CONNECTED 3967
B142E-GPS ANTENNA NOT CONNECTED 3969
B142F-SATELLITE RADIO ANTENNA NOT CONNECTED 3970
B1430(2.5)-SATELLITE RADIO ANTENNA INTERNAL PERFORMANCE 3972
B1430(4.0)-SATELLITE RADIO ANTENNA INTERNAL PERFORMANCE 3973
B143A- MICROPHONE 1 CIRCUIT PERFORMANCE 3975
B143B-MICROPHONE 1 CIRCUIT LOW 3980
B143C-MICROPHONE 1 CIRCUIT HIGH 3985
B143D-MICROPHONE 2 CIRCUIT PERFORMANCE 3988
B143E-MICROPHONE 2 CIRCUIT LOW 3993
B143F-MICROPHONE 2 CIRCUIT HIGH 3998
B156B-SATELLITE RADIO ANTENNA CIRCUIT 4000
B210D-BATTERY VOLTAGE LOW 4002
B210E-BATTERY VOLTAGE HIGH 4003
B221E-RADIO INTERNAL 4004
B222C-VEHICLE CONFIGURATION NOT PROGRAMMED 4004
U0141-LOST COMMUNICATION WITH IPM (FCM/TIPM) 4007
U0155-LOST COMMUNICATION WITH CLUSTER/CCN 4009
U0159-LOST COMMUNICATION WITH PARKING ASSIST CONTROL MODULE 4011
U0168-LOST COMMUNICATION WITH VEHICLE SECURITY CONTROL MODULE (WIRELESS IGNITION NODE OR WIN) 4013
U0186-LOST COMMUNICATION WITH AUDIO AMPLIFIER (AMP) 4015
U0197-LOST COMMUNICATION WITH HANDS FREE PHONE MODULE (HFM) 4017

continued..

page

U0249-LOST COMMUNICATION WITH VEHICLE ENTERTAINMENT CONTROL MODULE - LAST ROW (VES3) 4019
U1158-LOST COMMUNICATION WITH SATELLITE VIDEO RECEIVER (SDARV) 4021
SYSTEM, VIDEO ENTERTAINMENT, THREE (VES3)
DIAGNOSIS AND TESTING
B142B-VES UNIT HIGH TEMPERATURE 4022
B14CE-VES BRIGHTNESS UP INPUT BUTTON STUCK 4023
B14CF-VES BRIGHTNESS DOWN INPUT BUTTON STUCK 4023
B210A-SYSTEM VOLTAGE LOW 4024
B210B-SYSTEM VOLTAGE HIGH 4024
B210D-BATTERY VOLTAGE LOW 4025
B210E-BATTERY VOLTAGE HIGH 4026
B21A1-ECU RESET/RECOVERY OCCURRED 4026
B222B-VEHICLE ENTERTAINMENT SYSTEM INTERNAL 4027
B222C-VEHICLE CONFIGURATION NOT PROGRAMMED 4027
U0010-CAN INTERIOR BUS 4030
U0141-LOST COMMUNICATION WITH IPM (FCM/TIPM). 4032
U0155-LOST COMMUNICATION WITH CLUSTER/CCN 4034
U0168-LOST COMMUNICATION WITH VEHICLE SECURITY CONTROL MODULE (WIRELESS IGNITION NODE OR WIN) 4036
U0184-LOST COMMUNICATION WITH RADIO 4038
U1158-LOST COMMUNICATION WITH SATELLITE VIDEO RECEIVER (SDARV) 4040
VIDEO, SATELLITE (SDARV)
DIAGNOSIS AND TESTING
B1539-SATELLITE VIDEO ANTENNA PERFORMANCE (NOT CONNECTED). 4041
B210D-BATTERY VOLTAGE LOW 4043
B210E-BATTERY VOLTAGE HIGH 4044
B2287-SATELLITE VIDEO RECEIVER INTERNAL 4045
U0010-CAN INTERIOR BUS 4046
U0141-LOST COMMUNICATION WITH IPM (FCM/TIPM). 4048
U0184-LOST COMMUNICATION WITH RADIO 4050
U0196-LOST COMMUNICATION WITH VEHICLE ENTERTAINMENT CONTROL MODULE 4052

Special Tools



6801 - Terminal Probe

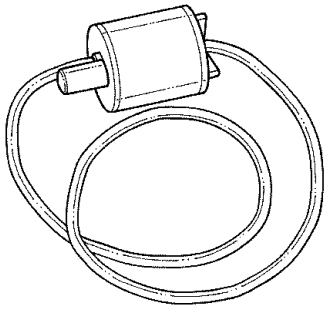

6922 - Adapter, Fuel Tank

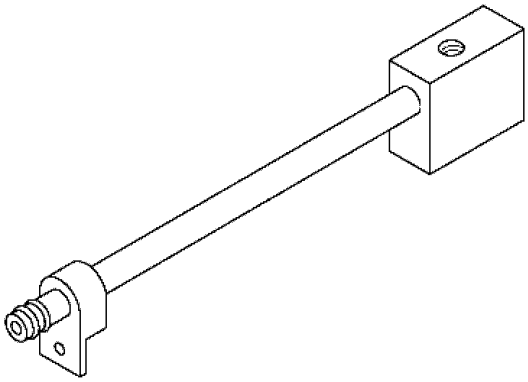

8259 - Adapter, Pressure Test

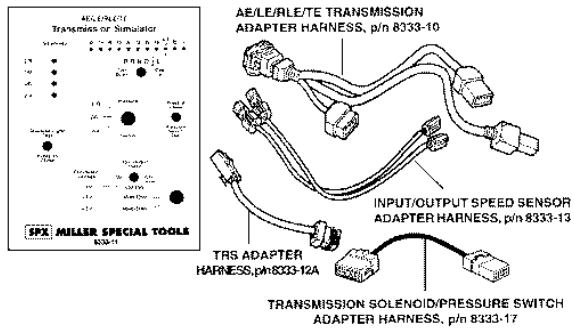

8333-1A - Set, Adapter Cable



8333A - Simulator, Transmission

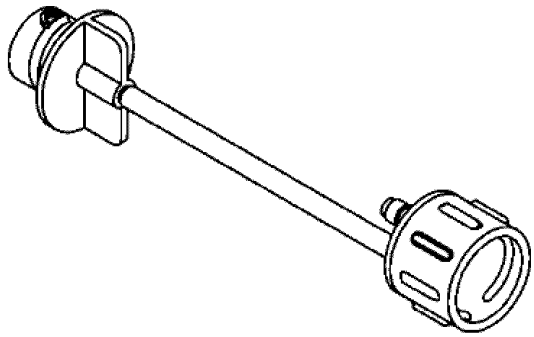

8382 - Adapter, Leak Check

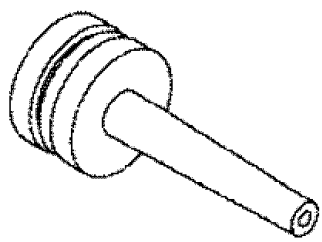

8399 - Adapter, Leak Check

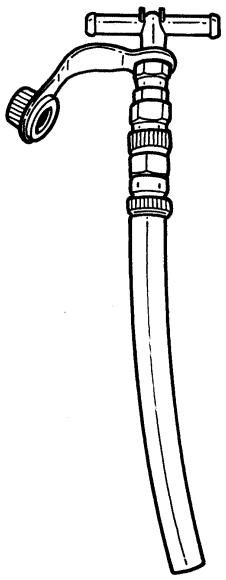

8404-14 - Adapter, Evaporative Service Port

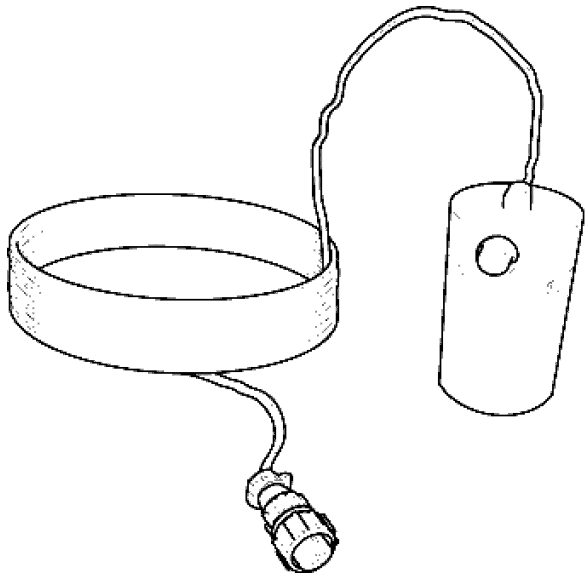

8404-CLL - Light, White

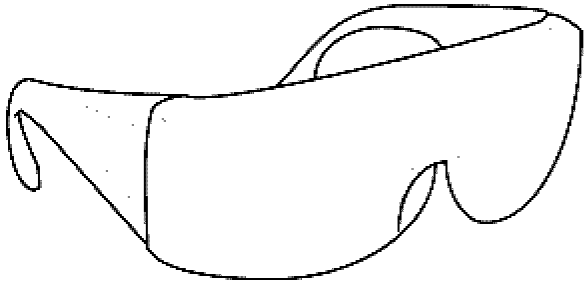

8404-20 - Goggles, Yellow

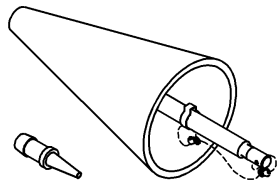

8404-EC - Exhaust Cone

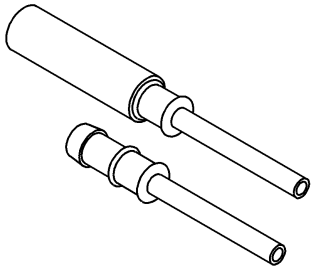

8404-ADP - Smoke Machine Adapters

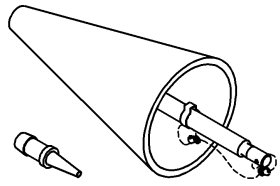

8404-ECT - Exhaust Cone, Truck

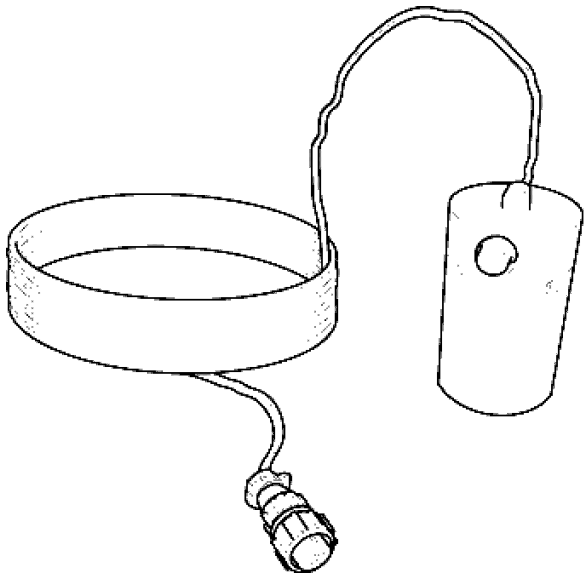

8404-UVL - Light, UV

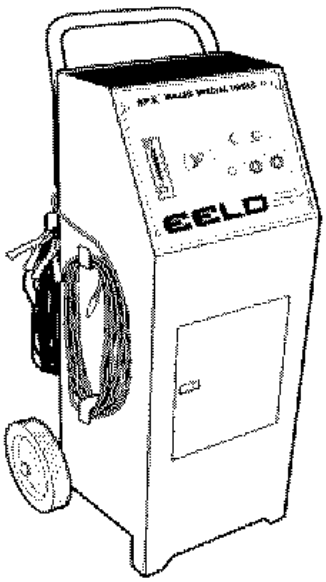

8404B - Kit, EELD And Accessory

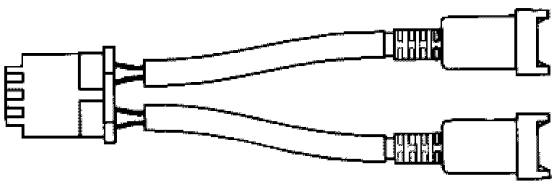

8443-1 - Jumpers, 2 Pin

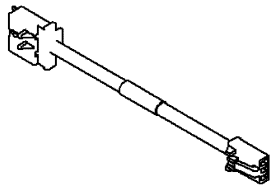

8443-19 - 4 Pin Jumper

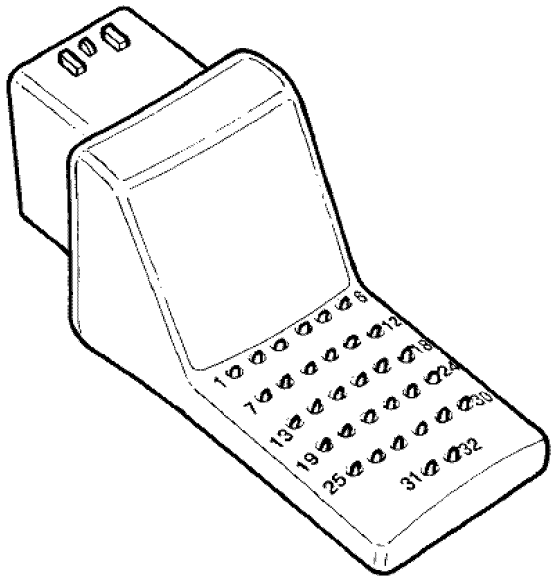

8443-24 - 32-Way Adapter



8443-8 - Jumper, SRS Load

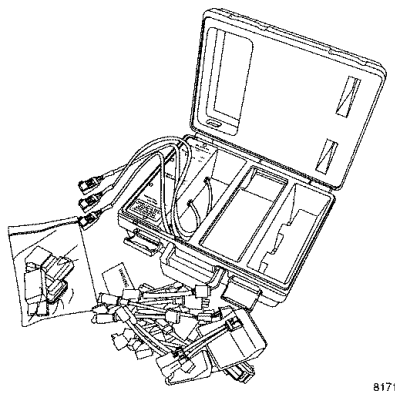

8443A - SRS Load Tool

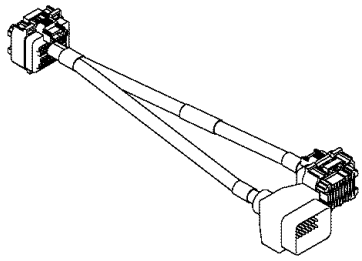

8815-1 - PCM Pinout Box Adapter

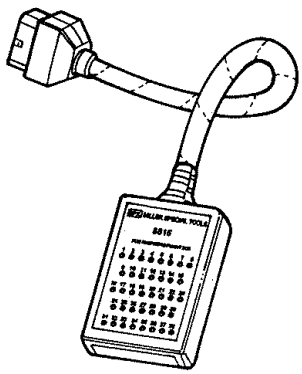

8815A - Kit, NGC, 38 Position

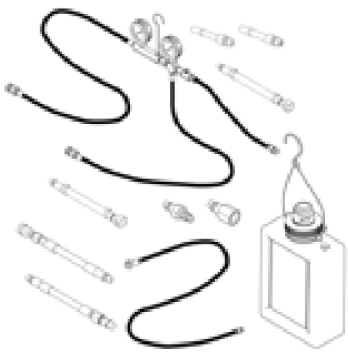

8978A - Decay Tool, Fuel

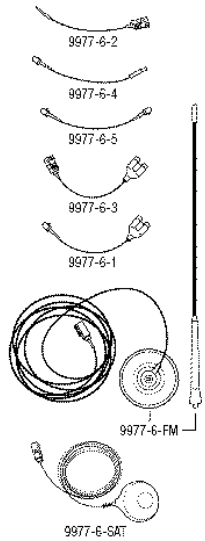

9977-6 - Kit, Radio Antenna Diagnostic

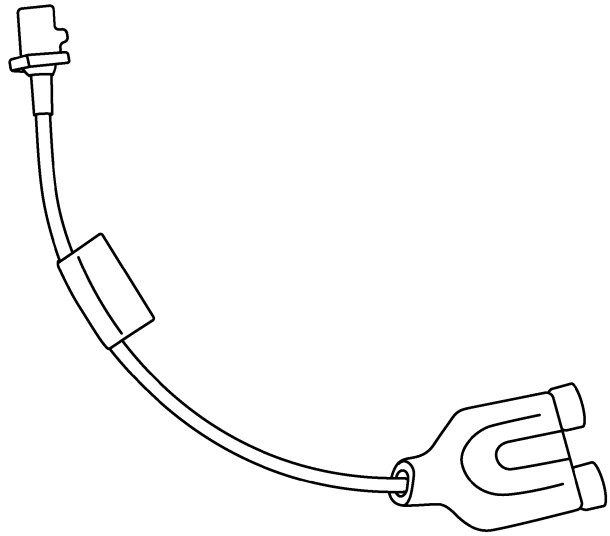

9977-6-1 - Adapter

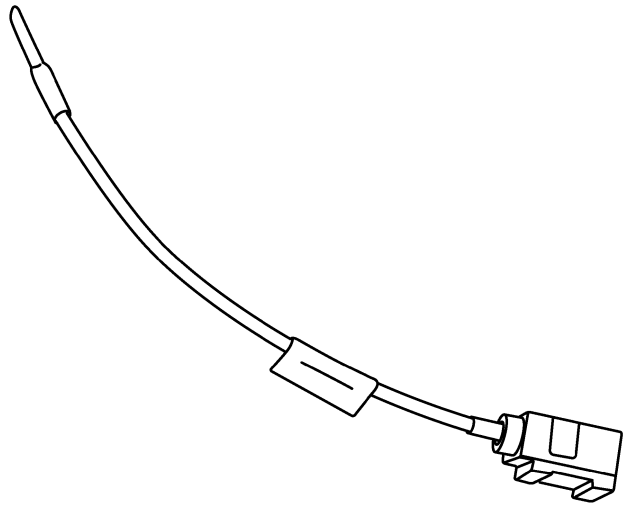

9977-6-2 - Jumper

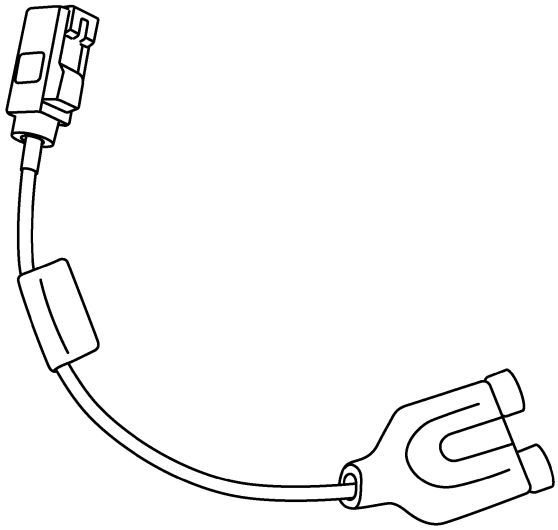

9977-6-3 - Adapter

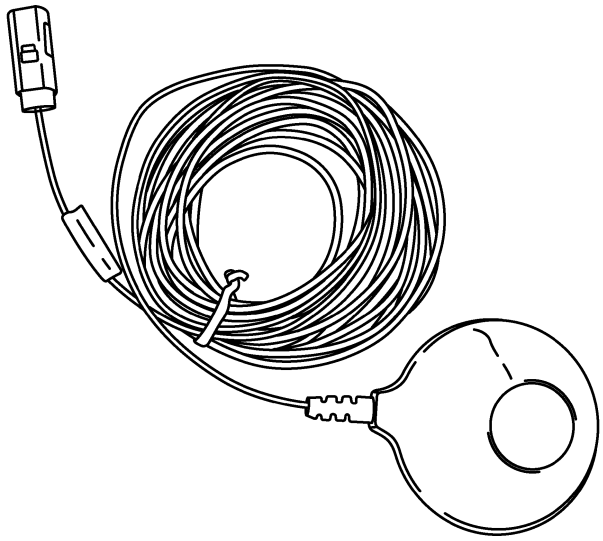

9977-6-SAT - Antenna

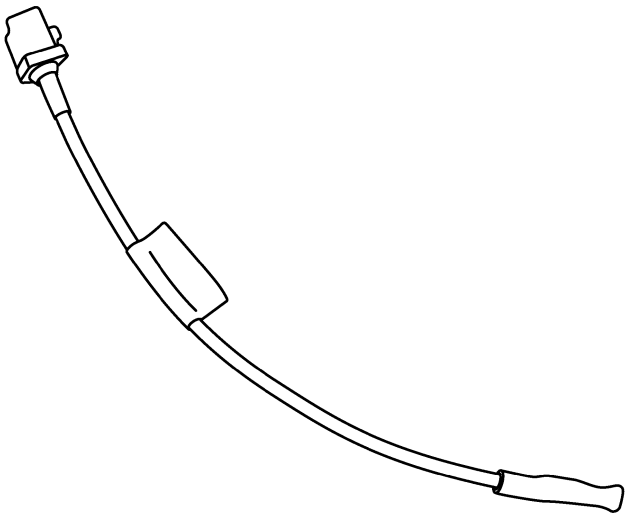

9977-6-4 - Jumper

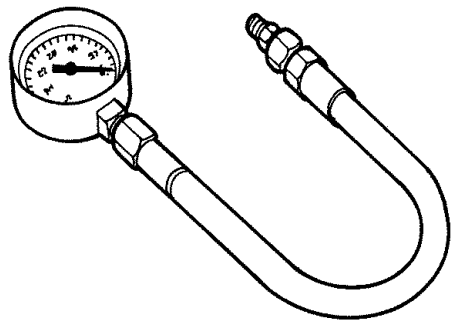

C-3293-SP - Gauge, Pressure 0-300 P.S.I.

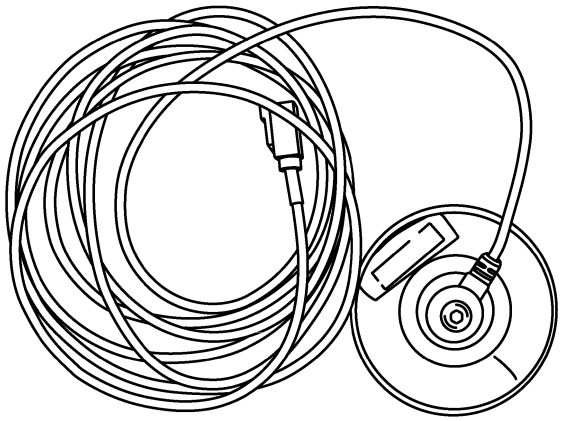

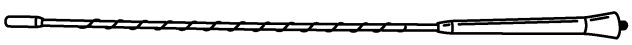

9977-6-FM - Antenna

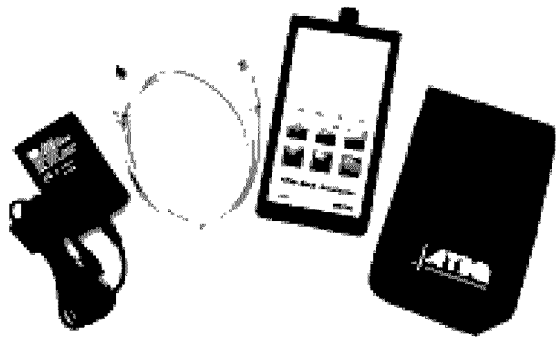

CH9936 - Analyzer, TPM/RKE

AMPLIFIER (AMP)

Diagnosis and Testing

■ B1460-CHANNEL 1 AUDIO SPEAKER OUTPUT CIRCUIT PERFORMANCE

For a complete wiring diagram, **refer to the Wiring Information**.

- **When Monitored:**
  With the ignition on.
- **Set Condition:**
  This Diagnostic Trouble Code (DTC) sets if a Direct Current (DC) offset occurs on the output channel, the amplifier shall set a DTC after a maturity rate of four to six seconds.

Possible Causes
AMPLIFIER

1. CHECK FOR AN INTERMITTENT CONDITION

1. Turn the ignition on and open one of the front doors.

NOTE: A front door must remain open whenever checking or erasing Amplifier DTCs.

2. Using the scan tool, record and erase the Amplifier DTCs.
3. Cycle the ignition switch from on to off, wait five seconds and then back to on.
4. Turn the Radio on and set the volumn to 20.
5. Adjust the speakers to the front and center.
6. Using the scan tool, read the active Amplifier DTCs.

Does the scan tool display active: B1460-CHANNEL 1 AUDIO SPEAKER OUTPUT CIRCUIT PERFORMANCE?

Yes

- Replace the Amplifier in accordance with the Service Information.
- Perform the BODY VERIFICATION TEST. (Refer to 28 - DTC-Based Diagnostics/MODULE, Totally Integrated Power (TIPM) - Standard Procedure).

No

- Test complete, the condition or conditions that originally set this DTC are not present at this time. Using the wiring diagrams as a guide, check all related splices and connectors for signs of water intrusion, corrosion, pushed out or bent terminals and correct pin tension.
- Perform the BODY VERIFICATION TEST. (Refer to 28 - DTC-Based Diagnostics/MODULE, Totally Integrated Power (TIPM) - Standard Procedure).

B1461-CHANNEL 1 AUDIO SPEAKER OUTPUT CIRCUIT LOW

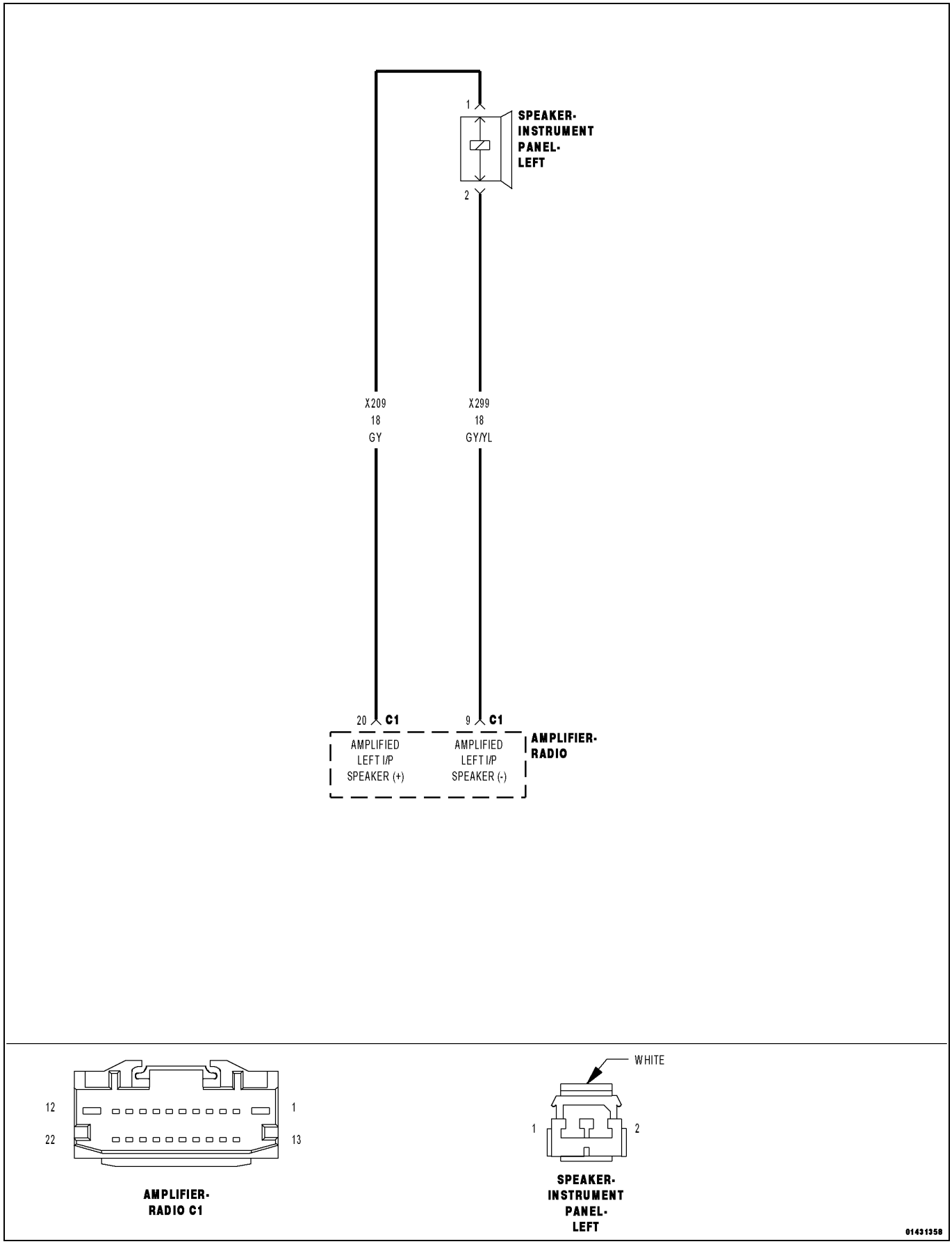

For a complete wiring diagram, **refer to the Wiring Information**.

- **When Monitored:**
  With the ignition on.
- **Set Condition:**
  The Amplifier detects a shorted to ground condition on the speaker output circuit.

Possible Causes
(X209) AMPLIFIED LEFT FRONT I/P SPEAKER (+) CIRCUIT SHORTED TO GROUND
(X299) AMPLIFIED LEFT FRONT I/P SPEAKER (-) CIRCUIT SHORTED TO GROUND
LEFT FRONT I/P SPEAKER
AMPLIFIER

1. CHECK FOR AN INTERMITTENT CONDITION

1. Turn the ignition on and open one of the front doors.

NOTE: A front door must remain open whenever checking or erasing Amplifier DTCs.

2. With the scan tool, record and erase the Amplifier DTCs.
3. Cycle the ignition switch from on to off, wait five seconds and then back to on.
4. Turn the Radio on and set the volume to 20.
5. Adjust the speakers to the front and center.
6. With the scan tool, read the active Amplifier DTCs.

Does the scan tool display active: B1461-CHANNEL 1 AUDIO SPEAKER OUTPUT CIRCUIT LOW?

Yes

- Go To 2

No

- Test complete, the condition or conditions that originally set this DTC are not present at this time. Using the wiring diagrams as a guide, check all related splices and connectors for signs of water intrusion, corrosion, pushed out or bent terminals and correct pin tension.
- Perform the BODY VERIFICATION TEST. (Refer to 28 - DTC-Based Diagnostics/MODULE, Totally Integrated Power (TIPM) - Standard Procedure).

2. LEFT INSTRUMENT PANEL (I/P) SPEAKER

1. Ensure one of the front doors is still open.
2. With the scan tool, erase the DTCs.
3. Turn the ignition off.
4. Disconnect the Left I/P Speaker harness connector.
5. Turn the ignition on.
6. Turn the radio on and set the volume to 25.
7. With the scan tool, read the active Amplifier DTCs.

Does the scan tool display active: B1461-CHANNEL 1 AUDIO SPEAKER OUTPUT CIRCUIT LOW?

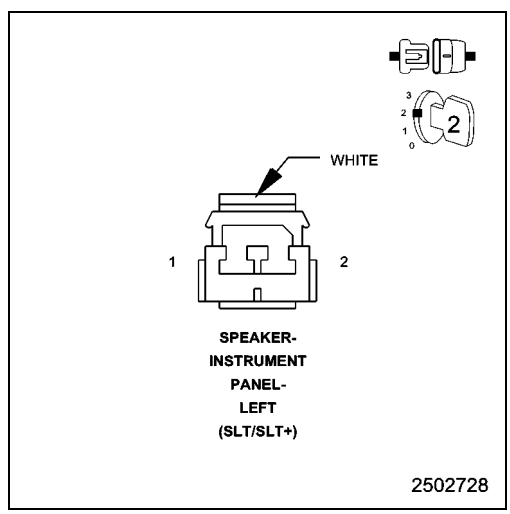

Yes

- Go To 3

No

- Replace the Left Instrument Panel Speaker.
- Perform the BODY VERIFICATION TEST. (Refer to 28 - DTC-Based Diagnostics/MODULE, Totally Integrated Power (TIPM) - Standard Procedure).

3. CHECK THE (X209) AMPLIFIED LEFT FRONT I/P SPEAKER (+) CIRCUIT FOR A SHORT TO GROUND

1. Turn the ignition off.
2. Disconnect the Amplifier C1 harness connector.
3. Measure the resistance between ground and the (X209) Left I/P Speaker (+) circuit.

Is the resistance below 10K Ohms?

Yes

- Repair the (X209) Left I/P Speaker (+) circuit for a short to ground.
- Perform the BODY VERIFICATION TEST. (Refer to 28 - DTC-Based Diagnostics/MODULE, Totally Integrated Power (TIPM) - Standard Procedure).

No

- Go To 4

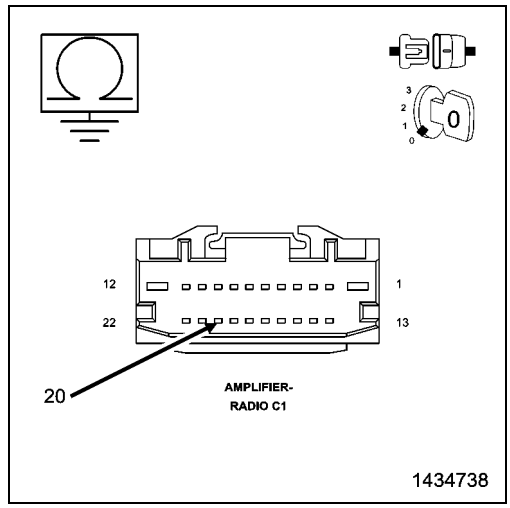

4. CHECK THE (X299) AMPLIFIED LEFT FRONT I/P SPEAKER (-) CIRCUIT FOR A SHORT TO GROUND

1. Measure the resistance between ground and the (X299) Left I/P Speaker (-) circuit.

Is the resistance below 10K Ohms?

Yes

- Repair the (X299) Left I/P Speaker (-) circuit for a short to ground.
- Perform the BODY VERIFICATION TEST. (Refer to 28 - DTC-Based Diagnostics/MODULE, Totally Integrated Power (TIPM) - Standard Procedure).

No

- Replace the Amplifier in accordance with the Service Information.
- Perform the BODY VERIFICATION TEST. (Refer to 28 - DTC-Based Diagnostics/MODULE, Totally Integrated Power (TIPM) - Standard Procedure).

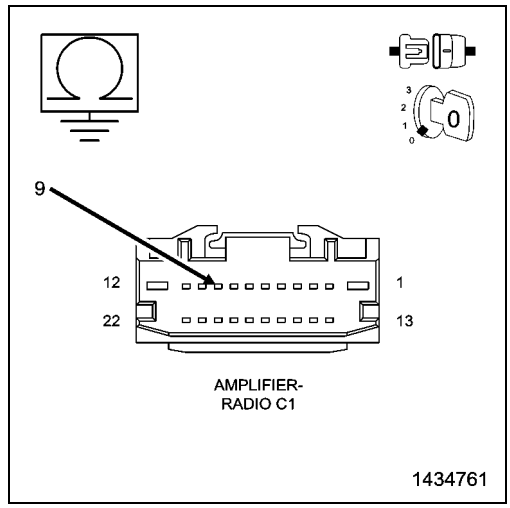

B1462-CHANNEL 1 AUDIO SPEAKER OUTPUT CIRCUIT HIGH

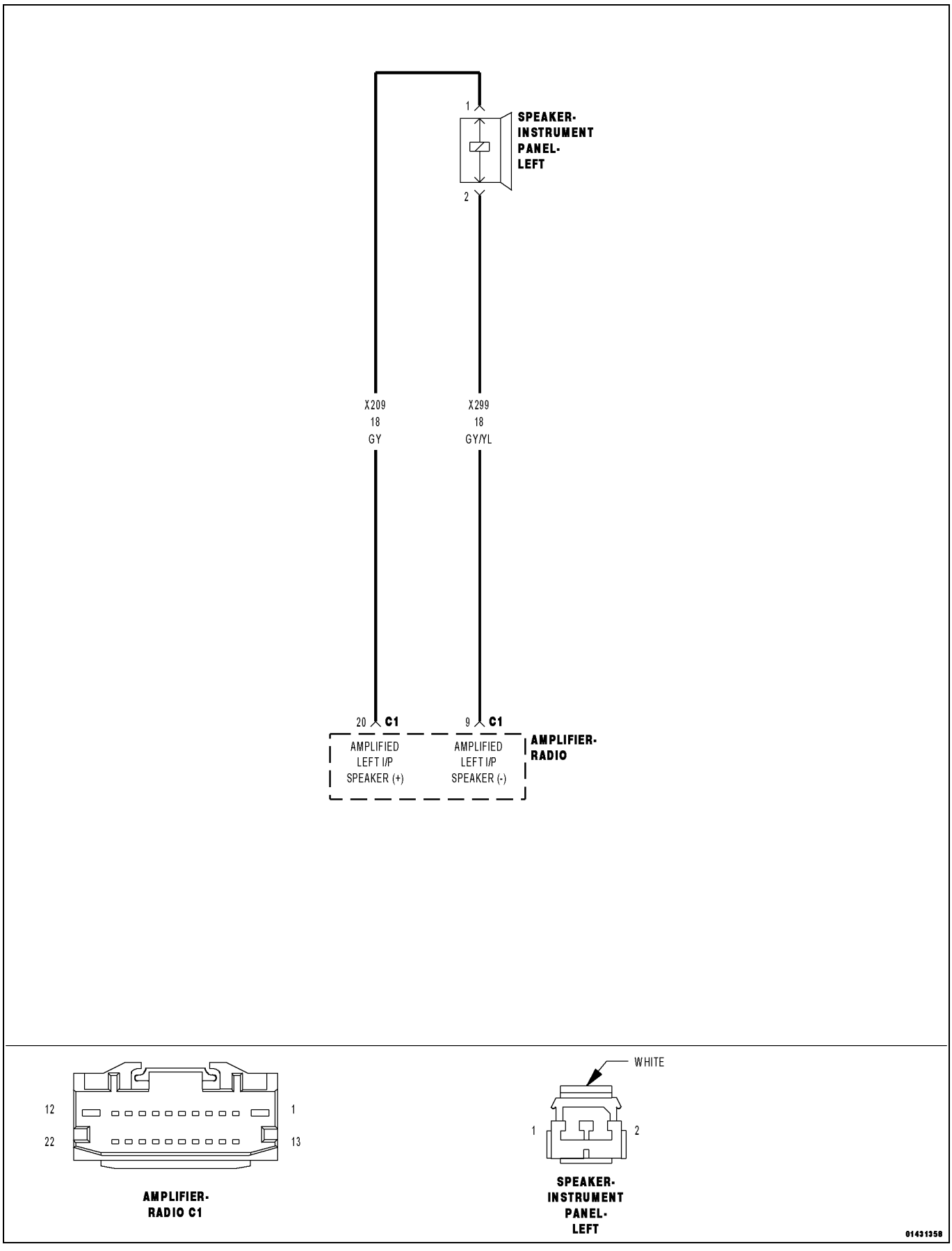

For a complete wiring diagram, **refer to the Wiring Information**.

- **When Monitored:**
  With the ignition on.
- **Set Condition:**
  The Amplifier detects a short to battery condition on the output circuit.

Possible Causes
(X209) AMPLIFIED LEFT I/P SPEAKER (+) CIRCUIT SHORTED TO VOLTAGE
(X299) AMPLIFIED LEFT I/P SPEAKER (-) CIRCUIT SHORTED TO VOLTAGE
AMPLIFIER

1. CHECK FOR AN INTERMITTENT CONDITION

1. Turn the ignition on and open one of the front doors.

NOTE: A front door must remain open whenever checking or erasing Amplifier DTCs.

2. With the scan tool, record and erase the Amplifier DTCs.
3. Cycle the ignition switch from on to off, wait five seconds and then back to on.
4. Turn the Radio on and set the volume to 20.
5. Adjust the speakers to the front and center.
6. With the scan tool, read the active Amplifier DTCs.

Does the scan tool display active: B1462-CHANNEL 1 AUDIO SPEAKER OUTPUT CIRCUIT HIGH?

Yes

- Go To 2

No

- Test complete, the condition or conditions that originally set this DTC are not present at this time. Using the wiring diagrams as a guide, check all related splices and connectors for signs of water intrusion, corrosion, pushed out or bent terminals and correct pin tension.
- Perform the BODY VERIFICATION TEST. (Refer to 28 - DTC-Based Diagnostics/MODULE, Totally Integrated Power (TIPM) - Standard Procedure).

2. CHECK FOR VOLTAGE ON THE (X209) LEFT INSTRUMENT PANEL (I/P) SPEAKER (+) CIRCUIT

1. Turn the ignition off.
2. Disconnect the Amplifier C1 harness connector.
3. Disconnect the Amplified Left I/P Speaker harness connector.
4. Turn the ignition on.
5. Measure the voltage between the (X209) Left I/P Speaker (+) circuit and ground.

Is there any voltage present?

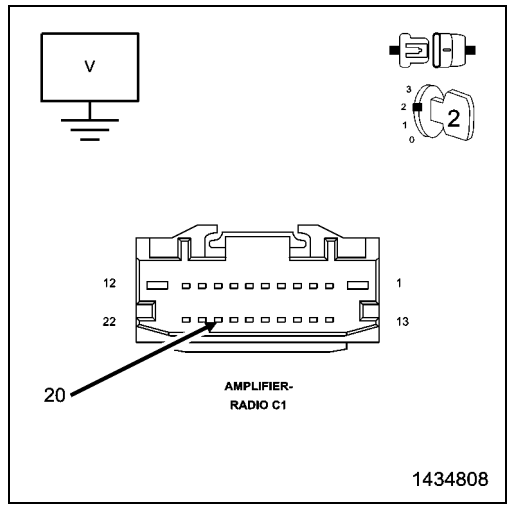

Yes

- Repair the (X209) Left I/P Speaker (+) circuit for a short to voltage.
- Perform the BODY VERIFICATION TEST. (Refer to 28 - DTC-Based Diagnostics/MODULE, Totally Integrated Power (TIPM) - Standard Procedure).

No

- Go To 3

3. CHECK FOR VOLTAGE ON THE (X299) LEFT I/P SPEAKER (-) CIRCUIT

1. Measure the voltage between the (X299) Left I/P Speaker (-) circuit and ground.

Is there any voltage present?

Yes

- Repair the (X299) Left I/P Speaker (-) circuit for a short to voltage.
- Perform the BODY VERIFICATION TEST. (Refer to 28 - DTC-Based Diagnostics/MODULE, Totally Integrated Power (TIPM) - Standard Procedure).

No

- Replace the Amplifier in accordance with the Service Information.
- Perform the BODY VERIFICATION TEST. (Refer to 28 - DTC-Based Diagnostics/MODULE, Totally Integrated Power (TIPM) - Standard Procedure).

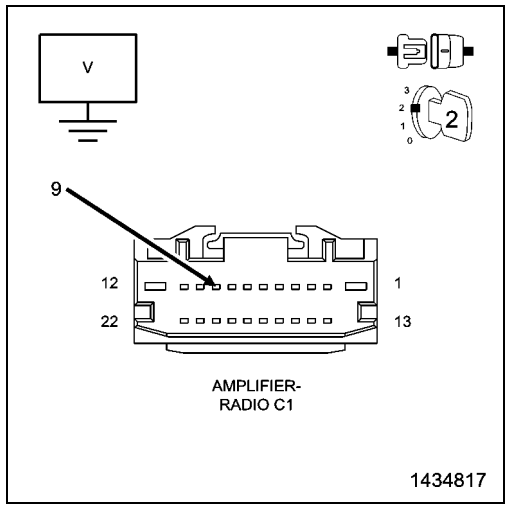

B1463-CHANNEL 1 AUDIO SPEAKER OUTPUT CIRCUIT OPEN

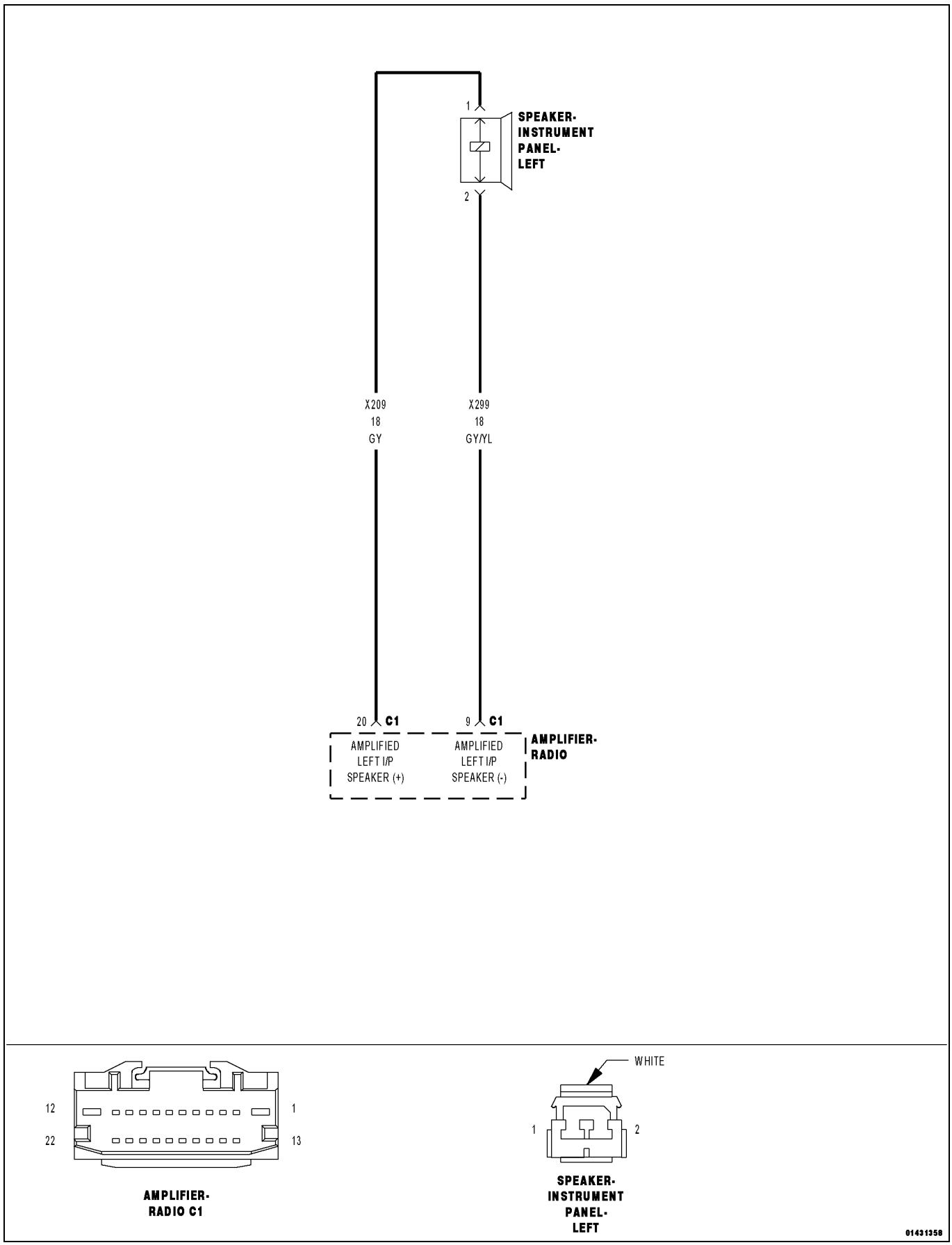

For a complete wiring diagram, **refer to the Wiring Information**.

- **When Monitored:**
  Amplifier Bus wake-up. Amplifier reset with scan tool.
- **Set Condition:**
  The Amplifier detects an open condition on the speaker output circuit.

Possible Causes
(X209) AMPLIFIED LEFT I/P SPEAKER (+) CIRCUIT OPEN
(X299) AMPLIFIED LEFT I/P SPEAKER (-) CIRCUIT OPEN
LEFT FRONT I/P SPEAKER
AMPLIFIER

1. CHECK FOR AN INTERMITTENT CONDITION

1. Turn the ignition on and open one of the front doors.

NOTE: A front door must remain open whenever checking or erasing Amplifier DTCs.

2. With the scan tool, record and erase the Amplifier DTCs.
3. Cycle the ignition switch from on to off, wait five seconds and then back to on.
4. Turn the Radio on and set the volume to 20.
5. Adjust the speakers to the front and center.
6. With the scan tool, read the active Amplifier DTCs.

Does the scan tool display active: B1463-CHANNEL 1 AUDIO SPEAKER OUTPUT CIRCUIT OPEN?

Yes

- Go To 2

No

- Test complete, the condition or conditions that originally set this DTC are not present at this time. Using the wiring diagrams as a guide, check all related splices and connectors for signs of water intrusion, corrosion, pushed out or bent terminals and correct pin tension.
- Perform the BODY VERIFICATION TEST. (Refer to 28 - DTC-Based Diagnostics/MODULE, Totally Integrated Power (TIPM) - Standard Procedure).

2. CHECK THE OPERATION OF THE LEFT FRONT I/P SPEAKER

1. Turn the ignition off.
2. Disconnect the Left I/P Speaker harness connector.
3. Turn the ignition on.
4. Turn the radio on and set the volume to 25.
5. Adjust the speakers to the front and center.
6. With a voltmeter set to read in A/C voltage, measure the voltage of the Amplified Left I/P Speaker circuits in the Amplified Left I/P Speaker harness connector.

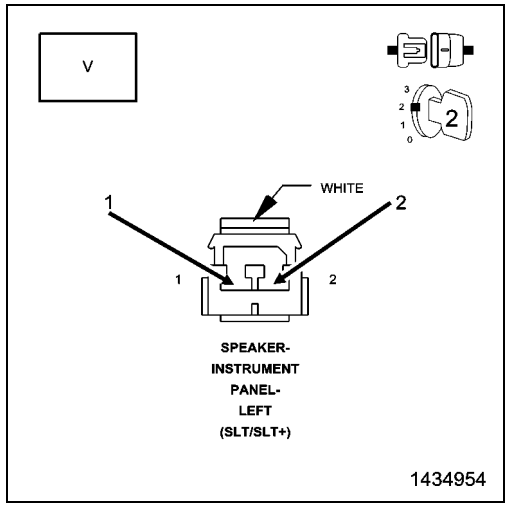

Is the voltage present greater than 1 volt?

Yes

- Replace the Amplified Left I/P Speaker in accordance with the Service Information.
- Perform the BODY VERIFICATION TEST. (Refer to 28 - DTC-Based Diagnostics/MODULE, Totally Integrated Power (TIPM) - Standard Procedure).

No

- Go To 3

3. CHECK THE (X209) LEFT I/P SPEAKER (+) CIRCUIT FOR AN OPEN

1. Turn the ignition off.
2. Disconnect the Amplifier C1 harness connector.
3. Measure the resistance of the (X209) Left I/P Speaker (+) circuit between the Amplifier C1 harness connector and the Left I/P Speaker harness connector.

Is the resistance below 2.0 Ohms?

Yes

- Go To 4

No

- Repair the (X209) Left I/P Speaker (+) circuit for an open.
- Perform the BODY VERIFICATION TEST. (Refer to 28 - DTC-Based Diagnostics/MODULE, Totally Integrated Power (TIPM) - Standard Procedure).

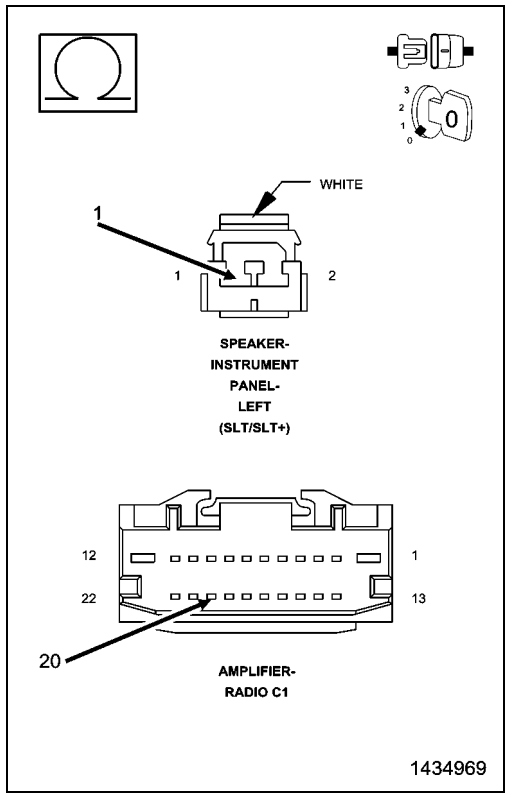

4. CHECK THE (X299) LEFT I/P SPEAKER (-) CIRCUIT FOR AN OPEN

1. Measure the resistance of the (X299) Left I/P Speaker (-) circuit between the Amplifier C1 harness connector and the Left I/P Speaker harness connector.

Is the resistance below 2.0 Ohms?

Yes

- Replace the Amplifier in accordance with the Service Information.
- Perform the BODY VERIFICATION TEST. (Refer to 28 - DTC-Based Diagnostics/MODULE, Totally Integrated Power (TIPM) - Standard Procedure).

No

- Repair the (X299) Left I/P Speaker (-) circuit for an open.
- Perform the BODY VERIFICATION TEST. (Refer to 28 - DTC-Based Diagnostics/MODULE, Totally Integrated Power (TIPM) - Standard Procedure).

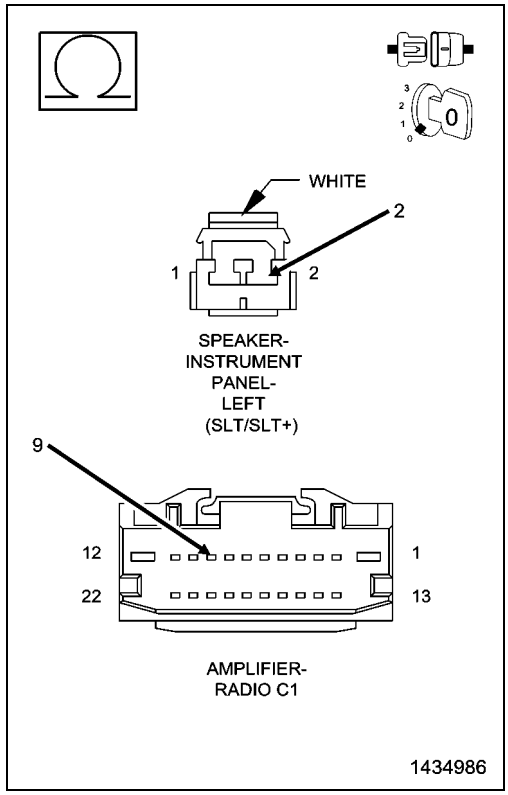

B1464-CHANNEL 1 AUDIO SPEAKER OUTPUT CIRCUIT SHORTED TOGETHER

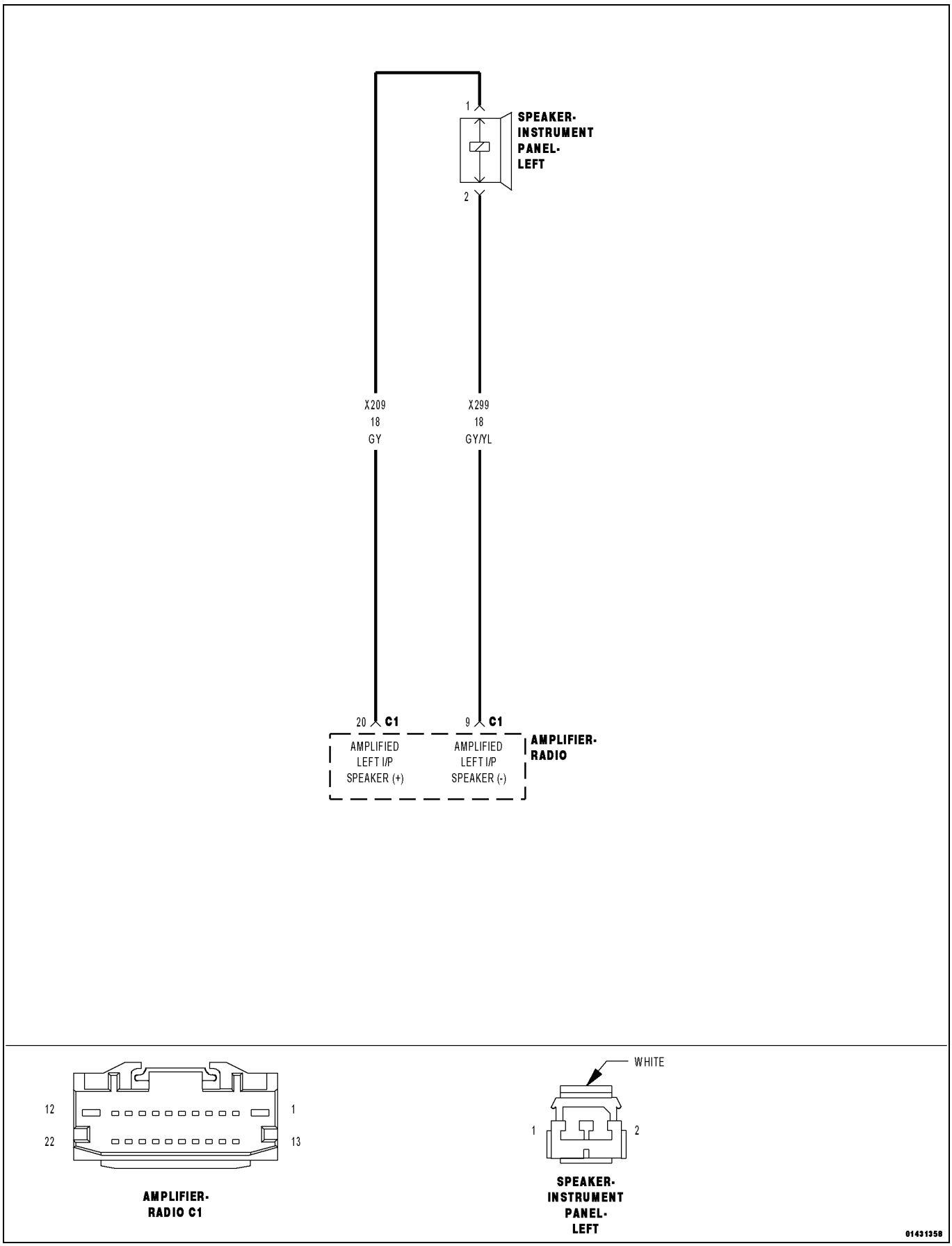

For a complete wiring diagram, **refer to the Wiring Information**.

- **When Monitored:**
  With the ignition on. Radio volume at 25 or higher.
- **Set Condition:**
  The Amplifier detects that the output circuits are shorted together.

Possible Causes
(X209) AMPLIFIED LEFT INSTRUMENT PANEL (I/P) (+) CIRCUIT SHORTED TO THE (X299) AMPLIFIED LEFT INSTRUMENT PANEL (I/P) (-) CIRCUIT
LEFT INSTRUMENT PANEL (I/P) SPEAKER
AMPLIFIER

1. CHECK FOR AN INTERMITTENT CONDITION

1. Turn the ignition on and open one of the front doors.

NOTE: A front door must remain open whenever checking or erasing Amplifier DTCs.

2. Using the scan tool, record and erase the Amplifier DTCs.
3. Cycle the ignition switch from on to off, wait five seconds and then back to on.
4. Turn the Radio on and set the volume to 20.
5. Adjust the speakers to the front and center.
6. Using the scan tool, read the active Amplifier DTCs.

Does the scan tool display active: B1464-CHANNEL 1 AUDIO SPEAKER OUTPUT CIRCUIT SHORTED TOGETHER?

Yes

- Go To 2

No

- Test complete, the condition or conditions that originally set this DTC are not present at this time. Using the wiring diagrams as a guide, check all related splices and connectors for signs of water intrusion, corrosion, pushed out or bent terminals and correct pin tension.
- Perform the BODY VERIFICATION TEST. (Refer to 28 - DTC-Based Diagnostics/MODULE, Totally Integrated Power (TIPM) - Standard Procedure).

2. CHECK THE OPERATION OF THE AMPLIFIED LEFT I/P SPEAKER

1. Turn the ignition off.
2. Disconnect the Left I/P Speaker harness connector.
3. Measure the resistance of the speaker between the two terminals.

NOTE: The graphic shows the connector for reference only. Measure at the speaker terminals.

Is the resistance of the speaker less than 1 Ohm?

Yes

- Replace the Left I/P Speaker in accordance with the Service Information.
- Perform the BODY VERIFICATION TEST. (Refer to 28 - DTC-Based Diagnostics/MODULE, Totally Integrated Power (TIPM) - Standard Procedure).

No

- Go To 3

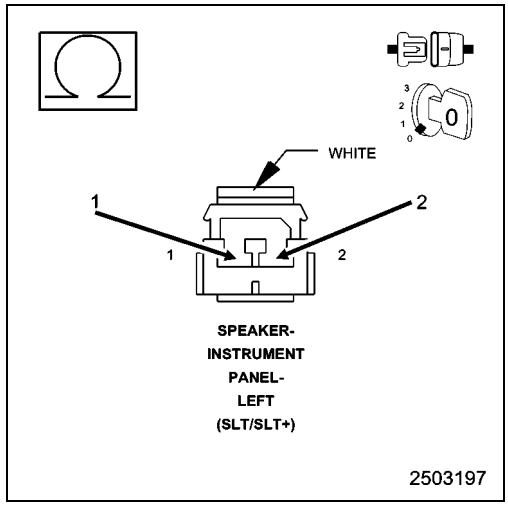

3. CHECK THE (X209) AMPLIFIED LEFT I/P SPEAKER (+) CIRCUIT, AND THE (X299) AMPLIFIED LEFT I/P SPEAKER (-) CIRCUITS FOR A SHORT TOGETHER

1. Disconnect the Amplifier C1 harness connector.
2. Measure the resistance between the (X209) Left I/P Speaker (+) circuit and the (X299) Left I/P Speaker (-) circuit.

Is the resistance below 10K Ohms?

Yes

- Repair the (X209) Left I/P Speaker (+) circuit for a short to the (X299) Left I/P Speaker (-) circuit.
- Perform the BODY VERIFICATION TEST. (Refer to 28 - DTC-Based Diagnostics/MODULE, Totally Integrated Power (TIPM) - Standard Procedure).

No

- Replace the Amplifier in accordance with the Service Information.
- Perform the BODY VERIFICATION TEST. (Refer to 28 - DTC-Based Diagnostics/MODULE, Totally Integrated Power (TIPM) - Standard Procedure).

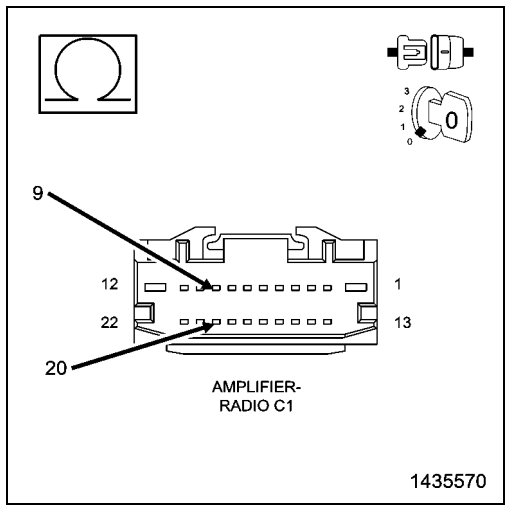

B1465-CHANNEL 2 AUDIO SPEAKER OUTPUT CIRCUIT PERFORMANCE

For a complete wiring diagram, **refer to the Wiring Information**.

- **When Monitored:**
  With the ignition on.
- **Set Condition:**
  This Diagnostic Trouble Code (DTC) sets if a Direct Current (DC) offset occurs on the output channel, the amplifier shall set a DTC after a maturity rate of four to six seconds.

Possible Causes
AMPLIFIER

1. CHECK FOR AN INTERMITTENT CONDITION

1. Turn the ignition on and open one of the front doors.

NOTE: A front door must remain open whenever checking or erasing Amplifier DTCs.

2. With the scan tool, record and erase the Amplifier DTCs.
3. Cycle the ignition switch from on to off, wait five seconds and then back to on.
4. Turn the Radio on and set the volume to 20.
5. Adjust the speakers to the front and center.
6. With the scan tool, read the active Amplifier DTCs.

Does the scan tool display active: B1465-CHANNEL 2 AUDIO SPEAKER OUTPUT CIRCUIT PERFORMANCE?

Yes

- Replace the Amplifier in accordance with the service information.
- Perform the BODY VERIFICATION TEST. (Refer to 28 - DTC-Based Diagnostics/MODULE, Totally Integrated Power (TIPM) - Standard Procedure).

No

- Test complete, the condition or conditions that originally set this DTC are not present at this time. Using the wiring diagrams as a guide, check all related splices and connectors for signs of water intrusion, corrosion, pushed out or bent terminals and correct pin tension.
- Perform the BODY VERIFICATION TEST. (Refer to 28 - DTC-Based Diagnostics/MODULE, Totally Integrated Power (TIPM) - Standard Procedure).

B1466-CHANNEL 2 AUDIO SPEAKER OUTPUT CIRCUIT LOW

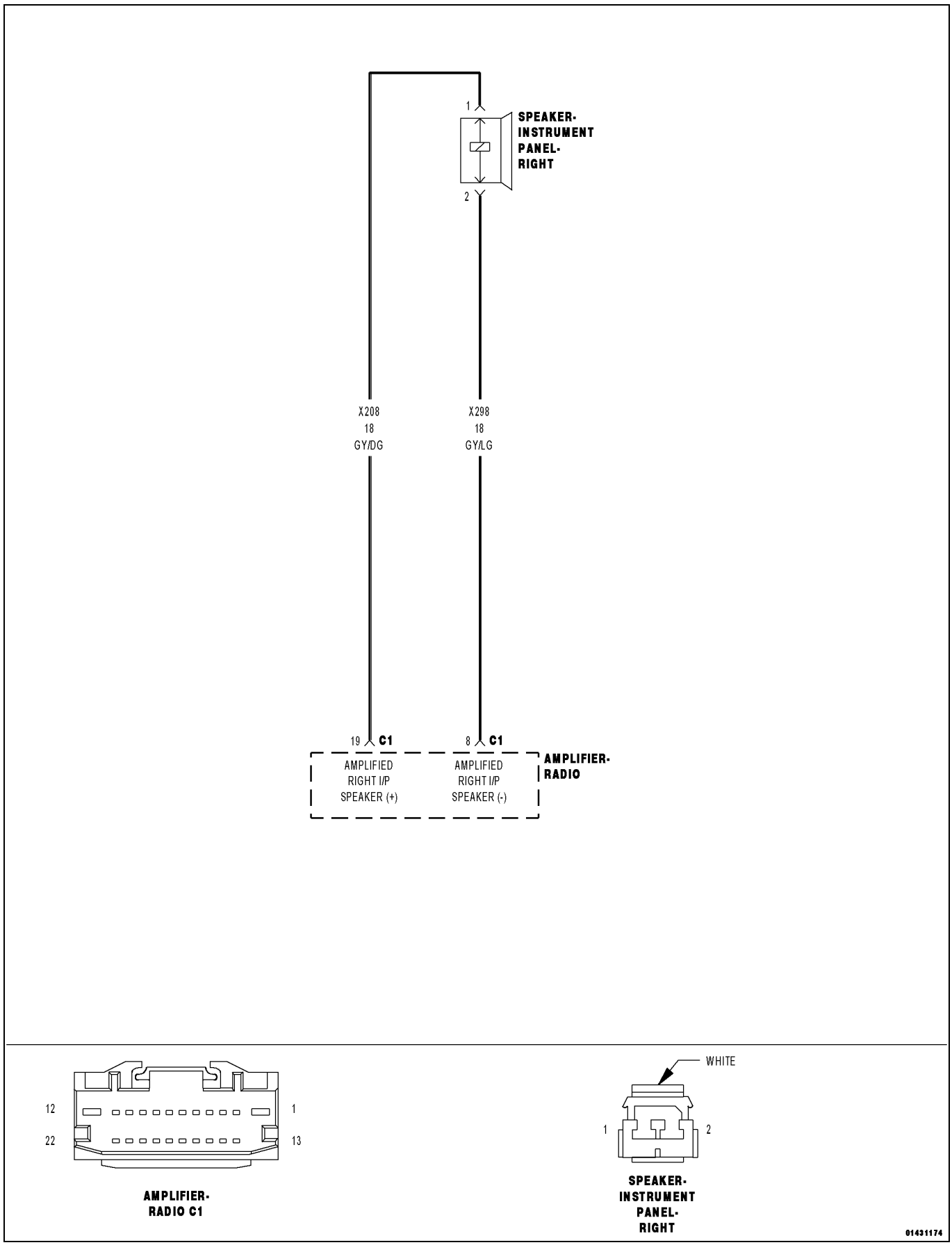

For a complete wiring diagram, **refer to the Wiring Information**.

- **When Monitored:**
  With the ignition on.
- **Set Condition:**
  The Amplifier detects a shorted to ground condition on the speaker output circuit.

Possible Causes
(X208) AMPLIFIED RIGHT I/P SPEAKER (+) CIRCUIT SHORTED TO GROUND
(X298) AMPLIFIED RIGHT I/P SPEAKER (-) CIRCUIT SHORTED TO GROUND
RIGHT I/P SPEAKER
AMPLIFIER

1. CHECK FOR AN INTERMITTENT CONDITION

1. Turn the ignition on and open one of the front doors.

NOTE: A front door must remain open whenever checking or erasing Amplifier DTCs.

2. Using the scan tool, record and erase the Amplifier DTCs.
3. Cycle the ignition switch from on to off, wait five seconds and then back to on.
4. Turn the Radio on and set the volume to 20.
5. Adjust the speakers to the front and center.
6. Using the scan tool, read the active Amplifier DTCs.

Does the scan tool display active: B1466-CHANNEL 2 AUDIO SPEAKER OUTPUT CIRCUIT LOW?

Yes

- Go To 2

No

- Test complete, the condition or conditions that originally set this DTC are not present at this time. Using the wiring diagrams as a guide, check all related splices and connectors for signs of water intrusion, corrosion, pushed out or bent terminals and correct pin tension.
- Perform the BODY VERIFICATION TEST. (Refer to 28 - DTC-Based Diagnostics/MODULE, Totally Integrated Power (TIPM) - Standard Procedure).

2. CHECK THE RIGHT INSTRUMENT PANEL (I/P) SPEAKER

1. Make sure one of the front doors is still open.
2. Using the scan tool, erase the DTCs.
3. Turn the ignition off.
4. Disconnect the Right I/P Speaker harness connector.
5. Turn the ignition on.
6. Turn the radio on and set the volume to 25.
7. Using the scan tool, read the active Amplifier DTCs.

Does the scan tool display active: B1466-CHANNEL 2 AUDIO SPEAKER OUTPUT CIRCUIT LOW?

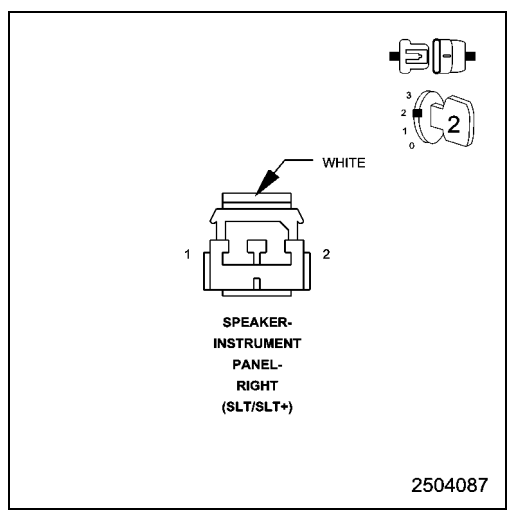

Yes

- Go To 3

No

- Replace the Right Instrument Panel Speaker.
- Perform the BODY VERIFICATION TEST. (Refer to 28 - DTC-Based Diagnostics/MODULE, Totally Integrated Power (TIPM) - Standard Procedure).

3. CHECK THE (X208) AMPLIFIED RIGHT I/P SPEAKER (+) CIRCUIT FOR A SHORT TO GROUND

1. Turn the ignition off.
2. Disconnect the Amplifier C1 harness connector.
3. Measure the resistance between ground and the (X208) Right I/P Speaker (+) circuit.

Is the resistance below 10K Ohms?

Yes

- Repair the (X208) Right I/P Speaker (+) circuit for a short to ground.
- Perform the BODY VERIFICATION TEST. (Refer to 28 - DTC-Based Diagnostics/MODULE, Totally Integrated Power (TIPM) - Standard Procedure).

No

- Go To 4

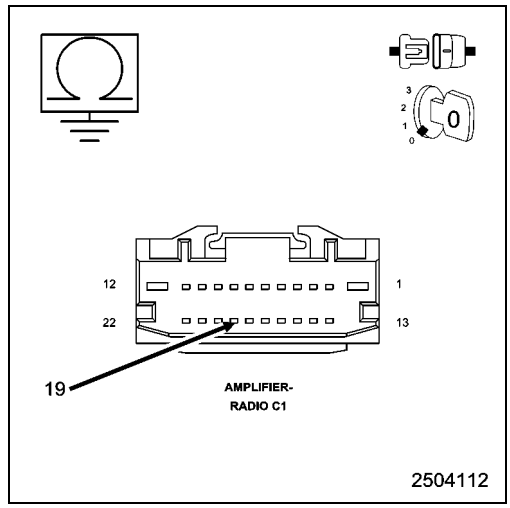

4. CHECK THE (X298) AMPLIFIED RIGHT I/P SPEAKER (-) CIRCUIT FOR A SHORT TO GROUND

1. Measure the resistance between ground and the (X298) Amplified Right I/P Speaker (-) circuit.

Is the resistance below 10K Ohms?

Yes

- Repair the (X298) Amplified Right I/P Speaker (-) for a short to ground.
- Perform the BODY VERIFICATION TEST. (Refer to 28 - DTC-Based Diagnostics/MODULE, Totally Integrated Power (TIPM) - Standard Procedure).

No

- Replace the Amplifier in accordance with the Service Information.
- Perform the BODY VERIFICATION TEST. (Refer to 28 - DTC-Based Diagnostics/MODULE, Totally Integrated Power (TIPM) - Standard Procedure).

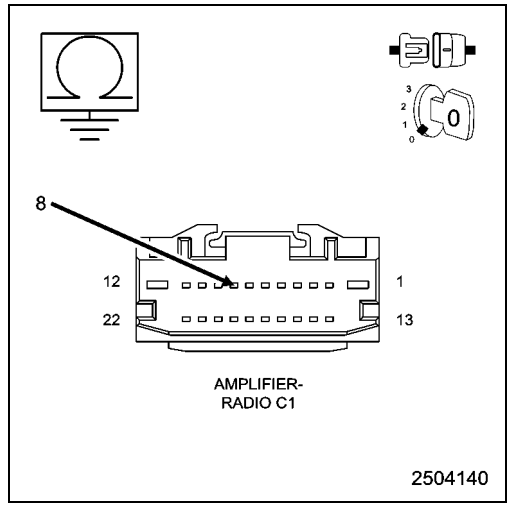

B1467-CHANNEL 2 AUDIO SPEAKER OUTPUT CIRCUIT HIGH

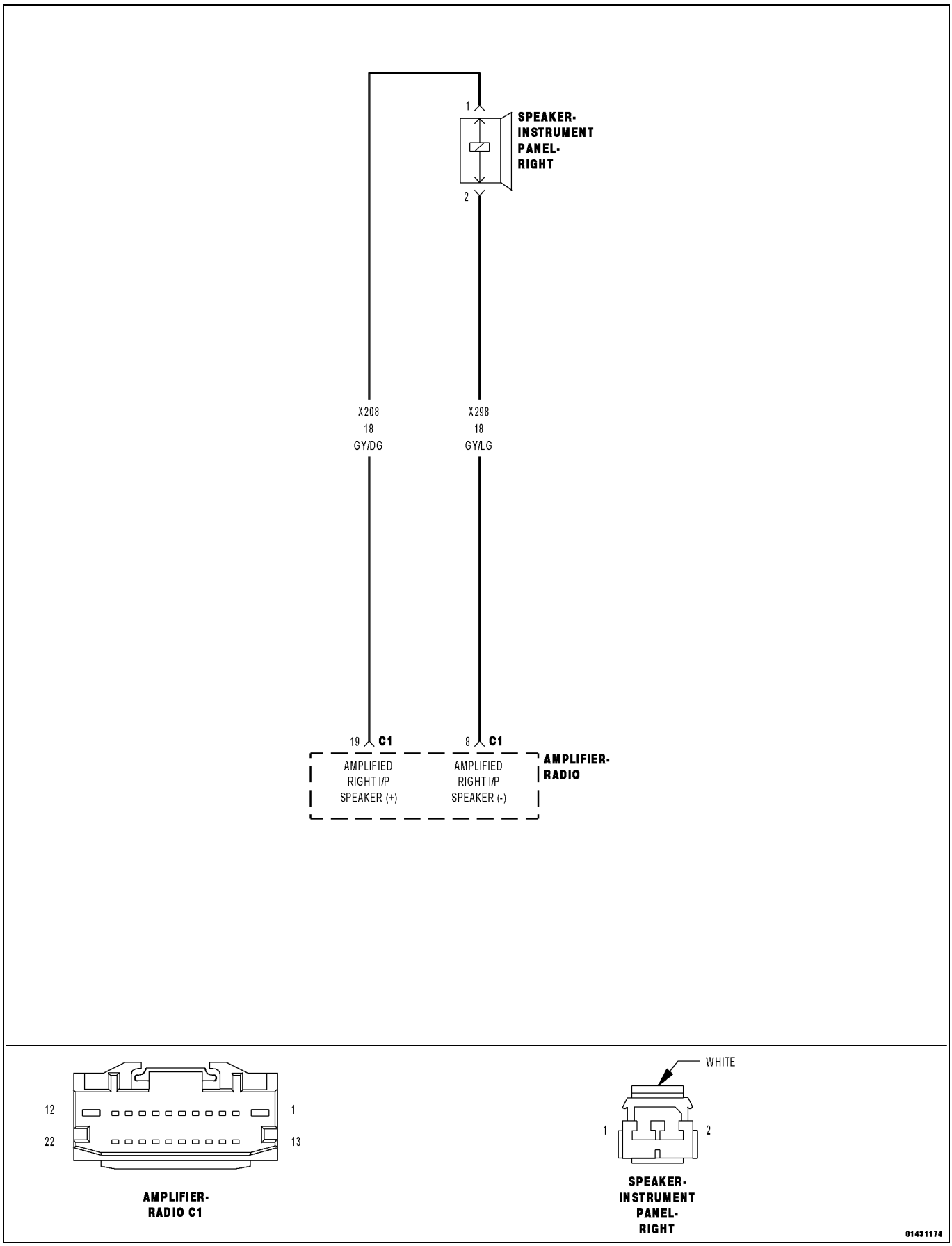

For a complete wiring diagram, **refer to the Wiring Information**.

- **When Monitored:**
  With the ignition on.
- **Set Condition:**
  The Amplifier detects a short to battery condition on the output circuit.

Possible Causes
(X208) AMPLIFIED RIGHT I/P SPEAKER (+) CIRCUIT SHORTED TO VOLTAGE
(X298) AMPLIFIED RIGHT I/P SPEAKER (-) CIRCUIT SHORTED TO VOLTAGE
AMPLIFIER

1. CHECK FOR AN INTERMITTENT CONDITION

1. Turn the ignition on and open one of the front doors.

NOTE: A front door must remain open whenever checking or erasing Amplifier DTCs.

2. Using the scan tool, record and erase the Amplifier DTCs.
3. Cycle the ignition switch from on to off, wait five seconds and then back to on.
4. Turn the Radio on and set the volume to 20.
5. Adjust the speakers to the front and center.
6. Using the scan tool, read the active Amplifier DTCs.

Does the scan tool display active: B1467-CHANNEL 2 AUDIO SPEAKER OUTPUT CIRCUIT HIGH?

Yes

- Go To 2

No

- Test complete, the condition or conditions that originally set this DTC are not present at this time. Using the wiring diagrams as a guide, check all related splices and connectors for signs of water intrusion, corrosion, pushed out or bent terminals and correct pin tension.
- Perform the BODY VERIFICATION TEST. (Refer to 28 - DTC-Based Diagnostics/MODULE, Totally Integrated Power (TIPM) - Standard Procedure).

2. CHECK FOR VOLTAGE ON THE (X208) AMPLIFIED RIGHT I/P SPEAKER (+) CIRCUIT

1. Turn the ignition off.
2. Disconnect the Amplifier C1 harness connector.
3. Disconnect the Amplified Right I/P Speaker harness connector.
4. Turn the ignition on.
5. Measure for voltage between the (X208) Amplified Right I/P Speaker (+) circuit and ground.

Is there any voltage present?

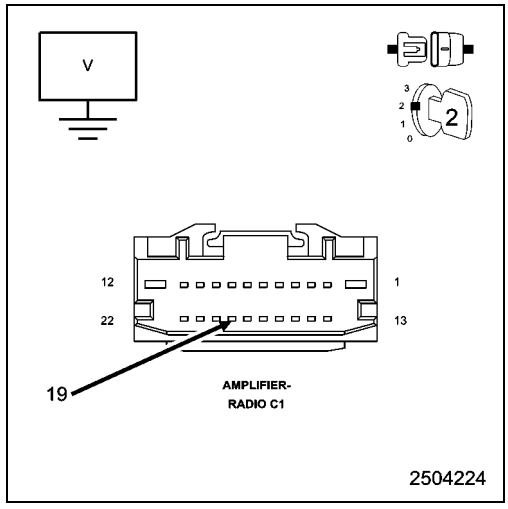

Yes

- Repair the (X208) Amplified Right I/P Speaker (+) circuit for a short to voltage.
- Perform the BODY VERIFICATION TEST. (Refer to 28 - DTC-Based Diagnostics/MODULE, Totally Integrated Power (TIPM) - Standard Procedure).

No

- Go To 3

3. CHECK FOR VOLTAGE ON THE (X298) AMPLIFIED RIGHT I/P SPEAKER (-) CIRCUIT

1. Measure for voltage on the (X298) Amplified Right I/P Speaker (-) circuit and ground.

Is there any voltage present?

Yes

- Repair the (X298) Amplified Right I/P Speaker (-) circuit for a short to voltage.
- Perform the BODY VERIFICATION TEST. (Refer to 28 - DTC-Based Diagnostics/MODULE, Totally Integrated Power (TIPM) - Standard Procedure).

No

- Replace the Amplifier in accordance with the Service Information.
- Perform the BODY VERIFICATION TEST. (Refer to 28 - DTC-Based Diagnostics/MODULE, Totally Integrated Power (TIPM) - Standard Procedure).

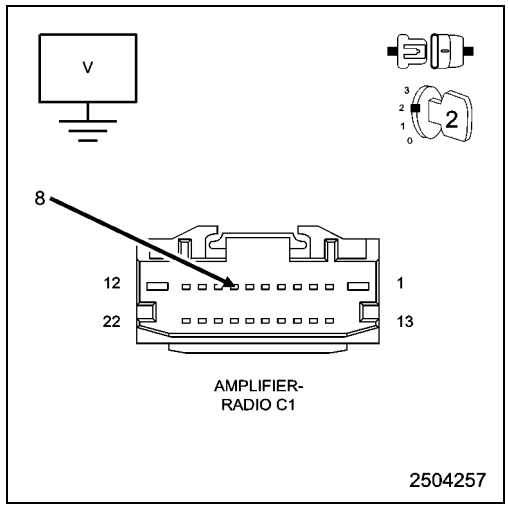

B1468-CHANNEL 2 AUDIO SPEAKER OUTPUT CIRCUIT OPEN

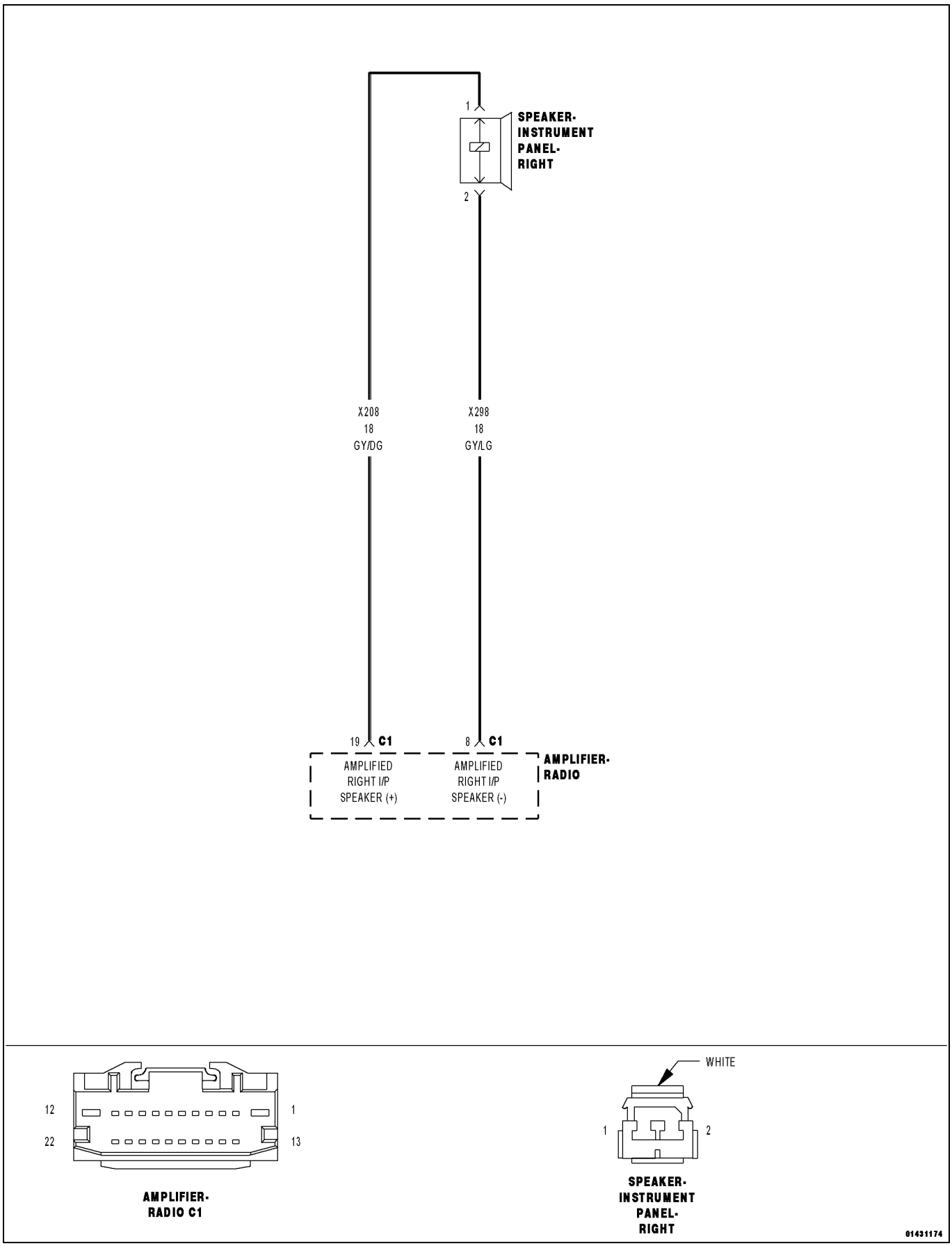

For a complete wiring diagram, **refer to the Wiring Information**.

- **When Monitored:**
  Amplifier Bus wake-up. Amplifier reset with scan tool.
- **Set Condition:**
  The Amplifier detects an open condition on the speaker output circuit.

Possible Causes
(X208) AMPLIFIED RIGHT I/P SPEAKER (+) CIRCUIT OPEN
(X298) AMPLIFIED RIGHT I/P SPEAKER (-) CIRCUIT OPEN
RIGHT I/P SPEAKER
AMPLIFIER

1. CHECK FOR AN INTERMITTENT CONDITION

1. Turn the ignition on and open one of the front doors.

NOTE: A front door must remain open whenever checking or erasing Amplifier DTCs.

2. With the scan tool, record and erase the Amplifier DTCs.
3. Cycle the ignition switch from on to off, wait five seconds and then back to on.
4. Turn the Radio on and set the volume to 20.
5. Adjust the speakers to the front and center.
6. With the scan tool, read the active Amplifier DTCs.

Does the scan tool display active: B1468-CHANNEL 2 AUDIO SPEAKER OUTPUT CIRCUIT OPEN?

Yes

- Go To 2

No

- Test complete, the condition or conditions that originally set this DTC are not present at this time. Using the wiring diagrams as a guide, check all related splices and connectors for signs of water intrusion, corrosion, pushed out or bent terminals and correct pin tension.
- Perform the BODY VERIFICATION TEST. (Refer to 28 - DTC-Based Diagnostics/MODULE, Totally Integrated Power (TIPM) - Standard Procedure).

2. CHECK THE OPERATION OF THE RIGHT FRONT I/P SPEAKER

1. Turn the ignition off.
2. Disconnect the Right I/P Speaker harness connector.
3. Turn the radio on and turn the volume to 25.
4. With a voltmeter set to read in A/C voltage, measure the voltage of the Amplified Right I/P Speaker circuits in the Amplified Right I/P Speaker harness connector.

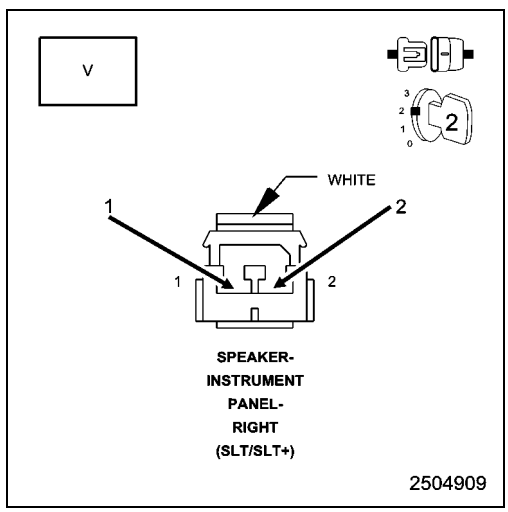

Is the voltage present greater than 1 volt?

Yes

- Replace the Amplified Right I/P Speaker in accordance with the Service Information.
- Perform the BODY VERIFICATION TEST. (Refer to 28 - DTC-Based Diagnostics/MODULE, Totally Integrated Power (TIPM) - Standard Procedure).

No

- Go To 3

3. CHECK THE (X208) AMPLIFIED RIGHT I/P SPEAKER (+) CIRCUIT FOR AN OPEN

1. Turn the ignition off.
2. Disconnect the Amplifier C1 harness connector.
3. Measure the resistance of the (X208) Amplified Right I/P Speaker (+) circuit between the Amplifier C1 harness connector and the Amplified Right I/P Speaker harness connector.

Is the resistance below 2.0 Ohms?

Yes

- Go To 4

No

- Repair the (X208) Amplified Right I/P Speaker (+) circuit for an open.
- Perform the BODY VERIFICATION TEST. (Refer to 28 - DTC-Based Diagnostics/MODULE, Totally Integrated Power (TIPM) - Standard Procedure).

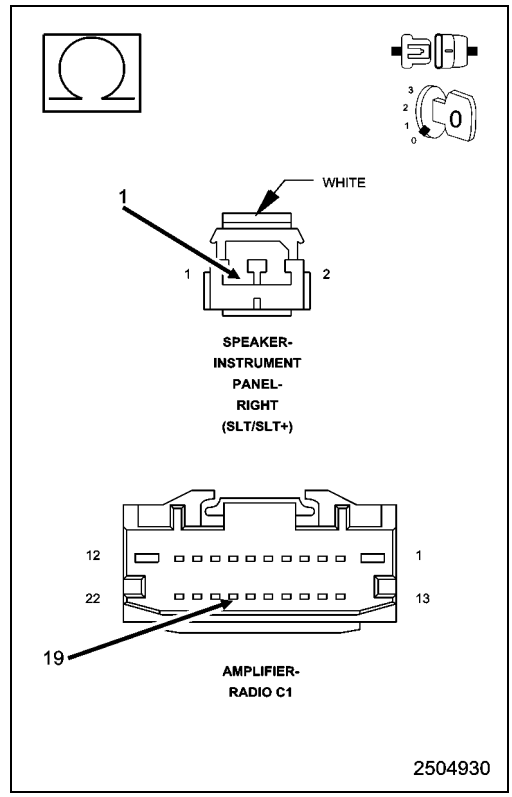

4. CHECK THE (X298) AMPLIFIED RIGHT I/P SPEAKER (-) CIRCUIT FOR AN OPEN

1. Measure the resistance of the (X298) Amplified Right I/P Speaker (-) circuit between the Amplifier C1 harness connector and the Amplified Right I/P Speaker harness connector.

Is the resistance below 2.0 Ohms?

Yes

- Replace the Amplifier in accordance with the Service Information.
- Perform the BODY VERIFICATION TEST.
  (Refer to 28 - DTC-Based Diagnostics/MODULE, Totally Integrated Power (TIPM) - Standard Procedure).

No

- Repair the (X298) Amplified Right I/P Speaker (-) circuit for an open.
- Perform the BODY VERIFICATION TEST. (Refer to 28 - DTC-Based Diagnostics/MODULE, Totally Integrated Power (TIPM) - Standard Procedure).

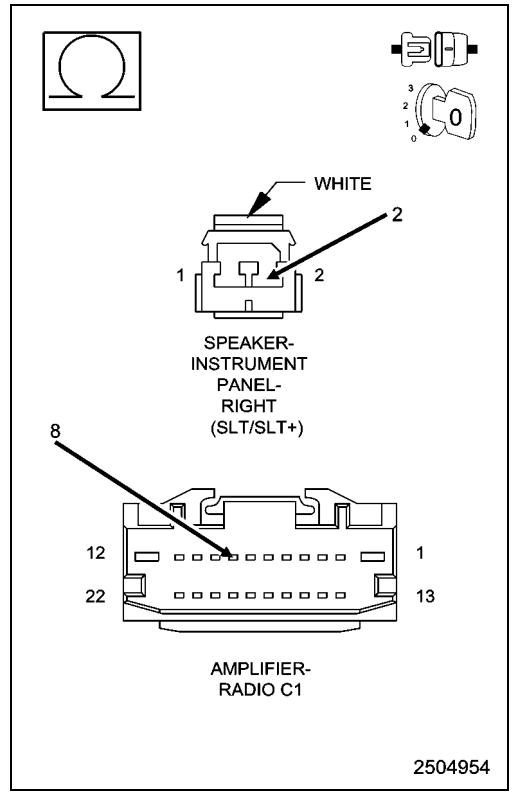

B1469-CHANNEL 2 AUDIO SPEAKER OUTPUT CIRCUIT SHORTED TOGETHER

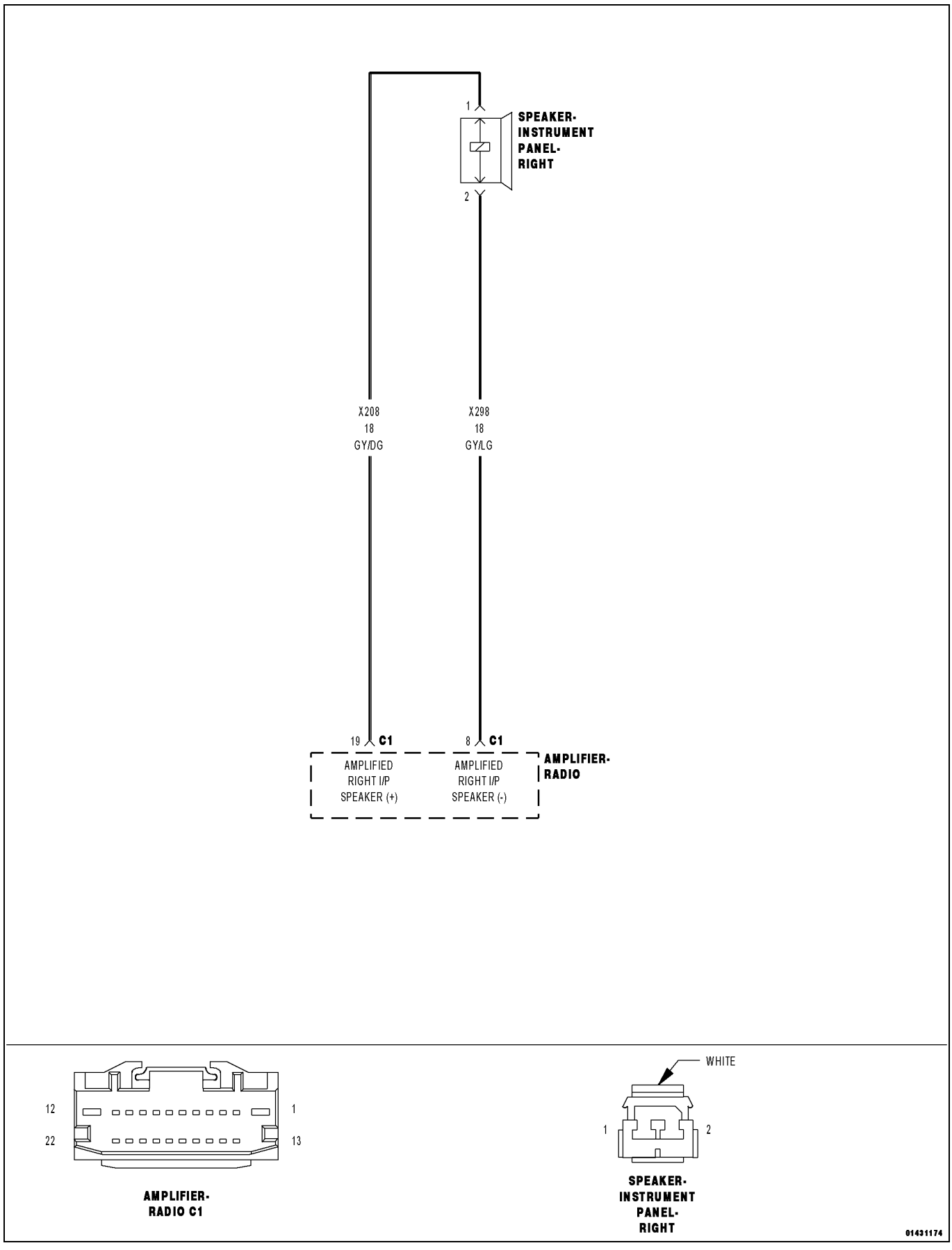

For a complete wiring diagram, **refer to the Wiring Information**.

- **When Monitored:**
  With the ignition on. Radio volume at 25 or higher.
- **Set Condition:**
  The Amplifier detects that the output circuits are shorted together.

Possible Causes
(X208) AMPLIFIED RIGHT I/P SPEAKER (+) CIRCUIT SHORTED TO THE (X298) AMPLIFIED RIGHT I/P SPEAKER (-) CIRCUIT
AMPLIFIED RIGHT I/P SPEAKER
AMPLIFIER

1. CHECK FOR AN INTERMITTENT CONDITION

1. Turn the ignition on and open one of the front doors.

NOTE: A front door must remain open whenever checking or erasing Amplifier DTCs.

2. With the scan tool, record and erase the Amplifier DTCs.
3. Cycle the ignition switch from on to off, wait five seconds and then back to on.
4. Turn the Radio on and set the volume to 20.
5. Adjust the speakers to the front and center.
6. With the scan tool, read the active Amplifier DTCs.

Does the scan tool display active: B1469-CHANNEL 2 AUDIO SPEAKER OUTPUT CIRCUIT SHORTED TOGETHER?

Yes

- Go To 2

No

- Test complete, the condition or conditions that originally set this DTC are not present at this time. Using the wiring diagrams as a guide, check all related splices and connectors for signs of water intrusion, corrosion, pushed out or bent terminals and correct pin tension.
- Perform the BODY VERIFICATION TEST. (Refer to 28 - DTC-Based Diagnostics/MODULE, Totally Integrated Power (TIPM) - Standard Procedure).

2. CHECK THE OPERATION OF THE AMPLIFIED RIGHT I/P SPEAKER

1. Turn the ignition off.
2. Disconnect the Amplified Right I/P Speaker.
3. Measure the resistance of the speaker between the two terminals.

NOTE: The graphic shows the connector for reference only. Measure at the speaker terminals.

Is the resistance of the speaker less than 1 Ohm?

Yes

- Replace the Amplified Right I/P Speaker in accordance with the Service Information.
- Perform the BODY VERIFICATION TEST. (Refer to 28 - DTC-Based Diagnostics/MODULE, Totally Integrated Power (TIPM) - Standard Procedure).

No

- Go To 3

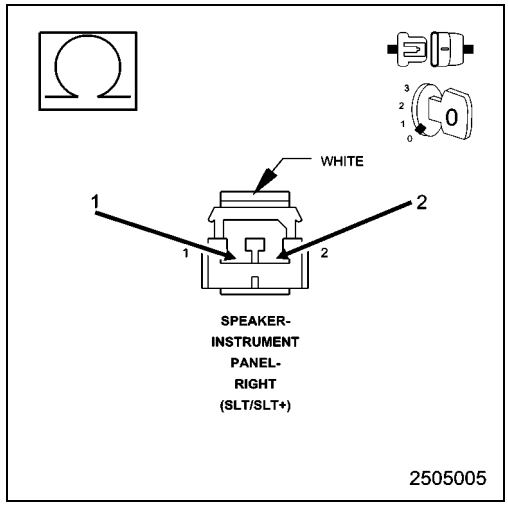

3. CHECK THE (X208) AMPLIFIED RIGHT I/P SPEAKER (+) CIRCUIT, AND THE (X298) AMPLIFIED RIGHT I/P SPEAKER (-) CIRCUITS FOR A SHORT TOGETHER

1. Disconnect the Amplifier C1 harness connector.
2. Measure the resistance between the (X208) Amplified Right I/P Speaker (+) circuit, and the (X298) Amplified Right I/P Speaker (-) circuit.

Is the resistance below 10K Ohms?

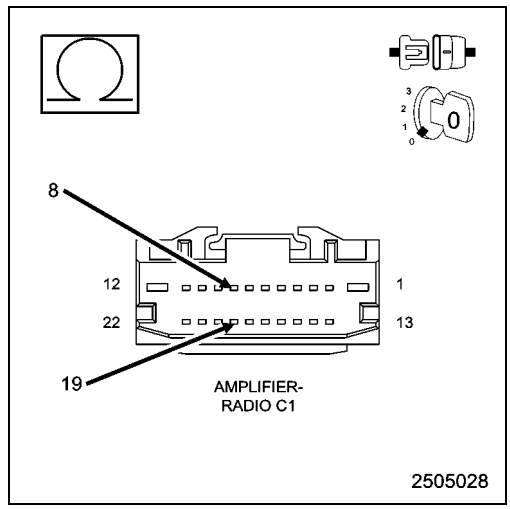

Yes

- Repair the (X208) Amplified Right I/P Speaker (+) circuit, and the (X298) Amplified Right I/P Speaker (-) circuit for a short together.
- Perform the BODY VERIFICATION TEST. (Refer to 28 - DTC-Based Diagnostics/MODULE, Totally Integrated Power (TIPM) - Standard Procedure)

No

- Replace the Amplifier in accordance with the Service Information.
- Perform the BODY VERIFICATION TEST. (Refer to 28 - DTC-Based Diagnostics/MODULE, Totally Integrated Power (TIPM) - Standard Procedure).

B146A-CHANNEL 3 AUDIO SPEAKER OUTPUT CIRCUIT PERFORMANCE

For a complete wiring diagram, **refer to the Wiring Information**.

- **When Monitored:**
  With the ignition on.
- **Set Condition:**
  This Diagnostic Trouble Code (DTC) sets if a Direct Current (DC) offset occurs on the output channel, the amplifier shall set a DTC after a maturity rate of four to six seconds.

Possible Causes
AMPLIFIER

1. CHECK FOR AN INTERMITTENT CONDITION

1. Turn the ignition on and open one of the front doors.

NOTE: A front door must remain open whenever checking or erasing Amplifier DTCs.

2. With the scan tool, record and erase the Amplifier DTCs.
3. Cycle the ignition switch from on to off, wait five seconds and then back to on.
4. Turn the Radio on and set the volume to 20.
5. Adjust the speakers to the front and center.
6. With the scan tool, read the active Amplifier DTCs.

Does the scan tool display active: B146A-CHANNEL 3 AUDIO SPEAKER OUTPUT CIRCUIT PERFORMANCE?

Yes

- Replace the Amplifier in accordance with the Service Information.
- Perform the BODY VERIFICATION TEST. (Refer to 28 - DTC-Based Diagnostics/MODULE, Totally Integrated Power (TIPM) - Standard Procedure).

No

- Test complete, the condition or conditions that originally set this DTC are not present at this time. Using the wiring diagrams as a guide, check all related splices and connectors for signs of water intrusion, corrosion, pushed out or bent terminals and correct pin tension.
- Perform the BODY VERIFICATION TEST. (Refer to 28 - DTC-Based Diagnostics/MODULE, Totally Integrated Power (TIPM) - Standard Procedure).

B146B-CHANNEL 3 AUDIO SPEAKER OUTPUT CIRCUIT LOW

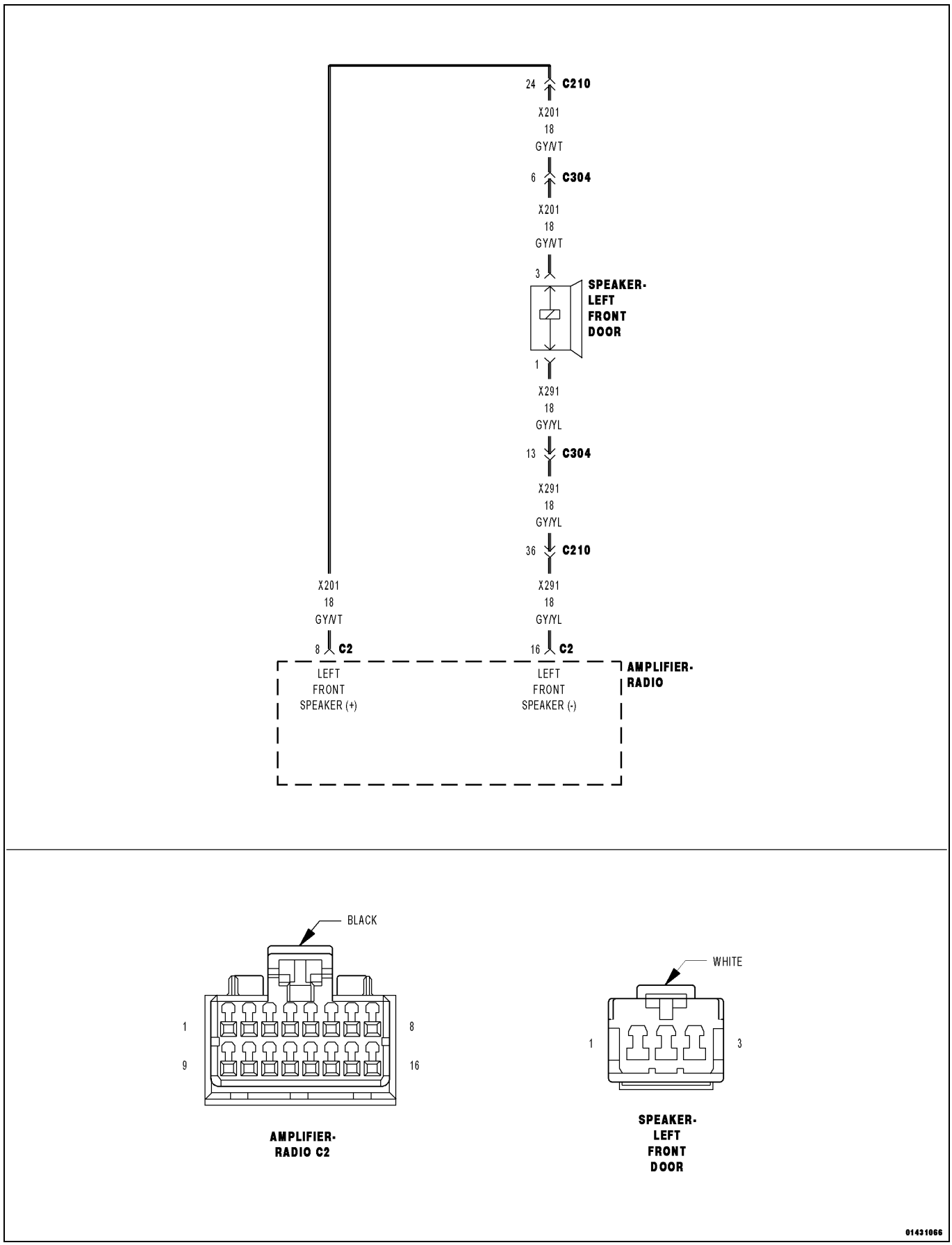

For a complete wiring diagram, **refer to the Wiring Information**.

- **When Monitored:**
  With the ignition on.
- **Set Condition:**
  The Amplifier detects a shorted to ground condition on the speaker output circuit.

Possible Causes
(X201) LEFT FRONT DOOR SPEAKER (+) CIRCUIT SHORTED TO GROUND
(X291) LEFT FRONT DOOR SPEAKER (-) CIRCUIT SHORTED TO GROUND
LEFT FRONT DOOR SPEAKER
AMPLIFIER

1. CHECK FOR AN INTERMITTENT CONDITION

1. Turn the ignition on and open one of the front doors.

NOTE: A front door must remain open whenever checking or erasing Amplifier DTCs.

2. Using the scan tool, record and erase the Amplifier DTCs.
3. Cycle the ignition switch from on to off, wait five seconds and then back to on.
4. Turn the Radio on and set the volume to 20.
5. Adjust the speakers to the front and center.
6. Using the scan tool, read the active Amplifier DTCs.

Does the scan tool display active: B146B-CHANNEL 3 AUDIO SPEAKER OUTPUT CIRCUIT LOW?

Yes

- Go To 2

No

- Test complete, the condition or conditions that originally set this DTC are not present at this time. Using the wiring diagrams as a guide, check all related splices and connectors for signs of water intrusion, corrosion, pushed out or bent terminals and correct pin tension.
- Perform the BODY VERIFICATION TEST. (Refer to 28 - DTC-Based Diagnostics/MODULE, Totally Integrated Power (TIPM) - Standard Procedure).

2. CHECK THE LEFT FRONT DOOR SPEAKER

1. Make sure one of the front doors is still open.
2. Using the scan tool, erase the DTCs.
3. Turn the ignition off.
4. Disconnect the Left Front Door Speaker harness connector.
5. Turn the ignition on.
6. Turn the radio on and set the volume to 25.
7. Using the scan tool, read the active Amplifier DTCs.

Does the scan tool display active: B146B-CHANNEL 3 AUDIO SPEAKER OUTPUT CIRCUIT LOW?

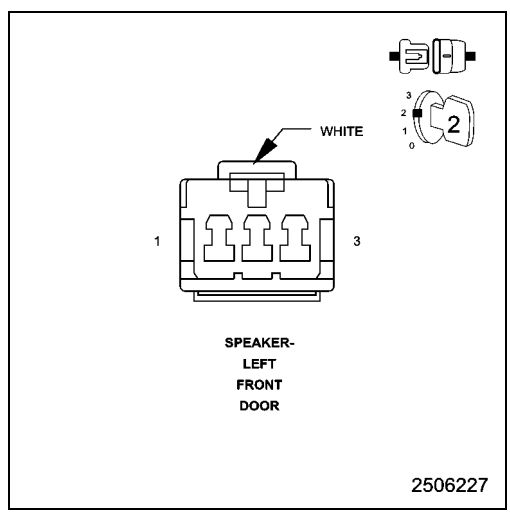

Yes

- Go To 3

No

- Replace the Left Front Door Speaker.
- Perform the BODY VERIFICATION TEST. (Refer to 28 - DTC-Based Diagnostics/MODULE, Totally Integrated Power (TIPM) - Standard Procedure).

3. CHECK THE (X201) LEFT FRONT DOOR SPEAKER (+) CIRCUIT FOR A SHORT TO GROUND

1. Turn the ignition off.
2. Disconnect the Amplifier C2 harness connector.
3. Measure the resistance between ground and the (X201) Left Front Door Speaker (+) circuit.

Is the resistance below 10K Ohms?

Yes

- Repair the (X201) Left Front Door Speaker (+) circuit for a short to ground.
- Perform the BODY VERIFICATION TEST. (Refer to 28 - DTC-Based Diagnostics/MODULE, Totally Integrated Power (TIPM) - Standard Procedure).

No

- Go To 4

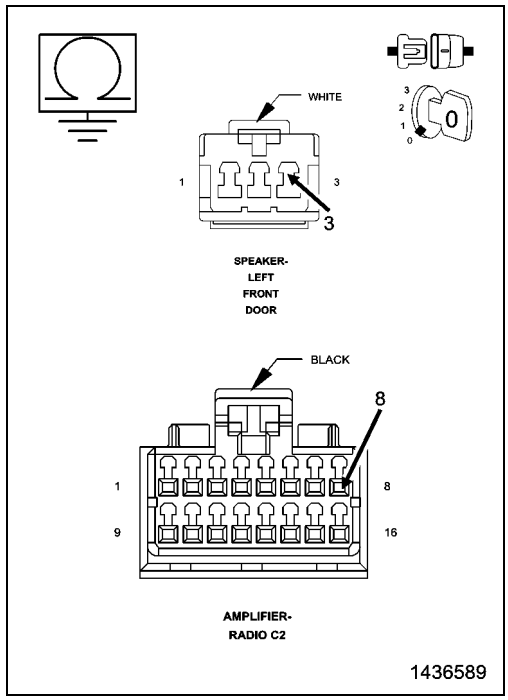

4. CHECK THE (X291) LEFT FRONT DOOR SPEAKER (-) CIRCUIT FOR A SHORT TO GROUND

1. Measure the resistance between ground and the (X291) Left Front Door Speaker (-) circuit.

Is the resistance below 10K Ohms?

Yes

- Repair the (X291) Left Front Door Speaker (-) for a short to ground.
- Perform the BODY VERIFICATION TEST. (Refer to 28 - DTC-Based Diagnostics/MODULE, Totally Integrated Power (TIPM) - Standard Procedure).

No

- Replace the Amplifier in accordance with the Service Information.
- Perform the BODY VERIFICATION TEST. (Refer to 28 - DTC-Based Diagnostics/MODULE, Totally Integrated Power (TIPM) - Standard Procedure).

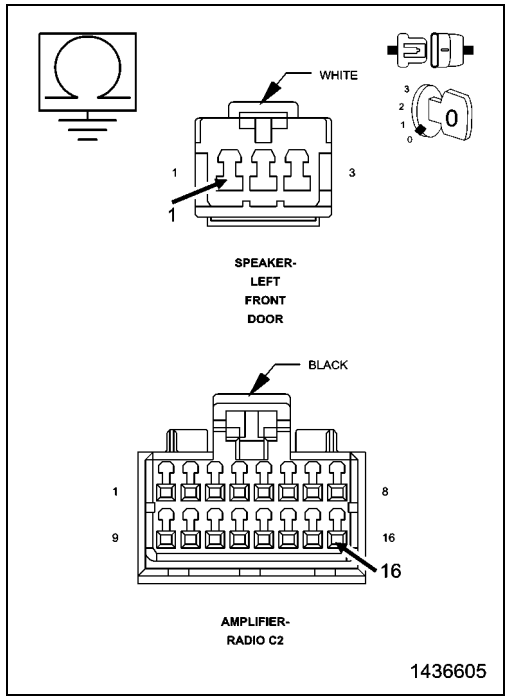

B146C-CHANNEL 3 AUDIO SPEAKER OUTPUT CIRCUIT HIGH

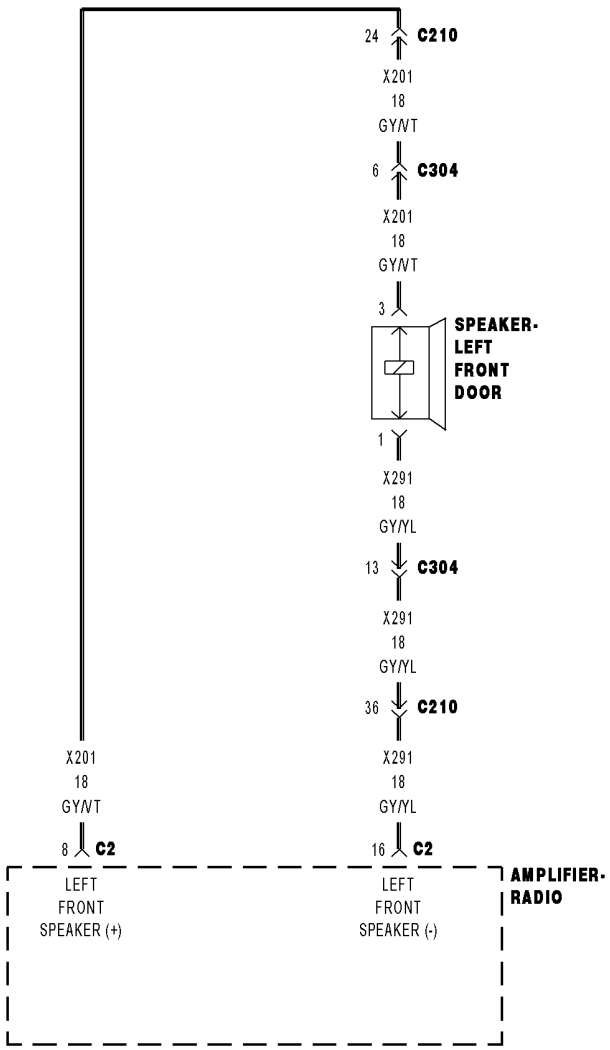

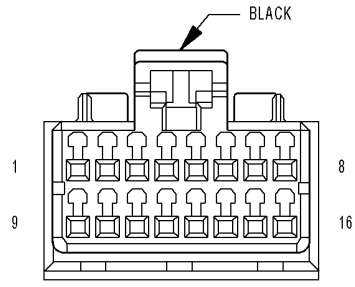

AMPLIFIER-
RADIO C2

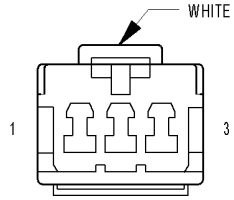

SPEAKER-
LEFT
FRONT
DOOR

01431066

For a complete wiring diagram, **refer to the Wiring Information**.

- **When Monitored:**
  With the ignition on.
- **Set Condition:**
  The Amplifier detects a short to battery condition on the output circuit.

Possible Causes
(X201) LEFT FRONT DOOR SPEAKER (+) CIRCUIT SHORTED TO VOLTAGE
(X291) LEFT FRONT DOOR SPEAKER (-) CIRCUIT SHORTED TO VOLTAGE
AMPLIFIER

1. CHECK FOR AN INTERMITTENT CONDITION

1. Turn the ignition on and open one of the front doors.

NOTE: A front door must remain open whenever checking or erasing Amplifier DTCs.

2. With the scan tool, record and erase the Amplifier DTCs.
3. Cycle the ignition switch from on to off, wait five seconds and then back to on.
4. Turn the Radio on and set the volume to 20.
5. Adjust the speakers to the front and center.
6. With the scan tool, read the active Amplifier DTCs.

Does the scan tool display active: B146C-CHANNEL 3 AUDIO SPEAKER OUTPUT CIRCUIT HIGH?

Yes

- Go To 2

No

- Test complete, the condition or conditions that originally set this DTC are not present at this time. Using the wiring diagrams as a guide, check all related splices and connectors for signs of water intrusion, corrosion, pushed out or bent terminals and correct pin tension.
- Perform the BODY VERIFICATION TEST. (Refer to 28 - DTC-Based Diagnostics/MODULE, Totally Integrated Power (TIPM) - Standard Procedure).

2. CHECK FOR VOLTAGE ON THE (X201) LEFT FRONT DOOR SPEAKER (+) CIRCUIT

1. Turn the ignition off.
2. Disconnect the Amplifier C2 harness connector.
3. Disconnect the Left Front Door Speaker harness connector.
4. Turn the ignition on.
5. Measure for voltage between the (X201) Left Front Door Speaker (+) circuit and ground.

Is there any voltage present?

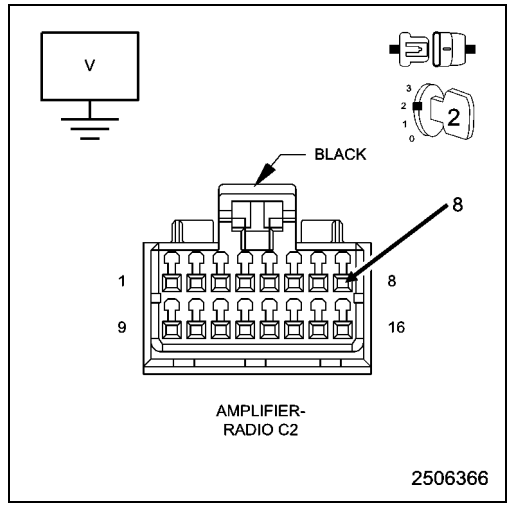

Yes

- Repair the (X201) Left Front Door Speaker (+) circuit for a short to voltage.
- Perform the BODY VERIFICATION TEST. (Refer to 28 - DTC-Based Diagnostics/MODULE, Totally Integrated Power (TIPM) - Standard Procedure).

No

- Go To 3

3. CHECK FOR VOLTAGE ON THE (X291) LEFT FRONT DOOR SPEAKER (-) CIRCUIT

1. Measure for voltage between the (X291) Left Front Door Speaker (-) circuit and ground.

Is there any voltage present?

Yes

- Repair the (X291) Left Front Door Speaker (-) circuit for a short to voltage.
- Perform the BODY VERIFICATION TEST. (Refer to 28 - DTC-Based Diagnostics/MODULE, Totally Integrated Power (TIPM) - Standard Procedure).

No

- Replace the Amplifier in accordance with the Service Information.
- Perform the BODY VERIFICATION TEST. (Refer to 28 - DTC-Based Diagnostics/MODULE, Totally Integrated Power (TIPM) - Standard Procedure).

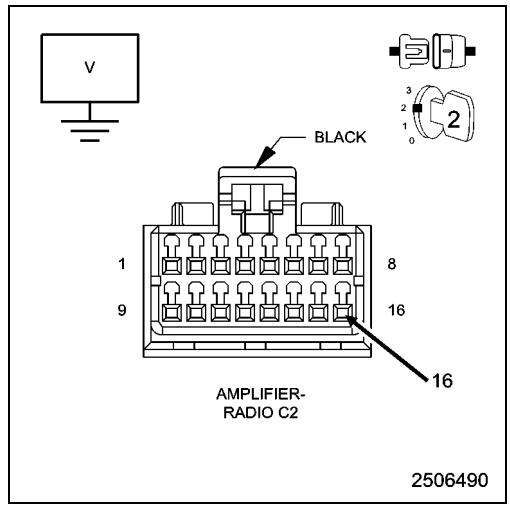

B146D-CHANNEL 3 AUDIO SPEAKER OUTPUT CIRCUIT OPEN

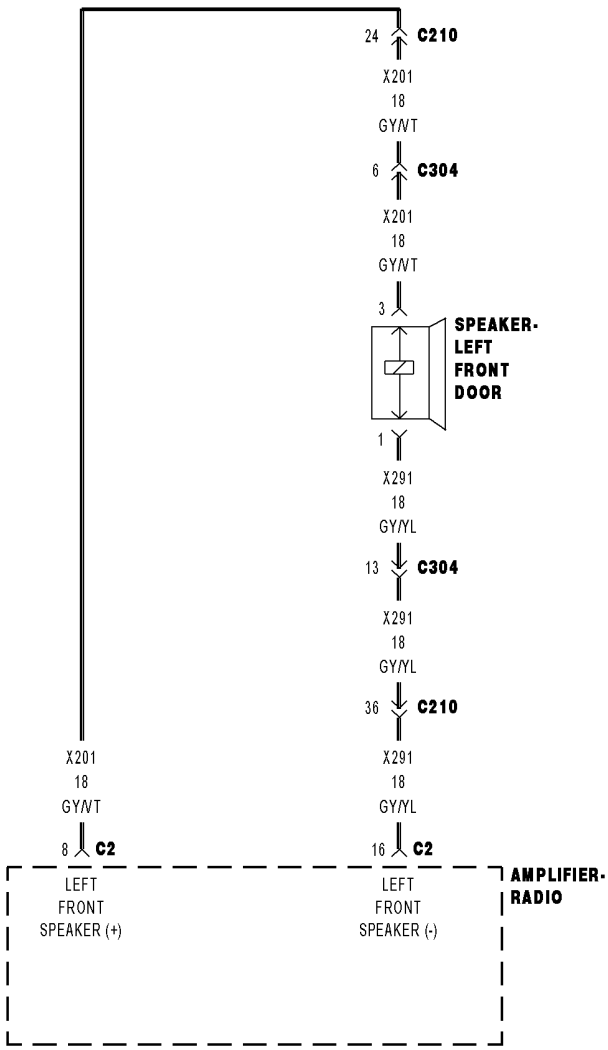

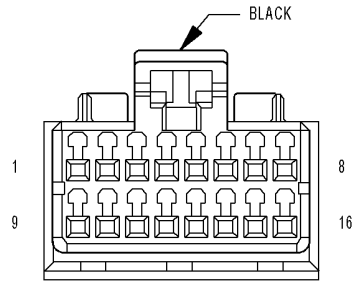

AMPLIFIER-
RADIO C2

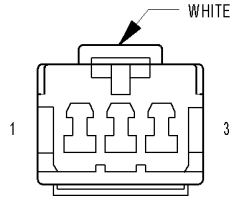

SPEAKER-
LEFT
FRONT
DOOR

01431066

For a complete wiring diagram, **refer to the Wiring Information**.

- **When Monitored:**
  Amplifier Bus wake-up. Amplifier reset with scan tool.
- **Set Condition:**
  The Amplifier detects an open condition on the speaker output circuit.

Possible Causes
(X201) LEFT FRONT DOOR SPEAKER (+) CIRCUIT OPEN
(X291) LEFT FRONT DOOR SPEAKER (-) CIRCUIT OPEN
LEFT FRONT DOOR SPEAKER
AMPLIFIER

1. CHECK FOR AN INTERMITTENT CONDITION

1. Turn the ignition on and open one of the front doors.

NOTE: A front door must remain open whenever checking or erasing Amplifier DTCs.

2. With the scan tool, record and erase the Amplifier DTCs.
3. Cycle the ignition switch from on to off, wait five seconds and then back to on.
4. Turn the Radio on and set the volume to 20.
5. Adjust the speakers to the front and center.
6. With the scan tool, read the active Amplifier DTCs.

Does the scan tool display active: B146D-CHANNEL 3 AUDIO SPEAKER OUTPUT CIRCUIT OPEN?

Yes

- Go To 2

No

- Test complete, the condition or conditions that originally set this DTC are not present at this time. Using the wiring diagrams as a guide, check all related splices and connectors for signs of water intrusion, corrosion, pushed out or bent terminals and correct pin tension.
- Perform the BODY VERIFICATION TEST. (Refer to 28 - DTC-Based Diagnostics/MODULE, Totally Integrated Power (TIPM) - Standard Procedure).

2. CHECK THE OPERATION OF THE LEFT FRONT DOOR SPEAKER

1. Turn the ignition off.
2. Disconnect the Left Front Door Speaker harness connector.
3. Turn the ignition on.
4. Turn the radio on and turn the volume to 25.
5. Adjust the speakers to the front and center.
6. With a voltmeter set to read in A/C voltage, measure the voltage of the Left Front Door Speaker circuits in the Left Front Door Speaker harness connector.

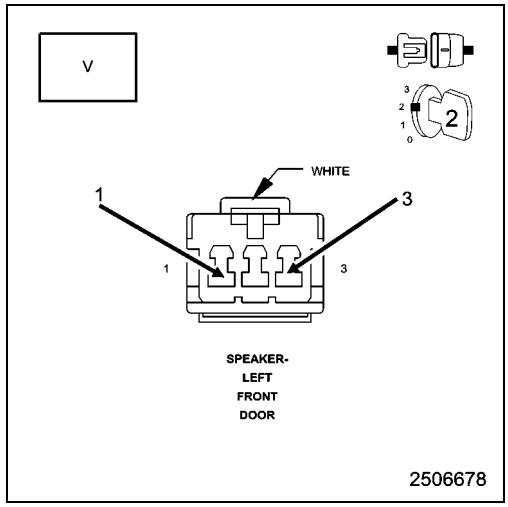

Is the voltage present greater than 1 volt?

Yes

- Replace the Left Front Door Speaker in accordance with the Service Information.
- Perform the BODY VERIFICATION TEST. (Refer to 28 - DTC-Based Diagnostics/MODULE, Totally Integrated Power (TIPM) - Standard Procedure).

No

- Go To 3

3. CHECK THE (X201) LEFT FRONT DOOR SPEAKER (+) CIRCUIT FOR AN OPEN

1. Turn the ignition off.
2. Disconnect the Amplifier C2 harness connector.
3. Measure the resistance of the (X201) Left Front Door Speaker (+) circuit between the Amplifier C2 harness connector and the Left Rear Speaker harness connector.

Is the resistance below 2.0 Ohms?

Yes

- Go To 4

No

- Repair the (X201) Left Front Door Speaker (+) circuit for an open.
- Perform the BODY VERIFICATION TEST. (Refer to 28 - DTC-Based Diagnostics/MODULE, Totally Integrated Power (TIPM) - Standard Procedure).

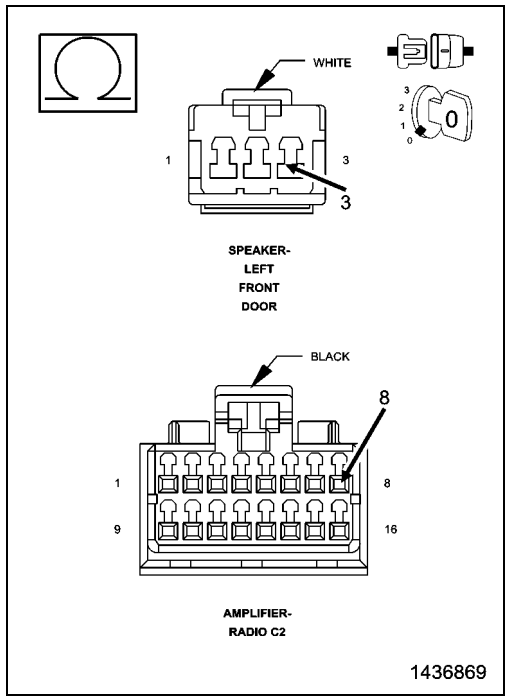

4. CHECK THE (X291) LEFT FRONT DOOR SPEAKER (-) CIRCUIT FOR AN OPEN

1. Measure the resistance of the (X291) Left Front Door Speaker (-) circuit between the Amplifier C2 harness connector and the Left Front Door Speaker harness connector.

Is the resistance below 2.0 Ohms?

Yes

- Replace the Amplifier in accordance with the Service Information.
- Perform the BODY VERIFICATION TEST. (Refer to 28 - DTC-Based Diagnostics/MODULE, Totally Integrated Power (TIPM) - Standard Procedure).

No

- Repair the (X291) Left Front Door Speaker (-) circuit for an open.
- Perform the BODY VERIFICATION TEST. (Refer to 28 - DTC-Based Diagnostics/MODULE, Totally Integrated Power (TIPM) - Standard Procedure).

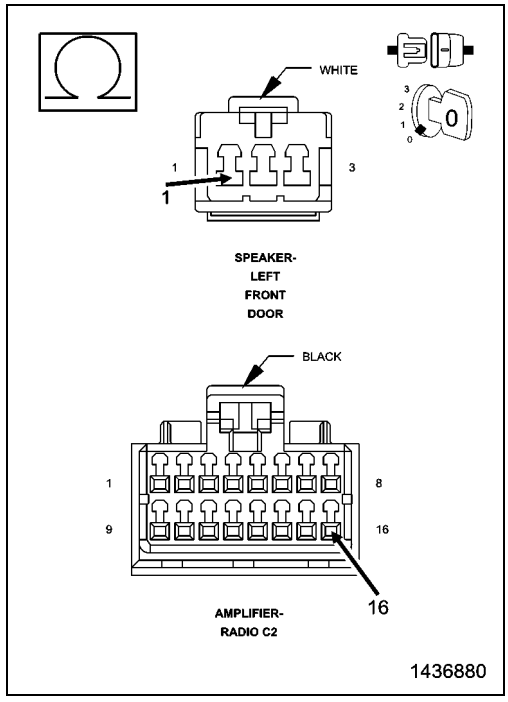

B146E-CHANNEL 3 AUDIO SPEAKER OUTPUT CIRCUIT SHORTED TOGETHER

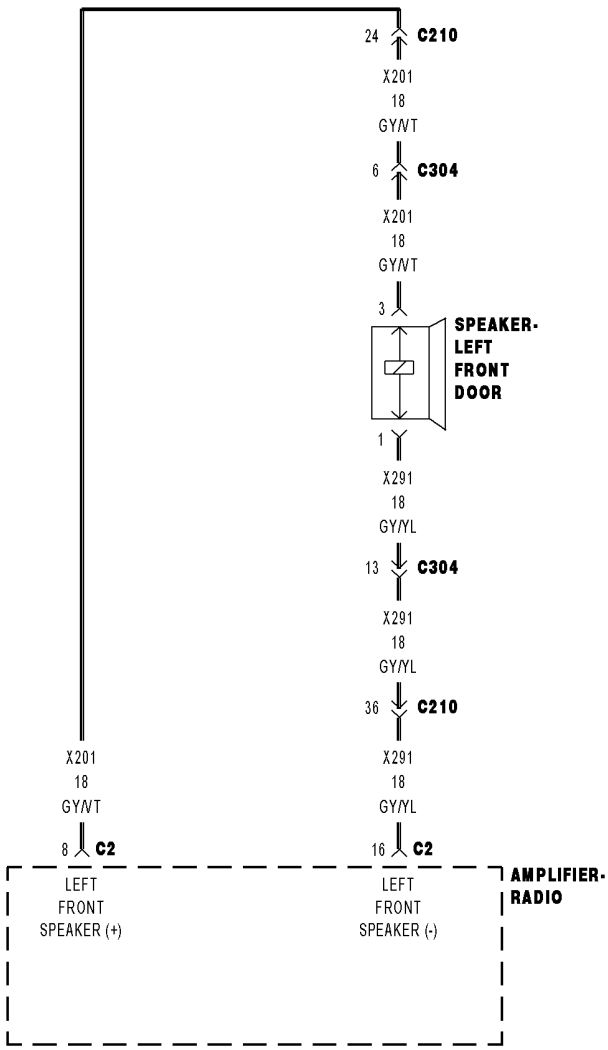

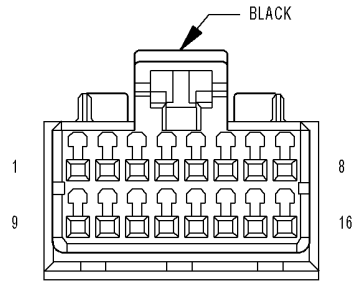

AMPLIFIER-
RADIO C2

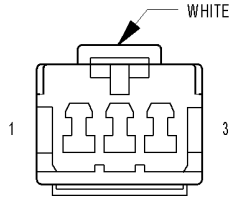

SPEAKER-
LEFT
FRONT
DOOR

01431066

For a complete wiring diagram, **refer to the Wiring Information**.

- **When Monitored:**
  With the ignition on. Radio volume at 25 or higher.
- **Set Condition:**
  The Amplifier detects that the output circuits are shorted together.

Possible Causes
(X201) LEFT FRONT DOOR SPEAKER (+) CIRCUIT SHORTED TO THE (X291) LEFT FRONT DOOR SPEAKER (-) CIRCUIT
LEFT FRONT DOOR SPEAKER
AMPLIFIER

1. CHECK FOR AN INTERMITTENT CONDITION

1. Turn the ignition on and open one of the front doors.

NOTE: A front door must remain open whenever checking or erasing Amplifier DTCs.

2. With the scan tool, record and erase the Amplifier DTCs.
3. Cycle the ignition switch from on to off, wait five seconds and then back to on.
4. Turn the Radio on and set the volume to 20.
5. Adjust the speakers to the front and center.
6. With the scan tool, read the active Amplifier DTCs.

Does the scan tool display active: B146E-CHANNEL 3 AUDIO SPEAKER OUTPUT CIRCUIT SHORTED TOGETHER?

Yes

- Go To 2

No

- Test complete, the condition or conditions that originally set this DTC are not present at this time. Using the wiring diagrams as a guide, check all related splices and connectors for signs of water intrusion, corrosion, pushed out or bent terminals and correct pin tension.
- Perform the BODY VERIFICATION TEST. (Refer to 28 - DTC-Based Diagnostics/MODULE, Totally Integrated Power (TIPM) - Standard Procedure).

2. CHECK THE OPERATION OF THE LEFT FRONT DOOR SPEAKER

1. Turn the ignition off.
2. Disconnect the Left Front Door Speaker harness connector.
3. Measure the resistance of the speaker between the two terminals.

NOTE: The graphic shows the connector for reference only. Measure at the speaker terminals.

Is the resistance of the speaker less than 1 Ohm?

Yes

- Replace the Left Front Door Speaker in accordance with the Service Information.
- Perform the BODY VERIFICATION TEST. (Refer to 28 - DTC-Based Diagnostics/MODULE, Totally Integrated Power (TIPM) - Standard Procedure).

No

- Go To 3

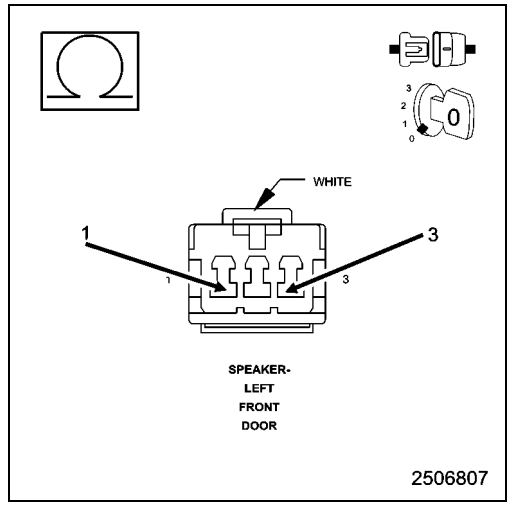

3. CHECK THE (X201) LEFT FRONT DOOR SPEAKER (+) CIRCUIT, AND THE (X291) LEFT FRONT DOOR SPEAKER (-) CIRCUITS FOR A SHORT TOGETHER

1. Disconnect the Amplifier C2 harness connector.
2. Measure the resistance between the (X201) Left Front Door Speaker (+) circuit, and the (X291) Left Front Door Speaker (-) circuit.

Is the resistance below 10K Ohms?

Yes

- Repair the (X201) Left Front Door Speaker (+) circuit, and the (X291) Left Front Door Speaker (-) circuit for a short together.
- Perform the BODY VERIFICATION TEST. (Refer to 28 - DTC-Based Diagnostics/MODULE, Totally Integrated Power (TIPM) - Standard Procedure).

No

- Replace the Amplifier in accordance with the Service Information.
- Perform the BODY VERIFICATION TEST. (Refer to 28 - DTC-Based Diagnostics/MODULE, Totally Integrated Power (TIPM) - Standard Procedure).

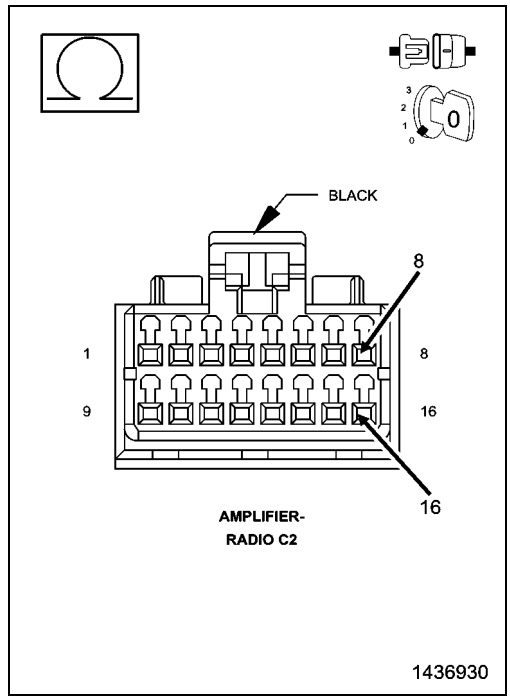

B146F-CHANNEL 4 AUDIO SPEAKER OUTPUT CIRCUIT PERFORMANCE

For a complete wiring diagram, **refer to the Wiring Information**.

- **When Monitored:**

  With the ignition on.
- **Set Condition:**

  This Diagnostic Trouble Code (DTC) sets if a Direct Current (DC) offset occurs on the output channel, the amplifier shall set a DTC after a maturity rate of four to six seconds.

Possible Causes
AMPLIFIER

1. CHECK FOR AN INTERMITTENT CONDITION

1. Turn the ignition on and open one of the front doors.

NOTE: A front door must remain open whenever checking or erasing Amplifier DTCs.

2. With the scan tool, record and erase the Amplifier DTCs.
3. Cycle the ignition switch from on to off, wait five seconds and then back to on.
4. Turn the Radio on and set the volume to 20.
5. Adjust the speakers to the front and center.
6. With the scan tool, read the active Amplifier DTCs.

Does the scan tool display active: B146F-CHANNEL 4 AUDIO SPEAKER OUTPUT CIRCUIT PERFORMANCE?

Yes

- Replace the Amplifier in accordance with the Service Information.
- Perform the BODY VERIFICATION TEST. (Refer to 28 - DTC-Based Diagnostics/MODULE, Totally Integrated Power (TIPM) - Standard Procedure).

No

- Test complete, the condition or conditions that originally set this DTC are not present at this time. Using the wiring diagrams as a guide, check all related splices and connectors for signs of water intrusion, corrosion, pushed out or bent terminals and correct pin tension.
- Perform the BODY VERIFICATION TEST. (Refer to 28 - DTC-Based Diagnostics/MODULE, Totally Integrated Power (TIPM) - Standard Procedure).

B1470-CHANNEL 4 AUDIO SPEAKER OUTPUT CIRCUIT LOW

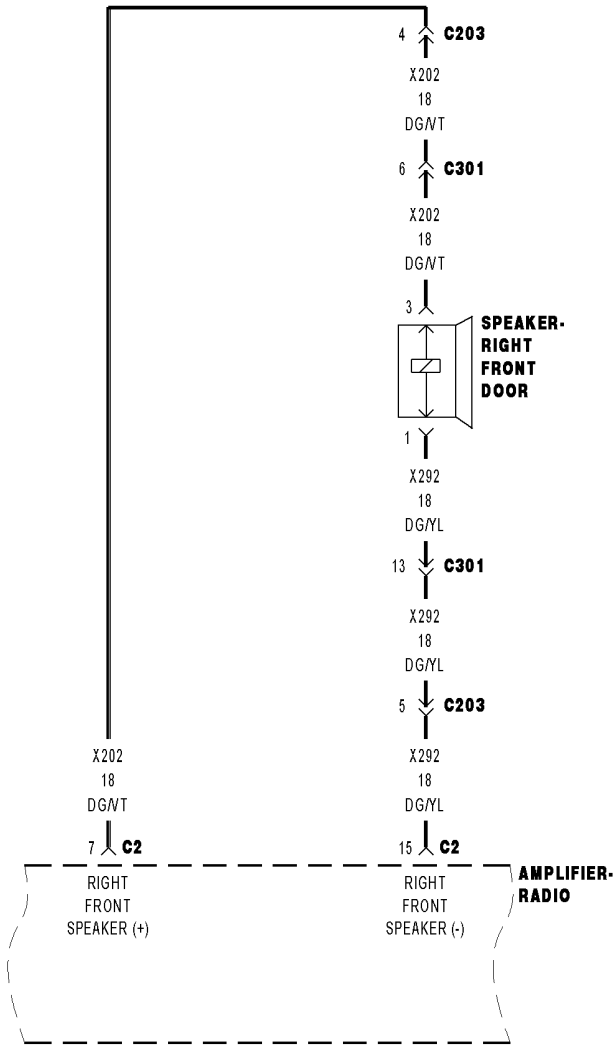

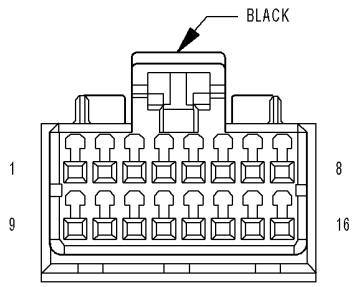

AMPLIFIER-
RADIO C2

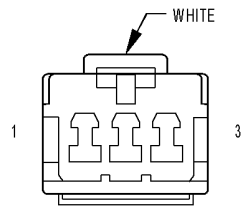

SPEAKER-
RIGHT
FRONT DOOR

02510282

For a complete wiring diagram, **refer to the Wiring Information**.

- **When Monitored:**
  With the ignition on.
- **Set Condition:**
  The Amplifier detects a shorted to ground condition on the speaker output circuit.

Possible Causes
(X202) RIGHT FRONT DOOR SPEAKER (+) CIRCUIT SHORTED TO GROUND
(X292) RIGHT FRONT DOOR SPEAKER (-) CIRCUIT SHORTED TO GROUND
RIGHT FRONT DOOR SPEAKER
AMPLIFIER

1. CHECK FOR AN INTERMITTENT CONDITION

1. Turn the ignition on and open one of the front doors.

NOTE: A front door must remain open whenever checking or erasing Amplifier DTCs.

2. With the scan tool, record and erase the Amplifier DTCs.
3. Cycle the ignition switch from on to off, wait five seconds and then back to on.
4. Turn the Radio on and set the volume to 20.
5. Adjust the speakers to the front and center.
6. With the scan tool, read the active Amplifier DTCs.

Does the scan tool display active: B1470-CHANNEL 4 AUDIO SPEAKER OUTPUT CIRCUIT LOW?

Yes

- Go To 2

No

- Test complete, the condition or conditions that originally set this DTC are not present at this time. Using the wiring diagrams as a guide, check all related splices and connectors for signs of water intrusion, corrosion, pushed out or bent terminals and correct pin tension.
- Perform BODY VERIFICATION TEST. (Refer to 28 - DTC-Based Diagnostics/MODULE, Totally Integrated Power (TIPM) - Standard Procedure).

2. CHECK THE RIGHT FRONT DOOR SPEAKER

1. Ensure one of the front doors is still open.
2. With the scan tool, erase the DTCs.
3. Turn the ignition off.
4. Disconnect the Right Front Door Speaker harness connector.
5. Turn the ignition on.
6. Turn the radio on and set the volume to 25.
7. With the scan tool, read the active Amplifier DTCs.

Does the scan tool display active: B1470-CHANNEL 4 AUDIO SPEAKER OUTPUT CIRCUIT LOW?

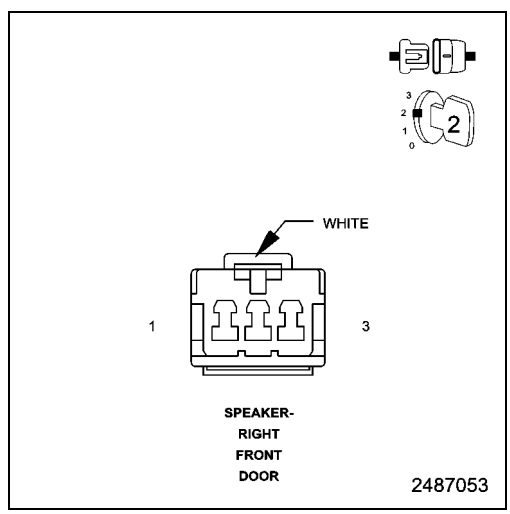

Yes

- Go To 3

No

- Replace the Right Front Door Speaker.
- Perform the BODY VERIFICATION TEST. (Refer to 28 - DTC-Based Diagnostics/MODULE, Totally Integrated Power (TIPM) - Standard Procedure).

3. CHECK THE (X202) RIGHT FRONT DOOR SPEAKER (+) CIRCUIT FOR A SHORT TO GROUND

1. Turn the ignition off.
2. Disconnect the Amplifier C2 harness connector.
3. Measure the resistance between ground and the (X202) Right Front Door Speaker (+) circuit.

Is the resistance below 10K Ohms?

Yes

- Repair the (X202) Right Front Door Speaker (+) circuit for a short to ground.
- Perform BODY VERIFICATION TEST. (Refer to 28 - DTC-Based Diagnostics/MODULE, Totally Integrated Power (TIPM) - Standard Procedure).

No

- Go To 4

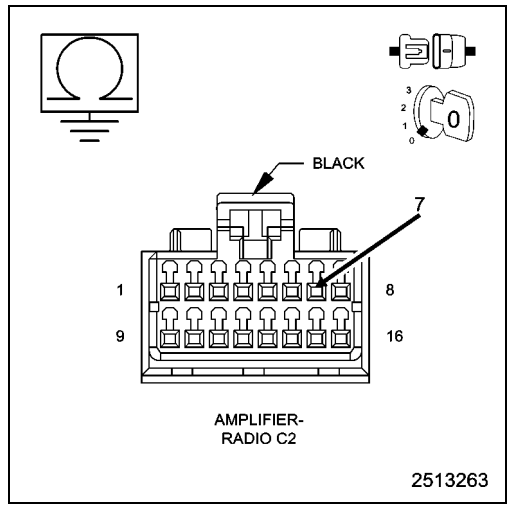

4. CHECK THE (X292) RIGHT FRONT DOOR SPEAKER (-) CIRCUIT FOR A SHORT TO GROUND

1. Measure the resistance between ground and the (X292) Right Front Door Speaker (-) circuit.

Is the resistance below 10K Ohms?

Yes

- Repair the (X292) Right Front Door Speaker (-) for a short to ground.
- Perform BODY VERIFICATION TEST. (Refer to 28 - DTC-Based Diagnostics/MODULE, Totally Integrated Power (TIPM) - Standard Procedure).

No

- Replace the Amplifier in accordance with the Service Information.
- Perform the BODY VERIFICATION TEST. (Refer to 28 - DTC-Based Diagnostics/MODULE, Totally Integrated Power (TIPM) - Standard Procedure).

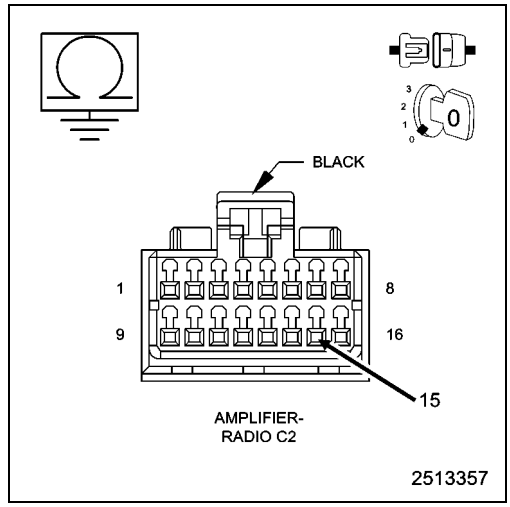

B1471-CHANNEL 4 AUDIO SPEAKER OUTPUT CIRCUIT HIGH

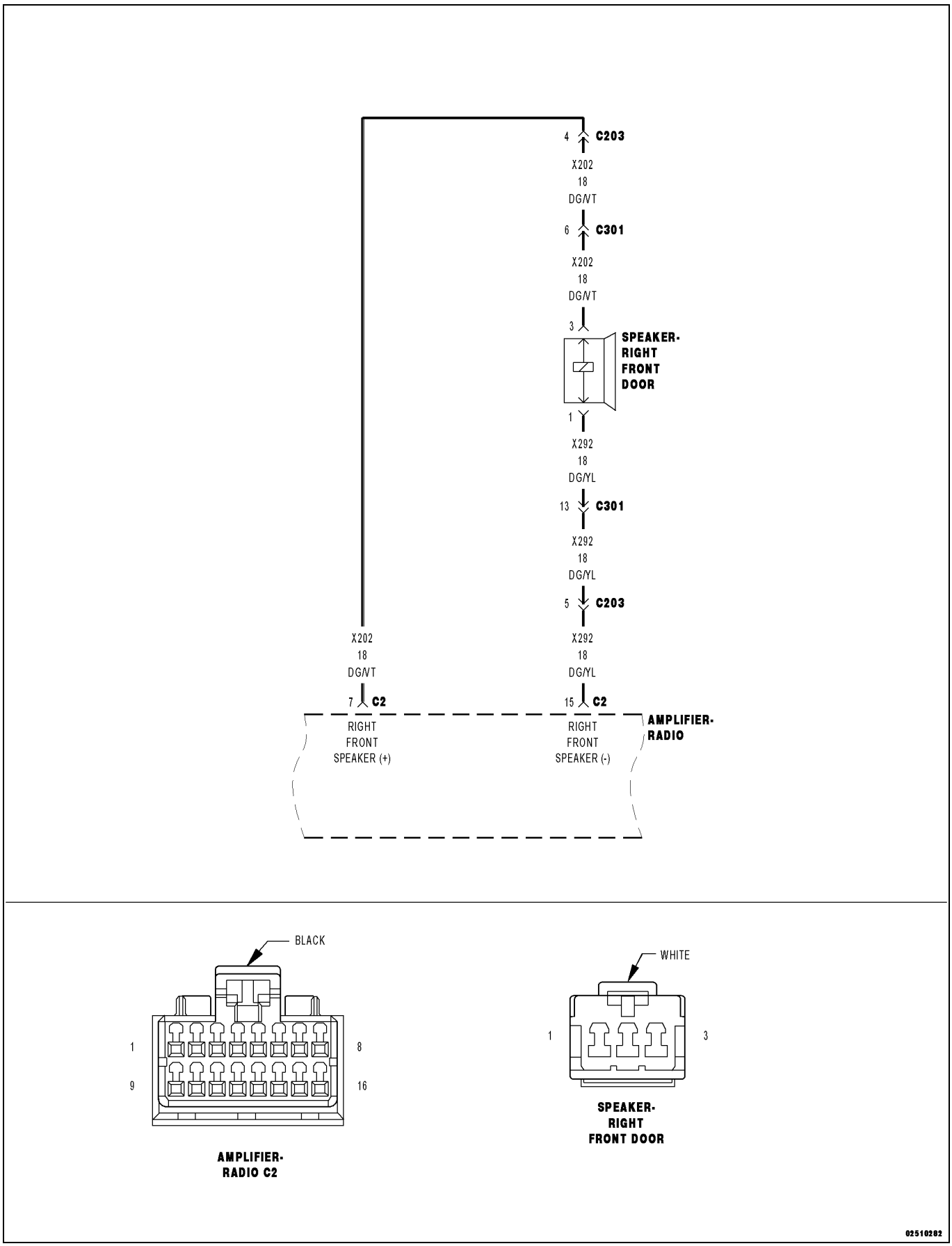

For a complete wiring diagram, **refer to the Wiring Information**.

- **When Monitored:**
  With the ignition on.
- **Set Condition:**
  The Amplifier detects a short to battery condition on the output circuit.

Possible Causes
(X202) RIGHT FRONT DOOR SPEAKER (+) CIRCUIT SHORTED TO VOLTAGE
(X292) RIGHT FRONT DOOR SPEAKER (-) CIRCUIT SHORTED TO VOLTAGE
AMPLIFIER

1. CHECK FOR AN INTERMITTENT CONDITION

1. Turn the ignition on and open one of the front doors.

NOTE: A front door must remain open whenever checking or erasing Amplifier DTCs.

2. With the scan tool, record and erase the Amplifier DTCs.
3. Cycle the ignition switch from on to off, wait five seconds and then back to on.
4. Turn the Radio on and set the volume to 20.
5. Adjust the speakers to the front and center.
6. With the scan tool, read the active Amplifier DTCs.

Does the scan tool display active: B1471-CHANNEL 4 AUDIO SPEAKER OUTPUT CIRCUIT HIGH?

Yes

- Go To 2

No

- Test complete, the condition or conditions that originally set this DTC are not present at this time. Using the wiring diagrams as a guide, check all related splices and connectors for signs of water intrusion, corrosion, pushed out or bent terminals and correct pin tension.
- Perform the BODY VERIFICATION TEST. (Refer to 28 - DTC-Based Diagnostics/MODULE, Totally Integrated Power (TIPM) - Standard Procedure).

2. CHECK FOR VOLTAGE ON THE (X202) RIGHT FRONT DOOR SPEAKER (+) CIRCUIT

1. Turn the ignition off.
2. Disconnect the Amplifier C2 harness connector.
3. Disconnect the Right Front Door Speaker harness connector.
4. Turn the ignition on.
5. Measure the voltage between the (X202) Right Front Door Speaker (+) circuit and ground.

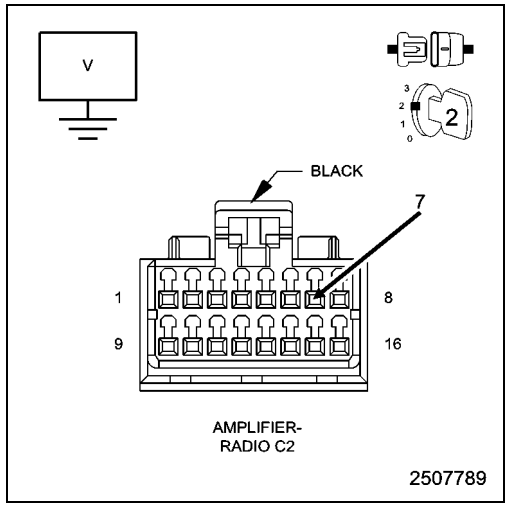

Is there any voltage present?

Yes

- Repair the (X202) Right Front Door Speaker (+) circuit for a short to voltage.
- Perform the BODY VERIFICATION TEST. (Refer to 28 - DTC-Based Diagnostics/MODULE, Totally Integrated Power (TIPM) - Standard Procedure).

No

- Go To 3

3. CHECK FOR VOLTAGE ON THE (X292) RIGHT FRONT DOOR SPEAKER (-) CIRCUIT

1. Measure the voltage between the (X292) Right Front Door Speaker (-) circuit and ground.

Is there any voltage present?

Yes

- Repair the (X292) Right Front Door Speaker (-) circuit for a short to voltage.
- Perform the BODY VERIFICATION TEST. (Refer to 28 - DTC-Based Diagnostics/MODULE, Totally Integrated Power (TIPM) - Standard Procedure).

No

- Replace the Amplifier in accordance with the Service Information.
- Perform the BODY VERIFICATION TEST. (Refer to 28 - DTC-Based Diagnostics/MODULE, Totally Integrated Power (TIPM) - Standard Procedure).

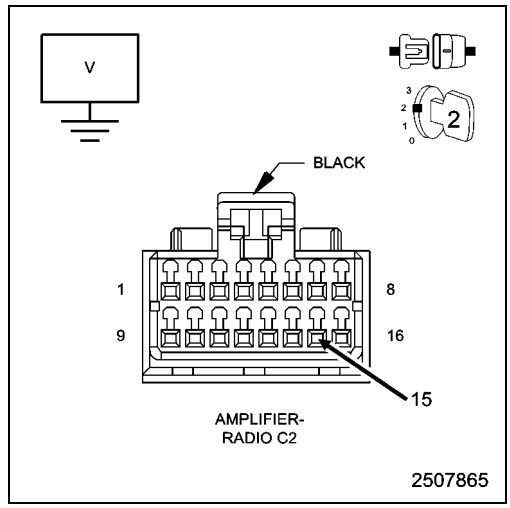

B1472-CHANNEL 4 AUDIO SPEAKER OUTPUT CIRCUIT OPEN

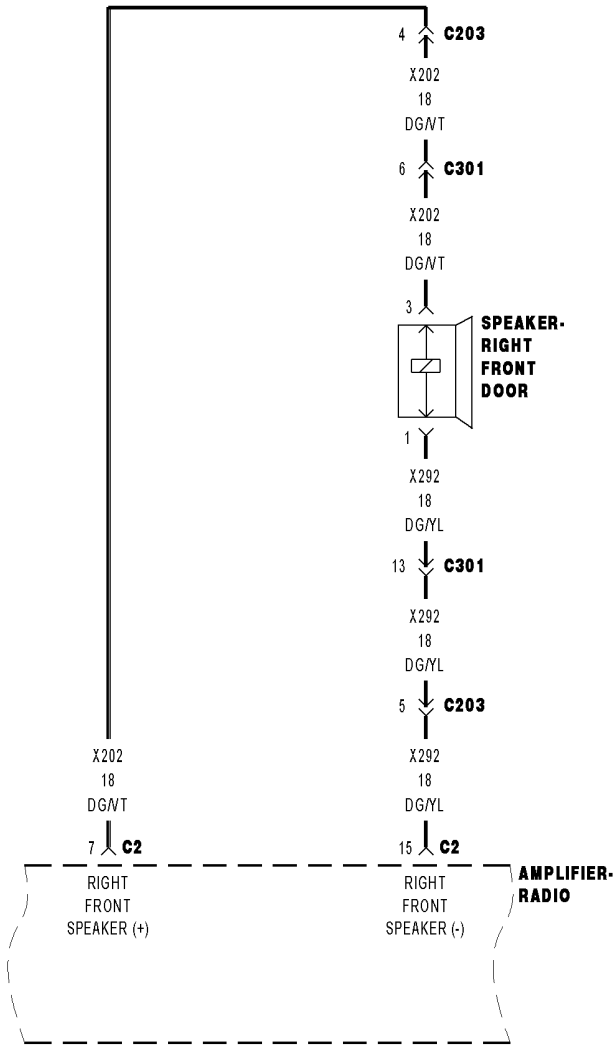

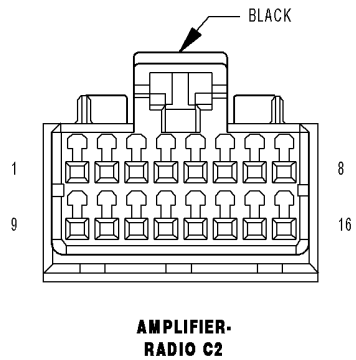

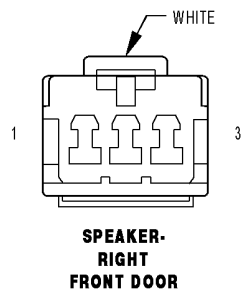

02510282

For a complete wiring diagram, **refer to the Wiring Information**.

- **When Monitored:**
  Amplifier Bus wake-up. Amplifier reset with scan tool.
- **Set Condition:**
  The Amplifier detects an open condition on the speaker output circuit.

Possible Causes
(X202) RIGHT FRONT DOOR SPEAKER (+) CIRCUIT OPEN
(X292) RIGHT FRONT DOOR SPEAKER (-) CIRCUIT OPEN
RIGHT FRONT DOOR SPEAKER
AMPLIFIER

1. CHECK FOR AN INTERMITTENT CONDITION

1. Turn the ignition on and open one of the front doors.

NOTE: A front door must remain open whenever checking or erasing Amplifier DTCs.

2. With the scan tool, record and erase the Amplifier DTCs.
3. Cycle the ignition switch from on to off, wait five seconds and then back to on.
4. Turn the Radio on and set the volume to 20.
5. Adjust the speakers to the front and center.
6. With the scan tool, read the active Amplifier DTCs.

Does the scan tool display active: B1472-CHANNEL 4 AUDIO SPEAKER OUTPUT CIRCUIT OPEN?

Yes

- Go To 2

No

- Test complete, the condition or conditions that originally set this DTC are not present at this time. Using the wiring diagrams as a guide, check all related splices and connectors for signs of water intrusion, corrosion, pushed out or bent terminals and correct pin tension.
- Perform the BODY VERIFICATION TEST. (Refer to 28 - DTC-Based Diagnostics/MODULE, Totally Integrated Power (TIPM) - Standard Procedure).

2. CHECK THE OPERATION OF THE RIGHT FRONT DOOR SPEAKER

1. Turn the ignition off.
2. Disconnect the Right Front Door Speaker harness connector.
3. Turn the ignition on.
4. Turn the radio on and turn the volume to 25.
5. Adjust the speakers to the front and center.
6. With a voltmeter set to read in A/C voltage, measure the voltage of the Right Front Door Speaker circuits in the Right Front Door Speaker harness connector.

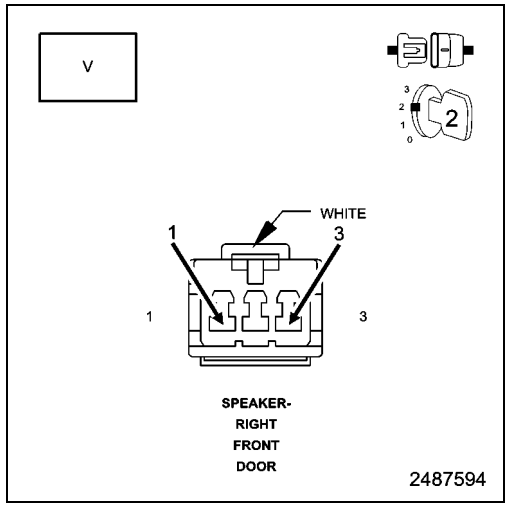

Is the voltage present greater than 1 volt?

Yes

- Replace the Right Front Door Speaker in accordance with the Service Information.
- Perform the BODY VERIFICATION TEST. (Refer to 28 - DTC-Based Diagnostics/MODULE, Totally Integrated Power (TIPM) - Standard Procedure).

No

- Go To 3

3. CHECK THE (X202) RIGHT FRONT DOOR SPEAKER (+) CIRCUIT FOR AN OPEN

1. Turn the ignition off.
2. Disconnect the Amplifier C2 harness connector.
3. Measure the resistance of the (X202) Right Front Door Speaker (+) circuit between the Amplifier C2 harness connector and the Right Front Door Speaker harness connector.

Is the resistance below 2.0 Ohms?

Yes

- Go To 4

No

- Repair the (X202) Right Front Door Speaker (+) circuit for an open.
- Perform the BODY VERIFICATION TEST. (Refer to 28 - DTC-Based Diagnostics/MODULE, Totally Integrated Power (TIPM) - Standard Procedure).

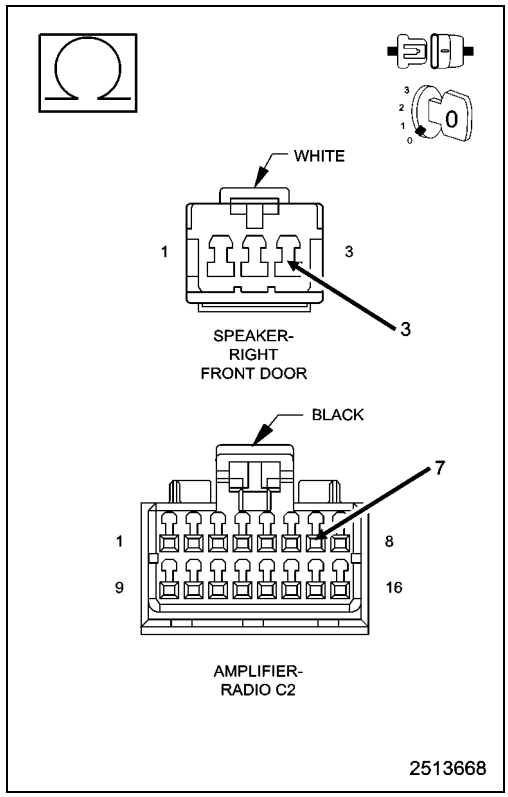

4. CHECK THE (X292) RIGHT FRONT DOOR SPEAKER (-) CIRCUIT FOR AN OPEN

1. Measure the resistance of the (X292) Right Front Door Speaker (-) circuit between the Amplifier C2 harness connector and the Right Front Door Speaker harness connector.

Is the resistance below 2.0 Ohms?

Yes

- Replace the Amplifier in accordance with the Service Information.
- Perform the BODY VERIFICATION TEST. (Refer to 28 - DTC-Based Diagnostics/MODULE, Totally Integrated Power (TIPM) - Standard Procedure).

No

- Repair the (X292) Right Front Door Speaker (-) circuit for an open.
- Perform the BODY VERIFICATION TEST. (Refer to 28 - DTC-Based Diagnostics/MODULE, Totally Integrated Power (TIPM) - Standard Procedure).

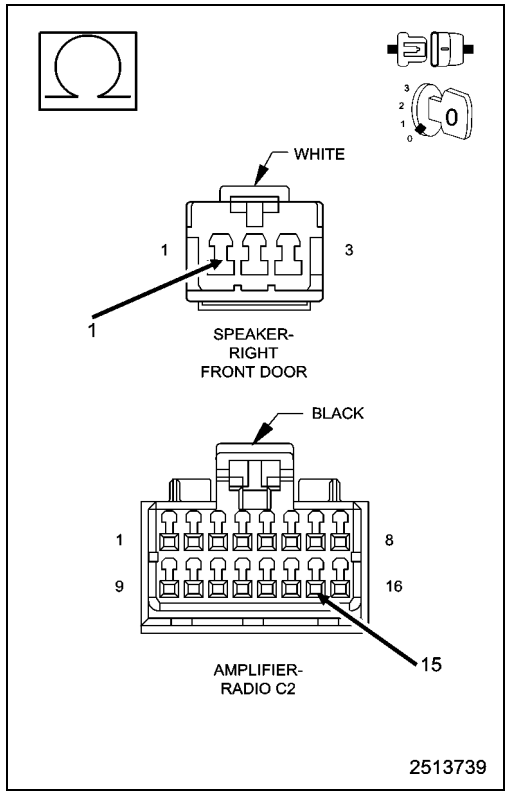

B1473-CHANNEL 4 AUDIO SPEAKER OUTPUT CIRCUIT SHORTED TOGETHER

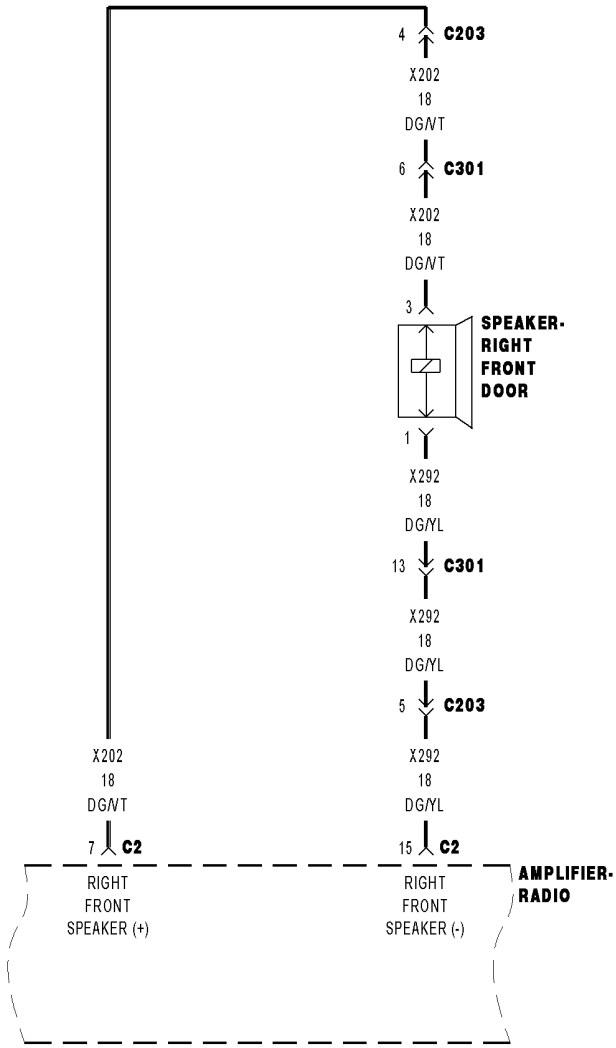

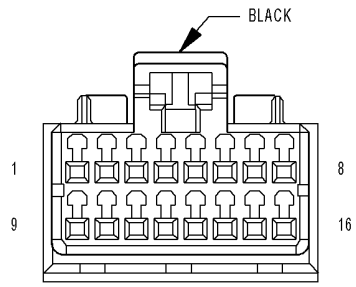

AMPLIFIER-
RADIO C2

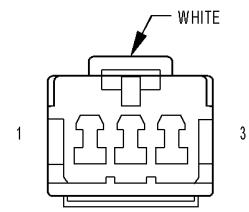

SPEAKER-
RIGHT
FRONT DOOR

02510282

For a complete wiring diagram, **refer to the Wiring Information**.

- **When Monitored:**
  With the ignition on.
  Radio volume at 25 or higher.
- **Set Condition:**
  The Amplifier detects that the output circuits are shorted together.

Possible Causes
(X202) RIGHT FRONT DOOR SPEAKER (+) CIRCUIT SHORTED TO THE (X292) RIGHT FRONT DOOR SPEAKER (-) CIRCUIT
RIGHT FRONT DOOR SPEAKER
AMPLIFIER

1. CHECK FOR AN INTERMITTENT CONDITION

1. Turn the ignition on and open one of the front doors.

NOTE: A front door must remain open whenever checking or erasing Amplifier DTCs.

2. With the scan tool, record and erase the Amplifier DTCs.
3. Cycle the ignition switch from on to off, wait five seconds and then back to on.
4. Turn the Radio on and set the volume to 20.
5. Adjust the speakers to the front and center.
6. With the scan tool, read the active Amplifier DTCs.

Does the scan tool display active: B1473-CHANNEL 4 AUDIO SPEAKER OUTPUT CIRCUIT SHORTED TOGETHER?

Yes

- Go To 2

No

- Test complete, the condition or conditions that originally set this DTC are not present at this time. Using the wiring diagrams as a guide, check all related splices and connectors for signs of water intrusion, corrosion, pushed out or bent terminals and correct pin tension.
- Perform the BODY VERIFICATION TEST. (Refer to 28 - DTC-Based Diagnostics/MODULE, Totally Integrated Power (TIPM) - Standard Procedure).

2. CHECK THE OPERATION OF THE RIGHT FRONT DOOR SPEAKER

1. Turn the ignition off.
2. Disconnect the Right Front Door Speaker.
3. Measure the resistance of the speaker between the two terminals.

NOTE: The graphic shows the connector for reference only. Measure at the speaker terminals.

Is the resistance of the speaker less than 1 Ohm?

Yes

- Replace the Right Front Door Speaker in accordance with the Service Information.
- Perform the BODY VERIFICATION TEST. (Refer to 28 - DTC-Based Diagnostics/MODULE, Totally Integrated Power (TIPM) - Standard Procedure).

No

- Go To 3

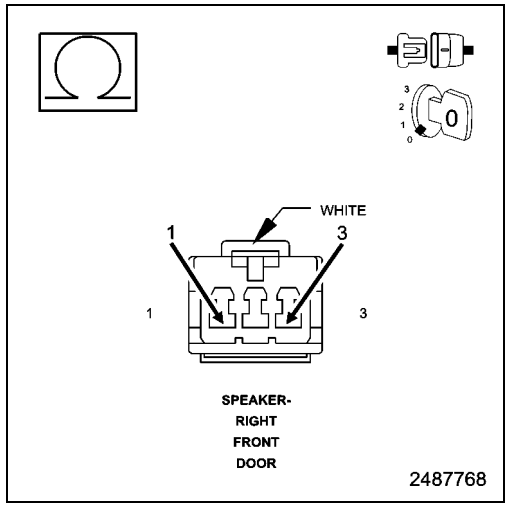

3. CHECK THE (X202) RIGHT FRONT DOOR SPEAKER (+) CIRCUIT, AND THE (X292) RIGHT FRONT DOOR SPEAKER (-) CIRCUITS FOR A SHORT TOGETHER

1. Disconnect the Amplifier C2 harness connector.
2. Measure the resistance between the (X202) Right Front Door Speaker (+) circuit, and the (X292) Right Front Door Speaker (-) circuit.

Is the resistance below 10K Ohms?

Yes

- Repair the (X202) Right Front Door Speaker (+) circuit, and the (X292) Right Front Door Speaker (-) circuit for a short together.
- Perform the BODY VERIFICATION TEST. (Refer to 28 - DTC-Based Diagnostics/MODULE, Totally Integrated Power (TIPM) - Standard Procedure).

No

- Replace the Amplifier in accordance with the Service Information.
- Perform the BODY VERIFICATION TEST. (Refer to 28 - DTC-Based Diagnostics/MODULE, Totally Integrated Power (TIPM) - Standard Procedure).

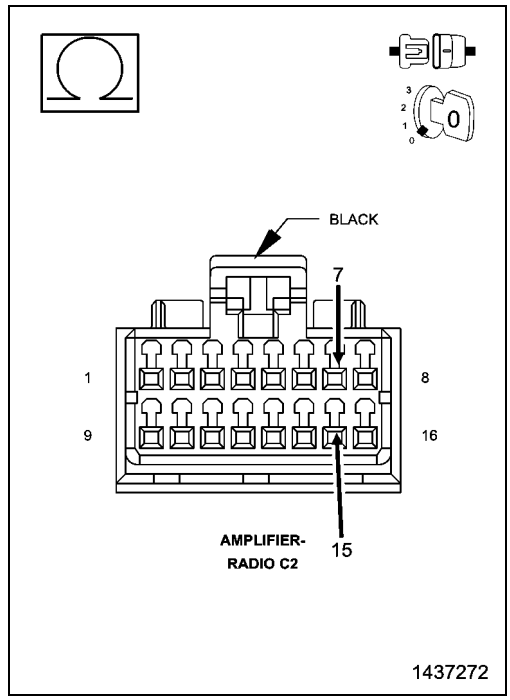

B1474-CHANNEL 5 AUDIO SPEAKER OUTPUT CIRCUIT PERFORMANCE

For a complete wiring diagram, **refer to the Wiring Information**.

- **When Monitored:**
  With the ignition on.
- **Set Condition:**
  This Diagnostic Trouble Code (DTC) sets if a Direct Current (DC) offset occurs on the output channel, the amplifier shall set a DTC after a maturity rate of four to six seconds.

Possible Causes
AMPLIFIER

1. CHECK FOR AN INTERMITTENT CONDITION

1. Turn the ignition on and open one of the front doors.

NOTE: A front door must remain open whenever checking or erasing Amplifier DTCs.

2. With the scan tool, record and erase the Amplifier DTCs.
3. Cycle the ignition switch from on to off, wait five seconds and then back to on.
4. Turn the Radio on and set the volume to 20.
5. Adjust the speakers to the rear and center.
6. With the scan tool, read the active Amplifier DTCs.

Does the scan tool display active: B1474-CHANNEL 5 AUDIO SPEAKER OUTPUT CIRCUIT PERFORMANCE?

Yes

- Replace the Amplifier in accordance with the Service Information.
- Perform the BODY VERIFICATION TEST. (Refer to 28 - DTC-Based Diagnostics/MODULE, Totally Integrated Power (TIPM) - Standard Procedure).

No

- Test complete, the condition or conditions that originally set this DTC are not present at this time. Using the wiring diagrams as a guide, check all related splices and connectors for signs of water intrusion, corrosion, pushed out or bent terminals and correct pin tension.
- Perform the BODY VERIFICATION TEST. (Refer to 28 - DTC-Based Diagnostics/MODULE, Totally Integrated Power (TIPM) - Standard Procedure).

B1475-CHANNEL 5 AUDIO SPEAKER OUTPUT CIRCUIT LOW

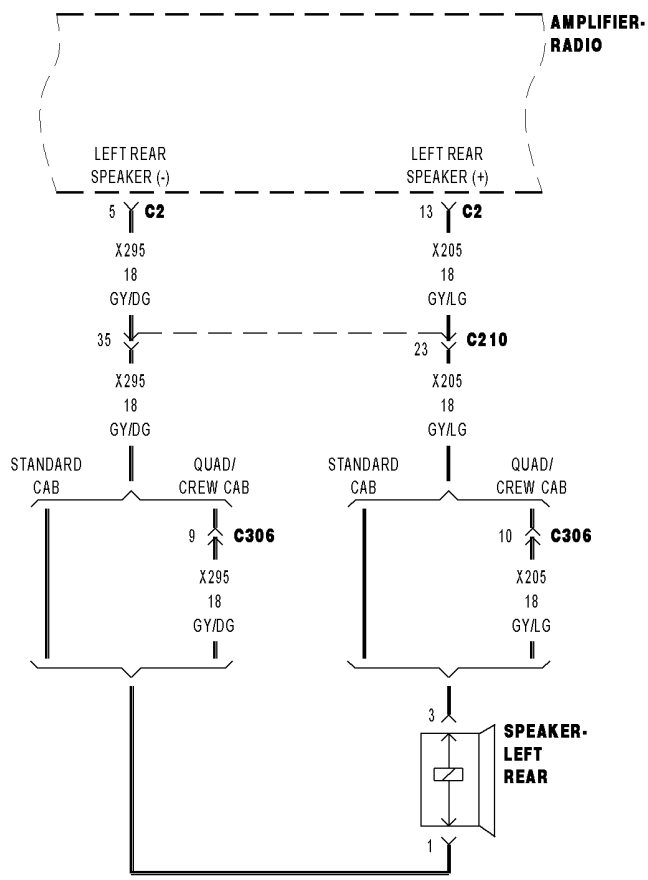

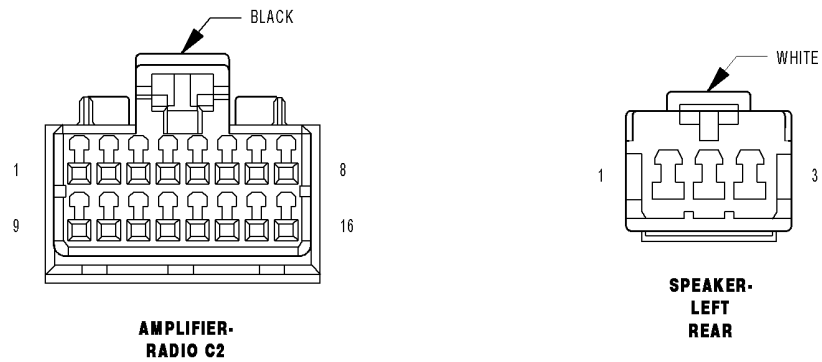

For a complete wiring diagram, **refer to the Wiring Information**.

- **When Monitored:**
  With the ignition on.
- **Set Condition:**
  The Amplifier detects a shorted to ground condition on the speaker output circuit.

Possible Causes
(X205) LEFT REAR SPEAKER (+) CIRCUIT SHORTED TO GROUND
(X295) LEFT REAR SPEAKER (-) CIRCUIT SHORTED TO GROUND
LEFT REAR SPEAKER
AMPLIFIER

1. CHECK FOR AN INTERMITTENT CONDITION

1. Turn the ignition on and open one of the front doors.

NOTE: A front door must remain open whenever checking or erasing Amplifier DTCs.

2. Using the scan tool, record and erase the Amplifier DTCs.
3. Cycle the ignition switch from on to off, wait five seconds and then back to on.
4. Turn the Radio on and set the volume to 20.
5. Adjust the speakers to the rear and center.
6. Using the scan tool, read the active Amplifier DTCs.

Does the scan tool display active: B1475-CHANNEL 5 OUTPUT CIRCUIT LOW?

Yes

- Go To 2

No

- Test complete, the condition or conditions that originally set this DTC are not present at this time. Using the wiring diagrams as a guide, check all related splices and connectors for signs of water intrusion, corrosion, pushed out or bent terminals and correct pin tension.
- Perform the BODY VERIFICATION TEST. (Refer to 28 - DTC-Based Diagnostics/MODULE, Totally Integrated Power (TIPM) - Standard Procedure).

2. CHECK THE LEFT REAR SPEAKER

1. Make sure one of the front doors is still open.
2. Using the scan tool, erase the DTCs.
3. Turn the ignition off.
4. Disconnect the Left Rear Speaker harness connector.
5. Turn the ignition on.
6. Turn the radio on and set the volume to 25.
7. Using the scan tool, read the active Amplifier DTCs.

Does the scan tool display active: B1475-CHANNEL 5 OUTPUT CIRCUIT LOW?

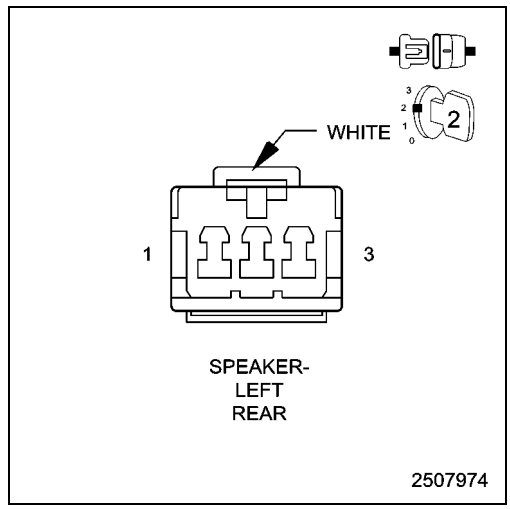

Yes

- Go To 3

No

- Replace the Left Rear Speaker.
- Perform the BODY VERIFICATION TEST. (Refer to 28 - DTC-Based Diagnostics/MODULE, Totally Integrated Power (TIPM) - Standard Procedure).

3. CHECK THE (X205) LEFT REAR SPEAKER (+) CIRCUIT FOR A SHORT TO GROUND

1. Turn the ignition off.
2. Disconnect the Amplifier C2 harness connector.
3. Measure the resistance between ground and the (X205) Left Rear Speaker (+) circuit.

Is the resistance below 10K Ohms?

Yes

- Repair the (X205) Left Rear Speaker (+) circuit for a short to ground.
- Perform the BODY VERIFICATION TEST. (Refer to 28 - DTC-Based Diagnostics/MODULE, Totally Integrated Power (TIPM) - Standard Procedure).

No

- Go To 4

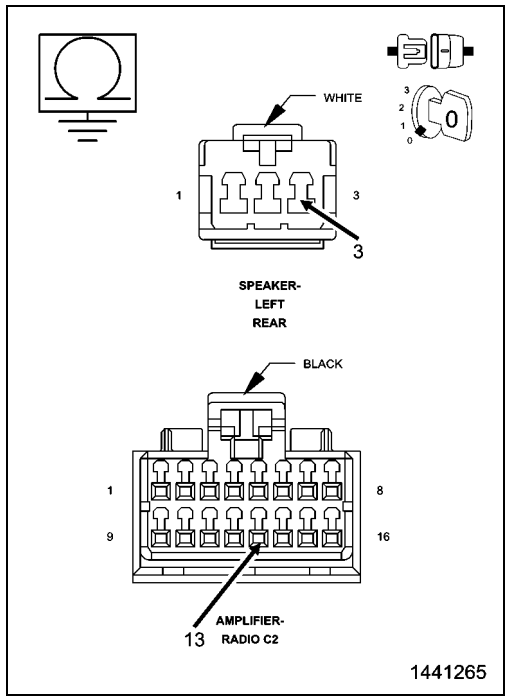

4. CHECK THE (X295) LEFT REAR SPEAKER (-) CIRCUIT FOR A SHORT TO GROUND

1. Measure the resistance between ground and the (X295) Left Rear Speaker (-) circuit.

Is the resistance below 10K Ohms?

Yes

- Repair the (X295) Left Rear Speaker (-) for a short to ground.
- Perform the BODY VERIFICATION TEST. (Refer to 28 - DTC-Based Diagnostics/MODULE, Totally Integrated Power (TIPM) - Standard Procedure).

No

- Replace the Amplifier in accordance with the Service Information.
- Perform the BODY VERIFICATION TEST. (Refer to 28 - DTC-Based Diagnostics/MODULE, Totally Integrated Power (TIPM) - Standard Procedure).

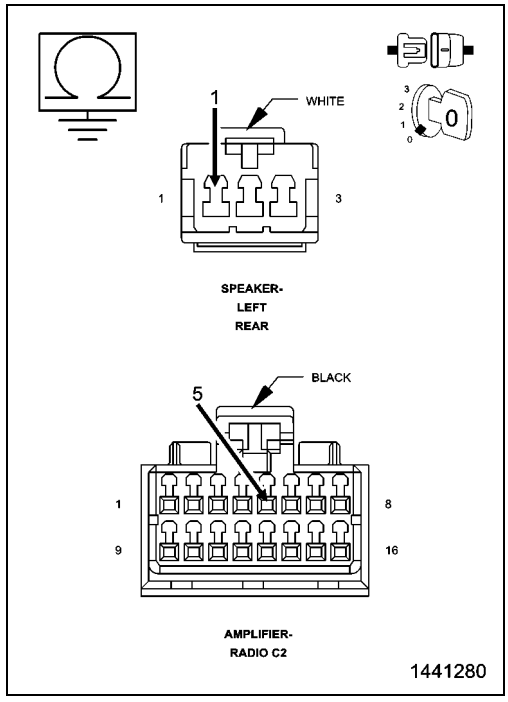

B1476-CHANNEL 5 AUDIO SPEAKER OUTPUT CIRCUIT HIGH

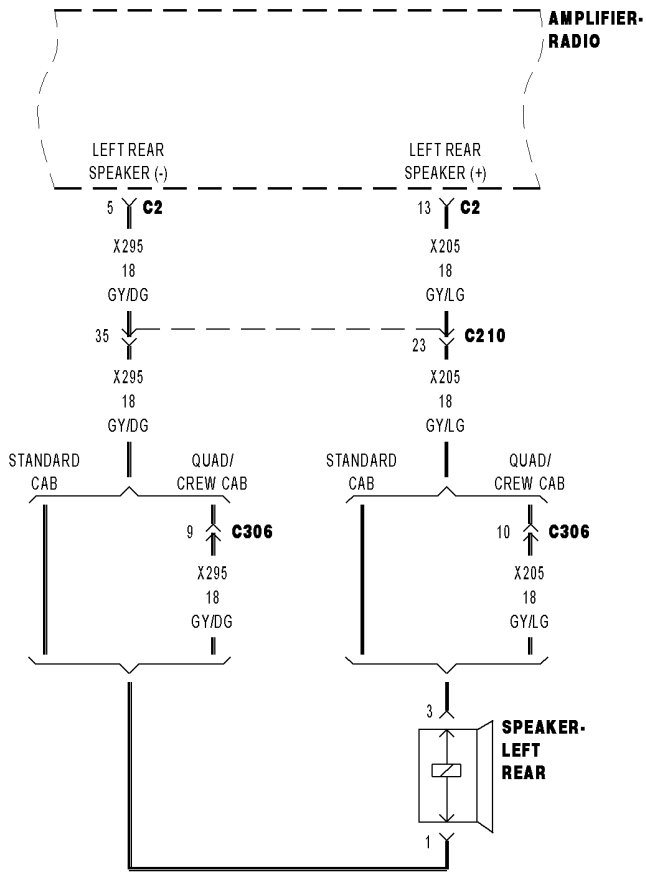

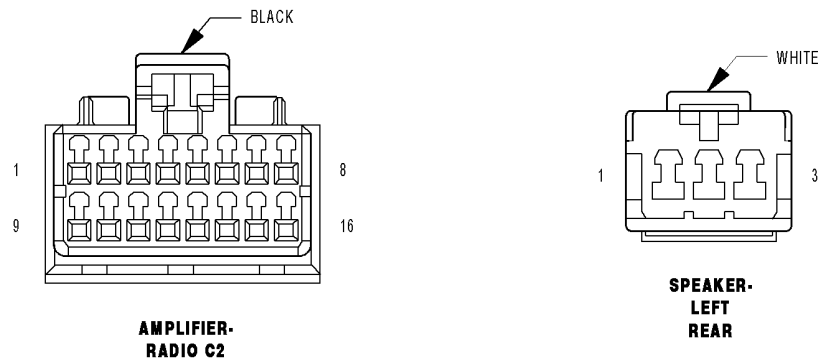

For a complete wiring diagram, **refer to the Wiring Information**.

- **When Monitored:**
  With the ignition on.
- **Set Condition:**
  The Amplifier detects a short to battery condition on the output circuit.

Possible Causes
(X205) LEFT REAR SPEAKER (+) CIRCUIT SHORTED TO VOLTAGE
(X295) LEFT REAR SPEAKER (-) CIRCUIT SHORTED TO VOLTAGE
AMPLIFIER

1. CHECK FOR AN INTERMITTENT CONDITION

1. Turn the ignition on and open one of the front doors.

NOTE: A front door must remain open whenever checking or erasing Amplifier DTCs.

2. Using the scan tool, record and erase the Amplifier DTCs.
3. Cycle the ignition switch from on to off, wait five seconds and then back to on.
4. Turn the Radio on and set the volume to 20.
5. Adjust the speakers to the rear and center.
6. Using the scan tool, read the active Amplifier DTCs.

Does the scan tool display active: B1476-CHANNEL 5 AUDIO SPEAKER OUTPUT CIRCUIT HIGH?

Yes

- Go To 2

No

- Test complete, the condition or conditions that originally set this DTC are not present at this time. Using the wiring diagrams as a guide, check all related splices and connectors for signs of water intrusion, corrosion, pushed out or bent terminals and correct pin tension.
- Perform the BODY VERIFICATION TEST. (Refer to 28 - DTC-Based Diagnostics/MODULE, Totally Integrated Power (TIPM) - Standard Procedure).

2. CHECK FOR VOLTAGE ON THE (X205) LEFT REAR SPEAKER (+) CIRCUIT

1. Turn the ignition off.
2. Disconnect the Amplifier C2 harness connector.
3. Disconnect the Left Rear Speaker harness connector.
4. Turn the ignition on.
5. Measure the voltage between the (X205) Left Rear Speaker (+) circuit and ground.

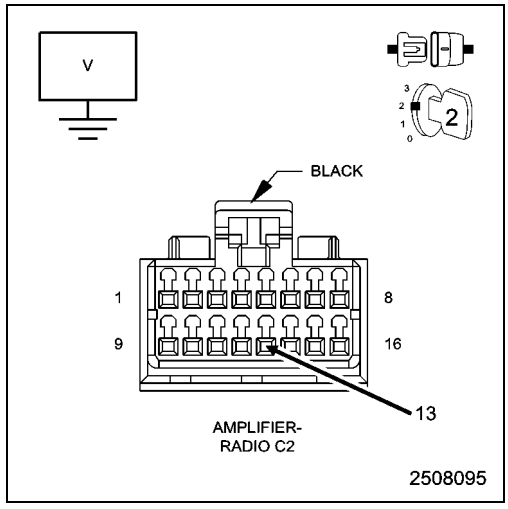

Is there any voltage present?

Yes

- Repair the (X205) Left Rear Speaker (+) circuit for a short to voltage.
- Perform the BODY VERIFICATION TEST. (Refer to 28 - DTC-Based Diagnostics/MODULE, Totally Integrated Power (TIPM) - Standard Procedure).

No

- Go To 3

3. CHECK FOR VOLTAGE ON THE (X295) LEFT REAR SPEAKER (-) CIRCUIT

1. Measure the voltage between the (X295) Left Rear Speaker (-) circuit and ground.

Is there any voltage present?

Yes

- Repair the (X295) Left Rear Speaker (-) circuit for a short to voltage.
- Perform the BODY VERIFICATION TEST. (Refer to 28 - DTC-Based Diagnostics/MODULE, Totally Integrated Power (TIPM) - Standard Procedure).

No

- Replace the Amplifier in accordance with the Service Information.
- Perform the BODY VERIFICATION TEST. (Refer to 28 - DTC-Based Diagnostics/MODULE, Totally Integrated Power (TIPM) - Standard Procedure).

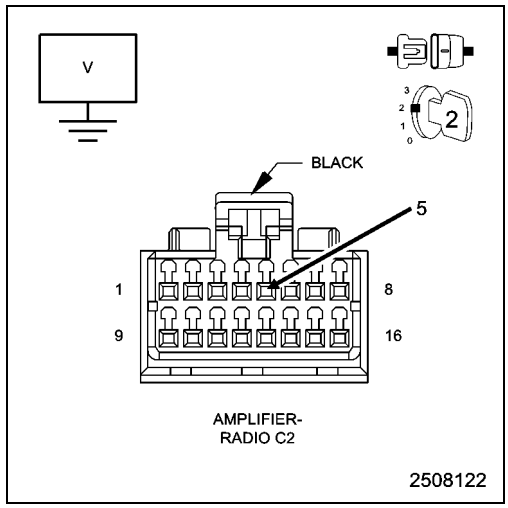

B1477-CHANNEL 5 AUDIO SPEAKER OUTPUT CIRCUIT OPEN

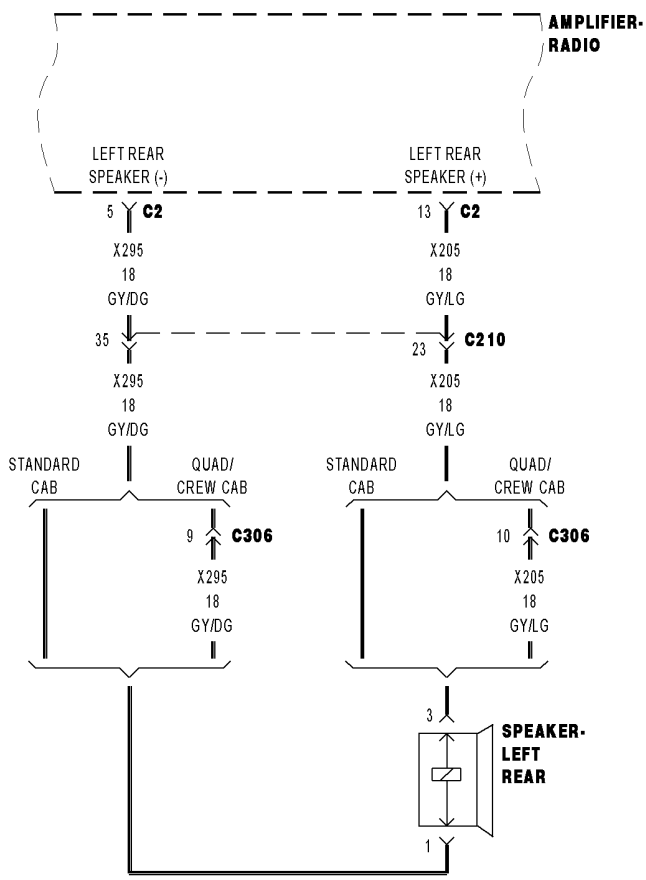

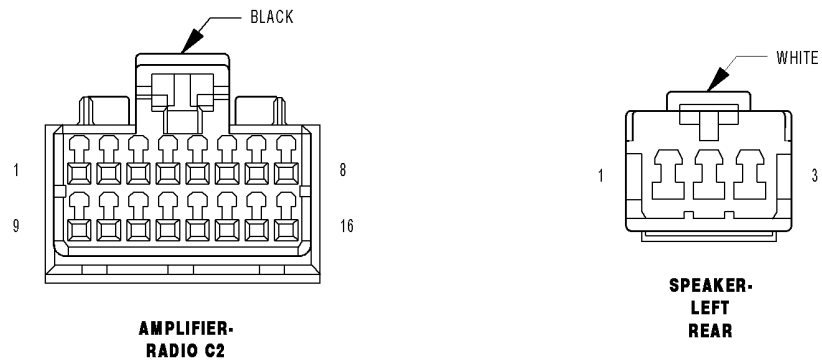

For a complete wiring diagram, **refer to the Wiring Information**.

- **When Monitored:**
  Amplifier Bus wake-up. Amplifier reset with scan tool.
- **Set Condition:**
  The Amplifier detects an open condition on the speaker output circuit.

Possible Causes
(X205) LEFT REAR SPEAKER (+) CIRCUIT OPEN
(X295) LEFT REAR SPEAKER (-) CIRCUIT OPEN
LEFT REAR SPEAKER
AMPLIFIER

1. CHECK FOR AN INTERMITTENT CONDITION

1. Turn the ignition on and open one of the front doors.

NOTE: A front door must remain open whenever checking or erasing Amplifier DTCs.

2. Using the scan tool, record and erase the Amplifier DTCs.
3. Cycle the ignition switch from on to off, wait five seconds and then back to on.
4. Turn the Radio on and set the volume to 20.
5. Adjust the speakers to the rear and center.
6. Using the scan tool, read the active Amplifier DTCs.

Does the scan tool display active: B1477-CHANNEL 5 AUDIO SPEAKER OUTPUT CIRCUIT OPEN?

Yes

- Go To 2

No

- Test complete, the condition or conditions that originally set this DTC are not present at this time. Using the wiring diagrams as a guide, check all related splices and connectors for signs of water intrusion, corrosion, pushed out or bent terminals and correct pin tension.
- Perform the BODY VERIFICATION TEST. (Refer to 28 - DTC-Based Diagnostics/MODULE, Totally Integrated Power (TIPM) - Standard Procedure).

2. CHECK THE OPERATION OF THE LEFT REAR SPEAKER

1. Turn the ignition off.
2. Disconnect the Left Rear Speaker harness connector.
3. Turn the ignition on.
4. Turn the radio on and turn the volume to 25.
5. Adjust the speakers to the rear and center.
6. With a Voltmeter set to read in A/C voltage, measure the voltage of the Left Rear Speaker circuits in the Left Rear Speaker harness connector.

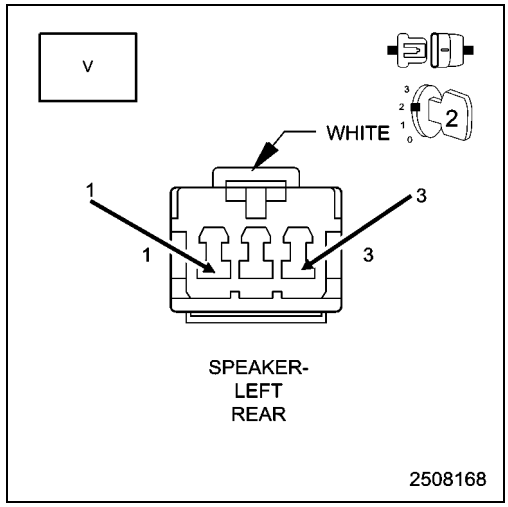

Is the voltage present greater than 1 Volt?

Yes

- Replace the Left Rear Speaker in accordance with the Service Information.
- Perform the BODY VERIFICATION TEST. (Refer to 28 - DTC-Based Diagnostics/MODULE, Totally Integrated Power (TIPM) - Standard Procedure).

No

- Go To 3

3. CHECK THE (X205) LEFT REAR SPEAKER (+) CIRCUIT FOR AN OPEN

1. Turn the ignition off.
2. Disconnect the Amplifier C2 harness connector.
3. Measure the resistance of the (X205) Left Rear Speaker (+) circuit between the Amplifier C2 harness connector and the Left Rear Speaker harness connector.

Is the resistance below 2.0 Ohms?

Yes

- Go To 4

No

- Repair the (X205) Left Rear Speaker (+) circuit for an open.
- Perform the BODY VERIFICATION TEST. (Refer to 28 - DTC-Based Diagnostics/MODULE, Totally Integrated Power (TIPM) - Standard Procedure).

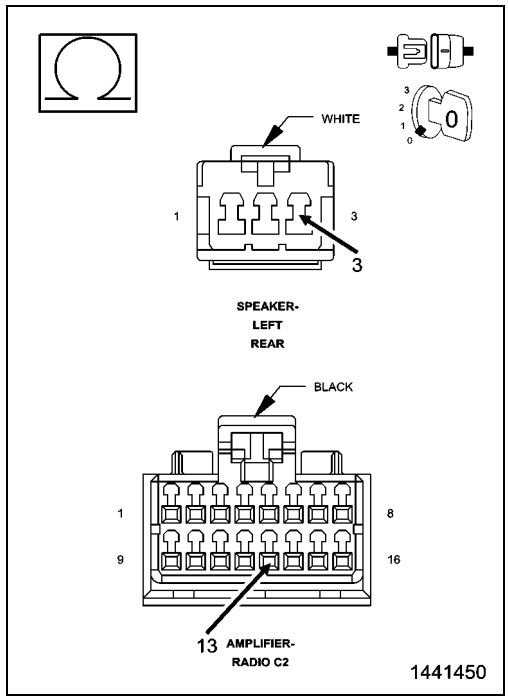

4. CHECK THE (X295) LEFT REAR SPEAKER (-) CIRCUIT FOR AN OPEN

1. Measure the resistance of the (X295) Left Rear Speaker (-) circuit between the Amplifier C2 harness connector and the Left Rear Speaker harness connector.

Is the resistance below 2.0 Ohms?

Yes

- Replace the Amplifier in accordance with the Service Information.
- Perform the BODY VERIFICATION TEST. (Refer to 28 - DTC-Based Diagnostics/MODULE, Totally Integrated Power (TIPM) - Standard Procedure).

No

- Repair the (X295) Left Rear Shelf Speaker (-) circuit for an open.
- Perform the BODY VERIFICATION TEST. (Refer to 28 - DTC-Based Diagnostics/MODULE, Totally Integrated Power (TIPM) - Standard Procedure).

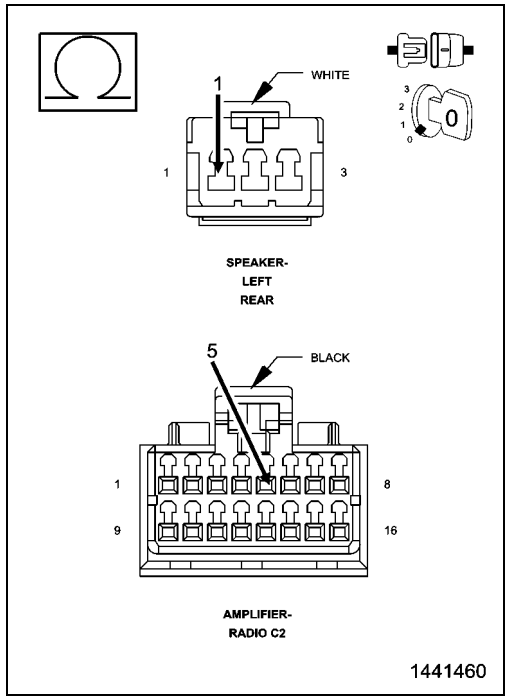

B1478-CHANNEL 5 AUDIO SPEAKER OUTPUT CIRCUIT SHORTED TOGETHER

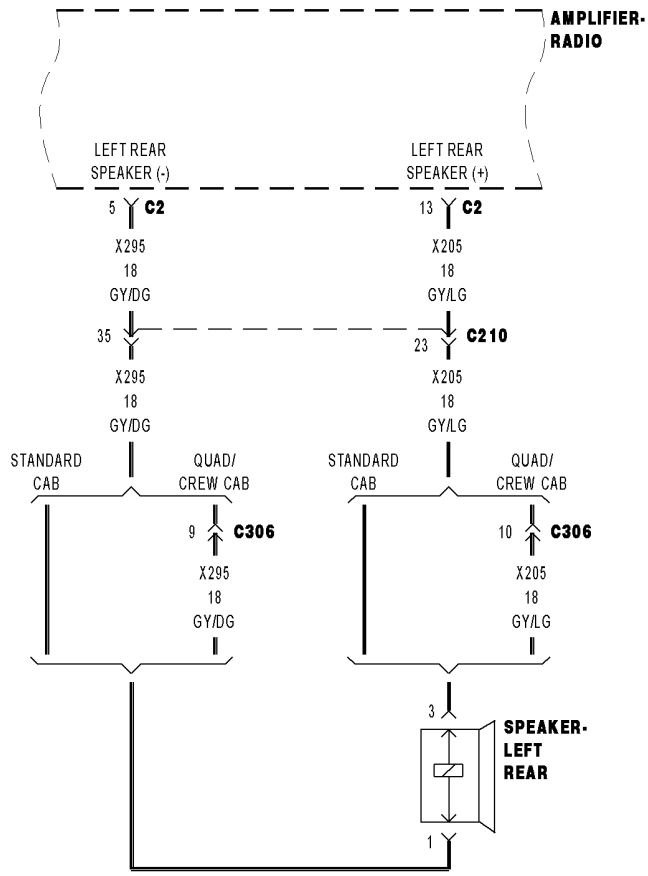

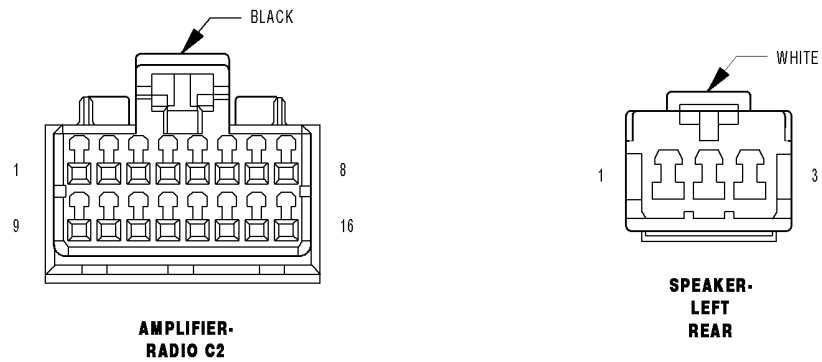

For a complete wiring diagram, **refer to the Wiring Information**.

- **When Monitored:**
  With the ignition on. Radio volume at 25 or higher.
- **Set Condition:**
  The Amplifier detects that the output circuits are shorted together.

Possible Causes
(X205) LEFT REAR SPEAKER (+) CIRCUIT SHORTED TO THE (X295) LEFT REAR SPEAKER (-) CIRCUIT
LEFT REAR SPEAKER
AMPLIFIER

1. CHECK FOR AN INTERMITTENT CONDITION

1. Turn the ignition on and open one of the front doors.

NOTE: A front door must remain open whenever checking or erasing Amplifier DTCs.

2. Using the scan tool, record and erase the Amplifier DTCs.
3. Cycle the ignition switch from on to off, wait five seconds and then back to on.
4. Turn the Radio on and set the volume to 20.
5. Adjust the speakers to the rear and center.
6. Using the scan tool, read the active Amplifier DTCs.

Does the scan tool display active: B1478-CHANNEL 5 AUDIO SPEAKER OUTPUT CIRCUIT SHORTED TOGETHER?

Yes

- Go To 2

No

- Test complete, the condition or conditions that originally set this DTC are not present at this time. Using the wiring diagrams as a guide, check all related splices and connectors for signs of water intrusion, corrosion, pushed out or bent terminals and correct pin tension.
- Perform the BODY VERIFICATION TEST. (Refer to 28 - DTC-Based Diagnostics/MODULE, Totally Integrated Power (TIPM) - Standard Procedure).

2. CHECK THE OPERATION OF THE LEFT REAR SPEAKER

1. Turn the ignition off.
2. Disconnect the Left Rear Speaker.
3. Measure the resistance of the speaker between the two terminals.

NOTE: The graphic shows the connector for reference only. Measure between the speaker terminals.

Is the resistance of the speaker less than 1 Ohm?

Yes

- Replace the Left Rear Speaker in accordance with the Service Information.
- Perform the BODY VERIFICATION TEST. (Refer to 28 - DTC-Based Diagnostics/MODULE, Totally Integrated Power (TIPM) - Standard Procedure).

No

- Go To 3

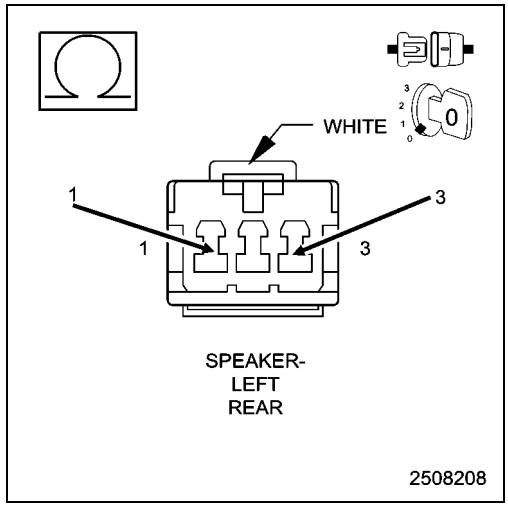

3. CHECK THE (X205) LEFT REAR SPEAKER (+) CIRCUIT, AND THE (X295) LEFT REAR SPEAKER (-) CIRCUITS FOR A SHORT TOGETHER

1. Turn the ignition off.
2. Disconnect the Amplifier C2 harness connector.
3. Measure the resistance between the (X205) Left Rear Speaker (+) circuit, and the (X295) Left Rear Speaker (-) circuit.

Is the resistance below 10K Ohms?

Yes

- Repair the (X205) Left Rear Speaker (+) circuit, and the (X295) Left Rear Speaker (-) circuit for a short together.
- Perform the BODY VERIFICATION TEST. (Refer to 28 - DTC-Based Diagnostics/MODULE, Totally Integrated Power (TIPM) - Standard Procedure).

No

- Replace the Amplifier in accordance with the Service Information.
- Perform the BODY VERIFICATION TEST. (Refer to 28 - DTC-Based Diagnostics/MODULE, Totally Integrated Power (TIPM) - Standard Procedure).

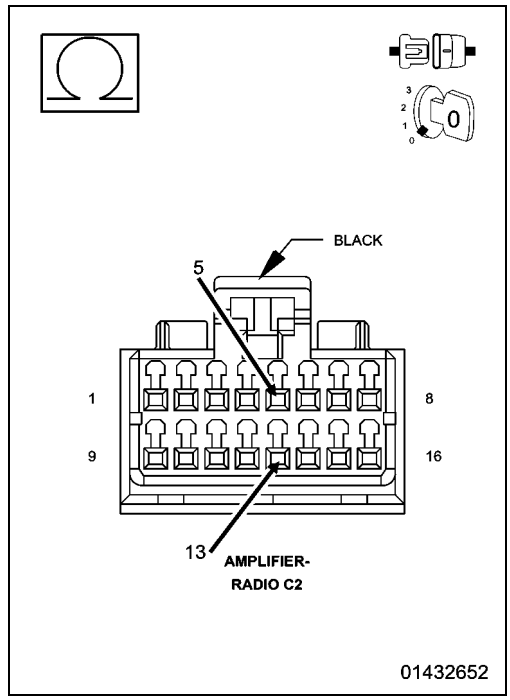

B1479-CHANNEL 6 AUDIO SPEAKER OUTPUT CIRCUIT PERFORMANCE

For a complete wiring diagram, **refer to the Wiring Information**.

- **When Monitored:**

  With the ignition on.
- **Set Condition:**

  This Diagnostic Trouble Code (DTC) sets if a Direct Current (DC) offset occurs on the output channel, the amplifier shall set a DTC after a maturity rate of four to six seconds.

Possible Causes
AMPLIFIER

1. CHECK FOR AN INTERMITTENT CONDITION

1. Turn the ignition on and open one of the front doors.

NOTE: A front door must remain open whenever checking or erasing Amplifier DTCs.

2. Using the scan tool, record and erase the Amplifier DTCs.
3. Cycle the ignition switch from on to off, wait five seconds and then back to on.
4. Turn the Radio on and set the volume to 20.
5. Adjust the speakers to the rear and center.
6. Using the scan tool, read the active Amplifier DTCs.

Does the scan tool display active: B1479-CHANNEL 6 AUDIO SPEAKER OUTPUT CIRCUIT PERFORMANCE?

Yes

- Replace the Amplifier in accordance with the Service Information.
- Perform the BODY VERIFICATION TEST.(Refer to 28 - DTC-Based Diagnostics/MODULE, Totally Integrated Power (TIPM) - Standard Procedure).

No

- Test complete, the condition or conditions that originally set this DTC are not present at this time. Using the wiring diagrams as a guide, check all related splices and connectors for signs of water intrusion, corrosion, pushed out or bent terminals and correct pin tension.
- Perform the BODY VERIFICATION TEST.(Refer to 28 - DTC-Based Diagnostics/MODULE, Totally Integrated Power (TIPM) - Standard Procedure).

B147A-CHANNEL 6 AUDIO SPEAKER OUTPUT CIRCUIT LOW

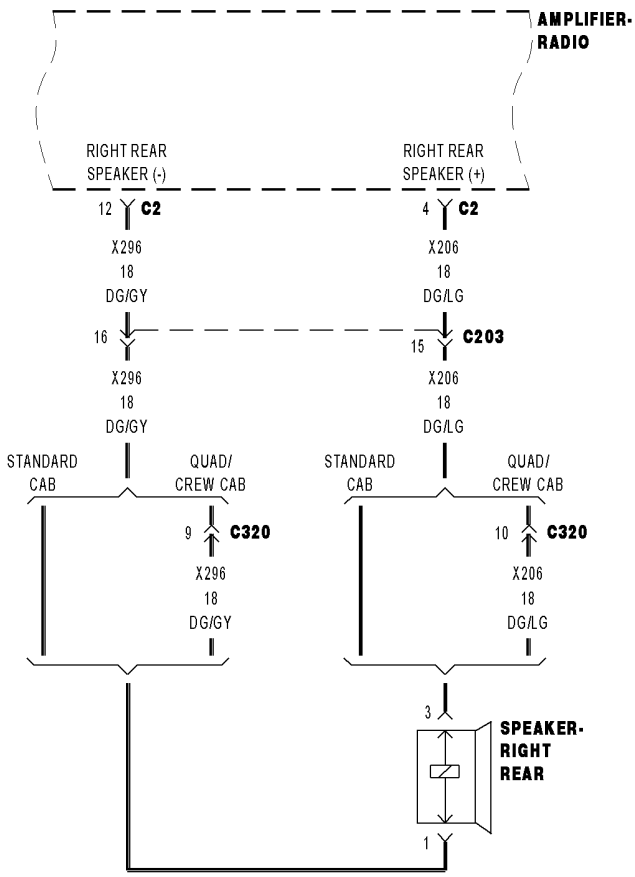

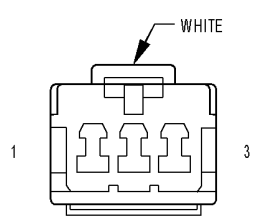

SPEAKER-
RIGHT REAR

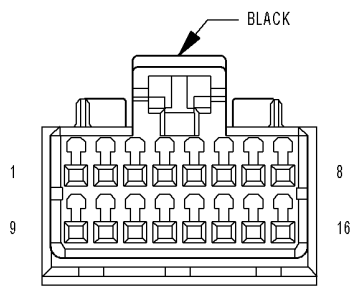

AMPLIFIER-
RADIO C2

02508629

For a complete wiring diagram, **refer to the Wiring Information**.

- **When Monitored:**
  With the ignition on.
- **Set Condition:**
  The Amplifier detects a shorted to ground condition on the speaker output circuit.

Possible Causes
(X206) RIGHT REAR SPEAKER (+) CIRCUIT SHORTED TO GROUND
(X296) RIGHT REAR SPEAKER (-) CIRCUIT SHORTED TO GROUND
RIGHT REAR SPEAKER
AMPLIFIER

1. CHECK FOR AN INTERMITTENT CONDITION

1. Turn the ignition on and open one of the front doors.

NOTE: A front door must remain open whenever checking or erasing Amplifier DTCs.

2. Using the scan tool, record and erase the Amplifier DTCs.
3. Cycle the ignition switch from on to off, wait five seconds and then back to on.
4. Turn the Radio on and set the volume to 20.
5. Adjust the speakers to the rear and center.
6. Using the scan tool, read the active Amplifier DTCs.

Does the scan tool display active: B147A-CHANNEL 6 AUDIO SPEAKER OUTPUT CIRCUIT LOW?

Yes

- Go To 2

No

- Test complete, the condition or conditions that originally set this DTC are not present at this time. Using the wiring diagrams as a guide, check all related splices and connectors for signs of water intrusion, corrosion, pushed out or bent terminals and correct pin tension.
- Perform the BODY VERIFICATION TEST. (Refer to 28 - DTC-Based Diagnostics/MODULE, Totally Integrated Power (TIPM) - Standard Procedure).

2. CHECK THE RIGHT REAR SPEAKER

1. Make sure one of the front doors is still open.
2. Using the scan tool, erase the DTCs.
3. Turn the ignition off.
4. Disconnect the Right Rear Speaker harness connector.
5. Turn the ignition on.
6. Turn the radio on and set the volume to 25.
7. Using the scan tool, read the active Amplifier DTCs.

Does the scan tool display active: B147A-CHANNEL 6 OUTPUT CIRCUIT LOW?

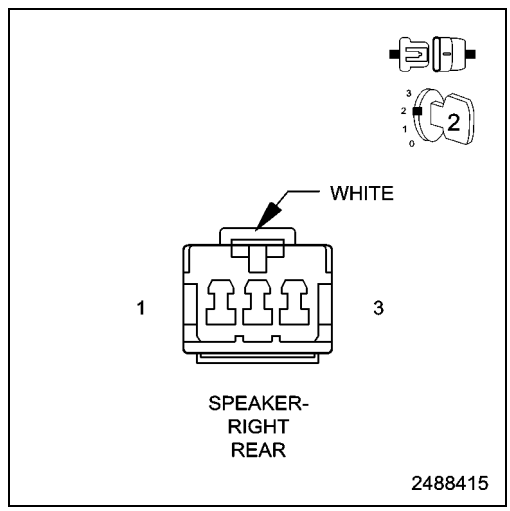

Yes

- Go To 3

No

- Replace the Right Rear Speaker.
- Perform the BODY VERIFICATION TEST. (Refer to 28 - DTC-Based Diagnostics/MODULE, Totally Integrated Power (TIPM) - Standard Procedure).

3. CHECK THE (X206) RIGHT REAR SPEAKER (+) CIRCUIT FOR A SHORT TO GROUND

1. Turn the ignition off.
2. Disconnect the Amplifier C2 harness connector.
3. Measure the resistance between ground and the (X206) Right Rear Speaker (+) circuit.

Is the resistance below 10K Ohms?

Yes

- Repair the (X206) Right Rear Speaker (+) circuit for a short to ground.
- Perform the BODY VERIFICATION TEST. (Refer to 28 - DTC-Based Diagnostics/MODULE, Totally Integrated Power (TIPM) - Standard Procedure).

No

- Go To 4

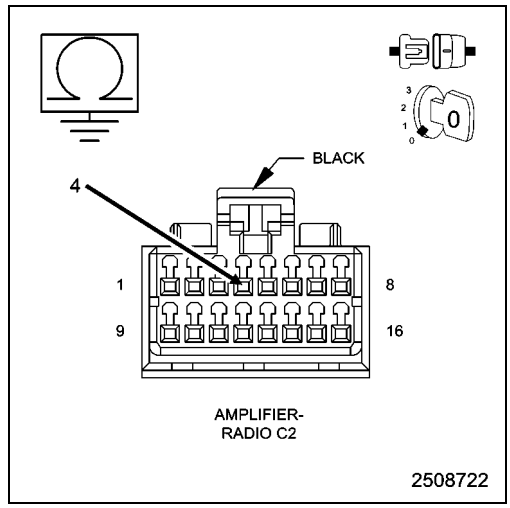

4. CHECK THE (X296) RIGHT REAR SPEAKER (-) CIRCUIT FOR A SHORT TO GROUND

1. Measure the resistance between ground and the (X296) Right Rear Speaker (-) circuit.

Is the resistance below 10K Ohms?

Yes

- Repair the (X296) Right Rear Speaker (-) for a short to ground.
- Perform the BODY VERIFICATION TEST. (Refer to 28 - DTC-Based Diagnostics/MODULE, Totally Integrated Power (TIPM) - Standard Procedure).

No

- Replace the Amplifier in accordance with the Service Information.
- Perform the BODY VERIFICATION TEST. (Refer to 28 - DTC-Based Diagnostics/MODULE, Totally Integrated Power (TIPM) - Standard Procedure).

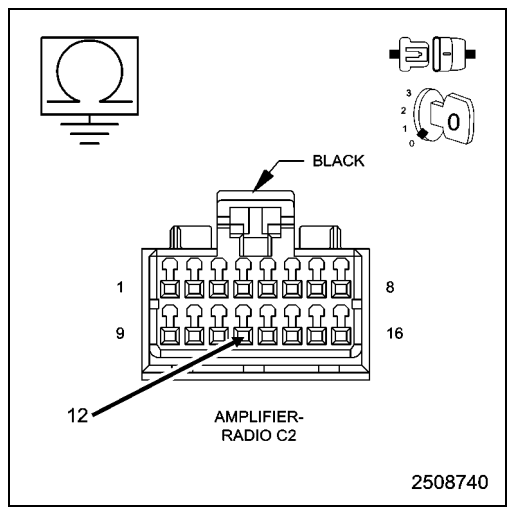

B147B-CHANNEL 6 AUDIO SPEAKER OUTPUT CIRCUIT HIGH

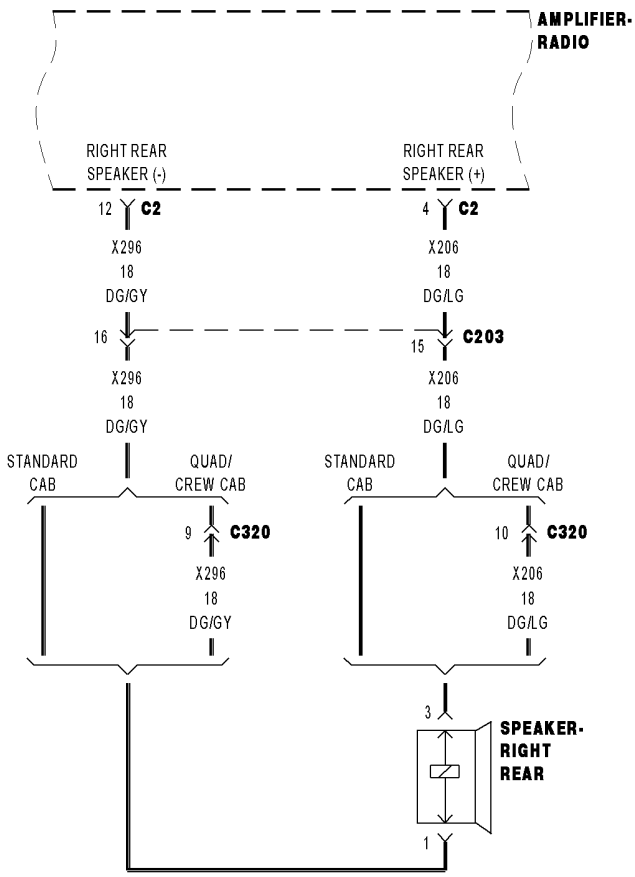

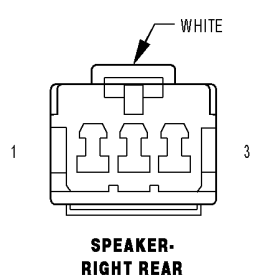

SPEAKER-
RIGHT REAR

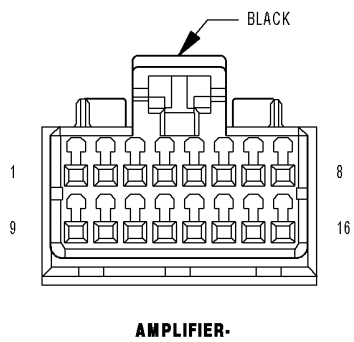

AMPLIFIER-
RADIO C2

02508629

For a complete wiring diagram, **refer to the Wiring Information**.

- **When Monitored:**
  With the ignition on.
- **Set Condition:**
  The Amplifier detects a short to battery condition on the output circuit.

Possible Causes
(X206) RIGHT REAR SPEAKER (+) CIRCUIT SHORTED TO VOLTAGE
(X296) RIGHT REAR SPEAKER (-) CIRCUIT SHORTED TO VOLTAGE
AMPLIFIER

1. CHECK FOR AN INTERMITTENT CONDITION

1. Turn the ignition on and open one of the front doors.

NOTE: A front door must remain open whenever checking or erasing Amplifier DTCs.

2. With the scan tool, record and erase the Amplifier DTCs.
3. Cycle the ignition switch from on to off, wait five seconds and then back to on.
4. Turn the Radio on and set the volume to 20.
5. Adjust the speakers to the rear and center.
6. With the scan tool, read the active Amplifier DTCs.

Does the scan tool display active: B147B-CHANNEL 6 AUDIO SPEAKER OUTPUT CIRCUIT HIGH?

Yes

- Go To 2

No

- Test complete, the condition or conditions that originally set this DTC are not present at this time. Using the wiring diagrams as a guide, check all related splices and connectors for signs of water intrusion, corrosion, pushed out or bent terminals and correct pin tension.
- Perform the BODY VERIFICATION TEST. (Refer to 28 - DTC-Based Diagnostics/MODULE, Totally Integrated Power (TIPM) - Standard Procedure).

2. CHECK FOR VOLTAGE ON THE (X206) RIGHT REAR SPEAKER (+) CIRCUIT

1. Turn the ignition off.
2. Disconnect the Amplifier C2 harness connector.
3. Disconnect the Right Rear Speaker harness connector.
4. Turn the ignition on.
5. Measure the voltage between the (X206) Right Rear Speaker (+) circuit and ground.

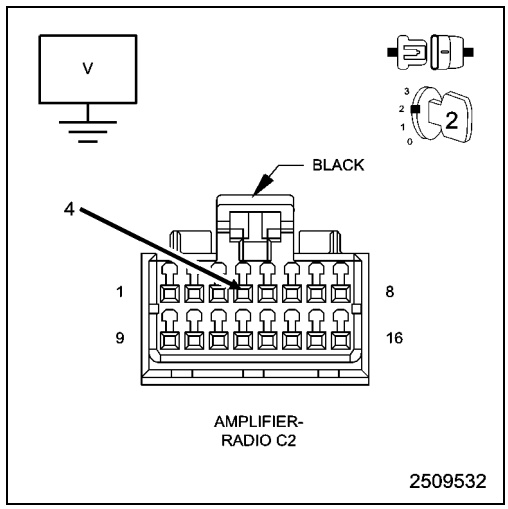

Is there any voltage present?

Yes

- Repair the (X206) Right Rear Speaker (+) circuit for a short to voltage.
- Perform the BODY VERIFICATION TEST. (Refer to 28 - DTC-Based Diagnostics/MODULE, Totally Integrated Power (TIPM) - Standard Procedure).

No

- Go To 3

3. CHECK FOR VOLTAGE ON THE (X296) RIGHT REAR SPEAKER (-) CIRCUIT

1. Measure the voltage between the (X296) Right Rear Speaker (-) circuit and ground.

Is there any voltage present?

Yes

- Repair the (X296) Right Rear Speaker (-) circuit for a short to voltage.
- Perform the BODY VERIFICATION TEST. (Refer to 28 - DTC-Based Diagnostics/MODULE, Totally Integrated Power (TIPM) - Standard Procedure).

No

- Replace the Amplifier in accordance with the Service Information.
- Perform the BODY VERIFICATION TEST. (Refer to 28 - DTC-Based Diagnostics/MODULE, Totally Integrated Power (TIPM) - Standard Procedure).

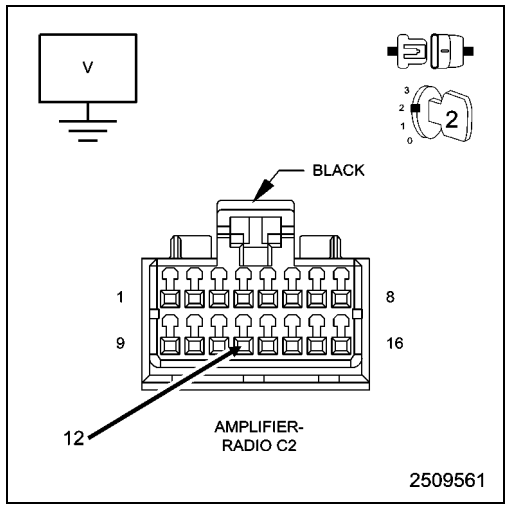

B147C-CHANNEL 6 AUDIO SPEAKER OUTPUT CIRCUIT OPEN

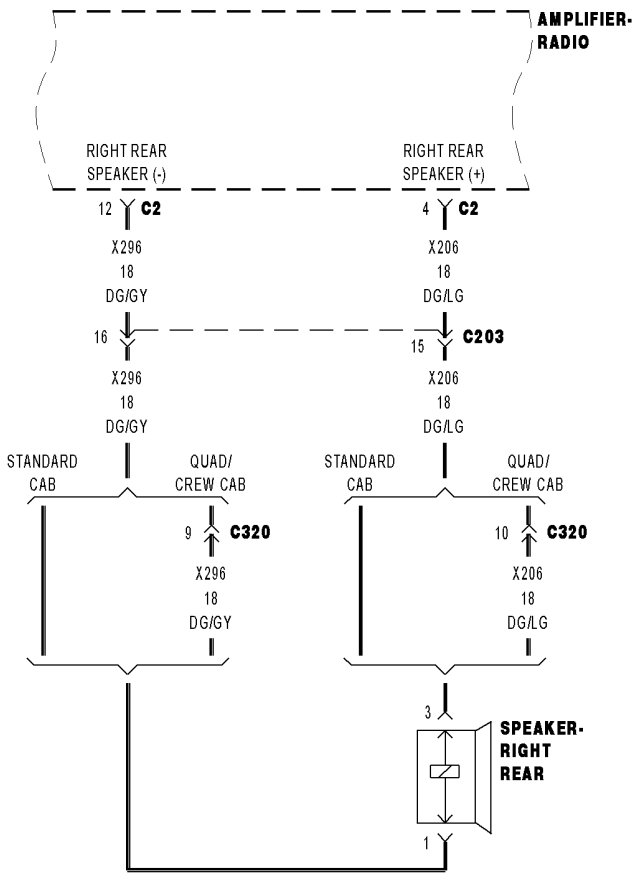

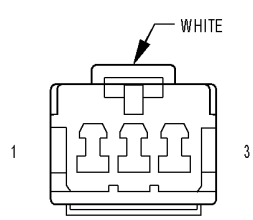

SPEAKER-
RIGHT REAR

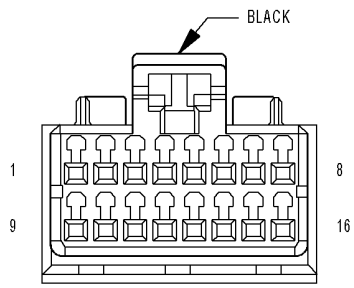

AMPLIFIER-
RADIO C2

02508629

For a complete wiring diagram, **refer to the Wiring Information**.

- **When Monitored:**
  Amplifier Bus wake-up. Amplifier reset with scan tool.
- **Set Condition:**
  The Amplifier detects an open condition on the speaker output circuit.

Possible Causes
(X206) RIGHT REAR SPEAKER (+) CIRCUIT OPEN
(X296) RIGHT REAR SPEAKER (-) CIRCUIT OPEN
RIGHT REAR SPEAKER
AMPLIFIER

1. CHECK FOR AN INTERMITTENT CONDITION

1. Turn the ignition on and open one of the front doors.

NOTE: A front door must remain open whenever checking or erasing Amplifier DTCs.

2. With the scan tool, record and erase the Amplifier DTCs.
3. Cycle the ignition switch from on to off, wait five seconds and then back to on.
4. Turn the Radio on and set the volume to 20.
5. Adjust the speakers to the rear and center.
6. With the scan tool, read the active Amplifier DTCs.

Does the scan tool display active: B147C-CHANNEL 6 AUDIO SPEAKER OUTPUT CIRCUIT OPEN?

Yes

- Go To 2

No

- Test complete, the condition or conditions that originally set this DTC are not present at this time. Using the wiring diagrams as a guide, check all related splices and connectors for signs of water intrusion, corrosion, pushed out or bent terminals and correct pin tension.
- Perform the BODY VERIFICATION TEST. (Refer to 28 - DTC-Based Diagnostics/MODULE, Totally Integrated Power (TIPM) - Standard Procedure).

2. CHECK THE OPERATION OF THE RIGHT REAR SPEAKER

1. Turn the ignition off.
2. Disconnect the Right Rear Speaker harness connector.
3. Turn the radio on and turn the volume to 25.
4. With a voltmeter set to read in A/C voltage, measure the voltage of the Right Rear Speaker circuits in the Right Rear Speaker harness connector.

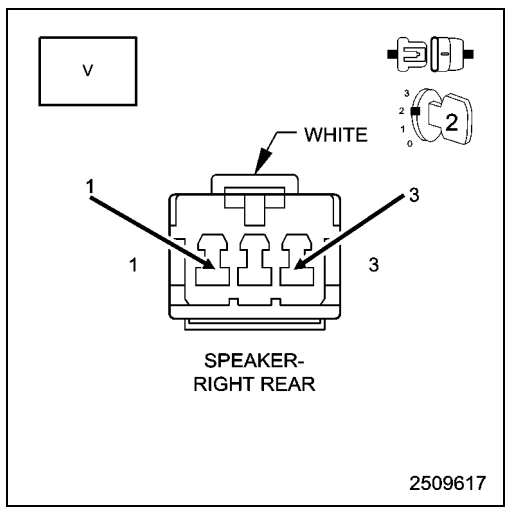

Is the voltage present greater than 1 volt?

Yes

- Replace the Right Rear Speaker in accordance with the Service Information.
- Perform the BODY VERIFICATION TEST. (Refer to 28 - DTC-Based Diagnostics/MODULE, Totally Integrated Power (TIPM) - Standard Procedure).

No

- Go To 3

3. CHECK THE (X206) RIGHT REAR SPEAKER (+) CIRCUIT FOR AN OPEN

1. Turn the ignition off.
2. Disconnect the Amplifier C2 harness connector.
3. Measure the resistance of the (X206) Right Rear Speaker (+) circuit between the Amplifier C2 harness connector and the Right Rear Speaker harness connector.

Is the resistance below 2.0 Ohms?

Yes

- Go To 4

No

- Repair the (X206) Right Rear Speaker (+) circuit for an open.
- Perform the BODY VERIFICATION TEST. (Refer to 28 - DTC-Based Diagnostics/MODULE, Totally Integrated Power (TIPM) - Standard Procedure).

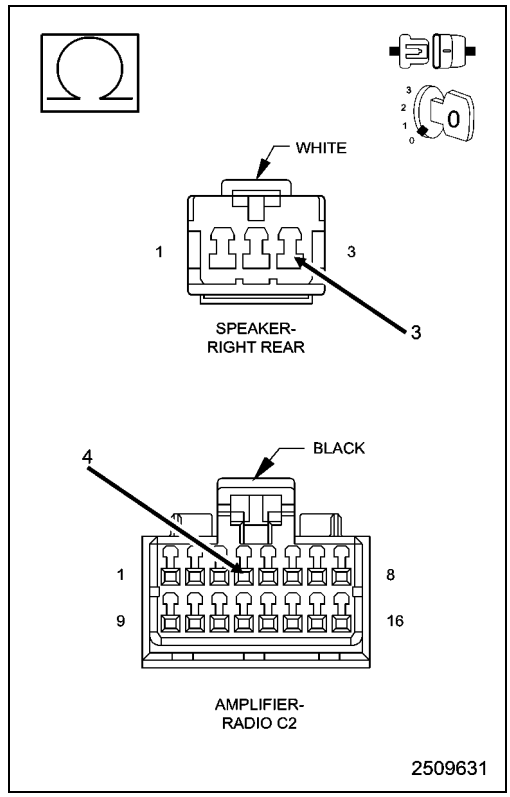

4. CHECK THE (X296) RIGHT REAR SPEAKER (-) CIRCUIT FOR AN OPEN

1. Measure the resistance of the (X296) Right Rear Speaker (-) circuit between the Amplifier C2 harness connector and the Right Rear Speaker harness connector.

Is the resistance below 2.0 Ohms?

Yes

- Replace the Amplifier in accordance with the Service Information.
- Perform the BODY VERIFICATION TEST. (Refer to 28 - DTC-Based Diagnostics/MODULE, Totally Integrated Power (TIPM) - Standard Procedure).

No

- Repair the (X296) Right Rear Speaker (-) circuit for an open.
- Perform the BODY VERIFICATION TEST. (Refer to 28 - DTC-Based Diagnostics/MODULE, Totally Integrated Power (TIPM) - Standard Procedure).

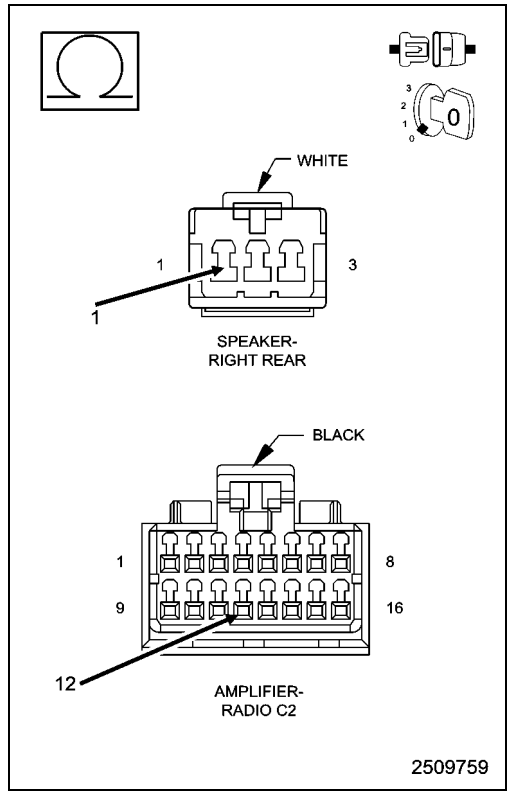

B147D-CHANNEL 6 AUDIO SPEAKER OUTPUT CIRCUIT SHORTED TOGETHER

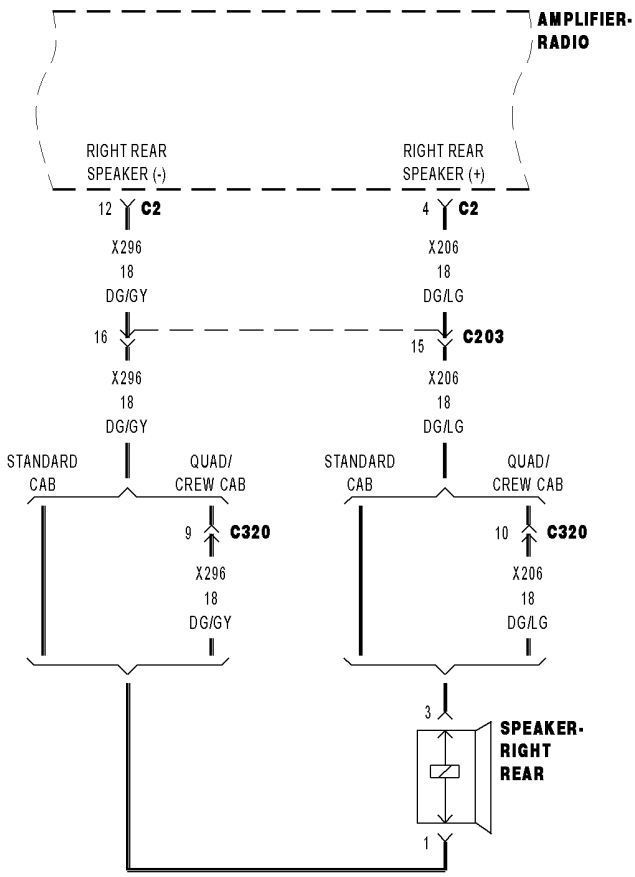

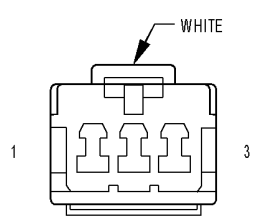

SPEAKER-
RIGHT REAR

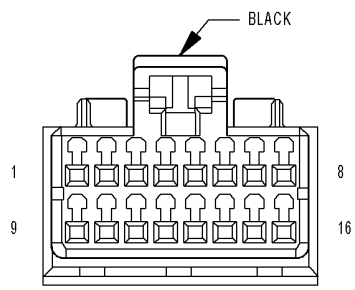

AMPLIFIER-
RADIO C2

02508629

For a complete wiring diagram, **refer to the Wiring Information**.

- **When Monitored:**
  With the ignition on. Radio volume at 25 or higher.
- **Set Condition:**
  The Amplifier detects that the output circuits are shorted together.

Possible Causes
(X206) RIGHT REAR SPEAKER (+) CIRCUIT SHORTED TO THE (X296) RIGHT REAR SPEAKER (-) CIRCUIT
RIGHT REAR SPEAKER
AMPLIFIER

1. CHECK FOR AN INTERMITTENT CONDITION

1. Turn the ignition on and open one of the front doors.

NOTE: A front door must remain open whenever checking or erasing Amplifier DTCs.

2. With the scan tool, record and erase the Amplifier DTCs.
3. Cycle the ignition switch from on to off, wait five seconds and then back to on.
4. Turn the Radio on and set the volume to 20.
5. Adjust the speakers to the rear and center.
6. With the scan tool, read the active Amplifier DTCs.

Does the scan tool display active: B147D-CHANNEL 6 AUDIO SPEAKER OUTPUT CIRCUIT SHORTED TOGETHER?

Yes

- Go To 2

No

- Test complete, the condition or conditions that originally set this DTC are not present at this time. Using the wiring diagrams as a guide, check all related splices and connectors for signs of water intrusion, corrosion, pushed out or bent terminals and correct pin tension.
- Perform the BODY VERIFICATION TEST. (Refer to 28 - DTC-Based Diagnostics/MODULE, Totally Integrated Power (TIPM) - Standard Procedure).

2. CHECK THE OPERATION OF THE RIGHT REAR SPEAKER

1. Turn the ignition off.
2. Disconnect the Right Rear Speaker.
3. Measure the resistance of the speaker between the two terminals.

NOTE: The graphic shows the connector for reference only. Measure between the speaker terminals.

Is the resistance of the speaker less than 1 Ohm?

Yes

- Replace the Right Rear Speaker in accordance with the Service Information.
- Perform the BODY VERIFICATION TEST. (Refer to 28 - DTC-Based Diagnostics/MODULE, Totally Integrated Power (TIPM) - Standard Procedure).

No

- Go To 3

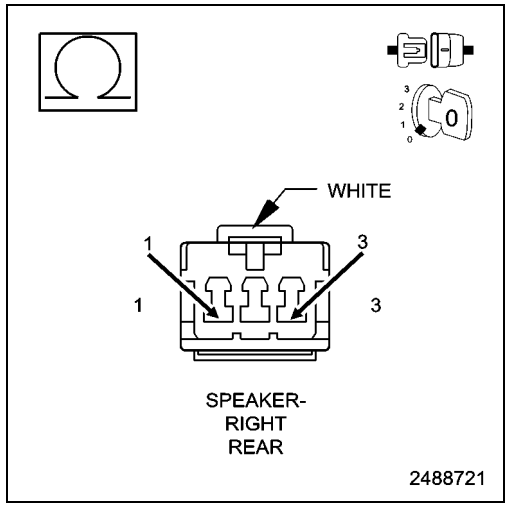

3. CHECK THE (X206) RIGHT REAR SPEAKER (+) CIRCUIT, AND THE (X296) RIGHT REAR SPEAKER (-) CIRCUITS FOR A SHORT TOGETHER

1. Disconnect the Amplifier C2 harness connector.
2. Measure the resistance between the (X206) Right Rear Speaker (+) circuit, and the (X296) Right Rear Speaker (-) circuit.

Is the resistance below 10K Ohms?

Yes

- Repair the (X206) Right Rear Speaker (+) circuit, and the (X296) Right Rear Speaker (-) circuit for a short together.
- Perform the BODY VERIFICATION TEST. (Refer to 28 - DTC-Based Diagnostics/MODULE, Totally Integrated Power (TIPM) - Standard Procedure).

No

- Replace the Amplifier in accordance with the Service Information.
- Perform the BODY VERIFICATION TEST. (Refer to 28 - DTC-Based Diagnostics/MODULE, Totally Integrated Power (TIPM) - Standard Procedure).

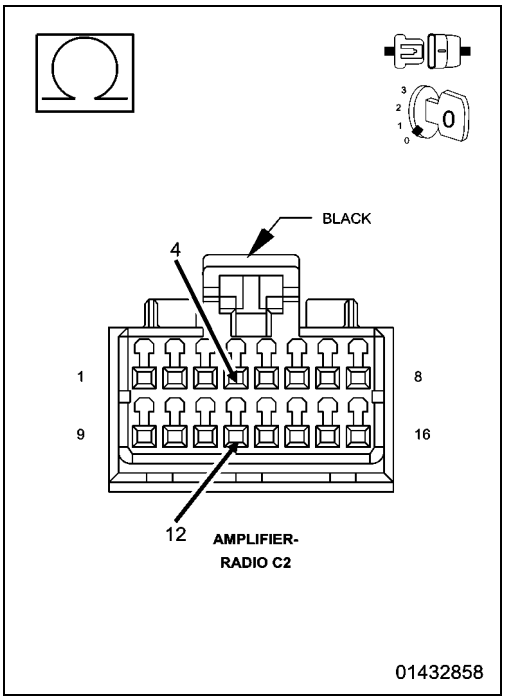

B147E-CHANNEL 7 AUDIO SPEAKER OUTPUT CIRCUIT PERFORMANCE

For a complete wiring diagram, **refer to the Wiring Information**.

- **When Monitored:**

  With the ignition on.
- **Set Condition:**

  This Diagnostic Trouble Code (DTC) sets if a Direct Current (DC) offset occurs on the output channel, the amplifier shall set a DTC after a maturity rate of four to six seconds.

Possible Causes
AMPLIFIER

1. CHECK FOR AN INTERMITTENT CONDITION

1. Turn the ignition on and open one of the front doors.

NOTE: A front door must remain open whenever checking or erasing Amplifier DTCs.

2. With the scan tool, record and erase the Amplifier DTCs.
3. Cycle the ignition switch from on to off, wait five seconds and then back to on.
4. Turn the Radio on and set the volume to 20.
5. Adjust the speakers to the rear and center.
6. With the scan tool, read the active Amplifier DTCs.

Does the scan tool display active: B147E-CHANNEL 7 AUDIO SPEAKER OUTPUT CIRCUIT PERFORMANCE?

Yes

- Replace the Amplifier in accordance with the Service Information.
- Perform the BODY VERIFICATION TEST. (Refer to 28 - DTC-Based Diagnostics/MODULE, Totally Integrated Power (TIPM) - Standard Procedure).

No

- Test complete, the condition or conditions that originally set this DTC are not present at this time. Using the wiring diagrams as a guide, check all related splices and connectors for signs of water intrusion, corrosion, pushed out or bent terminals and correct pin tension.
- Perform the BODY VERIFICATION TEST. (Refer to 28 - DTC-Based Diagnostics/MODULE, Totally Integrated Power (TIPM) - Standard Procedure).

B147F-CHANNEL 7 AUDIO SPEAKER OUTPUT CIRCUIT LOW

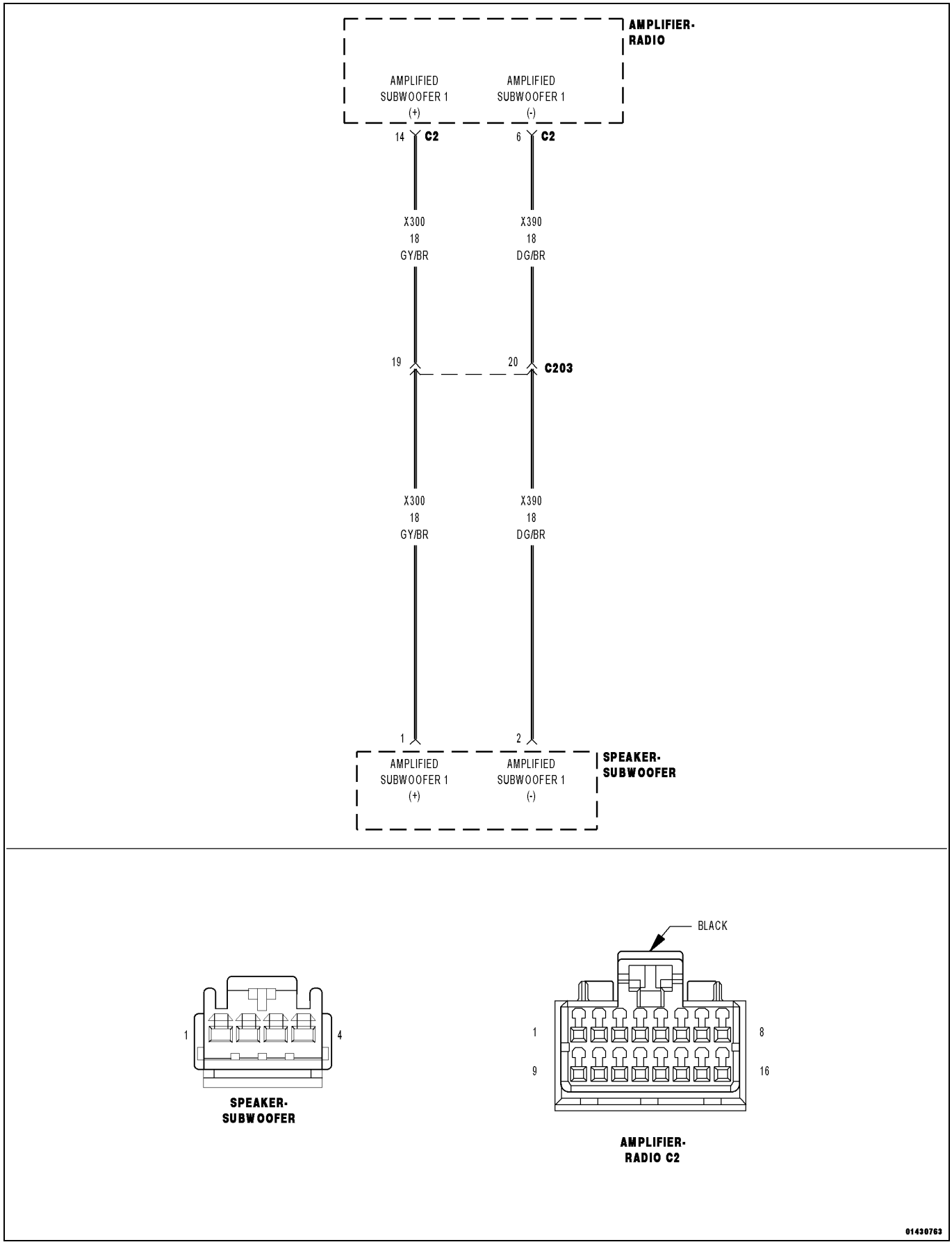

For a complete wiring diagram, **refer to the Wiring Information**.

- **When Monitored:**
  With the ignition on.
- **Set Condition:**
  The Amplifier detects a shorted to ground condition on the speaker output circuit.

Possible Causes
(X300) AMPLIFIED SUBWOOFER 1 (+) CIRCUIT SHORTED TO GROUND
(X390) AMPLIFIED SUBWOOFER 1 (-) CIRCUIT SHORTED TO GROUND
AMPLIFIED SUBWOOFER SPEAKER
AMPLIFIER

1. CHECK FOR AN INTERMITTENT CONDITION

1. Turn the ignition on and open one of the front doors.

NOTE: A front door must remain open whenever checking or erasing Amplifier DTCs.

2. Using the scan tool, record and erase the Amplifier DTCs.
3. Cycle the ignition switch from on to off, wait five seconds and then back to on.
4. Turn the Radio on and set the volume to 20.
5. Adjust the speakers to the rear and center.
6. Using the scan tool, read the active Amplifier DTCs.

Does the scan tool display active: B147F-CHANNEL 7 AUDIO SPEAKER OUTPUT CIRCUIT LOW?

Yes

- Go To 2

No

- Test complete, the condition or conditions that originally set this DTC are not present at this time. Using the wiring diagrams as a guide, check all related splices and connectors for signs of water intrusion, corrosion, pushed out or bent terminals and correct pin tension.
- Perform the BODY VERIFICATION TEST. (Refer to 28 - DTC-Based Diagnostics/MODULE, Totally Integrated Power (TIPM) - Standard Procedure).

2. CHECK THE SUBWOOFER SPEAKER

1. Make sure one of the front doors is still open.
2. Using the scan tool, erase the DTCs.
3. Turn the ignition off.
4. Disconnect the Subwoofer Speaker harness connector.
5. Turn the ignition on.
6. Turn the radio on and set the volume to 25.
7. Using the scan tool, read the active Amplifier DTCs.

Does the scan tool display active: B147F-CHANNEL 7 OUTPUT CIRCUIT LOW?

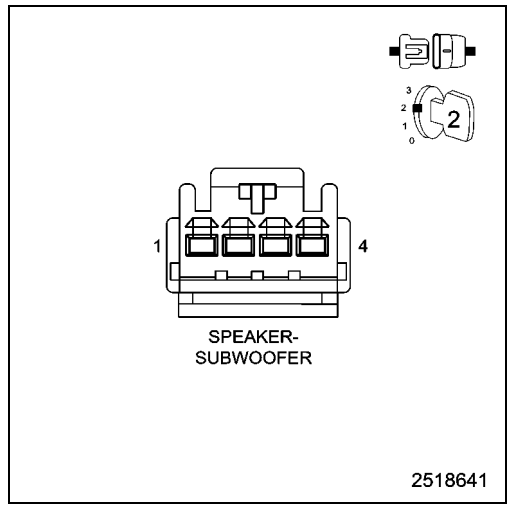

Yes

- Go To 3

No

- Replace the Subwoofer Speaker.
- Perform the BODY VERIFICATION TEST. (Refer to 28 - DTC-Based Diagnostics/MODULE, Totally Integrated Power (TIPM) - Standard Procedure).

3. CHECK THE (X300) AMPLIFIED SUBWOOFER 1 (+) CIRCUIT FOR A SHORT TO GROUND

1. Disconnect the Amplifier C2 harness connector.
2. Disconnect the Subwoofer Speaker harness connector.
3. Measure the resistance between ground and the (X300) Amplified Subwoofer 1 (+) circuit.

Is the resistance below 10K Ohms?

Yes

- Repair the (X300) Amplified Subwoofer 1 (+) circuit for a short to ground.
- Perform the BODY VERIFICATION TEST. (Refer to 28 - DTC-Based Diagnostics/MODULE, Totally Integrated Power (TIPM) - Standard Procedure).

No

- Go To 4

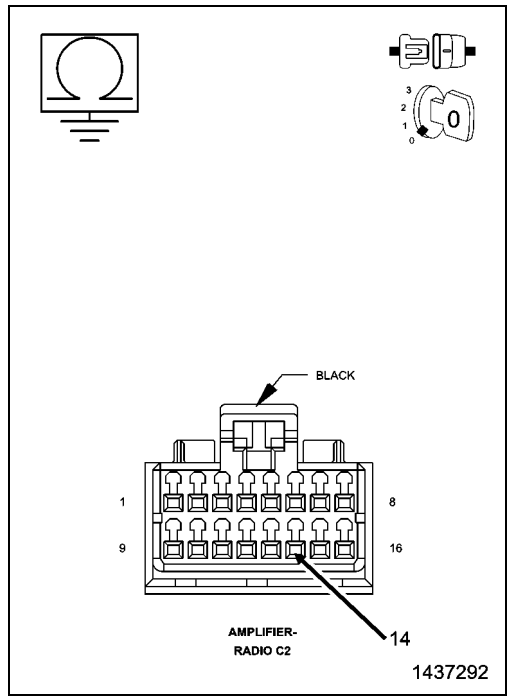

4. CHECK THE (X390) AMPLIFIED SUBWOOFER 1 (-) CIRCUIT FOR A SHORT TO GROUND

1. Measure the resistance between ground and the (X390) Amplified Subwoofer 1 (-) circuit.

Is the resistance below 10K Ohms?

Yes

- Repair the (X390) Amplified Subwoofer 1 (-) circuit for a short to ground.
- Perform the BODY VERIFICATION TEST. (Refer to 28 - DTC-Based Diagnostics/MODULE, Totally Integrated Power (TIPM) - Standard Procedure).

No

- Replace the Amplifier in accordance with the Service Information.
- Perform the BODY VERIFICATION TEST. (Refer to 28 - DTC-Based Diagnostics/MODULE, Totally Integrated Power (TIPM) - Standard Procedure).

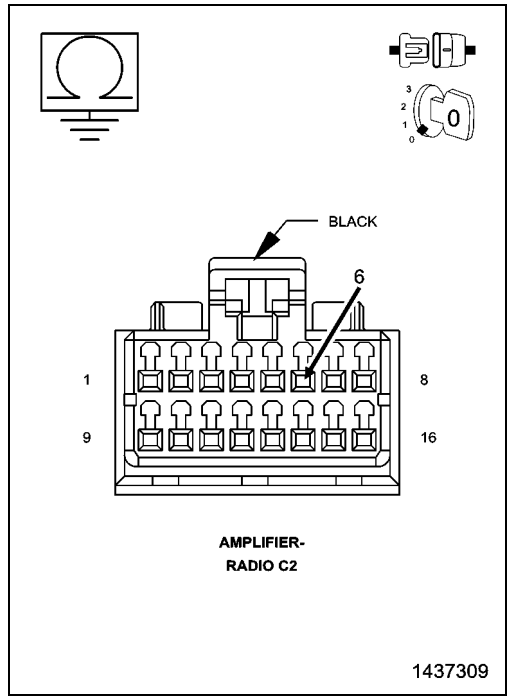

B1480-CHANNEL 7 AUDIO SPEAKER OUTPUT CIRCUIT HIGH

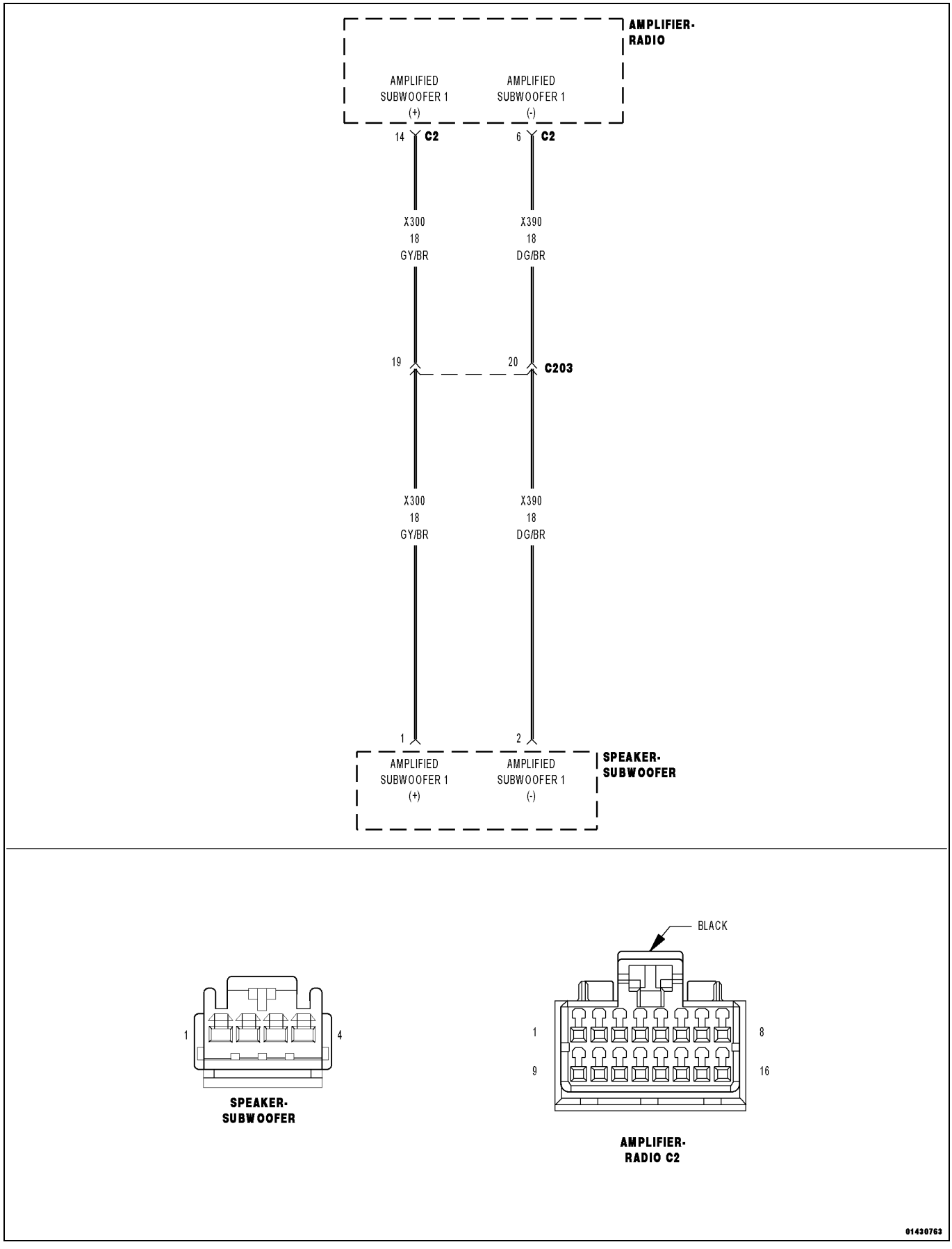

For a complete wiring diagram, **refer to the Wiring Information**.

- **When Monitored:**
  With the ignition on.
- **Set Condition:**
  The Amplifier detects a short to battery condition on the output circuit.

Possible Causes
(X300) AMPLIFIED SUBWOOFER 1 (+) CIRCUIT SHORTED TO VOLTAGE
(X390) AMPLIFIED SUBWOOFER 1 (-) CIRCUIT SHORTED TO VOLTAGE
AMPLIFIER

1. CHECK FOR AN INTERMITTENT CONDITION

1. Turn the ignition on and open one of the front doors.

NOTE: A front door must remain open whenever checking or erasing Amplifier DTCs.

2. With the scan tool, record and erase the Amplifier DTCs.
3. Cycle the ignition switch from on to off, wait five seconds and then back to on.
4. Turn the Radio on and set the volume to 20.
5. Adjust the speakers to the rear and center.
6. With the scan tool, read the active Amplifier DTCs.

Does the scan tool display active: B1480-CHANNEL 7 AUDIO SPEAKER OUTPUT CIRCUIT HIGH?

Yes

- Go To 2

No

- Test complete, the condition or conditions that originally set this DTC are not present at this time. Using the wiring diagrams as a guide, check all related splices and connectors for signs of water intrusion, corrosion, pushed out or bent terminals and correct pin tension.
- Perform the BODY VERIFICATION TEST. (Refer to 28 - DTC-Based Diagnostics/MODULE, Totally Integrated Power (TIPM) - Standard Procedure).

2. CHECK FOR VOLTAGE ON THE (X300) AMPLIFIED SUBWOOFER 1 (+) CIRCUIT

1. Turn the ignition off.
2. Disconnect the Amplifier C2 harness connector.
3. Disconnect the Subwoofer Speaker harness connector.
4. Turn the ignition on.
5. Measure the voltage between the (X300) Amplified Subwoofer 1 (+) circuit and ground.

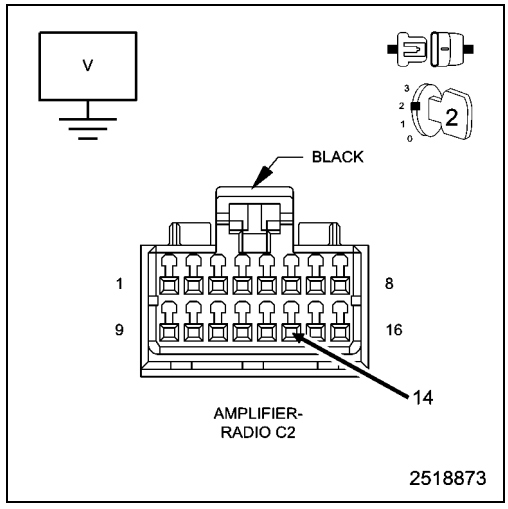

Is there any voltage present?

Yes

- Repair the (X300) Amplified Subwoofer 1 (+) circuit for a short to voltage.
- Perform the BODY VERIFICATION TEST. (Refer to 28 - DTC-Based Diagnostics/MODULE, Totally Integrated Power (TIPM) - Standard Procedure).

No

- Go To 3

3. CHECK FOR VOLTAGE ON THE (X390) AMPLIFIED SUBWOOFER 1 (-) CIRCUIT

1. Measure the voltage between the (X390) Amplified Subwoofer 1 (-) circuit and ground.

Is there any voltage present?

Yes

- Repair the (X390) Amplified Subwoofer 1 (-) circuit for a short to voltage.
- Perform the BODY VERIFICATION TEST. (Refer to 28 - DTC-Based Diagnostics/MODULE, Totally Integrated Power (TIPM) - Standard Procedure).

No

- Replace the Amplifier in accordance with the Service Information.
- Perform the BODY VERIFICATION TEST. (Refer to 28 - DTC-Based Diagnostics/MODULE, Totally Integrated Power (TIPM) - Standard Procedure).

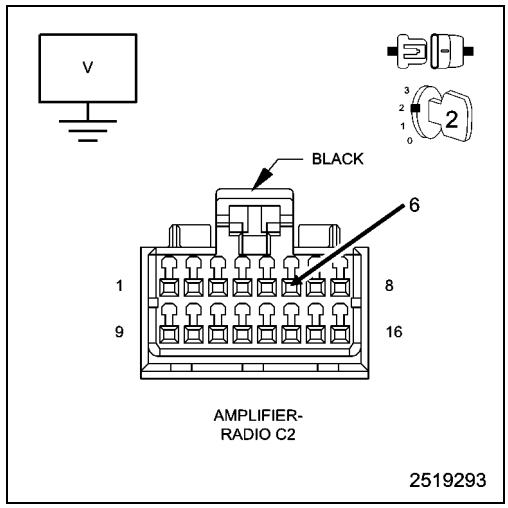

B1481-CHANNEL 7 AUDIO SPEAKER OUTPUT CIRCUIT OPEN

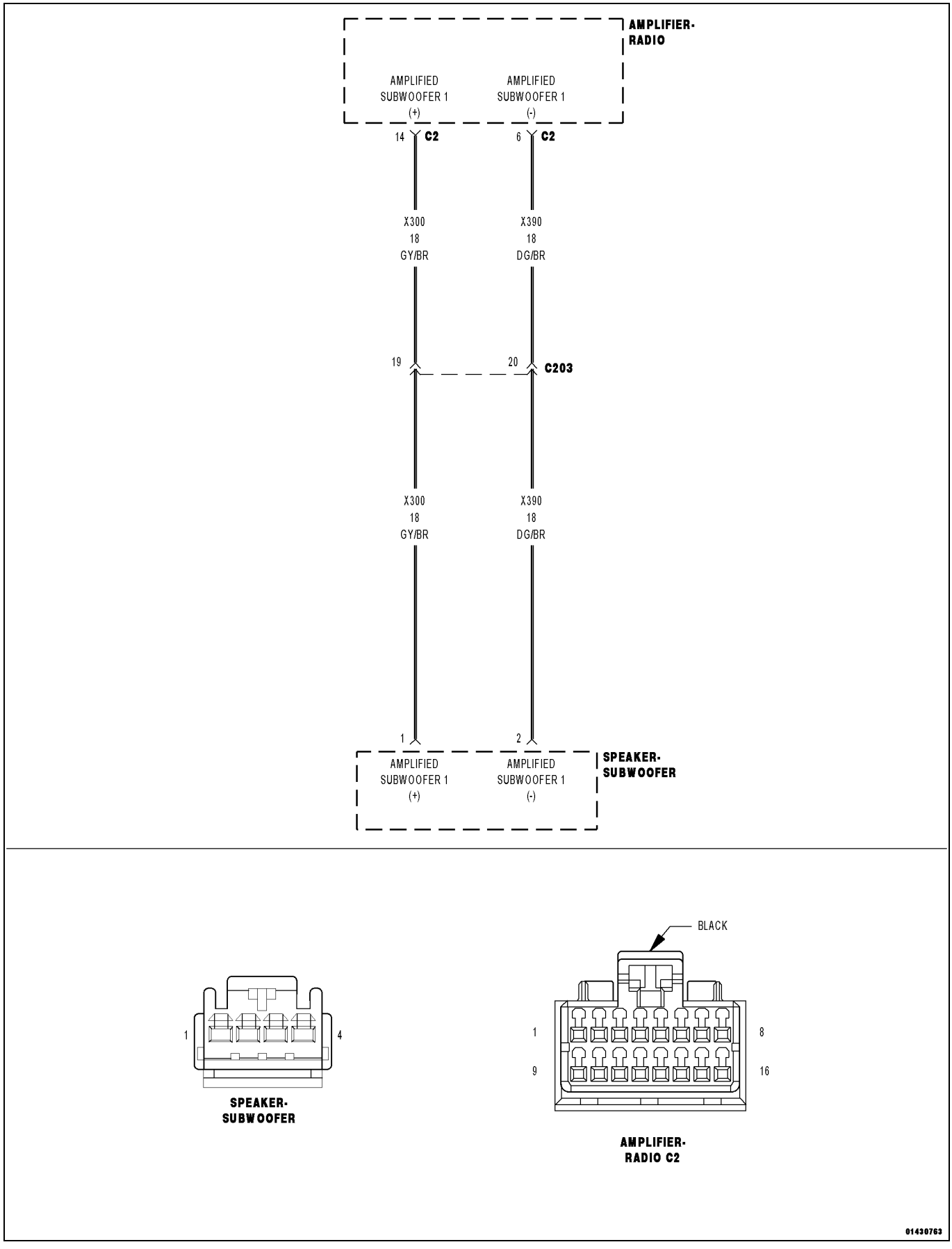

For a complete wiring diagram, **refer to the Wiring Information**.

- **When Monitored:**
  Amplifier Bus wake-up. Amplifier reset with scan tool.
- **Set Condition:**
  The Amplifier detects an open condition on the speaker output circuit.

Possible Causes
(X300) AMPLIFIED SUBWOOFER 1 (+) CIRCUIT OPEN
(X390) AMPLIFIED SUBWOOFER 1 (-) CIRCUIT OPEN
AMPLIFIED SUBWOOFER SPEAKER
AMPLIFIER

1. CHECK FOR AN INTERMITTENT CONDITION

1. Turn the ignition on and open one of the front doors.

NOTE: A front door must remain open whenever checking or erasing Amplifier DTCs.

2. With the scan tool, record and erase the Amplifier DTCs.
3. Cycle the ignition switch from on to off, wait five seconds and then back to on.
4. Turn the Radio on and set the volume to 20.
5. Adjust the speakers to the rear and center.
6. With the scan tool, read the active Amplifier DTCs.

Does the scan tool display active: B1481-CHANNEL 7 AUDIO SPEAKER OUTPUT CIRCUIT OPEN?

Yes

- Go To 2

No

- Test complete, the condition or conditions that originally set this DTC are not present at this time. Using the wiring diagrams as a guide, check all related splices and connectors for signs of water intrusion, corrosion, pushed out or bent terminals and correct pin tension.
- Perform the BODY VERIFICATION TEST. (Refer to 28 - DTC-Based Diagnostics/MODULE, Totally Integrated Power (TIPM) - Standard Procedure).

2. CHECK THE OPERATION OF THE SUBWOOFER SPEAKER

1. Turn the ignition off.
2. Disconnect the Subwoofer Speaker harness connector.
3. Turn the ignition on.
4. Turn the radio on and turn the volume to 25.
5. Adjust the speakers to the rear and center.
6. With a voltmeter set to read in A/C voltage, measure the voltage of the Subwoofer Speaker circuits in the Subwoofer Speaker harness connector.

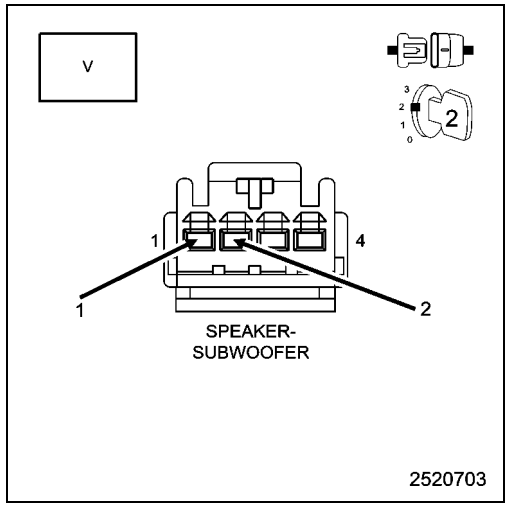

Is the voltage present greater than 1 volt?

Yes

- Replace the Subwoofer Speaker in accordance with the Service Information.
- Perform the BODY VERIFICATION TEST. (Refer to 28 - DTC-Based Diagnostics/MODULE, Totally Integrated Power (TIPM) - Standard Procedure).

No

- Go To 3

3. CHECK THE (X300) AMPLIFIED SUBWOOFER 1 (+) CIRCUIT FOR AN OPEN

1. Turn the ignition off.
2. Disconnect the Amplifier C2 harness connector.
3. Measure the resistance of the (X300) Amplified Subwoofer 1 (+) circuit between the Amplifier C2 harness connector and the Subwoofer Speaker harness connector.

Is the resistance below 2.0 Ohms?

Yes

- Go To 4

No

- Repair the (X300) Amplified Subwoofer 1 (+) circuit for an open.
- Perform the BODY VERIFICATION TEST. (Refer to 28 - DTC-Based Diagnostics/MODULE, Totally Integrated Power (TIPM) - Standard Procedure).

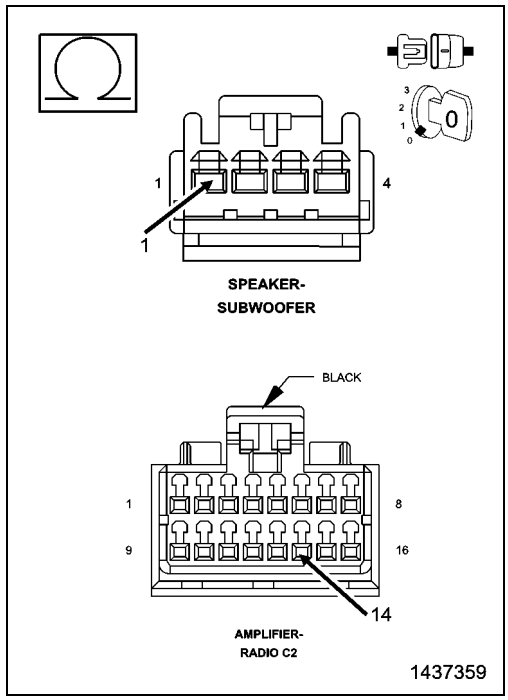

4. CHECK THE (X390) AMPLIFIED SUBWOOFER 1 (-) CIRCUIT FOR AN OPEN

1. Measure the resistance of the (X390) Amplified Subwoofer 1 (-) circuit between the Amplifier C2 harness connector and the Subwoofer Speaker harness connector.

Is the resistance below 2.0 Ohms?

Yes

- Replace the Amplifier in accordance with the Service Information.
- Perform the BODY VERIFICATION TEST. (Refer to 28 - DTC-Based Diagnostics/MODULE, Totally Integrated Power (TIPM) - Standard Procedure).

No

- Repair the (X390) Amplified Subwoofer 1 (-) circuit for an open.
- Perform the BODY VERIFICATION TEST. (Refer to 28 - DTC-Based Diagnostics/MODULE, Totally Integrated Power (TIPM) - Standard Procedure).

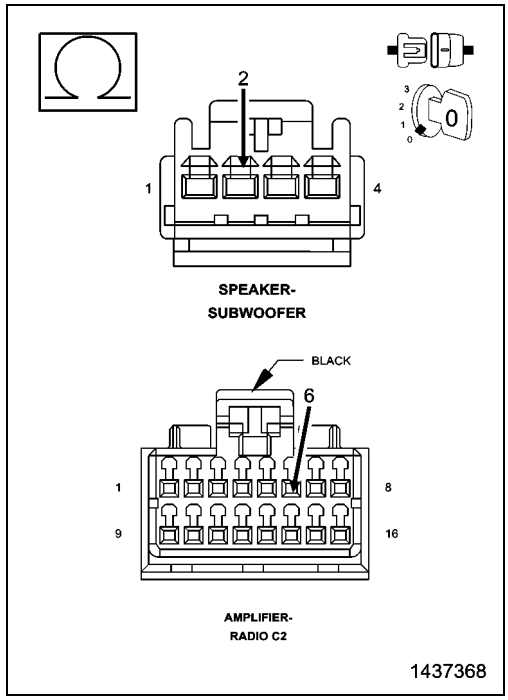

B1482-CHANNEL 7 AUDIO SPEAKER OUTPUT CIRCUIT SHORTED TOGETHER

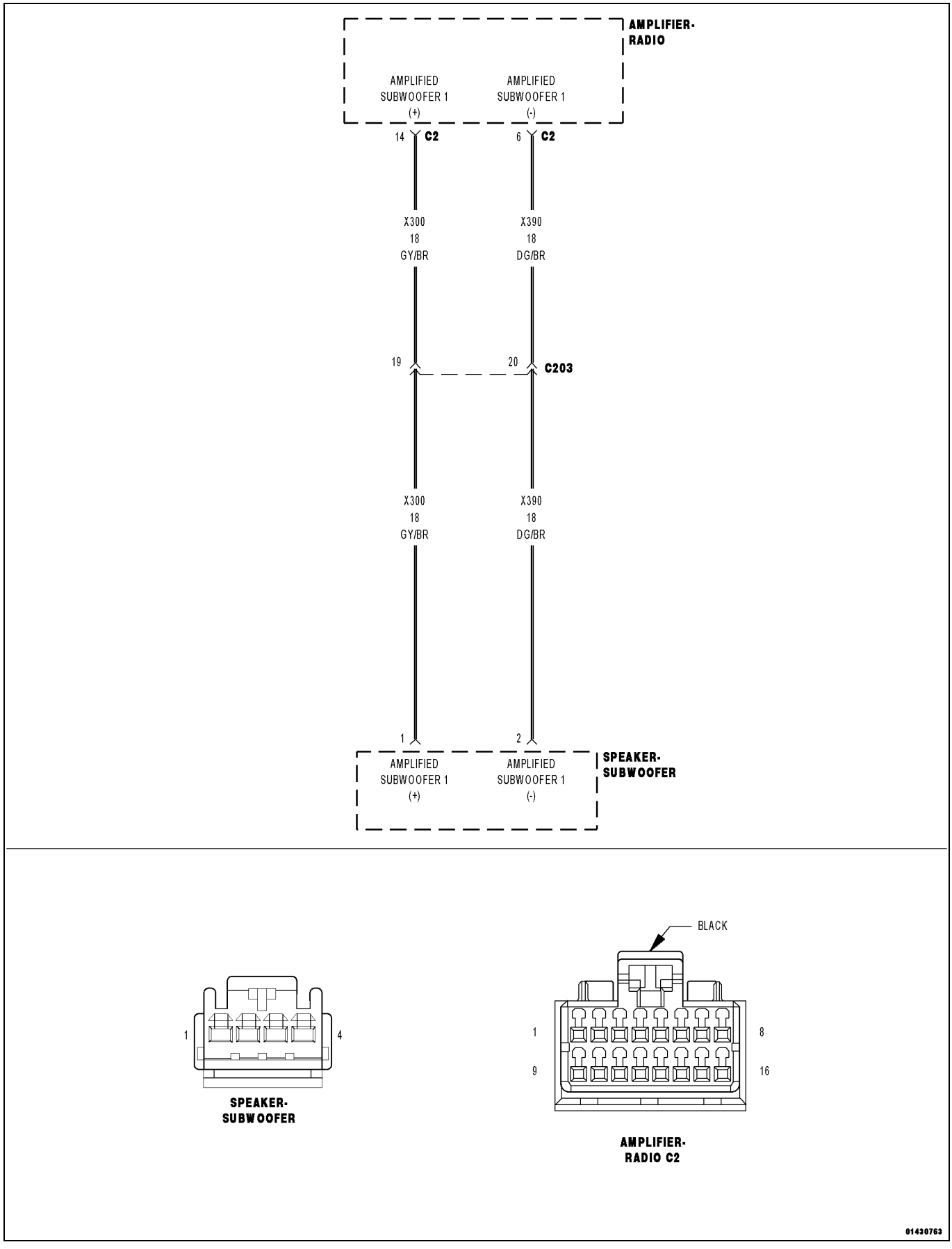

For a complete wiring diagram, **refer to the Wiring Information**.

- **When Monitored:**
  With the ignition on. Radio volume at 25 or higher.
- **Set Condition:**
  The Amplifier detects that the output circuits are shorted together.

Possible Causes
(X300) AMPLIFIED SUBWOOFER 1 (+) CIRCUIT SHORTED TO THE (X390) AMPLIFIED SUBWOOFER 1 (-) CIRCUIT
AMPLIFIED SUBWOOFER SPEAKER
AMPLIFIER

1. CHECK FOR AN INTERMITTENT CONDITION

1. Turn the ignition on and open one of the front doors.

NOTE: A front door must remain open whenever checking or erasing Amplifier DTCs.

2. With the scan tool, record and erase the Amplifier DTCs.
3. Cycle the ignition switch from on to off, wait five seconds and then back to on.
4. Turn the Radio on and set the volume to 20.
5. Adjust the speakers to the rear and center.
6. With the scan tool, read the active Amplifier DTCs.

Does the scan tool display active: B1482-CHANNEL 7 AUDIO SPEAKER OUTPUT CIRCUIT SHORTED TOGETHER?

Yes

- Go To 2

No

- Test complete, the condition or conditions that originally set this DTC are not present at this time. Using the wiring diagrams as a guide, check all related splices and connectors for signs of water intrusion, corrosion, pushed out or bent terminals and correct pin tension.
- Perform the BODY VERIFICATION TEST. (Refer to 28 - DTC-Based Diagnostics/MODULE, Totally Integrated Power (TIPM) - Standard Procedure).

2. CHECK THE OPERATION OF THE SUBWOOFER SPEAKER

1. Turn the ignition off.
2. Disconnect the Subwoofer Speaker.
3. Measure the resistance of the speaker between the two terminals.

NOTE: The graphic shows the connector for reference only. Measure between the speaker terminals.

Is the resistance of the speaker less than 1 Ohm?

Yes

- Replace the Subwoofer Speaker in accordance with the Service Information.
- Perform the BODY VERIFICATION TEST. (Refer to 28 - DTC-Based Diagnostics/MODULE, Totally Integrated Power (TIPM) - Standard Procedure).

No

- Go To 3

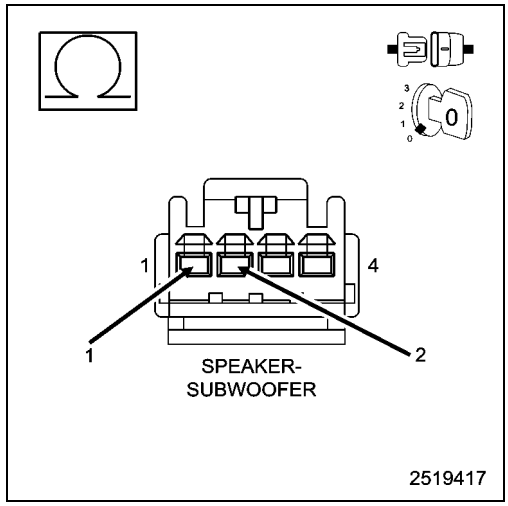

3. CHECK THE (X300) AMPLIFIED SUBWOOFER 1 (+) CIRCUIT, AND THE (X390) AMPLIFIED SUBWOOFER 1 (-) CIRCUITS FOR A SHORT TOGETHER

1. Turn the ignition off.
2. Disconnect the Amplifier C2 harness connector.
3. Measure the resistance between the (X300) Amplified Subwoofer 1 (+) circuit, and the (X390) Amplified Subwoofer 1 (-) circuit.

Is the resistance below 10K Ohms?

Yes

- Repair the (X300) Amplified Subwoofer 1 (+) circuit, and the (X390) Amplified Subwoofer 1 (-) circuit for a short together.
- Perform the BODY VERIFICATION TEST. (Refer to 28 - DTC-Based Diagnostics/MODULE, Totally Integrated Power (TIPM) - Standard Procedure).

No

- Replace the Amplifier in accordance with the Service Information.
- Perform the BODY VERIFICATION TEST. (Refer to 28 - DTC-Based Diagnostics/MODULE, Totally Integrated Power (TIPM) - Standard Procedure).

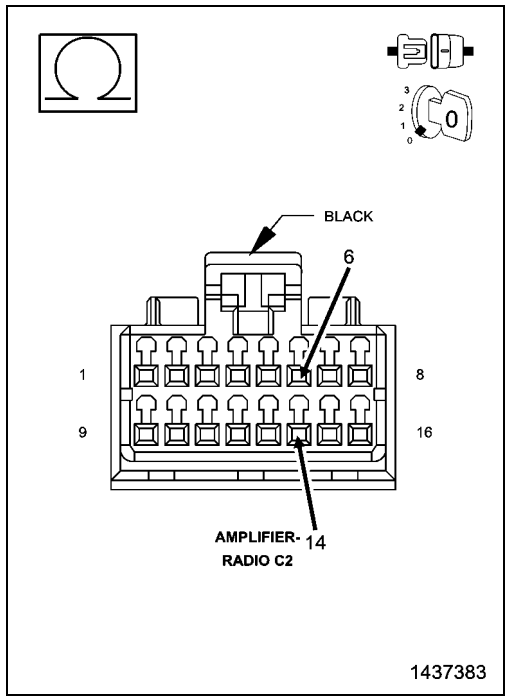

B1483-CHANNEL 8 AUDIO SPEAKER OUTPUT CIRCUIT/PERFORMANCE

For a complete wiring diagram, **refer to the Wiring Information**.

- **When Monitored:**

  With the ignition on.
- **Set Condition:**

  This Diagnostic Trouble Code (DTC) sets if a Direct Current (DC) offset occurs on the output channel, the amplifier shall set a DTC after a maturity rate of four to six seconds.

Possible Causes
AMPLIFIER

1. CHECK FOR AN INTERMITTENT CONDITION

1. Turn the ignition on and open one of the front doors.

NOTE: A front door must remain open whenever checking or erasing Amplifier DTCs.

2. With the scan tool, record and erase the Amplifier DTCs.
3. Cycle the ignition switch from on to off, wait five seconds and then back to on.
4. Turn the Radio on and set the volumn to 20.
5. Adjust the speakers to the front and center.
6. With the scan tool, read the active Amplifier DTCs.

Does the scan tool display active: B1483-CHANNEL 8 AUDIO SPEAKER OUTPUT CIRCUIT/PERFORMANCE?

Yes

- Replace the Amplifier in accordance with the Service Information.
- Perform the BODY VERIFICATION TEST. (Refer to 28 - DTC-Based Diagnostics/MODULE, Totally Integrated Power (TIPM) - Standard Procedure).

No

- Test complete, the condition or conditions that originally set this DTC are not present at this time. Using the wiring diagrams as a guide, check all related splices and connectors for signs of water intrusion, corrosion, pushed out or bent terminals and correct pin tension. .
- Perform the BODY VERIFICATION TEST. (Refer to 28 - DTC-Based Diagnostics/MODULE, Totally Integrated Power (TIPM) - Standard Procedure).

B1484-CHANNEL 8 AUDIO SPEAKER OUTPUT CIRCUIT LOW

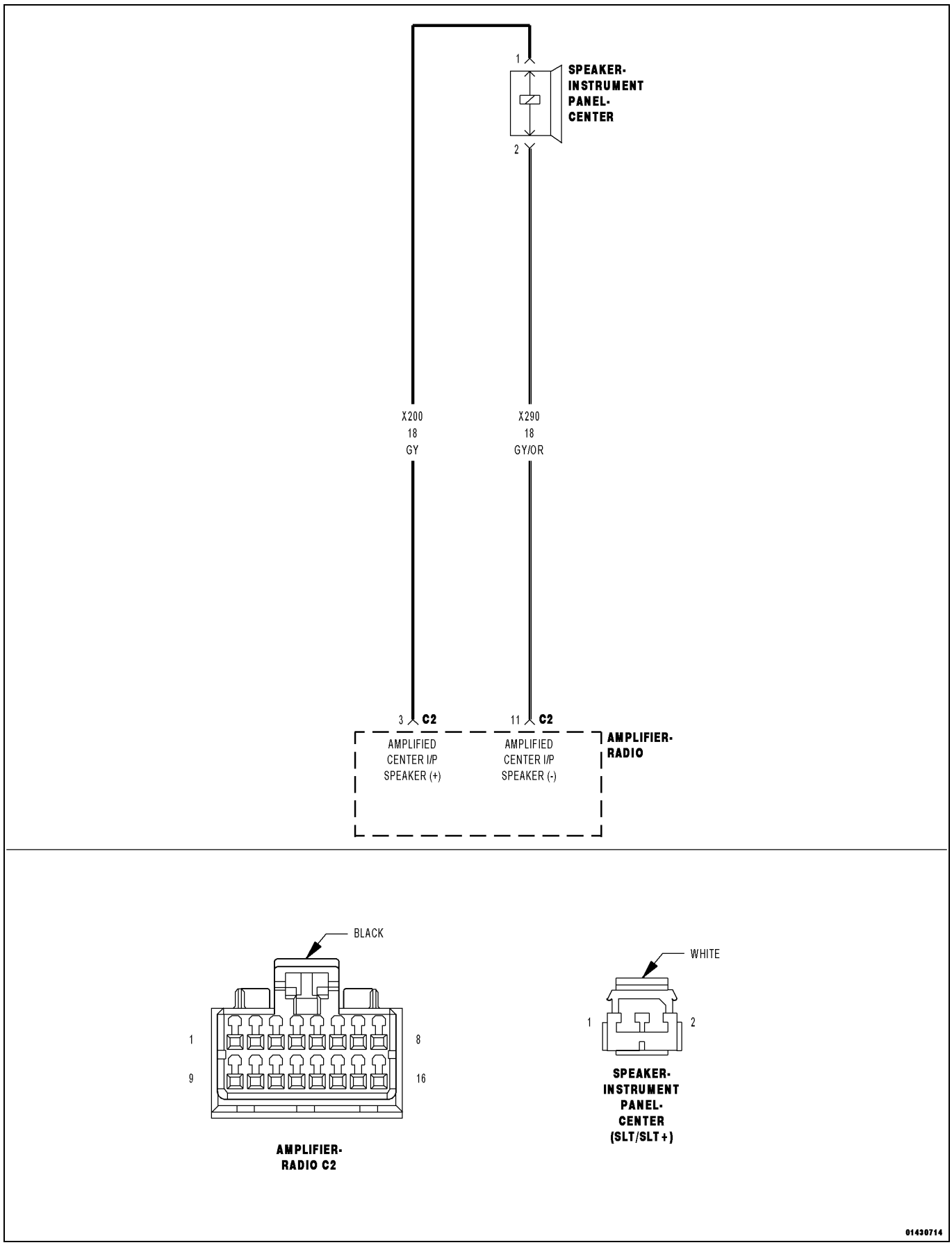

For a complete wiring diagram,**refer to the Wiring Information**.

- **When Monitored:**
  With the ignition on.
- **Set Condition:**
  The Amplifier detects a shorted to ground condition on the speaker output circuit.

Possible Causes
(X200) AMPLIFIED CENTER I/P SPEAKER (+) CIRCUIT SHORTED TO GROUND
(X290) AMPLIFIED CENTER I/P SPEAKER (-) CIRCUIT SHORTED TO GROUND
CENTER I/P SPEAKER
AMPLIFIER

1. CHECK FOR AN INTERMITTENT CONDITION

1. Turn the ignition on and open one of the front doors.

NOTE: A front door must remain open whenever checking or erasing Amplifier DTCs.

2. Using the scan tool, record and erase the Amplifier DTCs.
3. Cycle the ignition switch from on to off, wait five seconds and then back to on.
4. Turn the Radio on and set the volume to 20.
5. Adjust the speakers to the front and center.
6. Using the scan tool, read the active Amplifier DTCs.

Does the scan tool display active: B1484-CHANNEL 8 AUDIO SPEAKER OUTPUT CIRCUIT LOW?

Yes

- Go To 2

No

- Test complete, the condition or conditions that originally set this DTC are not present at this time. Using the wiring diagrams as a guide, check all related splices and connectors for signs of water intrusion, corrosion, pushed out or bent terminals and correct pin tension.
- Perform the BODY VERIFICATION TEST. (Refer to 28 - DTC-Based Diagnostics/MODULE, Totally Integrated Power (TIPM) - Standard Procedure).

2. CENTER INSTRUMENT PANEL (I/P) SPEAKER

1. Make sure one of the front doors is still open.
2. Using the scan tool, erase the DTCs.
3. Turn the ignition off.
4. Disconnect the Center I/P Speaker harness connector.
5. Turn the ignition on.
6. Turn the radio on and set the volume to 25.
7. Using the scan tool, read the active Amplifier DTCs.

Does the scan tool display active: B1484-CHANNEL 8 AUDIO SPEAKER OUTPUT CIRCUIT LOW?

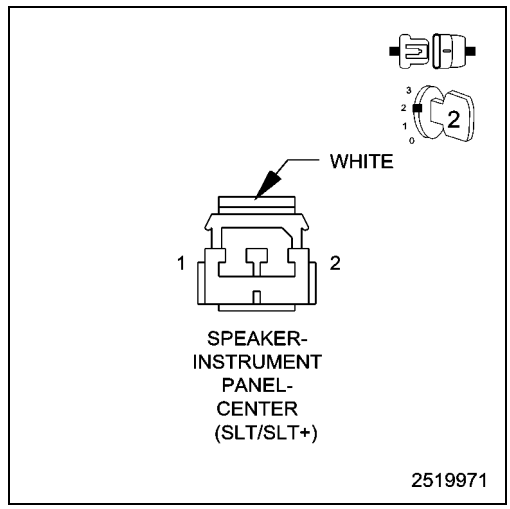

Yes

- Go To 3

No

- Replace the Center Instrument Panel Speaker.
- Perform the BODY VERIFICATION TEST. (Refer to 28 - DTC-Based Diagnostics/MODULE, Totally Integrated Power (TIPM) - Standard Procedure).

3. CHECK THE (X200) AMPLIFIED CENTER I/P SPEAKER (+) CIRCUIT FOR A SHORT TO GROUND

1. Turn the ignition off.
2. Disconnect the Amplifier C2 harness connector.
3. Measure the resistance between ground and the (X200) Amplified Center I/P Speaker (+) circuit.

Is the resistance below 10K Ohms?

Yes

- Repair the (X200) Amplified Center I/P Speaker (+) circuit for a short to ground.
- Perform the BODY VERIFICATION TEST. (Refer to 28 - DTC-Based Diagnostics/MODULE, Totally Integrated Power (TIPM) - Standard Procedure).

No

- Go To 4

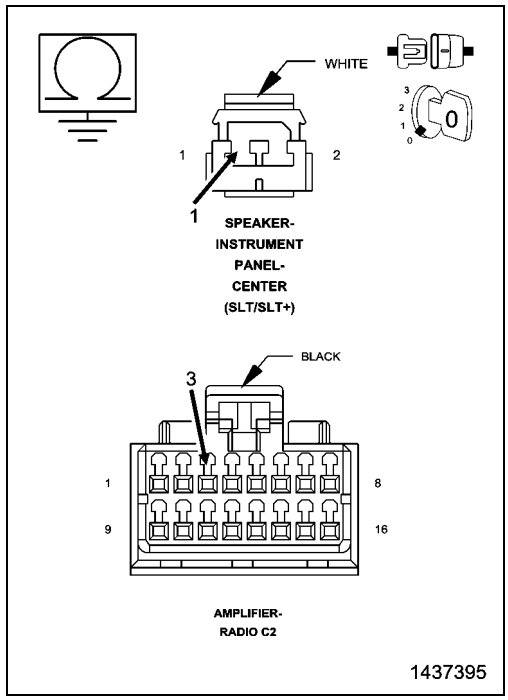

4. CHECK THE (X290) AMPLIFIED CENTER I/P SPEAKER (-) CIRCUIT FOR A SHORT TO GROUND

1. Measure the resistance between ground and the (X290) Amplified Center I/P Speaker (-) circuit.

Is the resistance below 10K Ohms?

Yes

- Repair the (X290) Amplified Center I/P Speaker (-) for a short to ground.
- Perform the BODY VERIFICATION TEST. (Refer to 28 - DTC-Based Diagnostics/MODULE, Totally Integrated Power (TIPM) - Standard Procedure).

No

- Replace the Amplifier in accordance with the Service Information.
- Perform the BODY VERIFICATION TEST. (Refer to 28 - DTC-Based Diagnostics/MODULE, Totally Integrated Power (TIPM) - Standard Procedure).

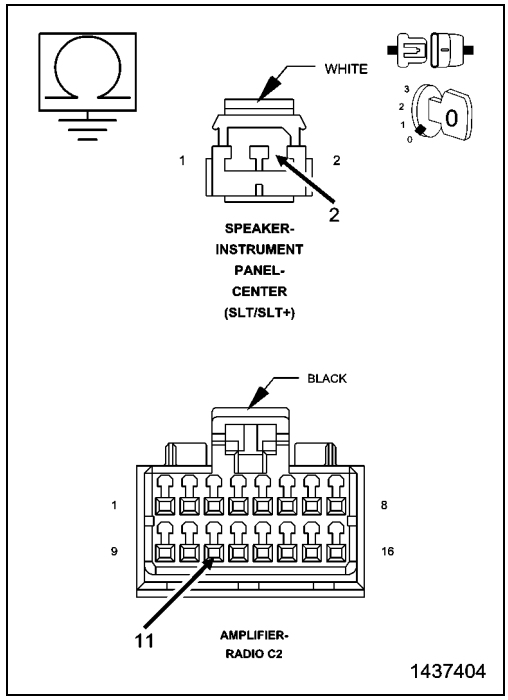

B1485-CHANNEL 8 AUDIO SPEAKER OUTPUT CIRCUIT HIGH

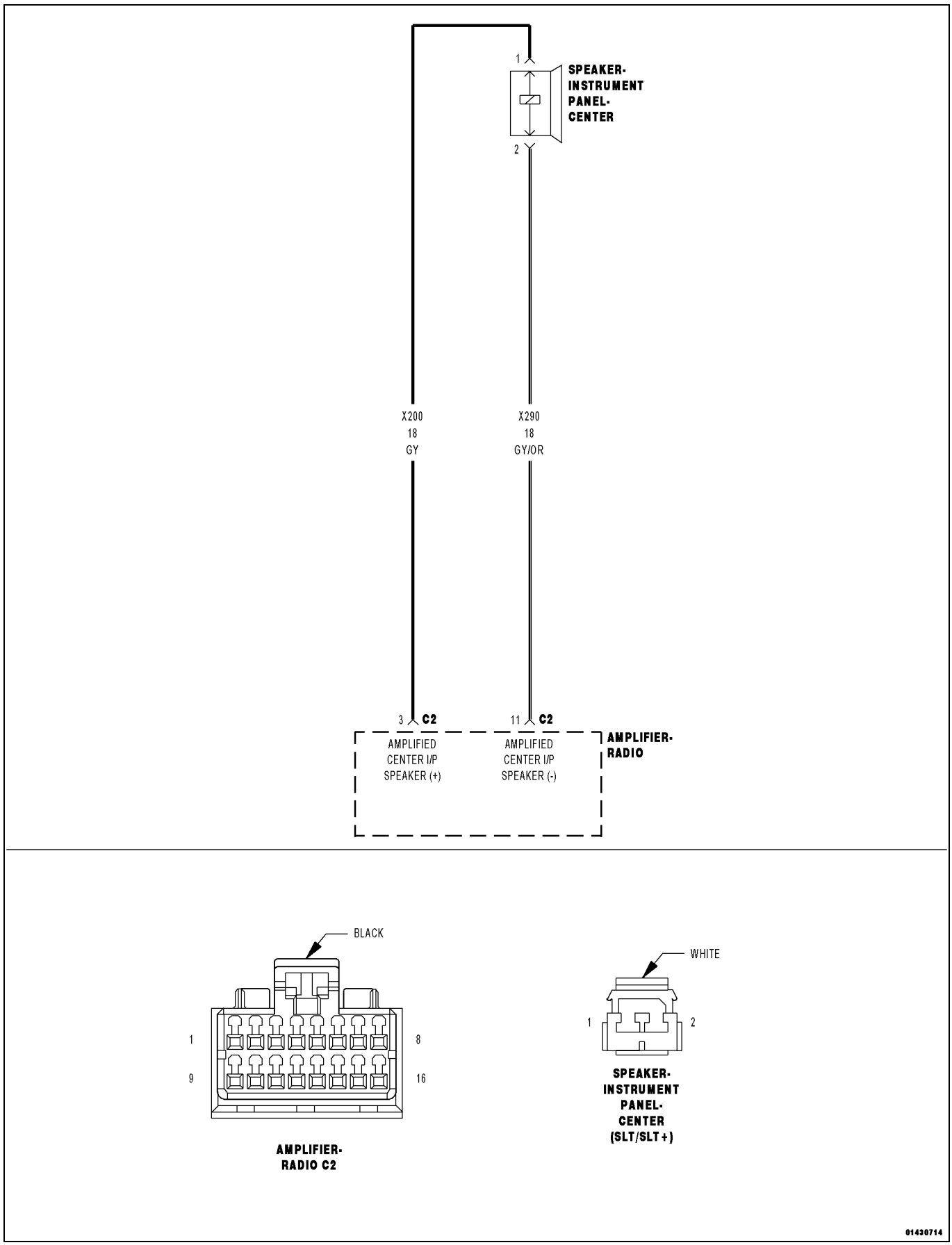

For a complete wiring diagram, **refer to the Wiring Information**.

- **When Monitored:**
  With the ignition on.
- **Set Condition:**
  The Amplifier detects a short to battery condition on the output circuit.

Possible Causes
(X200) AMPLIFIED CENTER I/P SPEAKER (+) CIRCUIT SHORTED TO VOLTAGE
(X290) AMPLIFIED CENTER I/P SPEAKER (-) CIRCUIT SHORTED TO VOLTAGE
AMPLIFIER

1. CHECK FOR AN INTERMITTENT CONDITION

1. Turn the ignition on and open one of the front doors.

NOTE: A front door must remain open whenever checking or erasing Amplifier DTCs.

2. With the scan tool, record and erase the Amplifier DTCs.
3. Cycle the ignition switch from on to off, wait five seconds and then back to on.
4. Turn the Radio on and set the volume to 20.
5. Adjust the speakers to the front and center.
6. With the scan tool, read the active Amplifier DTCs.

Does the scan tool display active: B1485-CHANNEL 8 AUDIO SPEAKER OUTPUT CIRCUIT HIGH?

Yes

- Go To 2

No

- Test complete, the condition or conditions that originally set this DTC are not present at this time. Using the wiring diagrams as a guide, check all related splices and connectors for signs of water intrusion, corrosion, pushed out or bent terminals and correct pin tension.
- Perform the BODY VERIFICATION TEST. (Refer to 28 - DTC-Based Diagnostics/MODULE, Totally Integrated Power (TIPM) - Standard Procedure).

2. CHECK FOR VOLTAGE ON THE (X200) AMPLIFIED CENTER I/P SPEAKER (+) CIRCUIT

1. Turn the ignition off.
2. Disconnect the Amplifier C2 harness connector.
3. Disconnect the Center I/P Speaker harness connector.
4. Turn the ignition on.
5. Measure for voltage between the (X200) Amplified Center I/P Speaker (+) circuit and ground.

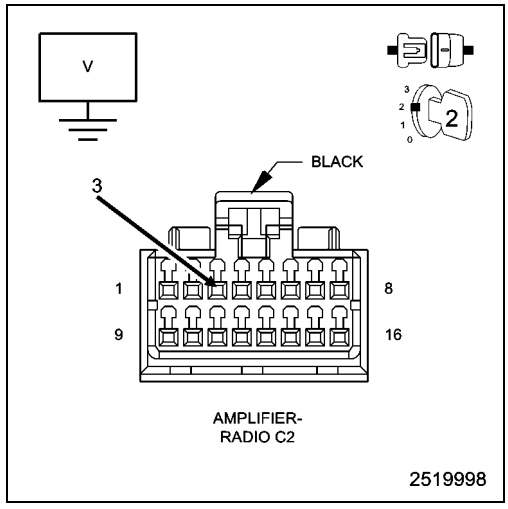

Is there any voltage present?

Yes

- Repair the (X200) Amplified Center I/P Speaker (+) circuit for a short to voltage.
- Perform the BODY VERIFICATION TEST. (Refer to 28 - DTC-Based Diagnostics/MODULE, Totally Integrated Power (TIPM) - Standard Procedure).

No

- Go To 3

3. CHECK FOR VOLTAGE ON THE (X290) AMPLIFIED CENTER I/P SPEAKER (-) CIRCUIT

1. Measure for voltage between the (X290) Amplified Center I/P Speaker (-) circuit and ground.

Is there any voltage present?

Yes

- Repair the (X290) Amplified Center I/P Speaker (-) circuit for a short to voltage.
- Perform the BODY VERIFICATION TEST. (Refer to 28 - DTC-Based Diagnostics/MODULE, Totally Integrated Power (TIPM) - Standard Procedure).

No

- Replace the Amplifier in accordance with the Service Information.
- Perform the BODY VERIFICATION TEST. (Refer to 28 - DTC-Based Diagnostics/MODULE, Totally Integrated Power (TIPM) - Standard Procedure).

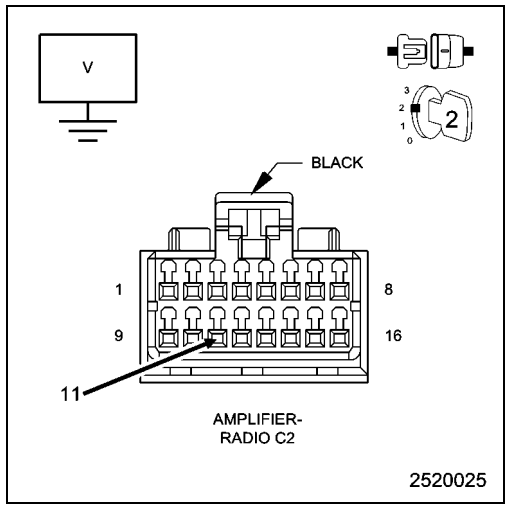

B1486-CHANNEL 8 AUDIO SPEAKER OUTPUT CIRCUIT OPEN

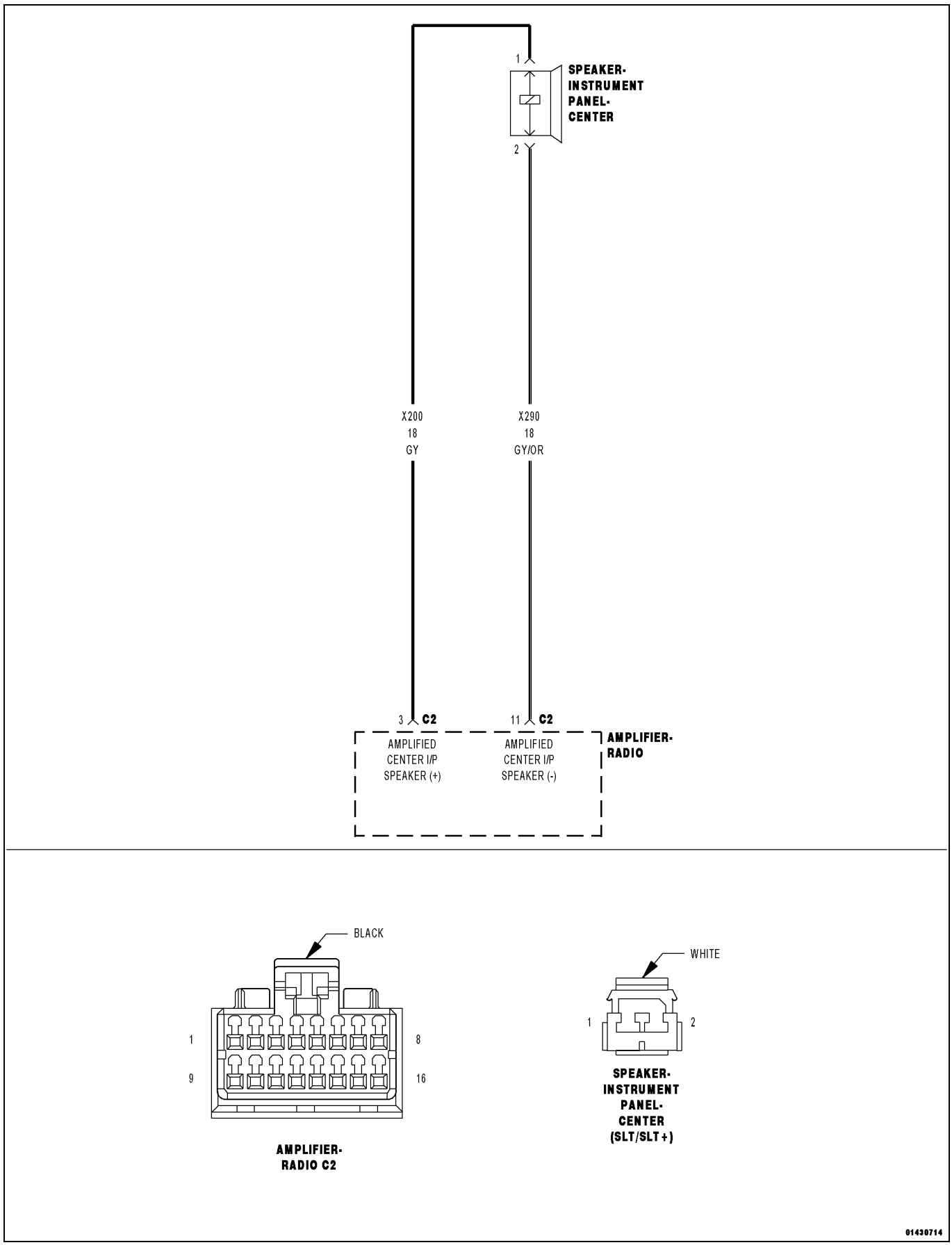

For a complete wiring diagram, **refer to the Wiring Information**.

- **When Monitored:**
  Amplifier Bus wake-up. Amplifier reset with scan tool.
- **Set Condition:**
  The Amplifier detects an open condition on the speaker output circuit.

Possible Causes
(X200) AMPLIFIED CENTER I/P SPEAKER (+) CIRCUIT OPEN
(X290) AMPLIFIED CENTER I/P SPEAKER (-) CIRCUIT OPEN
AMPLIFIED CENTER I/P SPEAKER
AMPLIFIER

1. CHECK FOR AN INTERMITTENT CONDITION

1. Turn the ignition on and open one of the front doors.

NOTE: A front door must remain open whenever checking or erasing Amplifier DTCs.

2. With the scan tool, record and erase the Amplifier DTCs.
3. Cycle the ignition switch from on to off, wait five seconds and then back to on.
4. Turn the Radio on and set the volume to 20.
5. Adjust the speakers to the front and center.
6. With the scan tool, read the active Amplifier DTCs.

Does the scan tool display active: B1486-CHANNEL 8 AUDIO SPEAKER OUTPUT CIRCUIT OPEN?

Yes

- Go To 2

No

- Test complete, the condition or conditions that originally set this DTC are not present at this time. Using the wiring diagrams as a guide, check all related splices and connectors for signs of water intrusion, corrosion, pushed out or bent terminals and correct pin tension.
- Perform the BODY VERIFICATION TEST. (Refer to 28 - DTC-Based Diagnostics/MODULE, Totally Integrated Power (TIPM) - Standard Procedure).

2. CHECK THE OPERATION OF THE CENTER I/P SPEAKER

1. Turn the ignition off.
2. Disconnect the Center I/P Speaker harness connector.
3. Turn the ignition on.
4. Turn the radio on and turn the volume to 25.
5. Adjust the speakers to the front and center.
6. With a voltmeter set to read in A/C voltage, measure the voltage of the Center I/P Speaker circuits in the Center I/P Speaker harness connector.

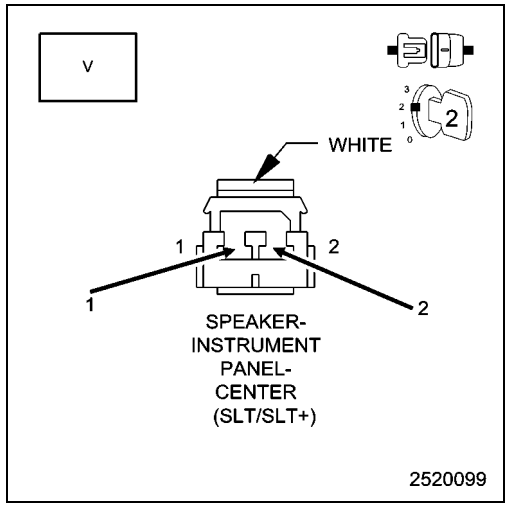

Is the voltage present greater than 1 volt?

Yes

- Replace the Center I/P Speaker in accordance with the Service Information.
- Perform the BODY VERIFICATION TEST. (Refer to 28 - DTC-Based Diagnostics/MODULE, Totally Integrated Power (TIPM) - Standard Procedure).

No

- Go To 3

3. CHECK THE (X200) AMPLIFIED CENTER I/P SPEAKER (+) CIRCUIT FOR AN OPEN

1. Turn the ignition off.
2. Disconnect the Amplifier C2 harness connector.
3. Measure the resistance of the (X200) Amplified Center I/P Speaker (+) circuit between the Amplifier C2 harness connector and the Center I/P Speaker harness connector.

Is the resistance below 2.0 Ohms?

Yes

- Go To 4

No

- Repair the (X200) Amplified Center I/P Speaker (+) circuit for an open.
- Perform the BODY VERIFICATION TEST. (Refer to 28 - DTC-Based Diagnostics/MODULE, Totally Integrated Power (TIPM) - Standard Procedure).

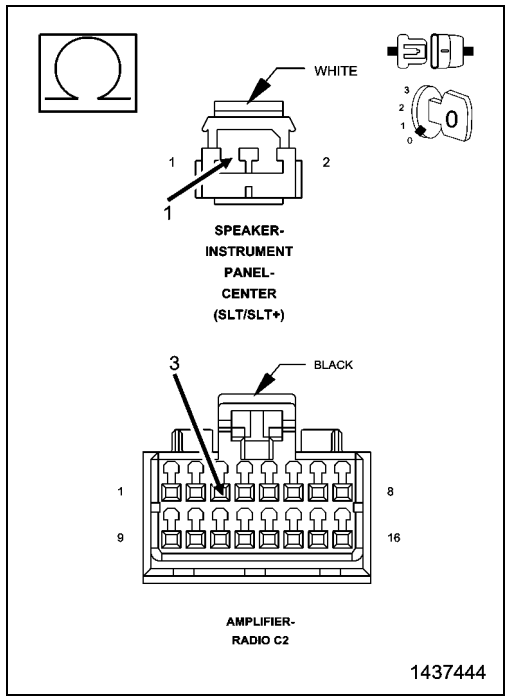

4. CHECK THE (X290) AMPLIFIED CENTER I/P SPEAKER (-) CIRCUIT FOR AN OPEN

1. Measure the resistance of the (X290) Amplified Center I/P Speaker (-) circuit between the Amplifier C2 harness connector and the Center I/P Speaker harness connector.

Is the resistance below 2.0 Ohms?

Yes

- Replace the Amplifier in accordance with the Service Information.
- Perform the BODY VERIFICATION TEST. (Refer to 28 - DTC-Based Diagnostics/MODULE, Totally Integrated Power (TIPM) - Standard Procedure).

No

- Repair the (X290) Amplified Center I/P Speaker (-) circuit for an open.
- Perform the BODY VERIFICATION TEST. (Refer to 28 - DTC-Based Diagnostics/MODULE, Totally Integrated Power (TIPM) - Standard Procedure).

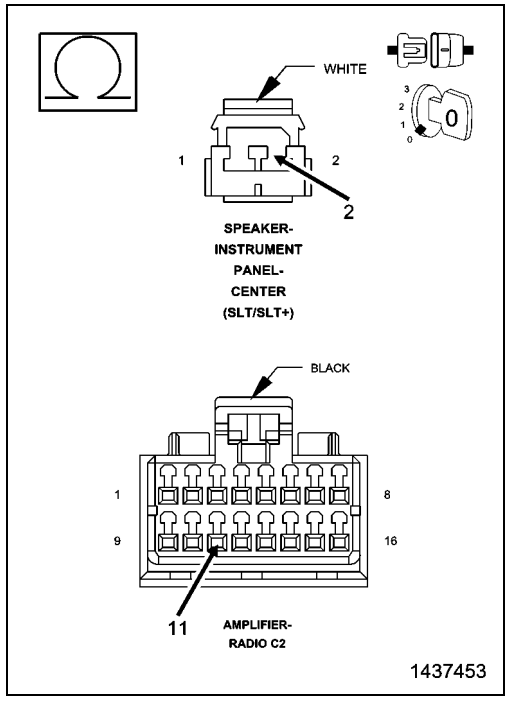

B1487-CHANNEL 8 AUDIO SPEAKER OUTPUT CIRCUIT SHORTED TOGETHER

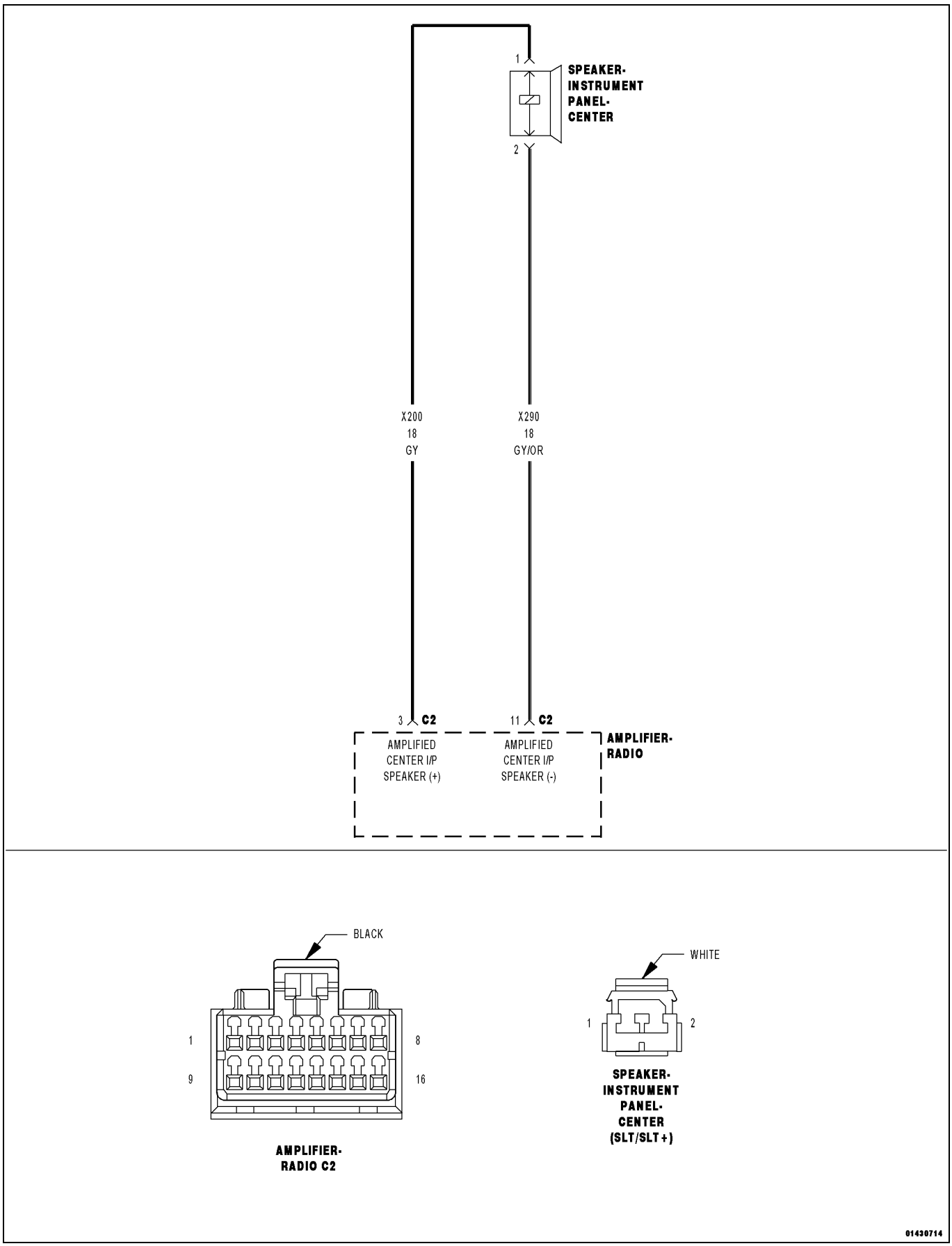

For a complete wiring diagram, **refer to the Wiring Information**.

- **When Monitored:**
  With the ignition on. Radio volume at 25 or higher.
- **Set Condition:**
  The Amplifier detects that the output circuits are shorted together.

Possible Causes
(X200) AMPLIFIED CENTER I/P SPEAKER (+) CIRCUIT SHORTED TO THE (X290) AMPLIFIED CENTER I/P SPEAKER (-) CIRCUIT
AMPLIFIED CENTER I/P SPEAKER
AMPLIFIER

1. CHECK FOR AN INTERMITTENT CONDITION

1. Turn the ignition on and open one of the front doors.

NOTE: A front door must remain open whenever checking or erasing Amplifier DTCs.

2. With the scan tool, record and erase the Amplifier DTCs.
3. Cycle the ignition switch from on to off, wait five seconds and then back to on.
4. Turn the Radio on and set the volume to 20.
5. Adjust the speakers to the front and center.
6. With the scan tool, read the active Amplifier DTCs.

Does the scan tool display active: B1487-CHANNEL 8 AUDIO SPEAKER OUTPUT CIRCUIT SHORTED TOGETHER?

Yes

- Go To 2

No

- Test complete, the condition or conditions that originally set this DTC are not present at this time. Using the wiring diagrams as a guide, check all related splices and connectors for signs of water intrusion, corrosion, pushed out or bent terminals and correct pin tension.
- Perform the BODY VERIFICATION TEST. (Refer to 28 - DTC-Based Diagnostics/MODULE, Totally Integrated Power (TIPM) - Standard Procedure).

2. CHECK THE OPERATION OF CENTER I/P SPEAKER

1. Turn the ignition off.
2. Disconnect the Center I/P Speaker.
3. Measure the resistance of the speaker between the two terminals.

NOTE: The graphic shows the connector for reference only. Measure at the speaker terminals.

Is the resistance of the speaker less than 1 Ohm?

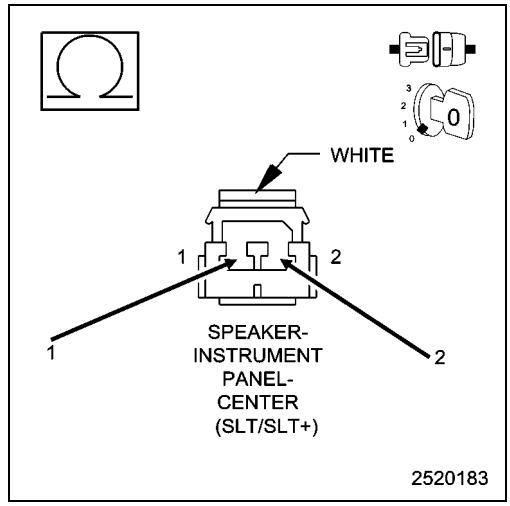

Yes

- Replace the Center I/P Speaker in accordance with the Service Information.
- Perform the BODY VERIFICATION TEST. (Refer to 28 - DTC-Based Diagnostics/MODULE, Totally Integrated Power (TIPM) - Standard Procedure).

No

- Go To 3

3. CHECK THE (X200) AMPLIFIED CENTER I/P SPEAKER (+) CIRCUIT, AND THE (X290) AMPLIFIED CENTER I/P SPEAKER (-) CIRCUITS FOR A SHORT TOGETHER

1. Disconnect the Amplifier C2 harness connector.
2. Measure the resistance between the (X200) Amplified Center I/P Speaker (+) circuit, and the (X290) Amplified Center I/P Speaker (-) circuit.

Is the resistance below 10K Ohms?

Yes

- Repair the (X200) Amplified Center I/P Speaker (+) circuit, and the (X290) Amplified Center I/P Speaker (-) circuit for a short together.
- Perform the BODY VERIFICATION TEST. (Refer to 28 - DTC-Based Diagnostics/MODULE, Totally Integrated Power (TIPM) - Standard Procedure).

No

- Replace the Amplifier in accordance with the Service Information.
- Perform the BODY VERIFICATION TEST. (Refer to 28 - DTC-Based Diagnostics/MODULE, Totally Integrated Power (TIPM) - Standard Procedure).

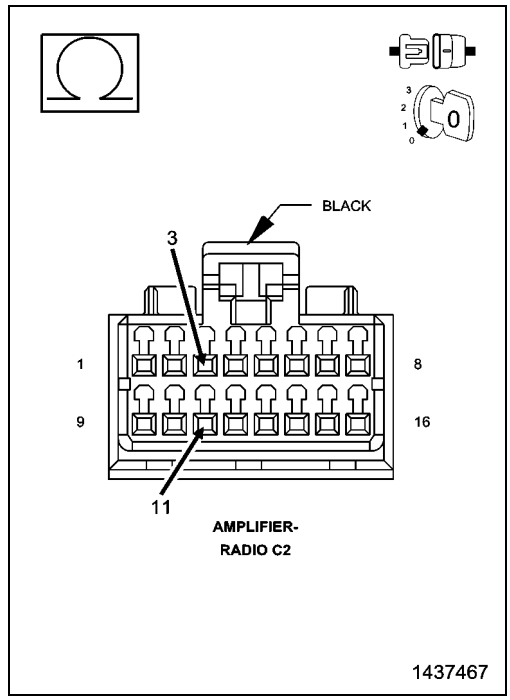

B1488-CABIN EQ MISMATCH PERFORMANCE

For a complete wiring diagram, **refer to the Wiring Information**.

- **When Monitored:**
  With the ignition on.
- **Set Condition:**
  If the Cabin Equalization Curve number message from the Totally Integrated Power Module (TIPM) is not the same as the Cabin Equalization Curve number stored in the Amplifier for 10 consecutive cycles, then the Amplifier will set this DTC.

POSSIBLE CAUSES
NO COMMUNICATION WITH TOTALLY INTEGRATED POWER MODULE (TIPM)
ACTIVE TIPM DTCs
TOTALLY INTEGRATED POWER MODULE (TIPM)
AMPLIFIER

1. CHECK FOR AN INTERMITTENT CONDITION

1. Turn the ignition on and open one of the front doors.

NOTE: A front door must remain open whenever checking or erasing Amplifier DTCs.

2. Turn the radio on.
3. With the scan tool, erase Amplifier DTCs.
4. With the scan tool, reset the amplifier.
5. With the scan tool, read Amplifier DTCs.

Does the scan tool display active: B1488-CABIN EQ MISMATCH PERFORMANCE?

Yes

- Go To 2

No

- Test complete, the condition or conditions that originally set this DTC are not present at this time. Using the wiring diagrams as a guide, check all related splices and connectors for signs of water intrusion, corrosion, pushed out or bent terminals and correct pin tension. .
- Perform the BODY VERIFICATION TEST. (Refer to 28 - DTC-Based Diagnostics/MODULE, Totally Integrated Power (TIPM) - Standard Procedure).

2. CHECK AMPLIFIER BUSSED INPUTS/SENSORS

1. With the scan tool in Amplifier Data Display, read the Cabin Equalization Curve number in the Bussed Inputs and Sensors Sections.

NOTE: The Cabin EQ Curve settings in the Inputs/Sensors section should match one another. The Cabin EQ# in the Inputs section is the information that is received from the TIPM. The Cabin EQ in the Sensors section is the information that is Stored in the Amplifier's memory.

Do the Cabin EQ settings match one another?

Yes

- Replace the Amplifier in accordance to the service information.
- Perform the BODY VERIFICATION TEST. (Refer to 28 - DTC-Based Diagnostics/MODULE, Totally Integrated Power (TIPM) - Standard Procedure).

No

- Go To 3

3. VERIFY COMMUNICATION WITH TIPM

1. With the scan tool, read the active modules on the BUS.

Does the scan tool show the TIPM active on the BUS?

Yes

- Go To 4

No

- (Refer to 29 - Non-DTC Diagnostics/Communication - Diagnosis and Testing) and perform the No Response From TIPM (Totally Integrated Power Module) diagnostic procedure.

4. CHECK TIPM FOR ACTIVE DTCs

1. With the scan tool, erase TIPM DTCs.
2. Turn the ignition off. Wait approximately 10 seconds.
3. Turn the ignition on.
4. With the scan tool, read TIPM DTCs.

Are any active DTCs present?

Yes

- (Refer to 28 - DTC-Based Diagnostics/MODULE, Totally Integrated Power (TIPM) - Diagnosis and Testing) and perform the appropriate diagnostic procedure.

No

- Replace the Totally Integrated Power Module (TIPM) in accordance with the Service Information.
- Perform the BODY VERIFICATION TEST. (Refer to 28 - DTC-Based Diagnostics/MODULE, Totally Integrated Power (TIPM) - Standard Procedure).

B14B9-CHANNEL 9 AUDIO SPEAKER OUTPUT CIRCUIT PERFORMANCE

For a complete wiring diagram, **refer to the Wiring Information**.

- **When Monitored:**
  With the ignition on.
- **Set Condition:**
  This Diagnostic Trouble Code (DTC) sets if a Direct Current (DC) offset occurs on the output channel, the amplifier shall set a DTC after a maturity rate of four to six seconds.

Possible Causes
AMPLIFIER

1. CHECK FOR AN INTERMITTENT CONDITION

1. Turn the ignition on and open one of the front doors.

NOTE: A front door must remain open whenever checking or erasing Amplifier DTCs.

2. With the scan tool, record and erase the Amplifier DTCs.
3. Cycle the ignition switch from on to off, wait five seconds and then back to on.
4. Turn the Radio on and set the volumn to 20.
5. Adjust the speakers to the front and center.
6. With the scan tool, read the active Amplifier DTCs.

Does the scan tool display active: B14B9-CHANNEL 9 AUDIO SPEAKER OUTPUT CIRCUIT PERFORMANCE?

Yes

- Replace the Amplifier in accordance with the Service Information.
- Perform the BODY VERIFICATION TEST. (Refer to 28 - DTC-Based Diagnostics/MODULE, Totally Integrated Power (TIPM) - Standard Procedure).

No

- Test complete, the condition or conditions that originally set this DTC are not present at this time. Using the wiring diagrams as a guide, check all related splices and connectors for signs of water intrusion, corrosion, pushed out or bent terminals and correct pin tension.
- Perform the BODY VERIFICATION TEST.(Refer to 28 - DTC-Based Diagnostics/MODULE, Totally Integrated Power (TIPM) - Standard Procedure).

B14BA-CHANNEL 9 AUDIO SPEAKER OUTPUT CIRCUIT LOW

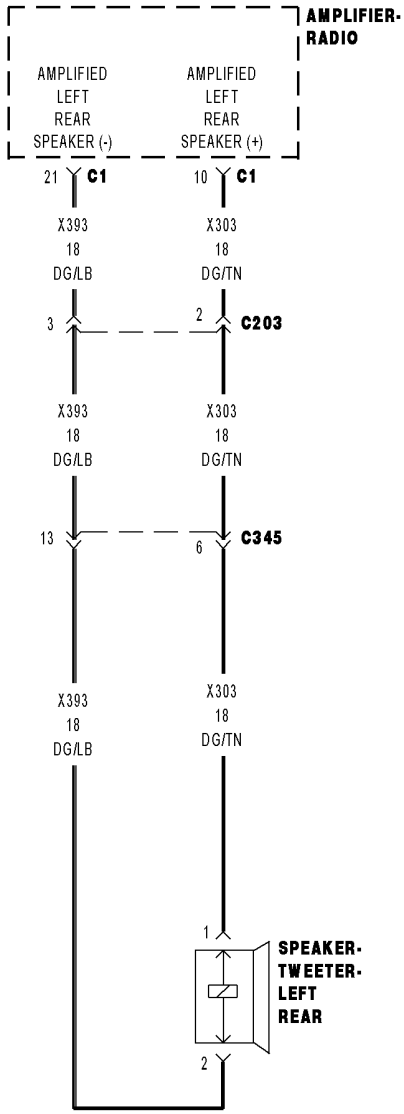

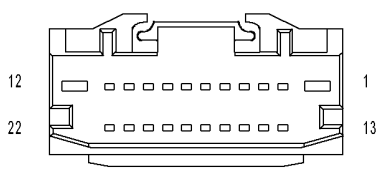

AMPLIFIER-
RADIO C1

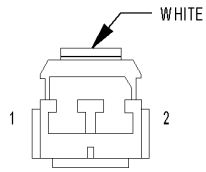

SPEAKER-
TWEETER-
LEFT REAR

01430667

For a complete wiring diagram, **refer to the Wiring Information**.

- **When Monitored:**
  With the ignition on.
- **Set Condition:**
  The Amplifier detects a shorted to ground condition on the speaker output circuit.

Possible Causes
(X303) LEFT REAR SPEAKER (+) CIRCUIT SHORTED TO GROUND
(X393) LEFT REAR SPEAKER (-) CIRCUIT SHORTED TO GROUND
LEFT REAR SPEAKER
AMPLIFIER

1. CHECK FOR AN INTERMITTENT CONDITION

1. Turn the ignition on and open one of the front doors.

NOTE: A front door must remain open whenever checking or erasing Amplifier DTCs.

2. With the scan tool, record and erase the Amplifier DTCs.
3. Cycle the ignition switch from on to off, wait five seconds and then back to on.
4. Turn the Radio on and set the volume to 20.
5. Adjust the speakers to the front and center.
6. With the scan tool, read the active Amplifier DTCs.

Does the scan tool display active: B14BA-CHANNEL 9 AUDIO SPEAKER OUTPUT CIRCUIT LOW?

Yes

- Go To 2

No

- Test complete, the condition or conditions that originally set this DTC are not present at this time. Using the wiring diagrams as a guide, check all related splices and connectors for signs of water intrusion, corrosion, pushed out or bent terminals and correct pin tension.
- Perform the BODY VERIFICATION TEST. (Refer to 28 - DTC-Based Diagnostics/MODULE, Totally Integrated Power (TIPM) - Standard Procedure).

2. CHECK THE LEFT REAR SPEAKER

1. Make sure one of the front doors is still open.
2. With the scan tool, erase the DTCs.
3. Turn the ignition off.
4. Disconnect the Left Rear Speaker harness connector.
5. Turn the ignition on.
6. Turn the radio on and set the volume to 25.
7. With the scan tool, read the active Amplifier DTCs.

Does the scan tool display active: B14BA-CHANNEL 9 AUDIO SPEAKER OUTPUT CIRCUIT LOW?

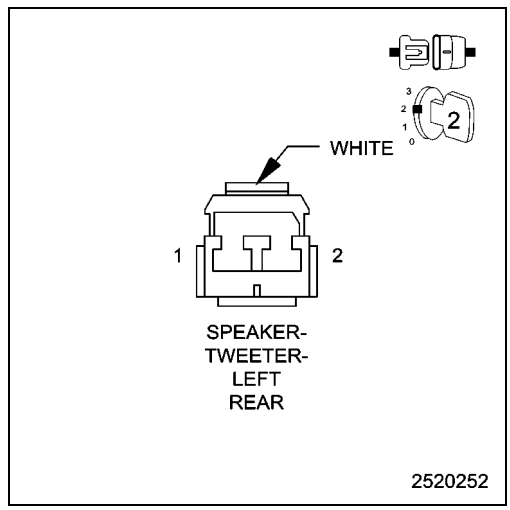

Yes

- Go To 3

No

- Replace the Left Rear Speaker.
- Perform the BODY VERIFICATION TEST. (Refer to 28 - DTC-Based Diagnostics/MODULE, Totally Integrated Power (TIPM) - Standard Procedure).

3. CHECK THE (X303) LEFT REAR SPEAKER (+) CIRCUIT FOR A SHORT TO GROUND

1. Disconnect the Amplifier C1 harness connector.
2. Disconnect the Left Rear Speaker harness connector.
3. Measure the resistance between ground and the (X303) Left Rear Speaker (+) circuit.

Is the resistance below 10K Ohms?

Yes

- Repair the (X303) Left Rear Speaker (+) circuit for a short to ground.
- Perform the BODY VERIFICATION TEST. (Refer to 28 - DTC-Based Diagnostics/MODULE, Totally Integrated Power (TIPM) - Standard Procedure).

No

- Go To 4

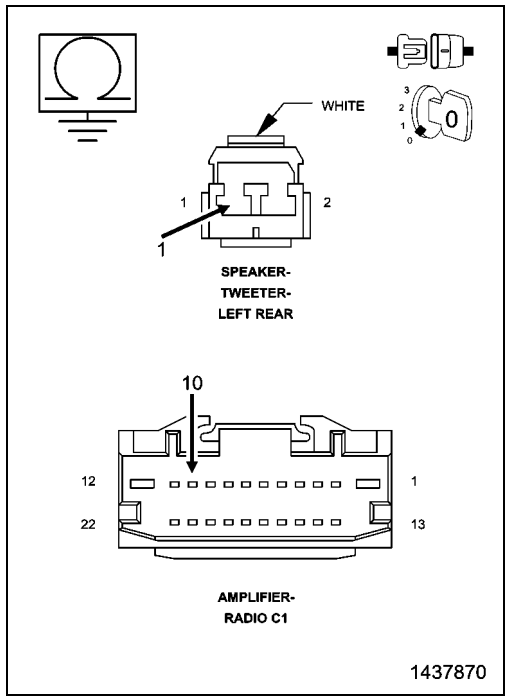

4. CHECK THE (X393) LEFT REAR SPEAKER (-) CIRCUIT FOR A SHORT TO GROUND

1. Measure the resistance between ground and the (X393) Left Rear Speaker (-) circuit.

Is the resistance below 10K Ohms?

Yes

- Repair the (X393) Left Rear Speaker (-) for a short to ground.
- Perform the BODY VERIFICATION TEST. (Refer to 28 - DTC-Based Diagnostics/MODULE, Totally Integrated Power (TIPM) - Standard Procedure).

No

- Replace the Amplifier in accordance with the Service Information.
- Perform the BODY VERIFICATION TEST. (Refer to 28 - DTC-Based Diagnostics/MODULE, Totally Integrated Power (TIPM) - Standard Procedure).

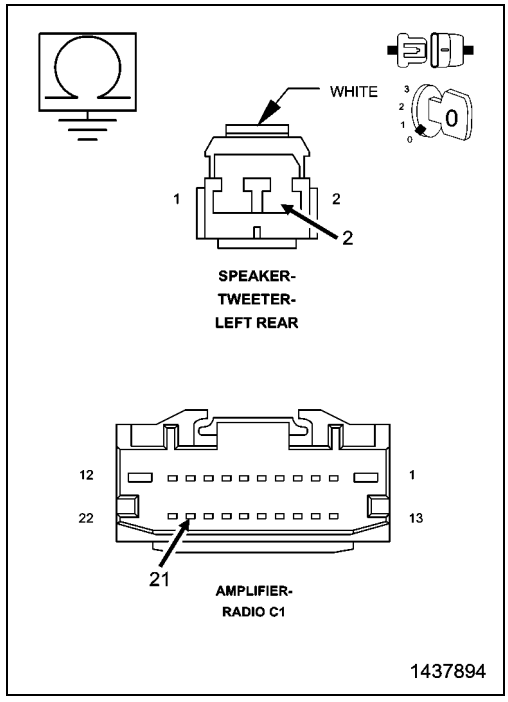

B14BB-CHANNEL 9 AUDIO SPEAKER OUTPUT CIRCUIT HIGH

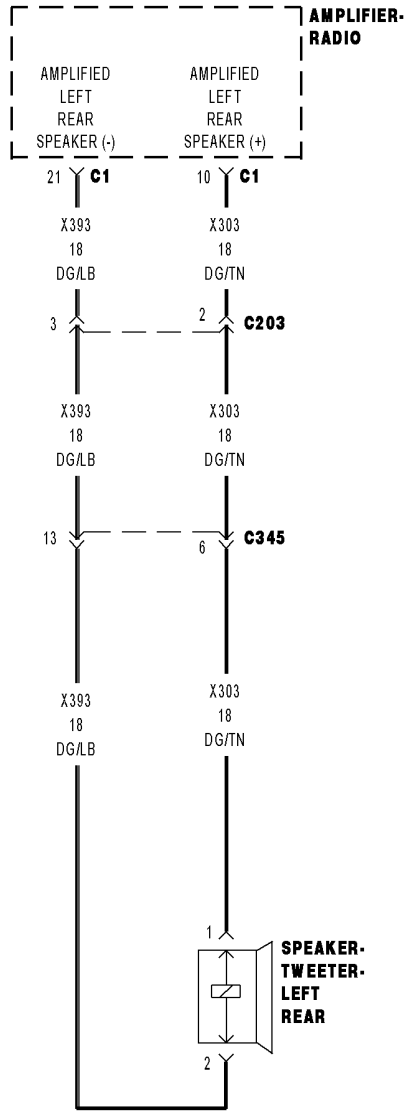

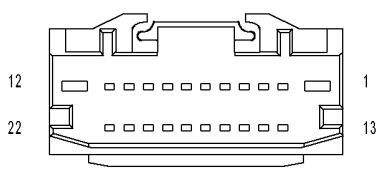

AMPLIFIER-
RADIO C1

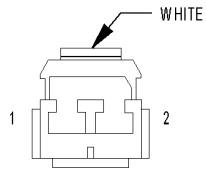

SPEAKER-
TWEETER-
LEFT REAR

01430667

For a complete wiring diagram, **refer to the Wiring Information**.

- **When Monitored:**
  With the ignition on.
- **Set Condition:**
  The Amplifier detects a short to battery condition on the output circuit.

Possible Causes
(X303) LEFT REAR SPEAKER (+) CIRCUIT SHORTED TO VOLTAGE
(X393) LEFT REAR SPEAKER (-) CIRCUIT SHORTED TO VOLTAGE
AMPLIFIER

1. CHECK FOR AN INTERMITTENT CONDITION

1. Turn the ignition on and open one of the front doors.

NOTE: A front door must remain open whenever checking or erasing Amplifier DTCs.

2. With the scan tool, record and erase the Amplifier DTCs.
3. Cycle the ignition switch from on to off, wait five seconds and then back to on.
4. Turn the Radio on and set the volume to 20.
5. Adjust the speakers to the front and center.
6. With the scan tool, read the active Amplifier DTCs.

Does the scan tool display active: B14BB-CHANNEL 9 AUDIO SPEAKER OUTPUT CIRCUIT HIGH?

Yes

- Go To 2

No

- Test complete, the condition or conditions that originally set this DTC are not present at this time. Using the wiring diagrams as a guide, check all related splices and connectors for signs of water intrusion, corrosion, pushed out or bent terminals and correct pin tension.
- Perform the BODY VERIFICATION TEST. (Refer to 28 - DTC-Based Diagnostics/MODULE, Totally Integrated Power (TIPM) - Standard Procedure).

2. CHECK FOR VOLTAGE ON THE (X303) LEFT REAR SPEAKER (+) CIRCUIT

1. Turn the ignition off.
2. Disconnect the Amplifier C1 harness connector.
3. Disconnect the Left Rear Speaker harness connector.
4. Turn the ignition on.
5. Measure for voltage between the (X303) Left Rear Speaker (+) circuit and ground.

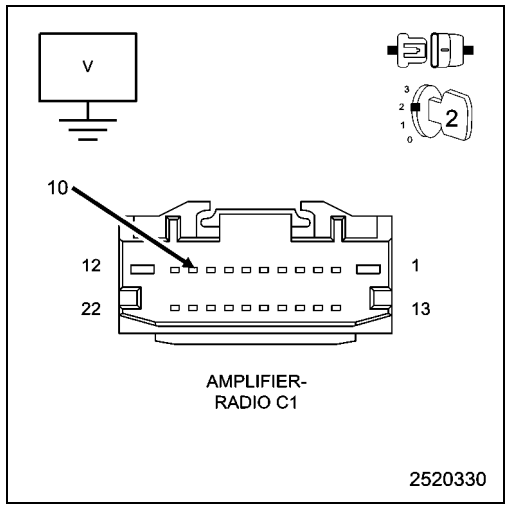

Is there any voltage present?

Yes

- Repair the (X303) Left Rear Speaker (+) circuit for a short to voltage.
- Perform the BODY VERIFICATION TEST. (Refer to 28 - DTC-Based Diagnostics/MODULE, Totally Integrated Power (TIPM) - Standard Procedure).

No

- Go To 3

3. CHECK FOR VOLTAGE ON THE (X393) LEFT REAR SPEAKER (-) CIRCUIT

1. Measure for voltage between the (X393) Left Rear Speaker (-) circuit and ground.

Is there any voltage present?

Yes

- Repair the (X393) Left Rear Speaker (-) circuit for a short to voltage.
- Perform the BODY VERIFICATION TEST. (Refer to 28 - DTC-Based Diagnostics/MODULE, Totally Integrated Power (TIPM) - Standard Procedure).

No

- Replace the Amplifier in accordance with the Service Information.
- Perform the BODY VERIFICATION TEST. (Refer to 28 - DTC-Based Diagnostics/MODULE, Totally Integrated Power (TIPM) - Standard Procedure).

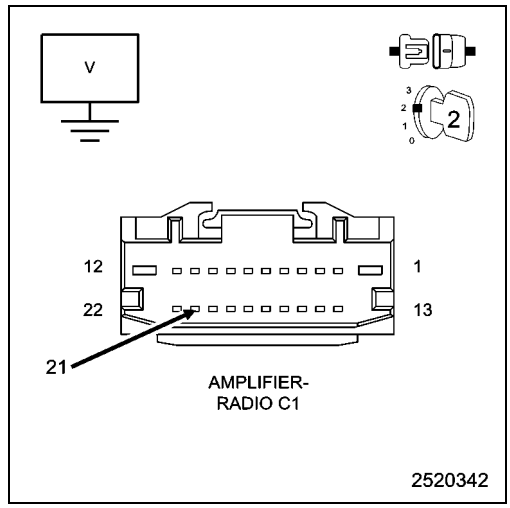

B14BC-CHANNEL 9 AUDIO SPEAKER OUTPUT CIRCUIT OPEN

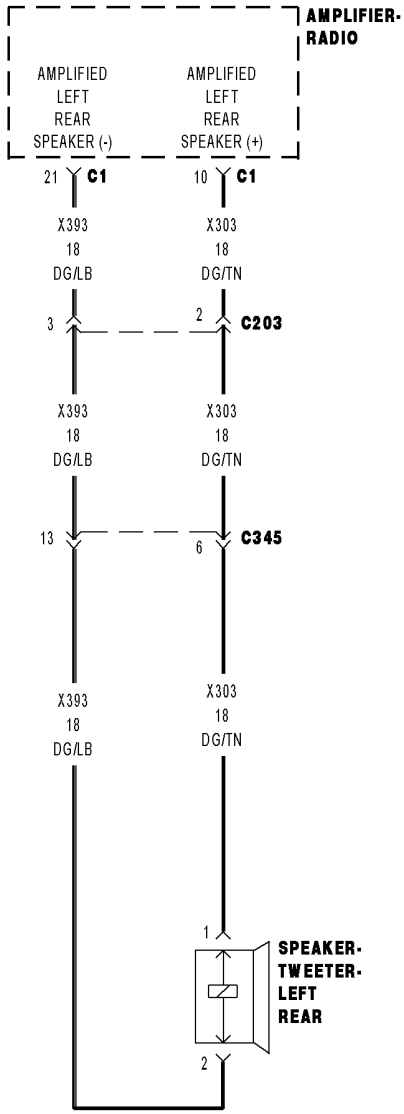

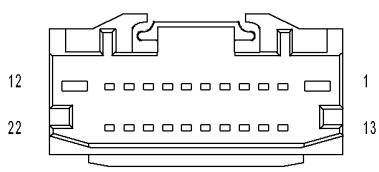

AMPLIFIER-
RADIO C1

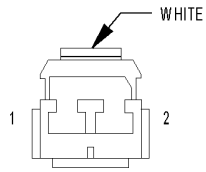

SPEAKER-
TWEETER-
LEFT REAR

01430667

For a complete wiring diagram, **refer to the Wiring Information**.

- **When Monitored:**
  Amplifier Bus wake-up. Amplifier reset with scan tool.
- **Set Condition:**
  The Amplifier detects an open condition on the speaker output circuit.

Possible Causes
(X303) LEFT REAR SPEAKER (+) CIRCUIT OPEN
(X393) LEFT REAR SPEAKER (-) CIRCUIT OPEN
LEFT REAR SPEAKER
AMPLIFIER

1. CHECK FOR AN INTERMITTENT CONDITION

1. Turn the ignition on and open one of the front doors.

NOTE: A front door must remain open whenever checking or erasing Amplifier DTCs.

2. With the scan tool, record and erase the Amplifier DTCs.
3. Cycle the ignition switch from on to off, wait five seconds and then back to on.
4. Turn the Radio on and set the volume to 20.
5. Adjust the speakers to the front and center.
6. With the scan tool, read the active Amplifier DTCs.

Does the scan tool display active: B14BC-CHANNEL 9 AUDIO SPEAKER OUTPUT CIRCUIT OPEN?

Yes

- Go To 2

No

- Test complete, the condition or conditions that originally set this DTC are not present at this time. Using the wiring diagrams as a guide, check all related splices and connectors for signs of water intrusion, corrosion, pushed out or bent terminals and correct pin tension.
- Perform the BODY VERIFICATION TEST. (Refer to 28 - DTC-Based Diagnostics/MODULE, Totally Integrated Power (TIPM) - Standard Procedure).

2. CHECK THE OPERATION OF THE LEFT REAR SPEAKER

1. Turn the ignition off.
2. Disconnect the Left Rear Speaker harness connector.
3. Turn the ignition on.
4. Turn the radio on and turn the volume to 25.
5. Adjust the speakers to the rear and center.
6. With a voltmeter set to read in A/C voltage, measure the voltage of the Left Rear Speaker circuits in the Left Rear Speaker harness connector.

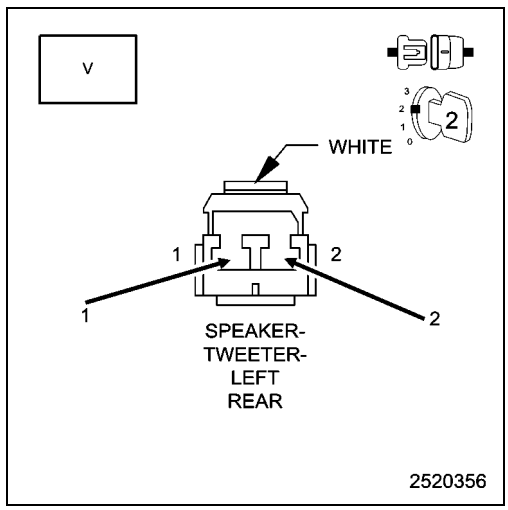

Is the voltage present greater than 1 volt?

Yes

- Replace the Left Rear Speaker in accordance with the Service Information.
- Perform the BODY VERIFICATION TEST. (Refer to 28 - DTC-Based Diagnostics/MODULE, Totally Integrated Power (TIPM) - Standard Procedure).

No

- Go To 3

3. CHECK THE (X303) LEFT REAR SPEAKER (+) CIRCUIT FOR AN OPEN

1. Turn the ignition off.
2. Disconnect the Amplifier C1 harness connector.
3. Measure the resistance of the (X303) Left Rear Speaker (+) circuit between the Amplifier C1 harness connector and the Left Rear Speaker harness connector.

Is the resistance below 2.0 Ohms?

Yes

- Go To 4

No

- Repair the (X303) Left Rear Speaker (+) circuit for an open.
- Perform the BODY VERIFICATION TEST. (Refer to 28 - DTC-Based Diagnostics/MODULE, Totally Integrated Power (TIPM) - Standard Procedure).

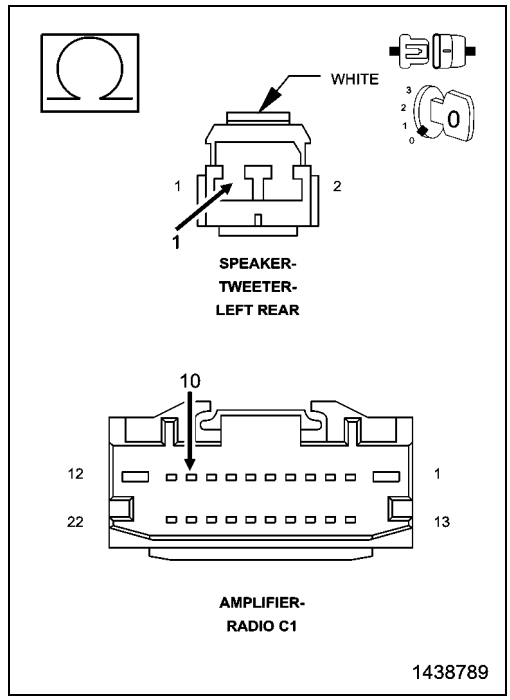

4. CHECK THE (X393) LEFT REAR SPEAKER (-) CIRCUIT FOR AN OPEN

1. Measure the resistance of the (X393) Left Rear Speaker (-) circuit between the Amplifier C1 harness connector and the Left Rear Speaker harness connector.

Is the resistance below 2.0 Ohms?

Yes

- Replace the Amplifier in accordance with the Service Information.
- Perform the BODY VERIFICATION TEST. (Refer to 28 - DTC-Based Diagnostics/MODULE, Totally Integrated Power (TIPM) - Standard Procedure).

No

- Repair the (X393) Left Rear Speaker (-) circuit for an open.
- Perform the BODY VERIFICATION TEST. (Refer to 28 - DTC-Based Diagnostics/MODULE, Totally Integrated Power (TIPM) - Standard Procedure).

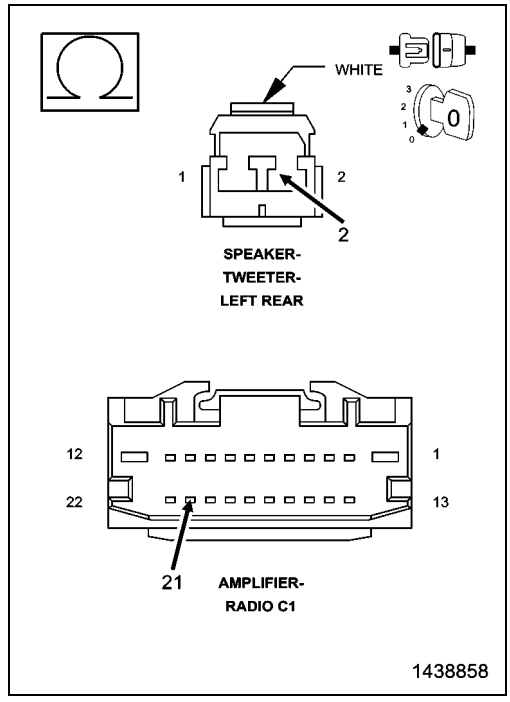

B14BD-CHANNEL 9 AUDIO SPEAKER OUTPUT CIRCUIT SHORTED TOGETHER

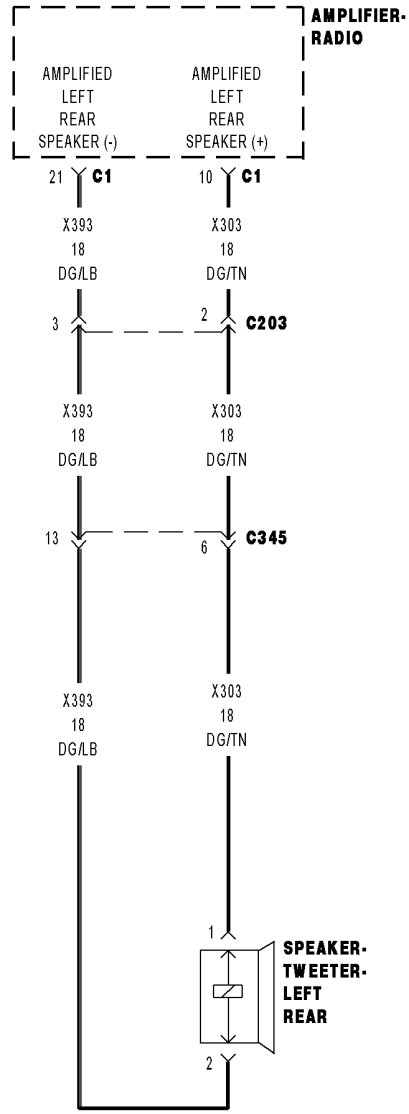

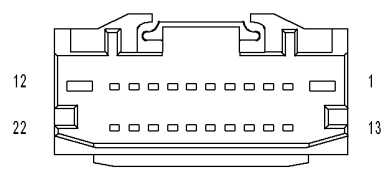

AMPLIFIER-
RADIO C1

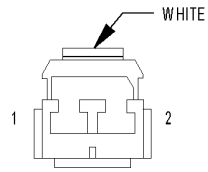

SPEAKER-
TWEETER-
LEFT REAR

01430667

For a complete wiring diagram, **refer to the Wiring Information**.

- **When Monitored:**
  With the ignition on. Radio volume at 25 or higher.
- **Set Condition:**
  The Amplifier detects that the output circuits are shorted together.

Possible Causes
(X303) LEFT REAR SPEAKER (+) CIRCUIT SHORTED TO THE (X393) LEFT REAR SPEAKER (-) CIRCUIT
LEFT REAR SPEAKER
AMPLIFIER

1. CHECK FOR AN INTERMITTENT CONDITION

1. Turn the ignition on and open one of the front doors.

NOTE: A front door must remain open whenever checking or erasing Amplifier DTCs.

2. With the scan tool, record and erase the Amplifier DTCs.
3. Cycle the ignition switch from on to off, wait five seconds and then back to on.
4. Turn the Radio on and set the volume to 20.
5. Adjust the speakers to the front and center.
6. With the scan tool, read the active Amplifier DTCs.

Does the scan tool display active: B14BD-CHANNEL 9 AUDIO SPEAKER OUTPUT CIRCUIT SHORTED TOGETHER?

Yes

- Go To 2

No

- Test complete, the condition or conditions that originally set this DTC are not present at this time. Using the wiring diagrams as a guide, check all related splices and connectors for signs of water intrusion, corrosion, pushed out or bent terminals and correct pin tension.
- Perform the BODY VERIFICATION TEST. (Refer to 28 - DTC-Based Diagnostics/MODULE, Totally Integrated Power (TIPM) - Standard Procedure).

2. CHECK THE OPERATION OF THE LEFT REAR SPEAKER

1. Turn the ignition off.
2. Disconnect the Left Rear Speaker.
3. Measure the resistance of the speaker between the two terminals.

NOTE: The graphic shows the connector for reference only. Measure at the speaker terminals.

Is the resistance of the speaker less than 1 Ohm?

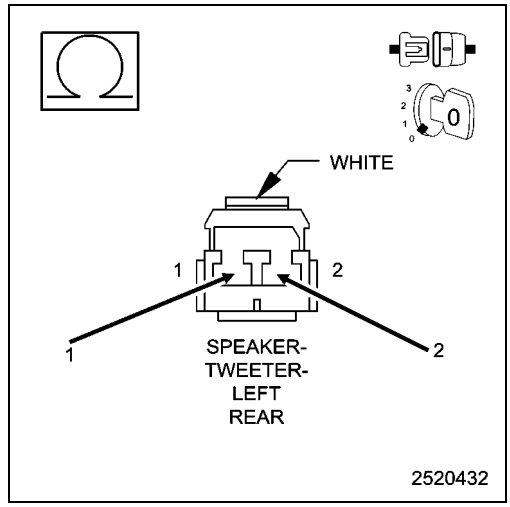

Yes

- Replace the Left Rear Speaker in accordance with the Service Information.
- Perform the BODY VERIFICATION TEST. (Refer to 28 - DTC-Based Diagnostics/MODULE, Totally Integrated Power (TIPM) - Standard Procedure).

No

- Go To 3

3. CHECK THE (X303) LEFT REAR SPEAKER (+) CIRCUIT, AND THE (X393) LEFT REAR SPEAKER (-) CIRCUITS FOR A SHORT TOGETHER

1. Turn the ignition off.
2. Disconnect the Amplifier C1 harness connector.
3. Measure the resistance between the (X303) Left Rear Speaker (+) circuit, and the (X393) Left Rear Speaker (-) circuit.

Is the resistance below 10K Ohms?

Yes

- Repair the (X303) Left Rear Speaker (+) circuit, and the (X393) Left Rear Speaker (-) circuit for a short together.
- Perform the BODY VERIFICATION TEST. (Refer to 28 - DTC-Based Diagnostics/MODULE, Totally Integrated Power (TIPM) - Standard Procedure).

No

- Replace the Amplifier in accordance with the Service Information.
- Perform the BODY VERIFICATION TEST. (Refer to 28 - DTC-Based Diagnostics/MODULE, Totally Integrated Power (TIPM) - Standard Procedure).

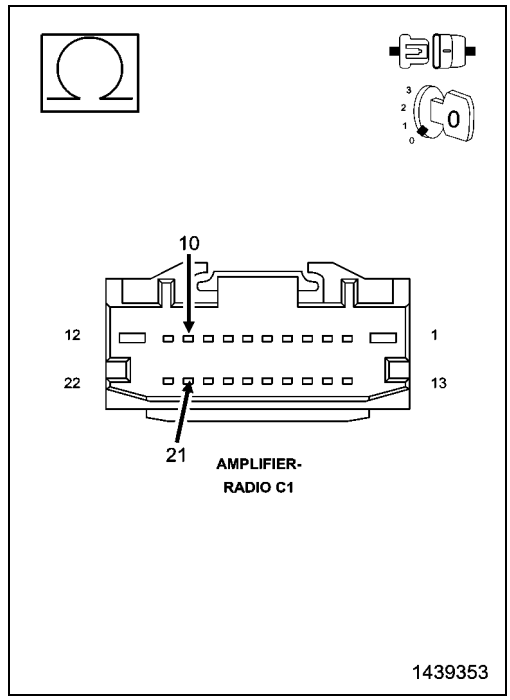

B14BE-CHANNEL 10 AUDIO SPEAKER OUTPUT CIRCUIT PERFORMANCE

For a complete wiring diagram, **refer to the Wiring Information**.

- **When Monitored:**

  With the ignition on.
- **Set Condition:**

  This Diagnostic Trouble Code (DTC) sets if a Direct Current (DC) offset occurs on the output channel, the amplifier shall set a DTC after a maturity rate of four to six seconds.

Possible Causes
AMPLIFIER

1. CHECK FOR AN INTERMITTENT CONDITION

1. Turn the ignition on and open one of the front doors.

NOTE: A front door must remain open whenever checking or erasing Amplifier DTCs.

2. With the scan tool, record and erase the Amplifier DTCs.
3. Cycle the ignition switch from on to off, wait five seconds and then back to on.
4. Turn the Radio on and set the volume to 20.
5. Adjust the speakers to the rear and center.
6. With the scan tool, read the active Amplifier DTCs.

Does the scan tool display active: B14BE-CHANNEL 10 AUDIO SPEAKER OUTPUT CIRCUIT PERFORMANCE?

Yes

- Replace the Amplifier in accordance with the Service Information.
- Perform the BODY VERIFICATION TEST. (Refer to 28 - DTC-Based Diagnostics/MODULE, Totally Integrated Power (TIPM) - Standard Procedure).

No

- Test complete, the condition or conditions that originally set this DTC are not present at this time. Using the wiring diagrams as a guide, check all related splices and connectors for signs of water intrusion, corrosion, pushed out or bent terminals and correct pin tension.
- Perform the BODY VERIFICATION TEST. (Refer to 28 - DTC-Based Diagnostics/MODULE, Totally Integrated Power (TIPM) - Standard Procedure).

B14BF-CHANNEL 10 AUDIO SPEAKER OUTPUT CIRCUIT LOW

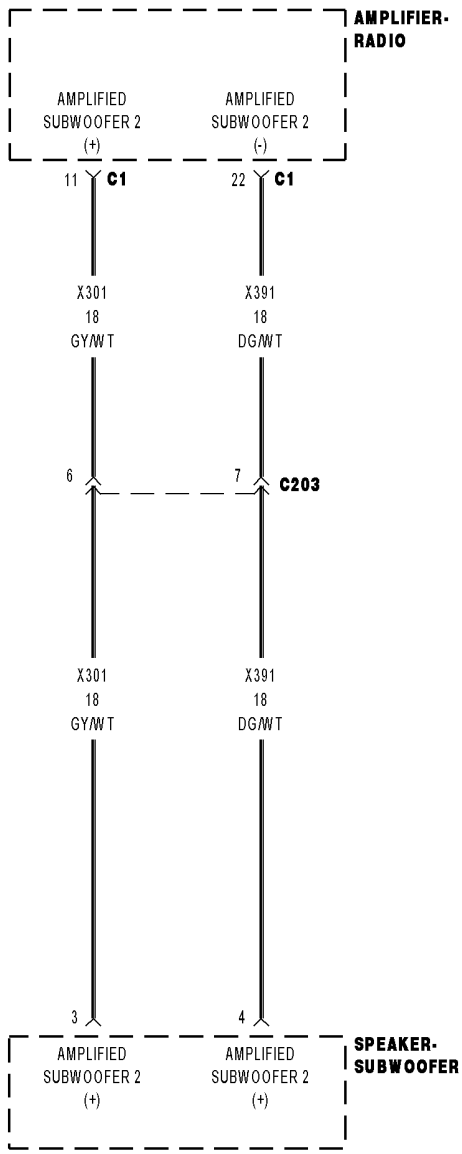

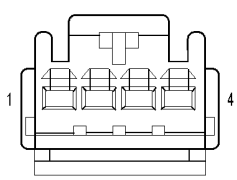

SPEAKER-
SUBWOOFER

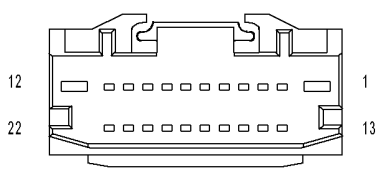

AMPLIFIER-
RADIO C1

01430635

For a complete wiring diagram, **refer to the Wiring Information**.

- **When Monitored:**
  With the ignition on.
- **Set Condition:**
  The Amplifier detects a shorted to ground condition on the speaker output circuit.

Possible Causes
(X301) AMPLIFIED SUBWOOFER 2 (+) CIRCUIT SHORTED TO GROUND
(X391) AMPLIFIED SUBWOOFER 2 (-) CIRCUIT SHORTED TO GROUND
AMPLIFIED SUBWOOFER SPEAKER
AMPLIFIER

1. CHECK FOR AN INTERMITTENT CONDITION

1. Turn the ignition on and open one of the front doors.

NOTE: A front door must remain open whenever checking or erasing Amplifier DTCs.

2. With the scan tool, record and erase the Amplifier DTCs.
3. Cycle the ignition switch from on to off, wait five seconds and then back to on.
4. Turn the Radio on and set the volume to 20.
5. Adjust the speakers to the rear and center.
6. With the scan tool, read the active Amplifier DTCs.

Does the scan tool display active: B14BF-CHANNEL 10 AUDIO SPEAKER OUTPUT CIRCUIT LOW?

Yes

- Go To 2

No

- Test complete, the condition or conditions that originally set this DTC are not present at this time. Using the wiring diagrams as a guide, check all related splices and connectors for signs of water intrusion, corrosion, pushed out or bent terminals and correct pin tension.
- Perform the BODY VERIFICATION TEST. (Refer to 28 - DTC-Based Diagnostics/MODULE, Totally Integrated Power (TIPM) - Standard Procedure).

2. CHECK THE SUBWOOFER SPEAKER

1. Make sure one of the front doors is still open.
2. With the scan tool, erase the DTCs.
3. Turn the ignition off.
4. Disconnect the Subwoofer Speaker harness connector.
5. Turn the ignition on.
6. Turn the radio on and set the volume to 25.
7. With the scan tool, read the active Amplifier DTCs.

Does the scan tool display active: B14BF-CHANNEL10 OUTPUT CIRCUIT LOW?

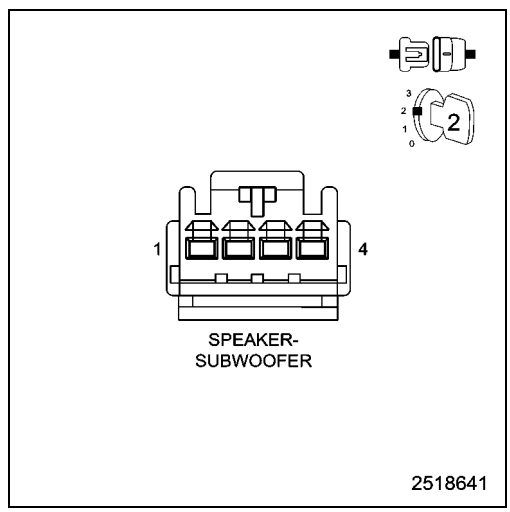

Yes

- Go To 3

No

- Replace the Subwoofer Speaker.
- Perform the BODY VERIFICATION TEST. (Refer to 28 - DTC-Based Diagnostics/MODULE, Totally Integrated Power (TIPM) - Standard Procedure).

3. CHECK THE (X301) AMPLIFIED SUBWOOFER 2 (+) CIRCUIT FOR A SHORT TO GROUND

1. Disconnect the Amplifier C1 harness connector.
2. Disconnect the Subwoofer Speaker harness connector.
3. Measure the resistance between ground and the (X301) Amplified Subwoofer 2 (+) circuit.

Is the resistance below 10K Ohms?

Yes

- Repair the (X301) Amplified Subwoofer 2 (+) circuit for a short to ground.
- Perform the BODY VERIFICATION TEST. (Refer to 28 - DTC-Based Diagnostics/MODULE, Totally Integrated Power (TIPM) - Standard Procedure).

No

- Go To 4

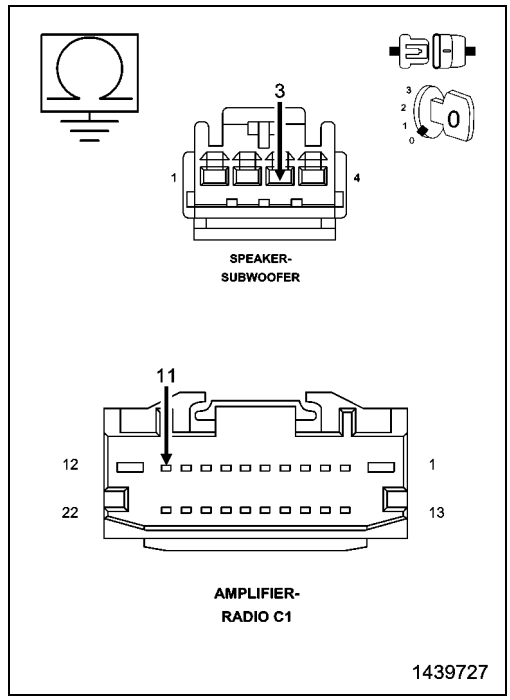

4. CHECK THE (X391) AMPLIFIED SUBWOOFER 2 (-) CIRCUIT FOR A SHORT TO GROUND

1. Measure the resistance between ground and the (X391) Amplified Subwoofer 2 (-) circuit.

Is the resistance below 10K Ohms?

Yes

- Repair the (X391) Amplified Subwoofer 2 (-) circuit for a short to ground.
- Perform the BODY VERIFICATION TEST. (Refer to 28 - DTC-Based Diagnostics/MODULE, Totally Integrated Power (TIPM) - Standard Procedure).

No

- Replace the Amplifier in accordance with the Service Information.
- Perform the BODY VERIFICATION TEST. (Refer to 28 - DTC-Based Diagnostics/MODULE, Totally Integrated Power (TIPM) - Standard Procedure).

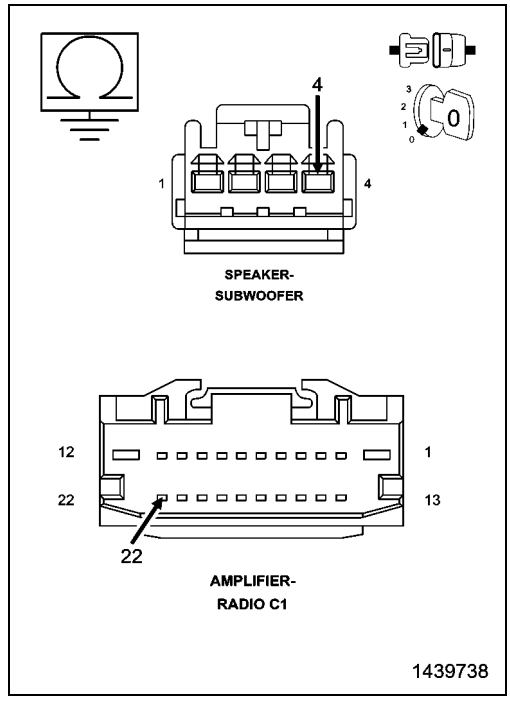

B14C0-CHANNEL 10 AUDIO SPEAKER OUTPUT CIRCUIT HIGH

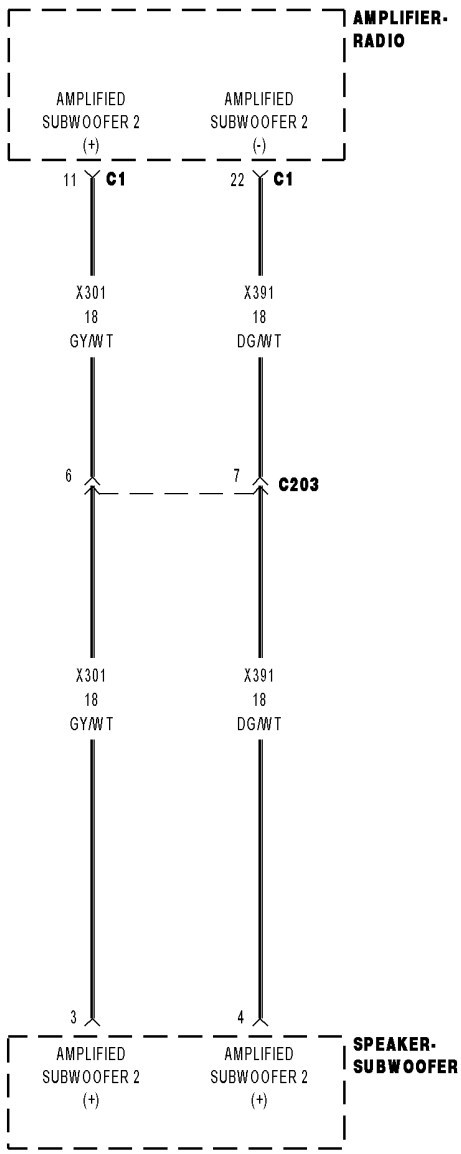

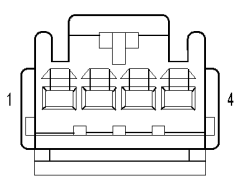

SPEAKER-
SUBWOOFER

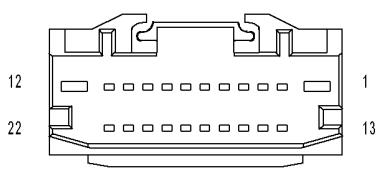

AMPLIFIER-
RADIO C1

01430635

For a complete wiring diagram, **refer to the Wiring Information**.

- **When Monitored:**
  With the ignition on.
- **Set Condition:**
  The Amplifier detects a short to battery condition on the output circuit.

Possible Causes
(X301) AMPLIFIED SUBWOOFER 2 (+) CIRCUIT SHORTED TO VOLTAGE
(X391) AMPLIFIED SUBWOOFER 2 (-) CIRCUIT SHORTED TO VOLTAGE
AMPLIFIER

1. CHECK FOR AN INTERMITTENT CONDITION

1. Turn the ignition on and open one of the front doors.

NOTE: A front door must remain open whenever checking or erasing Amplifier DTCs.

2. With the scan tool, record and erase the Amplifier DTCs.
3. Cycle the ignition switch from on to off, wait five seconds and then back to on.
4. Turn the Radio on and set the volume to 20.
5. Adjust the speakers to the rear and center.
6. With the scan tool, read the active Amplifier DTCs.

Does the scan tool display active: B14C0-CHANNEL 10 AUDIO SPEAKER OUTPUT CIRCUIT HIGH?

Yes

- Go To 2

No

- Test complete, the condition or conditions that originally set this DTC are not present at this time. Using the wiring diagrams as a guide, check all related splices and connectors for signs of water intrusion, corrosion, pushed out or bent terminals and correct pin tension.
- Perform the BODY VERIFICATION TEST. (Refer to 28 - DTC-Based Diagnostics/MODULE, Totally Integrated Power (TIPM) - Standard Procedure).

2. CHECK FOR VOLTAGE ON THE (X301) AMPLIFIED SUBWOOFER 2 (+) CIRCUIT

1. Turn the ignition off.
2. Disconnect the Amplifier C1 harness connector.
3. Disconnect the Subwoofer Speaker harness connector.
4. Turn the ignition on.
5. Measure the voltage between the (X301) Subwoofer Speaker 2 (+) circuit and ground.

Is there any voltage present?

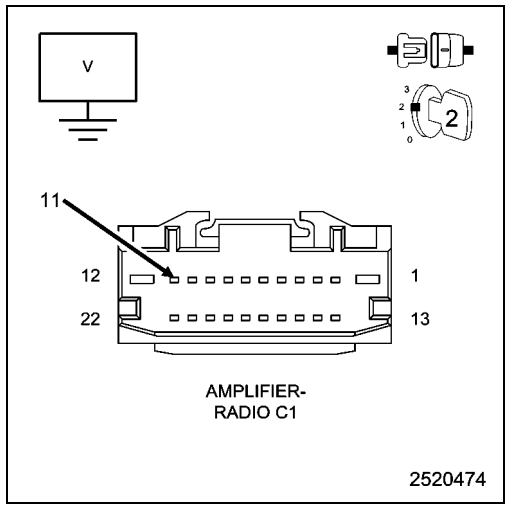

Yes

- Repair the (X301) Subwoofer Speaker 2 (+) circuit for a short to voltage.
- Perform the BODY VERIFICATION TEST. (Refer to 28 - DTC-Based Diagnostics/MODULE, Totally Integrated Power (TIPM) - Standard Procedure).

No

- Go To 3

3. CHECK FOR VOLTAGE ON THE (X391) AMPLIFIED SUBWOOFER 2 (-) CIRCUIT

1. Measure the voltage between the (X391) Subwoofer Speaker 2 (-) circuit and ground.

Is there any voltage present?

Yes

- Repair the (X391) Subwoofer Speaker 2 (-) circuit for a short to voltage.
- Perform the BODY VERIFICATION TEST. (Refer to 28 - DTC-Based Diagnostics/MODULE, Totally Integrated Power (TIPM) - Standard Procedure).

No

- Replace the Amplifier in accordance with the Service Information.
- Perform the BODY VERIFICATION TEST. (Refer to 28 - DTC-Based Diagnostics/MODULE, Totally Integrated Power (TIPM) - Standard Procedure).

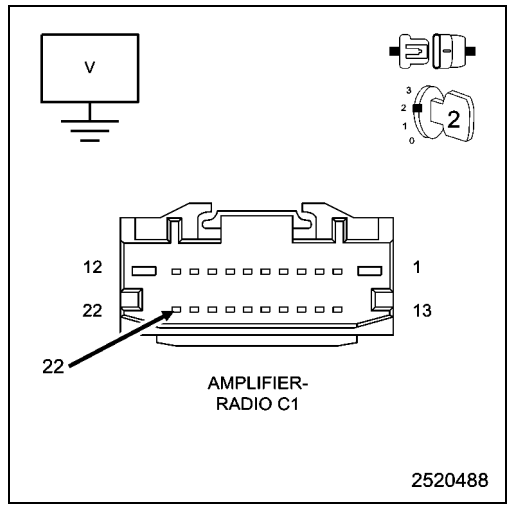

B14C1-CHANNEL 10 AUDIO SPEAKER OUTPUT CIRCUIT OPEN

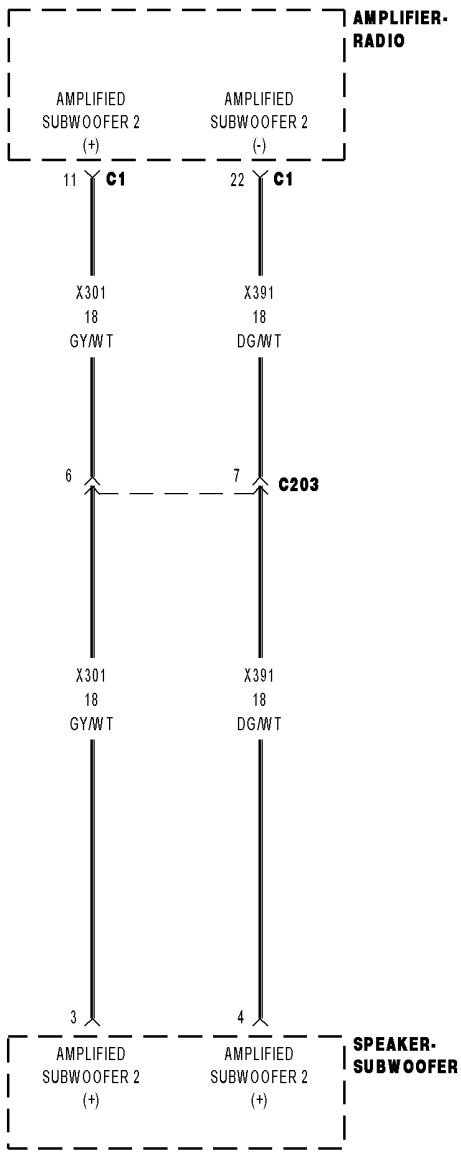

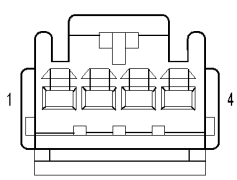

SPEAKER-
SUBWOOFER

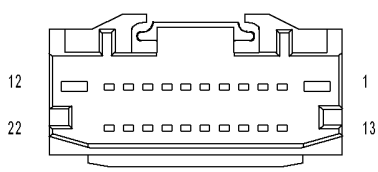

AMPLIFIER-
RADIO C1

01430635

For a complete wiring diagram, **refer to the Wiring Information**.

- **When Monitored:**
  Amplifier Bus wake-up. Amplifier reset with scan tool.
- **Set Condition:**
  The Amplifier detects an open condition on the speaker output circuit.

Possible Causes
(X301) AMPLIFIED SUBWOOFER 2 (+) CIRCUIT OPEN
(X391) AMPLIFIED SUBWOOFER 2 (-) CIRCUIT OPEN
AMPLIFIED SUBWOOFER SPEAKER
AMPLIFIER

1. CHECK FOR AN INTERMITTENT CONDITION

1. Turn the ignition on and open one of the front doors.

NOTE: A front door must remain open whenever checking or erasing Amplifier DTCs.

2. With the scan tool, record and erase the Amplifier DTCs.
3. Cycle the ignition switch from on to off, wait five seconds and then back to on.
4. Turn the Radio on and set the volume to 20.
5. Adjust the speakers to the rear and center.
6. With the scan tool, read the active Amplifier DTCs.

Does the scan tool display active: B14C1-CHANNEL 10 AUDIO SPEAKER OUTPUT CIRCUIT OPEN?

Yes

- Go To 2

No

- Test complete, the condition or conditions that originally set this DTC are not present at this time. Using the wiring diagrams as a guide, check all related splices and connectors for signs of water intrusion, corrosion, pushed out or bent terminals and correct pin tension.
- Perform the BODY VERIFICATION TEST. (Refer to 28 - DTC-Based Diagnostics/MODULE, Totally Integrated Power (TIPM) - Standard Procedure).

2. CHECK THE OPERATION OF THE SUBWOOFER SPEAKER

1. Turn the ignition off.
2. Disconnect the Subwoofer Speaker harness connector.
3. Turn the ignition on.
4. Turn the radio on and turn the volume to 25.
5. Adjust the speakers to the rear and center.
6. With a voltmeter set to read in A/C voltage, measure the voltage of the Subwoofer Speaker circuits in the Subwoofer Speaker harness connector.

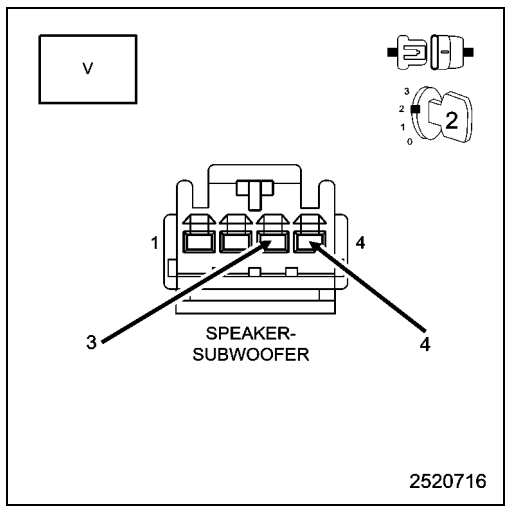

Is the voltage present greater than 1 volt?

Yes

- Replace the Subwoofer Speaker in accordance with the Service Information.
- Perform the BODY VERIFICATION TEST. (Refer to 28 - DTC-Based Diagnostics/MODULE, Totally Integrated Power (TIPM) - Standard Procedure).

No

- Go To 3

3. CHECK THE (X301) AMPLIFIED SUBWOOFER 2 (+) CIRCUIT FOR AN OPEN

1. Turn the ignition off.
2. Disconnect the Amplifier C1 harness connector.
3. Measure the resistance of the (X301) Amplified Subwoofer 2 (+) circuit between the Amplifier C1 harness connector and the Subwoofer Speaker harness connector.

Is the resistance below 2.0 Ohms?

Yes

- Go To 4

No

- Repair the (X301) Amplified Subwoofer 2 (+) circuit for an open.
- Perform the BODY VERIFICATION TEST. (Refer to 28 - DTC-Based Diagnostics/MODULE, Totally Integrated Power (TIPM) - Standard Procedure).

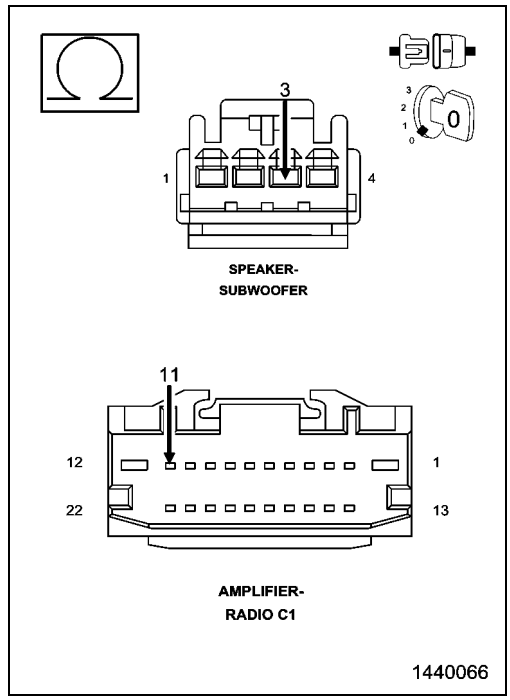

4. CHECK THE (X391) AMPLIFIED SUBWOOFER 2 (-) CIRCUIT FOR AN OPEN

1. Measure the resistance of the (X391) Amplified Subwoofer 2 (-) circuit between the Amplifier C1 harness connector and the Subwoofer Speaker harness connector.

Is the resistance below 2.0 Ohms?

Yes

- Replace the Amplifier in accordance with the Service Information.
- Perform the BODY VERIFICATION TEST. (Refer to 28 - DTC-Based Diagnostics/MODULE, Totally Integrated Power (TIPM) - Standard Procedure).

No

- Repair the (X391) Amplified Subwoofer 2 (-) circuit for an open.
- Perform the BODY VERIFICATION TEST. (Refer to 28 - DTC-Based Diagnostics/MODULE, Totally Integrated Power (TIPM) - Standard Procedure).

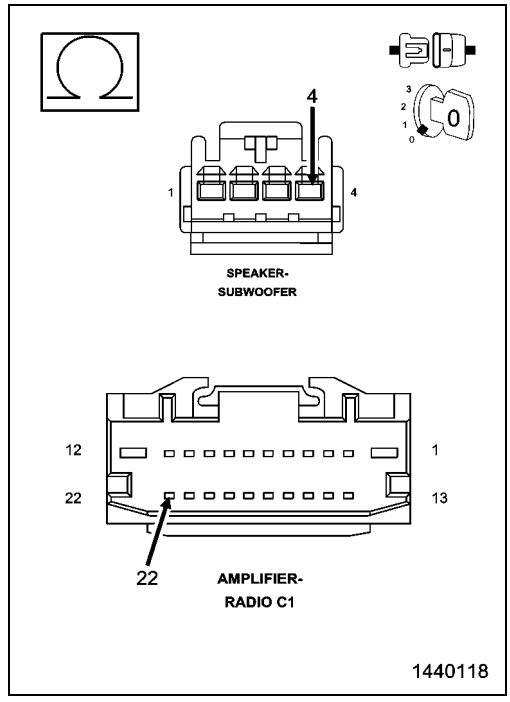

B14C2-CHANNEL 10 AUDIO SPEAKER OUTPUT CIRCUIT SHORTED TOGETHER

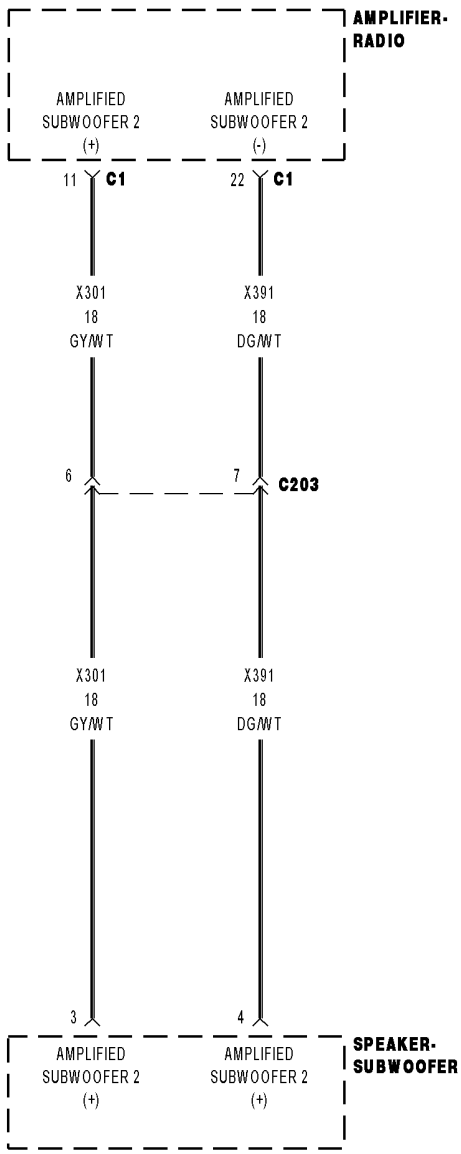

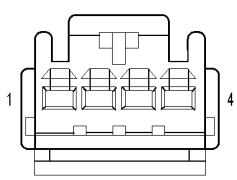

SPEAKER-
SUBWOOFER

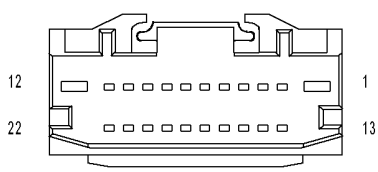

AMPLIFIER-
RADIO C1

01430635

For a complete wiring diagram, **refer to the Wiring Information**.

- **When Monitored:**
  With the ignition on. Radio volume at 25 or higher.
- **Set Condition:**
  The Amplifier detects that the output circuits are shorted together.

Possible Causes
(X301) AMPLIFIED SUBWOOFER 2 (+) CIRCUIT SHORTED TO THE (X391) AMPLIFIED SUBWOOFER 2 (-) CIRCUIT
AMPLIFIED SUBWOOFER SPEAKER
AMPLIFIER

1. CHECK FOR AN INTERMITTENT CONDITION

1. Turn the ignition on and open one of the front doors.

NOTE: A front door must remain open whenever checking or erasing Amplifier DTCs.

2. With the scan tool, record and erase the Amplifier DTCs.
3. Cycle the ignition switch from on to off, wait five seconds and then back to on.
4. Turn the Radio on and set the volume to 20.
5. Adjust the speakers to the rear and center.
6. With the scan tool, read the active Amplifier DTCs.

Does the scan tool display active: B14C2-CHANNEL 10 AUDIO SPEAKER OUTPUT CIRCUIT SHORTED TOGETHER?

Yes

- Go To 2

No

- Test complete, the condition or conditions that originally set this DTC are not present at this time. Using the wiring diagrams as a guide, check all related splices and connectors for signs of water intrusion, corrosion, pushed out or bent terminals and correct pin tension.
- Perform the BODY VERIFICATION TEST. (Refer to 28 - DTC-Based Diagnostics/MODULE, Totally Integrated Power (TIPM) - Standard Procedure).

2. CHECK THE OPERATION OF THE AMPLIFIED SUBWOOFER SPEAKER

1. Turn the ignition off.
2. Disconnect the Subwoofer Speaker.
3. Measure the resistance of the speaker between the two terminals.

NOTE: The graphic shows the connector for reference only. Measure between the speaker terminals.

Is the resistance of the speaker less than 1 Ohm?

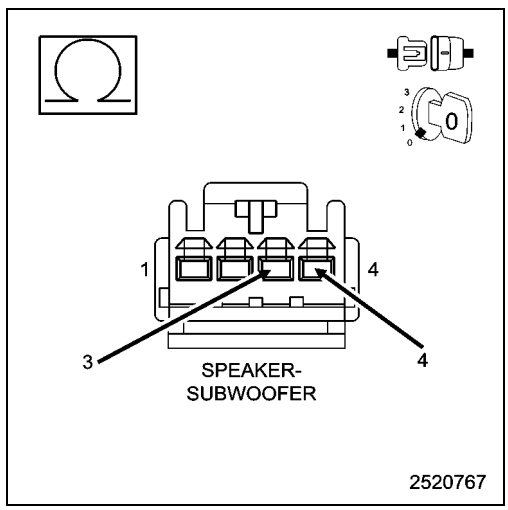

Yes

- Replace the Subwoofer Speaker in accordance with the Service Information.
- Perform the BODY VERIFICATION TEST. (Refer to 28 - DTC-Based Diagnostics/MODULE, Totally Integrated Power (TIPM) - Standard Procedure).

No

- Go To 3

3. CHECK THE (X301) AMPLIFIED SUBWOOFER 2 (+) CIRCUIT, AND THE (X391) AMPLIFIED SUBWOOFER 2 (-) CIRCUITS FOR A SHORT TOGETHER

1. Turn the ignition off.
2. Disconnect the Amplifier C1 harness connector.
3. Measure the resistance between the (X301) Amplified Subwoofer 2 (+) circuit, and the (X391) Amplified Subwoofer 2 (-) circuit.

Is the resistance below 10K Ohms?

Yes

- Repair the (X301) Amplified Subwoofer 2 (+) circuit, and the (X391) Amplified Subwoofer 2(-) circuit for a short together.
- Perform the BODY VERIFICATION TEST. (Refer to 28 - DTC-Based Diagnostics/MODULE, Totally Integrated Power (TIPM) - Standard Procedure).

No

- Replace the Amplifier in accordance with the Service Information.
- Perform the BODY VERIFICATION TEST. (Refer to 28 - DTC-Based Diagnostics/MODULE, Totally Integrated Power (TIPM) - Standard Procedure).

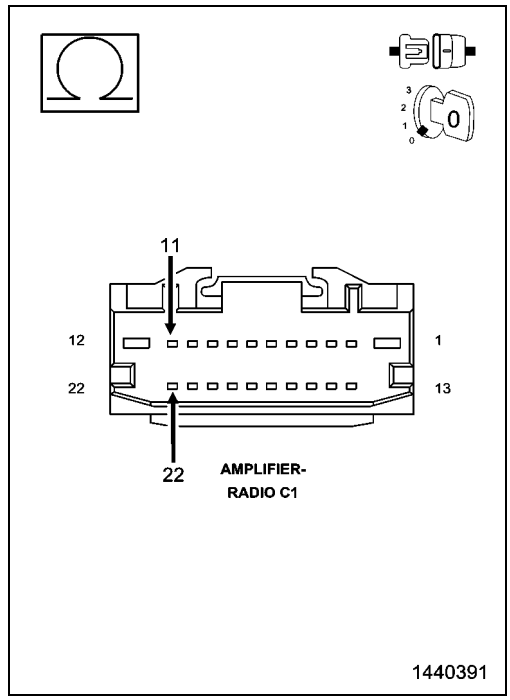

B14C3-CHANNEL 11 AUDIO SPEAKER OUTPUT CIRCUIT PERFORMANCE

For a complete wiring diagram, **refer to the Wiring Information**.

- **When Monitored:**

  With the ignition on.
- **Set Condition:**

  This Diagnostic Trouble Code (DTC) sets if a Direct Current (DC) offset occurs on the output channel, the amplifier shall set a DTC after a maturity rate of four to six seconds.

Possible Causes
AMPLIFIER

1. CHECK FOR AN INTERMITTENT CONDITION

1. Turn the ignition on and open one of the front doors.

NOTE: A front door must remain open whenever checking or erasing Amplifier DTCs.

2. With the scan tool, record and erase the Amplifier DTCs.
3. Cycle the ignition switch from on to off, wait five seconds and then back to on.
4. Turn the Radio on and set the volumn to 20.
5. Adjust the speakers to the front and center.
6. With the scan tool, read the active Amplifier DTCs.

Does the scan tool display active: B14C3-CHANNEL 11 AUDIO SPEAKER OUTPUT CIRCUIT PERFORMANCE?

Yes

- Replace the Amplifier in accordance with the Service Information.
- Perform the BODY VERIFICATION TEST. (Refer to 28 - DTC-Based Diagnostics/MODULE, Totally Integrated Power (TIPM) - Standard Procedure).

No

- Test complete, the condition or conditions that originally set this DTC are not present at this time. Using the wiring diagrams as a guide, check all related splices and connectors for signs of water intrusion, corrosion, pushed out or bent terminals and correct pin tension.
- Perform the BODY VERIFICATION TEST. (Refer to 28 - DTC-Based Diagnostics/MODULE, Totally Integrated Power (TIPM) - Standard Procedure).

B14C4-CHANNEL 11 AUDIO SPEAKER OUTPUT CIRCUIT LOW

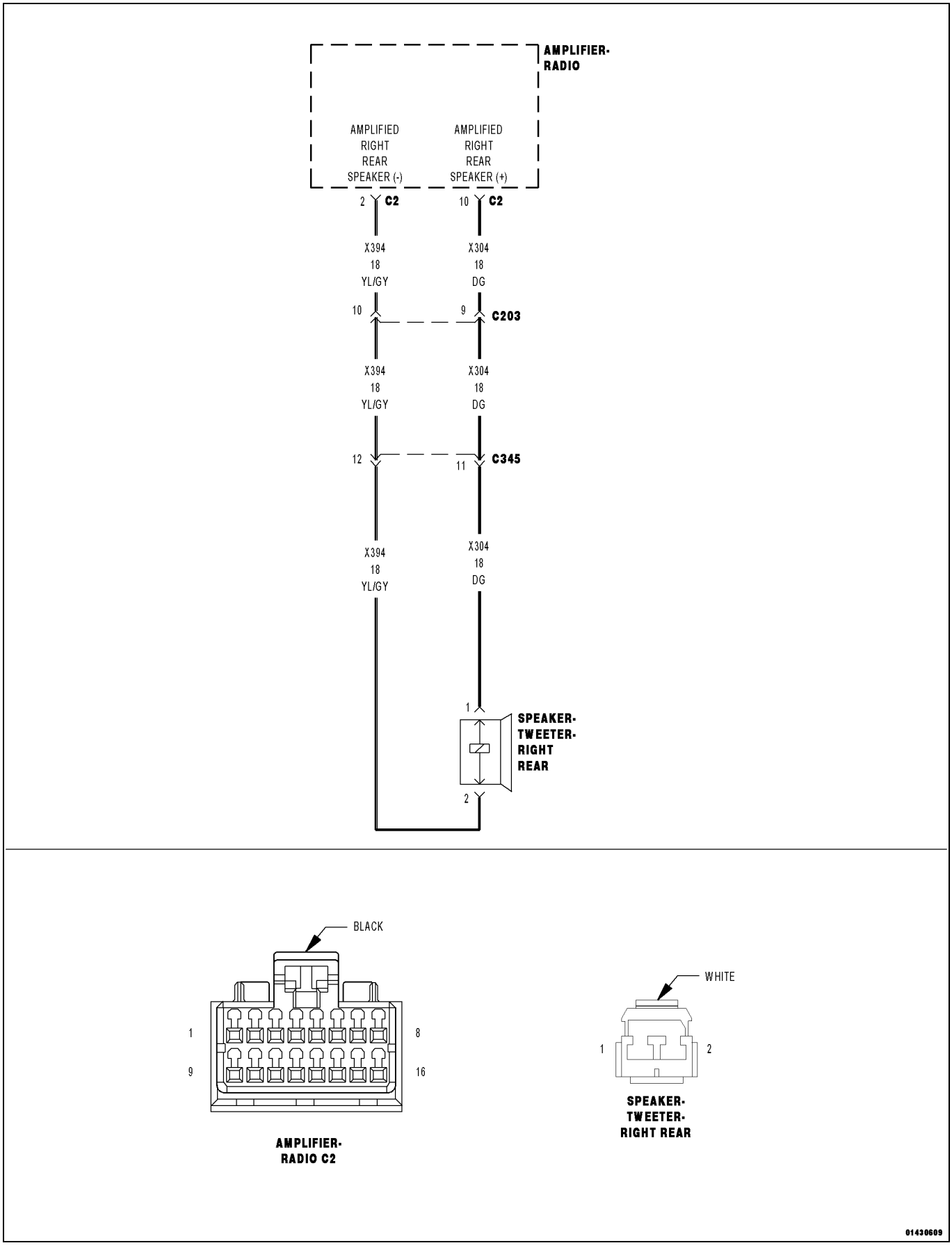

For a complete wiring diagram, **refer to the Wiring Information**.

- **When Monitored:**
  With the ignition on.
- **Set Condition:**
  The Amplifier detects a shorted to ground condition on the speaker output circuit.

Possible Causes
(X304) RIGHT REAR SPEAKER (+) CIRCUIT SHORTED TO GROUND
(X394) RIGHT REAR SPEAKER (-) CIRCUIT SHORTED TO GROUND
RIGHT REAR SPEAKER
AMPLIFIER

1. CHECK FOR AN INTERMITTENT CONDITION

1. Turn the ignition on and open one of the front doors.

NOTE: A front door must remain open whenever checking or erasing Amplifier DTCs.

2. With the scan tool, record and erase the Amplifier DTCs.
3. Cycle the ignition switch from on to off, wait five seconds and then back to on.
4. Turn the Radio on and set the volume to 20.
5. Adjust the speakers to the front and center.
6. With the scan tool, read the active Amplifier DTCs.

Does the scan tool display active: B14C4-CHANNEL 11 AUDIO SPEAKER OUTPUT CIRCUIT LOW?

Yes

- Go To 2

No

- Test complete, the condition or conditions that originally set this DTC are not present at this time. Using the wiring diagrams as a guide, check all related splices and connectors for signs of water intrusion, corrosion, pushed out or bent terminals and correct pin tension.
- Perform the BODY VERIFICATION TEST. (Refer to 28 - DTC-Based Diagnostics/MODULE, Totally Integrated Power (TIPM) - Standard Procedure).

2. CHECK THE RIGHT REAR SPEAKER

1. Make sure one of the front doors is still open.
2. With the scan tool, erase the DTCs.
3. Turn the ignition off.
4. Disconnect the Right Rear Speaker harness connector.
5. Turn the ignition on.
6. Turn the radio on and set the volume to 25.
7. With the scan tool, read the active Amplifier DTCs.

Does the scan tool display active: B14C4-CHANNEL 11 AUDIO SPEAKER OUTPUT CIRCUIT LOW?

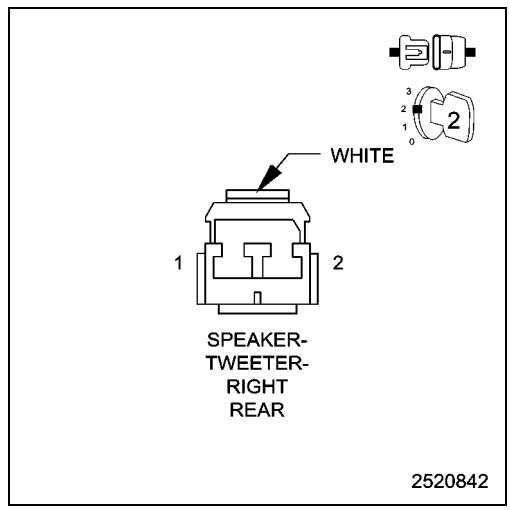

Yes

- Go To 3

No

- Replace the Right Rear Speaker.
- Perform the BODY VERIFICATION TEST. (Refer to 28 - DTC-Based Diagnostics/MODULE, Totally Integrated Power (TIPM) - Standard Procedure).

3. CHECK THE (X304) RIGHT REAR SPEAKER (+) CIRCUIT FOR A SHORT TO GROUND

1. Disconnect the Amplifier C2 harness connector.
2. Disconnect the Right Rear Speaker harness connector.
3. Measure the resistance between ground and the (X304) Right Rear Speaker (+) circuit.

Is the resistance below 10K Ohms?

Yes

- Repair the (X304) Right Rear Speaker (+) circuit for a short to ground.
- Perform the BODY VERIFICATION TEST. (Refer to 28 - DTC-Based Diagnostics/MODULE, Totally Integrated Power (TIPM) - Standard Procedure).

No

- Go To 4

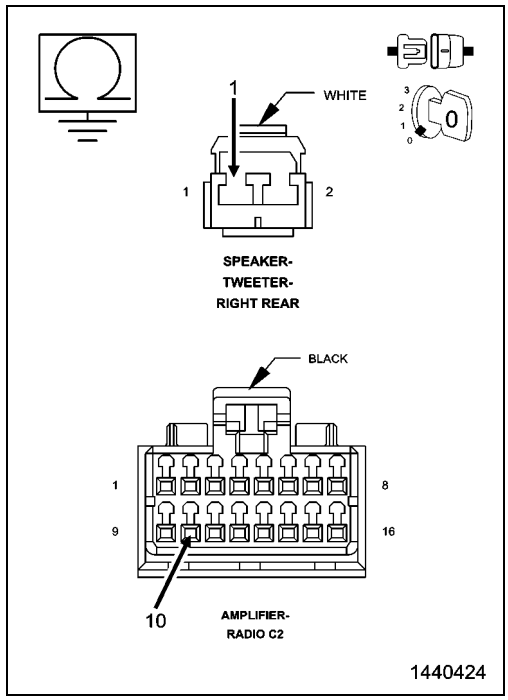

4. CHECK THE (X394) RIGHT REAR SPEAKER (-) CIRCUIT FOR A SHORT TO GROUND

1. Measure the resistance between ground and the (X394) Right Rear Speaker (-) circuit.

Is the resistance below 10K Ohms?

Yes

- Repair the (X394) Right Rear Speaker (-) for a short to ground.
- Perform the BODY VERIFICATION TEST. (Refer to 28 - DTC-Based Diagnostics/MODULE, Totally Integrated Power (TIPM) - Standard Procedure).

No

- Replace the Amplifier in accordance with the Service Information.
- Perform the BODY VERIFICATION TEST. (Refer to 28 - DTC-Based Diagnostics/MODULE, Totally Integrated Power (TIPM) - Standard Procedure).

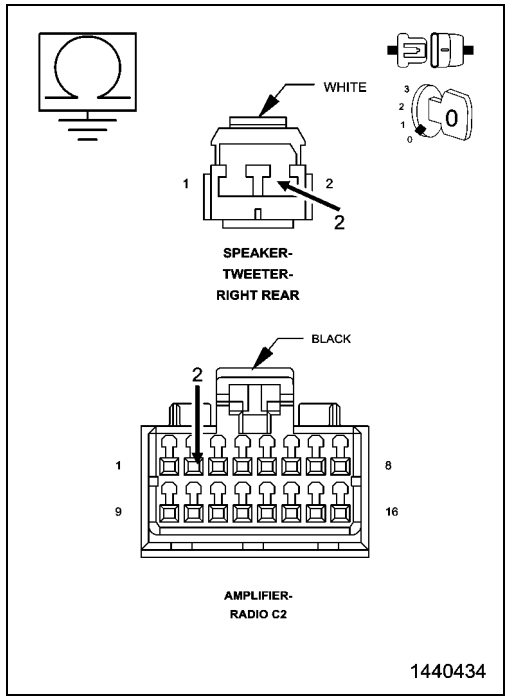

B14C6-CHANNEL 11 AUDIO SPEAKER OUTPUT CIRCUIT OPEN

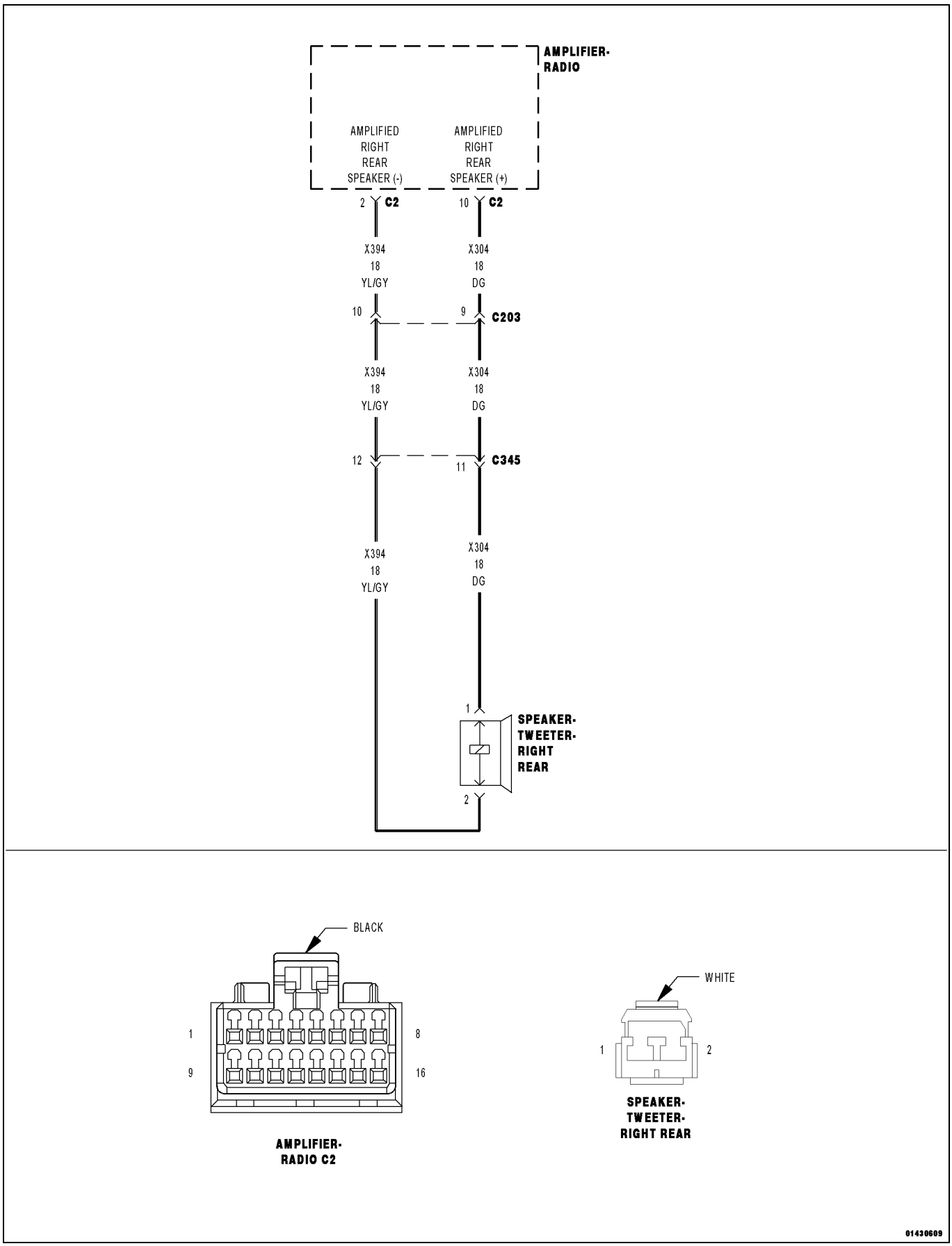

For a complete wiring diagram, **refer to the Wiring Information**.

- **When Monitored:**
  Amplifier Bus wake-up. Amplifier reset with scan tool.
- **Set Condition:**
  The Amplifier detects an open condition on the speaker output circuit.

Possible Causes
(X304) RIGHT REAR SPEAKER (+) CIRCUIT OPEN
(X394) RIGHT REAR SPEAKER (-) CIRCUIT OPEN
RIGHT REAR SPEAKER
AMPLIFIER

1. CHECK FOR AN INTERMITTENT CONDITION

1. Turn the ignition on and open one of the front doors.

NOTE: A front door must remain open whenever checking or erasing Amplifier DTCs.

2. With the scan tool, record and erase the Amplifier DTCs.
3. Cycle the ignition switch from on to off, wait five seconds and then back to on.
4. Turn the Radio on and set the volume to 20.
5. Adjust the speakers to the front and center.
6. With the scan tool, read the active Amplifier DTCs.

Does the scan tool display active: B14C6-CHANNEL 11 AUDIO SPEAKER OUTPUT CIRCUIT OPEN?

Yes

- Go To 2

No

- Test complete, the condition or conditions that originally set this DTC are not present at this time. Using the wiring diagrams as a guide, check all related splices and connectors for signs of water intrusion, corrosion, pushed out or bent terminals and correct pin tension.
- Perform the BODY VERIFICATION TEST. (Refer to 28 - DTC-Based Diagnostics/MODULE, Totally Integrated Power (TIPM) - Standard Procedure).

2. CHECK THE OPERATION OF THE RIGHT REAR SPEAKER

1. Turn the ignition off.
2. Disconnect the Right Rear Speaker harness connector.
3. Turn the ignition on.
4. Turn the radio on and turn the volume to 25.
5. Adjust the speakers to the rear and center.
6. With a voltmeter set to read in A/C voltage, measure the voltage of the Right Rear Speaker circuits in the Right Rear Speaker harness connector.

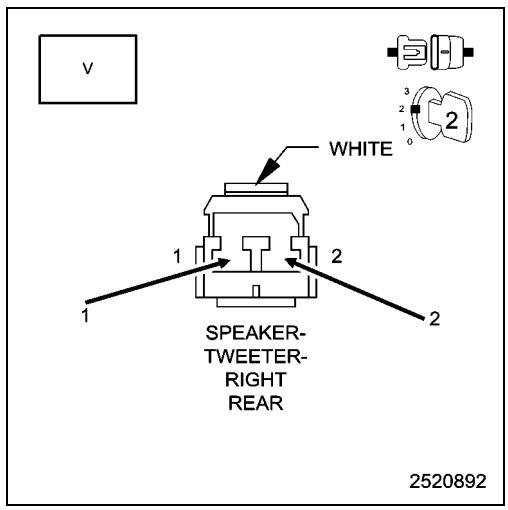

Is the voltage present greater than 1 volt?

Yes

- Replace the Right Rear Speaker in accordance with the Service Information.
- Perform the BODY VERIFICATION TEST. (Refer to 28 - DTC-Based Diagnostics/MODULE, Totally Integrated Power (TIPM) - Standard Procedure).

No

- Go To 3

3. CHECK THE (X304) RIGHT REAR SPEAKER (+) CIRCUIT FOR AN OPEN

1. Turn the ignition off.
2. Disconnect the Amplifier C2 harness connector.
3. Measure the resistance of the (X304) Right Rear Speaker (+) circuit between the Amplifier C2 harness connector and the Right Rear Speaker harness connector.

Is the resistance below 2.0 Ohms?

Yes

- Go To 4

No

- Repair the (X304) Right Rear Speaker (+) circuit for an open.
- Perform the BODY VERIFICATION TEST. (Refer to 28 - DTC-Based Diagnostics/MODULE, Totally Integrated Power (TIPM) - Standard Procedure).

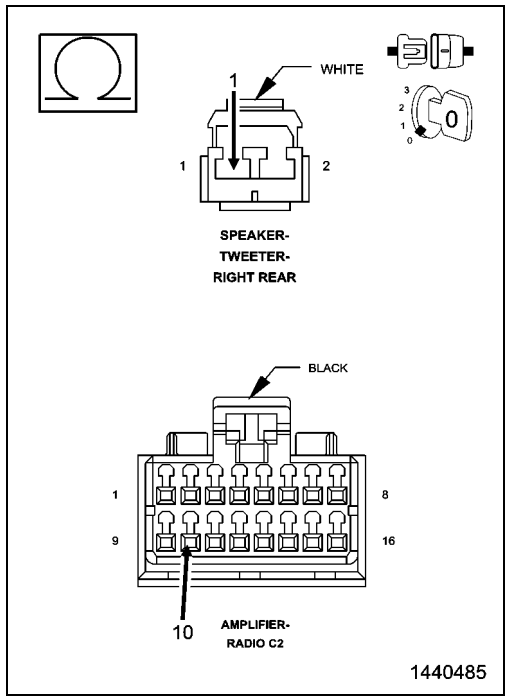

4. CHECK THE (X394) RIGHT REAR SPEAKER (-) CIRCUIT FOR AN OPEN

1. Turn the ignition off.
2. Disconnect the Amplifier C2 harness connector.
3. Measure the resistance of the (X394) Right Rear Speaker (-) circuit between the Amplifier C2 harness connector and the Right Rear Speaker harness connector.

Is the resistance below 2.0 Ohms?

Yes

- Replace the Amplifier in accordance with the Service Information.
- Perform the BODY VERIFICATION TEST. (Refer to 28 - DTC-Based Diagnostics/MODULE, Totally Integrated Power (TIPM) - Standard Procedure).

No

- Repair the (X394) Right Rear Speaker (-) circuit for an open.
- Perform the BODY VERIFICATION TEST. (Refer to 28 - DTC-Based Diagnostics/MODULE, Totally Integrated Power (TIPM) - Standard Procedure).

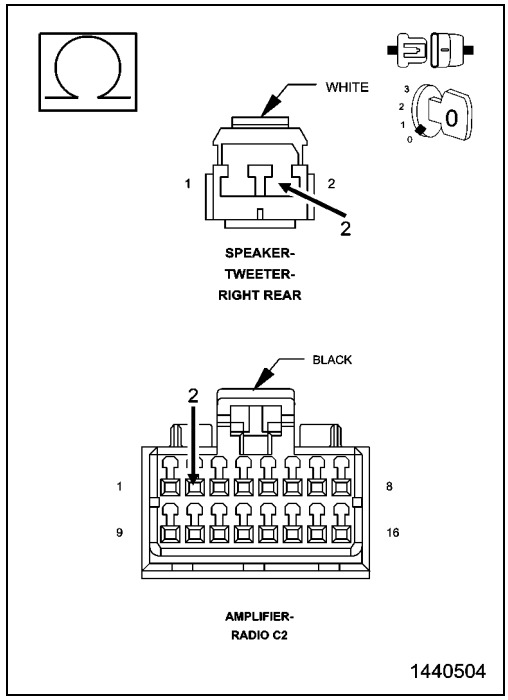

B14C5-CHANNEL 11 AUDIO SPEAKER OUTPUT CIRCUIT HIGH

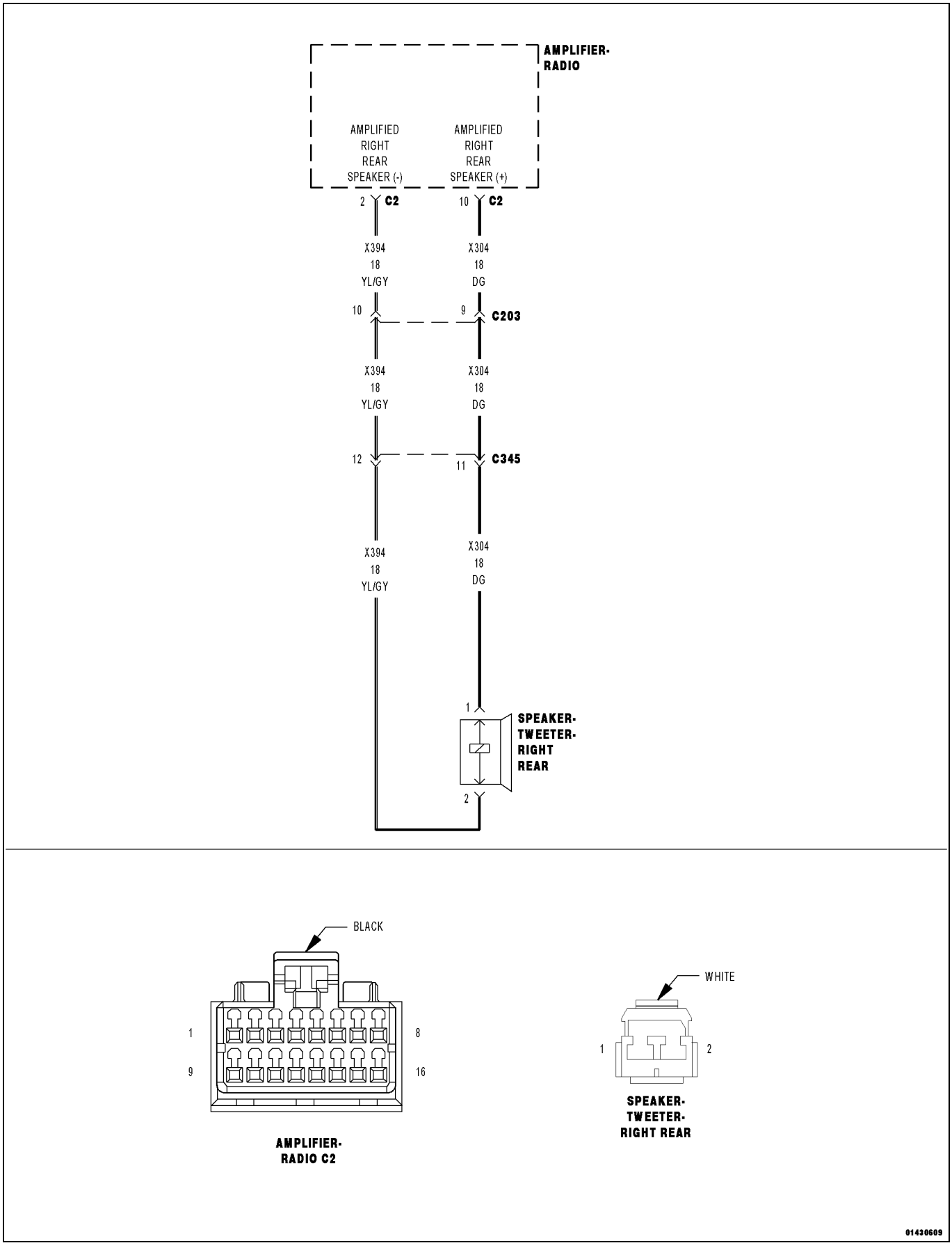

For a complete wiring diagram, **refer to the Wiring Information**.

- **When Monitored:**
  With the ignition on.
- **Set Condition:**
  The Amplifier detects a short to battery condition on the output circuit.

Possible Causes
(X304) RIGHT REAR SPEAKER (+) CIRCUIT SHORTED TO VOLTAGE
(X394) RIGHT REAR SPEAKER (-) CIRCUIT SHORTED TO VOLTAGE
AMPLIFIER

1. CHECK FOR AN INTERMITTENT CONDITION

1. Turn the ignition on and open one of the front doors.

NOTE: A front door must remain open whenever checking or erasing Amplifier DTCs.

2. With the scan tool, record and erase the Amplifier DTCs.
3. Cycle the ignition switch from on to off, wait five seconds and then back to on.
4. Turn the Radio on and set the volume to 20.
5. Adjust the speakers to the front and center.
6. With the scan tool, read the active Amplifier DTCs.

Does the scan tool display active: B14C5-CHANNEL 11 AUDIO SPEAKER OUTPUT CIRCUIT HIGH?

Yes

- Go To 2

No

- Test complete, the condition or conditions that originally set this DTC are not present at this time. Using the wiring diagrams as a guide, check all related splices and connectors for signs of water intrusion, corrosion, pushed out or bent terminals and correct pin tension.
- Perform the BODY VERIFICATION TEST. (Refer to 28 - DTC-Based Diagnostics/MODULE, Totally Integrated Power (TIPM) - Standard Procedure).

2. CHECK FOR VOLTAGE ON THE (X304) RIGHT REAR SPEAKER (+) CIRCUIT

1. Turn the ignition off.
2. Disconnect the Amplifier C2 harness connector.
3. Disconnect the Right Rear Speaker harness connector.
4. Turn the ignition on.
5. Measure for voltage on the (X304) Right Rear Speaker (+) circuit and ground.

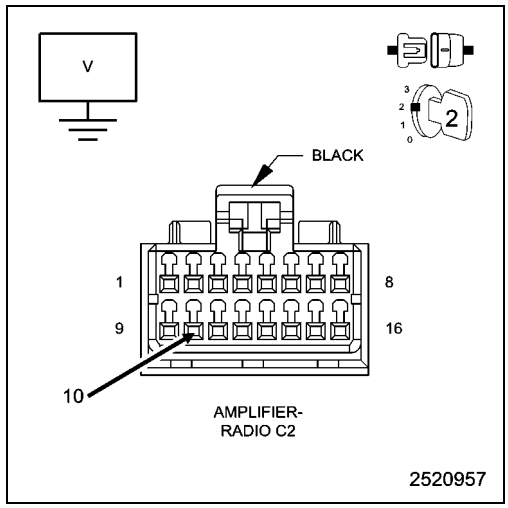

Is there any voltage present?

Yes

- Repair the (X304) Right Rear Speaker (+) circuit for a short to voltage.
- Perform the BODY VERIFICATION TEST. (Refer to 28 - DTC-Based Diagnostics/MODULE, Totally Integrated Power (TIPM) - Standard Procedure).

No

- Go To 3

3. CHECK FOR VOLTAGE ON THE (X394) RIGHT REAR SPEAKER (-) CIRCUIT

1. Measure for voltage on the (X394) Right Rear Speaker (-) circuit and ground.

Is there any voltage present?

Yes

- Repair the (X394) Right Rear Speaker (-) circuit for a short to voltage.
- Perform the BODY VERIFICATION TEST. (Refer to 28 - DTC-Based Diagnostics/MODULE, Totally Integrated Power (TIPM) - Standard Procedure).

No

- Replace the Amplifier in accordance with the Service Information.
- Perform the BODY VERIFICATION TEST. (Refer to 28 - DTC-Based Diagnostics/MODULE, Totally Integrated Power (TIPM) - Standard Procedure).

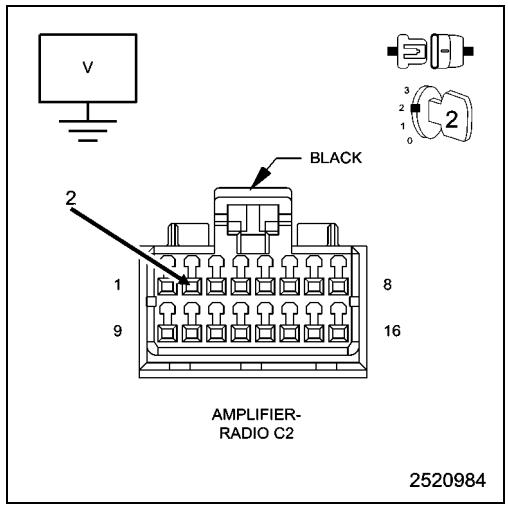

B14C7-CHANNEL 11 AUDIO SPEAKER OUTPUT CIRCUIT SHORTED TOGETHER

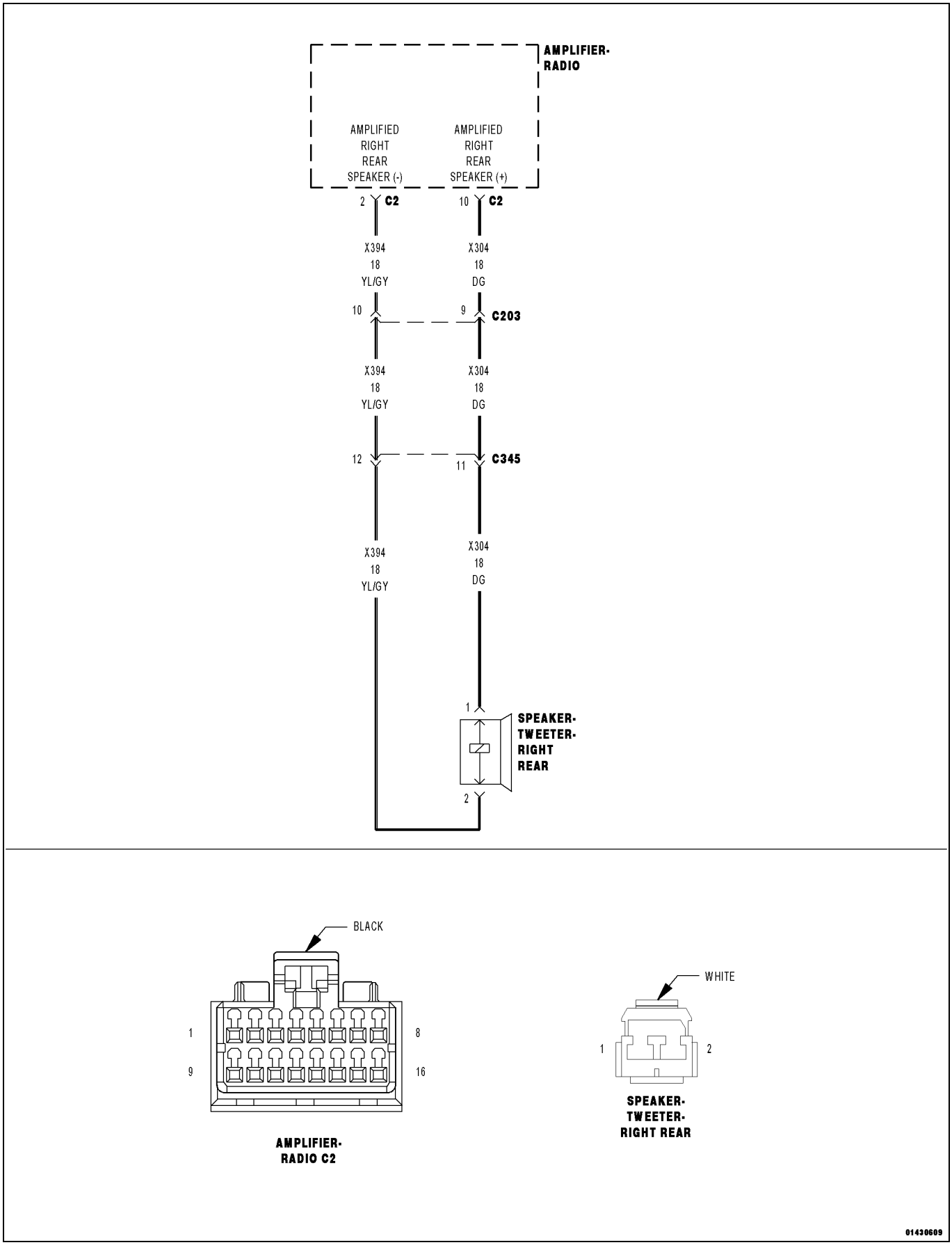

For a complete wiring diagram, **refer to the Wiring Information**.

- **When Monitored:**
  With the ignition on. Radio volume at 25 or higher.
- **Set Condition:**
  The Amplifier detects that the output circuits are shorted together.

Possible Causes
(X304) RIGHT REAR SPEAKER (+) CIRCUIT SHORTED TO THE (X394) RIGHT REAR SPEAKER (-) CIRCUIT
RIGHT REAR SPEAKER
AMPLIFIER

1. CHECK FOR AN INTERMITTENT CONDITION

1. Turn the ignition on and open one of the front doors.

NOTE: A front door must remain open whenever checking or erasing Amplifier DTCs.

2. With the scan tool, record and erase the Amplifier DTCs.
3. Cycle the ignition switch from on to off, wait five seconds and then back to on.
4. Turn the Radio on and set the volume to 20.
5. Adjust the speakers to the front and center.
6. With the scan tool, read the active Amplifier DTCs.

Does the scan tool display active: B14C7-CHANNEL 11 AUDIO SPEAKER OUTPUT CIRCUIT SHORTED TOGETHER?

Yes

- Go To 2

No

- Test complete, the condition or conditions that originally set this DTC are not present at this time. Using the wiring diagrams as a guide, check all related splices and connectors for signs of water intrusion, corrosion, pushed out or bent terminals and correct pin tension.
- Perform the BODY VERIFICATION TEST. (Refer to 28 - DTC-Based Diagnostics/MODULE, Totally Integrated Power (TIPM) - Standard Procedure).

2. CHECK THE OPERATION OF THE RIGHT REAR SPEAKER

1. Turn the ignition off.
2. Disconnect the Right Rear Speaker.
3. Measure the resistance of the speaker between the two terminals.

NOTE: The graphic shows the connector for reference only. Measure at the speaker terminals.

Is the resistance of the speaker less than 1 Ohm?

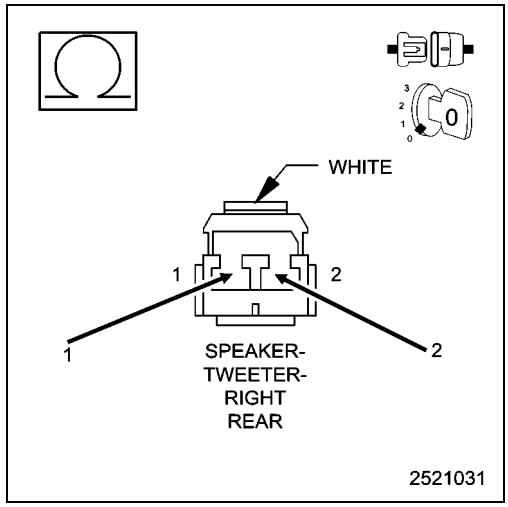

Yes

- Replace the Right Rear Speaker in accordance with the service information.
- Perform the BODY VERIFICATION TEST. (Refer to 28 - DTC-Based Diagnostics/MODULE, Totally Integrated Power (TIPM) - Standard Procedure).

No

- Go To 3

3. CHECK THE (X304) RIGHT REAR SPEAKER (+) CIRCUIT, AND THE (X394) RIGHT REAR SPEAKER (-) CIRCUITS FOR A SHORT TOGETHER

1. Turn the ignition off.
2. Disconnect the Amplifier C2 harness connector.
3. Measure the resistance between the (X304) Right Rear Speaker (+) circuit, and the (X394) Right Rear Speaker (-) circuit.

Is the resistance below 10K Ohms?

Yes

- Repair the (X304) Right Rear Speaker (+) circuit, and the (X394) Right Rear Speaker (-) circuit for a short together.
- Perform the BODY VERIFICATION TEST. (Refer to 28 - DTC-Based Diagnostics/MODULE, Totally Integrated Power (TIPM) - Standard Procedure).

No

- Replace the Amplifier in accordance with the Service Information.
- Perform the BODY VERIFICATION TEST. (Refer to 28 - DTC-Based Diagnostics/MODULE, Totally Integrated Power (TIPM) - Standard Procedure).

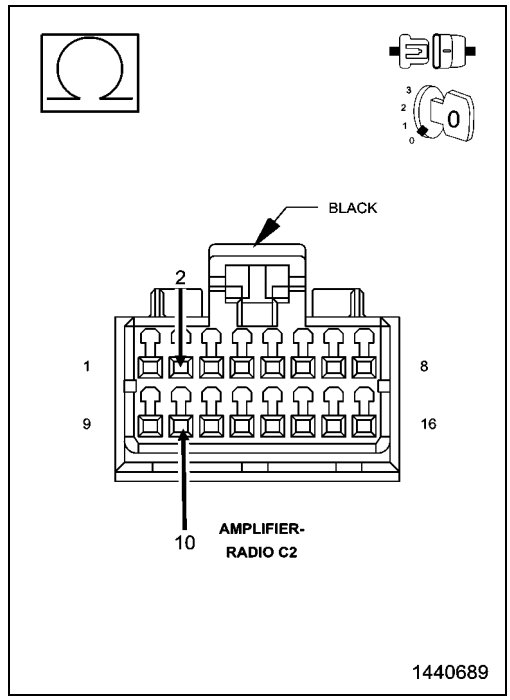

B210D-BATTERY VOLTAGE LOW

For a complete wiring diagram, **refer to the Wiring Information**.

- **When Monitored:**
  With the ignition on.
- **Set Condition:**
  If the module detects that the battery voltage is less than 9.0 volts for one second.

Possible Causes
VEHICLE CHARGING SYSTEM
RADIO

1. CHECK FOR AN INTERMITTENT CONDITION

1. Turn the ignition on, then off, and then on again.
2. With the scan tool, read the Radio DTCs.

Does the scan tool display active: B210D-BATTERY VOLTAGE LOW?

Yes

- Go To 2

No

- The conditions that caused this code to set are not present at this time. Using the wiring diagram/schematic as a guide, inspect the wiring and connectors.
- Perform the BODY VERIFICATION TEST. (Refer to 28 - DTC-Based Diagnostics/MODULE, Totally Integrated Power (TIPM) - Standard Procedure).

2. CHECK THE BATTERY VOLTAGE TO THE RADIO

1. With the scan tool in Data Display, read the Radio battery voltage.

Is the battery voltage less than 9.0 volts?

Yes

- Go To 3

No

- Replace the Radio in accordance with the Service Information.
- Perform the BODY VERIFICATION TEST. (Refer to 28 - DTC-Based Diagnostics/MODULE, Totally Integrated Power (TIPM) - Standard Procedure).

3. CHECK FOR CHARGING SYSTEM RELATED DTCS IN THE POWERTRAIN CONTROL MODULE (PCM)

1. With the scan tool in ECU View, select PCM and check for any Charging System related DTCs.

Does the scan tool display any Charging System related DTCs?

Yes

- (Refer to 28 - DTC-Based Diagnostics/MODULE, Powertrain Control (PCM) - Diagnosis and Testing) and perform the appropriate charging system or battery DTC diagnostic procedure.

No

- Replace the Radio in accordance with the Service Information.
- Perform the BODY VERIFICATION TEST. (Refer to 28 - DTC-Based Diagnostics/MODULE, Totally Integrated Power (TIPM) - Standard Procedure).

■ B210E-BATTERY VOLTAGE HIGH

For a complete wiring diagram, **refer to the Wiring Information**.

- **When Monitored:**
  With the ignition on.
- **Set Condition:**
  If the module detects that the battery voltage is greater 16.5 volts for one second.

Possible Causes
VEHICLE CHARGING SYSTEM
AMPLIFIER

1. CHECK FOR AN INTERMITTENT CONDITION

1. Turn the ignition on, then off, and then on again.
2. With the scan tool, read the Amplifier DTCs.

Does the scan tool display active: B210E-BATTERY VOLTAGE HIGH?

Yes

- Go To 2

No

- The conditions that caused this code to set are not present at this time. Using the wiring diagram/schematic as a guide, inspect the wiring and connectors.
- Perform the BODY VERIFICATION TEST. (Refer to 28 - DTC-Based Diagnostics/MODULE, Totally Integrated Power (TIPM) - Standard Procedure).

2. CHECK THE BATTERY VOLTAGE TO THE AMPLIFIER

1. With the scan tool in Data Display, read the Amplifier battery voltage.

Is the battery voltage greater than 16.5 volts?

Yes

- Go To 3

No

- Replace the Amplifier in accordance with the Service Information.
- Perform the BODY VERIFICATION TEST. (Refer to 28 - DTC-Based Diagnostics/MODULE, Totally Integrated Power (TIPM) - Standard Procedure).

3. CHECK FOR CHARGING SYSTEM RELATED DTCS IN THE POWERTRAIN CONTROL MODULE (PCM)

1. With the scan tool in ECU View, select PCM and check for any Charging System related DTCs.

Does the scan tool display any Charging System related DTCs?

Yes

- (Refer to 28 - DTC-Based Diagnostics/MODULE, Powertrain Control (PCM) - Diagnosis and Testing) and perform the appropriate charging system or battery DTC diagnostic procedure.

No

- Replace the Amplifier in accordance with the Service Information.
- Perform the BODY VERIFICATION TEST. (Refer to 28 - DTC-Based Diagnostics/MODULE, Totally Integrated Power (TIPM) - Standard Procedure).

B221F-AMPLIFIER INTERNAL

For a complete wiring diagram, **refer to the Wiring Information**.

- **When Monitored:**
  With the ignition on.
- **Set Condition:**
  The Amplifier detects a software checksum test failure.

Possible Causes
AMPLIFIER

1. REPLACE THE AMPLIFIER

1. When this code is set, the Amplifier must be replaced.

Repair

- Replace the Amplifier in accordance with the Service Information.
- Perform the BODY VERIFICATION TEST. (Refer to 28 - DTC-Based Diagnostics/MODULE, Totally Integrated Power (TIPM) - Standard Procedure).

B222C-VEHICLE CONFIGURATION NOT PROGRAMMED

For a complete wiring diagram, **refer to the Wiring Information**.

- **When Monitored:**
  With the ignition on.
- **Set Condition:**
  Vehicle configuration information not programmed into the Instrument Cluster.

POSSIBLE CAUSES
NO COMMUNICATION WITH TOTALLY INTEGRATED POWER MODULE (TIPM)
ACTIVE TIPM DTCS
INSTRUMENT CLUSTER
TOTALLY INTEGRATED POWER MODULE (TIPM)

1. TEST FOR AN INTERMITTENT CONDITION

1. Turn the ignition on.
2. With the scan tool, record and erase any Instrument Cluster DTCs.
3. Turn the ignition off, wait ten seconds then turn the ignition on.
4. With the scan tool, read DTCs.

Does the scan tool display: B222C-VEHICLE CONFIGURATION NOT PROGRAMMED?

Yes

- Go To 2

No

- The condition that caused this code to set is not present at this time. Using the wiring diagram as a guide, inspect the wiring and connectors for an intermittent condition. Operate the system several times and recheck for active DTCs.
- Perform the BODY VERIFICATION TEST. (Refer to 28 - DTC-Based Diagnostics/MODULE, Totally Integrated Power (TIPM) - Standard Procedure).

2. VERIFY COMMUNICATION WITH TIPM

1. With the scan tool in ECU VIEW, read active modules on the bus.

Does the scan tool show the TIPM active on the bus?

Yes

- Go To 3

No

- (Refer to 29 - Non-DTC Diagnostics/Communication - Diagnosis and Testing) and perform the No Response From TIPM diagnostic procedure.

3. CHECK TIPM FOR ACTIVE DTCS

1. With the scan tool, erase TIPM DTCs.
2. Turn the ignition off. Wait approximately ten seconds.
3. Turn the ignition on.
4. With the scan tool, read TIPM DTCs.

Are any active DTCs present?

Yes

- (Refer to 28 - DTC-Based Diagnostics/MODULE, Totally Integrated Power (TIPM) - Diagnosis and Testing) and perform the appropriate diagnostic procedure.

No

- Go To 4

4. CHECK CLUSTER VEHICLE INFORMATION WITH SCAN TOOL

1. With the scan tool in Cluster ECU Identification, read the Original and Current VINs, and the Body Style of the vehicle.

Does the information displayed match the vehicle?

Yes

- Replace the Instrument Cluster in accordance with the Service Information.
- Perform the BODY VERIFICATION TEST. (Refer to 28 - DTC-Based Diagnostics/MODULE, Totally Integrated Power (TIPM) - Standard Procedure).

No

- Replace the TIPM in accordance with the Service Information.
- Perform the BODY VERIFICATION TEST. (Refer to 28 - DTC-Based Diagnostics/MODULE, Totally Integrated Power (TIPM) - Standard Procedure).

U0010-CAN INTERIOR BUS

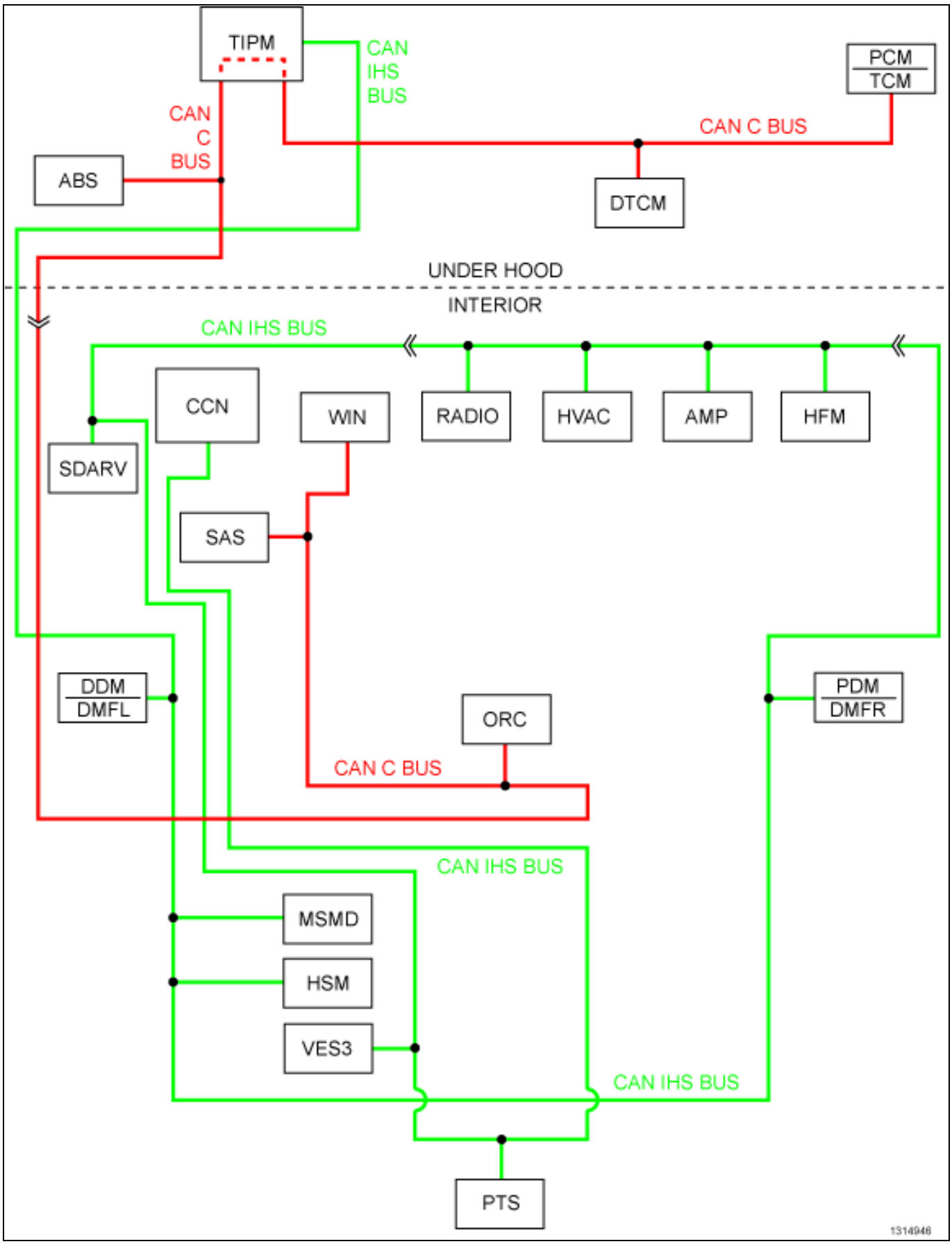

For a complete wiring diagram, **refer to the Wiring Information**.

- **When Monitored:**
  Continuously when the ignition is on.
  Battery voltage between 10 and 16 volts.
  IOD fuse installed.
- **Set Condition:**
  The TIPM detects a short to ground on the CAN Interior Bus (125K)(+) circuit or a short to voltage on the CAN Interior Bus (125K)(-) circuit.

Possible Causes
(D265) CAN INTERIOR BUS (125K)(+) CIRCUIT SHORTED TO GROUND
(D264) CAN INTERIOR BUS (125K)(-) CIRCUIT SHORTED TO VOLTAGE
ANY CAN INTERIOR BUS MODULE
TOTALLY INTEGRATED POWER MODULE

1. VERIFY DTC IS ACTIVE

NOTE: Ensure the IOD fuse is installed and the battery is fully charged before proceeding.

NOTE: This module will not be able to communicate when this fault is active and therefore will only display this DTC as stored. To diagnose this DTC, use a scan tool and check for DTCs in the TIPM. If DTCs are active, (Refer to 28 - DTC-Based Diagnostics/MODULE, Totally Integrated Power (TIPM) - Diagnosis and Testing) and perform the appropriate diagnostic procedure. If no DTCs are active, but there are stored Lost Communication DTCs, (Refer to 29 - Non-DTC Diagnostics/Communication - Diagnosis and Testing) and perform the appropriate No Response diagnostic procedure. If no DTCs are set, perform the BODY VERIFICATION TEST. (Refer to 28 - DTC-Based Diagnostics/MODULE, Totally Integrated Power (TIPM) - Standard Procedure).

1. Turn the ignition on.
2. With the scan tool, read active Amplifier DTCs.

Is this DTC active?

Yes

- (Refer to 28 - DTC-Based Diagnostics/MODULE, Totally Integrated Power (TIPM) - Diagnosis and Testing)and perform the diagnostic procedure for this DTC.

No

- (Refer to 29 - Non-DTC Diagnostics/Communication - Diagnosis and Testing) and perform the Stored Lost Communication DTCs diagnostic procedure.

U0141-LOST COMMUNICATION WITH IPM (FCM/TIPM)

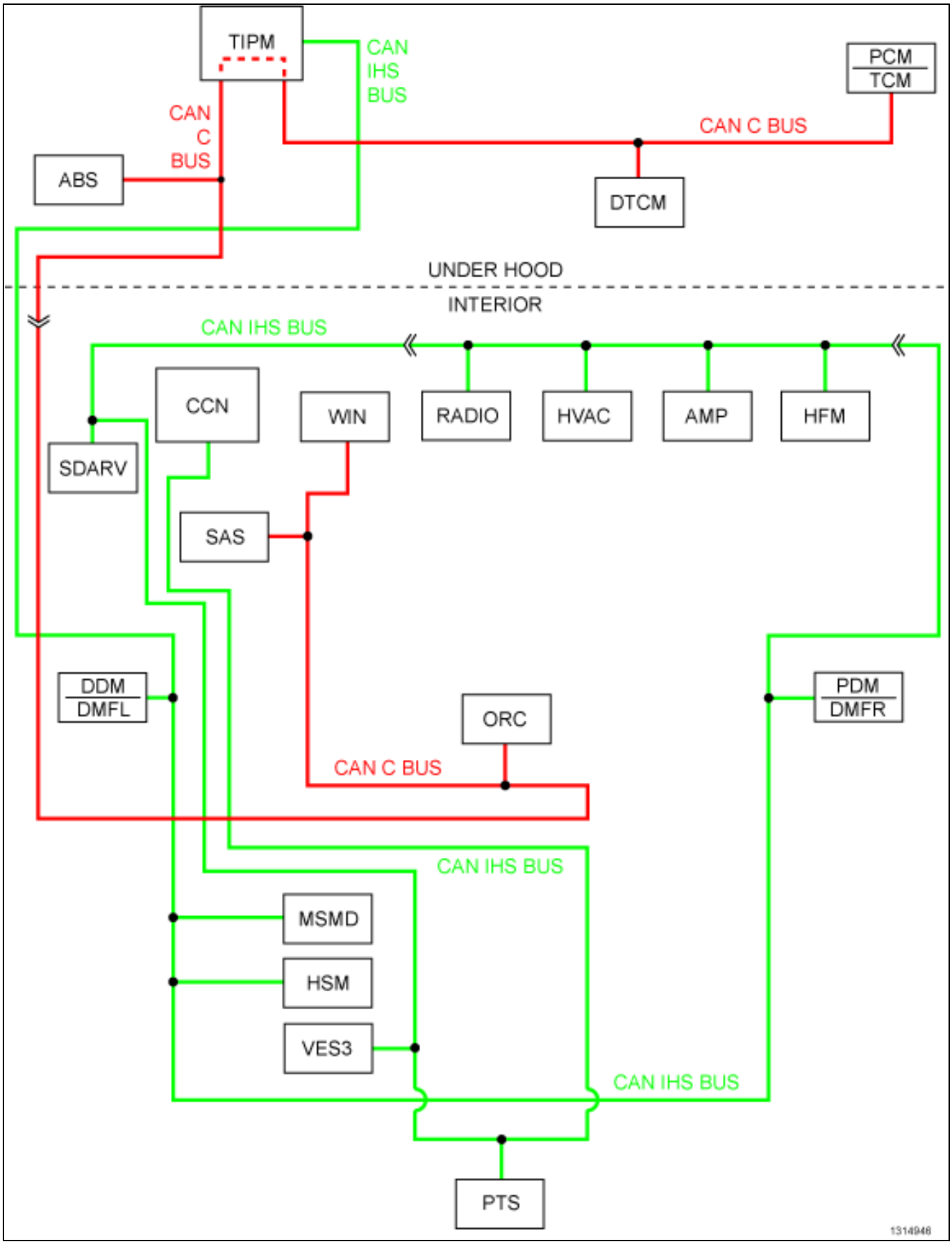

For a complete wiring diagram, **refer to the Wiring Information**.

- **When Monitored:**
  Continuously when the ignition is on.
  Battery voltage between 10 and 16 volts.
  Ignition Off Draw (IOD) fuse installed.
  Totally Integrated Power Module (TIPM) is configured correctly.
- **Set Condition:**
  Bus messages not received from the Totally Integrated Power Module (TIPM) for approximately two to five seconds.

Possible Causes
CAN B OR CAN C BUS CIRCUITS OPEN OR SHORTED
DTCS RELATED TO BATTERY VOLTAGE, IGNITION, OR VIN MESSAGES
TIPM NOT CONFIGURED CORRECTLY
TOTALLY INTEGRATED POWER MODULE (TIPM)
TIPM POWER AND GROUND
MODULE THAT SET THIS DTC

1. VERIFY DIAGNOSTIC TROUBLE CODE (DTC) IS ACTIVE

NOTE: Make sure the IOD fuse is installed and battery voltage is between 10 and 16 volts before proceeding.

1. With the scan tool, read active AMP DTCs.

Is this DTC active?

Yes

- (Refer to 28 - DTC-Based Diagnostics/MODULE, Totally Integrated Power (TIPM) - Diagnosis and Testing) and perform the U0141-Lost Communication with IPM (FCM/TIPM) diagnostic procedure.

No

- (Refer to 29 - Non-DTC Diagnostics/Communication - Diagnosis and Testing) and perform the Stored Lost Communication DTC diagnostic procedure.

U0184-LOST COMMUNICATION WITH RADIO

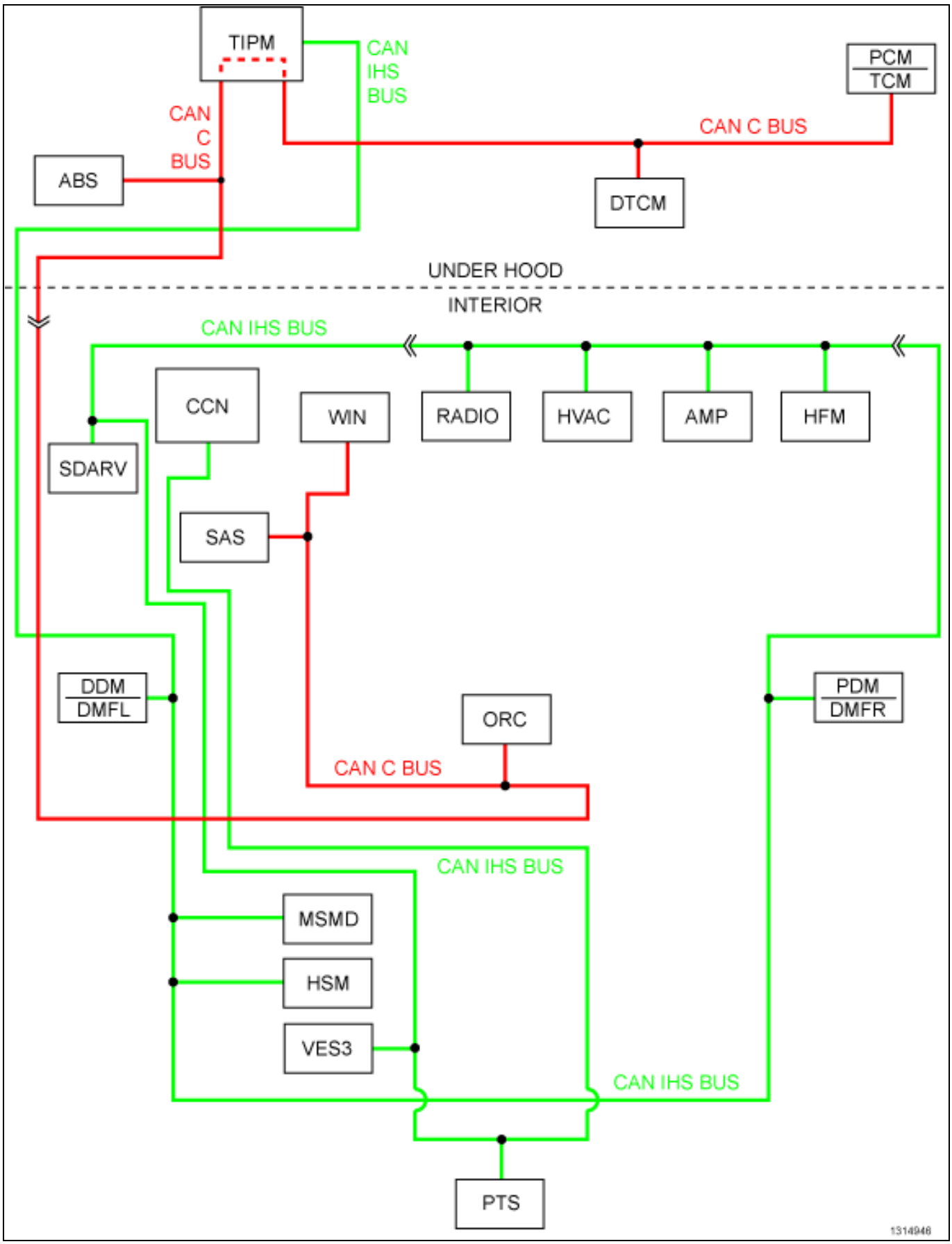

For a complete wiring diagram, **refer to the Wiring Information**.

- **When Monitored:**
  Continuously when the ignition is on.
  Battery voltage between 10 and 16 volts.
  Ignition Off Draw (IOD) fuse installed.
  Totally Integrated Power Module (TIPM) is configured correctly.
- **Set Condition:**
  Bus messages not received from the Radio for approximately two to five seconds.

Possible Causes
CAN IHS OR CAN C BUS CIRCUITS OPEN OR SHORTED
DTCS RELATED TO BATTERY VOLTAGE, IGNITION, OR VIN MESSAGES
TIPM NOT CONFIGURED CORRECTLY
RADIO POWER AND GROUND
RADIO
AMPLIFIER

1. VERIFY DIAGNOSTIC TROUBLE CODE (DTC) IS ACTIVE

NOTE: Make sure the IOD fuse is installed and battery voltage is between 10 and 16 volts before proceeding.

1. Using the scan tool, read active Amplifier DTCs.

Is this DTC active?

Yes

- (Refer to 28 - DTC-Based Diagnostics/MODULE, Totally Integrated Power (TIPM) - Diagnosis and Testing) and perform the U0184-Lost Communication with Radio diagnostic procedure.

No

- (Refer to 29 - Non-DTC Diagnostics/Communication - Diagnosis and Testing) and perform the Stored Lost Communication DTCs diagnostic procedure.

CONTROLLER, Occupant Restraint (ORC)

Diagnosis and Testing

■ B0001-11-DRIVER FRONTAL SQUIB 1 CONTROL - CIRCUIT SHORT TO GROUND

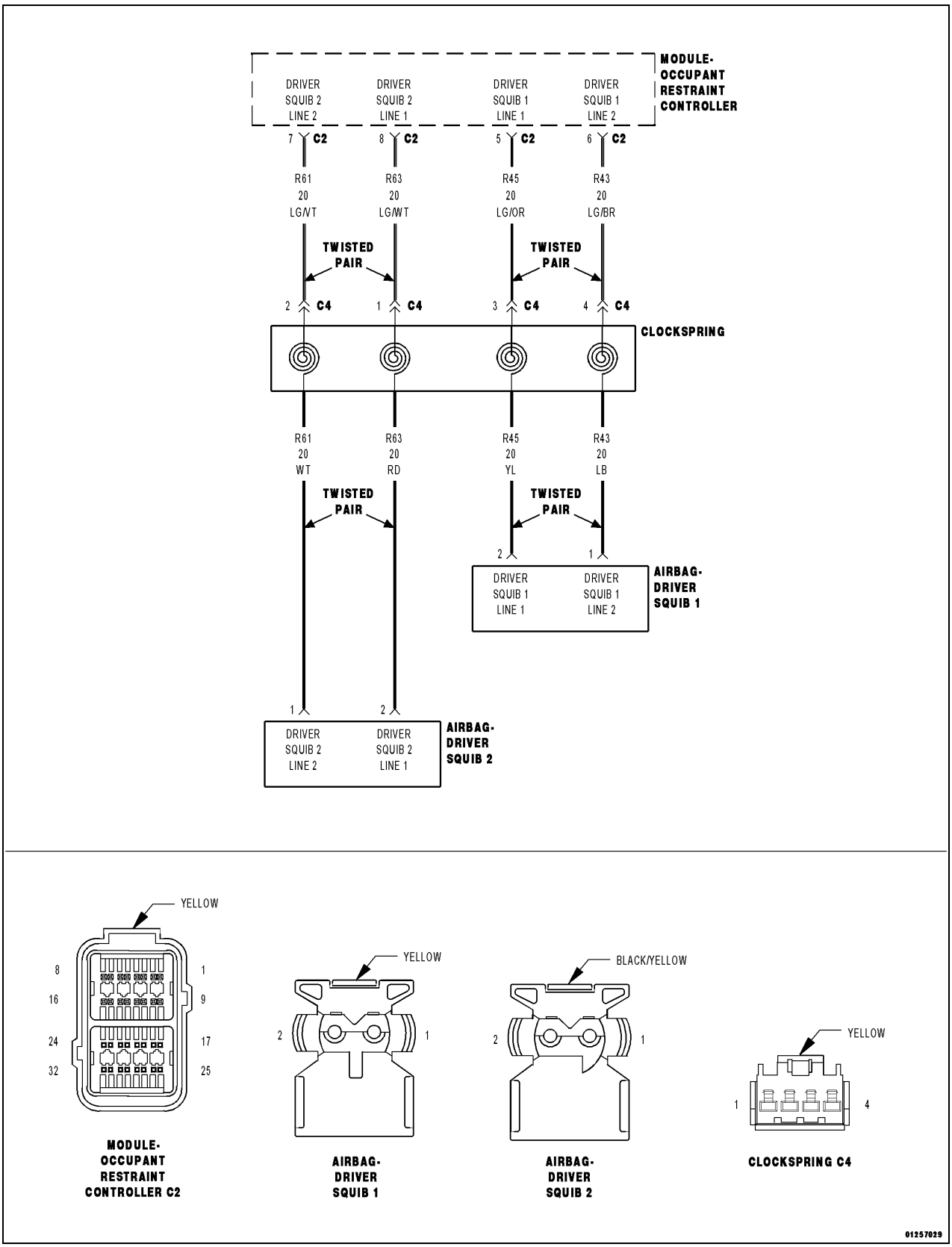

For a complete wiring diagram, **refer to the Wiring Information**.

Theory of Operation

When powered, the Occupant Restraint Controller (ORC) sends a test current to the squibs to verify the integrity of the squib and wiring. These circuits are maintained in a floating configuration at the ORC (connected to neither power or ground) as protection against inadvertent deployment. Use of the Supplemental Restraints System (SRS) Load Tool Kit 8443A in the tests below substitutes a suspect squib with a known good component. The use of the SRS Load Tool Adaptor provides a test point as well as a method for opening the shorting bar connections within the ORC harness connector .

- **When Monitored:**

  The ORC Module sends out a 40 mA diagnostic current on each squib voltage supply circuit at power up, and every 100 ms thereafter while the ignition is on.
- **Set Condition:**

  This Diagnostic Trouble Code (DTC) sets when the ORC detects a short to ground on the driver airbag squib circuit for more than 2.5 seconds. This DTC transitions from active to stored when the ORC sees a recovery from a short to ground for greater than 2.5 seconds.

Possible Causes
(R43) DRIVER SQUIB 1 LINE 2 CIRCUIT SHORTED TO GROUND
(R45) DRIVER SQUIB 1 LINE 1 CIRCUIT SHORTED TO GROUND
CLOCKSPRING
DRIVER AIRBAG
OCCUPANT RESTRAINT CONTROLLER (ORC) MODULE

Always perform the Pre-Diagnostic Troubleshooting procedure before proceeding. (Refer to 28 - DTC-Based Diagnostics/CONTROLLER, Occupant Restraint (ORC) - Standard Procedure).

1. VERIFY ACTIVE DTC

NOTE: Make Sure the battery is fully charged.

1. Turn the ignition on.
2. With the scan tool, read the ORC DTCs.

Does the scan tool display active B0001-11-DRIVER FRONTAL SQUIB 1 CONTROL - CIRCUIT SHORT TO GROUND DTC?

Yes

- Go To 2

No

- Perform the RESTRAINTS SYSTEM INTERMITTENT TEST. (Refer to 28 - DTC-Based Diagnostics/CONTROLLER, Occupant Restraint (ORC) - Standard Procedure).

2. CHECK FOR SHORTED SQUIB CIRCUITS IN DRIVER AIRBAG

WARNING: Turn the ignition off, disconnect the 12-volt battery and wait two minutes before proceeding. Failure to follow these instructions may result in possible serious or fatal injury.

1. Disconnect the Driver Airbag Squib harness connectors.

WARNING: Do not place an intact non-deployed airbag face down on a hard surface, the airbag propels into the air if accidentally deployed. Failure to follow these instructions may result in possible serious or fatal injury.

NOTE: Check connectors. Clean and repair as necessary.

2. Connect the SRS Load Tool Kit 8443A and the SRS Load Tool Jumper 8443-1 to the Driver Airbag Squib harness connectors.

WARNING: Turn the ignition on, then reconnect the 12-volt battery and wait two minutes before proceeding. Failure to follow these instructions may result in possible serious or fatal injury.

3. With the scan tool, read the ORC DTCs.

Does the scan tool display active B0001-11-DRIVER FRONTAL SQUIB 1 CONTROL - CIRCUIT SHORT TO GROUND DTC?

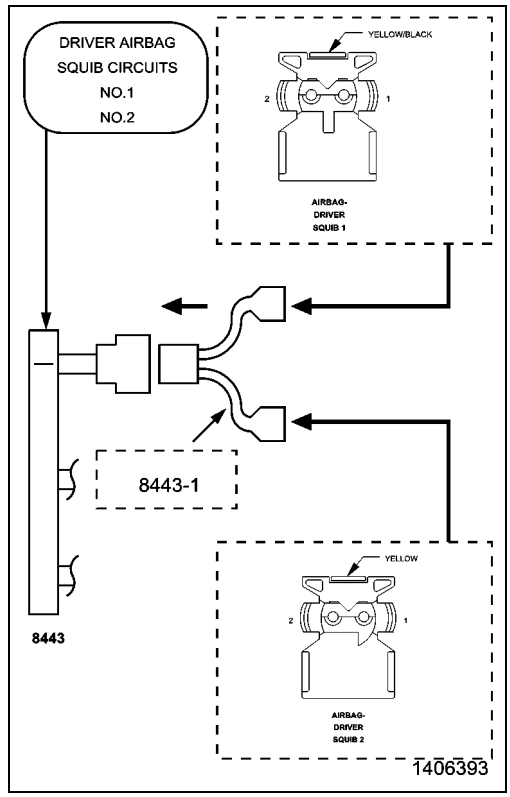

Yes

- Go To 3

No

WARNING: Turn the ignition off, disconnect the 12-volt battery and wait two minutes before proceeding. Failure to follow these instructions may result in possible serious or fatal injury.

- Replace the Driver Airbag in according to the Service Information.
- Perform the RESTRAINTS SYSTEM VERIFICATION TEST. (Refer to 28 - DTC-Based Diagnostics/CONTROLLER, Occupant Restraint (ORC) - Standard Procedure).

3. CHECK CLOCKSPRING SQUIB CIRCUITS FOR A SHORT TO GROUND

WARNING: Turn the ignition off, disconnect the 12-volt battery and wait two minutes before proceeding. Failure to follow these instructions may result in possible serious or fatal injury.

1. Disconnect the SRS Load Tool Kit 8443A and Jumper from the Driver Airbag Squib harness connectors.
2. Disconnect the Clockspring C4 harness connector.

NOTE: Check connectors. Clean and repair as necessary.

3. Connect the SRS Load Tool Kit 8443A and SRS Load Tool Jumper 8443-19 to the Clockspring C4 harness connector.

WARNING: Turn the ignition on, then reconnect the 12-volt battery and wait two minutes before proceeding. Failure to follow these instructions may result in possible serious or fatal injury.

4. With the scan tool, read the ORC DTCs.

Does the scan tool display active B0001-11-DRIVER FRONTAL SQUIB 1 CONTROL - CIRCUIT SHORT TO GROUND DTC?

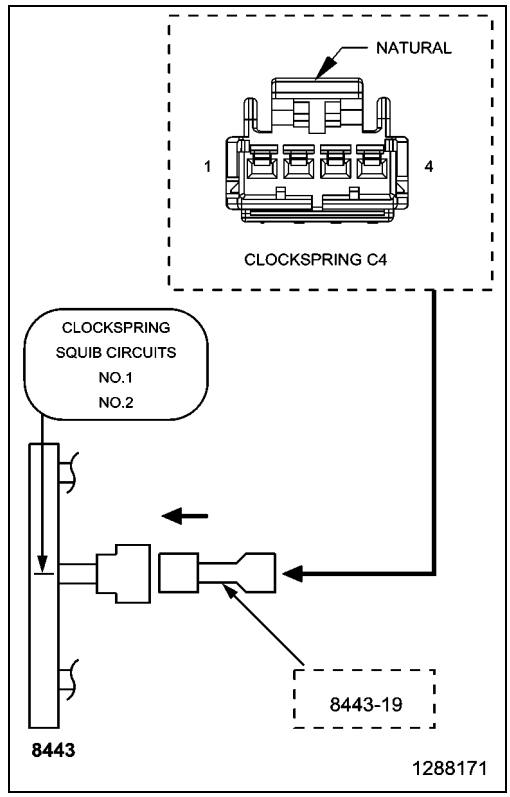

Yes

- Go To 4.

No

WARNING: Turn the ignition off, disconnect the 12-volt battery and wait two minutes before proceeding. Failure to follow these instructions may result in possible serious or fatal injury.

- Replace the Clockspring in according to the Service Information.
- Perform the RESTRAINTS SYSTEM VERIFICATION TEST. (Refer to 28 - DTC-Based Diagnostics/CONTROLLER, Occupant Restraint (ORC) - Standard Procedure).

4. CHECK (R43, R45) DRIVER SQUIB 1 CIRCUITS FOR A SHORT TO GROUND

WARNING: Turn the ignition off disconnect the 12-volt battery and wait two minutes before proceeding. Failure to follow these instructions may result in possible serious or fatal injury.

1. Disconnect the SRS Load Tool Kit 8443A and Jumper from the Clockspring C4 harness connector.
2. Disconnect the ORC harness connectors.

NOTE: Check connectors. Clean and repair as necessary.

3. Connect the SRS Load Tool Adaptor 8443-24 to the ORC C2 harness connector.
4. Measure the resistance of the (R43) Driver Squib 1 Line 2 circuit between the Clockspring C4 harness connector cavity 4 and ground.
5. Measure the resistance of the (R45) Driver Squib 1 Line 1 circuit between the Clockspring C4 harness connector cavity 3 and ground

Is the resistance below 10K Ohms for either measurement?

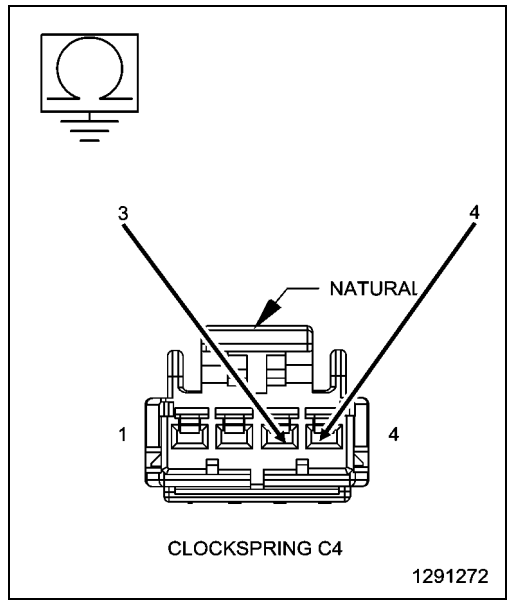

Yes

- Repair the (R43, R45) Driver Airbag Squib 1 circuits for a short to ground.
- Perform the RESTRAINTS SYSTEM VERIFICATION TEST. (Refer to 28 - DTC-Based Diagnostics/CONTROLLER, Occupant Restraint (ORC) - Standard Procedure).

No

WARNING: If the Occupant Restraint Controller (ORC) is dropped at any time, it must be replaced. Failure to follow these instructions may result in possible serious or fatal injury.

- Replace the ORC module according to the Service Information.
- Perform the RESTRAINTS SYSTEM VERIFICATION TEST. (Refer to 28 - DTC-Based Diagnostics/CONTROLLER, Occupant Restraint (ORC) - Standard Procedure).

B0001-12-DRIVER FRONTAL SQUIB 1 CONTROL - CIRCUIT SHORT TO BATTERY

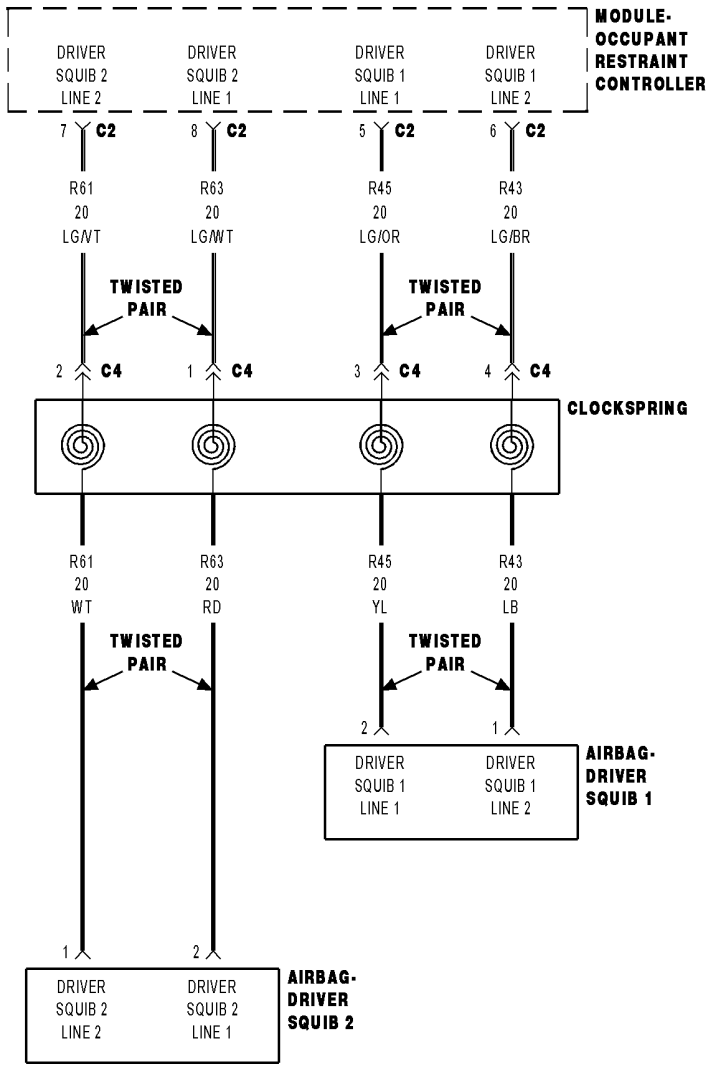

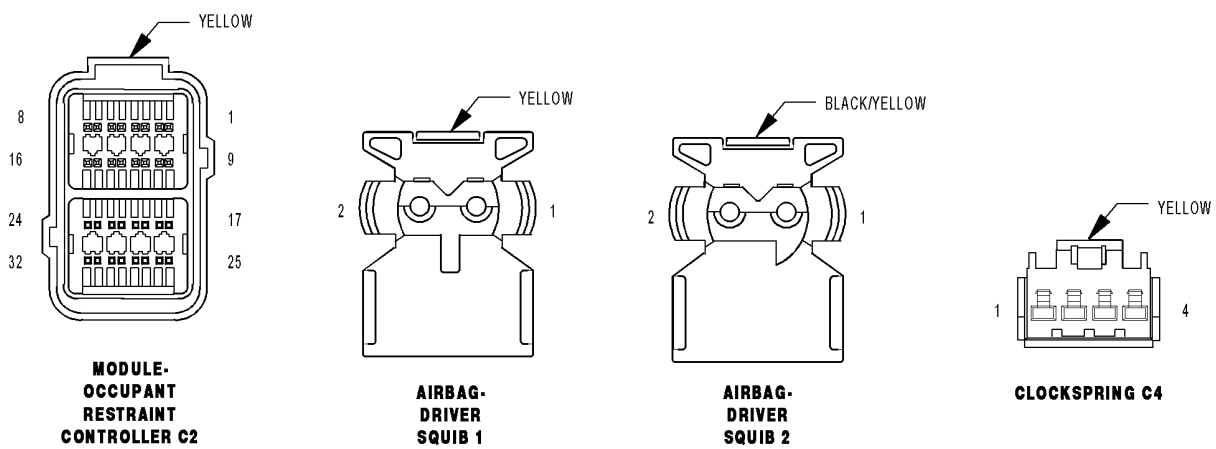

01257029

For a complete wiring diagram, **refer to the Wiring Information**.

Theory of Operation

When powered, the Occupant Restraint Controller (ORC) sends a test current to the squibs to verify the integrity of the squib and wiring. These circuits are maintained in a "floating" configuration at the ORC (connected to neither power or ground) as protection against inadvertent deployment. Use of the Supplemental Restraints System (SRS) Load Tool Kit 8443A in the tests below substitutes a suspect squib with a known good component. The use of the SRS Load Tool Adaptor tool provides a test point as well as a method for opening the shorting bar connections within the ORC harness connector.

- **When Monitored:**

  The ORC sends out a 40 mA diagnostic current on each squib voltage supply circuit at power up and every 100 ms thereafter while the ignition is on.
- **Set Condition:**

  This Diagnostic Trouble Code (DTC) sets when the ORC detects a short to voltage on the squib circuit for more than 2.5 seconds. This DTC transitions from active to stored when the ORC sees a recovery from a short to voltage for greater than 2.5 seconds.

Possible Causes
(R43) DRIVER SQUIB 1 LINE 2 CIRCUIT SHORTED TO VOLTAGE
(R45) DRIVER SQUIB 1 LINE 1 CIRCUIT SHORTED TO VOLTAGE
CLOCKSPRING
DRIVER AIRBAG
OCCUPANT RESTRAINT CONTROLLER (ORC)

Always perform the Pre-Diagnostic Troubleshooting procedure before proceeding. (Refer to 28 - DTC-Based Diagnostics/CONTROLLER, Occupant Restraint (ORC) - Standard Procedure).

1. VERIFY ACTIVE DTC

NOTE: Ensure the battery is fully charged.

1. Turn the ignition on.
2. With the scan tool, read ORC DTCs.

   Does the scan tool display active B0001-12-DRIVER FRONTAL SQUIB 1 CONTROL - CIRCUIT SHORT TO BATTERY DTC?

Yes

- Go To 2

No

- Perform the RESTRAINTS SYSTEM INTERMITTENT TEST. (Refer to 28 - DTC-Based Diagnostics/CONTROLLER, Occupant Restraint (ORC) - Standard Procedure).

2. CHECK FOR SHORTED SQUIB CIRCUITS IN DRIVER AIRBAG

WARNING: Turn the ignition off, disconnect the 12-volt battery and wait two minutes before proceeding. Failure to follow these instructions may result in possible serious or fatal injury.

1. Disconnect the Driver Airbag Squib harness connectors.

WARNING: Do not place an intact undeployed airbag face down on a hard surface, the airbag will propel into the air if accidentally deployed. Failure to follow these instructions may result in possible serious or fatal injury.

NOTE: Check connectors - Clean and repair as necessary.

2. Connect the SRS Load Tool Kit 8443A and the SRS Load Tool Jumper 8443-1 to the Driver Airbag Squib harness connectors.

WARNING: Turn the ignition on, then reconnect the 12-volt battery and wait two minutes before proceeding. Failure to follow these instructions may result in possible serious or fatal injury.

3. With the scan tool, read the ORC DTCs.

   Does the scan tool display active B0001-12-DRIVER FRONTAL SQUIB 1 CONTROL - CIRCUIT SHORT TO BATTERY DTC?

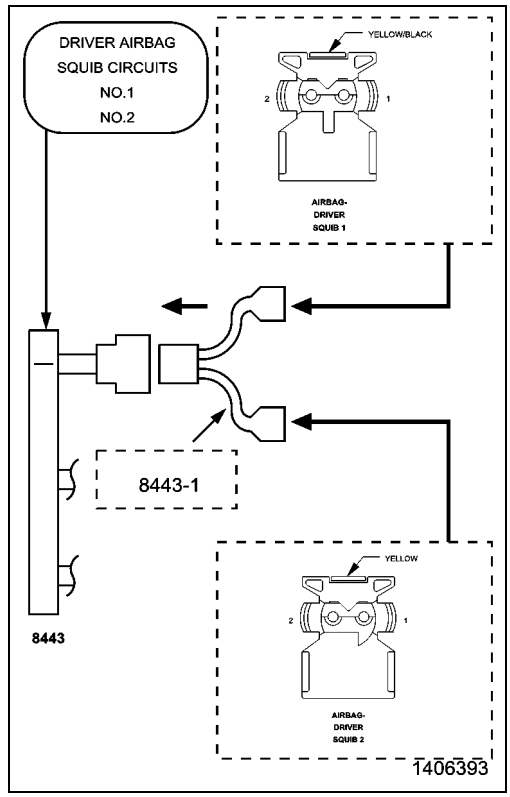

Yes

- Go To 3

No

WARNING: If the Occupant Restraint Controller (ORC) is dropped at any time, it must be replaced. Failure to follow these instructions may result in possible serious or fatal injury.

- Replace the Driver Airbag in accordance with the Service Information.
- Perform the RESTRAINTS SYSTEM VERIFICATION TEST. (Refer to 28 - DTC-Based Diagnostics/CONTROLLER, Occupant Restraint (ORC) - Standard Procedure).

3. CHECK CLOCKSPRING SQUIB CIRCUITS FOR A SHORT TO VOLTAGE

WARNING: Turn the ignition off, disconnect the 12-volt battery and wait two minutes before proceeding. Failure to follow these instructions may result in possible serious or fatal injury.

1. Disconnect the SRS Load Tool Kit 8443A and Jumper from the Driver Airbag Squib harness connectors.
2. Disconnect the Clockspring C4 harness connector.

NOTE: Check connectors - Clean and repair as necessary.

3. Connect the SRS Load Tool Kit 8443A and the SRS Load Tool Jumper 8443-19 to the Clockspring C4 harness connector.

WARNING: Turn the ignition on, then reconnect the 12-volt battery and wait two minutes before proceeding. Failure to follow these instructions may result in possible serious or fatal injury.

4. With the scan tool, read the ORC DTCs.

Does the scan tool display active B0001-12-DRIVER FRONTAL SQUIB 1 CONTROL - CIRCUIT SHORT TO BATTERY DTC?

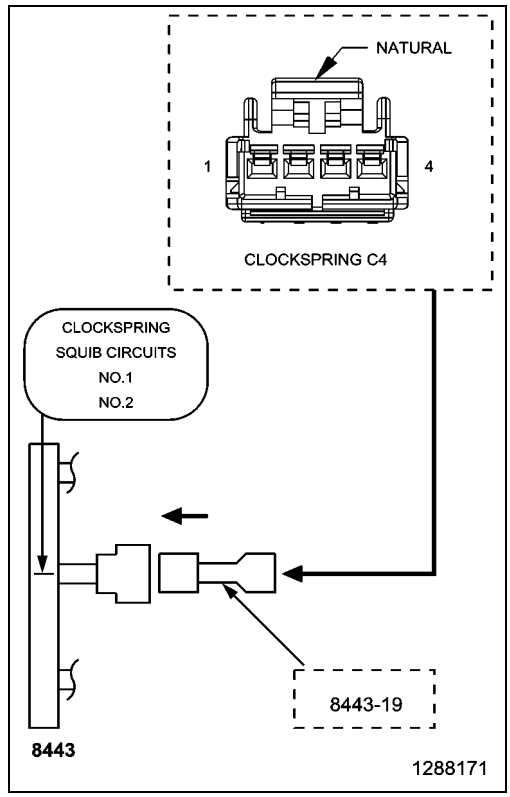

Yes

- Go To 4

No

WARNING: Turn the ignition off, disconnect the 12-volt battery and wait two minutes before proceeding. Failure to follow these instructions may result in possible serious or fatal injury.

- Replace the Clockspring in accordance with the Service Information.
- Perform the RESTRAINTS SYSTEM VERIFICATION TEST. (Refer to 28 - DTC-Based Diagnostics/CONTROLLER, Occupant Restraint (ORC) - Standard Procedure).

4. CHECK (R43, R45) DRIVER SQUIB 1 CIRCUITS FOR A SHORT TO VOLTAGE

WARNING: Turn the ignition off, disconnect the 12-volt battery and wait two minutes before proceeding. Failure to follow these instructions may result in possible serious or fatal injury.

1. Disconnect the SRS Load Tool Kit 8443A and Jumper from the Clockspring C4 harness connector.
2. Disconnect the ORC harness connectors.

NOTE: Check connectors - Clean and repair as necessary.

3. Connect the SRS Load Tool Adaptor 8443-24 to the ORC C2 harness connector.

WARNING: Turn the ignition on, then reconnect the 12-volt battery and wait two minutes before proceeding. Failure to follow these instructions may result in possible serious or fatal injury.

4. Measure the voltage of the (R43) Driver Squib 1 Line 2 circuit between the Clockspring C4 harness connector cavity 4 and ground.
5. Measure the voltage of the (R45) Driver Squib 1 Line 1 circuit between the Clockspring C4 harness connector cavity 3 and ground.

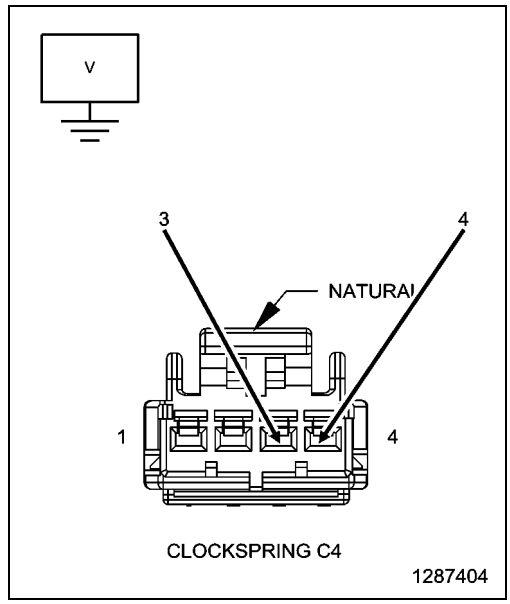

Is there any voltage present for either measurement?

Yes

WARNING: Turn the ignition off, disconnect the 12-volt battery and wait two minutes before proceeding. Failure to follow these instructions may result in possible serious or fatal injury.

- Repair the (R43, R45) Driver Squib 1 circuits for a short to voltage.
- Perform the RESTRAINTS SYSTEM VERIFICATION TEST. (Refer to 28 - DTC-Based Diagnostics/CONTROLLER, Occupant Restraint (ORC) - Standard Procedure).

No

WARNING: Turn the ignition off, disconnect the 12-volt battery and wait two minutes before proceeding. Failure to follow these instructions may result in possible serious or fatal injury.

WARNING: If the Occupant Restraint Controller (ORC) is dropped at any time, it must be replaced. Failure to follow these instructions may result in possible serious or fatal injury.

- Replace the ORC in accordance with the Service Information.
- Perform the RESTRAINTS SYSTEM VERIFICATION TEST. (Refer to 28 - DTC-Based Diagnostics/CONTROLLER, Occupant Restraint (ORC) - Standard Procedure).

B0001-13-DRIVER FRONTAL SQUIB 1 CONTROL - CIRCUIT OPEN

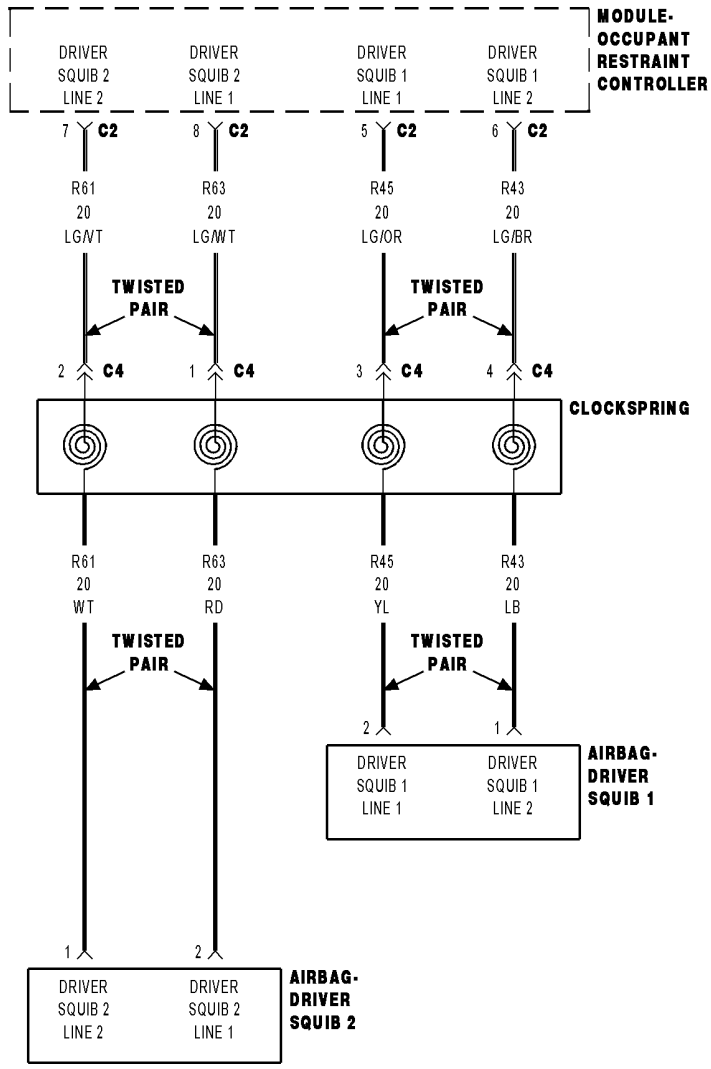

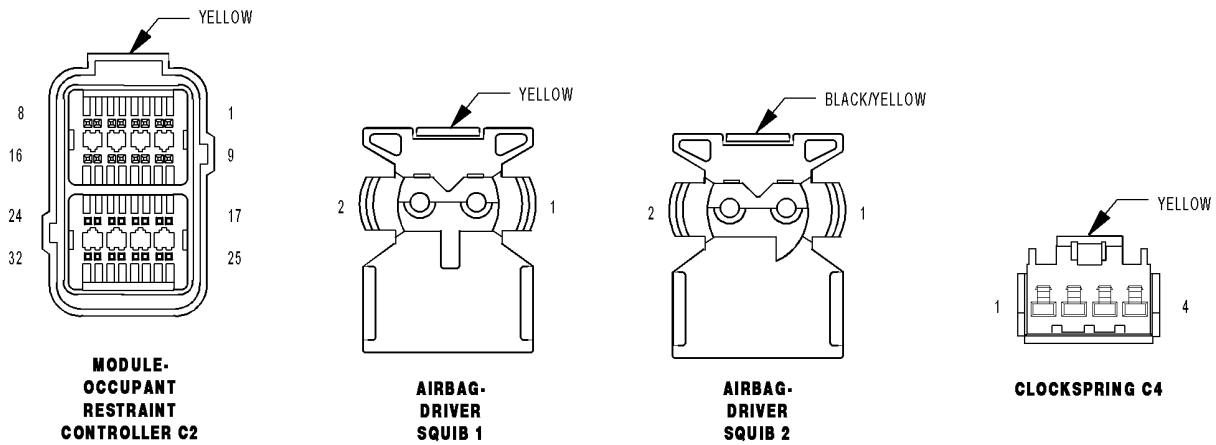

01257029

For a complete wiring diagram, **refer to the Wiring Information**.

Theory of Operation

When powered, the Occupant Restraint Controller (ORC) sends a test current to the squibs to verify the integrity of the squib and wiring. These circuits are maintained in a "floating" configuration at the ORC (connected to neither power or ground) as protection against inadvertent deployment. Use of the Supplemental Restraints System (SRS) Load Tool Kit 8443A in the tests below substitutes a suspect squib with a known good component. The use of the SRS Load Tool Adaptor provides a test point as well as a method for opening the shorting bar connections within the ORC harness connector.

- **When Monitored:**

  The ORC sends out a 40 mA diagnostic current on each squib voltage supply circuit at power up and every 100 ms thereafter while the ignition is on.
- **Set Condition:**

  This Diagnostic Trouble Code (DTC) sets when the ORC detects an open or high resistance on the squib 1 circuit for more than 2.5 seconds. This DTC transitions from active to stored when the ORC sees a recovery from an open condition for greater than 2.5 seconds.

Possible Causes
(R43) DRIVER SQUIB 1 LINE 2 CIRCUIT OPEN
(R45) DRIVER SQUIB 1 LINE 1 CIRCUIT OPEN
CLOCKSPRING
DRIVER AIRBAG
OCCUPANT RESTRAINT CONTROLLER (ORC)

Always perform the Pre-Diagnostic Troubleshooting procedure before proceeding. (Refer to 28 - DTC-Based Diagnostics/CONTROLLER, Occupant Restraint (ORC) - Standard Procedure).

1. VERIFY ACTIVE DTC

NOTE: Ensure the battery is fully charged.

1. Turn the ignition on.
2. With the scan tool, read ORC DTCs.

Does the scan tool display active B0001-13-DRIVER FRONTAL SQUIB 1 CONTROL - CIRCUIT OPEN DTC?

Yes

- Go To 2

No

- Perform the RESTRAINTS SYSTEM INTERMITTENT TEST. (Refer to 28 - DTC-Based Diagnostics/CONTROLLER, Occupant Restraint (ORC) - Standard Procedure).

2. CHECK DRIVER AIRBAG SQUIB CIRCUITS FOR OPEN CIRCUITS

WARNING: Turn the ignition off disconnect the 12-volt battery and wait two minutes before proceeding. Failure to follow these instructions may result in possible serious or fatal injury.

1. Disconnect the Driver Airbag Squib harness connectors.

WARNING: Do not place an intact non-deployed airbag face down on a hard surface, the airbag propels into the air if accidentally deployed. Failure to follow these instructions may result in possible serious or fatal injury.

NOTE: Check connectors - Clean and repair as necessary.

2. Connect the SRS Load Tool Kit 8443A and the SRS Load Tool Jumper 8443-1 to the Driver Airbag Squib harness connectors.

WARNING: Turn the ignition on, then reconnect the 12-volt battery and wait two minutes before proceeding. Failure to follow these instructions may result in possible serious or fatal injury.

3. With the scan tool, read the ORC DTCs.

Does the scan tool display active B0001-13-DRIVER FRONTAL SQUIB 1 CONTROL - CIRCUIT OPEN DTC?

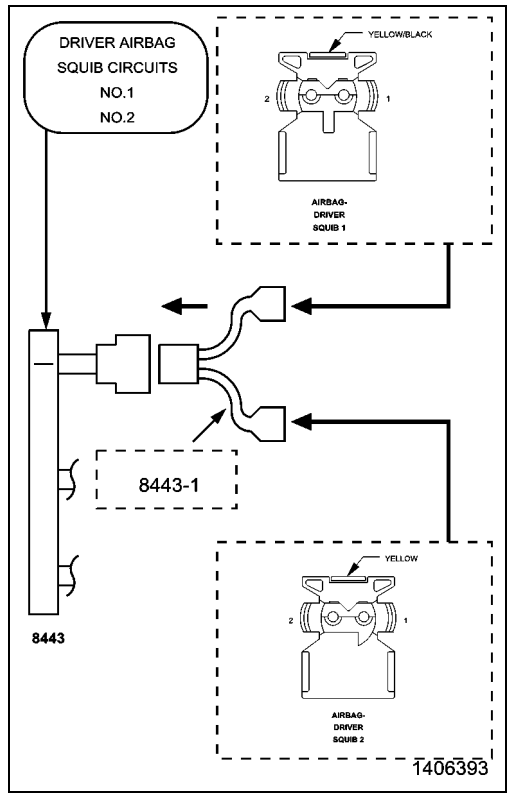

Yes

- Go To 3

No

WARNING: Turn the ignition off, disconnect the 12-volt battery and wait two minutes before proceeding. Failure to follow these instructions may result in possible serious or fatal injury.

- Replace the Driver Airbag in accordance with the Service Information.
- Perform the RESTRAINTS SYSTEM VERIFICATION TEST. (Refer to 28 - DTC-Based Diagnostics/CONTROLLER, Occupant Restraint (ORC) - Standard Procedure).

3. CHECK CLOCKSPRING SQUIB CIRCUITS FOR AN OPEN

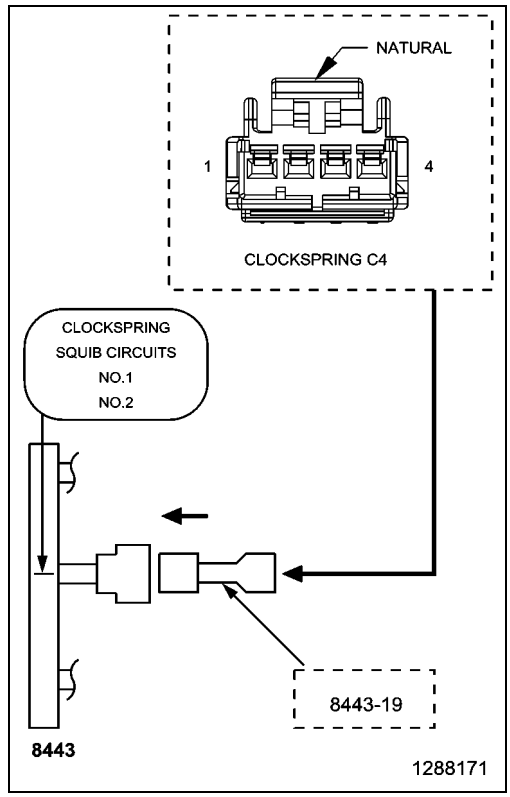

WARNING: Turn the ignition off, disconnect the 12-volt battery and wait two minutes before proceeding. Failure to follow these instructions may result in possible serious or fatal injury.

1. Disconnect the SRS Load Tool Kit 8443A and Jumper from the Driver Airbag Squib harness connectors.
2. Disconnect the Clockspring C4 harness connector.

NOTE: Check connectors - Clean and repair as necessary.
Connect the SRS Load Tool Kit 8443A and the SRS Load Tool Jumper 8443-19 to the Clockspring C4 connector.

WARNING: Turn the ignition on, then reconnect the 12-volt battery and wait two minutes before proceeding. Failure to follow these instructions may result in possible serious or fatal injury.

3. With the scan tool, read the ORC DTCs.

Does the scan tool display active B0001-13-DRIVER FRONTAL SQUIB 1 CONTROL - CIRCUIT OPEN DTC?

Yes

- Go To 4

No

WARNING: Turn the ignition off, disconnect the 12-volt battery and wait two minutes before proceeding. Failure to follow these instructions may result in possible serious or fatal injury.

- Replace the Clockspring in accordance with the Service Information.
- Perform the RESTRAINTS SYSTEM VERIFICATION TEST. (Refer to 28 - DTC-Based Diagnostics/CONTROLLER, Occupant Restraint (ORC) - Standard Procedure).

4. CHECK (R43, R45) DRIVER SQUIB 1 CIRCUITS FOR AN OPEN OR HIGH RESISTANCE

WARNING: Turn the ignition off, disconnect the 12-volt battery and wait two minutes before proceeding. Failure to follow these instructions may result in possible serious or fatal injury.

1. Disconnect the SRS Load Tool Kit 8443A and the Jumper from the Clockspring C4 harness connector.
2. Disconnect the ORC harness connectors.

NOTE: Check connectors - Clean and repair as necessary.

3. Connect the SRS Load Tool Adaptor 8443-24 to the ORC C2 harness connector.
4. Measure the resistance of the (R43) Driver Squib 1 Line 2 circuit between the Clockspring C4 harness connector cavity 4 and the SRS Load Tool Adaptor 8443-24 cavity 6.
5. Measure the resistance of the (R45) Driver Squib 1 Line 1 circuit between the Clockspring C4 harness connector cavity 3 and the SRS Load Tool Adaptor 8443-24 cavity 5.

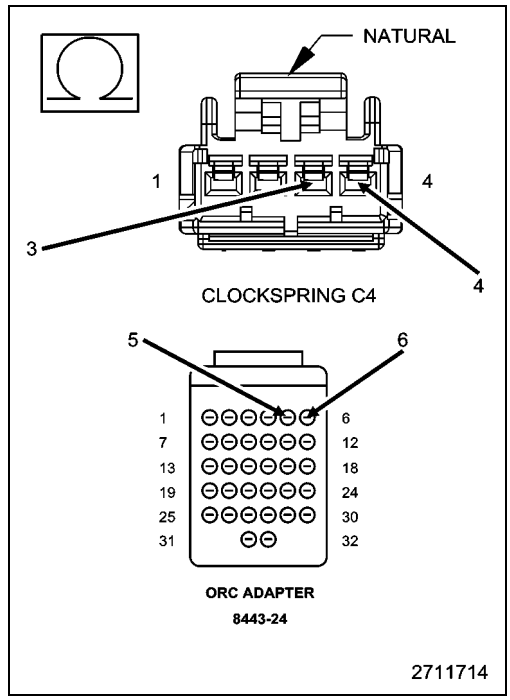

Is the resistance below 1.0 Ohms on both circuits?

Yes

WARNING: If the Occupant Restraint Controller (ORC) is dropped at any time, it must be replaced. Failure to follow these instructions may result in possible serious or fatal injury.

- Replace the ORC in accordance with the Service Information.
- Perform the RESTRAINTS SYSTEM VERIFICATION TEST. (Refer to 28 - DTC-Based Diagnostics/CONTROLLER, Occupant Restraint (ORC) - Standard Procedure).

No

- Repair the (R43, R45) Driver Squib 1 circuits for an open or high resistance.
- Perform the RESTRAINTS SYSTEM VERIFICATION TEST. (Refer to 28 - DTC-Based Diagnostics/CONTROLLER, Occupant Restraint (ORC) - Standard Procedure).

B0001-2B-DRIVER FRONTAL SQUIB 1 CONTROL - WIRES SHORTED TOGETHER

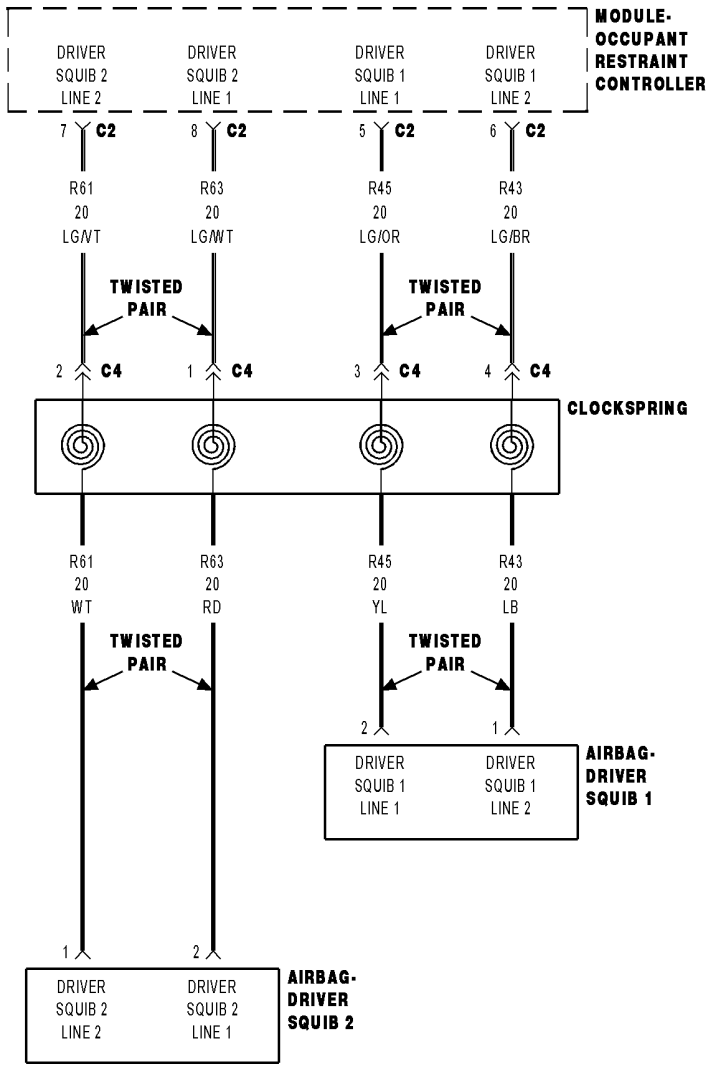

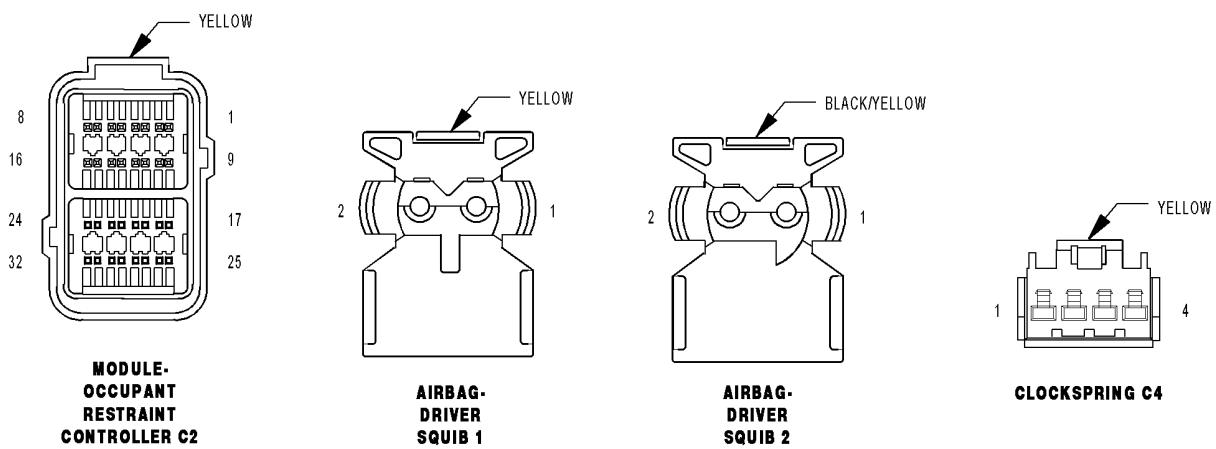

01257029

For a complete wiring diagram, **refer to the Wiring Information**.

Theory of Operation

When powered, the Occupant Restraint Controller (ORC) sends a test current to the squibs to verify the integrity of the squib and wiring. These circuits are maintained in a “floating” configuration at the ORC (connected to neither power nor ground) as protection against inadvertent deployment. Use of the Supplemental Restraints System (SRS) Load Tool Kit 8443A in the tests below substitutes a suspect squib with a known good component. The use of the SRS Load Tool Adaptor provides a test point as well as a method for opening the shorting bar connections within the ORC harness connector.

- **When Monitored:**

  The ORC sends out a 40 mA diagnostic current on each squib voltage supply circuit at power up and every 100 ms thereafter while the ignition is on.

- **Set Condition:**

  This Diagnostic Trouble Code (DTC) sets when the ORC detects both circuits of the same squib are shorted together for more than 2.5 seconds. This DTC transitions from active to stored when the ORC sees a recovery from a shorted together condition for greater than 2.5 seconds.

Possible Causes
(R43) DRIVER SQUIB 1 LINE 2 CIRCUIT SHORTED TO (R45) DRIVER SQUIB 1 LINE 1 CIRCUIT
CLOCKSPRING
DRIVER AIRBAG
OCCUPANT RESTRAINT CONTROLLER (ORC)

Always perform the Pre-Diagnostic Troubleshooting procedure before proceeding. (Refer to 28 - DTC-Based Diagnostics/CONTROLLER, Occupant Restraint (ORC) - Standard Procedure).

1. VERIFY ACTIVE DTC

NOTE: Ensure the battery is fully charged.

1. Turn the ignition on.
2. With the scan tool, read the ORC DTCs.

   Does the scan tool display active B0001-2B-DRIVER FRONTAL SQUIB 1 CONTROL - WIRES SHORTED TOGETHER DTC?

Yes

- Go To 2

No

- Perform the RESTRAINTS SYSTEM INTERMITTENT TEST. (Refer to 28 - DTC-Based Diagnostics/CONTROLLER, Occupant Restraint (ORC) - Standard Procedure).

2. CHECK DRIVER AIRBAG SQUIB 1 CIRCUITS FOR SHORT TOGETHER

WARNING: Turn the ignition off, disconnect the 12-volt battery and wait two minutes before proceeding. Failure to follow these instructions may result in possible serious or fatal injury.

1. Disconnect the Driver Airbag Squib harness connectors.

WARNING: Do not place an intact non-deployed airbag face down on a hard surface, the airbag propels into the air if accidentally deployed. Failure to follow these instructions may result in possible serious or fatal injury.

NOTE: Check connectors - Clean and repair as necessary.

2. Connect the SRS Load Tool Kit 8443A and the SRS Load Tool Jumper 8443-1 to the Driver Airbag Squib harness connectors.

WARNING: Turn the ignition on, then reconnect the 12-volt battery and wait two minutes before proceeding. Failure to follow these instructions may result in possible serious or fatal injury.

3. With the scan tool, read the ORC DTCs.

Does the scan tool display active B0001-2B-DRIVER FRONTAL SQUIB 1 CONTROL - WIRES SHORTED TOGETHER DTC?

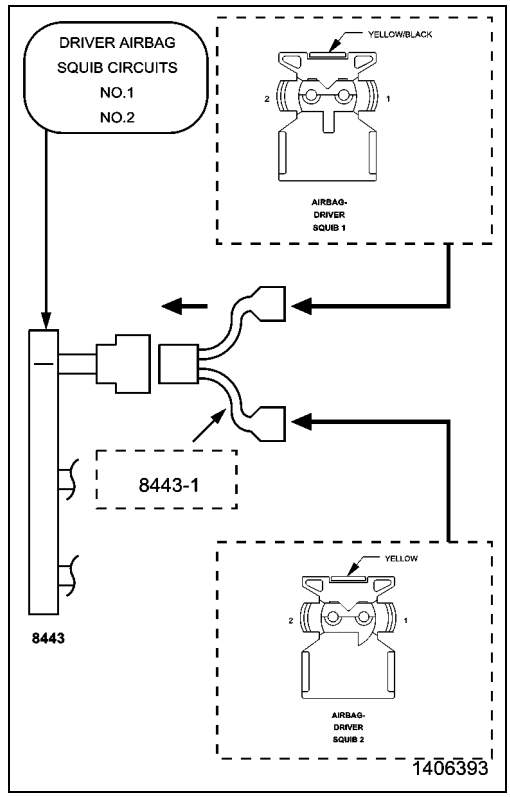

Yes

- Go To 3

No

WARNING: Turn the ignition off, disconnect the 12-volt battery and wait two minutes before proceeding. Failure to follow these instructions may result in possible serious or fatal injury.

- Replace the Driver Airbag in accordance with the Service Information.
- Perform the RESTRAINTS SYSTEM VERIFICATION TEST. (Refer to 28 - DTC-Based Diagnostics/CONTROLLER, Occupant Restraint (ORC) - Standard Procedure).

3. CHECK CLOCKSPRING SQUIB CIRCUITS FOR A SHORT TOGETHER

WARNING: Turn the ignition off, disconnect the 12-volt battery and wait two minutes before proceeding. Failure to follow these instructions may result in possible serious or fatal injury.

1. Disconnect the SRS Load Tool Kit 8443A and Jumper from the Driver Airbag Squib harness connectors.
2. Disconnect the Clockspring C4 harness connector.

NOTE: Check connectors - Clean and repair as necessary.

3. Connect the SRS Load Tool Kit 8443A and SRS Load Tool Jumper 8443-19 Jumper to the Clockspring C4 harness connector.

WARNING: Turn the ignition on, then reconnect the 12-volt battery and wait two minutes before proceeding. Failure to follow these instructions may result in possible serious or fatal injury.

4. With the scan tool, read the ORC DTCs.

Does the scan tool display active B0001-2B-DRIVER FRONTAL SQUIB 1 CONTROL - WIRES SHORTED TOGETHER DTC?

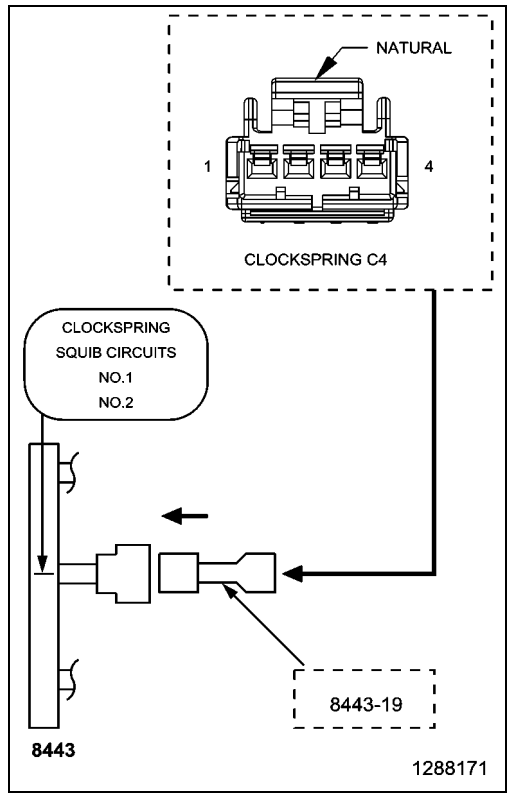

Yes

- Go To 4

No

WARNING: Turn the ignition off, disconnect the 12-volt battery and wait two minutes before proceeding. Failure to follow these instructions may result in possible serious or fatal injury.

- Replace the Clockspring in accordance with the Service Information.
- Perform the RESTRAINTS SYSTEM VERIFICATION TEST. (Refer to 28 - DTC-Based Diagnostics/CONTROLLER, Occupant Restraint (ORC) - Standard Procedure).

4. CHECK (R43) DRIVER SQUIB 1 LINE 2 CIRCUIT FOR A SHORT TO (R45) DRIVER SQUIB 1 LINE 1 CIRCUIT

WARNING: Turn the ignition off, disconnect the 12-volt battery and wait two minutes before proceeding. Failure to follow these instructions may result in possible serious or fatal injury.

1. Disconnect the SRS Load Tool Kit 8443A and Jumper from the Clockspring C4 harness connector.
2. Disconnect the ORC harness connectors.

NOTE: Check connectors - Clean and repair as necessary.

3. Connect the SRS Load Tool Adaptor 8443-24 to the ORC C2 harness connector.
4. Measure the resistance between the (R43) Driver Squib 1 Line 2 circuit cavity 4 and the (R45) Driver Squib 1 Line 1 circuit cavity 3 at the Clockspring C4 harness connector.

Is the resistance below 5.0 Ohms?

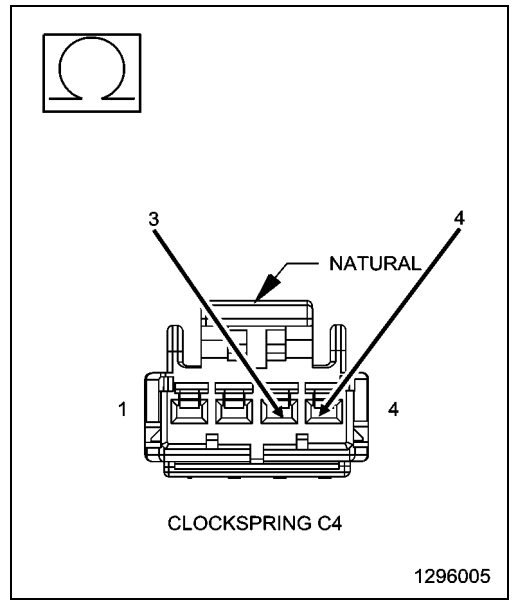

Yes

- Repair the (R43) Driver Squib 1 Line 2 circuit for a short to the (R45) Driver Squib 1 Line 1 circuit.
- Perform the RESTRAINTS SYSTEM VERIFICATION TEST. (Refer to 28 - DTC-Based Diagnostics/CONTROLLER, Occupant Restraint (ORC) - Standard Procedure).

No

WARNING: If the Occupant Restraint Controller (ORC) is dropped at any time, it must be replaced. Failure to follow these instructions may result in possible serious or fatal injury.

- Replace the ORC in accordance with the Service Information.
- Perform the RESTRAINTS SYSTEM VERIFICATION TEST. (Refer to 28 - DTC-Based Diagnostics/CONTROLLER, Occupant Restraint (ORC) - Standard Procedure).

B0002-11-DRIVER FRONTAL SQUIB 2 CONTROL - CIRCUIT SHORT TO GROUND

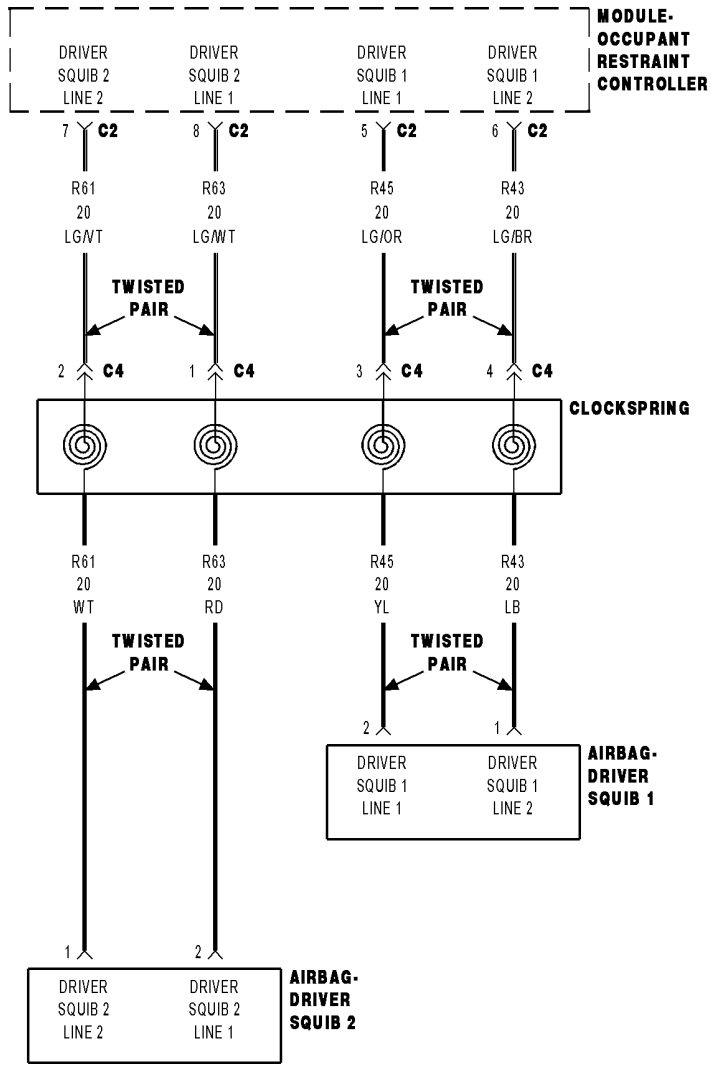

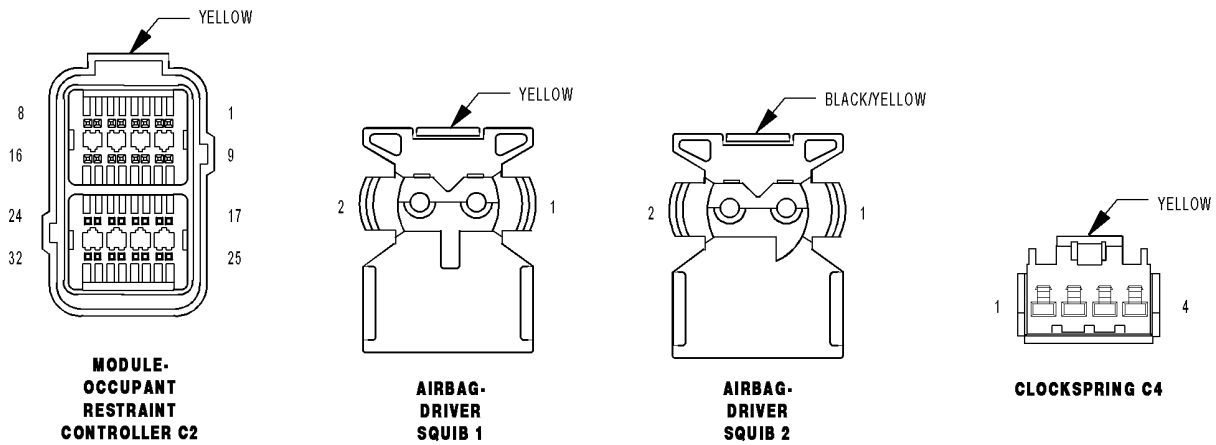

01257029

For a complete wiring diagram, **refer to the Wiring Information**.

Theory of Operation

When powered, the Occupant Restraint Controller (ORC) sends a test current to the squibs to verify the integrity of the squib and wiring. These circuits are maintained in a “floating” configuration at the ORC (connected to neither power nor ground) as protection against inadvertent deployment. Use of the Supplemental Restraints System (SRS) Load Tool Kit 8443A in the tests below substitutes a suspect squib with a known good component. The use of the SRS Load Tool Adaptor provides a test point as well as a method for opening the shorting bar connections within the ORC harness connector.

- **When Monitored:**

  The ORC sends out a 40 mA diagnostic current on each squib voltage supply circuit at power up and every 100 ms thereafter while the ignition is on.

- **Set Condition:**

  This Diagnostic Trouble Codes (DTC) sets when the ORC detects a short to ground on the squib circuit for more than 2.5 seconds. This DTC transitions from active to stored when the ORC sees a recovery from a short to ground condition for greater than 2.5 seconds.

Possible Causes
(R63) DRIVER SQUIB 2 LINE 1 CIRCUIT SHORTED TO GROUND
(R61) DRIVER SQUIB 2 LINE 2 CIRCUIT SHORTED TO GROUND
CLOCKSPRING
DRIVER AIRBAG
OCCUPANT RESTRAINT CONTROLLER (ORC)

Always perform the Pre-Diagnostic Troubleshooting procedure before proceeding. (Refer to 28 - DTC-Based Diagnostics/CONTROLLER, Occupant Restraint (ORC) - Standard Procedure).

1. VERIFY ACTIVE DTC

NOTE: Ensure the battery is fully charged.

1. Turn the ignition on.
2. With the scan tool, read the ORC DTCs.

Does the scan tool display an active B0002-11-DRIVER FRONTAL SQUIB 2 CONTROL - CIRCUIT SHORT TO GROUND DTC?

Yes

- Go To 2

No

- Perform the RESTRAINTS SYSTEM INTERMITTENT TEST. (Refer to 28 - DTC-Based Diagnostics/CONTROLLER, Occupant Restraint (ORC) - Standard Procedure).

2. CHECK DRIVER AIRBAG SQUIB 2 CIRCUITS FOR SHORT TO GROUND

WARNING: Turn the ignition off, disconnect the 12-volt battery and wait two minutes before proceeding. Failure to follow these instructions may result in possible serious or fatal injury.

1. Disconnect the Driver Airbag Squib harness connectors.

WARNING: Do not place an intact non-deployed airbag face down on a hard surface, the airbag propels into the air if accidentally deployed. Failure to follow these instructions may result in possible serious or fatal injury.

NOTE: Check connectors - Clean and repair as necessary.

2. Connect the SRS Load Tool Kit 8443A and the SRS Load Tool Jumper 8443-1 to the Driver Airbag Squib harness connectors.

WARNING: Turn the ignition on, then reconnect the 12-volt battery and wait two minutes before proceeding. Failure to follow these instructions may result in possible serious or fatal injury.

3. With the scan tool, read the ORC DTCs.

   Does the scan tool display active B0002-11-DRIVER FRONTAL SQUIB 2 CONTROL - CIRCUIT SHORT TO GROUND DTC?

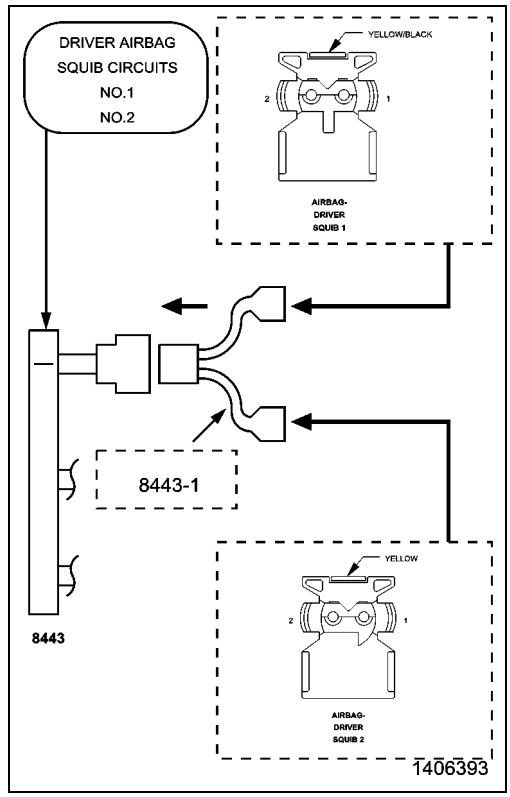

Yes

- Go To 3

No

WARNING: Turn the ignition off, disconnect the 12-volt battery and wait two minutes before proceeding. Failure to follow these instructions may result in possible serious or fatal injury.

- Replace the Driver Airbag in accordance with the Service Information.
- Perform the RESTRAINTS SYSTEM VERIFICATION TEST. (Refer to 28 - DTC-Based Diagnostics/CONTROLLER, Occupant Restraint (ORC) - Standard Procedure).

3. CHECK CLOCKSPRING SQUIB CIRCUITS FOR A SHORT TO GROUND

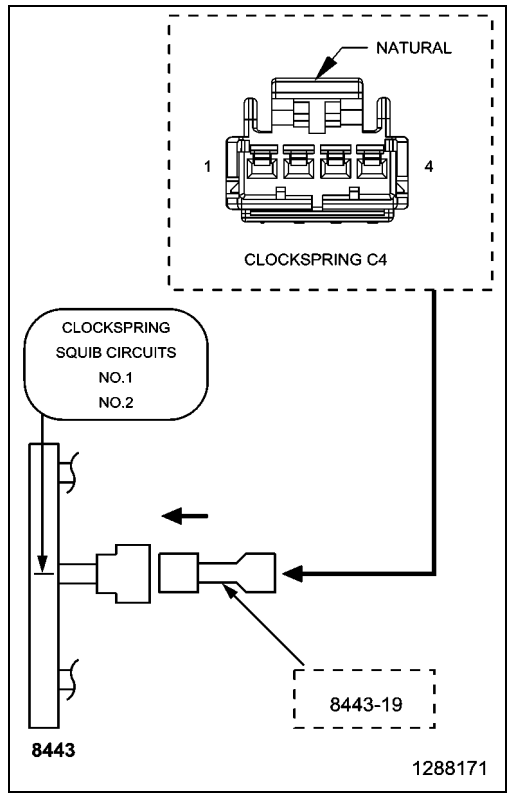

WARNING: Turn the ignition off, disconnect the 12-volt battery and wait two minutes before proceeding. Failure to follow these instructions may result in possible serious or fatal injury.

1. Disconnect the SRS Load Tool Kit 8443A and Jumper from the Driver Airbag Squib harness connectors.
2. Disconnect the Clockspring C4 harness connector.

NOTE: Check connectors - Clean and repair as necessary.

3. Connect the SRS Load Tool Kit 8443A and the SRS Load Tool Jumper 8443-19 to the Clockspring C4 harness connector.

WARNING: Turn the ignition on, then reconnect the 12-volt battery and wait two minutes before proceeding. Failure to follow these instructions may result in possible serious or fatal injury.

4. With the scan tool, read the ORC DTCs.

Does the scan tool display active B0002-11-DRIVER FRONTAL SQUIB 2 CONTROL - CIRCUIT SHORT TO GROUND DTC?

Yes

- Go To 4

No

WARNING: Turn the ignition off, disconnect the 12-volt battery and wait two minutes before proceeding. Failure to follow these instructions may result in possible serious or fatal injury.

- Replace the Clockspring in accordance with the Service Information.
- Perform the RESTRAINTS SYSTEM VERIFICATION TEST. (Refer to 28 - DTC-Based Diagnostics/CONTROLLER, Occupant Restraint (ORC) - Standard Procedure).

4. CHECK (R63, R61) DRIVER SQUIB 2 CIRCUITS FOR A SHORT TO GROUND

WARNING: Turn the ignition off, disconnect the 12-volt battery and wait two minutes before proceeding. Failure to follow these instructions may result in possible serious or fatal injury.

1. Disconnect the SRS Load Tool Kit 8443A and Jumper from the Clockspring C4 harness connector.
2. Disconnect the ORC harness connectors.

NOTE: Check connectors - Clean and repair as necessary.

3. Connect the SRS Load Tool Adaptor 8443-24 to the ORC C2 harness connector.
4. Measure the resistance of the (R63) Driver Squib 2 Line 1 circuit between the Clockspring C4 harness connector cavity 1 and ground.
5. Measure the resistance of the (R61) Driver Squib 2 Line 2 circuit between the Clockspring C4 harness connector cavity 2 and ground.

Is the resistance below 10K Ohms for either measurement?

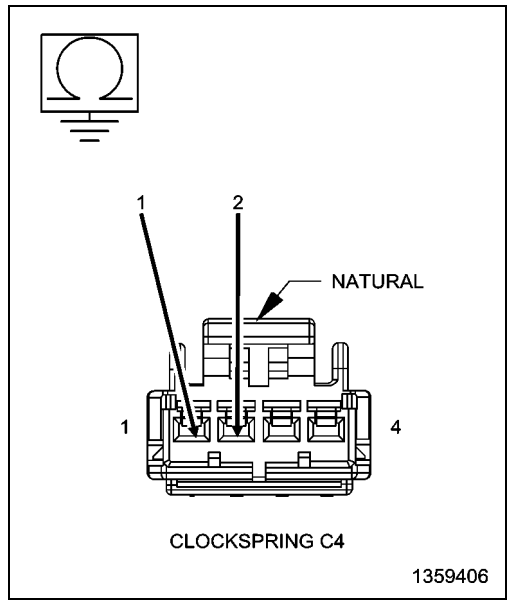

Yes

- Repair the (R63, R61) Driver Squib 2 circuits for a short to ground.
- Perform the RESTRAINTS SYSTEM VERIFICATION TEST. (Refer to 28 - DTC-Based Diagnostics/CONTROLLER, Occupant Restraint (ORC) - Standard Procedure).

No

WARNING: If the Occupant Restraint Controller (ORC) is dropped at any time, it must be replaced. Failure to follow these instructions may result in possible serious or fatal injury.

- Replace the ORC in accordance with the Service Information.
- Perform the RESTRAINTS SYSTEM VERIFICATION TEST. (Refer to 28 - DTC-Based Diagnostics/CONTROLLER, Occupant Restraint (ORC) - Standard Procedure).

B0002-12-DRIVER FRONTAL SQUIB 2 CONTROL - CIRCUIT SHORT TO BATTERY

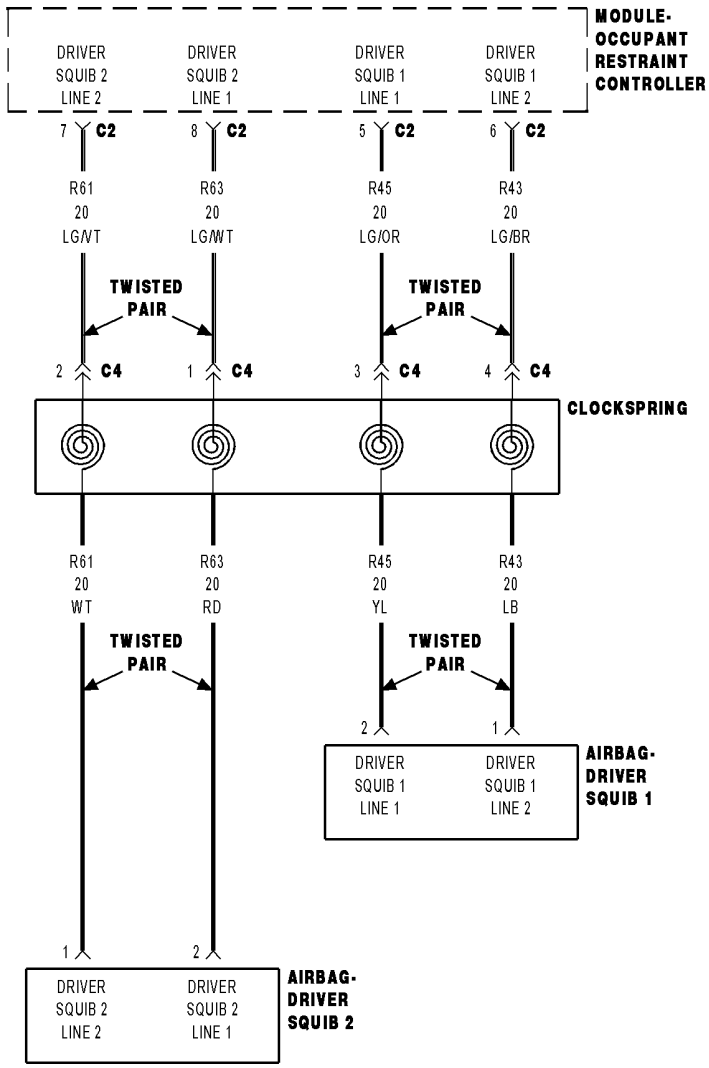

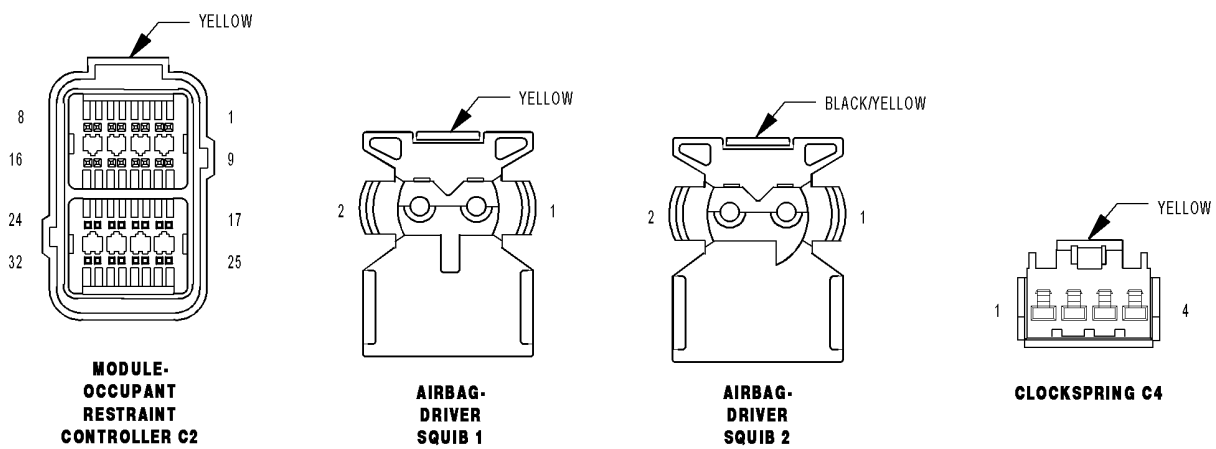

01257029

For a complete wiring diagram, **refer to the Wiring Information**.

Theory of Operation

When powered, the Occupant Restraint Controller (ORC) sends a test current to the squibs to verify the integrity of the squib and wiring. These circuits are maintained in a “floating” configuration at the ORC (connected to neither power nor ground) as protection against inadvertent deployment. Use of the Supplemental Restraints System (SRS) Load Tool Kit 8443A in the tests below substitutes a suspect squib with a known good component. The use of the SRS Load Tool Adaptor provides a test point as well as a method for opening the shorting bar connections within the ORC harness connector.

- **When Monitored:**

  The ORC sends out a 40 mA diagnostic current on each squib voltage supply circuit at power up and every 100 ms thereafter while the ignition is on.

- **Set Condition:**

  This Diagnostic Trouble Codes (DTC) sets when the ORC detects a short to voltage on the squib circuit for more than 2.5 seconds. This DTC transitions from active to stored when the ORC sees a recovery from a short to voltage condition for greater than 2.5 seconds.

Possible Causes
(R63) DRIVER SQUIB 2 LINE 1 CIRCUIT SHORTED TO VOLTAGE
(R61) DRIVER SQUIB 2 LINE 2 CIRCUIT SHORTED TO VOLTAGE
CLOCKSPRING
DRIVER AIRBAG
OCCUPANT RESTRAINT CONTROLLER (ORC)

Always perform the Pre-Diagnostic Troubleshooting procedure before proceeding. (Refer to 28 - DTC-Based Diagnostics/CONTROLLER, Occupant Restraint (ORC) - Standard Procedure).

1. VERIFY ACTIVE DTC

NOTE: Ensure the battery is fully charged.

1. Turn the ignition on.
2. With the scan tool, read ORC DTCs.

   Does the scan tool display active B0002-12-DRIVER FRONTAL SQUIB 2 CONTROL - CIRCUIT SHORT TO BATTERY DTC?

Yes

- Go To 2

No

- Perform the RESTRAINTS SYSTEM INTERMITTENT TEST. (Refer to 28 - DTC-Based Diagnostics/CONTROLLER, Occupant Restraint (ORC) - Standard Procedure).

2. CHECK DRIVER AIRBAG SQUIB 2 CIRCUITS FOR SHORT TO VOLTAGE

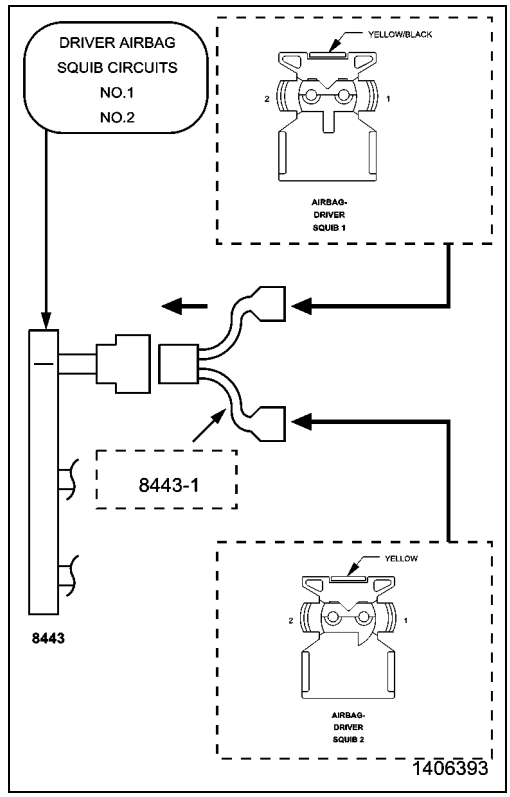

WARNING: Turn the ignition off, disconnect the 12-volt battery and wait two minutes before proceeding. Failure to follow these instructions may result in possible serious or fatal injury.

1. Disconnect the Driver Airbag Squib harness connectors.

WARNING: Do not place an intact non-deployed airbag face down on a hard surface, the airbag propels into the air if accidentally deployed. Failure to follow these instructions may result in possible serious or fatal injury.

NOTE: Check connectors - Clean and repair as necessary.

2. Connect the SRS Load Tool Kit 8443A and the SRS Load Tool Jumper 8443-1 to the Driver Airbag Squib harness connectors.

WARNING: Turn the ignition on, then reconnect the 12-volt battery and wait two minutes before proceeding. Failure to follow these instructions may result in possible serious or fatal injury.

3. With the scan tool, read the ORC DTCs.

   Does the scan tool display active B0002-12-DRIVER FRONTAL SQUIB 2 CONTROL - CIRCUIT SHORT TO BATTERY DTC?

Yes

- Go To 3

No

WARNING: Turn the ignition off, disconnect the 12-volt battery and wait two minutes before proceeding. Failure to follow these instructions may result in possible serious or fatal injury.

- Replace the Driver Airbag in accordance with the Service Information.
- Perform the RESTRAINTS SYSTEM VERIFICATION TEST. (Refer to 28 - DTC-Based Diagnostics/CONTROLLER, Occupant Restraint (ORC) - Standard Procedure).

3. CHECK CLOCKSPRING SQUIB CIRCUITS FOR A SHORT TO VOLTAGE

WARNING: Turn the ignition off, disconnect the 12-volt battery and wait two minutes before proceeding. Failure to follow these instructions may result in possible serious or fatal injury.

1. Disconnect the SRS Load Tool Kit 8443A and Jumper from the Driver Airbag Squib harness connectors.
2. Disconnect the Steering Control Module C4 harness connector.

NOTE: Check connectors - Clean and repair as necessary.

3. Connect the SRS Load Tool Kit 8443A and the SRS Load Tool Jumper 8443-19 to the Clockspring C4 harness connector.

WARNING: Turn the ignition on, then reconnect the 12-volt battery and wait two minutes before proceeding. Failure to follow these instructions may result in possible serious or fatal injury.

4. With the scan tool, read the ORC DTCs.

Does the scan tool display active B0002-12-DRIVER FRONTAL SQUIB 2 CONTROL - CIRCUIT SHORT TO BATTERY DTC?

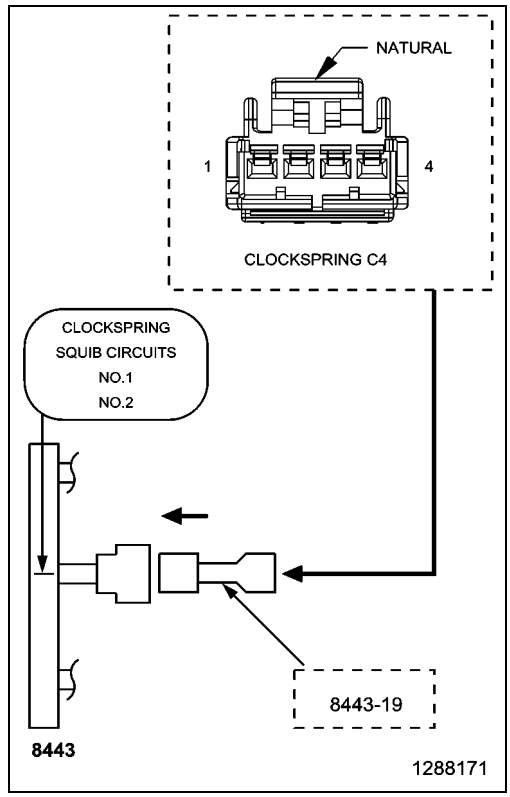

Yes

- Go To 4

No

WARNING: Turn the ignition off, disconnect the 12-volt battery and wait two minutes before proceeding. Failure to follow these instructions may result in possible serious or fatal injury.

- Replace the Clockspring in accordance with the Service Information.
- Perform the RESTRAINTS SYSTEM VERIFICATION TEST. (Refer to 28 - DTC-Based Diagnostics/CONTROLLER, Occupant Restraint (ORC) - Standard Procedure).

4. CHECK (R61, R63) DRIVER SQUIB 2 CIRCUITS FOR A SHORT TO VOLTAGE

WARNING: Turn the ignition off, disconnect the 12-volt battery and wait two minutes before proceeding. Failure to follow these instructions may result in possible serious or fatal injury.

1. Disconnect the SRS Load Tool Kit 8443A and Jumper from the Clockspring C4 harness connector.
2. Disconnect the ORC harness connectors.

NOTE: Check connectors - Clean and repair as necessary.

3. Connect the SRS Load Tool Adaptor 8443-24 to the ORC C2 harness connector.

WARNING: Turn the ignition on, then reconnect the 12-volt battery and wait two minutes before proceeding. Failure to follow these instructions may result in possible serious or fatal injury.

4. Measure the voltage of the (R63) Driver Squib 2 Line 1 circuit between the Clockspring C4 harness connector cavity 1 and ground.
5. Measure the voltage of the (R61) Driver Squib 2 Line 2 circuit between the Clockspring C4 harness connector cavity 2 and ground.

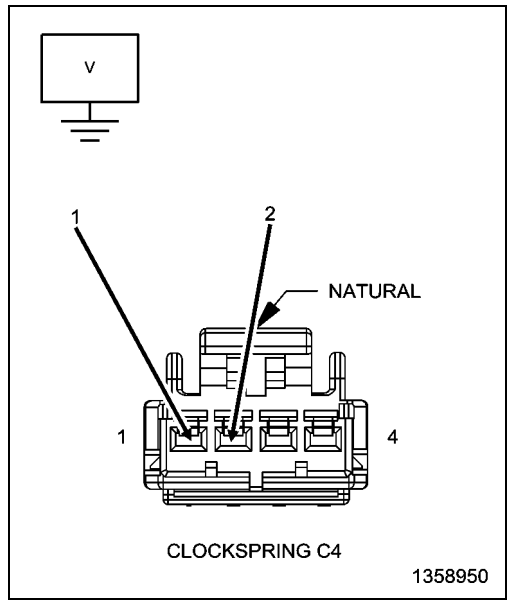

Is there any voltage present?

Yes

WARNING: Turn the ignition off, disconnect the 12-volt battery and wait two minutes before proceeding. Failure to follow these instructions may result in possible serious or fatal injury.

- Repair the (R63, R61) Driver Squib 2 circuits for a short to voltage.
- Perform the RESTRAINTS SYSTEM VERIFICATION TEST. (Refer to 28 - DTC-Based Diagnostics/CONTROLLER, Occupant Restraint (ORC) - Standard Procedure).

No

WARNING: Turn the ignition off, disconnect the 12-volt battery and wait two minutes before proceeding. Failure to follow these instructions may result in possible serious or fatal injury.

WARNING: If the Occupant Restraint Controller (ORC) is dropped at any time, it must be replaced. Failure to follow these instructions may result in possible serious or fatal injury.

- Replace the ORC in accordance with the Service Information.
- Perform the RESTRAINTS SYSTEM VERIFICATION TEST. (Refer to 28 - DTC-Based Diagnostics/CONTROLLER, Occupant Restraint (ORC) - Standard Procedure).

B0002-13-DRIVER FRONTAL SQUIB 2 CONTROL - CIRCUIT OPEN

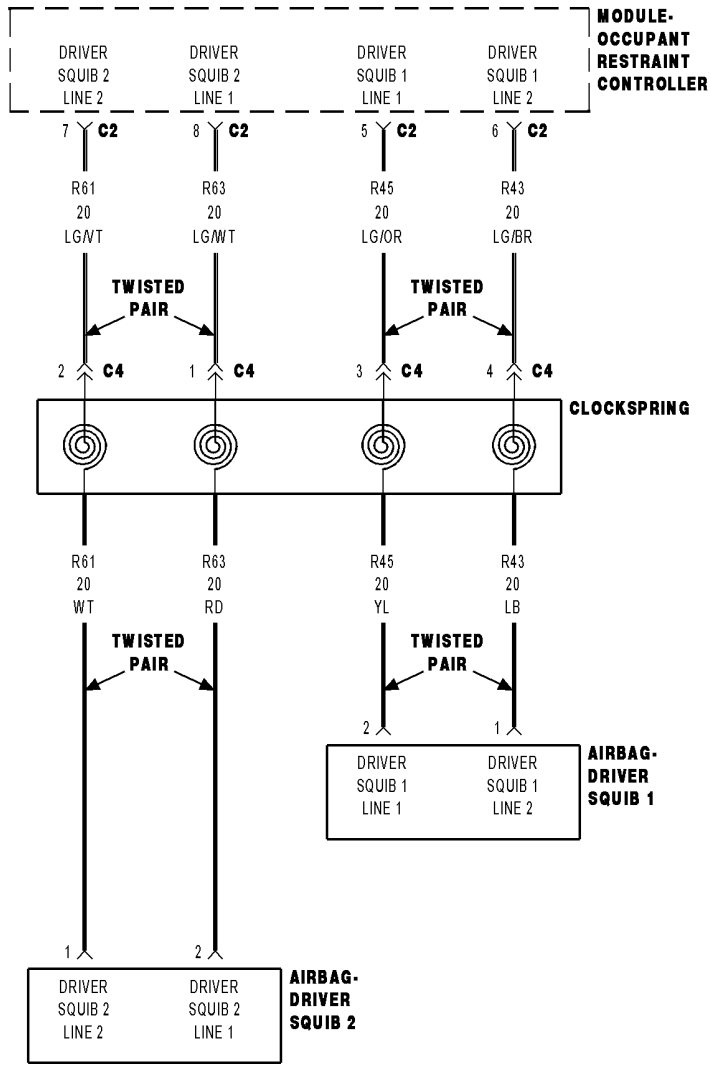

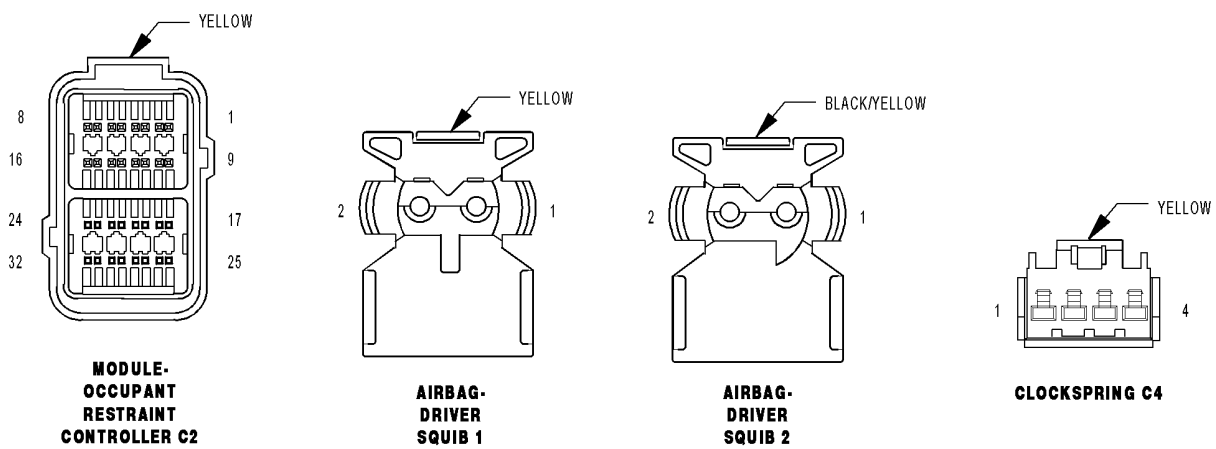

01257029

For a complete wiring diagram, **refer to the Wiring Information**.

Theory of Operation

When powered, the Occupant Restraint Controller (ORC) sends a test current to the squibs to verify the integrity of the squib and wiring. These circuits are maintained in a “floating” configuration at the ORC (connected to neither power nor ground) as protection against inadvertent deployment. Use of the Supplemental Restraints System (SRS) Load Tool Kit 8443A in the tests below substitutes a suspect squib with a known good component. The use of the SRS Load Tool Adapter provides a test point as well as a method for opening the shorting bar connections within the ORC harness connector.

- **When Monitored:**

  The ORC sends out a 40 mA diagnostic current on each squib voltage supply circuit at power up and every 100 ms thereafter while the ignition is on.
- **Set Condition:**

  This DTC sets when the ORC detects an open or high resistance on the squib circuit for more than 2.5 seconds. This Diagnostic Trouble Code (DTC) transitions from active to stored when the ORC sees a recovery from an open or high resistance condition for greater than 2.5 seconds.

Possible Causes
(R63) DRIVER SQUIB 2 LINE 1 CIRCUIT OPEN
(R61) DRIVER SQUIB 2 LINE 2 CIRCUIT OPEN
CLOCKSPRING
DRIVER AIRBAG
OCCUPANT RESTRAINT CONTROLLER (ORC)

Always perform the Pre-Diagnostic Troubleshooting procedure before proceeding. (Refer to 28 - DTC-Based Diagnostics/CONTROLLER, Occupant Restraint (ORC) - Standard Procedure).

1. VERIFY ACTIVE DTC

NOTE: Ensure the battery is fully charged.

1. Turn the ignition on.
2. With the scan tool, read ORC DTCs.

Does the scan tool display an active B0002-13-DRIVER FRONTAL SQUIB 2 CONTROL - CIRCUIT OPEN DTC?

Yes

- Go To 2

NO

- Perform the RESTRAINTS SYSTEM INTERMITTENT TEST. (Refer to 28 - DTC-Based Diagnostics/CONTROLLER, Occupant Restraint (ORC) - Standard Procedure).

2. CHECK DRIVER AIRBAG SQUIB 2 CIRCUITS FOR OPEN OR HIGH RESISTANCE

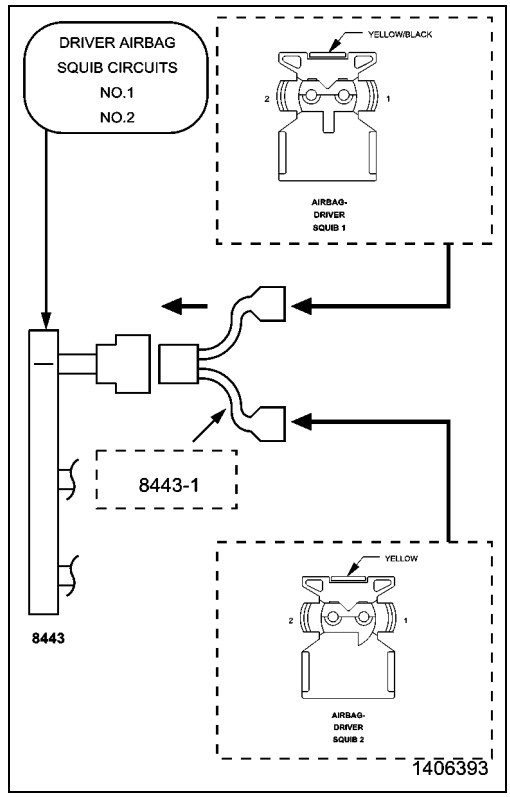

WARNING: Turn the ignition off, disconnect the 12-volt battery and wait two minutes before proceeding. Failure to follow these instructions may result in possible serious or fatal injury.

1. Disconnect the Driver Airbag Squib harness connectors.

WARNING: Do not place an intact non-deployed airbag face down on a hard surface, the airbag propels into the air if accidentally deployed. Failure to follow these instructions may result in possible serious or fatal injury.

NOTE: Check connectors - Clean and repair as necessary.

2. Connect the SRS Load Tool Kit 8443A and the SRS Load Tool Jumper 8443-1 to the Driver Airbag Squib harness connectors.

WARNING: Turn the ignition on, then reconnect the 12-volt battery and wait two minutes before proceeding. Failure to follow these instructions may result in possible serious or fatal injury.

3. With the scan tool, read the ORC DTCs.

   Does the scan tool display active B0002-13-DRIVER FRONTAL SQUIB 2 CONTROL - CIRCUIT OPEN DTC?

Yes

- Go To 3

No

WARNING: Turn the ignition off, disconnect the 12-volt battery and wait two minutes before proceeding. Failure to follow these instructions may result in possible serious or fatal injury.

- Replace the Driver Airbag in accordance with the Service Information.
- Perform the RESTRAINTS SYSTEM VERIFICATION TEST. (Refer to 28 - DTC-Based Diagnostics/CONTROLLER, Occupant Restraint (ORC) - Standard Procedure).

3. CHECK CLOCKSPRING SQUIB CIRCUITS FOR AN OPEN OR HIGH RESISTANCE

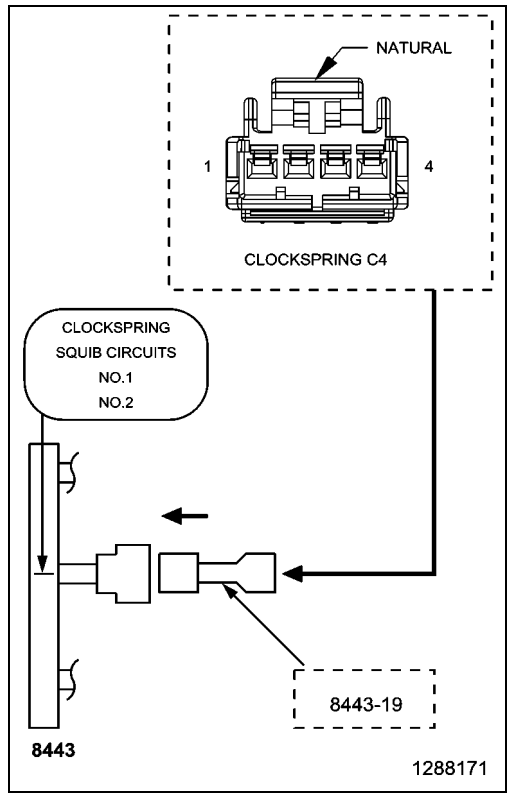

WARNING: Turn the ignition off, disconnect the 12-volt battery and wait two minutes before proceeding. Failure to follow these instructions may result in possible serious or fatal injury.

1. Disconnect the SRS Load Tool Kit 8443A and the Jumper from the Driver Airbag Squib harness connectors.
2. Disconnect the Clockspring C4 harness connector.

NOTE: Check connectors - Clean and repair as necessary.

3. Connect the SRS Load Tool Kit 8443A and the SRS Load Tool Jumper 8443-19 to the Clockspring C4 harness connector.

WARNING: Turn the ignition on, then reconnect the 12-volt battery and wait two minutes before proceeding. Failure to follow these instructions may result in possible serious or fatal injury.

4. With the scan tool, read the ORC DTCs.

   Does the scan tool display active B0002-13-DRIVER FRONTAL SQUIB 2 CONTROL - CIRCUIT OPEN DTC?

Yes

- Go To 4

No

WARNING: Turn the ignition off, disconnect the 12-volt battery and wait two minutes before proceeding. Failure to follow these instructions may result in possible serious or fatal injury.

- Replace the Clockspring in accordance with the Service Information.
- Perform the RESTRAINTS SYSTEM VERIFICATION TEST. (Refer to 28 - DTC-Based Diagnostics/CONTROLLER, Occupant Restraint (ORC) - Standard Procedure).

4. CHECK (R61, R63) DRIVER SQUIB 2 CIRCUITS FOR AN OPEN

WARNING: Turn the ignition off, disconnect the 12-volt battery and wait two minutes before proceeding. Failure to follow these instructions may result in possible serious or fatal injury.

1. Disconnect the SRS Load Tool Kit 8443A and the Jumper from the Clockspring C4 harness connector.
2. Disconnect the ORC harness connectors.

NOTE: Check connectors - Clean and repair as necessary.

3. Connect the SRS Load Tool Adaptor 8443-24 to the ORC C2 harness connector.
4. Measure the resistance of the (R63) Driver Squib 2 Line 1 circuit between the Clockspring C4 harness connector cavity 1 and the SRS Load Tool Adaptor 8443-24 cavity 8.
5. Measure the resistance of the (R61) Driver Squib 2 Line 2 circuit between the Clockspring C4 harness connector cavity 2 and the SRS Load Tool Adaptor 8443-24 cavity 7.

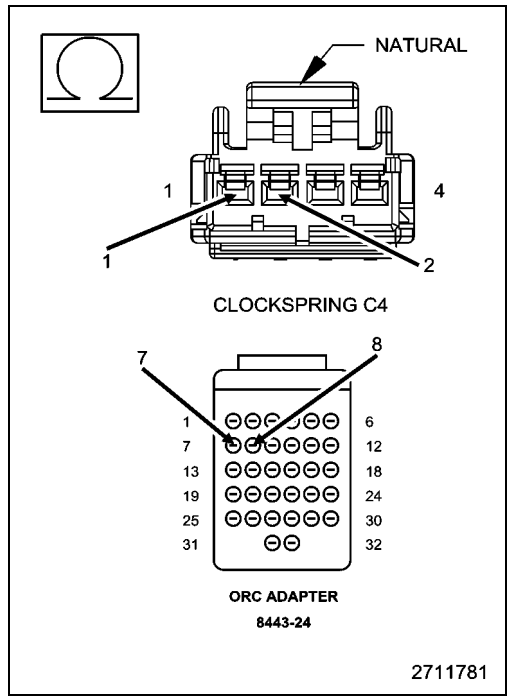

Is the resistance below 1.0 Ohms on both circuits?

Yes

WARNING: If the Occupant Restraint Controller (ORC) is dropped at any time, it must be replaced. Failure to follow these instructions may result in possible serious or fatal injury.

- Replace the ORC in accordance with the Service Information.
- Perform the RESTRAINTS SYSTEM VERIFICATION TEST. (Refer to 28 - DTC-Based Diagnostics/CONTROLLER, Occupant Restraint (ORC) - Standard Procedure).

No

- Repair the open (R63, R61) Driver Squib 2 Line 1 circuits.
- Perform the RESTRAINTS SYSTEM VERIFICATION TEST. (Refer to 28 - DTC-Based Diagnostics/CONTROLLER, Occupant Restraint (ORC) - Standard Procedure).

B0002-2B-DRIVER FRONTAL SQUIB 2 CONTROL - WIRES SHORTED TOGETHER

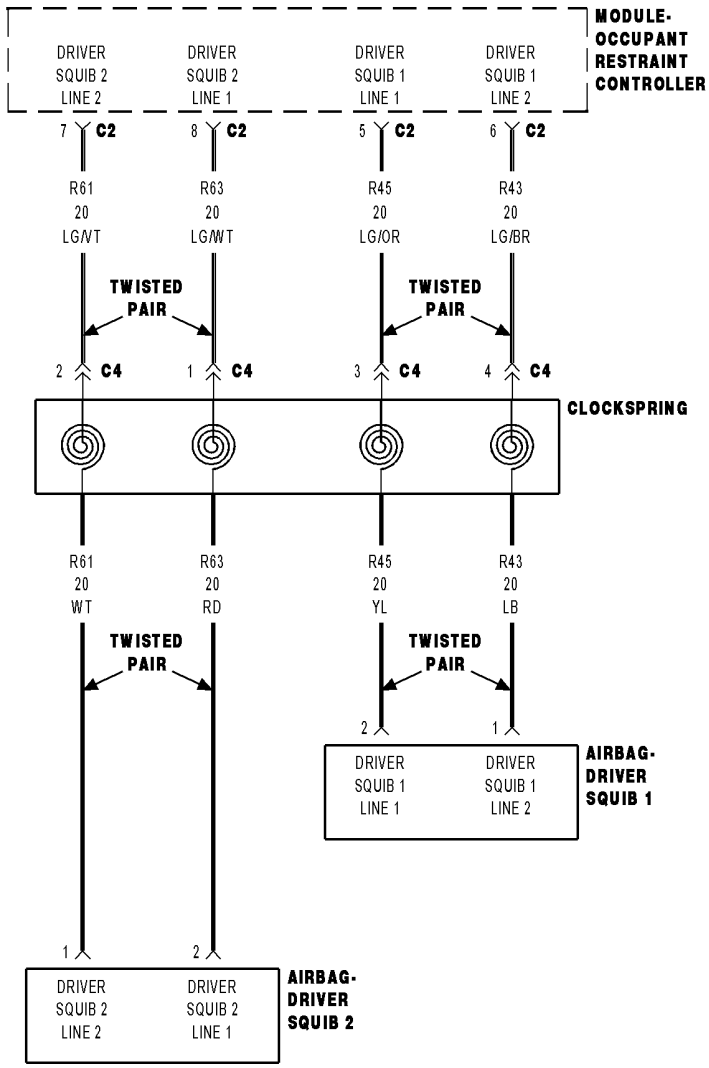

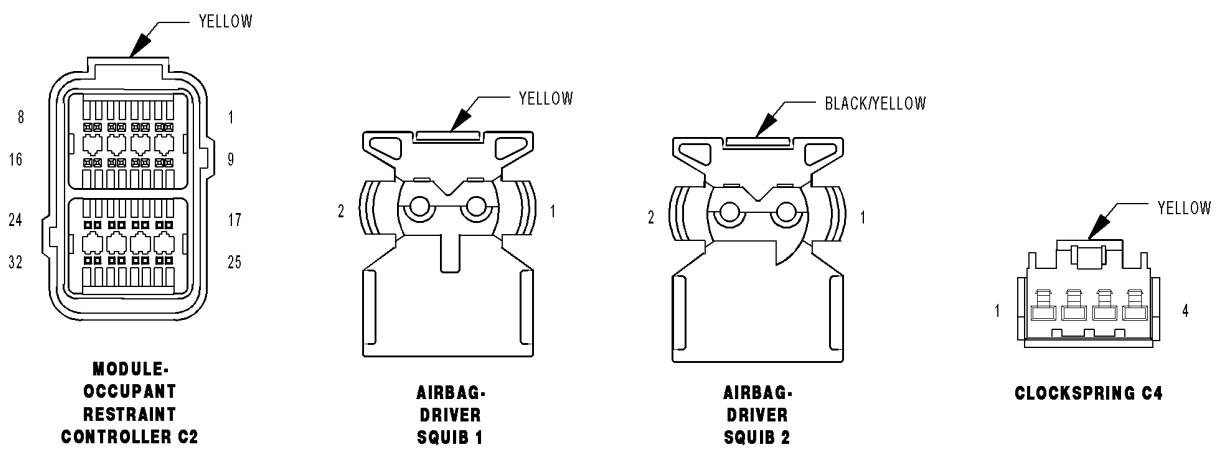

01257029

For a complete wiring diagram, **refer to the Wiring Information**.

Theory of Operation

When powered, the Occupant Restraint Controller (ORC) sends a test current to the squibs to verify the integrity of the squib and wiring. These circuits are maintained in a “floating” configuration at the ORC (connected to neither power nor ground) as protection against inadvertent deployment. Use of the Supplemental Restraints System (SRS) Load Tool Kit 8443A in the tests below substitutes a suspect squib with a known good component. The use of the SRS Load Tool Adaptor provides a test point as well as a method for opening the shorting bar connections within the ORC harness connector.

- **When Monitored:**

  The ORC sends out a 40 mA diagnostic current on each squib voltage supply circuit at power up and every 100 ms thereafter while the ignition is on.

- **Set Condition:**

  This Diagnostic Trouble Code (DTC) sets when the ORC detects both circuits of the same squib are shorted together for more than 2.5 seconds. This DTC transitions from active to stored when the ORC sees a recovery from a shorted together condition for greater than 2.5 seconds.

Possible Causes
(R63) DRIVER SQUIB 2 LINE 1 CIRCUIT SHORTED TO (R61) DRIVER SQUIB 2 LINE 2 CIRCUIT
CLOCKSPRING
DRIVER AIRBAG
OCCUPANT RESTRAINT CONTROLLER (ORC)

Always perform the Pre-Diagnostic Troubleshooting procedure before proceeding. (Refer to 28 - DTC-Based Diagnostics/CONTROLLER, Occupant Restraint (ORC) - Standard Procedure).

1. VERIFY ACTIVE DTC

NOTE: Ensure the battery is fully charged.

1. Turn the ignition on.
2. With the scan tool, read the ORC DTCs.

   Does the scan tool display active B0002-2B-DRIVER FRONTAL SQUIB 2 CONTROL - WIRES SHORTED TOGETHER DTC?

Yes

- Go To 2

No

- Perform the RESTRAINTS SYSTEM INTERMITTENT TEST. (Refer to 28 - DTC-Based Diagnostics/CONTROLLER, Occupant Restraint (ORC) - Standard Procedure).

2. CHECK DRIVER SQUIB 2 CIRCUITS FOR SHORT TOGETHER

WARNING: Turn the ignition off, disconnect the 12-volt battery and wait two minutes before proceeding. Failure to follow these instructions may result in possible serious or fatal injury.

WARNING: Do not place an intact non-deployed airbag face down on a hard surface, the airbag propels into the air if accidentally deployed. Failure to follow these instructions may result in possible serious or fatal injury.

1. Disconnect the Driver Airbag Squib harness connectors.

NOTE: Check connectors - Clean and repair as necessary.

2. Connect the SRS Load Tool Kit 8443A and the SRS Load Tool Jumper 8443-1 to the Driver Airbag Squib harness connectors.

WARNING: Turn the ignition on, then reconnect the 12-volt battery and wait two minutes before proceeding. Failure to follow these instructions may result in possible serious or fatal injury.

3. With the scan tool, read the ORC DTCs.

Does the scan tool display active B0002-2B-DRIVER FRONTAL SQUIB 2 CONTROL - WIRES SHORTED TOGETHER DTC?

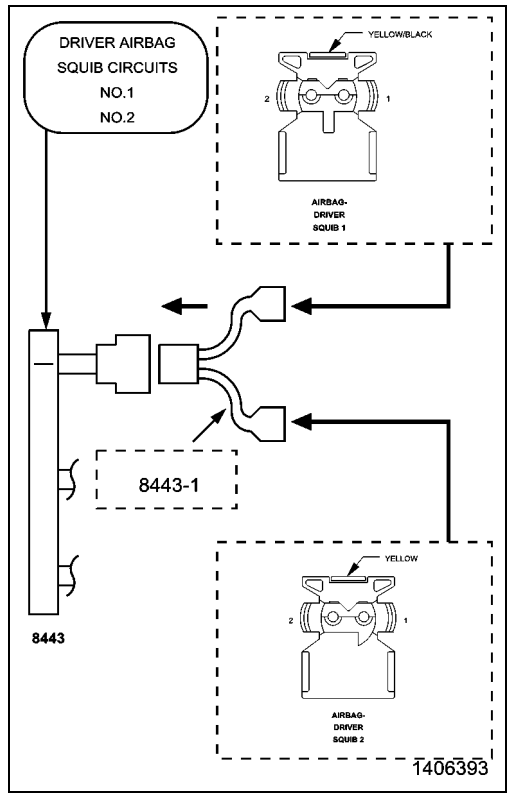

Yes

- Go To 3

No

WARNING: Turn the ignition off, disconnect the 12-volt battery and wait two minutes before proceeding. Failure to follow these instructions may result in possible serious or fatal injury.

- Replace the Driver Airbag in accordance with the Service Information.
- Perform the RESTRAINTS SYSTEM VERIFICATION TEST. (Refer to 28 - DTC-Based Diagnostics/CONTROLLER, Occupant Restraint (ORC) - Standard Procedure).

3. CHECK CLOCKSPRING SQUIB CIRCUITS FOR A SHORT TOGETHER

WARNING: Turn the ignition off, disconnect the 12-volt battery and wait two minutes before proceeding. Failure to follow these instructions may result in possible serious or fatal injury.

1. Disconnect the SRS Load Tool Kit 8443A and Jumper from the Driver Airbag Squib harness connectors.
2. Disconnect the Clockspring C4 harness connector.

NOTE: Check connectors - Clean and repair as necessary.

3. Connect the SRS Load Tool Kit 8443A and the SRS Load Tool Jumper 8443-19 to the Clockspring C4 harness connector.

WARNING: Turn the ignition on, then reconnect the 12-volt battery and wait two minutes before proceeding. Failure to follow these instructions may result in possible serious or fatal injury.

4. With the scan tool, read the ORC DTCs.

Does the scan tool display active B0002-2B-DRIVER FRONTAL SQUIB 2 CONTROL - WIRES SHORTED TOGETHER DTC?

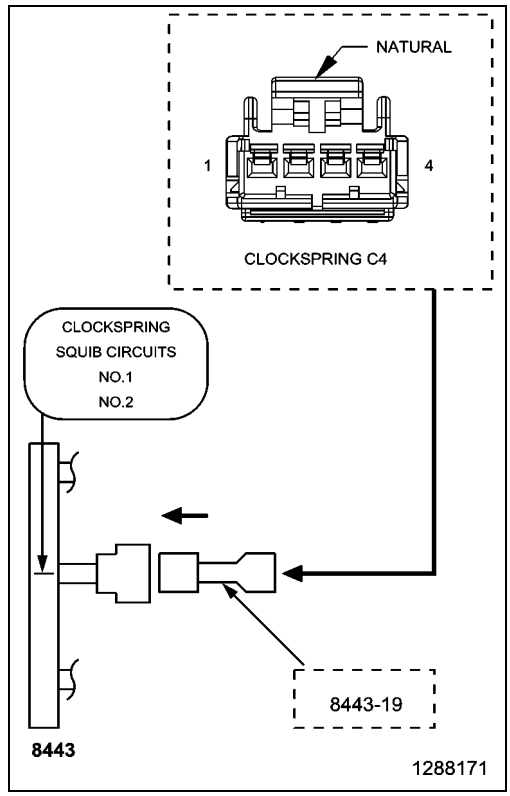

Yes

- Go To 4

No

- Replace the Clockspring in accordance with the Service Information.
- Perform the RESTRAINTS SYSTEM VERIFICATION TEST. (Refer to 28 - DTC-Based Diagnostics/CONTROLLER, Occupant Restraint (ORC) - Standard Procedure).

4. CHECK (R63) DRIVER SQUIB 2 LINE 1 CIRCUIT FOR A SHORT TO (R61) DRIVER SQUIB 2 LINE 2 CIRCUIT

WARNING: Turn the ignition off, disconnect the 12-volt battery and wait two minutes before proceeding. Failure to follow these instructions may result in possible serious or fatal injury.

1. Disconnect the SRS Load Tool Kit 8443A and Jumper from the Clockspring C4 harness connector.
2. Disconnect the ORC harness connectors.

NOTE: Check connectors - Clean and repair as necessary.

3. Connect the SRS Load Tool Adaptor 8443-24 to the ORC C2 harness connector.
4. Measure the resistance between the (R63) Driver Squib 2 Line 1 circuit cavity 1 and the (R61) Driver Squib 2 Line 2 circuit cavity 2 at the Clockspring C4 harness connector.

Is the resistance below 5.0 Ohms?

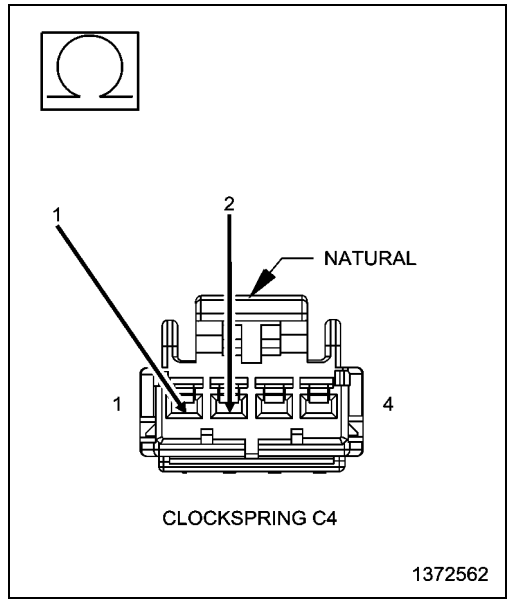

Yes

- Repair the (R63) Driver Squib 2 Line 1 circuit for a short to the (R61) Driver Squib 2 Line 2 circuit.
- Perform the RESTRAINTS SYSTEM VERIFICATION TEST. (Refer to 28 - DTC-Based Diagnostics/CONTROLLER, Occupant Restraint (ORC) - Standard Procedure).

No

WARNING: If the Occupant Restraint Controller (ORC) is dropped at any time, it must be replaced. Failure to follow these instructions may result in possible serious or fatal injury.

- Replace the ORC in accordance with the Service Information.
- Perform the RESTRAINTS SYSTEM VERIFICATION TEST. (Refer to 28 - DTC-Based Diagnostics/CONTROLLER, Occupant Restraint (ORC) - Standard Procedure).

■ B0010-11-PASSENGER FRONTAL SQUIB 1 CONTROL - CIRCUIT SHORT TO GROUND

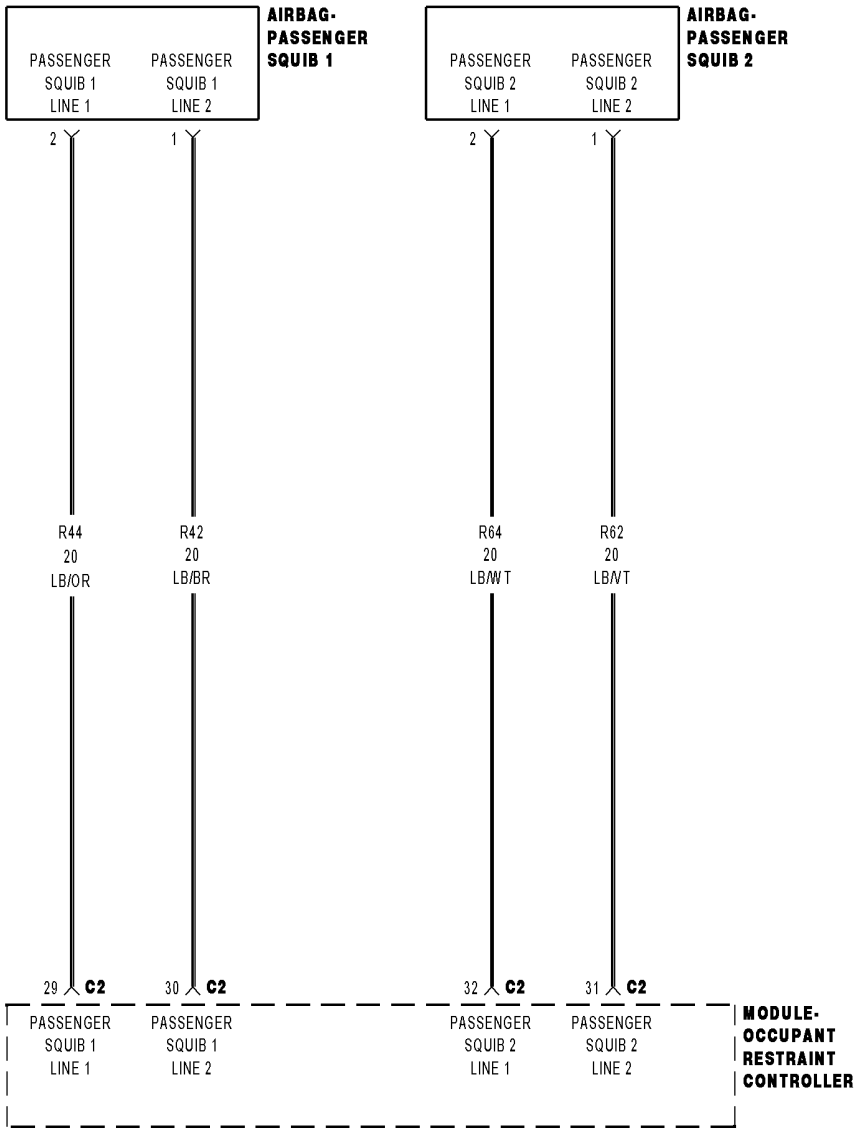

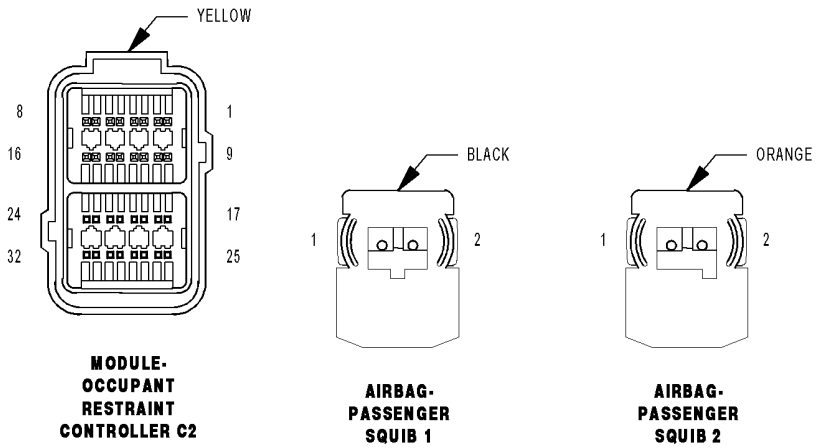

01257086

For a complete wiring diagram, **refer to the Wiring Information**.

Theory of Operation

When powered, the Occupant Restraint Controller (ORC) sends a test current to the squibs to verify the integrity of the squib and wiring. These circuits are maintained in a “floating” configuration at the ORC (connected to neither power nor ground) as protection against inadvertent deployment. Use of the Supplemental Restraints System (SRS) Load Tool Kit 8443A in the tests below substitutes a suspect squib with a known good component. The use of the SRS Load Tool Adapter provides a test point as well as a method for opening the shorting bar connections within the ORC harness connector.

- **When Monitored:**

  The ORC sends out a 40 mA diagnostic current on each squib voltage supply circuit at power up and every 100 ms thereafter while the ignition is on.
- **Set Condition:**

  This Diagnostic Trouble Code (DTC) sets when the ORC detects a short to ground on the squib circuit for more than 2.5 seconds. This DTC transitions from active to stored when the ORC sees a recovery from a short to ground condition for greater than 2.5 seconds.

Possible Causes
(R42) PASSENGER SQUIB 1 LINE 2 CIRCUIT SHORTED TO GROUND
(R44) PASSENGER SQUIB 1 LINE 1 CIRCUIT SHORTED TO GROUND
PASSENGER AIRBAG
OCCUPANT RESTRAINT CONTROLLER (ORC)

Always perform the Pre-Diagnostic Troubleshooting procedure before proceeding. (Refer to 28 - DTC-Based Diagnostics/CONTROLLER, Occupant Restraint (ORC) - Standard Procedure).

1. VERIFY ACTIVE DTC

NOTE: Ensure the battery is fully charged.

1. Turn the ignition on.
2. With the scan tool, read ORC DTCs.

   Does the scan tool display active B0010-11-PASSENGER FRONTAL SQUIB 1 CONTROL - CIRCUIT SHORT TO GROUND DTC?

Yes

- Go To 2

No

- Perform the RESTRAINTS SYSTEM INTERMITTENT TEST. (Refer to 28 - DTC-Based Diagnostics/CONTROLLER, Occupant Restraint (ORC) - Standard Procedure).

2. CHECK PASSENGER AIRBAG SQUIB FOR SHORT CIRCUITS

WARNING: Turn the ignition off, disconnect the 12-volt battery and wait two minutes before proceeding. Failure to follow these instructions may result in possible serious or fatal injury.

1. Disconnect the Passenger Airbag Squib harness connectors.

WARNING: Do not place an intact non-deployed airbag face down on a hard surface, the airbag propels into the air if accidentally deployed. Failure to follow these instructions may result in possible serious or fatal injury.

NOTE: Check connectors - Clean and repair as necessary.

2. Connect the SRS Load Tool Kit 8443A and SRS Load Tool Jumper 8443-8 to the Passenger Airbag Squib harness connectors.

WARNING: Turn the ignition on, then reconnect the 12-volt battery and wait two minutes before proceeding. Failure to follow these instructions may result in possible serious or fatal injury.

3. With the scan tool, read the ORC DTCs.

Does the scan tool display active B0010-11-PASSENGER FRONTAL SQUIB 1 CONTROL - CIRCUIT SHORT TO GROUND DTC?

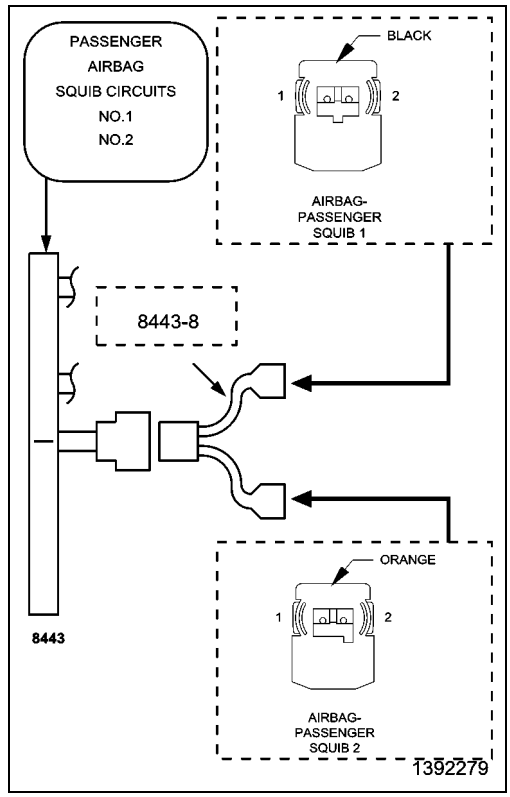

Yes

- Go To 3

No

WARNING: Turn the ignition off, disconnect the 12-volt battery and wait two minutes before proceeding. Failure to follow these instructions may result in possible serious or fatal injury.

- Replace the Passenger Airbag in accordance with the Service Information.
- Perform the RESTRAINTS SYSTEM VERIFICATION TEST. (Refer to 28 - DTC-Based Diagnostics/CONTROLLER, Occupant Restraint (ORC) - Standard Procedure).

3. CHECK (R42, R44) PASSENGER SQUIB 1 CIRCUITS FOR A SHORT TO GROUND

WARNING: Turn the ignition off, disconnect the 12-volt battery and wait two minutes before proceeding. Failure to follow these instructions may result in possible serious or fatal injury.

1. Disconnect the SRS Load Tool Kit 8443A and Jumper from the Passenger Airbag Squib harness connectors.
2. Disconnect the ORC harness connectors.

NOTE: Check connectors - Clean and repair as necessary.

3. Connect the SRS Load Tool Adaptor 8443-24 to the ORC C2 harness connector.
4. Measure the resistance of the (R42) Passenger Squib 1 Line 2 circuit between the Passenger Airbag Squib 1 harness connector cavity 1 and ground.
5. Measure the resistance of the (R44) Passenger Squib 1 Line 1 circuit between and the Passenger Airbag Squib 1 harness connector cavity 2 and ground.

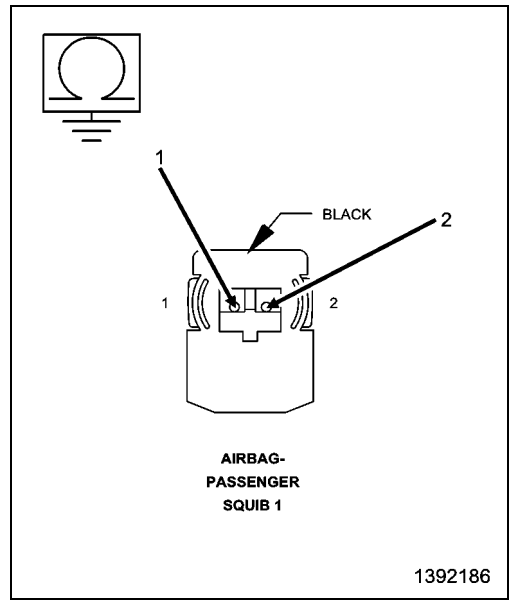

Is the resistance below 10K Ohms for either measurement?

Yes

- Repair the (R42, R44) Passenger Squib 1 circuits for a short to ground.
- Perform the RESTRAINTS SYSTEM VERIFICATION TEST. (Refer to 28 - DTC-Based Diagnostics/CONTROLLER, Occupant Restraint (ORC) - Standard Procedure).

No

WARNING: If the Occupant Restraint Controller (ORC) is dropped at any time, it must be replaced. Failure to follow these instructions may result in possible serious or fatal injury.

- Replace the ORC in accordance with the Service Information.
- Perform the RESTRAINTS SYSTEM VERIFICATION TEST. (Refer to 28 - DTC-Based Diagnostics/CONTROLLER, Occupant Restraint (ORC) - Standard Procedure).

■ B0010-12-PASSENGER FRONTAL SQUIB 1 CONTROL - CIRCUIT SHORT TO BATTERY

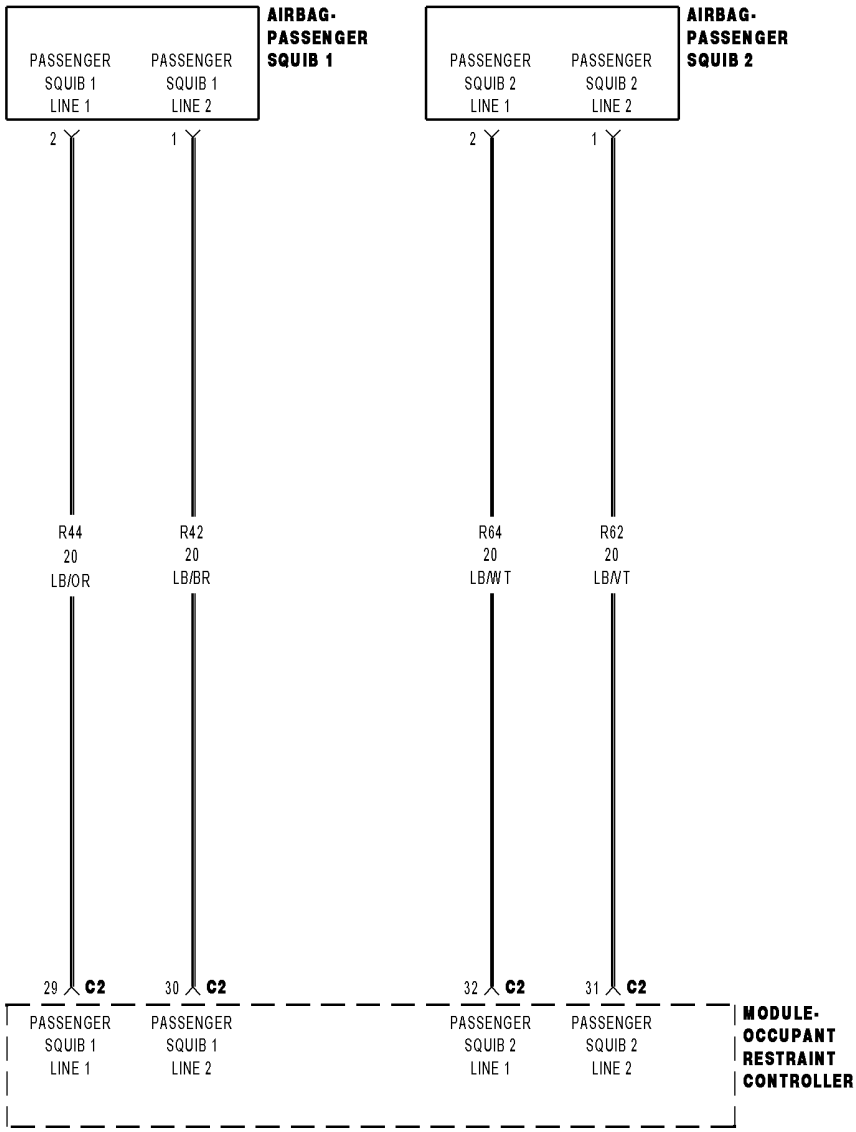

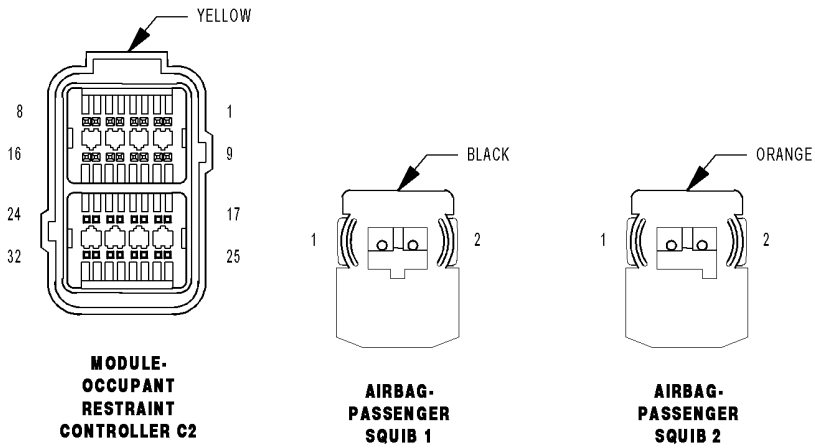

01257086

For a complete wiring diagram, **refer to the Wiring Information**.

Theory of Operation

When powered, the Occupant Restraint Controller (ORC) sends a test current to the squibs to verify the integrity of the squib and wiring. These circuits are maintained in a "floating" configuration at the ORC (connected to neither power or ground) as protection against inadvertent deployment. Use of the Supplemental Restraints System (SRS) Load Tool kit 8443A in the tests below substitutes a suspect squib with a known good component. The use of the SRS Load Tool Adapter provides a test point as well as a method for opening the shorting bar connections within the ORC harness connector.

- **When Monitored:**

  The ORC sends out a 40 mA diagnostic current on each squib voltage supply circuit at power up and every 100 ms thereafter while the ignition is on.
- **Set Condition:**

  This Diagnostic Trouble Code (DTC) sets when the ORC detects a short to voltage on the squib circuit for more than 2.5 seconds. This DTC transitions from active to stored when the ORC sees a recovery from a short to voltage for greater than 2.5 seconds.

Possible Causes
(R42) PASSENGER SQUIB 1 LINE 2 CIRCUIT SHORTED TO VOLTAGE
(R44) PASSENGER SQUIB 1 LINE 1 CIRCUIT SHORTED TO VOLTAGE
PASSENGER AIRBAG
OCCUPANT RESTRAINT CONTROLLER (ORC)

Always perform the Pre-Diagnostic Troubleshooting procedure before proceeding. (Refer to 28 - DTC-Based Diagnostics/CONTROLLER, Occupant Restraint (ORC) - Standard Procedure).

1. VERIFY ACTIVE DTC

NOTE: Ensure the battery is fully charged.

1. Turn the ignition on.
2. With the scan tool, read ORC DTCs.

   Does the scan tool display active B0010-12-PASSENGER FRONTAL SQUIB 1 CONTROL - CIRCUIT SHORT TO BATTERY DTC?

Yes

- Go To 2

No

- Perform the RESTRAINTS SYSTEM INTERMITTENT TEST. (Refer to 28 - DTC-Based Diagnostics/CONTROLLER, Occupant Restraint (ORC) - Standard Procedure).

2. CHECK PASSENGER AIRBAG SQUIB CIRCUITS FOR SHORT TO VOLTAGE

WARNING: Turn the ignition off, disconnect the 12-volt battery and wait two minutes before proceeding. Failure to follow these instructions may result in possible serious or fatal injury.

1. Disconnect the Passenger Airbag Squib harness connectors.

WARNING: Do not place an intact non-deployed airbag face down on a hard surface, the airbag propels into the air if accidentally deployed. Failure to follow these instructions may result in possible serious or fatal injury.

NOTE: Check connectors - Clean and repair as necessary.

2. Connect the SRS Load Tool Kit 8443-24 and SRS Load Tool Jumper 8443-8 to the Passenger Airbag Squib harness connectors.

WARNING: Turn the ignition on, then reconnect the 12-volt battery and wait two minutes before proceeding. Failure to follow these instructions may result in possible serious or fatal injury.

3. With the scan tool, read the ORC DTCs.

Does the scan tool display active B0010-12-PASSENGER FRONTAL SQUIB 1 CONTROL - CIRCUIT SHORT TO BATTERY DTC?

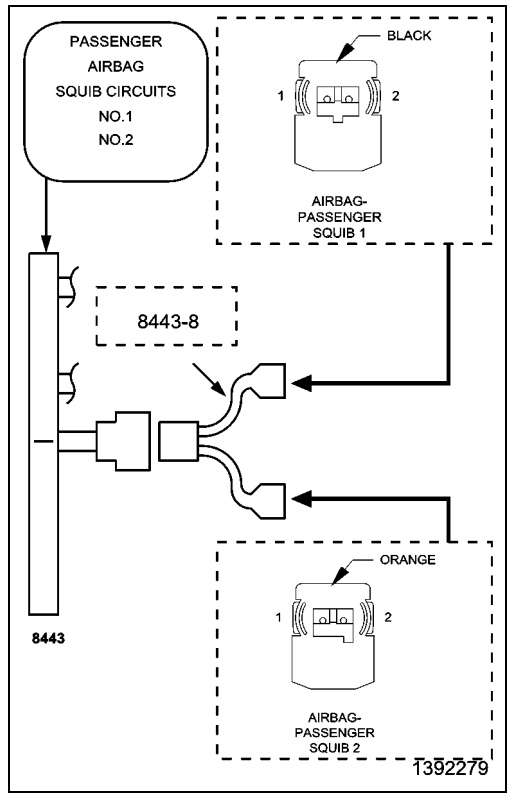

Yes

- Go To 3

No

WARNING: Turn the ignition off, disconnect the 12-volt battery and wait two minutes before proceeding. Failure to follow these instructions may result in possible serious or fatal injury.

- Replace the Passenger Airbag in accordance with the Service Information.
- Perform the RESTRAINTS SYSTEM VERIFICATION TEST. (Refer to 28 - DTC-Based Diagnostics/CONTROLLER, Occupant Restraint (ORC) - Standard Procedure).

3. CHECK (R42, R44) PASSENGER SQUIB 1 CIRCUITS FOR A SHORT TO VOLTAGE

WARNING: Turn the ignition off, disconnect the 12-volt battery and wait two minutes before proceeding. Failure to follow these instructions may result in possible serious or fatal injury.

1. Disconnect the SRS Load Tool Kit 8443A and Jumper from the Passenger Airbag Squib harness connectors.
2. Disconnect the ORC harness connectors.

NOTE: Check connectors - Clean and repair as necessary.

3. Connect the SRS Load Tool Adaptor 8443-24 to the ORC C2 harness connector.

WARNING: Turn the ignition on, then reconnect the 12-volt battery and wait two minutes before proceeding. Failure to follow these instructions may result in possible serious or fatal injury.

4. Measure the voltage of the (R42) Passenger Squib 1 Line 2 circuit between the Passenger Airbag Squib 1 harness connector cavity 1 and ground.
5. Measure the voltage of the (R44) Passenger Squib 1 Line 1 circuit between the Passenger Airbag Squib 1 harness connector cavity 2 and ground.

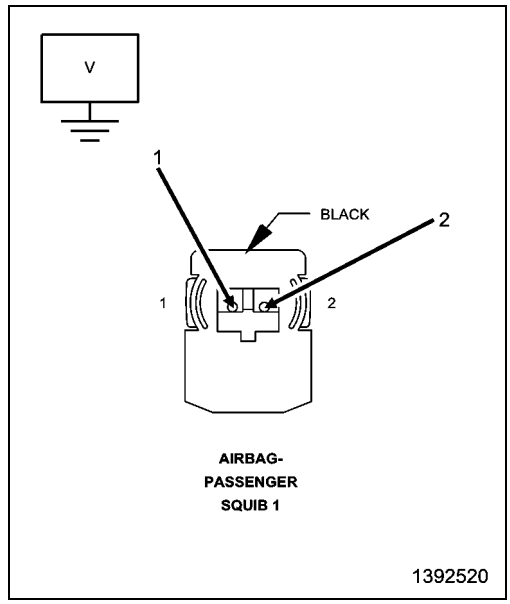

Is there any voltage present for either measurement?

Yes

WARNING: Turn the ignition off, disconnect the 12-volt battery and wait two minutes before proceeding. Failure to follow these instructions may result in possible serious or fatal injury.

- Repair the (R42, R44) Passenger Squib 1 circuits for a short to voltage.
- Perform the RESTRAINTS SYSTEM VERIFICATION TEST. (Refer to 28 - DTC-Based Diagnostics/CONTROLLER, Occupant Restraint (ORC) - Standard Procedure).

No

WARNING: Turn the ignition off, disconnect the 12-volt battery and wait two minutes before proceeding. Failure to follow these instructions may result in possible serious or fatal injury.

WARNING: If the Occupant Restraint Controller (ORC) is dropped at any time, it must be replaced. Failure to follow these instructions may result in possible serious or fatal injury.

- Replace the ORC in accordance with the Service Information.
- Perform the RESTRAINTS SYSTEM VERIFICATION TEST. (Refer to 28 - DTC-Based Diagnostics/CONTROLLER, Occupant Restraint (ORC) - Standard Procedure).

B0010-13-PASSENGER FRONTAL SQUIB 1 CONTROL - CIRCUIT OPEN

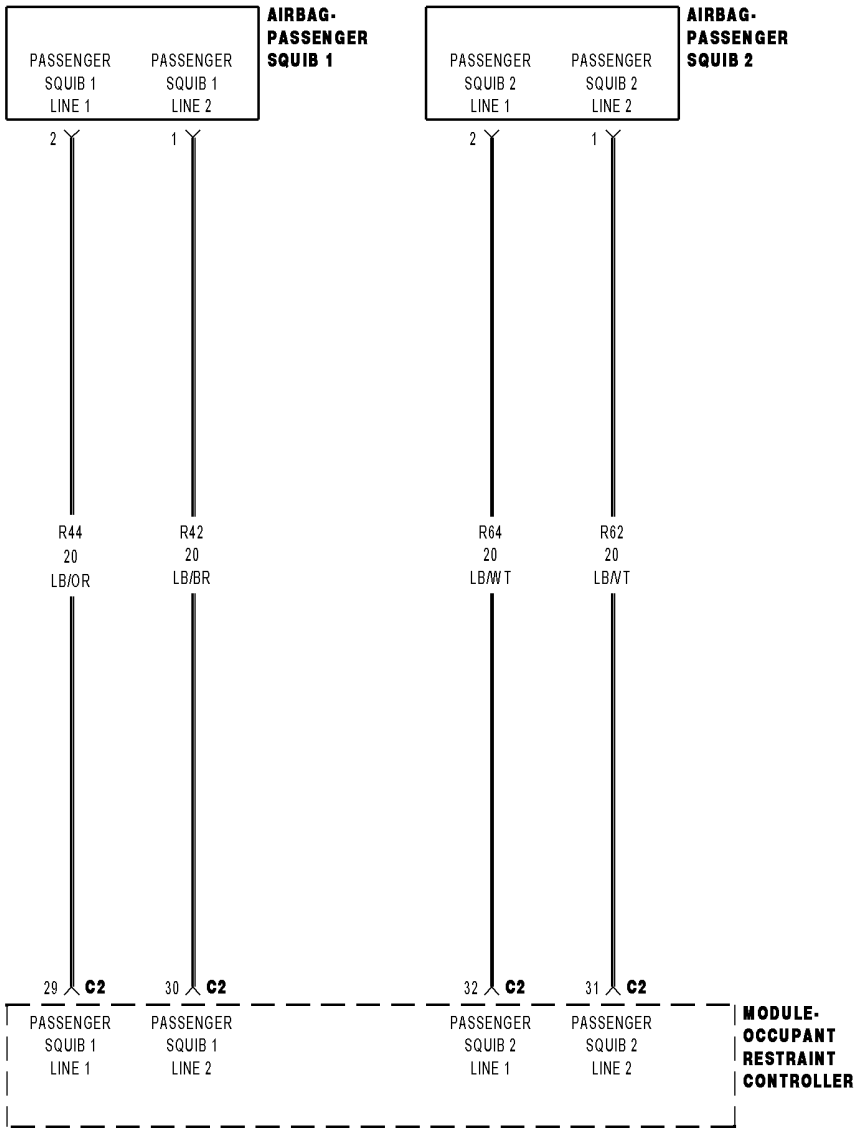

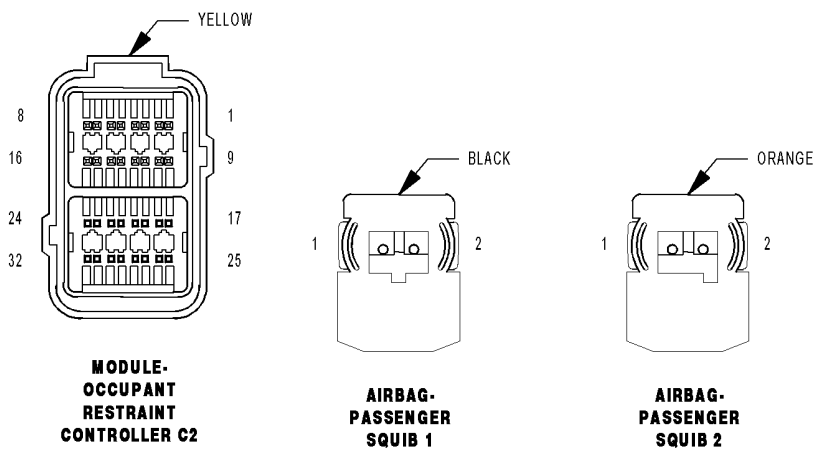

01257086

For a complete wiring diagram, **refer to the Wiring Information**.

Theory of Operation

When powered, the Occupant Restraint Controller (ORC) sends a test current to the squibs to verify the integrity of the squib and wiring. These circuits are maintained in a “floating” configuration at the ORC (connected to neither power nor ground) as protection against inadvertent deployment. Use of the Supplemental Restraints System (SRS) load Tool Kit 8443A in the tests below substitutes a suspect squib with a known good component. The use of the SRS Load Tool Adapter provides a test point as well as a method for opening the shorting bar connections within the ORC harness connector.

- **When Monitored:**

  The ORC sends out a 40 mA diagnostic current on each squib voltage supply circuit at power up and every 100 ms thereafter while the ignition is on.

- **Set Condition:**

  This Diagnostic Trouble Code (DTC) sets when the ORC detects an open or high resistance on the squib circuit for more than 2.5 seconds. This DTC transitions from active to stored when the ORC sees a recovery from an open condition for greater than 2.5 seconds.

Possible Causes
(R42) PASSENGER SQUIB 1 LINE 2 CIRCUIT OPEN
(R44) PASSENGER SQUIB 1 LINE 1 CIRCUIT OPEN
PASSENGER AIRBAG
OCCUPANT RESTRAINT CONTROLLER (ORC)

Always perform the Pre-Diagnostic Troubleshooting procedure before proceeding. (Refer to 28 - DTC-Based Diagnostics/CONTROLLER, Occupant Restraint (ORC) - Standard Procedure).

1. VERIFY ACTIVE DTC

NOTE: Ensure the battery is fully charged.

1. Turn the ignition on.
2. With the scan tool, read ORC DTCs

Does the scan tool display active B0010-13-PASSENGER FRONTAL SQUIB 1 CONTROL - CIRCUIT OPEN DTC?

Yes

- Go To 2

No

- Perform the RESTRAINTS SYSTEM INTERMITTENT TEST. (Refer to 28 - DTC-Based Diagnostics/CONTROLLER, Occupant Restraint (ORC) - Standard Procedure).

2. CHECK FOR OPEN PASSENGER AIRBAG SQUIB CIRCUITS

WARNING: Turn the ignition off, disconnect the 12-volt battery and wait two minutes before proceeding. Failure to follow these instructions may result in possible serious or fatal injury.

1. Disconnect the Passenger Airbag Squib harness connectors.

WARNING: Do not place an intact non-deployed airbag face down on a hard surface, the airbag propels into the air if accidentally deployed. Failure to follow these instructions may result in possible serious or fatal injury.

NOTE: Check connectors - Clean and repair as necessary.

2. Connect the SRS Load Tool Kit 8443A and SRS Load Tool Jumper 8443-8 to the Passenger Airbag Squib harness connectors.

WARNING: Turn the ignition on, then reconnect the 12-volt battery and wait two minutes before proceeding. Failure to follow these instructions may result in possible serious or fatal injury.

3. With the scan tool, read the ORC DTCs.

Does the scan tool display active B0010-13-PASSENGER FRONTAL SQUIB 1 CONTROL - CIRCUIT OPEN DTC?

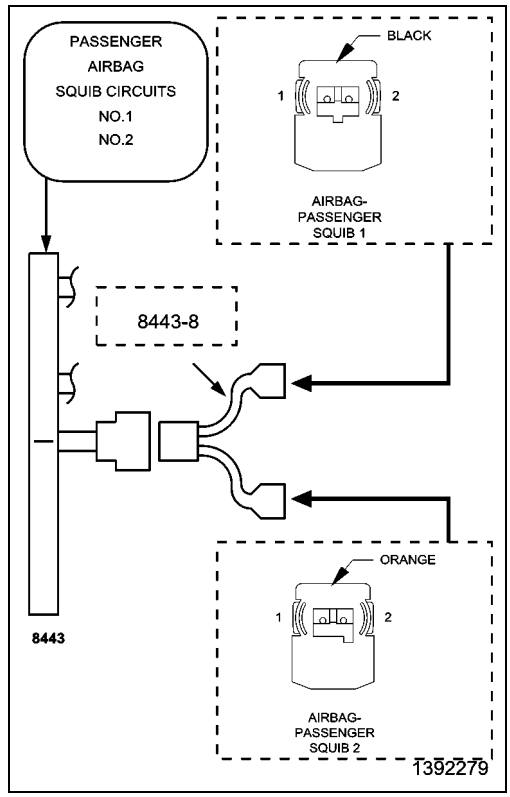

Yes

- Go To 3

No

WARNING: Turn the ignition off, disconnect the 12-volt battery and wait two minutes before proceeding. Failure to follow these instructions may result in possible serious or fatal injury.

- Replace the Passenger Airbag in accordance with the Service Information.
- Perform the RESTRAINTS SYSTEM VERIFICATION TEST. (Refer to 28 - DTC-Based Diagnostics/CONTROLLER, Occupant Restraint (ORC) - Standard Procedure).

3. CHECK (R42, R64) PASSENGER SQUIB 1 CIRCUITS FOR AN OPEN

WARNING: Turn the ignition off, disconnect the 12-volt battery and wait two minutes before proceeding. Failure to follow these instructions may result in possible serious or fatal injury.

1. Disconnect the SRS Load Tool Kit 8443A and Jumper from the Passenger Airbag Squib harness connectors.
2. Disconnect the ORC harness connectors.

NOTE: Check connectors - Clean and repair as necessary.

3. Connect the SRS Load Tool Adaptor 8443-24 to the ORC C2 harness connector.
4. Measure the resistance of the (R42) Passenger Squib 1 Line 2 circuit cavity 1 between the Passenger Airbag Squib 1 harness connector and the SRS Load Tool Adaptor 8443-24 cavity 30.
5. Measure the resistance of the (R44) Passenger Squib 1 Line 1 circuit cavity 2 between the Passenger Airbag Squib 1 harness connector and the SRS Load Tool Adaptor 8443-24 cavity 29.

Is the resistance below 1.0 Ohms on both circuits?

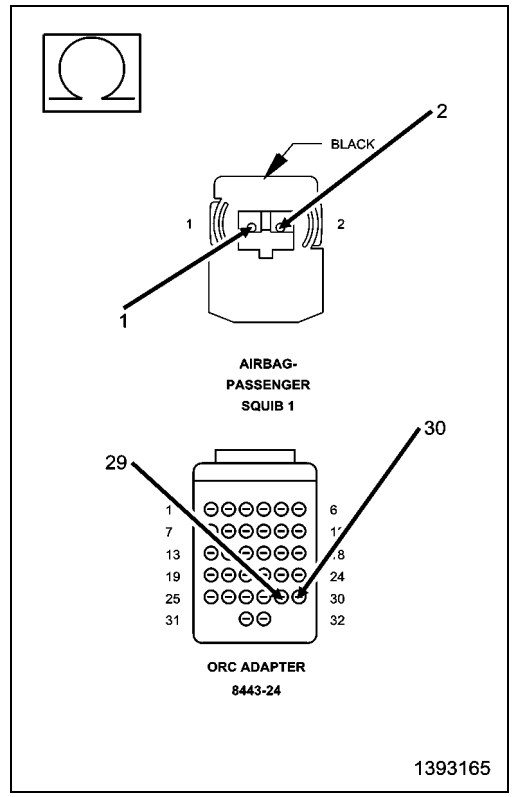

Yes

WARNING: If the Occupant Restraint Controller (ORC) is dropped at any time, it must be replaced. Failure to follow these instructions may result in possible serious or fatal injury.

- Replace the ORC in accordance with the Service Information.
- Perform the RESTRAINTS SYSTEM VERIFICATION TEST. (Refer to 28 - DTC-Based Diagnostics/CONTROLLER, Occupant Restraint (ORC) - Standard Procedure).

No

- Repair the (R42, R44) Passenger Squib 1 circuits for an open or high resistance.
- Perform the RESTRAINTS SYSTEM VERIFICATION TEST. (Refer to 28 - DTC-Based Diagnostics/CONTROLLER, Occupant Restraint (ORC) - Standard Procedure).

■ B0010-2B-PASSENGER FRONTAL SQUIB 1 CONTROL - WIRES SHORTED TOGETHER

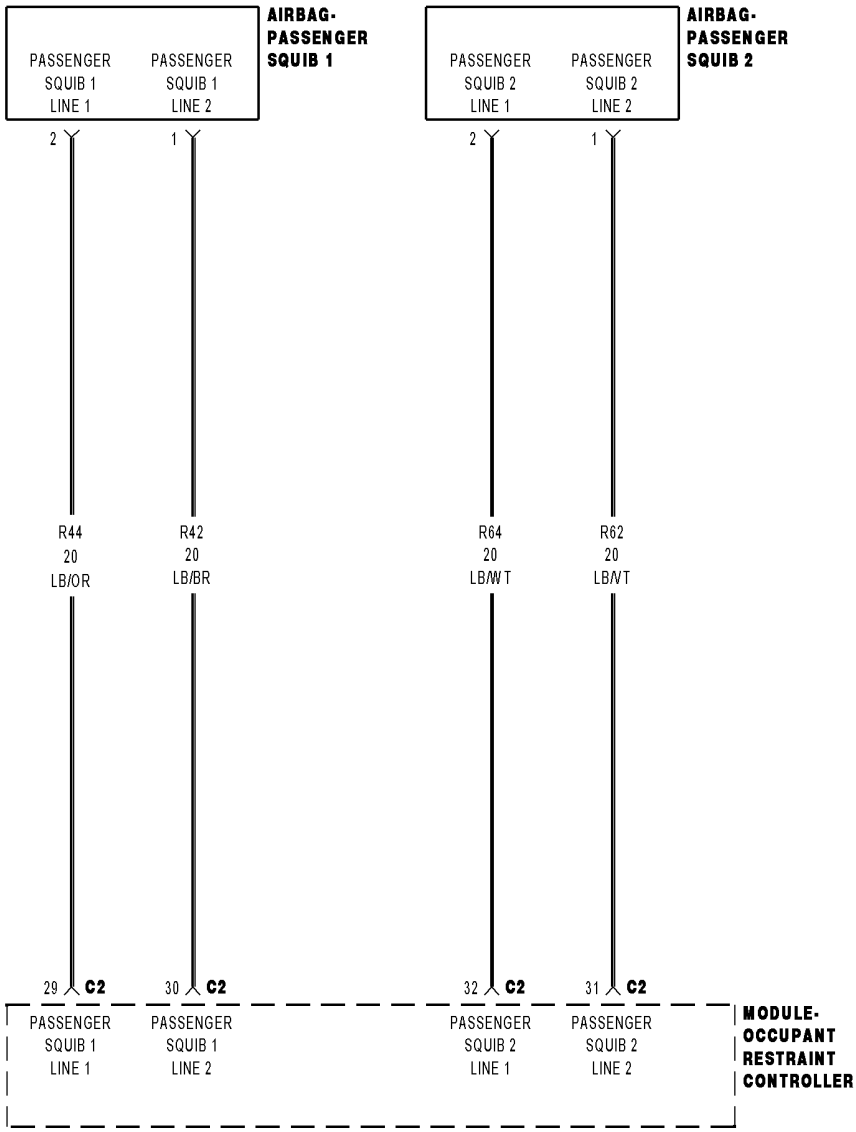

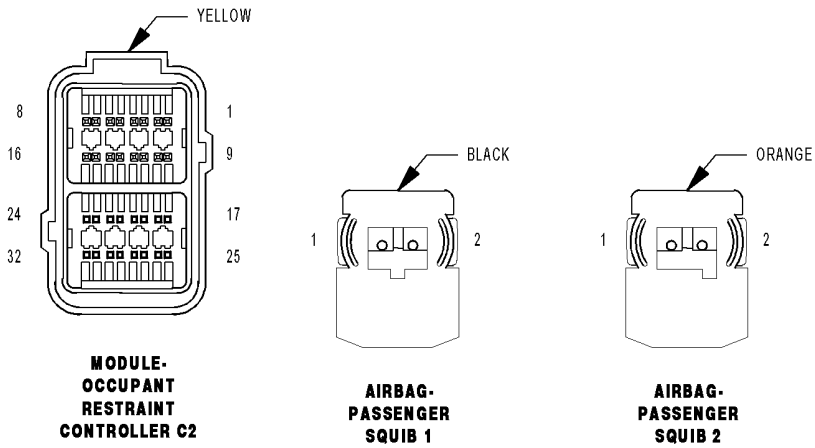

01257086

For a complete wiring diagram, **refer to the Wiring Information**.

Theory of Operation

When powered, the Occupant Restraint Controller (ORC) sends a test current to the squibs to verify the integrity of the squib and wiring. These circuits are maintained in a “floating” configuration at the ORC (connected to neither power nor ground) as protection against inadvertent deployment. Use of the Supplemental Restraints System (SRS) load Tool Kit 8443A in the tests below substitutes a suspect squib with a known good component. The use of the SRS Load Tool Adapter 8443-24 provides a test point as well as a method for opening the shorting bar connections within the ORC harness connector.

- **When Monitored:**

  The ORC sends out a 40 mA diagnostic current on each squib voltage supply circuit at power up and every 100 ms thereafter while the ignition is on.
- **Set Condition:**

  This Diagnostic Trouble Code (DTC) sets when the ORC detects both circuits of the same squib are shorted together for more than 2.5 seconds. This DTC transitions from active to stored when the ORC sees a recovery from a shorted together condition for greater than 2.5 seconds.

Possible Causes
(R42) PASSENGER SQUIB 1 LINE 2 CIRCUIT SHORTED TO (R44) PASSENGER SQUIB 1 LINE 1 CIRCUIT
PASSENGER AIRBAG
OCCUPANT RESTRAINT CONTROLLER (ORC)

Always perform the Pre-Diagnostic Troubleshooting procedure before proceeding. (Refer to 28 - DTC-Based Diagnostics/CONTROLLER, Occupant Restraint (ORC) - Standard Procedure).

NOTE: Due to the limited accessibility of the Passenger Airbag Squib connectors please be certain that the latches and lock of each connector is fully seated and engaged. The blind access of the connectors makes it possible to not have the connector fully seated and therefore creating the possibility of an intermittent fault situation developing over time.

1. VERIFY ACTIVE DTC

NOTE: Make sure the battery is fully charged.

1. Turn the ignition on.
2. With the scan tool, read ORC DTCs.

Does the scan tool display active B0010-2B-PASSENGER FRONTAL SQUIB 1 CONTROL - WIRES SHORTED TOGETHER DTC?

Yes

- Go To 2

No

- Perform the RESTRAINTS SYSTEM INTERMITTENT TEST. (Refer to 28 - DTC-Based Diagnostics/CONTROLLER, Occupant Restraint (ORC) - Standard Procedure).

2. CHECK PASSENGER AIRBAG SQUIB FOR CIRCUITS SHORT TOGETHER

WARNING: Turn the ignition off, disconnect the 12-volt battery and wait two minutes before proceeding. Failure to follow these instructions may result in possible serious or fatal injury.

1. Disconnect the Passenger Airbag Squib harness connectors.

WARNING: Do not place an intact non-deployed airbag face down on a hard surface, the airbag propels into the air if accidentally deployed. Failure to follow these instructions may result in possible serious or fatal injury.

NOTE: Check connectors - Clean and repair as necessary.

2. Connect the SRS Load Tool Kit 8443A and the SRS Load Tool Jumper 8443-8 to the Passenger Airbag Squib harness connectors.

WARNING: Turn the ignition on, then reconnect the 12-volt battery and wait two minutes before proceeding. Failure to follow these instructions may result in possible serious or fatal injury.

3. With the scan tool, read the ORC DTCs.

Does the scan tool display active B0010-2B-PASSENGER FRONTAL SQUIB 1 CONTROL - WIRES SHORTED TOGETHER DTC?

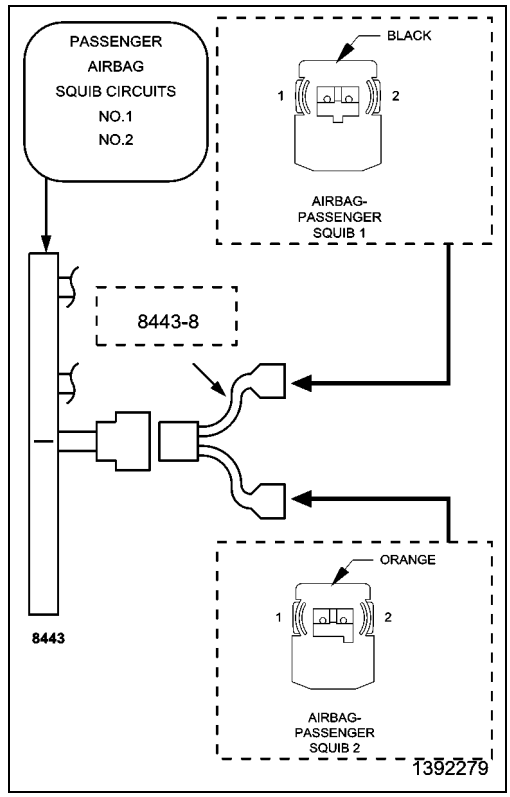

Yes

- Go To 3

No

WARNING: Turn the ignition off, disconnect the 12-volt battery and wait two minutes before proceeding. Failure to follow these instructions may result in possible serious or fatal injury.

- Replace the Passenger Airbag in accordance with the Service Information.
- Perform the RESTRAINTS SYSTEM VERIFICATION TEST. (Refer to 28 - DTC-Based Diagnostics/CONTROLLER, Occupant Restraint (ORC) - Standard Procedure).

3. CHECK (R42) PASSENGER SQUIB 1 LINE 2 CIRCUIT FOR A SHORT TO (R44) PASSENGER SQUIB 1 LINE 1 CIRCUIT

WARNING: Turn the ignition off, disconnect the 12-volt battery and wait two minutes before proceeding. Failure to follow these instructions may result in possible serious or fatal injury.

1. Disconnect the SRS Load Tool Kit 8443A and Jumper from the Passenger Airbag Squib 1 and 2 harness connectors.
2. Disconnect the ORC harness connectors.

NOTE: Check connectors - Clean and repair as necessary.

3. Connect the SRS Load Tool Adaptor 8443-24 to the ORC C2 harness connector.
4. Measure the resistance between the (R42) Passenger Squib 1 Line 2 circuit cavity 1 and the (R44) Passenger Squib 1 Line 1 circuit cavity 2 at the Passenger Airbag Squib 1 harness connector.

Is the resistance below 10K Ohms?

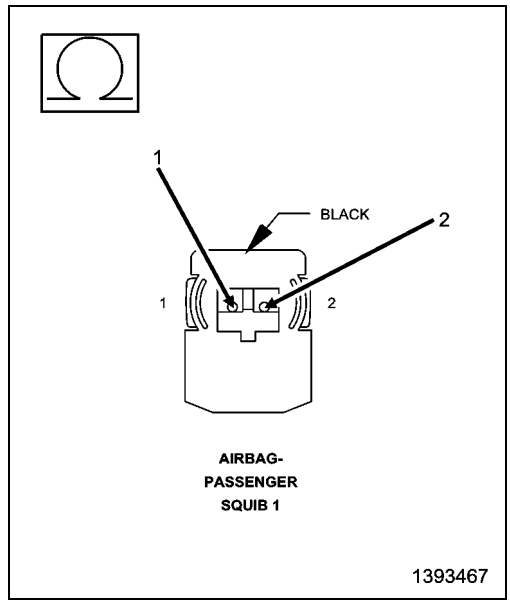

Yes

- Repair the (R42) Passenger Squib 1 Line 2 circuit for a short to the (R44) Passenger Squib 1 Line 1 circuit.
- Perform the RESTRAINTS SYSTEM VERIFICATION TEST. (Refer to 28 - DTC-Based Diagnostics/CONTROLLER, Occupant Restraint (ORC) - Standard Procedure).

No

WARNING: If the Occupant Restraint Controller (ORC) is dropped at any time, it must be replaced. Failure to follow these instructions may result in possible serious or fatal injury.

- Replace the ORC in accordance with the Service Information.
- Perform the RESTRAINTS SYSTEM VERIFICATION TEST. (Refer to 28 - DTC-Based Diagnostics/CONTROLLER, Occupant Restraint (ORC) - Standard Procedure).

■ B0011-11-PASSENGER FRONTAL SQUIB 2 CONTROL - CIRCUIT SHORT TO GROUND

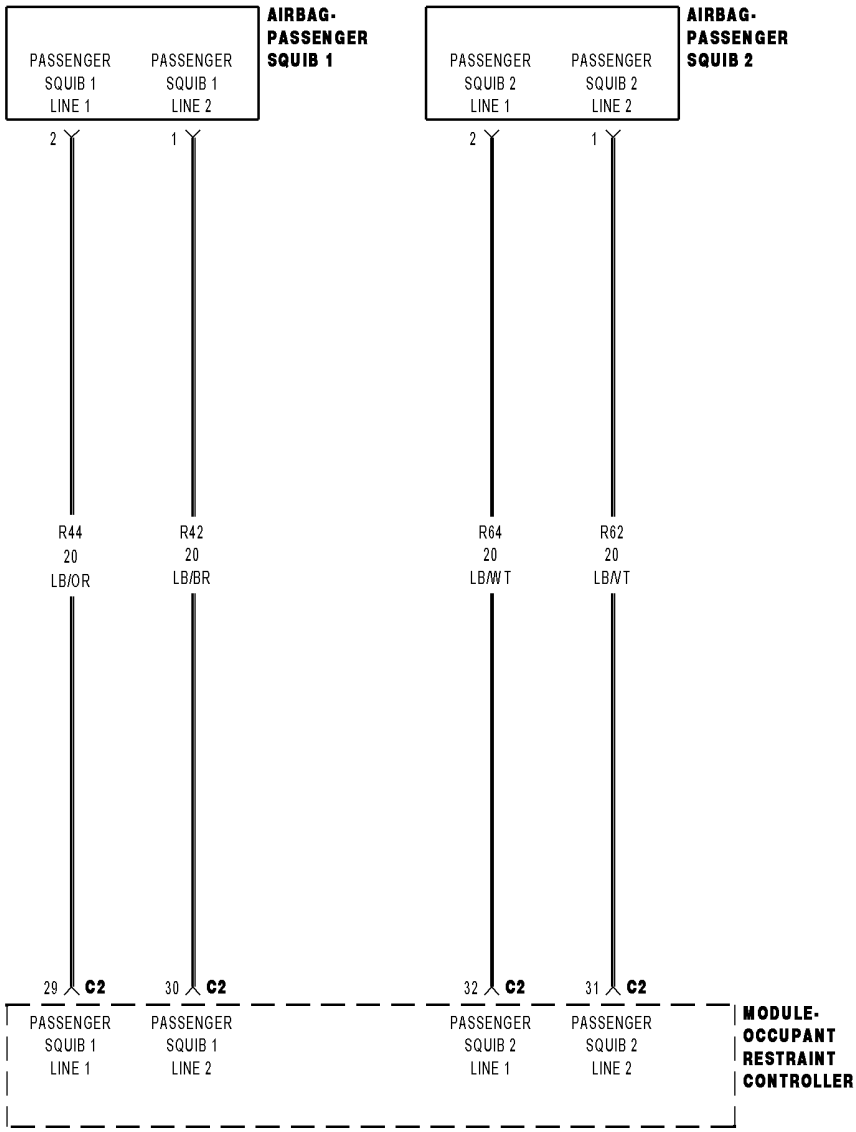

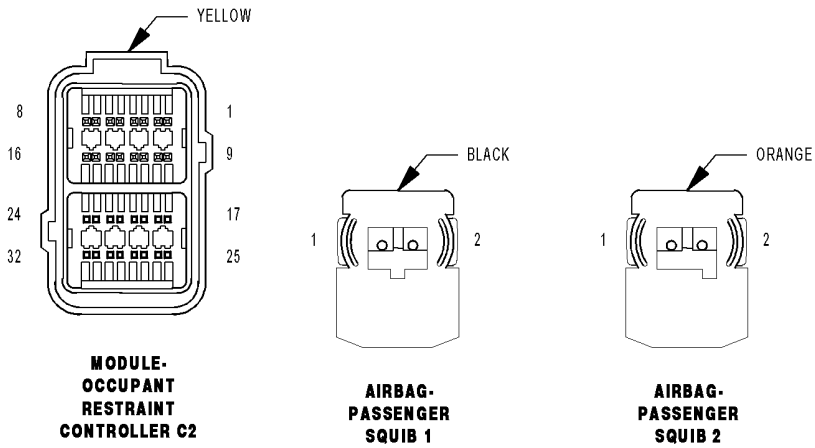

01257086

For a complete wiring diagram, **refer to the Wiring Information**.

Theory of Operation

When powered the Occupant Restraint Controller (ORC) sends a test current to the squibs to verify the integrity of the squib and wiring. These circuits are maintained in a "floating" configuration at the ORC (connected to neither power or ground) as protection against inadvertent deployment. Use of the Supplemental Restraints System (SRS) Load Tool Kit 8443A in the tests below substitutes a suspect squib with a known good component. The use of the SRS Load Tool Adapter provides a test point as well as a method for opening the shorting bar connections within the ORC harness connector.

- **When Monitored:**

  The ORC sends out a 40 mA diagnostic current on each squib voltage supply circuit at power up and every 100 ms thereafter while the ignition is on. With the ignition on, the Occupant Restraint Controller (ORC) monitors the resistance of the Passenger Squib 2 circuits.
- **Set Condition:**

  This Diagnostic Trouble Code (DTC) sets when the ORC detects a short to ground on the squib circuit for more than 2.5 seconds. This DTC transitions from active to stored when the ORC sees a recovery from a short to ground for greater than 2.5 seconds.

Possible Causes
(R64) PASSENGER SQUIB 2 LINE 1 CIRCUIT SHORTED TO GROUND
(R62) PASSENGER SQUIB 2 LINE 2 CIRCUIT SHORTED TO GROUND
PASSENGER AIRBAG
OCCUPANT RESTRAINT CONTROLLER (ORC)

Always perform the Pre-Diagnostic Troubleshooting procedure before proceeding. (Refer to 28 - DTC-Based Diagnostics/CONTROLLER, Occupant Restraint (ORC) - Standard Procedure).

1. VERIFY ACTIVE DTC

NOTE: Ensure the battery is fully charged.

1. Turn the ignition on.
2. With the scan tool, read ORC DTCs.

Is the DTC active or stored?

Yes

- Go To 2

No

- Perform the RESTRAINTS SYSTEM INTERMITTENT TEST. (Refer to 28 - DTC-Based Diagnostics/CONTROLLER, Occupant Restraint (ORC) - Standard Procedure).

2. CHECK PASSENGER AIRBAG SQUIB CIRCUITS FOR SHORT TO GROUND

WARNING: Turn the ignition off, disconnect the 12-volt battery and wait two minutes before proceeding. Failure to follow these instructions may result in possible serious or fatal injury.

1. Disconnect the Passenger Airbag Squib harness connectors.

WARNING: Do not place an intact non-deployed airbag face down on a hard surface, the airbag propels into the air if accidentally deployed. Failure to follow these instructions may result in possible serious or fatal injury.

NOTE: Check connectors - Clean and repair as necessary.

2. Connect the SRS Load Tool Kit 8443A and SRS Load Tool Jumper 8443-8 to the Passenger Airbag Squib harness connectors.

WARNING: Turn the ignition on, then reconnect the 12-volt battery and wait two minutes before proceeding. Failure to follow these instructions may result in possible serious or fatal injury.

3. With the scan tool, read the ORC DTCs.

Does the scan tool display active B0011-11-PASSENGER FRONTAL SQUIB 2 CONTROL - CIRCUIT SHORT TO GROUND DTC?

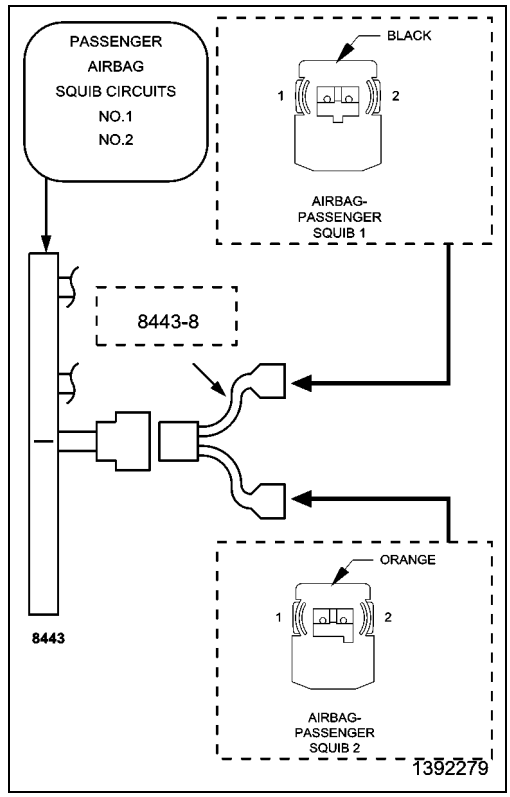

Yes

- Go To 3

No

WARNING: Turn the ignition off, disconnect the 12-volt battery and wait two minutes before proceeding. Failure to follow these instructions may result in possible serious or fatal injury.

- Replace the Passenger Airbag in accordance with the Service Information.
- Perform the RESTRAINTS SYSTEM VERIFICATION TEST. (Refer to 28 - DTC-Based Diagnostics/CONTROLLER, Occupant Restraint (ORC) - Standard Procedure).

3. CHECK (R62, R64) PASSENGER SQUIB 2 CIRCUITS FOR A SHORT TO GROUND

WARNING: Turn the ignition off, disconnect the 12-volt battery and wait two minutes before proceeding. Failure to follow these instructions may result in possible serious or fatal injury.

1. Disconnect the SRS Load Tool Kit 8443A and Jumper from the Passenger Airbag Squib harness connectors.
2. Disconnect the ORC harness connectors.

NOTE: Check connectors - Clean and repair as necessary.

3. Connect the SRS Load Tool Adaptor 8443-24 to the ORC C2 harness connector.
4. Measure the resistance of the (R64) Passenger Squib circuit between the Passenger Airbag Squib 2 harness connector cavity 2 and ground .
5. Measure the resistance of the (R62) Passenger Squib 2 Line 2 circuit between the Passenger Airbag Squib 2 harness connector cavity 1 and ground.

Is the resistance below 10K Ohms on either measurement?

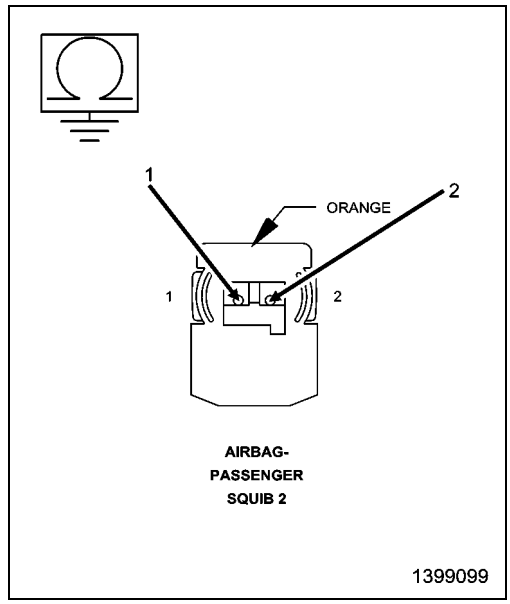

Yes

- Repair the (R62, R64) Passenger Squib 2 circuits for a short to ground.
- Perform the RESTRAINTS SYSTEM VERIFICATION TEST. (Refer to 28 - DTC-Based Diagnostics/CONTROLLER, Occupant Restraint (ORC) - Standard Procedure).

No

WARNING: If the Occupant Restraint Controller (ORC) is dropped at any time, it must be replaced. Failure to follow these instructions may result in possible serious or fatal injury.

- Replace the ORC in accordance with the Service Information.
- Perform the RESTRAINTS SYSTEM VERIFICATION TEST. (Refer to 28 - DTC-Based Diagnostics/CONTROLLER, Occupant Restraint (ORC) - Standard Procedure).

■ B0011-12-PASSENGER FRONTAL SQUIB 2 CONTROL - CIRCUIT SHORT TO BATTERY

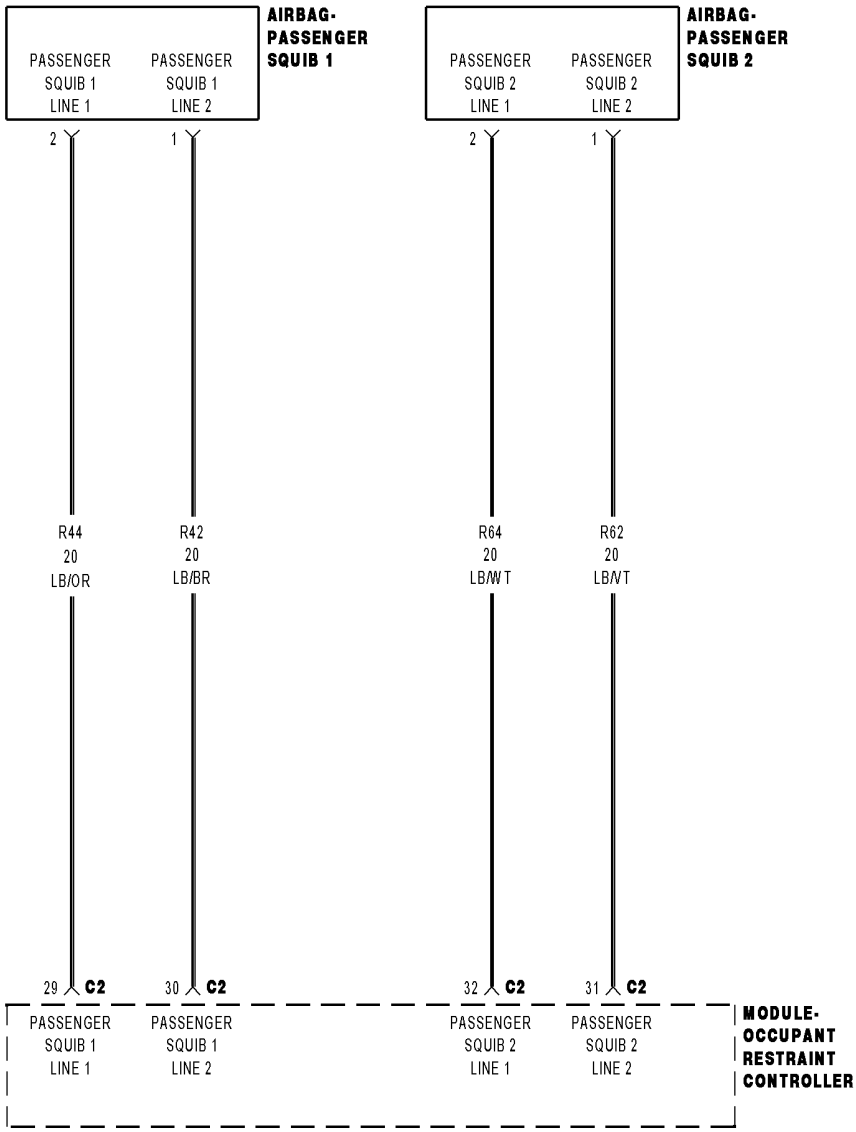

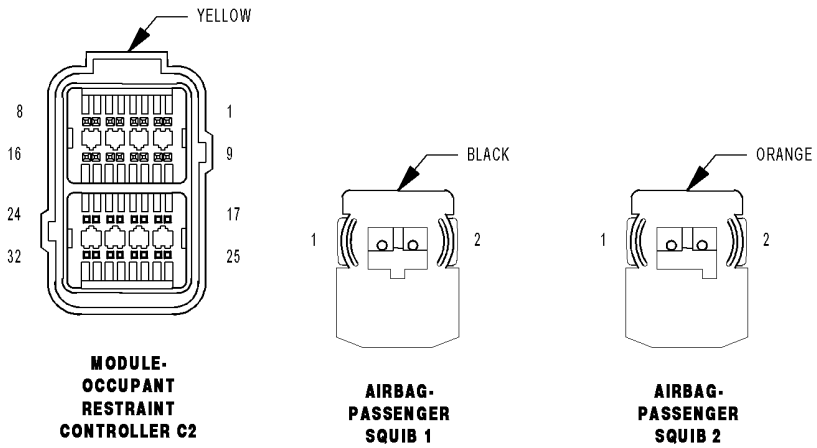

01257086

For a complete wiring diagram, **refer to the Wiring Information**.

Theory of Operation

When powered, the Occupant Restraint Controller (ORC) sends a test current to the squibs to verify the integrity of the squib and wiring. These circuits are maintained in a “floating” configuration at the ORC (connected to neither power nor ground) as protection against inadvertent deployment. Use of the Supplemental Restraints System (SRS) Load Tool Kit 8443A in the tests below substitutes a suspect squib with a known good component. The use of the SRS Load Tool Adapter provides a test point as well as a method for opening the shorting bar connections within the ORC harness connector.

- **When Monitored:**

  The ORC sends out a 40 mA diagnostic current on each squib voltage supply circuit at power up and every 100 ms thereafter while the ignition is on.
- **Set Condition:**

  This Diagnostic Trouble Code (DTC) sets when the ORC detects a short to voltage on the squib circuit for more than 2.5 seconds. This DTC transitions from active to stored when the ORC sees a recovery from a short to voltage for greater than 2.5 seconds.

Possible Causes
(R64) PASSENGER SQUIB 2 LINE 1 CIRCUIT SHORTED TO VOLTAGE
(R62) PASSENGER SQUIB 2 LINE 2 CIRCUIT SHORTED TO VOLTAGE
PASSENGER AIRBAG
OCCUPANT RESTRAINT CONTROLLER (ORC)

Always perform the Pre-Diagnostic Troubleshooting procedure before proceeding. (Refer to 28 - DTC-Based Diagnostics/CONTROLLER, Occupant Restraint (ORC) - Standard Procedure).

1. VERIFY ACTIVE DTC

NOTE: Ensure the battery is fully charged.

1. Turn the ignition on.
2. With the scan tool, read ORC DTCs.

   Does the scan tool display active B0011-12-PASSENGER FRONTAL SQUIB 2 CONTROL - CIRCUIT SHORT TO BATTERY DTC?

Yes

- Go To 2

No

- Perform the RESTRAINTS SYSTEM INTERMITTENT TEST. (Refer to 28 - DTC-Based Diagnostics/CONTROLLER, Occupant Restraint (ORC) - Standard Procedure).

2. CHECK PASSENGER AIRBAG SQUIB FOR SHORT TO VOLTAGE

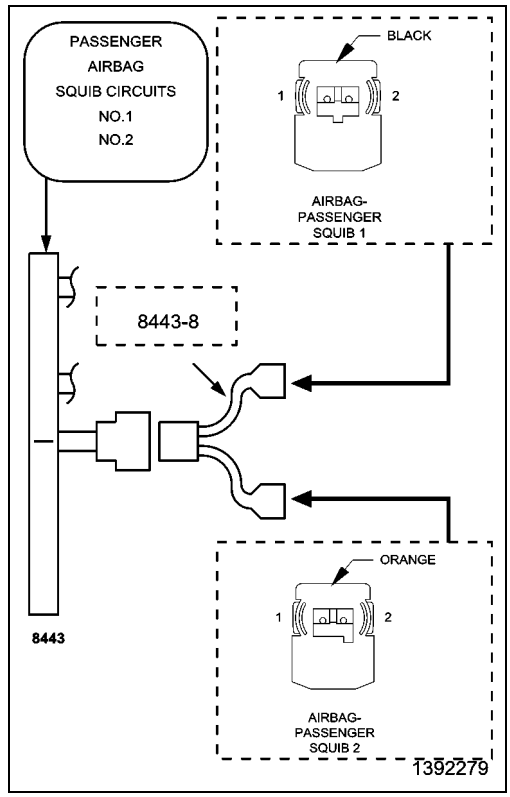

WARNING: Turn the ignition off, disconnect the 12-volt battery and wait two minutes before proceeding. Failure to follow these instructions may result in possible serious or fatal injury.

1. Disconnect the Passenger Airbag Squib harness connectors.

WARNING: Do not place an intact non-deployed airbag face down on a hard surface, the airbag propels into the air if accidentally deployed. Failure to follow these instructions may result in possible serious or fatal injury.

NOTE: Check connectors - Clean and repair as necessary.

2. Connect the SRS Load Tool Kit 8443A and SRS Load Tool Jumper 8443-8 to the Passenger Airbag Squib harness connectors.

WARNING: Turn the ignition on, then reconnect the 12-volt battery and wait two minutes before proceeding. Failure to follow these instructions may result in possible serious or fatal injury.

3. With the scan tool, read the ORC DTCs.

   Does the scan tool display active B0011-12-PASSENGER FRONTAL SQUIB 2 CONTROL - CIRCUIT SHORT TO BATTERY DTC?

Yes

- Go To 3

No

WARNING: Turn the ignition off, disconnect the 12-volt battery and wait two minutes before proceeding. Failure to follow these instructions may result in possible serious or fatal injury.

- Replace the Passenger Airbag in accordance with the Service Information.
- Perform the RESTRAINTS SYSTEM VERIFICATION TEST. (Refer to 28 - DTC-Based Diagnostics/CONTROLLER, Occupant Restraint (ORC) - Standard Procedure).

3. CHECK (R62, R64) PASSENGER SQUIB 2 CIRCUITS FOR A SHORT TO VOLTAGE

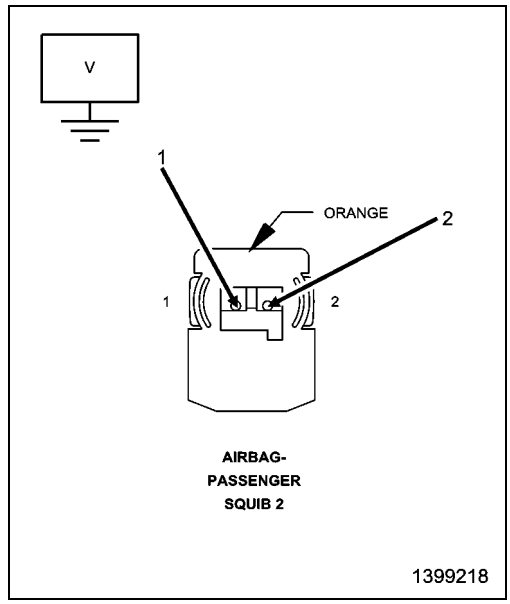

WARNING: Turn the ignition off, disconnect the 12-volt battery and wait two minutes before proceeding. Failure to follow these instructions may result in possible serious or fatal injury.

1. Disconnect the SRS Load Tool Kit 8443A and Jumper from the Passenger Airbag Squib harness connectors.
2. Disconnect the ORC harness connectors.

NOTE: Check connectors - Clean and repair as necessary.

3. Connect the SRS Load Tool Adaptor 8443-24 to the ORC C2 harness connector.

WARNING: Turn the ignition on, then reconnect the 12-volt battery and wait two minutes before proceeding. Failure to follow these instructions may result in possible serious or fatal injury.

4. Measure the voltage of the (R64) Passenger Squib 2 Line 1 circuit between the Passenger Airbag Squib 2 harness connector cavity 2 and ground.
5. Measure the voltage of the (R62) Passenger Squib 2 Line 2 circuit between the Passenger Airbag Squib 2 harness connector cavity 1 and ground.

Is there any voltage present for either measurement?

Yes

WARNING: Turn the ignition off, disconnect the 12-volt battery and wait two minutes before proceeding. Failure to follow these instructions may result in possible serious or fatal injury.

- Repair the (R62, R64) Passenger Squib 2 circuits for a short to voltage.
- Perform the RESTRAINTS SYSTEM VERIFICATION TEST. (Refer to 28 - DTC-Based Diagnostics/CONTROLLER, Occupant Restraint (ORC) - Standard Procedure).

No

WARNING: Turn the ignition off, disconnect the 12-volt battery and wait two minutes before proceeding. Failure to follow these instructions may result in possible serious or fatal injury.

WARNING: If the Occupant Restraint Controller (ORC) is dropped at any time, it must be replaced. Failure to follow these instructions may result in possible serious or fatal injury.

- Replace the ORC in accordance with the Service Information.
- Perform the RESTRAINTS SYSTEM VERIFICATION TEST. (Refer to 28 - DTC-Based Diagnostics/CONTROLLER, Occupant Restraint (ORC) - Standard Procedure).

B0011-13-PASSENGER FRONTAL SQUIB 2 CONTROL - CIRCUIT OPEN

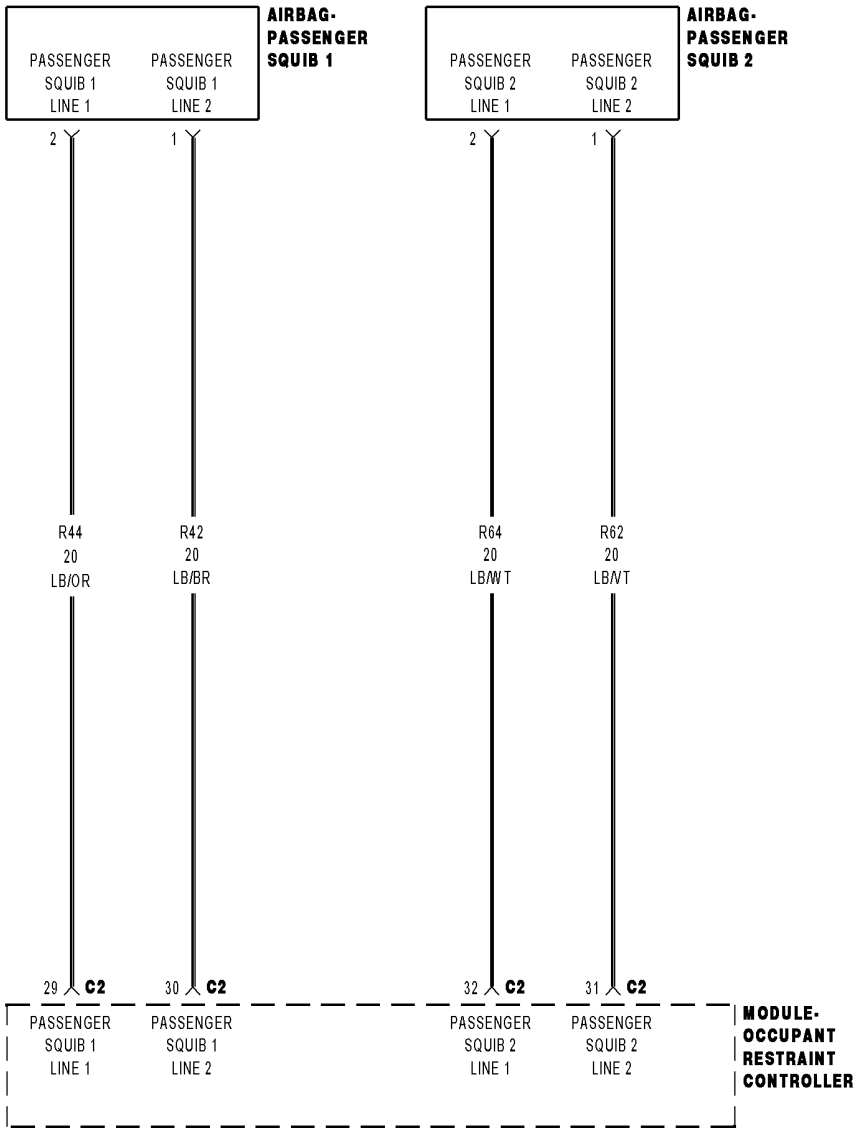

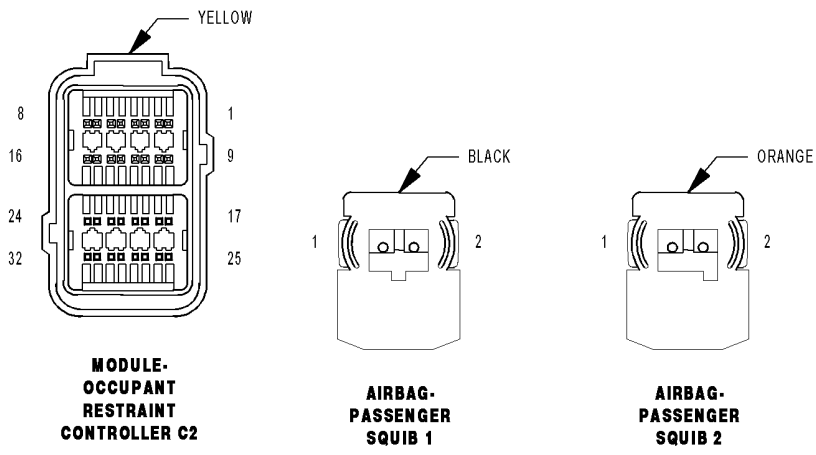

01257086

For a complete wiring diagram, **refer to the Wiring Information**.

Theory of Operation

When powered, the Occupant Restraint Controller (ORC) sends a test current to the squibs to verify the integrity of the squib and wiring. These circuits are maintained in a “floating” configuration at the ORC (connected to neither power nor ground) as protection against inadvertent deployment. Use of the Supplemental Restraints System (SRS) Load Tool in the tests below substitutes a suspect squib with a known good component. The use of the SRS Load Tool Adapter provides a test point as well as a method for opening the shorting bar connections within the ORC harness connector.

- **When Monitored:**

  The ORC sends out a 40 mA diagnostic current on each squib voltage supply circuit at power up and every 100 ms thereafter while the ignition is on.
- **Set Condition:**

  This Diagnostic Trouble Code (DTC) sets when the ORC detects an open or high resistance on the squib circuit for more than 2.5 seconds. This DTC transitions from active to stored when the ORC sees a recovery from an open condition for greater than 2.5 seconds.

Possible Causes
(R64) PASSENGER SQUIB 2 LINE 1 CIRCUIT OPEN
(R62) PASSENGER SQUIB 2 LINE 2 CIRCUIT OPEN
PASSENGER AIRBAG
OCCUPANT RESTRAINT CONTROLLER (ORC)

Always perform the Pre-Diagnostic Troubleshooting procedure before proceeding. (Refer to 28 - DTC-Based Diagnostics/CONTROLLER, Occupant Restraint (ORC) - Standard Procedure)

1. VERIFY ACTIVE DTC

NOTE: Ensure the battery is fully charged.

1. Turn the ignition on.
2. With the scan tool, read ORC DTCs.

Does the scan tool display active B0011-13-PASSENGER FRONTAL SQUIB 2 CONTROL - CIRCUIT OPEN DTC?

Yes

- Go To 2

No

- Perform the RESTRAINTS SYSTEM INTERMITTENT TEST. (Refer to 28 - DTC-Based Diagnostics/CONTROLLER, Occupant Restraint (ORC) - Standard Procedure).

2. CHECK PASSENGER AIRBAG SQUIB OPEN CIRCUITS

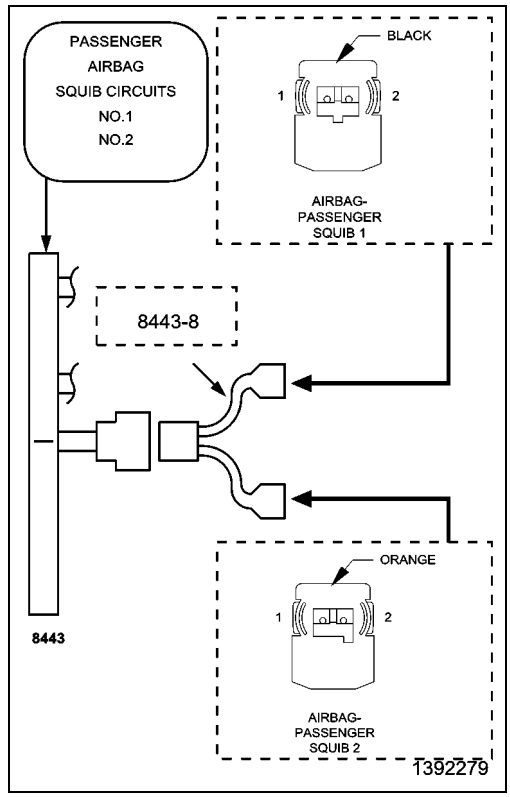

WARNING: Turn the ignition off, disconnect the 12-volt battery and wait two minutes before proceeding. Failure to follow these instructions may result in possible serious or fatal injury.

1. Disconnect the Passenger Airbag Squib harness connectors.

WARNING: Do not place an intact non-deployed airbag face down on a hard surface, the airbag propels into the air if accidentally deployed. Failure to follow these instructions may result in possible serious or fatal injury.
Connect the SRS Load Tool Kit 8443A and SRS Load Tool Jumper 8443-8 to the Passenger Airbag Squib harness connectors.

WARNING: Turn the ignition on, then reconnect the 12-volt battery and wait two minutes before proceeding. Failure to follow these instructions may result in possible serious or fatal injury.

2. With the scan tool, read the ORC DTCs.

Does the scan tool display active B0011-13-PASSENGER FRONTAL SQUIB 2 CONTROL - CIRCUIT OPEN DTC ?

Yes

- Go To 3

No

WARNING: Turn the ignition off, disconnect the 12-volt battery and wait two minutes before proceeding. Failure to follow these instructions may result in possible serious or fatal injury.

- Replace the Passenger Airbag in accordance with the Service Information.
- Perform the RESTRAINTS SYSTEM VERIFICATION TEST. (Refer to 28 - DTC-Based Diagnostics/CONTROLLER, Occupant Restraint (ORC) - Standard Procedure).

3. CHECK (R62, R64) PASSENGER SQUIB 2 CIRCUITS FOR AN OPEN

WARNING: Turn the ignition off, disconnect the 12-volt battery and wait two minutes before proceeding. Failure to follow these instructions may result in possible serious or fatal injury.

1. Disconnect the SRS Load Tool Kit 8443A and Jumper from the Passenger Airbag Squib harness connectors.
2. Disconnect the ORC harness connectors.

NOTE: Check connectors - Clean and repair as necessary.

3. Connect the SRS Load Tool Adaptor 8443-24 to the ORC C2 harness connector.
4. Measure the resistance of the (R64) Passenger Squib 2 Line 1 circuit between the Passenger Airbag Squib 2 harness connector cavity 2 and the SRS Load Tool Adaptor 8443-24 cavity 32.
5. Measure the resistance of the (R62) Passenger Squib 2 Line 2 circuit between the Passenger Airbag Squib 2 harness connector cavity 1 and the SRS Load Tool Adaptor 8443-24 cavity 312.

Is the resistance below 1.0 Ohms on both circuits?

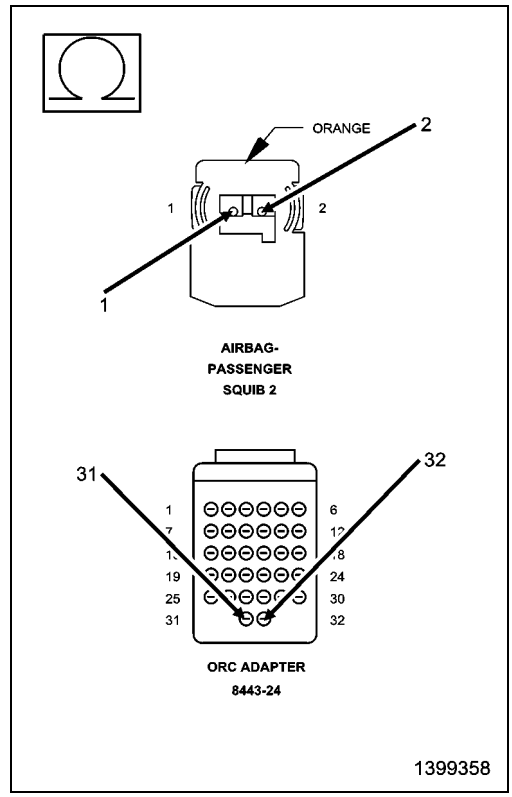

Yes

WARNING: If the Occupant Restraint Controller (ORC) is dropped at any time, it must be replaced. Failure to follow these instructions may result in possible serious or fatal injury.

- Replace the ORC in accordance with the Service Information.
- Perform the RESTRAINTS SYSTEM VERIFICATION TEST. (Refer to 28 - DTC-Based Diagnostics/CONTROLLER, Occupant Restraint (ORC) - Standard Procedure).

No

- Repair the (R62, R64) Passenger Squib 2 circuits for an open.
- Perform the RESTRAINTS SYSTEM VERIFICATION TEST. (Refer to 28 - DTC-Based Diagnostics/CONTROLLER, Occupant Restraint (ORC) - Standard Procedure).

■ B0011-2B-PASSENGER FRONTAL SQUIB 2 CONTROL - WIRES SHORTED TOGETHER

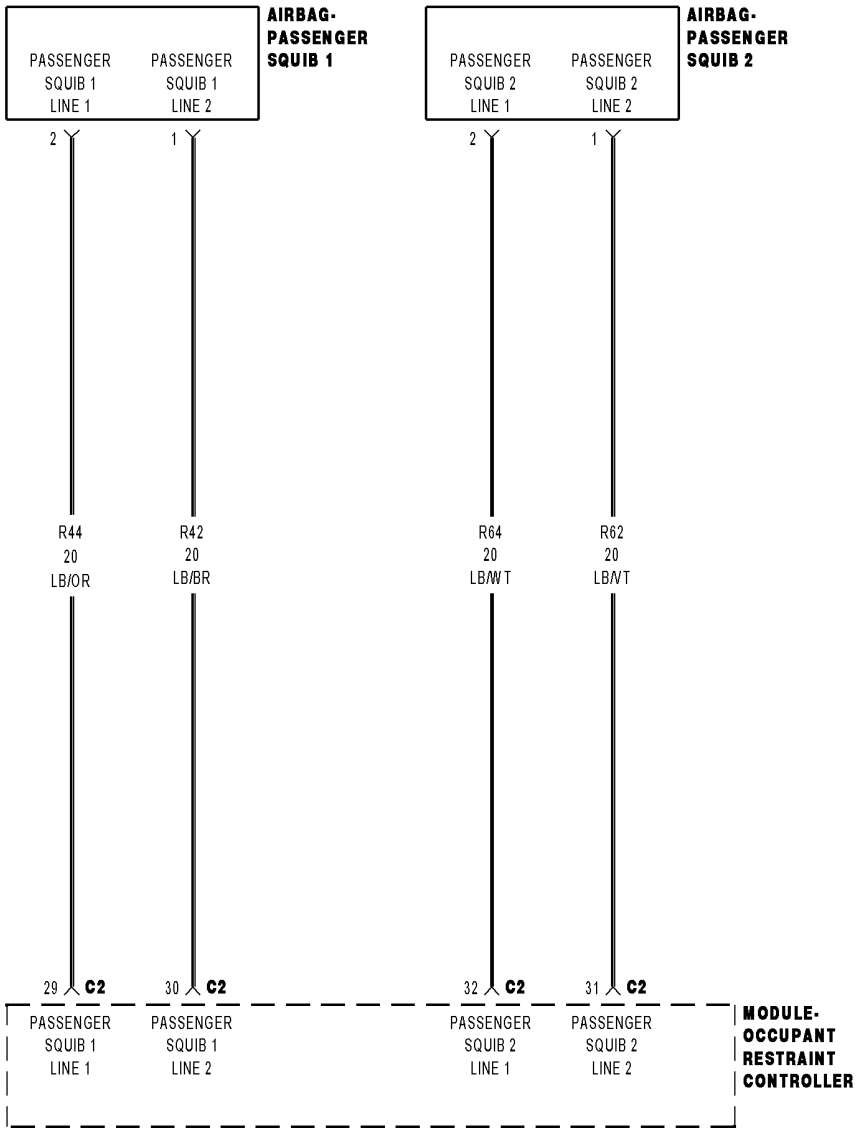

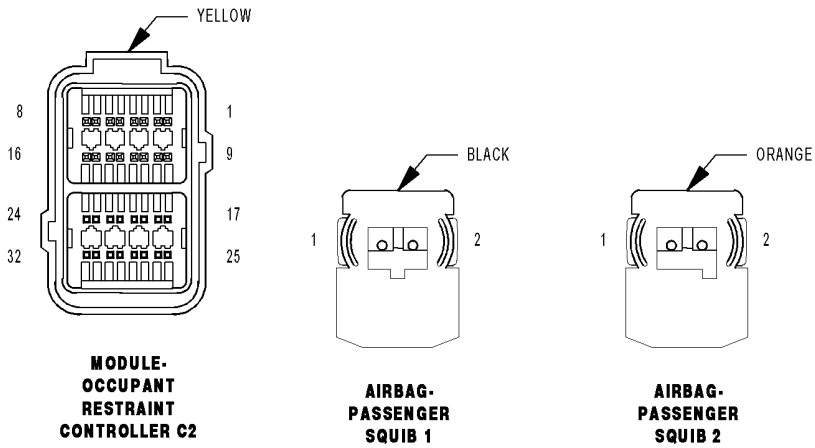

01257086

For a complete wiring diagram, **refer to the Wiring Information**.

Theory of Operation

When powered, the Occupant Restraint Controller (ORC) sends a test current to the squibs to verify the integrity of the squib and wiring. These circuits are maintained in a “floating” configuration at the ORC (connected to neither power nor ground) as protection against inadvertent deployment. Use of the Supplemental Restraints System (SRS) load Tool Kit 8443A in the tests below substitutes a suspect squib with a known good component. The use of the SRS Load Tool Adapter 8443-24 provides a test point as well as a method for opening the shorting bar connections within the ORC harness connector.

- **When Monitored:**

  The ORC sends out a 40 mA diagnostic current on each squib voltage supply circuit at power up, and every 100 ms thereafter while the ignition is on.
- **Set Condition:**

  This Diagnostic Trouble Code (DTC) sets when the ORC detects both circuits of the same squib are shorted together for more than 2.5 seconds. This DTC transitions from active to stored when the ORC sees a recovery from a shorted together condition for greater than 2.5 seconds.

Possible Causes
(R64) PASSENGER SQUIB 2 LINE 1 CIRCUIT SHORTED TO THE (R62) PASSENGER SQUIB 2 LINE 2 CIRCUIT
PASSENGER AIRBAG SQUIB
OCCUPANT RESTRAINT CONTROLLER (ORC)

Always perform the Pre-Diagnostic Troubleshooting procedure before proceeding.(Refer to 28 - DTC-Based Diagnostics/CONTROLLER, Occupant Restraint (ORC) - Standard Procedure).

NOTE: Due to the limited accessibility of the Passenger Airbag Squib connectors please be certain that the latches and lock of each connector is fully seated and engaged. The blind access of the connectors makes it possible to not have the connector fully seated and therefore creating the possibility of an intermittent fault situation developing over time.

1. VERIFY ACTIVE DTC

NOTE: Make sure the battery is fully charged.

1. Turn the ignition on.
2. With the scan tool, read ORC DTCs.

Does the scan tool display active B0011-2B-PASSENGER FRONTAL SQUIB 2 CONTROL - WIRES SHORTED TOGETHER DTC?

Yes

- Go To 2

No

- Perform the RESTRAINTS SYSTEM INTERMITTENT TEST. (Refer to 28 - DTC-Based Diagnostics/CONTROLLER, Occupant Restraint (ORC) - Standard Procedure).

2. CHECK PASSENGER AIRBAG SQUIB FOR CIRCUITS SHORT TOGETHER

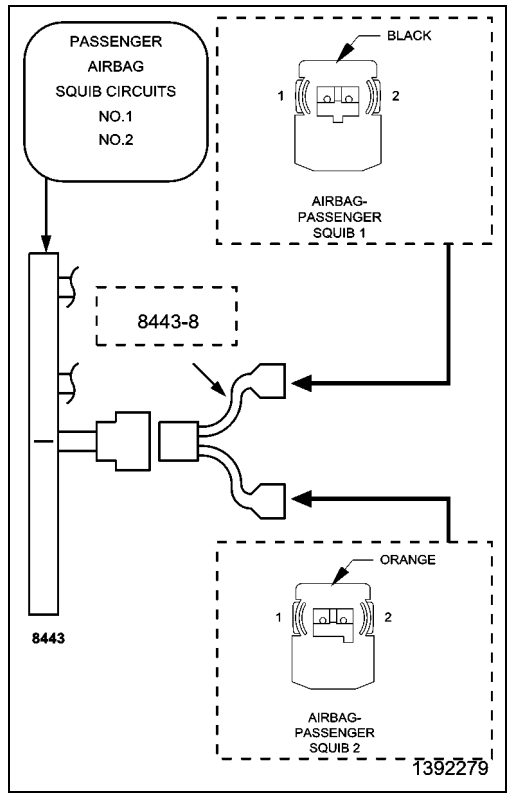

WARNING: Turn the ignition off, disconnect the 12-volt battery and wait two minutes before proceeding. Failure to follow these instructions may result in possible serious or fatal injury.

1. Disconnect the Passenger Airbag Squib harness connectors.

WARNING: Do not place an intact non-deployed airbag face down on a hard surface, the airbag propels into the air if accidentally deployed. Failure to follow these instructions may result in possible serious or fatal injury.

NOTE: Check connectors. Clean and repair as necessary.

2. Connect the SRS Load Tool Kit 8443A and SRS Load Tool Jumper 8443-8 to the Passenger Airbag Squib harness connectors.

WARNING: Turn the ignition on, then reconnect the 12-volt battery and wait two minutes before proceeding. Failure to follow these instructions may result in possible serious or fatal injury.

3. With using a scan tool, read the ORC DTCs.

   Does the scan tool display active B0011-2B-PASSENGER FRONTAL SQUIB 2 CONTROL - WIRES SHORTED TOGETHER DTC?

Yes

- Go To 3

No

WARNING: Turn the ignition off, disconnect the 12-volt battery and wait two minutes before proceeding. Failure to follow these instructions may result in possible serious or fatal injury.

- Replace the Passenger Airbag in according to the Service Information.
- Perform the RESTRAINTS SYSTEM VERIFICATION TEST. (Refer to 28 - DTC-Based Diagnostics/CONTROLLER, Occupant Restraint (ORC) - Standard Procedure).

3. CHECK (R64) PASSENGER SQUIB 2 LINE 1 CIRCUIT FOR A SHORT TO (R62) PASSENGER SQUIB 2 LINE 2 CIRCUIT

WARNING: Turn the ignition off, disconnect the 12-volt battery and wait two minutes before proceeding. Failure to follow these instructions may result in possible serious or fatal injury.

1. Disconnect the SRS Load Tool Kit 8443A and Jumper from the Passenger Airbag Squib harness connectors.
2. Disconnect the ORC harness connectors.

NOTE: Check connectors - Clean and repair as necessary.

3. Connect the SRS Load Tool Adaptor 8443-24 to the ORC C2 harness connector.
4. Measure the resistance between the (R64) Passenger Squib 2 Line 1 circuit cavity 2 and the (R62) Passenger Squib 2 Line 2 circuit cavity 1 at the Passenger Airbag Squib 2 harness connector.

Is the resistance below 10K Ohms?

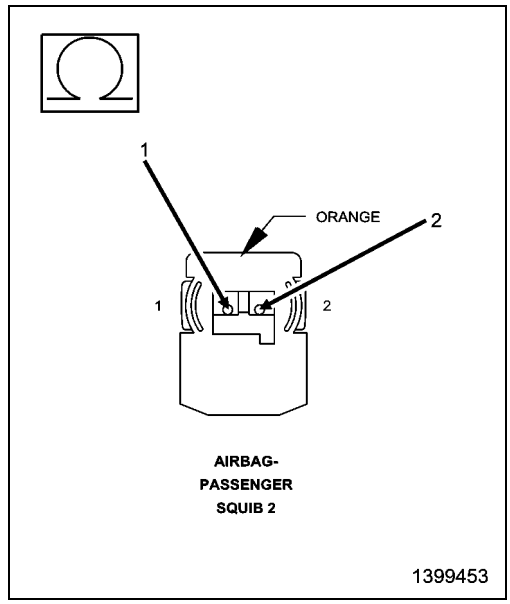

Yes

- Repair the (R64) Passenger Squib 2 Line 1 circuit for a short to the (R62) Passenger Squib 2 Line 2 circuit.
- Perform the RESTRAINTS SYSTEM VERIFICATION TEST. (Refer to 28 - DTC-Based Diagnostics/CONTROLLER, Occupant Restraint (ORC) - Standard Procedure).

No

WARNING: If the Occupant Restraint Controller (ORC) is dropped at any time, it must be replaced. Failure to follow these instructions may result in possible serious or fatal injury.

- Replace the ORC in accordance with the Service Information.
- Perform the RESTRAINTS SYSTEM VERIFICATION TEST. (Refer to 28 - DTC-Based Diagnostics/CONTROLLER, Occupant Restraint (ORC) - Standard Procedure).

B0021-11-LEFT CURTAIN DEPLOYMENT SQUIB 1 - CIRCUIT SHORT TO GROUND

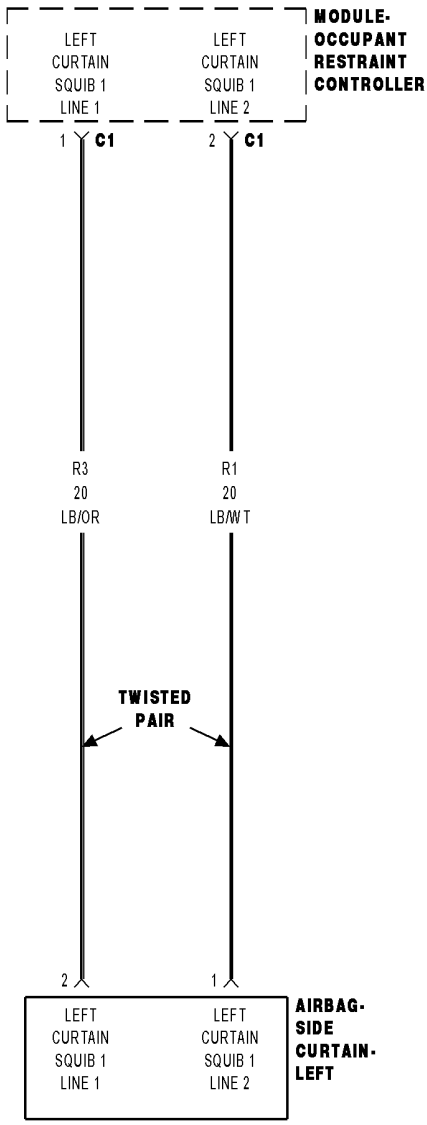

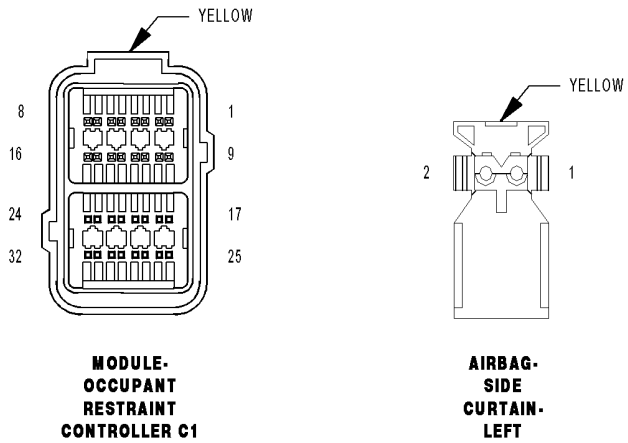

MODULE-
OCCUPANT
RESTRAINT
CONTROLLER C1

AIRBAG-
SIDE
CURTAIN-
LEFT

01257137

For a complete wiring diagram, **refer to the Wiring Information**.

Theory of Operation

When powered, the Occupant Restraint Controller (ORC) sends a test current to the squibs to verify the integrity of the squib and wiring. These circuits are maintained in a “floating” configuration at the ORC (connected to neither power nor ground) as protection against inadvertent deployment. Use of the Supplemental Restraints System (SRS) Load Tool Kit 8443A in the tests below substitutes a suspect squib with a known good component. The use of the SRS Load Tool Adapter provides a test point as well as a method for opening the shorting bar connections within the ORC harness connector.

- **When Monitored:**

  The ORC sends out a 40 mA diagnostic current on each squib voltage supply circuit at power up and every 100 ms thereafter while the ignition is on. With the ignition on, the Occupant Restraint Controller (ORC) monitors the resistance of the Left Side Curtain Squib 1 circuits.

- **Set Condition:**

  This Diagnostic Trouble Code (DTC) sets when the ORC detects a short to ground on the squib circuit for more than 2.5 seconds. This DTC transitions from active to stored when the ORC sees a recovery from a short to ground condition for greater than 2.5 seconds. The ORC has detected low resistance of the Left Side Curtain Squib 1 circuits.

Possible Causes
(R3) LEFT SIDE CURTAIN SQUIB 1 LINE 1 CIRCUIT SHORTED TO GROUND
(R1) LEFT SIDE CURTAIN SQUIB 1 LINE 2 CIRCUIT SHORTED TO GROUND
LEFT SIDE CURTAIN AIRBAG
OCCUPANT RESTRAINT CONTROLLER (ORC)

Always perform the Pre-Diagnostic Troubleshooting procedure before proceeding. (Refer to 28 - DTC-Based Diagnostics/CONTROLLER, Occupant Restraint (ORC) - Standard Procedure).

1. VERIFY ACTIVE DTC

NOTE: Ensure the battery is fully charged.

1. Turn the ignition on.
2. With the scan tool, read ORC DTCs.

Does the scan tool display active B0021-11-LEFT CURTAIN DEPLOYMENT SQUIB 1 - CIRCUIT SHORT TO GROUND DTC?

Yes

- Go To 2

No

- Perform the RESTRAINTS SYSTEM INTERMITTENT TEST. (Refer to 28 - DTC-Based Diagnostics/CONTROLLER, Occupant Restraint (ORC) - Standard Procedure).

2. CHECK LEFT SIDE CURTAIN AIRBAG CIRCUITS FOR SHORT TO GROUND

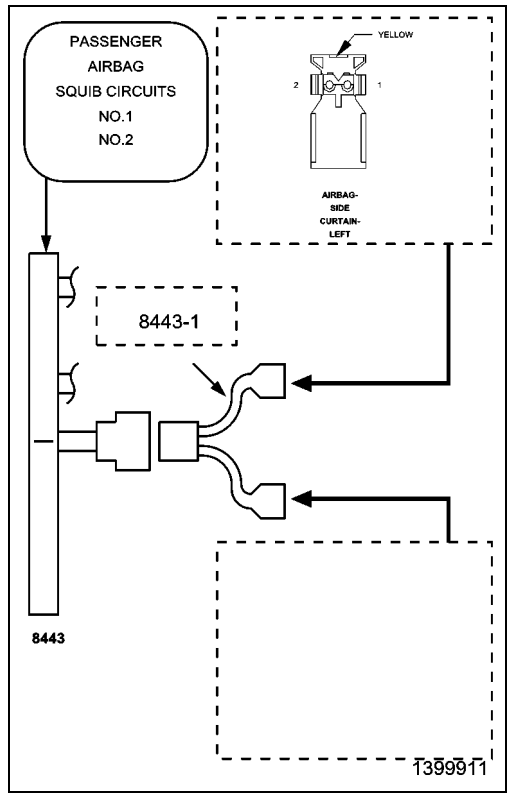

WARNING: Turn the ignition off, disconnect the 12-volt battery and wait two minutes before proceeding. Failure to follow these instructions may result in possible serious or fatal injury.

1. Disconnect the Left Side Curtain Airbag harness connector.

WARNING: Do not place an intact non-deployed airbag face down on a hard surface, the airbag propels into the air if accidentally deployed. Failure to follow these instructions may result in possible serious or fatal injury.

NOTE: Check connectors - Clean and repair as necessary.

2. Connect the SRS Load Tool Kit 8443A and SRS Load Tool Jumper 8443-1 to the Left Side Curtain Airbag harness connector.

WARNING: Turn the ignition on, then reconnect the 12-volt battery and wait two minutes before proceeding. Failure to follow these instructions may result in possible serious or fatal injury.

3. With the scan tool, read the ORC DTCs.

   Does the scan tool display active B0021-11-LEFT CURTAIN DEPLOYMENT SQUIB 1 - CIRCUIT SHORT TO GROUND DTC?

Yes

- Go To 3

No

WARNING: Turn the ignition off, disconnect the 12-volt battery and wait two minutes before proceeding. Failure to follow these instructions may result in possible serious or fatal injury.

- Replace the Left Side Curtain Airbag in accordance with the Service Information.
- Perform the RESTRAINTS SYSTEM VERIFICATION TEST. (Refer to 28 - DTC-Based Diagnostics/CONTROLLER, Occupant Restraint (ORC) - Standard Procedure).

3. CHECK (R1, R3) LEFT CURTAIN SQUIB 1 CIRCUITS FOR A SHORT TO GROUND

WARNING: Turn the ignition off, disconnect the 12-volt battery and wait two minutes before proceeding. Failure to follow these instructions may result in possible serious or fatal injury.

1. Disconnect the SRS Load Tool Kit 8443A and Jumper from the Left Side Curtain Airbag harness connector.
2. Disconnect the ORC harness connectors.

NOTE: Check connectors - Clean and repair as necessary.

3. Connect the SRS Load Tool Adaptor 8443-24 to the ORC C1 harness connector.
4. Measure the resistance of the (R3) Left Curtain Squib 1 Line 1 circuit between the Left Side Curtain Airbag harness connector cavity 2 and ground.
5. Measure the resistance of the (R1) Left Curtain Squib 1 Line 2 circuit between the Left Side Curtain Airbag harness connector cavity 1 and ground.

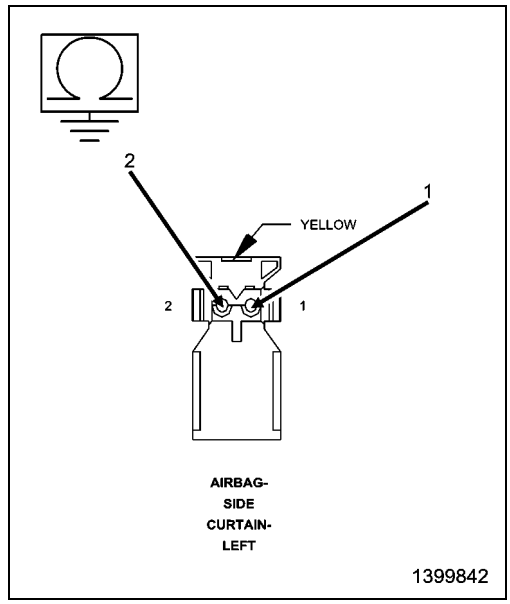

Is the resistance below 10K Ohms on either circuit?

Yes

- Repair the Left Curtain Squib 1 circuits for a short to ground.
- Perform the RESTRAINTS SYSTEM VERIFICATION TEST. (Refer to 28 - DTC-Based Diagnostics/CONTROLLER, Occupant Restraint (ORC) - Standard Procedure).

No

WARNING: If the Occupant Restraint Controller (ORC) is dropped at any time, it must be replaced. Failure to follow these instructions may result in possible serious or fatal injury.

- Replace the ORC in accordance with the Service Information.
- Perform the RESTRAINTS SYSTEM VERIFICATION TEST. (Refer to 28 - DTC-Based Diagnostics/CONTROLLER, Occupant Restraint (ORC) - Standard Procedure).

B0021-12-LEFT CURTAIN DEPLOYMENT SQUIB 1 - CIRCUIT SHORT TO BATTERY

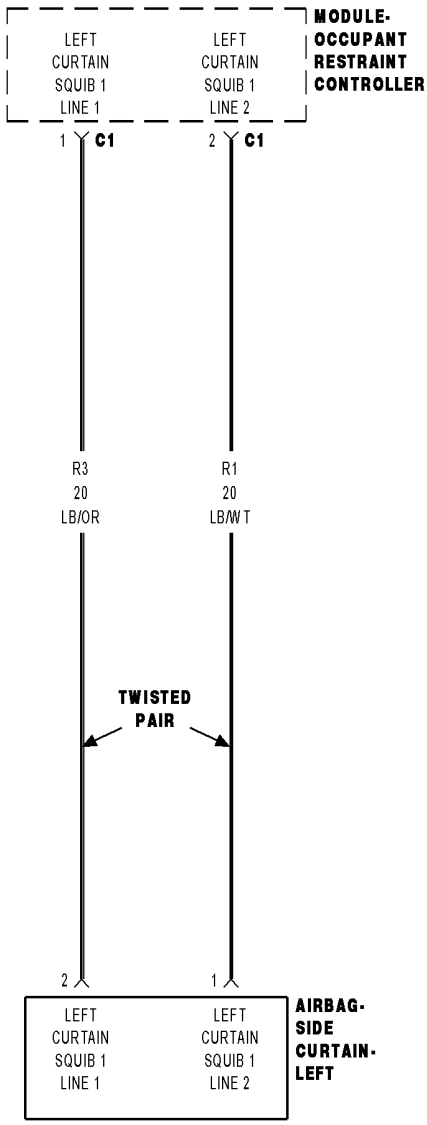

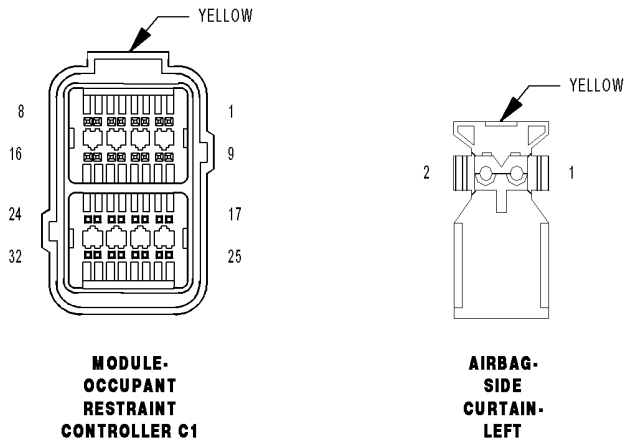

For a complete wiring diagram, **refer to the Wiring Information**.

Theory of Operation

When powered, the Occupant Restraint Controller (ORC) sends a test current to the squibs to verify the integrity of the squib and wiring. These circuits are maintained in a “floating” configuration at the ORC (connected to neither power nor ground) as protection against inadvertent deployment. Use of the Supplemental Restraints System (SRS) Load Tool in the tests below substitutes a suspect squib with a known good component. The use of the SRS Load Tool Adapter provides a test point as well as a method for opening the shorting bar connections within the ORC harness connector.

- **When Monitored:**

  The ORC sends out a 40 mA diagnostic current on each squib voltage supply circuit at power up and every 100 ms thereafter while the ignition is on.

- **Set Condition:**

  This Diagnostic Trouble Code (DTC) sets when the ORC detects a short to voltage on the squib circuit for more than 2.5 seconds. This DTC transitions from active to stored when the ORC sees a recovery from a short to voltage for greater than 2.5 seconds.

Possible Causes
(R3) LEFT CURTAIN SQUIB 1 LINE 1 CIRCUIT SHORTED TO VOLTAGE
(R1) LEFT CURTAIN SQUIB 1 LINE 2 CIRCUIT SHORTED TO VOLTAGE
LEFT SIDE CURTAIN AIRBAG
OCCUPANT RESTRAINT CONTROLLER (ORC)

Always perform the Pre-Diagnostic Troubleshooting procedure before proceeding. (Refer to 28 - DTC-Based Diagnostics/CONTROLLER, Occupant Restraint (ORC) - Standard Procedure).

1. VERIFY ACTIVE DTC

NOTE: Ensure the battery is fully charged.

1. Turn the ignition on.
2. With the scan tool, read ORC DTCs.

   Does the scan tool display active B0021-12-LEFT CURTAIN DEPLOYMENT SQUIB 1 - CIRCUIT SHORT TO BATTERY DTC?

Yes

- Go To 2

No

- Perform the RESTRAINTS SYSTEM INTERMITTENT TEST. (Refer to 28 - DTC-Based Diagnostics/CONTROLLER, Occupant Restraint (ORC) - Standard Procedure).

2. CHECK LEFT SIDE CURTAIN AIRBAG FOR SHORT TO VOLTAGE

WARNING: Turn the ignition off, disconnect the 12-volt battery and wait two minutes before proceeding. Failure to follow these instructions may result in possible serious or fatal injury.

1. Disconnect the Left Side Curtain Airbag harness connector.

NOTE: Check connectors - Clean and repair as necessary.

2. Connect the SRS Load Tool Kit 8443A and SRS Load Tool Jumper 8443-1 to the Left Side Curtain Airbag harness connector.

WARNING: Turn the ignition on, then reconnect the 12-volt battery and wait two minutes before proceeding. Failure to follow these instructions may result in possible serious or fatal injury.

3. With the scan tool, read the ORC DTCs.

Does the scan tool display active B0021-12-LEFT CURTAIN DEPLOYMENT SQUIB 1 - CIRCUIT SHORT TO BATTERY DTC ?

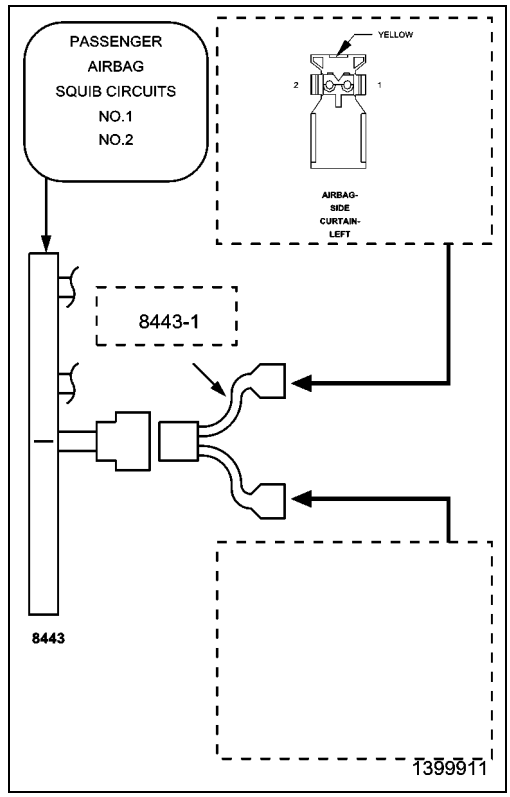

Yes

- Go To 3

No

WARNING: Turn the ignition off, disconnect the 12-volt battery and wait two minutes before proceeding. Failure to follow these instructions may result in possible serious or fatal injury.

- Replace the Left Side Curtain Airbag in accordance with the Service Information.
- Perform the RESTRAINTS SYSTEM VERIFICATION TEST. (Refer to 28 - DTC-Based Diagnostics/CONTROLLER, Occupant Restraint (ORC) - Standard Procedure).

3. CHECK (R1, R3) LEFT CURTAIN SQUIB 1 CIRCUITS FOR A SHORT TO VOLTAGE

WARNING: Turn the ignition off, disconnect the 12-volt battery and wait two minutes before proceeding. Failure to follow these instructions may result in possible serious or fatal injury.

1. Disconnect the SRS Load Tool Kit 8443A and Jumper from the Left Side Curtain Airbag harness connector.
2. Disconnect the ORC harness connectors.

NOTE: Check connectors - Clean and repair as necessary.

3. Connect the SRS Load Tool Adaptor 8443-24 to the ORC C1 harness connector.

WARNING: Turn the ignition on, then reconnect the 12-volt battery and wait two minutes before proceeding. Failure to follow these instructions may result in possible serious or fatal injury.

4. Measure the voltage of the (R3) Left Curtain Squib 1 Line 1 circuit between the Left Side Curtain Airbag harness connector cavity 2 and ground.
5. Measure the voltage of the (R1) Left Curtain Squib 1 Line 2 circuit between the Left Side Curtain Airbag harness connector cavity 1 and ground.

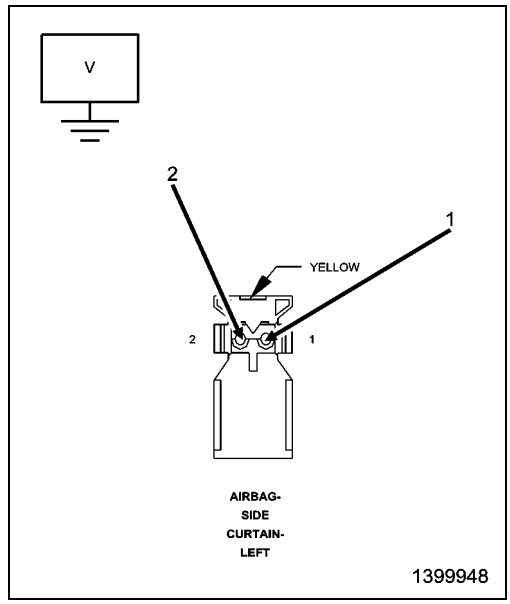

Is there any voltage present for either measurement?

Yes

WARNING: Turn the ignition off, disconnect the 12-volt battery and wait two minutes before proceeding. Failure to follow these instructions may result in possible serious or fatal injury.

- Repair the Left Side Curtain Squib 1 circuits for a short to voltage.
- Perform the RESTRAINTS SYSTEM VERIFICATION TEST. (Refer to 28 - DTC-Based Diagnostics/CONTROLLER, Occupant Restraint (ORC) - Standard Procedure).

No

WARNING: Turn the ignition off, disconnect the 12-volt battery and wait two minutes before proceeding. Failure to follow these instructions may result in possible serious or fatal injury.

WARNING: If the Occupant Restraint Controller (ORC) is dropped at any time, it must be replaced. Failure to follow these instructions may result in possible serious or fatal injury.

- Replace the ORC in accordance with the Service Information.
- Perform the RESTRAINTS SYSTEM VERIFICATION TEST. (Refer to 28 - DTC-Based Diagnostics/CONTROLLER, Occupant Restraint (ORC) - Standard Procedure).

■ B0021-13-LEFT CURTAIN DEPLOYMENT SQUIB 1 - CIRCUIT OPEN

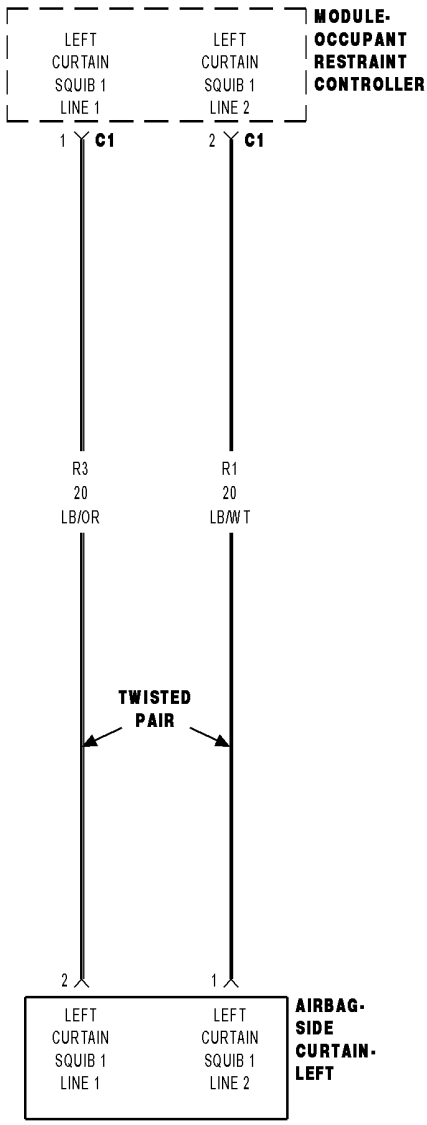

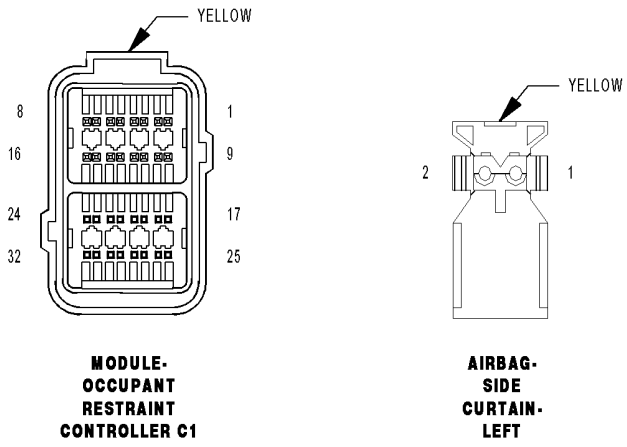

01257137

For a complete wiring diagram, **refer to the Wiring Information**.

Theory of Operation

When powered, the Occupant Restraint Controller (ORC) sends a test current to the squibs to verify the integrity of the squib and wiring. These circuits are maintained in a “floating” configuration at the ORC (connected to neither power nor ground) as protection against inadvertent deployment. Use of the Supplemental Restraints System (SRS) Load Tool Kit 8443A in the tests below substitutes a suspect squib with a known good component. The use of the SRS Load Tool Adapter provides a test point as well as a method for opening the shorting bar connections within the ORC harness connector.

- **When Monitored:**

  The ORC sends out a 40 mA diagnostic current on each squib voltage supply circuit at power up and every 100 ms thereafter while the ignition is on.

- **Set Condition:**

  This Diagnostic Trouble Code (DTC) sets when the ORC detects an open or high resistance on the squib circuit for more than 2.5 seconds. This DTC transitions from active to stored when the ORC sees a recovery from an open condition for greater than 2.5 seconds.

Possible Causes
(R3) LEFT CURTAIN SQUIB 1 LINE 1 CIRCUIT OPEN
(R1) LEFT CURTAIN SQUIB 1 LINE 2 CIRCUIT OPEN
LEFT SIDE CURTAIN AIRBAG
OCCUPANT RESTRAINT CONTROLLER (ORC)

Always perform the Pre-Diagnostic Troubleshooting procedure before proceeding. (Refer to 28 - DTC-Based Diagnostics/CONTROLLER, Occupant Restraint (ORC) - Standard Procedure).

1. VERIFY ACTIVE DTC

NOTE: Ensure the battery is fully charged.

1. Turn the ignition on.
2. With the scan tool, read ORC DTCs.

Does the scan tool display active B0021-13-LEFT CURTAIN DEPLOYMENT SQUIB 1 - CIRCUIT OPEN DTC?

Yes

- Go To 2

No

- Perform the RESTRAINTS SYSTEM INTERMITTENT TEST. (Refer to 28 - DTC-Based Diagnostics/CONTROLLER, Occupant Restraint (ORC) - Standard Procedure).

2. CHECK LEFT SIDE CURTAIN AIRBAG FOR OPEN CIRCUITS

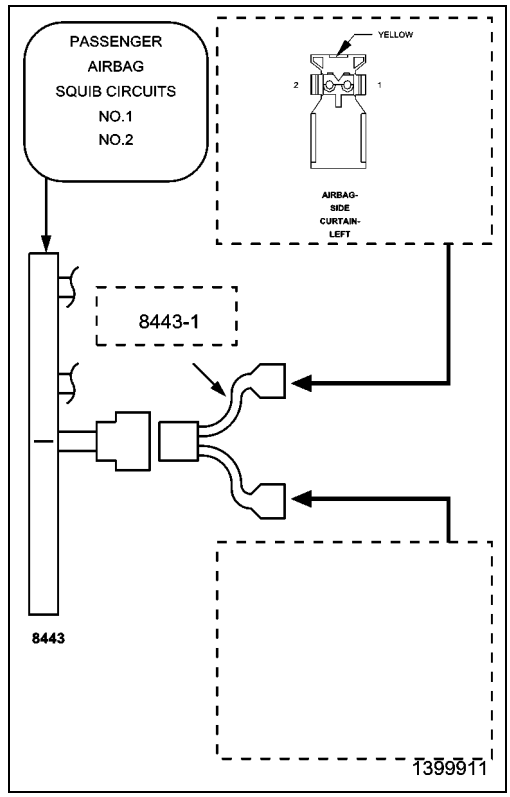

WARNING: Turn the ignition off, disconnect the 12-volt battery and wait two minutes before proceeding. Failure to follow these instructions may result in possible serious or fatal injury.

1. Disconnect the Left Side Curtain Airbag harness connector.

WARNING: To avoid serious or fatal injury, do not place an intact undeployed curtain airbag face down on a hard surface, the airbag will propel into the air if accidentally deployed.

NOTE: Check connectors - Clean and repair as necessary.

2. Connect the SRS Load Tool Kit 8443A and SRS Load Tool Jumper 8443-1 to the Left Side Curtain Airbag harness connector.

WARNING: Turn the ignition on, then reconnect the 12-volt battery and wait two minutes before proceeding. Failure to follow these instructions may result in possible serious or fatal injury.

3. With the scan tool, read the ORC DTCs.

Does the scan tool display active B0021-13-LEFT CURTAIN DEPLOYMENT SQUIB 1 - CIRCUIT OPEN DTC?

Yes

- Go To 3

No

WARNING: Turn the ignition off, disconnect the 12-volt battery and wait two minutes before proceeding. Failure to follow these instructions may result in possible serious or fatal injury.

- Replace the Left Side Curtain Airbag in accordance with the Service Information.
- Perform the RESTRAINTS SYSTEM VERIFICATION TEST. (Refer to 28 - DTC-Based Diagnostics/CONTROLLER, Occupant Restraint (ORC) - Standard Procedure).

3. CHECK (R1, R3) LEFT CURTAIN SQUIB 1 CIRCUITS FOR AN OPEN

WARNING: Turn the ignition off, disconnect the 12-volt battery and wait two minutes before proceeding. Failure to follow these instructions may result in possible serious or fatal injury.

1. Disconnect the SRS Load Tool Kit 8443A and Jumper from the Left Side Curtain Airbag harness connector.
2. Disconnect the ORC harness connectors.

NOTE: Check connectors - Clean and repair as necessary.

3. Connect the SRS Load Tool Adaptor 8443-24 to the ORC C1 harness connector.
4. Measure the resistance of the (R3) Left Curtain Squib 1 Line 1 circuit between the Left Side Curtain Airbag harness connector cavity 2 and the SRS Load Tool Adaptor 8443-24 cavity 1.
5. Measure the resistance of the (R1) Left Curtain Squib 1 Line 2 circuit between the Left Side Curtain Airbag harness connector cavity 1 and the SRS Load Tool Adaptor 8443-24 cavity 2.

Is the resistance below 1.0 Ohms on both circuits?

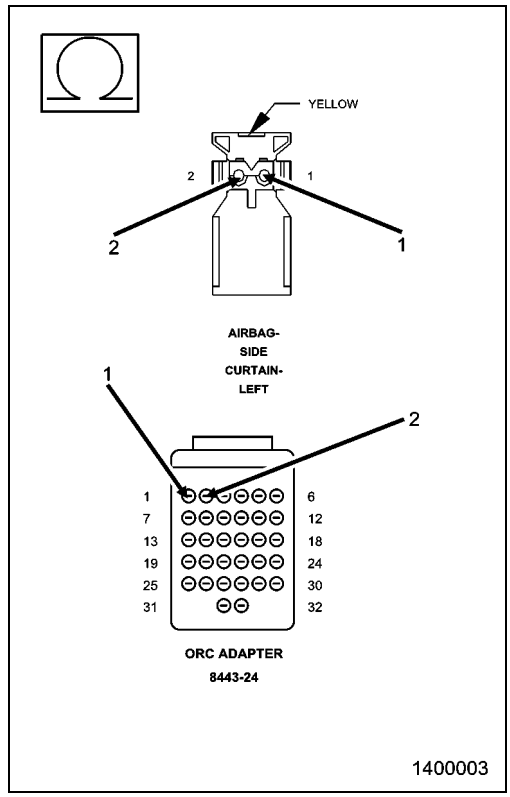

Yes

WARNING: If the Occupant Restraint Controller (ORC) is dropped at any time, it must be replaced. Failure to follow these instructions may result in possible serious or fatal injury.

- Replace the ORC in accordance with the Service Information.
- Perform the RESTRAINTS SYSTEM VERIFICATION TEST. (Refer to 28 - DTC-Based Diagnostics/CONTROLLER, Occupant Restraint (ORC) - Standard Procedure).

No

- Repair the (R1, R3) Left Curtain Squib 1 circuits for an open.
- Perform the RESTRAINTS SYSTEM VERIFICATION TEST. (Refer to 28 - DTC-Based Diagnostics/CONTROLLER, Occupant Restraint (ORC) - Standard Procedure).

B0021-2B-LEFT CURTAIN DEPLOYMENT SQUIB 1 - WIRES SHORTED TOGETHER

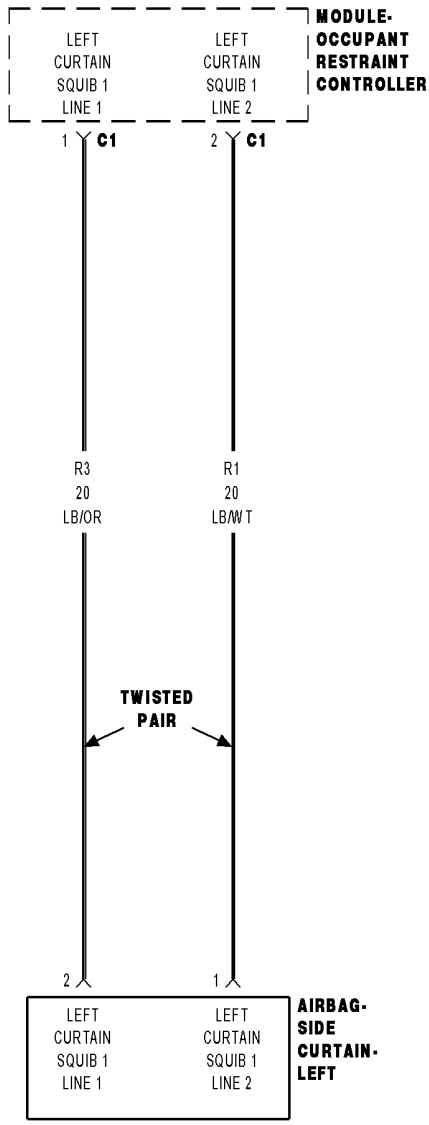

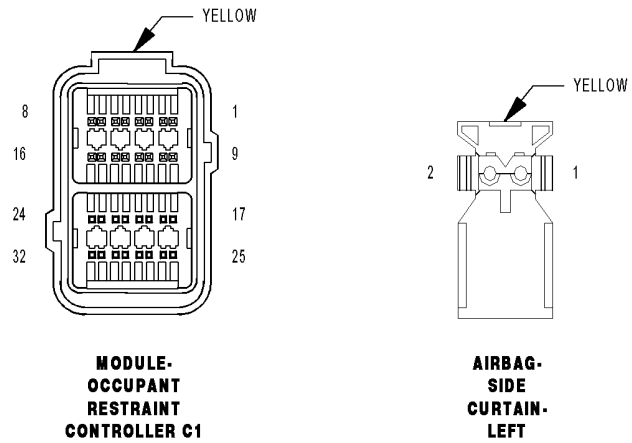

MODULE-
OCCUPANT
RESTRAINT
CONTROLLER C1

AIRBAG-
SIDE
CURTAIN-
LEFT

01257137

For a complete wiring diagram, **refer to the Wiring Information**.

Theory of Operation

When powered, the Occupant Restraint Controller (ORC) sends a test current to the squibs to verify the integrity of the squib and wiring. These circuits are maintained in a “floating” configuration at the ORC (connected to neither power nor ground) as protection against inadvertent deployment. Use of the Supplemental Restraints System (SRS) Load Tool Kit 8443A in the tests below substitutes a suspect squib with a known good component. The use of the SRS Load Tool Adapter provides a test point as well as a method for opening the shorting bar connections within the ORC harness connector.

- **When Monitored:**

  The ORC sends out a 40 mA diagnostic current on each squib voltage supply circuit at power up and every 500 ms thereafter while the ignition is on.

- **Set Condition:**

  This Diagnostic Trouble Code (DTC) sets when the ORC detects both circuits of the same squib are shorted together for more than 2.5 seconds. This DTC transitions from active to stored when the ORC sees a recovery from a shorted together condition for greater than 2.5 seconds.

Possible Causes
(R3) LEFT CURTAIN SQUIB 1 LINE 1 CIRCUIT SHORTED TO (R1) LEFT CURTAIN SQUIB 1 LINE 2 CIRCUIT
LEFT SIDE CURTAIN AIRBAG
OCCUPANT RESTRAINT CONTROLLER (ORC)

Always perform the Pre-Diagnostic Troubleshooting procedure before proceeding. (Refer to 28 - DTC-Based Diagnostics/CONTROLLER, Occupant Restraint (ORC) - Standard Procedure).

1. VERIFY ACTIVE DTC

NOTE: Ensure the battery is fully charged.

1. Turn the ignition on.
2. With the scan tool, read the ORC DTCs.

Does the scan tool display active B0021-2B-LEFT CURTAIN DEPLOYMENT SQUIB 1 - WIRES SHORTED TOGETHER DTC?

Yes

- Go To 2

No

- Perform the RESTRAINTS SYSTEM INTERMITTENT TEST. (Refer to 28 - DTC-Based Diagnostics/CONTROLLER, Occupant Restraint (ORC) - Standard Procedure).

2. CHECK LEFT SIDE CURTAIN AIRBAG FOR SHORT CIRCUITS

WARNING: Turn the ignition off, disconnect the 12-volt battery and wait two minutes before proceeding. Failure to follow these instructions may result in possible serious or fatal injury.

1. Disconnect the Left Side Curtain Airbag harness connector.

WARNING: Do not place an intact non-deployed airbag face down on a hard surface, the airbag propels into the air if accidentally deployed. Failure to follow these instructions may result in possible serious or fatal injury.

NOTE: Check connectors - Clean and repair as necessary.

2. Connect the SRS Load Tool Kit 8443A and SRS Load Tool Jumper 8443-1 to the Left Side Curtain Airbag harness connector.

WARNING: Turn the ignition on, then reconnect the 12-volt battery and wait two minutes before proceeding. Failure to follow these instructions may result in possible serious or fatal injury.

3. With the scan tool, read the ORC DTCs.

Does the scan tool display active B0021-2B-LEFT CURTAIN DEPLOYMENT SQUIB 1 - WIRES SHORTED TOGETHER DTC?

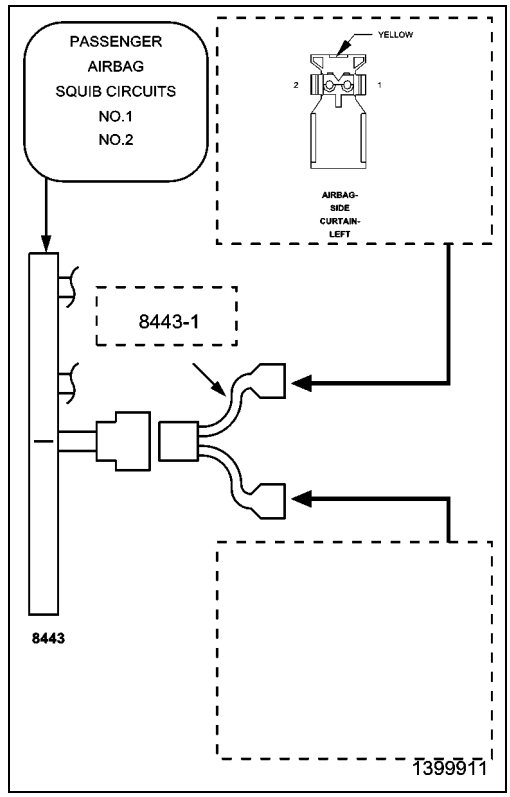

Yes

- Go To 3

No

WARNING: Turn the ignition off, disconnect the 12-volt battery and wait two minutes before proceeding. Failure to follow these instructions may result in possible serious or fatal injury.

- Replace the Left Side Curtain Airbag in accordance with the Service Information.
- Perform the RESTRAINTS SYSTEM VERIFICATION TEST. (Refer to 28 - DTC-Based Diagnostics/CONTROLLER, Occupant Restraint (ORC) - Standard Procedure).

3. CHECK (R3) LEFT CURTAIN SQUIB 1 LINE 1 CIRCUIT FOR A SHORT TO (R1) LEFT CURTAIN SQUIB 1 LINE 2 CIRCUIT

WARNING: Turn the ignition off, disconnect the 12-volt battery and wait two minutes before proceeding. Failure to follow these instructions may result in possible serious or fatal injury.

1. Disconnect the SRS Load Tool Kit 8443A and Jumper from the Left Side Curtain Airbag harness connector.
2. Disconnect the ORC harness connectors.

NOTE: Check connectors - Clean and repair as necessary.

3. Connect the SRS Load Tool Adaptor 8443-24 to the ORC C1 harness connector.
4. Measure the resistance between the (R3) Left Curtain Squib 1 Line 1 circuit cavity 2 and the (R1) Left Curtain Squib 1 Line 2 circuit cavity 1 at the Left Side Curtain Airbag harness connector.

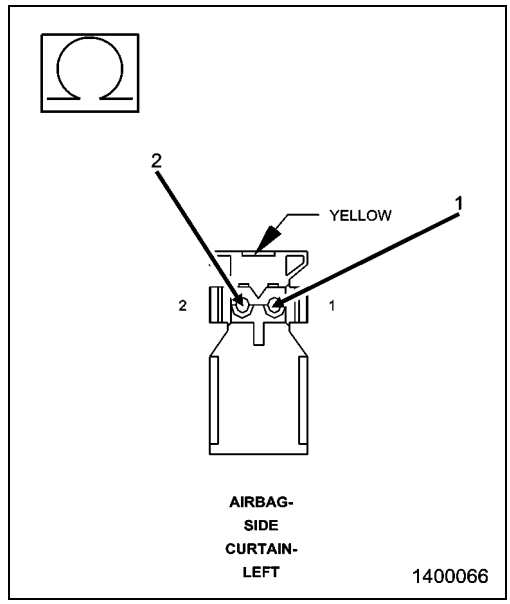

Is the resistance below 5.0 Ohms?

Yes

- Repair the (R3) Left Curtain Squib 1 Line 1 circuit for a short to the (R1) Left Curtain Squib 1 Line 2 circuit.
- Perform the RESTRAINTS SYSTEM VERIFICATION TEST. (Refer to 28 - DTC-Based Diagnostics/CONTROLLER, Occupant Restraint (ORC) - Standard Procedure).

No

WARNING: If the Occupant Restraint Controller (ORC) is dropped at any time, it must be replaced. Failure to follow these instructions may result in possible serious or fatal injury.

- Replace the ORC in accordance with the Service Information.
- Perform the RESTRAINTS SYSTEM VERIFICATION TEST. (Refer to 28 - DTC-Based Diagnostics/CONTROLLER, Occupant Restraint (ORC) - Standard Procedure).

B0029-11-RIGHT CURTAIN DEPLOYMENT SQUIB 1 - CIRCUIT SHORT TO GROUND

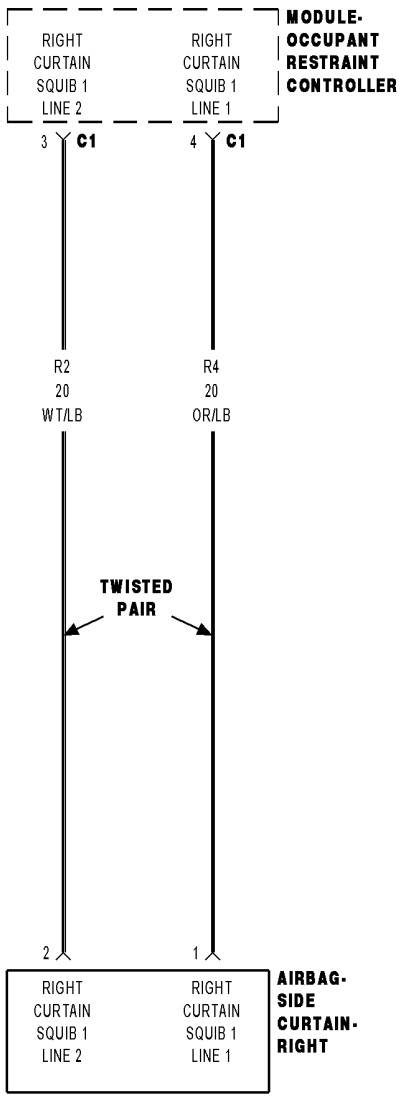

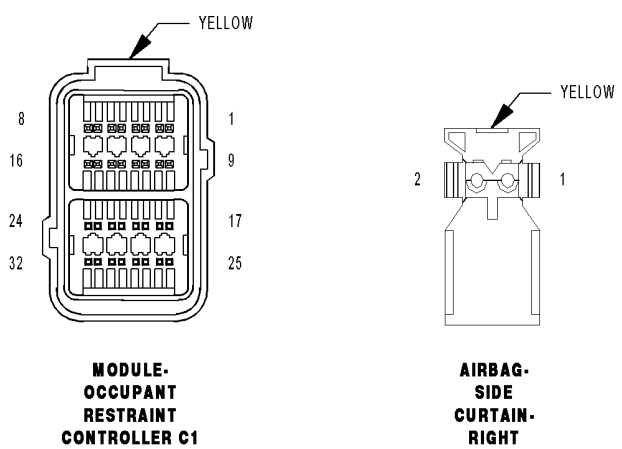

For a complete wiring diagram, **refer to the Wiring Information**.

Theory of Operation

When powered, the Occupant Restraint Controller (ORC) sends a test current to the squibs to verify the integrity of the squib and wiring. These circuits are maintained in a “floating” configuration at the ORC (connected to neither power nor ground) as protection against inadvertent deployment. Use of the Supplemental Restraints System (SRS) Load Tool Kit 8443A in the tests below substitutes a suspect squib with a known good component. The use of the SRS Load Tool Adapter provides a test point as well as a method for opening the shorting bar connections within the ORC harness connector.

- **When Monitored:**

  The ORC sends out a 40 mA diagnostic current on each squib voltage supply circuit at power up and every 500 ms thereafter while the ignition is on. With the ignition on, the Occupant Restraint Controller (ORC) monitors the resistance of the Right Side Curtain Squib 1 circuits.

- **Set Condition:**

  This Diagnostic Trouble Code (DTC) sets when the ORC detects a short to ground on the squib circuit for more than 2.5 seconds. This DTC transitions from active to stored when the ORC sees a recovery from a short to ground condition for greater than 2.5 seconds. The ORC has detected low resistance of the Right Side Curtain Squib 1 circuits.

Possible Causes
(R4) RIGHT CURTAIN SQUIB 1 LINE 1 CIRCUIT SHORTED TO GROUND
(R2) RIGHT CURTAIN SQUIB 1 LINE 2 CIRCUIT SHORTED TO GROUND
RIGHT SIDE CURTAIN AIRBAG
OCCUPANT RESTRAINT CONTROLLER (ORC)

Always perform the Pre-Diagnostic Troubleshooting procedure before proceeding. (Refer to 28 - DTC-Based Diagnostics/CONTROLLER, Occupant Restraint (ORC) - Standard Procedure).

1. VERIFY ACTIVE DTC

NOTE: Ensure the battery is fully charged.

1. Turn the ignition on.
2. With the scan tool, read ORC DTCs.

Does the scan tool display active B0029-11-RIGHT CURTAIN DEPLOYMENT SQUIB 1 - CIRCUIT SHORT TO GROUND DTC?

Yes

- Go To 2

No

- Perform the RESTRAINTS SYSTEM INTERMITTENT TEST. (Refer to 28 - DTC-Based Diagnostics/CONTROLLER, Occupant Restraint (ORC) - Standard Procedure).

2. CHECK RIGHT SIDE CURTAIN AIRBAG FOR SHORT CIRCUITS

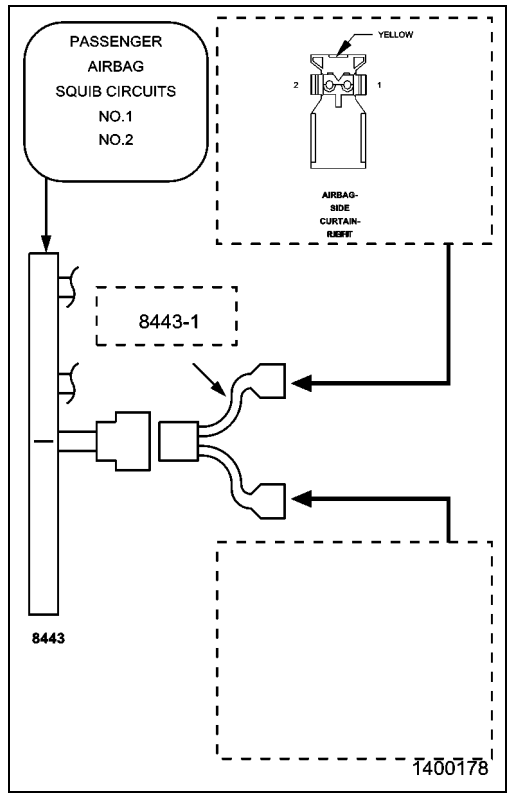

WARNING: Turn the ignition off, disconnect the 12-volt battery and wait two minutes before proceeding. Failure to follow these instructions may result in possible serious or fatal injury.

1. Disconnect the Right Side Curtain Airbag harness connector.

WARNING: Do not place an intact non-deployed airbag face down on a hard surface, the airbag propels into the air if accidentally deployed. Failure to follow these instructions may result in possible serious or fatal injury.

NOTE: Check connectors - Clean and repair as necessary.

2. Connect the SRS Load Tool Kit 8443A and SRS Load Tool Jumper 8443-1 to the Right Side Curtain Airbag harness connector.

WARNING: Turn the ignition on, then reconnect the 12-volt battery and wait two minutes before proceeding. Failure to follow these instructions may result in possible serious or fatal injury.

3. With the scan tool, read the ORC DTCs.

   Does the scan tool display active B0029-11-RIGHT CURTAIN DEPLOYMENT SQUIB 1 - CIRCUIT SHORT TO GROUND DTC?

Yes

- Go To 3

No

WARNING: Turn the ignition off, disconnect the 12-volt battery and wait two minutes before proceeding. Failure to follow these instructions may result in possible serious or fatal injury.

- Replace the Right Side Curtain Airbag in accordance with the Service Information.
- Perform the RESTRAINTS SYSTEM VERIFICATION TEST. (Refer to 28 - DTC-Based Diagnostics/CONTROLLER, Occupant Restraint (ORC) - Standard Procedure).

3. CHECK (R2, R4) RIGHT CURTAIN SQUIB 1 CIRCUITS FOR A SHORT TO GROUND

WARNING: Turn the ignition off, disconnect the 12-volt battery and wait two minutes before proceeding. Failure to follow these instructions may result in possible serious or fatal injury.

1. Disconnect the SRS Load Tool Kit 8443A and Jumper from the Right Side Curtain Airbag harness connector.
2. Disconnect the ORC harness connectors.

NOTE: Check connectors - Clean and repair as necessary.

3. Connect the SRS Load Tool Adaptor 8443-24 to the ORC C1 harness connector.
4. Measure the resistance of the (R4) Right Curtain Squib 1 Line 1 circuit between the Right Side Curtain Airbag harness connector cavity 1 and ground.
5. Measure the resistance of the (R2) Right Curtain Squib 1 Line 2 circuit between the Right Side Curtain Airbag harness connector cavity 2.

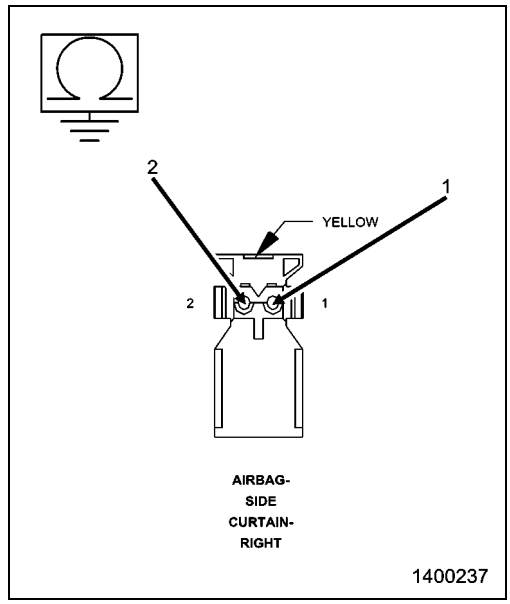

Is the resistance below 10K Ohms on either circuit?

Yes

- Repair the Right Curtain Squib 1 circuits for a short to ground.
- Perform the RESTRAINTS SYSTEM VERIFICATION TEST. (Refer to 28 - DTC-Based Diagnostics/CONTROLLER, Occupant Restraint (ORC) - Standard Procedure).

No

WARNING: If the Occupant Restraint Controller (ORC) is dropped at any time, it must be replaced. Failure to follow these instructions may result in possible serious or fatal injury.

- Replace the ORC in accordance with the Service Information.
- Perform the RESTRAINTS SYSTEM VERIFICATION TEST. (Refer to 28 - DTC-Based Diagnostics/CONTROLLER, Occupant Restraint (ORC) - Standard Procedure).

B0029-12-RIGHT CURTAIN DEPLOYMENT SQUIB 1 - CIRCUIT SHORT TO BATTERY

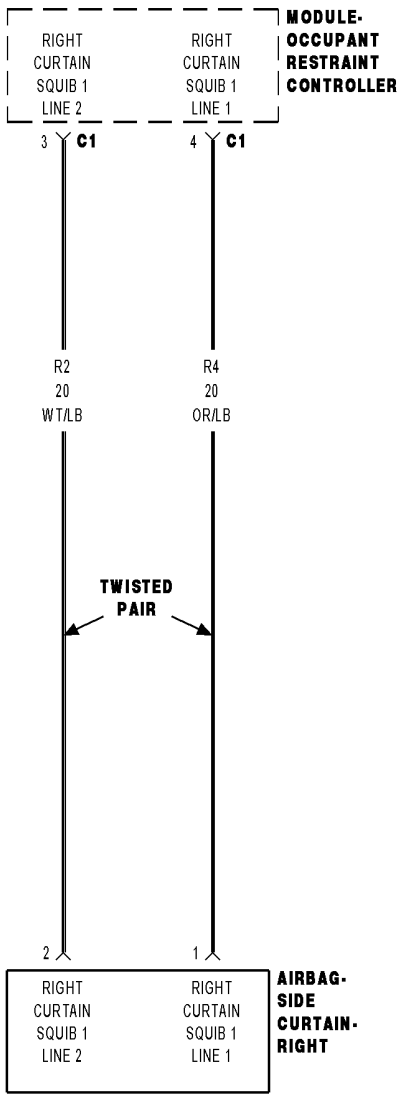

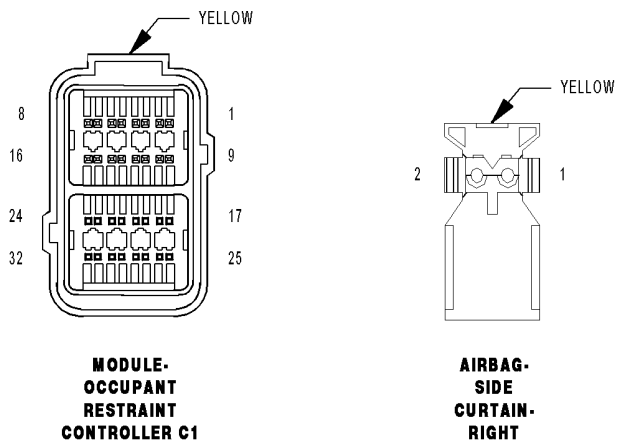

For a complete wiring diagram, **refer to the Wiring Information**.

Theory of Operation

When powered, the Occupant Restraint Controller (ORC) sends a test current to the squibs to verify the integrity of the squib and wiring. These circuits are maintained in a “floating” configuration at the ORC (connected to neither power nor ground) as protection against inadvertent deployment. Use of the Supplemental Restraints System (SRS) Load Tool Kit 8443A in the tests below substitutes a suspect squib with a known good component. The use of the SRS Load Tool Adapter provides a test point as well as a method for opening the shorting bar connections within the ORC harness connector.

- **When Monitored:**

  The ORC sends out a 40 mA diagnostic current on each squib voltage supply circuit at power up and every 100 ms thereafter while the ignition is on. With the ignition on, the ORC monitors the voltage on the Right Side Curtain Squib 1 circuits.

- **Set Condition:**

  This Diagnostic Trouble Code (DTC) sets when the ORC detects a short to voltage on the Right Side Curtain Squib 1 circuit for more than 2.5 seconds. This DTC transitions from active to stored when the ORC sees a recovery from a short to voltage for greater than 2.5 seconds.

Possible Causes
(R4) RIGHT CURTAIN SQUIB 1 LINE 1 CIRCUIT SHORTED TO VOLTAGE
(R2) RIGHT CURTAIN SQUIB 1 LINE 2 CIRCUIT SHORTED TO VOLTAGE
RIGHT SIDE CURTAIN AIRBAG
OCCUPANT RESTRAINT CONTROLLER (ORC)

Always perform the Pre-Diagnostic Troubleshooting procedure before proceeding. (Refer to 28 - DTC-Based Diagnostics/CONTROLLER, Occupant Restraint (ORC) - Standard Procedure).

1. VERIFY ACTIVE DTC

NOTE: Ensure the battery is fully charged.

1. Turn the ignition on.
2. Select Active or Stored DTC.

Does the scan tool display active B0029-12-RIGHT CURTAIN DEPLOYMENT SQUIB 1 - CIRCUIT SHORT TO BATTERY DTC?

Yes

- Go To 2

No

- Perform the RESTRAINTS SYSTEM INTERMITTENT TEST. (Refer to 28 - DTC-Based Diagnostics/CONTROLLER, Occupant Restraint (ORC) - Standard Procedure).

2. CHECK RIGHT SIDE CURTAIN AIRBAG FOR SHORT TO VOLTAGE

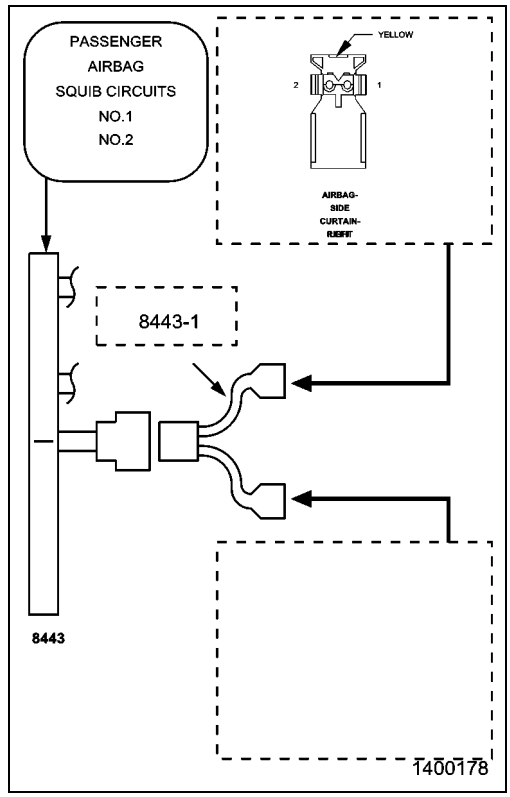

WARNING: Turn the ignition off, disconnect the 12-volt battery and wait two minutes before proceeding. Failure to follow these instructions may result in possible serious or fatal injury.

1. Disconnect the Right Side Curtain Airbag harness connector.

WARNING: Do not place an intact non-deployed airbag face down on a hard surface, the airbag propels into the air if accidentally deployed. Failure to follow these instructions may result in possible serious or fatal injury.

NOTE: Check connectors - Clean and repair as necessary.

2. Connect the SRS Load Tool Kit 8443A and SRS Load Tool Jumper 8443-1 to the Right Side Curtain Airbag harness connector.

WARNING: Turn the ignition on, then reconnect the 12-volt battery and wait two minutes before proceeding. Failure to follow these instructions may result in possible serious or fatal injury.

3. With the scan tool, read the ORC DTCs.

   Does the scan tool display active B0029-12-RIGHT CURTAIN DEPLOYMENT SQUIB 1 - CIRCUIT SHORT TO BATTERY DTC?

Yes

- Go To 3

No

WARNING: Turn the ignition off, disconnect the 12-volt battery and wait two minutes before proceeding. Failure to follow these instructions may result in possible serious or fatal injury.

- Replace the Right Side Curtain Airbag in accordance with the Service Information.
- Perform the RESTRAINTS SYSTEM VERIFICATION TEST. (Refer to 28 - DTC-Based Diagnostics/CONTROLLER, Occupant Restraint (ORC) - Standard Procedure).

3. CHECK (R2, R4) RIGHT CURTAIN SQUIB 1 CIRCUITS FOR A SHORT TO VOLTAGE

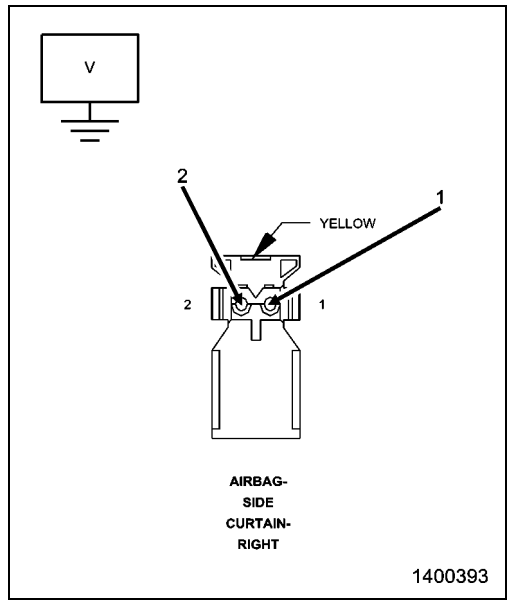

WARNING: Turn the ignition off, disconnect the 12-volt battery and wait two minutes before proceeding. Failure to follow these instructions may result in possible serious or fatal injury.

1. Disconnect the SRS Load Tool Kit 8443A and Jumper from the Right Side Curtain Airbag harness connector.
2. Disconnect the ORC harness connectors.

NOTE: Check connectors - Clean and repair as necessary.

3. Connect the SRS Load Tool Adaptor 8443-24 to the ORC C1 harness connector.

WARNING: Turn the ignition on, then reconnect the 12-volt battery and wait two minutes before proceeding. Failure to follow these instructions may result in possible serious or fatal injury.

4. Measure the voltage of the (R4) Right Curtain Squib 1 Line 1 circuit between the Right Side Curtain Airbag harness connector cavity 1 and ground.
5. Measure the voltage of the (R2) Right Curtain Squib 1 Line 2 circuit between the Right Side Curtain Airbag harness connector cavity 2 and ground.

Is there any voltage present for either measurement?

Yes

WARNING: Turn the ignition off, disconnect the 12-volt battery and wait two minutes before proceeding. Failure to follow these instructions may result in possible serious or fatal injury.

- Repair the Right Curtain Squib 1 circuits for a short to voltage.
- Perform the RESTRAINTS SYSTEM VERIFICATION TEST. (Refer to 28 - DTC-Based Diagnostics/CONTROLLER, Occupant Restraint (ORC) - Standard Procedure).

No

WARNING: Turn the ignition off, disconnect the 12-volt battery and wait two minutes before proceeding. Failure to follow these instructions may result in possible serious or fatal injury.

WARNING: If the Occupant Restraint Controller (ORC) is dropped at any time, it must be replaced. Failure to follow these instructions may result in possible serious or fatal injury.

- Replace the ORC in accordance with the Service Information.
- Perform the RESTRAINTS SYSTEM VERIFICATION TEST. (Refer to 28 - DTC-Based Diagnostics/CONTROLLER, Occupant Restraint (ORC) - Standard Procedure).

B0029-13-RIGHT CURTAIN DEPLOYMENT SQUIB 1 - CIRCUIT OPEN

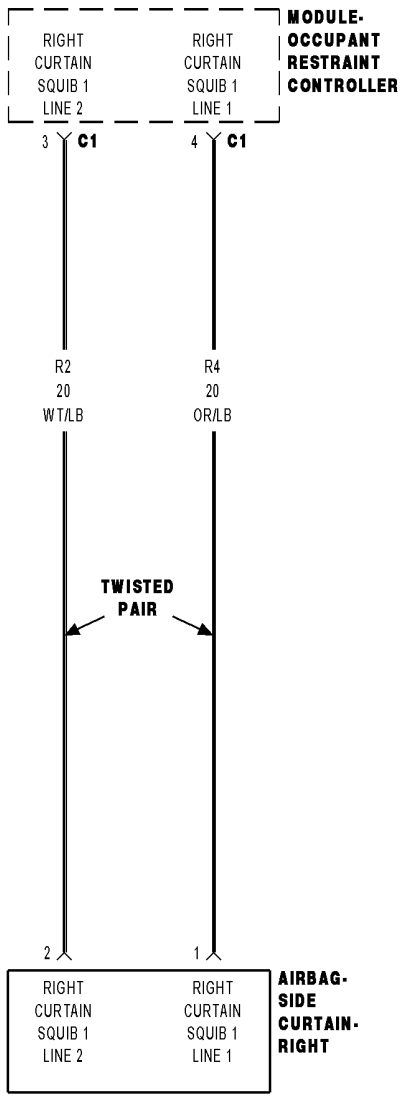

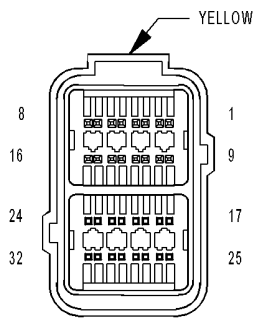

MODULE-
OCCUPANT
RESTRAINT
CONTROLLER C1

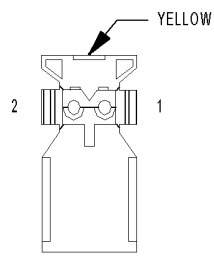

AIRBAG-
SIDE
CURTAIN-
RIGHT

01257152

For a complete wiring diagram, **refer to the Wiring Information**.

Theory of Operation

When powered, the Occupant Restraint Controller (ORC) sends a test current to the squibs to verify the integrity of the squib and wiring. These circuits are maintained in a “floating” configuration at the ORC (connected to neither power nor ground) as protection against inadvertent deployment. Use of the Supplemental Restraints System (SRS) Load Tool Kit 8443A in the tests below substitutes a suspect squib with a known good component. The use of the SRS Load Tool Adapter provides a test point as well as a method for opening the shorting bar connections within the ORC harness connector.

- **When Monitored:**

  The ORC sends out a 40 mA diagnostic current on each squib voltage supply circuit at power up and every 100 ms thereafter while the ignition is on.
- **Set Condition:**

  This Diagnostic Trouble Code (DTC) sets when the ORC detects an open or high resistance on the squib circuit for more than 2.5 seconds. This DTC transitions from active to stored when the ORC sees a recovery from an open condition for greater than 2.5 seconds.

Possible Causes
(R4) RIGHT CURTAIN SQUIB 1 LINE 1 CIRCUIT OPEN
(R2) RIGHT CURTAIN SQUIB 1 LINE 2 CIRCUIT OPEN
RIGHT SIDE CURTAIN AIRBAG
OCCUPANT RESTRAINT CONTROLLER (ORC)

Always perform the Pre-Diagnostic Troubleshooting procedure before proceeding. (Refer to 28 - DTC-Based Diagnostics/CONTROLLER, Occupant Restraint (ORC) - Standard Procedure).

1. VERIFY ACTIVE DTC

NOTE: Ensure the battery is fully charged.

1. Turn the ignition on.
2. With the scan tool, read ORC DTCs.

Does the scan tool display active B0029-13-RIGHT CURTAIN DEPLOYMENT SQUIB 1 - CIRCUIT OPEN DTC?

Yes

- Go To 2

No

- Perform the RESTRAINTS SYSTEM INTERMITTENT TEST. (Refer to 28 - DTC-Based Diagnostics/CONTROLLER, Occupant Restraint (ORC) - Standard Procedure).

2. CHECK RIGHT SIDE CURTAIN AIRBAG FOR OPEN SQUIB CIRCUITS

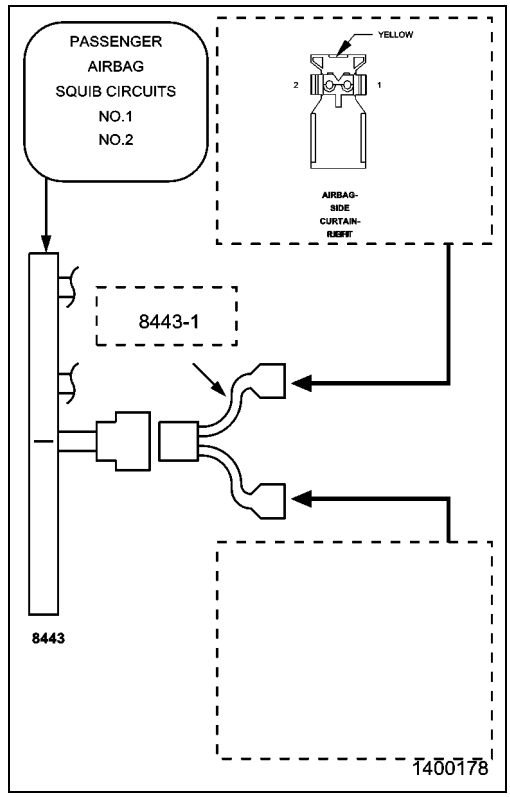

WARNING: Turn the ignition off, disconnect the 12-volt battery and wait two minutes before proceeding. Failure to follow these instructions may result in possible serious or fatal injury.

1. Disconnect the Right Side Curtain Airbag harness connector.

WARNING: To avoid serious or fatal injury, do not place an intact undeployed curtain airbag face down on a hard surface, the airbag will propel into the air if accidentally deployed.

NOTE: Check connectors - Clean and repair as necessary.

2. Connect the SRS Load Tool Kit 8443A and SRS Load Tool Jumper 8443-1 to the Right Side Curtain Airbag harness connector.

WARNING: Turn the ignition on, then reconnect the 12-volt battery and wait two minutes before proceeding. Failure to follow these instructions may result in possible serious or fatal injury.

3. With the scan tool, read the ORC DTCs.

Does the scan tool display active B0029-13-RIGHT CURTAIN DEPLOYMENT SQUIB 1 - CIRCUIT OPEN DTC?

Yes

- Go To 3

No

WARNING: Turn the ignition off, disconnect the 12-volt battery and wait two minutes before proceeding. Failure to follow these instructions may result in possible serious or fatal injury.

- Replace the Right Side Curtain Airbag in accordance with the Service Information.
- Perform the RESTRAINTS SYSTEM VERIFICATION TEST. (Refer to 28 - DTC-Based Diagnostics/CONTROLLER, Occupant Restraint (ORC) - Standard Procedure).

3. CHECK (R2, R4) RIGHT CURTAIN SQUIB 1 CIRCUITS FOR AN OPEN

WARNING: Turn the ignition off, disconnect the 12-volt battery and wait two minutes before proceeding. Failure to follow these instructions may result in possible serious or fatal injury.

1. Disconnect the SRS Load Tool Kit 8443A and Jumper from the Right Side Curtain Airbag harness connector.
2. Disconnect the ORC harness connectors.

NOTE: Check connectors - Clean and repair as necessary.

3. Connect the SRS Load Tool Adaptor 8443-24 to the ORC C1 harness connector.
4. Measure the resistance of the (R4) Right Curtain Squib 1 Line 1 circuit between the Right Side Curtain Airbag harness connector cavity 1 and the SRS Load Tool Adaptor 8443-24 cavity 4.
5. Measure the resistance of the (R2) Right Curtain Squib 1 Line 2 circuit between the Right Side Curtain Airbag harness connector cavity 2 and the SRS Load Tool Adaptor 8443-24 cavity 3.

Is the resistance below 1.0 Ohm on both circuits?

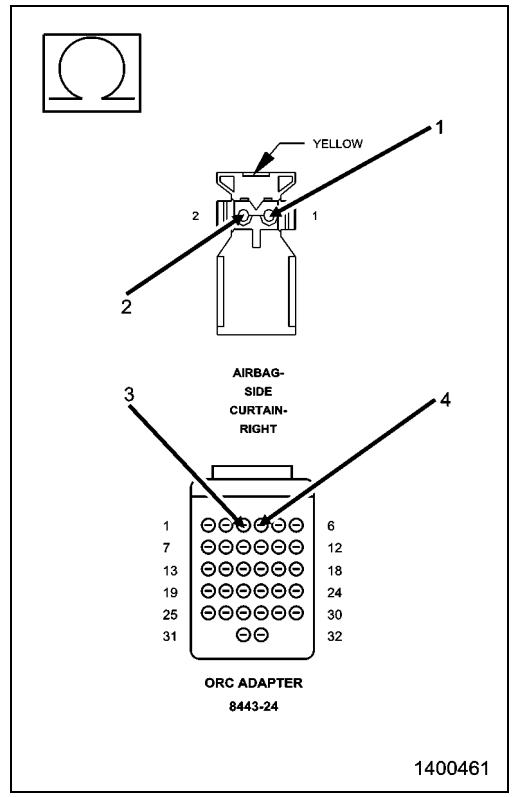

Yes

WARNING: If the Occupant Restraint Controller (ORC) is dropped at any time, it must be replaced. Failure to follow these instructions may result in possible serious or fatal injury.

- Replace the ORC in accordance with the Service Information.
- Perform the RESTRAINTS SYSTEM VERIFICATION TEST. (Refer to 28 - DTC-Based Diagnostics/CONTROLLER, Occupant Restraint (ORC) - Standard Procedure).

No

- Repair the (R2, R4) Right Curtain Squib 1 circuit for an open.
- Perform the RESTRAINTS SYSTEM VERIFICATION TEST. (Refer to 28 - DTC-Based Diagnostics/CONTROLLER, Occupant Restraint (ORC) - Standard Procedure).

B0029-2B-RIGHT CURTAIN DEPLOYMENT SQUIB 1 - WIRES SHORTED TOGETHER

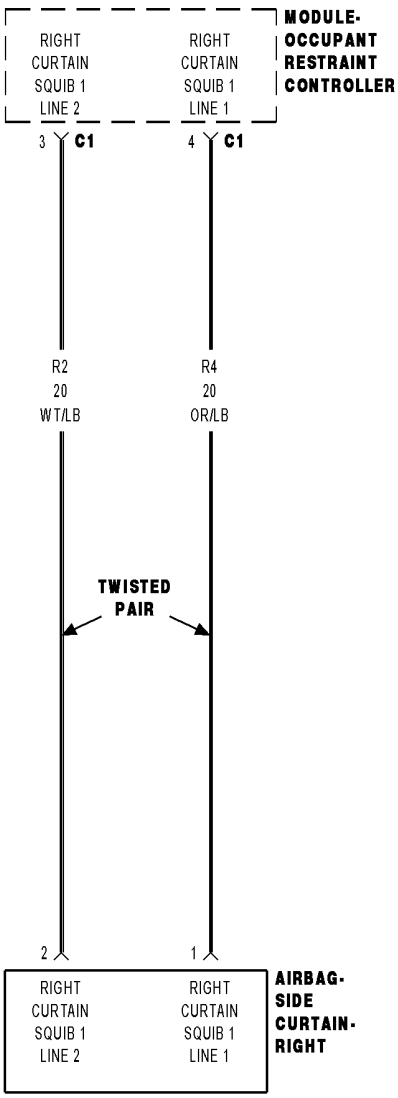

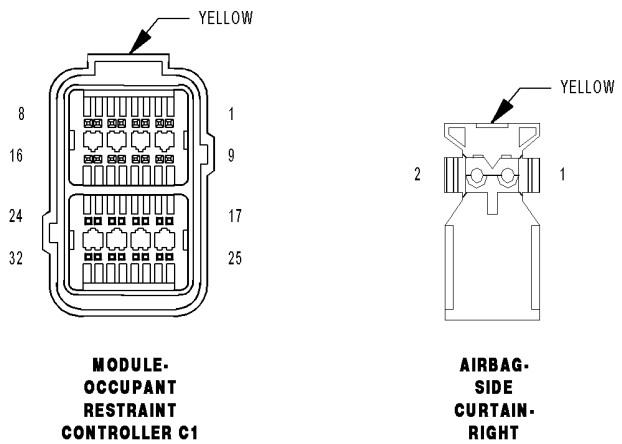

For a complete wiring diagram, **refer to the Wiring Information**.

Theory of Operation

When powered, the Occupant Restraint Controller (ORC) sends a test current to the squibs to verify the integrity of the squib and wiring. These circuits are maintained in a floating configuration at the ORC (connected to neither power nor ground) as protection against inadvertent deployment. Use of the Supplemental Restraints System (SRS) Load Tool Kit 8443A in the tests below substitutes a suspect squib with a known good component. The use of the SRS Load Tool Adapter provides a test point as well as a method for opening the shorting bar connections within the ORC harness connector.

- **When Monitored:**

  The ORC sends out a 40 mA diagnostic current on each squib voltage supply circuit at power up and every 100 ms thereafter while the ignition is on.

- **Set Condition:**

  This Diagnostic Trouble Code (DTC) sets when the ORC detects both circuits of the Right Side Curtain Squib 1 are shorted together for more than 2.5 seconds. This DTC transitions from active to stored when the ORC sees a recovery from a shorted together condition for greater than 2.5 seconds.

Possible Causes
(R4) RIGHT CURTAIN SQUIB 1 LINE 1 CIRCUIT SHORTED TO (R2) RIGHT CURTAIN SQUIB 1 LINE 2 CIRCUIT
RIGHT SIDE CURTAIN AIRBAG
OCCUPANT RESTRAINT CONTROLLER (ORC)

Always perform the Pre-Diagnostic Troubleshooting procedure before proceeding. (Refer to 28 - DTC-Based Diagnostics/CONTROLLER, Occupant Restraint (ORC) - Standard Procedure). .

1. VERIFY ACTIVE DTC

NOTE: Ensure the battery is fully charged.

1. Turn the ignition on.
2. With the scan tool, read the ORC DTCs.

Does the scan tool display active B0029-2B-RIGHT CURTAIN DEPLOYMENT SQUIB 1 - WIRES SHORTED TOGETHER DTC?

Yes

- Go To 2

No

- Perform the RESTRAINTS SYSTEM INTERMITTENT TEST. (Refer to 28 - DTC-Based Diagnostics/CONTROLLER, Occupant Restraint (ORC) - Standard Procedure).

2. CHECK RIGHT SIDE CURTAIN AIRBAG FOR SHORT SQUIB CIRCUITS

WARNING: Turn the ignition off, disconnect the 12-volt battery and wait two minutes before proceeding. Failure to follow these instructions may result in possible serious or fatal injury.

1. Disconnect the Right Side Curtain Airbag harness connector.

WARNING: Do not place an intact non-deployed airbag face down on a hard surface, the airbag propels into the air if accidentally deployed. Failure to follow these instructions may result in possible serious or fatal injury.

NOTE: Check connectors - Clean and repair as necessary.

2. Connect the SRS Load Tool Kit 8443A and SRS Load Tool Jumper 8443-1 to the Right Side Curtain Airbag harness connector.

WARNING: Turn the ignition on, then reconnect the 12-volt battery and wait two minutes before proceeding. Failure to follow these instructions may result in possible serious or fatal injury.

3. With the scan tool, read the ORC DTCs.

Does the scan tool display active B0029-2B-RIGHT CURTAIN DEPLOYMENT SQUIB 1 - WIRES SHORTED TOGETHER DTC?

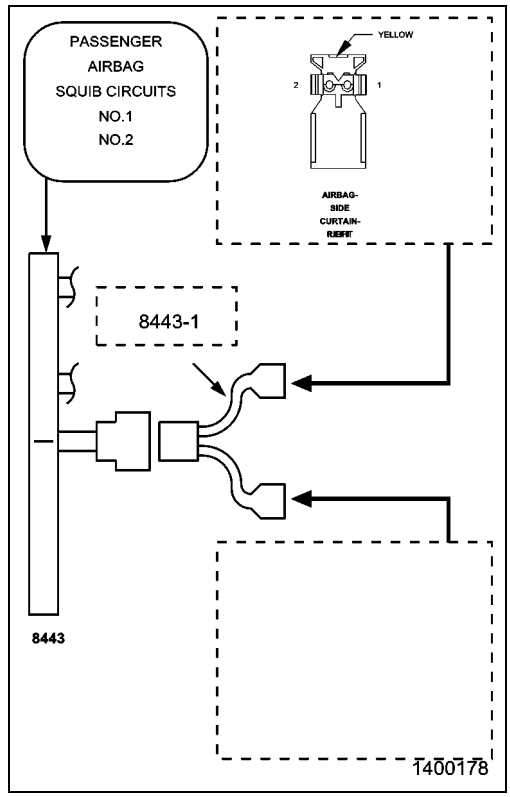

Yes

- Go To 3

No

WARNING: Turn the ignition off, disconnect the 12-volt battery and wait two minutes before proceeding. Failure to follow these instructions may result in possible serious or fatal injury.

- Replace the Right Side Curtain Airbag in accordance with the Service Information.
- Perform the RESTRAINTS SYSTEM VERIFICATION TEST. (Refer to 28 - DTC-Based Diagnostics/CONTROLLER, Occupant Restraint (ORC) - Standard Procedure).

3. CHECK (R4) RIGHT CURTAIN SQUIB 1 LINE 1 CIRCUIT FOR A SHORT TO (R2) RIGHT CURTAIN SQUIB 1 LINE 2 CIRCUIT

WARNING: Turn the ignition off, disconnect the 12-volt battery and wait two minutes before proceeding. Failure to follow these instructions may result in possible serious or fatal injury.

1. Disconnect the SRS Load Tool Kit 8443A and Jumper from the Right Side Curtain Airbag harness connector.
2. Disconnect the ORC harness connectors.

NOTE: Check connectors - Clean and repair as necessary.

3. Connect the SRS Load Tool Adaptor 8443-24 to the ORC C1 harness connector.
4. Measure the resistance between the (R4) Right Curtain Squib 1 Line 1 circuit cavity 1 and the (R2) Right Curtain Squib 1 Line 2 circuit cavity 2 at the Right Side Curtain Airbag harness connector.

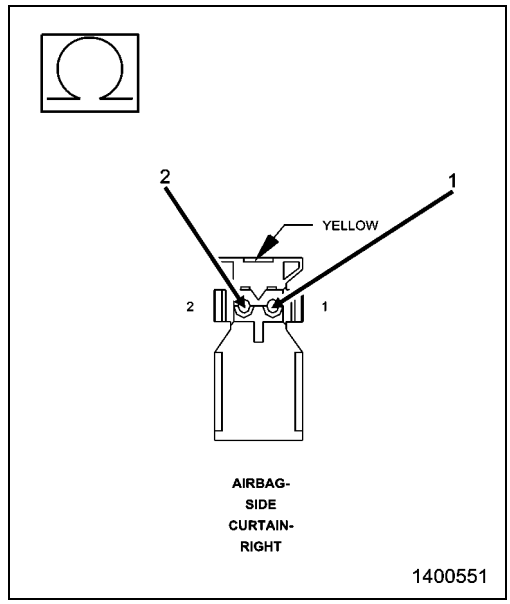

Is the resistance below 5.0 Ohms?

Yes

- Repair the (R4) Right Curtain Squib 1 Line 1 circuit for a short to the (R2) Right Curtain Squib 1 Line 2 circuit.
- Perform the RESTRAINTS SYSTEM VERIFICATION TEST.(Refer to 28 - DTC-Based Diagnostics/CONTROLLER, Occupant Restraint (ORC) - Standard Procedure).

No

WARNING: If the Occupant Restraint Controller (ORC) is dropped at any time, it must be replaced. Failure to follow these instructions may result in possible serious or fatal injury.

- Replace the ORC in accordance with the Service Information.
- Perform the RESTRAINTS SYSTEM VERIFICATION TEST.(Refer to 28 - DTC-Based Diagnostics/CONTROLLER, Occupant Restraint (ORC) - Standard Procedure).

B0050-11-DRIVER SEATBELT SENSOR - CIRCUIT SHORT TO GROUND

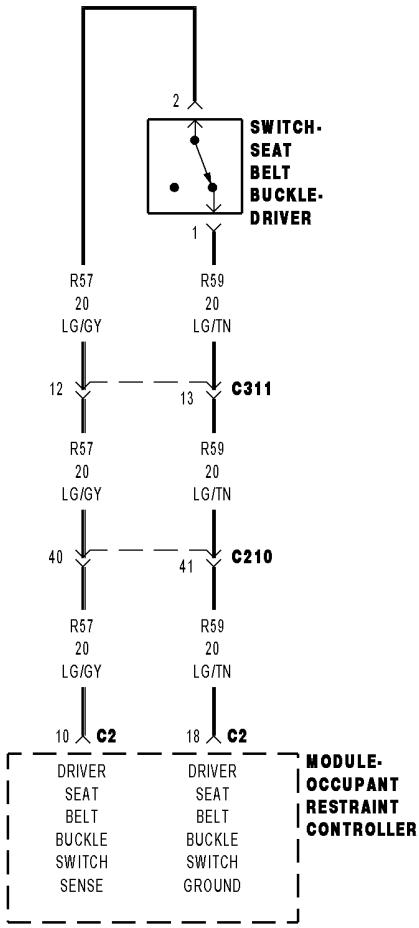

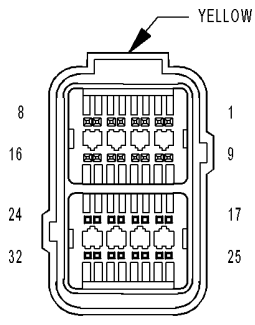

MODULE-
OCCUPANT
RESTRAINT
CONTROLLER C2

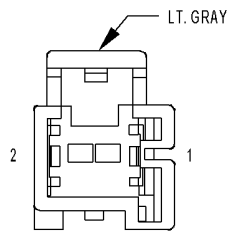

SWITCH-
SEAT BELT
BUCKLE-
DRIVER

01381179

For a complete wiring diagram, **refer to the Wiring Information**.

Theory of Operation

When powered, the Occupant Restraint Controller (ORC) sends a test current across the Driver Seat Belt Switch circuits every 60 ms to verify the integrity of the switch and wiring. The DTC will set if the circuits are shorted together or to ground for 2.5 seconds and the code will transitions from active to stored when the current return to normal range for five seconds.

- **When Monitored:**
  While the ignition on and the Occupant Restraint Controller (ORC) is configured for a Driver Seat Belt Switch, the ORC checks the switch input current ranges.
- **Set Condition:**
  If the ORC detects the passenger seat belt buckle switch circuits shorted to ground.

Possible Causes
(R57) DRIVER SEAT BELT SWITCH SENSE CIRCUIT SHORTED TO GROUND
(R59) DRIVER SEAT BELT SWITCH GROUND CIRCUIT SHORTED TO GROUND
DRIVER SEAT BELT BUCKLE SWITCH
OCCUPANT RESTRAINT CONTROLLER (ORC)

Always perform the Pre-Diagnostic Troubleshooting procedure before proceeding. (Refer to 28 - DTC-Based Diagnostics/CONTROLLER, Occupant Restraint (ORC) - Standard Procedure).

1. VERIFY ACTIVE DTC

NOTE: Make sure the battery is fully charged.

1. Turn the ignition on.
2. With the scan tool, read ORC DTCs.

Does the scan tool display active B0050-11-DRIVER SEATBELT SENSOR - CIRCUIT SHORT TO GROUND DTC?

Yes

- Go To 2

No

- Perform the RESTRAINTS SYSTEM INTERMITTENT TEST. (Refer to 28 - DTC-Based Diagnostics/CONTROLLER, Occupant Restraint (ORC) - Standard Procedure).

2. CHECK DRIVER SEAT BELT SWITCH CIRCUITS FOR A SHORT TO GROUND

WARNING: Turn the ignition off, disconnect the 12-volt battery and wait two minutes before proceeding. Failure to follow these instructions may result in possible serious or fatal injury.

1. Disconnect the Driver Seat Belt Buckle Switch harness connector.
2. Disconnect the ORC harness connectors.

NOTE: Check connectors - Clean and repair as necessary.

3. Connect the SRS Load Tool Adapter 8443-24 to the ORC C2 harness connectors.
4. Measure the resistance of the (R57) Driver Seat Belt Buckle Switch Sense circuit between the Driver Seat Belt Buckle Switch harness connector cavity 2 and ground.
5. Measure the resistance of the (R59) Driver Seat Belt Buckle Switch Ground circuit between the Driver Seat Belt Switch harness connector cavity 1 and ground.

Is the resistance below 10k Ohms on any of these circuits?

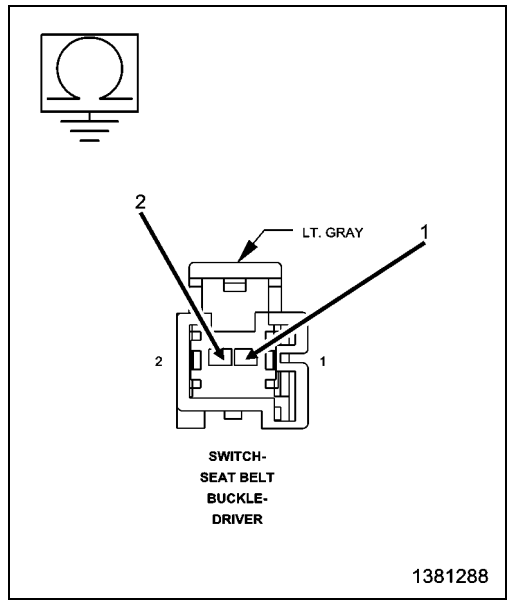

Yes

- Repair the (R57) or (R59) Driver Seat Belt Buckle Switch circuits for a short to ground.
- Perform the RESTRAINTS SYSTEM VERIFICATION TEST. (Refer to 28 - DTC-Based Diagnostics/CONTROLLER, Occupant Restraint (ORC) - Standard Procedure).

No

- Go To 4

3. CHECK DRIVER SEAT BELT SWITCH CIRCUITS FOR A SHORT TO GROUND

1. Measure the resistance between the (R57) Driver Seat Belt Buckle Switch Sense circuit and (R59) Driver Seat Belt Buckle Switch Ground circuit at the Driver Seat Belt Buckle Switch harness connector.

Is the resistance below 10k Ohms on any of these circuits?

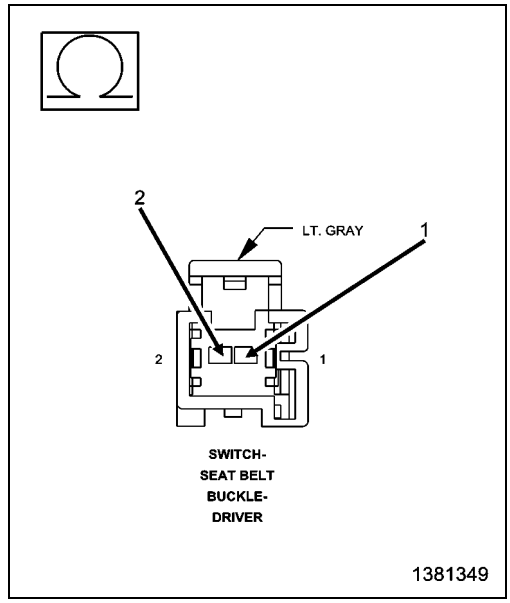

Yes

- Repair the (R57) Driver Seat Belt Buckle Switch Sense circuit for a short to the (R59) Driver Seat Belt Buckle Switch Ground circuit.
- Perform the RESTRAINTS SYSTEM VERIFICATION TEST. (Refer to 28 - DTC-Based Diagnostics/CONTROLLER, Occupant Restraint (ORC) - Standard Procedure).

No

- Go To 4

4. CHECK OPERATION OF THE DRIVER SEAT BELT SWITCH

1. Replace the Driver Seat Belt Buckle Switch.
2. Reconnect the vehicle body harness connector to the Driver Seat Belt Buckle Switch.
3. Remove any special tools or jumper wires and reconnect all previously disconnected components - except the Battery.

WARNING: Turn the ignition on, then reconnect the 12-volt battery and wait two minutes before proceeding. Failure to follow these instructions may result in possible serious or fatal injury.

4. Connect the scan tool to the Data Link Connector - use the most current software available.
5. Use the scan tool and erase the stored codes in all airbag system modules.
6. Turn the Ignition OFF, and wait 15 seconds before turning the Ignition ON.
7. Wait one minute, and read active DTCs and if there are none present read the stored DTCs.

Does the scan tool display active B0050-11-DRIVER SEATBELT SENSOR - CIRCUIT SHORT TO GROUND DTC?

Yes

WARNING: Turn the ignition off, disconnect the 12-volt battery and wait two minutes before proceeding. Failure to follow these instructions may result in possible serious or fatal injury.

WARNING: If the Occupant Restraint Controller (ORC) is dropped at any time, it must be replaced. Failure to follow these instructions may result in possible serious or fatal injury.

- Replace the ORC in accordance with Service Instructions.
- Perform the RESTRAINTS SYSTEM VERIFICATION TEST. (Refer to 28 - DTC-Based Diagnostics/CONTROLLER, Occupant Restraint (ORC) - Standard Procedure).

No

- Repair is complete.
- Perform the RESTRAINTS SYSTEM VERIFICATION TEST. (Refer to 28 - DTC-Based Diagnostics/CONTROLLER, Occupant Restraint (ORC) - Standard Procedure).

B0050-12-DRIVER SEATBELT SENSOR - CIRCUIT SHORT TO BATTERY

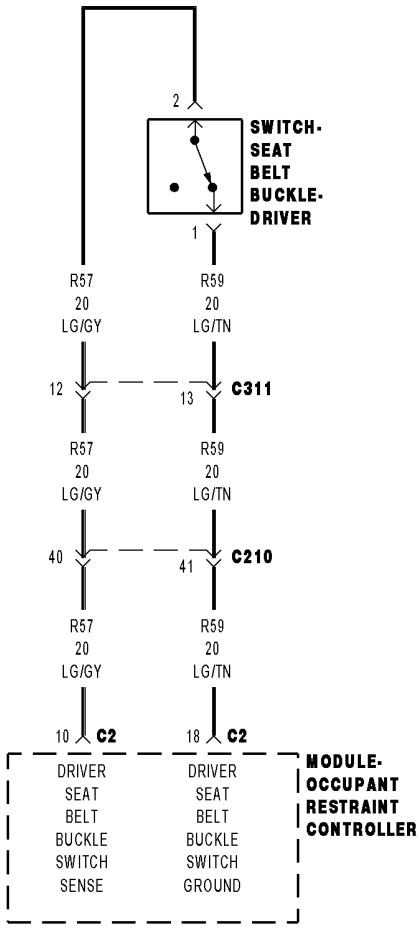

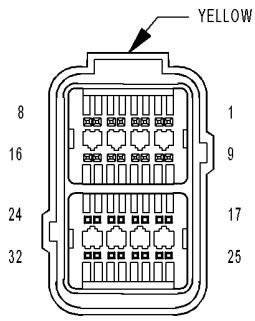

MODULE-
OCCUPANT
RESTRAINT
CONTROLLER C2

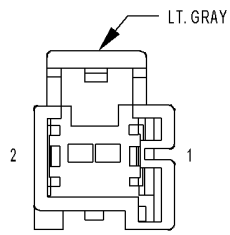

SWITCH-
SEAT BELT
BUCKLE-
DRIVER

01381179

For a complete wiring diagram, **refer to the Wiring Information**.

Theory of Operation

When powered, the Occupant Restraint Controller (ORC) sends a test current across the Driver Seat Belt Buckle Switch circuits every 60 ms to verify the integrity of the switch and wiring. The DTC will set if the circuits are shorted to battery for 2.5 seconds and the code will transitions from active to stored when the current return to normal range for five seconds.

- **When Monitored:**
  With the ignition on and the Occupant Restraint Controller (ORC) configured for a Driver Seat Belt Buckle Switch. The ORC monitors the switch input current ranges.
- **Set Condition:**
  If the ORC detects a short to voltage on the Driver Seat Belt Buckle Switch circuits.

Possible Causes
(R57) DRIVER SEAT BELT BUCKLE SWITCH SENSE CIRCUIT SHORTED TO VOLTAGE
(R59) DRIVER SEAT BELT BUCKLE SWITCH GROUND CIRCUIT SHORTED TO VOLTAGE
DRIVER SEAT BELT BUCKLE SWITCH
OCCUPANT RESTRAINT CONTROLLER (ORC)

Always perform the Pre-Diagnostic Troubleshooting procedure before proceeding. (Refer to 28 - DTC-Based Diagnostics/CONTROLLER, Occupant Restraint (ORC) - Standard Procedure).

1. VERIFY ACTIVE DTC

NOTE: Make sure the battery is fully charged.

1. Turn the ignition on.
2. With the scan tool, read ORC DTC.

Does the scan tool display active B0050-12-DRIVER SEATBELT SENSOR - CIRCUIT SHORT TO BATTERY DTC?

Yes

- Go To 2

No

- Perform the RESTRAINTS SYSTEM INTERMITTENT TEST. (Refer to 28 - DTC-Based Diagnostics/CONTROLLER, Occupant Restraint (ORC) - Standard Procedure).

2. CHECK DRIVER SEAT BELT BUCKLE SWITCH SHORT TO VOLTAGE

WARNING: Turn the ignition off, disconnect the 12-volt battery and wait two minutes before proceeding. Failure to follow these instructions may result in possible serious or fatal injury.

1. Disconnect the Driver Seat Belt Buckle Switch harness connector.
2. Disconnect the ORC harness connectors.

NOTE: Check connectors - Clean and repair as necessary.

3. Connect the SRS Load Tool Adapter 8443-24 to the ORC harness connectors.

WARNING: Turn the ignition on, then reconnect the 12-volt battery and wait two minutes before proceeding. Failure to follow these instructions may result in possible serious or fatal injury.

4. Measure the voltage on the (R57) Driver Seat Belt Buckle Switch Sense circuit between the Driver Seat Belt Buckle Switch harness connector cavity 2 and ground.
5. Measure the voltage on the (R59) Driver Seat Belt Buckle Switch Ground circuit between the Driver Seat Belt Buckle Switch harness connector cavity 1 and ground.

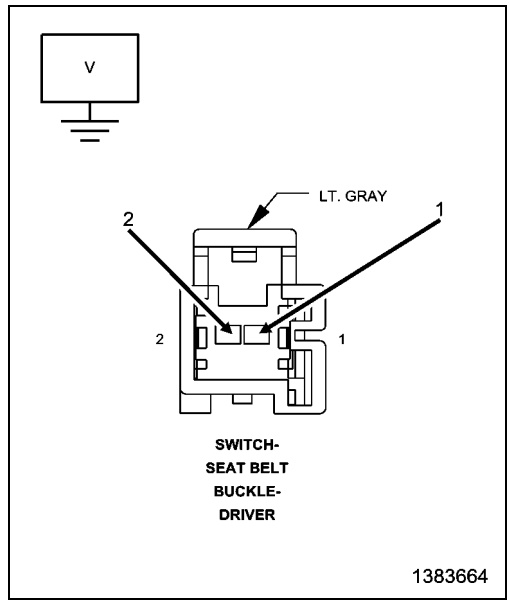

Is there a short to voltage on any of these circuits?

Yes

WARNING: Turn the ignition off, disconnect the 12-volt battery and wait two minutes before proceeding. Failure to follow these instructions may result in possible serious or fatal injury.

- Repair the (R57, R59) Driver Seat Belt Buckle Switch circuit for a short to voltage.
- Perform the RESTRAINTS SYSTEM VERIFICATION TEST. (Refer to 28 - DTC-Based Diagnostics/CONTROLLER, Occupant Restraint (ORC) - Standard Procedure).

No

- Go To 3

3. CHECK OPERATION OF THE DRIVER SEAT BUCKLE BELT SWITCH

WARNING: Turn the ignition off, disconnect the 12-volt battery and wait two minutes before proceeding. Failure to follow these instructions may result in possible serious or fatal injury.

1. Replace the Driver Seat Belt Buckle Switch.
2. Reconnect the vehicle body harness connector to the Driver Seat Belt Buckle Switch.
3. Remove any special tools or jumper wires and reconnect all previously disconnected components - except the Battery.

WARNING: Turn the ignition on, then reconnect the 12-volt battery and wait two minutes before proceeding. Failure to follow these instructions may result in possible serious or fatal injury.

4. Connect the scan tool to the Data Link Connector - use the most current software available.
5. Use the scan tool and erase the stored DTCs.
6. Turn the Ignition OFF, and wait 15 seconds before turning the Ignition ON.
7. Wait one minute, and read active DTCs and if there are none present read the stored DTCs.

Does the scan tool display active B0050-12-DRIVER SEATBELT SENSOR - CIRCUIT SHORT TO BATTERY DTC?

Yes

WARNING: Turn the ignition off, disconnect the 12-volt battery and wait two minutes before proceeding. Failure to follow these instructions may result in possible serious or fatal injury.

WARNING: If the Occupant Restraint Controller (ORC) is dropped at any time, it must be replaced. Failure to follow these instructions may result in possible serious or fatal injury.

- Replace the ORC in accordance with Service Instructions.
- Perform the RESTRAINTS SYSTEM VERIFICATION TEST. (Refer to 28 - DTC-Based Diagnostics/CONTROLLER, Occupant Restraint (ORC) - Standard Procedure).

No

- Repair is complete.
- Perform the RESTRAINTS SYSTEM VERIFICATION TEST. (Refer to 28 - DTC-Based Diagnostics/CONTROLLER, Occupant Restraint (ORC) - Standard Procedure).

B0050-13-DRIVER SEATBELT SENSOR - CIRCUIT OPEN

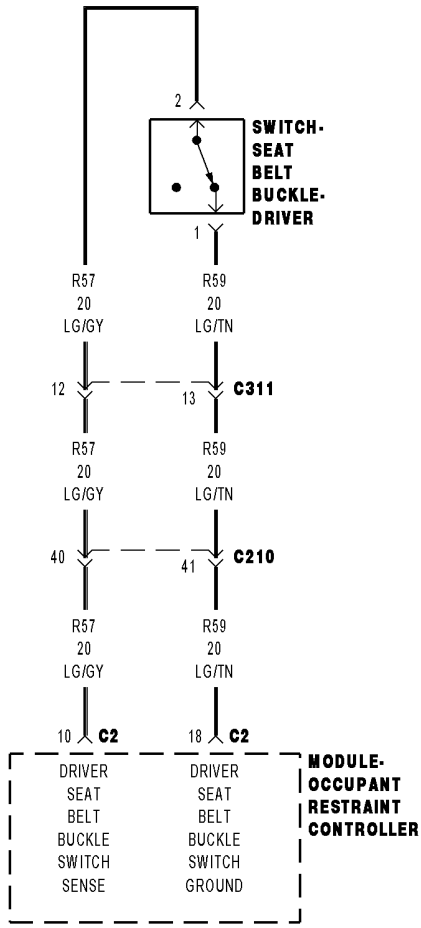

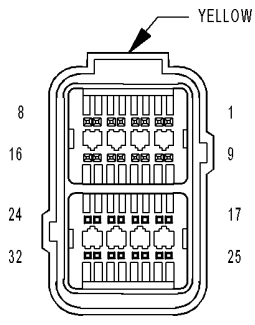

MODULE-
OCCUPANT
RESTRAINT
CONTROLLER C2

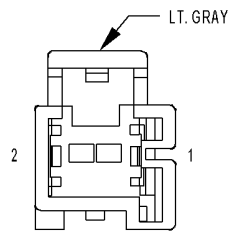

SWITCH-
SEAT BELT
BUCKLE-
DRIVER

01381179

For a complete wiring diagram, **refer to the Wiring Information**.

Theory of Operation

When powered, the Occupant Restraint Controller (ORC) sends a test current across the Driver Seat Belt Buckle Switch circuits every 60 ms to verify the integrity of the switch and wiring. The DTC will set if the circuits are open for 2.5 seconds and the code will transitions from active to stored when the current return to normal range for 5 seconds.

- **When Monitored:**
  The ORC checks the Driver Seat Belt Buckle Switch input current when the ignition ON and the Occupant Restraint Controller (ORC) configured for a Driver Seat Belt Buckle Switch.
- **Set Condition:**
  The DTC will set if the ORC detects an open on the Driver Seat Belt Buckle Switch circuits.

Possible Causes
(R57) DRIVER SEAT BELT BUCKLE SWITCH SENSE CIRCUIT OPEN
(R59) DRIVER SEAT BELT BUCKLE SWITCH GROUND CIRCUIT OPEN
DRIVER SEAT BELT BUCKLE SWITCH
OCCUPANT RESTRAINT CONTROLLER (ORC)

Always perform the Pre-Diagnostic Troubleshooting procedure before proceeding. (Refer to 28 - DTC-Based Diagnostics/CONTROLLER, Occupant Restraint (ORC) - Standard Procedure).

1. VERIFY ACTIVE DTC

NOTE: Ensure the battery is fully charged.

1. Turn the ignition on.
2. With the scan tool, read ORC DTC.

Does the scan tool display active B0050-13-DRIVER SEATBELT SENSOR - CIRCUIT OPEN DTC?

Yes

- Go To 2

No

- Perform the RESTRAINTS SYSTEM INTERMITTENT TEST. (Refer to 28 - DTC-Based Diagnostics/CONTROLLER, Occupant Restraint (ORC) - Standard Procedure).

2. VERIFY WIRING

WARNING: Turn the ignition off, disconnect the 12-volt battery and wait two minutes before proceeding. Failure to follow these instructions may result in possible serious or fatal injury.

1. Disconnect the Driver Seat Belt Buckle Switch harness connector.
2. Disconnect the ORC harness connectors.

NOTE: Check connectors - Clean and repair as necessary.

3. Connect the SRS Load Tool Adapter 8443-24 to the ORC C2 harness connector.
4. Measure the resistance of the (R57) Driver Seat Belt Buckle Switch Sense circuit between the Driver Seat Belt Buckle Switch harness connector cavity 2 and the SRS Load Tool Adapter 8443-24 cavity 10.
5. Measure the resistance of the (R59) Driver Seat Belt Buckle Switch Ground circuit between the Driver Seat Belt Buckle Switch harness connector cavity 1 and SRS Load Tool Adapter 8443-24 cavity 18.

Is the resistance greater than 1.0 Ohms on any of these circuits?

Yes

- Repair the (R57, R59) Driver Seat Belt Buckle Switch circuits for an open.
- Perform the RESTRAINTS SYSTEM VERIFICATION TEST. (Refer to 28 - DTC-Based Diagnostics/CONTROLLER, Occupant Restraint (ORC) - Standard Procedure).

No

- Go To 3

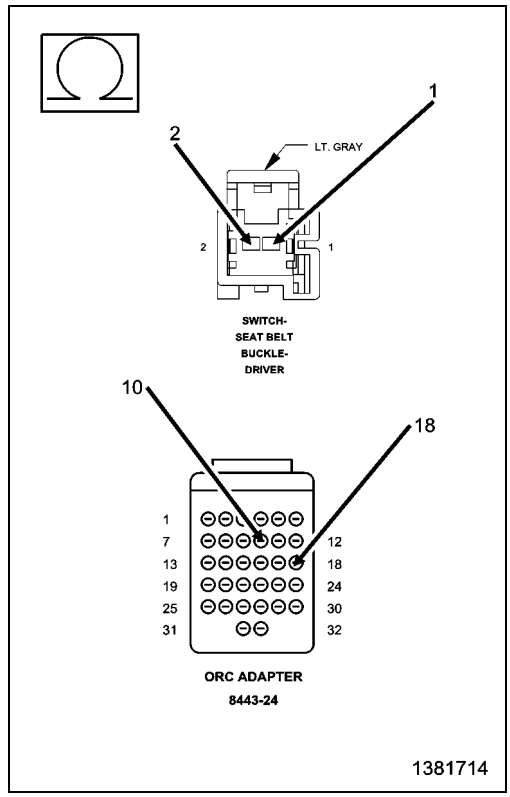

3. VERIFY OPEN SWITCH

1. Replace the Driver Seat Belt Buckle Switch.
2. Reconnect the vehicle body harness connector to the Driver Seat Belt Buckle Switch.
3. Remove any special tools or jumper wires and reconnect all previously disconnected components - except the Battery.

WARNING: Turn the ignition on, then reconnect the 12-volt battery and wait two minutes before proceeding. Failure to follow these instructions may result in possible serious or fatal injury.

4. Connect the scan tool to the Data Link Connector - use the most current software available.
5. Use the scan tool and erase the stored DTCs.
6. Turn the Ignition OFF, and wait 15 seconds before turning the Ignition ON.
7. Wait one minute, and read active DTCs and if there are none present read the stored DTCs.

Does the scan tool display active B0050-13-DRIVER SEATBELT SENSOR - CIRCUIT OPEN DTC?

Yes

WARNING: Turn the ignition off, disconnect the 12-volt battery and wait two minutes before proceeding. Failure to follow these instructions may result in possible serious or fatal injury.

WARNING: If the Occupant Restraint Controller (ORC) is dropped at any time, it must be replaced. Failure to follow these instructions may result in possible serious or fatal injury.

- Replace the ORC in accordance with Service Instructions.
- Perform the RESTRAINTS SYSTEM VERIFICATION TEST. (Refer to 28 - DTC-Based Diagnostics/CONTROLLER, Occupant Restraint (ORC) - Standard Procedure).

No

- Repair is complete.
- Perform the RESTRAINTS SYSTEM VERIFICATION TEST. (Refer to 28 - DTC-Based Diagnostics/CONTROLLER, Occupant Restraint (ORC) - Standard Procedure).

■ B0090-49-LEFT FRONTAL RESTRAINTS SENSOR - INTERNAL ELECTRONIC FAILURE

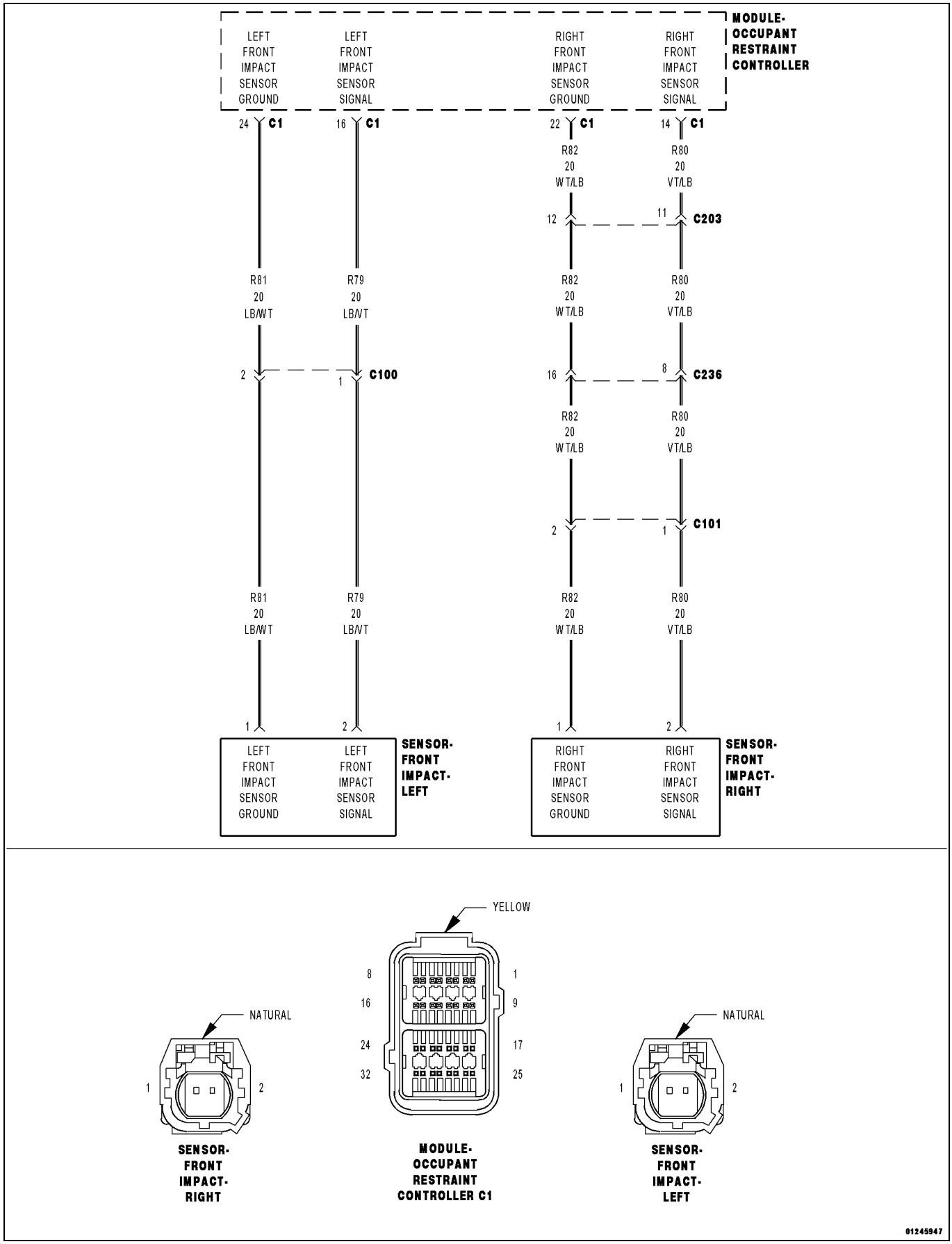

For a complete wiring diagram, **refer to the Wiring Information**.

Theory of Operation

The location of this left front impact sensor is in the Left Crush Zone of the engine compartment. (Refer to 10 - Restraints/ SENSOR, Impact - Description)Impact sensors perform internal self-tests and communicate the sensors status using power supplied by the Occupant Restraint Controller (ORC). The sensor communicates this internal failure message using the sensor signal circuit. If the scan tool shows this DTC has a Stored history of setting then the left front impact sensor is to be replaced.

- **When Monitored:**

  Impact sensors perform the self-test for internal circuitry at power up during the initialization process, and continuously through the ignition cycle every 10 ms.
- **Set Condition:**

  This DTC sets when the ORC receives notification of a self-test failure within the impact sensor. Once set, this DTC is latched for the entire ignition cycle.

Possible Causes
LEFT FRONT IMPACT SENSOR

Always perform the Pre-Diagnostic Troubleshooting procedure before proceeding. (Refer to 28 - DTC-Based Diagnostics/CONTROLLER, Occupant Restraint (ORC) - Standard Procedure).

NOTE: If the scan tool shows this DTC has a Stored history of setting then the left front impact sensor is to be replaced.

1. VERIFY ACTIVE DTC

NOTE: Make sure the battery is fully charged.

1. Turn the ignition ON.
2. With the scan tool, read ORC DTCs.

Does the scan tool display active B0090-49-LEFT FRONTAL RESTRAINTS SENSOR - INTERNAL ELECTRONIC FAILURE DTC or shows a setting history in stored?

Yes

WARNING: Turn the ignition off, disconnect the 12-volt battery and wait two minutes before proceeding. Failure to follow these instructions may result in possible serious or fatal injury.

- Replace the Left Front Impact Sensor in accordance with the Service Information.
- Perform the RESTRAINT SYSTEM VERIFICATION TEST. (Refer to 28 - DTC-Based Diagnostics/CONTROLLER, Occupant Restraint (ORC) - Standard Procedure).

No (Did not set a active or stored DTC B0090-49- LEFT FRONTAL SENSOR - INTERNAL ELECTRONIC FAILURE)

- Perform the RESTRAINTS SYSTEM INTERMITTENT TEST. (Refer to 28 - DTC-Based Diagnostics/CONTROLLER, Occupant Restraint (ORC) - Standard Procedure).

■ B0095-49-RIGHT FRONTAL ACCELERATION SENSOR - INTERNAL ELECTRONIC FAILURE

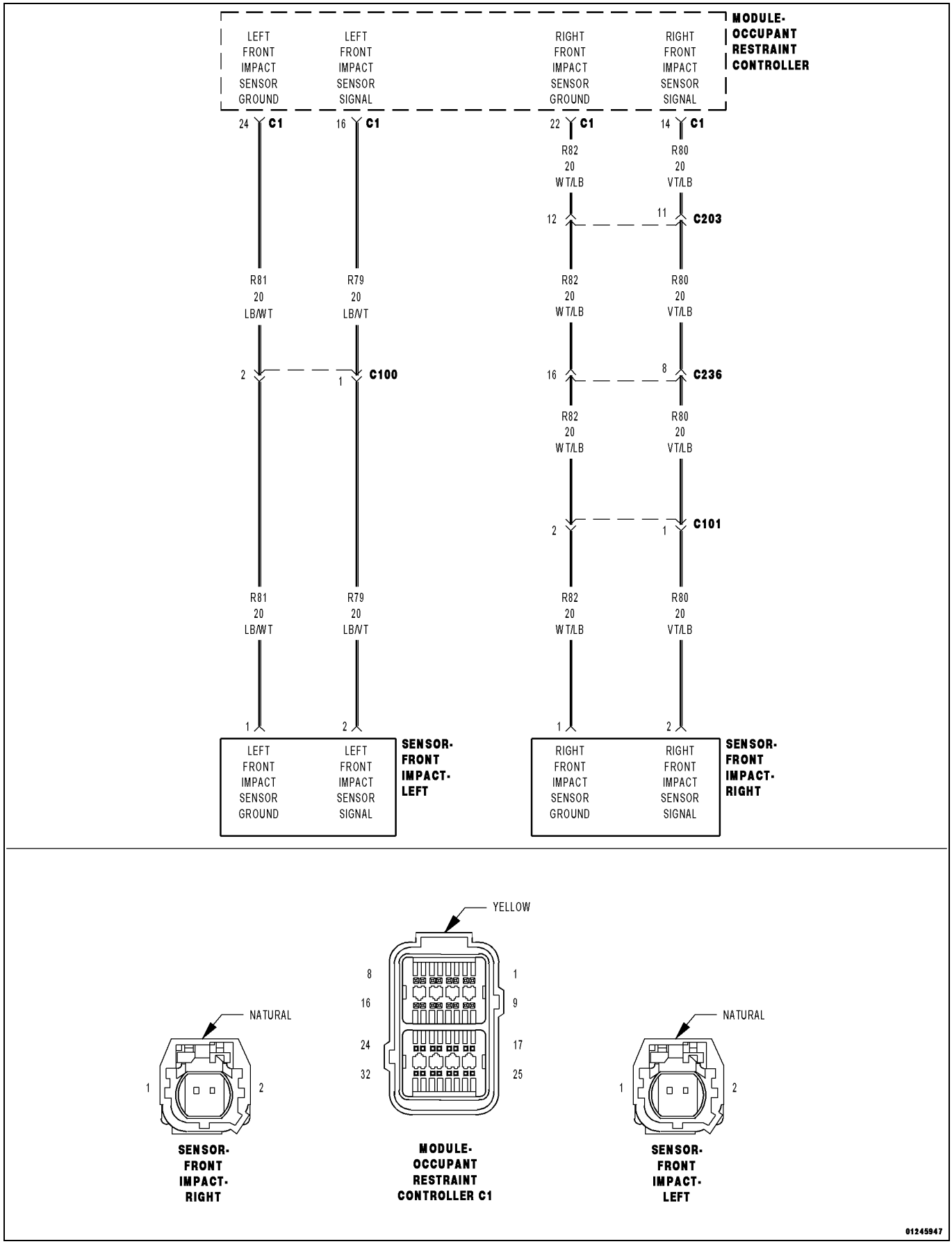

For a complete wiring diagram, **refer to the Wiring Information**.

Theory of Operation

The location of this right front impact sensor is in the Right Crush Zone of the engine compartment. (Refer to 10 - Restraints/SENSOR, Impact - Description). Impact sensors perform internal self-tests and communicate the sensors status using power supplied by the Occupant Restraint Controller (ORC). The sensor communicates this internal failure message using the sensor signal circuit. If the scan tool shows this DTC has a Stored history of setting then the right front impact sensor is to be replaced.

- **When Monitored:**

  Impact sensors perform the self-test for internal circuitry at power up during the initialization process, and continuously through the ignition cycle every 10 ms.
- **Set Condition:**

  This DTC sets when the ORC receives notification of a self-test failure within the impact sensor. Once set, this DTC is latched for the entire ignition cycle.

Possible Causes
RIGHT FRONT IMPACT SENSOR

Always perform the Pre-Diagnostic Troubleshooting procedure before proceeding. (Refer to 28 - DTC-Based Diagnostics/CONTROLLER, Occupant Restraint (ORC) - Standard Procedure).

NOTE: If the scan tool shows this DTC has a Stored history of setting then the right front impact sensor is to be replaced.

1. VERIFY ACTIVE DTC

NOTE: Make sure the battery is fully charged.

1. Turn the ignition on.
2. With the scan tool, read ORC DTCs.

Does the scan tool display an active B0095-49-RIGHT FRONTAL ACCELERATION SENSOR - INTERNAL ELECTRONIC FAILURE DTC or shows a setting history in stored?

Yes

WARNING: Turn the ignition off, disconnect the 12-volt battery and wait two minutes before proceeding. Failure to follow these instructions may result in possible serious or fatal injury.

- Replace the Right Front Impact Sensor in accordance with the Service Information.
- Perform the RESTRAINT SYSTEM VERIFICATION TEST. (Refer to 28 - DTC-Based Diagnostics/CONTROLLER, Occupant Restraint (ORC) - Standard Procedure).

No (Did not set a active or stored DTC B0095-49- RIGHT FRONTAL SENSOR - INTERNAL ELECTRONIC FAILURE)

- Perform the RESTRAINTS SYSTEM INTERMITTENT TEST. (Refer to 28 - DTC-Based Diagnostics/CONTROLLER, Occupant Restraint (ORC) - Standard Procedure).

■ B0091-49-LEFT SIDE ACCELERATION SENSOR 1 - INTERNAL ELECTRONIC FAILURE

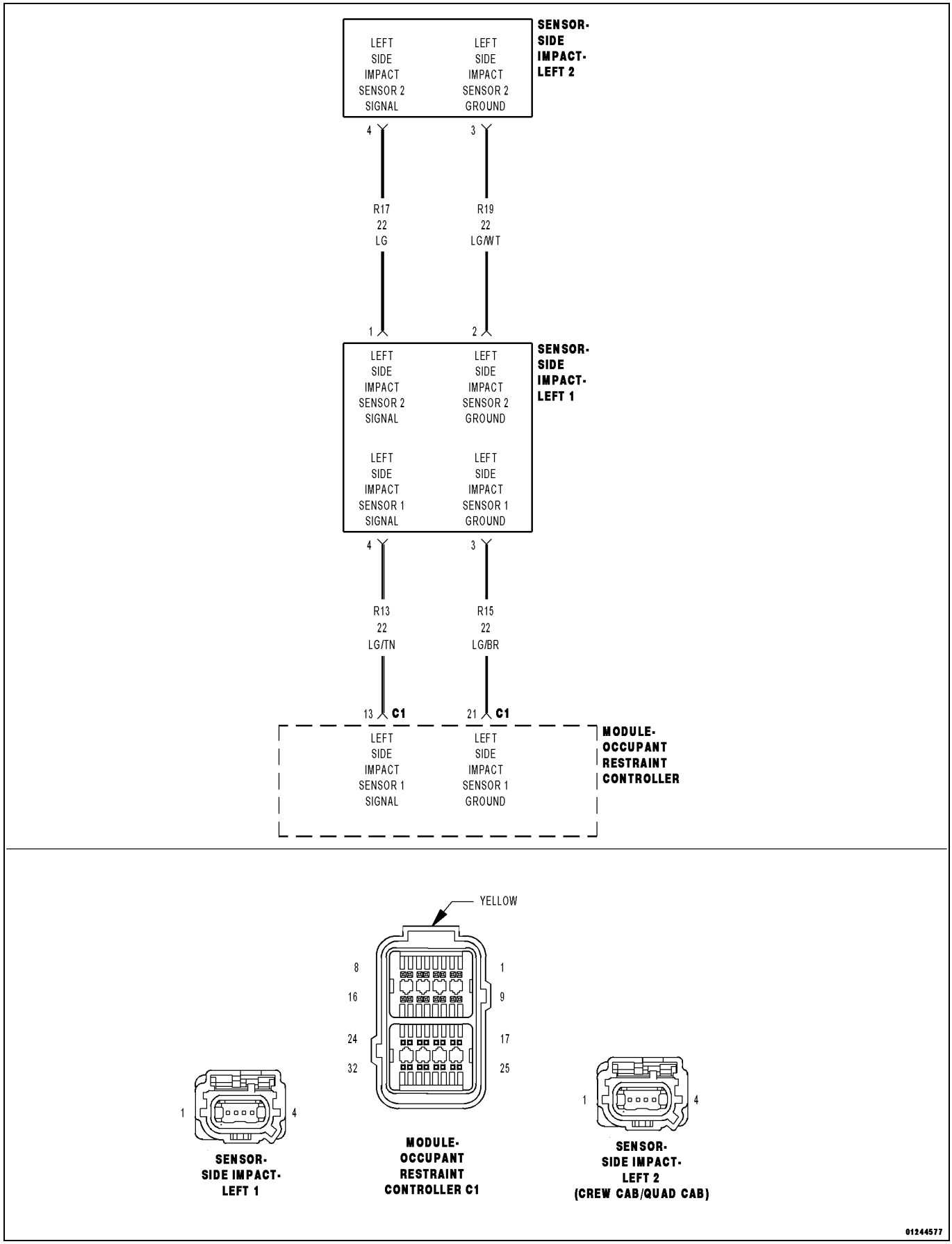

For a complete wiring diagram, **refer to the Wiring Information**.

Theory of Operation

The location of this left side impact sensor 1 is located in the Left B-pillar just past the first row seating.(Refer to 10 - Restraints/SENSOR, Impact - Description). Impact sensors perform internal self-tests and communicate the sensors status using power supplied by the Occupant Restraint Controller (ORC). The sensor communicates this internal failure message using the sensor signal circuit. If the scan tool shows this DTC has a Stored history of setting then the left side impact sensor is to be replaced.

- **When Monitored:**

  Impact sensors perform the self-test for internal circuitry at power up during the initialization process, and continuously through the ignition cycle every 10 ms.
- **Set Condition:**

  This DTC sets when the ORC receives notification of a self-test failure within the impact sensor. Once set, this DTC is latched for the entire ignition cycle.

Possible Causes
LEFT SIDE IMPACT SENSOR 1

Always Perform the Pre-Diagnostic Troubleshooting procedure before proceeding. (Refer to 28 - DTC-Based Diagnostics/CONTROLLER, Occupant Restraint (ORC) - Standard Procedure).

NOTE: If the scan tool shows this DTC has a Stored history of setting then the left side impact sensor is to be replaced.

1. VERIFY ACTIVE DTC

NOTE: Make sure the battery is fully charged.

1. Turn the ignition on.
2. With the scan tool, read ORC DTCs.

Does the scan tool display active B0091-49-LEFT SIDE ACCELERATION SENSOR 1 - INTERNAL ELECTRONIC FAILURE DTC or shows a setting history in stored?

Yes

WARNING: Turn the ignition off, disconnect the 12-volt battery and wait two minutes before proceeding. Failure to follow these instructions may result in possible serious or fatal injury.

- Replace the Left Side Impact Sensor 1 in accordance with the Service Information.
- Perform the RESTRAINT SYSTEM VERIFICATION TEST. (Refer to 28 - DTC-Based Diagnostics/CONTROLLER, Occupant Restraint (ORC) - Standard Procedure).

No (Did not set a active or stored DTC B0091-49- LEFT SIDE ACCELERATION SENSOR - INTERNAL ELECTRONIC FAILURE)

- Perform the RESTRAINTS SYSTEM INTERMITTENT TEST. (Refer to 28 - DTC-Based Diagnostics/CONTROLLER, Occupant Restraint (ORC) - Standard Procedure).

■ B0092-49-LEFT SIDE ACCELERATION SENSOR 2 - INTERNAL ELECTRONIC FAILURE

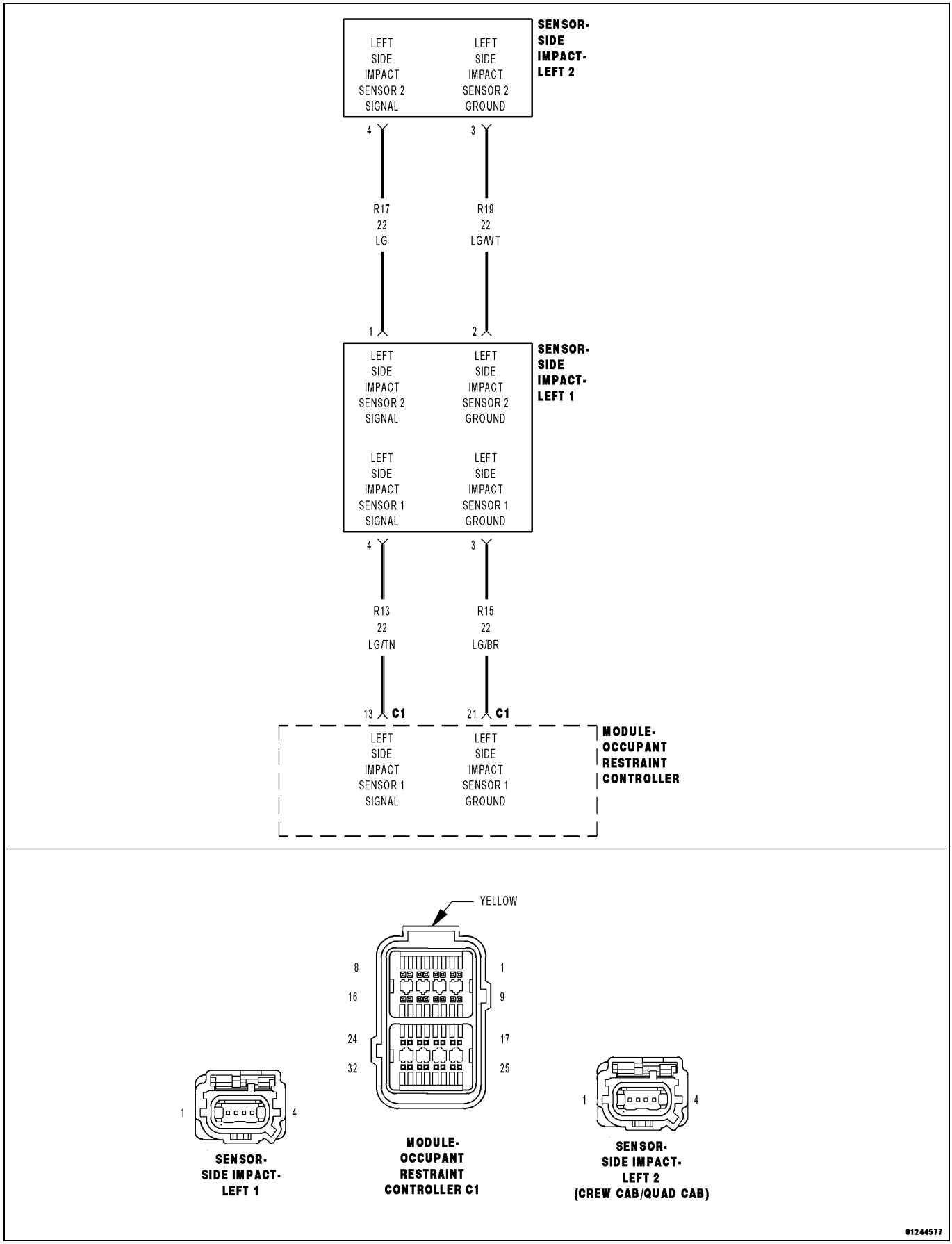

For a complete wiring diagram, **refer to the Wiring Information**.

Theory of Operation

The location of this left side impact sensor 2 is located in the Left C-pillar just past the second row seating.(Refer to 10 - Restraints/SENSOR, Impact - Description). Impact sensors perform internal self-tests and communicate the sensors status using power supplied by the Occupant Restraint Controller (ORC). The sensor communicates this internal failure message using the sensor signal circuit. If the scan tool shows this DTC has a Stored history of setting then the left side impact sensor is to be replaced.

- **When Monitored:**

  Impact sensors perform the self-test for internal circuitry at power up during the initialization process, and continuously through the ignition cycle every 10 ms.
- **Set Condition:**

  This Diagnostic Trouble Code (DTC) will sets if the ORC receives an internal failure message from the Impact Sensor. The DTC will be latched on for the duration of the ignition cycle.

Possible Causes
LEFT SIDE IMPACT SENSOR 2

Always perform the Pre-Diagnostic Troubleshooting procedure before proceeding. (Refer to 28 - DTC-Based Diagnostics/CONTROLLER, Occupant Restraint (ORC) - Standard Procedure).

NOTE: If the scan tool shows this DTC has a Stored history of setting then the left side impact sensor is to be replaced.

1. VERIFY ACTIVE DTC

NOTE: Make sure the battery is fully charged.

1. Turn the ignition on.
2. With the scan tool, read ORC DTCs.

Does the scan tool display an active B0092-49-LEFT SIDE ACCELERATION SENSOR 2 - INTERNAL ELECTRONIC FAILURE DTC or shows a setting history in stored?

Yes

WARNING: Turn the ignition off, disconnect the 12-volt battery and wait two minutes before proceeding. Failure to follow these instructions may result in possible serious or fatal injury.

- Replace the Left Side Impact Sensor 2 in accordance with the Service Information.
- Perform the RESTRAINT SYSTEM VERIFICATION TEST. (Refer to 28 - DTC-Based Diagnostics/CONTROLLER, Occupant Restraint (ORC) - Standard Procedure).

No (Did not set a active or stored DTC B0092-49- LEFT SIDE SATELLITE SENSOR 2- INTERNAL ELECTRONIC FAILURE)

- Perform the RESTRAINT SYSTEM INTERMITTENT TEST. (Refer to 28 - DTC-Based Diagnostics/CONTROLLER, Occupant Restraint (ORC) - Standard Procedure).

B009A-49-LEFT SIDE SATELLITE SENSOR 4 - INTERNAL ELECTRONIC FAILURE

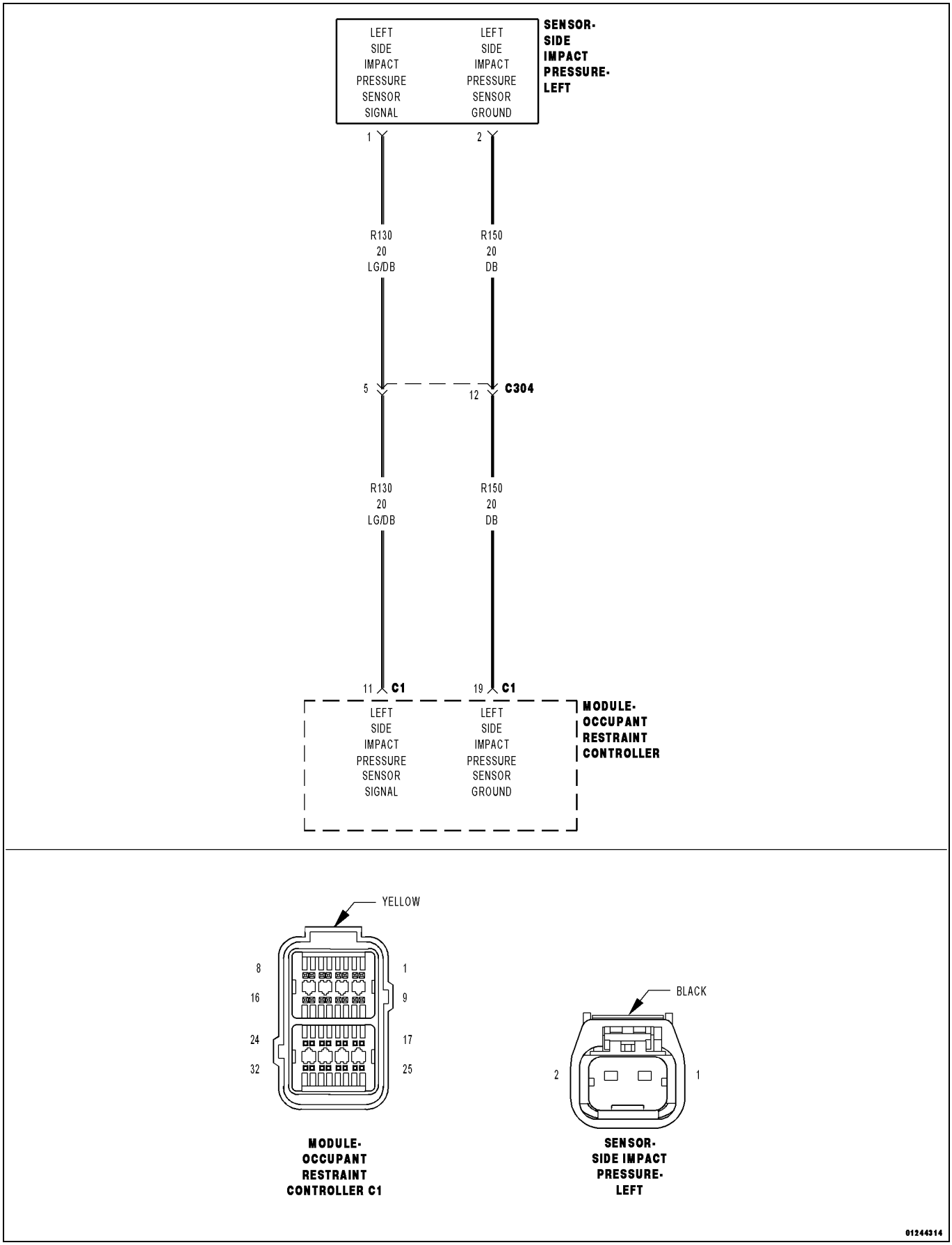

For a complete wiring diagram, **refer to the Wiring Information**.

Theory of Operation

The location of this left side impact sensor (pressure sensor) 4 is located in the Left Front Door. (Refer to 10 - Restraints/ SENSOR, Impact - Description). Impact sensors perform internal self-tests and communicate the sensors status using power supplied by the Occupant Restraint Controller (ORC). The sensor communicates this internal failure message using the sensor signal circuit. If the scan tool shows this DTC has a Stored history of setting then the left side impact sensor is to be replaced.

- **When Monitored:**

  Impact sensors perform the self-test for internal circuitry at power up during the initialization process, and continuously through the ignition cycle every 10 ms.
- **Set Condition:**

  This DTC sets when the ORC receives notification of a self-test failure within the impact sensor. Once set, this DTC is latched for the entire ignition cycle.

Possible Causes
LEFT SIDE IMPACT PRESSURE SENSOR (SENSOR 4)

Always perform the Pre-Diagnostic Troubleshooting procedure before proceeding. (Refer to 28 - DTC-Based Diagnostics/CONTROLLER, Occupant Restraint (ORC) - Standard Procedure).

NOTE: If the scan tool shows this DTC has a Stored history of setting then the left side impact sensor is to be replaced.

1. VERIFY ACTIVE DTC

NOTE: Make sure the battery is fully charged.

1. Turn the ignition on.
2. With the scan tool, read ORC DTCs.

Does the scan tool display active B009A-49-LEFT SIDE SATELLITE SENSOR 4 - INTERNAL ELECTRONIC FAILURE DTC or shows a setting history in stored?

Yes

WARNING: Turn the ignition off, disconnect the 12-volt battery and wait two minutes before proceeding. Failure to follow these instructions may result in possible serious or fatal injury.

- Replace the Left Side Impact Pressure Sensor in accordance with the Service Information.
- Perform the RESTRAINT SYSTEM VERIFICATION TEST. (Refer to 28 - DTC-Based Diagnostics/CONTROLLER, Occupant Restraint (ORC) - Standard Procedure).

No (Did not set a active or stored DTC B009A-49-LEFT SIDE SATELLITE SENSOR 4- INTERNAL ELECTRONIC FAILURE)

- Perform the RESTRAINT SYSTEM INTERMITTENT TEST. (Refer to 28 - DTC-Based Diagnostics/CONTROLLER, Occupant Restraint (ORC) - Standard Procedure).

■ B0096-49-RIGHT SIDE ACCELERATION SENSOR 1 - INTERNAL ELECTRONIC FAILURE

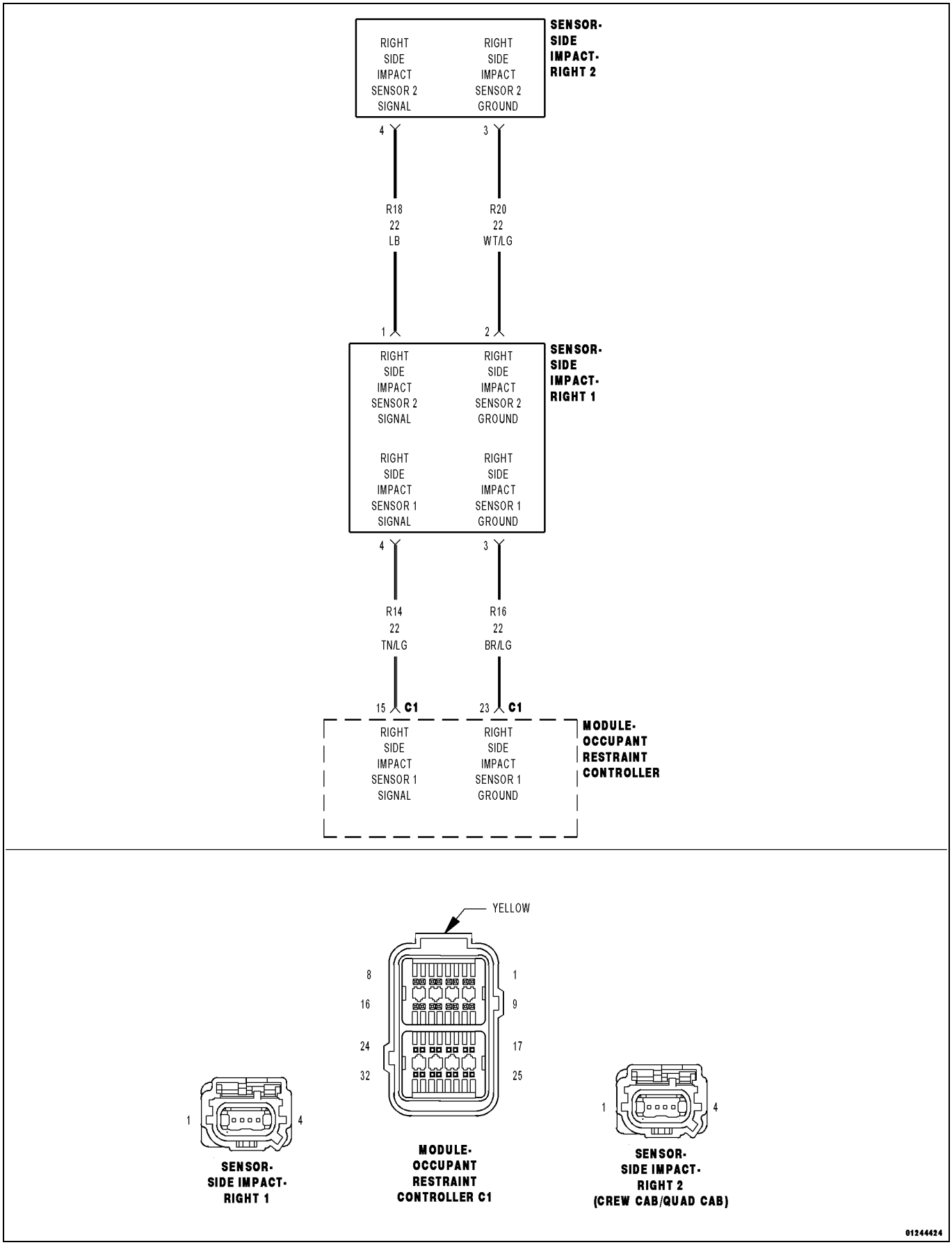

For a complete wiring diagram, **refer to the Wiring Information**.

Theory of Operation

The location of this right side impact sensor 1 is located in the Right B-pillar just past the first row seating.(Refer to 10 - Restraints/SENSOR, Impact - Description). Impact sensors perform internal self-tests and communicate the sensors status using power supplied by the Occupant Restraint Controller (ORC). The sensor communicates this internal failure message using the sensor signal circuit. If the scan tool shows this DTC has a Stored history of setting then the right side impact sensor is to be replaced.

- **When Monitored:**

  Impact sensors perform the self-test for internal circuitry at power up during the initialization process, and continuously through the ignition cycle every 10 ms.
- **Set Condition:**

  This DTC sets when the ORC receives notification of a self-test failure within the impact sensor. Once set, this DTC is latched for the entire ignition cycle.

Possible Causes
RIGHT SIDE IMPACT SENSOR 1

Always Perform the Pre-Diagnostic Troubleshooting procedure before proceeding. (Refer to 28 - DTC-Based Diagnostics/CONTROLLER, Occupant Restraint (ORC) - Standard Procedure).

NOTE: If the scan tool shows this DTC has a Stored history of setting then the right side impact sensor is to be replaced.

1. VERIFY ACTIVE DTC

NOTE: Ensure the battery is fully charged.

1. Turn the ignition on.
2. With the scan tool, read ORC DTCs.

Does the scan tool display active B0096-49-RIGHT SIDE ACCELERATION SENSOR 1 - INTERNAL ELECTRONIC FAILURE DTC or shows a setting history in stored?

Yes

WARNING: Turn the ignition off, disconnect the 12-volt battery and wait two minutes before proceeding. Failure to follow these instructions may result in possible serious or fatal injury.

- Replace the Right Side Impact Sensor 1 in accordance with the Service Information.
- Perform the RESTRAINT SYSTEM VERIFICATION TEST. (Refer to 28 - DTC-Based Diagnostics/CONTROLLER, Occupant Restraint (ORC) - Standard Procedure).

No (Did not set a active or stored DTC B0096-49-RIGHT SIDE SATELLITE SENSOR 1- INTERNAL ELECTRONIC FAILURE)

- Perform the RESTRAINTS SYSTEM INTERMITTENT TEST. (Refer to 28 - DTC-Based Diagnostics/CONTROLLER, Occupant Restraint (ORC) - Standard Procedure).

■ B0097-49-RIGHT SIDE ACCELERATION SENSOR 2 - INTERNAL ELECTRONIC FAILURE

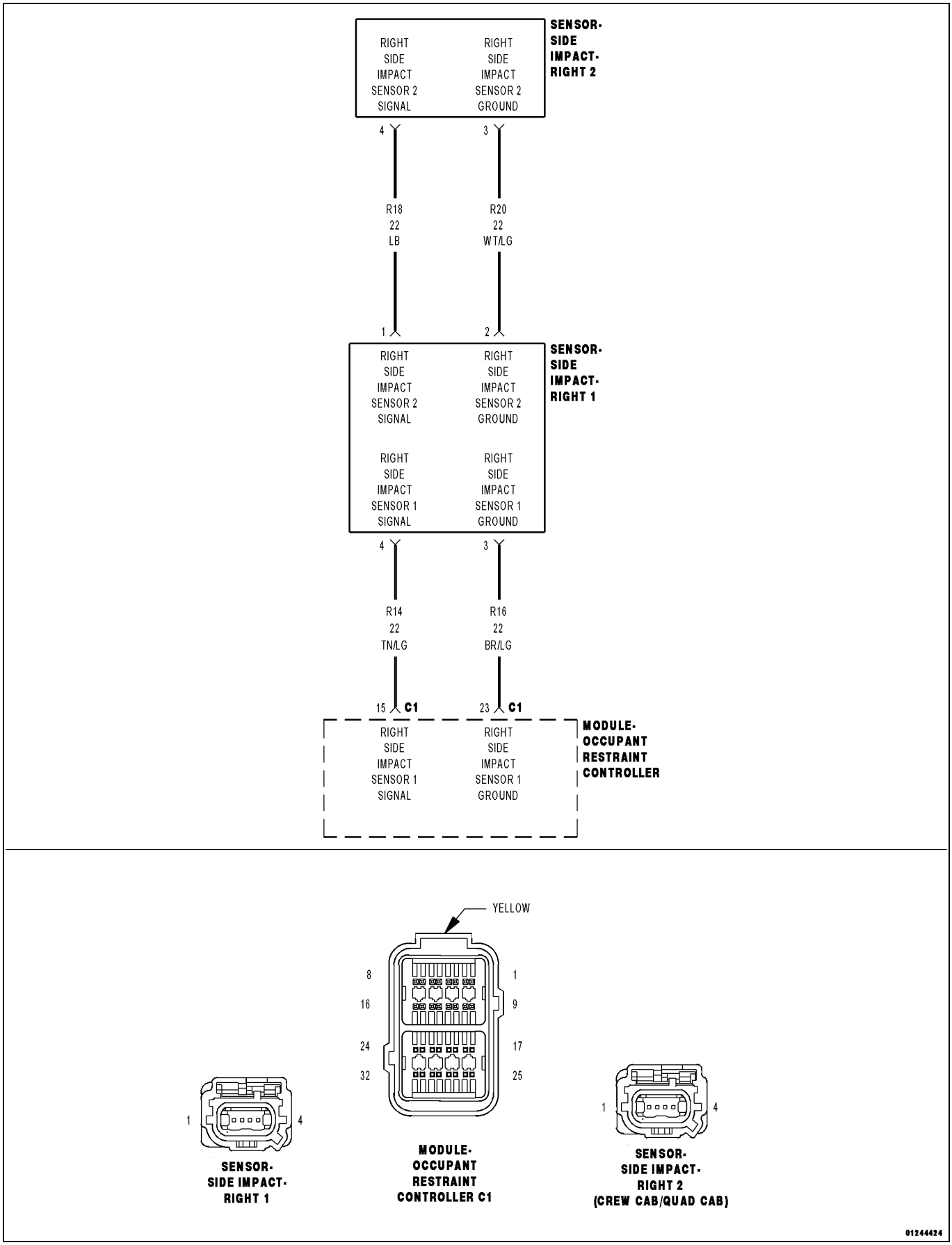

For a complete wiring diagram, **refer to the Wiring Information**.

Theory of Operation

The location of this right side impact sensor 2 is located in the Right C-pillar just past the second row seating.(Refer to 10 - Restraints/SENSOR, Impact - Description). Impact sensors perform internal self-tests and communicate the sensors status using power supplied by the Occupant Restraint Controller (ORC). The sensor communicates this internal failure message using the sensor signal circuit. If the scan tool shows this DTC has a Stored history of setting then the right side impact sensor is to be replaced.

- **When Monitored:**

  Impact sensors perform the self-test for internal circuitry at power up during the initialization process, and continuously through the ignition cycle every 10 ms.
- **Set Condition:**

  This DTC sets when the ORC receives notification of a self-test failure within the impact sensor. Once set, this DTC is latched for the entire ignition cycle.

Possible Causes
RIGHT SIDE IMPACT SENSOR 2

Always perform the Pre-Diagnostic Troubleshooting procedure before proceeding. (Refer to 28 - DTC-Based Diagnostics/CONTROLLER, Occupant Restraint (ORC) - Standard Procedure).

NOTE: If the scan tool shows this DTC has a Stored history of setting then the right side impact sensor is to be replaced.

1. VERIFY ACTIVE DTC

NOTE: Make sure the battery is fully charged.

1. Turn the ignition on.
2. With the scan tool, read ORC DTCs.

Does the scan tool display active B0097-49-RIGHT SIDE ACCELERATION SENSOR 2 - INTERNAL ELECTRONIC FAILURE DTC or shows a setting history in stored?

Yes

WARNING: Turn the ignition off, disconnect the 12-volt battery and wait two minutes before proceeding. Failure to follow these instructions may result in possible serious or fatal injury.

- Replace the Right Side Impact Sensor 2 in accordance with the Service Information.
- Perform the RESTRAINT SYSTEM VERIFICATION TEST. (Refer to 28 - DTC-Based Diagnostics/CONTROLLER, Occupant Restraint (ORC) - Standard Procedure).

No (Did not set a active or stored DTC B0097-49-RIGHT SIDE SATELLITE SENSOR 2- INTERNAL ELECTRONIC FAILURE)

- Perform the RESTRAINT SYSTEM INTERMITTENT TEST. (Refer to 28 - DTC-Based Diagnostics/CONTROLLER, Occupant Restraint (ORC) - Standard Procedure).

B009D-49-RIGHT SIDE SATELLITE SENSOR 4 - INTERNAL ELECTRONIC FAILURE

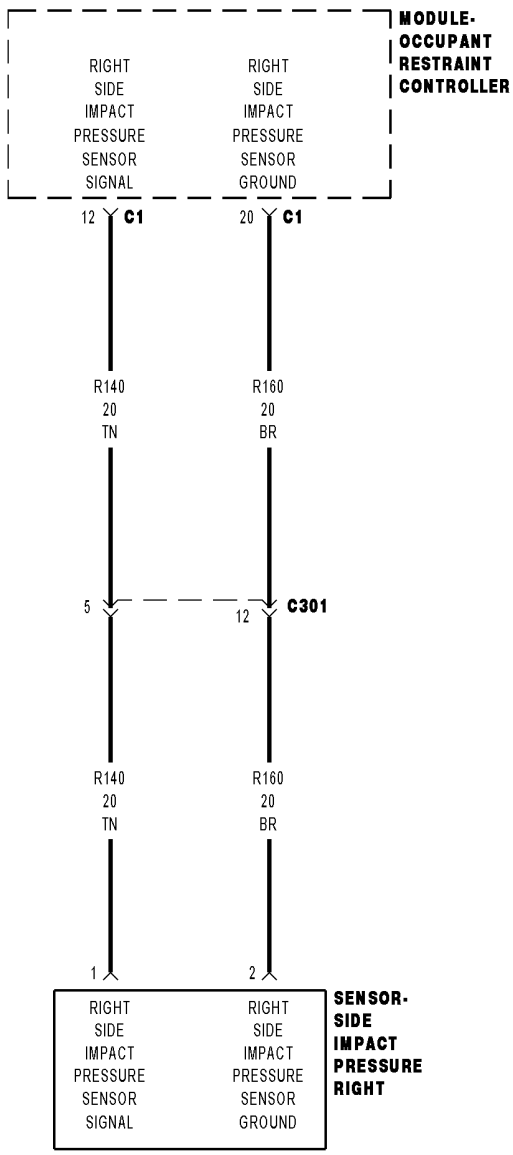

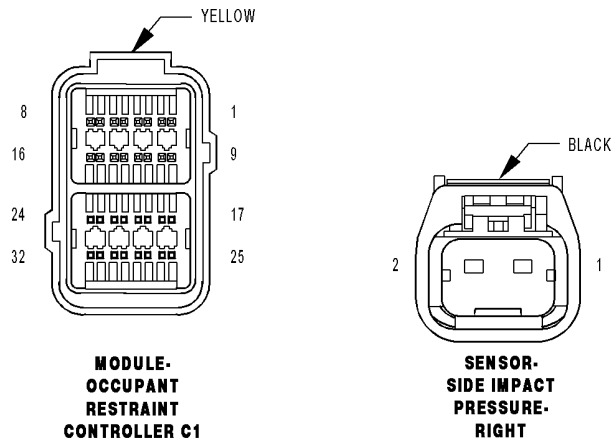

01244365

For a complete wiring diagram, **refer to the Wiring Information**.

Theory of Operation

The location of this right side impact sensor (pressure sensor) 4 is located in the Right Front Door. (Refer to 10 - Restraints/SENSOR, Impact - Description). Impact sensors perform internal self-tests and communicate the sensors status using power supplied by the Occupant Restraint Controller (ORC). The sensor communicates this internal failure message using the sensor signal circuit. If the scan tool shows this DTC has a Stored history of setting then the right side impact sensor is to be replaced.

- **When Monitored:**

  Impact sensors perform the self-test for internal circuitry at power up during the initialization process, and continuously through the ignition cycle every 10 ms.
- **Set Condition:**

  This DTC sets when the ORC receives notification of a self-test failure within the impact sensor. Once set, this DTC is latched for the entire ignition cycle.

Possible Causes
RIGHT SIDE IMPACT PRESSURE SENSOR (SENSOR 4)

Always perform the Pre-Diagnostic Troubleshooting procedure before proceeding. (Refer to 28 - DTC-Based Diagnostics/CONTROLLER, Occupant Restraint (ORC) - Standard Procedure).

NOTE: If the scan tool shows this DTC has a Stored history of setting then the right side impact sensor is to be replaced.

1. VERIFY ACTIVE DTC

NOTE: Make sure the battery is fully charged.

1. Turn the ignition on.
2. With the scan tool, read ORC DTCs.

Does the scan tool display active B009D-49-RIGHT SIDE SATELLITE SENSOR 4 - INTERNAL ELECTRONIC FAILURE DTC or shows a setting history in stored?

Yes

WARNING: Turn the ignition off, disconnect the 12-volt battery and wait two minutes before proceeding. Failure to follow these instructions may result in possible serious or fatal injury.

- Replace the Right Side Impact Pressure Sensor in accordance with the Service Information. (Refer to 10 - Restraints/SENSOR, Impact - Removal).
- Perform the RESTRAINT SYSTEM VERIFICATION TEST. (Refer to 28 - DTC-Based Diagnostics/CONTROLLER, Occupant Restraint (ORC) - Standard Procedure).

No (Did not set a active or stored DTC B009D-49-RIGHT SIDE SATELLITE SENSOR 4- INTERNAL ELECTRONIC FAILURE)

- Perform the RESTRAINT SYSTEM INTERMITTENT TEST. (Refer to 28 - DTC-Based Diagnostics/CONTROLLER, Occupant Restraint (ORC) - Standard Procedure).

■ B00B5-11-DRIVER SEAT TRACK POSITION RESTRAINTS SENSOR - CIRCUIT SHORT TO GROUND

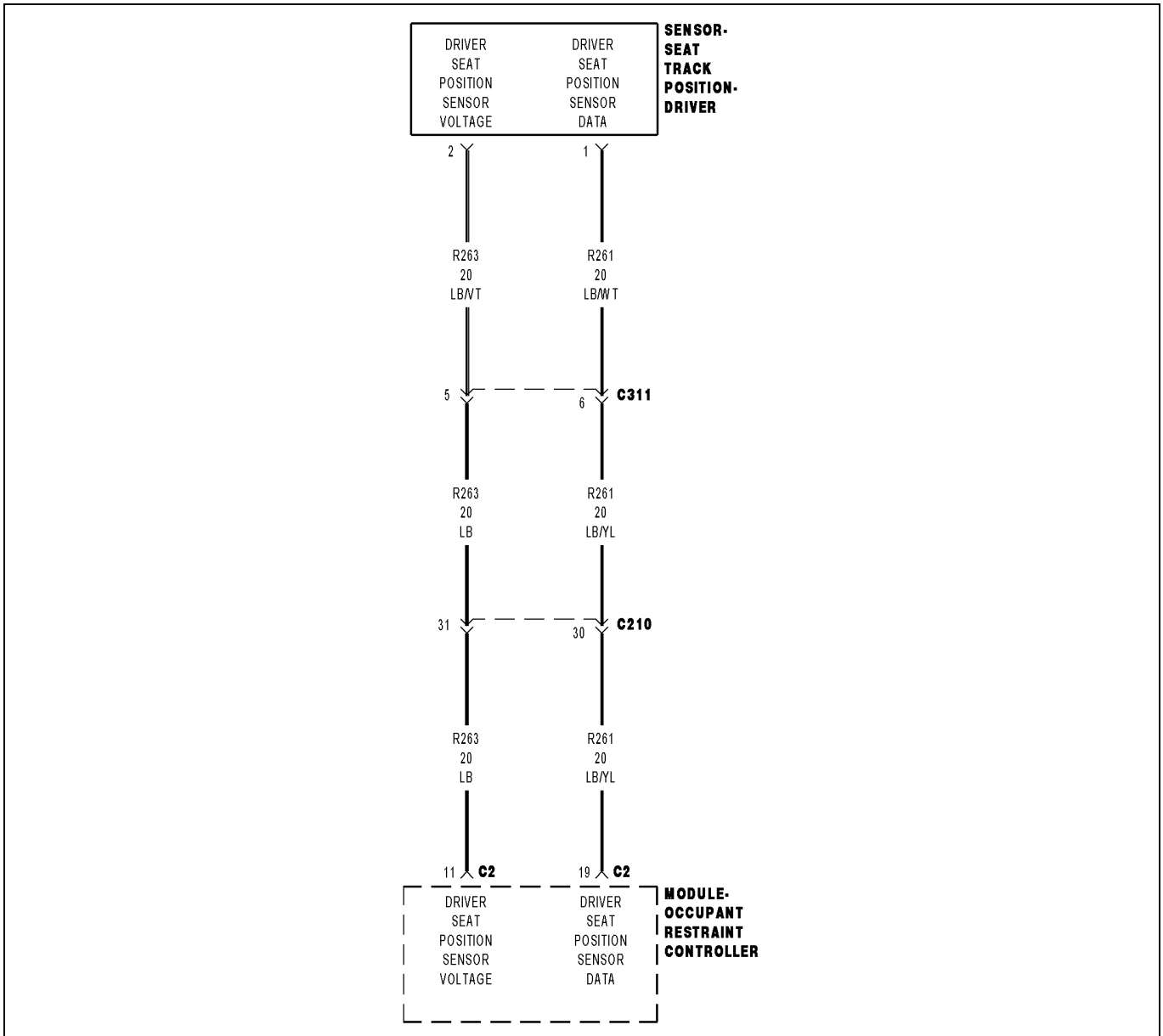

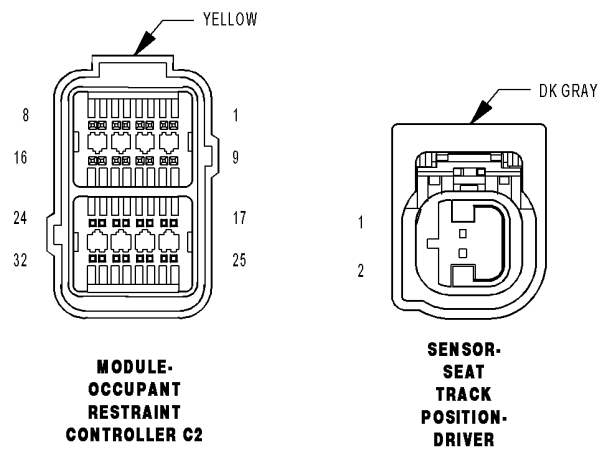

01257179

For a complete wiring diagram, **refer to the Wiring Information**.

Theory of Operation

When powered, the Occupant Restraint Controller (ORC) sends a test current to the seat track position sensors to verify the integrity of the sensors and wiring. The use of the Supplemental Restraints System (SRS) Load Tool Adapter in the tests below provides a test point in place of the ORC harness connectors.

- **When Monitored:**

  With the ignition in the RUN position, ORC supply voltage above 6.0 volts, and the ORC configured for a Driver Seat Track Position Sensor, the ORC sends a test current to the seat track position sensor every 60 ms to verify the integrity of the sensors and wiring.

- **Set Condition:**

  When the ORC detects a short to ground, below 5K Ohms, for 3.0 seconds the Diagnostic Trouble Code (DTC) will be set active. The ORC will switch the DTC from active to stored when the resistance is above 5K Ohms for more than 3.0 seconds.

Possible Causes
DRIVER SEAT HARNESS IMPROPERLY ROUTED
DRIVER SEAT HARNESS WIRES CHAFED, PIERCED, PINCHED, PARTIALLY BROKEN
(R261) DRIVER SEAT POSITION SENSOR DATA CIRCUIT SHORTED TO GROUND
(R263) DRIVER SEAT POSITION SENSOR VOLTAGE CIRCUIT SHORTED TO GROUND
DRIVER SEAT TRACK POSITION SENSOR
OCCUPANT RESTRAINT CONTROLLER (ORC)

Always perform the Pre-Diagnostic Troubleshooting procedure before proceeding. (Refer to 28 - DTC-Based Diagnostics/CONTROLLER, Occupant Restraint (ORC) - Standard Procedure).

1. VERIFY ACTIVE DTC

NOTE: Ensure the battery is fully charged.

1. Turn the ignition on.
2. With the scan tool, read ORC DTCs.

Does the scan tool display active B00B5-11-DRIVER SEAT TRACK POSITION RESTRAINTS SENSOR - CIRCUIT SHORT TO GROUND DTC?

Yes

- Go To 2

No

- Perform the RESTRAINTS SYSTEM INTERMITTENT TEST. (Refer to 28 - DTC-Based Diagnostics/CONTROLLER, Occupant Restraint (ORC) - Standard Procedure).

2. CHECK FOR ACTIVE INTERNAL FAULTS, IGNITION FAULTS, AND BATTERY FAULTS IN THE OCCUPANT RESTRAINT CONTROLLER (ORC)

1. With the scan tool, read ORC DTCs.

Does the scan tool display any active DTCs relating to internal faults, ignition faults, battery faults?

Yes

- Diagnose and repair the internal faults, ignition faults, battery faults. (Refer to 28 - DTC-Based Diagnostics/CONTROLLER, Occupant Restraint (ORC) - Diagnosis and Testing).

No

- Go To 3

3. VERIFY THAT DRIVER SEAT HARNESS IS ROUTED CORRECTLY

1. Verify that the Driver Seat harness is routed correctly.

Is the Driver Seat Harness routed correctly?

Yes

- Go To 4

No

- Reroute the Driver Seat harness as necessary.
- Perform the RESTRAINTS SYSTEM VERIFICATION TEST.(Refer to 28 - DTC-Based Diagnostics/CONTROLLER, Occupant Restraint (ORC) - Standard Procedure).

4. CHECK (R261, R263) DRIVER SEAT POSITION SENSOR CIRCUITS FOR A SHORT TO GROUND

1. Measure the resistance of the (R261) Driver Seat Position Sensor Data circuit between the Driver Seat Track Position Sensor harness connector cavity 1 and ground.
2. Measure the resistance of the (R263) Driver Seat Position Sensor Voltage circuit between the Driver Seat Track Position Sensor harness connector cavity 2 and ground.

Is the resistance below 10K Ohms on either circuit?

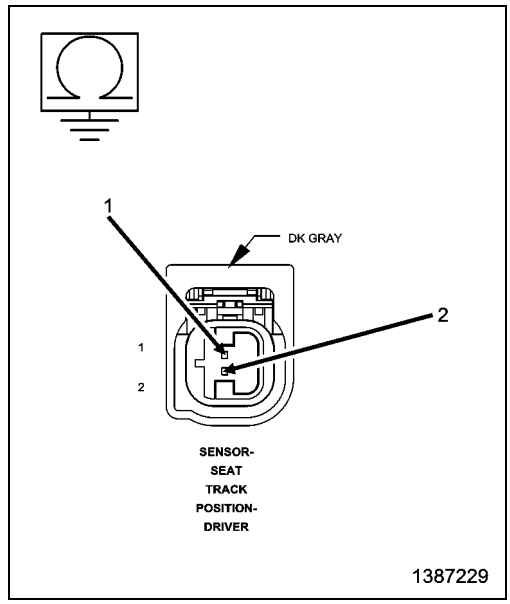

Yes

NOTE: Do not attempt to repair the Seat Harness. Replace the Seat Harness if the condition inspecting or testing for is present in the Seat Harness.

- Replace the Driver Seat Harness in accordance with the service information.
- Perform the RESTRAINTS SYSTEM VERIFICATION TEST. (Refer to 28 - DTC-Based Diagnostics/CONTROLLER, Occupant Restraint (ORC) - Standard Procedure).

No

WARNING: Turn the ignition off, disconnect the 12-volt battery and wait two minutes before proceeding. Failure to follow these instructions may result in possible serious or fatal injury.

WARNING: If the Occupant Restraint Controller (ORC) is dropped at any time, it must be replaced. Failure to follow these instructions may result in possible serious or fatal injury.

- Replace the ORC in accordance with the service information.
- Perform the RESTRAINTS SYSTEM VERIFICATION TEST. (Refer to 28 - DTC-Based Diagnostics/CONTROLLER, Occupant Restraint (ORC) - Standard Procedure).

■ B00B5-12-DRIVER SEAT TRACK POSITION RESTRAINTS SENSOR - CIRCUIT SHORT TO BATTERY

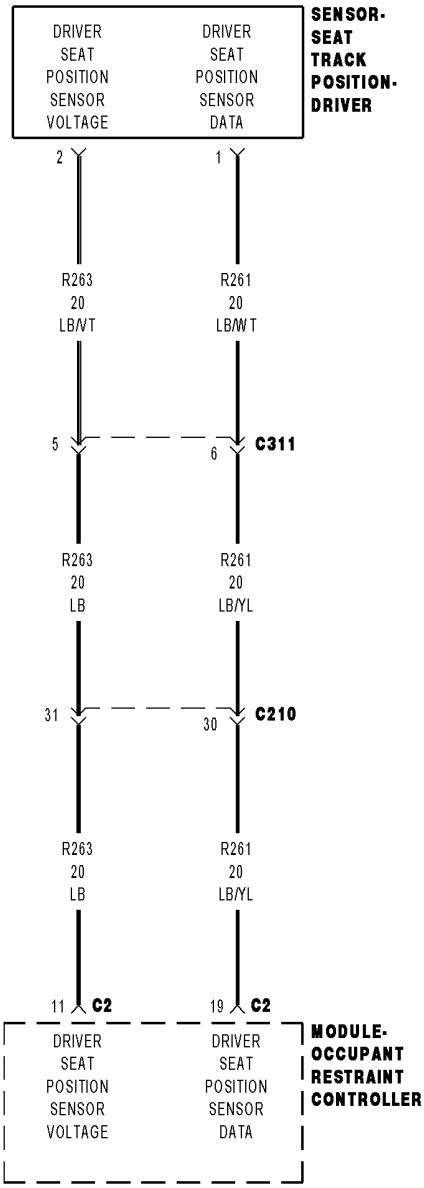

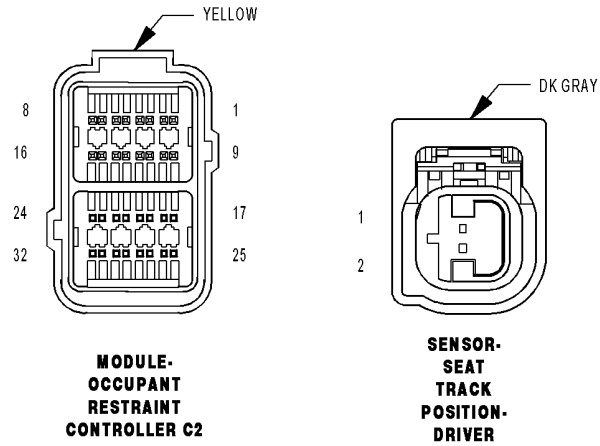

01257179

For a complete wiring diagram, **refer to the Wiring Information**.

Theory of Operation

When powered, the Occupant Restraint Controller (ORC) sends a test current to the seat track position sensors to verify the integrity of the sensors and wiring. The use of the Supplemental Restraints System (SRS) Load Tool Adapter in the tests below provides a test point in place of the ORC harness connectors.

- **When Monitored:**

  With the ignition in the RUN position, ORC supply voltage above 6.0 volts, and the ORC configured for a Driver Seat Track Position Sensor, the ORC sends a test current to the seat track position sensor every 100 ms to verify the integrity of the sensors and wiring.

- **Set Condition:**

  When the ORC detects a short to voltage for 2.5 seconds the Diagnostic Trouble Code (DTC) will be set active. The ORC will switch the DTC from active to stored when the circuit return to normal for 3.0 seconds.

Possible Causes
(R261) DRIVER SEAT POSITION SENSOR DATA CIRCUIT SHORTED TO VOLTAGE
(R263) DRIVER SEAT POSITION SENSOR VOLTAGE CIRCUIT SHORTED TO VOLTAGE
(R261) DRIVER SEAT POSITION SENSOR DATA CIRCUIT SHORTED TO (R263) DRIVER SEAT POSITION SENSOR VOLTAGE CIRCUIT
DRIVER SEAT TRACK POSITION SENSOR
OCCUPANT RESTRAINT CONTROLLER (ORC)

Always perform the Pre-Diagnostic Troubleshooting procedure before proceeding. (Refer to 28 - DTC-Based Diagnostics/CONTROLLER, Occupant Restraint (ORC) - Standard Procedure).

1. VERIFY ACTIVE DTC

NOTE: Ensure the battery is fully charged.

1. Turn the ignition on.
2. With the scan tool, read ORC DTCs.

Does the scan tool display active B00B5-12-DRIVER SEAT TRACK POSITION RESTRAINTS SENSOR - CIRCUIT SHORT TO BATTERY DTC?

Yes

- Go To 2

No

- Perform the RESTRAINTS SYSTEM INTERMITTENT TEST. (Refer to 28 - DTC-Based Diagnostics/CONTROLLER, Occupant Restraint (ORC) - Standard Procedure).

2. CHECK FOR ACTIVE INTERNAL FAULTS, IGNITION FAULTS, AND BATTERY FAULTS IN THE OCCUPANT RESTRAINT CONTROLLER (ORC)

1. With the scan tool, read ORC DTCs.

Does the scan tool display any active DTCs relating to internal faults, ignition faults, or battery faults?

Yes

- Diagnose and repair the internal faults, ignition faults, battery faults. (Refer to 28 - DTC-Based Diagnostics/CONTROLLER, Occupant Restraint (ORC) - Diagnosis and Testing).

No

- Go To 3

3. CHECK DTC B00B5-12-DRIVER SEAT TRACK POSITION RESTRAINTS SENSOR - CIRCUIT SHORT TO BATTERY WITH SENSOR DISCONNECTED

WARNING: Turn the ignition off, disconnect the 12-volt battery and wait two minutes before proceeding. Failure to follow these instructions may result in possible serious or fatal injury.

1. Disconnect the Driver Seat Track Position Sensor harness connector.

WARNING: Turn the ignition on, then reconnect the 12-volt battery and wait two minutes before proceeding. Failure to follow these instructions may result in possible serious or fatal injury.

2. Wait two minutes, and then with the scan tool, read ORC DTCs.

Does the scan tool display active B00B5-12-DRIVER SEAT TRACK POSITION RESTRAINTS SENSOR - CIRCUIT SHORT TO BATTERY DTC?

Yes

- Go To 4

No

WARNING: Turn the ignition off, disconnect the 12-volt battery and wait two minutes before proceeding. Failure to follow these instructions may result in possible serious or fatal injury.

- Replace the Driver Seat Track Position Sensor in accordance with the service information.
- Perform the RESTRAINTS SYSTEM VERIFICATION TEST. (Refer to 28 - DTC-Based Diagnostics/CONTROLLER, Occupant Restraint (ORC) - Standard Procedure).

4. CHECK (R261, R263) DRIVE SEAT POSITION SENSOR CIRCUITS FOR A SHORT TO VOLTAGE

WARNING: Turn the ignition off, disconnect the 12-volt battery and wait two minutes before proceeding. Failure to follow these instructions may result in possible serious or fatal injury.

1. Disconnect the ORC harness connectors.

WARNING: Turn the ignition on, then reconnect the 12-volt battery and wait two minutes before proceeding. Failure to follow these instructions may result in possible serious or fatal injury.

2. Measure the voltage of the (R261) Driver Seat Position Sensor Data circuit between the Driver Seat Track Position Sensor harness connector cavity 1 and ground.
3. Measure the voltage of the (R263) Driver Seat Position Sensor Voltage circuit between the Driver Seat Track Position Sensor harness connector cavity 2 and ground.

Is there any voltage on either circuit?

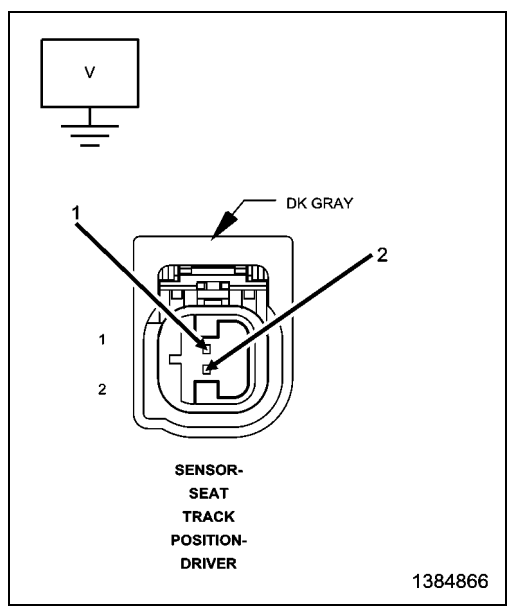

Yes

NOTE: Do not attempt to repair the Seat Harness. Replace the Seat Harness if the condition inspecting or testing for is present in the Seat Harness.

WARNING: Turn the ignition off, disconnect the 12-volt battery and wait two minutes before proceeding. Failure to follow these instructions may result in possible serious or fatal injury.

- Replace the Driver Seat Harness in accordance with the Service Information.
- Perform the RESTRAINTS SYSTEM VERIFICATION TEST. (Refer to 28 - DTC-Based Diagnostics/CONTROLLER, Occupant Restraint (ORC) - Standard Procedure).

No

- Go To 5

5. CHECK (R261) DRIVER SEAT POSITION SENSOR DATA CIRCUIT FOR A SHORT TO (R263) DRIVER SEAT POSITION SENSOR VOLTAGE CIRCUIT

WARNING: Turn the ignition off, disconnect the 12-volt battery and wait two minutes before proceeding. Failure to follow these instructions may result in possible serious or fatal injury.

1. Measure the resistance between the (R261) Driver Seat Position Sensor Data circuit cavity 1 and the (R263) Driver Seat Position Sensor Voltage circuit cavity 2 at the Driver Seat Track Position Sensor harness connector.

Is the resistance below 10K Ohms?

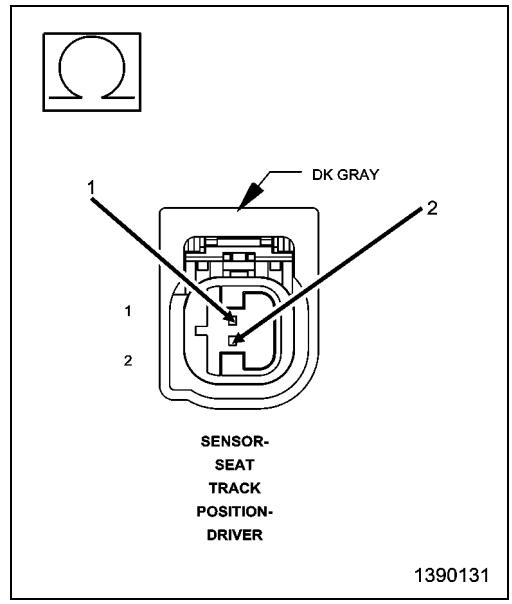

Yes

NOTE: Do not attempt to repair the Seat Harness. Replace the Seat Harness if the condition inspecting or testing for is present in the Seat Harness.

- Replace the Driver Seat Harness in accordance with the service information.
- Perform the RESTRAINTS SYSTEM VERIFICATION TEST. (Refer to 28 - DTC-Based Diagnostics/CONTROLLER, Occupant Restraint (ORC) - Standard Procedure).

No

WARNING: If the Occupant Restraint Controller (ORC) is dropped at any time, it must be replaced. Failure to follow these instructions may result in possible serious or fatal injury.

- Replace the ORC in accordance with the Service information.
- Perform the RESTRAINTS SYSTEM VERIFICATION TEST. (Refer to 28 - DTC-Based Diagnostics/CONTROLLER, Occupant Restraint (ORC) - Standard Procedure).

■ B00B5-13-DRIVER SEAT TRACK POSITION RESTRAINTS SENSOR - CIRCUIT OPEN

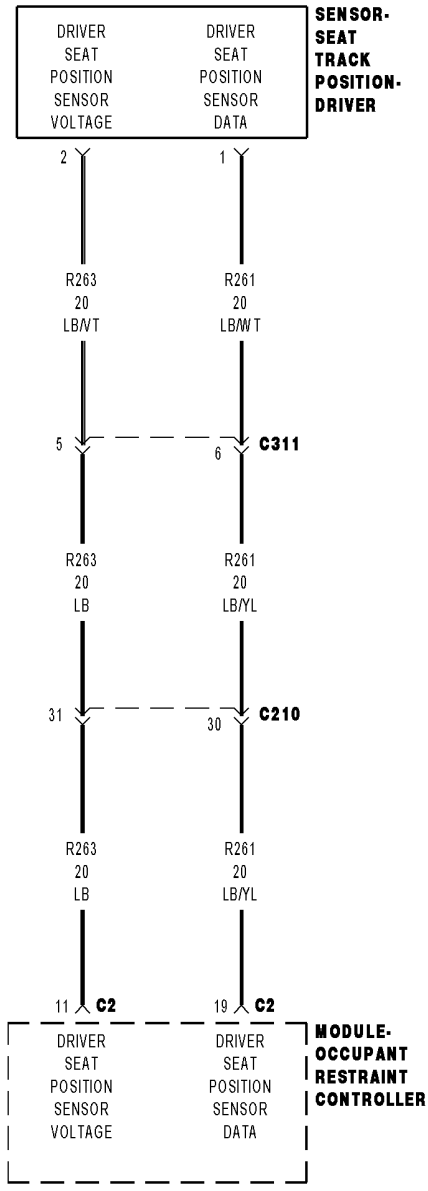

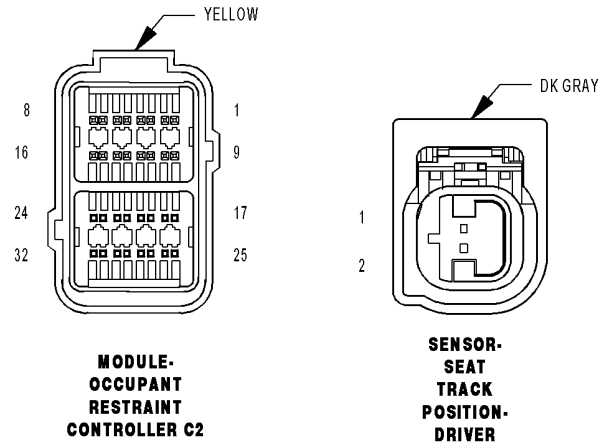

01257179

For a complete wiring diagram, **refer to the Wiring Information**.

Theory of Operation

When powered, the Occupant Restraint Controller (ORC) sends a test current to the seat track position sensors to verify the integrity of the sensors and wiring. The use of the Supplemental Restraints System (SRS) Load Tool Adapter tool in the tests below provides a test point in place of the ORC harness connectors.

- **When Monitored:**

  With the ignition in the RUN position, ORC supply voltage above 6.0 volts, and the ORC configured for a Driver Seat Track Position Sensor, the ORC sends a test current to the seat track position sensor every 100 ms to verify the integrity of the sensors and wiring.

- **Set Condition:**

  When the ORC detects a short to ground, below 5K Ohms, for 3.0 seconds the Diagnostic Trouble Code (DTC) will be set active. The ORC will switch the DTC from active to stored when the resistance is above 5K Ohms for more than 2.5 seconds.

Possible Causes
DRIVER SEAT HARNESS CONNECTOR TERMINALS BROKEN, BENT, PUSHED OUT, SPREAD, CORRODED, CONTAMINATED
(R261, R263) DRIVER SEAT POSITION SENSOR CIRCUITS OPEN
DRIVER SEAT TRACK POSITION SENSOR
OCCUPANT RESTRAINT CONTROLLER (ORC)

Always perform the Pre-Diagnostic Troubleshooting procedure before proceeding. (Refer to 28 - DTC-Based Diagnostics/CONTROLLER, Occupant Restraint (ORC) - Standard Procedure).

1. CHECK FOR ACTIVE INTERNAL FAULTS, IGNITION FAULTS, AND BATTERY FAULTS IN THE OCCUPANT RESTRAINT CONTROLLER (ORC)

NOTE: Ensure the battery is fully charged.

1. Turn the ignition on.
2. Using a scan tool, read ORC DTCs.

Does the scan tool display any active DTCs relating to internal faults, ignition faults, or battery faults?

Yes

- Perform the appropriate diagnostic procedure. (Refer to 28 - DTC-Based Diagnostics/CONTROLLER, Occupant Restraint (ORC) - Diagnosis and Testing).

No

- Go To 2

2. VERIFY ACTIVE DTC

Does the scan tool display active B00B5-13-DRIVER SEAT TRACK POSITION RESTRAINTS SENSOR - CIRCUIT OPEN DTC?

Yes

- Go To 3

No

- Perform the RESTRAINTS SYSTEM INTERMITTENT TEST. (Refer to 28 - DTC-Based Diagnostics/CONTROLLER, Occupant Restraint (ORC) - Standard Procedure).

3. INSPECT DRIVER SEAT HARNESS WIRES AND CONNECTORS

WARNING: Turn the ignition off, disconnect the battery and wait two minutes before proceeding. Failure to follow these instructions may result in possible serious or fatal injury.

1. Using the wiring diagram/schematic as a guide, inspect the Driver Seat wiring harness and connectors. Look for chafed, pierced, pinched, or partially broken wires and broken, bent, pushed out, spread, corroded, or contaminated terminals.

Are any of these conditions present?

Yes

NOTE: Do not attempt to repair the Driver Seat harness. Replace the Driver Seat harness if any of these conditions exist.

- Replace the Driver Seat harness according to the Service Information.
- Perform the RESTRAINTS SYSTEM VERIFICATION TEST. (Refer to 28 - DTC-Based Diagnostics/CONTROLLER, Occupant Restraint (ORC) - Standard Procedure).

No

- Go To 4

4. CHECK FOR DTC OPEN DRIVER SEAT TRACK POSITION SENSOR CIRCUITS

WARNING: Turn the ignition off, disconnect the 12-volt battery and wait two minutes before proceeding. Failure to follow these instructions may result in possible serious or fatal injury.

1. Disconnect the ORC harness connectors.
2. Connect the SRS Load Tool Adaptor 8443-24 to the ORC C2 harness connector.
3. Measure the resistance of the (R261) Driver Seat Position Sensor Data circuit between the Driver Seat Track Position Sensor harness connector cavity 1 and the SRS Load Tool Adaptor 8443-24 cavity 19.
4. Measure the resistance of the (R263) Driver Seat Position Sensor Voltage circuit between the Driver Seat Track Position Sensor harness connector cavity 2 and the SRS Load Tool Adaptor 8443-24 cavity 11.

Is the resistance of either circuit above 5.0 Ohms?

Yes

NOTE: Do not attempt to repair the Seat Harness. Replace the Seat Harness if the condition inspecting or testing for is present in the Seat Harness.

- Replace the Driver Seat Harness in accordance with the Service Information.
- Perform the RESTRAINTS SYSTEM VERIFICATION TEST. (Refer to 28 - DTC-Based Diagnostics/CONTROLLER, Occupant Restraint (ORC) - Standard Procedure).

No

- Go To 5

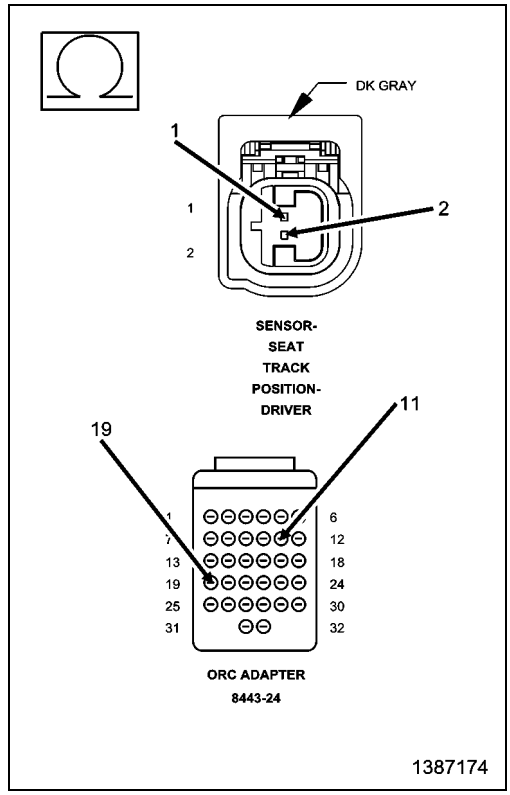

5. CHECK (R261, R263) DRIVER SEAT POSITION SENSOR CIRCUITS FOR A SHORT TO VOLTAGE

WARNING: Turn the ignition on, then reconnect the 12-volt battery and wait two minutes before proceeding. Failure to follow these instructions may result in possible serious or fatal injury.

1. Measure the voltage of the (R261) Driver Seat Position Sensor Data circuit between the Driver Seat Track Position Sensor harness connector cavity 1 and ground.
2. Measure the voltage of the (R263) Driver Seat Position Sensor Voltage circuit between the Driver Seat Track Position harness connector cavity 2 and ground.

Is there any voltage on either circuit?

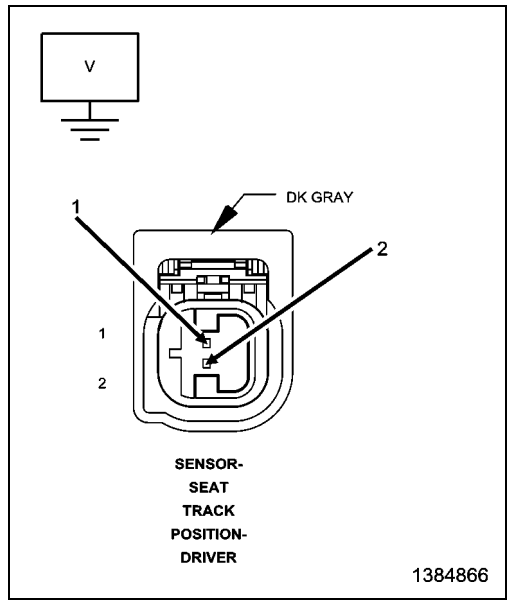

Yes

NOTE: Do not attempt to repair the Driver Seat harness. Replace the Driver Seat harness if any of these conditions exist.

WARNING: Turn the ignition off, disconnect the 12-volt battery and wait two minutes before proceeding. Failure to follow these instructions may result in possible serious or fatal injury.

- Replace the Driver Seat harness according to the Service Information.
- Perform the RESTRAINTS SYSTEM VERIFICATION TEST. (Refer to 28 - DTC-Based Diagnostics/CONTROLLER, Occupant Restraint (ORC) - Standard Procedure).

No

WARNING: If the Occupant Restraint Controller (ORC) is dropped at any time, it must be replaced. Failure to follow these instructions may result in possible serious or fatal injury.

- Replace the ORC according to the Service Information.
- Perform the RESTRAINTS SYSTEM VERIFICATION TEST. (Refer to 28 - DTC-Based Diagnostics/CONTROLLER, Occupant Restraint (ORC) - Standard Procedure).

■ B1BA5-00-AIRBAG SQUIB CONFIGURATION MISMATCH -

For a complete wiring diagram, **refer to the Wiring Information**.

Theory of Operation

When powered, the Occupant Restraint Controller (ORC) sends a test current to the Squibs. During this test, the squibs discovered are checked for agreement with the pre-programmed vehicle configuration of squib circuits assigned to the ORC.

- **When Monitored:**

  The ORC checks its feature configuration for a stored airbag and tensioner configuration at power-up and initialization.
- **Set Condition:**

  This Diagnostic Trouble Code (DTC) sets when the ORC detects a 2 consecutive message mismatches between the Vehicle Configuration and the ORC configuration. Once set, this DTC is latched for the entire power cycle.

Possible Causes
POWERTRAIN CONTROL MODULE (PCM)
OCCUPANT RESTRAINT CONTROLLER (ORC)

Always perform the Pre-Diagnostic Troubleshooting procedure before proceeding. (Refer to 28 - DTC-Based Diagnostics/CONTROLLER, Occupant Restraint (ORC) - Standard Procedure).

1. VERIFY ACTIVE DTC

NOTE: Ensure the battery is fully charged.

1. Turn the ignition on.
2. With the scan tool, read ORC DTCs.

Does the scan tool display active B1BA5-00-AIRBAG SQUIB CONFIGURATION MISMATCH - DTC?

Yes

- Go To 2

No

- Perform the RESTRAINTS SYSTEM INTERMITTENT TEST.(Refer to 28 - DTC-Based Diagnostics/CONTROLLER, Occupant Restraint (ORC) - Standard Procedure).

2. VERIFY ORC PART NUMBER

1. With the scan tool, read the ORC part number.

Is the part number correct for the vehicle?

Yes

- Go To 3

No

WARNING: Turn the ignition off, disconnect the 12-volt battery and wait two minutes before proceeding. Failure to follow these instructions may result in possible serious or fatal injury.

WARNING: If the Occupant Restraint Controller (ORC) is dropped at any time, it must be replaced. Failure to follow these instructions may result in possible serious or fatal injury.

- Replace the ORC in accordance with Service Information.
- Perform the RESTRAINTS SYSTEM VERIFICATION TEST.(Refer to 28 - DTC-Based Diagnostics/CONTROLLER, Occupant Restraint (ORC) - Standard Procedure).

3. CHECK THE VIN WITH THE SCAN TOOL

1. With the scan tool, read the VIN.
2. Compare the vehicle VIN to the ORC VIN.

Is the correct VIN displayed?

Yes

- Go To 4

No

- Replace the PCM in accordance with Service Information.
- Perform the POWERTRAIN VERIFICATION TEST. (Refer to 28 - DTC-Based Diagnostics/MODULE, Powertrain Control (PCM) - Standard Procedure).

4. VERIFY TIPM CONFIGURATION

1. With the scan tool, read the TIPM configuration.

Does the TIPM configuration match the vehicle equipment?

Yes

WARNING: Turn the ignition off, disconnect the 12-volt battery and wait two minutes before proceeding. Failure to follow these instructions may result in possible serious or fatal injury.

WARNING: If the Occupant Restraint Controller (ORC) is dropped at any time, it must be replaced. Failure to follow these instructions may result in possible serious or fatal injury.

- Replace the ORC in accordance with Service Information.
- Perform the RESTRAINTS SYSTEM VERIFICATION TEST.(Refer to 28 - DTC-Based Diagnostics/CONTROLLER, Occupant Restraint (ORC) - Standard Procedure).

No

- Re-configure or replace the TIPM in accordance with Service Information.
- Perform the BODY VERIFICATION TEST. (Refer to 28 - DTC-Based Diagnostics/MODULE, Totally Integrated Power (TIPM) - Standard Procedure).

■ B1BC7-00-DEPLOYMENT DATA RECORD FULL -

For a complete wiring diagram, **refer to the Wiring Information**.

Theory of Operation

When powered, the Occupant Restraint Controller (ORC) performs an internal self test. The repair of this fault condition does not involve any external circuitry and centers on verifying the integrity of the module's internal memory.

- **When Monitored:**

  The ORC checks its internal memory for the number of recorded deployment events once at every power up, during the initialization process and after any deployment.
- **Set Condition:**

  This Diagnostic Trouble Code (DTC) sets when the ORC detects the third airbag deployment event. Once set, this DTC is latched permanently.

Possible Causes
OCCUPANT RESTRAINT CONTROLLER (ORC)

Always perform the Pre-Diagnostic Troubleshooting procedure before proceeding. (Refer to 28 - DTC-Based Diagnostics/CONTROLLER, Occupant Restraint (ORC) - Standard Procedure).

1. VERIFY ACTIVE DTC

1. Turn the ignition ON.
2. With the scan tool, read ORC active DTCs.

Does the scan tool display an active B1BC7-00-DEPLOYMENT DATA RECORD FULL - DTC?

Yes

WARNING: Turn the ignition off, disconnect the 12-volt battery and wait two minutes before proceeding. Failure to follow these instructions may result in possible serious or fatal injury.

WARNING: If the Occupant Restraint Controller (ORC) is dropped at any time, it must be replaced. Failure to follow these instructions may result in possible serious or fatal injury.

- Replace the ORC in accordance with the service information.
- Perform the RESTRAINTS SYSTEM VERIFICATION TEST. (Refer to 28 - DTC-Based Diagnostics/CONTROLLER, Occupant Restraint (ORC) - Standard Procedure).

No

- Perform the RESTRAINTS SYSTEM VERIFICATION TEST. (Refer to 28 - DTC-Based Diagnostics/CONTROLLER, Occupant Restraint (ORC) - Standard Procedure).

■ B007E-11-DRIVER SEATBELT RETRACTOR PRETENSIONER DEPLOYMENT CONTROL - CIRCUIT SHORT TO GROUND

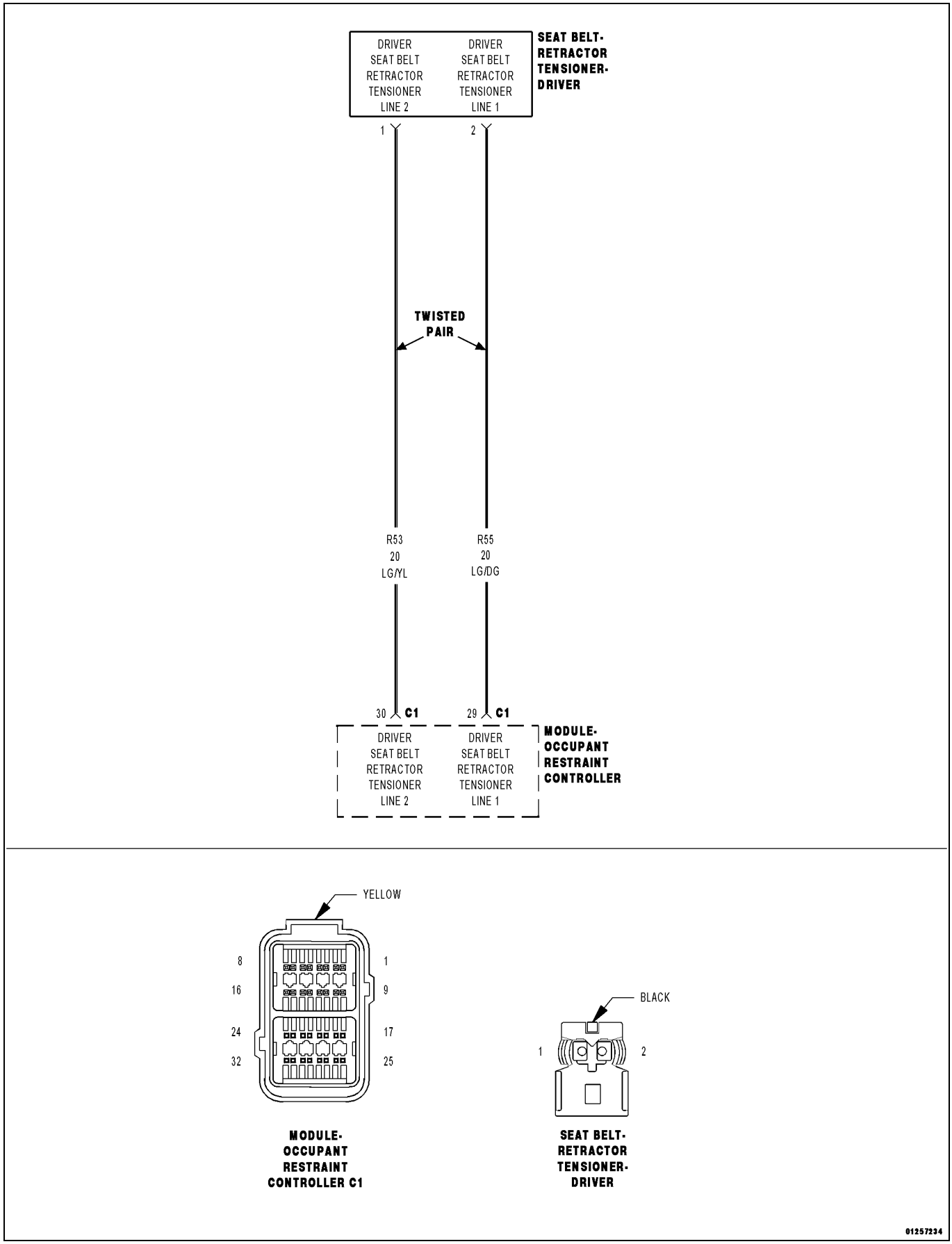

For a complete wiring diagram, **refer to Wiring Information**.

Theory of Operation

When powered, the Occupant Restraint Controller (ORC) sends a test current to the squibs to verify the integrity of the squib and wiring. These circuits are maintained in a “floating” configuration at the ORC (connected to neither power nor ground) as protection against inadvertent deployment. Use of the Supplemental Restraints System (SRS) Load Tool Kit 8443A in the tests below substitutes a suspect squib with a known good component. The SRS Load Tool Adapter provides a test point as well as a method for opening the shorting bar connections within the ORC harness connector.

- **When Monitored:**

  The ORC sends out a 40 mA diagnostic current on each squib voltage supply circuit at power up and every 100 ms thereafter while the ignition is on. The ORC then monitors the data return wire to determine the state of the circuit.
- **Set Condition:**

  This Diagnostic Trouble Code (DTC) sets when the ORC detects a short to ground on the squib circuit for more than 2.5 seconds. This DTC transitions from active to stored when the ORC sees a recovery from a short to ground for greater than 2.5 seconds.

Possible Causes
(R53) DRIVER SEAT BELT RETRACTOR TENSIONER LINE 2 CIRCUIT SHORTED TO GROUND
(R55) DRIVER SEAT BELT RETRACTOR TENSIONER LINE 1 CIRCUIT SHORTED TO GROUND
DRIVER SEAT BELT RETRACTOR TENSIONER
OCCUPANT RESTRAINT CONTROLLER (ORC)

Always perform the Pre-Diagnostic Troubleshooting procedure before proceeding (Refer to 28 - DTC-Based Diagnostics/CONTROLLER, Occupant Restraint (ORC) - Standard Procedure).

1. VERIFY ACTIVE DTC

NOTE: Ensure the battery is fully charged.

1. Turn the ignition on.
2. With the scan tool, read ORC DTCs.

Does the scan tool display an active B007E-11-DRIVER SEATBELT RETRACTOR PRETENSIONER DEPLOYMENT CONTROL - CIRCUIT SHORT TO GROUND DTC?

Yes

- Go To 2

No

- Perform the RESTRAINTS SYSTEM INTERMITTENT TEST. (Refer to 28 - DTC-Based Diagnostics/CONTROLLER, Occupant Restraint (ORC) - Standard Procedure).

2. CHECK DRIVER SEAT BELT RETRACTOR TENSIONER SHORT TO GROUND

WARNING: Turn the ignition off, disconnect the 12-volt battery and wait two minutes before proceeding. Failure to follow these instructions may result in possible serious or fatal injury.

1. Disconnect the Driver Seat Belt Retractor Tensioner harness connector.

NOTE: Check connectors - Clean and repair as necessary.

2. Connect the SRS Load Tool Kit 8443A and SRS Load Tool Jumper 8443-8 to the Driver Seat Belt Retractor Tensioner harness connector.

WARNING: Turn the ignition on, then reconnect the 12-volt battery and wait two minutes before proceeding. Failure to follow these instructions may result in possible serious or fatal injury.

3. With the scan tool, read the ORC DTCs.

Does the scan tool display an active B007E-11-DRIVER SEATBELT RETRACTOR PRETENSIONER DEPLOYMENT CONTROL - CIRCUIT SHORT TO GROUND DTC?

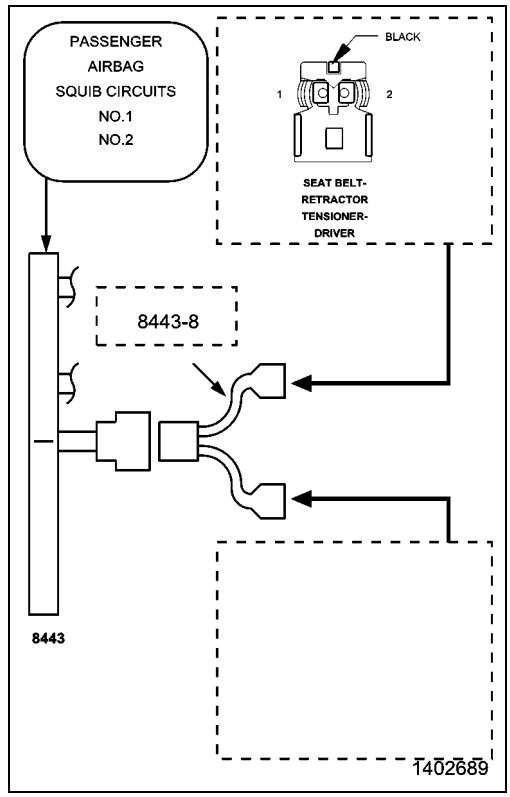

Yes

- Go To 3

No

WARNING: Turn the ignition off, disconnect the 12-volt battery and wait two minutes before proceeding. Failure to follow these instructions may result in possible serious or fatal injury.

- Replace the Driver Seat Belt Retractor Tensioner in accordance with the Service Information.
- Perform the RESTRAINTS SYSTEM VERIFICATION TEST.(Refer to 28 - DTC-Based Diagnostics/CONTROLLER, Occupant Restraint (ORC) - Standard Procedure).

3. CHECK (R53, R55) DRIVER SEAT BELT RETRACTOR TENSIONER CIRCUITS FOR A SHORT TO GROUND

WARNING: Turn the ignition off, disconnect the 12-volt battery and wait two minutes before proceeding. Failure to follow these instructions may result in possible serious or fatal injury.

1. Disconnect the SRS Load Tool Kit 8443A and SRS Load Tool Jumper from the Driver Seat Belt Retractor Tensioner harness connector.
2. Disconnect the ORC harness connectors.

NOTE: Check connectors - Clean and repair as necessary.

3. Connect the Load Tool SRS Load Tool Adapter 8443-24 to the ORC C1 harness connector.
4. Measure the resistance of the (R55) Driver Seat Belt Retractor Tensioner Line 1 circuit between the Driver Seat Belt Retractor Tensioner harness connector cavity 2 and ground.
5. Measure the resistance of the (R53) Driver Seat Belt Retractor Tensioner Line 2 circuit between the Driver Seat Belt Retractor Tensioner harness connector cavity 1 and ground.

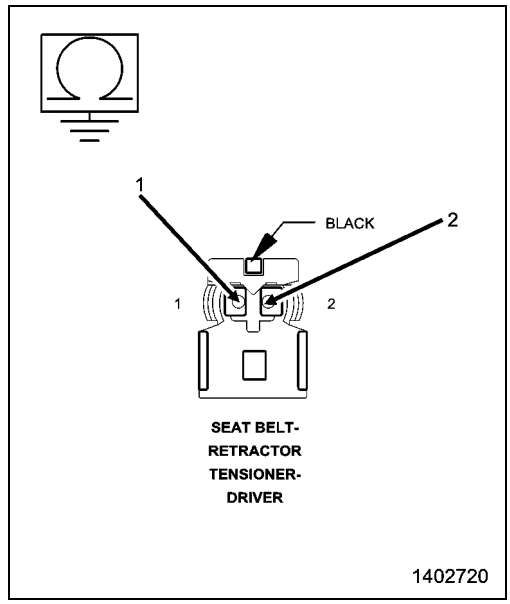

Is the resistance below 10K Ohms on either circuit?

Yes

- Repair the Driver Seat Belt Retractor Tensioner circuits for a short to ground.
- Perform the RESTRAINTS SYSTEM VERIFICATION TEST.(Refer to 28 - DTC-Based Diagnostics/CONTROLLER, Occupant Restraint (ORC) - Standard Procedure).

No

WARNING: If the Occupant Restraint Controller (ORC) is dropped at any time, it must be replaced. Failure to follow these instructions may result in possible serious or fatal injury.

- Replace the ORC in accordance with the Service Information.
- Perform the RESTRAINTS SYSTEM VERIFICATION TEST.(Refer to 28 - DTC-Based Diagnostics/CONTROLLER, Occupant Restraint (ORC) - Standard Procedure).

■ B007E-12-DRIVER SEATBELT RETRACTOR PRETENSIONER DEPLOYMENT CONTROL - CIRCUIT SHORT TO BATTERY

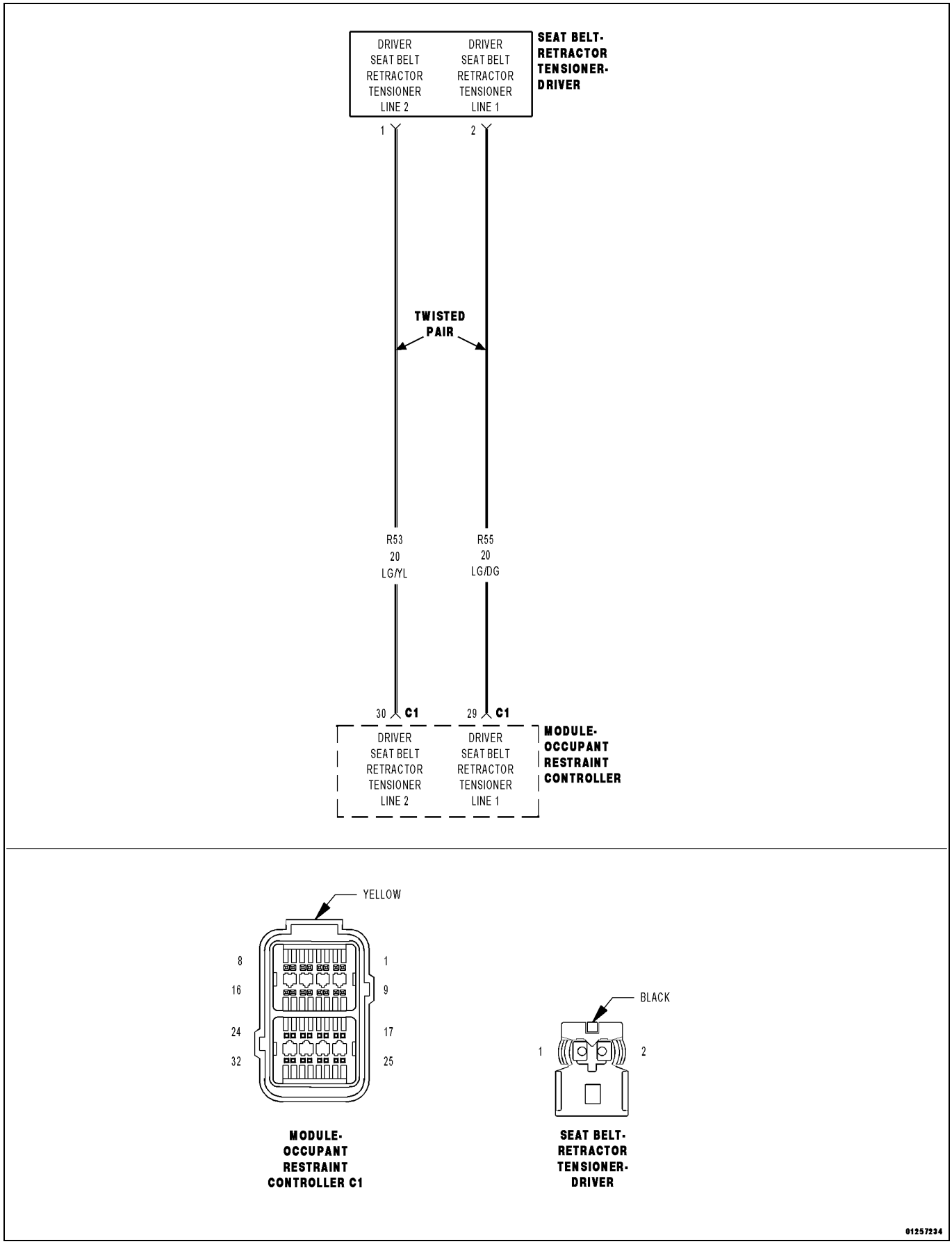

For a complete wiring diagram, **refer to the Wiring Information**.

Theory of Operation

When powered, the Occupant Restraint Controller (ORC) sends a test current to the squibs to verify the integrity of the squib and wiring. These circuits are maintained in a “floating” configuration at the ORC (connected to neither power nor ground) as protection against inadvertent deployment. Use of the Supplemental Restraints System (SRS) Load Tool Kit 8443A in the tests below substitutes a suspect squib with a known good component. The SRS Load Tool Adapter provides a test point as well as a method for opening the shorting bar connections within the ORC harness connector.

- **When Monitored:**

  The ORC sends out a 40 mA diagnostic current on each squib voltage supply circuit at power up and every 100 ms thereafter while the ignition is on. The ORC then monitors the data return wire to determine the state of the circuit.
- **Set Condition:**

  This Diagnostic Trouble Code (DTC) sets when the ORC detects a short to voltage on the squib circuit for more than 2.5 seconds. This DTC transitions from active to stored when the ORC sees a recovery from a short to voltage for greater than 2.5 seconds.

Possible Causes
(R53) DRIVER SEAT BELT RETRACTOR TENSIONER LINE 2 CIRCUIT SHORTED TO VOLTAGE
(R55) DRIVER SEAT BELT RETRACTOR TENSIONER LINE 1 CIRCUIT SHORTED TO VOLTAGE
DRIVER SEAT BELT RETRACTOR TENSIONER
OCCUPANT RESTRAINT CONTROLLER (ORC)

Always perform the Pre-Diagnostic Troubleshooting procedure before proceeding (Refer to 28 - DTC-Based Diagnostics/CONTROLLER, Occupant Restraint (ORC) - Standard Procedure).

1. VERIFY ACTIVE DTC

NOTE: Ensure the battery is fully charged.

1. Turn the ignition on.
2. With the scan tool, read ORC DTCs.

Does the scan tool display active B007E-12-DRIVER SEATBELT RETRACTOR PRETENSIONER DEPLOYMENT CONTROL - CIRCUIT SHORT TO BATTERY DTC?

Yes

- Go To 2

No

- Perform the RESTRAINTS SYSTEM INTERMITTENT TEST. (Refer to 28 - DTC-Based Diagnostics/CONTROLLER, Occupant Restraint (ORC) - Standard Procedure).

2. CHECK DRIVER SEAT BELT RETRACTOR TENSIONER FOR A SHORT TO BATTERY

WARNING: Turn the ignition off, disconnect the 12-volt battery and wait two minutes before proceeding. Failure to follow these instructions may result in possible serious or fatal injury.

1. Disconnect the Driver Seat Belt Retractor Tensioner harness connector.

NOTE: Check connectors - Clean and repair as necessary.

2. Connect the SRS Load Tool Kit 8443A and the SRS Load Tool Jumper 8443-8 to the Driver Seat Belt Retractor Tensioner harness connector.

WARNING: Turn the ignition on, then reconnect the 12-volt battery and wait two minutes before proceeding. Failure to follow these instructions may result in possible serious or fatal injury.

3. With the scan tool, read the ORC DTCs.

Does the scan tool display active B007E-12-DRIVER SEATBELT RETRACTOR PRETENSIONER DEPLOYMENT CONTROL - CIRCUIT SHORT TO BATTERY DTC?

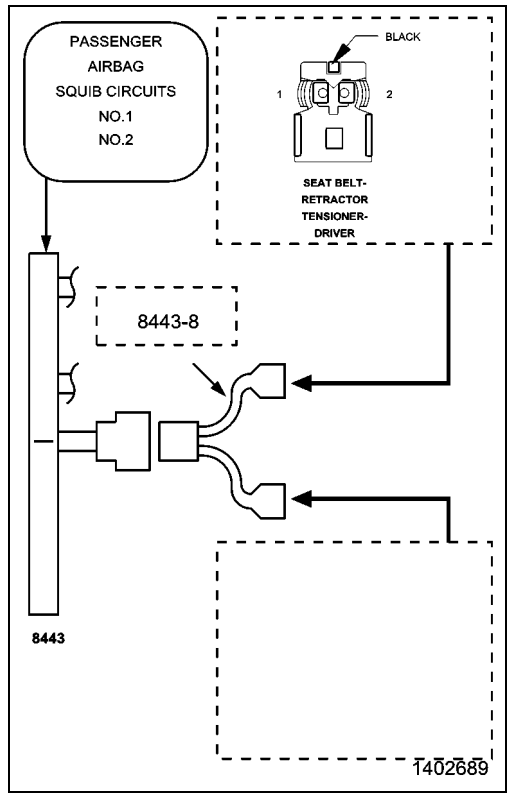

Yes

- Go To 3

No

WARNING: Turn the ignition off, disconnect the 12-volt battery and wait two minutes before proceeding. Failure to follow these instructions may result in possible serious or fatal injury.

- Replace the Driver Seat Belt Retractor Tensioner in accordance with the Service Information.
- Perform the RESTRAINTS SYSTEM VERIFICATION TEST. (Refer to 28 - DTC-Based Diagnostics/CONTROLLER, Occupant Restraint (ORC) - Standard Procedure).

3. CHECK (R53, R55) DRIVER SEAT BELT RETRACTOR TENSIONER CIRCUITS FOR A SHORT TO BATTERY

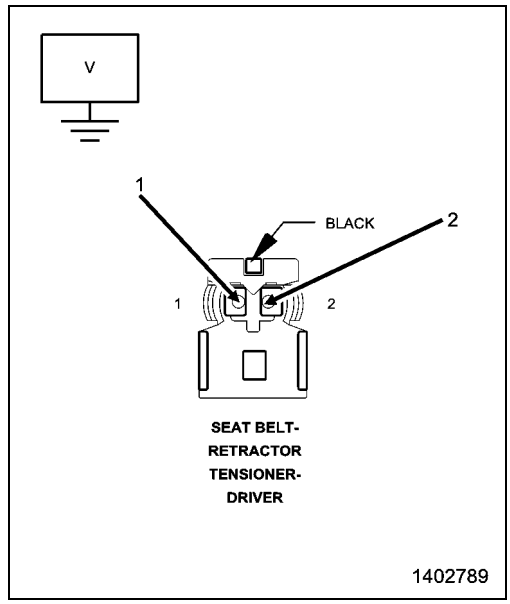

WARNING: Turn the ignition off, disconnect the 12-volt battery and wait two minutes before proceeding. Failure to follow these instructions may result in possible serious or fatal injury.

1. Disconnect the SRS Load Tool kit 8443A and the Jumper from the Driver Seat Belt Retractor Tensioner harness connector.
2. Disconnect the ORC harness connectors.

NOTE: Check connectors - Clean and repair as necessary.

3. Connect the SRS Load Tool Adapter 8443-24 Adaptor to the ORC C1 harness connector.

WARNING: Turn the ignition on, then reconnect the 12-volt battery and wait two minutes before proceeding. Failure to follow these instructions may result in possible serious or fatal injury.

4. Measure the voltage of the (R55) Driver Seat Belt Retractor Tensioner Line 1 circuit between the Driver Seat Belt Retractor Tensioner harness connector cavity 2 and ground.
5. Measure the voltage of the (R53) Driver Seat Belt Retractor Tensioner Line 2 circuit between the Driver Seat Belt Retractor Tensioner harness connector cavity 1 and ground.

Is there any voltage present on either circuit?

Yes

WARNING: Turn the ignition off, disconnect the 12-volt battery and wait two minutes before proceeding. Failure to follow these instructions may result in possible serious or fatal injury.

- Repair the Driver Seat Belt Retractor Tensioner circuits with voltage present.
- Perform the RESTRAINTS SYSTEM VERIFICATION TEST. (Refer to 28 - DTC-Based Diagnostics/CONTROLLER, Occupant Restraint (ORC) - Standard Procedure).

No

WARNING: Turn the ignition off, disconnect the 12-volt battery and wait two minutes before proceeding. Failure to follow these instructions may result in possible serious or fatal injury.

WARNING: If the Occupant Restraint Controller (ORC) is dropped at any time, it must be replaced. Failure to follow these instructions may result in possible serious or fatal injury.

- Replace the ORC in accordance with the Service Information.
- Perform the RESTRAINTS SYSTEM VERIFICATION TEST. (Refer to 28 - DTC-Based Diagnostics/CONTROLLER, Occupant Restraint (ORC) - Standard Procedure).

■ B007E-13-DRIVER SEATBELT RETRACTOR PRETENSIONER DEPLOYMENT CONTROL - CIRCUIT OPEN

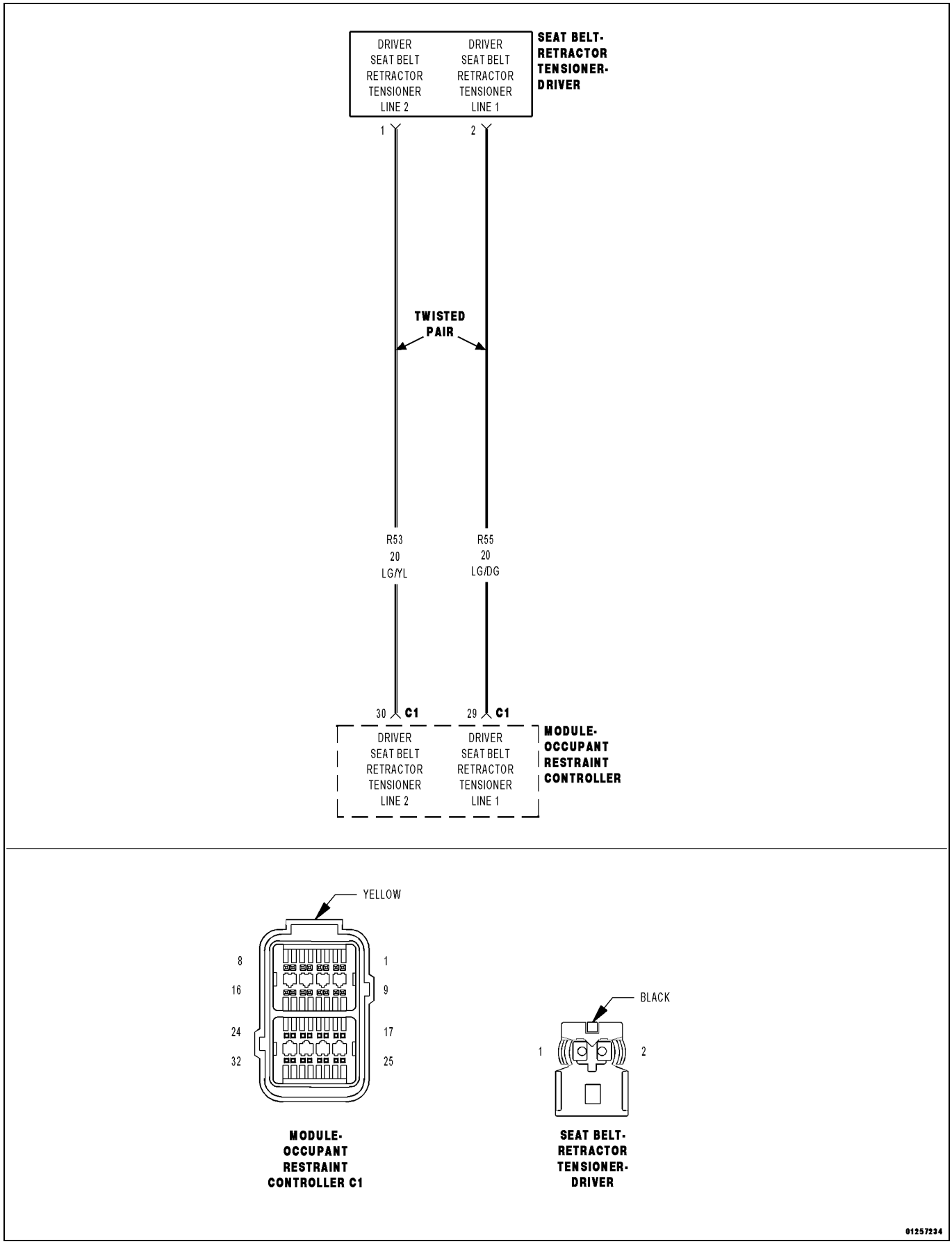

For a complete wiring diagram, **refer to the Wiring Information**.

Theory of Operation

When powered, the Occupant Restraint Controller (ORC) sends a test current to the squibs to verify the integrity of the squib and wiring. These circuits are maintained in a “floating” configuration at the ORC (connected to neither power nor ground) as protection against inadvertent deployment. Use of the Supplemental Restraints System (SRS) Load Tool Kit 8443A in the tests below substitutes a suspect squib with a known good component. The SRS Load Tool Adapter provides a test point as well as a method for opening the shorting bar connections within the ORC harness connector.

- **When Monitored:**

  The ORC sends out a 40 mA diagnostic current on each squib voltage supply circuit at power up and every 100 ms thereafter while the ignition is on. The ORC then monitors the data return wire to determine the state of the circuit.
- **Set Condition:**

  This Diagnostic Trouble Code (DTC) sets when the ORC detects an open on the squib circuit for more than 2.5 seconds. This DTC transitions from active to stored when the ORC sees a recovery from an open condition for greater than 2.5 seconds.

Possible Causes
(R53) DRIVER SEAT BELT RETRACTOR TENSIONER LINE 2 CIRCUIT OPEN
(R55) DRIVER SEAT BELT RETRACTOR TENSIONER LINE 1 CIRCUIT OPEN
DRIVER SEAT BELT RETRACTOR TENSIONER
OCCUPANT RESTRAINT CONTROLLER (ORC)

Always perform the Pre-Diagnostic Troubleshooting procedure before proceeding. (Refer to 28 - DTC-Based Diagnostics/CONTROLLER, Occupant Restraint (ORC) - Standard Procedure).

1. VERIFY ACTIVE DTC

NOTE: Ensure the battery is fully charged.

1. Turn the ignition on.
2. With the scan tool, read ORC DTCs.

Does the scan tool display active B007E-13-DRIVER SEATBELT RETRACTOR PRETENSIONER DEPLOYMENT CONTROL - CIRCUIT OPEN DTC?

Yes

- Go To 2

No

- Perform the RESTRAINTS SYSTEM INTERMITTENT TEST. (Refer to 28 - DTC-Based Diagnostics/CONTROLLER, Occupant Restraint (ORC) - Standard Procedure).

2. CHECK DRIVER SEAT BELT RETRACTOR TENSIONER OPEN

WARNING: Turn the ignition off, disconnect the 12-volt battery and wait two minutes before proceeding. Failure to follow these instructions may result in possible serious or fatal injury.

1. Disconnect the Driver Seat Belt Retractor Tensioner harness connector.

NOTE: Check connectors - Clean and repair as necessary.

2. Connect the SRS Load Tool Kit 8443A and the SRS Load Tool Jumper 8443-8 to the Driver Seat Belt Retractor Tensioner harness connector.

WARNING: Turn the ignition on, then reconnect the 12-volt battery and wait two minutes before proceeding. Failure to follow these instructions may result in possible serious or fatal injury.

3. With the scan tool, read the ORC DTCs.

Does the scan tool display B007E-13-DRIVER SEATBELT RETRACTOR PRETENSIONER DEPLOYMENT CONTROL - CIRCUIT OPEN DTC ?

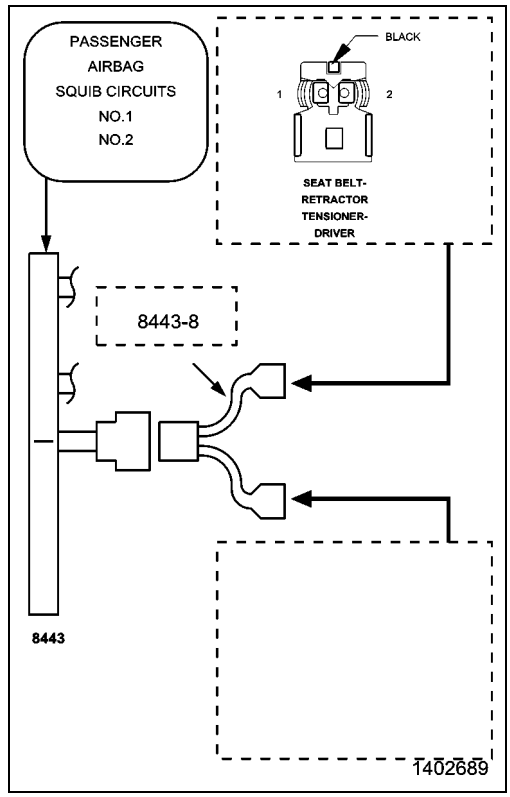

Yes

- Go To 3

No

WARNING: Turn the ignition off, disconnect the 12-volt battery and wait two minutes before proceeding. Failure to follow these instructions may result in possible serious or fatal injury.

- Replace the Driver Seat Belt Retractor Tensioner in accordance with the Service Information.
- Perform the RESTRAINTS SYSTEM VERIFICATION TEST. (Refer to 28 - DTC-Based Diagnostics/CONTROLLER, Occupant Restraint (ORC) - Standard Procedure).

3. CHECK (R53, R55) DRIVER SEAT BELT RETRACTOR TENSIONER CIRCUITS FOR AN OPEN

WARNING: Turn the ignition off, disconnect the 12-volt battery and wait two minutes before proceeding. Failure to follow these instructions may result in possible serious or fatal injury.

1. Disconnect the SRS Load Tool Kit 8443A and Jumper from the Driver Seat Belt Retractor Tensioner harness connector.
2. Disconnect the ORC harness connectors.

NOTE: Check connectors - Clean and repair as necessary.

3. Connect the SRS Load Tool Adapter 8443-24 Adaptor to the ORC C1 harness connector.
4. Measure the resistance of the (R55) Driver Seat Belt Retractor Tensioner Line 1 circuit between the Driver Seat Belt Retractor Tensioner harness connector cavity 2 and the SRS Load Tool Adapter 8443-24 cavity 29.
5. Measure the resistance of the (R53) Driver Seat Belt Retractor Tensioner Line 2 circuit between the Driver Seat Belt Retractor Tensioner harness connector cavity 1 and the SRS Load Tool Adapter 8443-24 cavity 30.

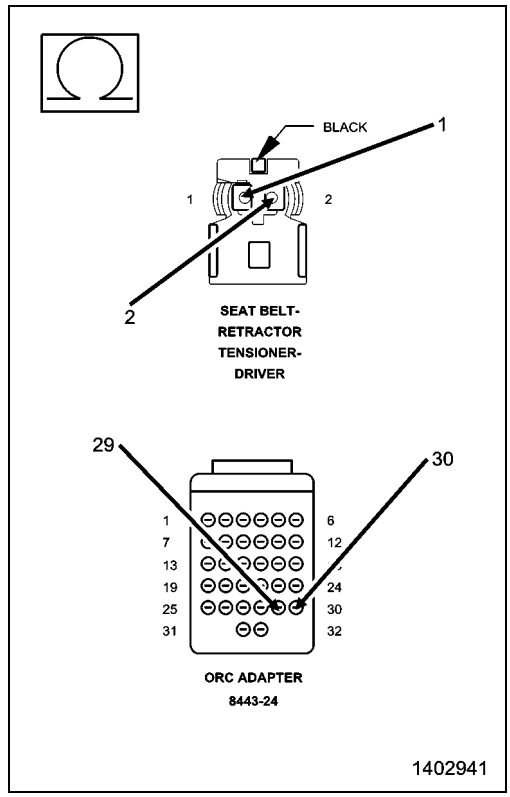

Is the resistance below 1.0 ohms?

Yes

WARNING: If the Occupant Restraint Controller (ORC) is dropped at any time, it must be replaced. Failure to follow these instructions may result in possible serious or fatal injury.

- Replace the ORC in accordance with Service Information.
- Perform the RESTRAINTS SYSTEM VERIFICATION TEST. (Refer to 28 - DTC-Based Diagnostics/CONTROLLER, Occupant Restraint (ORC) - Standard Procedure).

No

- Repair the (R53, R55) Driver Seat Belt Retractor Tensioner circuits for an open or high resistance.
- Perform the RESTRAINTS SYSTEM VERIFICATION TEST. (Refer to 28 - DTC-Based Diagnostics/CONTROLLER, Occupant Restraint (ORC) - Standard Procedure).

■ B007E-2B-DRIVER SEATBELT RETRACTOR PRETENSIONER DEPLOYMENT CONTROL - WIRES SHORTED TOGETHER

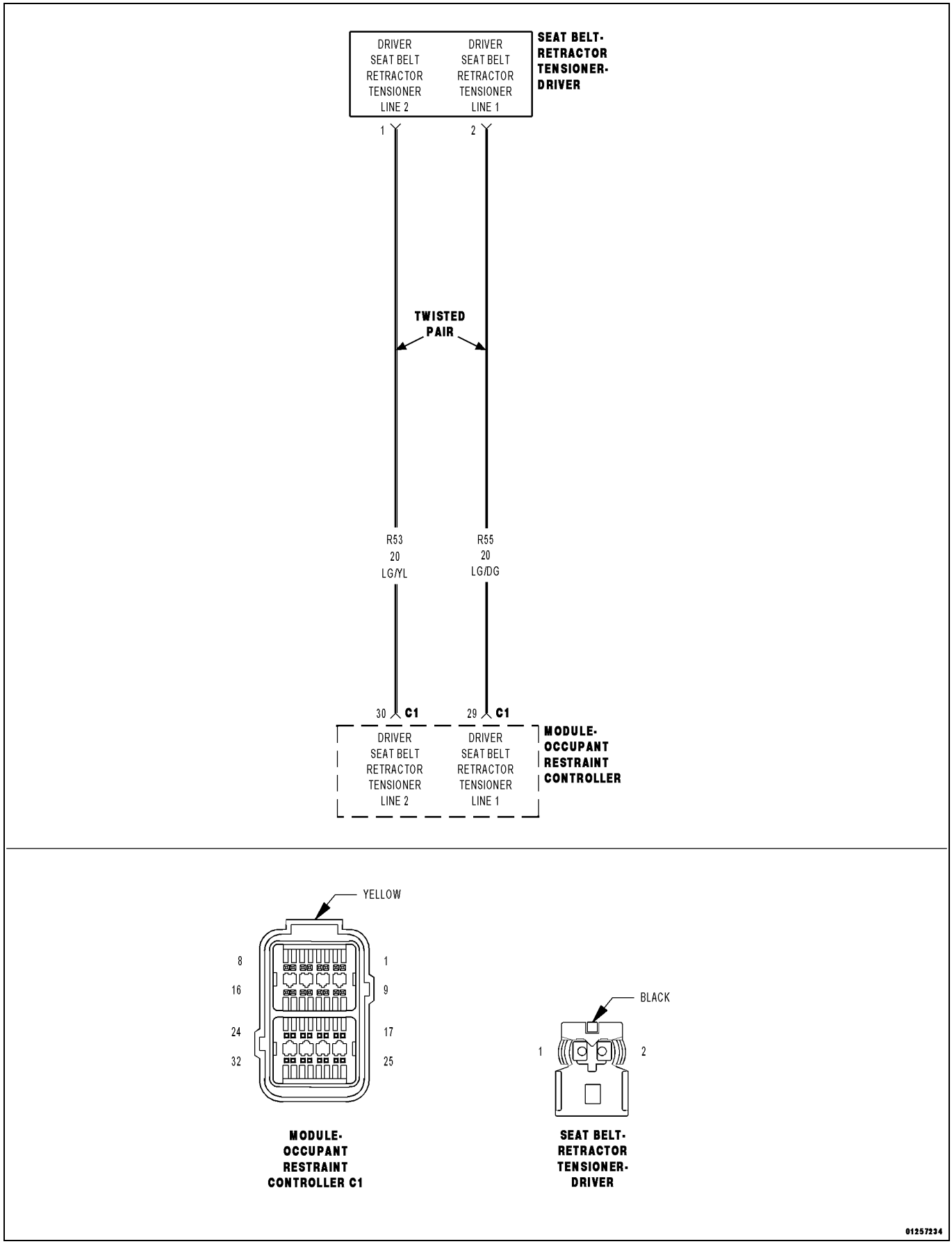

For a complete wiring diagram, **refer to the Wiring Information**.

Theory of Operation

When powered, the Occupant Restraint Controller (ORC) sends a test current to the squibs to verify the integrity of the squib and wiring. These circuits are maintained in a “floating” configuration at the ORC (connected to neither power nor ground) as protection against inadvertent deployment. Use of the Supplemental Restraints System (SRS) Load Tool Kit 8443A in the tests below substitutes a suspect squib with a known good component. The SRS Load Tool Adapter provides a test point as well as a method for opening the shorting bar connections within the ORC harness connectors.

- **When Monitored:**

  The ORC sends out a 40 mA diagnostic current on each squib voltage supply circuit at power up and every 100 ms thereafter while the ignition is on. The ORC then monitors the data return wire to determine the state of the circuit.
- **Set Condition:**

  This Diagnostic Trouble Code (DTC) sets when the ORC detects both circuits of the same squib are shorted together for more than 2.5 seconds. This DTC transitions from active to stored when the ORC sees a recovery from the shorted together condition for greater than 2.5 seconds.

Possible Causes
(R53) DRIVER SEAT BELT RETRACTOR TENSIONER LINE 2 CIRCUIT SHORTED TO (R55) DRIVER SEAT BELT RETRACTOR TENSIONER LINE 1 CIRCUIT
DRIVER SEAT BELT RETRACTOR TENSIONER
OCCUPANT RESTRAINT CONTROLLER (ORC)

Always perform the Pre-Diagnostic Troubleshooting procedure before proceeding. (Refer to 28 - DTC-Based Diagnostics/CONTROLLER, Occupant Restraint (ORC) - Standard Procedure).

1. VERIFY ACTIVE DTC

NOTE: Ensure the battery is fully charged.

1. Turn the ignition on.
2. With the scan tool, read ORC DTCs.

Does the scan tool display active B007E-2B-DRIVER SEATBELT RETRACTOR PRETENSIONER DEPLOYMENT CONTROL - WIRES SHORTED TOGETHER DTC?

Yes

- Go To 2

No

- Perform the RESTRAINTS SYSTEM INTERMITTENT TEST. (Refer to 28 - DTC-Based Diagnostics/CONTROLLER, Occupant Restraint (ORC) - Standard Procedure).

2. CHECK DRIVER SEAT BELT RETRACTOR TENSIONER FOR CIRCUITS SHORT TOGETHER

WARNING: Turn the ignition off, disconnect the 12-volt battery and wait two minutes before proceeding. Failure to follow these instructions may result in possible serious or fatal injury.

1. Disconnect the Driver Seat Belt Retractor Tensioner harness connector.

NOTE: Check connectors - Clean and repair as necessary.

2. Connect the SRS Load Tool Kit 8443A and the SRS Load Tool Jumper 8443-8 to the Driver Seat Belt Retractor Tensioner harness connector.

WARNING: Turn the ignition on, then reconnect the 12-volt battery and wait two minutes before proceeding. Failure to follow these instructions may result in possible serious or fatal injury.

3. With the scan tool, read the ORC DTCs.

Does the scan tool display active B007E-2B-DRIVER SEATBELT RETRACTOR PRETENSIONER DEPLOYMENT CONTROL - WIRES SHORTED TOGETHER DTC?

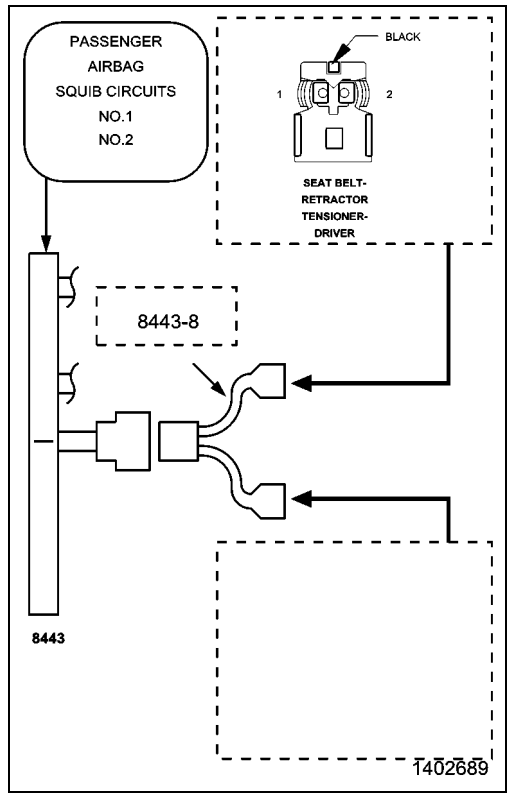

Yes

- Go To 3

No

WARNING: Turn the ignition off, disconnect the 12-volt battery and wait two minutes before proceeding. Failure to follow these instructions may result in possible serious or fatal injury.

- Replace the Driver Seat Belt Retractor Tensioner in accordance with the Service Information.
- Perform the RESTRAINTS SYSTEM VERIFICATION TEST. (Refer to 28 - DTC-Based Diagnostics/CONTROLLER, Occupant Restraint (ORC) - Standard Procedure).

3. CHECK (R55) DRIVER SEAT BELT RETRACTOR TENSIONER LINE 1 CIRCUIT FOR A SHORT TO (R53) DRIVER SEAT BELT RETRACTOR TENSIONER LINE 2 CIRCUIT

WARNING: Turn the ignition off, disconnect the 12-volt battery and wait two minutes before proceeding. Failure to follow these instructions may result in possible serious or fatal injury.

1. Disconnect the SRS Load Tool Kit 8443A and the Jumper from the Driver Seat Belt Retractor Tensioner harness connector.
2. Disconnect the ORC harness connectors.

NOTE: Check connectors - Clean and repair as necessary.

3. Connect the SRS Load Tool Adapter 8443-24 to the ORC C1 harness connector.
4. Measure the resistance between the (R55) Driver Seat Belt Retractor Tensioner Line 1 circuit cavity 2 and the (R53) Driver Seat Belt Retractor Tensioner Line 2 circuit cavity 1 at the Driver Seat Belt Retractor Tensioner harness connector.

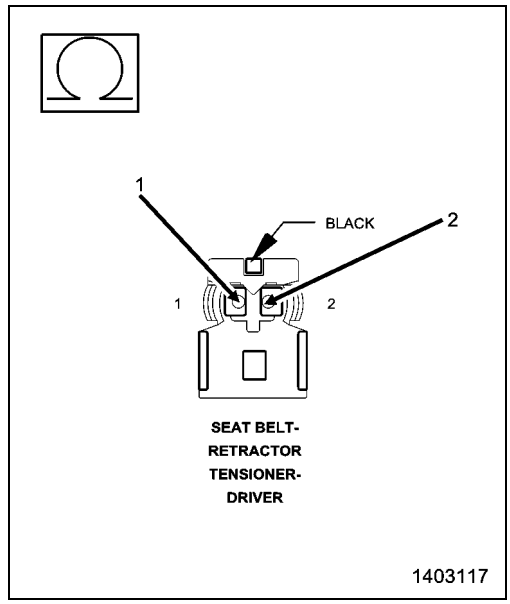

Is the resistance below 5.0 Ohms?

Yes

- Repair the (R55) Driver Seat Belt Retractor Tensioner Line 1 circuit for a short to the (R53) Driver Seat Belt Retractor Tensioner Line 2 circuit.
- Perform the RESTRAINTS SYSTEM VERIFICATION TEST. (Refer to 28 - DTC-Based Diagnostics/CONTROLLER, Occupant Restraint (ORC) - Standard Procedure).

No

WARNING: If the Occupant Restraint Controller (ORC) is dropped at any time, it must be replaced. Failure to follow these instructions may result in possible serious or fatal injury.

- Replace the ORC in accordance with Service Information.
- Perform the RESTRAINTS SYSTEM VERIFICATION TEST. (Refer to 28 - DTC-Based Diagnostics/CONTROLLER, Occupant Restraint (ORC) - Standard Procedure).

■ B007F-11-PASSENGER SEATBELT RETRACTOR PRETENSIONER DEPLOYMENT CONTROL - CIRCUIT SHORT TO GROUND

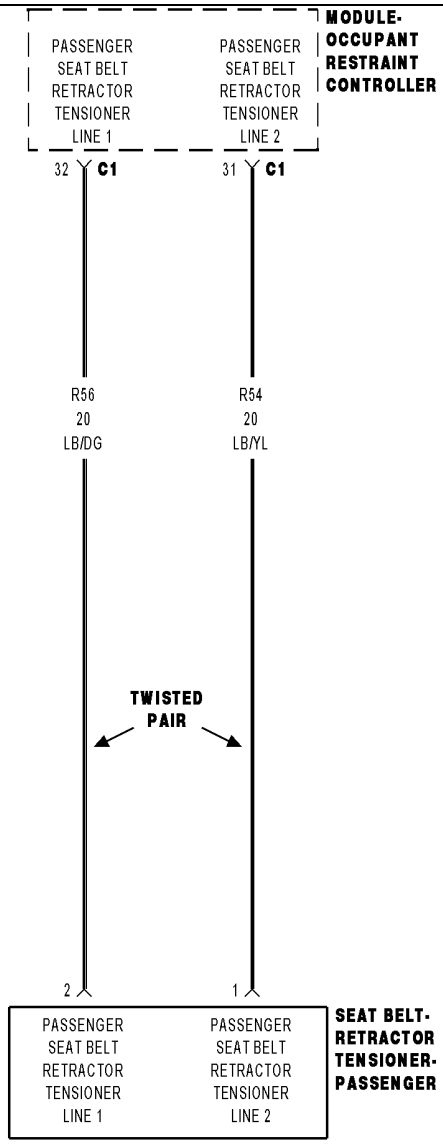

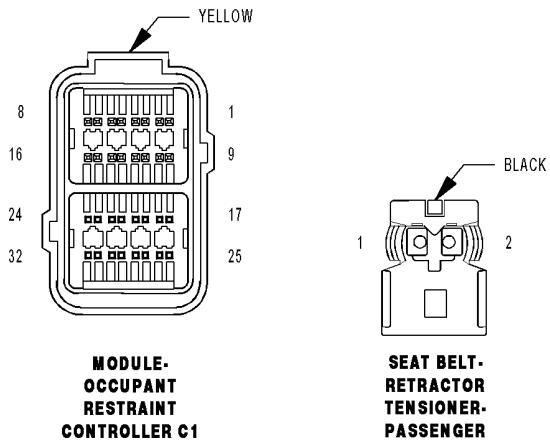

01257249

For a complete wiring diagram, **refer to the Wiring Information**.

Theory of Operation

When powered, the Occupant Restraint Controller (ORC) sends a test current to the squibs to verify the integrity of the squib and wiring. These circuits are maintained in a “floating” configuration at the ORC (connected to neither power nor ground) as protection against inadvertent deployment. Use of the Supplemental Restraints System (SRS) Load Tool Kit 8443A in the tests below substitutes a suspect squib with a known good component. The use of the SRS Load Tool Adapter provides a test point as well as a method for opening the shorting bar connections within the ORC harness connector.

- **When Monitored:**

  The ORC sends out a 40 mA diagnostic current on each squib voltage supply circuit at power up and every 100 ms thereafter while the ignition is on. The ORC then monitors the data return wire to determine the state of the circuit.
- **Set Condition:**

  This Diagnostic Trouble Code (DTC) sets when the ORC detects a short to ground on the squib circuit for more than 2.5 seconds. This DTC transitions from active to stored when the ORC sees a recovery from a short to ground for greater than 2.5 seconds.

Possible Causes
(R54) PASSENGER SEAT BELT RETRACTOR TENSIONER LINE 2 CIRCUIT SHORTED TO GROUND
(R56) PASSENGER SEAT BELT RETRACTOR TENSIONER LINE 1 CIRCUIT SHORTED TO GROUND
PASSENGER SEAT BELT TENSIONER
OCCUPANT RESTRAINT CONTROLLER (ORC)

Always perform the Pre-Diagnostic Troubleshooting procedure before proceeding. (Refer to 28 - DTC-Based Diagnostics/CONTROLLER, Occupant Restraint (ORC) - Standard Procedure).

1. VERIFY ACTIVE DTC

NOTE: Ensure the battery is fully charged.

1. Turn the ignition on.
2. With the scan tool, read ORC DTCs.

Does the scan tool display active B007F-11-PASSENGER SEATBELT RETRACTOR PRETENSIONER DEPLOYMENT CONTROL - CIRCUIT SHORT TO GROUND DTC?

Yes

- Go To 2

No

- Perform the RESTRAINTS SYSTEM INTERMITTENT TEST. (Refer to 28 - DTC-Based Diagnostics/CONTROLLER, Occupant Restraint (ORC) - Standard Procedure).

2. CHECK PASSENGER SEAT BELT RETRACTOR TENSIONER FOR A SHORT TO GROUND

WARNING: Turn the ignition off, disconnect the 12-volt battery and wait two minutes before proceeding. Failure to follow these instructions may result in possible serious or fatal injury.

1. Disconnect the Passenger Seat Belt Retractor Tensioner harness connector.

WARNING: Do not place an intact non-deployed airbag face down on a hard surface, the airbag propels into the air if accidentally deployed. Failure to follow these instructions may result in possible serious or fatal injury.

NOTE: Check connectors - Clean and repair as necessary.

2. Connect the SRS Load Tool Kit 8443A and the SRS Load Tool Jumper 8443-8 to the Passenger Seat Belt Retractor Tensioner harness connector.

WARNING: Turn the ignition on, then reconnect the 12-volt battery and wait two minutes before proceeding. Failure to follow these instructions may result in possible serious or fatal injury.

3. With the scan tool, read the ORC DTCs.

   Does the scan tool display active B007F-11-PASSENGER SEAT-BELT RETRACTOR PRETENSIONER DEPLOYMENT CONTROL - CIRCUIT SHORT TO GROUND DTC?

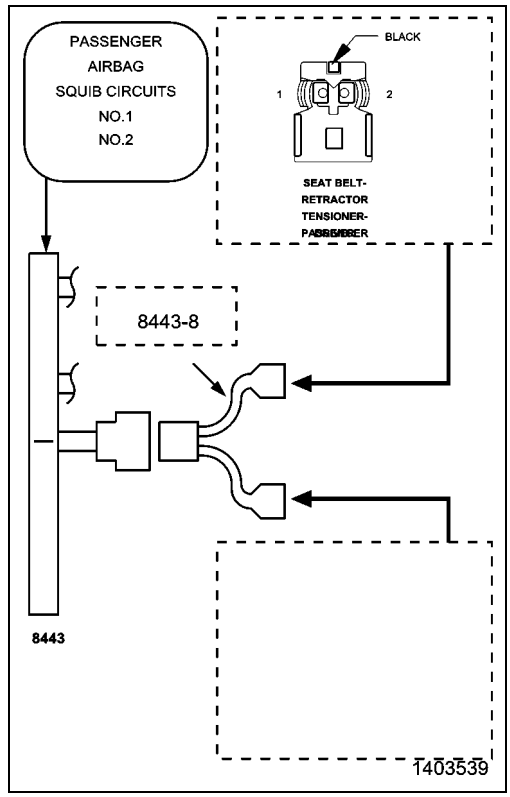

Yes

- Go To 3

No

WARNING: Turn the ignition off, disconnect the 12-volt battery and wait two minutes before proceeding. Failure to follow these instructions may result in possible serious or fatal injury.

- Replace the Passenger Seat Belt Retractor Tensioner in accordance with the Service Information.
- Perform the RESTRAINTS SYSTEM VERIFICATION TEST. (Refer to 28 - DTC-Based Diagnostics/CONTROLLER, Occupant Restraint (ORC) - Standard Procedure).

3. CHECK (R54, R56) PASSENGER SEAT BELT RETRACTOR TENSIONER CIRCUITS FOR A SHORT TO GROUND

WARNING: Turn the ignition off, disconnect the 12-volt battery and wait two minutes before proceeding. Failure to follow these instructions may result in possible serious or fatal injury.

1. Disconnect the SRS Load Tool Kit 8443A and Jumper from the Passenger Seat Belt Retractor Tensioner harness connector.
2. Disconnect the ORC harness connectors.

NOTE: Check connectors - Clean and repair as necessary.

3. Connect the SRS Load Tool Adapter 8443-24 to the ORC C1 harness connector.
4. Measure the resistance of the (R56) Passenger Seat Belt Retractor Tensioner Line 1 circuit between the Passenger Seat Belt Tensioner harness connector cavity 2 and ground.
5. Measure the resistance of the (R54) Passenger Seat Belt Retractor Tensioner Line 2 circuit between the Passenger Seat Belt Tensioner harness connector cavity 1 and ground.

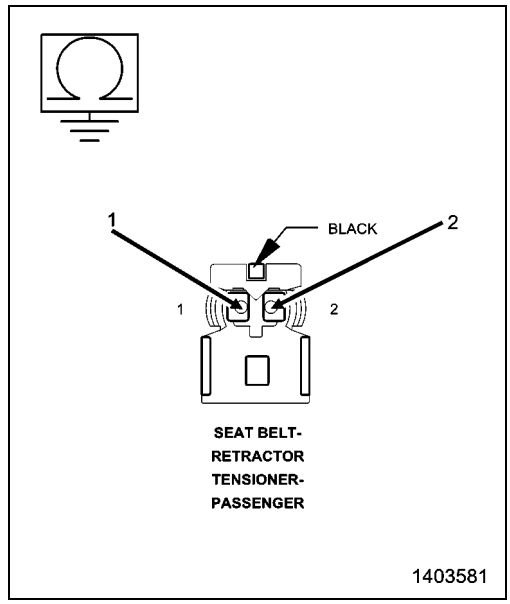

Is the resistance below 10K Ohms on either circuit?

Yes

- Repair the Passenger Seat Belt Retractor Tensioner circuits for a short to ground.
- Perform the RESTRAINTS SYSTEM VERIFICATION TEST. (Refer to 28 - DTC-Based Diagnostics/CONTROLLER, Occupant Restraint (ORC) - Standard Procedure).

No

WARNING: If the Occupant Restraint Controller (ORC) is dropped at any time, it must be replaced. Failure to follow these instructions may result in possible serious or fatal injury.

- Replace the ORC in accordance with the Service Information.
- Perform the RESTRAINTS SYSTEM VERIFICATION TEST. (Refer to 28 - DTC-Based Diagnostics/CONTROLLER, Occupant Restraint (ORC) - Standard Procedure).

■ B007F-12-PASSENGER SEATBELT RETRACTOR PRETENSIONER DEPLOYMENT CONTROL - CIRCUIT SHORT TO BATTERY

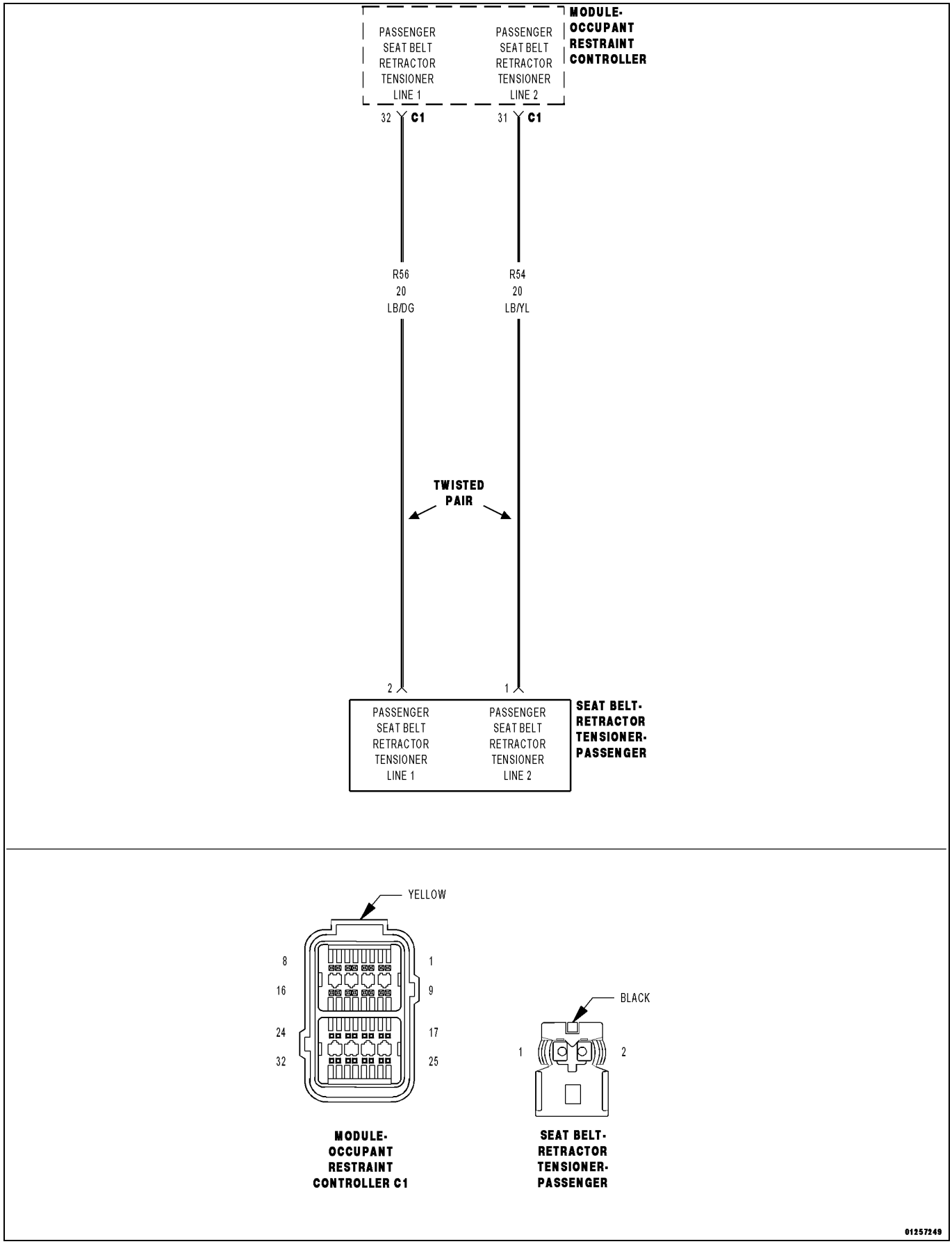

For a complete wiring diagram, **refer to Wiring Information**.

Theory of Operation

When powered, the Occupant Restraint Controller (ORC) sends a test current to the squibs to verify the integrity of the squib and wiring. These circuits are maintained in a “floating” configuration at the ORC (connected to neither power nor ground) as protection against inadvertent deployment. Use of the Supplemental Restraints System (SRS) Load Tool Kit 8443A in the tests below substitutes a suspect squib with a known good component. The use of the SRS Load Tool Adapter provides a test point as well as a method for opening the shorting bar connections within the ORC harness connector.

- **When Monitored:**

  The ORC sends out a 40 mA diagnostic current on each squib voltage supply circuit at power up and every 100 ms thereafter while the ignition is on. The ORC then monitors the data return wire to determine the state of the circuit.
- **Set Condition:**

  This Diagnostic Trouble Code (DTC) sets when the ORC detects a short to voltage on the squib circuit for more than 2.5 seconds. This DTC transitions from active to stored when the ORC sees a recovery from a short to voltage for greater than 2.5 seconds.

Possible Causes
(R54) PASSENGER SEAT BELT RETRACTOR TENSIONER LINE 2 CIRCUIT SHORTED TO VOLTAGE
(R56) PASSENGER SEAT BELT RETRACTOR TENSIONER LINE 1 CIRCUIT SHORTED TO VOLTAGE
PASSENGER SEAT BELT RETRACTOR TENSIONER
OCCUPANT RESTRAINT CONTROLLER (ORC)

Always perform the Pre-Diagnostic Troubleshooting procedure before proceeding. (Refer to 28 - DTC-Based Diagnostics/CONTROLLER, Occupant Restraint (ORC) - Standard Procedure).

1. VERIFY ACTIVE DTC

NOTE: Ensure the battery is fully charged.

1. Turn the ignition on.
2. With the scan tool, read ORC DTCs.

   Does the scan tool display active B007F-12-PASSENGER SEATBELT RETRACTOR PRETENSIONER DEPLOYMENT CONTROL - CIRCUIT SHORT TO BATTERY DTC?

Yes

- Go To 2

No

- Perform the RESTRAINTS SYSTEM INTERMITTENT TEST.(Refer to 28 - DTC-Based Diagnostics/CONTROLLER, Occupant Restraint (ORC) - Standard Procedure).

2. CHECK PASSENGER SEAT BELT RETRACTOR TENSIONER FOR SHORT VOLTAGE

WARNING: Turn the ignition off, disconnect the 12-volt battery and wait two minutes before proceeding. Failure to follow these instructions may result in possible serious or fatal injury.

1. Disconnect the Passenger Seat Belt Retractor Tensioner harness connector.

NOTE: Check connectors - Clean and repair as necessary.

2. Connect the SRS Load Tool Kit 8443A and SRS Load Tool Jumper 8443-8 to the Passenger Seat Belt Retractor Tensioner harness connector.

WARNING: Turn the ignition on, then reconnect the 12-volt battery and wait two minutes before proceeding. Failure to follow these instructions may result in possible serious or fatal injury.

3. With the scan tool, read the ORC DTCs.

Does the scan tool display active B007F-12-PASSENGER SEAT-BELT RETRACTOR PRETENSIONER DEPLOYMENT CONTROL - CIRCUIT SHORT TO BATTERY DTC?

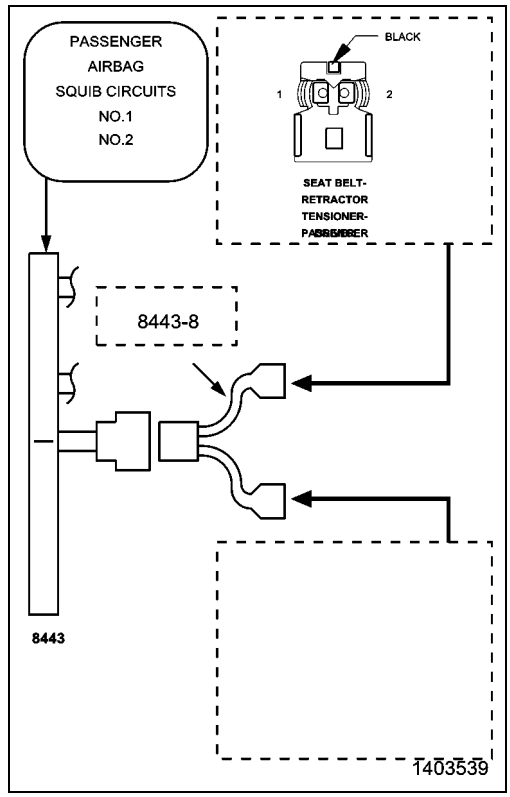

Yes

- Go To 3

No

WARNING: Turn the ignition off, disconnect the 12-volt battery and wait two minutes before proceeding. Failure to follow these instructions may result in possible serious or fatal injury.

- Replace the Passenger Seat Belt Retractor Tensioner in accordance with the Service Information.
- Perform the RESTRAINTS SYSTEM VERIFICATION TEST. (Refer to 28 - DTC-Based Diagnostics/CONTROLLER, Occupant Restraint (ORC) - Standard Procedure).

3. CHECK (R54, R56) PASSENGER SEAT BELT RETRACTOR TENSIONER CIRCUITS FOR A SHORT TO VOLTAGE

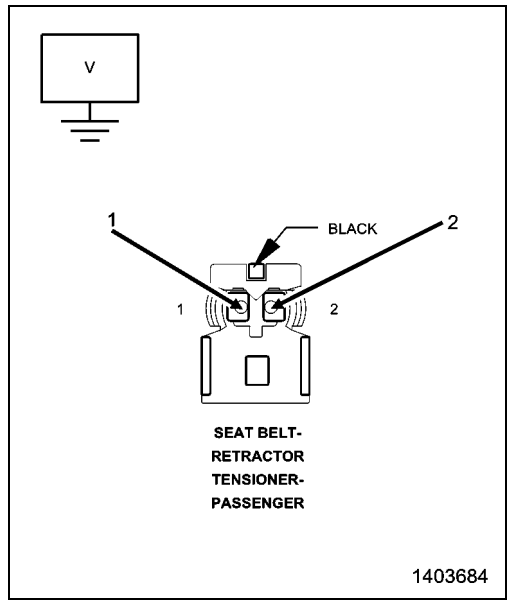

WARNING: Turn the ignition off, disconnect the 12-volt battery and wait two minutes before proceeding. Failure to follow these instructions may result in possible serious or fatal injury.

1. Disconnect the SRS Load Tool Kit 8443A and Jumper from the Passenger Seat Belt Retractor Tensioner harness connector.
2. Disconnect the ORC harness connectors.

NOTE: Check connectors - Clean and repair as necessary.

3. Connect the SRS Load Tool Adapter 8443-24 to the ORC C1 harness connectors.

WARNING: Turn the ignition on, then reconnect the 12-volt battery and wait two minutes before proceeding. Failure to follow these instructions may result in possible serious or fatal injury.

4. Measure the voltage of the (R56) Passenger Seat Belt Retractor Tensioner Line 1 circuit between the Passenger Seat Belt Retractor Tensioner harness connector cavity 2 and ground.
5. Measure the voltage of the (R54) Passenger Seat Belt Retractor Tensioner Line 2 circuit between the Passenger Seat Belt Retractor Tensioner harness connector cavity 1 and ground.

Is there any voltage present on either circuit?

Yes

WARNING: Turn the ignition off, disconnect the 12-volt battery and wait two minutes before proceeding. Failure to follow these instructions may result in possible serious or fatal injury.

- Repair the Passenger Seat Belt Retractor Tensioner circuits for a short to voltage.
- Perform the RESTRAINTS SYSTEM VERIFICATION TEST. (Refer to 28 - DTC-Based Diagnostics/CONTROLLER, Occupant Restraint (ORC) - Standard Procedure).

No

WARNING: Turn the ignition off, disconnect the 12-volt battery and wait two minutes before proceeding. Failure to follow these instructions may result in possible serious or fatal injury.

WARNING: If the Occupant Restraint Controller (ORC) is dropped at any time, it must be replaced. Failure to follow these instructions may result in possible serious or fatal injury.

- Replace the ORC in accordance with the Service Information.
- Perform the RESTRAINTS SYSTEM VERIFICATION TEST. (Refer to 28 - DTC-Based Diagnostics/CONTROLLER, Occupant Restraint (ORC) - Standard Procedure).

■ B007F-13-PASSENGER SEATBELT RETRACTOR PRETENSIONER DEPLOYMENT CONTROL - CIRCUIT OPEN

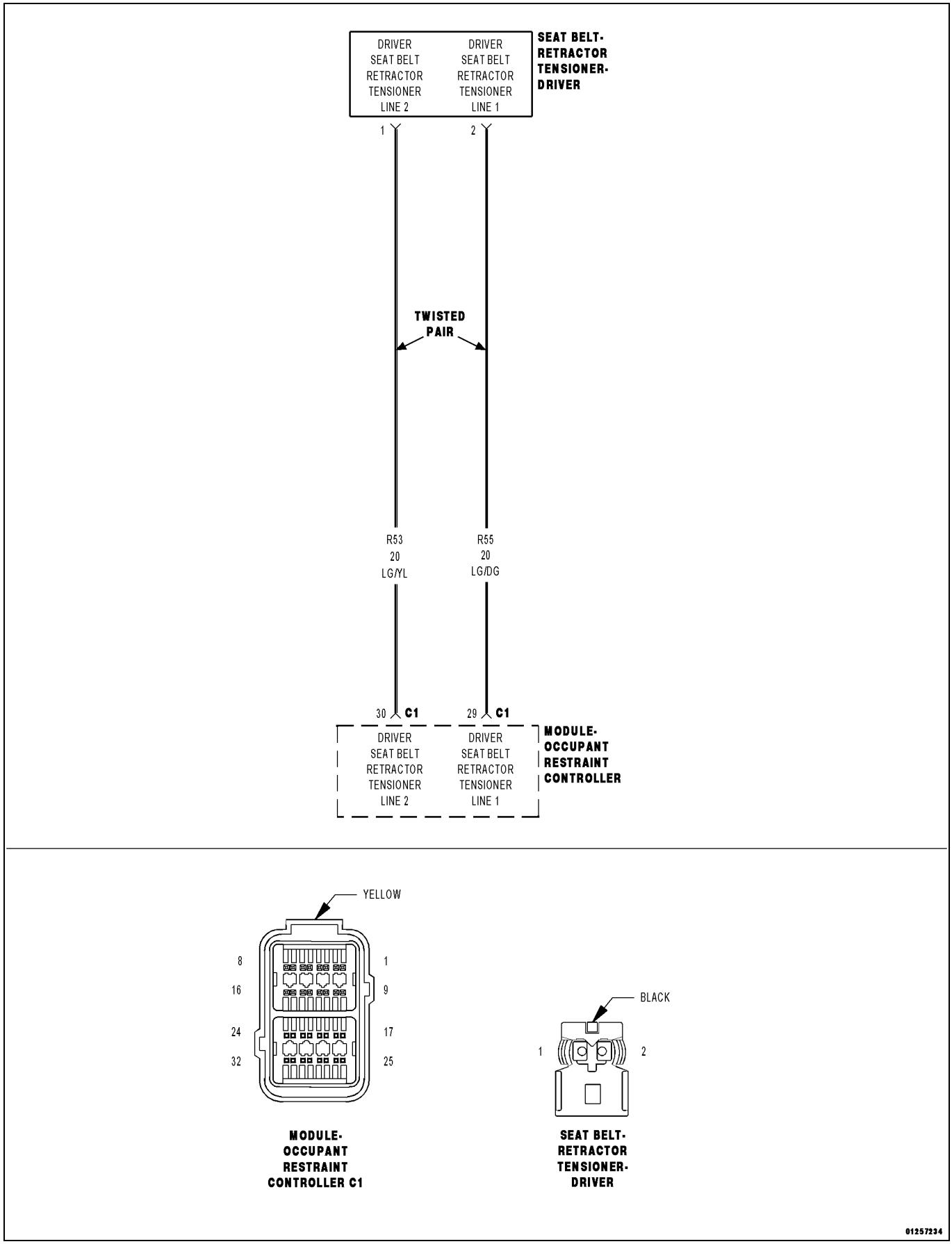

For a complete wiring diagram, **refer to the Wiring Information**.

Theory of Operation

When powered, the Occupant Restraint Controller (ORC) sends a test current to the squibs to verify the integrity of the squib and wiring. These circuits are maintained in a “floating” configuration at the ORC (connected to neither power nor ground) as protection against inadvertent deployment. Use of the Supplemental Restraints System (SRS) Load Tool Kit 8443A in the tests below substitutes a suspect squib with a known good component. The use of the SRS Load Tool Adapter provides a test point as well as a method for opening the shorting bar connections within the ORC harness connector.

- **When Monitored:**

  The ORC sends out a 40 mA diagnostic current on each squib voltage supply circuit at power up and every 100 ms thereafter while the ignition is in on. The ORC then monitors the data return wire to determine the state of the circuit.

- **Set Condition:**

  This Diagnostic Trouble Code (DTC) sets when the ORC detects an open on the squib circuit for more than 2.5 seconds. This DTC transitions from active to stored when the ORC sees a recovery from an open condition for greater than 2.5 seconds.

Possible Causes
(R54) PASSENGER SEAT BELT RETRACTOR TENSIONER LINE 2 CIRCUIT OPEN
(R56) PASSENGER SEAT BELT RETRACTOR TENSIONER LINE 1 CIRCUIT OPEN
PASSENGER SEAT BELT RETRACTOR TENSIONER
OCCUPANT RESTRAINT CONTROLLER (ORC)

Always perform the Pre-Diagnostic Troubleshooting procedure before proceeding. (Refer to 28 - DTC-Based Diagnostics/CONTROLLER, Occupant Restraint (ORC) - Standard Procedure).

1. VERIFY ACTIVE DTC

NOTE: Ensure the battery is fully charged.

1. Turn the ignition on.
2. With the scan tool, read ORC DTCs.

Does the scan tool display active B007F-13-PASSENGER SEATBELT RETRACTOR PRETENSIONER DEPLOYMENT CONTROL - CIRCUIT OPEN DTC?

Yes

- Go To 2

No

- Perform the RESTRAINT SYSTEM INTERMITTENT TEST. (Refer to 28 - DTC-Based Diagnostics/CONTROLLER, Occupant Restraint (ORC) - Standard Procedure).

2. CHECK FOR PASSENGER SEAT BELT RETRACTOR TENSIONER CIRCUIT OPEN

WARNING: Turn the ignition off, disconnect the 12-volt battery and wait two minutes before proceeding. Failure to follow these instructions may result in possible serious or fatal injury.

1. Disconnect the Passenger Seat Belt Retractor Tensioner harness connector.

NOTE: Check connectors - Clean and repair as necessary.

2. Connect the SRS Load Tool Kit 8443A and the SRS Load Tool Jumper 8443-8 to the Passenger Seat Belt Retractor Tensioner harness connector.

WARNING: Turn the ignition on, then reconnect the 12-volt battery and wait two minutes before proceeding. Failure to follow these instructions may result in possible serious or fatal injury.

3. With the scan tool, read the active ORC DTCs.

Does the scan tool display active B007F-13-PASSENGER SEAT-BELT RETRACTOR PRETENSIONER DEPLOYMENT CONTROL - CIRCUIT OPEN DTC?

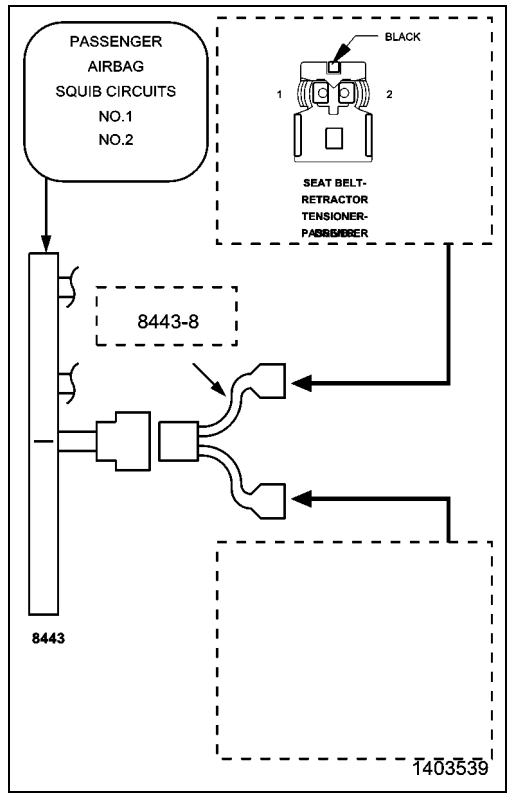

Yes

- Go To 3

No

WARNING: Turn the ignition off, disconnect the 12-volt battery and wait two minutes before proceeding. Failure to follow these instructions may result in possible serious or fatal injury.

- Replace the Passenger Seat Belt Retractor Tensioner in accordance with the Service Information.
- Perform the RESTRAINTS SYSTEM VERIFICATION TEST. (Refer to 28 - DTC-Based Diagnostics/CONTROLLER, Occupant Restraint (ORC) - Standard Procedure).

3. CHECK (R54, R56) PASSENGER SEAT BELT RETRACTOR TENSIONER CIRCUITS FOR AN OPEN

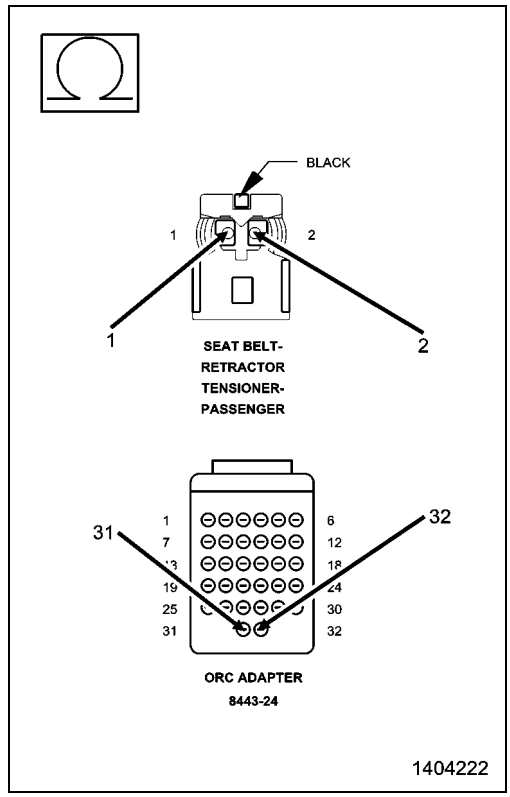

WARNING: Turn the ignition off, disconnect the 12-volt battery and wait two minutes before proceeding. Failure to follow these instructions may result in possible serious or fatal injury.

1. Disconnect the SRS Load Tool Kit 8443A and Jumper from the Passenger Seat Belt Retractor Tensioner harness connector.
2. Disconnect the ORC harness connectors.

NOTE: Check connectors - Clean and repair as necessary.

3. Connect the SRS Load Tool Adapter 8443-24 to the ORC C1 harness connectors.
4. Measure the resistance of the (R56) Passenger Seat Belt Retractor Tensioner Line 1 circuit between the Passenger Seat Belt Retractor Tensioner harness connector cavity 2 and the SRS Load Tool Adaptor 8443-24 cavity 32.
5. Measure the resistance of the (R54) Passenger Seat Belt Retractor Tensioner Line 2 circuit between the Passenger Seat Belt Retractor Tensioner harness connector cavity 1 and the SRS Load Tool Adaptor 8443-24 cavity 31.

Is the resistance below 1.0 Ohms on both circuits?

Yes

WARNING: If the Occupant Restraint Controller (ORC) is dropped at any time, it must be replaced. Failure to follow these instructions may result in possible serious or fatal injury.

- Replace the ORC in accordance with Service Information.
- Perform the RESTRAINTS SYSTEM VERIFICATION TEST. (Refer to 28 - DTC-Based Diagnostics/CONTROLLER, Occupant Restraint (ORC) - Standard Procedure).

No

- Repair the (R56) Passenger Seat Belt Retractor Tensioner Line 1 circuit.
- Perform the RESTRAINTS SYSTEM VERIFICATION TEST. (Refer to 28 - DTC-Based Diagnostics/CONTROLLER, Occupant Restraint (ORC) - Standard Procedure).

■ B007F-2B-PASSENGER SEATBELT RETRACTOR PRETENSIONER DEPLOYMENT CONTROL - WIRES SHORTED TOGETHER

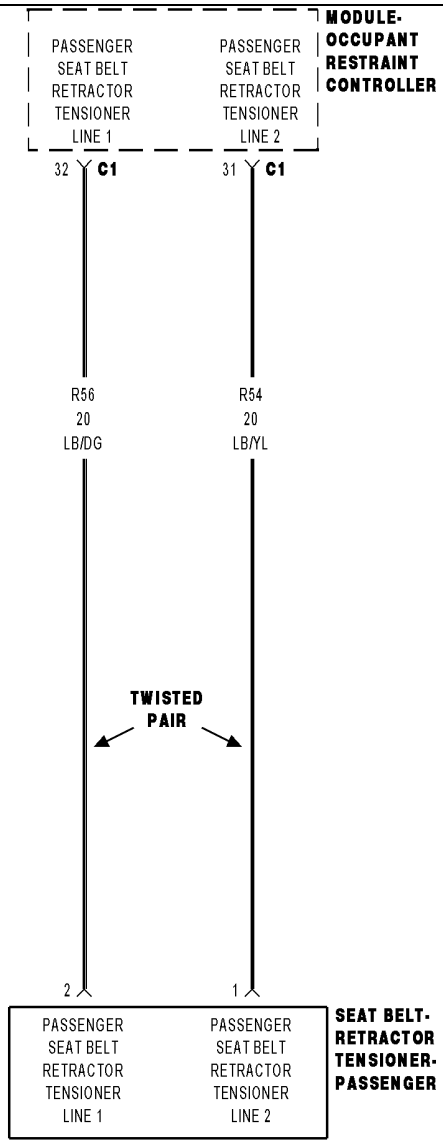

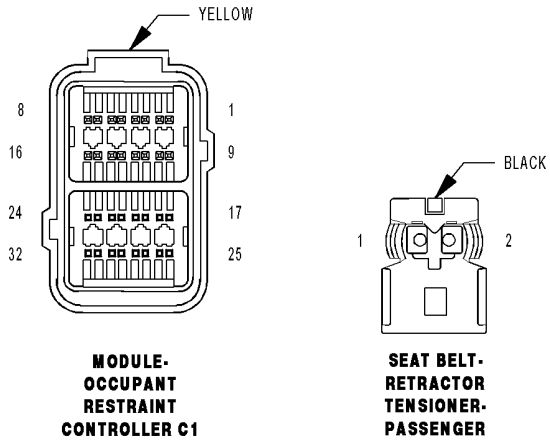

01257249

For a complete wiring diagram, **refer to Wiring Information**.

Theory of Operation

When powered, the Occupant Restraint Controller (ORC) sends a test current to the squibs to verify the integrity of the squib and wiring. These circuits are maintained in a “floating” configuration at the ORC (connected to neither power nor ground) as protection against inadvertent deployment. Use of the Supplemental Restraints System (SRS) Load Tool Kit 8443A in the tests below substitutes a suspect squib with a known good component. The use of the SRS Load Tool Adapter provides a test point as well as a method for opening the shorting bar connections within the ORC harness connector.

- **When Monitored:**

  The ORC sends out a 40 mA diagnostic current on each squib voltage supply circuit at power up and every 100 ms thereafter while the ignition is in on. The ORC then monitors the data return wire to determine the state of the circuit.

- **Set Condition:**

  This Diagnostic Trouble Code (DTC) sets when the ORC detects both circuits of the same squib are shorted together for more than 2.5 seconds. This DTC transitions from active to stored when the ORC sees a recovery from the shorted together condition for greater than 2.5 seconds.

Possible Causes
(R54) PASSENGER SEAT BELT RETRACTOR TENSIONER LINE 2 CIRCUIT SHORTED TO (R56) PASSENGER SEAT BELT RETRACTOR TENSIONER LINE 1
PASSENGER SEAT BELT RETRACTOR TENSIONER
OCCUPANT RESTRAINT CONTROLLER (ORC)

Always perform the Pre-Diagnostic Troubleshooting procedure before proceeding. (Refer to 28 - DTC-Based Diagnostics/CONTROLLER, Occupant Restraint (ORC) - Standard Procedure).

1. VERIFY ACTIVE DTC

NOTE: Ensure the battery is fully charged.

1. Turn the ignition on.
2. With the scan tool, read ORC DTCs.

Does the scan tool display active B007F-2B-PASSENGER SEATBELT RETRACTOR PRETENSIONER DEPLOYMENT CONTROL - WIRES SHORTED TOGETHER DTC?

Yes

- Go To 2

No

- Perform the RESTRAINTS SYSTEM INTERMITTENT TEST. (Refer to 28 - DTC-Based Diagnostics/CONTROLLER, Occupant Restraint (ORC) - Standard Procedure).

2. CHECK PASSENGER SEAT BELT RETRACTOR TENSIONER CIRCUITS SHORT TO TOGETHER

WARNING: Turn the ignition off, disconnect the 12-volt battery and wait two minutes before proceeding. Failure to follow these instructions may result in possible serious or fatal injury.

1. Disconnect the Passenger Seat Belt Tensioner harness connector.

NOTE: Check connectors - Clean and repair as necessary.

2. Connect the SRS Load Tool Kit 8443A and the SRS Load Tool Jumper 8443-8 to the Passenger Seat Belt Tensioner Retractor harness connector.

WARNING: Turn the ignition on, then reconnect the 12-volt battery and wait two minutes before proceeding. Failure to follow these instructions may result in possible serious or fatal injury.

3. With the scan tool, read the ORC DTCs.

Does the scan tool display active B007F-2B-PASSENGER SEAT-BELT RETRACTOR PRETENSIONER DEPLOYMENT CONTROL - WIRES SHORTED TOGETHER DTC?

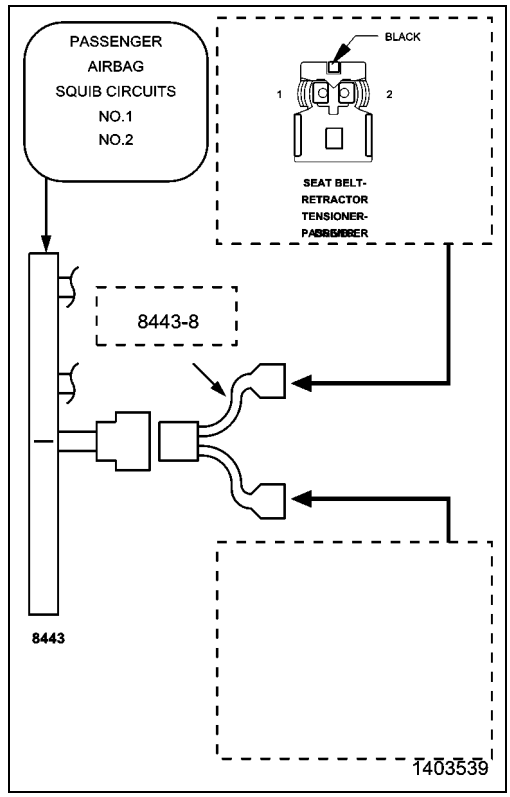

Yes

- Go To 3

No

WARNING: Turn the ignition off, disconnect the 12-volt battery and wait two minutes before proceeding. Failure to follow these instructions may result in possible serious or fatal injury.

- Replace the Passenger Seat Belt Retractor Tensioner in accordance with the Service Information.
- Perform the RESTRAINTS SYSTEM VERIFICATION TEST. (Refer to 28 - DTC-Based Diagnostics/CONTROLLER, Occupant Restraint (ORC) - Standard Procedure).

3. CHECK (R56) PASSENGER SEAT BELT RETRACTOR TENSIONER LINE 1 CIRCUIT FOR A SHORT TO (R54) PASSENGER SEAT BELT RETRACTOR TENSIONER LINE 2 CIRCUIT

WARNING: Turn the ignition off, disconnect the 12-volt battery and wait two minutes before proceeding. Failure to follow these instructions may result in possible serious or fatal injury.

1. Disconnect the SRS Load Tool Kit 8443A and the Jumper from the Passenger Seat Belt Tensioner Retractor harness connector.
2. Disconnect the ORC harness connectors.

NOTE: Check connectors - Clean and repair as necessary.

3. Connect the SRS Load Tool Adapter 8443-24 to the ORC C1 harness connector.
4. Measure the resistance between the (R56) Passenger Seat Belt Retractor Tensioner Line 1 circuit cavity 2 and the (R54) Passenger Seat Belt Retractor Tensioner Line 2 circuit cavity 1 at the Passenger Seat Belt Tensioner harness connector.

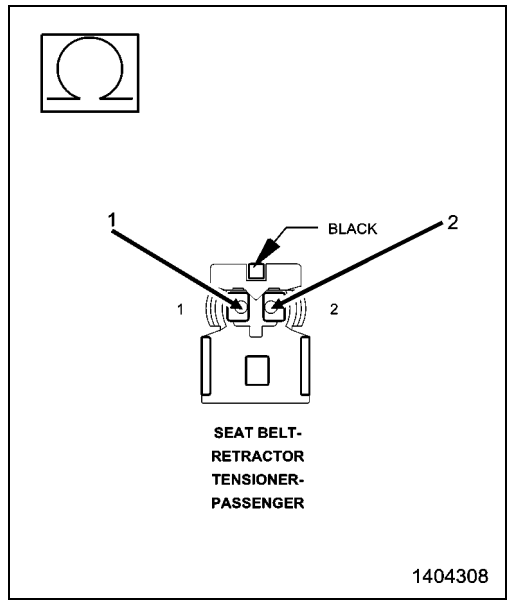

Is the resistance below 5.0 Ohms?

Yes

- Repair the (R56) Passenger Seat Belt Retractor Tensioner Line 1 circuit for a short to the (R54) Passenger Seat Belt Retractor Tensioner Line 2 circuit.
- Perform the RESTRAINTS SYSTEM VERIFICATION TEST. (Refer to 28 - DTC-Based Diagnostics/CONTROLLER, Occupant Restraint (ORC) - Standard Procedure).

No

WARNING: If the Occupant Restraint Controller (ORC) is dropped at any time, it must be replaced. Failure to follow these instructions may result in possible serious or fatal injury.

- Replace the ORC in accordance with Service Information.
- Perform the RESTRAINTS SYSTEM VERIFICATION TEST. (Refer to 28 - DTC-Based Diagnostics/CONTROLLER, Occupant Restraint (ORC) - Standard Procedure).

B2199-16-BATTERY VOLTAGE - CIRCUIT VOLTAGE BELOW THRESHOLD

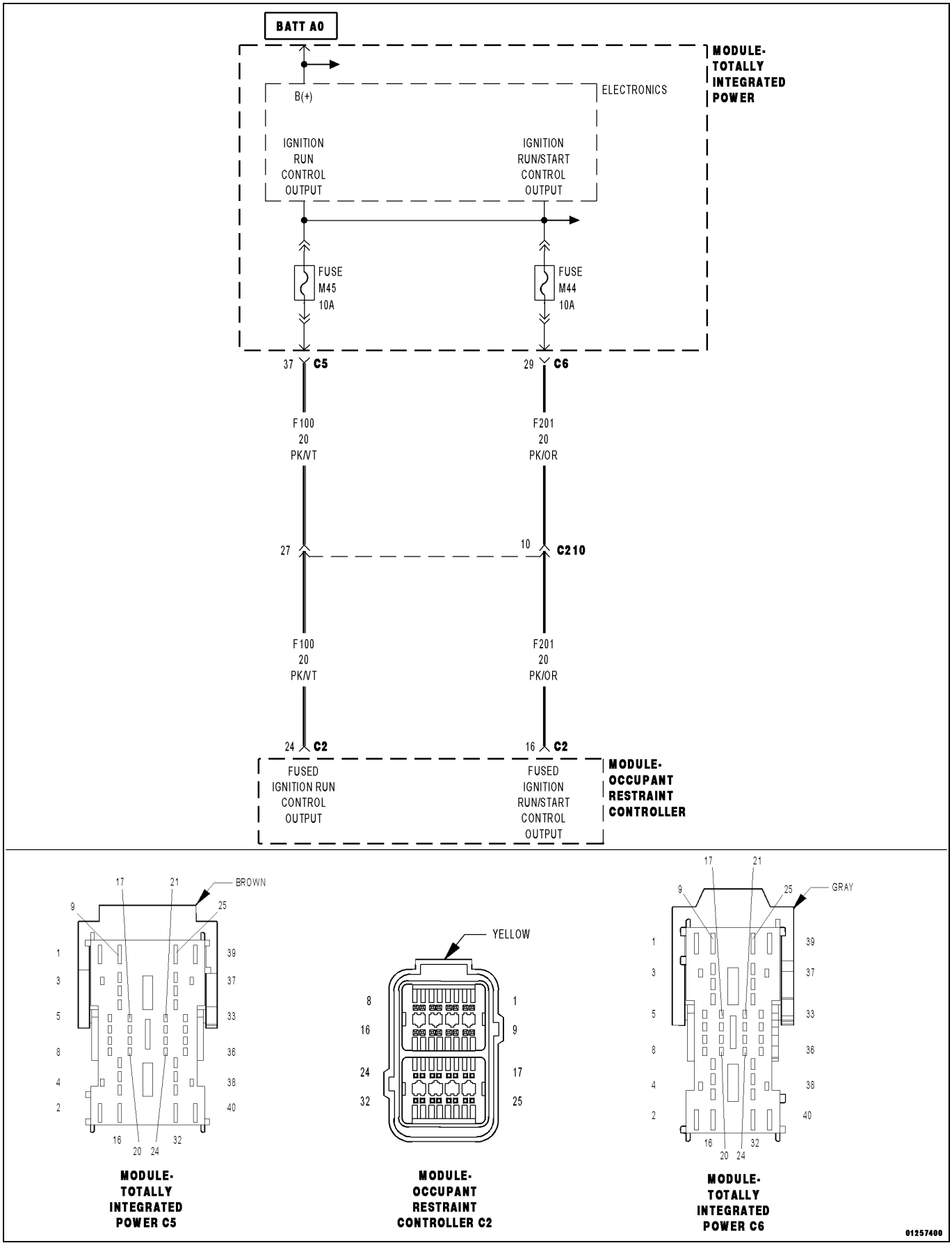

For a complete wiring diagram, **refer to the Wiring Information**.

Theory of Operation

The Occupant Restraint Controller (ORC) receives fused ignition voltage from the Totally Integrated Power Module (TIPM). The ORC is equipped with two voltage sources the F100 and F201 circuit. These circuits power the ORC and the capacitors used to initiate the squib deployment circuits in the event of collision detection.

- **When Monitored:**

  The ORC continuously monitors the voltage on the F100 and F201 supply circuits.
- **Set Condition:**

  The ORC will set this DTC when the voltage on both supply circuits are below 9 ± 0.5 volts for more than 15 seconds.

Possible Causes
CHARGING SYSTEM VOLTAGE LOW
(F100) FUSED IGNITION RUN CONTROL OUTPUT CIRCUIT HIGH RESISTANCE
(F201) FUSED IGNITION RUN/START CONTROL OUTPUT CIRCUIT HIGH RESISTANCE
TOTALLY INTEGRATED CONTROL MODULE (TIPM)
OCCUPANT RESTRAINT CONTROLLER (ORC)

Always perform the Pre-Diagnostic Troubleshooting procedure before proceeding. (Refer to 28 - DTC-Based Diagnostics/CONTROLLER, Occupant Restraint (ORC) - Standard Procedure).

1. CHECK FOR CHARGING SYSTEM DTC

NOTE: Ensure the battery is fully charged.

1. Turn the ignition on.
2. With the scan tool, read Powertrain Control Module (PCM) DTCs.

Are there any Charging System DTCs set in the PCM?

Yes

- (Refer to 28 - DTC-Based Diagnostics/MODULE, Powertrain Control (PCM) - Diagnosis and Testing) for Charging System diagnostic procedures.

No

- Go To 2

2. VERIFY ACTIVE DTC

1. With the scan tool, read all ORC DTCs.

Does the scan tool display active B2199-16-BATTERY VOLTAGE - CIRCUIT VOLTAGE BELOW THRESHOLD DTC?

Yes

- Go To 3

No

- Perform the RESTRAINTS SYSTEM INTERMITTENT TEST. (Refer to 28 - DTC-Based Diagnostics/CONTROLLER, Occupant Restraint (ORC) - Standard Procedure).

3. CHECK LOW VOLTAGE ON THE M44 AND M45 SUPPLY CIRCUITS

1. Remove the TIPM M44 and M45 fuse.

NOTE: Check connectors - Clean and repair as necessary.

2. Measure the voltage on the Ignition Run Control Output circuit between the TIPM M45 fuse supply terminal and ground.
3. Measure the voltage on the Ignition Run/Start Control Output circuit between the TIPM M44 fuse supply terminal and ground.

Is the voltage below 9 ± 0.5 volts on both circuits?

Yes

- Replace the TIPM in accordance with Service Information.
- Perform the BODY VERIFICATION TEST. (Refer to 28 - DTC-Based Diagnostics/MODULE, Totally Integrated Power (TIPM) - Standard Procedure).

No

- Go To 4

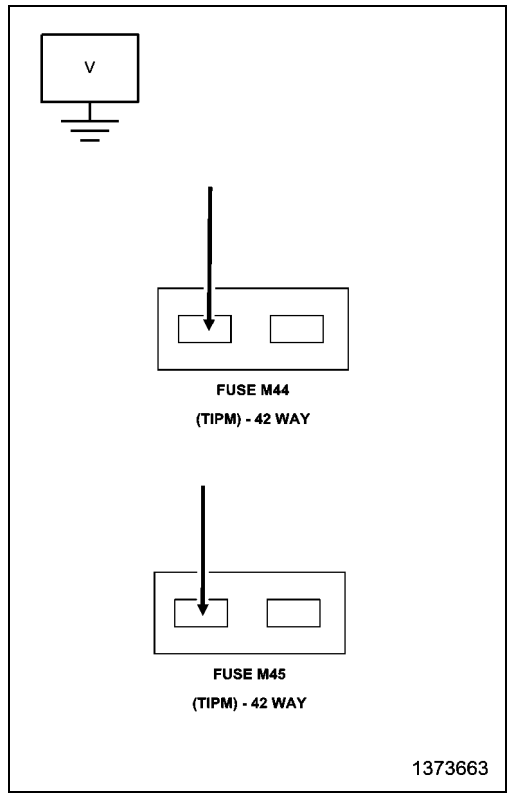

4. CHECK FOR LOW VOLTAGE AT THE ORC

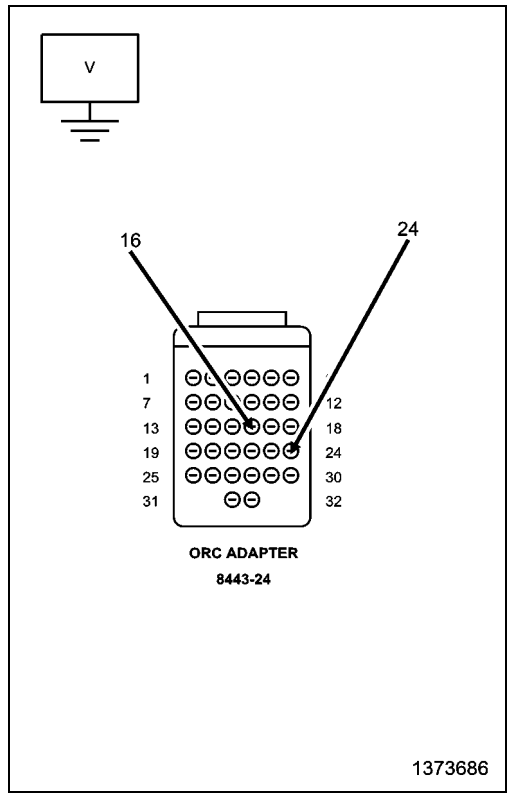

WARNING: Turn the ignition off, disconnect the 12-volt battery and wait two minutes before proceeding. Failure to follow these instructions may result in possible serious or fatal injury.

1. Install the TIPM M44 and M45 fuses.
2. Disconnect the ORC harness connectors.

NOTE: Check connectors - Clean and repair as necessary.

3. Connect the SRS Load Tool Adapter 8443-24 to the ORC C2 harness connector.

WARNING: Turn the ignition on, then reconnect the 12-volt battery and wait two minutes before proceeding. Failure to follow these instructions may result in possible serious or fatal injury.

4. Measure the voltage on the (F100) Fused Ignition Run Control Output circuit between the SRS Load Tool Adapter 8443-24 to the ORC C2 connector cavity 24 and ground.
5. Measure the voltage on the (F201) Fused Ignition Run/Start Control Output circuit between the SRS Load Tool Adapter 8443-24 to the ORC C2 connector cavity 16 and ground.

Is the voltage below 9 ± 0.5 volts on both circuits?

Yes

WARNING: Turn the ignition off, disconnect the 12-volt battery and wait two minutes before proceeding. Failure to follow these instructions may result in possible serious or fatal injury.

- Using the wiring diagram/schematic as a guide, inspect the related wiring and connectors. Look for chafed, pierced, pinched, or partially broken wires and broken, bent, pushed out, spread, corroded, or contaminated terminals.
- Repair the F100 and F201 Fused Run and Run/Start Control Output circuits for high resistance.
- Perform the RESTRAINTS SYSTEM VERIFICATION TEST. (Refer to 28 - DTC-Based Diagnostics/CONTROLLER, Occupant Restraint (ORC) - Standard Procedure).

No

WARNING: Turn the ignition off, disconnect the 12-volt battery and wait two minutes before proceeding. Failure to follow these instructions may result in possible serious or fatal injury.

WARNING: If the Occupant Restraint Controller (ORC) is dropped at any time, it must be replaced. Failure to follow these instructions may result in possible serious or fatal injury.

- Replace the ORC in accordance with Service Information.
- Perform the RESTRAINTS SYSTEM VERIFICATION TEST. (Refer to 28 - DTC-Based Diagnostics/CONTROLLER, Occupant Restraint (ORC) - Standard Procedure).

■ B2199-17-BATTERY VOLTAGE - CIRCUIT VOLTAGE ABOVE THRESHOLD

For a complete wiring diagram, **refer to Wiring Information**.

Theory of Operation

The Occupant Restraint Controller (ORC) receives fused ignition voltage from the Totally Integrated Power Module (TIPM). The ORC is equipped with two voltage sources the F100 and F201 circuit. These circuits power the ORC and the capacitors used to initiate the squib deployment circuits in the event of collision detection.

- **When Monitored:**
  With the ignition on, the ORC continuously monitors the voltage on the F100 and F201 supply circuits.
- **Set Condition:**
  The ORC will set this Diagnostic Trouble Code (DTC) when the voltage on both supply circuits are above 16 ± 0.5 volts for more than 15 seconds.

Possible Causes
CHARGING SYSTEM VOLTAGE HIGH
OCCUPANT RESTRAINT CONTROLLER (ORC)

Always perform the Pre-Diagnostic Troubleshooting procedure before proceeding. (Refer to 28 - DTC-Based Diagnostics/CONTROLLER, Occupant Restraint (ORC) - Standard Procedure).

NOTE: Ensure the battery is fully charged.

1. CHECK PCM FOR CHARGING SYSTEM DTC

1. Turn the ignition on.
2. With the scan tool, read Powertrain Control Module (PCM) DTCs.

Are there any Charging System DTCs set in the PCM?

Yes

- (Refer to 28 - DTC-Based Diagnostics/MODULE, Powertrain Control (PCM) - Diagnosis and Testing) for Charging System diagnostic procedures.

No

- Go To 2

2. VERIFY ACTIVE DTC

1. Turn the ignition on.
2. With the scan tool, read all ORC DTCs.

Does the scan tool display active B2199-17-BATTERY VOLTAGE - CIRCUIT VOLTAGE ABOVE THRESHOLD DTC?

Yes

WARNING: Turn the ignition off, disconnect the 12-volt battery and wait two minutes before proceeding. Failure to follow these instructions may result in possible serious or fatal injury.

- Replace the ORC in accordance with Service Information.
- Perform the RESTRAINTS SYSTEM VERIFICATION TEST. (Refer to 28 - DTC-Based Diagnostics/CONTROLLER, Occupant Restraint (ORC) - Standard Procedure).

No

- Perform the RESTRAINTS SYSTEM INTERMITTENT TEST. (Refer to 28 - DTC-Based Diagnostics/CONTROLLER, Occupant Restraint (ORC) - Standard Procedure).

B212C-13-IGNITION RUN/START INPUT - CIRCUIT OPEN

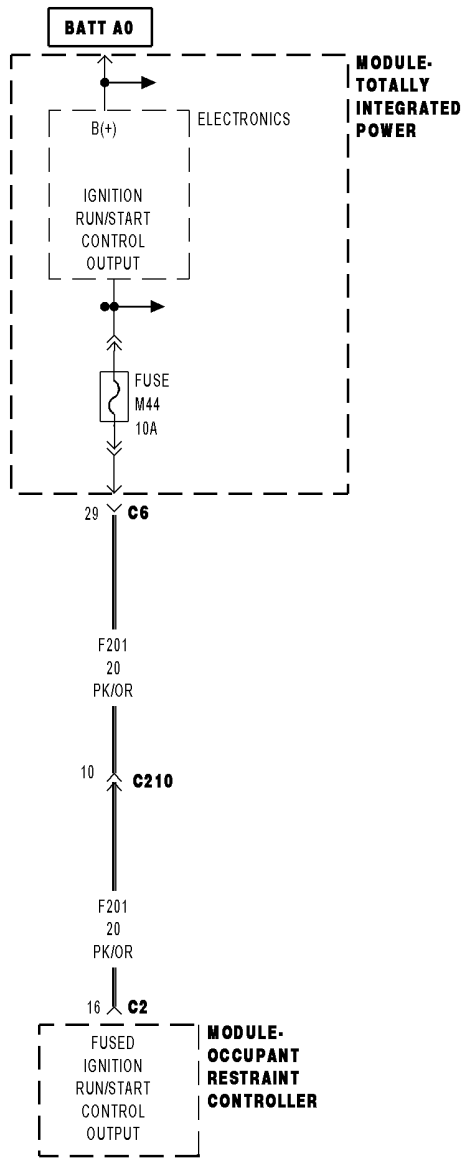

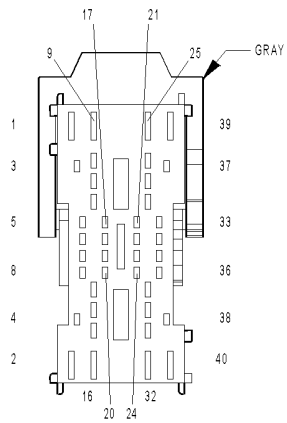

MODULE-
TOTALLY
INTEGRATED
POWER C6

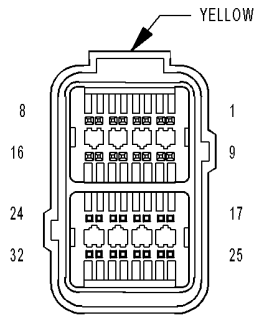

MODULE-
OCCUPANT
RESTRAINT
CONTROLLER C2

01247795

For a complete wiring diagram, **refer to the Wiring Information**.

Theory of Operation

The Occupant Restraint Controller (ORC) receives power for the Run/Start circuit from the Totally Integrated Power Module (TIPM) via fuse M44. This circuits power the ORC and the capacitors used to initiate the squib deployment circuits in the event of collision detection. The use of the Supplemental Restraints System (SRS) Load Tool Adapter in the tests below provides a test point in place of the ORC harness connectors.

- **When Monitored:**

  The ORC monitors the voltage on the Run/Start and Run circuits and compares their voltage at power up during the initialization process, and once every 100 ms throughout the ignition cycle.

- **Set Condition:**

  This Diagnostic Trouble Code (DTC) sets when the ORC detects the voltage below 6 volts on the Fused Ignition Run/Start Control Output circuit for more than 15 seconds while the Fused Ignition Run Control Output circuit remains above 6 volts. In the event the ORC detects voltage has returned to normal operating range for a minimum of 5 seconds, this DTC immediately transitions to stored status.

Possible Causes
ACTIVE TIPM RUN/START DTC
TIPM M44 FUSE OPEN
(F201) FUSED IGNITION RUN/START CONTROL OUTPUT CIRCUIT OPEN
(F201) FUSED IGNITION RUN/START CONTROL OUTPUT CIRCUIT SHORTED TO GROUND
TOTALLY INTEGRATED POWER MODULE (TIPM)
OCCUPANT RESTRAINT CONTROLLER (ORC)

Always perform the Pre-Diagnostic Troubleshooting procedure before proceeding. (Refer to 28 - DTC-Based Diagnostics/CONTROLLER, Occupant Restraint (ORC) - Standard Procedure).

1. VERIFY ACTIVE DTC

NOTE: Make sure the battery is fully charged.

1. Turn the ignition on.
2. Using a scan tool, read ORC DTCs.

Does the scan tool display active B212C-13-IGNITION RUN/START INPUT - CIRCUIT OPEN DTC?

Yes

- Go To 2

No

- Perform the RESTRAINTS SYSTEM INTERMITTENT TEST. (Refer to 28 - DTC-Based Diagnostics/CONTROLLER, Occupant Restraint (ORC) - Standard Procedure).

2. CHECK FOR ACTIVE TIPM RUN/START DTC

1. With the scan tool, read TIPM DTCs.

Does the scan tool display any active TIPM Run/Start circuit related DTCs?

Yes

- Perform the appropriate TIPM diagnostic procedures. (Refer to 28 - DTC-Based Diagnostics/MODULE, Totally Integrated Power (TIPM) - Diagnosis and Testing).

No

- Go To 3

3. INSPECT TIPM M44 FUSE

1. Turn the ignition to OFF.
2. Remove and inspect TIPM M44 fuse.

NOTE: Check connectors. Clean and repair as necessary.

Is fuse TIPM M44 fuse open?

Yes

- Go To 4

No

- Go To 6

4. CHECK (F201) FUSED IGNITION RUN/START CONTROL OUTPUT CIRCUIT RESISTANCE

WARNING: Turn the ignition off, disconnect the 12-volt battery and wait two minutes before proceeding. Failure to follow these instructions may result in possible serious or fatal injury.

1. Measure the resistance of the (F201) Fused Ignition Run/Start Control Output circuit between TIPM M44 fuse terminal (output side) and ground.

Is the resistance below 100 Ohms?

Yes

- Go To 5

No

- Using the wiring diagram/schematic as a guide, inspect the related wiring and connectors. Look for chafed, pierced, pinched, or partially broken wires and broken, bent, pushed out, spread, corroded, or contaminated terminals.
- Replace TIPM M44 fuse.
- Perform the RESTRAINTS SYSTEM VERIFICATION TEST. (Refer to 28 - DTC-Based Diagnostics/CONTROLLER, Occupant Restraint (ORC) - Standard Procedure).

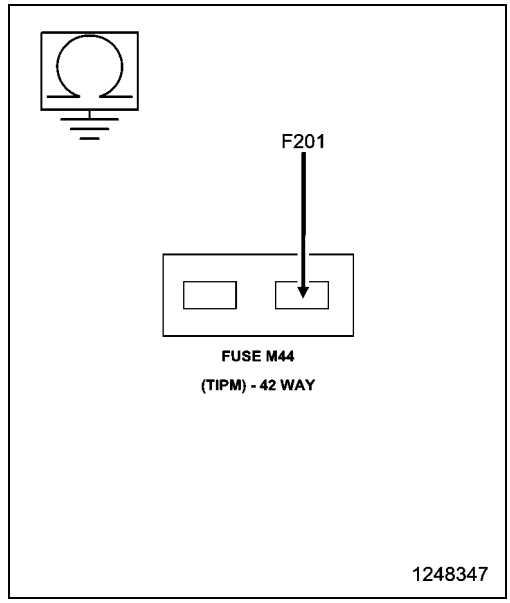

5. CHECK (F201) FUSED IGNITION RUN/START CONTROL OUTPUT CIRCUIT RESISTANCE WITH ORC DISCONNECTED

1. Disconnect both ORC harness connectors.

NOTE: Check connectors - Clean and repair as necessary.

2. Connect the SRS Load Tool Adapter 8443-24 to the ORC C2 harness connector.
3. Measure the resistance of the (F201) Fused Ignition Run/Start Control Output circuit between SRS Load Tool Adapter 8443-24 cavity 16 and ground.

Is the resistance below 100 Ohms?

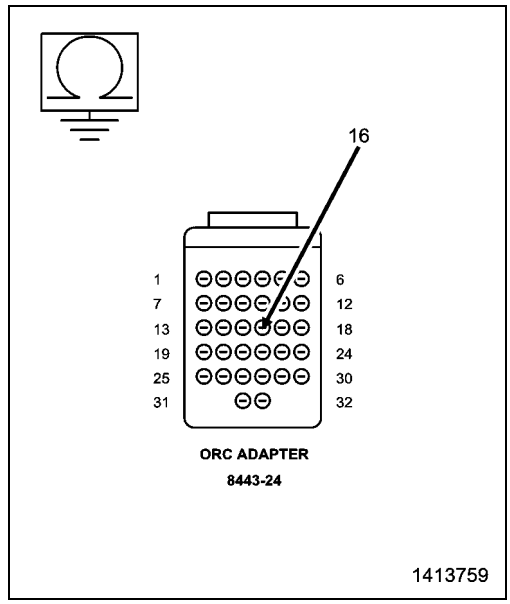

Yes

- Replace the TIPM M44 fuse.
- Repair the (F201) Fused Ignition Run/Start Control Output circuit for a short to ground.
- Perform the RESTRAINTS SYSTEM VERIFICATION TEST. (Refer to 28 - DTC-Based Diagnostics/CONTROLLER, Occupant Restraint (ORC) - Standard Procedure).

No

•

WARNING: If the Occupant Restraint Controller (ORC) is dropped at any time, it must be replaced. Failure to follow these instructions may result in possible serious or fatal injury.

Replace the ORC in accordance with the Service Information.

- Replace the TIPM M44 fuse.
- Perform the RESTRAINTS SYSTEM VERIFICATION TEST. (Refer to 28 - DTC-Based Diagnostics/CONTROLLER, Occupant Restraint (ORC) - Standard Procedure).

6. CHECK (F201) IGNITION RUN/START CONTROL OUTPUT CIRCUIT FOR AN OPEN OR HIGH RESISTANCE

1. Turn the ignition on.
2. Measure the voltage of the Ignition Run/Start Control Output circuit at the TIPM M44 fuse terminal (supply side).

Is the voltage above 6.0 volts?

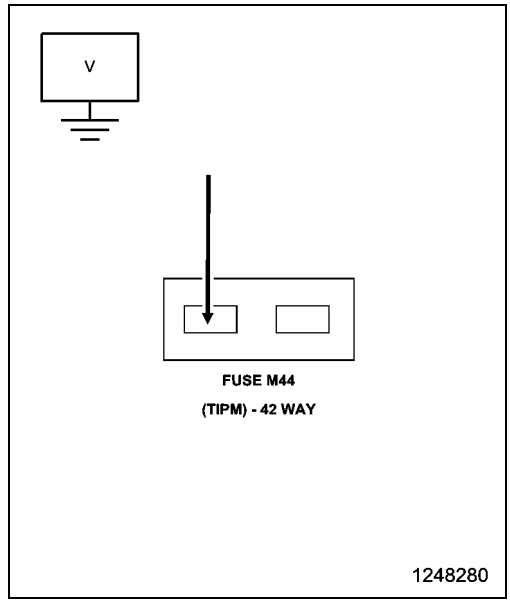

Yes

- Go To 7

No

WARNING: Turn the ignition off, disconnect the 12-volt battery and wait two minutes before proceeding. Failure to follow these instructions may result in possible serious or fatal injury.

- Repair the open Ignition Run/Start Control Output circuit.
- Perform the RESTRAINTS SYSTEM VERIFICATION TEST. (Refer to 28 - DTC-Based Diagnostics/CONTROLLER, Occupant Restraint (ORC) - Standard Procedure).

7. CHECK ORC CIRCUIT OPEN

WARNING: Turn the ignition off, disconnect the 12-volt battery and wait two minutes before proceeding. Failure to follow these instructions may result in possible serious or fatal injury.

1. Reinstall the TIPM M44 Fuse.
2. Disconnect both ORC harness connectors.

NOTE: Check connectors - Clean and repair as necessary.

3. Install the SRS Load Tool Adapter 8443-24 to the ORC C2 harness connector.

WARNING: Turn the ignition on, then reconnect the 12-volt battery and wait two minutes before proceeding. Failure to follow these instructions may result in possible serious or fatal injury.

4. Measure the voltage of the (F201) Fused Ignition Run/Start Control Output circuit between the SRS Load Tool Adapter 8443-24 cavity 16 and ground.

Is the voltage above 6.0 volts?

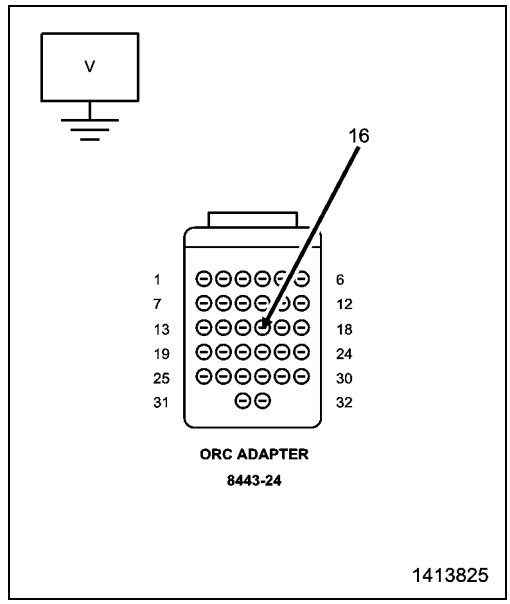

Yes

WARNING: Turn the ignition off, disconnect the 12-volt battery and wait two minutes before proceeding. Failure to follow these instructions may result in possible serious or fatal injury.

WARNING: If the Occupant Restraint Controller (ORC) is dropped at any time, it must be replaced. Failure to follow these instructions may result in possible serious or fatal injury.

- Replace the ORC in accordance with the Service Information.
- Perform the RESTRAINTS SYSTEM VERIFICATION TEST. (Refer to 28 - DTC-Based Diagnostics/CONTROLLER, Occupant Restraint (ORC) - Standard Procedure).

No

- Go To 8.

8. CHECK FOR OPEN (F201) FUSED IGNITION RUN START CONTROL OUTPUT CIRCUIT

WARNING: Turn the ignition off, disconnect the 12-volt battery and wait two minutes before proceeding. Failure to follow these instructions may result in possible serious or fatal injury.
Disconnect the TIPM C6 harness connector.

NOTE: Check connectors - Clean and repair as necessary.

1. Measure the resistance of the (F201) Fused Ignition Run/Start Control Output circuit between the SRS Load Tool Adapter 8443-24 cavity 16 and the TIPM C6 harness connector cavity 29.

Is the resistance below 5.0 Ohms?

Yes

- Turn the ignition OFF.
- Replace the TIPM in accordance with the Service Information.
- Perform the BODY VERIFICATION TEST. (Refer to 28 - DTC-Based Diagnostics/MODULE, Totally Integrated Power (TIPM) - Standard Procedure).

No

- Repair the open (F201) Fused Ignition Run/Start Control Output circuit.
- Perform the RESTRAINTS SYSTEM VERIFICATION TEST. (Refer to 28 - DTC-Based Diagnostics/CONTROLLER, Occupant Restraint (ORC) - Standard Procedure).

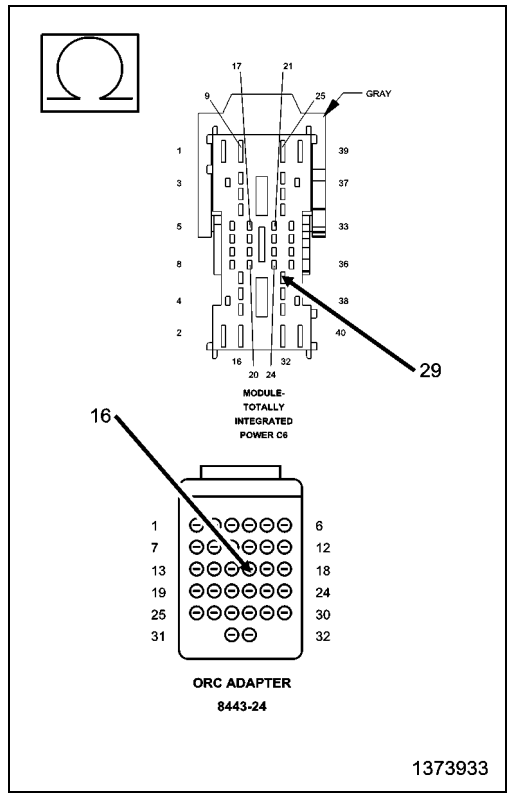

B212D-13-IGNITION RUN ONLY INPUT-CIRCUIT OPEN

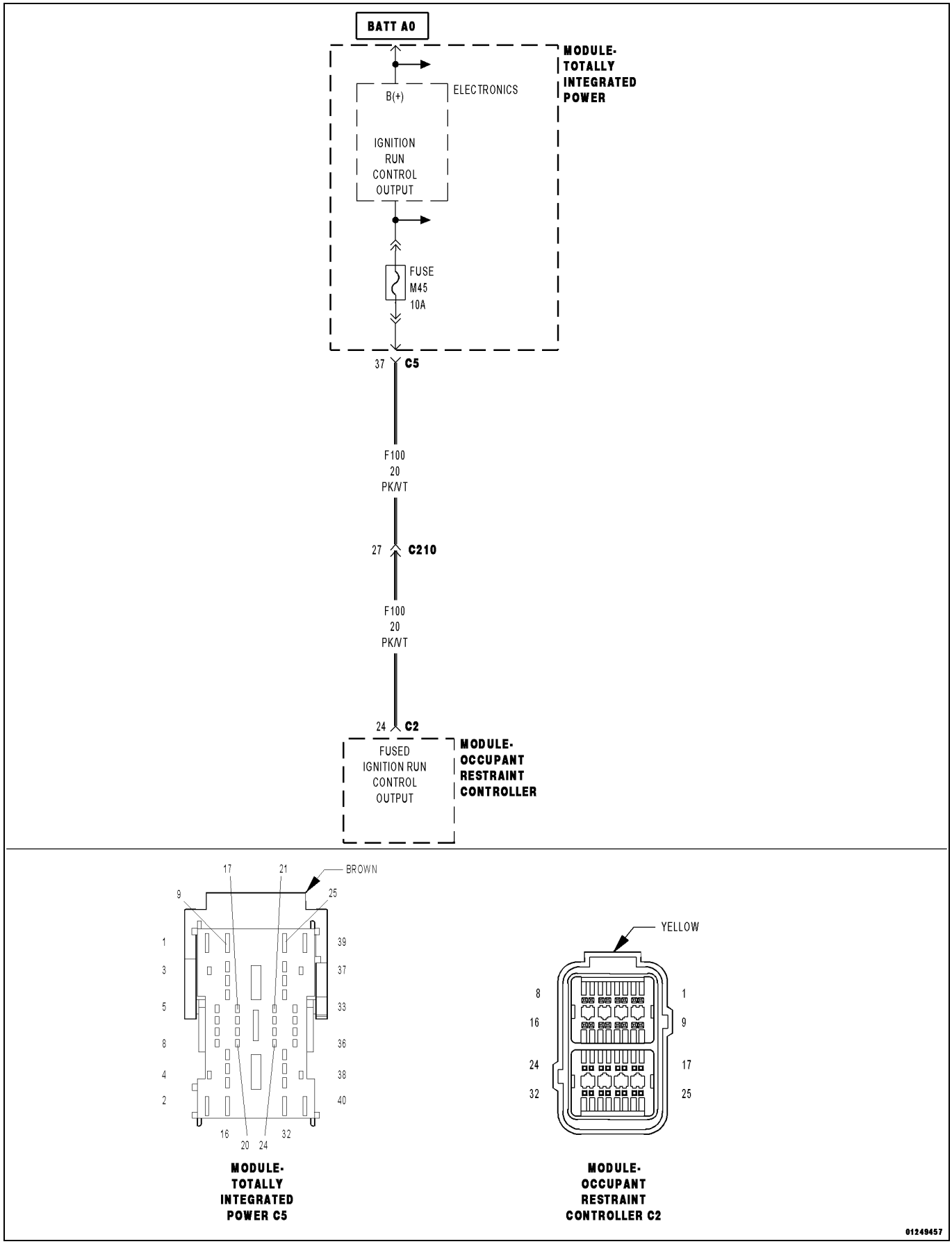

For a complete wiring diagram, **refer to Wiring Information**.

Theory of Operation

The Occupant Restraint Controller (ORC) receives power for the Run circuit from the Totally Integrated Power Module (TIPM) via fuse M45. This circuits power the ORC and the capacitors used to initiate the squib deployment circuits in the event of collision detection.

- **When Monitored:**

  The ORC monitors the voltage on the Run/Start and Run circuits and compares their voltage at power up during the initialization process, and once every 100 ms throughout the ignition cycle. The use of the Supplemental Restraints System (SRS) Load Tool Adapter in the tests below provides a test point in place of the ORC harness connectors.

- **Set Condition:**

  This Diagnostic Trouble Code (DTC) sets when the ORC detects the voltage below 6 volts on the Fused Ignition Run Control Output circuit for more than 15 seconds while the Fused Ignition Run/Start Control Output circuit remains above 9 volts. In the event the ORC detects voltage has returned to normal operating range for a minimum of 5 seconds, this DTC immediately transitions to stored status.

Possible Causes
ACTIVE TIPM RUN RELAY TROUBLE CODES
TIPM M45 FUSE OPEN
(F100) FUSED IGNITION RUN CONTROL OUTPUT CIRCUIT OPEN
(F100) FUSED IGNITION RUN CONTROL OUTPUT CIRCUIT SHORTED TO GROUND
TOTALLY INTEGRATED POWER MODULE (TIPM)
OCCUPANT RESTRAINT CONTROLLER (ORC)

Always perform the Pre-Diagnostic Troubleshooting procedure before proceeding. (Refer to 28 - DTC-Based Diagnostics/CONTROLLER, Occupant Restraint (ORC) - Standard Procedure).

1. VERIFY ACTIVE DTC

NOTE: Ensure the battery is fully charged.

1. Turn the ignition on.
2. With the scan tool, read ORC DTCs.

Does the scan tool display active B212D-13-IGNITION RUN ONLY INPUT CIRCUIT OPEN DTC?

Yes

- Go To 2

No

- Perform the RESTRAINTS SYSTEM INTERMITTENT TEST. (Refer to 28 - DTC-Based Diagnostics/CONTROLLER, Occupant Restraint (ORC) - Standard Procedure).

2. CHECK FOR ACTIVE RUN RELAY DTC

1. With the scan tool, read TIPM DTCs.

Does the scan tool display any active TIPM Run Relay related DTCs?

Yes

- Perform the appropriate TIPM diagnostic procedures. (Refer to 28 - DTC-Based Diagnostics/MODULE, Totally Integrated Power (TIPM) - Diagnosis and Testing).

No

- Go To 3

3. INSPECT TIPM FUSE M45

1. Turn the Ignition OFF.
2. Remove and inspect the TIPM Fuse M45.

NOTE: Check connectors - Clean and repair as necessary.

Is the TIPM Fuse M45 open?

Yes

- Go To 4

No

- Go To 6

4. CHECK (F100) FUSED IGNITION RUN CONTROL OUTPUT CIRCUIT RESISTANCE

WARNING: Turn the ignition off, disconnect the 12-volt battery and wait two minutes before proceeding. Failure to follow these instructions may result in possible serious or fatal injury.

1. Measure the resistance of the (F100) Fused Ignition Run Control Output circuit between the TIPM Fuse M45 output terminal and ground.

Is the resistance below 100 Ohms?

Yes

- Go To 5

No

- Using the wiring diagram/schematic as a guide, inspect the related wiring and connectors. Look for chafed, pierced, pinched, or partially broken wires and broken, bent, pushed out, spread, corroded, or contaminated terminals.
- Replace TIPM Fuse M45.
- Perform the RESTRAINTS SYSTEM VERIFICATION TEST. (Refer to 28 - DTC-Based Diagnostics/CONTROLLER, Occupant Restraint (ORC) - Standard Procedure).

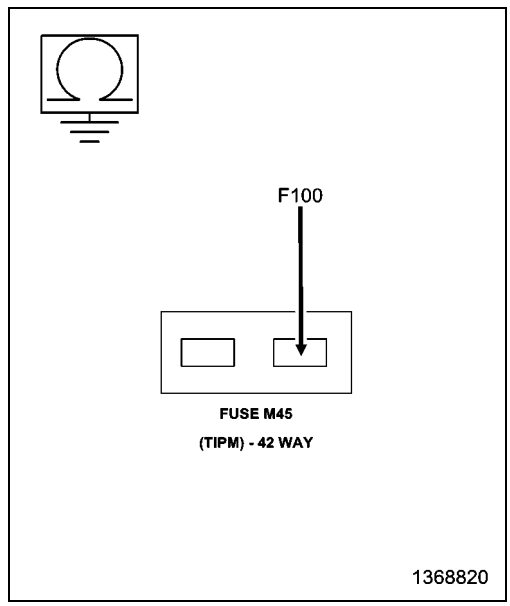

5. CHECK (F100) FUSED IGNITION RUN CONTROL OUTPUT CIRCUIT WITH ORC DISCONNECTED

1. Disconnect the ORC harness connectors.

NOTE: Check connectors - Clean and repair as necessary.

2. Connect the SRS Load Tool Adaptor 8443-24 to the ORC C2 harness connector.
3. Measure the resistance of the (F100) Fused Ignition Run Control Output circuit between SRS Load Tool Adaptor 8443-24 cavity 24 and ground.

Is the resistance below 100 Ohms?

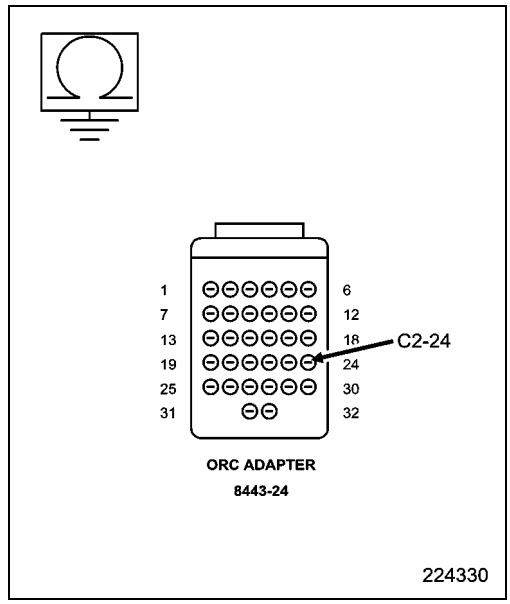

Yes

- Repair the (F100) Fused Ignition Run Control Output circuit for a short to ground.
- Replace the TIPM Fuse M45.
- Perform the RESTRAINTS SYSTEM VERIFICATION TEST. (Refer to 28 - DTC-Based Diagnostics/CONTROLLER, Occupant Restraint (ORC) - Standard Procedure).

No

WARNING: If the Occupant Restraint Controller (ORC) is dropped at any time, it must be replaced. Failure to follow these instructions may result in possible serious or fatal injury.

- Replace the ORC in accordance with the Service Information.
- Replace the TIPM Fuse M45.
- Perform the RESTRAINTS SYSTEM VERIFICATION TEST. (Refer to 28 - DTC-Based Diagnostics/CONTROLLER, Occupant Restraint (ORC) - Standard Procedure).

6. CHECK TIPM FUSE M45 SUPPLY CIRCUIT VOLTAGE

1. Turn the ignition on.
2. Measure the voltage of the Ignition Run Control Output circuit between the TIPM Fuse M45 supply terminal and ground.

Is the voltage above 6.0 volts?

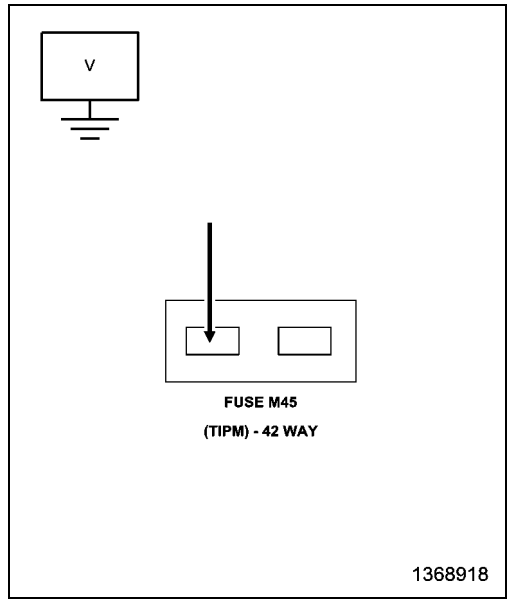

Yes

- Go To 7

No

- Repair the open Ignition Run Control Output circuit.
- Perform the RESTRAINTS SYSTEM VERIFICATION TEST. (Refer to 28 - DTC-Based Diagnostics/CONTROLLER, Occupant Restraint (ORC) - Standard Procedure).

7. CHECK FOR OPEN (F100) FUSED IGNITION RUN CONTROL OUTPUT AT ORC

WARNING: Turn the ignition off, disconnect the battery and wait two minutes before proceeding. Failure to follow these instructions may result in possible serious or fatal injury.

1. Reinstall the TIPM Fuse M45.
2. Disconnect the ORC harness connectors.

NOTE: Check connectors - Clean and repair as necessary.

3. Connect the SRS Load Tool Adapter 8443-24 to the ORC C2 harness connector.

WARNING: Turn the ignition on, then reconnect the 12-volt battery and wait two minutes before proceeding. Failure to follow these instructions may result in possible serious or fatal injury.

4. Measure the voltage of the (F100) Fused Ignition Run Control Output circuit between the SRS Load Tool Adapter 8443-24 cavity 24 and ground.

Is the voltage above 6.0 volts?

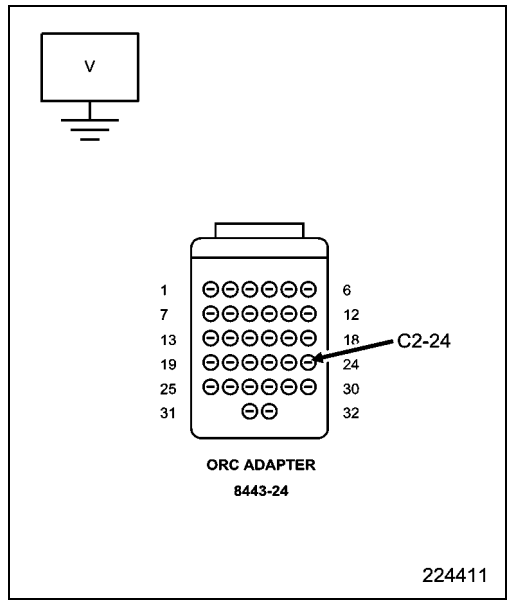

Yes

- Replace the ORC in accordance with the Service Information.
- Perform the RESTRAINTS SYSTEM VERIFICATION TEST. (Refer to 28 - DTC-Based Diagnostics/CONTROLLER, Occupant Restraint (ORC) - Standard Procedure).

No

- Go To 8

8. CHECK FOR OPEN (F100) FUSED IGNITION RUN CONTROL OUTPUT CIRCUIT

WARNING: Turn the ignition off, disconnect the 12-volt battery and wait two minutes before proceeding. Failure to follow these instructions may result in possible serious or fatal injury.

1. Disconnect the TIPM C5 harness connector.

NOTE: Check connectors - Clean and repair as necessary.

2. Measure the resistance of the (F100) Fused Ignition Run Control Output circuit between the SRS Load Tool Adapter 8443-24 cavity 24 and the TIPM C5 harness connector cavity 37.

Is the resistance below 5.0 Ohms?

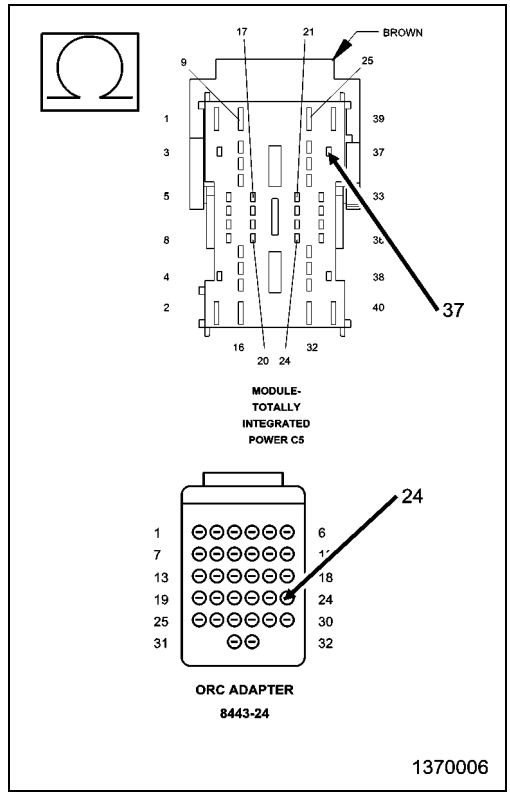

Yes

- Replace the TIPM in accordance with the Service Information.
- Perform the BODY VERIFICATION TEST. (Refer to 28 - DTC-Based Diagnostics/MODULE, Totally Integrated Power (TIPM) - Standard Procedure).

No

- Repair the (F100) Fused Ignition Run Control Output circuit for an open or high resistance.
- Perform the RESTRAINTS SYSTEM VERIFICATION TEST. (Refer to 28 - DTC-Based Diagnostics/CONTROLLER, Occupant Restraint (ORC) - Standard Procedure).

B210F-00-LOSS OF BATTERY VOLTAGE

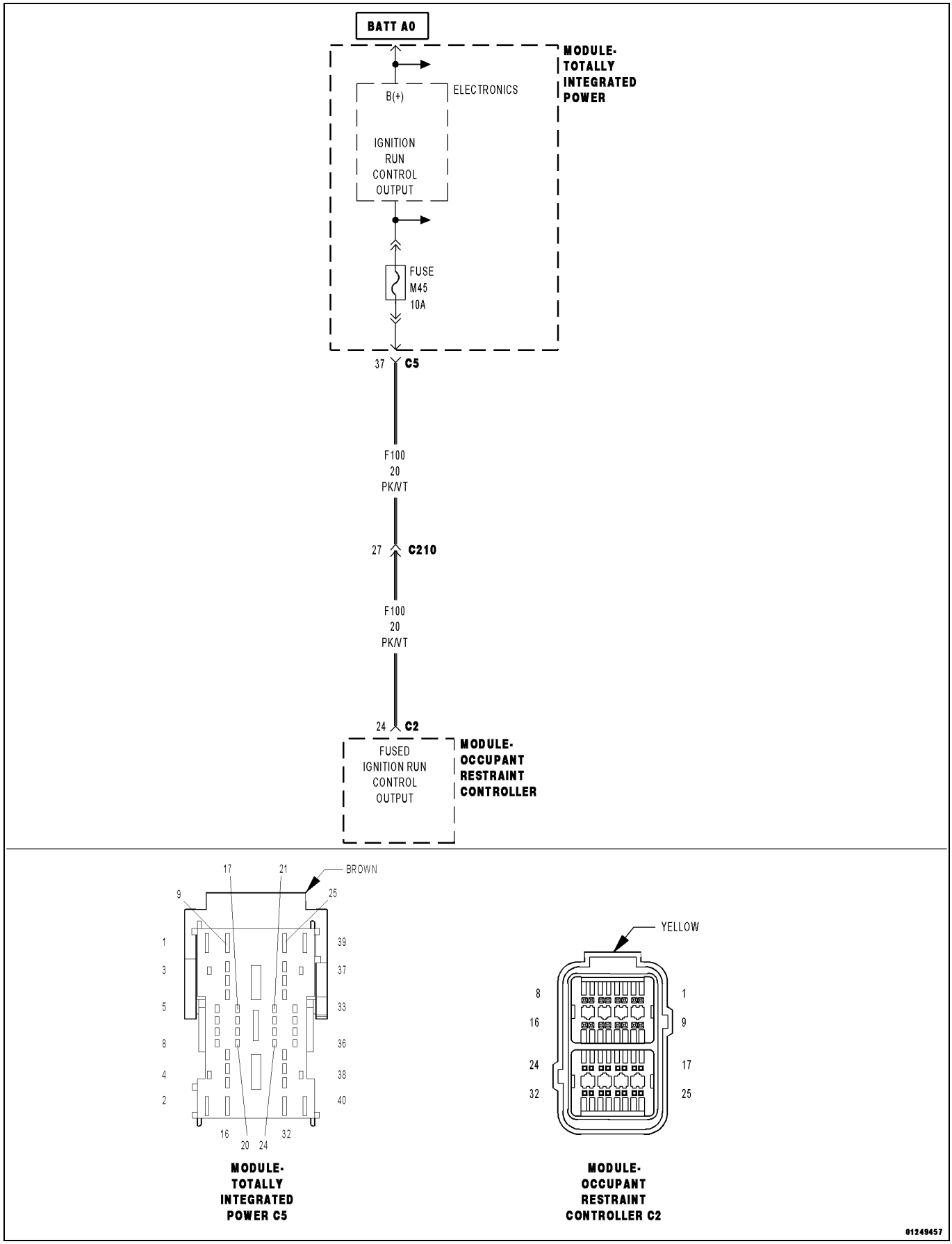

For a complete wiring diagram, **refer to Wiring Information**.

Theory of Operation

The Occupant Restraint Controller (ORC) receives power for the Run circuit from the Totally Integrated Power Module (TIPM) via fuse M45. This circuits power the ORC and the capacitors used to initiate the squib deployment circuits in the event of collision detection.

- **When Monitored:**

  The ORC monitors the voltage on the Run/Start and Run circuits and compares their voltage at power up during the initialization process, and once every 100 ms throughout the ignition cycle. The use of the Supplemental Restraints System (SRS) Load Tool Adapter in the tests below provides a test point in place of the ORC harness connectors.

- **Set Condition:**

  This Diagnostic Trouble Code (DTC) sets when the ORC detects the voltage below 6 volts on the Fused Ignition Run Control Output circuit for more than 15 seconds while the Fused Ignition Run/Start Control Output circuit remains above 9 volts. In the event the ORC detects voltage has returned to normal operating range for a minimum of five seconds, this DTC immediately transitions to stored status.

Possible Causes
ACTIVE TIPM RUN RELAY TROUBLE CODES
TIPM M45 FUSE OPEN
(F100) FUSED IGNITION RUN CONTROL OUTPUT CIRCUIT SHORTED TO GROUND
TOTALLY INTEGRATED POWER MODULE (TIPM)
OCCUPANT RESTRAINT CONTROLLER (ORC)

Always perform the Pre-Diagnostic Troubleshooting procedure before proceeding. (Refer to 28 - DTC-Based Diagnostics/CONTROLLER, Occupant Restraint (ORC) - Standard Procedure).

1. VERIFY ACTIVE DTC

NOTE: Make sure the battery is fully charged.

1. Turn the ignition on.
2. With the scan tool, read ORC DTCs.

Does the scan tool display active B210F-00-LOSS OF BATTERY VOLTAGE - DTC?

Yes

- Go To 2

No

- Perform the RESTRAINTS SYSTEM INTERMITTENT TEST. (Refer to 28 - DTC-Based Diagnostics/CONTROLLER, Occupant Restraint (ORC) - Standard Procedure).

2. CHECK FOR ACTIVE RUN RELAY DTC

1. With the scan tool, read TIPM DTCs.

Does the scan tool display any active TIPM Run Relay related DTCs?

Yes

- Perform the appropriate TIPM diagnostic procedures. (Refer to 28 - DTC-Based Diagnostics/MODULE, Totally Integrated Power (TIPM) - Diagnosis and Testing).

No

- Go To 3

3. INSPECT TIPM FUSE M45

1. Turn the Ignition OFF.
2. Remove and inspect the TIPM Fuse M45.

NOTE: Check connectors - Clean and repair as necessary.

Is the TIPM Fuse M45 open?

Yes

- Go To 4

No

- Go To 5

4. CHECK (F100) FUSED IGNITION RUN CONTROL OUTPUT CIRCUIT RESISTANCE

WARNING: Turn the ignition off, disconnect the 12-volt battery and wait two minutes before proceeding. Failure to follow these instructions may result in possible serious or fatal injury.

1. Measure the resistance of the (F100) Fused Ignition Run Control Output circuit between the TIPM Fuse M45 output terminal and ground.

Is the resistance below 100 Ohms?

Yes

- Go To 5

No

- Using the wiring diagram/schematic as a guide, inspect the related wiring and connectors. Look for chafed, pierced, pinched, or partially broken wires and broken, bent, pushed out, spread, corroded, or contaminated terminals.
- Replace TIPM Fuse M45.
- Perform the RESTRAINTS SYSTEM VERIFICATION TEST. (Refer to 28 - DTC-Based Diagnostics/CONTROLLER, Occupant Restraint (ORC) - Standard Procedure).

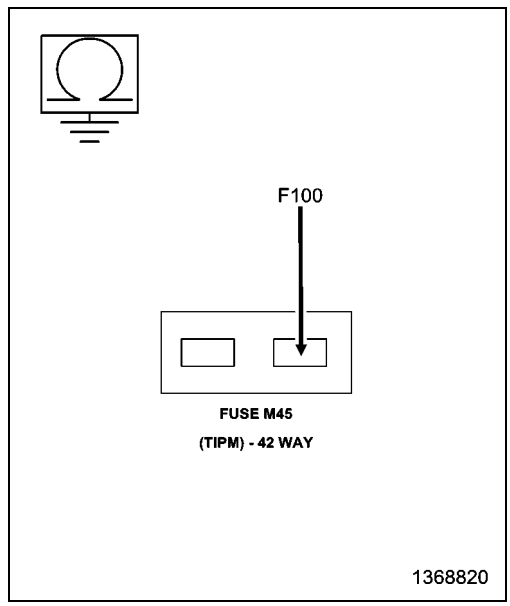

5. CHECK (F100) FUSED IGNITION RUN CONTROL OUTPUT CIRCUIT WITH ORC DISCONNECTED

1. Disconnect the ORC harness connectors.

NOTE: Check connectors - Clean and repair as necessary.

2. Connect the SRS Load Tool Adaptor 8443-24 to the ORC C2 harness connector.
3. Measure the resistance of the (F100) Fused Ignition Run Control Output circuit between SRS Load Tool Adaptor 8443-24 cavity 24 and ground.

Is the resistance below 100 Ohms?

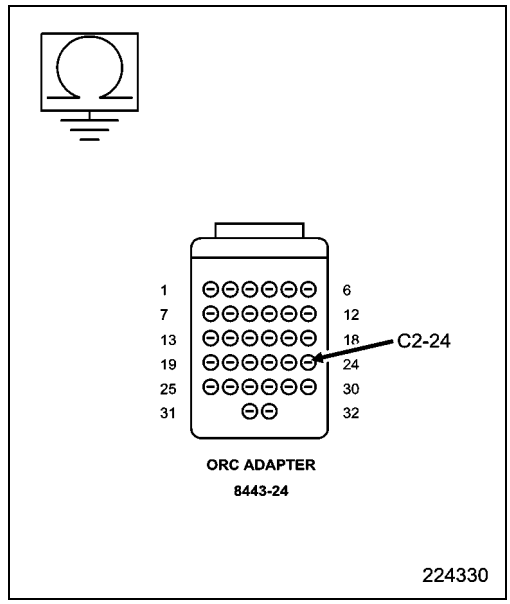

Yes

- Repair the (F100) Fused Ignition Run Control Output circuit for a short to ground.
- Replace the TIPM Fuse M45.
- Perform the RESTRAINTS SYSTEM VERIFICATION TEST. (Refer to 28 - DTC-Based Diagnostics/CONTROLLER, Occupant Restraint (ORC) - Standard Procedure).

No

WARNING: If the Occupant Restraint Controller (ORC) is dropped at any time, it must be replaced. Failure to follow these instructions may result in possible serious or fatal injury.

- Replace the ORC in accordance with the Service Information.
- Replace the TIPM Fuse M45.
- Perform the RESTRAINTS SYSTEM VERIFICATION TEST. (Refer to 28 - DTC-Based Diagnostics/CONTROLLER, Occupant Restraint (ORC) - Standard Procedure).

■ B2207-00-OCCUPANT RESTRAINT CONTROLLER INTERNAL 1

Theory of Operation

When powered, the Occupant Restraint Controller (ORC) performs an internal self test. The repair of this fault condition does not involve any external circuitry and centers on verifying the integrity of the module's internal circuitry and software validity.

- **When Monitored:**

  The ORC checks the status and validity of the internal operating hardware and software at power up during the initialization process, and continuously through the ignition cycle.

- **Set Condition:**

  This Diagnostic Trouble Code (DTC) sets when a fault is detected internal to ORC hardware and/or software. Once set, this DTC is latched permanently and the module must be replaced.

Possible Causes
OCCUPANT RESTRAINT CONTROLLER (ORC)

Always Perform the Pre-Diagnostic Troubleshooting procedure before proceeding. (Refer to 28 - DTC-Based Diagnostics/CONTROLLER, Occupant Restraint (ORC) - Standard Procedure).

1. REPLACE OCCUPANT RESTRAINT CONTROLLER (ORC)

NOTE: When this DTC is set, the module self test has discovered an internal fault that cannot be repaired and the module must be replaced regardless of DTC status.

When this code is set do not clear codes, view repair.

Repair

WARNING: If the Occupant Restraint Controller (ORC) is dropped at any time, it must be replaced. Failure to take the proper precautions can result in accidental airbag deployment. Failure to follow these instructions may result in possible serious or fatal injury.

WARNING: Turn the ignition off disconnect the 12-volt battery and wait two minutes before proceeding. Failure to follow these instructions may result in possible serious or fatal injury.

- Replace the ORC in accordance with Service Information.
- Perform the RESTRAINTS SYSTEM VERIFICATION TEST. (Refer to 28 - DTC-Based Diagnostics/CONTROLLER, Occupant Restraint (ORC) - Standard Procedure).

■ B2208-00-OCCUPANT RESTRAINT CONTROLLER INTERNAL 2

Theory of Operation

When powered, the Occupant Restraint Controller (ORC) performs an internal self test. The repair of this fault condition does not involve any external circuitry and centers on verifying the integrity of the module's internal circuitry and software validity.

- **When Monitored:**

  The ORC checks the status and validity of the internal operating hardware and software at power up during the initialization process, and continuously through the ignition cycle.

- **Set Condition:**

  This Diagnostic Trouble Code (DTC) sets when a fault is detected internal to ORC hardware and/or software. Once set, this DTC is latched permanently and the module must be replaced.

Possible Causes
OCCUPANT RESTRAINT CONTROLLER (ORC)

Always Perform the Pre-Diagnostic Troubleshooting procedure before proceeding. (Refer to 28 - DTC-Based Diagnostics/CONTROLLER, Occupant Restraint (ORC) - Standard Procedure).

1. REPLACE OCCUPANT RESTRAINT CONTROLLER (ORC)

NOTE: When this DTC is set, the module self test has discovered an internal fault that cannot be repaired and the module must be replaced regardless of DTC status.

When this code is set do not clear codes, view repair.

Repair

WARNING: If the Occupant Restraint Controller (ORC) is dropped at any time, it must be replaced. Failure to take the proper precautions can result in accidental airbag deployment. Failure to follow these instructions may result in possible serious or fatal injury.

WARNING: Turn the ignition off disconnect the 12-volt battery and wait two minutes before proceeding. Failure to follow these instructions may result in possible serious or fatal injury.

- Replace the ORC in accordance with Service Information.
- Perform the RESTRAINTS SYSTEM VERIFICATION TEST. (Refer to 28 - DTC-Based Diagnostics/CONTROLLER, Occupant Restraint (ORC) - Standard Procedure).

■ B2209-00-OCCUPANT RESTRAINT CONTROLLER INTERNAL 3

Theory of Operation

When powered, the Occupant Restraint Controller (ORC) performs an internal self test. The repair of this fault condition does not involve any external circuitry and centers on verifying the integrity of the module's internal circuitry and software validity.

- **When Monitored:**

  The ORC checks the status and validity of the internal operating hardware and software at power up during the initialization process, and continuously through the ignition cycle.

- **Set Condition:**

  This Diagnostic Trouble Code (DTC) sets when a fault is detected internal to ORC hardware and/or software. Once set, this DTC is latched permanently and the module must be replaced.

Possible Causes
OCCUPANT RESTRAINT CONTROLLER (ORC)

Always Perform the Pre-Diagnostic Troubleshooting procedure before proceeding. (Refer to 28 - DTC-Based Diagnostics/CONTROLLER, Occupant Restraint (ORC) - Standard Procedure).

1. REPLACE OCCUPANT RESTRAINT CONTROLLER (ORC)

NOTE: When this DTC is set, the module self test has discovered an internal fault that cannot be repaired and the module must be replaced regardless of DTC status.

When this code is set do not clear codes, view repair.

Repair

WARNING: If the Occupant Restraint Controller (ORC) is dropped at any time, it must be replaced. Failure to take the proper precautions can result in accidental airbag deployment. Failure to follow these instructions may result in possible serious or fatal injury.

WARNING: Turn the ignition off disconnect the 12-volt battery and wait two minutes before proceeding. Failure to follow these instructions may result in possible serious or fatal injury.

- Replace the ORC in accordance with Service Information.
- Perform the RESTRAINTS SYSTEM VERIFICATION TEST. (Refer to 28 - DTC-Based Diagnostics/CONTROLLER, Occupant Restraint (ORC) - Standard Procedure).

■ B220A-00-OCCUPANT RESTRAINT CONTROLLER INTERNAL 4

Theory of Operation

When powered, the Occupant Restraint Controller (ORC) performs an internal self test. The repair of this fault condition does not involve any external circuitry and centers on verifying the integrity of the module's internal circuitry and software validity.

- **When Monitored:**

  The ORC checks the status and validity of the internal operating hardware and software at power up during the initialization process, and continuously through the ignition cycle.

- **Set Condition:**

  This Diagnostic Trouble Code (DTC) sets when a fault is detected internal to ORC hardware and/or software. Once set, this DTC is latched permanently and the module must be replaced.

Possible Causes
OCCUPANT RESTRAINT CONTROLLER (ORC)

Always Perform the Pre-Diagnostic Troubleshooting procedure before proceeding. (Refer to 28 - DTC-Based Diagnostics/CONTROLLER, Occupant Restraint (ORC) - Standard Procedure).

1. REPLACE OCCUPANT RESTRAINT CONTROLLER (ORC)

NOTE: When this DTC is set, the module self test has discovered an internal fault that cannot be repaired and the module must be replaced regardless of DTC status.

When this code is set do not clear codes, view repair.

Repair

WARNING: If the Occupant Restraint Controller (ORC) is dropped at any time, it must be replaced. Failure to take the proper precautions can result in accidental airbag deployment. Failure to follow these instructions may result in possible serious or fatal injury.

WARNING: Turn the ignition off disconnect the 12-volt battery and wait two minutes before proceeding. Failure to follow these instructions may result in possible serious or fatal injury.

- Replace the ORC in accordance with Service Information.
- Perform the RESTRAINTS SYSTEM VERIFICATION TEST. (Refer to 28 - DTC-Based Diagnostics/CONTROLLER, Occupant Restraint (ORC) - Standard Procedure).

■ B220B-00-OCCUPANT RESTRAINT CONTROLLER FIRING STORED ENERGY

Theory of Operation

When powered, the Occupant Restraint Controller (ORC) performs an internal self test. The repair of this fault condition does not involve any external circuitry and centers on verifying the integrity of the module's internal circuitry and software validity.

- **When Monitored:**

  The ORC checks the status of firing stored energy circuit at power up during the initialization process, and continuously through the ignition cycle.

- **Set Condition:**

  This Diagnostic Trouble Code (DTC) sets when a fault is detected internal to ORC firing stored energy circuit. Once set, this DTC is latched permanently and the ORC must be replaced.

Possible Causes
OCCUPANT RESTRAINT CONTROLLER (ORC)

Always Perform the Pre-Diagnostic Troubleshooting procedure before proceeding. (Refer to 28 - DTC-Based Diagnostics/CONTROLLER, Occupant Restraint (ORC) - Standard Procedure).

1. REPLACE OCCUPANT RESTRAINT CONTROLLER (ORC)

NOTE: When this DTC is set, the module self test has discovered an internal fault that cannot be repaired and the module must be replaced regardless of DTC status.

When this code is set do not clear codes, view repair.

Repair

WARNING: If the Occupant Restraint Controller (ORC) is dropped at any time, it must be replaced. Failure to take the proper precautions can result in accidental airbag deployment. Failure to follow these instructions may result in possible serious or fatal injury.

WARNING: Turn the ignition off disconnect the 12-volt battery and wait two minutes before proceeding. Failure to follow these instructions may result in possible serious or fatal injury.

- Replace the ORC in accordance with Service Information.
- Perform the RESTRAINTS SYSTEM VERIFICATION TEST. (Refer to 28 - DTC-Based Diagnostics/CONTROLLER, Occupant Restraint (ORC) - Standard Procedure).

B223B-00-VEHICLE CONFIGURATION MISMATCH -

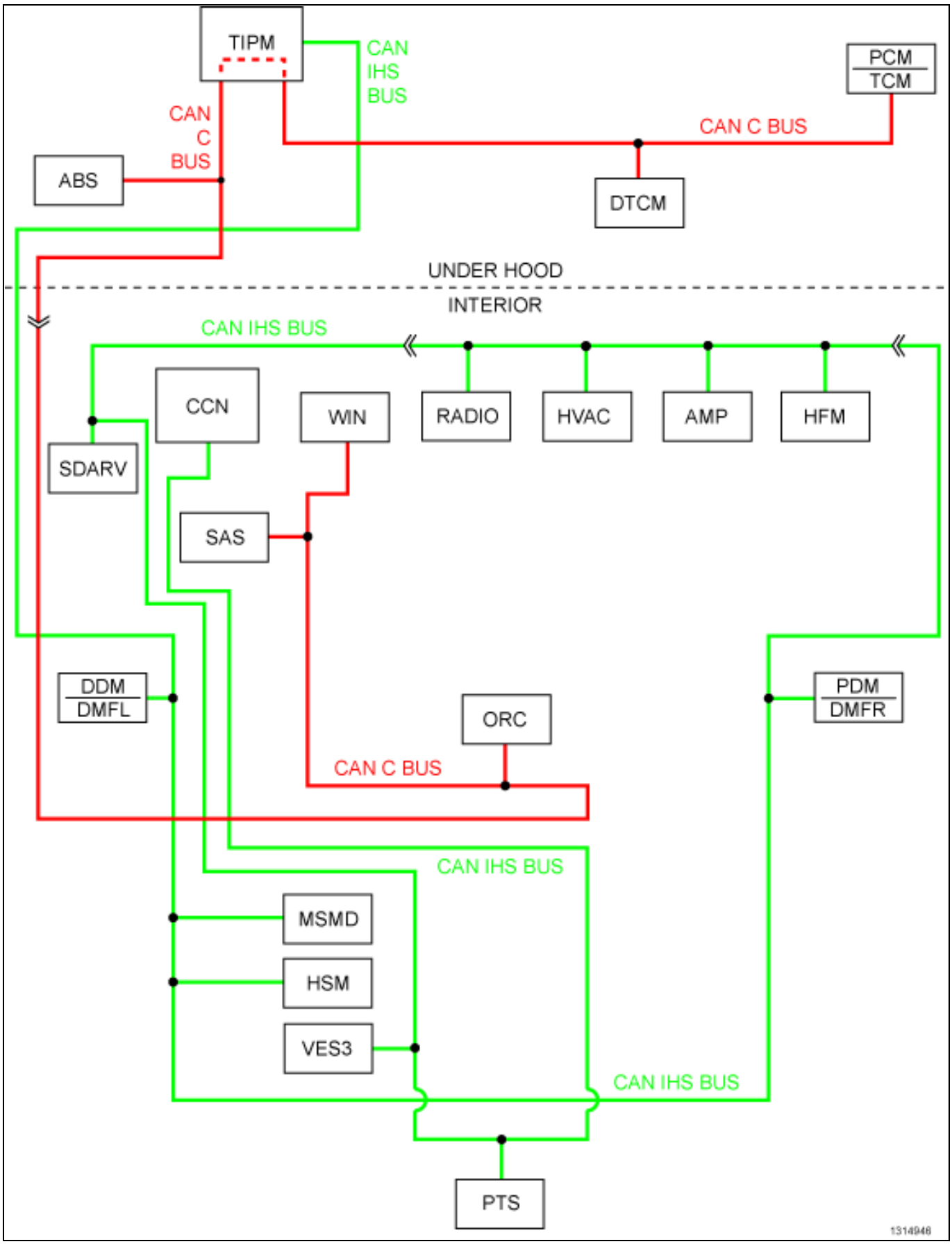

For a complete wiring diagram, **refer to the Wiring Information**.

Theory of Operation

When powered, the Occupant Restraint Controller (ORC) performs an internal self test. The repair of this fault centers on verifying ORC and Totally Integrated Power Module (TIPM) configuration.

- **When Monitored:**

  The ORC checks its feature configuration for side airbags present and Passenger Airbag Disable (PAD) Switch present at power-up and initialization.
- **Set Condition:**

  This Diagnostic Trouble Code (DTC) sets when the ORC detects a 2 consecutive message mismatches between the TIPM configuration and the ORC configuration. Once set, this DTC is latched for the entire power cycle.

Possible Causes
TIPM CONFIGURATION
OCCUPANT RESTRAINT CONTROLLER (ORC)

Always Perform the Pre-Diagnostic Troubleshooting procedure before proceeding. (Refer to 28 - DTC-Based Diagnostics/CONTROLLER, Occupant Restraint (ORC) - Standard Procedure).

1. VERIFY ACTIVE ORC DTC

NOTE: Ensure the battery is fully charged.

1. Turn the ignition on.
2. Wait 12 seconds, with the scan tool, read all ORC DTCs.

Does the scan tool display active B223B-00-VEHICLE CONFIGURATION MISMATCH - DTC?

Yes

- Go To 2

No

- Perform the RESTRAINTS SYSTEM INTERMITTENT TEST. (Refer to 28 - DTC-Based Diagnostics/CONTROLLER, Occupant Restraint (ORC) - Standard Procedure).

2. VERIFY ORC PART NUMBER

1. With the scan tool, read the ORC part number.

Is the part number correct for the vehicle?

Yes

- Go To 3

No

WARNING: Turn the ignition off, disconnect the 12-volt battery and wait two minutes before proceeding. Failure to follow these instructions may result in possible serious or fatal injury.

WARNING: If the Occupant Restraint Controller (ORC) is dropped at any time, it must be replaced. Failure to follow these instructions may result in possible serious or fatal injury.

- Replace the ORC in accordance with Service Information.
- Perform the RESTRAINTS SYSTEM VERIFICATION TEST. (Refer to 28 - DTC-Based Diagnostics/CONTROLLER, Occupant Restraint (ORC) - Standard Procedure).

3. CHECK THE TIPM CONFIGURATION

1. With the scan tool, check for Side Airbags and PAD Switch configuration.

Does the Vehicle Configuration in the TIPM match the Vehicle Configuration in the ORC?

Yes

WARNING: Turn the ignition off, disconnect the 12-volt battery and wait two minutes before proceeding. Failure to follow these instructions may result in possible serious or fatal injury.

WARNING: If the Occupant Restraint Controller (ORC) is dropped at any time, it must be replaced. Failure to follow these instructions may result in possible serious or fatal injury.

- Replace the ORC in accordance with Service Information.
- Perform the RESTRAINTS SYSTEM VERIFICATION TEST. (Refer to 28 - DTC-Based Diagnostics/CONTROLLER, Occupant Restraint (ORC) - Standard Procedure).

No

- With the scan tool enter program network configuration and program the TIPM to the vehicle configuration.
- Perform the BODY VERIFICATION TEST. (Refer to 28 - DTC-Based Diagnostics/MODULE, Totally Integrated Power (TIPM) - Standard Procedure).

B222A-00-VEHICLE LINE MISMATCH -

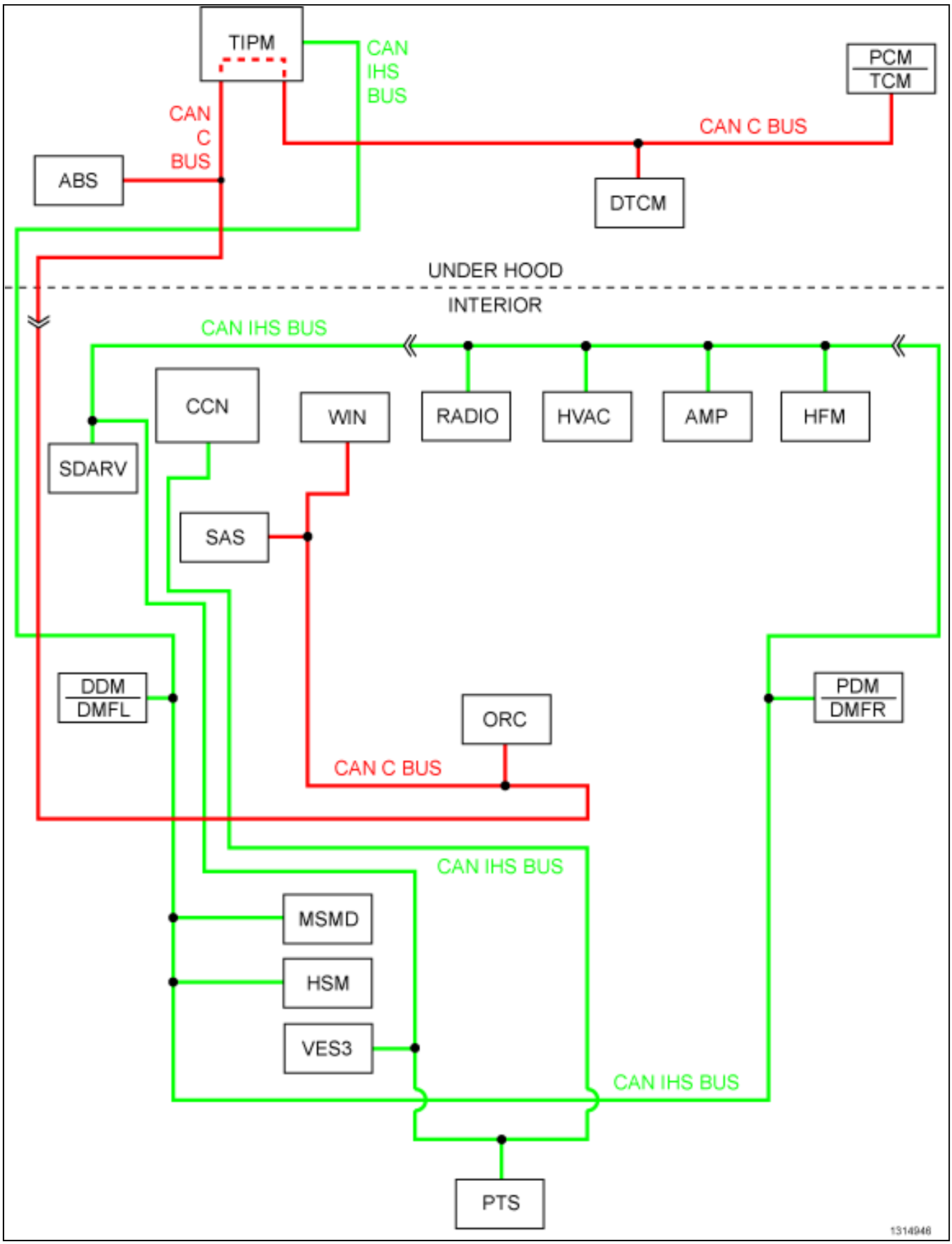

For a complete wiring diagram, **refer to the Wiring Information**.

Theory of Operation

When powered, the Occupant Restraint Controller (ORC) performs an internal self test. The repair of this fault centers on verifying the ORC programmed and vehicle content configuration.

- **When Monitored:**
  The ORC checks its feature configuration for a stored Vehicle Line and Country Code at power-up and initialization.
- **Set Condition:**
  This Diagnostic Trouble Code (DTC) sets when the ORC detects a 2 consecutive message mismatches between the Vehicle configuration and the ORC configuration. Once set this DTC is latched active for the ignition cycle.

Possible Causes
OCCUPANT RESTRAINT CONTROLLER (ORC)

Always Perform the Pre-Diagnostic Troubleshooting procedure before proceeding. (Refer to 28 - DTC-Based Diagnostics/CONTROLLER, Occupant Restraint (ORC) - Standard Procedure).

1. REPLACE OCCUPANT RESTRAINT CONTROLLER (ORC)

1. Turn the ignition on.
2. With the scan tool, read ORC DTCs.

Does the scan tool display active B222A-00-VEHICLE LINE MISMATCH - DTC?

Yes

WARNING: Turn the ignition off, disconnect the 12-volt battery and wait two minutes before proceeding. Failure to follow these instructions may result in possible serious or fatal injury.

WARNING: If the Occupant Restraint Controller (ORC) is dropped at any time, it must be replaced. Failure to follow these instructions may result in possible serious or fatal injury.

- Replace the Occupant Restraint Controller (ORC) in accordance with the Service Information.
- Perform the RESTRAINTS SYSTEM VERIFICATION TEST. (Refer to 28 - DTC-Based Diagnostics/CONTROLLER, Occupant Restraint (ORC) - Standard Procedure).

No

- Perform the RESTRAINTS SYSTEM INTERMITTENT TEST. (Refer to 28 - DTC-Based Diagnostics/CONTROLLER, Occupant Restraint (ORC) - Standard Procedure).

U0001-00-CAN C BUS

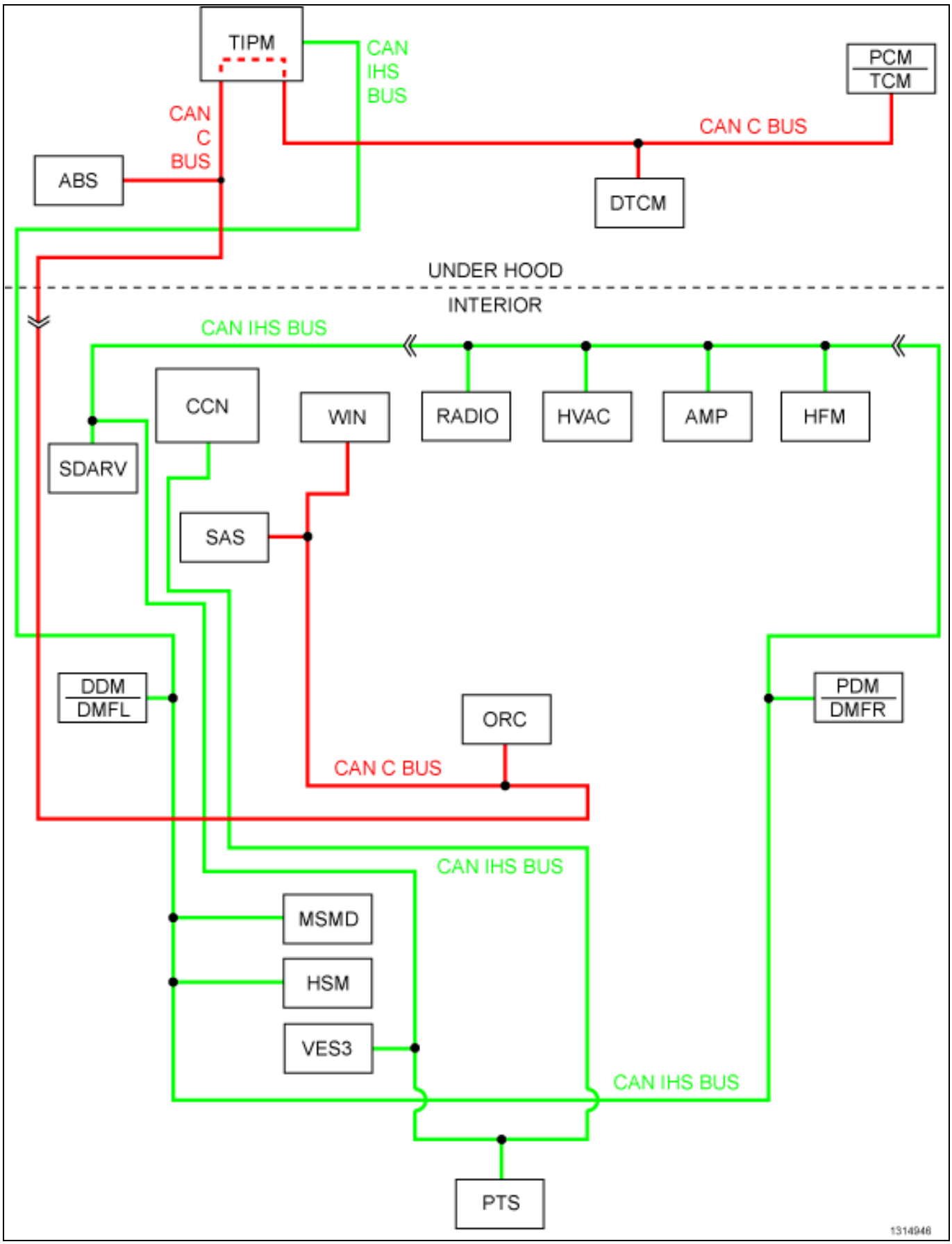

For a complete wiring diagram, **refer to the Wiring Information**.

Theory of Operation

When powered, the Occupant Restraint Controller module (ORC) “listens” to the serial data bus for the broadcast of various serial data messages.

- **When Monitored:**

  The ORC checks for serial data message traffic at power up during the initialization process, and continuously through the ignition cycle.
- **Set Condition:**

  This Diagnostic Trouble Code (DTC) sets when the ORC fails to detect serial data message traffic for more than five seconds. In the event the ORC detects serial data message traffic, this DTC will immediately transition to stored status.

1. VERIFY ACTIVE DTC

NOTE: Make sure the IOD fuse is installed and battery Voltage is between 10 and 16 Volts before proceeding.

1. Turn the ignition on.
2. With the scan tool, read ORC DTCs.

Does the scan tool display active U0001-00-CAN C BUS - DTC?

Yes

- (Refer to 28 - DTC-Based Diagnostics/MODULE, Totally Integrated Power (TIPM) - Diagnosis and Testing) and perform the U0001-Can C Bus diagnostic procedure.

No

- (Refer to 29 - Non-DTC Diagnostics/Communication - Diagnosis and Testing) and perform the Stored Lost Communication diagnostic procedure.

U0002-00-CAN C BUS OFF PERFORMANCE

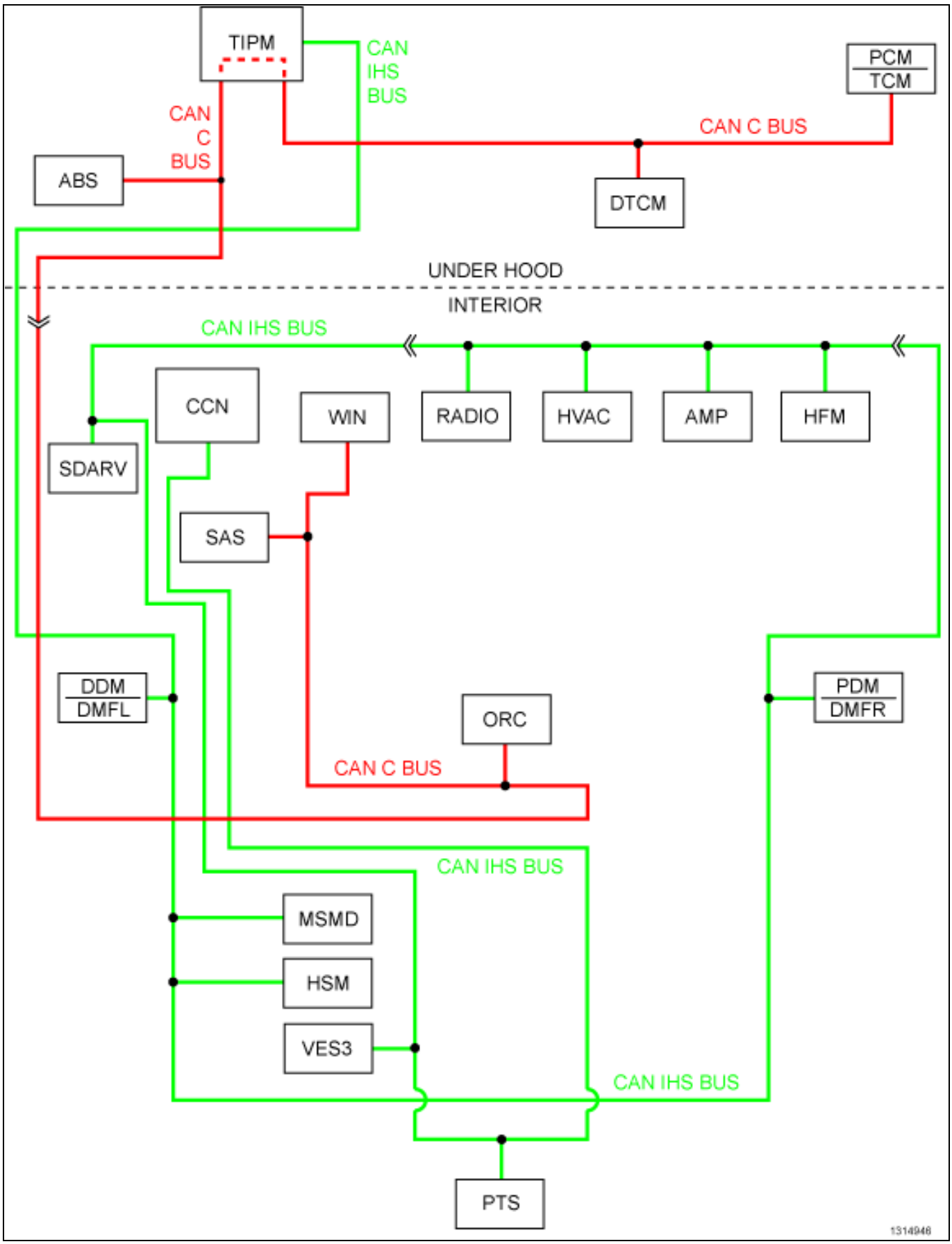

For a complete wiring diagram, **refer to the Wiring Information**.

Theory of Operation

When powered, the Occupant Restraint Controller module (ORC) “listens” to the serial data bus for the broadcast of various serial data messages.

- **When Monitored:**

  The ORC checks for serial data message traffic at power up during the initialization process, and continuously through the ignition cycle.
- **Set Condition:**

  This Diagnostic Trouble Code (DTC) sets when the ORC fails to detect serial data message traffic for more than five seconds. In the event the ORC detects serial data message traffic, this DTC will immediately transition to stored status.

1. VERIFY ACTIVE DTC

NOTE: Make sure the IOD fuse is installed and battery Voltage is between 10 and 16 Volts before proceeding.

1. Turn the ignition on.
2. With the scan tool, read ORC DTCs.

Does the scan tool display active U0002-00-CAN C BUS OFF PERFORMANCE - DTC?

Yes

- (Refer to 28 - DTC-Based Diagnostics/MODULE, Totally Integrated Power (TIPM) - Diagnosis and Testing) and perform the U0002-Can C Bus Off Performance diagnostic procedure.

No

- (Refer to 29 - Non-DTC Diagnostics/Communication - Diagnosis and Testing) and perform the Stored Lost Communication DTCs diagnostic procedure.

U0141-00-LOST COMMUNICATION WITH IPM (FCM/TIPM)

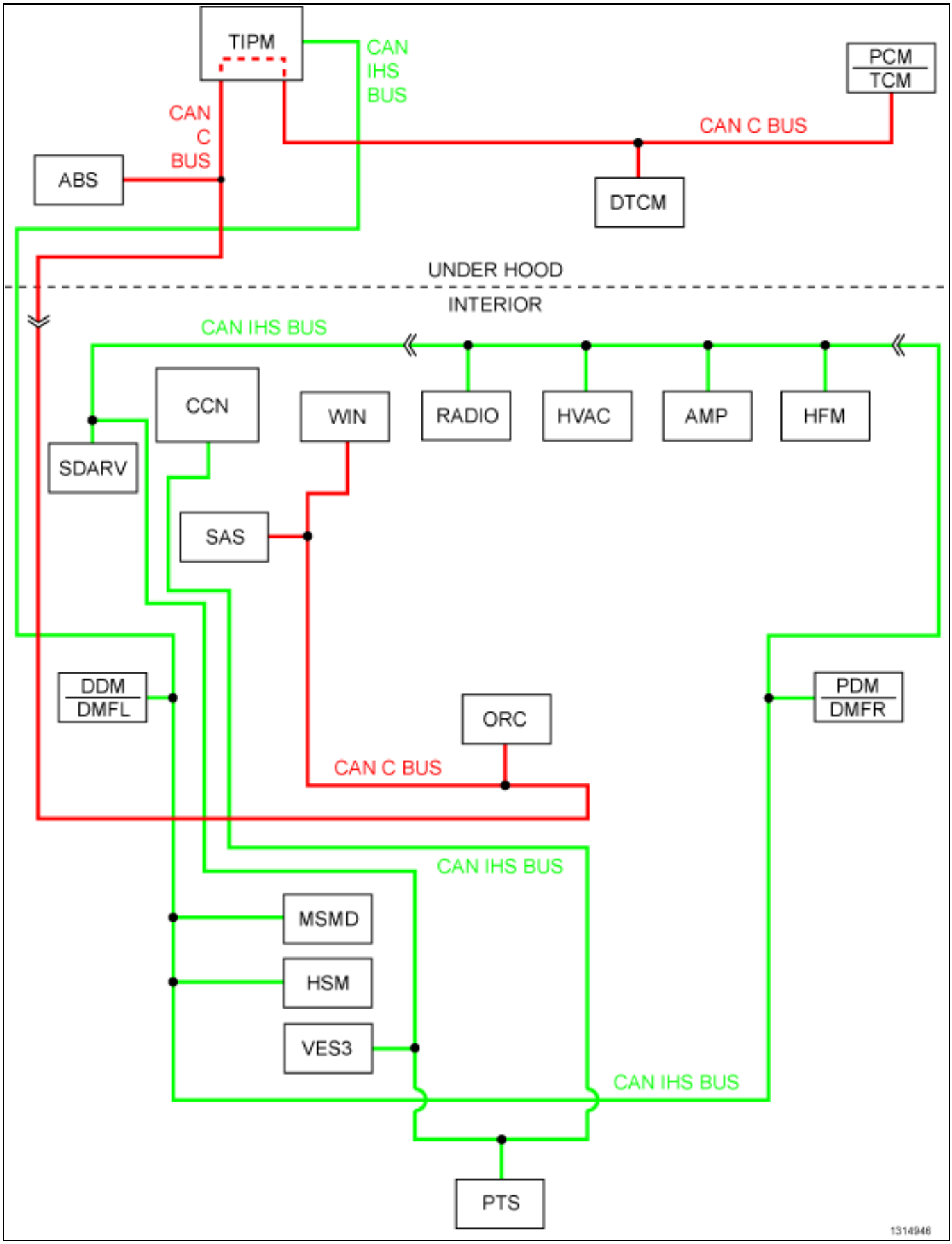

For a complete wiring diagram, **refer to the Wiring Information**.

Theory of Operation

When powered, the Occupant Restraint Controller module (ORC) “listens” for data bus messages from the TIPM.

- **When Monitored:**

  With the ignition on. The ORC checks continuously checks for serial data message traffic.

- **Set Condition:**

  This Diagnostic Trouble Code (DTC) sets when Bus messages are not received from the Totally Integrated Power Module (TIPM) for approximately two to five seconds.

1. VERIFY ACTIVE DTC

NOTE: Make sure the battery is fully charged.

1. Turn the ignition on.
2. With the scan tool, read ORC DTCs.

Does the scan tool display active U0141-00-LOST COMMUNICATION WITH IPM (FCM/TIPM) - DTC?

Yes

- (Refer to 28 - DTC-Based Diagnostics/MODULE, Totally Integrated Power (TIPM) - Diagnosis and Testing) and perform the U0141-Lost Communicatio with IPM (FCM/TIPM) diagnostic procedure.

No

- (Refer to 29 - Non-DTC Diagnostics/Communication - Diagnosis and Testing) and perform the Stored Lost Communication diagnostic procedure.

U0170-00-LOST COMMUNICATION W/ UP-FRONT LEFT SATELLITE SENSOR

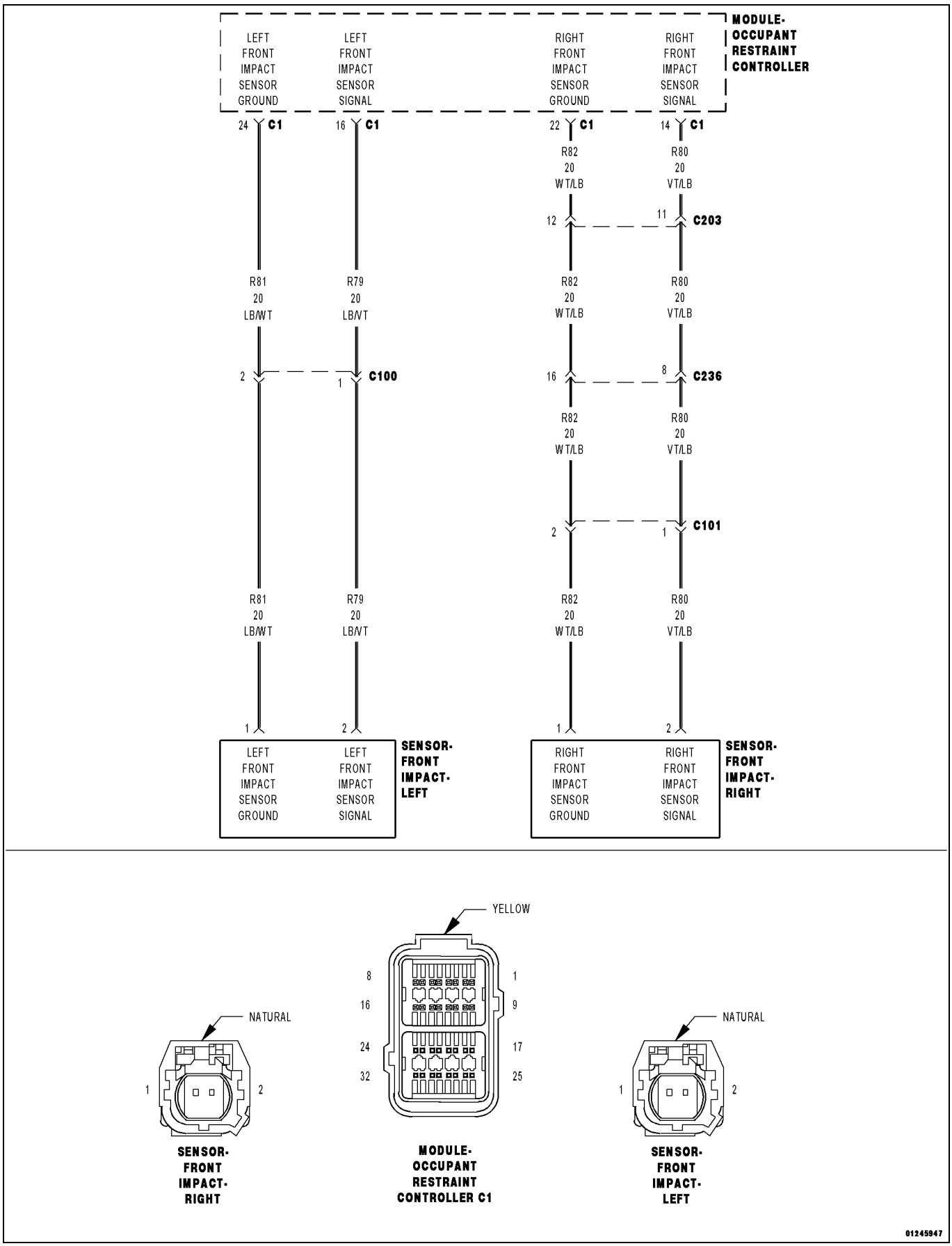

For a complete wiring diagram, **refer to the Wiring Information**.

Theory of Operation

The impact sensors perform their own self test using power supplied by the Occupant Restraint Controller (ORC) then communicate this status back to the ORC with periodic updates. The repair of this fault condition involves verifying the integrity of the wiring between the ORC and the sensor.

- **When Monitored:**

  The impact sensor performs a self test for internal circuitry at power up during the initialization process, and continuously through the ignition cycle every 10 ms.

- **Set Condition:**

  This Diagnostic Trouble Code (DTC) sets when the ORC receives notification of a self test failure within the impact sensor. Once set, this DTC is latched for the entire ignition cycle.

Possible Causes
(R79, R81) LEFT FRONT IMPACT SENSOR CIRCUITS SHORTED TO VOLTAGE
(R79, R81) LEFT FRONT IMPACT SENSOR CIRCUITS SHORTED TO GROUND
(R79, R81) LEFT FRONT IMPACT SENSOR CIRCUITS SHORTED TOGETHER
(R79, R81) LEFT FRONT IMPACT SENSOR CIRCUITS OPEN
LEFT FRONT IMPACT SENSOR
OCCUPANT RESTRAINT CONTROLLER (ORC)

Always perform the Pre-Diagnostic Troubleshooting procedure before proceeding. (Refer to 28 - DTC-Based Diagnostics/CONTROLLER, Occupant Restraint (ORC) - Standard Procedure).

1. VERIFY ACTIVE DTC

WARNING: Turn the ignition off, disconnect the 12-volt battery and wait two minutes before proceeding. Failure to follow these instructions may result in possible serious or fatal injury.

NOTE: Using the wiring diagram/schematic as a guide check all related splices and connectors for signs of water intrusion, corrosion, pushed out or bent terminals, and correct pin tension.

NOTE: If after the harness inspection it appears the impact sensor connector is only seated halfway. Reseat the harness connector into the impact sensor and lock the tab. Follow the instructions below checking for active codes.

WARNING: Turn the ignition on, then reconnect the 12-volt battery and wait two minutes before proceeding. Failure to follow these instructions may result in possible serious or fatal injury.

NOTE: Make sure the battery is fully charged.

1. Turn the ignition on.
2. With the scan tool, read ORC DTCs.

Does the scan tool display active U0170-00-LOST COMMUNICATION W/ UP-FRONT LEFT SATELLITE SENSOR - DTC?

Yes

- Go To 2

No

- Perform the RESTRAINTS SYSTEM INTERMITTENT TEST. (Refer to 28 - DTC-Based Diagnostics/CONTROLLER, Occupant Restraint (ORC) - Standard Procedure).

2. CHECK THE (R79, R81) LEFT FRONT IMPACT SENSOR CIRCUITS FOR A SHORT TO VOLTAGE

WARNING: Turn the ignition off, disconnect the 12-volt battery and wait two minutes before proceeding. Failure to follow these instructions may result in possible serious or fatal injury.

1. Disconnect the Left Front Impact Sensor harness connector.
2. Disconnect the ORC harness connectors.

NOTE: Check connectors - Clean and repair as necessary.

WARNING: Turn the ignition on, then reconnect the 12-volt battery and wait two minutes before proceeding. Failure to follow these instructions may result in possible serious or fatal injury.

3. Measure the voltage of the (R79) Left Front Impact Sensor Signal circuit cavity 2 and (R81) Left Front Impact Sensor Ground circuit cavity 1 between the Left Front Impact Sensor harness connector and ground.

Is there any voltage present?

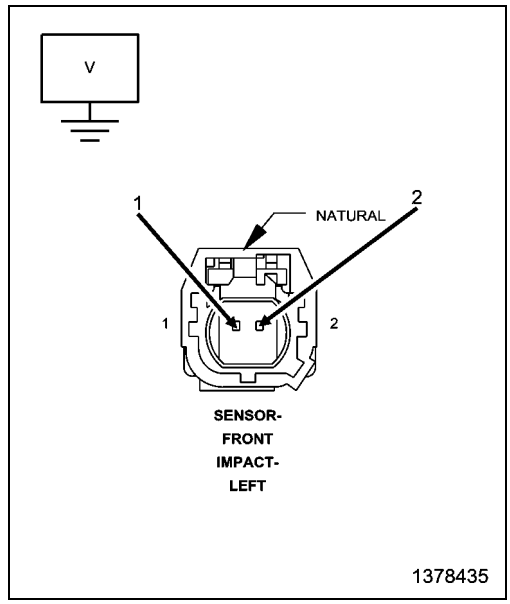

Yes

- Repair the (R79, R81) Left Front Impact Sensor circuits for a short to voltage.
- Perform the RESTRAINTS SYSTEM VERIFICATION TEST. (Refer to 28 - DTC-Based Diagnostics/CONTROLLER, Occupant Restraint (ORC) - Standard Procedure).

No

- Go To 3

3. CHECK THE (R79, R81) LEFT FRONT IMPACT SENSOR CIRCUITS FOR A SHORT TO GROUND

WARNING: Turn the ignition off, disconnect the 12-volt battery and wait two minutes before proceeding. Failure to follow these instructions may result in possible serious or fatal injury.

1. Measure the resistance of the (R79) Left Front Impact Sensor Signal circuit between the Left Front Impact Sensor harness connector cavity 2 and ground.
2. Measure the resistance of the (R81) Left Front Impact Sensor Ground circuit between the Left Front Impact Sensor harness connector cavity 1 and ground.

Is the resistance below 100K Ohms?

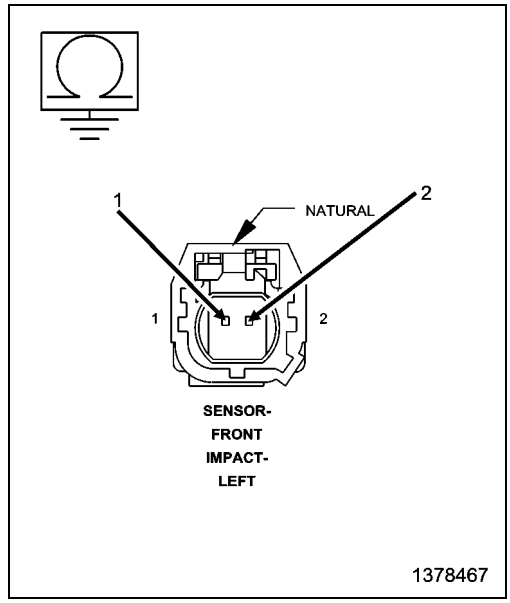

Yes

- Repair the (R79, R81) Left Front Impact Sensor circuits for a short to ground.
- Perform the RESTRAINTS SYSTEM VERIFICATION TEST. (Refer to 28 - DTC-Based Diagnostics/CONTROLLER, Occupant Restraint (ORC) - Standard Procedure).

No

- Go To 4

4. CHECK THE (R79, R81) LEFT FRONT IMPACT SENSOR CIRCUITS FOR A SHORT TOGETHER

1. Measure the resistance between the (R79) Left Front Impact Sensor Signal and (R81) Left Front Impact Sensor Ground circuits at the Left Front Impact Sensor harness connector.

Is the resistance below 100K Ohms?

Yes

- Repair the (R79, R81) Left Front Impact Sensor circuits shorted together.
- Perform the RESTRAINTS SYSTEM VERIFICATION TEST. (Refer to 28 - DTC-Based Diagnostics/CONTROLLER, Occupant Restraint (ORC) - Standard Procedure).

No

- Go To 5

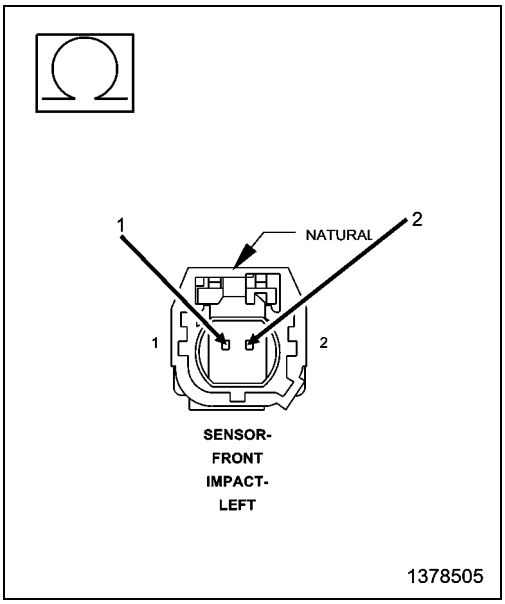

5. CHECK THE (R81) LEFT FRONT IMPACT SENSOR GROUND CIRCUIT FOR AN OPEN OR HIGH RESISTANCE

1. Connect the SRS Load Tool Adapter 8443-24 to the ORC C1 harness connector.
2. Measure the resistance of the (R81) Left Front Impact Sensor Ground circuit between the Left Front Impact Sensor harness connector cavity 1 and the SRS Load Tool Adapter 8443-24 cavity 24.

Is the resistance below 1 Ohm?

Yes

- Go To 6

No

- Repair the (R81) Left Front Impact Sensor Ground circuit for an open or high resistance.
- Perform the RESTRAINTS SYSTEM VERIFICATION TEST. (Refer to 28 - DTC-Based Diagnostics/CONTROLLER, Occupant Restraint (ORC) - Standard Procedure).

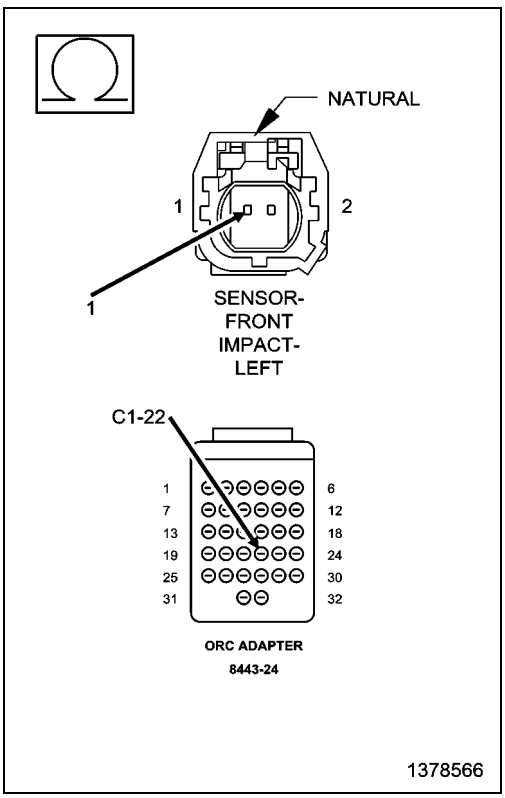

6. CHECK THE (R79) LEFT FRONT IMPACT SENSOR CIRCUIT FOR AN OPEN OR HIGH RESISTANCE

1. Measure the resistance of the (R79) Left Front Impact Sensor Ground circuit between the Left Front Impact Sensor harness connector and the SRS Load Tool Adapter 8443-24 cavity 16.

Is the resistance below 1 Ohm?

Yes

- Go To 7

No

- Repair the (R79) Left Front Impact Sensor Signal circuit for an open or high resistance.
- Perform the RESTRAINTS SYSTEM VERIFICATION TEST. (Refer to 28 - DTC-Based Diagnostics/CONTROLLER, Occupant Restraint (ORC) - Standard Procedure).

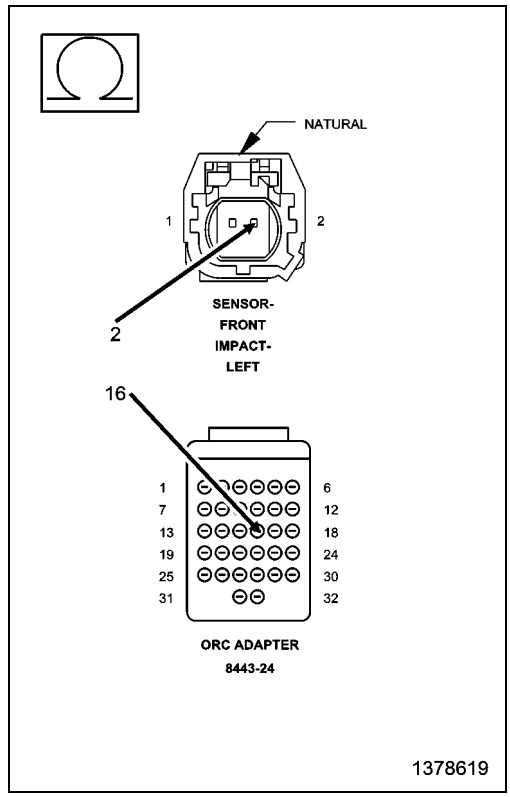

7. CHECK OPERATION OF THE LEFT FRONT IMPACT SENSOR

1. Replace the Left Front Impact Sensor in accordance with the Service Information.
2. Reconnect the vehicle body harness connector to the impact sensor.
3. Remove any special tools or jumper wires and reconnect all previously disconnected components - except the Battery.

WARNING: Turn the ignition on, then reconnect the 12-volt battery and wait two minutes before proceeding. Failure to follow these instructions may result in possible serious or fatal injury.

4. Connect the scan tool to the Data Link Connector - use the most current software available.
5. Use the scan tool and erase the stored codes in all airbag system modules.
6. Turn the ignition OFF, and wait 15 seconds before turning the ignition ON.
7. Wait one minute, and read active codes and if there are none present read the stored codes.

Does the scan tool display active U0170-00-LOST COMMUNICATION W/ UP-FRONT LEFT SATELLITE SENSOR - DTC?

Yes

WARNING: Turn the ignition off, disconnect the 12-volt battery and wait two minutes before proceeding. Failure to follow these instructions may result in possible serious or fatal injury.

WARNING: If the Occupant Restraint Controller (ORC) is dropped at any time, it must be replaced. Failure to follow these instructions may result in possible serious or fatal injury.

- Replace the ORC in accordance with Service Information.
- Perform the RESTRAINTS SYSTEM VERIFICATION TEST. (Refer to 28 - DTC-Based Diagnostics/CONTROLLER, Occupant Restraint (ORC) - Standard Procedure).

No

- Repair is complete.
- Perform the RESTRAINTS SYSTEM VERIFICATION TEST. (Refer to 28 - DTC-Based Diagnostics/CONTROLLER, Occupant Restraint (ORC) - Standard Procedure).

U0171-00-LOST COMMUNICATION W/ UP-FRONT RIGHT SATELLITE SENSOR

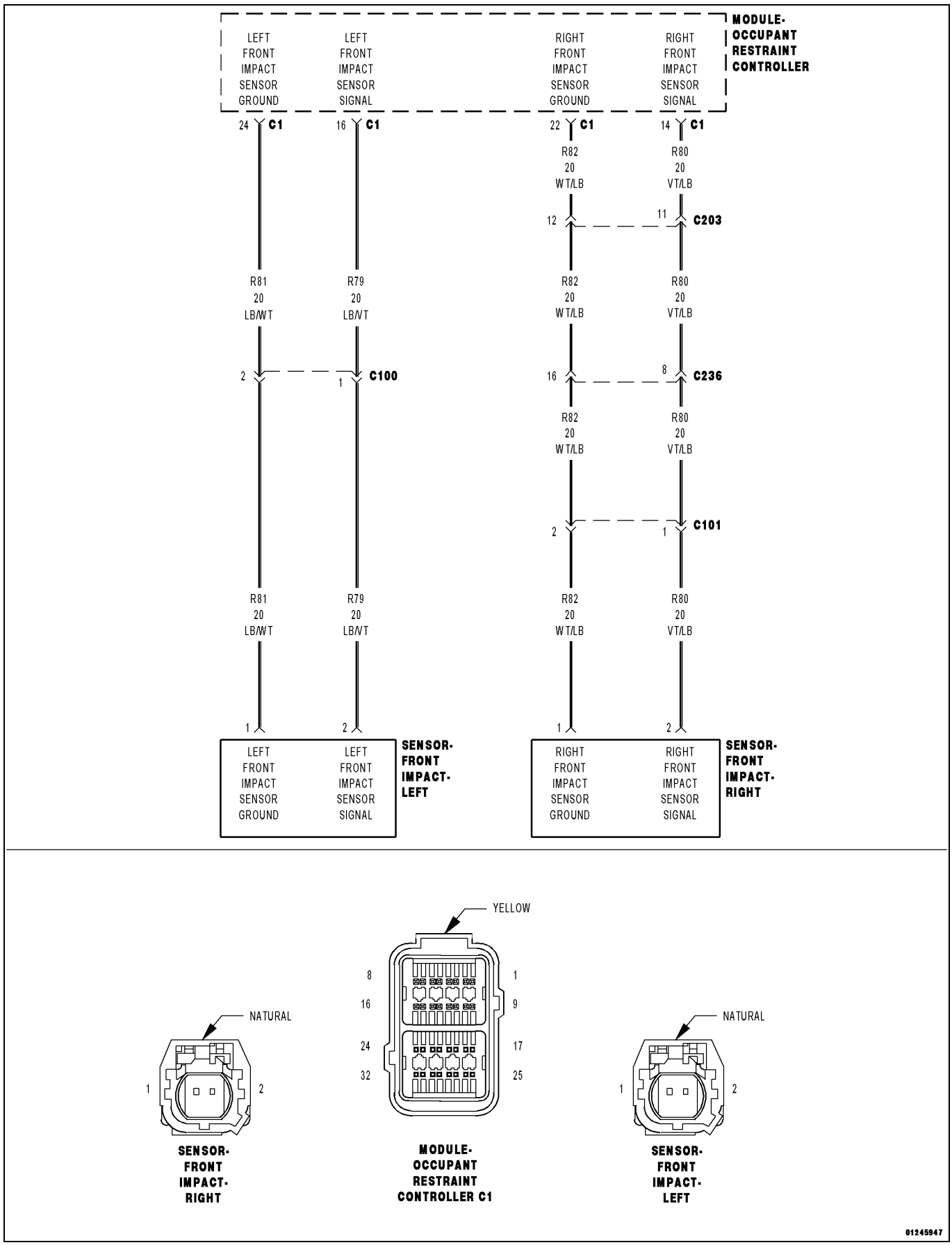

For a complete wiring diagram, **refer to the Wiring Information**.

Theory of Operation

The impact sensors perform their own self test using power supplied by the Occupant Restraint Controller (ORC) then communicate this status back to the ORC with periodic updates. The repair of this fault condition involves verifying the integrity of the wiring between the ORC and the sensor.

- **When Monitored:**

  The impact sensor performs a self test for internal circuitry at power up during the initialization process, and continuously through the ignition cycle every 10 ms.
- **Set Condition:**

  This Diagnostic Trouble Code (DTC) sets when the ORC receives notification of a self test failure within the impact sensor. Once set, this DTC is latched for the entire ignition cycle.

Possible Causes
(R80, R82) RIGHT FRONT IMPACT SENSOR CIRCUITS SHORTED TO VOLTAGE
(R80, R82) RIGHT FRONT IMPACT SENSOR CIRCUITS SHORTED TO GROUND
(R80, R82) RIGHT FRONT IMPACT SENSOR CIRCUITS SHORTED TOGETHER
(R80, R82) RIGHT FRONT IMPACT SENSOR CIRCUITS OPEN
RIGHT FRONT IMPACT SENSOR
OCCUPANT RESTRAINT CONTROLLER (ORC)

Always perform the Pre-Diagnostic Troubleshooting procedure before proceeding. (Refer to 28 - DTC-Based Diagnostics/CONTROLLER, Occupant Restraint (ORC) - Standard Procedure).

1. VERIFY ACTIVE DTC

WARNING: Turn the ignition off, disconnect the 12-volt battery and wait two minutes before proceeding. Failure to follow these instructions may result in possible serious or fatal injury.

NOTE: Using the wiring diagram/schematic as a guide check all related splices and connectors for signs of water intrusion, corrosion, pushed out or bent terminals, and correct pin tension.

NOTE: If after the harness inspection it appears the impact sensor connector is only seated halfway. Reseat the harness connector into the impact sensor and lock the tab. Follow the instructions below checking for active codes.

WARNING: Turn the ignition on, then reconnect the 12-volt battery and wait two minutes before proceeding. Failure to follow these instructions may result in possible serious or fatal injury.

NOTE: Make sure the battery is fully charged.

1. Turn the ignition on.
2. With the scan tool, read ORC DTCs.

   Does the scan tool display active U0171-00-LOST COMMUNICATION W/ UP-FRONT RIGHT SATELLITE SENSOR - DTC?

Yes

- Go To 2

No

- Perform the RESTRAINTS SYSTEM INTERMITTENT TEST. (Refer to 28 - DTC-Based Diagnostics/CONTROLLER, Occupant Restraint (ORC) - Standard Procedure).

2. CHECK THE (R80, R82) RIGHT FRONT IMPACT SENSOR CIRCUITS FOR A SHORT TO VOLTAGE

WARNING: Turn the ignition off, disconnect the 12-volt battery and wait two minutes before proceeding. Failure to follow these instructions may result in possible serious or fatal injury.

1. Disconnect the Right Front Impact Sensor harness connector.
2. Disconnect the ORC harness connectors.

WARNING: Turn the ignition on, then reconnect the 12-volt battery and wait two minutes before proceeding. Failure to follow these instructions may result in possible serious or fatal injury.

3. Measure the voltage of the (R80) Right Front Impact Sensor Signal circuit cavity 2 and (R82) Right Front Impact Sensor Ground circuit cavity 1 at the Right Front Impact Sensor harness connector.

Is there any voltage present?

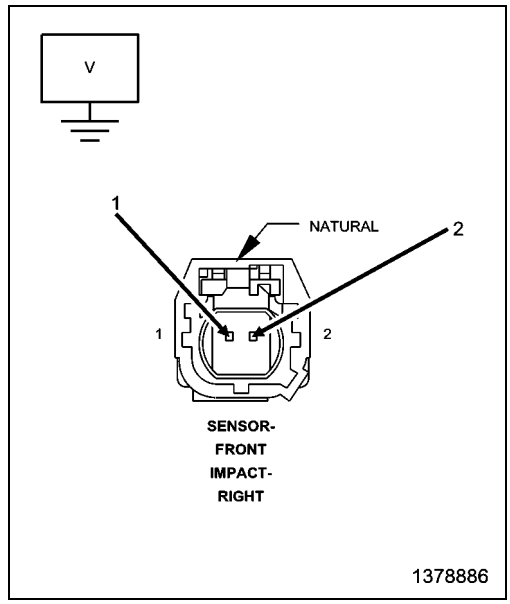

Yes

- Repair the (R80, R82) Right Front Impact Sensor circuits for a short to voltage.
- Perform the RESTRAINTS SYSTEM VERIFICATION TEST. (Refer to 28 - DTC-Based Diagnostics/CONTROLLER, Occupant Restraint (ORC) - Standard Procedure).

No

- Go To 3

3. CHECK THE (R80, R82) RIGHT FRONT IMPACT SENSOR CIRCUITS FOR A SHORT TO GROUND

WARNING: Turn the ignition off, disconnect the 12-volt battery and wait two minutes before proceeding. Failure to follow these instructions may result in possible serious or fatal injury.

1. Measure the resistance between ground and the (R80) Right Front Impact Sensor Signal circuit at the Right Front Impact Sensor harness connector cavity 2.
2. Measure the resistance between ground the (R82) Right Front Impact Sensor Ground circuit at the Right Front Impact Sensor harness connector cavity 1.

Is the resistance below 100K Ohms?

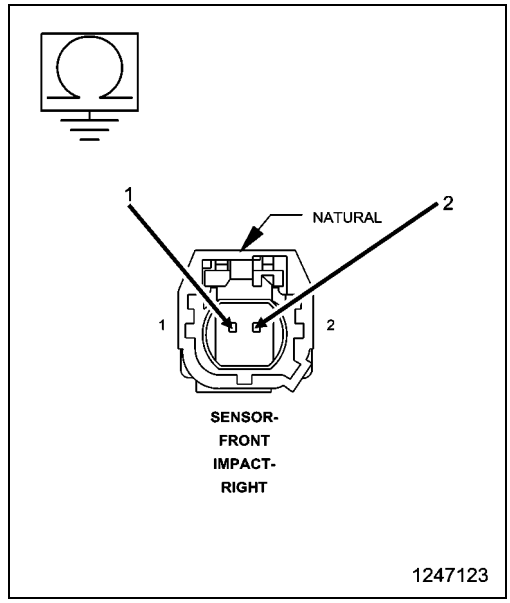

Yes

- Repair the (R80, R82) Right Front Impact Sensor circuits for a short to ground.
- Perform the RESTRAINTS SYSTEM VERIFICATION TEST. (Refer to 28 - DTC-Based Diagnostics/CONTROLLER, Occupant Restraint (ORC) - Standard Procedure).

No

- Go To 4

4. CHECK THE (R80, R82) RIGHT FRONT IMPACT SENSOR CIRCUITS FOR A SHORT TOGETHER

1. Measure the resistance between the (R80) Right Front Impact Sensor Signal and (R82) Right Front Impact Sensor Ground circuits at the Right Front Impact Sensor harness connector.

Is the resistance below 100K Ohms?

Yes

- Repair the (R80, R82) Right Front Impact Sensor circuits shorted together.
- Perform the RESTRAINTS SYSTEM VERIFICATION TEST. (Refer to 28 - DTC-Based Diagnostics/CONTROLLER, Occupant Restraint (ORC) - Standard Procedure).

No

- Go To 5

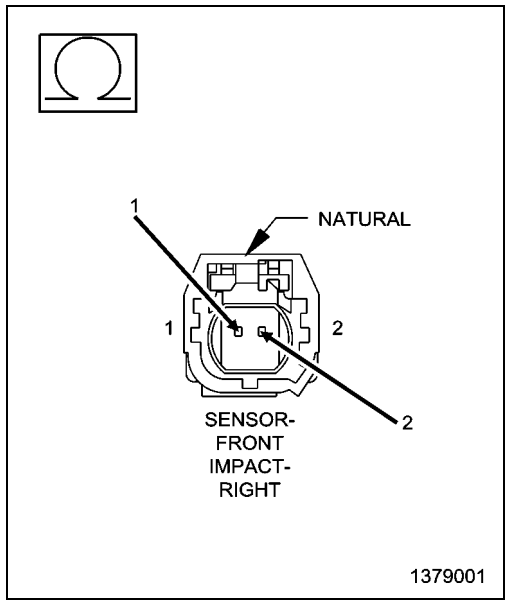

5. CHECK THE (R82) RIGHT FRONT IMPACT SENSOR GROUND CIRCUIT FOR AN OPEN OR HIGH RESISTANCE

1. Connect the SRS Load Tool Adaptor 8443-24 to the ORC C1 harness connector.
2. Measure the resistance of the (R82) Right Front Impact Sensor Ground circuit between the Right Front Impact Sensor harness connector and the SRS Load Tool Adaptor 8443-24 cavity 22.

Is the resistance below 1 Ohm?

Yes

- Go To 6

No

- Repair the (R82) Right Front Impact Sensor Ground circuit for an open or high resistance.
- Perform the RESTRAINTS SYSTEM VERIFICATION TEST. (Refer to 28 - DTC-Based Diagnostics/CONTROLLER, Occupant Restraint (ORC) - Standard Procedure).

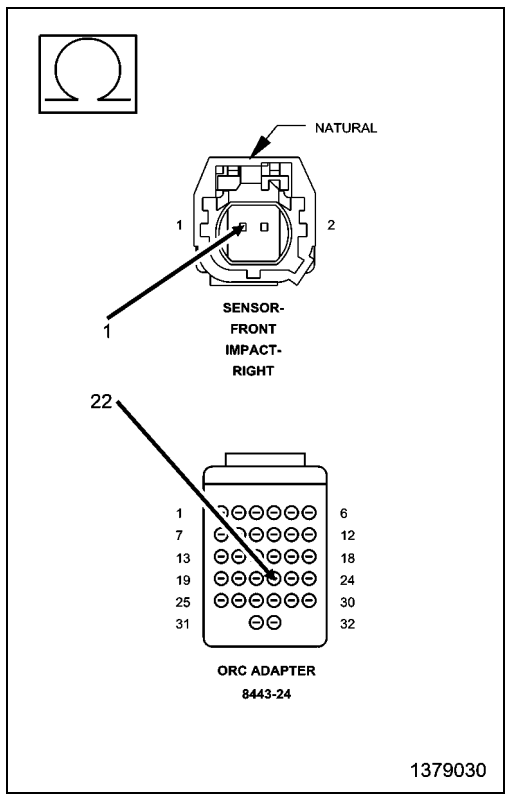

6. CHECK THE (R80) RIGHT FRONT IMPACT SENSOR SIGNAL CIRCUIT FOR AN OPEN OR HIGH RESISTANCE

1. Measure the resistance of the (R80) Right Front Impact Sensor Signal circuit between the Right Front Impact Sensor harness connector and the SRS Load Tool Adaptor 8443-24 cavity 14.

Is the resistance below 1 Ohm?

Yes

- Go To 7

No

- Repair the (R80) Right Front Impact Sensor Signal circuit for an open or high resistance.
- Perform the RESTRAINTS SYSTEM VERIFICATION TEST. (Refer to 28 - DTC-Based Diagnostics/CONTROLLER, Occupant Restraint (ORC) - Standard Procedure).

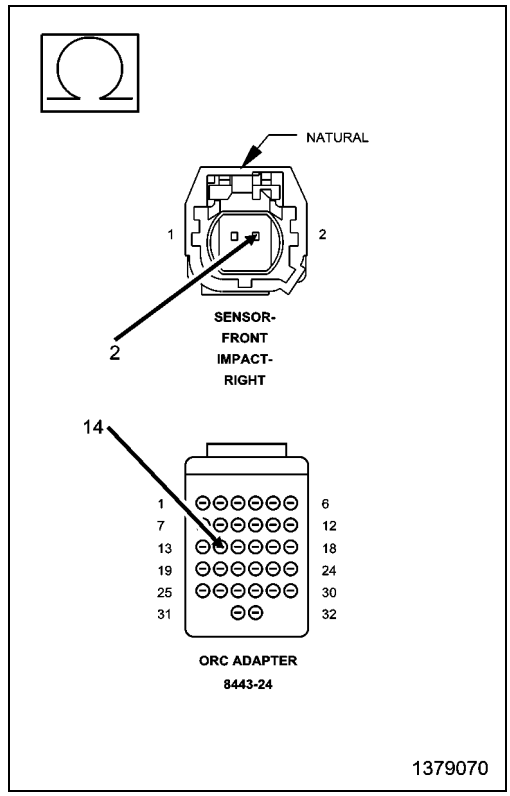

7. CHECK OPERATION OF THE FRONT RIGHT IMPACT SENSOR

1. Replace the Right Front Impact Sensor in accordance with the Service Information.
2. Reconnect the vehicle body harness connector to the impact sensor.
3. Remove any special tools or jumper wires and reconnect all previously disconnected components - except the Battery.

WARNING: Turn the ignition on, then reconnect the 12-volt battery and wait two minutes before proceeding. Failure to follow these instructions may result in possible serious or fatal injury.

4. Connect the scan tool to the Data Link Connector - use the most current software available.
5. Use the scan tool and erase the stored codes in all airbag system modules.
6. Turn the ignition OFF, and wait 15 seconds before turning the ignition ON.
7. Wait one minute, and read active codes and if there are none present read the stored codes.

Does the scan tool display active U0171-00-LOST COMMUNICATION W/ UP-FRONT RIGHT SATELLITE SENSOR - DTC return?

Yes

WARNING: Turn the ignition off, disconnect the 12-volt battery and wait two minutes before proceeding. Failure to follow these instructions may result in possible serious or fatal injury.

WARNING: If the Occupant Restraint Controller (ORC) is dropped at any time, it must be replaced. Failure to follow these instructions may result in possible serious or fatal injury.

- Replace the Occupant Restraint Controller (ORC) in accordance with Service Instructions.
- Perform the RESTRAINTS SYSTEM VERIFICATION TEST. (Refer to 28 - DTC-Based Diagnostics/CONTROLLER, Occupant Restraint (ORC) - Standard Procedure).

No

- Repair is complete.
- Perform the RESTRAINTS SYSTEM VERIFICATION TEST. (Refer to 28 - DTC-Based Diagnostics/CONTROLLER, Occupant Restraint (ORC) - Standard Procedure).

U0172-00-LOST COMMUNICATION W/ LEFT SIDE SATELLITE SENSOR 1

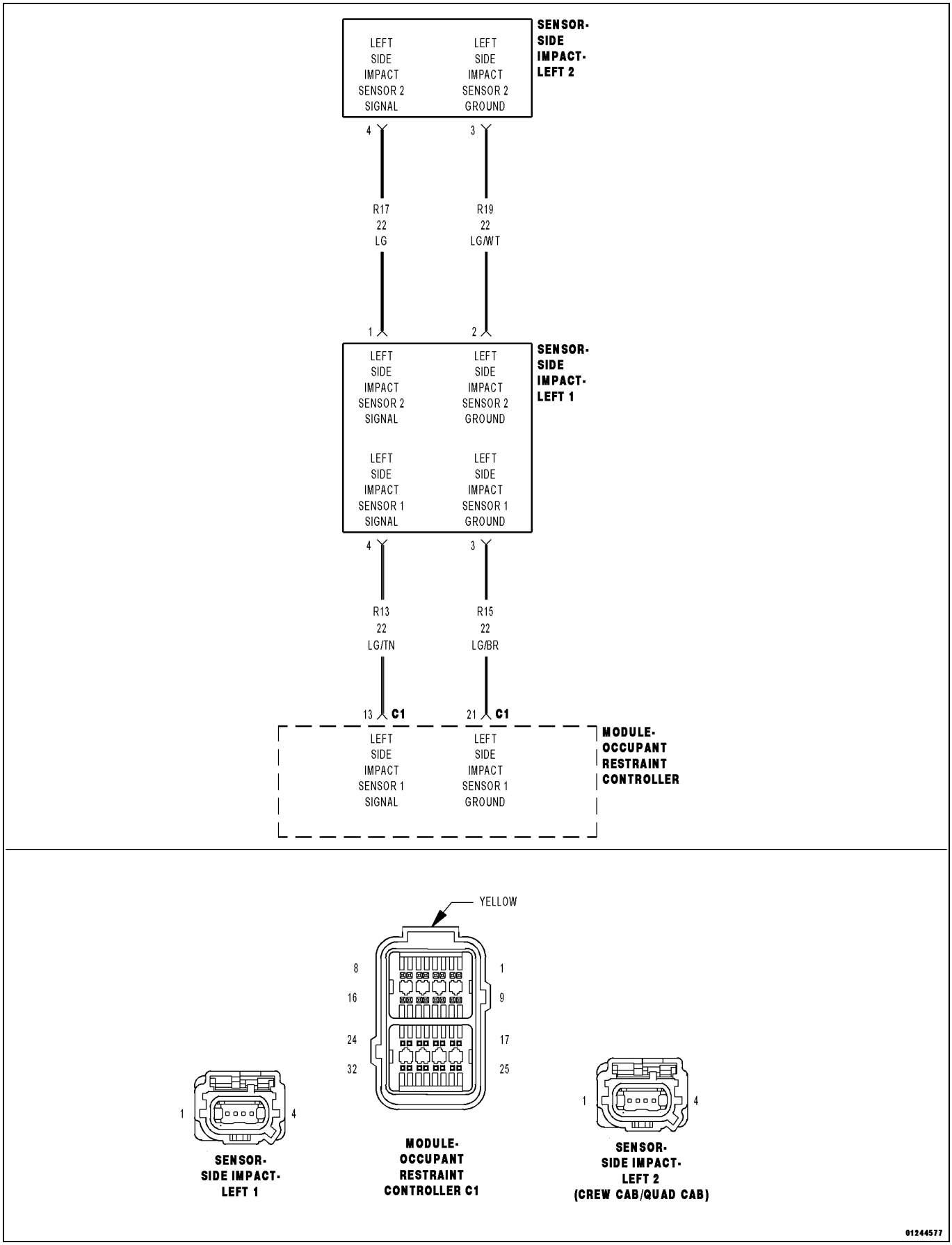

For a complete wiring diagram, **refer to the Wiring Information**.

Theory of Operation

The location of this left side impact sensor 1 is in the B-pillar just past the first row seating. (Refer to 10 - Restraints - Description). The impact sensors perform their own self test using power supplied by the Occupant Restraint Controller (ORC) then communicate this status back to the ORC with periodic updates. The repair of this fault condition involves verifying the integrity of the wiring between the ORC and the sensor. If the scan tool shows this DTC has a Stored history of setting then the left side impact sensor is to be replaced. A short to voltage fault on the left side impact sensor 1 sensor wiring can cause a loss of comm impact sensor 2 code to set and the possible replacement of a good left side impact sensor 2. The left side impact 1, and 2 sensors are wired in a daisy chain pattern. The short to battery fault in a loss of comm or internal circuit failure of the side impact sensor 1 can cause the impact sensor 2 on the same side to set a loss of comm code.

- **When Monitored:**

  The Occupant Restraint Controller (ORC) continuously communicates with the Left Side Impact Sensor 1 over the sensor signal circuit. The sensor communication and on board diagnostics are powered by the ORC signal.

- **Set Condition:**

  This Diagnostic Trouble Code (DTC) will set, if the ORC and the Left Side Impact Sensor 1 fail to establish and maintain valid data communications.

Possible Causes
(R13, R15) LEFT SIDE IMPACT SENSOR 1 CIRCUITS SHORTED TO VOLTAGE
(R13, R15) LEFT SIDE IMPACT SENSOR 1 CIRCUITS SHORTED TO GROUND
(R13, R15) LEFT SIDE IMPACT SENSOR 1 CIRCUITS SHORTED TOGETHER
(R13, R15) LEFT SIDE IMPACT SENSOR 1 CIRCUITS OPEN
LEFT SIDE IMPACT SENSOR 1
OCCUPANT RESTRAINT CONTROLLER (ORC)

Always Perform the Pre-Diagnostic Troubleshooting procedure before proceeding. (Refer to 28 - DTC-Based Diagnostics/CONTROLLER, Occupant Restraint (ORC) - Standard Procedure).

1. VERIFY ACTIVE DTC

WARNING: Turn the ignition off, disconnect the 12-volt battery and wait two minutes before proceeding. Failure to follow these instructions may result in possible serious or fatal injury.

NOTE: Using the wiring diagram/schematic as a guide check all related splices and connectors for signs of water intrusion, corrosion, pushed out or bent terminals, and correct pin tension.

NOTE: If after the harness inspection it appears the impact sensor connector is only seated halfway. Reseat the harness connector into the impact sensor and lock the tab. Follow the instructions below checking for active codes.

WARNING: Turn the ignition on, then reconnect the 12-volt battery and wait two minutes before proceeding. Failure to follow these instructions may result in possible serious or fatal injury.

NOTE: Make sure the battery is fully charged.

1. Turn the ignition on.
2. With the scan tool, read ORC DTCs.

   Does the scan tool display active B0091-49-LEFT SIDE ACCELERATION SENSOR 1 - INTERNAL ELECTRONIC FAILURE, U0172-00-LOST COMMUNICATION W/ LEFT SIDE SATELLITE SENSOR 1, U0173-00-LOST COMMUNICATION W/ LEFT SIDE SATELLITE SENSOR 2- DTC?

Yes

- Check for all other internal and lost communication codes indicated in the left side impact sensor daisy chain wiring after diagnosing DTC B0091-49-LEFT SIDE ACCELERATION SENSOR 1 - INTERNAL ELECTRONIC FAILURE, and DTC U0172-LOST COMMUNICATION W/LEFT SIDE SATELLITE ACCELERATION SENSOR 1. Go To The DTC Displayed (Refer to 28 - DTC-Based Diagnostics/CONTROLLER, Occupant Restraint (ORC) - Diagnosis and Testing). Go To 2

No

- Perform the RESTRAINTS SYSTEM INTERMITTENT TEST. (Refer to 28 - DTC-Based Diagnostics/CONTROLLER, Occupant Restraint (ORC) - Standard Procedure).

2. CHECK THE (R13, R15) LEFT SIDE IMPACT SENSOR 1 CIRCUITS FOR A SHORT TO VOLTAGE

WARNING: Turn the ignition off, disconnect the 12-volt battery and wait two minutes before proceeding. Failure to follow these instructions may result in possible serious or fatal injury.

1. Disconnect the Left Side Impact Sensor 1 harness connector.
2. Disconnect the ORC harness connectors.

WARNING: Turn the ignition on, then reconnect the 12-volt battery and wait two minutes before proceeding. Failure to follow these instructions may result in possible serious or fatal injury.

3. Measure the voltage of the (R13) Left Side Impact Sensor 1 Signal circuit at the Left Side Impact Sensor 1 harness connector cavity 4.
4. Measure the voltage of the (R15) Left Side Impact Sensor 1 Ground circuit at the Left Side Impact Sensor 1 harness connector cavity 3.

   Is there any voltage present?

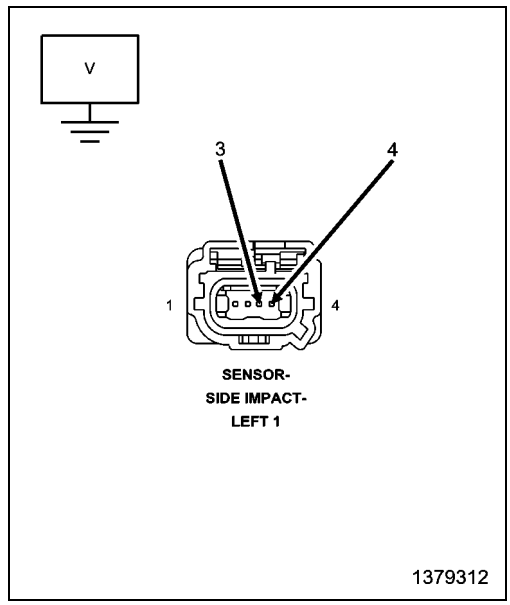

Yes

- Repair the (R13, R15) Left Side Impact Sensor 1 circuits for a short to voltage.
- Perform the RESTRAINTS SYSTEM VERIFICATION TEST. (Refer to 28 - DTC-Based Diagnostics/CONTROLLER, Occupant Restraint (ORC) - Standard Procedure).

No

- Go To 3

3. CHECK THE (R13, R15) LEFT SIDE IMPACT SENSOR 1 CIRCUITS FOR A SHORT TO GROUND

WARNING: Turn the ignition off, disconnect the 12-volt battery and wait two minutes before proceeding. Failure to follow these instructions may result in possible serious or fatal injury.

1. Measure the resistance between ground and the (R13) Left Side Impact Sensor 1 Signal circuit at the Left Side Impact Sensor 1 harness connector cavity 4.
2. Measure the resistance between ground and the (R15) Left Side Impact Sensor 1 Ground circuit at the Left Side Impact Sensor 1 harness connector cavity 3.

Is the resistance below 100K Ohms?

Yes

- Repair the (R13, R15) Left Side Impact Sensor 1 circuit for a short to ground.
- Perform the RESTRAINTS SYSTEM VERIFICATION TEST. (Refer to 28 - DTC-Based Diagnostics/CONTROLLER, Occupant Restraint (ORC) - Standard Procedure).

No

- Go To 4

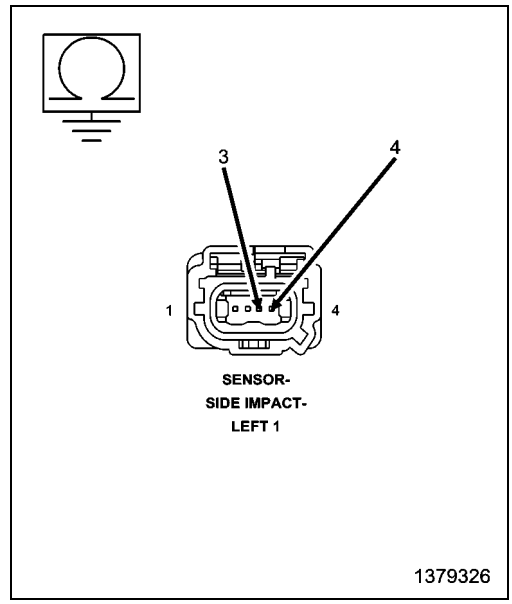

4. CHECK THE (R13, R15) LEFT SIDE IMPACT SENSOR 1 CIRCUITS FOR A SHORT TOGETHER

1. Measure the resistance between the (R13) Left Side Impact Sensor 1 Signal and (R15) Left Side Impact Sensor 1 Ground circuits at the Left Side Impact Sensor 1 harness connector cavity 3 and 4.

Is the resistance below 100K Ohms?

Yes

- Repair the (R13, R15) Left Side Impact Sensor 1 circuits shorted together.
- Perform the RESTRAINTS SYSTEM VERIFICATION TEST. (Refer to 28 - DTC-Based Diagnostics/CONTROLLER, Occupant Restraint (ORC) - Standard Procedure).

No

- Go To 5

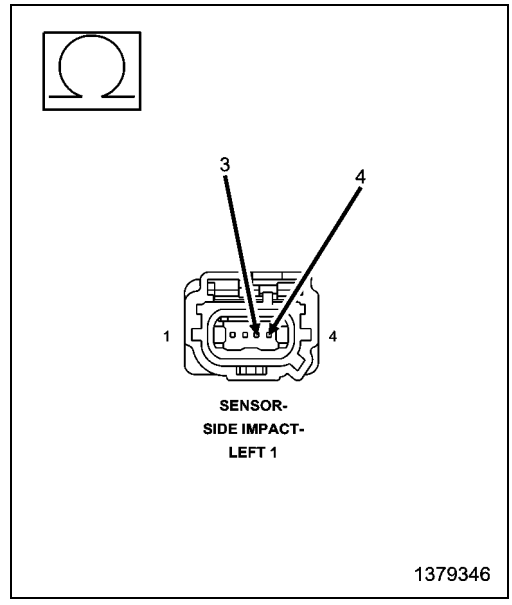

5. CHECK THE (R15) LEFT SIDE IMPACT SENSOR 1 GROUND CIRCUIT FOR AN OPEN OR HIGH RESISTANCE

1. Connect the SRS Load Tool Adaptor 8443-24 to the ORC C1 harness connector.
2. Measure the resistance of the (R15) Left Side Impact Sensor 1 Ground circuit between the Left Side Impact Sensor 1 harness connector and the SRS Load Tool Adaptor 8443-24 cavity 21.

Is the resistance below 1 Ohm?

Yes

- Go To 6

No

- Repair the (R15) Left Side Impact Sensor 1 Ground circuit for an open or high resistance.
- Perform the RESTRAINTS SYSTEM VERIFICATION TEST. (Refer to 28 - DTC-Based Diagnostics/CONTROLLER, Occupant Restraint (ORC) - Standard Procedure).

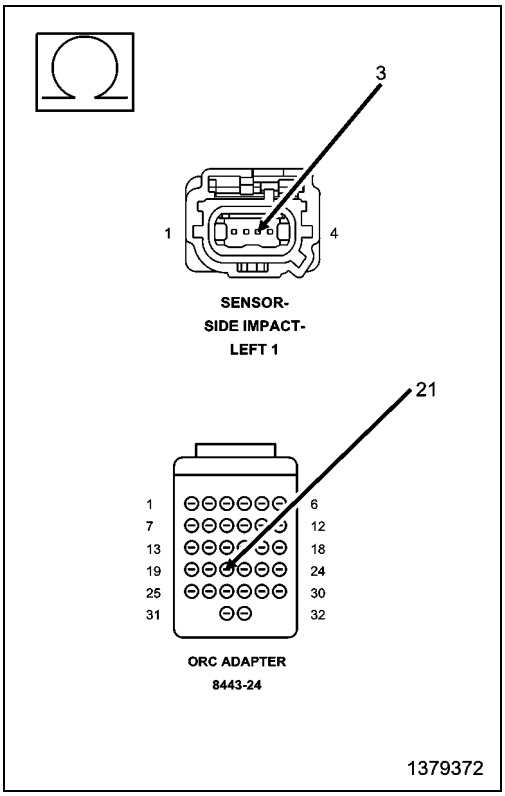

6. CHECK THE (R13) LEFT SIDE IMPACT SENSOR 1 CIRCUIT FOR AN OPEN OR HIGH RESISTANCE

1. Measure the resistance of the (R13) Left Side Impact Sensor 1 Signal circuit between the Left Side Impact Sensor 1 harness connector and the SRS Load Tool Adaptor 8443-24 cavity 13.

Is the resistance below 1 Ohm?

Yes

- Go To 7

No

- Repair the (R13) Left Side Impact Sensor 1 Signal circuit for an open or high resistance.
- Perform the RESTRAINTS SYSTEM VERIFICATION TEST. (Refer to 28 - DTC-Based Diagnostics/CONTROLLER, Occupant Restraint (ORC) - Standard Procedure).

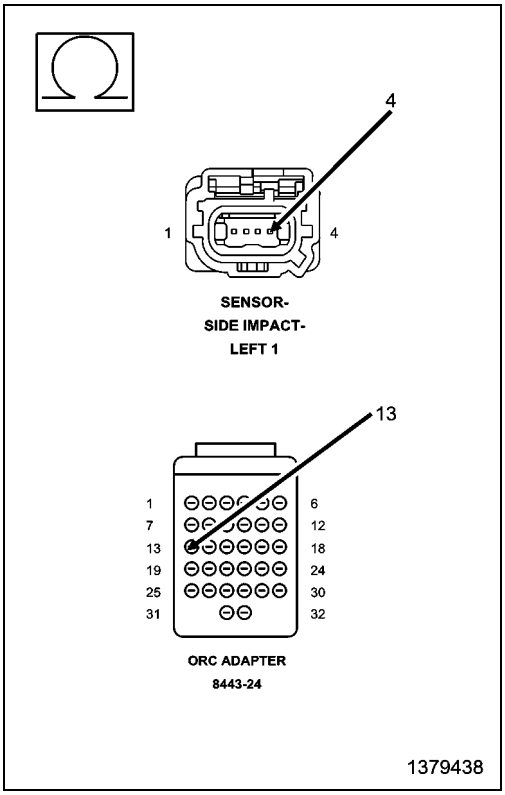

7. CHECK OPERATION OF THE LEFT SIDE IMPACT SENSOR 1

1. Replace the Left Side Impact Sensor 1 in accordance with the Service Information.
2. Reconnect the vehicle body harness connector to the impact sensor.
3. Remove any special tools or jumper wires and reconnect all previously disconnected components - except the Battery.

WARNING: Turn the ignition on, then reconnect the 12-volt battery and wait two minutes before proceeding. Failure to follow these instructions may result in possible serious or fatal injury.

4. Connect the scan tool to the Data Link Connector - use the most current software available.
5. Use the scan tool and erase the stored codes in all airbag system modules.
6. Turn the ignition OFF, and wait 15 seconds before turning the ignition ON.
7. Wait one minute, and read active codes and if there are none present read the stored codes.

Does the scan tool display active U0172-00-LOST COMMUNICATION W/ LEFT SIDE SATELLITE SENSOR 1 - DTC?

Yes

WARNING: Turn the ignition off, disconnect the 12-volt battery and wait two minutes before proceeding. Failure to follow these instructions may result in possible serious or fatal injury.

WARNING: If the Occupant Restraint Controller (ORC) is dropped at any time, it must be replaced. Failure to follow these instructions may result in possible serious or fatal injury.

- Replace the ORC in accordance with Service Instructions.
- Perform the RESTRAINTS SYSTEM VERIFICATION TEST. (Refer to 28 - DTC-Based Diagnostics/CONTROLLER, Occupant Restraint (ORC) - Standard Procedure).

No

- Repair is complete.
- Perform the RESTRAINTS SYSTEM VERIFICATION TEST. (Refer to 28 - DTC-Based Diagnostics/CONTROLLER, Occupant Restraint (ORC) - Standard Procedure).

U0173-00-LOST COMMUNICATION W/ LEFT SIDE SATELLITE SENSOR 2

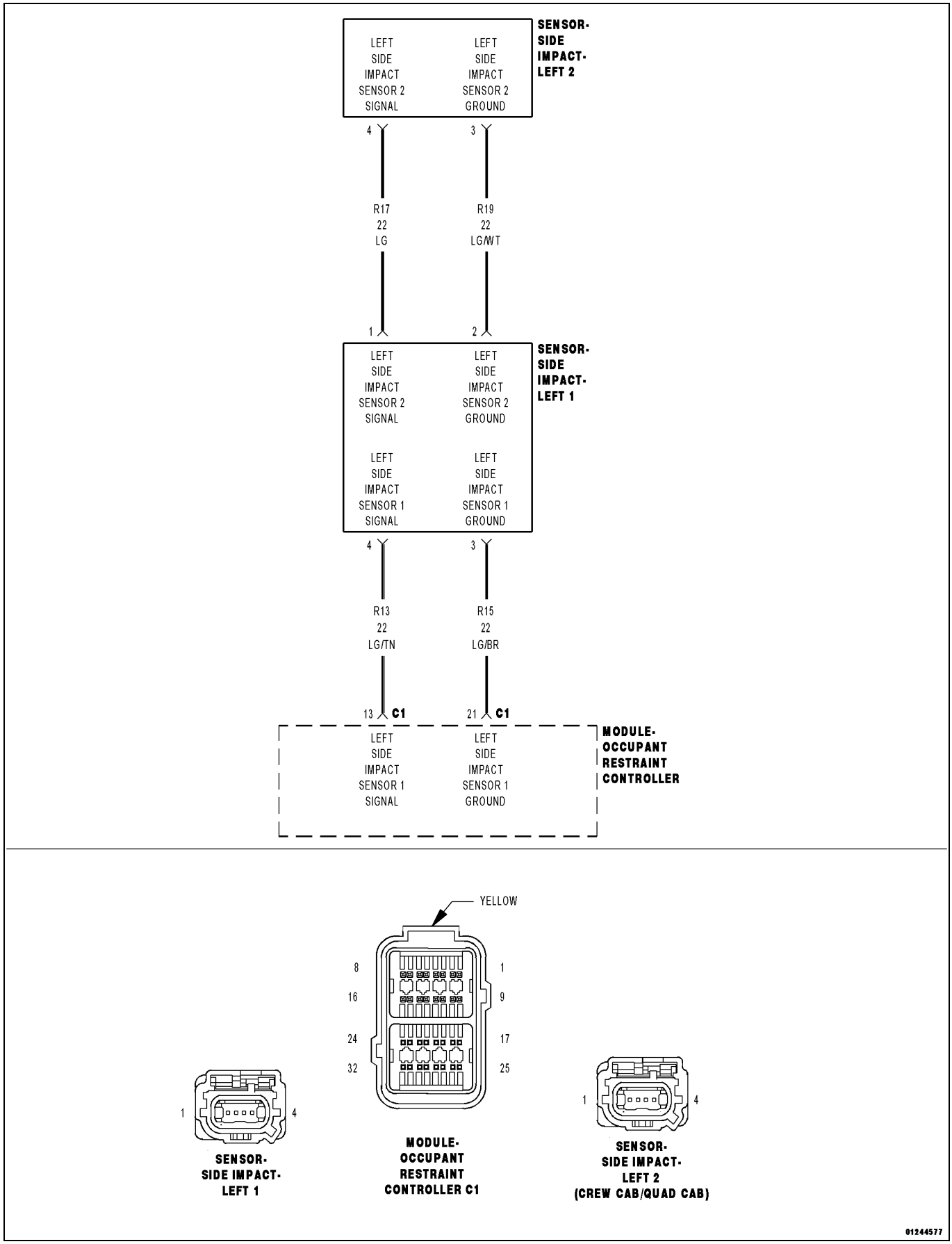

For a complete wiring diagram, **refer to the Wiring Information**.

Theory of Operation

The location of this left side impact sensor 2 is in the C-pillar just past the second row seating. (Refer to 10 - Restraints - Description). The impact sensors perform their own self test using power supplied by the Occupant Restraint Controller (ORC) then communicate this status back to the ORC with periodic updates. The repair of this fault condition involves verifying the integrity of the wiring between the ORC and the sensor. If the scan tool shows this DTC has a Stored history of setting then the left side impact sensor is to be replaced. A short to voltage fault on the left side impact sensor 1 sensor wiring can cause a loss of comm impact sensor 2 code to set and the possible replacement of a good left side impact sensor 2. The left side impact 1, and 2 sensors are wired in a daisy chain pattern. The short to battery fault in a loss of comm or internal circuit failure of the side impact sensor 1 can cause the impact sensor 2 on the same side to set a loss of comm code.

- **When Monitored:**

  The ORC continuously communicates with the Left Side Impact Sensor 2 over the sensor signal circuit. The sensor communication and on board diagnostics are powered by the ORC signal.

- **Set Condition:**

  This Diagnostic Trouble Code (DTC) will set, if the ORC is communicating with the Left Side Impact Sensor 1 but fails to establish and maintain valid data communications with the Left Right Side Impact Sensor 2.

NOTE: Perform all active LEFT SIDE SATELLITE SENSOR 1 diagnostic procedures before this procedure.

Possible Causes
LOSS OF COMMUNICATION WITH THE LEFT SIDE IMPACT SENSOR 1
(R17, R19) LEFT SIDE IMPACT SENSOR 2 CIRCUITS SHORTED TO VOLTAGE
(R17, R19) LEFT SIDE IMPACT SENSOR 2 CIRCUITS SHORTED TO GROUND
(R17, R19) LEFT SIDE IMPACT SENSOR 2 CIRCUITS SHORTED TOGETHER
(R17, R19) LEFT SIDE IMPACT SENSOR 2 CIRCUITS OPEN
LEFT SIDE IMPACT SENSOR 2
OCCUPANT RESTRAINT CONTROLLER (ORC)

Always Perform the Pre-Diagnostic Troubleshooting procedure before proceeding. (Refer to 28 - DTC-Based Diagnostics/CONTROLLER, Occupant Restraint (ORC) - Standard Procedure).

1. VERIFY THAT DTC U0173-LOST COMMUNICATION W/LEFT SIDE SATELLITE ACCELERATION SENSOR 2 IS ACTIVE

WARNING: Turn the ignition off, disconnect the 12-volt battery and wait two minutes before proceeding. Failure to follow these instructions may result in possible serious or fatal injury.

NOTE: Using the wiring diagram/schematic as a guide check all related splices and connectors for signs of water intrusion, corrosion, pushed out or bent terminals, and correct pin tension.

NOTE: If after the harness inspection it appears the impact sensor connector is only seated halfway. Reseat the harness connector into the impact sensor and lock the tab. Follow the instructions below checking for active codes.

WARNING: Turn the ignition on, then reconnect the 12-volt battery and wait two minutes before proceeding. Failure to follow these instructions may result in possible serious or fatal injury.

NOTE: Make sure the battery is fully charged.

1. Turn the ignition on.
2. With the scan tool, read ORC DTCs.

   Does the scan tool display active B0091-49-LEFT SIDE ACCELERATION SENSOR 1 - INTERNAL ELECTRONIC FAILURE, B0092-49-LEFT SIDE ACCELERATION SENSOR 2 - INTERNAL ELECTRONIC FAILURE, U0172-00-LOST COMMUNICATION W/ LEFT SIDE SATELLITE SENSOR 1, U0173-00-LOST COMMUNICATION W/ LEFT SIDE SATELLITE SENSOR 2 - DTC?

Yes

- Check for all other internal and lost communication codes indicated in the right side impact sensor daisy chain wiring before diagnosing DTC U0173-LOST COMMUNICATION W/LEFT SIDE SATELLITE ACCELERATION SENSOR 2. Go To The DTC Displayed (Refer to 28 - DTC-Based Diagnostics/CONTROLLER, Occupant Restraint (ORC) - Diagnosis and Testing). If internal fault 1 and lost comm fault 1 have been checked follow DTC U0173-LOST COMMUNICATION W/LEFT SIDE SATELLITE ACCELERATION SENSOR 2. Go To 2

No

- Perform the RESTRAINTS SYSTEM INTERMITTENT TEST. (Refer to 28 - DTC-Based Diagnostics/CONTROLLER, Occupant Restraint (ORC) - Standard Procedure).

2. CHECK THE (R17, R19) LEFT SIDE IMPACT SENSOR 2 CIRCUITS FOR A SHORT TO VOLTAGE

WARNING: Turn the ignition off, disconnect the 12-volt battery and wait two minutes before proceeding. Failure to follow these instructions may result in possible serious or fatal injury.

1. Disconnect the Left Side Impact Sensor 1 harness connector.
2. Disconnect the Left Side Impact Sensor 2 harness connector.

WARNING: Turn the ignition on, then reconnect the 12-volt battery and wait two minutes before proceeding. Failure to follow these instructions may result in possible serious or fatal injury.

3. Measure the voltage of the (R19) Left Side Impact Sensor 2 Ground circuit cavity 3 at the Left Side Impact Sensor 2 harness connector.
4. Measure the voltage of the (R17) Left Side Impact Sensor 2 Signal circuit cavity 4 at the Left Side Impact Sensor 2 harness connector.

   Is there any voltage present?

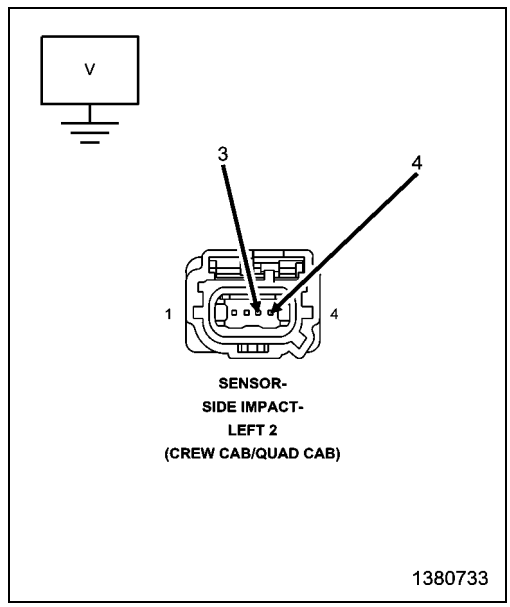

Yes

- Repair the (R17, R19) Left Side Impact Sensor 2 circuits for a short to voltage.
- Perform the RESTRAINTS SYSTEM VERIFICATION TEST. (Refer to 28 - DTC-Based Diagnostics/CONTROLLER, Occupant Restraint (ORC) - Standard Procedure).

No

- Go To 3

3. CHECK THE (R17, R19) LEFT SIDE IMPACT SENSOR 2 CIRCUITS FOR A SHORT TO GROUND

WARNING: Turn the ignition off, disconnect the 12-volt battery and wait two minutes before proceeding. Failure to follow these instructions may result in possible serious or fatal injury.

1. Measure the resistance between ground and the (R17) Left Side Impact Sensor 2 Signal circuit at the Left Side Impact Sensor 2 harness connector cavity 4.
2. Measure the resistance between ground and the (R19) Left Side Impact Sensor 2 Ground circuit at the Left Side Impact Sensor 2 harness connector cavity 3.

Is the resistance below 100K Ohms?

Yes

- Repair the (R17, R19) Left Side Impact Sensor 2 circuits for a short to ground.
- Perform the RESTRAINTS SYSTEM VERIFICATION TEST. (Refer to 28 - DTC-Based Diagnostics/CONTROLLER, Occupant Restraint (ORC) - Standard Procedure).

No

- Go To 4

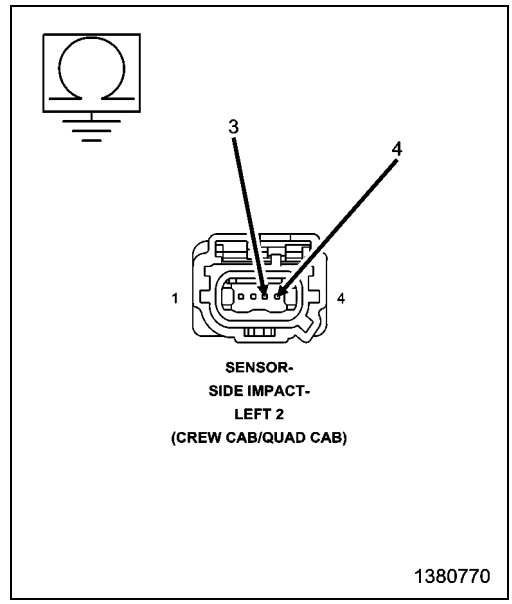

4. CHECK THE (R17, R19) LEFT SIDE IMPACT SENSOR 2 CIRCUITS FOR A SHORT TOGETHER

1. Measure the resistance between the (R17) Left Side Impact Sensor 2 Signal circuit and (R19) Left Side Impact Sensor 2 Ground circuits at the Left Side Impact Sensor 2 harness connector.

Is the resistance below 100K Ohms?

Yes

- Repair the (R17, R19) Left Side Impact Sensor 2 circuits shorted together.
- Perform the RESTRAINTS SYSTEM VERIFICATION TEST. (Refer to 28 - DTC-Based Diagnostics/CONTROLLER, Occupant Restraint (ORC) - Standard Procedure).

No

- Go To 5

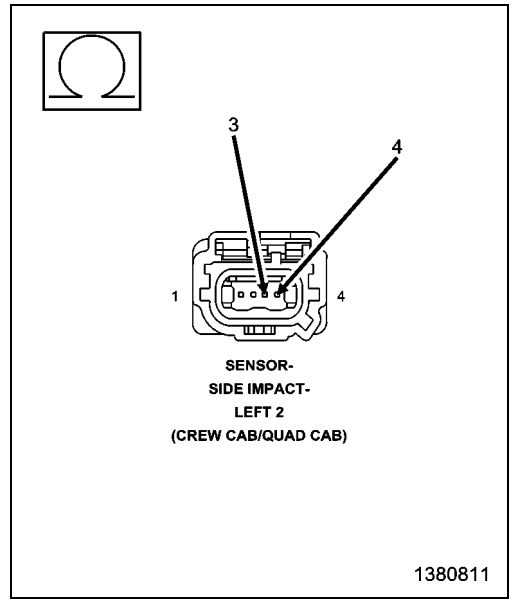

5. CHECK THE (R19) LEFT SIDE IMPACT SENSOR 2 GROUND CIRCUIT FOR AN OPEN OR HIGH RESISTANCE

1. Disconnect the Left Side Impact Sensor 1 harness connector.
2. Measure the resistance of the (R19) Left Side Impact Sensor 2 Ground circuit between the Left Side Impact Sensor 2 harness connector cavity 3 and the Left Side Impact Sensor 1 harness connector cavity 2.

Is the resistance below 1 Ohm?

Yes

- Go To 6

No

- Repair the (R19) Left Side Impact Sensor 2 Ground circuit for an open or high resistance.
- Perform the RESTRAINTS SYSTEM VERIFICATION TEST. (Refer to 28 - DTC-Based Diagnostics/CONTROLLER, Occupant Restraint (ORC) - Standard Procedure).

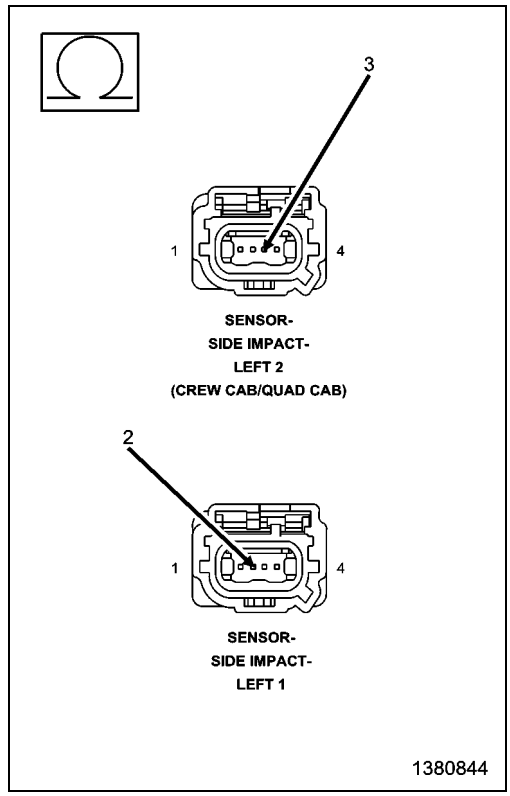

6. CHECK THE (R13) LEFT SIDE IMPACT SENSOR 2 SIGNAL CIRCUIT FOR AN OPEN OR HIGH RESISTANCE

1. Measure the resistance of the (R17) Left Side Impact Sensor 2 Signal circuit between the Left Side Impact Sensor 2 harness connector cavity 4 and the Left Side Impact Sensor 1 harness connector cavity 1.

Is the resistance below 1 Ohm?

Yes

- Go To 7

No

- Repair the (R17) Left Side Impact Sensor 2 Signal circuit for an open or high resistance.
- Perform the RESTRAINTS SYSTEM VERIFICATION TEST. (Refer to 28 - DTC-Based Diagnostics/CONTROLLER, Occupant Restraint (ORC) - Standard Procedure).

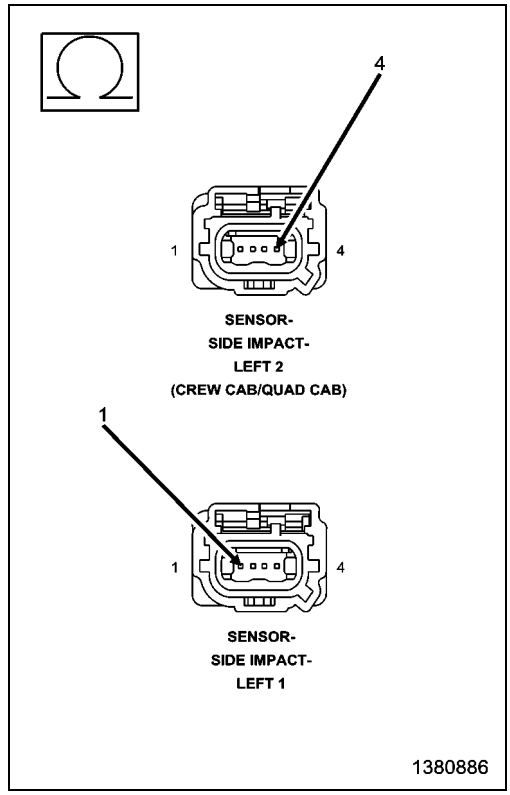

7. CHECK OPERATION OF THE LEFT SIDE IMPACT SENSOR 2

1. Replace the Left Side Impact Sensor 2 in accordance with the Service Information.
2. Reconnect the vehicle body harness to the impact sensor.
3. Remove any special tools or jumper wires and reconnect all previously disconnected components - except the Battery.

WARNING: Turn the ignition on, then reconnect the 12-volt battery and wait two minutes before proceeding. Failure to follow these instructions may result in possible serious or fatal injury.

4. Connect the scan tool to the Data Link Connector - use the most current software available.
5. Use the scan tool and erase the stored codes in all airbag system modules.
6. Turn the ignition OFF, and wait 15 seconds before turning the ignition ON.
7. Wait one minute, and read active codes and if there are none present read the stored codes.

Did the scan tool display active U0173-00-LOST COMMUNICATION W/ LEFT SIDE SATELLITE SENSOR 2 - DTC?

Yes

WARNING: Turn the ignition off, disconnect the 12-volt battery and wait two minutes before proceeding. Failure to follow these instructions may result in possible serious or fatal injury.

WARNING: If the Occupant Restraint Controller (ORC) is dropped at any time, it must be replaced. Failure to follow these instructions may result in possible serious or fatal injury.

- Replace the ORC in accordance with Service Instructions.
- Perform the RESTRAINTS SYSTEM VERIFICATION TEST. (Refer to 28 - DTC-Based Diagnostics/CONTROLLER, Occupant Restraint (ORC) - Standard Procedure).

No

- Repair is complete.
- Perform the RESTRAINTS SYSTEM VERIFICATION TEST. (Refer to 28 - DTC-Based Diagnostics/CONTROLLER, Occupant Restraint (ORC) - Standard Procedure).

U0175-00-LOST COMMUNICATION W/ RIGHT SIDE SATELLITE SENSOR 1

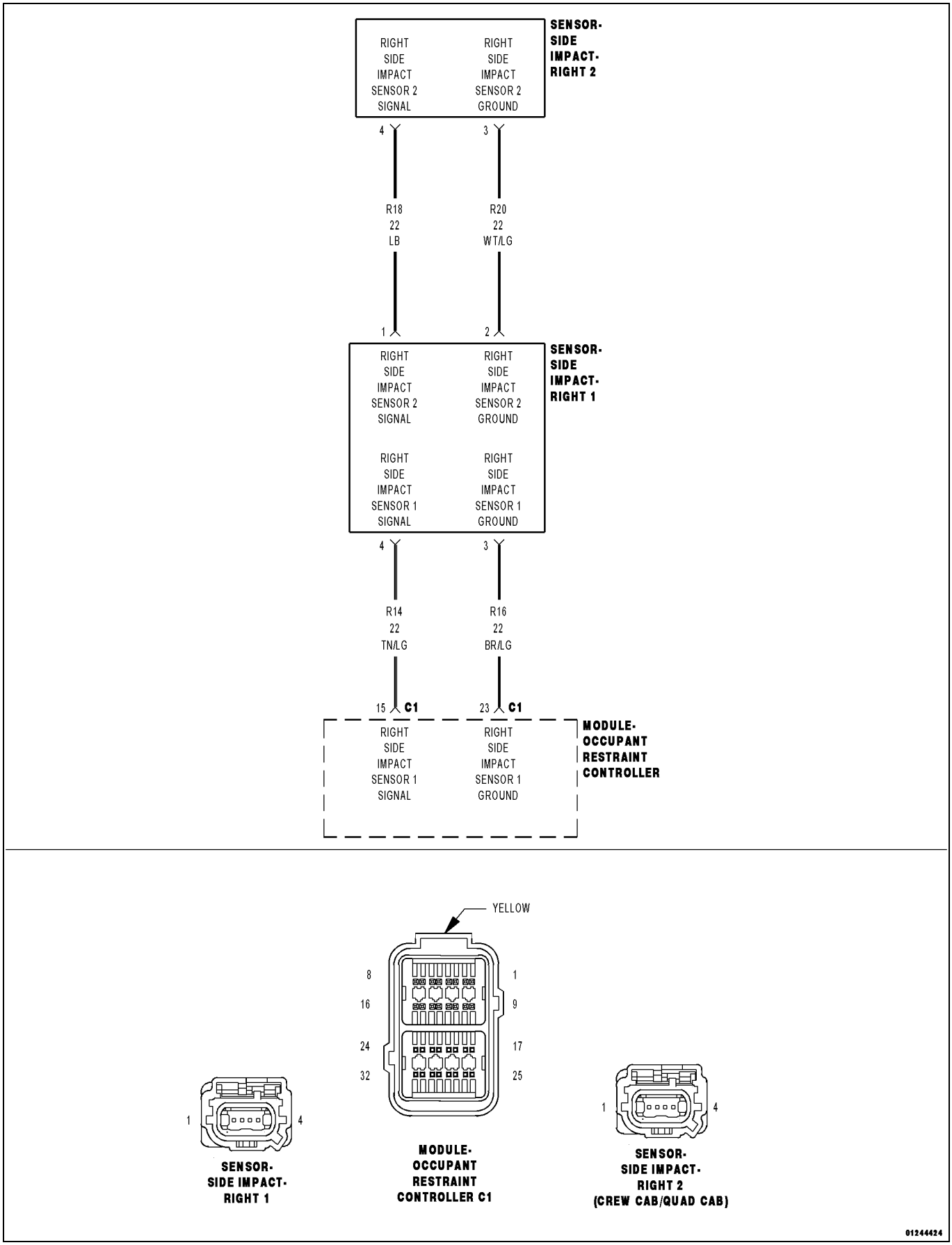

For a complete wiring diagram, **refer to the Wiring Information**.

Theory of Operation

The location of this right side impact sensor 1 is in the B-pillar just past the first row seating. (Refer to 10 - Restraints - Description). The impact sensors perform their own self test using power supplied by the Occupant Restraint Controller (ORC) then communicate this status back to the ORC with periodic updates. The repair of this fault condition involves verifying the integrity of the wiring between the ORC and the sensor. If the scan tool shows this DTC has a Stored history of setting then the right side impact sensor is to be replaced. A short to voltage fault on the right side impact sensor 1 sensor wiring can cause a loss of comm impact sensor 2 or 4 code to set and the possible replacement of a good right side impact sensor 2 or 4. The right side impact 1, 2, and 4 sensors are wired in a daisy chain pattern. The short to battery fault in a loss of comm or internal circuit failure of the side impact sensor 1 can cause the impact sensor 2 and 4 on the same side to set a loss of comm code.

- **When Monitored:**

  The Occupant Restraint Controller (ORC) continuously communicates with the Right Side Impact Sensor 1 over the sensor signal circuit. The sensor communication and on board diagnostics are powered by the ORC signal.
- **Set Condition:**

  This Diagnostic Trouble Code (DTC) will set, if the ORC and the Right Side Impact Sensor 1 fail to establish and maintain valid data communications.

Possible Causes
(R14, R16) RIGHT SIDE IMPACT SENSOR 1 CIRCUITS SHORTED TO VOLTAGE
(R14, R16) RIGHT SIDE IMPACT SENSOR 1 CIRCUITS SHORTED TO GROUND
(R14, R16) RIGHT SIDE IMPACT SENSOR 1 CIRCUITS SHORTED TOGETHER
(R16) RIGHT SIDE IMPACT SENSOR 1 CIRCUITS OPEN
RIGHT SIDE IMPACT SENSOR 1
OCCUPANT RESTRAINT CONTROLLER (ORC

Always Perform the Pre-Diagnostic Troubleshooting procedure before proceeding. (Refer to 28 - DTC-Based Diagnostics/CONTROLLER, Occupant Restraint (ORC) - Standard Procedure).

1. VERIFY ACTIVE DTC

WARNING: Turn the ignition off, disconnect the 12-volt battery and wait two minutes before proceeding. Failure to follow these instructions may result in possible serious or fatal injury.

NOTE: Using the wiring diagram/schematic as a guide check all related splices and connectors for signs of water intrusion, corrosion, pushed out or bent terminals, and correct pin tension.

NOTE: If after the harness inspection it appears the impact sensor connector is only seated halfway. Reseat the harness connector into the impact sensor and lock the tab. Follow the instructions below checking for active codes.

WARNING: Turn the ignition on, then reconnect the 12-volt battery and wait two minutes before proceeding. Failure to follow these instructions may result in possible serious or fatal injury.

NOTE: Make sure the battery is fully charged.

1. Turn the ignition on.
2. With the scan tool, read ORC DTCs.

   Does the scan tool display active B0096-49-RIGHT SIDE ACCELERATION SENSOR 1 - INTERNAL ELECTRONIC FAILURE, U0175-00-LOST COMMUNICATION W/ RIGHT SIDE SATELLITE SENSOR 1, U0176-00-LOST COMMUNICATION W/ RIGHT SIDE SATELLITE SENSOR 2, U11B0-00-LOST COMMUNICATION W/ RIGHT SIDE SATELLITE SENSOR 4 - DTC?

Yes

- Check for all other internal and lost communication codes indicated in the right side impact sensor daisy chain wiring, starting with DTC B0096-49-RIGHT SIDE ACCELERATION SENSOR 1 - INTERNAL ELECTRONIC FAILURE, then DTC U0175-00-LOST COMMUNICATION W/RIGHT SIDE SATELLITE ACCELERATION SENSOR 1. (Refer to 28 - DTC-Based Diagnostics/CONTROLLER, Occupant Restraint (ORC) - Diagnosis and Testing). Then Go To 2

No

- Perform the RESTRAINTS SYSTEM INTERMITTENT TEST. (Refer to 28 - DTC-Based Diagnostics/CONTROLLER, Occupant Restraint (ORC) - Standard Procedure).

2. CHECK THE (R14, R16) RIGHT SIDE IMPACT SENSOR 1 CIRCUITS FOR A SHORT TO VOLTAGE

WARNING: Turn the ignition off, disconnect the 12-volt battery and wait two minutes before proceeding. Failure to follow these instructions may result in possible serious or fatal injury.

1. Disconnect the Right Side Impact Sensor 1 harness connector.
2. Disconnect the ORC harness connectors.

WARNING: Turn the ignition on, then reconnect the 12-volt battery and wait two minutes before proceeding. Failure to follow these instructions may result in possible serious or fatal injury.

3. Measure the voltage of the (R14) Right Side Impact Sensor 1 Signal circuit cavity 4 and (R16) Right Side Impact Sensor 1 Ground circuit cavity 3 at the Right Side Impact Sensor 1 harness connector.

   Is there any voltage present?

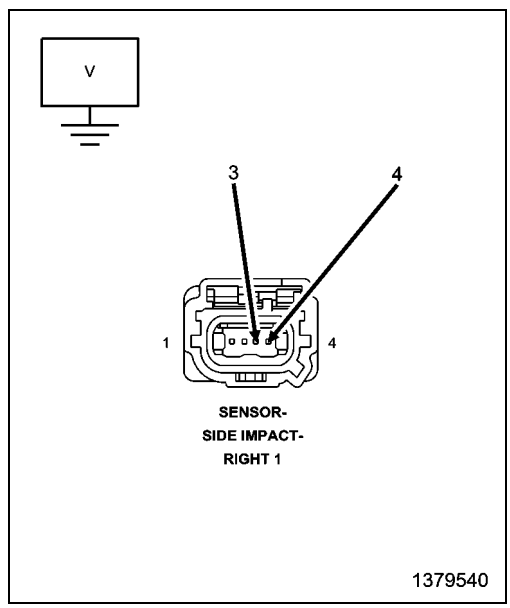

Yes

WARNING: Turn the ignition off, disconnect the 12-volt battery and wait two minutes before proceeding. Failure to follow these instructions may result in possible serious or fatal injury.

- Repair the (R14, R16) Right Side Impact Sensor 1 circuits for a short to voltage.
- Perform the RESTRAINTS SYSTEM VERIFICATION TEST. (Refer to 28 - DTC-Based Diagnostics/CONTROLLER, Occupant Restraint (ORC) - Standard Procedure).

No

- Go To 3

3. CHECK THE (R14, R16) RIGHT SIDE IMPACT SENSOR 1 CIRCUITS FOR A SHORT TO GROUND

WARNING: Turn the ignition off, disconnect the 12-volt battery and wait two minutes before proceeding. Failure to follow these instructions may result in possible serious or fatal injury.

1. Measure the resistance between ground and the (R16) Right Side Impact Sensor 1 Ground circuit at the Right Side Impact Sensor 1 harness connector cavity 3.
2. Measure the resistance between ground and the (R14) Right Side Impact Sensor 1 Signal circuit at the Right Side Impact Sensor 1 harness connector cavity 4.

Is the resistance below 100K Ohms?

Yes

- Repair the (R14, R16) Right Side Impact Sensor 1 circuits for a short to ground.
- Perform the RESTRAINTS SYSTEM VERIFICATION TEST. (Refer to 28 - DTC-Based Diagnostics/CONTROLLER, Occupant Restraint (ORC) - Standard Procedure).

No

- Go To 4

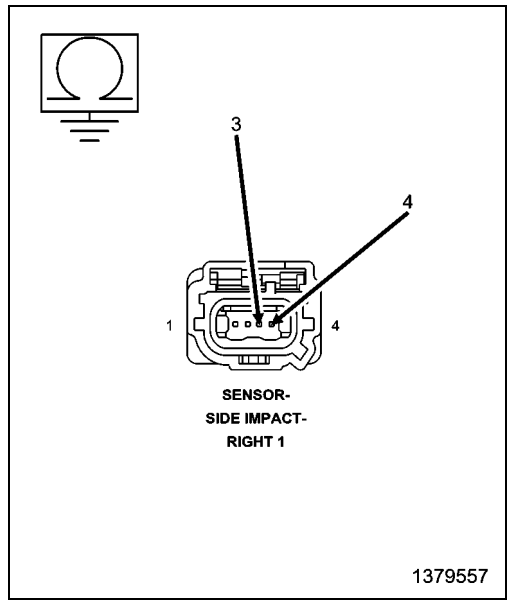

4. CHECK THE (R14, R16) RIGHT SIDE IMPACT SENSOR 1 CIRCUITS FOR A SHORT TOGETHER

1. Measure the resistance between the (R14) Right Side Impact Sensor 1 Signal and (R16) Right Side Impact Sensor 1 Ground circuits at the Right Side Impact Sensor 1 harness connector.

Is the resistance below 100K Ohms?

Yes

- Repair the (R14, R16) Right Side Impact Sensor 1 circuits shorted together.
- Perform the RESTRAINTS SYSTEM VERIFICATION TEST. (Refer to 28 - DTC-Based Diagnostics/CONTROLLER, Occupant Restraint (ORC) - Standard Procedure).

No

- Go To 5

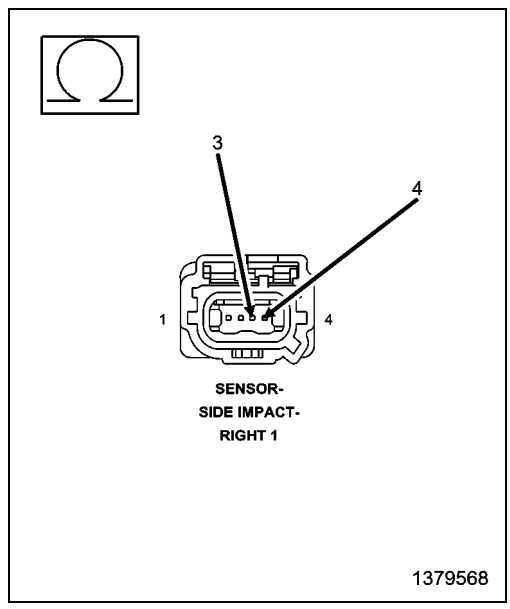

5. CHECK THE (R16) RIGHT SIDE IMPACT SENSOR 1 GROUND CIRCUIT FOR AN OPEN OR HIGH RESISTANCE

1. Connect the SRS Load Tool Adaptor 8443-24 to the ORC C1 harness connector.
2. Measure the resistance of the (R16) Right Side Impact Sensor 1 Ground circuit between the Right Side Impact Sensor 1 harness connector cavity 3 and the SRS Load Tool Adaptor 8443-24 cavity 23.

Is the resistance below 1 Ohm?

Yes

- Go To 6

No

- Repair the (R16) Right Side Impact Sensor 1 Ground circuit for an open or high resistance.
- Perform the RESTRAINTS SYSTEM VERIFICATION TEST. (Refer to 28 - DTC-Based Diagnostics/CONTROLLER, Occupant Restraint (ORC) - Standard Procedure).

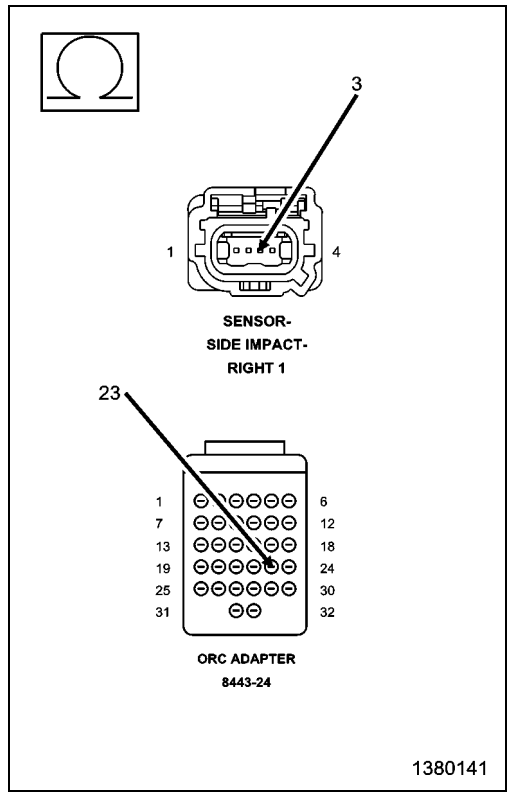

6. CHECK THE (R14) RIGHT SIDE IMPACT SENSOR 1 CIRCUIT FOR AN OPEN OR HIGH RESISTANCE

1. Measure the resistance of the (R14) Right Side Impact Sensor 1 Signal circuit between the Right Side Impact Sensor 1 harness connector cavity 4 and the SRS Load Tool Adaptor 8443-24 cavity 15.

Is the resistance below 1 Ohm?

Yes

- Go To 7

No

- Repair the (R14) Right Side Impact Sensor 1 Signal circuit for an open or high resistance.
- Perform the RESTRAINTS SYSTEM VERIFICATION TEST. (Refer to 28 - DTC-Based Diagnostics/CONTROLLER, Occupant Restraint (ORC) - Standard Procedure).

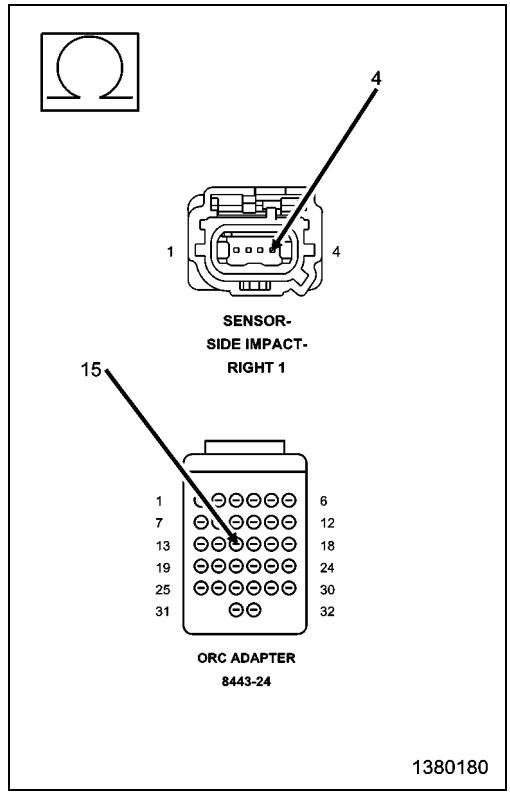

7. CHECK OPERATION OF THE RIGHT SIDE IMPACT SENSOR 1

1. Replace the Right Side Impact Sensor 1.
2. Reconnect the vehicle body harness to the impact sensor.
3. Remove any special tools or jumper wires and reconnect all previously disconnected components - except the Battery.

WARNING: Turn the ignition on, then reconnect the 12-volt battery and wait two minutes before proceeding. Failure to follow these instructions may result in possible serious or fatal injury.

4. Connect the scan tool to the Data Link Connector - use the most current software available.
5. Use the scan tool and erase the stored codes in all airbag system modules.
6. Turn the ignition OFF, and wait 15 seconds before turning the ignition ON.
7. Wait one minute, and read active codes and if there are none present read the stored codes.

Does the scan tool display active U0175-00-LOST COMMUNICATION W/ RIGHT SIDE SATELLITE SENSOR 1 - DTC?

Yes

WARNING: Turn the ignition off, disconnect the 12-volt battery and wait two minutes before proceeding. Failure to follow these instructions may result in possible serious or fatal injury.

WARNING: If the Occupant Restraint Controller (ORC) is dropped at any time, it must be replaced. Failure to follow these instructions may result in possible serious or fatal injury.

- Replace the ORC in accordance with Service Instructions.
- Perform the RESTRAINTS SYSTEM VERIFICATION TEST. (Refer to 28 - DTC-Based Diagnostics/CONTROLLER, Occupant Restraint (ORC) - Standard Procedure).

No

- Repair is complete.
- Perform the RESTRAINTS SYSTEM VERIFICATION TEST. (Refer to 28 - DTC-Based Diagnostics/CONTROLLER, Occupant Restraint (ORC) - Standard Procedure).

U0176-00-LOST COMMUNICATION W/ RIGHT SIDE SATELLITE SENSOR 2

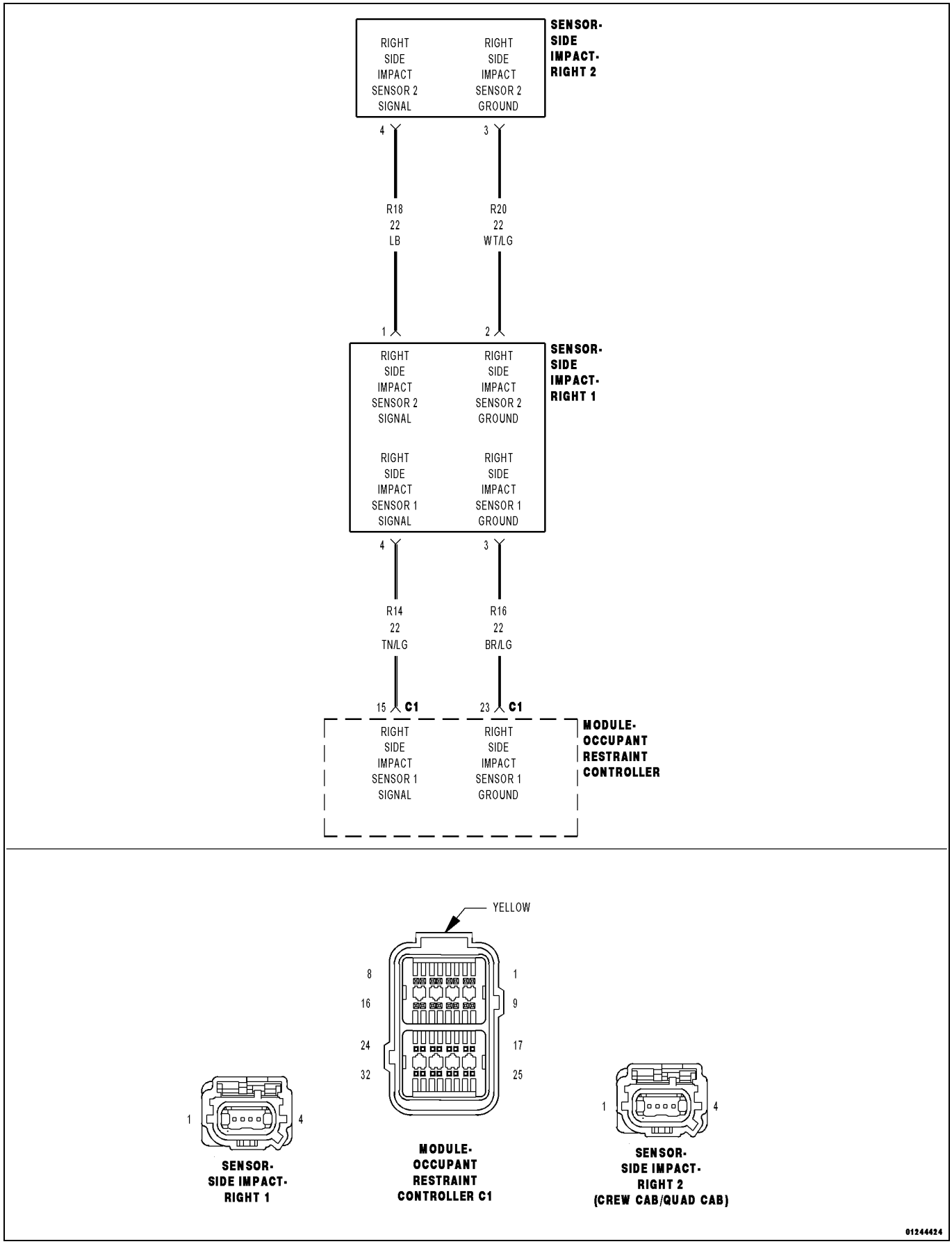

For a complete wiring diagram, **refer to the Wiring Information**.

Theory of Operation

The location of this right side impact sensor 2 is in the C-pillar just past the second row seating. (Refer to 10 - Restraints - Description). The impact sensors perform their own self test using power supplied by the Occupant Restraint Controller (ORC) then communicate this status back to the ORC with periodic updates. The repair of this fault condition involves verifying the integrity of the wiring between the ORC and the sensor. If the scan tool shows this DTC has a Stored history of setting then the right side impact sensor is to be replaced. A short to voltage fault on the right side impact sensor 1 sensor wiring can cause a loss of comm impact sensor 2 code to set and the possible replacement of a good right side impact sensor 2. The right side impact 1, and 2 sensors are wired in a daisy chain pattern. The short to battery fault in a loss of comm or internal circuit failure of the side impact sensor 1 can cause the impact sensor 2 on the same side to set a loss of comm code.

- **When Monitored:**

  The Occupant Restraint Controller (ORC) continuously communicates with the Right Side Impact Sensor 2 over the sensor signal circuit. The sensor communication and on board diagnostics are powered by the ORC signal.

- **Set Condition:**

  This Diagnostic Trouble Code (DTC) will set, if the ORC is communicating with the Right Side Impact Sensor 1 but fails to establish and maintain valid data communications with the Right Side Impact Sensor 2.

NOTE: Perform all active RIGHT SIDE SATELLITE SENSOR 1 diagnostic procedures before this procedure.

Possible Causes
LOSS OF COMMUNICATION WITH THE RIGHT SIDE IMPACT SENSOR 1
(R18, R20) RIGHT SIDE IMPACT SENSOR 2 CIRCUITS SHORTED TO VOLTAGE
(R18, R20) RIGHT SIDE IMPACT SENSOR 2 CIRCUITS SHORTED TO GROUND
(R18, R20) RIGHT SIDE IMPACT SENSOR 2 CIRCUITS SHORTED TOGETHER
(R18, R20) RIGHT SIDE IMPACT SENSOR 2 CIRCUITS OPEN
RIGHT SIDE IMPACT SENSOR 2
OCCUPANT RESTRAINT CONTROLLER (ORC

Always Perform the Pre-Diagnostic Troubleshooting procedure before proceeding. (Refer to 28 - DTC-Based Diagnostics/CONTROLLER, Occupant Restraint (ORC) - Standard Procedure).

1. VERIFY ACTIVE RIGHT SIDE SATELLITE SENSOR 2 DTC

WARNING: Turn the ignition off, disconnect the 12-volt battery and wait two minutes before proceeding. Failure to follow these instructions may result in possible serious or fatal injury.

NOTE: Using the wiring diagram/schematic as a guide check all related splices and connectors for signs of water intrusion, corrosion, pushed out or bent terminals, and correct pin tension.

NOTE: If after the harness inspection it appears the impact sensor connector is only seated halfway. Reseat the harness connector into the impact sensor and lock the tab. Follow the instructions below checking for active codes.

WARNING: Turn the ignition on, then reconnect the 12-volt battery and wait two minutes before proceeding. Failure to follow these instructions may result in possible serious or fatal injury.

NOTE: Make sure the battery is fully charged.

1. Turn the ignition on.
2. With the scan tool, read ORC DTCs.

   Does the scan tool display active B1B75-RIGHT SIDE SATELLITE ACCELERATION SENSOR 1 INTERNAL, U0175-LOST COMMUNICATION W/RIGHT SIDE SATELLITE ACCELERATION SENSOR 1, U0176-LOST COMMUNICATION W/RIGHT SIDE SATELLITE ACCELERATION SENSOR 2?- DTC?

Yes

- Check for all other internal and lost communication codes indicated in the right side impact sensor daisy chain wiring before diagnosing DTC U0176-LOST COMMUNICATION W/RIGHT SIDE SATELLITE ACCELERATION SENSOR 2. Go To The DTC Displayed (Refer to 28 - DTC-Based Diagnostics/CONTROLLER, Occupant Restraint (ORC) - Diagnosis and Testing). If internal fault 1 and lost comm fault 1 have been checked follow DTC U0176-LOST COMMUNICATION W/RIGHT SIDE SATELLITE ACCELERATION SENSOR 2. Go To 2

No

- Perform the RESTRAINTS SYSTEM INTERMITTENT TEST. (Refer to 28 - DTC-Based Diagnostics/CONTROLLER, Occupant Restraint (ORC) - Standard Procedure).

2. CHECK THE (R18, R20) RIGHT SIDE IMPACT SENSOR 2 CIRCUITS FOR A SHORT TO VOLTAGE

WARNING: Turn the ignition off, disconnect the 12-volt battery and wait two minutes before proceeding. Failure to follow these instructions may result in possible serious or fatal injury.

1. Disconnect the Right Side Impact Sensor 1 harness connector.
2. Disconnect the Right Side Impact Sensor 2 harness connector.

WARNING: Turn the ignition on, then reconnect the 12-volt battery and wait two minutes before proceeding. Failure to follow these instructions may result in possible serious or fatal injury.

3. Measure the voltage of the (R18) Right Side Impact Sensor 1 Signal circuit cavity 4 and (R20) Right Side Impact Sensor 1 Ground circuit cavity 3 at the Right Side Impact Sensor 1 harness connector.

   Is there any voltage present?

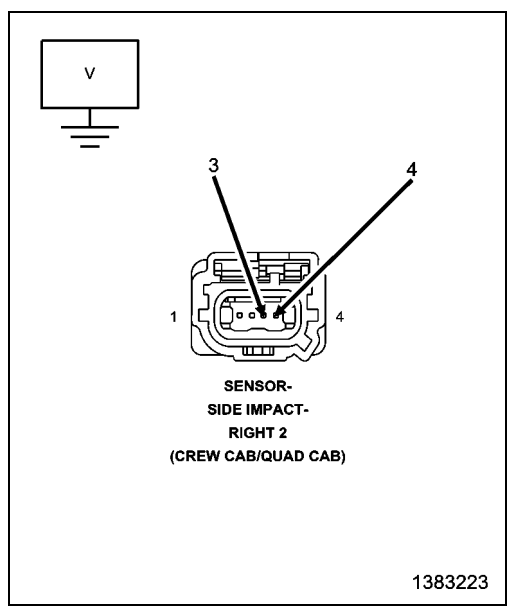

Yes

- Repair the (R18, R20) Right Side Impact Sensor 1 circuits for a short to voltage.
- Perform the RESTRAINTS SYSTEM VERIFICATION TEST. (Refer to 28 - DTC-Based Diagnostics/CONTROLLER, Occupant Restraint (ORC) - Standard Procedure).

No

- Go To 3

3. CHECK THE (R18, R20) RIGHT SIDE IMPACT SENSOR 1 CIRCUITS FOR A SHORT TO GROUND

WARNING: Turn the ignition on, then reconnect the battery and wait two minutes before proceeding. Failure to follow these instructions may result in possible serious or fatal injury.

1. Measure the resistance between ground and the (R18) Right Side Impact Sensor 2 Signal circuit at the Right Side Impact Sensor 2 harness connector cavity 4.
2. Measure the resistance between ground and the (R20) Right Side Impact Sensor 2 Ground circuit at the Right Side Impact Sensor 2 harness connector cavity 3.

Is the resistance below 100K Ohms?

Yes

- Repair the (R18, R20) Right Side Impact Sensor 2 circuits for a short to ground.
- Perform the RESTRAINTS SYSTEM VERIFICATION TEST. (Refer to 28 - DTC-Based Diagnostics/CONTROLLER, Occupant Restraint (ORC) - Standard Procedure).

No

- Go To 4

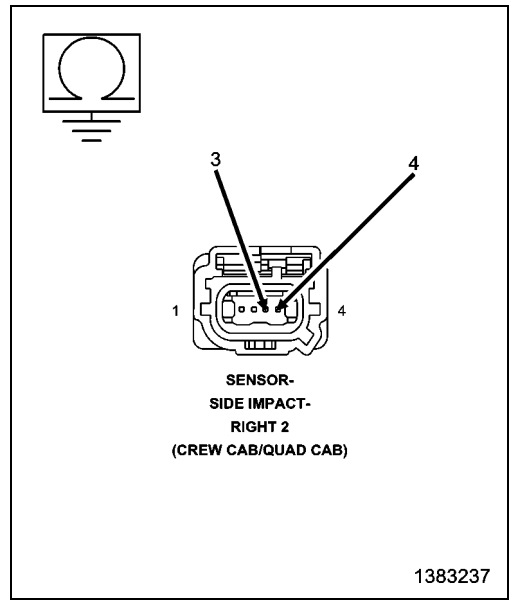

4. CHECK THE (R18, R20) RIGHT SIDE IMPACT SENSOR 2 CIRCUITS FOR A SHORT TOGETHER

1. Measure the resistance between the (R18) Right Side Impact Sensor 2 Signal circuit cavity 4 and (R20) Right Side Impact Sensor 2 Ground circuit cavity 3 at the Right Side Impact Sensor 2 harness connector.

Is the resistance below 100K Ohms?

Yes

- Repair the (R18, R20) Right Side Impact Sensor 2 circuits shorted together.
- Perform the RESTRAINTS SYSTEM VERIFICATION TEST. (Refer to 28 - DTC-Based Diagnostics/CONTROLLER, Occupant Restraint (ORC) - Standard Procedure).

No

- Go To 5

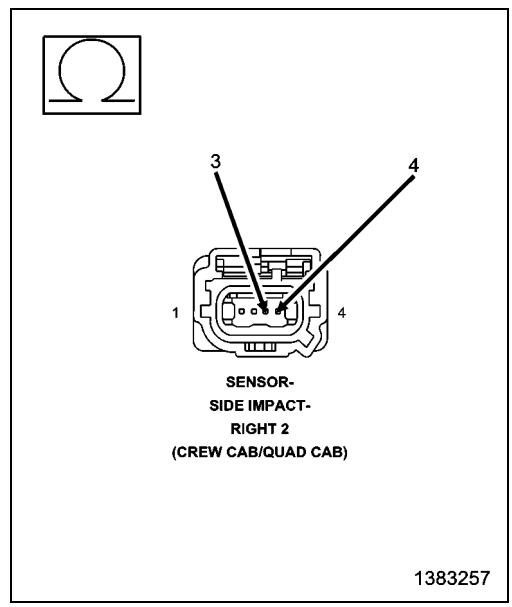

5. CHECK THE (R20) RIGHT SIDE IMPACT SENSOR 2 GROUND CIRCUIT FOR AN OPEN OR HIGH RESISTANCE

1. Disconnect the Right Side Impact Sensor 1 harness connector.
2. Measure the resistance of the (R20) Right Side Impact Sensor 2 Ground circuit between the Right Side Impact Sensor 2 harness connector cavity 3 and the Right Side Impact Sensor 1 harness connector cavity 2.

Is the resistance below 1 Ohm?

Yes

- Go To 6

No

- Repair the (R20) Right Side Impact Sensor 2 Ground circuit for an open or high resistance.
- Perform the RESTRAINTS SYSTEM VERIFICATION TEST. (Refer to 28 - DTC-Based Diagnostics/CONTROLLER, Occupant Restraint (ORC) - Standard Procedure).

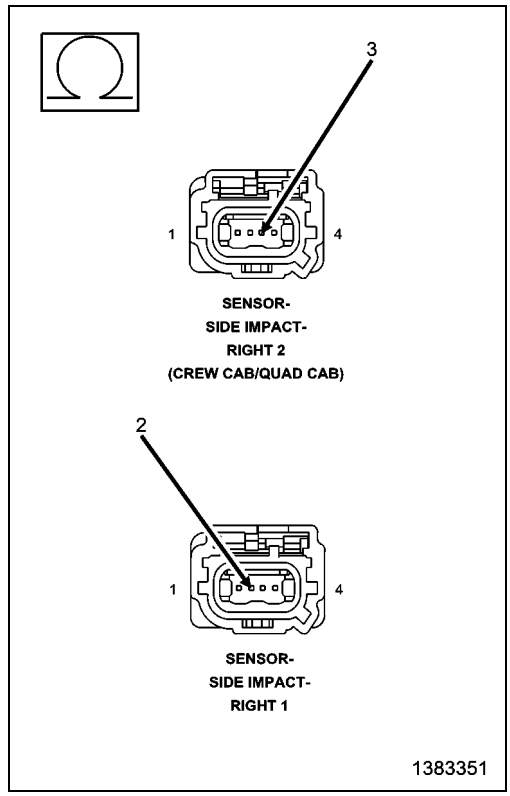

6. CHECK THE (R18) RIGHT SIDE IMPACT SENSOR 2 SIGNAL CIRCUIT FOR AN OPEN OR HIGH RESISTANCE

1. Measure the resistance of the (R18) Right Side Impact Sensor 2 Signal circuit between the Right Side Impact Sensor 1 harness connector cavity 4 and the Right Side Impact Sensor 1 harness connector cavity 1.

Is the resistance below 1 Ohm?

Yes

- Go To 7

No

- Repair the (R18) Right Side Impact Sensor 2 Signal circuit for an open or high resistance.
- Perform the RESTRAINTS SYSTEM VERIFICATION TEST. (Refer to 28 - DTC-Based Diagnostics/CONTROLLER, Occupant Restraint (ORC) - Standard Procedure).

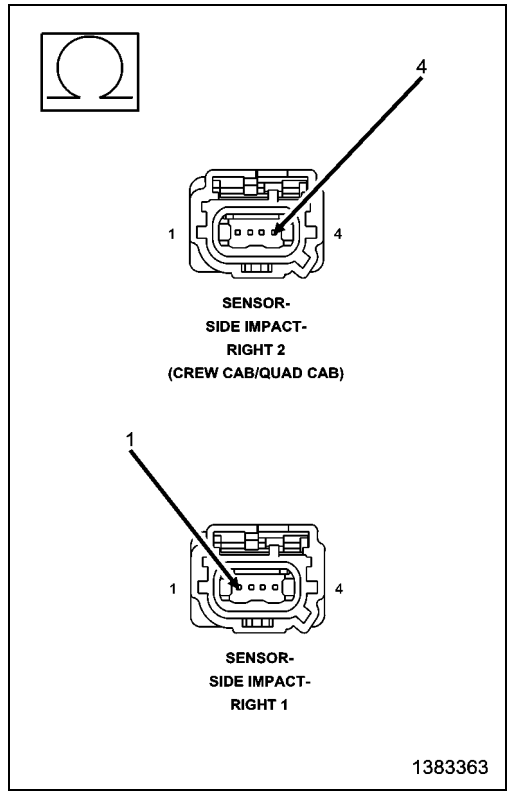

7. CHECK OPERATION OF THE RIGHT SIDE IMPACT SENSOR 2

1. Replace the Right Side Impact Sensor 2.
2. Reconnect the vehicle body harness connector to the Right Side Impact Sensor 2.
3. Remove any special tools or jumper wires and reconnect all previously disconnected components - except the Battery.

WARNING: Turn the ignition on, then reconnect the 12-volt battery and wait two minutes before proceeding. Failure to follow these instructions may result in possible serious or fatal injury.

4. Connect the scan tool to the Data Link Connector - use the most current software available.
5. Use the scan tool and erase the stored codes in all airbag system modules.
6. Turn the ignition OFF, and wait 15 seconds before turning the ignition ON.
7. Wait one minute, and read active codes and if there are none present read the stored codes.

Did the scan tool display active U0176-00-LOST COMMUNICATION W/ RIGHT SIDE SATELLITE SENSOR 2 - DTC?

Yes

WARNING: Turn the ignition off, disconnect the 12-volt battery and wait two minutes before proceeding. Failure to follow these instructions may result in possible serious or fatal injury.

WARNING: If the Occupant Restraint Controller (ORC) is dropped at any time, it must be replaced. Failure to follow these instructions may result in possible serious or fatal injury.

- Replace the ORC in accordance with Service Instructions.
- Perform the RESTRAINTS SYSTEM VERIFICATION TEST. (Refer to 28 - DTC-Based Diagnostics/CONTROLLER, Occupant Restraint (ORC) - Standard Procedure).

No

- Repair is complete.
- Perform the RESTRAINTS SYSTEM VERIFICATION TEST. (Refer to 28 - DTC-Based Diagnostics/CONTROLLER, Occupant Restraint (ORC) - Standard Procedure).

U11AD-00-LOST COMMUNICATION W/ LEFT SIDE SATELLITE SENSOR 4

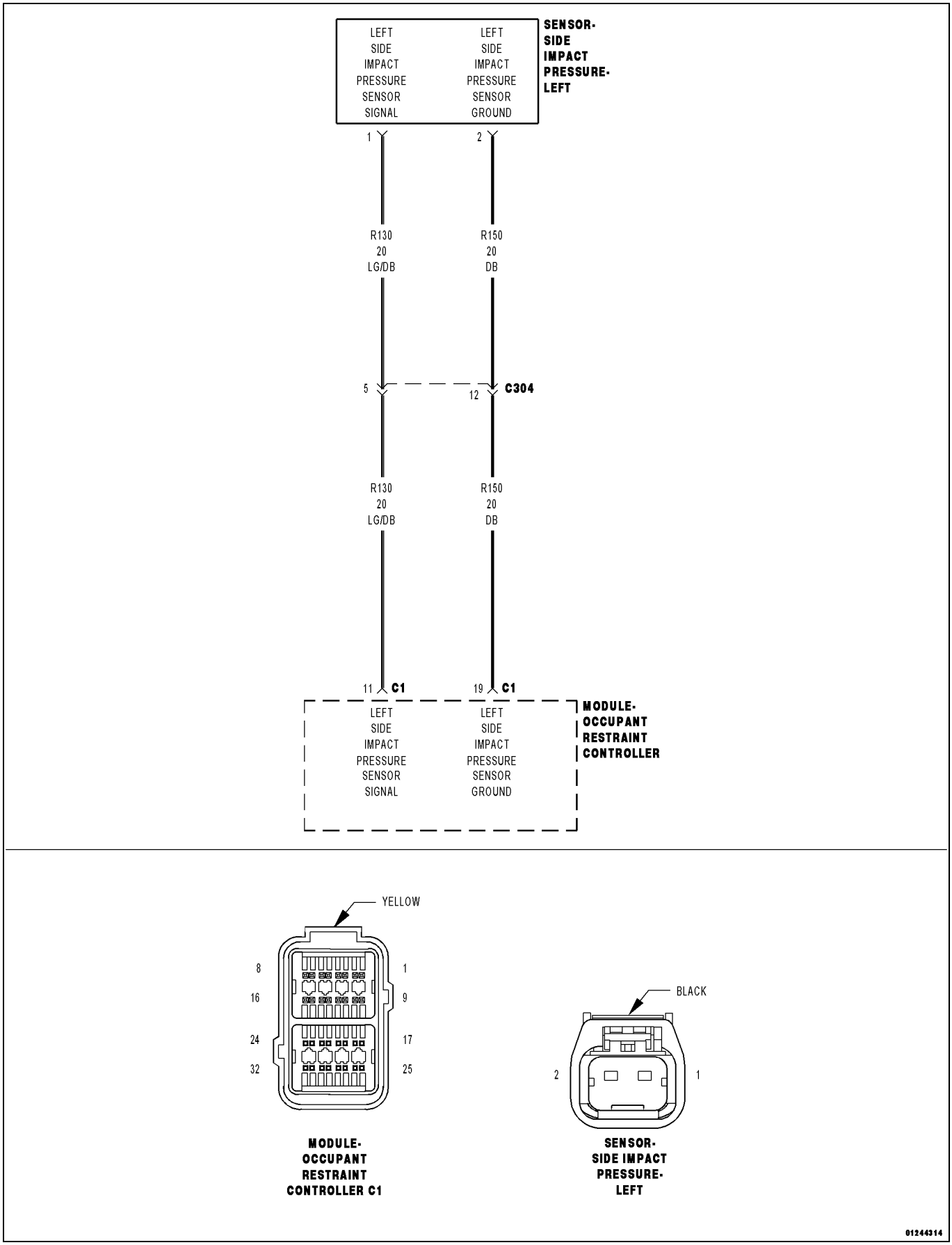

For a complete wiring diagram, **refer to the Wiring Information**.

Theory of Operation

The sensor 4 impact sensors are located in the first row driver and passenger doors. Impact pressure sensors perform their own self test using power supplied by the Occupant Restraint Controller (ORC) then communicate this status back to the ORC. The repair of this fault centers on verifying the integrity of the sensor's internal circuitry and software validity. A short to voltage fault on the left side impact sensor 2 sensor wiring can cause a loss of comm impact sensor 4 code to set and the possible replacement of a good left side impact sensor 4. The left side impact 1, 2, and 4 sensors are wired in a daisy chain pattern. The short to battery fault in a loss of comm or internal circuit failure of the side impact sensor 1 can cause the impact sensors 2 and 4 on the same side to set a loss of comm code.

- **When Monitored:**

  The ORC continuously communicates with the Left Side Impact Pressure Sensor over the sensor signal circuit. The sensor communication and on board diagnostics are powered by the ORC signal.

- **Set Condition:**

  This Diagnostic Trouble Code (DTC) will set, if the ORC and the Left Side Impact Pressure Sensor do not establish and maintain valid data communications.

Possible Causes
(R130, R150) LEFT SIDE IMPACT PRESSURE SENSOR CIRCUITS SHORTED TO VOLTAGE
(R130, R150) LEFT SIDE IMPACT PRESSURE SENSOR CIRCUITS SHORTED TO GROUND
(R130, R150) LEFT SIDE IMPACT PRESSURE SENSOR CIRCUITS SHORTED TOGETHER
(R130, R150) LEFT SIDE IMPACT PRESSURE SENSOR CIRCUITS OPEN
LEFT SIDE IMPACT PRESSURE SENSOR
OCCUPANT RESTRAINT CONTROLLER (ORC)

Always Perform the Pre-Diagnostic Troubleshooting procedure before proceeding. (Refer to 28 - DTC-Based Diagnostics/CONTROLLER, Occupant Restraint (ORC) - Standard Procedure).

1. VERIFY ACTIVE DTC

WARNING: Turn the ignition off, disconnect the 12-volt battery and wait two minutes before proceeding. Failure to follow these instructions may result in possible serious or fatal injury.

NOTE: Using the wiring diagram/schematic as a guide check all related splices and connectors for signs of water intrusion, corrosion, pushed out or bent terminals, and correct pin tension.

NOTE: If after the harness inspection it appears the impact sensor connector is only seated halfway. Reseat the harness connector into the impact sensor and lock the tab. Follow the instructions below checking for active codes.

WARNING: Turn the ignition on, then reconnect the 12-volt battery and wait two minutes before proceeding. Failure to follow these instructions may result in possible serious or fatal injury.

NOTE: Make sure the battery is fully charged.

1. Turn the ignition on.
2. With the scan tool, read ORC DTCs.

   Does the scan tool display active B0091-49-LEFT SIDE ACCELERATION SENSOR 1 - INTERNAL ELECTRONIC FAILURE, B0092-49-LEFT SIDE ACCELERATION SENSOR 2 - INTERNAL ELECTRONIC FAILURE, U0172-00-LOST COMMUNICATION W/ LEFT SIDE SATELLITE SENSOR 1, U0173-00-LOST COMMUNICATION W/ LEFT SIDE SATELLITE SENSOR 2, U11AD-00-LOST COMMUNICATION W/ LEFT SIDE SATELLITE SENSOR 4 - DTC?

Yes

NOTE: Check for the active codes and repair for the fault starting with the Internal failure code or codes, check for active or stored status. Upon fixing the left side impact sensor 1 internal fault then check the left side impact sensor 2 internal fault if status changes to stored for all codes fault is fixed if status is still active proceed to the left side impact sensor 1 loss of comm check for status of the left side impact sensor 1 code status being active. If all codes go to stored status, fault in daisy chain is fixed if code status is still active continue. Check the left side impact sensor 2 check for status of the left side impact sensor 2 code going to stored. If status of all codes goes to stored status, fault in daisy chain is fixed if code status is still active continue. Check the left side impact sensor 4, fix fault and check for status of code going to stored status.

- Check for all other internal and lost communication codes indicated in the left side impact sensor daisy chain wiring before diagnosing DTC U11AD-00-LOST COMMUNICATION W/ LEFT SIDE SATELLITE SENSOR 4. Go To The DTC Displayed (Refer to 28 - DTC-Based Diagnostics/CONTROLLER, Occupant Restraint (ORC) - Diagnosis and Testing). If internal fault 1 and 2 and lost comm fault 1 and 2 have been checked follow DTC U11AD-00-LOST COMMUNICATION W/ LEFT SIDE SATELLITE SENSOR 4. Go To 2

No

- Perform the RESTRAINTS SYSTEM INTERMITTENT TEST. (Refer to 28 - DTC-Based Diagnostics/CONTROLLER, Occupant Restraint (ORC) - Standard Procedure).

2. CHECK THE (R130, R150) LEFT SIDE IMPACT PRESSURE SENSOR CIRCUITS FOR A SHORT TO VOLTAGE

WARNING: Turn the ignition off, disconnect the 12-volt battery and wait two minutes before proceeding. Failure to follow these instructions may result in possible serious or fatal injury.

1. Disconnect the Left Side Impact Pressure Sensor harness connector.
2. Disconnect the ORC harness connectors.

WARNING: Turn the ignition on, then reconnect the 12-volt battery and wait two minutes before proceeding. Failure to follow these instructions may result in possible serious or fatal injury.

3. Measure the voltage of the (R130) Left Side Impact Pressure Sensor Signal circuit and (R150) Left Side Impact Pressure Sensor Ground circuit at the Left Side Impact Pressure Sensor harness connector.

Is there any voltage present?

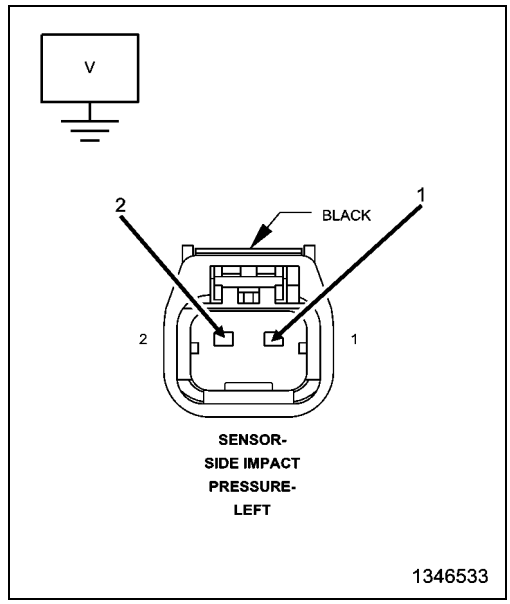

Yes

- Repair the (R130, R150) Left Side Impact Pressure Sensor circuits for a short to voltage.
- Perform the RESTRAINTS SYSTEM VERIFICATION TEST. (Refer to 28 - DTC-Based Diagnostics/CONTROLLER, Occupant Restraint (ORC) - Standard Procedure).

No

- Go To 3

3. CHECK THE (R130, R150) LEFT SIDE IMPACT PRESSURE SENSOR CIRCUITS FOR A SHORT TO GROUND

WARNING: Turn the ignition off, disconnect the 12-volt battery and wait two minutes before proceeding. Failure to follow these instructions may result in possible serious or fatal injury.

1. Measure the resistance between ground and the (R130) Left Side Impact Pressure Sensor Signal circuit at the Left Side Impact Pressure Sensor harness connector .
2. Measure the resistance between ground and the (R150) Left Side Impact Pressure Sensor Ground circuit at the Left Side Impact Pressure Sensor harness connector.

Is the resistance below 100K Ohms?

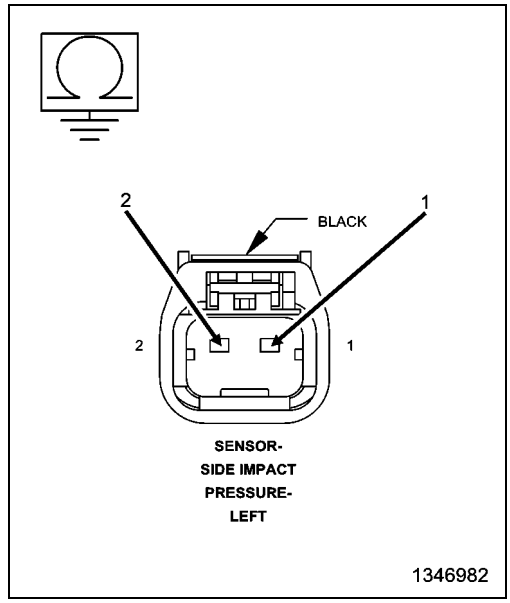

Yes

- Repair the (R130, R150) Left Side Impact Pressure Sensor circuits for a short to ground.
- Perform the RESTRAINTS SYSTEM VERIFICATION TEST. (Refer to 28 - DTC-Based Diagnostics/CONTROLLER, Occupant Restraint (ORC) - Standard Procedure).

No

- Go To 4

4. CHECK THE (R130, R150) LEFT SIDE IMPACT PRESSURE SENSOR CIRCUITS FOR A SHORT TOGETHER

1. Measure the resistance between the (R130) Left Side Impact Pressure Sensor Signal and (R150) Left Side Impact Pressure Sensor Ground circuits at the Left Side Impact Pressure Sensor harness connector.

Is the resistance below 100K Ohms?

Yes

- Repair the (R13, R15) Left Side Impact Pressure Sensor circuits shorted together.
- Perform the RESTRAINTS SYSTEM VERIFICATION TEST. (Refer to 28 - DTC-Based Diagnostics/CONTROLLER, Occupant Restraint (ORC) - Standard Procedure).

No

- Go To 5

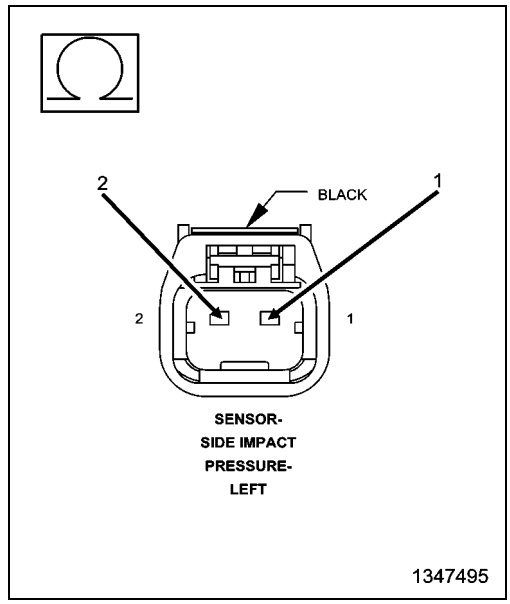

5. CHECK THE (R150) LEFT SIDE IMPACT PRESSURE SENSOR GROUND CIRCUIT FOR AN OPEN OR HIGH RESISTANCE

1. Connect the SRS Load Tool Adapter 8443-24 to the ORC harness connector.
2. Measure the resistance of the (R150) Left Side Impact Pressure Sensor Ground circuit between the Left Side Impact Pressure Sensor harness connector cavity 2 and the SRS Load Tool Adapter 8443-24 cavity 19.

Is the resistance below 1 Ohm?

Yes

- Go To 6

No

- Repair the (R150) Left Side Impact Pressure Sensor Ground circuit for an open or high resistance.
- Perform the RESTRAINTS SYSTEM VERIFICATION TEST. (Refer to 28 - DTC-Based Diagnostics/CONTROLLER, Occupant Restraint (ORC) - Standard Procedure).

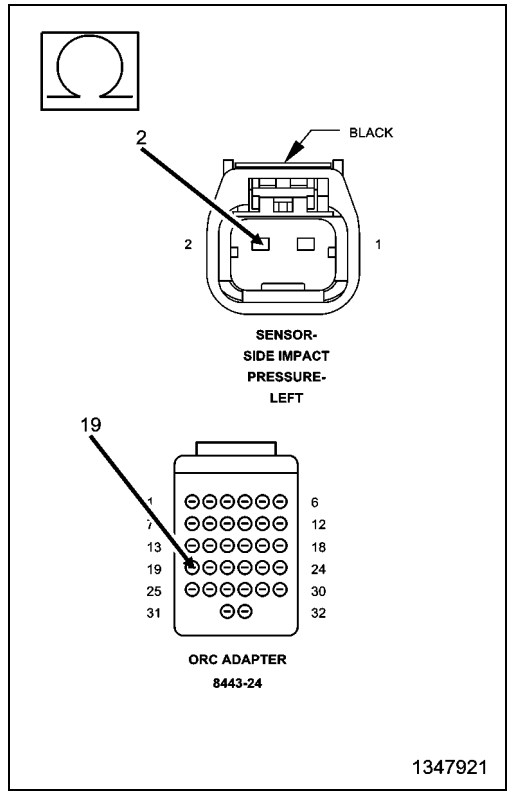

6. CHECK THE (R130) LEFT SIDE IMPACT PRESSURE SENSOR CIRCUIT FOR AN OPEN OR HIGH RESISTANCE

1. Measure the resistance of the (R130) Left Side Impact Pressure Sensor Signal circuit between the Left Side Impact Pressure Sensor harness connector cavity 1 and the SRS Load Tool Adapter 8443-24 cavity 11.

Is the resistance below 1 Ohm?

Yes

- Go To 7

No

- Repair the (R13) Left Side Impact Pressure Sensor Signal circuit for an open or high resistance.
- Perform the RESTRAINTS SYSTEM VERIFICATION TEST. (Refer to 28 - DTC-Based Diagnostics/CONTROLLER, Occupant Restraint (ORC) - Standard Procedure).

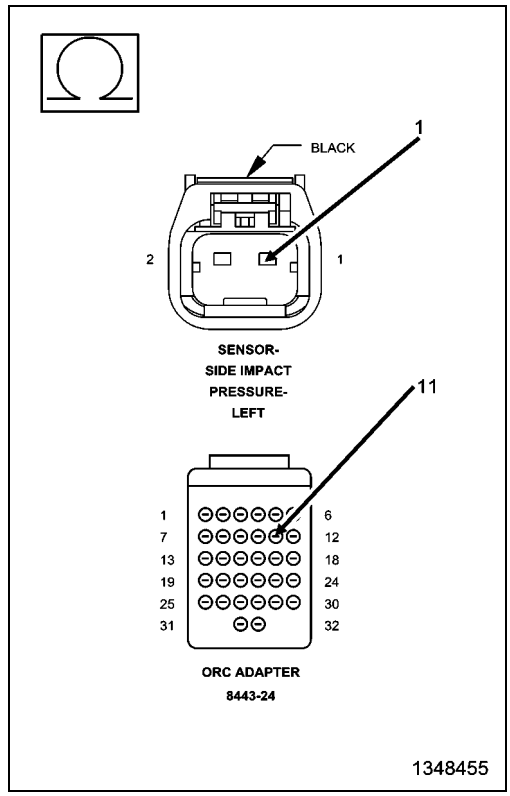

7. CHECK OPERATION OF THE LEFT SIDE IMPACT PRESSURE SENSOR

1. Replace the Left Side Impact Pressure Sensor in accordance with the Service Information.
2. Reconnect the vehicle body harness to the impact pressure sensor.
3. Remove any special tools or jumper wires and reconnect all previously disconnected components - except the Battery.

WARNING: Turn the ignition on, then reconnect the 12-volt battery and wait two minutes before proceeding. Failure to follow these instructions may result in possible serious or fatal injury.

4. Connect the scan tool to the Data Link Connector - use the most current software available.
5. Use the scan tool and erase the stored codes in all airbag system modules.
6. Turn the ignition OFF, and wait 15 seconds before turning the ignition ON.
7. Wait one minute, and read active codes and if there are none present read the stored codes.

Did the active U11AD-00-LOST COMMUNICATION W/ LEFT SIDE SATELLITE SENSOR 4 - DTC return?

Yes

WARNING: Turn the ignition off, disconnect the 12-volt battery and wait two minutes before proceeding. Failure to follow these instructions may result in possible serious or fatal injury.

WARNING: If the Occupant Restraint Controller (ORC) is dropped at any time, it must be replaced. Failure to follow these instructions may result in possible serious or fatal injury.

- Replace the Occupant Restraint Controller (ORC) in accordance with Service Instructions.
- Perform the RESTRAINTS SYSTEM VERIFICATION TEST. (Refer to 28 - DTC-Based Diagnostics/CONTROLLER, Occupant Restraint (ORC) - Standard Procedure).

No

- Repair is complete.
- Perform the RESTRAINTS SYSTEM VERIFICATION TEST. (Refer to 28 - DTC-Based Diagnostics/CONTROLLER, Occupant Restraint (ORC) - Standard Procedure).

U11B0-00-LOST COMMUNICATION W/ RIGHT SIDE SATELLITE SENSOR 4

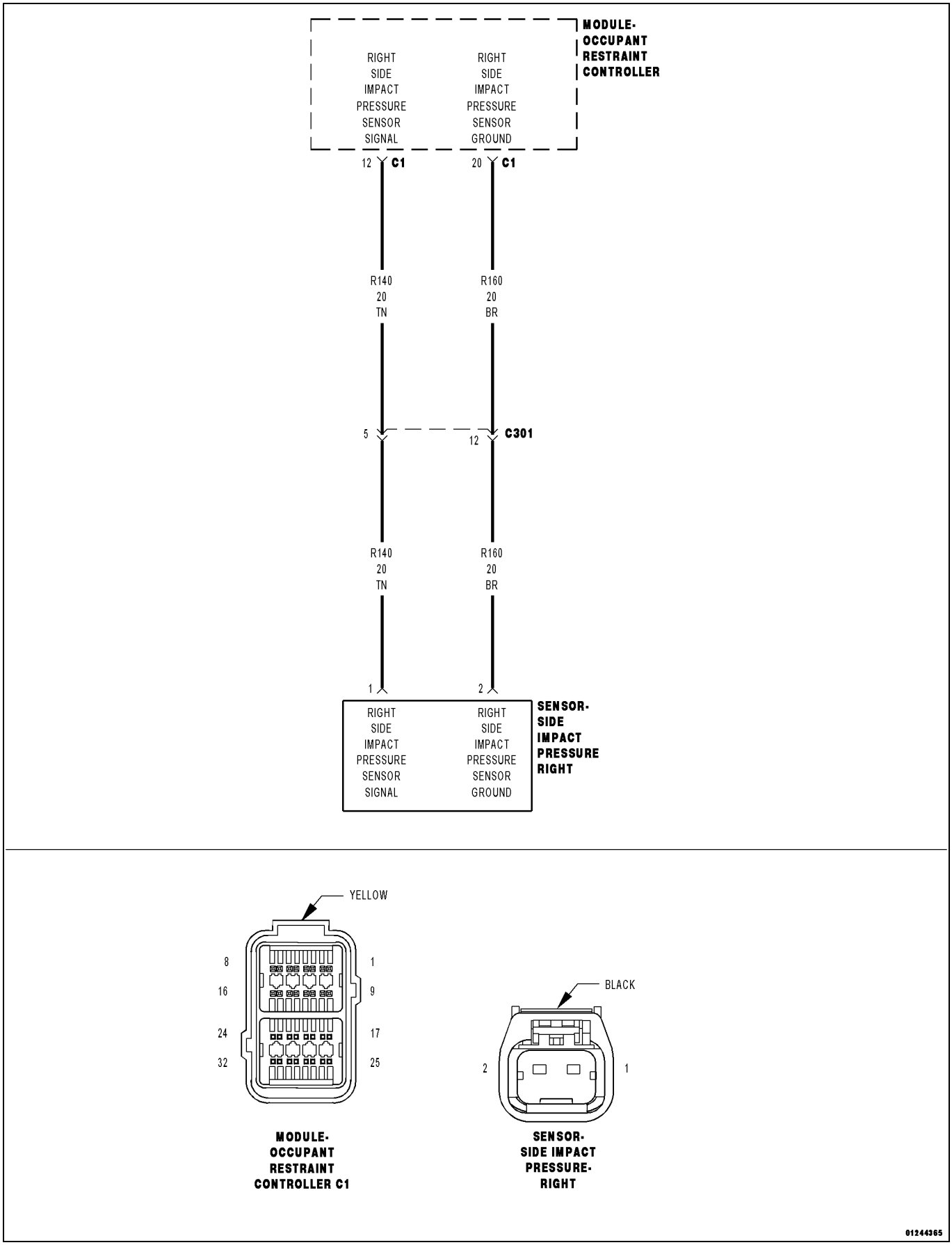

For a complete wiring diagram, **refer to the Wiring Information**.

Theory of Operation

The sensor 4 impact sensors are located in the first row driver and passenger doors. Impact pressure sensors perform their own self test using power supplied by the Occupant Restraint Controller (ORC) then communicate this status back to the ORC. The repair of this fault centers on verifying the integrity of the sensor's internal circuitry and software validity. A short to voltage fault on the right side impact sensor 2 sensor wiring can cause a loss of comm impact sensor 4 code to set and the possible replacement of a good right side impact sensor 4. The right side impact 1, 2, and 4 sensors are wired in a daisy chain pattern. The short to battery fault in a loss of comm or internal circuit failure of the side impact sensor 1 can cause the impact sensors 2 and 4 on the same side to set a loss of comm code.

- **When Monitored:**

  The ORC continuously communicates with the Right Side Impact Pressure Sensor over the sensor signal circuit. The sensor communication and on board diagnostics are powered by the ORC signal.

- **Set Condition:**

  This Diagnostic Trouble Code (DTC) will set, if the ORC and the Right Side Impact Pressure Sensor do not establish and maintain valid data communications.

Possible Causes
(R140, R160) RIGHT SIDE IMPACT PRESSURE SENSOR CIRCUITS SHORTED TO VOLTAGE
(R140, R160) RIGHT SIDE IMPACT PRESSURE SENSOR CIRCUITS SHORTED TO GROUND
(R140, R160) RIGHT SIDE IMPACT PRESSURE SENSOR CIRCUITS SHORTED TOGETHER
(R140, R160) RIGHT SIDE IMPACT PRESSURE SENSOR CIRCUITS OPEN
RIGHT SIDE IMPACT PRESSURE SENSOR
OCCUPANT RESTRAINT CONTROLLER (ORC

Always Perform the Pre-Diagnostic Troubleshooting procedure before proceeding. (Refer to 28 - DTC-Based Diagnostics/CONTROLLER, Occupant Restraint (ORC) - Standard Procedure).

1. VERIFY ACTIVE DTC

WARNING: Turn the ignition off, disconnect the 12-volt battery and wait two minutes before proceeding. Failure to follow these instructions may result in possible serious or fatal injury.

NOTE: Using the wiring diagram/schematic as a guide check all related splices and connectors for signs of water intrusion, corrosion, pushed out or bent terminals, and correct pin tension.

NOTE: If after the harness inspection it appears the impact sensor connector is only seated halfway. Reseat the harness connector into the impact sensor and lock the tab. Follow the instructions below checking for active codes.

WARNING: Turn the ignition on, then reconnect the 12-volt battery and wait two minutes before proceeding. Failure to follow these instructions may result in possible serious or fatal injury.

NOTE: Make sure the battery is fully charged.

1. Turn the ignition on.
2. With the scan tool, read ORC DTCs.

Does the scan tool display active Service Info B0096-49-RIGHT SIDE ACCELERATION SENSOR 1 - INTERNAL ELECTRONIC FAILURE, B0097-49-RIGHT SIDE ACCELERATION SENSOR 2 - INTERNAL ELECTRONIC FAILURE, U0175-00-LOST COMMUNICATION W/ RIGHT SIDE SATELLITE SENSOR 1, U0176-00-LOST COMMUNICATION W/ RIGHT SIDE SATELLITE SENSOR 2 , U11B0-00-LOST COMMUNICATION W/ RIGHT SIDE SATELLITE SENSOR 4 - DTC?

Yes

NOTE: Check for the active codes and repair for the fault starting with the Internal failure code or codes, check for active or stored status. Upon fixing the right side impact sensor 1 then check the right side impact sensor 2 internal fault if status changes to stored for all codes fault is fixed if status is still active proceed to the right side impact sensor 1 loss of comm check for status of the right side impact sensor 1 code status being active. If all codes status goes to stored status, fault in daisy chain is fixed if code status is still active continue. Check the right side impact sensor 2 check for status of the right side impact sensor 2 code going to stored. If status of all codes goes to stored status, fault in daisy chain is fixed if code status is still active continue. Check the right side impact sensor 4, fix fault and check for status of code going to stored status.

- Check for all other internal and lost communication codes indicated in the right side impact sensor daisy chain wiring before diagnosing DTC U11B0-00-LOST COMMUNICATION W/ RIGHT SIDE SATELLITE SENSOR 4. Go To The DTC Displayed (Refer to 28 - DTC-Based Diagnostics/CONTROLLER, Occupant Restraint (ORC) - Diagnosis and Testing). If internal fault 1 and 2 and lost comm fault 1 and 2 have been checked follow DTC U11B0-00-LOST COMMUNICATION W/ RIGHT SIDE SATELLITE SENSOR 4. Go To 2

No

- Perform the RESTRAINTS SYSTEM INTERMITTENT TEST. (Refer to 28 - DTC-Based Diagnostics/CONTROLLER, Occupant Restraint (ORC) - Standard Procedure).

2. CHECK THE (R140, R160) RIGHT SIDE IMPACT PRESSURE SENSOR CIRCUITS FOR A SHORT TO VOLTAGE

WARNING: Turn the ignition off, disconnect the 12-volt battery and wait two minutes before proceeding. Failure to follow these instructions may result in possible serious or fatal injury.

1. Disconnect the Right Side Impact Pressure Sensor harness connector.
2. Disconnect the ORC harness connectors.

WARNING: Turn the ignition on, then reconnect the 12-volt battery and wait two minutes before proceeding. Failure to follow these instructions may result in possible serious or fatal injury.

3. Measure the voltage of the (R140) Right Side Impact Pressure Sensor Signal circuit at the Right Side Impact Pressure Sensor harness connector.
4. Measure the voltage of the (R160) Right Side Impact Pressure Sensor Ground circuit at the Right Side Impact Pressure Sensor harness connector.

Is there any voltage present?

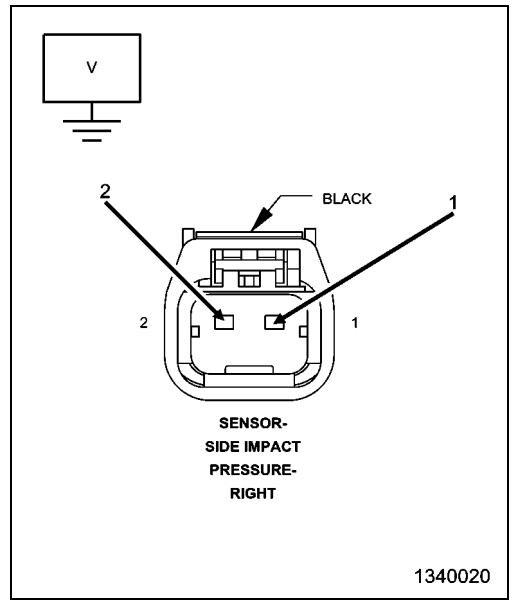

Yes

- Repair the (R140, R160) Right Side Impact Pressure Sensor circuits for a short to voltage.
- Check the scan tool for active
- Perform the RESTRAINTS SYSTEM VERIFICATION TEST. (Refer to 28 - DTC-Based Diagnostics/CONTROLLER, Occupant Restraint (ORC) - Standard Procedure).

No

- Go To 3

3. CHECK THE (R140, R1160) RIGHT SIDE IMPACT PRESSURE SENSOR CIRCUITS FOR A SHORT TO GROUND

WARNING: Turn the ignition off, disconnect the 12-volt battery and wait two minutes before proceeding. Failure to follow these instructions may result in possible serious or fatal injury.

1. Measure the resistance between ground and the (R140) Right Side Impact Pressure Sensor Signal circuit at the Right Side Impact Pressure Sensor harness connector.
2. Measure the resistance between ground and the (R160) Right Side Impact Pressure Sensor Ground circuit at the Right Side Impact Pressure Sensor harness connector.

Is the resistance below 100K Ohms?

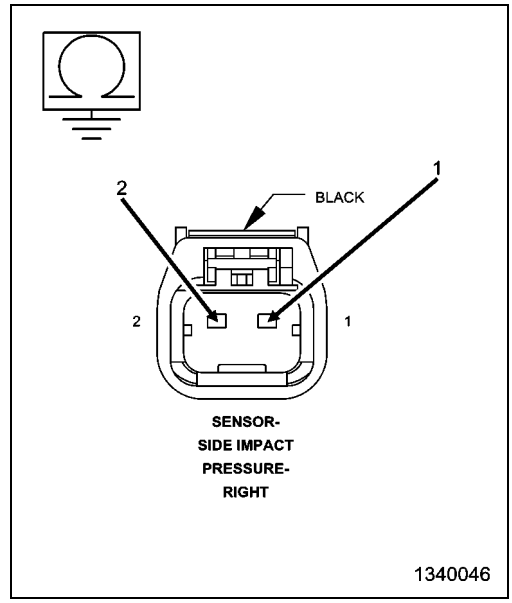

Yes

- Repair the (R140, R160) Right Side Impact Pressure Sensor circuits for a short to ground.
- Perform the RESTRAINTS SYSTEM VERIFICATION TEST. (Refer to 28 - DTC-Based Diagnostics/CONTROLLER, Occupant Restraint (ORC) - Standard Procedure).

No

- Go To 4

4. CHECK THE (R140, R160) RIGHT SIDE IMPACT PRESSURE SENSOR CIRCUITS FOR A SHORT TOGETHER

1. Measure the resistance between the (R140) Right Side Impact Pressure Sensor Signal circuit and (R160) Right Side Impact Pressure Sensor Ground circuit at the Right Side Impact Pressure Sensor harness connector.

Is the resistance below 100K Ohms?

Yes

- Repair the (R140, R160) Right Side Impact Pressure Sensor circuits shorted together.
- Perform the RESTRAINTS SYSTEM VERIFICATION TEST. (Refer to 28 - DTC-Based Diagnostics/CONTROLLER, Occupant Restraint (ORC) - Standard Procedure).

No

- Go To 5

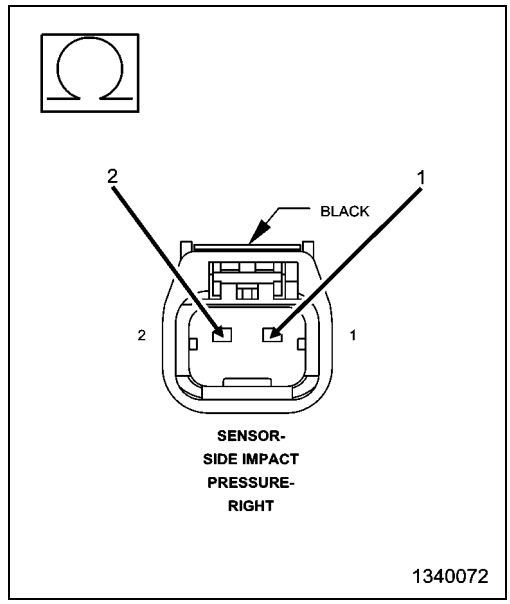

5. CHECK THE (R140) RIGHT SIDE IMPACT PRESSURE SENSOR SIGNAL CIRCUIT FOR AN OPEN OR HIGH RESISTANCE

1. Connect the SRS Load Tool Adaptor 8443-24 to the ORC C1 harness connector.
2. Measure the resistance of the (R140) Right Side Impact Pressure Sensor Signal circuit between the Right Side Impact Pressure Sensor harness connector cavity 1 and the SRS Load Tool Adaptor 8443-24 cavity 12.

Is the resistance below 1 Ohm?

Yes

- Go To 6

No

- Repair the (R140) Right Side Impact Pressure Sensor Signal circuit for an open or high resistance.
- Perform the RESTRAINTS SYSTEM VERIFICATION TEST. (Refer to 28 - DTC-Based Diagnostics/CONTROLLER, Occupant Restraint (ORC) - Standard Procedure).

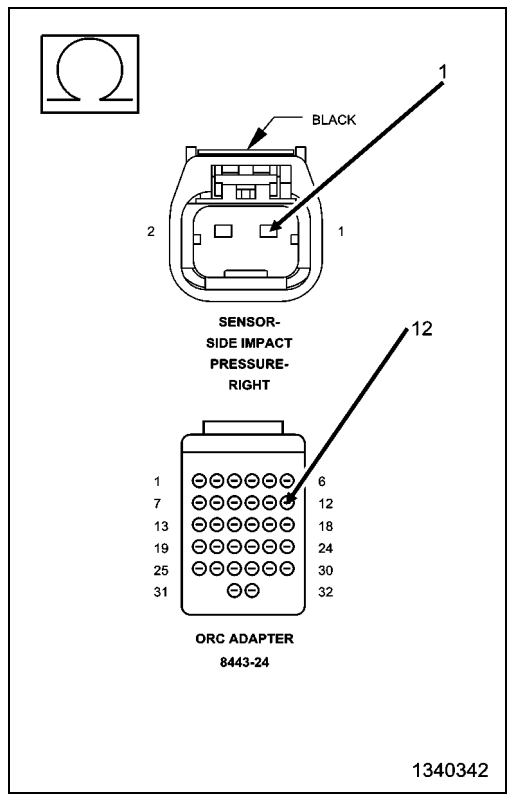

6. CHECK THE (R160) RIGHT SIDE IMPACT PRESSURE SENSOR GROUND CIRCUIT FOR AN OPEN OR HIGH RESISTANCE

1. Measure the resistance of the (R160) Right Side Impact Pressure Sensor Ground circuit between the Right Side Impact Pressure Sensor harness connector cavity 2 and the SRS Load Tool Adaptor 8443-24 cavity 20.

Is the resistance below 1 Ohm?

Yes

- Go To 7

No

- Repair the (R160) Right Side Impact Pressure Sensor ground circuit for an open or high resistance.
- Perform the RESTRAINTS SYSTEM VERIFICATION TEST. (Refer to 28 - DTC-Based Diagnostics/CONTROLLER, Occupant Restraint (ORC) - Standard Procedure).

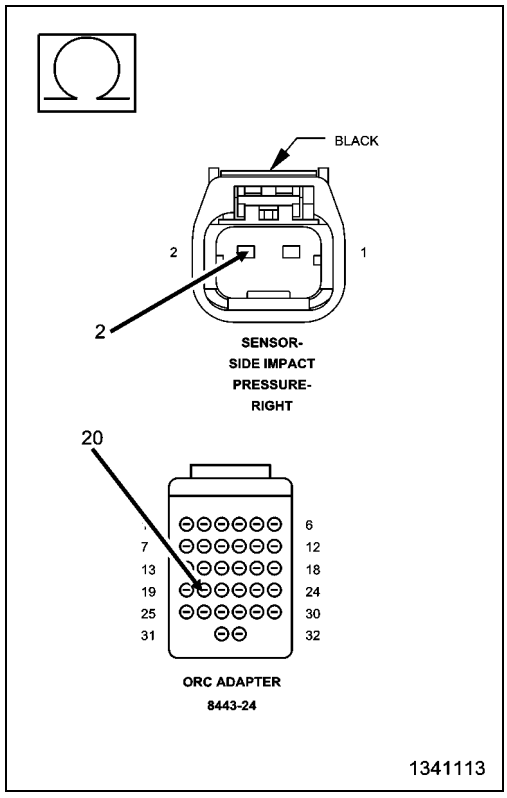

7. CHECK OPERATION OF THE RIGHT SIDE IMPACT PRESSURE SENSOR

1. Replace the Right Side Impact Pressure Sensor.
2. Reconnect the vehicle body harness to the Right Side Impact Pressure Sensor.
3. Remove any special tools or jumper wires and reconnect all previously disconnected components - except the Battery.

WARNING: Turn the ignition on, then reconnect the 12-volt battery and wait two minutes before proceeding. Failure to follow these instructions may result in possible serious or fatal injury.

4. Connect the scan tool to the Data Link Connector - use the most current software available.
5. Use the scan tool and erase the stored codes in all airbag system modules.
6. Turn the ignition OFF, and wait 15 seconds before turning the ignition ON.
7. Wait one minute, and read active codes and if there are none present read the stored codes.

Did the active U11B0-00-LOST COMMUNICATION W/ RIGHT SIDE SATELLITE SENSOR 4 - DTC return?

Yes

WARNING: Turn the ignition off, disconnect the 12-volt battery and wait two minutes before proceeding. Failure to follow these instructions may result in possible serious or fatal injury.

WARNING: If the Occupant Restraint Controller (ORC) is dropped at any time, it must be replaced. Failure to follow these instructions may result in possible serious or fatal injury.

- Replace the Occupant Restraint Controller (ORC) in accordance with Service Instructions.
- Perform the RESTRAINTS SYSTEM VERIFICATION TEST. (Refer to 28 - DTC-Based Diagnostics/CONTROLLER, Occupant Restraint (ORC) - Standard Procedure).

No

- Repair is complete.
- Perform the RESTRAINTS SYSTEM VERIFICATION TEST. (Refer to 28 - DTC-Based Diagnostics/CONTROLLER, Occupant Restraint (ORC) - Standard Procedure).

U1414-00-IMPLAUSIBLE/MISSING ECU NETWORK CONFIGURATION DATA -

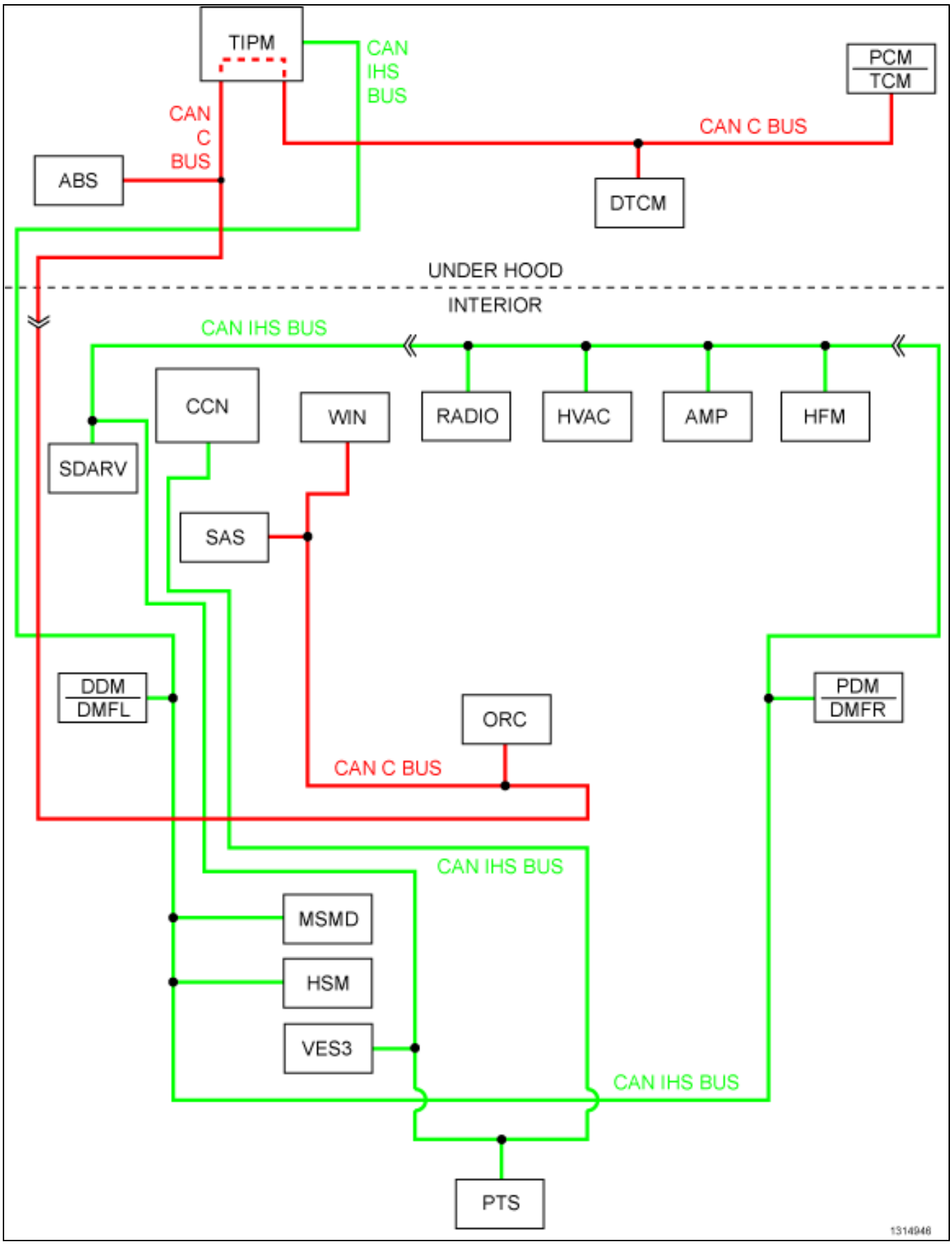

For a complete wiring diagram, **refer to the Wiring Information**.

Theory of Operation

When powered, the Occupant Restraint Controller (ORC) performs an internal self test. The repair of this fault centers on verifying that the ORC is configured correctly for the vehicle's restraint system components.

- **When Monitored:**

  The ORC checks for a configuration message from the Totally Integrated Power Module (TIPM) at power-up and initialization.

- **Set Condition:**

  This Diagnostic Trouble Code (DTC) sets when the configuration message is not equal to the programmed configuration or when the configuration message is missing for 7 seconds. Once set, this DTC is latched for a power cycle.

Possible Causes
TOTALLY INTEGRATED POWER MODULE (TIPM)

Always Perform the Pre-Diagnostic Troubleshooting procedure before proceeding. (Refer to 28 - DTC-Based Diagnostics/CONTROLLER, Occupant Restraint (ORC) - Standard Procedure).

1. VERIFY ACTIVE ORC DTC

NOTE: Ensure the battery is fully charged.

1. Turn the ignition on.
2. With the scan tool, read ORC DTCs.

Does the scan tool display an active U1414-00-IMPLAUSIBLE/MISSING ECU NETWORK CONFIGURATION DATA - DTC?

Yes

- Go To 2

No

- Repair complete.
- Perform the RESTRAINTS SYSTEM VERIFICATION TEST. (Refer to 28 - DTC-Based Diagnostics/CONTROLLER, Occupant Restraint (ORC) - Standard Procedure).

2. VERIFY ACTIVE TIPM DTC

1. With the scan tool, read TIPM DTCs.

Does the scan tool display any active TIPM DTCs?

Yes

- Perform the appropriate TIPM diagnostic procedures. (Refer to 28 - DTC-Based Diagnostics/MODULE, Totally Integrated Power (TIPM) - Diagnosis and Testing).

No

- Replace the Totally Integrated Power Module (TIPM) in accordance with Service Information.
- Perform the BODY VERIFICATION TEST. (Refer to 28 - DTC-Based Diagnostics/MODULE, Totally Integrated Power (TIPM) - Standard Procedure).

U1415-00-IMPLAUSIBLE/MISSING VEHICLE CONFIGURATION DATA -

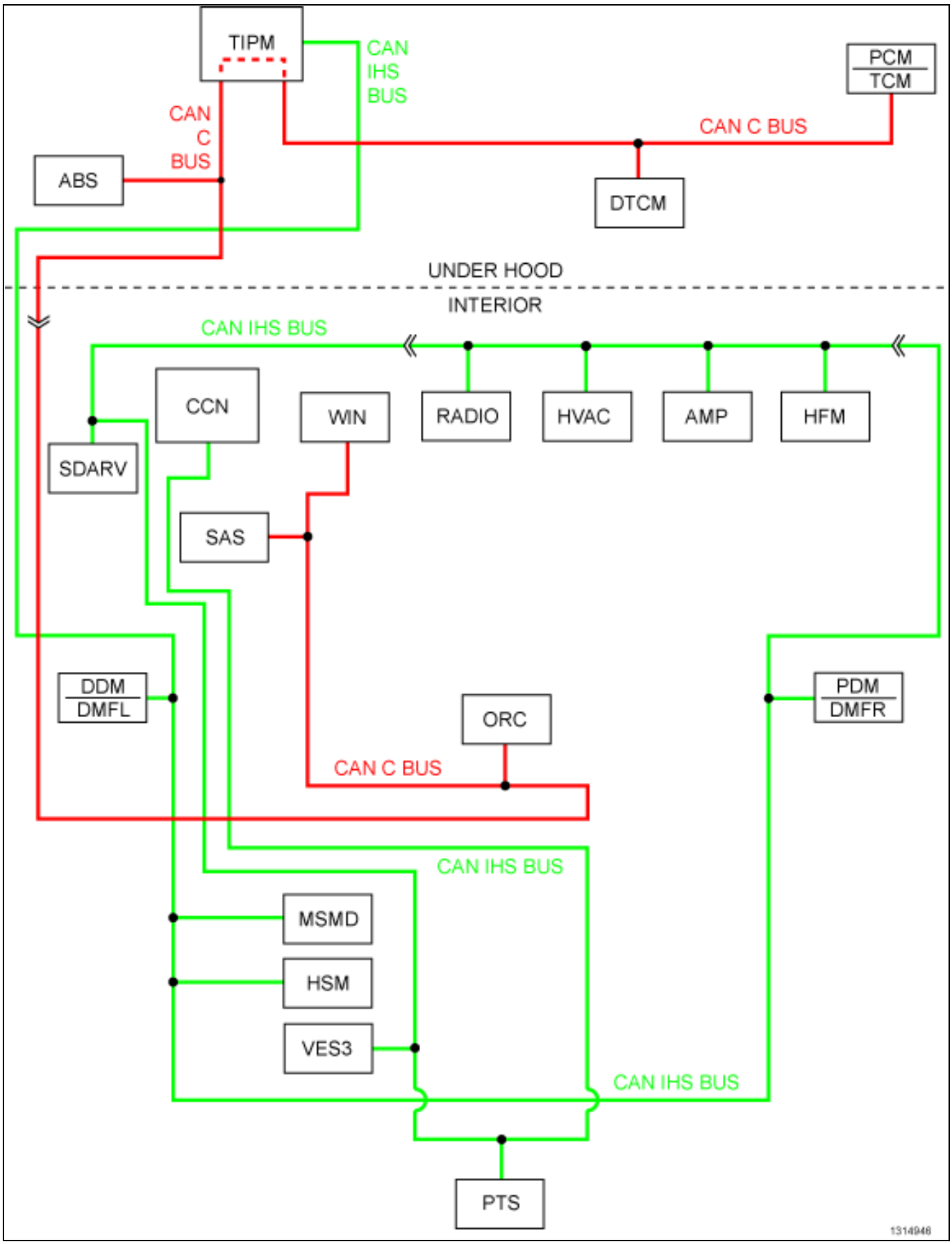

For a complete wiring diagram,**refer to the Wiring Information**.

Theory of Operation

When powered, the Occupant Restraint Controller (ORC) performs an internal self test. The repair of this fault centers on verifying that the ORC is configured correctly for the vehicle's restraint system components.

- **When Monitored:**

  The ORC checks for a configuration message from the Totally Integrated Power Module (TIPM) at power-up and initialization.
- **Set Condition:**

  This Diagnostic Trouble Code (DTC) sets when the configuration message is not equal to the programmed configuration or when the configuration message is missing for 7 seconds. Once set, this DTC is latched for a power cycle.

Possible Causes
TOTALLY INTEGRATED POWER MODULE (TIPM)

Always Perform the Pre-Diagnostic Troubleshooting procedure before proceeding. (Refer to 28 - DTC-Based Diagnostics/CONTROLLER, Occupant Restraint (ORC) - Standard Procedure).

1. VERIFY ACTIVE ORC DTC

NOTE: Ensure the battery is fully charged.

1. Turn the ignition on.
2. With the scan tool, read ORC DTCs.

Does the scan tool display an active U1415-00-IMPLAUSIBLE/MISSING VEHICLE CONFIGURATION DATA - DTC?

Yes

- Go To 2

No

- Repair complete.
- Perform the RESTRAINTS SYSTEM VERIFICATION TEST. (Refer to 28 - DTC-Based Diagnostics/CONTROLLER, Occupant Restraint (ORC) - Standard Procedure).

2. VERIFY ACTIVE TIPM DTC

1. With the scan tool, read TIPM DTCs.

Does the scan tool display any active TIPM DTCs?

Yes

- Perform the appropriate TIPM diagnostic procedures. (Refer to 28 - DTC-Based Diagnostics/MODULE, Totally Integrated Power (TIPM) - Diagnosis and Testing).

No

- Replace the Totally Integrated Power Module (TIPM) in accordance with Service Information.
- Perform the BODY VERIFICATION TEST. (Refer to 28 - DTC-Based Diagnostics/MODULE, Totally Integrated Power (TIPM) - Standard Procedure).

Standard Procedure

■ RESTRAINTS SYSTEM INTERMITTENT TEST

For a complete wiring diagram, **refer to the Wiring Information**.

1. RECORD AND ERASE ALL RESTRAINT SYSTEM DTCS

With the scan tool, record and erase all DTCs from all restraints system modules. Monitor for any active codes as you work through the following steps.

- Review the code monitored and set conditions for any DTCs that are stored and attempt to reproduce the conditions listed.
- Wiggle the wiring harness and connectors of the related airbag circuit, sensor, or component.
- If codes are related to the Driver Airbag circuits, rotate the steering wheel from stop to stop.
- Turn the ignition off.
- Refer to any Technical Service Bulletins (TSBs) that may apply.

Was the source of the customer complaint found or did any DTCs appear and stay active?

Yes

- Make the appropriate repairs and either perform the RESTRAINTS SYSTEM VERIFICATION TEST. (Refer to 28 - DTC-Based Diagnostics/CONTROLLER, Occupant Restraint (ORC) - Standard Procedure).
- Select the DTC procedure from the Table of Contents in this section. (Refer to 28 - DTC-Based Diagnostics/CONTROLLER, Occupant Restraint (ORC) - Diagnosis and Testing).

No

- Go To 2

2. ATTEMPT TO REPRODUCE THE CONDITION

In the event the customer complaint cannot be duplicated due to an intermittent condition in the restraints system, the following may aid in attempting to reproduce the condition.

WARNING: Turn the ignition off, disconnect the 12-volt battery and wait two minutes before proceeding. Failure to follow these instructions may result in possible serious or fatal injury.

- Using the wiring diagram/schematic as a guide, inspect the wiring and connectors related to the stored code or component in question.
- Look for chafed, pierced, pinched, or partially broken wires and broken, bent, pushed out, spread, corroded, or contaminated terminals.
- Reconnect any disconnected components and harness connectors and ensure they are properly seated.
-

WARNING: Turn the ignition on, then reconnect the 12-volt battery and wait two minutes before proceeding. Failure to follow these instructions may result in possible serious or fatal injury.
If numerous trouble codes were set, use a schematic and inspect any common ground or supply circuits.

Was the source of the intermittent condition located?

Yes

- Make the appropriate repairs and perform the RESTRAINTS SYSTEM VERIFICATION TEST. (Refer to 28 - DTC-Based Diagnostics/CONTROLLER, Occupant Restraint (ORC) - Standard Procedure).

No

- The problem cannot be found at this time.

RESTRAINTS SYSTEM PRE-DIAGNOSTIC PROCEDURE

Before attempting to repair any restraint system, technicians should be familiar with and fully understand the system operation. Refer to Restraints System Description and Operation for complete details (Refer to 10 - Restraints - Description) (Refer to 10 - Restraints - Operation). The following should be used as a checklist to be completed in its entirety prior to referencing specific Restraints Diagnostic Procedures.

FOLLOW THE BASIC OUTLINE SET FORTH IN THE SIX-STEP TROUBLESHOOTING PROCEDURE

1. Verification of complaint.
2. Verification of any related symptoms.
3. Symptom analysis.
4. Problem isolation.
5. Repair of isolated problem.
6. Verification of proper operation.

TAKE INTO ACCOUNT CURRENT VEHICLE CONDITION, REPAIR HISTORY, AND TECHNICAL SERVICE BULLETINS (TSBs)

- Verify that there are no outward signs of vehicle damage or effects from a collision that could impact the proper operation of the Restraints system.
- Check for aftermarket vehicle accessories that may have been installed improperly or could interfere with the system.
- Check the vehicle repair history for repairs that may relate to the current condition.
- Check for current Technical Service Bulletins (TSBs) for the Restraints system related to the customer concern. If a TSB applies, follow the procedure outlined in the TSB.

DIAGNOSE ONLY THOSE FAILURES THAT ARE ACTIVE AND CAN BE REPRODUCED

- Check the control module central to the subsystem that is exhibiting the condition for active DTCs.
- For an intermittent failure that is not active at the time of vehicle inspection, perform the RESTRAINTS SYSTEM INTERMITTENT TEST and document the event on the repair order. (Refer to 28 - DTC-Based Diagnostics/CONTROLLER, Occupant Restraint (ORC) - Standard Procedure).

ADDRESS ACTIVE DIAGNOSTIC TROUBLE CODES (DTCs) IN THE CORRECT ORDER

1. Low/High Voltage and Serial Data Loss of Communication Codes.
2. Module Internal Failure and Configuration Mismatch Codes.
3. Circuit specific DTC failures.

Should the malfunction still be present after conducting this Pre-diagnostic Procedure, technicians should continue to the appropriate DTC procedure. (Refer to 28 - DTC-Based Diagnostics/CONTROLLER, Occupant Restraint (ORC) - Diagnosis and Testing).

Was the Pre-Test reviewed and is the DTC still present?

Yes

- Perform the appropriate DTC procedure. (Refer to 28 - DTC-Based Diagnostics/CONTROLLER, Occupant Restraint (ORC) - Diagnosis and Testing).

No

- Test Complete.

■ RESTRAINTS SYSTEM VERIFICATION TEST

1. Perform the Restraints System Verification Test

1. Remove any special tools or jumper wires and reconnect all previously disconnected components - except the Battery.

WARNING: Turn the ignition on, then reconnect the 12-volt battery and wait two minutes before proceeding. Failure to follow these instructions may result in possible serious or fatal injury.

2. Connect the scan tool to the Data Link Connector - use the most current software available.
3. With the scan tool, erase stored DTCs in all airbag system modules.
4. Perform module reset.

NOTE: If equipped with an Airbag On - Off switch, read the DTCs in all switch positions.

5. Exercise the Restraints System to duplicate the appropriate monitor conditions for any DTCs that were set.
6. Wait one minute, and read active codes, if there are none present, read the stored codes.
7. If the scan tool shows any active or stored codes, (Refer to 28 - DTC-Based Diagnostics/CONTROLLER, Occupant Restraint (ORC) - Diagnosis and Testing) and follow the path specified for that trouble code. If no active or stored codes are present, the repair is complete.

Are any DTCs present or, is the original condition still present?

Yes

- (Refer to 28 - DTC-Based Diagnostics/CONTROLLER, Occupant Restraint (ORC) - Diagnosis and Testing) and perform the appropriate diagnostic procedure.

No

- If the battery was disconnected for any reason, you must perform the Battery Reconnection procedure in the 8F-Engine Systems section of the Service Information.
- Repair is complete.

HVAC, MTC

Diagnosis and Testing

■ B1000-92-A/C SWITCH REQUEST INPUT - PERFORMANCE OR INCORRECT OPERATION

For a complete wiring diagram, **refer to the Wiring Information**.

Theory of Operation

The A/C On/Off control switch input to the controller changes when the switch is pushed inward. An active DTC indicates that the switch is stuck in a pushed position. A stored DTC indicates that the switch was stuck in a pushed position for more than 60 seconds but has since returned to its normal state.

- **When Monitored:**

  With the ignition on.
- **Set Condition:**

  If the A/C On/Off control switch is stuck in a pushed position for more than 60 seconds. This DTC has a de-maturing time of two seconds. If the DTCs status changes from active to stored, the DTC will stay in memory for 100 ignition cycles.

Possible Causes
OBJECT HOLDING SWITCH IN A PUSHED POSITION
A/C HEATER CONTROL

Always perform the HVAC Pre-Diagnostic Troubleshooting procedure before proceeding. (Refer to 28 - DTC-Based Diagnostics/HVAC - Standard Procedure).

1. INSPECT FOR OBJECT HOLDING SWITCH IN A PUSHED POSITION

1. Inspect the A/C Heater Control for an object or debris holding the A/C On/Off control switch in a pushed position.

Is the A/C On/Off control switch being held in?

Yes

- Clean or repair the A/C Heater Control as necessary.
- Perform HVAC VERIFICATION TEST. (Refer to 28 - DTC-Based Diagnostics/HVAC - Standard Procedure).

No

- Go To 2

2. A/C HEATER CONTROL

1. Turn the ignition on.
2. With the scan tool, erase HVAC DTCs.
3. Turn the ignition off for 10 seconds, and then turn the ignition on and wait a minimum of 60 seconds.
4. With the scan tool, read HVAC DTCs.

Does the scan tool display this DTC as Active?

Yes

- Replace and program the A/C Heater Control in accordance with the Service Information.
- Perform HVAC VERIFICATION TEST. (Refer to 28 - DTC-Based Diagnostics/HVAC - Standard Procedure).

No

- Test complete.
- Perform HVAC VERIFICATION TEST. (Refer to 28 - DTC-Based Diagnostics/HVAC - Standard Procedure).

■ B1009-92-RECIRCULATION SWITCH REQUEST INPUT - PERFORMANCE OR INCORRECT OPERATION

For a complete wiring diagram, **refer to the Wiring Information**.

Theory of Operation

The Recirculation mode switch input changes when the switch is pushed inward. An active DTC indicates that the switch is stuck in a pushed position. A stored DTC indicates that the switch was stuck in a pushed position for more than 60 seconds but has since returned to its normal state.

- **When Monitored:**
  With the ignition on.
- **Set Condition:**
  If the Recirculation mode switch is stuck in a pushed position for more than 60 seconds. This DTC has a maturing time of 60 seconds and a de-maturing time of two seconds. If the DTCs status changes from active to stored, the DTC will stay in memory for 100 ignition cycles.

Possible Causes
OBJECT HOLDING SWITCH IN A PUSHED POSITION
A/C HEATER CONTROL

Always perform the HVAC Pre-Diagnostic Troubleshooting procedure before proceeding. (Refer to 28 - DTC-Based Diagnostics/HVAC - Standard Procedure).

1. INSPECT FOR OBJECT HOLDING SWITCH IN A PUSHED POSITION

1. Inspect the A/C Heater Control for an object or debris holding the Recirculation mode switch in a pushed position.

Is the Recirculation mode switch being held in?

Yes

- Repair or clean the A/C Heater Control as necessary.
- Perform HVAC VERIFICATION TEST. (Refer to 28 - DTC-Based Diagnostics/HVAC - Standard Procedure).

No

- Go To 2

2. A/C HEATER CONTROL

1. Turn the ignition on.
2. With the scan tool, erase HVAC DTCs.
3. Turn the ignition off for 10 seconds, and then turn the ignition on and wait a minimum of 60 seconds.
4. With the scan tool, read HVAC DTCs.

Does the scan tool display this DTC as Active?

Yes

- Replace and program the A/C Heater Control in accordance with the Service Information.
- Perform HVAC VERIFICATION TEST. (Refer to 28 - DTC-Based Diagnostics/HVAC - Standard Procedure).

No

- Test complete.
- Perform HVAC VERIFICATION TEST. (Refer to 28 - DTC-Based Diagnostics/HVAC - Standard Procedure).

■ B1015-12-REAR DEFROST SWITCH REQUEST INPUT CIRCUIT/PERFORMANCE

For a complete wiring diagram, **refer to the Wiring Information**.

Theory of Operation

The HVAC A/C Heater Control contains various switches and knobs that are used to change the systems operation. Many of the switches are momentary switches which are normally open or in the Off position and the status changes when the switch button or knob is pushed or turned. An active Diagnostic Trouble Code (DTC) indicates that the switch is stuck in an On position. A stored DTC indicates that the switch was stuck in a On position for more than 60 seconds but has since returned to its normal state of Off.

- **When Monitored:**
  With the ignition on.
- **Set Condition:**
  If the Electric Back light (EBL) Electronic Rear Defrost switch is stuck in an On position for more than 60 seconds. This DTC has a de-maturing time of two seconds. If the DTCs status changes from active to stored, the DTC will stay in memory for 100 ignition cycles.

Possible Causes
OBJECT HOLDING SWITCH IN AN ON POSITION
A/C HEATER CONTROL

Always perform the HVAC Pre-Diagnostic Troubleshooting procedure before proceeding. (Refer to 28 - DTC-Based Diagnostics/HVAC - Standard Procedure).

1. INSPECT FOR OBJECT HOLDING SWITCH IN AN ON POSITION

1. Inspect the A/C Heater Control for an object or debris holding the (EBL) Electronic Rear Defrost switch in an On position.

NOTE: Using the scan tool you can read the On/Off status of the control switch.

Is the (EBL) Electronic Rear Defrost switch being held in or stuck in an On?

Yes

- Clean or repair the A/C Heater Control as necessary. If you are unable to clean the switch to where the switch can work properly, replace and program the A/C Heater Control in accordance with the Service Information.
- Perform the HVAC VERIFICATION TEST. (Refer to 28 - DTC-Based Diagnostics/HVAC - Standard Procedure).

No

- Go To 2

2. A/C HEATER CONTROL

1. Turn the ignition on.
2. With the scan tool, erase HVAC DTCs.
3. Turn the ignition off for 10 seconds, and then turn the ignition on and wait a minimum of 60 seconds.
4. With the scan tool, read HVAC DTCs.

Does the scan tool display this DTC as Active or is the status of the switch reading On?

Yes

- Replace and program the A/C Heater Control in accordance with the Service Information.
- Perform the HVAC VERIFICATION TEST. (Refer to 28 - DTC-Based Diagnostics/HVAC - Standard Procedure).

No

- Test complete.
- Perform the HVAC VERIFICATION TEST. (Refer to 28 - DTC-Based Diagnostics/HVAC - Standard Procedure).

B1030-11-EVAPORATOR TEMPERATURE SENSOR - CIRCUIT SHORT TO GROUND

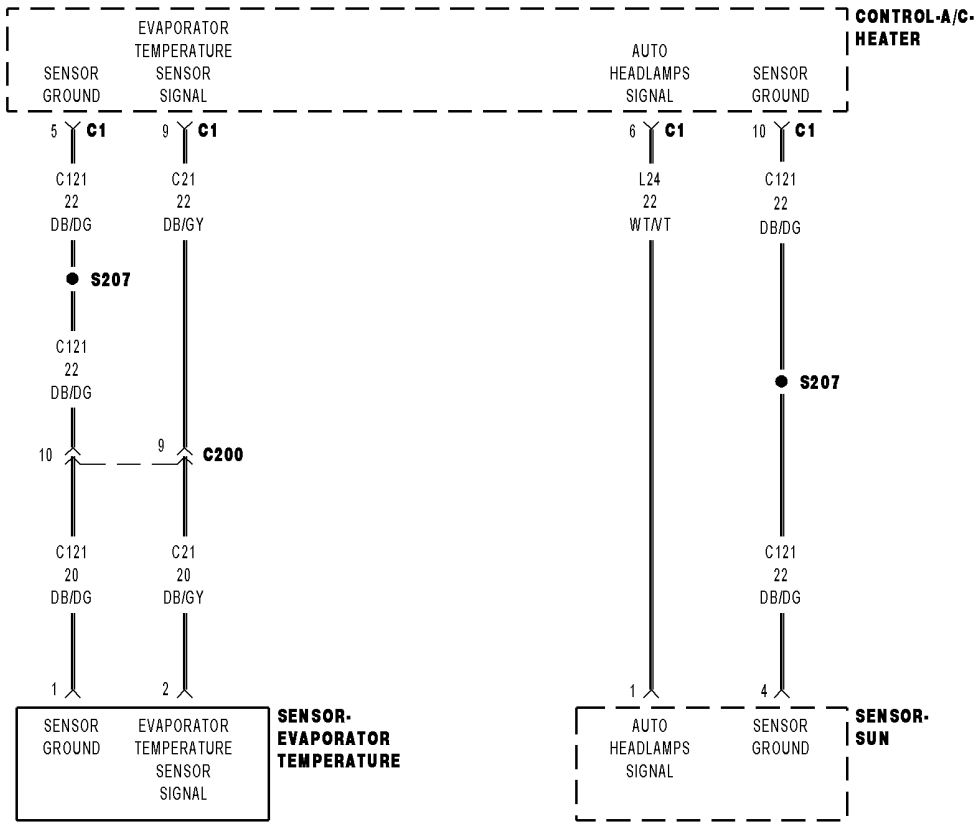

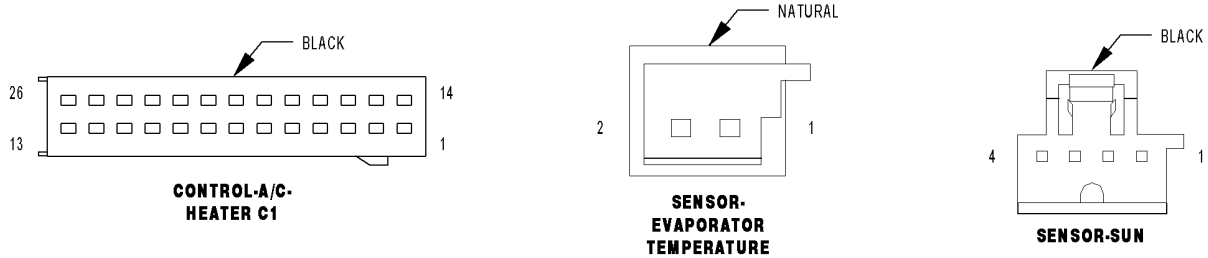

01216194

For a complete wiring diagram, **refer to the Wiring Information**.

Theory of Operation

The Evaporator Temperature Sensor is a variable resistor that changes in conjunction with temperature, or otherwise known as a thermistor. The Evaporator Temperature Sensor is located in the HVAC housing downstream of the A/C evaporator. The A/C Heater Control module monitors the evaporator temperature by monitoring the voltage change of the Evaporator Temperature Sensor Signal circuit. The sensor thermistor forms the lower half of a voltage divider and the upper half of the voltage divider is provided by a pull up resistor to 5.0 volts. If the monitored voltage drops below or rises above a predetermined voltage, a DTC will set.

- **When Monitored:**

  With the ignition on.
- **Set Condition:**

  The Evaporator Temperature Sensor voltage input to the A/C Heater Control is below a calibrated range for a continuous period of 30 seconds. If the A/C Heater Control detects a valid voltage, the DTC will change from active to stored and will stay stored for 100 ignition cycles.

Possible Causes
(C21) EVAPORATOR TEMPERATURE SENSOR SIGNAL CIRCUIT SHORTED TO GROUND
(C21) EVAPORATOR TEMPERATURE SENSOR SIGNAL CIRCUIT SHORT TO THE (C121) SENSOR GROUND CIRCUIT
EVAPORATOR TEMPERATURE SENSOR
A/C HEATER CONTROL

Always perform the HVAC Pre-Diagnostic Troubleshooting procedure before proceeding. (Refer to 28 - DTC-Based Diagnostics/HVAC - Standard Procedure).

1. CHECK (C21) EVAPORATOR TEMPERATURE SENSOR SIGNAL CIRCUIT VOLTAGE

1. Ignition on, engine not running.
2. With the scan tool, read HVAC DTCs.

NOTE: It can take up to 30 seconds or more for this DTC to mature.

Is this DTC active?

Yes

- Go To 2

No

- Go To 5

2. CHECK (C21) EVAPORATOR TEMPERATURE SENSOR SIGNAL CIRCUIT FOR A SHORT TO GROUND

1. Turn the ignition off.
2. Disconnect the A/C Heater Control C1 harness connector.
3. Disconnect the Evaporator Temperature Sensor harness connector.
4. Measure the resistance between ground and the (C21) Evaporator Temperature Sensor Signal circuit.

Is the resistance below 100k Ohms?

Yes

- Repair the (C21) Evaporator Temperature Sensor Signal circuit for a short to ground.
- Perform HVAC VERIFICATION TEST (Refer to 28 - DTC-Based Diagnostics/HVAC - Standard Procedure).

No

- Go To 3

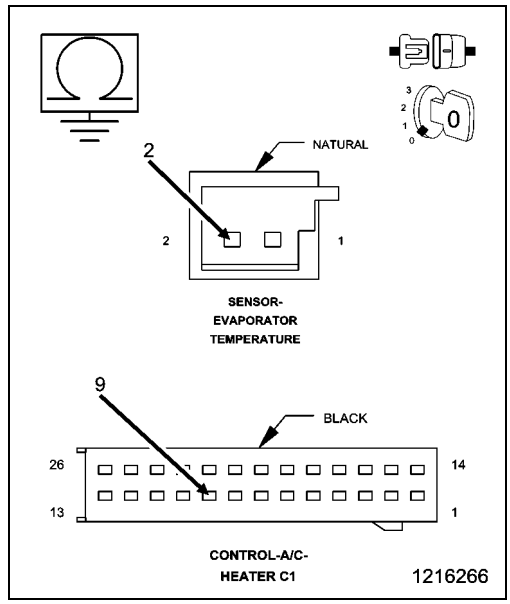

3. CHECK (C21) EVAPORATOR TEMPERATURE SENSOR SIGNAL CIRCUIT FOR A SHORT TO (C121) SENSOR GROUND CIRCUIT

1. Measure the resistance between the (C21) Evaporator Temperature Sensor Signal circuit and the (C121) Sensor Ground circuit.

Is the resistance below 100k Ohms?

Yes

- Repair the (C21) Evaporator Temperature Sensor Signal circuit for a short to (C121) Sensor Ground circuit.
- Perform HVAC VERIFICATION TEST (Refer to 28 - DTC-Based Diagnostics/HVAC - Standard Procedure).

No

- Go To 4

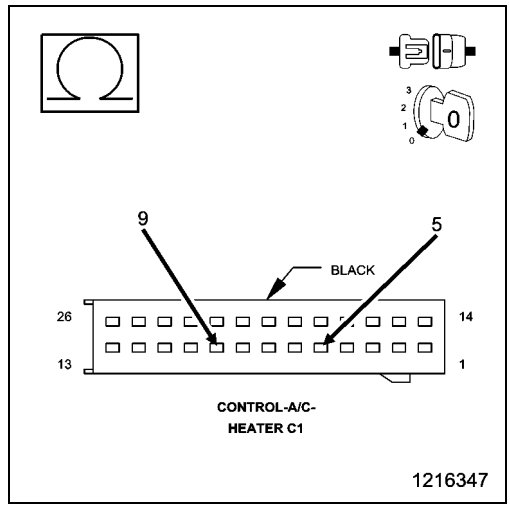

4. CHECK THE EVAPORATOR TEMPERATURE SENSOR

1. Replace the Evaporator Temperature Sensor in accordance with the Service Information.
2. Perform HVAC VERIFICATION TEST (Refer to 28 - DTC-Based Diagnostics/HVAC - Standard Procedure).

Does the DTC reset?

Yes

- Replace the A/C Heater Control in accordance with the Service Information.
- Perform HVAC VERIFICATION TEST (Refer to 28 - DTC-Based Diagnostics/HVAC - Standard Procedure).

No

- Test complete.

5. CHECK THE WIRING AND CONNECTORS

1. The conditions necessary to set the DTC are not present at this time.
2. With the scan tool, check the Environmental Data to help identify the conditions in which the DTC was set.
3. Using the schematics as a guide, inspect the wiring and connectors specific to this circuit.
4. Check for an intermittent condition by inspecting the related wiring harness for chafed, pierced, pinched, or partially broken wires.
5. Check the connectors for broken, bent, pushed out, spread, corroded, or contaminated terminals.
6. Wiggle the wiring and connectors while checking for shorted and open circuits.

Were there any problems found?

Yes

- Repair as necessary.
- Perform HVAC VERIFICATION TEST (Refer to 28 - DTC-Based Diagnostics/HVAC - Standard Procedure).

No

- Test complete.

B1030-12-EVAPORATOR TEMPERATURE SENSOR - CIRCUIT SHORT TO BATTERY

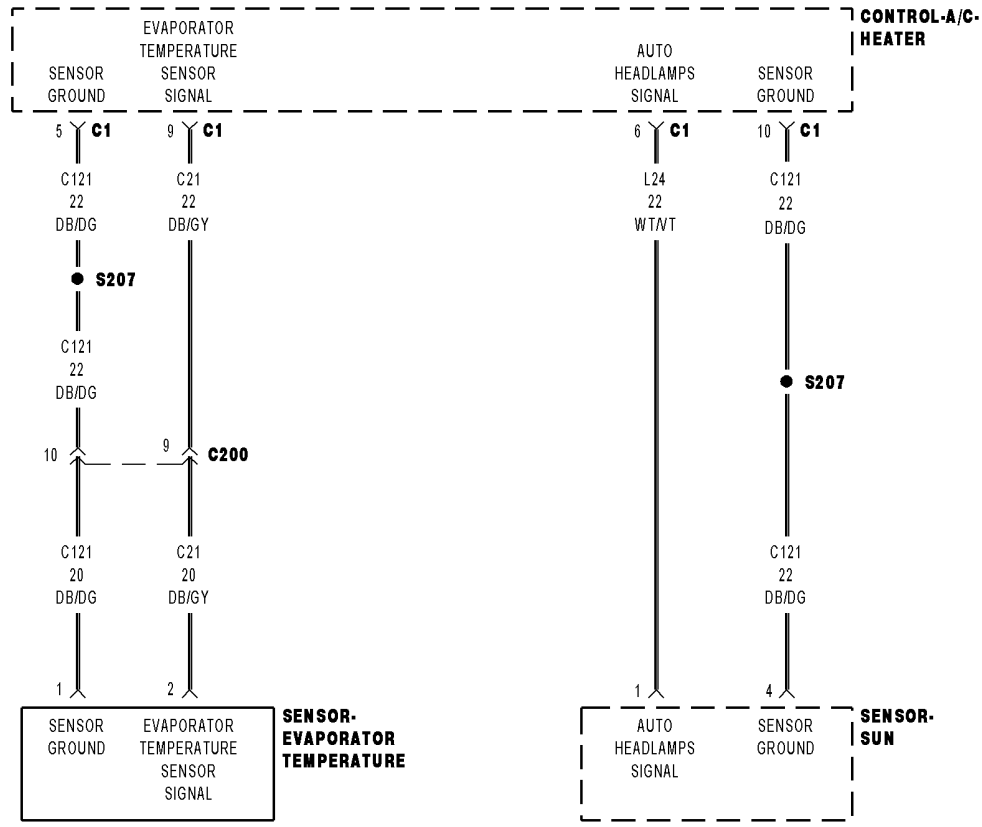

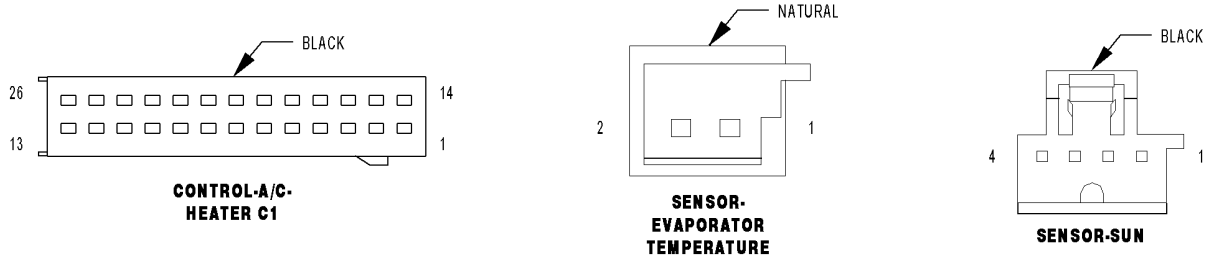

01216194

For a complete wiring diagram, **refer to the Wiring Information**.

Theory of Operation

The Evaporator Temperature Sensor is a variable resistor that changes in conjunction with temperature, or otherwise known as a thermistor. The Evaporator Temperature Sensor is located in the HVAC housing downstream of the A/C evaporator. The A/C Heater Control module monitors the evaporator temperature by monitoring the voltage change of the Evaporator Temperature Sensor Signal circuit. The sensor thermistor forms the lower half of a voltage divider and the upper half of the voltage divider is provided by a pull up resistor to 5.0 volts. If the monitored voltage drops below or rises above a predetermined voltage, a DTC will set.

- **When Monitored:**
  With the ignition on.
- **Set Condition:**
  The Evaporator Temperature Sensor voltage input to the A/C Heater Control is above a calibrated range for a continuous period of 30 seconds. If the A/C Heater Control detects a valid voltage, the DTC will change from Active to Stored and will stay in the controllers memory for 100 ignition cycles.

Possible Causes
(C21) EVAPORATOR TEMPERATURE SENSOR SIGNAL CIRCUIT SHORTED TO VOLTAGE
(C21) EVAPORATOR TEMPERATURE SENSOR SIGNAL CIRCUIT OPEN
(C121) SENSOR GROUND CIRCUIT OPEN
EVAPORATOR TEMPERATURE SENSOR
A/C HEATER CONTROL

Always perform the HVAC Pre-Diagnostic Troubleshooting procedure before proceeding. (Refer to 28 - DTC-Based Diagnostics/HVAC - Standard Procedure).

1. CHECK (C21) EVAPORATOR TEMPERATURE SENSOR SIGNAL CIRCUIT VOLTAGE

1. Ignition on, engine not running.
2. With the scan tool, read HVAC DTCs.

NOTE: It can take up to 30 seconds or more for this DTC to mature.

Is this DTC active?

Yes

- Go To 2

No

- Go To 6

2. CHECK THE (C21) EVAPORATOR TEMPERATURE SENSOR SIGNAL CIRCUIT VOLTAGE

1. Turn the ignition off to the lock position.
2. Disconnect the Evaporator Temperature Sensor harness connector.

NOTE: Due to the small terminal and pin size of the Evaporator Temperature Sensor and harness connector, make sure to not damage the terminals in this process.

3. Connect a jumper wire between the (C21) Evaporator Temperature Sensor Signal circuit and the (C121) Sensor Ground circuit in the Evaporator Temperature Sensor harness connector.
4. Ignition on, engine not running.
5. With the scan tool, read the Evaporator Temperature Sensor voltage.

Is the voltage below 0.2 of a volt?

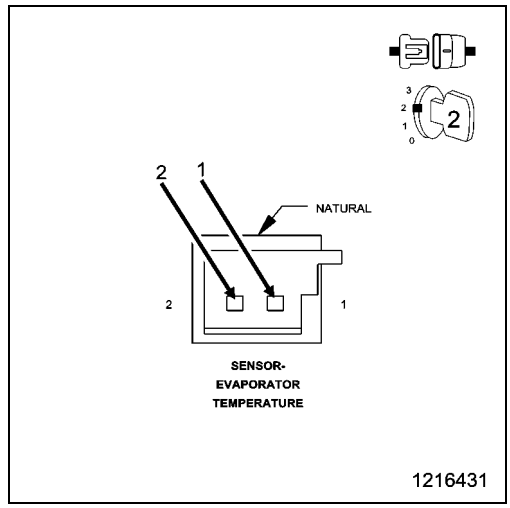

Yes

- Replace the Evaporator Temperature Sensor in accordance with the Service Information.
- Perform HVAC VERIFICATION TEST (Refer to 28 - DTC-Based Diagnostics/HVAC - Standard Procedure).

No

- Go To 3

3. CHECK THE (C21) EVAPORATOR TEMPERATURE SENSOR SIGNAL CIRCUIT FOR A SHORT TO VOLTAGE

1. Turn the ignition off to the lock position.
2. Disconnect the jumper wire from the previous step.
3. Disconnect the A/C Heater Control C1 harness connector.
4. Ignition on, engine not running.
5. Measure the voltage of the (C21) Evaporator Temperature Sensor Signal circuit.

Is voltage above 0.2 of a volt?

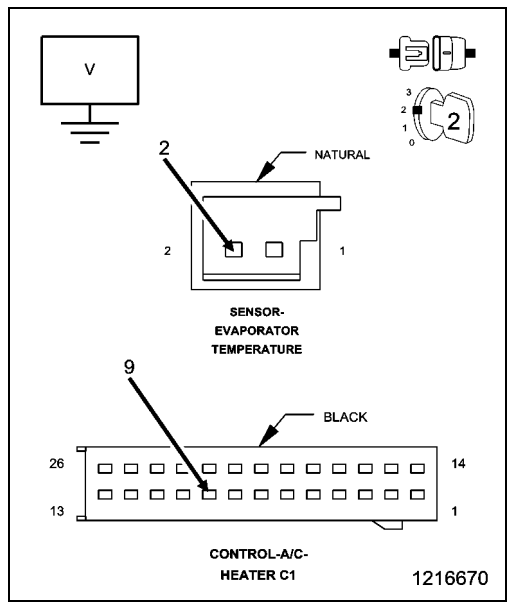

Yes

- Repair the (C21) Evaporator Temperature Sensor Signal circuit for a short to voltage.
- Perform HVAC VERIFICATION TEST (Refer to 28 - DTC-Based Diagnostics/HVAC - Standard Procedure).

No

- Go To 4

4. CHECK THE (C21) EVAPORATOR TEMPERATURE SENSOR SIGNAL CIRCUIT FOR AN OPEN

1. Turn the ignition off to the lock position.
2. Measure the resistance of the (C21) Evaporator Temperature Sensor Signal circuit between the A/C Heater Control C1 harness connector and the Evaporator Temperature Sensor harness connector.

Is the resistance above 1.0 Ohm?

Yes

- Repair the (C21) Evaporator Temperature Sensor Signal circuit for an open.
- Perform HVAC VERIFICATION TEST (Refer to 28 - DTC-Based Diagnostics/HVAC - Standard Procedure).

No

- Go To 5

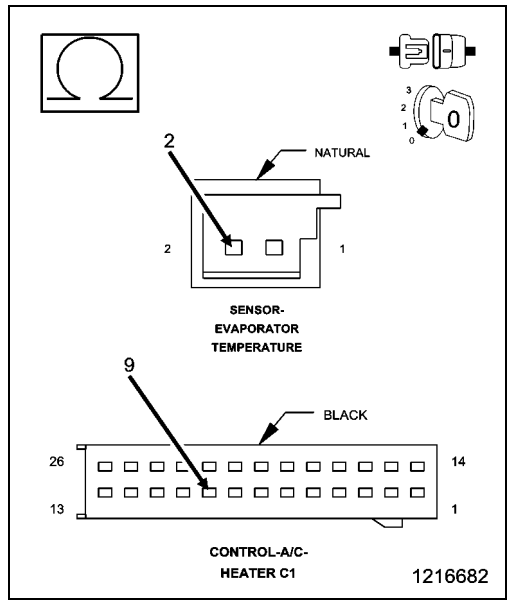

5. CHECK THE (C121) SENSOR GROUND CIRCUIT FOR AN OPEN

1. Measure the resistance of the (C121) Sensor Ground circuit between the A/C Heater Control C1 harness connector and the Evaporator Temperature Sensor harness connector.

Is the resistance above 1.0 Ohm?

Yes

- Repair the (C121) Sensor Ground circuit for an open.
- Perform HVAC VERIFICATION TEST (Refer to 28 - DTC-Based Diagnostics/HVAC - Standard Procedure).

No

- Replace and program the A/C Heater Control in accordance with the Service Information.
- Perform HVAC VERIFICATION TEST (Refer to 28 - DTC-Based Diagnostics/HVAC - Standard Procedure).

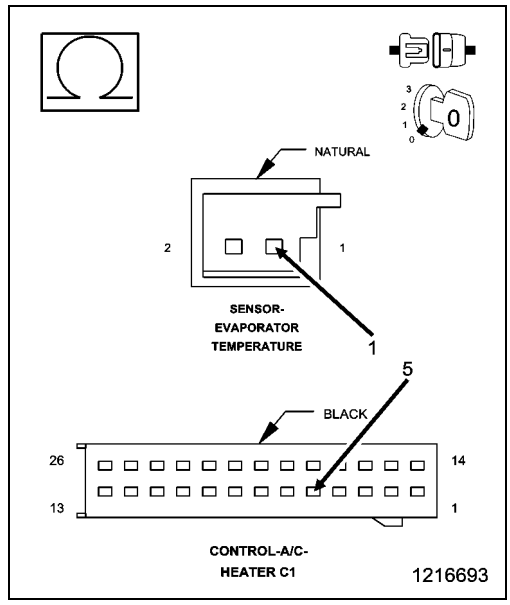

6. CHECK THE WIRING AND CONNECTORS

1. The conditions necessary to set the DTC are not present at this time.
2. With the scan tool, check the Environmental Data to help identify the conditions in which the DTC was set.
3. Using the schematics as a guide, inspect the wiring and connectors specific to this circuit.
4. Check for an intermittent condition by inspecting the related wiring harness for chafed, pierced, pinched, or partially broken wires.
5. Check the connectors for broken, bent, pushed out, spread, corroded, or contaminated terminals.
6. Wiggle the wiring and connectors while checking for shorted and open circuits.

Were there any problems found?

Yes

- Repair as necessary.
- Perform HVAC VERIFICATION TEST (Refer to 28 - DTC-Based Diagnostics/HVAC - Standard Procedure).

No

- Test complete.

B1058-13-RECIRCULATION DOOR CONTROL - CIRCUIT OPEN

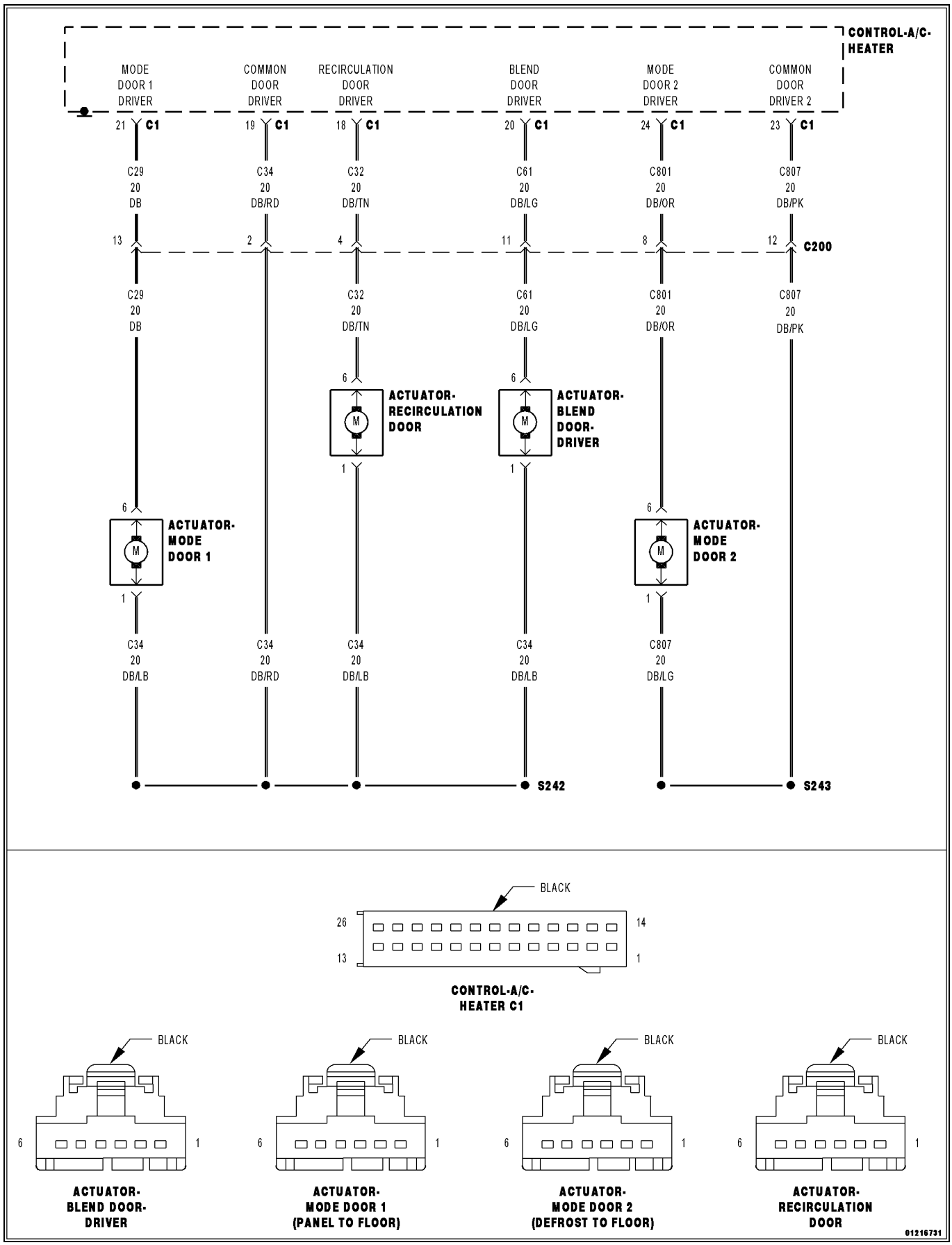

For a complete wiring diagram, **refer to the Wiring Information**.

Theory of Operation

After the initial installation of the A/C Heater Control, the controller is calibrated to each individual blend/mode door actuator. These calibrations are stored as in the number of pulses it takes to move the door from one stop to another. The A/C Heater Control drives the Door Actuators by the use of Door Driver circuit and a Common Door Driver circuit and monitors all door actuator pulses to detect door movement in both directions. Most of the door actuators share a common door driver circuit but each door actuator has its own unique driver circuit. The Defrost Door Actuator does not share a common door driver circuit because defrost mode is used as a system default mode if there is a system malfunction. Due to shared circuitry, similar DTCs can set at the same time for multiple actuators depending upon the type of circuit malfunction, its location, and the direction the actuator is moving when the malfunction is present.

- **When Monitored:**
  With the ignition on and an actuator movement is commanded by the A/C Heater Control.
- **Set Condition:**
  If an actuator move is commanded by the A/C Heater Control and there are no feedback pulses detected in that direction, the controller commands the actuator in the opposite direction. If no feedback pulses are detected in either direction this DTC will set. If the A/C Heater Control detects a valid pulse feedback in both directions, the DTC will change from Active to Stored and will stay in the controllers memory for 100 ignition cycles.

Possible Causes
(C32) RECIRCULATION DOOR DRIVER CIRCUIT OPEN
(C34) COMMON DOOR DRIVER CIRCUIT OPEN
RECIRCULATION DOOR ACTUATOR
A/C HEATER CONTROL

Always perform the HVAC Pre-Diagnostic Troubleshooting procedure before proceeding. (Refer to 28 - DTC-Based Diagnostics/HVAC - Standard Procedure).

1. CHECK FOR OTHER DTCS

1. Ignition on, engine not running.
2. With the scan tool, read HVAC DTCs.

Is there more than one Door Control - Circuit Open DTC present?

Yes

- Repair the (C34) Common Door Driver circuit for an open.

NOTE: Due to the common shared driver circuit, probable area of concern is the splice, or from the splice to the A/C Heater Control harness connector. Make sure to check all inline connectors.

No

- Go To 2

2. CHECK IF DTC IS ACTIVE

1. Ignition on, engine not running.
2. With the scan tool, read HVAC DTCs.

Is this DTC active?

Yes

- Go To 4

No

- Go To 3

3. PERFORM HVAC ACTUATOR CALIBRATION TEST

1. With the scan tool, perform the HVAC Actuator Calibration Test.

Did this DTC change from Stored to Active while performing the HVAC Actuator Calibration Test?

Yes

- Go To 4

No

- Go To 7

4. CHECK THE RECIRCULATION DOOR ACTUATOR

1. Turn the ignition off to the lock position.
2. Disconnect the A/C Heater Control C1 harness connector.
3. Measure the resistance between the (C32) Recirculation Door Driver circuit and the (C34) Common Door Driver circuit.

Is the resistance 38.0 Ohms (± 5.0 Ohms)?

Yes

- Replace and program the A/C Heater Control in accordance with the Service Information.
- Perform HVAC VERIFICATION TEST (Refer to 28 - DTC-Based Diagnostics/HVAC - Standard Procedure).

No

- Go To 5

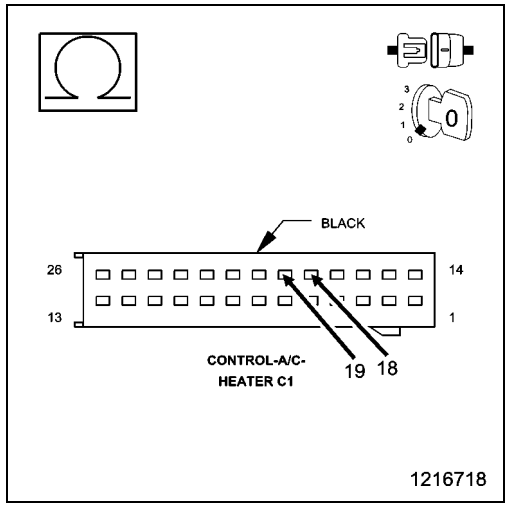

5. CHECK THE (C32) RECIRCULATION DOOR DRIVER CIRCUIT FOR AN OPEN

1. Turn the ignition off to the lock position.
2. Disconnect the Recirculation Door Actuator harness connector.
3. Measure the resistance of the (C32) Recirculation Door Driver circuit between the A/C Heater Control C1 harness connector and the Recirculation Door Actuator harness connector.

Is the resistance above 5.0 Ohms?

Yes

- Repair the (C32) Recirculation Door Driver circuit for an open.
- Perform HVAC VERIFICATION TEST (Refer to 28 - DTC-Based Diagnostics/HVAC - Standard Procedure).

No

- Go To 6

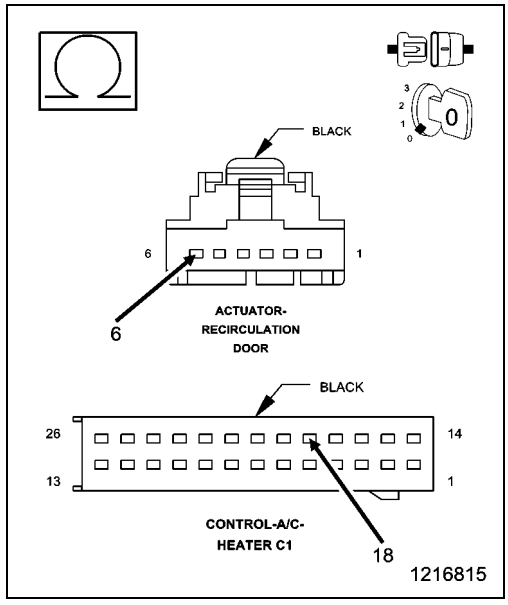

6. CHECK THE (C34) COMMON DOOR DRIVER CIRCUIT FOR AN OPEN

1. Measure the resistance of the (C34) Common Door Driver circuit between the A/C Heater Control C1 harness connector and the Recirculation Door Actuator harness connector.

Is the resistance above 5.0 Ohms?

Yes

- Repair the (C34) Common Door Driver circuit for an open.

NOTE: Probable location is the wiring harness splice or the wiring between the splice and the door actuator.

- Perform HVAC VERIFICATION TEST (Refer to 28 - DTC-Based Diagnostics/HVAC - Standard Procedure).

No

- Replace the Recirculation Door Actuator in accordance with the Service Information.
- Perform HVAC VERIFICATION TEST (Refer to 28 - DTC-Based Diagnostics/HVAC - Standard Procedure).

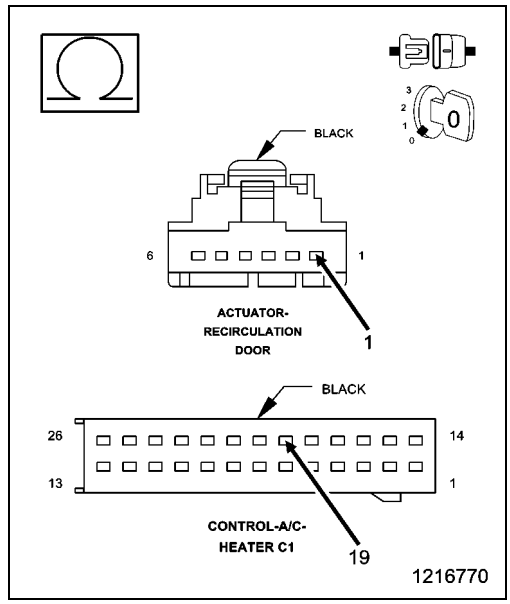

7. CHECK THE WIRING AND CONNECTORS

1. The conditions necessary to set the DTC are not present at this time.
2. With the scan tool, check the Environmental Data to help identify the conditions in which the DTC was set.
3. Using the schematics as a guide, inspect the wiring and connectors specific to this circuit.
4. Check for an intermittent condition by inspecting the related wiring harness for chafed, pierced, pinched, or partially broken wires.
5. Check the connectors for broken, bent, pushed out, spread, corroded, or contaminated terminals.
6. Wiggle the wiring and connectors while checking for shorted and open circuits.

Were there any problems found?

Yes

- Repair as necessary.
- Perform HVAC VERIFICATION TEST (Refer to 28 - DTC-Based Diagnostics/HVAC - Standard Procedure).

No

- Test complete.

■ B1058-92-RECIRCULATION DOOR CONTROL - PERFORMANCE OR INCORRECT OPERATION

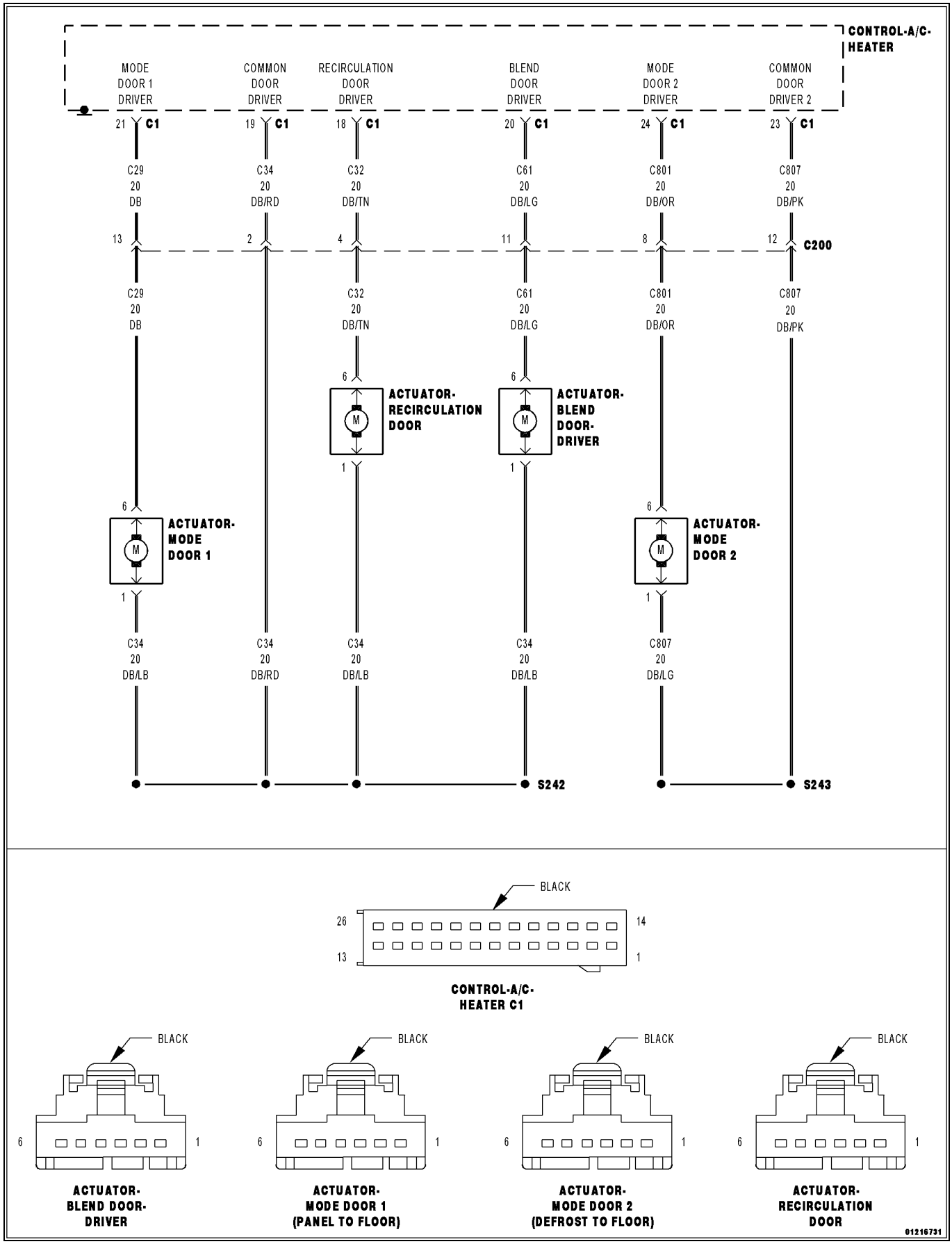

For a complete wiring diagram, **refer to the Wiring Information**.

Theory of Operation

After the initial installation of the A/C Heater Control, the controller is calibrated to each individual blend/mode door actuator. These calibrations are stored as in the number of pulses it takes to move the door from one stop to another. The A/C Heater Control drives the Door Actuators by the use of Door Driver circuit and a Common Door Driver circuit and monitors all door actuator pulses to detect door movement in both directions. Most of the door actuators share a common door driver circuit but each door actuator has its own unique driver circuit. The Defrost Door Actuator does not share a common door driver circuit because defrost mode is used as a system default mode if there is a system malfunction. Due to shared circuitry, similar DTCs can set at the same time for multiple actuators depending upon the type of circuit malfunction, its location, and the direction the actuator is moving when the malfunction is present.

- **When Monitored:**
  With the ignition on and an actuator movement is commanded by the A/C Heater Control.
- **Set Condition:**
  If an actuator move is commanded by the A/C Heater Control and there are no feedback pulses detected in that direction, the controller commands the actuator in the opposite direction. If feedback pulses are detected in only one direction this DTC will set. If the A/C Heater Control detects a valid pulse feedback in both directions, the DTC will change from Active to Stored and will stay in the controllers memory for 100 ignition cycles.

Possible Causes
(C32) RECIRCULATION DOOR DRIVER CIRCUIT SHORTED TO VOLTAGE
(C32) RECIRCULATION DOOR DRIVER CIRCUIT SHORTED TO GROUND
(C34) COMMON DOOR DRIVER CIRCUIT SHORTED TO VOLTAGE
(C34) COMMON DOOR DRIVER CIRCUIT SHORTED TO GROUND
RECIRCULATION DOOR BINDING
RECIRCULATION DOOR ACTUATOR
A/C HEATER CONTROL

Always perform the HVAC Pre-Diagnostic Troubleshooting procedure before proceeding. (Refer to 28 - DTC-Based Diagnostics/HVAC - Standard Procedure).

1. CHECK IF DTC IS ACTIVE

1. Ignition on, engine not running.
2. With the scan tool, read HVAC DTCs.

NOTE: It can take up to 60 seconds or more for this DTC to mature.

Is this DTC active?

Yes

- Go To 3

No

- Go To 2

2. PERFORM HVAC ACTUATOR CALIBRATION TEST

1. With the scan tool, perform the HVAC Actuator Calibration Test.

Did this DTC change from Stored to Active while performing the HVAC Actuator Calibration Test?

Yes

- Go To 3

No

- Go To 9

3. CHECK THE (C32) RECIRCULATION DOOR DRIVER CIRCUIT FOR A SHORT TO VOLTAGE

1. Turn the ignition off to the lock position.
2. Disconnect the A/C Heater Control C1 harness connector.
3. Disconnect the Recirculation Door Actuator harness connector.
4. Ignition on, engine not running.
5. Measure the voltage of the (C32) Recirculation Door Driver circuit.

Is there any voltage present?

Yes

- Repair the (C32) Recirculation Door Driver circuit for a short to voltage.
- Perform HVAC VERIFICATION TEST (Refer to 28 - DTC-Based Diagnostics/HVAC - Standard Procedure).

No

- Go To 4

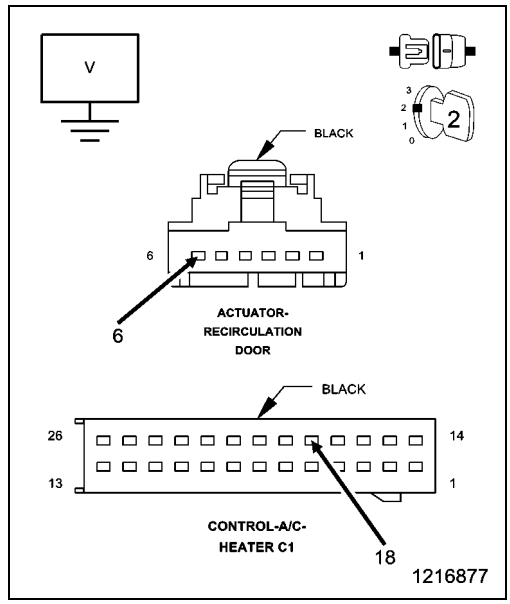

4. CHECK THE (C34) COMMON DOOR DRIVER CIRCUIT FOR A SHORT TO VOLTAGE

1. Measure the voltage of the (C34) Common Door Driver circuit.

Is there any voltage present?

Yes

- Repair the (C34) Common Door Driver circuit for a short to voltage.
- Perform HVAC VERIFICATION TEST (Refer to 28 - DTC-Based Diagnostics/HVAC - Standard Procedure).

No

- Go To 5

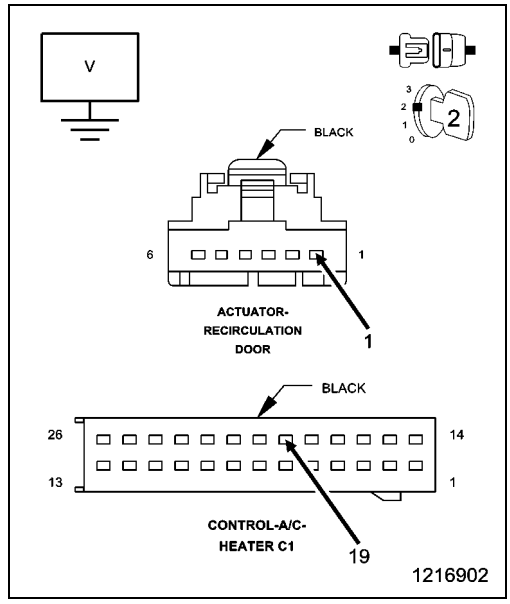

5. CHECK THE (C32) RECIRCULATION DOOR DRIVER CIRCUIT FOR A SHORT TO GROUND

1. Turn the ignition off to the lock position.
2. Measure the resistance between ground and the (C32) Recirculation Door Driver circuit.

Is the resistance below 100k Ohms?

Yes

- Repair the (C32) Recirculation Door Driver circuit for a short to ground.
- Perform HVAC VERIFICATION TEST (Refer to 28 - DTC-Based Diagnostics/HVAC - Standard Procedure).

No

- Go To 6

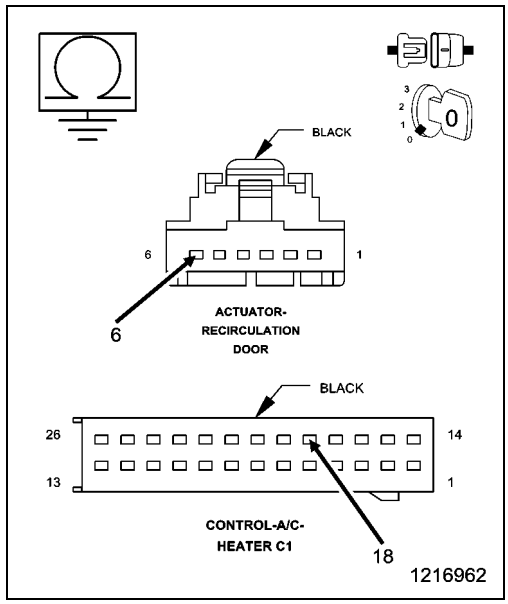

6. CHECK THE (C34) COMMON DOOR DRIVER CIRCUIT FOR A SHORT TO GROUND

1. Measure the resistance between ground and the (C34) Common Door Driver circuit.

Is the resistance below 100k Ohms?

Yes

- Repair the (C34) Common Door Driver circuit for a short to ground.
- Perform HVAC VERIFICATION TEST (Refer to 28 - DTC-Based Diagnostics/HVAC - Standard Procedure).

No

- Go To 7

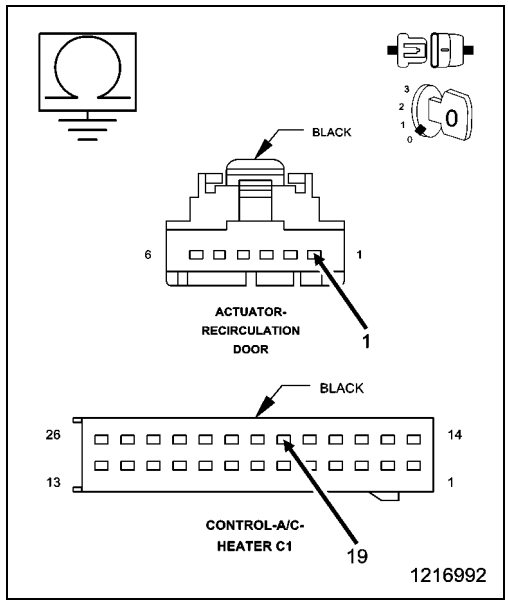

7. CHECK THE RECIRCULATION DOOR

1. Remove the Recirculation Door Actuator and check the Recirculation Door for binding and full travel.

Were there any problems with the Recirculation Door movement?

Yes

- Repair or replace the Recirculation Door as necessary in accordance with the Service Information.
- Perform HVAC VERIFICATION TEST (Refer to 28 - DTC-Based Diagnostics/HVAC - Standard Procedure).

No

- Go To 8

8. CHECK THE RECIRCULATION DOOR ACTUATOR

1. Replace the Recirculation Door Actuator in accordance with the Service Information.
2. With the scan tool, erase HVAC DTCs and perform the HVAC Actuator Calibration Test.

Did this DTC reset?

Yes

- Replace and program the A/C Heater Control in accordance with the Service Information.
- Perform HVAC VERIFICATION TEST (Refer to 28 - DTC-Based Diagnostics/HVAC - Standard Procedure).

No

- Test complete.
- Perform HVAC VERIFICATION TEST (Refer to 28 - DTC-Based Diagnostics/HVAC - Standard Procedure).

9. CHECK THE WIRING AND CONNECTORS

1. The conditions necessary to set the DTC are not present at this time.
2. With the scan tool, check the Environmental Data to help identify the conditions in which the DTC was set.
3. Using the schematics as a guide, inspect the wiring and connectors specific to this circuit.
4. Check for an intermittent condition by inspecting the related wiring harness for chafed, pierced, pinched, or partially broken wires.
5. Check the connectors for broken, bent, pushed out, spread, corroded, or contaminated terminals.
6. Wiggle the wiring and connectors while checking for shorted and open circuits.

Were there any problems found?

Yes

- Repair as necessary.
- Perform HVAC VERIFICATION TEST (Refer to 28 - DTC-Based Diagnostics/HVAC - Standard Procedure).

No

- Test complete.

■ B105C-00-RECIRCULATION DOOR TRAVEL RANGE TOO SMALL

For a complete wiring diagram, **refer to the Wiring Information**.

Theory of Operation

After the initial installation of the A/C Heater Control, the controller is calibrated to each individual blend/mode door actuator. These calibrations are stored as in the number of pulses it takes to move the door from one stop to another. The A/C Heater Control drives the Door Actuators by the use of Door Driver circuit and a Common Door Driver circuit and monitors all door actuator pulses to detect door movement in both directions. Most of the door actuators share a common door driver circuit but each door actuator has its own unique driver circuit. Due to shared circuitry, similar DTCs can set at the same time for multiple actuators depending upon the type of circuit malfunction, its location, and the direction the actuator is moving when the malfunction is present.

- **When Monitored:**

  When ever an Actuator Calibration Test is performed
- **Set Condition:**

  The A/C Heater Control uses a pulse feedback to the controller to detect the total door movement range. If the amount of pulses required to move the door completely in both directions is less than what the controller has stored in its memory, this DTC will set. If an Actuator Calibration Test is performed and the A/C Heater Control detects a valid range of the door movement span in both directions, the DTC will change from Active to Stored and will stay in the controllers memory for 100 ignition cycles.

Possible Causes
RELATED DTCS PRESENT
RECIRCULATION DOOR BINDING
RECIRCULATION DOOR ACTUATOR
A/C HEATER CONTROL

Always perform the HVAC Pre-Diagnostic Troubleshooting procedure before proceeding. (Refer to 28 - DTC-Based Diagnostics/HVAC - Standard Procedure).

1. CHECK FOR RELATED DTCS

1. Ignition on, engine not running.
2. With the scan tool, read HVAC DTCs.

Are there any Door Control - Circuit Open or Door Control - Performance or Incorrect Operation DTCs present?

Yes

- (Refer to 28 - DTC-Based Diagnostics/HVAC - Diagnosis and Testing) and perform the appropriate diagnostic procedure.

No

- Go To 2

2. CHECK IF DTC IS ACTIVE

1. Ignition on, engine not running.
2. With the scan tool, read HVAC DTCs.

Is this DTC active?

Yes

- Go To 4

No

- Go To 3

3. PERFORM HVAC ACTUATOR CALIBRATION TEST

1. With the scan tool, perform the HVAC Actuator Calibration Test.

Did this DTC change from Stored to Active while performing the HVAC Actuator Calibration Test?

Yes

- Go To 4

No

- Go To 6

4. CHECK THE RECIRCULATION DOOR

1. Remove the Recirculation Door Actuator and check the Recirculation Door for binding and full travel.

Were there any problems found?

Yes

- Repair or replace the Recirculation Door as necessary in accordance with the Service Information.
- Perform HVAC VERIFICATION TEST. (Refer to 28 - DTC-Based Diagnostics/HVAC - Standard Procedure).

No

- Go To 5

5. CHECK THE RECIRCULATION DOOR ACTUATOR

1. Replace the Recirculation Door Actuator in accordance with the Service Information.
2. With the scan tool, erase HVAC DTCs and perform the HVAC Actuator Calibration Test.

Did this DTC reset?

Yes

- Replace and program the A/C Heater Control in accordance with the Service Information.
- Perform HVAC VERIFICATION TEST. (Refer to 28 - DTC-Based Diagnostics/HVAC - Standard Procedure).

No

- Test complete.
- Perform HVAC VERIFICATION TEST. (Refer to 28 - DTC-Based Diagnostics/HVAC - Standard Procedure).

6. CHECK THE WIRING AND CONNECTORS

1. The conditions necessary to set the DTC are not present at this time.
2. With the scan tool, check the Environmental Data to help identify the conditions in which the DTC was set.
3. Using the schematics as a guide, inspect the wiring and connectors specific to this circuit.
4. Check for an intermittent condition by inspecting the related wiring harness for chafed, pierced, pinched, or partially broken wires.
5. Check the connectors for broken, bent, pushed out, spread, corroded, or contaminated terminals.
6. Wiggle the wiring and connectors while checking for shorted and open circuits.

Were there any problems found?

Yes

- Repair as necessary.
- Perform HVAC VERIFICATION TEST. (Refer to 28 - DTC-Based Diagnostics/HVAC - Standard Procedure).

No

- Test complete.

■ B105D-00-RECIRCULATION DOOR TRAVEL RANGE TOO LARGE

For a complete wiring diagram, **refer to the Wiring Information**.

Theory of Operation

After the initial installation of the A/C Heater Control, the controller is calibrated to each individual blend/mode door actuator. These calibrations are stored as in the number of pulses it takes to move the door from one stop to another. The A/C Heater Control drives the Door Actuators by the use of Door Driver circuit and a Common Door Driver circuit and monitors all door actuator pulses to detect door movement in both directions. Most of the door actuators share a common door driver circuit but each door actuator has its own unique driver circuit. Due to shared circuitry, similar DTCs can set at the same time for multiple actuators depending upon the type of circuit malfunction, its location, and the direction the actuator is moving when the malfunction is present.

- **When Monitored:**

  When ever an Actuator Calibration Test is performed
- **Set Condition:**

  The A/C Heater Control uses a pulse feedback to the controller to detect the total door movement range. If the amount of pulses required to move the door completely in both directions is greater than what the controller has stored in its memory, this DTC will set. If an Actuator Calibration Test is performed and the A/C Heater Control detects a valid range of the door movement span in both directions, the DTC will change from Active to Stored and will stay in the controllers memory for 100 ignition cycles.

Possible Causes
RELATED DTCS PRESENT
RECIRCULATION DOOR STOPS
RECIRCULATION DOOR
RECIRCULATION DOOR ACTUATOR
A/C HEATER CONTROL

Always perform the HVAC Pre-Diagnostic Troubleshooting procedure before proceeding. (Refer to 28 - DTC-Based Diagnostics/HVAC - Standard Procedure).

1. CHECK FOR RELATED DTCS

1. Ignition on, engine not running.
2. With the scan tool, read HVAC DTCs.

Are there any Door Control - Circuit Open or Door Control - Performance or Incorrect Operation DTCs present?

Yes

- (Refer to 28 - DTC-Based Diagnostics/HVAC - Diagnosis and Testing) and perform the appropriate diagnostic procedure.

No

- Go To 2

2. CHECK IF DTC IS ACTIVE

1. Ignition on, engine not running.
2. With the scan tool, read HVAC DTCs.

Is this DTC active?

Yes

- Go To 4

No

- Go To 3

3. PERFORM HVAC ACTUATOR CALIBRATION TEST

1. With the scan tool, perform the HVAC Actuator Calibration Test.

Did this DTC change from Stored to Active while performing the HVAC Actuator Calibration Test?

Yes

- Go To 4

No

- Go To 6

4. CHECK THE RECIRCULATION DOOR

1. Remove the Recirculation Door Actuator and check the Recirculation Door stops, linkage (stripped or cracked) and door.

Were there any problems found?

Yes

- Repair or replace the Recirculation Door as necessary in accordance with the Service Information.
- Perform HVAC VERIFICATION TEST. (Refer to 28 - DTC-Based Diagnostics/HVAC - Standard Procedure).

No

- Go To 5

5. CHECK THE RECIRCULATION DOOR ACTUATOR

1. Replace the Recirculation Door Actuator in accordance with the Service Information.
2. With the scan tool, erase HVAC DTCs and perform the HVAC Actuator Calibration Test.

Did this DTC reset?

Yes

- Replace and program the A/C Heater Control in accordance with the Service Information.
- Perform HVAC VERIFICATION TEST. (Refer to 28 - DTC-Based Diagnostics/HVAC - Standard Procedure).

No

- Test complete.
- Perform HVAC VERIFICATION TEST. (Refer to 28 - DTC-Based Diagnostics/HVAC - Standard Procedure).

6. CHECK THE WIRING AND CONNECTORS

1. The conditions necessary to set the DTC are not present at this time.
2. With the scan tool, check the Environmental Data to help identify the conditions in which the DTC was set.
3. Using the schematics as a guide, inspect the wiring and connectors specific to this circuit.
4. Check for an intermittent condition by inspecting the related wiring harness for chafed, pierced, pinched, or partially broken wires.
5. Check the connectors for broken, bent, pushed out, spread, corroded, or contaminated terminals.
6. Wiggle the wiring and connectors while checking for shorted and open circuits.

Were there any problems found?

Yes

- Repair as necessary.
- Perform HVAC VERIFICATION TEST. (Refer to 28 - DTC-Based Diagnostics/HVAC - Standard Procedure).

No

- Test complete.

■ B10B2-00-A/C COOL DOWN TEST PERFORMANCE

For a complete wiring diagram, **refer to the Wiring Information**.

Theory of Operation

The A/C Heater Controller has software to enable it to perform an A/C Cool Down Test by a command using a scan tool. This test checks for evaporator temperature drop over a predetermined time. If the test fails, this DTC will set. However, certain test conditions are required to perform this test. Failure to run this test within those parameters can result in failure of the test.

- **When Monitored:**
  With ever an A/C Cooldown Test is performed.
- **Set Condition:**
  This DTC is set whenever the A/C Cooldown Test is performed and the desired temperature drop is not achieved by the system. The DTC will go to stored after a successful A/C Cooldown Test.

Possible Causes
A/C SYSTEM WORKING IMPROPERLY

Always perform the HVAC Pre-Diagnostic Troubleshooting procedure before proceeding. (Refer to 28 - DTC-Based Diagnostics/HVAC - Standard Procedure).

1. CONDITIONS FOR A/C COOLDOWN TEST

1. The following condition must be met before running the A/C Cooldown test.
- No Powertrain Control Module (PCM) DTCs present.
- Condenser cooling fan working properly.
- No active HVAC evaporator temperature sensor, sun sensor, recirculation, mode, or blend door actuator DTCs present.
- The refrigerant system must be fully charged.
- The blower motor must operate correctly in all speeds.
- The evaporator temperature must be above 12.7° C (55° F).
- The A/C compressor must be turned off.
- Blower must be on high.

Are all of the above conditions met before running the A/C Cooldown Test?

Yes

- Perform the appropriate Service Information related to cooldown test diagnostic information and testing repair procedures as necessary.

NOTE: Run the Cooldown Test again after any repairs are performed.

- If the Cooldown Test passes, perform HVAC VERIFICATION TEST (Refer to 28 - DTC-Based Diagnostics/HVAC - Standard Procedure).

No

- Run the A/C Cooldown test again with the above test conditions.

B11C2-13-FRONT MODE DOOR 1 CONTROL - CIRCUIT OPEN

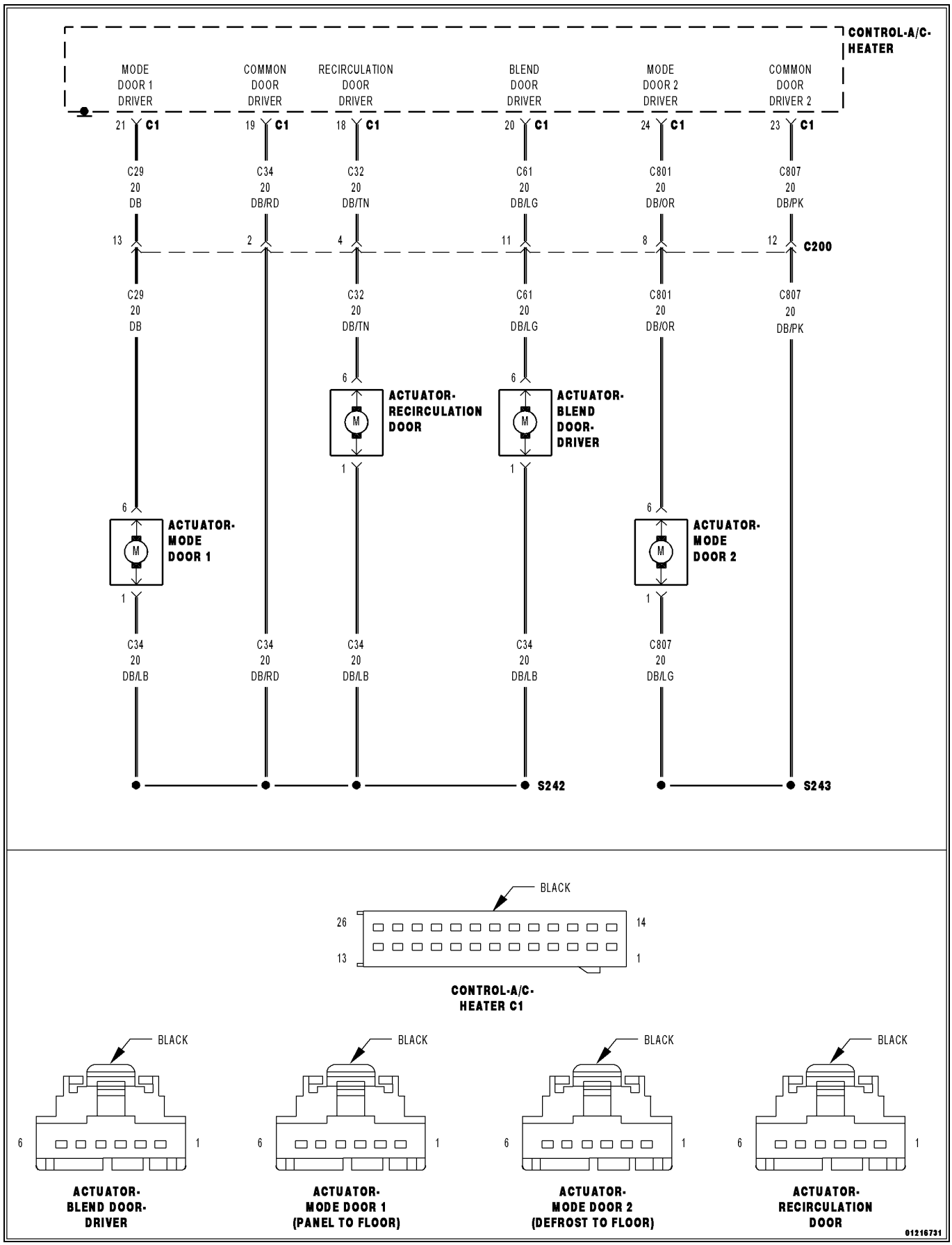

For a complete wiring diagram, **refer to the Wiring Information**.

Theory of Operation

After the initial installation of the A/C Heater Control, the controller is calibrated to each individual blend/mode door actuator. These calibrations are stored as in the number of pulses it takes to move the door from one stop to another. The A/C Heater Control drives the Door Actuators by the use of Door Driver circuit and a Common Door Driver circuit and monitors all door actuator pulses to detect door movement in both directions. Most of the door actuators share a common door driver circuit but each door actuator has its own unique driver circuit. The Defrost Door Actuator does not share a common door driver circuit because defrost mode is used as a system default mode if there is a system malfunction. Due to shared circuitry, similar DTCs can set at the same time for multiple actuators depending upon the type of circuit malfunction, its location, and the direction the actuator is moving when the malfunction is present.

- **When Monitored:**
  With the ignition on and an actuator movement is commanded by the A/C Heater Control.
- **Set Condition:**
  If an actuator move is commanded by the A/C Heater Control and there are no feedback pulses detected in that direction, the controller commands the actuator in the opposite direction. If no feedback pulses are detected in either direction this DTC will set. If the A/C Heater Control detects a valid pulse feedback in both directions, the DTC will change from Active to Stored and will stay in the controllers memory for 100 ignition cycles.

Possible Causes
(C29) MODE DOOR 1 DRIVER CIRCUIT OPEN
(C34) COMMON DOOR DRIVER CIRCUIT OPEN
MODE DOOR 1 (PANEL/FLOOR) ACTUATOR
A/C HEATER CONTROL

Always perform the HVAC Pre-Diagnostic Troubleshooting procedure before proceeding. (Refer to 28 - DTC-Based Diagnostics/HVAC - Standard Procedure).

1. CHECK FOR OTHER DTCS

1. Ignition on, engine not running.
2. With the scan tool, read HVAC DTCs.

Is there more than one Door Control - Circuit Open DTC present?

Yes

- Repair the (C34) Common Door Driver circuit for an open.

NOTE: Due to the common shared driver circuit, probable area of concern is the splice, or from the splice to the A/C Heater Control harness connector. Make sure to check all inline connectors.

No

- Go To 2

2. CHECK IF DTC IS ACTIVE

1. Ignition on, engine not running.
2. With the scan tool, read HVAC DTCs.

Is this DTC active?

Yes

- Go To 4

No

- Go To 3

3. PERFORM HVAC ACTUATOR CALIBRATION TEST

1. With the scan tool, perform the HVAC Actuator Calibration Test.

Did this DTC change from Stored to Active while performing the HVAC Actuator Calibration Test?

Yes

- Go To 4

No

- Go To 7

4. CHECK THE MODE DOOR 1 (PANEL/FLOOR) ACTUATOR

1. Turn the ignition off to the lock position.
2. Disconnect the A/C Heater Control C1 harness connector.
3. Measure the resistance between the (C29) Mode Door 1 Driver circuit and the (C34) Common Door Driver circuit.

Is the resistance 38.0 Ohms (± 5.0 Ohms)?

Yes

- Replace and program the A/C Heater Control in accordance with the Service Information.
- Perform HVAC VERIFICATION TEST (Refer to 28 - DTC-Based Diagnostics/HVAC - Standard Procedure).

No

- Go To 5

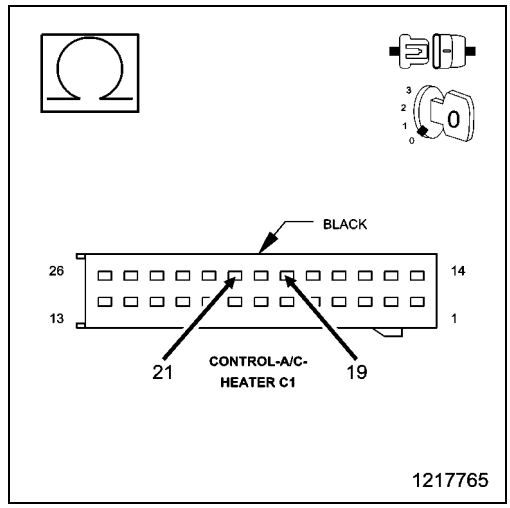

5. CHECK THE (C29) MODE DOOR 1 DRIVER CIRCUIT FOR AN OPEN

1. Turn the ignition off to the lock position.
2. Disconnect the Mode Door 1 (Panel/Floor) Actuator harness connector.
3. Measure the resistance of the (C29) Mode Door 1 Driver circuit between the A/C Heater Control C1 harness connector and the Mode Door 1 (Panel/Floor) Actuator harness connector.

Is the resistance above 5.0 Ohms?

Yes

- Repair the (C29) Mode Door 1 Driver circuit for an open.
- Perform HVAC VERIFICATION TEST (Refer to 28 - DTC-Based Diagnostics/HVAC - Standard Procedure).

No

- Go To 6

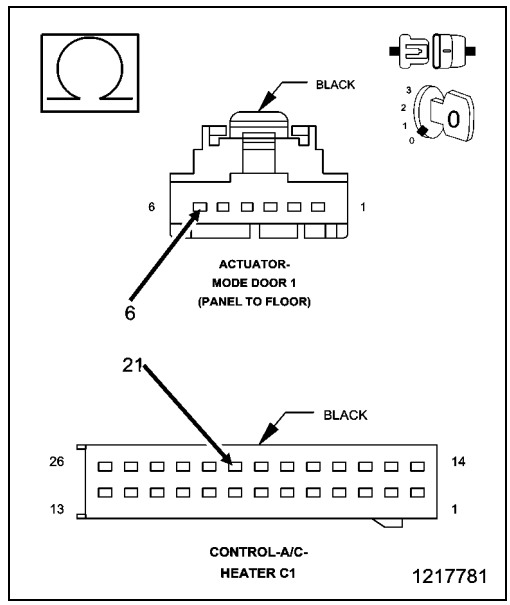

6. CHECK THE (C34) COMMON DOOR DRIVER CIRCUIT FOR AN OPEN

1. Measure the resistance of the (C34) Common Door Driver circuit between the A/C Heater Control C1 harness connector and the Mode Door 1 Actuator harness connector.

Is the resistance above 5.0 Ohms?

Yes

- Repair the (C34) Common Door Driver circuit for an open.

NOTE: Probable location is the wiring harness splice or the wiring between the splice and the door actuator.

- Perform HVAC VERIFICATION TEST (Refer to 28 - DTC-Based Diagnostics/HVAC - Standard Procedure).

No

- Replace the Recirculation Door Actuator in accordance with the Service Information.
- Perform HVAC VERIFICATION TEST (Refer to 28 - DTC-Based Diagnostics/HVAC - Standard Procedure).

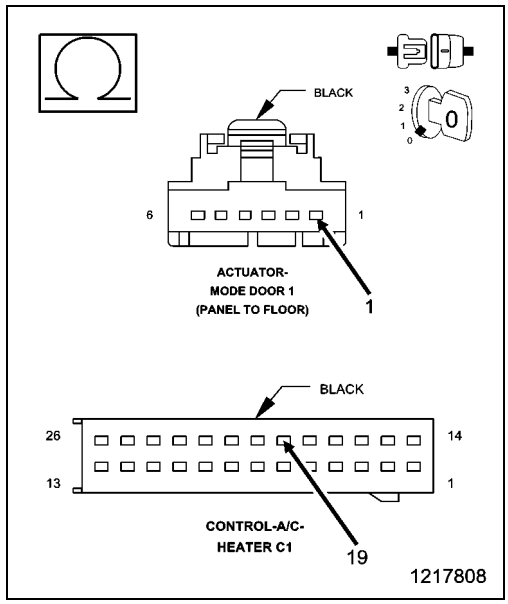

7. CHECK THE WIRING AND CONNECTORS

1. The conditions necessary to set the DTC are not present at this time.
2. Using the schematics as a guide, inspect the wiring and connectors specific to this circuit.
3. Check for an intermittent condition by inspecting the related wiring harness for chafed, pierced, pinched, partially broken wires.
4. Check the connectors for broken, bent, pushed out, spread, corroded, or contaminated terminals.
5. Wiggle the wiring and connectors while checking for shorted and open circuits.
6. With the scan tool, check the Environmental Data to help identify the conditions in which the DTC was set.

Were there any problems found?

Yes

- Repair as necessary.
- Perform HVAC VERIFICATION TEST (Refer to 28 - DTC-Based Diagnostics/HVAC - Standard Procedure).

No

- Test complete.

■ B11C2-92-FRONT MODE DOOR 1 CONTROL - PERFORMANCE OR INCORRECT OPERATION

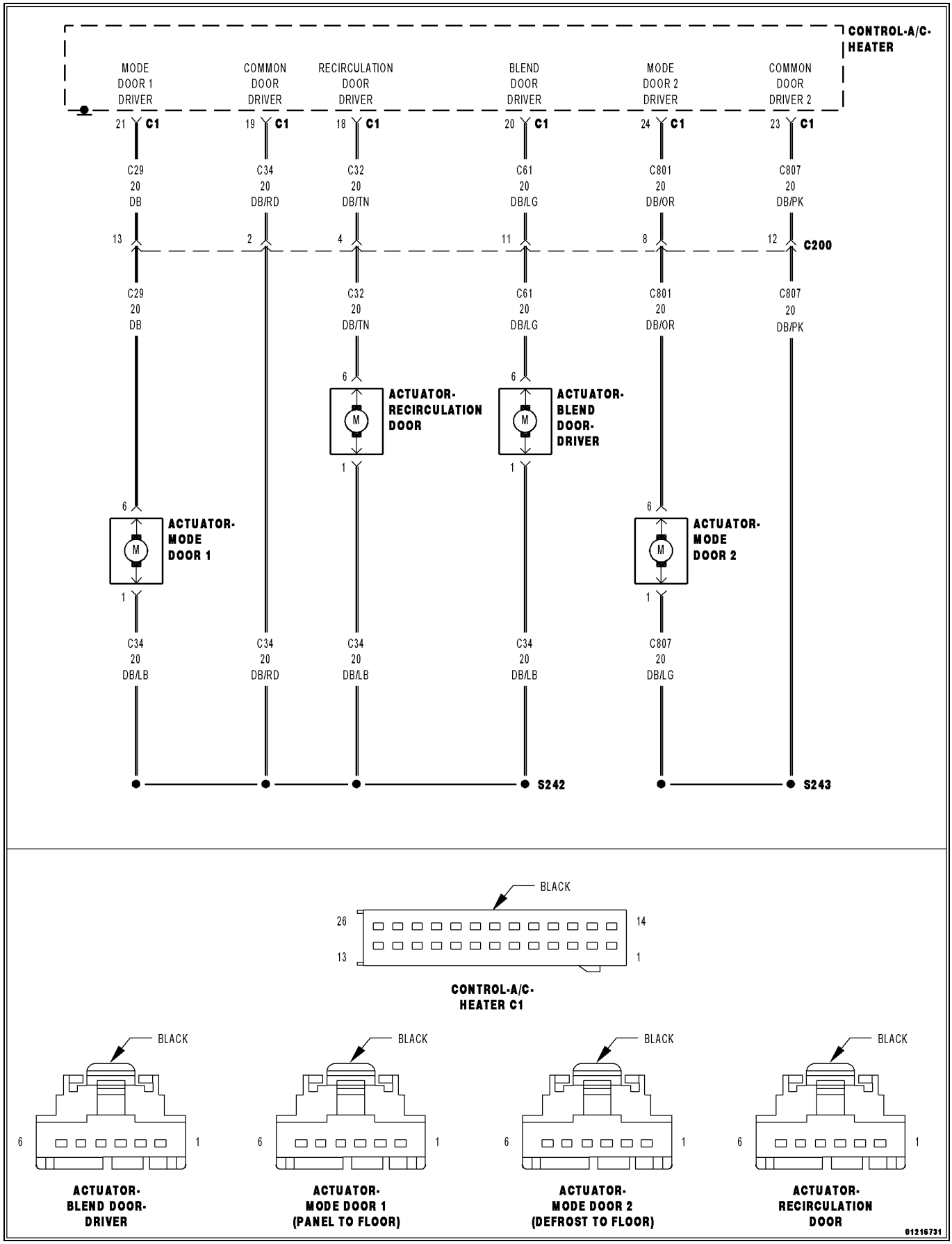

For a complete wiring diagram, **refer to the Wiring Information**.

Theory of Operation

After the initial installation of the A/C Heater Control, the controller is calibrated to each individual blend/mode door actuator. These calibrations are stored as in the number of pulses it takes to move the door from one stop to another. The A/C Heater Control drives the Door Actuators by the use of Door Driver circuit and a Common Door Driver circuit and monitors all door actuator pulses to detect door movement in both directions. Most of the door actuators share a common door driver circuit but each door actuator has its own unique driver circuit. The Defrost Door Actuator does not share a common door driver circuit because defrost mode is used as a system default mode if there is a system malfunction. Due to shared circuitry, similar DTCs can set at the same time for multiple actuators depending upon the type of circuit malfunction, its location, and the direction the actuator is moving when the malfunction is present.

- **When Monitored:**
  With the ignition on and an actuator movement is commanded by the A/C Heater Control.
- **Set Condition:**
  If an actuator move is commanded by the A/C Heater Control and there are no feedback pulses detected in that direction, the controller commands the actuator in the opposite direction. If feedback pulses are detected in only one direction this DTC will set. If the A/C Heater Control detects a valid pulse feedback in both directions, the DTC will change from Active to Stored and will stay in the controllers memory for 100 ignition cycles.

Possible Causes
(C29) MODE DOOR 1 DRIVER CIRCUIT SHORT TO VOLTAGE
(C29) MODE DOOR 1 DRIVER CIRCUIT SHORT TO GROUND
(C34) COMMON DOOR DRIVER CIRCUIT SHORT TO VOLTAGE
(C34) COMMON DOOR DRIVER CIRCUIT SHORT TO GROUND
MODE DOOR 1 DOOR (PANEL/FLOOR) BINDING
MODE DOOR 1 ACTUATOR (PANEL/FLOOR)
A/C HEATER CONTROL

Always perform the HVAC Pre-Diagnostic Troubleshooting procedure before proceeding (Refer to 28 - DTC-Based Diagnostics/HVAC - Standard Procedure).

1. CHECK IF DTC IS ACTIVE

1. Ignition on, engine not running.
2. With the scan tool, read HVAC DTCs.

NOTE: It can take up to 60 seconds or more for this DTC to mature.

Is this DTC active?

Yes

- Go To 3

No

- Go To 2

2. PERFORM HVAC ACTUATOR CALIBRATION TEST

1. With the scan tool, perform the HVAC Actuator Calibration Test.

Did this DTC change from Stored to Active while performing the HVAC Actuator Calibration Test?

Yes

- Go To 3

No

- Go To 9

3. CHECK THE (C29) MODE DOOR 1 DRIVER CIRCUIT FOR A SHORT TO VOLTAGE

1. Turn the ignition off to the lock position.
2. Disconnect the A/C Heater Control C1 harness connector.
3. Disconnect the Mode Door 1 Actuator (Panel/Floor) harness connector.
4. Ignition on, engine not running.
5. Measure the voltage of the (C29) Mode Door 1 Driver circuit.

Is there any voltage present?

Yes

- Repair the (C29) Mode Door 1 Driver circuit for a short to voltage.
- Perform HVAC VERIFICATION TEST (Refer to 28 - DTC-Based Diagnostics/HVAC - Standard Procedure).

No

- Go To 4

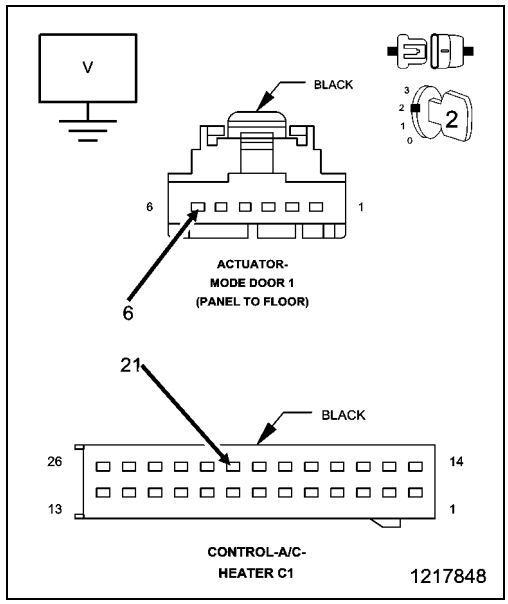

4. CHECK THE (C34) COMMON DOOR DRIVER CIRCUIT FOR A SHORT TO VOLTAGE

1. Measure the voltage of the (C34) Common Door Driver circuit.

Is there any voltage present?

Yes

- Repair the (C34) Common Door Driver circuit for a short to voltage.
- Perform HVAC VERIFICATION TEST (Refer to 28 - DTC-Based Diagnostics/HVAC - Standard Procedure).

No

- Go To 5

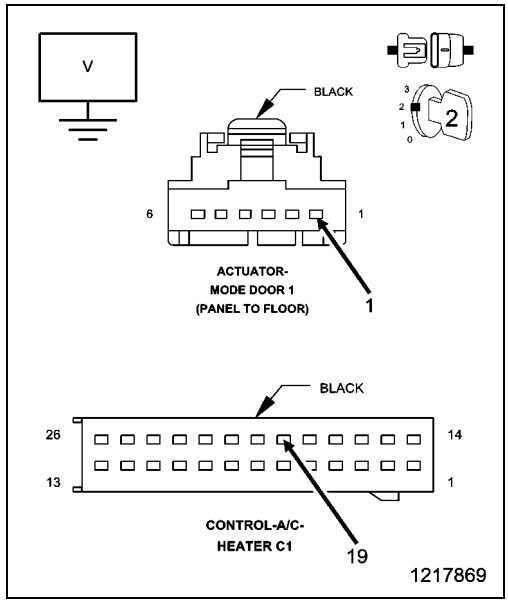

5. CHECK THE (C29) MODE DOOR 1 DRIVER CIRCUIT FOR A SHORT TO GROUND

1. Turn the ignition off to the lock position.
2. Measure the resistance between ground and the (C29) Mode Door 1 Driver circuit.

Is the resistance below 100k Ohms?

Yes

- Repair the (C29) Mode Door 1 Driver circuit for a short to ground.
- Perform HVAC VERIFICATION TEST (Refer to 28 - DTC-Based Diagnostics/HVAC - Standard Procedure).

No

- Go To 6

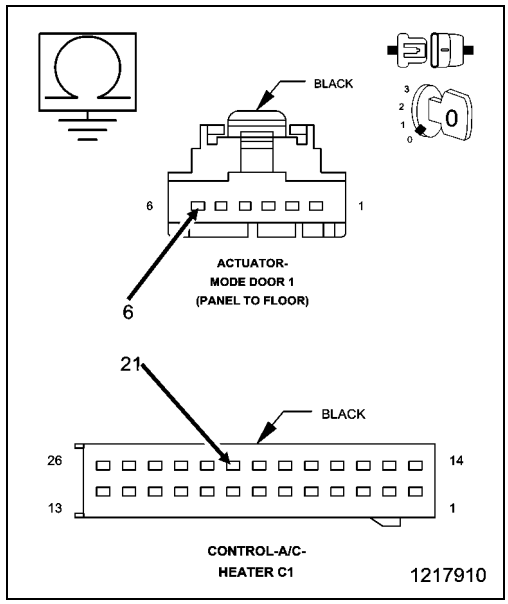

6. CHECK THE (C34) COMMON DOOR DRIVER CIRCUIT FOR A SHORT TO GROUND

1. Measure the resistance between ground and the (C34) Common Door Driver circuit.

Is the resistance below 100k Ohms?

Yes

- Repair the (C34) Common Door Driver circuit for a short to ground.
- Perform HVAC VERIFICATION TEST (Refer to 28 - DTC-Based Diagnostics/HVAC - Standard Procedure).

No

- Go To 7

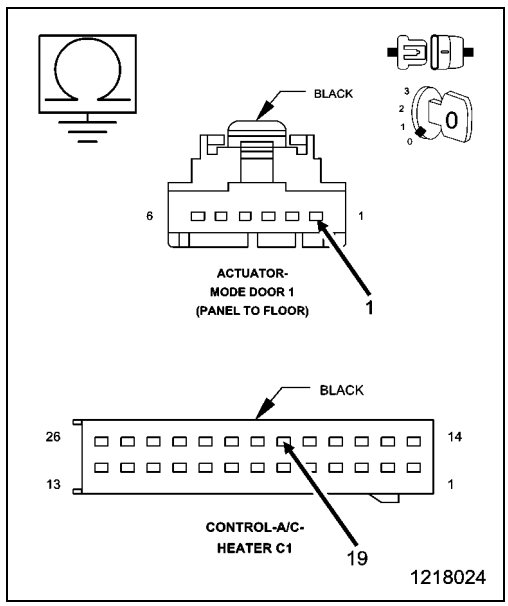

7. CHECK THE MODE DOOR 1 (PANEL/FLOOR)

1. Remove the Mode Door 1 Actuator (Panel/Floor) and check the Mode Door 1 (Panel/Floor) for binding and full travel.

Were there any problems found?

Yes

- Repair or replace the Mode Door 1 (Panel/Floor) as necessary in accordance with the Service Information.
- Perform HVAC VERIFICATION TEST (Refer to 28 - DTC-Based Diagnostics/HVAC - Standard Procedure).

No

- Go To 8

8. CHECK THE MODE DOOR 1 ACTUATOR

1. Replace the Mode Door 1 Actuator (Panel/Floor) in accordance with the Service Information.
2. With the scan tool, erase HVAC DTCs and perform the HVAC Actuator Calibration Test.

Did this DTC reset?

Yes

- Replace and program the A/C Heater Control in accordance with the Service Information.
- Perform HVAC VERIFICATION TEST (Refer to 28 - DTC-Based Diagnostics/HVAC - Standard Procedure).

No

- Test complete.
- Perform HVAC VERIFICATION TEST (Refer to 28 - DTC-Based Diagnostics/HVAC - Standard Procedure).

9. CHECK THE WIRING AND CONNECTORS

1. The conditions necessary to set the DTC are not present at this time.
2. Using the schematics as a guide, inspect the wiring and connectors specific to this circuit.
3. Check for an intermittent condition by inspecting the related wiring harness for chafed, pierced, pinched, partially broken wires.
4. Check the connectors for broken, bent, pushed out, spread, corroded, or contaminated terminals.
5. Wiggle the wiring and connectors while checking for shorted and open circuits.
6. With the scan tool, check the Environmental Data to help identify the conditions in which the DTC was set.

Were there any problems found?

Yes

- Repair as necessary.
- Perform HVAC VERIFICATION TEST (Refer to 28 - DTC-Based Diagnostics/HVAC - Standard Procedure).

No

- Test complete.

■ B11C3-00-FRONT MODE DOOR 1 TRAVEL RANGE TOO SMALL

For a complete wiring diagram, **refer to the Wiring Information**.

After the initial installation of the A/C Heater Control, the controller is calibrated to each individual blend/mode door actuator. These calibrations are stored as in the number of pulses it takes to move the door from one stop to another. The A/C Heater Control drives the Door Actuators by the use of Door Driver circuit and a Common Door Driver circuit and monitors all door actuator pulses to detect door movement in both directions. Most of the door actuators share a common door driver circuit but each door actuator has its own unique driver circuit. The Defrost Door Actuator does not share a common door driver circuit because defrost mode is used as a system default mode if there is a system malfunction. Due to shared circuitry, similar DTCs can set at the same time for multiple actuators depending upon the type of circuit malfunction, its location, and the direction the actuator is moving when the malfunction is present.

- **When Monitored:**

  When ever an Actuator Calibration Test is performed.
- **Set Condition:**

  The A/C Heater Control uses a pulse feedback to the controller to detect the total door movement range. If the amount of pulses required to move the door completely in both directions is less than what the controller has stored in its memory, this DTC will set. If an Actuator Calibration Test is performed and the A/C Heater Control detects a valid range of the door movement span in both directions, the DTC will change from Active to Stored and will stay in the controllers memory for 100 ignition cycles.

Possible Causes
RELATED DTCS PRESENT
MODE DOOR 1 (PANEL/FLOOR) BINDING
MODE DOOR 1 (PANEL/FLOOR) ACTUATOR
A/C HEATER CONTROL

Always perform the HVAC Pre-Diagnostic Troubleshooting procedure before proceeding. (Refer to 28 - DTC-Based Diagnostics/HVAC - Standard Procedure).

1. CHECK FOR RELATED DTCS

1. Ignition on, engine not running.
2. With the scan tool, read HVAC DTCs.

Are there any Door Control - Circuit Open or Door Control - Performance or Incorrect Operation DTCs present?

Yes

- (Refer to 28 - DTC-Based Diagnostics/HVAC - Diagnosis and Testing) and perform the appropriate diagnostic procedure.

No

- Go To 2

2. CHECK IF DTC IS ACTIVE

1. Ignition on, engine not running.
2. With the scan tool, read HVAC DTCs.

Is this DTC active?

Yes

- Go To 4

No

- Go To 3

3. PERFORM HVAC ACTUATOR CALIBRATION TEST

1. With the scan tool, perform the HVAC Actuator Calibration Test.

Did this DTC change from Stored to Active while performing the HVAC Actuator Calibration Test?

Yes
- Go To 4

No
- Go To 6

4. CHECK THE MODE DOOR 1 (PANEL/FLOOR)

1. Remove the Mode Door 1 (Panel/Floor) Actuator and check the Mode Door 1 (Panel/Floor) for binding and full travel.

Were there any problems found?

Yes
- Repair or replace the Mode Door 1 (Panel/Floor) as necessary in accordance with the Service Information.
- Perform the HVAC VERIFICATION TEST. (Refer to 28 - DTC-Based Diagnostics/HVAC - Standard Procedure).

No
- Go To 5

5. CHECK THE MODE DOOR 1 (PANEL/FLOOR) ACTUATOR

1. Replace the Mode Door 1 (Panel/Floor) Actuator in accordance with the Service Information.
2. With the scan tool, erase HVAC DTCs and perform the HVAC Actuator Calibration Test.

Did this DTC reset?

Yes
- Replace and program the A/C Heater Control in accordance with the Service Information.
- Perform the HVAC VERIFICATION TEST. (Refer to 28 - DTC-Based Diagnostics/HVAC - Standard Procedure).

No
- Test complete.
- Perform the HVAC VERIFICATION TEST. (Refer to 28 - DTC-Based Diagnostics/HVAC - Standard Procedure).

6. CHECK THE WIRING AND CONNECTORS

1. The conditions necessary to set the DTC are not present at this time.
2. Using the schematics as a guide, inspect the wiring and connectors specific to this circuit.
3. Check for an intermittent condition by inspecting the related wiring harness for chafed, pierced, pinched, partially broken wires.
4. Check the connectors for broken, bent, pushed out, spread, corroded, or contaminated terminals.
5. Wiggle the wiring and connectors while checking for shorted and open circuits.
6. With the scan tool, check the Environmental Data to help identify the conditions in which the DTC was set.

Were there any problems found?

Yes
- Repair as necessary.
- Perform the HVAC VERIFICATION TEST. (Refer to 28 - DTC-Based Diagnostics/HVAC - Standard Procedure).

No
- Test complete.

■ B11C4-00-FRONT MODE DOOR 1 TRAVEL RANGE TOO LARGE

For a complete wiring diagram, **refer to the Wiring Information**.

Theory of Operation

After the initial installation of the A/C Heater Control, the controller is calibrated to each individual blend/mode door actuator. These calibrations are stored as in the number of pulses it takes to move the door from one stop to another. The A/C Heater Control drives the Door Actuators by the use of Door Driver circuit and a Common Door Driver circuit and monitors all door actuator pulses to detect door movement in both directions. Most of the door actuators share a common door driver circuit but each door actuator has its own unique driver circuit. The Defrost Door Actuator does not share a common door driver circuit because defrost mode is used as a system default mode if there is a system malfunction. Due to shared circuitry, similar DTCs can set at the same time for multiple actuators depending upon the type of circuit malfunction, its location, and the direction the actuator is moving when the malfunction is present.

- **When Monitored:**
  When ever an Actuator Calibration Test is performed
- **Set Condition:**
  The A/C Heater Control uses a pulse feedback to the controller to detect the total door movement range. If the amount of pulses required to move the door completely in both directions is greater than what the controller has stored in its memory, this DTC will set. If an Actuator Calibration Test is performed and the A/C Heater Control detects a valid range of the door movement span in both directions, the DTC will change from Active to Stored and will stay in the controllers memory for 100 ignition cycles.

Possible Causes
RELATED DTCS PRESENT
RECIRCULATION DOOR STOPS
MODE DOOR 1 (PANEL/FLOOR)
MODE DOOR 1 (PANEL/FLOOR) ACTUATOR
A/C HEATER CONTROL

Always perform the HVAC Pre-Diagnostic Troubleshooting procedure before proceeding. (Refer to 28 - DTC-Based Diagnostics/HVAC - Standard Procedure).

1. CHECK FOR RELATED DTCS

1. Ignition on, engine not running.
2. With the scan tool, read HVAC DTCs.

Are there any Door Control - Circuit Open or Door Control - Performance or Incorrect Operation DTCs present?

Yes

- (Refer to 28 - DTC-Based Diagnostics/HVAC - Diagnosis and Testing) and perform the appropriate diagnostic procedure.

No

- Go To 2

2. CHECK IF DTC IS ACTIVE

1. Ignition on, engine not running.
2. With the scan tool, read HVAC DTCs.

Is this DTC active?

Yes

- Go To 4

No

- Go To 3

3. PERFORM HVAC ACTUATOR CALIBRATION TEST

1. With the scan tool, perform the HVAC Actuator Calibration Test.

Did this DTC change from Stored to Active while performing the HVAC Actuator Calibration Test?

Yes

- Go To 4

No

- Go To 6

4. CHECK THE MODE DOOR 1 (PANEL/FLOOR)

1. Remove the Mode Door 1 (Panel/Floor) Actuator and check the Mode Door 1 (Panel/Floor) stops, linkage (stripped or cracked) and door.

Were there any problems found?

Yes

- Repair or replace the Mode Door 1 (Panel/Floor) as necessary in accordance with the Service Information.
- Perform the HVAC VERIFICATION TEST. (Refer to 28 - DTC-Based Diagnostics/HVAC - Standard Procedure).

No

- Go To 5

5. CHECK THE MODE DOOR 1 (PANEL/FLOOR) ACTUATOR

1. Replace the Mode Door 1 (Panel/Floor) Actuator in accordance with the Service Information.
2. With the scan tool, erase HVAC DTCs and perform the HVAC Actuator Calibration Test.

Did this DTC reset?

Yes

- Replace and program the A/C Heater Control in accordance with the Service Information.
- Perform the HVAC VERIFICATION TEST. (Refer to 28 - DTC-Based Diagnostics/HVAC - Standard Procedure).

No

- Test complete.
- Perform the HVAC VERIFICATION TEST. (Refer to 28 - DTC-Based Diagnostics/HVAC - Standard Procedure).

6. CHECK THE WIRING AND CONNECTORS

1. The conditions necessary to set the DTC are not present at this time.
2. Using the schematics as a guide, inspect the wiring and connectors specific to this circuit.
3. Check for an intermittent condition by inspecting the related wiring harness for chafed, pierced, pinched, partially broken wires.
4. Check the connectors for broken, bent, pushed out, spread, corroded, or contaminated terminals.
5. Wiggle the wiring and connectors while checking for shorted and open circuits.
6. With the scan tool, check the Environmental Data to help identify the conditions in which the DTC was set.

Were there any problems found?

Yes

- Repair as necessary.
- Perform the HVAC VERIFICATION TEST. (Refer to 28 - DTC-Based Diagnostics/HVAC - Standard Procedure).

No

- Test complete.

B11CB-13-MAIN/LEFT TEMPERATURE DOOR 1 CONTROL - CIRCUIT OPEN

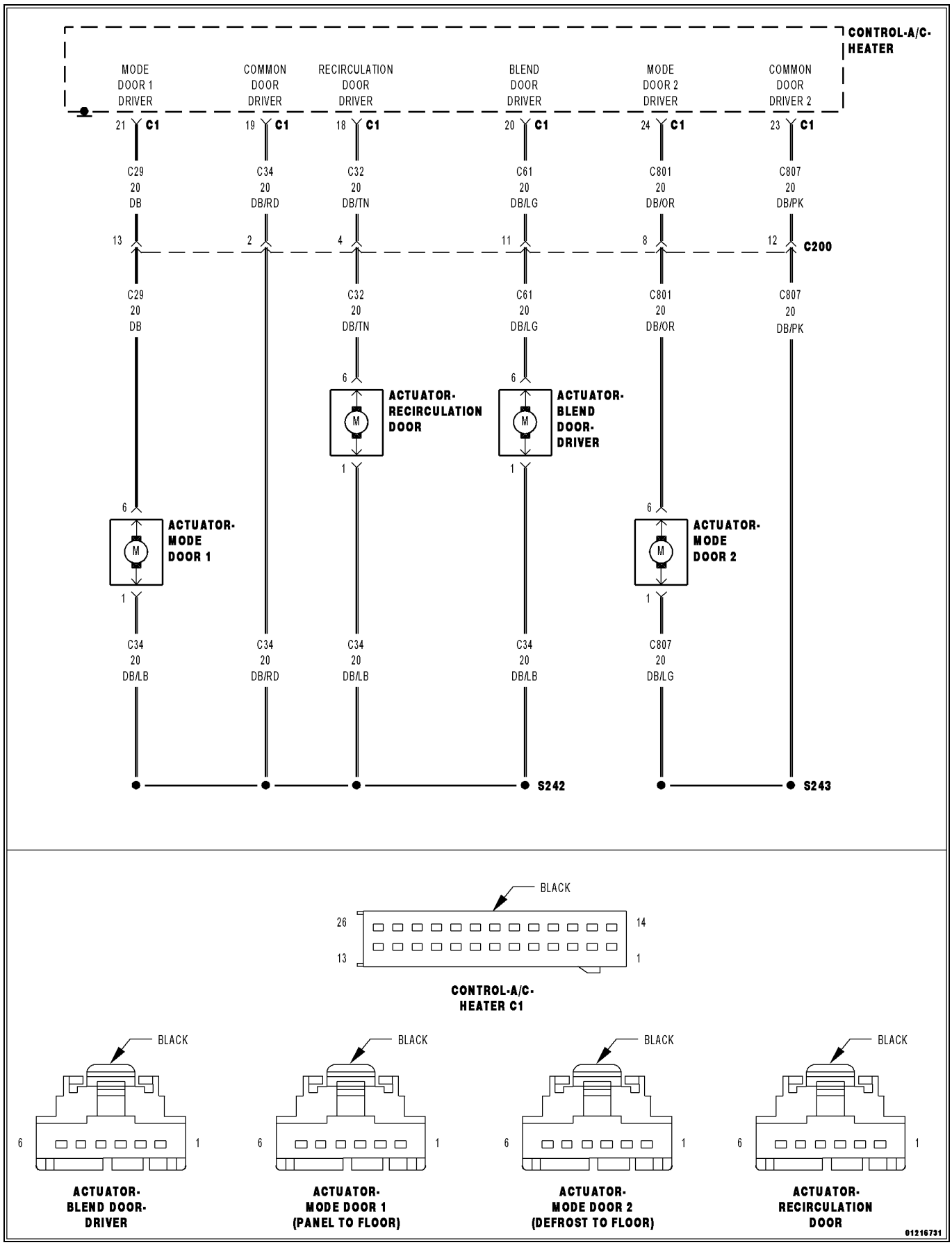

For a complete wiring diagram, **refer to the Wiring Information**.

Theory of Operation

After the initial installation of the A/C Heater Control, the controller is calibrated to each individual blend/mode door actuator. These calibrations are stored as in the number of pulses it takes to move the door from one stop to another. The A/C Heater Control drives the Door Actuators by the use of Door Driver circuit and a Common Door Driver circuit and monitors all door actuator pulses to detect door movement in both directions. Most of the door actuators share a common door driver circuit but each door actuator has its own unique driver circuit. The Defrost Door Actuator does not share a common door driver circuit because defrost mode is used as a system default mode if there is a system malfunction. Due to shared circuitry, similar DTCs can set at the same time for multiple actuators depending upon the type of circuit malfunction, its location, and the direction the actuator is moving when the malfunction is present.

- **When Monitored:**
  With the ignition on and an actuator movement is commanded by the A/C Heater Control.
- **Set Condition:**
  If an actuator move is commanded by the A/C Heater Control and there are no feedback pulses detected in that direction, the controller commands the actuator in the opposite direction. If no feedback pulses are detected in either direction this DTC will set. If the A/C Heater Control detects a valid pulse feedback in both directions, the DTC will change from Active to Stored and will stay in the controllers memory for 100 ignition cycles.

Possible Causes
(C61) BLEND DOOR DRIVER CIRCUIT OPEN
(C34) COMMON DOOR DRIVER CIRCUIT OPEN
BLEND DOOR ACTUATOR (DRIVER)
A/C HEATER CONTROL

Always perform the HVAC Pre-Diagnostic Troubleshooting procedure before proceeding (Refer to 28 - DTC-Based Diagnostics/HVAC - Standard Procedure).

1. CHECK FOR OTHER DTCS

1. Ignition on, engine not running.
2. With the scan tool, read HVAC DTCs.

Is there more than one Door Control - Circuit Open DTC present?

Yes

- Repair the (C34) Common Door Driver circuit for an open.

NOTE: Due to the common shared driver circuit, probable area of concern is the splice, or from the splice to the A/C Heater Control harness connector. Make sure to check all inline connectors.

No

- Go To 2

2. CHECK IF DTC IS ACTIVE

1. Ignition on, engine not running.
2. With the scan tool, read HVAC DTCs.

Is this DTC active?

Yes

- Go To 4

No

- Go To 3

3. PERFORM HVAC ACTUATOR CALIBRATION TEST

1. With the scan tool, perform the HVAC Actuator Calibration Test.

Did this DTC change from Stored to Active while performing the HVAC Actuator Calibration Test?

Yes

- Go To 4

No

- Go To 7

4. CHECK THE BLEND DOOR ACTUATOR

1. Turn the ignition off to the lock position.
2. Disconnect the A/C Heater Control C1 harness connector.
3. Measure the resistance between the (C61) Blend Door Driver circuit and the (C34) Common Door Driver circuit.

Is the resistance 38.0 Ohms (± 5.0 Ohms)?

Yes

- Replace and program the A/C Heater Control in accordance with the Service Information.
- Perform HVAC VERIFICATION TEST (Refer to 28 - DTC-Based Diagnostics/HVAC - Standard Procedure).

No

- Go To 5

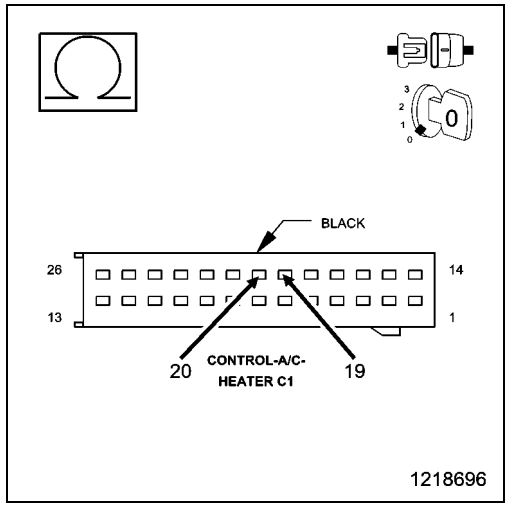

5. CHECK THE (C61) BLEND DOOR DRIVER CIRCUIT FOR AN OPEN

1. Turn the ignition off to the lock position.
2. Disconnect the Blend Door Actuator harness connector.
3. Measure the resistance of the (C61) Blend Door Driver circuit between the A/C Heater Control C1 harness connector and the Blend Door Actuator harness connector.

Is the resistance above 5.0 Ohms?

Yes

- Repair the (C61) Blend Door Driver circuit for an open.
- Perform HVAC VERIFICATION TEST (Refer to 28 - DTC-Based Diagnostics/HVAC - Standard Procedure).

No

- Go To 6

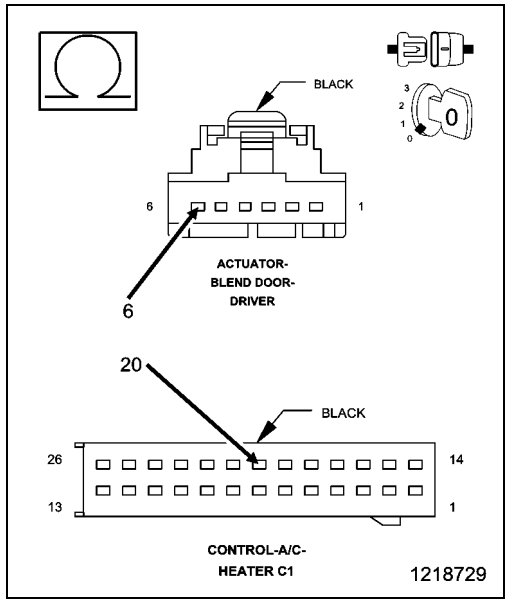

6. CHECK THE (C34) COMMON DOOR DRIVER CIRCUIT FOR AN OPEN

1. Measure the resistance of the (C34) Common Door Driver circuit between the A/C Heater Control C1 harness connector and the Blend Door Actuator harness connector.

Is the resistance above 5.0 Ohms?

Yes

- Repair the (C34) Common Door Driver circuit for an open.

NOTE: Probable location is the wiring harness splice or the wiring between the splice and the door actuator.

- Perform HVAC VERIFICATION TEST (Refer to 28 - DTC-Based Diagnostics/HVAC - Standard Procedure).

No

- Replace the Blend Door Actuator (Driver) in accordance with the Service Information.
- Perform HVAC VERIFICATION TEST (Refer to 28 - DTC-Based Diagnostics/HVAC - Standard Procedure).

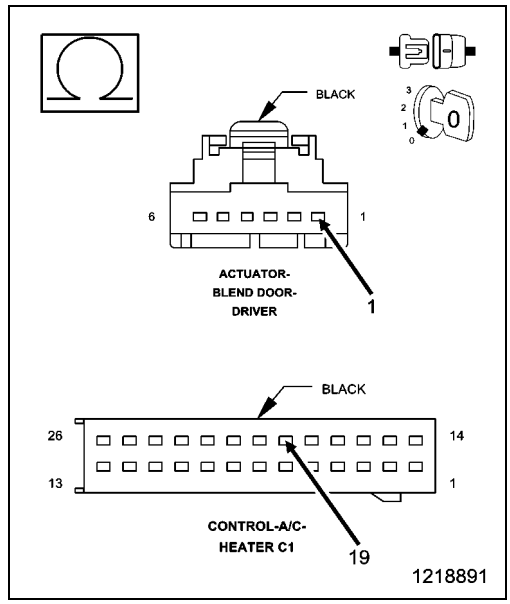

7. CHECK THE WIRING AND CONNECTORS

1. The conditions necessary to set the DTC are not present at this time.
2. Using the schematics as a guide, inspect the wiring and connectors specific to this circuit.
3. Check for an intermittent condition by inspecting the related wiring harness for chafed, pierced, pinched, partially broken wires.
4. Check the connectors for broken, bent, pushed out, spread, corroded, or contaminated terminals.
5. Wiggle the wiring and connectors while checking for shorted and open circuits.
6. With the scan tool, check the Environmental Data to help identify the conditions in which the DTC was set.

Were there any problems found?

Yes

- Repair as necessary.
- Perform HVAC VERIFICATION TEST (Refer to 28 - DTC-Based Diagnostics/HVAC - Standard Procedure).

No

- Test complete.

■ B11CB-92-MAIN/LEFT TEMPERATURE DOOR 1 CONTROL - PERFORMANCE OR INCORRECT OPERATION

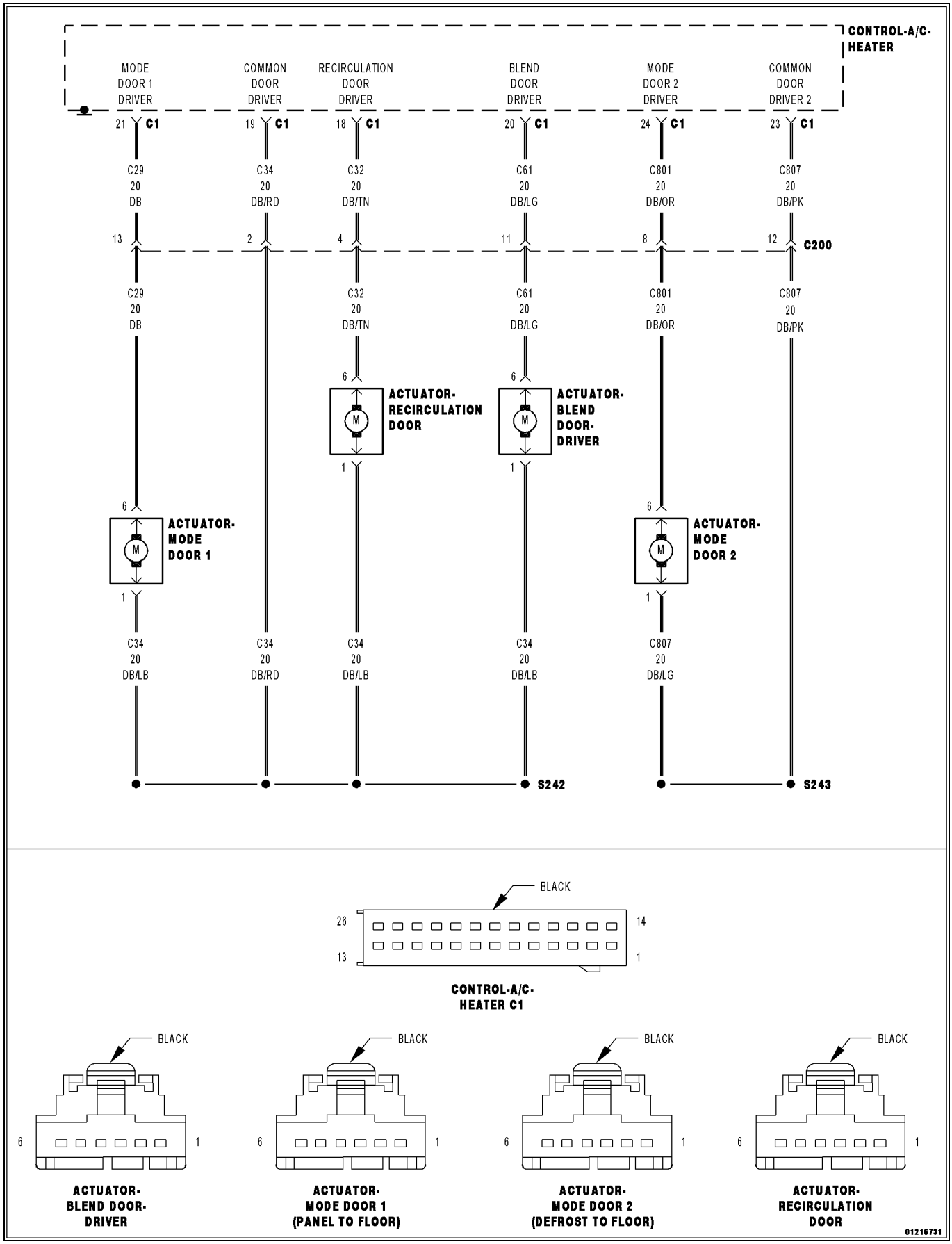

For a complete wiring diagram, **refer to the Wiring Information**.

Theory of Operation

After the initial installation of the A/C Heater Control, the controller is calibrated to each individual blend/mode door actuator. These calibrations are stored as in the number of pulses it takes to move the door from one stop to another. The A/C Heater Control drives the Door Actuators by the use of Door Driver circuit and a Common Door Driver circuit and monitors all door actuator pulses to detect door movement in both directions. Most of the door actuators share a common door driver circuit but each door actuator has its own unique driver circuit. The Defrost Door Actuator does not share a common door driver circuit because defrost mode is used as a system default mode if there is a system malfunction. Due to shared circuitry, similar DTCs can set at the same time for multiple actuators depending upon the type of circuit malfunction, its location, and the direction the actuator is moving when the malfunction is present.

- **When Monitored:**
  With the ignition on and an actuator movement is commanded by the A/C Heater Control.
- **Set Condition:**
  If an actuator move is commanded by the A/C Heater Control and there are no feedback pulses detected in that direction, the controller commands the actuator in the opposite direction. If feedback pulses are detected in only one direction this DTC will set. If the A/C Heater Control detects a valid pulse feedback in both directions, the DTC will change from Active to Stored and will stay in the controllers memory for 100 ignition cycles.

Possible Causes
(C61) BLEND DOOR DRIVER CIRCUIT SHORT TO VOLTAGE
(C61) BLEND DOOR DRIVER CIRCUIT SHORT TO GROUND
(C34) COMMON DOOR DRIVER CIRCUIT SHORT TO VOLTAGE
(C34) COMMON DOOR DRIVER CIRCUIT SHORT TO GROUND
BLEND DOOR BINDING
BLEND DOOR ACTUATOR
A/C HEATER CONTROL

Always perform the HVAC Pre-Diagnostic Troubleshooting procedure before proceeding. (Refer to 28 - DTC-Based Diagnostics/HVAC - Standard Procedure).

1. CHECK IF DTC IS ACTIVE

1. Ignition on, engine not running.
2. With the scan tool, read HVAC DTCs.

NOTE: It can take up to 60 seconds or more for this DTC to mature.

Is this DTC active?

Yes

- Go To 3

No

- Go To 2

2. PERFORM HVAC ACTUATOR CALIBRATION TEST

1. With the scan tool, perform the HVAC Actuator Calibration Test.

Did this DTC change from Stored to Active while performing the HVAC Actuator Calibration Test?

Yes

- Go To 3

No

- Go To 9

3. CHECK THE (C61) BLEND DOOR DRIVER CIRCUIT FOR A SHORT TO VOLTAGE

1. Turn the ignition off to the lock position.
2. Disconnect the A/C Heater Control C1 harness connector.
3. Disconnect the Blend Door Actuator harness connector.
4. Ignition on, engine not running.
5. Measure the voltage of the (C61) Blend Door Driver circuit.

Is there any voltage present?

Yes

- Repair the (C61) Blend Door Driver circuit for a short to voltage.
- Perform HVAC VERIFICATION TEST (Refer to 28 - DTC-Based Diagnostics/HVAC - Standard Procedure).

No

- Go To 4

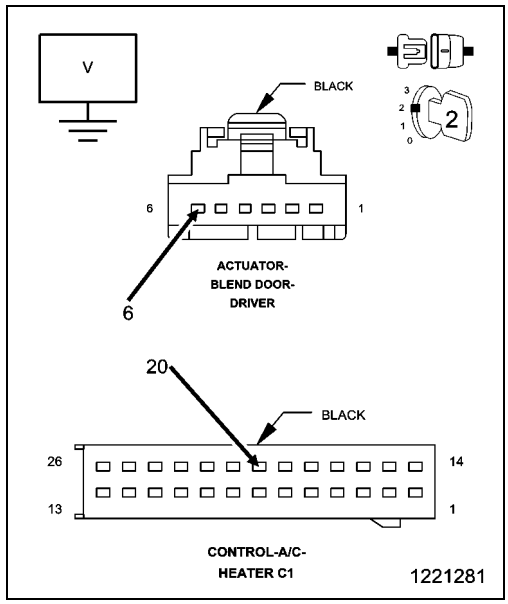

4. CHECK THE (C34) COMMON DOOR DRIVER CIRCUIT FOR A SHORT TO VOLTAGE

1. Measure the voltage of the (C34) Common Door Driver circuit.

Is there any voltage present?

Yes

- Repair the (C34) Common Door Driver circuit for a short to voltage.
- Perform HVAC VERIFICATION TEST (Refer to 28 - DTC-Based Diagnostics/HVAC - Standard Procedure).

No

- Go To 5

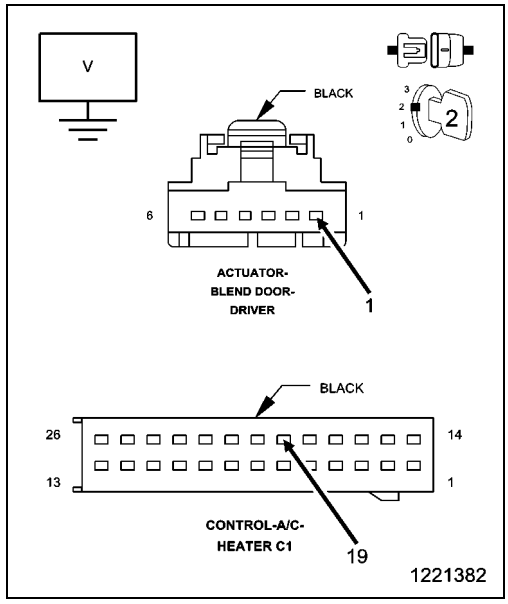

5. CHECK THE (C61) BLEND DOOR DRIVER CIRCUIT FOR A SHORT TO GROUND

1. Turn the ignition off to the lock position.
2. Measure the resistance between ground and the (C61) Blend Door Driver circuit.

Is the resistance below 100k ohms?

Yes

- Repair the (C61) Blend Door Driver circuit for a short to ground.
- Perform HVAC VERIFICATION TEST (Refer to 28 - DTC-Based Diagnostics/HVAC - Standard Procedure).

No

- Go To 6

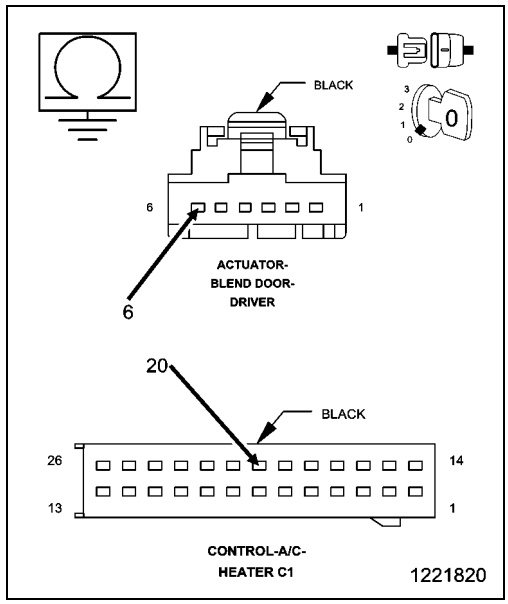

6. CHECK THE (C34) COMMON DOOR DRIVER CIRCUIT FOR A SHORT TO GROUND

1. Measure the resistance between ground and the (C34) Common Door Driver circuit.

Is the resistance below 100k ohms?

Yes

- Repair the (C34) Common Door Driver circuit for a short to ground.
- Perform HVAC VERIFICATION TEST (Refer to 28 - DTC-Based Diagnostics/HVAC - Standard Procedure).

No

- Go To 7

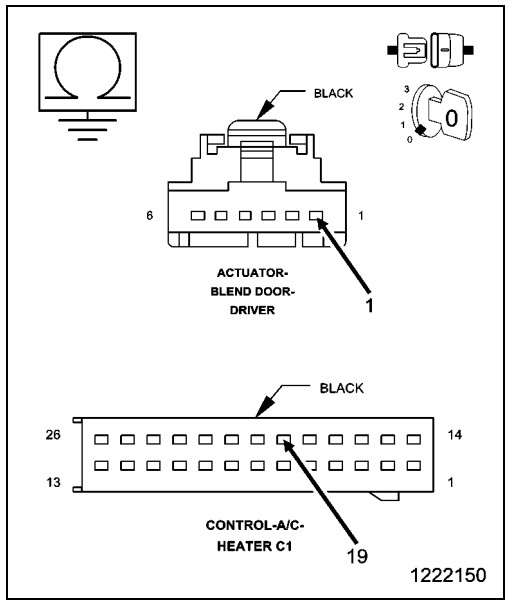

7. CHECK THE BLEND DOOR

1. Remove the Blend Door Actuator and check the Blend Door for binding and full travel.

Were there any problems found?

Yes

- Repair or replace the Blend Door as necessary in accordance with the Service Information.
- Perform HVAC VERIFICATION TEST (Refer to 28 - DTC-Based Diagnostics/HVAC - Standard Procedure).

No

- Go To 8

8. CHECK THE BLEND DOOR ACTUATOR

1. Replace the Blend Door Actuator in accordance with the Service Information.
2. With the scan tool, erase HVAC DTCs and perform the HVAC Actuator Calibration Test.

Did this DTC reset?

Yes

- Replace and program the A/C Heater Control in accordance with the Service Information.
- Perform HVAC VERIFICATION TEST (Refer to 28 - DTC-Based Diagnostics/HVAC - Standard Procedure).

No

- Test complete.
- Perform HVAC VERIFICATION TEST (Refer to 28 - DTC-Based Diagnostics/HVAC - Standard Procedure).

9. CHECK THE WIRING AND CONNECTORS

1. The conditions necessary to set the DTC are not present at this time.
2. Using the schematics as a guide, inspect the wiring and connectors specific to this circuit.
3. Check for an intermittent condition by inspecting the related wiring harness for chafed, pierced, pinched, partially broken wires.
4. Check the connectors for broken, bent, pushed out, spread, corroded, or contaminated terminals.
5. Wiggle the wiring and connectors while checking for shorted and open circuits.
6. With the scan tool, check the Environmental Data to help identify the conditions in which the DTC was set.

Were there any problems found?

Yes

- Repair as necessary.
- Perform HVAC VERIFICATION TEST (Refer to 28 - DTC-Based Diagnostics/HVAC - Standard Procedure).

No

- Test complete.

■ B11CC-00-MAIN/LEFT TEMPERATURE DOOR 1 TRAVEL TOO SMALL

For a complete wiring diagram, **refer to the Wiring Information**.

Theory of Operation

After the initial installation of the A/C Heater Control, the controller is calibrated to each individual blend/mode door actuator. These calibrations are stored as in the number of pulses it takes to move the door from one stop to another. The A/C Heater Control drives the Door Actuators by the use of Door Driver circuit and a Common Door Driver circuit and monitors all door actuator pulses to detect door movement in both directions. Most of the door actuators share a common door driver circuit but each door actuator has its own unique driver circuit. The Defrost Door Actuator does not share a common door driver circuit because defrost mode is used as a system default mode if there is a system malfunction. Due to shared circuitry, similar DTCs can set at the same time for multiple actuators depending upon the type of circuit malfunction, its location, and the direction the actuator is moving when the malfunction is present.

- **When Monitored:**

  When ever an Actuator Calibration Test is performed
- **Set Condition:**

  The A/C Heater Control uses a pulse feedback to the controller to detect the total door movement range. If the amount of pulses required to move the door completely in both directions is less than what the controller has stored in its memory, this DTC will set. If an Actuator Calibration Test is performed and the A/C Heater Control detects a valid range of the door movement span in both directions, the DTC will change from Active to Stored and will stay in the controllers memory for 100 ignition cycles.

Possible Causes
RELATED DTCS PRESENT
BLEND DOOR BINDING
BLEND DOOR ACTUATOR
A/C HEATER CONTROL

Always perform the HVAC Pre-Diagnostic Troubleshooting procedure before proceeding. (Refer to 28 - DTC-Based Diagnostics/HVAC - Standard Procedure).

1. CHECK FOR RELATED DTCS

1. Ignition on, engine not running.
2. With the scan tool, read HVAC DTCs.

Are there any Door Control - Circuit Open or Door Control - Performance or Incorrect Operation DTCs present?

Yes

- (Refer to 28 - DTC-Based Diagnostics/HVAC - Diagnosis and Testing) and perform the appropriate diagnostic procedure.

No

- Go To 2

2. CHECK IF DTC IS ACTIVE

1. Ignition on, engine not running.
2. With the scan tool, read HVAC DTCs.

Is this DTC active?

Yes

- Go To 4

No

- Go To 3

3. PERFORM HVAC ACTUATOR CALIBRATION TEST

1. With the scan tool, perform the HVAC Actuator Calibration Test.

Did this DTC change from Stored to Active while performing the HVAC Actuator Calibration Test?

Yes

- Go To 4

No

- Go To 6

4. CHECK THE BLEND DOOR

1. Remove the Blend Door Actuator and check the Blend Door for binding and full travel.

Is there any problem with the Blend Door movement?

Yes

- Repair or replace the Blend Door as necessary in accordance with the Service Information.
- Perform the HVAC VERIFICATION TEST. (Refer to 28 - DTC-Based Diagnostics/HVAC - Standard Procedure).

No

- Go To 5

5. CHECK THE BLEND DOOR ACTUATOR

1. Replace the Blend Door Actuator in accordance with the Service Information.
2. With the scan tool, erase HVAC DTCs and perform the HVAC Actuator Calibration Test.

Did this DTC reset?

Yes

- Replace and program the A/C Heater Control in accordance with the Service Information.
- Perform the HVAC VERIFICATION TEST. (Refer to 28 - DTC-Based Diagnostics/HVAC - Standard Procedure).

No

- Test complete.
- Perform the HVAC VERIFICATION TEST. (Refer to 28 - DTC-Based Diagnostics/HVAC - Standard Procedure).

6. CHECK THE WIRING AND CONNECTORS

1. The conditions necessary to set the DTC are not present at this time.
2. Using the schematics as a guide, inspect the wiring and connectors specific to this circuit.
3. Check for an intermittent condition by inspecting the related wiring harness for chafed, pierced, pinched, partially broken wires.
4. Check the connectors for broken, bent, pushed out, spread, corroded, or contaminated terminals.
5. Wiggle the wiring and connectors while checking for shorted and open circuits.
6. With the scan tool, check the Environmental Data to help identify the conditions in which the DTC was set.

Were there any problems found?

Yes

- Repair as necessary.
- Perform the HVAC VERIFICATION TEST. (Refer to 28 - DTC-Based Diagnostics/HVAC - Standard Procedure).

No

- Test complete.

■ B11CD-00-MAIN/LEFT TEMPERATURE DOOR 1 TRAVEL TOO LARGE

For a complete wiring diagram, **refer to the Wiring Information**.

Theory of Operation

After the initial installation of the A/C Heater Control, the controller is calibrated to each individual blend/mode door actuator. These calibrations are stored as in the number of pulses it takes to move the door from one stop to another. The A/C Heater Control drives the Door Actuators by the use of Door Driver circuit and a Common Door Driver circuit and monitors all door actuator pulses to detect door movement in both directions. Most of the door actuators share a common door driver circuit but each door actuator has its own unique driver circuit. The Defrost Door Actuator does not share a common door driver circuit because defrost mode is used as a system default mode if there is a system malfunction. Due to shared circuitry, similar DTCs can set at the same time for multiple actuators depending upon the type of circuit malfunction, its location, and the direction the actuator is moving when the malfunction is present.

- **When Monitored:**

  When ever an Actuator Calibration Test is performed
- **Set Condition:**

  The A/C Heater Control uses a pulse feedback to the controller to detect the total door movement range. If the amount of pulses required to move the door completely in both directions is greater than what the controller has stored in its memory, this DTC will set. If an Actuator Calibration Test is performed and the A/C Heater Control detects a valid range of the door movement span in both directions, the DTC will change from Active to Stored and will stay in the controllers memory for 100 ignition cycles.

Possible Causes
RELATED DTCS PRESENT
BLEND DOOR STOPS
BLEND DOOR
BLEND DOOR ACTUATOR
A/C HEATER CONTROL

Always perform the HVAC Pre-Diagnostic Troubleshooting procedure before proceeding. (Refer to 28 - DTC-Based Diagnostics/HVAC - Standard Procedure).

1. CHECK FOR RELATED DTCS

1. Ignition on, engine not running.
2. With the scan tool, read HVAC DTCs.

Are there any Door Control - Circuit Open or Door Control - Performance or Incorrect Operation DTCs present?

Yes

- (Refer to 28 - DTC-Based Diagnostics/HVAC - Diagnosis and Testing) and perform the appropriate diagnostic procedure.

No

- Go To 2

2. CHECK IF DTC IS ACTIVE

1. Ignition on, engine not running.
2. With the scan tool, read HVAC DTCs.

Is this DTC active?

Yes

- Go To 4

No

- Go To 3

3. PERFORM HVAC ACTUATOR CALIBRATION TEST

1. With the scan tool, perform the HVAC Actuator Calibration Test.

Did this DTC change from Stored to Active while performing the HVAC Actuator Calibration Test?

Yes

- Go To 4

No

- Go To 6

4. CHECK THE BLEND DOOR

1. Remove the Blend Door Actuator and check the Blend Door stops, linkage (stripped or cracked) and door.

Was there any problems with the Blend Door or movement?

Yes

- Repair or replace the Blend Door as necessary in accordance with the Service Information.
- Perform the HVAC VERIFICATION TEST. (Refer to 28 - DTC-Based Diagnostics/HVAC - Standard Procedure).

No

- Go To 5

5. CHECK THE BLEND DOOR ACTUATOR

1. Replace the Blend Door Actuator in accordance with the Service Information.
2. With the scan tool, erase HVAC DTCs and perform the HVAC Actuator Calibration Test.

Did this DTC reset?

Yes

- Replace and program the A/C Heater Control in accordance with the Service Information.
- Perform the HVAC VERIFICATION TEST. (Refer to 28 - DTC-Based Diagnostics/HVAC - Standard Procedure).

No

- Test complete.
- Perform the HVAC VERIFICATION TEST. (Refer to 28 - DTC-Based Diagnostics/HVAC - Standard Procedure).

6. CHECK THE WIRING AND CONNECTORS

1. The conditions necessary to set the DTC are not present at this time.
2. Using the schematics as a guide, inspect the wiring and connectors specific to this circuit.
3. Check for an intermittent condition by inspecting the related wiring harness for chafed, pierced, pinched, partially broken wires.
4. Check the connectors for broken, bent, pushed out, spread, corroded, or contaminated terminals.
5. Wiggle the wiring and connectors while checking for shorted and open circuits.
6. With the scan tool, check the Environmental Data to help identify the conditions in which the DTC was set.

Were there any problems found?

Yes

- Repair as necessary.
- Perform the HVAC VERIFICATION TEST. (Refer to 28 - DTC-Based Diagnostics/HVAC - Standard Procedure).

No

- Test complete.

■ B160F-11-TWILIGHT/AMBIENT LIGHT SENSOR INPUT - CIRCUIT SHORT TO GROUND

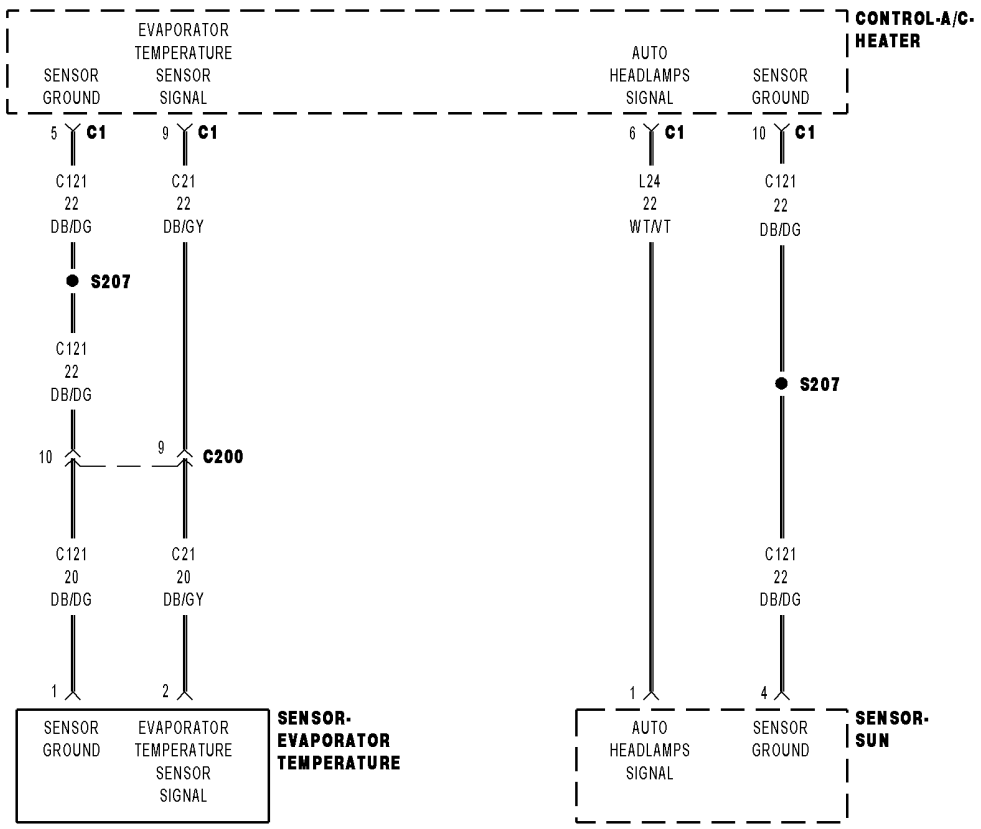

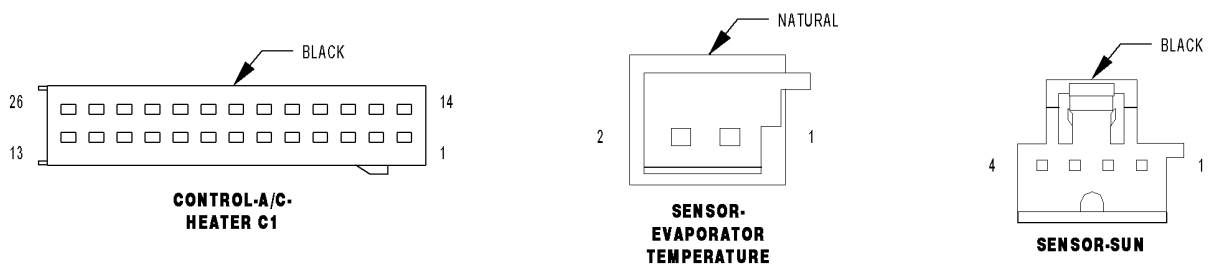

01216194

For a complete wiring diagram, **refer to the Wiring Information**.

- **When Monitored:**
  With the ignition on.
- **Set Condition:**
  If the Twilight Light Sensor input voltage is less than 0.16 of a volt for period of 30 seconds.

Possible Causes
(L24) AUTO HEADLAMPS SIGNAL CIRCUIT SHORT TO GROUND
SUN SENSOR
A/C HEATER CONTROL

Always perform the HVAC Pre-Diagnostic Troubleshooting procedure before proceeding. (Refer to 28 - DTC-Based Diagnostics/HVAC - Standard Procedure).

1. CHECK IF THE DTC IS ACTIVE

1. Ignition on, engine not running.
2. With the scan tool, read HVAC DTCs.

NOTE: It can take up to 60 seconds or more for this DTC to mature.

Is this DTC active?

Yes

- Go To 2

No

- Go To 4

2. CHECK (L24) AUTO HEADLAMPS SIGNAL CIRCUIT FOR A SHORT TO GROUND

1. Turn the ignition off to the lock position.
2. Disconnect the A/C Heater Control C1 harness connector.
3. Disconnect the Sun Sensor harness connector.
4. Measure the resistance between ground and he (L24) Auto Headlamps Signal circuit.

Is the resistance below 100k Ohms?

Yes

- Repair the (L24) Auto Headlamps Signal circuit for a short to ground.
- Perform HVAC VERIFICATION TEST (Refer to 28 - DTC-Based Diagnostics/HVAC - Standard Procedure).

No

- Go To 3

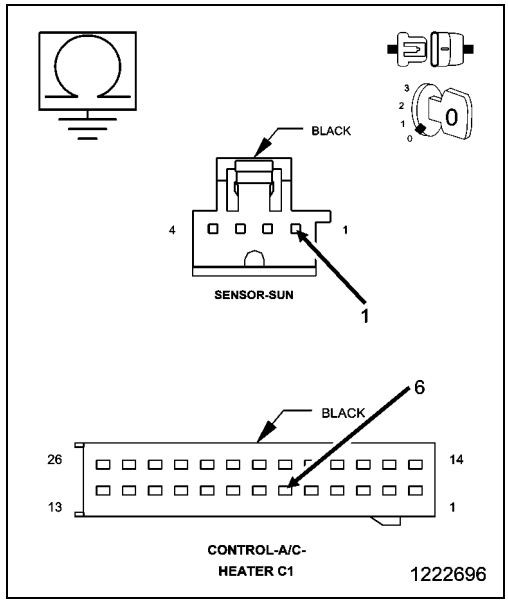

3. CHECK SUN SENSOR AND A/C HEATER CONTROL

1. Replace the Sun Sensor in accordance with the Service Information.
2. Perform HVAC VERIFICATION TEST (Refer to 28 - DTC-Based Diagnostics/HVAC - Standard Procedure).

Did this DTC reset while performing the HVAC Verification Test?

Yes

- Replace and program the A/C Heater Control in accordance with the Service Information.
- Perform HVAC VERIFICATION TEST (Refer to 28 - DTC-Based Diagnostics/HVAC - Standard Procedure).

No

- Test complete.

4. CHECK THE WIRING AND CONNECTORS

1. The conditions necessary to set the DTC are not present at this time.
2. Using the schematics as a guide, inspect the wiring and connectors specific to this circuit.
3. Check for an intermittent condition by inspecting the related wiring harness for chafed, pierced, pinched, partially broken wires.
4. Check the connectors for broken, bent, pushed out, spread, corroded, or contaminated terminals.
5. Wiggle the wiring and connectors while checking for shorted and open circuits.
6. With the scan tool, check the Environmental Data to help identify the conditions in which the DTC was set.

Were there any problems found?

Yes

- Repair as necessary.
- Perform HVAC VERIFICATION TEST (Refer to 28 - DTC-Based Diagnostics/HVAC - Standard Procedure).

No

- Test complete.

■ B160F-12-TWILIGHT/AMBIENT LIGHT SENSOR INPUT - CIRCUIT SHORT TO BATTERY

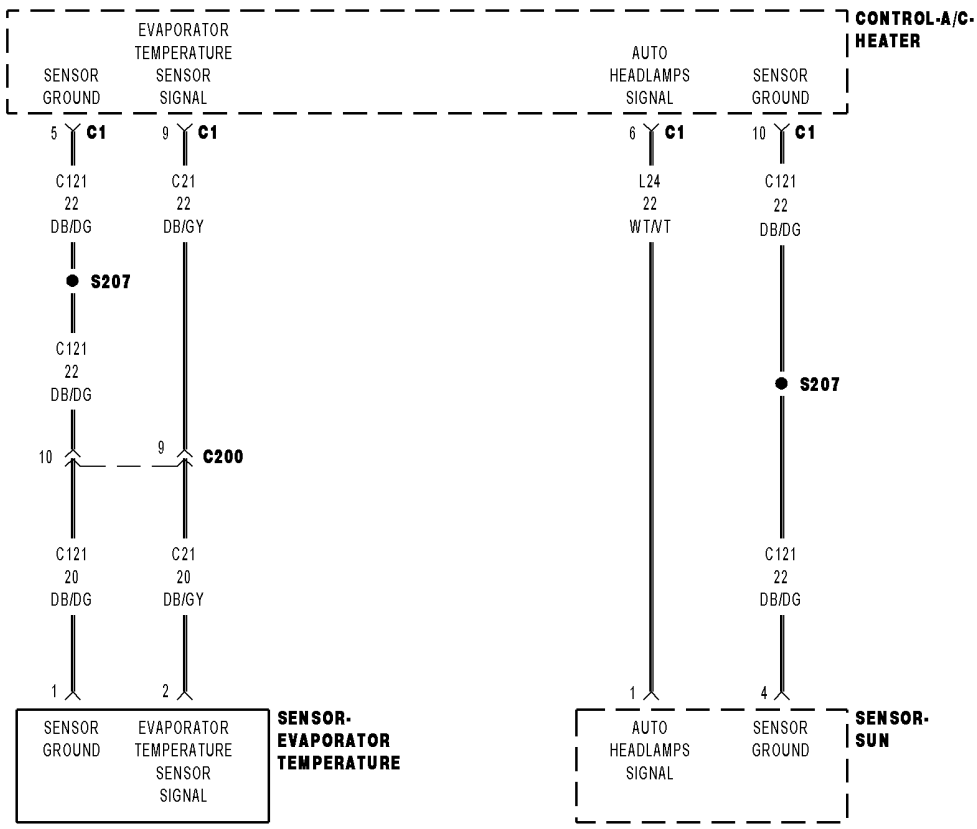

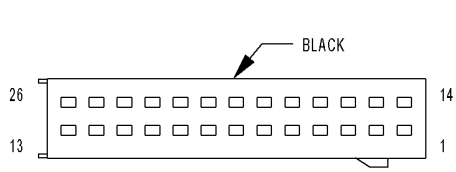

CONTROL-A/C-HEATER C1

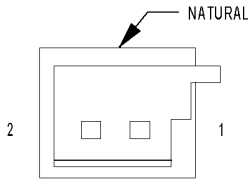

SENSOR-EVAPORATOR TEMPERATURE

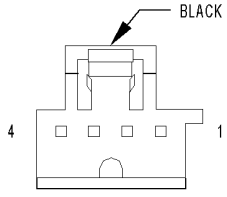

SENSOR-SUN

01216194

For a complete wiring diagram, **refer to the Wiring Information**.

- **When Monitored:**
  With the ignition on.
- **Set Condition:**
  If the Twilight Light Sensor input voltage is greater than 4.9 volts for period of 30 seconds.

Possible Causes
(L24) AUTO HEADLAMPS SIGNAL CIRCUIT SHORT TO VOLTAGE
(L24) AUTO HEADLAMPS SIGNAL CIRCUIT SHORT OPEN
(C121) SENSOR GROUND CIRCUIT OPEN
SUN SENSOR
A/C HEATER CONTROL

Always perform the HVAC Pre-Diagnostic Troubleshooting procedure before proceeding. (Refer to 28 - DTC-Based Diagnostics/HVAC - Standard Procedure).

1. CHECK IF THE DTC IS ACTIVE

1. Ignition on, engine not running.
2. With the scan tool, read HVAC DTCs.

NOTE: It can take up to 60 seconds or more for this DTC to mature.

Is this DTC active?

Yes

- Go To 2

No

- Go To 6

2. CHECK (L24) AUTO HEADLAMPS SIGNAL CIRCUIT FOR A SHORT TO VOLTAGE

1. Turn the ignition off.
2. Disconnect the A/C Heater Control C1 harness connector.
3. Ignition on, engine not running.
4. Measure the voltage of the (L24) Auto Headlamps Signal circuit.

Is there any voltage present?

Yes

- Repair the (L24) Auto Headlamps Signal circuit for a short to voltage.
- Perform HVAC VERIFICATION TEST (Refer to 28 - DTC-Based Diagnostics/HVAC - Standard Procedure).

No

- Go To 3

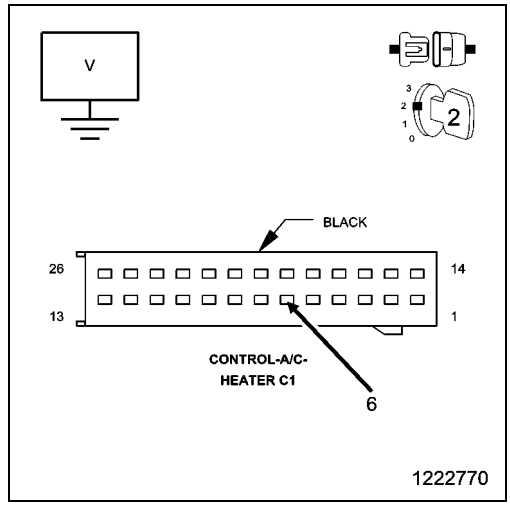

3. CHECK (L24) AUTO HEADLAMPS SIGNAL CIRCUIT FOR AN OPEN

1. Turn the ignition off to the lock position.
2. Disconnect the Sun Sensor harness connector.
3. Measure the resistance of the (L24) Auto Headlamps Signal circuit between the A/C Heater Control C1 harness connector and the Sun Sensor harness connector.

Is the resistance below 5.0 Ohms?

Yes

- Go To 4

No

- Repair the (L24) Auto Headlamps Signal circuit for an open.
- Perform HVAC VERIFICATION TEST (Refer to 28 - DTC-Based Diagnostics/HVAC - Standard Procedure).

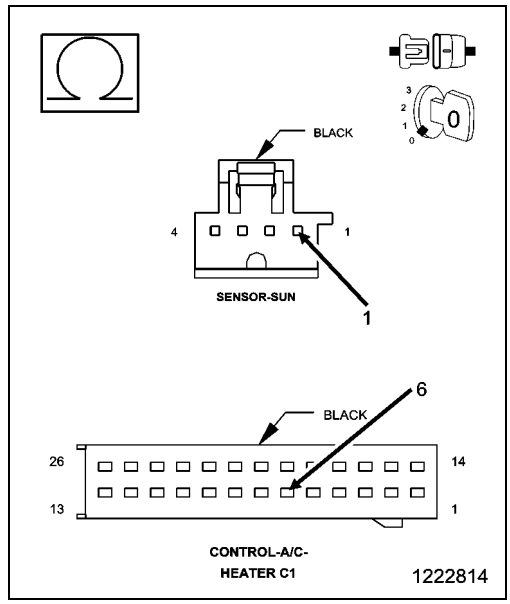

4. CHECK (C121) SENSOR GROUND CIRCUIT FOR AN OPEN

1. Measure the resistance of the (C121) Sensor Ground circuit between the A/C Heater Control C1 harness connector and the Sun Sensor harness connector.

Is the resistance below 5.0 Ohms?

Yes

- Go To 5

No

- Repair the (C121) Sensor Ground circuit for an open.
- Perform HVAC VERIFICATION TEST (Refer to 28 - DTC-Based Diagnostics/HVAC - Standard Procedure).

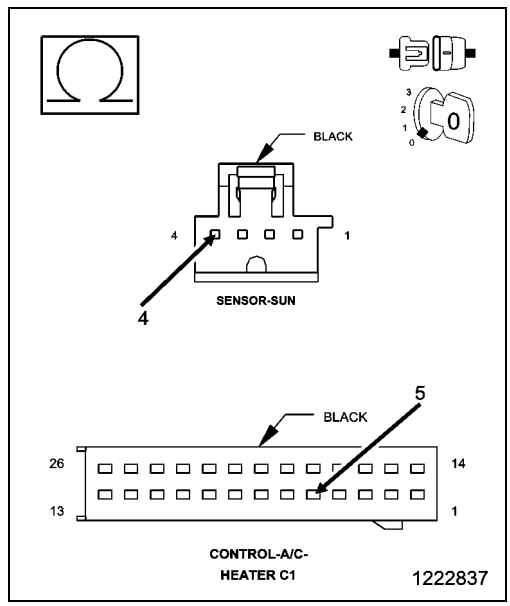

5. CHECK THE SUN SENSOR AND A/C HEATER CONTROL

1. Replace the Sun Sensor in accordance with the Service Information.
2. Perform HVAC VERIFICATION TEST (Refer to 28 - DTC-Based Diagnostics/HVAC - Standard Procedure).

Did this DTC reset while performing the HVAC Verification Test?

Yes

- Replace and program the A/C Heater Control in accordance with the Service Information.
- Perform HVAC VERIFICATION TEST (Refer to 28 - DTC-Based Diagnostics/HVAC - Standard Procedure).

No

- Test complete.

6. CHECK THE WIRING AND CONNECTORS

1. The conditions necessary to set the DTC are not present at this time.
2. Using the schematics as a guide, inspect the wiring and connectors specific to this circuit.
3. Check for an intermittent condition by inspecting the related wiring harness for chafed, pierced, pinched, partially broken wires.
4. Check the connectors for broken, bent, pushed out, spread, corroded, or contaminated terminals.
5. Wiggle the wiring and connectors while checking for shorted and open circuits.
6. With the scan tool, check the Environmental Data to help identify the conditions in which the DTC was set.

Were there any problems found?

Yes

- Repair as necessary.
- Perform HVAC VERIFICATION TEST (Refer to 28 - DTC-Based Diagnostics/HVAC - Standard Procedure).

No

- Test complete.

■ B210A-84-SYSTEM VOLTAGE LOW - SIGNAL BELOW ALLOWABLE RANGE

For a complete wiring diagram, **refer to the Wiring Information**.

Theory of Operation

The A/C Heater Control constantly monitors battery and ignition voltage as well as battery voltage derived from BUS communication to ensure proper operation. If the voltage to the controller is out of range it could cause damage to the controller or its respective components. If the voltage of either circuit drops below or rises above a predetermined calibration a DTC will set.

- **When Monitored:**
  With the ignition on.
- **Set Condition:**
  If the controller system voltage or ignition voltage broadcast over the BUS is lower than monitored controller voltage the for period of 30 seconds.

Possible Causes
RELATED TIPM DTCS PRESENT
RELATED CHARGING SYSTEM DTCS PRESENT
RELATED HVAC DTCS PRESENT
OTHER CONTROLLERS REPORTING UNDER VOLTAGE CONDITION
A/C HEATER CONTROL

Always perform the HVAC Pre-Diagnostic Troubleshooting procedure before proceeding. (Refer to 28 - DTC-Based Diagnostics/HVAC - Standard Procedure).

1. CHECK FOR TIPM DTCS

1. Ignition on, engine not running.
2. With the scan tool, read DTCs.

Are there any Totally Integrated Power Module (TIPM) DTCs present?

Yes

- (Refer to 28 - DTC-Based Diagnostics/MODULE, Totally Integrated Power (TIPM) - Diagnosis and Testing) and perform the appropriate diagnostic procedure.

No

- Go To 2

2. CHECK FOR POWERTRAIN CONTROL MODULE DTCS

1. With the scan tool, read DTCs.

Are there any Powertrain Control Module (PCM) charging system DTCs present?

Yes

- (Refer to 28 - DTC-Based Diagnostics/MODULE, Powertrain Control (PCM) - Diagnosis and Testing) and perform the appropriate diagnostic procedure.

No

- Go To 3

3. CHECK FOR HVAC DTCS

1. With the scan tool, read HVAC DTCs.

Is the DTC B210D-84-BATTERY VOLTAGE LOW - SIGNAL BELOW ALLOWABLE RANGE present also?

Yes

- (Refer to 28 - DTC-Based Diagnostics/HVAC - Diagnosis and Testing) and perform the appropriate diagnostic procedure.

No

- Go To 4

4. CHECK IF THE DTC IS ACTIVE

1. With the scan tool, read HVAC DTCs.

NOTE: It can take up to 30 seconds or more for this DTC to mature.

Is this DTC active?

Yes

- Go To 5

No

- Go To 6

5. CHECK IF OTHER CONTROLLERS ARE REPORTING AN OVER VOLTAGE CONDITION

1. With the scan tool read DTCs.

Are any other controllers reporting an over voltage condition?

Yes

- Refer to DTC Based Diagnostics and perform the appropriate diagnostic procedure.

No

- Replace and program the A/C Heater Control in accordance with the Service Information.
- Perform HVAC VERIFICATION TEST (Refer to 28 - DTC-Based Diagnostics/HVAC - Standard Procedure).

6. CHECK THE WIRING AND CONNECTORS

1. The conditions necessary to set the DTC are not present at this time.
2. With the scan tool, check the Environmental Data to help identify the conditions in which the DTC was set.
3. Using the schematics as a guide, inspect the wiring and connectors specific to this circuit.
4. Check for an intermittent condition by inspecting the related wiring harness for chafed, pierced, pinched, partially broken wires.
5. Check the connectors for broken, bent, pushed out, spread, corroded, or contaminated terminals.
6. Wiggle the wiring and connectors while checking for shorted and open circuits.

Were there any problems found?

Yes

- Repair as necessary.
- Perform HVAC VERIFICATION TEST (Refer to 28 - DTC-Based Diagnostics/HVAC - Standard Procedure).

No

- Test complete.

■ B210B-85-SYSTEM VOLTAGE HIGH - SIGNAL ABOVE ALLOWABLE RANGE

For a complete wiring diagram, **refer to the Wiring Information**.

Theory of Operation

The A/C Heater Control constantly monitors battery and ignition voltage as well as battery voltage derived from BUS communication to ensure proper operation. If the voltage to the controller is out of range it could cause damage to the controller or its respective components. If the voltage of either circuit drops below or rises above a predetermined calibration a DTC will set.

- **When Monitored:**
  With the ignition on.
- **Set Condition:**
  If the controller system voltage or ignition voltage broadcast over the BUS is higher than monitored controller voltage the for period of 30 seconds.

Possible Causes
RELATED TIPM DTCS PRESENT
RELATED CHARGING SYSTEM DTCS PRESENT
RELATED HVAC DTCS PRESENT
OTHER CONTROLLERS REPORTING OVER VOLTAGE CONDITION
A/C HEATER CONTROL

Always perform the HVAC Pre-Diagnostic Troubleshooting procedure before proceeding. (Refer to 28 - DTC-Based Diagnostics/HVAC - Standard Procedure).

1. CHECK FOR TIPM DTCS

1. Ignition on, engine not running.
2. With the scan tool, read DTCs.

Are there any Totally Integrated Power Module (TIPM) DTCs present?

Yes

- (Refer to 28 - DTC-Based Diagnostics/MODULE, Totally Integrated Power (TIPM) - Diagnosis and Testing) and perform the appropriate diagnostic procedure.

No

- Go To 2

2. CHECK FOR POWERTRAIN CONTROL MODULE DTCS

1. With the scan tool, read DTCs.

Are there any Powertrain Control Module (PCM) charging system DTCs present?

Yes

- (Refer to 28 - DTC-Based Diagnostics/MODULE, Powertrain Control (PCM) - Diagnosis and Testing) and perform the appropriate diagnostic procedure.

No

- Go To 3

3. CHECK FOR HVAC DTCS

1. With the scan tool, read HVAC DTCs.

Is the DTC B210E-85-BATTERY VOLTAGE HIGH - SIGNAL ABOVE ALLOWABLE RANGE present also?

Yes

- (Refer to 28 - DTC-Based Diagnostics/HVAC - Diagnosis and Testing) and perform the appropriate diagnostic procedure.

No

- Go To 4

4. CHECK IF THE DTC IS ACTIVE

1. With the scan tool, read HVAC DTCs.

NOTE: It can take up to 30 seconds or more for this DTC to mature.

Is this DTC active?

Yes

- Go To 5

No

- Go To 6

5. CHECK IF OTHER CONTROLLERS ARE REPORTING AN OVER VOLTAGE CONDITION

1. Ignition on, engine not running.
2. With the scan tool read DTCs.

Are any other controllers reporting an over voltage condition?

Yes

- Refer to DTC Based Diagnostics and perform the appropriate diagnostic procedure.

No

- Replace and program the A/C Heater Control in accordance with the Service Information.
- Perform HVAC VERIFICATION TEST (Refer to 28 - DTC-Based Diagnostics/HVAC - Standard Procedure).

6. CHECK THE WIRING AND CONNECTORS

1. The conditions necessary to set the DTC are not present at this time.
2. With the scan tool, check the Environmental Data to help identify the conditions in which the DTC was set.
3. Using the schematics as a guide, inspect the wiring and connectors specific to this circuit.
4. Check for an intermittent condition by inspecting the related wiring harness for chafed, pierced, pinched, partially broken wires.
5. Check the connectors for broken, bent, pushed out, spread, corroded, or contaminated terminals.
6. Wiggle the wiring and connectors while checking for shorted and open circuits.

Were there any problems found?

Yes

- Repair as necessary.
- Perform HVAC VERIFICATION TEST (Refer to 28 - DTC-Based Diagnostics/HVAC - Standard Procedure).

No

- Test complete.

B210D-84-BATTERY VOLTAGE LOW - SIGNAL BELOW ALLOWABLE RANGE

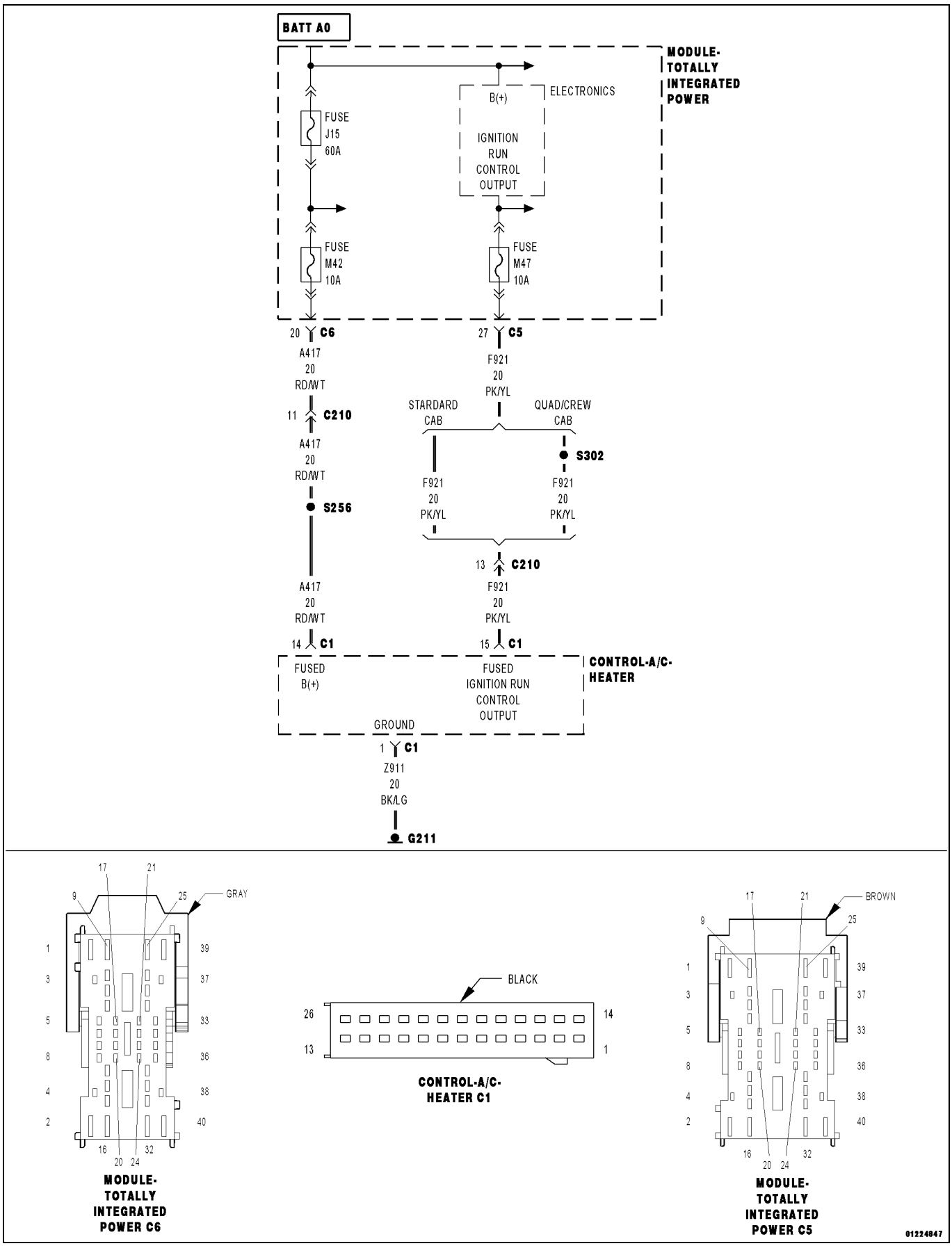

For a complete wiring diagram, **refer to the Wiring Information**.

Theory of Operation

The A/C Heater Control constantly monitors battery and ignition voltage to ensure proper operation. If the voltage to the controller is out of range it could cause damage to the controller or its respective components. If the voltage of either circuit drops below or rises above a predetermined calibration a DTC will set.

- **When Monitored:**
  With the ignition on.
- **Set Condition:**
  If the controller battery voltage is lower than 8.0 volts for period of 30 seconds.

Possible Causes
RELATED TIPM DTCS PRESENT
RELATED CHARGING SYSTEM DTCS PRESENT
(A417) FUSED B(+) CIRCUIT OPEN
(F921) FUSED IGNITION RUN CONTROL OUTPUT CIRCUIT OPEN
(Z911) GROUND CIRCUIT OPEN
A/C HEATER CONTROL

Always perform the HVAC Pre-Diagnostic Troubleshooting procedure before proceeding. (Refer to 28 - DTC-Based Diagnostics/HVAC - Standard Procedure).

1. CHECK FOR TIPM DTCS

1. Ignition on, engine not running.
2. With the scan tool, read DTCs.

Are there any Totally Integrated Power Module (TIPM) DTCs present?

Yes

- (Refer to 28 - DTC-Based Diagnostics/MODULE, Totally Integrated Power (TIPM) - Diagnosis and Testing) and perform the appropriate diagnostic procedure.

No

- Go To 2

2. CHECK FOR CHARGING SYSTEM DTCS

1. With the scan tool, read DTCs.

Are there any Powertrain Control Module (PCM) charging system DTCs present?

Yes

- (Refer to 28 - DTC-Based Diagnostics/MODULE, Powertrain Control (PCM) - Diagnosis and Testing) and perform the appropriate diagnostic procedure.

No

- Go To 3

3. CHECK IF THE DTC IS ACTIVE

1. With the scan tool, read HVAC DTCs.

Is this DTC active?

Yes

- Go To 4

No

- Go To 7

4. CHECK THE (A417) FUSED B(+) CIRCUIT FOR AN OPEN

1. Ignition on, engine not running.
2. While back probing, measure the voltage of the (A417) Fused B(+) circuit in the A/C Heater Control harness connector.

Is the voltage below 9.0 volts?

Yes

- Repair the (F921) Fused Ignition Run Control Output circuit for an open or high resistance.
- Perform HVAC VERIFICATION TEST (Refer to 28 - DTC-Based Diagnostics/HVAC - Standard Procedure).

No

- Go To 5

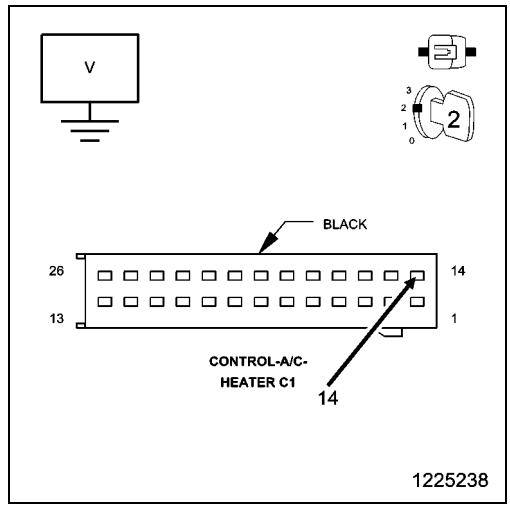

5. CHECK (F921) FUSED IGNITION RUN CONTROL OUTPUT CIRCUIT FOR AN OPEN

1. Ignition on, engine not running.
2. While back probing, measure the voltage of the (F921) Fused Ignition Run Control Output circuit in the A/C Heater Control harness connector.

Is the voltage below 9.0 volts?

Yes

- Repair the (F921) Fused Ignition Run Control Output circuit for an open or high resistance.
- Perform HVAC VERIFICATION TEST (Refer to 28 - DTC-Based Diagnostics/HVAC - Standard Procedure).

No

- Go To 6

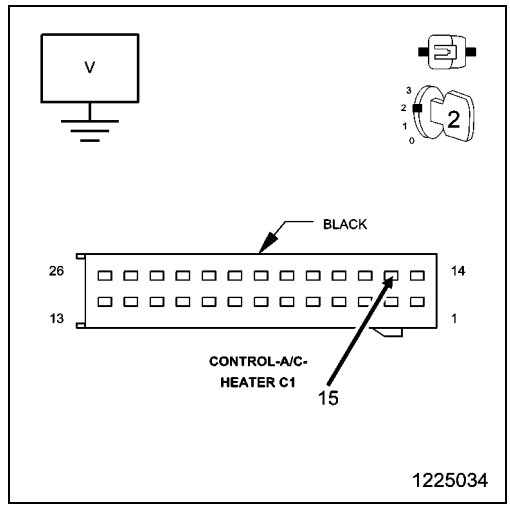

6. CHECK THE (Z911) GROUND CIRCUIT FOR AN OPEN

1. Turn the ignition off to the lock position.
2. Disconnect the A/C Heater Control harness connector.
3. Using a 12-volt test light connected to 12-volts, check the (Z911) Ground circuit.

NOTE: The test light must illuminate brightly . Compare the brightness to that of a direct connection to the battery.

Does the test light illuminate brightly?

Yes

- Replace and program the A/C Heater Control in accordance with the Service Information.
- Perform HVAC VERIFICATION TEST (Refer to 28 - DTC-Based Diagnostics/HVAC - Standard Procedure).

No

- Repair the (Z911) Ground circuit for an open.
- Perform HVAC VERIFICATION TEST (Refer to 28 - DTC-Based Diagnostics/HVAC - Standard Procedure).

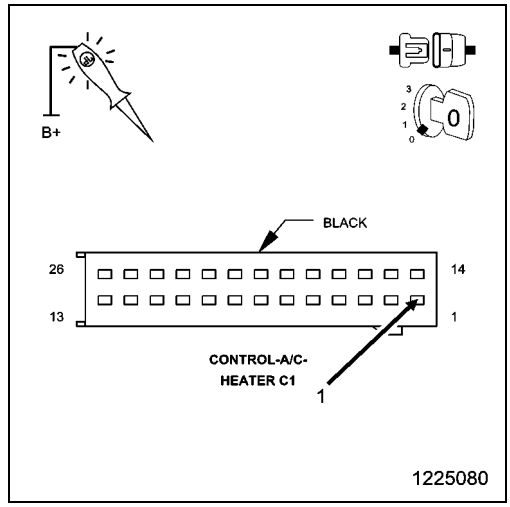

7. CHECK THE WIRING AND CONNECTORS

1. The conditions necessary to set the DTC are not present at this time.
2. Using the schematics as a guide, inspect the wiring and connectors specific to this circuit.
3. Check for an intermittent condition by inspecting the related wiring harness for chafed, pierced, pinched, partially broken wires.
4. Check the connectors for broken, bent, pushed out, spread, corroded, or contaminated terminals.
5. Wiggle the wiring and connectors while checking for shorted and open circuits.
6. With the scan tool, check the Environmental Data to help identify the conditions in which the DTC was set.

Were there any problems found?

Yes

- Repair as necessary.
- Perform HVAC VERIFICATION TEST (Refer to 28 - DTC-Based Diagnostics/HVAC - Standard Procedure).

No

- Test complete.

B210E-85-BATTERY VOLTAGE HIGH - SIGNAL ABOVE ALLOWABLE RANGE

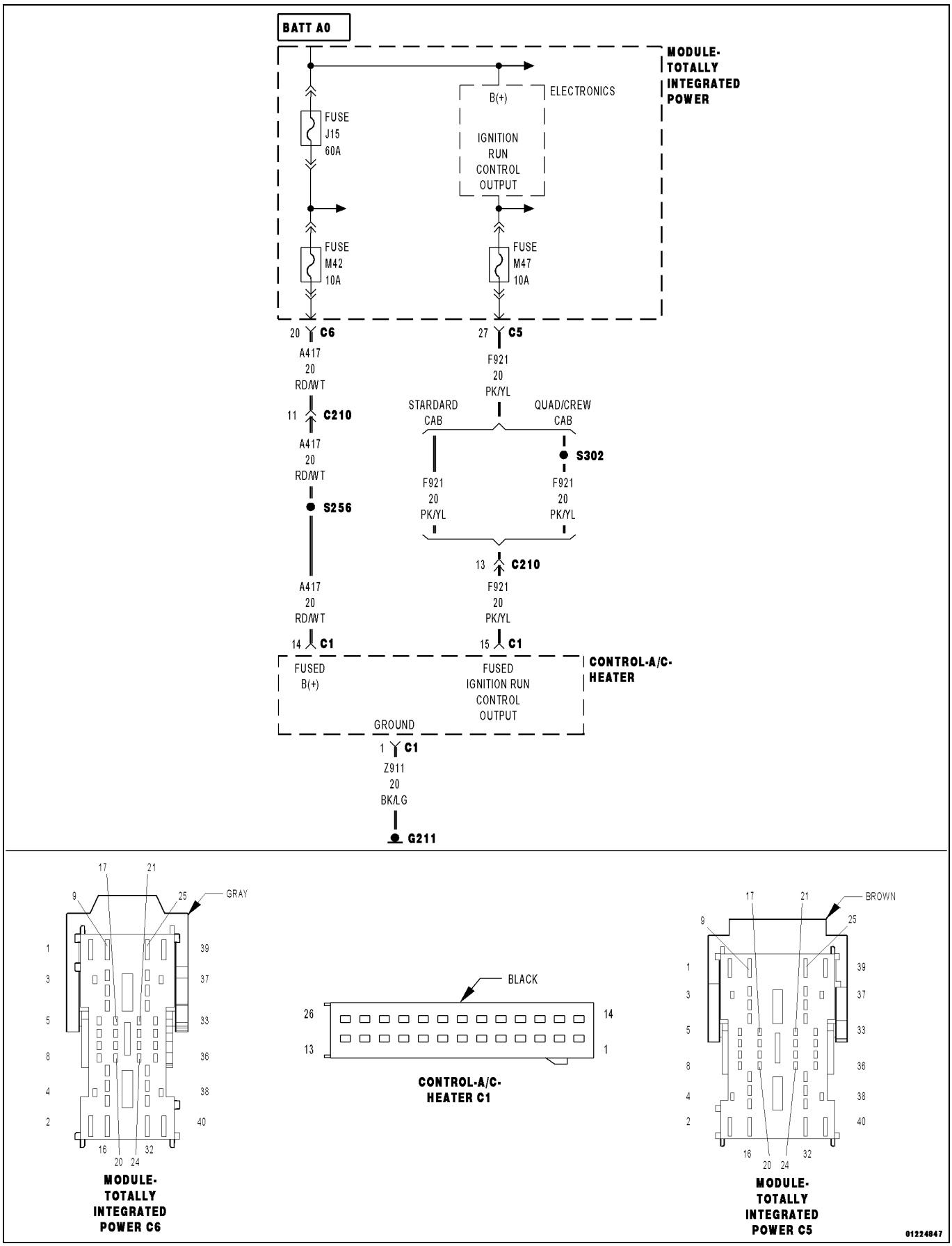

For a complete wiring diagram, **refer to the Wiring Information**.

Theory of Operation

The A/C Heater Control constantly monitors battery and ignition voltage as well as battery voltage derived from BUS communication to ensure proper operation. If the voltage to the controller is out of range it could cause damage to the controller or its respective components. If the voltage of either circuit drops below or rises above a predetermined calibration a DTC will set.

- **When Monitored:**
  With the ignition on.
- **Set Condition:**
  If the controller battery voltage is higher than 17.0 volts for period of 30 seconds.

Possible Causes
RELATED TIPM DTCS PRESENT
RELATED CHARGING SYSTEM DTCS PRESENT
(F921) FUSED IGNITION RUN CONTROL OUTPUT CIRCUIT SHORT TO VOLTAGE
A/C HEATER CONTROL

Always perform the HVAC Pre-Diagnostic Troubleshooting procedure before proceeding. (Refer to 28 - DTC-Based Diagnostics/HVAC - Standard Procedure).

1. CHECK FOR TIPM DTCS

1. Ignition on, engine not running.
2. With the scan tool, read DTCs.

Are there any Totally Integrated Power Module (TIPM) DTCs present?

Yes

- (Refer to 28 - DTC-Based Diagnostics/MODULE, Totally Integrated Power (TIPM) - Diagnosis and Testing) and perform the appropriate diagnostic procedure.

No

- Go To 2

2. CHECK FOR CHARGING SYSTEM DTCS

1. With the scan tool, read DTCs.

Are there any Powertrain Control Module (PCM) charging system DTCs present?

Yes

- (Refer to 28 - DTC-Based Diagnostics/MODULE, Powertrain Control (PCM) - Diagnosis and Testing) and perform the appropriate diagnostic procedure.

No

- Go To 3

3. CHECK IF THE DTC IS ACTIVE

1. With the scan tool, read HVAC DTCs.

NOTE: It can take up to 30 seconds or more for this DTC to mature.

Is this DTC active?

Yes

- Go To 4

No

- Go To 6

4. CHECK (F921) FUSED IGNITION RUN CONTROL OUTPUT CIRCUIT

1. Ignition on, engine not running.
2. While back probing, measure the voltage of the (F921) Fused Ignition Run Control Output circuit in the A/C Heater Control harness connector.
3. With the scan tool, read HVAC voltage.

Does the voltage between the measured voltage and the voltage on the scan tool match ± 0.5 of a volt?

Yes

- Replace and program the A/C Heater Control in accordance with the Service Information.
- Perform HVAC VERIFICATION TEST (Refer to 28 - DTC-Based Diagnostics/HVAC - Standard Procedure).

No

- Go To 5

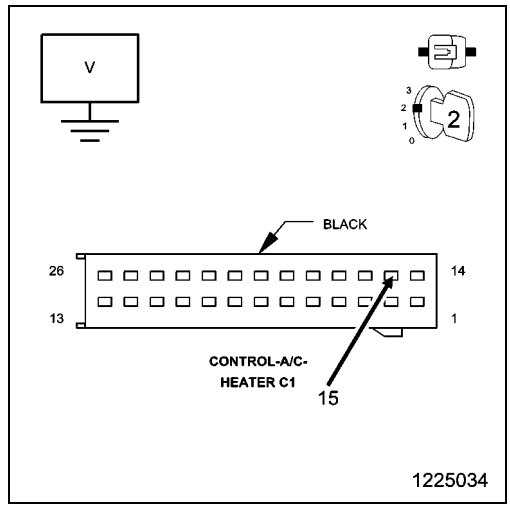

5. CHECK (F921) FUSED IGNITION RUN CONTROL OUTPUT CIRCUIT FOR A SHORT TO VOLTAGE

1. Turn the ignition off to the lock position.
2. Disconnect the A/C Heater Control harness connector.
3. Measure the voltage of the (F921) Fused Ignition Run Control Output circuit in the A/C Heater Control harness connector.

Is there any voltage present?

Yes

- Repair the (F921) Fused Ignition Run Control Output circuit for a short to voltage.
- Perform HVAC VERIFICATION TEST (Refer to 28 - DTC-Based Diagnostics/HVAC - Standard Procedure).

No

- Replace and program the A/C Heater Control in accordance with the Service Information.
- Perform HVAC VERIFICATION TEST (Refer to 28 - DTC-Based Diagnostics/HVAC - Standard Procedure).

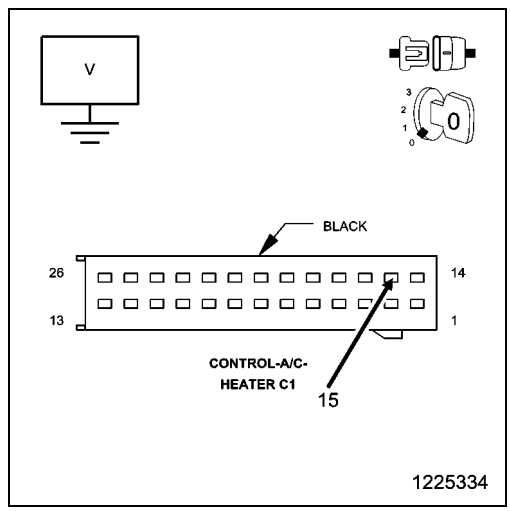

6. CHECK THE WIRING AND CONNECTORS

1. The conditions necessary to set the DTC are not present at this time.
2. With the scan tool, check the Environmental Data to help identify the conditions in which the DTC was set.
3. Using the schematics as a guide, inspect the wiring and connectors specific to this circuit.
4. Check for an intermittent condition by inspecting the related wiring harness for chafed, pierced, pinched, partially broken wires.
5. Check the connectors for broken, bent, pushed out, spread, corroded, or contaminated terminals.
6. Wiggle the wiring and connectors while checking for shorted and open circuits.

Were there any problems found?

Yes

- Repair as necessary.
- Perform HVAC VERIFICATION TEST (Refer to 28 - DTC-Based Diagnostics/HVAC - Standard Procedure).

No

- Test complete.

■ B2214-00-(HVAC) CLIMATE CONTROL INTERNAL

For a complete wiring diagram **refer to the Wiring Information**.

- **When Monitored:**
  With the ignition on.
- **Set Condition:**
  If the A/C Heater Control has an internal fault. This DTC has a maturing time of five seconds and a de-maturing time of 10 seconds. If the DTC's status changes from active to stored it will stay in memory for 100 ignition cycles.

Possible Causes
A/C HEATER CONTROL

Always perform the HVAC Pre-Diagnostic Troubleshooting procedure before proceeding. (Refer to 28 - DTC-Based Diagnostics/HVAC - Standard Procedure).

1. CHECK THE A/C HEATER CONTROL

Repair

- Check for any controller software updates. If an update is available, reprogram the controller with the latest software. If no software updates are available, replace and program the A/C Heater Control in accordance with the Service Information.
- Perform HVAC VERIFICATION TEST (Refer to 28 - DTC-Based Diagnostics/HVAC - Standard Procedure).

■ B222A-00-VEHICLE LINE MISMATCH

For a complete wiring diagram, **refer to the Wiring Information**.

Theory of Operation

The A/C Heater Controller checks for vehicle configuration using communication over the BUS. If the stored configuration does not match the configuration stored in the controller this DTC will set.

- **When Monitored:**
  With the ignition on.
- **Set Condition:**
  If the stored configuration does not match the configuration stored in the controller.

Possible Causes
VEHICLE CONFIGURATION NOT STORED IN THE TOTALLY INTEGRATED POWER MODULE (TIPM)
CONTROL MODULE INSTALLED IN INCORRECT VEHICLE
A/C HEATER CONTROL

Always perform the HVAC Pre-Diagnostic Troubleshooting procedure before proceeding. (Refer to 28 - DTC-Based Diagnostics/HVAC - Standard Procedure).

1. CHECK THE VEHICLE CONFIGURATION

NOTE: The DTC must be active and no BUS communication DTCs present before performing this test. If BUS communication DTCs are present, perform there respective test first. If the DTC is stored, erase the DTC and cycle the ignition. If the DTC resets and changes to active, then proceed.

1. With the scan tool, check the vehicle configuration stored in the Totally Integrated Power Module (TIPM).
2. With the scan tool, check the vehicle configuration stored in the A/C Heater Control (HVAC).

Pick the answer that best describes your findings:

TIPM has wrong or no vehicle configuration

- With the scan tool, program the proper vehicle configuration in the TIPM.
- Perform HVAC VERIFICATION TEST (Refer to 28 - DTC-Based Diagnostics/HVAC - Standard Procedure).

HVAC has wrong vehicle configuration but TIPM has correct configuration

- Replace the A/C Heater Control in accordance with the Service Information.
- Perform HVAC VERIFICATION TEST (Refer to 28 - DTC-Based Diagnostics/HVAC - Standard Procedure).

HVAC and TIPM have proper calibration and the DTC is active in the HVAC

- Check if other modules such as the Powertrain Control Module (PCM) have the wrong configuration stored in the controller and reprogram or replace as necessary. If all other modules show the proper configuration, replace the A/C Heater Control in accordance with the Service Information.
- Perform HVAC VERIFICATION TEST (Refer to 28 - DTC-Based Diagnostics/HVAC - Standard Procedure).

U0010-00-CAN INTERIOR BUS

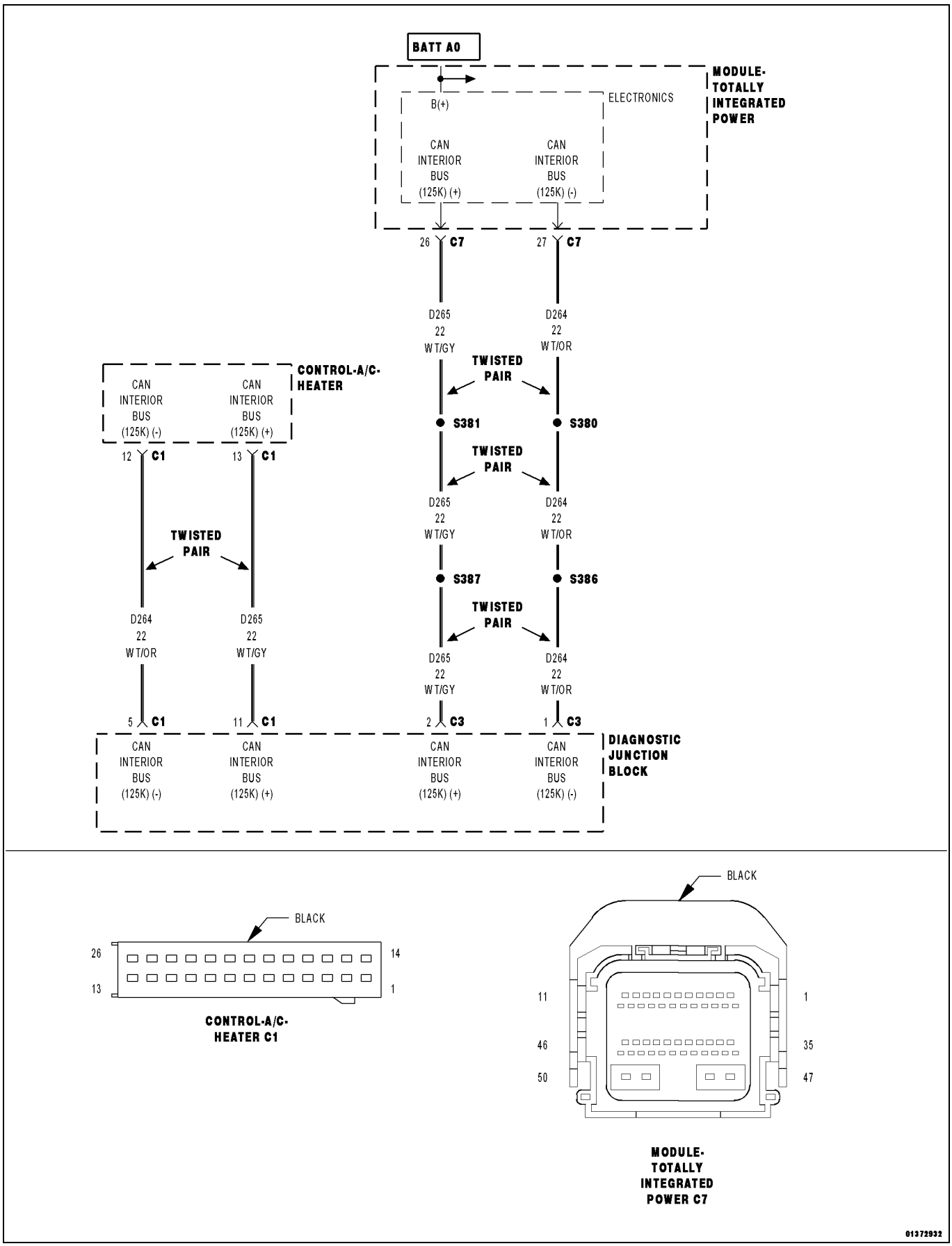

For a complete wiring diagram, **refer to the Wiring Information**.

- **When Monitored:**
  Continuously with the ignition on.
- **Set Condition:**
  If the CAN Interior Bus (+) or CAN Interior Bus (-) circuit is open, shorted to voltage, or shorted to ground.

Possible Causes
ACTIVE CAN BUS DTC IN THE TOTALLY INTEGRATED POWER MODULE
(D265) CAN C INTERIOR BUS (125K) (+) CIRCUIT OPEN
(D264) CAN C INTERIOR BUS (125K) (-) CIRCUIT OPEN
(D265) CAN C INTERIOR BUS (125K) (+) CIRCUIT SHORTED TO GROUND
(D264) CAN C INTERIOR BUS (125K) (-) CIRCUIT SHORTED TO GROUND
A/C HEATER CONTROL

Always perform the HVAC Pre-Diagnostic Troubleshooting procedure before proceeding. (Refer to 28 - DTC-Based Diagnostics/HVAC - Standard Procedure).

1. VERIFY THE DTC IS ACTIVE

1. Turn the ignition on.
2. With the scan tool, read HVAC DTCs.

Does the scan tool display this DTC as active?

Yes

- Go To 2

No

- Go To 7

2. CHECK FOR ACTIVE CAN BUS RELATED DTCS IN THE TOTALLY INTEGRATED POWER MODULE (TIPM)

1. With the scan tool, read the Totally Integrated Power Module (TIPM) DTCs.

Does the scan tool display any active CAN BUS related DTCs?

Yes

- (Refer to 28 - DTC-Based Diagnostics/MODULE, Totally Integrated Power (TIPM) - Diagnosis and Testing) and perform the appropriate diagnostic procedure.

No

- Go To 3

3. CHECK (D265) CAN INTERIOR BUS (+) CIRCUIT FOR AN OPEN

1. Turn the ignition off to the lock position.
2. Disconnect the negative battery cable.
3. Disconnect the A/C Heater Control C1 harness connector.
4. Disconnect the Totally Integrated Power Module (TIPM) C7 harness connector.
5. Measure the resistance of the (D265) CAN Interior Bus (125K) (+) circuit between the Totally Integrated Power Module (TIPM) C7 harness connector and the A/C Heater Control C1 harness connector.

Is the resistance below 1.0 Ohm?

Yes

- Go To 4

No

- Repair the (D265) CAN Interior Bus (125K) (+) circuit for an open.
- Perform HVAC VERIFICATION TEST (Refer to 28 - DTC-Based Diagnostics/HVAC - Standard Procedure).

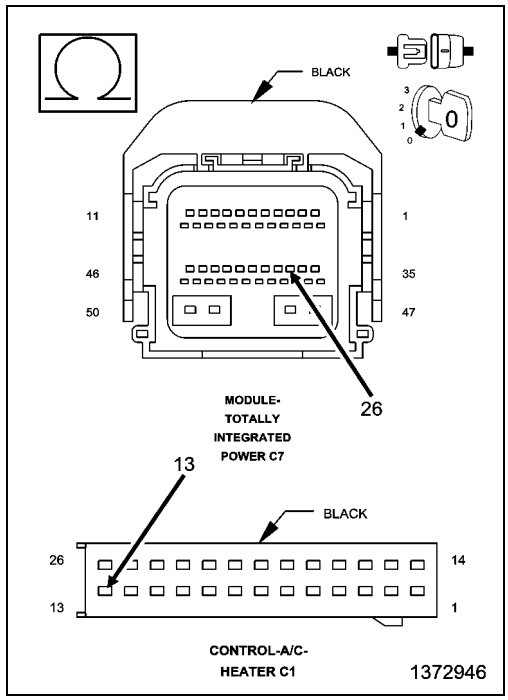

4. CHECK (D264) CAN INTERIOR BUS (-) CIRCUIT FOR AN OPEN

1. Measure the resistance of the (D264) CAN Interior Bus (125K) (-) circuit between the Totally Integrated Power Module (TIPM) C7 connector and the A/C Heater Control C1 harness connector.

Is the resistance below 1.0 Ohm?

Yes

- Go To 5

No

- Repair the (D264) CAN Interior Bus (125K) (-) circuit for an open.
- Perform HVAC VERIFICATION TEST (Refer to 28 - DTC-Based Diagnostics/HVAC - Standard Procedure).

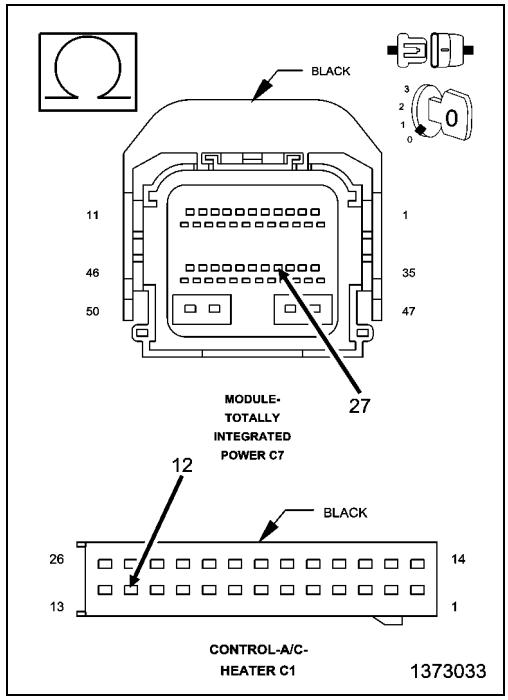

5. CHECK (D265) CAN C INTERIOR BUS (125K) (+) CIRCUIT FOR A SHORT TO GROUND

1. Measure the resistance between ground and the (D265) CAN C Interior Bus (125K) (+) circuit in the A/C Heater Control C1 harness connector.

Is the resistance above 100k Ohms?

Yes

- Go To 6

No

- Repair the (D265) CAN C Interior Bus (125K) (+) circuit for a short to ground.
- Perform HVAC VERIFICATION TEST (Refer to 28 - DTC-Based Diagnostics/HVAC - Standard Procedure).

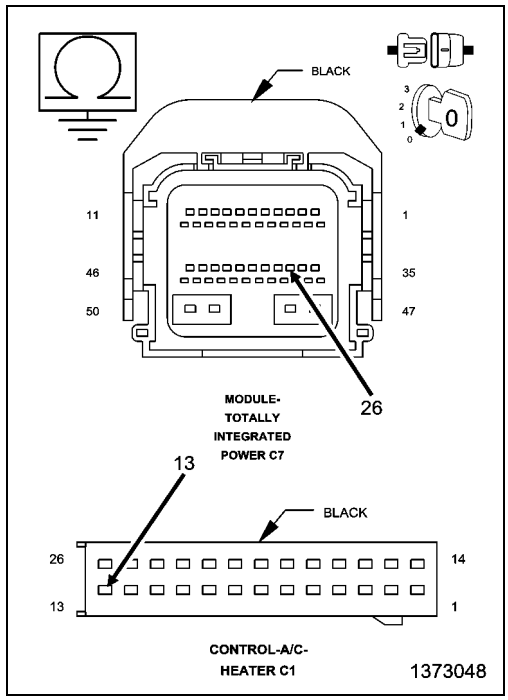

6. CHECK (D264) CAN C INTERIOR BUS (-) CIRCUIT FOR A SHORT TO GROUND

1. Measure the resistance between ground and the (D264) CAN C Interior Bus (125K) (-) circuit.

Is the resistance above 100k Ohms?

Yes

- Replace the A/C Heater Control in accordance with the Service Information.
- Perform HVAC VERIFICATION TEST (Refer to 28 - DTC-Based Diagnostics/HVAC - Standard Procedure).

No

- Repair the (D264) CAN C Interior Bus (125K) (-) circuit for a short to ground.
- Perform HVAC VERIFICATION TEST (Refer to 28 - DTC-Based Diagnostics/HVAC - Standard Procedure).

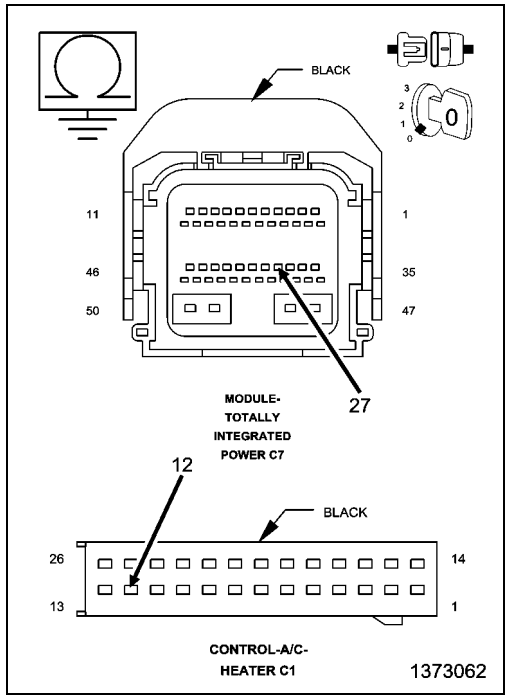

7. CHECK THE WIRING AND CONNECTORS

1. The conditions necessary to set the DTC are not present at this time.
2. Using the schematics as a guide, inspect the wiring and connectors specific to this circuit.
3. Check for an intermittent condition by inspecting the related wiring harness for chafed, pierced, pinched, partially broken wires.
4. Check the connectors for broken, bent, pushed out, spread, corroded, or contaminated terminals.
5. Wiggle the wiring and connectors while checking for shorted and open circuits.
6. With the scan tool, check the Environmental Data to help identify the conditions in which the DTC was set.

Were there any problems found?

Yes

- Repair as necessary.
- Perform HVAC VERIFICATION TEST (Refer to 28 - DTC-Based Diagnostics/HVAC - Standard Procedure).

No

- Test complete.

U0141-00-LOST COMMUNICATION WITH IPM (FCM/TIPM)

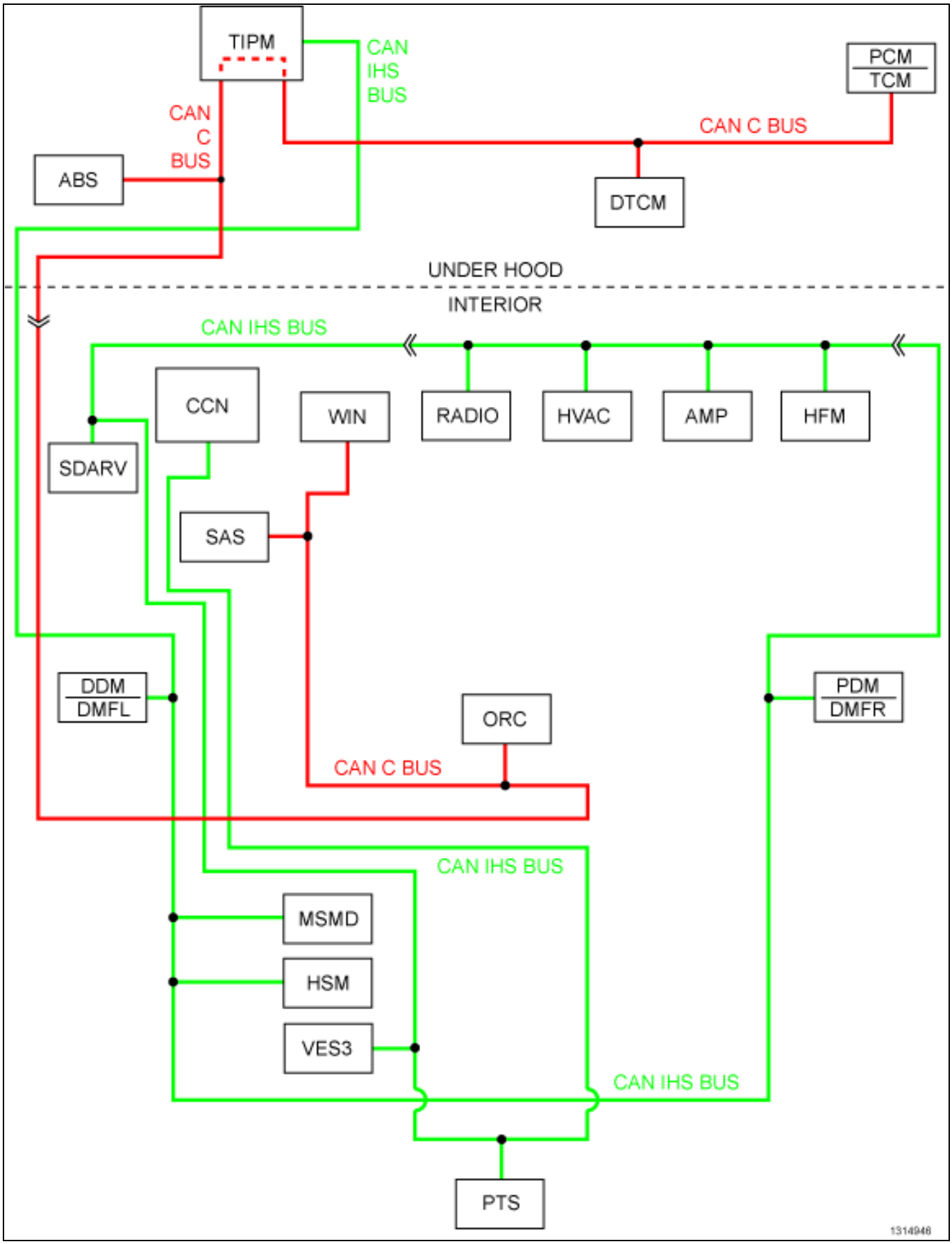

For a complete wiring diagram, **refer to the Wiring Information**.

- **When Monitored:**
  Continuously when the ignition is on.
  Battery voltage between 10 and 16 volts.
  Ignition Off Draw (IOD) fuse installed.
  Totally Integrated Power Module (TIPM) is configured correctly.
- **Set Condition:**
  If the A/C Heater Control loses communication with the Totally Integrated Power Module (TIPM).

Possible Causes
(D265) CAN INTERIOR BUS(+) (125k) CIRCUIT SHORTED TO VOLTAGE
(D264) CAN INTERIOR BUS(-) (125k) CIRCUIT SHORTED TO GROUND
TOTALLY INTEGRATED POWER MODULE (TIPM) POWER AND GROUND
TIPM NOT CONFIGURED CORRECTLY
TOTALLY INTEGRATED POWER MODULE (TIPM)
HVAC MODULE

1. VERIFY DTC IS ACTIVE

NOTE: Make sure the IOD fuse is installed and the battery is fully charged before proceeding.

1. Turn the ignition on.
2. With the scan tool, read active HVAC DTCs.

Is this DTC active?

Yes

- **(Refer to 28 - DTC-Based Diagnostics/MODULE, Totally Integrated Power (TIPM) - Diagnosis and Testing)** and perform the U0141-Lost Communication with IPM (FCM/TIPM) diagnostic procedure.

No

- **(Refer to 29 - Non-DTC Diagnostics/Communication - Diagnosis and Testing)** and perform the Stored Lost Communication DTCs diagnostic procedure.

U0155-00-LOST COMMUNICATION WITH CLUSTER/CCN

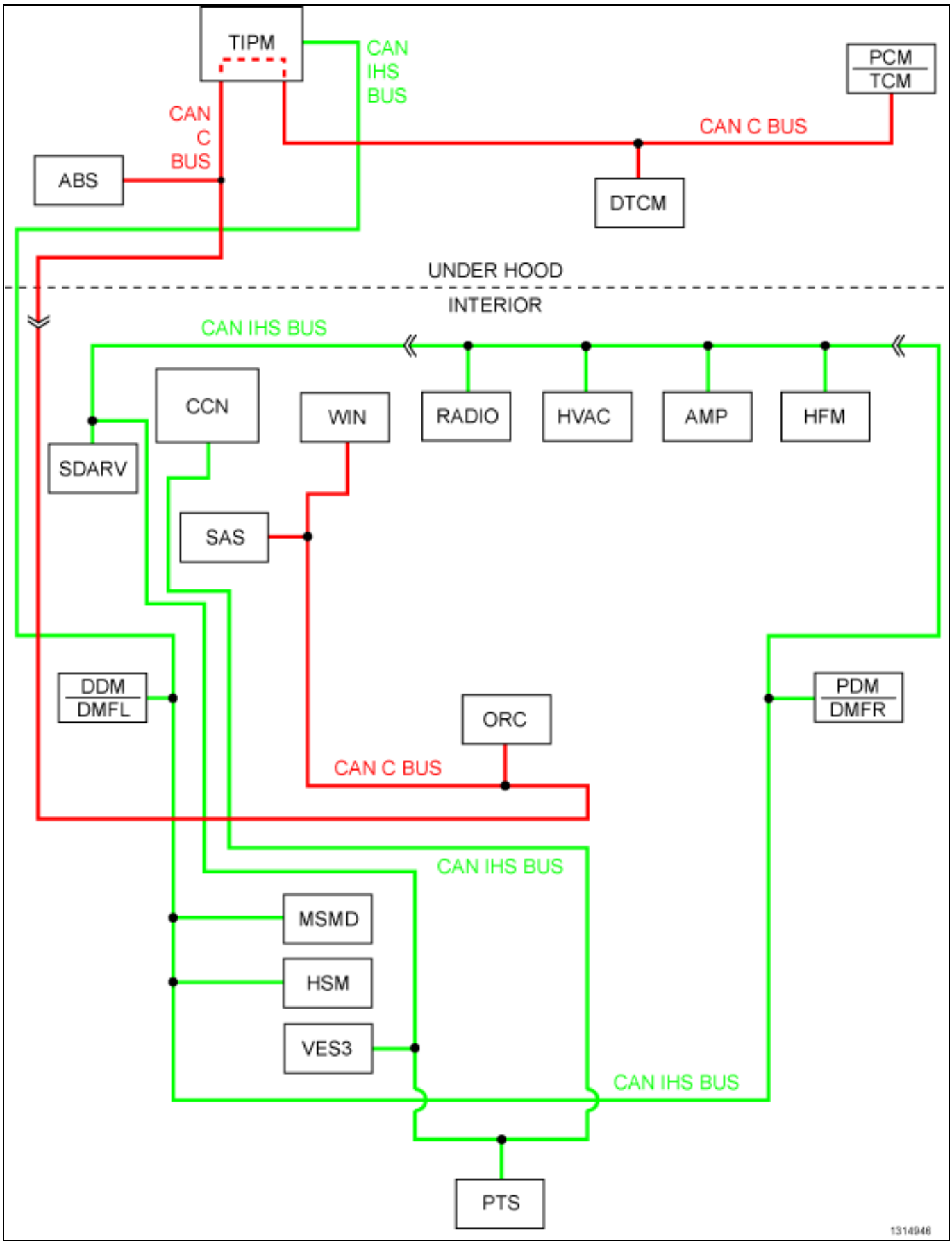

For a complete wiring diagram, **refer to the Wiring Information**.

- **When Monitored:**
  Continuously when the ignition is on.
  Battery voltage between 10 and 16 volts.
  Ignition Off Draw (IOD) fuse installed.
  Totally Integrated Power Module (TIPM) is configured correctly.
- **Set Condition:**
  If the A/C Heater Control loses communication with the Cluster (CCN).

Possible Causes
TOTALLY INTEGRATED POWER MODULE (TIPM) POWER AND GROUND
TIPM NOT CONFIGURED CORRECTLY
INSTRUMENT CLUSTER (CCN)
MODULE THAT SET THIS DTC

1. VERIFY DTC IS ACTIVE

NOTE: Make sure the IOD fuse is installed and the battery is fully charged before proceeding.

1. Turn the ignition on.
2. With the scan tool, read HVAC DTCs.

Is this DTC active?

Yes

- **(Refer to 28 - DTC-Based Diagnostics/MODULE, Totally Integrated Power (TIPM) - Diagnosis and Testing)** and perform the U0155-Lost Communication with Cluster/CCN diagnostic procedure.

No

- **(Refer to 29 - Non-DTC Diagnostics/Communication - Diagnosis and Testing)** and perform the Stored Lost Communication DTCs diagnostic procedure.

Standard Procedure

■ STANDARD PROCEDURE - HVAC SYSTEM TEST

For a complete wiring diagram, **refer to the Wiring Information**.

Theory of Operation

The HVAC System Test provides a starting point in the diagnostic process by identifying the appropriate diagnostic procedure or system test to perform when diagnosing a given symptom, condition, or Diagnostic Trouble Code (DTC). It also provides a means for testing the entire HVAC system by utilizing the A/C Heater Control's On-Board System Tests. The HVAC System Tests can also assist in diagnosing stored DTCs.

1. HVAC SYSTEM TEST

NOTE: Diagnose and repair all active DTCs before diagnosing and repairing stored DTCs. If active DTCs are present (Refer to 28 - DTC-Based Diagnostics/HVAC - Diagnosis and Testing) and perform the appropriate diagnostic procedure.

Make a selection based on the symptom, condition, or DTC that you want to diagnose.

Scan Tool Indicates HVAC Not Active On Bus

- (Refer to 29 - Non-DTC Diagnostics/Communication - Diagnosis and Testing) and perform the No Response from HVAC diagnostic procedure.

Blower Motor Inoperative

- (Refer to 29 - Non-DTC Diagnostics/HVAC - Diagnosis and Testing) for Blower Motor diagnostic procedures.

Actuator Calibration Test

- Go To 4

A/C System Performance Test

- Go To 2

2. A/C COOLDOWN TEST

The following are prerequisites of the A/C Cooldown Test. Verify that the:

- Refrigerant system has an adequate charge. Check and repair as necessary before proceeding in accordance with the Service Information (Refer to 24 - Heating and Air Conditioning - Diagnosis and Testing).
- Blower motor operates correctly in all speeds. Diagnose and repair all blower related faults before proceeding.
- Work area ambient temperature is above 16° C (60° F) before proceeding. Move the vehicle to a warmer work area if necessary.
- Evaporator temperature is above 13° C (55° F) before proceeding.
- A/C compressor is not running. If the compressor is running, turn the A/C off and allow the evaporator to warm up before proceeding.

NOTE: Running the AC Cooldown test will cause the A/C status indicator to flash. One or more status messages will display on the scan tool after running the Cooldown Test. These messages will clear after paging back out of this test function. Therefore, it is important to note all messages before doing so.

1. Start the engine.
2. Turn the Blower control to the high speed position.
3. With the scan tool in HVAC, select System Tests and then select Cooldown test. Allow the test to run to completion.

Does the scan tool display a status message that indicates a fault has occurred?

Yes

- (Refer to 28 - DTC-Based Diagnostics/HVAC - Diagnosis and Testing) and perform the appropriate diagnostic procedure.

No

- Go To 3

3. MODE SWITCH AND DOOR ACTUATOR CIRCUIT TEST

NOTE: If at anytime a DTC becomes active during this test, proceed to the conclusion question. If multiple DTCs are active, diagnose those that relate to a short circuit first.

1. Start the engine and turn the Blower control to the low speed position.
2. Set the Blend control (single-zone) or Driver and Passenger Blend control (dual-zone) to the full cold position.
3. Monitor the scan tool for active HVAC DTCs while performing the following test steps.
   - If equipped, press the A/C mode switch on, wait 30 seconds, and then press it off.
   - If equipped, press the Recirculation mode switch on, wait 30 seconds, and then press it off.
   - If equipped, press the EBL mode switch on, wait 30 seconds, and then press it off.
   - Move the Blend control (single-zone) or Driver Blend control (dual-zone) from full cold to full hot, wait 30 seconds, and then move it back to full cold.
   - If equipped, move the Passenger Blend control from full cold to full hot, wait 30 seconds, and then moved it back to full cold.
   - Turn the Mode select control to the defrost position, wait 30 seconds, and then turn it to the panel position (dual-zone) or panel / recirculation position (single-zone). Wait 30 seconds before proceeding.

Does the scan tool display any active DTCs?

Yes

- (Refer to 28 - DTC-Based Diagnostics/HVAC - Diagnosis and Testing) and perform the appropriate diagnostic procedure.

No

- Go To 4

4. ACTUATOR CALIBRATION TEST

1. Ignition on, engine not running.
2. With the scan tool, select Actuator Calibration Test. When the test is complete, read HVAC DTCs.

Does the scan tool display any DTCs?

Yes

- (Refer to 28 - DTC-Based Diagnostics/HVAC - Diagnosis and Testing) and perform the appropriate diagnostic procedure.

No

- Test Complete.

HVAC PRE-DIAGNOSTIC TROUBLESHOOTING PROCEDURE

For a complete wiring diagram, **refer to the Wiring Information**.

Perform the following steps prior to any diagnostic procedure(s).

- Testing should only be performed with the battery fully charged to avoid false diagnosis.
- With the scan tool, read Powertrain Control Module (PCM) DTCs. If PCM DTCs are present, (Refer to 28 - DTC-Based Diagnostics/MODULE, Powertrain Control (PCM) - Diagnosis and Testing) and perform the appropriate diagnostic procedure(s) before proceeding.
- With the scan tool, read Totally Integrated Power Module (TIPM) DTCs. If TIPM DTCs are present, (Refer to 28 - DTC-Based Diagnostics/MODULE, Totally Integrated Power (TIPM) - Diagnosis and Testing) and perform the appropriate diagnostic procedure(s) first before proceeding.
- With the scan tool, read HVAC DTCs. Record all Stored, Active, and Pending DTC information.
- With the scan tool, read the Environmental Data. Use this data to identify the conditions in which the DTC was set.
- Refer to the When Monitored and Set Conditions for this DTC. DTCs can set at ignition on, at start up, or operating under specific conditions.
- Using the wiring diagram as a guide, inspect the wiring and connectors related to this circuit and clean/repair as necessary.
- Check for controller software updates. Some conditions can be corrected by upgrading the controller software.

NOTE: If the controller is updated with new software, with the scan tool, perform a HVAC Actuator Calibration Test.

- Check for Service Information Tune-ups or Service Bulletins for any possible causes that may apply.

Did any of the above procedures repair the vehicle?

Yes

- Testing is complete.
- Perform HVAC VERIFICATION TEST (Refer to 28 - DTC-Based Diagnostics/HVAC - Standard Procedure)

No

- (Refer to 28 - DTC-Based Diagnostics/HVAC - Diagnosis and Testing) and perform the appropriate diagnostic procedure.

■ HVAC VERIFICATION TEST

Perform the following procedures to verify that the repair(s) are valid.

1. Make sure that all accessories are turned off.
2. Make sure that the battery is fully charged.
3. Turn the ignition off to the lock position.
4. Disconnect all jumper wires and reconnect all previously disconnected components and connectors.
5. With the scan tool, record and erase all DTCs from ALL modules.
6. Turn the ignition off, remove the scan tool from the DLC (Data Link Connector). Open the door and close the door. Wait a minimum 30 seconds, then turn the ignition on. Reconnect the scan tool.

NOTE: Disconnecting the scan tool and opening and closing the door will allow the controller to enter into sleep mode.

7. With the scan tool perform the HVAC Actuator Calibration Test.
8. Start and run the engine for two minutes while operating all functions of the system that caused the original concern.
9. With the scan tool, check for DTCs in all modules.

Is the original condition still present or are there any other HVAC DTCs present?

Yes

- (Refer to 28 - DTC-Based Diagnostics/HVAC - Diagnosis and Testing) and perform the appropriate diagnostic procedure.

No

- Repair is complete.

HVAC, ATC

Diagnosis and Testing

■ B1000-A/C SWITCH REQUEST INPUT CIRCUIT/PERFORMANCE

For a complete wiring diagram, **refer to the Wiring Information**.

Theory of Operation

The HVAC A/C Heater Control contains various switches and knobs that are used to change the systems operation. Many of the switches are momentary switches which are normally open or in the Off position and the status changes when the switch button or knob is pushed or turned. An active DTC indicates that the switch is stuck in an On position. A stored DTC indicates that the switch was stuck in a On position for more than 60 seconds but has since returned to its normal state of Off.

- **When Monitored:**
  With the ignition on.
- **Set Condition:**
  If the A/C On/Off Control Switch is stuck in an On position for more than 60 seconds. This DTC has a de-maturing time of two seconds. If the DTCs status changes from active to stored, the DTC will stay in memory for 100 ignition cycles.

Possible Causes
OBJECT HOLDING SWITCH IN AN ON POSITION
A/C HEATER CONTROL

Always perform the HVAC Pre-Diagnostic Troubleshooting procedure before proceeding (Refer to 28 - DTC-Based Diagnostics/HVAC - Standard Procedure).

1. INSPECT FOR OBJECT HOLDING SWITCH IN AN ON POSITION

1. Inspect the A/C Heater Control for an object or debris holding the A/C On/Off Control Switch in an On position.

NOTE: Using the scan tool you can read the On/Off status of the control switch.

Is the A/C On/Off control switch being held in or stuck On?

Yes

- Clean or repair the A/C Heater Control as necessary. If you are unable to clean the switch to where the switch can work properly, replace and program the A/C Heater Control in accordance with the Service Information.
- Perform HVAC VERIFICATION TEST (Refer to 28 - DTC-Based Diagnostics/HVAC - Standard Procedure).

No

- Go To 2

2. A/C HEATER CONTROL

1. Turn the ignition on.
2. With the scan tool, erase HVAC DTCs.
3. Turn the ignition off for 10 seconds, and then turn the ignition on and wait a minimum of 60 seconds.
4. With the scan tool, read HVAC DTCs.

Does the scan tool display this DTC as Active or is the status of the switch reading On?

Yes

- Replace and program the A/C Heater Control in accordance with the Service Information.
- Perform HVAC VERIFICATION TEST (Refer to 28 - DTC-Based Diagnostics/HVAC - Standard Procedure).

No

- Test complete.
- Perform HVAC VERIFICATION TEST (Refer to 28 - DTC-Based Diagnostics/HVAC - Standard Procedure).

■ B1009-RECIRCULATION SWITCH REQUEST INPUT CIRCUIT/PERFORMANCE

For a complete wiring diagram, **refer to the Wiring Information**.

Theory of Operation

The HVAC A/C Heater Control contains various switches and knobs that are used to change the systems operation. Many of the switches are momentary switches which are normally open or in the Off position and the status changes when the switch button or knob is pushed or turned. An active DTC indicates that the switch is stuck in an On position. A stored DTC indicates that the switch was stuck in a On position for more than 60 seconds but has since returned to its normal state of Off.

- **When Monitored:**
  With the ignition on.
- **Set Condition:**
  If the Recirculation mode switch is stuck in a On position for more than 60 seconds. This DTC has a de-maturing time of two seconds. If the DTCs status changes from active to stored, the DTC will stay in memory for 100 ignition cycles.

Possible Causes
OBJECT HOLDING SWITCH IN AN ON POSITION
A/C HEATER CONTROL

Always perform the HVAC Pre-Diagnostic Troubleshooting procedure before proceeding. (Refer to 28 - DTC-Based Diagnostics/HVAC - Standard Procedure).

1. INSPECT FOR OBJECT HOLDING SWITCH IN AN ON POSITION

1. Inspect the A/C Heater Control for an object or debris holding the Recirculation mode switch in an On position.

NOTE: Using the scan tool you can read the On/Off status of the control switch.

Is the Recirculation mode switch being held in or stuck On?

Yes

- Clean or repair the A/C Heater Control as necessary. If you are unable to clean the switch to where the switch can work properly, replace and program the A/C Heater Control in accordance with the Service Information.
- Perform HVAC VERIFICATION TEST (Refer to 28 - DTC-Based Diagnostics/HVAC - Standard Procedure).

No

- Go To 2

2. A/C HEATER CONTROL

1. Turn the ignition on.
2. With the scan tool, erase HVAC DTCs.
3. Turn the ignition off for 10 seconds, and then turn the ignition on and wait a minimum of 60 seconds.
4. With the scan tool, read HVAC DTCs.

Does the scan tool display this DTC as Active or is the status of the switch reading On?

Yes

- Replace and program the A/C Heater Control in accordance with the Service Information.
- Perform HVAC VERIFICATION TEST (Refer to 28 - DTC-Based Diagnostics/HVAC - Standard Procedure).

No

- Test complete.
- Perform HVAC VERIFICATION TEST (Refer to 28 - DTC-Based Diagnostics/HVAC - Standard Procedure).

■ B1015-REAR DEFROST SWITCH REQUEST INPUT CIRCUIT/PERFORMANCE

For a complete wiring diagram, **refer to the Wiring Information**.

Theory of Operation

The HVAC A/C Heater Control contains various switches and knobs that are used to change the systems operation. Many of the switches are momentary switches which are normally open or in the Off position and the status changes when the switch button or knob is pushed or turned. An active DTC indicates that the switch is stuck in an On position. A stored DTC indicates that the switch was stuck in a On position for more than 60 seconds but has since returned to its normal state of Off.

- **When Monitored:**
  With the ignition on.
- **Set Condition:**
  If the Electric Back light (EBL) Electronic Rear Defrost switch is stuck in an On position for more than 60 seconds. This DTC has a de-maturing time of two seconds. If the DTCs status changes from active to stored, the DTC will stay in memory for 100 ignition cycles.

Possible Causes
OBJECT HOLDING SWITCH IN AN ON POSITION
A/C HEATER CONTROL

Always perform the HVAC Pre-Diagnostic Troubleshooting procedure before proceeding. (Refer to 28 - DTC-Based Diagnostics/HVAC - Standard Procedure).

1. INSPECT FOR OBJECT HOLDING SWITCH IN AN ON POSITION

1. Inspect the A/C Heater Control for an object or debris holding the (EBL) Electronic Rear Defrost switch in an On position.

NOTE: Using the scan tool you can read the On/Off status of the control switch.

Is the (EBL) Electronic Rear Defrost switch being held in or stuck in an On?

Yes

- Clean or repair the A/C Heater Control as necessary. If you are unable to clean the switch to where the switch can work properly, replace and program the A/C Heater Control in accordance with the Service Information.
- Perform HVAC VERIFICATION TEST (Refer to 28 - DTC-Based Diagnostics/HVAC - Standard Procedure).

No

- Go To 2

2. A/C HEATER CONTROL

1. Turn the ignition on.
2. With the scan tool, erase HVAC DTCs.
3. Turn the ignition off for 10 seconds, and then turn the ignition on and wait a minimum of 60 seconds.
4. With the scan tool, read HVAC DTCs.

Does the scan tool display this DTC as Active or is the status of the switch reading On?

Yes

- Replace and program the A/C Heater Control in accordance with the Service Information.
- Perform HVAC VERIFICATION TEST (Refer to 28 - DTC-Based Diagnostics/HVAC - Standard Procedure).

No

- Test complete.
- Perform HVAC VERIFICATION TEST (Refer to 28 - DTC-Based Diagnostics/HVAC - Standard Procedure).

B1031-EVAPORATOR TEMPERATURE SENSOR CIRCUIT LOW

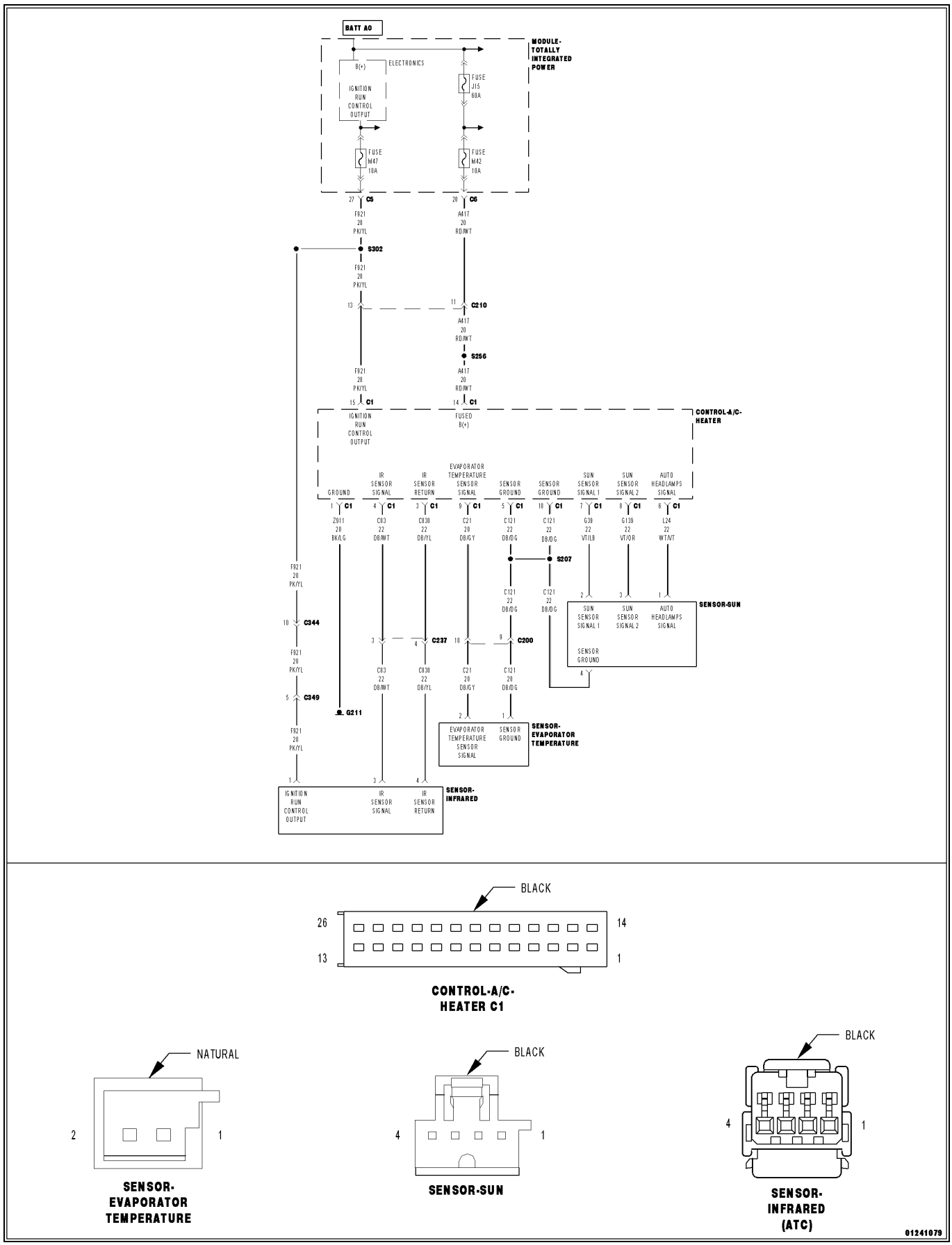

For a complete wiring diagram, **refer to the Wiring Information**.

- **When Monitored:**
  With the ignition on.
- **Set Condition:**
  The Evaporator Temperature Sensor voltage input to the A/C Heater Control is below 0.08 of a volt for a continuous period of 60 seconds. If the A/C Heater Control detects a valid voltage, the DTC will change from active to stored and will stay stored for 100 ignition cycles.

Possible Causes
(C21) EVAPORATOR TEMPERATURE SENSOR SIGNAL CIRCUIT SHORT TO GROUND
(C21) EVAPORATOR TEMPERATURE SENSOR SIGNAL CIRCUIT SHORT TO (C121) SENSOR GROUND CIRCUIT
EVAPORATOR TEMPERATURE SENSOR
A/C HEATER CONTROL

Always perform the HVAC Pre-Diagnostic Troubleshooting procedure before proceeding. (Refer to 28 - DTC-Based Diagnostics/HVAC - Standard Procedure).

1. CHECK IF THE DTC IS ACTIVE

1. Ignition on, engine not running.
2. With the scan tool, read HVAC DTCs after 60 seconds.

Is this DTC active?

Yes

- Go To 2

No

- Go To 5

2. CHECK (C21) EVAPORATOR TEMPERATURE SENSOR SIGNAL CIRCUIT FOR A SHORT TO GROUND

1. Turn the ignition off.
2. Disconnect the A/C Heater Control C1 harness connector.
3. Disconnect the Evaporator Temperature Sensor harness connector.
4. Measure the resistance between ground and the (C21) Evaporator Temperature Sensor Signal circuit.

Is the resistance below 100k Ohms?

Yes

- Repair the (C21) Evaporator Temperature Sensor Signal circuit for a short to ground.
- Perform HVAC VERIFICATION TEST (Refer to 28 - DTC-Based Diagnostics/HVAC - Standard Procedure).

No

- Go To 3

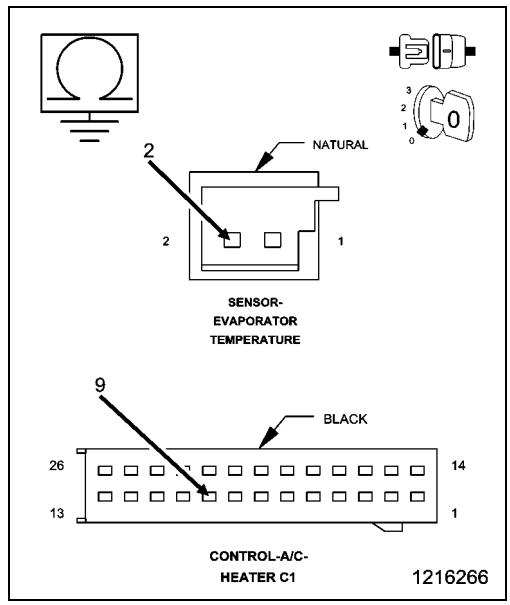

3. CHECK (C21) EVAPORATOR TEMPERATURE SENSOR SIGNAL CIRCUIT FOR A SHORT TO THE (C121) SENSOR GROUND CIRCUIT

1. Measure the resistance between the (C21) Evaporator Temperature Sensor Signal circuit and the (C121) Sensor Ground circuit.

Is the resistance below 100k Ohms?

Yes

- Repair the (C21) Evaporator Temperature Sensor Signal circuit for a short to (C121) Sensor Ground circuit.
- Perform HVAC VERIFICATION TEST (Refer to 28 - DTC-Based Diagnostics/HVAC - Standard Procedure).

No

- Go To 4

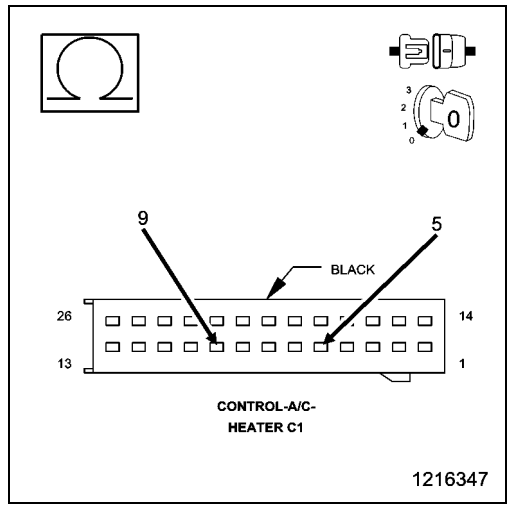

4. CHECK THE EVAPORATOR TEMPERATURE SENSOR

1. Replace the Evaporator Temperature Sensor in Accordance with the Service Information.
2. Perform HVAC VERIFICATION TEST (Refer to 28 - DTC-Based Diagnostics/HVAC - Standard Procedure).
3. Cycle the ignition off for 30 seconds then back on and wait a minimum of 60 seconds.
4. With the scan tool read HVAC DTCs.

Does this DTC reset?

Yes

- Replace and program the A/C Heater Control in accordance with the Service Information.
- Perform HVAC VERIFICATION TEST (Refer to 28 - DTC-Based Diagnostics/HVAC - Standard Procedure).

No

- Test complete.

5. CHECK THE WIRING AND CONNECTORS

1. The conditions necessary to set the DTC are not present at this time.
2. Using the schematics as a guide, inspect the wiring and connectors specific to this circuit.
3. Check for an intermittent condition by inspecting the related wiring harness for chafed, pierced, pinched, partially broken wires.
4. Check the connectors for broken, bent, pushed out, spread, corroded, or contaminated terminals.
5. Wiggle the wiring and connectors while checking for shorted and open circuits.
6. With the scan tool, check the Environmental Data to help identify the conditions in which the DTC was set.

Were there any problems found?

Yes

- Repair as necessary.
- Perform HVAC VERIFICATION TEST (Refer to 28 - DTC-Based Diagnostics/HVAC - Standard Procedure).

No

- Test complete.

B1032-EVAPORATOR TEMPERATURE SENSOR CIRCUIT HIGH

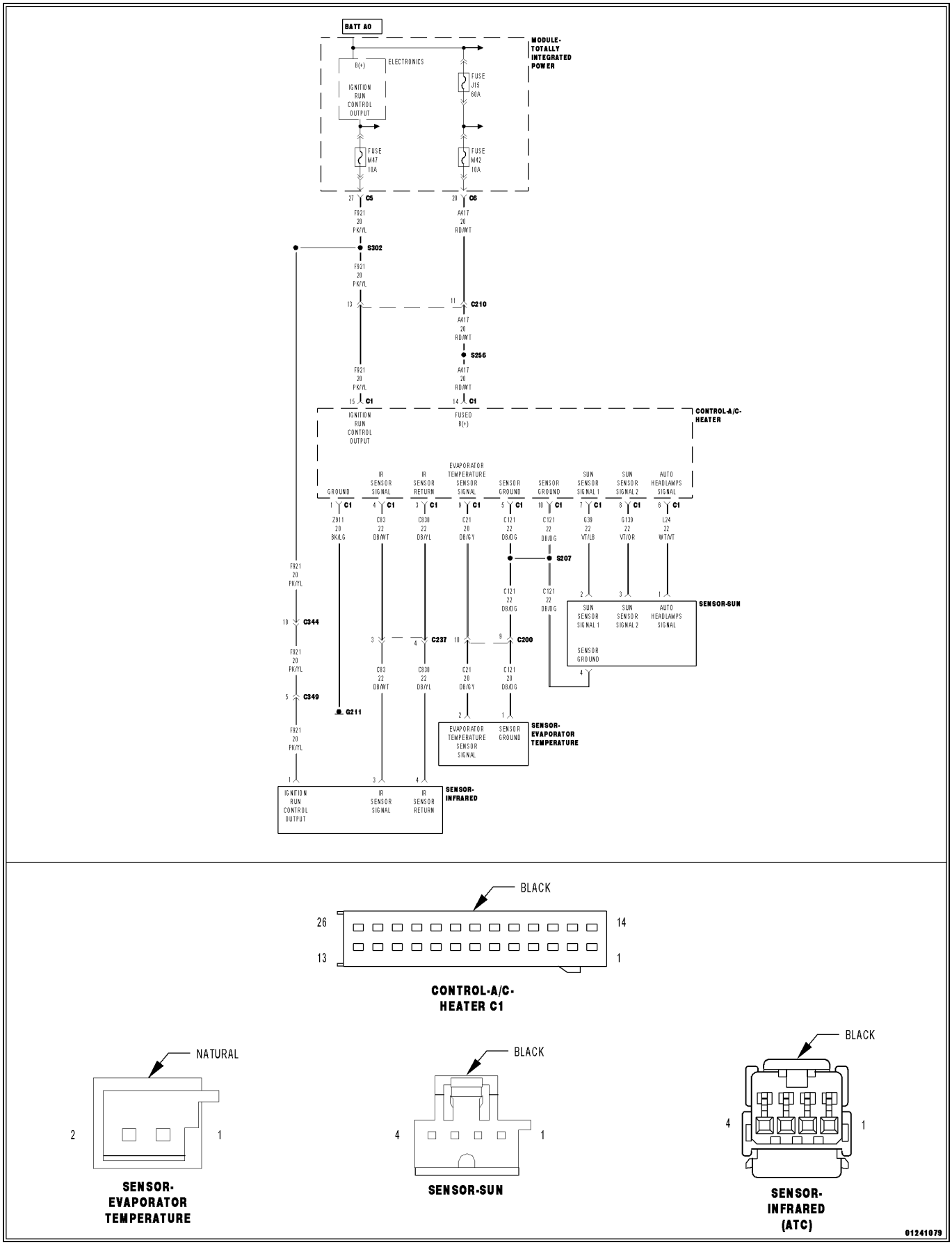

For a complete wiring diagram, **refer to the Wiring Information**.

Theory of Operation

The Evaporator Temperature Sensor resistance changes in conjunction to temperature. The sensor thermistor forms the lower half of a voltage divider and the upper half of the voltage divider is provided by a 9.09K pull up resistor to 5.0 volts.

- **When Monitored:**
  With the ignition on.
- **Set Condition:**
  The Evaporator Temperature Sensor voltage input to the A/C Heater Control is above 4.9 volts for a continuous period of 60 seconds. If the A/C Heater Control detects a valid voltage, the DTC will change from Active to Stored and will stay in the controllers memory for 100 ignition cycles.

Possible Causes
(C21) EVAPORATOR TEMPERATURE SENSOR SIGNAL CIRCUIT SHORT TO VOLTAGE
(C21) EVAPORATOR TEMPERATURE SENSOR SIGNAL CIRCUIT OPEN
(C121) SENSOR GROUND CIRCUIT OPEN
EVAPORATOR TEMPERATURE SENSOR
A/C HEATER CONTROL

Always perform the HVAC Pre-Diagnostic Troubleshooting procedure before proceeding. (Refer to 28 - DTC-Based Diagnostics/HVAC - Standard Procedure).

1. CHECK (C21) EVAPORATOR TEMPERATURE SENSOR SIGNAL CIRCUIT VOLTAGE

1. Ignition on, engine not running.
2. With the scan tool, read HVAC DTCs after 60 seconds.

Is this DTC active?

Yes

- Go To 2

No

- Go To 7

2. CHECK THE (C21) EVAPORATOR TEMPERATURE SENSOR SIGNAL CIRCUIT VOLTAGE

1. Turn the ignition off to the lock position.
2. Disconnect the Evaporator Temperature Sensor harness connector.

NOTE: Due to the small terminal and pin size of the Evaporator Temperature Sensor and harness connector, make sure to not damage the terminals in this process.

3. Connect a jumper wire between the (C21) Evaporator Temperature Sensor Signal circuit and the (C121) Sensor Ground circuit in the Evaporator Temperature Sensor harness connector.
4. Ignition on, engine not running.
5. With the scan tool, read the Evaporator Temperature Sensor voltage.

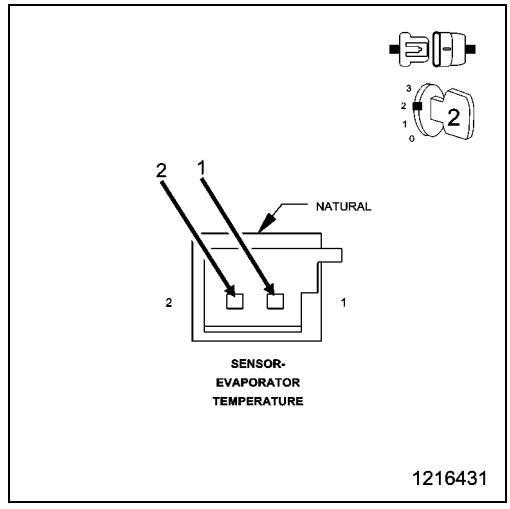

Is the voltage below 0.2 volts?

Yes

- Replace the Evaporator Temperature Sensor in accordance with the Service Information.
- Perform HVAC VERIFICATION TEST (Refer to 28 - DTC-Based Diagnostics/HVAC - Standard Procedure).

No

- Go To 3

3. CHECK THE (C21) EVAPORATOR TEMPERATURE SENSOR SIGNAL CIRCUIT FOR A SHORT TO VOLTAGE

1. Turn the ignition off to the lock position.
2. Disconnect the jumper wire from the previous step.
3. Disconnect the A/C Heater Control C1 harness connector.
4. Ignition on, engine not running.
5. Measure the voltage of the (C21) Evaporator Temperature Sensor Signal circuit

Is voltage above 0.2 of a volt?

Yes

- Repair the (C21) Evaporator Temperature Sensor Signal circuit for a short to voltage.
- Perform HVAC VERIFICATION TEST (Refer to 28 - DTC-Based Diagnostics/HVAC - Standard Procedure).

No

- Go To 4

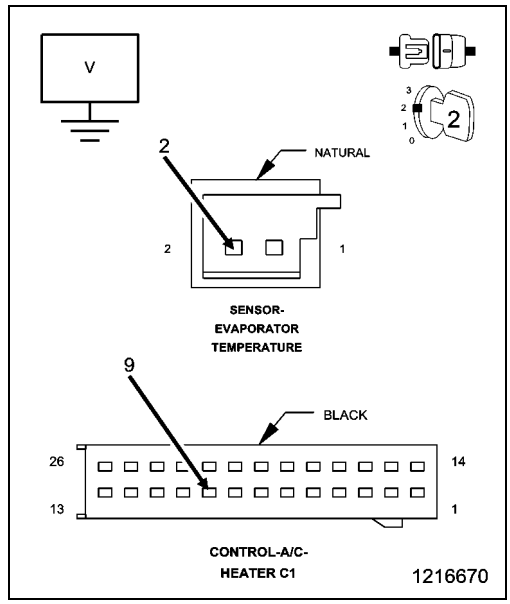

4. CHECK THE (C21) EVAPORATOR TEMPERATURE SENSOR SIGNAL CIRCUIT FOR AN OPEN

1. Turn the ignition off to the lock position.
2. Measure the resistance of the (C21) Evaporator Temperature Sensor Signal circuit between the A/C Heater Control C1 harness connector and the Evaporator Temperature Sensor harness connector.

Is the resistance above 1.0 Ohm?

Yes

- Repair the (C21) Evaporator Temperature Sensor Signal circuit for an open.
- Perform HVAC VERIFICATION TEST (Refer to 28 - DTC-Based Diagnostics/HVAC - Standard Procedure).

No

- Go To 5

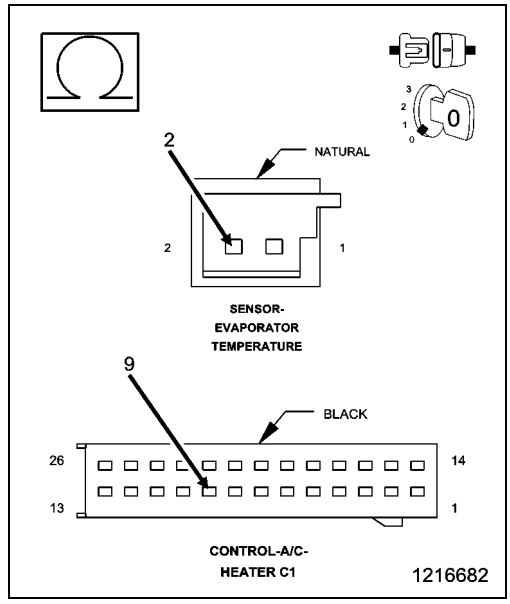

5. CHECK THE (C121) SENSOR GROUND CIRCUIT FOR AN OPEN

1. Measure the resistance of the (C121) Sensor Ground circuits between the A/C Heater Control C1 harness connector and the Evaporator Temperature Sensor harness connector.

NOTE: There are two C121 terminals in the A/C Heater Control C1 harness connector. Make sure to check both.

Is the resistance above 1.0 Ohm?

Yes

- Repair the (C121) Sensor Ground circuit for an open.
- Perform HVAC VERIFICATION TEST (Refer to 28 - DTC-Based Diagnostics/HVAC - Standard Procedure).

No

- Go To 6

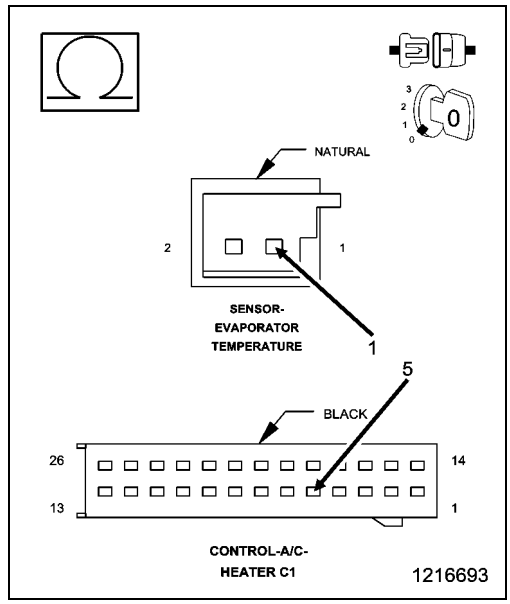

6. CHECK THE EVAPORATOR TEMPERATURE SENSOR

1. Replace the Evaporator Temperature Sensor in Accordance with the Service Information.
2. Perform HVAC VERIFICATION TEST (Refer to 28 - DTC-Based Diagnostics/HVAC - Standard Procedure).
3. Cycle the ignition off for 30 seconds then back on and wait a minimum of 60 seconds.
4. With the Scan tool read HVAC DTCs.

Does this DTC reset?

Yes

- Replace and program the A/C Heater Control in accordance with the Service Information.
- Perform HVAC VERIFICATION TEST (Refer to 28 - DTC-Based Diagnostics/HVAC - Standard Procedure).

No

- Test complete.

7. CHECK THE WIRING AND CONNECTORS

1. The conditions necessary to set the DTC are not present at this time.
2. Using the schematics as a guide, inspect the wiring and connectors specific to this circuit.
3. Check for an intermittent condition by inspecting the related wiring harness for chafed, pierced, pinched, partially broken wires.
4. Check the connectors for broken, bent, pushed out, spread, corroded, or contaminated terminals.
5. Wiggle the wiring and connectors while checking for shorted and open circuits.
6. With the scan tool, check the Environmental Data to help identify the conditions in which the DTC was set.

Were there any problems found?

Yes

- Repair as necessary.
- Perform HVAC VERIFICATION TEST (Refer to 28 - DTC-Based Diagnostics/HVAC - Standard Procedure).

No

- Test complete.

B1034-INFRARED TEMPERATURE SENSOR CIRCUIT LOW

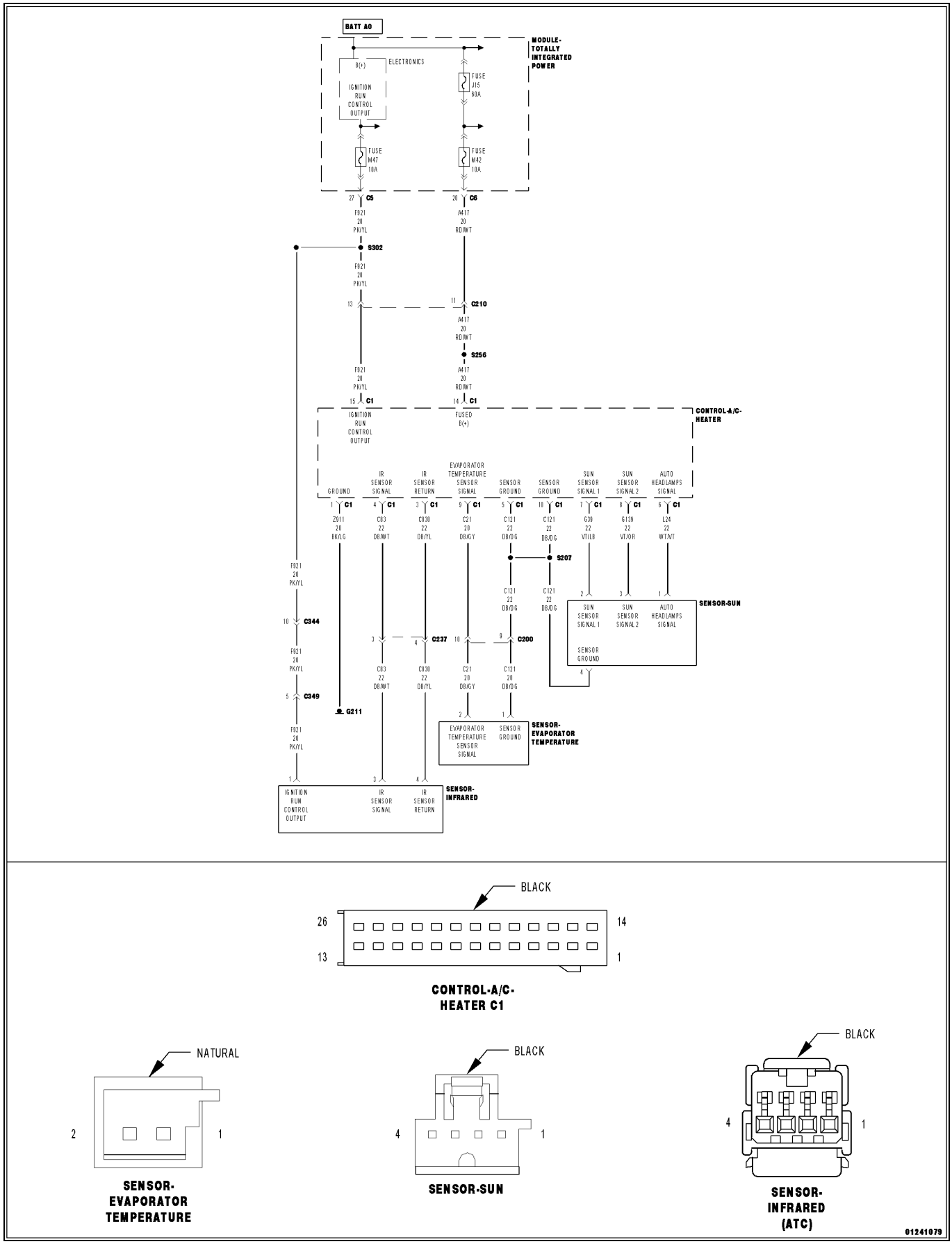

For a complete wiring diagram, **refer to the Wiring Information**.

- **When Monitored:**
  With the ignition on.
- **Set Condition:**
  The Infrared Temperature Sensor pulse with modulated (PWM) signal to the A/C Heater Control is less than 5% for a continuous period of 60 seconds. If the A/C Heater Control detects a valid PWM signal, the DTC will change from active to stored and will stay stored for 100 ignition cycles.

Possible Causes
(F921) FUSED IGNITION RUN CONTROL OUTPUT CIRCUIT OPEN
(C83) IR SENSOR SIGNAL CIRCUIT SHORT TO GROUND
(C83) IR SENSOR SIGNAL CIRCUIT OPEN
INFRARED SENSOR
A/C HEATER CONTROL

Always perform the HVAC Pre-Diagnostic Troubleshooting procedure before proceeding. (Refer to 28 - DTC-Based Diagnostics/HVAC - Standard Procedure).

1. CHECK IF DTC IS ACTIVE

1. Ignition on, engine not running.
2. With the scan tool, read HVAC DTCs after a minimum of 60 seconds.

Is this DTC active?

Yes
- Go To 2

No
- Go To 6

2. CHECK THE (F921) FUSED IGNITION RUN CONTROL OUTPUT CIRCUIT FOR AN OPEN

1. Turn the ignition off to the lock position.
2. Disconnect the Infrared Sensor harness connector.
3. Ignition on, engine not running.
4. With a test light connected to ground, check the (F921) Fused Ignition Run Control Output circuit.

NOTE: The test light must illuminate brightly. Compare the brightness to that of a direct connection to the battery.

Does the test light illuminate brightly?

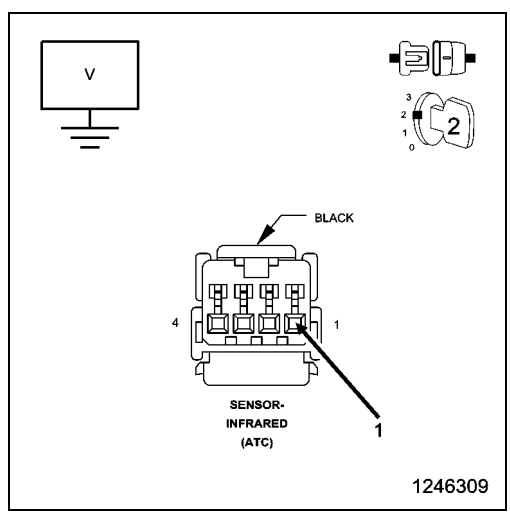

Yes
- Go To 3

No
- Repair the (F921) Fused Ignition Run Control Output circuit for an open.
- Perform HVAC VERIFICATION TEST (Refer to 28 - DTC-Based Diagnostics/HVAC - Standard Procedure).

3. CHECK THE (C83) IR SENSOR SIGNAL CIRCUIT FOR A SHORT TO GROUND

1. Turn the ignition off to the lock position.
2. Disconnect the A/C Heater Control C1 harness connector.
3. Measure the resistance between ground and the (C83) IR Sensor Signal circuit.

Is the resistance below 100k Ohms?

Yes

- Repair the (C83) IR Sensor Signal circuit for a short to ground.
- Perform HVAC VERIFICATION TEST (Refer to 28 - DTC-Based Diagnostics/HVAC - Standard Procedure).

No

- Go To 4

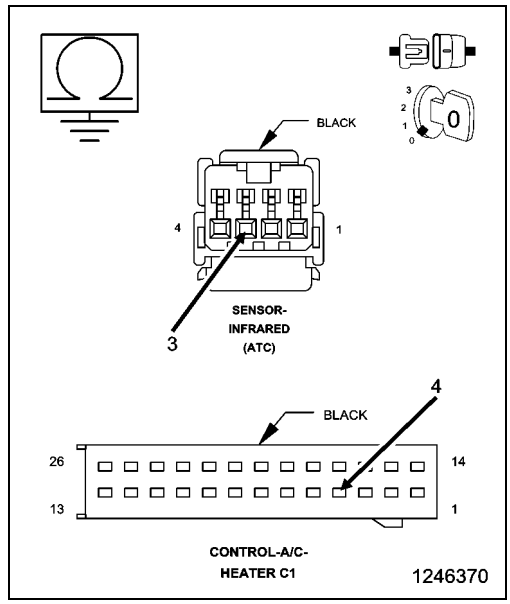

4. CHECK THE (C83) IR SENSOR SIGNAL CIRCUIT FOR AN OPEN

1. Measure the resistance of the (C83) IR Sensor Signal circuit between the A/C Heater Control C1 harness connector.

Is the resistance below 100k Ohms?

Yes

- Repair the (C83) IR Sensor Signal circuit for an open.
- Perform HVAC VERIFICATION TEST (Refer to 28 - DTC-Based Diagnostics/HVAC - Standard Procedure).

No

- Go To 5

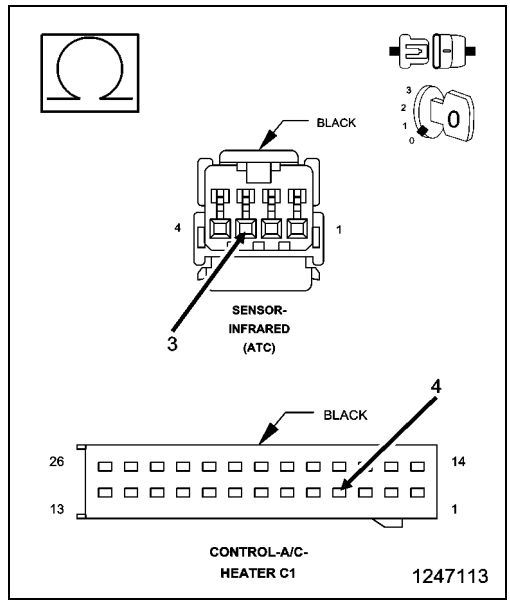

5. CHECK THE INFRARED SENSOR

1. Replace the Infrared Sensor in accordance with the Service Information.
2. Perform HVAC VERIFICATION TEST (Refer to 28 - DTC-Based Diagnostics/HVAC - Standard Procedure).

Did the DTC reset performing the HVAC Verification Test?

Yes

- Replace and program the A/C Heater Control in accordance with the Service Information.
- Perform HVAC VERIFICATION TEST (Refer to 28 - DTC-Based Diagnostics/HVAC - Standard Procedure).

No

- Test complete.

6. CHECK THE WIRING AND CONNECTORS

1. The conditions necessary to set the DTC are not present at this time.
2. Using the schematics as a guide, inspect the wiring and connectors specific to this circuit.
3. Check for an intermittent condition by inspecting the related wiring harness for chafed, pierced, pinched, partially broken wires.
4. Check the connectors for broken, bent, pushed out, spread, corroded, or contaminated terminals.
5. Wiggle the wiring and connectors while checking for shorted and open circuits.
6. With the scan tool, check the Environmental Data to help identify the conditions in which the DTC was set.

Were there any problems found?

Yes

- Repair as necessary.
- Perform HVAC VERIFICATION TEST (Refer to 28 - DTC-Based Diagnostics/HVAC - Standard Procedure).

No

- Test complete.

B1035-INFRARED TEMPERATURE SENSOR CIRCUIT HIGH

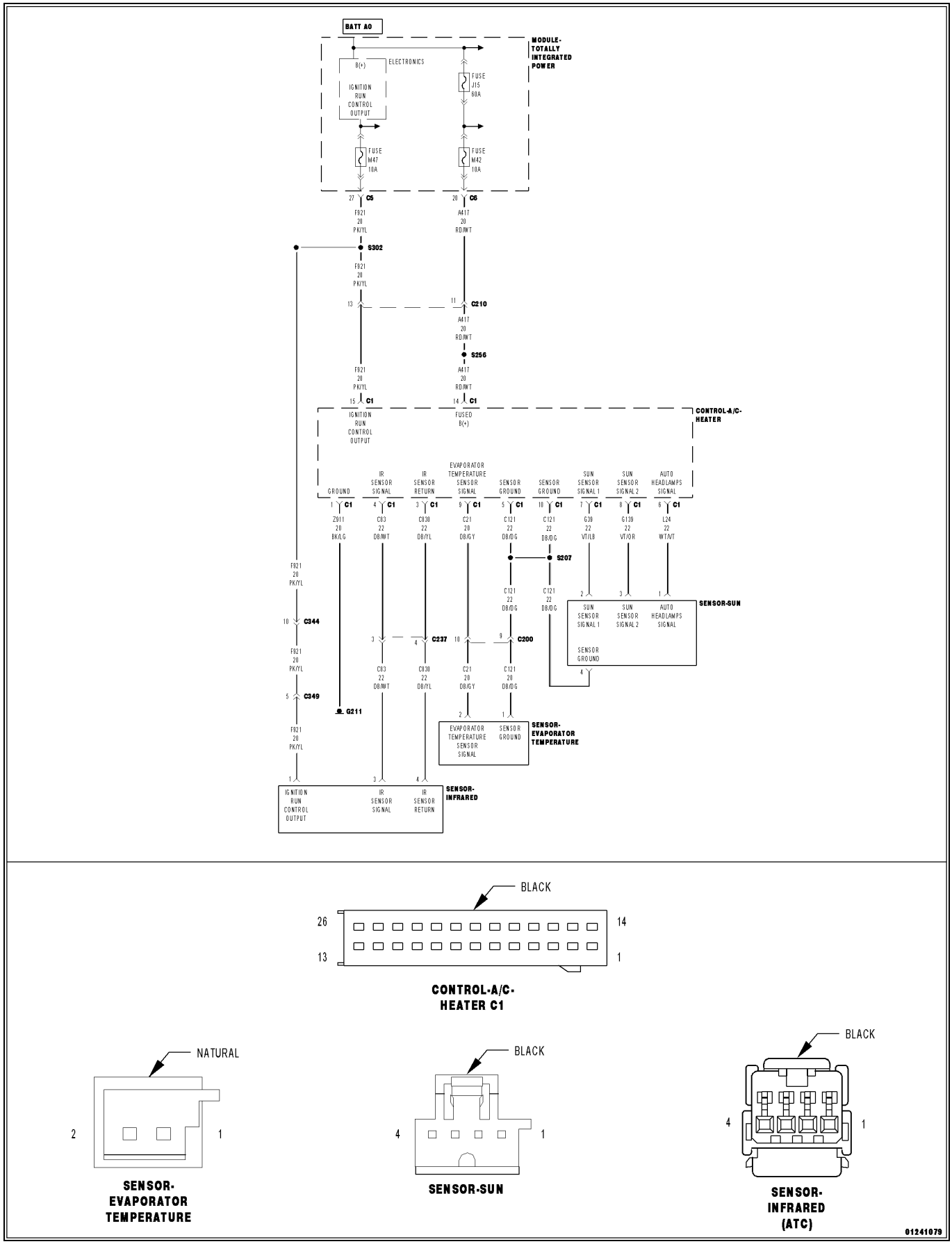

For a complete wiring diagram, **refer to the Wiring Information**.

- **When Monitored:**
  With the ignition on.
- **Set Condition:**
  The Infrared Temperature Sensor pulse with modulated (PWM) signal to the A/C Heater Control is greater than 95% for a continuous period of 60 seconds or more. If the A/C Heater Control detects a valid PWM signal, the DTC will change from active to stored and will stay stored for 100 ignition cycles.

Possible Causes
(C83) IR SENSOR SIGNAL CIRCUIT SHORTED TO VOLTAGE
(C830) IR SENSOR RETURN CIRCUIT SHORTED TO VOLTAGE
(C830) IR SENSOR RETURN CIRCUIT OPEN
INFRARED TEMPERATURE SENSOR
A/C HEATER CONTROL

Always perform the HVAC Pre-Diagnostic Troubleshooting procedure before proceeding. (Refer to 28 - DTC-Based Diagnostics/HVAC - Standard Procedure).

1. CHECK IF DTC IS ACTIVE

1. Ignition on, engine not running.
2. With the scan tool, read HVAC DTCs after a minimum of 60 seconds.

Is this DTC active?

Yes
- Go To 2

No
- Go To 6

2. CHECK THE (C83) IR SENSOR SIGNAL CIRCUIT FOR A SHORT TO VOLTAGE

1. Turn the ignition off to the lock position.
2. Disconnect the A/C Heater Control C1 harness connector.
3. Disconnect the Infrared Sensor harness connector.
4. Ignition on, engine not running.
5. Measure the voltage of the (C83) IR Sensor Signal circuit.

Is there any voltage present?

Yes
- Repair the (C83) IR Sensor Signal circuit for a short to voltage.
- Perform HVAC VERIFICATION TEST (Refer to 28 - DTC-Based Diagnostics/HVAC - Standard Procedure).

No
- Go To 3

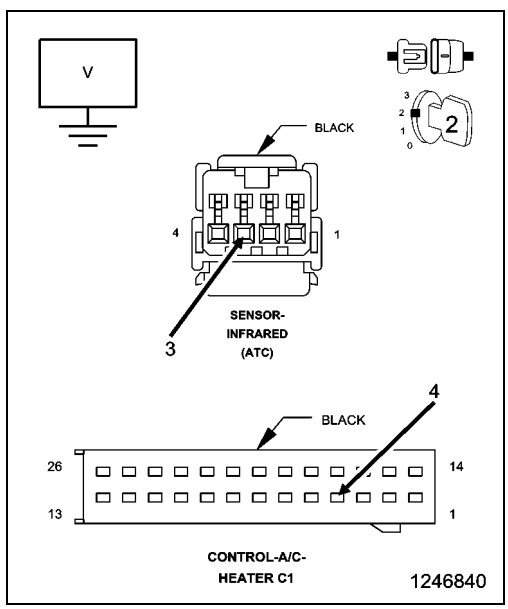

3. CHECK THE (C830) IR SENSOR RETURN CIRCUIT FOR A SHORT TO VOLTAGE

1. Measure the voltage of the (C830) IR Sensor Return circuit.

Is there any voltage present?

Yes

- Repair the (C830) IR Sensor Return circuit for a short to voltage.
- Perform HVAC VERIFICATION TEST (Refer to 28 - DTC-Based Diagnostics/HVAC - Standard Procedure).

No

- Go To 4

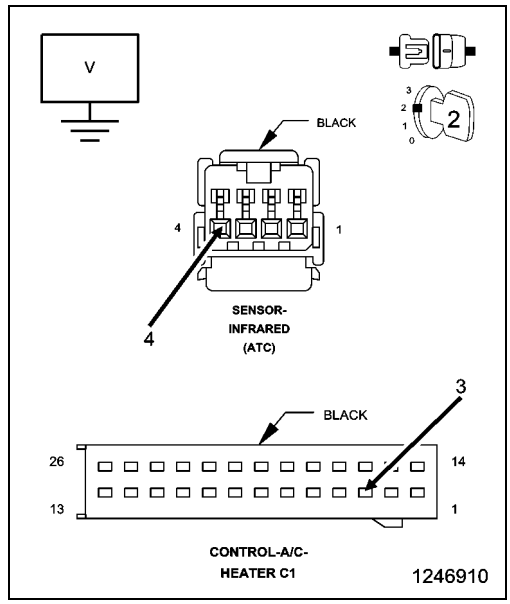

4. CHECK THE (C830) IR SENSOR RETURN CIRCUIT FOR AN OPEN

1. Turn the ignition off to the lock position.
2. Measure the resistance of the (C830) IR Sensor Return circuit between the A/C Heater Control C1 harness connector and the Infrared Sensor harness connector.

Is the resistance above 5.0 Ohms?

Yes

- Repair the (C830) IR Sensor Return circuit for an open.
- Perform HVAC VERIFICATION TEST (Refer to 28 - DTC-Based Diagnostics/HVAC - Standard Procedure).

No

- Go To 5

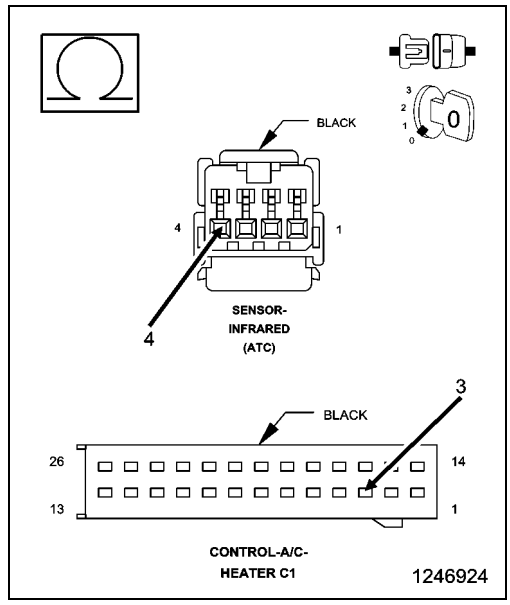

5. CHECK THE INFRARED SENSOR

1. Replace the Infrared Sensor in accordance with the Service Information.
2. Perform HVAC VERIFICATION TEST (Refer to 28 - DTC-Based Diagnostics/HVAC - Standard Procedure).

Did the DTC reset performing the HVAC Verification Test?

Yes

- Replace and program the A/C Heater Control in accordance with the Service Information.
- Perform HVAC VERIFICATION TEST (Refer to 28 - DTC-Based Diagnostics/HVAC - Standard Procedure).

No

- Test complete.

6. CHECK THE WIRING AND CONNECTORS

1. The conditions necessary to set the DTC are not present at this time.
2. Using the schematics as a guide, inspect the wiring and connectors specific to this circuit.
3. Check for an intermittent condition by inspecting the related wiring harness for chafed, pierced, pinched, partially broken wires.
4. Check the connectors for broken, bent, pushed out, spread, corroded, or contaminated terminals.
5. Wiggle the wiring and connectors while checking for shorted and open circuits.
6. With the scan tool, check the Environmental Data to help identify the conditions in which the DTC was set.

Were there any problems found?

Yes

- Repair as necessary.
- Perform HVAC VERIFICATION TEST (Refer to 28 - DTC-Based Diagnostics/HVAC - Standard Procedure).

No

- Test complete.

B1040-PANEL MODE DOOR 1 CONTROL CIRCUIT/PERFORMANCE

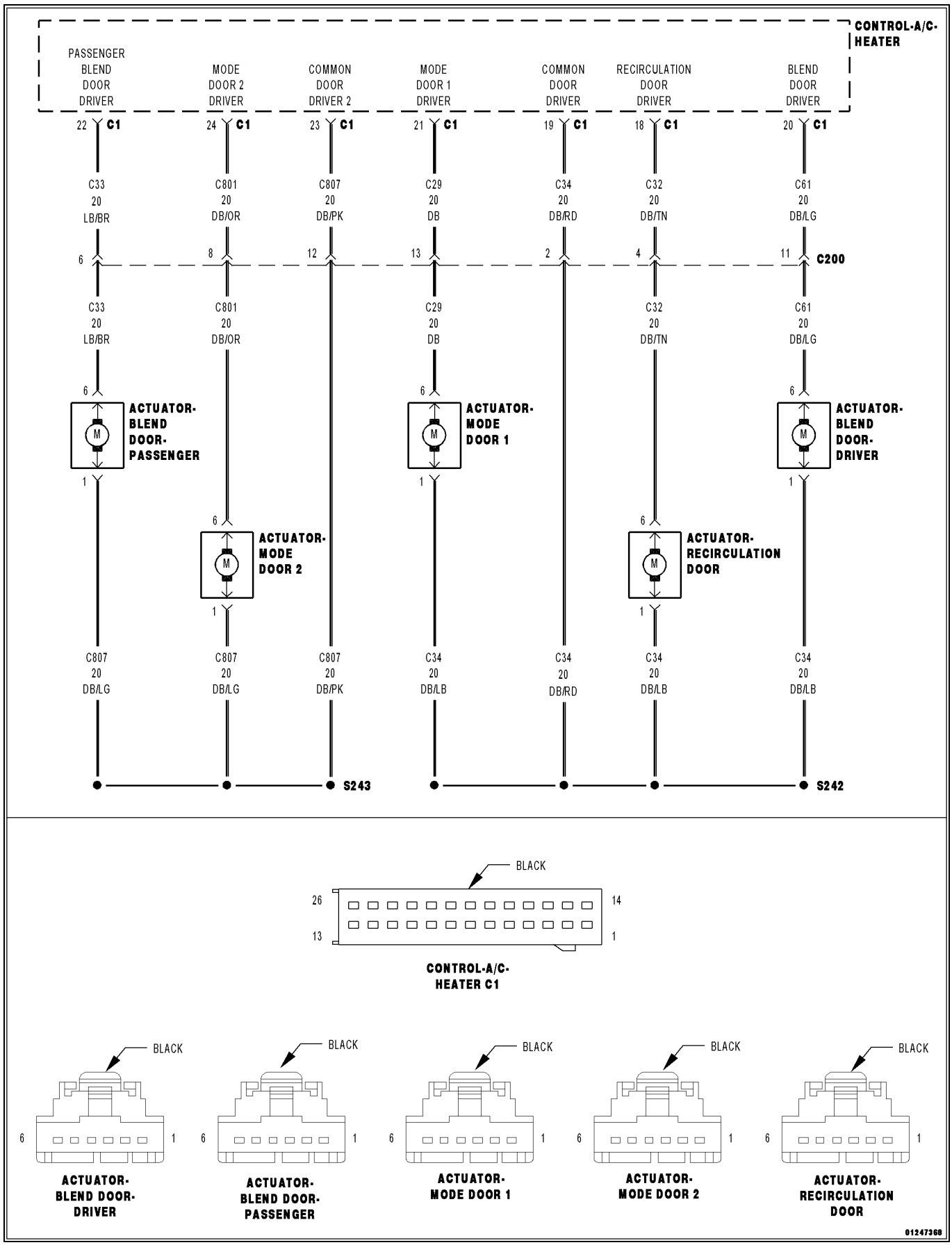

For a complete wiring diagram, **refer to the Wiring Information**.

Theory of Operation

After the initial installation of the A/C Heater Control, the controller is calibrated to each individual blend/mode door actuator. These calibrations are stored as in the number of pulses it takes to move the door from one stop to another. The A/C Heater Control drives the Door Actuators by the use of Door Driver circuit and a Common Door Driver circuit and monitors all door actuator pulses to detect door movement in both directions. Most of the door actuators share a common door driver circuit but each door actuator has its own unique driver circuit. Due to shared circuitry, similar DTCs can set at the same time for multiple actuators depending upon the type of circuit malfunction, its location, and the direction the actuator is moving when the malfunction is present.

- **When Monitored:**
  With the ignition on and an actuator movement is commanded by the A/C Heater Control.
- **Set Condition:**
  If an actuator move is commanded by the A/C Heater Control and there are no feedback pulses detected in that direction, the controller commands the actuator in the opposite direction. If feedback pulses are detected in only one direction this DTC will set. If the A/C Heater Control detects a valid pulse feedback in both directions, the DTC will change from Active to Stored and will stay in the controllers memory for 100 ignition cycles.

Possible Causes
(C29) MODE DOOR 1 DRIVER CIRCUIT SHORTED TO VOLTAGE
(C29) MODE DOOR 1 DRIVER CIRCUIT SHORTED TO GROUND
(C34) COMMON DOOR DRIVER CIRCUIT SHORTED TO VOLTAGE
(C34) COMMON DOOR DRIVER CIRCUIT SHORTED TO GROUND
MODE DOOR 1 DOOR (PANEL/FLOOR) BINDING
MODE DOOR 1 ACTUATOR (PANEL/FLOOR)
A/C HEATER CONTROL

Always perform the HVAC Pre-Diagnostic Troubleshooting procedure before proceeding. (Refer to 28 - DTC-Based Diagnostics/HVAC - Standard Procedure).

1. CHECK IF DTC IS ACTIVE

1. Ignition on, engine not running.
2. With the scan tool, read HVAC DTCs.

Is this DTC active?

Yes
- Go To 3

No
- Go To 2

2. PERFORM HVAC ACTUATOR CALIBRATION TEST

1. With the scan tool, perform the HVAC Actuator Calibration Test.

Did this DTC change from Stored to Active while performing the HVAC Actuator Calibration Test?

Yes
- Go To 3

No
- Go To 9

3. CHECK THE (C29) MODE DOOR 1 DRIVER CIRCUIT FOR A SHORT TO VOLTAGE

1. Turn the ignition off to the lock position.
2. Disconnect the A/C Heater Control C1 harness connector.
3. Disconnect the Mode Door 1 Actuator (Panel/Floor) harness connector.
4. Ignition on, engine not running.
5. Measure the voltage of the (C29) Mode Door 1 Driver circuit.

Is there any voltage present?

Yes

- Repair the (C29) Mode Door 1 Driver circuit for a short to voltage.
- Perform HVAC VERIFICATION TEST (Refer to 28 - DTC-Based Diagnostics/HVAC - Standard Procedure).

No

- Go To 4

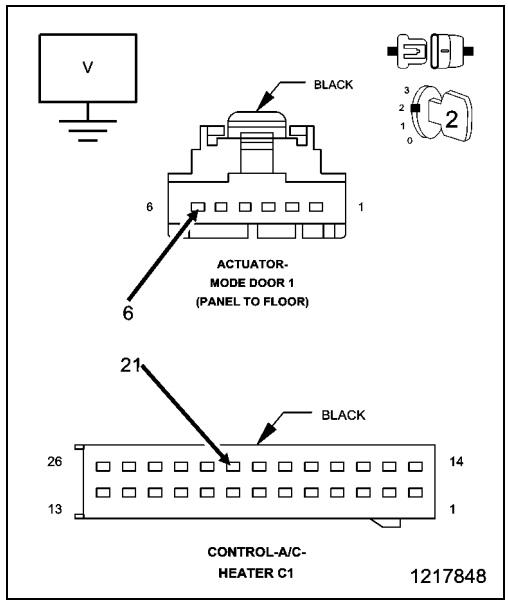

4. CHECK THE (C34) COMMON DOOR DRIVER CIRCUIT FOR A SHORT TO VOLTAGE

1. Measure the voltage of the (C34) Common Door Driver circuit.

Is there any voltage present?

Yes

- Repair the (C34) Common Door Driver circuit for a short to voltage.
- Perform HVAC VERIFICATION TEST (Refer to 28 - DTC-Based Diagnostics/HVAC - Standard Procedure).

No

- Go To 5

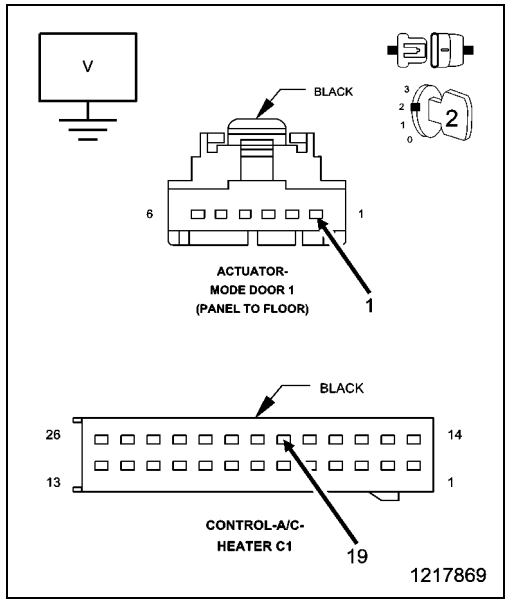

5. CHECK THE (C29) MODE DOOR 1 DRIVER CIRCUIT FOR A SHORT TO GROUND

1. Turn the ignition off to the lock position.
2. Measure the resistance between ground and the (C29) Mode Door 1 Driver circuit.

Is the resistance below 100k Ohms?

Yes

- Repair the (C29) Mode Door 1 Driver circuit for a short to ground.
- Perform HVAC VERIFICATION TEST (Refer to 28 - DTC-Based Diagnostics/HVAC - Standard Procedure).

No

- Go To 6

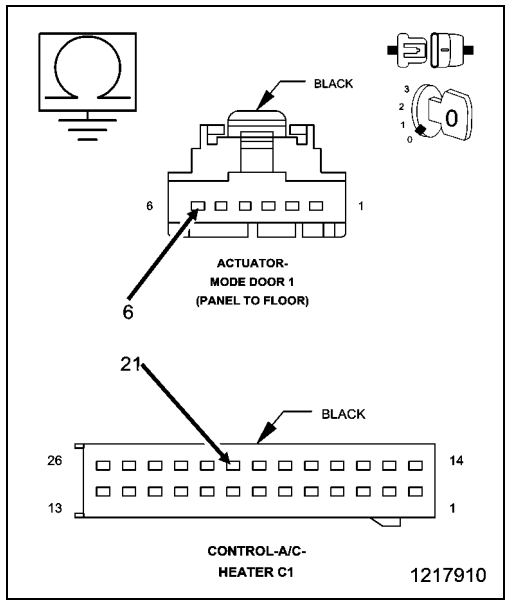

6. CHECK THE (C34) COMMON DOOR DRIVER CIRCUIT FOR A SHORT TO GROUND

1. Measure the resistance between ground and the (C34) Common Door Driver circuit.

Is the resistance below 100k Ohms?

Yes

- Repair the (C34) Common Door Driver circuit for a short to ground.
- Perform HVAC VERIFICATION TEST (Refer to 28 - DTC-Based Diagnostics/HVAC - Standard Procedure).

No

- Go To 7

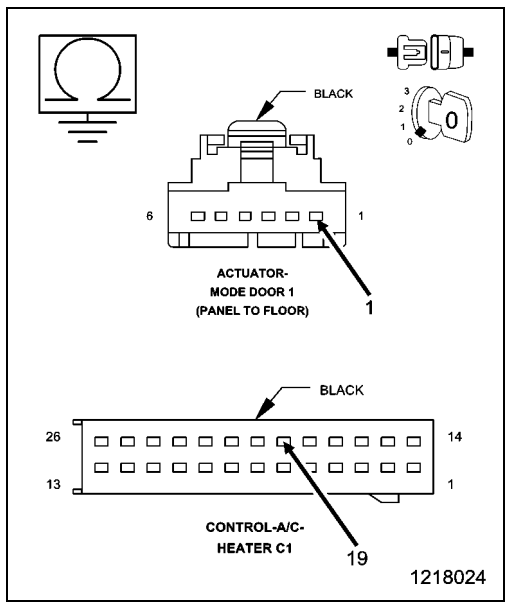

7. CHECK THE MODE DOOR 1 (PANEL/FLOOR)

1. Remove the Mode Door 1 Actuator (Panel/Floor) and check the Mode Door 1 (Panel/Floor) for binding and full travel.

Were there any problems found?

Yes

- Repair or replace the Mode Door 1 (Panel/Floor) as necessary in accordance with the Service Information.
- Perform HVAC VERIFICATION TEST (Refer to 28 - DTC-Based Diagnostics/HVAC - Standard Procedure).

No

- Go To 8

8. CHECK THE MODE DOOR 1 ACTUATOR

1. Replace the Mode Door 1 Actuator (Panel/Floor) in accordance with the Service Information.
2. With the scan tool, erase HVAC DTCs and perform the HVAC System Test.

Did this DTC reset?

Yes

- Replace and program the A/C Heater Control in accordance with the Service Information.
- Perform HVAC VERIFICATION TEST (Refer to 28 - DTC-Based Diagnostics/HVAC - Standard Procedure).

No

- Test complete.
- Perform HVAC VERIFICATION TEST (Refer to 28 - DTC-Based Diagnostics/HVAC - Standard Procedure).

9. CHECK THE WIRING AND CONNECTORS

1. The conditions necessary to set the DTC are not present at this time.
2. Using the schematics as a guide, inspect the wiring and connectors specific to this circuit.
3. Check for an intermittent condition by inspecting the related wiring harness for chafed, pierced, pinched, partially broken wires.
4. Check the connectors for broken, bent, pushed out, spread, corroded, or contaminated terminals.
5. Wiggle the wiring and connectors while checking for shorted and open circuits.
6. With the scan tool, check the Environmental Data to help identify the conditions in which the DTC was set.

Were there any problems found?

Yes

- Repair as necessary.
- Perform HVAC VERIFICATION TEST (Refer to 28 - DTC-Based Diagnostics/HVAC - Standard Procedure).

No

- Test complete.

B1043-PANEL MODE DOOR 1 CONTROL CIRCUIT OPEN

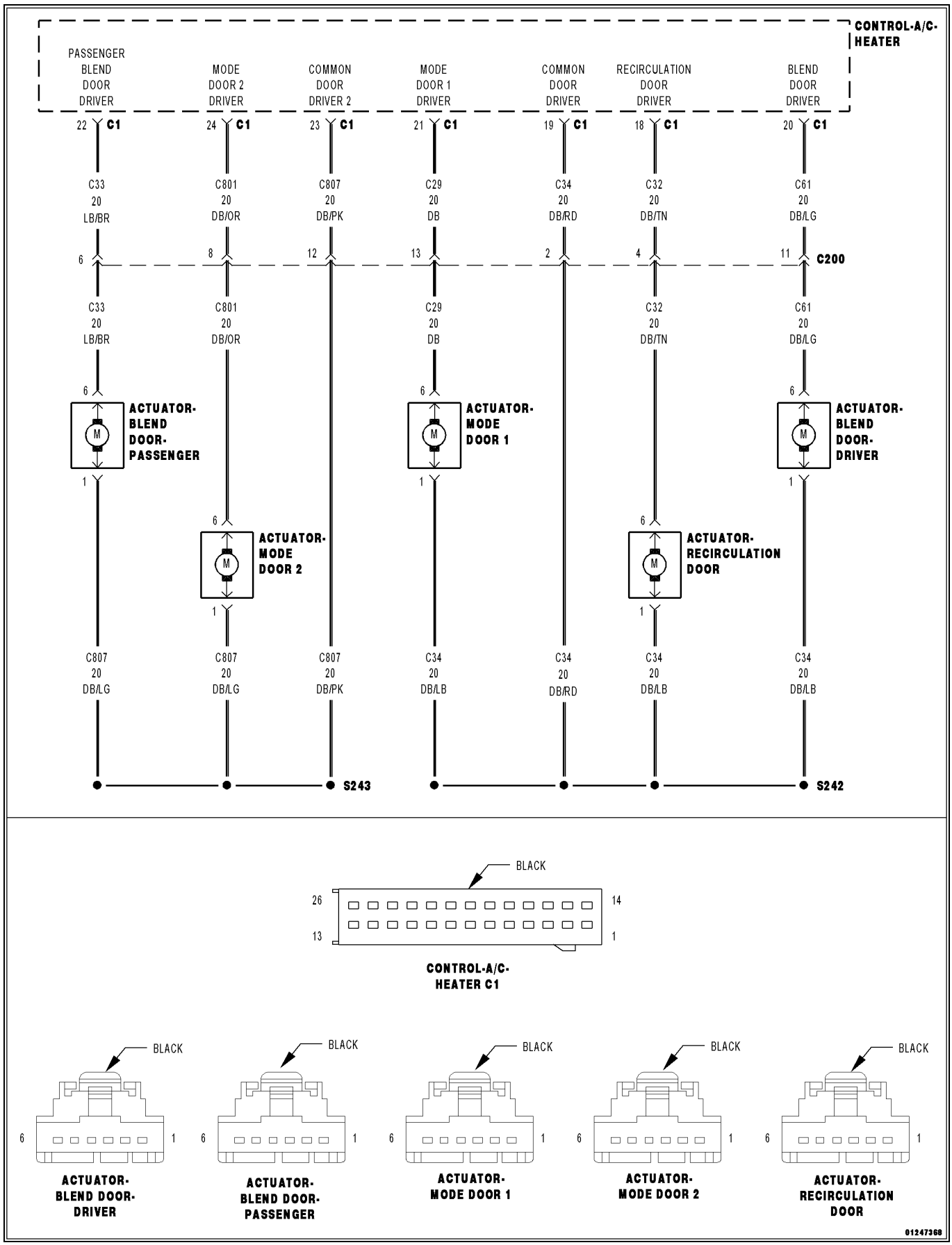

For a complete wiring diagram, **refer to the Wiring Information**.

Theory of Operation

After the initial installation of the A/C Heater Control, the controller is calibrated to each individual blend/mode door actuator. These calibrations are stored as in the number of pulses it takes to move the door from one stop to another. The A/C Heater Control drives the Door Actuators by the use of Door Driver circuit and a Common Door Driver circuit and monitors all door actuator pulses to detect door movement in both directions. Most of the door actuators share a common door driver circuit but each door actuator has its own unique driver circuit. Due to shared circuitry, similar DTCs can set at the same time for multiple actuators depending upon the type of circuit malfunction, its location, and the direction the actuator is moving when the malfunction is present.

- **When Monitored:**
  With the ignition on and an actuator movement is commanded by the A/C Heater Control.
- **Set Condition:**
  If an actuator move is commanded by the A/C Heater Control and there are no feedback pulses detected in that direction, the controller commands the actuator in the opposite direction. If no feedback pulses are detected in either direction this DTC will set. If the A/C Heater Control detects a valid pulse feedback in both directions, the DTC will change from Active to Stored and will stay in the controllers memory for 100 ignition cycles.

Possible Causes
(C29) MODE DOOR 1 DRIVER CIRCUIT OPEN
(C34) COMMON DOOR DRIVER CIRCUIT OPEN
MODE DOOR 1 (PANEL/FLOOR) ACTUATOR
A/C HEATER CONTROL

Always perform the HVAC Pre-Diagnostic Troubleshooting procedure before proceeding. (Refer to 28 - DTC-Based Diagnostics/HVAC - Standard Procedure).

1. CHECK FOR OTHER DTCS

1. Ignition on, engine not running.
2. With the scan tool, read HVAC DTCs.

Is there more than one Door Control - Circuit Open DTC present?

Yes

- Repair the (C34) Common Door Driver circuit for an open.

NOTE: Due to the common shared driver circuit, probable area of concern is the splice, or from the splice to the A/C Heater Control harness connector. Make sure to check all inline connectors.

No

- Go To 2

2. CHECK IF DTC IS ACTIVE

1. Ignition on, engine not running.
2. With the scan tool, read HVAC DTCs.

Is this DTC active?

Yes

- Go To 4

No

- Go To 3

3. PERFORM HVAC CALIBRATION ACTUATOR TEST

1. With the scan tool, perform the HVAC Calibration Actuator Test.

Did this DTC change from Stored to Active while performing the HVAC Actuator Calibration Test?

Yes

- Go To 4

No

- Go To 7

4. CHECK THE MODE DOOR 1 (PANEL/FLOOR) ACTUATOR

1. Turn the ignition off to the lock position.
2. Disconnect the A/C Heater Control C1 harness connector.
3. Measure the resistance between the (C29) Mode Door 1 Driver circuit and the (C34) Common Door Driver circuit.

Is the resistance 38.0 Ohms (± 5.0 Ohms)?

Yes

- Replace and program the A/C Heater Control in accordance with the Service Information.
- Perform HVAC VERIFICATION TEST (Refer to 28 - DTC-Based Diagnostics/HVAC - Standard Procedure).

No

- Go To 5

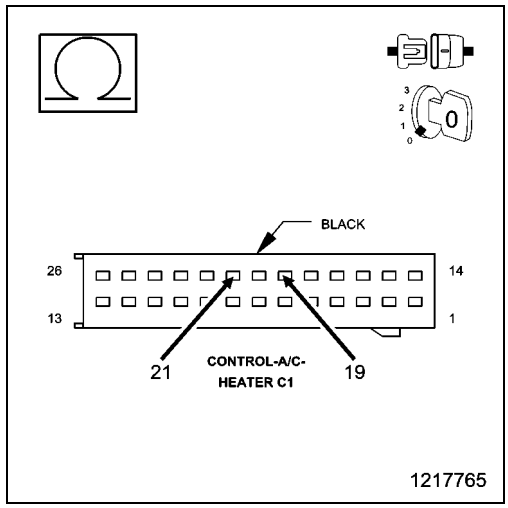

5. CHECK THE (C29) MODE DOOR 1 DRIVER CIRCUIT FOR AN OPEN

1. Turn the ignition off to the lock position.
2. Disconnect the Mode Door 1 (Panel/Floor) Actuator harness connector.
3. Measure the resistance of the (C29) Mode Door 1 Driver circuit between the A/C Heater Control C1 harness connector and the Mode Door 1 (Panel/Floor) Actuator harness connector.

Is the resistance above 5.0 Ohms?

Yes

- Repair the (C29) Mode Door 1 Driver circuit for an open.
- Perform HVAC VERIFICATION TEST (Refer to 28 - DTC-Based Diagnostics/HVAC - Standard Procedure).

No

- Go To 6

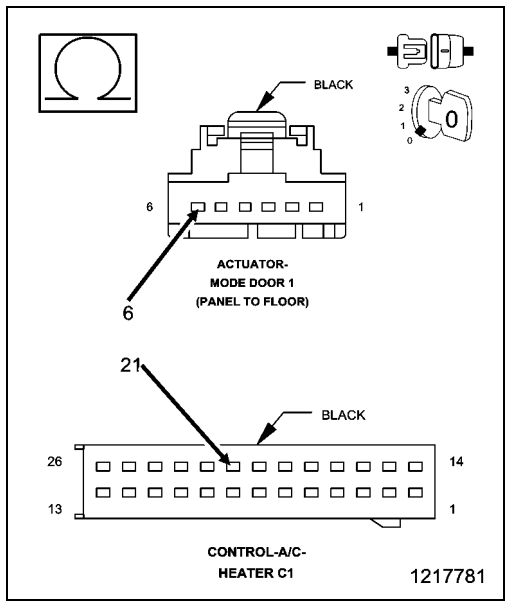

6. CHECK THE (C34) COMMON DOOR DRIVER CIRCUIT FOR AN OPEN

1. Measure the resistance of the (C34) Common Door Driver circuit between the A/C Heater Control C1 harness connector and the Mode Door 1 Actuator harness connector.

Is the resistance above 5.0 Ohms?

Yes

- Repair the (C34) Common Door Driver circuit for an open.

NOTE: Probable location is the wiring harness splice or the wiring between the splice and the door actuator.

- Perform HVAC VERIFICATION TEST (Refer to 28 - DTC-Based Diagnostics/HVAC - Standard Procedure).

No

- Replace the Recirculation Door Actuator in accordance with the Service Information.
- Perform HVAC VERIFICATION TEST (Refer to 28 - DTC-Based Diagnostics/HVAC - Standard Procedure).

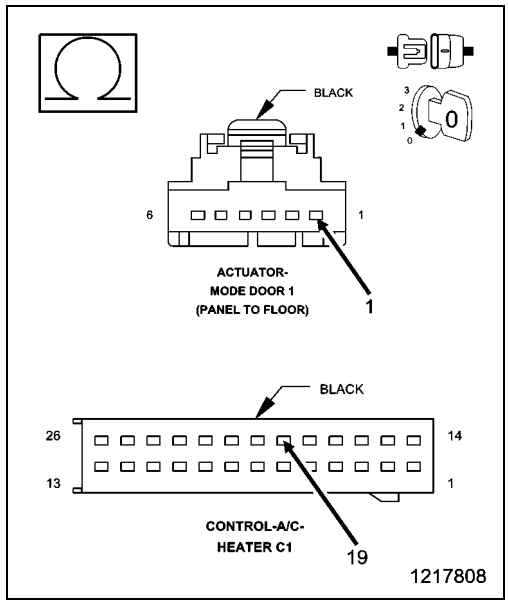

7. CHECK THE WIRING AND CONNECTORS

1. The conditions necessary to set the DTC are not present at this time.
2. Using the schematics as a guide, inspect the wiring and connectors specific to this circuit.
3. Check for an intermittent condition by inspecting the related wiring harness for chafed, pierced, pinched, partially broken wires.
4. Check the connectors for broken, bent, pushed out, spread, corroded, or contaminated terminals.
5. Wiggle the wiring and connectors while checking for shorted and open circuits.
6. With the scan tool, check the Environmental Data to help identify the conditions in which the DTC was set.

Were there any problems found?

Yes

- Repair as necessary.
- Perform HVAC VERIFICATION TEST (Refer to 28 - DTC-Based Diagnostics/HVAC - Standard Procedure).

No

- Test complete.

■ B1044-PANEL MODE DOOR 1 TRAVEL RANGE TOO SMALL

For a complete wiring diagram, **refer to the Wiring Information**.

After the initial installation of the A/C Heater Control, the controller is calibrated to each individual blend/mode door actuator. These calibrations are stored as in the number of pulses it takes to move the door from one stop to another. The A/C Heater Control drives the Door Actuators by the use of Door Driver circuit and a Common Door Driver circuit and monitors all door actuator pulses to detect door movement in both directions. Most of the door actuators share a common door driver circuit but each door actuator has its own unique driver circuit. Due to shared circuitry, similar DTCs can set at the same time for multiple actuators depending upon the type of circuit malfunction, its location, and the direction the actuator is moving when the malfunction is present.

- **When Monitored:**

  When ever an Actuator Calibration Test is performed
- **Set Condition:**

  The A/C Heater Control uses a pulse feedback to the controller to detect the total door movement range. If the amount of pulses required to move the door completely in both directions is less than what the controller has stored in its memory, this DTC will set. If an Actuator Calibration Test is performed and the A/C Heater Control detects a valid range of the door movement span in both directions, the DTC will change from Active to Stored and will stay in the controllers memory for 100 ignition cycles.

Possible Causes
RELATED DTCS PRESENT
MODE DOOR 1 (PANEL/FLOOR) BINDING
MODE DOOR 1 (PANEL/FLOOR) ACTUATOR
A/C HEATER CONTROL

Always perform the HVAC Pre-Diagnostic Troubleshooting procedure before proceeding. (Refer to 28 - DTC-Based Diagnostics/HVAC - Standard Procedure).

1. CHECK FOR RELATED DTCS

1. Ignition on, engine not running.
2. With the scan tool, read HVAC DTCs.

Are there any Door Control - Circuit Open or Door Control - Performance or Incorrect Operation DTCs present?

Yes

- (Refer to 28 - DTC-Based Diagnostics/HVAC - Diagnosis and Testing) and perform the appropriate diagnostic procedure.

No

- Go To 2

2. CHECK IF DTC IS ACTIVE

1. Ignition on, engine not running.
2. With the scan tool, read HVAC DTCs.

Is this DTC active?

Yes

- Go To 4

No

- Go To 3

3. PERFORM HVAC ACTUATOR CALIBRATION TEST

1. With the scan tool, perform the HVAC Actuator Calibration Test.

Did this DTC change from Stored to Active while performing the HVAC Actuator Calibration Test?

Yes

- Go To 4

No

- Go To 6

4. CHECK THE MODE DOOR 1 (PANEL/FLOOR)

1. Remove the Mode Door 1 (Panel/Floor) Actuator and check the Mode Door 1 (Panel/Floor) for binding and full travel.

Were there any problems found?

Yes

- Repair or replace the Mode Door 1 (Panel/Floor) as necessary in accordance with the Service Information.
- Perform the HVAC VERIFICATION TEST. (Refer to 28 - DTC-Based Diagnostics/HVAC - Standard Procedure).

No

- Go To 5

5. CHECK THE MODE DOOR 1 (PANEL/FLOOR) ACTUATOR

1. Replace the Mode Door 1 (Panel/Floor) Actuator in accordance with the Service Information.
2. Perform the HVAC VERIFICATION TEST. (Refer to 28 - DTC-Based Diagnostics/HVAC - Standard Procedure).

Did this DTC reset during or after the Verification Test?

Yes

- Replace and program the A/C Heater Control in accordance with the Service Information.
- Perform the HVAC VERIFICATION TEST. (Refer to 28 - DTC-Based Diagnostics/HVAC - Standard Procedure).

No

- Test complete.

6. CHECK THE WIRING AND CONNECTORS

1. The conditions necessary to set the DTC are not present at this time.
2. Using the schematics as a guide, inspect the wiring and connectors specific to this circuit.
3. Check for an intermittent condition by inspecting the related wiring harness for chafed, pierced, pinched, partially broken wires.
4. Check the connectors for broken, bent, pushed out, spread, corroded, or contaminated terminals.
5. Wiggle the wiring and connectors while checking for shorted and open circuits.
6. With the scan tool, check the Environmental Data to help identify the conditions in which the DTC was set.

Were there any problems found?

Yes

- Repair as necessary.
- Perform the HVAC VERIFICATION TEST. (Refer to 28 - DTC-Based Diagnostics/HVAC - Standard Procedure).

No

- Test complete.

■ B1045-PANEL MODE DOOR 1 TRAVEL RANGE TOO LARGE

For a complete wiring diagram, **refer to the Wiring Information**.

Theory of Operation

After the initial installation of the A/C Heater Control, the controller is calibrated to each individual blend/mode door actuator. These calibrations are stored as in the number of pulses it takes to move the door from one stop to another. The A/C Heater Control drives the Door Actuators by the use of Door Driver circuit and a Common Door Driver circuit and monitors all door actuator pulses to detect door movement in both directions. Most of the door actuators share a common door driver circuit but each door actuator has its own unique driver circuit. Due to shared circuitry, similar DTCs can set at the same time for multiple actuators depending upon the type of circuit malfunction, its location, and the direction the actuator is moving when the malfunction is present.

- **When Monitored:**
  When ever an Actuator Calibration Test is performed
- **Set Condition:**
  The A/C Heater Control uses a pulse feedback to the controller to detect the total door movement range. If the amount of pulses required to move the door completely in both directions is greater than what the controller has stored in its memory, this DTC will set. If an Actuator Calibration Test is performed and the A/C Heater Control detects a valid range of the door movement span in both directions, the DTC will change from Active to Stored and will stay in the controllers memory for 100 ignition cycles.

Possible Causes
RELATED DTCS PRESENT
MODE DOOR 1 DOOR STOPS
MODE DOOR 1 (PANEL/FLOOR)
MODE DOOR 1 (PANEL/FLOOR) ACTUATOR
A/C HEATER CONTROL

Always perform the HVAC Pre-Diagnostic Troubleshooting procedure before proceeding. (Refer to 28 - DTC-Based Diagnostics/HVAC - Standard Procedure).

1. CHECK FOR RELATED DTCS

1. Ignition on, engine not running.
2. With the scan tool, read HVAC DTCs.

Are there any Door Control - Circuit Open or Door Control - Performance or Incorrect Operation DTCs present?

Yes

- (Refer to 28 - DTC-Based Diagnostics/HVAC - Diagnosis and Testing) and perform the appropriate diagnostic procedure.

No

- Go To 2

2. CHECK IF DTC IS ACTIVE

1. Ignition on, engine not running.
2. With the scan tool, read HVAC DTCs.

Is this DTC active?

Yes

- Go To 4

No

- Go To 3

3. PERFORM HVAC ACTUATOR CALIBRATION TEST

1. With the scan tool, perform the HVAC Actuator Calibration Test.

Did this DTC change from Stored to Active while performing the HVAC System Test?

Yes

- Go To 4

No

- Go To 6

4. CHECK THE MODE DOOR 1 (PANEL/FLOOR)

1. Remove the Mode Door 1 (Panel/Floor) Actuator and check the Mode Door 1 (Panel/Floor) stops, linkage (stripped or cracked) and door.

Were there any problems found?

Yes

- Repair or replace the Mode Door 1 (Panel/Floor) as necessary in accordance with the Service Information.
- Perform the HVAC VERIFICATION TEST. (Refer to 28 - DTC-Based Diagnostics/HVAC - Standard Procedure).

No

- Go To 5

5. CHECK THE MODE DOOR 1 (PANEL/FLOOR) ACTUATOR

1. Replace the Mode Door 1 (Panel/Floor) Actuator in accordance with the Service Information.
2. With the scan tool, erase HVAC DTCs and perform the HVAC Actuator Calibration Test.

Did this DTC reset?

Yes

- Replace and program the A/C Heater Control in accordance with the Service Information.
- Perform the HVAC VERIFICATION TEST. (Refer to 28 - DTC-Based Diagnostics/HVAC - Standard Procedure).

No

- Test complete.
- Perform the HVAC VERIFICATION TEST. (Refer to 28 - DTC-Based Diagnostics/HVAC - Standard Procedure).

6. CHECK THE WIRING AND CONNECTORS

1. The conditions necessary to set the DTC are not present at this time.
2. Using the schematics as a guide, inspect the wiring and connectors specific to this circuit.
3. Check for an intermittent condition by inspecting the related wiring harness for chafed, pierced, pinched, partially broken wires.
4. Check the connectors for broken, bent, pushed out, spread, corroded, or contaminated terminals.
5. Wiggle the wiring and connectors while checking for shorted and open circuits.
6. With the scan tool, check the Environmental Data to help identify the conditions in which the DTC was set.

Were there any problems found?

Yes

- Repair as necessary.
- Perform the HVAC VERIFICATION TEST. (Refer to 28 - DTC-Based Diagnostics/HVAC - Standard Procedure).

No

- Test complete.

B1058-RECIRCULATION DOOR CONTROL CIRCUIT/PERFORMANCE

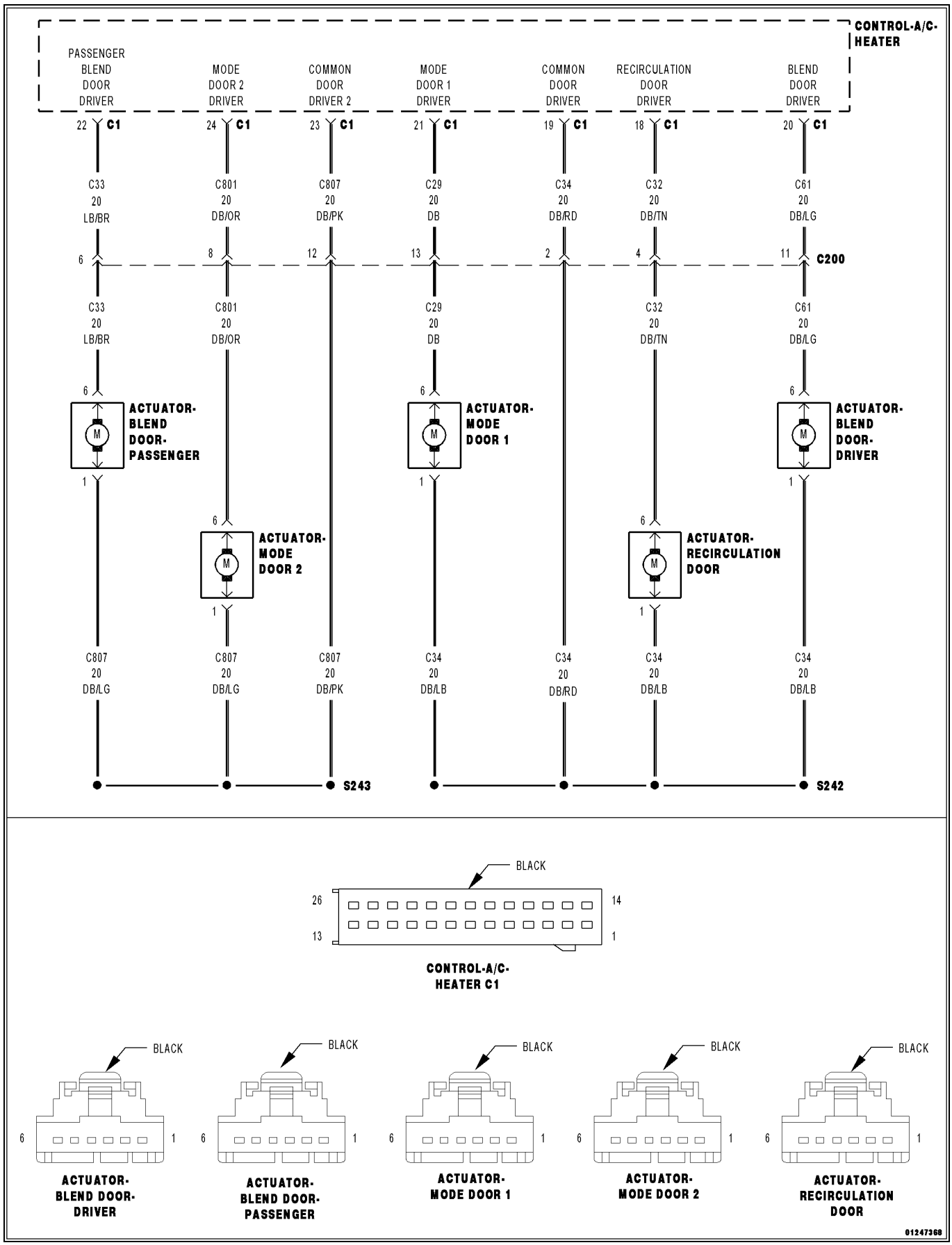

For a complete wiring diagram, **refer to the Wiring Information**.

Theory of Operation

After the initial installation of the A/C Heater Control, the controller is calibrated to each individual blend/mode door actuator. These calibrations are stored as in the number of pulses it takes to move the door from one stop to another. The A/C Heater Control drives the Door Actuators by the use of Door Driver circuit and a Common Door Driver circuit and monitors all door actuator pulses to detect door movement in both directions. Most of the door actuators share a common door driver circuit but each door actuator has its own unique driver circuit. Due to shared circuitry, similar DTCs can set at the same time for multiple actuators depending upon the type of circuit malfunction, its location, and the direction the actuator is moving when the malfunction is present.

- **When Monitored:**
  With the ignition on and an actuator movement is commanded by the A/C Heater Control.
- **Set Condition:**
  If an actuator move is commanded by the A/C Heater Control and there are no feedback pulses detected in that direction, the controller commands the actuator in the opposite direction. If feedback pulses are detected in only one direction this DTC will set. If the A/C Heater Control detects a valid pulse feedback in both directions, the DTC will change from Active to Stored and will stay in the controllers memory for 100 ignition cycles.

Possible Causes
(C32) RECIRCULATION DOOR DRIVER CIRCUIT SHORTED TO VOLTAGE
(C32) RECIRCULATION DOOR DRIVER CIRCUIT SHORTED TO GROUND
(C34) COMMON DOOR DRIVER CIRCUIT SHORTED TO VOLTAGE
(C34) COMMON DOOR DRIVER CIRCUIT SHORTED TO GROUND
RECIRCULATION DOOR BINDING
RECIRCULATION DOOR ACTUATOR
A/C HEATER CONTROL

Always perform the HVAC Pre-Diagnostic Troubleshooting procedure before proceeding. (Refer to 28 - DTC-Based Diagnostics/HVAC - Standard Procedure).

1. CHECK IF DTC IS ACTIVE

1. Ignition on, engine not running.
2. With the scan tool, read HVAC DTCs.

Is this DTC active?

Yes
- Go To 3

No
- Go To 2

2. PERFORM HVAC ACTUATOR CALIBRATION TEST

1. With the scan tool, perform the HVAC Actuator Calibration Test.

Did this DTC change from Stored to Active while performing the HVAC Actuator Calibration Test?

Yes
- Go To 3

No
- Go To 9

3. CHECK THE (C32) RECIRCULATION DOOR DRIVER CIRCUIT FOR A SHORT TO VOLTAGE

1. Turn the ignition off to the lock position.
2. Disconnect the A/C Heater Control C1 harness connector.
3. Disconnect the Recirculation Door Actuator harness connector.
4. Ignition on, engine not running.
5. Measure the voltage of the (C32) Recirculation Door Driver circuit.

Is there any voltage present?

Yes

- Repair the (C32) Recirculation Door Driver circuit for a short to voltage.
- Perform HVAC VERIFICATION TEST (Refer to 28 - DTC-Based Diagnostics/HVAC - Standard Procedure).

No

- Go To 4

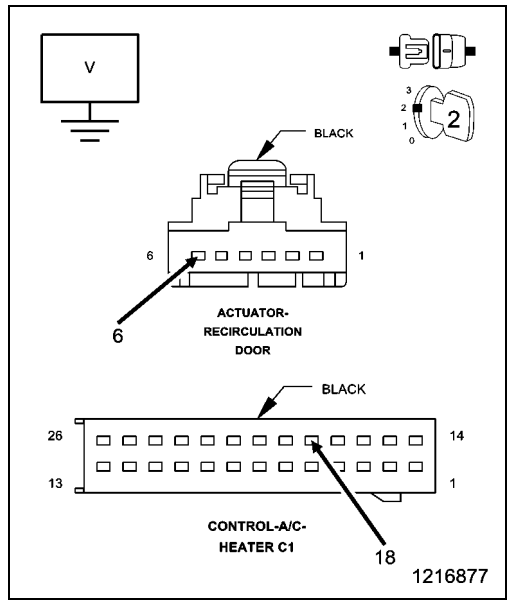

4. CHECK THE (C34) COMMON DOOR DRIVER CIRCUIT FOR A SHORT TO VOLTAGE

1. Measure the voltage of the (C34) Common Door Driver circuit.

Is there any voltage present?

Yes

- Repair the (C34) Common Door Driver circuit for a short to voltage.
- Perform HVAC VERIFICATION TEST (Refer to 28 - DTC-Based Diagnostics/HVAC - Standard Procedure).

No

- Go To 5

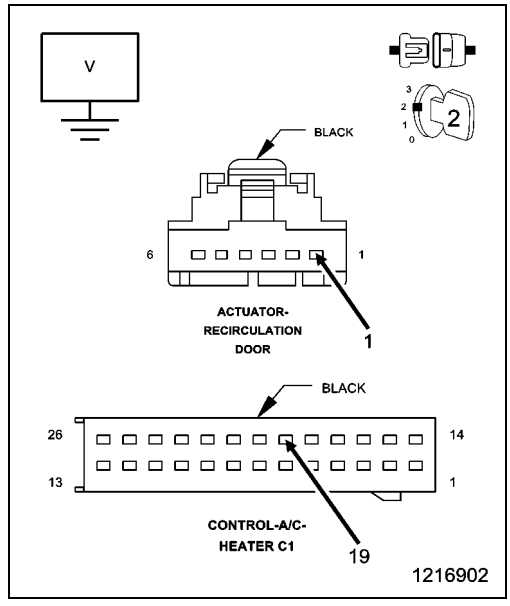

5. CHECK THE (C32) RECIRCULATION DOOR DRIVER CIRCUIT FOR A SHORT TO GROUND

1. Turn the ignition off to the lock position.
2. Measure the resistance between ground and the (C32) Recirculation Door Driver circuit.

Is the resistance below 100k Ohms?

Yes

- Repair the (C32) Recirculation Door Driver circuit for a short to ground.
- Perform HVAC VERIFICATION TEST (Refer to 28 - DTC-Based Diagnostics/HVAC - Standard Procedure).

No

- Go To 6

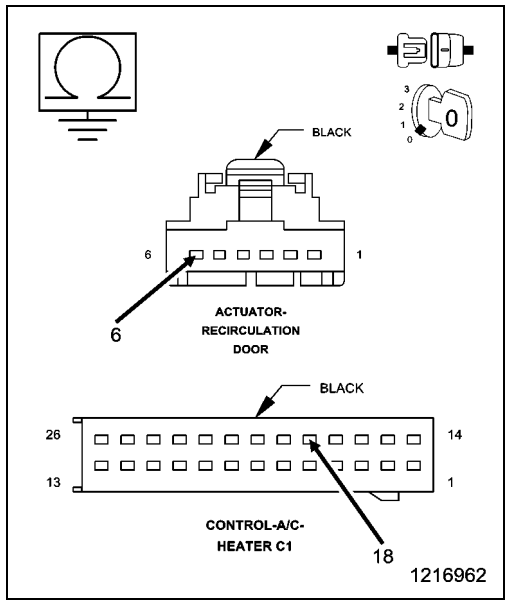

6. CHECK THE (C34) COMMON DOOR DRIVER CIRCUIT FOR A SHORT TO GROUND

1. Measure the resistance between ground and the (C34) Common Door Driver circuit.

Is the resistance below 100k Ohms?

Yes

- Repair the (C34) Common Door Driver circuit for a short to ground.
- Perform HVAC VERIFICATION TEST (Refer to 28 - DTC-Based Diagnostics/HVAC - Standard Procedure).

No

- Go To 7

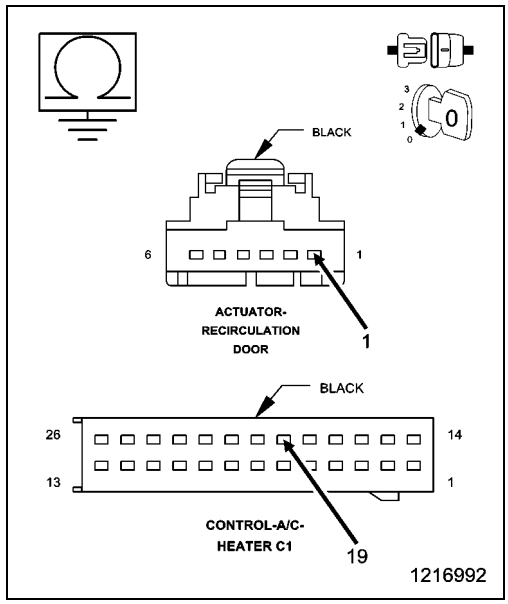

7. CHECK THE RECIRCULATION DOOR

1. Remove the Recirculation Door Actuator and check the Recirculation Door for binding and full travel.

Were there any problems with the Recirculation Door movement?

Yes

- Repair or replace the Recirculation Door as necessary in accordance with the Service Information.
- Perform HVAC VERIFICATION TEST (Refer to 28 - DTC-Based Diagnostics/HVAC - Standard Procedure).

No

- Go To 8

8. CHECK THE RECIRCULATION DOOR ACTUATOR

1. Replace the Recirculation Door Actuator in accordance with the Service Information.
2. With the scan tool, erase HVAC DTCs and perform the HVAC Actuator Calibration Test.

Did this DTC reset?

Yes

- Replace and program the A/C Heater Control in accordance with the Service Information.
- Perform HVAC VERIFICATION TEST (Refer to 28 - DTC-Based Diagnostics/HVAC - Standard Procedure).

No

- Test complete.
- Perform HVAC VERIFICATION TEST (Refer to 28 - DTC-Based Diagnostics/HVAC - Standard Procedure).

9. CHECK THE WIRING AND CONNECTORS

1. The conditions necessary to set the DTC are not present at this time.
2. Using the schematics as a guide, inspect the wiring and connectors specific to this circuit.
3. Check for an intermittent condition by inspecting the related wiring harness for chafed, pierced, pinched, partially broken wires.
4. Check the connectors for broken, bent, pushed out, spread, corroded, or contaminated terminals.
5. Wiggle the wiring and connectors while checking for shorted and open circuits.
6. With the scan tool, check the Environmental Data to help identify the conditions in which the DTC was set.

Were there any problems found?

Yes

- Repair as necessary.
- Perform HVAC VERIFICATION TEST (Refer to 28 - DTC-Based Diagnostics/HVAC - Standard Procedure).

No

- Test complete.

B105B-RECIRCULATION DOOR CONTROL CIRCUIT OPEN

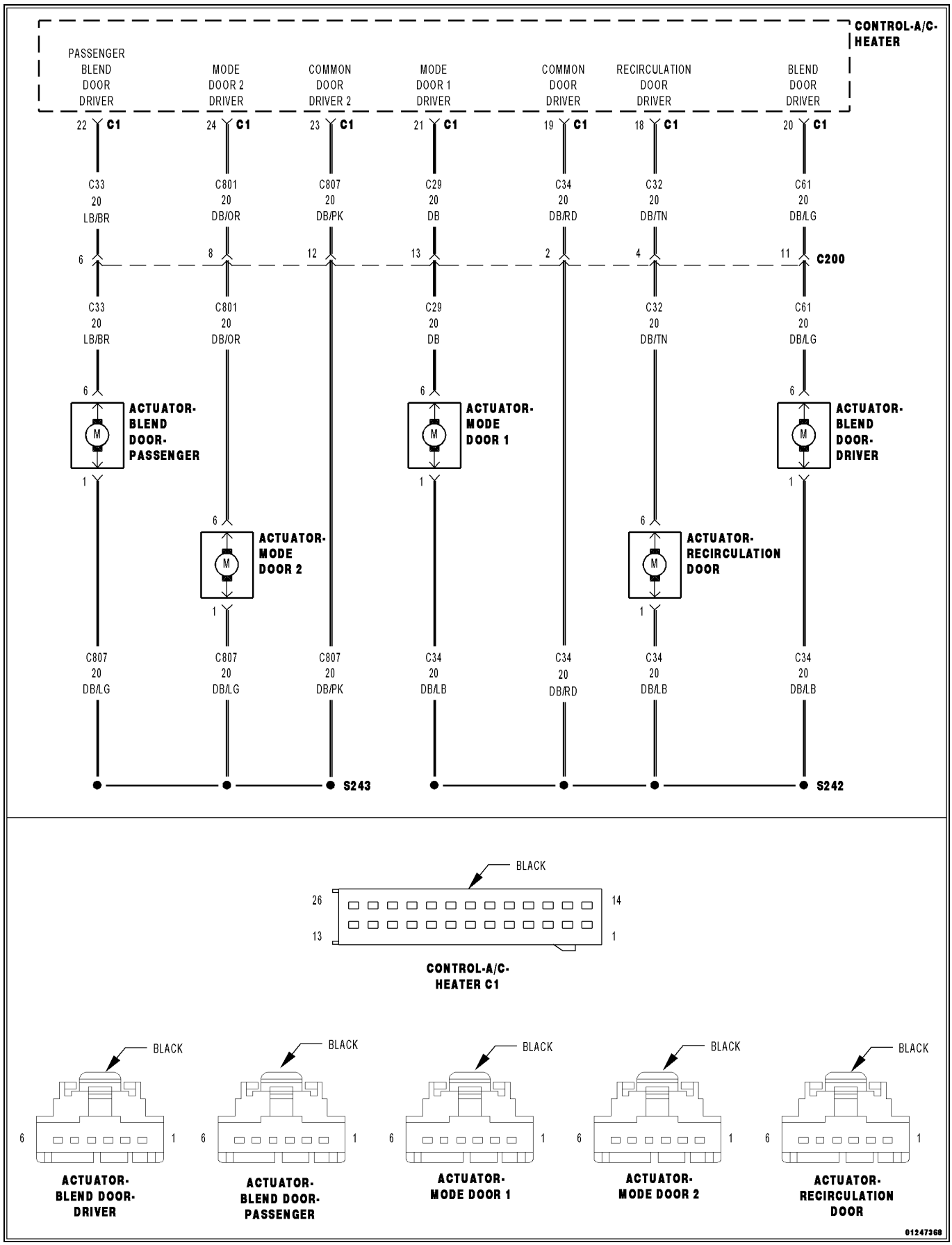

For a complete wiring diagram, **refer to the Wiring Information**.

Theory of Operation

After the initial installation of the A/C Heater Control, the controller is calibrated to each individual blend/mode door actuator. These calibrations are stored as in the number of pulses it takes to move the door from one stop to another. The A/C Heater Control drives the Door Actuators by the use of Door Driver circuit and a Common Door Driver circuit and monitors all door actuator pulses to detect door movement in both directions. Most of the door actuators share a common door driver circuit but each door actuator has its own unique driver circuit. Due to shared circuitry, similar DTCs can set at the same time for multiple actuators depending upon the type of circuit malfunction, its location, and the direction the actuator is moving when the malfunction is present.

- **When Monitored:**
  With the ignition on and an actuator movement is commanded by the A/C Heater Control.
- **Set Condition:**
  If an actuator move is commanded by the A/C Heater Control and there are no feedback pulses detected in that direction, the controller commands the actuator in the opposite direction. If no feedback pulses are detected in either direction this DTC will set. If the A/C Heater Control detects a valid pulse feedback in both directions, the DTC will change from Active to Stored and will stay in the controllers memory for 100 ignition cycles.

Possible Causes
(C32) RECIRCULATION DOOR DRIVER CIRCUIT OPEN
(C34) COMMON DOOR DRIVER CIRCUIT OPEN
RECIRCULATION DOOR ACTUATOR
A/C HEATER CONTROL

Always perform the HVAC Pre-Diagnostic Troubleshooting procedure before proceeding (Refer to 28 - DTC-Based Diagnostics/HVAC - Standard Procedure).

1. CHECK FOR OTHER DTCS

1. Ignition on, engine not running.
2. With the scan tool, read HVAC DTCs.

Is there more than one Door Control - Circuit Open DTC present?

Yes

- Repair the (C34) Common Door Driver circuit for an open.

NOTE: Due to the common shared driver circuit, probable area of concern is the splice, or from the splice to the A/C Heater Control harness connector. Make sure to check all inline connectors.

No

- Go To 2

2. CHECK IF DTC IS ACTIVE

1. Ignition on, engine not running.
2. With the scan tool, read HVAC DTCs.

Is this DTC active?

Yes

- Go To 4

No

- Go To 3

3. PERFORM HVAC ACTUATOR CALIBRATION TEST

1. With the scan tool, perform the HVAC Actuator Calibration Test.

Did this DTC change from Stored to Active while performing the HVAC Actuator Calibration Test?

Yes

- Go To 4

No

- Go To 7

4. CHECK THE RECIRCULATION DOOR ACTUATOR

1. Turn the ignition off to the lock position.
2. Disconnect the A/C Heater Control C1 harness connector.
3. Measure the resistance between the (C32) Recirculation Door Driver circuit and the (C34) Common Door Driver circuit.

Is the resistance 38.0 Ohms (± 5.0 Ohms)?

Yes

- Replace and program the A/C Heater Control in accordance with the Service Information.
- Perform HVAC VERIFICATION TEST (Refer to 28 - DTC-Based Diagnostics/HVAC - Standard Procedure).

No

- Go To 5

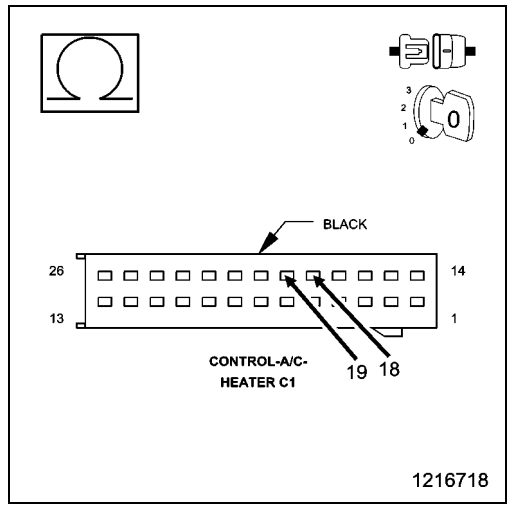

5. CHECK THE (C32) RECIRCULATION DOOR DRIVER CIRCUIT FOR AN OPEN

1. Turn the ignition off to the lock position.
2. Disconnect the Recirculation Door Actuator harness connector.
3. Measure the resistance of the (C32) Recirculation Door Driver circuit between the A/C Heater Control C1 harness connector and the Recirculation Door Actuator harness connector.

Is the resistance above 5.0 Ohms?

Yes

- Repair the (C32) Recirculation Door Driver circuit for an open.
- Perform HVAC VERIFICATION TEST (Refer to 28 - DTC-Based Diagnostics/HVAC - Standard Procedure).

No

- Go To 6

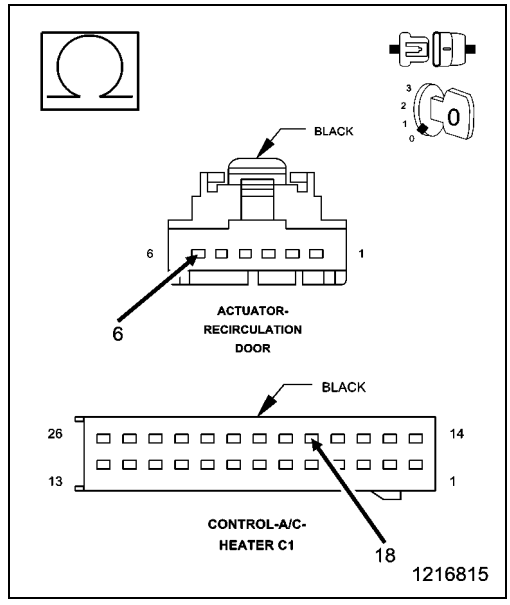

6. CHECK THE (C34) COMMON DOOR DRIVER CIRCUIT FOR AN OPEN

1. Measure the resistance of the (C34) Common Door Driver circuit between the A/C Heater Control C1 harness connector and the Recirculation Door Actuator harness connector.

Is the resistance above 5.0 Ohms?

Yes

- Repair the (C34) Common Door Driver circuit for an open.

NOTE: Probable location is the wiring harness splice or the wiring between the splice and the door actuator.

- Perform HVAC VERIFICATION TEST (Refer to 28 - DTC-Based Diagnostics/HVAC - Standard Procedure).

No

- Replace the Recirculation Door Actuator in accordance with the Service Information.
- Perform HVAC VERIFICATION TEST (Refer to 28 - DTC-Based Diagnostics/HVAC - Standard Procedure).

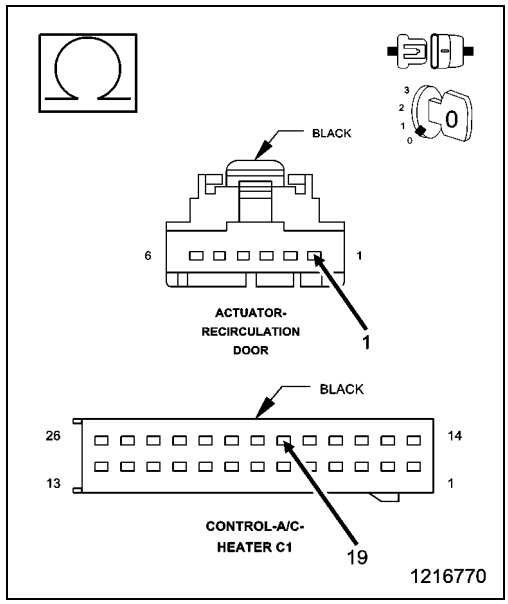

7. CHECK THE WIRING AND CONNECTORS

1. The conditions necessary to set the DTC are not present at this time.
2. Using the schematics as a guide, inspect the wiring and connectors specific to this circuit.
3. Check for an intermittent condition by inspecting the related wiring harness for chafed, pierced, pinched, partially broken wires.
4. Check the connectors for broken, bent, pushed out, spread, corroded, or contaminated terminals.
5. Wiggle the wiring and connectors while checking for shorted and open circuits.
6. With the scan tool, check the Environmental Data to help identify the conditions in which the DTC was set.

Were there any problems found?

Yes

- Repair as necessary.
- Perform HVAC VERIFICATION TEST (Refer to 28 - DTC-Based Diagnostics/HVAC - Standard Procedure).

No

- Test complete.

■ B105C-RECIRCULATION DOOR TRAVEL RANGE TOO SMALL

For a complete wiring diagram, **refer to the Wiring Information**.

Theory of Operation

After the initial installation of the A/C Heater Control, the controller is calibrated to each individual blend/mode door actuator. These calibrations are stored as in the number of pulses it takes to move the door from one stop to another. The A/C Heater Control drives the Door Actuators by the use of Door Driver circuit and a Common Door Driver circuit and monitors all door actuator pulses to detect door movement in both directions. Most of the door actuators share a common door driver circuit but each door actuator has its own unique driver circuit. Due to shared circuitry, similar DTCs can set at the same time for multiple actuators depending upon the type of circuit malfunction, its location, and the direction the actuator is moving when the malfunction is present.

- **When Monitored:**
  When ever an Actuator Calibration Test is performed.
- **Set Condition:**
  The A/C Heater Control uses a pulse feedback to the controller to detect the total door movement range. If the amount of pulses required to move the door completely in both directions is less than what the controller has stored in its memory, this DTC will set. If an Actuator Calibration Test is performed and the A/C Heater Control detects a valid range of the door movement span in both directions, the DTC will change from Active to Stored and will stay in the controllers memory for 100 ignition cycles.

Possible Causes
RELATED DTCS PRESENT
RECIRCULATION DOOR BINDING
RECIRCULATION DOOR ACTUATOR
A/C HEATER CONTROL

Always perform the HVAC Pre-Diagnostic Troubleshooting procedure before proceeding. (Refer to 28 - DTC-Based Diagnostics/HVAC - Standard Procedure).

1. CHECK FOR RELATED DTCS

1. Ignition on, engine not running.
2. With the scan tool, read HVAC DTCs.

Are there any Door Control - Circuit Open or Door Control - Performance or Incorrect Operation DTCs present?

Yes

- (Refer to 28 - DTC-Based Diagnostics/HVAC - Diagnosis and Testing) and perform the appropriate diagnostic procedure.

No

- Go To 2

2. CHECK IF DTC IS ACTIVE

1. Ignition on, engine not running.
2. With the scan tool, read HVAC DTCs.

Is this DTC active?

Yes

- Go To 4

No

- Go To 3

3. PERFORM HVAC ACTUATOR CALIBRATION TEST

1. With the scan tool, perform the HVAC Actuator Calibration Test.

Did this DTC change from Stored to Active while performing the HVAC Actuator Calibration Test?

Yes

- Go To 4

No

- Go To 6

4. CHECK THE RECIRCULATION DOOR

1. Remove the Recirculation Door Actuator and check the Recirculation Door for binding and full travel.

Were there any problems found?

Yes

- Repair or replace the Recirculation Door as necessary in accordance with the Service Information.
- Perform the HVAC VERIFICATION TEST. (Refer to 28 - DTC-Based Diagnostics/HVAC - Standard Procedure).

No

- Go To 5

5. CHECK THE RECIRCULATION DOOR ACTUATOR

1. Replace the Recirculation Door Actuator in accordance with the Service Information.
2. With the scan tool, erase HVAC DTCs and perform the HVAC Actuator Calibration Test.

Did this DTC reset?

Yes

- Replace and program the A/C Heater Control in accordance with the Service Information.
- Perform the HVAC VERIFICATION TEST. (Refer to 28 - DTC-Based Diagnostics/HVAC - Standard Procedure).

No

- Test complete.
- Perform the HVAC VERIFICATION TEST. (Refer to 28 - DTC-Based Diagnostics/HVAC - Standard Procedure).

6. CHECK THE WIRING AND CONNECTORS

1. The conditions necessary to set the DTC are not present at this time.
2. Using the schematics as a guide, inspect the wiring and connectors specific to this circuit.
3. Check for an intermittent condition by inspecting the related wiring harness for chafed, pierced, pinched, partially broken wires.
4. Check the connectors for broken, bent, pushed out, spread, corroded, or contaminated terminals.
5. Wiggle the wiring and connectors while checking for shorted and open circuits.
6. With the scan tool, check the Environmental Data to help identify the conditions in which the DTC was set.

Were there any problems found?

Yes

- Repair as necessary.
- Perform the HVAC VERIFICATION TEST. (Refer to 28 - DTC-Based Diagnostics/HVAC - Standard Procedure).

No

- Test complete.

■ B105D-RECIRCULATION DOOR TRAVEL RANGE TOO LARGE

For a complete wiring diagram, **refer to the Wiring Information**.

Theory of Operation

After the initial installation of the A/C Heater Control, the controller is calibrated to each individual blend/mode door actuator. These calibrations are stored as in the number of pulses it takes to move the door from one stop to another. The A/C Heater Control drives the Door Actuators by the use of Door Driver circuit and a Common Door Driver circuit and monitors all door actuator pulses to detect door movement in both directions. Most of the door actuators share a common door driver circuit but each door actuator has its own unique driver circuit. Due to shared circuitry, similar DTCs can set at the same time for multiple actuators depending upon the type of circuit malfunction, its location, and the direction the actuator is moving when the malfunction is present.

- **When Monitored:**
  When ever an Actuator Calibration Test is performed.
- **Set Condition:**
  The A/C Heater Control uses a pulse feedback to the controller to detect the total door movement range. If the amount of pulses required to move the door completely in both directions is greater than what the controller has stored in its memory, this DTC will set. If an Actuator Calibration Test is performed and the A/C Heater Control detects a valid range of the door movement span in both directions, the DTC will change from Active to Stored and will stay in the controllers memory for 100 ignition cycles.

Possible Causes
RELATED DTCS PRESENT
RECIRCULATION DOOR STOPS
RECIRCULATION DOOR
RECIRCULATION DOOR ACTUATOR
A/C HEATER CONTROL

Always perform the HVAC Pre-Diagnostic Troubleshooting procedure before proceeding. (Refer to 28 - DTC-Based Diagnostics/HVAC - Standard Procedure).

1. CHECK FOR RELATED DTCS

1. Ignition on, engine not running.
2. With the scan tool, read HVAC DTCs.

Are there any Door Control - Circuit Open or Door Control - Performance or Incorrect Operation DTCs present?

Yes

- (Refer to 28 - DTC-Based Diagnostics/HVAC - Diagnosis and Testing) and perform the appropriate diagnostic procedure.

No

- Go To 2

2. CHECK IF DTC IS ACTIVE

1. Ignition on, engine not running.
2. With the scan tool, read HVAC DTCs.

Is this DTC active?

Yes

- Go To 4

No

- Go To 3

3. PERFORM HVAC ACTUATOR CALIBRATION TEST

1. With the scan tool, perform the HVAC Actuator Calibration Test.

Did this DTC change from Stored to Active while performing the HVAC Actuator Calibration Test?

Yes

- Go To 4

No

- Go To 6

4. CHECK THE RECIRCULATION DOOR

1. Remove the Recirculation Door Actuator and check the Recirculation Door stops, linkage (stripped or cracked) and door.

Were there any problems found?

Yes

- Repair or replace the Recirculation Door as necessary in accordance with the Service Information.
- Perform the HVAC VERIFICATION TEST. (Refer to 28 - DTC-Based Diagnostics/HVAC - Standard Procedure).

No

- Go To 5

5. CHECK THE RECIRCULATION DOOR ACTUATOR

1. Replace the Recirculation Door Actuator in accordance with the Service Information.
2. With the scan tool, erase HVAC DTCs and perform the HVAC Actuator Calibration Test.

Did this DTC reset?

Yes

- Replace and program the A/C Heater Control in accordance with the Service Information.
- Perform the HVAC VERIFICATION TEST. (Refer to 28 - DTC-Based Diagnostics/HVAC - Standard Procedure).

No

- Test complete.
- Perform the HVAC VERIFICATION TEST. (Refer to 28 - DTC-Based Diagnostics/HVAC - Standard Procedure).

6. CHECK THE WIRING AND CONNECTORS

1. The conditions necessary to set the DTC are not present at this time.
2. Using the schematics as a guide, inspect the wiring and connectors specific to this circuit.
3. Check for an intermittent condition by inspecting the related wiring harness for chafed, pierced, pinched, partially broken wires.
4. Check the connectors for broken, bent, pushed out, spread, corroded, or contaminated terminals.
5. Wiggle the wiring and connectors while checking for shorted and open circuits.
6. With the scan tool, check the Environmental Data to help identify the conditions in which the DTC was set.

Were there any problems found?

Yes

- Repair as necessary.
- Perform the HVAC VERIFICATION TEST. (Refer to 28 - DTC-Based Diagnostics/HVAC - Standard Procedure).

No

- Test complete.

B109B-PANEL MODE DOOR 2 CONTROL CIRCUIT/PERFORMANCE

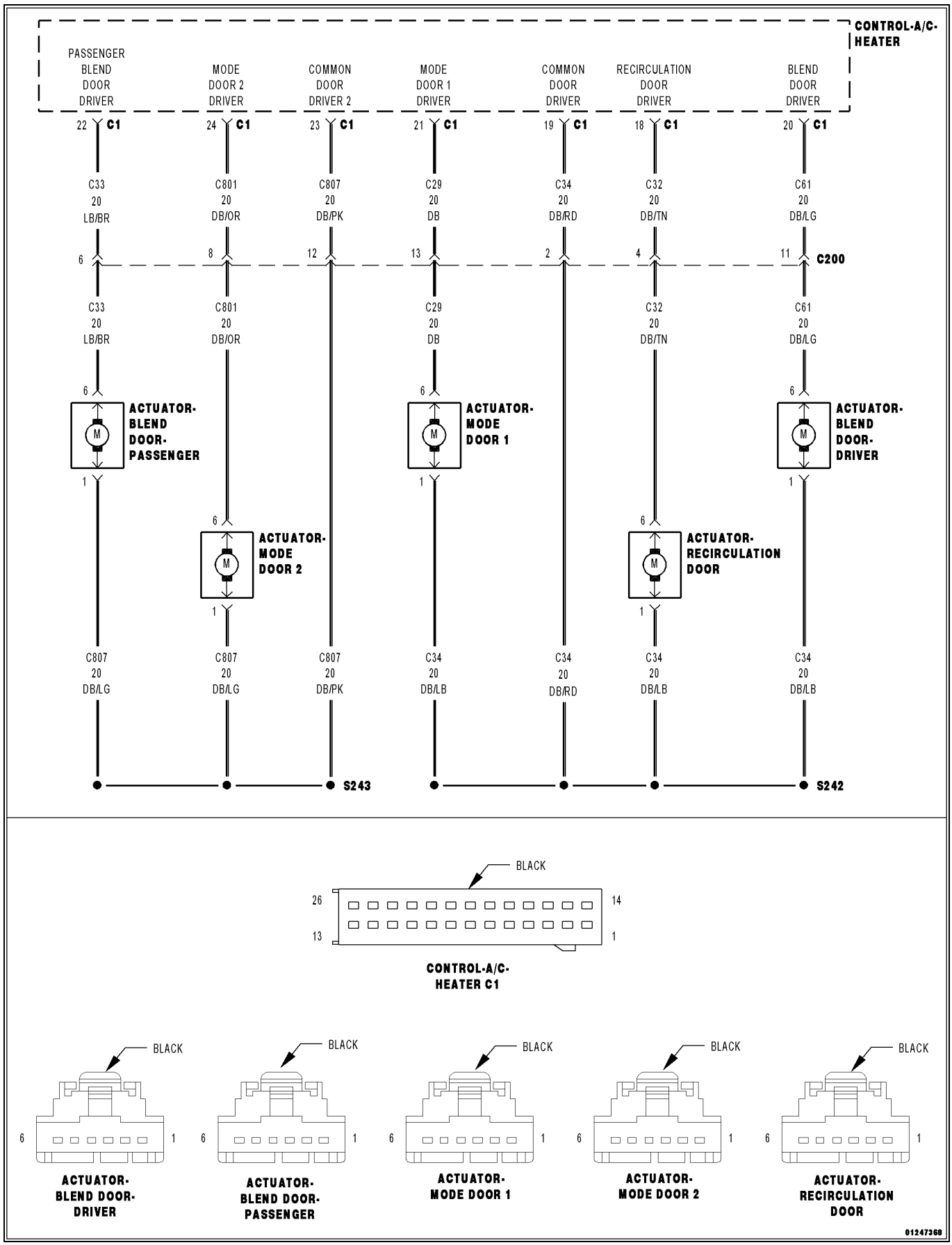

For a complete wiring diagram, **refer to the Wiring Information**.

Theory of Operation

After the initial installation of the A/C Heater Control, the controller is calibrated to each individual blend/mode door actuator. These calibrations are stored as in the number of pulses it takes to move the door from one stop to another. The A/C Heater Control drives the Door Actuators by the use of Door Driver circuit and a Common Door Driver circuit and monitors all door actuator pulses to detect door movement in both directions. Most of the door actuators share a common door driver circuit but each door actuator has its own unique driver circuit. Due to shared circuitry, similar DTCs can set at the same time for multiple actuators depending upon the type of circuit malfunction, its location, and the direction the actuator is moving when the malfunction is present.

- **When Monitored:**
  With the ignition on and an actuator movement is commanded by the A/C Heater Control.
- **Set Condition:**
  If an actuator move is commanded by the A/C Heater Control and there are no feedback pulses detected in that direction, the controller commands the actuator in the opposite direction. If feedback pulses are detected in only one direction this DTC will set. If the A/C Heater Control detects a valid pulse feedback in both directions, the DTC will change from Active to Stored and will stay in the controllers memory for 100 ignition cycles.

Possible Causes
(C801) MODE DOOR 2 DRIVER CIRCUIT SHORT TO VOLTAGE
(C801) MODE DOOR 2 DRIVER CIRCUIT SHORT TO GROUND
(807) COMMON DOOR DRIVER 2 CIRCUIT SHORT TO VOLTAGE
(807) COMMON DOOR DRIVER 2 CIRCUIT SHORT TO GROUND
MODE DOOR 2 DOOR (DEFROST/FLOOR) BINDING
MODE DOOR 2 ACTUATOR (DEFROST/FLOOR)
A/C HEATER CONTROL

Always perform the HVAC Pre-Diagnostic Troubleshooting procedure before proceeding. (Refer to 28 - DTC-Based Diagnostics/HVAC - Standard Procedure).

1. CHECK IF DTC IS ACTIVE

1. Ignition on, engine not running.
2. With the scan tool, read HVAC DTCs.

Is this DTC active?

Yes
- Go To 3

No
- Go To 2

2. PERFORM HVAC ACTUATOR CALIBRATION TEST

1. With the scan tool, perform the HVAC Actuator Calibration Test.

Did this DTC change from Stored to Active while performing the HVAC Actuator Calibration Test?

Yes
- Go To 3

No
- Go To 9

3. CHECK THE (C801) MODE DOOR 2 DRIVER CIRCUIT FOR A SHORT TO VOLTAGE

1. Turn the ignition off to the lock position.
2. Disconnect the A/C Heater Control C1 harness connector.
3. Disconnect the Mode Door 2 Actuator (Defrost/Floor) harness connector.
4. Ignition on, engine not running.
5. Measure the voltage of the (C801) Mode Door 2 Driver circuit.

Is there any voltage present?

Yes

- Repair the (C801) Mode Door 2 Driver circuit for a short to voltage.
- Perform HVAC VERIFICATION TEST (Refer to 28 - DTC-Based Diagnostics/HVAC - Standard Procedure).

No

- Go To 4

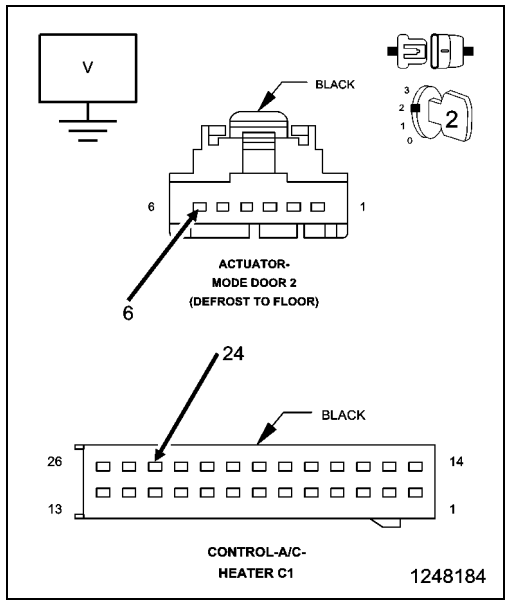

4. CHECK THE (807) COMMON DOOR DRIVER 2 CIRCUIT FOR A SHORT TO VOLTAGE

1. Measure the voltage of the (807) Common Door Driver 2 circuit.

Is there any voltage present?

Yes

- Repair the (807) Common Door Driver 2 circuit for a short to voltage.
- Perform HVAC VERIFICATION TEST (Refer to 28 - DTC-Based Diagnostics/HVAC - Standard Procedure).

No

- Go To 5

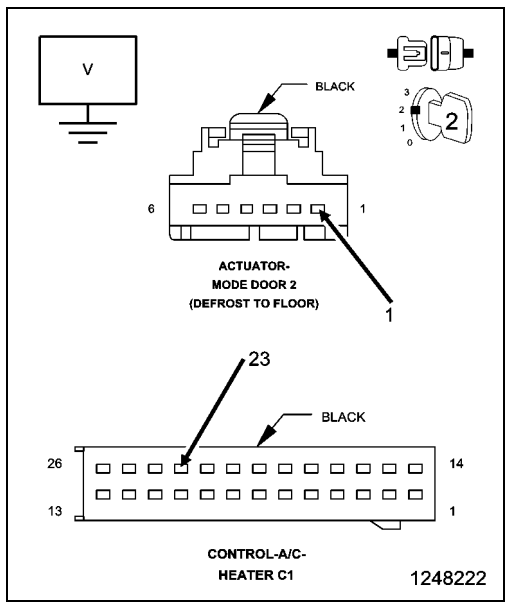

5. CHECK THE (C801) MODE DOOR 2 DRIVER CIRCUIT FOR A SHORT TO GROUND

1. Turn the ignition off to the lock position.
2. Measure the resistance between ground and the (C801) Mode Door 2 Driver circuit.

Is the resistance below 100k Ohms?

Yes

- Repair the (C801) Mode Door 2 Driver circuit for a short to ground.
- Perform HVAC VERIFICATION TEST (Refer to 28 - DTC-Based Diagnostics/HVAC - Standard Procedure).

No

- Go To 6

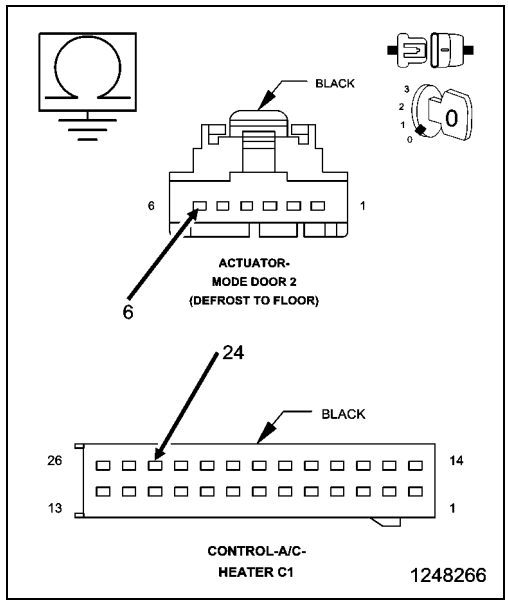

6. CHECK THE (807) COMMON DOOR DRIVER 2 CIRCUIT FOR A SHORT TO GROUND

1. Measure the resistance between ground and the (807) Common Door Driver 2 circuit.

Is the resistance below 100k Ohms?

Yes

- Repair the (807) Common Door Driver 2 circuit for a short to ground.
- Perform HVAC VERIFICATION TEST (Refer to 28 - DTC-Based Diagnostics/HVAC - Standard Procedure).

No

- Go To 7

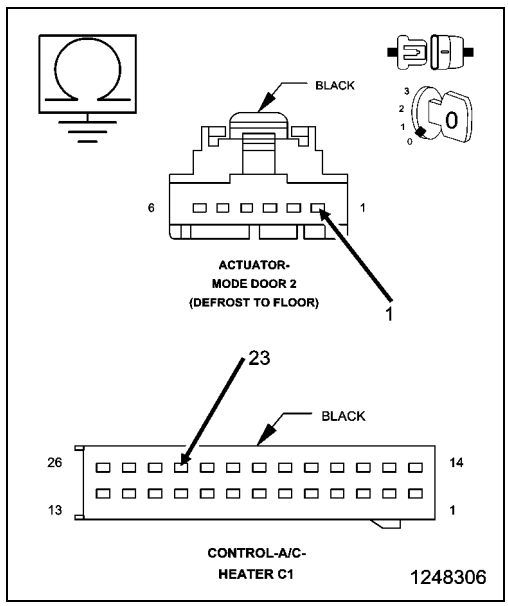

7. CHECK THE MODE DOOR 2 (DEFROST/FLOOR)

1. Remove the Mode Door 2 Actuator and check the Mode Door 2 (Defrost/Floor) for binding and full travel.

Were there any problems found?

Yes

- Repair or replace the Mode Door 2 (Defrost/Floor) as necessary in accordance with the Service Information.
- Perform HVAC VERIFICATION TEST (Refer to 28 - DTC-Based Diagnostics/HVAC - Standard Procedure).

No

- Go To 8

8. CHECK THE MODE DOOR 2 ACTUATOR

1. Replace the Mode Door 2 Actuator in accordance with the Service Information.
2. With the scan tool, erase HVAC DTCs and perform the HVAC Actuator Calibration Test.

Did this DTC reset?

Yes

- Replace and program the A/C Heater Control in accordance with the Service Information.
- Perform HVAC VERIFICATION TEST (Refer to 28 - DTC-Based Diagnostics/HVAC - Standard Procedure).

No

- Test complete.
- Perform HVAC VERIFICATION TEST (Refer to 28 - DTC-Based Diagnostics/HVAC - Standard Procedure).

9. CHECK THE WIRING AND CONNECTORS

1. The conditions necessary to set the DTC are not present at this time.
2. Using the schematics as a guide, inspect the wiring and connectors specific to this circuit.
3. Check for an intermittent condition by inspecting the related wiring harness for chafed, pierced, pinched, partially broken wires.
4. Check the connectors for broken, bent, pushed out, spread, corroded, or contaminated terminals.
5. Wiggle the wiring and connectors while checking for shorted and open circuits.
6. With the scan tool, check the Environmental Data to help identify the conditions in which the DTC was set.

Were there any problems found?

Yes

- Repair as necessary.
- Perform HVAC VERIFICATION TEST (Refer to 28 - DTC-Based Diagnostics/HVAC - Standard Procedure).

No

- Test complete.

B109E-PANEL MODE DOOR 2 CONTROL CIRCUIT OPEN

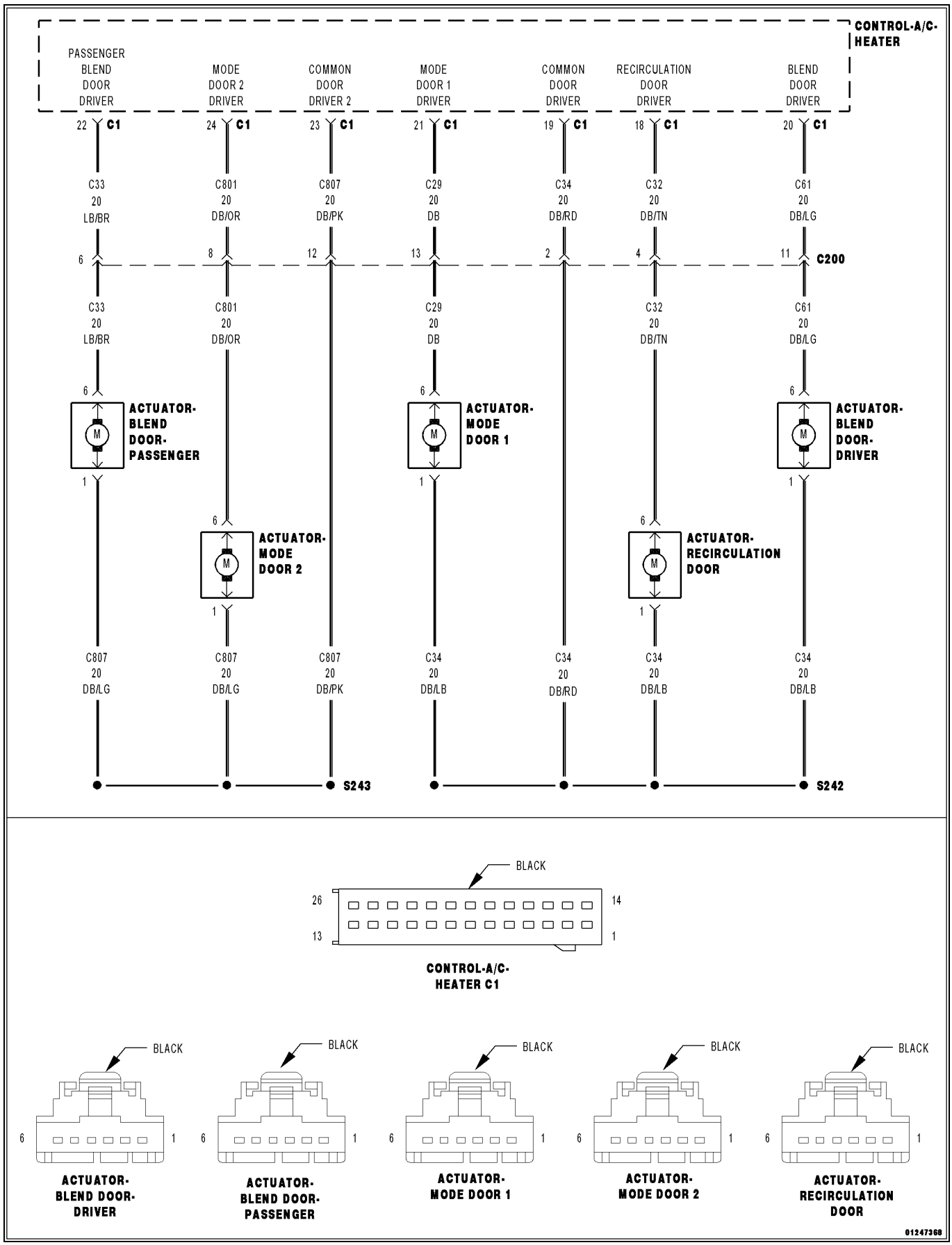

For a complete wiring diagram, **refer to the Wiring Information**.

Theory of Operation

After the initial installation of the A/C Heater Control, the controller is calibrated to each individual blend/mode door actuator. These calibrations are stored as in the number of pulses it takes to move the door from one stop to another. The A/C Heater Control drives the Door Actuators by the use of Door Driver circuit and a Common Door Driver circuit and monitors all door actuator pulses to detect door movement in both directions. Most of the door actuators share a common door driver circuit but each door actuator has its own unique driver circuit. Due to shared circuitry, similar DTCs can set at the same time for multiple actuators depending upon the type of circuit malfunction, its location, and the direction the actuator is moving when the malfunction is present.

- **When Monitored:**
  With the ignition on and an actuator movement is commanded by the A/C Heater Control.
- **Set Condition:**
  If an actuator move is commanded by the A/C Heater Control and there are no feedback pulses detected in that direction, the controller commands the actuator in the opposite direction. If no feedback pulses are detected in either direction this DTC will set. If the A/C Heater Control detects a valid pulse feedback in both directions, the DTC will change from Active to Stored and will stay in the controllers memory for 100 ignition cycles.

Possible Causes
(C807) MODE DOOR 2 DRIVER CIRCUIT OPEN
(C801) COMMON DOOR DRIVER CIRCUIT OPEN
BLEND DOOR ACTUATOR (DRIVER)
A/C HEATER CONTROL

Always perform the HVAC Pre-Diagnostic Troubleshooting procedure before proceeding (Refer to 28 - DTC-Based Diagnostics/HVAC - Standard Procedure).

1. CHECK IF DTC IS ACTIVE

1. Ignition on, engine not running.
2. With the scan tool, read HVAC DTCs.

Is this DTC active?

Yes
- Go To 3

No
- Go To 2

2. PERFORM HVAC ACTUATOR CALIBRATION TEST

1. With the scan tool, perform the HVAC Actuator Calibration Test.

Did this DTC change from Stored to Active while performing the HVAC Actuator Calibration Test?

Yes
- Go To 3

No
- Go To 6

3. CHECK THE MODE DOOR 2 ACTUATOR

1. Turn the ignition off to the lock position.
2. Disconnect the A/C Heater Control C1 harness connector.
3. Measure the resistance between the (C801) Mode Door 2 Driver circuit and the (C807) Common Door Driver circuit.

Is the resistance 38.0 Ohms (± 5.0 Ohms)?

Yes

- Replace and program the A/C Heater Control in accordance with the Service Information.
- Perform HVAC VERIFICATION TEST (Refer to 28 - DTC-Based Diagnostics/HVAC - Standard Procedure).

No

- Go To 4

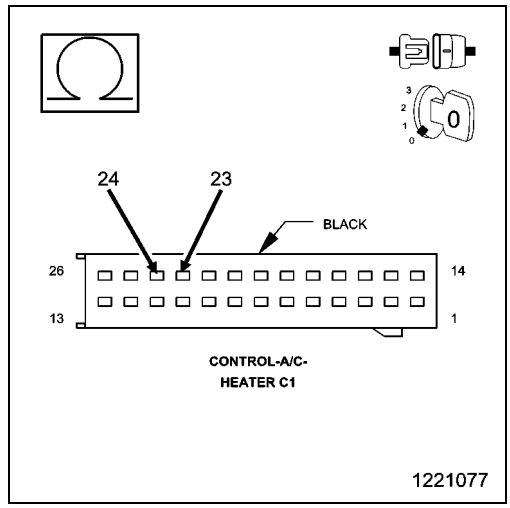

4. CHECK THE (C801) MODE DOOR 2 DRIVER CIRCUIT FOR AN OPEN

1. Turn the ignition off to the lock position.
2. Disconnect the Mode Door 2 (Defrost/Floor) Actuator harness connector.
3. Measure the resistance of the (C801) Mode Door 2 Driver circuit between the A/C Heater Control C1 harness connector and the Mode Door 2 (Defrost/Floor) Actuator harness connector.

Is the resistance above 5.0 Ohms?

Yes

- Repair the (C801) Mode Door 2 Driver circuit for an open.
- Perform HVAC VERIFICATION TEST (Refer to 28 - DTC-Based Diagnostics/HVAC - Standard Procedure).

No

- Go To 5

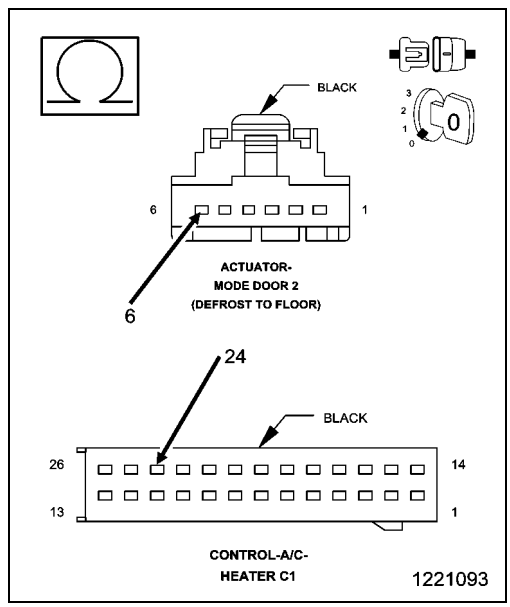

5. CHECK THE (C807) COMMON DOOR DRIVER CIRCUIT FOR AN OPEN

1. Measure the resistance of the (C807) Common Door Driver 2 circuit between the A/C Heater Control C1 harness connector and the Mode Door 2 (Defrost/Floor) Actuator harness connector.

Is the resistance above 5.0 Ohms?

Yes

- Repair the (C807) Common Door Driver 2 circuit for an open.
- Perform HVAC VERIFICATION TEST (Refer to 28 - DTC-Based Diagnostics/HVAC - Standard Procedure).

No

- Replace the Blend Door (Driver) Actuator in accordance with the Service Information.
- Perform HVAC VERIFICATION TEST (Refer to 28 - DTC-Based Diagnostics/HVAC - Standard Procedure).

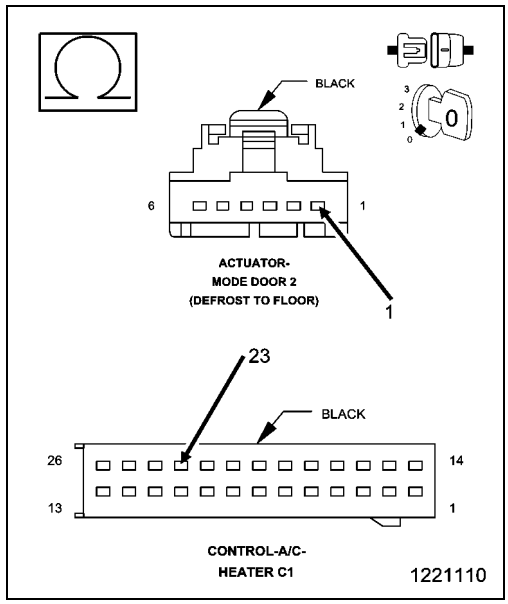

6. CHECK THE WIRING AND CONNECTORS

1. The conditions necessary to set the DTC are not present at this time.
2. With the scan tool, check the Environmental Data to help identify the conditions in which the DTC was set.
3. Using the schematics as a guide, inspect the wiring and connectors specific to this circuit.
4. Check for an intermittent condition by inspecting the related wiring harness for chafed, pierced, pinched, partially broken wires.
5. Check the connectors for broken, bent, pushed out, spread, corroded, or contaminated terminals.
6. Wiggle the wiring and connectors while checking for shorted and open circuits.

Were there any problems found?

Yes

- Repair as necessary.
- Perform HVAC VERIFICATION TEST (Refer to 28 - DTC-Based Diagnostics/HVAC - Standard Procedure).

No

- Test complete.

■ B109F-PANEL MODE DOOR 2 TRAVEL RANGE TOO SMALL

For a complete wiring diagram, **refer to the Wiring Information**.

Theory of Operation

After the initial installation of the A/C Heater Control, the controller is calibrated to each individual blend/mode door actuator. These calibrations are stored as in the number of pulses it takes to move the door from one stop to another. The A/C Heater Control drives the Door Actuators by the use of Door Driver circuit and a Common Door Driver circuit and monitors all door actuator pulses to detect door movement in both directions. Most of the door actuators share a common door driver circuit but each door actuator has its own unique driver circuit. Due to shared circuitry, similar DTCs can set at the same time for multiple actuators depending upon the type of circuit malfunction, its location, and the direction the actuator is moving when the malfunction is present.

- **When Monitored:**

  When ever an Actuator Calibration Test is performed.

- **Set Condition:**

  The A/C Heater Control uses a pulse feedback to the controller to detect the total door movement range. If the amount of pulses required to move the door completely in both directions is less than what the controller has stored in its memory, this DTC will set. If an Actuator Calibration Test is performed and the A/C Heater Control detects a valid range of the door movement span in both directions, the DTC will change from Active to Stored and will stay in the controllers memory for 100 ignition cycles.

Possible Causes
RELATED DTCS PRESENT
MODE DOOR 2 (DEFROST/FLOOR) BINDING
MODE DOOR 2 (DEFROST/FLOOR) ACTUATOR
A/C HEATER CONTROL

Always perform the HVAC Pre-Diagnostic Troubleshooting procedure before proceeding. (Refer to 28 - DTC-Based Diagnostics/HVAC - Standard Procedure).

1. CHECK FOR RELATED DTCS

1. Ignition on, engine not running.
2. With the scan tool, read HVAC DTCs.

Are there any Door Control - Circuit Open or Door Control - Performance or Incorrect Operation DTCs present?

Yes

- (Refer to 28 - DTC-Based Diagnostics/HVAC - Diagnosis and Testing) and perform the appropriate diagnostic procedure.

No

- Go To 2

2. CHECK IF DTC IS ACTIVE

1. Ignition on, engine not running.
2. With the scan tool, read HVAC DTCs.

Is this DTC active?

Yes

- Go To 4

No

- Go To 3

3. PERFORM HVAC ACTUATOR CALIBRATION TEST

1. With the scan tool, perform the HVAC Actuator Calibration Test.

Did this DTC change from Stored to Active while performing the HVAC Actuator Calibration Test?

Yes

- Go To 4

No

- Go To 6

4. CHECK THE MODE DOOR 2 (DEFROST/FLOOR)

1. Remove the Mode Door 2 (Defrost/Floor) Actuator and check the Mode Door 2 for binding and full travel.

Were there any problems found?

Yes

- Repair or replace the Mode Door 2 (Defrost/Floor) as necessary in accordance with the Service Information.
- Perform the HVAC VERIFICATION TEST. (Refer to 28 - DTC-Based Diagnostics/HVAC - Standard Procedure).

No

- Go To 5

5. CHECK THE MODE DOOR 2 (DEFROST/FLOOR) ACTUATOR

1. Replace the Mode Door 2 (Defrost/Floor) Actuator in accordance with the Service Information.
2. With the scan tool, erase HVAC DTCs and perform the HVAC Actuator Calibration Test.

Did this DTC reset?

Yes

- Replace and program the A/C Heater Control in accordance with the Service Information.
- Perform the HVAC VERIFICATION TEST. (Refer to 28 - DTC-Based Diagnostics/HVAC - Standard Procedure).

No

- Test complete.
- Perform the HVAC VERIFICATION TEST. (Refer to 28 - DTC-Based Diagnostics/HVAC - Standard Procedure).

6. CHECK THE WIRING AND CONNECTORS

1. The conditions necessary to set the DTC are not present at this time.
2. Using the schematics as a guide, inspect the wiring and connectors specific to this circuit.
3. Check for an intermittent condition by inspecting the related wiring harness for chafed, pierced, pinched, partially broken wires.
4. Check the connectors for broken, bent, pushed out, spread, corroded, or contaminated terminals.
5. Wiggle the wiring and connectors while checking for shorted and open circuits.
6. With the scan tool, check the Environmental Data to help identify the conditions in which the DTC was set.

Were there any problems found?

Yes

- Repair as necessary.
- Perform the HVAC VERIFICATION TEST. (Refer to 28 - DTC-Based Diagnostics/HVAC - Standard Procedure).

No

- Test complete.

■ B10A0-PANEL MODE DOOR 2 TRAVEL RANGE TOO LARGE

For a complete wiring diagram, **refer to the Wiring Information**.

Theory of Operation

After the initial installation of the A/C Heater Control, the controller is calibrated to each individual blend/mode door actuator. These calibrations are stored as in the number of pulses it takes to move the door from one stop to another. The A/C Heater Control drives the Door Actuators by the use of Door Driver circuit and a Common Door Driver circuit and monitors all door actuator pulses to detect door movement in both directions. Most of the door actuators share a common door driver circuit but each door actuator has its own unique driver circuit. Due to shared circuitry, similar DTCs can set at the same time for multiple actuators depending upon the type of circuit malfunction, its location, and the direction the actuator is moving when the malfunction is present.

- **When Monitored:**

  When ever an Actuator Calibration Test is performed.
- **Set Condition:**

  The A/C Heater Control uses a pulse feedback to the controller to detect the total door movement range. If the amount of pulses required to move the door completely in both directions is greater than what the controller has stored in its memory, this DTC will set. If an Actuator Calibration Test is performed and the A/C Heater Control detects a valid range of the door movement span in both directions, the DTC will change from Active to Stored and will stay in the controllers memory for 100 ignition cycles.

Possible Causes
RELATED DTCS PRESENT
RECIRCULATION DOOR STOPS
MODE DOOR 2 (DEFROST/FLOOR)
MODE DOOR 2 (DEFROST/FLOOR) ACTUATOR
A/C HEATER CONTROL

Always perform the HVAC Pre-Diagnostic Troubleshooting procedure before proceeding. (Refer to 28 - DTC-Based Diagnostics/HVAC - Standard Procedure).

1. CHECK FOR RELATED DTCS

1. Ignition on, engine not running.
2. With the scan tool, read HVAC DTCs.

Are there any Door Control - Circuit Open or Door Control - Performance or Incorrect Operation DTCs present?

Yes

- (Refer to 28 - DTC-Based Diagnostics/HVAC - Diagnosis and Testing) and perform the appropriate diagnostic procedure.

No

- Go To 2

2. CHECK IF DTC IS ACTIVE

1. Ignition on, engine not running.
2. With the scan tool, read HVAC DTCs.

Is this DTC active?

Yes

- Go To 4

No

- Go To 3

3. PERFORM HVAC ACTUATOR CALIBRATION TEST

1. With the scan tool, perform the HVAC Actuator Calibration Test.

Did this DTC change from Stored to Active while performing the HVAC Actuator Calibration Test?

Yes

- Go To 4

No

- Go To 6

4. CHECK THE MODE DOOR 2 (DEFROST/FLOOR)

1. Remove the Mode Door 2 (Defrost/Floor) Actuator and check the Mode Door 2 stops, linkage (stripped or cracked) and door.

Were there any problems found?

Yes

- Repair or replace the Mode Door 2 (Defrost/Floor) as necessary in accordance with the Service Information.
- Perform the HVAC VERIFICATION TEST. (Refer to 28 - DTC-Based Diagnostics/HVAC - Standard Procedure).

No

- Go To 5

5. CHECK THE MODE DOOR 2 (DEFROST/FLOOR) ACTUATOR

1. Replace the Mode Door 2 (Defrost/Floor) Actuator in accordance with the Service Information.
2. With the scan tool, erase HVAC DTCs and perform the HVAC Actuator Calibration Test.

Did this DTC reset?

Yes

- Replace and program the A/C Heater Control in accordance with the Service Information.
- Perform the HVAC VERIFICATION TEST. (Refer to 28 - DTC-Based Diagnostics/HVAC - Standard Procedure).

No

- Test complete.
- Perform the HVAC VERIFICATION TEST. (Refer to 28 - DTC-Based Diagnostics/HVAC - Standard Procedure).

6. CHECK THE WIRING AND CONNECTORS

1. The conditions necessary to set the DTC are not present at this time.
2. Using the schematics as a guide, inspect the wiring and connectors specific to this circuit.
3. Check for an intermittent condition by inspecting the related wiring harness for chafed, pierced, pinched, partially broken wires.
4. Check the connectors for broken, bent, pushed out, spread, corroded, or contaminated terminals.
5. Wiggle the wiring and connectors while checking for shorted and open circuits.
6. With the scan tool, check the Environmental Data to help identify the conditions in which the DTC was set.

Were there any problems found?

Yes

- Repair as necessary.
- Perform the HVAC VERIFICATION TEST. (Refer to 28 - DTC-Based Diagnostics/HVAC - Standard Procedure).

No

- Test complete.

B10A5-LEFT BLEND DOOR 1 CONTROL CIRCUIT OPEN

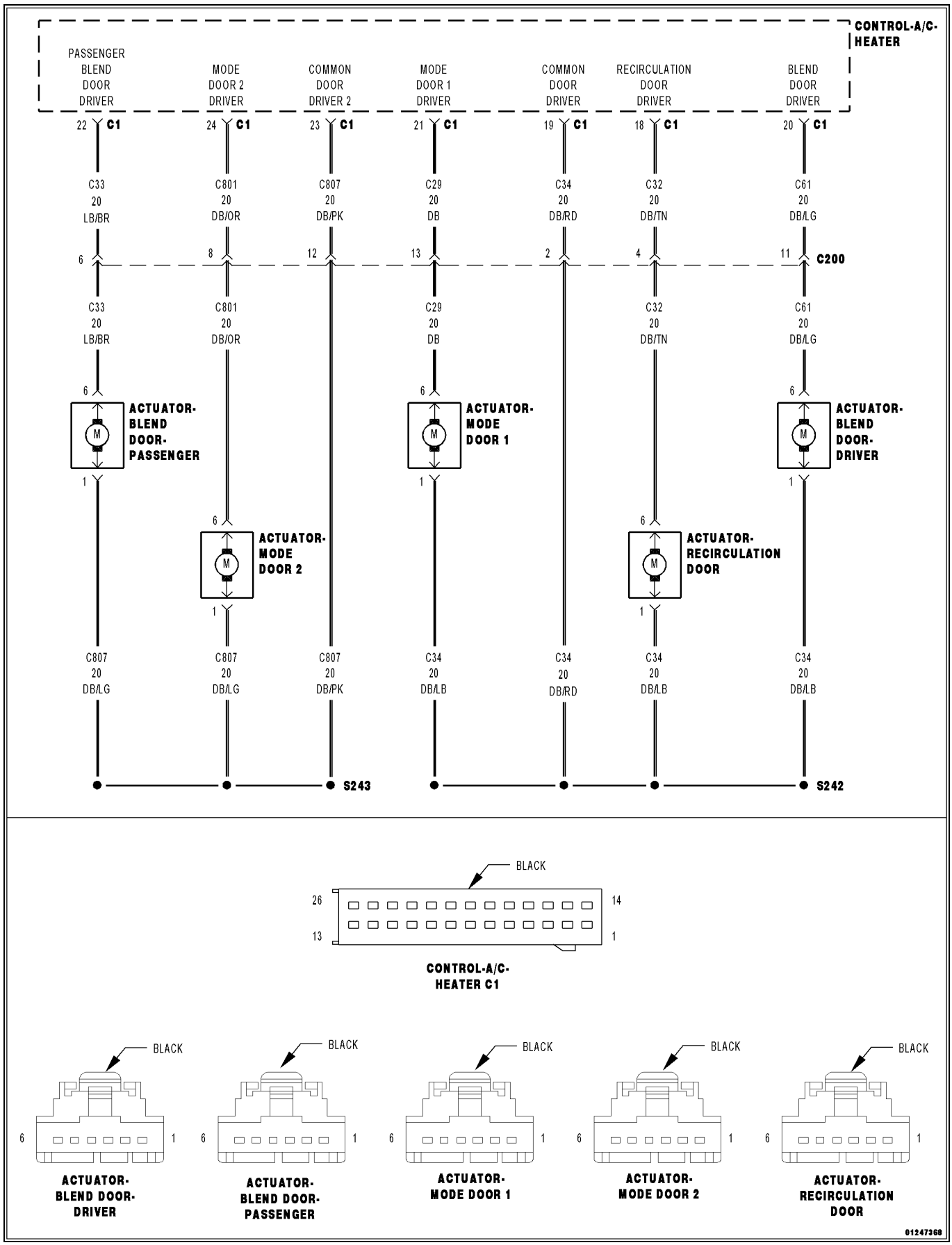

For a complete wiring diagram, **refer to the Wiring Information**.

Theory of Operation

After the initial installation of the A/C Heater Control, the controller is calibrated to each individual blend/mode door actuator. These calibrations are stored as in the number of pulses it takes to move the door from one stop to another. The A/C Heater Control drives the Door Actuators by the use of Door Driver circuit and a Common Door Driver circuit and monitors all door actuator pulses to detect door movement in both directions. Most of the door actuators share a common door driver circuit but each door actuator has its own unique driver circuit. Due to shared circuitry, similar DTCs can set at the same time for multiple actuators depending upon the type of circuit malfunction, its location, and the direction the actuator is moving when the malfunction is present.

- **When Monitored:**
  With the ignition on and an actuator movement is commanded by the A/C Heater Control.
- **Set Condition:**
  If an actuator move is commanded by the A/C Heater Control and there are no feedback pulses detected in that direction, the controller commands the actuator in the opposite direction. If no feedback pulses are detected in either direction this DTC will set. If the A/C Heater Control detects a valid pulse feedback in both directions, the DTC will change from Active to Stored and will stay in the controllers memory for 100 ignition cycles.

Possible Causes
(C61) BLEND DOOR DRIVER CIRCUIT OPEN
(C34) COMMON DOOR DRIVER CIRCUIT OPEN
BLEND DOOR ACTUATOR (DRIVER)
A/C HEATER CONTROL

Always perform the HVAC Pre-Diagnostic Troubleshooting procedure before proceeding (Refer to 28 - DTC-Based Diagnostics/HVAC - Standard Procedure).

1. CHECK FOR OTHER DTCS

1. Ignition on, engine not running.
2. With the scan tool, read HVAC DTCs.

Is there more than one Door Control - Circuit Open DTC present?

Yes

- Repair the (C34) Common Door Driver circuit for an open.

NOTE: Due to the common shared driver circuit, probable area of concern is the splice, or from the splice to the A/C Heater Control harness connector. Make sure to check all inline connectors.

No

- Go To 2

2. CHECK IF DTC IS ACTIVE

1. Ignition on, engine not running.
2. With the scan tool, read HVAC DTCs.

Is this DTC active?

Yes

- Go To 4

No

- Go To 3

3. PERFORM HVAC ACTUATOR CALIBRATION TEST

1. With the scan tool, perform the HVAC Actuator Calibration Test.

Did this DTC change from Stored to Active while performing the HVAC Actuator Calibration Test?

Yes

- Go To 4

No

- Go To 7

4. CHECK THE BLEND DOOR ACTUATOR

1. Turn the ignition off to the lock position.
2. Disconnect the A/C Heater Control C1 harness connector.
3. Measure the resistance between the (C61) Blend Door Driver circuit and the (C34) Common Door Driver circuit.

Is the resistance 38.0 Ohms (± 5.0 Ohms)?

Yes

- Replace and program the A/C Heater Control in accordance with the Service Information.
- Perform HVAC VERIFICATION TEST (Refer to 28 - DTC-Based Diagnostics/HVAC - Standard Procedure).

No

- Go To 5

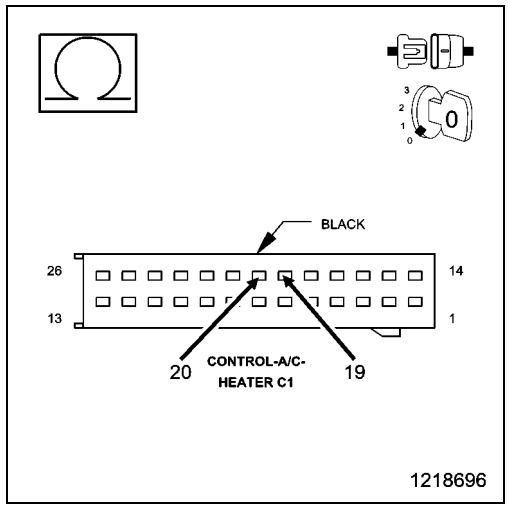

5. CHECK THE (C61) BLEND DOOR DRIVER CIRCUIT FOR AN OPEN

1. Turn the ignition off to the lock position.
2. Disconnect the Blend Door Driver Actuator harness connector.
3. Measure the resistance of the (C61) Blend Door Driver circuit between the A/C Heater Control C1 harness connector and the Blend Door Actuator harness connector.

Is the resistance above 5.0 Ohms?

Yes

- Repair the (C61) Blend Door Driver circuit for an open.
- Perform HVAC VERIFICATION TEST (Refer to 28 - DTC-Based Diagnostics/HVAC - Standard Procedure).

No

- Go To 6

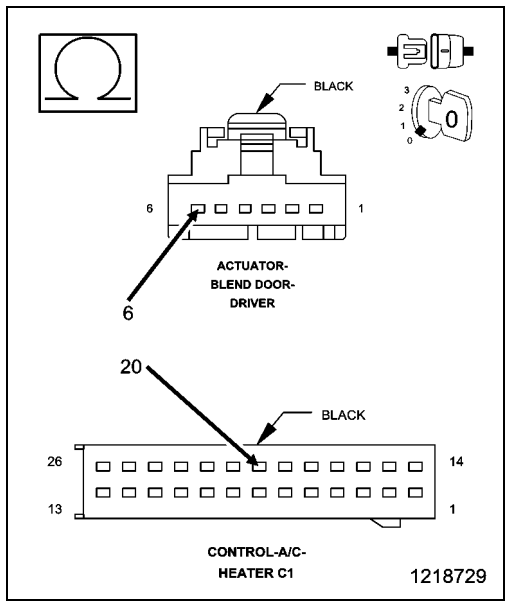

6. CHECK THE (C34) COMMON DOOR DRIVER CIRCUIT FOR AN OPEN

1. Measure the resistance of the (C34) Common Door Driver circuit between the A/C Heater Control C1 harness connector and the Blend Door Actuator harness connector.

Is the resistance above 5.0 Ohms?

Yes

- Repair the (C34) Common Door Driver circuit for an open.

NOTE: Probable location is the wiring harness splice or the wiring between the splice and the door actuator.

- Perform HVAC VERIFICATION TEST (Refer to 28 - DTC-Based Diagnostics/HVAC - Standard Procedure).

No

- Replace the Blend Door Actuator in accordance with the Service Information.
- Perform HVAC VERIFICATION TEST (Refer to 28 - DTC-Based Diagnostics/HVAC - Standard Procedure).

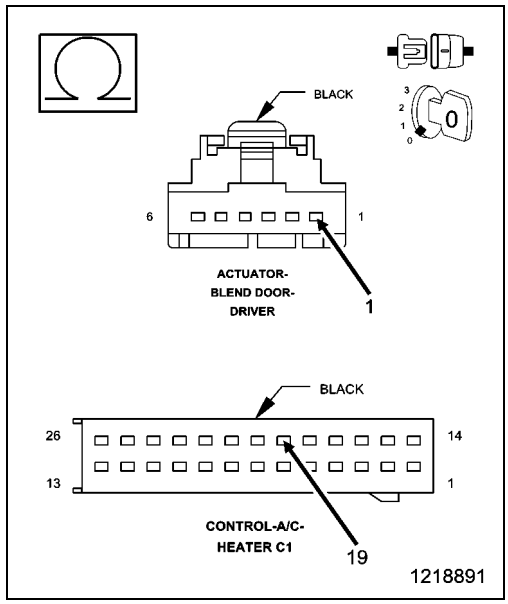

7. CHECK THE WIRING AND CONNECTORS

1. The conditions necessary to set the DTC are not present at this time.
2. Using the schematics as a guide, inspect the wiring and connectors specific to this circuit.
3. Check for an intermittent condition by inspecting the related wiring harness for chafed, pierced, pinched, partially broken wires.
4. Check the connectors for broken, bent, pushed out, spread, corroded, or contaminated terminals.
5. Wiggle the wiring and connectors while checking for shorted and open circuits.
6. With the scan tool, check the Environmental Data to help identify the conditions in which the DTC was set.

Were there any problems found?

Yes

- Repair as necessary.
- Perform HVAC VERIFICATION TEST (Refer to 28 - DTC-Based Diagnostics/HVAC - Standard Procedure).

No

- Test complete.

■ B10A6-LEFT BLEND DOOR 1 TRAVEL TOO SMALL

For a complete wiring diagram, **refer to the Wiring Information**.

Theory of Operation

After the initial installation of the A/C Heater Control, the controller is calibrated to each individual blend/mode door actuator. These calibrations are stored as in the number of pulses it takes to move the door from one stop to another. The A/C Heater Control drives the Door Actuators by the use of Door Driver circuit and a Common Door Driver circuit and monitors all door actuator pulses to detect door movement in both directions. Most of the door actuators share a common door driver circuit but each door actuator has its own unique driver circuit. Due to shared circuitry, similar DTCs can set at the same time for multiple actuators depending upon the type of circuit malfunction, its location, and the direction the actuator is moving when the malfunction is present.

- **When Monitored:**

  When ever an Actuator Calibration Test is performed.

- **Set Condition:**

  The A/C Heater Control uses a pulse feedback to the controller to detect the total door movement range. If the amount of pulses required to move the door completely in both directions is less than what the controller has stored in its memory, this DTC will set. If an Actuator Calibration Test is performed and the A/C Heater Control detects a valid range of the door movement span in both directions, the DTC will change from Active to Stored and will stay in the controllers memory for 100 ignition cycles.

Possible Causes
RELATED DTCS PRESENT
BLEND DOOR BINDING
BLEND DOOR ACTUATOR
A/C HEATER CONTROL

Always perform the HVAC Pre-Diagnostic Troubleshooting procedure before proceeding. (Refer to 28 - DTC-Based Diagnostics/HVAC - Standard Procedure).

1. CHECK FOR RELATED DTCS

1. Ignition on, engine not running.
2. With the scan tool, read HVAC DTCs.

Are there any Door Control - Circuit Open or Door Control - Performance or Incorrect Operation DTCs present?

Yes

- (Refer to 28 - DTC-Based Diagnostics/HVAC - Diagnosis and Testing) and perform the appropriate diagnostic procedure.

No

- Go To 2

2. CHECK IF DTC IS ACTIVE

1. Ignition on, engine not running.
2. With the scan tool, read HVAC DTCs.

Is this DTC active?

Yes

- Go To 4

No

- Go To 3

3. PERFORM HVAC ACTUATOR CALIBRATION TEST

1. With the scan tool, perform the HVAC Actuator Calibration Test.

Did this DTC change from Stored to Active while performing the HVAC Actuator Calibration Test?

Yes

- Go To 4

No

- Go To 6

4. CHECK THE BLEND DOOR

1. Remove the Blend Door Actuator and check the Blend Door (Driver) for binding and full travel.

Is there any problem with the Blend Door movement?

Yes

- Repair or replace the Blend Door as necessary in accordance with the Service Information.
- Perform the HVAC VERIFICATION TEST. (Refer to 28 - DTC-Based Diagnostics/HVAC - Standard Procedure).

No

- Go To 5

5. CHECK THE BLEND DOOR ACTUATOR

1. Replace the Blend Door Actuator in accordance with the Service Information.
2. With the scan tool, erase HVAC DTCs and perform the HVAC Actuator Calibration Test.

Did this DTC reset?

Yes

- Replace and program the A/C Heater Control in accordance with the Service Information.
- Perform the HVAC VERIFICATION TEST. (Refer to 28 - DTC-Based Diagnostics/HVAC - Standard Procedure).

No

- Test complete.
- Perform the HVAC VERIFICATION TEST. (Refer to 28 - DTC-Based Diagnostics/HVAC - Standard Procedure).

6. CHECK THE WIRING AND CONNECTORS

1. The conditions necessary to set the DTC are not present at this time.
2. Using the schematics as a guide, inspect the wiring and connectors specific to this circuit.
3. Check for an intermittent condition by inspecting the related wiring harness for chafed, pierced, pinched, partially broken wires.
4. Check the connectors for broken, bent, pushed out, spread, corroded, or contaminated terminals.
5. Wiggle the wiring and connectors while checking for shorted and open circuits.
6. With the scan tool, check the Environmental Data to help identify the conditions in which the DTC was set.

Were there any problems found?

Yes

- Repair as necessary.
- Perform the HVAC VERIFICATION TEST. (Refer to 28 - DTC-Based Diagnostics/HVAC - Standard Procedure).

No

- Test complete.

■ B10A7-LEFT BLEND DOOR 1 TRAVEL TOO LARGE

For a complete wiring diagram, **refer to the Wiring Information**.

Theory of Operation

After the initial installation of the A/C Heater Control, the controller is calibrated to each individual blend/mode door actuator. These calibrations are stored as in the number of pulses it takes to move the door from one stop to another. The A/C Heater Control drives the Door Actuators by the use of Door Driver circuit and a Common Door Driver circuit and monitors all door actuator pulses to detect door movement in both directions. Most of the door actuators share a common door driver circuit but each door actuator has its own unique driver circuit. Due to shared circuitry, similar DTCs can set at the same time for multiple actuators depending upon the type of circuit malfunction, its location, and the direction the actuator is moving when the malfunction is present.

- **When Monitored:**

  When ever an Actuator Calibration Test is performed.
- **Set Condition:**

  The A/C Heater Control uses a pulse feedback to the controller to detect the total door movement range. If the amount of pulses required to move the door completely in both directions is greater than what the controller has stored in its memory, this DTC will set. If an Actuator Calibration Test is performed and the A/C Heater Control detects a valid range of the door movement span in both directions, the DTC will change from Active to Stored and will stay in the controllers memory for 100 ignition cycles.

Possible Causes
RELATED DTCS PRESENT
BLEND DOOR STOPS
BLEND DOOR
BLEND DOOR ACTUATOR
A/C HEATER CONTROL

Always perform the HVAC Pre-Diagnostic Troubleshooting procedure before proceeding. (Refer to 28 - DTC-Based Diagnostics/HVAC - Standard Procedure).

1. CHECK FOR RELATED DTCS

1. Ignition on, engine not running.
2. With the scan tool, read HVAC DTCs.

Are there any Door Control - Circuit Open or Door Control - Performance or Incorrect Operation DTCs present?

Yes

- (Refer to 28 - DTC-Based Diagnostics/HVAC - Diagnosis and Testing) and perform the appropriate diagnostic procedure.

No

- Go To 2

2. CHECK IF DTC IS ACTIVE

1. Ignition on, engine not running.
2. With the scan tool, read HVAC DTCs.

Is this DTC active?

Yes

- Go To 4

No

- Go To 3

3. PERFORM HVAC ACTUATOR CALIBRATION TEST

1. With the scan tool, perform the HVAC Actuator Calibration Test.

Did this DTC change from Stored to Active while performing the HVAC Actuator Calibration Test?

Yes

- Go To 4

No

- Go To 6

4. CHECK THE BLEND DOOR

1. Remove the Blend Door Actuator (Driver) and check the Blend Door stops, linkage (stripped or cracked) and door.

Was there any problems with the Blend Door or movement?

Yes

- Repair or replace the Blend Door as necessary in accordance with the Service Information.
- Perform the HVAC VERIFICATION TEST. (Refer to 28 - DTC-Based Diagnostics/HVAC - Standard Procedure).

No

- Go To 5

5. CHECK THE BLEND DOOR ACTUATOR

1. Replace the Blend Door Actuator in accordance with the Service Information.
2. With the scan tool, erase HVAC DTCs and perform the HVAC Actuator Calibration Test.

Did this DTC reset?

Yes

- Replace and program the A/C Heater Control in accordance with the Service Information.
- Perform the HVAC VERIFICATION TEST. (Refer to 28 - DTC-Based Diagnostics/HVAC - Standard Procedure).

No

- Test complete.
- Perform the HVAC VERIFICATION TEST. (Refer to 28 - DTC-Based Diagnostics/HVAC - Standard Procedure).

6. CHECK THE WIRING AND CONNECTORS

1. The conditions necessary to set the DTC are not present at this time.
2. Using the schematics as a guide, inspect the wiring and connectors specific to this circuit.
3. Check for an intermittent condition by inspecting the related wiring harness for chafed, pierced, pinched, partially broken wires.
4. Check the connectors for broken, bent, pushed out, spread, corroded, or contaminated terminals.
5. Wiggle the wiring and connectors while checking for shorted and open circuits.
6. With the scan tool, check the Environmental Data to help identify the conditions in which the DTC was set.

Were there any problems found?

Yes

- Repair as necessary.
- Perform the HVAC VERIFICATION TEST. (Refer to 28 - DTC-Based Diagnostics/HVAC - Standard Procedure).

No

- Test complete.

B10A8-LEFT BLEND DOOR ACTUATOR PERFORMANCE

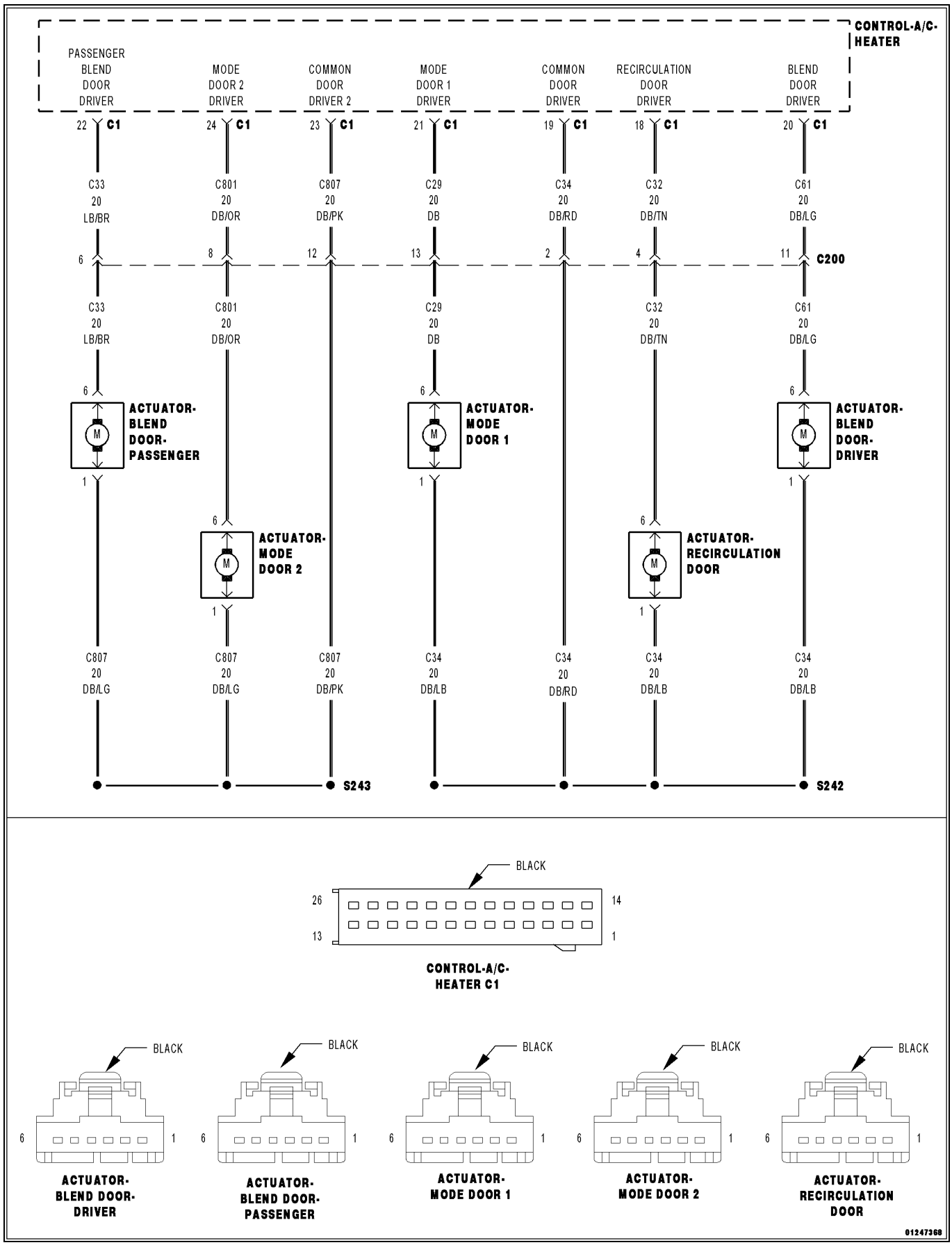

For a complete wiring diagram, **refer to the Wiring Information**.

Theory of Operation

After the initial installation of the A/C Heater Control, the controller is calibrated to each individual blend/mode door actuator. These calibrations are stored as in the number of pulses it takes to move the door from one stop to another. The A/C Heater Control drives the Door Actuators by the use of Door Driver circuit and a Common Door Driver circuit and monitors all door actuator pulses to detect door movement in both directions. Most of the door actuators share a common door driver circuit but each door actuator has its own unique driver circuit. Due to shared circuitry, similar DTCs can set at the same time for multiple actuators depending upon the type of circuit malfunction, its location, and the direction the actuator is moving when the malfunction is present.

- **When Monitored:**
  With the ignition on and an actuator movement is commanded by the A/C Heater Control.
- **Set Condition:**
  If an actuator move is commanded by the A/C Heater Control and there are no feedback pulses detected in that direction, the controller commands the actuator in the opposite direction. If feedback pulses are detected in only one direction this DTC will set. If the A/C Heater Control detects a valid pulse feedback in both directions, the DTC will change from Active to Stored and will stay in the controllers memory for 100 ignition cycles.

Possible Causes
(C61) BLEND DOOR DRIVER CIRCUIT SHORTED TO VOLTAGE
(C61) BLEND DOOR DRIVER CIRCUIT SHORTED TO GROUND
(C34) COMMON DOOR DRIVER CIRCUIT SHORTED TO VOLTAGE
(C34) COMMON DOOR DRIVER CIRCUIT SHORTED TO GROUND
BLEND DOOR BINDING (DRIVER)
BLEND DOOR ACTUATOR (DRIVER)
A/C HEATER CONTROL

Always perform the HVAC Pre-Diagnostic Troubleshooting procedure before proceeding. (Refer to 28 - DTC-Based Diagnostics/HVAC - Standard Procedure).

1. CHECK IF DTC IS ACTIVE

1. Ignition on, engine not running.
2. With the scan tool, read HVAC DTCs.

Is this DTC active?

Yes
- Go To 3

No
- Go To 2

2. PERFORM HVAC ACTUATOR CALIBRATION TEST

1. With the scan tool, perform the HVAC Actuator Calibration Test.

Did this DTC change from Stored to Active while performing the HVAC Actuator Calibration Test?

Yes
- Go To 3

No
- Go To 9

3. CHECK THE (C61) BLEND DOOR DRIVER CIRCUIT FOR A SHORT TO VOLTAGE

1. Turn the ignition off to the lock position.
2. Disconnect the A/C Heater Control C1 harness connector.
3. Disconnect the Blend Door Actuator harness connector.
4. Ignition on, engine not running.
5. Measure the voltage of the (C61) Blend Door Driver circuit.

Is there any voltage present?

Yes

- Repair the (C61) Blend Door Driver circuit for a short to voltage.
- Perform HVAC VERIFICATION TEST (Refer to 28 - DTC-Based Diagnostics/HVAC - Standard Procedure).

No

- Go To 4

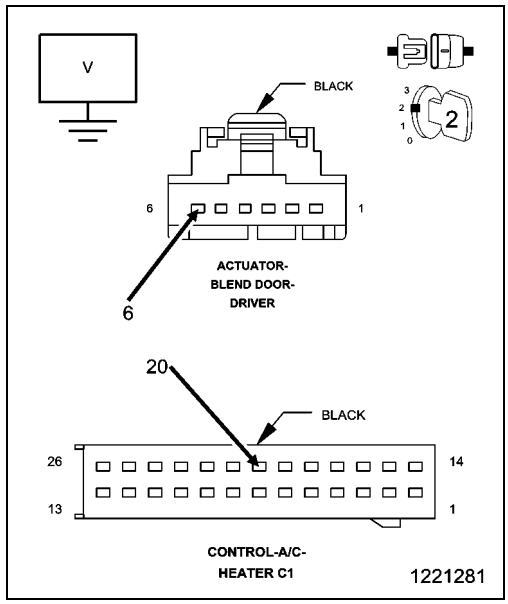

4. CHECK THE (C34) COMMON DOOR DRIVER CIRCUIT FOR A SHORT TO VOLTAGE

1. Measure the voltage of the (C34) Common Door Driver circuit.

Is there any voltage present?

Yes

- Repair the (C34) Common Door Driver circuit for a short to voltage.
- Perform HVAC VERIFICATION TEST (Refer to 28 - DTC-Based Diagnostics/HVAC - Standard Procedure).

No

- Go To 5

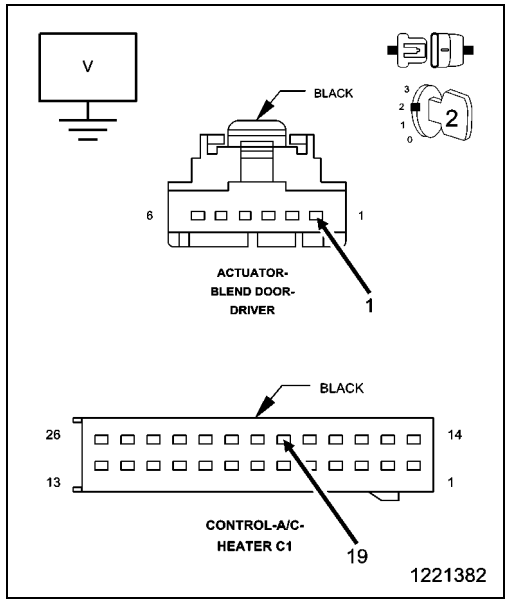

5. CHECK THE (C61) BLEND DOOR DRIVER CIRCUIT FOR A SHORT TO GROUND

1. Turn the ignition off to the lock position.
2. Measure the resistance between ground and the (C61) Blend Door Driver circuit.

Is the resistance below 100k Ohms?

Yes

- Repair the (C61) Blend Door Driver circuit for a short to ground.
- Perform HVAC VERIFICATION TEST (Refer to 28 - DTC-Based Diagnostics/HVAC - Standard Procedure).

No

- Go To 6

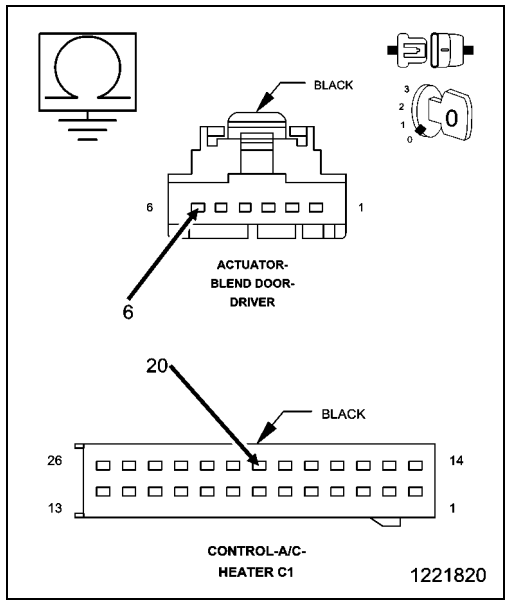

6. CHECK THE (C34) COMMON DOOR DRIVER CIRCUIT FOR A SHORT TO GROUND

1. Measure the resistance between ground and the (C34) Common Door Driver circuit.

Is the resistance below 100k Ohms?

Yes

- Repair the (C34) Common Door Driver circuit for a short to ground.
- Perform HVAC VERIFICATION TEST (Refer to 28 - DTC-Based Diagnostics/HVAC - Standard Procedure).

No

- Go To 7

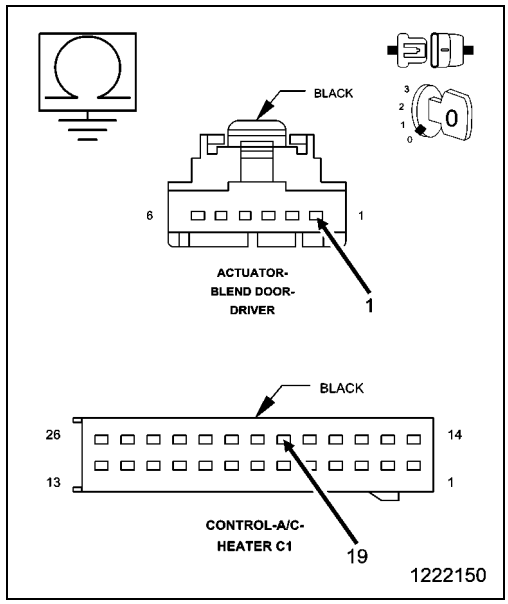

7. CHECK THE BLEND DOOR

1. Remove the Blend Door Actuator (Driver) and check the Blend Door for binding and full travel.

Were there any problems found?

Yes

- Repair or replace the Blend Door as necessary in accordance with the Service Information.
- Perform HVAC VERIFICATION TEST (Refer to 28 - DTC-Based Diagnostics/HVAC - Standard Procedure).

No

- Go To 8

8. CHECK THE BLEND DOOR ACTUATOR

1. Replace the Blend Door Actuator in accordance with the Service Information.
2. With the scan tool, erase HVAC DTCs and perform the HVAC Actuator Calibration Test.

Did this DTC reset?

Yes

- Replace and program the A/C Heater Control in accordance with the Service Information.
- Perform HVAC VERIFICATION TEST (Refer to 28 - DTC-Based Diagnostics/HVAC - Standard Procedure).

No

- Test complete.
- Perform HVAC VERIFICATION TEST (Refer to 28 - DTC-Based Diagnostics/HVAC - Standard Procedure).

9. CHECK THE WIRING AND CONNECTORS

1. The conditions necessary to set the DTC are not present at this time.
2. Using the schematics as a guide, inspect the wiring and connectors specific to this circuit.
3. Check for an intermittent condition by inspecting the related wiring harness for chafed, pierced, pinched, partially broken wires.
4. Check the connectors for broken, bent, pushed out, spread, corroded, or contaminated terminals.
5. Wiggle the wiring and connectors while checking for shorted and open circuits.
6. With the scan tool, check the Environmental Data to help identify the conditions in which the DTC was set.

Were there any problems found?

Yes

- Repair as necessary.
- Perform HVAC VERIFICATION TEST (Refer to 28 - DTC-Based Diagnostics/HVAC - Standard Procedure).

No

- Test complete.

B10AC-RIGHT BLEND DOOR CONTROL CIRCUIT OPEN

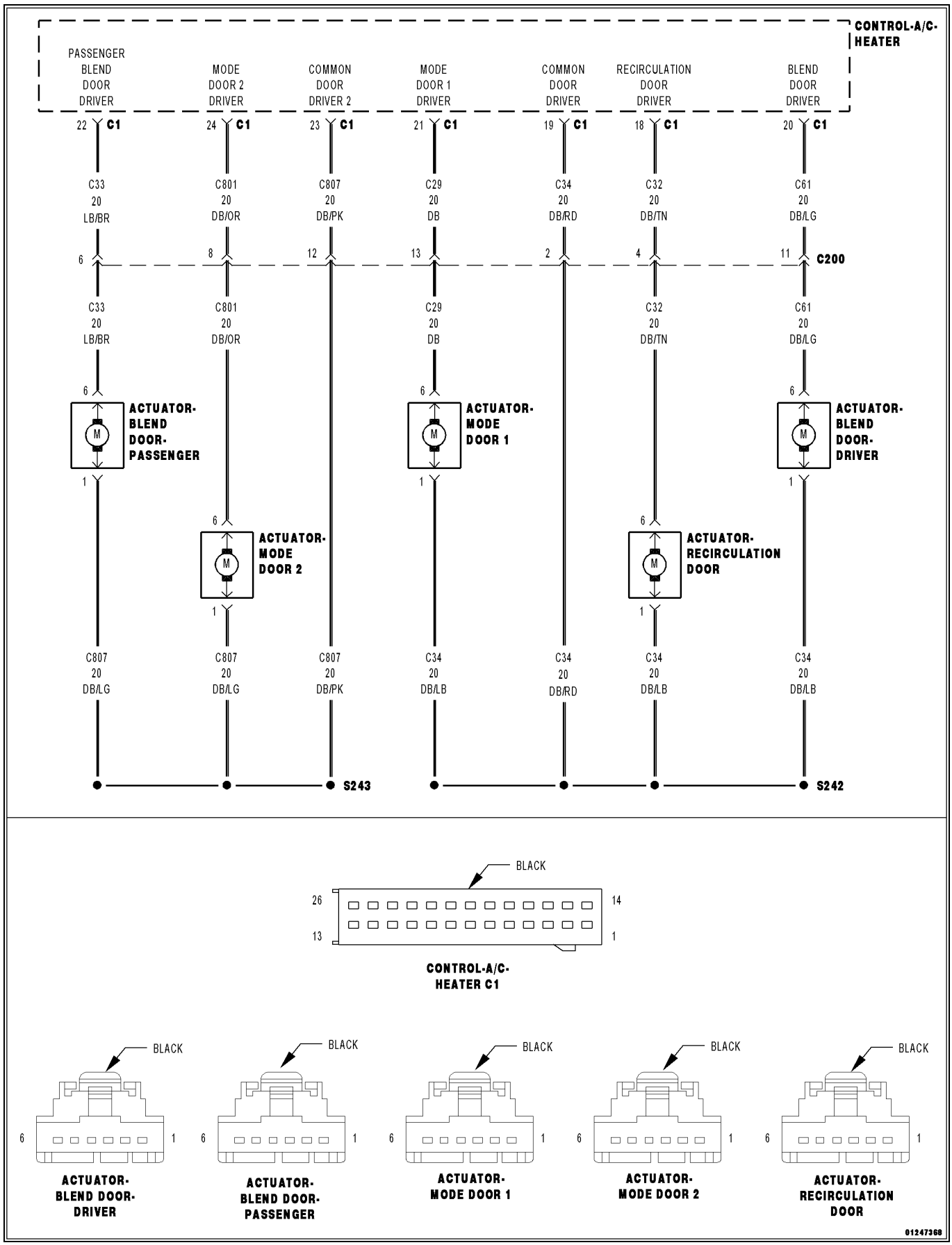

For a complete wiring diagram, **refer to the Wiring Information**.

Theory of Operation

After the initial installation of the A/C Heater Control, the controller is calibrated to each individual blend/mode door actuator. These calibrations are stored as in the number of pulses it takes to move the door from one stop to another. The A/C Heater Control drives the Door Actuators by the use of Door Driver circuit and a Common Door Driver circuit and monitors all door actuator pulses to detect door movement in both directions. Most of the door actuators share a common door driver circuit but each door actuator has its own unique driver circuit. Due to shared circuitry, similar DTCs can set at the same time for multiple actuators depending upon the type of circuit malfunction, its location, and the direction the actuator is moving when the malfunction is present.

- **When Monitored:**
  With the ignition on and an actuator movement is commanded by the A/C Heater Control.
- **Set Condition:**
  If an actuator move is commanded by the A/C Heater Control and there are no feedback pulses detected in that direction, the controller commands the actuator in the opposite direction. If no feedback pulses are detected in either direction this DTC will set. If the A/C Heater Control detects a valid pulse feedback in both directions, the DTC will change from Active to Stored and will stay in the controllers memory for 100 ignition cycles.

Possible Causes
(C33) PASSENGER BLEND DOOR DRIVER CIRCUIT OPEN
(C807) COMMON DOOR DRIVER 2 CIRCUIT OPEN
BLEND DOOR ACTUATOR (DRIVER)
A/C HEATER CONTROL

Always perform the HVAC Pre-Diagnostic Troubleshooting procedure before proceeding. (Refer to 28 - DTC-Based Diagnostics/HVAC - Standard Procedure).

1. CHECK FOR OTHER DTCS

1. Ignition on, engine not running.
2. With the scan tool, read HVAC DTCs.

Is there more than one Door Control - Circuit Open DTC present?

Yes

- Repair the (C807) Common Door Driver 2 circuit for an open.

NOTE: Due to the common shared driver circuit, probable area of concern is the splice, or from the splice to the A/C Heater Control harness connector. Make sure to check all inline connectors.

No

- Go To 2

2. CHECK IF DTC IS ACTIVE

1. Ignition on, engine not running.
2. With the scan tool, read HVAC DTCs.

Is this DTC active?

Yes

- Go To 4

No

- Go To 3

3. PERFORM HVAC ACTUATOR CALIBRATION TEST

1. With the scan tool, perform the HVAC Actuator Calibration Test.

Did this DTC change from Stored to Active while performing the HVAC Actuator Calibration Test?

Yes

- Go To 4

No

- Go To 7

4. CHECK THE BLEND DOOR ACTUATOR

1. Turn the ignition off to the lock position.
2. Disconnect the A/C Heater Control C1 harness connector.
3. Measure the resistance between the (C33) Passenger Blend Door Driver circuit and the (C807) Common Door Driver 2 circuit.

Is the resistance 38.0 Ohms (± 5.0 Ohms)?

Yes

- Replace and program the A/C Heater Control in accordance with the Service Information.
- Perform HVAC VERIFICATION TEST (Refer to 28 - DTC-Based Diagnostics/HVAC - Standard Procedure).

No

- Go To 5

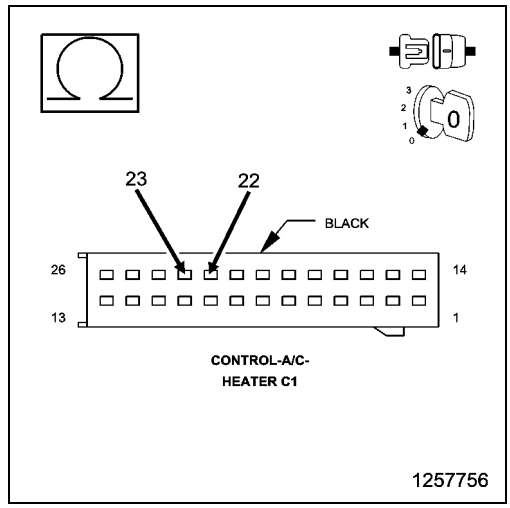

5. CHECK THE (C33) PASSENGER BLEND DOOR DRIVER CIRCUIT FOR AN OPEN

1. Turn the ignition off to the lock position.
2. Disconnect the Passenger Blend Door Driver Actuator harness connector.
3. Measure the resistance of the (C33) Passenger Blend Door Driver circuit between the A/C Heater Control C1 harness connector and the Passenger Blend Door Actuator harness connector.

Is the resistance above 5.0 Ohms?

Yes

- Repair the (C33) Passenger Blend Door Driver circuit for an open.
- Perform HVAC VERIFICATION TEST (Refer to 28 - DTC-Based Diagnostics/HVAC - Standard Procedure).

No

- Go To 6

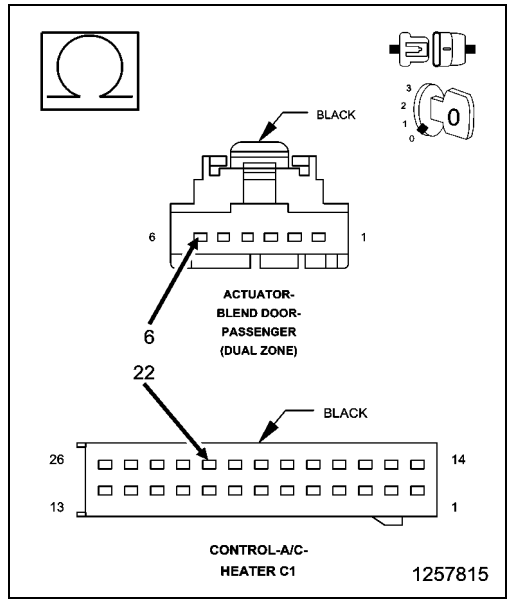

6. CHECK THE (C807) COMMON DOOR DRIVER 2 CIRCUIT FOR AN OPEN

1. Measure the resistance of the (C807) Common Door Driver 2 circuit between the A/C Heater Control C1 harness connector and the Passenger Blend Door Actuator harness connector.

Is the resistance above 5.0 Ohms?

Yes

- Repair the (C807) Common Door Driver 2 circuit for an open.

NOTE: Probable location is the wiring harness splice or the wiring between the splice and the door actuator.

- Perform HVAC VERIFICATION TEST (Refer to 28 - DTC-Based Diagnostics/HVAC - Standard Procedure).

No

- Replace the Passenger Blend Door Actuator in accordance with the Service Information.
- Perform HVAC VERIFICATION TEST (Refer to 28 - DTC-Based Diagnostics/HVAC - Standard Procedure).

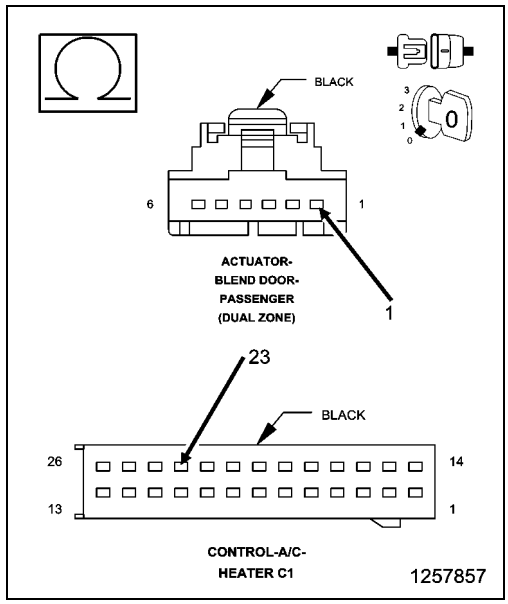

7. CHECK THE WIRING AND CONNECTORS

1. The conditions necessary to set the DTC are not present at this time.
2. Using the schematics as a guide, inspect the wiring and connectors specific to this circuit.
3. Check for an intermittent condition by inspecting the related wiring harness for chafed, pierced, pinched, partially broken wires.
4. Check the connectors for broken, bent, pushed out, spread, corroded, or contaminated terminals.
5. Wiggle the wiring and connectors while checking for shorted and open circuits.
6. With the scan tool, check the Environmental Data to help identify the conditions in which the DTC was set.

Were there any problems found?

Yes

- Repair as necessary.
- Perform HVAC VERIFICATION TEST (Refer to 28 - DTC-Based Diagnostics/HVAC - Standard Procedure).

No

- Test complete.

■ B10AD-RIGHT BLEND DOOR TRAVEL TOO SMALL

For a complete wiring diagram, **refer to the Wiring Information**.

Theory of Operation

After the initial installation of the A/C Heater Control, the controller is calibrated to each individual blend/mode door actuator. These calibrations are stored as in the number of pulses it takes to move the door from one stop to another. The A/C Heater Control drives the Door Actuators by the use of Door Driver circuit and a Common Door Driver circuit and monitors all door actuator pulses to detect door movement in both directions. Most of the door actuators share a common door driver circuit but each door actuator has its own unique driver circuit. Due to shared circuitry, similar DTCs can set at the same time for multiple actuators depending upon the type of circuit malfunction, its location, and the direction the actuator is moving when the malfunction is present.

- **When Monitored:**

  When ever an Actuator Calibration Test is performed.
- **Set Condition:**

  The A/C Heater Control uses a pulse feedback to the controller to detect the total door movement range. If the amount of pulses required to move the door completely in both directions is less than what the controller has stored in its memory, this DTC will set. If an Actuator Calibration Test is performed and the A/C Heater Control detects a valid range of the door movement span in both directions, the DTC will change from Active to Stored and will stay in the controllers memory for 100 ignition cycles.

Possible Causes
RELATED DTCS PRESENT
PASSENGER BLEND DOOR BINDING
PASSENGER BLEND DOOR ACTUATOR
A/C HEATER CONTROL

Always perform the HVAC Pre-Diagnostic Troubleshooting procedure before proceeding. (Refer to 28 - DTC-Based Diagnostics/HVAC - Standard Procedure).

1. CHECK FOR RELATED DTCS

1. Ignition on, engine not running.
2. With the scan tool, read HVAC DTCs.

Are there any Door Control - Circuit Open or Door Control - Performance or Incorrect Operation DTCs present?

Yes

- (Refer to 28 - DTC-Based Diagnostics/HVAC - Diagnosis and Testing) and perform the appropriate diagnostic procedure.

No

- Go To 2

2. CHECK IF DTC IS ACTIVE

1. Ignition on, engine not running.
2. With the scan tool, read HVAC DTCs.

Is this DTC active?

Yes

- Go To 4

No

- Go To 3

3. PERFORM HVAC ACTUATOR CALIBRATION TEST

1. With the scan tool, perform the HVAC Actuator Calibration Test.

Did this DTC change from Stored to Active while performing the HVAC Actuator Calibration Test?

Yes

- Go To 4

No

- Go To 6

4. CHECK THE PASSENGER BLEND DOOR

1. Remove the Passenger Blend Door Actuator and check the Passenger Blend Door for binding and full travel.

Is there any problem with the Blend Door movement?

Yes

- Repair or replace the Passenger Blend Door as necessary in accordance with the Service Information.
- Perform the HVAC VERIFICATION TEST. (Refer to 28 - DTC-Based Diagnostics/HVAC - Standard Procedure).

No

- Go To 5

5. CHECK THE PASSENGER BLEND DOOR ACTUATOR

1. Replace the Passenger Blend Door Actuator in accordance with the Service Information.
2. With the scan tool, erase HVAC DTCs and perform the HVAC Actuator Calibration Test.

Did this DTC reset?

Yes

- Replace and program the A/C Heater Control in accordance with the Service Information.
- Perform the HVAC VERIFICATION TEST. (Refer to 28 - DTC-Based Diagnostics/HVAC - Standard Procedure).

No

- Test complete.
- Perform the HVAC VERIFICATION TEST. (Refer to 28 - DTC-Based Diagnostics/HVAC - Standard Procedure).

6. CHECK THE WIRING AND CONNECTORS

1. The conditions necessary to set the DTC are not present at this time.
2. Using the schematics as a guide, inspect the wiring and connectors specific to this circuit.
3. Check for an intermittent condition by inspecting the related wiring harness for chafed, pierced, pinched, partially broken wires.
4. Check the connectors for broken, bent, pushed out, spread, corroded, or contaminated terminals.
5. Wiggle the wiring and connectors while checking for shorted and open circuits.
6. With the scan tool, check the Environmental Data to help identify the conditions in which the DTC was set.

Were there any problems found?

Yes

- Repair as necessary.
- Perform the HVAC VERIFICATION TEST. (Refer to 28 - DTC-Based Diagnostics/HVAC - Standard Procedure).

No

- Test complete.

■ B10AE-RIGHT BLEND DOOR TRAVEL TOO LARGE

For a complete wiring diagram, **refer to the Wiring Information**.

Theory of Operation

After the initial installation of the A/C Heater Control, the controller is calibrated to each individual blend/mode door actuator. These calibrations are stored as in the number of pulses it takes to move the door from one stop to another. The A/C Heater Control drives the Door Actuators by the use of Door Driver circuit and a Common Door Driver circuit and monitors all door actuator pulses to detect door movement in both directions. Most of the door actuators share a common door driver circuit but each door actuator has its own unique driver circuit. Due to shared circuitry, similar DTCs can set at the same time for multiple actuators depending upon the type of circuit malfunction, its location, and the direction the actuator is moving when the malfunction is present.

- **When Monitored:**

  When ever an Actuator Calibration Test is performed.
- **Set Condition:**

  The A/C Heater Control uses a pulse feedback to the controller to detect the total door movement range. If the amount of pulses required to move the door completely in both directions is greater than what the controller has stored in its memory, this DTC will set. If an Actuator Calibration Test is performed and the A/C Heater Control detects a valid range of the door movement span in both directions, the DTC will change from Active to Stored and will stay in the controllers memory for 100 ignition cycles.

Possible Causes
RELATED DTCS PRESENT
PASSENGER BLEND DOOR STOPS
PASSENGER BLEND DOOR
PASSENGER BLEND DOOR ACTUATOR
A/C HEATER CONTROL

Always perform the HVAC Pre-Diagnostic Troubleshooting procedure before proceeding. (Refer to 28 - DTC-Based Diagnostics/HVAC - Standard Procedure).

1. CHECK FOR RELATED DTCS

1. Ignition on, engine not running.
2. With the scan tool, read HVAC DTCs.

Are there any Door Control - Circuit Open or Door Control - Performance or Incorrect Operation DTCs present?

Yes

- (Refer to 28 - DTC-Based Diagnostics/HVAC - Diagnosis and Testing) and perform the appropriate diagnostic procedure.

No

- Go To 2

2. CHECK IF DTC IS ACTIVE

1. Ignition on, engine not running.
2. With the scan tool, read HVAC DTCs.

Is this DTC active?

Yes

- Go To 4

No

- Go To 3

3. PERFORM HVAC ACTUATOR CALIBRATION TEST

1. With the scan tool, perform the HVAC Actuator Calibration Test.

Did this DTC change from Stored to Active while performing the HVAC Actuator Calibration Test?

Yes

- Go To 4

No

- Go To 6

4. CHECK THE PASSENGER BLEND DOOR

1. Remove the Passenger Blend Door Actuator and check the Passenger Blend Door stops, linkage (stripped or cracked) and door.

Was there any problems with the Blend Door or movement?

Yes

- Repair or replace the Passenger Blend Door as necessary in accordance with the Service Information.
- Perform the HVAC VERIFICATION TEST. (Refer to 28 - DTC-Based Diagnostics/HVAC - Standard Procedure).

No

- Go To 5

5. CHECK THE PASSENGER BLEND DOOR ACTUATOR

1. Replace the Passenger Blend Door Actuator in accordance with the Service Information.
2. With the scan tool, erase HVAC DTCs and perform the HVAC Actuator Calibration Test.

Did this DTC reset?

Yes

- Replace and program the A/C Heater Control in accordance with the Service Information.
- Perform the HVAC VERIFICATION TEST. (Refer to 28 - DTC-Based Diagnostics/HVAC - Standard Procedure).

No

- Test complete.
- Perform the HVAC VERIFICATION TEST. (Refer to 28 - DTC-Based Diagnostics/HVAC - Standard Procedure).

6. CHECK THE WIRING AND CONNECTORS

1. The conditions necessary to set the DTC are not present at this time.
2. Using the schematics as a guide, inspect the wiring and connectors specific to this circuit.
3. Check for an intermittent condition by inspecting the related wiring harness for chafed, pierced, pinched, partially broken wires.
4. Check the connectors for broken, bent, pushed out, spread, corroded, or contaminated terminals.
5. Wiggle the wiring and connectors while checking for shorted and open circuits.
6. With the scan tool, check the Environmental Data to help identify the conditions in which the DTC was set.

Were there any problems found?

Yes

- Repair as necessary.
- Perform the HVAC VERIFICATION TEST. (Refer to 28 - DTC-Based Diagnostics/HVAC - Standard Procedure).

No

- Test complete.

B10AF-RIGHT BLEND DOOR ACTUATOR PERFORMANCE

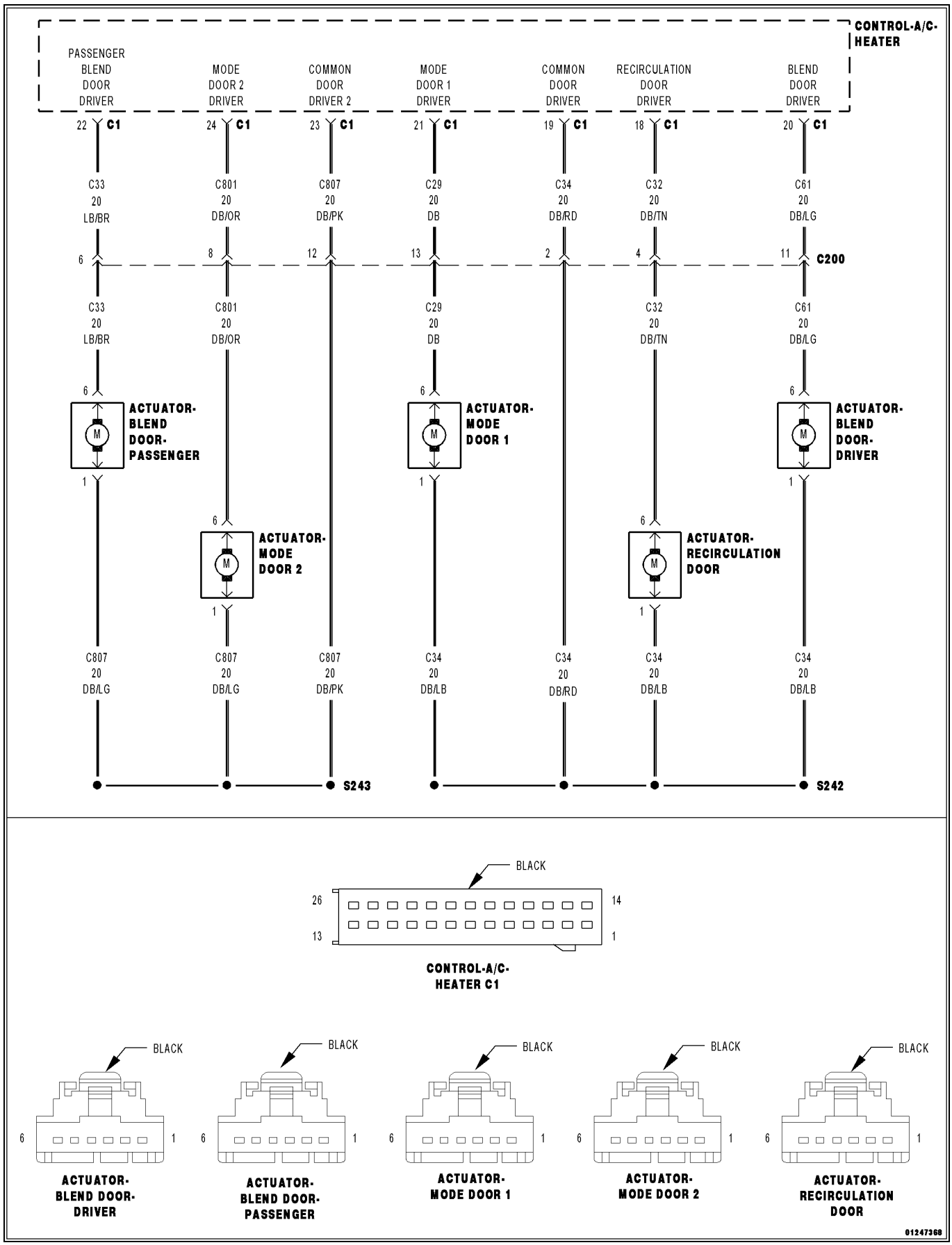

For a complete wiring diagram, **refer to the Wiring Information**.

Theory of Operation

After the initial installation of the A/C Heater Control, the controller is calibrated to each individual blend/mode door actuator. These calibrations are stored as in the number of pulses it takes to move the door from one stop to another. The A/C Heater Control drives the Door Actuators by the use of Door Driver circuit and a Common Door Driver circuit and monitors all door actuator pulses to detect door movement in both directions. Most of the door actuators share a common door driver circuit but each door actuator has its own unique driver circuit. Due to shared circuitry, similar DTCs can set at the same time for multiple actuators depending upon the type of circuit malfunction, its location, and the direction the actuator is moving when the malfunction is present.

- **When Monitored:**
  With the ignition on and an actuator movement is commanded by the A/C Heater Control.
- **Set Condition:**
  If an actuator move is commanded by the A/C Heater Control and there are no feedback pulses detected in that direction, the controller commands the actuator in the opposite direction. If feedback pulses are detected in only one direction this DTC will set. If the A/C Heater Control detects a valid pulse feedback in both directions, the DTC will change from Active to Stored and will stay in the controllers memory for 100 ignition cycles.

Possible Causes
(C33) PASSENGER BLEND DOOR DRIVER CIRCUIT SHORTED TO VOLTAGE
(C33) PASSENGER BLEND DOOR DRIVER CIRCUIT SHORTED TO GROUND
(C807) COMMON DOOR DRIVER 2 CIRCUIT SHORTED TO VOLTAGE
(C807) COMMON DOOR DRIVER 2 CIRCUIT SHORTED TO GROUND
BLEND DOOR BINDING (PASSENGER)
BLEND DOOR ACTUATOR (PASSENGER)
A/C HEATER CONTROL

Always perform the HVAC Pre-Diagnostic Troubleshooting procedure before proceeding. (Refer to 28 - DTC-Based Diagnostics/HVAC - Standard Procedure).

1. CHECK IF DTC IS ACTIVE

1. Ignition on, engine not running.
2. With the scan tool, read HVAC DTCs.

Is this DTC active?

Yes
- Go To 3

No
- Go To 2

2. PERFORM HVAC ACTUATOR CALIBRATION TEST

1. With the scan tool, perform the HVAC Actuator Calibration Test.

Did this DTC change from Stored to Active while performing the HVAC Actuator Calibration Test?

Yes
- Go To 3

No
- Go To 9

3. CHECK THE (C33) PASSENGER BLEND DOOR DRIVER CIRCUIT FOR A SHORT TO VOLTAGE

1. Turn the ignition off to the lock position.
2. Disconnect the A/C Heater Control C1 harness connector.
3. Disconnect the Passenger Blend Door Actuator harness connector.
4. Ignition on, engine not running.
5. Measure the voltage of the (C33) Passenger Blend Door Driver circuit.

Is there any voltage present?

Yes

- Repair the (C33) Passenger Blend Door Driver circuit for a short to voltage.
- Perform HVAC VERIFICATION TEST (Refer to 28 - DTC-Based Diagnostics/HVAC - Standard Procedure).

No

- Go To 4

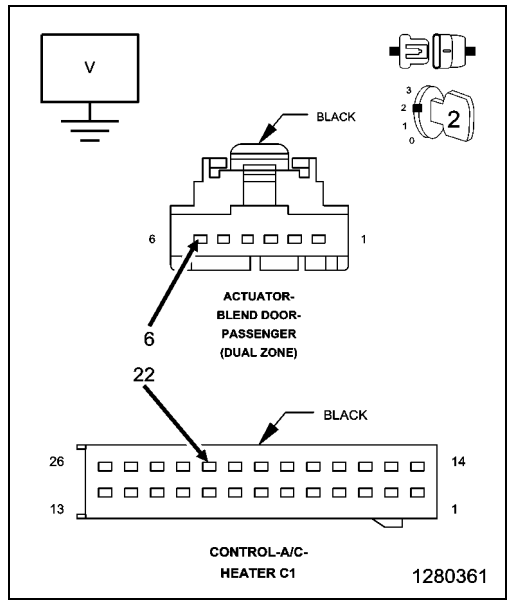

4. CHECK THE (C807) COMMON DOOR DRIVER 2 CIRCUIT FOR A SHORT TO VOLTAGE

1. Measure the voltage of the (C807) Common Door Driver 2 circuit.

Is there any voltage present?

Yes

- Repair the (C807) Common Door Driver 2 circuit for a short to voltage.
- Perform HVAC VERIFICATION TEST (Refer to 28 - DTC-Based Diagnostics/HVAC - Standard Procedure).

No

- Go To 5

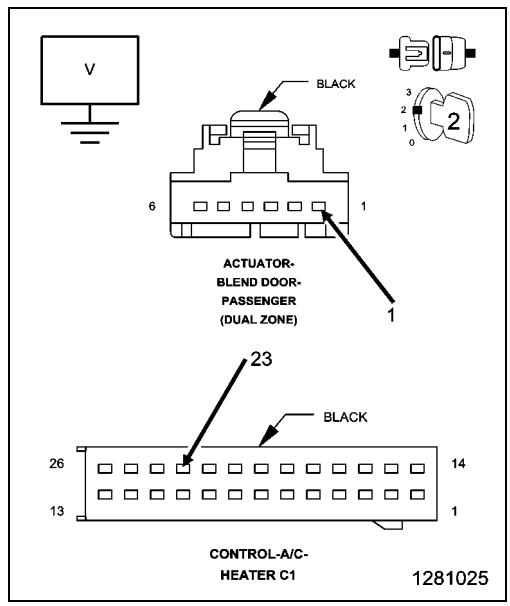

5. CHECK THE (C33) PASSENGER BLEND DOOR DRIVER CIRCUIT FOR A SHORT TO GROUND

1. Turn the ignition off to the lock position.
2. Measure the resistance between ground and the (C33) Passenger Blend Door Driver circuit.

Is the resistance below 100k Ohms?

Yes

- Repair the (C33) Passenger Blend Door Driver circuit for a short to ground.
- Perform HVAC VERIFICATION TEST (Refer to 28 - DTC-Based Diagnostics/HVAC - Standard Procedure).

No

- Go To 6

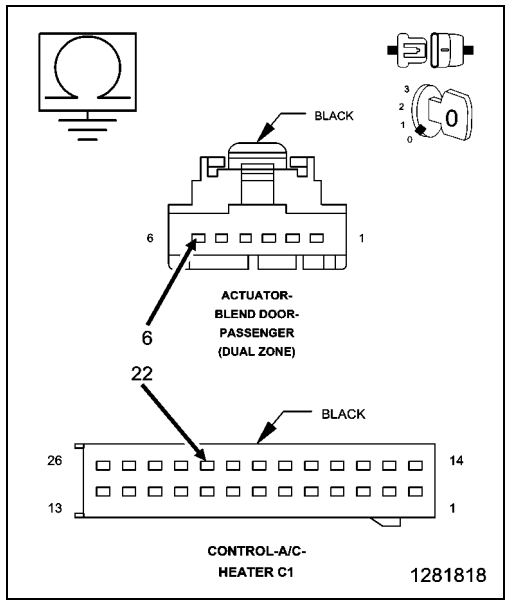

6. CHECK THE (C807) COMMON DOOR DRIVER 2 CIRCUIT FOR A SHORT TO GROUND

1. Measure the resistance between ground and the (C807) Common Door Driver 2 circuit.

Is the resistance below 100k Ohms?

Yes

- Repair the (C807) Common Door Driver 2 circuit for a short to ground.
- Perform HVAC VERIFICATION TEST (Refer to 28 - DTC-Based Diagnostics/HVAC - Standard Procedure).

No

- Go To 7

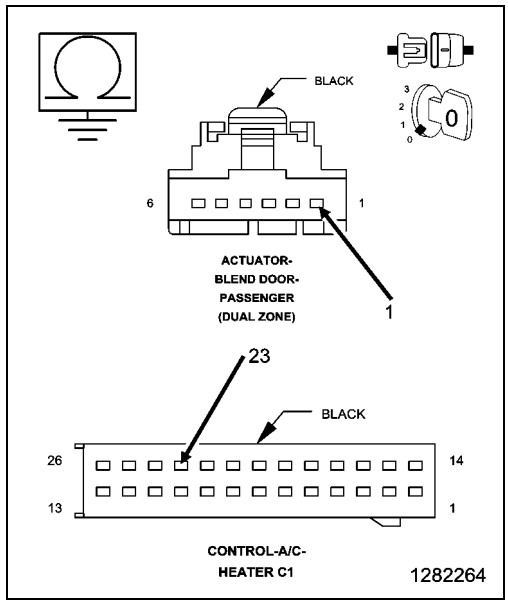

7. CHECK THE BLEND DOOR

1. Remove the Passenger Blend Door Actuator and check the Passenger Blend Door for binding and full travel.

Were there any problems found?

Yes

- Repair or replace the Passenger Blend Door as necessary in accordance with the Service Information.
- Perform HVAC VERIFICATION TEST (Refer to 28 - DTC-Based Diagnostics/HVAC - Standard Procedure).

No

- Go To 8

8. CHECK THE BLEND DOOR ACTUATOR

1. Replace the Passenger Blend Door Actuator in accordance with the Service Information.
2. With the scan tool, erase HVAC DTCs and perform the HVAC Actuator Calibration Test.

Did this DTC reset?

Yes

- Replace and program the A/C Heater Control in accordance with the Service Information.
- Perform HVAC VERIFICATION TEST (Refer to 28 - DTC-Based Diagnostics/HVAC - Standard Procedure).

No

- Test complete.
- Perform HVAC VERIFICATION TEST (Refer to 28 - DTC-Based Diagnostics/HVAC - Standard Procedure).

9. CHECK THE WIRING AND CONNECTORS

1. The conditions necessary to set the DTC are not present at this time.
2. Using the schematics as a guide, inspect the wiring and connectors specific to this circuit.
3. Check for an intermittent condition by inspecting the related wiring harness for chafed, pierced, pinched, partially broken wires.
4. Check the connectors for broken, bent, pushed out, spread, corroded, or contaminated terminals.
5. Wiggle the wiring and connectors while checking for shorted and open circuits.
6. With the scan tool, check the Environmental Data to help identify the conditions in which the DTC was set.

Were there any problems found?

Yes

- Repair as necessary.
- Perform HVAC VERIFICATION TEST (Refer to 28 - DTC-Based Diagnostics/HVAC - Standard Procedure).

No

- Test complete.

■ B10B2-A/C COOL DOWN TEST PERFORMANCE

For a complete wiring diagram, **refer to the Wiring Information**.

Theory of Operation

The A/C Heater Controller has software to enable it to perform an A/C Cool Down Test by a command using a scan tool. This test checks for evaporator temperature drop over a predetermined time. If the test fails, this DTC will set. However, certain test conditions are required to perform this test. Failure to run this test within those parameters can result in failure of the test.

- **When Monitored:**

  With ever an A/C Cooldown Test is performed.
- **Set Condition:**

  This DTC is set whenever the A/C Cooldown Test is performed and the desired temperature drop is not achieved by the system. The DTC will go to stored after a successful A/C Cooldown Test.

Possible Causes
A/C SYSTEM WORKING IMPROPERLY

Always perform the HVAC Pre-Diagnostic Troubleshooting procedure before proceeding. (Refer to 28 - DTC-Based Diagnostics/HVAC - Standard Procedure).

1. CONDITIONS FOR A/C COOLDOWN TEST

1. The following condition must be met before running the A/C Cooldown test.

- No Powertrain Control Module (PCM) DTCs present
- Condenser cooling fan working properly
- No active HVAC evaporator temperature sensor, sun sensor, recirculation, mode, or blend door actuator DTCs present
- The refrigerant system must be fully charged
- The blower motor must operate correctly in all speeds
- The evaporator temperature must be above 12.7° C (55° F)
- The A/C compressor must be turned off
- Blower must be on high

Are all of the above conditions met before running the A/C Cooldown Test?

Yes

- Refer to the Service Information for additional Cooldown Test related diagnostic information and testing procedures and repair as necessary.

NOTE: Run the Cooldown Test again after any repairs are performed.

- If the Cooldown Test passes, perform HVAC VERIFICATION TEST (Refer to 28 - DTC-Based Diagnostics/HVAC - Standard Procedure).

No

- Run the A/C Cooldown test again with the above test conditions.

B10E9-BLOWER MOTOR CONTROL CIRCUIT LOW

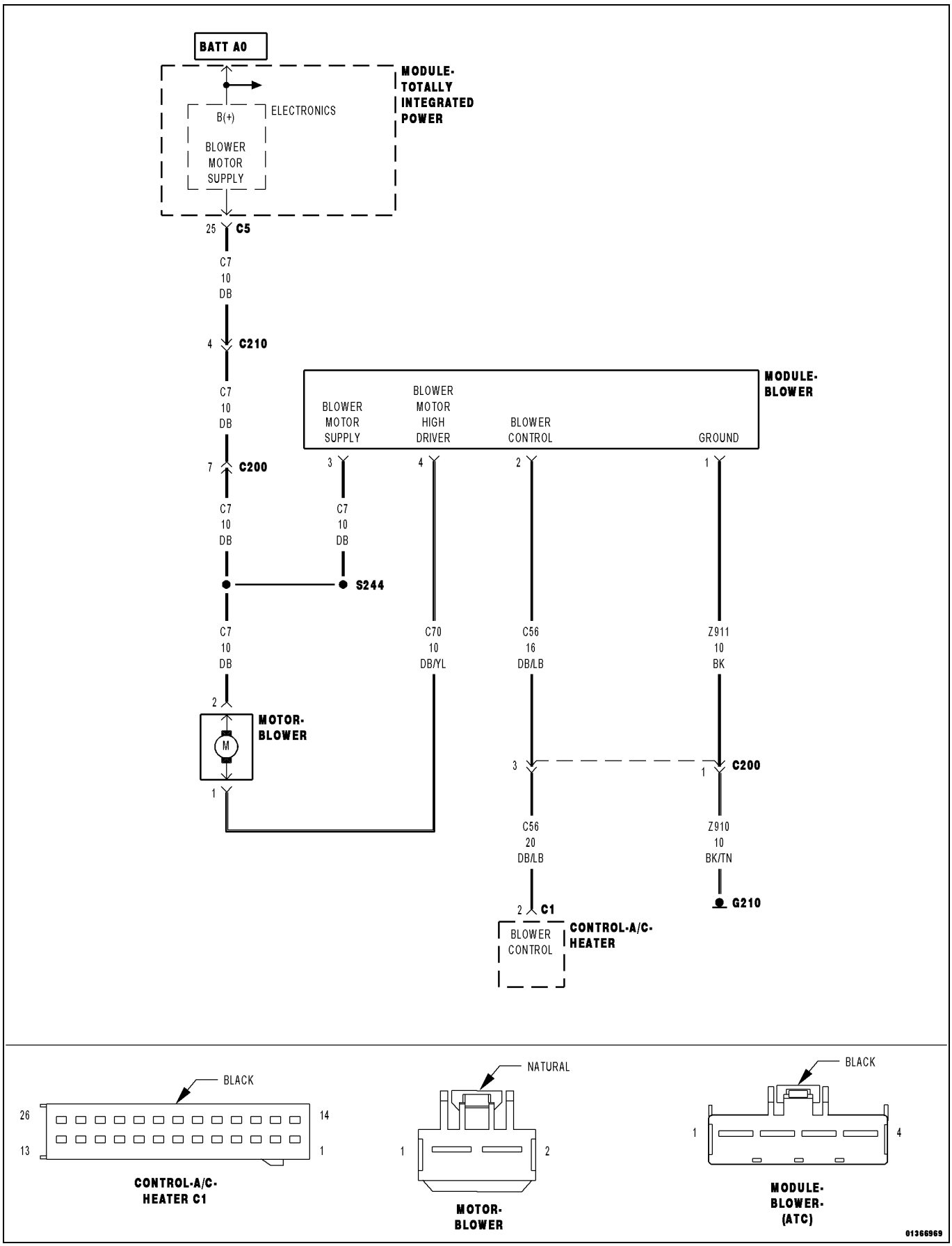

For a complete wiring diagram, **refer to the Wiring Information**.

Theory of Operation

The A/C Heater Control constantly monitors the Blower Control circuit to the Blower Module for proper operation. If the voltage on that circuit drops below or rises above a predetermined value, a DTC will set.

- **When Monitored:**
  With the ignition on.
- **Set Condition:**
  If the Blower Control circuit voltage is less than a calibrated value for the period of 30 seconds.

Possible Causes
(C56) BLOWER CONTROL CIRCUIT SHORT TO GROUND
(C56) BLOWER CONTROL CIRCUIT OPEN
(Z911) GROUND CIRCUIT OPEN
BLOWER MODULE
A/C HEATER CONTROL

Always perform the HVAC Pre-Diagnostic Troubleshooting procedure before proceeding. (Refer to 28 - DTC-Based Diagnostics/HVAC - Standard Procedure).

1. CHECK IF DTC IS ACTIVE

1. Ignition on, engine not running.
2. With the scan tool, read HVAC DTCs.

NOTE: It can take up to 30 seconds or more for this DTC to mature.

Is this DTC active?

Yes

- Go To 2

No

- Go To 6

2. CHECK THE (C56) BLOWER CONTROL CIRCUIT FOR A SHORT TO GROUND

1. Turn the ignition off to the lock position.
2. Disconnect the Blower Module harness connector
3. Disconnect the A/C Heater Control harness connector.
4. Measure the resistance between ground and the (C56) Blower Control circuit.

Is the resistance below 100k Ohms?

Yes

- Repair the (C56) Blower Control circuit for an short to ground.
- Perform HVAC VERIFICATION TEST (Refer to 28 - DTC-Based Diagnostics/HVAC - Standard Procedure).

No

- Go To 3

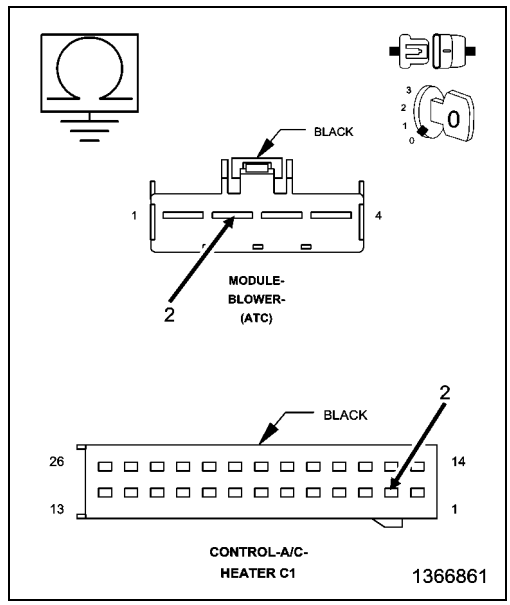

3. CHECK THE (C56) BLOWER CONTROL CIRCUIT FOR AN OPEN

1. Turn the ignition off to the lock position.
2. Measure the resistance of the (C56) Blower Control circuit between the A/C Heater Control harness connector and the Blower Module harness connnector.

Is the resistance above 100k Ohms?

Yes

- Repair the (C56) Blower Control circuit for an open.
- Perform HVAC VERIFICATION TEST (Refer to 28 - DTC-Based Diagnostics/HVAC - Standard Procedure).

No

- Go To 4

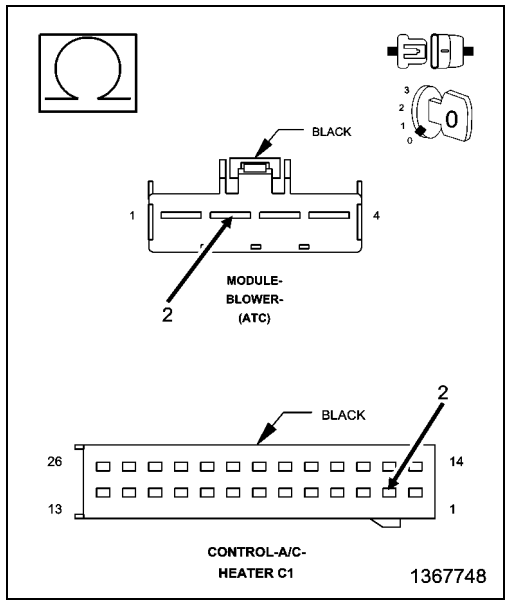

4. CHECK THE (Z911) GROUND CIRCUIT FOR AN OPEN

1. Using a 12-volt test light connected to 12-volts, check the (Z911) Ground circuit.

NOTE: The test light must illuminate brightly. Compare the brightness to that of a direct connection to the battery.

Does the test light illuminate brightly?

Yes

- Repair the (C56) Blower Control circuit for an open.
- Perform HVAC VERIFICATION TEST (Refer to 28 - DTC-Based Diagnostics/HVAC - Standard Procedure).

No

- Go To 5

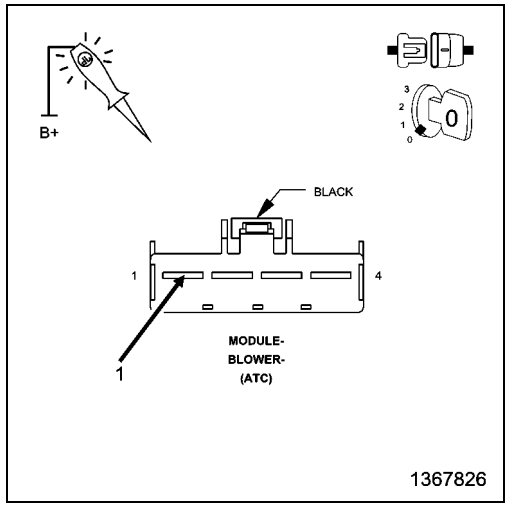

5. CHECK THE BLOWER MODULE

1. Turn the ignition off to the lock position.
2. Replace the Blower Module in accordance with the Service Information.
3. Perform HVAC VERIFICATION TEST (Refer to 28 - DTC-Based Diagnostics/HVAC - Standard Procedure).

Did the DTC reset during or after the HVAC Verification Test?

Yes

- Replace and program the A/C Heater Control in accordance with the Service Information.
- Perform HVAC VERIFICATION TEST (Refer to 28 - DTC-Based Diagnostics/HVAC - Standard Procedure).

No

- Test complete.

6. CHECK THE WIRING AND CONNECTORS

1. The conditions necessary to set the DTC are not present at this time.
2. Using the schematics as a guide, inspect the wiring and connectors specific to this circuit.
3. Check for an intermittent condition by inspecting the related wiring harness for chafed, pierced, pinched, partially broken wires.
4. Check the connectors for broken, bent, pushed out, spread, corroded, or contaminated terminals.
5. Wiggle the wiring and connectors while checking for shorted and open circuits.
6. With the scan tool, check the Environmental Data to help identify the conditions in which the DTC was set.

Were there any problems found?

Yes

- Repair as necessary.
- Perform HVAC VERIFICATION TEST (Refer to 28 - DTC-Based Diagnostics/HVAC - Standard Procedure).

No

- Test complete.

B10EA-BLOWER MOTOR CONTROL CIRCUIT HIGH

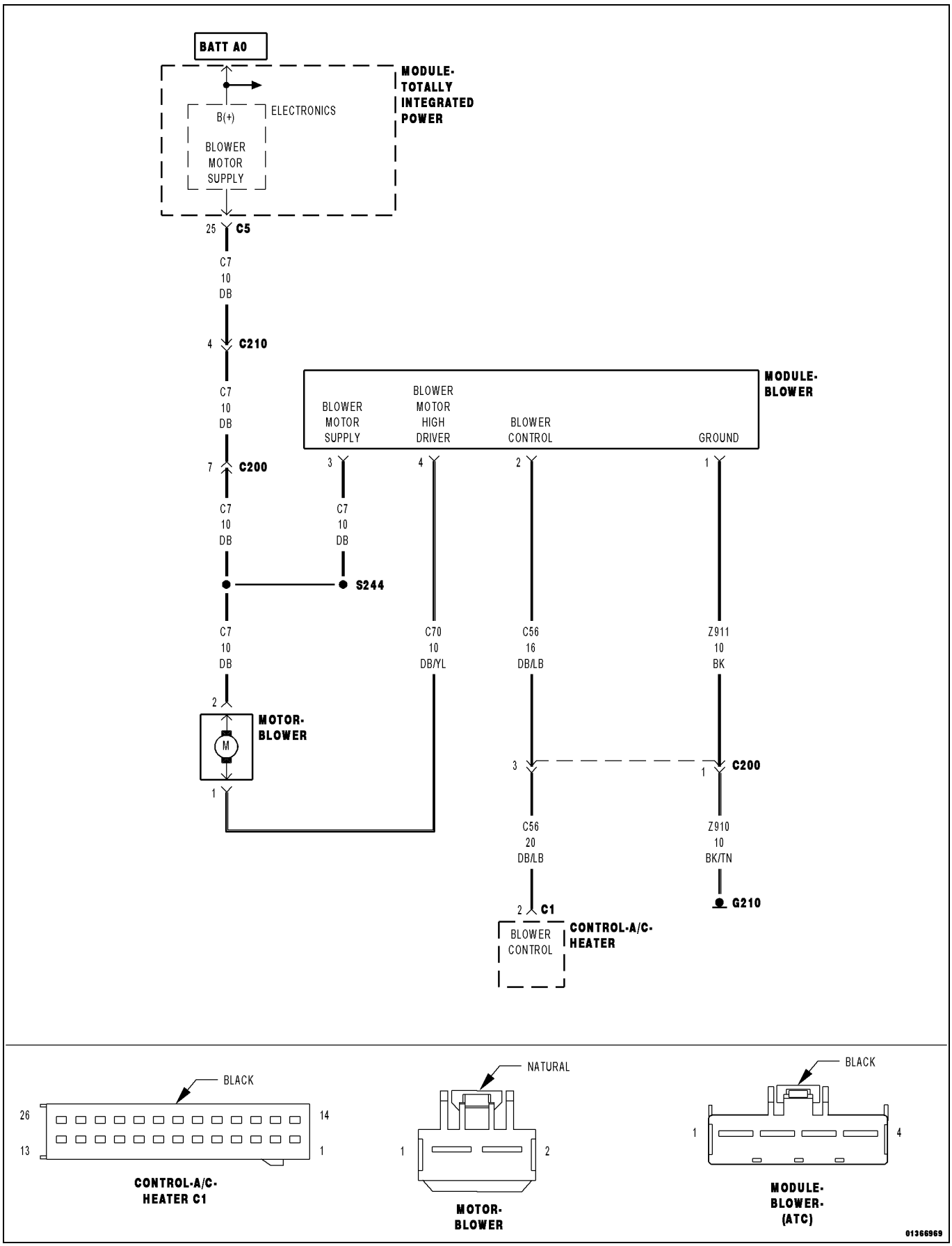

For a complete wiring diagram, **refer to the Wiring Information**.

Theory of Operation

The A/C Heater Control constantly monitors the Blower Control circuit to the Blower Module for proper operation. If the voltage on that circuit drops below or rises above a predetermined value, a DTC will set.

- **When Monitored:**
  With the ignition on.
- **Set Condition:**
  If the Blower Control circuit voltage is greater than a calibrated value for the period of 30 seconds.

Possible Causes
(C56) BLOWER CONTROL CIRCUIT SHORT TO VOLTAGE
(C56) BLOWER CONTROL CIRCUIT OPEN
(Z911) GROUND CIRCUIT OPEN
BLOWER MODULE
A/C HEATER CONTROL

Always perform the HVAC Pre-Diagnostic Troubleshooting procedure before proceeding. (Refer to 28 - DTC-Based Diagnostics/HVAC - Standard Procedure).

1. CHECK IF DTC IS ACTIVE

1. Ignition on, engine not running.
2. With the scan tool, read HVAC DTCs.

NOTE: It can take up to 30 seconds or more for this DTC to mature.

Is this DTC active?

Yes

- Go To 2

No

- Go To 6

2. CHECK THE (C56) BLOWER CONTROL CIRCUIT FOR A SHORT TO VOLTAGE

1. Turn the ignition off to the lock position.
2. Disconnect the Blower Module harness connector.
3. Disconnect the A/C Heater Control harness connector.

NOTE: Check connectors - Clean/repair as necessary.

4. Ignition on, engine not running.
5. Check the voltage of the (C56) Blower Control circuit.

Is there any voltage present?

Yes

- Repair the (C56) Blower Control circuit for an short to voltage.
- Perform HVAC VERIFICATION TEST (Refer to 28 - DTC-Based Diagnostics/HVAC - Standard Procedure).

No

- Go To 3

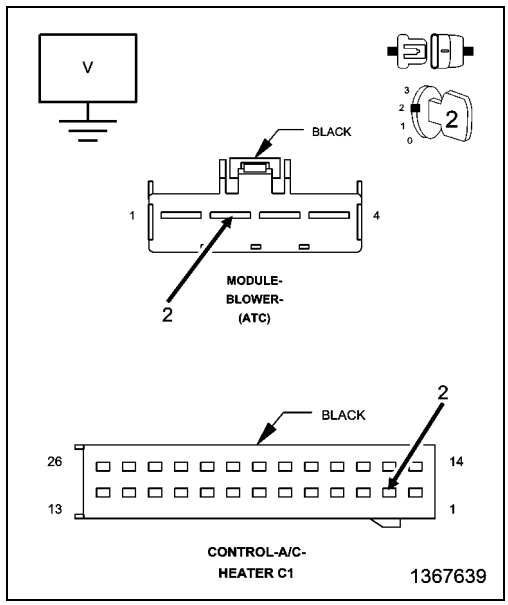

3. CHECK THE (C56) BLOWER CONTROL CIRCUIT FOR AN OPEN

1. Turn the ignition off to the lock position.
2. Measure the resistance of the (C56) Blower Control circuit between the A/C Heater Control harness connector and the Blower Module harness connector.

Is the resistance above 1.0 Ohm?

Yes

- Repair the (C56) Blower Control circuit for an open.
- Perform HVAC VERIFICATION TEST (Refer to 28 - DTC-Based Diagnostics/HVAC - Standard Procedure).

No

- Go To 4

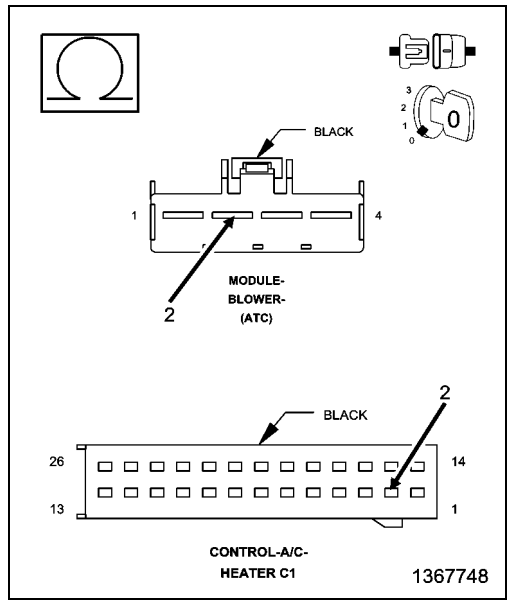

4. CHECK THE (Z911) GROUND CIRCUIT FOR AN OPEN

1. Using a 12-volt test light connected to 12-volts, check the (Z911) Ground circuit.

NOTE: The test light must illuminate brightly. Compare the brightness to that of a direct connection to the battery.

Does the test light illuminate brightly?

Yes

- Repair the (C56) Blower Control circuit for an open.
- Perform HVAC VERIFICATION TEST (Refer to 28 - DTC-Based Diagnostics/HVAC - Standard Procedure).

No

- Go To 5

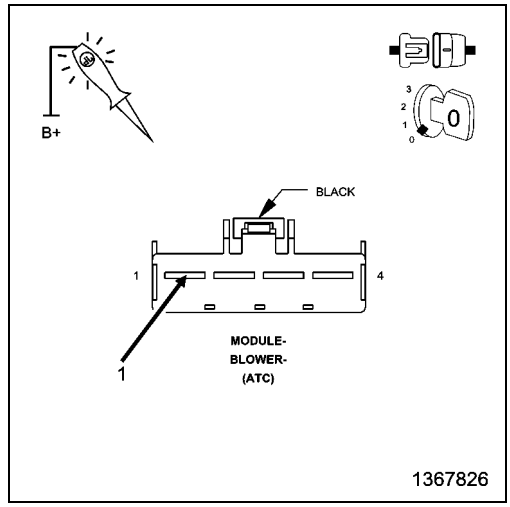

5. CHECK THE BLOWER MODULE

1. Turn the ignition off to the lock position.
2. Replace the Blower Module in accordance with the Service Information.
3. Perform HVAC VERIFICATION TEST (Refer to 28 - DTC-Based Diagnostics/HVAC - Standard Procedure).

Did the DTC reset during or after the HVAC Verification Test?

Yes

- Replace and program the A/C Heater Control in accordance with the Service Information.
- Perform HVAC VERIFICATION TEST (Refer to 28 - DTC-Based Diagnostics/HVAC - Standard Procedure).

No

- Test complete.

6. CHECK THE WIRING AND CONNECTORS

1. The conditions necessary to set the DTC are not present at this time.
2. Using the schematics as a guide, inspect the wiring and connectors specific to this circuit.
3. Check for an intermittent condition by inspecting the related wiring harness for chafed, pierced, pinched, partially broken wires.
4. Check the connectors for broken, bent, pushed out, spread, corroded, or contaminated terminals.
5. Wiggle the wiring and connectors while checking for shorted and open circuits.
6. With the scan tool, check the Environmental Data to help identify the conditions in which the DTC was set.

Were there any problems found?

Yes

- Repair as necessary.
- Perform HVAC VERIFICATION TEST (Refer to 28 - DTC-Based Diagnostics/HVAC - Standard Procedure).

No

- Test complete.

■ B1141-CLIMATE SYNC SWITCH PERFORMANCE

For a complete wiring diagram, **refer to the Wiring Information**.

Theory of Operation

The HVAC A/C Heater Control contains various switches and knobs that are used to change the systems operation. Many of the switches are momentary switches which are normally open or in the Off position and the status changes when the switch button or knob is pushed or turned. An active DTC indicates that the switch is stuck in an On position. A stored DTC indicates that the switch was stuck in a On position for more than 60 seconds but has since returned to its normal state of Off.

- **When Monitored:**
  With the ignition on.
- **Set Condition:**
  If the Sync Control Switch is stuck in an On position for more than 60 seconds. This DTC has a de-maturing time of two seconds. If the DTCs status changes from active to stored, the DTC will stay in memory for 100 ignition cycles.

Possible Causes
OBJECT HOLDING SWITCH IN AN ON POSITION
A/C HEATER CONTROL

Always perform the HVAC Pre-Diagnostic Troubleshooting procedure before proceeding. (Refer to 28 - DTC-Based Diagnostics/HVAC - Standard Procedure).

1. INSPECT FOR OBJECT HOLDING SWITCH IN AN ON POSITION

1. Inspect the A/C Heater Control for an object or debris holding the Sync Control Switch in an On position.

NOTE: Using the scan tool you can read the On/Off status of the control switch.

Is the Sync Control Switch being held in or stuck On?

Yes

- Clean or repair the A/C Heater Control as necessary. If you are unable to clean the switch to where the switch can work properly, replace and program the A/C Heater Control in accordance with the Service Information.
- Perform HVAC VERIFICATION TEST (Refer to 28 - DTC-Based Diagnostics/HVAC - Standard Procedure).

No

- Go To 2

2. A/C HEATER CONTROL

1. Turn the ignition on.
2. With the scan tool, erase HVAC DTCs.
3. Turn the ignition off for 10 seconds, and then turn the ignition on and wait a minimum of 60 seconds.
4. With the scan tool, read HVAC DTCs.

Does the scan tool display this DTC as Active or is the status of the switch reading On?

Yes

- Replace and program the A/C Heater Control in accordance with the Service Information.
- Perform HVAC VERIFICATION TEST (Refer to 28 - DTC-Based Diagnostics/HVAC - Standard Procedure).

No

- Test complete.
- Perform HVAC VERIFICATION TEST (Refer to 28 - DTC-Based Diagnostics/HVAC - Standard Procedure).

■ B1184-LEFT TEMP UP SWITCH REQUEST INPUT CIRCUIT/PERFORMANCE

For a complete wiring diagram, **refer to the Wiring Information**.

Theory of Operation

The HVAC A/C Heater Control contains various switches and knobs that are used to change the systems operation. Many of the switches are momentary switches which are normally open or in the Off position and the status changes when the switch button or knob is pushed or turned. An active DTC indicates that the switch is stuck in an On position. A stored DTC indicates that the switch was stuck in a On position for more than 60 seconds but has since returned to its normal state of Off.

- **When Monitored:**
  With the ignition on.
- **Set Condition:**
  If the Left Temperature Up Control Switch is stuck in an On position for more than 60 seconds. This DTC has a de-maturing time of two seconds. If the DTCs status changes from active to stored, the DTC will stay in memory for 100 ignition cycles.

Possible Causes
OBJECT HOLDING SWITCH IN AN ON POSITION
A/C HEATER CONTROL

Always perform the HVAC Pre-Diagnostic Troubleshooting procedure before proceeding. (Refer to 28 - DTC-Based Diagnostics/HVAC - Standard Procedure).

1. INSPECT FOR OBJECT HOLDING SWITCH IN AN ON POSITION

1. Inspect the A/C Heater Control for an object or debris holding the Left Temperature Up Control Switch in an On position.

NOTE: Using the scan tool you can read the On/Off status of the control switch.

Is the Left Temperature Up Control Switch being held in or stuck On?

Yes

- Clean or repair the A/C Heater Control as necessary. If you are unable to clean the switch to where the switch can work properly, replace and program the A/C Heater Control in accordance with the Service Information.
- Perform HVAC VERIFICATION TEST (Refer to 28 - DTC-Based Diagnostics/HVAC - Standard Procedure).

No

- Go To 2

2. A/C HEATER CONTROL

1. Turn the ignition on.
2. With the scan tool, erase HVAC DTCs.
3. Turn the ignition off for 10 seconds, and then turn the ignition on and wait a minimum of 60 seconds.
4. With the scan tool, read HVAC DTCs.

Does the scan tool display this DTC as Active or is the status of the switch reading On?

Yes

- Replace and program the A/C Heater Control in accordance with the Service Information.
- Perform HVAC VERIFICATION TEST (Refer to 28 - DTC-Based Diagnostics/HVAC - Standard Procedure).

No

- Test complete.
- Perform HVAC VERIFICATION TEST (Refer to 28 - DTC-Based Diagnostics/HVAC - Standard Procedure).

■ B1185-LEFT TEMP DOWN SWITCH REQUEST INPUT CIRCUIT/PERFORMANCE

For a complete wiring diagram, **refer to the Wiring Information**.

Theory of Operation

The HVAC A/C Heater Control contains various switches and knobs that are used to change the systems operation. Many of the switches are momentary switches which are normally open or in the Off position and the status changes when the switch button or knob is pushed or turned. An active DTC indicates that the switch is stuck in an On position. A stored DTC indicates that the switch was stuck in a On position for more than 60 seconds but has since returned to its normal state of Off.

- **When Monitored:**
  With the ignition on.
- **Set Condition:**
  If the Left Temperature Down Control Switch is stuck in an On position for more than 60 seconds. This DTC has a de-maturing time of two seconds. If the DTCs status changes from active to stored, the DTC will stay in memory for 100 ignition cycles.

Possible Causes
OBJECT HOLDING SWITCH IN AN ON POSITION
A/C HEATER CONTROL

Always perform the HVAC Pre-Diagnostic Troubleshooting procedure before proceeding. (Refer to 28 - DTC-Based Diagnostics/HVAC - Standard Procedure).

1. INSPECT FOR OBJECT HOLDING SWITCH IN AN ON POSITION

1. Inspect the A/C Heater Control for an object or debris holding the Left Temperature Down Control Switch in an On position.

NOTE: Using the scan tool you can read the On/Off status of the control switch.

Is the Left Temperature Down Control Switch being held in or stuck On?

Yes

- Clean or repair the A/C Heater Control as necessary. If you are unable to clean the switch to where the switch can work properly, replace and program the A/C Heater Control in accordance with the Service Information.
- Perform HVAC VERIFICATION TEST (Refer to 28 - DTC-Based Diagnostics/HVAC - Standard Procedure).

No

- Go To 2

2. A/C HEATER CONTROL

1. Turn the ignition on.
2. With the scan tool, erase HVAC DTCs.
3. Turn the ignition off for 10 seconds, and then turn the ignition on and wait a minimum of 60 seconds.
4. With the scan tool, read HVAC DTCs.

Does the scan tool display this DTC as Active or is the status of the switch reading On?

Yes

- Replace and program the A/C Heater Control in accordance with the Service Information.
- Perform HVAC VERIFICATION TEST (Refer to 28 - DTC-Based Diagnostics/HVAC - Standard Procedure).

No

- Test complete.
- Perform HVAC VERIFICATION TEST (Refer to 28 - DTC-Based Diagnostics/HVAC - Standard Procedure).

■ B1186-RIGHT TEMP UP SWITCH REQUEST INPUT CIRCUIT/PERFORMANCE

For a complete wiring diagram, **refer to the Wiring Information**.

Theory of Operation

The HVAC A/C Heater Control contains various switches and knobs that are used to change the systems operation. Many of the switches are momentary switches which are normally open or in the Off position and the status changes when the switch button or knob is pushed or turned. An active DTC indicates that the switch is stuck in an On position. A stored DTC indicates that the switch was stuck in a On position for more than 60 seconds but has since returned to its normal state of Off.

- **When Monitored:**
  With the ignition on.
- **Set Condition:**
  If the Right Temperature Up Control Switch is stuck in an On position for more than 60 seconds. This DTC has a de-maturing time of two seconds. If the DTCs status changes from active to stored, the DTC will stay in memory for 100 ignition cycles.

Possible Causes
OBJECT HOLDING SWITCH IN AN ON POSITION
A/C HEATER CONTROL

Always perform the HVAC Pre-Diagnostic Troubleshooting procedure before proceeding. (Refer to 28 - DTC-Based Diagnostics/HVAC - Standard Procedure).

1. INSPECT FOR OBJECT HOLDING SWITCH IN AN ON POSITION

1. Inspect the A/C Heater Control for an object or debris holding the Right Temperature Up Control Switch in an On position.

NOTE: Using the scan tool you can read the On/Off status of the control switch.

Is the Right Temperature Up Control Switch being held in or stuck On?

Yes

- Clean or repair the A/C Heater Control as necessary. If you are unable to clean the switch to where the switch can work properly, replace and program the A/C Heater Control in accordance with the Service Information.
- Perform HVAC VERIFICATION TEST (Refer to 28 - DTC-Based Diagnostics/HVAC - Standard Procedure).

No

- Go To 2

2. A/C HEATER CONTROL

1. Turn the ignition on.
2. With the scan tool, erase HVAC DTCs.
3. Turn the ignition off for 10 seconds, and then turn the ignition on and wait a minimum of 60 seconds.
4. With the scan tool, read HVAC DTCs.

Does the scan tool display this DTC as Active or is the status of the switch reading On?

Yes

- Replace and program the A/C Heater Control in accordance with the Service Information.
- Perform HVAC VERIFICATION TEST (Refer to 28 - DTC-Based Diagnostics/HVAC - Standard Procedure).

No

- Test complete.
- Perform HVAC VERIFICATION TEST (Refer to 28 - DTC-Based Diagnostics/HVAC - Standard Procedure).

■ B1187-RIGHT TEMP DOWN SWITCH REQUEST INPUT CIRCUIT/PERFORMANCE

For a complete wiring diagram, **refer to the Wiring Information**.

Theory of Operation

The HVAC A/C Heater Control contains various switches and knobs that are used to change the systems operation. Many of the switches are momentary switches which are normally open or in the Off position and the status changes when the switch button or knob is pushed or turned. An active DTC indicates that the switch is stuck in an On position. A stored DTC indicates that the switch was stuck in a On position for more than 60 seconds but has since returned to its normal state of Off.

- **When Monitored:**
  With the ignition on.
- **Set Condition:**
  If the Right Temperature Down Control Switch is stuck in an On position for more than 60 seconds. This DTC has a de-maturing time of two seconds. If the DTCs status changes from active to stored, the DTC will stay in memory for 100 ignition cycles.

Possible Causes
OBJECT HOLDING SWITCH IN AN ON POSITION
A/C HEATER CONTROL

Always perform the HVAC Pre-Diagnostic Troubleshooting procedure before proceeding. (Refer to 28 - DTC-Based Diagnostics/HVAC - Standard Procedure).

1. INSPECT FOR OBJECT HOLDING SWITCH IN AN ON POSITION

1. Inspect the A/C Heater Control for an object or debris holding the Right Temperature Down Control Switch in an On position.

NOTE: Using the scan tool you can read the On/Off status of the control switch.

Is the Right Temperature Down Control Switch being held in or stuck On?

Yes

- Clean or repair the A/C Heater Control as necessary. If you are unable to clean the switch to where the switch can work properly, replace and program the A/C Heater Control in accordance with the Service Information.
- Perform HVAC VERIFICATION TEST (Refer to 28 - DTC-Based Diagnostics/HVAC - Standard Procedure).

No

- Go To 2

2. A/C HEATER CONTROL

1. Turn the ignition on.
2. With the scan tool, erase HVAC DTCs.
3. Turn the ignition off for 10 seconds, and then turn the ignition on and wait a minimum of 60 seconds.
4. With the scan tool, read HVAC DTCs.

Does the scan tool display this DTC as Active or is the status of the switch reading On?

Yes

- Replace and program the A/C Heater Control in accordance with the Service Information.
- Perform HVAC VERIFICATION TEST (Refer to 28 - DTC-Based Diagnostics/HVAC - Standard Procedure).

No

- Test complete.
- Perform HVAC VERIFICATION TEST (Refer to 28 - DTC-Based Diagnostics/HVAC - Standard Procedure).

B1601-LEFT SOLAR SENSOR CIRCUIT LOW

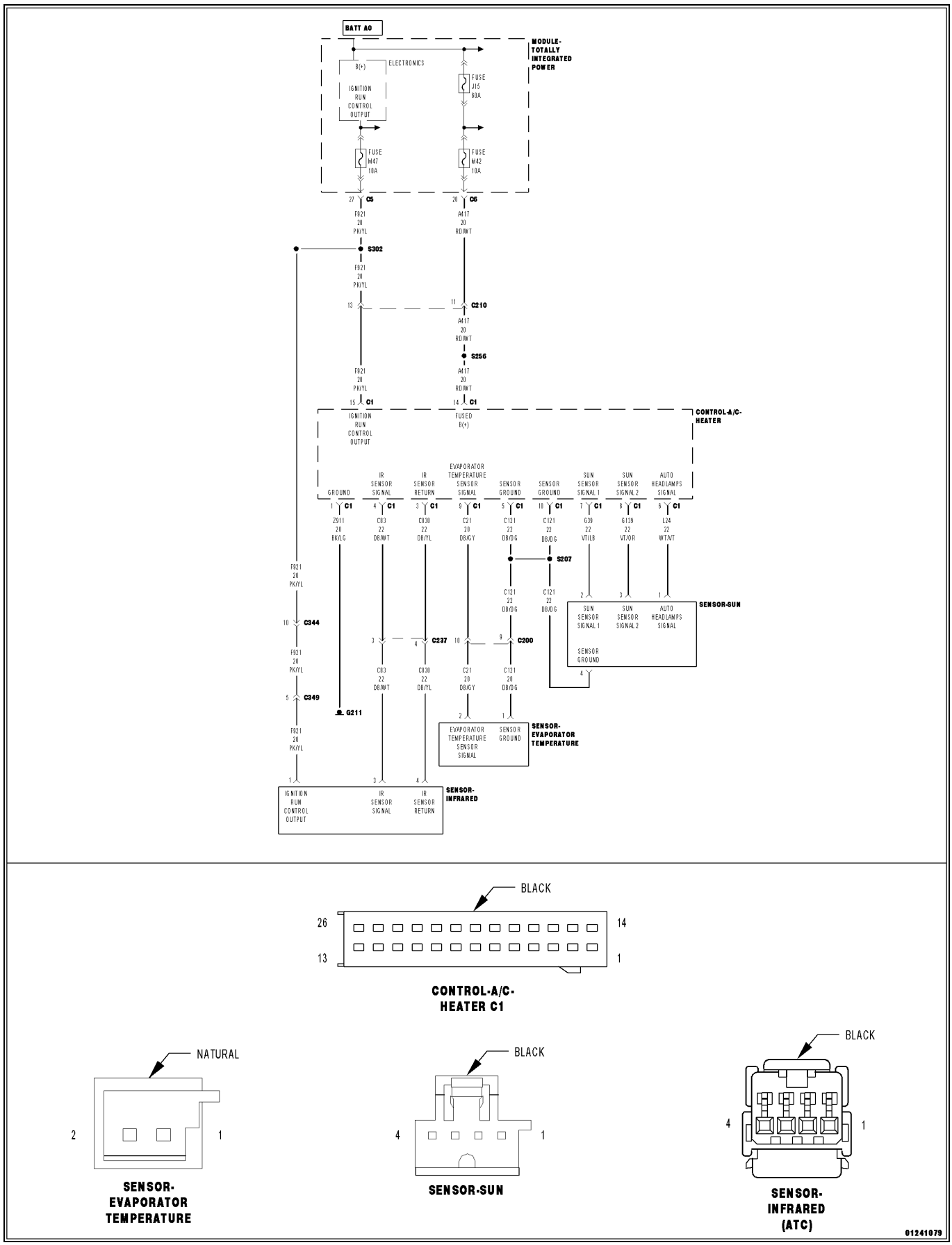

For a complete wiring diagram, **refer to the Wiring Information**.

- **When Monitored:**
  With the ignition on.
- **Set Condition:**
  If the Left Sun Sensor Signal input voltage is less than 0.16 of a volt for period of 30 seconds.

Possible Causes
(G39) SUN SENSOR SIGNAL 1 CIRCUIT SHORTED TO GROUND
SUN SENSOR
A/C HEATER CONTROL

Always perform the HVAC Pre-Diagnostic Troubleshooting procedure before proceeding. (Refer to 28 - DTC-Based Diagnostics/HVAC - Standard Procedure).

1. CHECK IF THE DTC IS ACTIVE

1. Ignition on, engine not running.
2. With the scan tool, read HVAC DTCs.

NOTE: It can take up to 30 seconds or more for this DTC to mature.

Is this DTC active?

Yes

- Go To 2

No

- Go To 4

2. CHECK (G39) SUN SENSOR SIGNAL 1 CIRCUIT FOR A SHORT TO GROUND

1. Turn the ignition off to the lock position.
2. Disconnect the A/C Heater Control C1 harness connector.
3. Disconnect the Sun Sensor harness connector.
4. Measure the resistance between ground and the (G39) Sun Sensor Signal 1 circuit.

Is the resistance below 100k ohms?

Yes

- Repair the (G39) Sun Sensor Signal 1 circuit for a short to ground.
- Perform HVAC VERIFICATION TEST (Refer to 28 - DTC-Based Diagnostics/HVAC - Standard Procedure).

No

- Go To 3

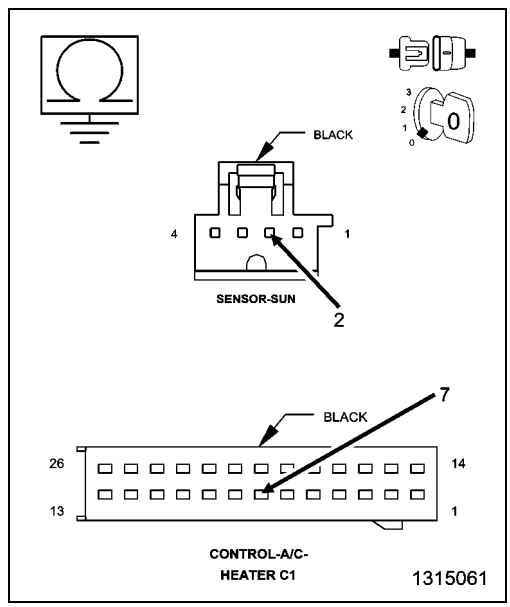

3. CHECK THE SUN SENSOR AND A/C HEATER CONTROL

1. Replace the Sun Sensor in accordance with the Service Information.
2. Perform HVAC VERIFICATION TEST (Refer to 28 - DTC-Based Diagnostics/HVAC - Standard Procedure).

Did this DTC reset while performing the HVAC Verification Test?

Yes

- Replace and program the A/C Heater Control in accordance with the Service Information.
- Perform HVAC VERIFICATION TEST (Refer to 28 - DTC-Based Diagnostics/HVAC - Standard Procedure).

No

- Test complete.

4. CHECK THE WIRING AND CONNECTORS

1. The conditions necessary to set the DTC are not present at this time.
2. Using the schematics as a guide, inspect the wiring and connectors specific to this circuit.
3. Check for an intermittent condition by inspecting the related wiring harness for chafed, pierced, pinched, partially broken wires.
4. Check the connectors for broken, bent, pushed out, spread, corroded, or contaminated terminals.
5. Wiggle the wiring and connectors while checking for shorted and open circuits.
6. With the scan tool, check the Environmental Data to help identify the conditions in which the DTC was set.

Were there any problems found?

Yes

- Repair as necessary.
- Perform HVAC VERIFICATION TEST (Refer to 28 - DTC-Based Diagnostics/HVAC - Standard Procedure).

No

- Test complete.

B1602-LEFT SOLAR SENSOR CIRCUIT HIGH

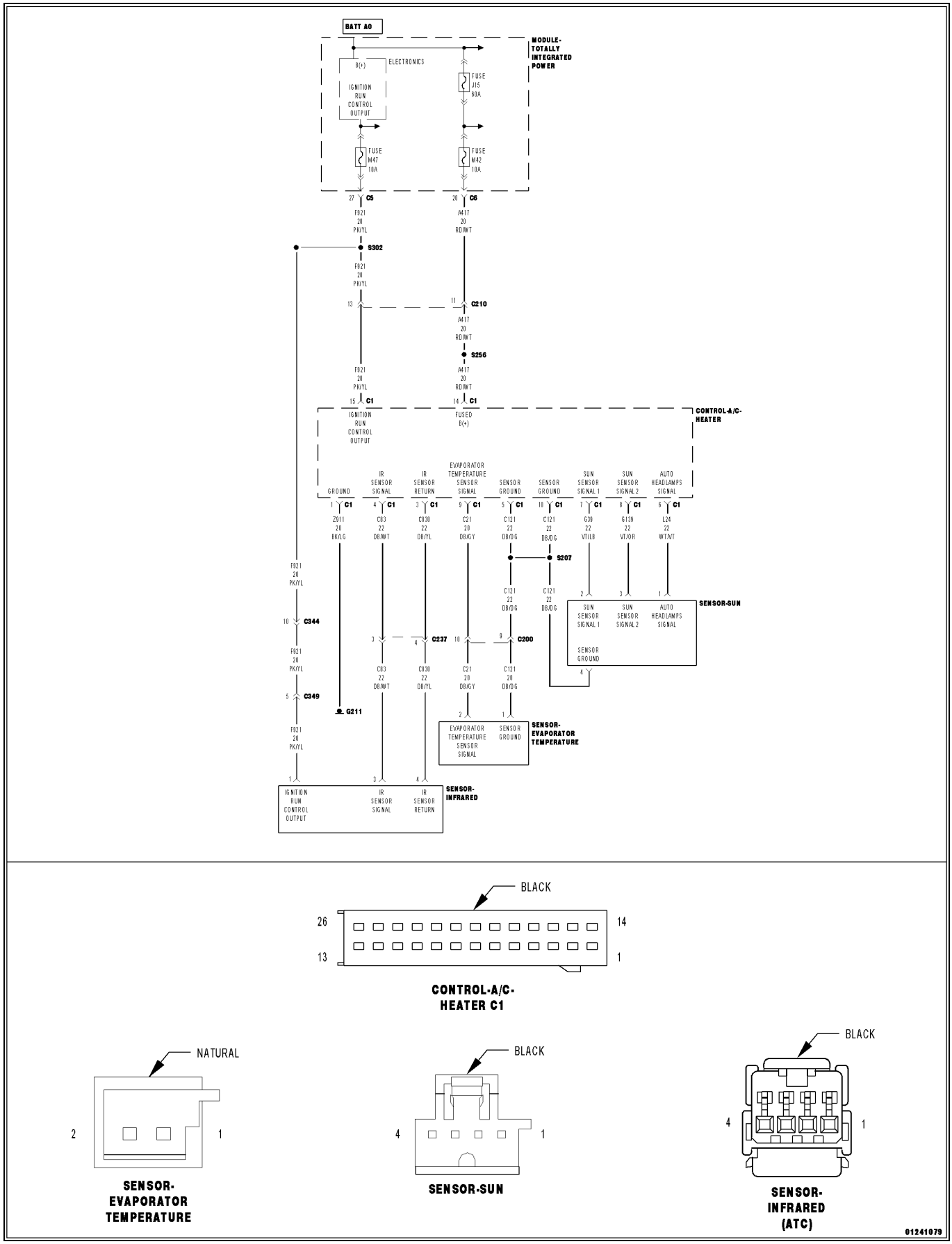

For a complete wiring diagram, **refer to the Wiring Information**.

- **When Monitored:**
  With the ignition on.
- **Set Condition:**
  If the Left Sun Sensor Signal input voltage is greater than 4.90 volts for period of 30 seconds.

Possible Causes
(G39) SUN SENSOR SIGNAL 1 CIRCUIT SHORT TO VOLTAGE
(G39) SUN SENSOR SIGNAL 1 CIRCUIT OPEN
(C121) SENSOR GROUND CIRCUIT OPEN
SUN SENSOR
A/C HEATER CONTROL

Always perform the HVAC Pre-Diagnostic Troubleshooting procedure before proceeding. (Refer to 28 - DTC-Based Diagnostics/HVAC - Standard Procedure).

1. CHECK IF DTC IS ACTIVE

1. Ignition on, engine not running.
2. With the scan tool, read HVAC DTCs.

NOTE: It can take up to 30 seconds or more for this DTC to mature.

Is this DTC active?

Yes

- Go To 2

No

- Go To 6

2. CHECK THE (G39) SUN SENSOR SIGNAL 1 CIRCUIT FOR A SHORT TO VOLTAGE

1. Turn the ignition off to the lock position.
2. Disconnect the Sun Sensor harness connector.
3. Disconnect the A/C Heater Control harness connector.

NOTE: Check connectors - Clean/repair as necessary.

4. Ignition on, engine not running.
5. Check the voltage of the (G39) Sun Sensor Signal 1 circuit.

Is there any voltage present?

Yes

- Repair the (G39) Sun Sensor Signal 1 circuit for an short to voltage.
- Perform HVAC VERIFICATION TEST (Refer to 28 - DTC-Based Diagnostics/HVAC - Standard Procedure).

No

- Go To 3

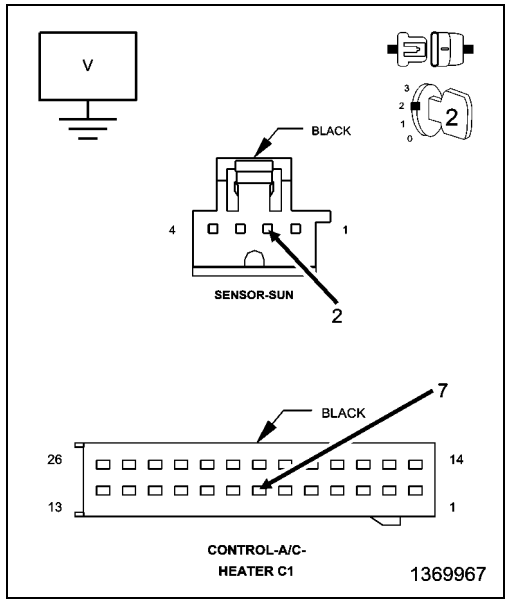

3. CHECK THE (G39) SUN SENSOR SIGNAL 1 CIRCUIT FOR AN OPEN

1. Turn the ignition off to the lock position.
2. Measure the resistance of the (G39) Sun Sensor Signal 1 circuit between the A/C Heater Control harness connector and the Sun Sensor harness connector.

Is the resistance above 5.0 Ohms?

Yes

- Repair the (G39) Sun Sensor Signal 1 circuit for an open.
- Perform HVAC VERIFICATION TEST (Refer to 28 - DTC-Based Diagnostics/HVAC - Standard Procedure).

No

- Go To 4

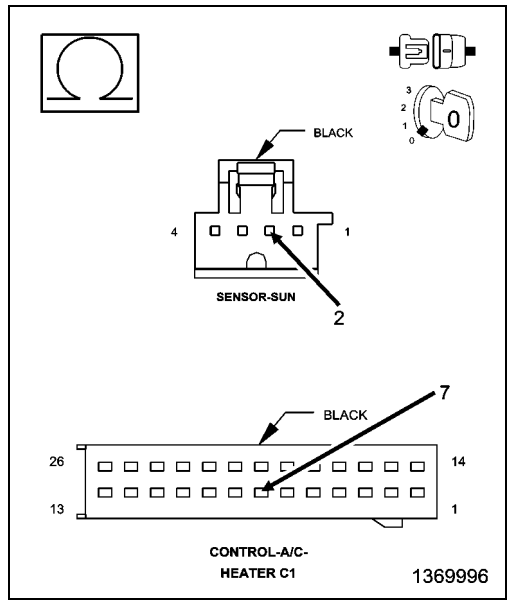

4. CHECK THE (C121) SENSOR GROUND CIRCUIT FOR AN OPEN

1. Measure the resistance of the (C121) Sensor Ground circuit between the A/C Heater Control C1 harness connector and the Sun Sensor harness connector.

Is the resistance above 5.0 Ohms?

Yes

- Repair the (C121) Sensor Ground circuit for an open.
- Perform HVAC VERIFICATION TEST (Refer to 28 - DTC-Based Diagnostics/HVAC - Standard Procedure).

No

- Go To 5

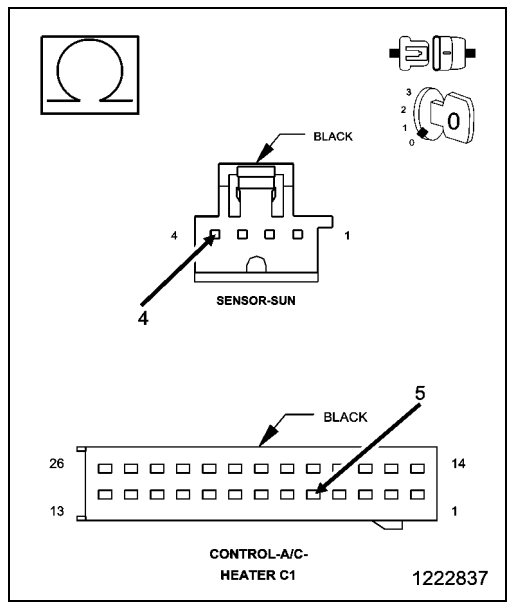

5. CHECK THE SUN SENSOR AND A/C HEATER CONTROL

1. Turn the ignition off to the lock position.
2. Replace the Sun Sensor in accordance with the Service Information.
3. Perform HVAC VERIFICATION TEST (Refer to 28 - DTC-Based Diagnostics/HVAC - Standard Procedure).

Did the DTC reset during or after the HVAC Verification Test?

Yes

- Replace and program the A/C Heater Control in accordance with the Service Information.
- Perform HVAC VERIFICATION TEST (Refer to 28 - DTC-Based Diagnostics/HVAC - Standard Procedure).

No

- Test complete.

6. CHECK THE WIRING AND CONNECTORS

1. The conditions necessary to set the DTC are not present at this time.
2. Using the schematics as a guide, inspect the wiring and connectors specific to this circuit.
3. Check for an intermittent condition by inspecting the related wiring harness for chafed, pierced, pinched, partially broken wires.
4. Check the connectors for broken, bent, pushed out, spread, corroded, or contaminated terminals.
5. Wiggle the wiring and connectors while checking for shorted and open circuits.
6. With the scan tool, check the Environmental Data to help identify the conditions in which the DTC was set.

Were there any problems found?

Yes

- Repair as necessary.
- Perform HVAC VERIFICATION TEST (Refer to 28 - DTC-Based Diagnostics/HVAC - Standard Procedure).

No

- Test complete.

B1604-RIGHT SOLAR SENSOR CIRCUIT LOW

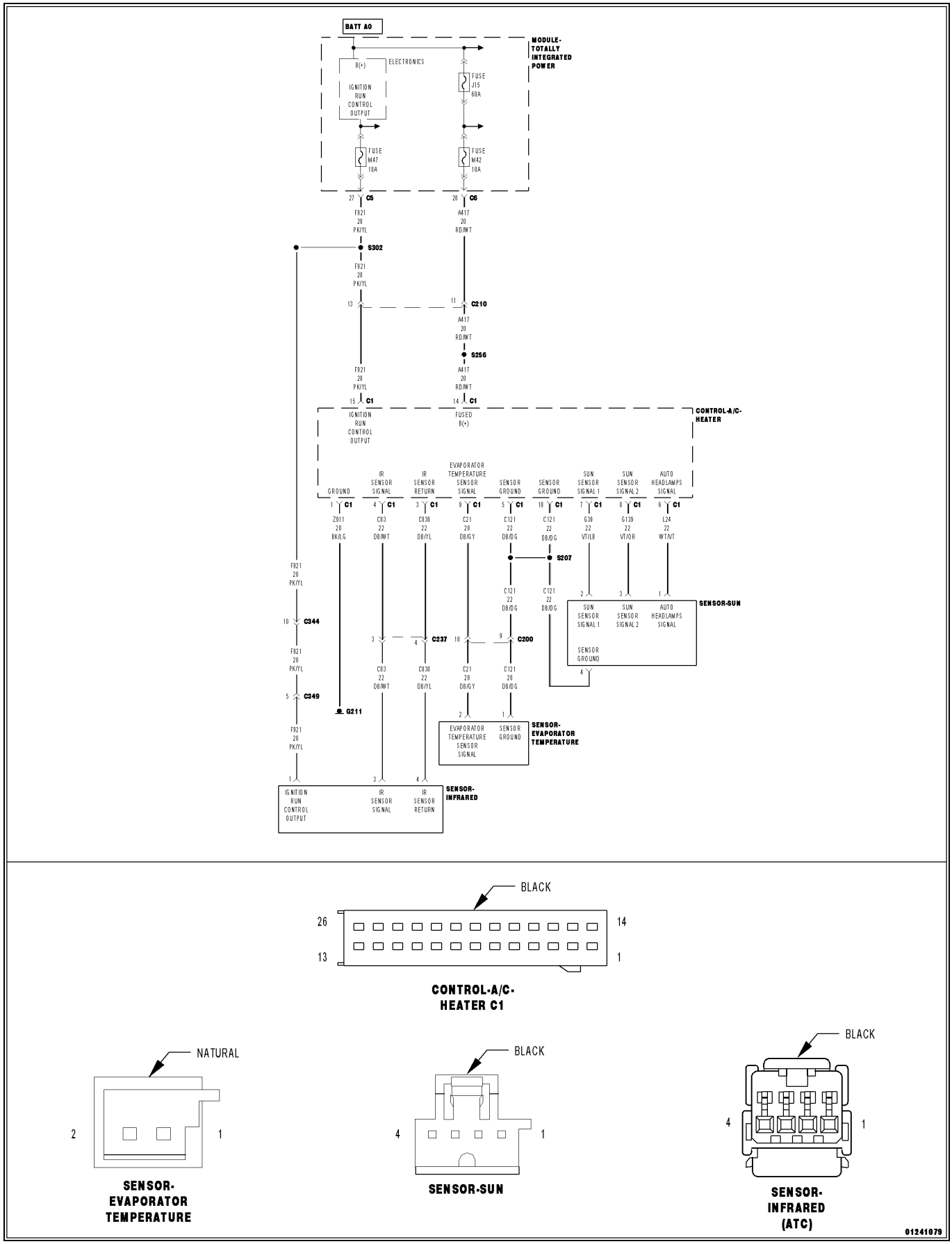

For a complete wiring diagram, **refer to the Wiring Information**.

- **When Monitored:**
  With the ignition on.
- **Set Condition:**
  If the Right Sun Sensor Signal input voltage is less than 0.16 of a volt for period of 30 seconds.

Possible Causes
(G139) SUN SENSOR SIGNAL 2 CIRCUIT SHORT TO GROUND
SUN SENSOR
A/C HEATER CONTROL

Always perform the HVAC Pre-Diagnostic Troubleshooting procedure before proceeding. (Refer to 28 - DTC-Based Diagnostics/HVAC - Standard Procedure).

1. CHECK IF THE DTC IS ACTIVE

1. Ignition on, engine not running.
2. With the scan tool, read HVAC DTCs.

NOTE: It can take up to 30 seconds or more for this DTC to mature.

Is this DTC active?

Yes

- Go To 2

No

- Go To 4

2. CHECK (G139) SUN SENSOR SIGNAL 1 CIRCUIT FOR A SHORT TO GROUND

1. Turn the ignition off to the lock position.
2. Disconnect the A/C Heater Control C1 harness connector.
3. Disconnect the Sun Sensor harness connector.
4. Measure the resistance between ground and the (G139) Sun Sensor Signal 2 circuit.

Is the resistance below 100k Ohms?

Yes

- Repair the (G139) Sun Sensor Signal 2 circuit for a short to ground.
- Perform HVAC VERIFICATION TEST (Refer to 28 - DTC-Based Diagnostics/HVAC - Standard Procedure).

No

- Go To 3

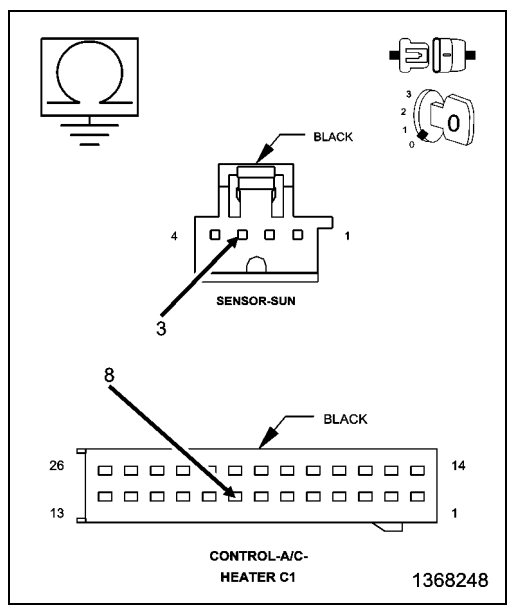

3. CHECK THE SUN SENSOR AND A/C HEATER CONTROL

1. Replace the Sun Sensor in accordance with the Service Information.
2. Perform HVAC VERIFICATION TEST (Refer to 28 - DTC-Based Diagnostics/HVAC - Standard Procedure).

Did this DTC reset while performing the HVAC Verification Test?

Yes

- Replace and program the A/C Heater Control in accordance with the Service Information.
- Perform HVAC VERIFICATION TEST (Refer to 28 - DTC-Based Diagnostics/HVAC - Standard Procedure).

No

- Test complete.

4. CHECK THE WIRING AND CONNECTORS

1. The conditions necessary to set the DTC are not present at this time.
2. Using the schematics as a guide, inspect the wiring and connectors specific to this circuit.
3. Check for an intermittent condition by inspecting the related wiring harness for chafed, pierced, pinched, partially broken wires.
4. Check the connectors for broken, bent, pushed out, spread, corroded, or contaminated terminals.
5. Wiggle the wiring and connectors while checking for shorted and open circuits.
6. With the scan tool, check the Environmental Data to help identify the conditions in which the DTC was set.

Were there any problems found?

Yes

- Repair as necessary.
- Perform HVAC VERIFICATION TEST (Refer to 28 - DTC-Based Diagnostics/HVAC - Standard Procedure).

No

- Test complete.

B1605-RIGHT SOLAR SENSOR CIRCUIT HIGH

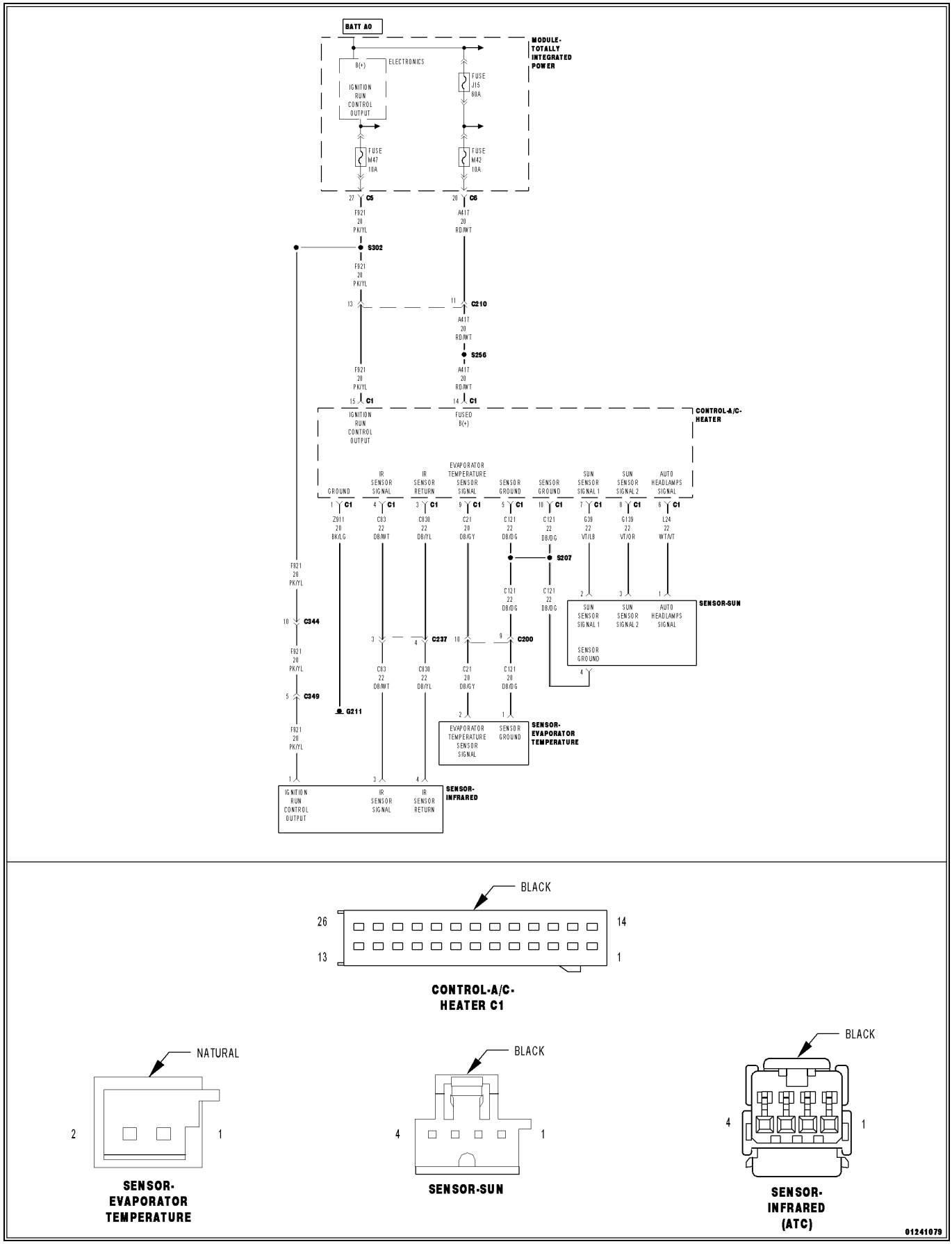

For a complete wiring diagram, **refer to the Wiring Information**.

- **When Monitored:**
  With the ignition on.
- **Set Condition:**
  If the Right Sun Sensor Signal input voltage is greater than 4.90 volts for period of 30 seconds.

Possible Causes
(G139) SUN SENSOR SIGNAL 2 CIRCUIT SHORT TO VOLTAGE
(G139) SUN SENSOR SIGNAL 2 CIRCUIT OPEN
(C121) SENSOR GROUND CIRCUIT OPEN
SUN SENSOR
A/C HEATER CONTROL

Always perform the HVAC Pre-Diagnostic Troubleshooting procedure before proceeding. (Refer to 28 - DTC-Based Diagnostics/HVAC - Standard Procedure).

1. CHECK IF DTC IS ACTIVE

1. Ignition on, engine not running.
2. With the scan tool, read HVAC DTCs.

NOTE: It can take up to 30 seconds or more for this DTC to mature.

Is this DTC active?

Yes

- Go To 2

No

- Go To 6

2. CHECK THE (G139) SUN SENSOR SIGNAL 2 CIRCUIT FOR A SHORT TO VOLTAGE

1. Turn the ignition off to the lock position.
2. Disconnect the Sun Sensor harness connector.
3. Disconnect the A/C Heater Control harness connector.

NOTE: Check connectors - Clean/repair as necessary.

4. Ignition on, engine not running.
5. Check the voltage of the (G139) Sun Sensor Signal 2 circuit.

Is there any voltage present?

Yes

- Repair the (G139) Sun Sensor Signal 2 circuit for an short to voltage.
- Perform HVAC VERIFICATION TEST (Refer to 28 - DTC-Based Diagnostics/HVAC - Standard Procedure).

No

- Go To 3

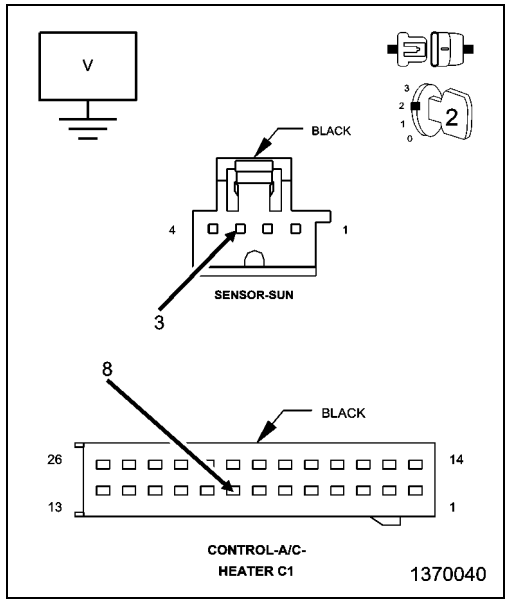

3. CHECK THE (G139) SUN SENSOR SIGNAL 2 CIRCUIT FOR AN OPEN

1. Turn the ignition off to the lock position.
2. Measure the resistance of the (G139) Sun Sensor Signal 2 circuit between the A/C Heater Control harness connector and the Sun Sensor harness connector.

Is the resistance above 5.0 Ohms?

Yes

- Repair the (G139) Sun Sensor Signal 2 circuit for an open.
- Perform HVAC VERIFICATION TEST (Refer to 28 - DTC-Based Diagnostics/HVAC - Standard Procedure).

No

- Go To 4

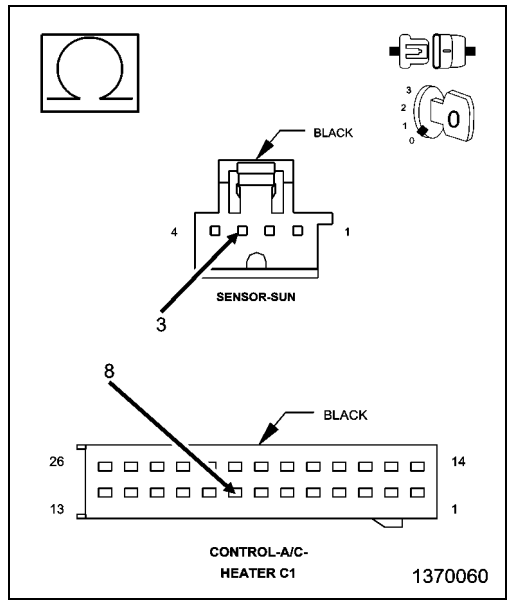

4. CHECK THE (C121) SENSOR GROUND CIRCUIT FOR AN OPEN

1. Measure the resistance of the (C121) Sensor Ground circuit between the A/C Heater Control C1 harness connector and the Sun Sensor harness connector.

Is the resistance above 5.0 Ohms?

Yes

- Repair the (C121) Sensor Ground circuit for an open.
- Perform HVAC VERIFICATION TEST (Refer to 28 - DTC-Based Diagnostics/HVAC - Standard Procedure).

No

- Go To 5

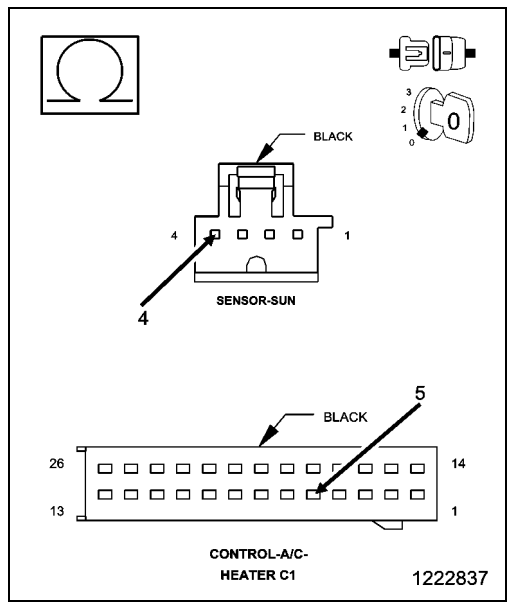

5. CHECK THE SUN SENSOR AND A/C HEATER CONTROL

1. Turn the ignition off to the lock position.
2. Replace the Sun Sensor in accordance with the Service Information.
3. Perform HVAC VERIFICATION TEST (Refer to 28 - DTC-Based Diagnostics/HVAC - Standard Procedure).

Did the DTC reset during or after the HVAC Verification Test?

Yes

- Replace and program the A/C Heater Control in accordance with the Service Information.
- Perform HVAC VERIFICATION TEST (Refer to 28 - DTC-Based Diagnostics/HVAC - Standard Procedure).

No

- Test complete.

6. CHECK THE WIRING AND CONNECTORS

1. The conditions necessary to set the DTC are not present at this time.
2. Using the schematics as a guide, inspect the wiring and connectors specific to this circuit.
3. Check for an intermittent condition by inspecting the related wiring harness for chafed, pierced, pinched, partially broken wires.
4. Check the connectors for broken, bent, pushed out, spread, corroded, or contaminated terminals.
5. Wiggle the wiring and connectors while checking for shorted and open circuits.
6. With the scan tool, check the Environmental Data to help identify the conditions in which the DTC was set.

Were there any problems found?

Yes

- Repair as necessary.
- Perform HVAC VERIFICATION TEST (Refer to 28 - DTC-Based Diagnostics/HVAC - Standard Procedure).

No

- Test complete.

B1610-AMBIENT LIGHT SENSOR 1 INPUT CIRCUIT LOW

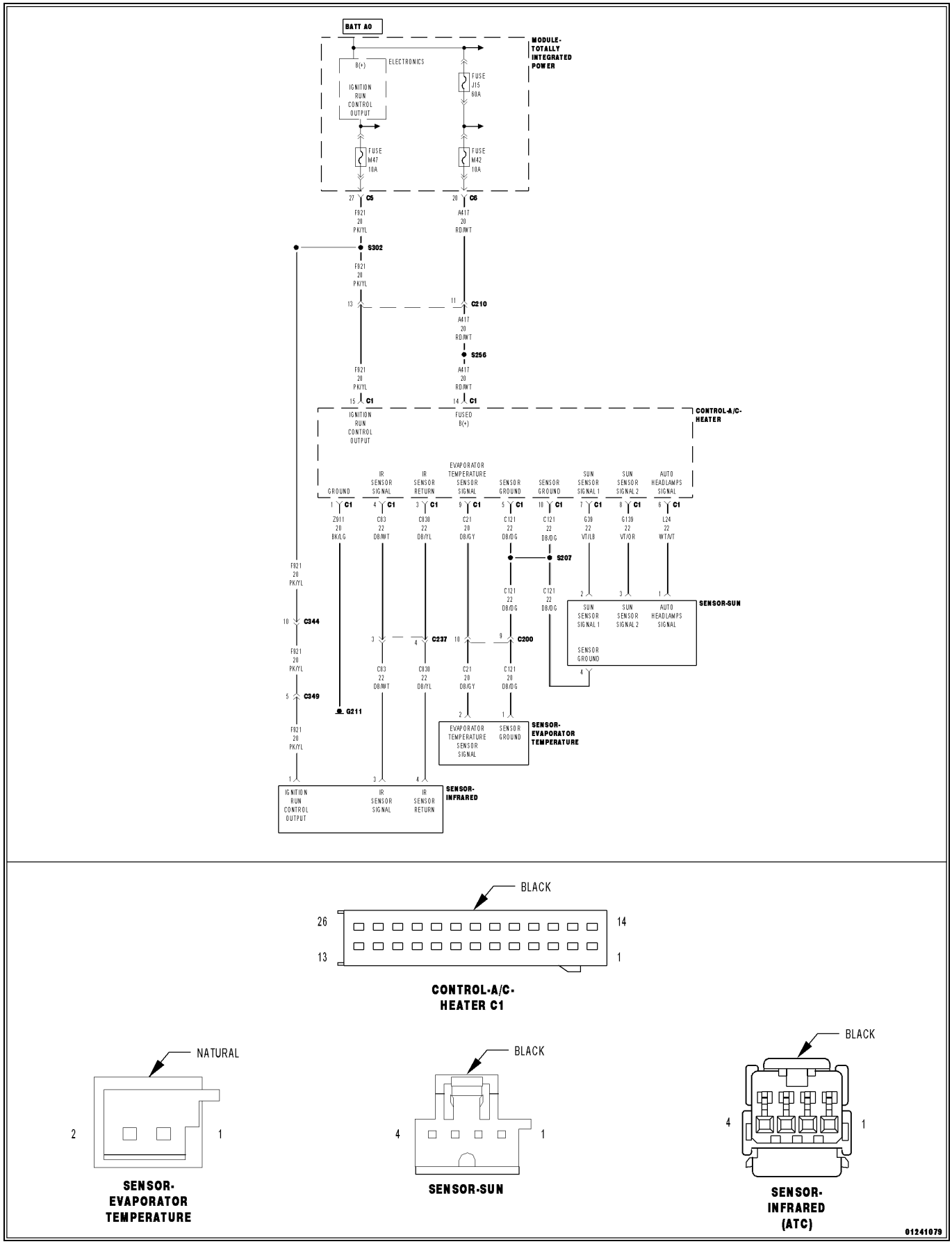

For a complete wiring diagram, **refer to the Wiring Information**.

- **When Monitored:**
  With the ignition on.
- **Set Condition:**
  If the Twilight or Ambient Light Sensor input voltage is less than 0.16 of a volt for period of 30 seconds.

Possible Causes
(L24) AUTO HEADLAMPS SIGNAL CIRCUIT SHORT TO GROUND
SUN SENSOR
A/C HEATER CONTROL

Always perform the HVAC Pre-Diagnostic Troubleshooting procedure before proceeding. (Refer to 28 - DTC-Based Diagnostics/HVAC - Standard Procedure).

1. CHECK IF THE DTC IS ACTIVE

1. Ignition on, engine not running.
2. With the scan tool, read HVAC DTCs.

NOTE: It can take up to 30 seconds or more for this DTC to mature.

Is this DTC active?

Yes

- Go To 2

No

- Go To 4

2. CHECK THE (L24) AUTO HEADLAMPS SIGNAL CIRCUIT FOR A SHORT TO GROUND

1. Turn the ignition off to the lock position.
2. Disconnect the A/C Heater Control C1 harness connector.
3. Disconnect the Sun Sensor harness connector.
4. Measure the resistance between ground and the (L24) Auto Headlamps Signal circuit.

Is the resistance below 100k Ohms?

Yes

- Repair the (L24) Auto Headlamps Signal circuit for a short to ground.
- Perform HVAC VERIFICATION TEST (Refer to 28 - DTC-Based Diagnostics/HVAC - Standard Procedure).

No

- Go To 3

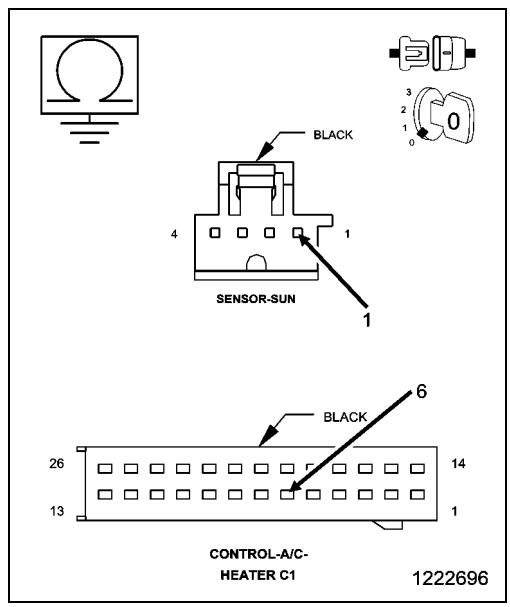

3. CHECK THE SUN SENSOR AND A/C HEATER CONTROL

1. Replace the Sun Sensor in accordance with the Service Information.
2. Perform HVAC VERIFICATION TEST (Refer to 28 - DTC-Based Diagnostics/HVAC - Standard Procedure).

Did this DTC reset while performing the HVAC Verification Test?

Yes

- Replace and program the A/C Heater Control in accordance with the Service Information.
- Perform HVAC VERIFICATION TEST (Refer to 28 - DTC-Based Diagnostics/HVAC - Standard Procedure).

No

- Test complete.

4. CHECK THE WIRING AND CONNECTORS

1. The conditions necessary to set the DTC are not present at this time.
2. Using the schematics as a guide, inspect the wiring and connectors specific to this circuit.
3. Check for an intermittent condition by inspecting the related wiring harness for chafed, pierced, pinched, partially broken wires.
4. Check the connectors for broken, bent, pushed out, spread, corroded, or contaminated terminals.
5. Wiggle the wiring and connectors while checking for shorted and open circuits.
6. With the scan tool, check the Environmental Data to help identify the conditions in which the DTC was set.

Were there any problems found?

Yes

- Repair as necessary.
- Perform HVAC VERIFICATION TEST (Refer to 28 - DTC-Based Diagnostics/HVAC - Standard Procedure).

No

- Test complete.

B1611-AMBIENT LIGHT SENSOR 1 INPUT CIRCUIT HIGH

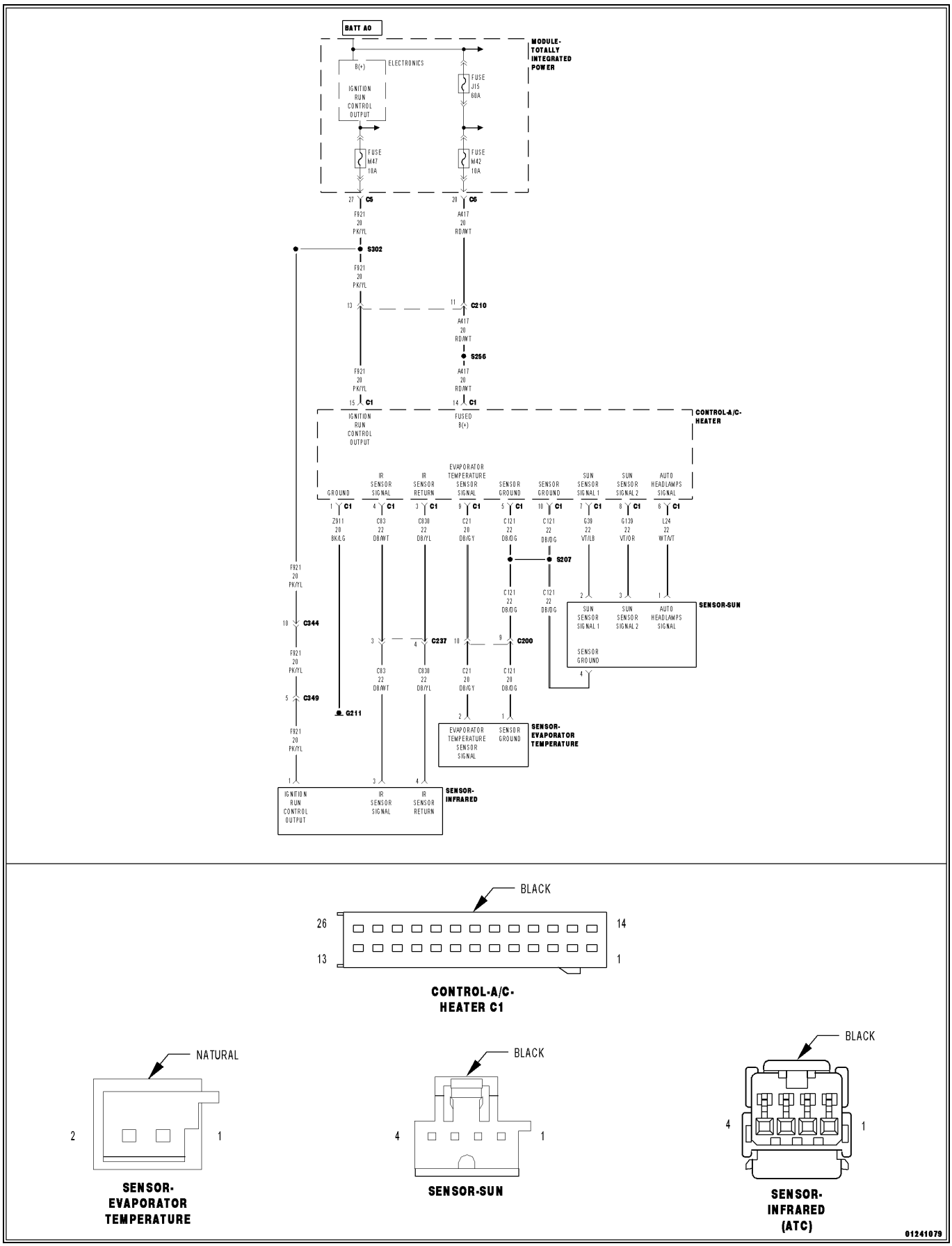

For a complete wiring diagram, **refer to the Wiring Information**.

- **When Monitored:**
  With the ignition on.
- **Set Condition:**
  If the Twilight or Ambient Light Sensor input voltage is greater than 4.9 volts for period of 60 seconds.

Possible Causes
(L24) AUTO HEADLAMPS SIGNAL CIRCUIT SHORT TO VOLTAGE
(L24) AUTO HEADLAMPS SIGNAL CIRCUIT SHORT OPEN
(C121) SENSOR GROUND CIRCUIT OPEN
SUN SENSOR
A/C HEATER CONTROL

Always perform the HVAC Pre-Diagnostic Troubleshooting procedure before proceeding. (Refer to 28 - DTC-Based Diagnostics/HVAC - Standard Procedure).

1. CHECK IF THE DTC IS ACTIVE

1. Ignition on, engine not running.
2. With the scan tool, read HVAC DTCs.

NOTE: It can take up to 60 seconds or more for this DTC to mature.

Is this DTC active?

Yes

- Go To 2

No

- Go To 6

2. CHECK (L24) AUTO HEADLAMPS SIGNAL CIRCUIT FOR A SHORT TO VOLTAGE

1. Turn the ignition off.
2. Disconnect the A/C Heater Control C1 harness connector.
3. Ignition on, engine not running.
4. Measure the voltage of the (L24) Auto Headlamps Signal circuit.

Is there any voltage present?

Yes

- Repair the (L24) Auto Headlamps Signal circuit for a short to voltage.
- Perform HVAC VERIFICATION TEST (Refer to 28 - DTC-Based Diagnostics/HVAC - Standard Procedure).

No

- Go To 3

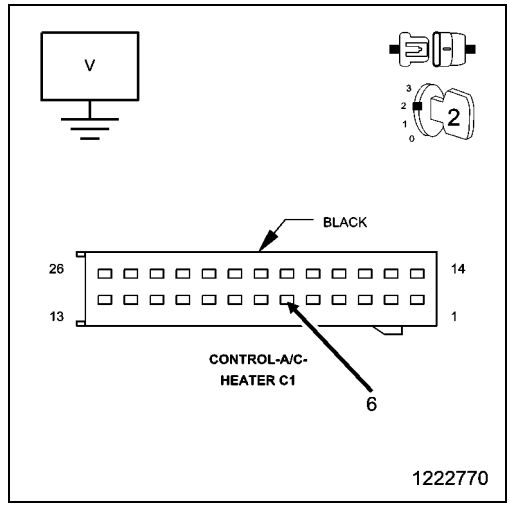

3. CHECK (L24) AUTO HEADLAMPS SIGNAL CIRCUIT FOR AN OPEN

1. Turn the ignition off to the lock position.
2. Disconnect the Sun Sensor harness connector.
3. Measure the resistance of the (L24) Auto Headlamps Signal circuit between the A/C Heater Control C1 harness connector and the Sun Sensor harness connector.

Is the resistance below 5.0 Ohms?

Yes

- Go To 4

No

- Repair the (L24) Auto Headlamps Signal circuit for an open.
- Perform HVAC VERIFICATION TEST (Refer to 28 - DTC-Based Diagnostics/HVAC - Standard Procedure).

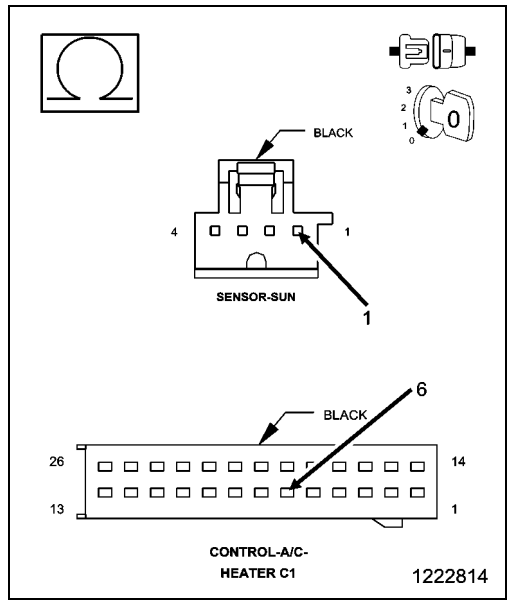

4. CHECK (C121) SENSOR GROUND CIRCUIT FOR AN OPEN

1. Measure the resistance of the (C121) Sensor Ground circuit between the A/C Heater Control C1 harness connector and the Sun Sensor harness connector.

Is the resistance below 5.0 Ohms?

Yes

- Go To 5

No

- Repair the (C121) Sensor Ground circuit for an open.
- Perform HVAC VERIFICATION TEST (Refer to 28 - DTC-Based Diagnostics/HVAC - Standard Procedure).

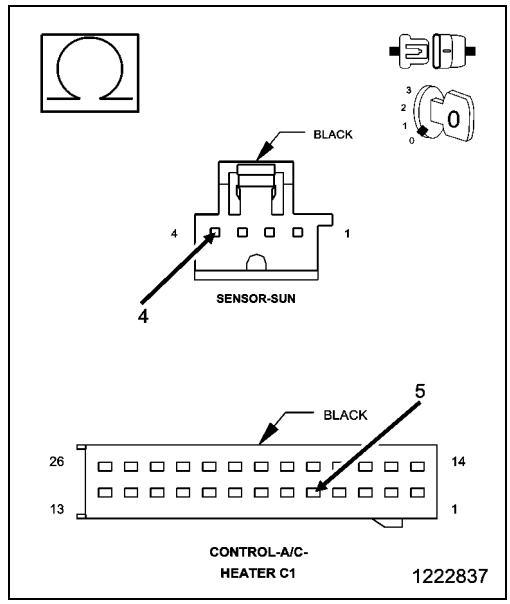

5. CHECK THE SUN SENSOR A/C HEATER CONTROL

1. Replace the Sun Sensor in accordance with the Service Information.
2. Perform HVAC VERIFICATION TEST (Refer to 28 - DTC-Based Diagnostics/HVAC - Standard Procedure).

Did this DTC reset while performing the HVAC Verification Test?

Yes

- Replace and program the A/C Heater Control in accordance with the Service Information.
- Perform HVAC VERIFICATION TEST (Refer to 28 - DTC-Based Diagnostics/HVAC - Standard Procedure).

No

- Test complete.

6. CHECK THE WIRING AND CONNECTORS

1. The conditions necessary to set the DTC are not present at this time.
2. Using the schematics as a guide, inspect the wiring and connectors specific to this circuit.
3. Check for an intermittent condition by inspecting the related wiring harness for chafed, pierced, pinched, partially broken wires.
4. Check the connectors for broken, bent, pushed out, spread, corroded, or contaminated terminals.
5. Wiggle the wiring and connectors while checking for shorted and open circuits.
6. With the scan tool, check the Environmental Data to help identify the conditions in which the DTC was set.

Were there any problems found?

Yes

- Repair as necessary.
- Perform HVAC VERIFICATION TEST (Refer to 28 - DTC-Based Diagnostics/HVAC - Standard Procedure).

No

- Test complete.

■ B2214-00-(HVAC) CLIMATE CONTROL INTERNAL

For a complete wiring diagram **refer to the Wiring Information**.

- **When Monitored:**
  With the ignition on.
- **Set Condition:**
  If the A/C Heater Control has an internal fault. This DTC has a maturing time of 5 seconds and a de-maturing time of 10 seconds. If the DTCs status changes from active to stored it will stay in memory for 100 ignition cycles.

Possible Causes
A/C HEATER CONTROL

Always perform the HVAC Pre-Diagnostic Troubleshooting procedure before proceeding. (Refer to 28 - DTC-Based Diagnostics/HVAC - Standard Procedure).

1. CHECK THE A/C HEATER CONTROL

Repair

- Check for any controller software updates. If an update is available, reprogram the controller with the latest software. If no software updates are available, replace and program the A/C Heater Control in accordance with the Service Information.
- Perform HVAC VERIFICATION TEST (Refer to 28 - DTC-Based Diagnostics/HVAC - Standard Procedure).

■ B222A-VEHICLE LINE MISMATCH

For a complete wiring diagram, **refer to the Wiring Information**.

Theory of Operation

The A/C Heater Controller checks for vehicle configuration using communication over the BUS. If the stored configuration does not match the configuration stored in the controller this DTC will set.

- **When Monitored:**
  With the ignition on.
- **Set Condition:**
  If the stored configuration does not match the configuration stored in the controller.

Possible Causes
VEHICLE CONFIGURATION NOT STORED IN THE TOTALLY INTEGRATED POWER MODULE (TIPM)
CONTROL MODULE INSTALLED IN INCORRECT VEHICLE
A/C HEATER CONTROL

Always perform the HVAC Pre-Diagnostic Troubleshooting procedure before proceeding. (Refer to 28 - DTC-Based Diagnostics/HVAC - Standard Procedure).

1. CHECK THE VEHICLE CONFIGURATION

NOTE: The DTC must be active and no BUS communication DTCs present before performing this test. If BUS communication DTCs are present, perform there respective test first. If the DTC is stored, erase the DTC and cycle the ignition. If the DTC resets and changes to active, then proceed.

1. With the scan tool, check the vehicle configuration stored in the Totally Integrated Power Module (TIPM).
2. With the scan tool, check the vehicle configuration stored in the A/C Heater Control (HVAC).

Pick the answer that best describes your findings:

TIPM has wrong or no vehicle configuration

- With the scan tool, program the proper vehicle configuration in the TIPM.
- Perform HVAC VERIFICATION TEST (Refer to 28 - DTC-Based Diagnostics/HVAC - Standard Procedure).

HVAC has wrong vehicle configuration but TIPM has correct configuration

- Replace the A/C Heater Control in accordance with the Service Information.
- Perform HVAC VERIFICATION TEST (Refer to 28 - DTC-Based Diagnostics/HVAC - Standard Procedure).

HVAC and TIPM have proper calibration and the DTC is active in the HVAC

- Check if other modules such as the Powertrain Control Module (PCM) have the wrong configuration stored in the controller and reprogram or replace as necessary. If all other modules show the proper configuration, replace the A/C Heater Control in accordance with the Service Information.
- Perform HVAC VERIFICATION TEST (Refer to 28 - DTC-Based Diagnostics/HVAC - Standard Procedure).

U0010-CAN INTERIOR BUS

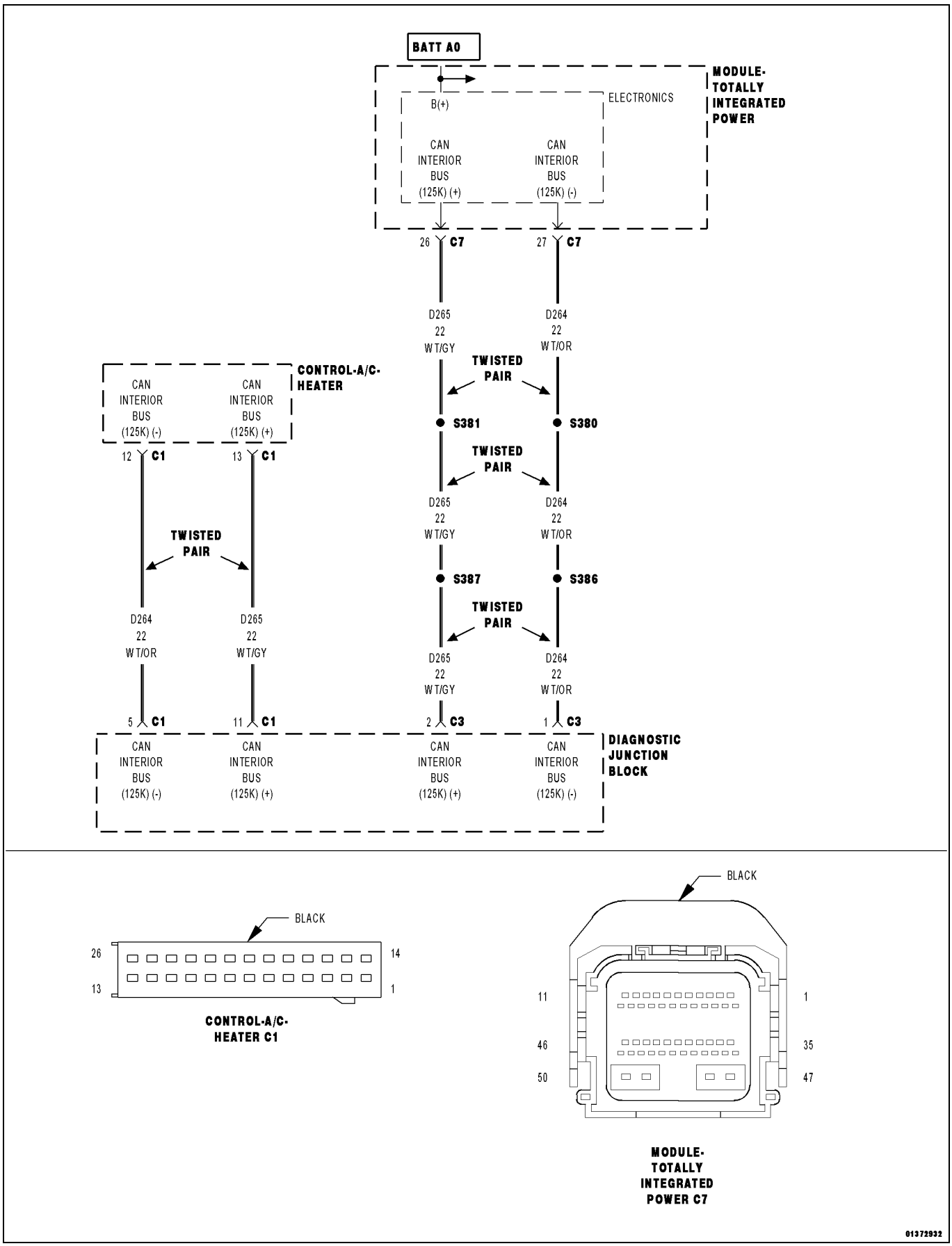

For a complete wiring diagram, **refer to the Wiring Information**.

- **When Monitored:**
  Continuously with the ignition on.
- **Set Condition:**
  If the CAN Interior Bus (+) or CAN Interior Bus (-) circuit is open, shorted to voltage, or shorted to ground.

Possible Causes
ACTIVE CAN BUS DTC IN THE TOTALLY INTEGRATED POWER MODULE
(D265) CAN C INTERIOR BUS (125K) (+) CIRCUIT OPEN
(D264) CAN C INTERIOR BUS (125K) (-) CIRCUIT OPEN
(D265) CAN C INTERIOR BUS (125K) (+) CIRCUIT SHORT TO GROUND
(D264) CAN C INTERIOR BUS (125K) (-) CIRCUIT SHORT TO GROUND
A/C HEATER CONTROL

Always perform the HVAC Pre-Diagnostic Troubleshooting procedure before proceeding. (Refer to 28 - DTC-Based Diagnostics/HVAC - Standard Procedure).

1. VERIFY THE DTC IS ACTIVE

1. Turn the ignition on.
2. With the scan tool, read HVAC DTCs.

Does the scan tool display this DTC as active?

Yes

- Go To 2

No

- Go To 7

2. CHECK FOR ACTIVE CAN BUS RELATED DTCS IN THE TOTALLY INTEGRATED POWER MODULE (TIPM)

1. With the scan tool, read the Totally Integrated Power Module (TIPM) DTCs.

Does the scan tool display any active CAN BUS related DTCs?

Yes

- (Refer to 28 - DTC-Based Diagnostics/MODULE, Totally Integrated Power (TIPM) - Diagnosis and Testing) and perform the appropriate diagnostic procedure.

No

- Go To 3

3. CHECK (D265) CAN INTERIOR BUS (+) CIRCUIT FOR AN OPEN

1. Turn the ignition off to the lock position.
2. Disconnect the negative battery cable.
3. Disconnect the A/C Heater Control C1 harness connector.
4. Disconnect the Totally Integrated Power Module (TIPM) C7 harness connector.
5. Measure the resistance of the (D265) CAN Interior Bus (125K) (+) circuit between the Totally Integrated Power Module (TIPM) C7 harness connector and the A/C Heater Control C1 harness connector.

Is the resistance below 1.0 Ohm?

Yes

- Go To 4

No

- Repair the (D265) CAN Interior Bus (125K) (+) circuit for an open.
- Perform HVAC VERIFICATION TEST (Refer to 28 - DTC-Based Diagnostics/HVAC - Standard Procedure).

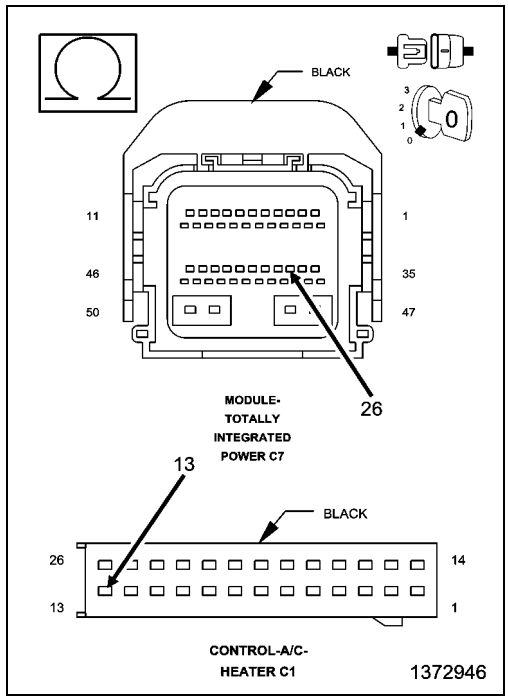

4. CHECK (D264) CAN INTERIOR BUS (-) CIRCUIT FOR AN OPEN

1. Measure the resistance of the (D264) CAN Interior Bus (125K) (-) circuit between the Totally Integrated Power Module (TIPM) C7 connector and the A/C Heater Control C1 harness connector.

Is the resistance below 1.0 Ohm?

Yes

- Go To 5

No

- Repair the (D264) CAN Interior Bus (125K) (-) circuit for an open.
- Perform HVAC VERIFICATION TEST (Refer to 28 - DTC-Based Diagnostics/HVAC - Standard Procedure).

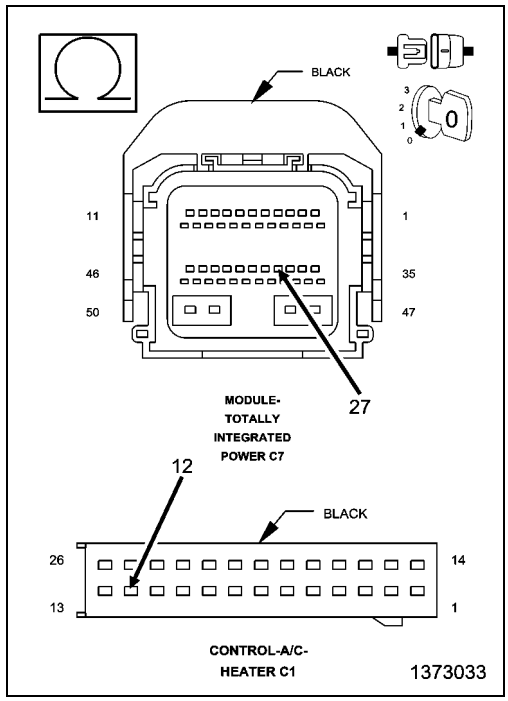

5. CHECK (D265) CAN C INTERIOR BUS (125K) (+) CIRCUIT FOR A SHORT TO GROUND

1. Measure the resistance between ground and the (D265) CAN C Interior Bus (125K) (+) circuit in the A/C Heater Control C1 harness connector.

Is the resistance above 100k Ohms?

Yes

- Go To 6

No

- Repair the (D265) CAN C Interior Bus (125K) (+) circuit for a short to ground.
- Perform HVAC VERIFICATION TEST (Refer to 28 - DTC-Based Diagnostics/HVAC - Standard Procedure).

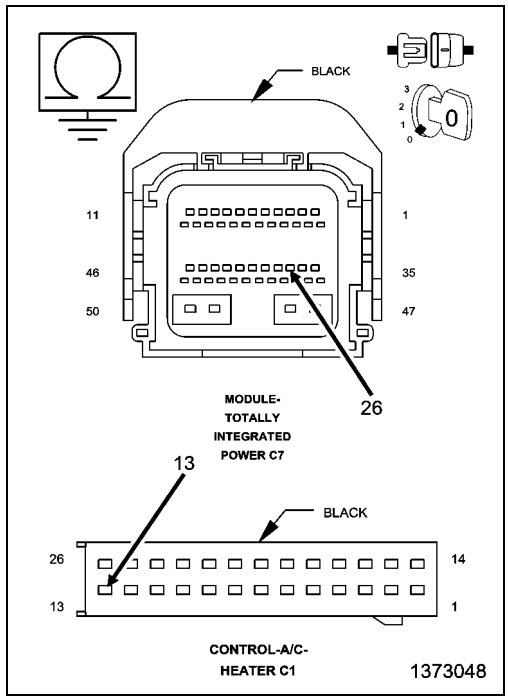

6. CHECK (D264) CAN C INTERIOR BUS (-) CIRCUIT FOR A SHORT TO GROUND

1. Measure the resistance between ground and the (D264) CAN C Interior Bus (125K) (-) circuit.

Is the resistance above 100k Ohms?

Yes

- Replace the A/C Heater Control in accordance with the Service Information.
- Perform HVAC VERIFICATION TEST (Refer to 28 - DTC-Based Diagnostics/HVAC - Standard Procedure).

No

- Repair the (D264) CAN C Interior Bus (125K) (-) circuit for a short to ground.
- Perform HVAC VERIFICATION TEST (Refer to 28 - DTC-Based Diagnostics/HVAC - Standard Procedure).

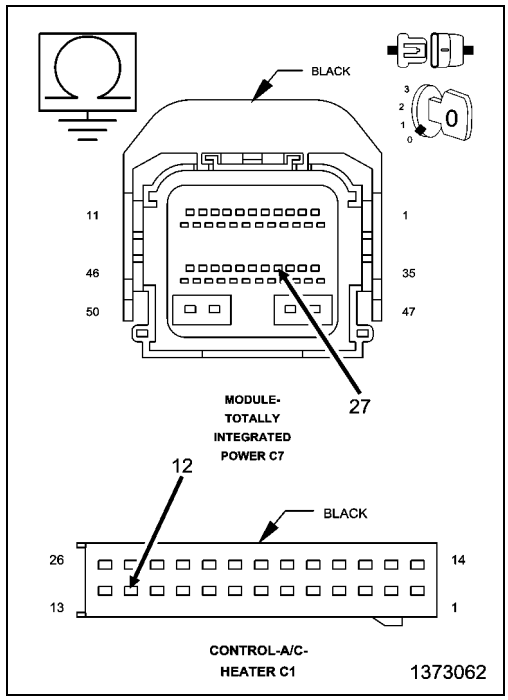

7. CHECK THE WIRING AND CONNECTORS

1. The conditions necessary to set the DTC are not present at this time.
2. Using the schematics as a guide, inspect the wiring and connectors specific to this circuit.
3. Check for an intermittent condition by inspecting the related wiring harness for chafed, pierced, pinched, partially broken wires.
4. Check the connectors for broken, bent, pushed out, spread, corroded, or contaminated terminals.
5. Wiggle the wiring and connectors while checking for shorted and open circuits.
6. With the scan tool, check the Environmental Data to help identify the conditions in which the DTC was set.

Were there any problems found?

Yes

- Repair as necessary.
- Perform HVAC VERIFICATION TEST (Refer to 28 - DTC-Based Diagnostics/HVAC - Standard Procedure).

No

- Test complete.

■ U0141-LOST COMMUNICATION WITH IPM (FCM/TIPM)

For a complete wiring diagram, **refer to the Wiring Information**.

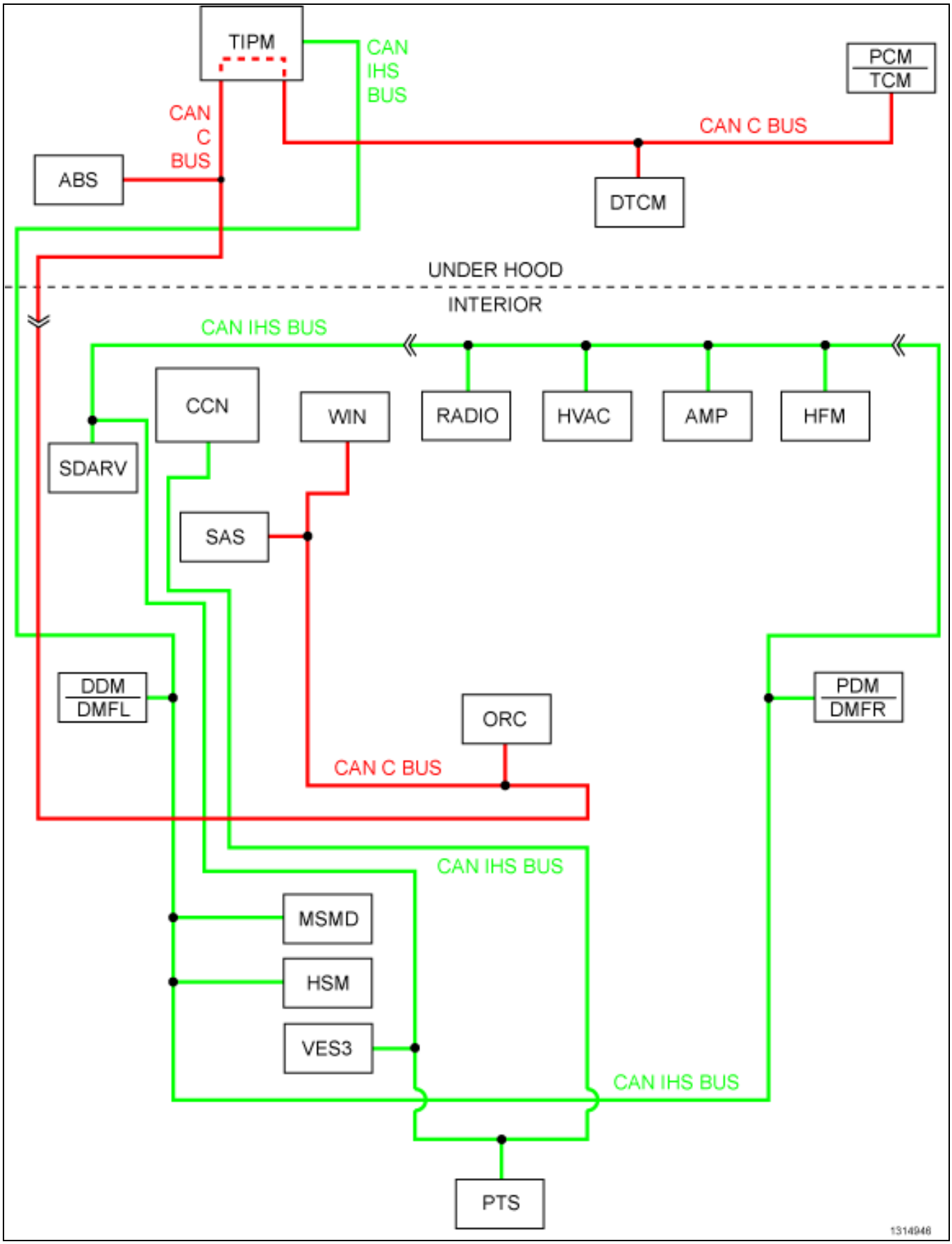
TIPM
CAN IHS BUS
PCM TCM
CAN C BUS
CAN C BUS
ABS
DTCM
UNDER HOOD
INTERIOR
CAN IHS BUS
CCN
WIN
RADIO
HVAC
AMP
HFM
SDARV
SAS
DDM DMFL
PDM DMFR
ORC
CAN C BUS
CAN IHS BUS
MSMD
HSM
VES3
CAN IHS BUS
PTS
1314948

- **When Monitored:**
  Continuously when the ignition is on.
  Battery voltage between 10 and 16 volts.
  Ignition Off Draw (IOD) fuse installed.
  Totally Integrated Power Module (TIPM) is configured correctly.
- **Set Condition:**
  If the A/C Heater Control loses communication with the Totally Integrated Power Module (TIPM).

Possible Causes
(D265) CAN INTERIOR BUS(+) (125k) CIRCUIT SHORTED TO VOLTAGE
(D264) CAN INTERIOR BUS(-) (125k) CIRCUIT SHORTED TO GROUND
TOTALLY INTEGRATED POWER MODULE (TIPM) POWER AND GROUND
TIPM NOT CONFIGURED CORRECTLY
TOTALLY INTEGRATED POWER MODULE (TIPM)
HVAC MODULE

1. VERIFY DTC IS ACTIVE

NOTE: Make sure the IOD fuse is installed and the battery is fully charged before proceeding.

1. Turn the ignition on.
2. With the scan tool, read active HVAC DTCs.

Is this DTC active?

Yes

- **(Refer to 28 - DTC-Based Diagnostics/MODULE, Totally Integrated Power (TIPM) - Diagnosis and Testing)** and perform the U0141-Lost Communication with IPM (FCM/TIPM) diagnostic procedure.

No

- **(Refer to 29 - Non-DTC Diagnostics/Communication - Diagnosis and Testing)** and perform the Stored Lost Communication DTCs diagnostic procedure.

U0155-LOST COMMUNICATION WITH CLUSTER/CCN

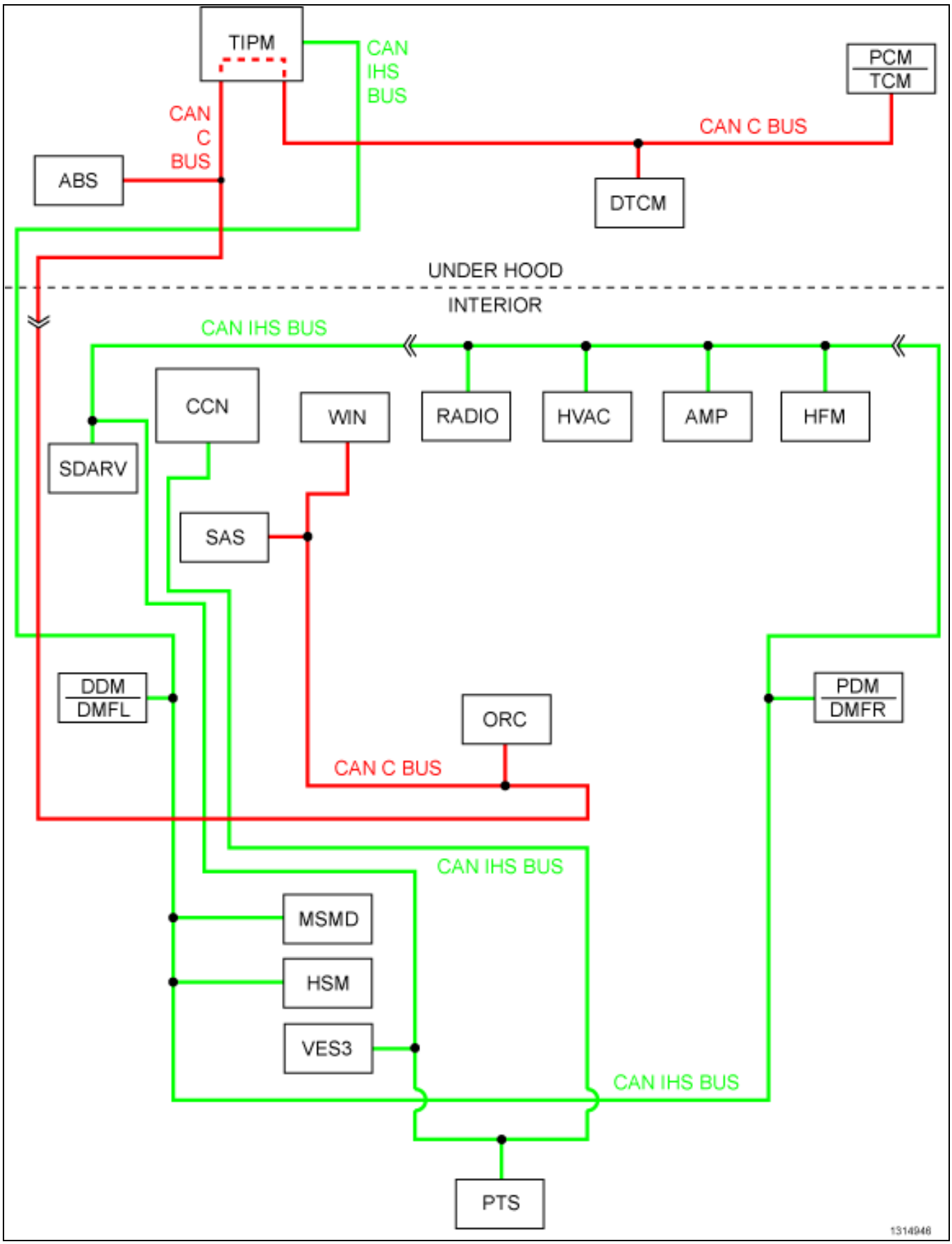

For a complete wiring diagram, **refer to the Wiring Information**.

- **When Monitored:**
  Continuously when the ignition is on.
  Battery voltage between 10 and 16 volts.
  Ignition Off Draw (IOD) fuse installed.
  Totally Integrated Power Module (TIPMP is configured correctly.
- **Set Condition:**
  If the A/C Heater Control loses communication with the Cluster (CCN).

Possible Causes
(D265) CAN INTERIOR BUS(+) (125k) CIRCUIT SHORTED TO VOLTAGE
(D264) CAN INTERIOR BUS(-) (125k) CIRCUIT SHORTED TO GROUND
INSTRUMENT CLUSTER POWER AND GROUND
TIPM NOT CONFIGURED CORRECTLY
INSTRUMENT CLUSTER (CCN)
HVAC CONTROL MODULE

1. VERIFY DTC IS ACTIVE

NOTE: Make sure the IOD fuse is installed and the battery is fully charged before proceeding.

1. Turn the ignition on.
2. With the scan tool, read active HVAC Module DTCs.

Is this DTC active?

Yes

- **(Refer to 28 - DTC-Based Diagnostics/MODULE, Totally Integrated Power (TIPM) - Diagnosis and Testing)** and perform the U0155-Lost Communication with Cluster/CCNdiagnostic procedure.

No

- **(Refer to 29 - Non-DTC Diagnostics/Communication - Diagnosis and Testing)** and perform the Stored Lost Communication DTCs diagnostic procedure.

Standard Procedure

■ STANDARD PROCEDURE - HVAC SYSTEM TEST

For a complete wiring diagram, **refer to the Wiring Information**.

Theory of Operation

The HVAC System Test provides a starting point in the diagnostic process by identifying the appropriate diagnostic procedure or system test to perform when diagnosing a given symptom, condition, or Diagnostic Trouble Code (DTC). It also provides a means for testing the entire HVAC system by utilizing the A/C Heater Control's On-Board System Tests. The HVAC System Tests can also assist in diagnosing stored DTCs.

1. HVAC SYSTEM TEST

NOTE: Diagnose and repair all active DTCs before diagnosing and repairing stored DTCs. If active DTCs are present (Refer to 28 - DTC-Based Diagnostics/HVAC - Diagnosis and Testing) and perform the appropriate diagnostic procedure.

Make a selection based on the symptom, condition, or DTC that you want to diagnose.

Scan Tool Indicates HVAC Not Active On Bus

- (Refer to 29 - Non-DTC Diagnostics/Communication - Diagnosis and Testing) and perform the No Response from HVAC diagnostic procedure.

Blower Motor Inoperative

- (Refer to 29 - Non-DTC Diagnostics/HVAC - Diagnosis and Testing) for Blower Motor diagnostic procedures.

Actuator Calibration Test

- Go To 4

A/C System Performance Test

- Go To 2

2. A/C COOLDOWN TEST

The following are prerequisites of the A/C Cooldown Test. Verify that the:

- Refrigerant system has an adequate charge. Check and repair as necessary before proceeding in accordance with the Service Information (Refer to 24 - Heating and Air Conditioning - Diagnosis and Testing).
- Blower motor operates correctly in all speeds. Diagnose and repair all blower related faults before proceeding.
- Work area ambient temperature is above 16° C (60° F) before proceeding. Move the vehicle to a warmer work area if necessary.
- Evaporator temperature is above 13° C (55° F) before proceeding.
- A/C compressor is not running. If the compressor is running, turn the A/C off and allow the evaporator to warm up before proceeding.

NOTE: Running the AC Cooldown test will cause the A/C status indicator to flash. One or more status messages will display on the scan tool after running the Cooldown Test. These messages will clear after paging back out of this test function. Therefore, it is important to note all messages before doing so.

1. Start the engine.
2. Turn the Blower control to the high speed position.
3. With the scan tool in HVAC, select System Tests and then select Cooldown test. Allow the test to run to completion.

Does the scan tool display a status message that indicates a fault has occurred?

Yes

- (Refer to 28 - DTC-Based Diagnostics/HVAC - Diagnosis and Testing) and perform the appropriate diagnostic procedure.

No

- Go To 3

3. MODE SWITCH AND DOOR ACTUATOR CIRCUIT TEST

NOTE: If at anytime a DTC becomes active during this test, proceed to the conclusion question. If multiple DTCs are active, diagnose those that relate to a short circuit first.

1. Start the engine and turn the Blower control to the low speed position.
2. Set the Blend control (single-zone) or Driver and Passenger Blend control (dual-zone) to the full cold position.
3. Monitor the scan tool for active HVAC DTCs while performing the following test steps.
   - If equipped, press the A/C mode switch on, wait 30 seconds, and then press it off.
   - If equipped, press the Recirculation mode switch on, wait 30 seconds, and then press it off.
   - If equipped, press the EBL mode switch on, wait 30 seconds, and then press it off.
   - Move the Blend control (single-zone) or Driver Blend control (dual-zone) from full cold to full hot, wait 30 seconds, and then move it back to full cold.
   - If equipped, move the Passenger Blend control from full cold to full hot, wait 30 seconds, and then moved it back to full cold.
   - Turn the Mode select control to the defrost position, wait 30 seconds, and then turn it to the panel position (dual-zone) or panel / recirculation position (single-zone). Wait 30 seconds before proceeding.

Does the scan tool display any active DTCs?

Yes

- (Refer to 28 - DTC-Based Diagnostics/HVAC - Diagnosis and Testing) and perform the appropriate diagnostic procedure.

No

- Go To 4

4. ACTUATOR CALIBRATION TEST

1. Ignition on, engine not running.
2. With the scan tool, select Actuator Calibration Test. When the test is complete, read HVAC DTCs.

Does the scan tool display any DTCs?

Yes

- (Refer to 28 - DTC-Based Diagnostics/HVAC - Diagnosis and Testing) and perform the appropriate diagnostic procedure.

No

- Test Complete.

HVAC PRE-DIAGNOSTIC TROUBLESHOOTING PROCEDURE

For a complete wiring diagram, **refer to the Wiring Information**.

Perform the following steps prior to any diagnostic procedure(s).

- Testing should only be performed with the battery fully charged to avoid false diagnosis.
- With the scan tool, read Powertrain Control Module (PCM) DTCs. If PCM DTCs are present, (Refer to 28 - DTC-Based Diagnostics/MODULE, Powertrain Control (PCM) - Diagnosis and Testing) and perform the appropriate diagnostic procedure(s) before proceeding.
- With the scan tool, read Totally Integrated Power Module (TIPM) DTCs. If TIPM DTCs are present, (Refer to 28 - DTC-Based Diagnostics/MODULE, Totally Integrated Power (TIPM) - Diagnosis and Testing) and perform the appropriate diagnostic procedure(s) first before proceeding.
- With the scan tool, read HVAC DTCs. Record all Stored, Active, and Pending DTC information.
- With the scan tool, read the Environmental Data. Use this data to identify the conditions in which the DTC was set.
- Refer to the When Monitored and Set Conditions for this DTC. DTCs can set at ignition on, at start up, or operating under specific conditions.
- Using the wiring diagram as a guide, inspect the wiring and connectors related to this circuit and clean/repair as necessary.
- Check for controller software updates. Some conditions can be corrected by upgrading the controller software.

NOTE: If the controller is updated with new software, with the scan tool, perform a HVAC Actuator Calibration Test.

- Check for Service Information Tune-ups or Service Bulletins for any possible causes that may apply.

Did any of the above procedures repair the vehicle?

Yes

- Testing is complete.
- Perform HVAC VERIFICATION TEST (Refer to 28 - DTC-Based Diagnostics/HVAC - Standard Procedure)

No

- (Refer to 28 - DTC-Based Diagnostics/HVAC - Diagnosis and Testing) and perform the appropriate diagnostic procedure.

HVAC VERIFICATION TEST

Perform the following procedures to verify that the repair(s) are valid.

1. Make sure that all accessories are turned off.
2. Make sure that the battery is fully charged.
3. Turn the ignition off to the lock position.
4. Disconnect all jumper wires and reconnect all previously disconnected components and connectors.
5. With the scan tool, record and erase all DTCs from ALL modules.
6. Turn the ignition off, remove the scan tool from the DLC (Data Link Connector). Open the door and close the door. Wait a minimum 30 seconds, then turn the ignition on. Reconnect the scan tool.

NOTE: Disconnecting the scan tool and opening and closing the door will allow the controller to enter into sleep mode.

7. With the scan tool perform the HVAC Actuator Calibration Test.
8. Start and run the engine for two minutes while operating all functions of the system that caused the original concern.
9. With the scan tool, check for DTCs in all modules.

Is the original condition still present or are there any other HVAC DTCs present?

Yes

- (Refer to 28 - DTC-Based Diagnostics/HVAC - Diagnosis and Testing) and perform the appropriate diagnostic procedure.

No

- Repair is complete.

MODULE, Antilock Brake (ABS)

Diagnosis and Testing

C1000-BRAKE PEDAL SWITCH 1 CIRCUIT PERFORMANCE

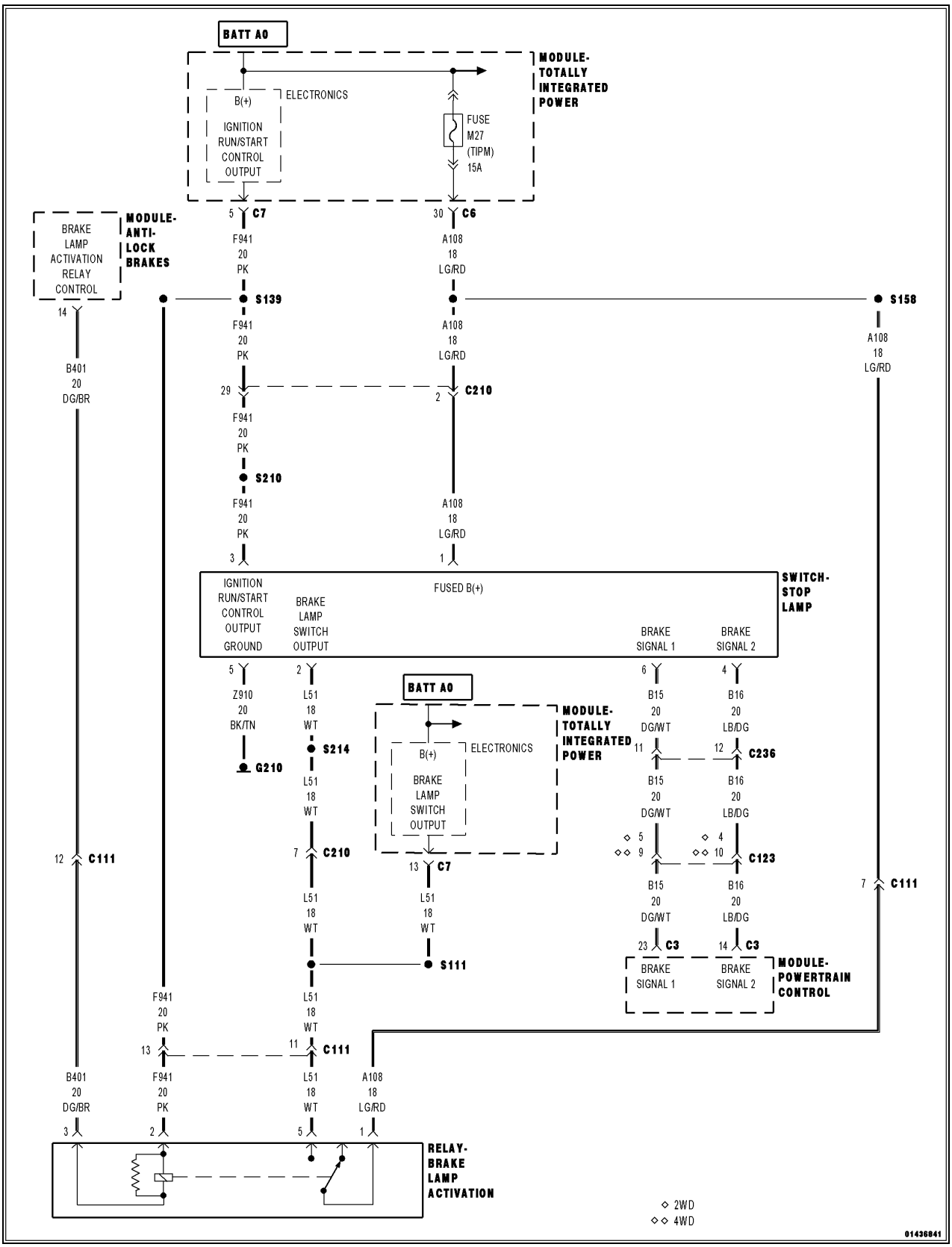

For a complete wiring diagram, **refer to the Wiring Information**.

Theory of Operation

The ABS Module detects an invalid signal between the master cylinder pressure applied and the Brake Lamp Switch Output Circuit for two minutes. If the Brake Lamp Switch Output circuit is still active with no pressure applied, code C1000 is set.

- **When Monitored:**
  Ignition Switch ON.

When Set:

When the set conditions have been met and the brake switch input has been active for more than two consecutive minutes.

Possible Causes
(B15) BRAKE SIGNAL 1 CIRCUIT SHORTED TO VOLTAGE
BRAKE LAMP SWITCH OPERATION
ANTI-LOCK BRAKE SYSTEM (ABS) MODULE
TOTALLY INTEGRATED POWER MODULE (TIPM)

1. ACTIVE DTC

NOTE: Diagnose and repair all PCM and any communication faults that are present before continuing with this test procedure.

NOTE: If applicable make sure the Stop Lamp Switch is properly adjusted in accordance with Service Information before continuing.

1. Ignition on, engine not running.
2. With a scan tool, record and erase the DTCs.
3. Cycle the ignition from off to on.
4. Press the brake pedal.
5. With a scan tool, read the DTCs.

Is the DTC Active at this time?

Yes

- Go To 2

No

- Perform the ABS INTERMITTENT CONDITION diagnostic procedure. (Refer to 28 - DTC-Based Diagnostics/MODULE, Antilock Brake (ABS) - Standard Procedure).

2. (B15) BRAKE SIGNAL 1 CIRCUIT SHORTED TO VOLTAGE

1. Ignition on, engine not running.
2. Using a 12-volt test light connected to ground, back probe the (B15) Brake Signal 1 circuit.

Does the test light illuminate brightly?

Yes

- Go To 3

No

- Perform the ABS-INTERMITTENT CONDITION TEST. (Refer to 28 - DTC-Based Diagnostics/MODULE, Antilock Brake (ABS) - Standard Procedure).

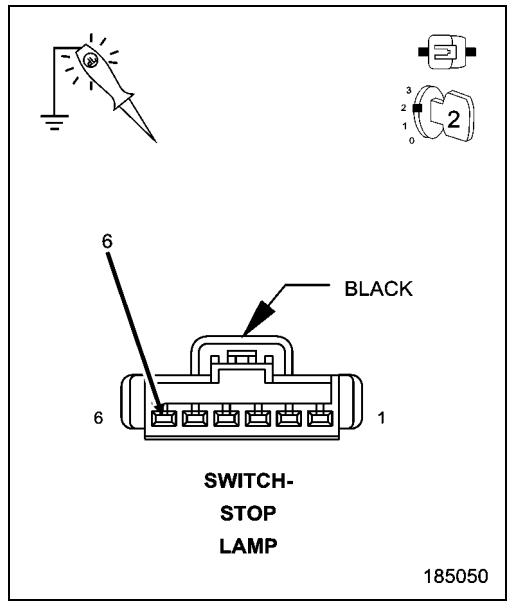

3. STOP LAMP BRAKE PEDAL SWITCH SHORTED

1. Turn the ignition off to the lock position.
2. Disconnect the Stop Lamp Switch harness connector.
3. Measure the resistance of the Stop Lamp Switch between (B15) Brake Signal 1 circuit and (A108) Fused B(+) circuit at the Stop Lamp Switch harness connector.

Is there continuity?

Yes

- Replace the Stop Lamp Switch in accordance with the Service Information
- Go To 4

No

- Go To 5

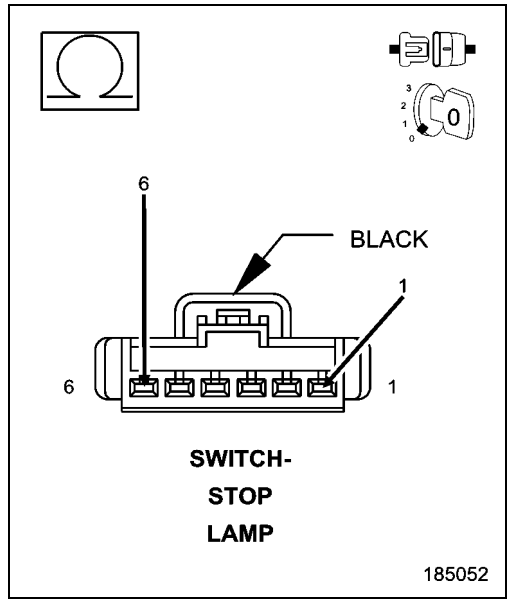

4. CHECK (B15) BRAKE SIGNAL 1 CIRCUIT SHORTED TO VOLTAGE

1. Connect the Stop Lamp Switch harness connector.
2. Ignition on, engine not running.
3. Using a 12-volt test light connected to ground, back probe the (B15) Brake Signal 1 circuit at the Stop Lamp Switch harness connector.

Does the test light illuminate?

Yes

- Go To 5

No

- Repair the short to voltage in the (B15) Brake Signal 1 circuit.
- Perform the ABS VERIFICATION TEST. (Refer to 28 - DTC-Based Diagnostics/MODULE, Antilock Brake (ABS) - Standard Procedure).

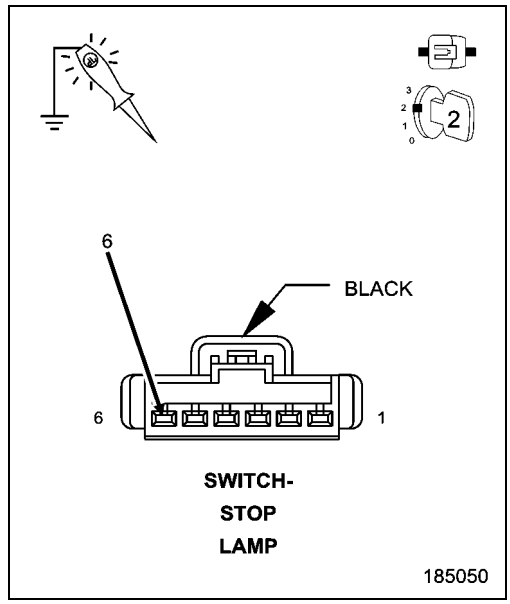

5. CHECK ABS MODULE BACKFEEDING VOLTAGE TO (B15) BRAKE SIGNAL 1 CIRCUIT

1. Turn ignition off to the lock position.
2. Disconnect the ABS Module harness connector.
3. Ignition on, engine not running.
4. Using a 12-volt test light connected to ground, test the (B15) Brake Signal 1 circuit at the Stop Lamp Switch harness connector.

Does the test light illuminate?

Yes

- Go To 6

No

- Replace the Anti-lock Brake System (ABS) Module in accordance with Service Information
- Perform the ABS VERIFICATION TEST. (Refer to 28 - DTC-Based Diagnostics/MODULE, Antilock Brake (ABS) - Standard Procedure).

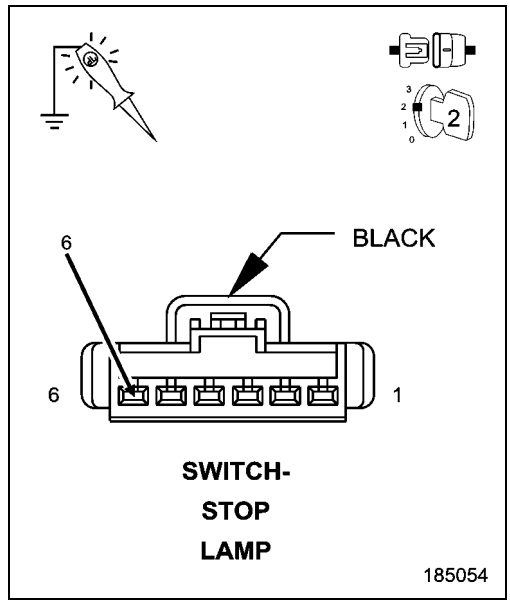

6. CHECK TIPM MODULE BACKFEEDING VOLTAGE TO (B15) BRAKE SIGNAL 1 CIRCUIT

1. Turn the ignition off.
2. Disconnect the TIPM harness connector.
3. Ignition on, engine not running.
4. Using a 12-volt test light connected to ground, test the (B15) Brake Signal 1 circuit.

Does the test light illuminate?

Yes

- Repair the short to voltage in the (B15) Brake Signal 1 circuit.
- Perform the ABS VERIFICATION TEST. (Refer to 28 - DTC-Based Diagnostics/MODULE, Antilock Brake (ABS) - Standard Procedure).

No

- Replace and program the Totally Integrated Power Module (TIPM) in accordance with the Service Information.
- Perform the BODY VERIFICATION TEST. (Refer to 28 - DTC-Based Diagnostics/MODULE, Totally Integrated Power (TIPM) - Standard Procedure).

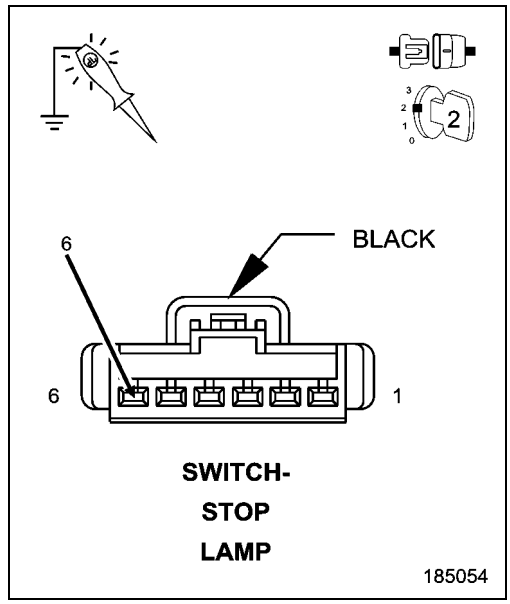

C1008-BRAKE FLUID LEVEL CIRCUIT HIGH

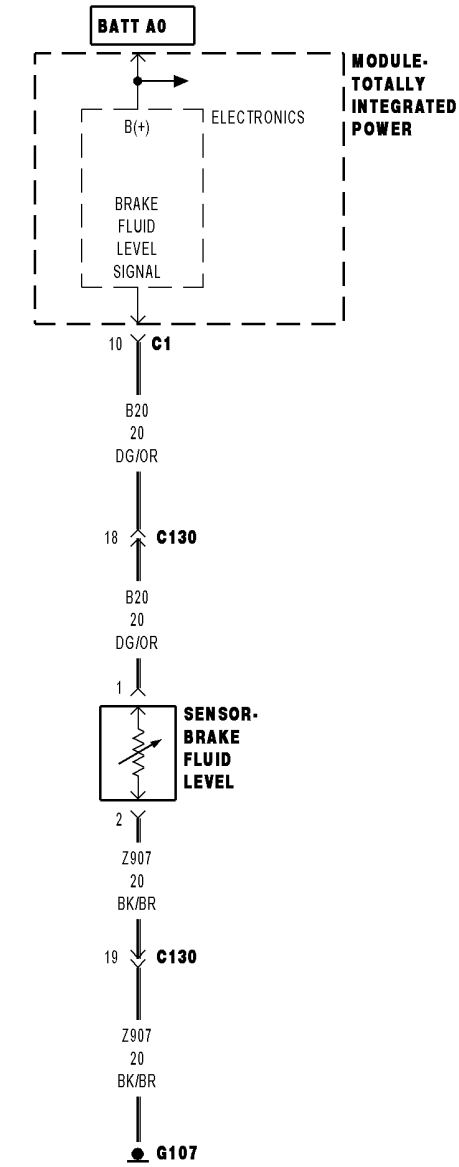

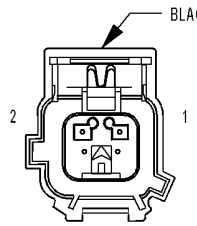

SENSOR-
BRAKE
FLUID
LEVEL

01440697

For a complete wiring diagram, **refer to the Wiring Information**.

- **When Monitored:**
  With the ignition on.
- **Set Condition:**
  When the Totally Integrated Power Module (TIPM) detects the Brake Fluid Level Circuit voltage is greater than expected for more than five seconds.

Possible Causes
(B20) BRAKE FLUID LEVEL SIGNAL CIRCUIT OPEN
(B20) BRAKE FLUID LEVEL SIGNAL CIRCUIT SHORTED TO BATTERY VOLTAGE
BRAKE FLUID LEVEL SWITCH INTERNAL FAILURE
(Z907) GROUND CIRCUIT OPEN
TOTALLY INTEGRATED POWER MODULE (TIPM)

1. CHECK FOR ACTIVE DIAGNOSTIC TROUBLE CODE (DTC)

1. Turn the ignition on.
2. With the scan tool, read the TIPM DTCs.

Does the scan tool display this DTC as active?

Yes

- Go To 2

No

- Test complete, the condition or conditions that originally set this DTC are not present at this time. Using the wiring diagrams as a guide, check all related splices and connectors for signs of water intrusion, corrosion, pushed out or bent terminals, and correct pin tension.
- Perform the BODY VERIFICATION TEST. (Refer to 28 - DTC-Based Diagnostics/MODULE, Totally Integrated Power (TIPM) - Standard Procedure).

2. CHECK THE (B20) BRAKE FLUID LEVEL SIGNAL CIRCUIT FOR A SHORT TO VOLTAGE

1. Turn the ignition off.
2. Disconnect the Brake Fluid Level Sensor harness connector.
3. Disconnect the TIPM C1 harness connector.
4. Turn the ignition on.
5. Measure the voltage between ground and the (B20) Brake Fluid Level Signal circuit.

Is there any voltage present?

Yes

- Repair the short to voltage in the (B20) Brake Fluid Level Signal circuit.
- Perform the BODY VERIFICATION TEST. (Refer to 28 - DTC-Based Diagnostics/MODULE, Totally Integrated Power (TIPM) - Standard Procedure).

No

- Go To 3

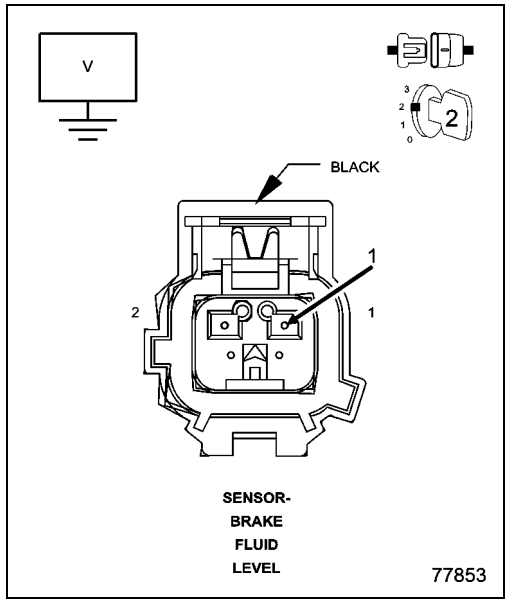

3. CHECK THE (B20) BRAKE FLUID LEVEL SIGNAL CIRCUIT FOR AN OPEN

1. Turn the ignition off.
2. Measure the resistance of the (B20) Brake Fluid Level Signal circuit between the Brake Fluid Level Sensor harness connector and the TIPM C1 harness connector.

Is the resistance below 5.0 Ohms?

Yes

- Go To 4

No

- Repair the open in the (B20) Brake Fluid Level Signal circuit.
- Perform the BODY VERIFICATION TEST. (Refer to 28 - DTC-Based Diagnostics/MODULE, Totally Integrated Power (TIPM) - Standard Procedure).

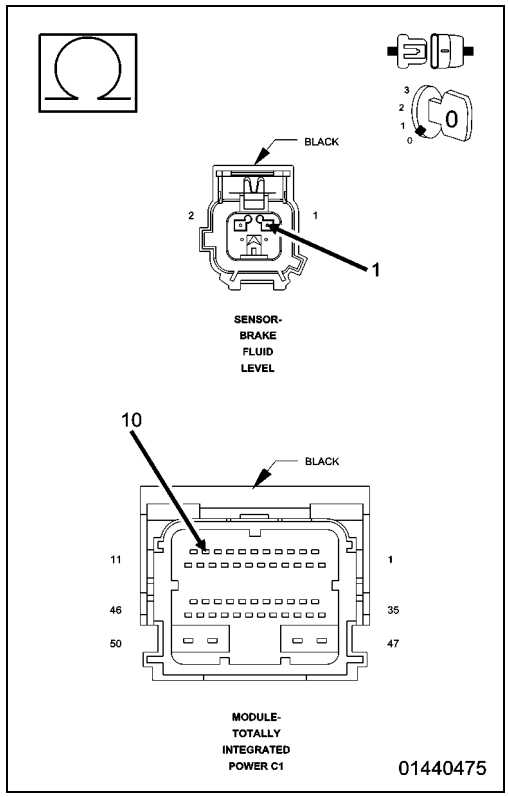

4. CHECK THE (Z907) GROUND CIRCUIT FOR AN OPEN

1. Measure the resistance between ground and the (Z907) Ground circuit.

Is the resistance below 5.0 Ohms?

Yes

- Go To 5

No

- Repair the open in the (Z907) Ground circuit.
- Perform the BODY VERIFICATION TEST. (Refer to 28 - DTC-Based Diagnostics/MODULE, Totally Integrated Power (TIPM) - Standard Procedure).

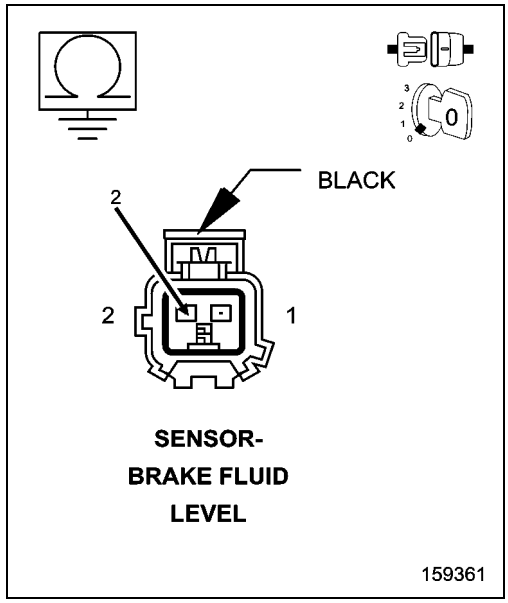

5. BRAKE FLUID LEVEL SWITCH INTERNAL FAILURE

1. Reconnect the TIPM C1 harness connector.
2. Connect a jumper wire between the (B20) Brake Fluid Level Signal circuit and the (Z907) Ground circuit in the Brake Fluid Level Sensor harness connector.
3. Turn the ignition on.
4. With the scan tool, read the Brake Fluid Level.

Does the scan tool display Low?

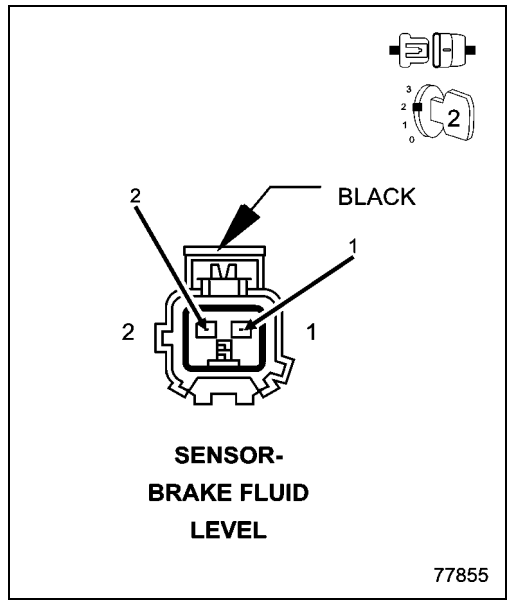

Yes

- Replace the Brake Fluid Level Sensor in accordance with the Service Information.
- Perform the BODY VERIFICATION TEST. (Refer to 28 - DTC-Based Diagnostics/MODULE, Totally Integrated Power (TIPM) - Standard Procedure).

No

- Replace the TIPM in accordance with the Service Information.
- Perform the BODY VERIFICATION TEST. (Refer to 28 - DTC-Based Diagnostics/MODULE, Totally Integrated Power (TIPM) - Standard Procedure).

C1009-BRAKE FLUID LEVEL LOW

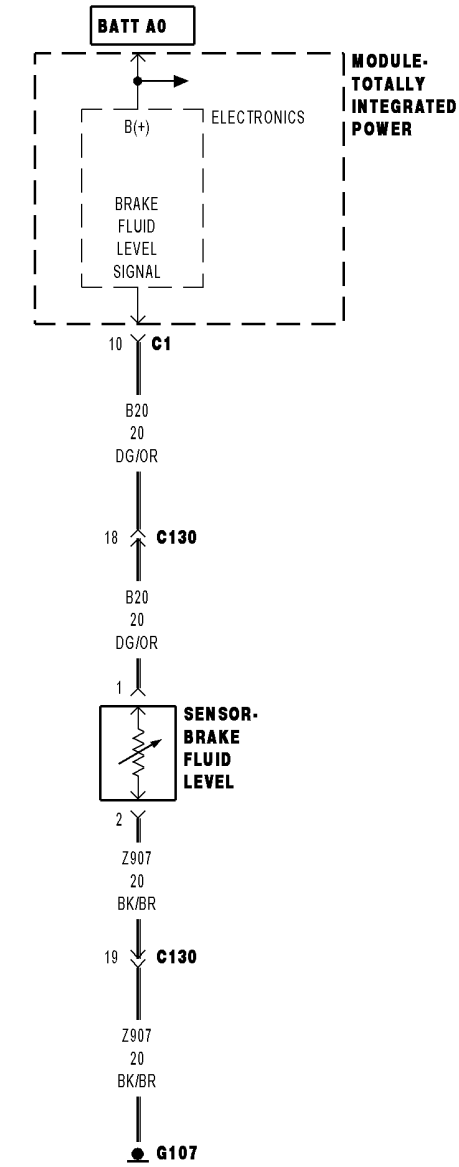

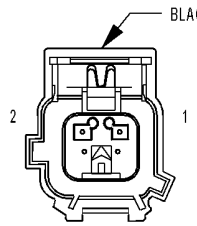

SENSOR-
BRAKE
FLUID
LEVEL

01440697

For a complete wiring diagram, **refer to the Wiring Information**.

- **When Monitored:**
  With the ignition on.
- **Set Condition:**
  When the Totally Integrated Power Module (TIPM) indicates that the Brake Fluid Level Circuit is less then 0.10 of a volt.

Possible Causes
BRAKE FLUID LEVEL LOW
(B20) BRAKE FLUID LEVEL SWITCH SIGNAL CIRCUIT IS SHORTED TO GROUND
BRAKE FLUID LEVEL SWITCH INTERNAL FAILURE
TOTALLY INTEGRATED POWER MODULE (TIPM)

1. BRAKE FLUID LEVEL SWITCH SIGNAL VOLTAGE BELOW 0.10 OF A VOLT

NOTE: This DTC must be active for the results of this test to be valid.

1. Ignition on, engine not running.
2. With the scan tool, read Brake Fluid Level Switch Signal voltage.

Is the voltage below 0.10 of a volt?

Yes

- Go To 2

No

- Perform the INTERMITTENT CONDITION diagnostic procedure. (Refer to 28 - DTC-Based Diagnostics/MODULE, Antilock Brake (ABS) - Standard Procedure).

2. CHECK BRAKE FLUID LEVEL

NOTE: Visually inspect for worn brake linings or undersized rotors.

Was low brake fluid level found?

Yes

- Repair as needed.
- Perform the ABS VERIFICATION TEST. (Refer to 28 - DTC-Based Diagnostics/MODULE, Antilock Brake (ABS) - Standard Procedure).

No

- Go To 3

3. BRAKE FLUID LEVEL SWITCH INTERNAL FAILURE

1. Turn the ignition off to the lock position.
2. Disconnect the Brake Fluid Level Switch harness connector.
3. Ignition on, engine not running.
4. With the scan tool, read the Brake Fluid Level Switch voltage

Is the voltage approximately 5 volts?

Yes

- Replace the Brake Fluid Level Switch in accordance with the Service Information.
- Perform the ABS VERIFICATION TEST. (Refer to 28 - DTC-Based Diagnostics/MODULE, Antilock Brake (ABS) - Standard Procedure).

No

- Go To 4

4. CHECK THE (B20) BRAKE FLUID LEVEL SWITCH SIGNAL CIRCUIT FOR A SHORT TO GROUND

1. Turn the ignition off to the lock position.
2. Disconnect the TIPM C1 harness connector.
3. Measure the resistance of the (B20) Brake Fluid Level circuit in the Brake Fluid Level Switch harness connector to ground.

Is the resistance below 100 Ohms?

Yes

- Repair the (B20) Brake Fluid Level circuit for a short to ground.
- Perform the ABS VERIFICATION TEST. (Refer to 28 - DTC-Based Diagnostics/MODULE, Antilock Brake (ABS) - Standard Procedure).

No

- Go To 5

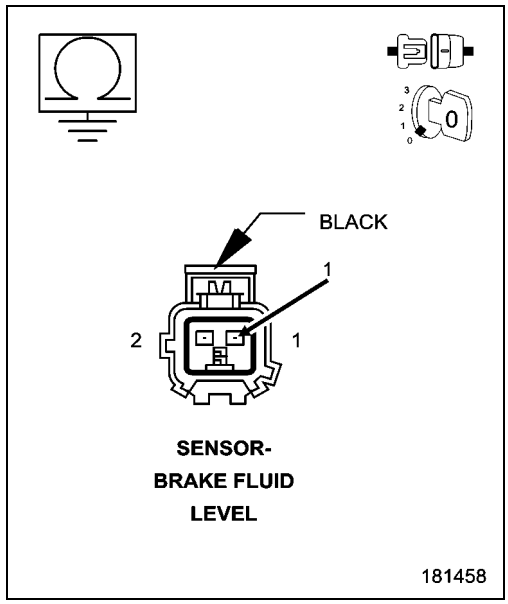

5. TOTALLY INTEGRATED POWER MODULE (TIPM)

Repair

- Replace and program the Totally Integrated Power Module (TIPM) in accordance with the Service Information.
- Perform the ABS VERIFICATION TEST. (Refer to 28 - DTC-Based Diagnostics/MODULE, Antilock Brake (ABS) - Standard Procedure).

C100A-LEFT FRONT WHEEL SPEED SENSOR CIRCUIT

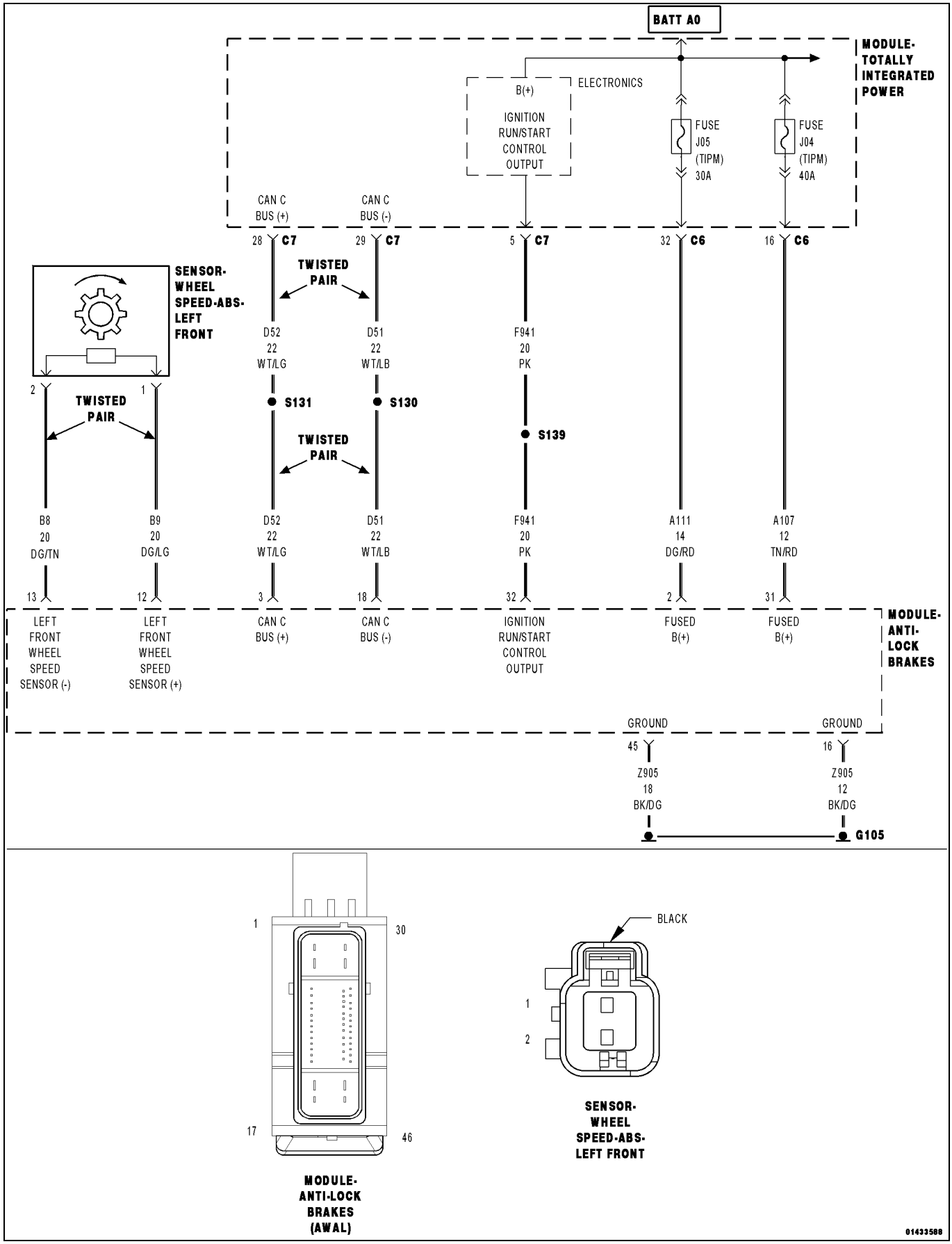

For a complete wiring diagram, **refer to the Wiring Information**.

NOTE: The Electronic Stability Control (ESC) may also be referred to as Electronic Stability Program (ESP) depending on the vehicle model year and configuration. Certain components may also reference ESP, ESC, or use the traction control symbol.

- **When Monitored:**
  With the ignition on and no system under voltage or over voltage condition present.
- **Set Condition:**
  If the measured wheel speed sensor feedback voltage is less than .304 of a volt, the sensor is considered open.
  If the measured wheel speed sensor feedback voltage is greater than 1.39 volts, or if a sensor over current condition is detected, the sensor is considered shorted.
  If a shorted or open condition is present for more than 100 msec, the DTC will set.

Possible Causes
(B9) LEFT FRONT WHEEL SPEED SENSOR SUPPLY CIRCUIT SHORTED TO GROUND
(B8) LEFT FRONT WHEEL SPEED SENSOR SIGNAL CIRCUIT SHORTED TO GROUND
(B9) LEFT FRONT WHEEL SPEED SENSOR SUPPLY CIRCUIT OPEN
(B8) LEFT FRONT WHEEL SPEED SENSOR SIGNAL CIRCUIT OPEN
(B9) LEFT FRONT WHEEL SPEED SENSOR SUPPLY CIRCUIT SHORTED TO VOLTAGE
(B8) LEFT FRONT WHEEL SPEED SENSOR SIGNAL CIRCUIT SHORTED TO VOLTAGE
(B9) LEFT FRONT WHEEL SPEED SENSOR SUPPLY CIRCUIT SHORTED TO THE (B8) LEFT FRONT WHEEL SPEED SENSOR SIGNAL CIRCUIT
LEFT FRONT WHEEL SPEED SENSOR
ANTI-LOCK BRAKE SYSTEM (ABS) MODULE

1. DTC IS ACTIVE

1. Ignition on, engine not running.
2. With the scan tool, erase DTCs.
3. Cycle the ignition switch from off to on.
4. With the scan tool, select View DTCs.

Is the status Active for this DTC?

Yes

- Go To 2

No

- The condition that caused the symptom is currently not present. Inspect the related wiring for a possible intermittent condition. Look for any chafed, pierced, pinched, or partially broken wires.
- Perform the ABS INTERMITTENT CONDITION TEST. (Refer to 28 - DTC-Based Diagnostics/MODULE, Antilock Brake (ABS) - Standard Procedure).

2. WHEEL SPEED SENSOR INSPECTION

1. Turn the ignition off to the lock position.
2. Inspect the Wheel Speed Sensor for proper mounting.
3. Inspect the Wheel Speed Sensor harness and connector.
4. Inspect the Wheel Speed Sensor for excessive debris on the sensor.

Were any problems found?

Yes

- Repair as necessary in accordance with the Service Information.
- Perform the ABS VERIFICATION TEST. (Refer to 28 - DTC-Based Diagnostics/MODULE, Antilock Brake (ABS) - Standard Procedure).

No

- Go To 3

3. CHECK (B9) LEFT FRONT WHEEL SPEED SENSOR SUPPLY CIRCUIT VOLTAGE

1. Disconnect the Left Front Wheel Speed Sensor harness connector.
2. Turn the ignition on.
3. Measure the voltage between the (B9) Left Front Wheel Speed Sensor Supply circuit and ground.

Is the voltage above 10 volts?

Yes

- Go To 4

No

- Go To 6

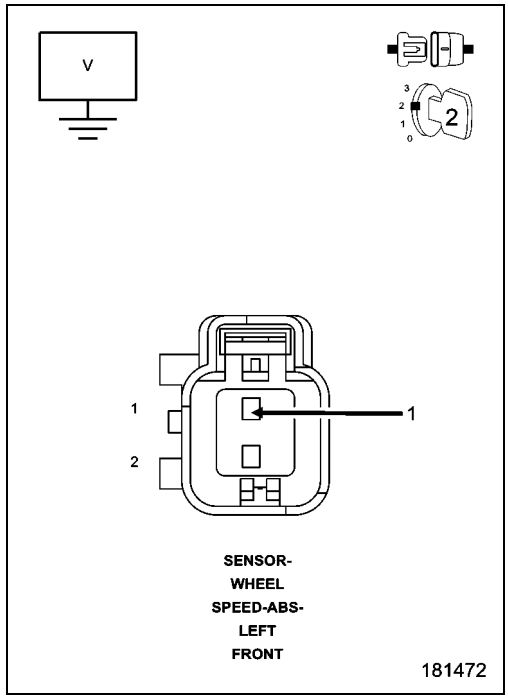

4. (B9) LEFT FRONT WHEEL SPEED SENSOR SUPPLY CIRCUIT SHORTED TO VOLTAGE

1. Turn the ignition off to the lock position.
2. Disconnect the ABS Module harness connector.
3. Ignition on, engine not running.
4. Measure the voltage of the (B9) Left Front Wheel Speed Sensor Supply circuit at the Left Front Wheel Speed Sensor harness connector.

Is there any voltage present?

Yes

- Repair (B9) Left Front Wheel Speed Sensor Supply circuit for a short to voltage.
- Perform the ABS VERIFICATION TEST. (Refer to 28 - DTC-Based Diagnostics/MODULE, Antilock Brake (ABS) - Standard Procedure).

No

- Go To 5

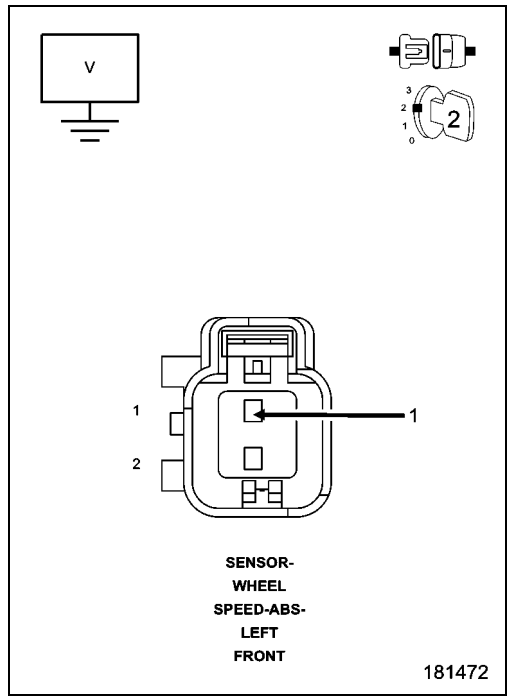

5. (B8) LEFT FRONT WHEEL SPEED SENSOR SIGNAL CIRCUIT SHORTED TO GROUND

1. Turn the ignition off.
2. Measure the resistance between the (B8) Left Front Wheel Speed Sensor Signal circuit and ground.

Is the resistance above 5.0 Ohms?

Yes

- Replace the Left Front Wheel Speed Sensor in accordance with the Service Information.
- Perform ABS VERIFICATION TEST. (Refer to 28 - DTC-Based Diagnostics/MODULE, Antilock Brake (ABS) - Standard Procedure)

No

- Repair the (B8) Left Front Wheel Speed Sensor Signal circuit for a short to ground.
- Perform ABS VERIFICATION TEST. (Refer to 28 - DTC-Based Diagnostics/MODULE, Antilock Brake (ABS) - Standard Procedure)

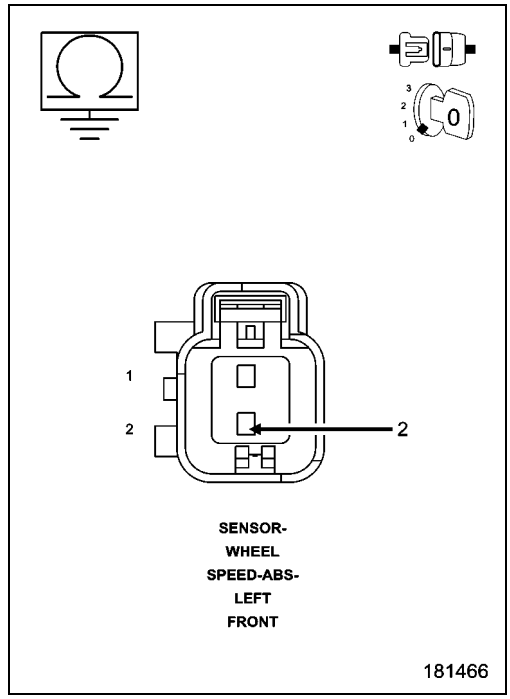

6. (B9) LEFT FRONT WHEEL SPEED SENSOR SUPPLY CIRCUIT SHORTED TO GROUND

1. Turn the ignition off.
2. Disconnect the ABS Module harness connector.
3. Measure the resistance between the (B9) Left Front Wheel Speed Sensor Supply circuit and ground.

Is the resistance above 5.0 Ohms?

Yes

- Go To 7

No

- Repair the (B9) Left Front Wheel Speed Sensor Supply circuit for a short to ground.
- Perform the ABS VERIFICATION TEST. (Refer to 28 - DTC-Based Diagnostics/MODULE, Antilock Brake (ABS) - Standard Procedure).

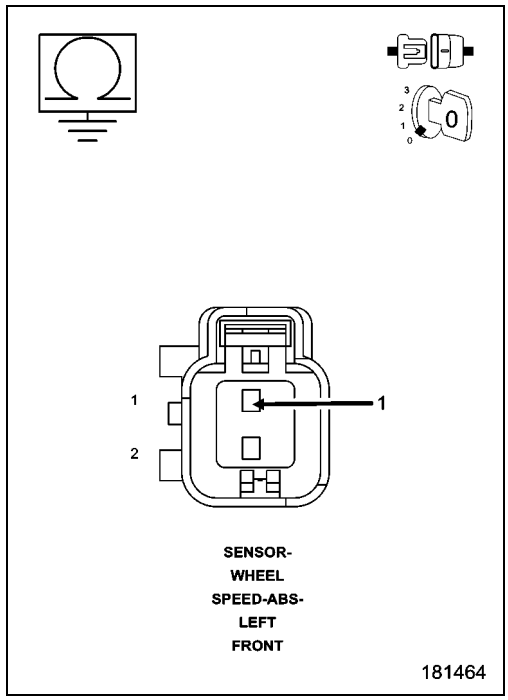

7. (B9) LEFT FRONT WHEEL SPEED SENSOR SUPPLY CIRCUIT OPEN

1. Measure the resistance of the (B9) Left Front Wheel Speed Sensor Supply circuit between the Left Front Wheel Speed Sensor harness connector and the ABS harness connector.

Is the resistance below 5 Ohms?

Yes

- Go To 8

No

- Repair the open (B9) Left Front Wheel Speed Sensor Supply circuit.
- Perform the ABS VERIFICATION TEST. (Refer to 28 - DTC-Based Diagnostics/MODULE, Antilock Brake (ABS) - Standard Procedure).

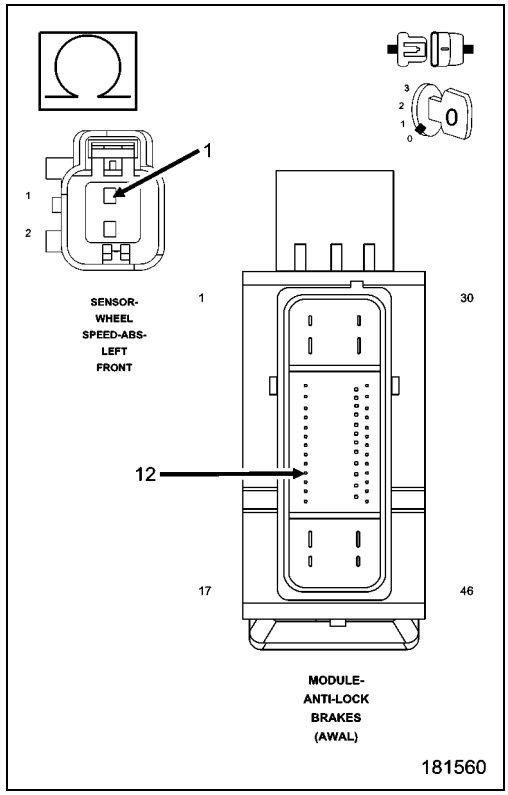

8. (B8) LEFT FRONT WHEEL SPEED SENSOR SIGNAL CIRCUIT OPEN

1. Measure the resistance of the (B8) Left Front Wheel Speed Sensor Signal circuit between the Left Front Wheel Speed Sensor harness connector and the ABS harness connector.

Is the resistance below 5 Ohms?

Yes

- Go To 9

No

- Repair the open (B8) Left Front Wheel Speed Sensor Signal circuit.
- Perform the ABS VERIFICATION TEST. (Refer to 28 - DTC-Based Diagnostics/MODULE, Antilock Brake (ABS) - Standard Procedure).

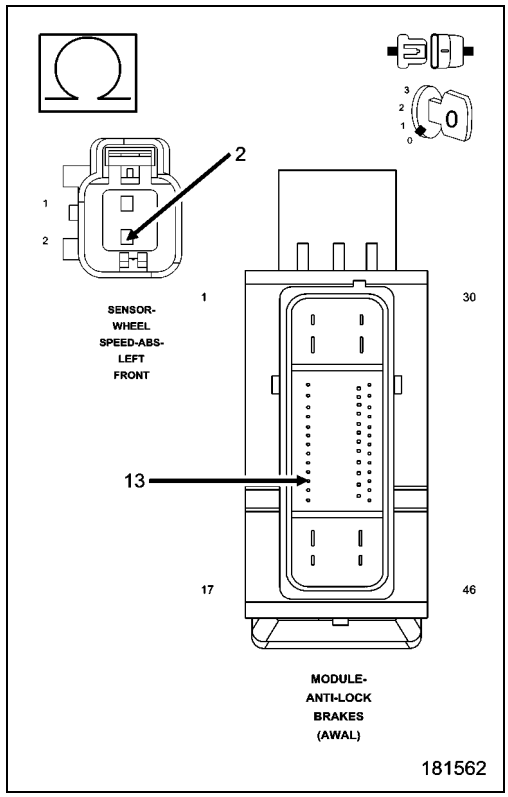

9. (B8) LEFT FRONT WHEEL SPEED SENSOR SIGNAL CIRCUIT SHORTED TO VOLTAGE

1. Turn the ignition on.
2. Measure the voltage of the (B8) Left Front Wheel Speed Sensor Signal circuit at the Left Front Wheel Speed Sensor harness connector .

Is there any voltage present?

Yes

- Repair the (B8) Left Front Wheel Speed Sensor Signal circuit for a short to voltage.
- Perform the ABS VERIFICATION TEST. (Refer to 28 - DTC-Based Diagnostics/MODULE, Antilock Brake (ABS) - Standard Procedure).

No

- Go To 10

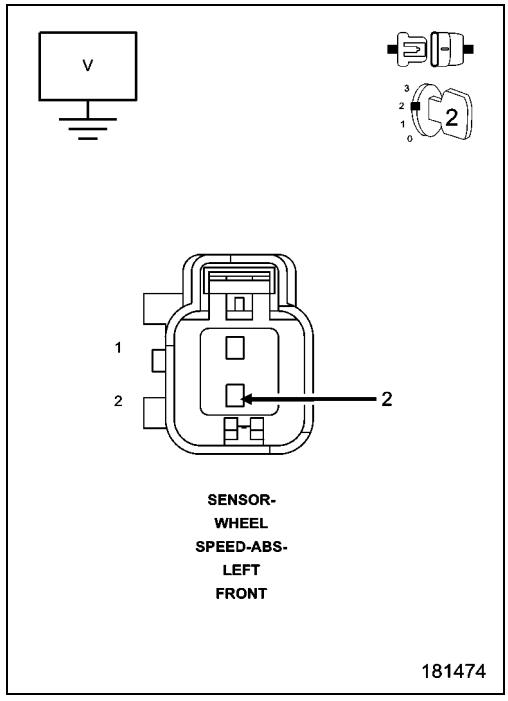

10. (B9) LEFT FRONT WHEEL SPEED SENSOR SUPPLY CIRCUIT SHORTED TO THE (B8) LEFT FRONT WHEEL SPEED SENSOR SIGNAL CIRCUIT

1. Turn the ignition off to the lock position.
2. Measure the resistance between the (B9) Left Front Wheel Speed Sensor Supply circuit and the (B8) Left Front Wheel Speed Sensor Signal circuit at the ABS Module harness connector.

Is the resistance below 5.0 Ohms?

Yes

- Repair (B9) Left Front Wheel Speed Sensor Supply circuit for a short to the (B8) Left Front Wheel Speed Sensor Signal circuit.
- Perform the ABS VERIFICATION TEST. (Refer to 28 - DTC-Based Diagnostics/MODULE, Antilock Brake (ABS) - Standard Procedure).

No

- Replace the Anti-Lock Brakes Module in accordance with the Service Information.
- Perform the ABS VERIFICATION TEST. (Refer to 28 - DTC-Based Diagnostics/MODULE, Antilock Brake (ABS) - Standard Procedure).

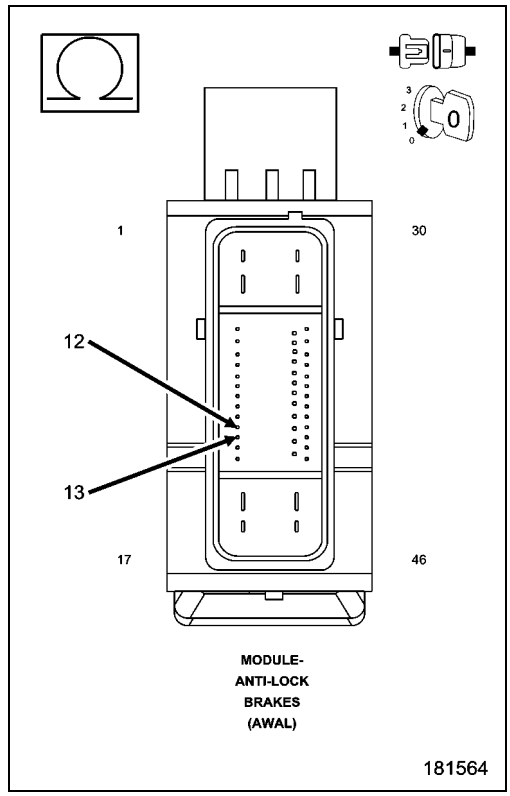

C1011-LEFT FRONT WHEEL SPEED SENSOR SIGNAL ERRATIC PERFORMANCE

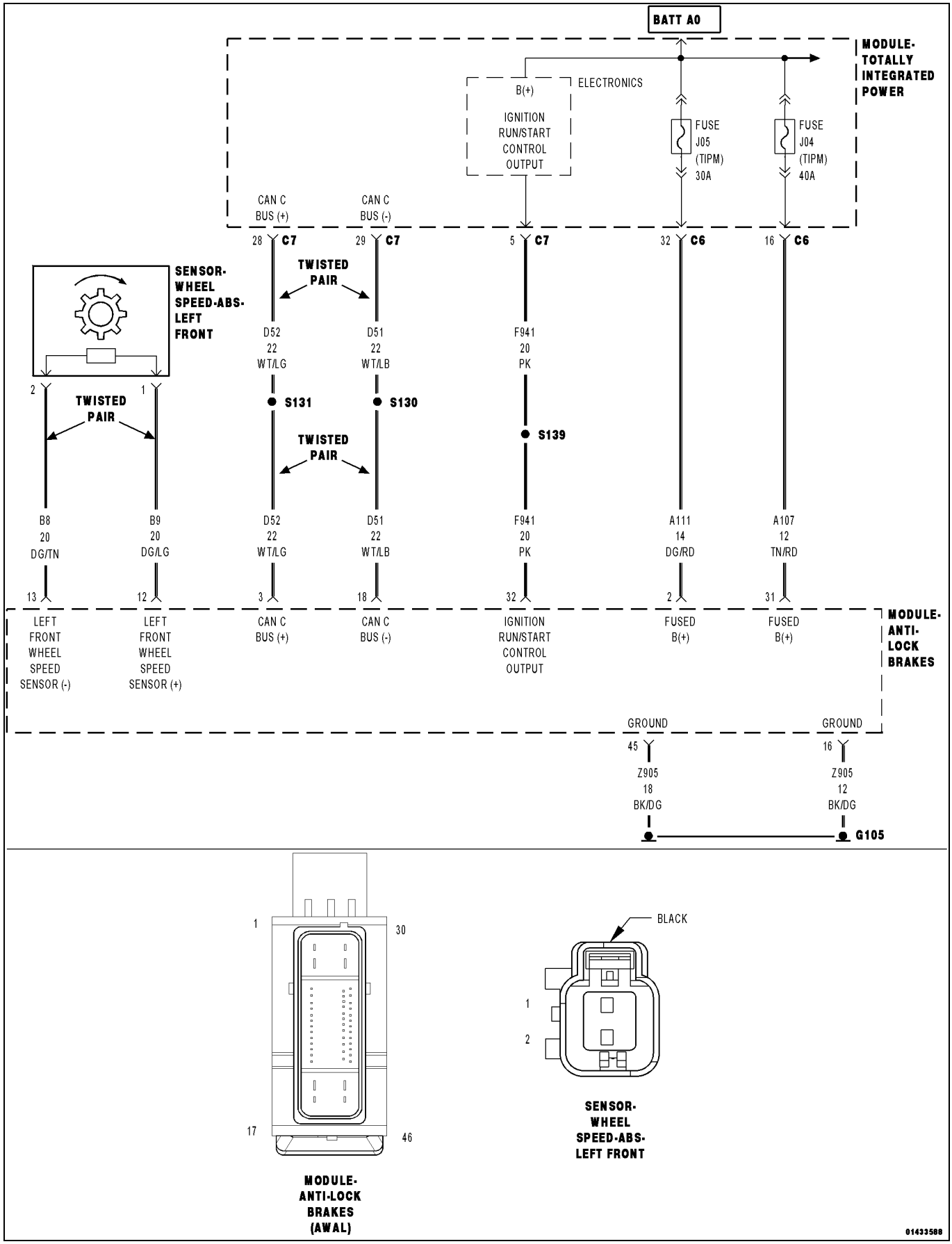

For a complete wiring diagram, **refer to the Wiring Information**.

NOTE: The Electronic Stability Control (ESC) may also be referred to as Electronic Stability Program (ESP) depending on the vehicle model year and configuration. Certain components may also reference ESP, ESC, or use the traction control symbol.

- **When Monitored:**
  With the ignition on and no system under voltage or over voltage condition present.
- **Set Condition:**
  Each time excessive wheel speed sensor acceleration or deceleration is detected, a fault counter increments. If the fault counter exceeds a specified value, the DTC will set.

Possible Causes
(B9) LEFT FRONT WHEEL SPEED SENSOR SUPPLY CIRCUIT SHORT TO GROUND
(B8) LEFT FRONT WHEEL SPEED SENSOR SIGNAL CIRCUIT SHORT TO GROUND
(B9) LEFT FRONT WHEEL SPEED SENSOR SUPPLY CIRCUIT OPEN
(B8) LEFT FRONT WHEEL SPEED SENSOR SIGNAL CIRCUIT OPEN
(B9) LEFT FRONT WHEEL SPEED SENSOR SUPPLY CIRCUIT SHORTED TO VOLTAGE
(B8) LEFT FRONT WHEEL SPEED SENSOR SIGNAL CIRCUIT SHORTED TO VOLTAGE
(B9) LEFT FRONT WHEEL SPEED SENSOR SUPPLY CIRCUIT SHORTED TO THE (B8) LEFT FRONT WHEEL SPEED SENSOR SIGNAL CIRCUIT
TONE WHEEL
EXCESSIVE LEFT FRONT WHEEL SPEED SENSOR AIR GAP
WHEEL BEARING
LEFT FRONT WHEEL SPEED SENSOR (WSS)
ANTI-LOCK BRAKE SYSTEM (ABS) MODULE

1. DTC IS ACTIVE

1. Ignition on, engine not running.
2. With the scan tool, clear DTCs.
3. Turn the ignition off to the lock position.
4. Ignition on, engine not running.
5. With the scan tool, select View DTCs.

Is the status Active for this DTC?

Yes

- Go To 2

No

- The condition that caused the symptom is currently not present. Inspect the related wiring for a possible intermittent condition. Look for any chafed, pierced, pinched, or partially broken wires.
- Perform the ABS-INTERMITTENT CONDITION TEST. (Refer to 28 - DTC-Based Diagnostics/MODULE, Antilock Brake (ABS) - Standard Procedure).

2. WHEEL SPEED SENSOR INSPECTION

1. Turn the ignition off to the lock position.
2. Inspect the Wheel Speed Sensor for proper mounting.
3. Inspect the Wheel Speed Sensor harness and connector.
4. Inspect the Wheel Speed Sensor for excessive debris on the sensor.

Were any problems found?

Yes

- Repair as necessary in accordance with the Service Information.
- Perform the ABS VERIFICATION TEST. (Refer to 28 - DTC-Based Diagnostics/MODULE, Antilock Brake (ABS) - Standard Procedure).

No

- Go To 3

3. TONE WHEEL DAMAGED/MISSING

1. Inspect the Tone Wheel in accordance with the Service Information.

NOTE: The Tone Wheel Teeth should be perfectly square, not bent or nicked.

Were any problems found?

Yes

- Replace the Tone Wheel in accordance with the Service Information.
- Perform the ABS VERIFICATION TEST. (Refer to 28 - DTC-Based Diagnostics/MODULE, Antilock Brake (ABS) - Standard Procedure).

No

- Go To 4

4. EXCESSIVE WHEEL SPEED SENSOR AIR GAP

1. Measure the Wheel Speed Sensor Air Gap in accordance with the Service Information.

Were any problems found?

Yes

- Repair as necessary in accordance with the Service Information.
- Perform the ABS VERIFICATION TEST. (Refer to 28 - DTC-Based Diagnostics/MODULE, Antilock Brake (ABS) - Standard Procedure).

No

- Go To 5

5. WHEEL BEARING LOOSE/BINDING

1. Inspect the wheel bearings for excessive run out or improper clearance in accordance with the Service Information.

Were any problems found?

Yes

- Repair as necessary in accordance with the Service Information.
- Perform the ABS VERIFICATION TEST. (Refer to 28 - DTC-Based Diagnostics/MODULE, Antilock Brake (ABS) - Standard Procedure).

No

- Go To 6

6. CHECK (B9) LEFT FRONT WHEEL SPEED SENSOR SUPPLY CIRCUIT VOLTAGE

1. Disconnect the Left Front Wheel Speed Sensor harness connector.
2. Turn the ignition on.
3. Measure the voltage between the (B9) Left Front Wheel Speed Sensor Supply circuit and ground.

Is the voltage above 10 volts?

Yes

- Go To 7

No

- Go To 9

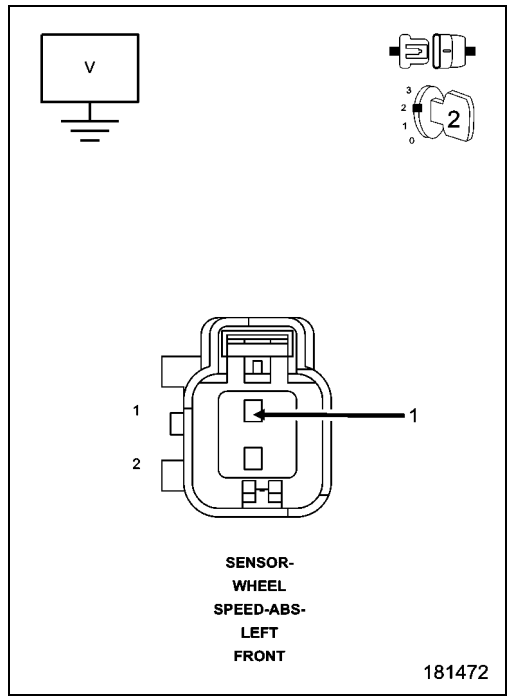

7. (B9) LEFT FRONT WHEEL SPEED SENSOR SUPPLY CIRCUIT SHORTED TO VOLTAGE

1. Turn the ignition off to the lock position.
2. Disconnect the ABS Module harness connector.
3. Ignition on, engine not running.
4. Measure the voltage of the (B9) Left Front Wheel Speed Sensor Supply circuit at the Left Front Wheel Speed Sensor harness connector.

Is there any voltage present?

Yes

- Repair (B9) Left Front Wheel Speed Sensor Supply circuit for a short to voltage.
- Perform the ABS VERIFICATION TEST. (Refer to 28 - DTC-Based Diagnostics/MODULE, Antilock Brake (ABS) - Standard Procedure).

No

- Go To 8

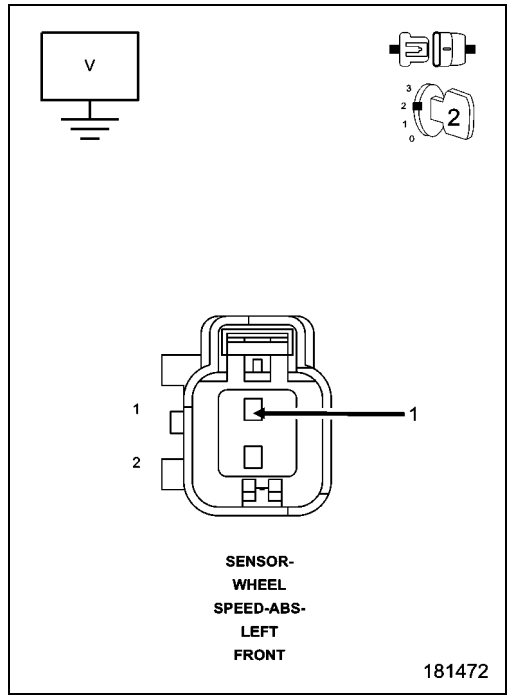

8. (B8) LEFT FRONT WHEEL SPEED SENSOR SIGNAL CIRCUIT SHORTED TO GROUND

1. Turn the ignition off.
2. Measure the resistance between the (B8) Left Front Wheel Speed Sensor Signal circuit and ground.

Is the resistance above 5.0 Ohms?

Yes

- Replace the Left Front Wheel Speed Sensor in accordance with the Service Information.
- Perform the ABS VERIFICATION TEST. (Refer to 28 - DTC-Based Diagnostics/MODULE, Antilock Brake (ABS) - Standard Procedure).

No

- Repair the (B8) Left Front Wheel Speed Sensor Signal circuit for a short to ground.
- Perform the ABS VERIFICATION TEST. (Refer to 28 - DTC-Based Diagnostics/MODULE, Antilock Brake (ABS) - Standard Procedure).

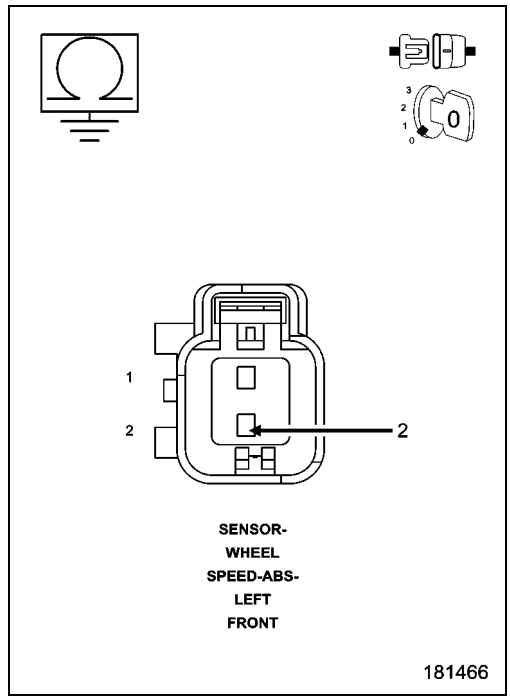

9. (B9) LEFT FRONT WHEEL SPEED SENSOR SUPPLY CIRCUIT SHORTED TO GROUND

1. Turn the ignition off.
2. Disconnect the ABS Module harness connector.
3. Measure the resistance between the (B9) Left Front Wheel Speed Sensor Supply circuit and ground.

Is the resistance above 5.0 Ohms?

Yes

- Go To 10

No

- Repair the (B9) Left Front Wheel Speed Sensor Supply circuit for a short to ground.
- Perform the ABS VERIFICATION TEST. (Refer to 28 - DTC-Based Diagnostics/MODULE, Antilock Brake (ABS) - Standard Procedure).

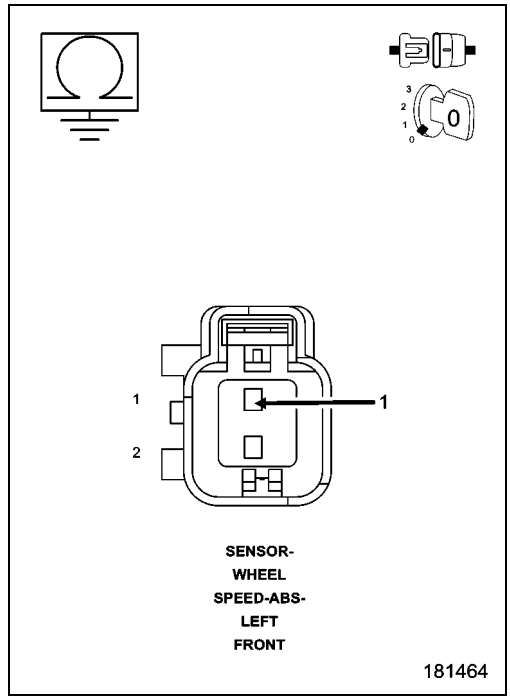

10. (B9) LEFT FRONT WHEEL SPEED SENSOR SUPPLY CIRCUIT OPEN

1. Measure the resistance of the (B9) Left Front Wheel Speed Sensor Supply circuit between the Left Front Wheel Speed Sensor harness connector and the ABS harness connector.

Is the resistance below 5 Ohms?

Yes

- Go To 11

No

- Repair the open (B9) Left Front Wheel Speed Sensor Supply circuit.
- Perform the ABS VERIFICATION TEST. (Refer to 28 - DTC-Based Diagnostics/MODULE, Antilock Brake (ABS) - Standard Procedure).

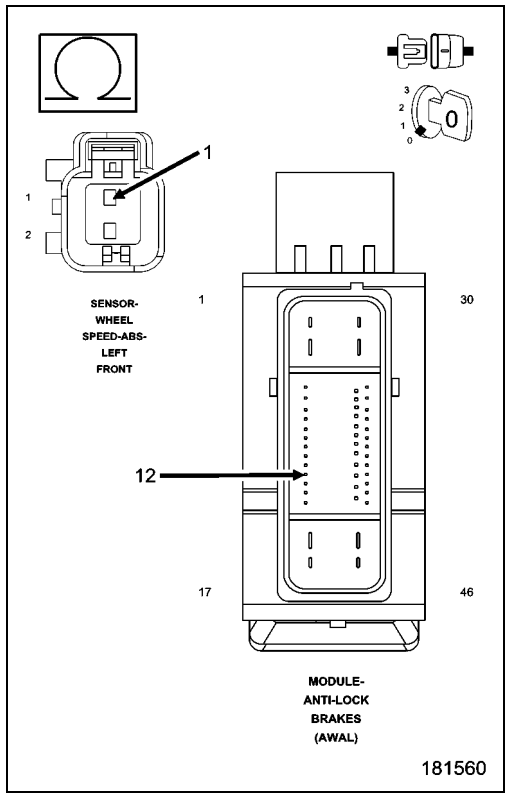

11. (B8) LEFT FRONT WHEEL SPEED SENSOR SIGNAL CIRCUIT OPEN

1. Measure the resistance of the (B8) Left Front Wheel Speed Sensor Signal circuit between the Left Front Wheel Speed Sensor harness connector and the ABS harness connector.

Is the resistance below 5 Ohms?

Yes

- Go To 12

No

- Repair the open (B8) Left Front Wheel Speed Sensor Signal circuit.
- Perform the ABS VERIFICATION TEST. (Refer to 28 - DTC-Based Diagnostics/MODULE, Antilock Brake (ABS) - Standard Procedure).

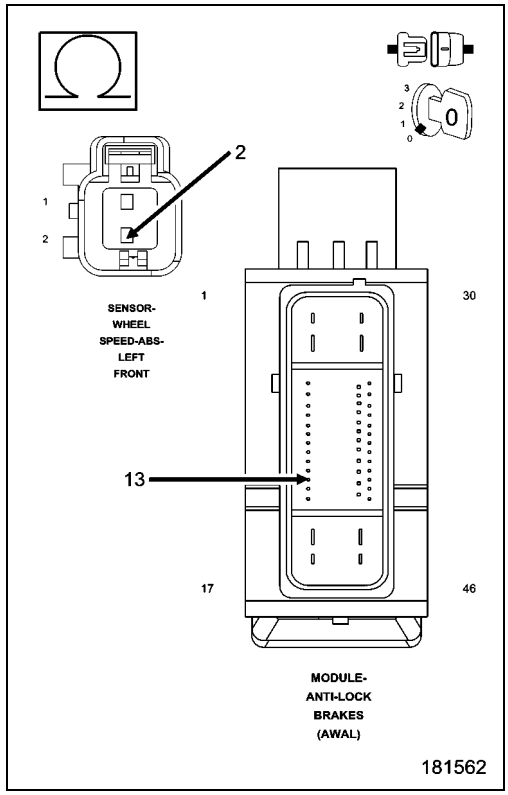

12. (B8) LEFT FRONT WHEEL SPEED SENSOR SIGNAL CIRCUIT SHORTED TO VOLTAGE

1. Turn the ignition on.
2. Measure the voltage of the (B8) Left Front Wheel Speed Sensor Signal circuit at the Left Front Wheel Speed Sensor harness connector .

Is there any voltage present?

Yes

- Repair the (B8) Left Front Wheel Speed Sensor Signal circuit for a short to voltage.
- Perform the ABS VERIFICATION TEST. (Refer to 28 - DTC-Based Diagnostics/MODULE, Antilock Brake (ABS) - Standard Procedure).

No

- Go To 13

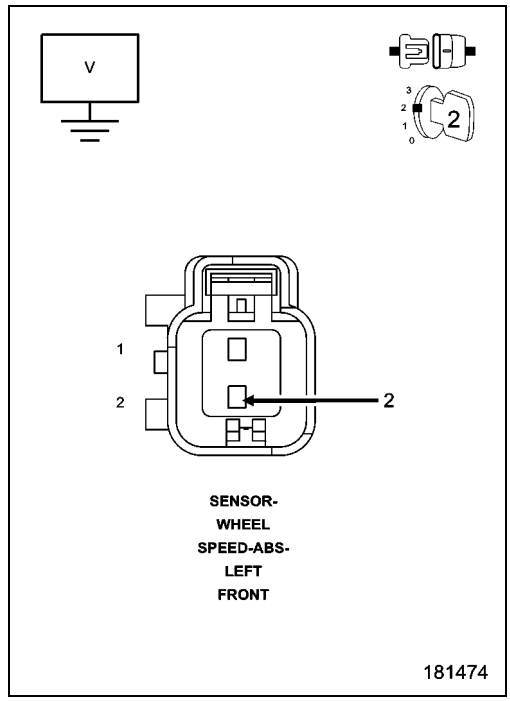

13. (B9) LEFT FRONT WHEEL SPEED SENSOR SUPPLY CIRCUIT SHORTED TO THE (B8) LEFT FRONT WHEEL SPEED SENSOR SIGNAL CIRCUIT

1. Turn the ignition off to the lock position.
2. Measure the resistance between the (B9) Left Front Wheel Speed Sensor Supply circuit and the (B8) Left Front Wheel Speed Sensor Signal circuit at the ABS Module harness connector.

Is the resistance below 5.0 Ohms?

Yes

- Repair (B9) Left Front Wheel Speed Sensor Supply circuit for a short to the (B8) Left Front Wheel Speed Sensor Signal circuit.
- Perform the ABS VERIFICATION TEST. (Refer to 28 - DTC-Based Diagnostics/MODULE, Antilock Brake (ABS) - Standard Procedure).

No

- Replace the Anti-Lock Brakes Module in accordance with the Service Information.
- Perform the ABS VERIFICATION TEST. (Refer to 28 - DTC-Based Diagnostics/MODULE, Antilock Brake (ABS) - Standard Procedure).

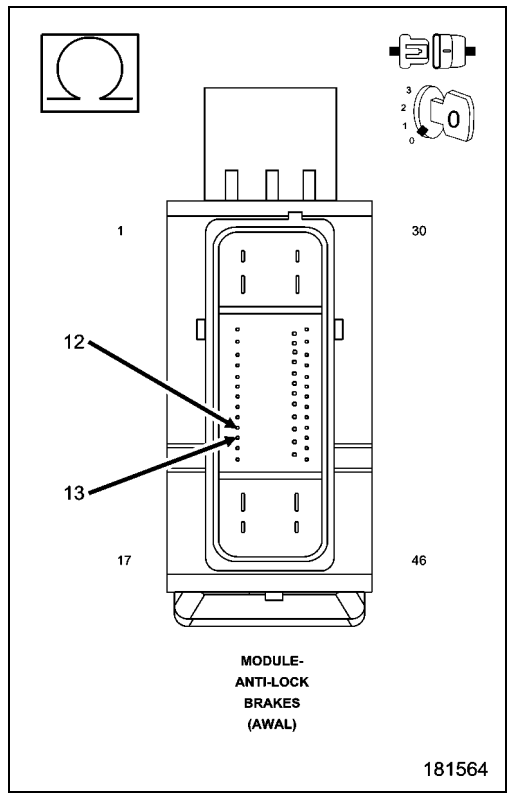

C1014-LEFT FRONT WHEEL SPEED COMPARATIVE PERFORMANCE

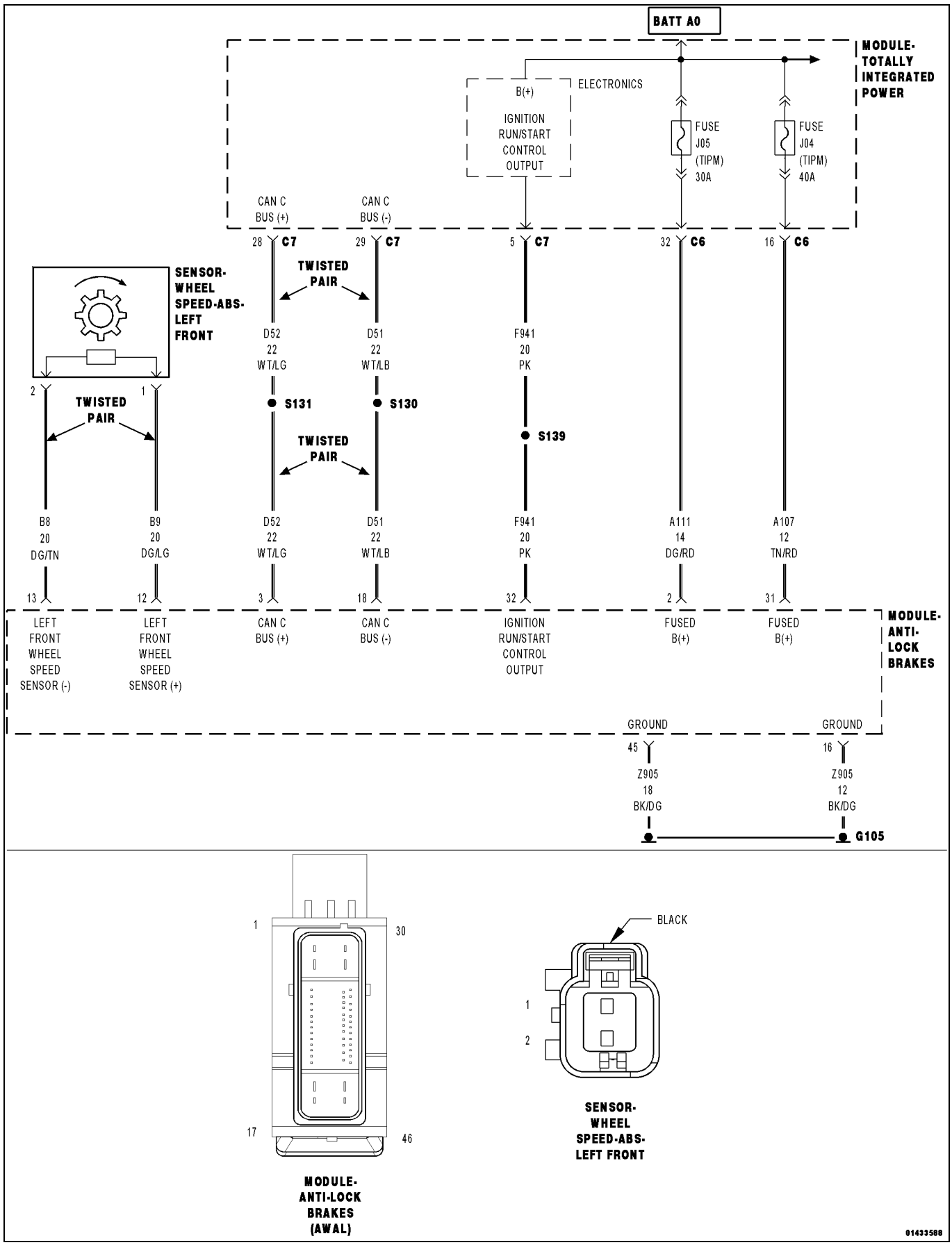

For a complete wiring diagram, **refer to the Wiring Information**.

NOTE: The Electronic Stability Control (ESC) may also be referred to as Electronic Stability Program (ESP) depending on the vehicle model year and configuration. Certain components may also reference ESP, ESC, or use the traction control symbol.

- **When Monitored:**

  With the ignition on, no system under voltage or over voltage condition present, no open or shorted wheel speed sensor DTCs set, vehicle not under high acceleration, and vehicle speed greater than 0.

- **Set Condition:**

  This DTC will set if either one wheel is sensed above a predetermined range for 5000 msec while the other wheels are below 20% of maximum velocity of all wheels OR if more than one wheel is sensed at below 20% of maximum velocity of all wheels while at least one wheel is sensed above a predetermined range. The condition must exist for two minutes for this DTC to set.

  If the number of missing sensors changes at any update, the fault monitor is reset.

Possible Causes
(B9) LEFT FRONT WHEEL SPEED SENSOR SUPPLY CIRCUIT SHORT TO GROUND
(B8) LEFT FRONT WHEEL SPEED SENSOR SIGNAL CIRCUIT SHORT TO GROUND
(B9) LEFT FRONT WHEEL SPEED SENSOR SUPPLY CIRCUIT OPEN
(B8) LEFT FRONT WHEEL SPEED SENSOR SIGNAL CIRCUIT OPEN
(B9) LEFT FRONT WHEEL SPEED SENSOR SUPPLY CIRCUIT SHORTED TO VOLTAGE
(B8) LEFT FRONT WHEEL SPEED SENSOR SIGNAL CIRCUIT SHORTED TO VOLTAGE
(B9) LEFT FRONT WHEEL SPEED SENSOR SUPPLY CIRCUIT SHORTED TO THE (B8) LEFT FRONT WHEEL SPEED SENSOR SIGNAL CIRCUIT
TONE WHEEL
EXCESSIVE LEFT FRONT WHEEL SPEED SENSOR AIR GAP
WHEEL BEARING
LEFT FRONT WHEEL SPEED SENSOR (WSS)
ANTI-LOCK BRAKE SYSTEM (ABS) MODULE

1. DTC IS ACTIVE

1. Ignition on, engine not running.
2. With the scan tool, clear DTCs.
3. Turn the ignition off to the lock position.
4. Ignition on, engine not running.
5. With the scan tool, select View DTCs.

Is the status Active for this DTC?

Yes

- Go To 2

No

- The condition that caused the symptom is currently not present. Inspect the related wiring for a possible intermittent condition. Look for any chafed, pierced, pinched, or partially broken wires.
- Perform the ABS-INTERMITTENT CONDITION TEST. (Refer to 28 - DTC-Based Diagnostics/MODULE, Antilock Brake (ABS) - Standard Procedure).

2. WHEEL SPEED SENSOR INSPECTION

1. Turn the ignition off to the lock position.
2. Inspect the Wheel Speed Sensor for proper mounting.
3. Inspect the Wheel Speed Sensor harness and connector.
4. Inspect the Wheel Speed Sensor for excessive debris on the sensor.

Were any problems found?

Yes

- Repair as necessary in accordance with the Service Information.
- Perform the ABS VERIFICATION TEST. (Refer to 28 - DTC-Based Diagnostics/MODULE, Antilock Brake (ABS) - Standard Procedure).

No

- Go To 3

3. TONE WHEEL DAMAGED/MISSING

1. Inspect the Tone Wheel in accordance with the Service Information.

NOTE: The Tone Wheel Teeth should be perfectly square, not bent or nicked.

Were any problems found?

Yes

- Replace the Tone Wheel in accordance with the Service Information.
- Perform the ABS VERIFICATION TEST. (Refer to 28 - DTC-Based Diagnostics/MODULE, Antilock Brake (ABS) - Standard Procedure).

No

- Go To 4

4. EXCESSIVE WHEEL SPEED SENSOR AIR GAP

1. Measure the Wheel Speed Sensor Air Gap in accordance with the Service Information.

Were any problems found?

Yes

- Repair as necessary in accordance with the Service Information.
- Perform the ABS VERIFICATION TEST. (Refer to 28 - DTC-Based Diagnostics/MODULE, Antilock Brake (ABS) - Standard Procedure).

No

- Go To 5

5. WHEEL BEARING LOOSE/BINDING

1. Inspect the wheel bearings for excessive run out or improper clearance in accordance with the Service Information.

Were any problems found?

Yes

- Repair as necessary in accordance with the Service Information.
- Perform the ABS VERIFICATION TEST. (Refer to 28 - DTC-Based Diagnostics/MODULE, Antilock Brake (ABS) - Standard Procedure).

No

- Go To 6

6. CHECK (B9) LEFT FRONT WHEEL SPEED SENSOR SUPPLY CIRCUIT VOLTAGE

1. Disconnect the Left Front Wheel Speed Sensor harness connector.
2. Turn the ignition on.
3. Measure the voltage between the (B9) Left Front Wheel Speed Sensor Supply circuit and ground.

Is the voltage above 10 volts?

Yes

- Go To 7

No

- Go To 9

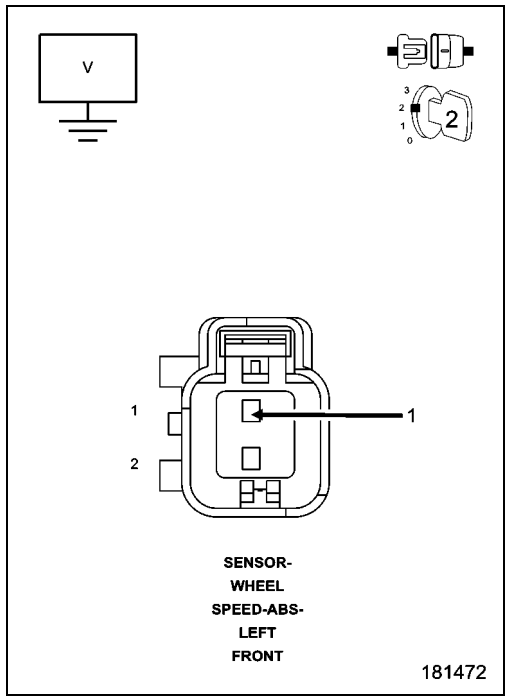

7. (B9) LEFT FRONT WHEEL SPEED SENSOR SUPPLY CIRCUIT SHORTED TO VOLTAGE

1. Turn the ignition off to the lock position.
2. Disconnect the ABS Module harness connector.
3. Ignition on, engine not running.
4. Measure the voltage of the (B9) Left Front Wheel Speed Sensor Supply circuit at the Left Front Wheel Speed Sensor harness connector.

Is there any voltage present?

Yes

- Repair (B9) Left Front Wheel Speed Sensor Supply circuit for a short to voltage.
- Perform the ABS VERIFICATION TEST. (Refer to 28 - DTC-Based Diagnostics/MODULE, Antilock Brake (ABS) - Standard Procedure).

No

- Go To 8

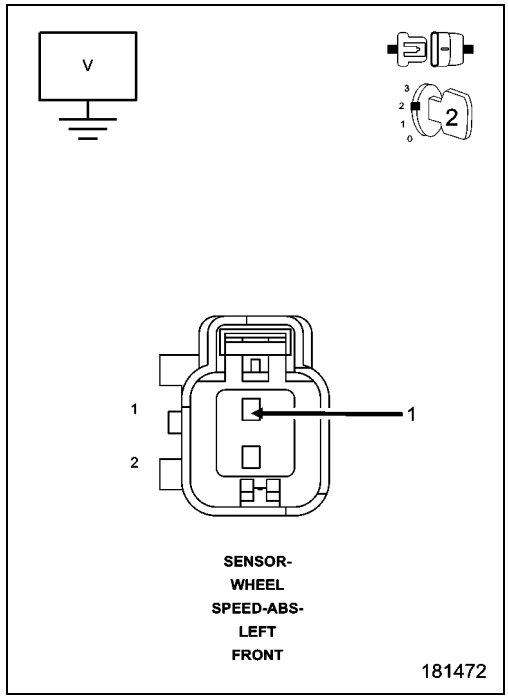

8. (B8) LEFT FRONT WHEEL SPEED SENSOR SIGNAL CIRCUIT SHORTED TO GROUND

1. Turn the ignition off.
2. Measure the resistance between the (B8) Left Front Wheel Speed Sensor Signal circuit and ground.

Is the resistance above 5.0 Ohms?

Yes

- Replace the Left Front Wheel Speed Sensor in accordance with the Service Information.
- Perform the ABS VERIFICATION TEST. (Refer to 28 - DTC-Based Diagnostics/MODULE, Antilock Brake (ABS) - Standard Procedure)

No

- Repair the (B8) Left Front Wheel Speed Sensor Signal circuit for a short to ground.
- Perform the ABS VERIFICATION TEST. (Refer to 28 - DTC-Based Diagnostics/MODULE, Antilock Brake (ABS) - Standard Procedure)

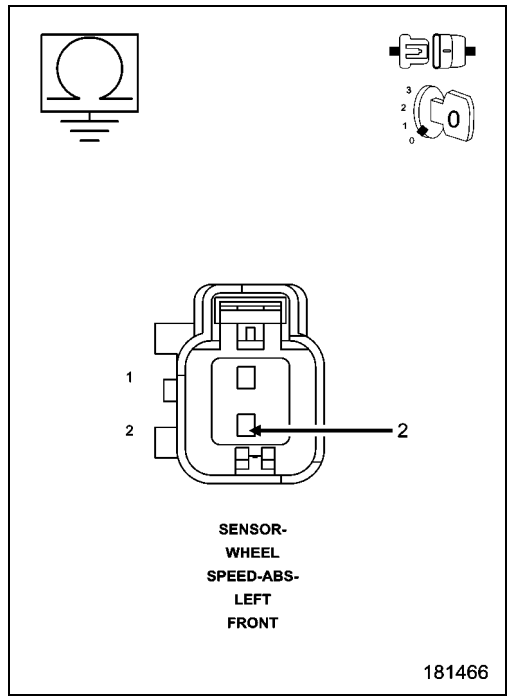

9. (B9) LEFT FRONT WHEEL SPEED SENSOR SUPPLY CIRCUIT SHORTED TO GROUND

1. Turn the ignition off.
2. Disconnect the ABS Module harness connector.
3. Measure the resistance between the (B9) Left Front Wheel Speed Sensor Supply circuit and ground.

Is the resistance above 5.0 Ohms?

Yes

- Go To 10

No

- Repair the (B9) Left Front Wheel Speed Sensor Supply circuit for a short to ground.
- Perform the ABS VERIFICATION TEST. (Refer to 28 - DTC-Based Diagnostics/MODULE, Antilock Brake (ABS) - Standard Procedure).

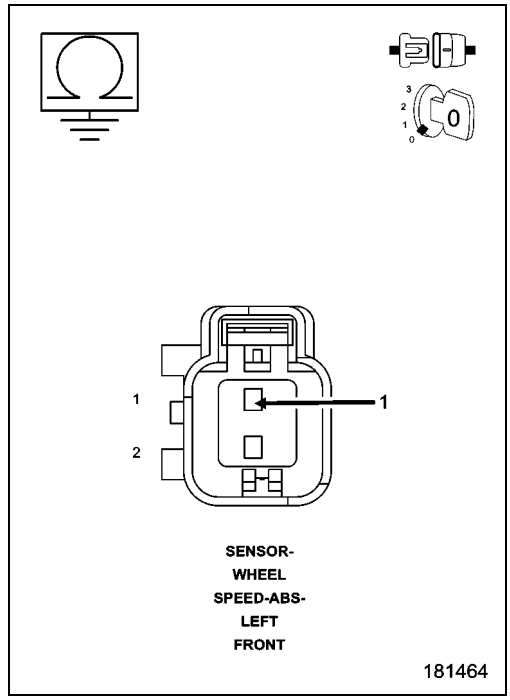

10. (B9) LEFT FRONT WHEEL SPEED SENSOR SUPPLY CIRCUIT OPEN

1. Measure the resistance of the (B9) Left Front Wheel Speed Sensor Supply circuit between the Left Front Wheel Speed Sensor harness connector and the ABS harness connector.

Is the resistance below 5 Ohms?

Yes

- Go To 11

No

- Repair the open (B9) Left Front Wheel Speed Sensor Supply circuit.
- Perform the ABS VERIFICATION TEST. (Refer to 28 - DTC-Based Diagnostics/MODULE, Antilock Brake (ABS) - Standard Procedure).

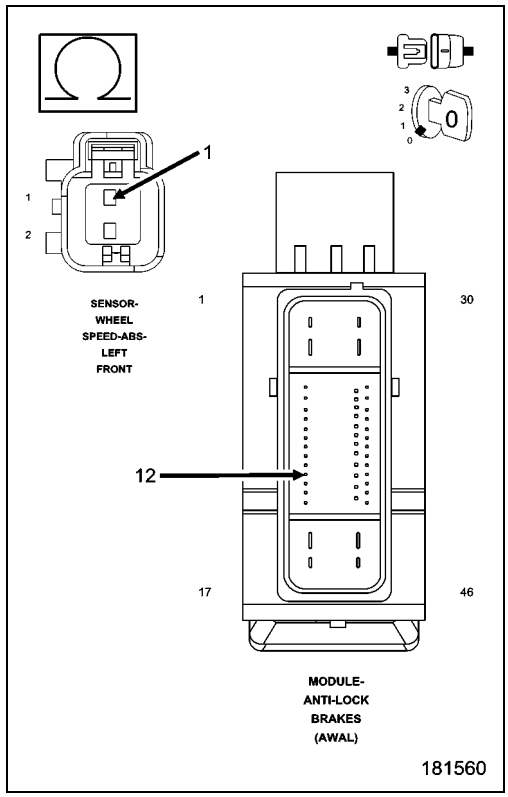

11. (B8) LEFT FRONT WHEEL SPEED SENSOR SIGNAL CIRCUIT OPEN

1. Measure the resistance of the (B8) Left Front Wheel Speed Sensor Signal circuit between the Left Front Wheel Speed Sensor harness connector and the ABS harness connector.

Is the resistance below 5 Ohms?

Yes

- Go To 12

No

- Repair the open (B8) Left Front Wheel Speed Sensor Signal circuit.
- Perform the ABS VERIFICATION TEST. (Refer to 28 - DTC-Based Diagnostics/MODULE, Antilock Brake (ABS) - Standard Procedure).

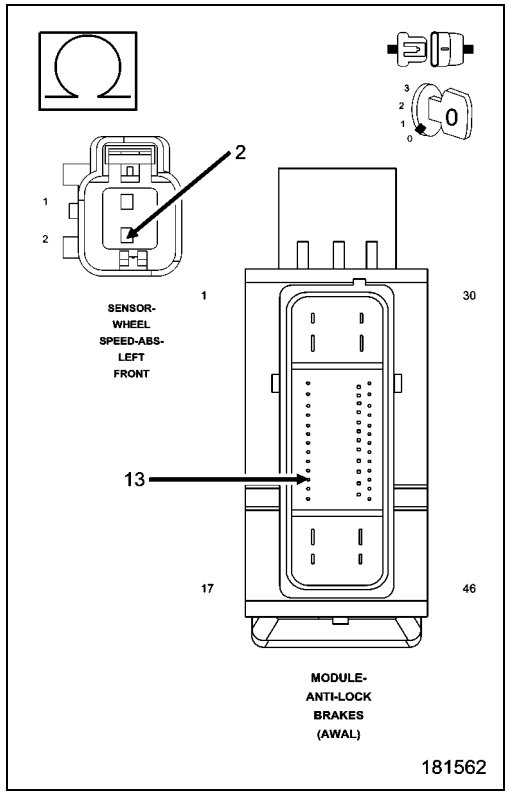

12. (B8) LEFT FRONT WHEEL SPEED SENSOR SIGNAL CIRCUIT SHORTED TO VOLTAGE

1. Turn the ignition on.
2. Measure the voltage of the (B8) Left Front Wheel Speed Sensor Signal circuit at the Left Front Wheel Speed Sensor harness connector .

Is there any voltage present?

Yes

- Repair the (B8) Left Front Wheel Speed Sensor Signal circuit for a short to voltage.
- Perform the ABS VERIFICATION TEST. (Refer to 28 - DTC-Based Diagnostics/MODULE, Antilock Brake (ABS) - Standard Procedure).

No

- Go To 13

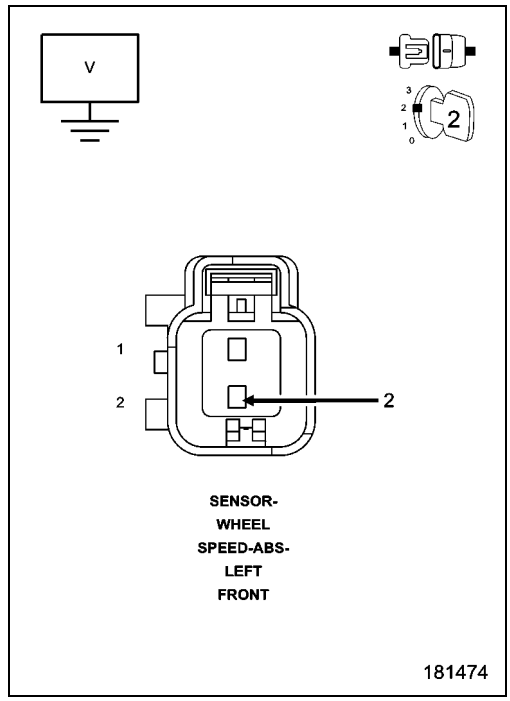

13. (B9) LEFT FRONT WHEEL SPEED SENSOR SUPPLY CIRCUIT SHORTED TO THE (B8) LEFT FRONT WHEEL SPEED SENSOR SIGNAL CIRCUIT

1. Turn the ignition off to the lock position.
2. Measure the resistance between the (B9) Left Front Wheel Speed Sensor Supply circuit and the (B8) Left Front Wheel Speed Sensor Signal circuit at the ABS Module harness connector.

Is the resistance below 5.0 Ohms?

Yes

- Repair (B9) Left Front Wheel Speed Sensor Supply circuit for a short to the (B8) Left Front Wheel Speed Sensor Signal circuit.
- Perform the ABS VERIFICATION TEST. (Refer to 28 - DTC-Based Diagnostics/MODULE, Antilock Brake (ABS) - Standard Procedure).

No

- Replace the Anti-Lock Brakes Module in accordance with the Service Information.
- Perform the ABS VERIFICATION TEST. (Refer to 28 - DTC-Based Diagnostics/MODULE, Antilock Brake (ABS) - Standard Procedure).

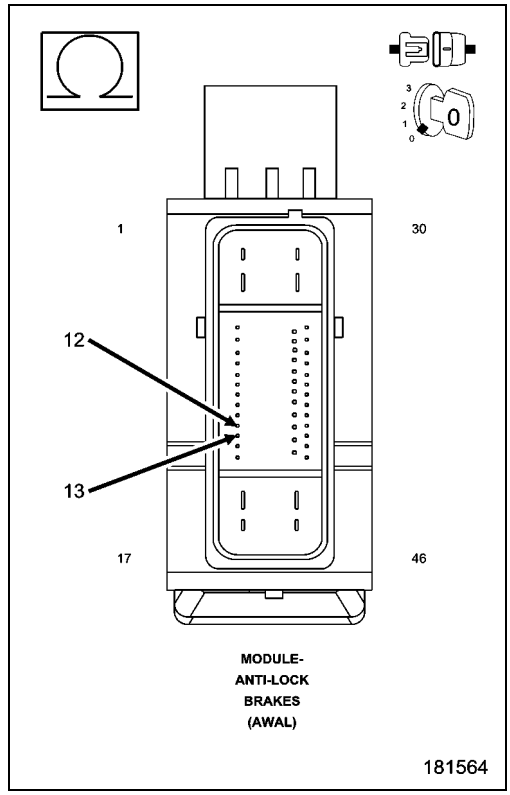

C1015-RIGHT FRONT WHEEL SPEED SENSOR CIRCUIT

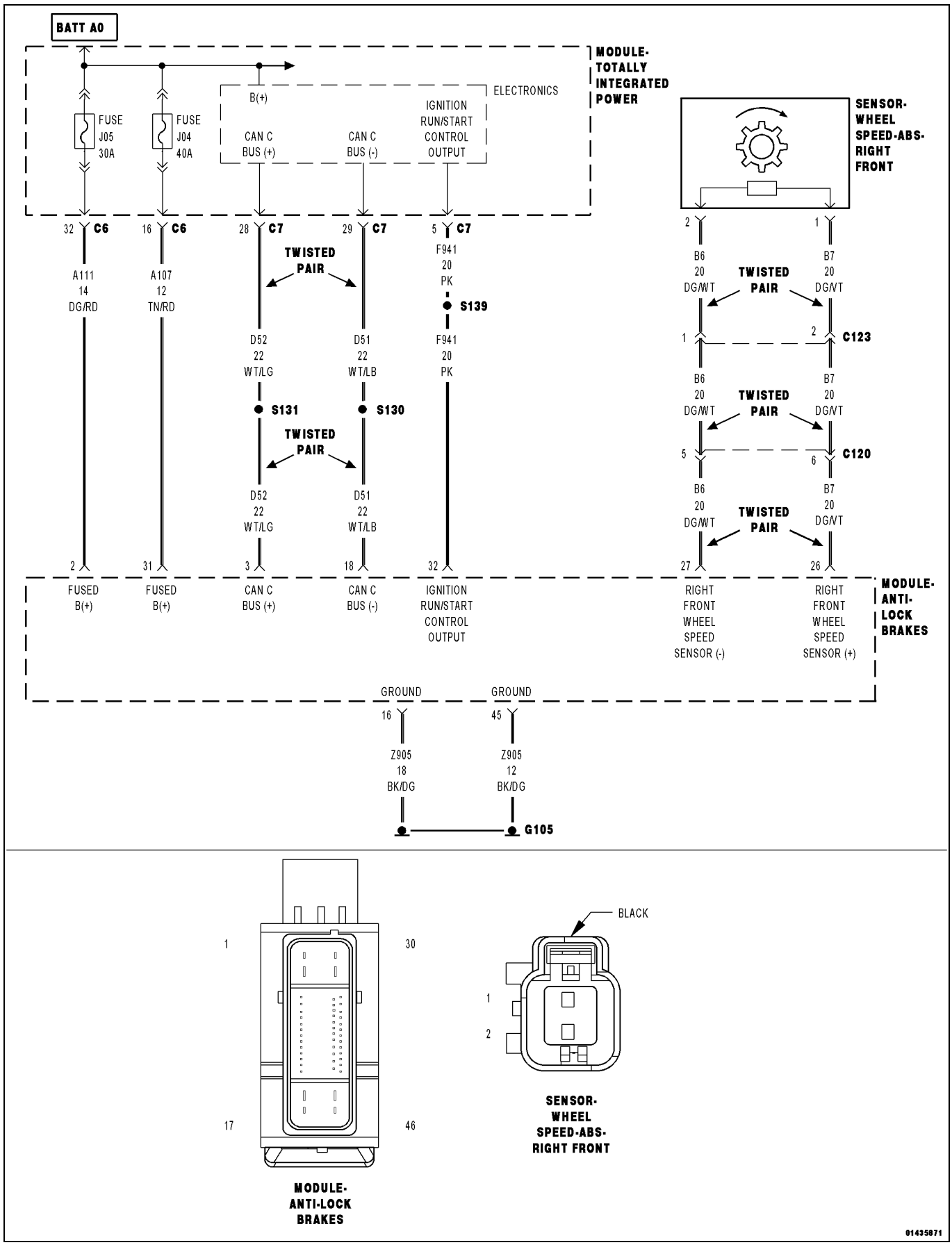

For a complete wiring diagram, **refer to the Wiring Information**.

NOTE: The Electronic Stability Control (ESC) may also be referred to as Electronic Stability Program (ESP) depending on the vehicle model year and configuration. Certain components may also reference ESP, ESC, or use the traction control symbol.

- **When Monitored:**
  With the ignition on and no system under voltage or over voltage condition present.
- **Set Condition:**
  If the measured wheel speed sensor feedback voltage is less than .304 of a volt, the sensor is considered open.
  If the measured wheel speed sensor feedback voltage is greater than 1.39 volts, or if a sensor over current condition is detected, the sensor is considered shorted.
  If a shorted or open condition is present for more than 100 msec, the DTC will set.

Possible Causes
(B7) RIGHT FRONT WHEEL SPEED SENSOR SUPPLY CIRCUIT SHORTED TO GROUND
(B6) RIGHT FRONT WHEEL SPEED SENSOR SIGNAL CIRCUIT SHORTED TO GROUND
(B7) RIGHT FRONT WHEEL SPEED SENSOR SUPPLY CIRCUIT OPEN
(B6) RIGHT FRONT WHEEL SPEED SENSOR SIGNAL CIRCUIT OPEN
(B7) RIGHT FRONT WHEEL SPEED SENSOR SUPPLY CIRCUIT SHORTED TO VOLTAGE
(B6) RIGHT FRONT WHEEL SPEED SENSOR SIGNAL CIRCUIT SHORTED TO VOLTAGE
(B7) RIGHT FRONT WHEEL SPEED SENSOR SUPPLY CIRCUIT SHORTED TO THE (B6) RIGHT FRONT WHEEL SPEED SENSOR SIGNAL CIRCUIT
RIGHT FRONT WHEEL SPEED SENSOR (WSS)
ANTI-LOCK BRAKE SYSTEM (ABS) MODULE

1. DTC IS ACTIVE

1. Ignition on, engine not running.
2. With the scan tool, clear DTCs.
3. Turn the ignition off to the lock position.
4. Ignition on, engine not running.
5. With the scan tool, select View DTCs.

Is the status Active for this DTC?

Yes

- Go To 2

No

- The condition that caused the symptom is currently not present. Inspect the related wiring for a possible intermittent condition. Look for any chafed, pierced, pinched, or partially broken wires.
- Perform the ABS INTERMITTENT CONDITION TEST. (Refer to 28 - DTC-Based Diagnostics/MODULE, Antilock Brake (ABS) - Standard Procedure).

2. WHEEL SPEED SENSOR INSPECTION

1. Turn the ignition off to the lock position.
2. Inspect the Wheel Speed Sensor for proper mounting.
3. Inspect the Wheel Speed Sensor harness and connector.
4. Inspect the Wheel Speed Sensor for excessive debris on the sensor.

Were any problems found?

Yes

- Repair as necessary in accordance with the Service Information.
- Perform the ABS VERIFICATION TEST. (Refer to 28 - DTC-Based Diagnostics/MODULE, Antilock Brake (ABS) - Standard Procedure).

No

- Go To 3

3. CHECK (B7) RIGHT FRONT WHEEL SPEED SENSOR SUPPLY CIRCUIT VOLTAGE

1. Disconnect the Right Front Wheel Speed Sensor harness connector.
2. Turn the ignition on.
3. Measure the voltage between the (B7) Right Front Wheel Speed Sensor Supply circuit and ground.

Is the voltage above 10 volts?

Yes

- Go To 4

No

- Go To 6

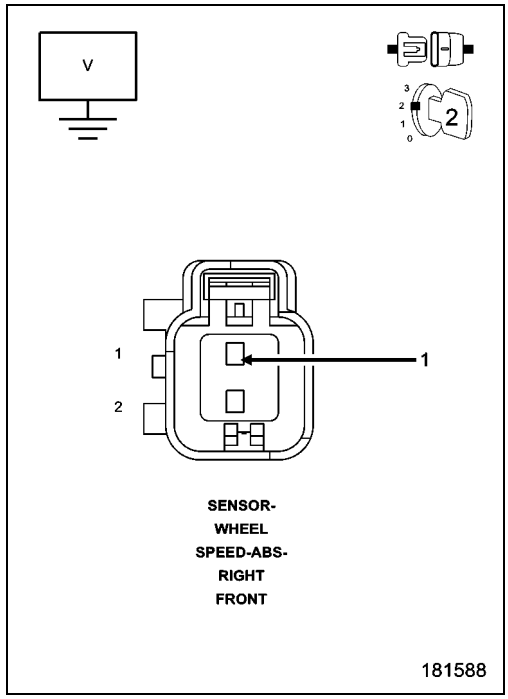

4. (B7) RIGHT FRONT WHEEL SPEED SENSOR SUPPLY CIRCUIT SHORTED TO VOLTAGE

1. Turn the ignition off to the lock position.
2. Disconnect the ABS Module harness connector.
3. Ignition on, engine not running.
4. Measure the voltage of the (B7) Right Front Wheel Speed Sensor Supply circuit at the Right Front Wheel Speed Sensor harness connector.

Is there any voltage present?

Yes

- Repair (B7) Right Front Wheel Speed Sensor Supply circuit for a short to voltage.
- Perform the ABS VERIFICATION TEST. (Refer to 28 - DTC-Based Diagnostics/MODULE, Antilock Brake (ABS) - Standard Procedure).

No

- Go To 5

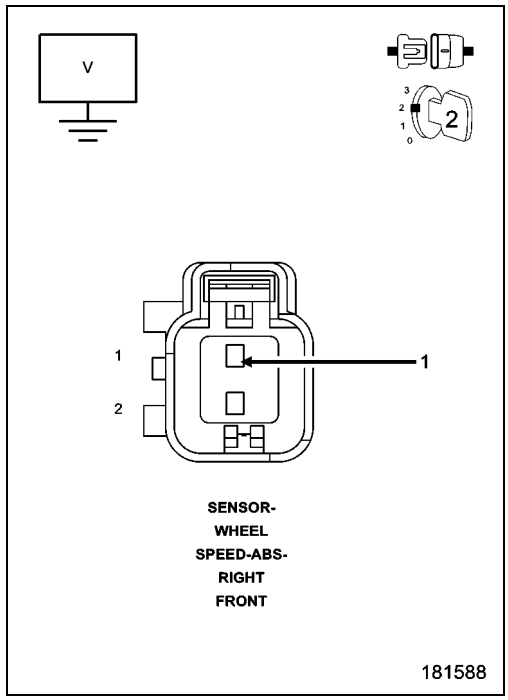

5. (B6) RIGHT FRONT WHEEL SPEED SENSOR SIGNAL CIRCUIT SHORTED TO GROUND

1. Turn the ignition off.
2. Measure the resistance between the (B6) Right Front Wheel Speed Sensor Signal circuit and ground.

Is the resistance above 5.0 Ohms?

Yes

- Replace the Right Front Wheel Speed Sensor in accordance with the Service Information.
- Perform ABS VERIFICATION TEST. (Refer to 28 - DTC-Based Diagnostics/MODULE, Antilock Brake (ABS) - Standard Procedure)

No

- Repair the (B6) Right Front Wheel Speed Sensor Signal circuit for a short to ground.
- Perform ABS VERIFICATION TEST. (Refer to 28 - DTC-Based Diagnostics/MODULE, Antilock Brake (ABS) - Standard Procedure)

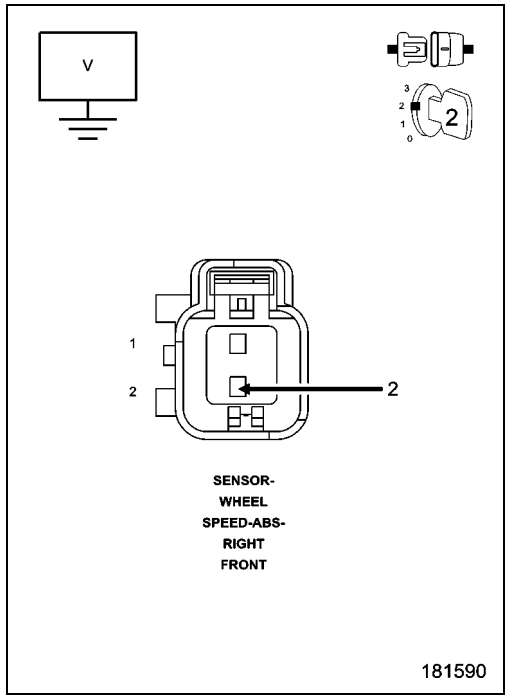

6. (B7) RIGHT FRONT WHEEL SPEED SENSOR SUPPLY CIRCUIT SHORTED TO GROUND

1. Turn the ignition off to the lock position.
2. Disconnect the ABS Module harness connector.
3. Measure the resistance between the (B7) Right Front Wheel Speed Sensor Supply circuit and ground.

Is the resistance above 5.0 Ohms?

Yes

- Go To 7

No

- Repair the (B7) Right Front Wheel Speed Sensor Supply circuit for a short to ground.
- Perform the ABS VERIFICATION TEST. (Refer to 28 - DTC-Based Diagnostics/MODULE, Antilock Brake (ABS) - Standard Procedure).

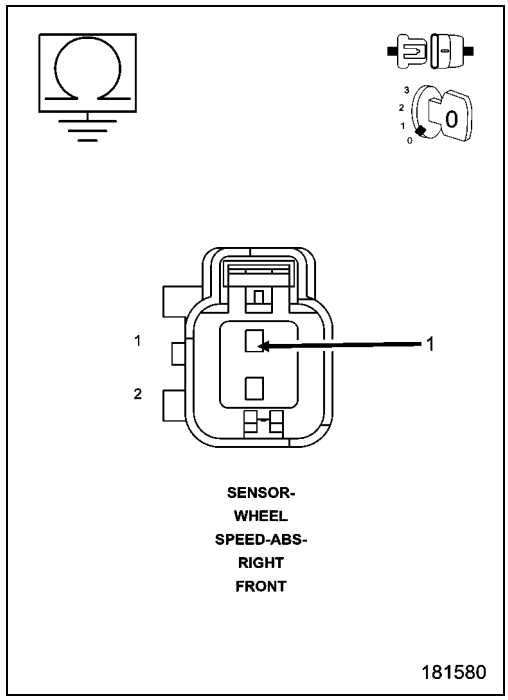

7. (B7) RIGHT FRONT WHEEL SPEED SENSOR SUPPLY CIRCUIT OPEN

1. Measure the resistance of the (B7) Right Front Wheel Speed Sensor Supply circuit between the ABS harness connector and the Right Front Wheel Speed Sensor harness connector.

Is the resistance below 5 Ohms?

Yes

- Go To 8

No

- Repair the open (B7) Right Front Wheel Speed Sensor Supply circuit.
- Perform the ABS VERIFICATION TEST. (Refer to 28 - DTC-Based Diagnostics/MODULE, Antilock Brake (ABS) - Standard Procedure).

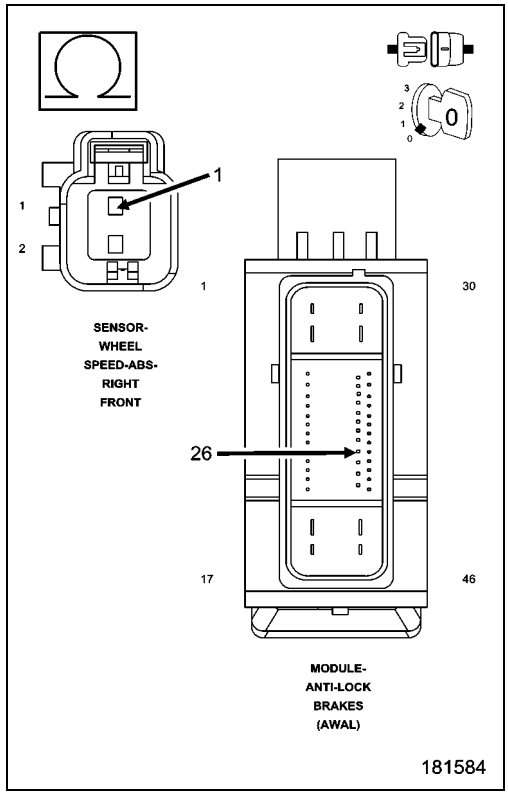

8. (B6) RIGHT FRONT WHEEL SPEED SENSOR SIGNAL CIRCUIT OPEN

1. Measure the resistance of the (B6) Right Front Wheel Speed Sensor Signal circuit between the ABS harness connector and the Right Front Wheel Speed Sensor harness connector.

Is the resistance below 5 Ohms?

Yes

- Go To 9

No

- Repair the open (B6) Right Front Wheel Speed Sensor Signal circuit.
- Perform the ABS VERIFICATION TEST. (Refer to 28 - DTC-Based Diagnostics/MODULE, Antilock Brake (ABS) - Standard Procedure).

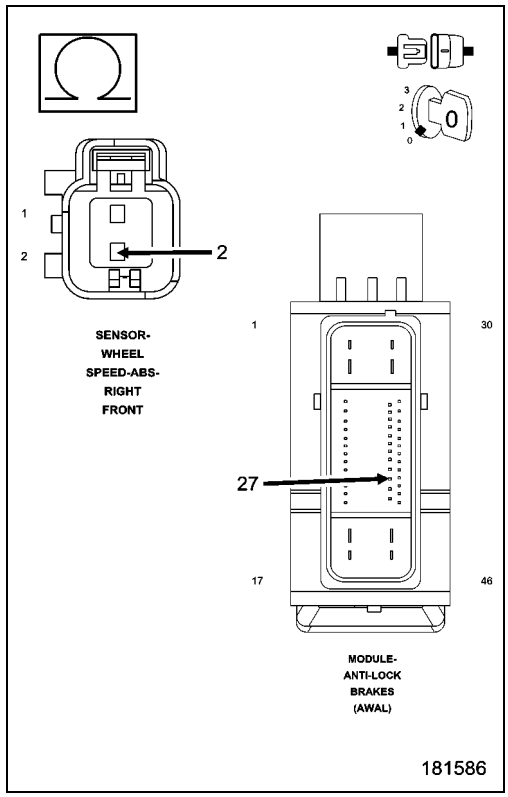

9. (B6) RIGHT FRONT WHEEL SPEED SENSOR SIGNAL CIRCUIT SHORTED TO VOLTAGE

1. Turn the ignition on.
2. Measure the voltage of the (B6) Right Front Wheel Speed Sensor Signal circuit at the Right Front Wheel Speed Sensor harness connector.

Is there any voltage present?

Yes

- Repair the (B6) Right Front Wheel Speed Sensor Signal circuit for a short to voltage.
- Perform the ABS VERIFICATION TEST. (Refer to 28 - DTC-Based Diagnostics/MODULE, Antilock Brake (ABS) - Standard Procedure).

No

- Go To 10

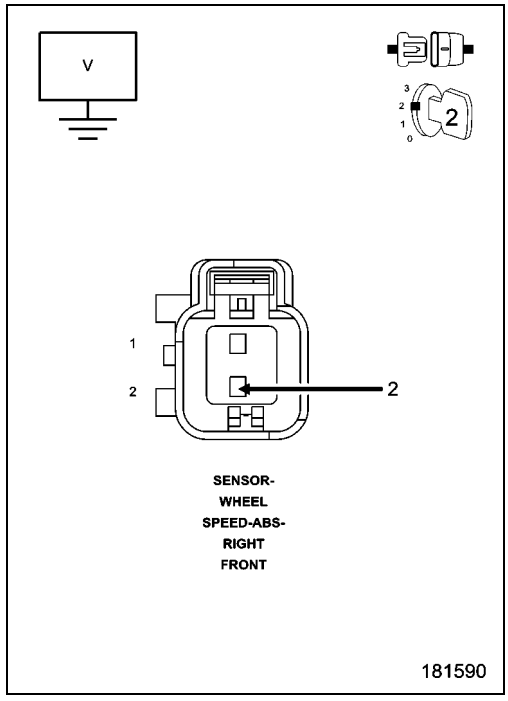

10. (B7) RIGHT FRONT WHEEL SPEED SENSOR SUPPLY CIRCUIT SHORTED TO THE (B6) RIGHT FRONT WHEEL SPEED SENSOR SIGNAL CIRCUIT

1. Turn the ignition off to the lock position.
2. Measure the resistance between the (B7) Right Front Wheel Speed Sensor Supply circuit and the (B6) Right Front Wheel Speed Sensor Signal circuit at the ABS Module harness connector.

Is the resistance below 5.0 Ohms?

Yes

- Repair (B7) Right Front Wheel Speed Sensor Supply circuit for a short to the (B6) Right Front Wheel Speed Sensor Signal circuit.
- Perform the ABS VERIFICATION TEST. (Refer to 28 - DTC-Based Diagnostics/MODULE, Antilock Brake (ABS) - Standard Procedure).

No

- Replace the Anti-Lock Brakes Module in accordance with the Service Information.
- Perform the ABS VERIFICATION TEST. (Refer to 28 - DTC-Based Diagnostics/MODULE, Antilock Brake (ABS) - Standard Procedure).

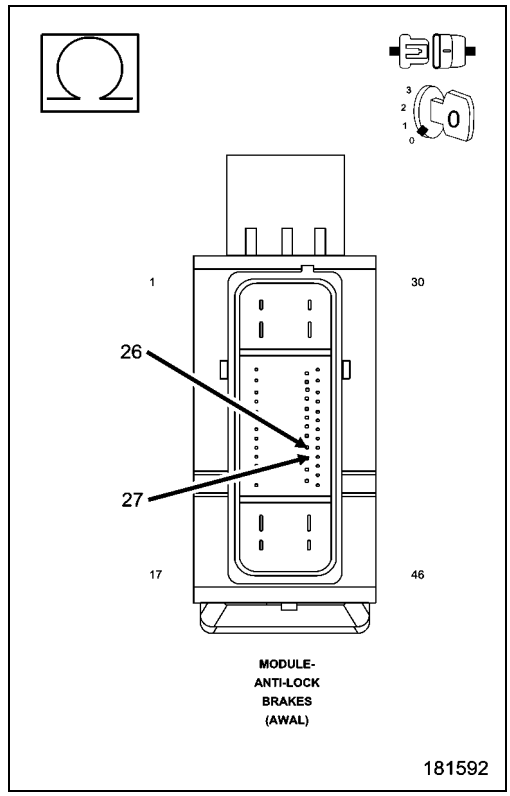

C101C-RIGHT FRONT WHEEL SPEED SENSOR SIGNAL ERRATIC PERFORMANCE

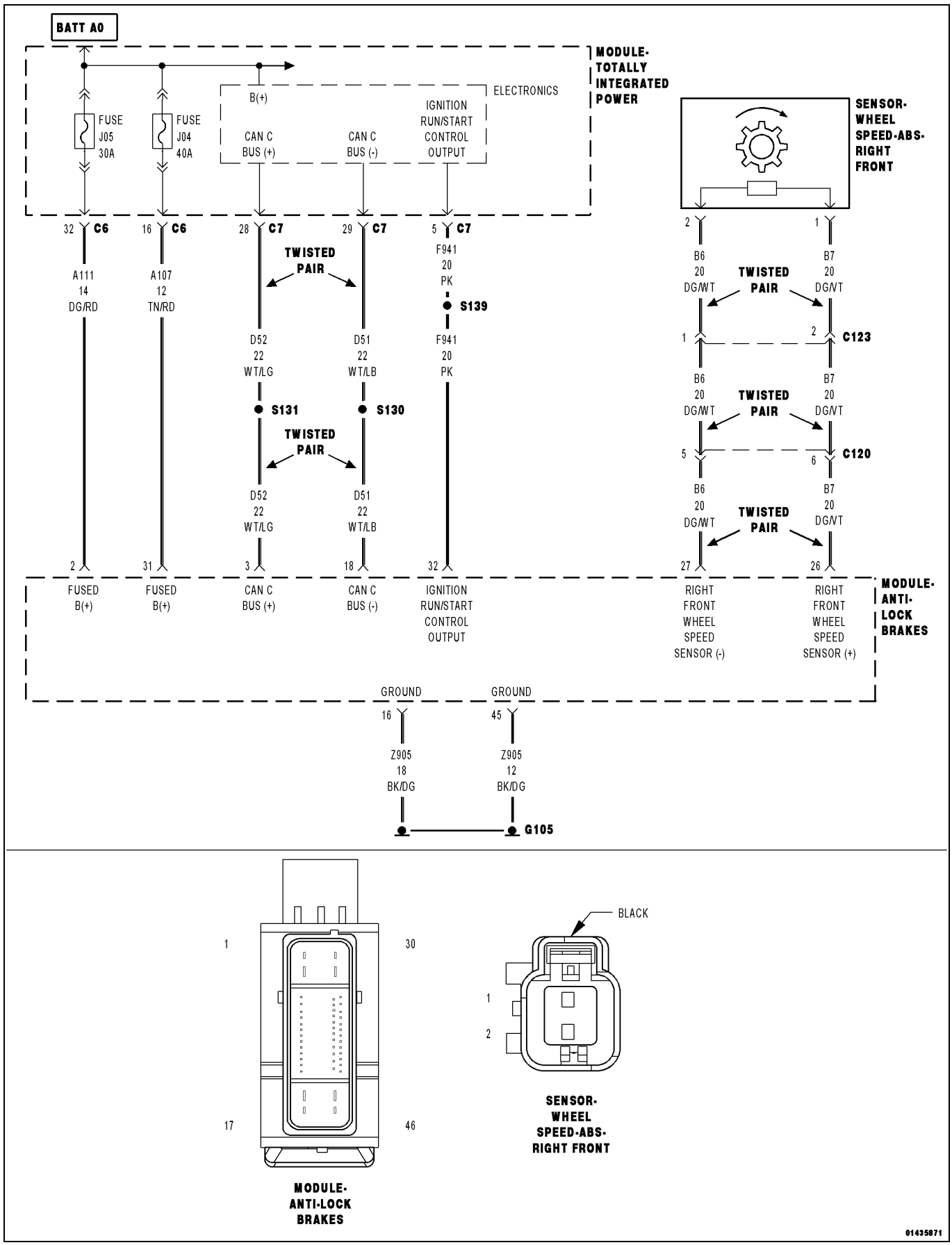

For a complete wiring diagram, **refer to the Wiring Information**.

NOTE: The Electronic Stability Control (ESC) may also be referred to as Electronic Stability Program (ESP) depending on the vehicle model year and configuration. Certain components may also reference ESP, ESC, or use the traction control symbol.

- **When Monitored:**
  With the ignition on and no system under voltage or over voltage condition present.
- **Set Condition:**
  Each time excessive wheel speed sensor acceleration or deceleration is detected, a fault counter increments. If the fault counter exceeds a specified value, the DTC will set.

Possible Causes
(B7) RIGHT FRONT WHEEL SPEED SENSOR SUPPLY CIRCUIT SHORT TO GROUND
(B6) RIGHT FRONT WHEEL SPEED SENSOR SIGNAL CIRCUIT SHORT TO GROUND
(B7) RIGHT FRONT WHEEL SPEED SENSOR SUPPLY CIRCUIT OPEN
(B6) RIGHT FRONT WHEEL SPEED SENSOR SIGNAL CIRCUIT OPEN
(B7) RIGHT FRONT WHEEL SPEED SENSOR SUPPLY CIRCUIT SHORTED TO VOLTAGE
(B6) RIGHT FRONT WHEEL SPEED SENSOR SIGNAL CIRCUIT SHORTED TO VOLTAGE
(B7) RIGHT FRONT WHEEL SPEED SENSOR SUPPLY CIRCUIT SHORTED TO THE (B6) RIGHT FRONT WHEEL SPEED SENSOR SIGNAL CIRCUIT
TONE WHEEL
EXCESSIVE RIGHT FRONT WHEEL SPEED SENSOR AIR GAP
WHEEL BEARING
RIGHT FRONT WHEEL SPEED SENSOR (WSS)
ANTI-LOCK BRAKE SYSTEM (ABS) MODULE

1. DTC IS ACTIVE

1. Ignition on, engine not running.
2. With the scan tool, erase DTCs.
3. Turn the ignition off to the lock position.
4. Ignition on, engine not running.
5. With the scan tool, select View DTCs.

Is the status Active for this DTC?

Yes

- Go To 2

No

- The condition that caused the symptom is currently not present. Inspect the related wiring for a possible intermittent condition. Look for any chafed, pierced, pinched, or partially broken wires.
- Perform the ABS-INTERMITTENT CONDITION TEST. (Refer to 28 - DTC-Based Diagnostics/MODULE, Antilock Brake (ABS) - Standard Procedure).

2. WHEEL SPEED SENSOR INSPECTION

1. Turn the ignition off to the lock position.
2. Inspect the Wheel Speed Sensor for proper mounting.
3. Inspect the Wheel Speed Sensor harness and connector.
4. Inspect the Wheel Speed Sensor for excessive debris on the sensor.

Were any problems found?

Yes

- Repair as necessary in accordance with the Service Information.
- Perform the ABS VERIFICATION TEST. (Refer to 28 - DTC-Based Diagnostics/MODULE, Antilock Brake (ABS) - Standard Procedure)

No

- Go To 3

3. TONE WHEEL DAMAGED/MISSING

1. Inspect the Tone Wheel in accordance with the Service Information.

NOTE: The Tone Wheel Teeth should be perfectly square, not bent or nicked.

Were any problems found?

Yes

- Replace the Tone Wheel in accordance with the Service Information.
- Perform the ABS VERIFICATION TEST. (Refer to 28 - DTC-Based Diagnostics/MODULE, Antilock Brake (ABS) - Standard Procedure).

No

- Go To 4

4. EXCESSIVE WHEEL SPEED SENSOR AIR GAP

1. Measure the Wheel Speed Sensor Air Gap in accordance with the Service Information.

Were any problems found?

Yes

- Repair as necessary in accordance with the Service Information.
- Perform the ABS VERIFICATION TEST. (Refer to 28 - DTC-Based Diagnostics/MODULE, Antilock Brake (ABS) - Standard Procedure).

No

- Go To 5

5. WHEEL BEARING LOOSE/BINDING

1. Inspect the wheel bearings for excessive run out or improper clearance in accordance with the Service Information.

Were any problems found?

Yes

- Repair as necessary in accordance with the Service Information.
- Perform the ABS VERIFICATION TEST. (Refer to 28 - DTC-Based Diagnostics/MODULE, Antilock Brake (ABS) - Standard Procedure).

No

- Go To 6

6. CHECK (B7) RIGHT FRONT WHEEL SPEED SENSOR SUPPLY CIRCUIT VOLTAGE

1. Disconnect the Right Front Wheel Speed Sensor harness connector.
2. Turn the ignition on.
3. Measure the voltage between the (B7) Right Front Wheel Speed Sensor Supply circuit and ground.

Is the voltage above 10 volts?

Yes

- Go To 7

No

- Go To 9

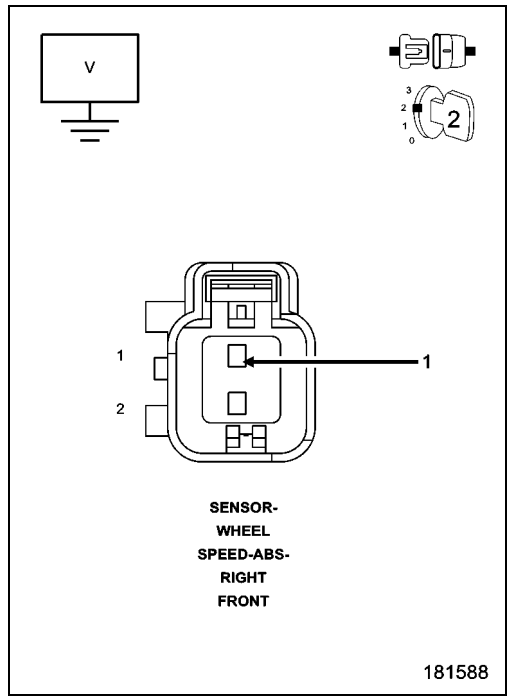

7. (B7) RIGHT FRONT WHEEL SPEED SENSOR SUPPLY CIRCUIT SHORTED TO VOLTAGE

1. Turn the ignition off to the lock position.
2. Disconnect the ABS Module harness connector.
3. Ignition on, engine not running.
4. Measure the voltage of the (B7) Right Front Wheel Speed Sensor Supply circuit at the Right Front Wheel Speed Sensor harness connector.

Is there any voltage present?

Yes

- Repair (B7) Right Front Wheel Speed Sensor Supply circuit for a short to voltage.
- Perform the ABS VERIFICATION TEST. (Refer to 28 - DTC-Based Diagnostics/MODULE, Antilock Brake (ABS) - Standard Procedure).

No

- Go To 8

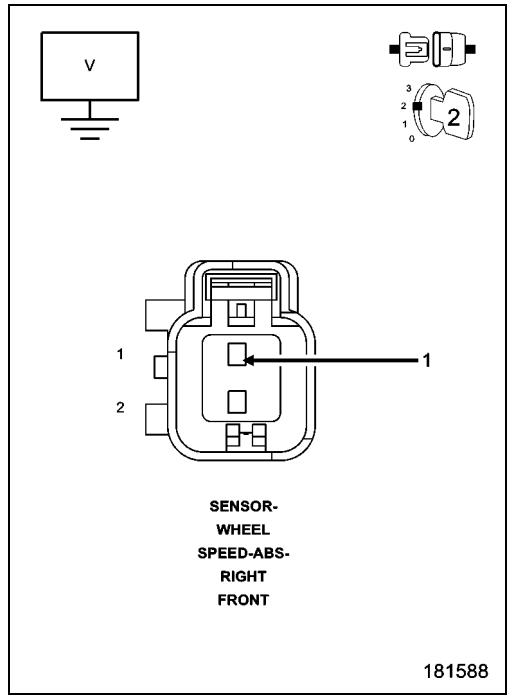

8. (B6) RIGHT FRONT WHEEL SPEED SENSOR SIGNAL CIRCUIT SHORTED TO GROUND

1. Turn the ignition off.
2. Measure the resistance between the (B6) Right Front Wheel Speed Sensor Signal circuit and ground.

Is the resistance above 5.0 Ohms?

Yes

- Replace the Right Front Wheel Speed Sensor in accordance with the Service Information.
- Perform the ABS VERIFICATION TEST. (Refer to 28 - DTC-Based Diagnostics/MODULE, Antilock Brake (ABS) - Standard Procedure)

No

- Repair the (B6) Right Front Wheel Speed Sensor Signal circuit for a short to ground.
- Perform the ABS VERIFICATION TEST. (Refer to 28 - DTC-Based Diagnostics/MODULE, Antilock Brake (ABS) - Standard Procedure)

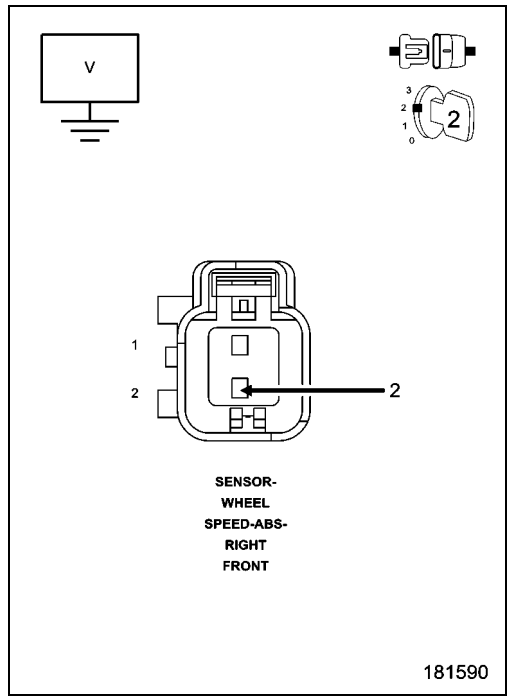

9. (B7) RIGHT FRONT WHEEL SPEED SENSOR SUPPLY CIRCUIT SHORTED TO GROUND

1. Turn the ignition off to the lock position.
2. Disconnect the ABS Module harness connector.
3. Measure the resistance between the (B7) Right Front Wheel Speed Sensor Supply circuit and ground.

Is the resistance above 5.0 Ohms?

Yes

- Go To 10

No

- Repair the (B7) Right Front Wheel Speed Sensor Supply circuit for a short to ground.
- Perform the ABS VERIFICATION TEST. (Refer to 28 - DTC-Based Diagnostics/MODULE, Antilock Brake (ABS) - Standard Procedure).

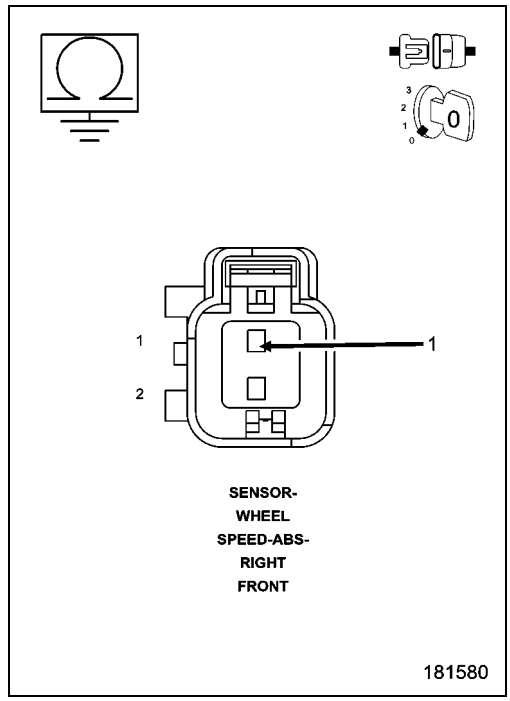

10. (B7) RIGHT FRONT WHEEL SPEED SENSOR SUPPLY CIRCUIT OPEN

1. Measure the resistance of the (B7) Right Front Wheel Speed Sensor Supply circuit between the ABS harness connector and the Right Front Wheel Speed Sensor harness connector.

Is the resistance below 5 Ohms?

Yes

- Go To 11

No

- Repair the open (B7) Right Front Wheel Speed Sensor Supply circuit.
- Perform the ABS VERIFICATION TEST. (Refer to 28 - DTC-Based Diagnostics/MODULE, Antilock Brake (ABS) - Standard Procedure).

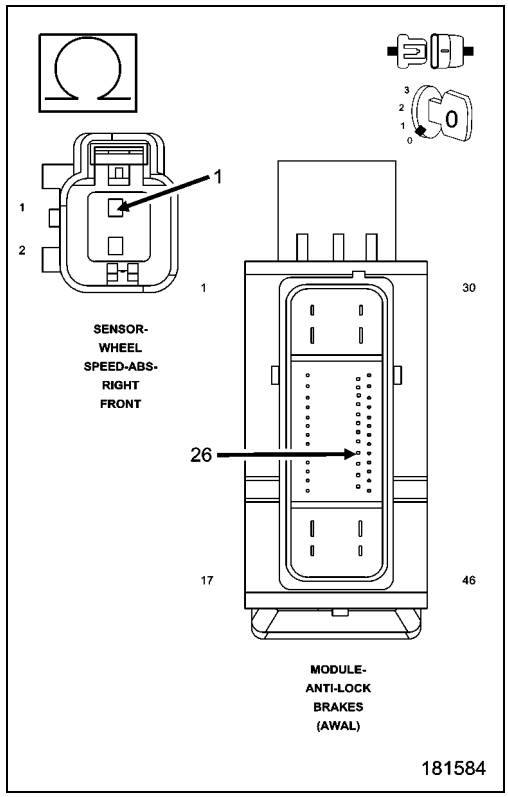

11. (B6) RIGHT FRONT WHEEL SPEED SENSOR SIGNAL CIRCUIT OPEN

1. Measure the resistance of the (B6) Right Front Wheel Speed Sensor Signal circuit between the ABS harness connector and the Right Front Wheel Speed Sensor harness connector.

Is the resistance below 5 Ohms?

Yes

- Go To 12

No

- Repair the open (B6) Right Front Wheel Speed Sensor Signal circuit.
- Perform the ABS VERIFICATION TEST. (Refer to 28 - DTC-Based Diagnostics/MODULE, Antilock Brake (ABS) - Standard Procedure).

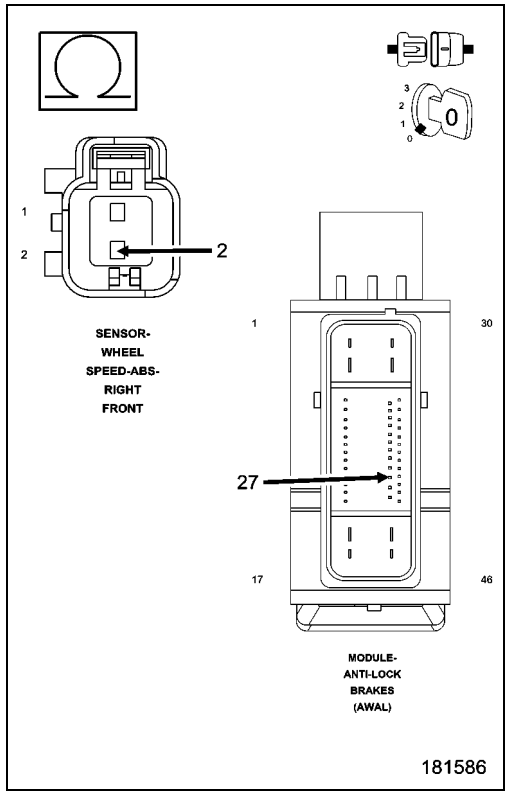

12. (B6) RIGHT FRONT WHEEL SPEED SENSOR SIGNAL CIRCUIT SHORTED TO VOLTAGE

1. Turn the ignition on.
2. Measure the voltage of the (B6) Right Front Wheel Speed Sensor Signal circuit at the Right Front Wheel Speed Sensor harness connector.

Is there any voltage present?

Yes

- Repair the (B6) Right Front Wheel Speed Sensor Signal circuit for a short to voltage.
- Perform the ABS VERIFICATION TEST. (Refer to 28 - DTC-Based Diagnostics/MODULE, Antilock Brake (ABS) - Standard Procedure).

No

- Go To 13

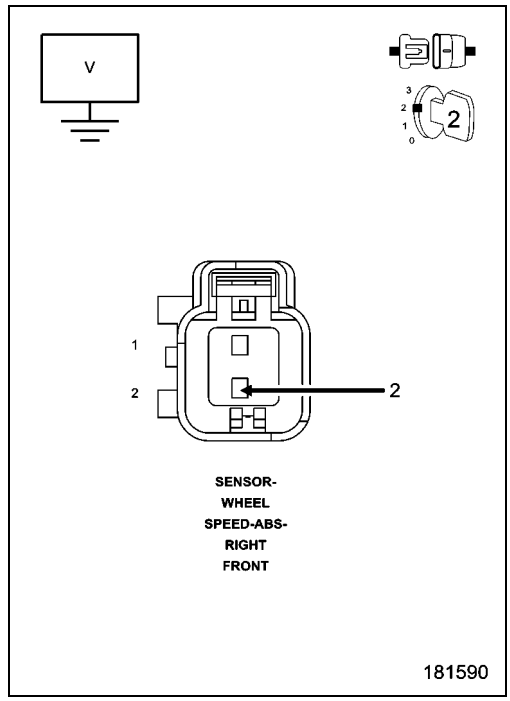

13. (B7) RIGHT FRONT WHEEL SPEED SENSOR SUPPLY CIRCUIT SHORTED TO THE (B6) RIGHT FRONT WHEEL SPEED SENSOR SIGNAL CIRCUIT

1. Turn the ignition off to the lock position.
2. Measure the resistance between the (B7) Right Front Wheel Speed Sensor Supply circuit and the (B6) Right Front Wheel Speed Sensor Signal circuit at the ABS Module harness connector.

Is the resistance below 5.0 Ohms?

Yes

- Repair (B7) Right Front Wheel Speed Sensor Supply circuit for a short to the (B6) Right Front Wheel Speed Sensor Signal circuit.
- Perform the ABS VERIFICATION TEST. (Refer to 28 - DTC-Based Diagnostics/MODULE, Antilock Brake (ABS) - Standard Procedure).

No

- Replace the Anti-Lock Brakes Module in accordance with the Service Information.
- Perform the ABS VERIFICATION TEST. (Refer to 28 - DTC-Based Diagnostics/MODULE, Antilock Brake (ABS) - Standard Procedure).

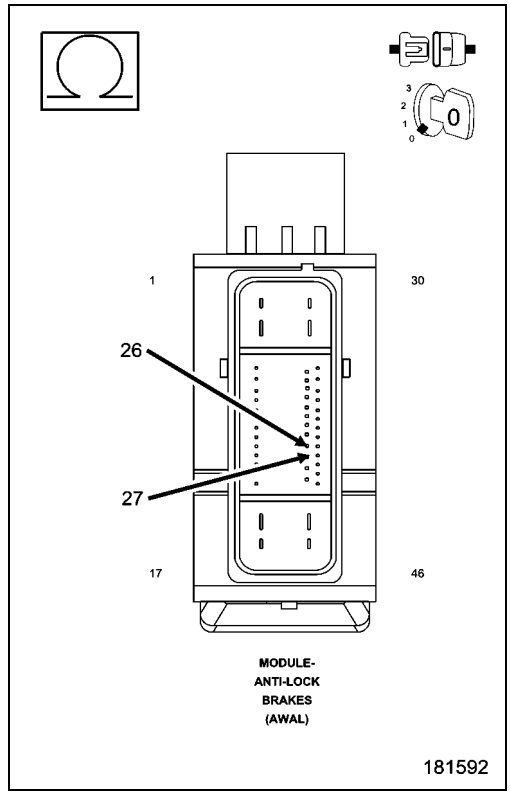

C101F-RIGHT FRONT WHEEL SPEED COMPARATIVE PERFORMANCE

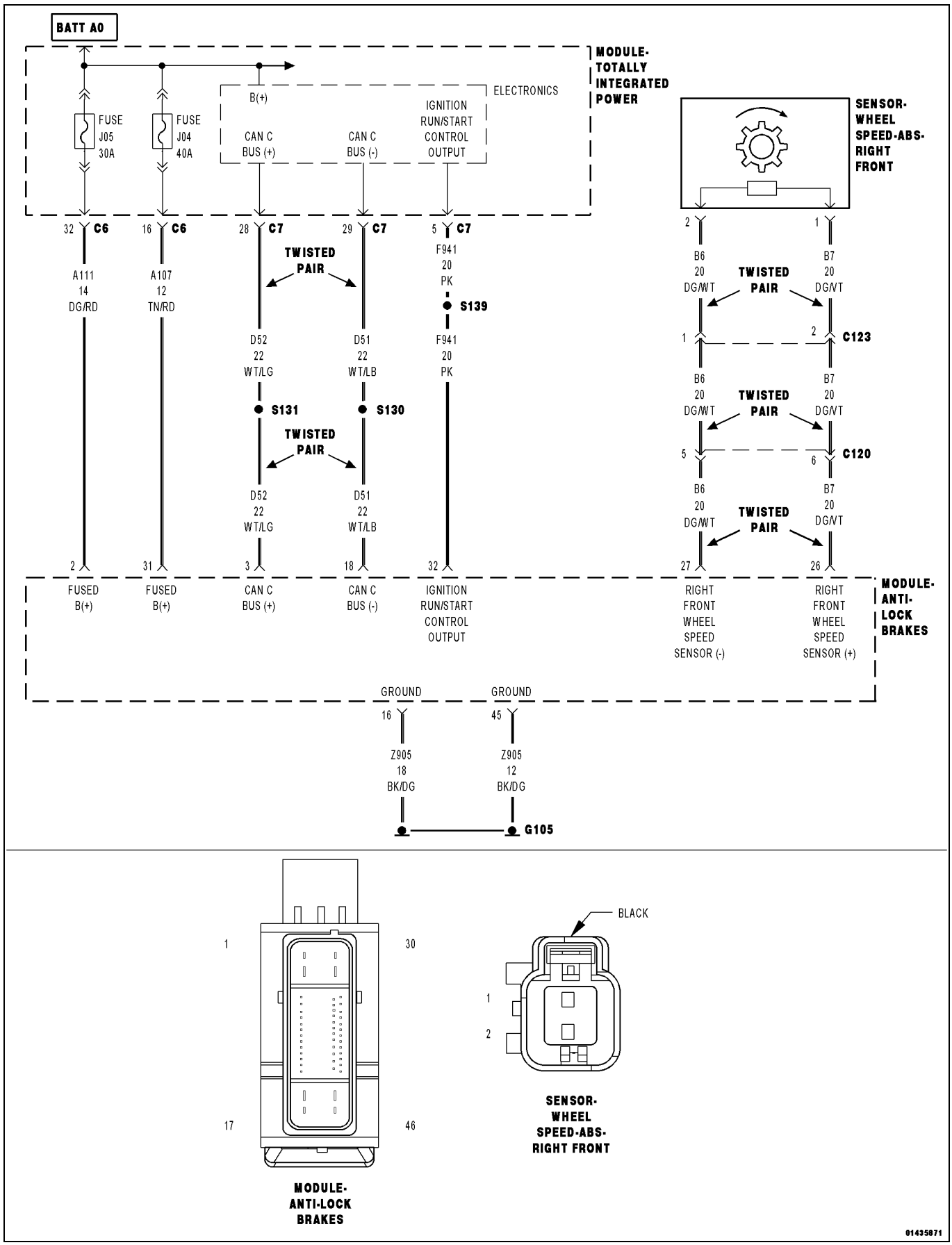

For a complete wiring diagram, **refer to the Wiring Information**.

NOTE: The Electronic Stability Control (ESC) may also be referred to as Electronic Stability Program (ESP) depending on the vehicle model year and configuration. Certain components may also reference ESP, ESC, or use the traction control symbol.

- **When Monitored:**

  With the ignition on, no system under voltage or over voltage condition present, no open or shorted wheel speed sensor DTCs set, vehicle not under high acceleration, and vehicle speed greater than 0.

- **Set Condition:**

  This DTC will set if either one wheel is sensed above a predetermined range for 5000 msec while the other wheels are below 20% of maximum velocity of all wheels OR if more than one wheel is sensed at below 20% of maximum velocity of all wheels while at least one wheel is sensed above a predetermined range. The condition must exist for two minutes for this DTC to set.

  If the number of missing sensors changes at any update, the fault monitor is reset.

Possible Causes
(B7) RIGHT FRONT WHEEL SPEED SENSOR SUPPLY CIRCUIT SHORT TO GROUND
(B6) RIGHT FRONT WHEEL SPEED SENSOR SIGNAL CIRCUIT SHORT TO GROUND
(B7) RIGHT FRONT WHEEL SPEED SENSOR SUPPLY CIRCUIT OPEN
(B6) RIGHT FRONT WHEEL SPEED SENSOR SIGNAL CIRCUIT OPEN
(B7) RIGHT FRONT WHEEL SPEED SENSOR SUPPLY CIRCUIT SHORTED TO VOLTAGE
(B6) RIGHT FRONT WHEEL SPEED SENSOR SIGNAL CIRCUIT SHORTED TO VOLTAGE
(B7) RIGHT FRONT WHEEL SPEED SENSOR SUPPLY CIRCUIT SHORTED TO THE (B6) RIGHT FRONT WHEEL SPEED SENSOR SIGNAL CIRCUIT
TONE WHEEL
EXCESSIVE RIGHT FRONT WHEEL SPEED SENSOR AIR GAP
WHEEL BEARING
RIGHT FRONT WHEEL SPEED SENSOR (WSS)
ANTI-LOCK BRAKE SYSTEM (ABS) MODULE

1. DTC IS ACTIVE

1. Ignition on, engine not running.
2. With the scan tool, erase DTCs.
3. Turn the ignition off to the lock position.
4. Ignition on, engine not running.
5. With the scan tool, select View DTCs.

Is the status Active for this DTC?

Yes

- Go To 2

No

- The condition that caused the symptom is currently not present. Inspect the related wiring for a possible intermittent condition. Look for any chafed, pierced, pinched, or partially broken wires.
- Perform the ABS-INTERMITTENT CONDITION TEST. (Refer to 28 - DTC-Based Diagnostics/MODULE, Antilock Brake (ABS) - Standard Procedure).

2. WHEEL SPEED SENSOR INSPECTION

1. Turn the ignition off to the lock position.
2. Inspect the Wheel Speed Sensor for proper mounting.
3. Inspect the Wheel Speed Sensor harness and connector.
4. Inspect the Wheel Speed Sensor for excessive debris on the sensor.

Were any problems found?

Yes

- Repair as necessary in accordance with the Service Information.
- Perform the ABS VERIFICATION TEST. (Refer to 28 - DTC-Based Diagnostics/MODULE, Antilock Brake (ABS) - Standard Procedure).

No

- Go To 3

3. TONE WHEEL DAMAGED/MISSING

1. Inspect the Tone Wheel in accordance with the Service Information.

NOTE: The Tone Wheel Teeth should be perfectly square, not bent or nicked.

Were any problems found?

Yes

- Replace the Tone Wheel in accordance with the Service Information.
- Perform the ABS VERIFICATION TEST. (Refer to 28 - DTC-Based Diagnostics/MODULE, Antilock Brake (ABS) - Standard Procedure).

No

- Go To 4

4. EXCESSIVE WHEEL SPEED SENSOR AIR GAP

1. Measure the Wheel Speed Sensor Air Gap in accordance with the Service Information.

Were any problems found?

Yes

- Repair as necessary in accordance with the Service Information.
- Perform the ABS VERIFICATION TEST. (Refer to 28 - DTC-Based Diagnostics/MODULE, Antilock Brake (ABS) - Standard Procedure).

No

- Go To 5

5. WHEEL BEARING LOOSE/BINDING

1. Inspect the wheel bearings for excessive run out or improper clearance in accordance with the Service Information.

Were any problems found?

Yes

- Repair as necessary in accordance with the Service Information.
- Perform the ABS VERIFICATION TEST. (Refer to 28 - DTC-Based Diagnostics/MODULE, Antilock Brake (ABS) - Standard Procedure).

No

- Go To 6

6. CHECK (B7) RIGHT FRONT WHEEL SPEED SENSOR SUPPLY CIRCUIT VOLTAGE

1. Disconnect the Right Front Wheel Speed Sensor harness connector.
2. Turn the ignition on.
3. Measure the voltage between the (B7) Right Front Wheel Speed Sensor Supply circuit and ground.

Is the voltage above 10 volts?

Yes

- Go To 7

No

- Go To 9

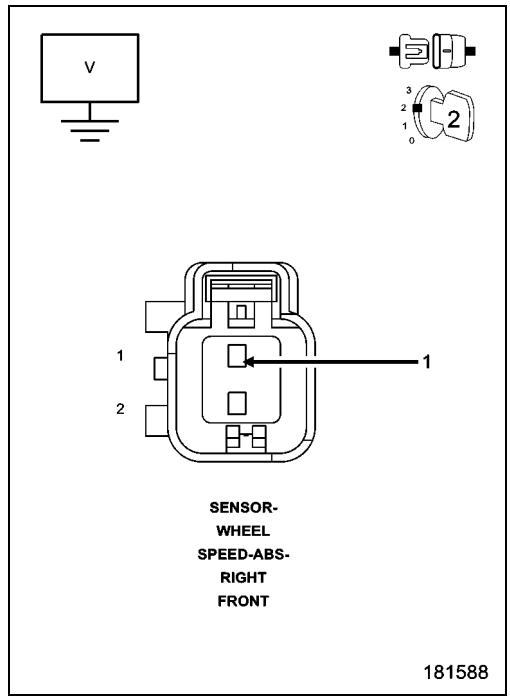

7. (B7) RIGHT FRONT WHEEL SPEED SENSOR SUPPLY CIRCUIT SHORTED TO VOLTAGE

1. Turn the ignition off to the lock position.
2. Disconnect the ABS Module harness connector.
3. Ignition on, engine not running.
4. Measure the voltage of the (B7) Right Front Wheel Speed Sensor Supply circuit at the Right Front Wheel Speed Sensor harness connector.

Is there any voltage present?

Yes

- Repair (B7) Right Front Wheel Speed Sensor Supply circuit for a short to voltage.
- Perform the ABS VERIFICATION TEST. (Refer to 28 - DTC-Based Diagnostics/MODULE, Antilock Brake (ABS) - Standard Procedure).

No

- Go To 8

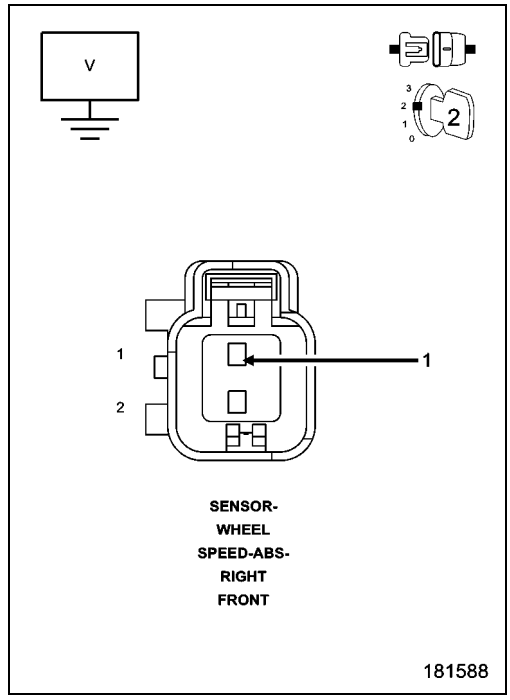

8. (B6) RIGHT FRONT WHEEL SPEED SENSOR SIGNAL CIRCUIT SHORTED TO GROUND

1. Turn the ignition off.
2. Measure the resistance between the (B6) Right Front Wheel Speed Sensor Signal circuit and ground.

Is the resistance above 5.0 Ohms?

Yes

- Replace the Right Front Wheel Speed Sensor in accordance with the Service Information.
- Perform the ABS VERIFICATION TEST. (Refer to 28 - DTC-Based Diagnostics/MODULE, Antilock Brake (ABS) - Standard Procedure).

No

- Repair the (B6) Right Front Wheel Speed Sensor Signal circuit for a short to ground.
- Perform the ABS VERIFICATION TEST. (Refer to 28 - DTC-Based Diagnostics/MODULE, Antilock Brake (ABS) - Standard Procedure).

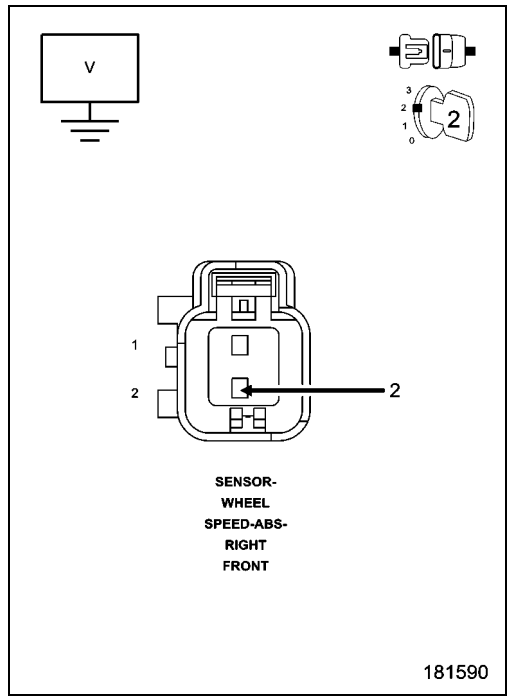

9. (B7) RIGHT FRONT WHEEL SPEED SENSOR SUPPLY CIRCUIT SHORTED TO GROUND

1. Turn the ignition off to the lock position.
2. Disconnect the ABS Module harness connector.
3. Measure the resistance between the (B7) Right Front Wheel Speed Sensor Supply circuit and ground.

Is the resistance above 5.0 Ohms?

Yes

- Go To 10

No

- Repair the (B7) Right Front Wheel Speed Sensor Supply circuit for a short to ground.
- Perform the ABS VERIFICATION TEST. (Refer to 28 - DTC-Based Diagnostics/MODULE, Antilock Brake (ABS) - Standard Procedure).

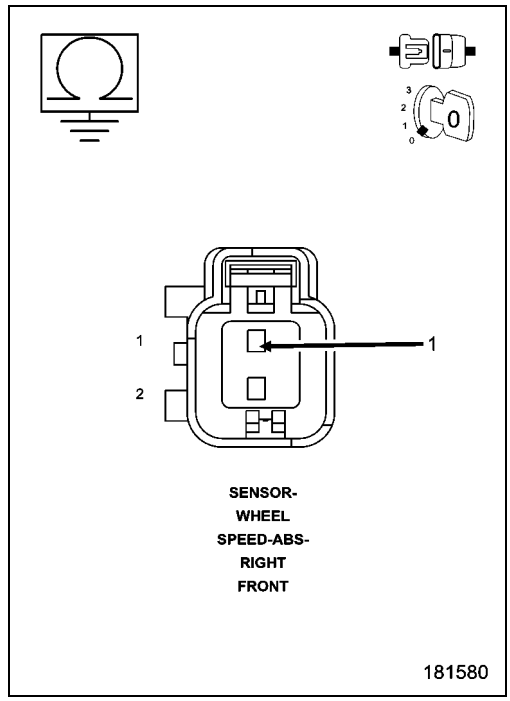

10. (B7) RIGHT FRONT WHEEL SPEED SENSOR SUPPLY CIRCUIT OPEN

1. Measure the resistance of the (B7) Right Front Wheel Speed Sensor Supply circuit between the ABS harness connector and the Right Front Wheel Speed Sensor harness connector.

Is the resistance below 5 Ohms?

Yes

- Go To 11

No

- Repair the open (B7) Right Front Wheel Speed Sensor Supply circuit.
- Perform the ABS VERIFICATION TEST. (Refer to 28 - DTC-Based Diagnostics/MODULE, Antilock Brake (ABS) - Standard Procedure).

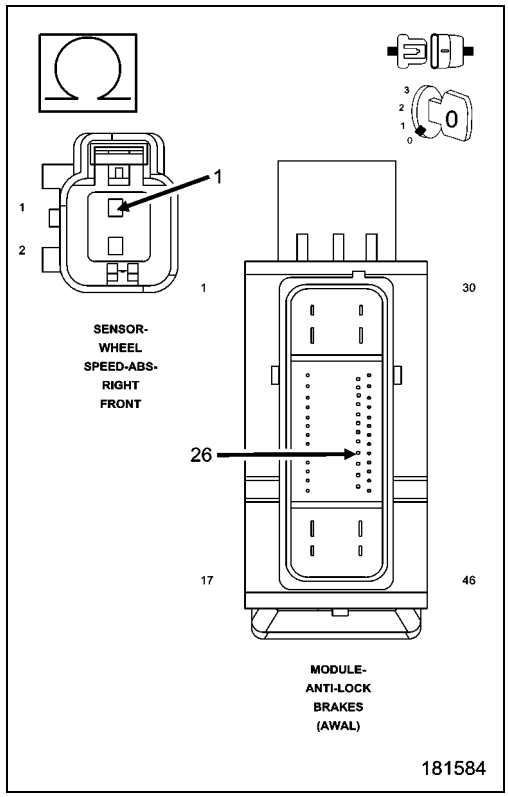

11. (B6) RIGHT FRONT WHEEL SPEED SENSOR SIGNAL CIRCUIT OPEN

1. Measure the resistance of the (B6) Right Front Wheel Speed Sensor Signal circuit between the ABS harness connector and the Right Front Wheel Speed Sensor harness connector.

Is the resistance below 5 Ohms?

Yes

- Go To 12

No

- Repair the open (B6) Right Front Wheel Speed Sensor Signal circuit.
- Perform the ABS VERIFICATION TEST. (Refer to 28 - DTC-Based Diagnostics/MODULE, Antilock Brake (ABS) - Standard Procedure).

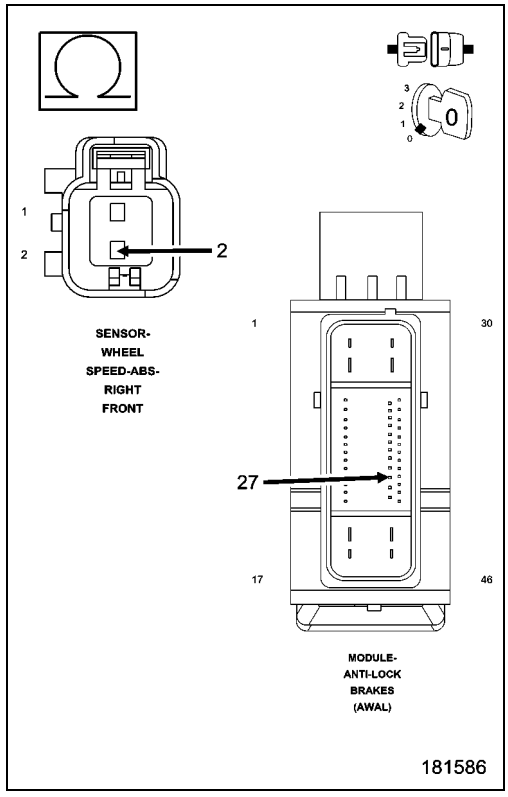

12. (B6) RIGHT FRONT WHEEL SPEED SENSOR SIGNAL CIRCUIT SHORTED TO VOLTAGE

1. Turn the ignition on.
2. Measure the voltage of the (B6) Right Front Wheel Speed Sensor Signal circuit at the Right Front Wheel Speed Sensor harness connector.

Is there any voltage present?

Yes

- Repair the (B6) Right Front Wheel Speed Sensor Signal circuit for a short to voltage.
- Perform the ABS VERIFICATION TEST. (Refer to 28 - DTC-Based Diagnostics/MODULE, Antilock Brake (ABS) - Standard Procedure).

No

- Go To 13

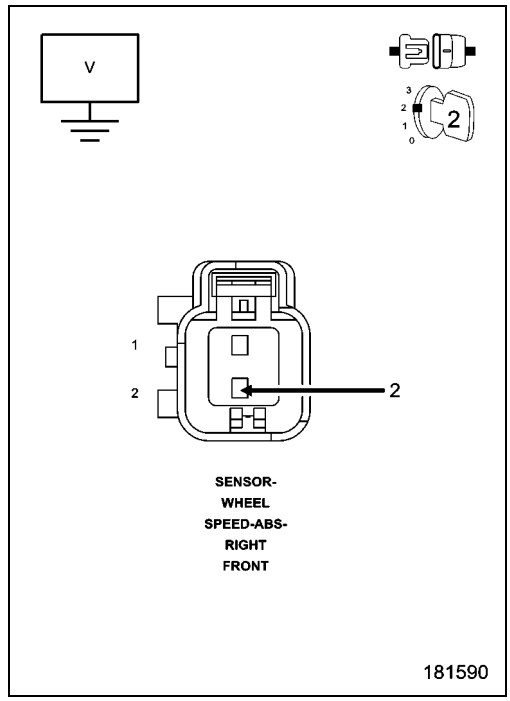

13. (B7) RIGHT FRONT WHEEL SPEED SENSOR SUPPLY CIRCUIT SHORTED TO THE (B6) RIGHT FRONT WHEEL SPEED SENSOR SIGNAL CIRCUIT

1. Turn the ignition off to the lock position.
2. Measure the resistance between the (B7) Right Front Wheel Speed Sensor Supply circuit and the (B6) Right Front Wheel Speed Sensor Signal circuit at the ABS Module harness connector.

Is the resistance below 5.0 Ohms?

Yes

- Repair (B7) Right Front Wheel Speed Sensor Supply circuit for a short to the (B6) Right Front Wheel Speed Sensor Signal circuit.
- Perform the ABS VERIFICATION TEST. (Refer to 28 - DTC-Based Diagnostics/MODULE, Antilock Brake (ABS) - Standard Procedure).

No

- Replace the Anti-Lock Brakes Module in accordance with the Service Information.
- Perform the ABS VERIFICATION TEST. (Refer to 28 - DTC-Based Diagnostics/MODULE, Antilock Brake (ABS) - Standard Procedure).

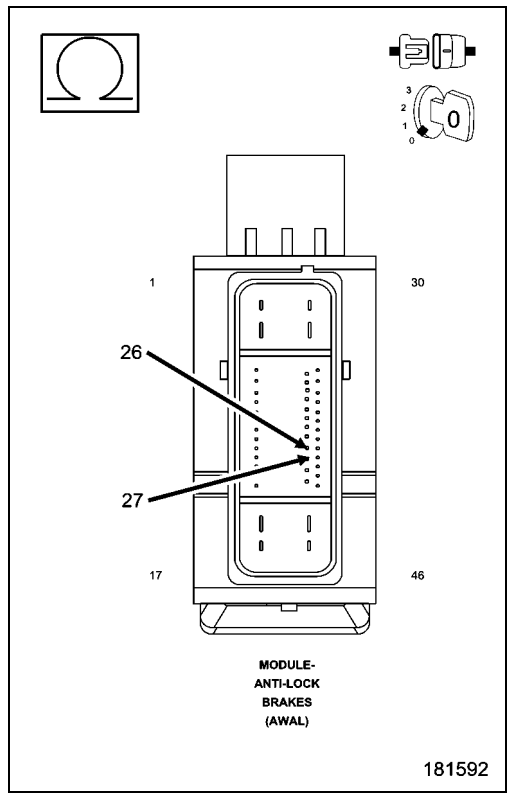

C1020-LEFT REAR WHEEL SPEED SENSOR CIRCUIT

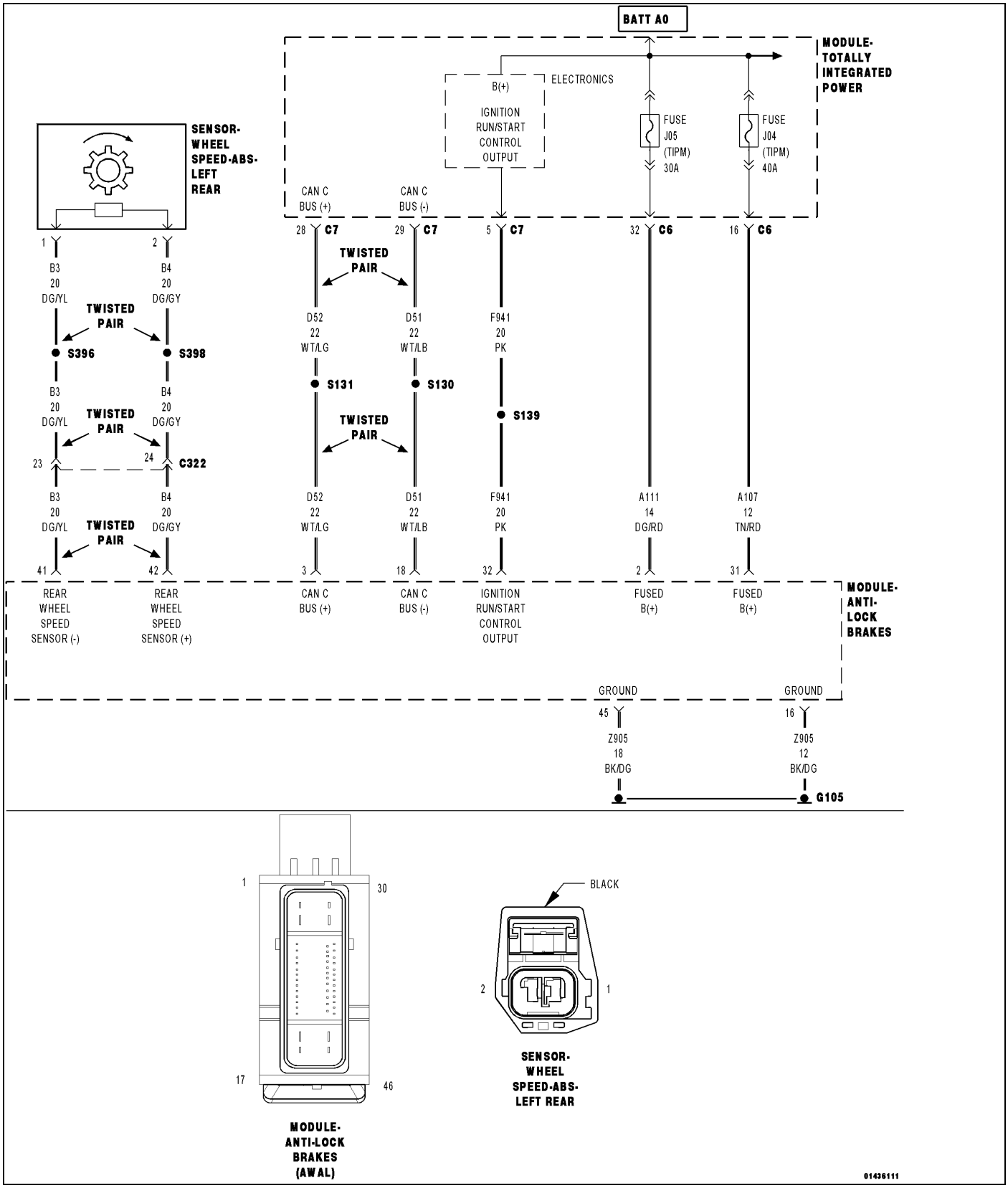

For a complete wiring diagram, **refer to the Wiring Information**.

NOTE: The Electronic Stability Control (ESC) may also be referred to as Electronic Stability Program (ESP) depending on the vehicle model year and configuration. Certain components may also reference ESP, ESC, or use the traction control symbol.

- **When Monitored:**
  With the ignition on and no system under voltage or over voltage condition present.
- **Set Condition:**
  If the measured wheel speed sensor feedback voltage is less than .304 of a volt, the sensor is considered open.
  If the measured wheel speed sensor feedback voltage is greater than 1.39 volts, or if a sensor over current condition is detected, the sensor is considered shorted.
  If a shorted or open condition is present for more than 100 msec, the DTC will set.

Possible Causes
(B4) LEFT REAR WHEEL SPEED SENSOR SUPPLY CIRCUIT SHORTED TO GROUND
(B3) LEFT REAR WHEEL SPEED SENSOR SIGNAL CIRCUIT SHORTED TO GROUND
(B4) LEFT REAR WHEEL SPEED SENSOR SUPPLY CIRCUIT OPEN
(B3) LEFT REAR WHEEL SPEED SENSOR SIGNAL CIRCUIT OPEN
(B4) LEFT REAR WHEEL SPEED SENSOR SUPPLY CIRCUIT SHORTED TO VOLTAGE
(B3) LEFT REAR WHEEL SPEED SENSOR SIGNAL CIRCUIT SHORTED TO VOLTAGE
(B4) LEFT REAR WHEEL SPEED SENSOR SUPPLY CIRCUIT SHORTED TO THE (B3) LEFT REAR WHEEL SPEED SENSOR SIGNAL CIRCUIT
LEFT REAR WHEEL SPEED SENSOR (WSS)
ANTI-LOCK BRAKE SYSTEM (ABS) MODULE

1. DTC IS ACTIVE

1. Ignition on, engine not running.
2. With the scan tool, erase DTCs.
3. Turn the ignition off to the lock position.
4. Ignition on, engine not running.
5. With the scan tool, read DTCs.

Is the status Active for this DTC?

Yes

- Go To 2

No

- The condition that caused the symptom is currently not present. Inspect the related wiring for a possible intermittent condition. Look for any chafed, pierced, pinched, or partially broken wires.
- Perform the ABS INTERMITTENT CONDITION TEST. (Refer to 28 - DTC-Based Diagnostics/MODULE, Antilock Brake (ABS) - Standard Procedure).

2. WHEEL SPEED SENSOR INSPECTION

1. Turn the ignition off to the lock position.
2. Inspect the Wheel Speed Sensor for proper mounting.
3. Inspect the Wheel Speed Sensor harness and connector.
4. Inspect the Wheel Speed Sensor for excessive debris on the sensor.

Were any problems found?

Yes

- Repair as necessary in accordance with the Service Information.
- Perform the ABS VERIFICATION TEST. (Refer to 28 - DTC-Based Diagnostics/MODULE, Antilock Brake (ABS) - Standard Procedure).

No

- Go To 3

3. CHECK (B4) LEFT REAR WHEEL SPEED SENSOR SUPPLY CIRCUIT VOLTAGE

1. Disconnect the Left Rear Wheel Speed Sensor harness connector.
2. Turn the ignition on.
3. Measure the voltage between the (B4) Left Rear Wheel Speed Sensor Supply circuit and ground.

Is the voltage above 10 volts?

Yes

- Go To 4

No

- Go To 6

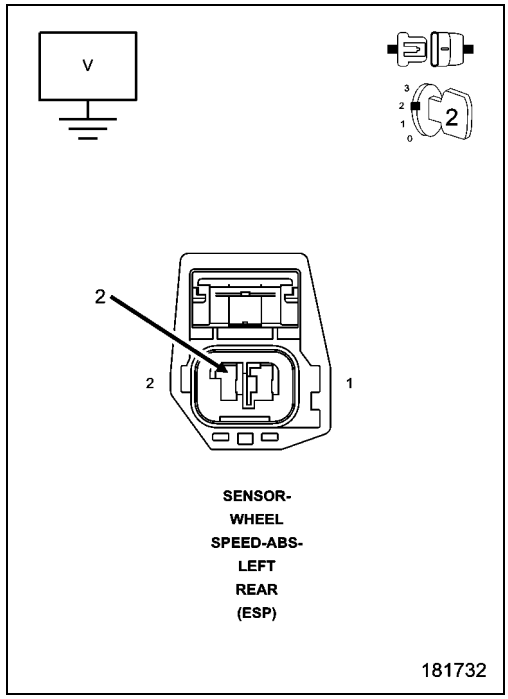

4. (B4) LEFT REAR WHEEL SPEED SENSOR SUPPLY CIRCUIT SHORTED TO VOLTAGE

1. Turn the ignition off to the lock position.
2. Disconnect the ABS Module harness connector.
3. Ignition on, engine not running.
4. Measure the voltage of the (B4) Left Rear Wheel Speed Sensor Supply circuit.

Is there any voltage present?

Yes

- Repair (B4) Left Rear Wheel Speed Sensor Supply circuit for a short to voltage.
- Perform the ABS VERIFICATION TEST. (Refer to 28 - DTC-Based Diagnostics/MODULE, Antilock Brake (ABS) - Standard Procedure).

No

- Go To 5

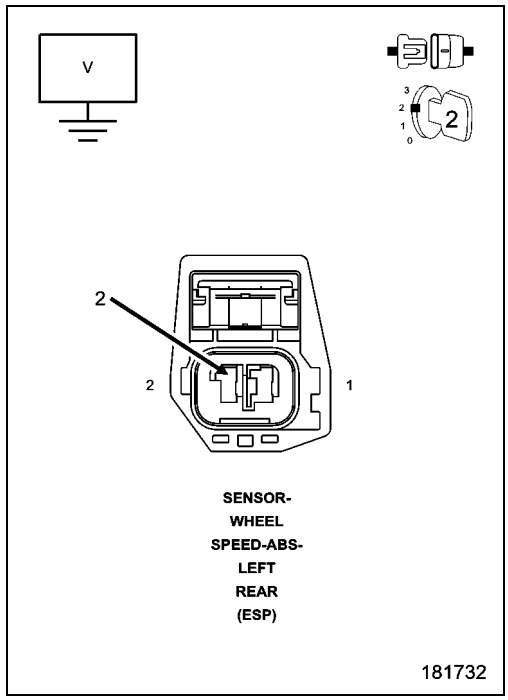

5. (B3) LEFT REAR WHEEL SPEED SENSOR SIGNAL CIRCUIT SHORTED TO GROUND

1. Turn the ignition off.
2. Measure the resistance between the (B3) Left Rear Wheel Speed Sensor Signal circuit and ground.

Is the resistance above 5.0 Ohms?

Yes

- Replace the Left Rear Wheel Speed Sensor in accordance with the Service Information.
- Perform ABS VERIFICATION TEST. (Refer to 28 - DTC-Based Diagnostics/MODULE, Antilock Brake (ABS) - Standard Procedure)

No

- Repair the (B3) Left Rear Wheel Speed Sensor Signal circuit for a short to ground.
- Perform ABS VERIFICATION TEST. (Refer to 28 - DTC-Based Diagnostics/MODULE, Antilock Brake (ABS) - Standard Procedure)

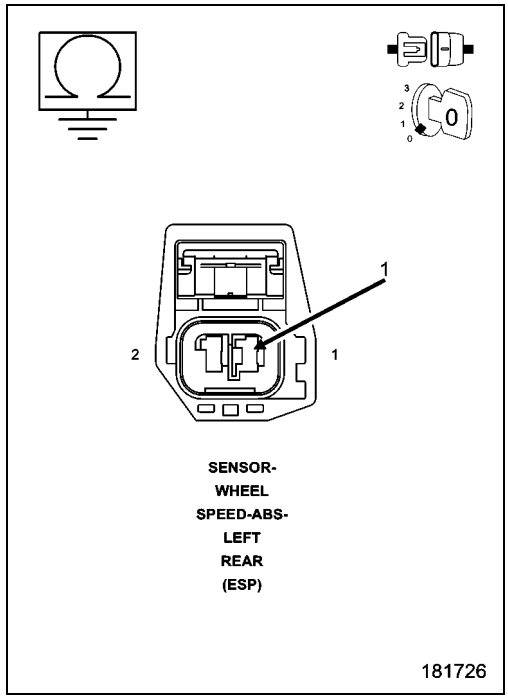

6. (B4) LEFT REAR WHEEL SPEED SENSOR SUPPLY CIRCUIT SHORTED TO GROUND

1. Turn the ignition off to the lock position.
2. Disconnect the ABS Module harness connector.
3. Measure the resistance between the (B4) Left Rear Wheel Speed Sensor Supply circuit and ground.

Is the resistance above 5.0 Ohms?

Yes

- Go To 7

No

- Repair the (B4) Left Rear Wheel Speed Sensor Supply circuit for a short to ground.
- Perform the ABS VERIFICATION TEST. (Refer to 28 - DTC-Based Diagnostics/MODULE, Antilock Brake (ABS) - Standard Procedure).

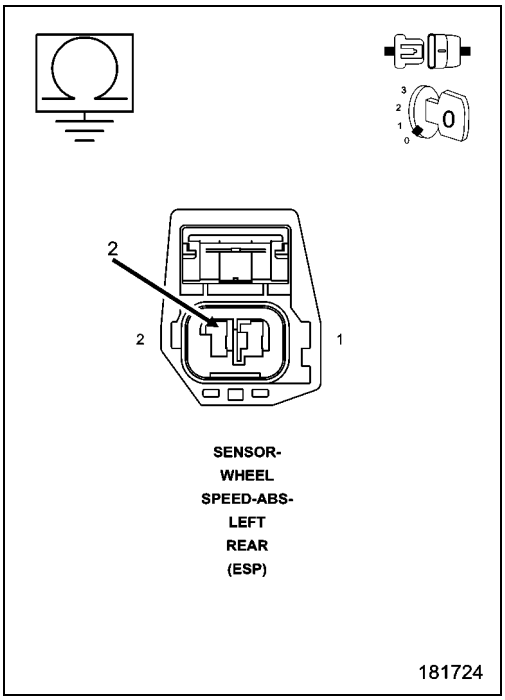

7. (B4) LEFT REAR WHEEL SPEED SENSOR SUPPLY CIRCUIT OPEN

1. Measure the resistance of the (B4) Left Rear Wheel Speed Sensor Supply circuit between the ABS harness connector and the Left Rear Wheel Speed Sensor harness connector.

Is the resistance below 5 Ohms?

Yes

- Go To 8

No

- Repair the open (B4) Left Rear Wheel Speed Sensor Supply circuit.
- Perform the ABS VERIFICATION TEST. (Refer to 28 - DTC-Based Diagnostics/MODULE, Antilock Brake (ABS) - Standard Procedure).

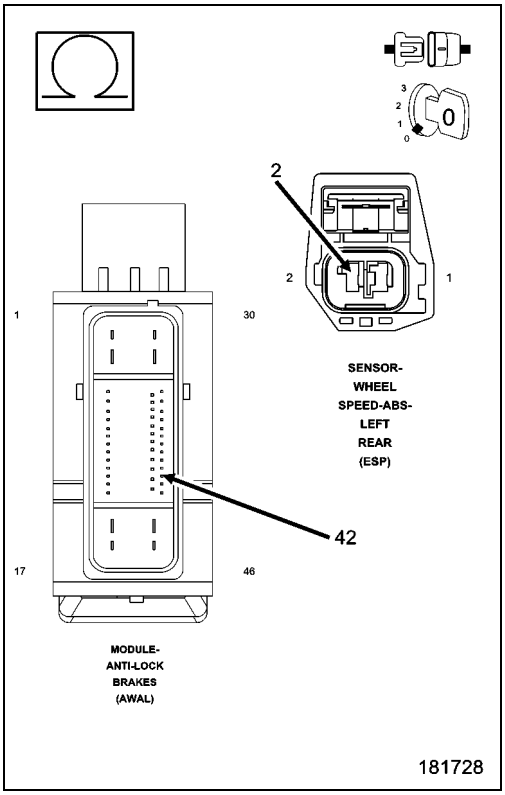

8. (B3) LEFT REAR WHEEL SPEED SENSOR SIGNAL CIRCUIT OPEN

1. Measure the resistance of the (B3) Left Rear Wheel Speed Sensor Signal circuit between the ABS harness connector and the Left Rear Wheel Speed Sensor harness connector.

Is the resistance below 5 Ohms?

Yes

- Go To 9

No

- Repair the open (B3) Left Rear Wheel Speed Sensor Signal circuit.
- Perform the ABS VERIFICATION TEST. (Refer to 28 - DTC-Based Diagnostics/MODULE, Antilock Brake (ABS) - Standard Procedure).

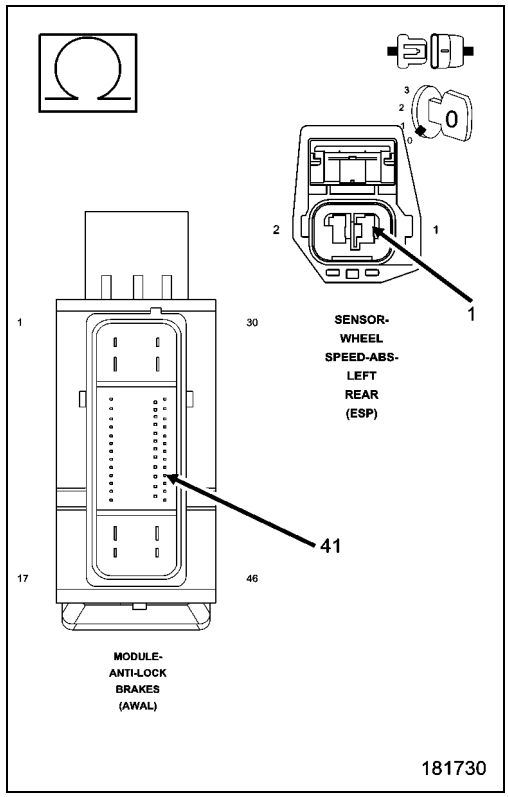

9. (B3) LEFT REAR WHEEL SPEED SENSOR SIGNAL CIRCUIT SHORTED TO VOLTAGE

1. Turn the ignition on.
2. Measure the voltage of the (B3) Left Rear Wheel Speed Sensor Signal circuit at the Left Rear Wheel Speed Sensor harness connector.

Is there any voltage present?

Yes

- Repair the (B3) Left Rear Wheel Speed Sensor Signal circuit for a short to voltage.
- Perform the ABS VERIFICATION TEST. (Refer to 28 - DTC-Based Diagnostics/MODULE, Antilock Brake (ABS) - Standard Procedure).

No

- Go To 10

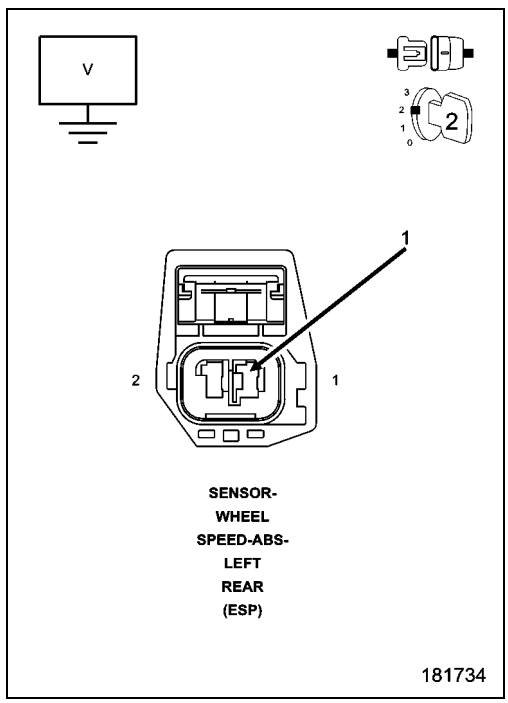

10. (B4) LEFT REAR WHEEL SPEED SENSOR SUPPLY CIRCUIT SHORTED TO THE (B3) LEFT REAR WHEEL SPEED SENSOR SIGNAL CIRCUIT

1. Turn the ignition off to the lock position.
2. Measure the resistance between the (B4) Left Rear Wheel Speed Sensor Supply circuit and the (B3) Left Rear Wheel Speed Sensor Signal circuit at the ABS Module harness connector.

Is the resistance below 5.0 Ohms?

Yes

- Repair (B4) Left Rear Wheel Speed Sensor Supply circuit for a short to the (B3) Left Rear Wheel Speed Sensor Signal circuit.
- Perform the ABS VERIFICATION TEST. (Refer to 28 - DTC-Based Diagnostics/MODULE, Antilock Brake (ABS) - Standard Procedure).

No

- Replace the Anti-Lock Brakes Module in accordance with the Service Information.
- Perform the ABS VERIFICATION TEST. (Refer to 28 - DTC-Based Diagnostics/MODULE, Antilock Brake (ABS) - Standard Procedure).

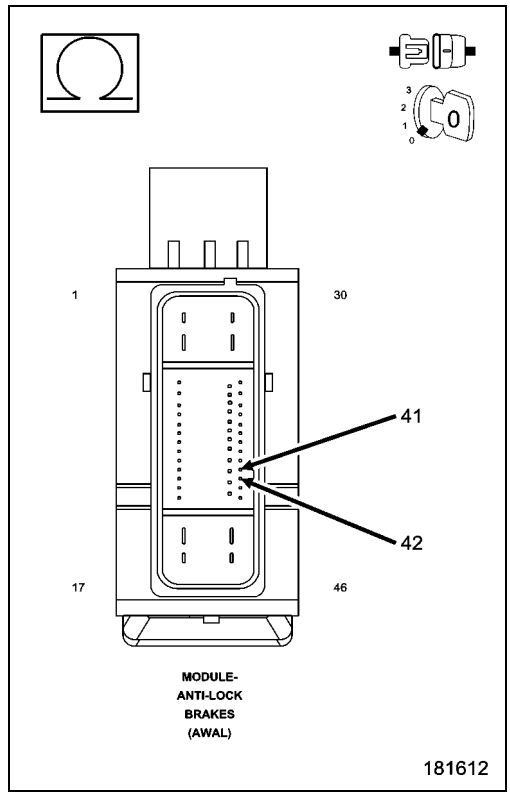

C1027-LEFT REAR WHEEL SPEED SENSOR SIGNAL ERRATIC PERFORMANCE

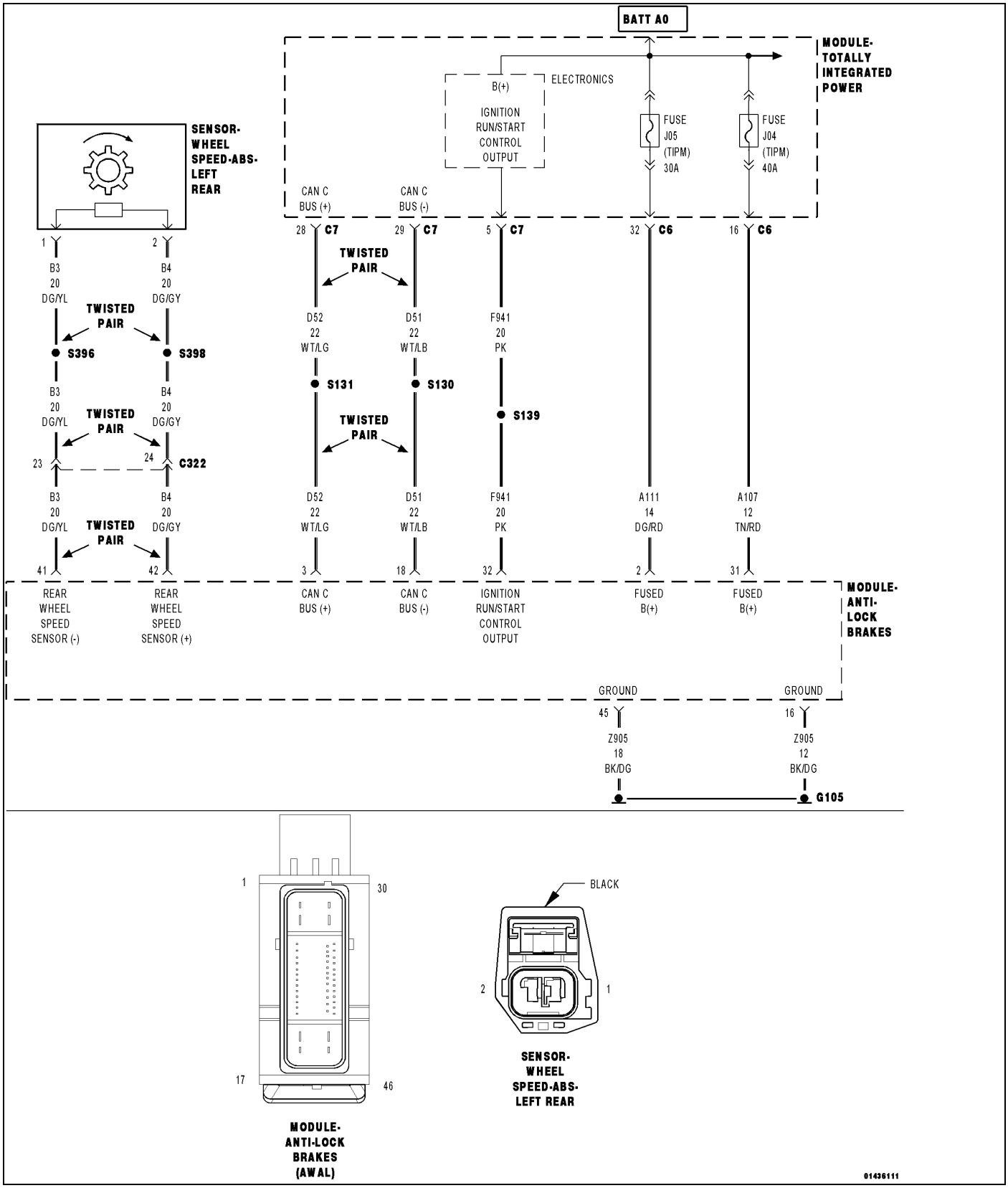

For a complete wiring diagram, **refer to the Wiring Information**.

NOTE: The Electronic Stability Control (ESC) may also be referred to as Electronic Stability Program (ESP) depending on the vehicle model year and configuration. Certain components may also reference ESP, ESC, or use the traction control symbol.

- **When Monitored:**
  With the ignition on.
- **Set Condition:**
  When the Left Rear WSS Signal is intermittently missing a vehicle speed above 40 km/h (25 mph) or erratic wheel speed signal during acceleration or sensed wheel speed is different from other wheels.

Possible Causes
(B4) LEFT REAR WHEEL SPEED SENSOR SUPPLY CIRCUIT SHORT TO GROUND
(B3) LEFT REAR WHEEL SPEED SENSOR SIGNAL CIRCUIT SHORT TO GROUND
(B4) LEFT REAR WHEEL SPEED SENSOR SUPPLY CIRCUIT OPEN
(B3) LEFT REAR WHEEL SPEED SENSOR SIGNAL CIRCUIT OPEN
(B4) LEFT REAR WHEEL SPEED SENSOR SUPPLY CIRCUIT SHORTED TO VOLTAGE
(B3) LEFT REAR WHEEL SPEED SENSOR SIGNAL CIRCUIT SHORTED TO VOLTAGE
(B4) LEFT REAR WHEEL SPEED SENSOR SUPPLY CIRCUIT SHORTED TO THE (B3) LEFT REAR WHEEL SPEED SENSOR SIGNAL CIRCUIT
TONE WHEEL
EXCESSIVE REAR WHEEL SPEED SENSOR AIR GAP
WHEEL BEARING
LEFT REAR WHEEL SPEED SENSOR (WSS)
ANTI-LOCK BRAKE SYSTEM (ABS) MODULE

1. DTC IS ACTIVE

1. Ignition on, engine not running.
2. With the scan tool, erase DTCs.
3. Turn the ignition off to the lock position.
4. Ignition on, engine not running.
5. With the scan tool, read DTCs.

Is the status Active for this DTC?

Yes

- Go To 2

No

- The condition that caused the symptom is currently not present. Inspect the related wiring for a possible intermittent condition. Look for any chafed, pierced, pinched, or partially broken wires.
- Perform the ABS INTERMITTENT CONDITION TEST. (Refer to 28 - DTC-Based Diagnostics/MODULE, Antilock Brake (ABS) - Standard Procedure).

2. WHEEL SPEED SENSOR INSPECTION

1. Turn the ignition off to the lock position.
2. Inspect the Wheel Speed Sensor for proper mounting.
3. Inspect the Wheel Speed Sensor harness and connector.
4. Inspect the Wheel Speed Sensor for excessive debris on the sensor.

Were any problems found?

Yes

- Repair as necessary in accordance with the Service Information.
- Perform the ABS VERIFICATION TEST. (Refer to 28 - DTC-Based Diagnostics/MODULE, Antilock Brake (ABS) - Standard Procedure).

No

- Go To 3

3. TONE WHEEL DAMAGED/MISSING

1. Inspect the Tone Wheel in accordance with the Service Information.

NOTE: The Tone Wheel Teeth should be perfectly square, not bent or nicked.

Were any problems found?

Yes

- Replace the Tone Wheel in accordance with the Service Information.
- Perform the ABS VERIFICATION TEST. (Refer to 28 - DTC-Based Diagnostics/MODULE, Antilock Brake (ABS) - Standard Procedure).

No

- Go To 4

4. EXCESSIVE WHEEL SPEED SENSOR AIR GAP

1. Measure the Wheel Speed Sensor Air Gap in accordance with the Service Information.

Were any problems found?

Yes

- Repair as necessary in accordance with the Service Information.
- Perform the ABS VERIFICATION TEST. (Refer to 28 - DTC-Based Diagnostics/MODULE, Antilock Brake (ABS) - Standard Procedure).

No

- Go To 5

5. WHEEL BEARING LOOSE/BINDING

1. Inspect the wheel bearings for excessive run out or improper clearance in accordance with the Service Information.

Were any problems found?

Yes

- Repair as necessary in accordance with the Service Information.
- Perform the ABS VERIFICATION TEST. (Refer to 28 - DTC-Based Diagnostics/MODULE, Antilock Brake (ABS) - Standard Procedure).

No

- Go To 6

6. CHECK (B4) LEFT REAR WHEEL SPEED SENSOR SUPPLY CIRCUIT VOLTAGE

1. Disconnect the Left Rear Wheel Speed Sensor harness connector.
2. Turn the ignition on.
3. Measure the voltage between the (B4) Left Rear Wheel Speed Sensor Supply circuit and ground.

Is the voltage above 10 volts?

Yes

- Go To 7

No

- Go To 9

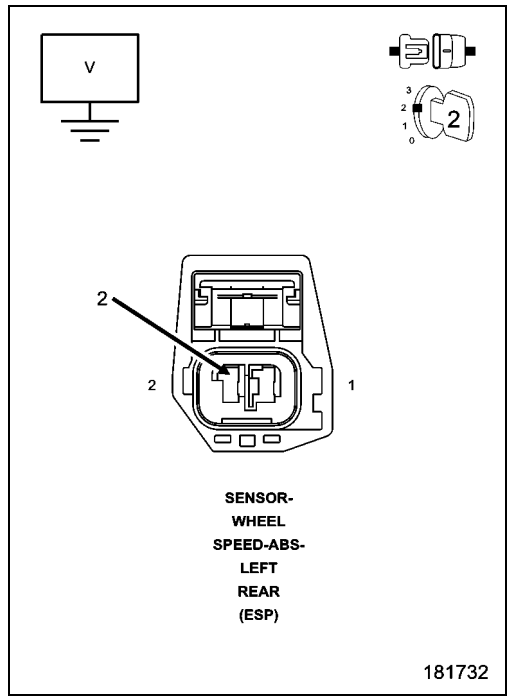

7. (B4) LEFT REAR WHEEL SPEED SENSOR SUPPLY CIRCUIT SHORTED TO VOLTAGE

1. Turn the ignition off to the lock position.
2. Disconnect the ABS Module harness connector.
3. Ignition on, engine not running.
4. Measure the voltage of the (B4) Left Rear Wheel Speed Sensor Supply circuit.

Is there any voltage present?

Yes

- Repair (B4) Left Rear Wheel Speed Sensor Supply circuit for a short to voltage.
- Perform the ABS VERIFICATION TEST. (Refer to 28 - DTC-Based Diagnostics/MODULE, Antilock Brake (ABS) - Standard Procedure).

No

- Go To 8

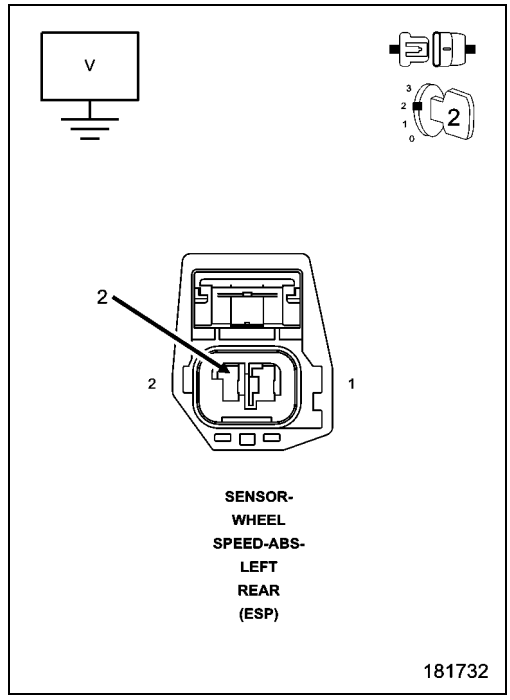

8. (B3) LEFT REAR WHEEL SPEED SENSOR SIGNAL CIRCUIT SHORTED TO GROUND

1. Turn the ignition off.
2. Measure the resistance between the (B3) Left Rear Wheel Speed Sensor Signal circuit and ground.

Is the resistance above 5.0 Ohms?

Yes

- Replace the Left Rear Wheel Speed Sensor in accordance with the Service Information.
- Perform ABS VERIFICATION TEST. (Refer to 28 - DTC-Based Diagnostics/MODULE, Antilock Brake (ABS) - Standard Procedure).

No

- Repair the (B3) Left Rear Wheel Speed Sensor Signal circuit for a short to ground.
- Perform ABS VERIFICATION TEST. (Refer to 28 - DTC-Based Diagnostics/MODULE, Antilock Brake (ABS) - Standard Procedure).

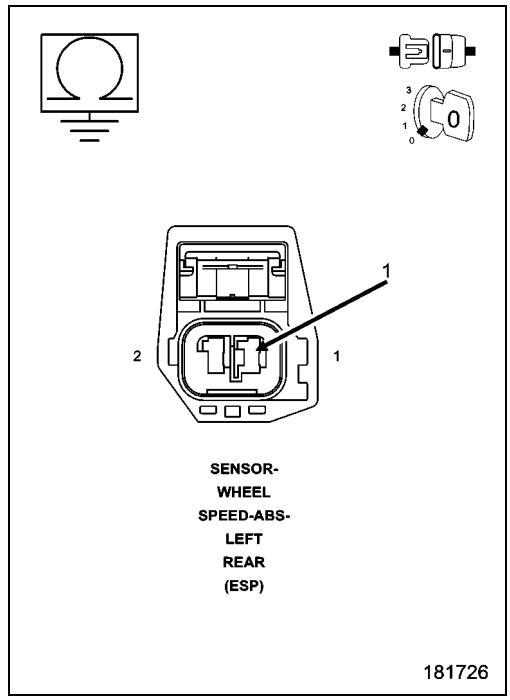

9. (B4) LEFT REAR WHEEL SPEED SENSOR SUPPLY CIRCUIT SHORTED TO GROUND

1. Turn the ignition off to the lock position.
2. Disconnect the ABS Module harness connector.
3. Measure the resistance between the (B4) Left Rear Wheel Speed Sensor Supply circuit and ground.

Is the resistance above 5.0 Ohms?

Yes

- Go To 10

No

- Repair the (B4) Left Rear Wheel Speed Sensor Supply circuit for a short to ground.
- Perform the ABS VERIFICATION TEST. (Refer to 28 - DTC-Based Diagnostics/MODULE, Antilock Brake (ABS) - Standard Procedure).

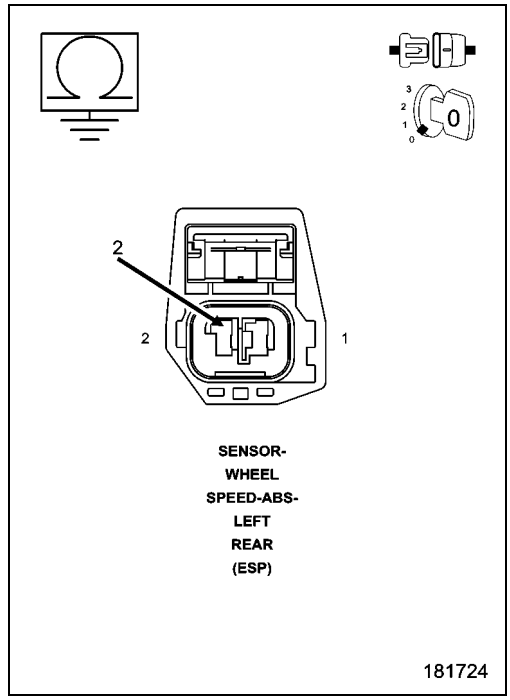

10. (B4) LEFT REAR WHEEL SPEED SENSOR SUPPLY CIRCUIT OPEN

1. Measure the resistance of the (B4) Left Rear Wheel Speed Sensor Supply circuit between the ABS harness connector and the Left Rear Wheel Speed Sensor harness connector.

Is the resistance below 5 Ohms?

Yes

- Go To 11

No

- Repair the open (B4) Left Rear Wheel Speed Sensor Supply circuit.
- Perform the ABS VERIFICATION TEST. (Refer to 28 - DTC-Based Diagnostics/MODULE, Antilock Brake (ABS) - Standard Procedure).

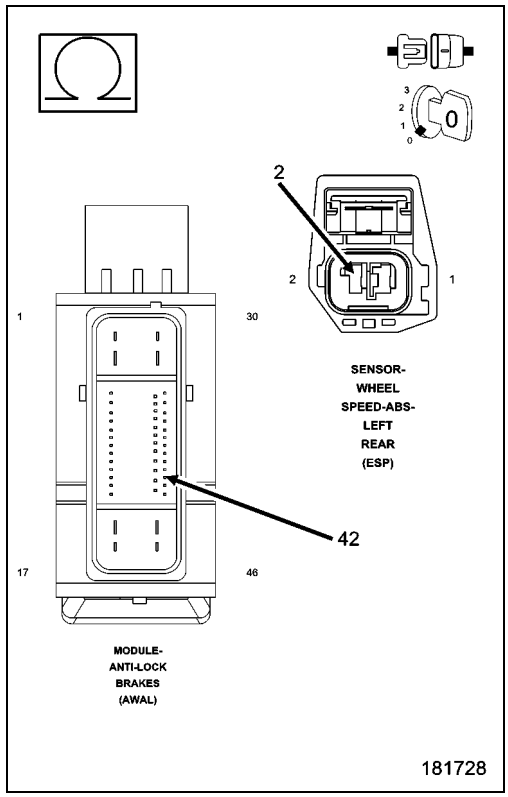

11. (B3) LEFT REAR WHEEL SPEED SENSOR SIGNAL CIRCUIT OPEN

1. Measure the resistance of the (B3) Left Rear Wheel Speed Sensor Signal circuit between the ABS harness connector and the Left Rear Wheel Speed Sensor harness connector.

Is the resistance below 5 Ohms?

Yes

- Go To 12

No

- Repair the open (B3) Left Rear Wheel Speed Sensor Signal circuit.
- Perform the ABS VERIFICATION TEST. (Refer to 28 - DTC-Based Diagnostics/MODULE, Antilock Brake (ABS) - Standard Procedure).

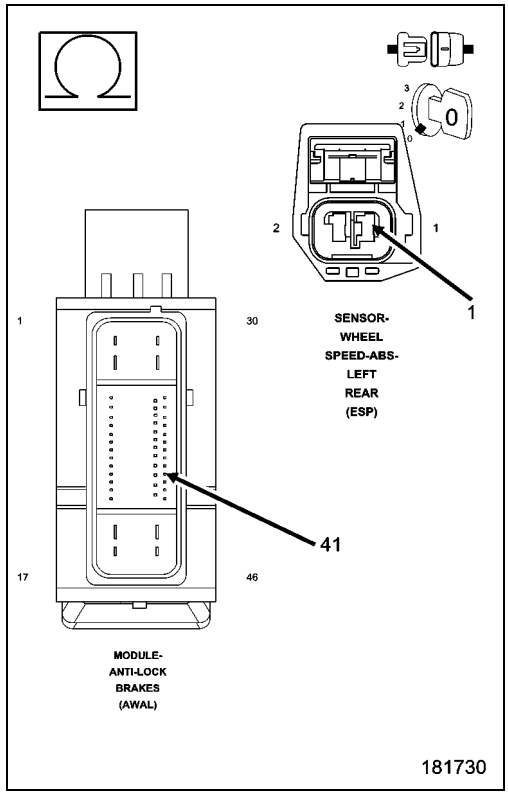

12. (B3) LEFT REAR WHEEL SPEED SENSOR SIGNAL CIRCUIT SHORTED TO VOLTAGE

1. Turn the ignition on.
2. Measure the voltage of the (B3) Left Rear Wheel Speed Sensor Signal circuit at the Left Rear Wheel Speed Sensor harness connector.

Is there any voltage present?

Yes

- Repair the (B3) Left Rear Wheel Speed Sensor Signal circuit for a short to voltage.
- Perform the ABS VERIFICATION TEST. (Refer to 28 - DTC-Based Diagnostics/MODULE, Antilock Brake (ABS) - Standard Procedure).

No

- Go To 13

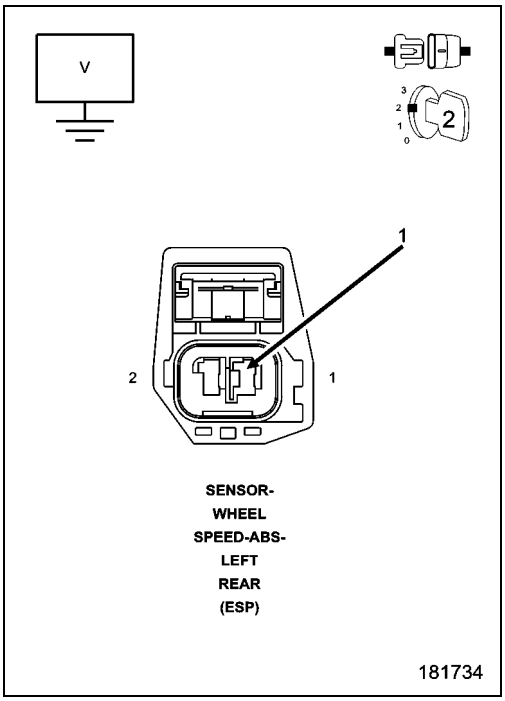

13. (B4) LEFT REAR WHEEL SPEED SENSOR SUPPLY CIRCUIT SHORTED TO THE (B3) LEFT REAR WHEEL SPEED SENSOR SIGNAL CIRCUIT

1. Turn the ignition off to the lock position.
2. Measure the resistance between the (B4) Left Rear Wheel Speed Sensor Supply circuit and the (B3) Left Rear Wheel Speed Sensor Signal circuit at the ABS Module harness connector.

Is the resistance below 5.0 Ohms?

Yes

- Repair (B4) Left Rear Wheel Speed Sensor Supply circuit for a short to the (B3) Left Rear Wheel Speed Sensor Signal circuit.
- Perform the ABS VERIFICATION TEST. (Refer to 28 - DTC-Based Diagnostics/MODULE, Antilock Brake (ABS) - Standard Procedure).

No

- Replace the Anti-Lock Brakes Module in accordance with the Service Information.
- Perform the ABS VERIFICATION TEST. (Refer to 28 - DTC-Based Diagnostics/MODULE, Antilock Brake (ABS) - Standard Procedure).

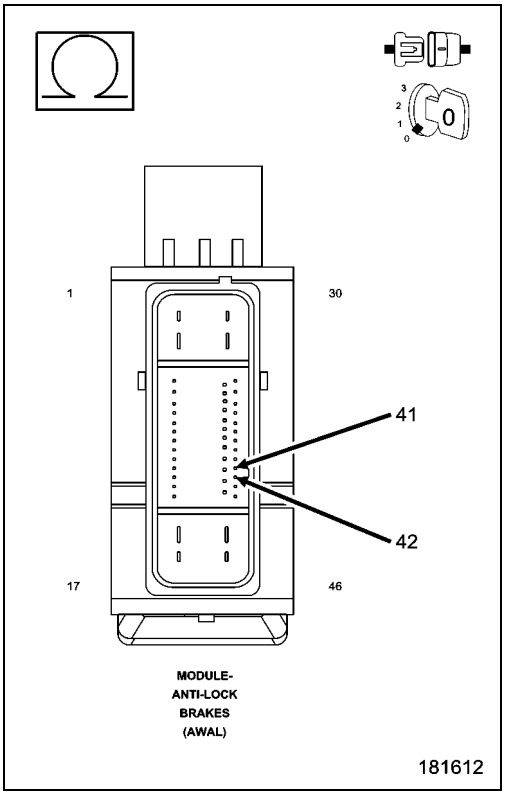

C102A-LEFT REAR WHEEL SPEED COMPARATIVE PERFORMANCE

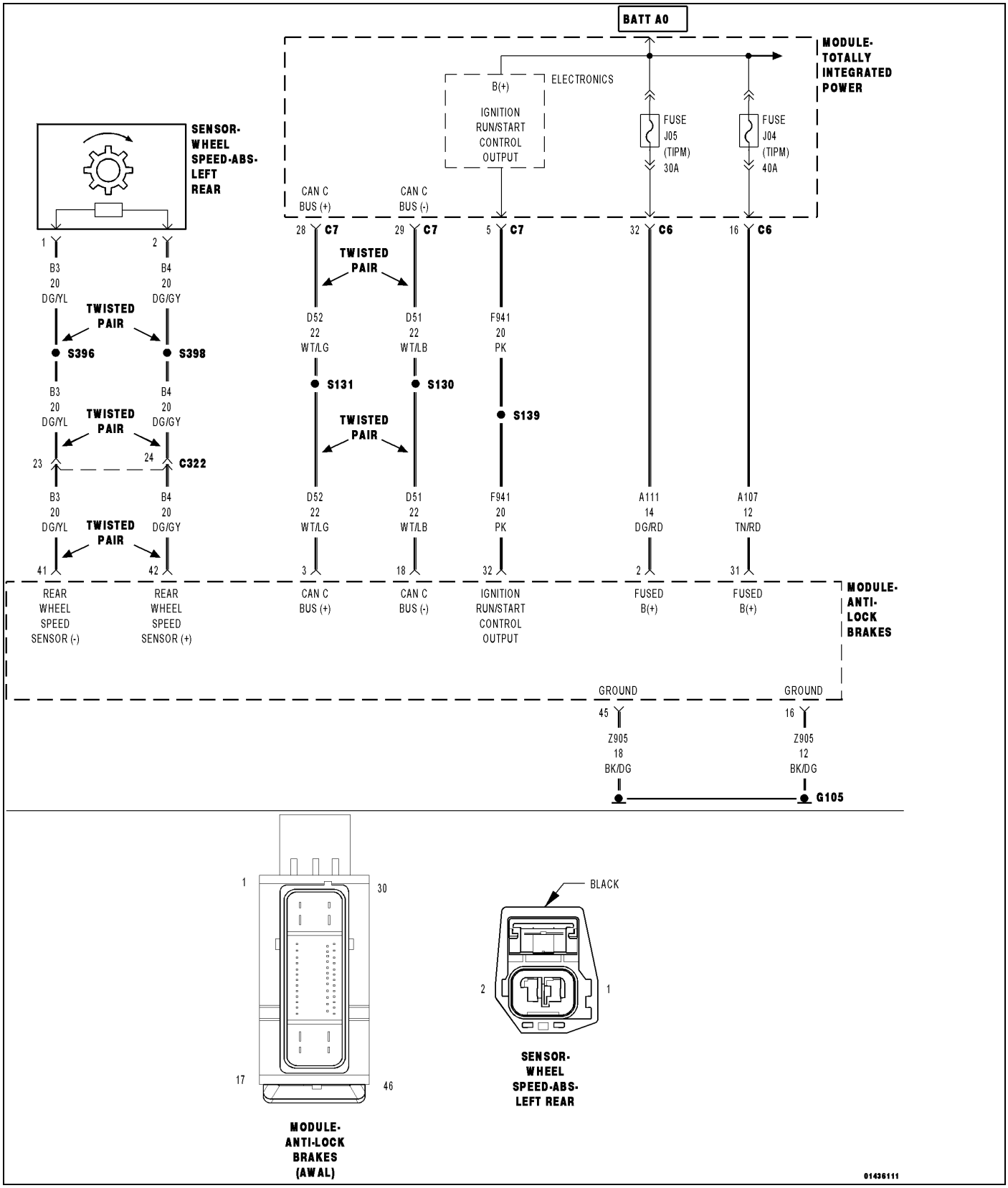

For a complete wiring diagram, **refer to the Wiring Information**.

NOTE: The Electronic Stability Control (ESC) may also be referred to as Electronic Stability Program (ESP) depending on the vehicle model year and configuration. Certain components may also reference ESP, ESC, or use the traction control symbol.

- **When Monitored:**
  With the ignition on.
- **Set Condition:**
  When the Left Rear WSS reading is different from the readings received from the other WSS's at a vehicle speed above 40 km/h (25 mph). The Anti-Lock Brake Module compares WSS readings from side-to-side on an axle and front-to-rear.

Possible Causes
(B4) LEFT REAR WHEEL SPEED SENSOR SUPPLY CIRCUIT SHORT TO GROUND
(B3) LEFT REAR WHEEL SPEED SENSOR SIGNAL CIRCUIT SHORT TO GROUND
(B4) LEFT REAR WHEEL SPEED SENSOR SUPPLY CIRCUIT OPEN
(B3) LEFT REAR WHEEL SPEED SENSOR SIGNAL CIRCUIT OPEN
(B4) LEFT REAR WHEEL SPEED SENSOR SUPPLY CIRCUIT SHORTED TO VOLTAGE
(B3) LEFT REAR WHEEL SPEED SENSOR SIGNAL CIRCUIT SHORTED TO VOLTAGE
(B4) LEFT REAR WHEEL SPEED SENSOR SUPPLY CIRCUIT SHORTED TO THE (B3) LEFT REAR WHEEL SPEED SENSOR SIGNAL CIRCUIT
TONE WHEEL
EXCESSIVE REAR WHEEL SPEED SENSOR AIR GAP
WHEEL BEARING
LEFT REAR WHEEL SPEED SENSOR (WSS)
ANTI-LOCK BRAKE SYSTEM (ABS) MODULE

1. DTC IS ACTIVE

1. Ignition on, engine not running.
2. With the scan tool, erase DTCs.
3. Turn the ignition off to the lock position.
4. Ignition on, engine not running.
5. With the scan tool, read DTCs.

Is the status Active for this DTC?

Yes

- Go To 2

No

- The condition that caused the symptom is currently not present. Inspect the related wiring for a possible intermittent condition. Look for any chafed, pierced, pinched, or partially broken wires.
- Perform the ABS INTERMITTENT CONDITION TEST. (Refer to 28 - DTC-Based Diagnostics/MODULE, Antilock Brake (ABS) - Standard Procedure).

2. WHEEL SPEED SENSOR INSPECTION

1. Turn the ignition off to the lock position.
2. Inspect the Wheel Speed Sensor for proper mounting.
3. Inspect the Wheel Speed Sensor harness and connector.
4. Inspect the Wheel Speed Sensor for excessive debris on the sensor.

Were any problems found?

Yes

- Repair as necessary in accordance with the Service Information.
- Perform the ABS VERIFICATION TEST. (Refer to 28 - DTC-Based Diagnostics/MODULE, Antilock Brake (ABS) - Standard Procedure).

No

- Go To 3

3. TONE WHEEL DAMAGED/MISSING

1. Inspect the Tone Wheel in accordance with the Service Information.

NOTE: The Tone Wheel Teeth should be perfectly square, not bent or nicked.

Were any problems found?

Yes

- Replace the Tone Wheel in accordance with the Service Information.
- Perform the ABS VERIFICATION TEST. (Refer to 28 - DTC-Based Diagnostics/MODULE, Antilock Brake (ABS) - Standard Procedure).

No

- Go To 4

4. EXCESSIVE WHEEL SPEED SENSOR AIR GAP

1. Measure the Wheel Speed Sensor Air Gap in accordance with the Service Information.

Were any problems found?

Yes

- Repair as necessary in accordance with the Service Information.
- Perform the ABS VERIFICATION TEST. (Refer to 28 - DTC-Based Diagnostics/MODULE, Antilock Brake (ABS) - Standard Procedure).

No

- Go To 5

5. WHEEL BEARING LOOSE/BINDING

1. Inspect the wheel bearings for excessive run out or improper clearance in accordance with the Service Information.

Were any problems found?

Yes

- Repair as necessary in accordance with the Service Information.
- Perform the ABS VERIFICATION TEST. (Refer to 28 - DTC-Based Diagnostics/MODULE, Antilock Brake (ABS) - Standard Procedure).

No

- Go To 6

6. CHECK (B4) LEFT REAR WHEEL SPEED SENSOR SUPPLY CIRCUIT VOLTAGE

1. Disconnect the Left Rear Wheel Speed Sensor harness connector.
2. Turn the ignition on.
3. Measure the voltage between the (B4) Left Rear Wheel Speed Sensor Supply circuit and ground.

Is the voltage above 10 volts?

Yes

- Go To 7

No

- Go To 9

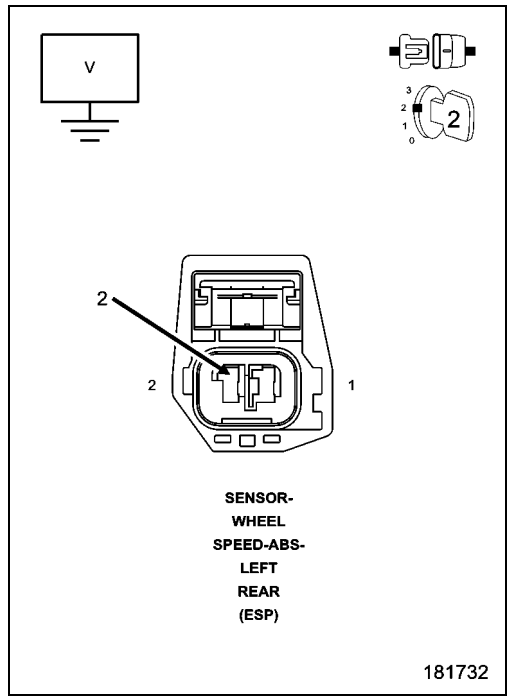

7. (B4) LEFT REAR WHEEL SPEED SENSOR SUPPLY CIRCUIT SHORTED TO VOLTAGE

1. Turn the ignition off to the lock position.
2. Disconnect the ABS Module harness connector.
3. Ignition on, engine not running.
4. Measure the voltage of the (B4) Left Rear Wheel Speed Sensor Supply circuit.

Is there any voltage present?

Yes

- Repair (B4) Left Rear Wheel Speed Sensor Supply circuit for a short to voltage.
- Perform the ABS VERIFICATION TEST. (Refer to 28 - DTC-Based Diagnostics/MODULE, Antilock Brake (ABS) - Standard Procedure).

No

- Go To 8

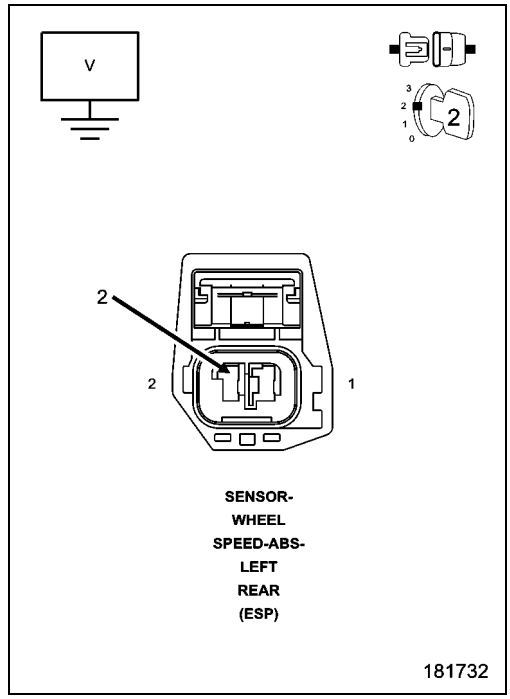

8. (B3) LEFT REAR WHEEL SPEED SENSOR SIGNAL CIRCUIT SHORTED TO GROUND

1. Turn the ignition off.
2. Measure the resistance between the (B3) Left Rear Wheel Speed Sensor Signal circuit and ground.

Is the resistance above 5.0 Ohms?

Yes

- Replace the Left Rear Wheel Speed Sensor in accordance with the Service Information.
- Perform ABS VERIFICATION TEST. (Refer to 28 - DTC-Based Diagnostics/MODULE, Antilock Brake (ABS) - Standard Procedure)

No

- Repair the (B3) Left Rear Wheel Speed Sensor Signal circuit for a short to ground.
- Perform ABS VERIFICATION TEST. (Refer to 28 - DTC-Based Diagnostics/MODULE, Antilock Brake (ABS) - Standard Procedure)

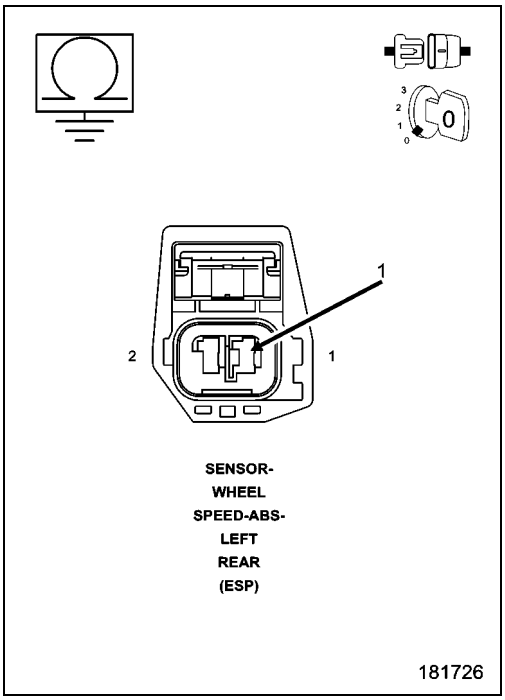

9. (B4) LEFT REAR WHEEL SPEED SENSOR SUPPLY CIRCUIT SHORTED TO GROUND

1. Turn the ignition off to the lock position.
2. Disconnect the ABS Module harness connector.
3. Measure the resistance between the (B4) Left Rear Wheel Speed Sensor Supply circuit and ground.

Is the resistance above 5.0 Ohms?

Yes

- Go To 10

No

- Repair the (B4) Left Rear Wheel Speed Sensor Supply circuit for a short to ground.
- Perform the ABS VERIFICATION TEST. (Refer to 28 - DTC-Based Diagnostics/MODULE, Antilock Brake (ABS) - Standard Procedure).

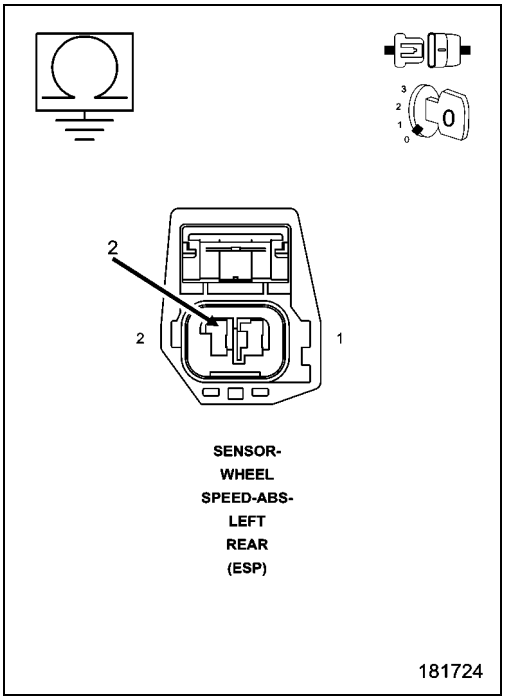

10. (B4) LEFT REAR WHEEL SPEED SENSOR SUPPLY CIRCUIT OPEN

1. Measure the resistance of the (B4) Left Rear Wheel Speed Sensor Supply circuit between the ABS harness connector and the Left Rear Wheel Speed Sensor harness connector.

Is the resistance below 5 Ohms?

Yes

- Go To 11

No

- Repair the open (B4) Left Rear Wheel Speed Sensor Supply circuit.
- Perform the ABS VERIFICATION TEST. (Refer to 28 - DTC-Based Diagnostics/MODULE, Antilock Brake (ABS) - Standard Procedure).

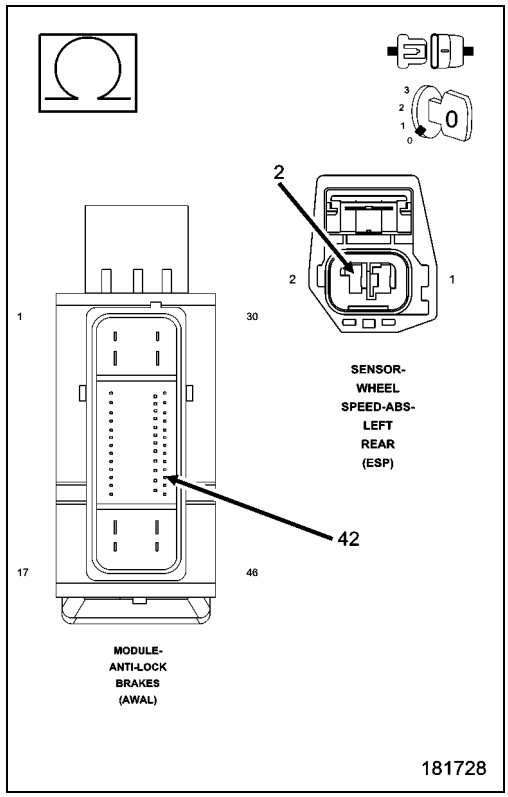

11. (B3) LEFT REAR WHEEL SPEED SENSOR SIGNAL CIRCUIT OPEN

1. Measure the resistance of the (B3) Left Rear Wheel Speed Sensor Signal circuit between the ABS harness connector and the Left Rear Wheel Speed Sensor harness connector.

Is the resistance below 5 Ohms?

Yes

- Go To 12

No

- Repair the open (B3) Left Rear Wheel Speed Sensor Signal circuit.
- Perform the ABS VERIFICATION TEST. (Refer to 28 - DTC-Based Diagnostics/MODULE, Antilock Brake (ABS) - Standard Procedure).

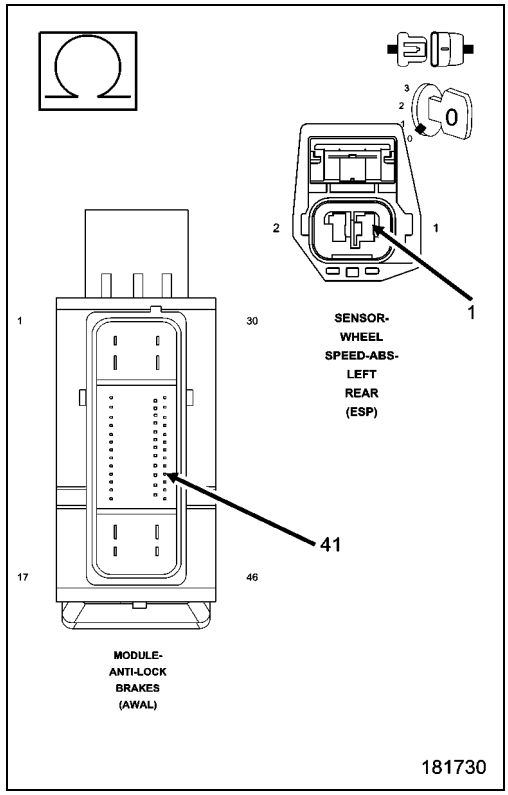

12. (B3) LEFT REAR WHEEL SPEED SENSOR SIGNAL CIRCUIT SHORTED TO VOLTAGE

1. Turn the ignition on.
2. Measure the voltage of the (B3) Left Rear Wheel Speed Sensor Signal circuit at the Left Rear Wheel Speed Sensor harness connector.

Is there any voltage present?

Yes

- Repair the (B3) Left Rear Wheel Speed Sensor Signal circuit for a short to voltage.
- Perform the ABS VERIFICATION TEST. (Refer to 28 - DTC-Based Diagnostics/MODULE, Antilock Brake (ABS) - Standard Procedure).

No

- Go To 13

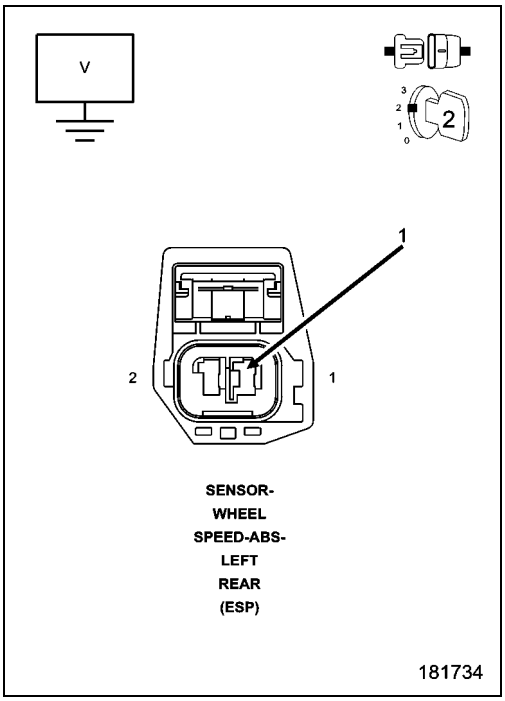

13. (B4) LEFT REAR WHEEL SPEED SENSOR SUPPLY CIRCUIT SHORTED TO THE (B3) LEFT REAR WHEEL SPEED SENSOR SIGNAL CIRCUIT

1. Turn the ignition off to the lock position.
2. Measure the resistance between the (B4) Left Rear Wheel Speed Sensor Supply circuit and the (B3) Left Rear Wheel Speed Sensor Signal circuit at the ABS Module harness connector.

Is the resistance below 5.0 Ohms?

Yes

- Repair (B4) Left Rear Wheel Speed Sensor Supply circuit for a short to the (B3) Left Rear Wheel Speed Sensor Signal circuit.
- Perform the ABS VERIFICATION TEST. (Refer to 28 - DTC-Based Diagnostics/MODULE, Antilock Brake (ABS) - Standard Procedure).

No

- Replace the Anti-Lock Brakes Module in accordance with the Service Information.
- Perform the ABS VERIFICATION TEST. (Refer to 28 - DTC-Based Diagnostics/MODULE, Antilock Brake (ABS) - Standard Procedure).

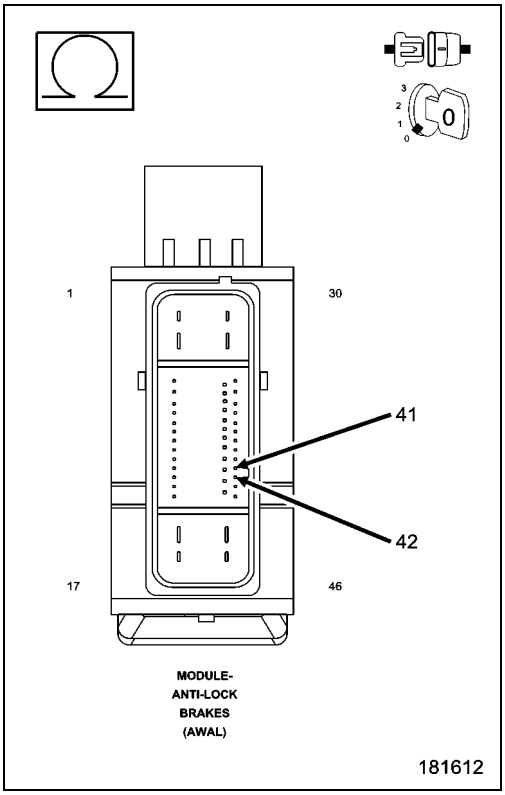

C102B-RIGHT REAR WHEEL SPEED SENSOR CIRCUIT

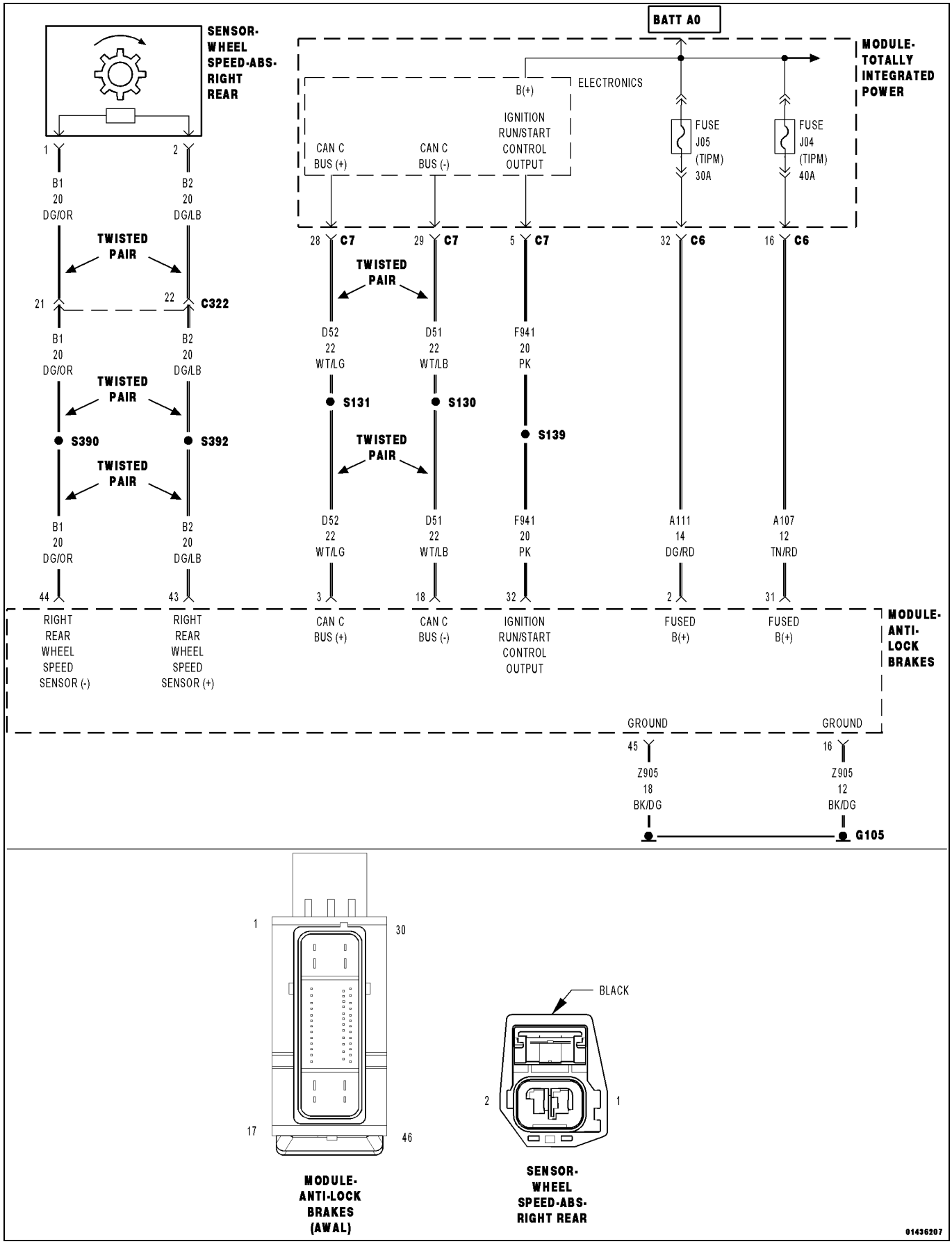

For a complete wiring diagram, **refer to the Wiring Information**.

NOTE: The Electronic Stability Control (ESC) may also be referred to as Electronic Stability Program (ESP) depending on the vehicle model year and configuration. Certain components may also reference ESP, ESC, or use the traction control symbol.

- **When Monitored:**
  With the ignition on and no system under voltage or over voltage condition present.
- **Set Condition:**
  If the measured wheel speed sensor feedback voltage is less than .304 of a volt, the sensor is considered open.
  If the measured wheel speed sensor feedback voltage is greater than 1.39 volts, or if a sensor over current condition is detected, the sensor is considered shorted.
  If a shorted or open condition is present for more than 100 msec, the DTC will set.

Possible Causes
(B2) RIGHT REAR WHEEL SPEED SENSOR SUPPLY CIRCUIT SHORTED TO GROUND
(B1) RIGHT REAR WHEEL SPEED SENSOR SIGNAL CIRCUIT SHORTED TO GROUND
(B2) RIGHT REAR WHEEL SPEED SENSOR SUPPLY CIRCUIT OPEN
(B1) REAR WHEEL SPEED SENSOR SIGNAL CIRCUIT OPEN
(B2) RIGHT REAR WHEEL SPEED SENSOR SUPPLY CIRCUIT SHORTED TO VOLTAGE
(B1) RIGHT REAR WHEEL SPEED SENSOR SIGNAL CIRCUIT SHORTED TO VOLTAGE
(B2) RIGHT REAR WHEEL SPEED SENSOR SUPPLY CIRCUIT SHORTED TO THE (B1) REAR WHEEL SPEED SENSOR SIGNAL CIRCUIT
RIGHT REAR WHEEL SPEED SENSOR (WSS)
ANTI-LOCK BRAKE SYSTEM (ABS) MODULE

1. DTC IS ACTIVE

1. Ignition on, engine not running.
2. With the scan tool, clear DTCs.
3. Turn the ignition off to the lock position.
4. Ignition on, engine not running.
5. With the scan tool, select View DTCs.

Is the status Active for this DTC?

Yes

- Go To 2

No

- The condition that caused the symptom is currently not present. Inspect the related wiring for a possible intermittent condition. Look for any chafed, pierced, pinched, or partially broken wires.
- Perform the ABS INTERMITTENT CONDITION TEST. (Refer to 28 - DTC-Based Diagnostics/MODULE, Antilock Brake (ABS) - Standard Procedure).

2. WHEEL SPEED SENSOR INSPECTION

1. Turn the ignition off to the lock position.
2. Inspect the Wheel Speed Sensor for proper mounting.
3. Inspect the Wheel Speed Sensor harness and connector.
4. Inspect the Wheel Speed Sensor for excessive debris on the sensor.

Were any problems found?

Yes

- Repair as necessary in accordance with the Service Information.
- Perform the ABS VERIFICATION TEST. (Refer to 28 - DTC-Based Diagnostics/MODULE, Antilock Brake (ABS) - Standard Procedure).

No

- Go To 3

3. CHECK (B2) RIGHT REAR WHEEL SPEED SENSOR SUPPLY CIRCUIT VOLTAGE

1. Disconnect the Right Rear Wheel Speed Sensor harness connector.
2. Turn the ignition on.
3. Measure the voltage between the (B2) Right Rear Wheel Speed Sensor Supply circuit and ground.

Is the voltage above 10 volts?

Yes

- Go To 4

No

- Go To 6

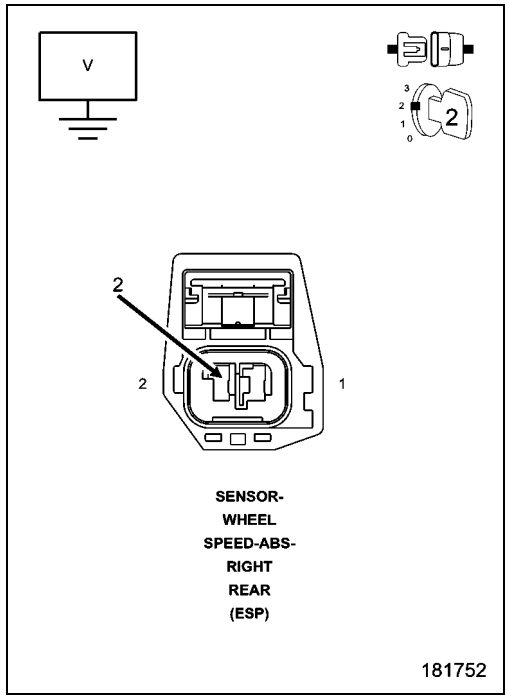

4. (B2) RIGHT REAR WHEEL SPEED SENSOR SUPPLY CIRCUIT SHORTED TO VOLTAGE

1. Turn the ignition off to the lock position.
2. Disconnect the ABS Module harness connector.
3. Ignition on, engine not running.
4. Measure the voltage of the (B2) Right Rear Wheel Speed Sensor Supply circuit at the Right Rear Wheel Speed Sensor harness connector.

Is there any voltage present?

Yes

- Repair (B2) Right Rear Wheel Speed Sensor Supply circuit for a short to voltage.
- Perform the ABS VERIFICATION TEST. (Refer to 28 - DTC-Based Diagnostics/MODULE, Antilock Brake (ABS) - Standard Procedure).

No

- Go To 5

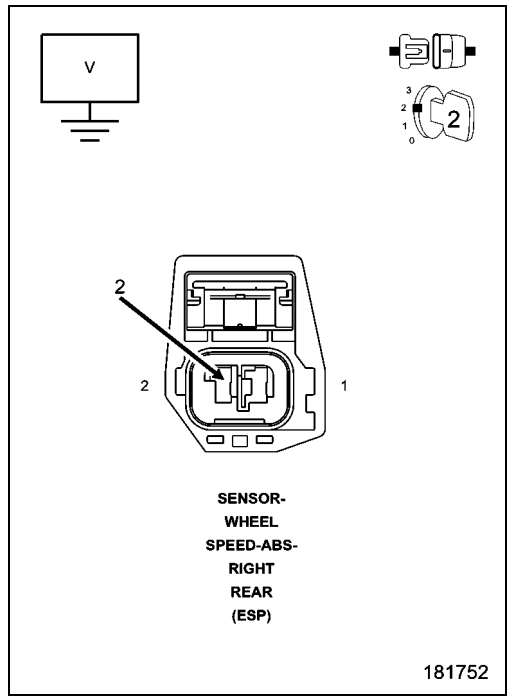

5. (B1) RIGHT REAR WHEEL SPEED SENSOR SIGNAL CIRCUIT SHORTED TO GROUND

1. Turn the ignition off.
2. Measure the resistance between the (B1) Right Rear Wheel Speed Sensor Signal circuit and ground.

Is the resistance above 5.0 Ohms?

Yes

- Replace the Right Rear Wheel Speed Sensor in accordance with the Service Information.
- Perform ABS VERIFICATION TEST. (Refer to 28 - DTC-Based Diagnostics/MODULE, Antilock Brake (ABS) - Standard Procedure)

No

- Repair the (B1) Right Rear Wheel Speed Sensor Signal circuit for a short to ground.
- Perform ABS VERIFICATION TEST. (Refer to 28 - DTC-Based Diagnostics/MODULE, Antilock Brake (ABS) - Standard Procedure)

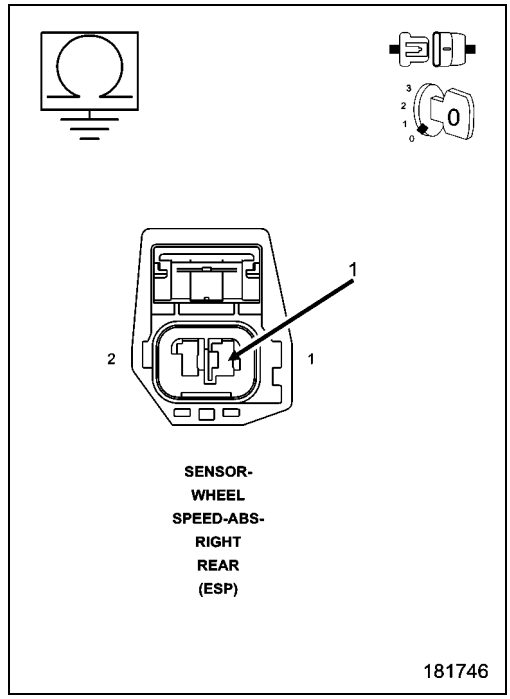

6. (B2) RIGHT REAR WHEEL SPEED SENSOR SUPPLY CIRCUIT SHORTED TO GROUND

1. Turn the ignition off to the lock position.
2. Disconnect the ABS Module harness connector.
3. Measure the resistance between the (B2) Right Rear Wheel Speed Sensor Supply circuit and ground.

Is the resistance above 5.0 Ohms?

Yes

- Go To 7

No

- Repair the (B2) Right Rear Wheel Speed Sensor Supply circuit for a short to ground.
- Perform the ABS VERIFICATION TEST. (Refer to 28 - DTC-Based Diagnostics/MODULE, Antilock Brake (ABS) - Standard Procedure).

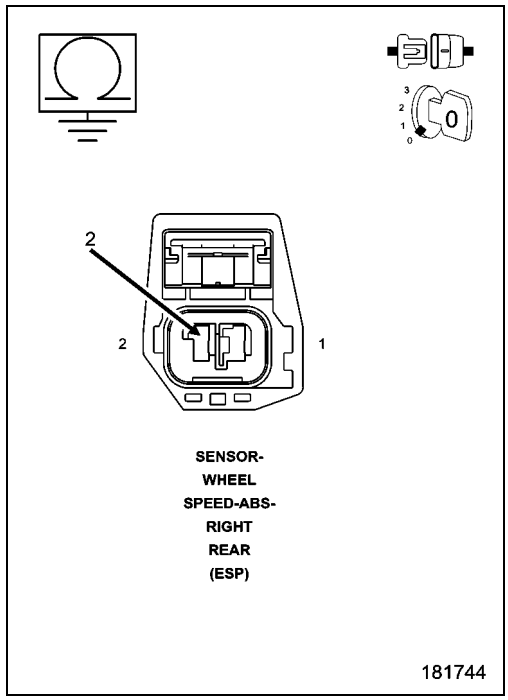

7. (B2) RIGHT REAR WHEEL SPEED SENSOR SUPPLY CIRCUIT OPEN

1. Measure the resistance of the (B2) Right Rear Wheel Speed Sensor Supply circuit between the ABS harness connector and the Right Rear Wheel Speed Sensor harness connector.

Is the resistance below 5 Ohms?

Yes

- Go To 8

No

- Repair the open (B2) Right Rear Wheel Speed Sensor Supply circuit.
- Perform the ABS VERIFICATION TEST. (Refer to 28 - DTC-Based Diagnostics/MODULE, Antilock Brake (ABS) - Standard Procedure).

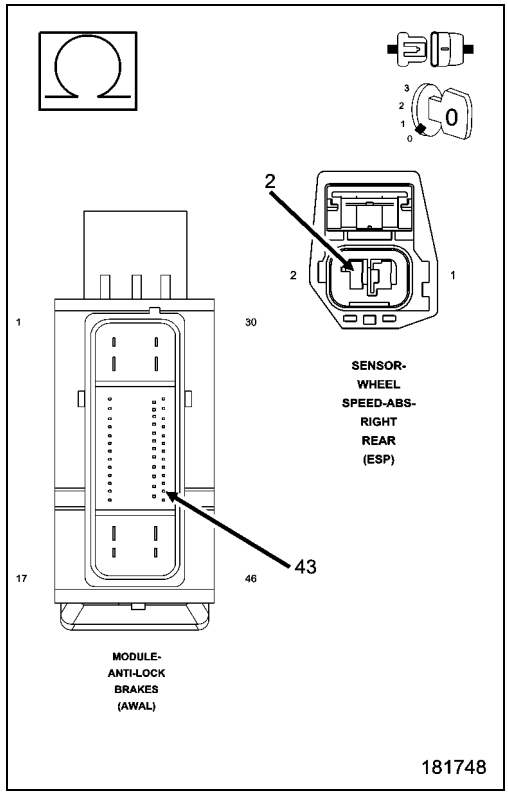

8. (B1) RIGHT REAR WHEEL SPEED SENSOR SIGNAL CIRCUIT OPEN

1. Measure the resistance of the (B1) Right Rear Wheel Speed Sensor Signal circuit between the ABS harness connector and the Right Rear Wheel Speed Sensor harness connector.

Is the resistance below 5 Ohms?

Yes

- Go To 9

No

- Repair the open (B1) Right Rear Wheel Speed Sensor Signal circuit.
- Perform the ABS VERIFICATION TEST. (Refer to 28 - DTC-Based Diagnostics/MODULE, Antilock Brake (ABS) - Standard Procedure).

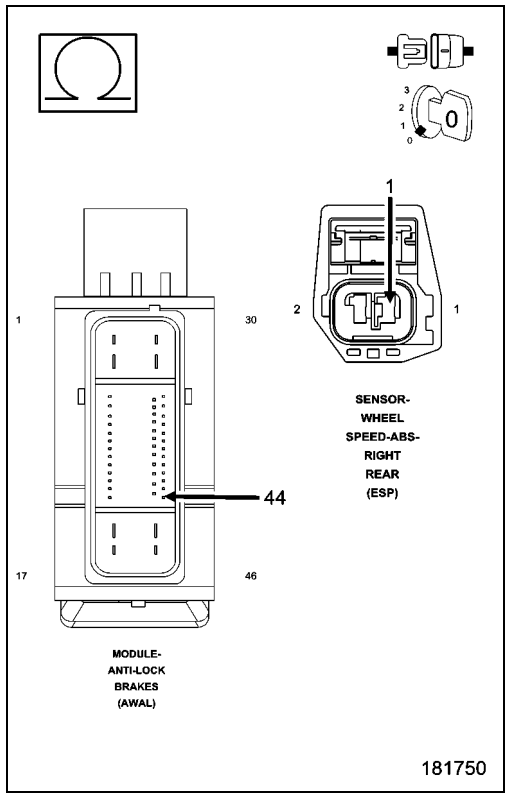

9. (B1) RIGHT REAR WHEEL SPEED SENSOR SIGNAL CIRCUIT SHORTED TO VOLTAGE

1. Turn the ignition on.
2. Measure the voltage of the (B1) Right Rear Wheel Speed Sensor Signal circuit at the Right Rear Wheel Speed Sensor harness connector.

Is there any voltage present?

Yes

- Repair the (B1) Right Rear Wheel Speed Sensor Signal circuit for a short to voltage.
- Perform the ABS VERIFICATION TEST. (Refer to 28 - DTC-Based Diagnostics/MODULE, Antilock Brake (ABS) - Standard Procedure).

No

- Go To 10

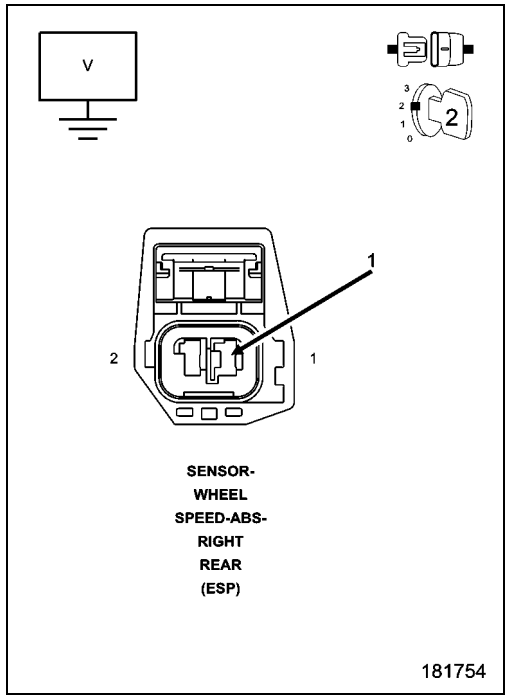

10. (B2) RIGHT REAR WHEEL SPEED SENSOR SUPPLY CIRCUIT SHORTED TO THE (B1) RIGHT REAR WHEEL SPEED SENSOR SIGNAL CIRCUIT

1. Turn the ignition off to the lock position.
2. Measure the resistance between the (B2) Right Rear Wheel Speed Sensor Supply circuit and the (B1) Right Rear Wheel Speed Sensor Signal circuit at the ABS Module harness connector.

Is the resistance below 5.0 Ohms?

Yes

- Repair (B2) Right Rear Wheel Speed Sensor Supply circuit for a short to the (B1) Right Rear Wheel Speed Sensor Signal circuit.
- Perform the ABS VERIFICATION TEST. (Refer to 28 - DTC-Based Diagnostics/MODULE, Antilock Brake (ABS) - Standard Procedure).

No

- Replace the Anti-Lock Brakes Module in accordance with the Service Information.
- Perform the ABS VERIFICATION TEST. (Refer to 28 - DTC-Based Diagnostics/MODULE, Antilock Brake (ABS) - Standard Procedure).

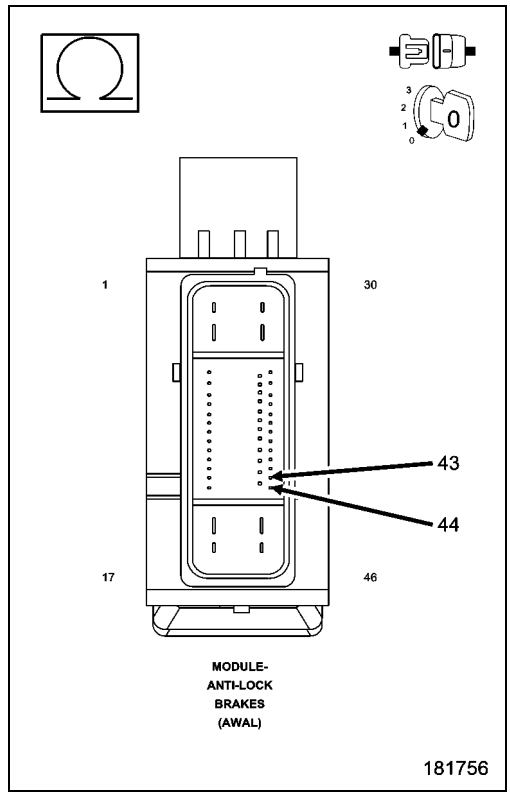

C1032-RIGHT REAR WHEEL SPEED SENSOR SIGNAL ERRATIC PERFORMANCE

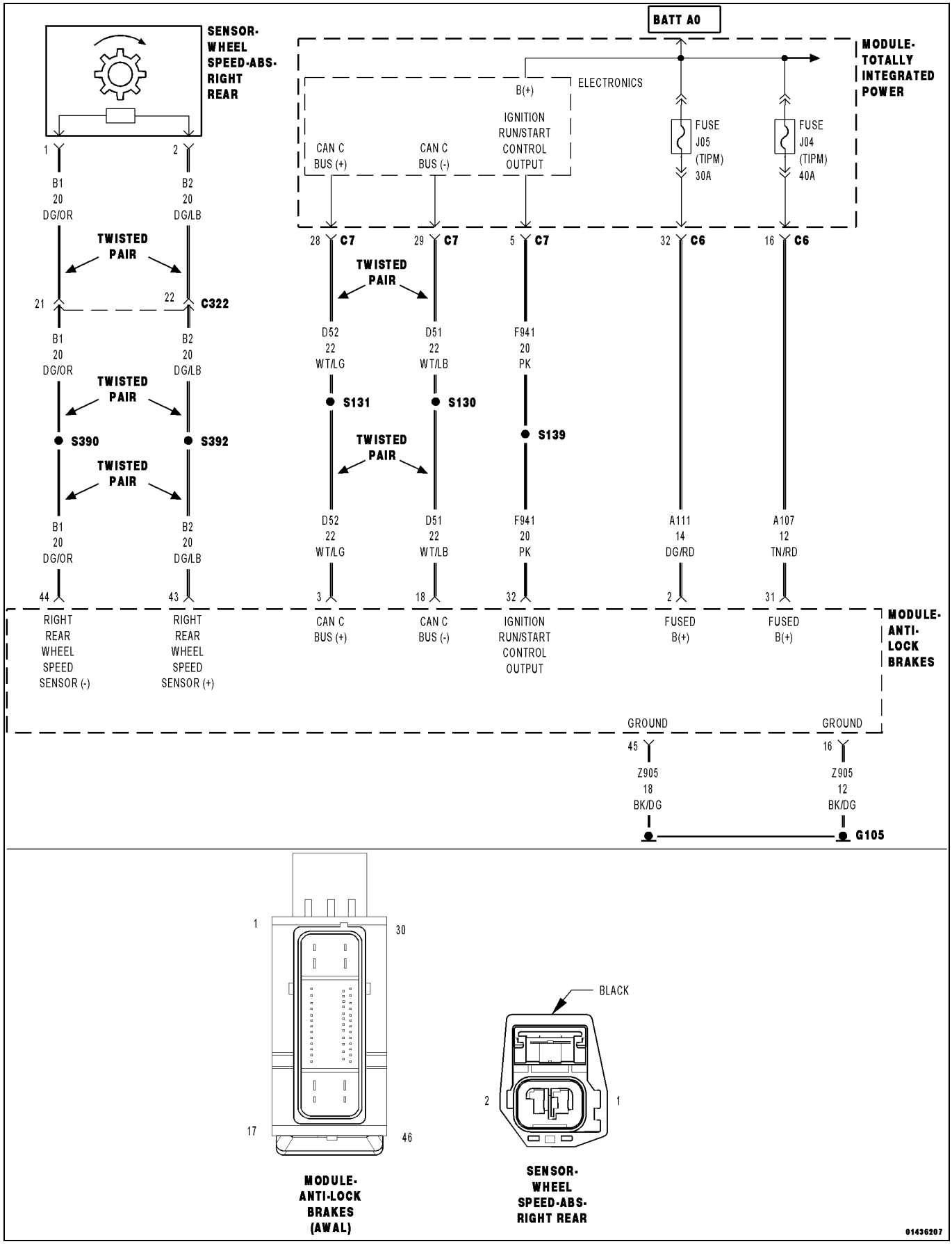

For a complete wiring diagram, **refer to the Wiring Information**.

NOTE: The Electronic Stability Control (ESC) may also be referred to as Electronic Stability Program (ESP) depending on the vehicle model year and configuration. Certain components may also reference ESP, ESC, or use the traction control symbol.

- **When Monitored:**
  With the ignition on and no system under voltage or over voltage condition present.
- **Set Condition:**
  If the measured wheel speed sensor feedback voltage is less than .304 of a volt, the sensor is considered open.
  If the measured wheel speed sensor feedback voltage is greater than 1.39 volts, or if a sensor over current condition is detected, the sensor is considered shorted.
  If a shorted or open condition is present for more than 100 msec, the DTC will set.

Possible Causes
(B2) REAR WHEEL SPEED SENSOR SUPPLY CIRCUIT SHORTED TO GROUND
(B1) REAR WHEEL SPEED SENSOR SIGNAL CIRCUIT SHORTED TO GROUND
(B2) REAR WHEEL SPEED SENSOR SUPPLY CIRCUIT OPEN
(B1) REAR WHEEL SPEED SENSOR SIGNAL CIRCUIT OPEN
(B2) RIGHT REAR WHEEL SPEED SENSOR SUPPLY CIRCUIT SHORTED TO VOLTAGE
(B1) RIGHT REAR WHEEL SPEED SENSOR SIGNAL CIRCUIT SHORTED TO VOLTAGE
(B2) RIGHT REAR WHEEL SPEED SENSOR SUPPLY CIRCUIT SHORTED TO THE (B1) REAR WHEEL SPEED SENSOR SIGNAL CIRCUIT
TONE WHEEL
EXCESSIVE REAR WHEEL SPEED SENSOR AIR GAP
WHEEL BEARING
RIGHT REAR WHEEL SPEED SENSOR (WSS)
ANTI-LOCK BRAKE SYSTEM (ABS) MODULE

1. DTC IS ACTIVE

1. Ignition on, engine not running.
2. With the scan tool, clear DTCs.
3. Turn the ignition off to the lock position.
4. Ignition on, engine not running.
5. With the scan tool, select View DTCs.

Is the status Active for this DTC?

Yes

- Go To 2

No

- The condition that caused the symptom is currently not present. Inspect the related wiring for a possible intermittent condition. Look for any chafed, pierced, pinched, or partially broken wires.
- Perform the ABS INTERMITTENT CONDITION TEST. (Refer to 28 - DTC-Based Diagnostics/MODULE, Antilock Brake (ABS) - Standard Procedure).

2. WHEEL SPEED SENSOR INSPECTION

1. Turn the ignition off to the lock position.
2. Inspect the Wheel Speed Sensor for proper mounting.
3. Inspect the Wheel Speed Sensor harness and connector.
4. Inspect the Wheel Speed Sensor for excessive debris on the sensor.

Were any problems found?

Yes

- Repair as necessary in accordance with the Service Information.
- Perform the ABS VERIFICATION TEST. (Refer to 28 - DTC-Based Diagnostics/MODULE, Antilock Brake (ABS) - Standard Procedure).

No

- Go To 3

3. TONE WHEEL DAMAGED/MISSING

1. Inspect the Tone Wheel in accordance with the Service Information.

NOTE: The Tone Wheel Teeth should be perfectly square, not bent or nicked.

Were any problems found?

Yes

- Replace the Tone Wheel in accordance with the Service Information.
- Perform the ABS VERIFICATION TEST. (Refer to 28 - DTC-Based Diagnostics/MODULE, Antilock Brake (ABS) - Standard Procedure).

No

- Go To 4

4. EXCESSIVE WHEEL SPEED SENSOR AIR GAP

1. Measure the Wheel Speed Sensor Air Gap in accordance with the Service Information.

Were any problems found?

Yes

- Repair as necessary in accordance with the Service Information.
- Perform the ABS VERIFICATION TEST. (Refer to 28 - DTC-Based Diagnostics/MODULE, Antilock Brake (ABS) - Standard Procedure).

No

- Go To 5

5. WHEEL BEARING LOOSE/BINDING

1. Inspect the wheel bearings for excessive run out or improper clearance in accordance with the Service Information.

Were any problems found?

Yes

- Repair as necessary in accordance with the Service Information.
- Perform the ABS VERIFICATION TEST. (Refer to 28 - DTC-Based Diagnostics/MODULE, Antilock Brake (ABS) - Standard Procedure).

No

- Go To 6

6. CHECK (B2) RIGHT REAR WHEEL SPEED SENSOR SUPPLY CIRCUIT VOLTAGE

1. Disconnect the Right Rear Wheel Speed Sensor harness connector.
2. Turn the ignition on.
3. Measure the voltage between the (B2) Right Rear Wheel Speed Sensor Supply circuit and ground.

Is the voltage above 10 volts?

Yes

- Go To 7

No

- Go To 9

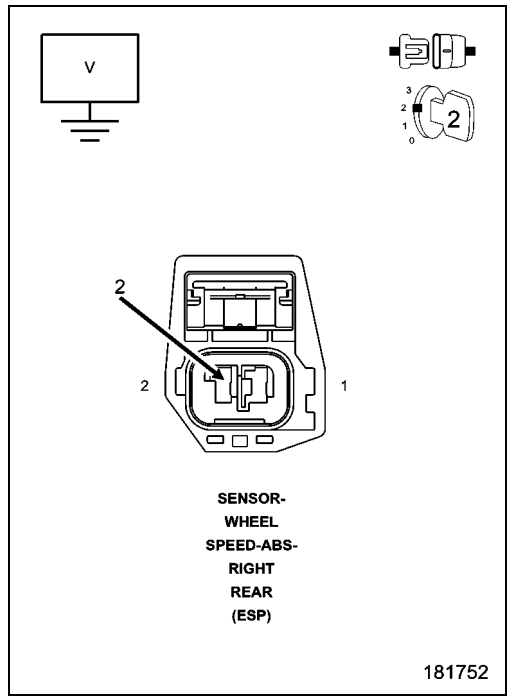

7. (B2) RIGHT REAR WHEEL SPEED SENSOR SUPPLY CIRCUIT SHORTED TO VOLTAGE

1. Turn the ignition off to the lock position.
2. Disconnect the ABS Module harness connector.
3. Ignition on, engine not running.
4. Measure the voltage of the (B2) Right Rear Wheel Speed Sensor Supply circuit at the Right Rear Wheel Speed Sensor harness connector.

Is there any voltage present?

Yes

- Repair (B2) Right Rear Wheel Speed Sensor Supply circuit for a short to voltage.
- Perform the ABS VERIFICATION TEST. (Refer to 28 - DTC-Based Diagnostics/MODULE, Antilock Brake (ABS) - Standard Procedure).

No

- Go To 8

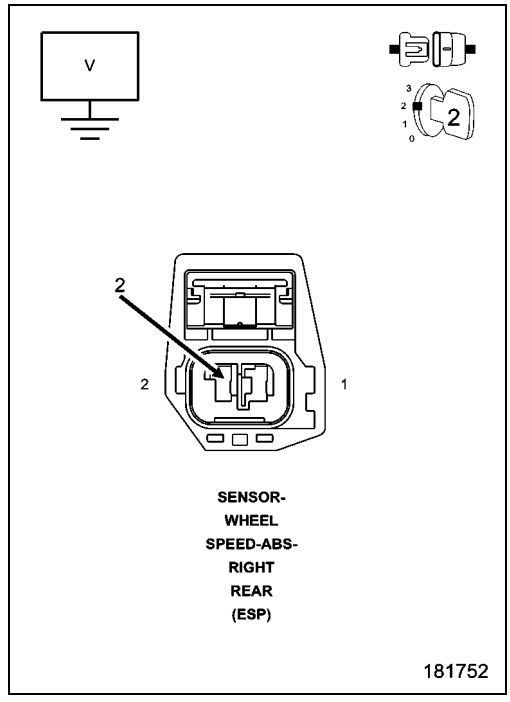

8. (B1) RIGHT REAR WHEEL SPEED SENSOR SIGNAL CIRCUIT SHORTED TO GROUND

1. Turn the ignition off.
2. Measure the resistance between the (B1) Right Rear Wheel Speed Sensor Signal circuit and ground.

Is the resistance above 5.0 Ohms?

Yes

- Replace the Right Rear Wheel Speed Sensor in accordance with the Service Information.
- Perform ABS VERIFICATION TEST. (Refer to 28 - DTC-Based Diagnostics/MODULE, Antilock Brake (ABS) - Standard Procedure)

No

- Repair the (B1) Right Rear Wheel Speed Sensor Signal circuit for a short to ground.
- Perform ABS VERIFICATION TEST. (Refer to 28 - DTC-Based Diagnostics/MODULE, Antilock Brake (ABS) - Standard Procedure)

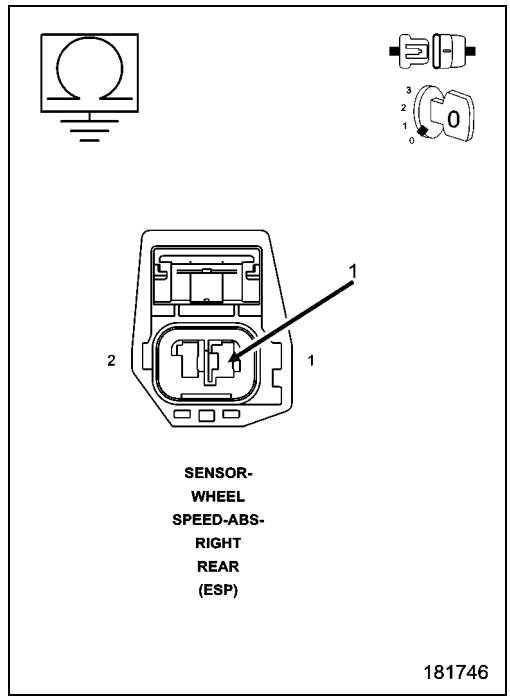

9. (B2) RIGHT REAR WHEEL SPEED SENSOR SUPPLY CIRCUIT SHORTED TO GROUND

1. Turn the ignition off to the lock position.
2. Disconnect the ABS Module harness connector.
3. Measure the resistance between the (B2) Right Rear Wheel Speed Sensor Supply circuit and ground.

Is the resistance above 5.0 Ohms?

Yes

- Go To 10

No

- Repair the (B2) Right Rear Wheel Speed Sensor Supply circuit for a short to ground.
- Perform the ABS VERIFICATION TEST. (Refer to 28 - DTC-Based Diagnostics/MODULE, Antilock Brake (ABS) - Standard Procedure).

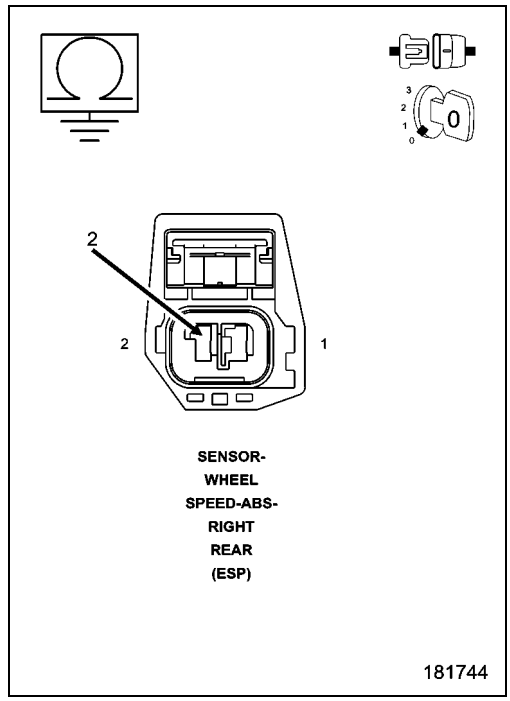

10. (B2) RIGHT REAR WHEEL SPEED SENSOR SUPPLY CIRCUIT OPEN

1. Measure the resistance of the (B2) Right Rear Wheel Speed Sensor Supply circuit between the ABS harness connector and the Right Rear Wheel Speed Sensor harness connector.

Is the resistance below 5 Ohms?

Yes

- Go To 11

No

- Repair the open (B2) Right Rear Wheel Speed Sensor Supply circuit.
- Perform the ABS VERIFICATION TEST. (Refer to 28 - DTC-Based Diagnostics/MODULE, Antilock Brake (ABS) - Standard Procedure).

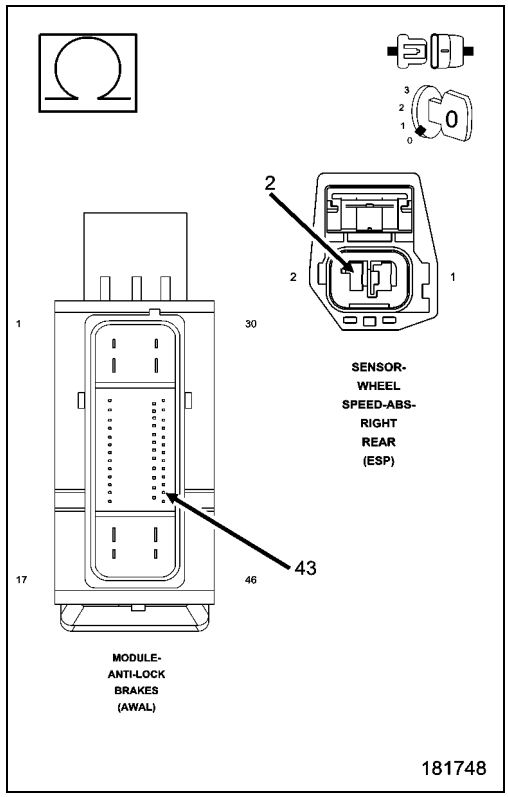

11. (B1) RIGHT REAR WHEEL SPEED SENSOR SIGNAL CIRCUIT OPEN

1. Measure the resistance of the (B1) Right Rear Wheel Speed Sensor Signal circuit between the ABS harness connector and the Right Rear Wheel Speed Sensor harness connector.

Is the resistance below 5 Ohms?

Yes

- Go To 12

No

- Repair the open (B1) Right Rear Wheel Speed Sensor Signal circuit.
- Perform the ABS VERIFICATION TEST. (Refer to 28 - DTC-Based Diagnostics/MODULE, Antilock Brake (ABS) - Standard Procedure).

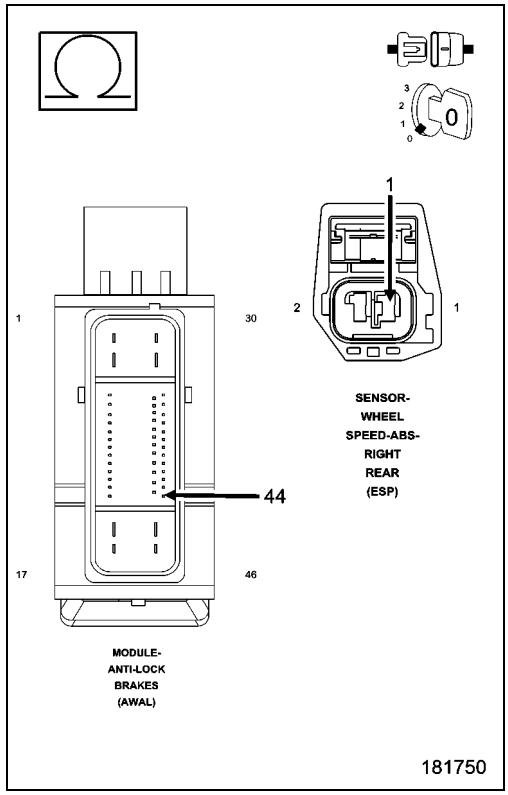

12. (B1) RIGHT REAR WHEEL SPEED SENSOR SIGNAL CIRCUIT SHORTED TO VOLTAGE

1. Turn the ignition on.
2. Measure the voltage of the (B1) Right Rear Wheel Speed Sensor Signal circuit at the Right Rear Wheel Speed Sensor harness connector.

Is there any voltage present?

Yes

- Repair the (B1) Right Rear Wheel Speed Sensor Signal circuit for a short to voltage.
- Perform the ABS VERIFICATION TEST. (Refer to 28 - DTC-Based Diagnostics/MODULE, Antilock Brake (ABS) - Standard Procedure).

No

- Go To 13

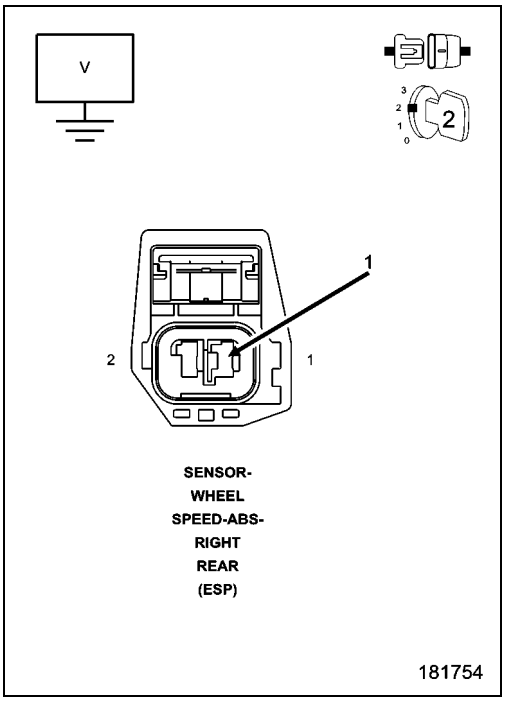

13. (B2) RIGHT REAR WHEEL SPEED SENSOR SUPPLY CIRCUIT SHORTED TO THE (B1) RIGHT REAR WHEEL SPEED SENSOR SIGNAL CIRCUIT

1. Turn the ignition off to the lock position.
2. Measure the resistance between the (B2) Right Rear Wheel Speed Sensor Supply circuit and the (B1) Right Rear Wheel Speed Sensor Signal circuit at the ABS Module harness connector.

Is the resistance below 5.0 Ohms?

Yes

- Repair (B2) Right Rear Wheel Speed Sensor Supply circuit for a short to the (B1) Right Rear Wheel Speed Sensor Signal circuit.
- Perform the ABS VERIFICATION TEST. (Refer to 28 - DTC-Based Diagnostics/MODULE, Antilock Brake (ABS) - Standard Procedure).

No

- Replace the Anti-Lock Brakes Module in accordance with the Service Information.
- Perform the ABS VERIFICATION TEST. (Refer to 28 - DTC-Based Diagnostics/MODULE, Antilock Brake (ABS) - Standard Procedure).

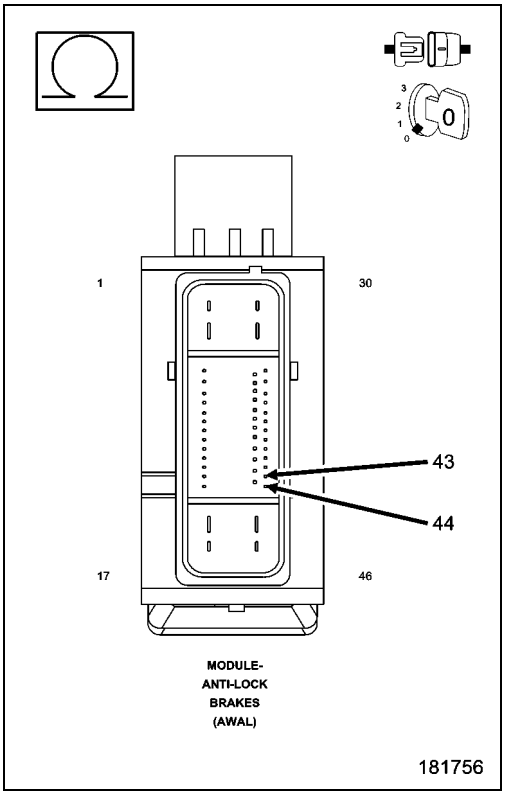

C1035-RIGHT REAR WHEEL SPEED COMPARATIVE PERFORMANCE

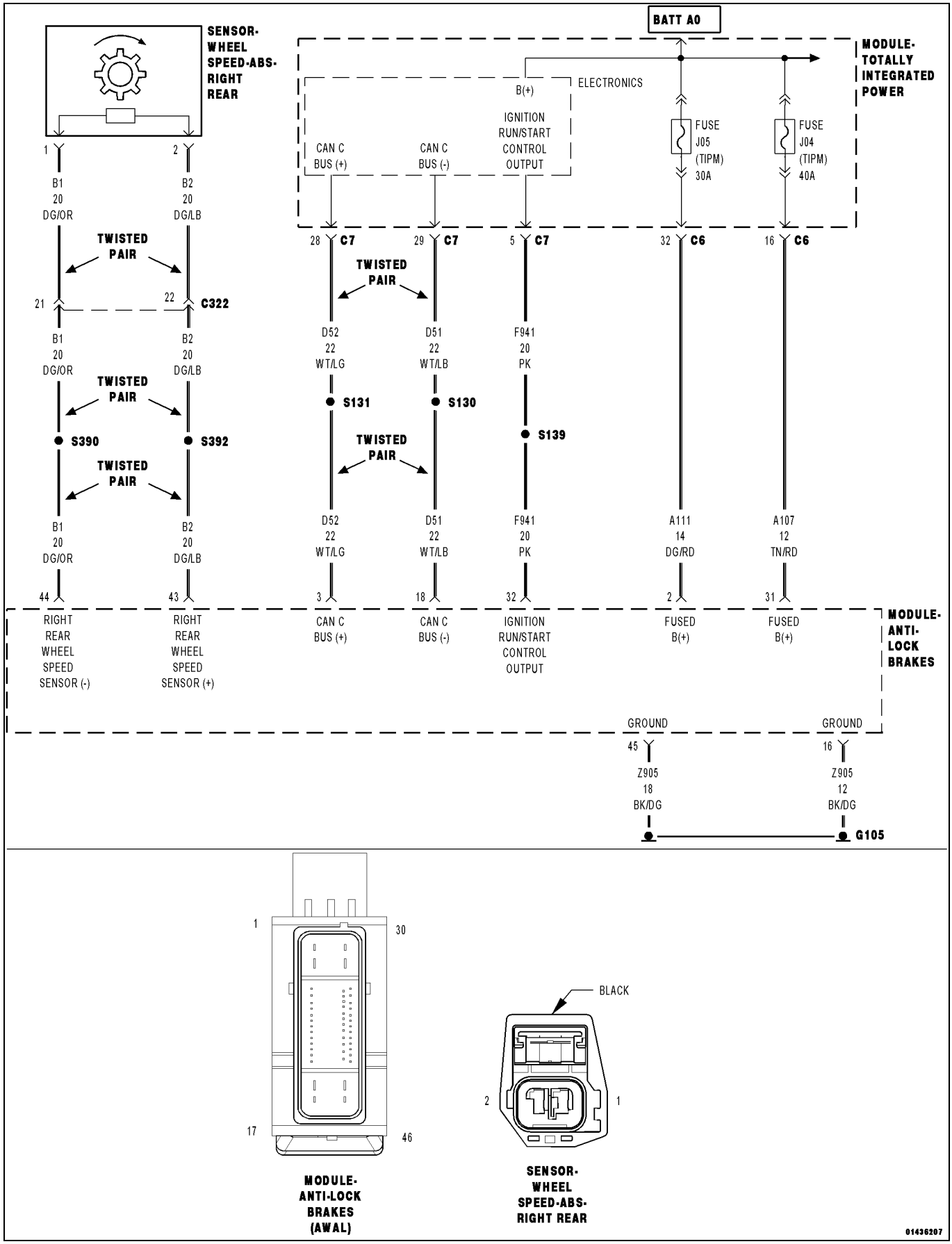

For a complete wiring diagram, **refer to the Wiring Information**.

NOTE: The Electronic Stability Control (ESC) may also be referred to as Electronic Stability Program (ESP) depending on the vehicle model year and configuration. Certain components may also reference ESP, ESC, or use the traction control symbol.

- **When Monitored:**
  With the ignition on and no system under voltage or over voltage condition present.
- **Set Condition:**
  If the measured wheel speed sensor feedback voltage is less than .304 volts, the sensor is considered open.
  If the measured wheel speed sensor feedback voltage is greater than 1.39 volts, or if a sensor over current condition is detected, the sensor is considered shorted.
  If a shorted or open condition is present for more than 100 msec, the DTC will set.

Possible Causes
(B2) REAR WHEEL SPEED SENSOR SUPPLY CIRCUIT SHORTED TO GROUND
(B1) REAR WHEEL SPEED SENSOR SIGNAL CIRCUIT SHORTED TO GROUND
(B2) REAR WHEEL SPEED SENSOR SUPPLY CIRCUIT OPEN
(B1) REAR WHEEL SPEED SENSOR SIGNAL CIRCUIT OPEN
(B2) RIGHT REAR WHEEL SPEED SENSOR SUPPLY CIRCUIT SHORTED TO VOLTAGE
(B1) RIGHT REAR WHEEL SPEED SENSOR SIGNAL CIRCUIT SHORTED TO VOLTAGE
(B2) RIGHT REAR WHEEL SPEED SENSOR SUPPLY CIRCUIT SHORTED TO THE (B1) REAR WHEEL SPEED SENSOR SIGNAL CIRCUIT
TONE WHEEL
EXCESSIVE REAR WHEEL SPEED SENSOR AIR GAP
WHEEL BEARING
RIGHT REAR WHEEL SPEED SENSOR (WSS)
ANTI-LOCK BRAKE SYSTEM (ABS) MODULE

1. DTC IS ACTIVE

1. Ignition on, engine not running.
2. With the scan tool, clear DTCs.
3. Turn the ignition off to the lock position.
4. Ignition on, engine not running.
5. With the scan tool, select View DTCs.

Is the status Active for this DTC?

Yes

- Go To 2

No

- The condition that caused the symptom is currently not present. Inspect the related wiring for a possible intermittent condition. Look for any chafed, pierced, pinched, or partially broken wires.
- Perform the ABS INTERMITTENT CONDITION TEST. (Refer to 28 - DTC-Based Diagnostics/MODULE, Antilock Brake (ABS) - Standard Procedure).

2. WHEEL SPEED SENSOR INSPECTION

1. Turn the ignition off to the lock position.
2. Inspect the Wheel Speed Sensor for proper mounting.
3. Inspect the Wheel Speed Sensor harness and connector.
4. Inspect the Wheel Speed Sensor for excessive debris on the sensor.

Were any problems found?

Yes

- Repair as necessary in accordance with the Service Information.
- Perform the ABS VERIFICATION TEST. (Refer to 28 - DTC-Based Diagnostics/MODULE, Antilock Brake (ABS) - Standard Procedure).

No

- Go To 3

3. TONE WHEEL DAMAGED/MISSING

1. Inspect the Tone Wheel in accordance with the Service Information.

NOTE: The Tone Wheel Teeth should be perfectly square, not bent or nicked.

Were any problems found?

Yes

- Replace the Tone Wheel in accordance with the Service Information.
- Perform the ABS VERIFICATION TEST. (Refer to 28 - DTC-Based Diagnostics/MODULE, Antilock Brake (ABS) - Standard Procedure).

No

- Go To 4

4. EXCESSIVE WHEEL SPEED SENSOR AIR GAP

1. Measure the Wheel Speed Sensor Air Gap in accordance with the Service Information.

Were any problems found?

Yes

- Repair as necessary in accordance with the Service Information.
- Perform the ABS VERIFICATION TEST. (Refer to 28 - DTC-Based Diagnostics/MODULE, Antilock Brake (ABS) - Standard Procedure).

No

- Go To 5

5. WHEEL BEARING LOOSE/BINDING

1. Inspect the wheel bearings for excessive run out or improper clearance in accordance with the Service Information.

Were any problems found?

Yes

- Repair as necessary in accordance with the Service Information.
- Perform the ABS VERIFICATION TEST. (Refer to 28 - DTC-Based Diagnostics/MODULE, Antilock Brake (ABS) - Standard Procedure).

No

- Go To 6

6. CHECK (B2) RIGHT REAR WHEEL SPEED SENSOR SUPPLY CIRCUIT VOLTAGE

1. Disconnect the Right Rear Wheel Speed Sensor harness connector.
2. Turn the ignition on.
3. Measure the voltage between the (B2) Right Rear Wheel Speed Sensor Supply circuit and ground.

Is the voltage above 10 volts?

Yes

- Go To 7

No

- Go To 9

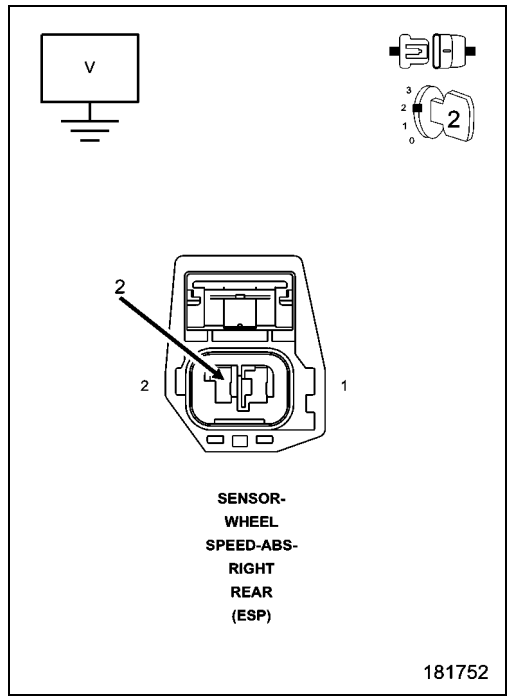

7. (B2) RIGHT REAR WHEEL SPEED SENSOR SUPPLY CIRCUIT SHORTED TO VOLTAGE

1. Turn the ignition off to the lock position.
2. Disconnect the ABS Module harness connector.
3. Ignition on, engine not running.
4. Measure the voltage of the (B2) Right Rear Wheel Speed Sensor Supply circuit at the Right Rear Wheel Speed Sensor harness connector.

Is there any voltage present?

Yes

- Repair (B2) Right Rear Wheel Speed Sensor Supply circuit for a short to voltage.
- Perform the ABS VERIFICATION TEST. (Refer to 28 - DTC-Based Diagnostics/MODULE, Antilock Brake (ABS) - Standard Procedure).

No

- Go To 8

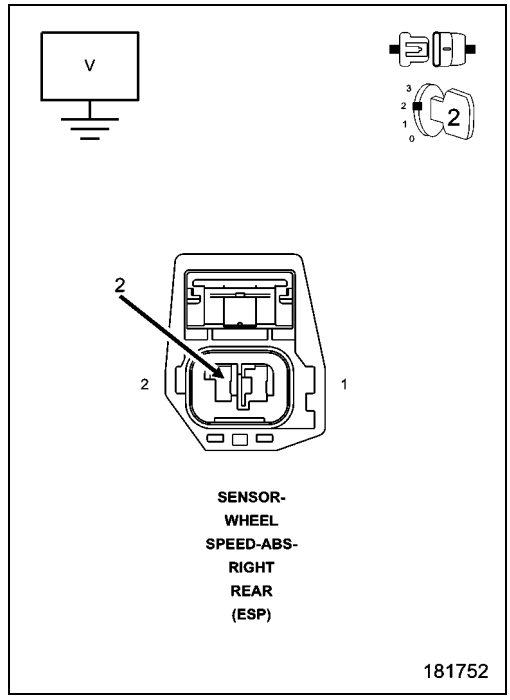

8. (B1) RIGHT REAR WHEEL SPEED SENSOR SIGNAL CIRCUIT SHORTED TO GROUND

1. Turn the ignition off.
2. Measure the resistance between the (B1) Right Rear Wheel Speed Sensor Signal circuit and ground.

Is the resistance above 5.0 Ohms?

Yes

- Replace the Right Rear Wheel Speed Sensor in accordance with the Service Information.
- Perform ABS VERIFICATION TEST. (Refer to 28 - DTC-Based Diagnostics/MODULE, Antilock Brake (ABS) - Standard Procedure)

No

- Repair the (B1) Right Rear Wheel Speed Sensor Signal circuit for a short to ground.
- Perform ABS VERIFICATION TEST. (Refer to 28 - DTC-Based Diagnostics/MODULE, Antilock Brake (ABS) - Standard Procedure)

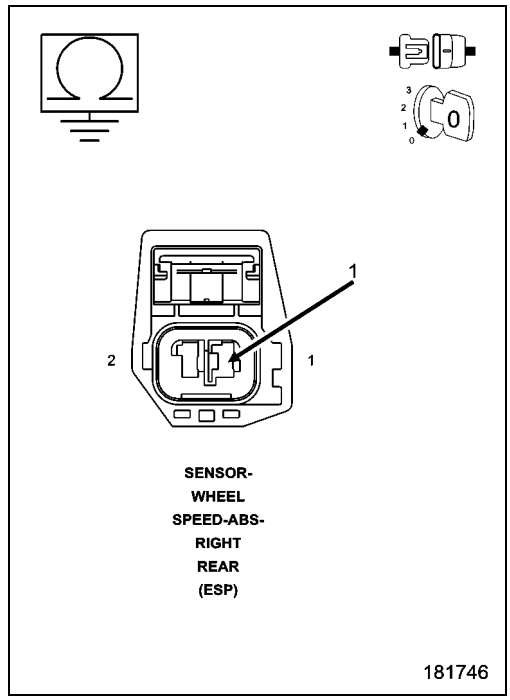

9. (B2) RIGHT REAR WHEEL SPEED SENSOR SUPPLY CIRCUIT SHORTED TO GROUND

1. Turn the ignition off to the lock position.
2. Disconnect the ABS Module harness connector.
3. Measure the resistance between the (B2) Right Rear Wheel Speed Sensor Supply circuit and ground.

Is the resistance above 5.0 Ohms?

Yes

- Go To 10

No

- Repair the (B2) Right Rear Wheel Speed Sensor Supply circuit for a short to ground.
- Perform the ABS VERIFICATION TEST. (Refer to 28 - DTC-Based Diagnostics/MODULE, Antilock Brake (ABS) - Standard Procedure).

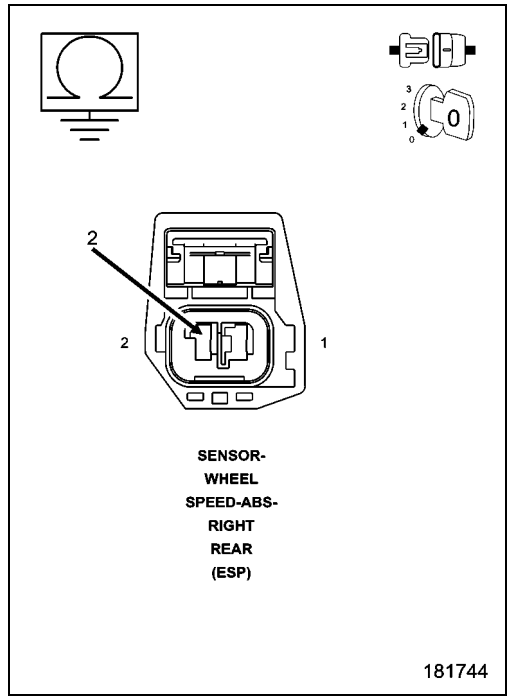

10. (B2) RIGHT REAR WHEEL SPEED SENSOR SUPPLY CIRCUIT OPEN

1. Measure the resistance of the (B2) Right Rear Wheel Speed Sensor Supply circuit between the ABS harness connector and the Right Rear Wheel Speed Sensor harness connector.

Is the resistance below 5 Ohms?

Yes

- Go To 11

No

- Repair the open (B2) Right Rear Wheel Speed Sensor Supply circuit.
- Perform the ABS VERIFICATION TEST. (Refer to 28 - DTC-Based Diagnostics/MODULE, Antilock Brake (ABS) - Standard Procedure).

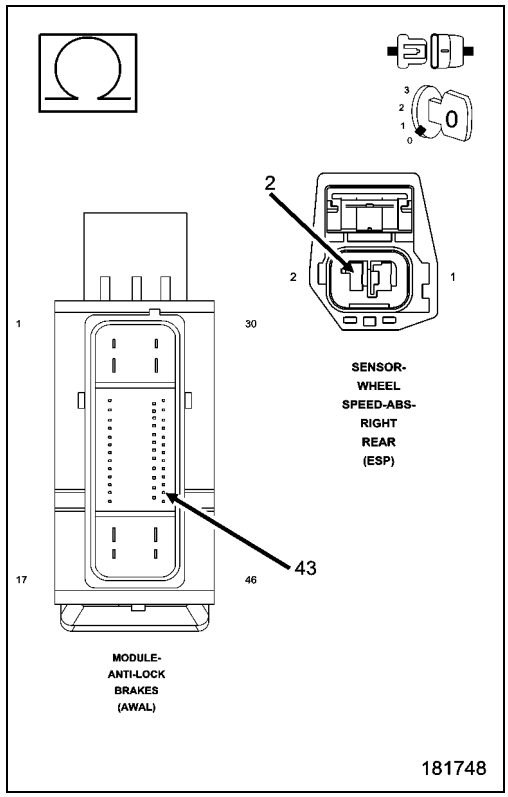

11. (B1) RIGHT REAR WHEEL SPEED SENSOR SIGNAL CIRCUIT OPEN

1. Measure the resistance of the (B1) Right Rear Wheel Speed Sensor Signal circuit between the ABS harness connector and the Right Rear Wheel Speed Sensor harness connector.

Is the resistance below 5 Ohms?

Yes

- Go To 12

No

- Repair the open (B1) Right Rear Wheel Speed Sensor Signal circuit.
- Perform the ABS VERIFICATION TEST. (Refer to 28 - DTC-Based Diagnostics/MODULE, Antilock Brake (ABS) - Standard Procedure).

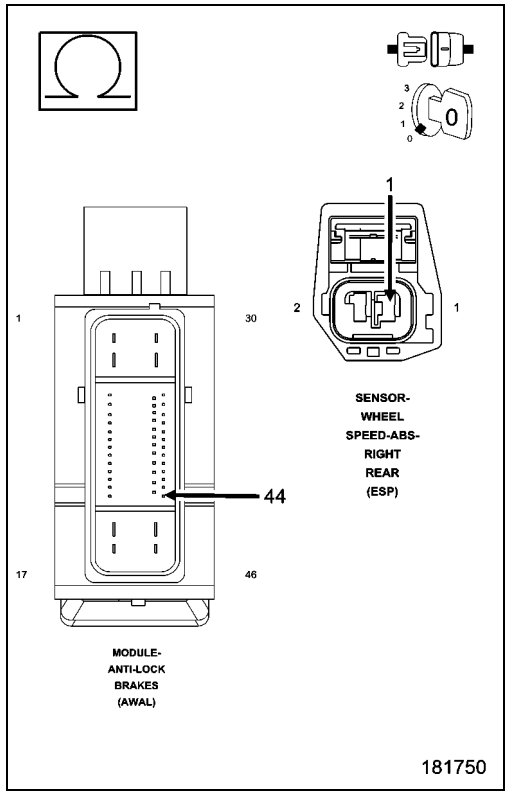

12. (B1) RIGHT REAR WHEEL SPEED SENSOR SIGNAL CIRCUIT SHORTED TO VOLTAGE

1. Turn the ignition on.
2. Measure the voltage of the (B1) Right Rear Wheel Speed Sensor Signal circuit at the Right Rear Wheel Speed Sensor harness connector.

Is there any voltage present?

Yes

- Repair the (B1) Right Rear Wheel Speed Sensor Signal circuit for a short to voltage.
- Perform the ABS VERIFICATION TEST. (Refer to 28 - DTC-Based Diagnostics/MODULE, Antilock Brake (ABS) - Standard Procedure).

No

- Go To 13

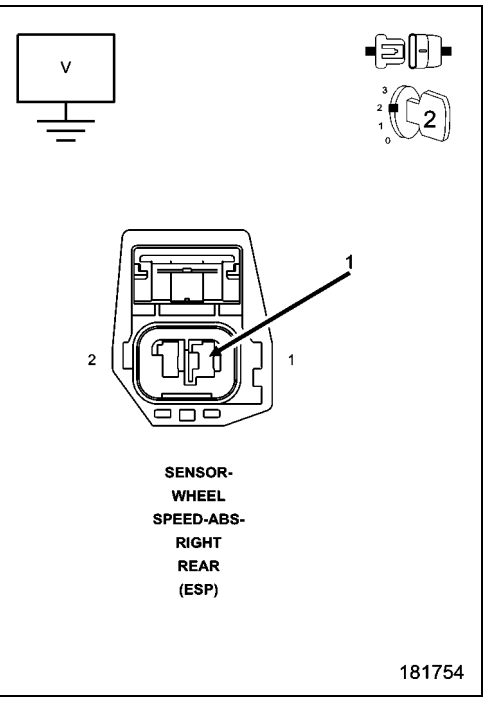

13. (B2) RIGHT REAR WHEEL SPEED SENSOR SUPPLY CIRCUIT SHORTED TO THE (B1) RIGHT REAR WHEEL SPEED SENSOR SIGNAL CIRCUIT

1. Turn the ignition off to the lock position.
2. Measure the resistance between the (B2) Right Rear Wheel Speed Sensor Supply circuit and the (B1) Right Rear Wheel Speed Sensor Signal circuit at the ABS Module harness connector.

Is the resistance below 5.0 Ohms?

Yes

- Repair (B2) Right Rear Wheel Speed Sensor Supply circuit for a short to the (B1) Right Rear Wheel Speed Sensor Signal circuit.
- Perform the ABS VERIFICATION TEST. (Refer to 28 - DTC-Based Diagnostics/MODULE, Antilock Brake (ABS) - Standard Procedure).

No

- Replace the Anti-Lock Brakes Module in accordance with the Service Information.
- Perform the ABS VERIFICATION TEST. (Refer to 28 - DTC-Based Diagnostics/MODULE, Antilock Brake (ABS) - Standard Procedure).

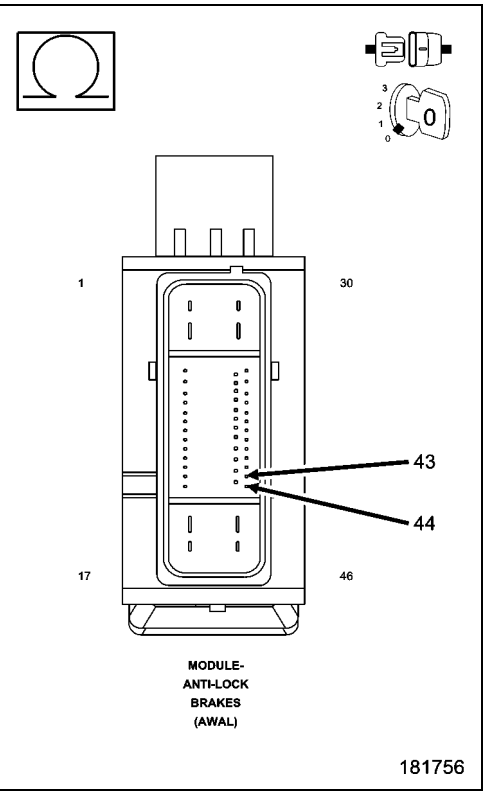

■ C104C-LEFT FRONT INLET VALVE CONTROL CIRCUIT LOW

For a complete wiring diagram **Refer to the Wiring Information.**

- **When Monitored:**
  Ignition on.
- **Set Condition:**
  The Anti-lock Brake Module has detected an internal error.

Possible Causes
ANTI-LOCK BRAKE MODULE

1. ANTI-LOCK BRAKE MODULE INTERNAL CONDITION

1. The Anti-lock Brake Module is reporting internal errors.

NOTE: Before continuing, check the Anti-lock Brake Module harness connector terminals for corrosion, damage, or terminal push out. Repair as necessary.

2. Using the schematics as a guide, inspect the wire harness and connectors. Pay particular attention to all Power and Ground circuits.
3. Perform any Technical Service Bulletins that may apply.

Were there any problems found?

Yes

- Repair as necessary.
- Perform ABS VERIFICATION TEST. (Refer to 28 - DTC-Based Diagnostics/MODULE, Antilock Brake (ABS) - Standard Procedure)

No

- Replace the Anti-lock Brake Module in accordance with the Service Information.
- Perform ABS VERIFICATION TEST. (Refer to 28 - DTC-Based Diagnostics/MODULE, Antilock Brake (ABS) - Standard Procedure)

C1050-RIGHT FRONT INLET VALVE CONTROL CIRCUIT LOW

For a complete wiring diagram **Refer to the Wiring Information.**

- **When Monitored:**
  Ignition on.
- **Set Condition:**
  The Anti-lock Brake Module has detected an internal error.

Possible Causes
ANTI-LOCK BRAKE MODULE

1. ANTI-LOCK BRAKE MODULE INTERNAL CONDITION

1. The Anti-lock Brake Module is reporting internal errors.

NOTE: Before continuing, check the Anti-lock Brake Module harness connector terminals for corrosion, damage, or terminal push out. Repair as necessary.

2. Using the schematics as a guide, inspect the wire harness and connectors. Pay particular attention to all Power and Ground circuits.
3. Perform any Technical Service Bulletins that may apply.

Were there any problems found?

Yes

- Repair as necessary.
- Perform ABS VERIFICATION TEST. (Refer to 28 - DTC-Based Diagnostics/MODULE, Antilock Brake (ABS) - Standard Procedure)

No

- Replace the Anti-lock Brake Module in accordance with the Service Information.
- Perform ABS VERIFICATION TEST. (Refer to 28 - DTC-Based Diagnostics/MODULE, Antilock Brake (ABS) - Standard Procedure)

C1054-LEFT REAR INLET VALVE CONTROL CIRCUIT LOW

For a complete wiring diagram **Refer to the Wiring Information.**.

- **When Monitored:**
  Ignition on.
- **Set Condition:**
  The Anti-lock Brake Module has detected an internal error.

Possible Causes
ANTI-LOCK BRAKE MODULE

1. ANTI-LOCK BRAKE MODULE INTERNAL CONDITION

1. The Anti-lock Brake Module is reporting internal errors.

NOTE: Before continuing, check the Anti-lock Brake Module harness connector terminals for corrosion, damage, or terminal push out. Repair as necessary.

2. Using the schematics as a guide, inspect the wire harness and connectors. Pay particular attention to all Power and Ground circuits.
3. Perform any Technical Service Bulletins that may apply.

Were there any problems found?

Yes

- Repair as necessary.
- Perform ABS VERIFICATION TEST. (Refer to 28 - DTC-Based Diagnostics/MODULE, Antilock Brake (ABS) - Standard Procedure)

No

- Replace the Anti-lock Brake Module in accordance with the Service Information.
- Perform ABS VERIFICATION TEST. (Refer to 28 - DTC-Based Diagnostics/MODULE, Antilock Brake (ABS) - Standard Procedure)

C1058-RIGHT REAR INLET VALVE CONTROL CIRCUIT LOW

For a complete wiring diagram **Refer to the Wiring Information.**.

- **When Monitored:**
  Ignition on.
- **Set Condition:**
  The Anti-lock Brake Module has detected an internal error.

Possible Causes
ANTI-LOCK BRAKE MODULE

1. ANTI-LOCK BRAKE MODULE INTERNAL CONDITION

1. The Anti-lock Brake Module is reporting internal errors.

NOTE: Before continuing, check the Anti-lock Brake Module harness connector terminals for corrosion, damage, or terminal push out. Repair as necessary.

2. Using the schematics as a guide, inspect the wire harness and connectors. Pay particular attention to all Power and Ground circuits.
3. Perform any Technical Service Bulletins that may apply.

Were there any problems found?

Yes

- Repair as necessary.
- Perform ABS VERIFICATION TEST. (Refer to 28 - DTC-Based Diagnostics/MODULE, Antilock Brake (ABS) - Standard Procedure)

No

- Replace the Anti-lock Brake Module in accordance with the Service Information.
- Perform ABS VERIFICATION TEST. (Refer to 28 - DTC-Based Diagnostics/MODULE, Antilock Brake (ABS) - Standard Procedure)

C1060-LEFT FRONT OUTLET VALVE CONTROL CIRCUIT LOW

For a complete wiring diagram **Refer to the Wiring Information**.

- **When Monitored:**
  Ignition on.
- **Set Condition:**
  The Anti-lock Brake Module has detected an internal error.

Possible Causes
ANTI-LOCK BRAKE MODULE

1. ANTI-LOCK BRAKE MODULE INTERNAL CONDITION

1. The Anti-lock Brake Module is reporting internal errors.

NOTE: Before continuing, check the Anti-lock Brake Module harness connector terminals for corrosion, damage, or terminal push out. Repair as necessary.

2. Using the schematics as a guide, inspect the wire harness and connectors. Pay particular attention to all Power and Ground circuits.
3. Refer to any Technical Service Bulletins that may apply.

Were there any problems found?

Yes

- Repair as necessary.
- Perform ABS VERIFICATION TEST. (Refer to 28 - DTC-Based Diagnostics/MODULE, Antilock Brake (ABS) - Standard Procedure)

No

- Replace the Anti-lock Brake Module in accordance with the Service Information.
- Perform ABS VERIFICATION TEST. (Refer to 28 - DTC-Based Diagnostics/MODULE, Antilock Brake (ABS) - Standard Procedure)

C1064-RIGHT FRONT OUTLET VALVE CONTROL CIRCUIT LOW

For a complete wiring diagram **Refer to the Wiring Information.**

- **When Monitored:**
  Ignition on.
- **Set Condition:**
  The Anti-lock Brake Module has detected an internal error.

Possible Causes
ANTI-LOCK BRAKE MODULE

1. ANTI-LOCK BRAKE MODULE INTERNAL CONDITION

1. The Anti-lock Brake Module is reporting internal errors.

NOTE: Before continuing, check the Anti-lock Brake Module harness connector terminals for corrosion, damage, or terminal push out. Repair as necessary.

2. Using the schematics as a guide, inspect the wire harness and connectors. Pay particular attention to all Power and Ground circuits.
3. Perform any Technical Service Bulletins that may apply.

Were there any problems found?

Yes

- Repair as necessary.
- Perform ABS VERIFICATION TEST. (Refer to 28 - DTC-Based Diagnostics/MODULE, Antilock Brake (ABS) - Standard Procedure)

No

- Replace the Anti-lock Brake Module in accordance with the Service Information.
- Perform ABS VERIFICATION TEST. (Refer to 28 - DTC-Based Diagnostics/MODULE, Antilock Brake (ABS) - Standard Procedure)

C1068-LEFT REAR OUTLET VALVE CONTROL CIRCUIT LOW

For a complete wiring diagram, **refer to the Wiring Information**.

- **When Monitored:**
  Ignition on.
- **Set Condition:**
  The Anti-Lock Brake Module has detected an internal error.

Possible Causes
ANTI-LOCK BRAKE MODULE

1. ANTI-LOCK BRAKE MODULE INTERNAL CONDITION

1. The Anti-lock Brake Module is reporting internal errors.

NOTE: Before continuing, check the Anti-lock Brake Module harness connector terminals for corrosion, damage, or terminal push out. Repair as necessary.

2. Using the schematics as a guide, inspect the wire harness and connectors. Pay particular attention to all Power and Ground circuits.
3. Perform any Technical Service Bulletins that may apply.

Were there any problems found?

Yes

- Repair as necessary.
- Perform ABS VERIFICATION TEST. (Refer to 28 - DTC-Based Diagnostics/MODULE, Antilock Brake (ABS) - Standard Procedure)

No

- Replace the Anti-Lock Brake Module in accordance with the Service Information.
- Perform ABS VERIFICATION TEST (Refer to 28 - DTC-Based Diagnostics/MODULE, Antilock Brake (ABS) - Standard Procedure).

C106C-RIGHT REAR OUTLET VALVE CONTROL CIRCUIT LOW

For a complete wiring diagram **Refer to the Wiring Information.**

- **When Monitored:**
  Ignition on.
- **Set Condition:**
  The Anti-lock Brake Module has detected an internal error.

Possible Causes
ANTI-LOCK BRAKE MODULE

1. ANTI-LOCK BRAKE MODULE INTERNAL CONDITION

1. The Anti-lock Brake Module is reporting internal errors.

NOTE: Before continuing, check the Anti-lock Brake Module harness connector terminals for corrosion, damage, or terminal push out. Repair as necessary.

2. Using the schematics as a guide, inspect the wire harness and connectors. Pay particular attention to all Power and Ground circuits.
3. Perform any Technical Service Bulletins that may apply.

Were there any problems found?

Yes

- Repair as necessary.
- Perform ABS VERIFICATION TEST. (Refer to 28 - DTC-Based Diagnostics/MODULE, Antilock Brake (ABS) - Standard Procedure)

No

- Replace the Anti-lock Brake Module in accordance with the Service Information.
- Perform ABS VERIFICATION TEST. (Refer to 28 - DTC-Based Diagnostics/MODULE, Antilock Brake (ABS) - Standard Procedure)

C1073-ABS MOTOR CONTROL CIRCUIT

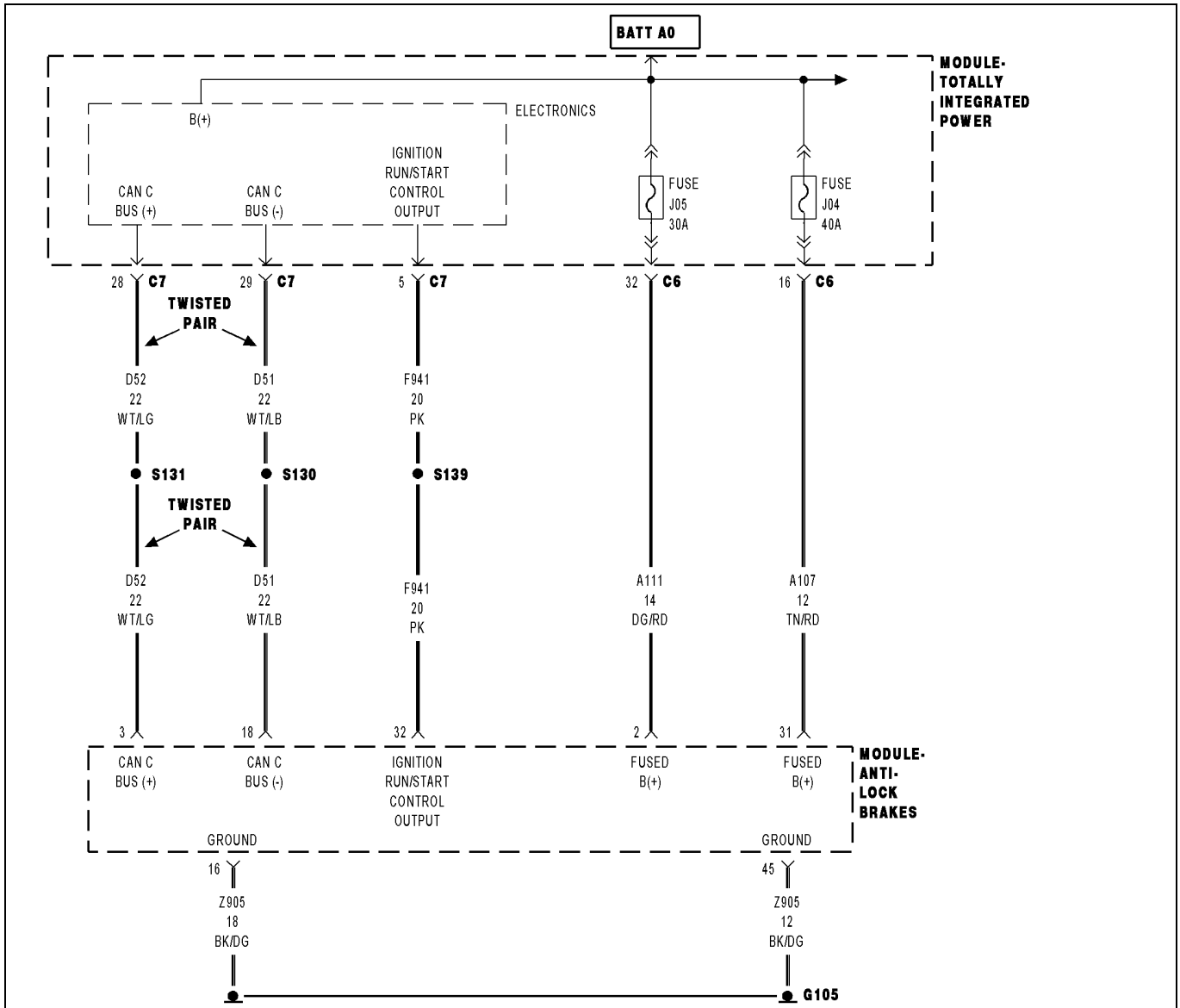

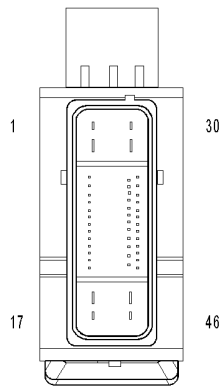

MODULE-
ANTI-LOCK
BRAKES
(AWAL)

01436737

For a complete wiring diagram, **refer to the Wiring Information**.

- **When Monitored:**

  With the ignition on and no system under voltage condition present.

- **Set Condition:**

  OPEN CIRCUIT: If pump motor feedback remains greater than 0.75 of a volt for more than 50 msec (+/- 5 msec) after monitoring conditions are met, the DTC will set.

  LOCKED MOTOR: If the module detects that the motor is spinning at less than 500 r.p.m. after monitoring conditions are met, the DTC will set.

  LOW VOLTAGE: The voltage of the supply is monitored every 3 msec. If the voltage is low for 150 msec, the DTC will set.

Possible Causes
FUSE J04 (40A)
INTERMITTENT ABS MOTOR CONTROL CIRCUIT DTC
(A107) FUSED B+ CIRCUIT OPEN OR HIGH RESISTANCE
(Z107) OR (Z127) GROUND CIRCUIT OPEN OR HIGH RESISTANCE
ANTI-LOCK BRAKE SYSTEM (ABS) MODULE

1. DTC IS ACTIVE

1. Ignition on, engine not running.
2. With the scan tool, clear DTCs.
3. Turn the ignition off to the lock position.
4. Ignition on, engine not running.
5. With the scan tool, actuate the ABS pump motor.

Did the Pump Motor operate when actuated?

No

- Go To 2

Yes

- Go To 5

2. (A107) FUSED B+ CIRCUIT OPEN OR HIGH RESISTANCE

1. Turn the ignition off to the lock position.
2. Disconnect the ABS Module harness connector.

NOTE: Check connector - Clean/repair as necessary.

3. Using a 12-volt test light connected to ground, check the (A107) Fused B+ Circuit.

NOTE: The test light should be illuminated and bright. Compare the brightness to that of a direct connection to the battery.

Is the test light illuminated and bright?

Yes

- Go To 3

No

- Repair the (A107) Fused B+ Circuit for an open circuit or high resistance.
- Perform the ABS VERIFICATION TEST. (Refer to 28 - DTC-Based Diagnostics/MODULE, Antilock Brake (ABS) - Standard Procedure).

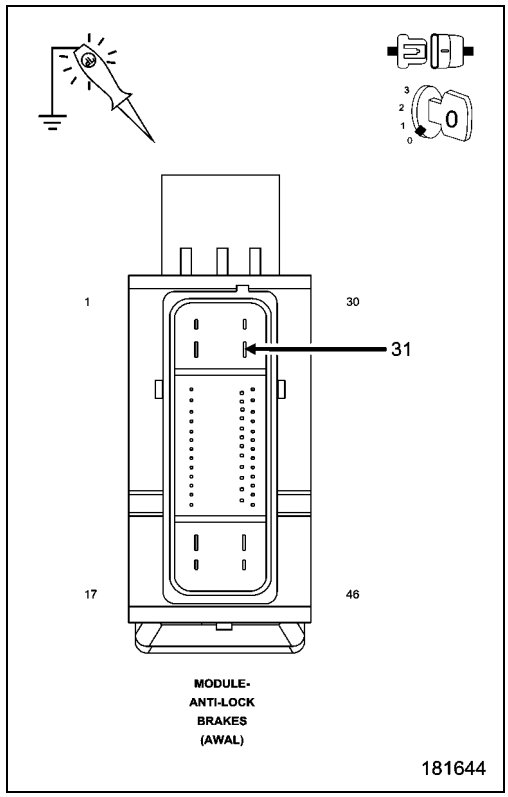

3. (Z107) or (Z127) GROUND CIRCUIT OPEN OR HIGH RESISTANCE

1. Using a 12-volt test light connected to 12-volts, check the (Z107) and (Z127) Ground circuits.

NOTE: The test light should be illuminated and bright. Compare the brightness to that of a direct connection to the battery.

Is the test light illuminated and bright?

Yes

- Go To 4

No

- Repair the (Z107) or (Z127) Ground Circuit(s) for an open circuit or high resistance.
- Perform the ABS VERIFICATION TEST. (Refer to 28 - DTC-Based Diagnostics/MODULE, Antilock Brake (ABS) - Standard Procedure).

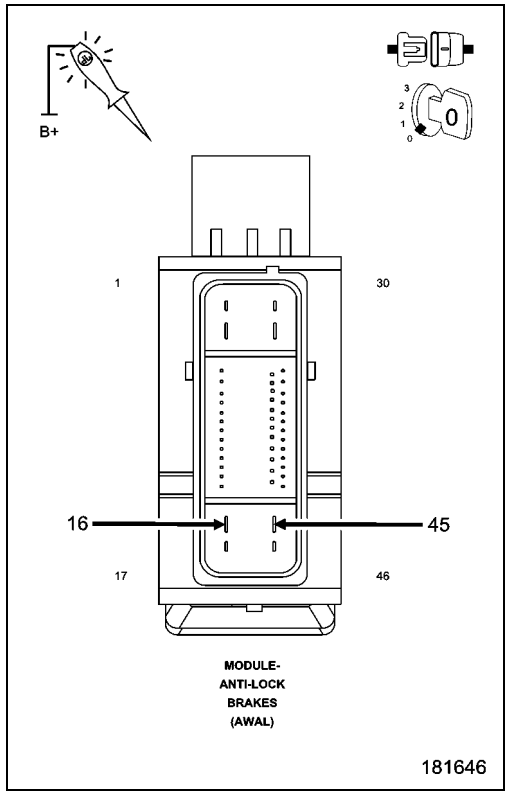

4. ANTI-LOCK BRAKE SYSTEM (ABS) MODULE

1. Turn the ignition off to the lock position.
2. Inspect the related wiring harness. Look for any chafed, pierced, pinched, or partially broken wires.
3. Inspect the related wire harness connectors. Look for broken, bent, pushed out, or corroded terminals.
4. Perform any Technical Service Bulletins that may apply.

Were any problems found?

Yes

- Repair as necessary.
- Perform the ABS VERIFICATION TEST. (Refer to 28 - DTC-Based Diagnostics/MODULE, Antilock Brake (ABS) - Standard Procedure).

No

- If no other problems are found, replace the Anti-lock Brake Module in accordance with the Service Information.
- Perform the ABS VERIFICATION TEST. (Refer to 28 - DTC-Based Diagnostics/MODULE, Antilock Brake (ABS) - Standard Procedure).

5. WIRING HARNESS INSPECTION

1. Turn the ignition off to the lock position.
2. Inspect the related wiring harness. Look for any chafed, pierced, pinched, or partially broken wires.
3. Inspect the related wire harness connectors. Look for broken, bent, pushed out, or corroded terminals.
4. Perform any Technical Service Bulletins that may apply.

Were any problems found?

Yes

- Repair as necessary.
- Perform the ABS VERIFICATION TEST. (Refer to 28 - DTC-Based Diagnostics/MODULE, Antilock Brake (ABS) - Standard Procedure).

No

- Test Complete.

■ C1078-TIRE REVOLUTIONS RANGE PERFORMANCE

For a complete wiring diagram, **refer to the Wiring Information**.

- **When Monitored:**
  With the ignition on.
- **Set Condition:**
  The DTC will set if the stored tire size is out of range as received from the Totally Integrated Power Module (TIPM).

Possible Causes
INTERMITTENT TIRE REVOLUTIONS RANGE PERFORMANCE DTC
INCORRECT TIRE SIZE PROGRAMMED INTO TOTALLY INTEGRATED POWER MODULE (TIPM)

1. DTC CONDITION IS PRESENT

1. Turn the ignition on.
2. Observe the ABS Warning Indicator.

Is the ABS Warning Indicator Flashing?

Yes

- Go To 2

No

- Go To 3

2. INCORRECT TIRES PROGRAMMED INTO TIPM

TIRE SIZE	BODY STYLE	ENGINE SIZE	SALES CODE	TIRE CIRCUM-FERENCE
305/40R22 GENERAL ALL SEASON	DS	ALL	TY4	2461mm (97in)
305/40R22 GENERAL ALL SEASON	DS	ALL	TYE	2461mm (97in)
P245/70R17 BSW GOOD YEAR ALL SEASON	DS	ALL	TSB	2353mm (93in)
P275/60R20 BSW GOOD YEAR ALL SEASON	DS	ALL	TTJ	2538mm (100in)
LT275/70R17C OWL GOOD YEAR ALL TERRAIN	DS	ALL	TTL	2480mm (98in)
P265/70R17 BSW GOOD YEAR ALL SEASON	DS	ALL	TTM	2450mm (96in)
P265/70R17 BSW GOOD YEAR ON/OFF ROAD	DS	ALL	TTS	2420mm (95in)
P265/70R17 OWL GOOD YEAR ON/OFF ROAD	DS	ALL	TTK	2435mm (96in)
P265/70R17 OWL GOOD YEAR ON/OFF ROAD	DS	ALL	TTT	2435mm (96in)
P265/70R17 OWL GOOD YEAR ALL SEASON	DS	ALL	TTY	2450mm (96in)
P275/60R20 OWL GOOD YEAR ALL SEASON	DS	ALL	TUK	2538mm (100in)

1. Inspect all four tires on the vehicle and note the size of each tire.

NOTE: A non-production size tire cannot be programmed into the TIPM. The production Powertrain, with the production size tires, is the only emissions certified configuration that is available for reprogramming.

2. Verify the correct Tire/wheel information is programmed in the TIPM.

Is the correct value programmed in the TIPM according to the chart?

Yes

- Test complete.
- Perform the ABS VERIFICATION TEST. (Refer to 28 - DTC-Based Diagnostics/MODULE, Antilock Brake (ABS) - Standard Procedure).

No

- Program the correct Tire/Wheel information in the TIPM.
- Perform the ABS VERIFICATION TEST. (Refer to 28 - DTC-Based Diagnostics/MODULE, Antilock Brake (ABS) - Standard Procedure).

3. WIRING HARNESS INSPECTION

1. Turn the ignition off.
2. Visually inspect the related wiring harness. Look for any chafed, pierced, pinched, or partially broken wires.
3. Visually inspect the related wire harness connectors. Look for broken, bent, pushed out, or corroded terminals.
4. Perform any Hotline letters or Technical Service Bulletins that may apply.

Were any problems found?

Yes

- Repair as necessary.
- Perform the ABS VERIFICATION TEST. (Refer to 28 - DTC-Based Diagnostics/MODULE, Antilock Brake (ABS) - Standard Procedure).

No

- Test Complete.

C1079-TONE WHEEL TEETH COUNT RANGE PERFORMANCE

For a complete wiring diagram **Refer to the Wiring Information.**

- **When Monitored:**
  Ignition on.
- **Set Condition:**
  The DTC will set if the stored tone wheel tooth count is out of range as received from the TIPM.

Possible Causes
TONE WHEEL TOOTH COUNT NOT PROGRAMED IN THE TIPM
TONE RING/AXLE SIZE MISMATCH
ANTI-LOCK BRAKE MODULE

1. TONE RING/AXLE SIZE MISMATCH

1. Turn the ignition on.
2. With the scan tool, determine the axle size that is programmed into the Anti-lock Brake Module.
3. Inspect and identify the vehicle axle size.
4. Compare the axle size programmed into the Anti-lock Brake Module, and the actual axle size installed into the vehicle.

Does the programmed axle size match the installed axle?

Yes

- Replace the Anti-lock Brake Module in accordance with the Service Information.
- Perform ABS VERIFICATION TEST. (Refer to 28 - DTC-Based Diagnostics/MODULE, Antilock Brake (ABS) - Standard Procedure)

No

- Reprogram the Anti-lock Brake Module in accordance with the Service Information.
- Perform ABS VERIFICATION TEST. (Refer to 28 - DTC-Based Diagnostics/MODULE, Antilock Brake (ABS) - Standard Procedure)

C107B-WHEEL SPEED COMPARATIVE PERFORMANCE

For a complete wiring diagram, **refer to the Wiring Information**.

- **When Monitored:**
  With the ignition on.
- **Set Condition:**
  When one or more WSS reading is different from the readings received from the other WSS's. The Anti-Lock Brake Module compares WSS readings from side-to-side on an axle and front-to-rear.

Possible Causes
UNDER INFLATED TIRE
WRONG TIRE SIZE
WSS LOOSE - SIGNAL, SUPPLY CIRCUITS/CONNECTOR/TERMINAL DAMAGE
BRAKE SYSTEM FAULT
TONE WHEEL DAMAGE
WSS - INTERNAL FAULT
ANTI-LOCK BRAKE MODULE - INTERNAL FAULT

1. CHECK FOR DTC C107B-WHEEL SPEED COMPARATIVE PERFORMANCE

NOTE: This DTC must be active for the results of this test to be valid.

1. Turn the ignition on.
2. With the scan tool, record and erase DTC's.
3. Cycle the ignition switch from off to on.
4. With the scan tool, read DTC's

NOTE: The Anti-Lock Brake Module must sense ALL 4 wheels at 12 km/h (7.5 m.p.h.) before it will extinguish the ABS indicators.

Does the scan tool display: C107B-WHEEL SPEED COMPARATIVE PERFORMANCE?

Yes

- Go To 2

No

- Perform the ABS-INTERMITTENT CONDITION TEST. (Refer to 28 - DTC-Based Diagnostics/MODULE, Antilock Brake (ABS) - Standard Procedure).

2. CHECK WHEEL SPEED SENSOR SIGNALS

1. Turn the ignition on.
2. With the scan tool, monitor ALL the WSS speeds while an assistant drives the vehicle.
3. Slowly accelerate as straight as possible from a stop to 40 km/h (25 m.p.h.).

Is one or more WSS speeds showing 0 km/h (0 m.p.h.) or not matching other wheel speeds?

Yes

- Go To 3

No

- Perform the ABS-INTERMITTENT CONDITION TEST. (Refer to 28 - DTC-Based Diagnostics/MODULE, Antilock Brake (ABS) - Standard Procedure).

3. CHECK WSS LOOSENESS, INSPECT SIGNAL,SUPPLY CIRCUITS/CONNECTORS/TERMINALS FOR DAMAGE

NOTE: Check all terminals for broken, bent, pushed out, or corroded terminals.

1. Turn the ignition off.
2. Inspect the Anti-Lock Brake Module harness connector, each WSS, and each WSS harness connector.
3. Inspect each WSS for looseness and not properly fastened.
4. Inspect each WSS Signal and WSS Supply circuits between each WSS and Anti-Lock Brake Module for damage.

Is any WSS loose or any of the wiring/connectors/terminals damaged?

Yes

- Repair as necessary.
- Perform ABS VERIFICATION TEST. (Refer to 28 - DTC-Based Diagnostics/MODULE, Antilock Brake (ABS) - Standard Procedure).

No

- Go To 4

4. CHECK BRAKE SYSTEM

1. Turn the ignition off.
2. Check the brake fluid level.
3. Check for trapped air in brake lines.
4. Inspect for brake fluid leakage on vehicle.
5. Inspect for loose mounted brake hardware.

Are any of the above conditions present?

Yes

- Repair as necessary.
- Perform ABS VERIFICATION TEST. (Refer to 28 - DTC-Based Diagnostics/MODULE, Antilock Brake (ABS) - Standard Procedure).

No

- Go To 5

5. CHECK EACH TONE WHEEL FOR DAMAGE

1. Turn the ignition off.
2. Inspect each Tone Wheel for damage, missing teeth, cracks, or looseness.

NOTE: The Tone Wheel teeth should be perfectly square, not bent, or nicked.

Is the Tone Wheels damaged?

Yes

- Repair as necessary.
- Perform ABS VERIFICATION TEST. (Refer to 28 - DTC-Based Diagnostics/MODULE, Antilock Brake (ABS) - Standard Procedure).

No

- Go To 6

6. ANTI-LOCK BRAKE MODULE - INTERNAL FAULT

1. Turn the ignition off.
2. Replace WSS in question and perform ABS VERIFICATION TEST (Refer to 28 - DTC-Based Diagnostics/MODULE, Antilock Brake (ABS) - Standard Procedure).
3. With the scan tool, erase DTCs.
4. Road test the vehicle over 40 km/h (25 m.p.h.).
5. Turn the ignition on.
6. With the scan tool, read DTCs

Did the DTC C107B-WHEEL SPEED COMPARATIVE PERFORMANCE reset?

Yes

- Replace the Anti-Lock Brake Module in accordance with the Service Information.
- Perform ABS VERIFICATION TEST (Refer to 28 - DTC-Based Diagnostics/MODULE, Antilock Brake (ABS) - Standard Procedure).

No

- Test Complete.

C107D-BRAKE PEDAL SWITCH 1/2 CORRELATION

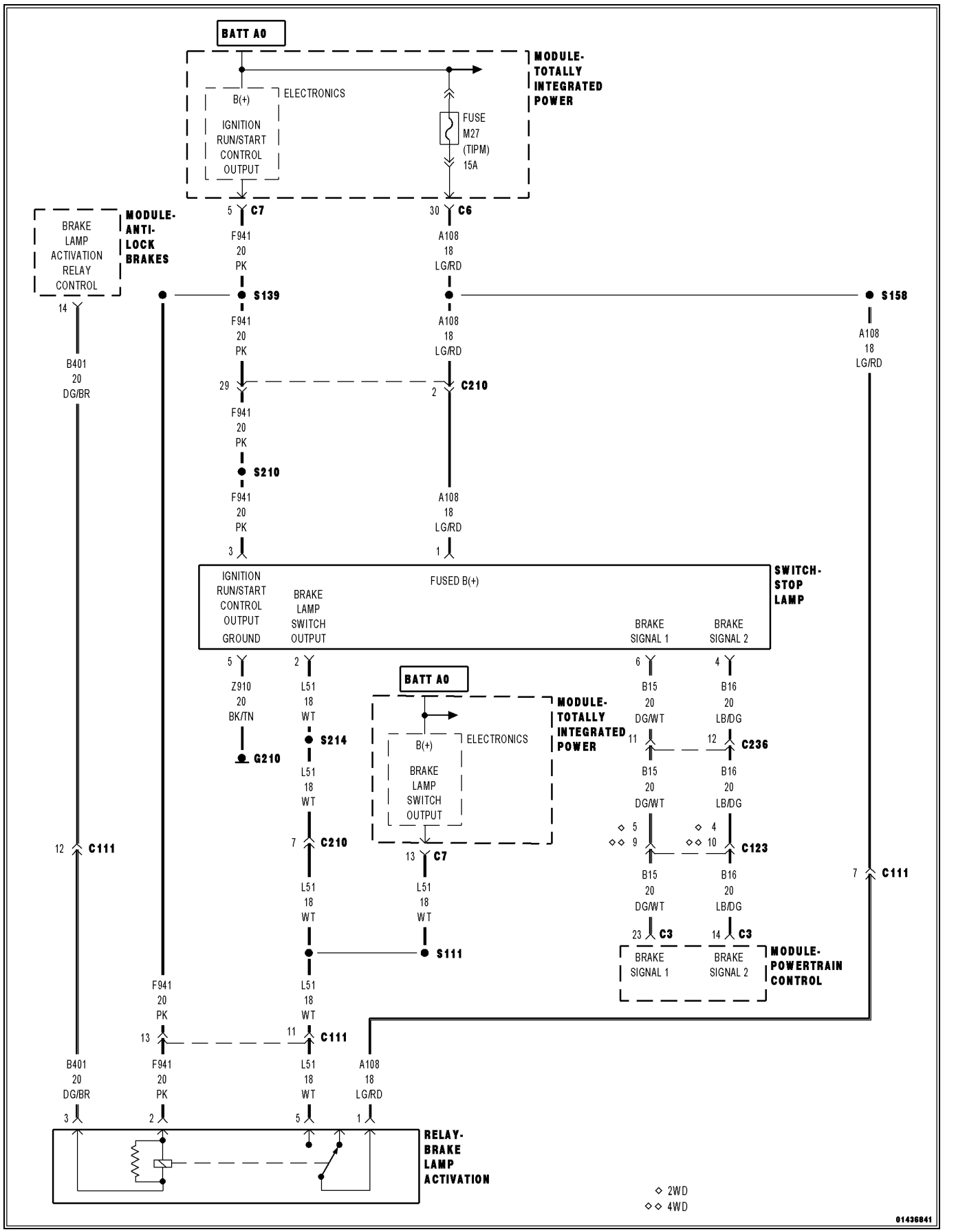

For a complete wiring diagram, **refer to the Wiring Information**.

NOTE: The Electronic Stability Control (ESC) may also be referred to as Electronic Stability Program (ESP) depending on the vehicle model year and configuration. Certain components may also reference ESP, ESC, or use the traction control symbol.

- **When Monitored:**
  When the vehicle is driven.
- **Set Condition:**
  If the Powertrain Control Module (PCM) detects an implausible signal from the Stop Lamp Switch and sends a message to the ABS Module via the CAN C bus.

Possible Causes
WIRING HARNESS, TERMINAL, CONNECTOR DAMAGE
STOP LAMP RELATED DTCs OR SYMPTOMS PRESENT FUSE OPEN
MISADJUSTED PEDAL SWITCH
(B15) BRAKE SIGNAL 1 CIRCUIT SHORTED TO GROUND
(B15) BRAKE SIGNAL 1 SIGNAL CIRCUIT OPEN
(Z910) GROUND CIRCUIT OPEN
STOP LAMP SWITCH
ANTI-LOCK BRAKES SYSTEM (ABS) MODULE

1. VERIFY DTC IS ACTIVE

NOTE: Diagnose and repair all Pressure Sensor and Voltage related DTCs and all Stop Lamp related DTCs and symptoms before diagnosing this DTC.

1. Ignition on, engine not running.
2. With the scan tool, read DTCs.
3. With the scan tool, read and record Environmental Data (EV Data).
4. With the scan tool, erase DTCs.
5. Cycle the ignition switch.

WARNING: Make sure brake capability is available before road testing.

6. Test drive the vehicle as follows: Drive for more than six minutes at a speed greater than 40 km/h (25 mph) and accelerate to a speed greater than 40 km/h (25 mph) and then decelerate to a speed lower than 3 km/h (2 mph) five consecutive times.
7. Park the vehicle.
8. With the scan tool, read DTCs.

Is the DTC active?

Yes

- Go To 2

No

- Perform the ABS INTERMITTENT CONDITION. (Refer to 28 - DTC-Based Diagnostics/MODULE, Antilock Brake (ABS) - Standard Procedure).

2. INSPECT RELATED WIRING HARNESS, TERMINALS, AND CONNECTORS

1. Turn ignition off to the lock position.
2. Visually inspect the related wiring harness. Look for any pinched, chafed, pierced, and partially broken wires.
3. Visually inspect the related wiring harness connectors. Look for broken, bent, pushed out, and corroded terminals.

Were any problems found?

Yes

- Repair as necessary.
- Perform the ABS VERIFICATION TEST. (Refer to 28 - DTC-Based Diagnostics/MODULE, Antilock Brake (ABS) - Standard Procedure).

No

- Go To 3

3. CHECK (B15) BRAKE SIGNAL 1 CIRCUIT FUNCTION WHILE PRESSING AND RELEASING THE BRAKE PEDAL

1. Ignition on, engine not running.
2. Using a 12-volt test light connected to 12 volts, backprobe the (B15) Brake Switch No. 1 Signal circuit at the PCM C3 harness connector.
3. Press and release the brake pedal.

Does the test light illumination toggle from off to on?

Yes

- Go To 7

No

- Go To 4

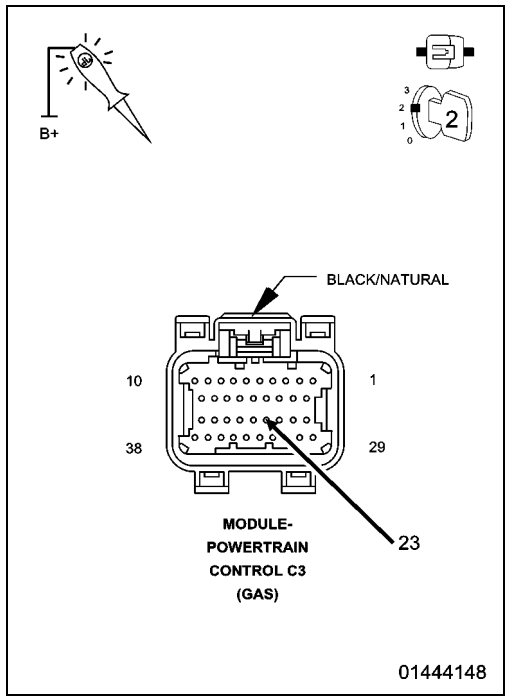

4. CHECK (B15) BRAKE SIGNAL 1 CIRCUIT FOR A SHORT TO GROUND

1. Turn ignition off to the lock position.
2. Disconnect the PCM C3 harness connector.
3. Disconnect the Stop Lamp Switch harness connector.
4. Measure the resistance of the (B15) Brake Signal 1 circuit between ground and the PCM C3 harness connector.

Is the resistance below 5.0 Ohms?

Yes

- Repair the (B15) Brake Signal 1 circuit for a short to ground.
- Perform the ABS VERIFICATION TEST. (Refer to 28 - DTC-Based Diagnostics/MODULE, Antilock Brake (ABS) - Standard Procedure).

No

- Go To 5

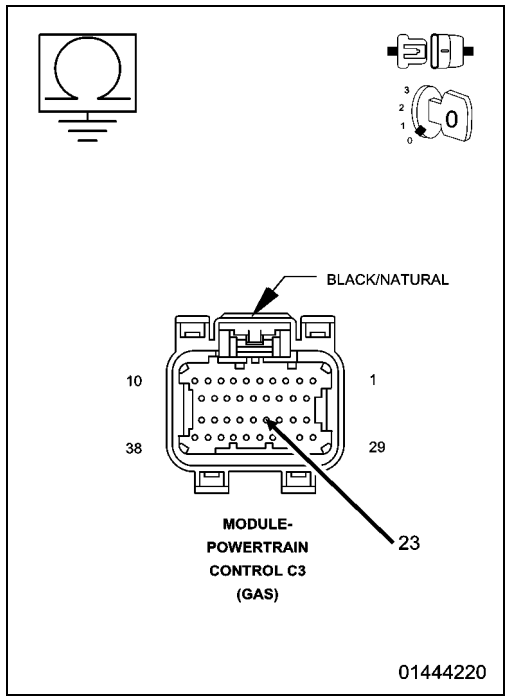

5. CHECK (B15) BRAKE SIGNAL 1 CIRCUIT FOR AN OPEN

1. Measure the resistance of the (B15) Brake Signal 1 circuit between the ABS Module harness connector and the Stop Lamp Switch harness connector.

Is the resistance below 5.0 Ohms?

Yes

- Go To 6

No

- Repair the (B15) Brake Signal 1 circuit for an open.
- Perform the ABS VERIFICATION TEST. (Refer to 28 - DTC-Based Diagnostics/MODULE, Antilock Brake (ABS) - Standard Procedure).

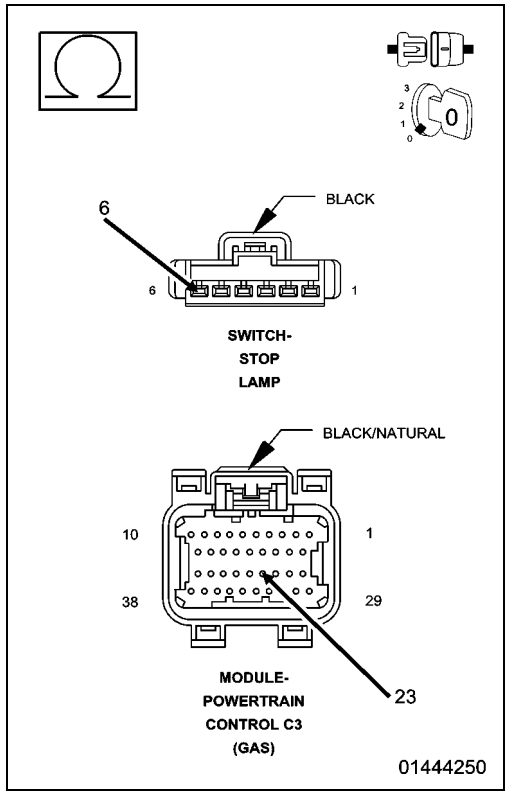

6. CHECK (Z910) GROUND CIRCUIT FOR A OPEN

1. Measure the resistance on the (Z910) Ground circuit and ground in the Stop Lamp Switch harness connector.

Is the resistance below 5 Ohms?

Yes

- Replace the Stop Lamp Switch in accordance with the Service Information.
- Perform the ABS VERIFICATION TEST. (Refer to 28 - DTC-Based Diagnostics/MODULE, Antilock Brake (ABS) - Standard Procedure).

No

- Repair the open in the (Z910) Ground circuit.
- Perform the ABS VERIFICATION TEST. (Refer to 28 - DTC-Based Diagnostics/MODULE, Antilock Brake (ABS) - Standard Procedure).

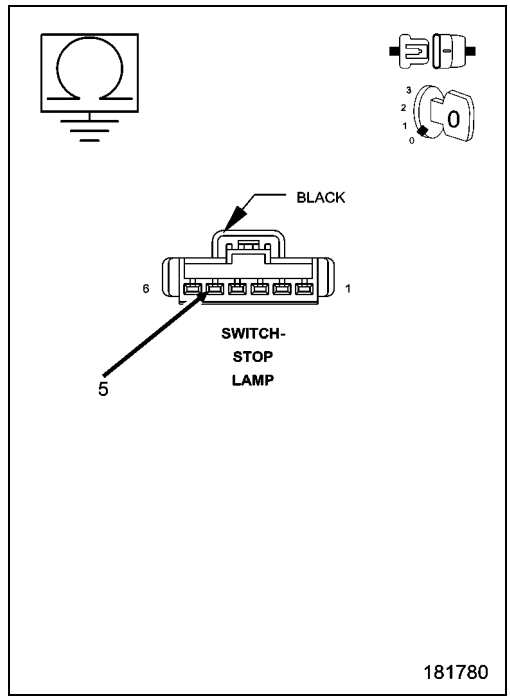

7. CHECK BRAKE PEDAL ADJUSTMENT

1. Connect the Stop Lamp Switch harness connector.
2. Using a 12-volt test light connected to 12 volts, backprobe the (B15) Brake Switch No. 1 Signal circuit in the Stop Lamp Switch harness connector.
3. Ignition on, engine not running.
4. Press and release the brake pedal.

Does the test light illumination toggle from off to on within 4-5 mm of brake pedal travel?

Yes

- Replace the Anti-Lock Bakes System (ABS) Module in accordance with the Service Information.
- Perform the ABS VERIFICATION TEST. (Refer to 28 - DTC-Based Diagnostics/MODULE, Antilock Brake (ABS) - Standard Procedure).

No

- Replace the Stop Lamp Switch in accordance with the Service Information.
- Perform the ABS VERIFICATION TEST. (Refer to 28 - DTC-Based Diagnostics/MODULE, Antilock Brake (ABS) - Standard Procedure).

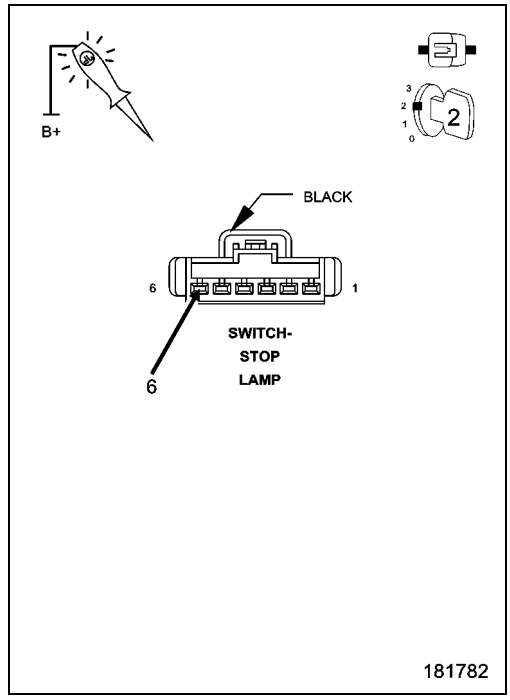

C1086-ABS SYSTEM CONTROL TOO LONG

For a complete wiring diagram **Refer to the Wiring Information.**

- **When Monitored:**
  With the ignition on.
- **Set Condition:**
  When the Anti-Lock Brake Module receives 5 seconds of dump activation without wheel speed recovery.

Possible Causes
ABS, TCS, ESP CONTROL TOO LONG
AIR IN BRAKE SYSTEM/WORN MECHANICAL COMPONENTS
HYDRAULIC CONTROL UNIT (HCU) INTERNAL FAILURE

1. CHECK FOR ACTIVE DTC

NOTE: If other DTC's are set they must be repaired before continuing. This DTC must be active for the results of this test to be valid and this DTC may set while driving under excessive driving conditions.

1. Turn the ignition on.
2. With the scan tool, read and record DTCs.
3. With the scan tool, erase DTCs.
4. Depress and release the brake pedal.
5. With the scan tool, read and record DTCs.

Does the scan tool display: C1086-ABS SYSTEM CONTROL TOO LONG?

Yes

- Go To 2

No

- Perform the ABS-INTERMITTENT CONDITION TEST. (Refer to 28 - DTC-Based Diagnostics/MODULE, Antilock Brake (ABS) - Standard Procedure).

2. CHECK FOR AIR IN BRAKE SYSTEM AND WORN MECHANICAL COMPONENTS

NOTE: Visually inspect for worn brake linings, undersized rotors, binding or frozen calipers. Repair as necessary.

NOTE: Before continuing the brake system must be bled to verify there is no air in the brake system.

Were any problems found?

Yes

- Repair as necessary.
- Perform ABS VERIFICATION TEST. (Refer to 28 - DTC-Based Diagnostics/MODULE, Antilock Brake (ABS) - Standard Procedure).

No

- Replace the Hydraulic Control Unit in accordance with the Service Information.
- Perform ABS VERIFICATION TEST. (Refer to 28 - DTC-Based Diagnostics/MODULE, Antilock Brake (ABS) - Standard Procedure).

C1090-ABS BRAKE LAMP CONTROL CIRCUIT LOW

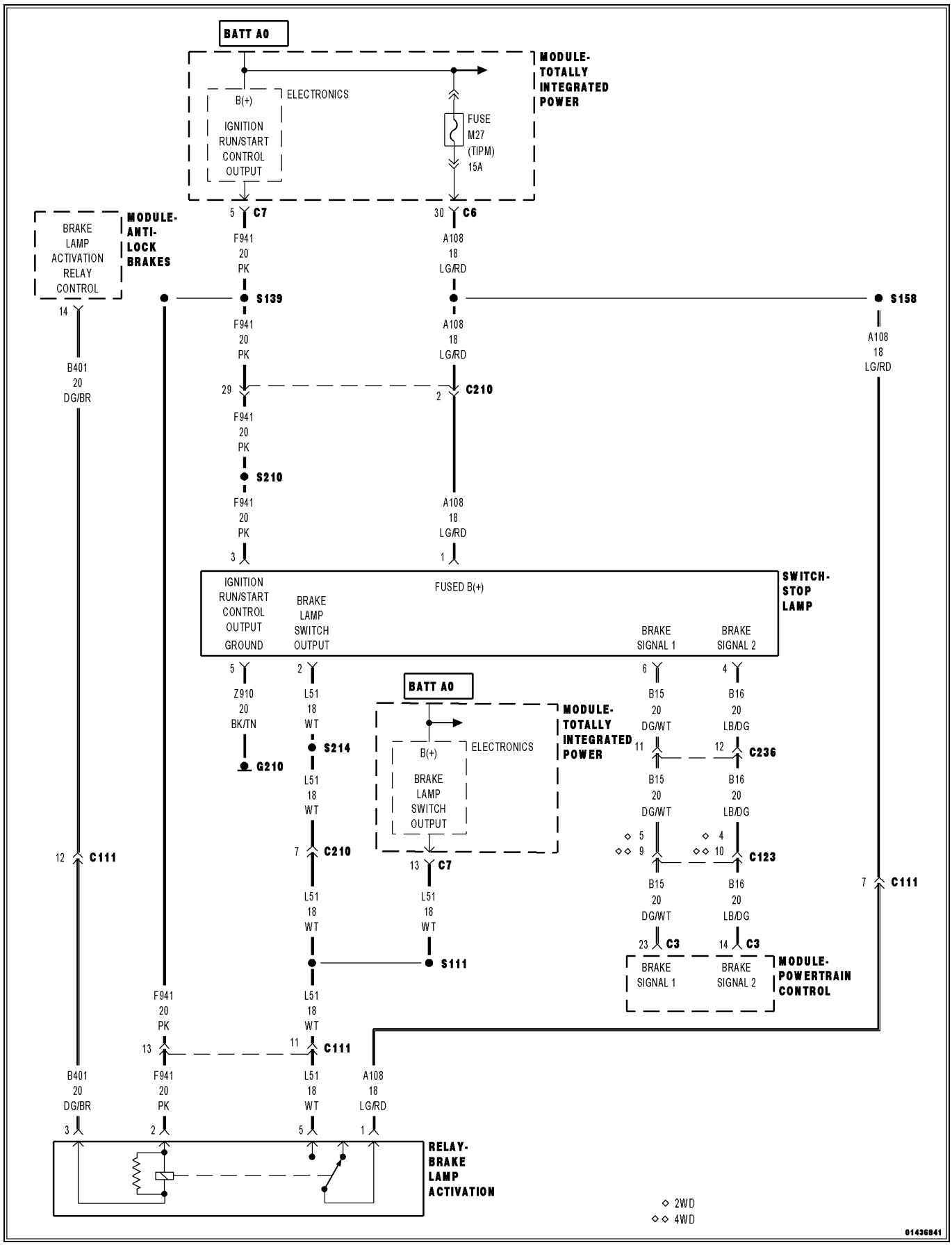

For a complete wiring diagram, **refer to the Wiring Information**.

- **When Monitored:**
  With the ignition on.
- **Set Condition:**
  When monitoring the Brake Lamp Activation Relay Control circuit the module detects a short to ground.

Possible Causes
FUSE
(B401) BRAKE LAMP ACTIVATION RELAY OPEN OR SHORTED TO GROUND
(A108) FUSED B(+)T CIRCUIT OPEN OR SHORTED TO GROUND
BRAKE LAMP ACTIVATION RELAY
ANTI-LOCK BRAKE SYSTEM (ABS) MODULE

1. CHECK FOR DTC C1090-ABS BRAKE LAMP CONTROL CIRCUIT LOW

NOTE: This DTC must be active for the results of this test to be valid.

1. Ignition on, engine not running.
2. With the scan tool, record and erase DTCs.
3. Start the engine.
4. Apply brake pedal firmly with at least 80 bar (1160 psi.).
5. With the scan tool, read DTCs.

Does the scan tool display: C1090-ABS BRAKE LAMP CONTROL CIRCUIT LOW?

Yes

- Go To 2

No

- Perform the ABS-INTERMITTENT CONDITION TEST. (Refer to 28 - DTC-Based Diagnostics/MODULE, Antilock Brake (ABS) - Standard Procedure).

2. CHECK CONNECTOR/TERMINAL FOR DAMAGE

NOTE: Check all terminals for broken, bent, pushed out, or corroded terminals.

1. Turn ignition off to the lock position.
2. Inspect the Anti-Lock Brake System (ABS) Module harness connector and the Brake Lamp Activation Relay harness connector.

Is the Anti-Lock Brake Module or any of the connectors/terminals damaged?

Yes

- Repair as necessary.
- Perform the ABS VERIFICATION TEST. (Refer to 28 - DTC-Based Diagnostics/MODULE, Antilock Brake (ABS) - Standard Procedure).

No

- Go To 3

3. CHECK (B401) BRAKE LAMP ACTIVATION RELAY SHORTED TO GROUND

1. Turn the ignition off to the lock position.
2. Disconnect the ABS Module.
3. Ignition on, engine not running.
4. Using a 12-volt test light connected to ground, probe the (B401) Brake Lamp Activation Relay Circuit at the ABS Module harness connector.

Does the test light illuminate brightly?

Yes

- Replace the Anti-Lock Brake System (ABS) Module in accordance with the service information.
- Perform ABS VERIFICATION TEST. (Refer to 28 - DTC-Based Diagnostics/MODULE, Antilock Brake (ABS) - Standard Procedure).

No

- Go To 4

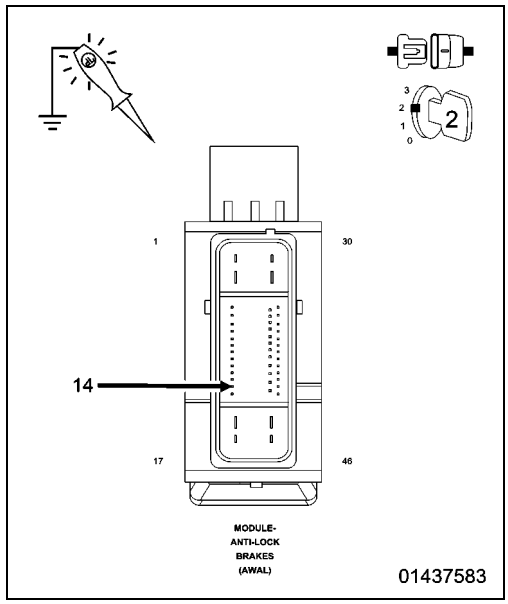

4. CHECK (A108) FUSED B(+)

1. Turn the ignition off to the lock position.
2. Disconnect the Brake Lamp Activation Relay.
3. Ignition on engine not running.
4. Using a 12-volt test light connected to ground, probe the (A108) Fused B(+)t Circuit at the Brake Lamp Activation Relay harness connector.

Does the test light illuminate brightly?

Yes

- Go To 5

No

- Check for open Fuse, if ok repair open or short to ground in the (A108) Fused B(+)t Circuit or short to ground in (B401) Brake Lamp Inhibit Relay circuit.
- Perform the ABS VERIFICATION TEST. (Refer to 28 - DTC-Based Diagnostics/MODULE, Antilock Brake (ABS) - Standard Procedure).

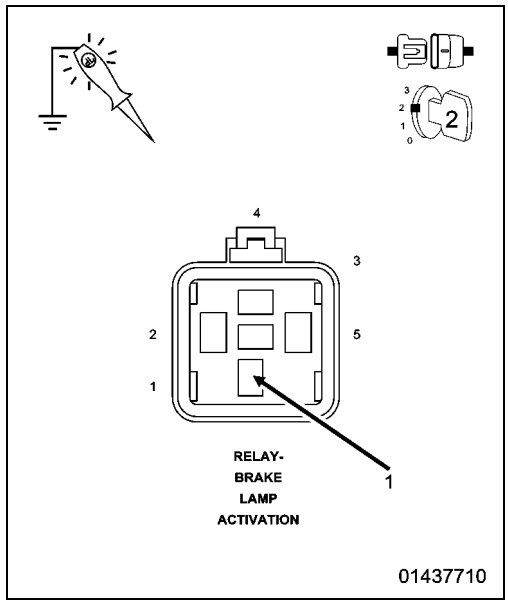

5. BRAKE LAMP ACTIVATION RELAY

1. Turn ignition off to the lock position.
2. Measure the resistance of the (B401) Brake Lamp Activation Relay Circuit between the Brake Lamp Activation relay and the ABS Module harness connector.

Is the resistance 5 Ohms ?

Yes

- Replace the Brake Lamp Activation Relay in accordance with the Service Information.
- Perform the ABS VERIFICATION TEST. (Refer to 28 - DTC-Based Diagnostics/MODULE, Antilock Brake (ABS) - Standard Procedure).

No

- Repair open in the (B401) Brake Lamp Inhibit Relay circuit.
- Perform the ABS VERIFICATION TEST. (Refer to 28 - DTC-Based Diagnostics/MODULE, Antilock Brake (ABS) - Standard Procedure).

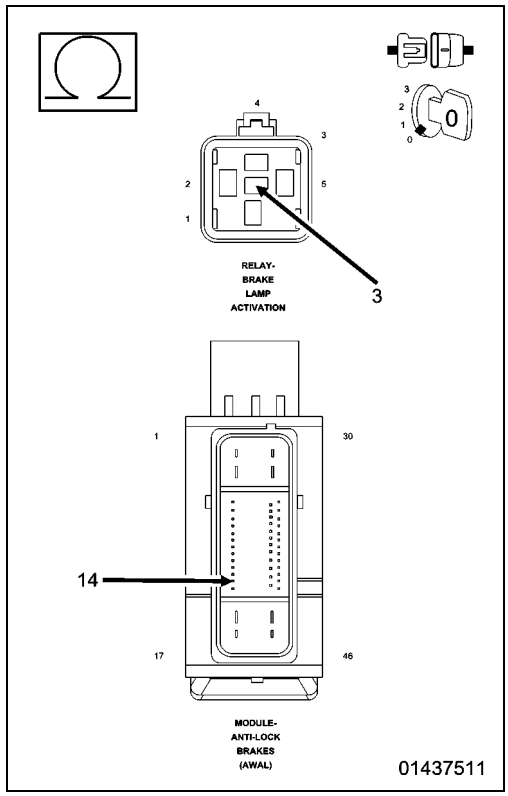

C1091-ABS BRAKE LAMP CONTROL CIRCUIT HIGH

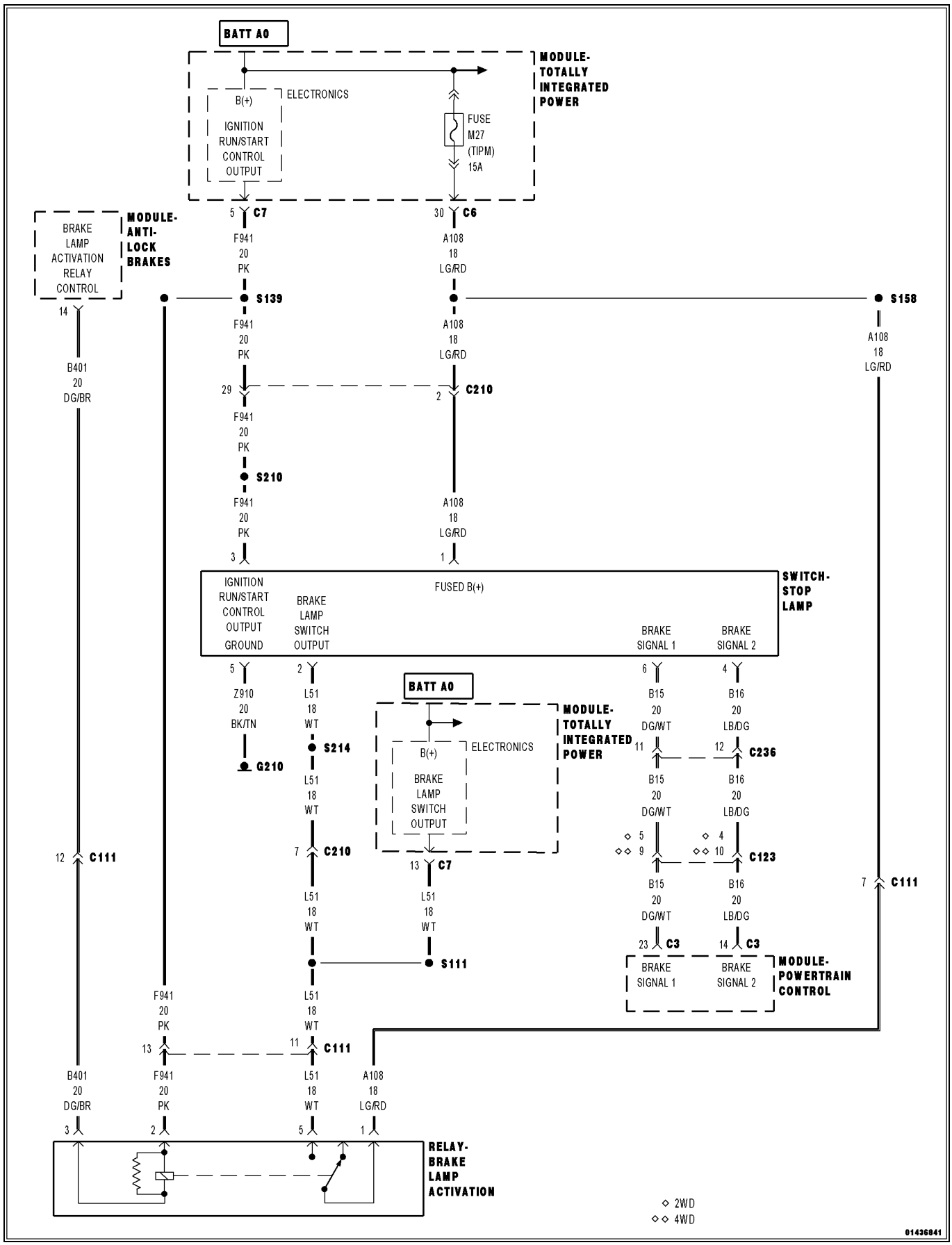

For a complete wiring diagram, **refer to the Wiring Information**.

NOTE: The Electronic Stability Control (ESC) may also be referred to as Electronic Stability Program (ESP) depending on the vehicle model year and configuration. Certain components may also reference ESP, ESC, or use the traction control symbol.

- **When Monitored:**
  With the ignition on and no system under voltage or over voltage condition present.
- **Set Condition:**
  When monitoring the Brake Lamp Activation Relay circuit the module detects a short to voltage.

Possible Causes
(B401) BRAKE LAMP ACTIVATION RELAY CONTROL SHORTED TO VOLTAGE
BRAKE LAMP ACTIVATION RELAY
ANTI-LOCK BRAKE SYSTEM (ABS) MODULE

1. CHECK FOR DTC C1091-ABS BRAKE LAMP CONTROL CIRCUIT HIGH

NOTE: This DTC must be active for the results of this test to be valid.

1. Ignition on, engine not running.
2. With the scan tool, record and erase DTCs.
3. Start the engine.
4. Apply brake pedal firmly with at least 80 bar (1160 psi.).
5. With the scan tool, read DTCs.

Does the scan tool display: C1091-ABS BRAKE LAMP CONTROL CIRCUIT HIGH?

Yes

- Go To 2

No

- Perform the ABS INTERMITTENT CONDITION TEST. (Refer to 28 - DTC-Based Diagnostics/MODULE, Antilock Brake (ABS) - Standard Procedure).

2. CHECK CONNECTOR/TERMINAL FOR DAMAGE

NOTE: Check all terminals for broken, bent, pushed out, or corroded terminals.

1. Turn ignition off to the lock position.
2. Inspect the Anti-Lock Brake System (ABS) Module harness connector and the Brake Lamp Activation Relay harness connector.

Is the Anti-Lock Brake System (ABS) Module or any of the connectors/terminals damaged?

Yes

- Repair as necessary.
- Perform the ABS VERIFICATION TEST. (Refer to 28 - DTC-Based Diagnostics/MODULE, Antilock Brake (ABS) - Standard Procedure).

No

- Go To 3

3. CHECK (B401) BRAKE LAMP ACTIVATION RELAY CONTROL SHORTED TO VOLTAGE

1. Turn ignition off to the lock position.
2. Disconnect the ABS Module.
3. Disconnect the Brake Lamp Activation Relay.
4. Ignition on, engine not running.
5. Using a 12-volt test light connected to ground, probe the (B401) Brake Lamp Activation Relay Control Circuit at the Brake Lamp Activation Relay harness connector.

Does the test light illuminate brightly?

Yes

- Repair the short to voltage in the (B401) Brake Lamp Inhibit Relay Control circuit.
- Perform the ABS VERIFICATION TEST. (Refer to 28 - DTC-Based Diagnostics/MODULE, Antilock Brake (ABS) - Standard Procedure).

No

- Go To 4

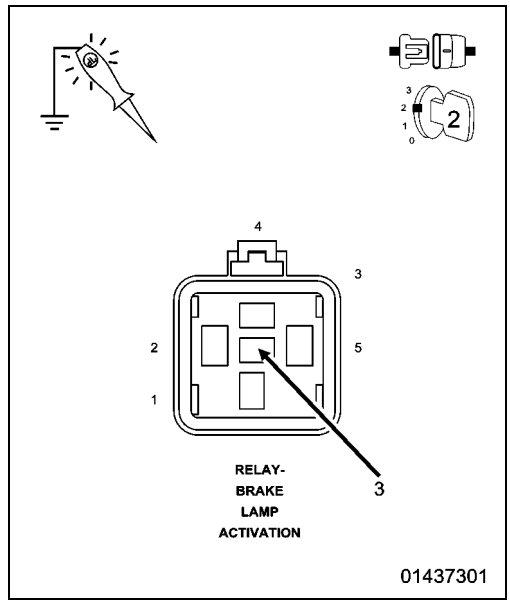

4. BRAKE LAMP ACTIVATION RELAY

1. Turn ignition off to the lock position.
2. Measure the resistance across the relay between the (B401) Brake Lamp Activation Relay Control Circuit and the (A108) Fused B(+) at the Brake Lamp Activation Relay harness connector.

Is the resistance 75 Ohms ±5 Ohms?

Yes

- Replace the Anti-Lock Brake System (ABS) Module in accordance with the service information.
- Perform the ABS VERIFICATION TEST. (Refer to 28 - DTC-Based Diagnostics/MODULE, Antilock Brake (ABS) - Standard Procedure).

No

- Replace the Brake Lamp Activation Relay in accordance with the Service Information.
- Perform the ABS VERIFICATION TEST. (Refer to 28 - DTC-Based Diagnostics/MODULE, Antilock Brake (ABS) - Standard Procedure).

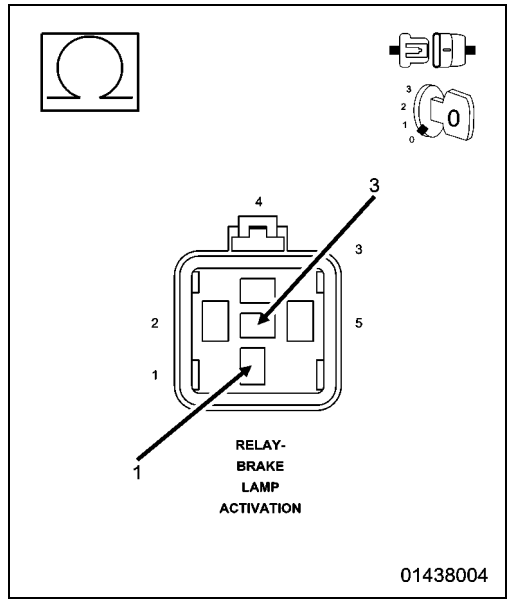

C1201-FRONT TRACTION CONTROL INLET VALVE CONTROL CIRCUIT LOW

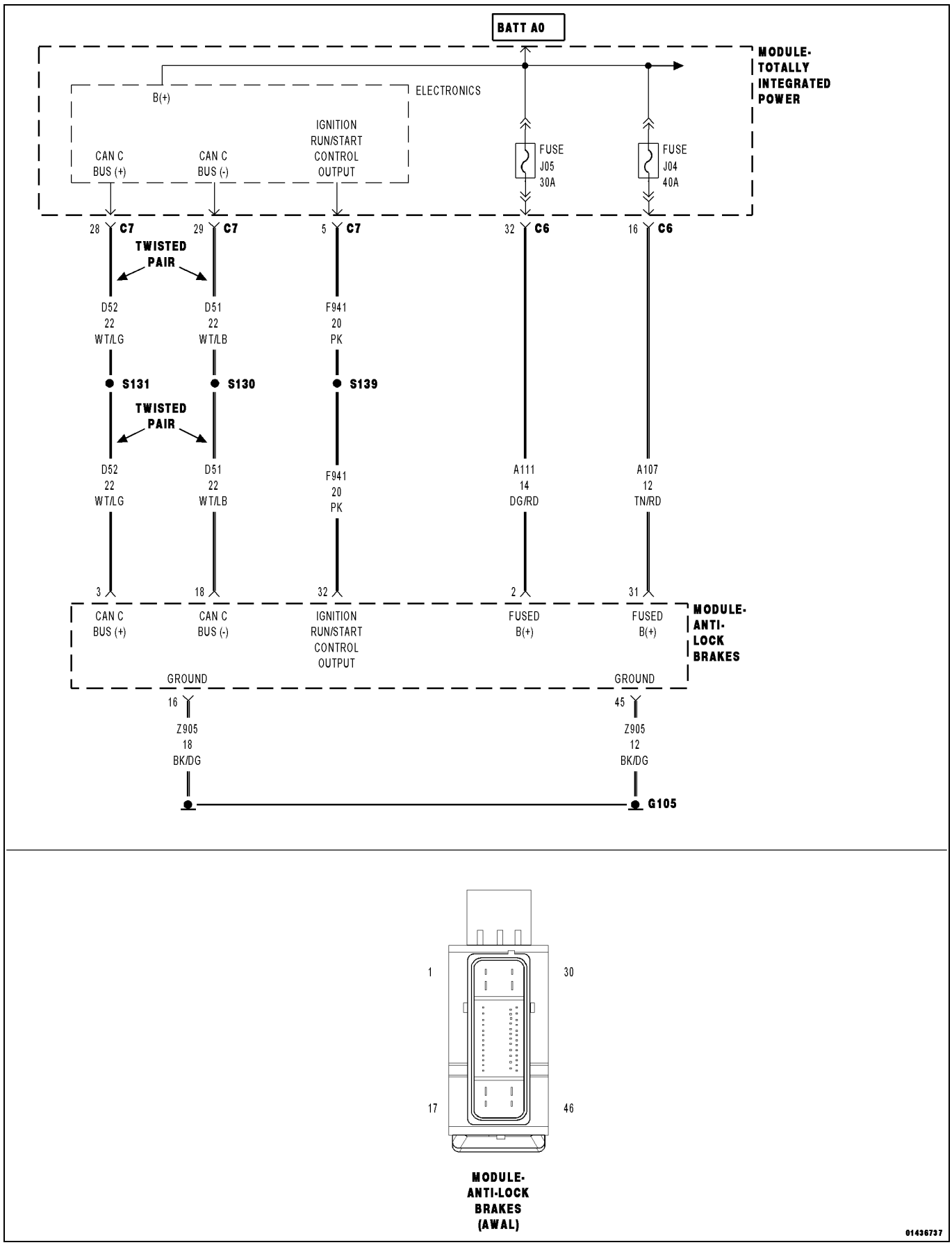

For a complete wiring diagram, **refer to the Wiring Information**.

- **When Monitored:**
  Continuous
- **Set Condition:**
  The electrical feedback of the power stage does not correspond with the activation of the respective valve.

Possible Causes
B+ CIRCUITS OPEN OR HIGH RESISTANCE
GROUND CIRCUITS OPEN OR HIGH RESISTANCE
ANTI-LOCK BRAKE SYSTEM (ABS) MODULE INTERNAL

1. B+ CIRCUITS OPEN OR HIGH RESISTANCE

1. Turn ignition off to the lock position.
2. Disconnect the ABS Module harness connector.

NOTE: Check connector - Clean/repair as necessary.

3. Ignition on, engine not running.
4. With a test light connected to ground check (A107) Fused B+, (A111) Fused B+ and (F941) Fused ignition switch output circuits at the ABS harness connector.

Does the test light illuminate brightly?

Yes

- Go To 2

No

- Repair the B+ circuits for an open or high resistance.
- Perform the ABS VERIFICATION TEST. (Refer to 28 - DTC-Based Diagnostics/MODULE, Antilock Brake (ABS) - Standard Procedure).

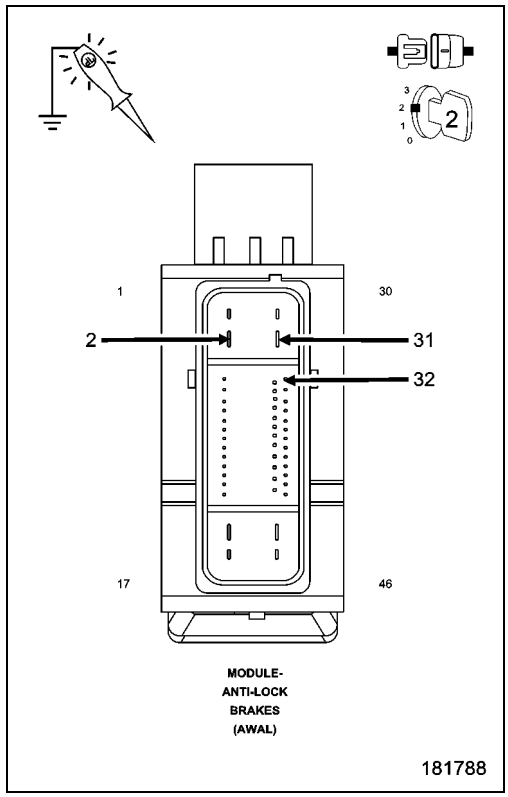

2. GROUND CIRCUITS OPEN OR HIGH RESISTANCE

1. Turn ignition off to the lock position.
2. With a test light Connected to B+ check (Z905) Ground circuits at the ABS harness connector.

Does the test light illuminate brightly?

Yes

- Replace the Anti-lock System Brake (ABS) Module in accordance with the service information.
- Perform the ABS VERIFICATION TEST. (Refer to 28 - DTC-Based Diagnostics/MODULE, Antilock Brake (ABS) - Standard Procedure).

No

- Repair the Ground circuits for an open or high resistance.
- Perform the ABS VERIFICATION TEST. (Refer to 28 - DTC-Based Diagnostics/MODULE, Antilock Brake (ABS) - Standard Procedure).

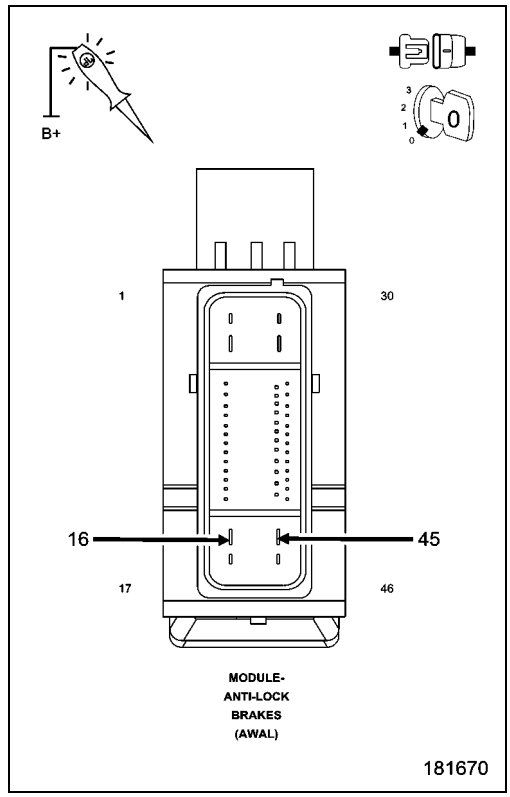

C1205-REAR TRACTION CONTROL INLET VALVE CONTROL CIRCUIT LOW

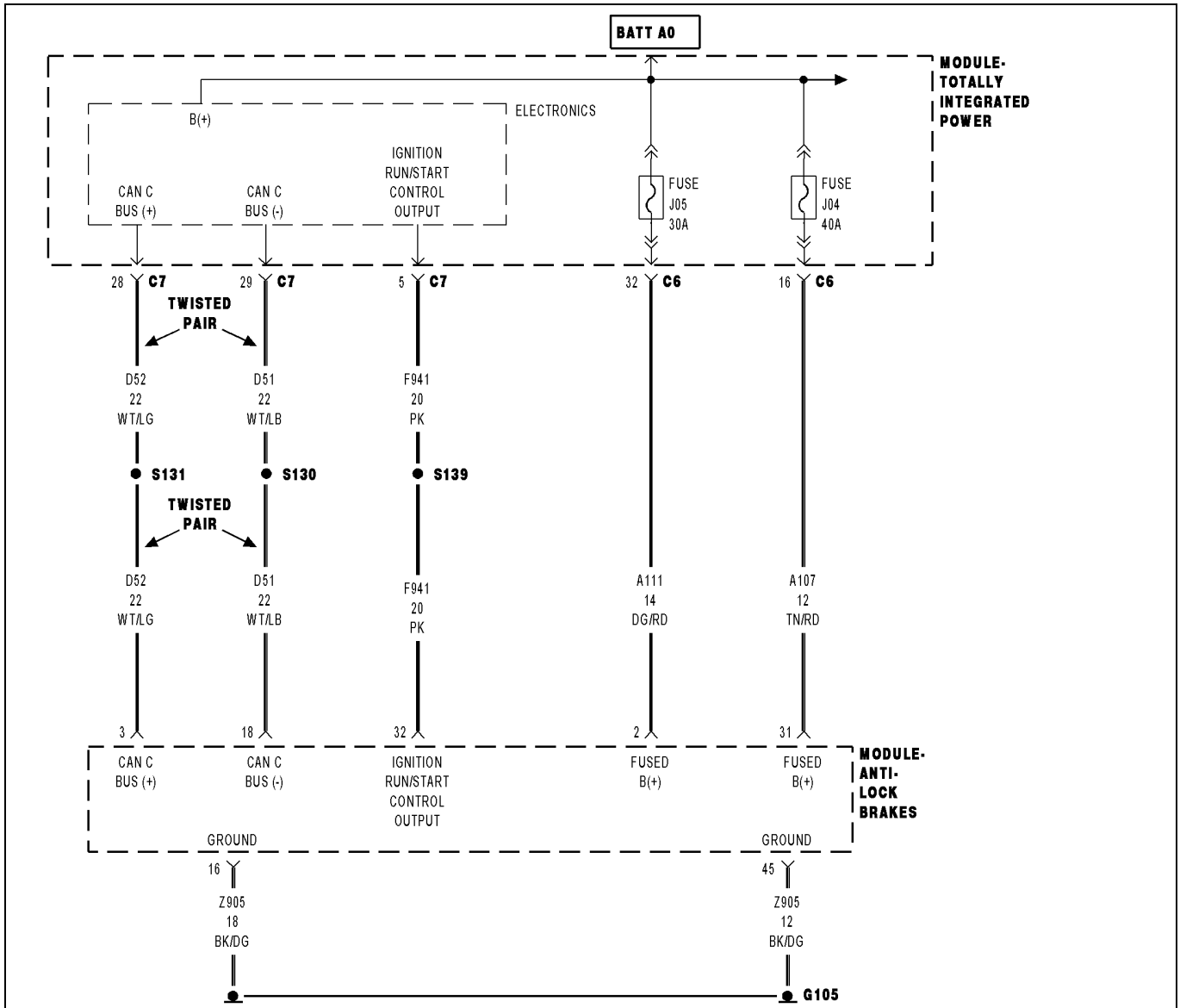

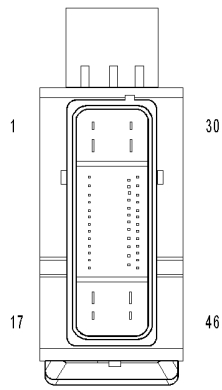

MODULE-
ANTI-LOCK
BRAKES
(AWAL)

01436737

For a complete wiring diagram, **refer to the Wiring Information**.

- **When Monitored:**
  Continuous
- **Set Condition:**
  The electrical feedback of the power stage does not correspond with the activation of the respective valve.

Possible Causes
B+ CIRCUITS OPEN OR HIGH RESISTANCE
GROUND CIRCUITS OPEN OR HIGH RESISTANCE
ANTI-LOCK BRAKE SYSTEM (ABS) MODULE INTERNAL

1. B+ CIRCUITS OPEN OR HIGH RESISTANCE

1. Turn ignition off to the lock position.
2. Disconnect the ABS Module harness connector.

NOTE: Check connector - Clean/repair as necessary.

3. Ignition on, engine not running.
4. With a test light connected to ground check (A107) Fused B+, (A111) Fused B+ and (F941) Fused ignition switch output circuits at the ABS harness connector.

Does the test light illuminate brightly?

Yes

- Go To 2

No

- Repair the B+ circuits for an open or high resistance.
- Perform the ABS VERIFICATION TEST. (Refer to 28 - DTC-Based Diagnostics/MODULE, Antilock Brake (ABS) - Standard Procedure).

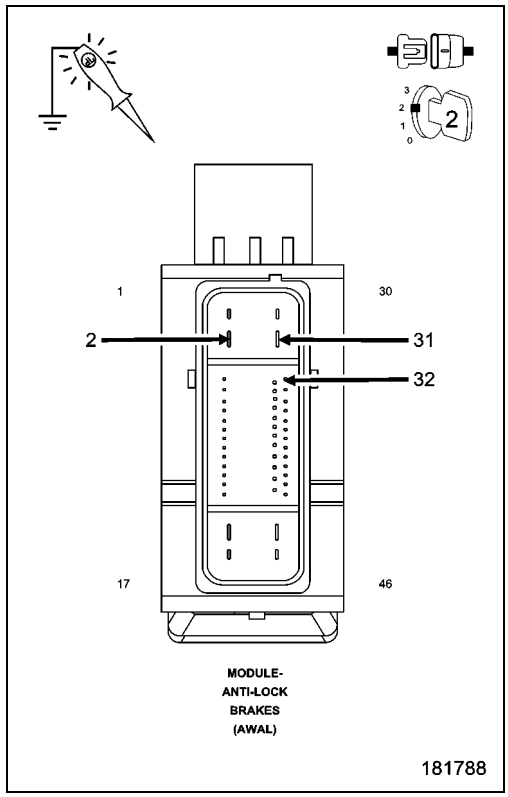

2. GROUND CIRCUITS OPEN OR HIGH RESISTANCE

1. Turn ignition off to the lock position.
2. With a test light Connected to B+ check (Z905) Ground circuits at the ABS harness connector.

Does the test light illuminate brightly?

Yes

- Replace the Anti-lock System Brake (ABS) Module in accordance with the service information.
- Perform the ABS VERIFICATION TEST. (Refer to 28 - DTC-Based Diagnostics/MODULE, Antilock Brake (ABS) - Standard Procedure).

No

- Repair the Ground circuits for an open or high resistance.
- Perform the ABS VERIFICATION TEST. (Refer to 28 - DTC-Based Diagnostics/MODULE, Antilock Brake (ABS) - Standard Procedure).

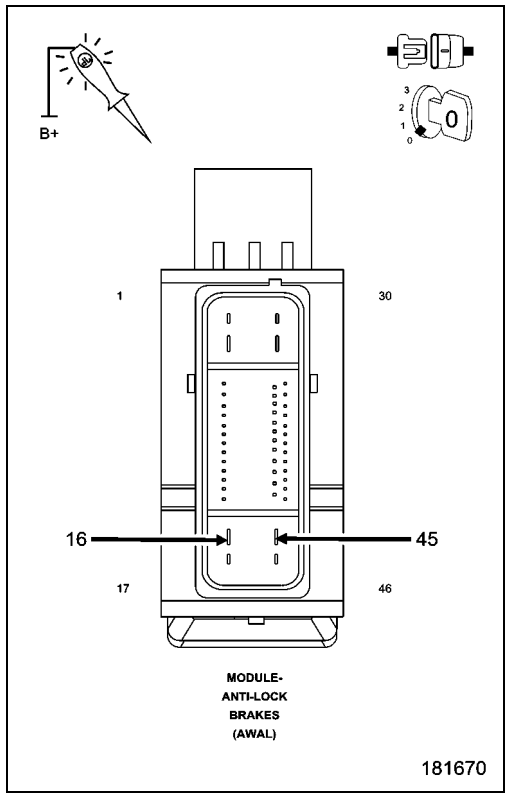

C1209-FRONT TRACTION CONTROL PRIME VALVE CONTROL CIRCUIT LOW

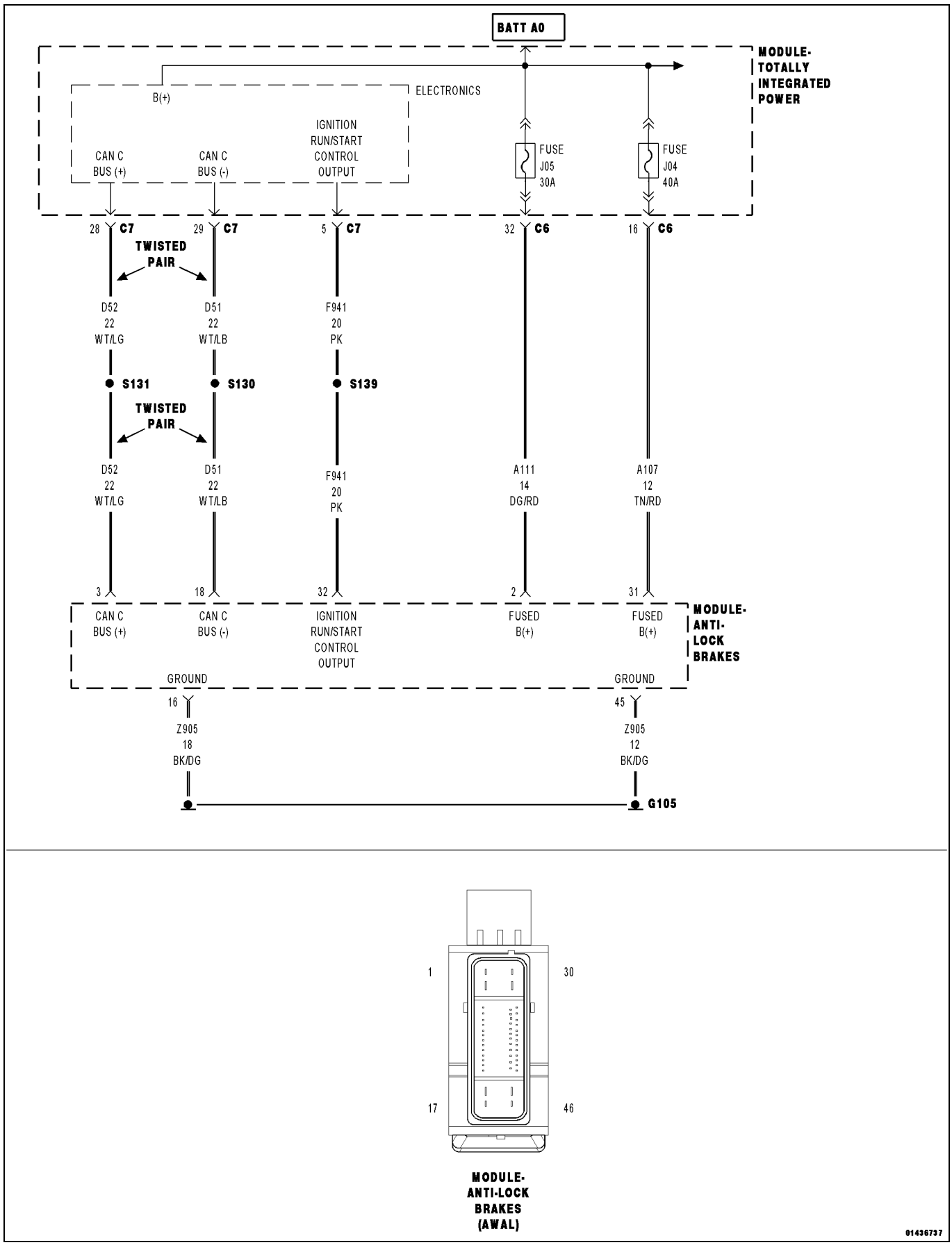

For a complete wiring diagram, **refer to the Wiring Information**.

- **When Monitored:**
  Continuous
- **Set Condition:**
  The electrical feedback of the power stage does not correspond with the activation of the respective valve.

Possible Causes
B+ CIRCUITS OPEN OR HIGH RESISTANCE
GROUND CIRCUITS OPEN OR HIGH RESISTANCE
ANTI-LOCK BRAKE SYSTEM (ABS) MODULE INTERNAL

1. HIGH RESISTANCE IN B+ CIRCUITS

1. Turn ignition off to the lock position.
2. Disconnect the ABS Module harness connector.

NOTE: Check connector - Clean/repair as necessary.

3. Ignition on, engine not running.
4. With a test light connected to ground check (A107) Fused B+, (A111) Fused B+ and (F941) Fused ignition switch output at the ABS harness connector.

Does the test light illuminate brightly?

Yes

- Go To 2

No

- Repair the B+ circuits for an open or high resistance.
- Perform the ABS VERIFICATION TEST. (Refer to 28 - DTC-Based Diagnostics/MODULE, Antilock Brake (ABS) - Standard Procedure).

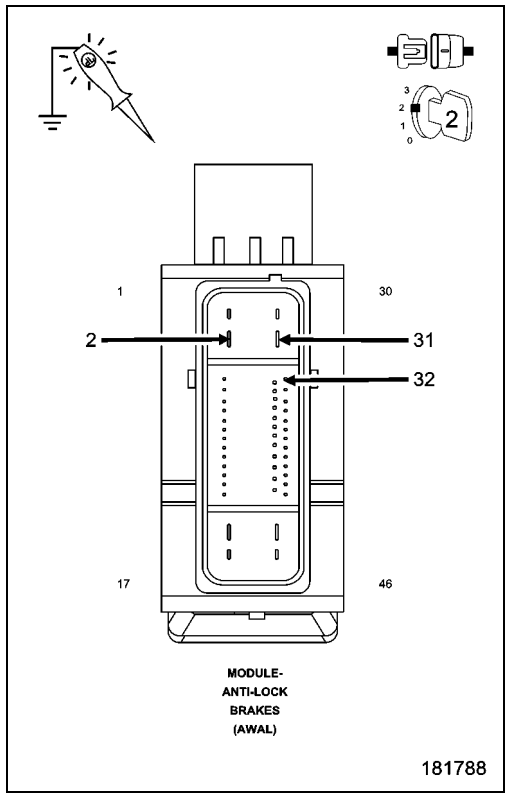

2. HIGH RESISTANCE IN GROUND CIRCUITS

1. Turn ignition off to the lock position.
2. With a test light Connected to B+ check (Z905) Grounds at the ABS harness connector.

Does the test light illuminate brightly?

Yes

- Replace the ABS Module in accordance with the service information.
- Perform the ABS VERIFICATION TEST. (Refer to 28 - DTC-Based Diagnostics/MODULE, Antilock Brake (ABS) - Standard Procedure).

No

- Repair the Ground circuits for an open or high resistance.
- Perform the ABS VERIFICATION TEST. (Refer to 28 - DTC-Based Diagnostics/MODULE, Antilock Brake (ABS) - Standard Procedure).

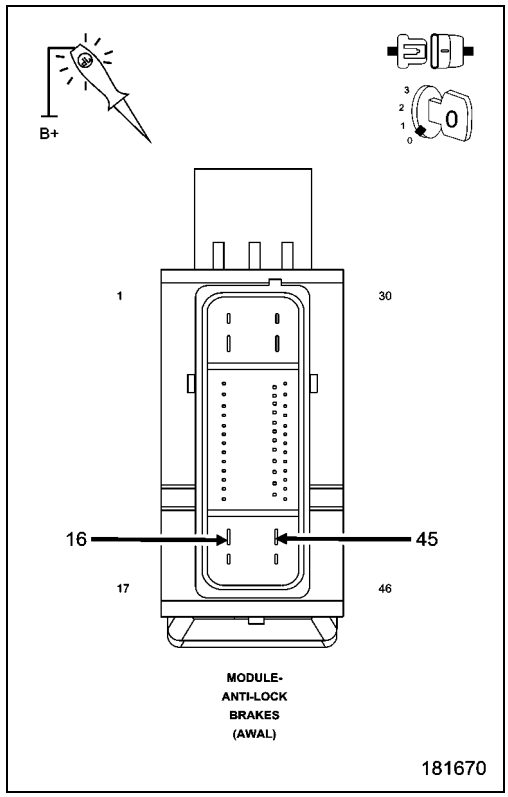

C120D-REAR TRACTION CONTROL PRIME VALVE CONTROL CIRCUIT LOW

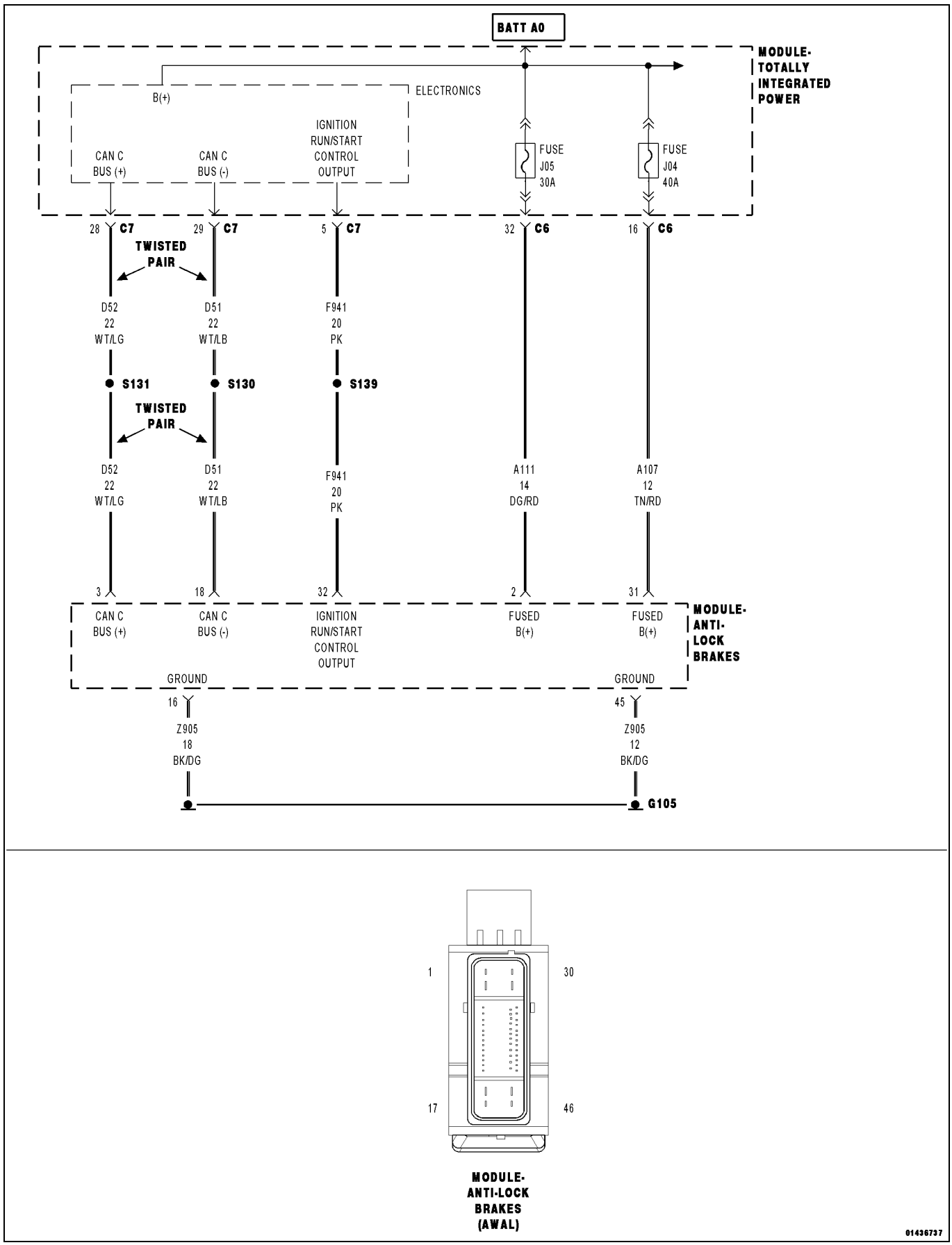

For a complete wiring diagram, **refer to the Wiring Information**.

- **When Monitored:**
  Continuous
- **Set Condition:**
  The electrical feedback of the power stage does not correspond with the activation of the respective valve.

Possible Causes
B+ CIRCUITS OPEN OR HIGH RESISTANCE
GROUND CIRCUITS OPEN OR HIGH RESISTANCE
ANTI-LOCK BRAKE SYSTEM (ABS) MODULE INTERNAL

1. B+ CIRCUITS OPEN OR HIGH RESISTANCE

1. Turn ignition off to the lock position.
2. Disconnect the ABS Module harness connector.

NOTE: Check connector - Clean/repair as necessary.

3. Ignition on, engine not running.
4. With a test light connected to ground check (A107) Fused B+, (A111) Fused B+ and (F941) Fused ignition switch output circuits at the ABS harness connector.

Does the test light illuminate brightly?

Yes

- Go To 2

No

- Repair the B+ circuits for an open or high resistance.
- Perform the ABS VERIFICATION TEST. (Refer to 28 - DTC-Based Diagnostics/MODULE, Antilock Brake (ABS) - Standard Procedure).

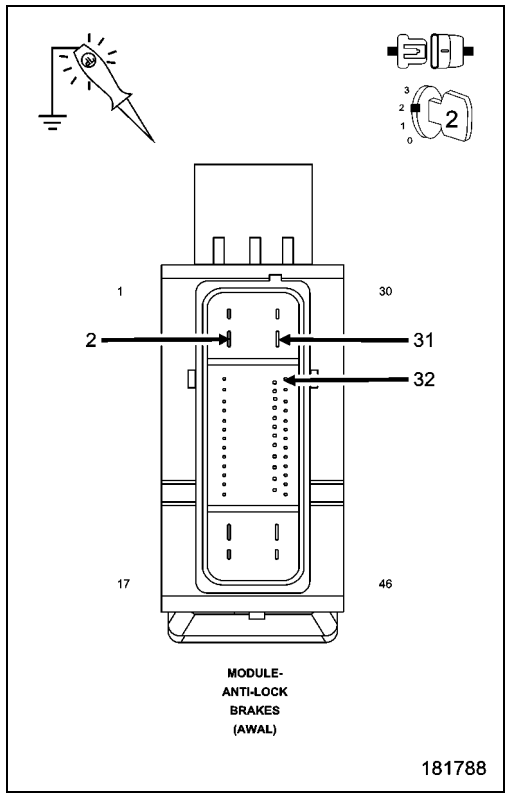

2. GROUND CIRCUITS OPEN OR HIGH RESISTANCE

1. Turn ignition off to the lock position.
2. With a test light Connected to B+ check (Z905) Ground circuits at the ABS harness connector.

Does the test light illuminate brightly?

Yes

- Replace the Anti-lock System Brake (ABS) Module in accordance with the service information.
- Perform the ABS VERIFICATION TEST. (Refer to 28 - DTC-Based Diagnostics/MODULE, Antilock Brake (ABS) - Standard Procedure).

No

- Repair the Ground circuits for an open or high resistance.
- Perform the ABS VERIFICATION TEST. (Refer to 28 - DTC-Based Diagnostics/MODULE, Antilock Brake (ABS) - Standard Procedure).

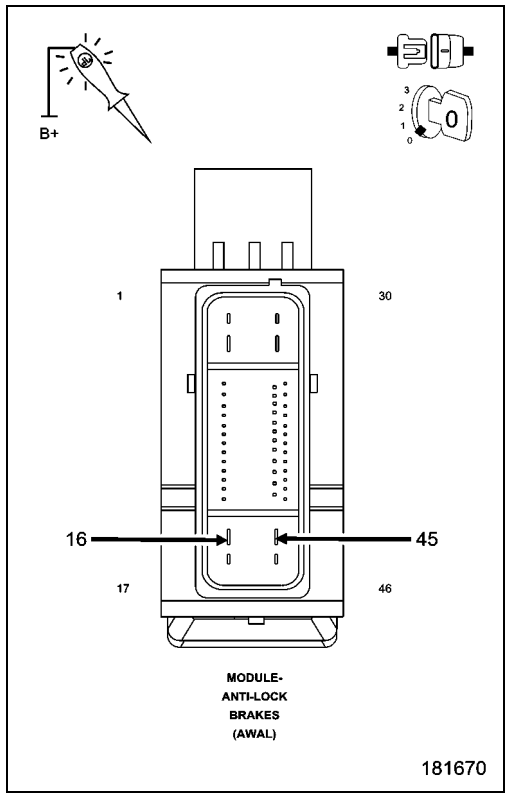

C1213-G SENSOR INPUT SIGNAL STUCK

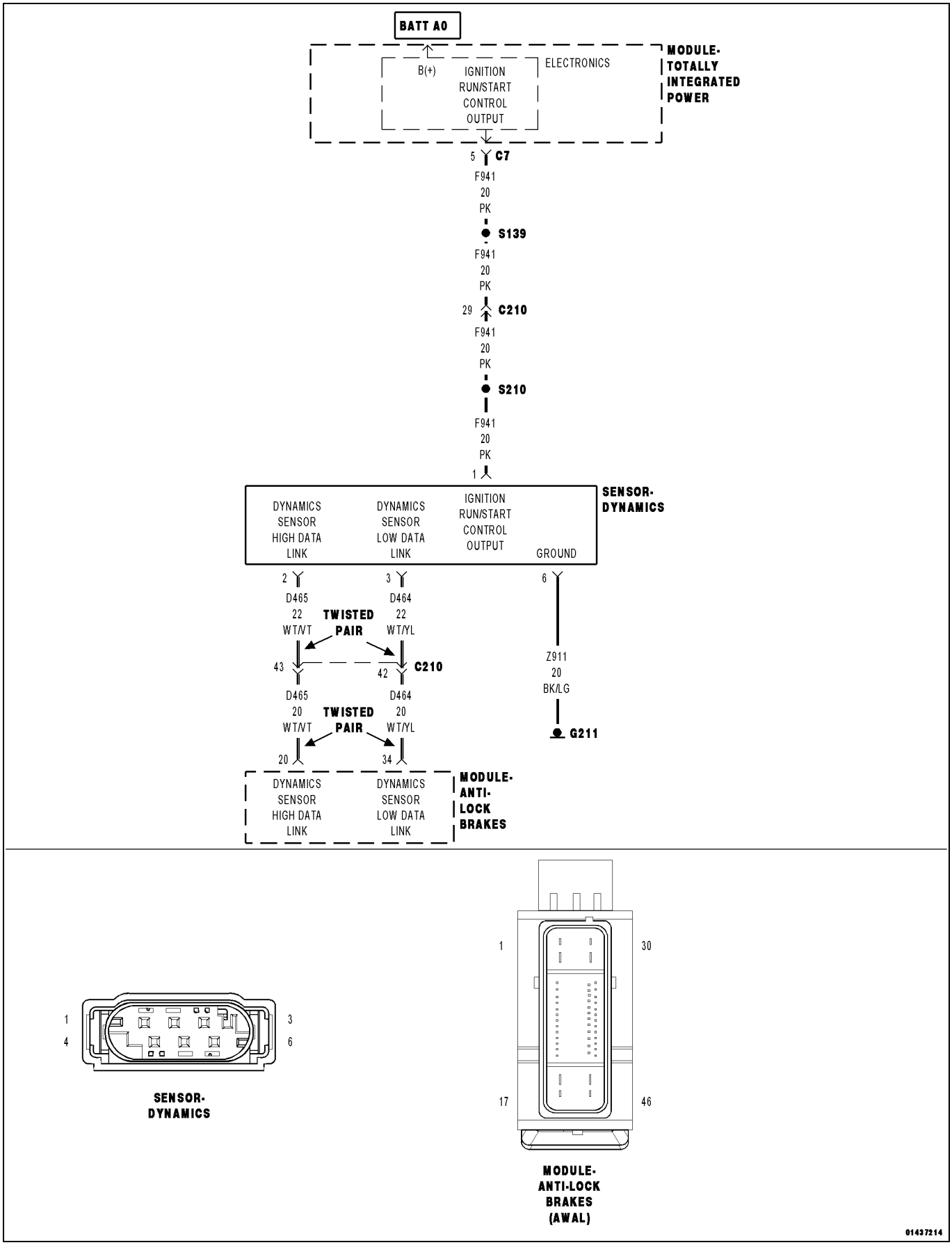

For a complete wiring diagram, **refer to the Wiring Information**.

- **When Monitored:**
  Ignition on. Continuously monitored when speed is greater than 2 km/h (1 mph).
- **Set Condition:**
  When the ABS Module detects a condition outside programmed parameters from the Dynamics Sensor.

Possible Causes
(F941) DYNAMICS SENSOR FUSED IGNITION SWITCH OUTPUT (RUN/START) CIRCUIT OPEN
(Z911) GROUND CIRCUIT OPEN
(D465) DYNAMICS SENSOR HIGH DATA LINK CIRCUIT SHORTED TO (D464) DYNAMICS SENSOR LOW DATA LINK CIRCUIT
(D465) DYNAMICS SENSOR HIGH DATA LINK CIRCUIT SHORTED TO VOLTAGE
(D465) DYNAMICS SENSOR HIGH DATA LINK CIRCUIT OPEN
(D465) DYNAMICS SENSOR HIGH DATA LINK CIRCUIT SHORTED TO GROUND
(D464) DYNAMICS SENSOR LOW DATA LINK CIRCUIT SHORTED TO VOLTAGE
(D464) DYNAMICS SENSOR LOW DATA LINK CIRCUIT OPEN
(D464) DYNAMICS SENSOR LOW DATA LINK CIRCUIT SHORTED TO GROUND
DYNAMICS SENSOR

1. VERIFY DTC IS ACTIVE

1. Ignition on, engine not running.
2. With the scan tool, read and record ABS DTCs.
3. With the scan tool, read and record Environmental Data (EV Data).
4. With the scan tool, erase ABS DTCs.
5. Cycle the ignition switch.

WARNING: To avoid possible serious or fatal injury, check brake capability is available before road testing.

6. Test drive the vehicle by turning the vehicle left or right in a curving manner at a velocity between 10 and 20 km/hr (6 and 12 m.p.h.).
7. Park the vehicle.
8. With the scan tool, read ABS DTCs.

Does this DTC reset?

Yes

- Go To 2

No

- Perform the ABS-INTERMITTENT CONDITION TEST. (Refer to 28 - DTC-Based Diagnostics/MODULE, Antilock Brake (ABS) - Standard Procedure).

2. CHECK THE DYNAMICS SENSOR INSTALLATION

NOTE: Dynamics Sensor installation and mounting bolt torque is crucial for proper operation.

1. Turn the ignition off to the lock position.
2. Check the Dynamics Sensor for damaged, modified, and bent mounting brackets.
3. Check the Dynamics Sensor mounting bolts for a loose or over tightened condition.

Were any problems found?

Yes

- Repair as necessary.
- Perform the ABS VERIFICATION TEST. (Refer to 28 - DTC-Based Diagnostics/MODULE, Antilock Brake (ABS) - Standard Procedure).

No

- Go To 3

3. (F941) DYNAMICS SENSOR FUSED IGNITION SWITCH OUTPUT (RUN/START) CIRCUIT OPEN

1. Disconnect the Dynamics Sensor harness connector.
2. Ignition on, engine not running.

NOTE: Check connector - Clean/repair as necessary.

3. Using a 12-volt test light connected to ground, check the (F941) Dynamics Sensor Fused Ignition Switch Output (RUN/START) Circuit in the ABS Module harness connector.

NOTE: The test light should be illuminated and bright. Compare the brightness to that of a direct connection to the battery.

Does the test light illuminate brightly?

Yes

- Go To 4

No

- Repair the (F941) Dynamics Sensor Fused Ignition Switch Output (RUN/START) circuit for an open or high resistance.
- Perform the ABS VERIFICATION TEST. (Refer to 28 - DTC-Based Diagnostics/MODULE, Antilock Brake (ABS) - Standard Procedure).

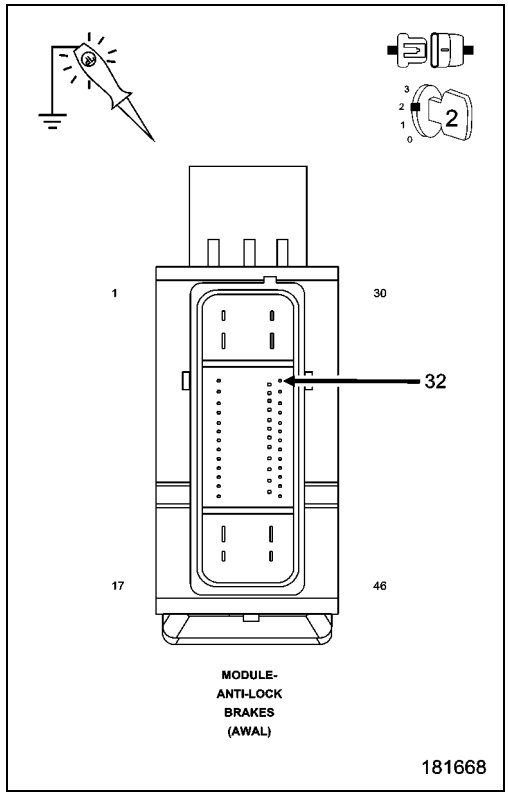

4. (Z911) GROUND CIRCUIT OPEN

1. Turn the ignition off to the lock position.
2. Using a 12-volt test light connected to B+, check the (Z911) Ground Circuit in the Dynamics Sensor harness connector.

NOTE: The test light should be illuminated and bright. Compare the brightness to that of a direct connection to the battery.

Does the test light illuminate brightly?

Yes

- Go To 5

No

- Repair the (Z911) Ground Circuit for an open or high resistance.
- Perform the ABS VERIFICATION TEST. (Refer to 28 - DTC-Based Diagnostics/MODULE, Antilock Brake (ABS) - Standard Procedure).

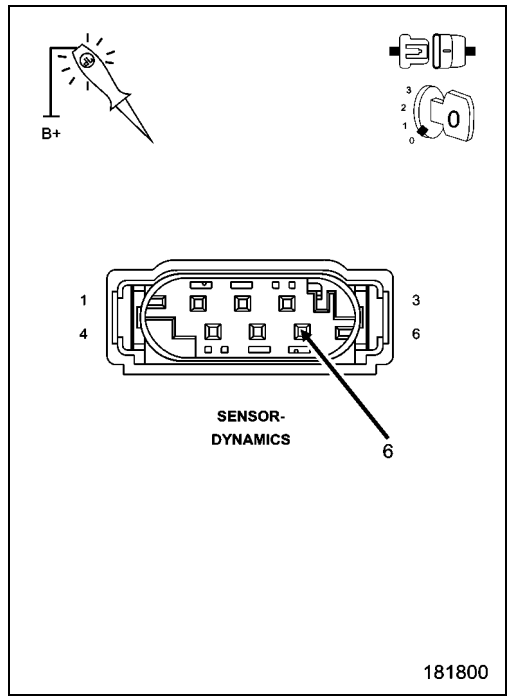

5. (D465) DYNAMICS SENSOR HIGH DATA LINK CIRCUIT SHORTED TO THE (D464) DYNAMICS SENSOR LOW DATA LINK CIRCUIT

1. Turn the ignition off to the lock position.
2. Measure the resistance between the (D465) Dynamics Sensor High Data circuit and the (D464) Dynamics Sensor Low Data circuit at the Dynamics Sensor harness connector.

Is the resistance above 5 Ohms?

Yes

- Go To 6

No

- Repair the short between (D465) Dynamics Sensor High Data circuit and the (D464) Dynamics Sensor Low Data circuit.
- Perform the ABS VERIFICATION TEST. (Refer to 28 - DTC-Based Diagnostics/MODULE, Antilock Brake (ABS) - Standard Procedure).

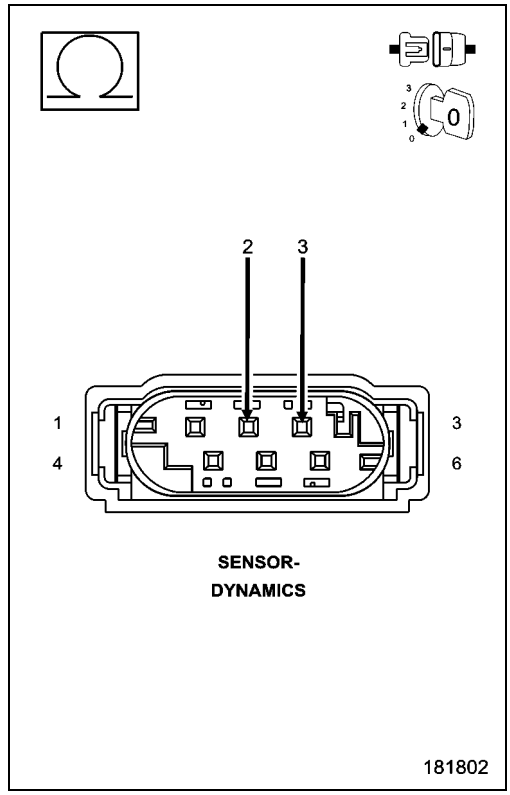

6. (D465) DYNAMICS SENSOR HIGH DATA LINK CIRCUIT SHORTED TO VOLTAGE

1. Ignition on, engine not running.
2. Measure the voltage between ground and (D465) Dynamics Sensor High Data Link circuit in the Dynamics Sensor harness connector.

Is there any voltage present?

Yes

- Repair the (D465) Dynamics Sensor High Data Link circuit for a short to voltage.
- Perform the ABS VERIFICATION TEST. (Refer to 28 - DTC-Based Diagnostics/MODULE, Antilock Brake (ABS) - Standard Procedure).

No

- Go To 7

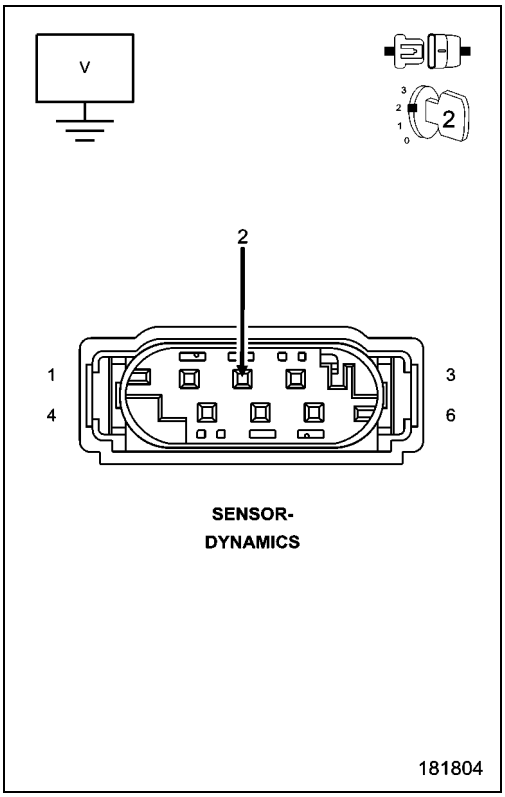

7. (D465) DYNAMICS SENSOR HIGH DATA LINK CIRCUIT OPEN

1. Turn the ignition off to the lock position.
2. Measure the resistance of the (D465) Dynamics Sensor High Data Link circuit between the ABS Module harness connector and the Dynamics Sensor harness connector.

Is the resistance above 5 Ohms?

Yes

- Repair the (D465) Dynamics Sensor High Data Link Circuit for an open.
- Perform the ABS VERIFICATION TEST. (Refer to 28 - DTC-Based Diagnostics/MODULE, Antilock Brake (ABS) - Standard Procedure).

No

- Go To 8

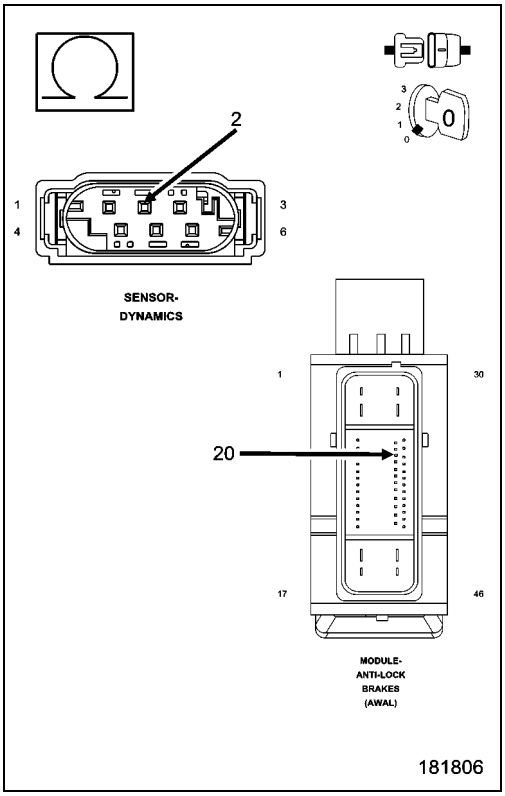

8. (D465) DYNAMICS SENSOR HIGH DATA LINK CIRCUIT SHORTED TO GROUND

1. Measure the resistance between ground and the (D465) Dynamics Sensor High Data Link circuit in the Dynamics Sensor harness connector.

Is the resistance below 5 Ohms?

Yes

- Repair the (D465) Dynamics Sensor High Data Link circuit shorted to ground.
- Perform the ABS VERIFICATION TEST. (Refer to 28 - DTC-Based Diagnostics/MODULE, Antilock Brake (ABS) - Standard Procedure).

No

- Go To 9

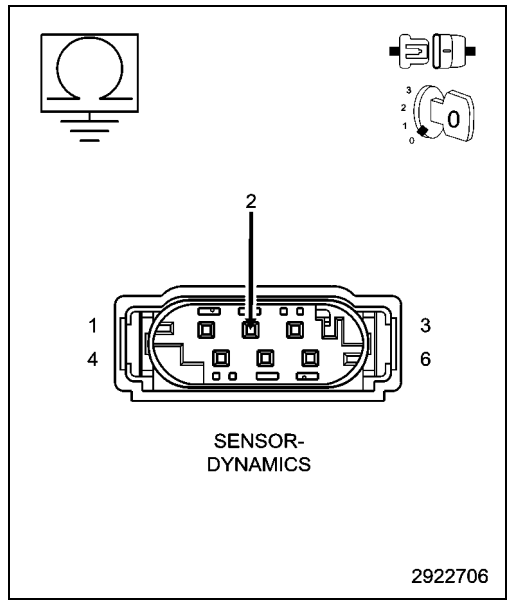

9. (D464) DYNAMICS SENSOR LOW DATA LINK CIRCUIT SHORTED TO VOLTAGE

1. Ignition on, engine not running.
2. Measure the voltage between ground and (D464) Dynamics Sensor Low Data Link circuit in the Dynamics Sensor harness connector.

Is there any voltage present?

Yes

- Repair the (D464) Dynamics Sensor Low Data Link crcuit for a short to voltage.
- Perform the ABS VERIFICATION TEST. (Refer to 28 - DTC-Based Diagnostics/MODULE, Antilock Brake (ABS) - Standard Procedure).

No

- Go To 10

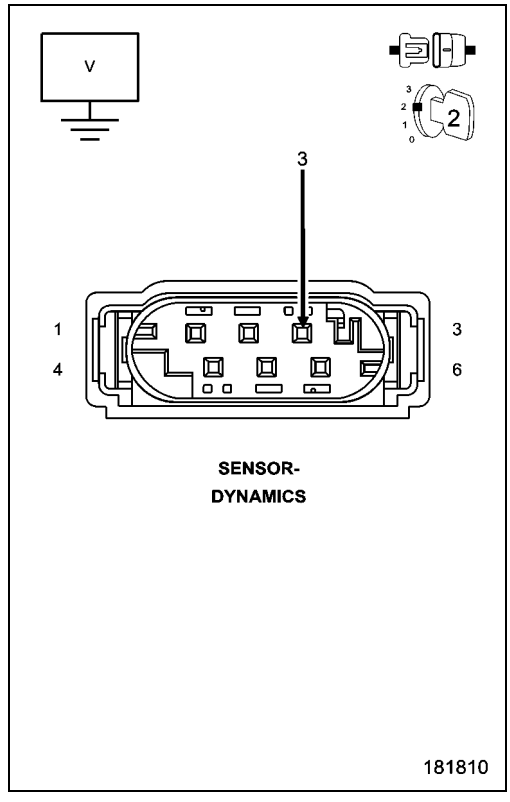

10. (D464) DYNAMICS SENSOR LOW DATA LINK CIRCUIT OPEN

1. Turn the ignition off to the lock position.
2. Measure the resistance of the (D464) Dynamics Sensor Low Data Link circuit between the ABS Module harness connector and the Dynamics Sensor harness connector.

Is the resistance above 5 Ohms?

Yes

- Repair the (D464) Dynamics Sensor High Data Link circuit for an open.
- Perform the ABS VERIFICATION TEST. (Refer to 28 - DTC-Based Diagnostics/MODULE, Antilock Brake (ABS) - Standard Procedure).

No

- Go To 11

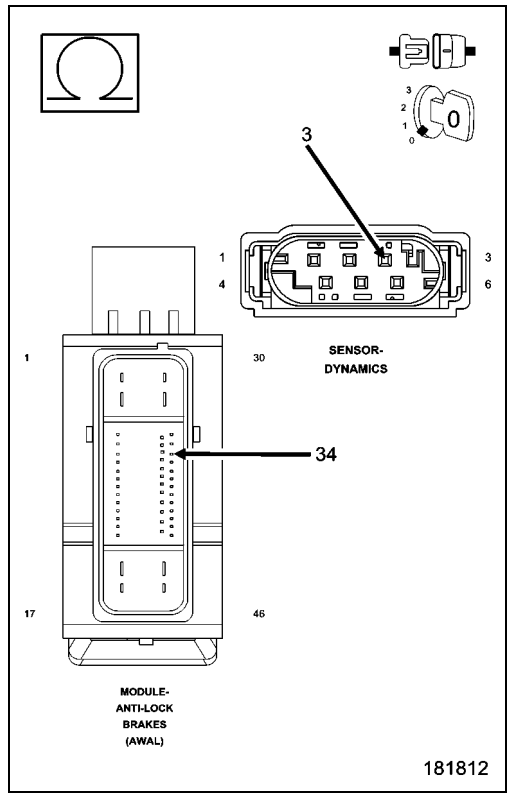

11. (D464) DYNAMICS SENSOR LOW DATA LINK CIRCUIT SHORTED TO GROUND

1. Measure the resistance of the (D464) Dynamics Sensor Low Data circuit from the Dynamics Sensor harness connector to ground.

Is the resistance below 5 Ohms?

Yes

- Repair the (D464) Dynamics Sensor Return circuit shorted to ground.
- Perform the ABS VERIFICATION TEST. (Refer to 28 - DTC-Based Diagnostics/MODULE, Antilock Brake (ABS) - Standard Procedure).

No

- Replace the Dynamics Sensor in accordance with the Service Manual.
- Perform the ABS VERIFICATION TEST. (Refer to 28 - DTC-Based Diagnostics/MODULE, Antilock Brake (ABS) - Standard Procedure).

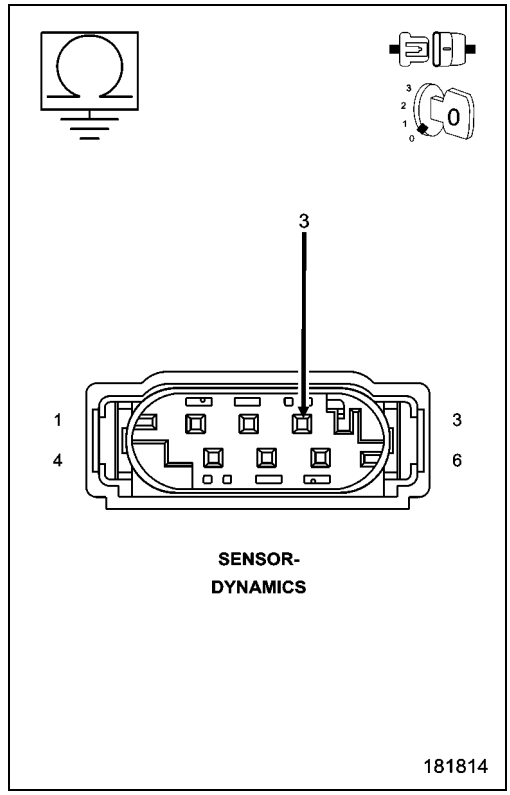

C1219-STEERING ANGLE SENSOR ERRATIC PERFORMANCE

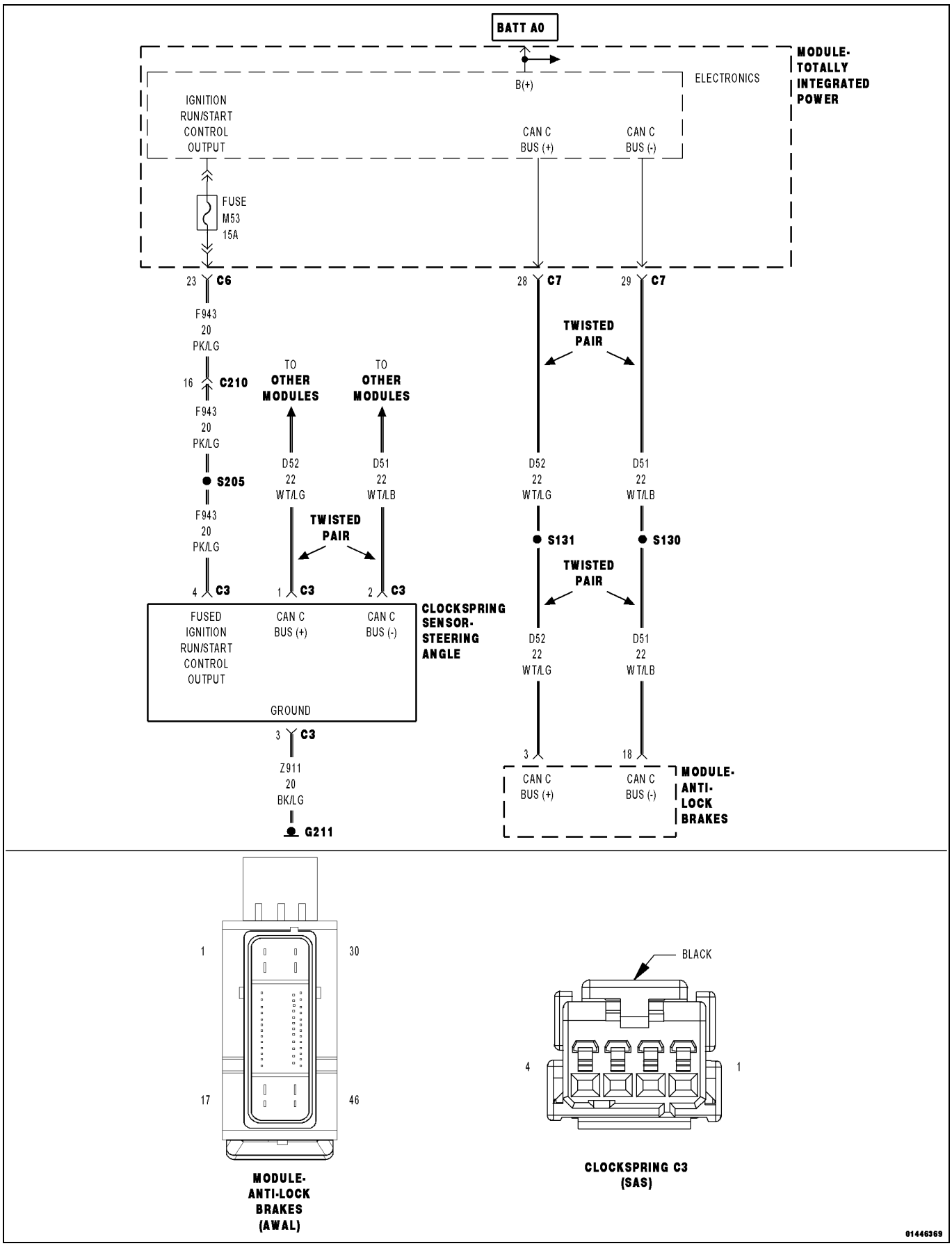

For a complete wiring diagram, **refer to the Wiring Information**.

- **When Monitored:**
  With the ignition on.
- **Set Condition:**
  When the Anti-Lock Brake (ABS) Module detects too rapid of a change in the Steering Angle Sensor.

Possible Causes
TERMINAL/CONNECTOR/WIRING HARNESS DAMAGE
(F943) FUSED B(+) CIRCUIT OPEN
(G211) GROUND CIRCUIT OPEN
CLOCKSPRING (SAS)
ANTI-LOCK BRAKE SYSTEM (ABS) MODULE

1. CHECK FOR A DTC C1219-STEERING ANGLE SENSOR ERRATIC PERFORMANCE

NOTE: This DTC must be active for the results of this test to be valid. Repair all other Steering Angle Sensor codes before proceeding.

1. Ignition on, engine not running.
2. With the scan tool, read and record DTCs.
3. With the scan tool, read and record Freeze Frame information.
4. With the scan tool, erase DTCs.
5. Cycle the ignition switch from off to on.
6. With the scan tool, read and record DTCs.

Does the scan tool display: C1219-Steering Angle Sensor Erratic Performance?

Yes

- Go To 2

No

- Perform the ABS-INTERMITTENT CONDITION TEST. (Refer to 28 - DTC-Based Diagnostics/MODULE, Antilock Brake (ABS) - Standard Procedure).

2. CHECK FOR STEERING ANGLE SENSOR ERRATIC SIGNAL

1. With the scan tool, graph Steering Angle while turning the steering wheel from lock to lock.

Is Steering Angle Signal erratic?

Yes

- Replace the Clockspring (SAS) in accordance with service information.
- Perform the ABS VERIFICATION TEST. (Refer to 28 - DTC-Based Diagnostics/MODULE, Antilock Brake (ABS) - Standard Procedure).

No

- Go To 3

3. CHECK THE TERMINALS/CONNECTORS/WIRING HARNESS FOR DAMAGE

WARNING: To avoid serious or fatal injury on vehicles equipped with airbags, disable the Supplemental Restraint System (SRS) before attempting any steering wheel, steering column, airbag, seat belt tensioner, impact sensor, or instrument panel component diagnosis or service. Disconnect and isolate the battery negative (ground) cable, then wait two minutes for the system capacitor to discharge before performing further diagnosis or service. This is the only sure way to disable the SRS. Failure to take the proper precautions could result in accidental airbag deployment.

NOTE: Proper Clockspring (SAS) installation is crucial for proper operation.

1. Check the Clockspring (SAS) installation.
2. Check all related wiring for bruised, chafed, pierced, or partially broken wires.
3. Check all related connectors for broken, bent, pushed out, or corroded terminals.

Were any problems found?

Yes

- Repair as necessary.
- Perform the ABS VERIFICATION TEST. (Refer to 28 - DTC-Based Diagnostics/MODULE, Antilock Brake (ABS) - Standard Procedure).

No

- Go To 4

4. CHECK THE VOLTAGE ON THE (F943) FUSED B(+) CIRCUIT

1. Turn the ignition off to the lock position.
2. Disconnect the Clockspring C3 (SAS) harness connector.
3. Ignition on, engine not running.
4. Measure the voltage of the (F943) Fused B(+) circuit and ground.

Is the voltage above 10 volts?

Yes

- Go To 5

No

- Repair the (F943) Fused B(+) circuit for an open.
- Perform the ABS VERIFICATION TEST. (Refer to 28 - DTC-Based Diagnostics/MODULE, Antilock Brake (ABS) - Standard Procedure).

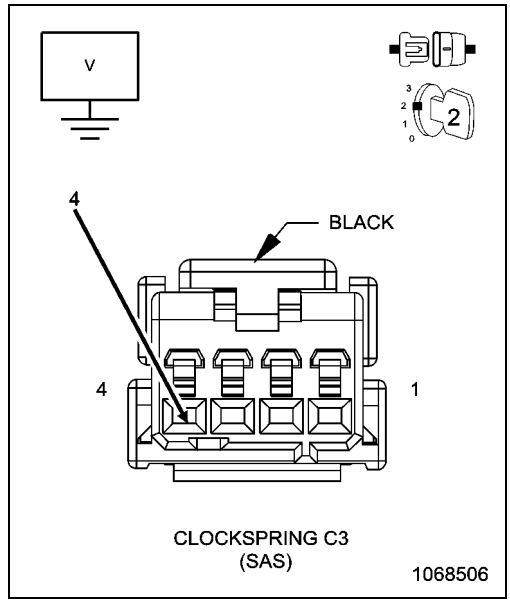

5. CHECK THE RESISTANCE OF THE (G211) GROUND CIRCUIT

1. Turn the ignition off.
2. Measure the resistance between the (G211) Ground circuit and ground.

Is the resistance below 5.0 Ohms?

Yes

- Replace Anti-Lock Brake System (ABS) Module in accordance with service information.
- Perform the ABS VERIFICATION TEST. (Refer to 28 - DTC-Based Diagnostics/MODULE, Antilock Brake (ABS) - Standard Procedure).

No

- Repair the (G211) Ground circuit for an open.
- Perform the ABS VERIFICATION TEST. (Refer to 28 - DTC-Based Diagnostics/MODULE, Antilock Brake (ABS) - Standard Procedure).

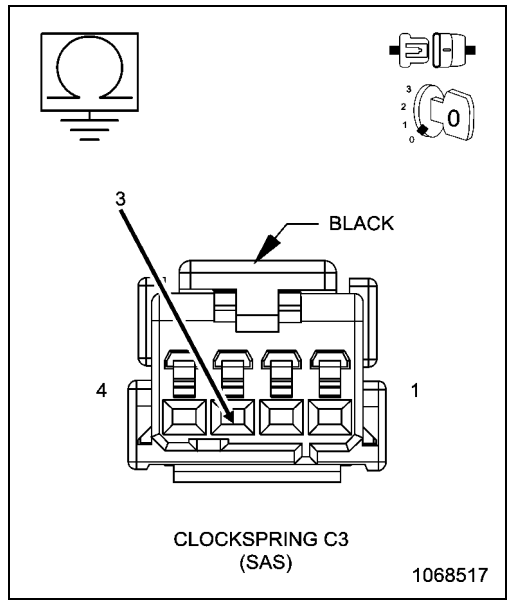

C121C-TORQUE REQUEST SIGNAL DENIED

For a complete wiring diagram **Refer to the Wiring Information.**

- **When Monitored:**
  With the ignition on.
- **Set Condition:**
  When the Anti-Lock Brake Module indicates if engine management relevant for Automatic Yaw Control/Traction Control System control can be accomplished.

Possible Causes
EXCESSIVE LOAD ON ENGINE
TRACTION CONTROL OPERATING FOR TO LONG
ANTI-LOCK BRAKE MODULE
POWERTRAIN CONTROL MODULE

1. CHECK FOR A DTC C121C-TORQUE REQUEST SIGNAL DENIED

NOTE: This DTC must be active for the results of this test to be valid and this DTC may set while driving under severe load conditions.

1. Turn the ignition on.
2. With the scan tool, read and record DTCs.
3. With the scan tool, read and record Freeze Frame information.
4. With the scan tool, erase DTCs.
5. Cycle the ignition switch from off to on.
6. Start Engine.
7. With the scan tool, read and record DTCs.

Does the scan tool display: C121C-TORQUE REQUEST SIGNAL DENIED?

Yes

- Go To 2

No

- Perform the ABS-INTERMITTENT CONDITION TEST. (Refer to 28 - DTC-Based Diagnostics/MODULE, Antilock Brake (ABS) - Standard Procedure).

2. CHECK THE POWERTRAIN DTCs

1. With the scan tool, read and record Powertrain DTCs.

Were any Powertrain ESP related DTCs found?

Yes

- Replace the Powertrain Module in accordance with the Service Information.
- Perform the POWERTRAIN VERIFICATION TEST. (Refer to 28 - DTC-Based Diagnostics/MODULE, Powertrain Control (PCM) - Standard Procedure)

No

- Replace the Anti-Lock Brake Module in accordance with the Service Information.
- Perform ABS VERIFICATION TEST - VER 1. (Refer to 28 - DTC-Based Diagnostics/MODULE, Antilock Brake (ABS) - Standard Procedure).

C121D-BRAKE PRESSURE SENSOR CIRCUIT

- **When Monitored:**
  With the ignition on.
- **Set Condition:**
  When the Anti-Lock Brake Module indicates that the Brake Pressure Sensor Signal is out of range.

Possible Causes
ANTI-LOCK BRAKE MODULE
ELECTRONIC CONTROL UNIT (ECU)

1. CHECK FOR A DTC C121D-BRAKE PRESSURE SENSOR CIRCUIT

NOTE: This DTC must be active for the results of this test to be valid.

1. Turn the ignition on.
2. With the scan tool, read and record DTCs.
3. With the scan tool, read and record Freeze Fame information.
4. With the scan tool, erase DTCs.
5. Start the engine.
6. Depress and release the brake pedal.
7. With the scan tool, read and record DTCs.

Does the scan tool display: C121D-BRAKE PRESSURE SENSOR CIRCUIT?

Yes

- Go To 2

No

- Perform the ABS-INTERMITTENT CONDITION TEST. (Refer to 28 - DTC-Based Diagnostics/MODULE, Antilock Brake (ABS) - Standard Procedure).

2. RECHECK FOR A DTC C121D-BRAKE PRESSURE SENSOR CIRCUIT

1. Turn the ignition on.
2. With the scan tool, read and record DTCs.
3. With the scan tool, read and record Freeze Frame information.
4. With the scan tool, erase DTCs.
5. Start the engine.
6. Depress and release the brake pedal.
7. With the scan tool, read and record DTCs.

Does the scan tool display: C121D-BRAKE PRESSURE SENSOR CIRCUIT?

Yes

- Replace the ECU in accordance with the Service Information.
- Perform ABS VERIFICATION TEST. (Refer to 28 - DTC-Based Diagnostics/MODULE, Antilock Brake (ABS) - Standard Procedure).

No

- Test complete

C121E-BRAKE PRESSURE SENSOR COMPARATIVE PERFORMANCE

For a complete wiring diagram **Refer to the Wiring Information.**

- **When Monitored:**
  With the ignition on.
- **Set Condition:**
  When the Anti-Lock Brake Module indicates that the Brake Pressure Sensor Signal is irrational.

Possible Causes
AIR IN BRAKE SYSTEM
BRAKE SWITCH SIGNAL OPEN
INTEGRATED CONTROL UNIT

1. CHECK FOR A DTC C121E-BRAKE PRESSURE SENSOR COMPARATIVE PERFORMANCE

1.
2. Turn the ignition on.
3. With the scan tool, read and record DTCs.
4. With the scan tool, read and record Freeze Frame information.
5. With the scan tool, erase DTCs.
6. Start the engine.
7. Depress and release the brake pedal.
8. With the scan tool, read and record DTCs.

Does the scan tool display: C121E-BRAKE PRESSURE SENSOR COMPARATIVE PERFORMANCE?

Yes

- Go To 2

No

- Perform the ABS-INTERMITTENT CONDITION TEST. (Refer to 28 - DTC-Based Diagnostics/MODULE, Antilock Brake (ABS) - Standard Procedure).

2. CHECK BRAKE SWITCH

1. With the scan tool look at the Brake Switch Signal.
2. Apply the brakes on and off while checking for a Brake Switch Signal change.

Did the Brake Switch Signal change?

Yes

- Go To 3

No

- Repair as needed.

3. CHECK BRAKE PRESSURE SENSOR

1. With the scan tool look at Pressure Sensor Signal and the Brake Switch Signal.
2. With the brakes not applied the Pressure Sensor should read ± 15 bar (218 psi).
3. Apply the brakes hard, the Pressure Sensor should read above 15 bar (218 psi).

Did Brake Pressure Sensor increase above 15 bar (218 psi)?

Yes

- Replace the Integrated Control Unit in accordance with the Service Information.
- Perform ABS VERIFICATION TEST. (Refer to 28 - DTC-Based Diagnostics/MODULE, Antilock Brake (ABS) - Standard Procedure).

No

- Go To 4

4. CHECK FOR AIR IN BRAKE SYSTEM

NOTE: Before continuing the brake system must be bled to verify there is no air in the brake system.

1. Turn ignition off.
2. Bleed brake system.

Was there any air in the brake system?

Yes

- Repair as needed.
- Perform ABS VERIFICATION TEST. (Refer to 28 - DTC-Based Diagnostics/MODULE, Antilock Brake (ABS) - Standard Procedure).

No

- Replace the Integrated Control Unit in accordance with the Service Information.
- Perform ABS VERIFICATION TEST. (Refer to 28 - DTC-Based Diagnostics/MODULE, Antilock Brake (ABS) - Standard Procedure).

C1231-DRIVE TEST: STEERING ANGLE SENSOR

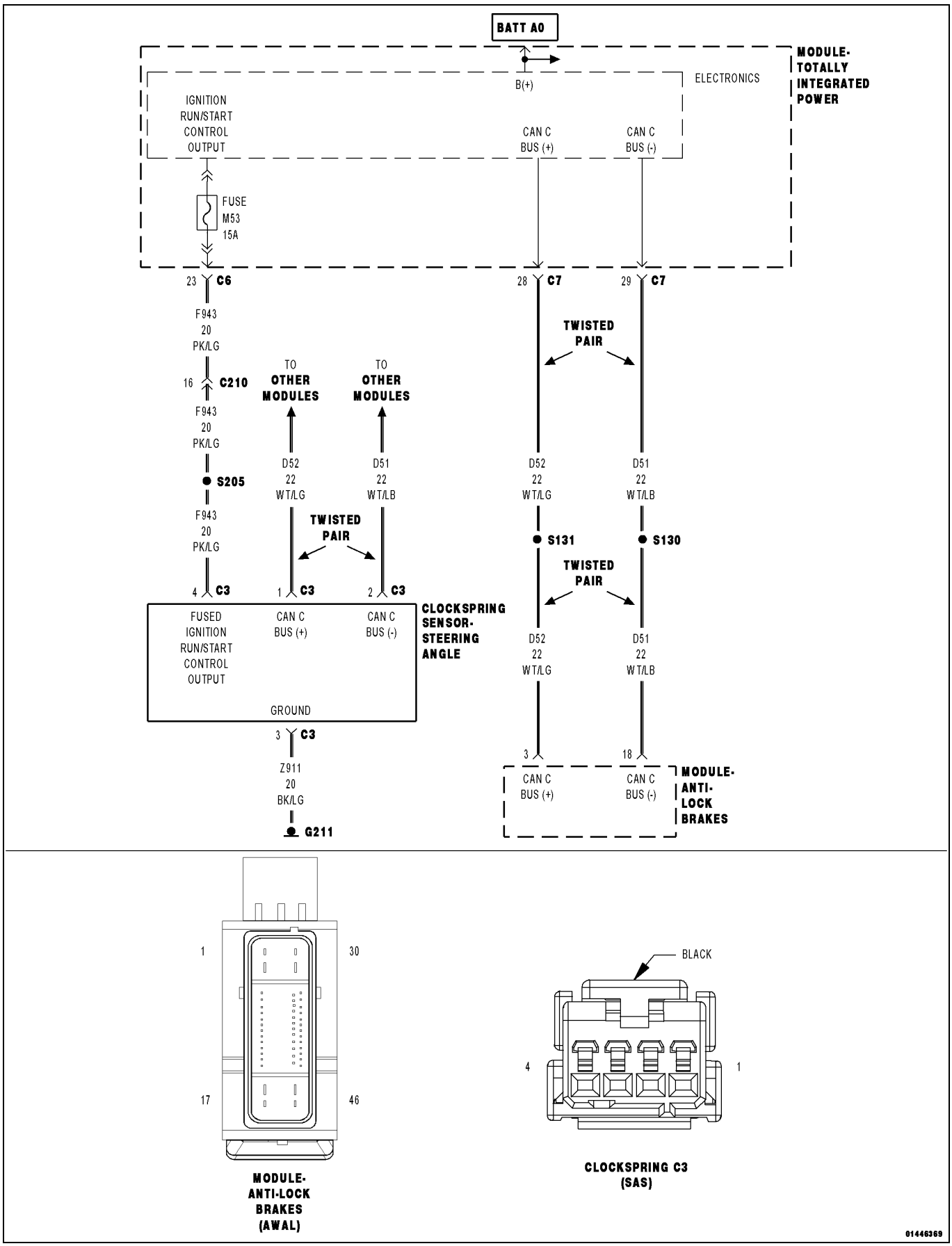

For a complete wiring diagram, **refer to the Wiring Information**.

NOTE: The Electronic Stability Control (ESC) may also be referred to as Electronic Stability Program (ESP) depending on the vehicle model year and configuration. Certain components may also reference ESP, ESC, or use the traction control symbol.

- **When Monitored:**
  During the Drive Test.
- **Set Condition:**
  If the Anti-Lock Brakes System (ABS) Module detects implausible Steering Angle Sensor (SAS) data.

Possible Causes
CLOCKSPRING INSTALLATION
CLOCKSPRING (SAS)
ANTI-LOCK BRAKES SYSTEM (ABS) MODULE

1. CHECK FOR A DTC C1231-DRIVE TEST: STEERING ANGLE SENSOR

NOTE: This DTC must be active for the results of this test to be valid.

1. Ignition on, engine not running.
2. Using the scan tool, read and record DTCs.
3. Using the scan tool, read and record Freeze Frame information.
4. Perform ECU initialization with drive test. Perform the ABS VERIFICATION TEST. (Refer to 28 - DTC-Based Diagnostics/MODULE, Antilock Brake (ABS) - Standard Procedure).
5. Start the engine.
6. Using the scan tool, read and record DTCs.

Does the scan tool display: C1231-DRIVE TEST: STEERING ANGLE SENSOR?

Yes

- Go To 2

No

- Perform the ABS-INTERMITTENT CONDITION TEST. (Refer to 28 - DTC-Based Diagnostics/MODULE, Antilock Brake (ABS) - Standard Procedure).

2. VERIFY THAT THE STEERING ANGLE SENSOR IS ACTIVE ON THE BUS

1. Using the scan tool, select ECU View.
2. Verify that the Steering Angle Sensor is active on the bus.

Is the Steering Angle Sensor active on the bus?

Yes

- Go To 3

No

- (Refer to 29 - Non-DTC Diagnostics/Communication - Diagnosis and Testing) and perform the No Response from SAS diagnostic procedure.

3. CHECK STEERING ANGLE

1. Turn steering wheel so wheels point in a straight ahead position.
2. With scan tool check steering angle.

Is the Steering Angle reading within ±15 degrees?

Yes

- Go To 4

No

- Go To 5

4. CHECK STEERING ANGLE CHANGE

1. Turn steering wheel so wheels point in a straight ahead position.
2. With scan tool check steering angle.
3. Rotate steering wheel to the right and the degrees will decrease and rotating steering wheel to the left the degrees will increase.

Did the steering angle change accordingly?

Yes

- Replace the Anti-Lock Brake System (ABS) Module in accordance with the Service Information.
- Perform the ABS VERIFICATION TEST. (Refer to 28 - DTC-Based Diagnostics/MODULE, Antilock Brake (ABS) - Standard Procedure).

No

- Replace the Clockspring (SAS) in accordance with the Service Information. (Refer to 10 - Restraints/CLOCKSPRING - Installation).

5. CHECK STEERING ANGLE SENSOR INSTALLATION

WARNING: To avoid serious or fatal injury on vehicles equipped with airbags, disable the Supplemental Restraint System (SRS) before attempting any steering wheel, steering column, airbag, seat belt tensioner, impact sensor, or instrument panel component diagnosis or service. Disconnect and isolate the battery negative (ground) cable, then wait two minutes for the system capacitor to discharge before performing further diagnosis or service. This is the only sure way to disable the SRS. Failure to take the proper precautions could result in accidental airbag deployment.

NOTE: Proper Clockspring (SAS) installation is crucial for proper operation.

1. Turn ignition off to the lock position.
2. Verify that the Clockspring (SAS) is properly installed. (Refer to 10 - Restraints/CLOCKSPRING - Installation)

Is the Clockspring (SAS) properly installed?

Yes

- Replace the Anti-Lock Brake System (ABS) Module in accordance with the Service Information.
- Perform the ABS VERIFICATION TEST. (Refer to 28 - DTC-Based Diagnostics/MODULE, Antilock Brake (ABS) - Standard Procedure).

No

- Repair as necessary.
- Perform the ABS VERIFICATION TEST. (Refer to 28 - DTC-Based Diagnostics/MODULE, Antilock Brake (ABS) - Standard Procedure).

■ C1232-DRIVE TEST: PRESSURE SENSOR

For a complete wiring diagram **Refer to the Wiring Information.**

- **When Monitored:**
  During the Drive Test.
- **Set Condition:**
  If the Pressure Sensor fails to activate.

Possible Causes
HYDRAULIC / BRAKE SYSTEM COMPONENT INSTALLATION
ELECTRONIC CONTROL UNIT (ECU)
PRESSURE SENSOR (HYDRAULIC CONTROL UNIT)

1. CHECK FOR A DTC C1232–DRIVE TEST: PRESSURE SENSOR

NOTE: This DTC must be active for the results of this test to be valid.

1. Turn the ignition on.
2. With the scan tool, read and record DTCs.
3. With the scan tool, read and record Freeze Frame information.
4. Perform ECU initialization with drive test. Refer to ABS VERIFICATION TEST. (Refer to 28 - DTC-Based Diagnostics/MODULE, Antilock Brake (ABS) - Standard Procedure).
5. Start the engine.
6. With the scan tool, read and record DTCs.

Does the scan tool display: C1232–DRIVE TEST: PRESSURE SENSOR?

Yes

- Go To 2

No

- Perform the ABS-INTERMITTENT CONDITION TEST. (Refer to 28 - DTC-Based Diagnostics/MODULE, Antilock Brake (ABS) - Standard Procedure).

2. CHECK HYDRAULIC SYSTEM AND BRAKE SYSTEM COMPONENT INSTALLATION AND FUNCTION

1. Verify that the Anti-Lock Brakes Module and Hydraulic Control Unit are properly installed.
2. Verify that the hydraulic system is properly filled and bled.
3. Verify that the brake system components are installed and functioning properly.

Were any problems found?

Yes

- Repair as necessary.
- Perform ABS VERIFICATION TEST. (Refer to 28 - DTC-Based Diagnostics/MODULE, Antilock Brake (ABS) - Standard Procedure).

No

- Replace the ECU in accordance with the Service Information.
- Perform ABS VERIFICATION TEST. (Refer to 28 - DTC-Based Diagnostics/MODULE, Antilock Brake (ABS) - Standard Procedure).

■ C1234-DRIVE TEST: SENSOR CLUSTER INSTALLATION

For a complete wiring diagram **Refer to the Wiring Information.**

NOTE: The Electronic Stability Control (ESC) may also be referred to as Electronic Stability Program (ESP) depending on the vehicle model year and configuration. Certain components may also reference ESP, ESC, or use the traction control symbol.

- **When Monitored:**
  During the Drive Test.
- **Set Condition:**
  If the Anti-Lock Brake System (ABS) Module detects implausible Dynamics Sensor data.

Possible Causes
DYNAMICS SENSOR INSTALLATION
DYNAMICS SENSOR
ANTI-LOCK BRAKE SYSTEM (ABS) MODULE

1. CHECK FOR A DTC C1234–DRIVE TEST: SENSOR CLUSTER INSTALLATION

NOTE: This DTC must be active for the results of this test to be valid.

1. Turn the ignition on.
2. With the scan tool, read and record DTCs.
3. With the scan tool, read and record Freeze Frame information.
4. Perform ECU initialization with drive test. Refer to Perform ABS VERIFICATION TEST. (Refer to 28 - DTC-Based Diagnostics/MODULE, Antilock Brake (ABS) - Standard Procedure)
5. Start the engine.
6. With the scan tool, read and record DTCs.

Does the scan tool display: C1234–DRIVE TEST: SENSOR CLUSTER INSTALLATION?

Yes

- Go To 2

No

- Perform the ABS-INTERMITTENT CONDITION TEST. (Refer to 28 - DTC-Based Diagnostics/MODULE, Antilock Brake (ABS) - Standard Procedure).

2. CHECK THE DYNAMICS SENSOR INSTALLATION

NOTE: Dynamics Sensor installation and mounting bolt torque is crucial for proper operation.

1. Turn the ignition off.
2. Check the Dynamics Sensor for damaged, modified, and bent mounting brackets.
3. Check the Dynamics Sensor mounting bolts for a loose or over tightened condition.

Were any problems found?

Yes

- Repair as necessary.
- Perform ABS VERIFICATION TEST. (Refer to 28 - DTC-Based Diagnostics/MODULE, Antilock Brake (ABS) - Standard Procedure).

No

- Go To 3

3. REPLACE DYNAMICS SENSOR AND VERIFY IF DTC IS STILL ACTIVE

1. Replace the Dynamics Sensor in accordance with the Service Information. Perform ABS VERIFICATION TEST - VER 1. (Refer to 28 - DTC-Based Diagnostics/MODULE, Antilock Brake (ABS) - Standard Procedure).

WARNING: Make sure brake capability is available before road testing.

2. Park the vehicle.
3. With the scan tool, read ABS DTCs.

Does this DTC reset?

Yes

- Replace the Anti-Lock Brakes Module in accordance with the Service Information.
- Perform ABS VERIFICATION TEST. (Refer to 28 - DTC-Based Diagnostics/MODULE, Antilock Brake (ABS) - Standard Procedure).

No

- Test complete.
- Perform ABS VERIFICATION TEST. (Refer to 28 - DTC-Based Diagnostics/MODULE, Antilock Brake (ABS) - Standard Procedure).

C1235 DRIVE TEST: TEST ACTIVE

For a complete wiring diagram **Refer to the Wiring Information.**

- **When Monitored:**
  With ignition on.
- **Set Condition:**
  Conditions for running drive test not met.

Possible Causes
DRIVE TEST ACTIVATED BUT NOT RUN
ANTI-LOCK BRAKE MODULE

1. CHECK FOR A DTC C1235–DRIVE TEST: TEST ACTIVE

NOTE: This DTC must be active for the results of this test to be valid.

1. Turn the ignition on.
2. With the scan tool, read and record DTCs.
3. With the scan tool, read and record Freeze Frame information.
4. Perform ECU initialization with drive test. Refer to Perform ABS VERIFICATION TEST. (Refer to 28 - DTC-Based Diagnostics/MODULE, Antilock Brake (ABS) - Standard Procedure)

NOTE: Drive test must be performed correctly for ECU to initialize.

5. With the scan tool, erase DTCs.
6. Start the engine.
7. With the scan tool, read and record DTCs.

Does the scan tool display: C1235–DRIVE TEST: TEST ACTIVE?

Yes

- Go To 2

No

- Perform the ABS-INTERMITTENT CONDITION TEST. (Refer to 28 - DTC-Based Diagnostics/MODULE, Antilock Brake (ABS) - Standard Procedure).

2. DRIVE TEST ACTIVATED BUT NOT RUN

1. With scan tool rerun drive test.

WAS DRIVE TEST COMPLETED?

Yes

- Replace the Anti-Lock Brake Module in accordance with the Service Information.
- Perform ABS VERIFICATION TEST. (Refer to 28 - DTC-Based Diagnostics/MODULE, Antilock Brake (ABS) - Standard Procedure).

No

- Rerun drive test.

C1238-DRIVE TEST: UNSUCCESSFUL

For a complete wiring diagram **Refer to the Wiring Information**.

- **When Monitored:**
  During the Drive Test.
- **Set Condition:**
  If the Anti-Lock Brakes Module detects a fault with the Steering Angle Sensor, the Pressure Sensor, or the Dynamics Sensor.

Possible Causes
STEERING ANGLE SENSOR
PRESSURE SENSOR
DYNAMICS SENSOR
ANTI-LOCK BRAKES MODULE

1. DIAGNOSE AND REPAIR ALL DTCs

Repair

- Diagnose and repair all DTCs.

C1239-EMISSION ROLLS TEST ACTIVE

For a complete wiring diagram, **refer to the Wiring Information**.

NOTE: The Electronic Stability Control (ESC) may also be referred to as Electronic Stability Program (ESP) depending on the vehicle model year and configuration. Certain components may also reference ESP, ESC, or use the traction control symbol.

- **When Monitored:**
  Continuously with the ignition on and no BUS communication failure DTCs present.
- **Set Condition:**
  If the Anti-lock Brake Module receives two messages in a row indicating that the extended diagnostic session is active. ABS is inhibited during the extended diagnostic session.

Possible Causes
CAN COMMUNICATION DTCS(S) PRESENT
TIPM ROLLS MODE COMMAND ACTIVE
ANTI-LOCK BRAKE SYSTEM (ABS) MODULE

1. DTC IS PRESENT

NOTE: Make sure the battery is fully charged.

1. Turn the ignition on.
2. With the scan tool clear DTCs.
3. Turn the ignition off.
4. Turn the ignition on.
5. Using the scan tool, read DTCs.

Is the status Active for this DTC?

Yes

- Go To 2

No

- Go To 3

2. ANTI-LOCK BRAKE MODULE

1. Turn the ignition on.
2. Using the scan tool, select View DTCs in each module on the CAN B BUS and the CAN C BUS.

Are there CAN BUS communication DTCs present in any other module?

Yes

- Perform the appropriate diagnostic procedure before continuing with this test. (Refer to 28 - DTC-Based Diagnostics/MODULE, Totally Integrated Power (TIPM) - Diagnosis and Testing).
- Perform the ABS VERIFICATION TEST. (Refer to 28 - DTC-Based Diagnostics/MODULE, Antilock Brake (ABS) - Standard Procedure).

No

- Replace the Anti-lock Brake System (ABS) Module in accordance with the Service Information.
- Perform the ABS VERIFICATION TEST. (Refer to 28 - DTC-Based Diagnostics/MODULE, Antilock Brake (ABS) - Standard Procedure).

3. INTERMITTENT COMMUNICATION DTC

1. The condition necessary to set this DTC is not present at this time.
2. This DTC will set if the ABS Module receives two messages in a row from the TIPM indicating that the Emissions Rolls test is active.
3. Using the scan tool, select View DTCs in each of the modules on the CAN B BUS and the CAN C BUS. If there are any communications DTCs present, perform the appropriate diagnostic procedure. (Refer to 28 - DTC-Based Diagnostics/MODULE, Totally Integrated Power (TIPM) - Diagnosis and Testing).
4. Perform any Technical Service Bulletins that may apply.

Were any problems found?

Yes

- Repair as necessary.
- Perform the ABS VERIFICATION TEST. (Refer to 28 - DTC-Based Diagnostics/MODULE, Antilock Brake (ABS) - Standard Procedure).

No

- Test complete, the condition or conditions that originally set this DTC are not present at this time.

■ C123A-ESP SYSTEM SENSORS CALIBRATION

For a complete wiring diagram, **refer to the Wiring Information**.

NOTE: The Electronic Stability Control (ESC) may also be referred to as Electronic Stability Program (ESP) depending on the vehicle model year and configuration. Certain components may also reference ESP, ESC, or use the traction control symbol.

- **When Monitored:**
  Once per ignition cycle.
- **Set Condition:**
  If the calculated checksum does not match the stored checksum.

Possible Causes
ANTI-LOCK BRAKE SYSTEM (ABS) MODULE

1. INITIALIZE ANTI-LOCK BRAKES MODULE

1. Initialize the ECU, Perform the ABS VERIFICATION TEST. (Refer to 28 - DTC-Based Diagnostics/MODULE, Antilock Brake (ABS) - Standard Procedure).

Does this DTC reset?

Yes

- Replace the Anti-Lock Brake System (ABS) Module in accordance with the Service Information.
- Perform the ABS VERIFICATION TEST. (Refer to 28 - DTC-Based Diagnostics/MODULE, Antilock Brake (ABS) - Standard Procedure).

No

- Test complete, the condition or conditions that originally set this DTC are not present at this time. Using the wiring diagrams as a guide, check all related splices and connectors for signs of water intrusion, corrosion, pushed out or bent terminals, and correct pin tension.

C123B-ESP SYSTEM CONTROL TOO LONG

For a complete wiring diagram, **refer to the Wiring Information**.

NOTE: The Electronic Stability Control (ESC) may also be referred to as Electronic Stability Program (ESP) depending on the vehicle model year and configuration. Certain components may also reference ESP, ESC, or use the traction control symbol.

- **When Monitored:**
  With the ignition on.
- **Set Condition:**
  When the Anti-Lock Brake System (ABS) Module indicates excessive valve control lasting longer the 15 seconds.

Possible Causes
HYDRAULIC/BRAKE ISSUE
DYNAMICS SENSOR
INTEGRATED CONTROL UNIT

1. VERIFY DIAGNOSTIC TROUBLE CODE (DTC) IS ACTIVE

NOTE: If other DTCs are set they must be repaired before continuing. This DTC must be active for the results of this test to be valid and this DTC may set while driving under excessive driving conditions.

1. Turn the ignition on.
2. Using the scan tool, read and record ABS DTCs.
3. Using the scan tool, read and record Environmental Data (EV Data).
4. Using the scan tool, erase ABS DTCs.
5. Cycle the ignition switch.

WARNING: Make sure brake capability is available before road testing.

6. Test drive the vehicle by turning the vehicle left or right in a curving manner at a velocity between 10 and 20 km/hr (6 and 12 m.p.h.).
7. Park the vehicle.
8. Using the scan tool, read ABS DTCs.

Does this DTC reset?

Yes

- Go To 2

No

- Perform the ABS Intermittent Condition diagnostic procedure (Refer to 28 - DTC-Based Diagnostics/MODULE, Antilock Brake (ABS) - Standard Procedure).

2. CHECK HYDRAULIC SYSTEM AND BRAKE SYSTEM COMPONENT INSTALLATION AND FUNCTION

1. Verify that the Anti-Lock Brakes Module and Hydraulic Control Unit are properly installed.
2. Verify that the hydraulic system is properly filled and bled.
3. Verify that the brake system components are installed and functioning properly.

Were any problems found?

Yes

- Repair as necessary.
- Perform the ABS VERIFICATION TEST. (Refer to 28 - DTC-Based Diagnostics/MODULE, Antilock Brake (ABS) - Standard Procedure).

No

- Replace the Dynamics Sensor in accordance with the Service Information.
- Perform the ABS VERIFICATION TEST. (Refer to 28 - DTC-Based Diagnostics/MODULE, Antilock Brake (ABS) - Standard Procedure).

■ C123F-STEERING ANGLE SENSOR COMPARATIVE PERFORMANCE

For a complete wiring diagram, **refer to the Wiring Information**.

- **When Monitored:**
  With ignition on, but not if a checksum failure of the stored offset values is detected.
  Or, a CAN time-out failure is detected.
  Or, a failure is detected by the Steering Angle Sensor.
- **Set Condition:**
  If the Anti-Lock Brakes System (ABS) Module detects that either the calculated steering wheel angle offset or the steering wheel angle signal measured output is out of range.

Possible Causes
VEHICLE DAMAGE
STEERING COLUMN / INTERMEDIATE SHAFT DAMAGE
STEERING WHEEL ALIGNMENT
STEERING ANGLE SENSOR (SAS) LOOSE
CLOCKSPRING (SAS) IMPROPERLY INSTALLED (WRONG MOUNTING POSITION)
CLOCKSPRING (SAS)
ANTI-LOCK BRAKE SYSTEM (ABS) MODULE

1. PERFORM TEST DRIVE AND VERIFY DTC IS STILL ACTIVE

NOTE: If present, diagnose and repair DTC C1219-STEERING ANGLE SENSOR ERRATIC PERFORMANCE, C121A-STEERING ANGLE SENSOR NOT INITIALIZED, or C1240-STEERING ANGLE SENSOR OVERTRAVEL PERFORMANCE before diagnosing this DTC.

1. Ignition on, engine not running.
2. With the scan tool, erase ABS DTCs.
3. Cycle the ignition switch.

WARNING: To avoid possible serious or fatal injury, check brake capability is available before road testing.

4. Test drive the vehicle by turning the vehicle left or right in a curving manner at a velocity between 10 and 25 km/hr (6 and 15 m.p.h.).
5. Park the vehicle.
6. With the scan tool, read ABS DTCs.

Does this DTC reset?

Yes

- Go To 2

No

- Perform the ABS-INTERMITTENT CONDITION TEST. (Refer to 28 - DTC-Based Diagnostics/MODULE, Antilock Brake (ABS) - Standard Procedure).

2. CHECK STEERING ANGLE SENSOR OUTPUT

1. Start the engine.
2. Turn the steering wheel so wheels point in a straight ahead position.
3. With the scan tool, read the Steering Angle Sensor position.

Is the Steering Angle Sensor Position within ± 15° degrees?

Yes

- Go To 5

No

- Go To 3

3. INSPECT VEHICLE, STEERING COLUMN, AND INTERMEDIATE SHAFT FOR DAMAGE

NOTE: If possible, check vehicle repair history for collision damage.

1. Turn ignition off to the lock position.
2. Inspect the vehicle for damage causing tracking problems or steering wheel misalignment.
3. Inspect the steering column and intermediate shaft for damage.

Were any problems found?

Yes

- Repair as necessary.
- Perform the ABS VERIFICATION TEST. (Refer to 28 - DTC-Based Diagnostics/MODULE, Antilock Brake (ABS) - Standard Procedure).

No

- Go To 4

4. CHECK CLOCKSPRING (SAS) INSTALLATION

WARNING: To avoid serious or fatal injury on vehicles equipped with airbags, disable the Supplemental Restraint System (SRS) before attempting any steering wheel, steering column, airbag, seat belt tensioner, impact sensor, or instrument panel component diagnosis or service. Disconnect and isolate the battery negative (ground) cable, then wait two minutes for the system capacitor to discharge before performing further diagnosis or service. This is the only sure way to disable the SRS. Failure to take the proper precautions could result in accidental airbag deployment.

NOTE: Proper Clockspring (SAS) installation is crucial for proper operation.

1. Verify that the Clockspring (SAS) is properly installed.

Is the Steering Angle Sensor properly installed?

Yes

- Go To 5

No

- Repair as necessary and clear offsets by initializing ECU with wheels pointing straight ahead.
- Perform the ABS VERIFICATION TEST. (Refer to 28 - DTC-Based Diagnostics/MODULE, Antilock Brake (ABS) - Standard Procedure).

5. RE-INITIALIZE THE ESC MODULE

1. Perform ECU initialization with drive test to clear offsets. Perform the ABS VERIFICATION TEST. (Refer to 28 - DTC-Based Diagnostics/MODULE, Antilock Brake (ABS) - Standard Procedure).

Is DTC C123F-STEERING ANGLE SENSOR COMPARATIVE PERFORMANCE still active?

Yes

- Go To 6

No

- Sensor was probably loose or calibrated with wheels not centered to vehicle. Test complete.
- Perform the ABS VERIFICATION TEST. (Refer to 28 - DTC-Based Diagnostics/MODULE, Antilock Brake (ABS) - Standard Procedure).

6. CHECK STEERING ANGLE SENSOR OUTPUT WHILE ROTATING THE STEERING WHEEL

1. With the scan tool, read the Steering Angle Sensor position while rotating the steering wheel to the right and then to the left. The Steering Angle Sensor position should decrease when rotating the steering wheel to the right and increase when rotating the steering wheel to the left.

Did the steering angle change accordingly?

Yes

- Replace the Anti-Lock Brake System (ABS) Module in accordance with the Service Information.
- Perform the ABS VERIFICATION TEST. (Refer to 28 - DTC-Based Diagnostics/MODULE, Antilock Brake (ABS) - Standard Procedure).

No

- Replace the Clockspring (SAS) in accordance with the Service Information. (Refer to 10 - Restraints/CLOCKSPRING - Installation)

C1240-STEERING ANGLE SENSOR OVERTRAVEL PERFORMANCE

For a complete wiring diagram, **refer to the Wiring Information**.

NOTE: The Electronic Stability Control (ESC) may also be referred to as Electronic Stability Program (ESP) depending on the vehicle model year and configuration. Certain components may also reference ESP, ESC, or use the traction control symbol.

- **When Monitored:**
  With ignition on, but not if a CAN time out failure is detected.
  Or, if a fault is detected by the Steering Angle Sensor (SAS).
- **Set Condition:**
  If the Anti-Lock Brakes System (ABS) Module detects sensor overtravel over 720 degrees.

Possible Causes
STEERING COLUMN IMPROPERLY INSTALLED
STEERING ANGLE SENSOR (SAS) LOOSE
CLOCKSPRING (SAS) / STEERING WHEEL IMPROPERLY INSTALLED
CLOCKSPRING (SAS)
ANTI-LOCK BRAKE SYSTEM (ABS) MODULE

1. CHECK FOR A DTC C1240-STEERING ANGLE SENSOR OVERTRAVEL PERFORMANCE

NOTE: This DTC must be active for the results of this test to be valid.

1. Ignition on, engine not running.
2. Using the scan tool, read and record DTCs.
3. Using the scan tool, read and record Freeze Frame information.
4. Using the scan tool, erase DTCs.
5. Start the engine.
6. Turn steering wheel from lock to lock.
7. Using the scan tool, read and record DTCs.

Does the scan tool display: C1240-STEERING ANGLE SENSOR OVERTRAVEL PERFORMANCE?

Yes

- Go To 2

No

- Perform the ABS-INTERMITTENT CONDITION TEST. (Refer to 28 - DTC-Based Diagnostics/MODULE, Antilock Brake (ABS) - Standard Procedure).

2. VERIFY THAT THE STEERING ANGLE SENSOR IS ACTIVE ON THE BUS

1. Using the scan tool, select ECU View.
2. Verify that the Steering Angle Sensor is active on the bus.

Is the Steering Angle Sensor active on the bus?

Yes

- Go To 3

No

- (Refer to 29 - Non-DTC Diagnostics/Communication - Diagnosis and Testing) and perform the No Response from SAS diagnostic procedure.

3. CHECK STEERING ANGLE

1. Turn steering wheel so wheels point in a straight ahead position.
2. With scan tool check steering angle.

Is the Steering Angle reading within ±15 degrees?

Yes

- Go To 4

No

- Go To 5

4. CHECK STEERING ANGLE CHANGE

1. Turn steering wheel so wheels point in a straight ahead position.
2. With scan tool check steering angle if reading travels to 720 degrees whiling rotating wheel from lock to lock.

NOTE: Sensor damage can occur if wheel is turned over 720 degrees.

3. Rotate steering wheel to the right and the degrees will decrease and rotating steering wheel to the left the degrees will increase.

Did the steering angle change accordingly and display less the 720 degrees from lock to lock?

Yes

- Replace the Anti-lock Brake System (ABS) Module in accordance with the Service Information.
- Perform the ABS VERIFICATION TEST. (Refer to 28 - DTC-Based Diagnostics/MODULE, Antilock Brake (ABS) - Standard Procedure).

No

- Replace the Clockspring (SAS) in accordance with the Service Information. (Refer to 10 - Restraints/CLOCKSPRING - Installation).

5. CHECK CLOCKSPRING (SAS) INSTALLATION

WARNING: To avoid serious or fatal injury on vehicles equipped with airbags, disable the Supplemental Restraint System (SRS) before attempting any steering wheel, steering column, airbag, seat belt tensioner, impact sensor, or instrument panel component diagnosis or service. Disconnect and isolate the battery negative (ground) cable, then wait two minutes for the system capacitor to discharge before performing further diagnosis or service. This is the only sure way to disable the SRS. Failure to take the proper precautions could result in accidental airbag deployment.

NOTE: Proper Clockspring (SAS) installation is crucial for proper operation.

1. Turn the ignition off.
2. Verify that the Clockspring (SAS) is properly installed. (Refer to 10 - Restraints/CLOCKSPRING - Installation)

Is the Clockspring (SAS) properly installed?

Yes

- Replace the Anti-lock Brake System (ABS) Module in accordance with the Service Information.
- Perform the ABS VERIFICATION TEST. (Refer to 28 - DTC-Based Diagnostics/MODULE, Antilock Brake (ABS) - Standard Procedure).

No

- Repair as necessary.
- Perform the ABS VERIFICATION TEST. (Refer to 28 - DTC-Based Diagnostics/MODULE, Antilock Brake (ABS) - Standard Procedure).

■ C1242-G SENSOR INPUT SIGNAL PERFORMANCE

For a complete wiring diagram, **refer to the Wiring Information**.

- **When Monitored:**

  Continuously, with ignition on, until vehicle speed exceeds 20 km/h (12.4 m.p.h.) for the first time, but not if the sensor voltage is out of range,

  Or, during diagnostic mode.

  Or, if the monitoring was inhibited by a corresponding diagnostics command.

  Or, if the vehicle speed has exceeded 20 km/h (12.4 m.p.h.) during the actual ignition cycle.

  Or, if at least one over spinning wheel is detected.

  Or, if one of the control functions is active.
- **Set Condition:**

  Potential issue with yaw/lat/long sensors (dynamics sensor).

Possible Causes
DYNAMICS SENSOR INSTALLATION
DYNAMICS SENSOR OR ANTI-LOCK BRAKE MODULE
ANTI-LOCK BRAKES MODULE

1. VERIFY DTC IS ACTIVE

1. Turn the ignition on.
2. With the scan tool, read and record ABS DTCs.
3. With the scan tool, read and record Environmental Data (EV Data).
4. With the scan tool, erase ABS DTCs.
5. Cycle the ignition switch.

WARNING: To avoid possible serious or fatal injury, check brake capability is available before road testing.

6. Test drive the vehicle by turning the vehicle left or right in a curving manner at a velocity between 10 and 20 km/hr (6 and 12 m.p.h.).
7. Park the vehicle.
8. With the scan tool, read ABS DTCs.

Does this DTC reset?

Yes

- Go To 2

No

- Perform the ABS-INTERMITTENT CONDITION TEST. (Refer to 28 - DTC-Based Diagnostics/MODULE, Antilock Brake (ABS) - Standard Procedure).

2. CHECK THE DYNAMICS SENSOR INSTALLATION

NOTE: Dynamics Sensor installation and mounting bolt torque is crucial for proper operation.

1. Turn the ignition off.
2. Check the Dynamics Sensor for damaged, modified, and bent mounting brackets.
3. Check the Dynamics Sensor mounting bolts for a loose or over tightened condition.

Were any problems found?

Yes

- Repair as necessary.
- Perform ABS VERIFICATION TEST. (Refer to 28 - DTC-Based Diagnostics/MODULE, Antilock Brake (ABS) - Standard Procedure).

No

-

NOTE: Vehicles without a Dynamics Sensor replace Anti-Lock Brake Module.
Replace the Dynamics Sensor or Anti-Lock Brake Module in accordance with the Service Information.

- Perform ABS VERIFICATION TEST. (Refer to 28 - DTC-Based Diagnostics/MODULE, Antilock Brake (ABS) - Standard Procedure).

C1243-G SENSOR NOT INITIALIZED

For a complete wiring diagram, **Refer to the Wiring Information**.

- **When Monitored:**
  Once after ignition on.
- **Set Condition:**
  If the stored zero point calibration value of the longitudinal acceleration sensor is invalid.

Possible Causes
DYNAMICS SENSOR NOT CALIBRATED
DYNAMICS SENSOR
ANTI-LOCK BRAKES MODULE

1. PERFORM ECU INITIALIZATION

1. Turn the ignition on.
2. With the scan tool, erase ABS DTCs.
3. Cycle the ignition switch.

WARNING: To avoid possible serious or fatal injury, check brake capability is available before road testing.

4. Perform ECU initialization with drive test refer to ABS VERIFICATION TEST. (Refer to 28 - DTC-Based Diagnostics/MODULE, Antilock Brake (ABS) - Standard Procedure).

NOTE: The ECU Initialization process must include driving the vehicle into a 90° turn.

5. Park the vehicle.
   - Go To 2

2. VERIFY IF DTC IS STILL ACTIVE

1. Cycle the ignition switch.

WARNING: To avoid possible serious or fatal injury, check brake capability is available before road testing.

2. Test drive the vehicle by turning the vehicle left or right in a curving manner at a velocity between 10 and 25 km/h (6 and 15 mph).
3. Park the vehicle.
4. With the scan tool, read ABS DTCs.

Does this DTC reset?

Yes

- Replace the Dynamics Sensor or Anti-Lock Brake Module in accordance with the Service Information.

NOTE: Vehicles without a Dynamics Sensor replace Anti-Lock Brake Module.

- Perform ABS VERIFICATION TEST. (Refer to 28 - DTC-Based Diagnostics/MODULE, Antilock Brake (ABS) - Standard Procedure).

No

- Perform the ABS-INTERMITTENT CONDITION TEST. (Refer to 28 - DTC-Based Diagnostics/MODULE, Antilock Brake (ABS) - Standard Procedure).

C2100-BATTERY VOLTAGE LOW

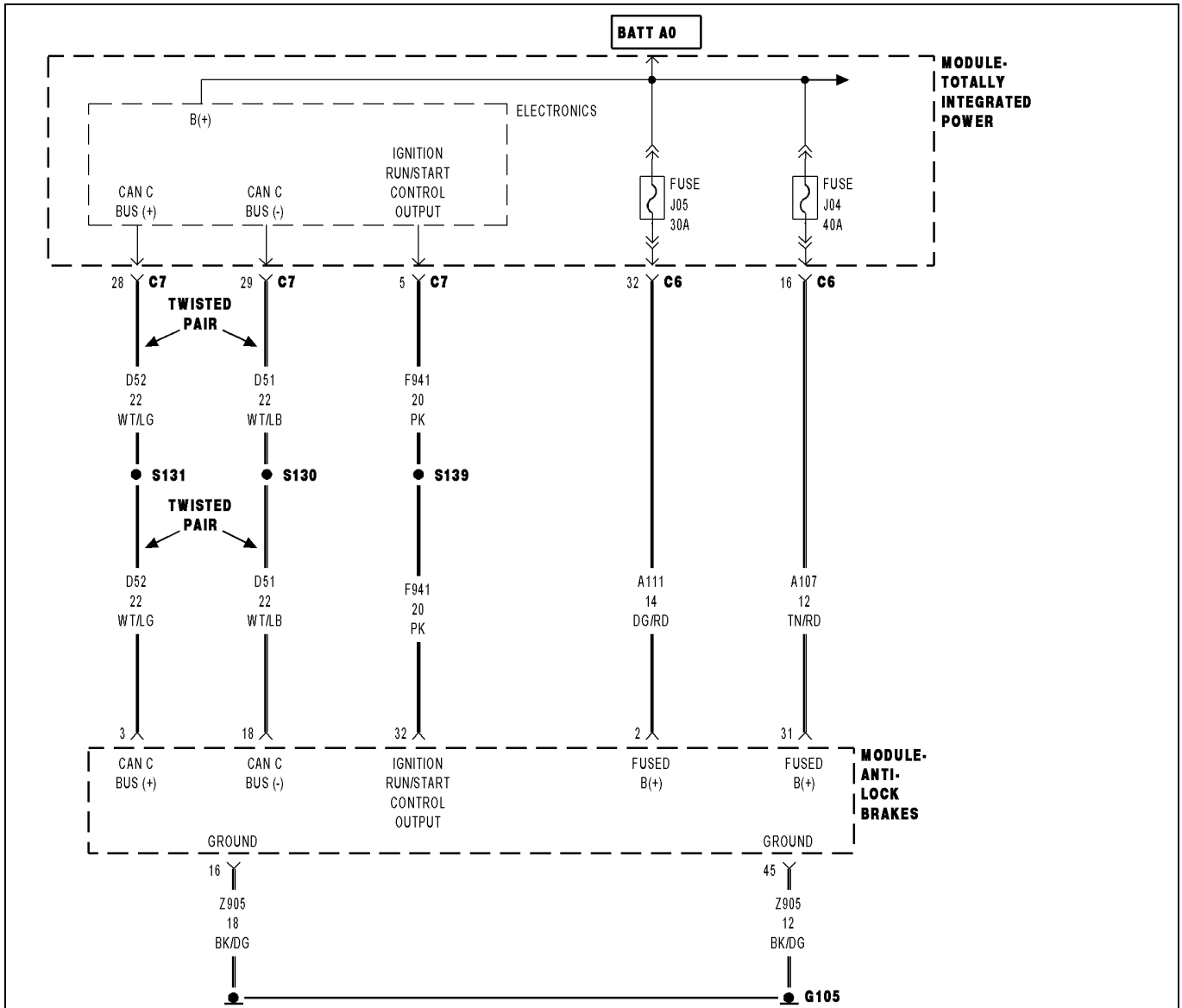

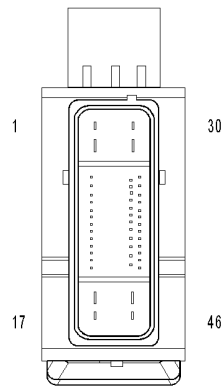

MODULE-
ANTI-LOCK
BRAKES
(AWAL)

01436737

For a complete wiring diagram, **refer to the Wiring Information**.

- **When Monitored:**
  Ignition on.
- **Set Condition:**
  If the sensed ignition voltage drops below 9.5 volts for 100 msec.

Possible Causes
INTERMITTENT BATTERY VOLTAGE LOW DTC
(F941) IGNITION RUN/START CONTROL OUTPUT CIRCUIT OPEN OR HIGH RESISTANCE
(Z905) GROUND CIRCUIT(S) OPEN OR HIGH RESISTANCE
ANTI-LOCK BRAKE SYSTEM (ABS) MODULE

1. DTC IS ACTIVE

NOTE: Diagnose and repair any powertrain Charging system DTCs before continuing with this procedure.

NOTE: Make sure the battery is fully charged.

1. Ignition on, engine not running.
2. With the scan tool, record and erase DTCs.
3. Turn ignition off to the lock position.
4. Start the engine.
5. With the scan tool, read DTCs.

Is the status Active for this DTC?

Yes

- Go To 2

No

- Perform ABS INTERMITTENT TEST. (Refer to 28 - DTC-Based Diagnostics/MODULE, Antilock Brake (ABS) - Standard Procedure).

2. (F941) IGNITION RUN/START CONTROL OUTPUT CIRCUIT OPEN OR HIGH RESISTANCE

1. Turn ignition off to the lock position.
2. Disconnect the Anti-lock Brake Module harness connector.
3. Check connectors - Clean/repair as necessary.
4. Ignition on, engine not running.
5. Using a 12-volt test light connected to ground, check the (F941) Ignition Run/Start Control Output circuit.

NOTE: Compare the brightness to that of a direct connection to the battery.

Does the test light illuminate brightly?

Yes

- Go To 3

No

- Repair the (F941) Ignition Run/Start Control Output circuit for an open circuit or high resistance.
- Perform the ABS VERIFICATION TEST. (Refer to 28 - DTC-Based Diagnostics/MODULE, Antilock Brake (ABS) - Standard Procedure).

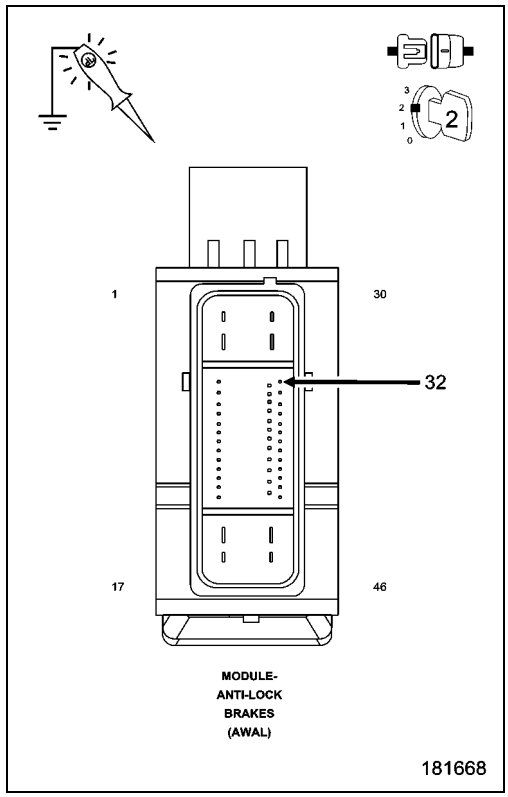

3. (Z905) GROUND CIRCUITS OPEN OR HIGH RESISTANCE

1. Turn ignition off to the lock position.
2. Using a 12-volt test light connected to B+, check the (Z905) Ground circuits.

NOTE: Compare the brightness to that of a direct connection to the battery.

Does the test light illuminate brightly?

Yes

- Replace the Anti-lock Brake System (ABS) Module in accordance with the Service Information.
- Perform the ABS VERIFICATION TEST. (Refer to 28 - DTC-Based Diagnostics/MODULE, Antilock Brake (ABS) - Standard Procedure).

No

- Repair the (Z905) Ground circuit(s) for an open circuit or high resistance.
- Perform the ABS VERIFICATION TEST. (Refer to 28 - DTC-Based Diagnostics/MODULE, Antilock Brake (ABS) - Standard Procedure).

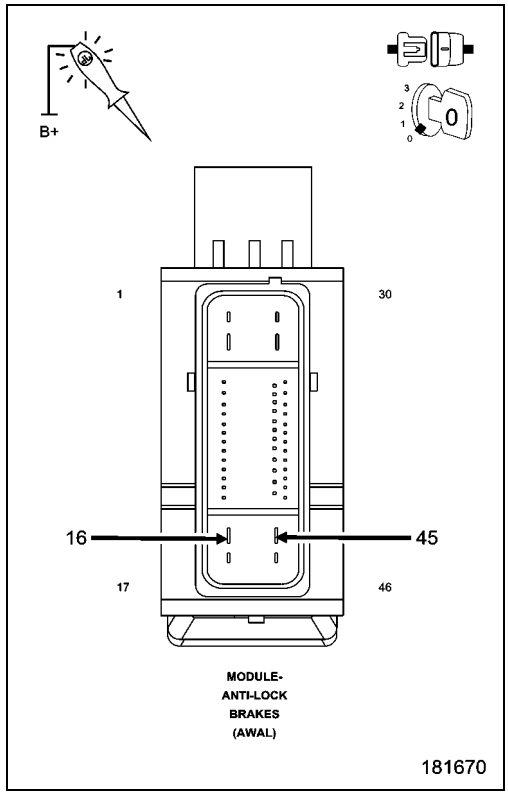

C2101-BATTERY VOLTAGE HIGH

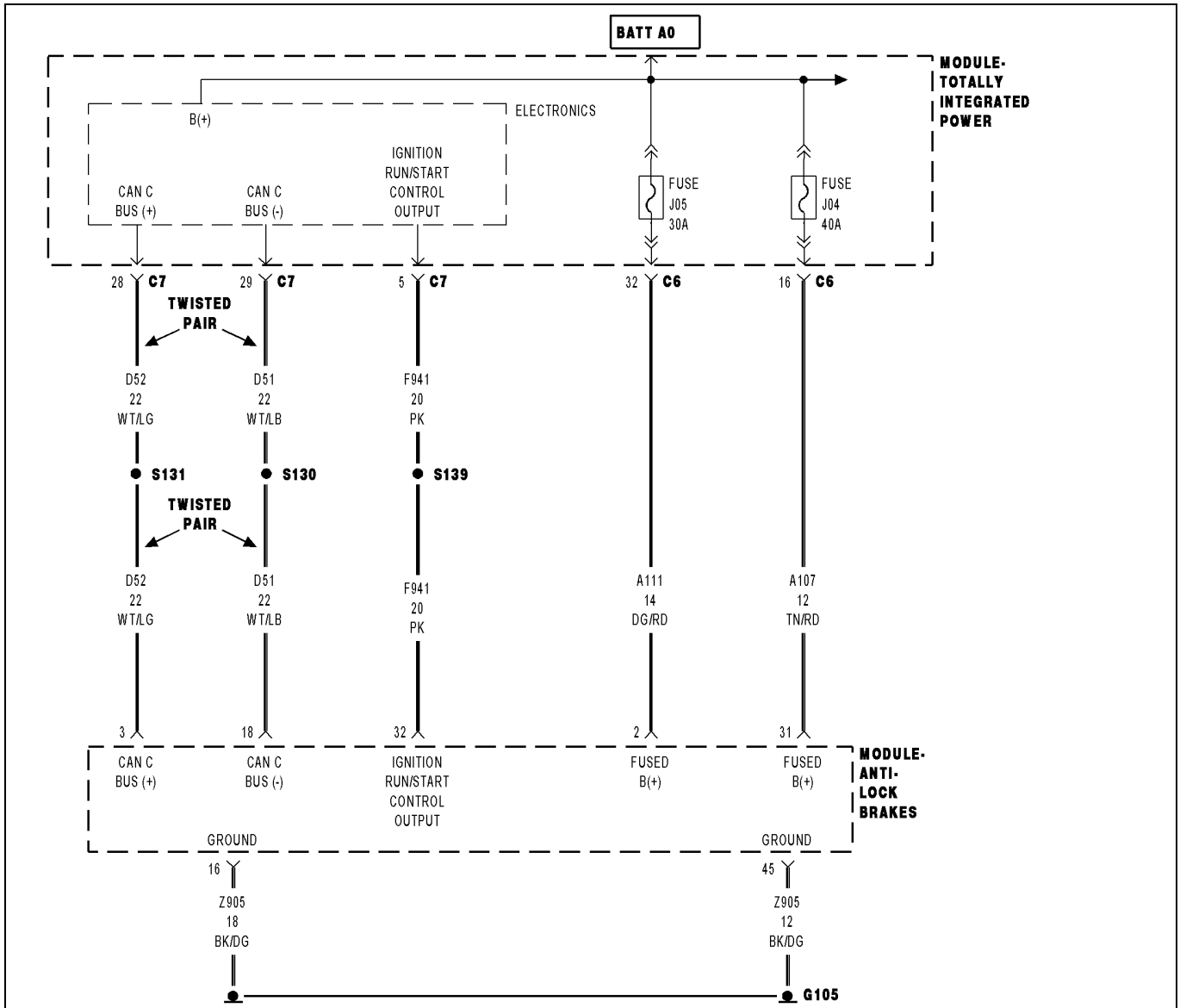

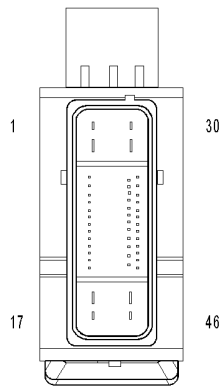

MODULE-
ANTI-LOCK
BRAKES
(AWAL)

01436737

For a complete wiring diagram, **refer to the Wiring Information**.

- **When Monitored:**
  Ignition on and no system undervoltage DTC active.
- **Set Condition:**
  If the sensed ignition voltage is greater than 16.5 volts for 100 msec.

Possible Causes
INTERMITTENT BATTERY VOLTAGE HIGH DTC
POWERTRAIN CONTROL MODULE (PCM) CHARGING SYSTEM DTCS PRESENT
ANTI-LOCK BRAKE SYSTEM (ABS) MODULE

1. CHARGING SYSTEM DTCS PRESENT

1. Ignition on, engine not running.
2. With the scan tool, read DTCs in the PCM.

Are there any Charging System or related voltage DTCs present?

Yes

- Perform the appropriate Charging System DTC diagnostic procedures before continuing with this test (Refer to 28 - DTC-Based Diagnostics/MODULE, Powertrain Control (PCM) - Diagnosis and Testing).

No

- Go To 2

2. DTC IS ACTIVE

1. Ignition on, engine not running.
2. With the scan tool, record and erase DTCs.
3. Turn ignition off to the lock position.
4. Start the engine.
5. With the scan tool, read DTCs.

Is the status Active for this DTC?

Yes

- Replace the Anit-lock Brake System (ABS) Module in accordance with the Service Information.
- Perform the ABS VERIFICATION TEST. (Refer to 28 - DTC-Based Diagnostics/MODULE, Antilock Brake (ABS) - Standard Procedure).

No

- Perform ABS INTERMITTENT TEST. (Refer to 28 - DTC-Based Diagnostics/MODULE, Antilock Brake (ABS) - Standard Procedure).

C2105-ABS VALVE SUPPLY VOLTAGE CIRCUIT LOW

For a complete wiring diagram **Refer to the Wiring Information.**

- **When Monitored:**
  Ignition on.
- **Set Condition:**
  The Anti-lock Brake Module has detected an internal error.

Possible Causes
ANTI-LOCK BRAKE MODULE

1. ANTI-LOCK BRAKE MODULE INTERNAL CONDITION

1. The Anti-lock Brake Module is reporting internal errors.

NOTE: Before continuing, check the Anti-lock Brake Module harness connector terminals for corrosion, damage, or terminal push out. Repair as necessary.

2. Using the schematics as a guide, inspect the wire harness and connectors. Pay particular attention to all Power and Ground circuits.
3. Perform any Technical Service Bulletins that may apply.

Were there any problems found?

Yes

- Repair as necessary.
- Perform ABS VERIFICATION TEST. (Refer to 28 - DTC-Based Diagnostics/MODULE, Antilock Brake (ABS) - Standard Procedure)

No

- Replace the Anti-lock Brake Module in accordance with the Service Information.
- Perform ABS VERIFICATION TEST. (Refer to 28 - DTC-Based Diagnostics/MODULE, Antilock Brake (ABS) - Standard Procedure)

C2200-ANTI-LOCK BRAKE MODULE INTERNAL

For a complete wiring diagram **Refer to the Wiring Information.**

- **When Monitored:**
  Ignition on.
- **Set Condition:**
  The Anti-lock Brake Module has detected an error after a system self test.

Possible Causes
ANTI-LOCK BRAKE MODULE

1. ANTI-LOCK BRAKE MODULE INTERNAL CONDITION

1. The Anti-lock Brake Module is reporting internal errors.

NOTE: Before continuing, check the Anti-lock Brake Module harness connector terminals for corrosion, damage, or terminal push out. Repair as necessary.

2. Using the schematics as a guide, inspect the wire harness and connectors. Pay particular attention to all Power and Ground circuits.
3. Perform any Technical Service Bulletins that may apply.

Were there any problems found?

Yes

- Repair as necessary.
- Perform ABS VERIFICATION TEST. (Refer to 28 - DTC-Based Diagnostics/MODULE, Antilock Brake (ABS) - Standard Procedure)

No

- Replace the Anti-lock Brake Module in accordance with the Service Information.
- Perform ABS VERIFICATION TEST. (Refer to 28 - DTC-Based Diagnostics/MODULE, Antilock Brake (ABS) - Standard Procedure)

C2202-ORIGINAL VIN MISMATCH / MISSING

For a complete wiring diagram, **refer to the Wiring Information.**

- **When Monitored:**
  Ignition on.
- **Set Condition:**
  This DTC will set if the current VIN does not match the broadcast VIN.

Possible Causes
COMMUNICATIONS DTC(S) PRESENT
POWERTRAIN CONTROL MODULE (PCM)
ANTI-LOCK BRAKE SYSTEM (ABS) MODULE

1. DTC IS ACTIVE

1. Ignition on, engine not running.
2. With the scan tool, erase DTCs.
3. Turn ignition off to the lock position.
4. Ignition on, engine not running.
5. Wait ten seconds.
6. With the scan tool, read DTCs.

Is the status Active for this DTC?

Yes

- Go To 2

No

- Go To 3

2. WRONG VIN PROGRAMMED IN PCM

1. Ignition on, engine not running.
2. With the scan tool, read the VIN in the PCM.
3. Compare VIN in the PCM to the vehicle VIN.

Is the correct VIN programmed in the PCM?

Yes

- Replace the Anti-lock Brake System (ABS) Module in accordance with the Service Information.
- Perform ABS VERIFICATION TEST. (Refer to 28 - DTC-Based Diagnostics/MODULE, Antilock Brake (ABS) - Standard Procedure)

No

- Replace the Powertrain Control Module (PCM) in accordance with the Service Information.
- Perform PCM VERIFICATION TEST. (Refer to 28 - DTC-Based Diagnostics/MODULE, Powertrain Control (PCM) - Standard Procedure)

3. COMMUNICATION DTCS PRESENT

1. Turn ignition off to the lock position.
2. With the scan tool, read DTCs in all other modules. If any communications DTCs are present, refer to the appropriate diagnostic procedure. (Refer to 28 - DTC-Based Diagnostics/MODULE, Totally Integrated Power (TIPM) - Diagnosis and Testing)
3. Perform any Technical Service Bulletins that may apply.

Were any problems found?

Yes

- Repair as necessary.
- Perform ABS VERIFICATION TEST. (Refer to 28 - DTC-Based Diagnostics/MODULE, Antilock Brake (ABS) - Standard Procedure)

No

- Test Complete.

C2204-DYNAMICS SENSOR INTERNAL

For a complete wiring diagram, **refer to the Wiring Information**.

NOTE: The Electronic Stability Control (ESC) may also be referred to as Electronic Stability Program (ESP) depending on the vehicle model year and configuration. Certain components may also reference ESP, ESC, or use the traction control symbol.

- **When Monitored:**
  Continuously, with ignition on, until vehicle speed exceeds 20 km/h (12.4 mph) for the first time, but not if the sensor voltage is out of range.
  Or, during diagnostic mode.
  Or, if the monitoring was inhibited by a corresponding diagnostics command.
  Or, if the vehicle speed has exceeded 20 km/h (12.4 mph) during the actual ignition cycle.
  Or, if at least one over spinning wheel is detected.
  Or, if one of the control functions is active.
- **Set Condition:**
  Internal problem with Dynamics Sensor.

Possible Causes
DYNAMICS SENSOR INSTALLATION
DYNAMICS SENSOR

1. VERIFY DIAGNOSTIC TROUBLE CODE (DTC) IS ACTIVE

1. Turn the ignition on.
2. Using the scan tool, read and record ABS DTCs.
3. Using the scan tool, read and record Environmental Data (EV Data).
4. Using the scan tool, erase ABS DTCs.
5. Cycle the ignition switch.

WARNING: Make sure brake capability is available before road testing.

6. Test drive the vehicle by turning the vehicle left or right in a curving manner at a velocity between 10 and 20 km/hr (6 and 12 mph).
7. Park the vehicle.
8. Using the scan tool, read ABS DTCs.

Does this DTC reset?

Yes

- Go To 2

No

- Perform the ABS Intermittent Condition diagnostic procedure (Refer to 28 - DTC-Based Diagnostics/MODULE, Antilock Brake (ABS) - Standard Procedure).

2. CHECK THE DYNAMICS SENSOR INSTALLATION

NOTE: Dynamics Sensor installation and mounting bolt torque is crucial for proper operation.

1. Turn the ignition off.
2. Check the Dynamics Sensor for damaged, modified, and bent mounting brackets.
3. Check the Dynamics Sensor mounting bolts for a loose or over tightened condition.

Were any problems found?

Yes

- Repair as necessary.
- Perform the ABS VERIFICATION TEST. (Refer to 28 - DTC-Based Diagnostics/MODULE, Antilock Brake (ABS) - Standard Procedure).

No

- Replace the Dynamics Sensor in accordance with the Service Information.
- Perform the ABS VERIFICATION TEST. (Refer to 28 - DTC-Based Diagnostics/MODULE, Antilock Brake (ABS) - Standard Procedure).

C2205-STEERING ANGLE SENSOR INTERNAL

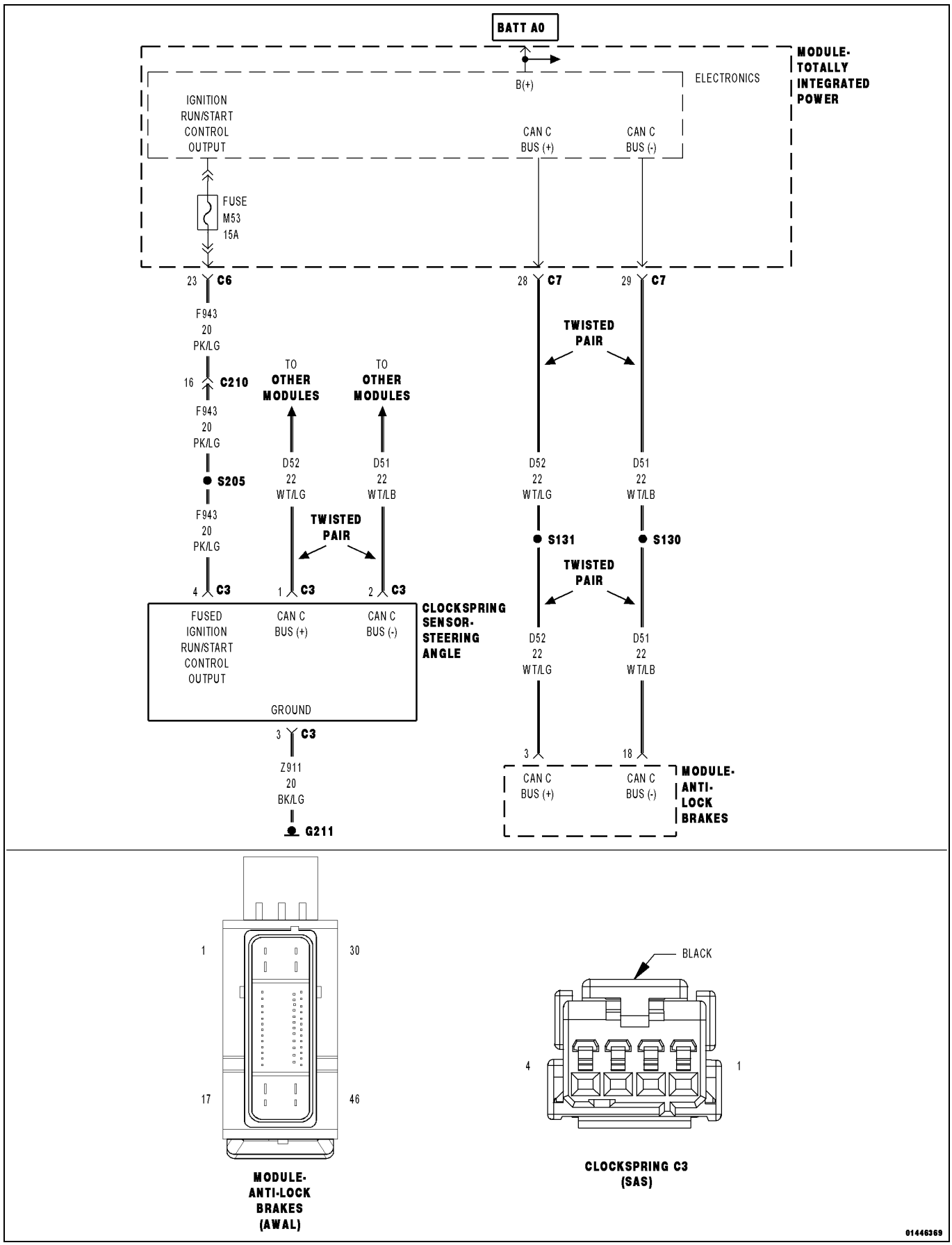

For a complete wiring diagram, **refer to the Wiring Information**.

- **When Monitored:**
  With the ignition on.
- **Set Condition:**
  When the Anti-Lock Brake System (ABS) Module detects the Steering Angle Sensor (SAS) has sent the internal failure status.

Possible Causes
WIRING HARNESS, TERMINAL, CONNECTOR DAMAGE
(F943) FUSED B(+) CIRCUIT OPEN
(G211) GROUND CIRCUIT OPEN
CLOCKSPRING (SAS)

1. CHECK FOR A DTC C2205-STEERING ANGLE SENSOR INTERNAL

NOTE: This DTC must be active for the results of this test to be valid.

1. Turn the ignition on, engine not running.
2. With the scan tool, read and record DTCs.
3. With the scan tool, read and record Freeze Frame information.
4. With the scan tool, erase DTCs.
5. Turn the steering wheel lock to lock.
6. With the scan tool, read and record DTCs.

Does the scan tool display: C2205-STEERING ANGLE SENSOR INTERNAL?

Yes

- Go To 2

No

- Perform the ABS-INTERMITTENT CONDITION TEST. (Refer to 28 - DTC-Based Diagnostics/MODULE, Antilock Brake (ABS) - Standard Procedure).

2. CHECK THE WIRING HARNESS, TERMINALS, AND CONNECTORS

WARNING: To avoid serious or fatal injury on vehicles equipped with airbags, disable the Supplemental Restraint System (SRS) before attempting any steering wheel, steering column, airbag, seat belt tensioner, impact sensor, or instrument panel component diagnosis or service. Disconnect and isolate the battery negative (ground) cable, then wait two minutes for the system capacitor to discharge before performing further diagnosis or service. This is the only sure way to disable the SRS. Failure to take the proper precautions could result in accidental airbag deployment.

NOTE: Proper Clockspring (SAS) installation is crucial for proper operation.

1. Turn the ignition off to the lock position.
2. Check the Clockspring (SAS) installation.
3. Visually inspect the related wiring harness. Look for any bruised, chafed, pierced, or partially broken wires.
4. Visually inspect the related wiring harness connectors. Look for broken, bent, pushed out, or corroded terminals.

Were any problems found?

Yes

- Repair as necessary.
- Perform the ABS VERIFICATION TEST. (Refer to 28 - DTC-Based Diagnostics/MODULE, Antilock Brake (ABS) - Standard Procedure).

No

- Go To 3

3. CHECK THE VOLTAGE ON THE (F943) STEERING ANGLE SENSOR SUPPLY CIRCUIT

1. Turn the ignition off to the lock position.
2. Disconnect the Clockspring C3 (SAS) harness connector.
3. Turn the ignition on, engine not running.
4. Measure the voltage between ground and the (F943) Steering Angle Sensor Supply circuit at the Clockspring C3 (SAS) harness connector.

Is the voltage above 10 volts?

Yes

- Go To 4

No

- Repair the (F943) Steering Angle Sensor Supply circuit for an open.
- Perform the ABS VERIFICATION TEST. (Refer to 28 - DTC-Based Diagnostics/MODULE, Antilock Brake (ABS) - Standard Procedure).

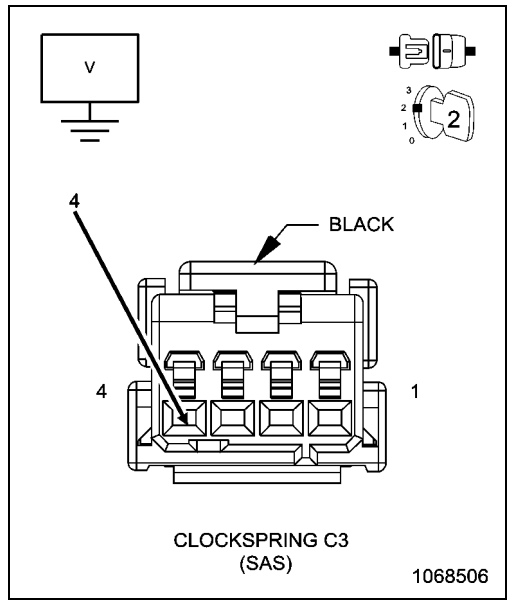

4. CHECK THE RESISTANCE OF THE (G211) GROUND CIRCUIT

1. Turn ignition off to the lock position.
2. Measure the resistance between the (G211) Steering Angle Sensor Ground Circuit and Ground at the Clockspring C3 (SAS) harness connector.

Is the resistance below 5.0 Ohm?

Yes

- Replace the Clockspring (SAS) in accordance with the Service Information. (Refer to 10 - Restraints/CLOCKSPRING - Installation)

No

- Repair the (G211) Steering Angle Sensor Ground circuit for an open.
- Perform the ABS VERIFICATION TEST. (Refer to 28 - DTC-Based Diagnostics/MODULE, Antilock Brake (ABS) - Standard Procedure).

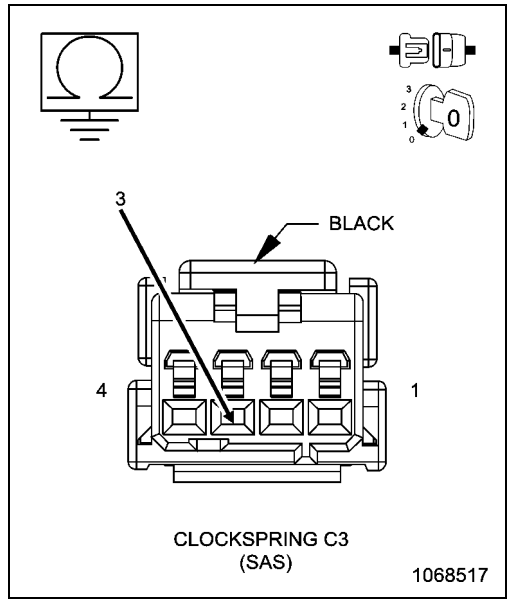

C2206-VEHICLE CONFIGURATION MISMATCH

For a complete wiring diagram, **refer to the Wiring Information.**

NOTE: The Electronic Stability Control (ESC) may also be referred to as Electronic Stability Program (ESP) depending on the vehicle model year and configuration. Certain components may also reference ESP, ESC, or use the traction control symbol.

- **When Monitored:**
  Ignition on.
- **Set Condition:**
  This DTC will set if the vehicle type is not identified or incorrectly identified.

Possible Causes
ANTI-LOCK BRAKE SYSTEM (ABS) MODULE
TOTALLY INTEGRATED POWER MODULE (TIPM)

1. ANTI-LOCK BRAKE SYSTEM (ABS) MODULE

NOTE: Diagnose and repair any Powertrain Control Module VIN or Communication DTCs before continuing with this test.

NOTE: If C2202-Original VIN Mismatch / Missing is set along with this DTC, perform the diagnostic procedure for C2202 before continuing with this test.

1. Ignition on, engine not running.
2. Using the scan tool, erase DTCs.
3. Turn ignition off to the lock position.
4. Ignition on, engine not running.
5. Using the scan tool, select View DTCs.

Is the status Active for this DTC?

Yes

- Check vehicle configuration in TIPM. Refer to TIPM section for procedure. (Refer to 28 - DTC-Based Diagnostics/MODULE, Totally Integrated Power (TIPM) - Diagnosis and Testing) If configuration incorrect, fix and reinitialize ABS module.
- Perform the ABS VERIFICATION TEST. (Refer to 28 - DTC-Based Diagnostics/MODULE, Antilock Brake (ABS) - Standard Procedure)

No

- Use the scan tool to read DTCs in all other modules. If any communication DTCs are present, perform the appropriate diagnostic procedure. Perform any Technical Service Bulletins that apply. If no problems are found, test is complete.

U0002-CAN C BUS OFF PERFORMANCE

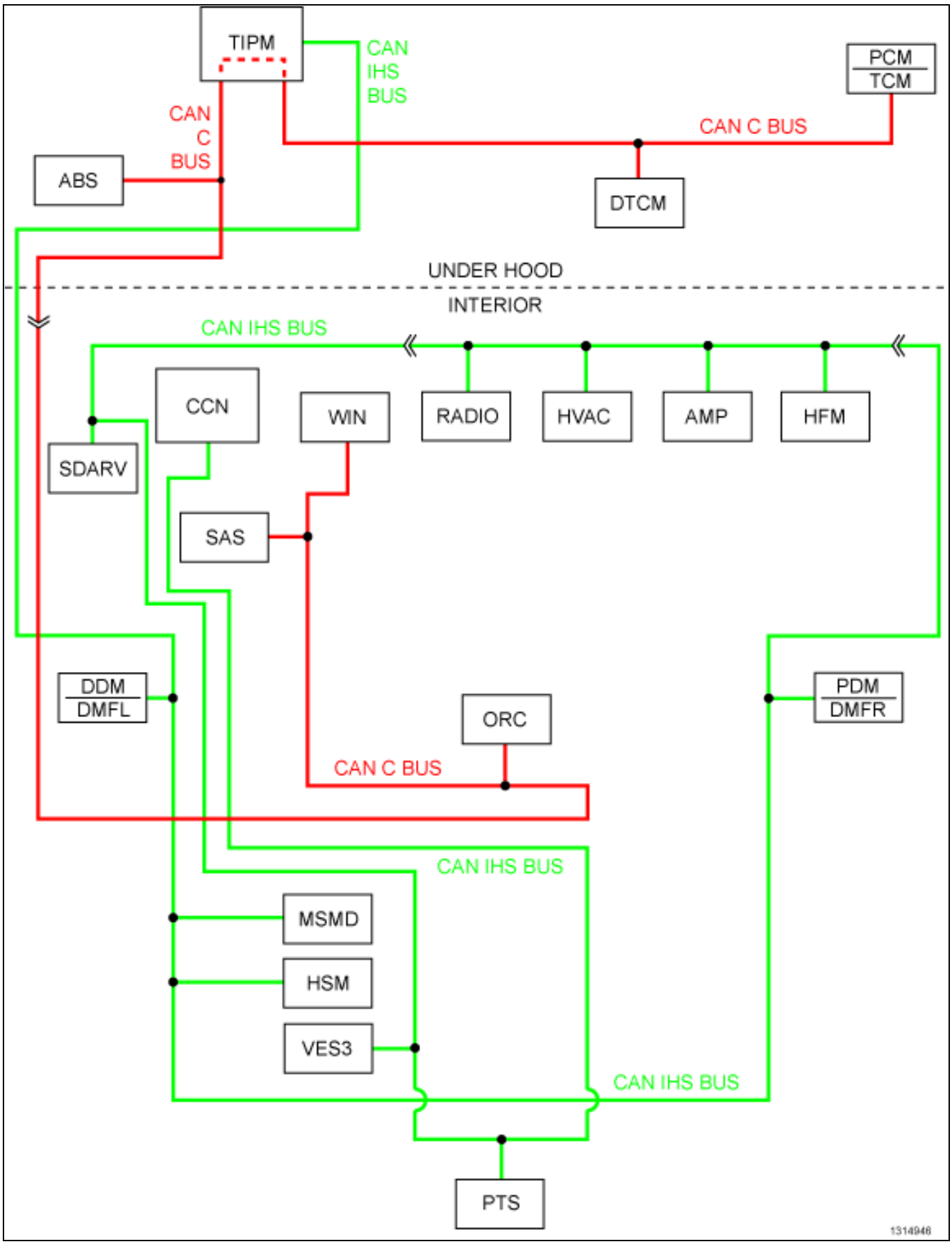

For a complete wiring diagram **Refer to the Wiring Information.**

- **When Monitored:**
  Continuously.
- **Set Condition:**
  Whenever the CAN C Bus (+) or CAN C Bus (-) is open, shorted to voltage or shorted to ground.

Possible Causes
INTERMITTENT CAN C BUS OFF PERFORMANCE DTC
CAN C BUS DTCs SET IN TIPM
(D52) CAN C BUS (+) CIRCUIT OPEN
(D51) CAN C BUS (-) CIRCUIT OPEN
ANTI-LOCK BRAKE SYSTEM (ABS) MODULE

1. DTC IS ACTIVE

1. Ignition on, engine not running.
2. With the scan tool, clear DTCs in the Anti-lock Brake Module.
3. Cycle the ignition from off to on at least 5 times, leaving the ignition on for a minimum of 90 seconds per cycle.
4. With the scan tool, select View DTCs in the Anti-lock Brake Module.

Does the DTC reset and/or remain active?

Yes

- Go to 2

No

- Go to 6

2. CAN C BUS DTCs SET IN FRONT CONTROL MODULE

1. With the scan tool, select View DTCs in the TIPM.

Are there any active CAN C Bus DTCs?

Yes

- Perform the appropriate diagnostic procedure. .(Refer to 28 - DTC-Based Diagnostics/MODULE, Totally Integrated Power (TIPM) - Diagnosis and Testing)

No

- Go to 3
-

3. (D52) CAN C BUS (+) CIRCUIT OPEN

1. Turn the ignition off.
2. Disconnect the ABS Module harness connector.
3. Disconnect the TIPM C7 harness connector.
4. Measure the resistance of the (D52) CAN C Bus (+) circuit between the Anti-lock Brake Module harness connector and the TIPM C7 harness connector.

Is the resistance above 2.0 ohms?

Yes

- Repair the (D52) CAN C Bus (+) circuit for an open.
- Perform ABS VERIFICATION TEST. (Refer to 28 - DTC-Based Diagnostics/MODULE, Antilock Brake (ABS) - Standard Procedure)

No

- Go to 4

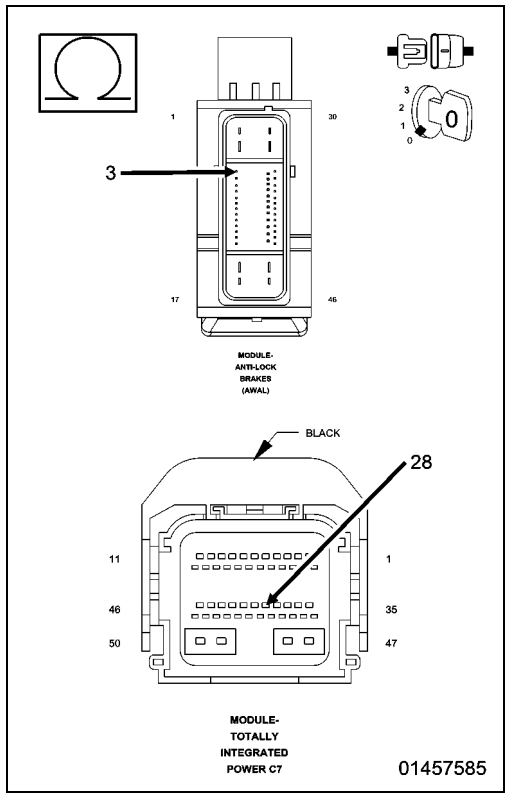

4. (D51) CAN C BUS (-) CIRCUIT OPEN

1. Measure the resistance of the (D51) CAN C Bus (-) circuit between the Anti-lock Brake Module harness connector and the TIPM C7 harness connector.

Is the resistance above 2.0 ohms?

Yes

- Repair the (D51) CAN C Bus (-) circuit for an open.
- Perform ABS VERIFICATION TEST. (Refer to 28 - DTC-Based Diagnostics/MODULE, Antilock Brake (ABS) - Standard Procedure)

No

- Go to 5

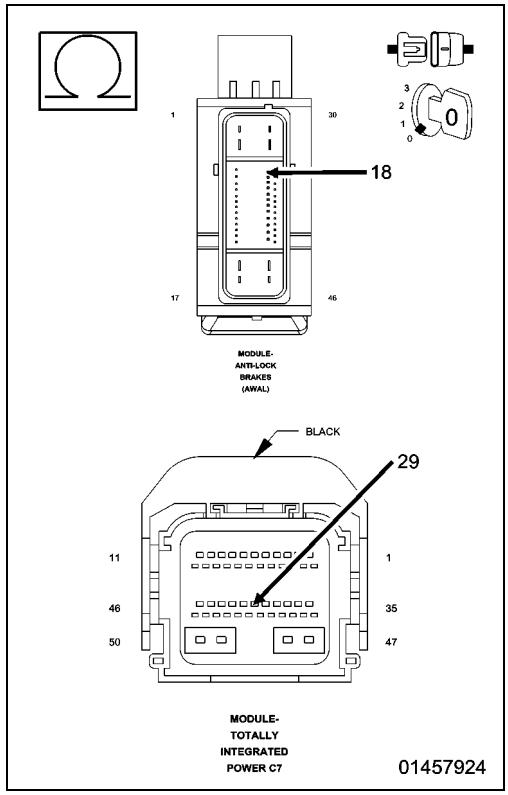

5. ANTI-LOCK BRAKE SYSTEM (ABS) MODULE

1. Inspect the wiring between the ABS Module harness connector and the TIPM harness connector. If any problems are found, repair as necessary. If no problems are found, view repair.

Repair

- Replace the Anti-lock Brake System (ABS) Module in accordance with the Service Information.
- Perform ABS VERIFICATION TEST. (Refer to 28 - DTC-Based Diagnostics/MODULE, Antilock Brake (ABS) - Standard Procedure)

6. INTERMITTENT CAN C BUS OFF PERFORMANCE DTC

1. The conditions necessary to set this DTC are not present at this time.
2. Using the wiring diagram/schematic as a guide, inspect the wiring and connectors.
3. While monitoring the scan tool data relative to this circuit, wiggle test the wiring and connectors.
4. Look for the data to change or for the DTC to reset during the wiggle test.

Were any problems found?

Yes

- Repair as necessary.
- Perform ABS VERIFICATION TEST. (Refer to 28 - DTC-Based Diagnostics/MODULE, Antilock Brake (ABS) - Standard Procedure)

No

- Test complete.

■ U0100-LOST COMMUNICATION WITH ECM/PCM

For a complete wiring diagram **Refer to the Wiring Information.**

1. LOST COMMUNICATION WITH POWERTRAIN CONTROL MODULE (PCM)

1. The Anti-lock Brake Module is reporting that network communication has been lost with the Powertrain Control Module (PCM).

View repair.

Repair

- Perform the appropriate diagnostic procedures. (Refer to 28 - DTC-Based Diagnostics/MODULE, Totally Integrated Power (TIPM) - Diagnosis and Testing)

■ U0101-LOST COMMUNICATION WITH TCM

For a complete wiring diagram, **refer to the Wiring Information.**

- **When Monitored:**
  - With the ignition on
  - Battery voltage between 10 and 16 volts
  - IOD fuse installed
- **Set Condition:**

  If the Anti-Lock Brakes System (ABS) Module fails to receive bus messages from the Transmission Control Module (TCM) for approximately 500 ms.

Possible Causes
DTCs RELATED TO BATTERY VOLTAGE, IGNITION, OR VIN MESSAGES
CAN C BUS CIRCUITS OPEN OR SHORTED
TRANSMISSION CONTROL MODULE (TCM) POWER AND GROUND
POWERTRAIN CONTROL MODULE (PCM) DTCs PRESENT
TRANSMISSION CONTROL MODULE (TCM)
ANTI-LOCK BRAKES SYSTEM (ABS) MODULE

1. VERIFY DTC IS ACTIVE

NOTE: Verify the IOD fuse is installed and battery voltage is between 10 and 16 volts before proceeding.

NOTE: If present, diagnose and repair DTC U0002-CAN C BUS OFF PERFORMANCE, DTC U0146-LOST COMMUNICATION WITH CENTRAL GATEWAY, or DTC U1502-IMPLAUSIBLE MESSAGE DATA LENGTH RECEIVED FROM FCM / BCM before diagnosing this DTC.

1. Ignition on, engine not running.
2. With the scan tool, read and record ABS DTCs.
3. With the scan tool, read and record Environmental Data (EV Data).
4. With the scan tool, erase ABS DTCs.
5. Cycle the ignition switch.
6. With the scan tool, read ABS DTCs.

Does this DTC reset?

Yes

- Go To 2

No

- Perform the Stored Lost Communication test procedure. (Refer to 29 - Non-DTC Diagnostics/Communication - Diagnosis and Testing).
- Perform BODY VERIFICATION TEST. (Refer to 28 - DTC-Based Diagnostics/MODULE, Totally Integrated Power (TIPM) - Standard Procedure)

2. CHECK FOR ANY OF THE FOLLOWING ACTIVE DTCs

1. With the scan tool, read all active DTCs from all CAN C Bus modules.

NOTE: Check for CAN C hardware electrical, VIN Missing/Mismatch, battery or ignition related DTCs.

Does the scan tool display any active DTCs related to the conditions listed above?

Yes

- Diagnose and repair the DTCs. Go To the Table of Contents in the applicable Section.

No

- Go To 3

3. VERIFY THAT THE TCM IS ACTIVE ON THE BUS

1. With the scan tool, select ECU View.
2. Verify that the TCM is active on the bus.

Is the TCM active on the bus?

Yes

- Go To 4

No

- Perform the Stored Lost Communication test procedure. (Refer to 29 - Non-DTC Diagnostics/Communication - Diagnosis and Testing).
- Perform BODY VERIFICATION TEST. (Refer to 28 - DTC-Based Diagnostics/MODULE, Totally Integrated Power (TIPM) - Standard Procedure)

4. CHECK FOR ADDITIONAL COMMUNICATION RELATED DTCs

1. With the scan tool, select Network View and select Advanced.

Is there more than one module with active DTCs "Logged Against" the TCM?

Yes

- Replace/update the Transmission Control Module (TCM) in accordance with the service information.
- Perform TCM VERIFICATION TEST. (Refer to 28 - DTC-Based Diagnostics/MODULE, Powertrain Control (PCM) - Standard Procedure) .

No

- Replace the Anti-Lock Brakes System (ABS) Module in accordance with the service information.
- Perform ABS VERIFICATION TEST. (Refer to 28 - DTC-Based Diagnostics/MODULE, Antilock Brake (ABS) - Standard Procedure).

■ U0102-00-LOST COMMUNICATION WITH TRANSFER CASE CONTROL MODULE / AWD

For a complete wiring diagram, **refer to the Wiring Information**.

- **When Monitored:**

  Ignition run time is greater than one second.

  Battery voltage between 9 and 16 volts.

  Engine run time greater than three seconds.
- **Set Condition:**

  Bus messages not received from the Totally Integrated Power Module (TIPM) for approximately two to five seconds.

Possible Causes
CAN BUS CIRCUITS OPEN OR SHORTED
DTCS RELATED TO BATTERY VOLTAGE, IGNITION, OR VIN MESSAGES
TOTALLY INTEGRATED POWER MODULE POWER AND GROUND
TIPM NOT CONFIGURED CORRECTLY
TOTALLY INTEGRATED POWER MODULE (TIPM)
MODULE THAT SET THIS DTC

1. ACTIVE DTC

1. Ignition on, engine not running.
2. With the scan tool, select view DTCs.

Is the DTC Active at this time?

Yes

- **(Refer to 28 - DTC-Based Diagnostics/MODULE, Totally Integrated Power (TIPM) - Diagnosis and Testing)** and perform the U0102-LOST COMMUNICATION WITH DTCM diagnostic procedure.

No

- **(Refer to 29 - Non-DTC Diagnostics/Communication - Diagnosis and Testing)** and perform the Stored Lost Communication DTCs diagnostic procedure.

U0125-LOST COMMUNICATION WITH DYNAMICS SENSOR

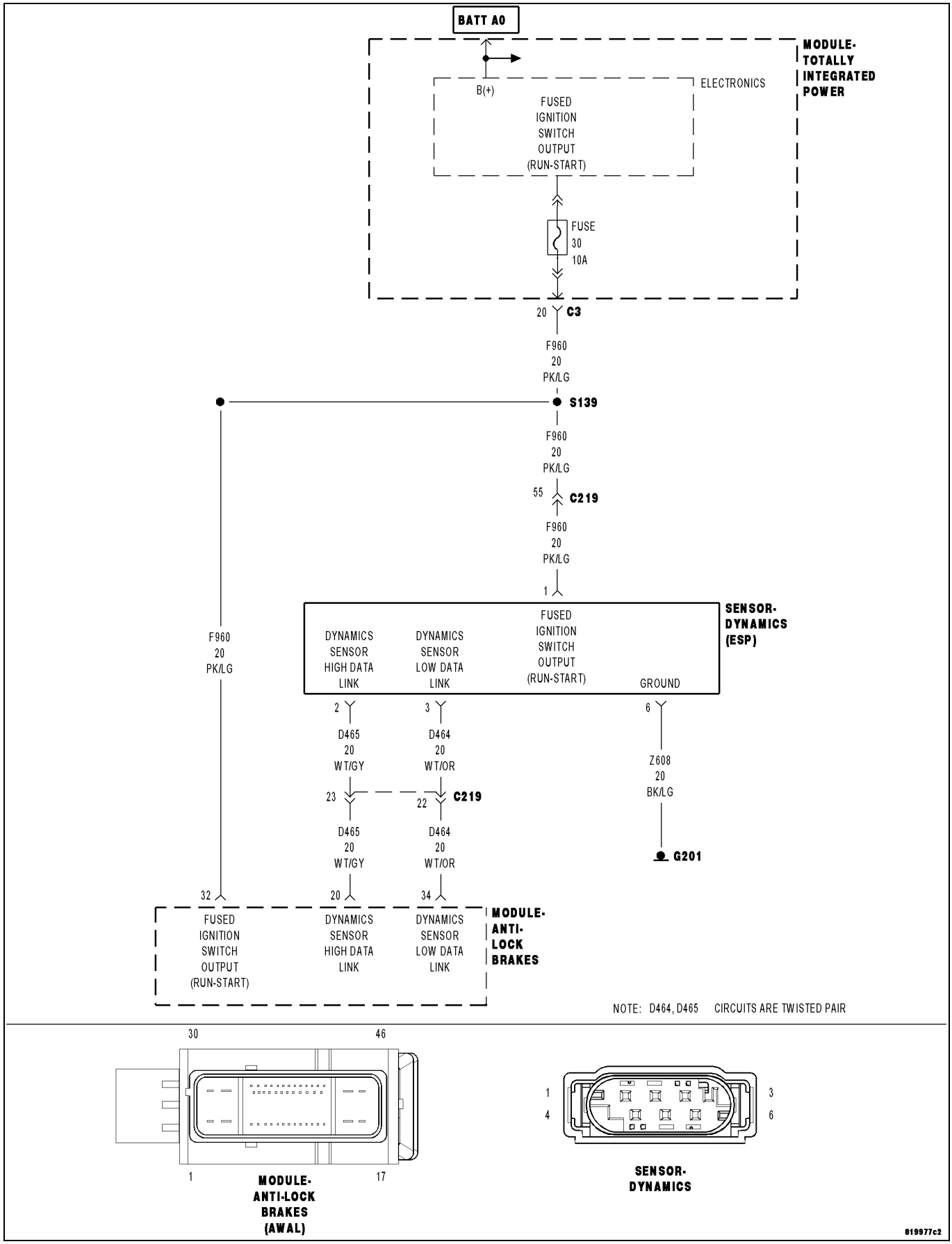

For a complete wiring diagram, **refer to the Wiring Information**.

NOTE: The Electronic Stability Control (ESC) may also be referred to as Electronic Stability Program (ESP) depending on the vehicle model year and configuration. Certain components may also reference ESP, ESC, or use the traction control symbol.

- **When Monitored:**
  With the ignition on.
- **Set Condition:**
  If the Anti-Lock Brakes Module fails to receive bus messages from the Dynamics Sensor.

Possible Causes
WIRING HARNESS, TERMINAL, CONNECTOR DAMAGE
(D465) DYNAMICS SENSOR HIGH DATA LINK CIRCUIT SHORTED TO VOLTAGE
(D465) DYNAMICS SENSOR HIGH DATA LINK CIRCUIT SHORTED TO GROUND
(D465) DYNAMICS SENSOR HIGH DATA LINK CIRCUIT OPEN
(D464) DYNAMICS SENSOR LOW DATA LINK CIRCUIT SHORTED TO VOLTAGE
(D464) DYNAMICS SENSOR LOW DATA LINK CIRCUIT SHORTED TO GROUND
(D464) DYNAMICS SENSOR LOW DATA LINK CIRCUIT OPEN
(D464) DYNAMICS SENSOR LOW DATA LINK CIRCUIT SHORTED TO (D465) DYNAMICS SENSOR HIGH DATA LINK CIRCUIT
DYNAMICS SENSOR

1. VERIFY DIAGNOSTIC TROUBLE CODE (DTC) IS ACTIVE

NOTE: If present, diagnose and repair DTC C2114-DYNAMICS SENSOR SUPPLY VOLTAGE LOW or DTC C2115-DYNAMICS SENSOR SUPPLY VOLTAGE HIGH before proceeding.

1. Turn the ignition on.
2. Using the scan tool, read and record ABS DTCs.
3. Using the scan tool, read and record Environmental Data (EV Data).
4. Using the scan tool, erase ABS DTCs.
5. Cycle the ignition switch.
6. Using the scan tool, read ABS DTCs.

Does this DTC reset?

Yes

- Go To 2

No

- Perform the ABS Intermittent Condition diagnostic procedure (Refer to 28 - DTC-Based Diagnostics/MODULE, Antilock Brake (ABS) - Standard Procedure).

2. INSPECT RELATED WIRING HARNESS, TERMINALS, AND CONNECTORS

WARNING: To avoid serious or fatal injury on vehicles equipped with airbags, disable the Supplemental Restraint System (SRS) before attempting any steering wheel, steering column, airbag, seat belt tensioner, impact sensor, or instrument panel component diagnosis or service. Disconnect and isolate the battery negative (ground) cable, then wait two minutes for the system capacitor to discharge before performing further diagnosis or service. This is the only sure way to disable the SRS. Failure to take the proper precautions could result in accidental airbag deployment.

NOTE: Proper Steering Angle Sensor installation is crucial for proper operation.

1. Visually inspect the related wiring harness. Look for any pinched, chafed, pierced, and partially broken wires.
2. Visually inspect the related wiring harness connectors. Look for broken, bent, pushed out, and corroded terminals.

Were any problems found?

Yes

- Repair as necessary.
- Perform the ABS VERIFICATION TEST. (Refer to 28 - DTC-Based Diagnostics/MODULE, Antilock Brake (ABS) - Standard Procedure).

No

- Go To 3

3. CHECK THE (D465) DYNAMICS SENSOR HIGH DATA LINK CIRCUIT FOR A SHORT TO VOLTAGE

1. Disconnect the Anti-Lock Brakes Module harness connector.
2. Disconnect the Dynamics Sensor harness connector.
3. Turn the ignition on.
4. Measure the voltage of the (D465) Dynamics Sensor High Data Link circuit.

Is there any voltage present?

Yes

- Repair the (D465) Dynamics Sensor High Data Link circuit for a short to voltage.
- Perform the ABS VERIFICATION TEST. (Refer to 28 - DTC-Based Diagnostics/MODULE, Antilock Brake (ABS) - Standard Procedure).

No

- Go To 4

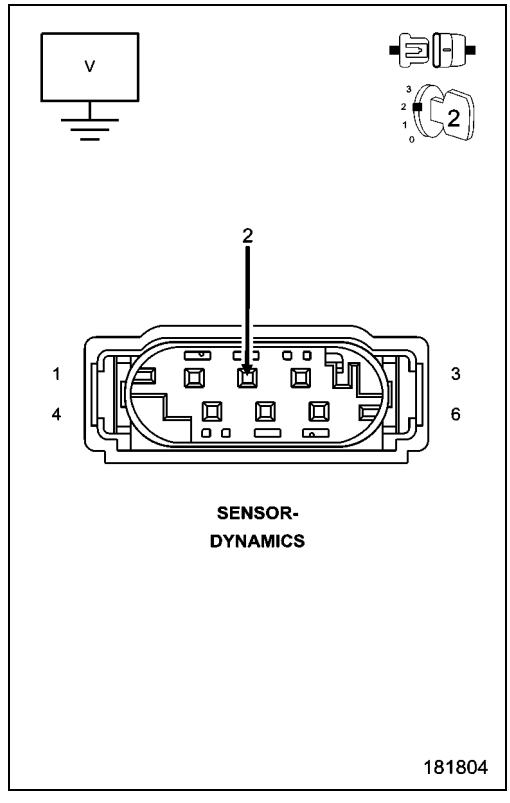

4. CHECK THE (D465) DYNAMICS SENSOR HIGH DATA LINK CIRCUIT FOR A SHORT TO GROUND

1. Turn the ignition off.
2. Measure the resistance of the (D465) Dynamics Sensor High Data Link circuit between ground and the Dynamics Sensor harness connector.

Is the resistance below 5.0 Ohms?

Yes

- Repair the (D465) Dynamics Sensor High Data Link circuit for a short to ground.
- Perform the ABS VERIFICATION TEST. (Refer to 28 - DTC-Based Diagnostics/MODULE, Antilock Brake (ABS) - Standard Procedure).

No

- Go To 5

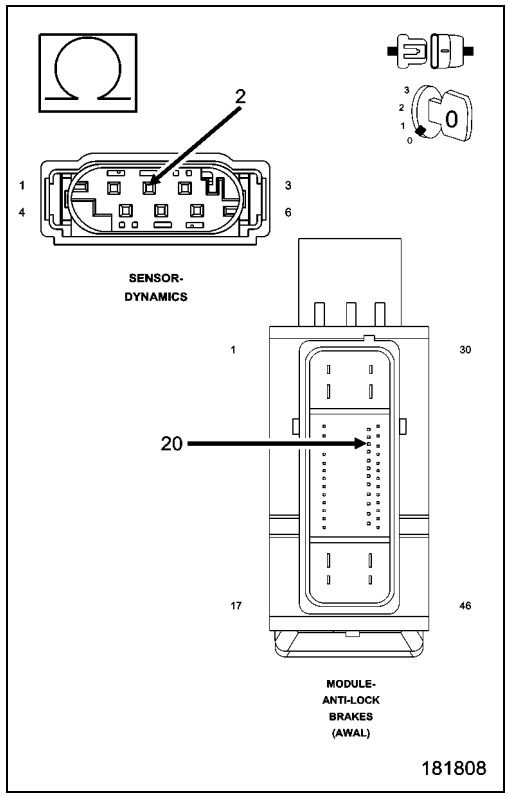

5. CHECK THE (D465) DYNAMICS SENSOR HIGH DATA LINK CIRCUIT FOR AN OPEN

1. Measure the resistance of the (D465) Dynamics Sensor High Data Link circuit between the Dynamics Sensor harness connector and the Anti-Lock Brakes Module harness connector.

Is the resistance below 5.0 Ohms?

Yes

- Go To 6

No

- Repair the (D465) Dynamics Sensor High Data Link circuit for an open.
- Perform the ABS VERIFICATION TEST. (Refer to 28 - DTC-Based Diagnostics/MODULE, Antilock Brake (ABS) - Standard Procedure).

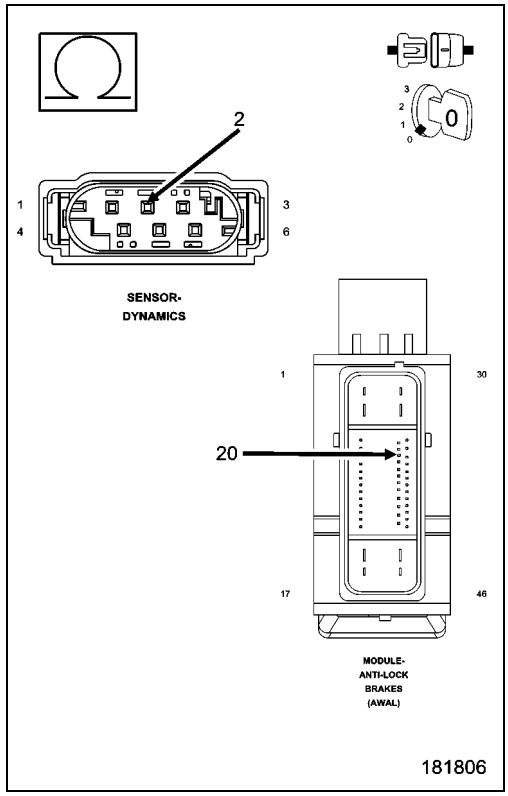

6. CHECK THE (D464) DYNAMICS SENSOR LOW DATA LINK CIRCUIT FOR A SHORT TO VOLTAGE

1. Turn the ignition on.
2. Measure the voltage of the (D464) Dynamics Sensor Low Data Link circuit.

Is there any voltage present?

Yes

- Repair the (D464) Dynamics Sensor Low Data Link circuit for a short to voltage.
- Perform the ABS VERIFICATION TEST. (Refer to 28 - DTC-Based Diagnostics/MODULE, Antilock Brake (ABS) - Standard Procedure).

No

- Go To 7

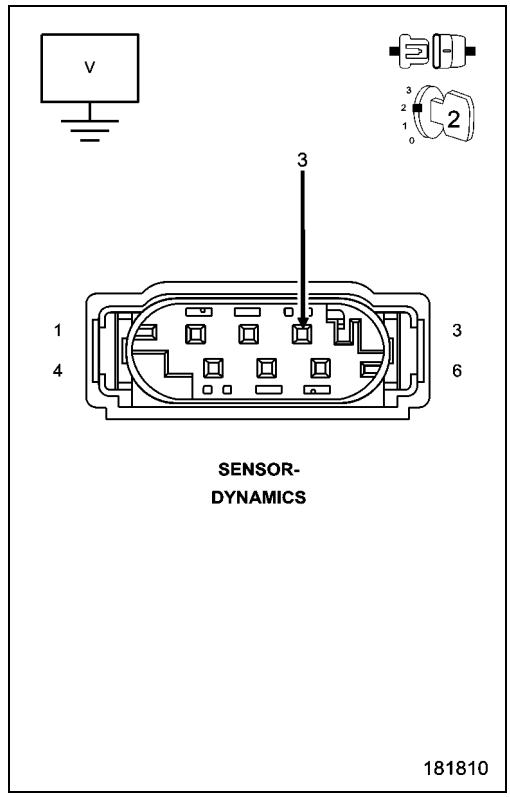

7. CHECK THE (D464) DYNAMICS SENSOR LOW DATA LINK CIRCUIT FOR A SHORT TO GROUND

1. Turn the ignition off.
2. Measure the resistance of the (D464) Dynamics Sensor Low Data Link circuit between ground and the Dynamics Sensor harness connector.

Is the resistance below 5.0 Ohms?

Yes

- Repair the (D464) Dynamics Sensor Low Data Link circuit for a short to ground.
- Perform the ABS VERIFICATION TEST. (Refer to 28 - DTC-Based Diagnostics/MODULE, Antilock Brake (ABS) - Standard Procedure).

No

- Go To 8

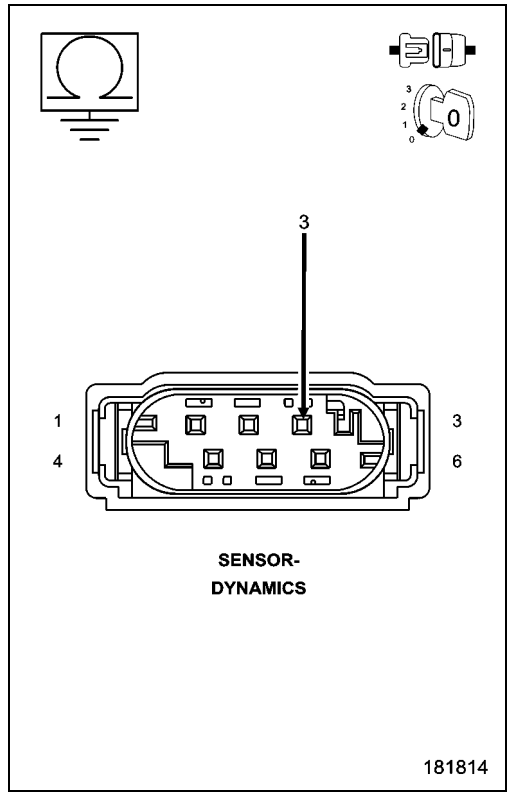

8. CHECK THE (D464) DYNAMICS SENSOR LOW DATA LINK CIRCUIT FOR AN OPEN

1. Measure the resistance of the (D464) Dynamics Sensor Low Data Link circuit between the Dynamics Sensor harness connector and the Anti-Lock Brakes Module harness connector.

Is the resistance below 5.0 Ohms?

Yes

- Go To 9

No

- Repair the (D464) Dynamics Sensor Low Data Link circuit for an open.
- Perform the ABS VERIFICATION TEST. (Refer to 28 - DTC-Based Diagnostics/MODULE, Antilock Brake (ABS) - Standard Procedure).

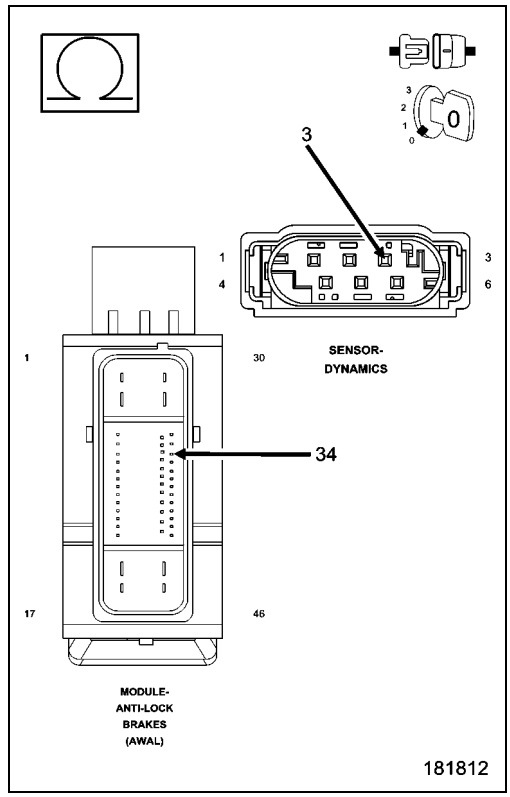

9. (D465) DYNAMICS SENSOR HIGH DATA LINK CIRCUIT SHORTED TO THE (D464) DYNAMICS SENSOR LOW DATA LINK CIRCUIT

1. Turn the ignition off.
2. Measure the resistance between the (D465) Dynamics Sensor High Data Link circuit and the (D464) Dynamics Sensor Low Data Link circuit at the Anti-lock Brake Module harness connector.

Is the resistance below 5.0 Ohms?

Yes

- Repair the (D464) Dynamics Sensor Low Data Link circuit for a short to (D465) Dynamics Sensor High Data Link circui.
- Perform the ABS VERIFICATION TEST. (Refer to 28 - DTC-Based Diagnostics/MODULE, Antilock Brake (ABS) - Standard Procedure).

No

- Replace the Dynamics Sensor in accordance with the Service Information.
- Perform the ABS VERIFICATION TEST. (Refer to 28 - DTC-Based Diagnostics/MODULE, Antilock Brake (ABS) - Standard Procedure).

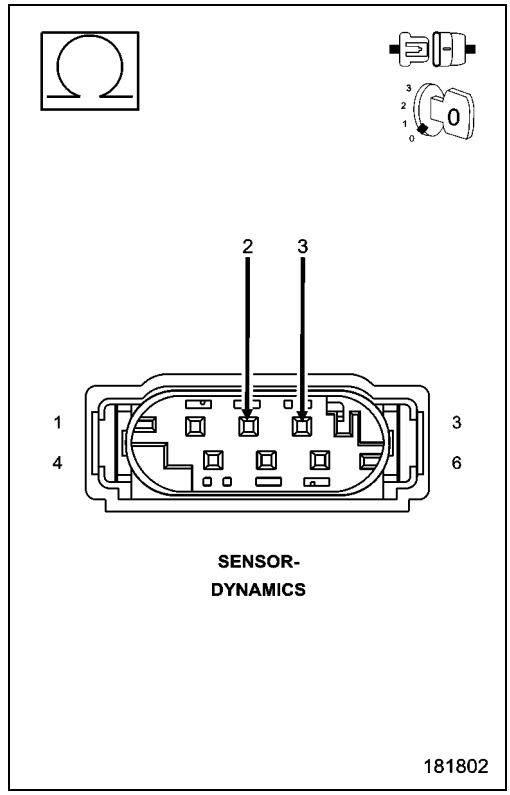

■ U0126-LOST COMMUNICATION WITH STEERING ANGLE SENSOR

For a complete wiring diagram, **refer to the Wiring Information**.

NOTE: The Electronic Stability Control (ESC) may also be referred to as Electronic Stability Program (ESP) depending on the vehicle model year and configuration. Certain components may also reference ESP, ESC, or use the traction control symbol.

- **When Monitored:**
  - With the ignition on
  - Battery voltage between 10 and 16 Volts
  - Ignition Off Draw (IOD) fuse installed
- **Set Condition:**

  If the Anti-Lock Brakes System (ABS) Module fails to receive bus messages from the Steering Angle Sensor (SAS) for approximately 100 ms.

Possible Causes
CAN B OR CAN C BUS CIRCUITS OPEN OR SHORTED
DTCS RELATED TO BATTERY VOLTAGE, IGNITION, OR VIN MESSAGES
ANTI-LOCK BRAKE SYSTEM (ABS) MODULE NOT CONFIGURED CORRECTLY
STEERING ANGLE SENSOR (SAS) POWER AND GROUND
CLOCKSPRING (SAS)
MODULE THAT SET THIS DTC

1. VERIFY DIAGNOSTIC TROUBLE CODE (DTC) IS ACTIVE

NOTE: Make sure the IOD fuse is installed and battery voltage is between 10 and 16 Volts before proceeding.

1. Using the scan tool, read active DTCs.

Is this DTC active?

Yes

- Go To 2

No

- Perform the ABS-INTERMITTENT CONDITION TEST. (Refer to 28 - DTC-Based Diagnostics/MODULE, Antilock Brake (ABS) - Standard Procedure).

2. VERIFY THAT THE STEERING ANGLE SENSOR IS ACTIVE ON THE BUS

1. Turn the ignition on.
2. Using the scan tool, select Network Diagnostics.
3. Verify that the Steering Angle Sensor is active on the bus.

Is the Steering Angle Sensor active on the bus?

Yes

- Go To 3

No

- (Refer to 29 - Non-DTC Diagnostics/Communication - Diagnosis and Testing) and perform the No Response from SAS diagnostic procedure.

3. CLOCKSPRING (SAS)

WARNING: To avoid serious or fatal injury on vehicles equipped with airbags, disable the Supplemental Restraint System (SRS) before attempting any steering wheel, steering column, airbag, seat belt tensioner, impact sensor, or instrument panel component diagnosis or service. Disconnect and isolate the battery negative (ground) cable, then wait two minutes for the system capacitor to discharge before performing further diagnosis or service. This is the only sure way to disable the SRS. Failure to take the proper precautions could result in accidental airbag deployment.

NOTE: Proper Clockspring (SAS) installation is crucial for proper operation.

1. Replace the Clockspring (SAS) in accordance with the Service Information. (Refer to 10 - Restraints/CLOCKSPRING - Installation).
2. Perform the ABS VERIFICATION TEST. (Refer to 28 - DTC-Based Diagnostics/MODULE, Antilock Brake (ABS) - Standard Procedure).
3. Using the scan tool, read ABS DTCs.

Did DTC U0126-LOST COMMUNICATION WITH STEERING ANGLE SENSOR reset?

Yes

- Replace the Anti-Lock Brakes System (ABS) Module in accordance with the Service Information.
- Perform the ABS VERIFICATION TEST. (Refer to 28 - DTC-Based Diagnostics/MODULE, Antilock Brake (ABS) - Standard Procedure).

No

- Test Complete.

U0141-LOST COMMUNICATION WITH FRONT CONTROL MODULE

For a complete wiring diagram **Refer to the Wiring Information.**

1. LOST COMMUNICATION WITH TIPM

1. The Anti-lock Brake Module is reporting that network communication has been lost with the TIPM.

View repair.

Repair

- Perform the appropriate diagnostic procedure. (Refer to 28 - DTC-Based Diagnostics/MODULE, Totally Integrated Power (TIPM) - Diagnosis and Testing)

U0401-IMPLAUSIBLE DATA RECEIVED FROM ECM/PCM

For a complete wiring diagram **Refer to the Wiring Information.**

- **When Monitored:**

  Continuously with the ignition on, one valid CAN message received at least once, and no U0002-CAN C Bus Off Performance DTC present.
- **Set Condition:**

  When the Anti-Lock Brake Module detects an incorrect CAN message from the Engine Control Module (ECM).

Possible Causes
ABM CAN BUS DTCS
ENGINE DTCS
ANTI-LOCK BRAKE MODULE

1. CHECK FOR DTC U0401-IMPLAUSIBLE DATA RECEIVED FROM ECM/PCM

NOTE: This DTC must be active for the results of this test to be valid.

1. Turn the ignition on.
2. With the scan tool, record and erase DTCs.
3. Cycle the ignition switch from off to on.
4. With the scan tool, read DTCs.

Does the scan tool display: U0401-IMPLAUSIBLE DATA RECEIVED FROM ECM/PCM?

Yes

- Go To 2

No

- Perform the ABS-INTERMITTENT CONDITION TEST. (Refer to 28 - DTC-Based Diagnostics/MODULE, Antilock Brake (ABS) - Standard Procedure).

2. CHECK IF TIPM CAN BUS DTCS ARE PRESENT

1. With the scan tool, read FCM DTCs.

Are there any TIPM CAN BUS DTCs present?

Yes

- Perform the appropriate diagnostic procedures. (Refer to 28 - DTC-Based Diagnostics/MODULE, Totally Integrated Power (TIPM) - Diagnosis and Testing)
- Perform ABS VERIFICATION TEST. (Refer to 28 - DTC-Based Diagnostics/MODULE, Antilock Brake (ABS) - Standard Procedure)

No

- Go To 3

3. CHECK IF ENGINE DTCS ARE PRESENT

1. With the scan tool, read Engine DTCs.

Are there any Engine DTCs present?

Yes

- Perform the appropriate diagnostic procedures. (Refer to 28 - DTC-Based Diagnostics/MODULE, Powertrain Control (PCM) - Diagnosis and Testing)

No

- Using the schematics as a guide, check the Anti-Lock Brake Module pins, terminals, and connectors for corrosion, damage, or terminal push out. Pay particular attention to all power and ground circuits. If no problems are found, replace the Anti-Lock Brake Module per the Service Information.
- Perform ABS VERIFICATION TEST. (Refer to 28 - DTC-Based Diagnostics/MODULE, Antilock Brake (ABS) - Standard Procedure)

■ U0429-IMPLAUSIBLE DATA RECEIVED FROM STEERING CONTROL MODULE

For a complete wiring diagram, **refer to the Wiring Information**.

- **When Monitored:**

  Continuously with the ignition on, one valid CAN message received at least once, and no U0002-CAN C Bus Off Performance DTC present.
- **Set Condition:**

  When the Anti-Lock Brake System (ABS) Module detects an incorrect CAN message from the Clockspring (Steering Angle Sensor SAS).

Possible Causes
CLOCKSPRING (SAS)
ANTI-LOCK BRAKE SYSTEM (ABS) MODULE

1. CHECK IF STEERING ANGLE SENSOR DTCS ARE PRESENT

1. With the scan tool, read Steering Angle Sensor DTCs.

Are there any Steering Angle Sensor DTCs present?

Yes

- Perform the appropriate diagnostic procedure. (Refer to 28 - DTC-Based Diagnostics/MODULE, Antilock Brake (ABS) - Diagnosis and Testing).

No

- Replace the Anti-Lock Brake Module in accordance with the Service Information.
- Perform the ABS VERIFICATION TEST. (Refer to 28 - DTC-Based Diagnostics/MODULE, Antilock Brake (ABS) - Standard Procedure).

U1003-ESP CAN C BUS PERFORMANCE

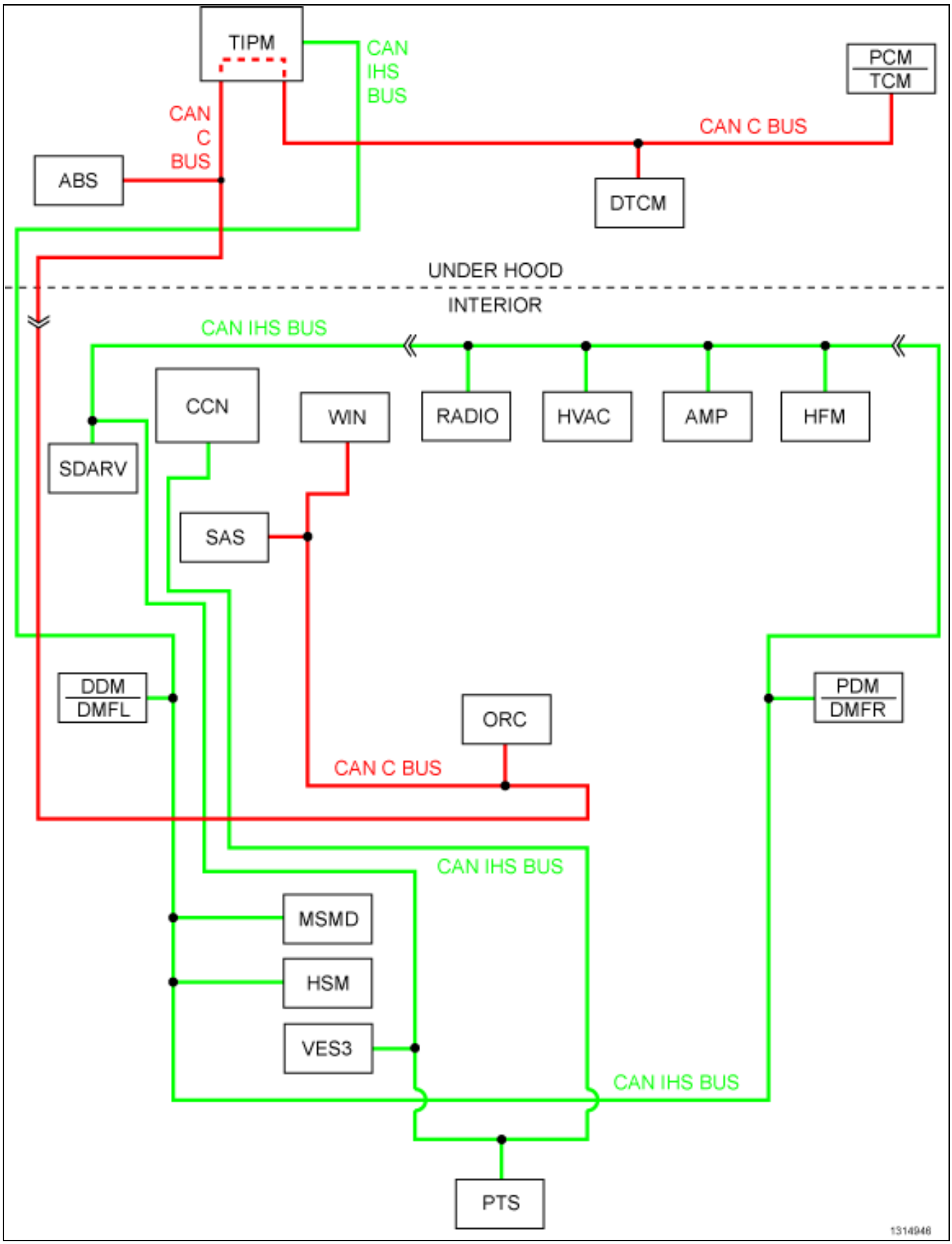

For a complete wiring diagram **Refer to the Wiring Information.**

- **When Monitored:**
  Continuously.
- **Set Condition:**
  One of the CAN messages that is assigned to the basic CAN channel was missed by the CAN driver. This means that the whole system was very slow in responding to the CAN interrupts.

Possible Causes
INTERMITTENT ESP CAN C BUS PERFORMANCE DTC
CAN C BUS DTCs SET IN TOTALLY INTEGRATED POWER MODULE (TIPM)
(D52) CAN C BUS (+) CIRCUIT OPEN
(D51) CAN C BUS (-) CIRCUIT OPEN
ANTI-LOCK BRAKE SYSTEM (ABS) MODULE

1. DTC IS ACTIVE

1. Ignition on, engine not running.
2. With the scan tool, clear DTCs in the ABS Module.
3. Cycle the ignition from off to on at least 5 times, leaving the ignition on for a minimum of 90 seconds per cycle.
4. With the scan tool, select View DTCs in the Anti-lock Brake Module.

Does the DTC reset and/or remain active?

Yes

- Go to 2

No

- Go to 6

2. CAN C BUS DTCs SET IN TOTALLY INTEGRATED POWER MODULE (TIPM)

1. With the scan tool, select View DTCs in the TIPM.

Are there any active CAN C Bus DTCs?

Yes

- Perform the appropriate diagnostic procedures. (Refer to 28 - DTC-Based Diagnostics/MODULE, Totally Integrated Power (TIPM) - Diagnosis and Testing).

No

- Go to 3
-

3. (D52) CAN C BUS (+) CIRCUIT OPEN

1. Turn the ignition off.
2. Disconnect the ABS Module harness connector.
3. Disconnect the TIPM C7 harness connector.
4. Measure the resistance of the (D52) CAN C Bus (+) circuit between the ABS Module harness connector and the TIPM C7 harness connector.

Is the resistance above 2.0 ohms?

Yes

- Repair the (D52) CAN C Bus (+) circuit for an open.
- Perform ABS VERIFICATION TEST.(Refer to 28 - DTC-Based Diagnostics/MODULE, Antilock Brake (ABS) - Standard Procedure)

No

- Go to 4

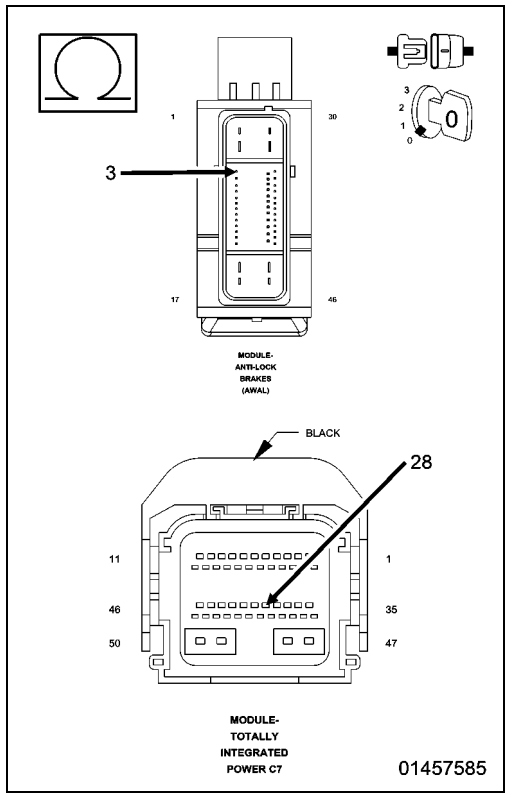

4. (D51) CAN C BUS (-) CIRCUIT OPEN

1. Measure the resistance of the (D51) CAN C Bus (-) circuit between the ABS Module harness connector and the TIPM C7 harness connector.

Is the resistance above 2.0 ohms?

Yes

- Repair the (D51) CAN C Bus (-) circuit for an open.
- Perform ABS VERIFICATION TEST.(Refer to 28 - DTC-Based Diagnostics/MODULE, Antilock Brake (ABS) - Standard Procedure)

No

- Go to 5

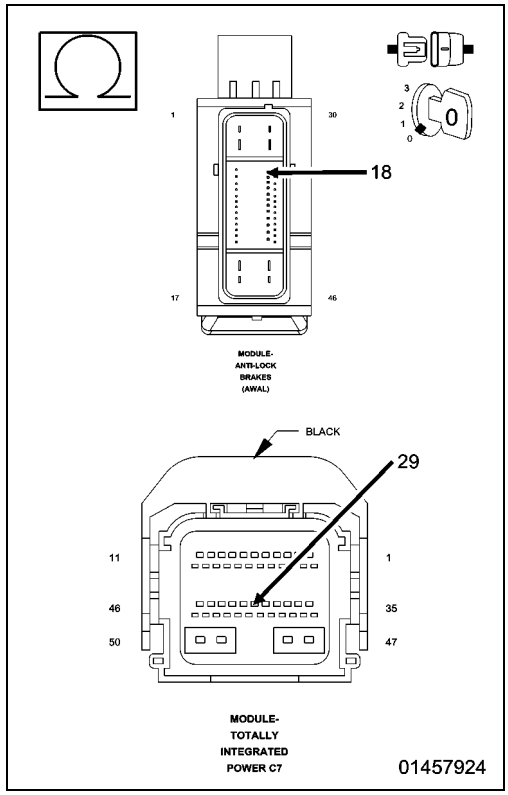

5. ANTI-LOCK BRAKE SYSTEM (ABS) MODULE

1. Inspect the wiring between the ABS Module harness connector and the TIPM harness connector. If any problems are found, repair as necessary. If no problems are found, view repair.

Repair

- Replace the Anti-lock Brake System (ABS) Module in accordance with the Service Information.
- Perform ABS VERIFICATION TEST. (Refer to 28 - DTC-Based Diagnostics/MODULE, Antilock Brake (ABS) - Standard Procedure)

6. INTERMITTENT ESP CAN C BUS PERFORMANCE DTC

1. The conditions necessary to set this DTC are not present at this time.
2. Using the wiring diagram/schematic as a guide, inspect the wiring and connectors.
3. While monitoring the scan tool data relative to this circuit, wiggle test the wiring and connectors.
4. Look for the data to change or for the DTC to reset during the wiggle test.

Were any problems found?

Yes

- Repair as necessary.
- Perform ABS VERIFICATION TEST.(Refer to 28 - DTC-Based Diagnostics/MODULE, Antilock Brake (ABS) - Standard Procedure)

No

- Test complete.

U1004-CAN C BUS TRANSMIT PERFORMANCE

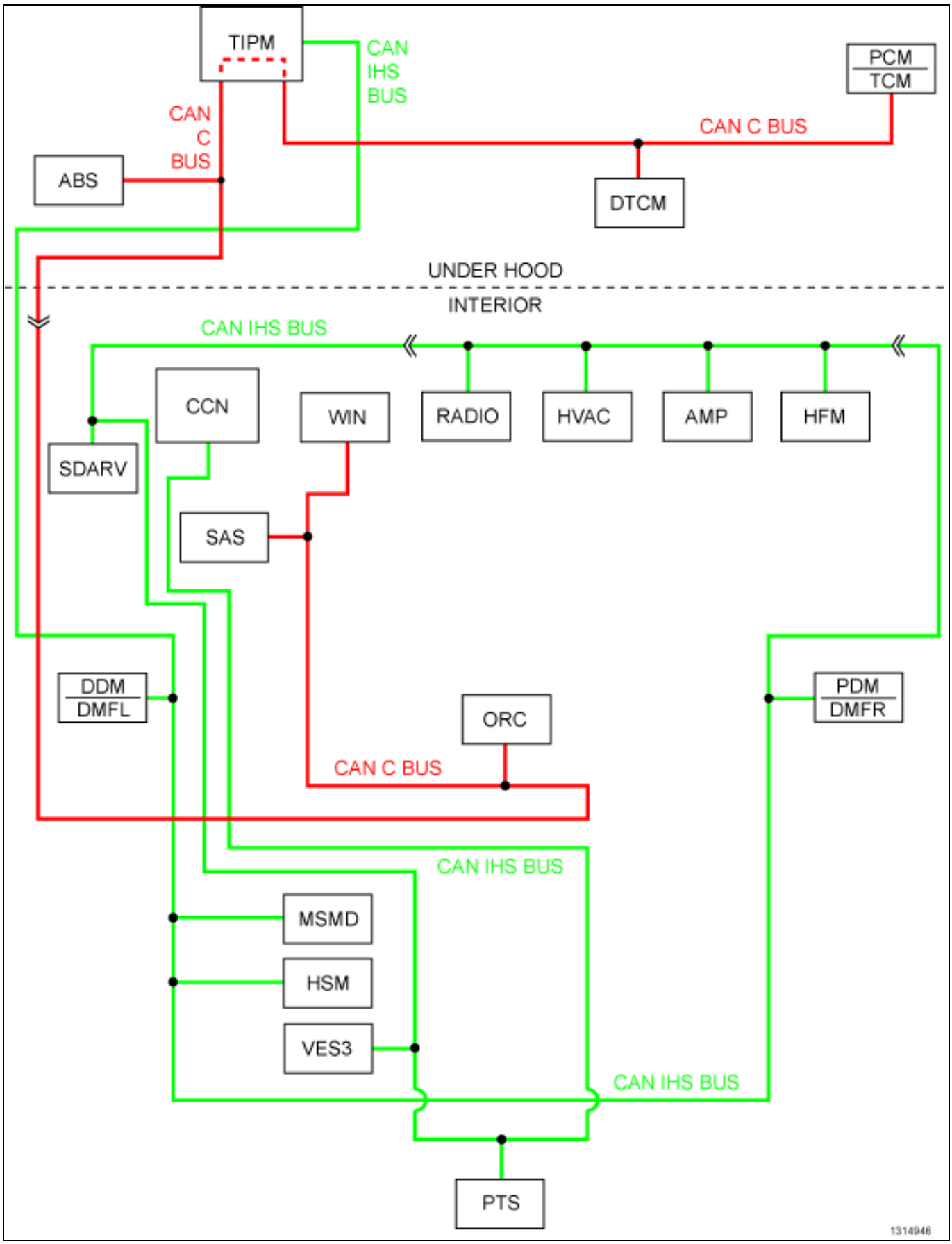

For a complete wiring diagram, **refer to the Wiring Information**.

NOTE: The Electronic Stability Control (ESC) may also be referred to as Electronic Stability Program (ESP) depending on the vehicle model year and configuration. Certain components may also reference ESP, ESC, or use the traction control symbol.

- **When Monitored:**
  Continuously.
- **Set Condition:**
  The CAN frame does not receive acknowledgment for a predefined amount of time.

Possible Causes
INTERMITTENT CAN C BUS TRANSMIT PERFORMANCE DTC
CAN C BUS DTCs SET IN TOTALLY INTEGRATED POWER MODULE (TIPM)
(D52) CAN C BUS (+) CIRCUIT OPEN
(D51) CAN C BUS (-) CIRCUIT OPEN
ANTI-LOCK BRAKE SYSTEM (ABS) MODULE

1. DIAGNOSTIC TROUBLE CODE (DTC) IS ACTIVE

1. Ignition on, engine not running.
2. Using the scan tool, select erase DTCs.
3. Cycle the ignition from off to on at least five times, leaving the ignition on for a minimum of 90 seconds per cycle.
4. Using the scan tool, select read DTCs.

Does the DTC reset and/or remain active?

Yes

- Go To 2

No

- Go To 6

2. CAN C BUS DTCs SET IN TOTALLY INTEGRATED POWER MODULE (TIPM)

1. Using the scan tool, read DTCs in the TIPM.

Are there any active CAN C Bus DTCs?

Yes

- (Refer to 29 - Non-DTC Diagnostics/Communication - Diagnosis and Testing) and perform the appropriate diagnostic procedure.

No

- Go To 3

3. (D52) CAN C BUS (+) CIRCUIT OPEN

1. Turn the ignition off.
2. Disconnect the Anti-lock Brake Module harness connector.
3. Disconnect the TIPM C7 harness connector.
4. Measure the resistance of the (D52) CAN C Bus (+) circuit between the Anti-lock Brake Module harness connector and the TIPM C7 harness connector.

Is the resistance above 2.0 Ohms?

Yes

- Repair the (D52) CAN C Bus (+) circuit for an open.
- Perform the ABS VERIFICATION TEST. (Refer to 28 - DTC-Based Diagnostics/MODULE, Antilock Brake (ABS) - Standard Procedure).

No

- Go To 4

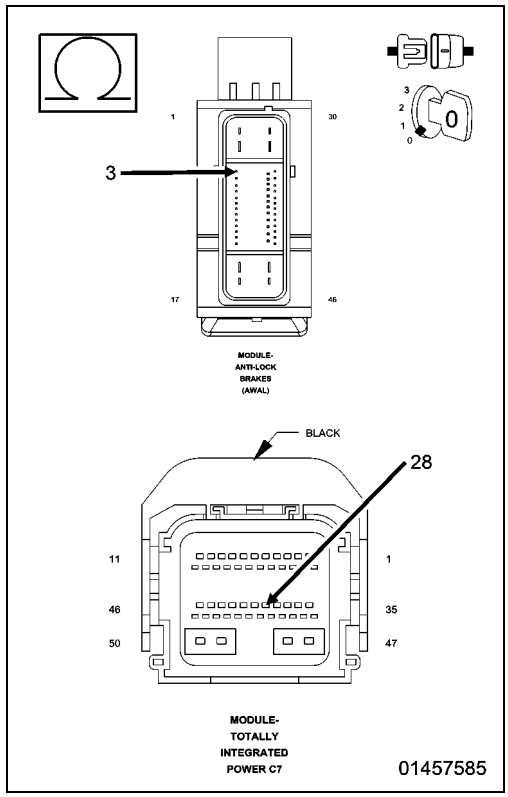

4. (D51) CAN C BUS (-) CIRCUIT OPEN

1. Measure the resistance of the (D51) CAN C Bus (-) circuit between the Anti-lock Brake Module harness connector and the TIPM C7 harness connector.

Is the resistance above 2.0 Ohms?

Yes

- Repair the (D51) CAN C Bus (-) circuit for an open.
- Perform the ABS VERIFICATION TEST. (Refer to 28 - DTC-Based Diagnostics/MODULE, Antilock Brake (ABS) - Standard Procedure).

No

- Go To 5

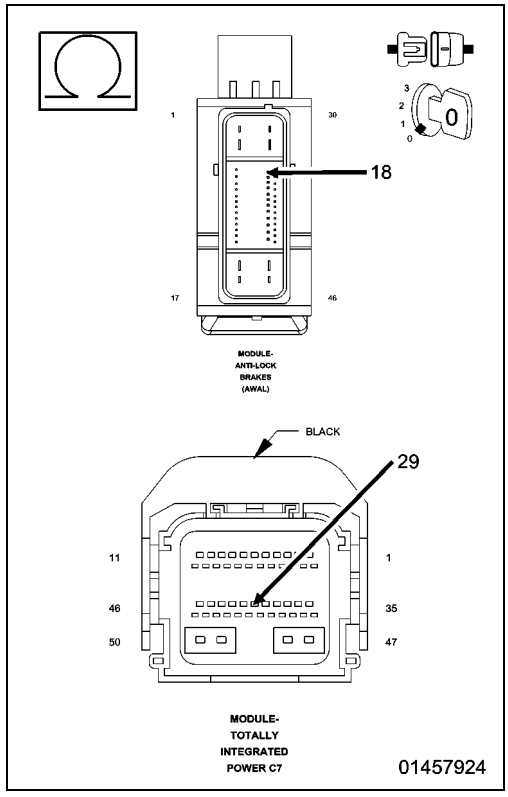

5. ANTI-LOCK BRAKE SYSTEM (ABS) MODULE

1. Inspect the wiring between the ABS Module harness connector and the TIPM harness connector. If any problems are found, repair as necessary. If no problems are found, view repair.

Repair

- Replace the Anti-lock Brake Module in accordance with the Service Information.
- Perform the ABS VERIFICATION TEST. (Refer to 28 - DTC-Based Diagnostics/MODULE, Antilock Brake (ABS) - Standard Procedure).

6. INTERMITTENT CAN C BUS TRANSMIT PERFORMANCE DTC

1. The conditions necessary to set this DTC are not present at this time.
2. Using the wiring diagram/schematic as a guide, inspect the wiring and connectors.
3. While monitoring the scan tool data relative to this circuit, wiggle test the wiring and connectors.
4. Look for the data to change or for the DTC to reset during the wiggle test.

Were any problems found?

Yes

- Repair as necessary.
- Perform the ABS VERIFICATION TEST. (Refer to 28 - DTC-Based Diagnostics/MODULE, Antilock Brake (ABS) - Standard Procedure).

No

- Test complete, the condition or conditions that originally set this DTC are not present at this time.

Standard Procedure

■ ABS VERIFICATION TEST

1. ABS VERIFICATION TEST

WARNING: To avoid possible serious or fatal injury, check brake capability is available before road testing.

NOTE: If the Anti-Lock Brake System (ABS) Module, Steering Angle Sensor (SAS), or the Dynamics Sensor was replaced, it must be initialized using the scan tool. If not initialized, the ABS indicator will flash continuously with no DTCs. To initialize the ABS Module and clear offsets have wheels pointing straight ahead and follow the directions on the scan tool. The drive test requires a 90° turn. If the Dynamics Sensor was replaced, test drive the vehicle by turning the vehicle left or right in a curving manner at a velocity between 10 and 25 km/h (6 and 15 mph).

1. Turn the ignition off.
2. Connect all previously disconnected components and connectors.
3. Verify all accessories are turned off and the battery is fully charged.
4. Verify that the ignition is on, with the scan tool, erase all Diagnostic Trouble Codes (DTCs) from All modules. Start the engine and allow it to run for two minutes and fully operate the system that was indicating the failure.
5. Turn the ignition off and wait five seconds. Turn the ignition on and using the scan tool, read DTCs from all modules.
6. If any Diagnostic Trouble Codes are present, (Refer to 28 - DTC-Based Diagnostics/MODULE, Antilock Brake (ABS) - Diagnosis and Testing) and perform the diagnostic procedure.
7. **NOTE: For Sensor Signal and Pump Motor faults, the ABS Module must sense all 4 wheels at 12 km/h (7.5 mph) before it will extinguish the ABS indicator.**
8. If there are no DTCs present after turning ignition on, road test the vehicle for at least five minutes. Perform several anti-lock braking stops.
9. Again, with the scan tool read DTCs. If any DTCs are present, (Refer to 28 - DTC-Based Diagnostics/MODULE, Antilock Brake (ABS) - Diagnosis and Testing) for the diagnostic procedure and troubleshoot the new or recurring DTC.
10. If there are no Diagnostic Trouble Codes (DTCs) present, and the customer's concern can no longer be duplicated, the repair is complete.

Are any DTCs present or is the original concern still present?

Yes

- Repair is not complete, perform the appropriate diagnostic procedure.(Refer to 28 - DTC-Based Diagnostics/MODULE, Antilock Brake (ABS) - Diagnosis and Testing).

No

- Repair is complete.

■ ABS INTERMITTENT CONDITION

For a complete wiring diagram, **refer to the Wiring Information**.

1. PERFORM ABS INTERMITTENT CONDITION TEST

NOTE: The conditions that set the DTC are not present at this time. The following list may help in identifying the intermittent condition.

WARNING: When the engine is operating, do not stand in direct line with the fan. Do not put your hands near the pulleys, belts or fan. Do not wear loose clothing. Failure to follow these instructions may result in possible serious or fatal injury.

1. Refer to any Technical Service Bulletins (TSBs) that may apply.
2. Review the scan tool Environmental Data (EV Data). If possible, try to duplicate the conditions under which the DTC set.
3. Turn the ignition off.
4. Visually inspect the related wire harness. Disconnect all the related harness connectors. Look for any chafed, pierced, pinched, partially broken wires and broken, bent, pushed out, or corroded terminals.
5. Wiggle the wires while checking for shorts and open circuits.
6. Perform a voltage drop test on the related circuits between the suspected inoperative component and the Anti-Lock Brake Module.
7. Inspect and clean all PCM, ABS, engine, and chassis grounds that are related to the most current DTC.
8. If numerous trouble codes were set, use a wire schematic and look for any common ground or supply circuits
9. For any Relay DTCs, actuate the Relay with the scan tool and wiggle the related wire harness to try to interrupt the actuation.
10. Use the scan tool to perform a System Test if one applies to failing component.
11. A co-pilot, data recorder, or lab scope should be used to help diagnose intermittent conditions.

Were any problems found during the above inspections?

Yes

- Perform the necessary repairs.
- Perform the ABS VERIFICATION TEST. (Refer to 28 - DTC-Based Diagnostics/MODULE, Antilock Brake (ABS) - Standard Procedure).

No

- Test Complete.

MODULE, Driver Door (DDM), (DMFL)

Diagnosis and Testing

■ B164A-11-DRIVER MIRROR SIGNAL LAMP CONTROL - CIRCUIT SHORT TO GROUND

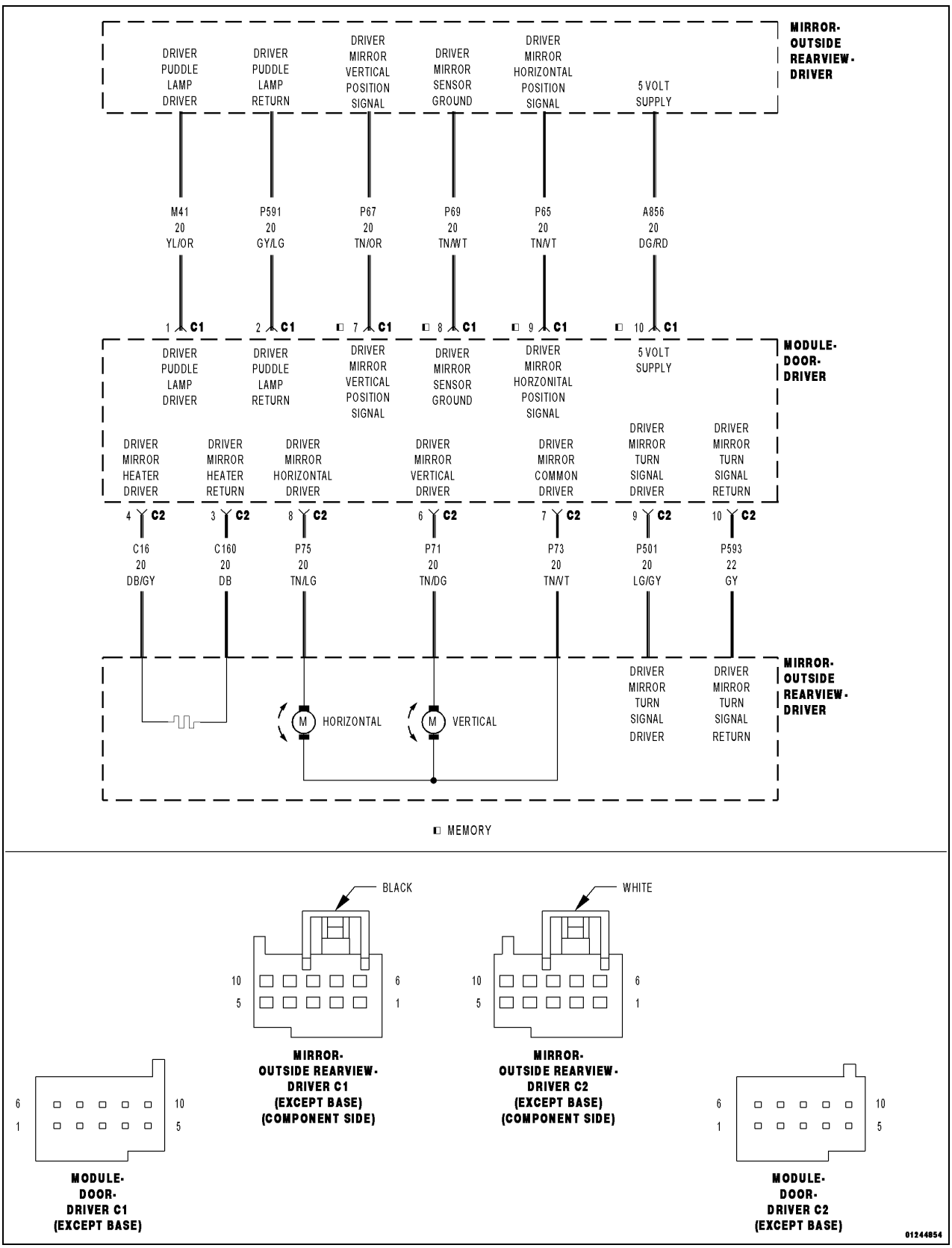

For a complete wiring diagram, **refer to the Wiring Information**.

- **When Monitored:**
  Continuously.
- **Set Condition:**
  The Door Module senses a short low on the (P501) Driver Mirror Turn Signal Driver circuit for more than two seconds with the turn signal switched on.

Possible Causes
(P501) DRIVER MIRROR TURN SIGNAL DRIVER CIRCUIT SHORTED TO GROUND
(P501) DRIVER MIRROR TURN SIGNAL DRIVER CIRCUIT SHORTED TO THE (P71) DRIVER MIRROR VERTICAL DRIVER CIRCUIT
(P501) DRIVER MIRROR TURN SIGNAL DRIVER CIRCUIT SHORTED TO THE (P73) DRIVER MIRROR COMMON DRIVER CIRCUIT
(P501) DRIVER MIRROR TURN SIGNAL DRIVER CIRCUIT SHORTED TO THE (P75) DRIVER MIRROR HORIZONTAL DRIVER CIRCUIT
(P501) DRIVER MIRROR TURN SIGNAL DRIVER CIRCUIT SHORTED TO THE (C160) DRIVER MIRROR HEATER RETURN CIRCUIT
(P501) DRIVER MIRROR TURN SIGNAL DRIVER CIRCUIT SHORTED TO THE (P593) DRIVER MIRROR TURN SIGNAL RETURN CIRCUIT
(P501) DRIVER MIRROR TURN SIGNAL DRIVER CIRCUIT SHORTED TO THE (P69) DRIVER MIRROR SENSOR GROUND CIRCUIT
(P501) DRIVER MIRROR TURN SIGNAL DRIVER CIRCUIT SHORTED TO THE (P591) DRIVER PUDDLE LAMP RETURN CIRCUIT
DRIVER OUTSIDE REARVIEW MIRROR SHORTED
DOOR MODULE

1. TEST FOR INTERMITTENT CONDITION

1. Turn the ignition on.
2. With the scan tool, record and erase DTCs.
3. Turn the turn signal on.
4. Turn the puddle lamps on, if equipped with puddle lamp mirror.
5. Turn the rear defogger on, if equipped with heated mirror.
6. Press and release the Mirror Select switch to select the Driver Outside Rearview Mirror.
7. Operate the Mirror Adjust switch in all directions several times while monitoring the scan tool for DTCs.

NOTE: After adjusting the mirror in one direction wait at least two seconds before adjusting the mirror in the opposite direction, as this will allow time for an active fault to set if present.

Does the scna tool display B164A-11-DRIVER MIRROR SIGNAL LAMP CONTROL - CIRCUIT SHORT TO GROUND?

Yes

- Go To 2

No

- Test complete, the condition or conditions that originally set this DTC are not present at this time. Using the wiring diagrams as a guide, check all related splices and connectors for signs of water intrusion, corrosion, pushed out or bent terminals, and correct pin tension. For vehicle's equipped with folding outside rearview mirrors, repeat test with mirror folded. If DTC is now active, Go To 2.
- Perform the BODY VERIFICATION TEST. (Refer to 28 - DTC-Based Diagnostics/MODULE, Totally Integrated Power (TIPM) - Standard Procedure).

2. CHECK (P501) DRIVER MIRROR TURN SIGNAL DRIVER CIRCUIT FOR A SHORT TO GROUND

1. Turn the ignition off.
2. Disconnect the Driver Outside Rearview Mirror C2 (Component Side) harness connector from the Door Module.
3. Measure the resistance between ground and the (P501) Driver Mirror Turn Signal Driver circuit.

Is the resistance below 10K Ohms?

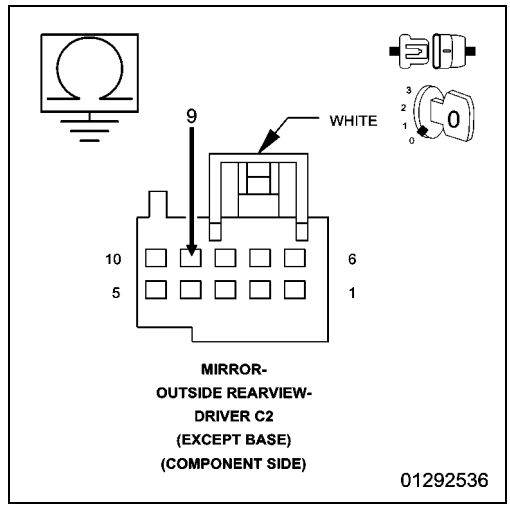

Yes

- Repair the short to ground in the (P501) Driver Mirror Turn Signal Driver circuit. If the wiring harness and harness connector are okay, replace the Driver Outside Rearview Mirror in accordance with the Service Information.
- Perform the BODY VERIFICATION TEST. (Refer to 28 - DTC-Based Diagnostics/MODULE, Totally Integrated Power (TIPM) - Standard Procedure).

No

- Go To 3

3. CHECK (P501) DRIVER MIRROR TURN SIGNAL DRIVER CIRCUIT FOR A SHORT TO THE (P71) DRIVER MIRROR VERTICAL DRIVER CIRCUIT, (P73) DRIVER MIRROR COMMON DRIVER CIRCUIT, OR TO THE (P75) DRIVER MIRROR HORIZONTAL DRIVER CIRCUIT

1. Measure the resistance between the (P501) Driver Mirror Turn Signal Driver circuit and the (P71) Driver Mirror Vertical Driver circuit in the Driver Outside Rearview Mirror C2 (Component Side) harness connector.
2. Measure the resistance between the (P501) Driver Mirror Turn Signal Driver circuit and the (P73) Driver Mirror Common Driver circuit in the Driver Outside Rearview Mirror C2 (Component Side) harness connector.
3. Measure the resistance between the (P501) Driver Mirror Turn Signal Driver circuit and the (P75) Driver Mirror Horizontal Driver circuit in the Driver Outside Rearview Mirror C2 (Component Side) harness connector.

Is the resistance below 10K Ohms for any measurement?

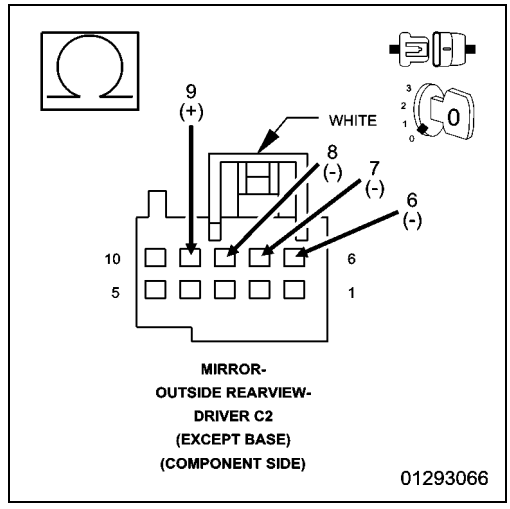

Yes

- Repair all circuits with a resistance below 10K Ohms for a short to the (P501) Driver Mirror Turn Signal Driver circuit. If the wiring harness and harness connector are okay, replace the Driver Outside Rearview Mirror in accordance with the Service Information.
- Perform the BODY VERIFICATION TEST. (Refer to 28 - DTC-Based Diagnostics/MODULE, Totally Integrated Power (TIPM) - Standard Procedure).

No, with Heated Mirror

- Go To 4

No, without Heated Mirror

- Go To 5

4. CHECK (P501) DRIVER MIRROR TURN SIGNAL DRIVER CIRCUIT FOR A SHORT TO THE (C160) DRIVER MIRROR HEATER RETURN CIRCUIT

1. Measure the resistance between the (P501) Driver Mirror Turn Signal Driver circuit and the (C160) Driver Mirror Heater Return circuit in the Driver Outside Rearview Mirror C2 (Component Side) harness connector.

Is the resistance below 10K Ohms?

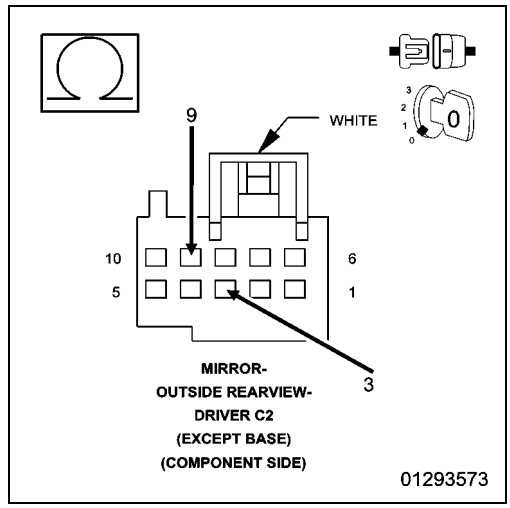

Yes

- Repair the (P501) Driver Mirror Turn Signal Driver circuit for a short to the (C160) Driver Mirror Heater Return circuit. If the wiring harness and harness connector are okay, replace the Driver Outside Rearview Mirror in accordance with the Service Information.
- Perform the BODY VERIFICATION TEST. (Refer to 28 - DTC-Based Diagnostics/MODULE, Totally Integrated Power (TIPM) - Standard Procedure).

No

- Go To 5

5. CHECK (P501) DRIVER MIRROR TURN SIGNAL DRIVER CIRCUIT FOR A SHORT TO THE (P593) DRIVER MIRROR TURN SIGNAL RETURN CIRCUIT

NOTE: The Ohmmeter positive lead must be connected to the (P593) Driver Mirror Turn Signal Return circuit and the negative lead to the (P501) Driver Mirror Turn Signal Driver circuit for the test results to be valid.

1. Measure the resistance between the (P501) Driver Mirror Turn Signal Driver circuit and the (P593) Driver Mirror Turn Signal Return circuit in the Driver Outside Rearview Mirror C2 (Component Side) harness connector.

Is there any resistance present?

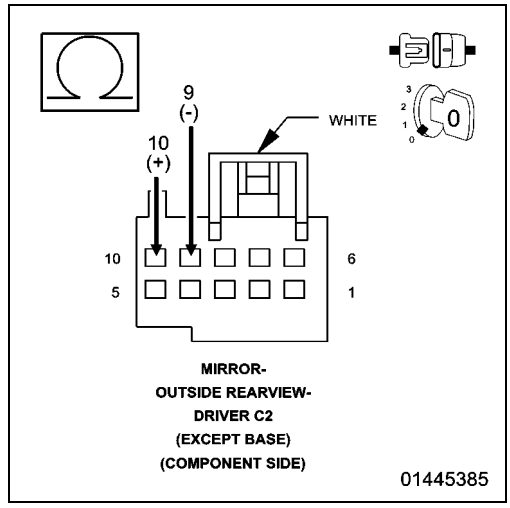

Yes

- Repair the (P501) Driver Mirror Turn Signal Driver circuit for a short to the (P593) Driver Mirror Turn Signal Return circuit. If the wiring harness and harness connector are okay, replace the Driver Outside Rearview Mirror in accordance with the Service Information.
- Perform the BODY VERIFICATION TEST. (Refer to 28 - DTC-Based Diagnostics/MODULE, Totally Integrated Power (TIPM) - Standard Procedure).

No

- 6

6. CHECK (P501) DRIVER MIRROR TURN SIGNAL DRIVER CIRCUIT FOR A SHORT TO THE (P69) DRIVER MIRROR SENSOR GROUND CIRCUIT

1. Disconnect the Driver Outside Rearview Mirror C1 (Component Side) harness connector from the Door Module.
2. Measure the resistance between the (P501) Driver Mirror Turn Signal Driver circuit and the (P69) Driver Mirror Sensor Ground circuit in the Driver Outside Rearview Mirror C2 and C1 (Component Side) harness connectors.

Is the resistance below 10K Ohms?

Yes

- Repair the (P501) Driver Mirror Turn Signal Driver circuit for a short to the (P69) Driver Mirror Sensor Ground circuit. If the wiring harness and harness connector are okay, replace the Driver Outside Rearview Mirror in accordance with the Service Information.
- Perform the BODY VERIFICATION TEST. (Refer to 28 - DTC-Based Diagnostics/MODULE, Totally Integrated Power (TIPM) - Standard Procedure).

No, with Puddle Lamp Mirror

- Go To 7

No, without Puddle Lamp Mirror

- Inspect the wiring harness and harness connectors for damage and repair as necessary. If the wiring harness and harness connectors are okay, replace the Door Module in accordance with the Service Information.
- Perform the BODY VERIFICATION TEST. (Refer to 28 - DTC-Based Diagnostics/MODULE, Totally Integrated Power (TIPM) - Standard Procedure).

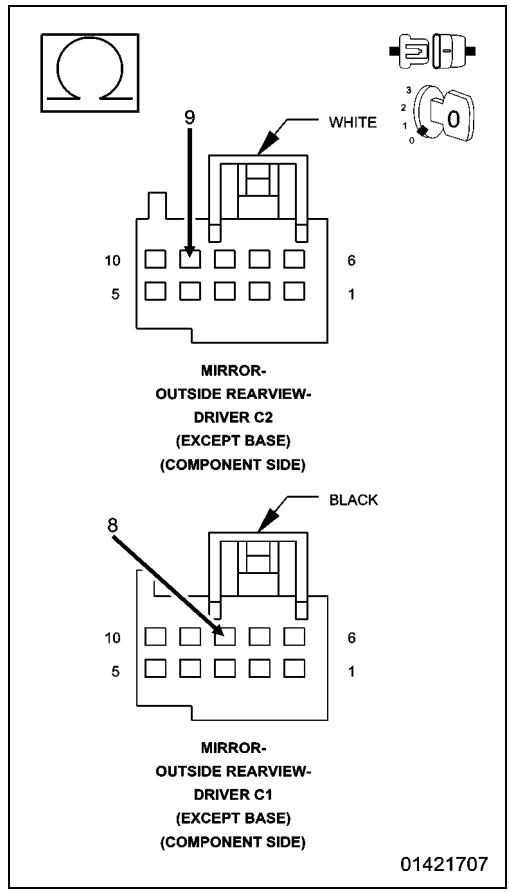

7. CHECK (P501) DRIVER MIRROR TURN SIGNAL DRIVER CIRCUIT FOR A SHORT TO THE (P591) DRIVER PUDDLE LAMP RETURN CIRCUIT

1. Measure the resistance between the (P501) Driver Mirror Turn Signal Driver circuit and the (P591) Driver Puddle Lamp Return circuit in the Driver Outside Rearview Mirror C2 and C1 (Component Side) harness connectors.

Is the resistance below 10K Ohms?

Yes

- Repair the (P501) Driver Mirror Turn Signal Driver circuit for a short to the (P591) Driver Puddle Lamp Return circuit. If the wiring harness and harness connector are okay, replace the Driver Outside Rearview Mirror in accordance with the Service Information.
- Perform the BODY VERIFICATION TEST. (Refer to 28 - DTC-Based Diagnostics/MODULE, Totally Integrated Power (TIPM) - Standard Procedure).

No

- Inspect the wiring harness and harness connectors for damage and repair as necessary. If the wiring harness and harness connectors are okay, replace the Door Module in accordance with the Service Information.
- Perform the BODY VERIFICATION TEST. (Refer to 28 - DTC-Based Diagnostics/MODULE, Totally Integrated Power (TIPM) - Standard Procedure).

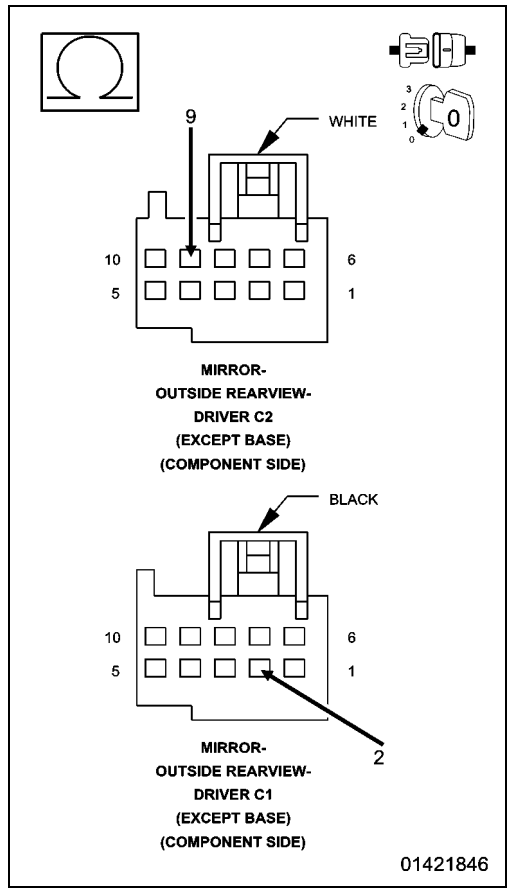

■ B164A-15-DRIVER MIRROR SIGNAL LAMP CONTROL - CIRCUIT SHORT TO BATTERY OR OPEN

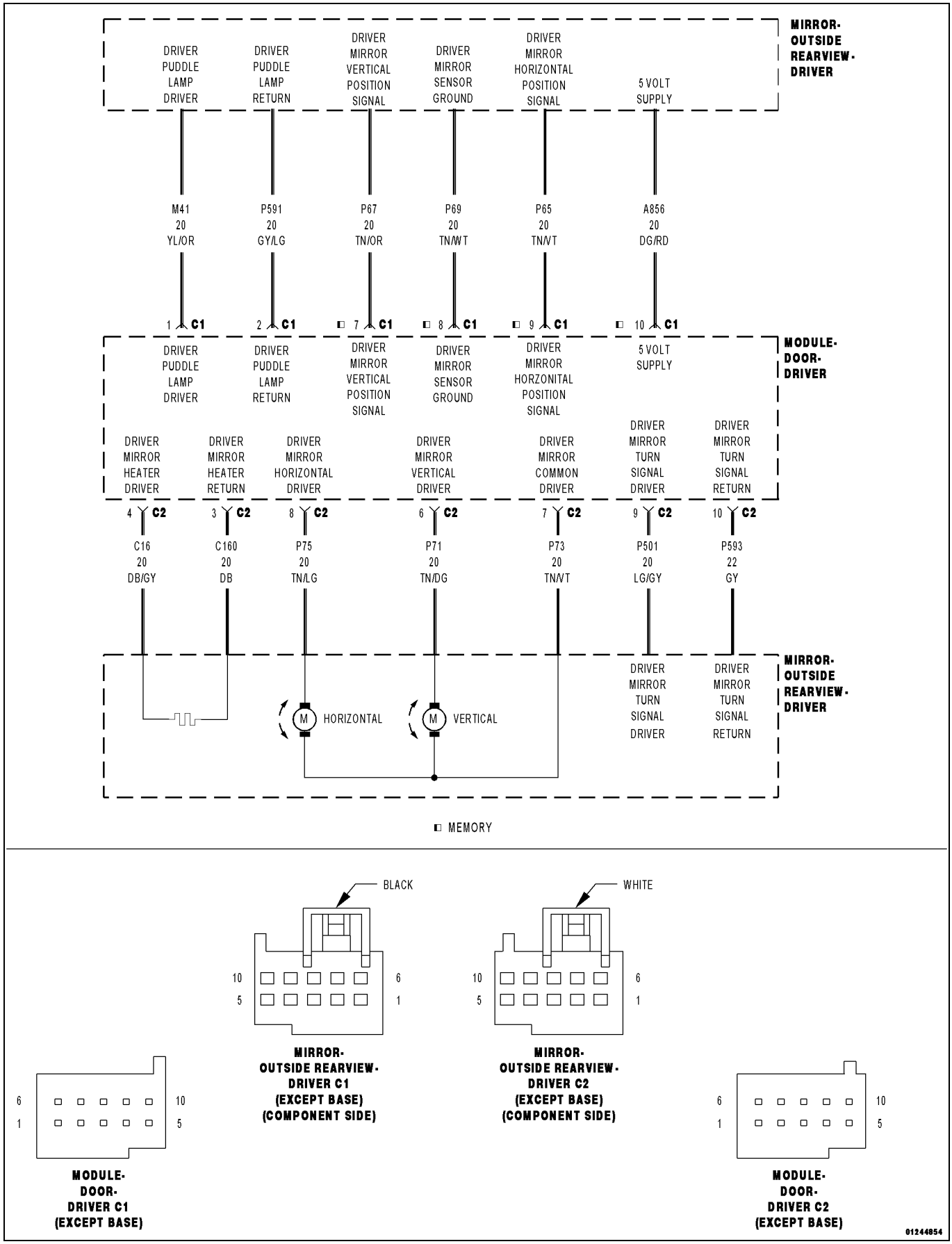

For a complete wiring diagram, **refer to the Wiring Information**.

- **When Monitored:**
  Continuously.
- **Set Condition:**
  The Door Module senses current greater than 100 mA or an open on the (P501) Driver Mirror Turn Signal Driver circuit for more than two seconds with the turn signal switched on.

Possible Causes
(P501) DRIVER MIRROR TURN SIGNAL DRIVER CIRCUIT SHORTED TO VOLTAGE
(P501) DRIVER MIRROR TURN SIGNAL DRIVER CIRCUIT SHORTED TO THE (P71) DRIVER MIRROR VERTICAL DRIVER CIRCUIT
(P501) DRIVER MIRROR TURN SIGNAL DRIVER CIRCUIT SHORTED TO THE (P73) DRIVER MIRROR COMMON DRIVER CIRCUIT
(P501) DRIVER MIRROR TURN SIGNAL DRIVER CIRCUIT SHORTED TO THE (P75) DRIVER MIRROR HORIZONTAL DRIVER CIRCUIT
(P501) DRIVER MIRROR TURN SIGNAL DRIVER CIRCUIT SHORTED TO THE (C16) DRIVER MIRROR HEATER DRIVER CIRCUIT
(P501) DRIVER MIRROR TURN SIGNAL DRIVER CIRCUIT OPEN
(P593) DRIVER MIRROR TURN SIGNAL RETURN CIRCUIT OPEN
(P501) DRIVER MIRROR TURN SIGNAL DRIVER CIRCUIT SHORTED TO THE (M41) DRIVER PUDDLE LAMP DRIVER CIRCUIT
DRIVER OUTSIDE REARVIEW MIRROR
DOOR MODULE

1. TEST FOR INTERMITTENT CONDITION

1. Turn the ignition on.
2. Using a scan tool, record and erase Diagnostic Trouble Codes (DTCs).
3. Turn the turn signal on.
4. Turn the puddle lamps on, if equipped with puddle lamp mirror.
5. Turn the rear defogger on, if equipped with heated mirror.
6. Press and release the Mirror Select switch to select the Driver Outside Rearview Mirror.
7. Operate the Mirror Adjust switch in all directions several times while monitoring the scan tool for DTCs.

NOTE: After adjusting the mirror in one direction wait at least two seconds before adjusting the mirror in the opposite direction, as this will allow time for an active fault to set if present.

Is the DTC active?

Yes

- Go To 2

No

- The conditions that caused this code to set are not present at this time. For vehicle's equipped with folding outside rearview mirrors, repeat test with mirror folded. If DTC is now active, Go To 2. Otherwise, use the wiring diagram/ schematic as a guide and inspect the wiring and connectors.
- Perform the BODY VERIFICATION TEST. (Refer to 28 - DTC-Based Diagnostics/MODULE, Totally Integrated Power (TIPM) - Standard Procedure).

2. CHECK (P501) DRIVER MIRROR TURN SIGNAL DRIVER CIRCUIT FOR A SHORT TO VOLTAGE

1. Turn the ignition off.
2. Disconnect the Driver Outside Rearview Mirror C2 (Component Side) connector from the Door Module C2 connector.
3. Turn the ignition on.
4. Measure the voltage of the (P501) Driver Mirror Turn Signal Driver circuit between the Driver Outside Rearview Mirror C2 (Component Side) connector and ground.

Is there any voltage present?

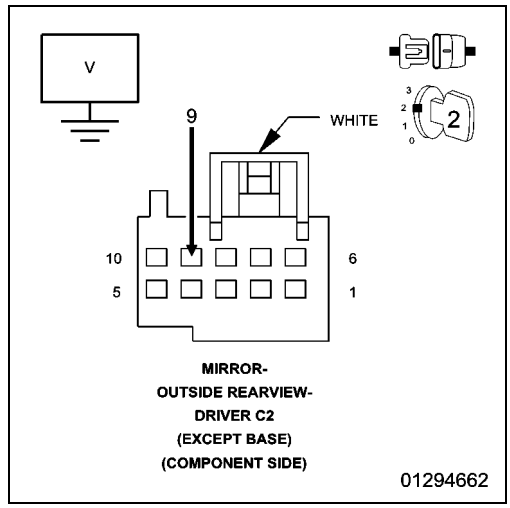

Yes

- Repair the (P501) Driver Mirror Turn Signal Driver circuit for a short to voltage. If the wiring harness and connector are okay, replace the Driver Outside Rearview Mirror in accordance with the Service Information.
- Perform the BODY VERIFICATION TEST. (Refer to 28 - DTC-Based Diagnostics/MODULE, Totally Integrated Power (TIPM) - Standard Procedure).

No

- Go To 3

3. CHECK (P501) DRIVER MIRROR TURN SIGNAL DRIVER CIRCUIT FOR A SHORT TO THE (P71) DRIVER MIRROR VERTICAL DRIVER CIRCUIT, (P73) DRIVER MIRROR COMMON DRIVER CIRCUIT, OR TO THE (P75) DRIVER MIRROR HORIZONTAL DRIVER CIRCUIT

1. Turn the ignition off.
2. Measure the resistance between the (P501) Driver Mirror Turn Signal Driver circuit and the (P71) Driver Mirror Vertical Driver circuit at the Driver Outside Rearview Mirror C2 (Component Side) connector.
3. Measure the resistance between the (P501) Driver Mirror Turn Signal Driver circuit and the (P73) Driver Mirror Common Driver circuit at the Driver Outside Rearview Mirror C2 (Component Side) connector.
4. Measure the resistance between the (P501) Driver Mirror Turn Signal Driver circuit and the (P75) Driver Mirror Horizontal Driver circuit at the Driver Outside Rearview Mirror C2 (Component Side) connector.

Is the resistance below 10K Ohms for any measurement?

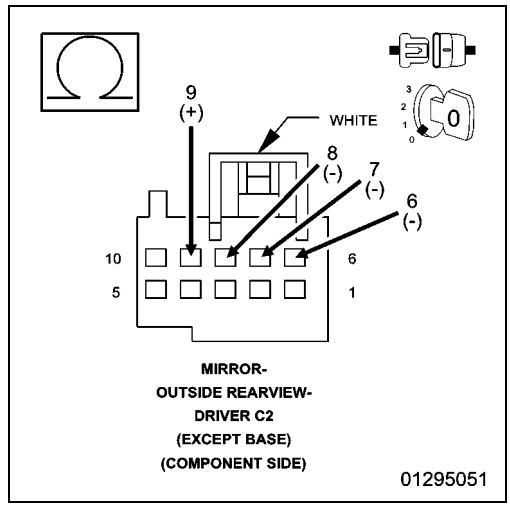

Yes

- Repair all circuits with a resistance below 10K Ohms for a short to the (P501) Driver Mirror Turn Signal Driver circuit. If the wiring harness and connector are okay, replace the Driver Outside Rearview Mirror in accordance with the Service Information.
- Perform the BODY VERIFICATION TEST. (Refer to 28 - DTC-Based Diagnostics/MODULE, Totally Integrated Power (TIPM) - Standard Procedure).

No, with Heated Mirror

- Go To 4

No, without Heated Mirror

- Go To 5

4. CHECK (P501) DRIVER MIRROR TURN SIGNAL DRIVER CIRCUIT FOR A SHORT TO THE (C16) DRIVER MIRROR HEATER DRIVER CIRCUIT

1. Measure the resistance between the (P501) Driver Mirror Turn Signal Driver circuit and the (C16) Driver Mirror Heater Driver circuit at the Driver Outside Rearview Mirror C2 (Component Side) connector.

Is the resistance below 10K Ohms?

Yes

- Repair the (P501) Driver Mirror Turn Signal Driver circuit for a short to the (C16) Driver Mirror Heater Driver circuit. If the wiring harness and connector are okay, replace the Driver Outside Rearview Mirror in accordance with the Service Information.
- Perform the BODY VERIFICATION TEST. (Refer to 28 - DTC-Based Diagnostics/MODULE, Totally Integrated Power (TIPM) - Standard Procedure).

No

- Go To 5

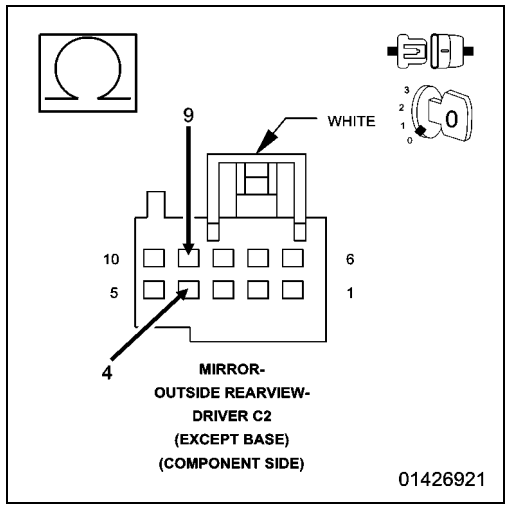

5. CHECK (P501) DRIVER MIRROR TURN SIGNAL DRIVER CIRCUIT AND (P593) DRIVER MIRROR TURN SIGNAL RETURN CIRCUIT FOR AN OPEN

NOTE: The Ohmmeter positive lead must be connected to the (P501) Driver Mirror Turn Signal Driver circuit and the negative lead to the (P593) Driver Mirror Turn Signal Return circuit for the test results to be valid.

1. Measure the resistance between the (P501) Driver Mirror Turn Signal Driver circuit and the (P593) Driver Mirror Turn Signal Return circuit at the Driver Outside Rearview Mirror C2 (Component Side) connector.

Is the resistance above 1K Ohm?

Yes

- Repair the (P501) Driver Mirror Turn Signal Driver circuit or the (P593) Driver Mirror Turn Signal Return circuit for an open. If the wiring harness and connector are okay, replace the Driver Outside Rearview Mirror in accordance with the Service Information.
- Perform the BODY VERIFICATION TEST. (Refer to 28 - DTC-Based Diagnostics/MODULE, Totally Integrated Power (TIPM) - Standard Procedure).

No, with Puddle Lamp Mirror

- Go To 6

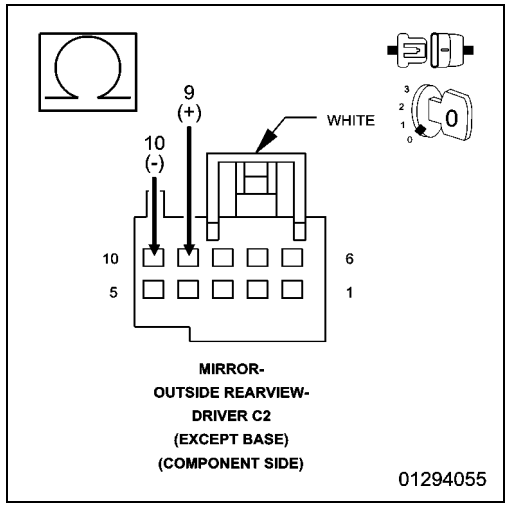

No, without Puddle Lamp Mirror

- Inspect the wiring and connectors for damage and repair as necessary. If the wiring and connectors are okay, replace the Door Module in accordance with the Service Information.
- Perform the BODY VERIFICATION TEST. (Refer to 28 - DTC-Based Diagnostics/MODULE, Totally Integrated Power (TIPM) - Standard Procedure).

6. CHECK (P501) DRIVER MIRROR TURN SIGNAL DRIVER CIRCUIT FOR A SHORT TO THE (M41) DRIVER PUDDLE LAMP DRIVER CIRCUIT

1. Disconnect the Driver Outside Rearview Mirror C1 (Component Side) connector from the Door Module C1 connector.
2. Measure the resistance between the (P501) Driver Mirror Turn Signal Driver circuit and the (M41) Driver Puddle Lamp Driver circuit at the Driver Outside Rearview Mirror C2 and C1 (Component Side) connectors.

Is the resistance below 10K Ohms?

Yes

- Repair the (P501) Driver Mirror Turn Signal Driver circuit for a short to the (M41) Driver Puddle Lamp Driver circuit. If the wiring harness and connector are okay, replace the Driver Outside Rearview Mirror in accordance with the Service Information.
- Perform the BODY VERIFICATION TEST. (Refer to 28 - DTC-Based Diagnostics/MODULE, Totally Integrated Power (TIPM) - Standard Procedure).

No

- Inspect the wiring and connectors for damage and repair as necessary. If the wiring and connectors are okay, replace the Door Module in accordance with the Service Information.
- Perform the BODY VERIFICATION TEST. (Refer to 28 - DTC-Based Diagnostics/MODULE, Totally Integrated Power (TIPM) - Standard Procedure).

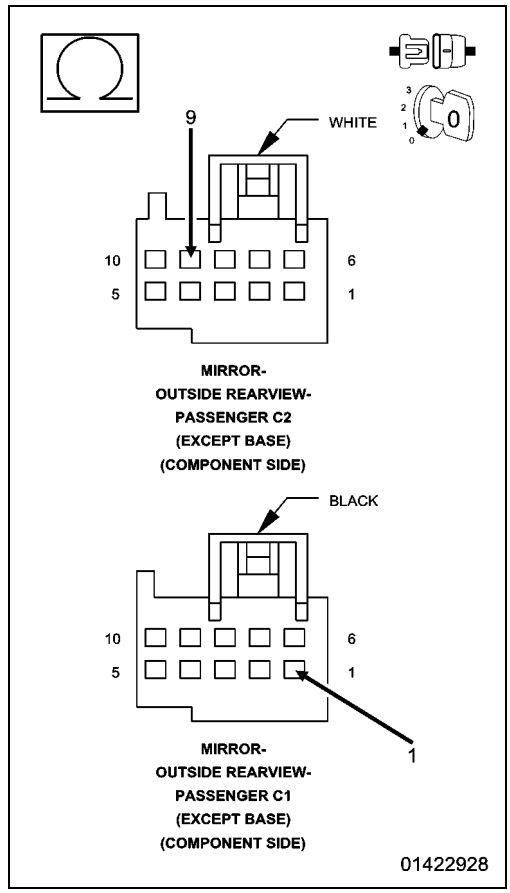

■ B1800-2A-DRIVER DOOR LOCK/UNLOCK SWITCH - SIGNAL STUCK IN RANGE

For a complete wiring diagram, **refer to the Wiring Information**.

- **When Monitored:**
  Continuously
- **Set Condition:**
  When the Door Lock/Unlock Switch is stuck for over 30 seconds, this code will set.

Possible Causes
OBSTRUCTION IN SWITCH
DOOR LOCK SWITCH

1. TEST FOR INTERMITTENT CONDITION

1. With the scan tool, record and erase the DTCs.
2. Operate the Driver Door Lock Switch in all positions several times.
3. Cycle the ignition from on to off.
4. Turn the ignition on.
5. With the scan tool, read the DTCs.

Does the scan tool display B1800-2A-DRIVER DOOR LOCK/UNLOCK SWITCH - SIGNAL STUCK IN RANGE?

Yes

- Go To 2

No

- The conditions that caused this code to set are not present at this time. Using the wiring diagram/schematic as a guide, inspect the wiring and connectors.
- Perform the BODY VERIFICATION TEST. (Refer to 28 - DTC-Based Diagnostics/MODULE, Totally Integrated Power (TIPM) - Standard Procedure).

2. DOOR LOCK SWITCH

1. Check the switch for any objects that could cause a sticking condition.

Was anything found that could cause a sticking condition?

Yes

- Clean or remove the object as necessary.
- Perform the BODY VERIFICATION TEST. (Refer to 28 - DTC-Based Diagnostics/MODULE, Totally Integrated Power (TIPM) - Standard Procedure).

No

- Replace the Door Lock Switch.
- Perform the BODY VERIFICATION TEST. (Refer to 28 - DTC-Based Diagnostics/MODULE, Totally Integrated Power (TIPM) - Standard Procedure).

B1853-11-DRIVER WINDOW CONTROL - CIRCUIT SHORT TO GROUND

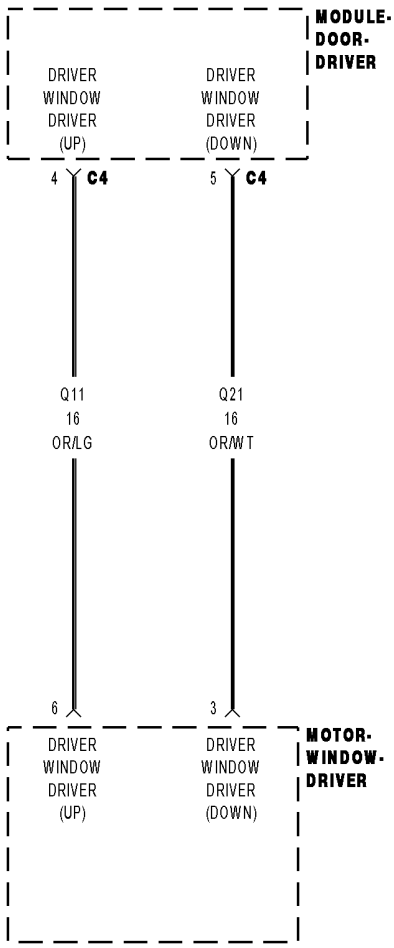

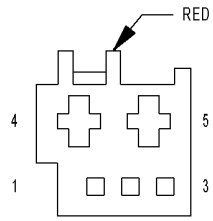

MODULE-
DOOR-
DRIVER C4

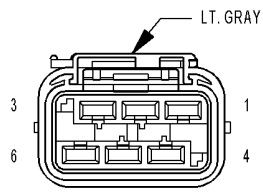

MOTOR-
WINDOW-
DRIVER

01217730

For a complete wiring diagram, **refer to the Wiring Information**.

- **When Monitored:**
  Whenever the module is awake.
- **Set Condition:**
  When both Driver Window Driver circuits (Up and Down) are grounded during a window movement command, this code will set.

Possible Causes
(Q21) DRIVER WINDOW DRIVER (DOWN) CIRCUIT SHORTED TO GROUND
(Q11) DRIVER WINDOW DRIVER (UP) CIRCUIT SHORTED TO GROUND
(Q21) DRIVER WINDOW DRIVER (DOWN) CIRCUIT SHORTED TO THE (Q11) DRIVER WINDOW DRIVER (UP) CIRCUIT
WINDOW MOTOR SHORTED
DRIVER DOOR MODULE (DDM)

1. TEST FOR INTERMITTENT CONDITION

1. Turn the ignition on.
2. With the scan tool, record and erase the DTCs
3. Try to operate the Driver Window up and down several times.
4. Wait 30 seconds.
5. With the scan tool, read the DTCs.

Does the scan tool display B1853-11-DRIVER WINDOW CONTROL - CIRCUIT SHORT TO GROUND?

Yes

- Go To 2

No

- The conditions that caused this code to set are not present at this time. Using the wiring diagram/schematic as a guide, inspect the wiring and connectors.
- Perform the BODY VERIFICATION TEST. (Refer to 28 - DTC-Based Diagnostics/MODULE, Totally Integrated Power (TIPM) - Standard Procedure).

2. WINDOW MOTOR SHORTED

1. With the scan tool, erase the DTCs.
2. Turn the ignition off.
3. Disconnect the Driver Window Motor connector.
4. Turn the ignition on.
5. Operate the driver window switch up and down several times.
6. With the scan tool, read the DTCs.

Does the scan tool display B1853-11-DRIVER WINDOW CONTROL - CIRCUIT SHORT TO GROUND?

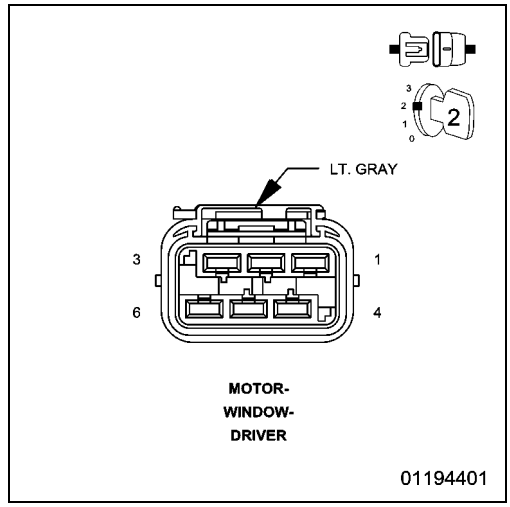

No

- Replace the Driver Window Motor in accordances with the Service Information.
- Perform the BODY VERIFICATION TEST. (Refer to 28 - DTC-Based Diagnostics/MODULE, Totally Integrated Power (TIPM) - Standard Procedure).

Yes

- Go To 3

3. (Q21) DRIVER WINDOW DRIVER (DOWN) CIRCUIT SHORTED TO GROUND

1. Turn the ignition off.
2. Disconnect the Driver Door Module C4 connector.
3. Measure the resistance between Ground and the (Q21) Driver Window Driver Down circuit.

Is the resistance below 10,000 Ohms?

Yes

- Repair the (Q21) Driver Window Driver Down circuit for a short to ground.
- Perform the BODY VERIFICATION TEST. (Refer to 28 - DTC-Based Diagnostics/MODULE, Totally Integrated Power (TIPM) - Standard Procedure).

No

- Go To 4

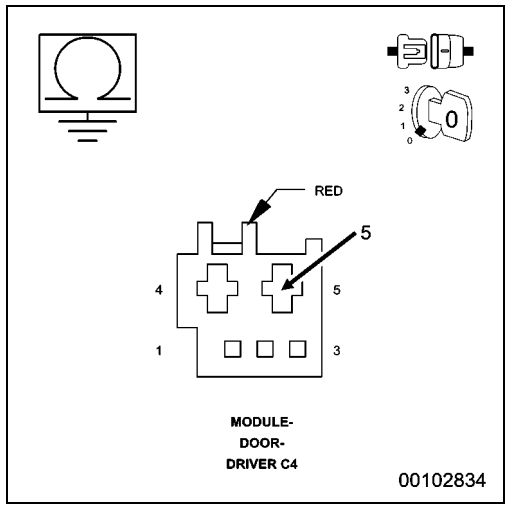

4. (Q11) DRIVER WINDOW DRIVER (UP) CIRCUIT SHORTED TO GROUND

1. Measure the resistance between Ground and the (Q11) Driver Window Driver Up circuit.

Is the resistance below 10,000 Ohms?

Yes

- Repair the (Q11) Driver Window Driver (Up) circuit for a short to ground.
- Perform the BODY VERIFICATION TEST. (Refer to 28 - DTC-Based Diagnostics/MODULE, Totally Integrated Power (TIPM) - Standard Procedure).

No

- Go To 5

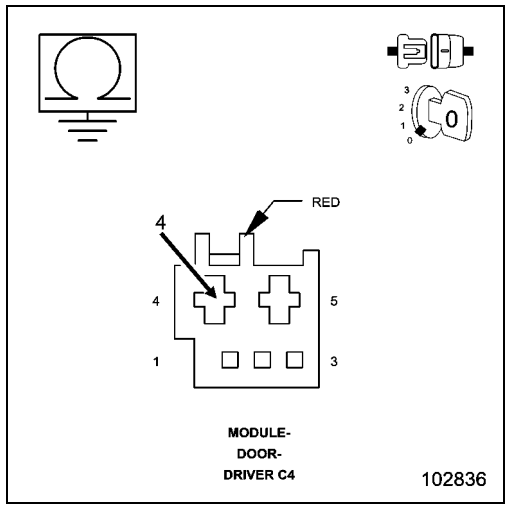

5. (Q21) DRIVER WINDOW DRIVER (DOWN) CIRCUIT SHORT TO THE (Q11) DRIVER WINDOW DRIVER (UP) CIRCUIT

1. Measure the resistance between the (Q21) Driver Window Driver (Down) circuit and the (Q11) Driver Window Driver (Up) circuit.

Is the resistance below 10,000 Ohms?

Yes

- Repair the (Q21) Driver Window Driver (Down) circuit for a short to the (Q11) Driver Window Driver (Up) circuit.
- Perform the BODY VERIFICATION TEST. (Refer to 28 - DTC-Based Diagnostics/MODULE, Totally Integrated Power (TIPM) - Standard Procedure).

No

- Replace the Driver Door Module in accordance with the Service Information.
- Perform the BODY VERIFICATION TEST. (Refer to 28 - DTC-Based Diagnostics/MODULE, Totally Integrated Power (TIPM) - Standard Procedure).

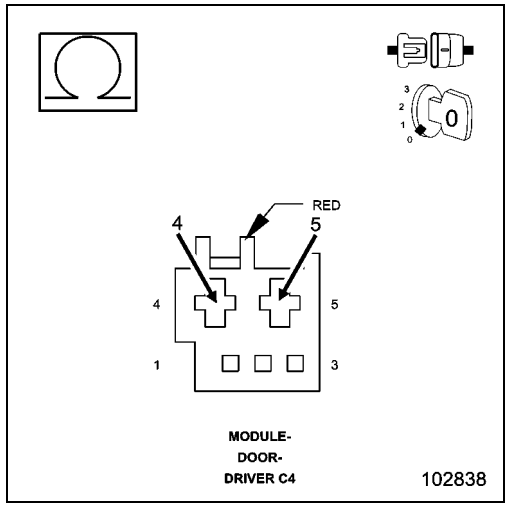

B1853-13-DRIVER WINDOW CONTROL - CIRCUIT OPEN

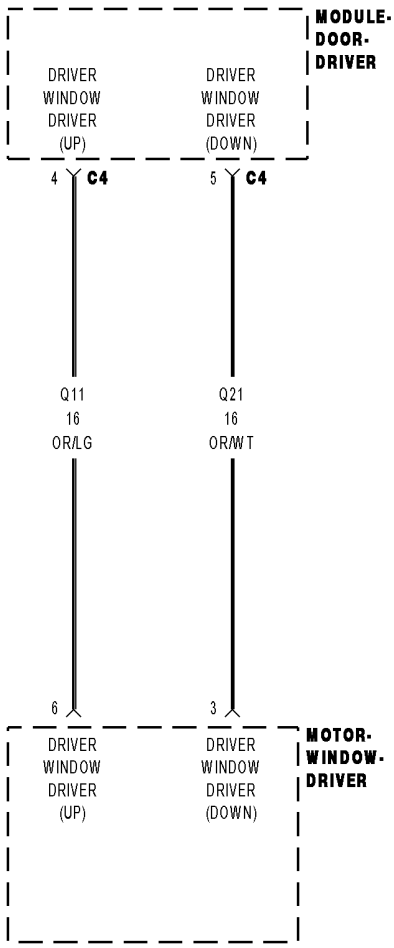

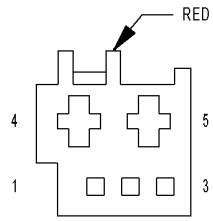

MODULE-
DOOR-
DRIVER C4

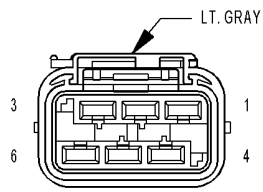

MOTOR-
WINDOW-
DRIVER

01217730

For a complete wiring diagram, **refer to the Wiring Information**.

- **When Monitored:**
  Whenever the module is awake.
- **Set Condition:**
  When one or both Driver Window Driver circuits (Up and Down) are not supplied with voltage, when they should be, during a window movement command for more than 2000 ms.

Possible Causes
(Q21) DRIVER WINDOW DRIVER (DOWN) CIRCUIT OPEN
(Q11) DRIVER WINDOW DRIVER (UP) CIRCUIT OPEN
WINDOW MOTOR (REGULATOR)
DRIVER DOOR MODULE (DDM)

1. TEST FOR INTERMITTENT CONDITION

1. Turn the ignition on.
2. With the scan tool, record and erase DTCs.
3. Operate the Driver Window switch up and down several times.
4. Wait 30 seconds.
5. With the scan tool, read the active DTCs.

Does the scan tool display B1853-13-DRIVER WINDOW CONTROL - CIRCUIT OPEN?

Yes

- Go To 2

No

- Test complete, the condition or conditions that originally set this DTC are not present at this time. Using the wiring diagrams as a guide, check all related splices and connectors for signs of water intrusion, corrosion, pushed out or bent terminals, and correct pin tension.
- Perform the BODY VERIFICATION TEST. (Refer to 28 - DTC-Based Diagnostics/MODULE, Totally Integrated Power (TIPM) - Standard Procedure).

2. WINDOW MOTOR OR CIRCUIT OPEN

1. Turn the ignition off.
2. Disconnect the Driver Window Motor harness connector.
3. Connect a test light between the (Q11) Driver Window Driver (Up) circuit and the (Q21) Driver Window Driver (Down) circuit.
4. Turn the ignition on.
5. Trip the driver door latch to the closed position.
6. Operate the driver window switch up and down several times while observing the test light.

Does the test light illuminate brightly when the switch is pressed in both directions? With the express up window, the test light will only flash momentarily each time the switch is activated.

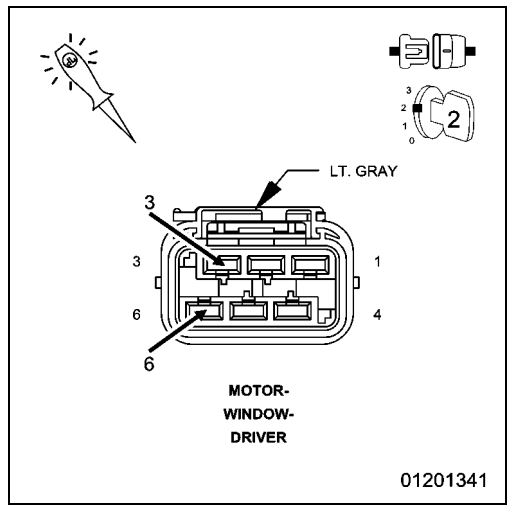

Yes

- Replace the Driver Window Motor (regulator) in accordance with the Service Information.
- Perform the BODY VERIFICATION TEST. (Refer to 28 - DTC-Based Diagnostics/MODULE, Totally Integrated Power (TIPM) - Standard Procedure).

No

- Go To 3

3. (Q21) DRIVER WINDOW DRIVER (DOWN) CIRCUIT OPEN

1. Turn the ignition off.
2. Disconnect the Driver Door Module C4 harness connector.
3. Measure the resistance of the (Q21) Driver Window Driver (Down) circuit between the Driver Door Module C4 harness connector and the Driver Window Motor harness connector.

Is the resistance above 2.0 Ohms?

Yes

- Repair the open in the (Q21) Driver Window Driver (Down) circuit.
- Perform the BODY VERIFICATION TEST. (Refer to 28 - DTC-Based Diagnostics/MODULE, Totally Integrated Power (TIPM) - Standard Procedure).

No

- Go To 4

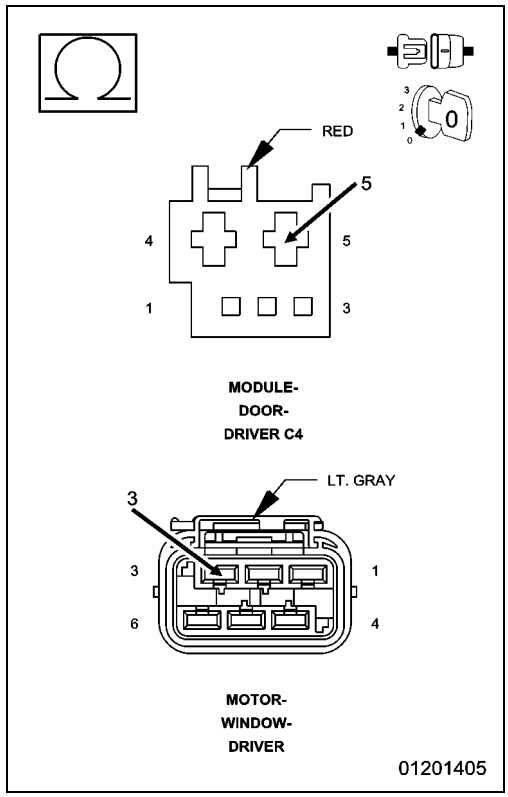

4. (Q11) DRIVER WINDOW DRIVER (UP) CIRCUIT OPEN

1. Measure the resistance of the (Q11) Driver Window Driver (Up) circuit between the Driver Door Module C4 harness connector and the Driver Window Motor harness connector.

Is the resistance above 2.0 Ohms?

Yes

- Repair the open in the (Q11) Driver Window Driver (Up) circuit.
- Perform the BODY VERIFICATION TEST. (Refer to 28 - DTC-Based Diagnostics/MODULE, Totally Integrated Power (TIPM) - Standard Procedure).

No

- Replace the Driver Door Module in accordance with the Service Information.
- Perform the BODY VERIFICATION TEST. (Refer to 28 - DTC-Based Diagnostics/MODULE, Totally Integrated Power (TIPM) - Standard Procedure).

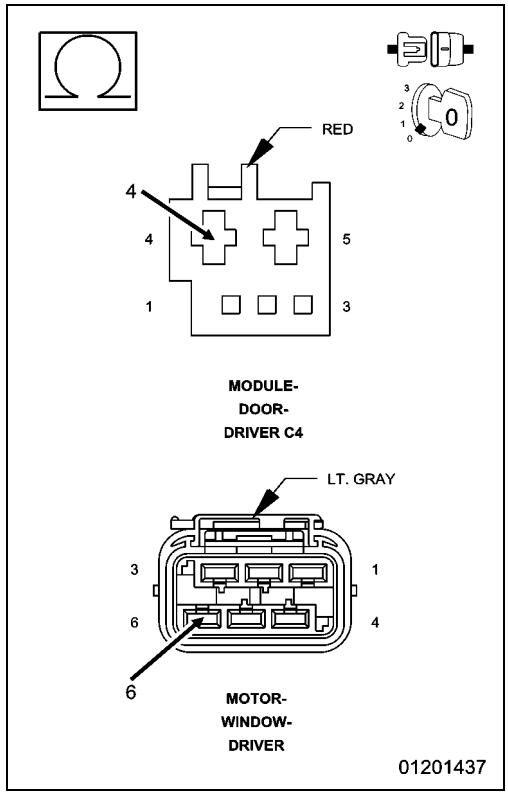

■ B1857-11-DRIVER WINDOW POSITION SENSOR POWER SUPPLY - CIRCUIT SHORT TO GROUND

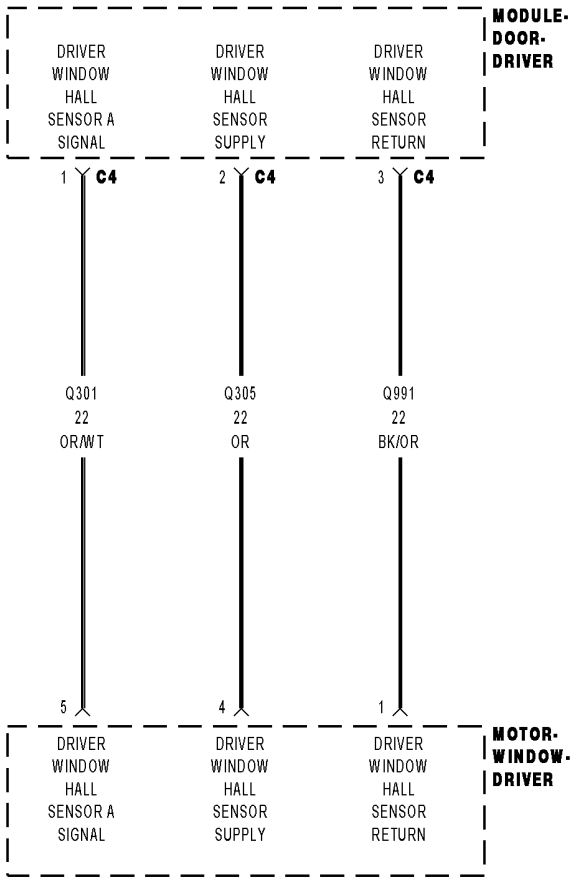

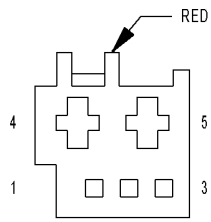

MODULE-
DOOR-
DRIVER C4

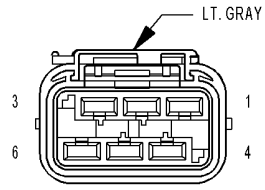

MOTOR-
WINDOW-
DRIVER

01217746

For a complete wiring diagram, **refer to the Wiring Information**.

- **When Monitored:**
  Whenever the module is awake.
- **Set Condition:**
  When the Driver Window Hall Sensor Supply circuit falls below 0.8 of a Volt for over 480 ms.

Possible Causes
(Q305) DRIVER WINDOW HALL SENSOR SUPPLY CIRCUIT SHORTED TO GROUND
WINDOW MOTOR SHORTED
DRIVER DOOR MODULE (DDM)

1. TEST FOR INTERMITTENT CONDITION

1. Turn the ignition on.
2. With the scan tool, record and erase DTCs.
3. Operate the Driver Window switch up and down several times.
4. Wait 30 seconds.
5. With the scan tool, read the active DTCs.

Does the scan tool display B1857-11-DRIVER WINDOW POSITION SENSOR POWER SUPPLY - CIRCUIT SHORT TO GROUND?

Yes

- Go To 2

No

- Test complete, the condition or conditions that originally set this DTC are not present at this time. Using the wiring diagrams as a guide, check all related splices and connectors for signs of water intrusion, corrosion, pushed out or bent terminals, and correct pin tension.
- Perform the BODY VERIFICATION TEST. (Refer to 28 - DTC-Based Diagnostics/MODULE, Totally Integrated Power (TIPM) - Standard Procedure).

2. WINDOW MOTOR SHORTED

1. With the scan tool, erase DTCs.
2. Turn the ignition off.
3. Disconnect the Driver Window Motor harness connector.
4. Turn the ignition on.
5. Operate the Driver Window switch up and down several times.
6. With the scan tool, read the active DTCs.

Does the scan tool display B1857-11-DRIVER WINDOW POSITION SENSOR POWER SUPPLY - CIRCUIT SHORT TO GROUND?

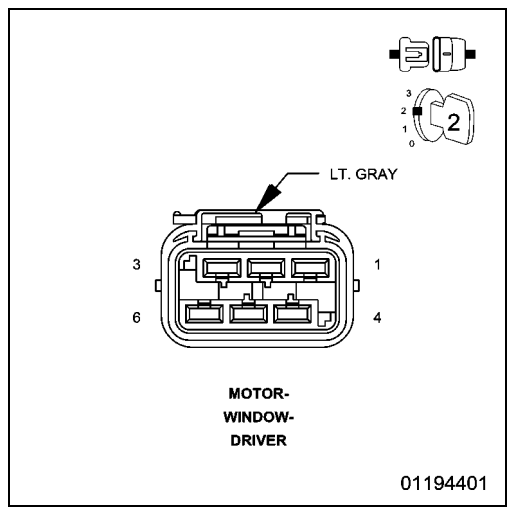

Yes

- Go To 3

No

- Replace the Window Motor (regulator) in accordance with the Service Information.
- Perform the BODY VERIFICATION TEST. (Refer to 28 - DTC-Based Diagnostics/MODULE, Totally Integrated Power (TIPM) - Standard Procedure).

3. (Q305) DRIVER WINDOW HALL SENSOR SUPPLY CIRCUIT SHORTED TO GROUND

1. Turn the ignition off.
2. Disconnect the Driver Door Module C4 harness connector.
3. Measure the resistance between ground and the (Q305) Driver Window Hall Sensor Supply circuit.

Is the resistance below 10,000 Ohms?

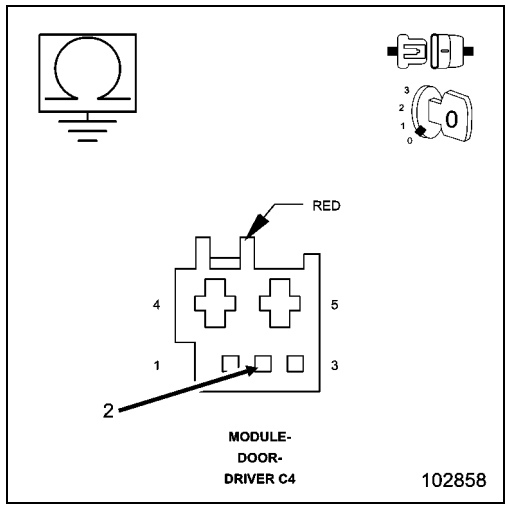

Yes

- Repair the short to ground in the (Q305) Driver Window Hall Sensor Supply circuit.
- Perform the BODY VERIFICATION TEST. (Refer to 28 - DTC-Based Diagnostics/MODULE, Totally Integrated Power (TIPM) - Standard Procedure).

No

- Replace the Driver Door Module in accordance with the Service Information.
- Perform the BODY VERIFICATION TEST. (Refer to 28 - DTC-Based Diagnostics/MODULE, Totally Integrated Power (TIPM) - Standard Procedure).

■ B1857-15-DRIVER WINDOW POSITION SENSOR POWER SUPPLY - CIRCUIT SHORT TO BATTERY OR OPEN - EXPRESS MOTOR ONLY

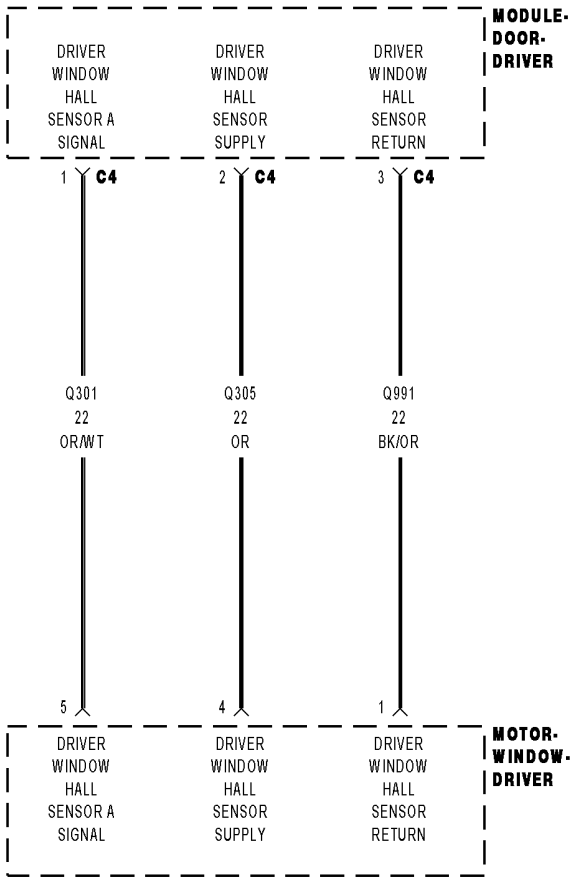

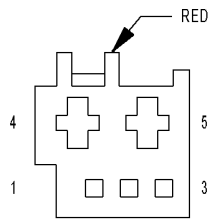

MODULE-
DOOR-
DRIVER C4

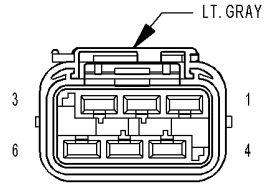

MOTOR-
WINDOW-
DRIVER

01217746

For a complete wiring diagram, **refer to the Wiring Information**.

- **When Monitored:**
  Whenever the module is awake.
- **Set Condition:**
  When the Driver Window Hall Sensor Supply circuit is above 1.5 Volts for over 2000 ms. and the power to the module has been turned off.

Possible Causes
(Q305) DRIVER WINDOW HALL SENSOR SUPPLY CIRCUIT SHORTED TO VOLTAGE
(Q305) DRIVER WINDOW HALL SENSOR SUPPLY CIRCUIT OPEN
(Q991) DRIVER WINDOW HALL SENSOR RETURN CIRCUIT OPEN
DRIVER WINDOW MOTOR
DRIVER DOOR MODULE (DDM)

1. TEST FOR INTERMITTENT CONDITION

1. Turn the ignition on.
2. With the scan tool, record and erase DTCs.
3. Wait 30 seconds.
4. Operate the Driver Window switch up and down several times.
5. With the scan tool, read the active DTCs.

Does the scan tool display B1857-15-DRIVER WINDOW POSITION SENSOR POWER SUPPLY - CIRCUIT SHORT TO BATTERY OR OPEN?

Yes

- Go To 2

No

- Test complete, the condition or conditions that originally set this DTC are not present at this time. Using the wiring diagrams as a guide, check all related splices and connectors for signs of water intrusion, corrosion, pushed out or bent terminals, and correct pin tension.
- Perform the BODY VERIFICATION TEST. (Refer to 28 - DTC-Based Diagnostics/MODULE, Totally Integrated Power (TIPM) - Standard Procedure).

2. (Q305) DRIVER WINDOW HALL SENSOR SUPPLY CIRCUIT SHORTED TO VOLTAGE

1. Turn the ignition off.
2. Disconnect the Driver Door Module C4 harness connector.
3. Disconnect the Driver Window Motor harness connector.
4. Turn the ignition on.
5. Measure the voltage between ground and the (Q305) Driver Window Hall Sensor Supply circuit in the Driver Window Motor harness connector and ground.

Is there any voltage present?

Yes

- Repair the short to voltage in the (Q305) Driver Window Hall Sensor Supply circuit.
- Perform the BODY VERIFICATION TEST. (Refer to 28 - DTC-Based Diagnostics/MODULE, Totally Integrated Power (TIPM) - Standard Procedure).

No

- Go To 3

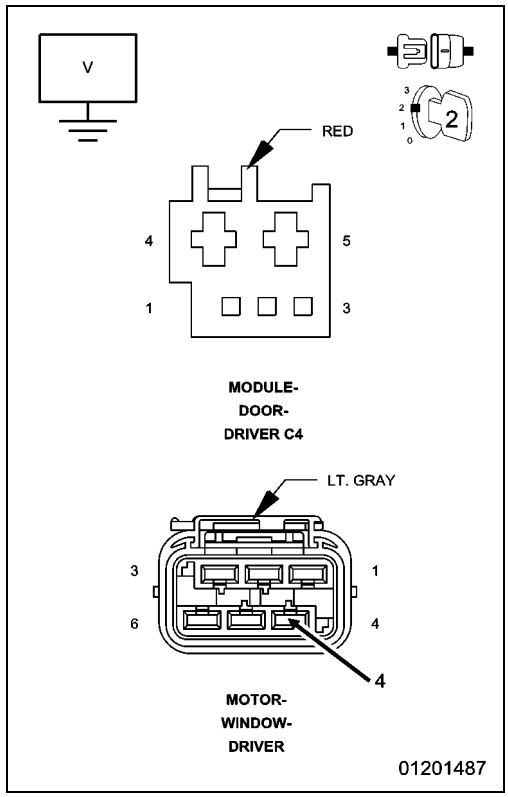

3. (Q305) DRIVER WINDOW HALL SENSOR SUPPLY CIRCUIT OPEN

1. Turn the ignition off.
2. Measure the resistance of the (Q305) Driver Window Hall Sensor Supply circuit from the Driver Door Module C4 harness connector to the Driver Window Motor harness connector.

Is the resistance above 2.0 Ohms?

Yes

- Repair the open in the (Q305) Driver Window Hall Sensor Supply circuit.
- Perform the BODY VERIFICATION TEST. (Refer to 28 - DTC-Based Diagnostics/MODULE, Totally Integrated Power (TIPM) - Standard Procedure).

No

- Go To 4

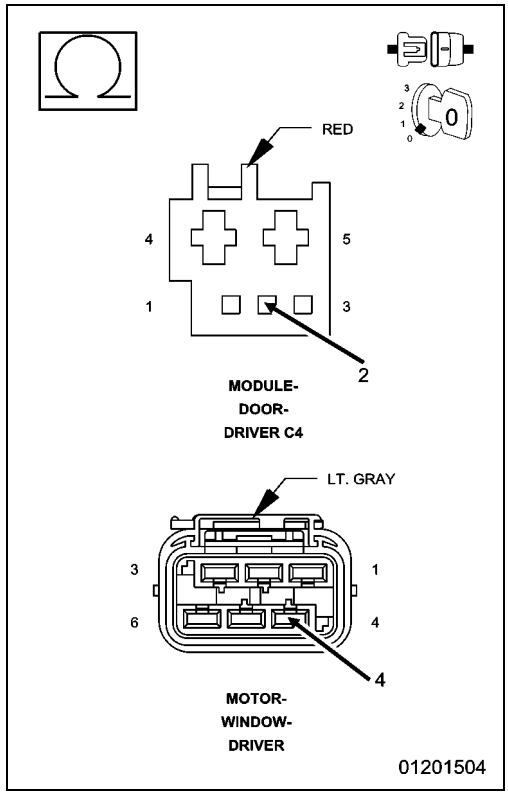

4. (Q991) DRIVER WINDOW HALL SENSOR RETURN CIRCUIT OPEN

1. Measure the resistance of the (Q991) Driver Window Hall Sensor Return circuit from the Driver Door Module C4 harness connector to the Driver Window Motor harness connector.

Is the resistance above 2.0 Ohms?

Yes

- Repair the open in the (Q991) Driver Window Hall Sensor Return circuit.
- Perform the BODY VERIFICATION TEST. (Refer to 28 - DTC-Based Diagnostics/MODULE, Totally Integrated Power (TIPM) - Standard Procedure).

No

- Go To 5

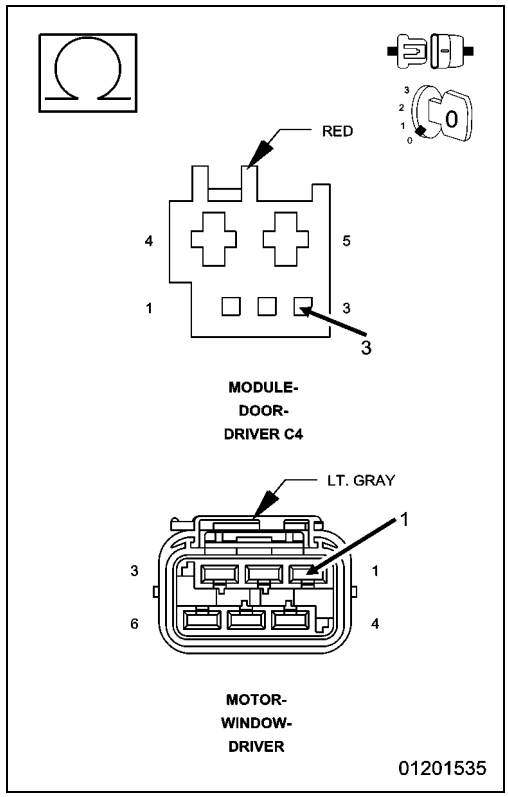

5. DRIVER WINDOW HALL SENSOR OPEN

1. Reconnect the Drive Window Motor harness connector.
2. Measure the resistance between the (Q991) Driver Window Hall Sensor Return circuit and the (Q305) Driver Window Hall Sensor Supply circuit in the Driver Door Module C4 harness connector.

NOTE: If the Ohmmeter displays "OL", reconnect the Driver Door Module C4 harness connector and move the motor to a different position. Disconnect the Driver Door Module C4 harness connector and check the resistance again. If the Ohmmeter still displays "OL", re-try moving the motor again and re-check.

Is the resistance between 500,000 and 650,000 (500k and 650k) Ohms?

Yes

- Replace the Door Module in accordance with the Service Information
- Perform the BODY VERIFICATION TEST. (Refer to 28 - DTC-Based Diagnostics/MODULE, Totally Integrated Power (TIPM) - Standard Procedure).

No

- Replace the Window Motor in accordance with the Service Information.
- Perform the BODY VERIFICATION TEST. (Refer to 28 - DTC-Based Diagnostics/MODULE, Totally Integrated Power (TIPM) - Standard Procedure).

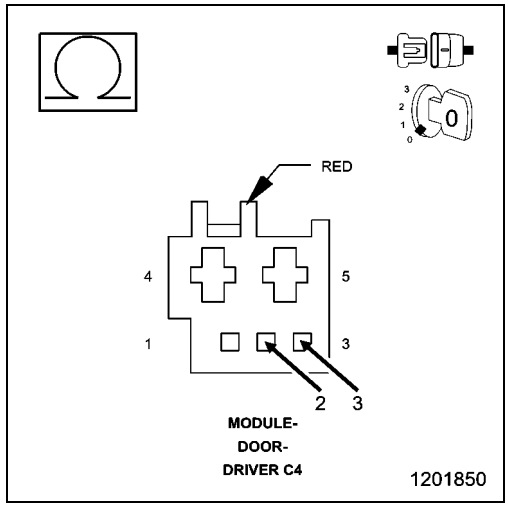

B185A-31-DRIVER WINDOW POSITION SENSOR - NO SIGNAL

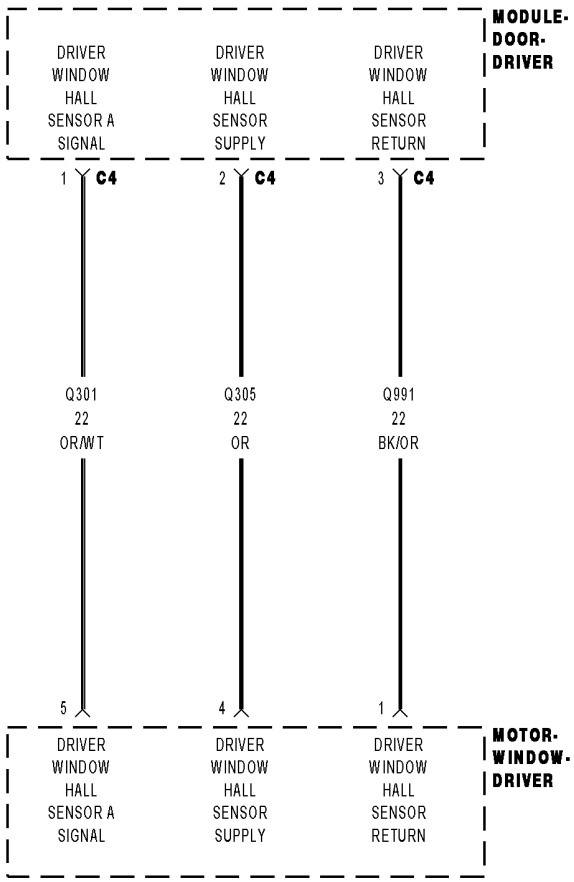

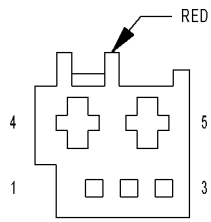

MODULE-
DOOR-
DRIVER C4

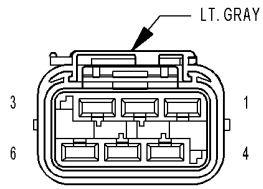

MOTOR-
WINDOW-
DRIVER

01217746

For a complete wiring diagram, **refer to the Wiring Information**.

- **When Monitored:**
  Whenever the module is awake.
- **Set Condition:**
  When one of the window motor hall sensors does not generate a signal during a window movement.

Possible Causes
(Q301) DRIVER WINDOW HALL SENSOR A SIGNAL CIRCUIT SHORTED TO GROUND
(Q991) DRIVER WINDOW HALL SENSOR RETURN CIRCUIT OPEN
(Q301) DRIVER WINDOW HALL SENSOR A SIGNAL CIRCUIT SHORTED TO THE (Q991) DRIVER WINDOW HALL SENSOR RETURN CIRCUIT
(Q301) DRIVER WINDOW HALL SENSOR A SIGNAL CIRCUIT OPEN
WINDOW MOTOR MALFUNCTION

1. TEST FOR INTERMITTENT CONDITION

1. Turn the ignition on.
2. With the scan tool, record and erase DTCs.
3. Operate the Driver Window switch up and down several times.
4. Wait 30 seconds.
5. With the scan tool, read the active DTCs.

Does the scan tool display B185A-31-DRIVER WINDOW POSITION SENSOR - NO SIGNAL?

Yes

- Go To 2

No

- Test complete, the condition or conditions that originally set this DTC are not present at this time. Using the wiring diagrams as a guide, check all related splices and connectors for signs of water intrusion, corrosion, pushed out or bent terminals, and correct pin tension.
- Perform the BODY VERIFICATION TEST. (Refer to 28 - DTC-Based Diagnostics/MODULE, Totally Integrated Power (TIPM) - Standard Procedure).

2. (Q301) DRIVER WINDOW HALL SENSOR A SIGNAL SHORTED TO GROUND

1. Turn the ignition off.
2. Disconnect the Driver Window Motor harness connector.
3. Disconnect the Driver Door Module C4 harness connector.
4. Measure the resistance between ground and the (Q301) Driver Window Hall Sensor A Signal circuit in the Driver Window Motor harness connector.

Is the resistance below 10,000 Ohms?

Yes

- Repair the short to ground in the Driver Window Hall Sensor A signal circuit.
- Perform the BODY VERIFICATION TEST. (Refer to 28 - DTC-Based Diagnostics/MODULE, Totally Integrated Power (TIPM) - Standard Procedure).

No

- Go To 3

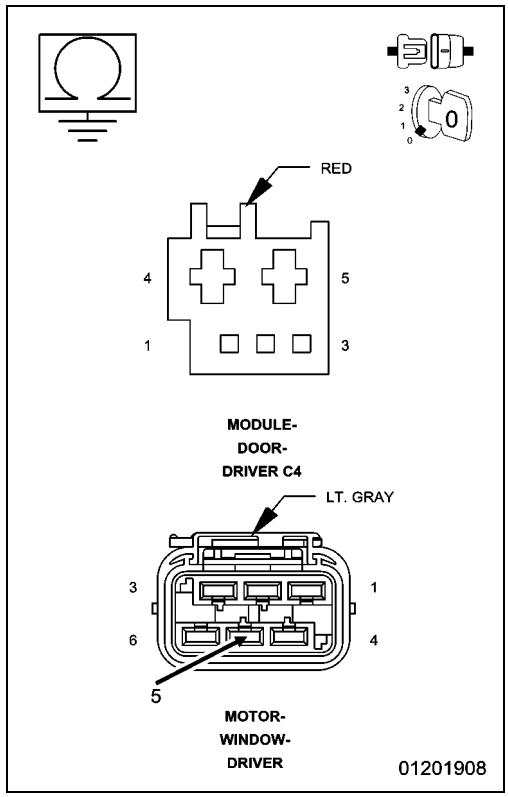

3. (Q991) DRIVER WINDOW HALL SENSOR RETURN CIRCUIT OPEN

1. Measure the resistance of the (Q991) Driver Window Hall Sensor Return circuit between the Driver Door Module C4 harness connector and the Driver Window Motor harness connector.

Is the resistance above 2.0 Ohms?

Yes

- Repair the open in the (Q991) Driver Window Hall Sensor Return circuit.
- Perform the BODY VERIFICATION TEST. (Refer to 28 - DTC-Based Diagnostics/MODULE, Totally Integrated Power (TIPM) - Standard Procedure).

No

- Go To 4

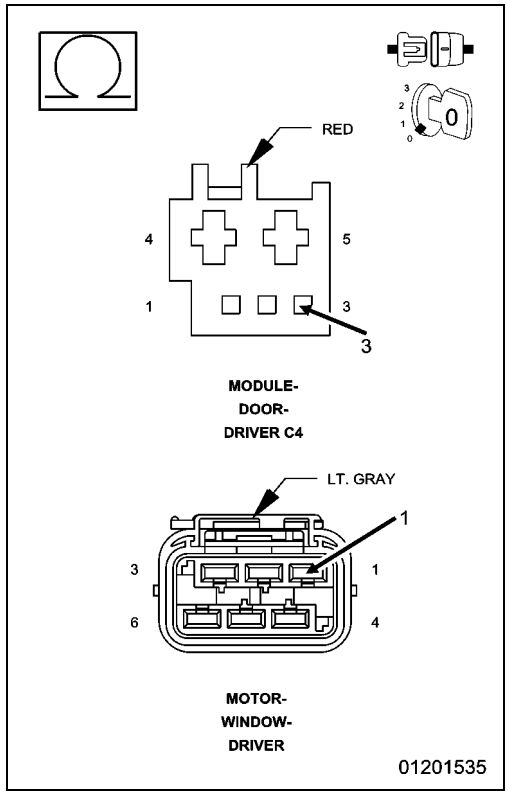

4. (Q301) DRIVER WINDOW HALL SENSOR A SIGNAL CIRCUIT OPEN

1. Measure the resistance of the (Q301) Driver Window Hall Sensor A Signal circuit between the Driver Door Module C4 harness connector and the Driver Window Motor harness connector.

Is the resistance above 2.0 Ohms?

Yes

- Repair the open in the (Q301) Driver Window Hall Sensor A Signal circuit.
- Perform the BODY VERIFICATION TEST. (Refer to 28 - DTC-Based Diagnostics/MODULE, Totally Integrated Power (TIPM) - Standard Procedure).

No

- Go To 5

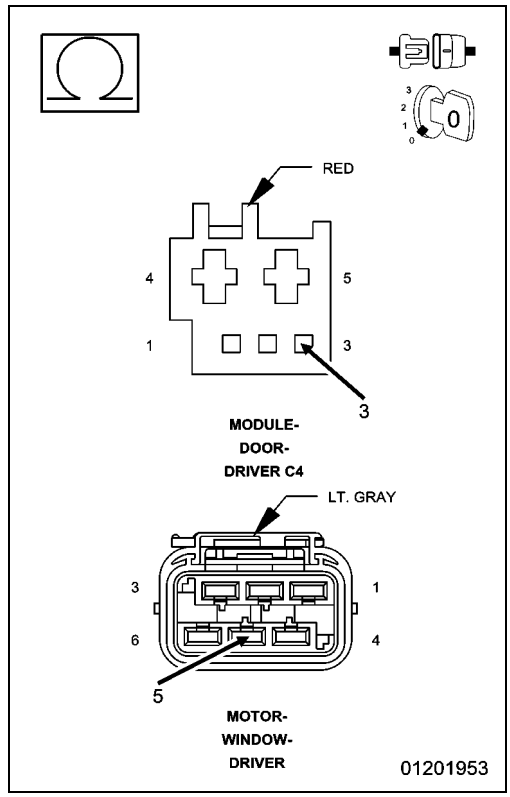

5. (Q301) DRIVER WINDOW HALL SENSOR A SIGNAL CIRCUIT SHORTED TO THE (Q991) DRIVER WINDOW HALL SENSOR RETURN CIRCUIT

1. Measure the resistance between the (Q301) Driver Window Hall Sensor A Signal circuit and the (Q991) Driver Window Hall Sensor Return circuit in the Driver Window Motor harness connector.

Is the resistance below 10,000 Ohms?

Yes

- Repair the (Q301) Driver Window Hall Sensor A Signal circuit for a short to the (Q991) Driver Window Hall Sensor Return circuit.
- Perform the BODY VERIFICATION TEST. (Refer to 28 - DTC-Based Diagnostics/MODULE, Totally Integrated Power (TIPM) - Standard Procedure).

No

- Replace the Window Motor in accordance with the Service Information.
- Perform the BODY VERIFICATION TEST. (Refer to 28 - DTC-Based Diagnostics/MODULE, Totally Integrated Power (TIPM) - Standard Procedure).

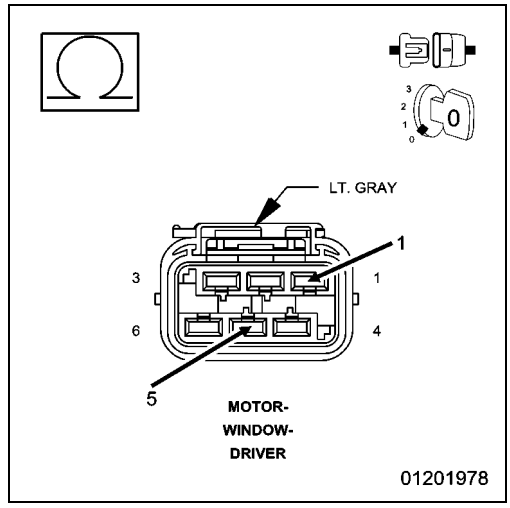

B18B5-00-MASTER SWITCH - FRONT LEFT WINDOW SWITCH

For a complete wiring diagram, **refer to the Wiring Information**.

- **When Monitored:**
  At all times.
- **Set Condition:**
  Whenever the module detects a Front Left Window signal from the master power window switch, for over 30 seconds, this code will set.

POSSIBLE CAUSES
MASTER POWER WINDOW SWITCH

1. TEST FOR INTERMITTENT CONDITION

1. Turn the ignition on.
2. With the scan tool, record and erase the DTCs.
3. Operate the Front Left Window up and down several times.
4. Wait 30 seconds.
5. With the scan tool, read the active DTCs.

Does the scan tool display B18B5-00-MASTER SWITCH–FRONT LEFT WINDOW SWITCH as active?

Yes

- Go To 2

No

- The conditions that caused this code to set are not present at this time. Operate the switch several more times. If the switch ever sticks, replace it.
- Perform the BODY VERIFICATION TEST. (Refer to 28 - DTC-Based Diagnostics/MODULE, Totally Integrated Power (TIPM) - Standard Procedure).

2. MASTER POWER WINDOW/DOOR LOCK SWITCH

NOTE: Anytime this code is active, the switch must be replaced.

Repair

- Replace the Driver Window/Door Lock Switch in accordance with the Service Information.
- Perform the BODY VERIFICATION TEST. (Refer to 28 - DTC-Based Diagnostics/MODULE, Totally Integrated Power (TIPM) - Standard Procedure).

B1D04-2A-MIRROR ADJUST SWITCH INPUT - SIGNAL STUCK IN RANGE

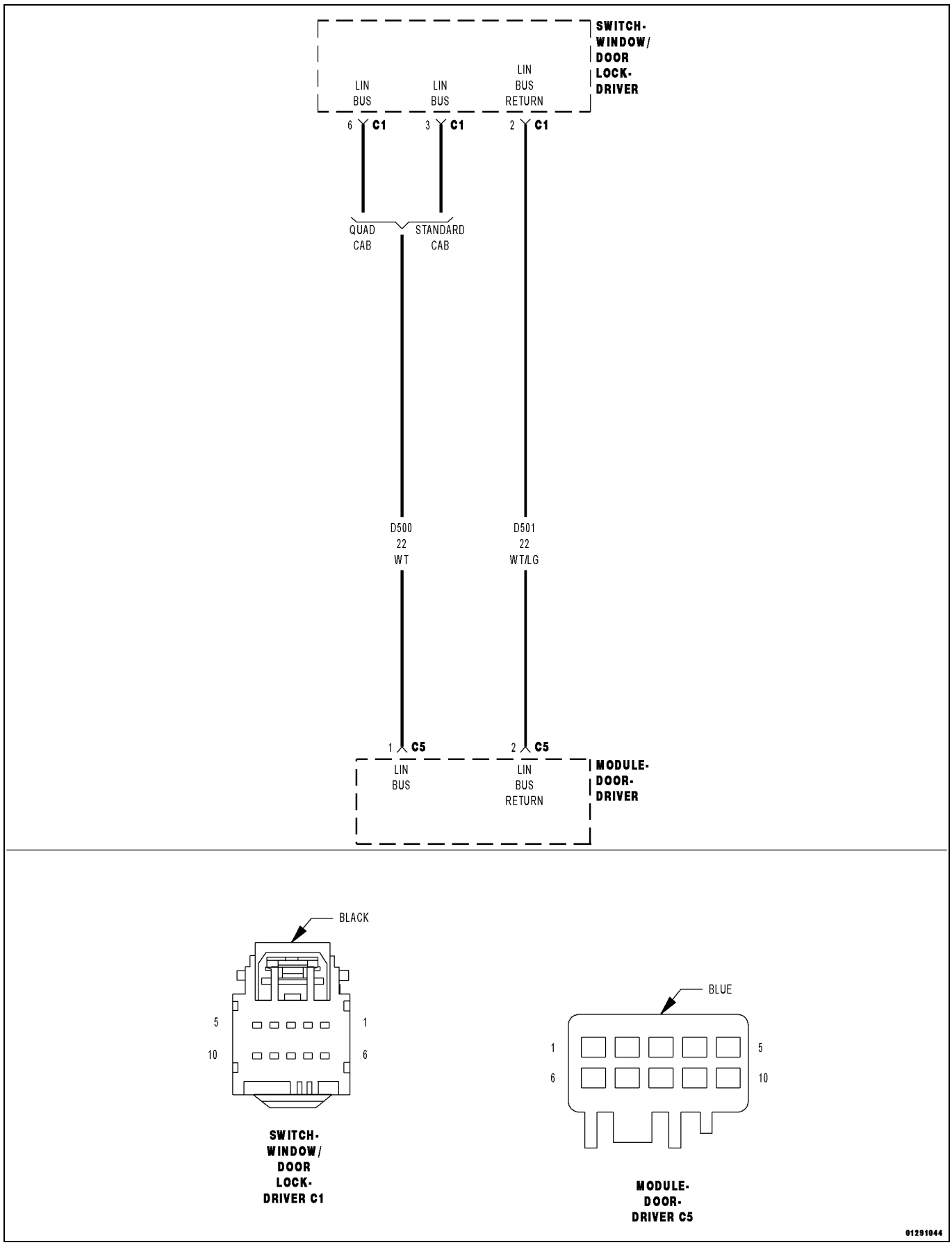

For a complete wiring diagram, **refer to the Wiring Information**.

- **When Monitored:**
  Continuously.
- **Set Condition:**
  The Door Module senses the Mirror Adjust switch input for more than 30 seconds.

Possible Causes
OBJECT HOLDING MIRROR ADJUST SWITCH IN A PUSHED POSITION
SUBSTANCE CAUSING MIRROR ADJUST SWITCH TO GET STUCK IN A PUSHED POSITION
DRIVER DOOR SWITCH ASSEMBLY

1. INSPECT DRIVER DOOR SWITCH ASSEMBLY FOR DAMAGE

NOTE: Diagnose and repair all LIN Bus related Diagnostic Trouble Codes (DTCs) before performing this test procedure.

1. Turn the ignition off.
2. Inspect the Driver Door switch assembly for damage.

Is the switch assembly damaged?

Yes

- Replace the Driver Door switch assembly in accordance with the Service Information.
- Perform the BODY VERIFICATION TEST. (Refer to 28 - DTC-Based Diagnostics/MODULE, Totally Integrated Power (TIPM) - Standard Procedure).

No

- Go To 2

2. INSPECT FOR OBJECT OR SUBSTANCE CAUSING MIRROR ADJUST SWITCH TO STAY OR STICK IN A PUSHED POSITION

1. Inspect the Mirror Adjust switch for anything that would cause it to stay or stick in a pushed position.

Is anything present that would cause the Mirror Adjust switch to stay or stick in a pushed position?

Yes

- Repair as necessary.
- Perform the BODY VERIFICATION TEST. (Refer to 28 - DTC-Based Diagnostics/MODULE, Totally Integrated Power (TIPM) - Standard Procedure).

No

- Go To 3

3. TEST FOR INTERMITTENT CONDITION

1. Turn the ignition on.
2. Using a scan tool, record and erase DTCs.
3. Press and release either Mirror Select switch.
4. Operate the Mirror Adjust switch in all positions several times and then wait 30 seconds.
5. Using a scan tool, read DTCs.

Is the same DTC active?

Yes

- Replace the Driver Door switch assembly in accordance with the Service Information.
- Perform the BODY VERIFICATION TEST. (Refer to 28 - DTC-Based Diagnostics/MODULE, Totally Integrated Power (TIPM) - Standard Procedure).

No

- The conditions that caused this code to set are not present at this time.
- Perform the BODY VERIFICATION TEST. (Refer to 28 - DTC-Based Diagnostics/MODULE, Totally Integrated Power (TIPM) - Standard Procedure).

■ B1D08-11-DRIVER MIRROR POSITION SENSOR POWER SUPPLY - CIRCUIT SHORT TO GROUND

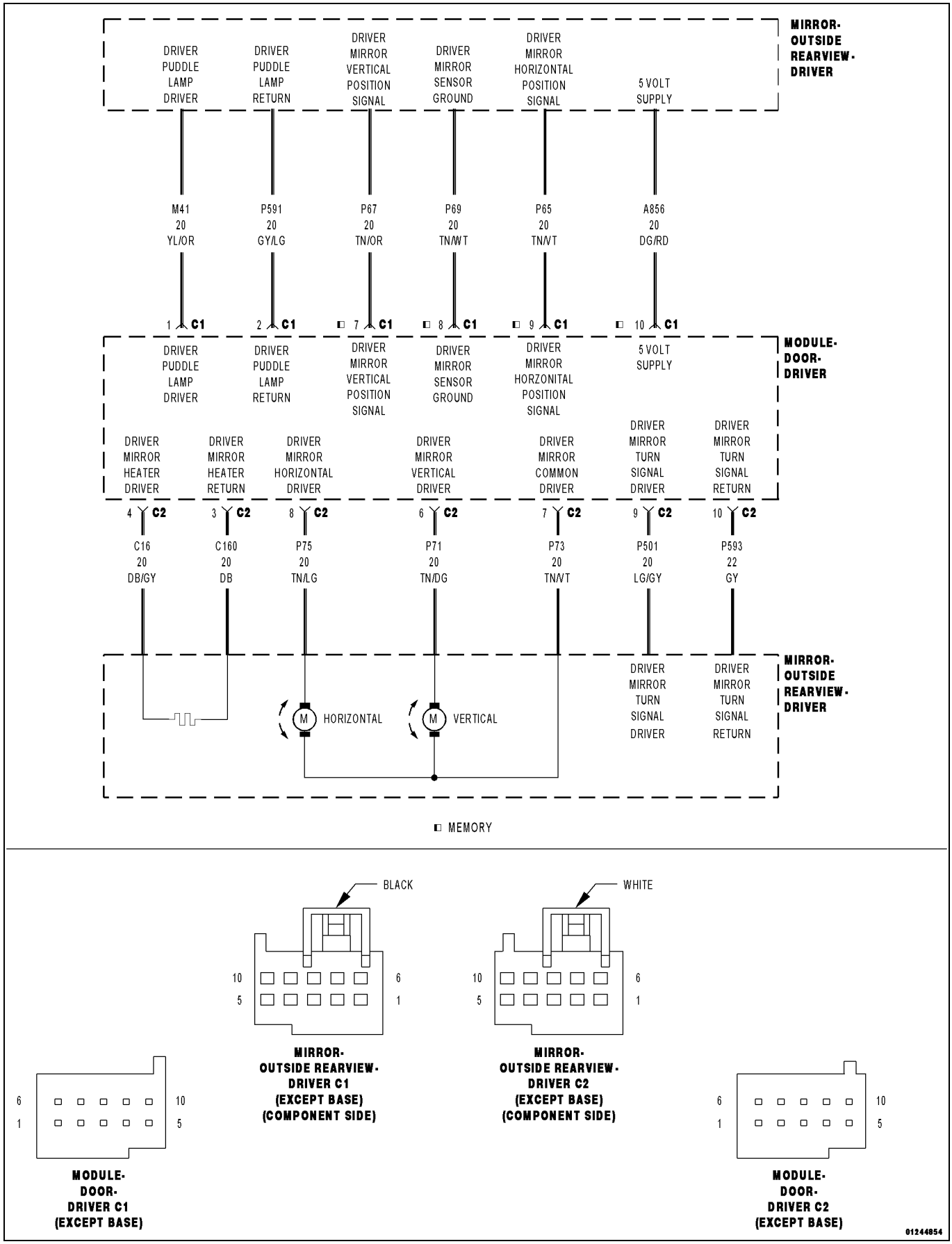

For a complete wiring diagram, **refer to the Wiring Information**.

- **When Monitored:**
  Continuously.
- **Set Condition:**
  The Door Module senses a short low on the (A856) 5-Volt Supply circuit for more than two seconds with the output turned on.

Possible Causes
(A856) 5-VOLT SUPPLY CIRCUIT SHORTED TO GROUND
(A856) 5-VOLT SUPPLY CIRCUIT SHORTED TO THE (P69) DRIVER MIRROR SENSOR GROUND CIRCUIT
(A856) 5-VOLT SUPPLY CIRCUIT SHORTED TO THE (P591) DRIVER PUDDLE LAMP RETURN CIRCUIT
(A856) 5-VOLT SUPPLY CIRCUIT SHORTED TO THE (P71) DRIVER MIRROR VERTICAL DRIVER CIRCUIT
(A856) 5-VOLT SUPPLY CIRCUIT SHORTED TO THE (P73) DRIVER MIRROR COMMON DRIVER CIRCUIT
(A856) 5-VOLT SUPPLY CIRCUIT SHORTED TO THE (P75) DRIVER MIRROR HORIZONTAL DRIVER CIRCUIT
(A856) 5-VOLT SUPPLY CIRCUIT SHORTED TO THE (C160) DRIVER MIRROR HEATER RETURN CIRCUIT
(A856) 5-VOLT SUPPLY CIRCUIT SHORTED TO THE (P593) DRIVER MIRROR TURN SIGNAL RETURN CIRCUIT
DRIVER OUTSIDE REARVIEW MIRROR SHORTED
DOOR MODULE

1. TEST FOR INTERMITTENT CONDITION

1. Turn the ignition on.
2. Using a scan tool, record and erase Diagnostic Trouble Codes (DTCs).
3. Turn the turn signal on, if equipped with turn signal mirror.
4. Turn the puddle lamps on, if equipped with puddle lamp mirror.
5. Turn the rear defogger on, if equipped with heated mirror.
6. Press and release the Mirror Select switch to select the Driver Outside Rearview Mirror.
7. Operate the Mirror Adjust switch in all directions several times while monitoring the scan tool for DTCs.

NOTE: After adjusting the mirror in one direction wait at least two seconds before adjusting the mirror in the opposite direction, as this will allow time for an active fault to set if present.

Is the DTC active?

Yes

- Go To 2

No

- The conditions that caused this code to set are not present at this time. For vehicle's equipped with folding outside rearview mirrors, repeat test with mirror folded. If DTC is now active, Go To 2. Otherwise, use the wiring diagram/ schematic as a guide and inspect the wiring and connectors.
- Perform the BODY VERIFICATION TEST. (Refer to 28 - DTC-Based Diagnostics/MODULE, Totally Integrated Power (TIPM) - Standard Procedure).

2. CHECK (A856) 5-VOLT SUPPLY CIRCUIT FOR A SHORT TO GROUND

1. Turn the ignition off.
2. Disconnect the Driver Outside Rearview Mirror C1 (Component Side) connector from the Door Module C1 connector.
3. Measure the resistance of the (A856) 5-Volt Supply circuit between ground and the Driver Outside Rearview Mirror C1 (Component Side) connector.

Is the resistance below 10K Ohms?

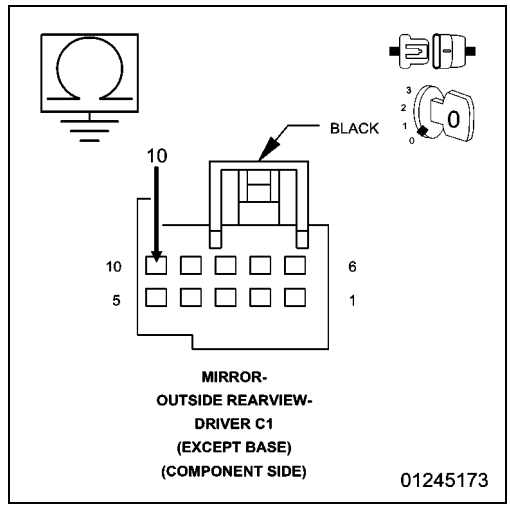

Yes

- Repair the (A856) 5-Volt Supply circuit for a short to ground. If the wiring harness and connector are okay, replace the Driver Outside Rearview Mirror in accordance with the Service Information
- Perform the BODY VERIFICATION TEST. (Refer to 28 - DTC-Based Diagnostics/MODULE, Totally Integrated Power (TIPM) - Standard Procedure).

No

- Go To 3

3. CHECK (A856) 5-VOLT SUPPLY CIRCUIT FOR A SHORT TO (P69) DRIVER MIRROR SENSOR GROUND CIRCUIT

1. Measure the residence between the (A856) 5-Volt Supply circuit and the (P69) Driver Mirror Sensor Ground circuit at the Driver Outside Rearview Mirror C1 (Component Side) connector.

Is the resistance below 1.0 Ohm?

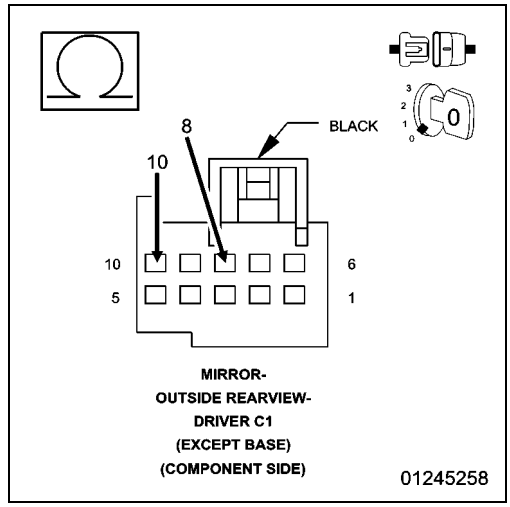

Yes

- Repair the (A856) 5-Volt Supply circuit for a short to the (P69) Driver Mirror Sensor Ground circuit. If the wiring harness and connector are okay, replace the Driver Outside Rearview Mirror in accordance with the Service Information.
- Perform the BODY VERIFICATION TEST. (Refer to 28 - DTC-Based Diagnostics/MODULE, Totally Integrated Power (TIPM) - Standard Procedure).

No, with Puddle Lamp Mirror

- Go To 4

No, without Puddle Lamp Mirror

- Go To 5

4. CHECK (A856) 5-VOLT SUPPLY CIRCUIT FOR A SHORT TO (P591) DRIVER PUDDLE LAMP RETURN CIRCUIT

1. Measure the residence between the (A856) 5-Volt Supply circuit and the (P591) Driver Puddle Lamp Return circuit at the Driver Outside Rearview Mirror C1 (Component Side) connector.

Is the resistance below 10K Ohms?

Yes

- Repair the (A856) 5-Volt Supply circuit for a short to the (P591) Driver Puddle Lamp Return circuit. If the wiring harness and connector are okay, replace the Driver Outside Rearview Mirror in accordance with the Service Information.
- Perform the BODY VERIFICATION TEST. (Refer to 28 - DTC-Based Diagnostics/MODULE, Totally Integrated Power (TIPM) - Standard Procedure).

No

- Go To 5

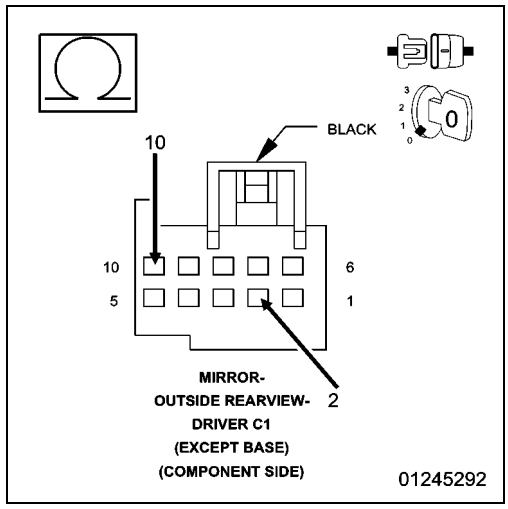

5. CHECK (A856) 5-VOLT SUPPLY CIRCUIT FOR A SHORT TO (P71) DRIVER MIRROR VERTICAL DRIVER CIRCUIT, (P73) DRIVER MIRROR COMMON DRIVER CIRCUIT, OR TO (P75) DRIVER MIRROR HORIZONTAL DRIVER CIRCUIT

1. Disconnect the Driver Outside Rearview Mirror C2 (Component Side) connector from the Door Module C2 connector.
2. Measure the resistance between the (A856) 5-Volt Supply circuit and the (P71) Driver Mirror Vertical Driver circuit at the Driver Outside Rearview Mirror C1 and C2 (Component Side) connectors.
3. Measure the resistance between the (A856) 5-Volt Supply circuit and the (P73) Driver Mirror Common Driver circuit at the Driver Outside Rearview Mirror C1 and C2 (Component Side) connectors.
4. Measure the resistance between the (A856) 5-Volt Supply circuit and the (P75) Driver Mirror Horizontal Driver circuit at the Driver Outside Rearview Mirror C1 and C2 (Component Side) connectors.

Is the resistance below 10K Ohms for any measurement?

Yes

- Repair all circuits with a resistance below 10K Ohms for a short to the (A856) 5-Volt Supply circuit. If the wiring harness and connector are okay, replace the Driver Outside Rearview Mirror in accordance with the Service Information.
- Perform the BODY VERIFICATION TEST. (Refer to 28 - DTC-Based Diagnostics/MODULE, Totally Integrated Power (TIPM) - Standard Procedure).

No, with Heated/Turn Signal Mirror

- Go To 6

No, without Heated/Turn Signal Mirror

- Inspect the wiring and connectors for damage and repair as necessary. If the wiring and connectors are okay, replace the Door Module in accordance with the Service Information.
- Perform the BODY VERIFICATION TEST. (Refer to 28 - DTC-Based Diagnostics/MODULE, Totally Integrated Power (TIPM) - Standard Procedure).

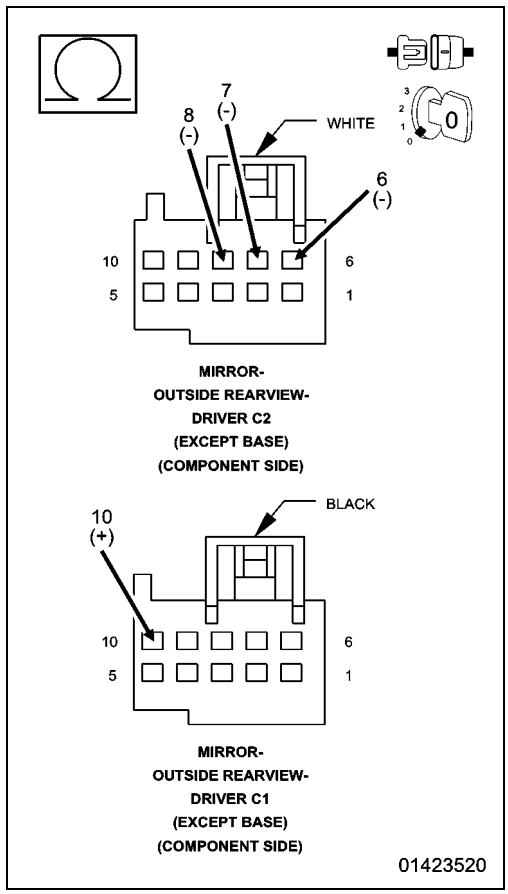

6. CHECK (A856) 5-VOLT SUPPLY CIRCUIT FOR A SHORT TO (C160) DRIVER MIRROR HEATER RETURN CIRCUIT OR TO (P593) DRIVER MIRROR TURN SIGNAL RETURN CIRCUIT

1. For Heated Mirror, measure the resistance between the (A856) 5-Volt Supply circuit and the (C160) Driver Mirror Heater Return circuit at the Driver Outside Rearview Mirror C1 and C2 (Component Side) connectors.
2. For Turn Signal Mirror, measure the resistance between the (A856) 5-Volt Supply circuit and the (P593) Driver Mirror Turn Signal Return circuit at the Driver Outside Rearview Mirror C1 and C2 (Component Side) connectors.

Is the resistance below 10K Ohms for either measurement?

Yes

- Repair all circuits with a resistance below 10K Ohms for a short to the (A856) 5-Volt Supply circuit. If the wiring harness and connector are okay, replace the Driver Outside Rearview Mirror in accordance with the Service Information.
- Perform the BODY VERIFICATION TEST. (Refer to 28 - DTC-Based Diagnostics/MODULE, Totally Integrated Power (TIPM) - Standard Procedure).

No

- Inspect the wiring and connectors for damage and repair as necessary. If the wiring and connectors are okay, replace the Door Module in accordance with the Service Information.
- Perform the BODY VERIFICATION TEST. (Refer to 28 - DTC-Based Diagnostics/MODULE, Totally Integrated Power (TIPM) - Standard Procedure).

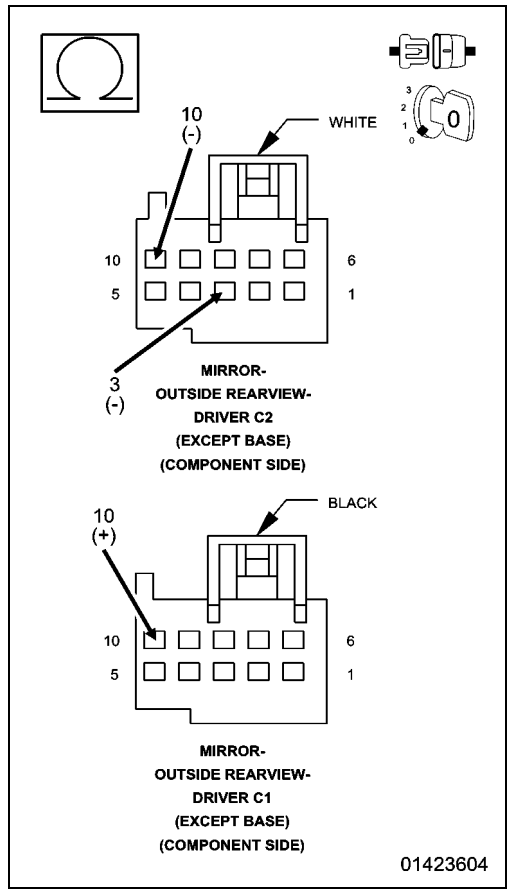

■ B1D0B-11-DRIVER MIRROR VERTICAL POSITION SENSOR INPUT - CIRCUIT SHORT TO GROUND

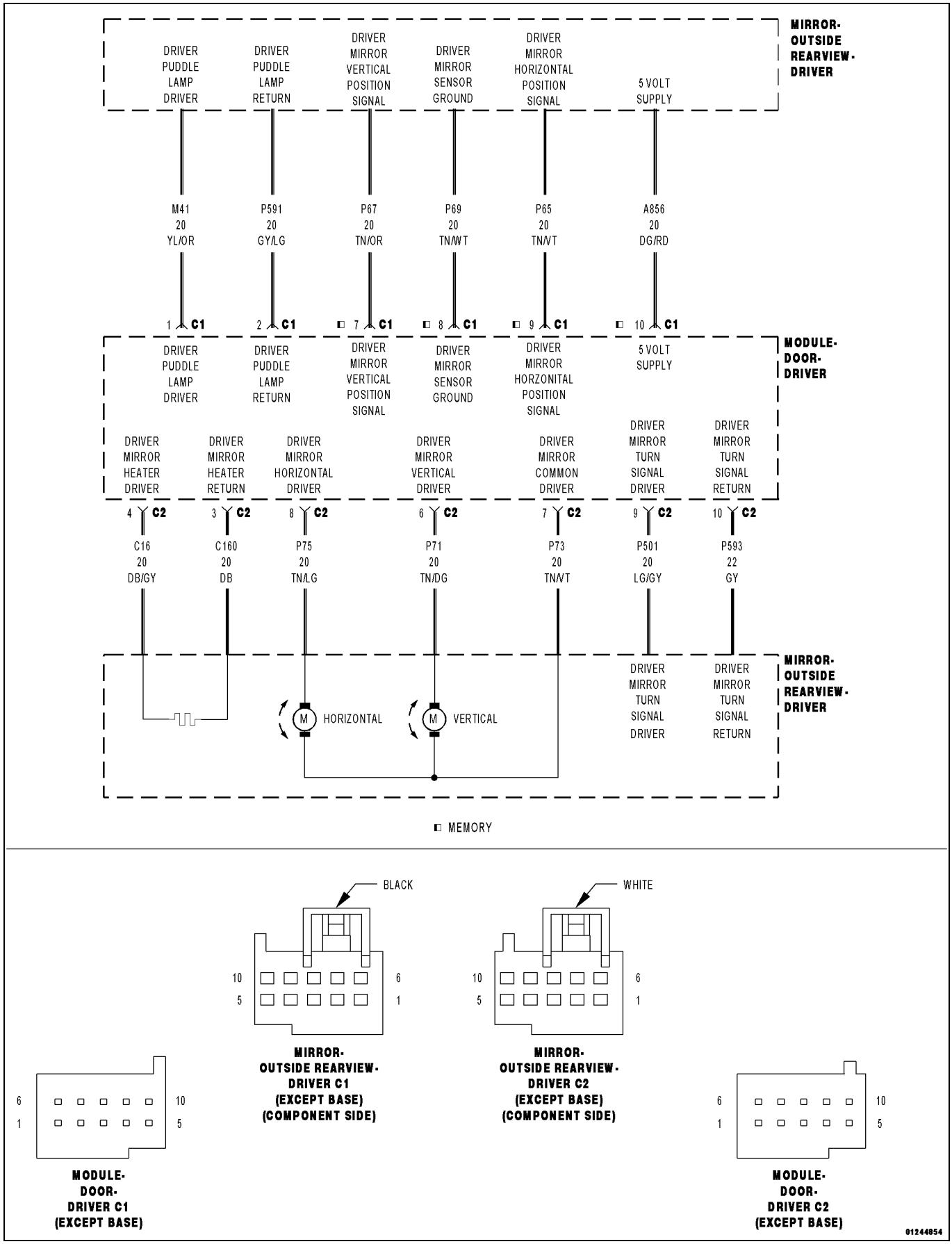

For a complete wiring diagram, **refer to the Wiring Information**.

- **When Monitored:**
  Continuously.
- **Set Condition:**
  The Door Module senses a short low on the (P67) Driver Mirror Vertical Position Signal circuit for more than two seconds.

Possible Causes
(P67) DRIVER MIRROR VERTICAL POSITION SIGNAL CIRCUIT SHORTED TO GROUND
(P67) DRIVER MIRROR VERTICAL POSITION SIGNAL CIRCUIT SHORTED TO THE (P69) DRIVER MIRROR SENSOR GROUND CIRCUIT
(P67) DRIVER MIRROR VERTICAL POSITION SIGNAL CIRCUIT SHORTED TO THE (P591) DRIVER PUDDLE LAMP RETURN CIRCUIT
(P67) DRIVER MIRROR VERTICAL POSITION SIGNAL CIRCUIT SHORTED TO THE (P71) DRIVER MIRROR VERTICAL DRIVER CIRCUIT
(P67) DRIVER MIRROR VERTICAL POSITION SIGNAL CIRCUIT SHORTED TO THE (P73) DRIVER MIRROR COMMON DRIVER CIRCUIT
(P67) DRIVER MIRROR VERTICAL POSITION SIGNAL CIRCUIT SHORTED TO THE (P75) DRIVER MIRROR HORIZONTAL DRIVER CIRCUIT
(P67) DRIVER MIRROR VERTICAL POSITION SIGNAL CIRCUIT SHORTED TO THE (C160) DRIVER MIRROR HEATER RETURN CIRCUIT
(P67) DRIVER MIRROR VERTICAL POSITION SIGNAL CIRCUIT SHORTED TO THE (P593) DRIVER MIRROR TURN SIGNAL RETURN CIRCUIT
DRIVER OUTSIDE REARVIEW MIRROR SHORTED
DOOR MODULE

1. TEST FOR INTERMITTENT CONDITION

1. Turn the ignition on.
2. Using a scan tool, record and erase Diagnostic Trouble Codes (DTCs).
3. Turn the turn signal on, if equipped with turn signal mirror.
4. Turn the puddle lamps on, if equipped with puddle lamp mirror.
5. Turn the rear defogger on, if equipped with heated mirror.
6. Press and release the Mirror Select switch to select the Driver Outside Rearview Mirror.
7. Operate the Mirror Adjust switch in all directions several times while monitoring the scan tool for DTCs.

NOTE: After adjusting the mirror in one direction wait at least two seconds before adjusting the mirror in the opposite direction, as this will allow time for an active fault to set if present.

Is the DTC active?

Yes

- Go To 2

No

- The conditions that caused this code to set are not present at this time. For vehicle's equipped with folding outside rearview mirrors, repeat test with mirror folded. If DTC is now active, Go To 2. Otherwise, use the wiring diagram/ schematic as a guide and inspect the wiring and connectors.
- Perform the BODY VERIFICATION TEST. (Refer to 28 - DTC-Based Diagnostics/MODULE, Totally Integrated Power (TIPM) - Standard Procedure).

2. CHECK (P67) DRIVER MIRROR VERTICAL POSITION SIGNAL CIRCUIT FOR A SHORT TO GROUND

1. Turn the ignition off.
2. Disconnect the Driver Outside Rearview Mirror C1 (Component Side) connector from the Door Module C1 connector.
3. Measure the resistance of the (P67) Driver Mirror Vertical Position Signal circuit between ground and the Driver Outside Rearview Mirror C1 (Component Side) connector.

Is the resistance below 10K Ohms?

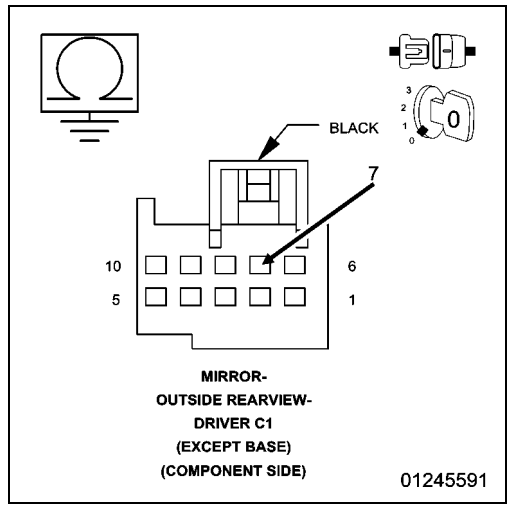

Yes

- Repair the (P67) Driver Mirror Vertical Position Signal circuit for a short to ground. If the wiring harness and connector are okay, replace the Driver Outside Rearview Mirror in accordance with the Service Information.
- Perform the BODY VERIFICATION TEST. (Refer to 28 - DTC-Based Diagnostics/MODULE, Totally Integrated Power (TIPM) - Standard Procedure).

No

- Go To 3

3. CHECK (P67) DRIVER MIRROR VERTICAL POSITION SIGNAL CIRCUIT FOR A SHORT TO (P69) DRIVER MIRROR SENSOR GROUND CIRCUIT

1. Measure the residence between the (P67) Driver Mirror Vertical Position Signal circuit and the (P69) Driver Mirror Sensor Ground circuit at the Driver Outside Rearview Mirror C1 (Component Side) connector.

Is the resistance below 1.0 Ohm?

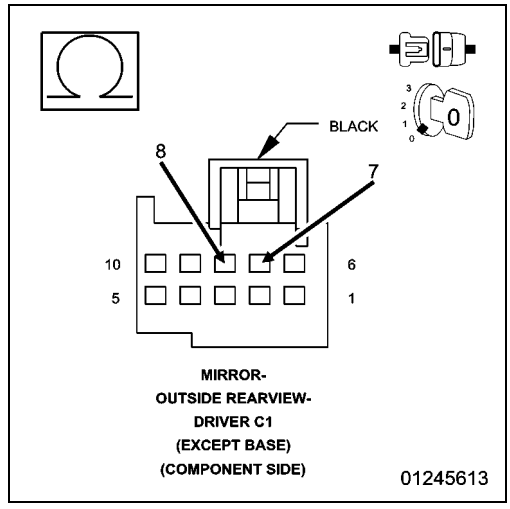

Yes

- Repair the (P67) Driver Mirror Vertical Position Signal circuit for a short to the (P69) Driver Mirror Sensor Ground circuit. If the wiring harness and connector are okay, replace the Driver Outside Rearview Mirror in accordance with the Service Information.
- Perform the BODY VERIFICATION TEST. (Refer to 28 - DTC-Based Diagnostics/MODULE, Totally Integrated Power (TIPM) - Standard Procedure).

No, with Puddle Lamp Mirror

- Go To 4

No, without Puddle Lamp Mirror

- Go To 5

4. CHECK (P67) DRIVER MIRROR VERTICAL POSITION SIGNAL CIRCUIT FOR A SHORT TO (P591) DRIVER PUDDLE LAMP RETURN CIRCUIT

1. Measure the residence between the (P67) Driver Mirror Vertical Position Signal circuit and the (P591) Driver Puddle Lamp Return circuit at the Driver Outside Rearview Mirror C1 (Component Side) connector.

Is the resistance below 10K Ohms?

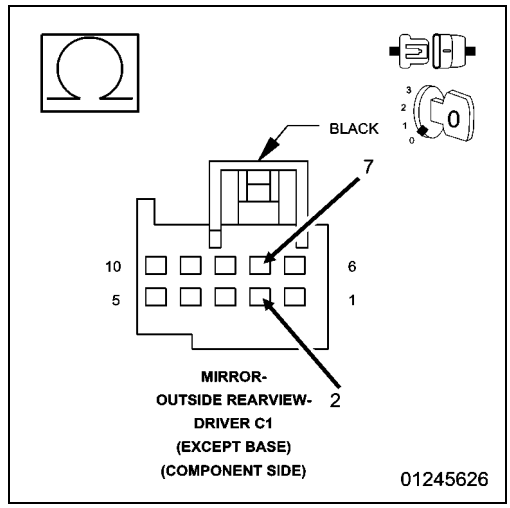

Yes

- Repair the (P67) Driver Mirror Vertical Position Signal circuit for a short to the (P591) Driver Puddle Lamp Return circuit. If the wiring harness and connector are okay, replace the Driver Outside Rearview Mirror in accordance with the Service Information.
- Perform the BODY VERIFICATION TEST. (Refer to 28 - DTC-Based Diagnostics/MODULE, Totally Integrated Power (TIPM) - Standard Procedure).

No

- Go To 5

5. CHECK (P67) DRIVER MIRROR VERTICAL POSITION SIGNAL CIRCUIT FOR A SHORT TO (P71) DRIVER MIRROR VERTICAL DRIVER CIRCUIT, (P73) DRIVER MIRROR COMMON DRIVER CIRCUIT, OR TO (P75) DRIVER MIRROR HORIZONTAL DRIVER CIRCUIT

1. Disconnect the Driver Outside Rearview Mirror C2 (Component Side) connector from the Door Module C2 connector.
2. Measure the resistance between the (P67) Driver Mirror Vertical Position Signal circuit and the (P71) Driver Mirror Vertical Driver circuit at the Driver Outside Rearview Mirror C1 and C2 (Component Side) connectors.
3. Measure the resistance between the (P67) Driver Mirror Vertical Position Signal circuit and the (P73) Driver Mirror Common Driver circuit at the Driver Outside Rearview Mirror C1 and C2 (Component Side) connectors.
4. Measure the resistance between the (P67) Driver Mirror Vertical Position Signal circuit and the (P75) Driver Mirror Horizontal Driver circuit at the Driver Outside Rearview Mirror C1 and C2 (Component Side) connectors.

Is the resistance below 10K Ohms for any measurement?

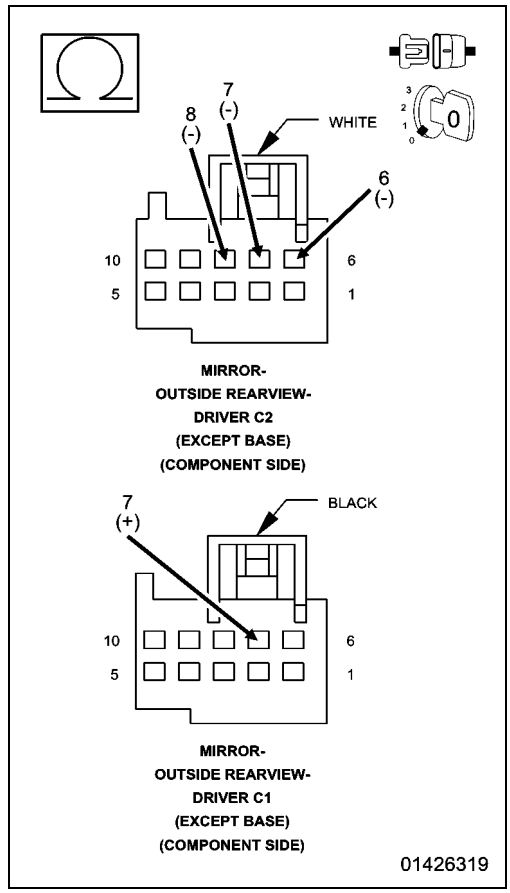

Yes

- Repair all circuits with a resistance below 10K Ohms for a short to the (P67) Driver Mirror Vertical Position Signal circuit. If the wiring harness and connector are okay, replace the Driver Outside Rearview Mirror in accordance with the Service Information.
- Perform the BODY VERIFICATION TEST. (Refer to 28 - DTC-Based Diagnostics/MODULE, Totally Integrated Power (TIPM) - Standard Procedure).

No, with Heated/Turn Signal Mirror

- Go To 6

No, without Heated/Turn Signal Mirror

- Inspect the wiring and connectors for damage and repair as necessary. If the wiring and connectors are okay, replace the Door Module in accordance with the Service Information.
- Perform the BODY VERIFICATION TEST. (Refer to 28 - DTC-Based Diagnostics/MODULE, Totally Integrated Power (TIPM) - Standard Procedure).

6. CHECK (P67) DRIVER MIRROR VERTICAL POSITION SIGNAL CIRCUIT FOR A SHORT TO (C160) DRIVER MIRROR HEATER RETURN CIRCUIT OR TO (P593) DRIVER MIRROR TURN SIGNAL RETURN CIRCUIT

1. For Heated Mirror, measure the resistance between the (P67) Driver Mirror Vertical Position Signal circuit and the (C160) Driver Mirror Heater Return circuit at the Driver Outside Rearview Mirror C1 and C2 (Component Side) connectors.
2. For Turn Signal Mirror, measure the resistance between the (P67) Driver Mirror Vertical Position Signal circuit and the (P593) Driver Mirror Turn Signal Return circuit at the Driver Outside Rearview Mirror C1 and C2 (Component Side) connectors.

Is the resistance below 10K Ohms for either measurement?

Yes

- Repair all circuits with a resistance below 10K Ohms for a short to the (P67) Driver Mirror Vertical Position Signal circuit. If the wiring harness and connector are okay, replace the Driver Outside Rearview Mirror in accordance with the Service Information.
- Perform the BODY VERIFICATION TEST. (Refer to 28 - DTC-Based Diagnostics/MODULE, Totally Integrated Power (TIPM) - Standard Procedure).

No

- Inspect the wiring and connectors for damage and repair as necessary. If the wiring and connectors are okay, replace the Door Module in accordance with the Service Information.
- Perform the BODY VERIFICATION TEST. (Refer to 28 - DTC-Based Diagnostics/MODULE, Totally Integrated Power (TIPM) - Standard Procedure).

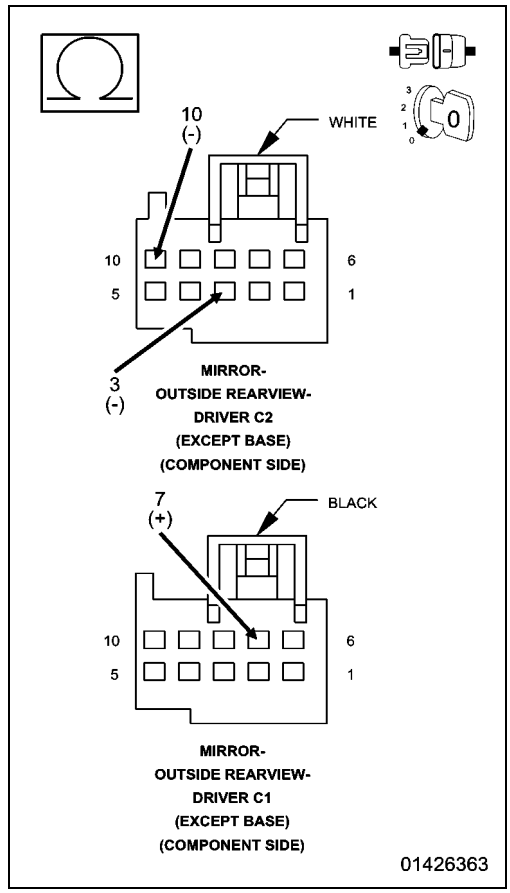

■ B1D0B-12-DRIVER MIRROR VERTICAL POSITION SENSOR INPUT - CIRCUIT SHORT TO BATTERY

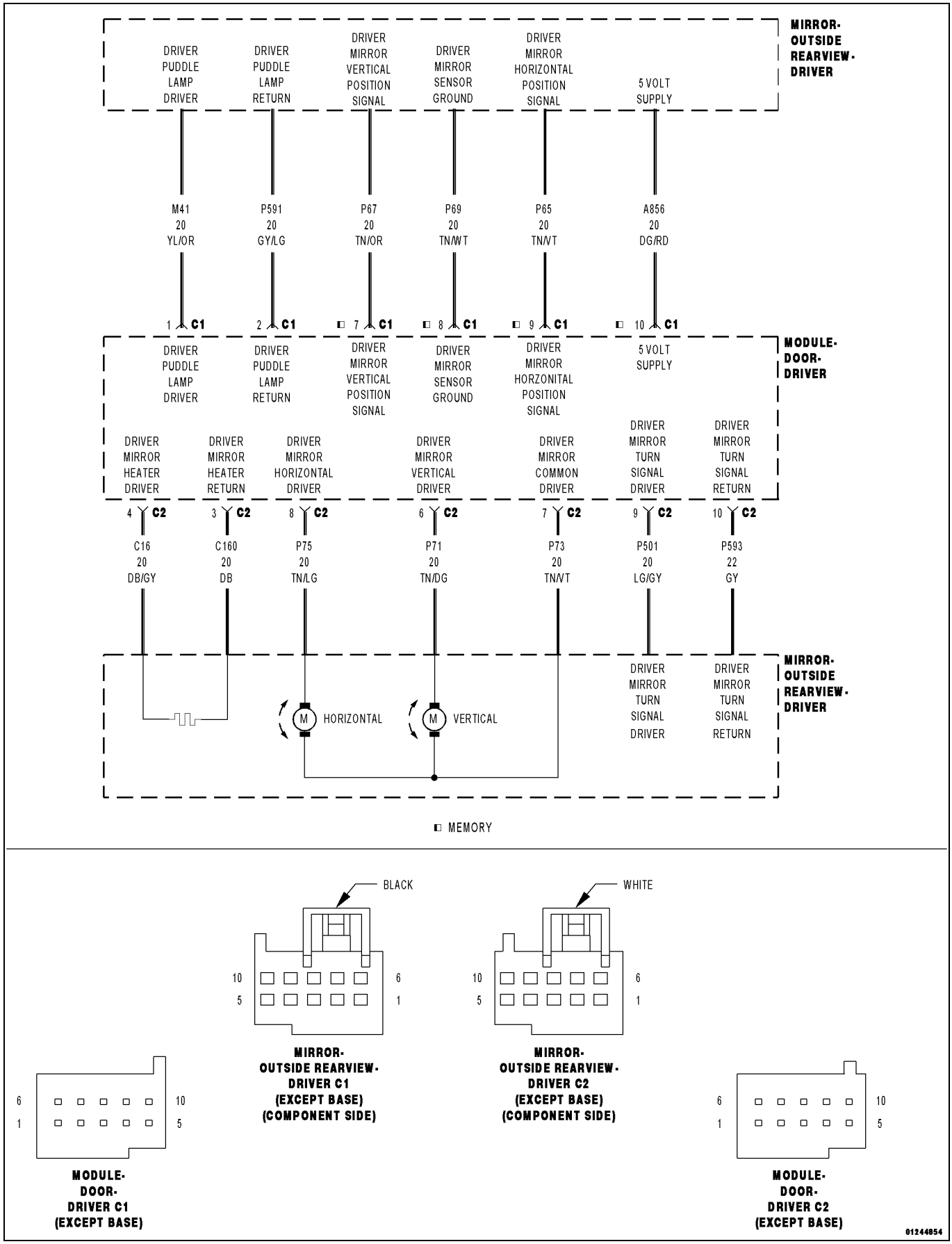

For a complete wiring diagram, **refer to the Wiring Information**.

- **When Monitored:**
  Continuously.
- **Set Condition:**
  The Door Module senses more than 400 mA current on the (A856) 5-volt Supply circuit or an open or a short high on the (P67) Driver Mirror Vertical Position Signal circuit for more than two seconds.

Possible Causes
(P67) DRIVER MIRROR VERTICAL POSITION SIGNAL CIRCUIT SHORTED TO VOLTAGE
(P67) DRIVER MIRROR VERTICAL POSITION SIGNAL CIRCUIT SHORTED TO (M41) DRIVER PUDDLE LAMP DRIVER CIRCUIT
(P67) DRIVER MIRROR VERTICAL POSITION SIGNAL CIRCUIT OPEN
(P69) DRIVER MIRROR SENSOR GROUND CIRCUIT OPEN
(P67) DRIVER MIRROR VERTICAL POSITION SIGNAL CIRCUIT SHORTED TO (P71) DRIVER MIRROR VERTICAL DRIVER CIRCUIT
(P67) DRIVER MIRROR VERTICAL POSITION SIGNAL CIRCUIT SHORTED TO (P73) DRIVER MIRROR COMMON DRIVER CIRCUIT
(P67) DRIVER MIRROR VERTICAL POSITION SIGNAL CIRCUIT SHORTED TO (P75) DRIVER MIRROR HORIZONTAL DRIVER CIRCUIT
(P67) DRIVER MIRROR VERTICAL POSITION SIGNAL CIRCUIT SHORTED TO (C16) DRIVER MIRROR HEATER DRIVER CIRCUIT
(P67) DRIVER MIRROR VERTICAL POSITION SIGNAL CIRCUIT SHORTED TO (P501) DRIVER MIRROR TURN SIGNAL DRIVER CIRCUIT
(A856) 5-VOLT SUPPLY CIRCUIT SHORTED TO VOLTAGE
(A856) 5-VOLT SUPPLY CIRCUIT SHORTED TO (M41) DRIVER PUDDLE LAMP DRIVER CIRCUIT
(A856) 5-VOLT SUPPLY CIRCUIT SHORTED TO (P71) DRIVER MIRROR VERTICAL DRIVER CIRCUIT
(A856) 5-VOLT SUPPLY CIRCUIT SHORTED TO (P73) DRIVER MIRROR COMMON DRIVER CIRCUIT
(A856) 5-VOLT SUPPLY CIRCUIT SHORTED TO (P75) DRIVER MIRROR HORIZONTAL DRIVER CIRCUIT
(A856) 5-VOLT SUPPLY CIRCUIT SHORTED TO (C16) DRIVER MIRROR HEATER DRIVER CIRCUIT
(A856) 5-VOLT SUPPLY CIRCUIT SHORTED TO (P501) DRIVER MIRROR TURN SIGNAL DRIVER CIRCUIT
DRIVER OUTSIDE REARVIEW MIRROR SHORTED
DOOR MODULE

1. TEST FOR INTERMITTENT CONDITION

1. Turn the ignition on.
2. Using a scan tool, record and erase Diagnostic Trouble Codes (DTCs).
3. Turn the turn signal on, if equipped with turn signal mirror.
4. Turn the puddle lamps on, if equipped with puddle lamp mirror.
5. Turn the rear defogger on, if equipped with heated mirror.
6. Press and release the Mirror Select switch to select the Driver Outside Rearview Mirror.
7. Operate the Mirror Adjust switch in all directions several times while monitoring the scan tool for DTCs.

NOTE: After adjusting the mirror in one direction wait at least two seconds before adjusting the mirror in the opposite direction, as this will allow time for an active fault to set if present.

Is the DTC active?

Yes

- Go To 2

No

- The conditions that caused this code to set are not present at this time. For vehicle's equipped with folding outside rearview mirrors, repeat test with mirror folded. If DTC is now active, Go To 2. Otherwise, use the wiring diagram/ schematic as a guide and inspect the wiring and connectors.
- Perform the BODY VERIFICATION TEST. (Refer to 28 - DTC-Based Diagnostics/MODULE, Totally Integrated Power (TIPM) - Standard Procedure).

2. CHECK (P67) DRIVER MIRROR VERTICAL POSITION SIGNAL CIRCUIT AND (A856) 5-VOLT SUPPLY CIRCUIT FOR A SHORT TO VOLTAGE

1. Turn the ignition off.
2. Disconnect the Driver Outside Rearview Mirror C1 (Component Side) connector from the Door Module C1 connector.
3. Turn the ignition on.
4. Measure the voltage of the (P67) Driver Mirror Vertical Position Signal circuit between the Driver Outside Rearview Mirror C1 (Component Side) connector and ground.
5. Measure the voltage of the (A856) 5-volt Supply circuit between the Driver Outside Rearview Mirror C1 (Component Side) connector and ground.

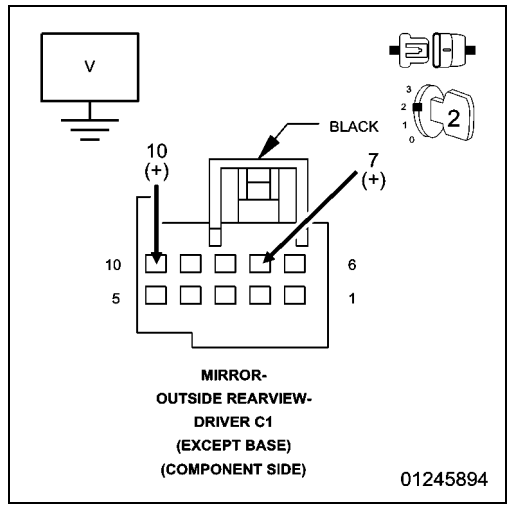

Is there any Voltage present on either circuit?

Yes

- Repair all circuits with Voltage present for a short to Voltage. If the wiring harness and connector are okay, replace the Driver Outside Rearview Mirror in accordance with the Service Information.
- Perform the BODY VERIFICATION TEST. (Refer to 28 - DTC-Based Diagnostics/MODULE, Totally Integrated Power (TIPM) - Standard Procedure).

No, with Puddle Lamp Mirror

- Go To 3

No, without Puddle Lamp Mirror

- Go To 4

3. CHECK (P67) DRIVER MIRROR VERTICAL POSITION SIGNAL CIRCUIT AND (A856) 5-VOLT SUPPLY CIRCUIT FOR A SHORT TO (M41) DRIVER PUDDLE LAMP DRIVER CIRCUIT

1. Turn the ignition off.
2. Measure the resistance between the (M41) Driver Puddle Lamp Driver circuit and the (P67) Driver Mirror Vertical Position Signal circuit at the Driver Outside Rearview Mirror C1 (Component Side) connector.
3. Measure the resistance between the (M41) Driver Puddle Lamp Driver circuit and the (A856) 5-volt Supply circuit at the Driver Outside Rearview Mirror C1 (Component Side) connector.

Is the resistance below 10K Ohms for either measurement?

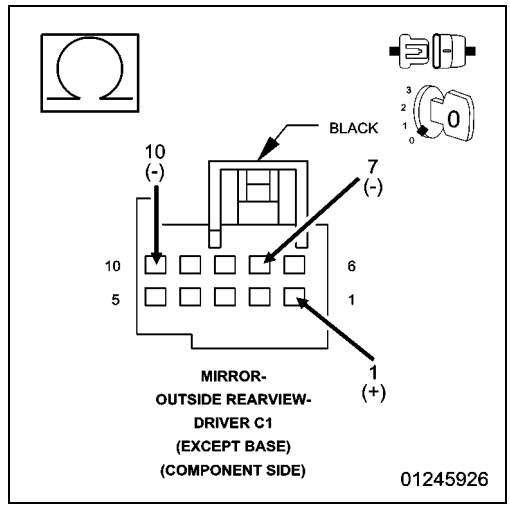

Yes

- Repair all circuits with a resistance below 10K Ohms for a short to the (M41) Driver Puddle Lamp Driver circuit. If the wiring harness and connector are okay, replace the Driver Outside Rearview Mirror in accordance with the Service Information.
- Perform the BODY VERIFICATION TEST. (Refer to 28 - DTC-Based Diagnostics/MODULE, Totally Integrated Power (TIPM) - Standard Procedure).

No

- Go To 4

4. CHECK (P67) DRIVER MIRROR VERTICAL POSITION SIGNAL CIRCUIT AND (P69) DRIVER MIRROR SENSOR GROUND CIRCUIT FOR AN OPEN

1. If not done previously, turn the ignition off.
2. Measure the resistance between the (P67) Driver Mirror Vertical Position Signal circuit and the (P69) Driver Mirror Sensor Ground circuit at the Driver Outside Rearview Mirror C1 (Component Side) connector.

Is the resistance below 3.0 Ohms?

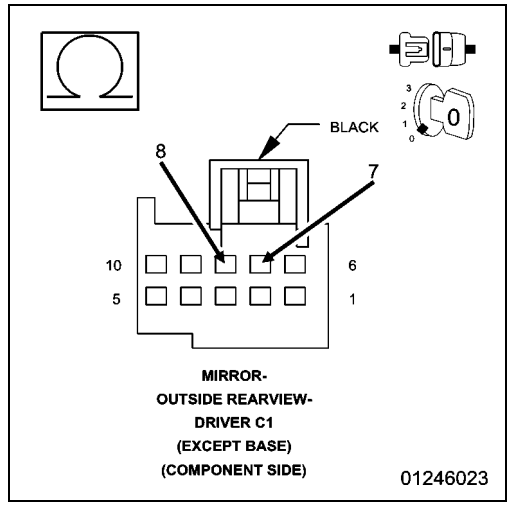

Yes

- Go To 5

No

- Repair (P67) Driver Mirror Vertical Position Signal circuit or the (P69) Driver Mirror Sensor Ground circuit for an open. If the wiring harness and connector are okay, replace the Driver Outside Rearview Mirror in accordance with the Service Information.
- Perform the BODY VERIFICATION TEST. (Refer to 28 - DTC-Based Diagnostics/MODULE, Totally Integrated Power (TIPM) - Standard Procedure).

5. CHECK (P67) DRIVER MIRROR VERTICAL POSITION SIGNAL CIRCUIT FOR A SHORT TO (P71) DRIVER MIRROR VERTICAL DRIVER CIRCUIT, (P73) DRIVER MIRROR COMMON DRIVER CIRCUIT, OR TO (P75) DRIVER MIRROR HORIZONTAL DRIVER CIRCUIT

1. Disconnect the Driver Outside Rearview Mirror C2 (Component Side) connector from the Door Module C2 connector.
2. Measure the resistance between the (P67) Driver Mirror Vertical Position Signal circuit and the (P71) Driver Mirror Vertical Driver circuit at the Driver Outside Rearview Mirror C1 and C2 (Component Side) connectors.
3. Measure the resistance between the (P67) Driver Mirror Vertical Position Signal circuit and the (P73) Driver Mirror Common Driver circuit at the Driver Outside Rearview Mirror C1 and C2 (Component Side) connectors.
4. Measure the resistance between the (P67) Driver Mirror Vertical Position Signal circuit and the (P75) Driver Mirror Horizontal Driver circuit at the Driver Outside Rearview Mirror C1 and C2 (Component Side) connectors.

Is the resistance below 10K Ohms for any measurement?

Yes

- Repair all circuits with a resistance below 10K Ohms for a short to the (P67) Driver Mirror Vertical Position Signal circuit. If the wiring harness and connector are okay, replace the Driver Outside Rearview Mirror in accordance with the Service Information.
- Perform the BODY VERIFICATION TEST. (Refer to 28 - DTC-Based Diagnostics/MODULE, Totally Integrated Power (TIPM) - Standard Procedure).

No, with Heated/Turn Signal Mirror

- Go To 6

No, without Heated/Turn Signal Mirror

- Go To 7

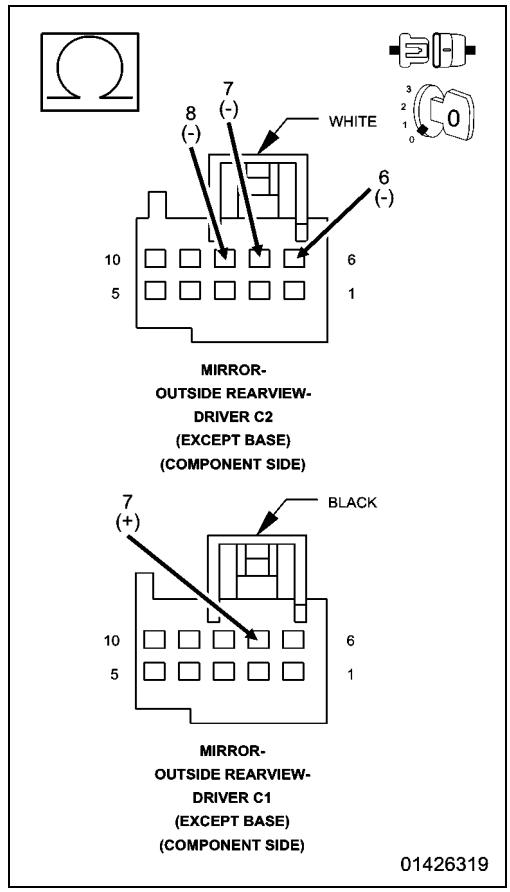

6. CHECK (P67) DRIVER MIRROR VERTICAL POSITION SIGNAL CIRCUIT FOR A SHORT TO (C16) DRIVER MIRROR HEATER DRIVER CIRCUIT OR TO (P501) DRIVER MIRROR TURN SIGNAL DRIVER CIRCUIT

1. For Heated Mirror, measure the resistance between the (P67) Driver Mirror Vertical Position Signal circuit and the (C16) Driver Mirror Heater Driver circuit at the Driver Outside Rearview Mirror C1 and C2 (Component Side) connectors.
2. For Turn Signal Mirror, measure the resistance between the (P67) Driver Mirror Vertical Position Signal circuit and the (P501) Driver Mirror Turn Signal Driver circuit at the Driver Outside Rearview Mirror C1 and C2 (Component Side) connectors.

Is the resistance below 10K Ohms for either measurement?

Yes

- Repair all circuits with a resistance below 10K Ohms for a short to the (P67) Driver Mirror Vertical Position Signal circuit. If the wiring harness and connector are okay, replace the Driver Outside Rearview Mirror in accordance with the Service Information.
- Perform the BODY VERIFICATION TEST. (Refer to 28 - DTC-Based Diagnostics/MODULE, Totally Integrated Power (TIPM) - Standard Procedure).

No

- Go To 7

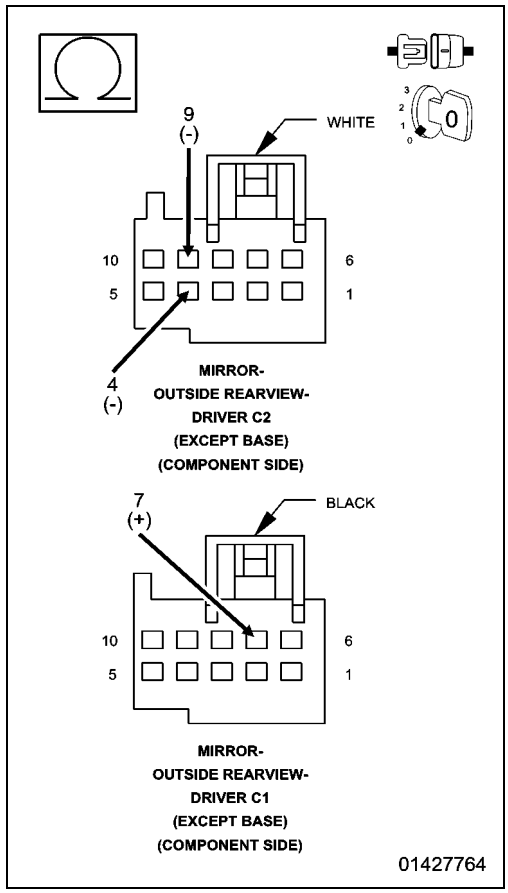

7. CHECK (A856) 5-VOLT SUPPLY CIRCUIT FOR A SHORT TO (P71) DRIVER MIRROR VERTICAL DRIVER CIRCUIT, (P73) DRIVER MIRROR COMMON DRIVER CIRCUIT, OR TO (P75) DRIVER MIRROR HORIZONTAL DRIVER CIRCUIT

1. Measure the resistance between the (A856) 5-volt Supply circuit and the (P71) Driver Mirror Vertical Driver circuit at the Driver Outside Rearview Mirror C1 and C2 (Component Side) connectors.
2. Measure the resistance between the (A856) 5-volt Supply circuit and the (P73) Driver Mirror Common Driver circuit at the Driver Outside Rearview Mirror C1 and C2 (Component Side) connectors.
3. Measure the resistance between the (A856) 5-volt Supply circuit and the (P75) Driver Mirror Horizontal Driver circuit at the Driver Outside Rearview Mirror C1 and C2 (Component Side) connectors.

Is the resistance below 10K Ohms for any measurement?

Yes

- Repair all circuits with a resistance below 10K Ohms for a short to the (A856) 5-volt Supply circuit. If the wiring harness and connector are okay, replace the Driver Outside Rearview Mirror in accordance with the Service Information.
- Perform the BODY VERIFICATION TEST. (Refer to 28 - DTC-Based Diagnostics/MODULE, Totally Integrated Power (TIPM) - Standard Procedure).

No, with Heated/Turn Signal Mirror

- Go To 8

No, without Heated/Turn Signal Mirror

- Inspect the wiring and connectors for damage and repair as necessary. If the wiring and connectors are okay, replace the Door Module in accordance with the Service Information.
- Perform the BODY VERIFICATION TEST. (Refer to 28 - DTC-Based Diagnostics/MODULE, Totally Integrated Power (TIPM) - Standard Procedure).

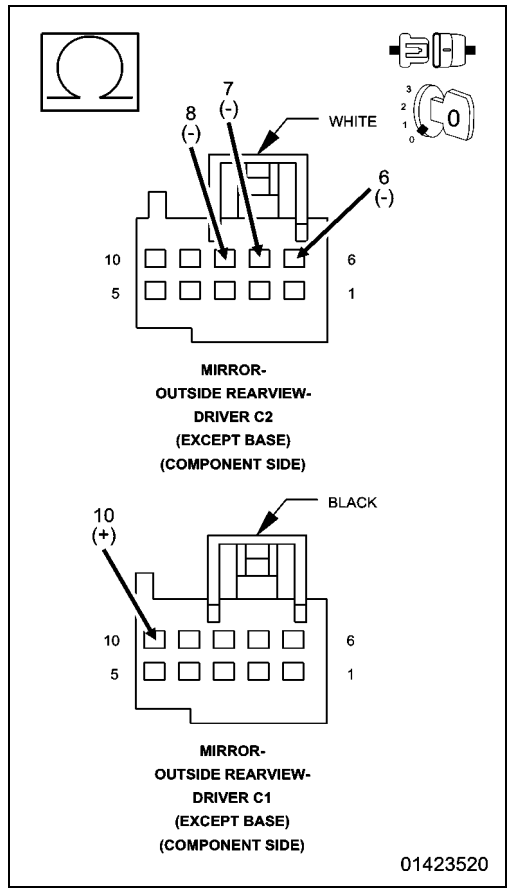

8. CHECK (A856) 5-VOLT SUPPLY CIRCUIT FOR A SHORT TO (C16) DRIVER MIRROR HEATER DRIVER CIRCUIT OR TO (P501) DRIVER MIRROR TURN SIGNAL DRIVER CIRCUIT

1. For Heated Mirror, measure the resistance between the (A856) 5-volt Supply circuit and the (C16) Driver Mirror Heater Driver circuit at the Driver Outside Rearview Mirror C1 and C2 (Component Side) connectors.
2. For Turn Signal Mirror, measure the resistance between the (A856) 5-volt Supply circuit and the (P501) Driver Mirror Turn Signal Driver circuit at the Driver Outside Rearview Mirror C1 and C2 (Component Side) connectors.

Is the resistance below 10K Ohms for either measurement?

Yes

- Repair all circuits with a resistance below 10K Ohms for a short to the (A856) 5-volt Supply circuit. If the wiring harness and connector are okay, replace the Driver Outside Rearview Mirror in accordance with the Service Information.
- Perform the BODY VERIFICATION TEST. (Refer to 28 - DTC-Based Diagnostics/MODULE, Totally Integrated Power (TIPM) - Standard Procedure).

No

- Inspect the wiring and connectors for damage and repair as necessary. If the wiring and connectors are okay, replace the Door Module in accordance with the Service Information.
- Perform the BODY VERIFICATION TEST. (Refer to 28 - DTC-Based Diagnostics/MODULE, Totally Integrated Power (TIPM) - Standard Procedure).

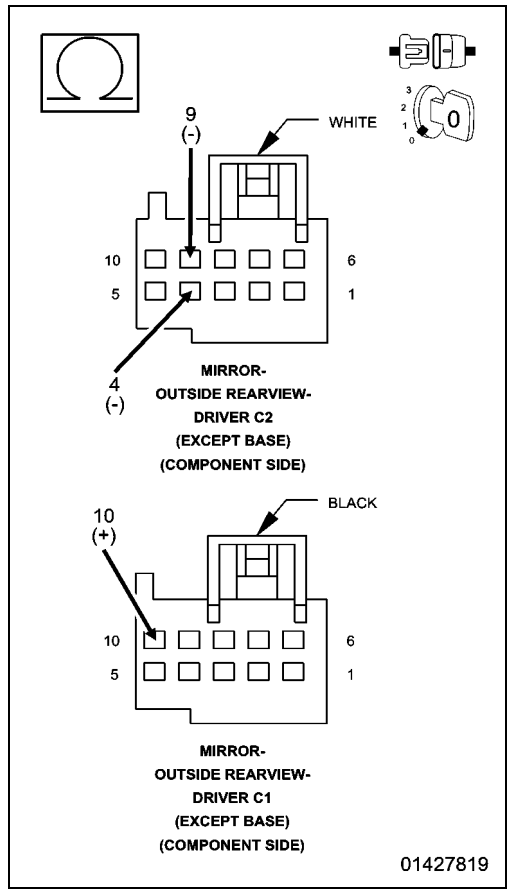

■ B1D0E-11-DRIVER MIRROR HORIZONTAL POSITION SENSOR INPUT - CIRCUIT SHORT TO GROUND

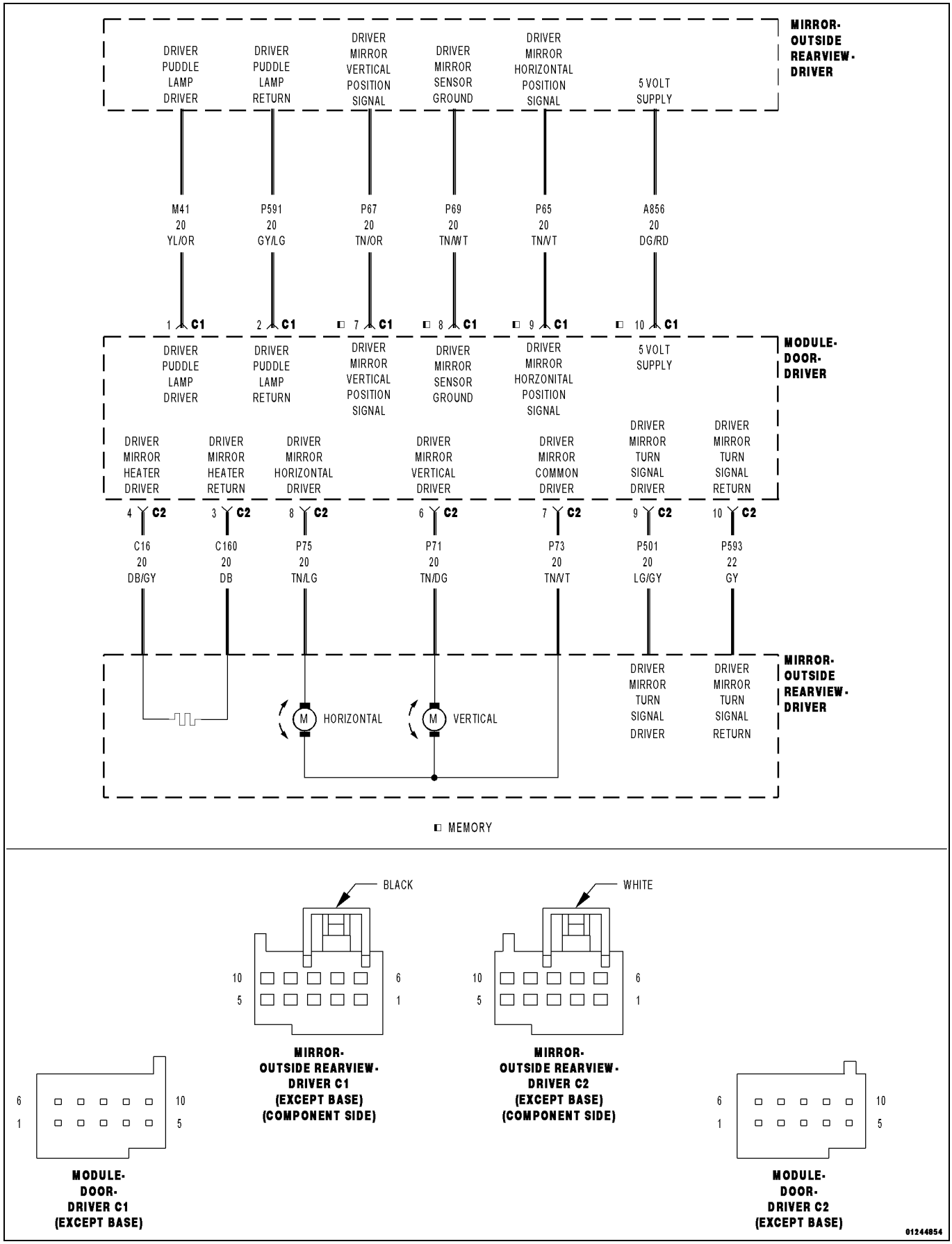

For a complete wiring diagram, **refer to the Wiring Information**.

- **When Monitored:**
  Continuously.
- **Set Condition:**
  The Door Module senses a short low on the (P65) Driver Mirror Horizontal Position Signal circuit for more than two seconds.

Possible Causes
(P65) DRIVER MIRROR HORIZONTAL POSITION SIGNAL CIRCUIT SHORTED TO GROUND
(P65) DRIVER MIRROR HORIZONTAL POSITION SIGNAL CIRCUIT SHORTED TO THE (P69) DRIVER MIRROR SENSOR GROUND CIRCUIT
(P65) DRIVER MIRROR HORIZONTAL POSITION SIGNAL CIRCUIT SHORTED TO THE (P591) DRIVER PUDDLE LAMP RETURN CIRCUIT
(P65) DRIVER MIRROR HORIZONTAL POSITION SIGNAL CIRCUIT SHORTED TO THE (P71) DRIVER MIRROR VERTICAL DRIVER CIRCUIT
(P65) DRIVER MIRROR HORIZONTAL POSITION SIGNAL CIRCUIT SHORTED TO THE (P73) DRIVER MIRROR COMMON DRIVER CIRCUIT
(P65) DRIVER MIRROR HORIZONTAL POSITION SIGNAL CIRCUIT SHORTED TO THE (P75) DRIVER MIRROR HORIZONTAL DRIVER CIRCUIT
(P65) DRIVER MIRROR HORIZONTAL POSITION SIGNAL CIRCUIT SHORTED TO THE (C160) DRIVER MIRROR HEATER RETURN CIRCUIT
(P65) DRIVER MIRROR HORIZONTAL POSITION SIGNAL CIRCUIT SHORTED TO THE (P593) DRIVER MIRROR TURN SIGNAL RETURN CIRCUIT
DRIVER OUTSIDE REARVIEW MIRROR SHORTED
DOOR MODULE

1. TEST FOR INTERMITTENT CONDITION

1. Turn the ignition on.
2. Using a scan tool, record and erase Diagnostic Trouble Codes (DTCs).
3. Turn the turn signal on, if equipped with turn signal mirror.
4. Turn the puddle lamps on, if equipped with puddle lamp mirror.
5. Turn the rear defogger on, if equipped with heated mirror.
6. Press and release the Mirror Select switch to select the Driver Outside Rearview Mirror.
7. Operate the Mirror Adjust switch in all directions several times while monitoring the scan tool for DTCs.

NOTE: After adjusting the mirror in one direction wait at least two seconds before adjusting the mirror in the opposite direction, as this will allow time for an active fault to set if present.

Is the DTC active?

Yes

- Go To 2

No

- The conditions that caused this code to set are not present at this time. For vehicle's equipped with folding outside rearview mirrors, repeat test with mirror folded. If DTC is now active, Go To 2. Otherwise, use the wiring diagram/ schematic as a guide and inspect the wiring and connectors.
- Perform the BODY VERIFICATION TEST. (Refer to 28 - DTC-Based Diagnostics/MODULE, Totally Integrated Power (TIPM) - Standard Procedure).

2. CHECK (P65) DRIVER MIRROR HORIZONTAL POSITION SIGNAL CIRCUIT FOR A SHORT TO GROUND

1. Turn the ignition off.
2. Disconnect the Driver Outside Rearview Mirror C1 (Component Side) connector from the Door Module C1 connector.
3. Measure the resistance of the (P65) Driver Mirror Horizontal Position Signal circuit between ground and the Driver Outside Rearview Mirror C1 (Component Side) connector.

Is the resistance below 10K Ohms?

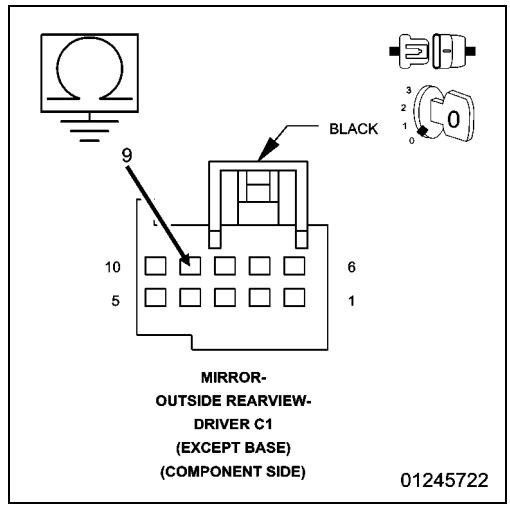

Yes

- Repair the (P65) Driver Mirror Horizontal Position Signal circuit for a short to ground. If the wiring harness and connector are okay, replace the Driver Outside Rearview Mirror in accordance with the Service Information.
- Perform the BODY VERIFICATION TEST. (Refer to 28 - DTC-Based Diagnostics/MODULE, Totally Integrated Power (TIPM) - Standard Procedure).

No

- Go To 3

3. CHECK (P65) DRIVER MIRROR HORIZONTAL POSITION SIGNAL CIRCUIT FOR A SHORT TO (P69) DRIVER MIRROR SENSOR GROUND CIRCUIT

1. Measure the residence between the (P65) Driver Mirror Horizontal Position Signal circuit and the (P69) Driver Mirror Sensor Ground circuit at the Driver Outside Rearview Mirror C1 (Component Side) connector.

Is the resistance below 1.0 Ohm?

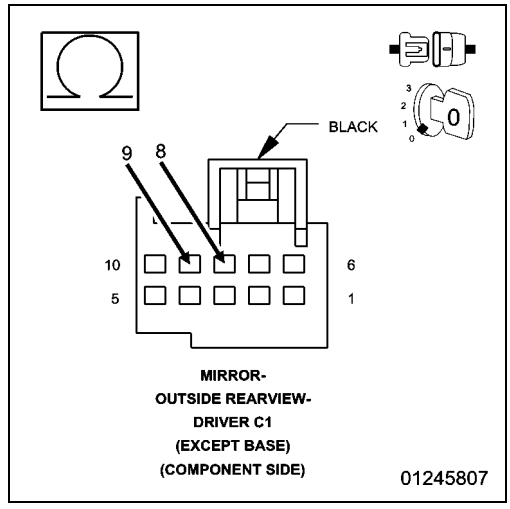

Yes

- Repair the (P65) Driver Mirror Horizontal Position Signal circuit for a short to the (P69) Driver Mirror Sensor Ground circuit. If the wiring harness and connector are okay, replace the Driver Outside Rearview Mirror in accordance with the Service Information.
- Perform the BODY VERIFICATION TEST. (Refer to 28 - DTC-Based Diagnostics/MODULE, Totally Integrated Power (TIPM) - Standard Procedure).

No, with Puddle Lamp Mirror

- Go To 4

No, without Puddle Lamp Mirror

- Go To 5

4. CHECK (P65) DRIVER MIRROR HORIZONTAL POSITION SIGNAL CIRCUIT FOR A SHORT TO (P591) DRIVER PUDDLE LAMP RETURN CIRCUIT

1. Measure the residence between the (P65) Driver Mirror Horizontal Position Signal circuit and the (P591) Driver Puddle Lamp Return circuit at the Driver Outside Rearview Mirror C1 (Component Side) connector.

Is the resistance below 10K Ohms?

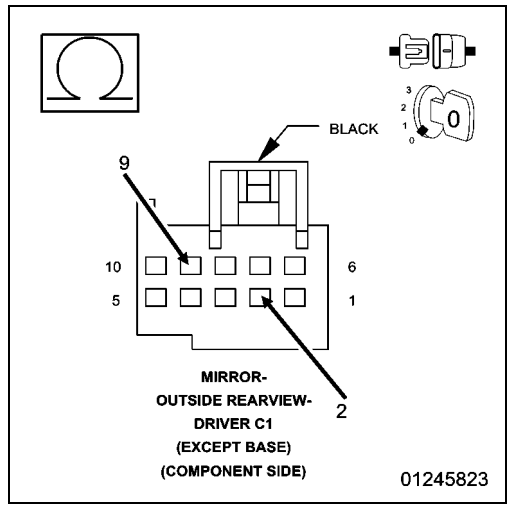

Yes

- Repair the (P65) Driver Mirror Horizontal Position Signal circuit for a short to the (P591) Driver Puddle Lamp Return circuit. If the wiring harness and connector are okay, replace the Driver Outside Rearview Mirror in accordance with the Service Information.
- Perform the BODY VERIFICATION TEST. (Refer to 28 - DTC-Based Diagnostics/MODULE, Totally Integrated Power (TIPM) - Standard Procedure).

No

- Go To 5

5. CHECK (P65) DRIVER MIRROR HORIZONTAL POSITION SIGNAL CIRCUIT FOR A SHORT TO (P71) DRIVER MIRROR VERTICAL DRIVER CIRCUIT, (P73) DRIVER MIRROR COMMON DRIVER CIRCUIT, OR TO (P75) DRIVER MIRROR HORIZONTAL DRIVER CIRCUIT

1. Disconnect the Driver Outside Rearview Mirror C2 (Component Side) connector from the Door Module C2 connector.
2. Measure the resistance between the (P65) Driver Mirror Horizontal Position Signal circuit and the (P71) Driver Mirror Vertical Driver circuit at the Driver Outside Rearview Mirror C1 and C2 (Component Side) connectors.
3. Measure the resistance between the (P65) Driver Mirror Horizontal Position Signal circuit and the (P73) Driver Mirror Common Driver circuit at the Driver Outside Rearview Mirror C1 and C2 (Component Side) connectors.
4. Measure the resistance between the (P65) Driver Mirror Horizontal Position Signal circuit and the (P75) Driver Mirror Horizontal Driver circuit at the Driver Outside Rearview Mirror C1 and C2 (Component Side) connectors.

Is the resistance below 10K Ohms for any measurement?

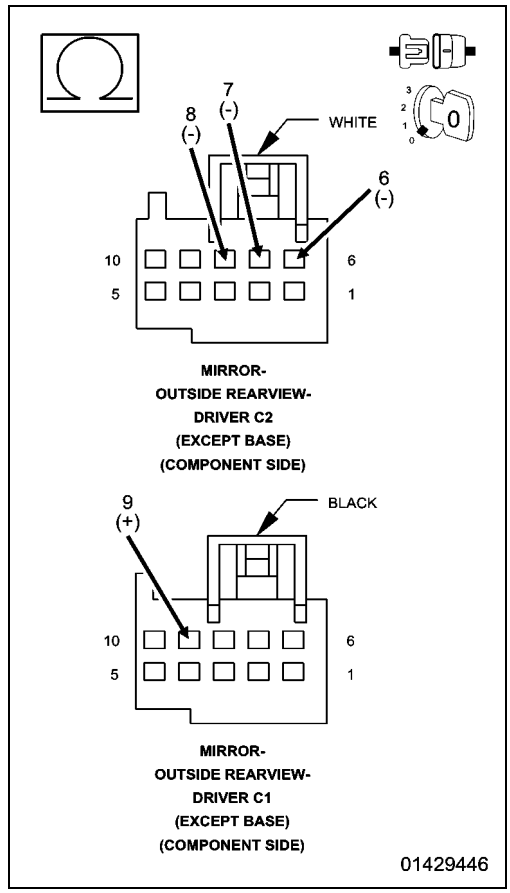

Yes

- Repair all circuits with a resistance below 10K Ohms for a short to the (P65) Driver Mirror Horizontal Position Signal circuit. If the wiring harness and connector are okay, replace the Driver Outside Rearview Mirror in accordance with the Service Information.
- Perform the BODY VERIFICATION TEST. (Refer to 28 - DTC-Based Diagnostics/MODULE, Totally Integrated Power (TIPM) - Standard Procedure).

No, with Heated/Turn Signal Mirror

- Go To 6

No, without Heated/Turn Signal Mirror

- Inspect the wiring and connectors for damage and repair as necessary. If the wiring and connectors are okay, replace the Door Module in accordance with the Service Information.
- Perform the BODY VERIFICATION TEST. (Refer to 28 - DTC-Based Diagnostics/MODULE, Totally Integrated Power (TIPM) - Standard Procedure).

6. CHECK (P65) DRIVER MIRROR HORIZONTAL POSITION SIGNAL CIRCUIT FOR A SHORT TO (C160) DRIVER MIRROR HEATER RETURN CIRCUIT OR TO (P593) DRIVER MIRROR TURN SIGNAL RETURN CIRCUIT

1. For Heated Mirror, measure the resistance between the (P65) Driver Mirror Horizontal Position Signal circuit and the (C160) Driver Mirror Heater Return circuit at the Driver Outside Rearview Mirror C1 and C2 (Component Side) connectors.
2. For Turn Signal Mirror, measure the resistance between the (P65) Driver Mirror Horizontal Position Signal circuit and the (P593) Driver Mirror Turn Signal Return circuit at the Driver Outside Rearview Mirror C1 and C2 (Component Side) connectors.

Is the resistance below 10K Ohms for either measurement?

Yes

- Repair all circuits with a resistance below 10K Ohms for a short to the (P65) Driver Mirror Horizontal Position Signal circuit. If the wiring harness and connector are okay, replace the Driver Outside Rearview Mirror in accordance with the Service Information.
- Perform the BODY VERIFICATION TEST. (Refer to 28 - DTC-Based Diagnostics/MODULE, Totally Integrated Power (TIPM) - Standard Procedure).

No

- Inspect the wiring and connectors for damage and repair as necessary. If the wiring and connectors are okay, replace the Door Module in accordance with the Service Information.
- Perform the BODY VERIFICATION TEST. (Refer to 28 - DTC-Based Diagnostics/MODULE, Totally Integrated Power (TIPM) - Standard Procedure).

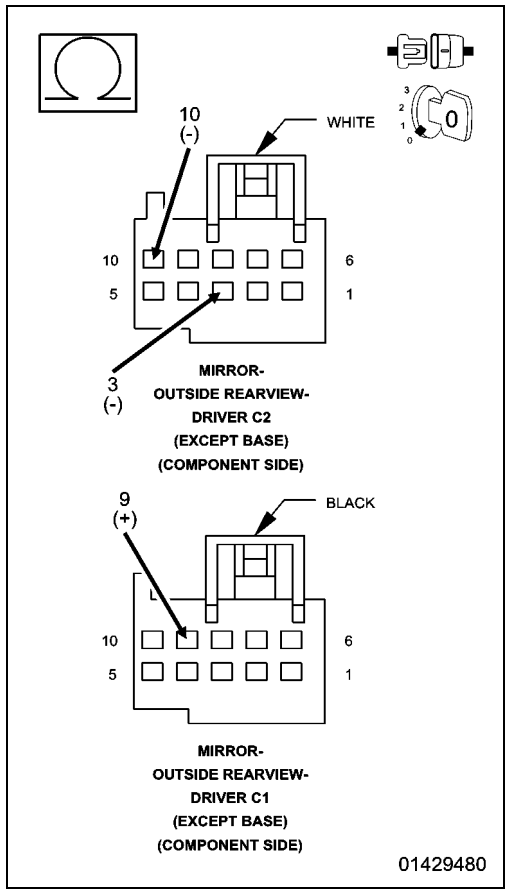

■ B1D0E-12-DRIVER MIRROR HORIZONTAL POSITION SENSOR INPUT - CIRCUIT SHORT TO BATTERY

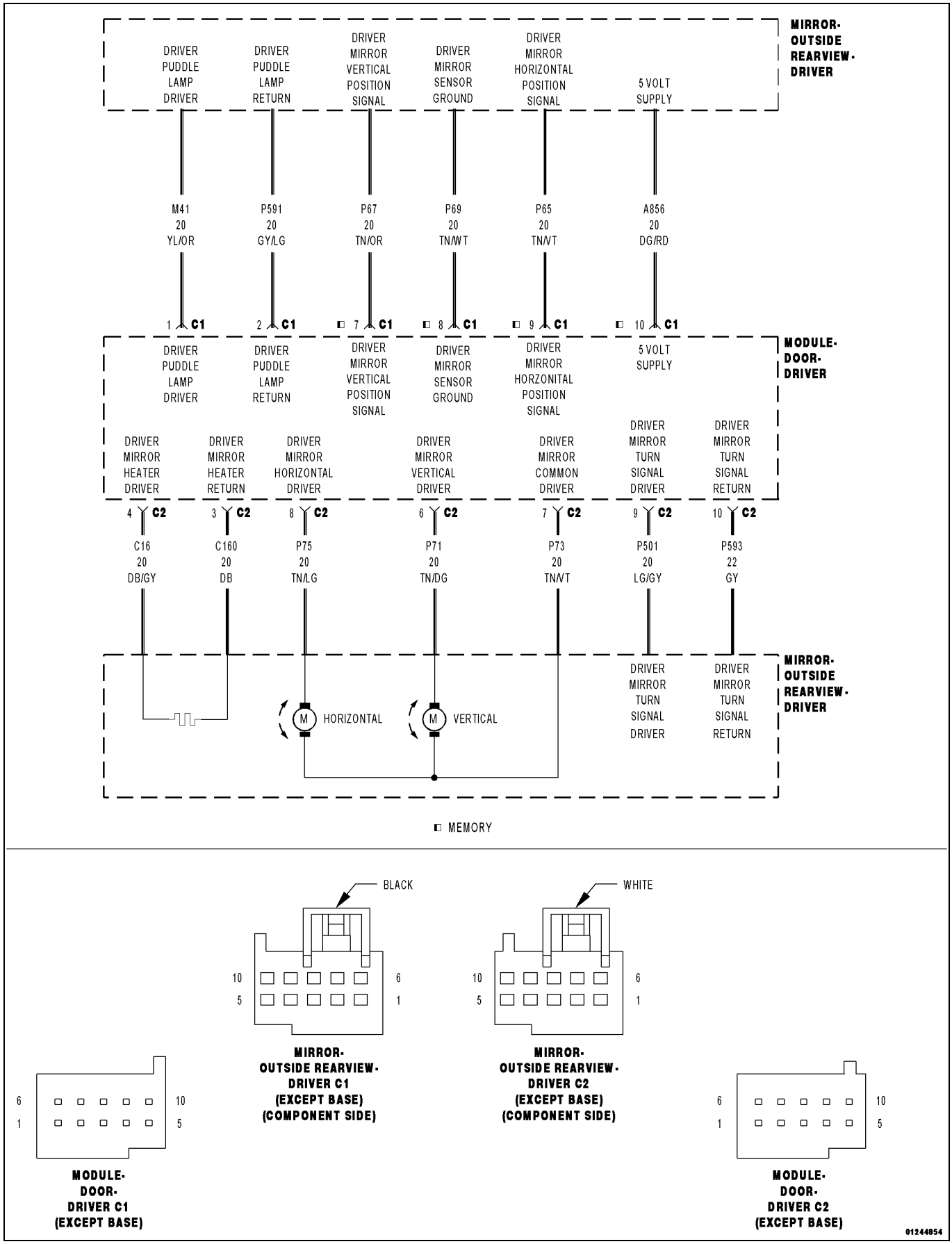

For a complete wiring diagram, **refer to the Wiring Information**.

- **When Monitored:**
  Continuously.
- **Set Condition:**
  The Door Module senses more than 400 mA current on the (A856) 5-volt Supply circuit or an open or a short high on the (P65) Driver Mirror Horizontal Position Signal circuit for more than two seconds.

Possible Causes
(P65) DRIVER MIRROR HORIZONTAL POSITION SIGNAL CIRCUIT SHORTED TO VOLTAGE
(P65) DRIVER MIRROR HORIZONTAL POSITION SIGNAL CIRCUIT SHORTED TO THE (M41) DRIVER PUDDLE LAMP DRIVER CIRCUIT
(P65) DRIVER MIRROR HORIZONTAL POSITION SIGNAL CIRCUIT OPEN
(P69) DRIVER MIRROR SENSOR GROUND CIRCUIT OPEN
(P65) DRIVER MIRROR HORIZONTAL POSITION SIGNAL CIRCUIT SHORTED TO THE (P71) DRIVER MIRROR VERTICAL DRIVER CIRCUIT
(P65) DRIVER MIRROR HORIZONTAL POSITION SIGNAL CIRCUIT SHORTED TO THE (P73) DRIVER MIRROR COMMON DRIVER CIRCUIT
(P65) DRIVER MIRROR HORIZONTAL POSITION SIGNAL CIRCUIT SHORTED TO THE (P75) DRIVER MIRROR HORIZONTAL DRIVER CIRCUIT
(P65) DRIVER MIRROR HORIZONTAL POSITION SIGNAL CIRCUIT SHORTED TO THE (C16) DRIVER MIRROR HEATER DRIVER CIRCUIT
(P65) DRIVER MIRROR HORIZONTAL POSITION SIGNAL CIRCUIT SHORTED TO THE (P501) DRIVER MIRROR TURN SIGNAL DRIVER CIRCUIT
(A856) 5-VOLT SUPPLY CIRCUIT SHORTED TO VOLTAGE
(A856) 5-VOLT SUPPLY CIRCUIT SHORTED TO THE (M41) DRIVER PUDDLE LAMP DRIVER CIRCUIT
(A856) 5-VOLT SUPPLY CIRCUIT SHORTED TO THE (P71) DRIVER MIRROR VERTICAL DRIVER CIRCUIT
(A856) 5-VOLT SUPPLY CIRCUIT SHORTED TO THE (P73) DRIVER MIRROR COMMON DRIVER CIRCUIT
(A856) 5-VOLT SUPPLY CIRCUIT SHORTED TO THE (P75) DRIVER MIRROR HORIZONTAL DRIVER CIRCUIT
(A856) 5-VOLT SUPPLY CIRCUIT SHORTED TO THE (C16) DRIVER MIRROR HEATER DRIVER CIRCUIT
(A856) 5-VOLT SUPPLY CIRCUIT SHORTED TO THE (P501) DRIVER MIRROR TURN SIGNAL DRIVER CIRCUIT
DRIVER OUTSIDE REARVIEW MIRROR SHORTED
DOOR MODULE

1. TEST FOR INTERMITTENT CONDITION

1. Turn the ignition on.
2. Using a scan tool, record and erase Diagnostic Trouble Codes (DTCs).
3. Turn the turn signal on, if equipped with turn signal mirror.
4. Turn the puddle lamps on, if equipped with puddle lamp mirror.
5. Turn the rear defogger on, if equipped with heated mirror.
6. Press and release the Mirror Select switch to select the Driver Outside Rearview Mirror.
7. Operate the Mirror Adjust switch in all directions several times while monitoring the scan tool for DTCs.

NOTE: After adjusting the mirror in one direction wait at least two seconds before adjusting the mirror in the opposite direction, as this will allow time for an active fault to set if present.

Is the DTC active?

Yes

- Go To 2

No

- The conditions that caused this code to set are not present at this time. For vehicle's equipped with folding outside rearview mirrors, repeat test with mirror folded. If DTC is now active, Go To 2. Otherwise, use the wiring diagram/ schematic as a guide and inspect the wiring and connectors.
- Perform the BODY VERIFICATION TEST. (Refer to 28 - DTC-Based Diagnostics/MODULE, Totally Integrated Power (TIPM) - Standard Procedure).

2. CHECK (P65) DRIVER MIRROR HORIZONTAL POSITION SIGNAL CIRCUIT AND (A856) 5-VOLT SUPPLY CIRCUIT FOR A SHORT TO VOLTAGE

1. Turn the ignition off.
2. Disconnect the Driver Outside Rearview Mirror C1 (Component Side) connector from the Door Module C1 connector.
3. Turn the ignition on.
4. Measure the Voltage of the (P65) Driver Mirror Horizontal Position Signal circuit between the Driver Outside Rearview Mirror C1 (Component Side) connector and ground.
5. Measure the voltage of the (A856) 5-volt Supply circuit between the Driver Outside Rearview Mirror C1 (Component Side) connector and ground.

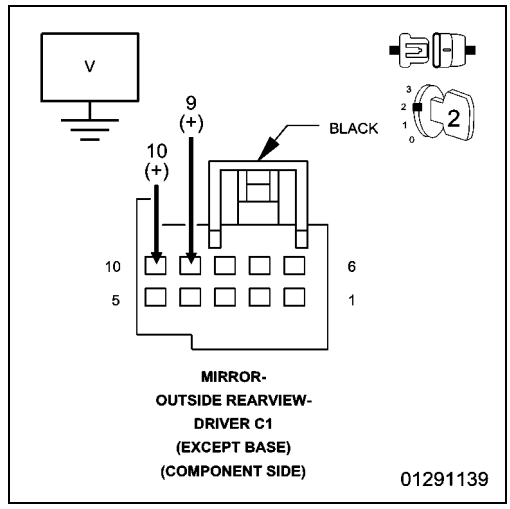

Is there any Voltage present on either circuit?

Yes

- Repair all circuits with Voltage present for a short to Voltage. If the wiring harness and connector are okay, replace the Driver Outside Rearview Mirror in accordance with the Service Information.
- Perform the BODY VERIFICATION TEST. (Refer to 28 - DTC-Based Diagnostics/MODULE, Totally Integrated Power (TIPM) - Standard Procedure).

No, with Puddle Lamp Mirror

- Go To 3

No, without Puddle Lamp Mirror

- Go To 4

3. CHECK (P65) DRIVER MIRROR HORIZONTAL POSITION SIGNAL CIRCUIT AND (A856) 5-VOLT SUPPLY CIRCUIT FOR A SHORT TO (M41) DRIVER PUDDLE LAMP DRIVER CIRCUIT

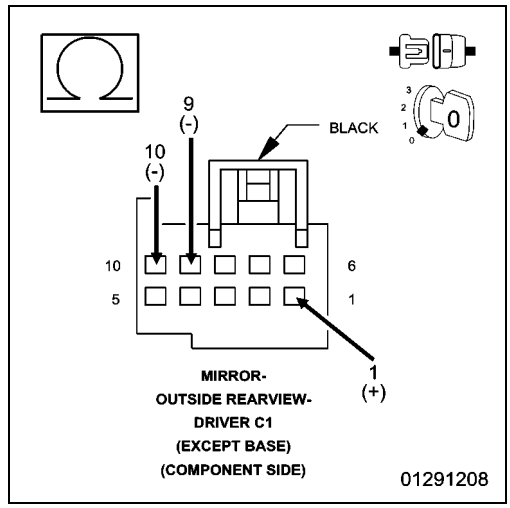

1. Turn the ignition off.
2. Measure the resistance between the (M41) Driver Puddle Lamp Driver circuit and the (P65) Driver Mirror Horizontal Position Signal circuit at the Driver Outside Rearview Mirror C1 (Component Side) connector.
3. Measure the resistance between the (M41) Driver Puddle Lamp Driver circuit and the (A856) 5-volt Supply circuit at the Driver Outside Rearview Mirror C1 (Component Side) connector.

Is the resistance below 10K Ohms for either measurement?

Yes

- Repair all circuits with a resistance below 10K Ohms for a short to the (M41) Driver Puddle Lamp Driver circuit. If the wiring harness and connector are okay, replace the Driver Outside Rearview Mirror in accordance with the Service Information.
- Perform the BODY VERIFICATION TEST. (Refer to 28 - DTC-Based Diagnostics/MODULE, Totally Integrated Power (TIPM) - Standard Procedure).

No

- Go To 4

4. CHECK (P65) DRIVER MIRROR HORIZONTAL POSITION SIGNAL CIRCUIT AND (P69) DRIVER MIRROR SENSOR GROUND CIRCUIT FOR AN OPEN

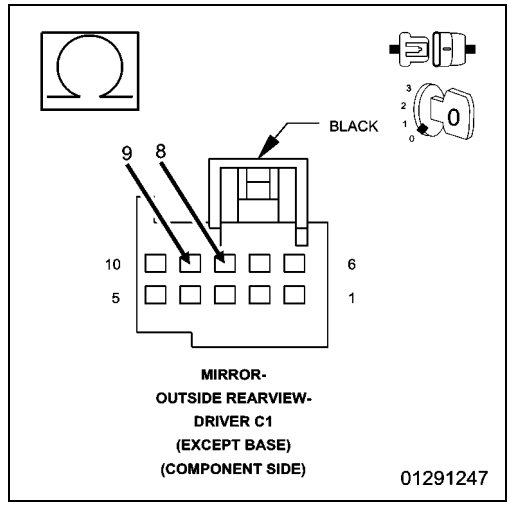

1. If not done previously, turn the ignition off.
2. Measure the resistance between the (P65) Driver Mirror Horizontal Position Signal circuit and the (P69) Driver Mirror Sensor Ground circuit at the Driver Outside Rearview Mirror C1 (Component Side) connector.

Is the resistance below 3.0 Ohms?

Yes

- Go To 5

No

- Repair the (P65) Driver Mirror Horizontal Position Signal circuit or the (P69) Driver Mirror Sensor Ground circuit for an open. If the wiring harness and connector are okay, replace the Driver Outside Rearview Mirror in accordance with the Service Information.
- Perform the BODY VERIFICATION TEST. (Refer to 28 - DTC-Based Diagnostics/MODULE, Totally Integrated Power (TIPM) - Standard Procedure).

5. CHECK (P65) DRIVER MIRROR HORIZONTAL POSITION SIGNAL CIRCUIT FOR A SHORT TO (P71) DRIVER MIRROR VERTICAL DRIVER CIRCUIT, (P73) DRIVER MIRROR COMMON DRIVER CIRCUIT, OR TO (P75) DRIVER MIRROR HORIZONTAL DRIVER CIRCUIT

1. Disconnect the Driver Outside Rearview Mirror C2 (Component Side) connector from the Door Module C2 connector.
2. Measure the resistance between the (P65) Driver Mirror Horizontal Position Signal circuit and the (P71) Driver Mirror Vertical Driver circuit at the Driver Outside Rearview Mirror C1 and C2 (Component Side) connectors.
3. Measure the resistance between the (P65) Driver Mirror Horizontal Position Signal circuit and the (P73) Driver Mirror Common Driver circuit at the Driver Outside Rearview Mirror C1 and C2 (Component Side) connectors.
4. Measure the resistance between the (P65) Driver Mirror Horizontal Position Signal circuit and the (P75) Driver Mirror Horizontal Driver circuit at the Driver Outside Rearview Mirror C1 and C2 (Component Side) connectors.

Is the resistance below 10K Ohms for any measurement?

Yes

- Repair all circuits with a resistance below 10K Ohms for a short to the (P65) Driver Mirror Horizontal Position Signal circuit. If the wiring harness and connector are okay, replace the Driver Outside Rearview Mirror in accordance with the Service Information.
- Perform the BODY VERIFICATION TEST. (Refer to 28 - DTC-Based Diagnostics/MODULE, Totally Integrated Power (TIPM) - Standard Procedure).

No, with Heated/Turn Signal Mirror

- Go To 6

No, without Heated/Turn Signal Mirror

- Go To 7

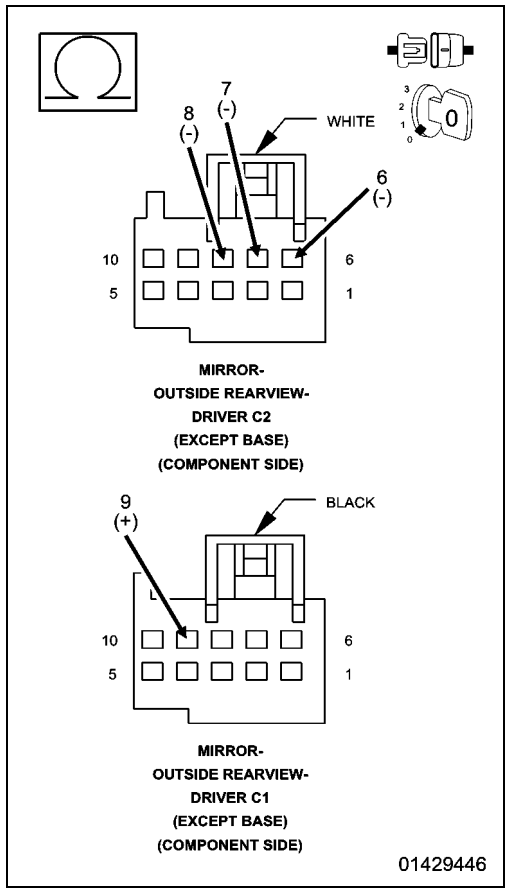

6. CHECK (P65) DRIVER MIRROR HORIZONTAL POSITION SIGNAL CIRCUIT FOR A SHORT TO (C16) DRIVER MIRROR HEATER DRIVER CIRCUIT OR TO (P501) DRIVER MIRROR TURN SIGNAL DRIVER CIRCUIT

1. For Heated Mirror, measure the resistance between the (P65) Driver Mirror Horizontal Position Signal circuit and the (C16) Driver Mirror Heater Driver circuit at the Driver Outside Rearview Mirror C1 and C2 (Component Side) connectors.
2. For Turn Signal Mirror, measure the resistance between the (P65) Driver Mirror Horizontal Position Signal circuit and the (P501) Driver Mirror Turn Signal Driver circuit at the Driver Outside Rearview Mirror C1 and C2 (Component Side) connectors.

Is the resistance below 10K Ohms for either measurement?

Yes

- Repair all circuits with a resistance below 10K Ohms for a short to the (P65) Driver Mirror Horizontal Position Signal circuit. If the wiring harness and connector are okay, replace the Driver Outside Rearview Mirror in accordance with the Service Information.
- Perform the BODY VERIFICATION TEST. (Refer to 28 - DTC-Based Diagnostics/MODULE, Totally Integrated Power (TIPM) - Standard Procedure).

No

- Go To 7

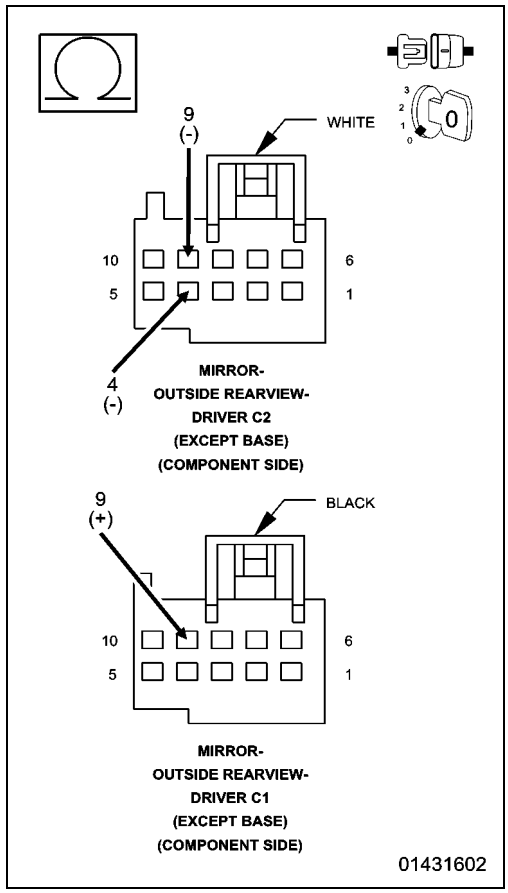

7. CHECK (A856) 5-VOLT SUPPLY CIRCUIT FOR A SHORT TO (P71) DRIVER MIRROR VERTICAL DRIVER CIRCUIT, (P73) DRIVER MIRROR COMMON DRIVER CIRCUIT, OR TO (P75) DRIVER MIRROR HORIZONTAL DRIVER CIRCUIT

1. Measure the resistance between the (A856) 5-volt Supply circuit and the (P71) Driver Mirror Vertical Driver circuit at the Driver Outside Rearview Mirror C1 and C2 (Component Side) connectors.
2. Measure the resistance between the (A856) 5-volt Supply circuit and the (P73) Driver Mirror Common Driver circuit at the Driver Outside Rearview Mirror C1 and C2 (Component Side) connectors.
3. Measure the resistance between the (A856) 5-volt Supply circuit and the (P75) Driver Mirror Horizontal Driver circuit at the Driver Outside Rearview Mirror C1 and C2 (Component Side) connectors.

Is the resistance below 10K Ohms for any measurement?

Yes

- Repair all circuits with a resistance below 10K Ohms for a short to the (A856) 5-volt Supply circuit. If the wiring harness and connector are okay, replace the Driver Outside Rearview Mirror in accordance with the Service Information.
- Perform the BODY VERIFICATION TEST. (Refer to 28 - DTC-Based Diagnostics/MODULE, Totally Integrated Power (TIPM) - Standard Procedure).

No, with Heated/Turn Signal Mirror

- Go To 8

No, without Heated/Turn Signal Mirror

- Inspect the wiring and connectors for damage and repair as necessary. If the wiring and connectors are okay, replace the Door Module in accordance with the Service Information.
- Perform the BODY VERIFICATION TEST. (Refer to 28 - DTC-Based Diagnostics/MODULE, Totally Integrated Power (TIPM) - Standard Procedure).

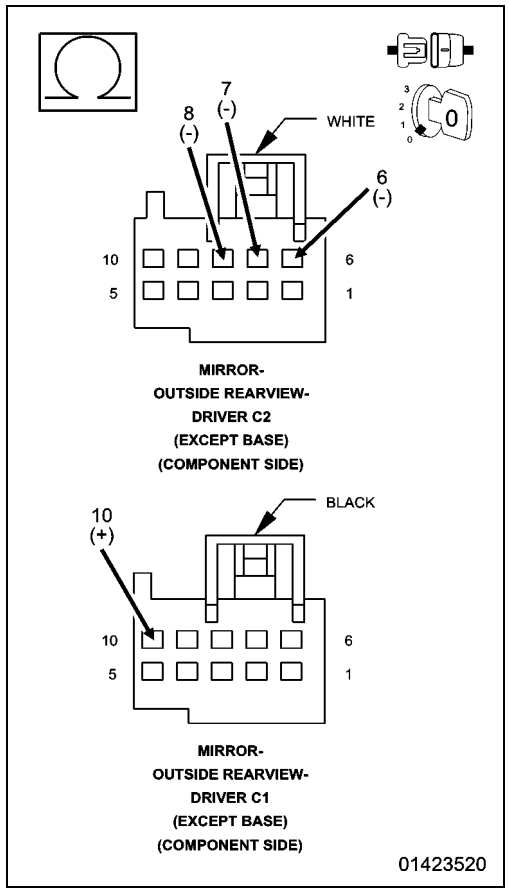

8. CHECK (A856) 5-VOLT SUPPLY CIRCUIT FOR A SHORT TO (C16) DRIVER MIRROR HEATER DRIVER CIRCUIT OR TO (P501) DRIVER MIRROR TURN SIGNAL DRIVER CIRCUIT

1. For Heated Mirror, measure the resistance between the (A856) 5-volt Supply circuit and the (C16) Driver Mirror Heater Driver circuit at the Driver Outside Rearview Mirror C1 and C2 (Component Side) connectors.
2. For Turn Signal Mirror, measure the resistance between the (A856) 5-volt Supply circuit and the (P501) Driver Mirror Turn Signal Driver circuit at the Driver Outside Rearview Mirror C1 and C2 (Component Side) connectors.

Is the resistance below 10K Ohms for either measurement?

Yes

- Repair all circuits with a resistance below 10K Ohms for a short to the (A856) 5-volt Supply circuit. If the wiring harness and connector are okay, replace the Driver Outside Rearview Mirror in accordance with the Service Information.
- Perform the BODY VERIFICATION TEST. (Refer to 28 - DTC-Based Diagnostics/MODULE, Totally Integrated Power (TIPM) - Standard Procedure).

No

- Inspect the wiring and connectors for damage and repair as necessary. If the wiring and connectors are okay, replace the Door Module in accordance with the Service Information.
- Perform the BODY VERIFICATION TEST. (Refer to 28 - DTC-Based Diagnostics/MODULE, Totally Integrated Power (TIPM) - Standard Procedure).

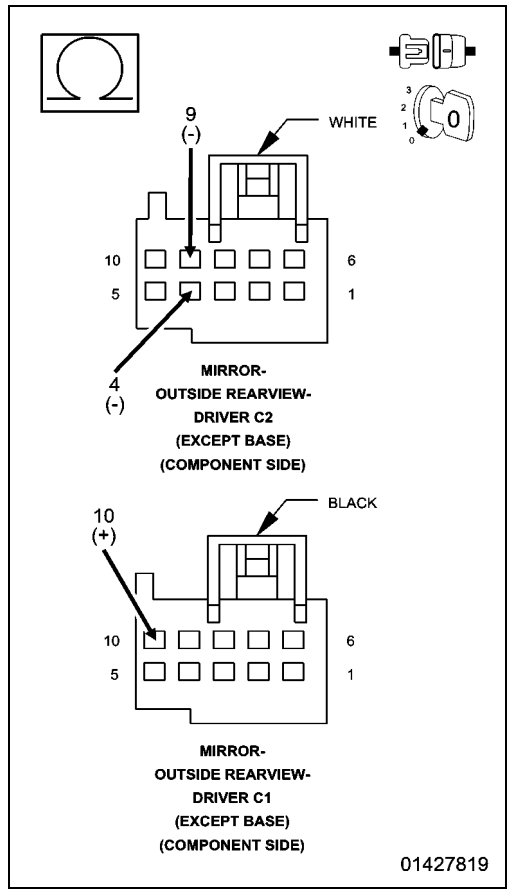

■ B1D1E-11-DRIVER MIRROR VERTICAL MOTOR CONTROL - CIRCUIT SHORT TO GROUND

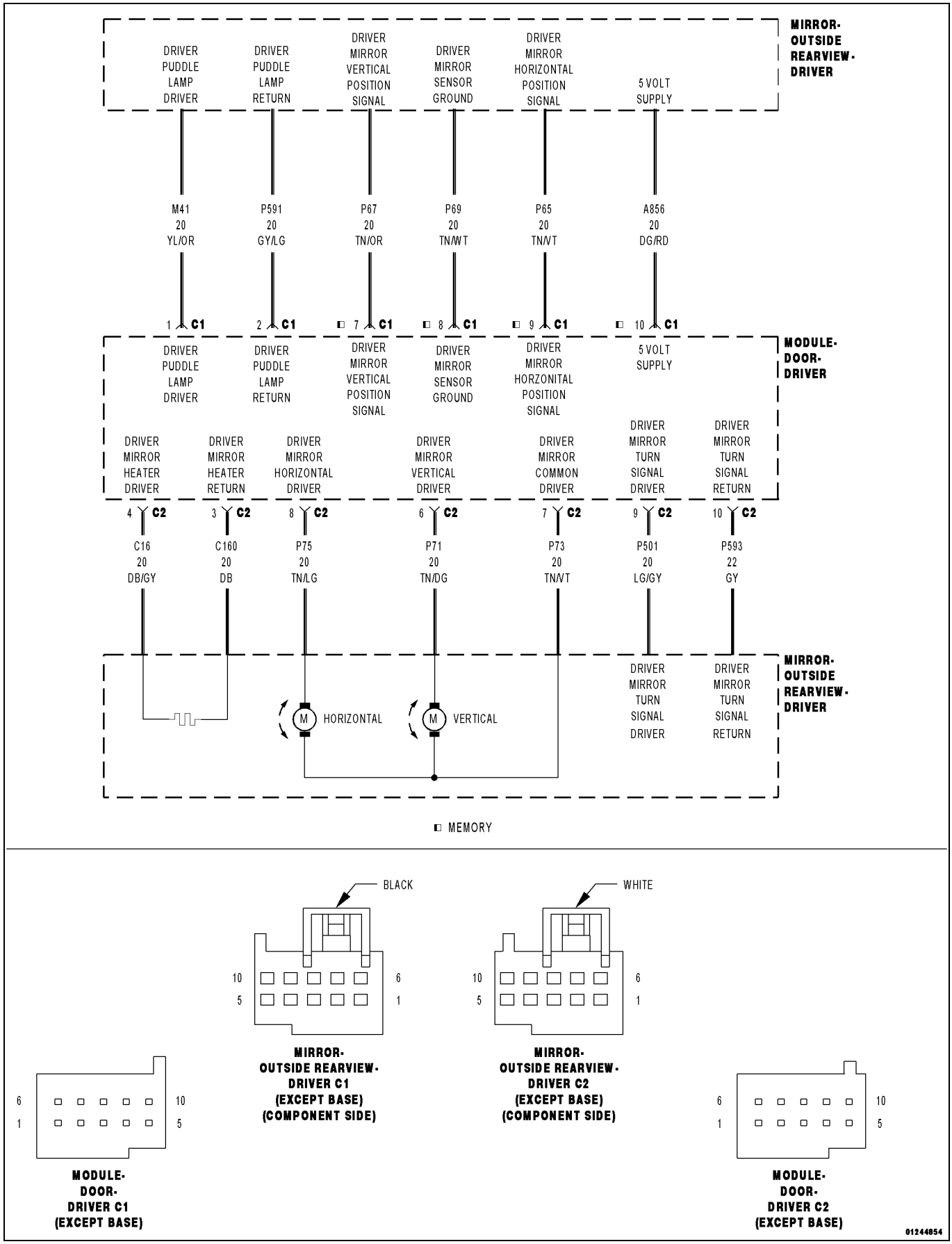

For a complete wiring diagram, **refer to the Wiring Information**.

- **When Monitored:**
  Continuously.
- **Set Condition:**
  The Door Module senses a short low on the (P71) Driver Mirror Vertical Driver circuit for more than two seconds.

Possible Causes
(P71) DRIVER MIRROR VERTICAL DRIVER CIRCUIT SHORTED TO GROUND
(P71) DRIVER MIRROR VERTICAL DRIVER CIRCUIT SHORTED TO THE (C160) DRIVER MIRROR HEATER RETURN CIRCUIT
(P71) DRIVER MIRROR VERTICAL DRIVER CIRCUIT SHORTED TO THE (P593) DRIVER MIRROR TURN SIGNAL RETURN CIRCUIT
(P71) DRIVER MIRROR VERTICAL DRIVER CIRCUIT SHORTED TO THE (P69) DRIVER MIRROR SENSOR GROUND CIRCUIT
(P71) DRIVER MIRROR VERTICAL DRIVER CIRCUIT SHORTED TO THE (P591) DRIVER PUDDLE LAMP RETURN CIRCUIT
DRIVER OUTSIDE REARVIEW MIRROR SHORTED
DOOR MODULE

1. TEST FOR INTERMITTENT CONDITION

1. Turn the ignition on.
2. Using a scan tool, record and erase Diagnostic Trouble Codes (DTCs).
3. Turn the turn signal on, if equipped with turn signal mirror.
4. Turn the puddle lamps on, if equipped with puddle lamp mirror.
5. Turn the rear defogger on, if equipped with heated mirror.
6. Press and release the Mirror Select switch to select the Driver Outside Rearview Mirror.
7. Operate the Mirror Adjust switch in all directions several times while monitoring the scan tool for DTCs.

NOTE: After adjusting the mirror in one direction wait at least two seconds before adjusting the mirror in the opposite direction, as this will allow time for an active fault to set if present.

Is the DTC active?

Yes

- Go To 2

No

- The conditions that caused this code to set are not present at this time. For vehicle's equipped with folding outside rearview mirrors, repeat test with mirror folded. If DTC is now active, Go To 2. Otherwise, use the wiring diagram/ schematic as a guide and inspect the wiring and connectors.
- Perform the BODY VERIFICATION TEST. (Refer to 28 - DTC-Based Diagnostics/MODULE, Totally Integrated Power (TIPM) - Standard Procedure).

2. CHECK (P71) DRIVER MIRROR VERTICAL DRIVER CIRCUIT FOR A SHORT TO GROUND

1. Turn the ignition off.
2. Disconnect the Driver Outside Rearview Mirror C2 (Component Side) connector from the Door Module C2 connector.
3. Measure the resistance of the (P71) Driver Mirror Vertical Driver circuit between ground and the Driver Outside Rearview Mirror C2 (Component Side) connector.

Is the resistance below 10K Ohms?

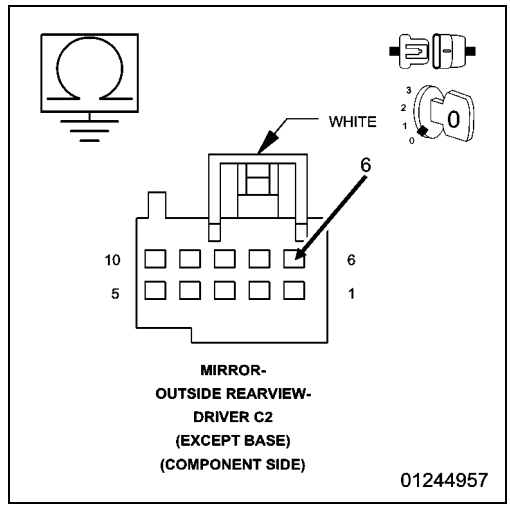

Yes

- Repair the (P71) Driver Mirror Vertical Driver circuit for a short to ground. If the wiring harness and connector are okay, replace the Driver Outside Rearview Mirror in accordance with the Service Information.
- Perform the BODY VERIFICATION TEST. (Refer to 28 - DTC-Based Diagnostics/MODULE, Totally Integrated Power (TIPM) - Standard Procedure).

No, with Heated/Turn Signal Mirror

- Go To 3

No, without Heated/Turn Signal Mirror

- Go To 4

3. CHECK (P71) DRIVER MIRROR VERTICAL DRIVER CIRCUIT FOR A SHORT TO (C160) DRIVER MIRROR HEATER RETURN CIRCUIT OR TO (P593) DRIVER MIRROR TURN SIGNAL RETURN CIRCUIT

1. For heated mirror, measure the resistance between the (P71) Driver Mirror Vertical Driver circuit and the (C160) Driver Mirror Heater Return circuit at the Driver Outside Rearview Mirror C2 (Component Side) connector.
2. For turn signal mirror, measure the resistance between the (P71) Driver Mirror Vertical Driver circuit and the (P593) Driver Mirror Turn Signal Return circuit at the Driver Outside Rearview Mirror C2 (Component Side) connector.

Is the resistance below 10K Ohms for either measurement?

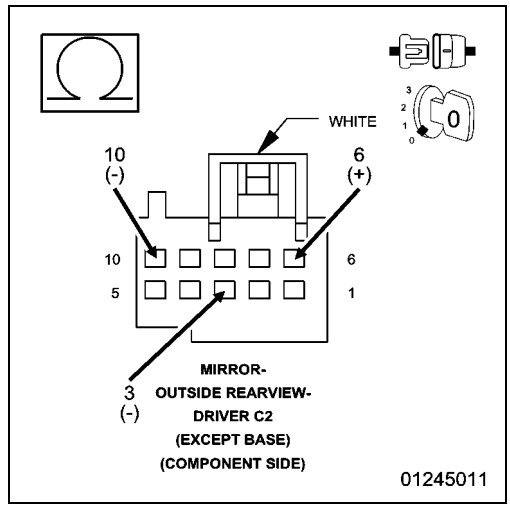

Yes

- Repair all circuits with a resistance below 10K Ohms for a short to the (P71) Driver Mirror Vertical Driver circuit. If the wiring harness and connector are okay, replace the Driver Outside Rearview Mirror in accordance with the Service Information.
- Perform the BODY VERIFICATION TEST. (Refer to 28 - DTC-Based Diagnostics/MODULE, Totally Integrated Power (TIPM) - Standard Procedure).

No

- Go To 4

4. CHECK (P71) DRIVER MIRROR VERTICAL DRIVER CIRCUIT FOR A SHORT TO (P69) DRIVER MIRROR SENSOR GROUND CIRCUIT

1. Disconnect the Driver Outside Rearview Mirror C1 (Component Side) connector from the Door Module C1 connector.
2. Measure the resistance between the (P71) Driver Mirror Vertical Driver circuit and the (P69) Driver Mirror Sensor Ground circuit at the Driver Outside Rearview Mirror C2 and C1 (Component Side) connectors.

Is the resistance below 10K Ohms?

Yes

- Repair the (P71) Driver Mirror Vertical Driver circuit for a short to the (P69) Driver Mirror Sensor Ground circuit. If the wiring harness and connector are okay, replace the Driver Outside Rearview Mirror in accordance with the Service Information.
- Perform the BODY VERIFICATION TEST. (Refer to 28 - DTC-Based Diagnostics/MODULE, Totally Integrated Power (TIPM) - Standard Procedure).

No, with Puddle Lamp Mirror

- Go To 5

No, without Puddle Lamp Mirror

- Inspect the wiring and connectors for damage and repair as necessary. If the wiring and connectors are okay, replace the Door Module in accordance with the Service Information.
- Perform the BODY VERIFICATION TEST. (Refer to 28 - DTC-Based Diagnostics/MODULE, Totally Integrated Power (TIPM) - Standard Procedure).

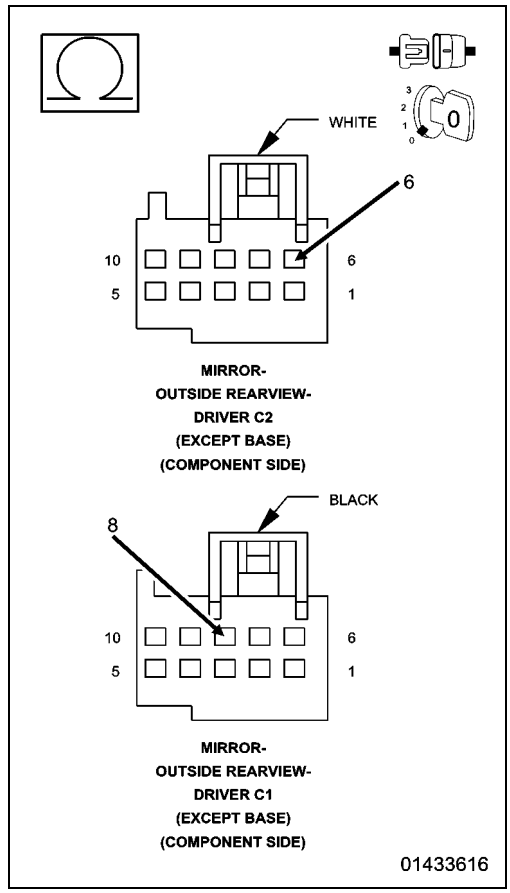

5. CHECK (P71) DRIVER MIRROR VERTICAL DRIVER CIRCUIT FOR A SHORT TO (P591) DRIVER PUDDLE LAMP RETURN CIRCUIT

1. Measure the resistance between the (P71) Driver Mirror Vertical Driver circuit and the (P591) Driver Puddle Lamp Return circuit at the Driver Outside Rearview Mirror C2 and C1 (Component Side) connectors.

Is the resistance below 10K Ohms?

Yes

- Repair the (P71) Driver Mirror Vertical Driver circuit for a short to the (P591) Driver Puddle Lamp Return circuit. If the wiring harness and connector are okay, replace the Driver Outside Rearview Mirror in accordance with the Service Information.
- Perform the BODY VERIFICATION TEST. (Refer to 28 - DTC-Based Diagnostics/MODULE, Totally Integrated Power (TIPM) - Standard Procedure).

No

- Inspect the wiring and connectors for damage and repair as necessary. If the wiring and connectors are okay, replace the Door Module in accordance with the Service Information.
- Perform the BODY VERIFICATION TEST. (Refer to 28 - DTC-Based Diagnostics/MODULE, Totally Integrated Power (TIPM) - Standard Procedure).

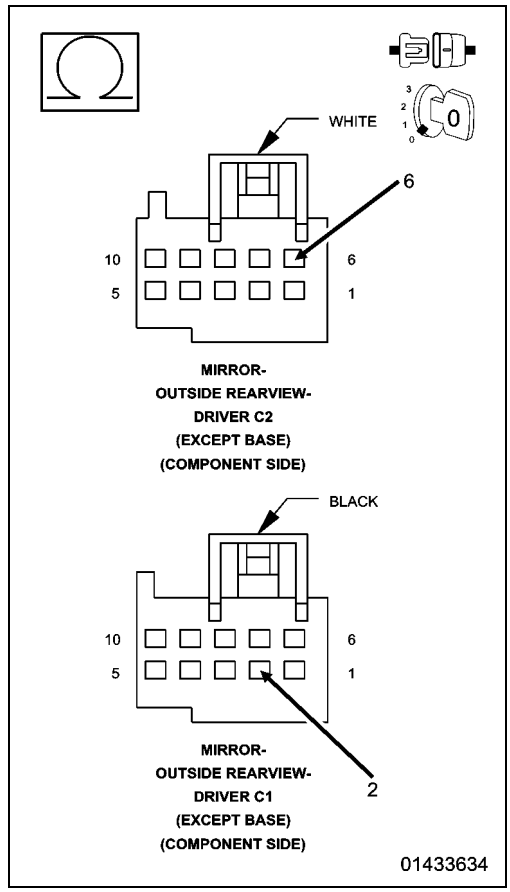

■ B1D22-11-DRIVER MIRROR HORIZONTAL MOTOR CONTROL - CIRCUIT SHORT TO GROUND

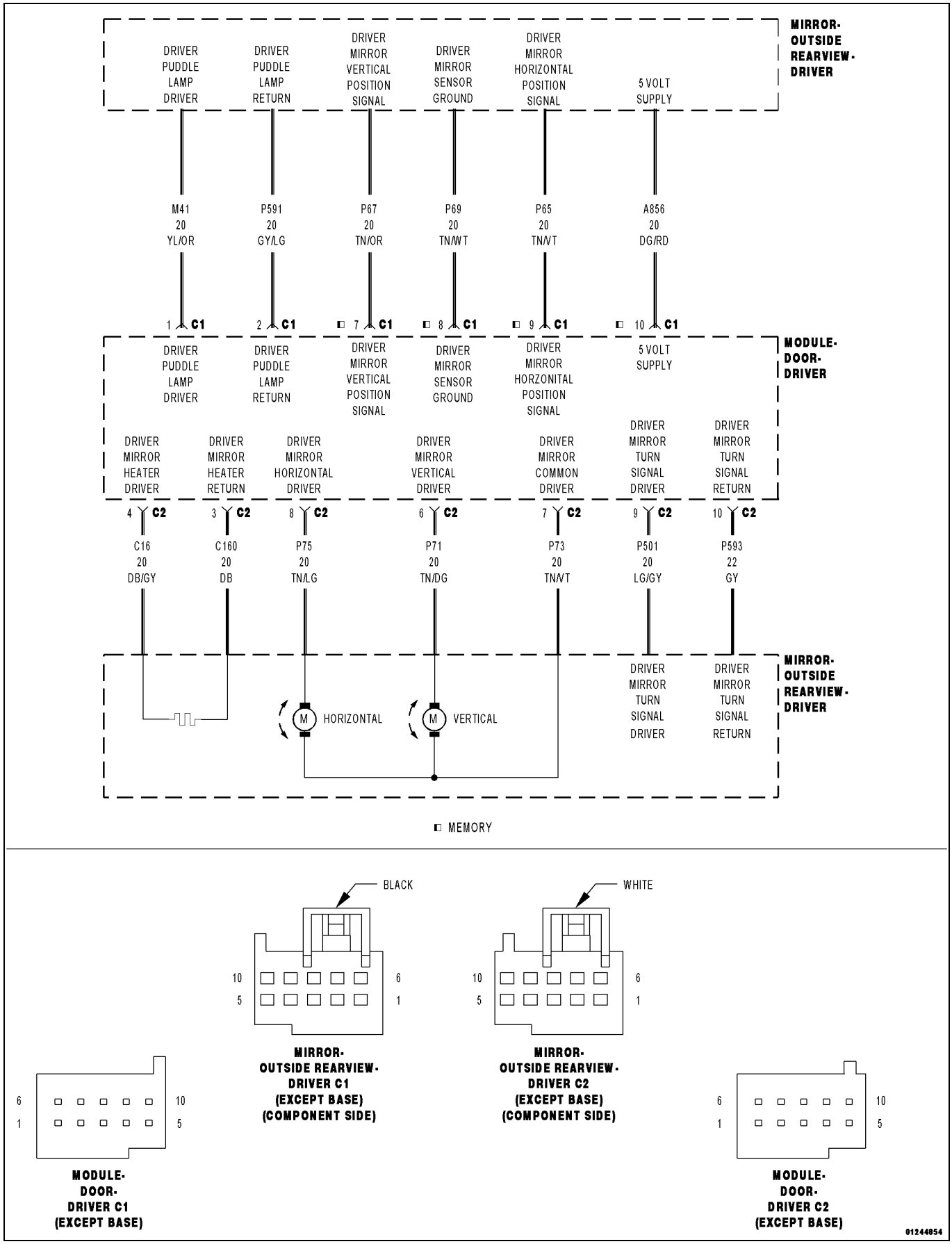

For a complete wiring diagram, **refer to the Wiring Information**.

- **When Monitored:**
  Continuously.
- **Set Condition:**
  The Door Module senses a short low on the (P75) Driver Mirror Horizontal Driver circuit for more than two seconds.

Possible Causes
(P75) DRIVER MIRROR HORIZONTAL DRIVER CIRCUIT SHORTED TO GROUND
(P75) DRIVER MIRROR HORIZONTAL DRIVER CIRCUIT SHORTED TO THE (C160) DRIVER MIRROR HEATER RETURN CIRCUIT
(P75) DRIVER MIRROR HORIZONTAL DRIVER CIRCUIT SHORTED TO THE (P593) DRIVER MIRROR TURN SIGNAL RETURN CIRCUIT
(P75) DRIVER MIRROR HORIZONTAL DRIVER CIRCUIT SHORTED TO THE (P69) DRIVER MIRROR SENSOR GROUND CIRCUIT
(P75) DRIVER MIRROR HORIZONTAL DRIVER CIRCUIT SHORTED TO THE (P591) DRIVER PUDDLE LAMP RETURN CIRCUIT
DRIVER OUTSIDE REARVIEW MIRROR SHORTED
DOOR MODULE

1. TEST FOR INTERMITTENT CONDITION

1. Turn the ignition on.
2. With a scan tool, record and erase DTCs.
3. Turn the turn signal on, if equipped with turn signal mirror.
4. Turn the puddle lamps on, if equipped with puddle lamp mirror.
5. Turn the rear defogger on, if equipped with heated mirror.
6. Press and release the Mirror Select switch to select the Driver Outside Rearview Mirror.
7. Operate the Mirror Adjust switch in all directions several times while monitoring the scan tool for DTCs.

NOTE: After adjusting the mirror in one direction wait at least two seconds before adjusting the mirror in the opposite direction, as this will allow time for an active fault to set if present.

Does the scan tool display B1D22-11-DRIVER MIRROR HORIZONTAL MOTOR CONTROL - CIRCUIT SHORT TO GROUND?

Yes

- Go To 2

No

- Test complete, the condition or conditions that originally set this DTC are not present at this time. Using the wiring diagrams as a guide, check all related splices and connectors for signs of water intrusion, corrosion, pushed out or bent terminals, and correct pin tension. For vehicle's equipped with folding outside rearview mirrors, repeat test with mirror folded. If DTC is now active, Go To 2.
- Perform the BODY VERIFICATION TEST. (Refer to 28 - DTC-Based Diagnostics/MODULE, Totally Integrated Power (TIPM) - Standard Procedure).

2. CHECK (P75) DRIVER MIRROR HORIZONTAL DRIVER CIRCUIT FOR A SHORT TO GROUND

1. Turn the ignition off.
2. Disconnect the Driver Outside Rearview Mirror C2 (Component Side) harness connector from the Door Module.
3. Measure the resistance between ground and the (P75) Driver Mirror Horizontal Driver circuit.

Is the resistance below 10K Ohms?

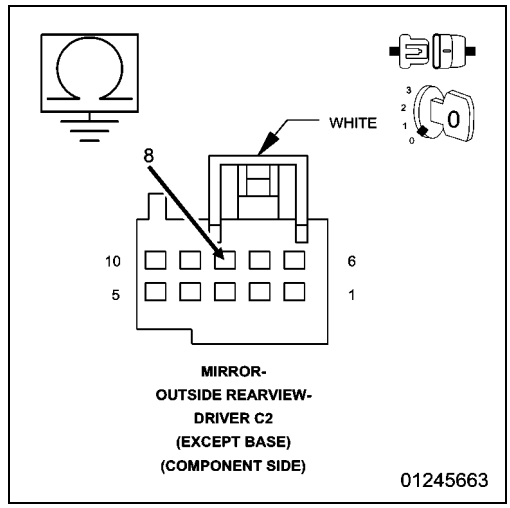

Yes

- Repair the short to ground in the (P75) Driver Mirror Horizontal Driver circuit. If the wiring harness and harness connector are okay, replace the Driver Outside Rearview Mirror in accordance with the Service Information.
- Perform the BODY VERIFICATION TEST. (Refer to 28 - DTC-Based Diagnostics/MODULE, Totally Integrated Power (TIPM) - Standard Procedure).

No, with Heated/Turn Signal Mirror

- Go To 3

No, without Heated/Turn Signal Mirror

- Go To 4

3. CHECK (P75) DRIVER MIRROR HORIZONTAL DRIVER CIRCUIT FOR A SHORT TO (C160) DRIVER MIRROR HEATER RETURN CIRCUIT OR TO (P593) DRIVER MIRROR TURN SIGNAL RETURN CIRCUIT

1. For heated mirror, measure the resistance between the (P75) Driver Mirror Horizontal Driver circuit and the (C160) Driver Mirror Heater Return circuit at the Driver Outside Rearview Mirror C2 (Component Side) harness connector.
2. For turn signal mirror, measure the resistance between the (P75) Driver Mirror Horizontal Driver circuit and the (P593) Driver Mirror Turn Signal Return circuit at the Driver Outside Rearview Mirror C2 (Component Side) harness connector.

Is the resistance below 10K Ohms for any measurement?

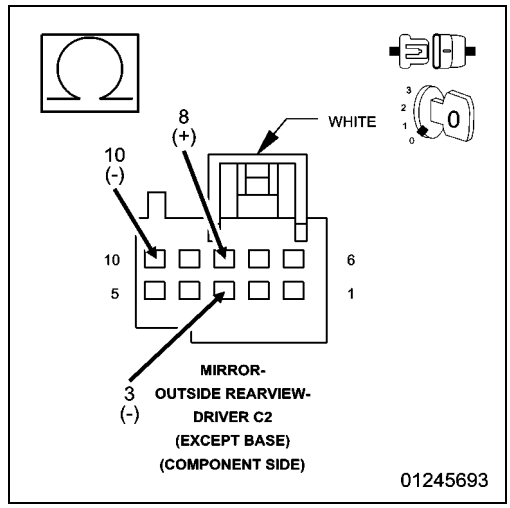

Yes

- Repair all circuits with a resistance below 10K Ohms for a short to the (P75) Driver Mirror Horizontal Driver circuit. If the wiring harness and harness connector are okay, replace the Driver Outside Rearview Mirror in accordance with the Service Information.
- Perform the BODY VERIFICATION TEST. (Refer to 28 - DTC-Based Diagnostics/MODULE, Totally Integrated Power (TIPM) - Standard Procedure).

No

- Go To 4

4. CHECK (P75) DRIVER MIRROR HORIZONTAL DRIVER CIRCUIT FOR A SHORT TO (P69) DRIVER MIRROR SENSOR GROUND CIRCUIT

1. Disconnect the Driver Outside Rearview Mirror C1 (Component Side) harness connector from the Door Module.
2. Measure the resistance between the (P75) Driver Mirror Horizontal Driver circuit and the (P69) Driver Mirror Sensor Ground circuit at the Driver Outside Rearview Mirror C2 and C1 (Component Side) harness connectors.

Is the resistance below 10K Ohms?

Yes

- Repair the (P75) Driver Mirror Horizontal Driver circuit for a short to the (P69) Driver Mirror Sensor Ground circuit. If the wiring harness and harness connector are okay, replace the Driver Outside Rearview Mirror in accordance with the Service Information.
- Perform the BODY VERIFICATION TEST. (Refer to 28 - DTC-Based Diagnostics/MODULE, Totally Integrated Power (TIPM) - Standard Procedure).

No, with Puddle Lamp Mirror

- Go To 5

No, without Puddle Lamp Mirror

- Inspect the wiring harness and harness connector for damage and repair as necessary. If the wiring harness and harness connector are okay, replace the Door Module in accordance with the Service Information.
- Perform the BODY VERIFICATION TEST. (Refer to 28 - DTC-Based Diagnostics/MODULE, Totally Integrated Power (TIPM) - Standard Procedure).

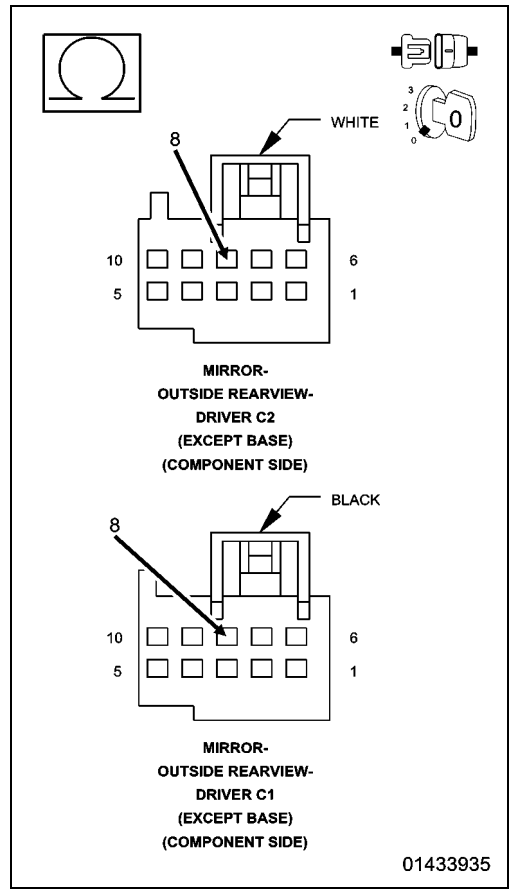

5. CHECK (P75) DRIVER MIRROR HORIZONTAL DRIVER CIRCUIT FOR A SHORT TO (P591) DRIVER PUDDLE LAMP RETURN CIRCUIT

1. Measure the resistance between the (P75) Driver Mirror Horizontal Driver circuit and the (P591) Driver Puddle Lamp Return circuit at the Driver Outside Rearview Mirror C2 and C1 (Component Side) harness connectors.

Is the resistance below 10K Ohms?

Yes

- Repair the (P75) Driver Mirror Horizontal Driver circuit for a short to the (P591) Driver Puddle Lamp Return circuit. If the wiring harness and harness connector are okay, replace the Driver Outside Rearview Mirror in accordance with the Service Information.
- Perform the BODY VERIFICATION TEST. (Refer to 28 - DTC-Based Diagnostics/MODULE, Totally Integrated Power (TIPM) - Standard Procedure).

No

- Inspect the wiring harness and harness connector for damage and repair as necessary. If the wiring harness and harness connector are okay, replace the Door Module in accordance with the Service Information.
- Perform the BODY VERIFICATION TEST. (Refer to 28 - DTC-Based Diagnostics/MODULE, Totally Integrated Power (TIPM) - Standard Procedure).

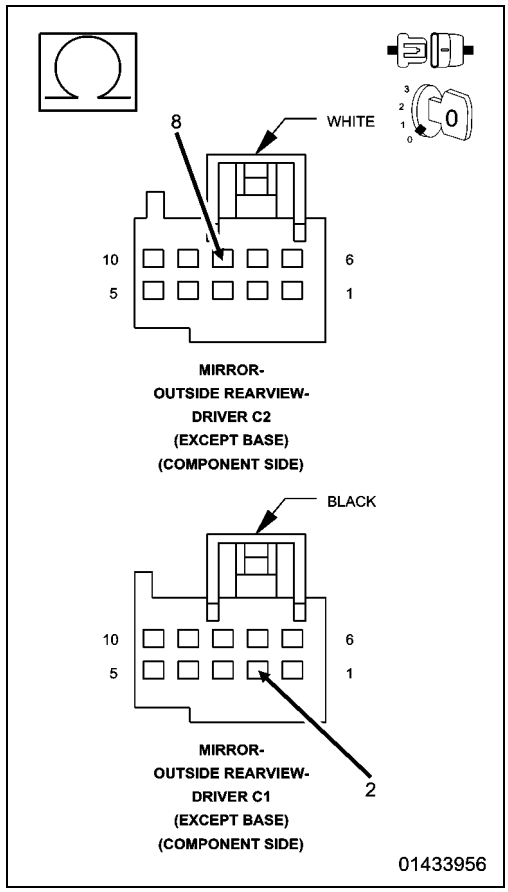

B1D32-11-DRIVER MIRROR HEATER CONTROL - CIRCUIT SHORT TO GROUND

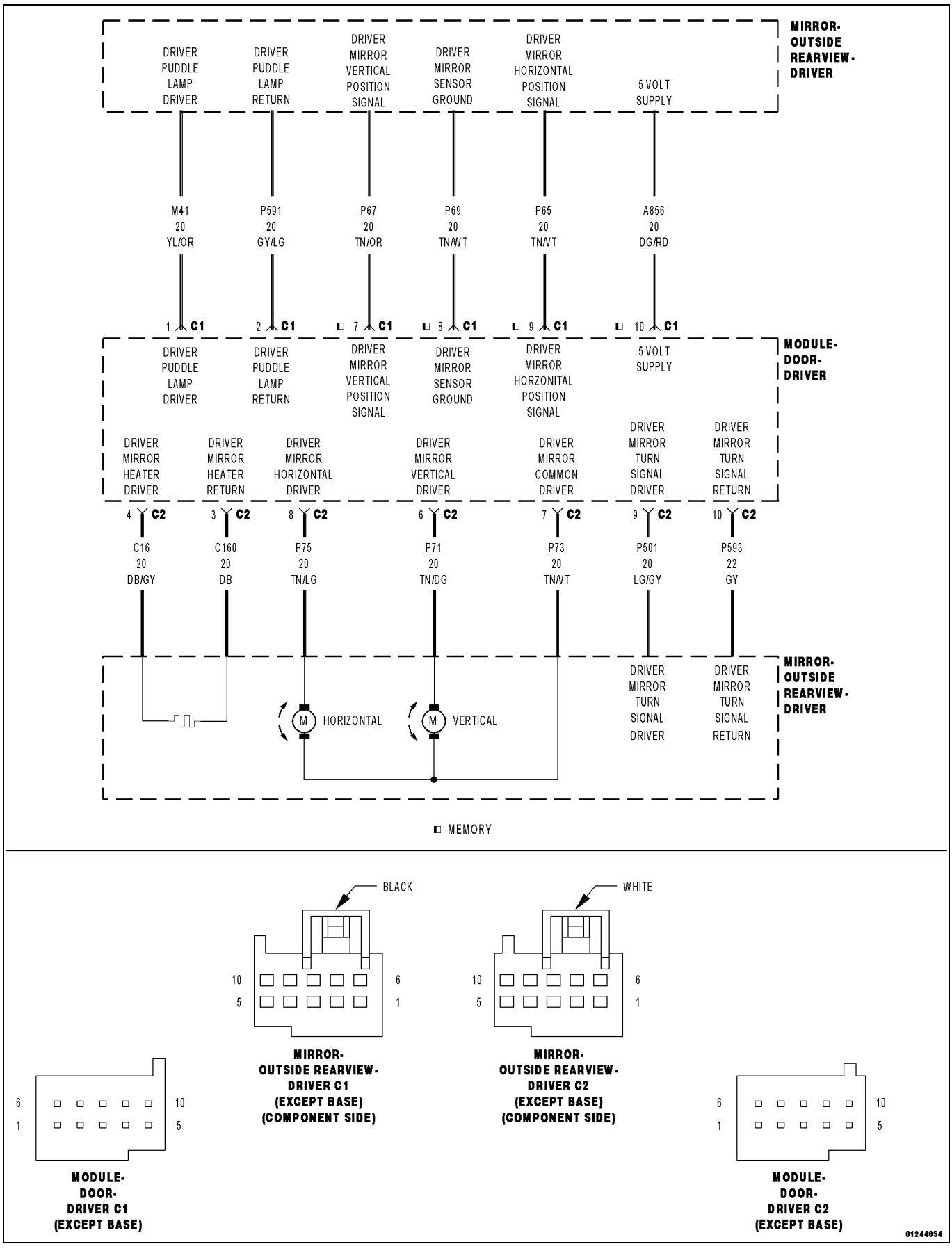

For a complete wiring diagram, **refer to the Wiring Information**.

- **When Monitored:**

  Continuously.
- **Set Condition:**

  The Door Module senses a short low on the (C16) Driver Mirror Heater Driver circuit for more than two seconds with the heater switched on.

Possible Causes
(C16) DRIVER MIRROR HEATER DRIVER CIRCUIT SHORTED TO GROUND
(C16) DRIVER MIRROR HEATER DRIVER CIRCUIT SHORTED TO THE (P75) DRIVER MIRROR HORIZONTAL DRIVER CIRCUIT
(C16) DRIVER MIRROR HEATER DRIVER CIRCUIT SHORTED TO THE (P71) DRIVER MIRROR VERTICAL DRIVER CIRCUIT
(C16) DRIVER MIRROR HEATER DRIVER CIRCUIT SHORTED TO THE (P73) DRIVER MIRROR COMMON DRIVER CIRCUIT
(C16) DRIVER MIRROR HEATER DRIVER CIRCUIT SHORTED TO THE (P593) DRIVER MIRROR TURN SIGNAL RETURN CIRCUIT
(C16) DRIVER MIRROR HEATER DRIVER CIRCUIT SHORTED TO THE (C160) DRIVER MIRROR HEATER RETURN CIRCUIT
(C16) DRIVER MIRROR HEATER DRIVER CIRCUIT SHORTED TO THE (69) DRIVER MIRROR SENSOR GROUND CIRCUIT
(C16) DRIVER MIRROR HEATER DRIVER CIRCUIT SHORTED TO THE (P591) DRIVER PUDDLE LAMP RETURN CIRCUIT
DRIVER OUTSIDE REARVIEW MIRROR SHORTED
DOOR MODULE

1. TEST FOR INTERMITTENT CONDITION

1. Turn the ignition on.
2. Using a scan tool, record and erase Diagnostic Trouble Codes (DTCs).
3. Turn the turn signal on, if equipped with turn signal mirror.
4. Turn the puddle lamps on, if equipped with puddle lamp mirror.
5. Turn the rear defogger on.
6. Press and release the Mirror Select switch to select the Driver Outside Rearview Mirror.
7. Operate the Mirror Adjust switch in all directions several times while monitoring the scan tool for DTCs.

NOTE: After adjusting the mirror in one direction wait at least two seconds before adjusting the mirror in the opposite direction, as this will allow time for an active fault to set if present.

Is the DTC active?

Yes

- Go To 2

No

- The conditions that caused this code to set are not present at this time. For vehicle's equipped with folding outside rearview mirrors, repeat test with mirror folded. If DTC is now active, Go To 2. Otherwise, use the wiring diagram/ schematic as a guide and inspect the wiring and connectors.
- Perform the BODY VERIFICATION TEST. (Refer to 28 - DTC-Based Diagnostics/MODULE, Totally Integrated Power (TIPM) - Standard Procedure).

2. CHECK (C16) DRIVER MIRROR HEATER DRIVER CIRCUIT FOR A SHORT TO GROUND

1. Turn the ignition off.
2. Disconnect the Driver Outside Rearview Mirror C2 (Component Side) connector from the Door Module C2 connector.
3. Measure the resistance of the (C16) Driver Mirror Heater Driver circuit between ground and the Driver Outside Rearview Mirror C2 (Component Side) connector.

Is the resistance below 10K Ohms?

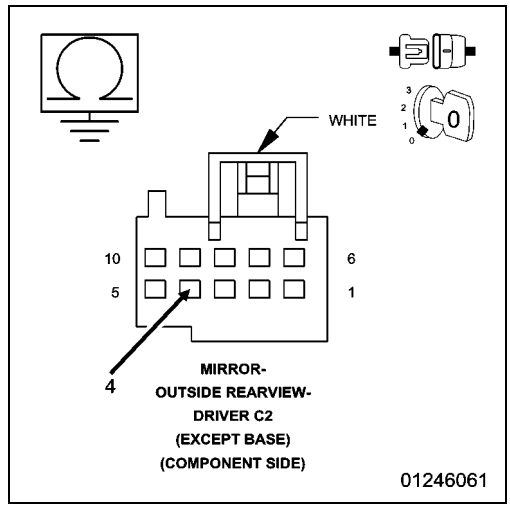

Yes

- Repair the (C16) Driver Mirror Heater Driver circuit for a short to ground. If the wiring harness and connector are okay, replace the Driver Outside Rearview Mirror in accordance with the Service Information.
- Perform the BODY VERIFICATION TEST. (Refer to 28 - DTC-Based Diagnostics/MODULE, Totally Integrated Power (TIPM) - Standard Procedure).

No

- Go To 3

3. CHECK (C16) DRIVER MIRROR HEATER DRIVER CIRCUIT FOR A SHORT TO (P75) DRIVER MIRROR HORIZONTAL DRIVER CIRCUIT, (P71) DRIVER MIRROR VERTICAL DRIVER CIRCUIT, OR TO (P73) DRIVER MIRROR COMMON DRIVER CIRCUIT

1. Measure the resistance between the (C16) Driver Mirror Heater Driver circuit and the (P75) Driver Mirror Horizontal Driver circuit at the Driver Outside Rearview Mirror C2 (Component Side) connector.
2. Measure the resistance between the (C16) Driver Mirror Heater Driver circuit and the (P71) Driver Mirror Vertical Driver circuit at the Driver Outside Rearview Mirror C2 (Component Side) connector.
3. Measure the resistance between the (C16) Driver Mirror Heater Driver circuit and the (P73) Driver Mirror Common Driver circuit at the Driver Outside Rearview Mirror C2 (Component Side) connector.

Is the resistance below 10K Ohms for any measurement?

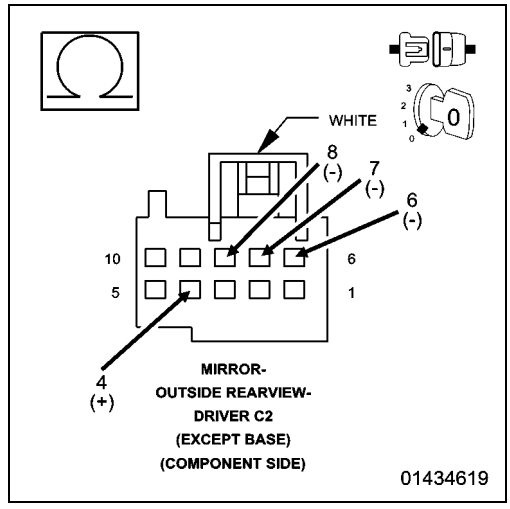

Yes

- Repair all circuits with a resistance below 10K Ohms for a short to the (C16) Driver Mirror Heater Driver circuit. If the wiring harness and connector are okay, replace the Driver Outside Rearview Mirror in accordance with the Service Information.
- Perform the BODY VERIFICATION TEST. (Refer to 28 - DTC-Based Diagnostics/MODULE, Totally Integrated Power (TIPM) - Standard Procedure).

No, with Turn Signal Mirror

- Go To 4

No, without Turn Signal Mirror

- Go To 5

4. CHECK (C16) DRIVER MIRROR HEATER DRIVER CIRCUIT FOR A SHORT TO (P593) DRIVER MIRROR TURN SIGNAL RETURN CIRCUIT

1. Measure the resistance between the (C16) Driver Mirror Heater Driver circuit and the (P593) Driver Mirror Turn Signal Return circuit at the Driver Outside Rearview Mirror C2 (Component Side) connector.

Is the resistance below 10K Ohms?

Yes

- Repair the (C16) Driver Mirror Heater Driver circuit for a short to the (P593) Driver Mirror Turn Signal Return circuit. If the wiring harness and connector are okay, replace the Driver Outside Rearview Mirror in accordance with the Service Information.
- Perform the BODY VERIFICATION TEST. (Refer to 28 - DTC-Based Diagnostics/MODULE, Totally Integrated Power (TIPM) - Standard Procedure).

No

- Go To 5

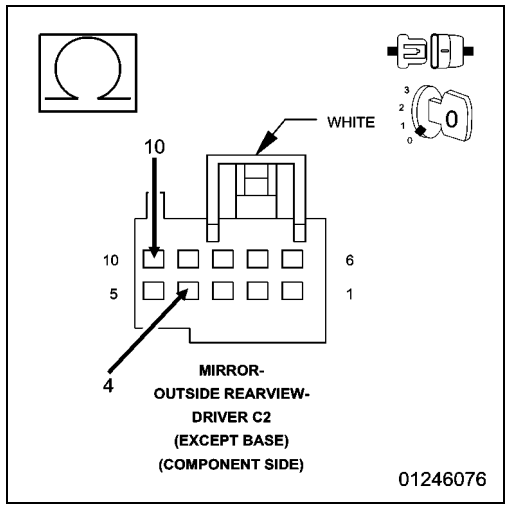

5. CHECK (C16) DRIVER MIRROR HEATER DRIVER CIRCUIT FOR A SHORT TO (C160) DRIVER MIRROR HEATER RETURN CIRCUIT

1. Measure the resistance between the (C16) Driver Mirror Heater Driver circuit and the (C160) Driver Mirror Heater Return circuit at the Driver Outside Rearview Mirror C2 (Component Side) connector.

Is the resistance below 1.0 Ohm?

Yes

- Repair the (C16) Driver Mirror Heater Driver circuit for a short to the (C160) Driver Mirror Heater Return circuit. If the wiring harness and connector are okay, replace the Driver Outside Rearview Mirror in accordance with the Service Information.
- Perform the BODY VERIFICATION TEST. (Refer to 28 - DTC-Based Diagnostics/MODULE, Totally Integrated Power (TIPM) - Standard Procedure).

No

- Go To 6

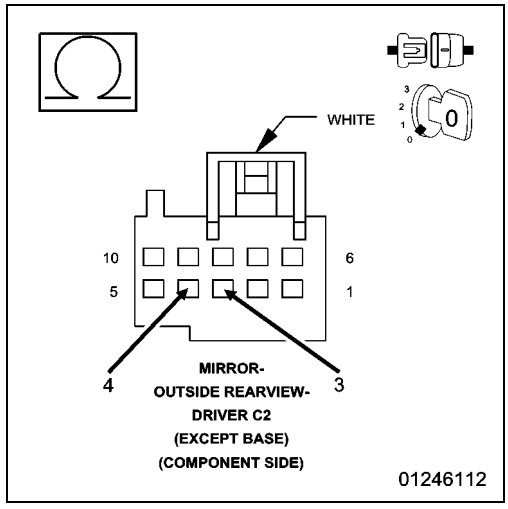

6. CHECK (C16) DRIVER MIRROR HEATER DRIVER CIRCUIT FOR A SHORT TO (69) DRIVER MIRROR SENSOR GROUND CIRCUIT

1. Disconnect the Driver Outside Rearview Mirror C1 (Component Side) connector from the Door Module C1 connector.
2. Measure the resistance between the (C16) Driver Mirror Heater Driver circuit and the (P69) Driver Mirror Sensor Ground circuit at the Driver Outside Rearview Mirror C2 and C1 (Component Side) connectors.

Is the resistance below 10K Ohms?

Yes

- Repair the (C16) Driver Mirror Heater Driver circuit for a short to the (P69) Driver Mirror Sensor Ground circuit. If the wiring harness and connector are okay, replace the Driver Outside Rearview Mirror in accordance with the Service Information.
- Perform the BODY VERIFICATION TEST. (Refer to 28 - DTC-Based Diagnostics/MODULE, Totally Integrated Power (TIPM) - Standard Procedure).

No, with Puddle Lamp Mirror

- Go To 7

No, without Puddle Lamp Mirror

- Inspect the wiring and connectors for damage and repair as necessary. If the wiring and connectors are okay, replace the Door Module in accordance with the Service Information.
- Perform the BODY VERIFICATION TEST. (Refer to 28 - DTC-Based Diagnostics/MODULE, Totally Integrated Power (TIPM) - Standard Procedure).

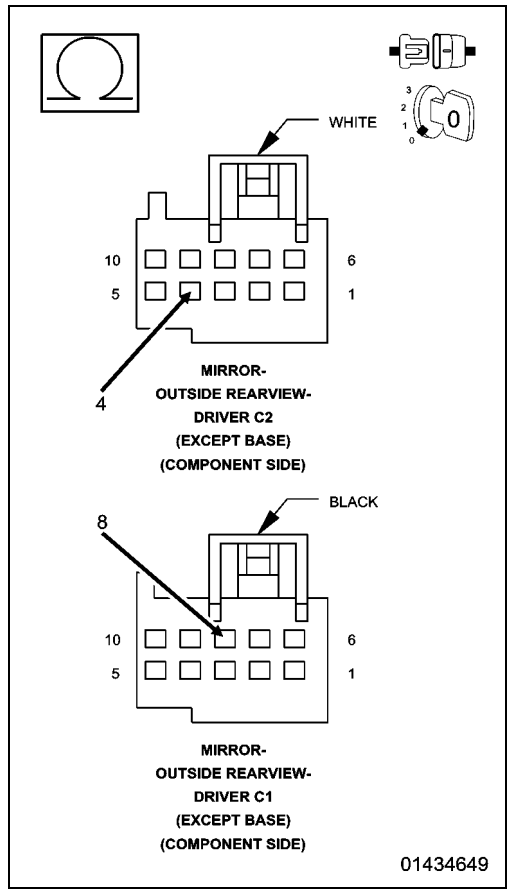

7. CHECK (C16) DRIVER MIRROR HEATER DRIVER CIRCUIT FOR A SHORT TO (P591) DRIVER PUDDLE LAMP RETURN CIRCUIT

1. Measure the resistance between the (C16) Driver Mirror Heater Driver circuit and the (P591) Driver Puddle Lamp Return circuit at the Driver Outside Rearview Mirror C2 and C1 (Component Side) connectors.

Is the resistance below 10K Ohms?

Yes

- Repair the (C16) Driver Mirror Heater Driver circuit for a short to the (P591) Driver Puddle Lamp Return circuit. If the wiring harness and connector are okay, replace the Driver Outside Rearview Mirror in accordance with the Service Information.
- Perform the BODY VERIFICATION TEST. (Refer to 28 - DTC-Based Diagnostics/MODULE, Totally Integrated Power (TIPM) - Standard Procedure).

No

- Inspect the wiring and connectors for damage and repair as necessary. If the wiring and connectors are okay, replace the Door Module in accordance with the Service Information.
- Perform the BODY VERIFICATION TEST. (Refer to 28 - DTC-Based Diagnostics/MODULE, Totally Integrated Power (TIPM) - Standard Procedure).

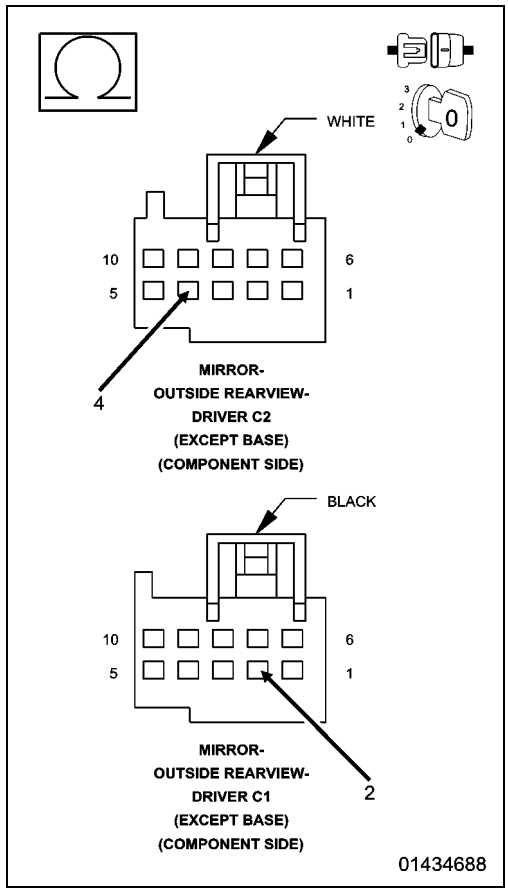

■ B1D32-15-DRIVER MIRROR HEATER CONTROL - CIRCUIT SHORT TO BATTERY OR OPEN

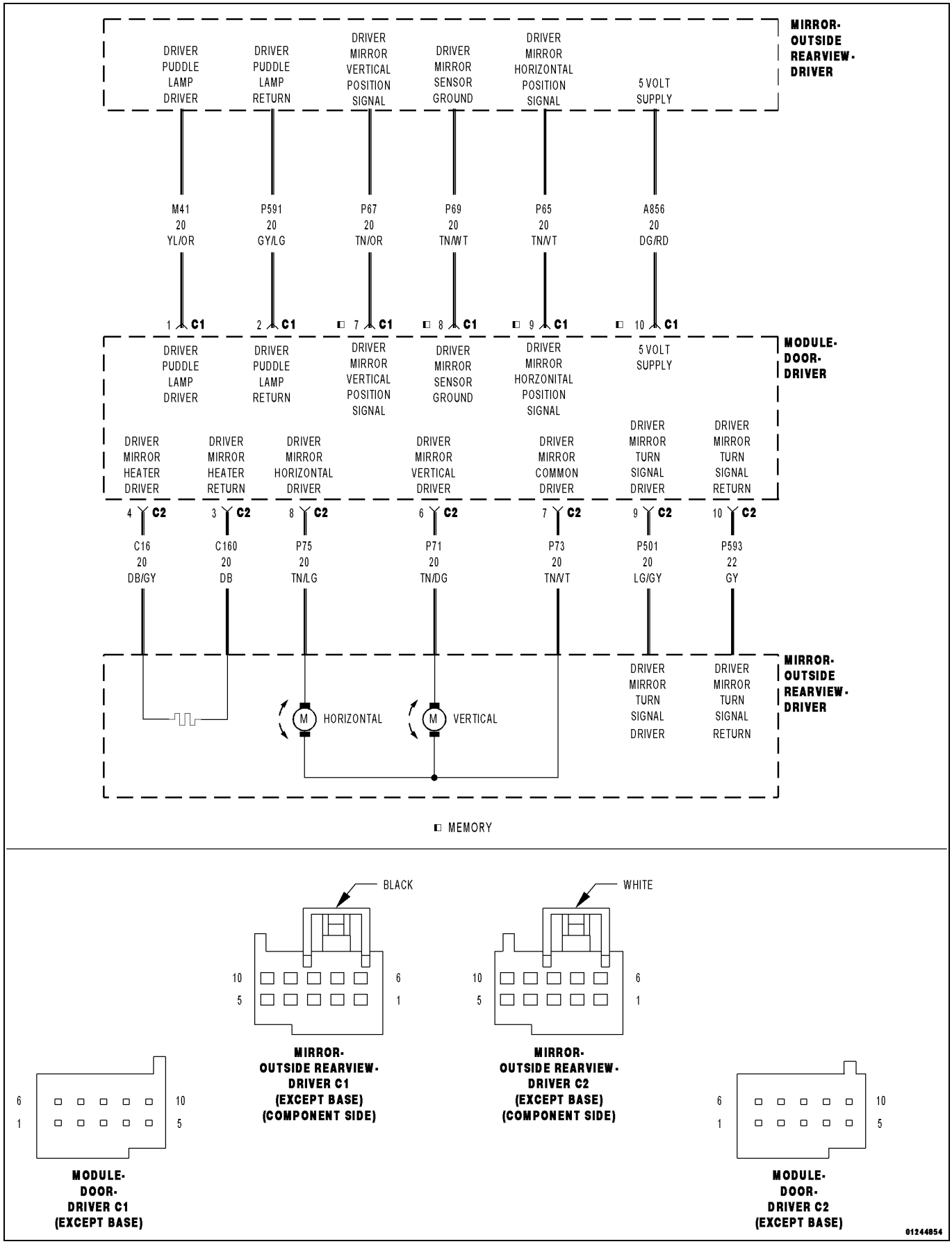

For a complete wiring diagram, **refer to the Wiring Information**.

- **When Monitored:**
  Continuously.
- **Set Condition:**
  The Door Module senses an open or a short high on the (C16) Driver Mirror Heater Driver circuit for more than two seconds.

Possible Causes
(C16) DRIVER MIRROR HEATER DRIVER CIRCUIT SHORTED TO VOLTAGE
(C16) DRIVER MIRROR HEATER DRIVER CIRCUIT OPEN
(C160) DRIVER MIRROR HEATER RETURN CIRCUIT OPEN
(C16) DRIVER MIRROR HEATER DRIVER CIRCUIT SHORTED TO THE (P75) DRIVER MIRROR HORIZONTAL DRIVER CIRCUIT
(C16) DRIVER MIRROR HEATER DRIVER CIRCUIT SHORTED TO THE (P71) DRIVER MIRROR VERTICAL DRIVER CIRCUIT
(C16) DRIVER MIRROR HEATER DRIVER CIRCUIT SHORTED TO THE (P73) DRIVER MIRROR COMMON DRIVER CIRCUIT
(C16) DRIVER MIRROR HEATER DRIVER CIRCUIT SHORTED TO THE (P501) DRIVER MIRROR TURN SIGNAL DRIVER CIRCUIT
(C16) DRIVER MIRROR HEATER DRIVER CIRCUIT SHORTED TO THE (M41) DRIVER PUDDLE LAMP DRIVER CIRCUIT
DRIVER OUTSIDE REARVIEW MIRROR
DOOR MODULE

1. TEST FOR INTERMITTENT CONDITION - HEATER OFF

1. Turn the ignition on.
2. Using a scan tool, record and erase Diagnostic Trouble Codes (DTCs).
3. Turn the turn signal on, if equipped with turn signal mirror.
4. Turn the puddle lamps on, if equipped with puddle lamp mirror.
5. Press and release the Mirror Select switch to select the Driver Outside Rearview Mirror.
6. Operate the Mirror Adjust switch in all directions several times while monitoring the scan tool for DTCs.

NOTE: After adjusting the mirror in one direction wait at least two seconds before adjusting the mirror in the opposite direction, as this will allow time for an active fault to set if present.

Is the DTC active?

Yes

- Go To 3

No

- Go To 2

2. TEST FOR INTERMITTENT CONDITION - HEATER ON

1. Turn the rear defogger on.
2. Operate the Mirror Adjust switch in all directions several times while monitoring the scan tool for DTCs.

NOTE: After adjusting the mirror in one direction wait at least two seconds before adjusting the mirror in the opposite direction, as this will allow time for an active fault to set if present.

Is the DTC active?

Yes

- Go To 3

No

- The conditions that caused this code to set are not present at this time. For vehicle's equipped with folding outside rearview mirrors, repeat test with mirror folded. If DTC is now active, Go To 3. Otherwise, use the wiring diagram/ schematic as a guide and inspect the wiring and connectors.
- Perform the BODY VERIFICATION TEST. (Refer to 28 - DTC-Based Diagnostics/MODULE, Totally Integrated Power (TIPM) - Standard Procedure).

3. CHECK (C16) DRIVER MIRROR HEATER DRIVER CIRCUIT FOR A SHORT TO VOLTAGE

1. Turn the ignition off.
2. Disconnect the Driver Outside Rearview Mirror C2 (Component Side) connector from the Door Module C2 connector.
3. Turn the ignition on.
4. Measure the voltage of the (C16) Driver Mirror Heater Driver circuit between the Driver Outside Rearview Mirror C2 (Component Side) connector and ground.

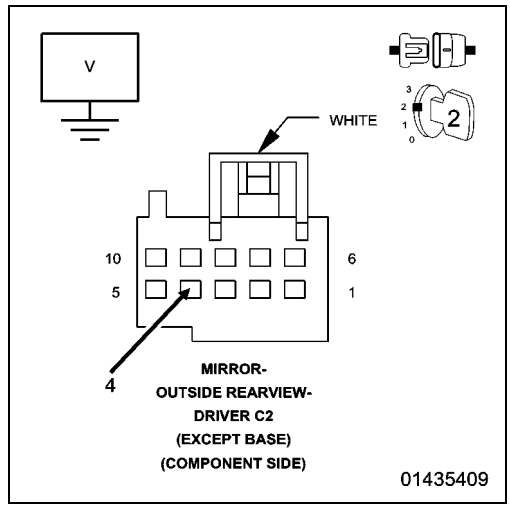

Is there any voltage present?

Yes

- Repair the (C16) Driver Mirror Heater Driver circuit for a short to voltage. If the wiring harness and connector are okay, replace the Driver Outside Rearview Mirror in accordance with the Service Information.
- Perform the BODY VERIFICATION TEST. (Refer to 28 - DTC-Based Diagnostics/MODULE, Totally Integrated Power (TIPM) - Standard Procedure).

No

- Go To 4

4. CHECK (C16) DRIVER MIRROR HEATER DRIVER CIRCUIT AND (C160) DRIVER MIRROR HEATER RETURN CIRCUIT FOR AN OPEN

1. Turn the ignition off.
2. Measure the resistance between the (C16) Driver Mirror Heater Driver circuit and the (C160) Driver Mirror Heater Return circuit at the Driver Outside Rearview Mirror C2 (Component Side) connector.

Is the resistance below 9.0 Ohms?

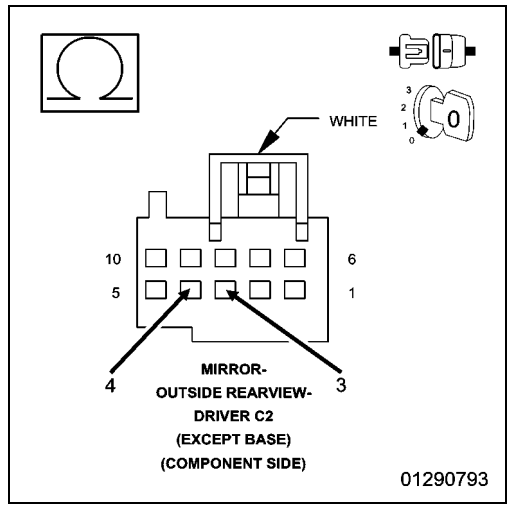

Yes

- Go To 5

No

- Repair the (C16) Driver Mirror Heater Driver circuit or the (C160) Driver Mirror Heater Return circuit for an open. If the wiring harness and connector are okay, replace the Driver Outside Rearview Mirror in accordance with the Service Information.
- Perform the BODY VERIFICATION TEST. (Refer to 28 - DTC-Based Diagnostics/MODULE, Totally Integrated Power (TIPM) - Standard Procedure).

5. CHECK (C16) DRIVER MIRROR HEATER DRIVER CIRCUIT FOR A SHORT TO (P75) DRIVER MIRROR HORIZONTAL DRIVER CIRCUIT, (P71) DRIVER MIRROR VERTICAL DRIVER CIRCUIT, OR TO (P73) DRIVER MIRROR COMMON DRIVER CIRCUIT

1. Measure the resistance between the (C16) Driver Mirror Heater Driver circuit and the (P75) Driver Mirror Horizontal Driver circuit at the Driver Outside Rearview Mirror C2 (Component Side) connector.
2. Measure the resistance between the (C16) Driver Mirror Heater Driver circuit and the (P71) Driver Mirror Vertical Driver circuit at the Driver Outside Rearview Mirror C2 (Component Side) connector.
3. Measure the resistance between the (C16) Driver Mirror Heater Driver circuit and the (P73) Driver Mirror Common Driver circuit at the Driver Outside Rearview Mirror C2 (Component Side) connector.

Is the resistance below 10K Ohms for any measurement?

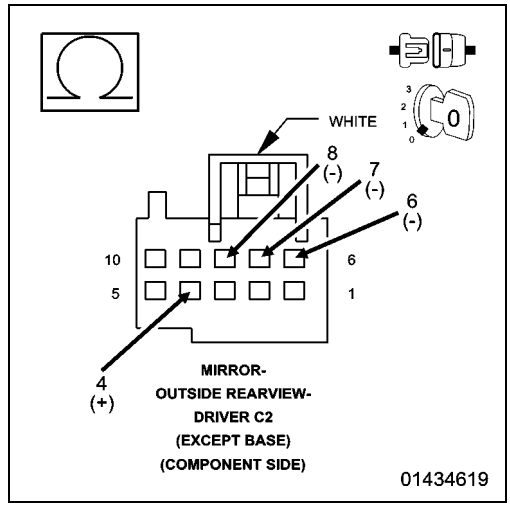

Yes

- Repair all circuits with a resistance below 10K Ohms for a short to the (C16) Driver Mirror Heater Driver circuit. If the wiring harness and connector are okay, replace the Driver Outside Rearview Mirror in accordance with the Service Information.
- Perform the BODY VERIFICATION TEST. (Refer to 28 - DTC-Based Diagnostics/MODULE, Totally Integrated Power (TIPM) - Standard Procedure).

No, with Turn Signal Mirror

- Go To 6

No, without Turn Signal Mirror

- Go To 7

6. CHECK (C16) DRIVER MIRROR HEATER DRIVER CIRCUIT FOR A SHORT TO (P501) DRIVER MIRROR TURN SIGNAL DRIVER CIRCUIT

1. Measure the resistance between the (C16) Driver Mirror Heater Driver circuit and the (P501) Driver Mirror Turn Signal Driver circuit at the Driver Outside Rearview Mirror C2 (Component Side) connector.

Is the resistance below 10K Ohms?

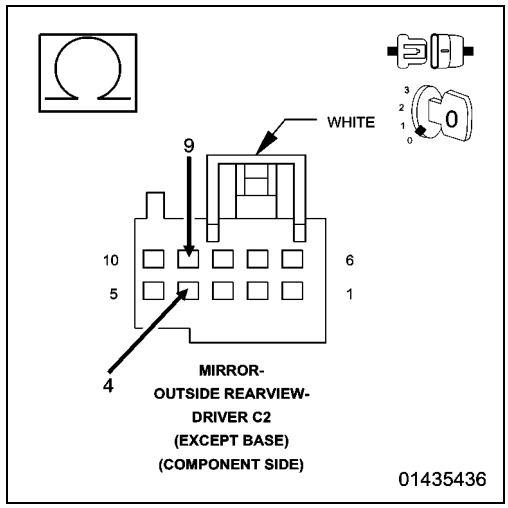

Yes

- Repair the (C16) Driver Mirror Heater Driver circuit for a short to the (P501) Driver Mirror Turn Signal Driver circuit. If the wiring harness and connector are okay, replace the Driver Outside Rearview Mirror in accordance with the Service Information.
- Perform the BODY VERIFICATION TEST. (Refer to 28 - DTC-Based Diagnostics/MODULE, Totally Integrated Power (TIPM) - Standard Procedure).

No, with Puddle Lamp Mirror

- Go To 7

No, without Puddle Lamp Mirror

- Inspect the wiring and connectors for damage and repair as necessary. If the wiring and connectors are okay, replace the Door Module in accordance with the Service Information.
- Perform the BODY VERIFICATION TEST. (Refer to 28 - DTC-Based Diagnostics/MODULE, Totally Integrated Power (TIPM) - Standard Procedure).

7. CHECK (C16) DRIVER MIRROR HEATER DRIVER CIRCUIT FOR A SHORT TO (M41) DRIVER PUDDLE LAMP DRIVER CIRCUIT

1. Disconnect the Driver Outside Rearview Mirror C1 (Component Side) connector from the Door Module C1 connector.
2. Measure the resistance between the (C16) Driver Mirror Heater Driver circuit and the (M41) Driver Puddle Lamp Driver circuit at the Driver Outside Rearview Mirror C2 and C1 (Component Side) connectors.

Is the resistance below 10K Ohms?

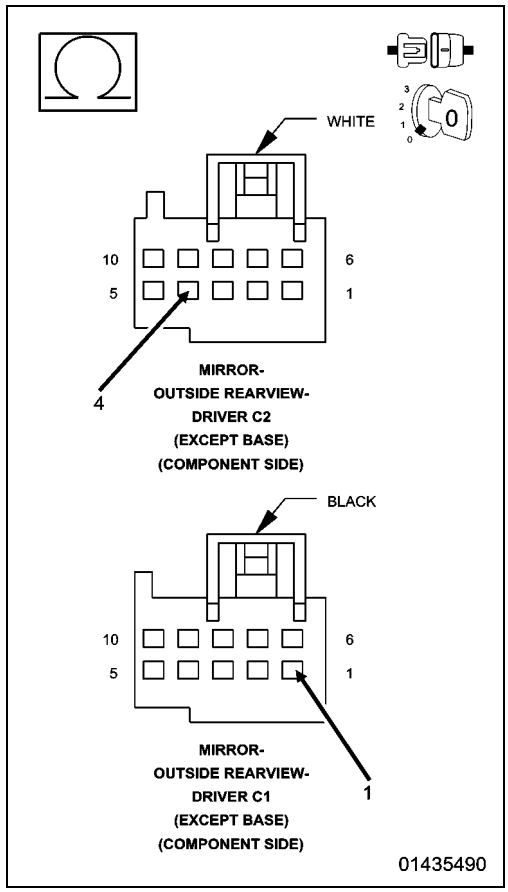

Yes

- Repair the (C16) Driver Mirror Heater Driver circuit for a short to the (M41) Driver Puddle Lamp Driver circuit. If the wiring harness and connector are okay, replace the Driver Outside Rearview Mirror in accordance with the Service Information.
- Perform the BODY VERIFICATION TEST. (Refer to 28 - DTC-Based Diagnostics/MODULE, Totally Integrated Power (TIPM) - Standard Procedure).

No

- Inspect the wiring and connectors for damage and repair as necessary. If the wiring and connectors are okay, replace the Door Module in accordance with the Service Information.
- Perform the BODY VERIFICATION TEST. (Refer to 28 - DTC-Based Diagnostics/MODULE, Totally Integrated Power (TIPM) - Standard Procedure).

B1D4A-2A-MEMORY SWITCH INPUT - SIGNAL STUCK IN RANGE

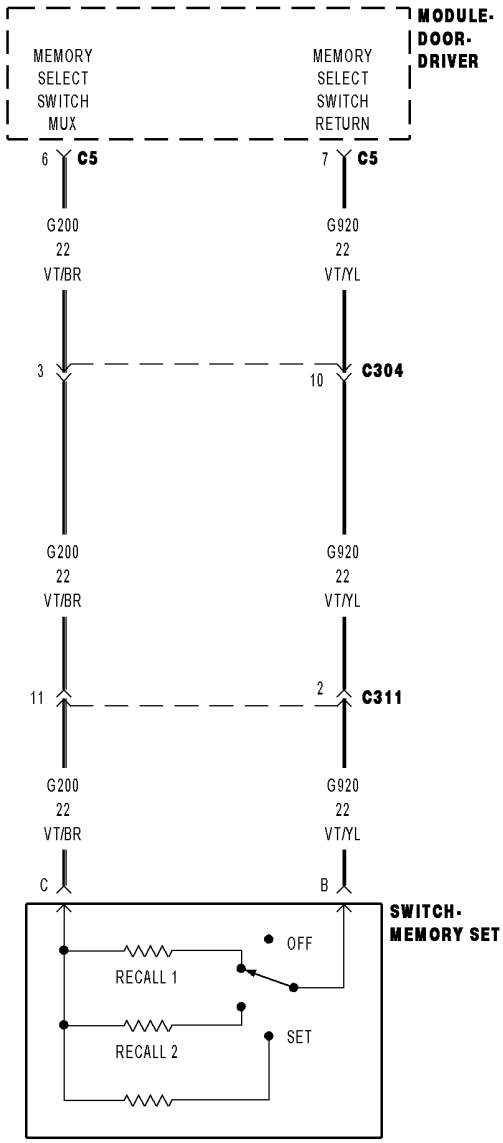

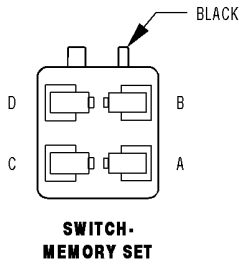

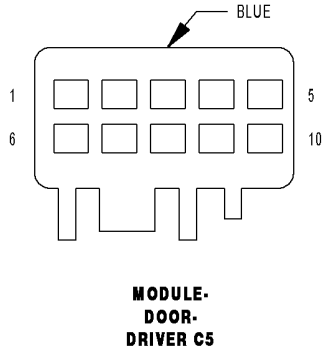

01291405

For a complete wiring diagram, **refer to the Wiring Information**.

- **When Monitored:**
  Continuously.
- **Set Condition:**
  The Door Module receives a conflicting input from the (G200) Memory Select Switch Mux circuit for more than 30 seconds.

Possible Causes
OBJECT HOLDING MEMORY SET SWITCH IN A PUSHED POSITION
SUBSTANCE CAUSING MEMORY SET SWITCH TO GET STUCK IN A PUSHED POSITION
(G200) MEMORY SELECT SWITCH MUX CIRCUIT SHORTED TO GROUND
(G200) MEMORY SELECT SWITCH MUX CIRCUIT SHORTED TO THE (G920) MEMORY SELECT SWITCH MUX RETURN CIRCUIT
MEMORY SET SWITCH
DOOR MODULE

1. INSPECT MEMORY SET SWITCH FOR DAMAGE

1. Turn the ignition off.
2. Inspect the Memory Set switch for damage.

Is the switch damaged?

Yes
- Replace the Memory Set switch in accordance with the Service Information.
- Perform the BODY VERIFICATION TEST. (Refer to 28 - DTC-Based Diagnostics/MODULE, Totally Integrated Power (TIPM) - Standard Procedure).

No
- Go To 2

2. INSPECT FOR OBJECT OR SUBSTANCE CAUSING MEMORY SET SWITCH TO STAY OR STICK IN A PUSHED POSITION

1. Inspect the Memory Set switch for anything that would cause it to stay or stick in a pushed position.

Is anything present that would cause the Memory Set switch to stay or stick in a pushed position?

Yes
- Repair as necessary.
- Perform the BODY VERIFICATION TEST. (Refer to 28 - DTC-Based Diagnostics/MODULE, Totally Integrated Power (TIPM) - Standard Procedure).

No
- Go To 3

3. TEST FOR INTERMITTENT CONDITION

1. Turn the ignition on.
2. Using a scan tool, record and erase Diagnostic Trouble Codes (DTCs).
3. Press the Memory Set switch several times in all positions.
4. Cycle the ignition from on to off three times.
5. Turn the ignition on then wait 30 seconds.
6. Using a scan tool, read DTCs.

Is the DTC active?

Yes

- Go To 4

No

- The conditions that caused this code to set are not present at this time. Verify seat harness is routed correctly. Using the wiring diagram/schematic as a guide, inspect the wiring and connectors. Attempt to reproduce condition by adjusting the seat.
- Perform the BODY VERIFICATION TEST. (Refer to 28 - DTC-Based Diagnostics/MODULE, Totally Integrated Power (TIPM) - Standard Procedure).

4. CHECK MEMORY SET SWITCH FOR A SHORT TO GROUND

1. Using a scan tool, erase DTCs.
2. Turn the ignition off.
3. Disconnect the Memory Set switch connector.
4. Cycle the ignition three times.
5. Turn the ignition on and then wait 30 seconds.
6. Using a scan tool, read DTCs.

Is the same DTC active?

Yes

- Go To 5

No

- Replace the Memory Set switch in accordance with the Service Information.
- Perform the BODY VERIFICATION TEST. (Refer to 28 - DTC-Based Diagnostics/MODULE, Totally Integrated Power (TIPM) - Standard Procedure).

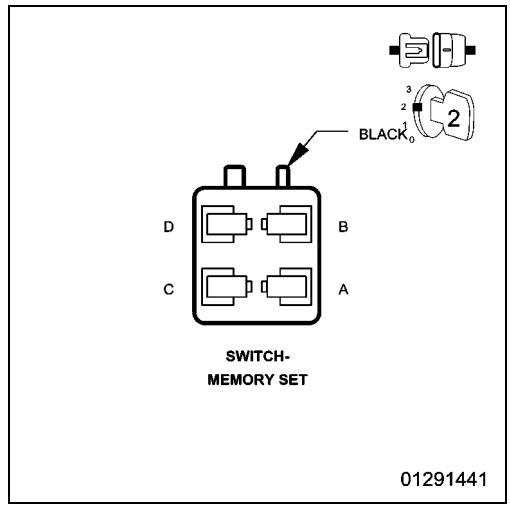

5. CHECK (G200) MEMORY SELECT SWITCH MUX CIRCUIT FOR A SHORT TO GROUND

1. Disconnect the Door Module C5 connector.
2. Measure the resistance between ground and the (G200) Memory Select Switch Mux circuit at the Memory Set switch connector.

Is the resistance below 10K Ohms?

Yes

- Repair the (G200) Memory Select Switch Mux circuit for a short to ground.
- Perform the BODY VERIFICATION TEST. (Refer to 28 - DTC-Based Diagnostics/MODULE, Totally Integrated Power (TIPM) - Standard Procedure).

No

- Go To 6

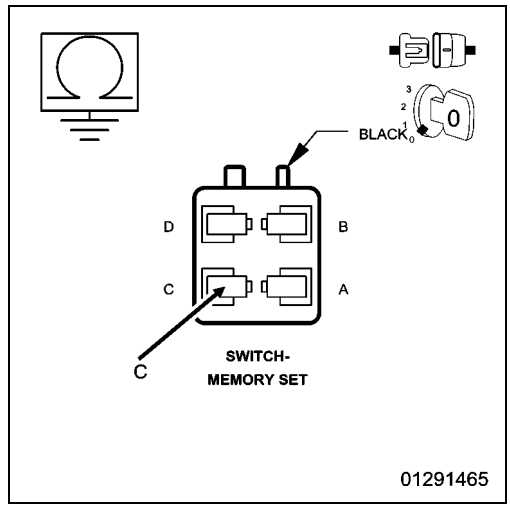

6. CHECK (G200) MEMORY SELECT SWITCH MUX CIRCUIT FOR A SHORT TO THE (G920) MEMORY SELECT SWITCH RETURN CIRCUIT

1. Measure the resistance between the (G200) Memory Select Switch Mux circuit and the (G920) Memory Select Switch Return circuit at the Memory Set switch connector.

Is the resistance below 10K Ohms?

Yes

- Repair the (G200) Memory Select Switch Mux circuit for a short to the (G920) Memory Select Switch return circuit.
- Perform the BODY VERIFICATION TEST. (Refer to 28 - DTC-Based Diagnostics/MODULE, Totally Integrated Power (TIPM) - Standard Procedure).

No

- Replace the Door Module in accordance with the Service Information.
- Perform the BODY VERIFICATION TEST. (Refer to 28 - DTC-Based Diagnostics/MODULE, Totally Integrated Power (TIPM) - Standard Procedure).

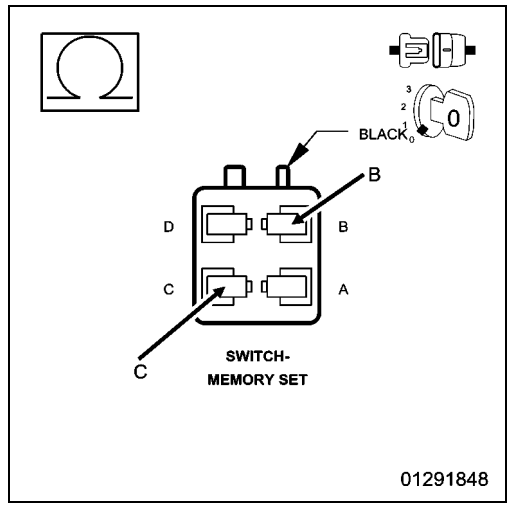

B1E64-00-LEFT MIRROR SELECT SWITCH STUCK

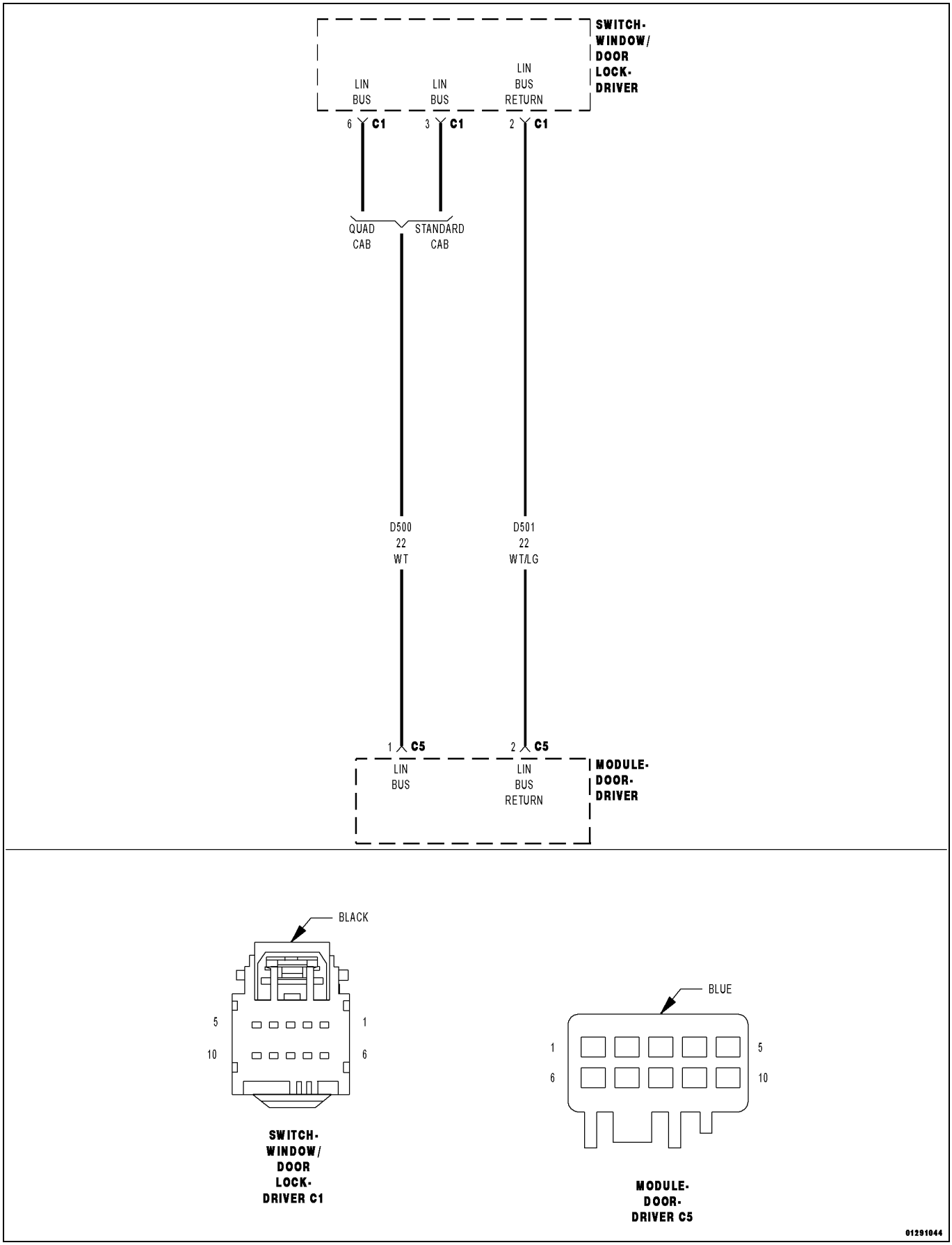

For a complete wiring diagram, **refer to the Wiring Information**.

- **When Monitored:**
  Continuously.
- **Set Condition:**
  The Door Module senses the Left Mirror Select switch input for more than 30 seconds.

Possible Causes
OBJECT HOLDING LEFT MIRROR SELECT SWITCH IN A PUSHED POSITION
SUBSTANCE CAUSING LEFT MIRROR SELECT SWITCH TO GET STUCK IN A PUSHED POSITION
DRIVER DOOR SWITCH ASSEMBLY

1. INSPECT DRIVER DOOR SWITCH ASSEMBLY FOR DAMAGE

NOTE: Diagnose and repair all LIN Bus related Diagnostic Trouble Codes (DTCs) before performing this test procedure.

1. Turn the ignition off.
2. Inspect the Driver Door switch assembly for damage.

Is the switch assembly damaged?

Yes

- Replace the Driver Door switch assembly in accordance with the Service Information.
- Perform the BODY VERIFICATION TEST. (Refer to 28 - DTC-Based Diagnostics/MODULE, Totally Integrated Power (TIPM) - Standard Procedure).

No

- Go To 2

2. INSPECT FOR OBJECT OR SUBSTANCE CAUSING LEFT MIRROR SELECT SWITCH TO STAY OR STICK IN A PUSHED POSITION

1. Inspect the Left Mirror Select switch for anything that would cause it to stay or stick in a pushed position.

Is anything present that would cause the Left Mirror Select switch to stay or stick in a pushed position?

Yes

- Repair as necessary.
- Perform the BODY VERIFICATION TEST. (Refer to 28 - DTC-Based Diagnostics/MODULE, Totally Integrated Power (TIPM) - Standard Procedure).

No

- Go To 3

3. TEST FOR INTERMITTENT CONDITION

1. Turn the ignition on.
2. Using a scan tool, record and erase DTCs.
3. Press and release the Left Mirror Select switch several times and then wait 30 seconds.
4. Using a scan tool, read DTCs.

Is the same DTC active?

Yes

- Replace the Driver Door switch assembly in accordance with the Service Information.
- Perform the BODY VERIFICATION TEST. (Refer to 28 - DTC-Based Diagnostics/MODULE, Totally Integrated Power (TIPM) - Standard Procedure).

No

- The conditions that caused this code to set are not present at this time.
- Perform the BODY VERIFICATION TEST. (Refer to 28 - DTC-Based Diagnostics/MODULE, Totally Integrated Power (TIPM) - Standard Procedure).

B1E65-00-RIGHT MIRROR SELECT SWITCH STUCK

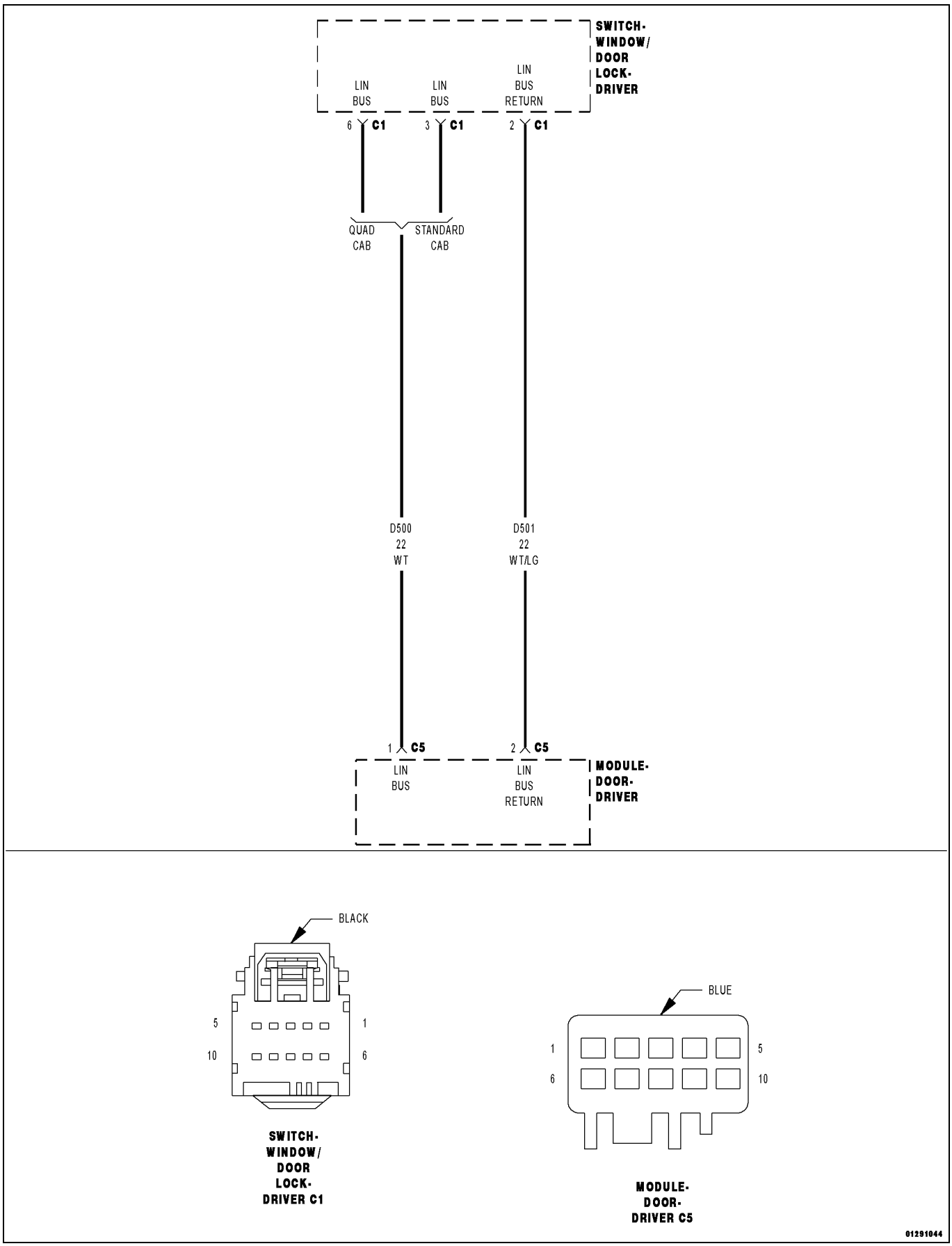

For a complete wiring diagram, **refer to the Wiring Information**.

- **When Monitored:**
  Continuously.
- **Set Condition:**
  The Door Module senses the Right Mirror Select switch input for more than 30 seconds.

Possible Causes
OBJECT HOLDING RIGHT MIRROR SELECT SWITCH IN A PUSHED POSITION
SUBSTANCE CAUSING RIGHT MIRROR SELECT SWITCH TO GET STUCK IN A PUSHED POSITION
DRIVER DOOR SWITCH ASSEMBLY

1. INSPECT DRIVER DOOR SWITCH ASSEMBLY FOR DAMAGE

NOTE: Diagnose and repair all LIN Bus related Diagnostic Trouble Codes (DTCs) before performing this test procedure.

1. Turn the ignition off.
2. Inspect the Driver Door switch assembly for damage.

Is the switch assembly damaged?

Yes

- Replace the Driver Door switch assembly in accordance with the Service Information.
- Perform the BODY VERIFICATION TEST. (Refer to 28 - DTC-Based Diagnostics/MODULE, Totally Integrated Power (TIPM) - Standard Procedure).

No

- Go To 2

2. INSPECT FOR OBJECT OR SUBSTANCE CAUSING RIGHT MIRROR SELECT SWITCH TO STAY OR STICK IN A PUSHED POSITION

1. Inspect the Right Mirror Select switch for anything that would cause it to stay or stick in a pushed position.

Is anything present that would cause the Right Mirror Select switch to stay or stick in a pushed position?

Yes

- Repair as necessary.
- Perform the BODY VERIFICATION TEST. (Refer to 28 - DTC-Based Diagnostics/MODULE, Totally Integrated Power (TIPM) - Standard Procedure).

No

- Go To 3

3. TEST FOR INTERMITTENT CONDITION

1. Turn the ignition on.
2. Using a scan tool, record and erase DTCs.
3. Press and release the Right Mirror Select switch several times and then wait 30 seconds.
4. Using a scan tool, read DTCs.

Is the same DTC active?

Yes

- Replace the Driver Door switch assembly in accordance with the Service Information.
- Perform the BODY VERIFICATION TEST. (Refer to 28 - DTC-Based Diagnostics/MODULE, Totally Integrated Power (TIPM) - Standard Procedure).

No

- The conditions that caused this code to set are not present at this time.
- Perform the BODY VERIFICATION TEST. (Refer to 28 - DTC-Based Diagnostics/MODULE, Totally Integrated Power (TIPM) - Standard Procedure).

B210C-16-BATTERY VOLTAGE INPUT - CIRCUIT VOLTAGE BELOW THRESHOLD

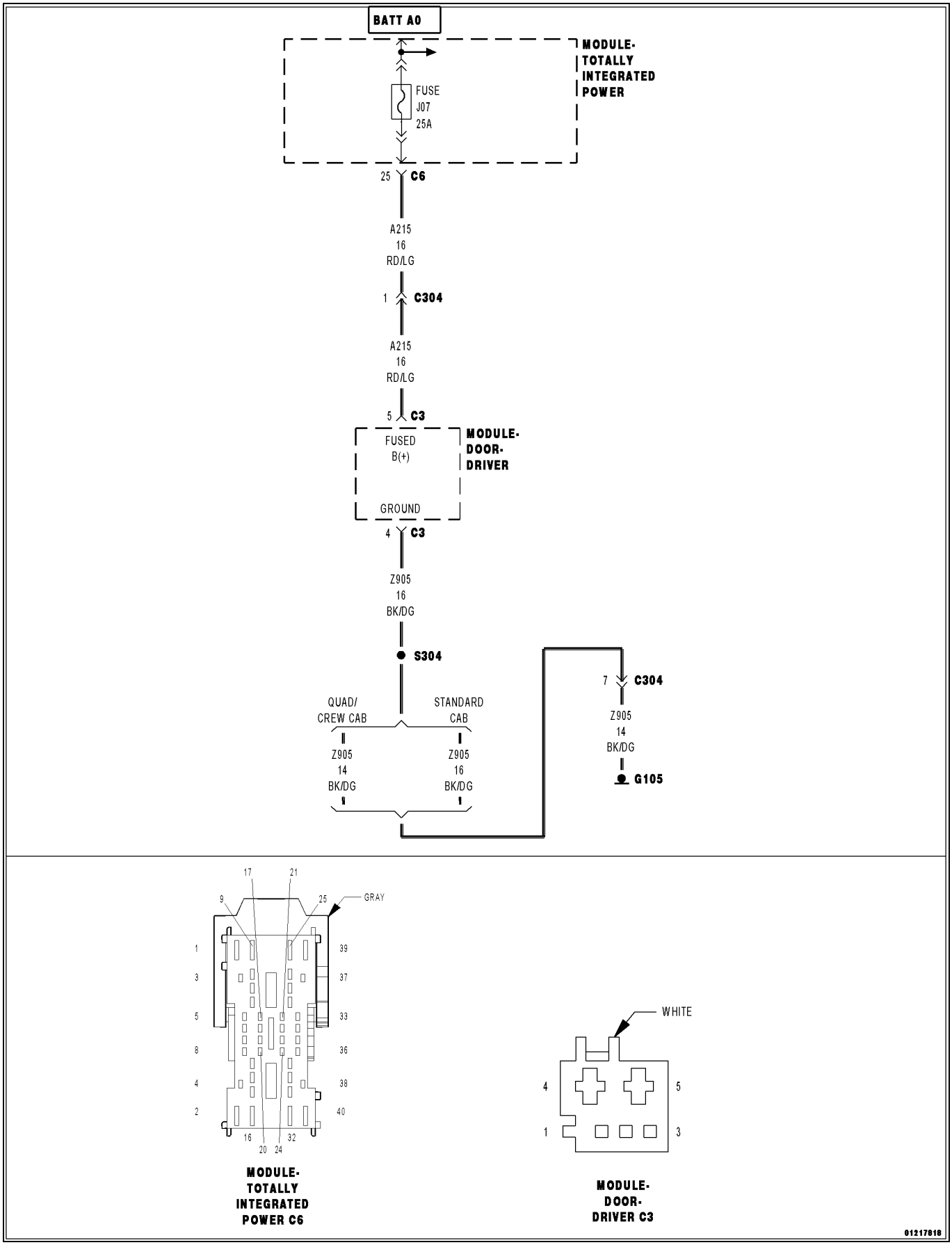

For a complete wiring diagram, **refer to the Wiring Information**.

- **When Monitored:**
  At all times.
- **Set Condition:**
  Anytime the module senses voltage input below 8.0 volts for more than four seconds, this code will set.

POSSIBLE CAUSES
LOW VOLTAGE ENGINE DTC
(A215) FUSED B(+) CIRCUIT HAS HIGH RESISTANCE
(Z905) GROUND CIRCUIT HAS HIGH RESISTANCE
DRIVER DOOR MODULE (DDM)

1. CHECK ENGINE DTCs

1. With the scan tool, read the Powertrain Control Module DTCs

Are there any Charging or Battery DTCs present?

No

- Go To 2

Yes

- (Refer to 28 - DTC-Based Diagnostics/MODULE, Powertrain Control (PCM) - Diagnosis and Testing) and perform the appropriate charging system or battery DTC diagnostic procedures.

2. TEST FOR INTERMITTENT CONDITION

1. With the scan tool, record and erase the DTCs.
2. Start the engine and run for two minutes.
3. With the scan tool, read the active DTCs in the Door Module.

Does the scan tool display B210C-16-BATTERY VOLTAGE INPUT - CIRCUIT VOLTAGE BELOW THRESHOLD?

Yes

- Go To 3

No

- Test complete, the condition or conditions that originally set this DTC are not present at this time. Using the wiring diagrams as a guide, check all related splices and connectors for signs of water intrusion, corrosion, pushed out or bent terminals and correct pin tension.
- Perform the BODY VERIFICATION TEST. (Refer to 28 - DTC-Based Diagnostics/MODULE, Totally Integrated Power (TIPM) - Standard Procedure).

3. (A215) FUSED B(+) OR (Z905) GROUND CIRCUITS RESISTED

1. Turn the ignition off.
2. Disconnect the Driver Door Module C3 connector.
3. Turn the ignition on.
4. Test the (A215) Fused B(+) circuits by connecting a 12-volt test light between the Fused B(+) circuit and the (Z905) Ground circuits in the door module C3 connector. The test light must illuminate brightly. Compare the brightness to that of a direct connection to the battery.

Does the test light illuminate brightly?

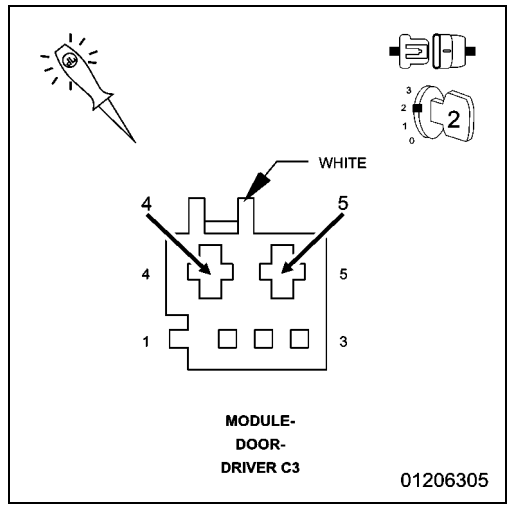

Yes

- Replace the Driver Door Module in accordance with the Service Information.
- Perform the BODY VERIFICATION TEST. (Refer to 28 - DTC-Based Diagnostics/MODULE, Totally Integrated Power (TIPM) - Standard Procedure).

No

- Test the (A215) Fused B(+) and the (Z905) Ground circuits to determine which one has the high resistance. Repair the necessary circuit for high resistance.
- Perform the BODY VERIFICATION TEST. (Refer to 28 - DTC-Based Diagnostics/MODULE, Totally Integrated Power (TIPM) - Standard Procedure).

B210C-17-BATTERY VOLTAGE INPUT - CIRCUIT VOLTAGE ABOVE THRESHOLD

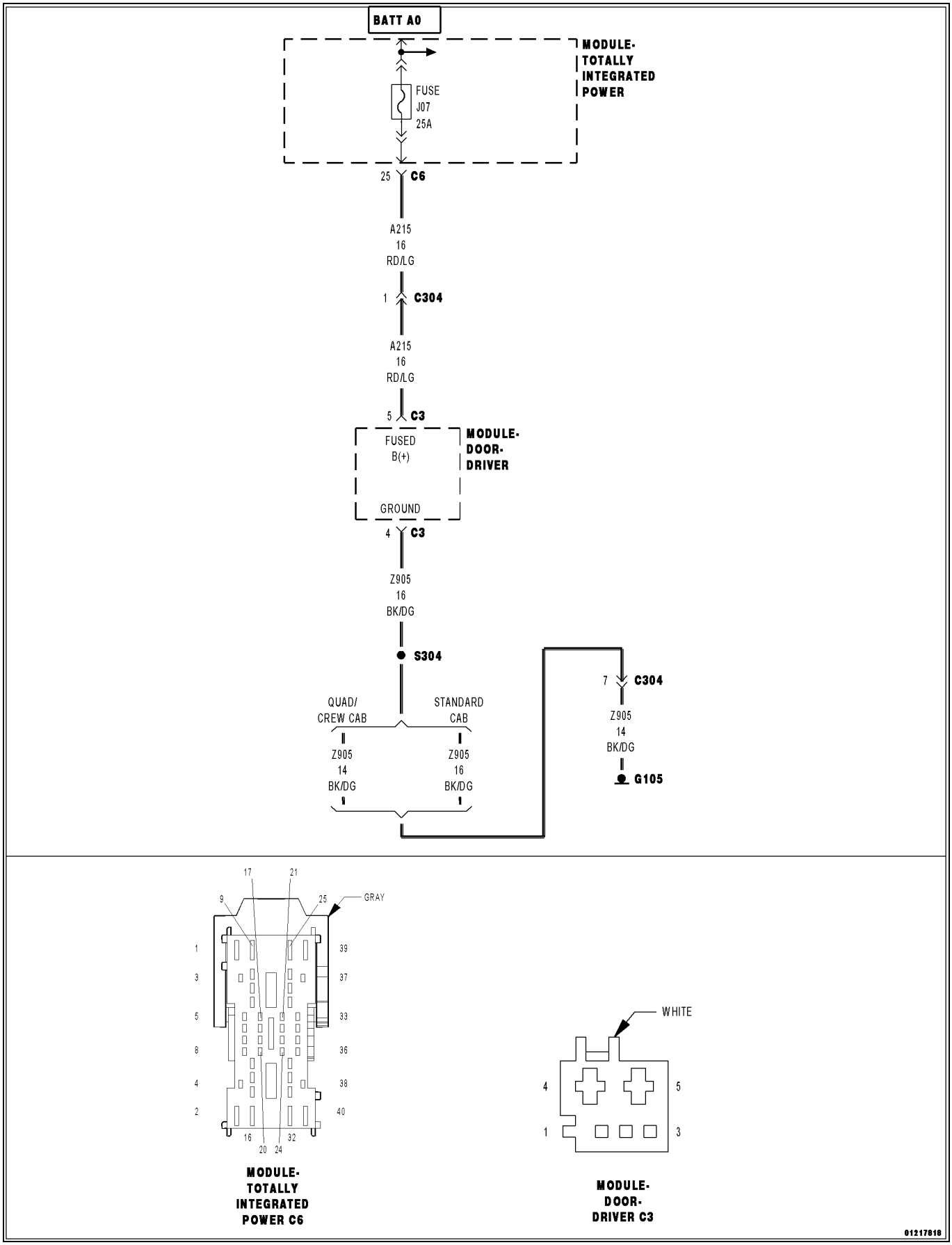

For a complete wiring diagram, **refer to the Wiring Information**.

- **When Monitored:**
  At all times.
- **Set Condition:**
  Anytime the module senses voltage input above 16.0 volts for for more than four seconds, this code will set.

POSSIBLE CAUSES
HIGH VOLTAGE ENGINE DTC
DRIVER DOOR MODULE (DDM)

1. CHECK ENGINE DTCs

1. With the scan tool, read Powertrain Control Module DTCs.

Are there any active Charging or Battery DTCs present?

No

- Go To 2

Yes

- (Refer to 28 - DTC-Based Diagnostics/MODULE, Powertrain Control (PCM) - Diagnosis and Testing) and perform the appropriate charging system or battery DTC diagnostic procedure.

2. TEST FOR INTERMITTENT CONDITION

1. With the scan tool, record and erase the DTCs.
2. Start the engine and run for two minutes.
3. With the scan tool, read the active door module DTCs.

Does the scan tool display B210C-17-BATTERY VOLTAGE INPUT - CIRCUIT VOLTAGE ABOVE THRESHOLD?

Yes

- Replace the Driver Door Module in accordance with the Service Information.
- Perform the BODY VERIFICATION TEST. (Refer to 28 - DTC-Based Diagnostics/MODULE, Totally Integrated Power (TIPM) - Standard Procedure).

No

- Test complete, the condition or conditions that originally set this DTC are not present at this time. Using the wiring diagrams as a guide, check all related splices and connectors for signs of water intrusion, corrosion, pushed out or bent terminals and correct pin tension.
- Perform the BODY VERIFICATION TEST. (Refer to 28 - DTC-Based Diagnostics/MODULE, Totally Integrated Power (TIPM) - Standard Procedure).

■ B21A1-00-ECU RESET/RECOVERY OCCURRED

For a complete wiring diagram, **refer to the Wiring Information**.

- **When Monitored:**
  At all times.
- **Set Condition:**
  Whenever the module detects a power on reset or a reflash, this code will set. This code is for information only. No repair is necessary.

POSSIBLE CAUSES
MODULE WAS RE-FLASHED
MODULE WAS RESET

This DTC is for information only. At some time the module was re-flashed or was reset during a power on operation. No repair is necessary.

B21DD-84-SYSTEM VOLTAGE - SIGNAL BELOW ALLOWABLE RANGE

For a complete wiring diagram, **refer to the Wiring Information**.

- **When Monitored:**
  At all times.
- **Set Condition:**
  This is a CAN message that the battery voltage was below 10.0 volts for over four seconds.

POSSIBLE CAUSES
LOW SYSTEM VOLTAGE
BATTERY OR CHARGING SYSTEM

1. CHECK ENGINE DTCs

1. With the scan tool, read Powertrain Control Module DTCs

Are there any Charging or Battery DTCs present?

Yes

- Perform the appropriate diagnostic procedure. (Refer to 28 - DTC-Based Diagnostics/MODULE, Powertrain Control (PCM) - Diagnosis and Testing) and perform the active charging system or battery DTC diagnostic procedure.

No

- This code is for information only. At some time there was a low battery system voltage. Check the battery and charging system in accordance with the Service Information.

B21DD-85-SYSTEM VOLTAGE - SIGNAL ABOVE ALLOWABLE RANGE

For a complete wiring diagram, **refer to the Wiring Information**.

- **When Monitored:**
  At all times.
- **Set Condition:**
  This is a CAN message that the system voltage was above 16.0 volts for over four seconds.

POSSIBLE CAUSES
HIGH BATTERY SYSTEM VOLTAGE
CHARGING SYSTEM

1. CHECK ENGINE DTCs

1. With the scan tool, read Powertrain Control Module DTCs

Are there any Charging or Battery DTCs present?

Yes

- (Refer to 28 - DTC-Based Diagnostics/MODULE, Powertrain Control (PCM) - Diagnosis and Testing) and perform the active charging system or battery DTC diagnostic procedure.

No

- This code is a CAN system message for information only. Check the charging system in accordance with the Service Information.

B2598-54-DOOR MODULE FRONT LEFT - MISSING CALIBRATION - QUAD/CREW CAB ONLY

For a complete wiring diagram, **refer to the Wiring Information**.

Theory of Operation

This code can set anytime the battery or the door module connector is disconnected.

- **When Monitored:**
  Whenever the window motor is operating.
- **Set Condition:**
  When the Door Module has lost the parameters for window travel.

Possible Causes
MODULE NOT CALIBRATED
EXPRESS WINDOW SWITCH
DRIVER DOOR MODULE (DDM)

NOTE: If there are any other Power Window DTCs, repair them before continuing.

1. TEST FOR INTERMITTENT CONDITION

1. Turn the ignition on.
2. With the scan tool, record and erase DTCs.
3. Operate the Driver Window switch up and down several times.
4. Wait 30 seconds.
5. With the scan tool, read the active DTCs.

Does the scan tool display B2598-54-DOOR MODULE FRONT LEFT - MISSING CALIBRATION?

Yes

- Go To 2

No

- Test complete, the condition or conditions that originally set this DTC are not present at this time. Using the wiring diagrams as a guide, check all related splices and connectors for signs of water intrusion, corrosion, pushed out or bent terminals, and correct pin tension.
- Perform the BODY VERIFICATION TEST. (Refer to 28 - DTC-Based Diagnostics/MODULE, Totally Integrated Power (TIPM) - Standard Procedure).

2. WINDOW MODULE NOT CALIBRATED

1. Activate the window to the full up position and continue to hold the switch for an additional two seconds.
2. Activate the window to the full down position and continue to hold the switch for an additional two seconds.
3. Again activate the window to the full up position and continue to hold the switch for an additional two seconds.
4. Lower the window all the way down then press and release the switch to the express up position.

Did the window move to the full up position?

Yes

- Test complete.
- Perform the BODY VERIFICATION TEST. (Refer to 28 - DTC-Based Diagnostics/MODULE, Totally Integrated Power (TIPM) - Standard Procedure).

No

- Go To 3

3. EXPRESS WINDOW SWITCH

1. Turn the ignition off.
2. Move the Driver Express Window Switch from the idle position to the up position and then to the express up position.

Is there two definite detent positions felt?

Yes

- Replace the Driver Door Module in accordance with the Service Information.
- Perform the BODY VERIFICATION TEST. (Refer to 28 - DTC-Based Diagnostics/MODULE, Totally Integrated Power (TIPM) - Standard Procedure).

No

- Replace the Driver Express Window Switch.
- Perform the BODY VERIFICATION TEST. (Refer to 28 - DTC-Based Diagnostics/MODULE, Totally Integrated Power (TIPM) - Standard Procedure).

■ B2598-96-DOOR MODULE FRONT LEFT - COMPONENT INTERNAL FAILURE

For a complete wiring diagram, **refer to the Wiring Information**.

- **When Monitored:**
  At all times.
- **Set Condition:**
  When the door module senses an internal fault, this code will set.

Possible Causes
DRIVER DOOR MODULE (DDM)

1. TEST FOR INTERMITTENT CONDITION

1. Turn the ignition on.
2. With the scan tool, record and erase the DTCs.
3. Operate the Driver Window up and down several times.
4. Wait 30 seconds.
5. With the scan tool, read the active DTCs.

Does the scan tool display B2598-96-DOOR MODULE FRONT LEFT - COMPONENT INTERNAL FAILURE?

Yes

- Replace the Door Module in accordance with the Service Information.
- Perform the BODY VERIFICATION TEST. (Refer to 28 - DTC-Based Diagnostics/MODULE, Totally Integrated Power (TIPM) - Standard Procedure).

No

- The conditions that caused this code to set are not present at this time. If this code ever repeats, replace the door module in accordance with the Service Information.
- Perform the BODY VERIFICATION TEST. (Refer to 28 - DTC-Based Diagnostics/MODULE, Totally Integrated Power (TIPM) - Standard Procedure).

B282E-11-DRIVER PUDDLE LAMP CONTROL - CIRCUIT SHORT TO GROUND

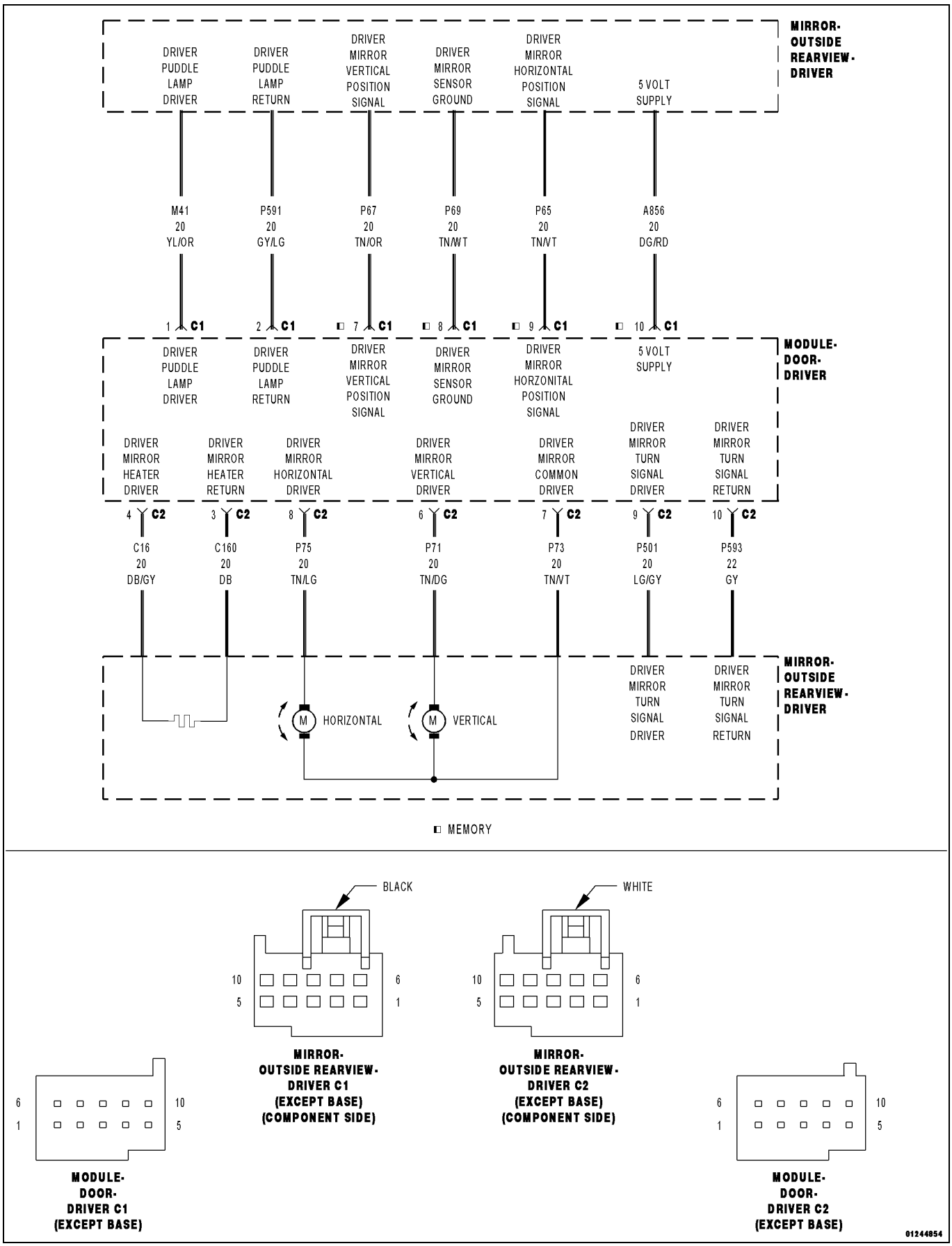

For a complete wiring diagram, **refer to the Wiring Information**.

- **When Monitored:**

  Continuously.
- **Set Condition:**

  The Door Module senses a short low on the (M41) Driver Puddle Lamp Driver circuit for more than two seconds with the lamp switched on.

Possible Causes
(M41) DRIVER PUDDLE LAMP DRIVER CIRCUIT SHORTED TO GROUND
(M41) DRIVER PUDDLE LAMP DRIVER CIRCUIT SHORTED TO THE (P69) DRIVER MIRROR SENSOR GROUND CIRCUIT
(M41) DRIVER PUDDLE LAMP DRIVER CIRCUIT SHORTED TO THE (P591) DRIVER PUDDLE LAMP RETURN CIRCUIT
(M41) DRIVER PUDDLE LAMP DRIVER CIRCUIT SHORTED TO THE (P71) DRIVER MIRROR VERTICAL DRIVER CIRCUIT
(M41) DRIVER PUDDLE LAMP DRIVER CIRCUIT SHORTED TO THE (P73) DRIVER MIRROR COMMON DRIVER CIRCUIT
(M41) DRIVER PUDDLE LAMP DRIVER CIRCUIT SHORTED TO THE (P75) DRIVER MIRROR HORIZONTAL DRIVER CIRCUIT
(M41) DRIVER PUDDLE LAMP DRIVER CIRCUIT SHORTED TO THE (C160) DRIVER MIRROR HEATER RETURN CIRCUIT
(M41) DRIVER PUDDLE LAMP DRIVER CIRCUIT SHORTED TO THE (P593) DRIVER MIRROR TURN SIGNAL RETURN CIRCUIT
DRIVER OUTSIDE REARVIEW MIRROR SHORTED
DOOR MODULE

1. TEST FOR INTERMITTENT CONDITION

1. Turn the ignition on.
2. Using a scan tool, record and erase Diagnostic Trouble Codes (DTCs).
3. Turn the turn signal on, if equipped with turn signal mirror.
4. Turn the puddle lamps on.

NOTE: Verify the panel lamps dimmer switch is not in the defeat (off) position.

5. Turn the rear defogger on, if equipped with heated mirror.
6. Press and release the Mirror Select switch to select the Driver Outside Rearview Mirror.
7. Operate the Mirror Adjust switch in all directions several times while monitoring the scan tool for DTCs.

NOTE: After adjusting the mirror in one direction wait at least two seconds before adjusting the mirror in the opposite direction, as this will allow time for an active fault to set if present.

Is the DTC active?

Yes

- Go To 2

No

- The conditions that caused this code to set are not present at this time. For vehicle's equipped with folding outside rearview mirrors, repeat test with mirror folded. If DTC is now active, Go To 2. Otherwise, use the wiring diagram/ schematic as a guide and inspect the wiring and connectors.
- Perform the BODY VERIFICATION TEST. (Refer to 28 - DTC-Based Diagnostics/MODULE, Totally Integrated Power (TIPM) - Standard Procedure).

2. CHECK (M41) DRIVER PUDDLE LAMP DRIVER CIRCUIT FOR A SHORT TO GROUND

1. Turn the ignition off.
2. Disconnect the Driver Outside Rearview Mirror C1 (Component Side) connector from the Door Module C1 connector.
3. Measure the resistance of the (M41) Driver Puddle Lamp Driver circuit between ground and the Driver Outside Rearview Mirror C1 (Component Side) connector.

Is the resistance below 10K Ohms?

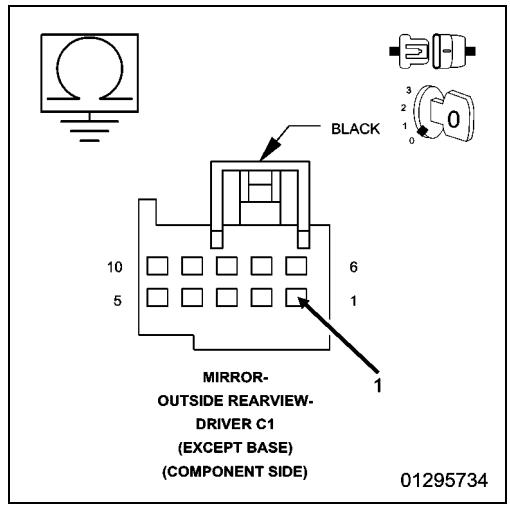

Yes

- Repair the (M41) Driver Puddle Lamp Driver circuit for a short to ground. If the wiring harness and connector are okay, replace the Driver Outside Rearview Mirror in accordance with the Service Information.
- Perform the BODY VERIFICATION TEST. (Refer to 28 - DTC-Based Diagnostics/MODULE, Totally Integrated Power (TIPM) - Standard Procedure).

No

- Go To 3

3. CHECK (M41) DRIVER PUDDLE LAMP DRIVER CIRCUIT FOR A SHORT TO THE (P69) DRIVER MIRROR SENSOR GROUND CIRCUIT

1. Measure the resistance between the (M41) Driver Puddle Lamp Driver circuit and the (P69) Driver Mirror Sensor Ground circuit at the Driver Outside Rearview Mirror C1 (Component Side) connector.

Is the resistance below 10K Ohms?

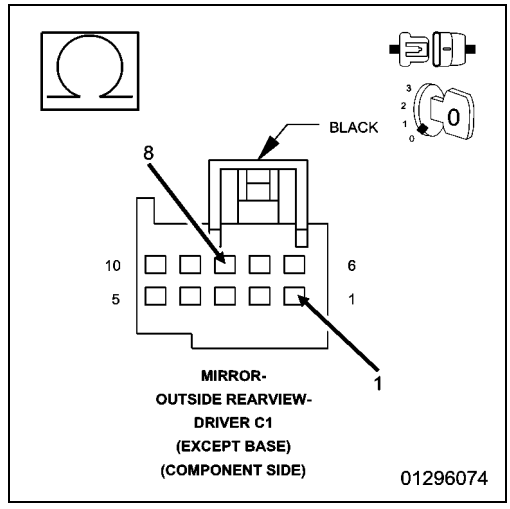

Yes

- Repair the (M41) Driver Puddle Lamp Driver circuit for a short to the (P69) Driver Mirror Sensor Ground circuit. If the wiring harness and connector are okay, replace the Driver Outside Rearview Mirror in accordance with the Service Information.
- Perform the BODY VERIFICATION TEST. (Refer to 28 - DTC-Based Diagnostics/MODULE, Totally Integrated Power (TIPM) - Standard Procedure).

No

- Go To 4

4. CHECK (M41) DRIVER PUDDLE LAMP DRIVER CIRCUIT FOR A SHORT TO THE (P591) DRIVER PUDDLE LAMP RETURN CIRCUIT

NOTE: The Ohmmeter positive lead must be connected to the (P591) Driver Puddle Lamp Return circuit and the negative lead to the (M41) Driver Puddle Lamp Driver circuit for the test results to be valid.

1. Measure the resistance between the (M41) Driver Puddle Lamp Driver circuit and the (P591) Driver Puddle Lamp Return circuit at the Driver Outside Rearview Mirror C1 (Component Side) connector.

Is there any resistance present?

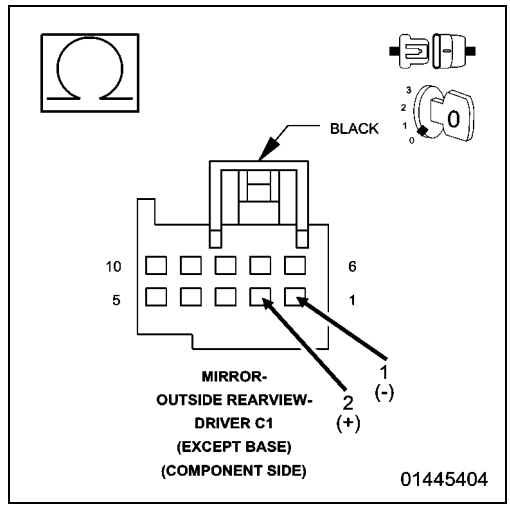

Yes

- Repair the (M41) Driver Puddle Lamp Driver circuit for a short to the (P591) Driver Puddle Lamp Return circuit. If the wiring harness and connector are okay, replace the Driver Outside Rearview Mirror in accordance with the Service Information.
- Perform the BODY VERIFICATION TEST. (Refer to 28 - DTC-Based Diagnostics/MODULE, Totally Integrated Power (TIPM) - Standard Procedure).

No

- Go To 5

5. CHECK (M41) DRIVER PUDDLE LAMP DRIVER CIRCUIT FOR A SHORT TO THE (P71) DRIVER MIRROR VERTICAL DRIVER CIRCUIT, (P73) DRIVER MIRROR COMMON DRIVER CIRCUIT, OR TO (P75) DRIVER MIRROR HORIZONTAL DRIVER CIRCUIT

1. Disconnect the Driver Outside Rearview Mirror C2 (Component Side) connector from the Door Module C2 connector.
2. Measure the resistance between the (M41) Driver Puddle Lamp Driver circuit and the (P71) Driver Mirror Vertical Driver circuit at the Driver Outside Rearview Mirror C1 and C2 (Component Side) connectors.
3. Measure the resistance between the (M41) Driver Puddle Lamp Driver circuit and the (P73) Driver Mirror Common Driver circuit at the Driver Outside Rearview Mirror C1 and C2 (Component Side) connectors.
4. Measure the resistance between the (M41) Driver Puddle Lamp Driver circuit and the (P75) Driver Mirror Horizontal Driver circuit at the Driver Outside Rearview Mirror C1 and C2 (Component Side) connectors.

Is the resistance below 10K Ohms for any measurement?

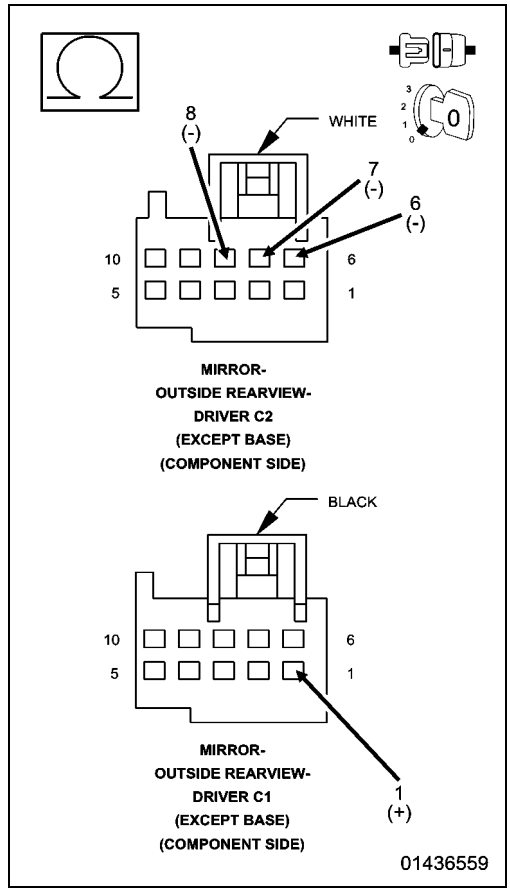

Yes

- Repair all circuits with a resistance below 10K Ohms for a short to the (M41) Driver Puddle Lamp Driver circuit. If the wiring harness and connector are okay, replace the Driver Outside Rearview Mirror in accordance with the Service Information.
- Perform the BODY VERIFICATION TEST. (Refer to 28 - DTC-Based Diagnostics/MODULE, Totally Integrated Power (TIPM) - Standard Procedure).

No, with Heated/Turn Signal Mirror

- Go To 6

No, without Heated/Turn Signal Mirror

- Inspect the wiring and connectors for damage and repair as necessary. If the wiring and connectors are okay, replace the Door Module in accordance with the Service Information.
- Perform the BODY VERIFICATION TEST. (Refer to 28 - DTC-Based Diagnostics/MODULE, Totally Integrated Power (TIPM) - Standard Procedure).

6. CHECK (M41) DRIVER PUDDLE LAMP DRIVER CIRCUIT FOR A SHORT TO THE (C160) DRIVER MIRROR HEATER RETURN CIRCUIT OR TO THE (P593) DRIVER MIRROR TURN SIGNAL RETURN CIRCUIT

1. For Heated Mirror, measure the resistance between the (M41) Driver Puddle Lamp Driver circuit and the (C160) Driver Mirror Heater Return circuit at the Driver Outside Rearview Mirror C1 and C2 (Component Side) connectors.
2. For Turn Signal Mirror, measure the resistance between the (M41) Driver Puddle Lamp Driver circuit and the (P593) Driver Mirror Turn Signal Return circuit at the Driver Outside Rearview Mirror C1 and C2 (Component Side) connectors.

Is the resistance below 10K Ohms for either measurement?

Yes

- Repair all circuits with a resistance below 10K Ohms for a short to the (M41) Driver Puddle Lamp Driver circuit. If the wiring harness and connector are okay, replace the Driver Outside Rearview Mirror in accordance with the Service Information.
- Perform the BODY VERIFICATION TEST. (Refer to 28 - DTC-Based Diagnostics/MODULE, Totally Integrated Power (TIPM) - Standard Procedure).

No

- Inspect the wiring and connectors for damage and repair as necessary. If the wiring and connectors are okay, replace the Door Module in accordance with the Service Information.
- Perform the BODY VERIFICATION TEST. (Refer to 28 - DTC-Based Diagnostics/MODULE, Totally Integrated Power (TIPM) - Standard Procedure).

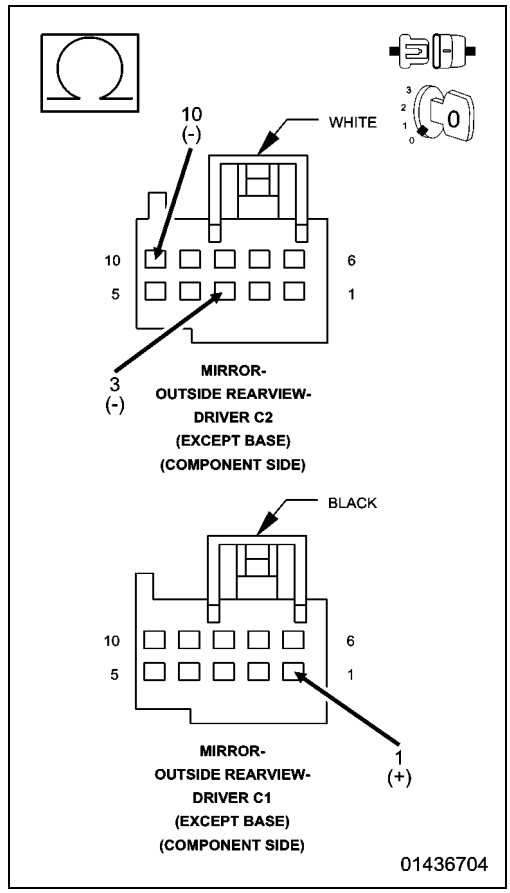

■ B282E-15-DRIVER PUDDLE LAMP CONTROL - CIRCUIT SHORT TO BATTERY OR OPEN

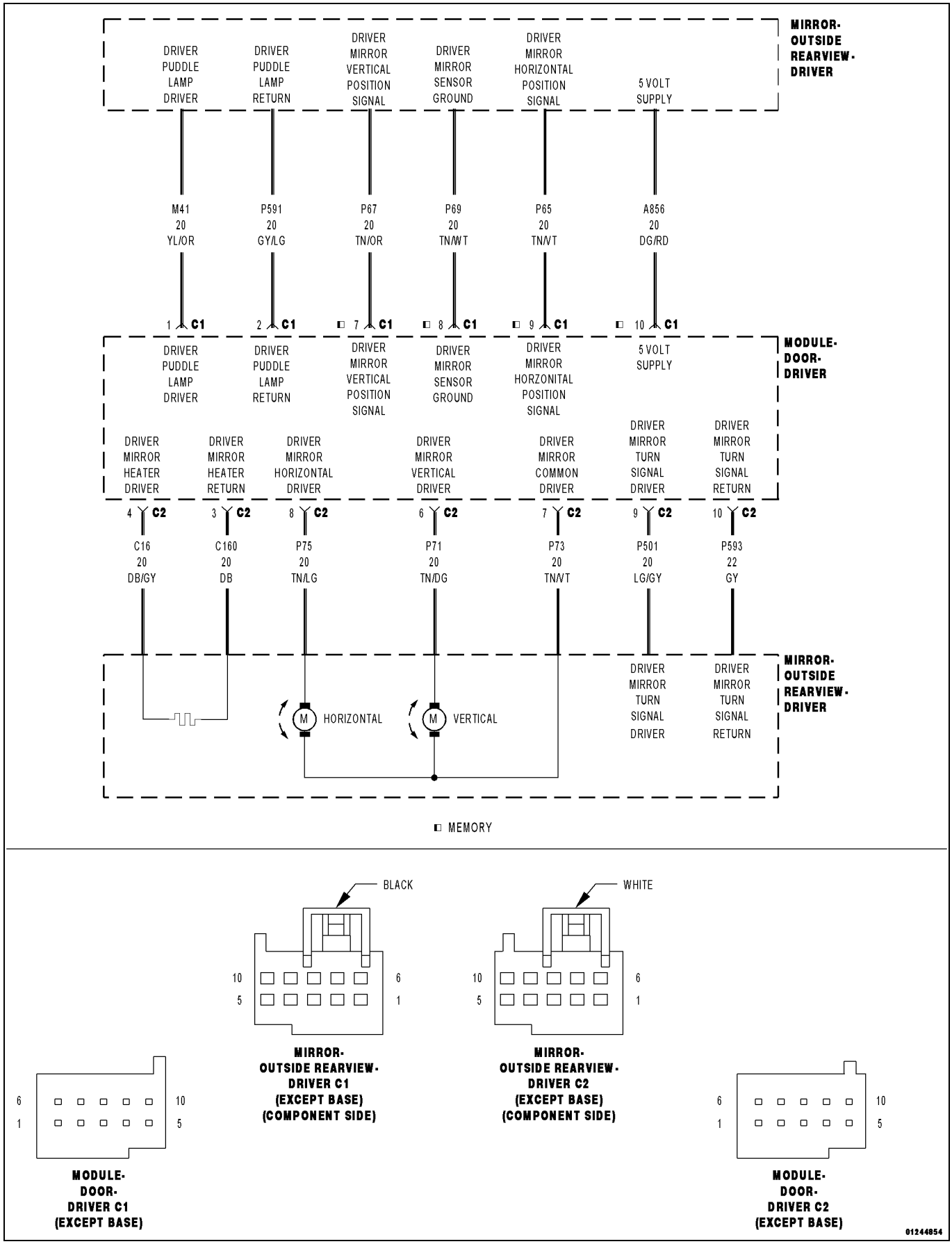

For a complete wiring diagram, **refer to the Wiring Information**.

- **When Monitored:**
  Continuously.
- **Set Condition:**
  The Door Module senses a short high or an open on the (M41) Driver Puddle Lamp Driver circuit for more than two seconds with the lamp switched on.

Possible Causes
(M41) DRIVER PUDDLE LAMP DRIVER CIRCUIT SHORTED TO VOLTAGE
(M41) DRIVER PUDDLE LAMP DRIVER CIRCUIT OPEN
(P591) DRIVER PUDDLE LAMP RETURN CIRCUIT OPEN
(M41) DRIVER PUDDLE LAMP DRIVER CIRCUIT SHORTED TO THE (P71) DRIVER MIRROR VERTICAL DRIVER CIRCUIT
(M41) DRIVER PUDDLE LAMP DRIVER CIRCUIT SHORTED TO THE (P73) DRIVER MIRROR COMMON DRIVER CIRCUIT
(M41) DRIVER PUDDLE LAMP DRIVER CIRCUIT SHORTED TO THE (P75) DRIVER MIRROR HORIZONTAL DRIVER CIRCUIT
(M41) DRIVER PUDDLE LAMP DRIVER CIRCUIT SHORTED TO THE (C16) DRIVER MIRROR HEATER DRIVER CIRCUIT
(M41) DRIVER PUDDLE LAMP DRIVER CIRCUIT SHORTED TO THE (P501) DRIVER MIRROR TURN SIGNAL DRIVER CIRCUIT
DRIVER OUTSIDE REARVIEW MIRROR
DOOR MODULE

1. TEST FOR INTERMITTENT CONDITION

1. Turn the ignition on.
2. Using a scan tool, record and erase Diagnostic Trouble Codes (DTCs).
3. Turn the turn signal on, if equipped with turn signal mirror.
4. Turn the puddle lamps on.

NOTE: Verify the panel lamps dimmer switch is not in the defeat (off) position.

5. Turn the rear defogger on, if equipped with heated mirror.
6. Press and release the Mirror Select switch to select the Driver Outside Rearview Mirror.
7. Operate the Mirror Adjust switch in all directions several times while monitoring the scan tool for DTCs.

NOTE: After adjusting the mirror in one direction wait at least two seconds before adjusting the mirror in the opposite direction, as this will allow time for an active fault to set if present.

Is the DTC active?

Yes

- Go To 2

No

- The conditions that caused this code to set are not present at this time. For vehicle's equipped with folding outside rearview mirrors, repeat test with mirror folded. If DTC is now active, Go To 2. Otherwise, use the wiring diagram/ schematic as a guide and inspect the wiring and connectors.
- Perform the BODY VERIFICATION TEST. (Refer to 28 - DTC-Based Diagnostics/MODULE, Totally Integrated Power (TIPM) - Standard Procedure).

2. CHECK (M41) DRIVER PUDDLE LAMP DRIVER CIRCUIT FOR A SHORT TO VOLTAGE

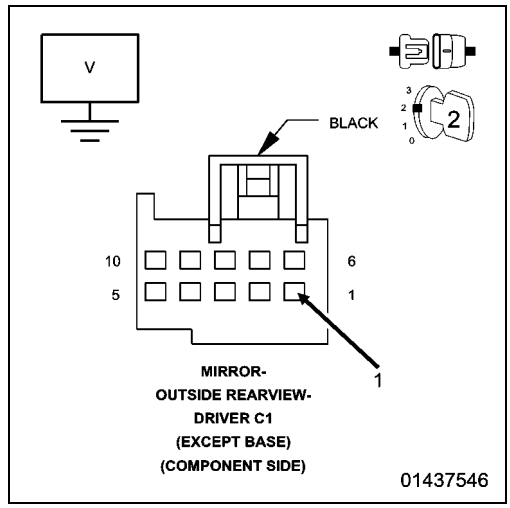

1. Turn the ignition off.
2. Disconnect Driver Outside Rearview Mirror C1 (Component Side) connector from the Door Module C1 connector.
3. Turn the ignition on.
4. Measure the voltage of the (M41) Driver Puddle Lamp Driver circuit between the Driver Outside Rearview Mirror C1 (Component Side) connector and ground.

Is there any voltage present?

Yes

- Repair the (M41) Driver Puddle Lamp Driver circuit for a short to voltage. If the wiring harness and connector are okay, replace the Driver Outside Rearview Mirror in accordance with the Service Information.
- Perform the BODY VERIFICATION TEST. (Refer to 28 - DTC-Based Diagnostics/MODULE, Totally Integrated Power (TIPM) - Standard Procedure).

No

- Go To 3

3. CHECK (M41) DRIVER PUDDLE LAMP DRIVER CIRCUIT AND (P591) DRIVER PUDDLE LAMP RETURN CIRCUIT FOR AN OPEN

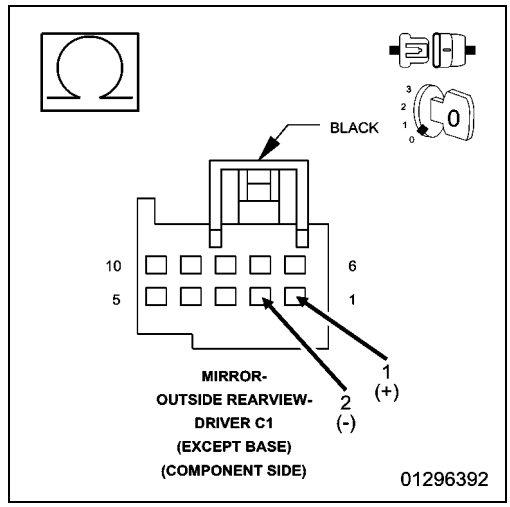

1. Turn the ignition off.

NOTE: The Ohmmeter positive lead must be connected to the (M41) Driver Puddle Lamp Driver circuit and the negative lead to the (P591) Driver Puddle Lamp Return circuit for the test results to be valid.

2. Measure the resistance between the (M41) Driver Puddle Lamp Driver circuit and the (P591) Driver Puddle Lamp Return circuit at the Driver Outside Rearview Mirror C1 (Component Side) connector.

Is the resistance above 1000 Ohms?

Yes

- Repair the (M41) Driver Puddle Lamp Driver circuit or the (P591) Driver Puddle Lamp Return circuit for an open. If the wiring harness and connector are okay, replace the Driver Outside Rearview Mirror in accordance with the Service Information.
- Perform the BODY VERIFICATION TEST. (Refer to 28 - DTC-Based Diagnostics/MODULE, Totally Integrated Power (TIPM) - Standard Procedure).

No

- Go To 4

4. CHECK (M41) DRIVER PUDDLE LAMP DRIVER CIRCUIT FOR A SHORT TO (P71) DRIVER MIRROR VERTICAL DRIVER CIRCUIT, (P73) DRIVER MIRROR COMMON DRIVER CIRCUIT, OR TO (P75) DRIVER MIRROR HORIZONTAL DRIVER CIRCUIT

1. Disconnect the Driver Outside Rearview Mirror C2 (Component Side) connector from the Door Module C2 connector.
2. Measure the resistance between the (M41) Driver Puddle Lamp Driver circuit and the (P71) Driver Mirror Vertical Driver circuit at the Driver Outside Rearview Mirror C1 and C2 (Component Side) connectors.
3. Measure the resistance between the (M41) Driver Puddle Lamp Driver circuit and the (P73) Driver Mirror Common Driver circuit at the Driver Outside Rearview Mirror C1 and C2 (Component Side) connectors.
4. Measure the resistance between the (M41) Driver Puddle Lamp Driver circuit and the (P75) Driver Mirror Horizontal Driver circuit at the Driver Outside Rearview Mirror C1 and C2 (Component Side) connectors.

Is the resistance below 10K Ohms for any measurement?

Yes

- Repair all circuits with a resistance below 10K Ohms for a short to the (M41) Driver Puddle Lamp Driver circuit. If the wiring harness and connector are okay, replace the Driver Outside Rearview Mirror in accordance with the Service Information.
- Perform the BODY VERIFICATION TEST. (Refer to 28 - DTC-Based Diagnostics/MODULE, Totally Integrated Power (TIPM) - Standard Procedure).

No, with Heated/Turn Signal Mirror

- Go To 5

No, without Heated/Turn Signal Mirror

- Inspect the wiring and connectors for damage and repair as necessary. If the wiring and connectors are okay, replace the Door Module in accordance with the Service Information.
- Perform the BODY VERIFICATION TEST. (Refer to 28 - DTC-Based Diagnostics/MODULE, Totally Integrated Power (TIPM) - Standard Procedure).

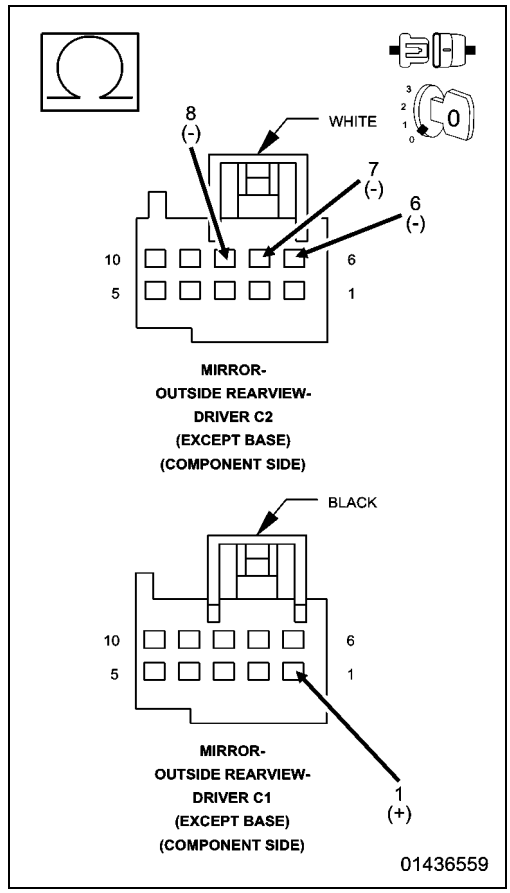

5. CHECK (M41) DRIVER PUDDLE LAMP DRIVER CIRCUIT FOR A SHORT TO (C16) DRIVER MIRROR HEATER DRIVER CIRCUIT OR TO (P501) DRIVER MIRROR TURN SIGNAL DRIVER CIRCUIT

1. For Heated Mirror, measure the resistance between the (M41) Driver Puddle Lamp Driver circuit and the (C16) Driver Mirror Heater Driver circuit at the Driver Outside Rearview Mirror C1 and C2 (Component Side) connectors.
2. For Turn Signal Mirror, measure the resistance between the (M41) Driver Puddle Lamp Driver circuit and the (P501) Driver Mirror Turn Signal Driver circuit at the Driver Outside Rearview Mirror C1 and C2 (Component Side) connectors.

Is the resistance below 10K Ohms for either measurement?

Yes

- Repair all circuits with a resistance below 10K Ohms for a short to the (M41) Driver Puddle Lamp Driver circuit. If the wiring harness and connector are okay, replace the Driver Outside Rearview Mirror in accordance with the Service Information.
- Perform the BODY VERIFICATION TEST. (Refer to 28 - DTC-Based Diagnostics/MODULE, Totally Integrated Power (TIPM) - Standard Procedure).

No

- Inspect the wiring and connectors for damage and repair as necessary. If the wiring and connectors are okay, replace the Door Module in accordance with the Service Information.
- Perform the BODY VERIFICATION TEST. (Refer to 28 - DTC-Based Diagnostics/MODULE, Totally Integrated Power (TIPM) - Standard Procedure).

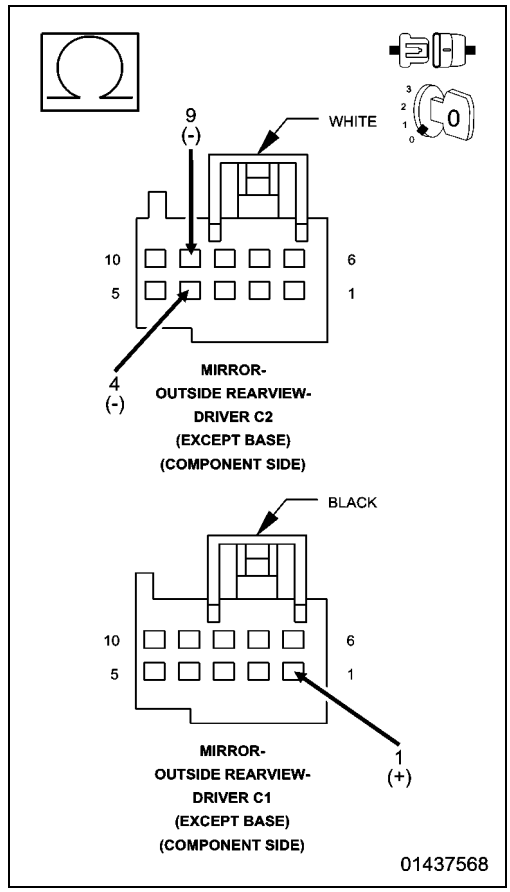

U0037-11-LIN BUS - CIRCUIT SHORT TO GROUND

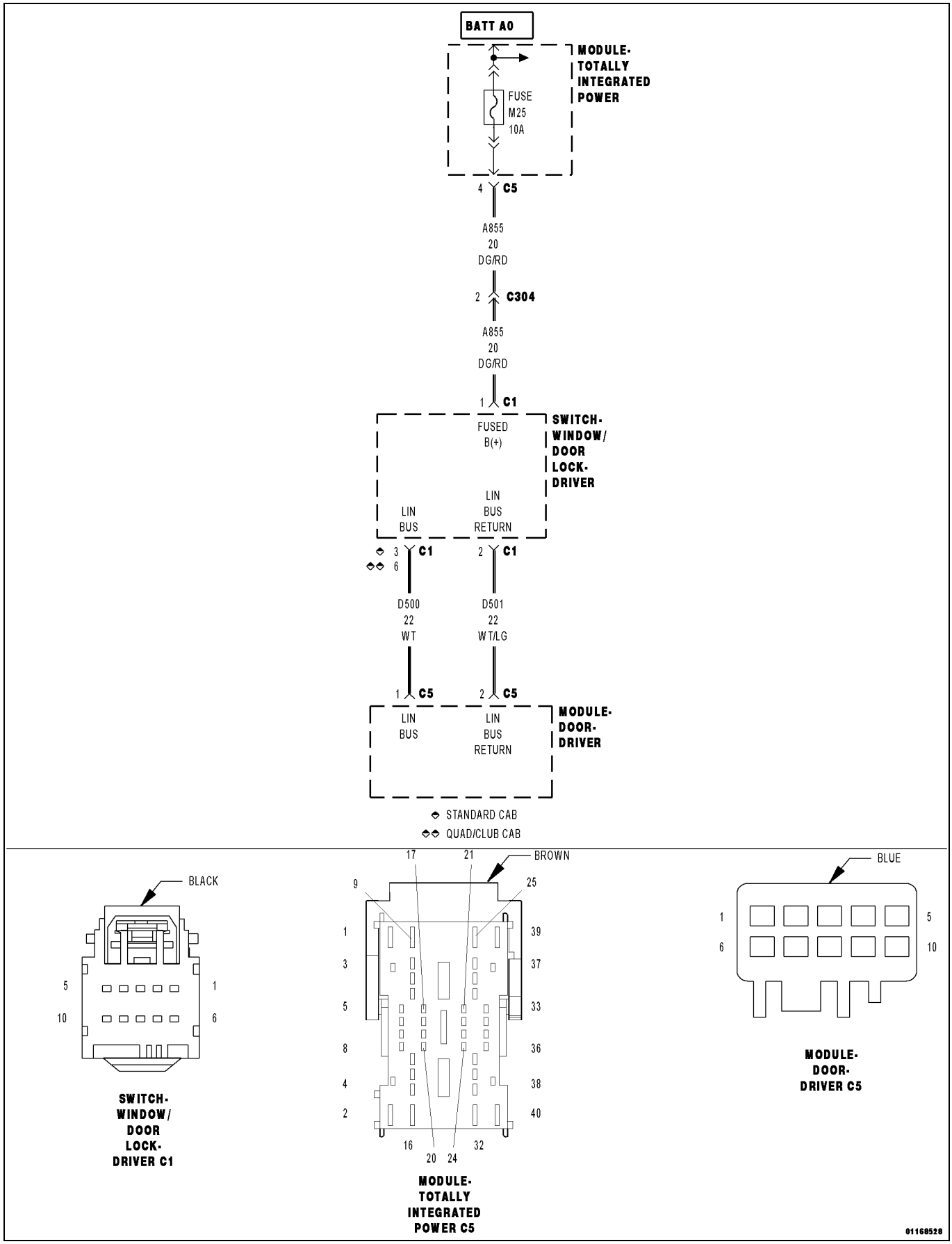

For a complete wiring diagram, **refer to the Wiring Information**.

- **When Monitored:**
  Continuously when the ignition is on.
- **Set Condition:**
  The module detects a short to ground on the LIN Bus circuit.

Possible Causes
(D500) LIN BUS CIRCUIT SHORTED TO GROUND
(D500) LIN BUS CIRCUIT SHORTED TO THE (D501) LIN BUS RETURN CIRCUIT
DRIVER WINDOW/DOOR LOCK SWITCH
DRIVER DOOR MODULE (DDM)

1. VERIFY DIAGNOSTIC TROUBLE CODE (DTC) IS ACTIVE

1. Turn the ignition on.
2. With the scan tool, read the active DTCs.

Does the scan tool display U0037-11-LIN BUS - CIRCUIT SHORT TO GROUND?

Yes

- Go To 2

No

- **(Refer to 29 - Non-DTC Diagnostics/Communication - Diagnosis and Testing)** and perform the Stored Lost Communication DTCs diagnostic procedure.

2. CHECK THE LIN BUS CIRCUIT

1. Turn the ignition off.
2. Disconnect the Driver Window/Door Lock Switch C1 harness connector.
3. Turn the ignition on.
4. Measure the voltage between the (D500) LIN Bus circuit and the (D501) LIN Bus Return circuit.

Is the voltage below 7.0 Volts?

Yes

- Go To 3

No

- Replace the Driver Window/Door Lock Switch.
- Perform the BODY VERIFICATION TEST. (Refer to 28 - DTC-Based Diagnostics/MODULE, Totally Integrated Power (TIPM) - Standard Procedure).

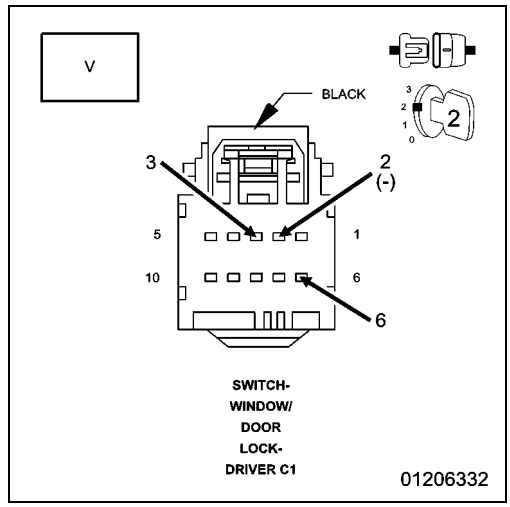

3. (D500) LIN BUS CIRCUIT SHORTED TO GROUND

1. Turn the ignition off.
2. Disconnect the Driver Door Module C5 harness connector.
3. Measure the resistance between ground and the (D500) LIN Bus circuit in the Door Module C5 harness connector.

Is the resistance below 10,000 Ohms?

Yes

- Repair the short to ground in the (D500) LIN Bus circuit.
- Perform the BODY VERIFICATION TEST. (Refer to 28 - DTC-Based Diagnostics/MODULE, Totally Integrated Power (TIPM) - Standard Procedure).

No

- Go To 4

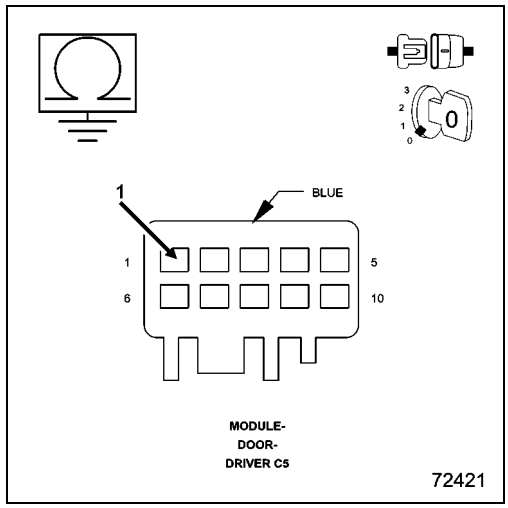

4. (D500) LIN BUS CIRCUIT SHORTED TO THE (D501) LIN BUS RETURN CIRCUIT

1. Measure the resistance between the (D500) LIN Bus circuit and the (D501) LIN Bus Return circuit in the Door Module C5 harness connector.

Is the resistance below 10,000 Ohms?

Yes

- Repair the (D500) LIN Bus circuit for a short to the (D501) LIN Bus Return circuit.
- Perform the BODY VERIFICATION TEST. (Refer to 28 - DTC-Based Diagnostics/MODULE, Totally Integrated Power (TIPM) - Standard Procedure).

No

- Replace the Driver Door Module in accordance with the Service Information.
- Perform the BODY VERIFICATION TEST. (Refer to 28 - DTC-Based Diagnostics/MODULE, Totally Integrated Power (TIPM) - Standard Procedure).

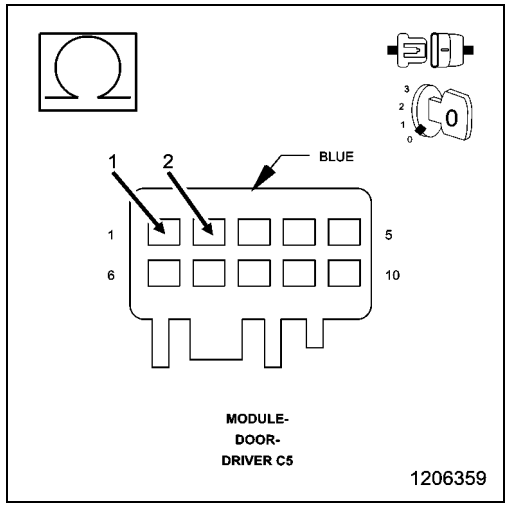

U0141-00-LOST COMMUNICATION WITH IPM (FCM/TIPM)

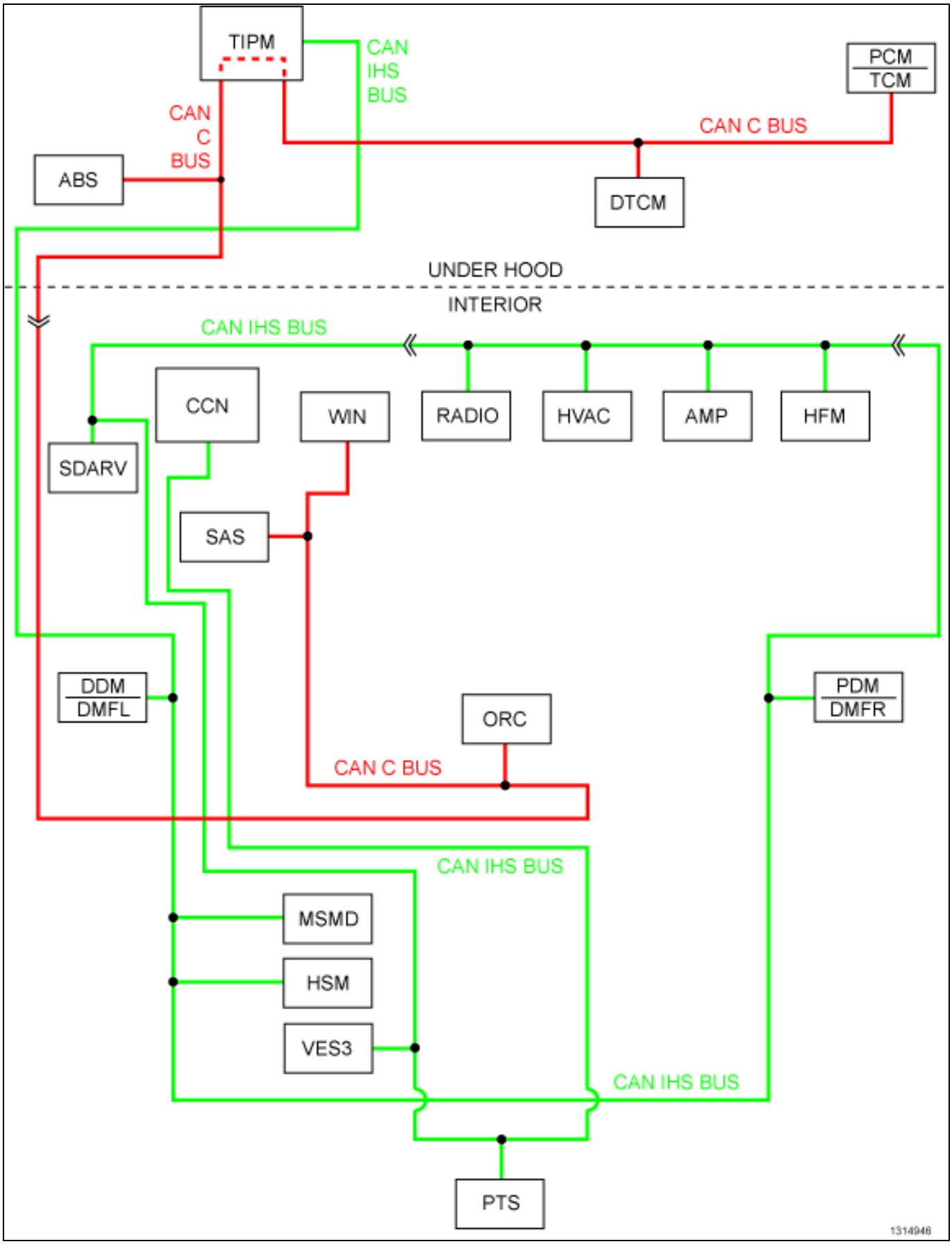

For a complete wiring diagram, **refer to the Wiring Information.**.

- **When Monitored:**
  Continuously when the ignition is on.
  Battery voltage between 10 and 16 volts.
  Ignition Off Draw (IOD) fuse installed.
  Totally Integrated Power Module (TIPM) is configured correctly.
- **Set Condition:**
  Bus messages not received from the Totally Integrated Power Module (TIPM) for approximately two to five seconds.

Possible Causes
(D265) CAN INTERIOR BUS(+) (125k) CIRCUIT SHORTED TO VOLTAGE
(D264) CAN INTERIOR BUS(-) (125k) CIRCUIT SHORTED TO GROUND
TOTALLY INTEGRATED POWER MODULE (TIPM) POWER AND GROUND
TIPM NOT CONFIGURED CORRECTLY
TOTALLY INTEGRATED POWER MODULE (TIPM)
MODULE THAT SET THIS DTC

1. VERIFY DTC IS ACTIVE

NOTE: Ensure the IOD fuse is installed and the battery is fully charged before proceeding.

1. Turn the ignition on.
2. With the scan tool, read active Door Module DTCs.

Is this DTC active?

Yes

- **(Refer to 28 - DTC-Based Diagnostics/MODULE, Totally Integrated Power (TIPM) - Diagnosis and Testing)** and perform the U0141-Lost Communication with IPM (FCM/TIPM) diagnostic procedure.

No

- **(Refer to 29 - Non-DTC Diagnostics/Communication - Diagnosis and Testing)** and perform the Stored Lost Communication DTCs diagnostic procedure.

U0155-00-LOST COMMUNICATION WITH CLUSTER/CCN

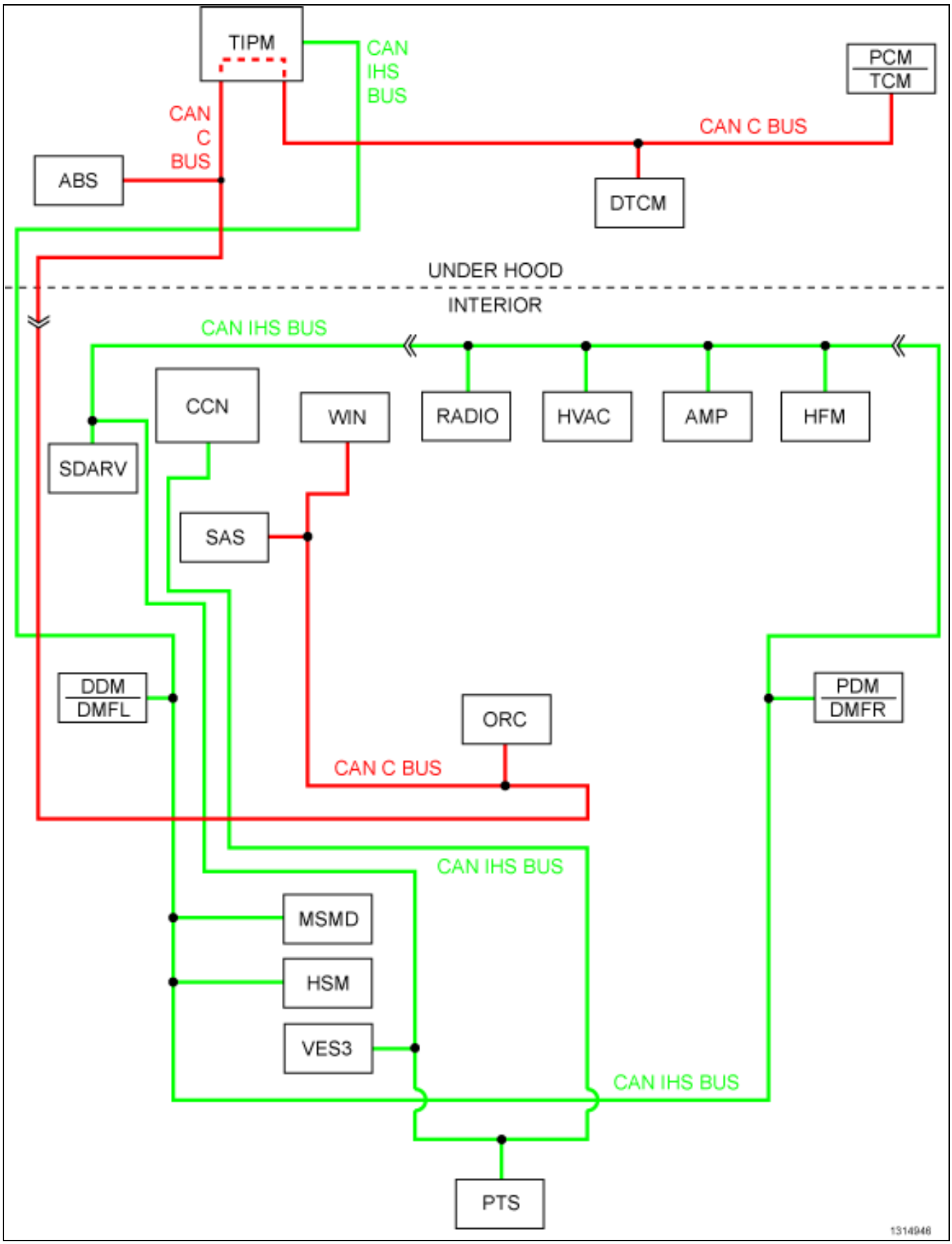

For a complete wiring diagram, **refer to the Wiring Information.**.

- **When Monitored:**
  Continuously when the ignition is on.
  Battery voltage between 10 and 16 volts.
  Ignition Off Draw (IOD) fuse installed.
  Totally Integrated Power Module (TIPMP is configured correctly.
- **Set Condition:**
  Bus messages not received from the Instrument Cluster (CCN) for approximately two to five seconds.

Possible Causes
(D265) CAN INTERIOR BUS(+) (125k) CIRCUIT SHORTED TO VOLTAGE
(D264) CAN INTERIOR BUS(-) (125k) CIRCUIT SHORTED TO GROUND
INSTRUMENT CLUSTER POWER AND GROUND
TIPM NOT CONFIGURED CORRECTLY
INSTRUMENT CLUSTER (CCN)
MODULE THAT SET THIS DTC

1. VERIFY DTC IS ACTIVE

NOTE: Ensure the IOD fuse is installed and the battery is fully charged before proceeding.

1. Turn the ignition on.
2. With the scan tool, read active Door Module DTCs.

Is this DTC active?

Yes

- **(Refer to 28 - DTC-Based Diagnostics/MODULE, Totally Integrated Power (TIPM) - Diagnosis and Testing)** and perform the U0155-Lost Communication with Cluster/CCNdiagnostic procedure.

No

- **(Refer to 29 - Non-DTC Diagnostics/Communication - Diagnosis and Testing)** and perform the Stored Lost Communication DTCs diagnostic procedure.

■ U0164-00-LOST COMMUNICATION WITH HVAC CONTROL MODULE

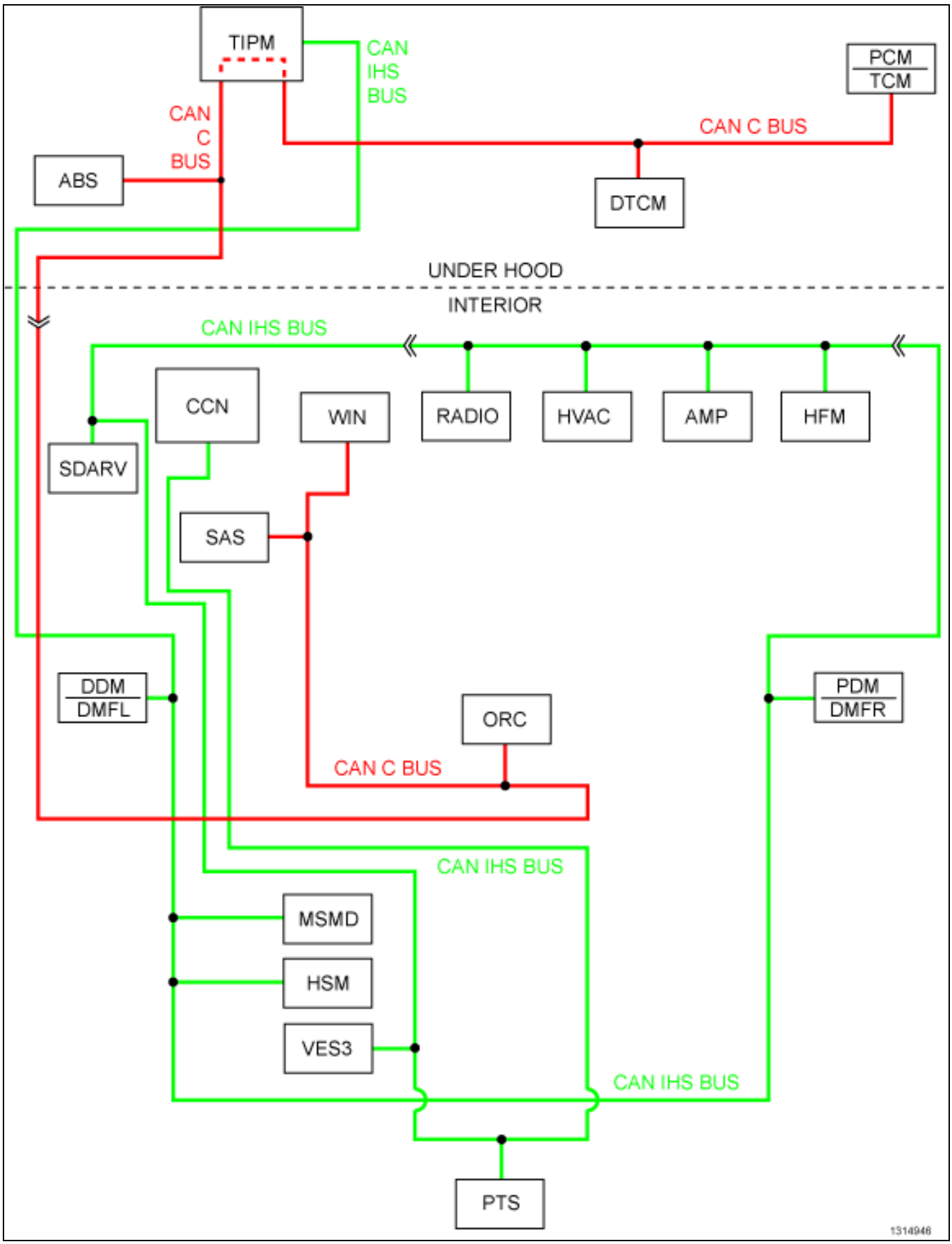

For a complete wiring diagram, **refer to the Wiring Information**.

- **When Monitored:**
  Continuously when the ignition is on.
  Battery voltage between 10 and 16 volts.
  Ignition Off Draw (IOD) fuse installed.
- **Set Condition:**
  Bus messages not received from the HVAC Control Module for approximately two to tive seconds.

Possible Causes
(D265) CAN INTERIOR BUS(+) (125k) CIRCUIT SHORTED TO VOLTAGE
(D264) CAN INTERIOR BUS(-) (125k) CIRCUIT SHORTED TO GROUND
DTCS RELATED TO BATTERY VOLTAGE, IGNITION, OR VIN MESSAGES
TIPM NOT CONFIGURED CORRECTLY
HVAC POWER AND GROUND
HVAC CONTROL MODULE
MODULE THAT SET THE DTC

1. VERIFY DTC IS ACTIVE

NOTE: Make sure the IOD fuse is installed and the battery is fully charged before proceeding.

1. Turn the ignition on.
2. With the scan tool, read active Door Module DTCs.

Is this DTC active?

Yes

- **(Refer to 28 - DTC-Based Diagnostics/MODULE, Totally Integrated Power (TIPM) - Diagnosis and Testing)** and perform the U0164-Lost Communication with HVAC Control Module.

No

- **(Refer to 29 - Non-DTC Diagnostics/Communication - Diagnosis and Testing)** and perform the Stored Lost Communication DTCs diagnostic procedure.

U0203-00-LOST COMMUNICATION WITH DOOR MODULE FRONT LEFT

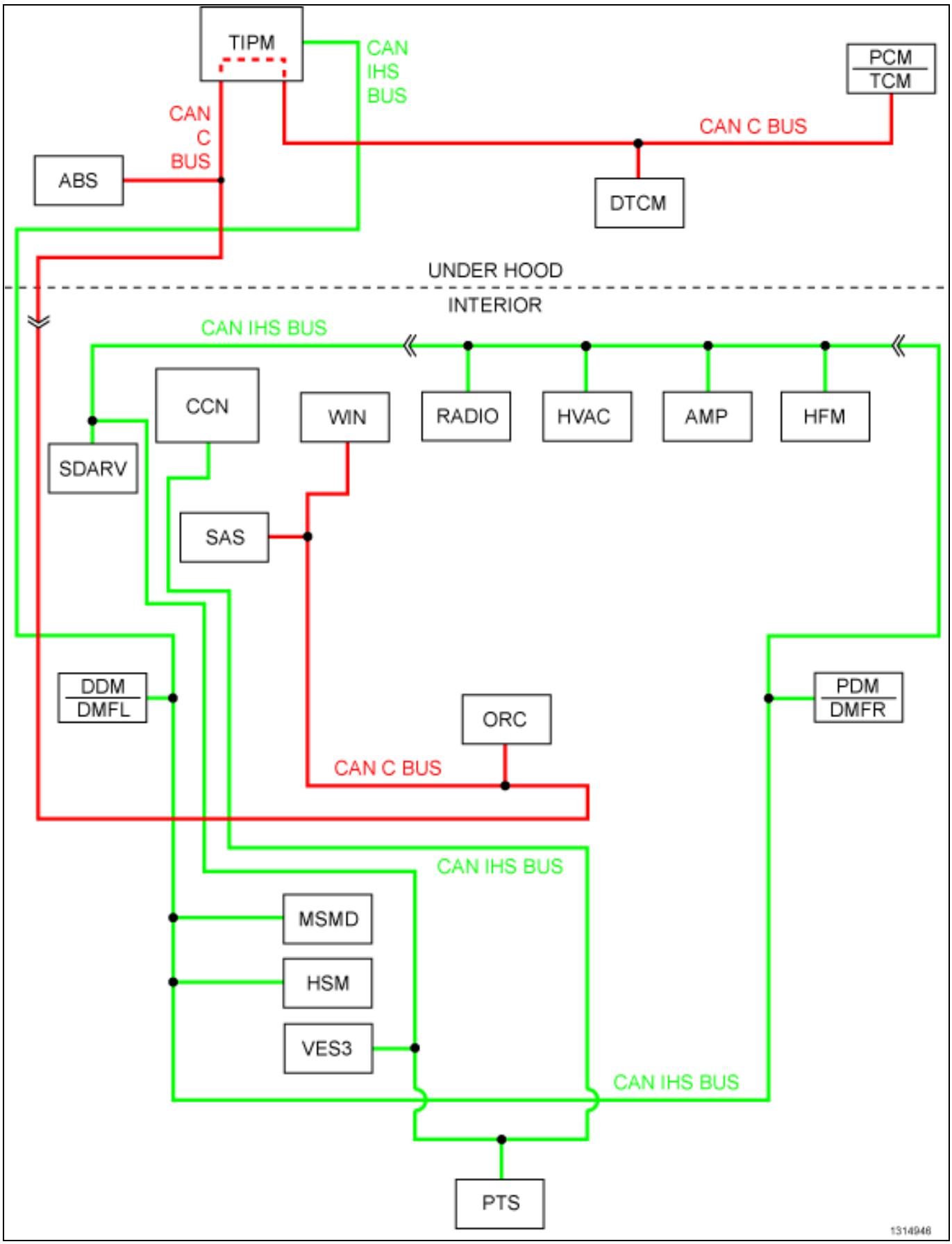

For a complete wiring diagram, **refer to the Wiring Information**.

- **When Monitored:**
  Continuously when the ignition is on.
  Battery voltage between 10 and 16 volts.
  Ignition Off Draw (IOD) fuse installed.
- **Set Condition:**
  Bus messages not received from the Left Front Door Module (DMFL) for approximately two to five seconds.

Possible Causes
(D265) CAN INTERIOR BUS(+) (125k) CIRCUIT SHORTED TO VOLTAGE
(D264) CAN INTERIOR BUS(-) (125k) CIRCUIT SHORTED TO GROUND
DTCS RELATED TO BATTERY VOLTAGE, IGNITION, OR VIN MESSAGES
TIPM NOT CONFIGURED CORRECTLY
DOOR MODULE POWER AND GROUND
LEFT FRONT DOOR MODULE
CONTROL MODULE MODULE THAT SET THE DTC

1. VERIFY DTC IS ACTIVE

NOTE: Ensure the IOD fuse is installed and the battery is fully charged before proceeding.

1. Turn the ignition on.
2. With the scan tool, read active Door Module DTCs.

Is this DTC active?

Yes

- **(Refer to 28 - DTC-Based Diagnostics/MODULE, Totally Integrated Power (TIPM) - Diagnosis and Testing)** and perform the U0203-Lost Communication with Door Module Front Left diagnostic procedure.

No

- **(Refer to 29 - Non-DTC Diagnostics/Communication - Diagnosis and Testing)** and perform the Stored Lost Communication DTCs diagnostic procedure.

U0204-00-LOST COMMUNICATION WITH DOOR MODULE FRONT RIGHT

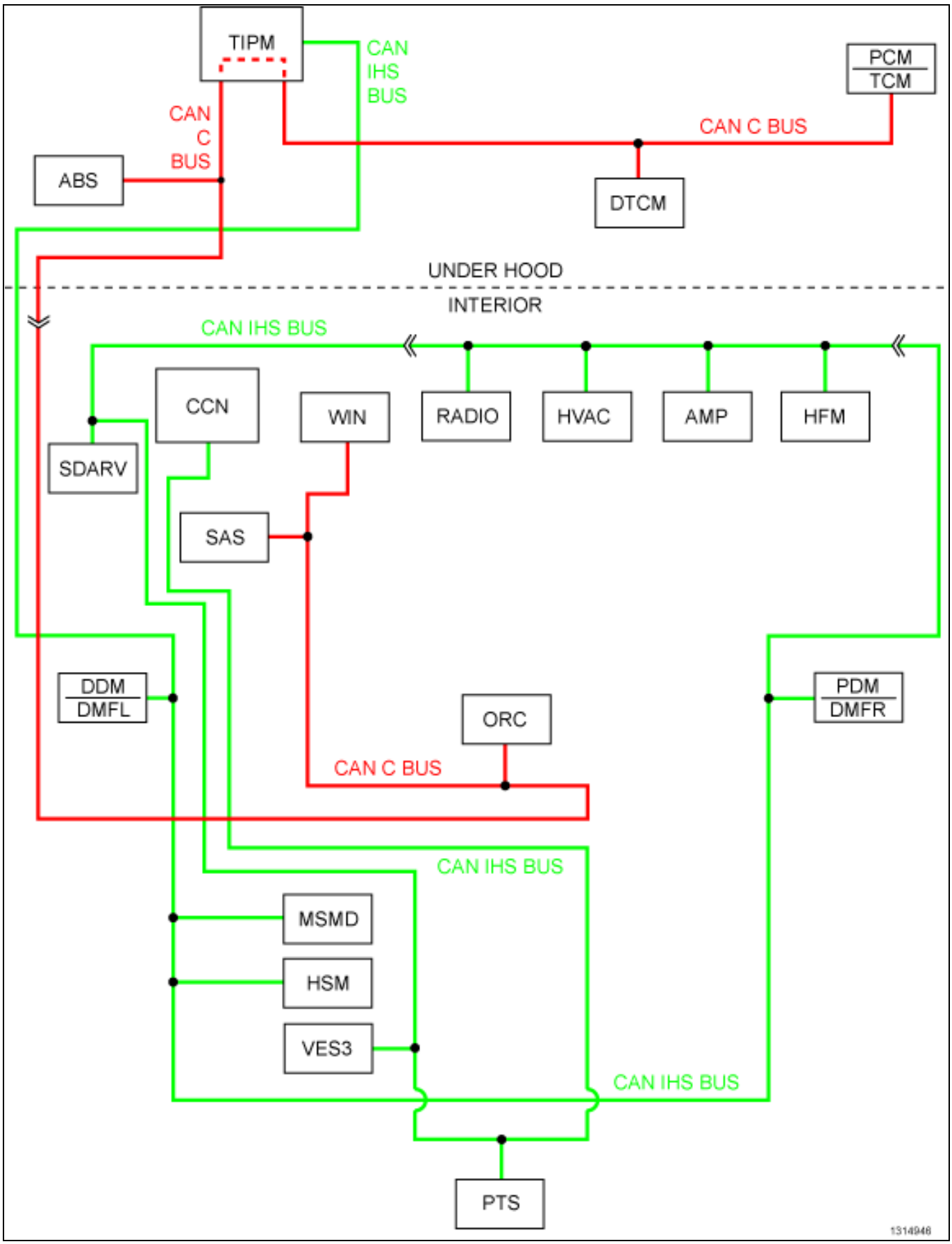

For a complete wiring diagram, **refer to the Wiring Information**.

- **When Monitored:**
  Continuously when the ignition is on.
  Battery voltage between 10 and 16 volts.
  Ignition Off Draw (IOD) fuse installed.
- **Set Condition:**
  Bus messages not received from the Right Front Door Module (DMFR) for approximately two to five seconds.

Possible Causes
(D265) CAN INTERIOR BUS(+) (125k) CIRCUIT SHORTED TO VOLTAGE
(D264) CAN INTERIOR BUS(-) (125k) CIRCUIT SHORTED TO GROUND
DTCS RELATED TO BATTERY VOLTAGE, IGNITION, OR VIN MESSAGES
TIPM NOT CONFIGURED CORRECTLY
DOOR MODULE POWER AND GROUND
RIGHT FRONT DOOR MODULE
CONTROL MODULE MODULE THAT SET THE DTC

1. VERIFY DTC IS ACTIVE

NOTE: Make sure the IOD fuse is installed and the battery is fully charged before proceeding.

1. Turn the ignition on.
2. With the scan tool, read active Door Module DTCs.

Is this DTC active?

Yes

- **(Refer to 28 - DTC-Based Diagnostics/MODULE, Totally Integrated Power (TIPM) - Diagnosis and Testing)** and perform the U0204-Lost Communication with Door Module Front Right diagnostic procedure.

No

- **(Refer to 29 - Non-DTC Diagnostics/Communication - Diagnosis and Testing)** and perform the Stored Lost Communication DTCs diagnostic procedure.

U0209-00-LOST COMMUNICATION WITH MEMORY SEAT CONTROL MODULE

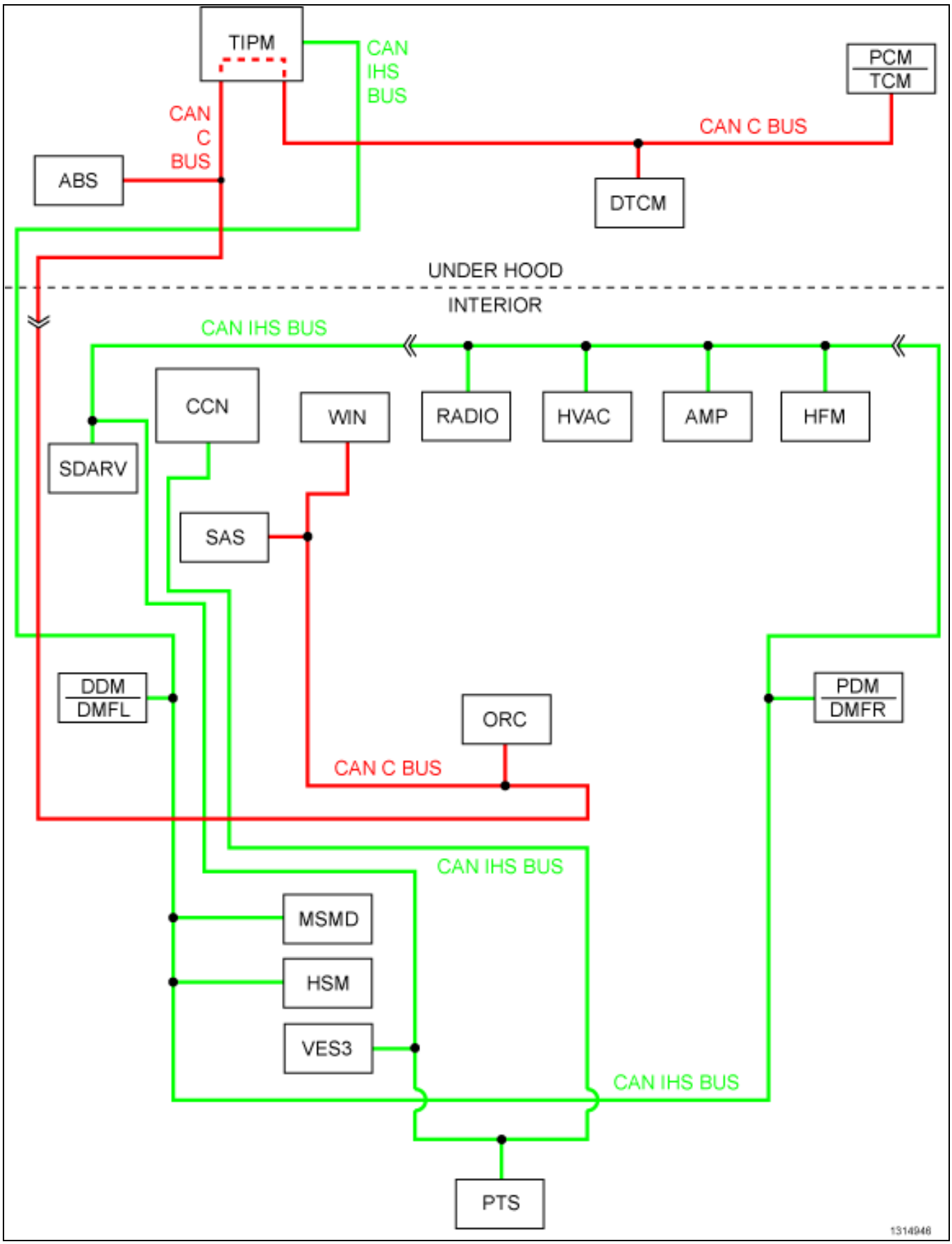

For a complete wiring diagram, **refer to the Wiring Information**.

- **When Monitored:**
  Continuously when the ignition is on.
  Battery voltage between 10 and 16 volts.
  Ignition Off Draw (IOD) fuse installed.
  Totallly Integrated Power Module (TIPM) is configured correctly.
- **Set Condition:**
  Bus messages not received from the Memory Seat Module for approximately two to five seconds.

Possible Causes
(D265) CAN INTERIOR BUS(+) (125k) CIRCUIT SHORTED TO VOLTAGE
(D264) CAN INTERIOR BUS(-) (125k) CIRCUIT SHORTED TO GROUND
MEMORY SEAT MODULE POWER AND GROUND
TIPM NOT CONFIGURED CORRECTLY
MEMORY SEAT MODULE
MODULE THAT SET THIS DTC

1. VERIFY DTC IS ACTIVE

NOTE: Make sure the IOD fuse is installed and the battery is fully charged before proceeding.

1. Turn the ignition on.
2. With the scan tool, read active Door Module DTCs.

Is this DTC active?

Yes

- **(Refer to 28 - DTC-Based Diagnostics/MODULE, Totally Integrated Power (TIPM) - Diagnosis and Testing)** and perform the U0209-Lost Communication with Memory Seat Control Module diagnostic procedure.

No

- **(Refer to 29 - Non-DTC Diagnostics/Communication - Diagnosis and Testing)** and perform the Stored Lost Communication DTCs diagnostic procedure.

U113D-LOST COMMUNICATION WITH MASTER POWER WINDOW SWITCH

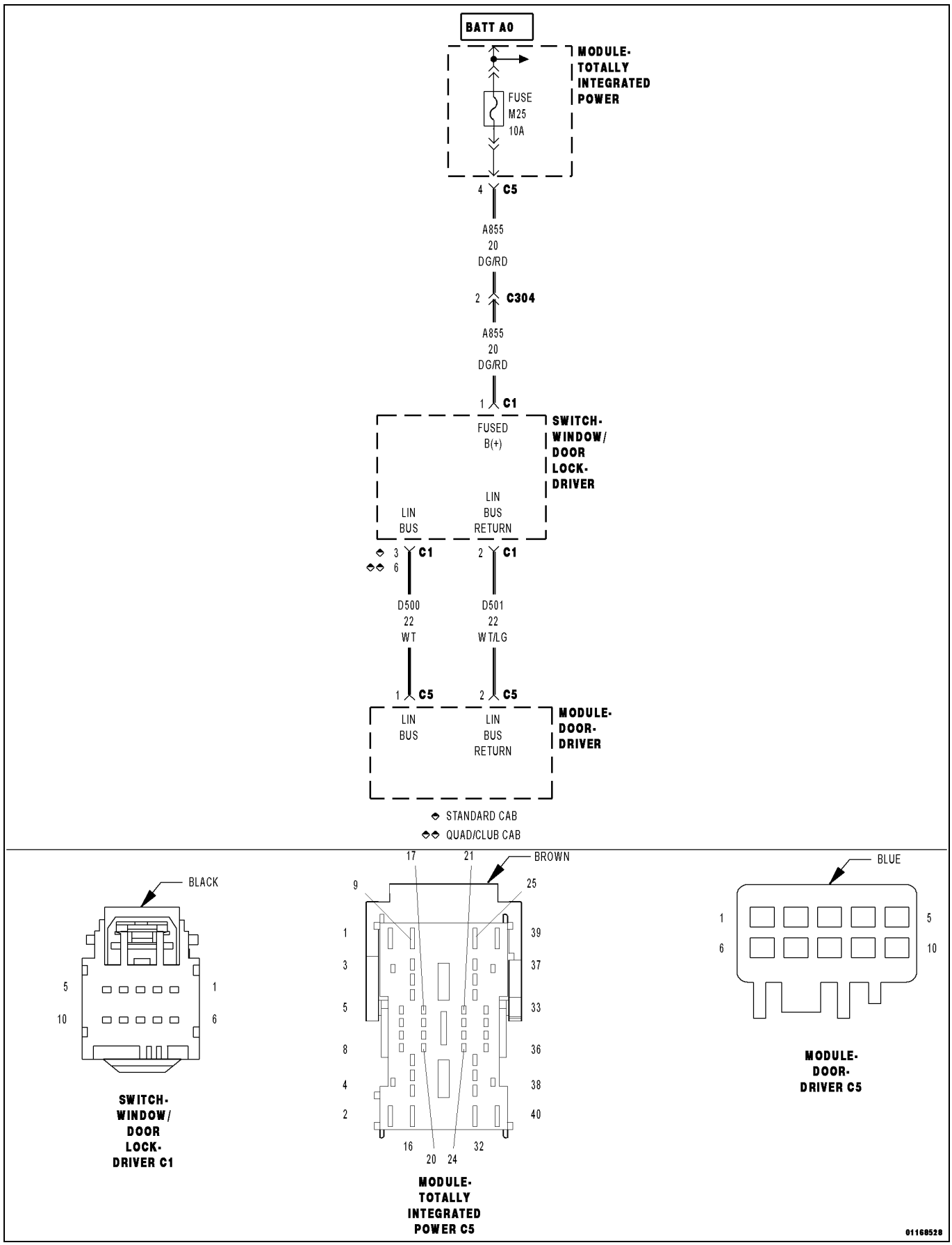

For a complete wiring diagram, **refer to the Wiring Information**.

- **When Monitored:**
  Whenever the module is awake.
- **Set Condition:**
  When the driver door module has lost communication with the Driver Window/Door Lock Switch.

Possible Causes
FUSE M25 IN THE TIPM OPEN
(A855) FUSED B(+) CIRCUIT OPEN
(D500) LIN BUS CIRCUIT SHORTED TO GROUND
(D500) LIN BUS CIRCUIT SHORTED TO VOLTAGE
(D500) LIN BUS CIRCUIT OPEN
(D501) LIN BUS RETURN CIRCUIT OPEN
DRIVER WINDOW/DOOR LOCK SWITCH
DRIVER DOOR MODULE (DDM)

1. TEST FOR INTERMITTENT CONDITION

NOTE: Make sure the battery is fully charged before proceeding.

1. Turn the ignition on.
2. With the scan tool, record and erase DTCs
3. Operate the Front Window switches up and down several times.
4. Wait 30 seconds.
5. With the scan tool, read the active DTCs.

Does the scan tool display U113D-LOST COMMUNICATION WITH MASTER POWER WINDOW SWITCH?

Yes

- Go To 2

No

- Test complete, the condition or conditions that originally set this DTC are not present at this time. Using the wiring diagrams as a guide, check all related splices and connectors for signs of water intrusion, corrosion, pushed out or bent terminals, and correct pin tension.
- Perform the BODY VERIFICATION TEST. (Refer to 28 - DTC-Based Diagnostics/MODULE, Totally Integrated Power (TIPM) - Standard Procedure).

2. (A855) FUSED B(+) CIRCUIT OPEN

NOTE: Make sure Fuse M25 in the TIPM is good before proceeding.

1. With the scan tool, erase DTCs.
2. Turn the ignition off.
3. Disconnect the Driver Window/Door Lock Switch C1 harness connector.
4. Turn the ignition on.
5. Using a 12-volt test light connected to Ground, check the (A855) Fused B(+) circuit.

Does the test light illuminate brightly?

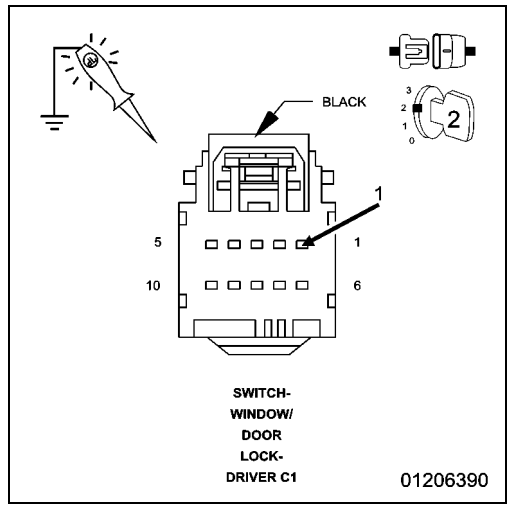

Yes

- Go To 3

No

- Repair the open in the (A855) Fused B(+) circuit. If the fuse is open, make sure to check for a short to ground.
- Perform the BODY VERIFICATION TEST. (Refer to 28 - DTC-Based Diagnostics/MODULE, Totally Integrated Power (TIPM) - Standard Procedure).

3. CHECK THE LIN BUS CIRCUIT

1. Measure the voltage between the (D500) LIN Bus circuit and the (D501) LIN Bus Return circuit.

Is the voltage below 7.0 Volts?

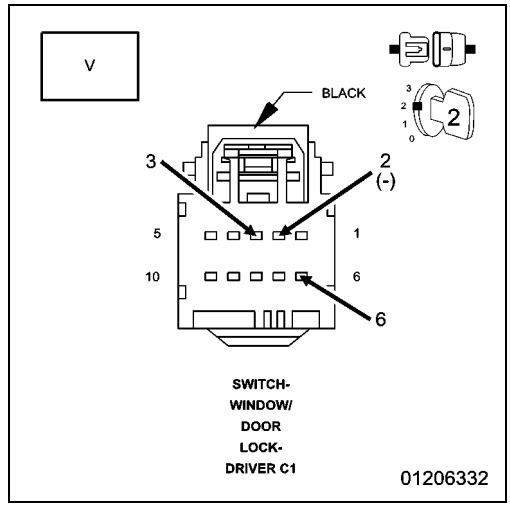

Yes

- Go To 5

No

- Go To 4

4. (D500) LIN BUS CIRCUIT SHORTED TO VOLTAGE

1. Turn the ignition off.
2. Disconnect the Driver Door Module C5 harness connector.
3. Turn the ignition on.
4. Measure the voltage between ground and the (D500) LIN Bus circuit.

Is there any voltage present?

Yes

- Repair the short to voltage in the (D500) LIN Bus circuit.
- Perform the BODY VERIFICATION TEST. (Refer to 28 - DTC-Based Diagnostics/MODULE, Totally Integrated Power (TIPM) - Standard Procedure).

No

- Replace the Driver Window/Door Lock Switch in accordance with the Service Information.
- Perform the BODY VERIFICATION TEST. (Refer to 28 - DTC-Based Diagnostics/MODULE, Totally Integrated Power (TIPM) - Standard Procedure).

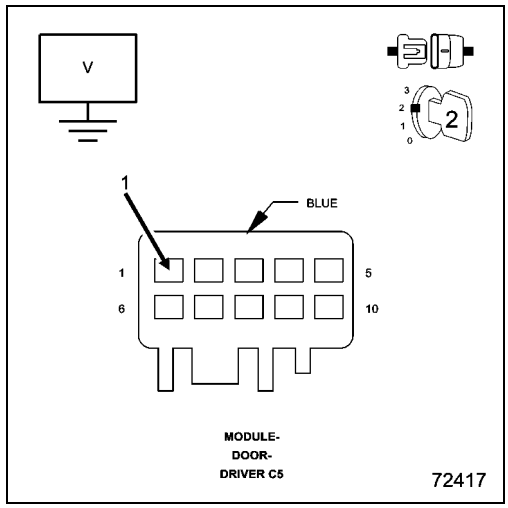

5. (D501) LIN BUS RETURN CIRCUIT OPEN

1. Using a 12-volt test light connected to 12-volts, check the (D501) LIN Bus Return circuit.

Does the test light illuminate brightly?

Yes

- Go To 6

No

- Repair the open in the (D501) LIN Bus Return circuit.
- Perform the BODY VERIFICATION TEST. (Refer to 28 - DTC-Based Diagnostics/MODULE, Totally Integrated Power (TIPM) - Standard Procedure).

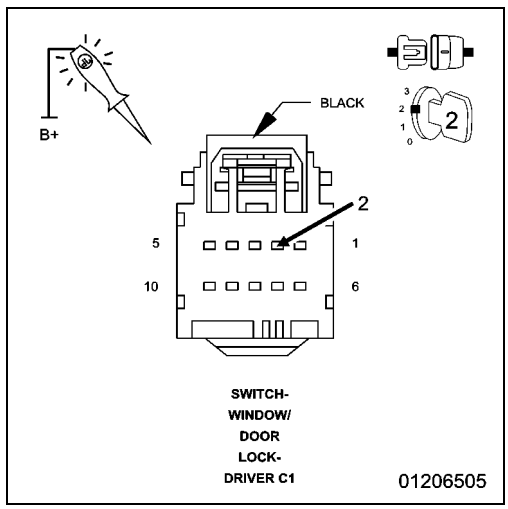

6. (D500) LIN BUS CIRCUIT SHORTED TO GROUND

1. Turn the ignition off.
2. Disconnect the Driver Door Module C5 harness connector.
3. Measure the resistance between ground and the (D500) LIN Bus circuit in the Driver Door Module C5 harness connector.

Is the resistance below 10,000 Ohms?

Yes

- Repair the short to ground in the (D500) LIN Bus circuit.
- Perform the BODY VERIFICATION TEST. (Refer to 28 - DTC-Based Diagnostics/MODULE, Totally Integrated Power (TIPM) - Standard Procedure).

No

- Go To 7

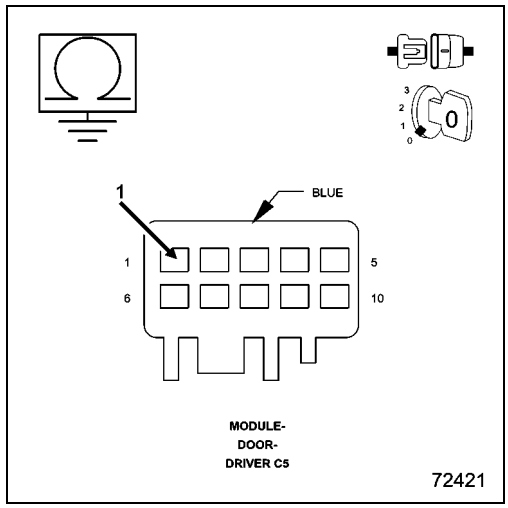

7. (D500) LIN BUS CIRCUIT OPEN

1. Measure the resistance of the (D500) LIN Bus circuit between the Door Module C5 harness connector and the Driver Window/Door Lock Switch C1 harness connector.

Is the resistance above 2.0 Ohms?

Yes

- Repair the open in the (D500) LIN Bus circuit.
- Perform the BODY VERIFICATION TEST. (Refer to 28 - DTC-Based Diagnostics/MODULE, Totally Integrated Power (TIPM) - Standard Procedure).

No

- Replace the Driver Door Module in accordance with the Service Information.
- Perform the BODY VERIFICATION TEST. (Refer to 28 - DTC-Based Diagnostics/MODULE, Totally Integrated Power (TIPM) - Standard Procedure).

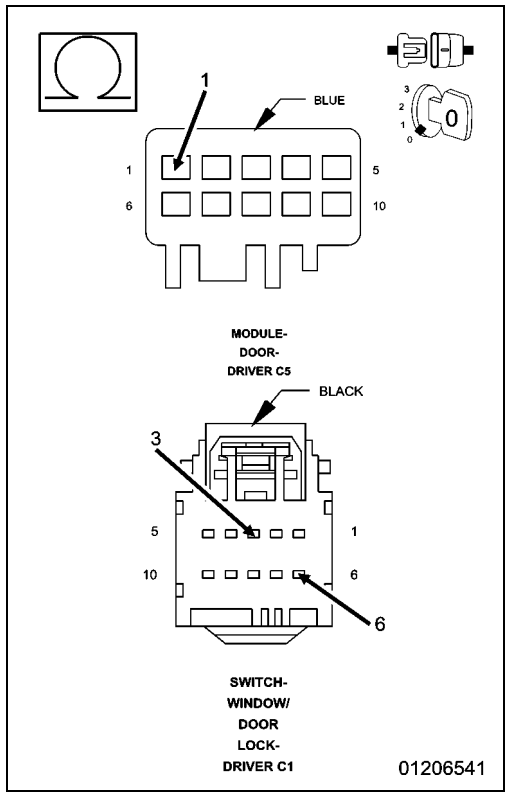

MODULE, Drivetrain Control (DTCM)

Diagnosis and Testing

■ C1403-TRANSFER CASE RANGE POSITION SENSOR PERFORMANCE

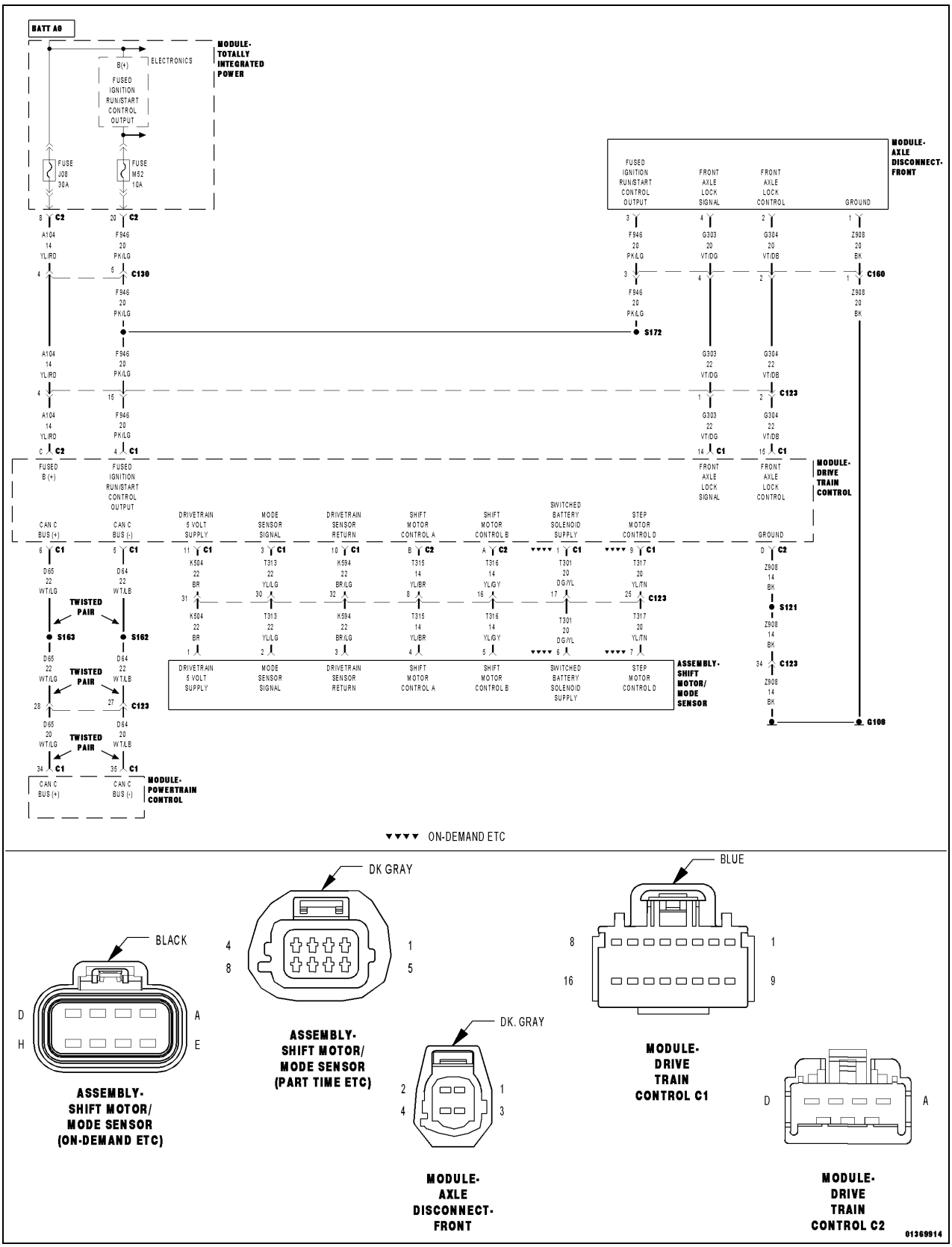

For a complete wiring diagram, **refer to the Wiring Information**.

- **When Monitored:**

  Ignition on. Battery voltage between 9 and 16 volts. No Range Position Sensor low or high voltage conditions present.

- **Set Condition:**

  During a blocked shift attempt, motor current indicates motor movement, but the sensor value change is less than a specified value.

Possible Causes
(K594) DRIVETRAIN SENSOR RETURN CIRCUIT OPEN
(K594) DRIVETRAIN SENSOR RETURN CIRCUIT FOR VOLTAGE
(K504) DRIVETRAIN 5-VOLT SUPPLY CIRCUIT FOR VOLTAGE
SHIFT MOTOR/MODE SENSOR ASSEMBLY
DRIVE TRAIN CONTROL MODULE (DTCM)

1. DTC IS ACTIVE

NOTE: If DTCs C1403 and C1407 are both present, refer to the diagnostics for C1407 before continuing with this procedure.

1. Ignition on, engine not running.

NOTE: Repair any system undervoltage or overvoltage DTCs that are set in this module before proceeding.

2. With the scan tool, read DTCs.

Is the DTC status Active at this time?

Yes

- Go To 2

No

- Go To 5

2. (K594) DRIVETRAIN SENSOR RETURN CIRCUIT HIGH RESISTANCE OR OPEN

1. Turn the ignition off to the lock position
2. Disconnect the Shift Motor/Mode Sensor Assembly harness connector.
3. Disconnect the DTCM C1 harness connector.
4. Measure the resistance of the (K594) Drivetrain Sensor Return circuit between the Shift Motor/Mode Sensor Assembly harness connector and the DTCM C1 harness connector.

Is the resistance above 5.0 Ohms?

Yes

- Repair the high resistance or open in the (K594) Drivetrain Sensor Return circuit.
- Perform the TRANSFER CASE VERIFICATION TEST. (Refer to 28 - DTC-Based Diagnostics/MODULE, Drivetrain Control (DTCM) - Standard Procedure).

No

- Go To 3

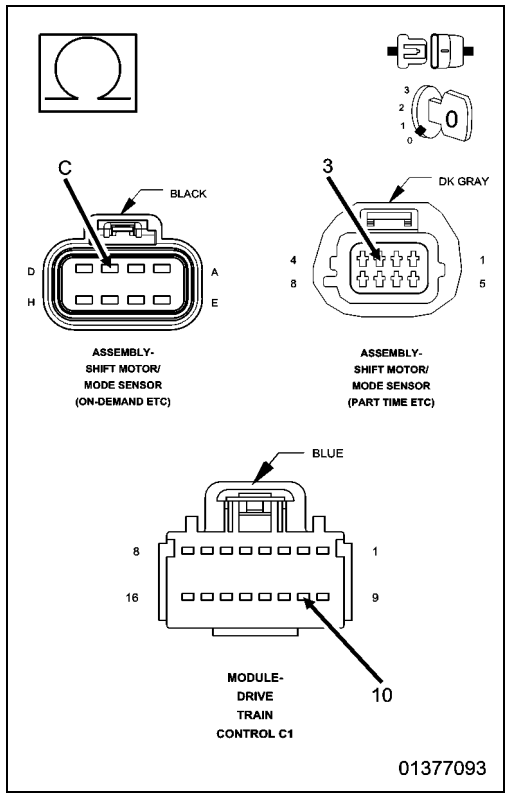

3. (K504) DRIVETRAIN 5-VOLT SUPPLY CIRCUIT VOLTAGE CHECK

1. Connect the DTCM C1 harness connector.
2. Connect a jumper wire between the (T313) Mode Sensor Signal circuit and the (K504) Drivetrain Sensor Return circuit at the Shift Motor/Mode Sensor Assembly harness connector.
3. Ignition on, engine not running.
4. With the scan tool, read the T-Case Position Sensor voltage.
5. The displayed voltage should be between 4.5 volts and 5.5 volts with the jumper wire in place.

Does the voltage display as described?

Yes

- Go To 4

No

- Replace the Drive Train Control Module (DTCM) in accordance with the Service Information.
- Perform the DTCM VERIFICATION TEST. (Refer to 28 - DTC-Based Diagnostics/MODULE, Drivetrain Control (DTCM) - Standard Procedure).

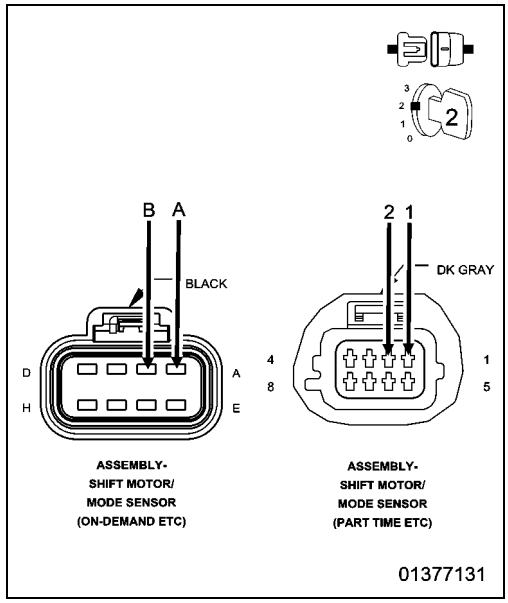

4. (K594) DRIVETRAIN SENSOR RETURN CIRCUIT VOLTAGE CHECK

1. Turn the ignition off to the lock position
2. Connect a jumper wire between the (T313) Mode Sensor Signal circuit and the (K594) Drivetrain Sensor Return circuit at the Shift Motor/Mode Sensor Assembly harness connector.
3. Ignition on, engine not running.
4. With the scan tool, read the T-Case Position Sensor voltage.
5. The displayed voltage should be between 0.0 volts and 0.4 of a volt with the jumper wire in place.

Does the voltage display as described?

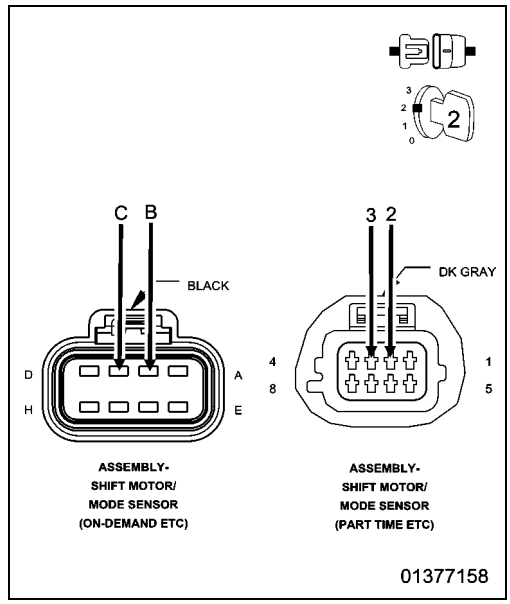

Yes

- Replace the Transfer Case Motor Mode Sensor in accordance with the Service Information.
- Perform the TRANSFER CASE VERIFICATION TEST. (Refer to 28 - DTC-Based Diagnostics/MODULE, Drivetrain Control (DTCM) - Standard Procedure).

No

- Replace the Drive Train Control Module (DTCM) in accordance with the Service Information.
- Perform the DTCM VERIFICATION TEST. (Refer to 28 - DTC-Based Diagnostics/MODULE, Drivetrain Control (DTCM) - Standard Procedure).

5. INTERMITTENT WIRING HARNESS AND CONNECTORS

1. The conditions necessary to set this DTC are not present at this time.
2. Using the wiring diagram/schematic as a guide, inspect the wiring harness and connectors.
3. Wiggle test the wiring harness and connectors while monitoring the scan tool data relative to this circuit.
4. Look for the data to change or for the DTC to reset during the wiggle test.
5. While monitoring the scan tool data relative to this circuit, move the selector switch to each position several times.
6. Look for the data to change other than as expected or for the DTC to reset.

Were any problems found?

Yes

- Repair as necessary.
- Perform the TRANSFER CASE VERIFICATION TEST. (Refer to 28 - DTC-Based Diagnostics/MODULE, Drivetrain Control (DTCM) - Standard Procedure).

No

- Test complete.

C1404-TRANSFER CASE RANGE POSITION SENSOR CIRCUIT LOW

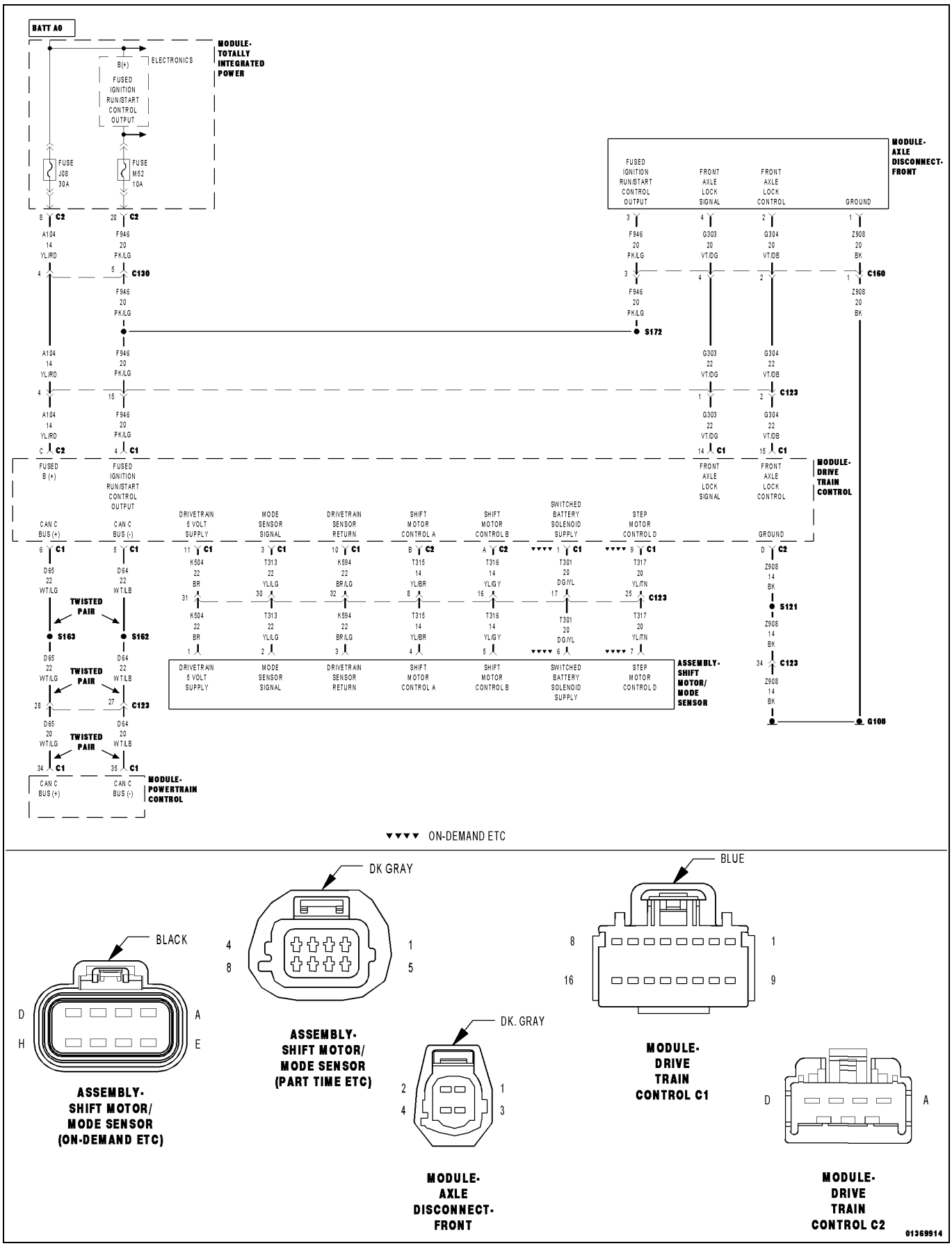

For a complete wiring diagram, **refer to the Wiring Information**.

- **When Monitored:**
  With the ignition on and no system undervoltage or overvoltage or supply voltage low conditions present.
- **Set Condition:**
  Sensor input voltage is below a specified value for a calibrated amount of time.

Possible Causes
INTERMITTENT TRANSFER CASE RANGE POSITION SENSOR CIRCUIT LOW
(K504) DRIVETRAIN 5-VOLT SUPPLY CIRCUIT OPEN
(K504) DRIVETRAIN 5-VOLT SUPPLY CIRCUIT SHORTED TO VOLTAGE
(T313) MODE SENSOR SIGNAL CIRCUIT OPEN
(T313) MODE SENSOR SIGNAL CIRCUIT SHORTED TO GROUND
TRANSFER CASE SHIFT MOTOR/MODE SENSOR ASSEMBLY
DRIVE TRAIN CONTROL MODULE (DTCM)

1. T-CASE POSITION SENSOR VOLTAGE BELOW 0.4 VOLTS

NOTE: If DTCs C1404 and C2112 are both present, refer to the diagnostics procedure for C2112 before continuing.

1. Ignition on, engine not running.
2. With the scan tool, read the T-Case Position Sensor voltage in the DTCM.

Is the voltage below 0.4 of a volt?

Yes
- Go To 2

No
- Go To 8

2. (K504) DRIVETRAIN 5-VOLT SUPPLY CIRCUIT VOLTAGE CHECK

1. Turn the ignition off to the lock position
2. Disconnect the Shift Motor/Mode Sensor Assembly harness connector.
3. Ignition on, engine not running.
4. Measure the voltage of the (K504) Drivetrain 5-volt Supply circuit at the Shift Motor/Mode Sensor Assembly harness connector.

Choose an answer that matches the voltage measured?

Below 4.5 volts
- Go To 3

Above 5.5 volts
- Go To 4

Between 4.5 volts and 5.5 volts
- Go To 5

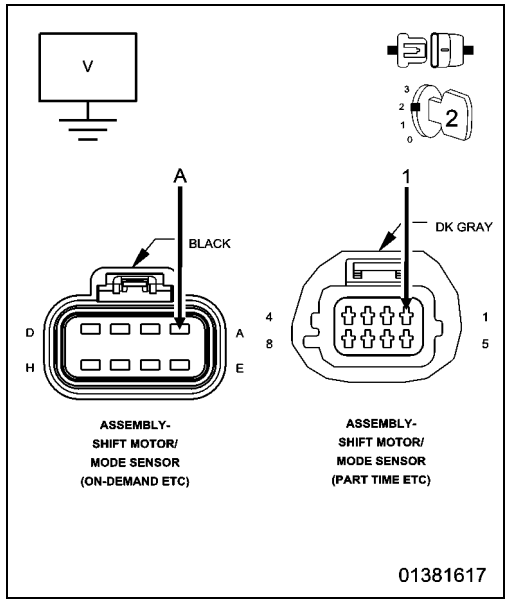

3. (K504) DRIVETRAIN 5-VOLT SUPPLY CIRCUIT FOR AN OPEN OR HIGH RESISTANCE

1. Turn the ignition off to the lock position
2. Disconnect the DTCM C1 harness connector.
3. Measure the resistance of the (K504) Drivetrain 5-volt Supply circuit between the DTCM C1 and the Shift Motor/Mode Sensor Assembly harness connector.

Is the resistance above 5.0 Ohms?

Yes

- Repair the (K504) Drivetrain 5-volt Supply circuit for an open or high resistance.
- Perform the TRANSFER CASE VERIFICATION TEST. (Refer to 28 - DTC-Based Diagnostics/MODULE, Drivetrain Control (DTCM) - Standard Procedure).

No

- Go To 4

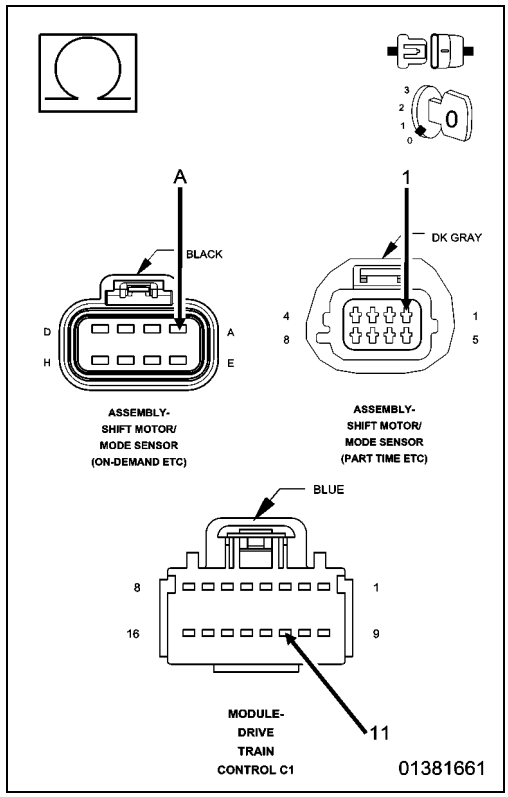

4. (K504) DRIVETRAIN 5-VOLT SUPPLY CIRCUIT SHORTED TO VOLTAGE

1. Measure the voltage of the (K504) Drivetrain 5-volt Supply circuit at the Shift Motor/Mode Sensor Assembly harness connector.

Is the voltage above 5.5 volts?

Yes

- Repair the (K504) Drivetrain 5-volt Supply circuit for a short to voltage.
- Perform the TRANSFER CASE VERIFICATION TEST. (Refer to 28 - DTC-Based Diagnostics/MODULE, Drivetrain Control (DTCM) - Standard Procedure).

No

- Go To 5

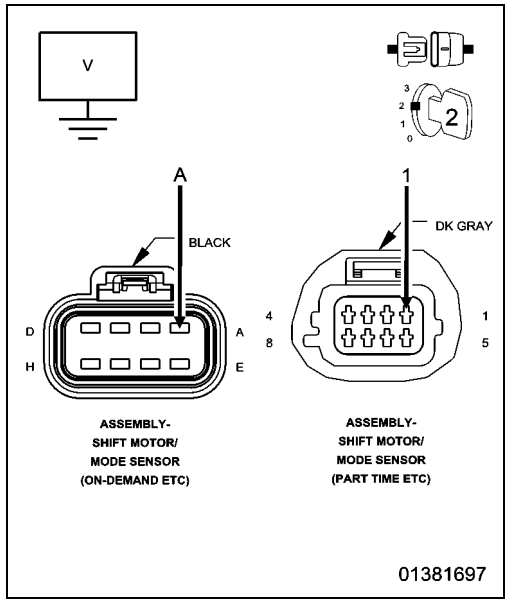

5. (T313) MODE SENSOR SIGNAL CIRCUIT SHORTED TO GROUND

1. Turn the ignition off to the lock position
2. Disconnect the DTCM C1 harness connector.
3. Measure the resistance between ground and the (T313) Mode Sensor Signal circuit at the Shift Motor/Mode Sensor Assembly harness connector.

Is the resistance below 5.0 Ohms?

Yes

- Repair the (T313) Mode Sensor Signal circuit for a short to ground.
- Perform the TRANSFER CASE VERIFICATION TEST. (Refer to 28 - DTC-Based Diagnostics/MODULE, Drivetrain Control (DTCM) - Standard Procedure).

No

- Go To 6

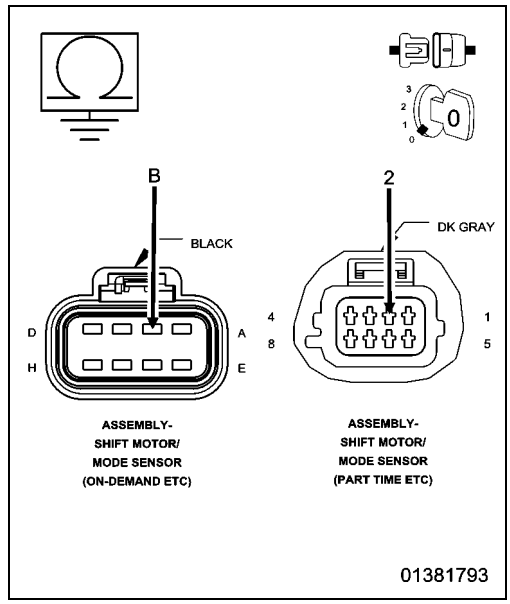

6. (T313) MODE SENSOR SIGNAL CIRCUIT OPEN

1. Measure the resistance of the (T313) Mode Sensor Signal circuit between the DTCM C1 harness connector and the Shift Motor/Mode Sensor Assembly harness connector.

Is the resistance above 5.0 Ohms?

Yes

- Repair the (T313) Mode Sensor Signal circuit for an open.
- Perform the TRANSFER CASE VERIFICATION TEST. (Refer to 28 - DTC-Based Diagnostics/MODULE, Drivetrain Control (DTCM) - Standard Procedure).

No

- Go To 7

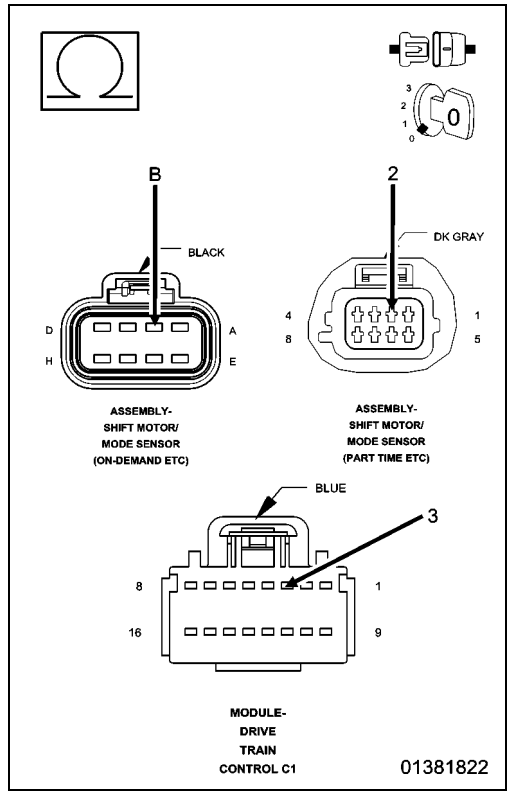

7. TRANSFER CASE SHIFT MOTOR/MODE SENSOR ASSEMBLY

1. Turn the ignition off to the lock position
2. Connect the DTCM C1 harness connector.
3. Connect a jumper wire between the (T313) Mode Sensor Signal circuit and the (K504) Drivetrain 5 volt supply circuit at the Shift Motor/Mode Sensor Assembly harness connector.
4. Ignition on, engine not running.
5. With the scan tool, read the T-Case Position Sensor voltage in the DTCM.
6. The displayed voltage should be between 4.5 volts and 5.5 volts with the jumper wire in place.

Does the voltage display as described?

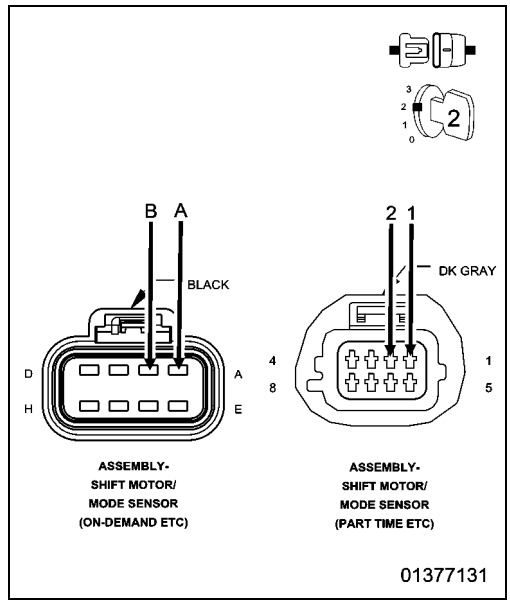

Yes

- Replace the Shift Motor/Mode Sensor in accordance with the Service Information.
- Perform the TRANSFER CASE VERIFICATION TEST. (Refer to 28 - DTC-Based Diagnostics/MODULE, Drivetrain Control (DTCM) - Standard Procedure).

No

- Replace the Drive Train Control Module (DTCM) in accordance with the Service Information.
- Perform the DTCM VERIFICATION TEST. (Refer to 28 - DTC-Based Diagnostics/MODULE, Drivetrain Control (DTCM) - Standard Procedure).

8. INTERMITTENT WIRING AND CONNECTORS

1. The conditions necessary to set this DTC are not present at this time.
2. Using the wiring diagram/schematic as a guide, inspect the wiring harness and connectors.
3. Wiggle test the wiring harness and connectors while monitoring the scan tool data relative to this circuit.
4. Look for the data to change or for the DTC to reset during the wiggle test.
5. While monitoring the scan tool data relative to this circuit, move the selector switch to each position several times.
6. Look for the data to change other than as expected or for the DTC to reset.

Were any problems found?

Yes

- Repair as necessary.
- Perform the TRANSFER CASE VERIFICATION TEST. (Refer to 28 - DTC-Based Diagnostics/MODULE, Drivetrain Control (DTCM) - Standard Procedure).

No

- Test complete.

C1405-TRANSFER CASE RANGE POSITION SENSOR CIRCUIT HIGH

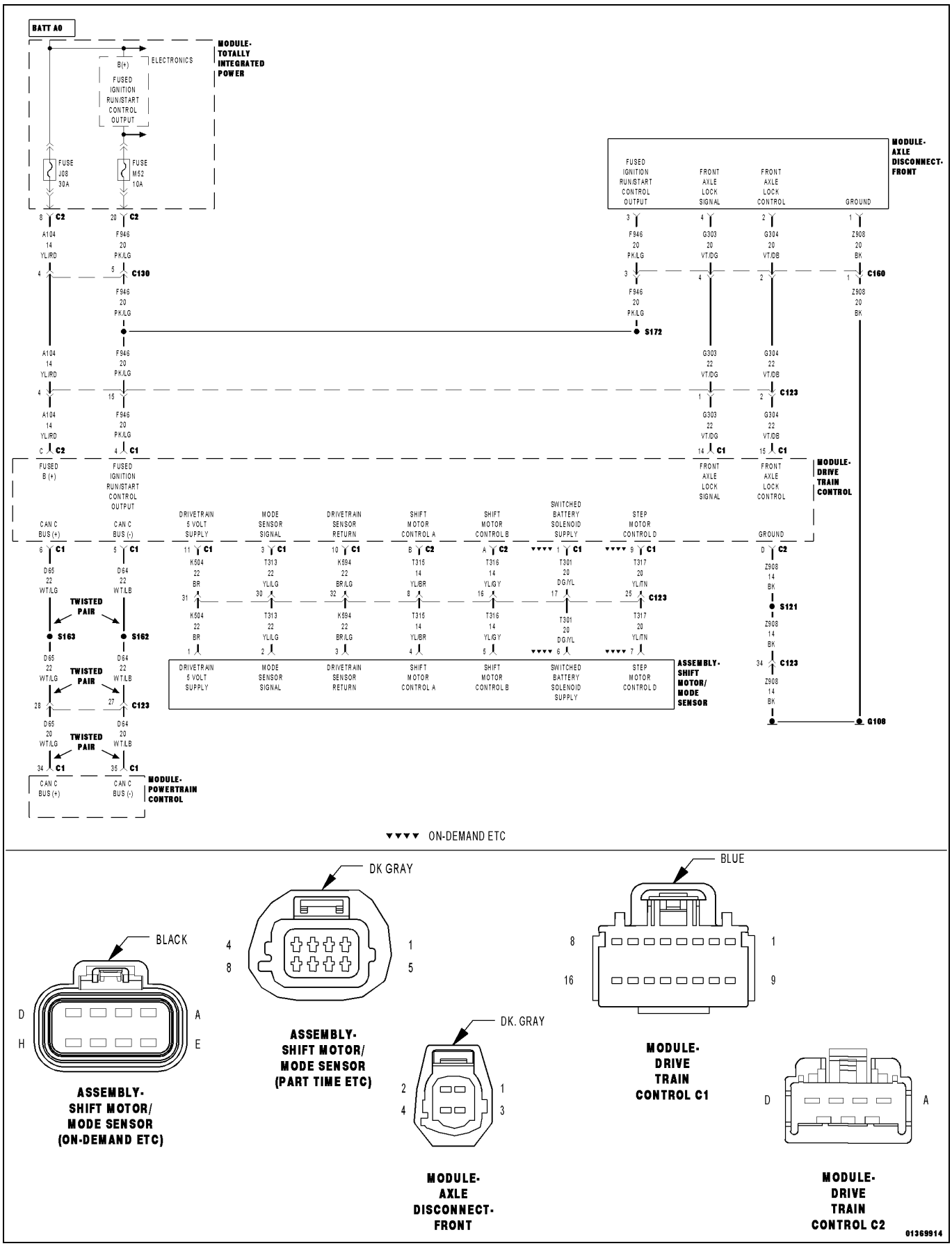

For a complete wiring diagram, **refer to the Wiring Information**.

- **When Monitored:**
  With the ignition on and no system undervoltage or overvoltage condition present.
- **Set Condition:**
  The sensor voltage is above a specified value for a calibrated amount of time.

Possible Causes
(K504) DRIVETRAIN 5 VOLT SUPPLY CIRCUIT SHORTED TO VOLTAGE
(T313) MODE SENSOR SIGNAL CIRCUIT SHORTED TO VOLTAGE
(K594) DRIVETRAIN SENSOR RETURN CIRCUIT OPEN
TRANSFER CASE SHIFT MOTOR/MODE SENSOR ASSEMBLY
DRIVE TRAIN CONTROL MODULE (DTCM)

1. T-CASE POSITION SENSOR VOLTAGE ABOVE 4.8 VOLTS

NOTE: If DTCs C1405 and C2112 are both present, refer to the diagnostics procedure for C2112 before continuing.

1. Ignition on, engine not running.
2. With the scan tool, read the T-Case Position Sensor voltage in the DTCM.

Is the voltage above 4.8 volts?

Yes

- Go To 2

No

- Go To 6

2. (K504) DRIVETRAIN 5 VOLT SUPPLY CIRCUIT SHORTED TO VOLTAGE

1. Turn the ignition off to the lock position
2. Disconnect the Shift Motor/Mode Sensor Assembly harness connector.
3. Ignition on, engine not running.
4. Measure the voltage of the (K504) Drivetrain 5 Volt Supply circuit at the Transfer Case Encoder harness connector.

Is the voltage above 5.5 volts?

Yes

- Repair the (K504) Drivetrain 5 Volt Supply circuit for a short to voltage.
- Perform the TRANSFER CASE VERIFICATION TEST. (Refer to 28 - DTC-Based Diagnostics/MODULE, Drivetrain Control (DTCM) - Standard Procedure).

No

- Go To 3

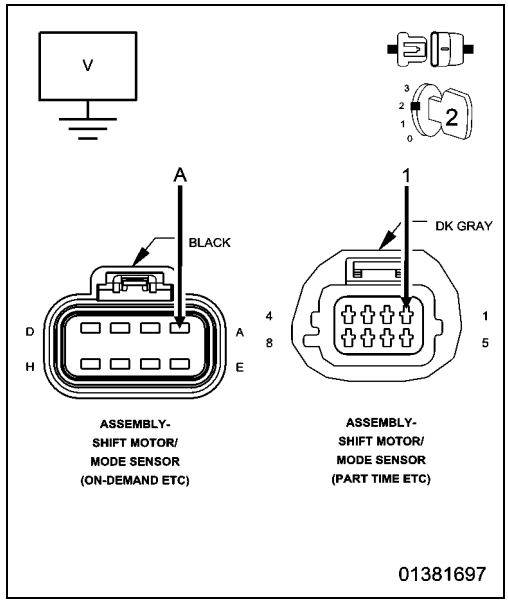

3. (T313) MODE SENSOR SIGNAL CIRCUIT SHORTED TO VOLTAGE

1. Measure the voltage of the (T313) Mode Sensor Signal circuit at the Shift Motor/Mode Sensor Assembly harness connector.

Is the voltage above 5.5 volts?

Yes

- Repair the (T313) Mode Sensor Signal circuit for a short to voltage.
- Perform the TRANSFER CASE VERIFICATION TEST. (Refer to 28 - DTC-Based Diagnostics/MODULE, Drivetrain Control (DTCM) - Standard Procedure).

No

- Go To 4

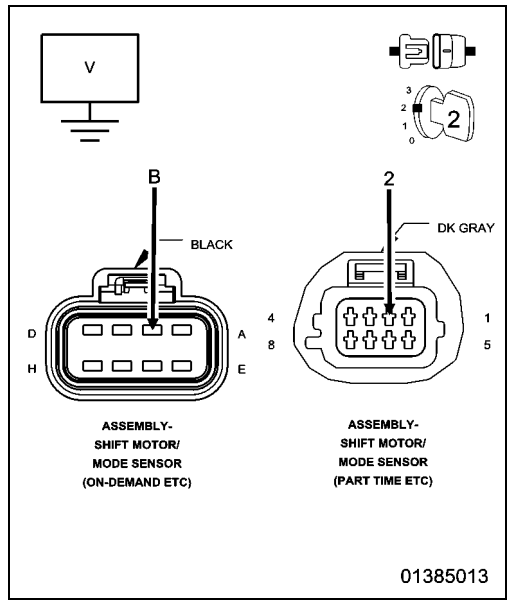

4. (K594) DRIVETRAIN SENSOR RETURN CIRCUIT OPEN

1. Disconnect the DTCM harness connector.
2. Measure the resistance of the (K594) Drivetrain Sensor Return circuit between the Shift Motor/Mode Sensor Assembly harness connector and the DTCM C1 harness connector.

Is the resistance above 5.0 Ohms?

Yes

- Repair the (K594) Drivetrain Sensor Return circuit for an open.
- Perform the TRANSFER CASE VERIFICATION TEST. (Refer to 28 - DTC-Based Diagnostics/MODULE, Drivetrain Control (DTCM) - Standard Procedure).

No

- Go To 5

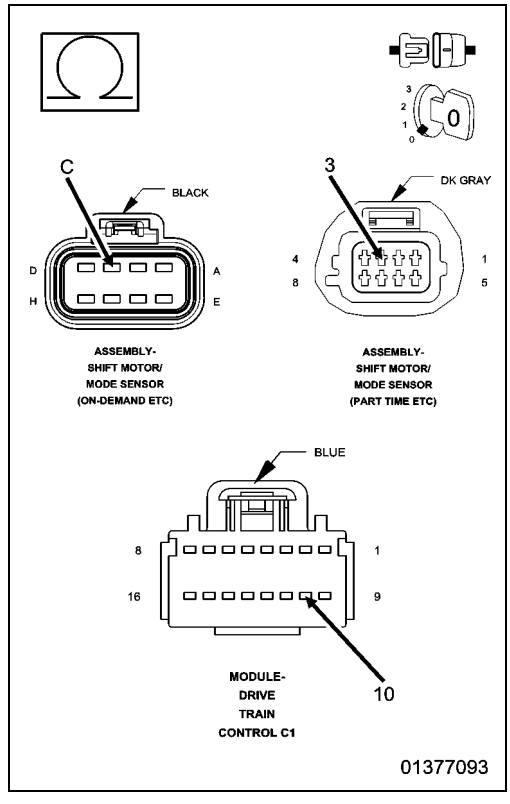

5. TRANSFER CASE SHIFT MOTOR/MODE SENSOR ASSEMBLY

1. Turn the ignition off to the lock position
2. Connect a jumper wire between the (K594) Drivetrain Sensor Return circuit and the (T313) Mode Sensor Signal circuit in the Shift Motor/ Mode Sensor Assembly harness connector.
3. Ignition on, engine not running.
4. With the scan tool, read the T-Case Position Sensor voltage in the DTCM.

NOTE: Remove the jumper wire before continuing.

Is the voltage below 0.2 of a volt?

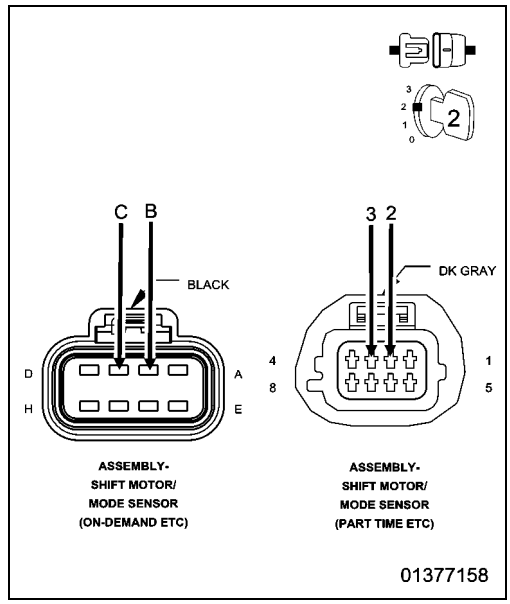

Yes

- Replace the Transfer Case Shift Motor/Mode Sensor Assembly in accordance with the Service Information.
- Perform the TRANSFER CASE VERIFICATION TEST. (Refer to 28 - DTC-Based Diagnostics/MODULE, Drivetrain Control (DTCM) - Standard Procedure).

No

- Replace the Drive Train Control Module (DTCM) in accordance with the Service Information.
- Perform the DTCM VERIFICATION TEST. (Refer to 28 - DTC-Based Diagnostics/MODULE, Drivetrain Control (DTCM) - Standard Procedure).

6. INTERMITTENT WIRING HARNESS AND CONNECTORS

1. The conditions necessary to set this DTC are not present at this time.
2. Using the wiring diagram/schematic as a guide, inspect the wiring harness and connectors.
3. Wiggle test the wiring harness and connectors while monitoring the scan tool data relative to this circuit.
4. Look for the data to change or for the DTC to reset during the wiggle test.
5. While monitoring the scan tool data relative to this circuit, move the selector switch to each position several times.
6. Look for the data to change other than as expected or for the DTC to reset.

Were any problems found?

Yes

- Repair as necessary.
- Perform the TRANSFER CASE VERIFICATION TEST. (Refer to 28 - DTC-Based Diagnostics/MODULE, Drivetrain Control (DTCM) - Standard Procedure).

No

- Test complete.

C1406-TRANSFER CASE BRAKE PERFORMANCE

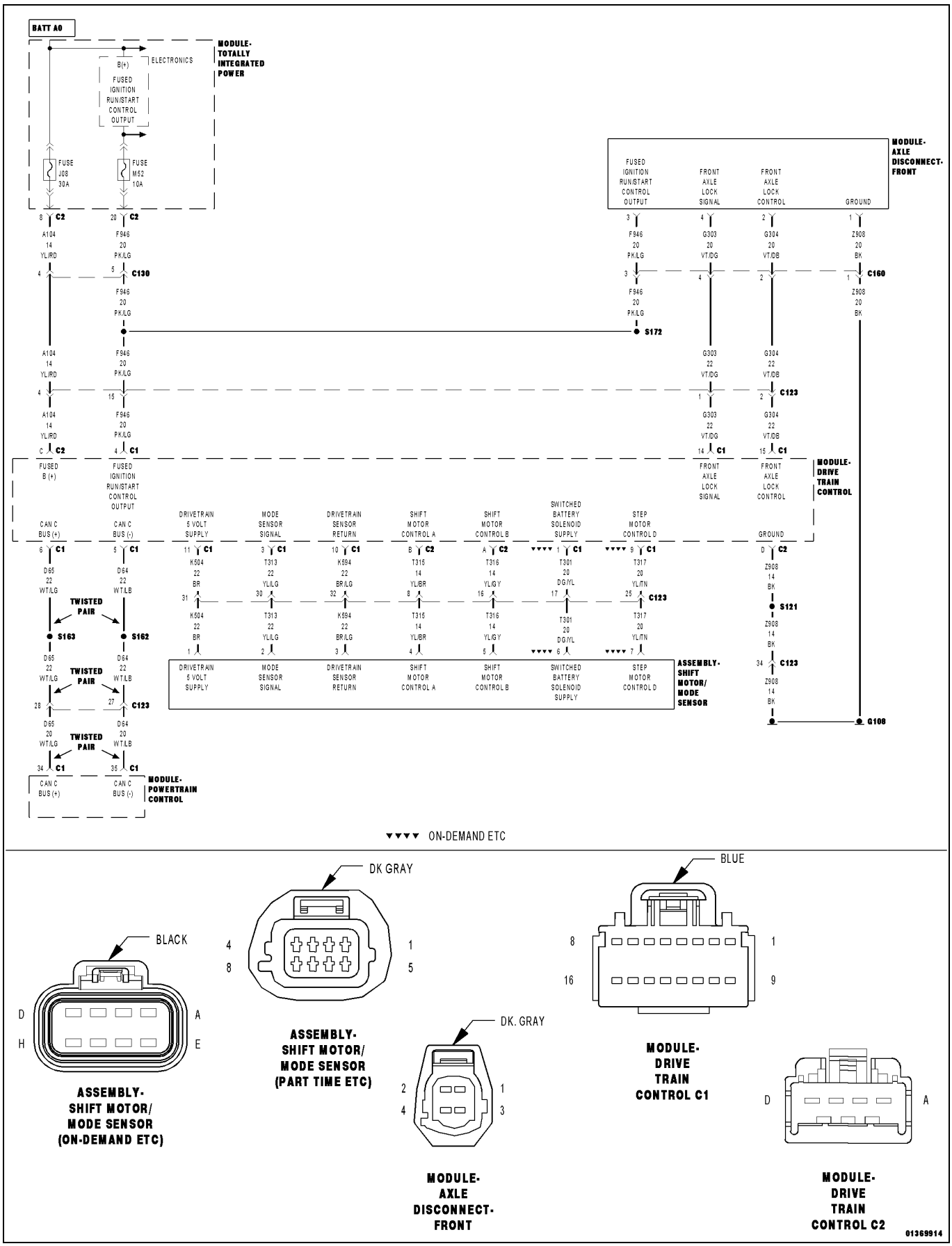

For a complete wiring diagram, **refer to the Wiring Information**.

- **When Monitored:**
  With the ignition on and no system undervoltage or overvoltage condition present.
- **Set Condition:**
  1. The Drive Train Control Module (DTCM) detects an excessive voltage variation on the Shift Motor/Mode Sensor Signal circuit.
  2. The Drive Train Control Module (DTCM) performs an error correction procedure too frequently.

Possible Causes
(T301) SWITCHED BATTERY SOLENOID SUPPLY CIRCUIT VOLTAGE
TRANSFER CASE SHIFT MOTOR/MODE SENSOR ASSEMBLY
DRIVE TRAIN CONTROL MODULE (DTCM)

1. DTC IS ACTIVE

1. Ignition on, engine not running.
2. With the scan tool, record and erase DTCs.
3. Start the engine and allow it to idle.
4. With the scan tool, read DTCs.

Is the status Active for this DTC?

Yes

- Go To 2

No

- Go To 3

2. (T301) SWITCHED BATTERY SOLENOID SUPPLY CIRCUIT VOLTAGE

1. Ignition on, engine not running.
2. Connect a 12-volt test light between the (T301) Switched Battery Solenoid Supply circuit and the (T317) Transfer Case Motor Lock Signal at the Transfer Case Shift Motor/Mode Sensor Assembly harness connector.

NOTE: As a failsafe precaution when the Transfer Case Motor harness connectors are disconnected, the DTCs must be erased in the DTCM. Failure to follow this will result in the DTCM detecting this condition and turning OFF the Switched Battery Solenoid Supply circuit.

3. Using the scan tool, erase the DTCs.
4. With the scan tool, actuate the T-Case Motor Solenoid Lock in the DTCM.

NOTE: Compare the brightness to that of a direct connection to the battery.

Does the test light illuminate brightly?

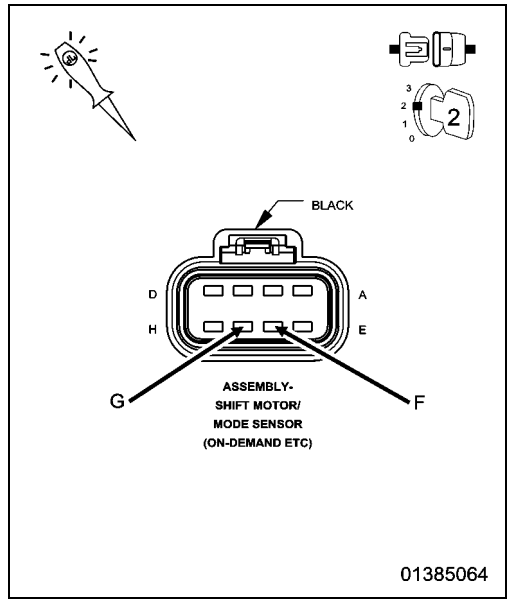

Yes

- Replace the Transfer Case Shift Motor/Mode Sensor Assembly in accordance with the Service Information.
- Perform the TRANSFER CASE VERIFICATION TEST. (Refer to 28 - DTC-Based Diagnostics/MODULE, Drivetrain Control (DTCM) - Standard Procedure).

No

- Replace the Drive Train Control Module (DTCM) in accordance with the Service Information.
- Perform the DTCM VERIFICATION TEST. (Refer to 28 - DTC-Based Diagnostics/MODULE, Drivetrain Control (DTCM) - Standard Procedure).

3. INTERMITTENT WIRING HARNESS AND CONNECTORS

1. The conditions necessary to set this DTC are not present at this time.
2. Using the wiring diagram/schematic as a guide, inspect the wiring harness and connectors.
3. Wiggle test the wiring harness and connectors while monitoring the scan tool data relative to this circuit.
4. Look for the data to change or for the DTC to reset during the wiggle test.
5. While monitoring the scan tool data relative to this circuit, move the selector switch to each position several times.
6. Look for the data to change other than as expected or for the DTC to reset.

Were any problems found?

Yes

- Repair as necessary.
- Perform the TRANSFER CASE VERIFICATION TEST. (Refer to 28 - DTC-Based Diagnostics/MODULE, Drivetrain Control (DTCM) - Standard Procedure).

No

- Test complete.

C1407-TRANSFER CASE BRAKE CONTROL CIRCUIT LOW

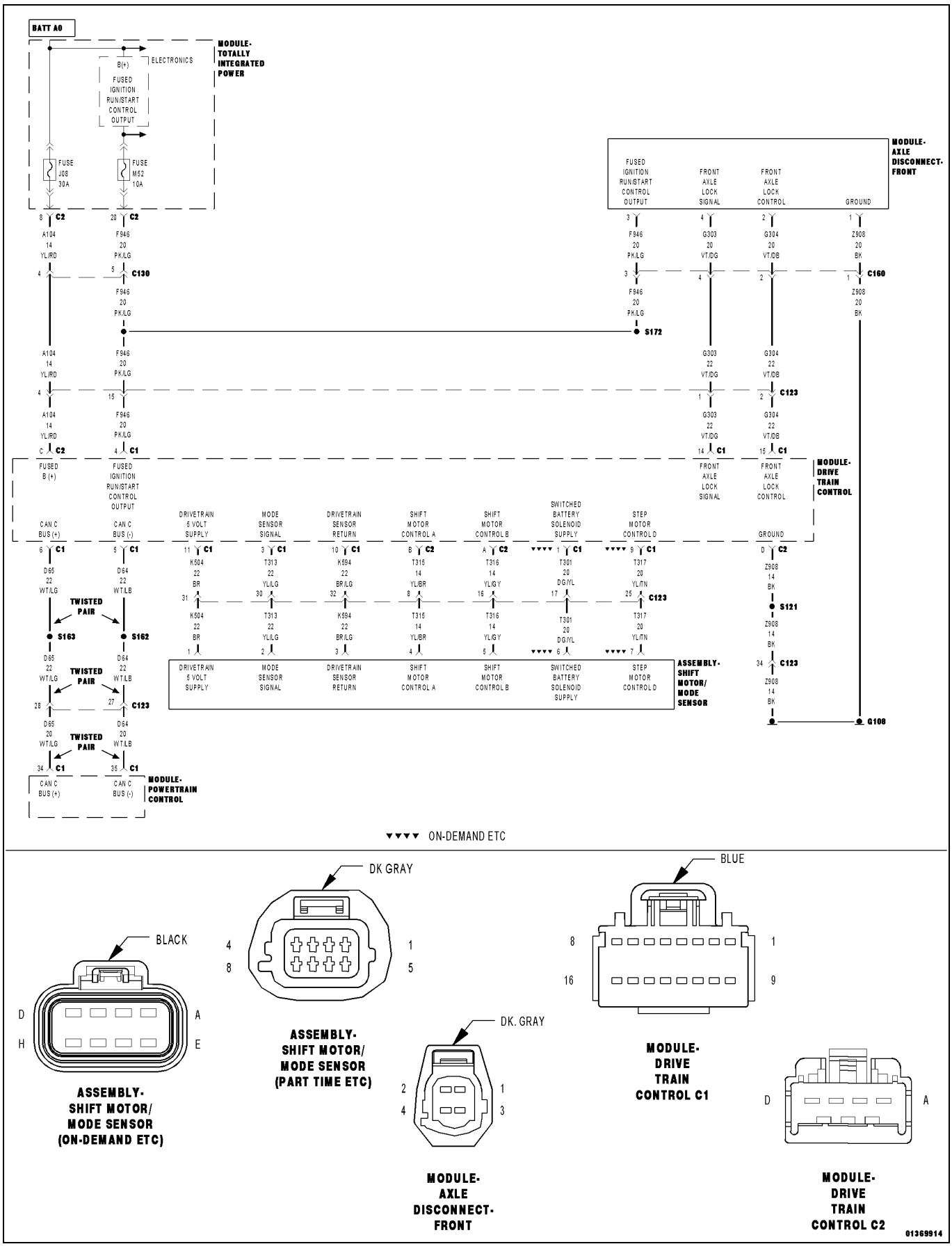

For a complete wiring diagram, **refer to the Wiring Information**.

- **When Monitored:**
  With the ignition on and no system undervoltage or overvoltage condition present.
- **Set Condition:**
  The Drive Train Control Module (DTCM) detects that the Transfer Case Motor Lock circuit diagnostic input is low when output is off.

Possible Causes
(T301) SWITCHED BATTERY SOLENOID SUPPLY CIRCUIT SHORTED TO GROUND
(T301) SWITCHED BATTERY SOLENOID SUPPLY CIRCUIT VOLTAGE
TRANSFER CASE SHIFT MOTOR/MODE SENSOR ASSEMBLY
DRIVE TRAIN CONTROL MODULE (DTCM)

1. DTC IS ACTIVE

1. Turn the ignition off to the lock position
2. With the scan tool, record and erase DTCs.
3. Start the engine and allow it to idle.
4. With the scan tool, read DTCs.

Is the status Active for this DTC?

Yes

- Go To 2

No

- Go To 4

2. (T301) SWITCHED BATTERY SOLENOID SUPPLY CIRCUIT SHORTED TO GROUND

1. Turn the ignition off to the lock position
2. Disconnect the Transfer Case Shift Motor/Mode Sensor Assembly harness connector.
3. Disconnect the DTCM C1 harness connector.
4. Measure the resistance between ground and the (T301) Switched Battery Solenoid Supply circuit.

Is the resistance below 5.0 Ohms?

Yes

- Repair the (T301) Switched Battery Solenoid Supply circuit for a short to ground.
- Perform the TRANSFER CASE VERIFICATION TEST. (Refer to 28 - DTC-Based Diagnostics/MODULE, Drivetrain Control (DTCM) - Standard Procedure).

No

- Go To 3

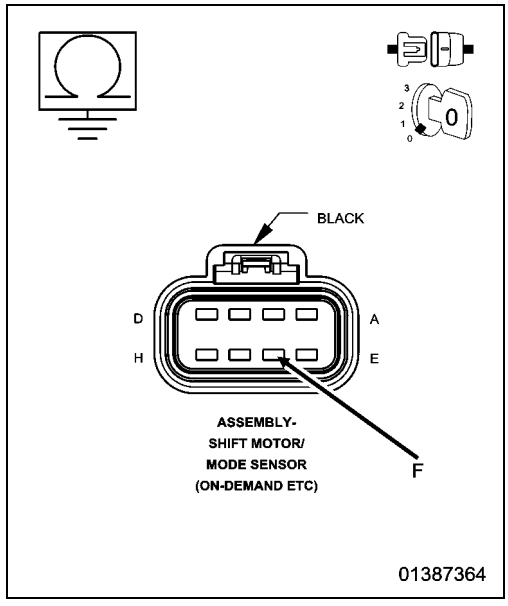

3. (T301) SWITCHED BATTERY SOLENOID SUPPLY CIRCUIT VOLTAGE

1. Ignition on, engine not running.
2. Connect a 12-volt test light between the (T301) Switched Battery Solenoid Supply circuit and the (T317) Transfer Case Motor Lock Signal at the Transfer Case Shift Motor/Mode Sensor Assembly harness connector.

NOTE: As a failsafe precaution when the Transfer Case Shift Motor/ Mode Sensor Assembly harness connector is disconnected, the DTCs must be cleared in the DTCM. Failure to follow this will result in the DTCM detecting this condition and turning OFF the Switched Battery Solenoid Supply circuit.

3. Using the scan tool, erase DTCs.
4. With the scan tool, actuate the T-Case Motor Solenoid Lock in the DTCM.

NOTE: Compare the brightness to that of a direct connection to the battery.

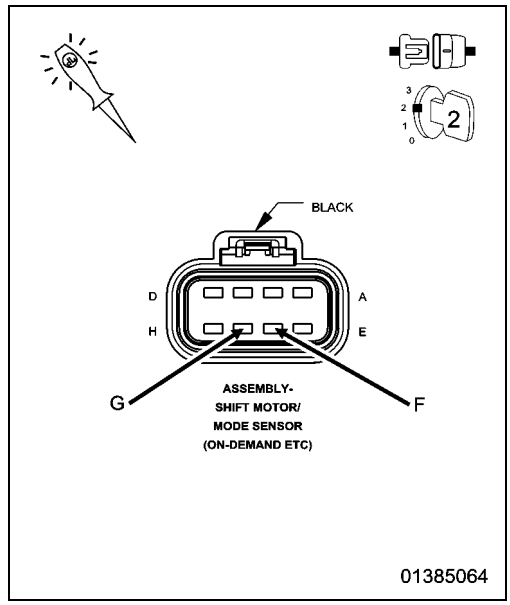

Does the test light illuminate brightly?

Yes

- Replace the Transfer Case Shift Motor/Mode Sensor Assembly in accordance with the Service Information.
- Perform the TRANSFER CASE VERIFICATION TEST. (Refer to 28 - DTC-Based Diagnostics/MODULE, Drivetrain Control (DTCM) - Standard Procedure).

No

- Replace the Drive Train Control Module (DTCM) in accordance with the Service Information.
- Perform the DTCM VERIFICATION TEST. (Refer to 28 - DTC-Based Diagnostics/MODULE, Drivetrain Control (DTCM) - Standard Procedure).

4. INTERMITTENT WIRING HARNESS AND CONNECTORS

1. The conditions necessary to set this DTC are not present at this time.
2. Using the wiring diagram/schematic as a guide, inspect the wiring harness and connectors.
3. Wiggle test the wiring harness and connectors while monitoring the scan tool data relative to this circuit.
4. Look for the data to change or for the DTC to reset during the wiggle test.
5. While monitoring the scan tool data relative to this circuit, move the selector switch to each position several times.
6. Look for the data to change other than as expected or for the DTC to reset.

Were any problems found?

Yes

- Repair as necessary.
- Perform the TRANSFER CASE VERIFICATION TEST. (Refer to 28 - DTC-Based Diagnostics/MODULE, Drivetrain Control (DTCM) - Standard Procedure).

No

- Test complete.

C1408-TRANSFER CASE BRAKE CONTROL CIRCUIT HIGH

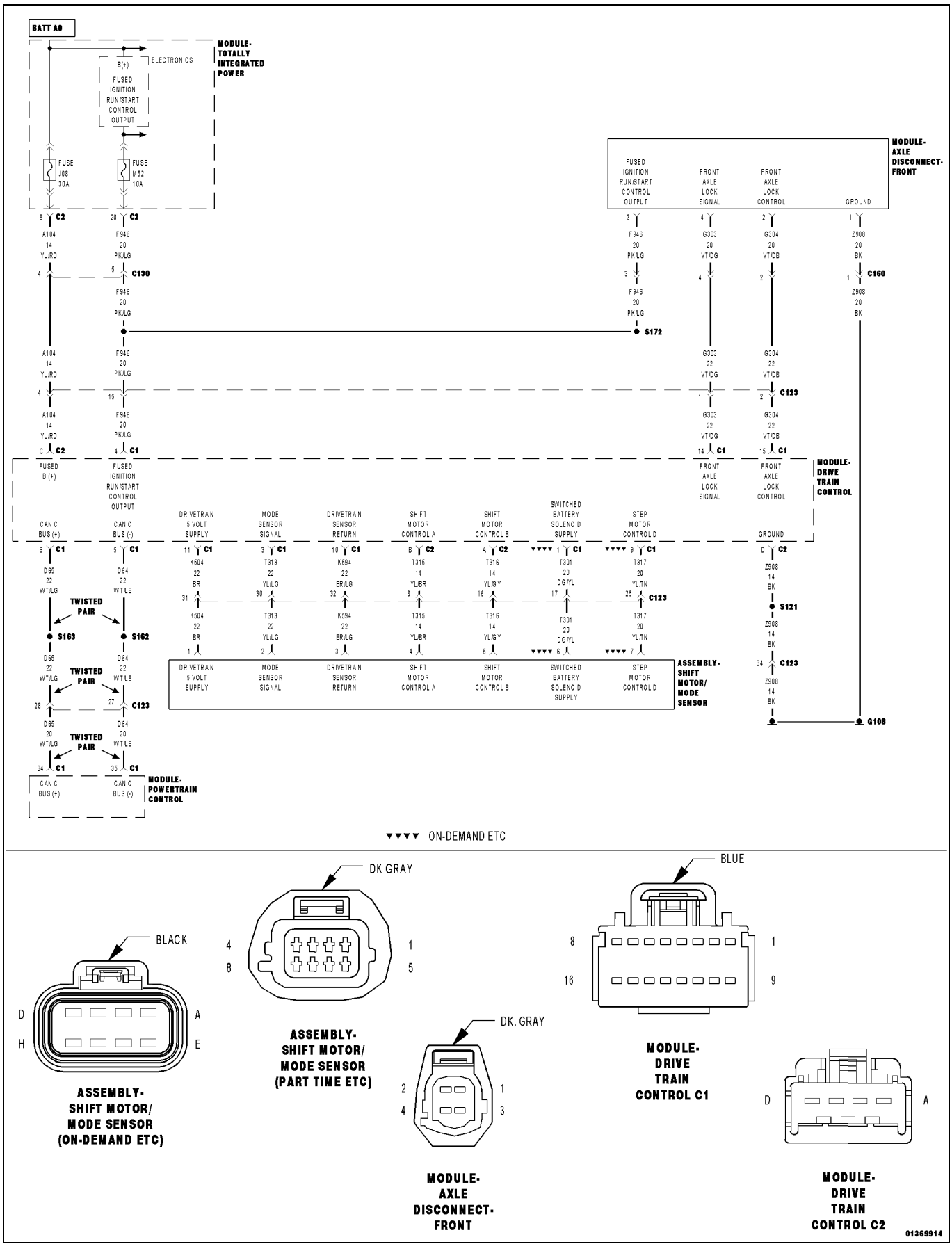

For a complete wiring diagram, **refer to the Wiring Information**.

- **When Monitored:**
  With the ignition on and no undervoltage or overvoltage condition present.
- **Set Condition:**
  The Drive Train Control Module detects that the Transfer Case Motor Lock circuit diagnostic input is high when the output is on.

Possible Causes
(T301) TRANSFER CASE MOTOR LOCK SIGNAL CIRCUIT OPEN
(T301) SWITCHED BATTERY SOLENOID SUPPLY CIRCUIT SHORTED TO VOLTAGE
(T317) TRANSFER CASE MOTOR LOCK SIGNAL CIRCUIT OPEN
TRANSFER CASE SHIFT MOTOR/MODE SENSOR ASSEMBLY
DRIVE TRAIN CONTROL MODULE (DTCM)

1. VERIFY THE DTC IS ACTIVE

1. Ignition on, engine not running.
2. With the scan tool, record and erase DTCs.
3. Test drive the vehicle.
4. Ignition on, engine not running.
5. With the scan tool, read DTCs.

Is the DTC active at this time?

Yes

- Go To 2

No

- Go To 7

2. (T301) SWITCHED BATTERY SOLENOID SUPPLY CIRCUIT OPEN

1. Turn the ignition off to the lock position
2. Disconnect the Transfer Case Shift Motor/Mode Sensor Assembly harness connector.
3. Disconnect the DTCM C1 harness connector.
4. Measure the resistance of the (T301) Switched Battery Solenoid Supply circuit between the Transfer Case Motor harness connector and the DTCM C1 harness connector.

Is the resistance above 5.0 Ohms?

Yes

- Repair the (T301) Switched Battery Solenoid Supply circuit for an open.
- Perform the TRANSFER CASE VERIFICATION TEST. (Refer to 28 - DTC-Based Diagnostics/MODULE, Drivetrain Control (DTCM) - Standard Procedure).

No

- Go To 3

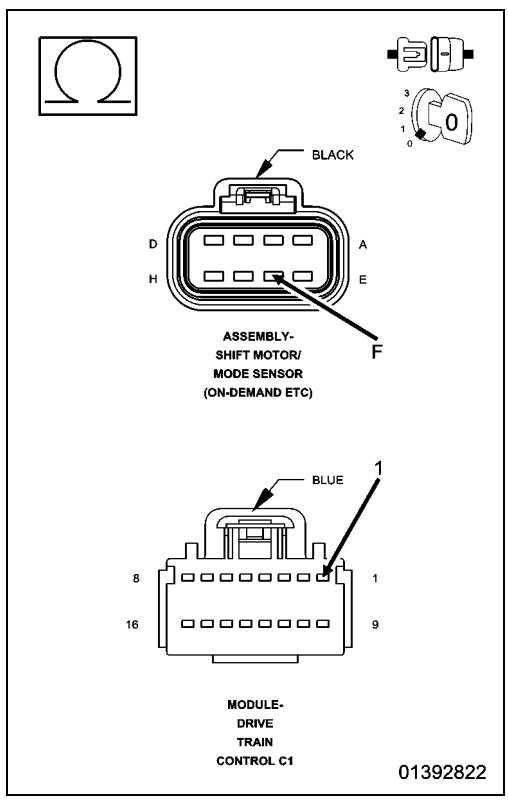

3. (T317) TRANSFER CASE MOTOR LOCK SIGNAL CIRCUIT OPEN

1. Measure the resistance of the (T317) Transfer Case Motor Lock Signal circuit between the Transfer Case Shift Motor/Mode Sensor Assembly harness connector and the DTCM C1 harness connector.

Is the resistance below 5.0 Ohms?

Yes

- Repair the (T317) Transfer Case Shift Motor/Mode Sensor Assembly Lock Signal circuit for an open.
- Perform the TRANSFER CASE VERIFICATION TEST. (Refer to 28 - DTC-Based Diagnostics/MODULE, Drivetrain Control (DTCM) - Standard Procedure).

No

- Go To 4

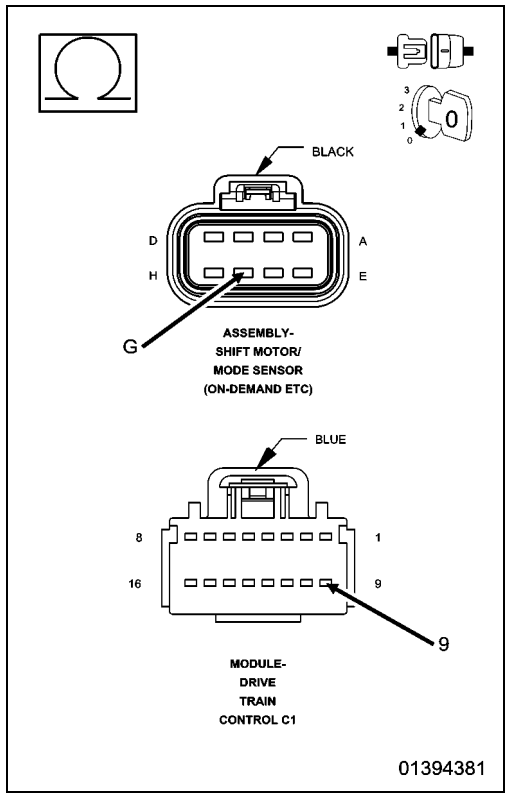

4. (T301) SWITCHED BATTERY SOLENOID SUPPLY CIRCUIT SHORTED TO VOLTAGE

1. Ignition on, engine not running.
2. Measure the voltage of the (T301) Switched Battery Solenoid Supply circuit in the Transfer Case Motor harness connector.

Is any voltage present?

Yes

- Repair the (T301) Switched Battery Solenoid Supply circuit for a short to voltage.
- Perform the TRANSFER CASE VERIFICATION TEST. (Refer to 28 - DTC-Based Diagnostics/MODULE, Drivetrain Control (DTCM) - Standard Procedure).

No

- Go To 5

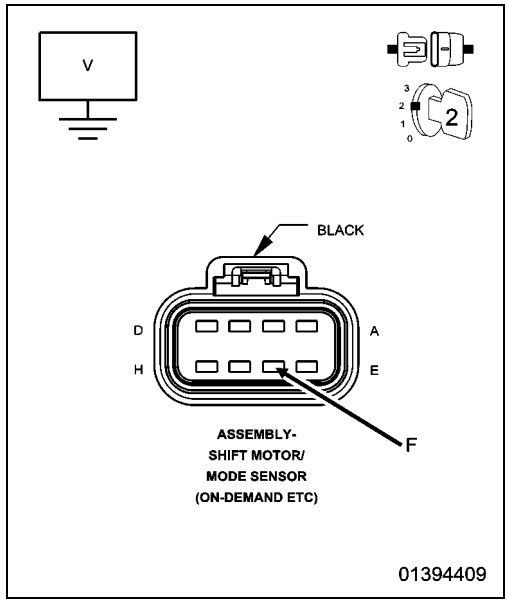

5. TRANSFER CASE SHIFT MOTOR/MODE SENSOR ASSEMBLY

1. Turn the ignition off to the lock position
2. Connect the Transfer Case Shift Motor/Mode Sensor Assembly harness connector.
3. Measure the resistance of the (T317) Transfer Case Motor Lock Signal circuit and the (T301) Switched Battery Solenoid Supply in the DTCM C1 harness connector.

Is the resistance greater than 20 Ohms?

Yes

- Replace the Transfer Case Shift Motor/Mode Sensor Assembly in accordance with the Service Information.
- Perform the TRANSFER CASE VERIFICATION TEST. (Refer to 28 - DTC-Based Diagnostics/MODULE, Drivetrain Control (DTCM) - Standard Procedure).

No

- Go To 6

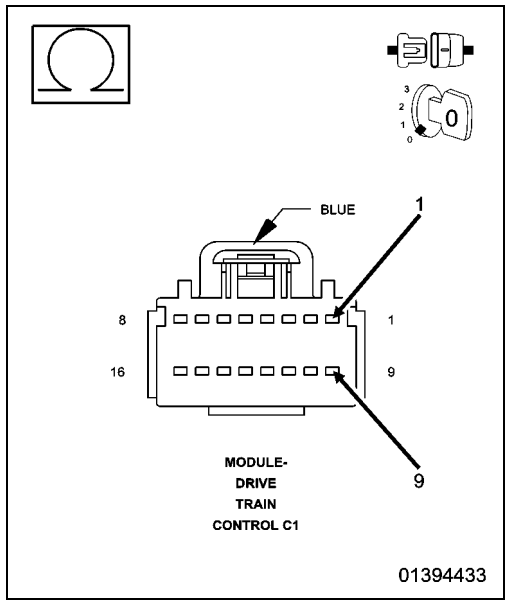

6. DRIVE TRAIN CONTROL MODULE (DTCM)

1. Connect the DTCM C1 harness connector.
2. Ignition on, engine not running.
3. With the scan tool, erase DTCs.
4. With the scan tool, read DTCs.

Does the DTC remain active?

Yes

- Replace the Drive Train Control Module (DTCM) in accordance with the Service Information.
- Perform the DTCM VERIFICATION TEST. (Refer to 28 - DTC-Based Diagnostics/MODULE, Drivetrain Control (DTCM) - Standard Procedure).

No

- Go To 7

7. INTERMITTENT WIRING HARNESS AND CONNECTORS

1. The conditions necessary to set this DTC are not present at this time.
2. Using the wiring diagram/schematic as a guide, inspect the wiring harness and connectors.
3. Wiggle test the wiring harness and connectors while monitoring the scan tool data relative to this circuit.
4. Look for the data to change or for the DTC to reset during the wiggle test.
5. While monitoring the scan tool data relative to this circuit, move the selector switch to each position several times.
6. Look for the data to change other than as expected or for the DTC to reset.

Were any problems found?

Yes

- Repair as necessary.
- Perform the TRANSFER CASE VERIFICATION TEST. (Refer to 28 - DTC-Based Diagnostics/MODULE, Drivetrain Control (DTCM) - Standard Procedure).

No

- Test complete.

C140A-TRANSFER CASE MOTOR PERFORMANCE

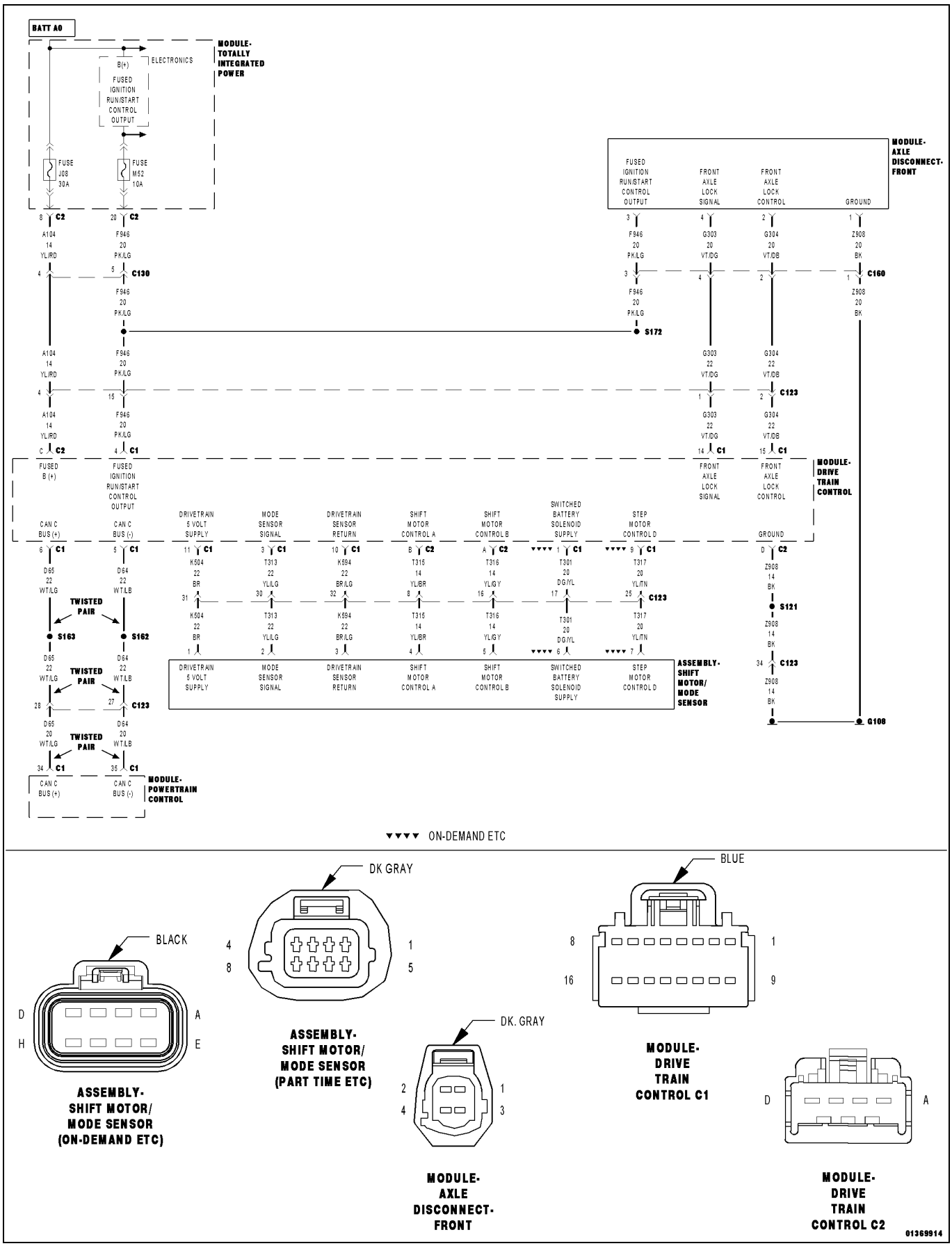

For a complete wiring diagram, **refer to the Wiring Information**.

- **When Monitored:**
  With the ignition on and no undervoltage or overvoltage condition present.
- **Set Condition:**
  A faulted condition is detected in the H-bridge driver.

Possible Causes
(T315) STEP MOTOR CONTROL A CIRCUIT SHORTED TO GROUND
(T316) STEP MOTOR CONTROL B CIRCUIT SHORTED TO GROUND
(T315) STEP MOTOR CONTROL A CIRCUIT SHORTED TO (T316) STEP MOTOR CONTROL B CIRCUIT
TRANSFER CASE SHIFT MOTOR/MODE SENSOR ASSEMBLY
DRIVE TRAIN CONTROL MODULE (DTCM)

1. DTC ACTIVE

1. Ignition on, engine not running.
2. With the scan tool, record and erase DTCs.
3. Test drive the vehicle.
4. Ignition on, engine not running.
5. With the scan tool, read DTCs.

Is DTC active?

Yes

- Go To 2

No

- Go To 5

2. (T315) STEP MOTOR CONTROL A CIRCUIT SHORTED TO GROUND

1. Turn the ignition off to the lock position
2. Disconnect the Transfer Case Shift Motor/Mode Sensor Assembly harness connector.
3. Disconnect the DTCM C2 harness connector.
4. Ignition on, engine not running.
5. Measure the resistance between ground and the (T315) Step Motor Control A circuit at the Transfer Case Shift Motor/Mode Sensor Assembly harness connector.

Is the resistance below 5.0 Ohms?

Yes

- Repair the (T315) Step Motor Control A circuit for a short to ground.
- Perform the TRANSFER CASE VERIFICATION TEST. (Refer to 28 - DTC-Based Diagnostics/MODULE, Drivetrain Control (DTCM) - Standard Procedure).

No

- Go To 3

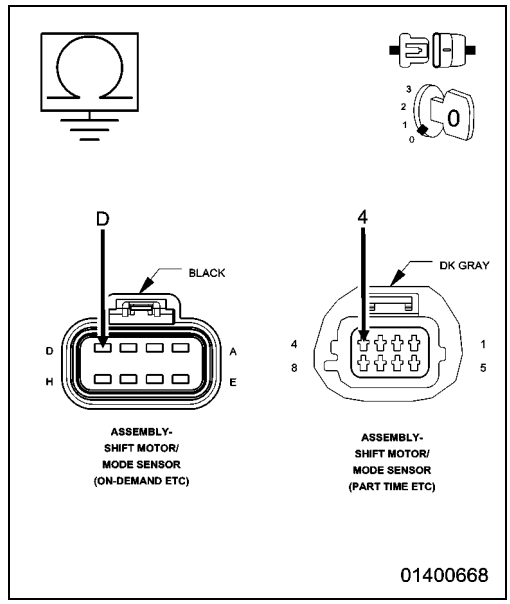

3. (T316) STEP MOTOR CONTROL B CIRCUIT SHORTED TO GROUND

1. Measure the resistance between ground and the (T316) Step Motor Control B circuit at the Transfer Case Motor/Mode Sensor Assembly harness connector.

Is the resistance below 5.0 Ohms?

Yes

- Repair the (T316) Step Motor Control B circuit for a short to ground.
- Perform the TRANSFER CASE VERIFICATION TEST. (Refer to 28 - DTC-Based Diagnostics/MODULE, Drivetrain Control (DTCM) - Standard Procedure).

No

- Go To 4

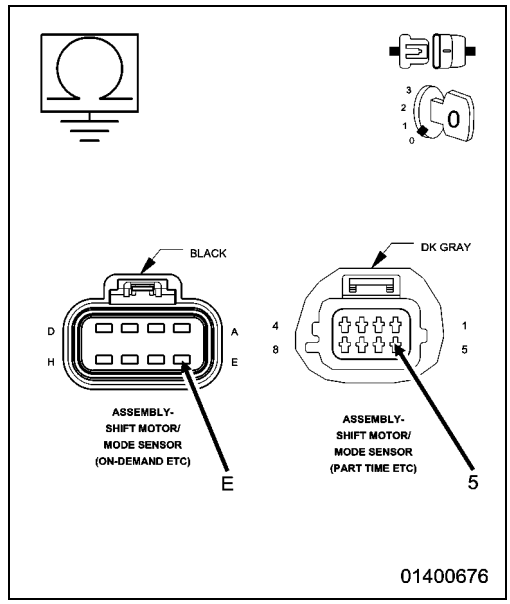

4. (T315) STEP MOTOR CONTROL A CIRCUIT SHORTED TO THE (T316) SHIFT MOTOR CONTROL B CIRCUIT

1. Measure the resistance between the (T315) Step Motor Control A circuit and the (T316) Step Motor Control B circuit at the Transfer Case Motor/Mode Sensor Assembly harness connector.

Is the resistance below 5.0 Ohms?

Yes

- Repair the (T315) Step Motor Control A circuit and the (T316) Step Motor Control B circuit for a short.
- Perform the TRANSFER CASE VERIFICATION TEST. (Refer to 28 - DTC-Based Diagnostics/MODULE, Drivetrain Control (DTCM) - Standard Procedure).

No

- Replace the Drive Train Control Module (DTCM) in accordance with the Service Information.
- Perform the DTCM VERIFICATION TEST. (Refer to 28 - DTC-Based Diagnostics/MODULE, Drivetrain Control (DTCM) - Standard Procedure).

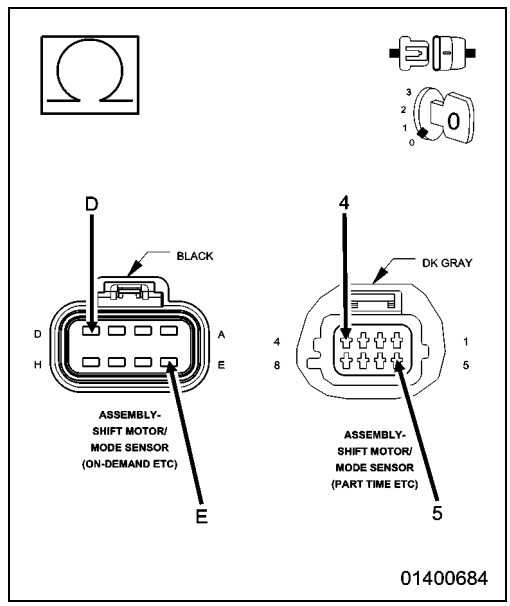

5. INTERMITTENT WIRING HARNESS AND CONNECTORS

1. The conditions necessary to set this DTC are not present at this time.
2. Using the wiring diagram/schematic as a guide, inspect the wiring harness and connectors.
3. Wiggle test the wiring harness and connectors while monitoring the scan tool data relative to this circuit.
4. Look for the data to change or for the DTC to reset during the wiggle test.
5. While monitoring the scan tool data relative to this circuit, move the selector switch to each position several times.
6. Look for the data to change other than as expected or for the DTC to reset.

Were any problems found?

Yes

- Repair as necessary.
- Perform the DTCM VERIFICATION TEST. (Refer to 28 - DTC-Based Diagnostics/MODULE, Drivetrain Control (DTCM) - Standard Procedure).

No

- Test complete.

C140D-TRANSFER CASE MOTOR CONTROL CIRCUIT OPEN

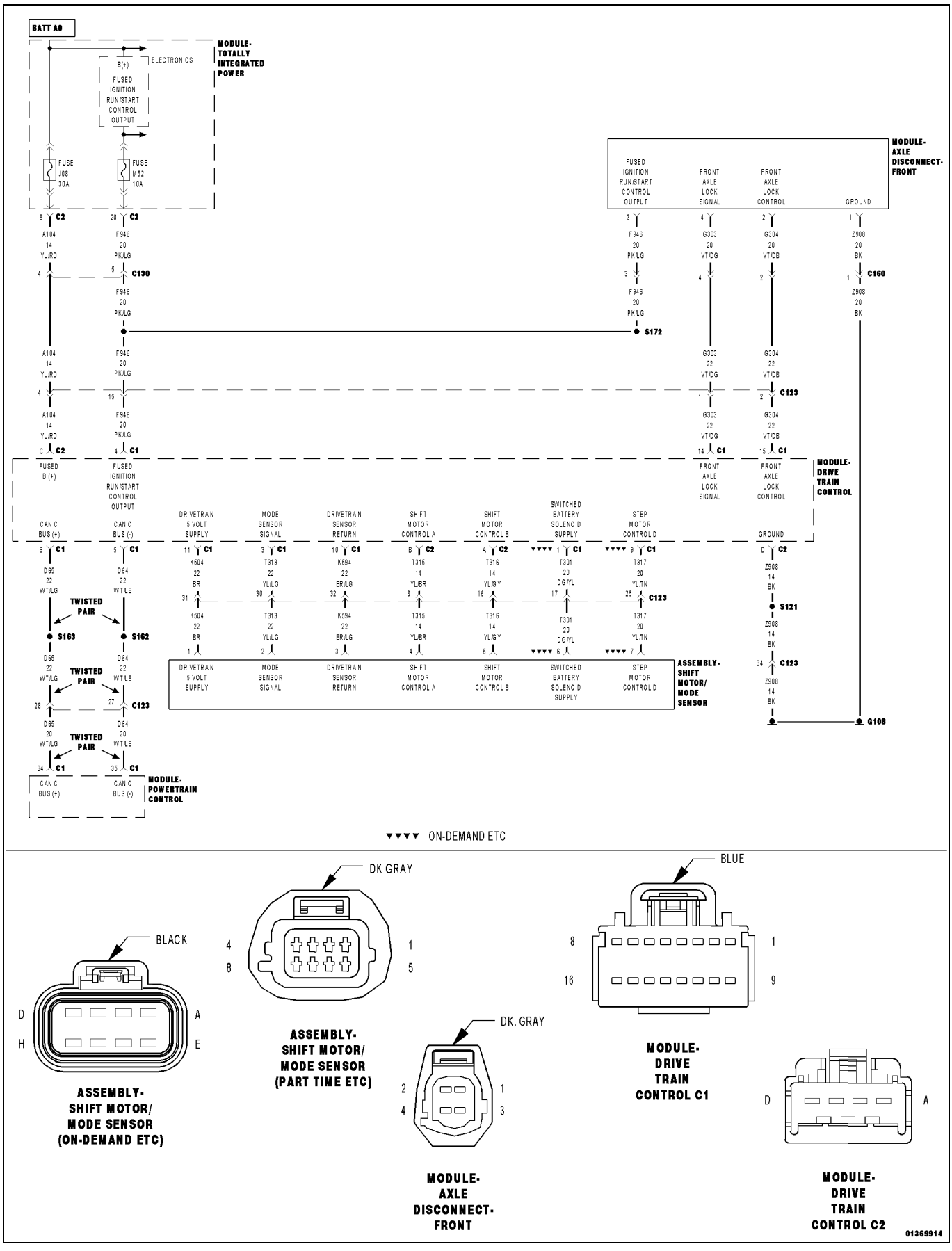

For a complete wiring diagram, **refer to the Wiring Information**.

- **When Monitored:**
  With the ignition on and no system undervoltage or overvoltage condition present.
- **Set Condition:**
  The Drive Train Control Module (DTCM) detects an open circuit on one of the Transfer Case Shift Motor/Mode Sensor Assembly Control circuits.

Possible Causes
(T315) STEP MOTOR CONTROL A CIRCUIT OPEN
(T316) STEP MOTOR CONTROL B CIRCUIT OPEN
(T315) STEP MOTOR CONTROL A CIRCUIT SHORTED TO VOLTAGE
(T316) STEP MOTOR CONTROL B CIRCUIT SHORTED TO VOLTAGE
TRANSFER CASE SHIFT MOTOR/MODE SENSOR ASSEMBLY
DRIVE TRAIN CONTROL MODULE (DTCM)

1. DTC IS ACTIVE

1. Ignition on, engine not running.
2. With the scan tool, record and erase DTCs.
3. Test drive the vehicle.
4. Ignition on, engine not running.
5. With the scan tool, read DTCs.

Is the status Active for this DTC?

Yes

- Go To 2

No

- Go To 7

2. (T315) STEP MOTOR CONTROL A CIRCUIT OPEN

1. Turn the ignition off to the lock position
2. Disconnect the Transfer Case Motor harness connector.
3. Disconnect the DTCM C2 harness connector.
4. Measure the resistance of the (T315) Step Motor Control A circuit from the Transfer Case Motor harness connector to the DTCM C2 harness connector.

Is the resistance above 5.0 Ohms?

Yes

- Repair the (T315) Step Motor Control B circuit for an open.
- Perform the TRANSFER CASE VERIFICATION TEST. (Refer to 28 - DTC-Based Diagnostics/MODULE, Drivetrain Control (DTCM) - Standard Procedure).

No

- Go To 3

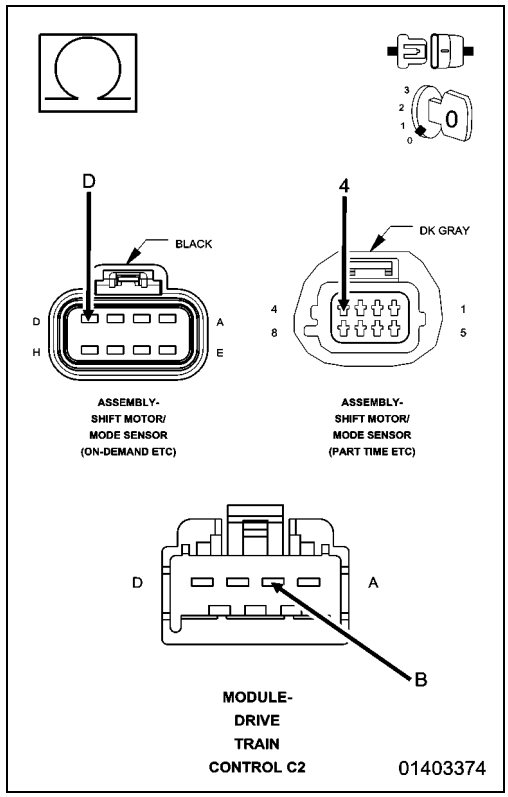

3. (T316) STEP MOTOR CONTROL B CIRCUIT OPEN

1. Measure the resistance of the (T316) Step Motor Control C circuit from the Transfer Case Motor harness connector to the Final Drive Control Module C2 harness connector.

Is the resistance above 5.0 Ohms?

Yes

- Repair the (T316) Step Motor Control C circuit for an open.
- Perform the TRANSFER CASE VERIFICATION TEST. (Refer to 28 - DTC-Based Diagnostics/MODULE, Drivetrain Control (DTCM) - Standard Procedure).

No

- Go To 4

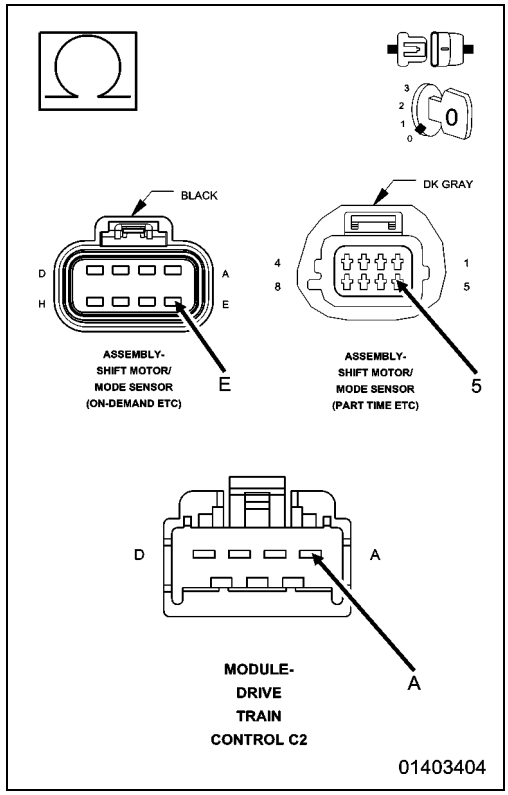

4. (T315) STEP MOTOR CONTROL A CIRCUIT SHORTED TO VOLTAGE

1. Ignition on, engine not running.
2. Measure the voltage of the (T315) Step Motor Control A circuit at the Transfer Case Motor harness connector.

Is the voltage above 0.5 of a volt?

Yes

- Repair the (T315) Step Motor Control A circuit for a short to voltage.
- Perform the TRANSFER CASE VERIFICATION TEST. (Refer to 28 - DTC-Based Diagnostics/MODULE, Drivetrain Control (DTCM) - Standard Procedure).

No

- Go To 5

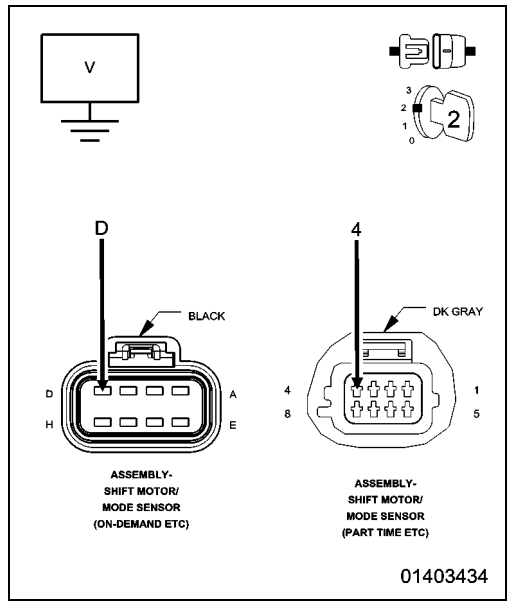

5. (T316) STEP MOTOR CONTROL B CIRCUIT SHORTED TO VOLTAGE

1. Measure the voltage of the (T316) Step Motor Control B circuit at the Transfer Case Motor harness connector.

Is the voltage above 0.5 of a volt?

Yes

- Repair the (T316) Step Motor Control B circuit for a short to voltage.
- Perform the TRANSFER CASE VERIFICATION TEST. (Refer to 28 - DTC-Based Diagnostics/MODULE, Drivetrain Control (DTCM) - Standard Procedure).

No

- Go To 6

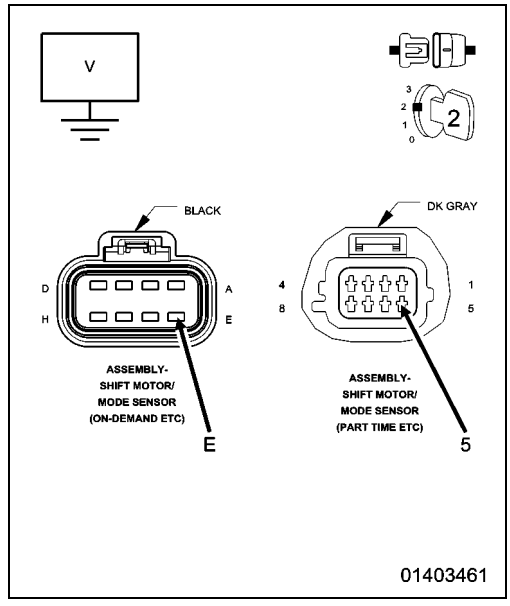

6. TRANSFER CASE SHIFT MOTOR/MODE SENSOR ASSEMBLY

1. Connect the Transfer Case Shift Motor/Mode Sensor Assembly harness connector.
2. Measure the resistance between the (T315) Step Motor Control A circuit and the (T316) Step Motor Control B circuit at the Final Drive Control Module C2 harness connector.

Is the resistance below 5.0 Ohms?

Yes

- Replace the Drive Train Control Module (DTCM) in accordance with the Service Information.
- Perform the DTCM VERIFICATION TEST. (Refer to 28 - DTC-Based Diagnostics/MODULE, Drivetrain Control (DTCM) - Standard Procedure).

No

- Replace the shorted Transfer Case Shift Motor/Mode Sensor Assembly in accordance with the Service Information.
- Perform the TRANSFER CASE VERIFICATION TEST. (Refer to 28 - DTC-Based Diagnostics/MODULE, Drivetrain Control (DTCM) - Standard Procedure).

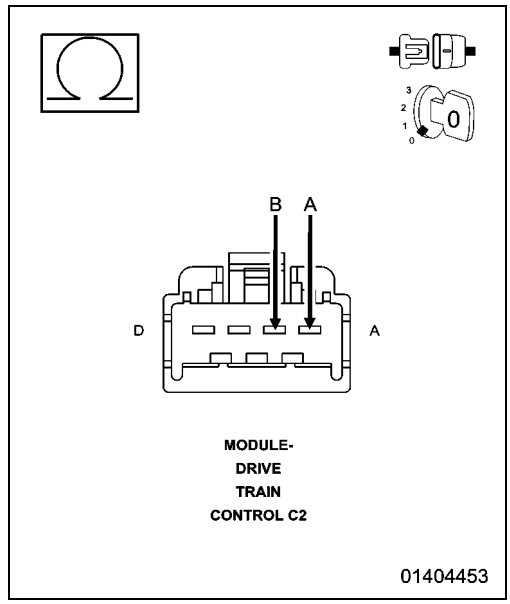

7. INTERMITTENT WIRING HARNESS AND CONNECTORS

1. The conditions necessary to set this DTC are not present at this time.
2. Using the wiring diagram/schematic as a guide, inspect the wiring harness and connectors.
3. Wiggle test the wiring harness and connectors while monitoring the scan tool data relative to this circuit.
4. Look for the data to change or for the DTC to reset during the wiggle test.
5. While monitoring the scan tool data relative to this circuit, move the selector switch to each position several times.
6. Look for the data to change other than as expected or for the DTC to reset.

Were any problems found?

Yes

- Repair as necessary.
- Perform the TRANSFER CASE VERIFICATION TEST. (Refer to 28 - DTC-Based Diagnostics/MODULE, Drivetrain Control (DTCM) - Standard Procedure).

No

- Test complete.

C140E-TRANSFER CASE MOTOR BLOCKED

For a complete wiring diagram, **refer to the Wiring Information**.

- **When Monitored:**
  With the ignition on and no system undervoltage or overvoltage condition present.
- **Set Condition:**
  The Drive Train Control Module (DTCM) is unable to engage the requested range.

Possible Causes
TRANSFER CASE INTERNAL CONDITION
TRANSFER CASE SHIFT MOTOR
DRIVE TRAIN CONTROL MODULE (DTCM)

1. DTC IS ACTIVE

1. Ignition on, engine not running.
2. With the scan tool, record and erase DTCs.
3. Test drive the vehicle.
4. Ignition on, engine not running.
5. With the scan tool, read DTCs.

Is the status Active for this DTC?

Yes

- Go To 2

No

- Go To 4

2. TRANSFER CASE INTERNAL CONDITION

1. Turn the ignition off to the lock position.
2. Inspect the Transfer Case in accordance with the Service Information to determine if there are any mechanical conditions that are preventing the Shift Motor from engaging the requested range.

Are any mechanical conditions preventing the Shift Motor from engaging the requested range?

Yes

- Repair or replace the Transfer Case in accordance with the Service Information.
- Perform the TRANSFER CASE VERIFICATION TEST. (Refer to 28 - DTC-Based Diagnostics/MODULE, Drivetrain Control (DTCM) - Standard Procedure).

No

- Go To 3

3. TRANSFER CASE MOTOR

1. Turn the ignition off to the lock position
2. Using the wiring diagram/schematic as a guide, inspect all wiring and connectors that pertain to this circuit.
3. If any problems are found, repair as necessary and retest.
4. If no other problems are found, replace the Transfer Case Motor in accordance with the Service Information.
5. Perform the TRANSFER CASE VERIFICATION TEST. (Refer to 28 - DTC-Based Diagnostics/MODULE, Drivetrain Control (DTCM) - Standard Procedure).
6. Ignition on, engine not running.
7. Test drive the vehicle.
8. With the scan tool, read DTCs.

Is the DTC status Active?

Yes

- Replace the Drive Train Control Module (DTCM) in accordance with the Service Information.
- Perform the DTCM VERIFICATION TEST. (Refer to 28 - DTC-Based Diagnostics/MODULE, Drivetrain Control (DTCM) - Standard Procedure).

No

- Test complete.

4. INTERMITTENT WIRING HARNESS AND CONNECTORS

1. The conditions necessary to set this DTC are not present at this time.
2. Using the wiring diagram/schematic as a guide, inspect the wiring harness and connectors.
3. Wiggle test the wiring harness and connectors while monitoring the scan tool data relative to this circuit.
4. Look for the data to change or for the DTC to reset during the wiggle test.
5. While monitoring the scan tool data relative to this circuit, move the selector switch to each position several times.
6. Look for the data to change other than as expected or for the DTC to reset.

Were any problems found?

Yes

- Repair as necessary.
- Perform the TRANSFER CASE VERIFICATION TEST. (Refer to 28 - DTC-Based Diagnostics/MODULE, Drivetrain Control (DTCM) - Standard Procedure).

No

- Test complete.

C140F-TRANSFER CASE RANGE POSITION SENSOR ERRATIC PERFORMANCE

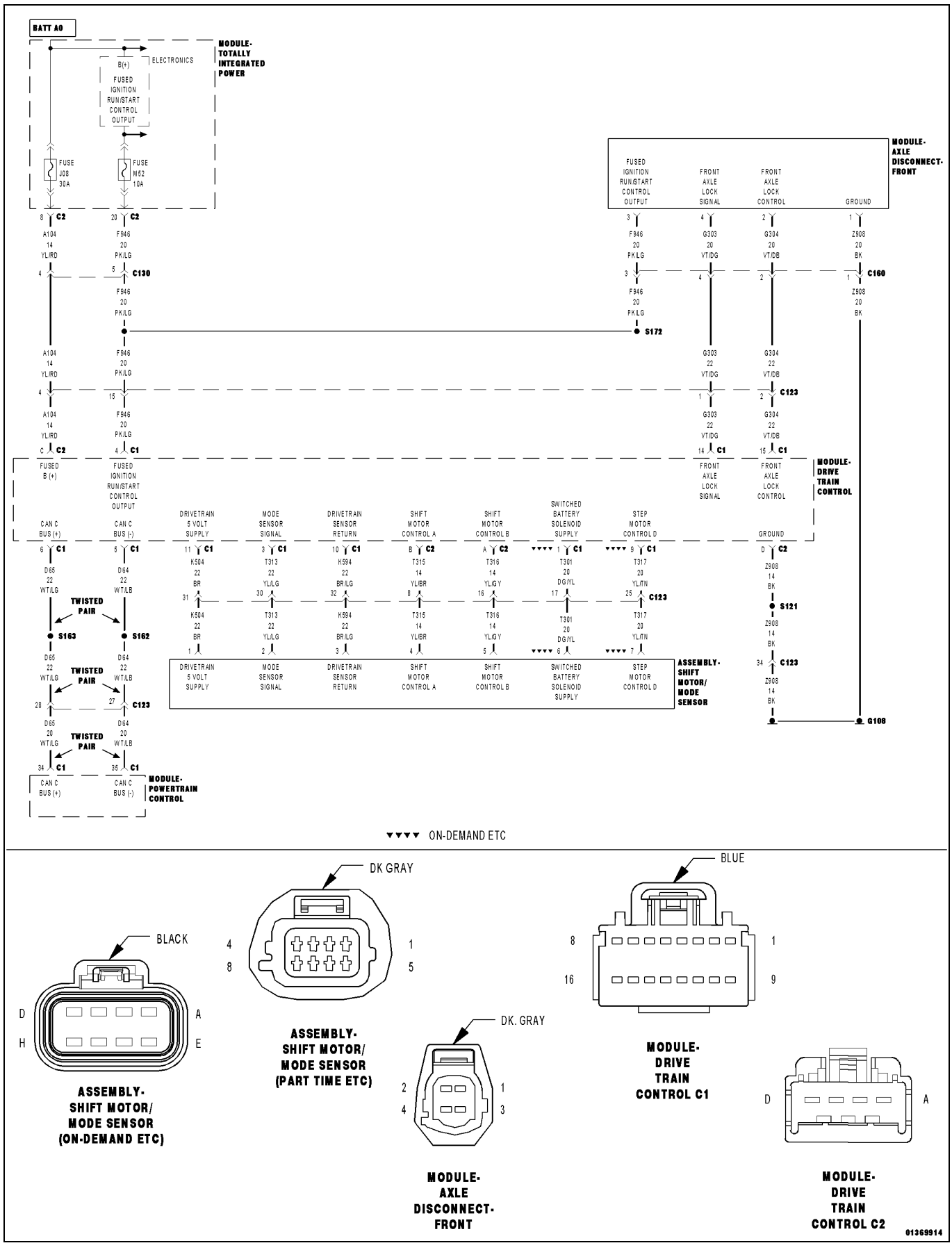

For a complete wiring diagram, **refer to the Wiring Information**.

- **When Monitored:**
  With the ignition on and no system undervoltage or overvoltage condition present.
- **Set Condition:**
  The Drive Train Control Module (DTCM) detects excessive voltage fluctuation on the Mode Sensor Signal circuit.

Possible Causes
(K504) DRIVETRAIN 5-VOLT SUPPLY CIRCUIT SHORTED TO VOLTAGE
(K504) DRIVETRAIN 5-VOLT SUPPLY CIRCUIT HIGH RESISTANCE
(K504) DRIVETRAIN 5-VOLT SUPPLY CIRCUIT SHORTED TO GROUND
(T313) MODE SENSOR SIGNAL CIRCUIT SHORTED TO VOLTAGE
(T313) MODE SENSOR SIGNAL CIRCUIT HIGH RESISTANCE
(T313) MODE SENSOR SIGNAL CIRCUIT SHORTED TO GROUND
(K594) DRIVETRAIN SENSOR RETURN CIRCUIT SHORTED TO VOLTAGE
(K594) DRIVETRAIN SENSOR RETURN CIRCUIT HIGH RESISTANCE
TRANSFER CASE SHIFT MOTOR/MODE SENSOR ASSEMBLY
DRIVE TRAIN CONTROL MODULE (DTCM)

1. DTC IS ACTIVE

NOTE: This DTC sets when the Drive Train Control Module (DTCM) detects excessive voltage fluctuation on the Mode Sensor Signal circuit. Perform a thorough inspection of all wiring and connectors between the sensor and the control module.

1. Ignition on, engine not running.
2. With the scan tool, record and erase DTCs.
3. Test drive the vehicle
4. Ignition on, engine not running.
5. With the scan tool, read DTCs.

Is the status Active for this DTC?

Yes

- Go To 2

No

- Go To 14

2. (K504) DRIVETRAIN 5-VOLT SUPPLY VOLTAGE ERRATIC

NOTE: This DTC sets when the Drive Train Control Module (DTCM) detects excessive voltage fluctuation on the Mode Sensor Signal circuit. Perform a thorough inspection of all wiring and connectors between the sensor and the control module.

1. Turn the ignition off to the lock position
2. Disconnect the Transfer Case Shift Motor/Mode Sensor Assembly harness connector.
3. Ignition on, engine not running.
4. Measure the voltage of the (K504) Drivetrain 5-volt Supply circuit at the Transfer Case Shift Motor/Mode Sensor Assembly harness connector.

NOTE: Voltage should be approximately 5.0 volts and steady. Compare any slight fluctuations found to a known good circuit in order to verify voltmeter functionality.

Is the voltage approximately 5.0 volts and steady?

Yes

- Go To 6

No

- Go To 3

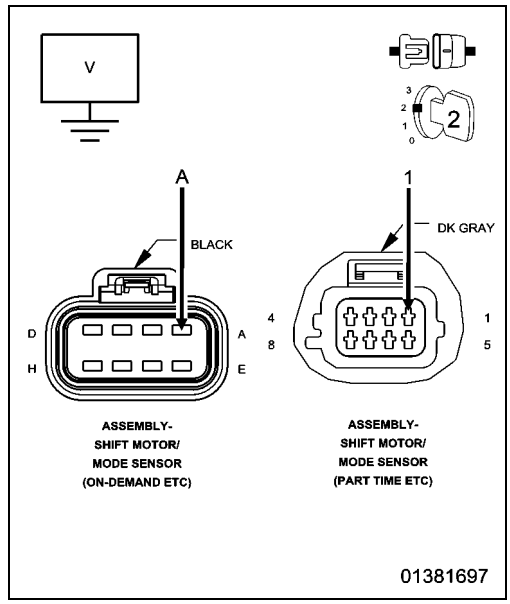

3. (K504) DRIVETRAIN 5-VOLT SUPPLY CIRCUIT INTERMITTENT SHORT TO VOLTAGE

1. Turn the ignition off to the lock position
2. Disconnect the DTCM C1 harness connector.
3. Ignition on, engine not running.
4. Measure the voltage of the (K504) Drivetrain 5-volt Supply circuit at the Transfer Case Shift Motor/Mode Sensor Assembly harness connector.
5. Monitor the voltmeter while performing a wiggle test on the wiring harness and connectors.

Is any voltage detected on the circuit during the wiggle test?

Yes

- Repair the (K504) Drivetrain 5-volt Supply circuit for an intermittent short to voltage.
- Perform the TRANSFER CASE VERIFICATION TEST. (Refer to 28 - DTC-Based Diagnostics/MODULE, Drivetrain Control (DTCM) - Standard Procedure).

No

- Go To 4

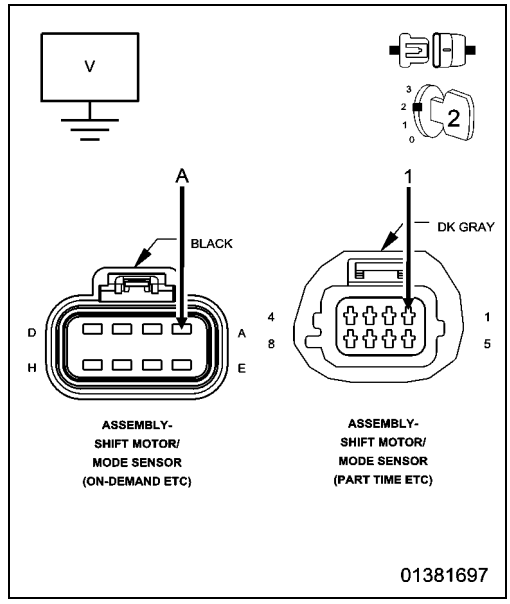

4. (K504) DRIVETRAIN 5-VOLT SUPPLY CIRCUIT HIGH RESISTANCE

1. Measure the resistance of the (K504) Drivetrain 5-volt Supply circuit between the Transfer Case Shift Motor/Mode Sensor Assembly harness connector and the DTCM C1 harness connector.
2. Monitor the ohmmeter while performing a wiggle test on the wiring harness and connectors.

Is the resistance ever above 5.0 Ohms during the wiggle test?

Yes

- Repair the (K504) Drivetrain 5-volt Supply circuit for an intermittent open circuit or high resistance.
- Perform the TRANSFER CASE VERIFICATION TEST. (Refer to 28 - DTC-Based Diagnostics/MODULE, Drivetrain Control (DTCM) - Standard Procedure).

No

- Go To 5

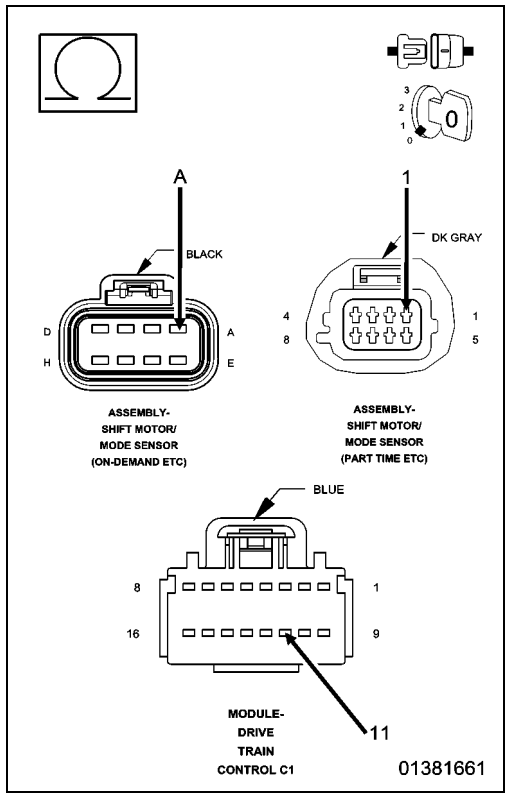

5. (K504) DRIVETRAIN 5-VOLT SUPPLY CIRCUIT INTERMITTENT SHORT TO GROUND

1. Measure the resistance between ground and the (K504) Drivetrain 5-volt Supply circuit at the Transfer Case Shift Motor/Mode Sensor Assembly harness connector.
2. Monitor the ohmmeter while performing a wiggle test on the wiring harness and connectors.

Is the resistance ever below 5.0 Ohms during the wiggle test?

Yes

- Repair the (K504) Drivetrain 5-volt Supply circuit for an intermittent short to ground.
- Perform the TRANSFER CASE VERIFICATION TEST. (Refer to 28 - DTC-Based Diagnostics/MODULE, Drivetrain Control (DTCM) - Standard Procedure).

No

- Replace the Drive Train Control Module (DTCM) in accordance with the Service Information.
- Perform the DTCM VERIFICATION TEST. (Refer to 28 - DTC-Based Diagnostics/MODULE, Drivetrain Control (DTCM) - Standard Procedure).

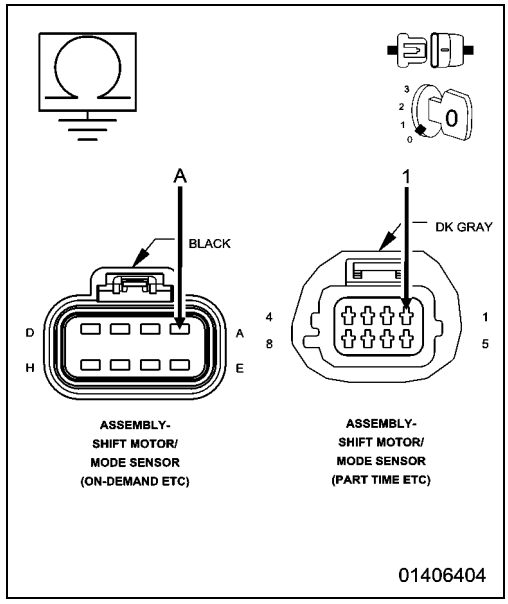

6. TRANSFER CASE POSITION SENSOR VOLTAGE

1. Turn the ignition off to the lock position
2. Connect the DTCM C1 harness connector.
3. Connect a jumper wire between the (T313) Mode Sensor Signal circuit and the (K594) Drivetrain Sensor Return circuit in the Transfer Case Shift Motor/Mode Sensor Assembly harness connector.
4. Ignition on, engine not running.
5. With the scan tool read the T-Case Position Sensor Voltage in the DTCM while performing a wiggle test on the wiring harness and connectors between the Transfer Case Shift Motor/Mode Sensor Assembly and the DTCM.

NOTE: Voltage should be approximately 0.0 volts and steady.

Is the T-Case Position Sensor Voltage approximately 0.0 volts and steady?

Yes

- Go To 12

No

- Go To 7

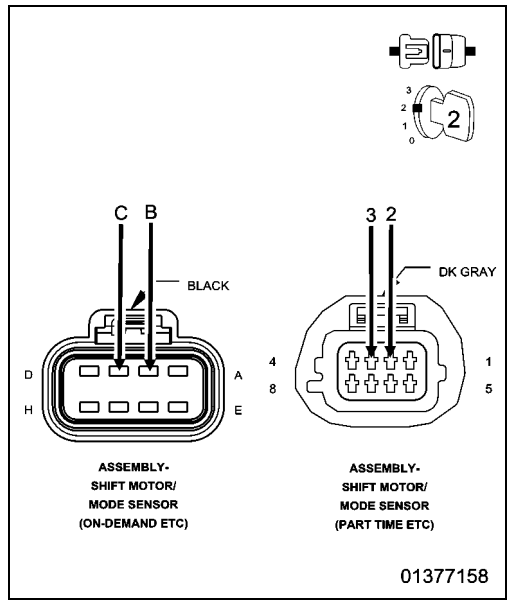

7. (T313) MODE SENSOR SIGNAL CIRCUIT INTERMITTENT SHORT TO VOLTAGE

NOTE: Remove the previously installed jumper wire.

1. Turn the ignition off to the lock position
2. Disconnect the DTCM C1 harness connector.
3. Ignition on, engine not running.
4. Measure the voltage of the (T313) Mode Sensor Signal circuit at the Transfer Case Shift Motor/Mode Sensor Assembly harness connector.
5. Monitor the voltmeter while performing a wiggle test on the wiring harness and connectors.

Is any voltage detected on the circuit during the wiggle test?

Yes

- Repair the (T313) Mode Sensor Signal circuit for an intermittent short to voltage.
- Perform the TRANSFER CASE VERIFICATION TEST. (Refer to 28 - DTC-Based Diagnostics/MODULE, Drivetrain Control (DTCM) - Standard Procedure).

No

- Go To 8

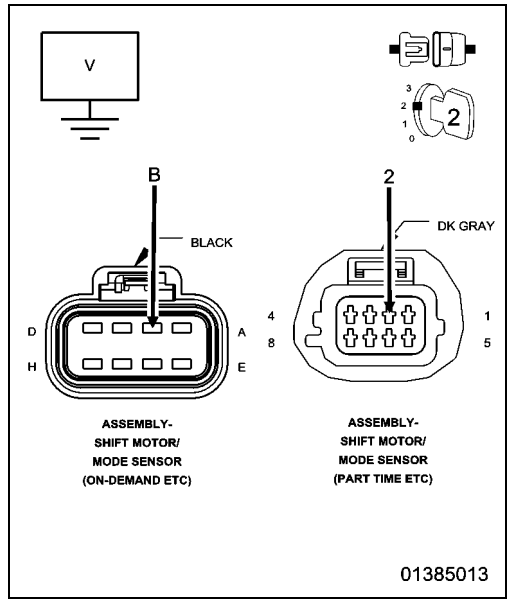

8. (K594) DRIVETRAIN SENSOR RETURN CIRCUIT INTERMITTENT SHORT TO VOLTAGE

1. Measure the voltage of the (K594) Drivetrain Sensor Return circuit at the Transfer Case Shift Motor/Mode Sensor Assembly harness connector.
2. Monitor the voltmeter while performing a wiggle test on the wiring harness and connectors.

Is any voltage detected on the circuit during the wiggle test?

Yes

- Repair the (K594) Drivetrain Sensor Return circuit for an intermittent short to voltage.
- Perform the TRANSFER CASE VERIFICATION TEST. (Refer to 28 - DTC-Based Diagnostics/MODULE, Drivetrain Control (DTCM) - Standard Procedure).

No

- Go To 9

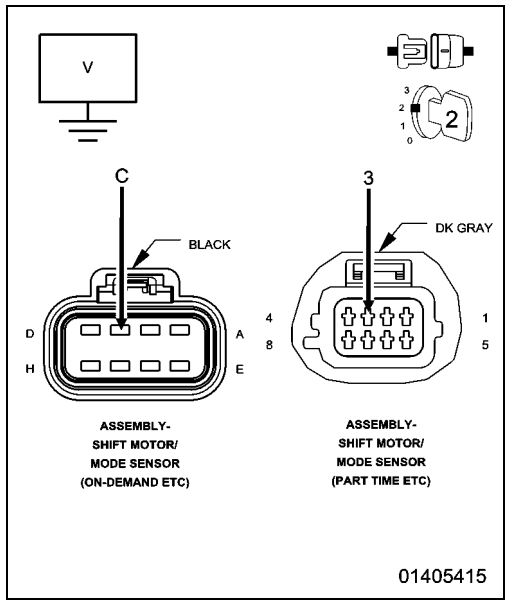

9. (T313) MODE SENSOR SIGNAL CIRCUIT HIGH RESISTANCE

1. Turn the ignition off to the lock position
2. Measure the resistance of the (T313) Mode Sensor Signal circuit between the Transfer Case Shift Motor/Mode Sensor Assembly harness connector and the DTCM C1 harness connector.
3. Monitor the ohmmeter while performing a wiggle test on the wiring harness and connectors.

Is the resistance ever above 5.0 Ohms during the wiggle test?

Yes

- Repair the (T313) Mode Sensor Signal circuit for an intermittent open circuit or high resistance.
- Perform the TRANSFER CASE VERIFICATION TEST. (Refer to 28 - DTC-Based Diagnostics/MODULE, Drivetrain Control (DTCM) - Standard Procedure).

No

- Go To 10

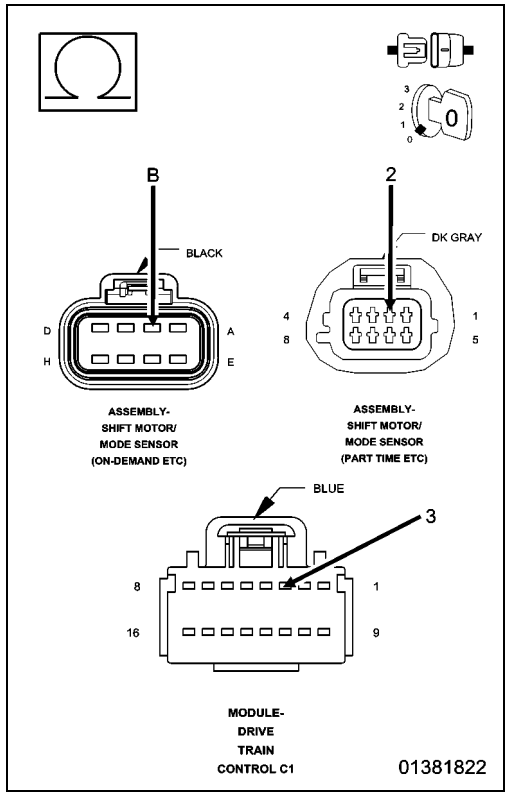

10. (K594) DRIVETRAIN SENSOR RETURN CIRCUIT HIGH RESISTANCE

1. Measure the resistance of the (K594) Drivetrain Sensor Return circuit between the Transfer Case Shift Motor/Mode Sensor Assembly harness connector and the DTCM C1 harness connector.
2. Monitor the ohmmeter while performing a wiggle test on the wiring harness and connectors.

Is the resistance ever above 5.0 Ohms during the wiggle test?

Yes

- Repair the (K594) Drivetrain Sensor Return circuit for an intermittent open circuit or high resistance.
- Perform the TRANSFER CASE VERIFICATION TEST. (Refer to 28 - DTC-Based Diagnostics/MODULE, Drivetrain Control (DTCM) - Standard Procedure).

No

- Go To 11

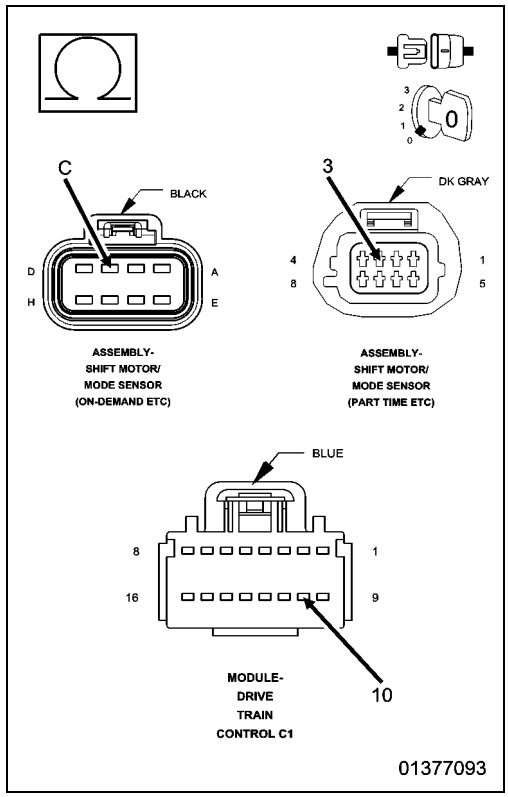

11. (T313) MODE SENSOR SIGNAL CIRCUIT INTERMITTENT SHORT TO GROUND

1. Measure the resistance between ground and the (T313) Mode Sensor Signal circuit at the Transfer Case Shift Motor/Mode Sensor Assembly harness connector.
2. Monitor the ohmmeter while performing a wiggle test on the wiring harness and connectors.

Is the resistance ever below 5.0 Ohms during the wiggle test?

Yes

- Repair the (T313) Mode Sensor Signal circuit for an intermittent short to ground.
- Perform the TRANSFER CASE VERIFICATION TEST. (Refer to 28 - DTC-Based Diagnostics/MODULE, Drivetrain Control (DTCM) - Standard Procedure).

No

- Go To 12

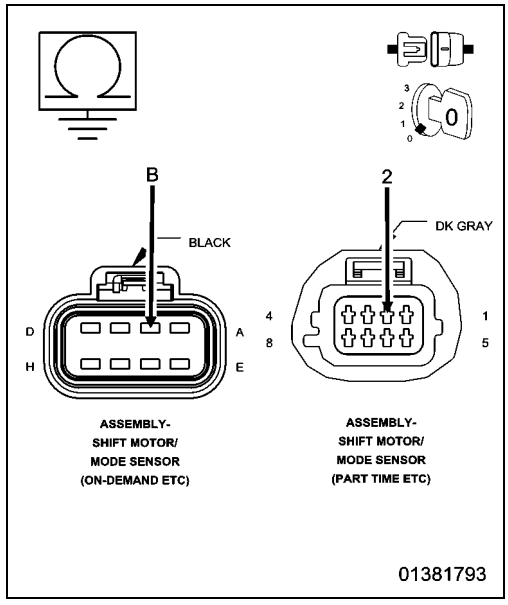

12. DRIVE TRAIN CONTROL MODULE (DTCM)

NOTE: This DTC sets when the Drive Train Control Module (DTCM) detects excessive voltage fluctuation on the Mode Sensor Signal circuit. Perform a thorough inspection of all wiring and connectors between the sensor and the control module.

1. Using the schematic as a guide, inspect the Drive Train Control Module (DTCM) power and ground circuits.

Were any problems found?

Yes

- Repair as necessary.
- Perform the TRANSFER CASE VERIFICATION TEST. (Refer to 28 - DTC-Based Diagnostics/MODULE, Drivetrain Control (DTCM) - Standard Procedure).

No

- Go To 13

13. TRANSFER CASE SHIFT MOTOR/MODE SENSOR ASSEMBLY

1. Replace the Transfer Case Shift Motor/Mode Sensor Assembly in accordance with the Service Information.
   Perform the TRANSFER CASE VERIFICATION TEST. (Refer to 28 - DTC-Based Diagnostics/MODULE, Drivetrain Control (DTCM) - Standard Procedure).
2. Test drive the vehicle.
3. With the scan tool, read the DTCs in the DTCM.

Does this DTC reset?

Yes

- Replace the Drive Train Control Module (DTCM) in accordance with the Service Information.
- Perform the DTCM VERIFICATION TEST. (Refer to 28 - DTC-Based Diagnostics/MODULE, Drivetrain Control (DTCM) - Standard Procedure).

No

- Test complete.

14. INTERMITTENT WIRING HARNESS AND CONNECTORS

1. The conditions necessary to set this DTC are not present at this time.
2. Using the wiring diagram/schematic as a guide, inspect the wiring harness and connectors.
3. Wiggle test the wiring harness and connectors while monitoring the scan tool data relative to this circuit.
4. Look for the data to change or for the DTC to reset during the wiggle test.
5. While monitoring the scan tool data relative to this circuit, move the selector switch to each position several times.
6. Look for the data to change other than as expected or for the DTC to reset.

Were any problems found?

Yes

- Repair as necessary.
- Perform the TRANSFER CASE VERIFICATION TEST. (Refer to 28 - DTC-Based Diagnostics/MODULE, Drivetrain Control (DTCM) - Standard Procedure).

No

- Test complete.

C1415-TRANSFER CASE MOTOR CURRENT PERFORMANCE

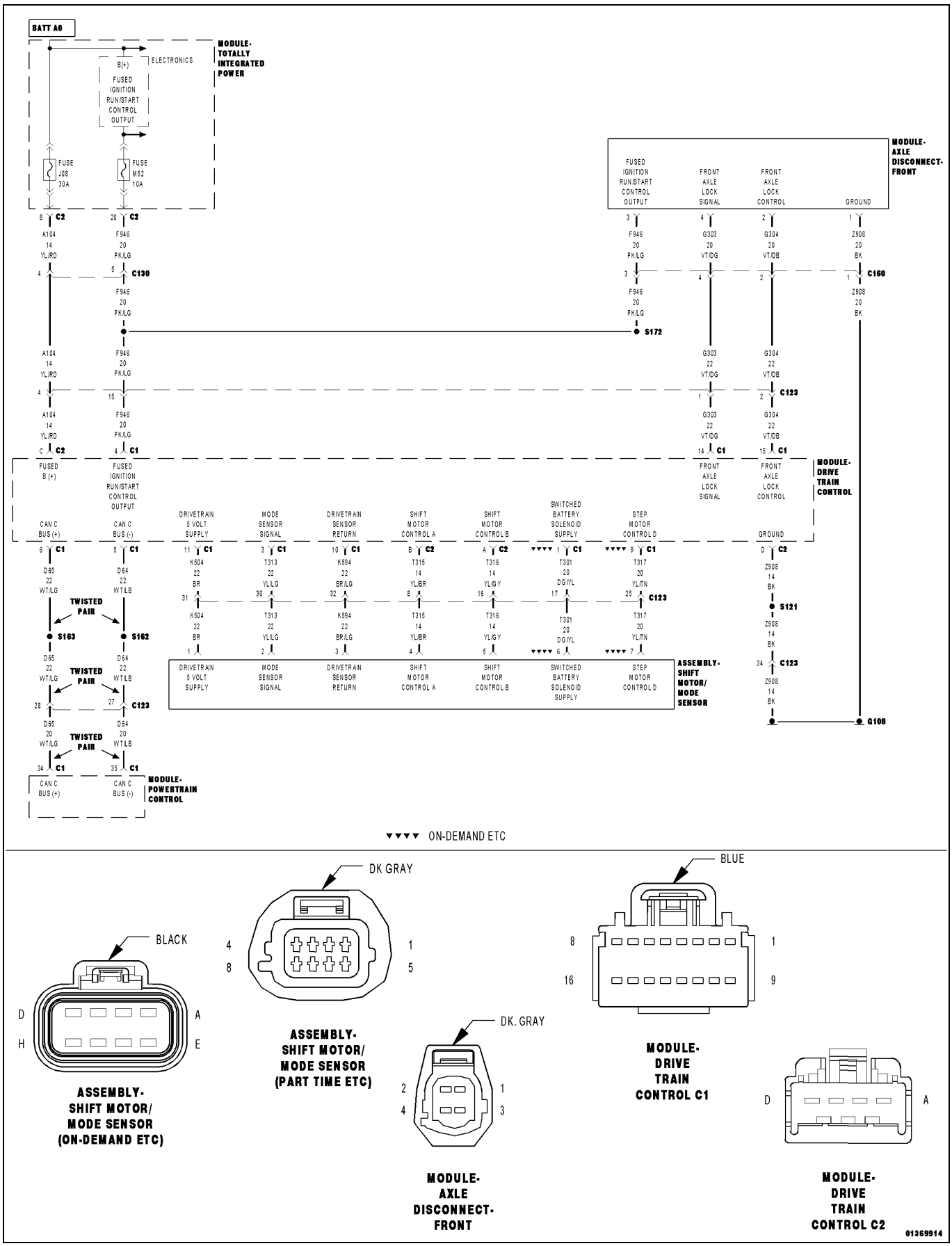

For a complete wiring diagram, **refer to the Wiring Information**.

- **When Monitored:**
  With the ignition on and no system undervoltage or overvoltage condition present.
- **Set Condition:**
  1. Current reading greater than 1A for 200 msec with no motor activation.
  2. Current reading never greater than 1A during a completed range or neutral shift.

Possible Causes
(T315) SHIFT MOTOR CONTROL A CIRCUIT OPEN OR HIGH RESISTANCE
(T316) SHIFT MOTOR CONTROL B CIRCUIT OPEN OR HIGH RESISTANCE
DRIVE TRAIN CONTROL MODULE (DTCM)

1. DTC IS ACTIVE

NOTE: If both DTCs C1415 and C140A are present, check the DTCM fuse and the B(+) supply to the Totally Integrated Power Module (TIPM).

1. Ignition on, engine not running.
2. With the scan tool, record and erase DTCs.
3. Test drive the vehicle
4. Ignition on, engine not running.
5. With the scan tool, read DTCs.

Is the status Active for this DTC?

Yes

- Go To 2

No

- Go To 4

2. (T315) SHIFT MOTOR CONTROL A CIRCUIT OPEN OR HIGH RESISTANCE

1. Turn the ignition off to the lock position
2. Disconnect the Transfer Case Shift Motor/Mode Sensor Assembly harness connector.
3. Disconnect the DTCM C2 harness connector.
4. Measure the resistance of the (T315) Shift Motor Control A circuit from the Transfer Case Shift Motor/Mode Sensor Assembly harness connector to the DTCM C2 harness connector.

Is the resistance above 5.0 Ohms?

Yes

- Repair the (T315) Shift Motor Control A circuit for an open or high resistance.
- Perform the TRANSFER CASE VERIFICATION TEST. (Refer to 28 - DTC-Based Diagnostics/MODULE, Drivetrain Control (DTCM) - Standard Procedure).

No

- Go To 3

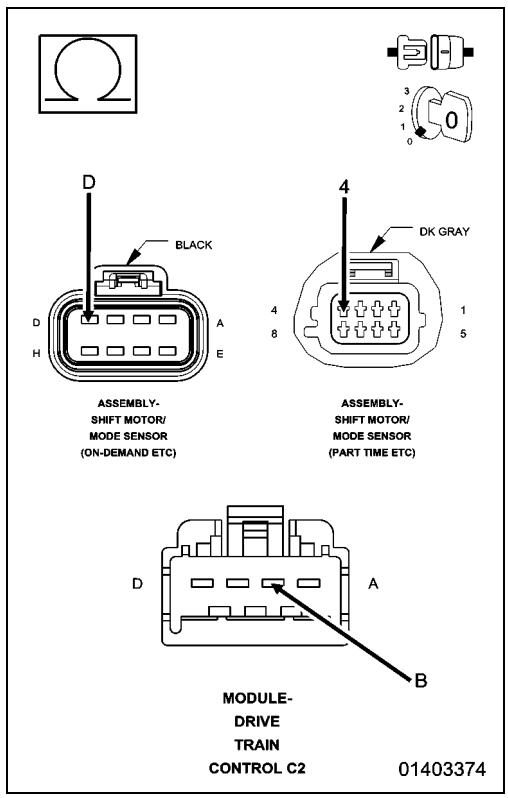

3. (T316) SHIFT MOTOR CONTROL B CIRCUIT OPEN OR HIGH RESISTANCE

1. Measure the resistance of the (T316) Shift Motor Control B circuit from the Transfer Case Shift Motor/Mode Sensor Assembly harness connector to the DTCM C2 harness connector.

Is the resistance above 5.0 Ohms?

Yes

- Repair the (T316) Shift Motor Control B circuit for an open or high resistance.
- Perform the TRANSFER CASE VERIFICATION TEST. (Refer to 28 - DTC-Based Diagnostics/MODULE, Drivetrain Control (DTCM) - Standard Procedure).

No

- Replace the Drive Train Control Module (DTCM) in accordance with the Service Information.
- Perform the DTCM VERIFICATION TEST. (Refer to 28 - DTC-Based Diagnostics/MODULE, Drivetrain Control (DTCM) - Standard Procedure).

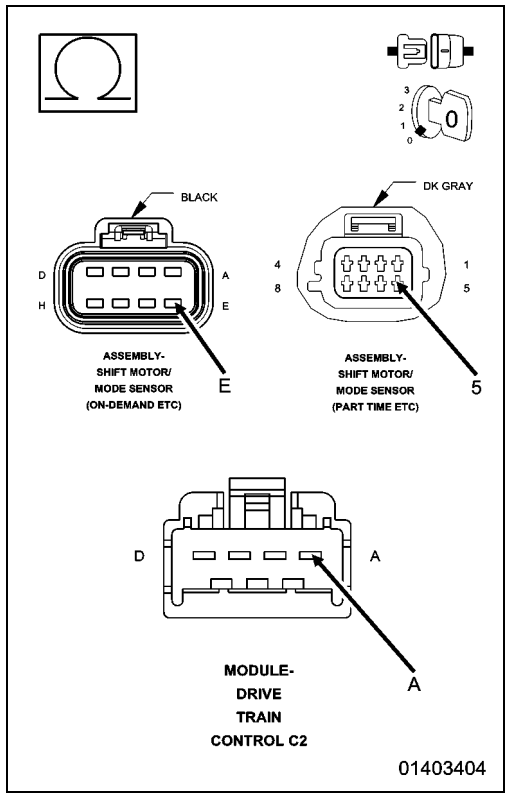

4. INTERMITTENT WIRING HARNESS AND CONNECTORS

1. The conditions necessary to set this DTC are not present at this time.
2. Using the wiring diagram/schematic as a guide, inspect the wiring harness and connectors.
3. Wiggle test the wiring harness and connectors while monitoring the scan tool data relative to this circuit.
4. Look for the data to change or for the DTC to reset during the wiggle test.
5. While monitoring the scan tool data relative to this circuit, move the selector switch to each position several times.
6. Look for the data to change other than as expected or for the DTC to reset.

Were any problems found?

Yes

- Repair as necessary.
- Perform the DTCM VERIFICATION TEST. (Refer to 28 - DTC-Based Diagnostics/MODULE, Drivetrain Control (DTCM) - Standard Procedure).

No

- Test complete.

C1438-TRANSFER CASE DIFFERENTIAL CLUTCH WORN

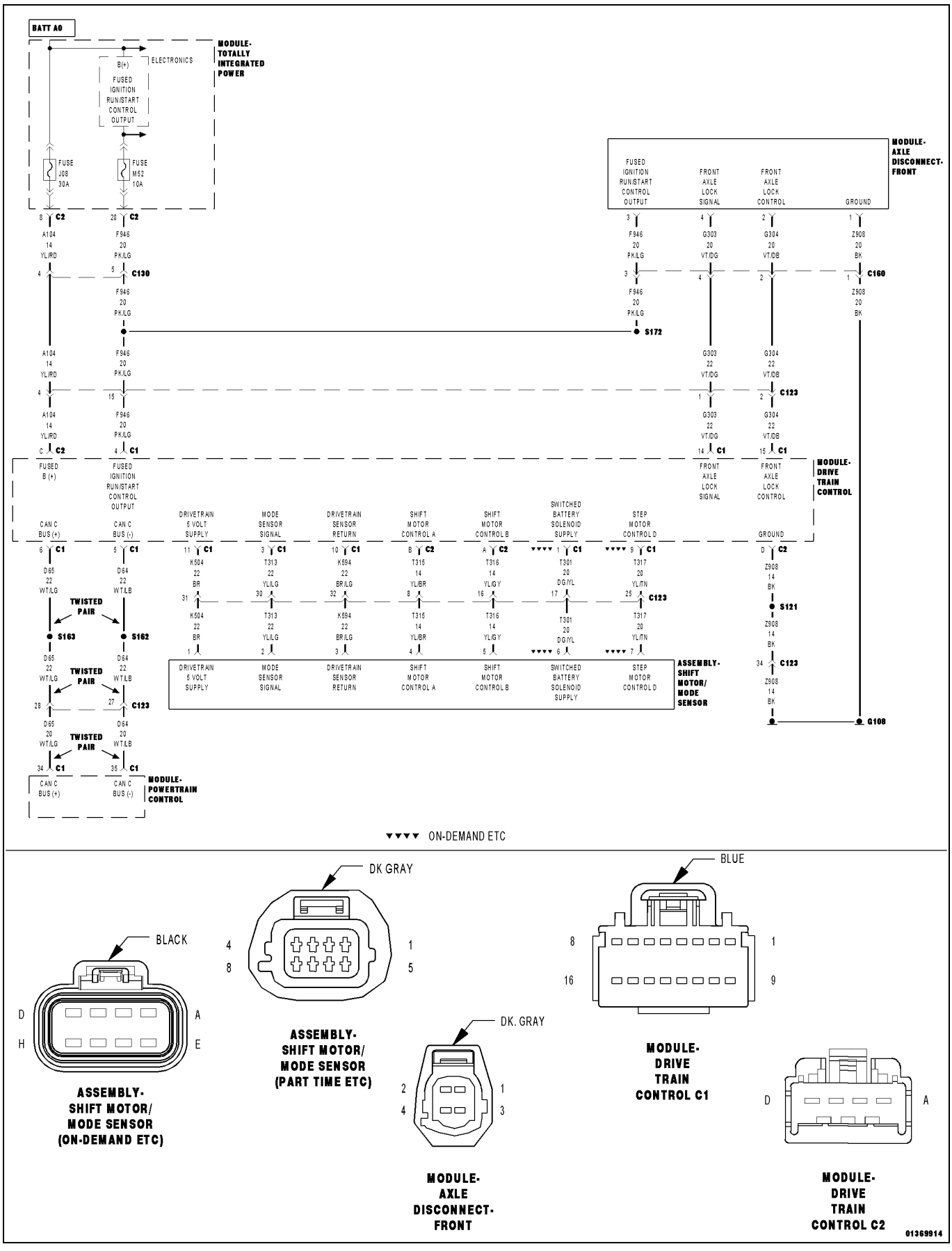

For a complete wiring diagram, **refer to the Wiring Information**.

- **When Monitored:**

  The ignition on, engine running. No Under/Overvoltage, and/or encoder error DTCs present. When shifted into 4-Low or in 4-high (if equipped).

- **Set Condition:**

  The Drive Train Control Module (DTCM) is unable to fully lock the T-Case (in Either High or Low) (if equipped) because the T-Case clutch is worn.

Possible Causes
(K504) DRIVETRAIN 5-VOLT SUPPLY CIRCUIT OPEN OR HIGH RESISTANCE
(T313) MODE SENSOR SIGNAL CIRCUIT OPEN OR HIGH RESISTANCE
(K594) DRIVETRAIN SENSOR RETURN CIRCUIT OPEN OR HIGH RESISTANCE
TRANSFER CASE CLUTCH WORN
DRIVE TRAIN CONTROL MODULE (DTCM)

1. DTC IS ACTIVE

NOTE: Diagnose and repair any system voltage or Transfer Case related DTCs in the DTCM before continuing with this test.

1. Ignition on, engine running.
2. With the scan tool, clear stored DTCs in the DTCM.
3. Test drive the vehicle.
4. During the test drive, move the Transfer Case Selector Switch (if equipped) to each position several times in accordance with the Service Information.
5. With the scan tool, read DTCs in the DTCM.

Is the status Active for this DTC?

Yes

- Go To 2

No

- Go To 6

2. (K504) DRIVETRAIN 5-VOLT SUPPLY CIRCUIT HIGH RESISTANCE

1. Turn the ignition off to the lock position
2. Disconnect the DTCM C1 harness connector.
3. Disconnect the Transfer Case Shift Motor/Mode Sensor Assembly harness connector.
4. Measure the resistance of the (K504) Drivetrain 5-volt Supply circuit between the Transfer Case Shift Motor/Mode Sensor Assembly harness connector and the DTCM C1 harness connector.

Is the resistance above 5.0 Ohms?

Yes

- Repair the high resistance in the (K504) Drivetrain 5-volt Supply circuit.
- Perform the TRANSFER CASE VERIFICATION TEST. (Refer to 28 - DTC-Based Diagnostics/MODULE, Drivetrain Control (DTCM) - Standard Procedure).

No

- Go To 3

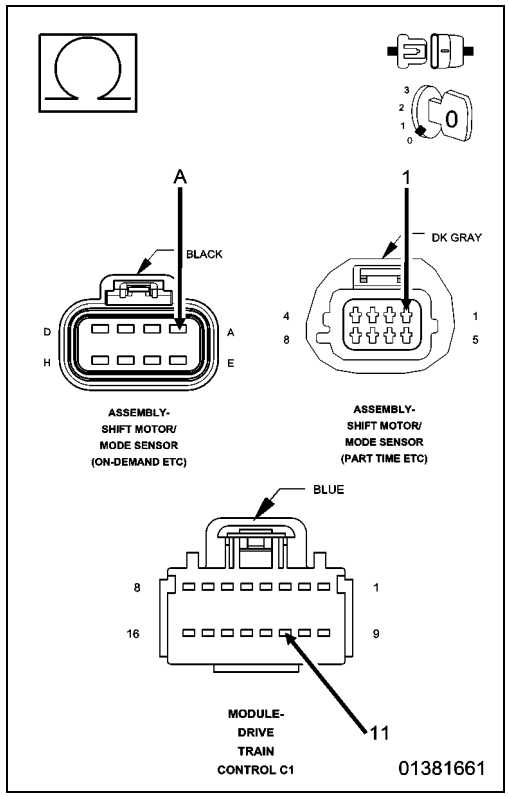

3. (T313) MODE SENSOR SIGNAL CIRCUIT HIGH RESISTANCE

1. Turn the ignition off to the lock position
2. Measure the resistance of the (T313) Mode Sensor Signal circuit between the Transfer Case Shift Motor/Mode Sensor Assembly harness connector and the DTCM C1 harness connector.

Is the resistance above 5.0 Ohms?

Yes

- Repair the high resistance in the (T313) Mode Sensor Signal circuit.
- Perform the TRANSFER CASE VERIFICATION TEST. (Refer to 28 - DTC-Based Diagnostics/MODULE, Drivetrain Control (DTCM) - Standard Procedure).

No

- Go To 4

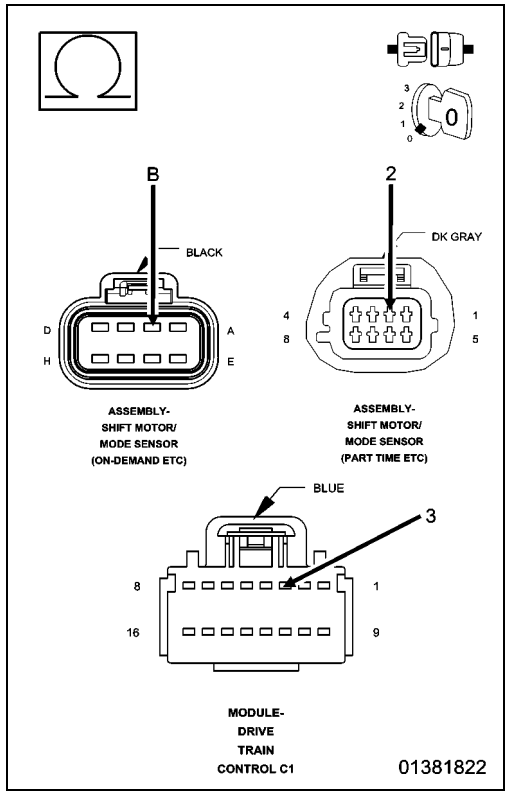

4. (K594) DRIVETRAIN SENSOR RETURN CIRCUIT HIGH RESISTANCE

1. Measure the resistance of the (K594) Drivetrain Sensor Return circuit between the Transfer Case Shift Motor/Mode Sensor Assembly harness connector and the DTCM C1 harness connector.

Is the resistance above 5.0 Ohms?

Yes

- Repair the high resistance in the (K594) Drivetrain Sensor Return circuit.
- Perform the TRANSFER CASE VERIFICATION TEST. (Refer to 28 - DTC-Based Diagnostics/MODULE, Drivetrain Control (DTCM) - Standard Procedure).

No

- Go To 5

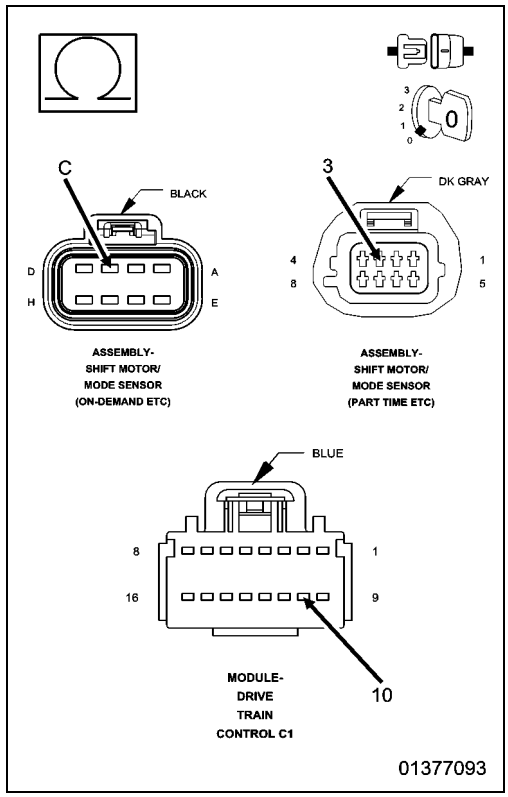

5. TRANSFER CLUTCH WORN

1. Ignition on, engine not running.
2. Shift the Transfer case into 4-LOW (if equipped).
3. With the scan tool, monitor the encoder voltage in the DTCM.
4. Shift the Transfer case into AWD (if equipped).

Is the encoder voltage between 4.625 volts and 4.750?

Yes

- Replace the worn clutch pack assembly in accordance with the Service Information.
- Perform the TRANSFER CASE VERIFICATION TEST. (Refer to 28 - DTC-Based Diagnostics/MODULE, Drivetrain Control (DTCM) - Standard Procedure).

No

- Replace the Drive Train Control Module (DTCM) in accordance with the Service Information.
- Perform the DTCM VERIFICATION TEST. (Refer to 28 - DTC-Based Diagnostics/MODULE, Drivetrain Control (DTCM) - Standard Procedure).

6. INTERMITTENT WIRING HARNESS AND CONNECTORS

1. The conditions necessary to set this DTC are not present at this time.
2. Using the wiring diagram/schematic as a guide, inspect the wiring harness and connectors.
3. Wiggle test the wiring harness and connectors while monitoring the scan tool data relative to this circuit.
4. Look for the data to change or for the DTC to reset during the wiggle test.
5. While monitoring the scan tool data relative to this circuit, move the selector switch to each position several times.
6. Look for the data to change other than as expected or for the DTC to reset.

Were any problems found?

Yes

- Repair as necessary.
- Perform the TRANSFER CASE VERIFICATION TEST. (Refer to 28 - DTC-Based Diagnostics/MODULE, Drivetrain Control (DTCM) - Standard Procedure).

No

- Test complete.

C1444-TRANSFER CASE MOTOR OVERUSE

For a complete wiring diagram, **refer to the Wiring Information**.

- **When Monitored:**
  With the ignition on.
- **Set Condition:**
  A calibrated motor abuse temperature limit has been achieved. The Drive Train Control Module (DTCM) monitors the motor use and has determined that excessive motor activations have occurred. This DTC will be stored after Transfer Case Motor has cooled down.

Possible Causes
TRANSFER CASE SELECTOR SWITCH
AMBIENT TEMPERATURE SENSOR
CLUSTER CONTROL NODE (CCN)
DRIVE TRAIN CONTROL MODULE (DTCM)

1. DTC IS ACTIVE

NOTE: Diagnose and repair any system voltage or Transfer Case related DTCs in the Drive Train Control Module (DTCM) before continuing with this test.

1. Ignition on, engine not running.
2. With the scan tool, clear Stored DTCs in the DTCM and the CCN.
3. Test drive the vehicle.
4. During the test drive, move the Transfer Case Selector Switch (if equipped) to each position several times in accordance with the Service Information.
5. With the scan tool, read DTCs in the DTCM and the CCN.

Does this DTC reset?

Yes

- Go To 2

No

- Go To 5

2. AMBIENT TEMPERATURE SENSOR

1. With the scan tool, monitor the ambient temperature in the Totally Integrated Power Module (TIPM).

Is the ambient temperature at room temperature?

Yes

- Go To 3

No

- Replace the Ambient Temperature Sensor in accordance with the Service Information.
- Perform the TRANSFER CASE VERIFICATION TEST. (Refer to 28 - DTC-Based Diagnostics/MODULE, Drivetrain Control (DTCM) - Standard Procedure).

3. TRANSFER CASE SELECTOR SWITCH

1. Using the wiring diagram/schematic as a guide, inspect the wiring and connectors relative to this circuit.
2. While monitoring the scan tool data relative to this circuit, wiggle test the wiring and connectors.

Were any problems found?

Yes

- Repair as necessary.
- Perform the TRANSFER CASE VERIFICATION TEST. (Refer to 28 - DTC-Based Diagnostics/MODULE, Drivetrain Control (DTCM) - Standard Procedure).

No

- Go To 4

4. CLUSTER CONTROL NODE

1. Turn the ignition off to the lock position
2. Replace the Transfer Case Selector Switch (if equipped) in accordance with the Service Information.
3. Ignition on, engine not running.
4. With the scan tool, clear Stored DTCs in the CCN and the DTCM.
5. Test drive the vehicle.
6. During the test drive, move the Transfer Case Selector Switch (if equipped) to each position several times in accordance with the Service Information.
7. With the scan tool, read DTCs in the CCN and the DTCM.

Does this DTC reset?

Yes

- Replace the Drive Train Control Module (DTCM) in accordance with the Service Information.
- Perform the DTCM VERIFICATION TEST. (Refer to 28 - DTC-Based Diagnostics/MODULE, Drivetrain Control (DTCM) - Standard Procedure).

No

- Test complete.

5. INTERMITTENT WIRING AND CONNECTORS

1. The conditions necessary to set this DTC are not present at this time.
2. Using the wiring diagram/schematic as a guide, inspect the wiring harness and connectors.
3. Wiggle test the wiring harness and connectors while monitoring the scan tool data relative to this circuit.
4. Look for the data to change or for the DTC to reset during the wiggle test.
5. While monitoring the scan tool data relative to this circuit, move the selector switch to each position several times.
6. Look for the data to change other than as expected or for the DTC to reset.

Were any problems found?

Yes

- Repair as necessary.
- Perform the TRANSFER CASE VERIFICATION TEST. (Refer to 28 - DTC-Based Diagnostics/MODULE, Drivetrain Control (DTCM) - Standard Procedure).

No

- Test complete.

C1464-FRONT AXLE DISCONNECT CONTROL CIRCUIT LOW

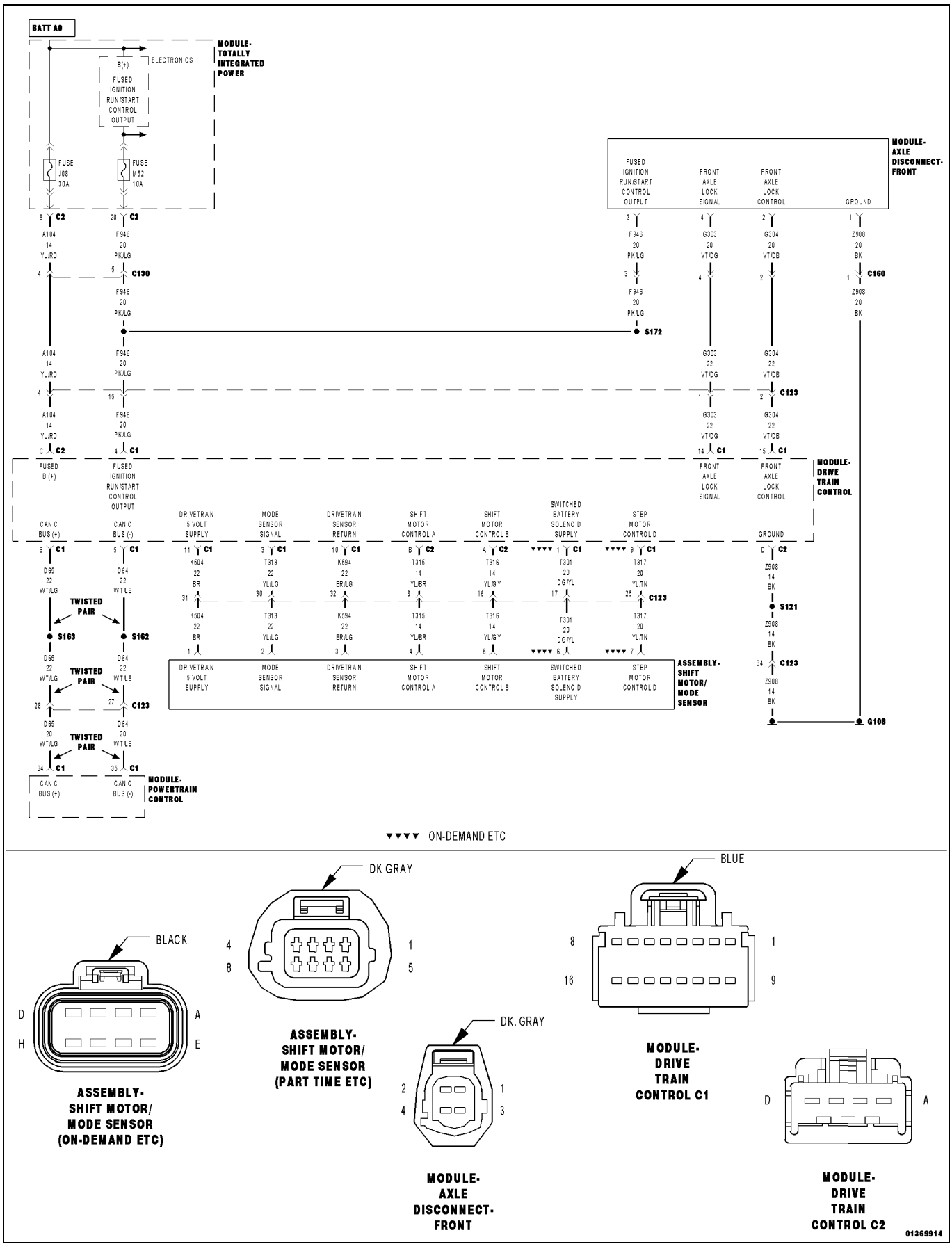

For a complete wiring diagram, **refer to the Wiring Information**.

- **When Monitored:**
  Continuously.
- **Set Condition:**
  The Drive Train Control Module (DTCM) detects the Front Axle Lock Control circuit is shorted low or open.

Possible Causes
(F946) FUSED IGNITION RUN/START CONTROL OUTPUT CIRCUIT OPEN OR HIGH RESISTANCE
(G304) FRONT AXLE LOCK CONTROL CIRCUIT SHORTED TO GROUND
(G304) FRONT AXLE LOCK CONTROL CIRCUIT OPEN OR HIGH RESISTANCE
FRONT AXLE DISCONNECT (FAD) MODULE
DRIVE TRAIN CONTROL MODULE (DTCM)

1. ACTIVE DTC

1. Ignition on, engine not running.
2. With the scan tool, record and erase DTCs.
3. With the scan tool, read DTCs.

Is the status Active for this DTC?

Yes

- Go To 2

No

- Go To 6

2. (F946) FUSED IGNITION RUN/START CONTROL OUTPUT CIRCUIT OPEN OR HIGH RESISTANCE

1. Turn the ignition off to the lock position.
2. Disconnect the FAD Module harness connector.
3. Disconnect the DTCM harness connector.
4. Ignition on, engine not running.
5. Using a 12-volt test light connected to ground, check the (F946) Fused Ignition Run/Start Control Output circuit at the DTCM C1 harness connector and the FAD Module harness connector.

NOTE: The test light must illuminate brightly. Compare the brightness to that of a direct connection to the battery.

Does the test light illuminate brightly?

Yes

- Go To 3

No

- Repair the (F946) Fused Ignition Run/Start Control Output circuit for an open or high resistance.
- Perform the DTCM VERIFICATION TEST. (Refer to 28 - DTC-Based Diagnostics/MODULE, Drivetrain Control (DTCM) - Standard Procedure).

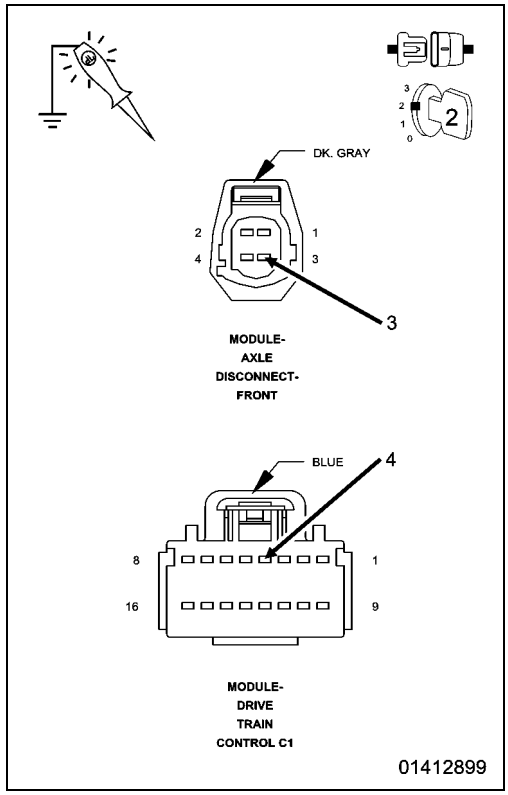

3. (G304) FRONT AXLE LOCK CONTROL CIRCUIT SHORT TO GROUND

1. Turn the ignition off to the lock position.
2. Measure the resistance between ground and the (G304) Front Axle Lock Control circuit at the DTCM C1 harness connector.

Is the resistance below 5.0 Ohms?

Yes

- Repair the (G304) Front Axle Lock Control circuit for a short to ground.
- Perform the DTCM VERIFICATION TEST. (Refer to 28 - DTC-Based Diagnostics/MODULE, Drivetrain Control (DTCM) - Standard Procedure).

No

- Go To 4

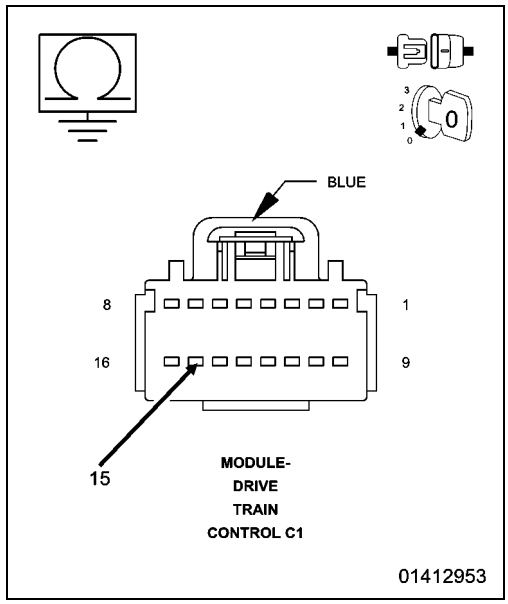

4. (G304) FRONT AXLE LOCK CONTROL CIRCUIT OPEN OR HIGH RESISTANCE

1. Measure the resistance of the (G304) Front Axle Lock Control circuit between the DTCM C1 harness connector and the FAD Module harness connector.

Is the resistance above 5.0 Ohms?

Yes

- Repair the (G304) Front Axle Lock Control circuit for an open or high resistance.
- Perform the DTCM VERIFICATION TEST. (Refer to 28 - DTC-Based Diagnostics/MODULE, Drivetrain Control (DTCM) - Standard Procedure).

No

- Go To 5

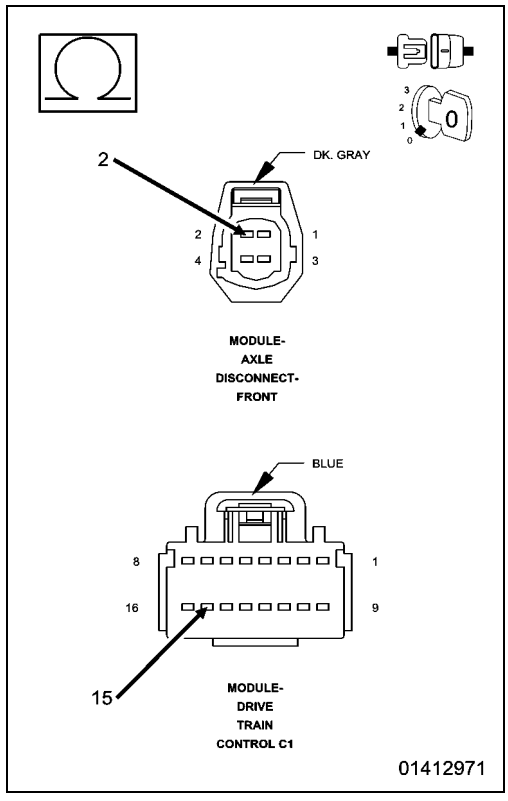

5. DRIVE TRAIN CONTROL MODULE (DTCM)

1. Turn the ignition off to the lock position
2. Replace the Front Axle Disconnect (FAD) Module in accordance with the Service Information.
   Perform the DTCM VERIFICATION TEST. (Refer to 28 - DTC-Based Diagnostics/MODULE, Drivetrain Control (DTCM) - Standard Procedure).
3. Ignition on, engine not running.
4. With the scan tool, clear DTCs in the DTCM.
5. Test drive the vehicle.
6. During the test drive, move the Transfer Case Selector Switch (if equipped) to each position several times in accordance with the Service Information.
7. With the scan tool, read DTCs in the DTCM.

Does this DTC reset?

Yes

- Replace the Drive Train Control Module (DTCM) in accordance with the Service Information.
- Perform the DTCM VERIFICATION TEST. (Refer to 28 - DTC-Based Diagnostics/MODULE, Drivetrain Control (DTCM) - Standard Procedure).

No

- Test Complete.

6. INTERMITTENT WIRING HARNESS AND CONNECTORS

1. The conditions necessary to set this DTC are not present at this time.
2. Using the wiring diagram/schematic as a guide, inspect the wiring harness and connectors.
3. Wiggle test the wiring harness and connectors while monitoring the scan tool data relative to this circuit.
4. Look for the data to change or for the DTC to reset during the wiggle test.
5. While monitoring the scan tool data relative to this circuit, move the selector switch to each position several times (if equipped).
6. Look for the data to change other than as expected or for the DTC to reset.

Were there any problems found?

Yes

- Repair as necessary.
- Perform the DTCM VERIFICATION TEST. (Refer to 28 - DTC-Based Diagnostics/MODULE, Drivetrain Control (DTCM) - Standard Procedure).

No

- Test Complete.

C1465-FRONT AXLE DISCONNECT CONTROL CIRCUIT HIGH

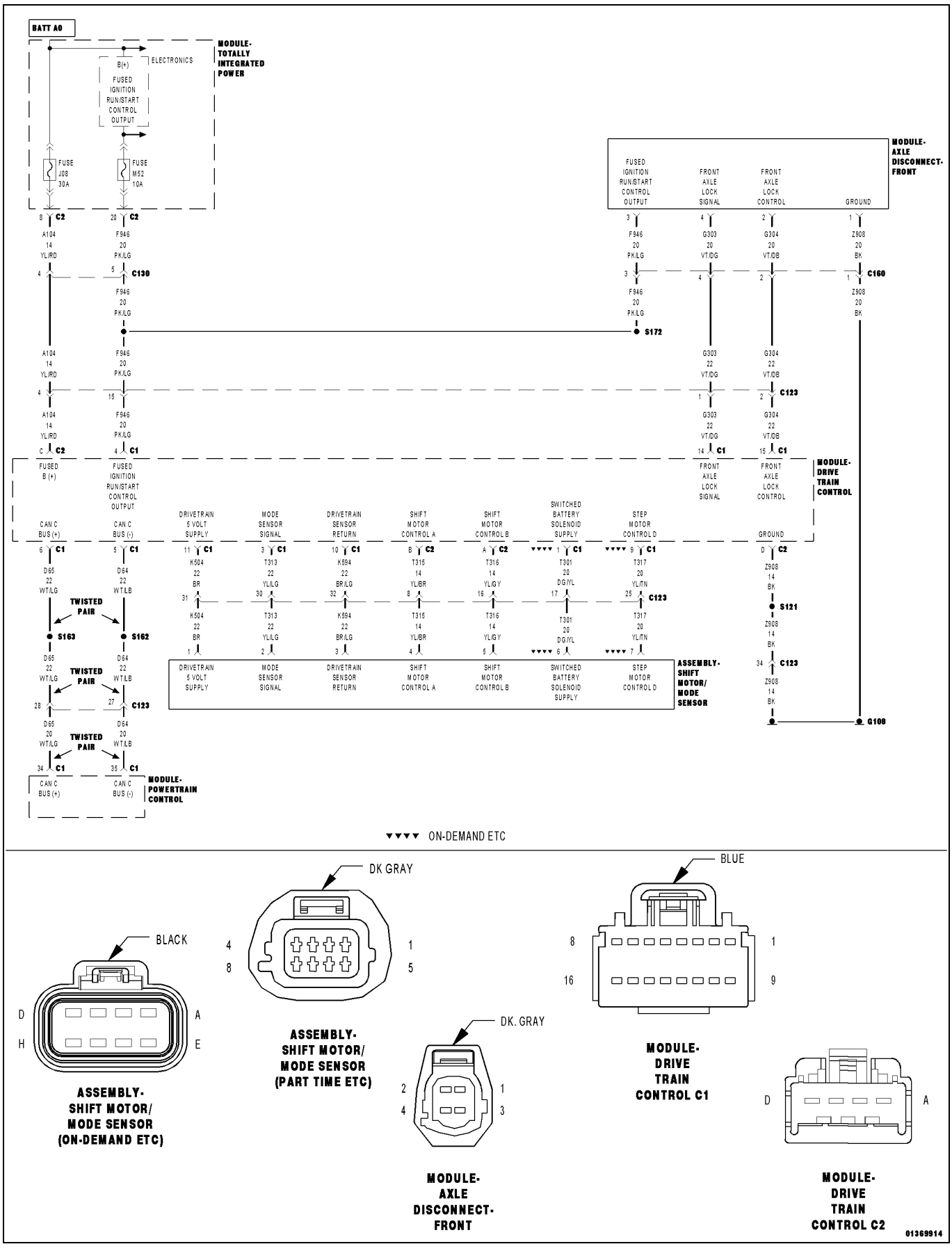

For a complete wiring diagram, **refer to the Wiring Information**.

- **When Monitored:**
  Continuously.
- **Set Condition:**
  The Drive Train Control Module (DTCM) detects the Front Axle Lock Control circuit is shorted high.

Possible Causes
(G304) FRONT AXLE LOCK CONTROL CIRCUIT SHORTED TO VOLTAGE
FRONT AXLE DISCONNECT (FAD) MODULE
DRIVE TRAIN CONTROL MODULE (DTCM)

1. ACTIVE DTC

1. Ignition on, engine not running.
2. With the scan tool, erase DTCs.
3. With the scan tool, read DTCs.

Is the status Active for this DTC?

Yes

- Go To 2

No

- Go To 6

2. (G304) FRONT AXLE LOCK CONTROL CIRCUIT SHORTED TO VOLTAGE

1. Turn the ignition off to the lock position.
2. Disconnect the FAD Module harness connector.
3. Disconnect the DTCM C1 harness connector.
4. Ignition on, engine not running.
5. Measure the voltage between ground and the (G304) Front Axle Lock Control circuit at the DTCM C1.

Is any there voltage present?

Yes

- Repair the short to voltage in the (G304) Front Axle Lock Control circuit.
- Perform the DTCM VERIFICATION TEST. (Refer to 28 - DTC-Based Diagnostics/MODULE, Drivetrain Control (DTCM) - Standard Procedure).

No

- Go To 3

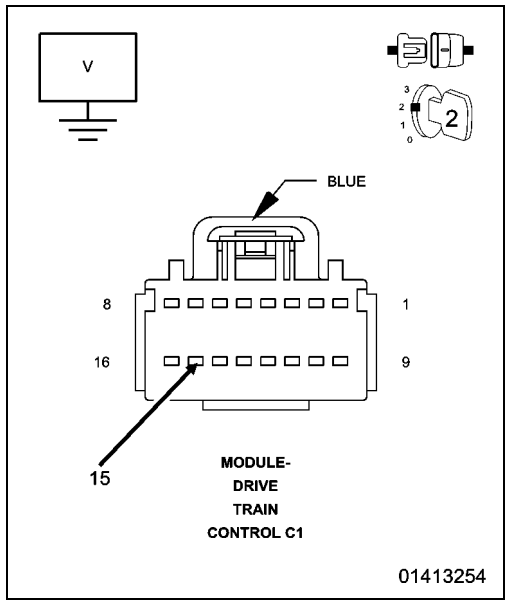

3. FRONT AXLE DISCONNECT (FAD) MODULE SHORTED TO VOLTAGE

1. Turn the ignition off to the lock position.
2. Connect the FAD Module harness connector.
3. Ignition on, engine not running.
4. Measure the voltage between ground and the (G304) Front Axle Lock Control circuit at the DTCM C1 harness connector.

Is any there voltage present?

Yes

- Go To 5

No

- Go To 4

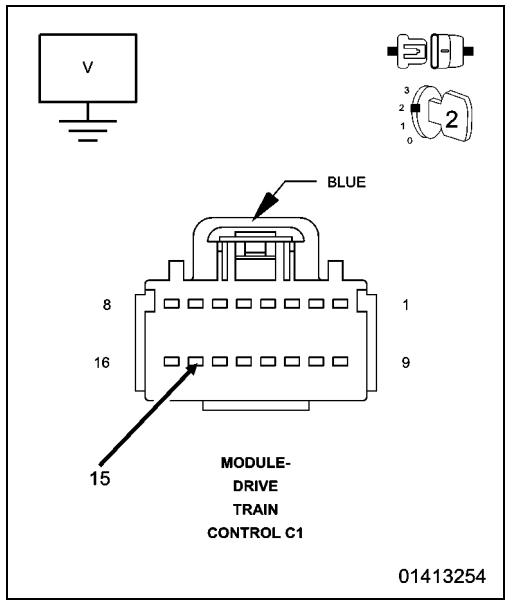

4. DRIVE TRAIN CONTROL MODULE (DTCM)

1. Using the wiring diagram/schematic as a guide, inspect all wiring and connectors that pertain to this circuit.

Were any problems found?

Yes

- Repair as necessary.
- Perform the DTCM VERIFICATION TEST. (Refer to 28 - DTC-Based Diagnostics/MODULE, Drivetrain Control (DTCM) - Standard Procedure).

No

- Replace the Drive Train Control Module (DTCM) in accordance with the Service Information.
- Perform the DTCM VERIFICATION TEST. (Refer to 28 - DTC-Based Diagnostics/MODULE, Drivetrain Control (DTCM) - Standard Procedure).

5. FRONT AXLE DISCONNECT (FAD) MODULE

1. Using the wiring diagram/schematic as a guide, inspect all wiring and connectors that pertain to this circuit.

Were any problems found?

Yes

- Repair as necessary.
- Perform the DTCM VERIFICATION TEST. (Refer to 28 - DTC-Based Diagnostics/MODULE, Drivetrain Control (DTCM) - Standard Procedure).

No

- Replace the Front Axle Disconnect (FAD) Module in accordance with the Service Information.
- Perform the DTCM VERIFICATION TEST. (Refer to 28 - DTC-Based Diagnostics/MODULE, Drivetrain Control (DTCM) - Standard Procedure).

6. INTERMITTENT WIRING HARNESS AND CONNECTORS

1. The conditions necessary to set this DTC are not present at this time.
2. Using the wiring diagram/schematic as a guide, inspect the wiring harness and connectors.
3. Wiggle test the wiring harness and connectors while monitoring the scan tool data relative to this circuit.
4. Look for the data to change or for the DTC to reset during the wiggle test.
5. While monitoring the scan tool data relative to this circuit, move the selector switch to each position several times (if equipped).
6. Look for the data to change other than as expected or for the DTC to reset.

Were there any problems found?

Yes

- Repair as necessary.
- Perform the DTCM VERIFICATION TEST. (Refer to 28 - DTC-Based Diagnostics/MODULE, Drivetrain Control (DTCM) - Standard Procedure).

No

- Test Complete.

C1472-TRANSFER CASE CLUTCH CONTROL CIRCUIT PERFORMANCE

For a complete wiring diagram, **refer to the Wiring Information**.

- **When Monitored:**

  Ignition on.
- **Set Condition:**

  The Drive Train Control Module (DTCM) detects an overheat condition due to excessive difference in speed across the Transfer Case from hard driving conditions (Mud, Sand, Snow, 2WD Chassis dynamometer etc.).

Possible Causes
DRIVING CONDITIONS
TRANSFER CASE CLUTCH PACK
DRIVE TRAIN CONTROL MODULE (DTCM)

1. ANTI-LOCK BRAKE SYSTEM (ABS) MODULE DTCS PRESENT

1. Ignition on, engine not running.
2. With the scan tool, read DTCs in the ABS Module.

Are there any ABS DTCs present?

Yes

- Perform the appropriate diagnostic procedure. (Refer to 28 - DTC-Based Diagnostics/MODULE, Antilock Brake (ABS) - Diagnosis and Testing).

No

- Go To 2

2. POWER CONTROL MODULE (PCM) DTCS PRESENT

1. Ignition on, engine not running.
2. With the scan tool, read DTCs in the PCM.

Are there any PCM DTCs present?

Yes

- Before continuing with this diagnostic procedure. (Refer to 28 - DTC-Based Diagnostics/MODULE, Powertrain Control (PCM) - Diagnosis and Testing) and perform the appropriate PCM diagnostic procedures.

No

- Go To 3

3. DTC IS ACTIVE

1. Ignition on, engine not running.
2. With the scan tool, read DTCs in the DTCM.

Is the status Active for this DTC?

Yes

- Go To 4

No

- Go To 6

4. VERIFY SET CONDITION

NOTE: Check with the customer on driving terrain (e.g. mud, sand, snow) for set condition.

1. With the scan tool, record and erase DTCs.
2. Test drive vehicle on dry paved road.
3. During the test drive, move the Transfer Case Selector Switch (if equipped) to each position several times in accordance with the Service Information.
4. With the scan tool, read DTCs.

Is the status Active for this DTC?

Yes

- Go To 5

No

- Go To 6

5. TRANSFER CASE CLUTCH PACK

1. Turn the ignition off to the lock position
2. Replace the Transfer Case Clutch Pack in accordance with the Service Information.
   Perform the TRANSFER CASE VERIFICATION TEST. (Refer to 28 - DTC-Based Diagnostics/MODULE, Drivetrain Control (DTCM) - Standard Procedure).
3. Ignition on, engine not running.
4. With the scan tool, clear Stored DTCs in the DTCM.
5. Test drive vehicle on dry paved road.
6. During the test drive, move the Transfer Case Selector Switch (if equipped) to each position several times in accordance with the Service Information.
7. With the scan tool, read DTCs in the DTCM.

Does this DTC reset?

Yes

- Replace the Drive Train Control Module (DTCM) in accordance with the Service Information.
- Perform the DTCM VERIFICATION TEST. (Refer to 28 - DTC-Based Diagnostics/MODULE, Drivetrain Control (DTCM) - Standard Procedure).

No

- Test Complete.

6. INTERMITTENT WIRING HARNESS AND CONNECTORS

1. The conditions necessary to set this DTC are not present at this time.
2. Using the wiring diagram/schematic as a guide, inspect the wiring harness and connectors.
3. Wiggle test the wiring harness and connectors while monitoring the scan tool data relative to this circuit.
4. Look for the data to change or for the DTC to reset during the wiggle test.
5. While monitoring the scan tool data relative to this circuit, move the selector switch to each position several times.
6. Look for the data to change other than as expected or for the DTC to reset.

Were there any problems found?

Yes

- Repair as necessary.
- Perform the TRANSFER CASE VERIFICATION TEST. (Refer to 28 - DTC-Based Diagnostics/MODULE, Drivetrain Control (DTCM) - Standard Procedure).

No

- Test Complete.

C1477-TRANSFER CASE CLUTCH OVER TEMPERATURE

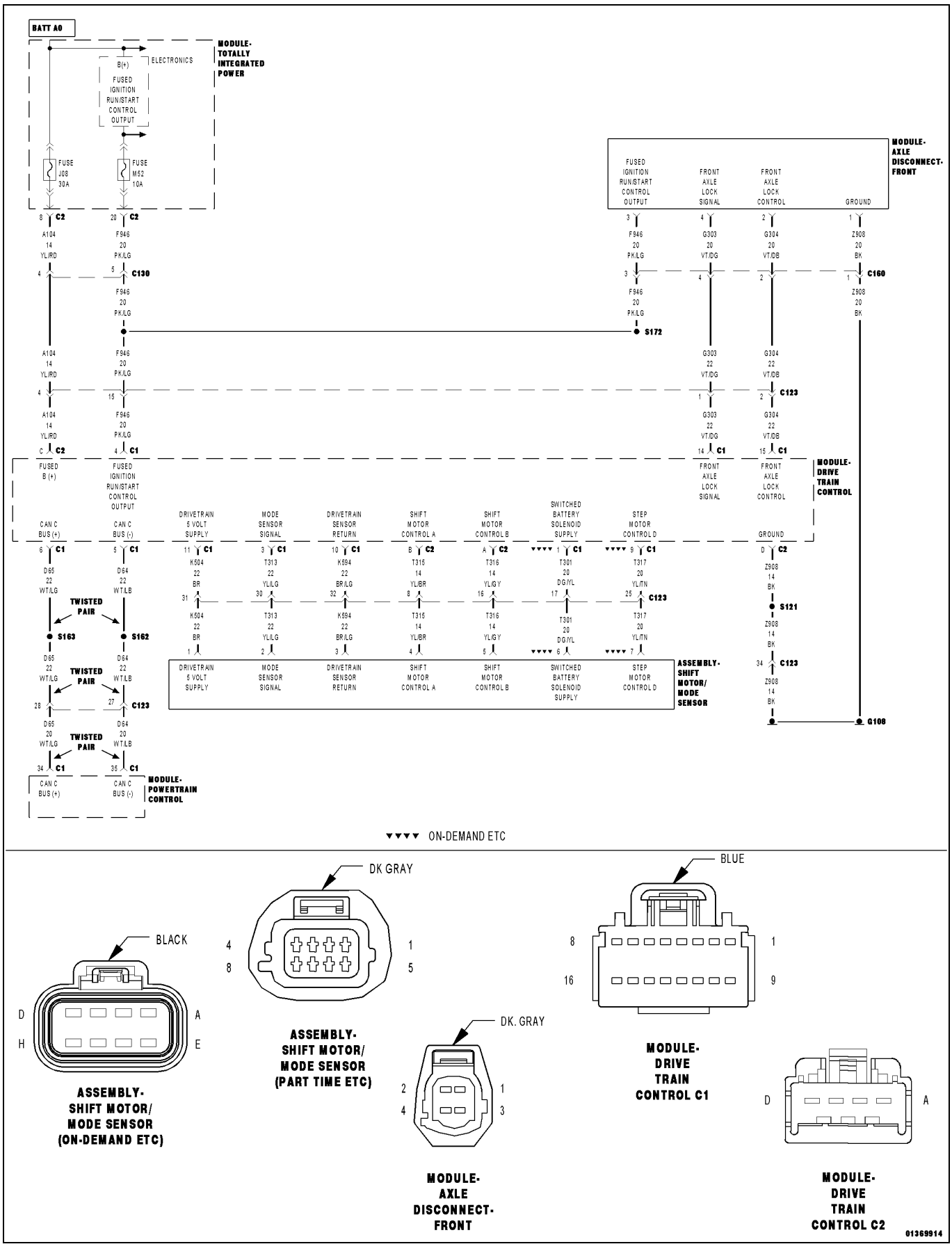

For a complete wiring diagram, **refer to the Wiring Information**.

- **When Monitored:**
  Ignition on.
- **Set Condition:**
  The Drive Train Control Module (DTCM) detects an overheat condition due to excessive difference in speed across the Transfer Case from hard driving conditions (Mud, Sand, Snow, 2WD Chassis dynamometer etc.).

Possible Causes
DRIVING CONDITIONS
(K504) DRIVE TRAIN 5-VOLT SUPPLY CIRCUIT SHORTED TO GROUND
DRIVE TRAIN CONTROL MODULE (DTCM)

1. ANTI-LOCK BRAKE SYSTEM (ABS) MODULE DTCS PRESENT

1. Ignition on, engine not running.
2. With the scan tool, read DTCs in the ABS Module.

Are there any ABS DTCs present?

Yes

- Perform the appropriate diagnostic procedure. (Refer to 28 - DTC-Based Diagnostics/MODULE, Antilock Brake (ABS) - Diagnosis and Testing).

No

- Go To 2

2. DTC IS ACTIVE

1. With the scan tool, read DTCs.

Is the status Active for this DTC?

Yes

- Go To 3

No

- Go To 6

3. VERIFY SET CONDITION

NOTE: Check with customer on the driving terrain when the code set (e.g. mud, sand, snow).

1. Allow the Transfer Case to cool down.
2. With the scan tool, erase DTCs.
3. Test drive vehicle on a straight dry paved road.
4. With the scan tool, read DTCs.

Is the status Active for this DTC?

Yes

- Go To 4

No

- Go To 6

4. (K504) DRIVE TRAIN 5-VOLT SUPPLY CIRCUIT SHORTED TO GROUND

1. Turn the ignition off to the lock position.
2. Disconnect the Transfer Case Shift Motor/Mode Sensor Assembly harness connector.
3. Disconnect the DTCM harness connector.
4. Measure the resistance between ground and the (K504) Drive Train 5-volt Supply circuit.

Is the resistance below 5.0 Ohms?

Yes

- Repair the (K504) Drive Train 5-volt Supply circuit for a short to ground.
- Perform the DTCM VERIFICATION TEST. (Refer to 28 - DTC-Based Diagnostics/MODULE, Drivetrain Control (DTCM) - Standard Procedure).

No

- Go To 5

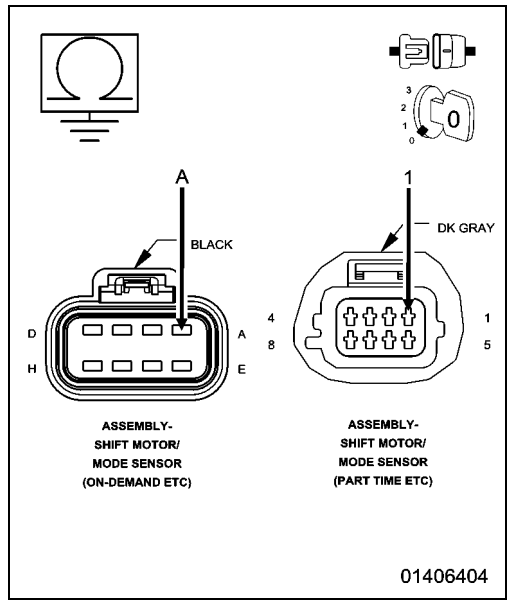

5. DRIVE TRAIN CONTROL MODULE (DTCM)

1. Using the wiring diagram/schematic as a guide, inspect all wiring and connectors that pertain to this circuit.

Were any problems found?

Yes

- Repair as necessary.
- Perform the DTCM VERIFICATION TEST. (Refer to 28 - DTC-Based Diagnostics/MODULE, Drivetrain Control (DTCM) - Standard Procedure).

No

- Replace the Drive Train Control Module (DTCM) in accordance with the Service Information.
- Perform the DTCM VERIFICATION TEST. (Refer to 28 - DTC-Based Diagnostics/MODULE, Drivetrain Control (DTCM) - Standard Procedure).

6. INTERMITTENT WIRING HARNESS AND CONNECTORS

1. The conditions necessary to set this DTC are not present at this time.
2. Using the wiring diagram/schematic as a guide, inspect the wiring harness and connectors.
3. Wiggle test the wiring harness and connectors while monitoring the scan tool data relative to this circuit.
4. Look for the data to change or for the DTC to reset during the wiggle test.
5. While monitoring the scan tool data relative to this circuit, move the selector switch to each position several times (if equipped).
6. Look for the data to change other than as expected or for the DTC to reset.

Were there any problems found?

Yes

- Repair as necessary.
- Perform the DTCM VERIFICATION TEST (Refer to 28 - DTC-Based Diagnostics/MODULE, Drivetrain Control (DTCM) - Standard Procedure).

No

- Test Complete.

C147B-FRONT AXLE DISCONNECT SENSOR CIRCUIT PERFORMANCE

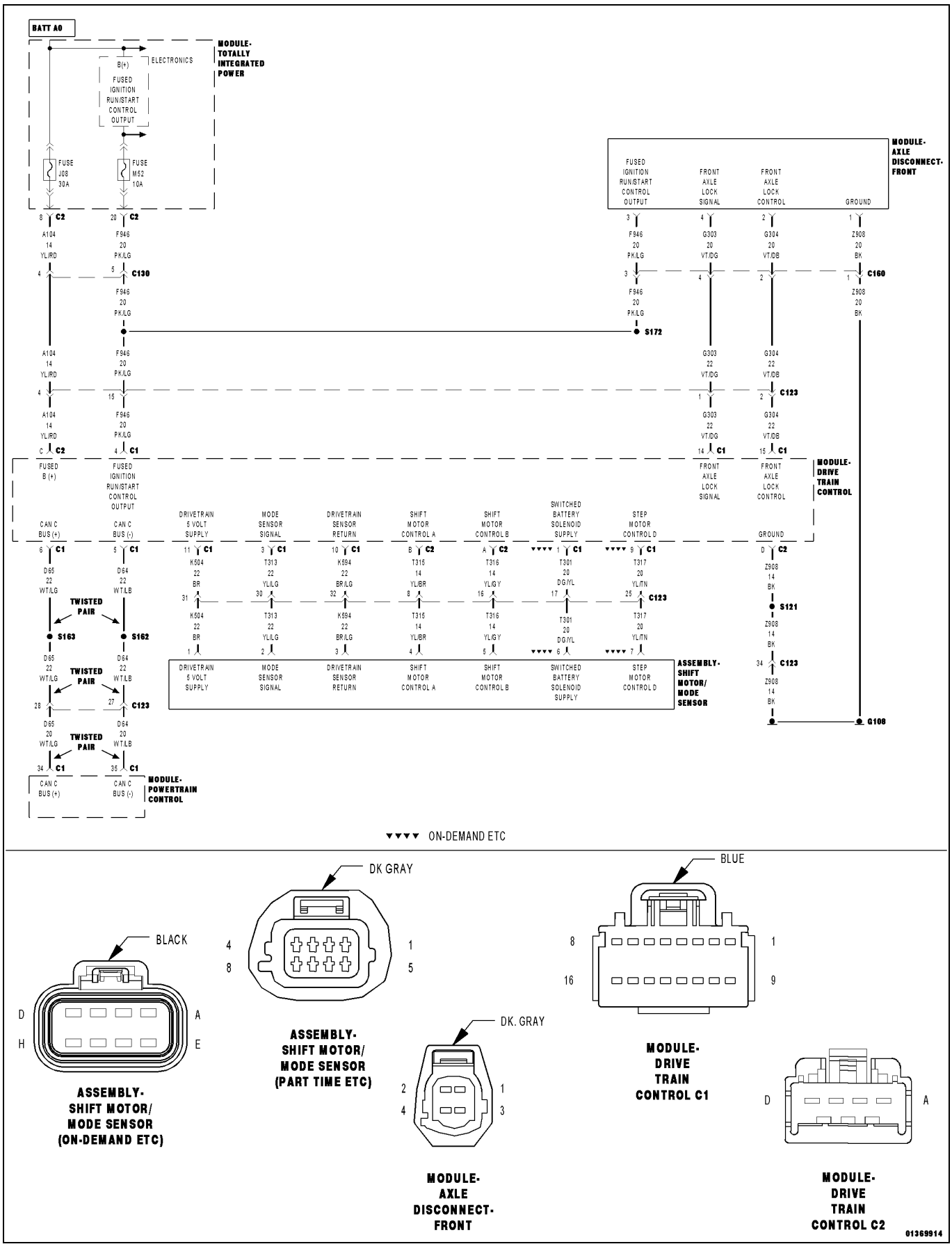

For a complete wiring diagram, **refer to the Wiring Information**.

- **When Monitored:**
  Continuously.
- **Set Condition:**
  The Drive Train Control Module (DTCM) detects the Front Axle Lock Control circuit is shorted low.

Possible Causes
(F946) FUSED IGNITION RUN/START CONTROL OUTPUT CIRCUIT OPEN OR HIGH RESISTANCE
(G303) FRONT AXLE LOCK SIGNAL CIRCUIT SHORTED TO VOLTAGE
(G303) FRONT AXLE LOCK SIGNAL CIRCUIT OPEN
(G303) FRONT AXLE LOCK SIGNAL CIRCUIT SHORTED TO GROUND
(G304) FRONT AXLE LOCK CONTROL CIRCUIT OPEN
(T315) SHIFT MOTOR CONTROL A SHORTED TO VOLTAGE
(T316) SHIFT CONTROL MOTOR B CIRCUIT SHORTED TO VOLTAGE
FRONT AXLE DISCONNECT (FAD) MODULE
DRIVE TRAIN CONTROL MODULE (DTCM)

1. ACTIVE DTC

1. Ignition on, engine not running.
2. With the scan tool, record and erase DTCs.
3. With the scan tool, read DTCs.

Is the status Active for this DTC?

Yes

- Go To 2

No

- Go To 9

2. (F946) FUSED IGNITION RUN/START CONTROL OUTPUT CIRCUIT OPEN OR HIGH RESISTANCE

1. Turn the ignition off to the lock position.
2. Disconnect the FAD Module harness connector.
3. Disconnect the DTCM C1 harness connector.
4. Ignition on, engine not running.
5. Using a 12-volt test light connected to ground, check the (F946) Fused Ignition Run/Start Control Output circuit at the FAD Module harness connector and the DTCM C1 harness connector.

NOTE: The test light must illuminate brightly. Compare the brightness to that of a direct connection to the battery.

Does the test light illuminate brightly?

Yes

- Go To 3

No

- Repair the (F946) Fused Ignition Run/Start Control Output circuit for an open or high resistance.
- Perform the DTCM VERIFICATION TEST. (Refer to 28 - DTC-Based Diagnostics/MODULE, Drivetrain Control (DTCM) - Standard Procedure).

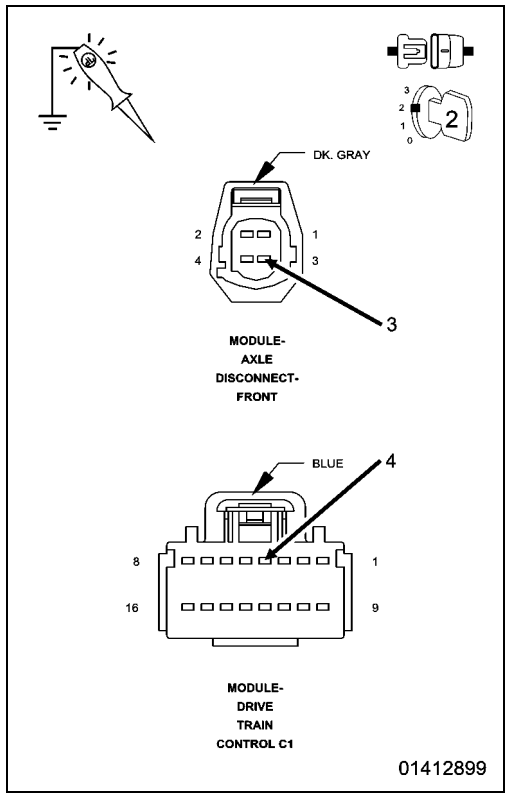

3. (G303) FRONT AXLE LOCK SIGNAL CIRCUIT SHORT TO VOLTAGE

1. Measure the voltage between ground and the (G303) Front Axle Lock Signal circuit at the DTCM harness connector.

Is any there voltage present?

Yes

- Repair the the (G304) Front Axle Lock Control circuit for a short to voltage.
- Perform the DTCM VERIFICATION TEST. (Refer to 28 - DTC-Based Diagnostics/MODULE, Drivetrain Control (DTCM) - Standard Procedure).

No

- Go To 4

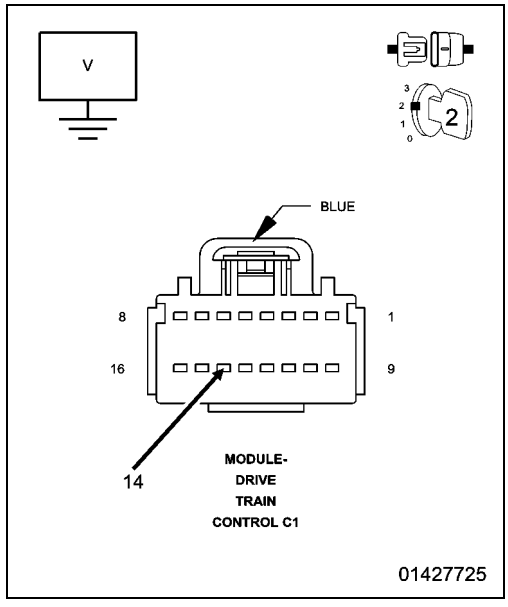

4. (G303) FRONT AXLE LOCK SIGNAL CIRCUIT SHORT TO GROUND

1. Turn the ignition off to the lock position.
2. Measure the resistance between ground and the (G303) Front Axle Lock Signal Control circuit at the DTCM harness connector.

Is the resistance below 5.0 Ohms?

Yes

- Repair the (G303) Front Axle Lock Signal circuit for a short to ground.
- Perform the DTCM VERIFICATION TEST. (Refer to 28 - DTC-Based Diagnostics/MODULE, Drivetrain Control (DTCM) - Standard Procedure)

No

- Go To 5

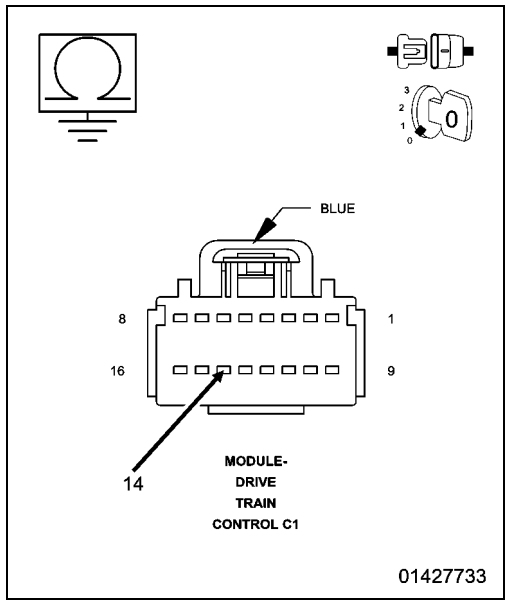

5. (G303) FRONT AXLE LOCK SIGNAL CIRCUIT OPEN

1. Measure the resistance of the (G303) Front Axle Lock Signal circuit between the DTCM harness connector and the FAD Module harness connector.

Is the resistance above 5.0 Ohms?

Yes

- Repair the (G303) Front Axle Lock Signal circuit for an open or high resistance.
- Perform the DTCM VERIFICATION TEST. (Refer to 28 - DTC-Based Diagnostics/MODULE, Drivetrain Control (DTCM) - Standard Procedure)

No

- Go To 6

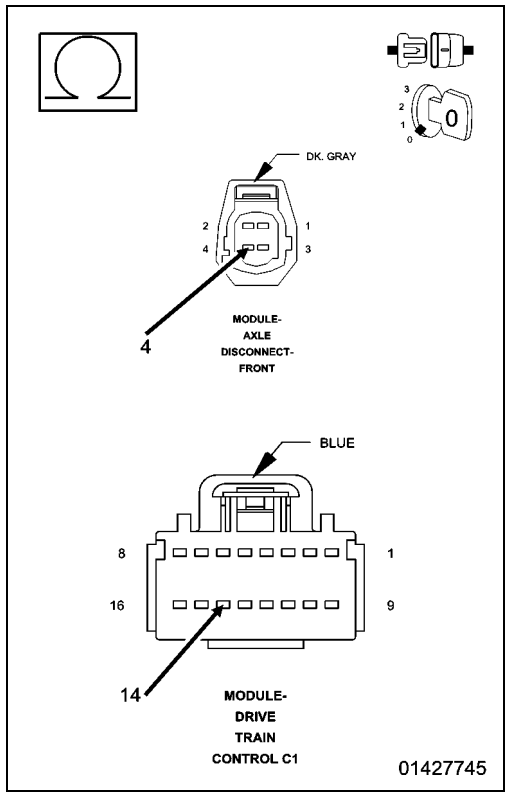

6. (G304) FRONT AXLE LOCK CONTROL CIRCUIT OPEN

1. Measure the resistance of the (G304) Front Axle Lock Control circuit between the DTCM harness connector and the FAD Module harness connector.

Is the resistance above 5.0 Ohms?

Yes

- Repair the (G304) Front Axle Lock Control circuit for an open or high resistance.
- Perform the DTCM VERIFICATION TEST. (Refer to 28 - DTC-Based Diagnostics/MODULE, Drivetrain Control (DTCM) - Standard Procedure).

No

- Go To 7

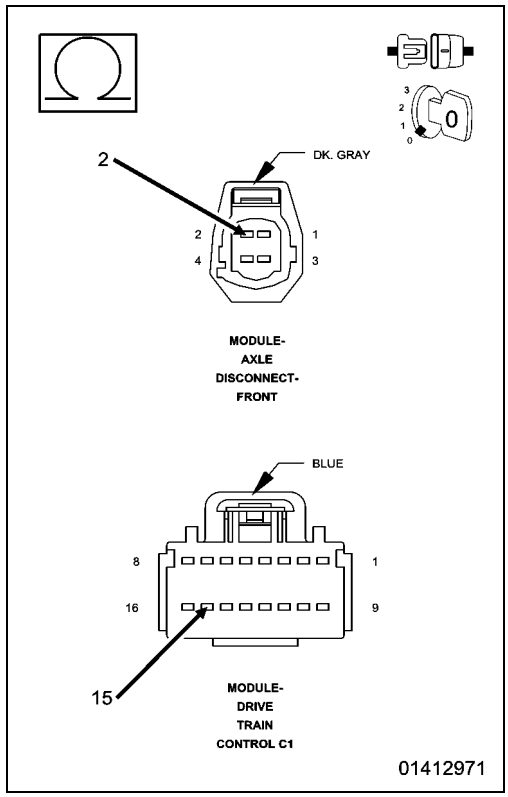

7. (T315) SHIFT MOTOR CONTROL A CIRCUIT SHORTED TO VOLTAGE

1. Turn the ignition off to the lock position.
2. Disconnect the Transfer Case Motor (AWD) C1 harness connector.
3. Ignition on, engine not running.
4. Measure the voltage between (T315) Shift Control Motor A circuit and ground.

Is there any voltage present?

Yes

- Repair (T315) Shift Motor Control A circuit for a short to voltage.
- Perform the DTCM VERIFICATION TEST. (Refer to 28 - DTC-Based Diagnostics/MODULE, Drivetrain Control (DTCM) - Standard Procedure).

No

- Go To 8

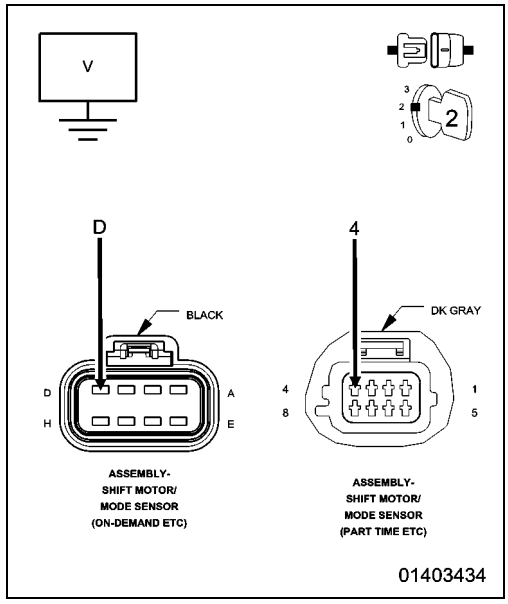

8. (T316) SHIFT CONTROL MOTOR B CIRCUIT SHORTED TO VOLTAGE

1. Measure the voltage between (T316) Shift Control Motor B circuit and ground.

Is there any voltage present?

Yes

- Repair (T316) Shift Control Motor B circuit for a the to voltage.
- Perform the DTCM VERIFICATION TEST. (Refer to 28 - DTC-Based Diagnostics/MODULE, Drivetrain Control (DTCM) - Standard Procedure).

No

- Replace the Drive Train Control Module (DTCM) in accordance with the Service Information.
- Perform the DTCM VERIFICATION TEST. (Refer to 28 - DTC-Based Diagnostics/MODULE, Drivetrain Control (DTCM) - Standard Procedure).

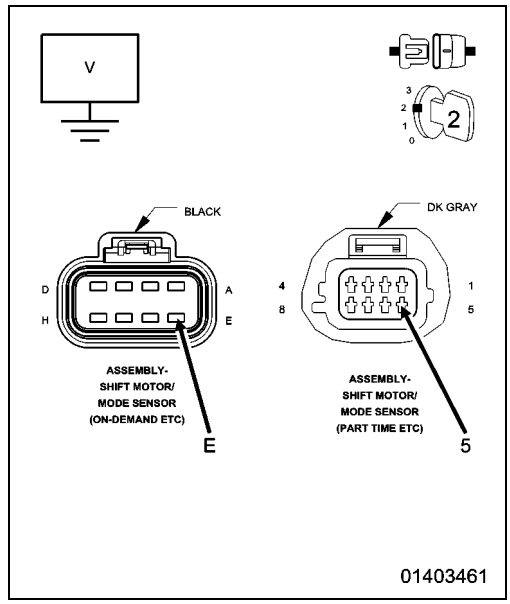

9. INTERMITTENT WIRING HARNESS AND CONNECTORS

1. The conditions necessary to set this DTC are not present at this time.
2. Using the wiring diagram/schematic as a guide, inspect the wiring harness and connectors.
3. Wiggle test the wiring harness and connectors while monitoring the scan tool data relative to this circuit.
4. Look for the data to change or for the DTC to reset during the wiggle test.
5. While monitoring the scan tool data relative to this circuit, move the selector switch to each position several times.
6. Look for the data to change other than as expected or for the DTC to reset.

Were there any problems found?

Yes

- Repair as necessary.
- Perform the DTCM VERIFICATION TEST. (Refer to 28 - DTC-Based Diagnostics/MODULE, Drivetrain Control (DTCM) - Standard Procedure).

No

- Test Complete.

C2100-BATTERY VOLTAGE LOW

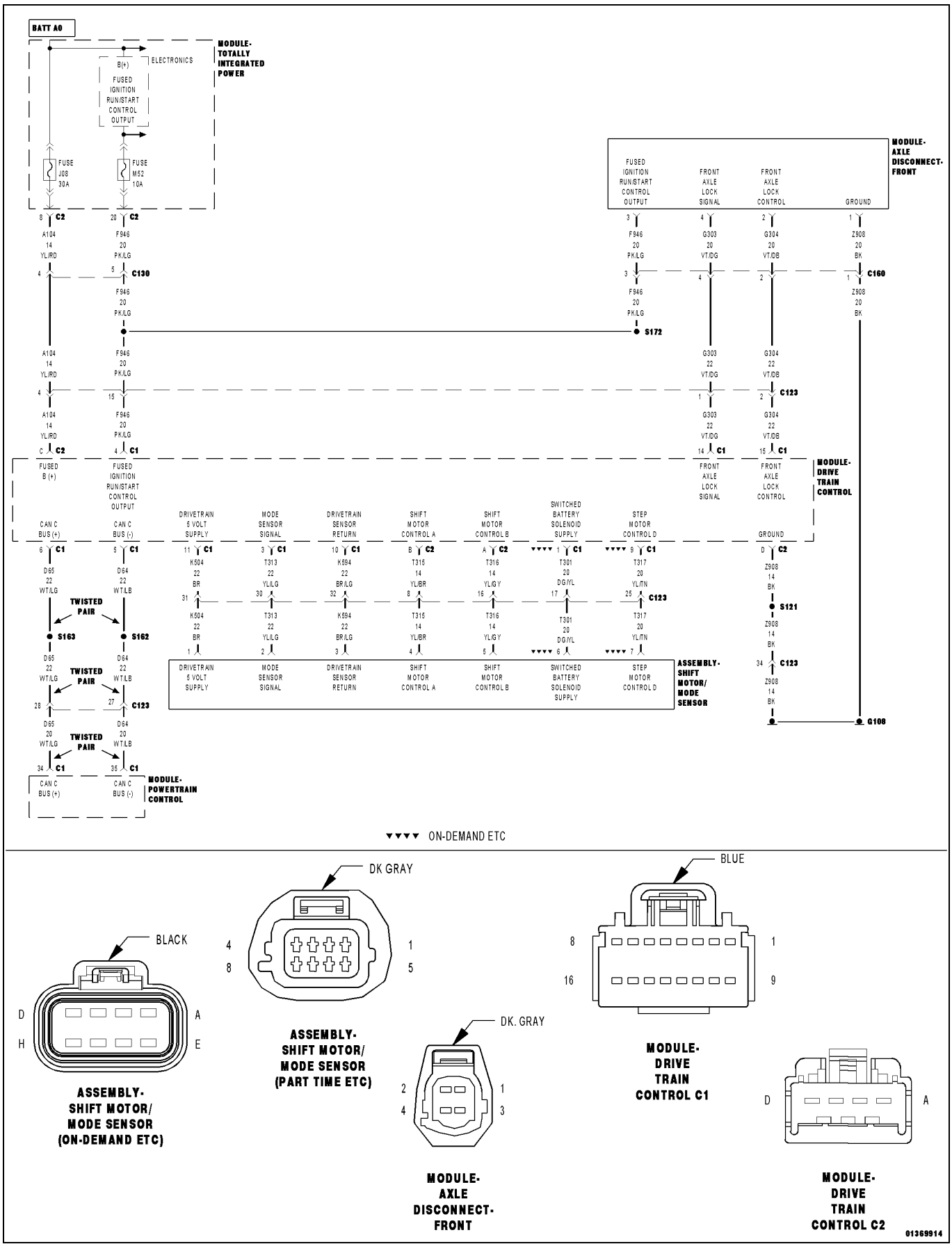

For a complete wiring diagram, **refer to the Wiring Information**.

- **When Monitored:**
  Continuously.
- **Set Condition:**
  The Drive Train Control Module (DTCM) detects that system voltage is below 8.5 volts for 60 seconds with engine RPM greater than 1500.

Possible Causes
CHARGING SYSTEM DTCS PRESENT
(A946) FUSED IGNITION RUN/START CONTROL OUTPUT CIRCUIT OPEN OR HIGH RESISTANCE
(Z908) GROUND CIRCUIT OPEN OR HIGH RESISTANCE
DRIVE TRAIN CONTROL MODULE (DTCM)

1. CHARGING SYSTEM DTCS PRESENT

1. Ignition on, engine not running.
2. With the scan tool, read DTCs in the TIPM.

Are there any Charging System or related voltage DTCs present?

Yes

- Perform the appropriate charging system or battery diagnostic procedure. (Refer to 28 - DTC-Based Diagnostics/ MODULE, Powertrain Control (PCM) - Diagnosis and Testing).

No

- Go To 2

2. DTC IS ACTIVE

1. With the scan tool, read DTCs in the DTCM.

Is the status Active for this DTC?

Yes

- Go To 3

No

- Go To 5

3. (A946) FUSED IGNITION RUN/START CONTROL OUTPUT CIRCUIT OPEN OR HIGH RESISTANCE

1. Turn the ignition off to the lock position.
2. Disconnect the FAD Module harness connector.
3. Disconnect the DTCM C1 harness connector.
4. Ignition on, engine not running.
5. Using a 12-volt test light connected to ground, check the (F946) Fused Ignition Run/Start Control Output circuit at the DTCM C1 harness connector and the FAD Module harness connector.

NOTE: The test light must illuminate brightly. Compare the brightness to that of a direct connection to the battery.

Does the test light illuminate brightly?

Yes

- Go To 4

No

- Repair the (F946) Fused Ignition Run/Start Control Output circuit for an open or high resistance.
- Perform the DTCM VERIFICATION TEST. (Refer to 28 - DTC-Based Diagnostics/MODULE, Drivetrain Control (DTCM) - Standard Procedure).

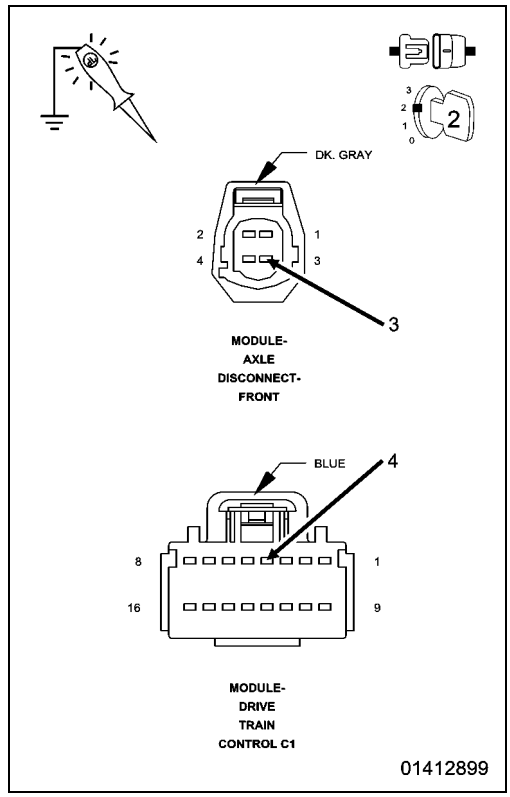

4. (Z908) GROUND CIRCUIT OPEN OR HIGH RESISTANCE

1. Turn the ignition off to the lock position
2. Disconnect the DTCM C2 harness connector.
3. With a 12-volt test light connected to B+, check the (Z908) Ground circuit at the DTCM C2 harness connector and the FAD Module harness connector.

NOTE: The test light must illuminate brightly. Compare the brightness to that of a direct connection to the battery.

Does the test light illuminate brightly?

Yes

- Replace the Drive Train Control Module (DTCM) in accordance with the Service information.
- Perform the DTCM VERIFICATION TEST. (Refer to 28 - DTC-Based Diagnostics/MODULE, Drivetrain Control (DTCM) - Standard Procedure).

No

- Repair the (Z908) Ground circuit for an open circuit or high resistance.
- Perform the DTCM VERIFICATION TEST. (Refer to 28 - DTC-Based Diagnostics/MODULE, Drivetrain Control (DTCM) - Standard Procedure).

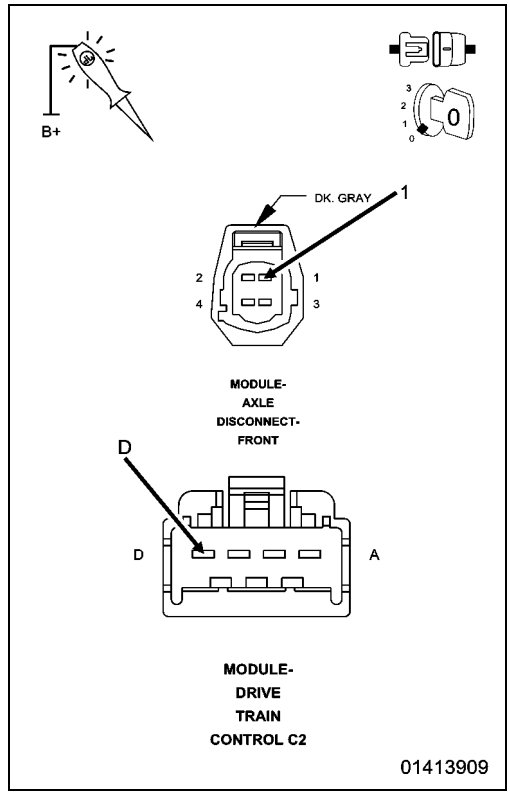

5. INTERMITTENT WIRING HARNESS AND CONNECTORS

1. The conditions necessary to set this DTC are not present at this time.
2. Using the wiring diagram/schematic as a guide, inspect the wiring harness and connectors.
3. Wiggle test the wiring harness and connectors while monitoring the scan tool data relative to this circuit.
4. Look for the data to change or for the DTC to reset during the wiggle test.
5. While monitoring the scan tool data relative to this circuit, move the selector switch to each position several times (if equipped).
6. Look for the data to change other than as expected or for the DTC to reset.

Were any problems found?

Yes

- Repair as necessary.
- Perform the DTCM VERIFICATION TEST. (Refer to 28 - DTC-Based Diagnostics/MODULE, Drivetrain Control (DTCM) - Standard Procedure).

No

- Test complete.

C2101-BATTERY VOLTAGE HIGH

For a complete wiring diagram, **refer to the Wiring Information**.

- **When Monitored:**
  Continuously.
- **Set Condition:**
  The Drive Train Control Module (DTCM) detects that system voltage is above 16.0 volts for 60 seconds with engine RPM greater than 1500.

Possible Causes
INTERMITTENT BATTERY VOLTAGE HIGH
CHARGING SYSTEM DTCS PRESENT
DRIVE TRAIN CONTROL MODULE (DTCM)

1. CHARGING SYSTEM DTCS PRESENT

1. Ignition on, engine not running.
2. With the scan tool, read DTCs in the TIPM.

Are there any Charging System or related voltage DTCs present?

Yes

- Perform the appropriate charging system or battery diagnostic procedure. (Refer to 28 - DTC-Based Diagnostics/MODULE, Powertrain Control (PCM) - Diagnosis and Testing).

No

- Go To 2

2. DTC IS ACTIVE

1. With the scan tool, read DTCs in the DTCM.

Is the status Active for this DTC?

Yes

- Replace the Drive Train Control Module (DTCM) in accordance with the Service information.
- Perform the DTCM VERIFICATION TEST. (Refer to 28 - DTC-Based Diagnostics/MODULE, Drivetrain Control (DTCM) - Standard Procedure).

No

- Go To 3

3. INTERMITTENT WIRING AND CONNECTORS

1. The conditions necessary to set this DTC are not present at this time.
2. Using the wiring diagram/schematic as a guide, inspect the wiring harness and connectors.
3. Wiggle test the wiring harness and connectors while monitoring the scan tool data relative to this circuit.
4. Look for the data to change or for the DTC to reset during the wiggle test.
5. While monitoring the scan tool data relative to this circuit, move the selector switch to each position several times (if equipped).
6. Look for the data to change other than as expected or for the DTC to reset.

Were any problems found?

Yes

- Repair as necessary.
- Perform the DTCM VERIFICATION TEST. (Refer to 28 - DTC-Based Diagnostics/MODULE, Drivetrain Control (DTCM) - Standard Procedure).

No

- Test complete.

C2111-SENSOR SUPPLY 1 VOLTAGE CIRCUIT LOW

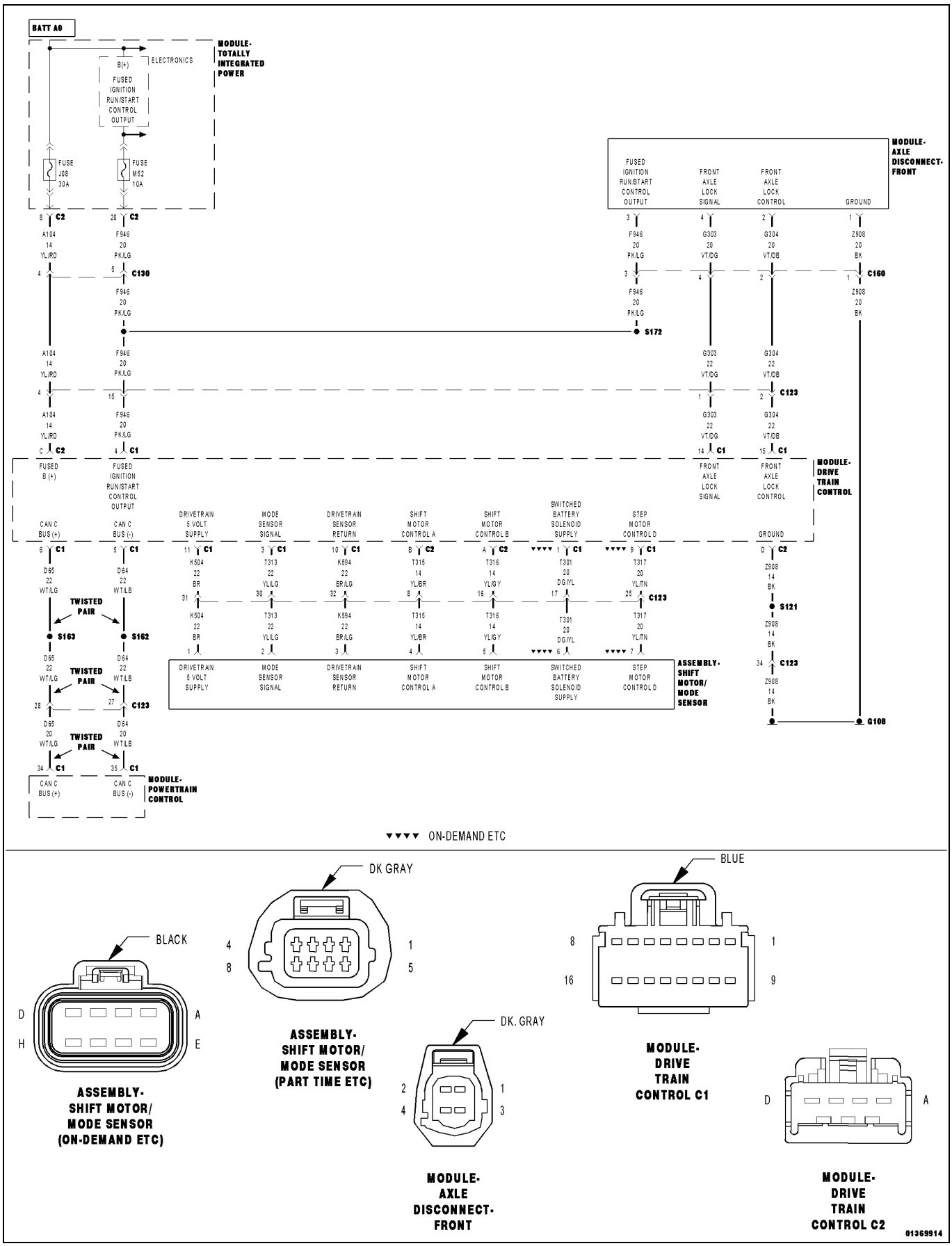

For a complete wiring diagram, **refer to the Wiring Information**.

- **When Monitored:**
  Ignition on.
- **Set Condition:**
  The Drive Train Control Module (DTCM) detects that the Drivetrain Sensor Supply voltage is below 2.5 volts for 300 mS.

Possible Causes
(K504) DRIVETRAIN 5-VOLT SUPPLY CIRCUIT SHORT TO GROUND
TRANSFER CASE SHIFT MOTOR/MODE SENSOR ASSEMBLY
DRIVE TRAIN CONTROL MODULE (DTCM)

1. ACTIVE DTC

1. Ignition on, engine not running.
2. With a scan tool, read DTCs.

Is the DTC active at this time?

Yes
- Go To 2

No
- Go To 5

2. DRIVETRAIN 5-VOLT SUPPLY (REFERENCE) VOLTAGE BELOW 4.8 VOLTS

1. Ignition on, engine not running.
2. With the scan tool, read the Drivetrain 5-volt Supply (Reference) Voltage in the DTCM.

Is the voltage below 4.8 volts?

Yes
- Go To 3

No
- Go To 5

3. TRANSFER CASE SHIFT MOTOR/MODE SENSOR ASSEMBLY

1. Turn the ignition off to the lock position
2. Disconnect the Transfer Case Shift Motor/Mode Sensor Assembly harness connector.
3. Ignition on, engine not running.
4. With the scan tool, read the 5-volt Supply (Reference) Voltage.

Is the voltage above 4.75 volts?

Yes
- Replace the Transfer Case Shift Motor/Mode Sensor Assembly in accordance with the Service Information.
- Perform the DTCM VERIFICATION TEST. (Refer to 28 - DTC-Based Diagnostics/MODULE, Drivetrain Control (DTCM) - Standard Procedure).

No
- Go To 4

4. (K504) DRIVETRAIN 5-VOLT SUPPLY CIRCUIT SHORTED TO GROUND

1. Turn the ignition off to the lock position
2. Disconnect the DTCM C1 harness connector.
3. Measure the resistance between ground and the (K504) Drivetrain 5- volt Supply circuit at the Transfer Case Shift Motor/Mode Sensor Assembly harness connector.

Is the resistance below 5.0 Ohms?

Yes

- Repair the (K504) Drivetrain 5-volt Supply circuit for a short to ground.
- Perform the DTCM VERIFICATION TEST. (Refer to 28 - DTC-Based Diagnostics/MODULE, Drivetrain Control (DTCM) - Standard Procedure).

No

- Replace the Drive Train Control Module (DTCM) in accordance with the Service information.
- Perform the DTCM VERIFICATION TEST. (Refer to 28 - DTC-Based Diagnostics/MODULE, Drivetrain Control (DTCM) - Standard Procedure).

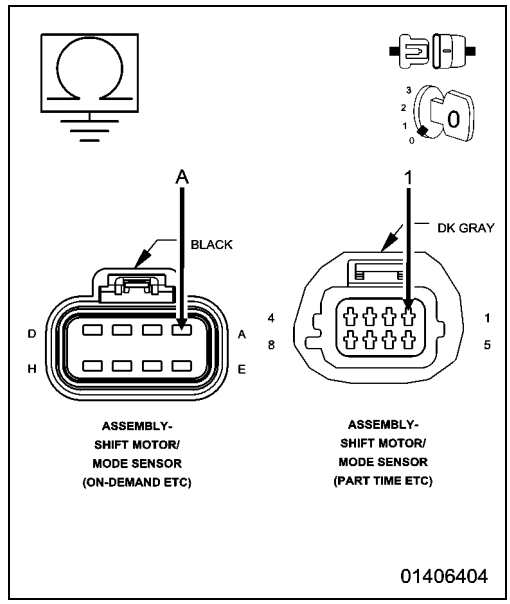

5. INTERMITTENT WIRING AND CONNECTORS

1. The conditions necessary to set this DTC are not present at this time.
2. Using the schematics as a guide, inspect the wiring and connectors specific to this circuit.
3. Wiggle test the wiring harness and connectors while checking for shorted and open circuits.
4. Using the scan tool, monitor the data related to this circuit while performing the wiggle test. Look for the data to change or for the DTC to reset.

Were there any problems found?

Yes

- Repair as necessary.
- Perform the DTCM VERIFICATION TEST. (Refer to 28 - DTC-Based Diagnostics/MODULE, Drivetrain Control (DTCM) - Standard Procedure).

No

- Test Complete.

C2112-SENSOR SUPPLY 1 VOLTAGE CIRCUIT HIGH

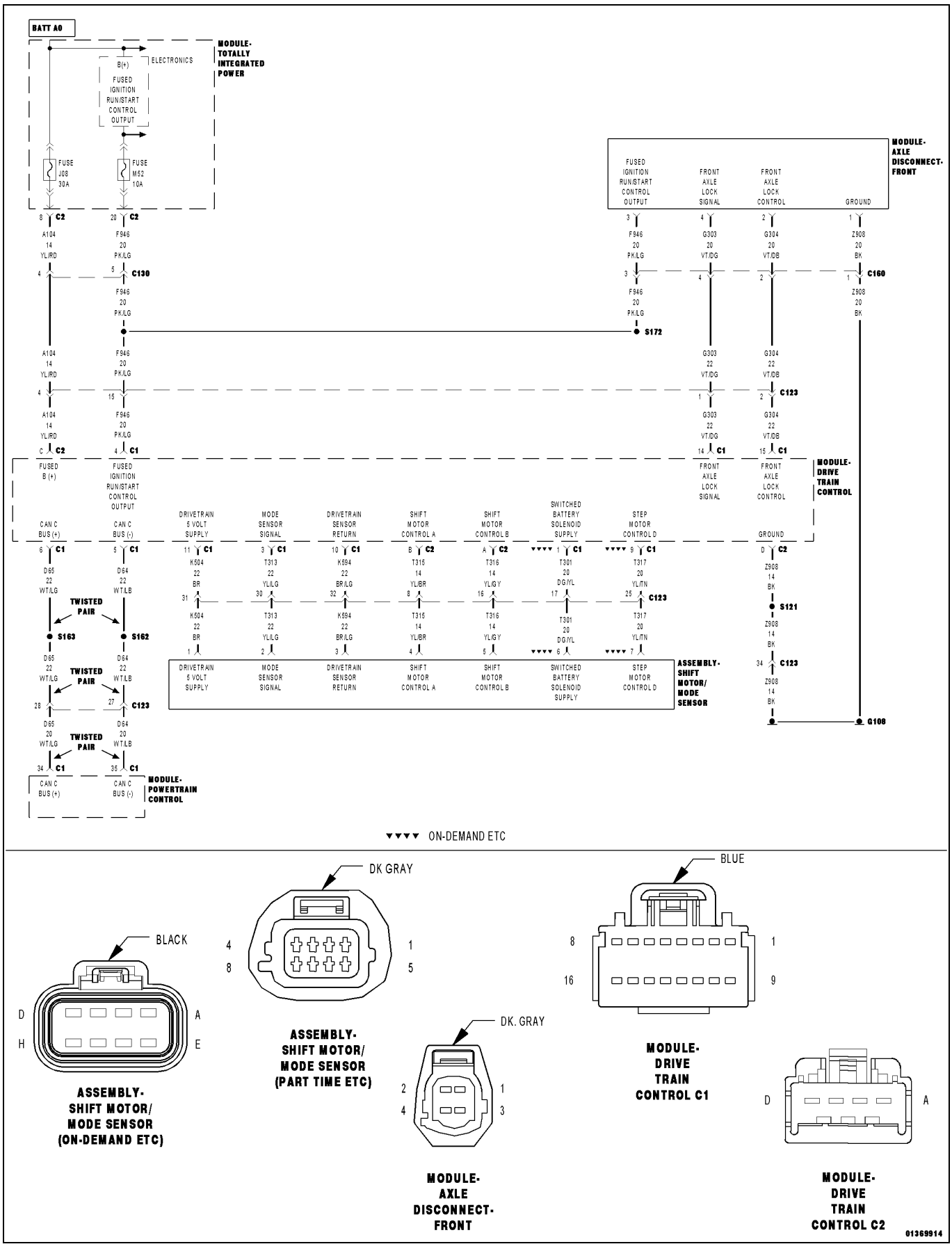

For a complete wiring diagram, **refer to the Wiring Information**.

- **When Monitored:**
  With the ignition on and no system undervoltage or overvoltage condition present.
- **Set Condition:**
  The Drive Train Control Module (DTCM) detects that the Drivetrain Sensor Supply voltage is above 7.5 volts for 300 ms

Possible Causes
(K504) DRIVETRAIN 5-VOLT SUPPLY CIRCUIT SHORT TO VOLTAGE
DRIVE TRAIN CONTROL MODULE (DTCM)

1. ACTIVE DTC

1. Ignition on, engine not running.
2. With a scan tool, read DTCs.

Is the DTC active at this time?

Yes

- Go To 2

No

- Go To 4

2. 5-VOLT SUPPLY (REFERENCE) VOLTAGE IS ABOVE 5.2 VOLTS

1. Ignition on, engine not running.
2. With the scan tool, read the Drivetrain 5-volt Supply (Reference) Voltage in the DTCM.

Is the voltage above 5.2 volts?

Yes

- Go To 3

No

- Go To 4

3. (K504) DRIVETRAIN 5-VOLT SUPPLY CIRCUIT SHORTED TO VOLTAGE

1. Turn the ignition off to the lock position
2. Disconnect the Transfer Case Shift Motor/Mode Sensor Assembly harness connector.
3. Disconnect the DTCM C1 harness connector.
4. Ignition on, engine not running.
5. Measure the voltage of the (K504) Drivetrain 5-volt Supply circuit at DTCM harness connector.

Is there any voltage present?

Yes

- Repair the (K504) Drivetrain 5-volt Supply circuit for a short to voltage.
- Perform DTCM VERIFICATION TEST. (Refer to 28 - DTC-Based Diagnostics/MODULE, Drivetrain Control (DTCM) - Standard Procedure).

No

- Replace the Final Drive Control Module (FDCM) in accordance with the Service information.
- Perform DTCM VERIFICATION TEST. (Refer to 28 - DTC-Based Diagnostics/MODULE, Drivetrain Control (DTCM) - Standard Procedure).

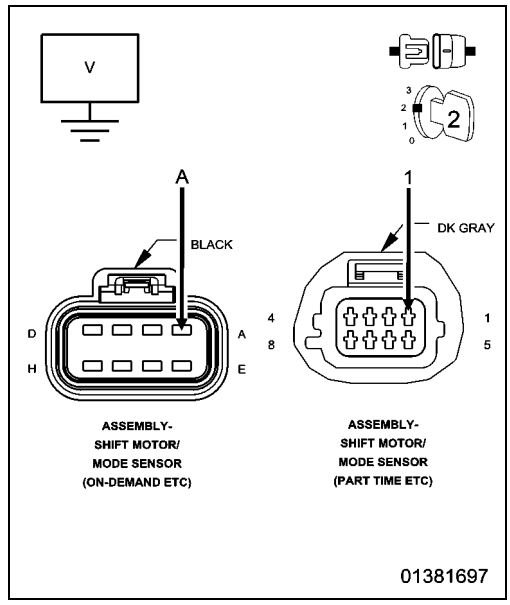

4. INTERMITTENT WIRING AND CONNECTORS

1. The conditions necessary to set this DTC are not present at this time.
2. Using the schematics as a guide, inspect the wiring and connectors specific to this circuit.
3. Wiggle test the wiring harness and connectors while checking for shorted and open circuits.
4. Using the scan tool, monitor the data related to this circuit while performing the wiggle test. Look for the data to change or for the DTC to reset.

Were there any problems found?

Yes

- Repair as necessary.
- Perform the DTCM VERIFICATION TEST. (Refer to 28 - DTC-Based Diagnostics/MODULE, Drivetrain Control (DTCM) - Standard Procedure).

No

- Test Complete.

C2201-FDCM/DTCM INTERNAL

For a complete wiring diagram, **refer to the Wiring Information**.

- **When Monitored:**
  With the ignition on.
- **Set Condition:**
  The Drive Train Control Module (DTCM) has detected a failure internal to the controller.

Possible Causes
DRIVE TRAIN CONTROL MODULE (DTCM)

1. DRIVE TRAIN CONTROL MODULE (DTCM)

1. The DTCM has detected an internal failure.

View Repair.

Repair

- Replace the Drive Train Control Module (DTCM) in accordance with the Service Information. (Refer to 08 - Electrical/8E - Electronic Control Modules/MODULE, Drivetrain Control - Removal).
- Perform the DTCM VERIFICATION TEST. (Refer to 28 - DTC-Based Diagnostics/MODULE, Drivetrain Control (DTCM) - Standard Procedure).

U0001-CAN C BUS

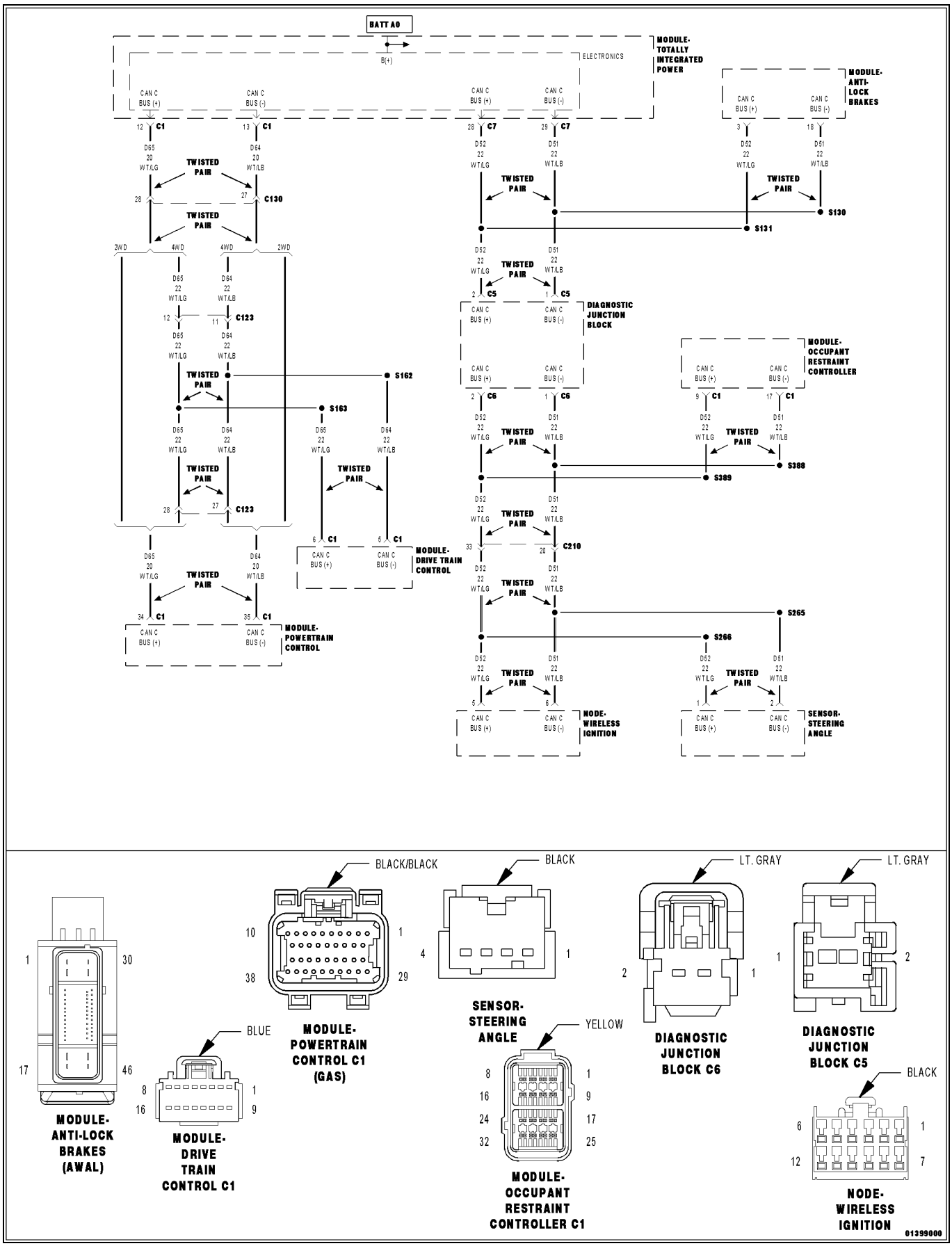

For a complete wiring diagram, **refer to the Wiring Information**.

Theory of Operation

The Drive Train Control Module (DTCM) communicates with other controllers over the CAN C bus. The DTCM continuously monitors the bus activity and receives the messages it needs. The CAN C bus is also used to communicate DTCM MIL status to the Engine Controller, therefor if the Engine Controller is unable to communicate with the DTCM, the Engine Controller will light the MIL.

- **When Monitored:**

Ignition run time is greater than one second. Battery voltage between 10 and 16 volts. Engine run time greater than three seconds.

- **Set Condition:**

  The Powertrain Control Module (PCM) loses communication over the CAN C Bus circuit. The circuit is continuously monitored. One Trip fault.

Possible Causes
CAN C BUS OPEN OR SHORTED CONDITION
ANTI-LOCK BRAKE SYSTEM (ABS) MODULE
DRIVE TRAIN CONTROL MODULE (DTCM)
OCCUPANT RESTRAINT CONTROLLER (ORC)
POWERTRAIN CONTROL MODULE (PCM)
STEERING ANGLE SENSOR (SAS)
TOTALLY INTEGRATED POWER MODULE (TIPM)
WIRELESS IGNITION NODE (WIN)

1. ACTIVE DTC

1. Ignition on, engine not running.
2. With a scan tool, select View TIPM DTCs.

Is the DTC Active at this time?

Yes

- (Refer to 28 - DTC-Based Diagnostics/MODULE, Totally Integrated Power (TIPM) - Diagnosis and Testing) and perform the U0001-CAN C Bus diagnostic procedure.

No

- (Refer to 29 - Non-DTC Diagnostics/Communication - Diagnosis and Testing) and perform the Stored Lost Communication DTCs diagnostic procedure.

U0100-LOST COMMUNICATION WITH ECM/PCM

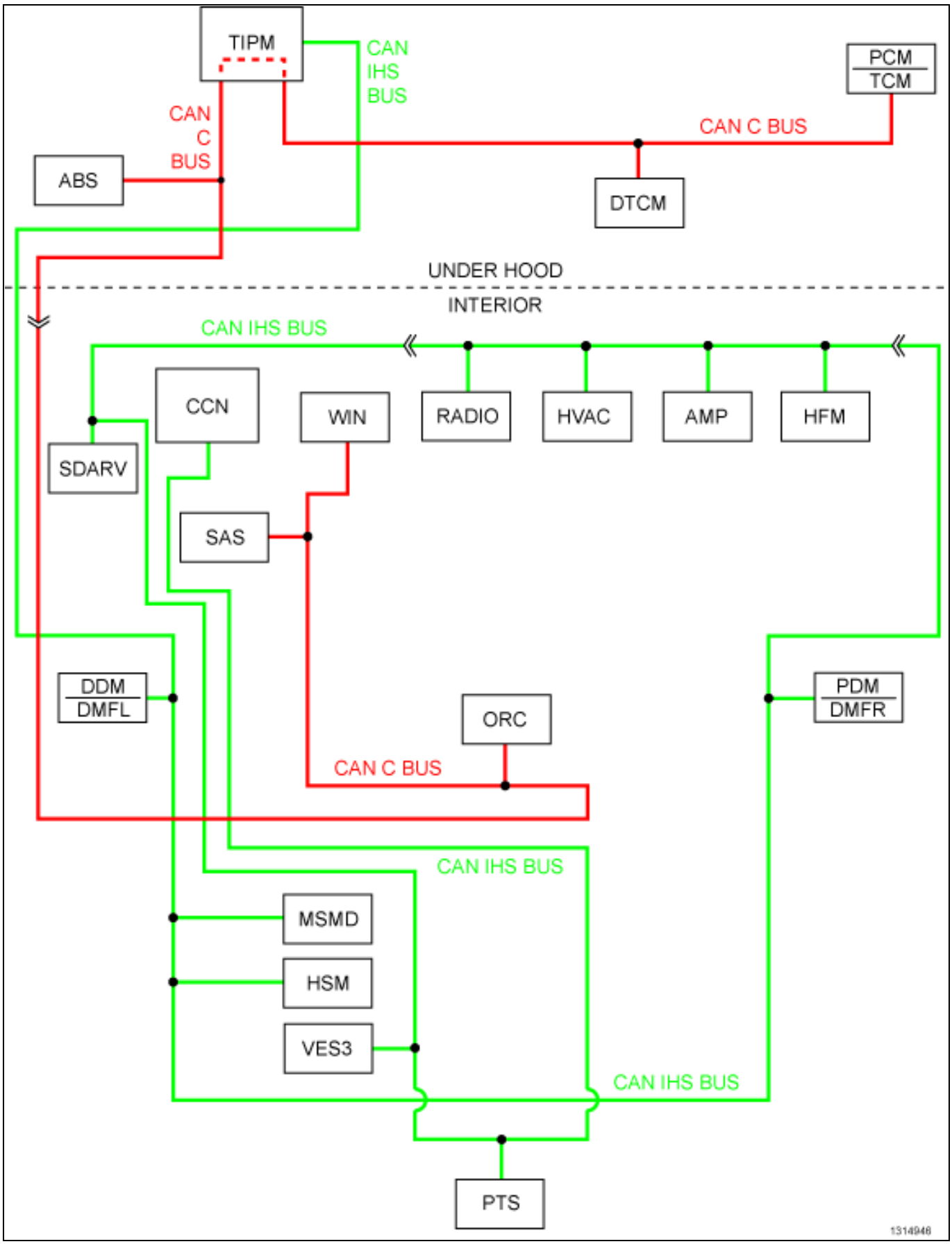

For a complete wiring diagram, **refer to the Wiring Information**.

- **When Monitored:**
  - With the ignition on
  - Battery voltage between 10 and 16 volts
  - Ignition Off Draw (IOD) fuse installed
  - Totally Integrated Power Module (TIPM) is configured correctly
- **Set Condition:**
  Bus messages not received from the ECM/PCM for approximately two to five seconds.

Possible Causes
CAN C+ OR CAN C– BUS CIRCUITS OPEN OR SHORTED
DTCS RELATED TO BATTERY VOLTAGE, IGNITION, OR VIN MESSAGES
TIPM NOT CONFIGURED CORRECTLY
ECM/PCM POWER AND GROUND
ECM/PCM
MODULE THAT SET THIS DTC

1. ACTIVE DTC

1. Ignition on, engine not running.
2. With a scan tool, read DTCs.

Is the DTC Active at this time?

Yes

- (Refer to 28 - DTC-Based Diagnostics/MODULE, Totally Integrated Power (TIPM) - Diagnosis and Testing) and perform the U0100-Lost Communication with ECM/PCM diagnostic procedure.

No

- (Refer to 29 - Non-DTC Diagnostics/Communication - Diagnosis and Testing) and perform the Stored Lost Communication DTCs diagnostic procedure.

U0101-LOST COMMUNICATION WITH TCM

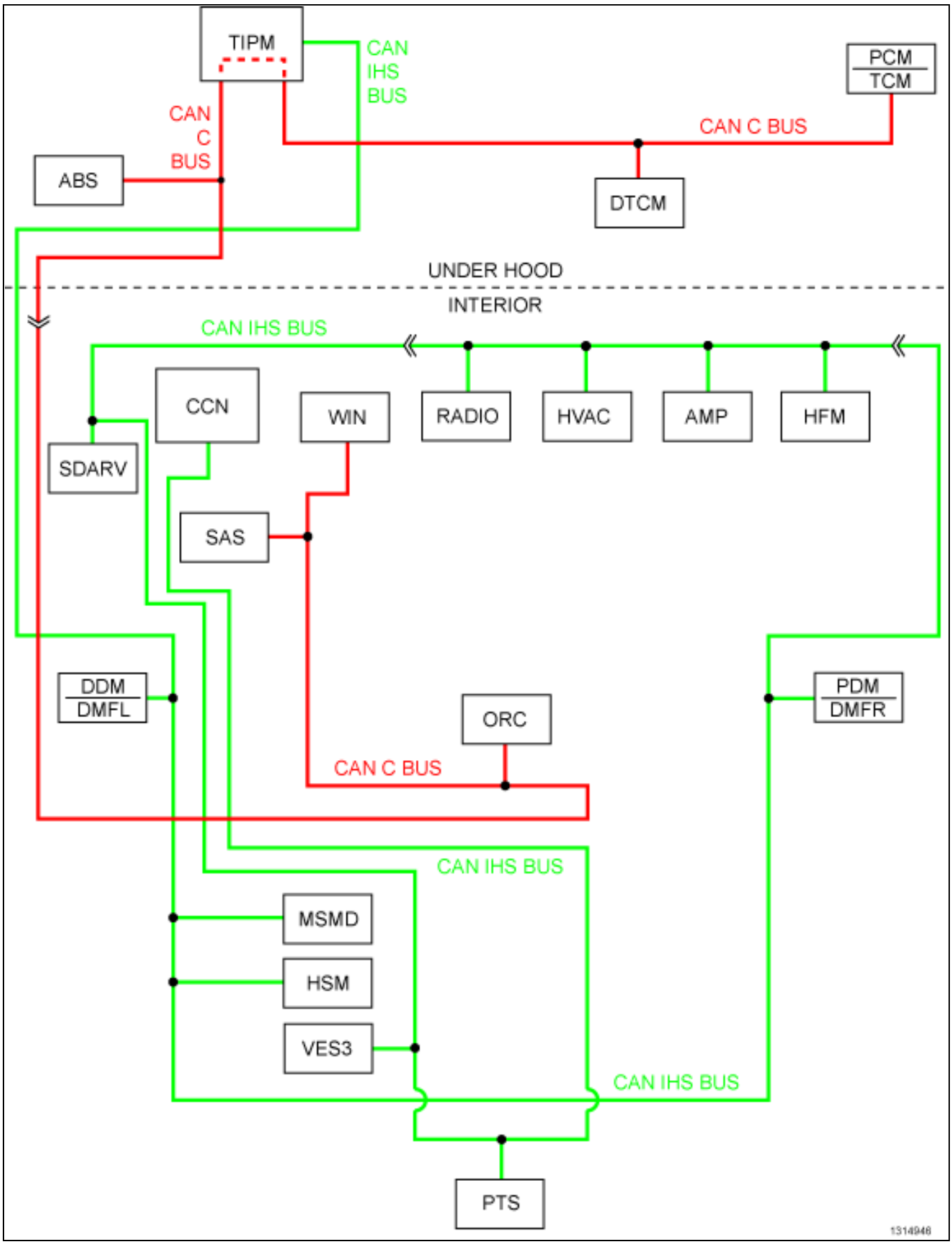

For a complete wiring diagram, **refer to the Wiring Information**.

- **When Monitored:**
  - With the ignition on.
  - Battery voltage between 10 and 16 volts.
  - Ignition Off Draw (IOD) fuse installed.
  - Totally Integrated Power Module (TIPM) is configured correctly.
- **Set Condition:**
  Bus messages not received from the Transmission Control Module (TCM) for approximately 500ms.

Possible Causes
CAN C BUS CIRCUITS OPEN OR SHORTED
DTCS RELATED TO BATTERY VOLTAGE, IGNITION, OR VIN MESSAGES
TIPM NOT CONFIGURED CORRECTLY
TCM
TCM POWER AND GROUND
MODULE THAT SET THIS DTC

1. VERIFY DTC IS ACTIVE

1. Ignition on, engine not running.
2. With a scan tool, read DTCs.

Is the DTC Active at this time?

Yes

- Perform the appropriate diagnostic procedure. (Refer to 28 - DTC-Based Diagnostics/MODULE, Totally Integrated Power (TIPM) - Diagnosis and Testing).

No

- Perform the INTERMITTENT CONDITION diagnostic procedure. (Refer to 28 - DTC-Based Diagnostics/MODULE, Powertrain Control (PCM) - Standard Procedure).

U0121-LOST COMMUNICATION WITH ABS

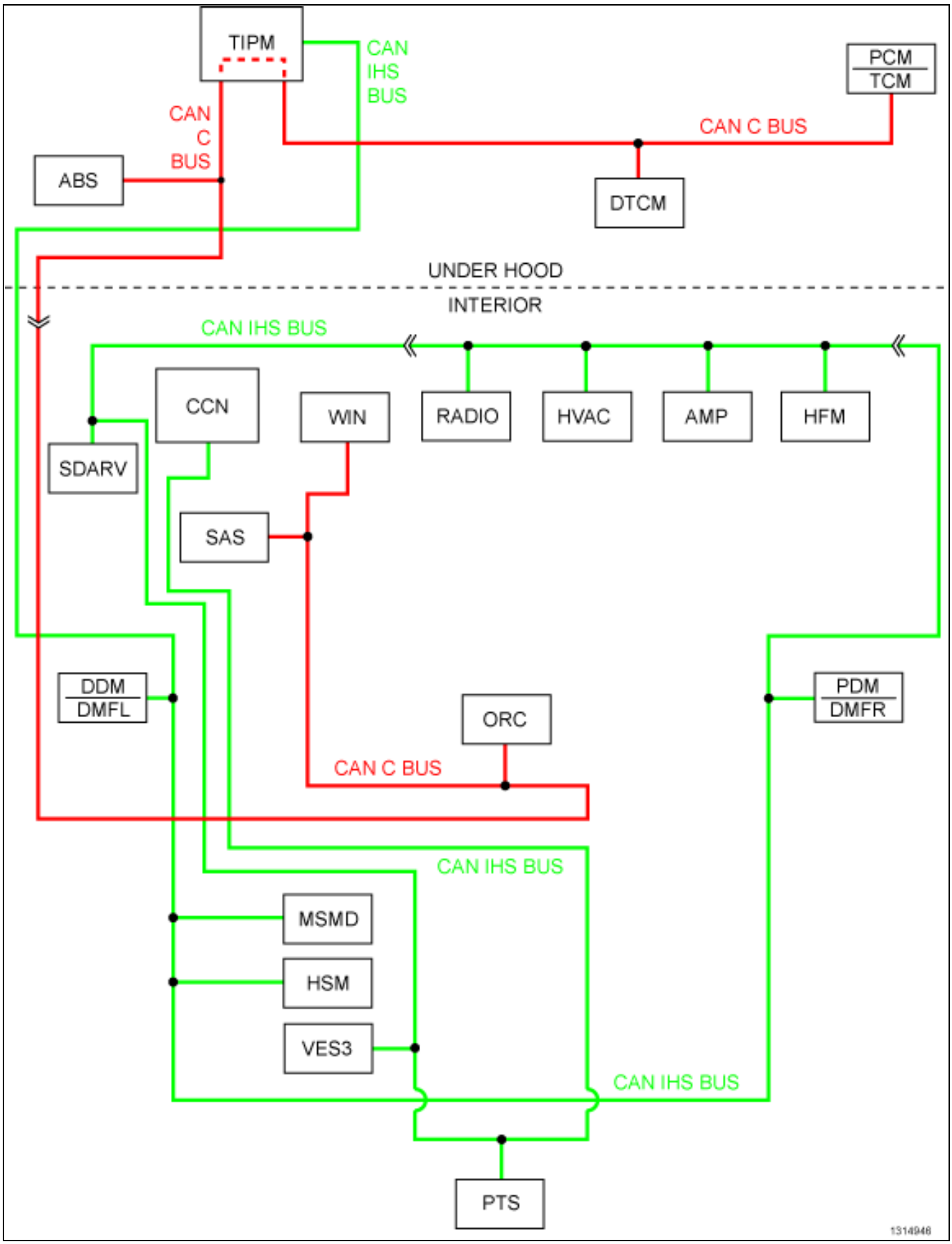

For a complete wiring diagram, **refer to the Wiring Information**.

Theory of Operation

The ABS communicates with other controllers over the CAN C bus. The DTCM Module continuously monitors the bus activity and receives the messages it needs. If the DTCM does not receive messages from the ABS Module , then this fault will set and the service 4WD is illuminated.

- **When Monitored:**
  With the ignition on.
  Battery voltage between 10 and 16 volts.
  Igniton Off Draw (IOD) fuse installed.
  Totally Integrated Power Module (TIPM) is configured correctly.
- **Set Condition:**
  Bus messages not received from the Antilock Brake Module for approximately two to five seconds.

Possible Causes
CAN B OR CAN C BUS CIRCUITS OPEN OR SHORTED
DTCS RELATED TO BATTERY VOLTAGE, IGNITION, OR VIN MESSAGES
TOTALLY INTEGRATED POWER MODULE (TIPM) NOT CONFIGURED CORRECTLY
ANTI-LOCK BRAKE SYSTEM (ABS) MODULE POWER AND GROUND
ANTI-LOCK BRAKE SYSTEM (ABS) MODULE
MODULE THAT SET THIS DTC

1. VERIFY DTC IS ACTIVE

1. Ignition on, engine not running.
2. With a scan tool, read DTCs.

Is the DTC Active at this time?

Yes

- Perform the appropriate diagnostic procedure. (Refer to 28 - DTC-Based Diagnostics/MODULE, Totally Integrated Power (TIPM) - Diagnosis and Testing).

No

- Perform the INTERMITTENT CONDITION diagnostic procedure. (Refer to 28 - DTC-Based Diagnostics/MODULE, Antilock Brake (ABS) - Standard Procedure).

U0212-LOST COMMUNICATION WITH SCM (SAS)

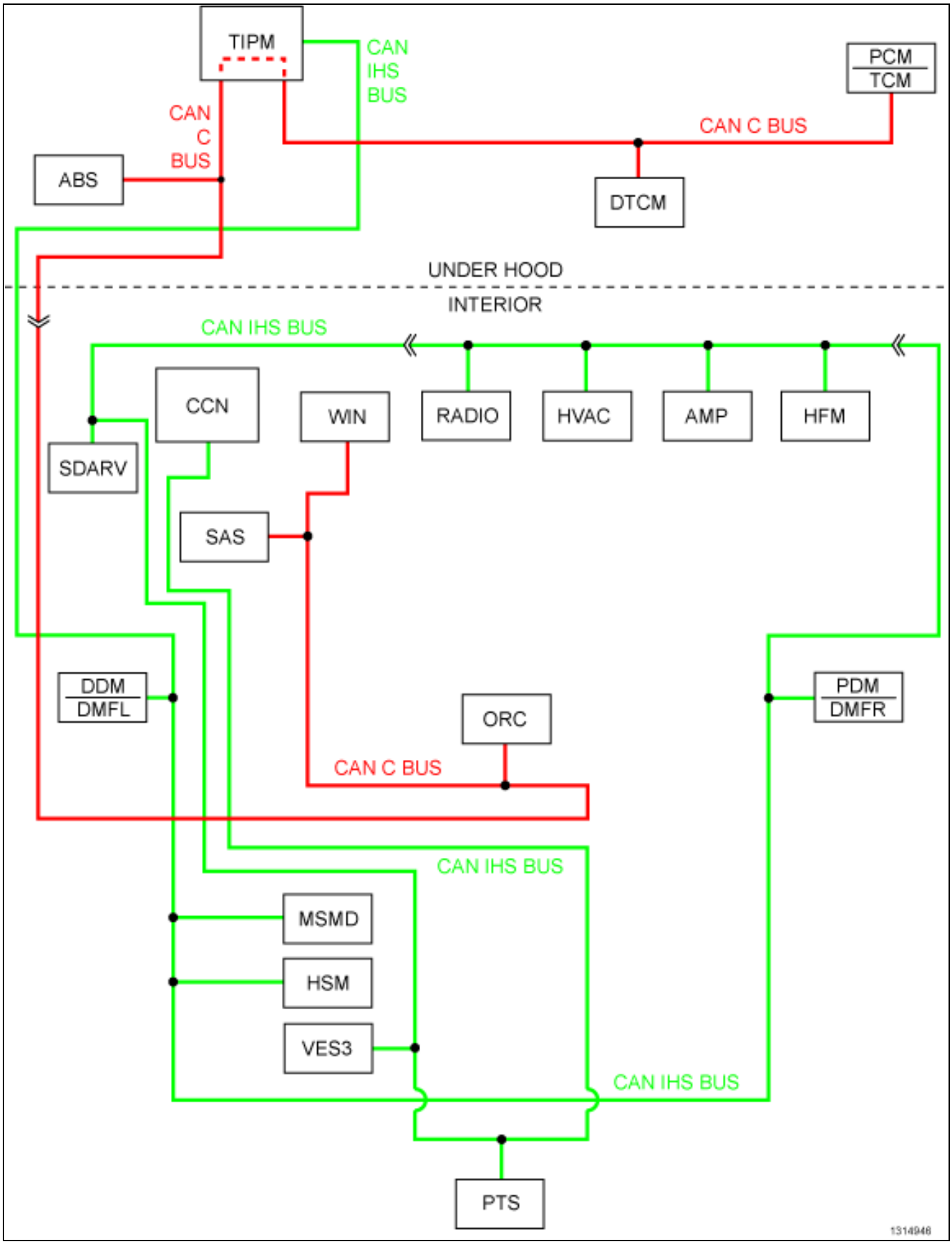

For a complete wiring diagram, **refer to the Wiring Information**.

- **When Monitored:**
  - With the ignition on
  - Battery voltage between 10 and 16 volts
  - Ignition Off Draw (IOD) fuse installed
- **Set Condition:**

  If the Drive Train Control Module (DTCM) fails to receive bus messages from the Steering Angle Sensor (SAS) for approximately 500 ms.

Possible Causes
DTCs RELATED TO BATTERY VOLTAGE, IGNITION, OR VIN MESSAGES
CAN C BUS CIRCUITS OPEN OR SHORTED
TOTALLY INTEGRATED POWER MODULE (TIPM) NOT CONFIGURED CORRECTLY
STEERING ANGLE SENSOR (SAS) POWER AND GROUND
STEERING ANGLE SENSOR (SAS)
DRIVE TRAIN CONTROL MODULE (DTCM)

1. VERIFY DTC IS ACTIVE

1. Ignition on, engine not running.
2. With the scan tool, record and erase DTCs.
3. Cycle the ignition switch.
4. With the scan tool, read DTCs.

Is the DTC Active at this time?

Yes

- Perform the appropriate diagnostic procedure for the Steering Angle Sensor (SAS). (Refer to 28 - DTC-Based Diagnostics/MODULE, Totally Integrated Power (TIPM) - Diagnosis and Testing).

No

- Perform the INTERMITTENT CONDITION TEST. (Refer to 28 - DTC-Based Diagnostics/MODULE, Antilock Brake (ABS) - Standard Procedure).

U0401-IMPLAUSIBLE DATA RECEIVED FROM ECM

For a complete wiring diagram, **refer to the Wiring Information**.

- **When Monitored:**

  With the ignition on for four seconds, no CAN BUS circuit error condition present, no lost communication with PCM condition present, and no system undervoltage or overvoltage condition present.
- **Set Condition:**

  The Drive Train Control Module (DTCM) is receiving implausible data for transfer case gear position, engine RPM, torque, or engine coolant temperature from the PCM.

Possible Causes
TOTALLY INTEGRATED POWER MODULE (TIPM) DTCS
POWERTRAIN CONTROL MODULE (PCM) DTCS
DRIVE TRAIN CONTROL MODULE (DTCM) DTCS
DRIVE TRAIN CONTROL MODULE (DTCM)

1. CHECK FOR DTC U0401-IMPLAUSIBLE DATA RECEIVED FROM ECM/PCM

NOTE: This DTC must be active for the results of this test to be valid.

1. Turn the ignition on.
2. With the scan tool, record and erase DTCs.
3. Cycle the ignition switch from off to on.
4. With the scan tool, read DTCs.

Does the scan tool display: U0401-IMPLAUSIBLE DATA RECEIVED FROM ECM/PCM?

Yes

- Go To 2

No

- Go To 4

2. CHECK IF TIPM CAN BUS DTCS ARE PRESENT

1. With the scan tool, read TIPM DTCs.

Are there any TIPM CAN BUS DTC's present?

Yes

- Perform the appropriate diagnostic procedure. (Refer to 28 - DTC-Based Diagnostics/MODULE, Totally Integrated Power (TIPM) - Diagnosis and Testing).

No

- Go To 3

3. POWERTRAIN DTCS PRESENT

1. With the scan tool, read PCM DTCs.

Are there any active DTCs present?

Yes

- Perform the appropriate diagnostic procedure. (Refer to 28 - DTC-Based Diagnostics/MODULE, Powertrain Control (PCM) - Diagnosis and Testing).

No

- Replace the Drive Train Control Module (DTCM) in accordance with the Service Information.
- Perform DTCM VERIFICATION TEST. (Refer to 28 - DTC-Based Diagnostics/MODULE, Drivetrain Control (DTCM) - Standard Procedure).

4. INTERMITTENT WIRING AND CONNECTORS

1. The conditions necessary to set this DTC are not present at this time.
2. Using the schematics as a guide, inspect the wiring and connectors specific to this circuit.
3. Wiggle test the wiring harness and connectors while checking for shorted and open circuits.
4. Using the scan tool, monitor the data related to this circuit while performing the wiggle test. Look for the data to change or for the DTC to reset.

Were there any problems found?

Yes

- Repair as necessary.
- Perform TRANSFER CASE VERIFICATION TEST. (Refer to 28 - DTC-Based Diagnostics/MODULE, Drivetrain Control (DTCM) - Standard Procedure).

No

- Test complete.

U0402-IMPLAUSIBLE DATA RECEIVED FROM TCM

For a complete wiring diagram, **refer to the Wiring Information**.

- **When Monitored:**
  With the ignition on for 4 seconds, no CAN BUS circuit error condition present, no lost communication with TCM condition present, and no system undervoltage or overvoltage condition present.
- **Set Condition:**
  The Drive Train Control Module (DTCM) is receiving implausible data for gear or PRNDL position from the TCM.

Possible Causes
TRANSMISSION DTCS PRESENT
DRIVE TRAIN CONTROL MODULE (DTCM) DTCS
DRIVE TRAIN CONTROL MODULE (DTCM)

1. CHECK FOR DTC U0401-IMPLAUSIBLE DATA RECEIVED FROM TCM

NOTE: This DTC must be active for the results of this test to be valid.

1. Turn the ignition on.
2. With the scan tool, record and erase DTCs.
3. Cycle the ignition switch from off to on.
4. With the scan tool, read DTCs.

Does the scan tool display: U0401-IMPLAUSIBLE DATA RECEIVED FROM TCM?

Yes

- Go To 2

No

- Go To 4

2. CHECK IF TIPM CAN BUS DTCS ARE PRESENT

1. With the scan tool, read TIPM DTCs.

Are there any TIPM CAN BUS DTCs present?

Yes

- Perform the appropriate diagnostic procedure. (Refer to 28 - DTC-Based Diagnostics/MODULE, Totally Integrated Power (TIPM) - Diagnosis and Testing).

No

- Go To 3

3. TRANSMISSION DTCS PRESENT

1. Ignition on, engine not running.
2. With the scan tool, read DTCs in the TCM.

Are there any DTCs present?

Yes

- Perform the appropriate diagnostic procedure. (Refer to 28 - DTC-Based Diagnostics/MODULE, Powertrain Control (PCM) - Diagnosis and Testing).

No

- Replace the Drive Train Control Module (DTCM) in accordance with the Service Information.
- Perform DTCM VERIFICATION TEST. (Refer to 28 - DTC-Based Diagnostics/MODULE, Drivetrain Control (DTCM) - Standard Procedure).

4. INTERMITTENT WIRING HARNESS AND CONNECTORS

1. The conditions necessary to set this DTC are not present at this time.
2. Using the wiring diagram/schematic as a guide, inspect the wiring harness and connectors.
3. Wiggle test the wiring harness and connectors while monitoring the scan tool data relative to this circuit.
4. Look for the data to change or for the DTC to reset during the wiggle test.
5. While monitoring the scan tool data relative to this circuit, move the selector switch to each position several times (if equipped).

Were there any problems found?

Yes

- Repair as necessary.
- Perform DTCM VERIFICATION TEST. (Refer to 28 - DTC-Based Diagnostics/MODULE, Drivetrain Control (DTCM) - Standard Procedure).

No

- Test complete.

■ U0415-IMPLAUSIBLE DATA RECEIVED FROM ABS

For a complete wiring diagram, **refer to the Wiring Information**.

- **When Monitored:**

  With the ignition on for Four seconds, no CAN BUS circuit error condition present, no lost communication with ABS condition present, and no system undervoltage or overvoltage condition present.
- **Set Condition:**

  The Drive Train Control Module (DTCM) is receiving implausible data for vehicle speed, wheel speeds, brake switch status, longitudinal acceleration, yaw rate, or lateral acceleration from the ABS controller.

Possible Causes
TOTALLY INTEGRATED POWER MODULE (TIPM) DTCS
ANTILOCK BRAKE SYSTEM (ABS) MODULE DTCS PRESENT
DRIVE TRAIN CONTROL MODULE (DTCM) DTCS
DRIVE TRAIN CONTROL MODULE (DTCM)

1. CHECK FOR DTC U0401-IMPLAUSIBLE DATA RECEIVED FROM TCM

NOTE: This DTC must be active for the results of this test to be valid.

1. Turn the ignition on.
2. With the scan tool, record and erase DTCs.
3. Cycle the ignition switch from off to on.
4. With the scan tool, read DTCs.

Does the scan tool display: U0401-IMPLAUSIBLE DATA RECEIVED FROM TCM?

Yes

- Go To 2

No

- Go To 4

2. CHECK IF TIPM CAN BUS DTCS ARE PRESENT

1. With the scan tool, read TIPM DTCs.

Are there any TIPM CAN BUS DTC's present?

Yes

- Perform the appropriate diagnostic procedure. (Refer to 28 - DTC-Based Diagnostics/MODULE, Totally Integrated Power (TIPM) - Diagnosis and Testing).

No

- Go To 3

3. ABS DTCS PRESENT

1. Ignition on, engine not running.
2. With the scan tool, read DTCs in the Antilock Brake Controller.

Are there any DTCs present?

Yes

- Perform the appropriate diagnostic procedure. (Refer to 28 - DTC-Based Diagnostics/MODULE, Antilock Brake (ABS) - Diagnosis and Testing).

No

- Replace the Drive Train Control Module (DTCM) in accordance with the Service Information.
- Perform DTCM VERIFICATION TEST. (Refer to 28 - DTC-Based Diagnostics/MODULE, Drivetrain Control (DTCM) - Standard Procedure).

4. INTERMITTENT WIRING HARNESS AND CONNECTORS

1. The conditions necessary to set this DTC are not present at this time.
2. Using the wiring diagram/schematic as a guide, inspect the wiring harness and connectors.
3. Wiggle test the wiring harness and connectors while monitoring the scan tool data relative to this circuit.
4. Look for the data to change or for the DTC to reset during the wiggle test.
5. While monitoring the scan tool data relative to this circuit, move the selector switch to each position several times (if equipped).

Were there any problems found?

Yes

- Repair as necessary.
- Perform DTCM VERIFICATION TEST. (Refer to 28 - DTC-Based Diagnostics/MODULE, Drivetrain Control (DTCM) - Standard Procedure).

No

- Test complete.

■ U0429-IMPLAUSIBLE DATA RECEIVED FROM SCM (SAS)

For a complete wiring diagram, **refer to the Wiring Information**.

- **When Monitored:**

  With the ignition on for four seconds, no CAN BUS circuit error condition present, no lost communication with Steering Angle Sensor (SAS) condition present, and no system undervoltage or overvoltage condition present.
- **Set Condition:**

  The Drive Train Control Module (DTCM) is receiving implausible data for sensor status from the Steering Angle Sensor (SAS).

Possible Causes
CAN BUS OPEN OR SHORTED CONDITION
STEERING ANGLE SENSOR (SAS) DTCS PRESENT
DRIVE TRAIN CONTROL MODULE (DTCM)

1. DTC IS ACTIVE

NOTE: Diagnose all CAN B and C communication DTCs before continuing.

1. Ignition on, engine not running.
2. With the scan tool, read DTCs.

Is the status Active for this DTC?

Yes
- Go To 2

No
- Go To 3

2. CHECK FOR SAS DTCS

1. With the scan tool, read DTCs in the Anti-lock Brake System (ABS) Module.

Are there any SAS DTCs present?

Yes
- Perform the appropriate diagnostic procedure. (Refer to 28 - DTC-Based Diagnostics/MODULE, Antilock Brake (ABS) - Diagnosis and Testing).

No
- Replace the Drive Train Control Module (DTCM) in accordance with the Service Information.
- Perform DTCM VERIFICATION TEST. (Refer to 28 - DTC-Based Diagnostics/MODULE, Drivetrain Control (DTCM) - Standard Procedure).

3. INTERMITTENT WIRING HARNESS AND CONNECTORS

1. The conditions necessary to set this DTC are not present at this time.
2. Using the wiring diagram/schematic as a guide, inspect the wiring harness and connectors.
3. Wiggle test the wiring harness and connectors while monitoring the scan tool data relative to this circuit.
4. Look for the data to change or for the DTC to reset during the wiggle test.

Were any problems found?

Yes
- Repair as necessary.
- Perform DTCM VERIFICATION TEST. (Refer to 28 - DTC-Based Diagnostics/MODULE, Drivetrain Control (DTCM) - Standard Procedure).

No
- Test complete.

Standard Procedure

■ DTCM VERIFICATION TEST

1. PERFORM DTCM VERIFICATION TEST

CAUTION: Before removing the DTCM harness connectors, clean the connectors and locking cam area of dirt and debris. Failure to do so can result in the connector being jammed or damage to the locking cams on the harness connector or module. Do not force the assist arm when releasing or installing the harness connector.

NOTE: If the Powertrain Control Module (PCM) or Totally Integrated Power Module (TIPM) was replaced, refer to the service information for proper programming procedures.

1. Disconnect all jumper wires and reconnect all previously disconnected components and connectors.
2. Make sure that all accessories are turned off.
3. Make sure that the battery is fully charged.
4. With the scan tool, record and erase all DTC(s) from the DTCM.
5. Start and run the engine for two minutes while operating all functions of the system that caused the original concern.

NOTE: When a Stabilizer System DTC diagnostic is complete and all repairs have been made, running the Stabilizer Motor System Test and/or LED System Test can also provide verification that the DTC has been repaired and the system is operating normally.

6. Turn the ignition off, wait five seconds, then turn the ignition on. Using the scan tool, read DTC(s) from the DTCM.

Are any DTCM DTC(s) present or is the original condition still present?

Yes

- The repair is not complete. Perform the appropriate diagnostic procedure for the DTC or symptom that is still present.

No

- The repair is complete.

■ TRANSFER CASE VERIFICATION TEST

1. Disconnect all jumper wires and reconnect all previously disconnected components and connectors.
2. Make sure that all accessories are turned off.
3. Make sure that the battery is fully charged.
4. With the scan tool, record and erase all DTC(s) from the Drive Train Control Module (DTCM) and the Cluster/CCN.
5. Test drive the vehicle. If equipped with a selector switch drive the vehicle in each Transfer Case range and verify proper operation in each range .
   - To select or deselect 2WD, AWD or 4HI mode, vehicle speed must be below 88 Kmh (55 mph) with all wheels at vehicle speed.
   - Shifts will not take place with a wheel speed difference of greater than 21 Kmh (13 mph) between the front and rear wheels.
   - To select or deselect 4LO (if equipped), vehicle speed must be below 5 Kmh (3 mph) with the ignition on, engine not running and the transmission in neutral (automatic transmission) or the clutch pedal pressed (manual transmission).
   - To select or deselect Transfer Case Neutral (if equipped), vehicle speed must be 0 Kmh (0 mph) with the ignition on, engine not running, the brake pedal applied, and the transmission in neutral (automatic transmission) or the clutch pedal pressed (manual transmission). Press the Neutral button (if equipped) on the Transfer Case Selector Switch until the Neutral Indicator is illuminated.

WARNING: Apply the parking brake. The vehicle may roll with the Transfer Case in neutral.

   - To verify that the Transfer Case is in Neutral, shift the automatic transmission into reverse and release the brake pedal for three seconds or shift the manual transmission into gear and slowly release the clutch pedal. There should be no vehicle movement if the Transfer Case is in Neutral.

6. With the scan tool, read DTCs in the Drive Train Control Module (DTCM) and in the Cluster Control Node (CCN).

Are any DTCs present in the DTCM or CCN?

Yes

- Perform the appropriate diagnostic procedure. (Refer to 28 - DTC-Based Diagnostics/MODULE, Drivetrain Control (DTCM) - Diagnosis and Testing) or (Refer to 28 - DTC-Based Diagnostics/NODE, Cabin Compartment (CCN) - Diagnosis and Testing).

No

- Test complete.

MODULE, Hands Free (HFM)

Diagnosis and Testing

■ B1438-VOICE RECOGNITION SWITCH STUCK

For a complete wiring diagram, **refer to the Wiring Information**.

- **When Monitored:**
  With the ignition on.
- **Set Condition:**
  The Hands Free Phone Module (HFM) detects the Voice Recognition Switch active for greater than 20 seconds.

Possible Causes
RADIO

1. CHECK FOR AN ACTIVE DTC

1. Turn the ignition on.
2. With the scan tool, record and erase DTCs.
3. Press the Voice Recognition switch three times.
4. With the scan tool, read DTCs.

Does the scan tool display this DTC as active?

Yes

- Replace the Radio in accordance with the Service Information.
- Perform the BODY VERIFICATION TEST. (Refer to 28 - DTC-Based Diagnostics/MODULE, Totally Integrated Power (TIPM) - Standard Procedure).

No

- Test complete, the condition or conditions that originally set this DTC are not present at this time.

■ B1439-PHONE SWITCH STUCK

For a complete wiring diagram, **refer to the Wiring Information**.

- **When Monitored:**
  With the ignition on.
- **Set Condition:**
  The Hands Free Phone Module (HFM) detects the Phone Switch active for greater than 20 seconds.

Possible Causes
RADIO

1. CHECK FOR AN ACTIVE DTC

1. Turn the ignition on.
2. With the scan tool, record and erase DTCs.
3. Press the Phone switch three times.
4. With the scan tool, read DTCs.

Does the scan tool display this DTC as active?

Yes

- Replace the Radio in accordance with the Service Information.
- Perform the BODY VERIFICATION TEST. (Refer to 28 - DTC-Based Diagnostics/MODULE, Totally Integrated Power (TIPM) - Standard Procedure).

No

- Test complete, the condition or conditions that originally set this DTC are not present at this time.

B143B-MICROPHONE 1 CIRCUIT LOW

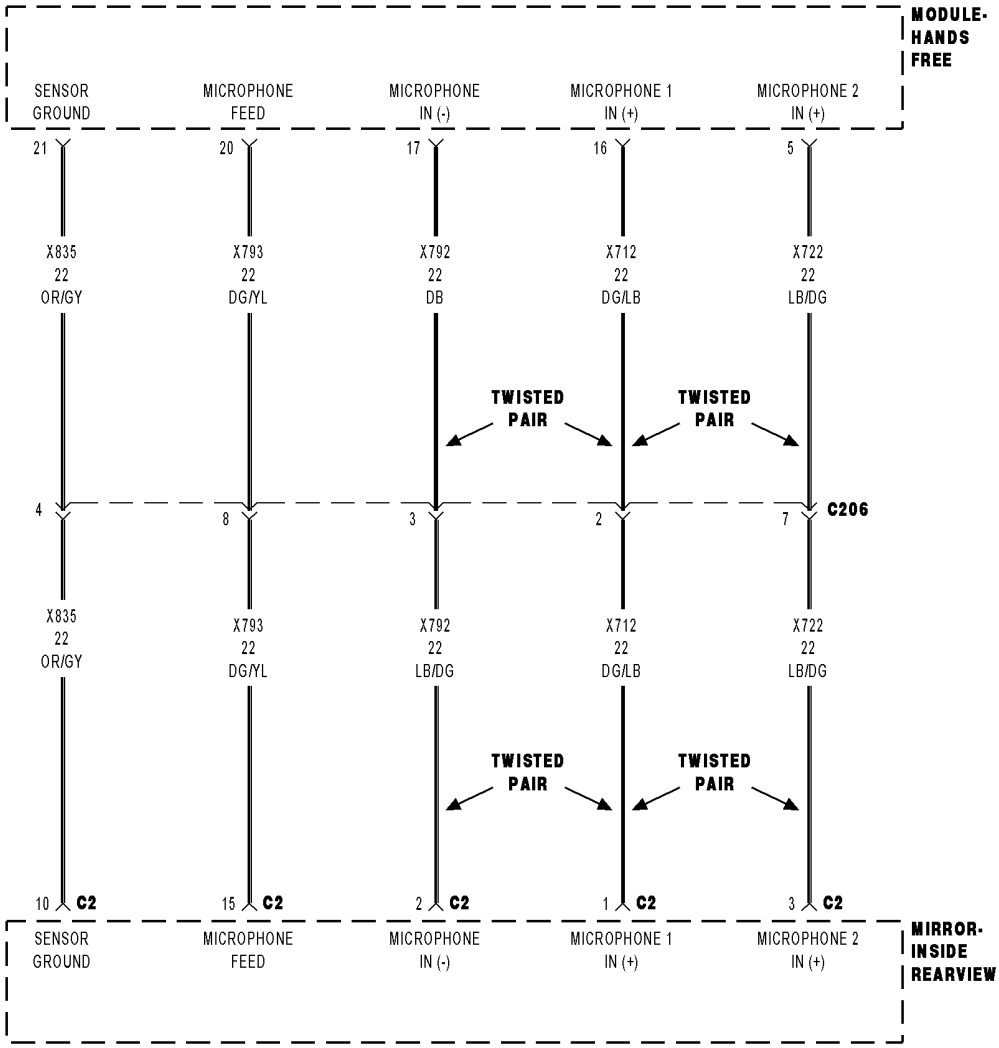

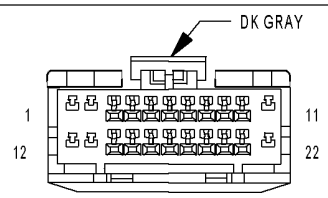

MODULE-
HANDS FREE

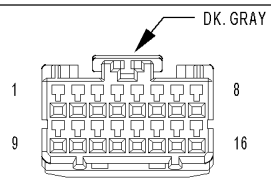

MIRROR-
INSIDE
REARVIEW C2
(HANDS FREE)

01379296

For a complete wiring diagram, **refer to the Wiring Information**.

- **When Monitored:**
  With the ignition on.
- **Set Condition:**
  The Hands Free Module (HFM) detects a short to ground or open on the (X712) Microphone 1 IN (+) circuit.

Possible Causes
(X712) MICROPHONE 1 IN (+) CIRCUIT OPEN
(X712) MICROPHONE 1 IN (+) CIRCUIT SHORTED TO GROUND
INSIDE REARVIEW MIRROR
HANDS FREE MODULE (HFM)

1. CHECK FOR ACTIVE DTC

NOTE: Verify the connection of the Rearview Mirror harness connector.

1. Turn the ignition on.
2. With the scan tool, read the active DTCs.

Does the scan tool display this DTC as active?

Yes

- Go To 2

No

- If the DTC is stored, check for an intermittent condition. Visually inspect the related wiring harness connectors. Look for broken, bent, pushed out, or corroded terminals.
- Perform the BODY VERIFICATION TEST. (Refer to 28 - DTC-Based Diagnostics/MODULE, Totally Integrated Power (TIPM) - Standard Procedure).

2. INSIDE REARVIEW MIRROR

1. Turn the ignition off.
2. Disconnect the Inside Rearview Mirror harness connector.
3. Connect a jumper wire between the (X793) Microphone Feed and the (X712) Microphone 1 IN (+) circuits.
4. Turn the ignition on.
5. With the scan tool, read the DTCs.

Does the scan tool display this DTC as active?

Yes

- Go To 3

No

- Replace the Inside Rearview Mirror in accordance with the Service Information.
- Perform the BODY VERIFICATION TEST. (Refer to 28 - DTC-Based Diagnostics/MODULE, Totally Integrated Power (TIPM) - Standard Procedure).

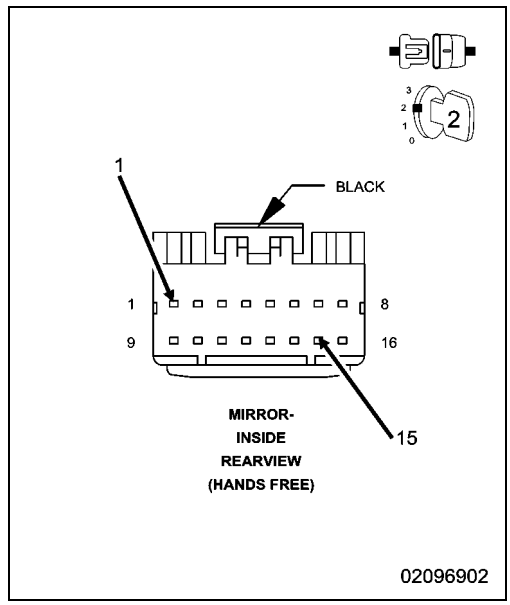

3. (X712) MICROPHONE 1 IN (+) CIRCUIT OPEN

1. Turn the ignition off.
2. Disconnect the Hands Free Module harness connector.
3. Measure the resistance of the (X712) Microphone 1 IN (+) circuit between the Inside Rearview Mirror and Hands Free Module harness connectors.

Is the resistance above 10K Ohms?

Yes

- Repair the (X712) Microphone 1 IN (+) circuit for an open.
- Perform the BODY VERIFICATION TEST. (Refer to 28 - DTC-Based Diagnostics/MODULE, Totally Integrated Power (TIPM) - Standard Procedure).

No

- Go To 4

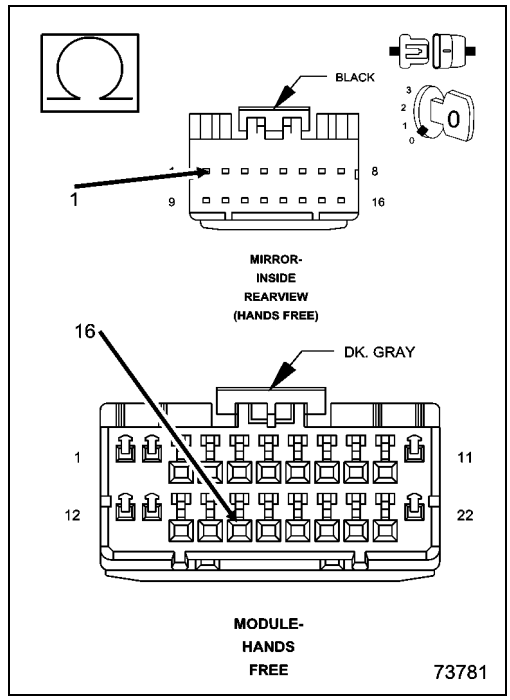

4. (X712) MICROPHONE 1 IN (+) CIRCUIT SHORTED TO GROUND

1. Turn the ignition off.
2. Disconnect the Hands Free Module harness connector.
3. Measure the resistance between ground and the (X712) Microphone 1 IN (+) circuit.

Is the resistance below 10K Ohms?

Yes

- Repair the (X712) Microphone 1 IN (+) circuit for short to ground.
- Perform the BODY VERIFICATION TEST. (Refer to 28 - DTC-Based Diagnostics/MODULE, Totally Integrated Power (TIPM) - Standard Procedure).

No

- Replace the Hands Free Module in accordance with the Service Information.
- Perform the BODY VERIFICATION TEST. (Refer to 28 - DTC-Based Diagnostics/MODULE, Totally Integrated Power (TIPM) - Standard Procedure).

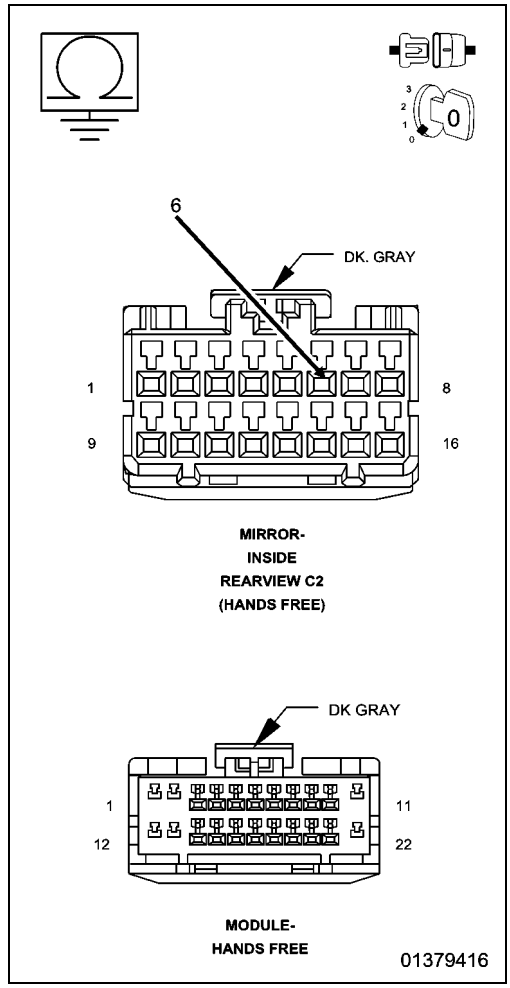

B143C-MICROPHONE 1 CIRCUIT HIGH

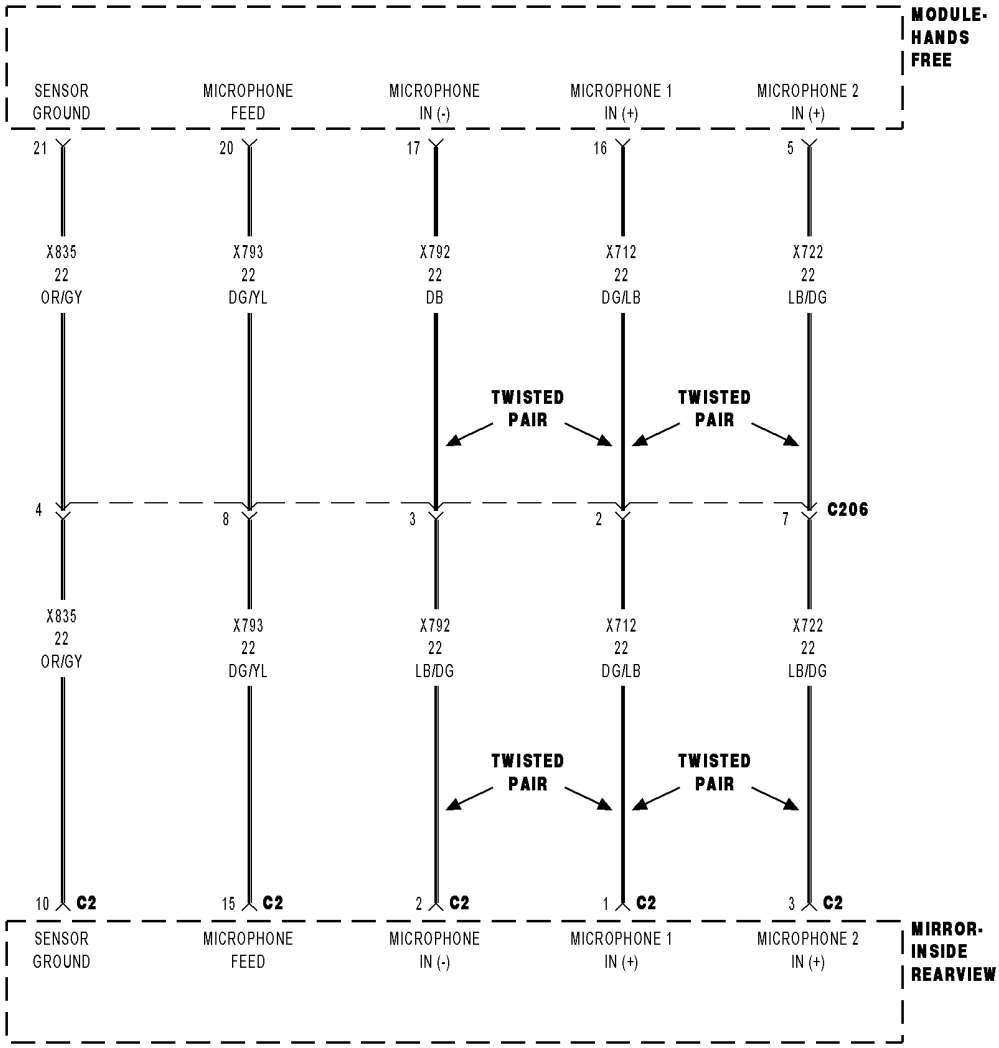

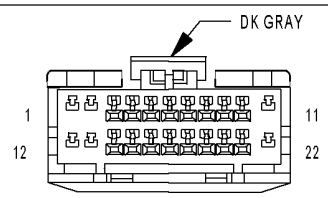

MODULE-
HANDS FREE

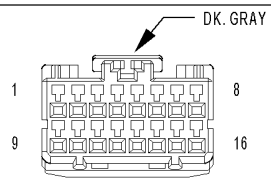

MIRROR-
INSIDE
REARVIEW C2
(HANDS FREE)

01379296

For a complete wiring diagram, **refer to the Wiring Information**.

- **When Monitored:**
  With the ignition on.
- **Set Condition:**
  The Hands Free Module (HFM) detects a short to voltage on the (X712) Microphone 1 IN (+) circuit.

Possible Causes
(X712) MICROPHONE 1 IN (+) CIRCUITS SHORTED TO VOLTAGE
INSIDE REARVIEW MIRROR
HANDS FREE MODULE (HFM)

1. CHECK FOR ACTIVE DTC

NOTE: Verify the connection of the Rearview Mirror harness connector.

1. Turn the ignition on.
2. With the scan tool, read the active DTCs.

Does the scan tool display this DTC as active?

Yes

- Go To 2

No

- If the DTC is stored, check for an intermittent condition. Visually inspect the related wiring harness connectors. Look for broken, bent, pushed out, or corroded terminals.
- Perform the BODY VERIFICATION TEST. (Refer to 28 - DTC-Based Diagnostics/MODULE, Totally Integrated Power (TIPM) - Standard Procedure).

2. INSIDE REARVIEW MIRROR

1. Turn the ignition off.
2. Disconnect the Rearview Mirror C2 harness connector.
3. Turn the ignition on.
4. With the scan tool, read the active DTCs.

Does the scan tool display this DTC as active?

Yes

- Go To 3

No

- Replace the Rearview Mirror in accordance with the Service Information.
- Perform the BODY VERIFICATION TEST. (Refer to 28 - DTC-Based Diagnostics/MODULE, Totally Integrated Power (TIPM) - Standard Procedure).

3. (X712) MICROPHONE 1 IN (+) CIRCUIT SHORTED TO VOLTAGE

1. Turn the ignition off.
2. Disconnect the Hands Free Module harness connector.
3. Turn the ignition on.
4. Measure the voltage of the (X712) Microphone circuit.

Is the voltage above 1.0 volt?

Yes

- Repair the (X712) Microphone circuit for a short to voltage.
- Perform the BODY VERIFICATION TEST. (Refer to 28 - DTC-Based Diagnostics/MODULE, Totally Integrated Power (TIPM) - Standard Procedure).

No

- Replace the Hands Free Module in accordance with the Service Information.
- Perform the BODY VERIFICATION TEST. (Refer to 28 - DTC-Based Diagnostics/MODULE, Totally Integrated Power (TIPM) - Standard Procedure).

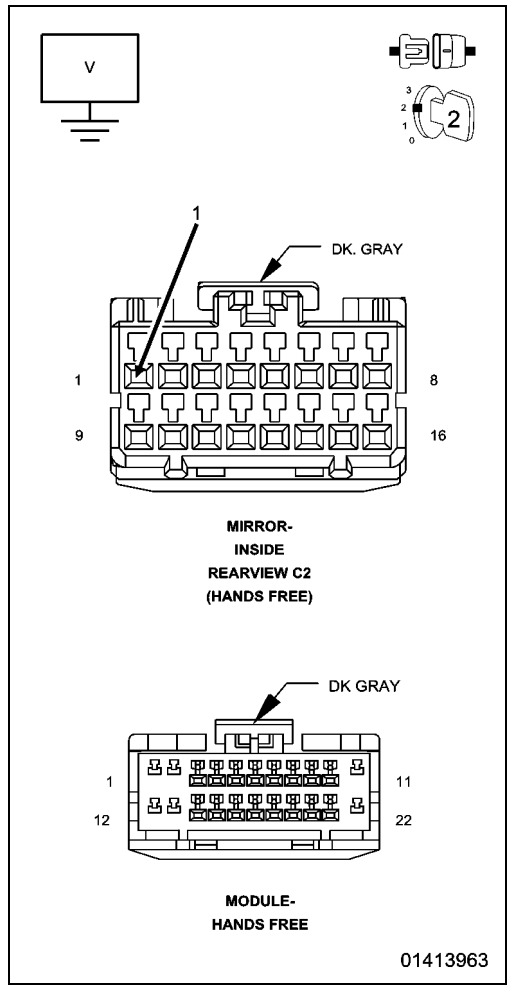

B143E-MICROPHONE 2 CIRCUIT LOW

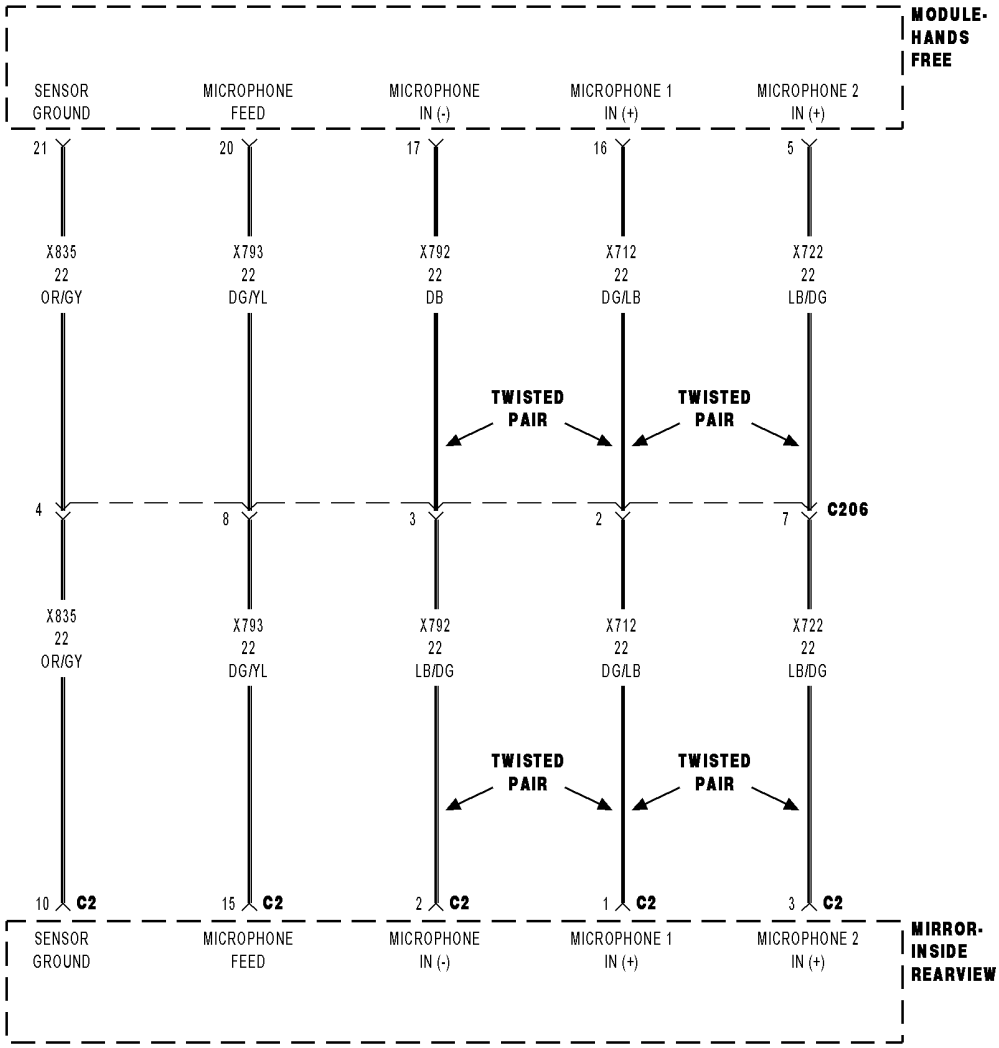

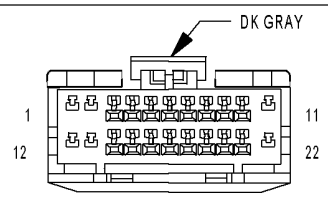

MODULE-
HANDS FREE

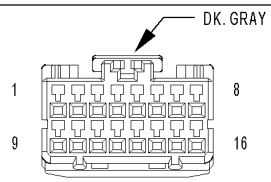

MIRROR-
INSIDE
REARVIEW C2
(HANDS FREE)

01379296

For a complete wiring diagram, **refer to the Wiring Information**.

- **When Monitored:**
  With the ignition on.
- **Set Condition:**
  The Hands Free Module (HFM) detects a short to ground or open on the (X722) Microphone 2 IN (+) circuit.

Possible Causes
(X722) MICROPHONE 2 IN (+) CIRCUIT OPEN
(X722) MICROPHONE 2 IN (+) CIRCUIT SHORTED TO GROUND
INSIDE REARVIEW MIRROR
HANDS FREE MODULE (HFM)

1. CHECK FOR ACTIVE DTC

NOTE: Verify the connection of the Rearview Mirror harness connector.

1. Turn the ignition on.
2. With the scan tool, read the active DTCs.

Does the scan tool display this DTC as active?

Yes

- Go To 2

No

- If the DTC is stored, check for an intermittent condition. Visually inspect the related wiring harness connectors. Look for broken, bent, pushed out, or corroded terminals.
- Perform the BODY VERIFICATION TEST. (Refer to 28 - DTC-Based Diagnostics/MODULE, Totally Integrated Power (TIPM) - Standard Procedure).

2. INSIDE REARVIEW MIRROR

1. Turn the ignition off.
2. Disconnect the Inside Rearview Mirror harness connector.
3. Connect a jumper wire between the (X793) Microphone Feed and the (X722) Microphone 2 IN (+) circuits.
4. Turn the ignition on.
5. With the scan tool, read the DTCs.

Does the scan tool display this DTC as active?

Yes

- Go To 3

No

- Replace the Inside Rearview Mirror in accordance with the Service Information.
- Perform the BODY VERIFICATION TEST. (Refer to 28 - DTC-Based Diagnostics/MODULE, Totally Integrated Power (TIPM) - Standard Procedure).

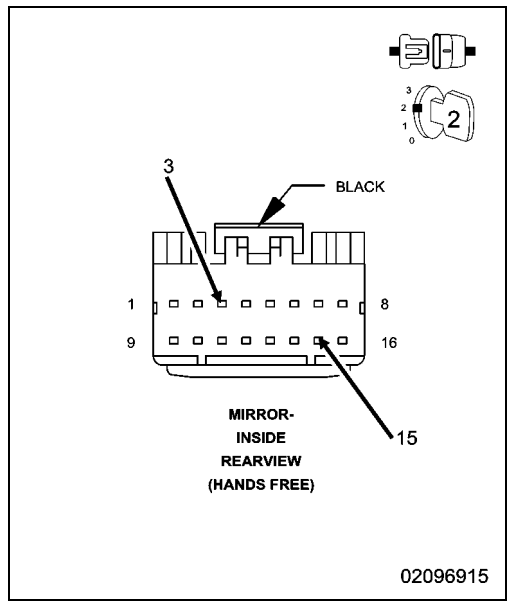

3. (X722) MICROPHONE 2 IN (+) CIRCUIT OPEN

1. Turn the ignition off.
2. Disconnect the Hands Free Module harness connector.
3. Measure the resistance of the (X722) Microphone 2 IN (+) circuit between the Inside Rearview Mirror and Hands Free Module harness connectors.

Is the resistance above 10K Ohms?

Yes

- Repair the (X722) Microphone 2 IN (+) circuit for an open.
- Perform the BODY VERIFICATION TEST. (Refer to 28 - DTC-Based Diagnostics/MODULE, Totally Integrated Power (TIPM) - Standard Procedure).

No

- Go To 4

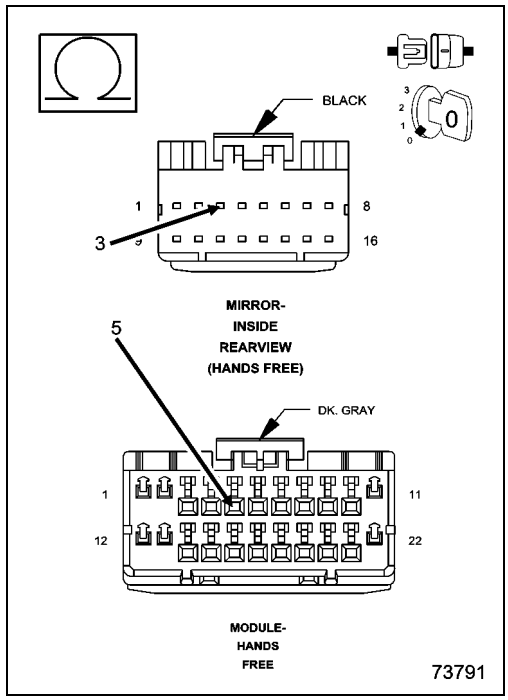

4. (X722) MICROPHONE 2 IN (+) CIRCUIT SHORTED TO GROUND

1. Turn the ignition off.
2. Disconnect the Hands Free Module harness connector.
3. Measure the resistance between ground and the (X722) Microphone 2 IN (+) circuit.

Is the resistance below 10K Ohms?

Yes

- Repair the (X722) Microphone 2 IN (+) circuit for short to ground.
- Perform the BODY VERIFICATION TEST. (Refer to 28 - DTC-Based Diagnostics/MODULE, Totally Integrated Power (TIPM) - Standard Procedure).

No

- Replace the Hands Free Module in accordance with the Service Information.
- Perform the BODY VERIFICATION TEST. (Refer to 28 - DTC-Based Diagnostics/MODULE, Totally Integrated Power (TIPM) - Standard Procedure).

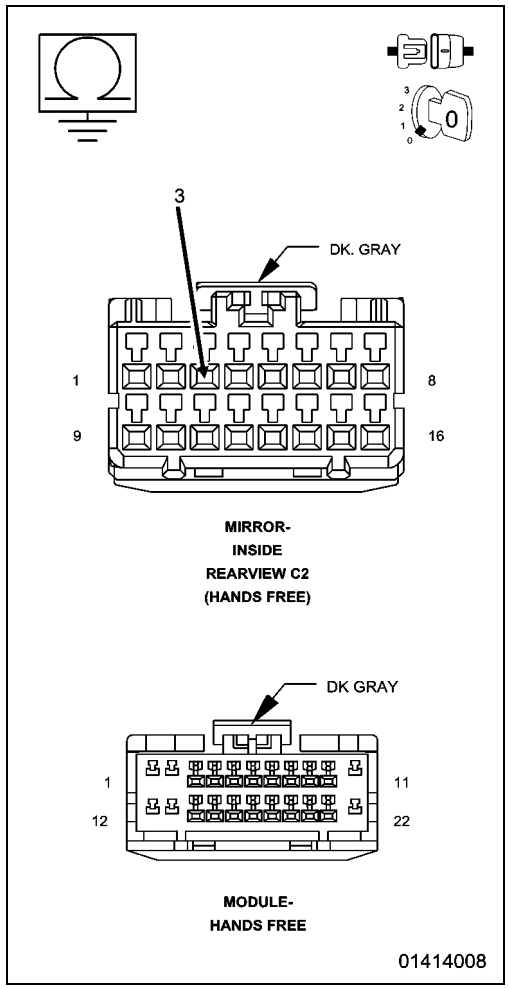

B143F-MICROPHONE 2 CIRCUIT HIGH

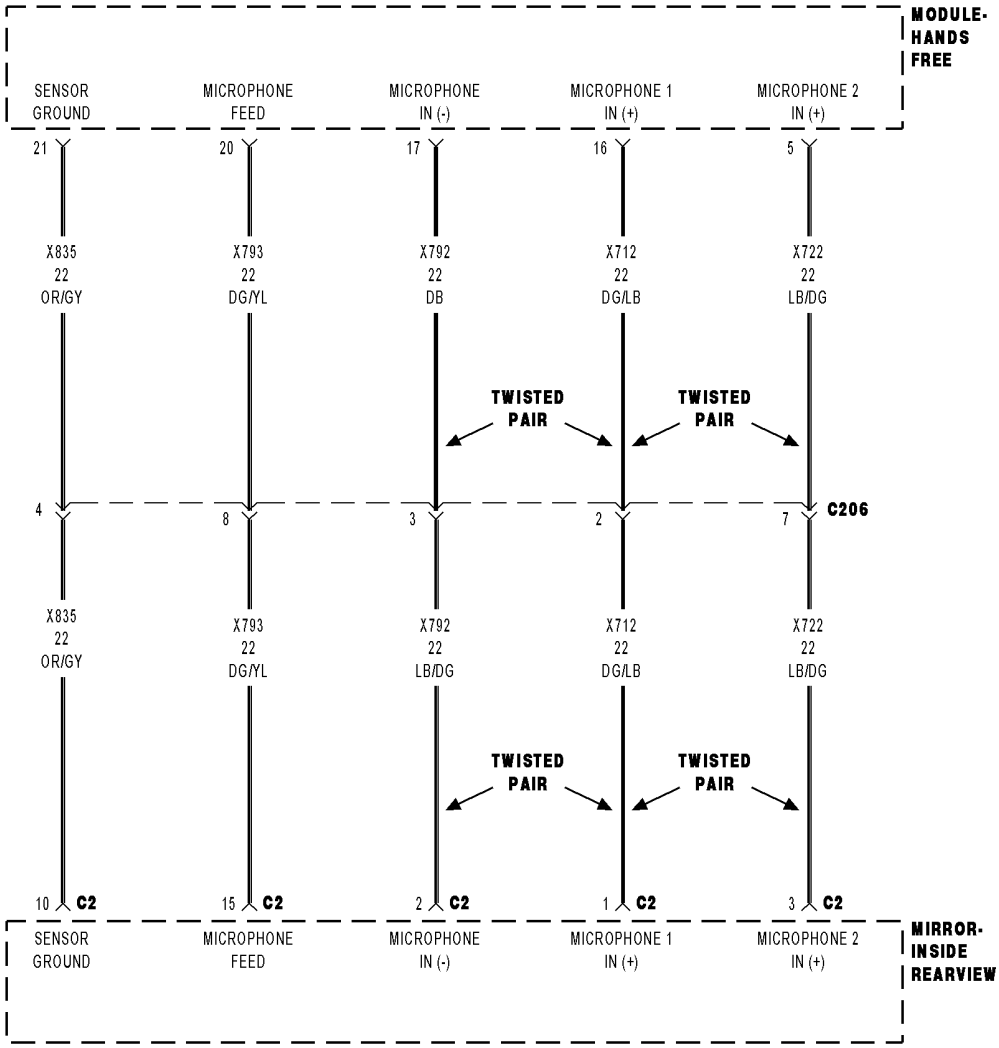

For a complete wiring diagram, **refer to the Wiring Information**.

- **When Monitored:**
  With the ignition on.
- **Set Condition:**
  The Hands Free Module (HFM) detects a short to voltage on the (X722) Microphone 2 IN (+) circuit.

Possible Causes
(X722) MICROPHONE 2 IN (+) CIRCUITS SHORTED TO VOLTAGE
INSIDE REARVIEW MIRROR
HANDS FREE MODULE (HFM)

1. CHECK FOR ACTIVE DTC

NOTE: Verify the connection of the Rearview Mirror harness connector.

1. Turn the ignition on.
2. With the scan tool, read the active DTCs.

Does the scan tool display this DTC as active?

Yes

- Go To 2

No

- If the DTC is stored, check for an intermittent condition. Visually inspect the related wiring harness connectors. Look for broken, bent, pushed out, or corroded terminals.
- Perform the BODY VERIFICATION TEST. (Refer to 28 - DTC-Based Diagnostics/MODULE, Totally Integrated Power (TIPM) - Standard Procedure).

2. INSIDE REARVIEW MIRROR

1. Turn the ignition off.
2. Disconnect the Rearview Mirror C2 harness connector.
3. Turn the ignition on.
4. With the scan tool, read the active DTCs.

Does the scan tool display this DTC as active?

Yes

- Go To 3

No

- Replace the Rearview Mirror in accordance with the Service Information.
- Perform the BODY VERIFICATION TEST. (Refer to 28 - DTC-Based Diagnostics/MODULE, Totally Integrated Power (TIPM) - Standard Procedure).

3. (X722) MICROPHONE CIRCUITS SHORTED TO VOLTAGE

1. Turn the ignition off.
2. Disconnect the Hands Free Module harness connector.
3. Turn the ignition on.
4. Measure the voltage of the (X722) Microphone circuit.

Is the voltage above 1.0 volt?

Yes

- Repair the (X722) Microphone circuit for a short to voltage.
- Perform the BODY VERIFICATION TEST. (Refer to 28 - DTC-Based Diagnostics/MODULE, Totally Integrated Power (TIPM) - Standard Procedure).

No

- Replace the Hands Free Module in accordance with the Service Information.
- Perform the BODY VERIFICATION TEST. (Refer to 28 - DTC-Based Diagnostics/MODULE, Totally Integrated Power (TIPM) - Standard Procedure).

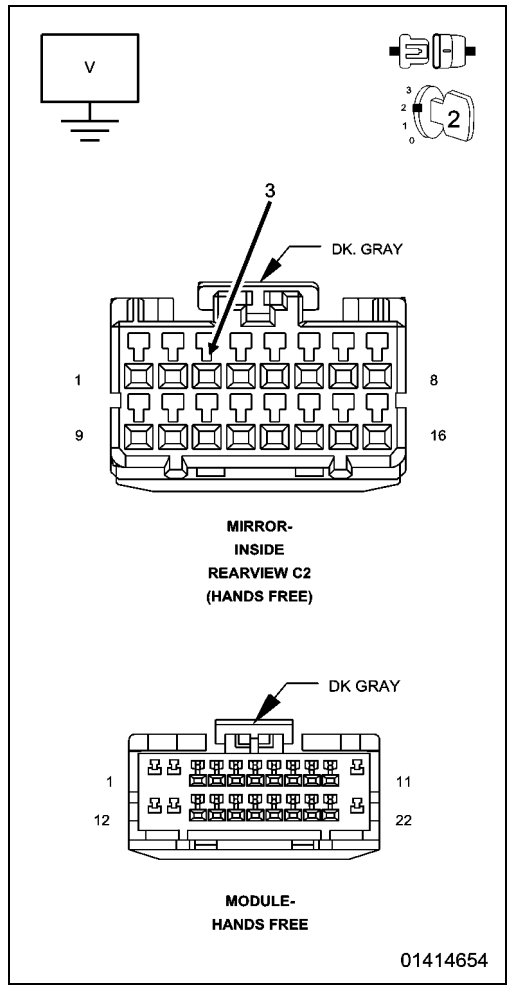

B1459-TELEMATICS MIRROR CONTROL CIRCUIT LOW

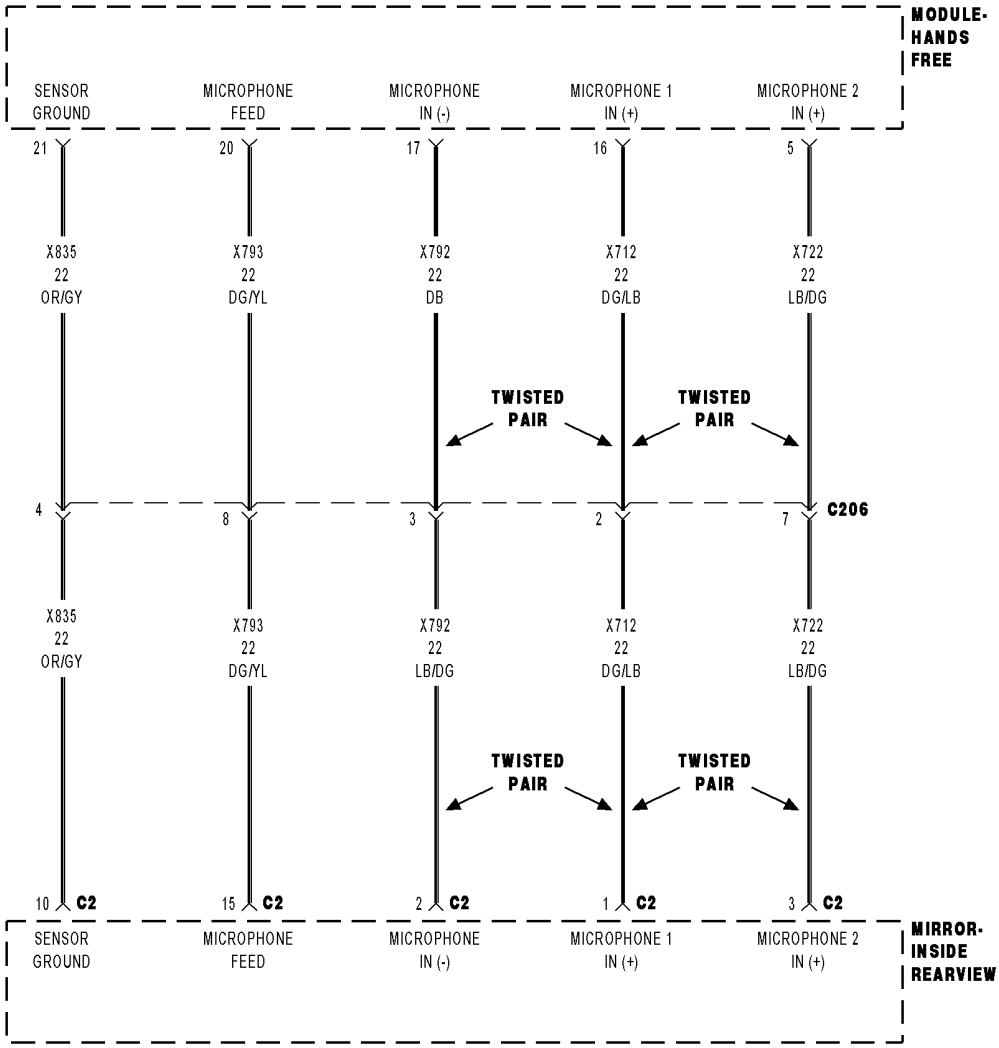

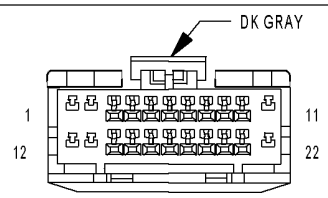

MODULE-
HANDS FREE

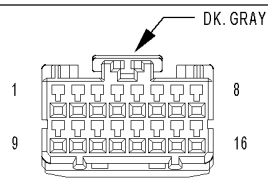

MIRROR-
INSIDE
REARVIEW C2
(HANDS FREE)

01379296

For a complete wiring diagram, **refer to the Wiring Information**.

- **When Monitored:**
  With the ignition on.
- **Set Condition:**
  The Hands Free Module detects low voltage on the (X793) Microphone Feed circuit.

Possible Causes
(X793) MICROPHONE FEED CIRCUIT OPEN
(X793) MICROPHONE FEED CIRCUIT SHORT TO GROUND
INSIDE REARVIEW MIRROR
HANDS FREE MODULE

1. CHECK FOR ACTIVE DTC

1. Turn the ignition on.
2. Cycle the ignition switch from off to on at least five times, leaving the ignition on for a minimum of 90 seconds per cycle.
3. Attempt to make a phone call with the system.
4. With the scan tool, read the active DTCs.

Does the scan tool display this DTC as active?

Yes

- Go To 2

No

- If the DTC is stored, check for an intermittent condition. Visually inspect the related wiring harness connectors. Look for broken, bent, pushed out, or corroded terminals.
- Perform the BODY VERIFICATION TEST. (Refer to 28 - DTC-Based Diagnostics/MODULE, Totally Integrated Power (TIPM) - Standard Procedure).

2. (X793) MICROPHONE FEED CIRCUIT OPEN

1. Turn the ignition off.
2. Disconnect the Hands Free Module harness connector.
3. Disconnect the Inside Rearview Mirror C2 harness connector.
4. Measure the resistance of the (X793) Microphone Feed circuit between the HFM connector and the inside rearview mirror connector.

Is the resistance below 5.0 Ohms?

Yes

- Go To 3

No

- Repair the (X793) Microphone Feed circuit for an open.
- Perform the BODY VERIFICATION TEST. (Refer to 28 - DTC-Based Diagnostics/MODULE, Totally Integrated Power (TIPM) - Standard Procedure).

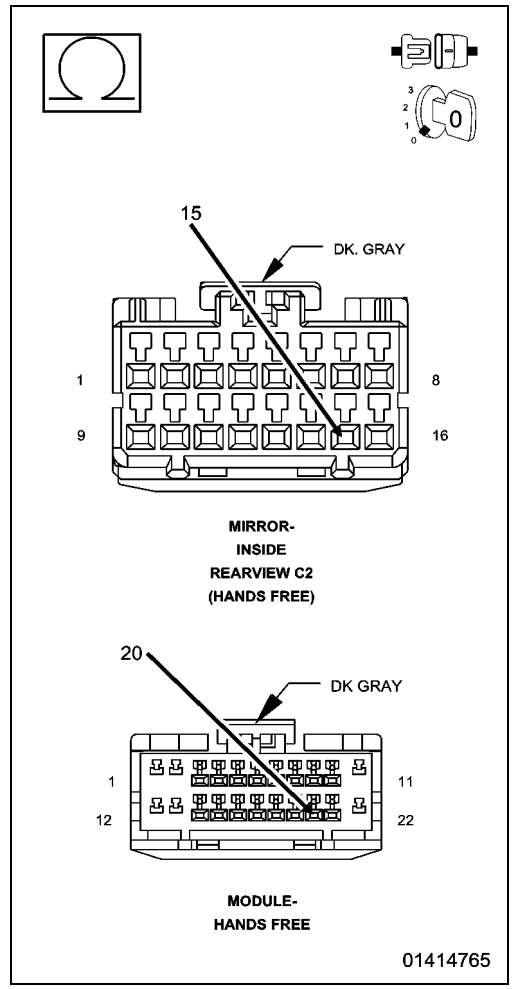

3. (X793) MICROPHONE FEED CIRCUIT SHORT TO GROUND

1. Measure the resistance between ground and the (X793) Microphone Feed circuit

Is the resistance below 100.0 Ohms?

Yes

- Repair the (X793) Microphone Feed circuit for short to ground.
- Perform the BODY VERIFICATION TEST. (Refer to 28 - DTC-Based Diagnostics/MODULE, Totally Integrated Power (TIPM) - Standard Procedure).

No

- Go To 4

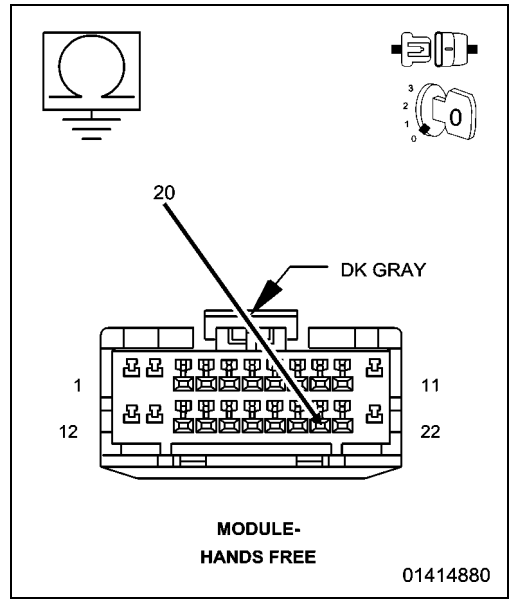

4. INSIDE REARVIEW MIRROR

1. Replace the Inside Rearview Mirror in accordance with the Service Information.
2. Cycle the ignition switch from off to on at least 5 times, leaving the ignition on for a minimum of 90 seconds per cycle.
3. Attempt to make a phone call with the system.
4. With the scan tool, read the active DTCs.

Does the scan tool display this DTC as active?

Yes

- Inspect the wiring and connectors for damage or shorted circuits. If ok, replace and program the Hands Free Module in accordance with the Service Information.
- Perform the BODY VERIFICATION TEST. (Refer to 28 - DTC-Based Diagnostics/MODULE, Totally Integrated Power (TIPM) - Standard Procedure).

No

- Repair is complete.
- Perform the BODY VERIFICATION TEST. (Refer to 28 - DTC-Based Diagnostics/MODULE, Totally Integrated Power (TIPM) - Standard Procedure).

U0019-CAN B BUS

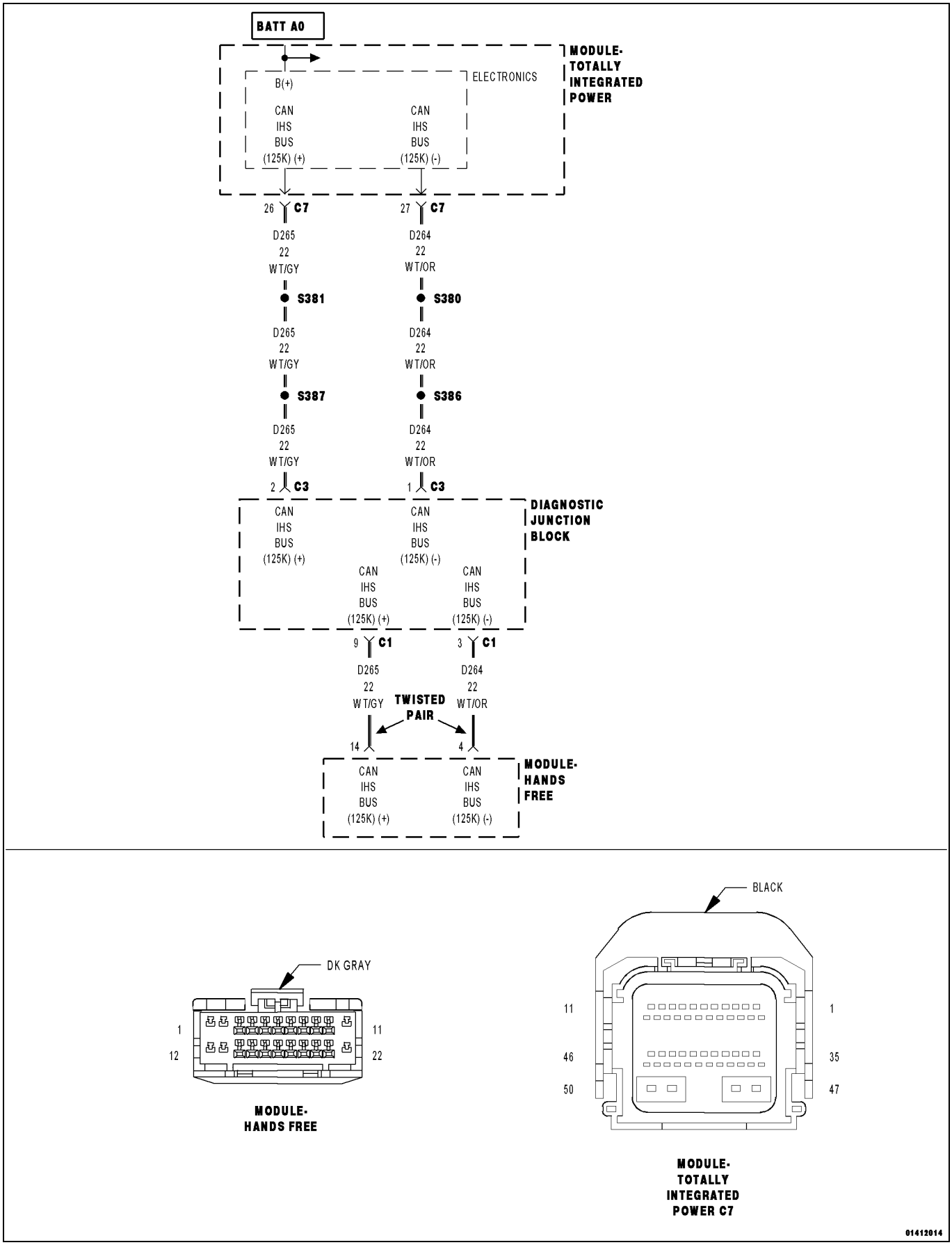

For a complete wiring diagram, **refer to the Wiring Information**.

- **When Monitored:**
  With the ignition on.
- **Set Condition:**
  Whenever the CAN Bus circuits are open, shorted to voltage, or shorted to ground.

Possible Causes
CAN BUS DTCS IN TOTALLY INTEGRATED POWER MODULE (TIPM)
(D264) CAN IHS BUS (125K) (-) CIRCUIT OPEN
(D265) CAN IHS BUS (125K) (+) CIRCUIT OPEN
HANDS FREE MODULE (HFM)

1. CHECK FOR ACTIVE DTCS

1. With the scan tool, read the active DTCs.
2. Cycle the ignition switch from off to on at least five times, leaving the ignition on for a minimum of 90 seconds per cycle.
3. With the scan tool, read the active DTCs.

Does the scan tool display this DTC as active?

Yes

- Go To 2

No

- If the DTC is stored, check for an intermittent condition. Visually inspect the related wiring harness connectors. Look for broken, bent, pushed out, or corroded terminals.
- Perform the BODY VERIFICATION TEST. (Refer to 28 - DTC-Based Diagnostics/MODULE, Totally Integrated Power (TIPM) - Standard Procedure).

2. CHECK TOTALLY INTEGRATED POWER MODULE DTCs

1. With the scan tool, read Totally Integrated Power Module active DTCs

Does the scan tool display any CAN B BUS DTCs - ACTIVE?

Yes

- (Refer to 28 - DTC-Based Diagnostics/MODULE, Totally Integrated Power (TIPM) - Diagnosis and Testing) and perform the appropriate CAN B Bus diagnostic procedures.

No

- Go To 3

3. (D264) CAN IHS BUS (125K) (-) CIRCUIT OPEN

1. Turn the ignition off.
2. Disconnect the Hands Free Module harness connector.
3. Disconnect the TIPM C7 harness connector.
4. Measure the resistance of the (D264) CAN IHS Bus (125K) (-) circuit between the TIPM C7 connector and the Hands Free Module connector.

Is the resistance below 2.0 Ohms?

Yes

- Go To 4

No

- Repair the (D264) CAN IHS Bus (125K) (-) circuit for an open.
- Perform the BODY VERIFICATION TEST. (Refer to 28 - DTC-Based Diagnostics/MODULE, Totally Integrated Power (TIPM) - Standard Procedure).

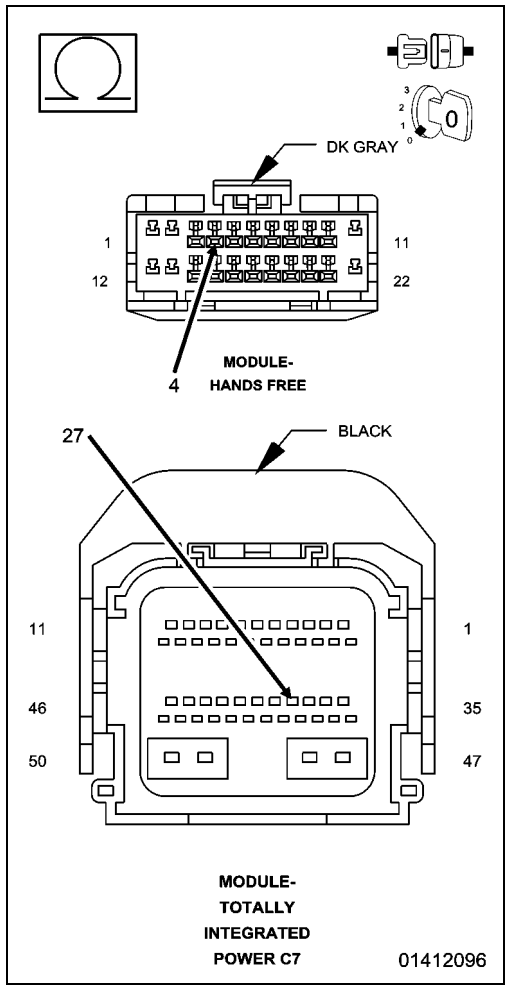

4. (D265) CAN IHS BUS (125K) (+) CIRCUIT OPEN

1. Measure the resistance of the (D265) CAN IHS Bus (125K) (+) circuit between the TIPM C7 connector and the Hands Free Module connector.

Is the resistance below 2.0 Ohms?

Yes

- Replace the Hands Free Module in accordance with the Service Information.
- Perform the BODY VERIFICATION TEST. (Refer to 28 - DTC-Based Diagnostics/MODULE, Totally Integrated Power (TIPM) - Standard Procedure).

No

- Repair the (D265) CAN IHS Bus (125K) (+) circuit for an open.
- Perform the BODY VERIFICATION TEST. (Refer to 28 - DTC-Based Diagnostics/MODULE, Totally Integrated Power (TIPM) - Standard Procedure).

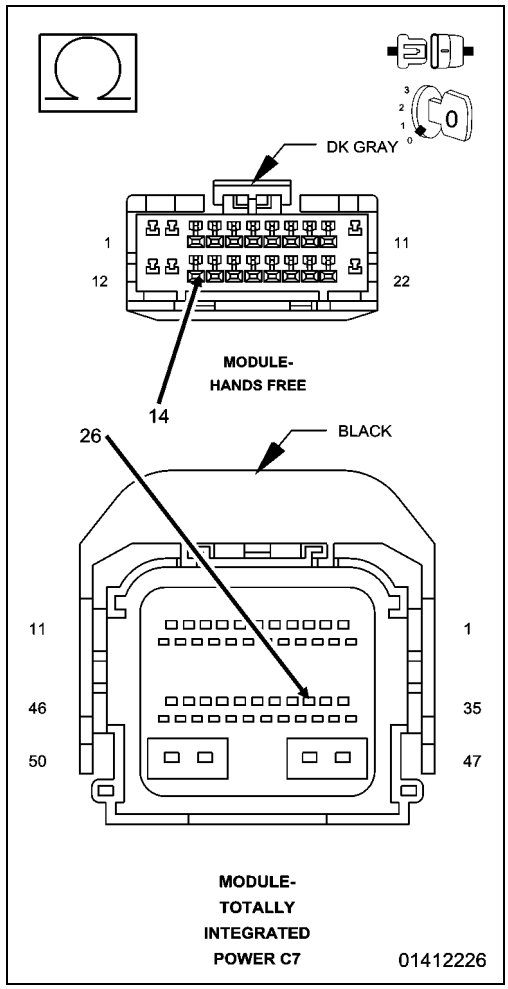

U0141-LOST COMMUNICATION WITH IPM (FCM/TIPM)

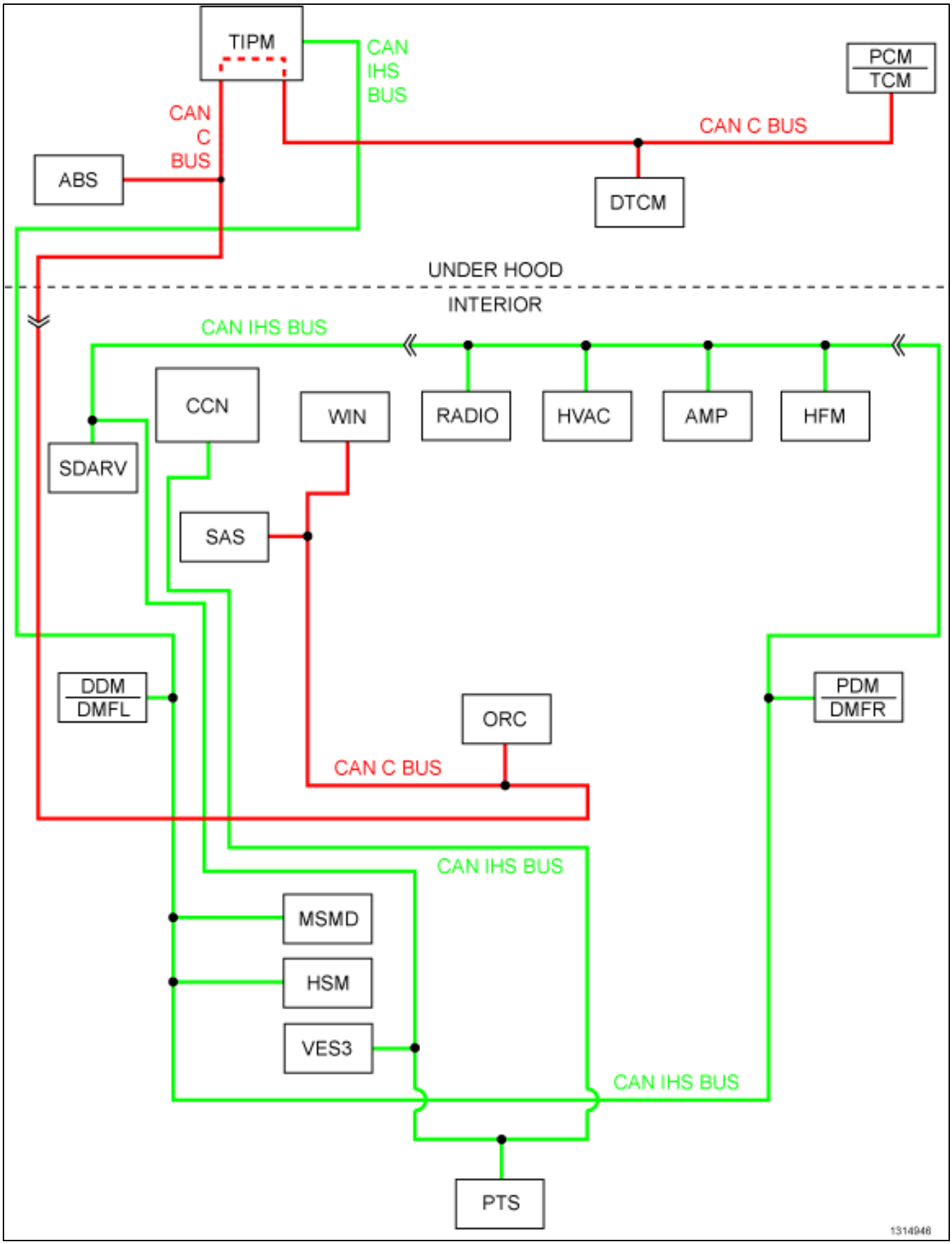

For a complete wiring diagram, **refer to the Wiring Information**.

- **When Monitored:**
  Continuously when the ignition is on.
  Battery voltage between 10 and 16 volts.
  Ignition Off Draw (IOD) fuse installed.
  Totally Integrated Power Module (TIPM) is configured correctly.
- **Set Condition:**
  Bus messages not received from the Totally Integrated Power Module (TIPM) for approximately two to five seconds.

Possible Causes
CAN B OR CAN C BUS CIRCUITS OPEN OR SHORTED
DTCS RELATED TO BATTERY VOLTAGE, IGNITION, OR VIN MESSAGES
TIPM NOT CONFIGURED CORRECTLY
TOTALLY INTEGRATED POWER MODULE (TIPM)
TIPM POWER AND GROUND
MODULE THAT SET THIS DTC

1. VERIFY DIAGNOSTIC TROUBLE CODE (DTC) IS ACTIVE

NOTE: Make sure the IOD fuse is installed and battery voltage is between 10 and 16 volts before proceeding.

1. With the scan tool, read active HFM DTCs.

Is this DTC active?

Yes

- (Refer to 28 - DTC-Based Diagnostics/MODULE, Totally Integrated Power (TIPM) - Diagnosis and Testing) and perform the U0141-Lost Communication with IPM (FCM/TIPM) diagnostic procedure.

No

- (Refer to 29 - Non-DTC Diagnostics/Communication - Diagnosis and Testing) and perform the Stored Lost Communication DTCs diagnostic procedure.

■ U0151-LOST COMMUNICATION WITH OCCUPANT RESTRAINT CONTROLLER (ORC)

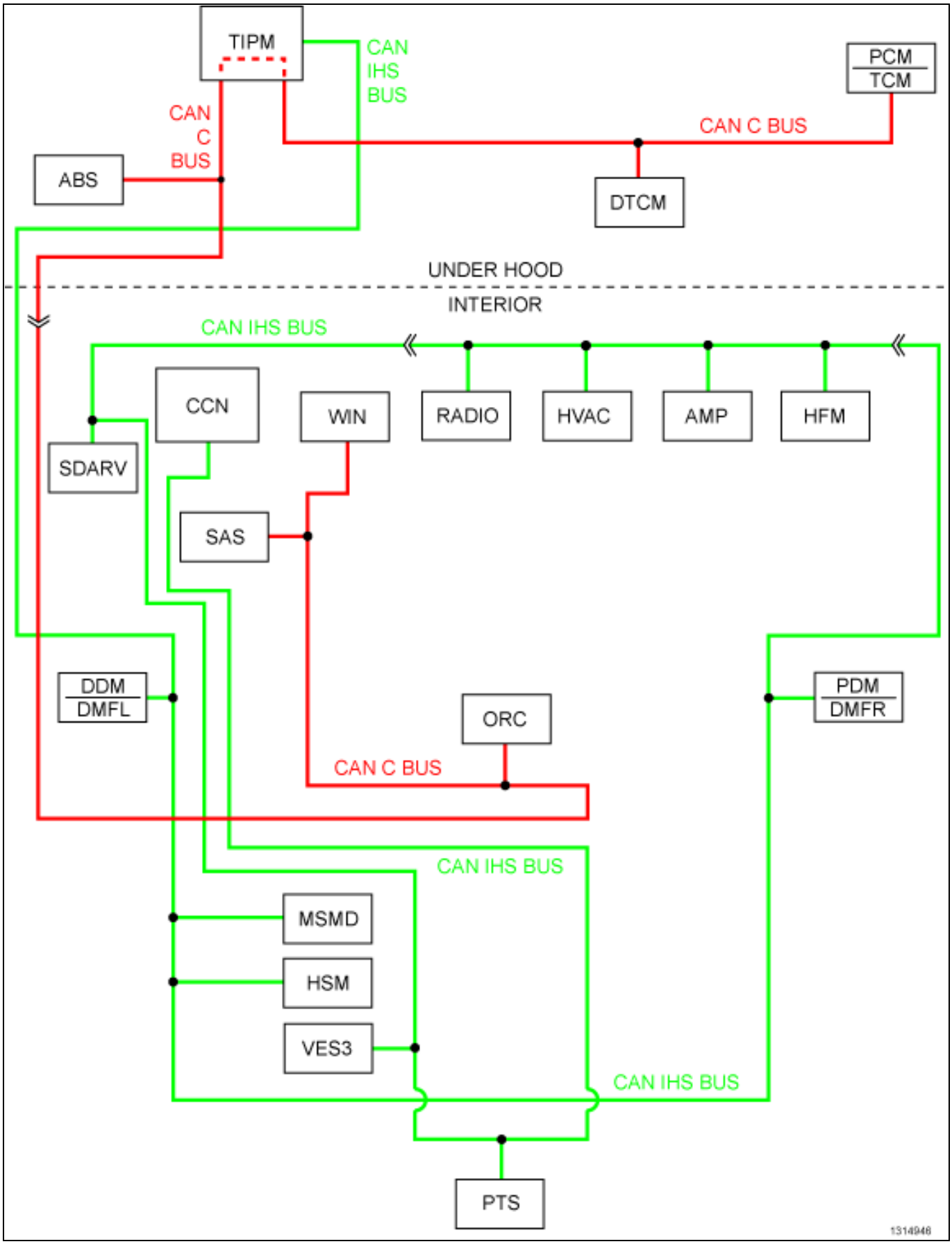

For a complete wiring diagram, **refer to the Wiring Information**.

- **When Monitored:**
  Continuously when the ignition is on.
  Battery voltage between 10 and 16 volts.
  Ignition Off Draw (IOD) fuse installed.
  Totally Integrated Power Module (TIPM) is configured correctly.
- **Set Condition:**
  Bus messages not received from the Occupant Restrain Controller (ORC) for approximately two to five seconds.

Possible Causes
CAN B OR CAN C BUS CIRCUITS OPEN OR SHORTED
DTCS RELATED TO BATTERY VOLTAGE, IGNITION, OR VIN MESSAGES
TIPM NOT CONFIGURED CORRECTLY
ORC
ORC POWER AND GROUND
MODULE THAT SET THIS DTC

1. VERIFY DIAGNOSTIC TROUBLE CODE (DTC) IS ACTIVE

NOTE: Make sure the IOD fuse is installed and battery voltage is between 10 and 16 volts before proceeding.

1. With the scan tool, read active HFM DTCs.

Is this DTC active?

Yes

- (Refer to 28 - DTC-Based Diagnostics/MODULE, Totally Integrated Power (TIPM) - Diagnosis and Testing) and perform the U0151-Lost Communication with Occupant Restraint Controller (ORC) diagnostic procedure.

No

- (Refer to 29 - Non-DTC Diagnostics/Communication - Diagnosis and Testing) and perform the Stored Lost Communication DTCs diagnostic procedure.

U0155-LOST COMMUNICATION WITH CLUSTER/CCN

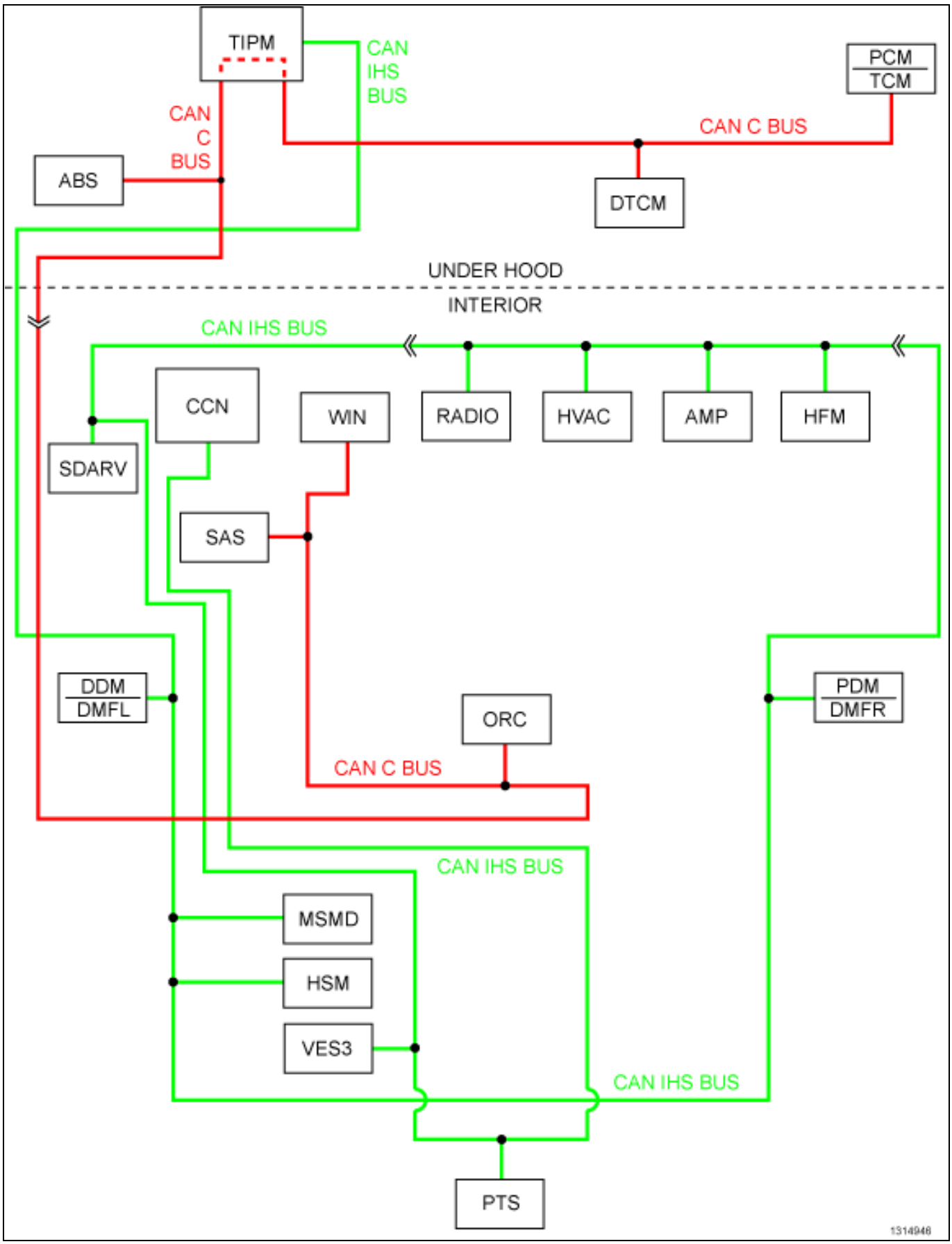

For a complete wiring diagram, **refer to the Wiring Information**.

- **When Monitored:**
  Continuously when the ignition is on.
  Battery voltage between 10 and 16 volts.
  Ignition Off Draw (IOD) fuse installed.
  Totally Integrated Power Module (TIPM) is configured correctly.
- **Set Condition:**
  Bus messages not received from the Cluster for approximately two to five seconds.

Possible Causes
CAN B OR CAN C BUS CIRCUITS OPEN OR SHORTED
DTCS RELATED TO BATTERY VOLTAGE, IGNITION, OR VIN MESSAGES
TIPM NOT CONFIGURED CORRECTLY
CLUSTER
CLUSTER POWER AND GROUND
MODULE THAT SET THIS DTC

1. VERIFY DIAGNOSTIC TROUBLE CODE (DTC) IS ACTIVE

NOTE: Make sure the IOD fuse is installed and battery voltage is between 10 and 16 volts before proceeding.

1. With the scan tool, read active HFM DTCs.

Is this DTC active?

Yes

- (Refer to 28 - DTC-Based Diagnostics/MODULE, Totally Integrated Power (TIPM) - Diagnosis and Testing) and perform the U0155-Lost Communication with Cluster/CCN diagnostic procedure.

No

- (Refer to 29 - Non-DTC Diagnostics/Communication - Diagnosis and Testing) and perform the Stored Lost Communication DTCs diagnostic procedure.

U0164-LOST COMMUNICATION WITH HVAC CONTROL MODULE

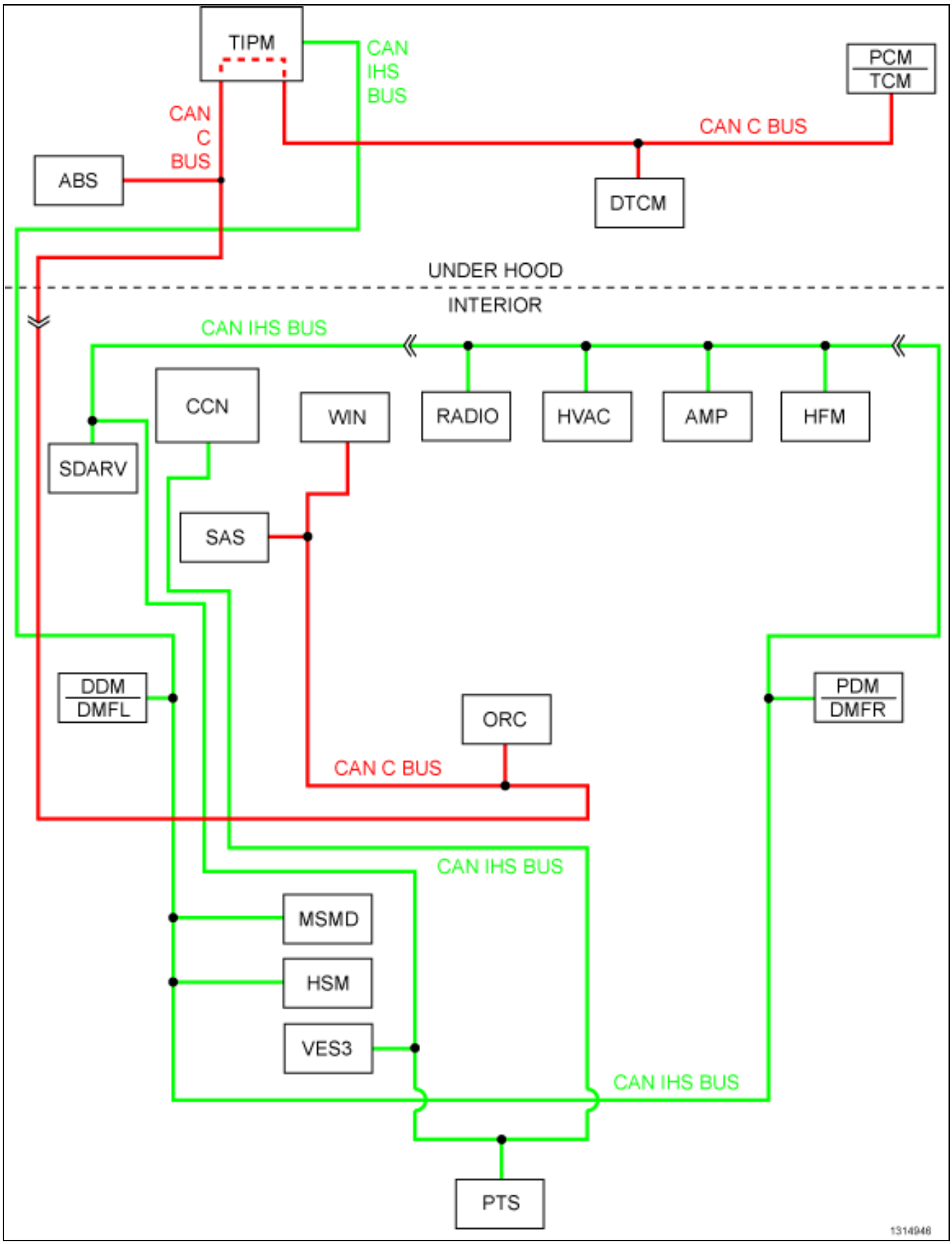

For a complete wiring diagram, **refer to the Wiring Information**.

- **When Monitored:**
  Continuously when the ignition is on.
  Battery voltage between 10 and 16 volts.
  Ignition Off Draw (IOD) fuse installed.
  Totally Integrated Power Module (TIPM) is configured correctly.
- **Set Condition:**
  Bus messages not received from the HVAC Control Module for approximately two to five seconds.

Possible Causes
CAN B OR CAN C BUS CIRCUITS OPEN OR SHORTED
DTCS RELATED TO BATTERY VOLTAGE, IGNITION, OR VIN MESSAGES
TIPM NOT CONFIGURED CORRECTLY
HVAC CONTROL MODULE
HVAC CONTROL MODULE POWER AND GROUND
MODULE THAT SET THIS DTC

1. VERIFY DIAGNOSTIC TROUBLE CODE (DTC) IS ACTIVE

NOTE: Make sure the IOD fuse is installed and battery voltage is between 10 and 16 volts before proceeding.

1. With the scan tool, read active HFM DTCs.

Is this DTC active?

Yes

- (Refer to 28 - DTC-Based Diagnostics/MODULE, Totally Integrated Power (TIPM) - Diagnosis and Testing) and perform the U0164-Lost Communication with HVAC Control Module diagnostic procedure.

No

- (Refer to 29 - Non-DTC Diagnostics/Communication - Diagnosis and Testing) and perform the Stored Lost Communication DTCs diagnostic procedure.

■ U0168-LOST COMMUNICATION WITH VEHICLE SECURITY CONTROL MODULE (WIRELESS IGNITION NODE)

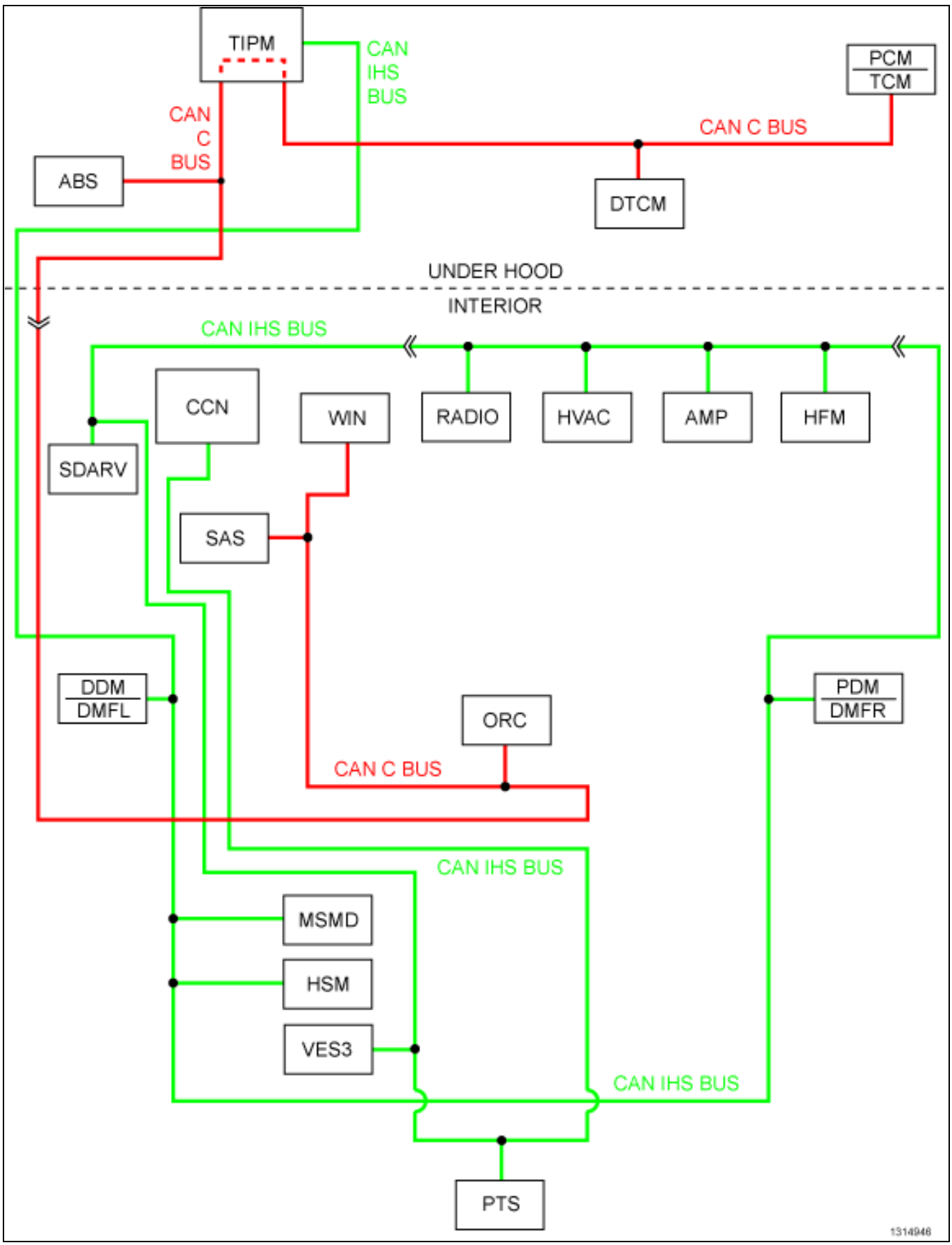

For a complete wiring diagram, **refer to the Wiring Information**.

- **When Monitored:**
  Continuously when the ignition is on.
  Battery voltage between 10 and 16 volts.
  Ignition Off Draw (IOD) fuse installed.
  Totally Integrated Power Module (TIPM) is configured correctly.
- **Set Condition:**
  Bus messages not received from the WIN for approximately two to five seconds.

Possible Causes
CAN B OR CAN C BUS CIRCUITS OPEN OR SHORTED
DTCS RELATED TO BATTERY VOLTAGE, IGNITION, OR VIN MESSAGES
TIPM NOT CONFIGURED CORRECTLY
WIRELESS IGNITION NODE (WIN)
WIN POWER AND GROUND
MODULE THAT SET THIS DTC

1. VERIFY DIAGNOSTIC TROUBLE CODE (DTC) IS ACTIVE

NOTE: Make sure the IOD fuse is installed and battery voltage is between 10 and 16 volts before proceeding.

1. With the scan tool, read active HFM DTCs.

Is this DTC active?

Yes

- (Refer to 28 - DTC-Based Diagnostics/MODULE, Totally Integrated Power (TIPM) - Diagnosis and Testing) and perform the U0168-Lost Communication with Vehicle Security Control Module (Wireless Ignition Node) diagnostic procedure.

No

- (Refer to 29 - Non-DTC Diagnostics/Communication - Diagnosis and Testing) and perform the Stored Lost Communication DTCs diagnostic procedure.

U0184-LOST COMMUNICATION WITH RADIO

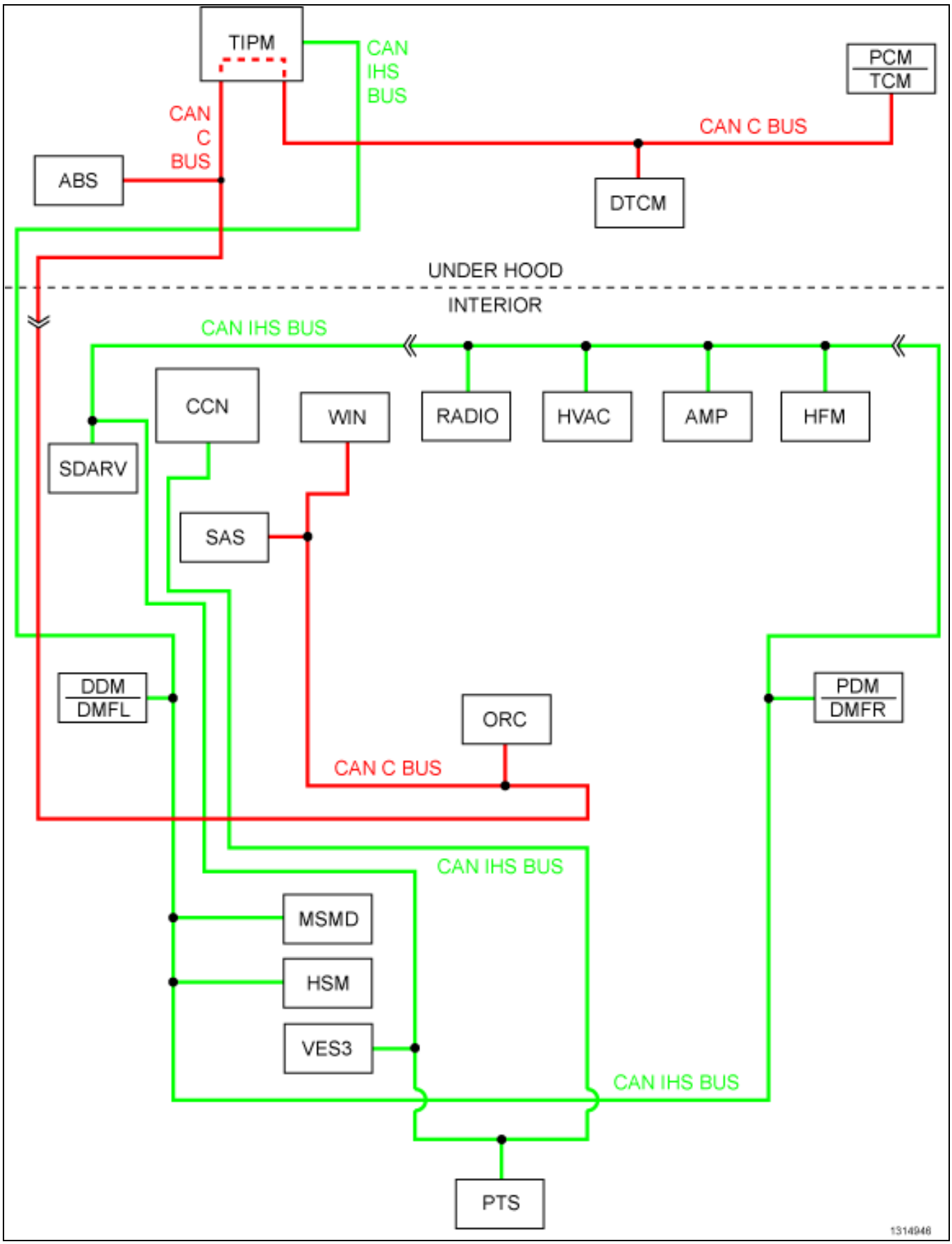

For a complete wiring diagram, **refer to the Wiring Information**.

- **When Monitored:**
  Continuously when the ignition is on.
  Battery voltage between 10 and 16 volts.
  Ignition Off Draw (IOD) fuse installed.
  Totally Integrated Power Module (TIPM) is configured correctly.
- **Set Condition:**
  Bus messages not received from the Radio for approximately two to five seconds.

Possible Causes
CAN B OR CAN C BUS CIRCUITS OPEN OR SHORTED
DTCS RELATED TO BATTERY VOLTAGE, IGNITION, OR VIN MESSAGES
TIPM NOT CONFIGURED CORRECTLY
RADIO
RADIO POWER AND GROUND
MODULE THAT SET THIS DTC

1. VERIFY DIAGNOSTIC TROUBLE CODE (DTC) IS ACTIVE

NOTE: Make sure the IOD fuse is installed and battery voltage is between 10 and 16 volts before proceeding.

1. With the scan tool, read active HFM DTCs.

Is this DTC active?

Yes

- (Refer to 28 - DTC-Based Diagnostics/MODULE, Totally Integrated Power (TIPM) - Diagnosis and Testing) and perform the U0184-Lost Communication with Radio diagnostic procedure.

No

- (Refer to 29 - Non-DTC Diagnostics/Communication - Diagnosis and Testing) and perform the Stored Lost Communication DTCs diagnostic procedure.

U0186-LOST COMMUNICATION WITH AUDIO AMPLIFIER (AMP)

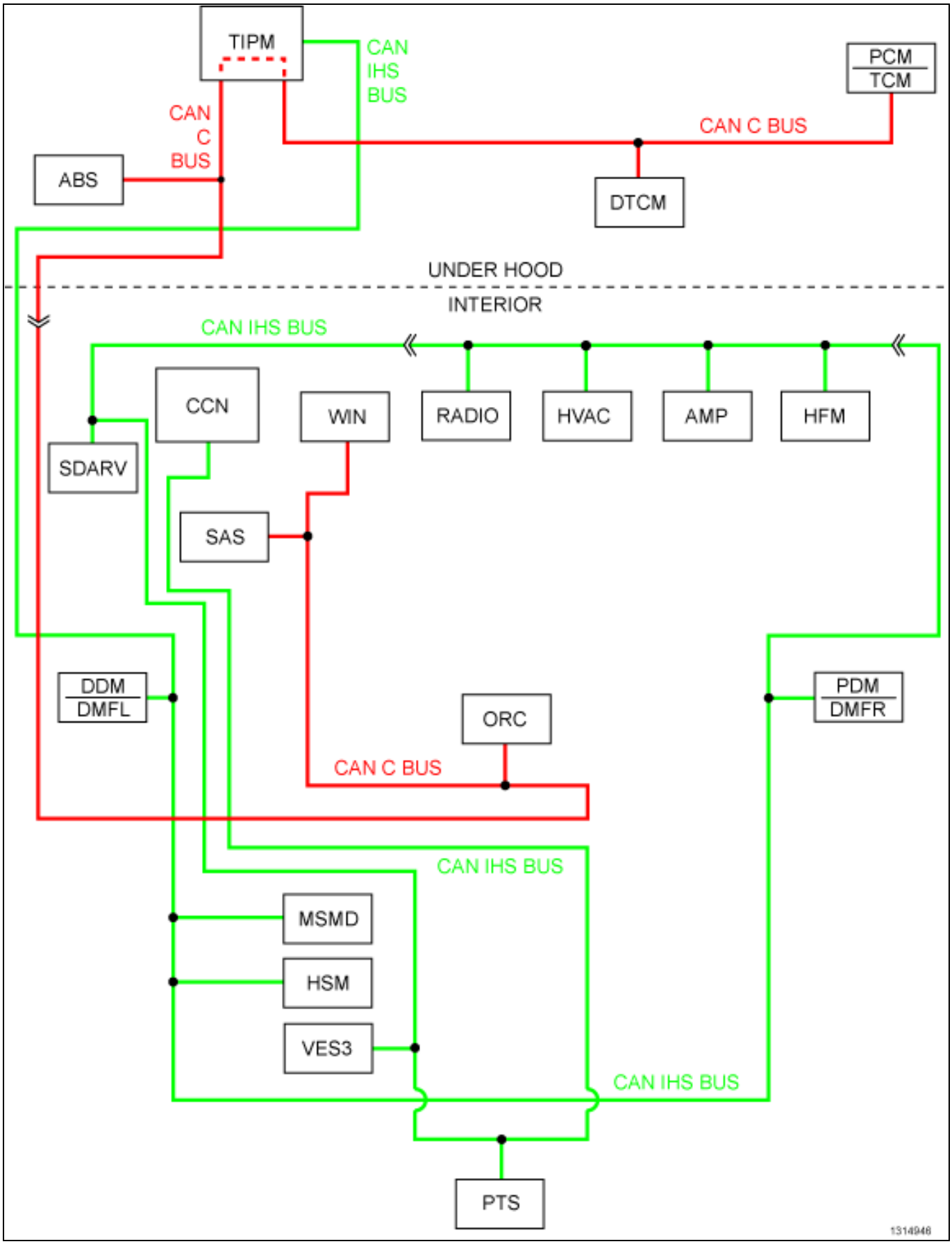

For a complete wiring diagram, **refer to the Wiring Information**.

- **When Monitored:**
  Continuously when the ignition is on.
  Battery voltage between 10 and 16 volts.
  Ignition Off Draw (IOD) fuse installed.
  Totally Integrated Power Module (TIPM) is configured correctly.
- **Set Condition:**
  Bus messages not received from the Audio Amplifier for approximately two to five seconds.

Possible Causes
CAN B OR CAN C BUS CIRCUITS OPEN OR SHORTED
DTCS RELATED TO BATTERY VOLTAGE, IGNITION, OR VIN MESSAGES
TIPM NOT CONFIGURED CORRECTLY
AUDIO AMPLIFIER
AUDIO AMPLIFIER POWER AND GROUND
MODULE THAT SET THIS DTC

1. VERIFY DIAGNOSTIC TROUBLE CODE (DTC) IS ACTIVE

NOTE: Make sure the IOD fuse is installed and battery voltage is between 10 and 16 volts before proceeding.

1. With the scan tool, read active HFM DTCs.

Is this DTC active?

Yes

- (Refer to 28 - DTC-Based Diagnostics/MODULE, Totally Integrated Power (TIPM) - Diagnosis and Testing) and perform the U0186-Lost Communication with Audio Amplifier (AMP) diagnostic procedure.

No

- (Refer to 29 - Non-DTC Diagnostics/Communication - Diagnosis and Testing) and perform the Stored Lost Communication DTCs diagnostic procedure.

■ U0196-LOST COMMUNICATION WITH VEHICLE ENTERTAINMENT CONTROL MODULE

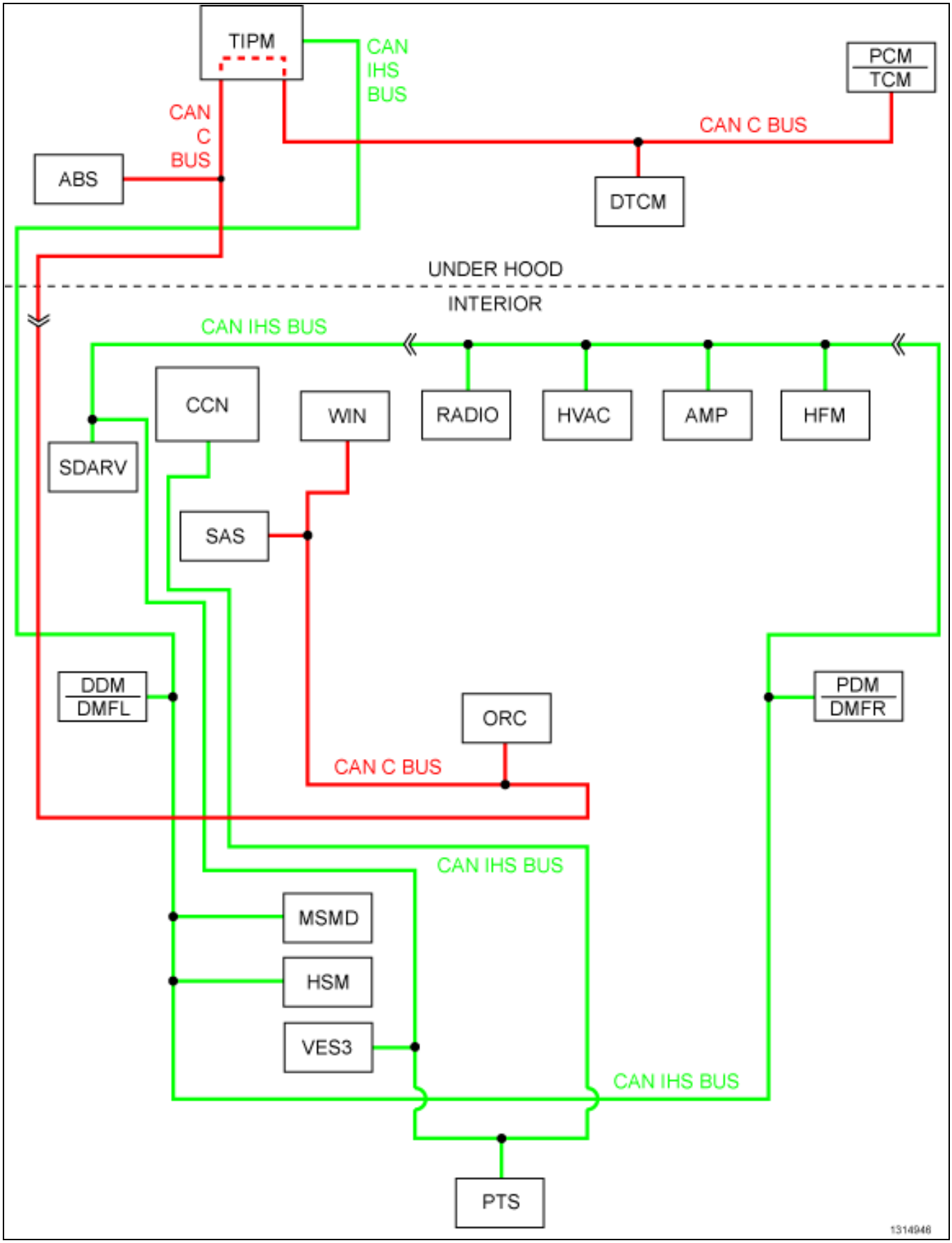

For a complete wiring diagram, **refer to the Wiring Information**.

- **When Monitored:**
  Continuously when the ignition is on.
  Battery voltage between 10 and 16 volts.
  Ignition Off Draw (IOD) fuse installed.
  Totally Integrated Power Module (TIPM) is configured correctly.
- **Set Condition:**
  Bus messages not received from the Vehicle Entertainment Control Module for approximately two to five seconds.

Possible Causes
CAN B OR CAN C BUS CIRCUITS OPEN OR SHORTED
DTCS RELATED TO BATTERY VOLTAGE, IGNITION, OR VIN MESSAGES
TIPM NOT CONFIGURED CORRECTLY
VEHICLE ENTERTAINMENT CONTROL MODULE
VEHICLE ENTERTAINMENT CONTROL MODULE POWER AND GROUND
MODULE THAT SET THIS DTC

1. VERIFY DIAGNOSTIC TROUBLE CODE (DTC) IS ACTIVE

NOTE: Make sure the IOD fuse is installed and battery voltage is between 10 and 16 volts before proceeding.

1. With the scan tool, read active HFM DTCs.

Is this DTC active?

Yes

- (Refer to 28 - DTC-Based Diagnostics/MODULE, Totally Integrated Power (TIPM) - Diagnosis and Testing) and perform the U0196-Lost Communication with Vehicle Entertainment Control Module diagnostic procedure.

No

- (Refer to 29 - Non-DTC Diagnostics/Communication - Diagnosis and Testing) and perform the Stored Lost Communication DTCs diagnostic procedure.

■ U0203-LOST COMMUNICATION WITH LEFT FRONT DOOR MODULE (DMLF) (DRIVER DOOR MODULE)

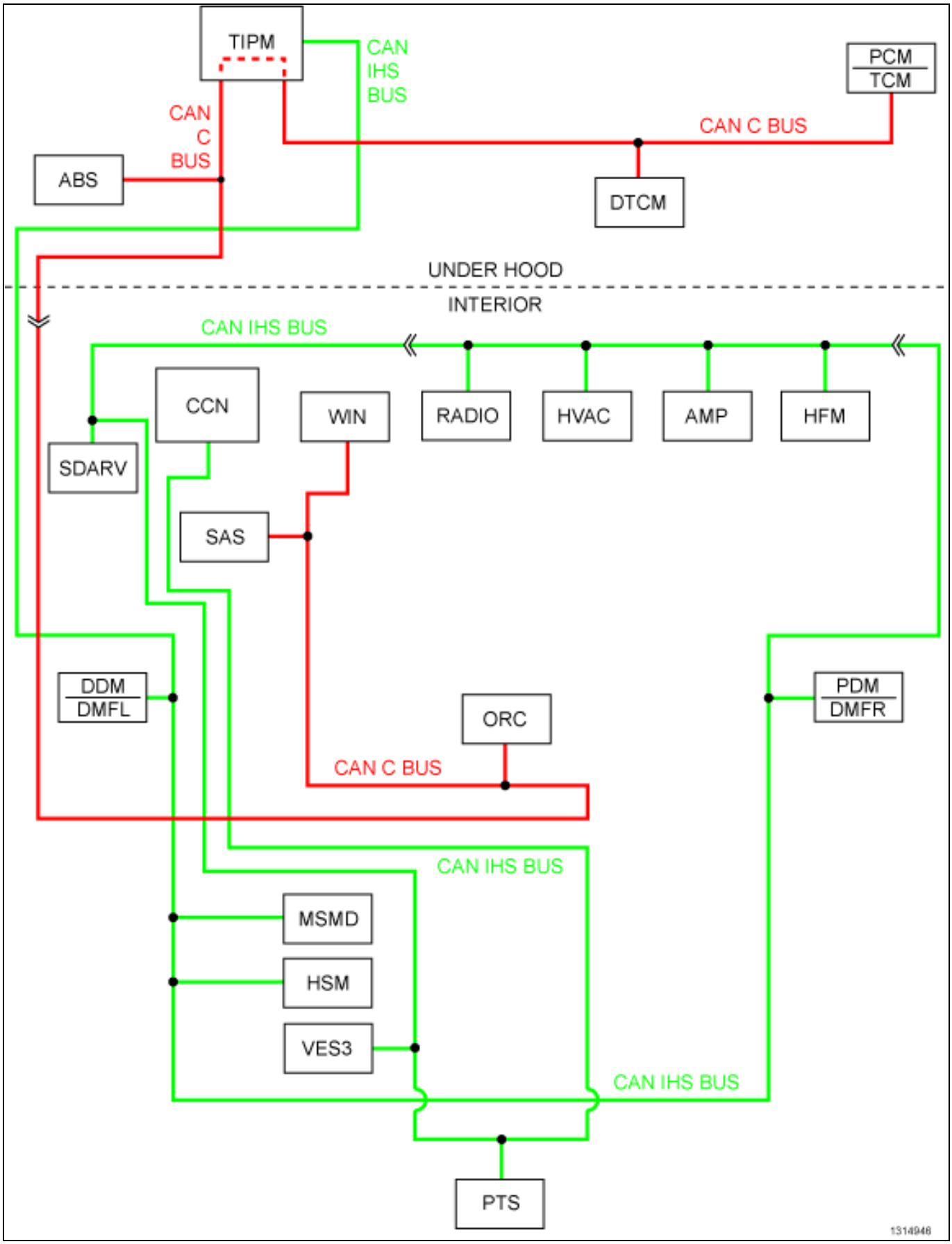

For a complete wiring diagram, **refer to the Wiring Information**.

- **When Monitored:**
  Continuously when the ignition is on.
  Battery voltage between 10 and 16 volts.
  Ignition Off Draw (IOD) fuse installed.
  Totally Integrated Power Module (TIPM) is configured correctly.
- **Set Condition:**
  Bus messages not received from the Driver Door Module for approximately two to five seconds.

Possible Causes
CAN B OR CAN C BUS CIRCUITS OPEN OR SHORTED
DTCS RELATED TO BATTERY VOLTAGE, IGNITION, OR VIN MESSAGES
TIPM NOT CONFIGURED CORRECTLY
LEFT FRONT (DRIVER) DOOR MODULE
LEFT FRONT (DRIVER) DOOR MODULE POWER AND GROUND
MODULE THAT SET THIS DTC

1. VERIFY DIAGNOSTIC TROUBLE CODE (DTC) IS ACTIVE

NOTE: Make sure the IOD fuse is installed and battery voltage is between 10 and 16 volts before proceeding.

1. With the scan tool, read active HFM DTCs.

Is this DTC active?

Yes

- (Refer to 28 - DTC-Based Diagnostics/MODULE, Totally Integrated Power (TIPM) - Diagnosis and Testing) and perform the U0203-Lost Communication with Left Front Door Module (DMLF) diagnostic procedure.

No

- (Refer to 29 - Non-DTC Diagnostics/Communication - Diagnosis and Testing) and perform the Stored Lost Communication DTCs diagnostic procedure.

■ U0204-LOST COMMUNICATION WITH RIGHT FRONT DOOR MODULE (DMRF) (PASSENGER DOOR MODULE)

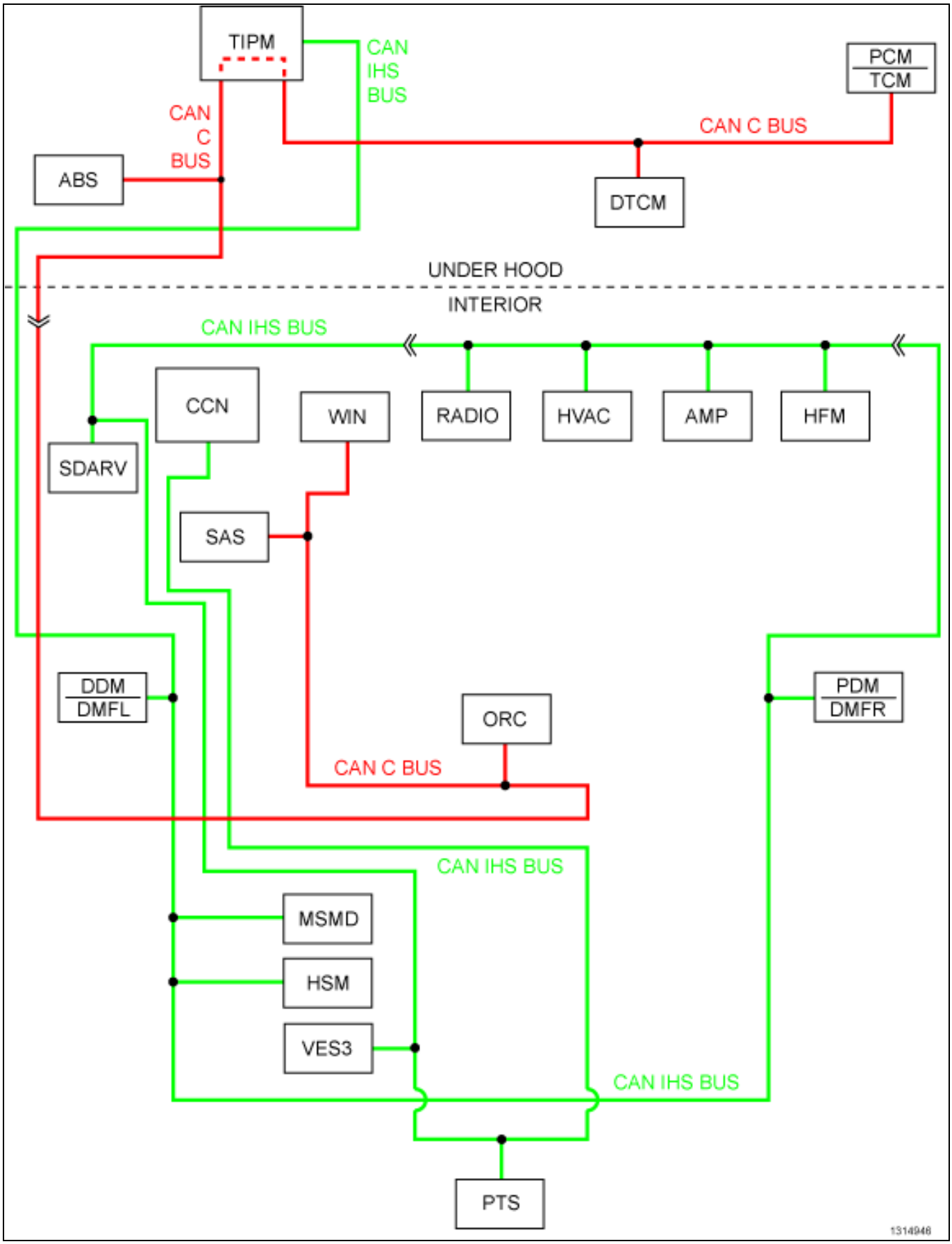

For a complete wiring diagram, **refer to the Wiring Information**.

- **When Monitored:**
  Continuously when the ignition is on.
  Battery voltage between 10 and 16 volts.
  Ignition Off Draw (IOD) fuse installed.
  Totally Integrated Power Module (TIPM) is configured correctly.
- **Set Condition:**
  Bus messages not received from the Right Front (Passenger) Door Module for approximately two to five seconds.

Possible Causes
CAN B OR CAN C BUS CIRCUITS OPEN OR SHORTED
DTCS RELATED TO BATTERY VOLTAGE, IGNITION, OR VIN MESSAGES
TIPM NOT CONFIGURED CORRECTLY
RIGHT FRONT (PASSENGER) DOOR MODULE
RIGHT FRONT (PASSENGER) DOOR MODULE POWER AND GROUND
MODULE THAT SET THIS DTC

1. VERIFY DIAGNOSTIC TROUBLE CODE (DTC) IS ACTIVE

NOTE: Make sure the IOD fuse is installed and battery voltage is between 10 and 16 volts before proceeding.

1. With the scan tool, read active HFM DTCs.

Is this DTC active?

Yes

- (Refer to 28 - DTC-Based Diagnostics/MODULE, Totally Integrated Power (TIPM) - Diagnosis and Testing) and perform the U0204-Lost Communication with Right Front Door Module (DMRF) diagnostic procedure.

No

- (Refer to 29 - Non-DTC Diagnostics/Communication - Diagnosis and Testing) and perform the Stored Lost Communication DTCs diagnostic procedure.

U0208-LOST COMMUNICATION WITH HEATED SEAT CONTROL MODULE

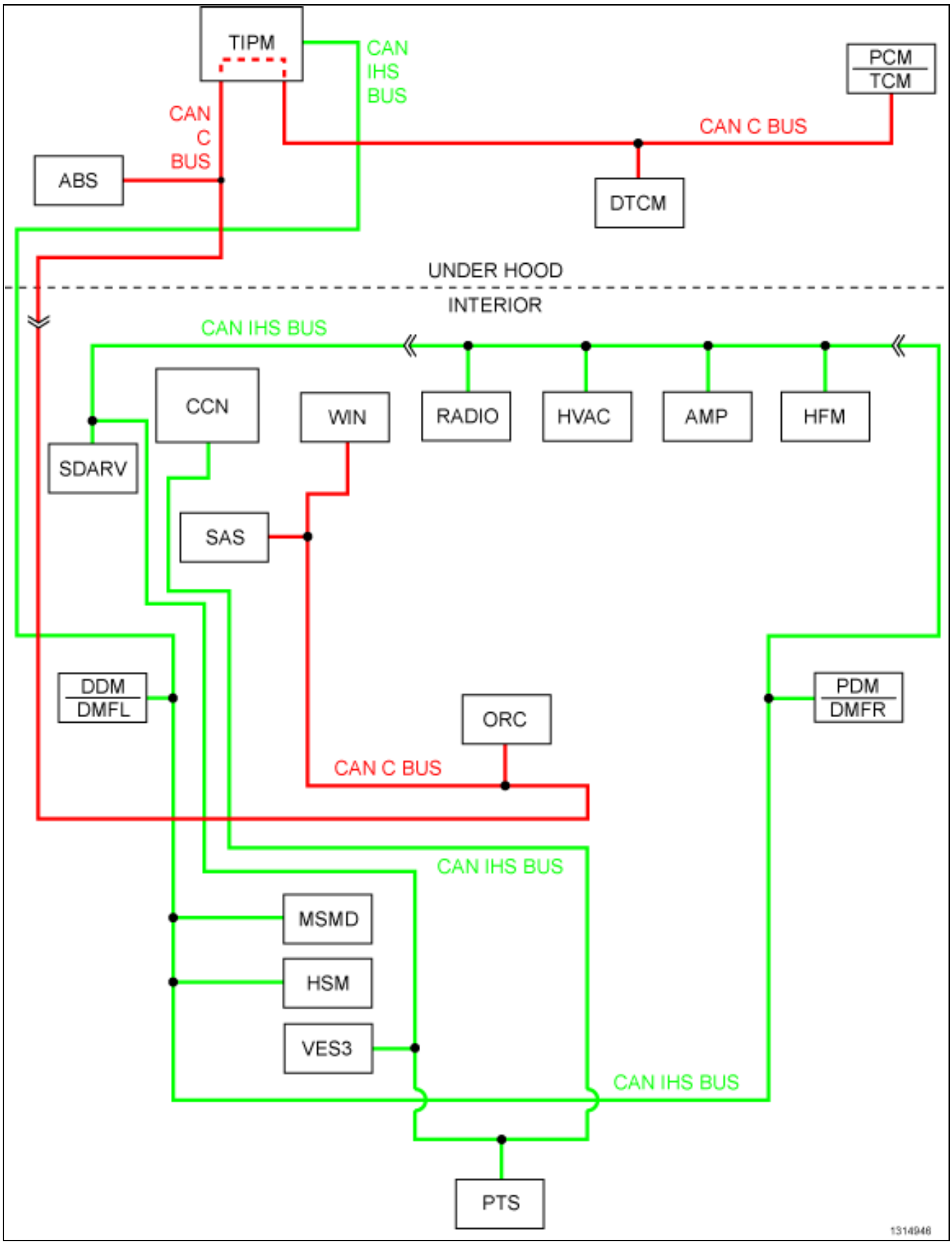

For a complete wiring diagram, **refer to the Wiring Information**.

- **When Monitored:**
  Continuously when the ignition is on.
  Battery voltage between 10 and 16 volts.
  Ignition Off Draw (IOD) fuse installed.
  Totally Integrated Power Module (TIPM) is configured correctly.
- **Set Condition:**
  Bus messages not received from the Heated Seat Control Module for approximately two to five seconds.

Possible Causes
CAN B OR CAN C BUS CIRCUITS OPEN OR SHORTED
DTCS RELATED TO BATTERY VOLTAGE, IGNITION, OR VIN MESSAGES
TIPM NOT CONFIGURED CORRECTLY
HEATED SEAT CONTROL MODULE
HEATED SEAT CONTROL MODULE POWER AND GROUND
MODULE THAT SET THIS DTC

1. VERIFY DIAGNOSTIC TROUBLE CODE (DTC) IS ACTIVE

NOTE: Make sure the IOD fuse is installed and battery voltage is between 10 and 16 volts before proceeding.

1. With the scan tool, read active HFM DTCs.

Is this DTC active?

Yes

- (Refer to 28 - DTC-Based Diagnostics/MODULE, Totally Integrated Power (TIPM) - Diagnosis and Testing) and perform the U0208-Lost Communication with Heated Seat Control Module diagnostic procedure.

No

- (Refer to 29 - Non-DTC Diagnostics/Communication - Diagnosis and Testing) and perform the Stored Lost Communication DTCs diagnostic procedure.

U0209-LOST COMMUNICATION WITH MEMORY SEAT CONTROL MODULE

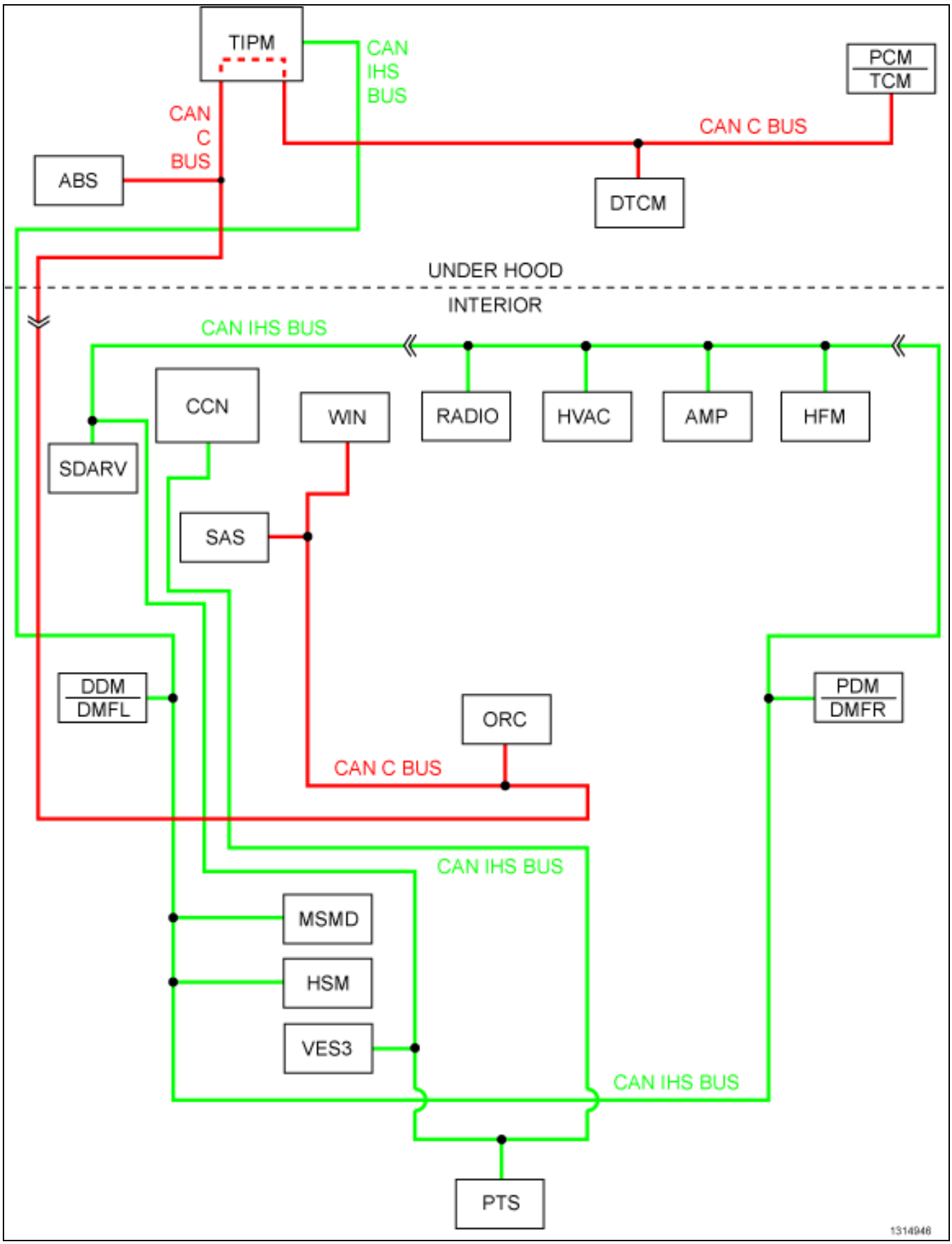

For a complete wiring diagram, **refer to the Wiring Information**.

- **When Monitored:**
  Continuously when the ignition is on.
  Battery voltage between 10 and 16 volts.
  Ignition Off Draw (IOD) fuse installed.
  Totally Integrated Power Module (TIPM) is configured correctly.
- **Set Condition:**
  Bus messages not received from the Memory Seat Control Module for approximately two to five seconds.

Possible Causes
CAN B OR CAN C BUS CIRCUITS OPEN OR SHORTED
DTCS RELATED TO BATTERY VOLTAGE, IGNITION, OR VIN MESSAGES
TIPM NOT CONFIGURED CORRECTLY
MEMORY SEAT CONTROL MODULE
MEMORY SEAT CONTROL MODULE POWER AND GROUND
MODULE THAT SET THIS DTC

1. VERIFY DIAGNOSTIC TROUBLE CODE (DTC) IS ACTIVE

NOTE: Make sure the IOD fuse is installed and battery voltage is between 10 and 16 volts before proceeding.

1. With the scan tool, read active HFM DTCs.

Is this DTC active?

Yes

- (Refer to 28 - DTC-Based Diagnostics/MODULE, Totally Integrated Power (TIPM) - Diagnosis and Testing) and perform the U0209-Lost Communication with Memory Seat Control Module diagnostic procedure.

No

- (Refer to 29 - Non-DTC Diagnostics/Communication - Diagnosis and Testing) and perform the Stored Lost Communication DTCs diagnostic procedure.

U1158-LOST COMMUNICATION WITH SATELLITE VIDEO RECEIVER (SDARV)

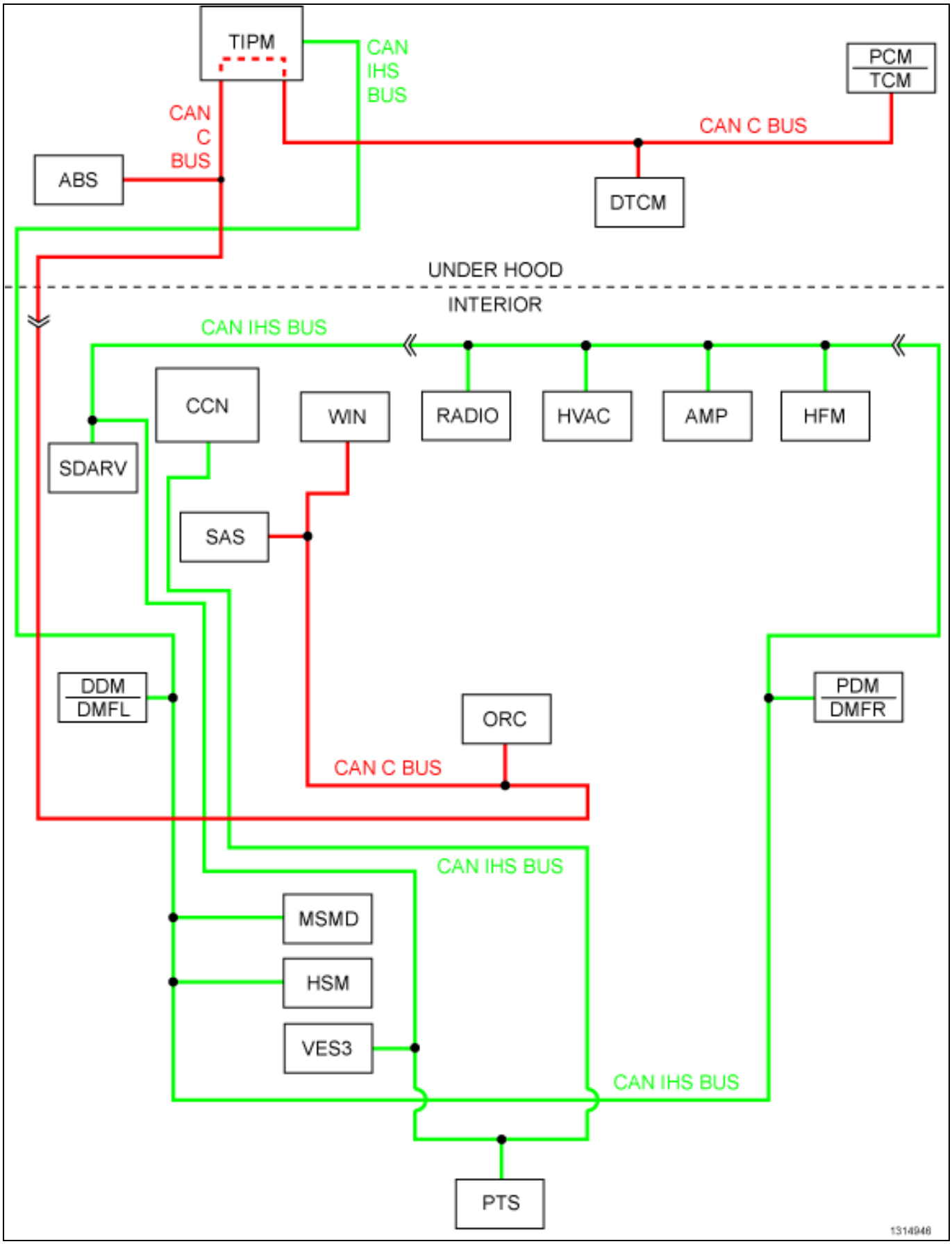

For a complete wiring diagram, **refer to the Wiring Information**.

- **When Monitored:**
  Continuously when the ignition is on.
  Battery voltage between 10 and 16 volts.
  Ignition Off Draw (IOD) fuse installed.
  Totally Integrated Power Module (TIPM) is configured correctly.
- **Set Condition:**
  Bus messages not received from the SDARV for approximately two to five seconds.

Possible Causes
CAN B OR CAN C BUS CIRCUITS OPEN OR SHORTED
DTCS RELATED TO BATTERY VOLTAGE, IGNITION, OR VIN MESSAGES
TIPM NOT CONFIGURED CORRECTLY
SDARV
SDARV POWER AND GROUND
MODULE THAT SET THIS DTC

1. VERIFY DIAGNOSTIC TROUBLE CODE (DTC) IS ACTIVE

NOTE: Make sure the IOD fuse is installed and battery voltage is between 10 and 16 volts before proceeding.

1. With the scan tool, read active HFM DTCs.

Is this DTC active?

Yes

- (Refer to 28 - DTC-Based Diagnostics/MODULE, Totally Integrated Power (TIPM) - Diagnosis and Testing) and perform the U1158-Lost Communication with Satellite Video Receiver (SDARV) diagnostic procedure.

No

- (Refer to 29 - Non-DTC Diagnostics/Communication - Diagnosis and Testing) and perform the Stored Lost Communication DTCs diagnostic procedure.

MODULE, Heated Seat (HSM)

Diagnosis and Testing

■ B10C4-11-HEATED STEERING WHEEL CONTROL - CIRCUIT SHORT TO GROUND

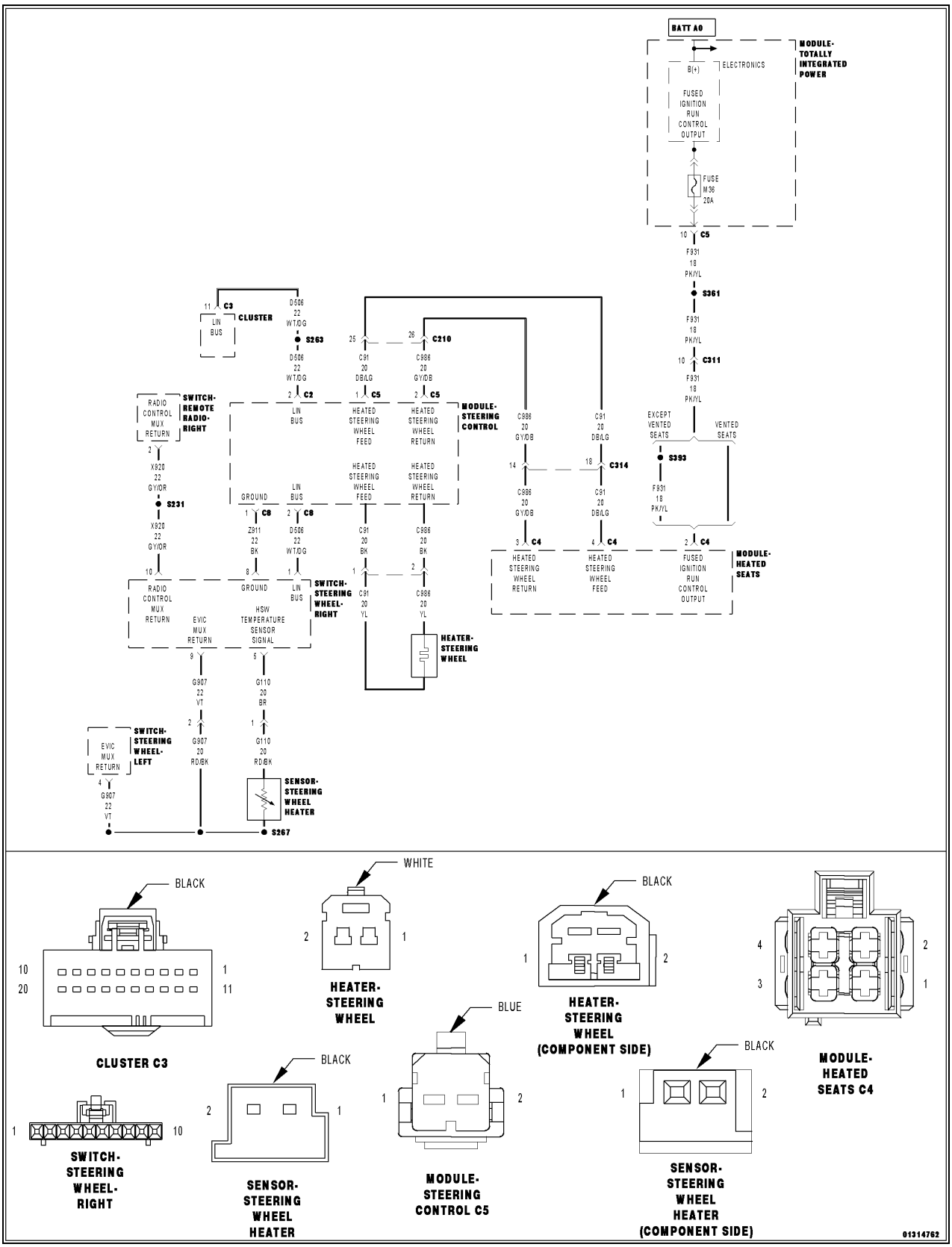

For a complete wiring diagram, **refer to the Wiring Information**.

- **When Monitored:**
  With the engine running.
- **Set Condition:**
  The Heated Seat Module (HSM) detects voltage below threshold on the (C91) Heated Steering Wheel Feed circuit for more than two seconds when the output is turned on.

Possible Causes
(C91) HEATED STEERING WHEEL FEED CIRCUIT SHORTED TO GROUND
(C91) HEATED STEERING WHEEL FEED CIRCUIT SHORTED TO THE (C986) HEATED STEERING WHEEL RETURN CIRCUIT
HEATED STEERING WHEEL (HSW)
STEERING CONTROL MODULE (SCM)
HEATED SEAT MODULE (HSM)

1. TEST FOR INTERMITTENT CONDITION

NOTE: Make sure the battery is fully charged and the charging system is operating properly before proceeding.

1. Turn the ignition on.
2. With the scan tool, record and erase Diagnostic Trouble Codes (DTCs).
3. Turn the ignition off.
4. Start the engine and let it run.
5. Turn the HSW on.
6. With the scan tool, read DTCs.

Is the DTC active?

Yes

- Go To 2

No

- The conditions that caused this code to set are not present at this time. Verify seat harness is routed correctly to the HSM. Using the wiring diagram/schematic as a guide, inspect the wiring and connectors. Look for chafed, pierced, pinched, or partially broken wires and broken, bent, pushed out, spread, corroded, or contaminated terminals. Attempt to reproduce condition by rotating the steering wheel. Attempt to reproduce condition by adjusting the seat.
- Perform the BODY VERIFICATION TEST. (Refer to 28 - DTC-Based Diagnostics/MODULE, Totally Integrated Power (TIPM) - Standard Procedure).

2. CHECK FOR SHORTED (C91) HEATED STEERING WHEEL FEED CIRCUIT BETWEEN SCM AND HSM

WARNING: Turn the ignition off, disconnect the 12-volt battery and wait two minutes before proceeding. Failure to follow these instructions may result in possible serious or fatal injury.

1. Disconnect the SCM C5 harness connector.

WARNING: Turn the ignition on, then reconnect the 12-volt battery and wait two minutes before proceeding. Failure to follow these instructions may result in possible serious or fatal injury.

2. With the scan tool, erase DTCs.
3. Start the engine and let it run.
4. Turn the HSW on.
5. With the scan tool, read DTCs.

Is the same DTC active?

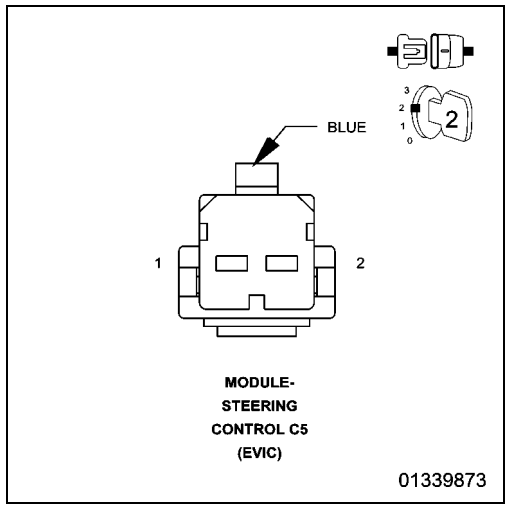

Yes

- Go To 3

No

- Go To 5

3. CHECK (C91) HEATED STEERING WHEEL FEED CIRCUIT FOR A SHORT TO GROUND

1. Turn the ignition off.
2. Disconnect the HSM C4 harness connector.

NOTE: Check connectors. Clean and repair as necessary.

3. Measure the resistance of the (C91) Heated Steering Wheel Feed circuit between ground and the SCM C1 harness connector.

Is the resistance below 10k Ohms?

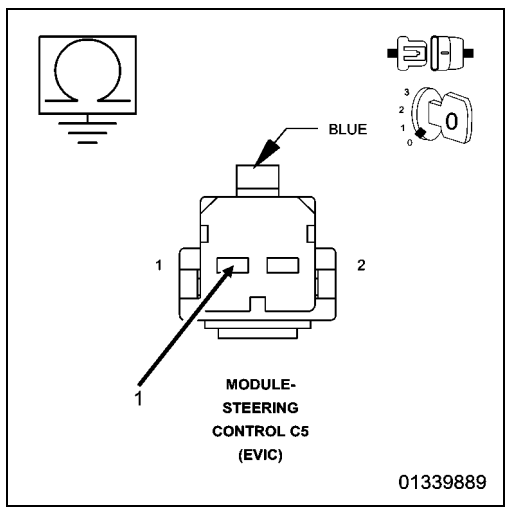

Yes

- Repair the short to ground in the (C91) Heated Steering Wheel Feed circuit.
- Perform the BODY VERIFICATION TEST. (Refer to 28 - DTC-Based Diagnostics/MODULE, Totally Integrated Power (TIPM) - Standard Procedure).

No

- Go To 4

4. CHECK (C91) HEATED STEERING WHEEL FEED CIRCUIT FOR A SHORT TO THE (C986) HEATED STEERING WHEEL RETURN CIRCUIT

1. Measure the resistance between the (C91) Heated Steering Wheel Feed circuit and the (C986) Heated Steering Wheel Return circuit at the SCM C5 harness connector.

Is the resistance below 10k Ohms?

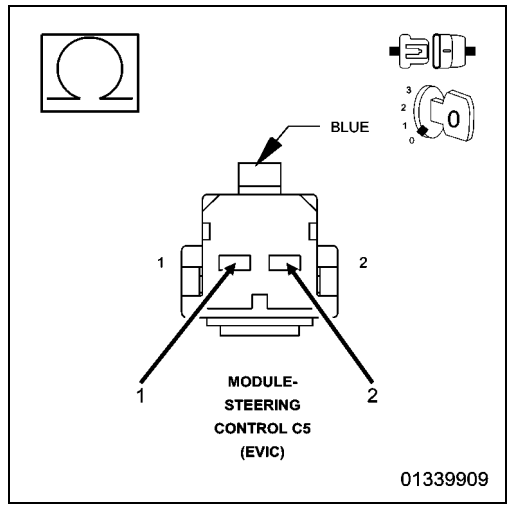

Yes

- Repair the short between the (C91) Heated Steering Wheel Feed circuit and the (C986) Heated Steering Wheel Return circuit.
- Perform the BODY VERIFICATION TEST. (Refer to 28 - DTC-Based Diagnostics/MODULE, Totally Integrated Power (TIPM) - Standard Procedure).

No

- Replace the Heated Seat Module (HSM) in accordance with the Service Information.
- Perform the BODY VERIFICATION TEST. (Refer to 28 - DTC-Based Diagnostics/MODULE, Totally Integrated Power (TIPM) - Standard Procedure).

5. CHECK FOR A SHORTED HSW

WARNING: Turn the ignition off, disconnect the 12-volt battery and wait two minutes before proceeding. Failure to follow these instructions may result in possible serious or fatal injury.

1. Remove the Driver Airbag in accordance with the Service Information.
2. Disconnect the Steering Wheel Heater connector.

NOTE: Before proceeding, thoroughly inspect the wiring harness and connectors between the HSW and the Steering Control Module. Look for chafed, pierced, pinched, or partially broken wires and broken, bent, pushed out, spread, corroded, or contaminated terminals.

3. Reconnect the SCM C5 harness connector.

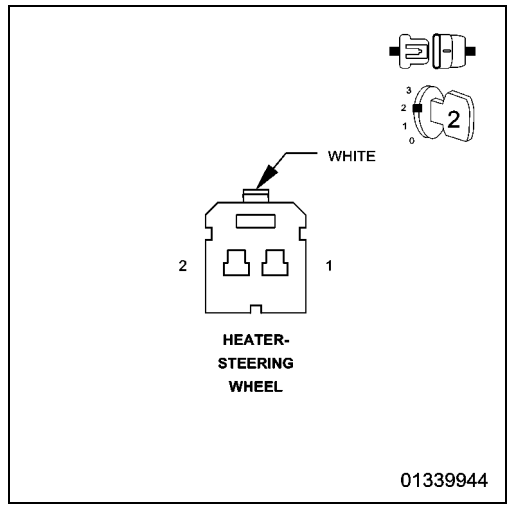

WARNING: Turn the ignition on, then reconnect the 12-volt battery and wait two minutes before proceeding. Failure to follow these instructions may result in possible serious or fatal injury.

4. With the scan tool, erase DTCs.
5. Turn the ignition off.
6. Start the engine and let it run.
7. Turn the HSW on.
8. With the scan tool, read DTCs.

Is the same DTC active?

Yes

- Replace the Steering Control Module (SCM) in accordance with the Service Information.
- Perform the BODY VERIFICATION TEST. (Refer to 28 - DTC-Based Diagnostics/MODULE, Totally Integrated Power (TIPM) - Standard Procedure).

No

- Replace the Heated Steering Wheel (HSW) in accordance with the Service Information.
- Perform the BODY VERIFICATION TEST. (Refer to 28 - DTC-Based Diagnostics/MODULE, Totally Integrated Power (TIPM) - Standard Procedure).

B10C4-12-HEATED STEERING WHEEL CONTROL - CIRCUIT SHORT TO BATTERY

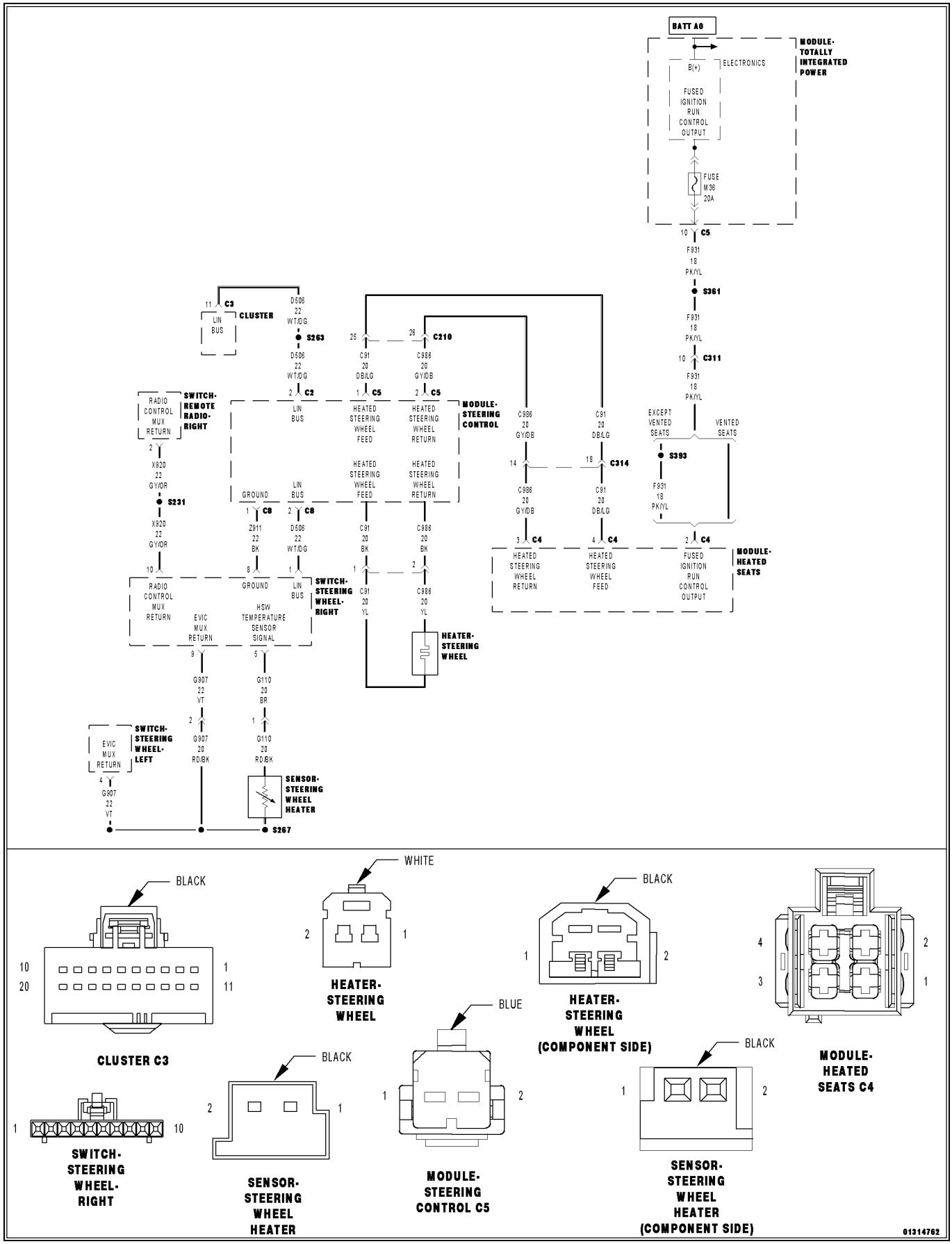

For a complete wiring diagram, **refer to the Wiring Information**.

- **When Monitored:**
  With the engine running.
- **Set Condition:**
  The Heated Seat Module (HSM) detects voltage on the (C91) Heated Steering Wheel Feed circuit for more than two seconds with the output turned off.

Possible Causes
(C91) HEATED STEERING WHEEL FEED CIRCUIT SHORTED TO VOLTAGE
(C91) HEATED STEERING WHEEL FEED CIRCUIT SHORTED TO THE (F931) FUSED IGNITION RUN CONTROL OUTPUT
HEATED STEERING WHEEL (HSW)
STEERING CONTROL MODULE (SCM)
HEATED SEAT MODULE (HSM)

1. TEST FOR INTERMITTENT CONDITION

NOTE: Make sure the battery is fully charged and the charging system is operating properly before proceeding.

1. Turn the ignition on.
2. With the scan tool, record and erase Diagnostic Trouble Codes (DTCs).
3. Turn the ignition off.
4. Start the engine and let it run.
5. With the scan tool, read DTCs.

Is the DTC active?

Yes

- Go To 2

No

- The conditions that caused this code to set are not present at this time. Verify seat harness is routed correctly to the HSM. Using the wiring diagram/schematic as a guide, inspect the wiring and connectors. Look for chafed, pierced, pinched, or partially broken wires and broken, bent, pushed out, spread, corroded, or contaminated terminals. Attempt to reproduce condition by operating all HSM functions one at a time, except for the HSW. Attempt to reproduce condition by rotating the steering wheel. Attempt to reproduce condition by adjusting the seat.
- Perform the BODY VERIFICATION TEST. (Refer to 28 - DTC-Based Diagnostics/MODULE, Totally Integrated Power (TIPM) - Standard Procedure).

2. CHECK FOR SHORTED (C91) HEATED STEERING WHEEL FEED CIRCUIT BETWEEN SCM AND HSM

WARNING: Turn the ignition off, disconnect the 12-volt battery and wait two minutes before proceeding. Failure to follow these instructions may result in possible serious or fatal injury.

1. Disconnect the SCM C5 harness connector.

NOTE: Check connectors. Clean and repair as necessary.

WARNING: Turn the ignition on, then reconnect the 12-volt battery and wait two minutes before proceeding. Failure to follow these instructions may result in possible serious or fatal injury.

2. Measure the voltage between ground and the (C91) Heated Steering Wheel Feed circuit at the SCM C5 harness connector.

Is there any voltage present?

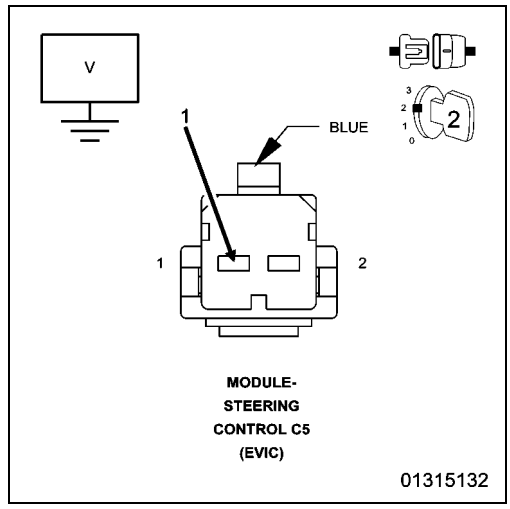

Yes

- Go To 3

No

- Go To 5

3. CHECK (C91) HEATED STEERING WHEEL FEED CIRCUIT FOR A SHORT TO THE (F931) FUSED IGNITION RUN CONTROL OUTPUT

1. Turn the ignition off.
2. Disconnect the HSM C4 harness connector.

NOTE: Check connectors. Clean and repair as necessary.

3. Measure the resistance between the (C91) Heated Steering Wheel Feed circuit and the (F931) Fused Ignition Run Control Output circuit at the HSM C4 harness connector.

Is the resistance below 10k Ohms?

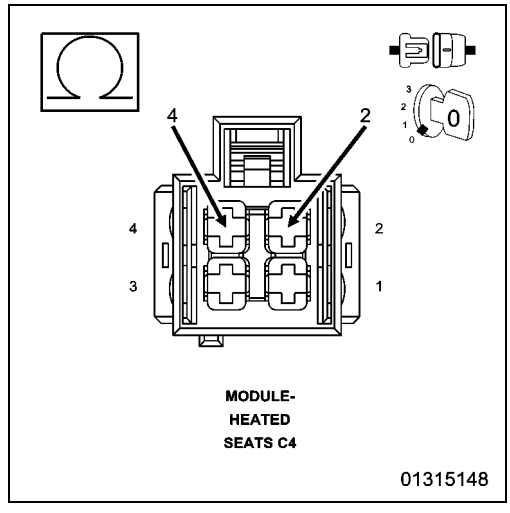

Yes

- Repair the short between the (C91) Heated Steering Wheel Feed circuit and the (F931) Fused Ignition Run Control Output circuit.
- Perform the BODY VERIFICATION TEST. (Refer to 28 - DTC-Based Diagnostics/MODULE, Totally Integrated Power (TIPM) - Standard Procedure).

No

- Go To 4

4. CHECK (C91) HEATED STEERING WHEEL FEED CIRCUIT FOR A SHORT TO VOLTAGE

1. Turn the ignition on.
2. Measure the voltage of the (C91) Heated Steering Wheel Feed circuit between the HSM C4 harness connector and ground.

Is there any voltage present?

Yes

- Repair the short to voltage in the (C91) Heated Steering Wheel Feed circuit.
- Perform the BODY VERIFICATION TEST. (Refer to 28 - DTC-Based Diagnostics/MODULE, Totally Integrated Power (TIPM) - Standard Procedure).

No

- Replace the Heated Seat Module (HSM) in accordance with the Service Information.
- Perform the BODY VERIFICATION TEST. (Refer to 28 - DTC-Based Diagnostics/MODULE, Totally Integrated Power (TIPM) - Standard Procedure).

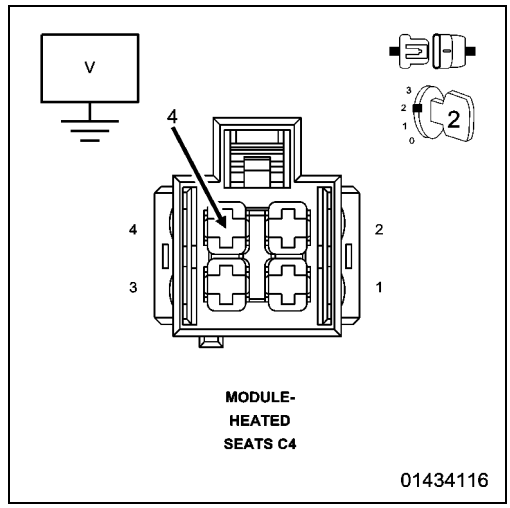

5. CHECK FOR A SHORTED SCM

WARNING: Turn the ignition off, disconnect the 12-volt battery and wait two minutes before proceeding. Failure to follow these instructions may result in possible serious or fatal injury.

1. Remove the Driver Airbag in accordance with the Service Information. (Refer to 10 - Restraints/AIR BAG, Driver - Removal).
2. Disconnect the Steering Wheel Heater connector.

NOTE: Before proceeding, thoroughly inspect the wiring harness and connectors between the HSW and the Steering Control Module. Look for chafed, pierced, pinched, or partially broken wires and broken, bent, pushed out, spread, corroded, or contaminated terminals.

3. Reconnect the SCM C5 connector.

WARNING: Turn the ignition on, then reconnect the 12-volt battery and wait two minutes before proceeding. Failure to follow these instructions may result in possible serious or fatal injury.

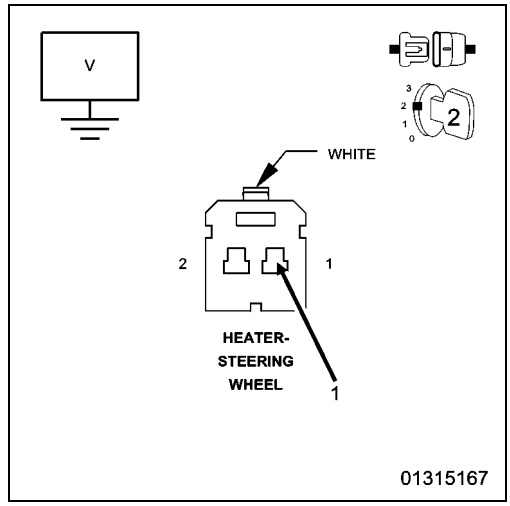

4. Turn the ignition on.
5. Measure the voltage of the (C91) Heated Steering Wheel Feed circuit between the Steering Wheel Heater connector and ground.

Is there any voltage present?

Yes

- Replace the Steering Control Module (SCM) in accordance with the Service Information.
- Perform the BODY VERIFICATION TEST. (Refer to 28 - DTC-Based Diagnostics/MODULE, Totally Integrated Power (TIPM) - Standard Procedure).

No

- Replace the Heated Steering Wheel (HSW) in accordance with the Service Information.
- Perform the BODY VERIFICATION TEST. (Refer to 28 - DTC-Based Diagnostics/MODULE, Totally Integrated Power (TIPM) - Standard Procedure).

B10C4-13-HEATED STEERING WHEEL CONTROL - CIRCUIT OPEN

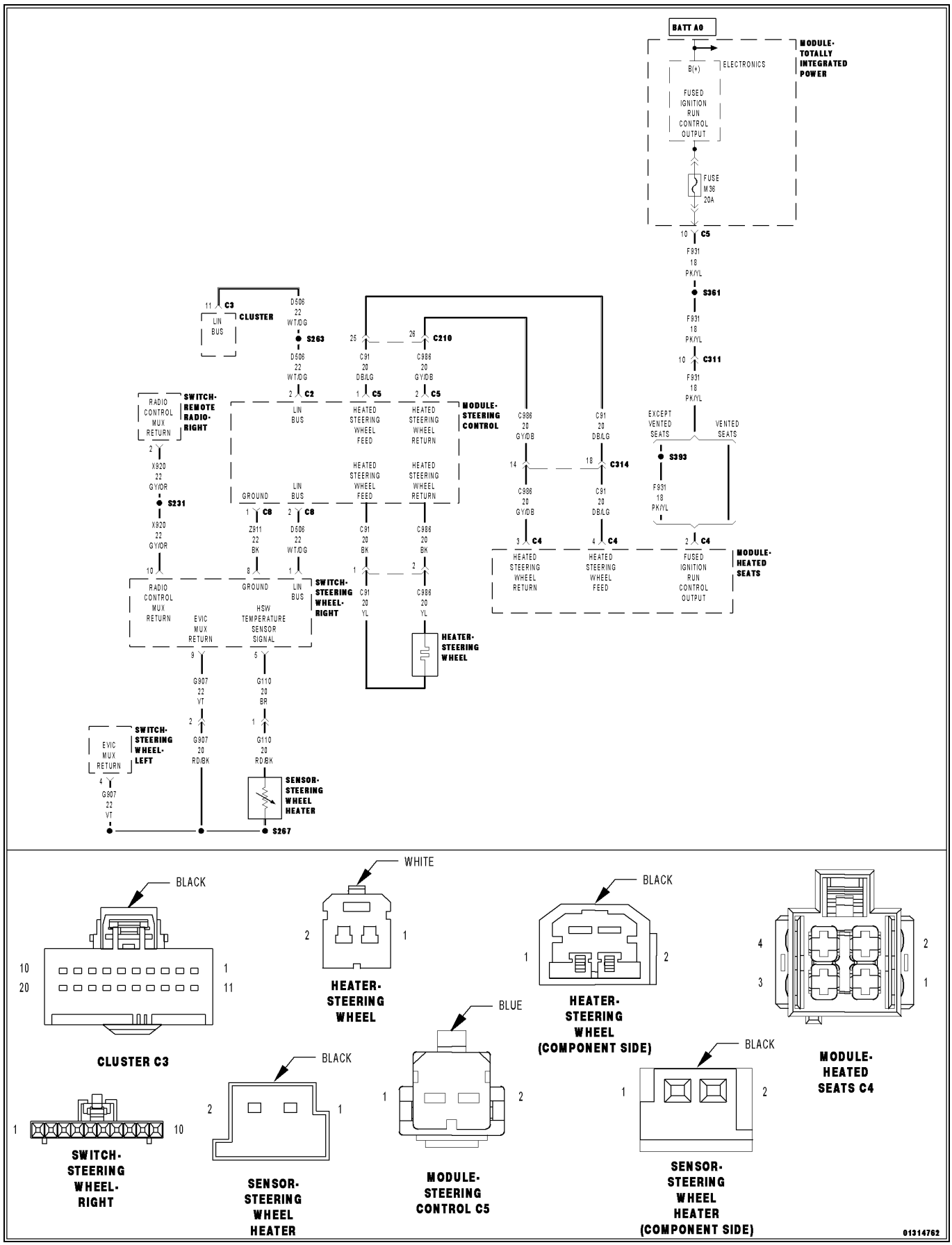

For a complete wiring diagram, **refer to the Wiring Information**.

- **When Monitored:**
  With the engine running.
- **Set Condition:**
  The Heated Seat Module (HSM) detects current below threshold on the (C91) Heated Steering Wheel Feed circuit for more than two seconds when the output is turned on.

Possible Causes
(C91) HEATED STEERING WHEEL FEED CIRCUIT OPEN
(C986) HEATED STEERING WHEEL RETURN CIRCUIT OPEN
HEATED STEERING WHEEL (HSW)
STEERING CONTROL MODULE (SCM)
HEATED SEAT MODULE (HSM)

1. TEST FOR INTERMITTENT CONDITION

NOTE: Make sure the battery is fully charged and the charging system is operating properly before proceeding.

1. Turn the ignition on.
2. With the scan tool, record and erase Diagnostic Trouble Codes (DTCs).
3. Turn the ignition off.
4. Start the engine and let it run.
5. Turn the HSW on.
6. With the scan tool, read DTCs.

Is the DTC active?

Yes

- Go To 2

No

- The conditions that caused this code to set are not present at this time. Verify seat harness is routed correctly to the HSM. Using the wiring diagram/schematic as a guide, inspect the wiring and connectors. Look for chafed, pierced, pinched, or partially broken wires and broken, bent, pushed out, spread, corroded, or contaminated terminals. Attempt to reproduce condition by rotating the steering wheel. Attempt to reproduce condition by adjusting the seat.
- Perform the BODY VERIFICATION TEST. (Refer to 28 - DTC-Based Diagnostics/MODULE, Totally Integrated Power (TIPM) - Standard Procedure).

2. CHECK FOR AN OPEN HSW

WARNING: Turn the ignition off, disconnect the 12-volt battery and wait two minutes before proceeding. Failure to follow these instructions may result in possible serious or fatal injury.

1. Remove the Driver Airbag in accordance with the Service Information.
2. Disconnect the Steering Wheel Heater connector.

NOTE: Check connectors. Clean and repair as necessary.

3. Measure the resistance between the (C91) Heated Steering Wheel Feed circuit and the (C986) Heated Steering Wheel Return circuit at the Steering Wheel Heater (component side) connector.

Is the resistance 1.85 ± 0.2 Ohms?

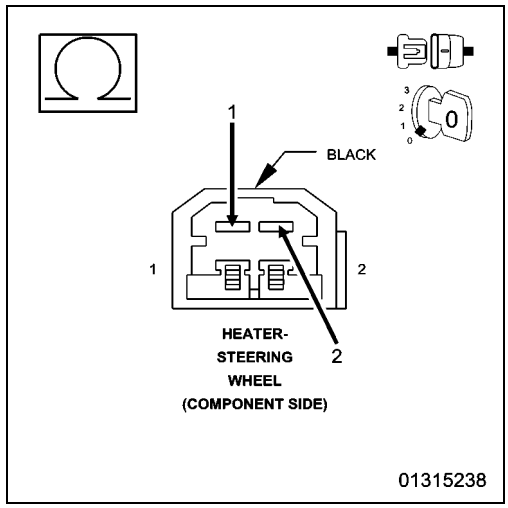

Yes

- Go To 3

No

- Replace the Heated Steering Wheel (HSW) in accordance with the Service Information.
- Perform the BODY VERIFICATION TEST. (Refer to 28 - DTC-Based Diagnostics/MODULE, Totally Integrated Power (TIPM) - Standard Procedure).

3. CHECK THE (C91) HEATED STEERING WHEEL FEED CIRCUIT FOR AN OPEN

1. Disconnect the HSM C4 connector.

NOTE: Clean and repair as necessary.

2. Measure the resistance of the (C91) Heated Steering Wheel Feed circuit between the Steering Wheel Heater connector and the HSM C4 connector.

Is the resistance below 5.0 Ohms?

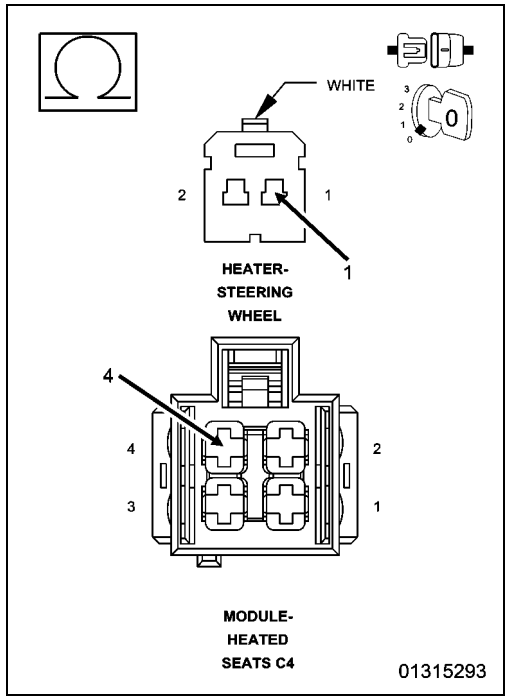

Yes

- Go To 4

No

- Go To 5

4. CHECK (C986) HEATED STEERING WHEEL RETURN CIRCUIT OPEN FOR AN OPEN

1. Measure the resistance of the (C986) Heated Steering Wheel Return circuit between the Steering Wheel Heater connector and the HSM C4 connector.

Is the resistance 5.0 Ohms?

Yes

- Replace the Heated Seat Module (HSM) in accordance with the Service Information.
- Perform the BODY VERIFICATION TEST. (Refer to 28 - DTC-Based Diagnostics/MODULE, Totally Integrated Power (TIPM) - Standard Procedure).

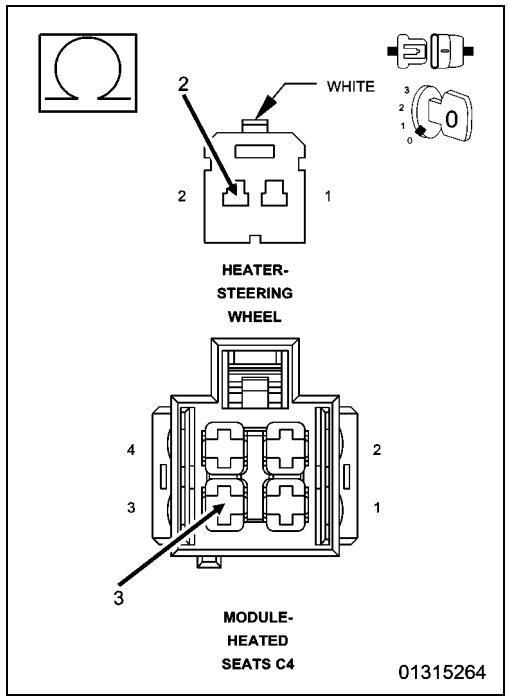

No

Go To 6

5. CHECK (C91) HEATED STEERING WHEEL FEED CIRCUIT FOR AN OPEN BETWEEN SCM AND HSM

1. Disconnect the SCM C5 connector.

NOTE: Check connectors. Clean and repair as necessary.

2. Measure the resistance of the (C91) Heated Steering Wheel Feed circuit between the SCM C5 component connector and the HSM C4 harness connector.

Is the resistance below 5.0 Ohms?

Yes

- Replace the Steering Control Module (SCM) in accordance with the Service Information.
- Perform the BODY VERIFICATION TEST. (Refer to 28 - DTC-Based Diagnostics/MODULE, Totally Integrated Power (TIPM) - Standard Procedure).

No

- Repair the (C91) Heated Steering Wheel Feed circuit for an open.
- Perform the BODY VERIFICATION TEST. (Refer to 28 - DTC-Based Diagnostics/MODULE, Totally Integrated Power (TIPM) - Standard Procedure).

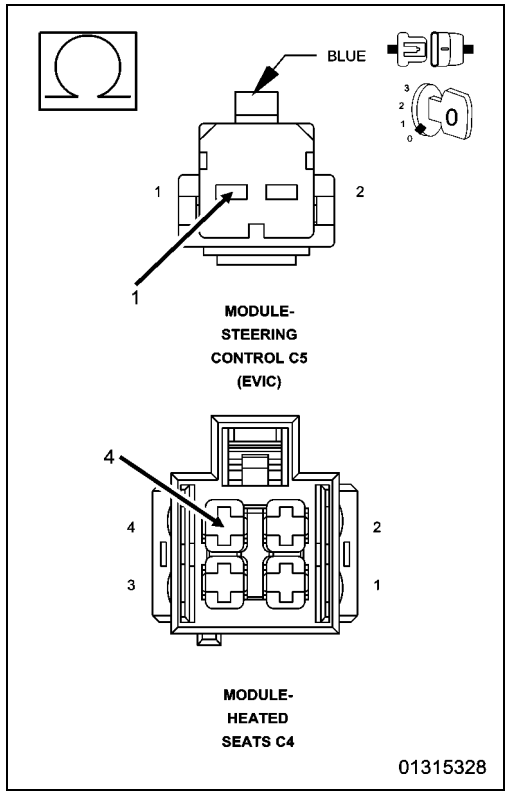

6. CHECK (C986) HEATED STEERING WHEEL RETURN CIRCUIT FOR AN OPEN BETWEEN SCM AND HSM

1. Disconnect the SCM C5 connector.

NOTE: Check connectors. Clean and repair as necessary.

2. Measure the resistance of the (C986) Heated Steering Wheel Return circuit between the SCM C2 component connector and the HSM C4 harness connector.

Is the resistance below 5.0 Ohms?

Yes

- Replace the Steering Control Module (SCM) in accordance with the Service Information.
- Perform the BODY VERIFICATION TEST. (Refer to 28 - DTC-Based Diagnostics/MODULE, Totally Integrated Power (TIPM) - Standard Procedure).

No

- Repair the (C986) Heated Steering Wheel Return circuit for an open.
- Perform the BODY VERIFICATION TEST. (Refer to 28 - DTC-Based Diagnostics/MODULE, Totally Integrated Power (TIPM) - Standard Procedure).

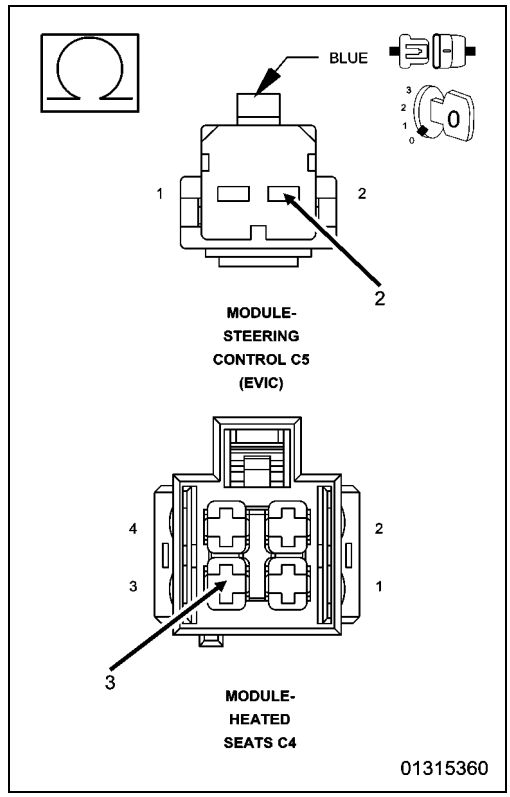

■ B10C4-1E-HEATED STEERING WHEEL CONTROL - CIRCUIT RESISTANCE OUT OF RANGE

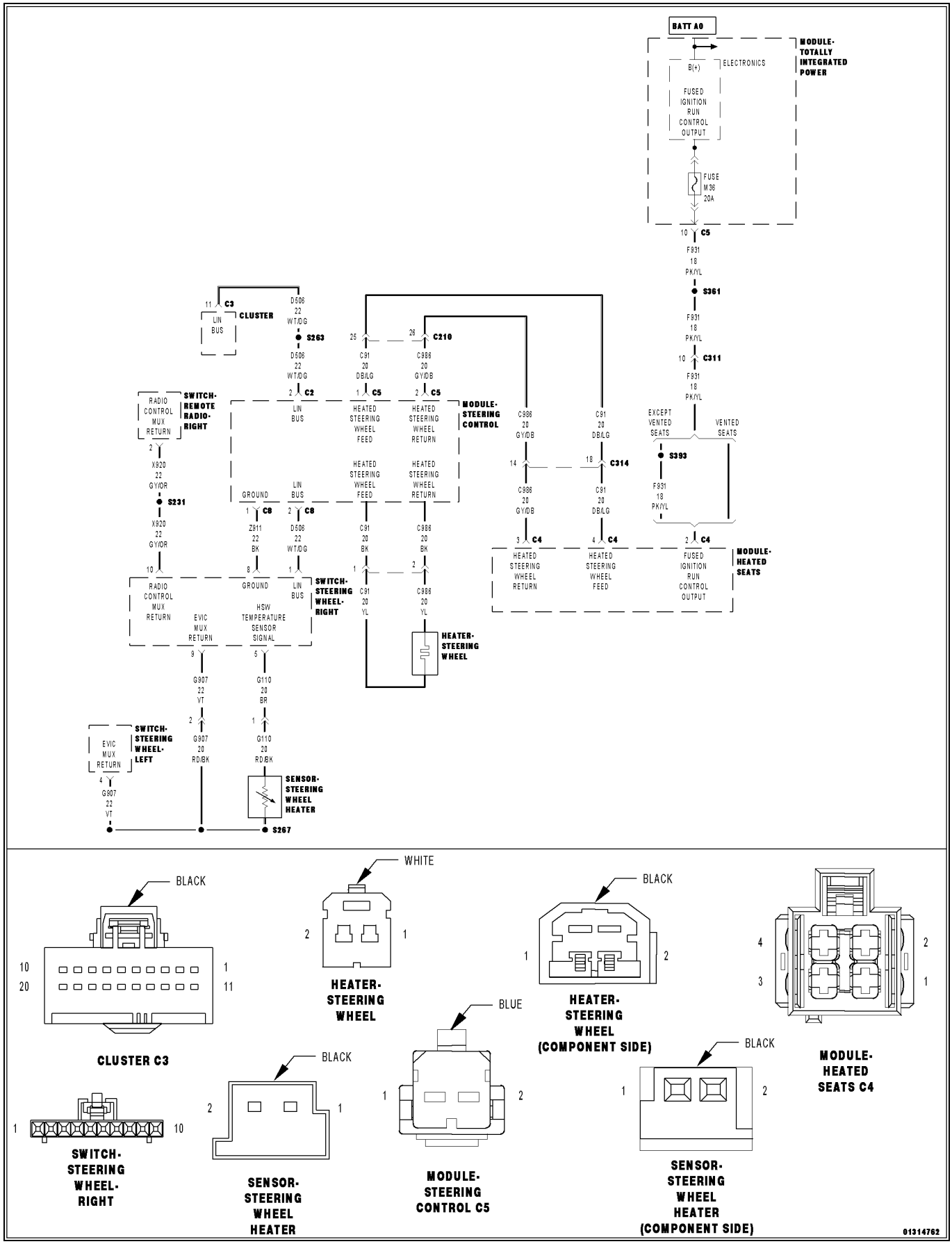

For a complete wiring diagram, **refer to the Wiring Information**.

- **When Monitored:**
  With the engine running.
- **Set Condition:**
  The Heated Seat Module (HSM) detects current between 0.5 and 1.0 amp on the (C91) Heated Steering Wheel Feed circuit for more than two seconds when the output is turned on.

Possible Causes
(C91) HEATED STEERING WHEEL FEED CIRCUIT RESISTANCE HIGH
(C986) HEATED STEERING WHEEL RETURN CIRCUIT RESISTANCE HIGH
HEATED STEERING WHEEL (HSW)
STEERING CONTROL MODULE (SCM)
HEATED SEAT MODULE (HSM)

1. TEST FOR INTERMITTENT CONDITION

NOTE: Before proceeding, verify the battery is fully charged, the charging system is operating properly, no Battery or System Voltage Diagnostic Trouble Codes (DTCs) are set, and the HSM Power and Ground circuits are clean and tight.

1. Turn the ignition on.
2. With the scan tool, record and erase Diagnostic Trouble Codes (DTCs).
3. Turn the ignition off.
4. Start the engine and let it run.
5. Turn the HSW on.
6. With the scan tool, read DTCs.

Is the DTC active?

Yes

- Go To 2

No

- The conditions that caused this code to set are not present at this time. Verify seat harness is routed correctly to the HSM. Using the wiring diagram/schematic as a guide, inspect the wiring and connectors. Look for chafed, pierced, pinched, or partially broken wires and broken, bent, pushed out, spread, corroded, or contaminated terminals. Attempt to reproduce condition by rotating the steering wheel. Attempt to reproduce condition by adjusting the seat.
- Perform the BODY VERIFICATION TEST. (Refer to 28 - DTC-Based Diagnostics/MODULE, Totally Integrated Power (TIPM) - Standard Procedure).

2. CHECK HSW CIRCUIT RESISTANCE

WARNING: Turn the ignition off, disconnect the 12-volt battery and wait two minutes before proceeding. Failure to follow these instructions may result in possible serious or fatal injury.

1. Remove the Driver Airbag in accordance with the Service Information.
2. Disconnect the Steering Wheel Heater connector.

NOTE: Before proceeding, thoroughly inspect the wiring harness and connectors between the HSW and the Steering Control Module. Look for chafed, pierced, pinched, or partially broken wires and broken, bent, pushed out, spread, corroded, or contaminated terminals.

3. Measure the resistance between the (C91) Heated Steering Wheel Feed circuit and the (C986) Heated Steering Wheel Return circuit at the Steering Wheel Heater (component side) connector.

Is the resistance 1.85 ± 0.2 Ohms?

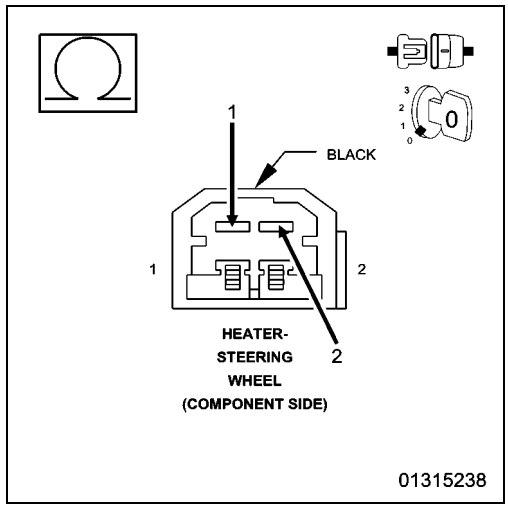

Yes

- Go To 3

No

- Replace the Heated Steering Wheel (HSW) in accordance with the Service Information.
- Perform the BODY VERIFICATION TEST. (Refer to 28 - DTC-Based Diagnostics/MODULE, Totally Integrated Power (TIPM) - Standard Procedure).

3. CHECK (C91) HEATED STEERING WHEEL FEED CIRCUIT FOR HIGH RESISTANCE

1. Disconnect the HSM C4 harness connector.

NOTE: Check connectors. Clean and repair as necessary.

2. Measure the resistance of the (C91) Heated Steering Wheel Feed circuit between the Steering Wheel Heater connector and the HSM C4 harness connector.

Is the resistance below 5.0 Ohms?

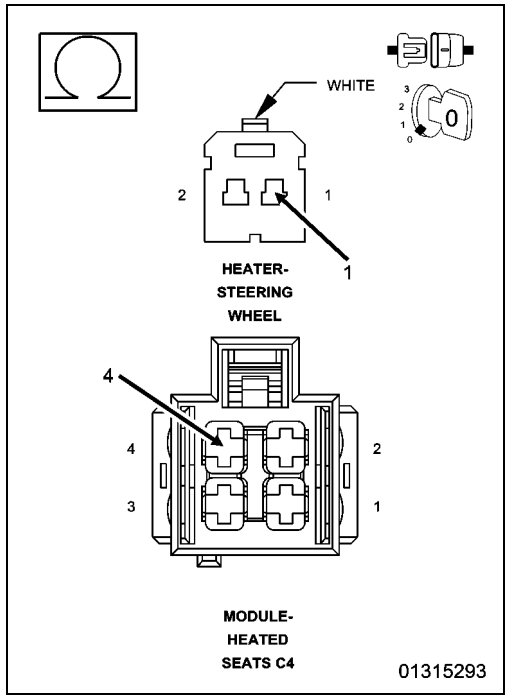

Yes

- Go To 4

No

- Go To 5

4. CHECK (C986) HEATED STEERING WHEEL RETURN CIRCUIT FOR A HIGH RESISTANCE

1. Measure the resistance of the (C986) Heated Steering Wheel Return circuit between the Steering Wheel Heater connector and the HSM C4 harness connector.

Is the resistance below 5.0 Ohms?

Yes

- Replace the Heated Seat Module (HSM) in accordance with the Service Information.
- Perform the BODY VERIFICATION TEST. (Refer to 28 - DTC-Based Diagnostics/MODULE, Totally Integrated Power (TIPM) - Standard Procedure).

No

- Go To 6

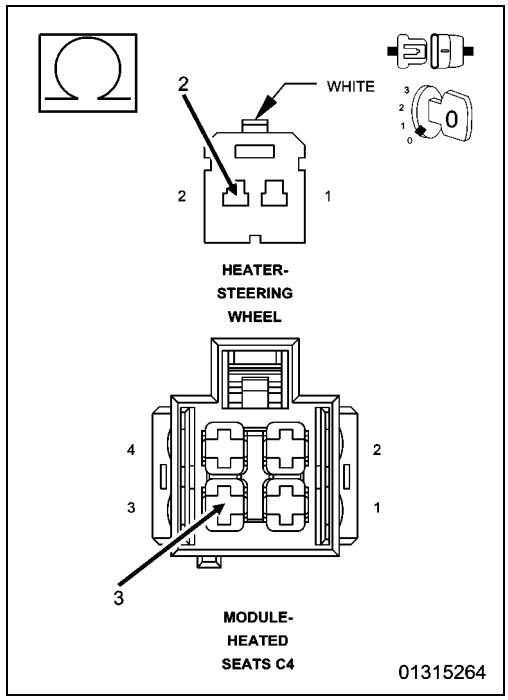

5. CHECK (C91) HEATED STEERING WHEEL FEED CIRCUIT FOR HIGH RESISTANCE BETWEEN SCM AND HSM

1. Disconnect the SCM C5 harness connector.

NOTE: Check connectors. Clean and repair as necessary.

2. Measure the resistance of the (C91) Heated Steering Wheel Feed circuit between the SCM C5 harness connector and the HSM C4 harness connector.

Is the resistance below 5.0 Ohms?

Yes

- Replace the Steering Control Module (SCM) in accordance with the Service Information.
- Perform the BODY VERIFICATION TEST. (Refer to 28 - DTC-Based Diagnostics/MODULE, Totally Integrated Power (TIPM) - Standard Procedure).

No

- Repair the high resistance in the (C91) Heated Steering Wheel Feed circuit.
- Perform the BODY VERIFICATION TEST. (Refer to 28 - DTC-Based Diagnostics/MODULE, Totally Integrated Power (TIPM) - Standard Procedure).

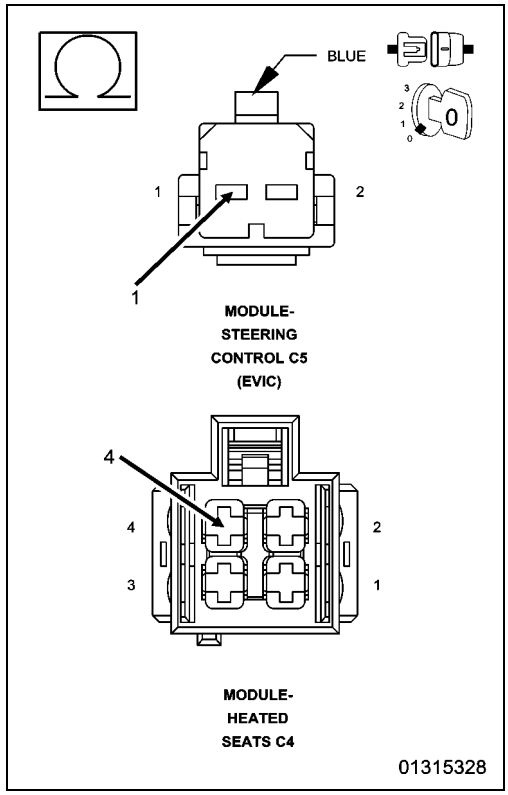

6. CHECK (C986) HEATED STEERING WHEEL RETURN CIRCUIT FOR HIGH RESISTANCE BETWEEN SCM AND HSM

1. Disconnect the SCM C5 harness connector.

NOTE: Check connectors. Clean and repair as necessary.

2. Measure the resistance of the (C986) Heated Steering Wheel Return circuit between the SCM C5 harness connector and the HSM C4 harness connector.

Is the resistance below 5.0 Ohms?

Yes

- Replace the Steering Control Module (SCM) in accordance with the Service Information.
- Perform the BODY VERIFICATION TEST. (Refer to 28 - DTC-Based Diagnostics/MODULE, Totally Integrated Power (TIPM) - Standard Procedure).

No

- Repair the high resistance in the (C986) Heated Steering Wheel Return circuit.
- Perform the BODY VERIFICATION TEST. (Refer to 28 - DTC-Based Diagnostics/MODULE, Totally Integrated Power (TIPM) - Standard Procedure).

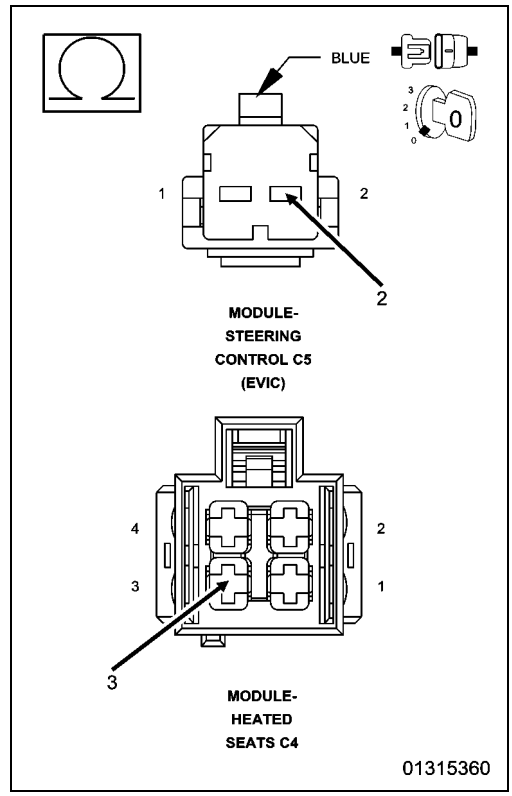

B11C1-13-STEERING WHEEL HEATER POWER SUPPLY - CIRCUIT OPEN

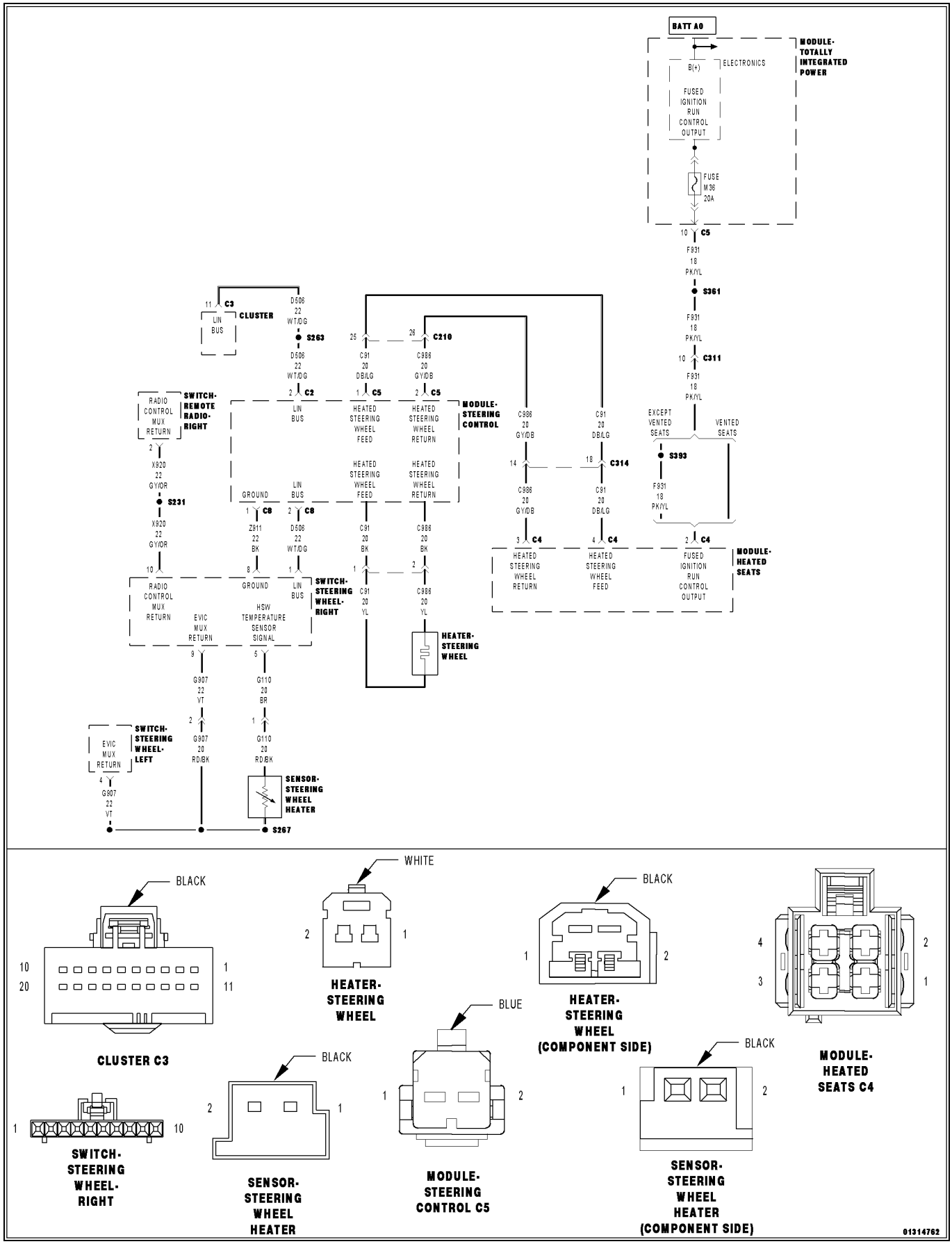

For a complete wiring diagram, **refer to the Wiring Information**.

- **When Monitored:**
  With the engine running.
- **Set Condition:**
  The Heated Seat Module (HSM) detects no voltage on the (F931) Fused Ignition Run Control Output circuit for more than two seconds.

Possible Causes
(F931) FUSED IGNITION RUN CONTROL OUTPUT CIRCUIT OPEN OR SHORTED TO GROUND
HEATED SEAT MODULE (HSM)

1. TEST FOR INTERMITTENT CONDITION

NOTE: Make sure the battery is fully charged and the charging system is operating properly before proceeding.

1. Turn the ignition on.
2. With the scan tool, record and erase Diagnostic Trouble Codes (DTCs).
3. Turn the ignition off.
4. Start the engine and let it run.
5. With the scan tool, read DTCs.

Is the DTC active?

Yes

- Go To 2

No

- The conditions that caused this code to set are not present at this time. Verify seat harness is routed correctly to the HSM. Using the wiring diagram/schematic as a guide, inspect the wiring and connectors. Look for chafed, pierced, pinched, or partially broken wires and broken, bent, pushed out, spread, corroded, or contaminated terminals. Attempt to reproduce condition by adjusting the seat.
- Perform the BODY VERIFICATION TEST. (Refer to 28 - DTC-Based Diagnostics/MODULE, Totally Integrated Power (TIPM) - Standard Procedure).

2. CHECK THE (F931) FUSED IGNITION RUN CONTROL OUTPUT CIRCUIT FOR AN OPEN OR SHORT

1. Turn the ignition off.
2. Disconnect the HSM C4 harness connector.
3. Turn the ignition on.
4. Using a 12-volt test light connected to ground, check the (F931) Fused Ignition Run Control Output circuit.

Does the test light illuminate brightly?

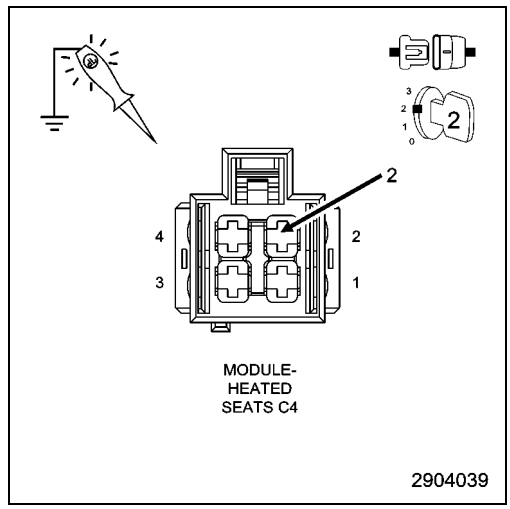

Yes

- Replace the Heated Seat Module (HSM) in accordance with the Service Information.
- Perform the BODY VERIFICATION TEST. (Refer to 28 - DTC-Based Diagnostics/MODULE, Totally Integrated Power (TIPM) - Standard Procedure).

No

- Repair the open or short in the (F931) Fused Ignition Run Control Output circuit.
- Perform the BODY VERIFICATION TEST. (Refer to 28 - DTC-Based Diagnostics/MODULE, Totally Integrated Power (TIPM) - Standard Procedure).

B11DC-13-REAR HEATED SEATS POWER SUPPLY - CIRCUIT OPEN

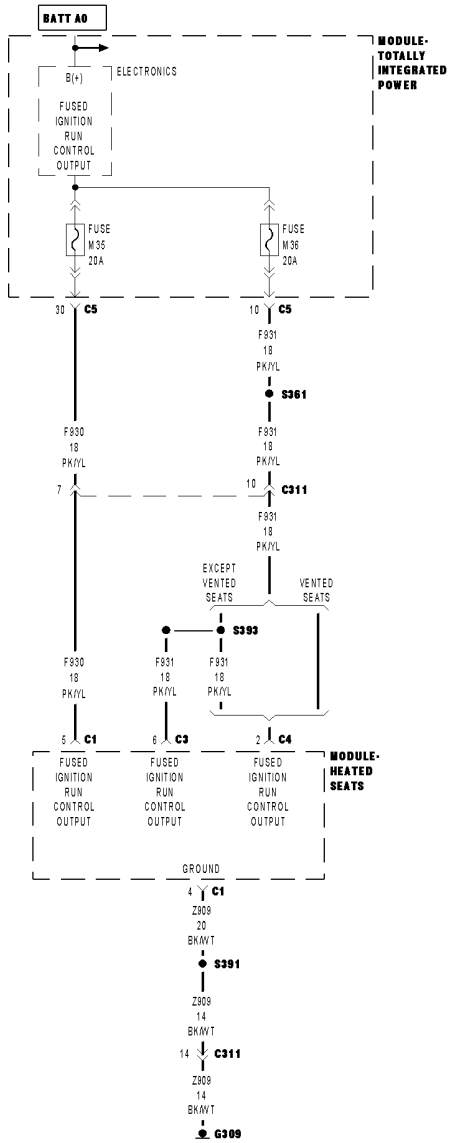

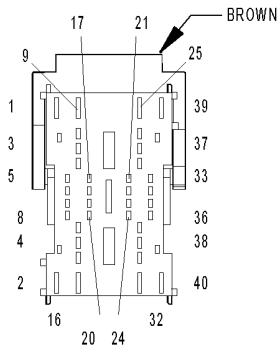

MODULE-
TOTALLY
INTEGRATED
POWER C5

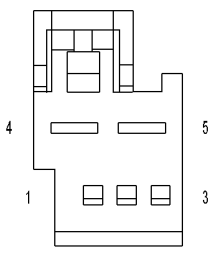

MODULE-
HEATED
SEATS C1

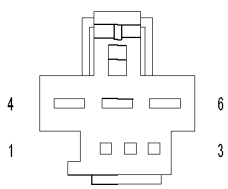

MODULE-
HEATED
SEATS C3

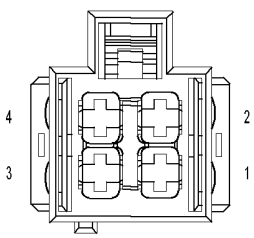

MODULE-
HEATED
SEATS C4

01301907

For a complete wiring diagram, **refer to the Wiring Information**.

- **When Monitored:**
  With the engine running.
- **Set Condition:**
  The Heated Seat Module (HSM) detects no voltage on the (F931) Fused Ignition Run Control Output circuit for more than two seconds.

Possible Causes
OPEN FUSE
(F931) FUSED IGNITION RUN CONTROL OUTPUT CIRCUIT SHORTED TO GROUND
(F931) FUSED IGNITION RUN CONTROL OUTPUT CIRCUIT OPEN
TOTALLLY INTEGRATED POWER MODULE (TIPM)
HEATED SEAT MODULE (HSM)

1. TEST FOR INTERMITTENT CONDITION

NOTE: Make sure the battery is fully charged and the charging system is operating properly before proceeding.

1. Turn the ignition on.
2. Using a scan tool, record and erase Diagnostic Trouble Codes (DTCs).
3. Turn the ignition off.
4. Start the engine and let it run.
5. Using a scan tool, read DTCs.

Is the DTC active?

Yes

- Go To 2

No

- The conditions that caused this code to set are not present at this time. Verify seat harness is routed correctly to the HSM. Using the wiring diagram/schematic as a guide, inspect the wiring and connectors. Look for chafed, pierced, pinched, or partially broken wires and broken, bent, pushed out, spread, corroded, or contaminated terminals. Attempt to reproduce condition by adjusting the seat.
- Perform the BODY VERIFICATION TEST. (Refer to 28 - DTC-Based Diagnostics/MODULE, Totally Integrated Power (TIPM) - Standard Procedure).

2. CHECK TIPM FUSE

1. Using a 12-volt test light connected to ground, check for power on both sides of TIPM Fuse M36.

Choose the applicable result?

No Power To Fuse

- Replace the Totally Integrated Power Module (TIPM) in accordance with the Service Information.
- Perform the BODY VERIFICATION TEST. (Refer to 28 - DTC-Based Diagnostics/MODULE, Totally Integrated Power (TIPM) - Standard Procedure).

Fuse Open

- Go To 3

Fuse Ok

- Go To 6

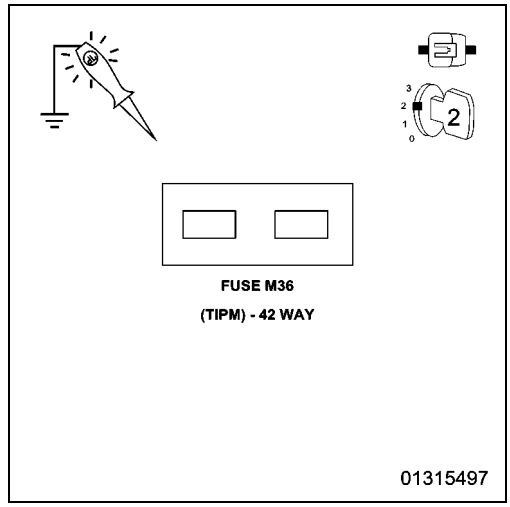

3. REPLACE AND RECHECK TIPM FUSE M36

1. Turn the ignition off.
2. Install a new TIPM Fuse.
3. Turn the ignition on.
4. Using a scan tool, erase DTCs.
5. Turn the ignition off.
6. Start the engine and let it run.
7. Operate each of the Heated Seats and the HSW, if equipped.
8. Inspect TIPM Fuse.

Is the fuse open?

Yes

- Go To 4

No

- Using the wiring diagram/schematic as a guide, inspect the wiring and connectors. Verify seat harness is routed correctly. Look for chafed, pierced, pinched, or partially broken wires and broken, bent, pushed out, spread, corroded, or contaminated terminals. Attempt to reproduce condition by adjusting the seat.
- Perform the BODY VERIFICATION TEST. (Refer to 28 - DTC-Based Diagnostics/MODULE, Totally Integrated Power (TIPM) - Standard Procedure).

4. CHECK (F931) FUSED IGNITION RUN CONTROL OUTPUT CIRCUIT INSIDE TIPM FOR SHORT TO GROUND

1. If not done previously, turn the ignition off.
2. Remove TIPM Fuse M36.
3. Disconnect the TIPM C5 harness connector.

NOTE: Check connectors. Clean and repair as necessary.

4. Measure the resistance between ground and the (F931) Fused Ignition Run Control Output circuit at the TIPM Fuse M36 (output side) connector.

Is the resistance below 10K Ohms?

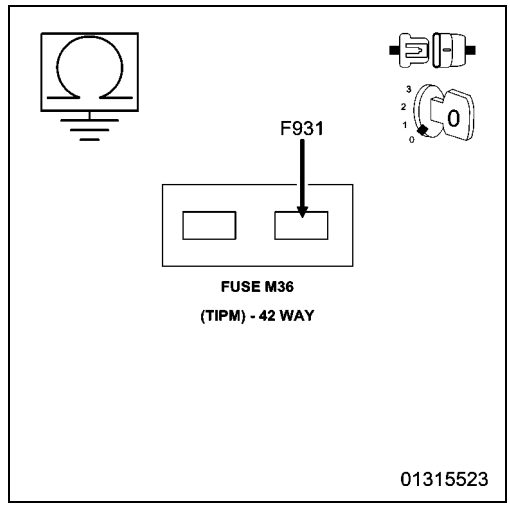

Yes

- Replace the Totally Integrated Power Module (TIPM) and Fuse M36 in accordance with the Service Information.
- Perform the BODY VERIFICATION TEST. (Refer to 28 - DTC-Based Diagnostics/MODULE, Totally Integrated Power (TIPM) - Standard Procedure).

No

- Go To 5

5. CHECK (F931) FUSED IGNITION RUN CONTROL OUTPUT CIRCUIT FOR A SHORT TO GROUND BETWEEN TIPM AND HSM

1. Disconnect the HSM C3 harness connector.
2. Disconnect the HSM C4 harness connector, if equipped.

NOTE: Check connectors. Clean and repair as necessary.

3. Measure the resistance between ground and the (F931) Fused Ignition Run Control Output circuit at the TIPM C5 harness connector.

Is the resistance below 10K Ohms?

Yes

- Repair the (F931) Fused Ignition Run Control Output circuit for a short to ground. Replace Fuse M36 in accordance with the Service Information.
- Perform the BODY VERIFICATION TEST. (Refer to 28 - DTC-Based Diagnostics/MODULE, Totally Integrated Power (TIPM) - Standard Procedure).

No

- Replace the Heated Seat Module (HSM) and Fuse M36 in accordance with the Service Information.
- Perform the BODY VERIFICATION TEST. (Refer to 28 - DTC-Based Diagnostics/MODULE, Totally Integrated Power (TIPM) - Standard Procedure).

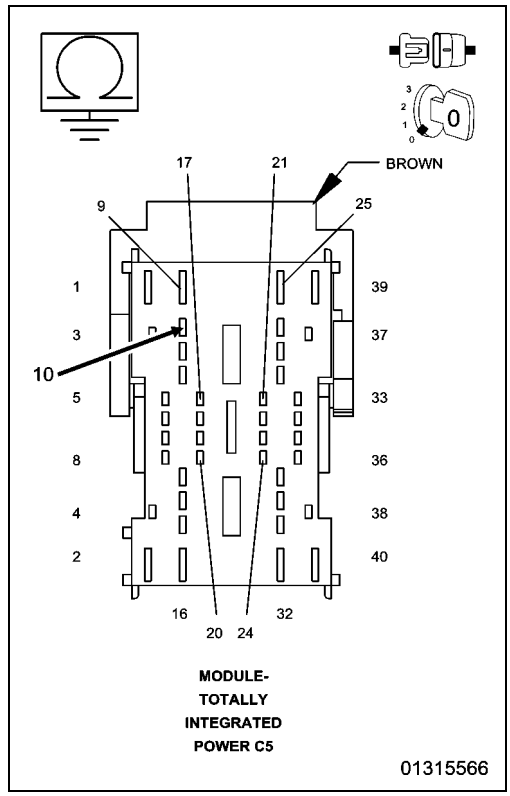

6. CHECK (F931) FUSED IGNITION RUN CONTROL OUTPUT CIRCUIT INSIDE TIPM FOR AN OPEN

NOTE: TIPM C5 harness connector shown. Mirror image for TIPM C5 component side connector.

1. If not done previously, turn the ignition off.
2. Remove TIPM Fuse M36.

NOTE: Check connectors. Clean and repair as necessary.

3. Measure the resistance of the (F931) Fused Ignition Run Control Output circuit between the TIPM Fuse M36 (output side) connector and the TIPM C5 (component side) connector.

NOTE: The graphic shows the connector end. Measure at the component side of the TIPM.

Is the resistance below 5.0 Ohms?

Yes

- Go To 7

No

- Replace the Totally Integrated Power Module (TIPM) in accordance with the Service Information.
- Perform the BODY VERIFICATION TEST. (Refer to 28 - DTC-Based Diagnostics/MODULE, Totally Integrated Power (TIPM) - Standard Procedure).

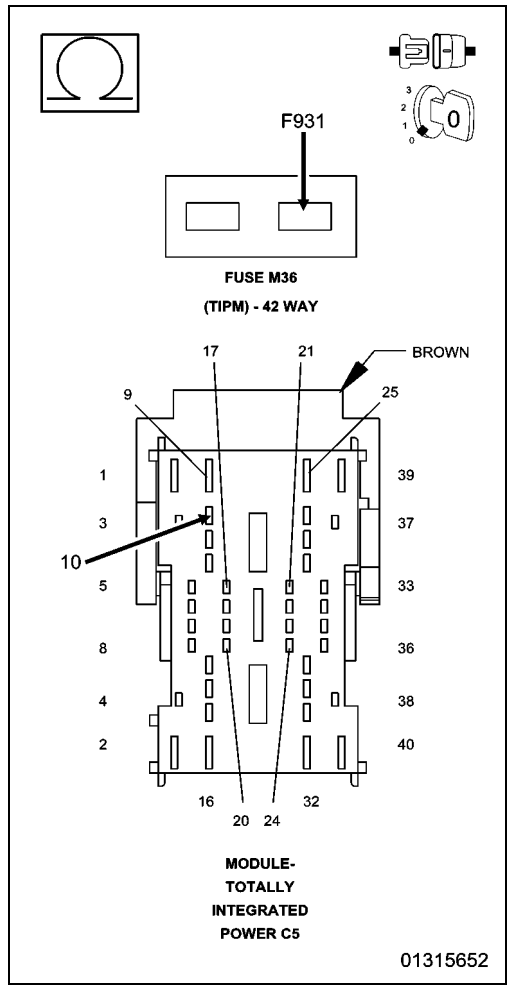

7. CHECK (F931) FUSED IGNITION RUN CONTROL OUTPUT CIRCUIT FOR AN OPEN BETWEEN TIPM AND HSM

1. Disconnect the HSM C3 harness connector.

NOTE: Check connectors. Clean and repair as necessary.

2. Measure the resistance of the (F931) Fused Ignition Run Control Output circuit between the TIPM C5 harness connector and the HSM C3 harness connector.

Is the resistance below 5.0 Ohms?

Yes

- Replace the Heated Seat Module (HSM) in accordance with the Service Information.
- Perform the BODY VERIFICATION TEST. (Refer to 28 - DTC-Based Diagnostics/MODULE, Totally Integrated Power (TIPM) - Standard Procedure).

No

- Repair the (F931) Fused Ignition Run Control Output circuit for an open.
- Perform the BODY VERIFICATION TEST. (Refer to 28 - DTC-Based Diagnostics/MODULE, Totally Integrated Power (TIPM) - Standard Procedure).

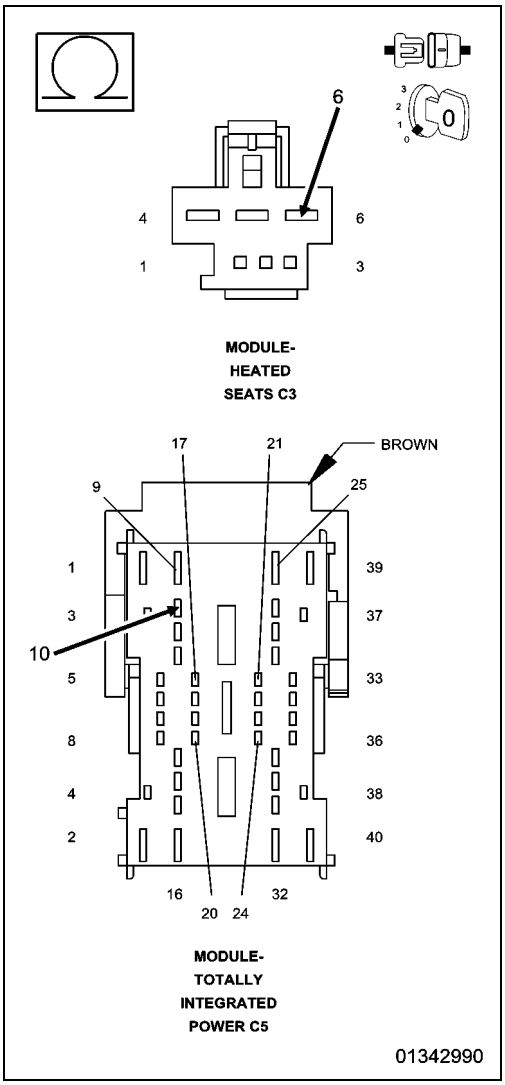

■ B1E99-11-FRONT LEFT HEATER CONTROL CIRCUIT - CIRCUIT SHORT TO GROUND

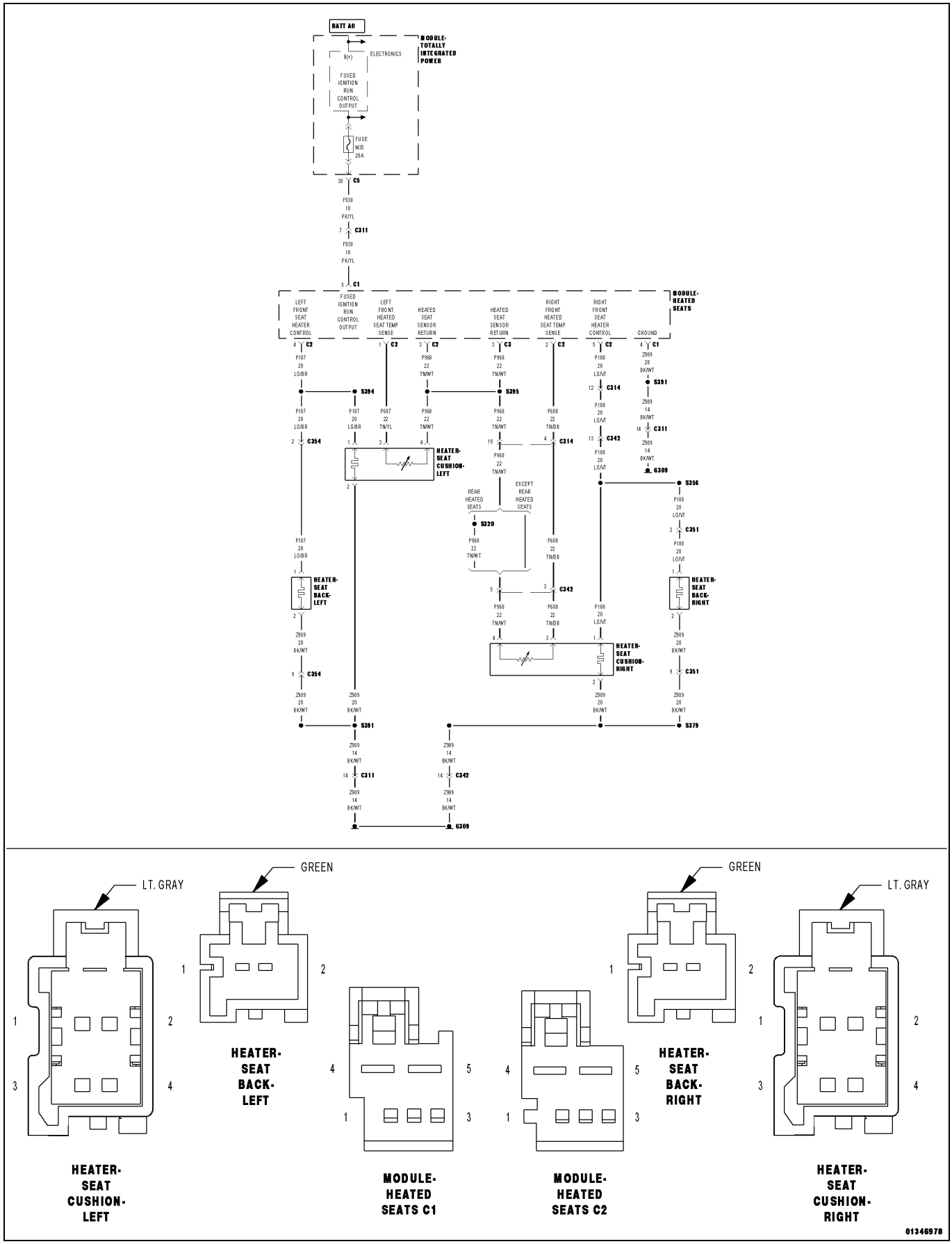

For a complete wiring diagram, **refer to the Wiring Information**.

- **When Monitored:**
  With the engine running.
- **Set Condition:**
  The Heated Seat Module (HSM) detects Voltage below 1.0 Volt or current above 10.0 amps on the (P187) Left Front Seat Heater Control circuit for more than two seconds with the output turned on.

Possible Causes
(P187) LEFT FRONT SEAT HEATER CONTROL CIRCUIT SHORTED TO GROUND
(P187) LEFT FRONT SEAT HEATER CONTROL CIRCUIT SHORTED TO THE (Z909) GROUND CIRCUIT
(P187) LEFT FRONT SEAT HEATER CONTROL CIRCUIT SHORTED TO THE (P968) HEATED SEAT SENSOR RETURN CIRCUIT
SEAT CUSHION HEATER ELEMENT SHORTED
SEAT BACK HEATER ELEMENT SHORTED
HEATED SEAT MODULE (HSM)

1. TEST FOR INTERMITTENT CONDITION

NOTE: Make sure the battery is fully charged and the charging system is operating properly before proceeding.

1. Turn the ignition on.
2. Using a scan tool, record and erase Diagnostic Trouble Codes (DTCs).
3. Turn the ignition off.
4. Start the engine and let it run.
5. Turn the Heated Seat on and operate in all modes.
6. Using a scan tool, read DTCs.

Is the DTC active?

Yes

- Go To 2

No

- The conditions that caused this code to set are not present at this time. Verify seat harness is routed correctly to the HSM. Using the wiring diagram/schematic as a guide, inspect the wiring and connectors. Look for chafed, pierced, pinched, or partially broken wires and broken, bent, pushed out, spread, corroded, or contaminated terminals. Attempt to reproduce condition by adjusting the seat.
- Perform the BODY VERIFICATION TEST. (Refer to 28 - DTC-Based Diagnostics/MODULE, Totally Integrated Power (TIPM) - Standard Procedure).

2. CHECK (P187) LEFT FRONT SEAT HEATER CONTROL CIRCUIT IN BODY HARNESS FOR A SHORT TO GROUND

1. Turn the ignition off.
2. Disconnect the C354 in-line harness connector.
3. Disconnect the Left Seat Cushion Heater harness connector.

NOTE: Check connectors. Clean and repair as necessary.

4. Turn the ignition on.
5. Using a scan tool, erase DTCs.
6. Turn the ignition off.
7. Start the engine and let it run.
8. Turn the Heated Seat on and operate in all modes.
9. Using a scan tool, read DTCs.

Is the same DTC active?

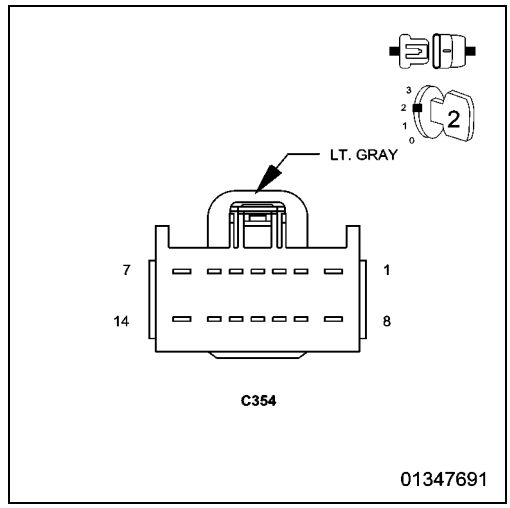

Yes

- Go To 3

No

- Go To 5

3. CHECK (P187) LEFT FRONT SEAT HEATER CONTROL CIRCUIT FOR A SHORT TO GROUND

1. Turn the ignition off.
2. Disconnect the HSM C2 harness connector.

NOTE: Check connectors. Clean and repair as necessary.

3. Measure the resistance between ground and the (P187) Left Front Seat Heater Control circuit at the Left Seat Cushion Heater harness connector.

Is the resistance below 10K Ohms?

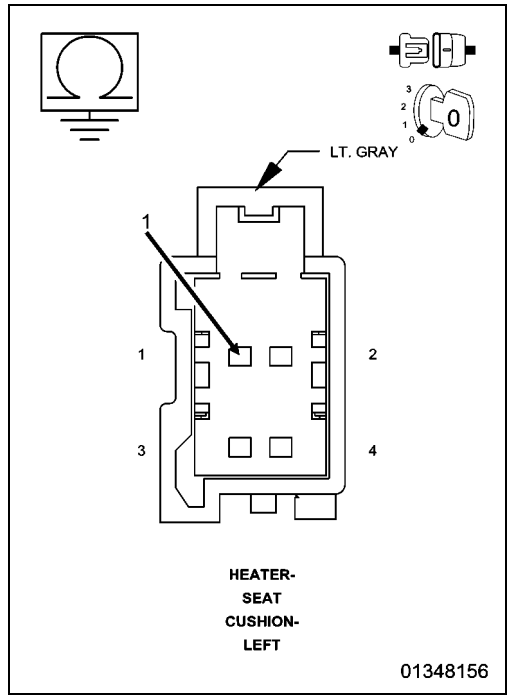

Yes

- Repair the (P187) Left Front Seat Heater Control circuit for a short to ground.
- Perform the BODY VERIFICATION TEST. (Refer to 28 - DTC-Based Diagnostics/MODULE, Totally Integrated Power (TIPM) - Standard Procedure).

No

- Go To 4

4. CHECK (P187) LEFT FRONT SEAT HEATER CONTROL CIRCUIT FOR A SHORT TO THE (Z909) GROUND CIRCUIT OR TO (P968) HEATED SEAT SENSOR RETURN CIRCUIT

1. Measure the resistance between the (P187) Left Front Seat Heater Control circuit and the (Z909) Ground circuit at the Left Seat Cushion Heater connector (harness side).
2. Measure the resistance between the (P187) Left Front Seat Heater Control circuit and the (P968) Heated Seat Sensor Return circuit at the Left Seat Cushion Heater connector (harness side).

Is the resistance below 10K Ohms for either measurement?

Yes

- Repair all circuits with a resistance below 10K Ohms for a short to the (P187) Left Front Seat Heater Control circuit.
- Perform the BODY VERIFICATION TEST. (Refer to 28 - DTC-Based Diagnostics/MODULE, Totally Integrated Power (TIPM) - Standard Procedure).

No

- Replace the Heated Seat Module (HSM) in accordance with the Service Information.
- Perform the BODY VERIFICATION TEST. (Refer to 28 - DTC-Based Diagnostics/MODULE, Totally Integrated Power (TIPM) - Standard Procedure).

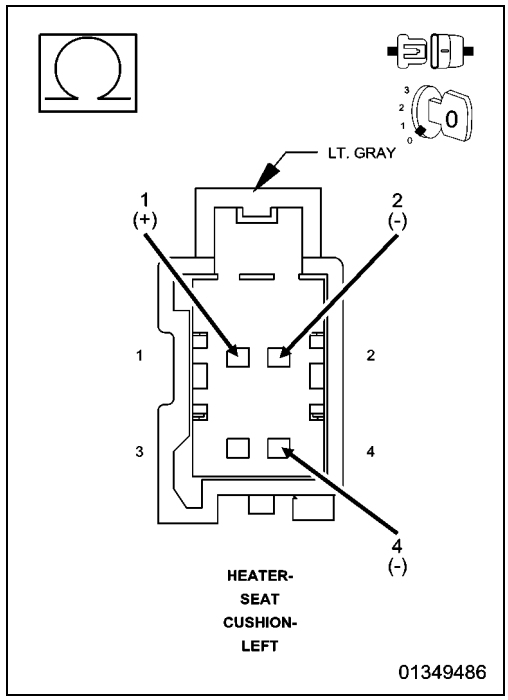

5. CHECK (P187) LEFT FRONT SEAT HEATER CONTROL CIRCUIT IN PIGTAIL HARNESS AND LEFT SEAT BACK HEATER ELEMENT FOR A SHORT TO GROUND

1. Turn the ignition off.
2. Reconnect the C354 in-line harness connector.
3. Turn the ignition on.
4. Using a scan tool, erase DTCs.
5. Turn the ignition off.
6. Start the engine and let it run.
7. Turn the Heated Seat on and operate in all modes.
8. Using a scan tool, read DTCs.

Is the same DTC active?

Yes

- Repair or replace the pigtail harness for a short to ground or replace the shorted Seat Back Heater Element in accordance with the Service Information.
- Perform the BODY VERIFICATION TEST. (Refer to 28 - DTC-Based Diagnostics/MODULE, Totally Integrated Power (TIPM) - Standard Procedure).

No

- Replace the Seat Cushion Heater Element in accordance with the Service Information.
- Perform the BODY VERIFICATION TEST. (Refer to 28 - DTC-Based Diagnostics/MODULE, Totally Integrated Power (TIPM) - Standard Procedure).

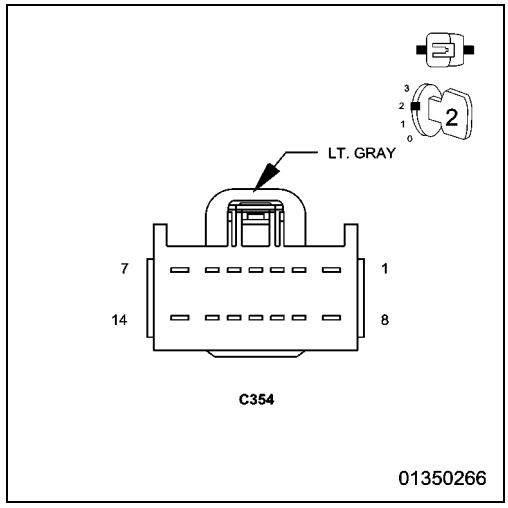

■ B1E99-12-FRONT LEFT HEATER CONTROL CIRCUIT - CIRCUIT SHORT TO BATTERY

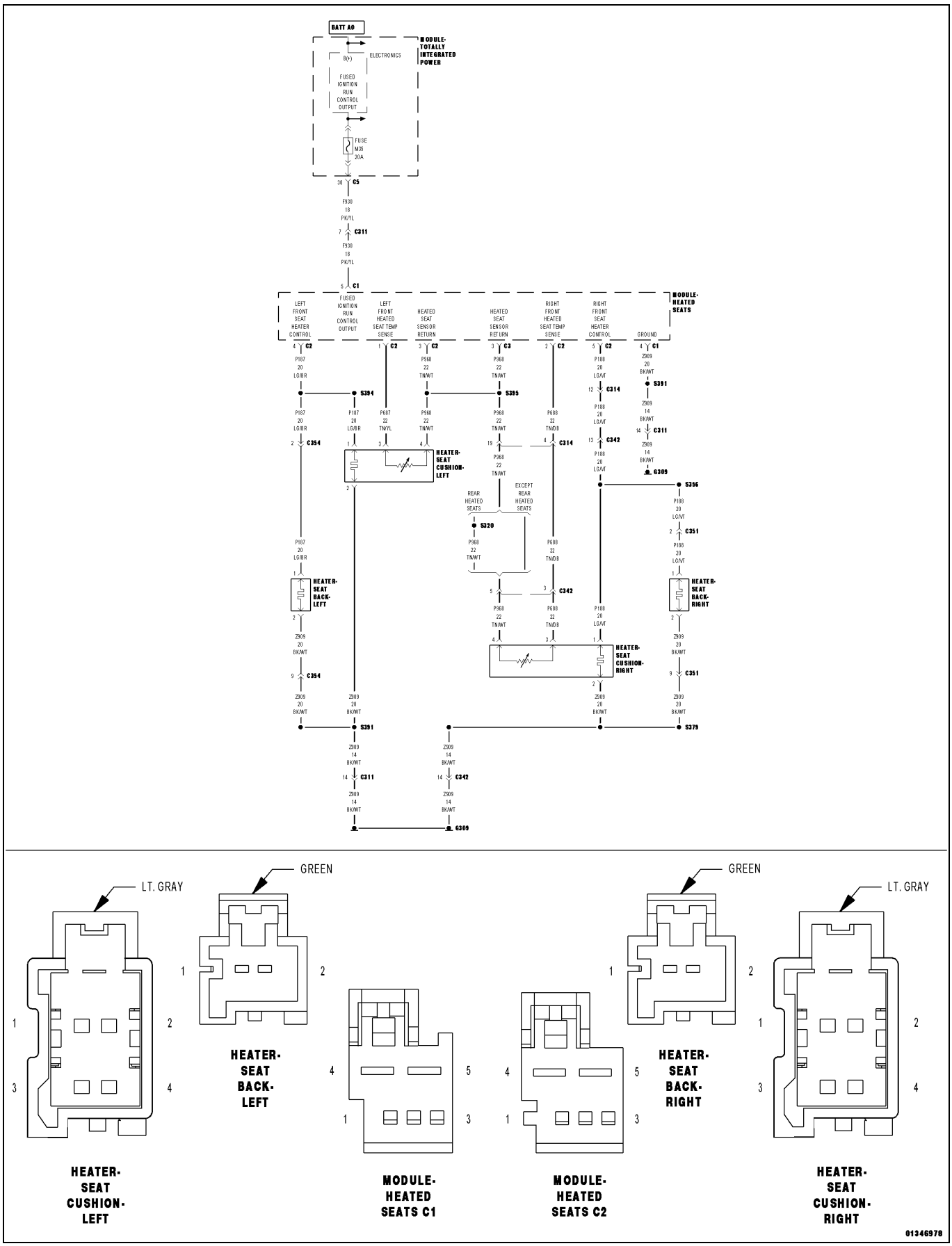

For a complete wiring diagram, **refer to the Wiring Information**.

- **When Monitored:**
  With the engine running.
- **Set Condition:**
  The Heated Seat Module (HSM) detects Voltage above 5.0 volts on the (P187) Left Front Seat Heater Control circuit for more than two seconds with the output turned off.

Possible Causes
(P187) LEFT FRONT SEAT HEATER CONTROL CIRCUIT SHORTED TO VOLTAGE
(P187) LEFT FRONT SEAT HEATER CONTROL CIRCUIT SHORTED TO THE (P188) RIGHT FRONT SEAT HEATER CONTROL CIRCUIT
HEATED SEAT MODULE (HSM)

1. TEST FOR INTERMITTENT CONDITION

NOTE: Make sure the battery is fully charged and the charging system is operating properly before proceeding.

1. Turn the ignition on.
2. Using a scan tool, record and erase Diagnostic Trouble Codes (DTCs).
3. Turn the ignition off.
4. Start the engine and let it run.
5. Using a scan tool, read DTCs.

Is the DTC active?

Yes

- Go To 2

No

- The conditions that caused this code to set are not present at this time. Verify seat harness is routed correctly to the HSM. Using the wiring diagram/schematic as a guide, inspect the wiring and connectors. Look for chafed, pierced, pinched, or partially broken wires and broken, bent, pushed out, spread, corroded, or contaminated terminals. Attempt to reproduce condition by operating all HSM functions one at a time, except for the Left Front Heated Seat. Attempt to reproduce condition by adjusting the seat.
- Perform the BODY VERIFICATION TEST. (Refer to 28 - DTC-Based Diagnostics/MODULE, Totally Integrated Power (TIPM) - Standard Procedure).

2. CHECK (P187) LEFT FRONT SEAT HEATER CONTROL CIRCUIT FOR A SHORT TO VOLTAGE

1. Turn the ignition off.
2. Disconnect the HSM C2 harness connector.

NOTE: Check connectors. Clean and repair as necessary.

3. Start the engine and let it run.
4. Measure the voltage of the (P187) Left Front Seat Heater Control circuit between the HSM C2 harness connector and ground.

Is there any voltage present?

Yes

- Repair the (P187) Left Front Seat Heater Control circuit for a short to voltage.
- Perform the BODY VERIFICATION TEST. (Refer to 28 - DTC-Based Diagnostics/MODULE, Totally Integrated Power (TIPM) - Standard Procedure).

No

- Go To 3

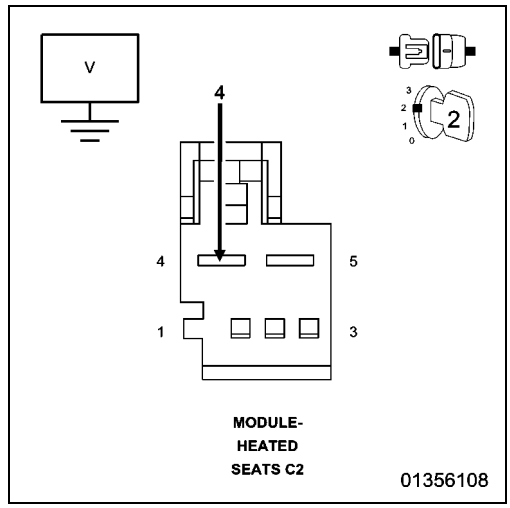

3. CHECK (P187) LEFT FRONT SEAT HEATER CONTROL CIRCUIT FOR A SHORT TO VOLTAGE DURING SEAT ADJUSTMENT

1. Measure the voltage of the (P187) Left Front Seat Heater Control circuit between the HSM C2 harness connector and ground while adjusting the seat in all positions.

Is there any voltage present during the seat adjustment?

Yes

- Repair the (P187) Left Front Seat Heater Control circuit for a short to voltage.
- Perform the BODY VERIFICATION TEST. (Refer to 28 - DTC-Based Diagnostics/MODULE, Totally Integrated Power (TIPM) - Standard Procedure).

No

- Go To 4

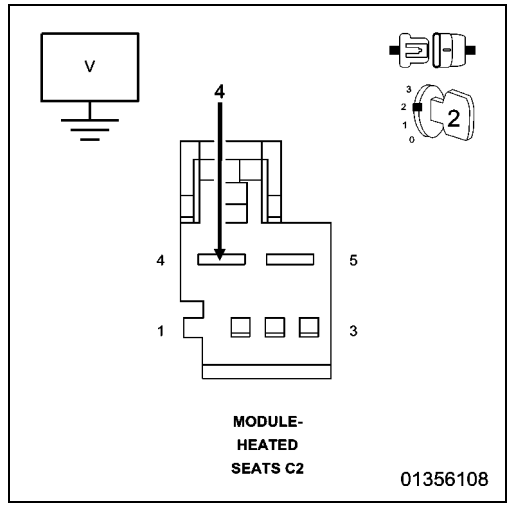

4. CHECK (P187) LEFT FRONT SEAT HEATER CONTROL CIRCUIT FOR A SHORT TO THE (P188) RIGHT FRONT SEAT HEATER CONTROL CIRCUIT

1. Turn the ignition off.
2. Disconnect the C354 and C342 in-line harness connectors.
3. Disconnect the Left Seat Cushion Heater harness connector.
4. Measure the resistance between the (P187) Left Front Seat Heater Control circuit and the (P188) Right Front Seat Heater Control circuit at HSM C2 harness connector.

Is the resistance below 10K Ohms?

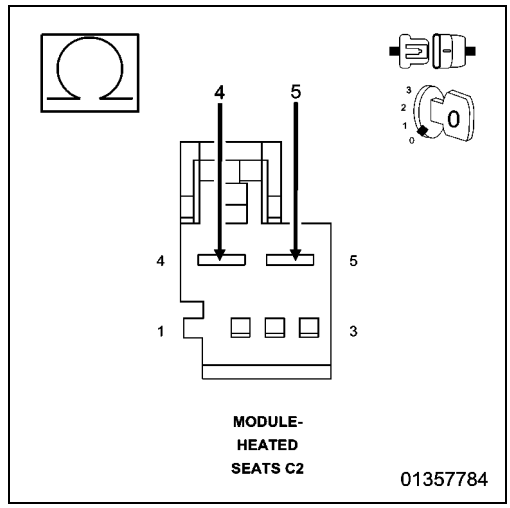

Yes

- Repair the (P187) Left Front Seat Heater Control circuit for a short to the (P188) Right Front Seat Heater Control circuit.
- Perform the BODY VERIFICATION TEST. (Refer to 28 - DTC-Based Diagnostics/MODULE, Totally Integrated Power (TIPM) - Standard Procedure).

No

- Replace the Heated Seat Module (HSM) in accordance with the Service Information.
- Perform the BODY VERIFICATION TEST. (Refer to 28 - DTC-Based Diagnostics/MODULE, Totally Integrated Power (TIPM) - Standard Procedure).

B1E99-13-FRONT LEFT HEATER CONTROL CIRCUIT - CIRCUIT OPEN

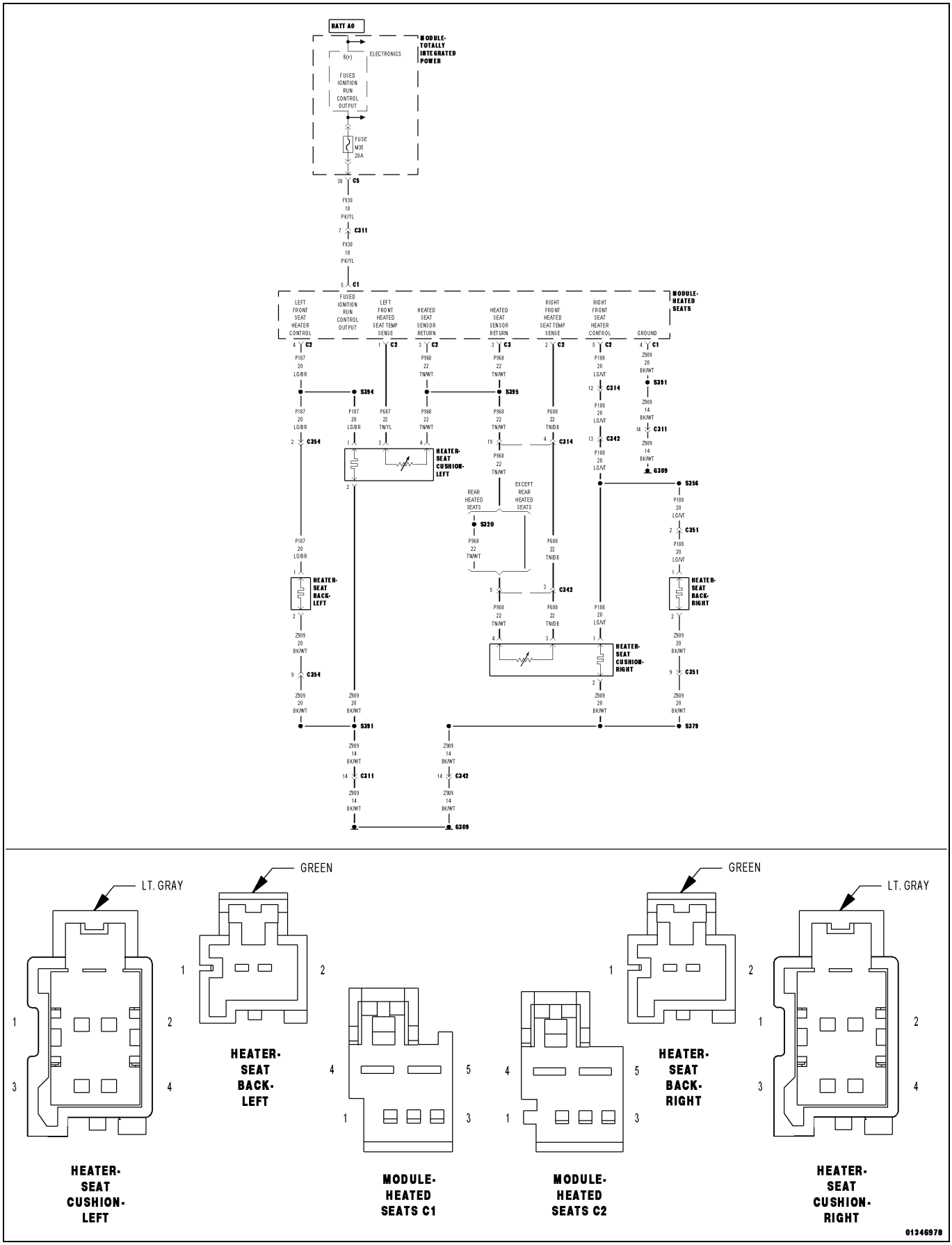

For a complete wiring diagram, **refer to the Wiring Information**.

- **When Monitored:**
  With the engine running.
- **Set Condition:**
  The Heated Seat Module (HSM) detects current below 0.5 of an amp on the (P187) Left Front Seat Heater Control circuit for more than two seconds with the output turned on.

Possible Causes
(P187) LEFT FRONT SEAT HEATER CONTROL CIRCUIT OPEN
(Z909) GROUND CIRCUIT OPEN
SEAT CUSHION HEATER ELEMENT OPEN
SEAT BACK HEATER ELEMENT OPEN
HEATED SEAT MODULE (HSM)

1. TEST FOR INTERMITTENT CONDITION

NOTE: Make sure the battery is fully charged and the charging system is operating properly before proceeding.

1. Turn the ignition on.
2. Using a scan tool, record and erase Diagnostic Trouble Codes (DTCs).
3. Turn the ignition off.
4. Start the engine and let it run.
5. Turn the Heated Seat on and operate in all modes.
6. Using a scan tool, read DTCs.

Is the DTC active?

Yes

- Go To 2

No

- The conditions that caused this code to set are not present at this time. Verify seat harness is routed correctly to the HSM. Using the wiring diagram/schematic as a guide, inspect the wiring and connectors. Look for chafed, pierced, pinched, or partially broken wires and broken, bent, pushed out, spread, corroded, or contaminated terminals. Attempt to reproduce condition by adjusting the seat.
- Perform the BODY VERIFICATION TEST. (Refer to 28 - DTC-Based Diagnostics/MODULE, Totally Integrated Power (TIPM) - Standard Procedure).

2. CHECK (P187) LEFT FRONT SEAT HEATER CONTROL CIRCUIT FOR AN OPEN

1. Turn the ignition off.
2. Disconnect the HSM C2 harness connector.
3. Disconnect the Left Seat Cushion Heater harness connector.
4. Disconnect the C354 in-line harness connector.

NOTE: Check connectors. Clean and repair as necessary.

5. Measure the resistance of the (P187) Left Front Seat Heater Control circuit between the HSM C2 harness connector and the Left Seat Cushion Heater harness connector (harness side).
6. Measure the resistance of the (P187) Left Front Seat Heater Control circuit between the HSM C2 harness connector and the C354 in-line harness connector (harness side).

Is the resistance below 5.0 Ohms for both measurements?

Yes

- Go To 3

No

- Repair the (P187) Left Front Seat Heater Control circuit for an open.
- Perform the BODY VERIFICATION TEST (Refer to 28 - DTC-Based Diagnostics/MODULE, Totally Integrated Power (TIPM) - Standard Procedure).

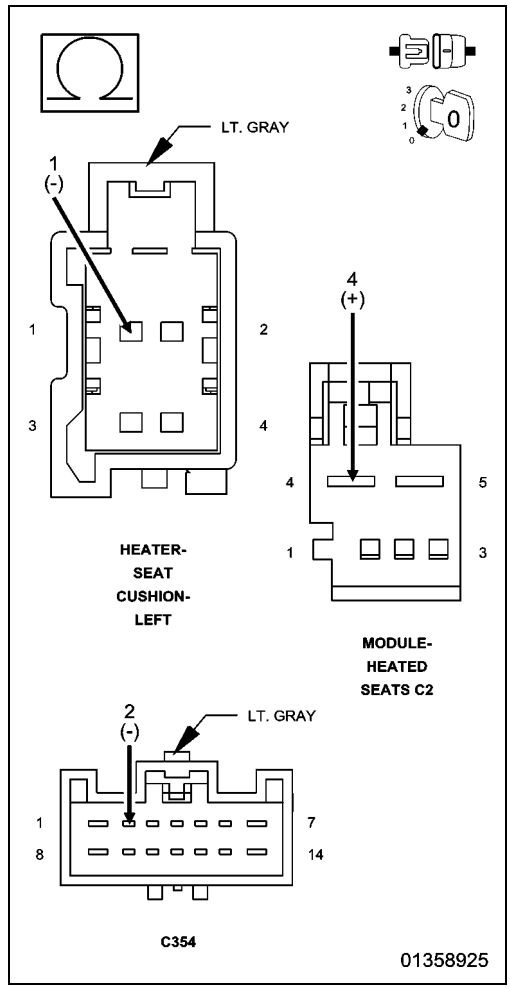

3. CHECK (Z909) GROUND CIRCUIT FOR AN OPEN

1. Measure the resistance of the (Z909) Ground circuit between ground and the Left Seat Cushion Heater harness connector (harness side).
2. Measure the resistance of the (Z909) Ground circuit between ground and the C354 in-line harness harness connector (harness side).

Is the resistance below 5.0 Ohms for both measurements?

Yes

- Go To 4

No

- Repair the (Z909) Ground circuit for an open.
- Perform the BODY VERIFICATION TEST (Refer to 28 - DTC-Based Diagnostics/MODULE, Totally Integrated Power (TIPM) - Standard Procedure).

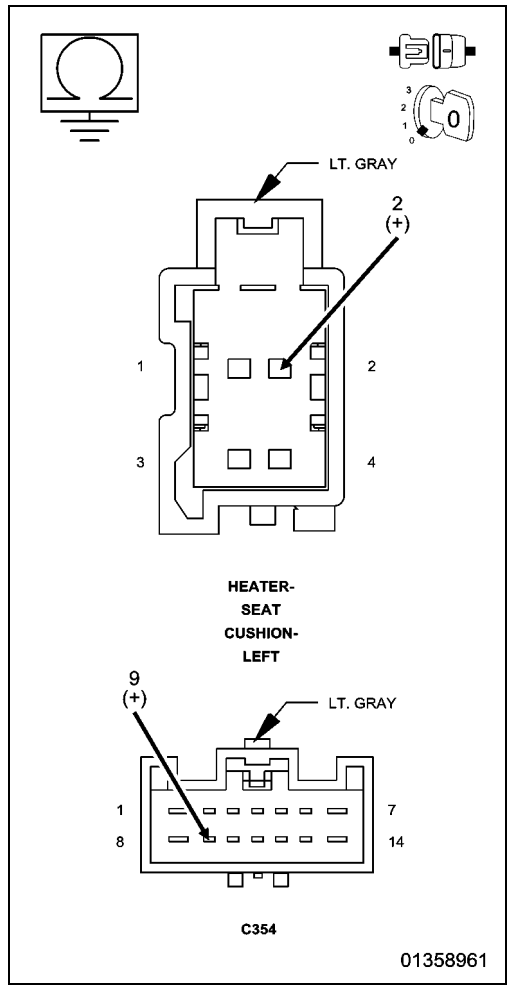

4. CHECK FOR AN OPEN LEFT SEAT CUSHION HEATER ELEMENT

1. Measure the resistance between the (P187) Left Front Seat Heater Control circuit and the (Z909) Ground circuit at the Left Seat Cushion Heater harness connector (component side).

Is the resistance above 4.8 Ohms (without vented seats) or 9.8 Ohms (with vented seats)?

Yes

- Replace the Seat Cushion Heater Element in accordance with the Service Information.
- Perform the BODY VERIFICATION TEST. (Refer to 28 - DTC-Based Diagnostics/MODULE, Totally Integrated Power (TIPM) - Standard Procedure).

No

- Go To 5

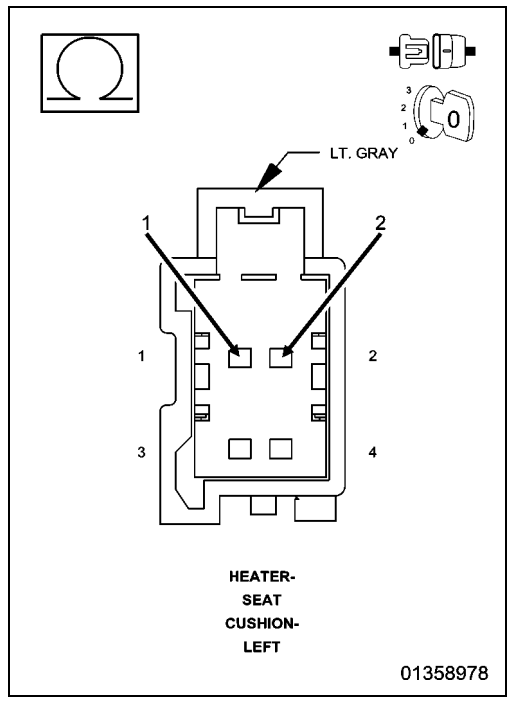

5. CHECK PIGTAIL HARNESS AND LEFT SEAT BACK HEATER ELEMENT FOR AN OPEN

1. Measure the resistance between the (P187) Left Front Seat Heater Control circuit and the (Z909) Ground circuit at the C354 in-line harness connector (seat back side).

Is the resistance above 4.8 Ohms (without vented seats) or 11.6 Ohms (with vented seats)?

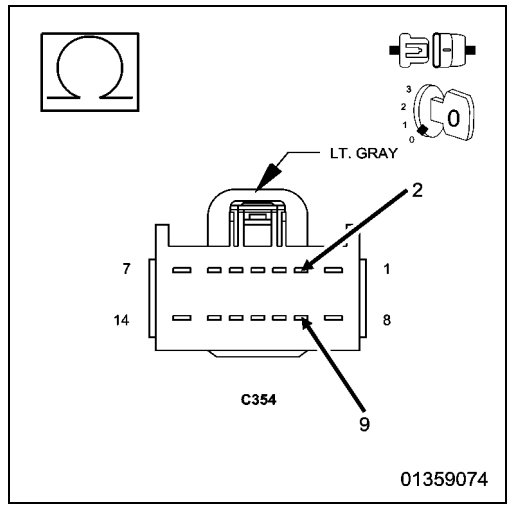

Yes

- Repair or replace the pigtail harness for an open or replace the open Seat Back Heater Element in accordance with the Service Information.
- Perform the BODY VERIFICATION TEST. (Refer to 28 - DTC-Based Diagnostics/MODULE, Totally Integrated Power (TIPM) - Standard Procedure).

No

- Repair or replace the pigtail harness for an open or replace the open Seat Back Heater Element in accordance with the Service Information.
- Perform the BODY VERIFICATION TEST. (Refer to 28 - DTC-Based Diagnostics/MODULE, Totally Integrated Power (TIPM) - Standard Procedure).

■ B1E99-1E-FRONT LEFT HEATER CONTROL CIRCUIT - CIRCUIT RESISTANCE OUT OF RANGE

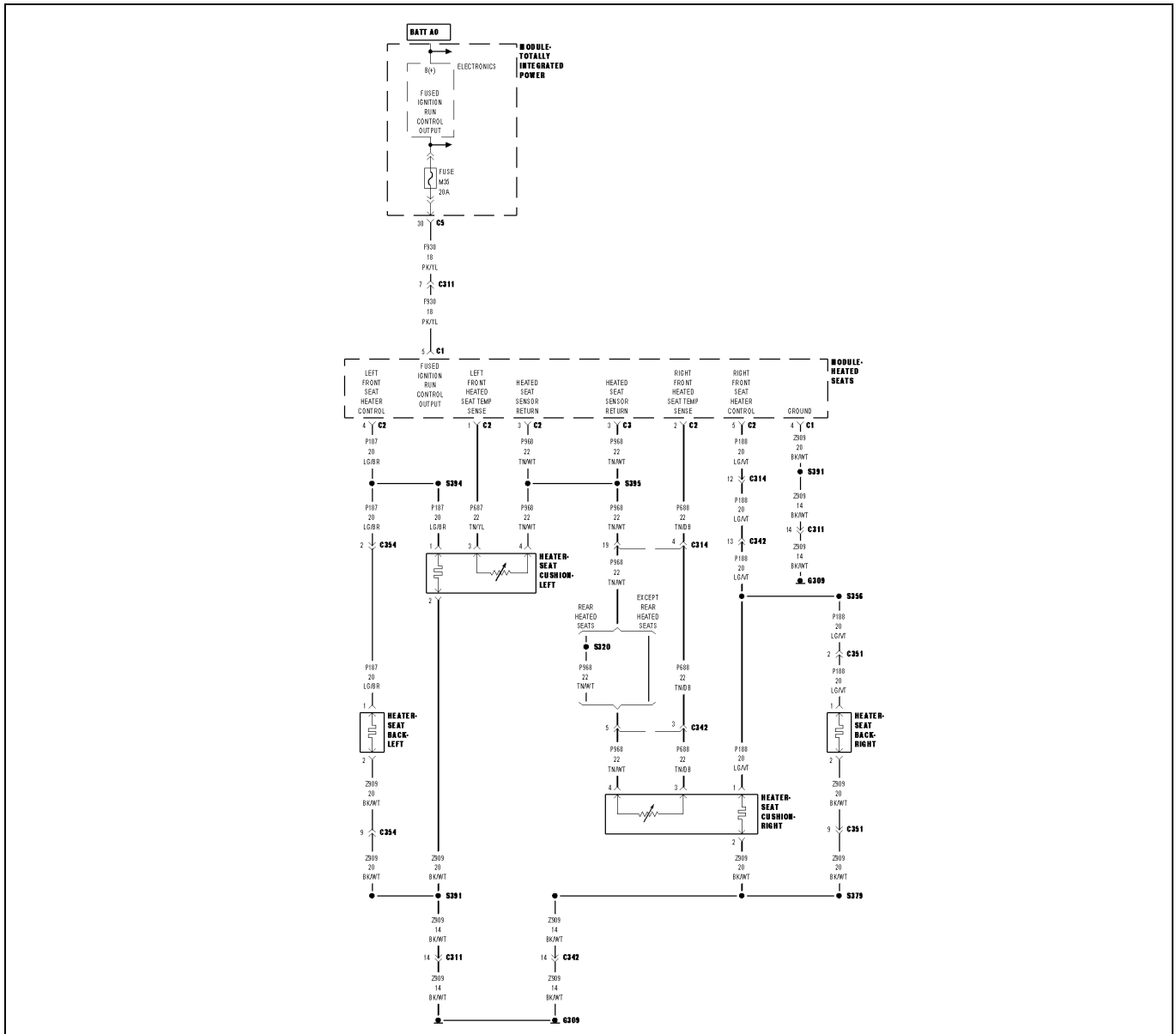

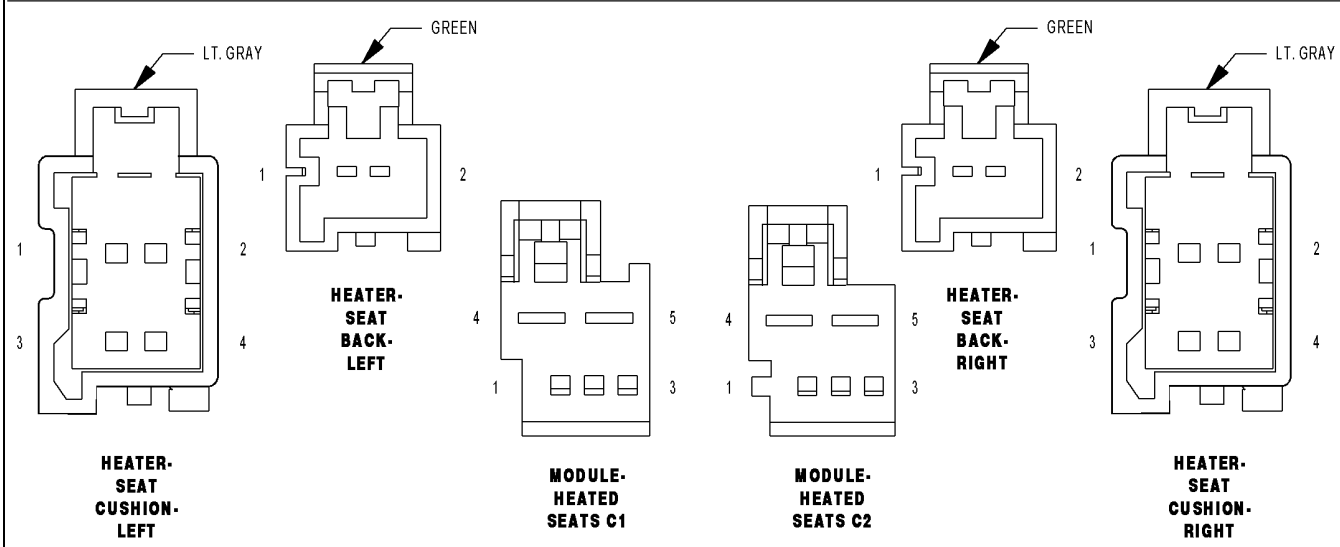

For a complete wiring diagram, **refer to the Wiring Information**.

- **When Monitored:**
  With the engine running.
- **Set Condition:**
  The Heated Seat Module (HSM) detects impedance above threshold on the (P187) Left Front Seat Heater Control circuit for more than two seconds with the output turned on.

Possible Causes
(P187) LEFT FRONT SEAT HEATER CONTROL CIRCUIT RESISTANCE HIGH
(Z909) GROUND CIRCUIT RESISTANCE HIGH
SEAT CUSHION HEATER ELEMENT
SEAT BACK HEATER ELEMENT
HEATED SEAT MODULE (HSM)

1. TEST FOR INTERMITTENT CONDITION

NOTE: Before proceeding, verify the battery is fully charged, the charging system is operating properly, no Battery or System Voltage Diagnostic Trouble Codes (DTCs) are set, and the HSM Power and Ground circuits are clean and tight.

1. Turn the ignition on.
2. Using a scan tool, record and erase Diagnostic Trouble Codes (DTCs).
3. Turn the ignition off.
4. Start the engine and let it run.
5. Turn the Heated Seat on and operate in all modes.
6. Using a scan tool, read DTCs.

Is the DTC active?

Yes

- Go To 2

No

- The conditions that caused this code to set are not present at this time. Verify seat harness is routed correctly to the HSM. Using the wiring diagram/schematic as a guide, inspect the wiring and connectors. Look for chafed, pierced, pinched, or partially broken wires and broken, bent, pushed out, spread, corroded, or contaminated terminals. Attempt to reproduce condition by adjusting the seat.
- Perform the BODY VERIFICATION TEST. (Refer to 28 - DTC-Based Diagnostics/MODULE, Totally Integrated Power (TIPM) - Standard Procedure).

2. CHECK (P187) LEFT FRONT SEAT HEATER CONTROL CIRCUIT FOR HIGH RESISTANCE

1. Turn the ignition off.
2. Disconnect the HSM C2 harness connector.
3. Disconnect the Left Seat Cushion Heater harness connector.
4. Disconnect the C354 in-line harness connector.

NOTE: Check connectors. Clean and repair as necessary.

5. Measure the resistance of the (P187) Left Front Seat Heater Control circuit between the HSM C2 harness connector and the Left Seat Cushion Heater harness connector.
6. Measure the resistance of the (P187) Left Front Seat Heater Control circuit between the HSM C2 connector and the C354 in-line harness connector (harness side).

Is the resistance below 5.0 Ohms for both measurements?

Yes

- Go To 3

No

- Repair the (P187) Left Front Seat Heater Control circuit for high resistance.
- Perform the BODY VERIFICATION TEST. (Refer to 28 - DTC-Based Diagnostics/MODULE, Totally Integrated Power (TIPM) - Standard Procedure).

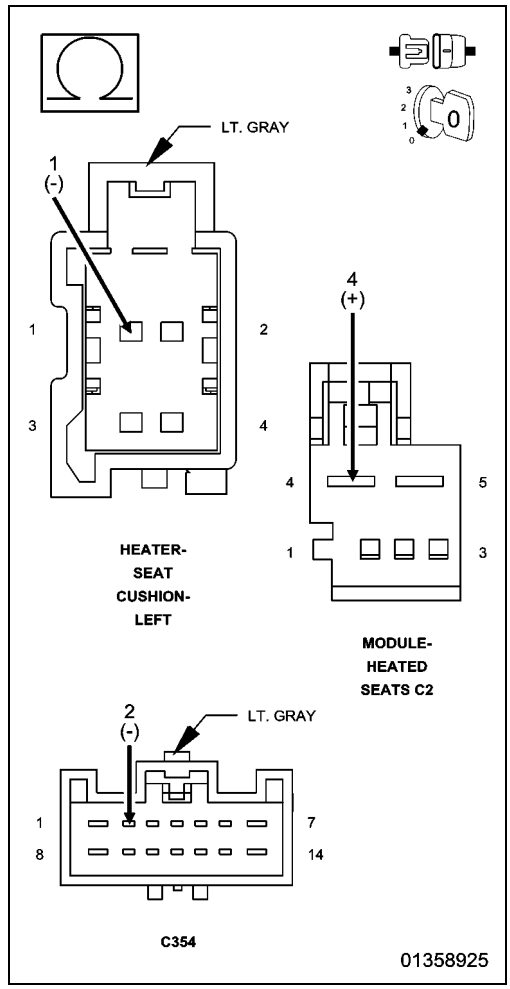

3. CHECK (Z909) GROUND CIRCUIT FOR HIGH RESISTANCE

1. Measure the resistance of the (Z909) Ground circuit between ground and the Left Seat Cushion Heater harness connector.
2. Measure the resistance of the (Z909) Ground circuit between ground and the C354 in-line harness connector (harness side).

Is the resistance below 5.0 Ohms for both measurements?

Yes

- Go To 4

No

- Repair the (Z909) Ground circuit for high resistance.
- Perform the BODY VERIFICATION TEST. (Refer to 28 - DTC-Based Diagnostics/MODULE, Totally Integrated Power (TIPM) - Standard Procedure).

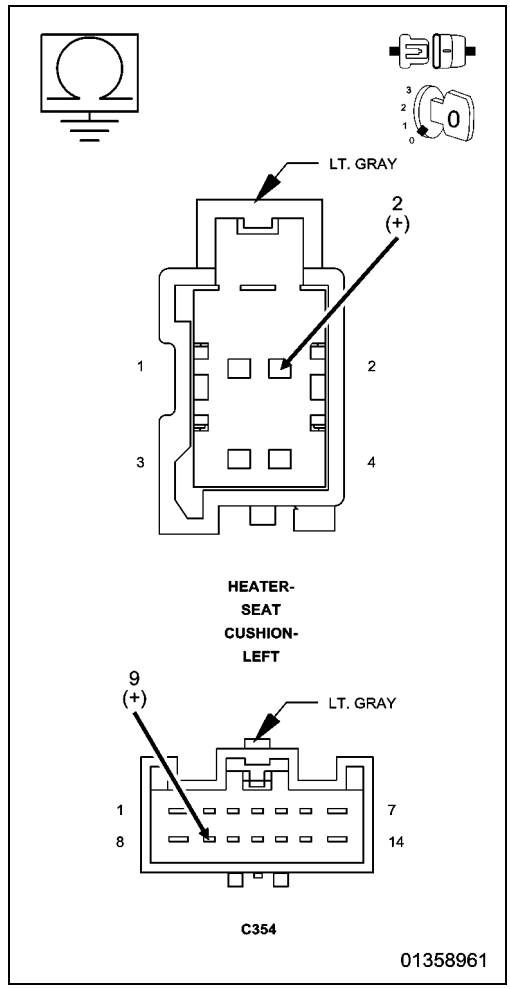

4. CHECK LEFT SEAT CUSHION HEATER ELEMENT RESISTANCE

1. Measure the resistance between the (P187) Left Front Seat Heater Control circuit and the (Z909) Ground circuit at the Left Seat Cushion Heater connector (component side).

Is the resistance above 4.8 Ohms (without vented seats) or 9.8 Ohms (with vented seats)?

Yes

- Replace the Seat Cushion Heater Element in accordance with the Service Information. (Refer to 08 - Electrical/8G - Heated/Cooled Systems/Heated Seats/PAD, Heater - Removal).
- Perform the BODY VERIFICATION TEST. (Refer to 28 - DTC-Based Diagnostics/MODULE, Totally Integrated Power (TIPM) - Standard Procedure).

No

- Go To 5

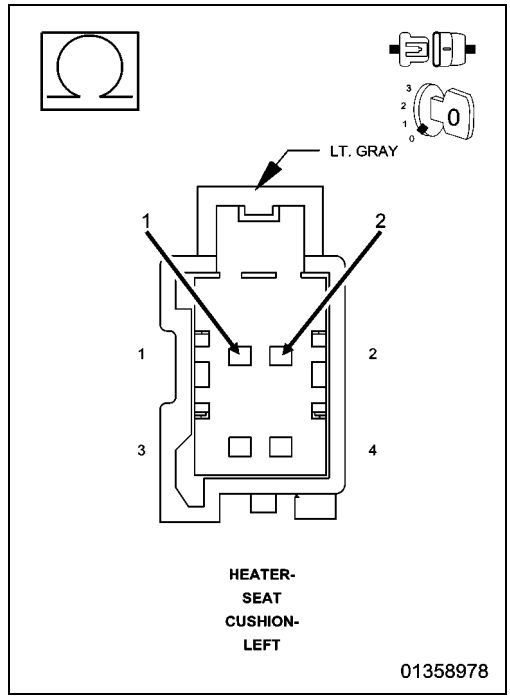

5. CHECK PIGTAIL HARNESS AND LEFT SEAT BACK HEATER ELEMENT RESISTANCE

1. Measure the resistance between the (P187) Left Front Seat Heater Control circuit and the (Z909) Ground circuit at the C354 in-line harness connector (seat back side).

Is the resistance above 4.8 Ohms (without vented seats) or 11.6 Ohms (with vented seats)?

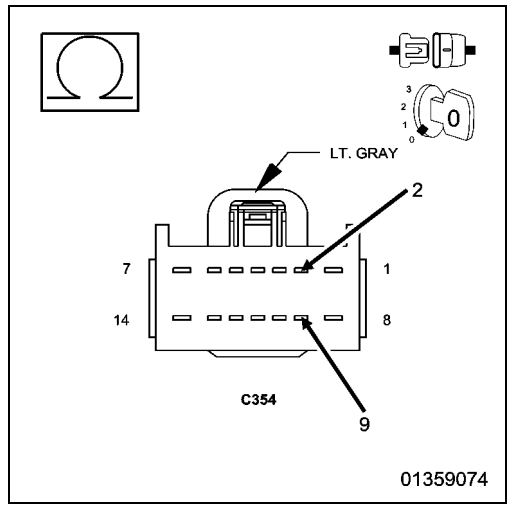

Yes

- Repair or replace the pigtail harness for high resistance or replace the Seat Back Heater Element in accordance with the Service Information.
- Perform the BODY VERIFICATION TEST. (Refer to 28 - DTC-Based Diagnostics/MODULE, Totally Integrated Power (TIPM) - Standard Procedure).

No

- Replace the Heated Seat Module (HSM) in accordance with the Service Information.
- Perform the BODY VERIFICATION TEST. (Refer to 28 - DTC-Based Diagnostics/MODULE, Totally Integrated Power (TIPM) - Standard Procedure).

■ B1E9A-11-FRONT RIGHT HEATER CONTROL CIRCUIT - CIRCUIT SHORT TO GROUND

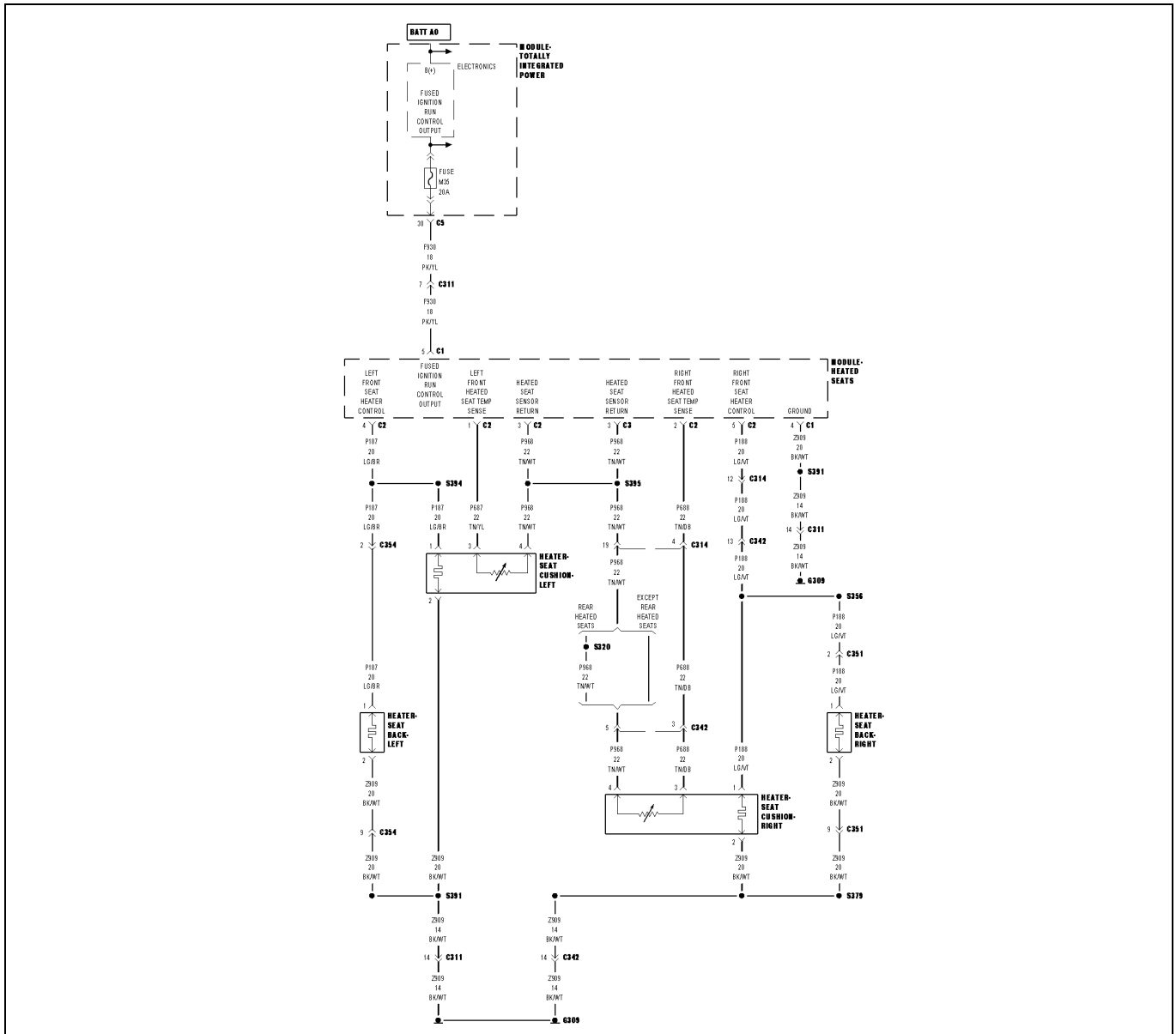

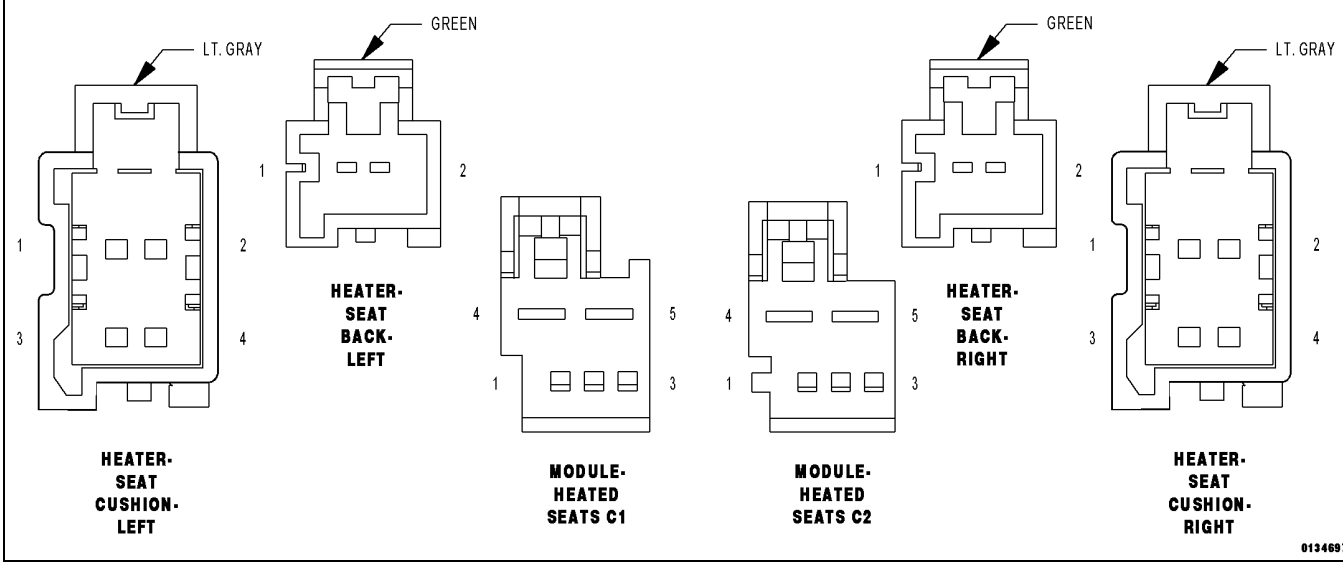

For a complete wiring diagram, **refer to the Wiring Information**.

- **When Monitored:**
  With the engine running.
- **Set Condition:**
  The Heated Seat Module (HSM) detects Voltage below 1.0 volt or current above 10.0 amps on the (P188) Right Front Seat Heater Control circuit for more than two seconds with the output turned on.

Possible Causes
(P188) RIGHT FRONT SEAT HEATER CONTROL CIRCUIT SHORTED TO GROUND
(P188) RIGHT FRONT SEAT HEATER CONTROL CIRCUIT SHORTED TO THE (Z909) GROUND CIRCUIT
(P188) RIGHT FRONT SEAT HEATER CONTROL CIRCUIT SHORTED TO THE (P968) HEATED SEAT SENSOR RETURN CIRCUIT
SEAT CUSHION HEATER ELEMENT SHORTED
SEAT BACK HEATER ELEMENT SHORTED
HEATED SEAT MODULE (HSM)

1. TEST FOR INTERMITTENT CONDITION

NOTE: Make sure the battery is fully charged and the charging system is operating properly before proceeding.

1. Turn the ignition on.
2. Using a scan tool, record and erase Diagnostic Trouble Codes (DTCs).
3. Turn the ignition off.
4. Start the engine and let it run.
5. Turn the Heated Seat on and operate in all modes.
6. Using a scan tool, read DTCs.

Is the DTC active?

Yes

- Go To 2

No

- The conditions that caused this code to set are not present at this time. Verify seat harness is routed correctly to the HSM. Using the wiring diagram/schematic as a guide, inspect the wiring and connectors. Look for chafed, pierced, pinched, or partially broken wires and broken, bent, pushed out, spread, corroded, or contaminated terminals. Attempt to reproduce condition by adjusting the seat.
- Perform the BODY VERIFICATION TEST. (Refer to 28 - DTC-Based Diagnostics/MODULE, Totally Integrated Power (TIPM) - Standard Procedure).

2. CHECK (P188) RIGHT FRONT SEAT HEATER CONTROL CIRCUIT IN BODY HARNESS FOR A SHORT TO GROUND

1. Turn the ignition off.
2. Disconnect the C351 in-line harness connector.
3. Disconnect the Right Seat Cushion Heater harness connector.

NOTE: Check connectors. Clean and repair as necessary.

4. Turn the ignition on.
5. Using a scan tool, erase DTCs.
6. Turn the ignition off.
7. Start the engine and let it run.
8. Turn the Heated Seat on and operate in all modes.
9. Using a scan tool, read DTCs.

Is the same DTC active?

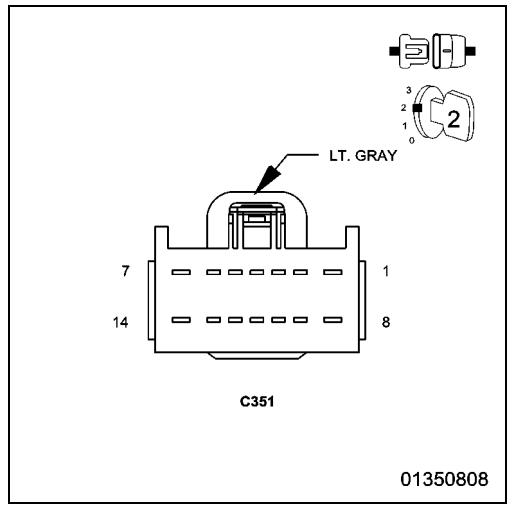

Yes

- Go To 3

No

- Go To 5

3. CHECK (P188) RIGHT FRONT SEAT HEATER CONTROL CIRCUIT FOR A SHORT TO GROUND

1. Turn the ignition off.
2. Disconnect the HSM C2 harness connector.

NOTE: Check connectors. Clean and repair as necessary.

3. Measure the resistance of the (P188) Right Front Seat Heater Control circuit between ground and the Right Seat Cushion Heater harness connector.

Is the resistance below 10K Ohms?

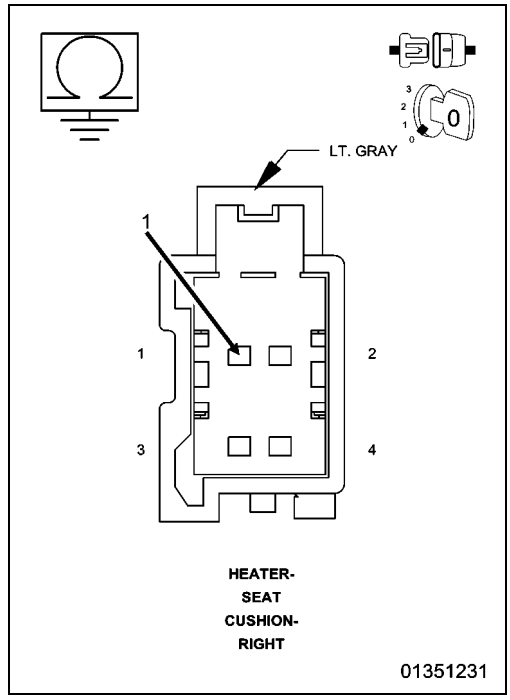

Yes

- Repair the (P188) Right Front Seat Heater Control circuit for a short to ground.
- Perform the BODY VERIFICATION TEST. (Refer to 28 - DTC-Based Diagnostics/MODULE, Totally Integrated Power (TIPM) - Standard Procedure).

No

- Go To 4

4. CHECK (P188) RIGHT FRONT SEAT HEATER CONTROL CIRCUIT FOR A SHORT TO THE (Z909) GROUND CIRCUIT OR TO (P968) HEATED SEAT SENSOR RETURN CIRCUIT

1. Measure the resistance between the (P188) Right Front Seat Heater Control circuit and the (Z909) Ground circuit at the Right Seat Cushion Heater connector (harness side).
2. Measure the resistance between the (P188) Right Front Seat Heater Control circuit and the (P968) Heated Seat Sensor Return circuit at the Right Seat Cushion Heater connector (harness side).

Is the resistance below 10K Ohms for either measurement?

Yes

- Repair all circuits with a resistance below 10K Ohms for a short to the (P188) Right Front Seat Heater Control circuit.
- Perform the BODY VERIFICATION TEST (Refer to 28 - DTC-Based Diagnostics/MODULE, Totally Integrated Power (TIPM) - Standard Procedure).

No

- Replace the Heated Seat Module (HSM) in accordance with the Service Information. (Refer to 08 - Electrical/8E - Electronic Control Modules/MODULE, Heated Seat - Removal).
- Perform the BODY VERIFICATION TEST (Refer to 28 - DTC-Based Diagnostics/MODULE, Totally Integrated Power (TIPM) - Standard Procedure).

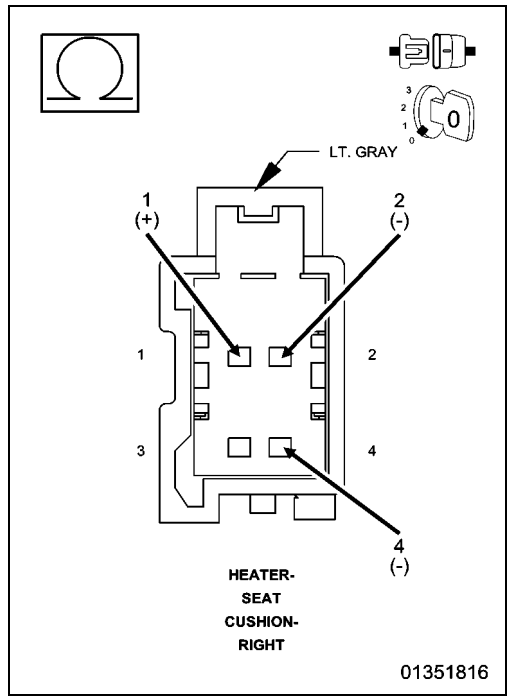

5. CHECK (P188) RIGHT FRONT SEAT HEATER CONTROL CIRCUIT IN PIGTAIL HARNESS AND RIGHT SEAT BACK HEATER ELEMENT FOR A SHORT TO GROUND

1. Turn the ignition off.
2. Reconnect the C351 in-line harness connector.
3. Turn the ignition on.
4. Using a scan tool, erase DTCs.
5. Turn the ignition off.
6. Start the engine and let it run.
7. Turn the Heated Seat on and operate in all modes.
8. Using a scan tool, read DTCs.

Is the same DTC active?

Yes

- Repair or replace the pigtail harness for a short to ground or replace the shorted Seat Back Heater Element in accordance with the Service Information.
- Perform the BODY VERIFICATION TEST. (Refer to 28 - DTC-Based Diagnostics/MODULE, Totally Integrated Power (TIPM) - Standard Procedure).

No

- Replace the shorted Seat Cushion Heater Element in accordance with the Service Information. (Refer to 08 - Electrical/8G - Heated/Cooled Systems/Heated Seats/PAD, Heater - Removal).
- Perform the BODY VERIFICATION TEST. (Refer to 28 - DTC-Based Diagnostics/MODULE, Totally Integrated Power (TIPM) - Standard Procedure).

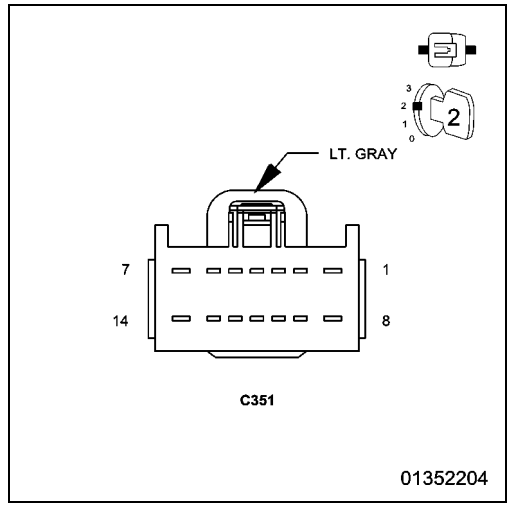

■ B1E9A-12-FRONT RIGHT HEATER CONTROL CIRCUIT - CIRCUIT SHORT TO BATTERY

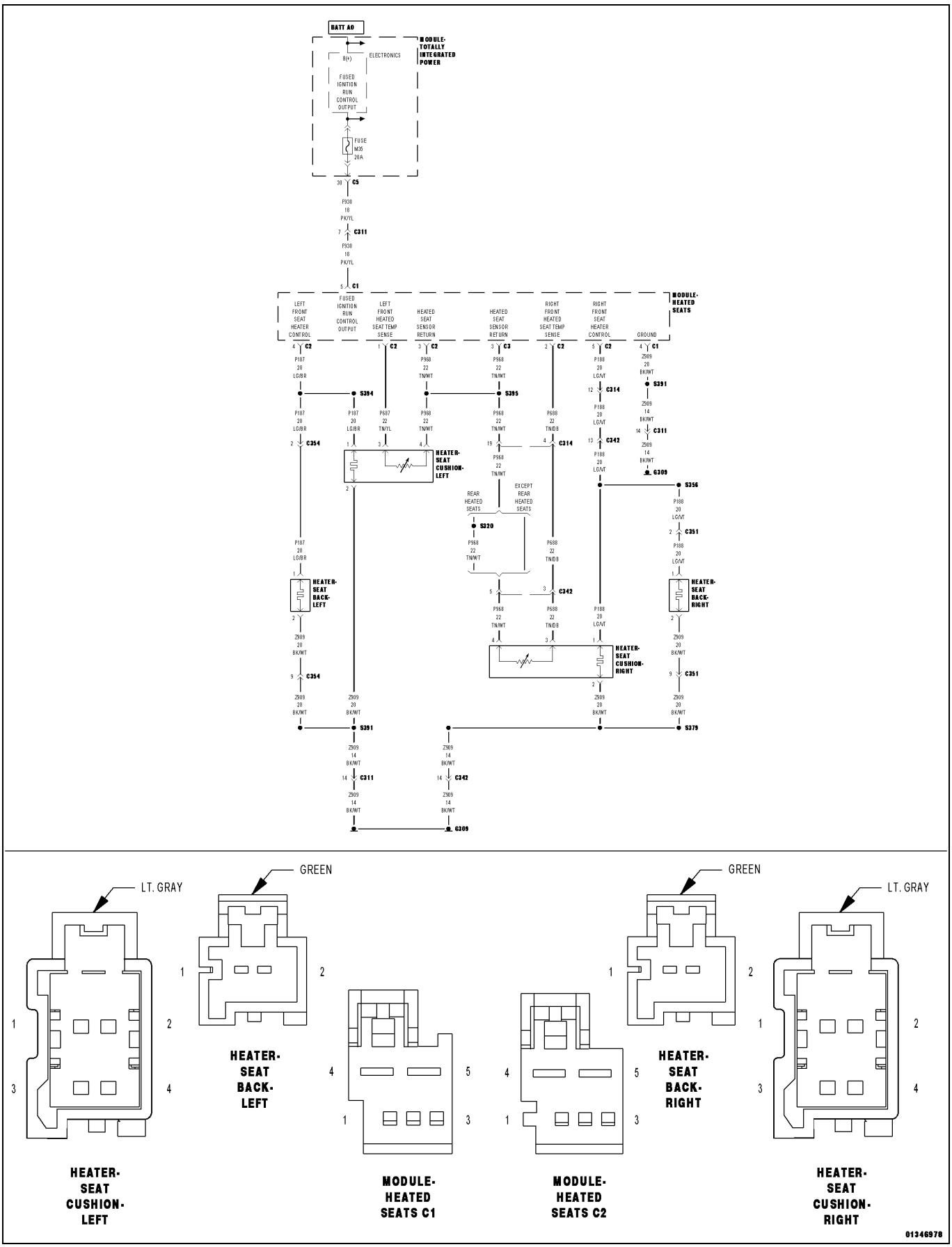

For a complete wiring diagram, **refer to the Wiring Information**.

- **When Monitored:**
  With the engine running.
- **Set Condition:**
  The Heated Seat Module (HSM) detects Voltage above 5.0 volts on the (P188) Right Front Seat Heater Control circuit for more than two seconds with the output turned off.

Possible Causes
(P188) RIGHT FRONT SEAT HEATER CONTROL CIRCUIT SHORTED TO VOLTAGE
(P188) RIGHT FRONT SEAT HEATER CONTROL CIRCUIT SHORTED TO THE (P187) LEFT FRONT SEAT HEATER CONTROL CIRCUIT
HEATED SEAT MODULE (HSM)

1. TEST FOR INTERMITTENT CONDITION

NOTE: Make sure the battery is fully charged and the charging system is operating properly before proceeding.

1. Turn the ignition on.
2. Using a scan tool, record and erase Diagnostic Trouble Codes (DTCs).
3. Turn the ignition off.
4. Start the engine and let it run.
5. Using a scan tool, read DTCs.

Is the DTC active?

Yes

- Go To 2

No

- The conditions that caused this code to set are not present at this time. Verify seat harness is routed correctly to the HSM. Using the wiring diagram/schematic as a guide, inspect the wiring and connectors. Look for chafed, pierced, pinched, or partially broken wires and broken, bent, pushed out, spread, corroded, or contaminated terminals. Attempt to reproduce condition by operating all HSM functions one at a time, except for the Right Front Heated Seat. Attempt to reproduce condition by adjusting the seat.
- Perform the BODY VERIFICATION TEST. (Refer to 28 - DTC-Based Diagnostics/MODULE, Totally Integrated Power (TIPM) - Standard Procedure).

2. CHECK (P188) RIGHT FRONT SEAT HEATER CONTROL CIRCUIT FOR A SHORT TO VOLTAGE

1. Turn the ignition off.
2. Disconnect the HSM C2 harness connector.

NOTE: Check connectors. Clean and repair as necessary.

3. Start the engine and let it run.
4. Measure the voltage of the (P188) Right Front Seat Heater Control circuit between the HSM C2 harness connector and ground.

Is there any voltage present?

Yes

- Repair the (P188) Right Front Seat Heater Control circuit for a short to voltage.
- Perform the BODY VERIFICATION TEST. (Refer to 28 - DTC-Based Diagnostics/MODULE, Totally Integrated Power (TIPM) - Standard Procedure).

No

- Go To 3

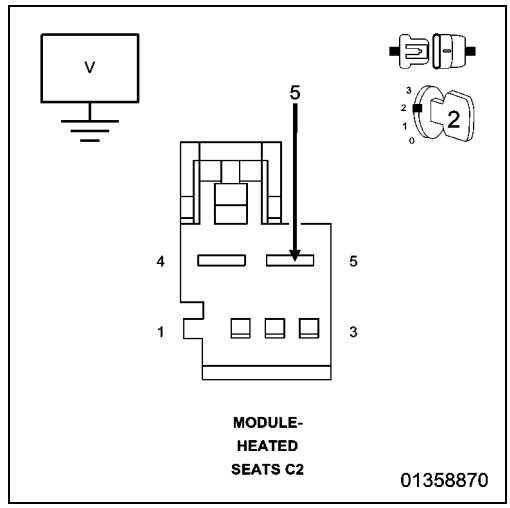

3. CHECK (P188) RIGHT FRONT SEAT HEATER CONTROL CIRCUIT FOR A SHORT TO VOLTAGE DURING SEAT ADJUSTMENT

1. Measure the voltage of the (P188) Right Front Seat Heater Control circuit between the HSM C2 harness connector and ground while adjusting the seat in all positions.

Is there any voltage present during the seat adjustment?

Yes

- Repair the (P188) Right Front Seat Heater Control circuit for a short to voltage.
- Perform the BODY VERIFICATION TEST. (Refer to 28 - DTC-Based Diagnostics/MODULE, Totally Integrated Power (TIPM) - Standard Procedure).

No

- Go To 4

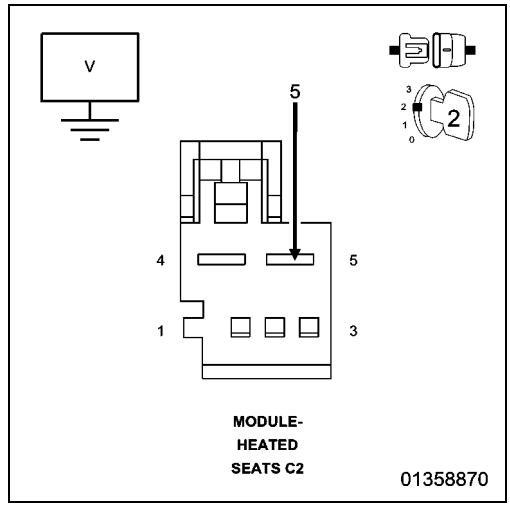

4. CHECK (P188) RIGHT FRONT SEAT HEATER CONTROL CIRCUIT FOR A SHORT TO THE (P187) LEFT FRONT SEAT HEATER CONTROL CIRCUIT

1. Turn the ignition off.
2. Disconnect the C354 and C342 in-line harness connectors.
3. Disconnect the Right Seat Cushion Heater connector.
4. Measure the resistance between the (P188) Right Front Seat Heater Control circuit and (P187) Left Front Seat Heater Control circuit at HSM C2 harness connector.

Is the resistance below 10K Ohms?

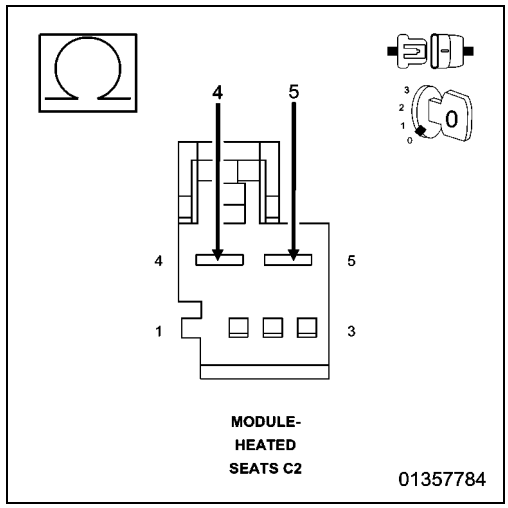

Yes

- Repair the (P188) Right Front Seat Heater Control circuit for a short to the (P187) Left Front Seat Heater Control circuit.
- Perform the BODY VERIFICATION TEST. (Refer to 28 - DTC-Based Diagnostics/MODULE, Totally Integrated Power (TIPM) - Standard Procedure).

No

- Replace the Heated Seat Module (HSM) in accordance with the Service Information. (Refer to 08 - Electrical/8G - Heated/Cooled Systems/Heated Seats/PAD, Heater - Removal).
- Perform the BODY VERIFICATION TEST. (Refer to 28 - DTC-Based Diagnostics/MODULE, Totally Integrated Power (TIPM) - Standard Procedure).

B1E9A-13-FRONT RIGHT HEATER CONTROL CIRCUIT - CIRCUIT OPEN

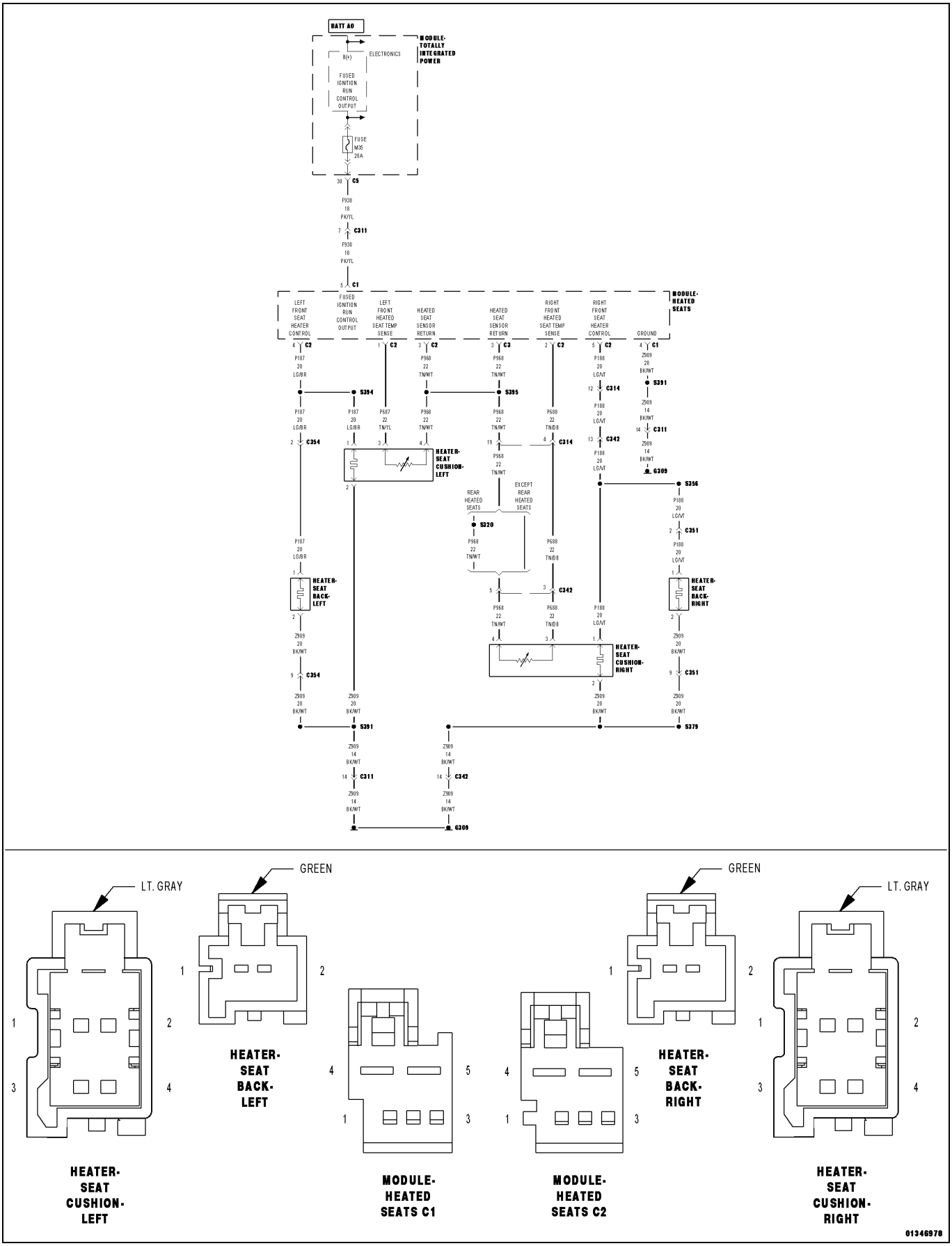

For a complete wiring diagram, **refer to the Wiring Information**.

- **When Monitored:**
  With the engine running.
- **Set Condition:**
  The Heated Seat Module (HSM) detects current below 0.5 of amp on the (P188) Right Front Seat Heater Control circuit for more than two seconds with the output turned on.

Possible Causes
(P188) RIGHT FRONT SEAT HEATER CONTROL CIRCUIT OPEN
(Z909) GROUND CIRCUIT OPEN
SEAT CUSHION HEATER ELEMENT OPEN
SEAT BACK HEATER ELEMENT OPEN
HEATED SEAT MODULE (HSM)

1. TEST FOR INTERMITTENT CONDITION

NOTE: Make sure the battery is fully charged and the charging system is operating properly before proceeding.

1. Turn the ignition on.
2. Using a scan tool, record and erase Diagnostic Trouble Codes (DTCs).
3. Turn the ignition off.
4. Start the engine and let it run.
5. Turn the Heated Seat on and operate in all modes.
6. Using a scan tool, read DTCs.

Is the DTC active?

Yes

- Go To 2

No

- The conditions that caused this code to set are not present at this time. Verify seat harness is routed correctly to the HSM. Using the wiring diagram/schematic as a guide, inspect the wiring and connectors. Look for chafed, pierced, pinched, or partially broken wires and broken, bent, pushed out, spread, corroded, or contaminated terminals. Attempt to reproduce condition by adjusting the seat.
- Perform the BODY VERIFICATION TEST. (Refer to 28 - DTC-Based Diagnostics/MODULE, Totally Integrated Power (TIPM) - Standard Procedure).

2. CHECK (P188) RIGHT FRONT SEAT HEATER CONTROL CIRCUIT FOR AN OPEN

1. Turn the ignition off.
2. Disconnect the HSM C2 harness connector.
3. Disconnect the Right Seat Cushion Heater harness connector.
4. Disconnect the C351 in-line harness connector.

NOTE: Check connectors. Clean and repair as necessary.

5. Measure the resistance of the (P188) Right Front Seat Heater Control circuit between the HSM C2 harness connector and the Right Seat Cushion Heater connector (harness side).
6. Measure the resistance of the (P188) Right Front Seat Heater Control circuit between the HSM C2 harness connector and the C351 in-line harness connector (harness side).

Is the resistance below 5.0 Ohms for both measurements?

Yes

- Go To 3

No

- Repair the (P188) Right Front Seat Heater Control circuit for an open.
- Perform the BODY VERIFICATION TEST. (Refer to 28 - DTC-Based Diagnostics/MODULE, Totally Integrated Power (TIPM) - Standard Procedure).

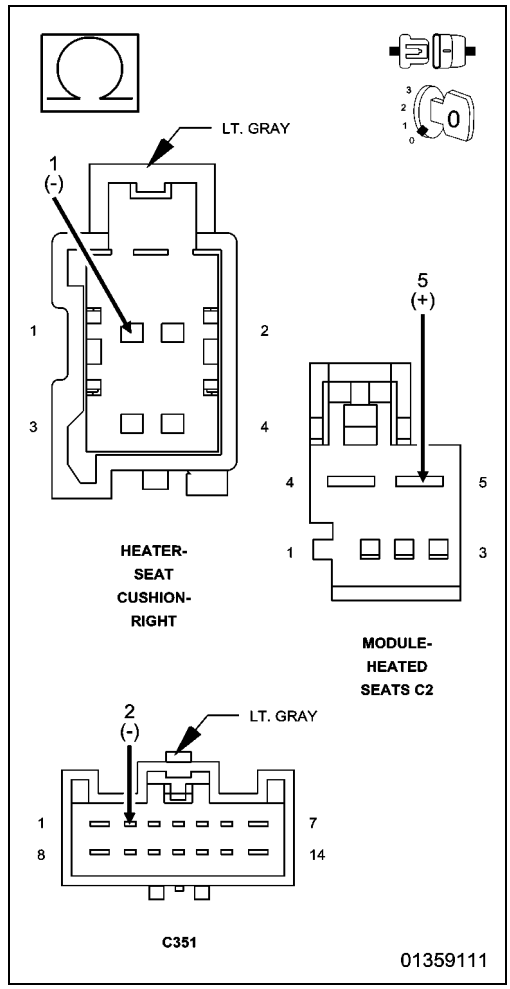

3. CHECK (Z909) GROUND CIRCUIT FOR AN OPEN

1. Measure the resistance of the (Z909) Ground circuit between ground and the Right Seat Cushion Heater harness connector.
2. Measure the resistance of the (Z909) Ground circuit between ground and the C351 in-line harness harness connector.

Is the resistance below 5.0 Ohms for both measurements?

Yes

- Go To 4

No

- Repair the (Z909) Ground circuit for an open.
- Perform the BODY VERIFICATION TEST. (Refer to 28 - DTC-Based Diagnostics/MODULE, Totally Integrated Power (TIPM) - Standard Procedure).

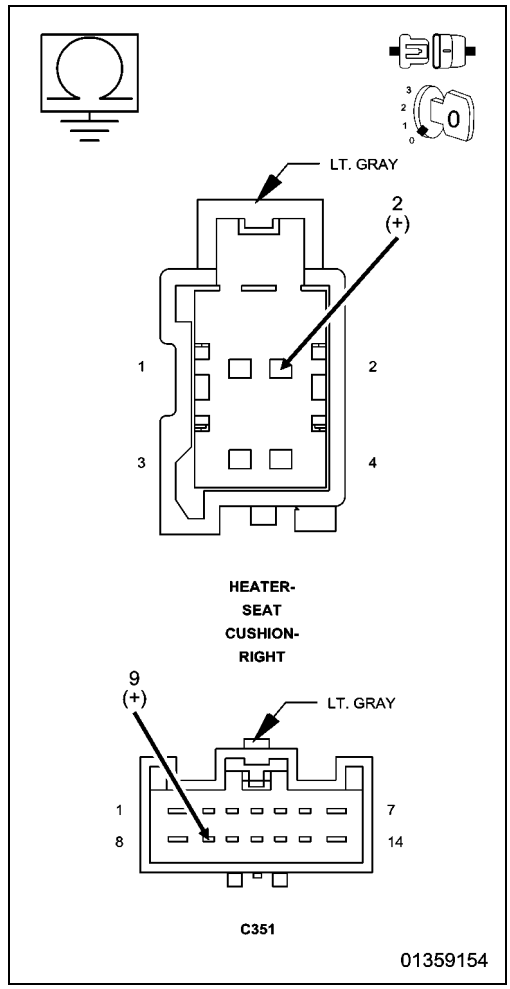

4. CHECK FOR AN OPEN RIGHT SEAT CUSHION HEATER ELEMENT

1. Measure the resistance between the (P188) Right Front Seat Heater Control circuit and the (Z909) Ground circuit at the Right Seat Cushion Heater connector (component side).

Is the resistance above 4.8 Ohms (without vented seats) or 9.8 Ohms (with vented seats)?

Yes

- Replace the Seat Cushion Heater Element in accordance with the Service Information.
- Perform the BODY VERIFICATION TEST. (Refer to 28 - DTC-Based Diagnostics/MODULE, Totally Integrated Power (TIPM) - Standard Procedure).

No

- Go To 5

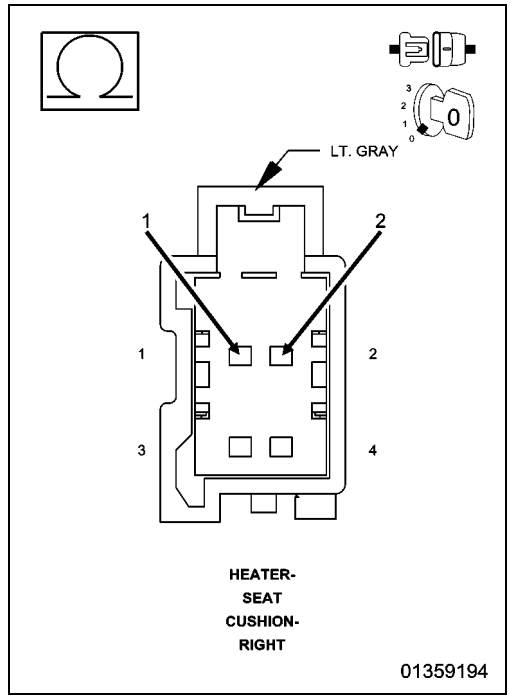

5. CHECK PIGTAIL HARNESS AND RIGHT SEAT BACK HEATER ELEMENT FOR AN OPEN

1. Measure the resistance between the (P188) Right Front Seat Heater Control circuit and the (Z909) Ground circuit at the C351 in-line harness connector (seat back side).

Is the resistance above 4.8 Ohms (without vented seats) or 11.6 Ohms (with vented seats)?

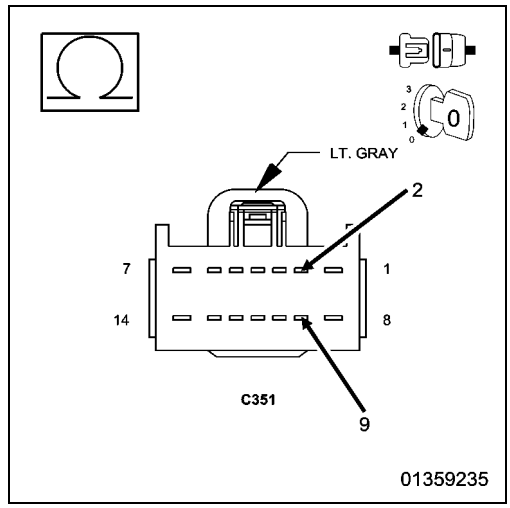

Yes

- Repair or replace the pigtail harness for an open or replace the open Seat Back Heater Element in accordance with the Service Information.
- Perform the BODY VERIFICATION TEST. (Refer to 28 - DTC-Based Diagnostics/MODULE, Totally Integrated Power (TIPM) - Standard Procedure).

No

- Replace the Heated Seat Module (HSM) in accordance with the Service Information.
- Perform the BODY VERIFICATION TEST. (Refer to 28 - DTC-Based Diagnostics/MODULE, Totally Integrated Power (TIPM) - Standard Procedure).

■ B1E9A-1E-FRONT RIGHT HEATER CONTROL CIRCUIT - CIRCUIT RESISTANCE OUT OF RANGE

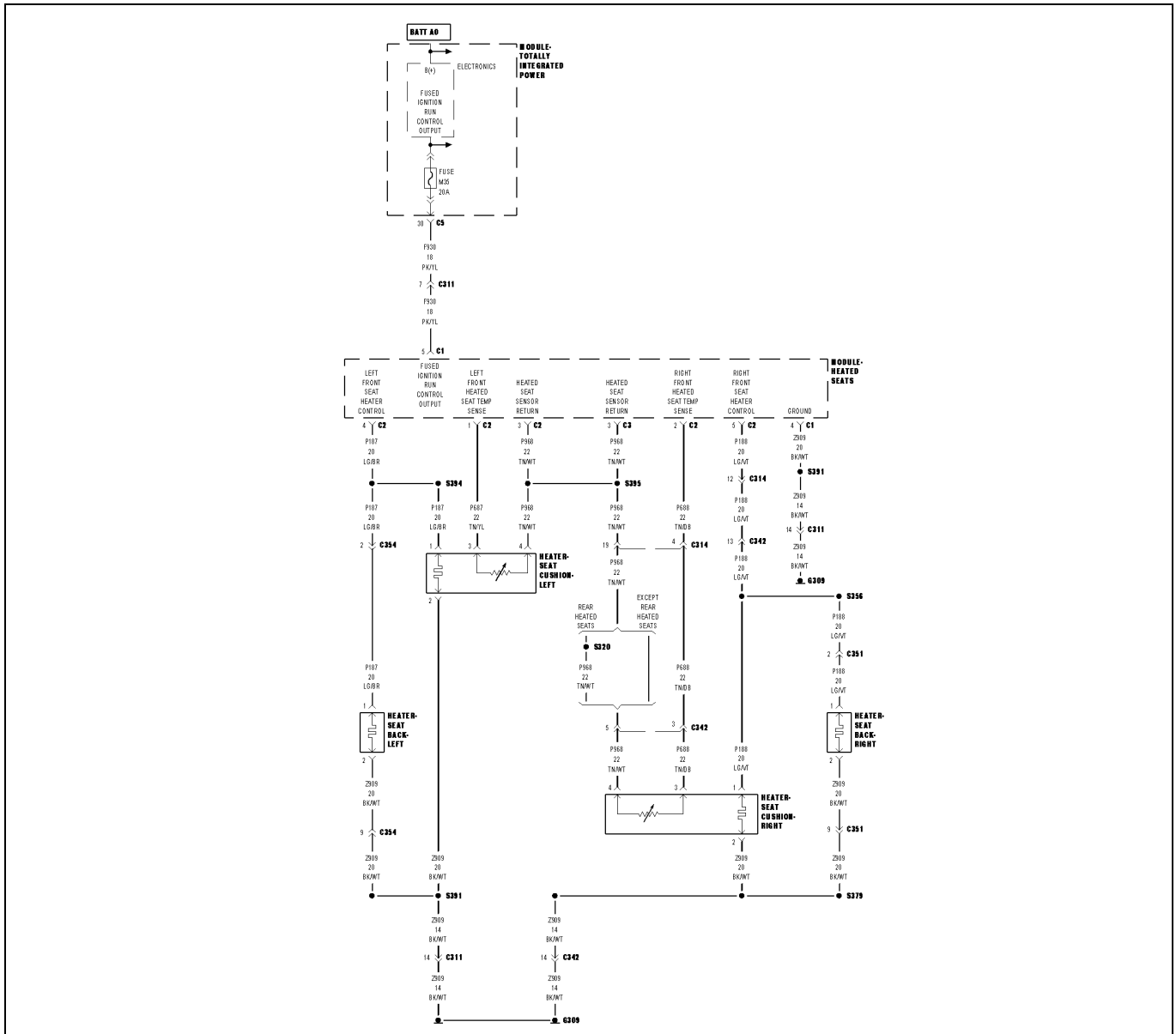

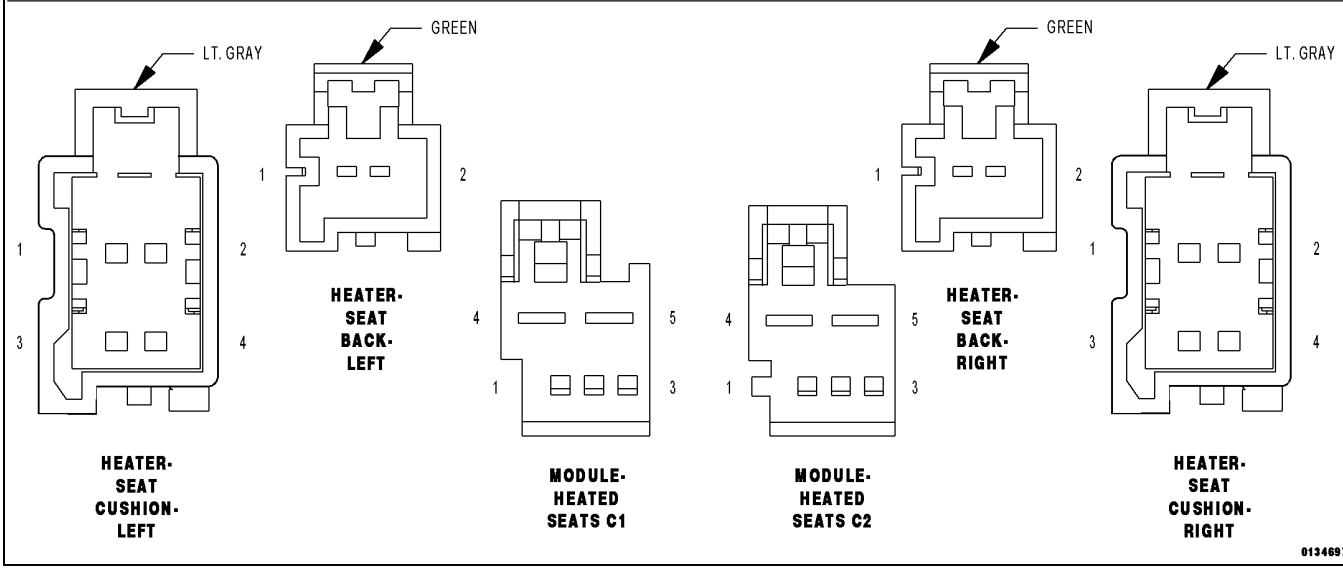

For a complete wiring diagram, **refer to the Wiring Information**.

- **When Monitored:**
  With the engine running.
- **Set Condition:**
  The Heated Seat Module (HSM) detects impedance above threshold on the (P188) Right Front Seat Heater Control circuit for more than two seconds with the output turned on.

Possible Causes
(P188) RIGHT FRONT SEAT HEATER CONTROL CIRCUIT RESISTANCE HIGH
(Z909) GROUND CIRCUIT RESISTANCE HIGH
SEAT CUSHION HEATER ELEMENT
SEAT BACK HEATER ELEMENT
HEATED SEAT MODULE (HSM)

1. TEST FOR INTERMITTENT CONDITION

NOTE: Before proceeding, verify the battery is fully charged, the charging system is operating properly, no Battery or System Voltage Diagnostic Trouble Codes (DTCs) are set, and the HSM Power and Ground circuits are clean and tight.

1. Turn the ignition on.
2. Using a scan tool, record and erase Diagnostic Trouble Codes (DTCs).
3. Turn the ignition off.
4. Start the engine and let it run.
5. Turn the Heated Seat on and operate in all modes.
6. Using a scan tool, read DTCs.

Is the DTC active?

Yes

- Go To 2

No

- The conditions that caused this code to set are not present at this time. Verify seat harness is routed correctly to the HSM. Using the wiring diagram/schematic as a guide, inspect the wiring and connectors. Look for chafed, pierced, pinched, or partially broken wires and broken, bent, pushed out, spread, corroded, or contaminated terminals. Attempt to reproduce condition by adjusting the seat.
- Perform the BODY VERIFICATION TEST. (Refer to 28 - DTC-Based Diagnostics/MODULE, Totally Integrated Power (TIPM) - Standard Procedure).

2. CHECK (P188) RIGHT FRONT SEAT HEATER CONTROL CIRCUIT FOR HIGH RESISTANCE

1. Turn the ignition off.
2. Disconnect the HSM C2 harness connector.
3. Disconnect the Right Seat Cushion Heater harness connector.
4. Disconnect the C351 in-line harness connector.

NOTE: Check connectors. Clean and repair as necessary.

5. Measure the resistance of the (P188) Right Front Seat Heater Control circuit between the HSM C2 harness connector and the Right Seat Cushion Heater harness connector.
6. Measure the resistance of the (P188) Right Front Seat Heater Control circuit between the HSM C2 harness connector and the C351 in-line harness connector.

Is the resistance below 5.0 Ohms for both measurements?

Yes

- Go To 3

No

- Repair the (P188) Right Front Seat Heater Control circuit for high resistance.
- Perform the BODY VERIFICATION TEST. (Refer to 28 - DTC-Based Diagnostics/MODULE, Totally Integrated Power (TIPM) - Standard Procedure).

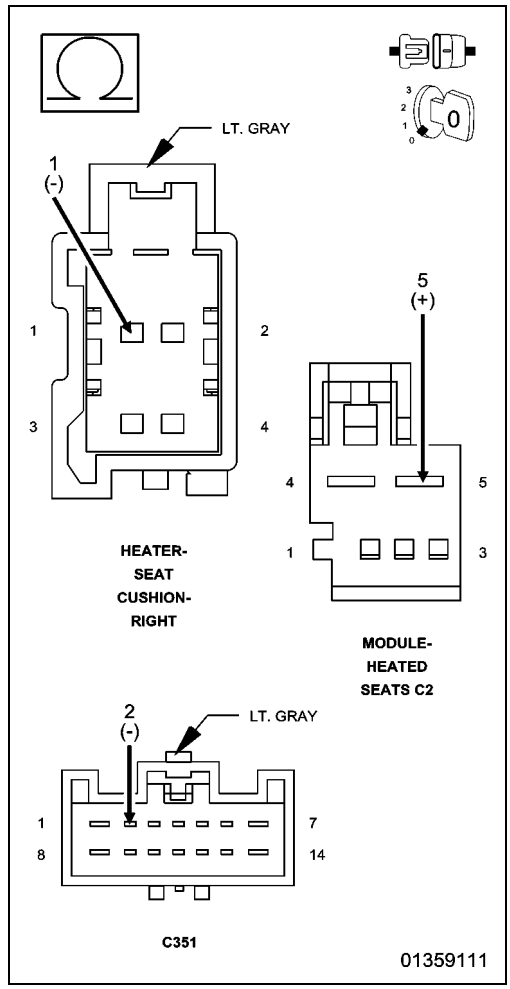

3. CHECK (Z909) GROUND CIRCUIT FOR HIGH RESISTANCE

1. Measure the resistance of the (Z909) Ground circuit between ground and the Right Seat Cushion Heater harness connector.
2. Measure the resistance of the (Z909) Ground circuit between ground and the C351 in-line harness connector.

Is the resistance below 5.0 Ohms for both measurements?

Yes

- Go To 4

No

- Repair the (Z909) Ground circuit for high resistance.
- Perform the BODY VERIFICATION TEST. (Refer to 28 - DTC-Based Diagnostics/MODULE, Totally Integrated Power (TIPM) - Standard Procedure).

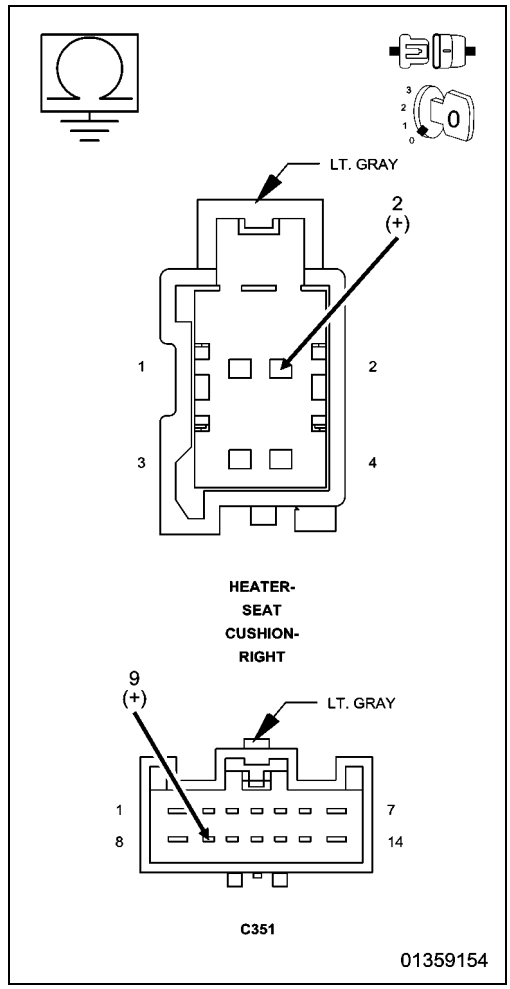

4. CHECK RIGHT SEAT CUSHION HEATER ELEMENT RESISTANCE

1. Measure the resistance between the (P188) Right Front Seat Heater Control circuit and the (Z909) Ground circuit at the Right Seat Cushion Heater connector (component side).

Is the resistance above 4.8 Ohms (without vented seats) or 9.8 Ohms (with vented seats)?

Yes

- Replace the Seat Cushion Heater Element in accordance with the Service Information. (Refer to 08 - Electrical/8G - Heated/Cooled Systems/Heated Seats/PAD, Heater - Removal).
- Perform the BODY VERIFICATION TEST. (Refer to 28 - DTC-Based Diagnostics/MODULE, Totally Integrated Power (TIPM) - Standard Procedure).

No

- Go To 5

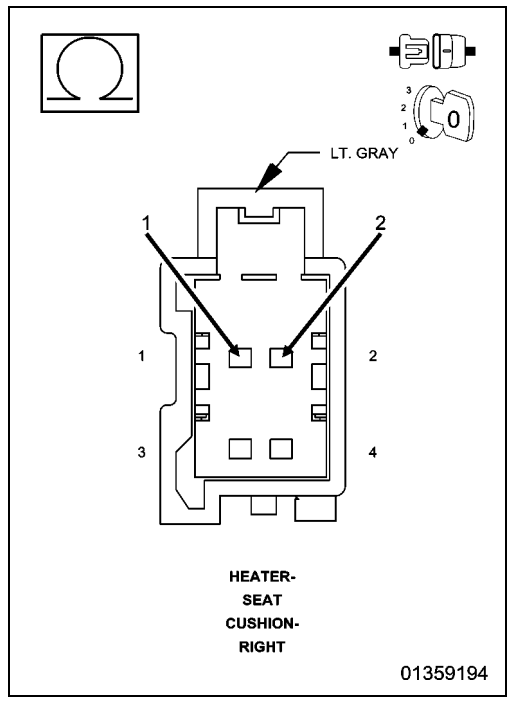

5. CHECK PIGTAIL HARNESS AND RIGHT SEAT BACK HEATER ELEMENT RESISTANCE

1. Measure the resistance between the (P188) Right Front Seat Heater Control circuit and the (Z909) Ground circuit at the C351 in-line harness connector (seat back side).

Is the resistance above 4.8 Ohms (without vented seats) or 11.6 Ohms (with vented seats)?

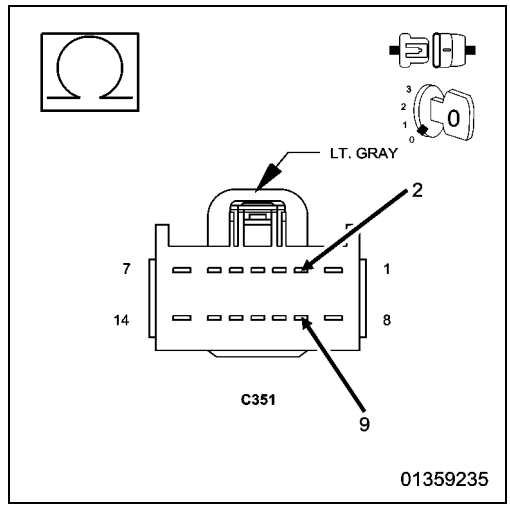

Yes

- Repair or replace the pigtail harness for high resistance or replace the Seat Back Heater Element in accordance with the Service Information. (Refer to 08 - Electrical/8G - Heated/Cooled Systems/Heated Seats/PAD, Heater - Removal).
- Perform the BODY VERIFICATION TEST. (Refer to 28 - DTC-Based Diagnostics/MODULE, Totally Integrated Power (TIPM) - Standard Procedure).

No

- Replace the Heated Seat Module (HSM) in accordance with the Service Information. (Refer to 08 - Electrical/8E - Electronic Control Modules/MODULE, Heated Seat - Removal).
- Perform the BODY VERIFICATION TEST. (Refer to 28 - DTC-Based Diagnostics/MODULE, Totally Integrated Power (TIPM) - Standard Procedure).

B1E9B-11-REAR LEFT HEATER CONTROL CIRCUIT - CIRCUIT SHORT TO GROUND

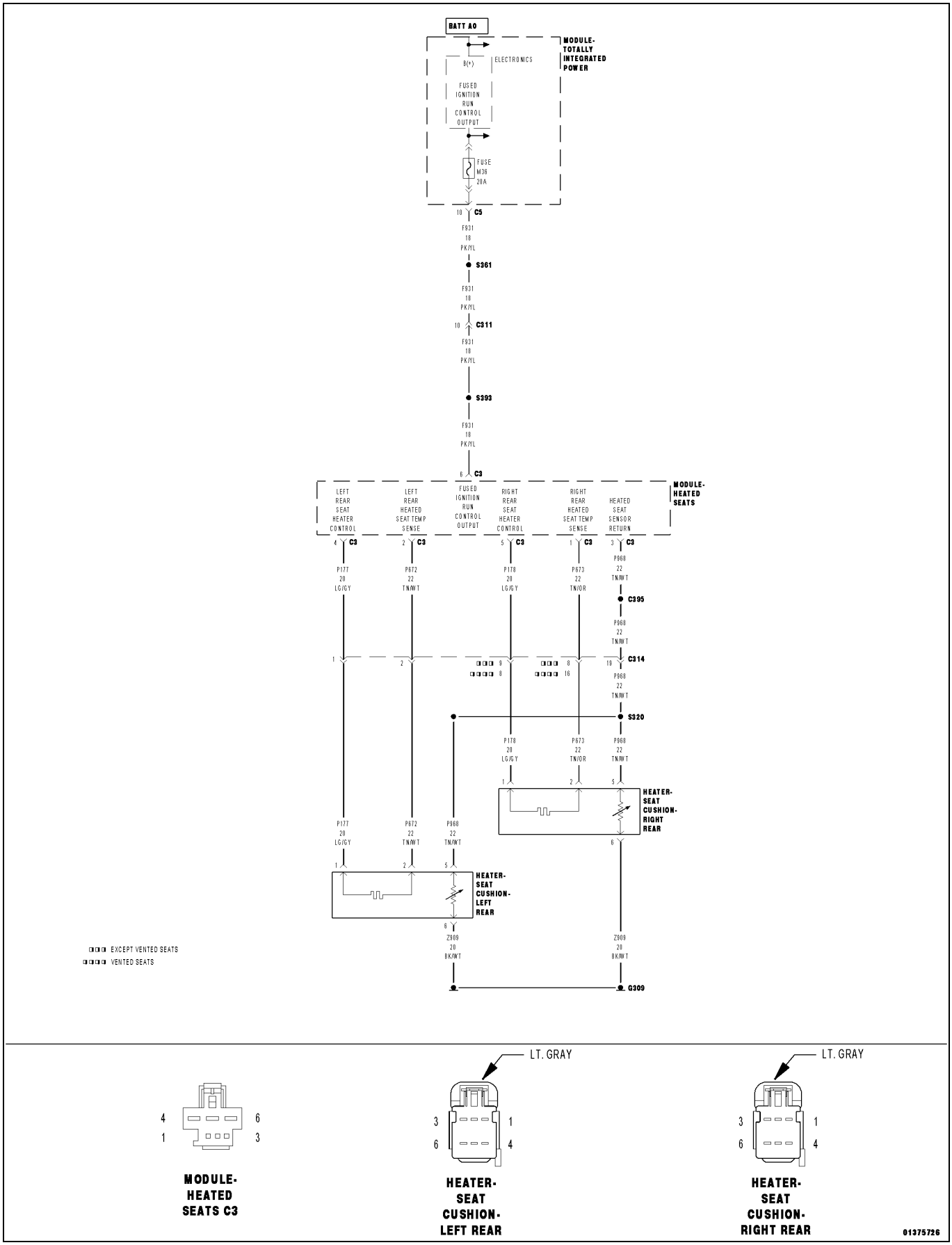

For a complete wiring diagram, **refer to the Wiring Information**.

- **When Monitored:**
  With the engine running.
- **Set Condition:**
  The Heated Seat Module (HSM) detects Voltage below 1.0 volt or current above 10.0 amps on the (P177) Left Rear Seat Heater Control circuit for more than two seconds with the output turned on.

Possible Causes
(P177) LEFT REAR SEAT HEATER CONTROL CIRCUIT SHORTED TO GROUND
(P177) LEFT REAR SEAT HEATER CONTROL CIRCUIT SHORTED TO THE (P968) HEATED SEAT SENSOR RETURN CIRCUIT
(P177) LEFT REAR SEAT HEATER CONTROL CIRCUIT SHORTED TO THE (Z909) GROUND CIRCUIT
SEAT CUSHION HEATER ELEMENT SHORTED
HEATED SEAT MODULE (HSM)

1. TEST FOR INTERMITTENT CONDITION

NOTE: Make sure the battery is fully charged and the charging system is operating properly before proceeding.

1. Turn the ignition on.
2. Using a scan tool, record and erase Diagnostic Trouble Codes (DTCs).
3. Turn the ignition off.
4. Start the engine and let it run.
5. Turn the Heated Seat on and operate in all modes.
6. Using a scan tool, read DTCs.

Is the DTC active?

Yes

- Go To 2

No

- The conditions that caused this code to set are not present at this time. Verify seat harness is routed correctly to the HSM. Using the wiring diagram/schematic as a guide, inspect the wiring and connectors. Look for chafed, pierced, pinched, or partially broken wires and broken, bent, pushed out, spread, corroded, or contaminated terminals. Attempt to reproduce condition by adjusting the front seat.
- Perform the BODY VERIFICATION TEST. (Refer to 28 - DTC-Based Diagnostics/MODULE, Totally Integrated Power (TIPM) - Standard Procedure).

2. CHECK (P177) LEFT REAR SEAT HEATER CONTROL CIRCUIT IN BODY HARNESS FOR A SHORT TO GROUND

1. Turn the ignition off.
2. Disconnect the Left Rear Seat Cushion Heater harness connector.

NOTE: Check connectors. Clean and repair as necessary.

3. Turn the ignition on.
4. Using a scan tool, erase DTCs.
5. Turn the ignition off.
6. Start the engine and let it run.
7. Turn the Heated Seat on and operate in all modes.
8. Using a scan tool, read DTCs.

Is the same DTC active?

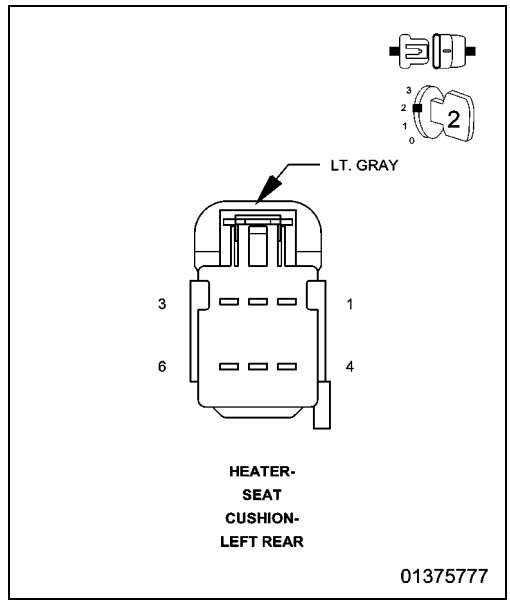

Yes

- Go To 3

No

- Replace the shorted Rear Seat Cushion Heater Element in accordance with the Service Information. (Refer to 08 - Electrical/8G - Heated/Cooled Systems/Heated Seats/PAD, Heater - Removal).
- Perform the BODY VERIFICATION TEST. (Refer to 28 - DTC-Based Diagnostics/MODULE, Totally Integrated Power (TIPM) - Standard Procedure).

3. CHECK (P177) LEFT REAR SEAT HEATER CONTROL CIRCUIT FOR A SHORT TO GROUND

1. Turn the ignition off.
2. Disconnect the HSM C3 harness connector.

NOTE: Check connectors. Clean and repair as necessary.

3. Measure the resistance of the (P177) Left Rear Seat Heater Control circuit between ground and the HSM C3 harness connector.

Is the resistance below 10K Ohms?

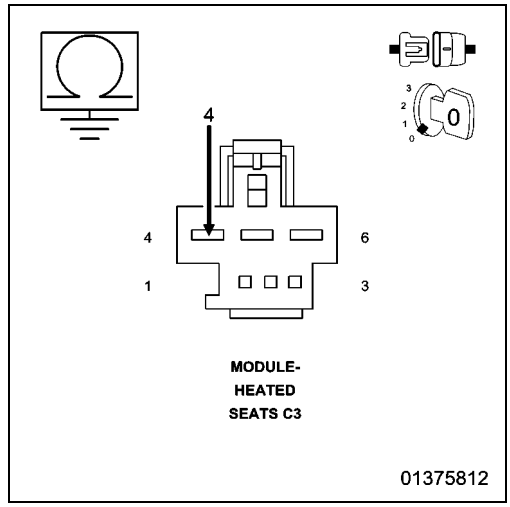

Yes

- Repair the (P177) Left Rear Seat Heater Control circuit for a short to ground.
- Perform the BODY VERIFICATION TEST. (Refer to 28 - DTC-Based Diagnostics/MODULE, Totally Integrated Power (TIPM) - Standard Procedure).

No

- Go To 4

4. CHECK (P177) LEFT REAR SEAT HEATER CONTROL CIRCUIT FOR A SHORT TO THE (P968) HEATED SEAT SENSOR RETURN CIRCUIT OR TO (Z909) GROUND CIRCUIT

1. Measure the resistance between the (P177) Left Rear Seat Heater Control circuit and the (P968) Heated Seat Sensor Return circuit at the Left Rear Seat Cushion Heater harness connector.
2. Measure the resistance between the (P177) Left Rear Seat Heater Control circuit and the (Z909) Ground circuit at the the Left Rear Seat Cushion Heater harness connector.

Is the resistance below 10K Ohms for either measurement?

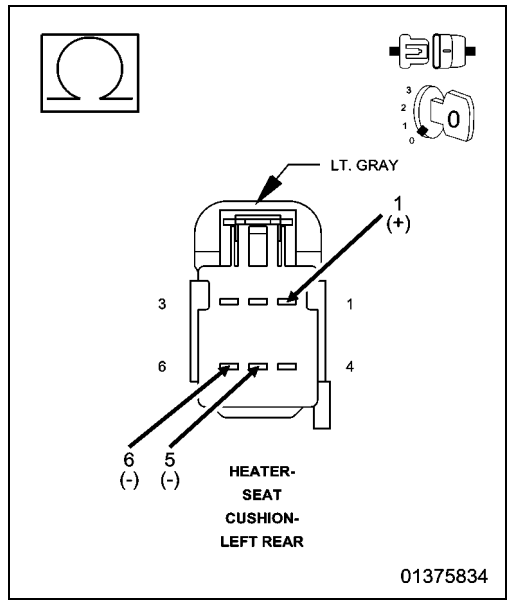

Yes

- Repair all circuits with a resistance below 10K Ohms for a short to the (P177) Left Rear Seat Heater Control circuit.
- Perform the BODY VERIFICATION TEST. (Refer to 28 - DTC-Based Diagnostics/MODULE, Totally Integrated Power (TIPM) - Standard Procedure).

No

- Replace the Heated Seat Module (HSM) in accordance with the Service Information. (Refer to 08 - Electrical/8E - Electronic Control Modules/MODULE, Heated Seat - Removal).
- Perform the BODY VERIFICATION TEST. (Refer to 28 - DTC-Based Diagnostics/MODULE, Totally Integrated Power (TIPM) - Standard Procedure).

■ B1E9B-12-REAR LEFT HEATER CONTROL CIRCUIT - CIRCUIT SHORT TO BATTERY

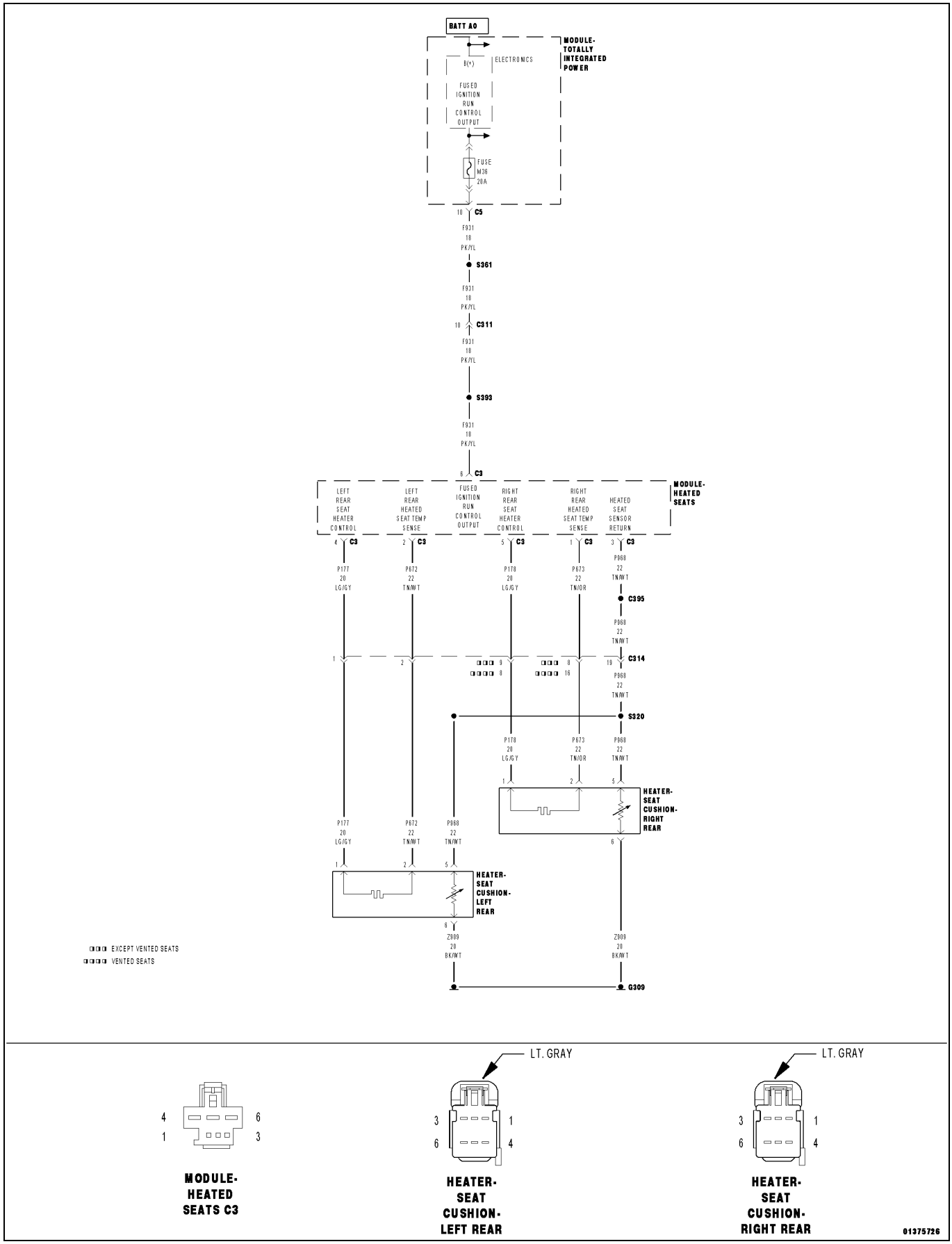

For a complete wiring diagram, **refer to the Wiring Information**.

- **When Monitored:**
  With the engine running.
- **Set Condition:**
  The Heated Seat Module (HSM) detects Voltage above 5.0 Volts on the (P177) Left Rear Seat Heater Control circuit for more than two seconds with the output turned off.

Possible Causes
(P177) LEFT REAR SEAT HEATER CONTROL CIRCUIT SHORTED TO VOLTAGE
(P177) LEFT REAR SEAT HEATER CONTROL CIRCUIT SHORTED TO THE (F931) FUSED IGNITION RUN CONTROL OUTPUT CIRCUIT
(P177) LEFT REAR SEAT HEATER CONTROL CIRCUIT SHORTED TO THE (P178) RIGHT REAR SEAT HEATER CONTROL CIRCUIT
HEATED SEAT MODULE (HSM)

1. TEST FOR INTERMITTENT CONDITION

NOTE: Make sure the battery is fully charged and the charging system is operating properly before proceeding.

1. Turn the ignition on.
2. Using a scan tool, record and erase Diagnostic Trouble Codes (DTCs).
3. Turn the ignition off.
4. Start the engine and let it run.
5. Using a scan tool, read DTCs.

Is the DTC active?

Yes

- Go To 2

No

- The conditions that caused this code to set are not present at this time. Verify seat harness is routed correctly to the HSM. Using the wiring diagram/schematic as a guide, inspect the wiring and connectors. Look for chafed, pierced, pinched, or partially broken wires and broken, bent, pushed out, spread, corroded, or contaminated terminals. Attempt to reproduce condition by operating all HSM functions one at a time, except for the Left Rear Heated Seat. Attempt to reproduce condition by adjusting the front seat.
- Perform the BODY VERIFICATION TEST. (Refer to 28 - DTC-Based Diagnostics/MODULE, Totally Integrated Power (TIPM) - Standard Procedure).

2. CHECK (P177) LEFT REAR SEAT HEATER CONTROL CIRCUIT FOR A SHORT TO VOLTAGE

1. Turn the ignition off.
2. Disconnect the HSM C3 harness connector.

NOTE: Check connectors. Clean and repair as necessary.

3. Start the engine and let it run.
4. Measure the voltage of the (P177) Left Rear Seat Heater Control circuit between the HSM C3 harness connector and ground.

Is there any voltage present?

Yes

- Go To 3

No

- Go To 4

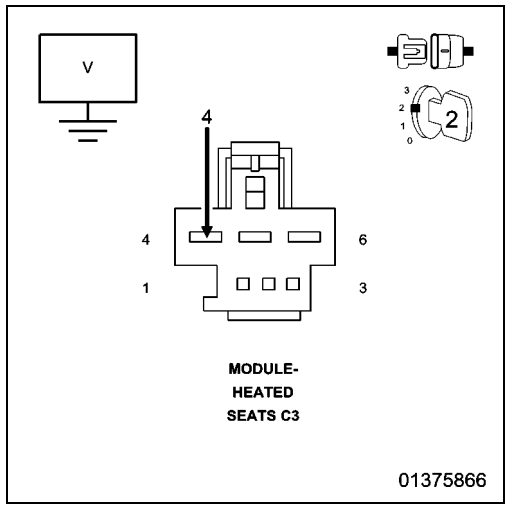

3. CHECK (P177) LEFT REAR SEAT HEATER CONTROL CIRCUIT FOR A SHORT TO THE (F931) FUSED IGNITION RUN CONTROL OUTPUT CIRCUIT

1. Turn the ignition off.
2. Measure the resistance between the (P177) Left Rear Seat Heater Control circuit and the (F931) Fused Ignition Run Control Output circuit at HSM C3 harness connector.

Is the resistance below 10K Ohms?

Yes

- Repair the (P177) Left Rear Seat Heater Control circuit for a short to the (F931) Fused Ignition Run Control Output circuit.
- Perform the BODY VERIFICATION TEST. (Refer to 28 - DTC-Based Diagnostics/MODULE, Totally Integrated Power (TIPM) - Standard Procedure).

No

- Repair the (P177) Left Rear Seat Heater Control circuit for a short to voltage.
- Perform the BODY VERIFICATION TEST. (Refer to 28 - DTC-Based Diagnostics/MODULE, Totally Integrated Power (TIPM) - Standard Procedure).

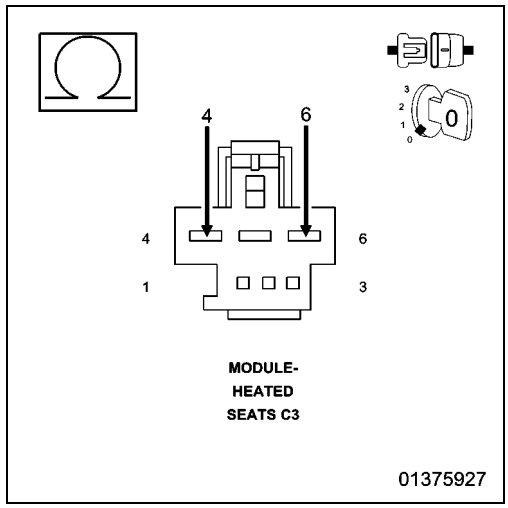

4. CHECK (P177) LEFT REAR SEAT HEATER CONTROL CIRCUIT FOR A SHORT TO VOLTAGE DURING SEAT ADJUSTMENT

1. Measure the Voltage of the (P177) Left Rear Seat Heater Control circuit between the HSM C3 harness connector and ground while adjusting the front seat.

Is there any Voltage present during the seat adjustment?

Yes

- Repair the (P177) Left Rear Seat Heater Control circuit for a short to voltage.
- Perform the BODY VERIFICATION TEST. (Refer to 28 - DTC-Based Diagnostics/MODULE, Totally Integrated Power (TIPM) - Standard Procedure).

No

- Go To 5

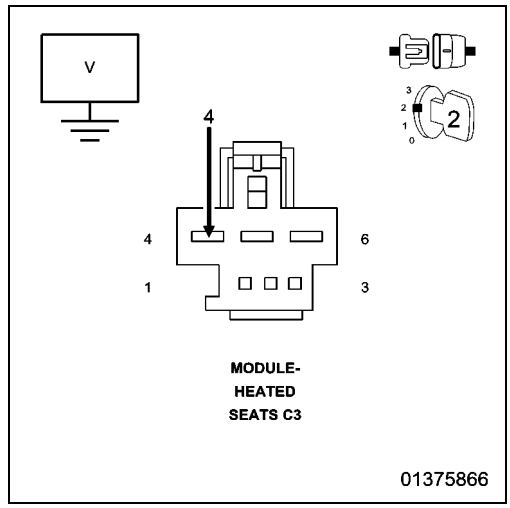

5. CHECK (P177) LEFT REAR SEAT HEATER CONTROL CIRCUIT FOR A SHORT TO THE (P178) RIGHT REAR SEAT HEATER CONTROL CIRCUIT

1. Turn the ignition off.
2. Disconnect the Left or Right Rear Seat Cushion Heater harness connector.
3. Measure the resistance between the (P177) Left Rear Seat Heater Control circuit and the (P178) Right Rear Seat Heater Control circuit at HSM C3 harness connector.

Is the resistance below 10K Ohms?

Yes

- Repair the (P177) Left Rear Seat Heater Control circuit for a short to the (P178) Right Rear Seat Heater Control circuit.
- Perform the BODY VERIFICATION TEST. (Refer to 28 - DTC-Based Diagnostics/MODULE, Totally Integrated Power (TIPM) - Standard Procedure).

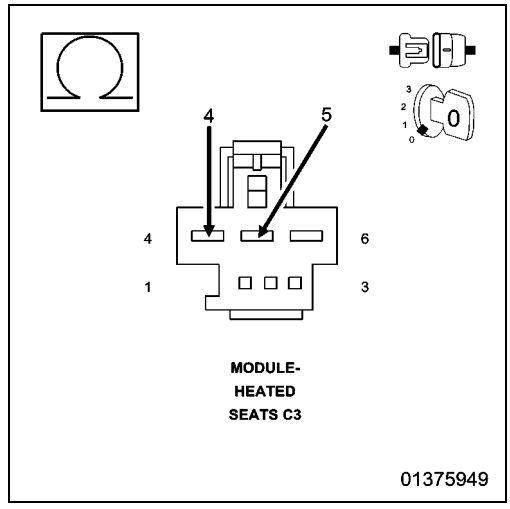

No

- Replace the Heated Seat Module (HSM) in accordance with the Service Information.
- Perform the BODY VERIFICATION TEST. (Refer to 28 - DTC-Based Diagnostics/MODULE, Totally Integrated Power (TIPM) - Standard Procedure).

B1E9B-13-REAR LEFT HEATER CONTROL CIRCUIT - CIRCUIT OPEN

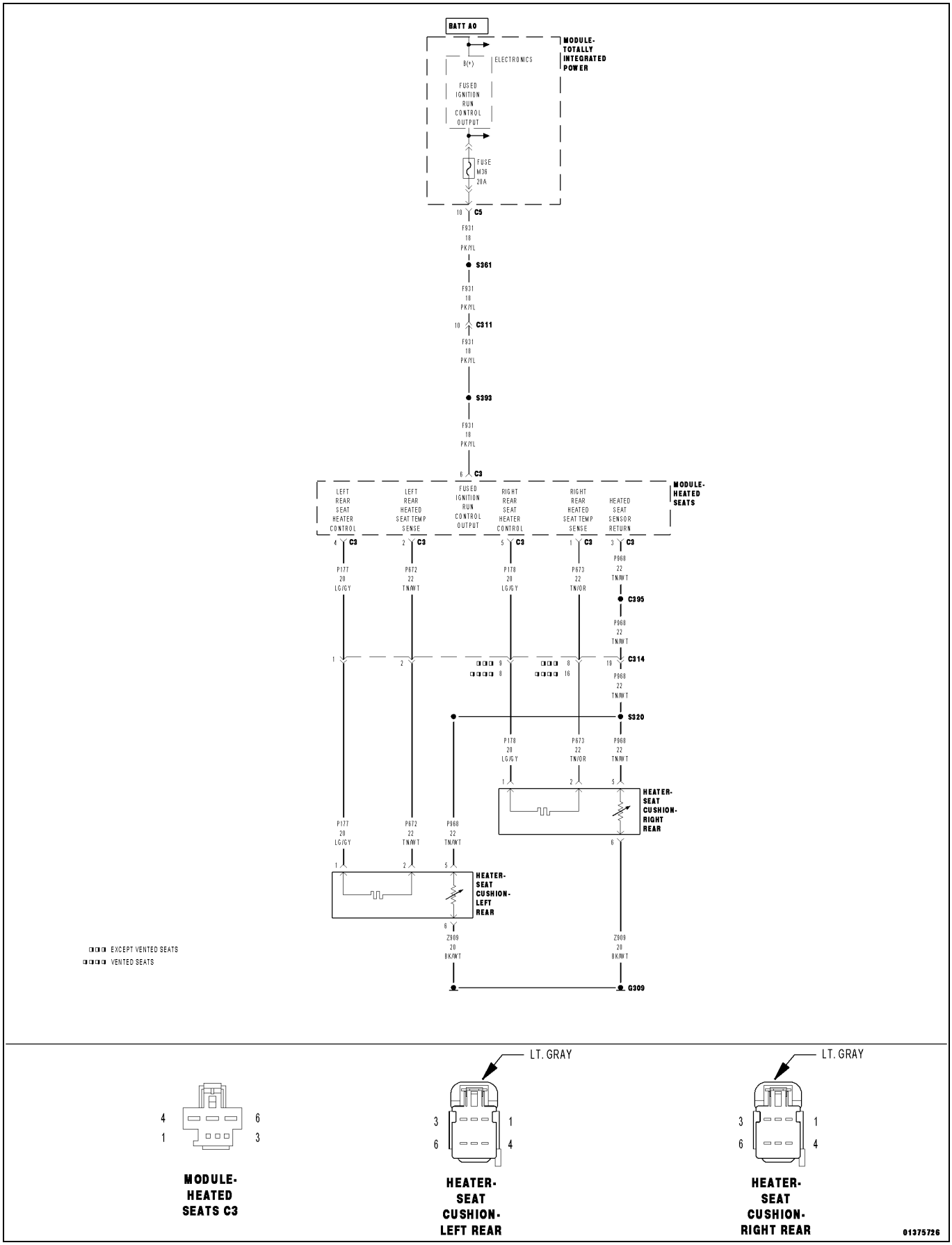

For a complete wiring diagram, **refer to the Wiring Information**.

- **When Monitored:**
  With the engine running.
- **Set Condition:**
  The Heated Seat Module (HSM) detects current below 0.5 of an amp on the (P177) Left Rear Seat Heater Control circuit for more than two seconds with the output turned on.

Possible Causes
(P177) LEFT REAR SEAT HEATER CONTROL CIRCUIT OPEN
(Z909) GROUND CIRCUIT OPEN
SEAT CUSHION HEATER ELEMENT OPEN
HEATED SEAT MODULE (HSM)

1. TEST FOR INTERMITTENT CONDITION

NOTE: Make sure the battery is fully charged and the charging system is operating properly before proceeding.

1. Turn the ignition on.
2. Using a scan tool, record and erase Diagnostic Trouble Codes (DTCs).
3. Turn the ignition off.
4. Start the engine and let it run.
5. Turn the Heated Seat on and operate in all modes.
6. Using a scan tool, read DTCs.

Is the DTC active?

Yes

- Go To 2

No

- The conditions that caused this code to set are not present at this time. Verify seat harness is routed correctly to the HSM. Using the wiring diagram/schematic as a guide, inspect the wiring and connectors. Look for chafed, pierced, pinched, or partially broken wires and broken, bent, pushed out, spread, corroded, or contaminated terminals. Attempt to reproduce condition by adjusting the front seat.
- Perform the BODY VERIFICATION TEST. (Refer to 28 - DTC-Based Diagnostics/MODULE, Totally Integrated Power (TIPM) - Standard Procedure).

2. CHECK FOR AN OPEN LEFT REAR SEAT CUSHION HEATER ELEMENT

1. Turn the ignition off.
2. Disconnect the Left Rear Seat Cushion Heater harness connector.

NOTE: Check connectors. Clean and repair as necessary.

3. Measure the resistance between the (P177) Left Rear Seat Heater Control circuit and the (Z909) Ground circuit at the Left Rear Seat Cushion Heater harness connector (seat side).

Is the resistance above 4.8 Ohms?

Yes

- Replace the Rear Seat Cushion Heater Element in accordance with the Service Information.
- Perform the BODY VERIFICATION TEST. (Refer to 28 - DTC-Based Diagnostics/MODULE, Totally Integrated Power (TIPM) - Standard Procedure).

No

- Go To 3

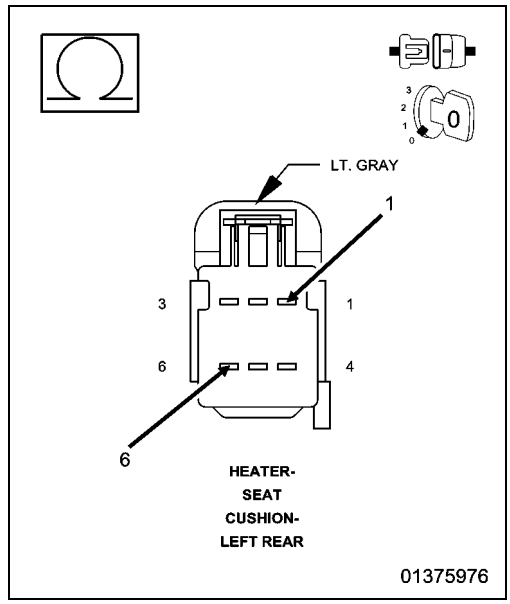

3. CHECK (P177) LEFT REAR SEAT HEATER CONTROL CIRCUIT FOR AN OPEN IN BODY HARNESS

1. Disconnect the HSM C3 harness connector.

NOTE: Check connectors. Clean and repair as necessary.

2. Measure the resistance of the (P177) Left Rear Seat Heater Control circuit between the HSM C3 harness connector and the Left Rear Seat Cushion Heater harness connector (harness side).

Is the resistance below 5.0 Ohms?

Yes

- Go To 4

No

- Repair the (P177) Left Rear Seat Heater Control circuit for an open.
- Perform the BODY VERIFICATION TEST. (Refer to 28 - DTC-Based Diagnostics/MODULE, Totally Integrated Power (TIPM) - Standard Procedure).

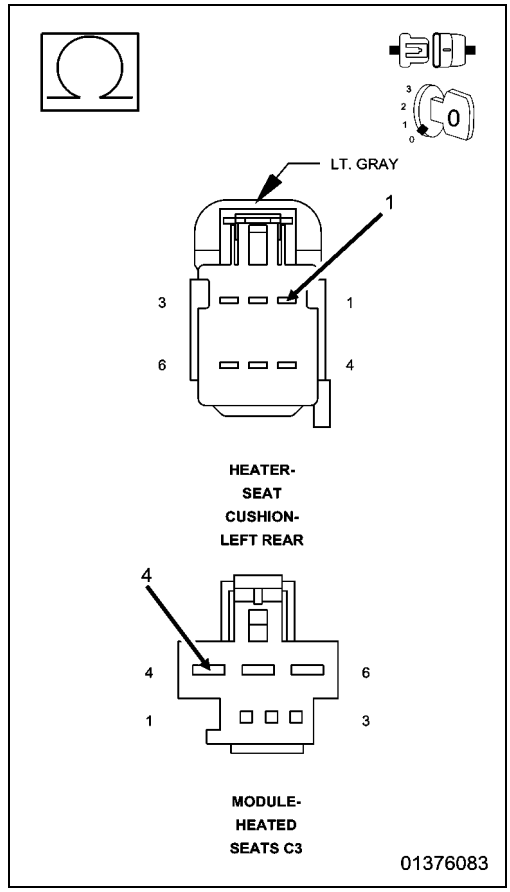

4. CHECK (Z909) GROUND CIRCUIT FOR AN OPEN

1. Measure the resistance of the (Z909) Ground circuit between ground and the Left Rear Seat Cushion Heater harness connector (harness side).

Is the resistance below 5.0 Ohms?

Yes

- Replace the Heated Seat Module (HSM) in accordance with the Service Information.
- Perform the BODY VERIFICATION TEST. (Refer to 28 - DTC-Based Diagnostics/MODULE, Totally Integrated Power (TIPM) - Standard Procedure).

No

- Repair the (Z909) Ground circuit for an open.
- Perform the BODY VERIFICATION TEST. (Refer to 28 - DTC-Based Diagnostics/MODULE, Totally Integrated Power (TIPM) - Standard Procedure).

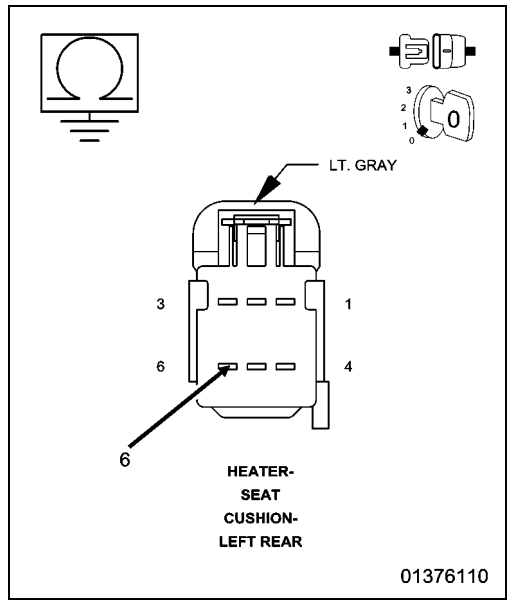

■ B1E9B-1E-REAR LEFT HEATER CONTROL CIRCUIT - CIRCUIT RESISTANCE OUT OF RANGE

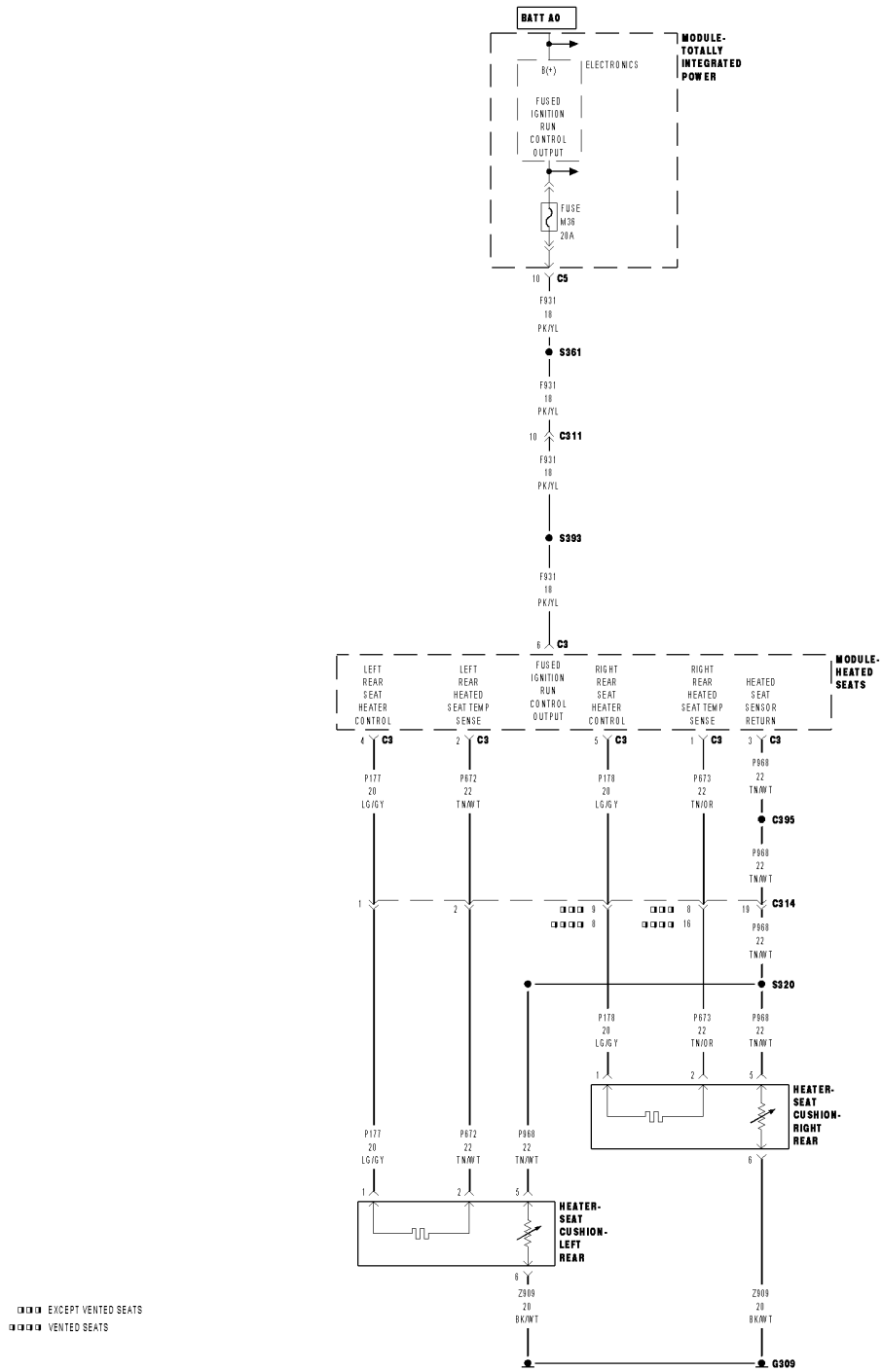

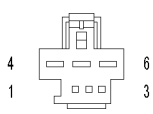

MODULE-HEATED SEATS C3

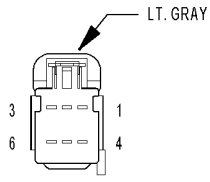

HEATER-SEAT CUSHION-LEFT REAR

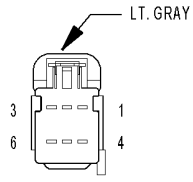

HEATER-SEAT CUSHION-RIGHT REAR

01375726

For a complete wiring diagram, **refer to the Wiring Information**.

- **When Monitored:**
  With the engine running.
- **Set Condition:**
  The Heated Seat Module (HSM) detects impedance above threshold on the (P177) Left Rear Seat Heater Control circuit for more than two seconds with the output turned on.

Possible Causes
(P177) LEFT REAR SEAT HEATER CONTROL CIRCUIT RESISTANCE HIGH
(Z909) GROUND CIRCUIT RESISTANCE HIGH
SEAT CUSHION HEATER ELEMENT
HEATED SEAT MODULE (HSM)

1. TEST FOR INTERMITTENT CONDITION

NOTE: Before proceeding, verify the battery is fully charged, the charging system is operating properly, no Battery or System voltage Diagnostic Trouble Codes (DTCs) are set and the HSM Power and Ground circuits are clean and tight.

1. Turn the ignition on.
2. Using a scan tool, record and erase Diagnostic Trouble Codes (DTCs).
3. Turn the ignition off.
4. Start the engine and let it run.
5. Turn the Heated Seat on and operate in all modes.
6. Using a scan tool, read DTCs.

Is the DTC active?

Yes

- Go To 2

No

- The conditions that caused this code to set are not present at this time. Verify seat harness is routed correctly to the HSM. Using the wiring diagram/schematic as a guide, inspect the wiring and connectors. Look for chafed, pierced, pinched or partially broken wires and broken, bent, pushed out, spread, corroded or contaminated terminals. Attempt to reproduce condition by adjusting the front seat.
- Perform the BODY VERIFICATION TEST. (Refer to 28 - DTC-Based Diagnostics/MODULE, Totally Integrated Power (TIPM) - Standard Procedure).

2. CHECK LEFT REAR SEAT CUSHION HEATER ELEMENT RESISTANCE

1. Turn the ignition off.
2. Disconnect the Left Rear Seat Cushion Heater harness connector.

NOTE: Check connectors. Clean and repair as necessary.

3. Measure the resistance between the (P177) Left Rear Seat Heater Control circuit and the (Z909) Ground circuit at the Left Rear Seat Cushion Heater harness connector (seat side).

Is the resistance above 4.8 Ohms?

Yes

- Replace the Rear Seat Cushion Heater Element in accordance with the Service Information.
- Perform the BODY VERIFICATION TEST. (Refer to 28 - DTC-Based Diagnostics/MODULE, Totally Integrated Power (TIPM) - Standard Procedure).

No

- Go To 3

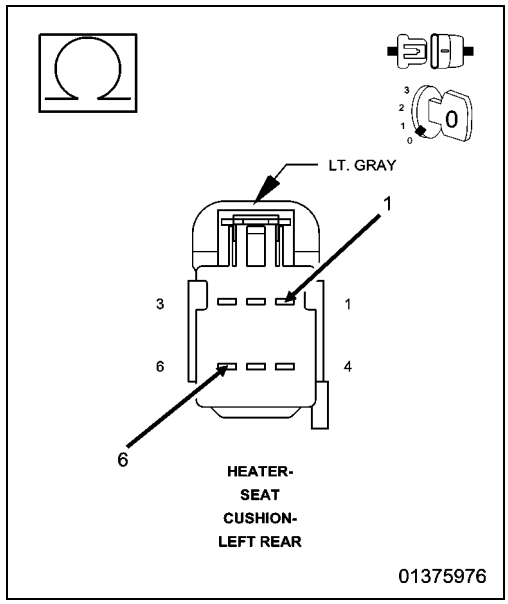

3. CHECK (P177) LEFT REAR SEAT HEATER CONTROL CIRCUIT FOR HIGH RESISTANCE IN BODY HARNESS

1. Disconnect the HSM C3 harness connector.

NOTE: Check connectors. Clean and repair as necessary.

2. Measure the resistance of the (P177) Left Rear Seat Heater Control circuit between the HSM C3 harness connector and the Left Rear Seat Cushion Heater harness connector (harness side).

Is the resistance below 5.0 Ohms?

Yes

- Go To 4

No

- Repair the (P177) Left Rear Seat Heater Control circuit for high resistance.
- Perform the BODY VERIFICATION TEST. (Refer to 28 - DTC-Based Diagnostics/MODULE, Totally Integrated Power (TIPM) - Standard Procedure).

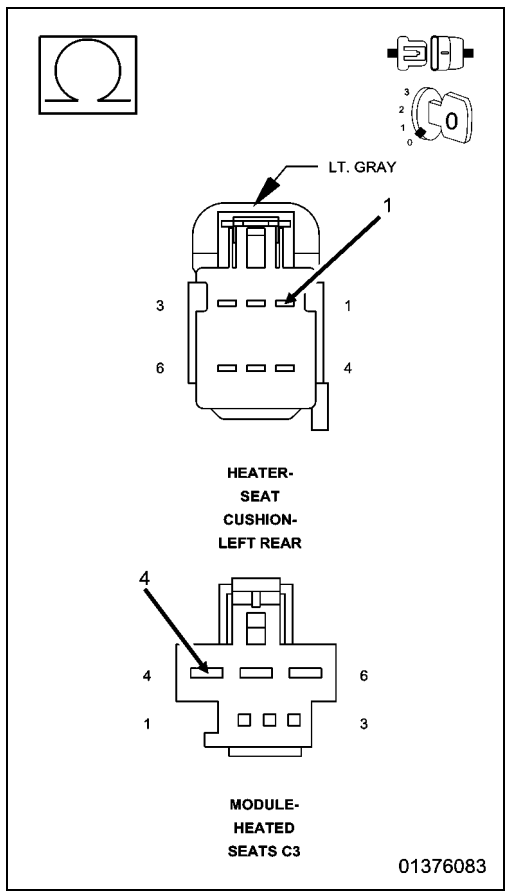

4. CHECK (Z909) GROUND CIRCUIT FOR HIGH RESISTANCE

1. Measure the resistance of the (Z909) Ground circuit between ground and the Left Rear Seat Cushion Heater harness connector (harness side).

Is the resistance below 5.0 Ohms?

Yes

- Replace the Heated Seat Module (HSM) in accordance with the Service Information.
- Perform the BODY VERIFICATION TEST. (Refer to 28 - DTC-Based Diagnostics/MODULE, Totally Integrated Power (TIPM) - Standard Procedure).

No

- Repair the (Z909) Ground circuit for high resistance.
- Perform the BODY VERIFICATION TEST. (Refer to 28 - DTC-Based Diagnostics/MODULE, Totally Integrated Power (TIPM) - Standard Procedure).

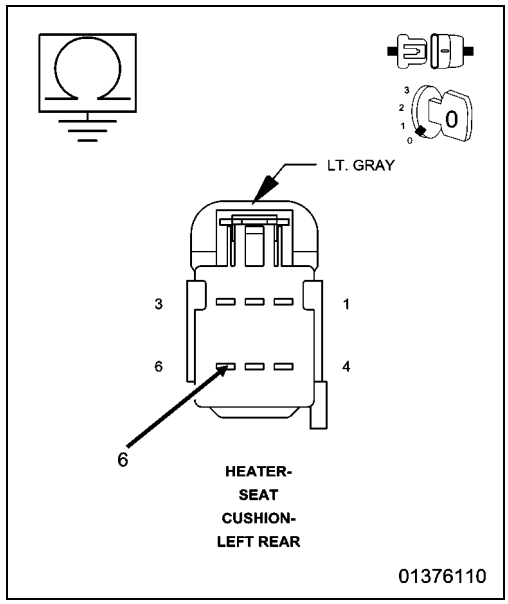

■ B1E9C-11-REAR RIGHT HEATER CONTROL CIRCUIT - CIRCUIT SHORT TO GROUND

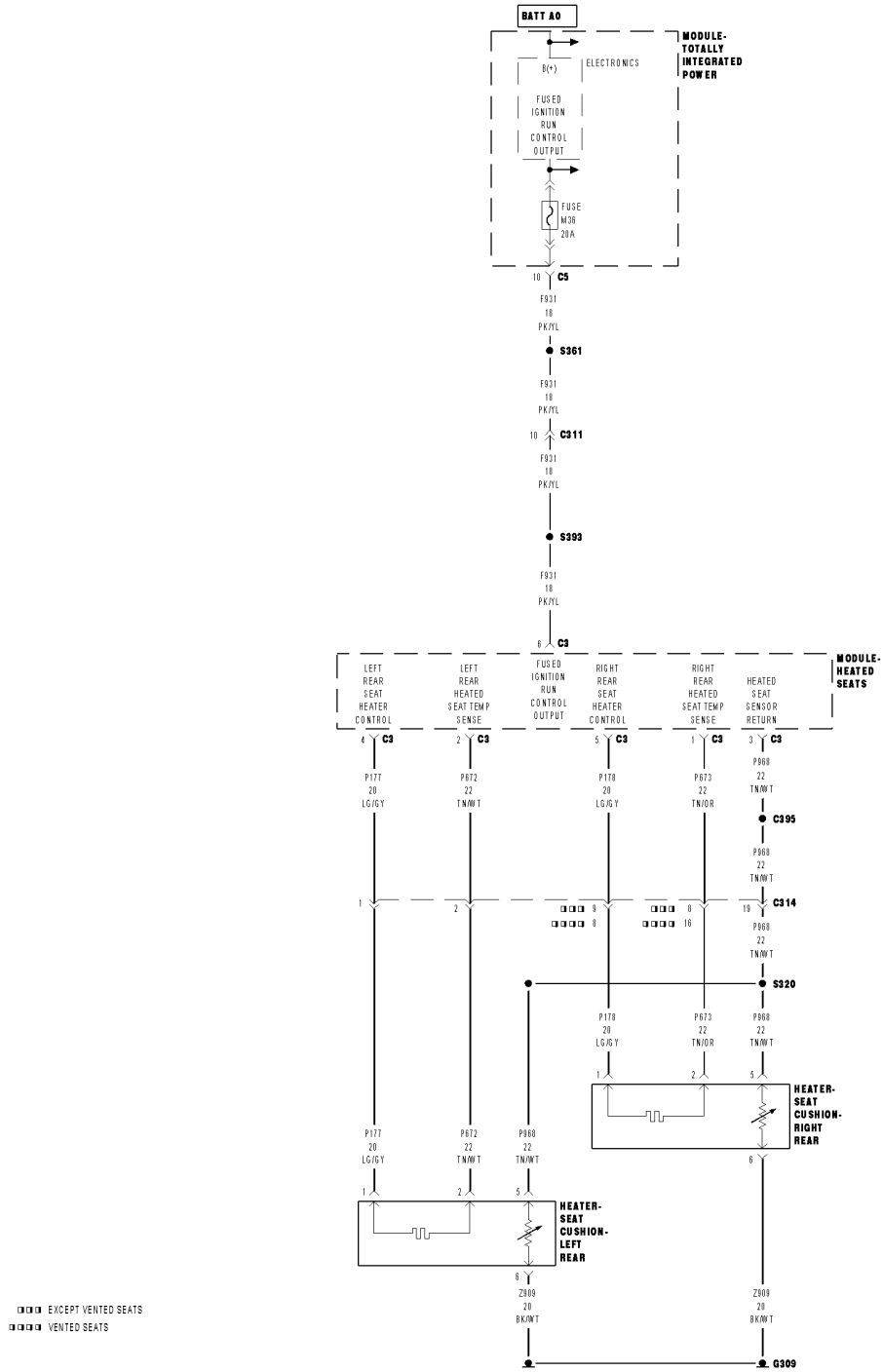

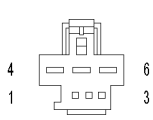

MODULE-HEATED SEATS C3

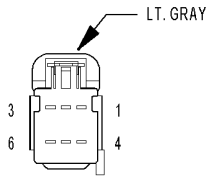

HEATER-SEAT CUSHION-LEFT REAR

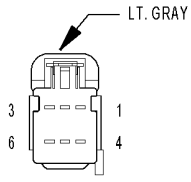

HEATER-SEAT CUSHION-RIGHT REAR

01375726

For a complete wiring diagram, **refer to the Wiring Information**.

- **When Monitored:**
  With the engine running.
- **Set Condition:**
  The Heated Seat Module (HSM) detects Voltage below 1.0 volt or current above 10.0 amps on the (P178) Right Rear Seat Heater Control circuit for more than two seconds with the output turned on.

Possible Causes
(P178) RIGHT REAR SEAT HEATER CONTROL CIRCUIT SHORTED TO GROUND
(P178) RIGHT REAR SEAT HEATER CONTROL CIRCUIT SHORTED TO THE (P968) HEATED SEAT SENSOR RETURN CIRCUIT
(P178) RIGHT REAR SEAT HEATER CONTROL CIRCUIT SHORTED TO THE (Z909) GROUND CIRCUIT
SEAT CUSHION HEATER ELEMENT SHORTED
HEATED SEAT MODULE (HSM)

1. TEST FOR INTERMITTENT CONDITION

NOTE: Make sure the battery is fully charged and the charging system is operating properly before proceeding.

1. Turn the ignition on.
2. Using a scan tool, record and erase Diagnostic Trouble Codes (DTCs).
3. Turn the ignition off.
4. Start the engine and let it run.
5. Turn the Heated Seat on and operate in all modes.
6. Using a scan tool, read DTCs.

Is the DTC active?

Yes

- Go To 2

No

- The conditions that caused this code to set are not present at this time. Verify seat harness is routed correctly to the HSM. Using the wiring diagram/schematic as a guide, inspect the wiring and connectors. Look for chafed, pierced, pinched, or partially broken wires and broken, bent, pushed out, spread, corroded, or contaminated terminals. Attempt to reproduce condition by adjusting the front seat.
- Perform the BODY VERIFICATION TEST. (Refer to 28 - DTC-Based Diagnostics/MODULE, Totally Integrated Power (TIPM) - Standard Procedure).

2. CHECK (P178) RIGHT REAR SEAT HEATER CONTROL CIRCUIT IN BODY HARNESS FOR A SHORT TO GROUND

1. Turn the ignition off.
2. Disconnect the Right Rear Seat Cushion Heater harness connector.

NOTE: Check connectors. Clean and repair as necessary.

3. Turn the ignition on.
4. Using a scan tool, erase DTCs.
5. Turn the ignition off.
6. Start the engine and let it run.
7. Turn the Heated Seat on and operate in all modes.
8. Using a scan tool, read DTCs.

Is the same DTC active?

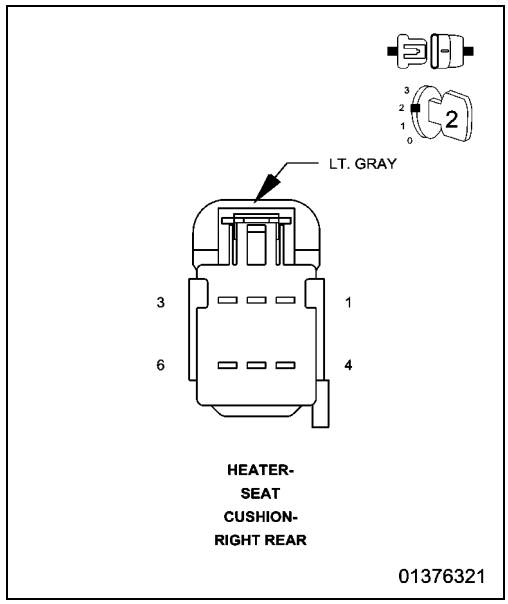

Yes

- Go To 3

No

- Replace the shorted Rear Seat Cushion Heater Element in accordance with the Service Information.
- Perform the BODY VERIFICATION TEST. (Refer to 28 - DTC-Based Diagnostics/MODULE, Totally Integrated Power (TIPM) - Standard Procedure).

3. CHECK (P178) RIGHT REAR SEAT HEATER CONTROL CIRCUIT FOR A SHORT TO GROUND

1. Turn the ignition off.
2. Disconnect the HSM C3 harness connector.

NOTE: Check connectors. Clean and repair as necessary.

3. Measure the resistance of the (P178) Right Rear Seat Heater Control circuit between ground and the HSM C3 harness connector.

Is the resistance below 10K Ohms?

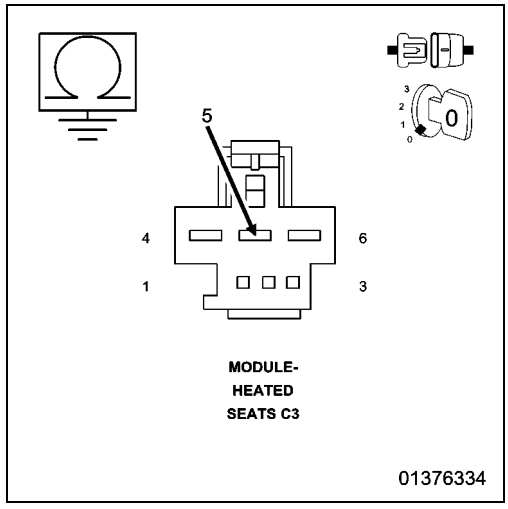

Yes

- Repair the (P178) Right Rear Seat Heater Control circuit for a short to ground.
- Perform the BODY VERIFICATION TEST. (Refer to 28 - DTC-Based Diagnostics/MODULE, Totally Integrated Power (TIPM) - Standard Procedure).

No

- Go To 4

4. CHECK (P178) RIGHT REAR SEAT HEATER CONTROL CIRCUIT FOR A SHORT TO THE (P968) HEATED SEAT SENSOR RETURN CIRCUIT OR TO (Z909) GROUND CIRCUIT

1. Measure the resistance between the (P178) Right Rear Seat Heater Control circuit and the (P968) Heated Seat Sensor Return circuit at the Right Rear Seat Cushion Heater harness connector.
2. Measure the resistance between the (P178) Right Rear Seat Heater Control circuit and the (Z909) Ground circuit at the Right Rear Seat Cushion Heater harness connector.

Is the resistance below 10K Ohms for either measurement?

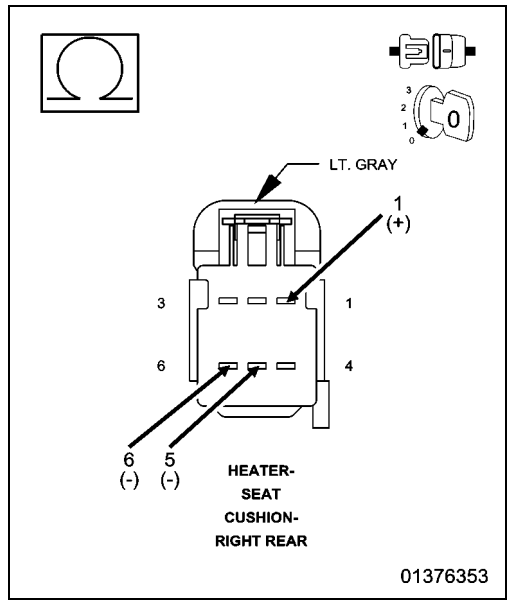

Yes

- Repair all circuits with a resistance below 10K Ohms for a short to the (P178) Right Rear Seat Heater Control circuit.
- Perform the BODY VERIFICATION TEST. (Refer to 28 - DTC-Based Diagnostics/MODULE, Totally Integrated Power (TIPM) - Standard Procedure).

No

- Replace the Heated Seat Module (HSM) in accordance with the Service Information.
- Perform the BODY VERIFICATION TEST. (Refer to 28 - DTC-Based Diagnostics/MODULE, Totally Integrated Power (TIPM) - Standard Procedure).

■ B1E9C-12-REAR RIGHT HEATER CONTROL CIRCUIT - CIRCUIT SHORT TO BATTERY

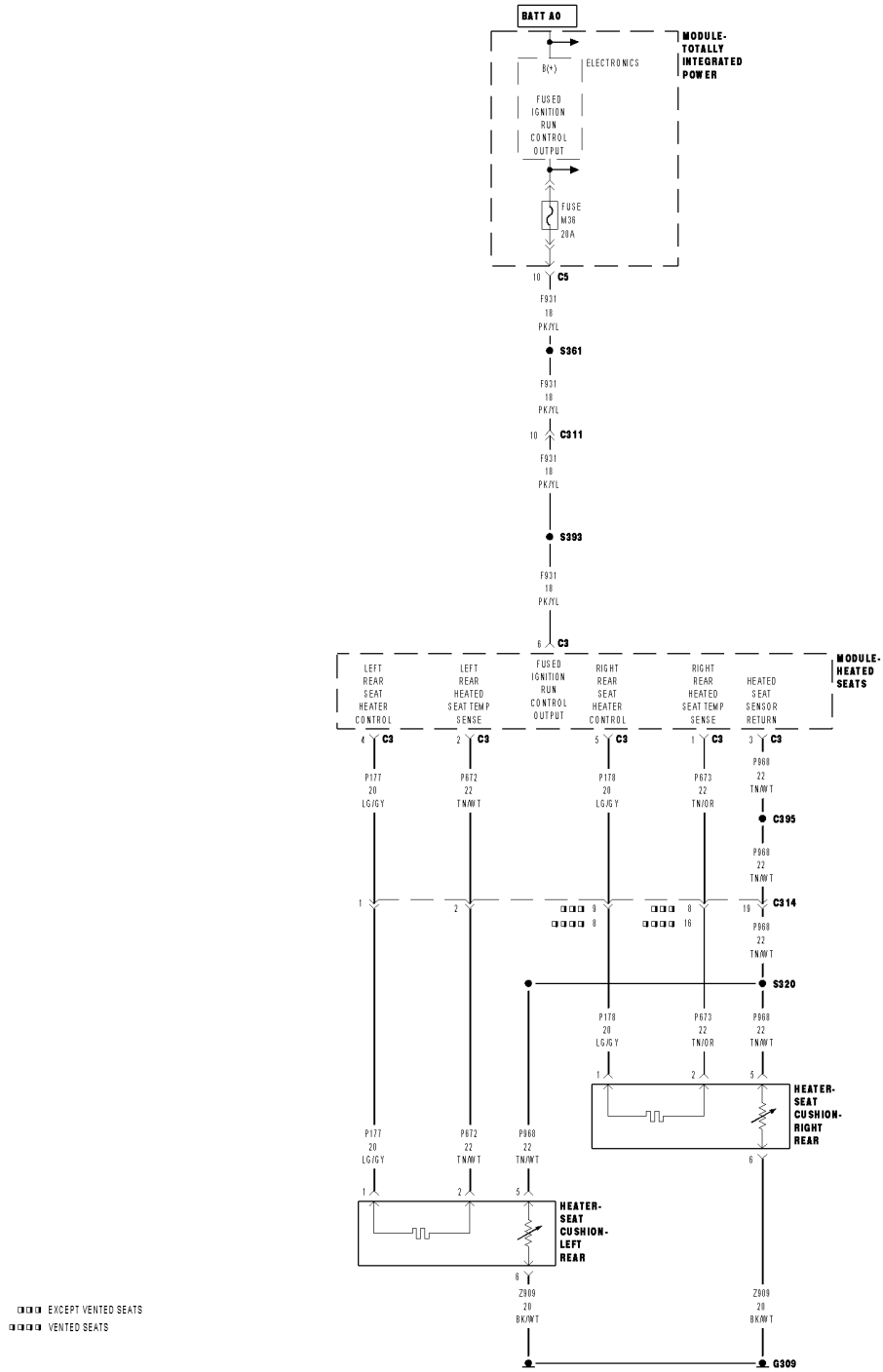

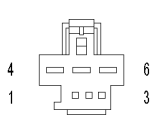

MODULE-HEATED SEATS C3

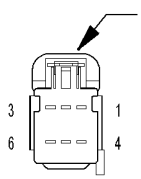

HEATER-SEAT CUSHION-LEFT REAR

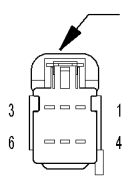

HEATER-SEAT CUSHION-RIGHT REAR

01375726

For a complete wiring diagram, **refer to the Wiring Information**.

- **When Monitored:**
  With the engine running.
- **Set Condition:**
  The Heated Seat Module (HSM) detects voltage above 5.0 volts on the (P178) Right Rear Seat Heater Control circuit for more than two seconds with the output turned off.

Possible Causes
(P178) RIGHT REAR SEAT HEATER CONTROL CIRCUIT SHORTED TO VOLTAGE
(P178) RIGHT REAR SEAT HEATER CONTROL CIRCUIT SHORTED TO THE (F931) FUSED IGNITION RUN CONTROL OUTPUT CIRCUIT
(P178) RIGHT REAR SEAT HEATER CONTROL CIRCUIT SHORTED TO THE (P177) LEFT REAR SEAT HEATER CONTROL CIRCUIT
HEATED SEAT MODULE (HSM)

1. TEST FOR INTERMITTENT CONDITION

NOTE: Make sure the battery is fully charged and the charging system is operating properly before proceeding.

1. Turn the ignition on.
2. Using a scan tool, record and erase Diagnostic Trouble Codes (DTCs).
3. Turn the ignition off.
4. Start the engine and let it run.
5. Using a scan tool, read DTCs.

Is the DTC active?

Yes

- Go To 2

No

- The conditions that caused this code to set are not present at this time. Verify seat harness is routed correctly to the HSM. Using the wiring diagram/schematic as a guide, inspect the wiring and connectors. Look for chafed, pierced, pinched, or partially broken wires and broken, bent, pushed out, spread, corroded, or contaminated terminals. Attempt to reproduce condition by operating all HSM functions one at a time, except for the Right Rear Heated Seat. Attempt to reproduce condition by adjusting the front seat.
- Perform the BODY VERIFICATION TEST. (Refer to 28 - DTC-Based Diagnostics/MODULE, Totally Integrated Power (TIPM) - Standard Procedure).

2. CHECK (P178) RIGHT REAR SEAT HEATER CONTROL CIRCUIT FOR A SHORT TO VOLTAGE

1. Turn the ignition off.
2. Disconnect the HSM C3 harness connector.

NOTE: Check connectors. Clean and repair as necessary.

3. Start the engine and let it run.
4. Measure the voltage of the (P178) Right Rear Seat Heater Control circuit between the HSM C3 harness connector and ground.

Is there any voltage present?

Yes

- Go To 3

No

- Go To 4

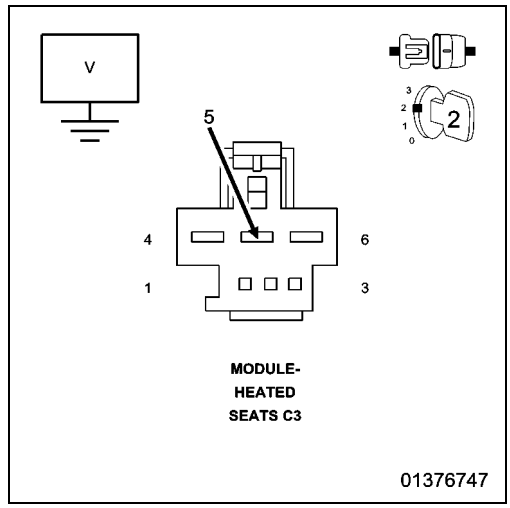

3. CHECK (P178) RIGHT REAR SEAT HEATER CONTROL CIRCUIT FOR A SHORT TO THE (F931) FUSED IGNITION RUN CONTROL OUTPUT CIRCUIT

1. Turn the ignition off.
2. Measure the resistance between the (P178) Right Rear Seat Heater Control circuit and the (F931) Fused Ignition Run Control Output circuit at the HSM C3 harness connector.

Is the resistance below 10K Ohms?

Yes

- Repair the (P178) Right Rear Seat Heater Control circuit for a short to the (F931) Fused Ignition Run Control Output circuit.
- Perform the BODY VERIFICATION TEST. (Refer to 28 - DTC-Based Diagnostics/MODULE, Totally Integrated Power (TIPM) - Standard Procedure).

No

- Repair the (P178) Right Rear Seat Heater Control circuit for a short to voltage.
- Perform the BODY VERIFICATION TEST. (Refer to 28 - DTC-Based Diagnostics/MODULE, Totally Integrated Power (TIPM) - Standard Procedure).

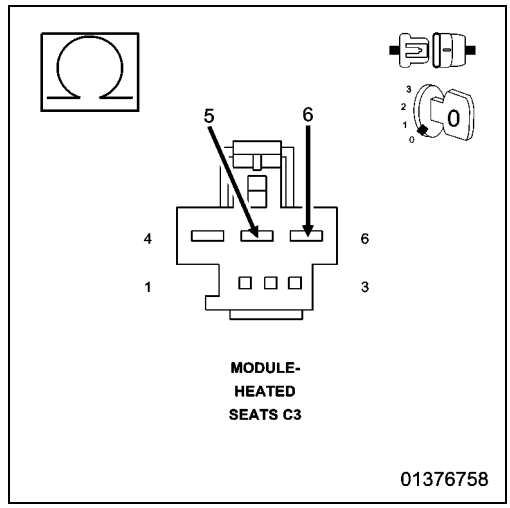

4. CHECK (P178) RIGHT REAR SEAT HEATER CONTROL CIRCUIT FOR A SHORT TO VOLTAGE DURING SEAT ADJUSTMENT

1. Measure the voltage of the (P178) Right Rear Seat Heater Control circuit between the HSM C3 harness connector and ground while adjusting the front seat.

Is there any voltage present during the seat adjustment?

Yes

- Repair the (P178) Right Rear Seat Heater Control circuit for a short to voltage.
- Perform the BODY VERIFICATION TEST. (Refer to 28 - DTC-Based Diagnostics/MODULE, Totally Integrated Power (TIPM) - Standard Procedure).

No

- Go To 5

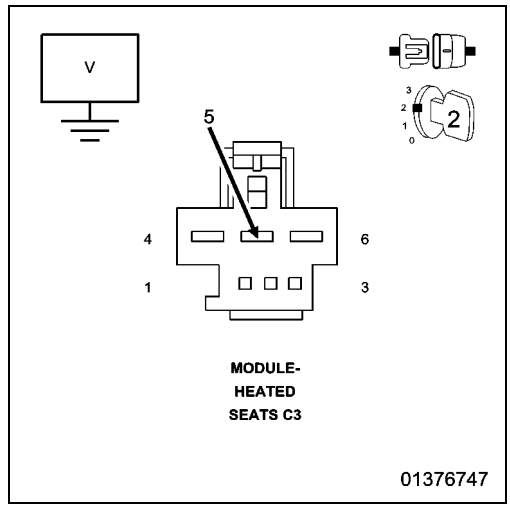

5. CHECK (P178) RIGHT REAR SEAT HEATER CONTROL CIRCUIT FOR A SHORT TO THE (P177) LEFT REAR SEAT HEATER CONTROL CIRCUIT

1. Turn the ignition off.
2. Disconnect the Left or Right Rear Seat Cushion Heater harness connector.
3. Measure the resistance between the (P178) Right Rear Seat Heater Control circuit and (P177) Left Rear Seat Heater Control circuit at HSM C3 harness connector.

Is the resistance below 10K Ohms?

Yes

- Repair the (P178) Right Rear Seat Heater Control circuit for a short to the (P177) Left Rear Seat Heater Control circuit.
- Perform the BODY VERIFICATION TEST. (Refer to 28 - DTC-Based Diagnostics/MODULE, Totally Integrated Power (TIPM) - Standard Procedure).

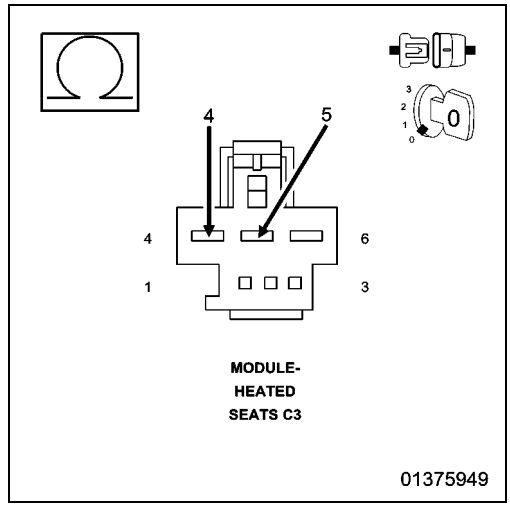

No

- Replace the Heated Seat Module (HSM) in accordance with the Service Information.
- Perform the BODY VERIFICATION TEST. (Refer to 28 - DTC-Based Diagnostics/MODULE, Totally Integrated Power (TIPM) - Standard Procedure).

B1E9C-13-REAR RIGHT HEATER CONTROL CIRCUIT - CIRCUIT OPEN

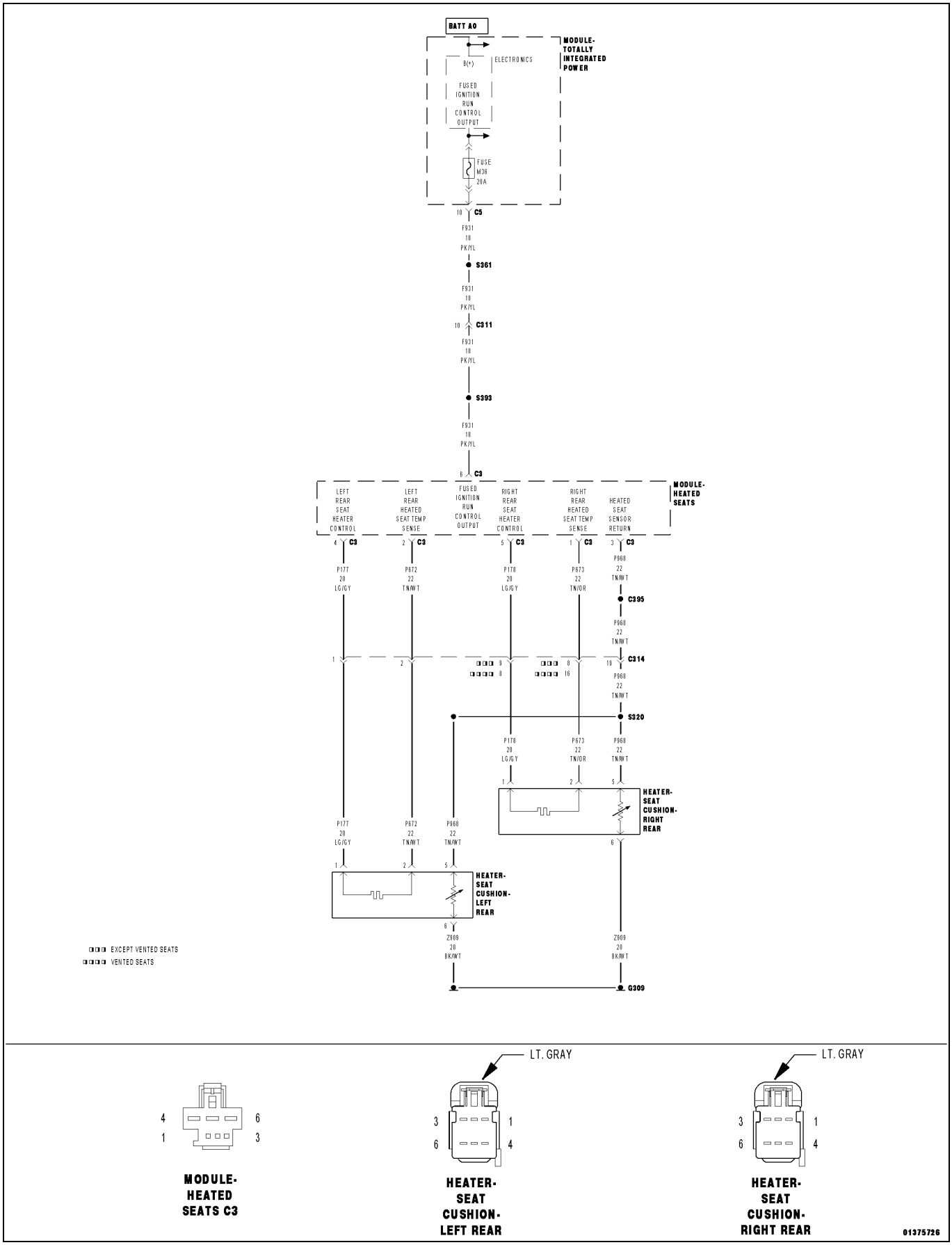

For a complete wiring diagram, **refer to the Wiring Information**.

- **When Monitored:**
  With the engine running.
- **Set Condition:**
  The Heated Seat Module (HSM) detects current below 0.5 of an amp on the (P178) Right Rear Seat Heater Control circuit for more than two seconds with the output turned on.

Possible Causes
(P178) RIGHT REAR SEAT HEATER CONTROL CIRCUIT OPEN
(Z909) GROUND CIRCUIT OPEN
SEAT CUSHION HEATER ELEMENT OPEN
HEATED SEAT MODULE (HSM)

1. TEST FOR INTERMITTENT CONDITION

NOTE: Make sure the battery is fully charged and the charging system is operating properly before proceeding.

1. Turn the ignition on.
2. Using a scan tool, record and erase Diagnostic Trouble Codes (DTCs).
3. Turn the ignition off.
4. Start the engine and let it run.
5. Turn the Heated Seat on and operate in all modes.
6. Using a scan tool, read DTCs.

Is the DTC active?

Yes

- Go To 2

No

- The conditions that caused this code to set are not present at this time. Verify seat harness is routed correctly. Using the wiring diagram/schematic as a guide, inspect the wiring and connectors. Look for chafed, pierced, pinched, or partially broken wires and broken, bent, pushed out, spread, corroded, or contaminated terminals. Attempt to reproduce condition by adjusting the front seat.
- Perform the BODY VERIFICATION TEST. (Refer to 28 - DTC-Based Diagnostics/MODULE, Totally Integrated Power (TIPM) - Standard Procedure).

2. CHECK FOR OPEN RIGHT REAR SEAT CUSHION HEATER ELEMENT

1. Turn the ignition off.
2. Disconnect the Right Rear Seat Cushion Heater harness connector.

NOTE: Check connectors. Clean and repair as necessary.

3. Measure the resistance between the (P178) Right Rear Seat Heater Control circuit and the (Z909) Ground circuit at the Right Rear Seat Cushion Heater Connector (seat side).

Is the resistance above 4.8 Ohms?

Yes

- Replace the Rear Seat Cushion Heater Element in accordance with the Service Information.
- Perform the BODY VERIFICATION TEST. (Refer to 28 - DTC-Based Diagnostics/MODULE, Totally Integrated Power (TIPM) - Standard Procedure).

No

- Go To 3

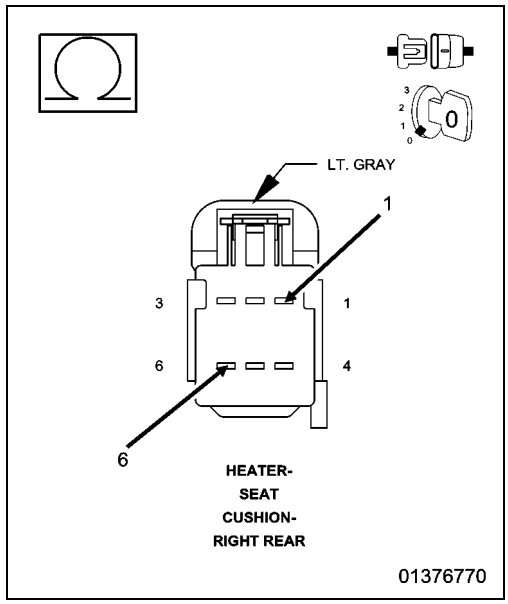

3. CHECK (P178) RIGHT REAR SEAT HEATER CONTROL CIRCUIT FOR AN OPEN IN BODY HARNESS

1. Disconnect the HSM C3 harness connector.

NOTE: Check connectors. Clean and repair as necessary.

2. Measure the resistance of the (P178) Right Rear Seat Heater Control circuit between the HSM C3 harness connector and the Right Rear Seat Cushion Heater harness connector (harness side).

Is the resistance below 5.0 Ohms?

Yes

- Go To 4

No

- Repair the (P178) Right Rear Seat Heater Control circuit for an open.
- Perform the BODY VERIFICATION TEST. (Refer to 28 - DTC-Based Diagnostics/MODULE, Totally Integrated Power (TIPM) - Standard Procedure).

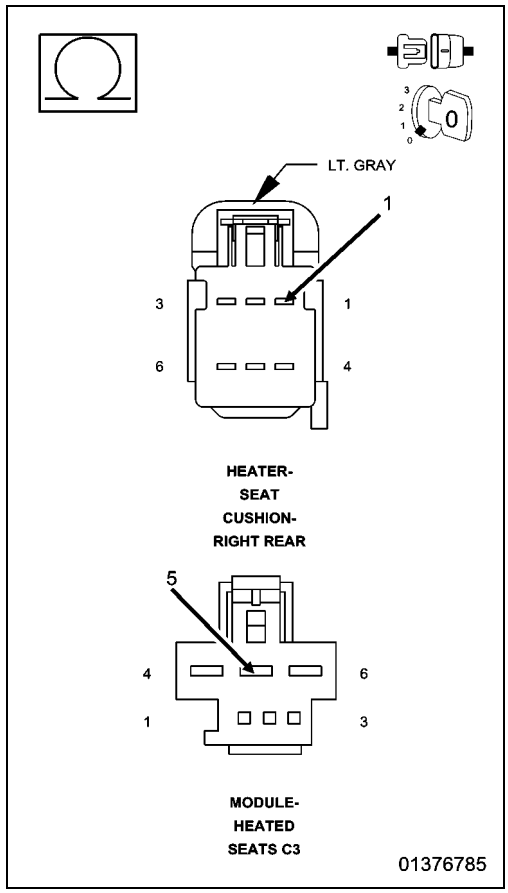

4. CHECK (Z909) GROUND CIRCUIT FOR AN OPEN

1. Measure the resistance of the (Z909) Ground circuit between ground and the Right Rear Seat Cushion Heater harness connector (harness side).

Is the resistance below 5.0 Ohms?

Yes

- Replace the Heated Seat Module (HSM) in accordance with the Service Information.
- Perform the BODY VERIFICATION TEST. (Refer to 28 - DTC-Based Diagnostics/MODULE, Totally Integrated Power (TIPM) - Standard Procedure).

No

- Repair the (Z909) Ground circuit for an open.
- Perform the BODY VERIFICATION TEST. (Refer to 28 - DTC-Based Diagnostics/MODULE, Totally Integrated Power (TIPM) - Standard Procedure).

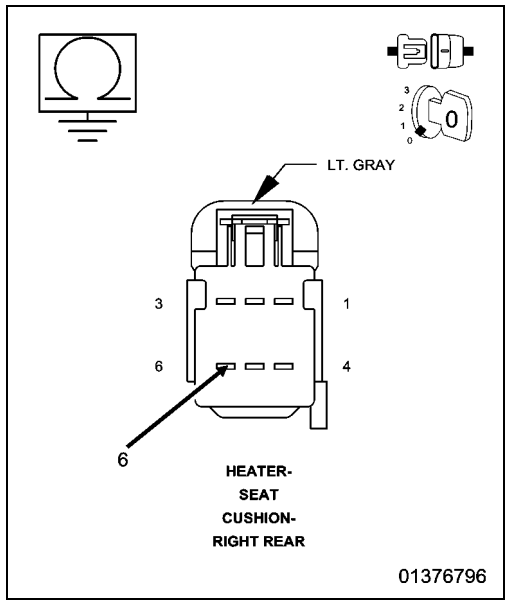

■ B1E9C-1E-REAR RIGHT HEATER CONTROL CIRCUIT - CIRCUIT RESISTANCE OUT OF RANGE

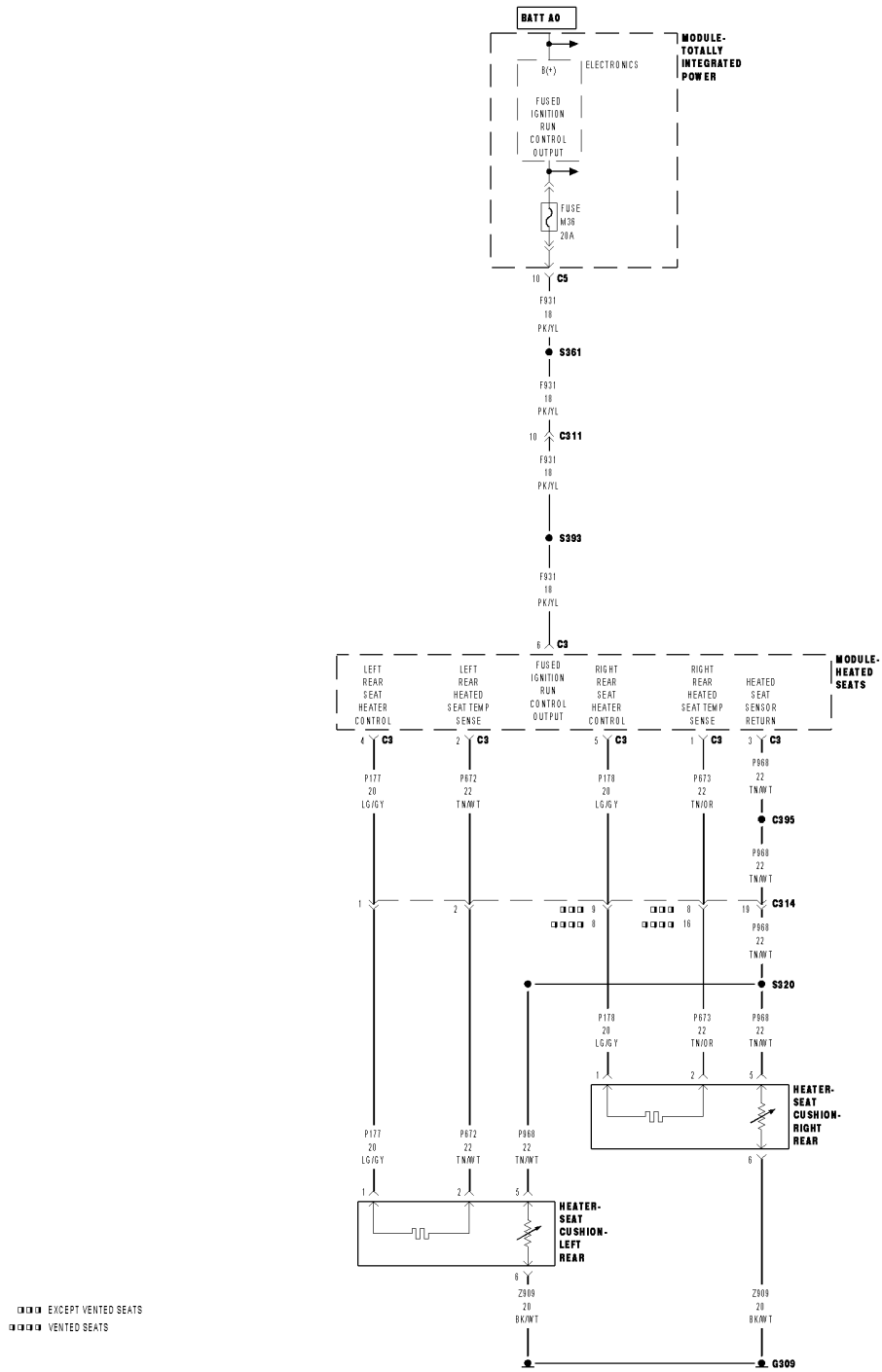

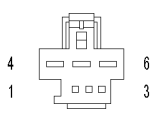

MODULE-HEATED SEATS C3

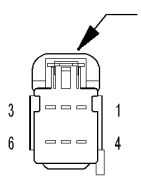

HEATER-SEAT CUSHION-LEFT REAR

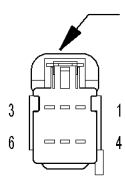

HEATER-SEAT CUSHION-RIGHT REAR

01375726

For a complete wiring diagram, **refer to the Wiring Information**.

- **When Monitored:**
  With the engine running.
- **Set Condition:**
  The Heated Seat Module (HSM) detects impedance above threshold on the (P178) Right Rear Seat Heater Control circuit for more than two seconds with the output turned on.

Possible Causes
(P178) RIGHT REAR SEAT HEATER CONTROL CIRCUIT RESISTANCE HIGH
(Z909) GROUND CIRCUIT RESISTANCE HIGH
SEAT CUSHION HEATER ELEMENT
HEATED SEAT MODULE (HSM)

1. TEST FOR INTERMITTENT CONDITION

NOTE: Before proceeding, verify the battery is fully charged, the charging system is operating properly, no Battery or System Voltage Diagnostic Trouble Codes (DTCs) are set, and the HSM Power and Ground circuits are clean and tight.

1. Turn the ignition on.
2. Using a scan tool, record and erase Diagnostic Trouble Codes (DTCs).
3. Turn the ignition off.
4. Start the engine and let it run.
5. Turn the Heated Seat on and operate in all modes.
6. Using a scan tool, read DTCs.

Is the DTC active?

Yes

- Go To 2

No

- The conditions that caused this code to set are not present at this time. Verify seat harness is routed correctly. Using the wiring diagram/schematic as a guide, inspect the wiring and connectors. Look for chafed, pierced, pinched, or partially broken wires and broken, bent, pushed out, spread, corroded, or contaminated terminals. Attempt to reproduce condition by adjusting the front seat.
- Perform the BODY VERIFICATION TEST. (Refer to 28 - DTC-Based Diagnostics/MODULE, Totally Integrated Power (TIPM) - Standard Procedure).

2. CHECK REAR SEAT CUSHION HEATER ELEMENT RESISTANCE

1. Turn the ignition off.
2. Disconnect the Right Rear Seat Cushion Heater harness connector.

NOTE: Check connectors. Clean and repair as necessary.

3. Measure the resistance between the (P178) Right Rear Seat Heater Control circuit and the (Z909) Ground circuit at the Right Rear Seat Cushion Heater Connector (seat side).

Is the resistance above 4.8 Ohms?

Yes

- Replace the Rear Seat Cushion Heater Element in accordance with the Service Information.
- Perform the BODY VERIFICATION TEST. (Refer to 28 - DTC-Based Diagnostics/MODULE, Totally Integrated Power (TIPM) - Standard Procedure).

No

- Go To 3

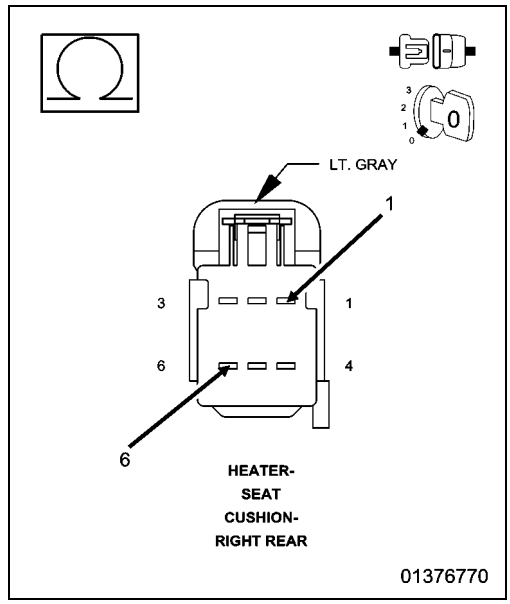

3. CHECK (P178) RIGHT REAR SEAT HEATER CONTROL CIRCUIT FOR HIGH RESISTANCE IN BODY HARNESS

1. Disconnect the HSM C3 harness connector.

NOTE: Check connectors. Clean and repair as necessary.

2. Measure the resistance of the (P178) Right Rear Seat Heater Control circuit between the HSM C3 harness connector and the Right Rear Seat Cushion Heater harness connector (harness side).

Is the resistance below 5.0 Ohms?

Yes

- Go To 4

No

- Repair the (P178) Right Rear Seat Heater Control circuit for high resistance.
- Perform the BODY VERIFICATION TEST. (Refer to 28 - DTC-Based Diagnostics/MODULE, Totally Integrated Power (TIPM) - Standard Procedure).

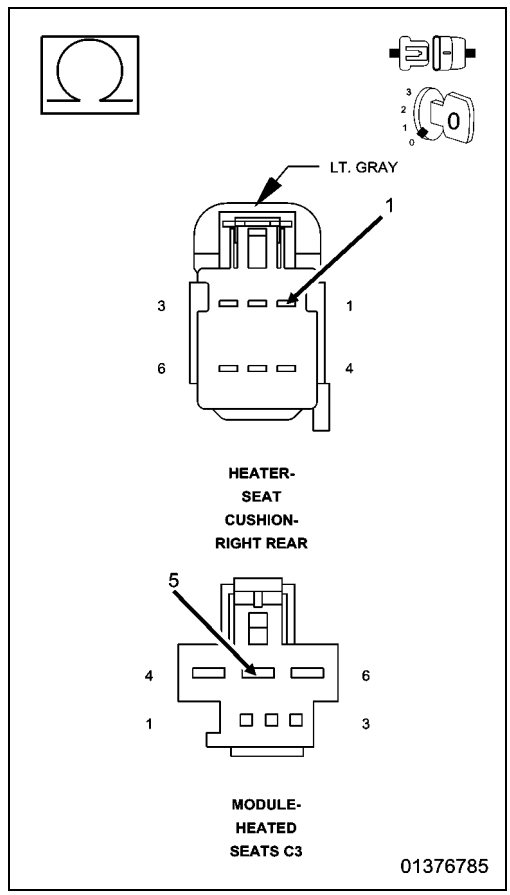

4. CHECK (Z909) GROUND CIRCUIT FOR HIGH RESISTANCE

1. Measure the resistance of the (Z909) Ground circuit between ground and the Right Rear Seat Cushion Heater harness connector (harness side).

Is the resistance below 5.0 Ohms?

Yes

- Replace the Heated Seat Module (HSM) in accordance with the Service Information.
- Perform the BODY VERIFICATION TEST. (Refer to 28 - DTC-Based Diagnostics/MODULE, Totally Integrated Power (TIPM) - Standard Procedure).

No

- Repair the (Z909) Ground circuit for high resistance.
- Perform the BODY VERIFICATION TEST. (Refer to 28 - DTC-Based Diagnostics/MODULE, Totally Integrated Power (TIPM) - Standard Procedure).

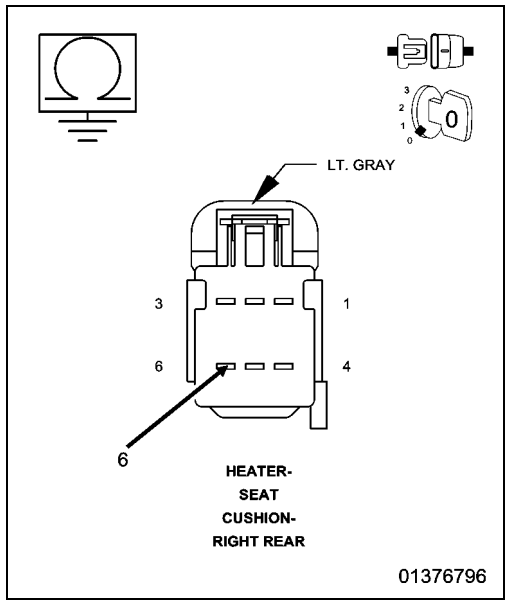

B1E9D-11-FRONT LEFT VENT CONTROL CIRCUIT - CIRCUIT SHORT TO GROUND

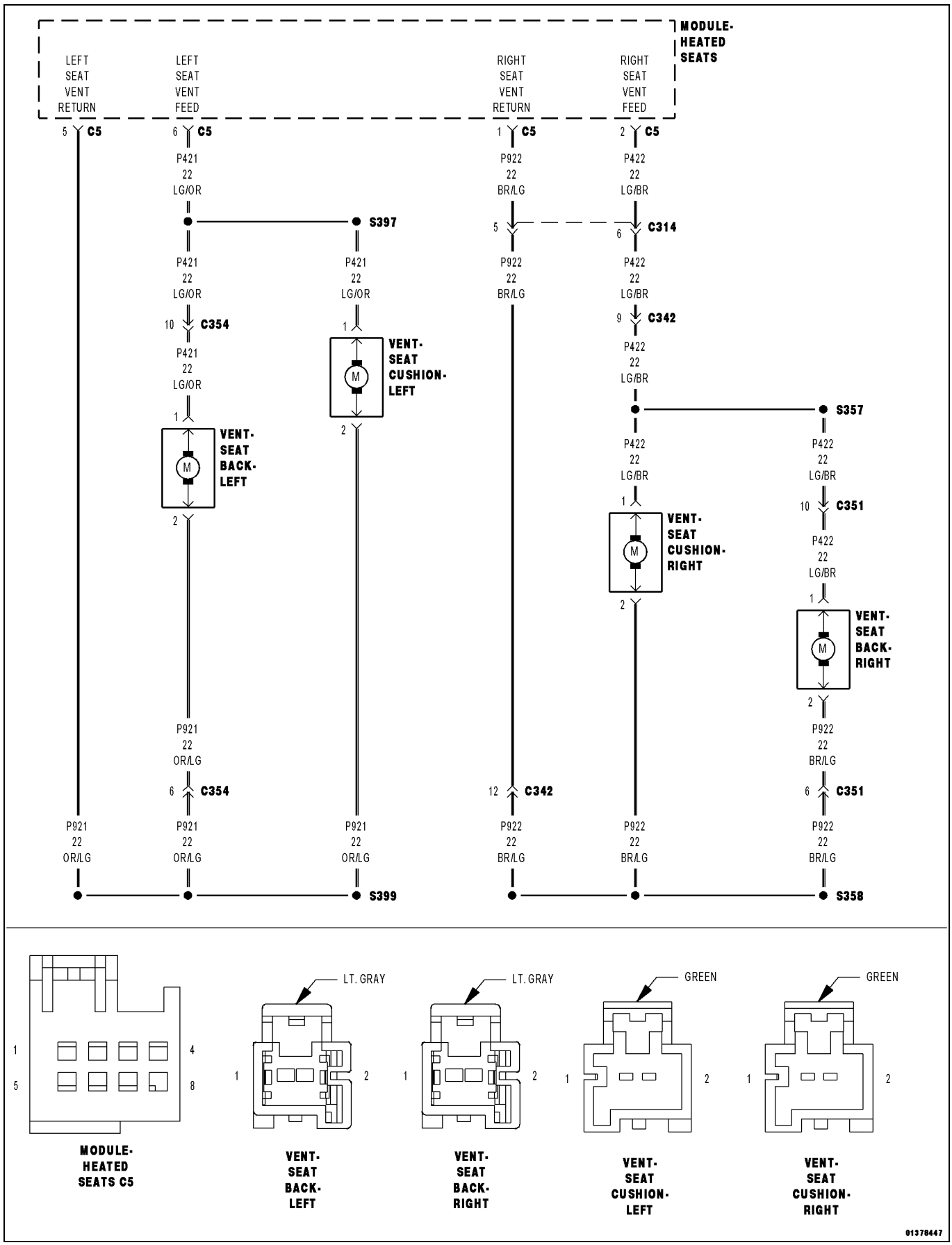

For a complete wiring diagram, **refer to the Wiring Information**.

- **When Monitored:**
  With the engine running.
- **Set Condition:**
  The Heated Seat Module (HSM) detects Voltage below 1.0 volt or current above threshold on the (P421) Left Seat Vent Feed circuit for more than 12 seconds with the output turned on.

Possible Causes
(P421) LEFT SEAT VENT FEED CIRCUIT SHORTED TO GROUND
(P421) LEFT SEAT VENT FEED CIRCUIT SHORTED TO THE (P921) LEFT SEAT VENT RETURN CIRCUIT
SEAT CUSHION VENT MOTOR SHORTED
SEAT BACK VENT MOTOR SHORTED
HEATED SEAT MODULE (HSM)

1. TEST FOR INTERMITTENT CONDITION

NOTE: Make sure the battery is fully charged and the charging system is operating properly before proceeding.

1. Turn the ignition on.
2. Using a scan tool, record and erase Diagnostic Trouble Codes (DTCs).
3. Turn the ignition off.
4. Start the engine and let it run.
5. Turn the Vented Seat on and wait at least 12 seconds before proceeding.
6. Using a scan tool, read DTCs.

Is the DTC active?

Yes

- Go To 2

No

- The conditions that caused this code to set are not present at this time. Verify seat harness is routed correctly to the HSM. Using the wiring diagram/schematic as a guide, inspect the wiring and connectors. Look for chafed, pierced, pinched, or partially broken wires and broken, bent, pushed out, spread, corroded, or contaminated terminals. Attempt to reproduce condition by adjusting the seat.
- Perform the BODY VERIFICATION TEST. (Refer to 28 - DTC-Based Diagnostics/MODULE, Totally Integrated Power (TIPM) - Standard Procedure).

2. CHECK (P421) LEFT SEAT VENT FEED CIRCUIT AND VENT MOTORS FOR A SHORT TO GROUND

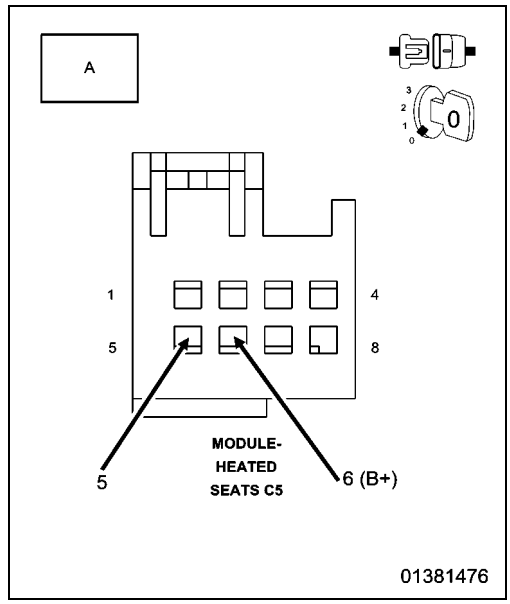

1. Turn the ignition off.
2. Disconnect the HSM C5 harness connector.

NOTE: Check connectors. Clean and repair as necessary.

3. Connect an ammeter between the (P921) Left Seat Vent Return circuit and ground at the HSM C5 harness connector.
4. Connect one end a fused jumper wire to Battery voltage and the other end to the (P421) Left Seat Vent Feed circuit at the HSM C5 harness connector.

NOTE: Both vent motors should be operational and the ammeter should read 720 to 880 ma.

Does the ammeter read 720 ma to 1.2 amps?

Yes

- Disconnect the fused jumper wire and ammeter. Replace the Heated Seat Module (HSM) in accordance with the Service Information. (Refer to 08 - Electrical/8E - Electronic Control Modules/MODULE, Heated Seat - Removal)
- Perform the BODY VERIFICATION TEST. (Refer to 28 - DTC-Based Diagnostics/MODULE, Totally Integrated Power (TIPM) - Standard Procedure).

No

- Disconnect the fused jumper wire. Go To 3

3. CHECK (P421) LEFT SEAT VENT FEED CIRCUIT AND SEAT BACK VENT MOTOR FOR A SHORT TO GROUND

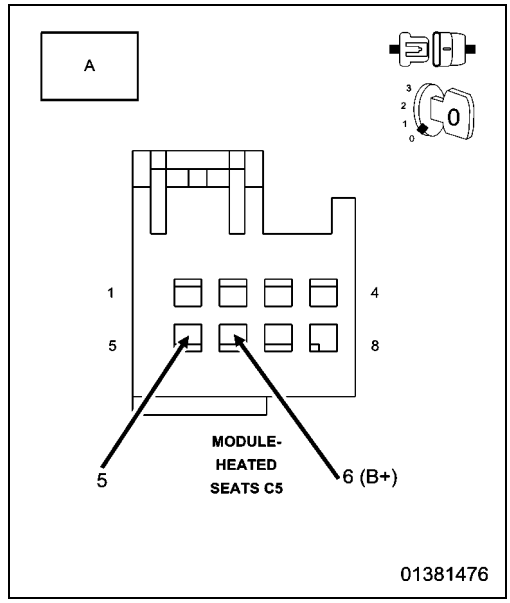

1. Disconnect the Left Seat Cushion Vent harness connector.

NOTE: Check connectors. Clean and repair as necessary.

2. Connect an ammeter between the (P921) Left Seat Vent Return circuit and ground at the HSM C5 harness connector.
3. Connect one end of a fused jumper wire to Battery voltage and the other end to the (P421) Left Seat Vent Feed circuit at the HSM C5 harness connector.

NOTE: The seat back vent motor should be operational and the ammeter should read 320 to 480 ma.

Does the ammeter read 320 to 600 ma?

Yes

- Disconnect the fused jumper wire and ammeter. Replace the Seat Cushion Vent Motor in accordance with the Service Information. (Refer to 08 - Electrical/8G - Heated/Cooled Systems/Heated/Cooled Accessories/MOTOR, Vented Seat - Removal)
- Perform the BODY VERIFICATION TEST. (Refer to 28 - DTC-Based Diagnostics/MODULE, Totally Integrated Power (TIPM) - Standard Procedure).

No

- Disconnect the fused jumper wire and the ammeter. Go To 4

4. CHECK (P421) LEFT SEAT VENT FEED CIRCUIT FOR A SHORT TO GROUND

1. Disconnect the C354 in-line harness connector.
2. Measure the resistance of the (P421) Left Seat Vent Feed circuit between ground at the HSM C5 harness connector.

Is the resistance below 10K Ohms?

Yes

- Repair the (P421) Left Seat Vent Feed circuit for a short to ground.
- Perform the BODY VERIFICATION TEST. (Refer to 28 - DTC-Based Diagnostics/MODULE, Totally Integrated Power (TIPM) - Standard Procedure).

No

- Go To 5

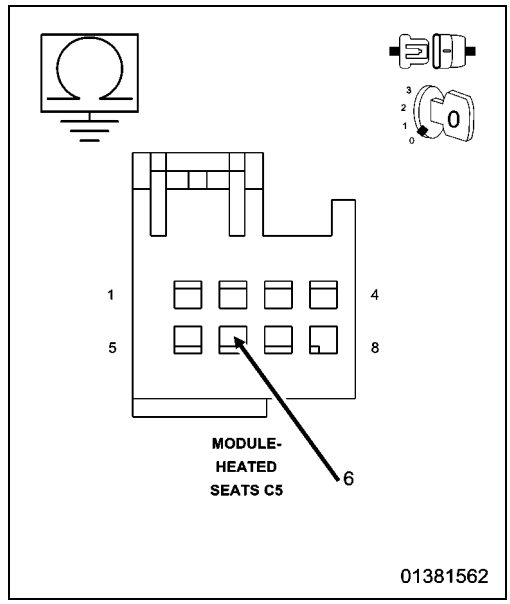

5. CHECK (P421) LEFT SEAT VENT FEED CIRCUIT FOR A SHORT TO THE (P921) LEFT SEAT VENT RETURN CIRCUIT

1. Measure the resistance between the (P421) Left Seat Vent Feed circuit and the (P921) Left Seat Vent Return circuit at the HSM C5 harness connector.

Is the resistance below 10K Ohms?

Yes

- Repair the (P421) Left Seat Vent Feed circuit for a short to the (P921) Left Seat Vent Return circuit.
- Perform the BODY VERIFICATION TEST. (Refer to 28 - DTC-Based Diagnostics/MODULE, Totally Integrated Power (TIPM) - Standard Procedure).

No

- Repair or replace the pigtail harness for a short to ground or replace the shorted Seat Back Vent Motor in accordance with the Service Information. (Refer to 08 - Electrical/8G - Heated/Cooled Systems/Heated/Cooled Accessories/MOTOR, Vented Seat - Removal)
- Perform the BODY VERIFICATION TEST. (Refer to 28 - DTC-Based Diagnostics/MODULE, Totally Integrated Power (TIPM) - Standard Procedure).

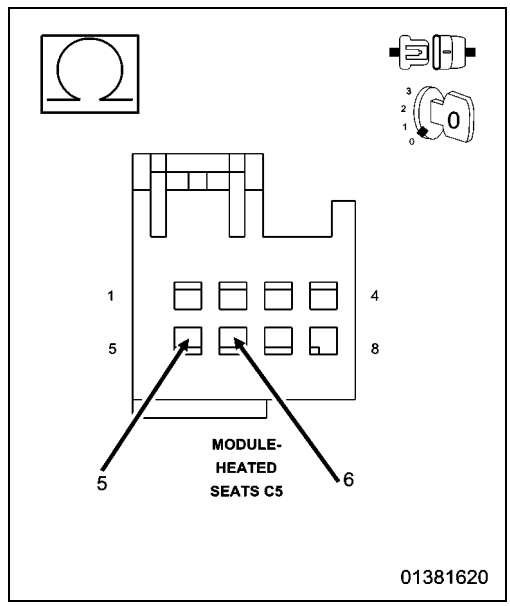

B1E9D-12-FRONT LEFT VENT CONTROL CIRCUIT - CIRCUIT SHORT TO BATTERY

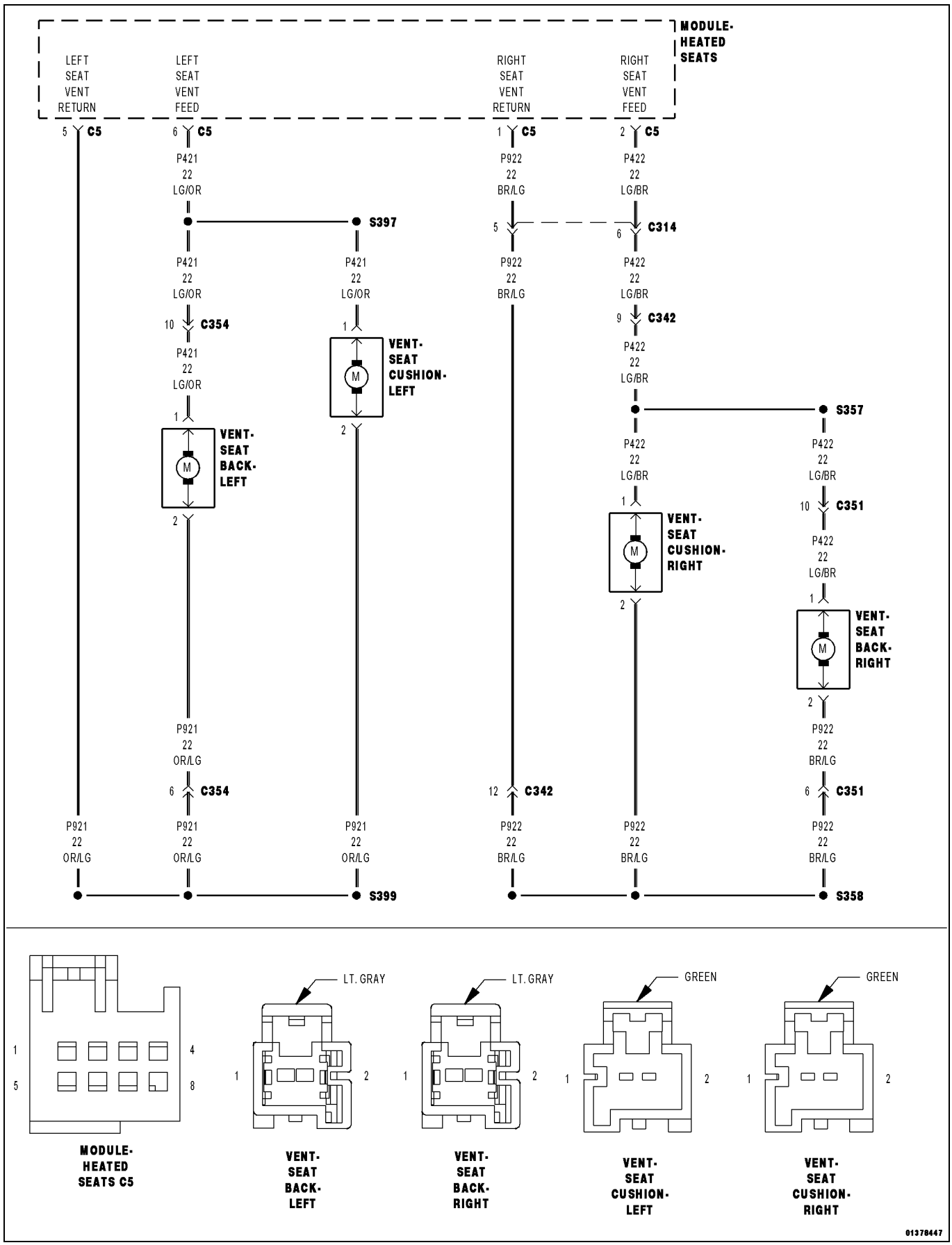

For a complete wiring diagram, **refer to the Wiring Information**.

- **When Monitored:**
  With the engine running.
- **Set Condition:**
  The Heated Seat Module (HSM) detects Voltage above 5.0 volts on the (P421) Left Seat Vent Feed circuit for more than two seconds with the output turned off.

Possible Causes
(P421) LEFT SEAT VENT FEED CIRCUIT SHORTED TO VOLTAGE
HEATED SEAT MODULE (HSM)

1. TEST FOR INTERMITTENT CONDITION

NOTE: Make sure the battery is fully charged and the charging system is operating properly before proceeding.

1. Turn the ignition on.
2. Using a scan tool, record and erase Diagnostic Trouble Codes (DTCs).
3. Turn the ignition off.
4. Start the engine and let it run.
5. Using a scan tool, read DTCs.

Is the DTC active?

Yes

- Go To 2

No

- The conditions that caused this code to set are not present at this time. Verify seat harness is routed correctly to the HSM. Using the wiring diagram/schematic as a guide, inspect the wiring and connectors. Look for chafed, pierced, pinched, or partially broken wires and broken, bent, pushed out, spread, corroded, or contaminated terminals. Attempt to reproduce condition by operating all HSM functions one at a time, except for the Left Front Vented Seat. Attempt to reproduce condition by adjusting the seat.
- Perform the BODY VERIFICATION TEST. (Refer to 28 - DTC-Based Diagnostics/MODULE, Totally Integrated Power (TIPM) - Standard Procedure).

2. CHECK (P421) LEFT SEAT VENT FEED CIRCUIT FOR A SHORT TO VOLTAGE

1. Turn the ignition off.
2. Disconnect the HSM C5 harness connector.

NOTE: Check connectors. Clean and repair as necessary.

3. Start the engine and let it run.
4. Measure the voltage of the (P421) Left Seat Vent Feed circuit between the HSM C5 harness connector and ground.

Is there any voltage present?

Yes

- Repair the (P421) Left Seat Vent Feed circuit for a short to voltage.
- Perform the BODY VERIFICATION TEST. (Refer to 28 - DTC-Based Diagnostics/MODULE, Totally Integrated Power (TIPM) - Standard Procedure).

No

- Go To 3

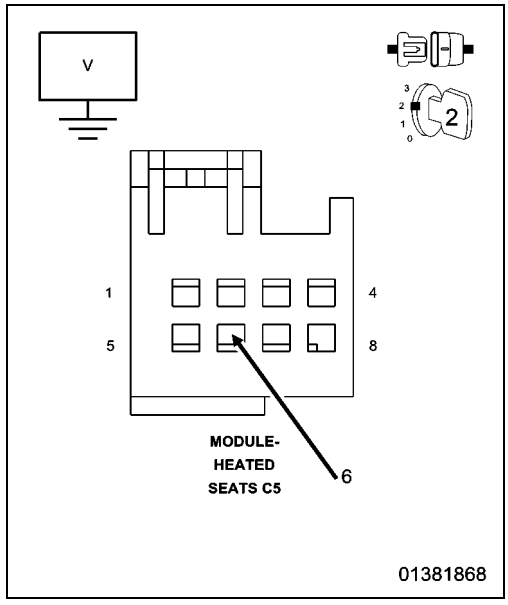

3. CHECK (P421) LEFT SEAT VENT FEED CIRCUIT FOR A SHORT TO VOLTAGE DURING SEAT ADJUSTMENT

1. Measure the voltage of the (P421) Left Seat Vent Feed circuit between the HSM C5 harness connector and ground while adjusting the seat in all positions.

Is there any voltage present during the seat adjustment?

Yes

- Repair the (P421) Left Seat Vent Feed circuit for a short to voltage.
- Perform the BODY VERIFICATION TEST. (Refer to 28 - DTC-Based Diagnostics/MODULE, Totally Integrated Power (TIPM) - Standard Procedure).

No

- Replace the Heated Seat Module (HSM) in accordance with the Service Information.
- Perform the BODY VERIFICATION TEST. (Refer to 28 - DTC-Based Diagnostics/MODULE, Totally Integrated Power (TIPM) - Standard Procedure).

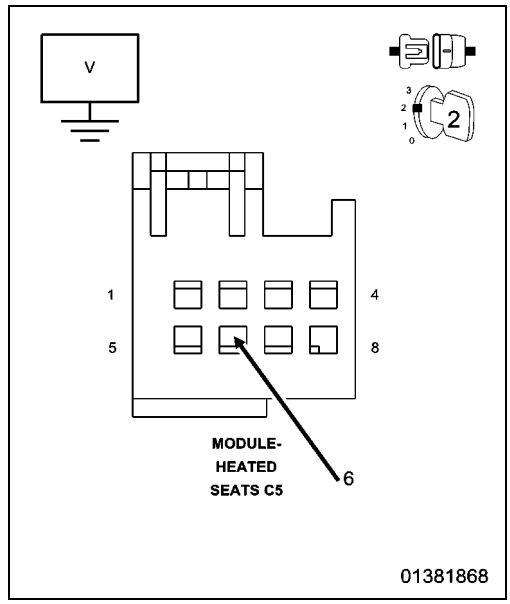

B1E9D-13-FRONT LEFT VENT CONTROL CIRCUIT - CIRCUIT OPEN

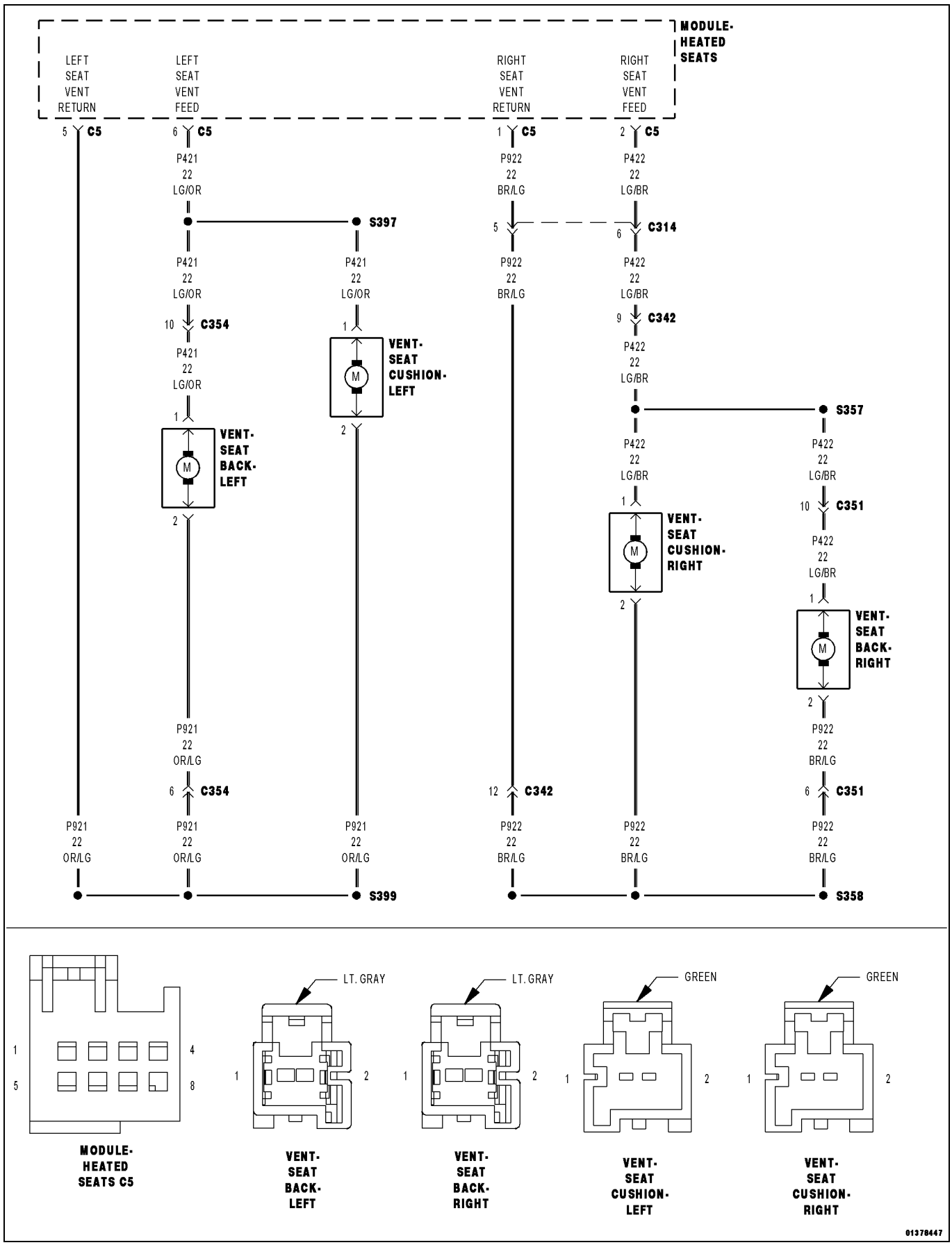

For a complete wiring diagram, **refer to the Wiring Information**.

- **When Monitored:**
  With the engine running.
- **Set Condition:**
  The Heated Seat Module (HSM) detects current below threshold on the (P421) Left Seat Vent Feed circuit for more than 12 seconds with the output turned on.

Possible Causes
(P421) LEFT SEAT VENT FEED CIRCUIT OPEN
(P921) LEFT SEAT VENT RETURN CIRCUIT OPEN
SEAT CUSHION VENT MOTOR OPEN
SEAT BACK VENT MOTOR OPEN
HEATED SEAT MODULE (HSM)

1. TEST FOR INTERMITTENT CONDITION

NOTE: Make sure the battery is fully charged and the charging system is operating properly before proceeding.

1. Turn the ignition on.
2. Using a scan tool, record and erase Diagnostic Trouble Codes (DTCs).
3. Turn the ignition off.
4. Start the engine and let it run.
5. Turn the Vented Seat and wait at least 12 seconds before proceeding.
6. Using a scan tool, read DTCs.

Is the DTC active?

Yes

- Go To 2

No

- The conditions that caused this code to set are not present at this time. Verify seat harness is routed correctly to the HSM. Using the wiring diagram/schematic as a guide, inspect the wiring and connectors. Look for chafed, pierced, pinched, or partially broken wires and broken, bent, pushed out, spread, corroded, or contaminated terminals. Attempt to reproduce condition by adjusting the seat.
- Perform the BODY VERIFICATION TEST. (Refer to 28 - DTC-Based Diagnostics/MODULE, Totally Integrated Power (TIPM) - Standard Procedure).

2. CHECK LEFT SEAT VENT MOTORS AND (P421) FEED AND (P921) RETURN CIRCUITS FOR AN OPEN

1. Turn the ignition off.
2. Disconnect the HSM C5 harness connector.

NOTE: Check connectors. Clean and repair as necessary.

3. Connect an ammeter between the (P921) Left Seat Vent Return circuit and ground at the HSM C5 harness connector.
4. Connect one end a fused jumper wire to Battery Voltage and the other end to the (P421) Left Seat Vent Feed circuit at the HSM C5 harness connector.

NOTE: Both vent motors should be operational and the ammeter should read 720 to 880 ma.

Does the ammeter read 720 ma to 1.2 amps?

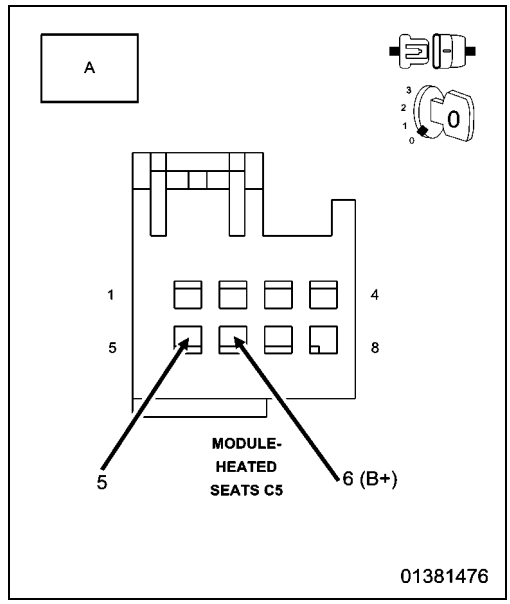

Yes

- Disconnect the ammeter and fused jumper wire. Replace the Heated Seat Module (HSM) in accordance with the Service Information.
- Perform the BODY VERIFICATION TEST. (Refer to 28 - DTC-Based Diagnostics/MODULE, Totally Integrated Power (TIPM) - Standard Procedure).

No

- Disconnect the fused jumper wire. Go To 3

3. CHECK LEFT SEAT BACK VENT MOTOR AND (P421) FEED AND (P921) RETURN CIRCUITS FOR AN OPEN

1. Disconnect the Left Seat Cushion Vent harness connector.

NOTE: Check connectors. Clean and repair as necessary.

2. Connect an ammeter between the (P921) Left Seat Vent Return circuit and ground at the HSM C5 harness connector.
3. Connect one end a fused jumper wire to Battery voltage and the other end to the (P421) Left Seat Vent Feed circuit at the HSM C5 harness connector.

NOTE: The seat back vent motor should be operational and the ammeter should read 320 to 480 ma.

Does the ammeter read 320 to 600 ma?

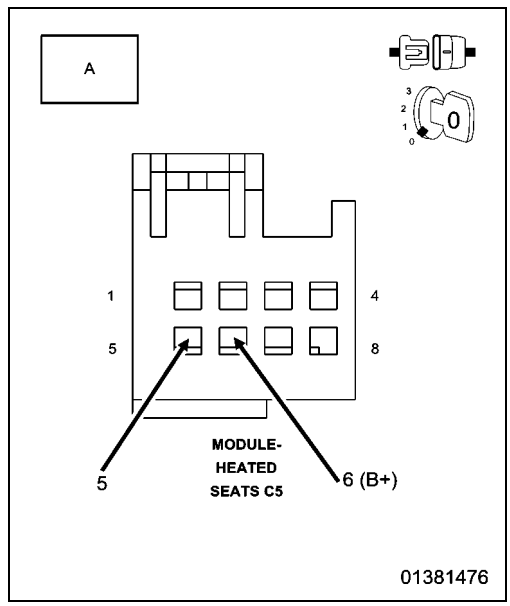

Yes

- Disconnect the ammeter and fused jumper wire. Repair or replace the pigtail harness for an open or replace the open Seat Cushion Vent Motor in accordance with the Service Information.
- Perform the BODY VERIFICATION TEST. (Refer to 28 - DTC-Based Diagnostics/MODULE, Totally Integrated Power (TIPM) - Standard Procedure).

No

- Disconnect the ammeter and fused jumper wire. Go To 4

4. CHECK (P421) LEFT SEAT VENT FEED CIRCUIT FOR AN OPEN

1. Disconnect the C354 in-line harness connector.

NOTE: Check connectors. Clean and repair as necessary.

2. Measure the resistance of the (P421) Left Seat Vent Feed circuit between the HSM C5 harness connector and the C354 in-line harness connector.

Is the resistance below 5.0 Ohms?

Yes

- Go To 5

No

- Repair the (P421) Left Seat Vent Feed circuit for an open.
- Perform the BODY VERIFICATION TEST. (Refer to 28 - DTC-Based Diagnostics/MODULE, Totally Integrated Power (TIPM) - Standard Procedure).

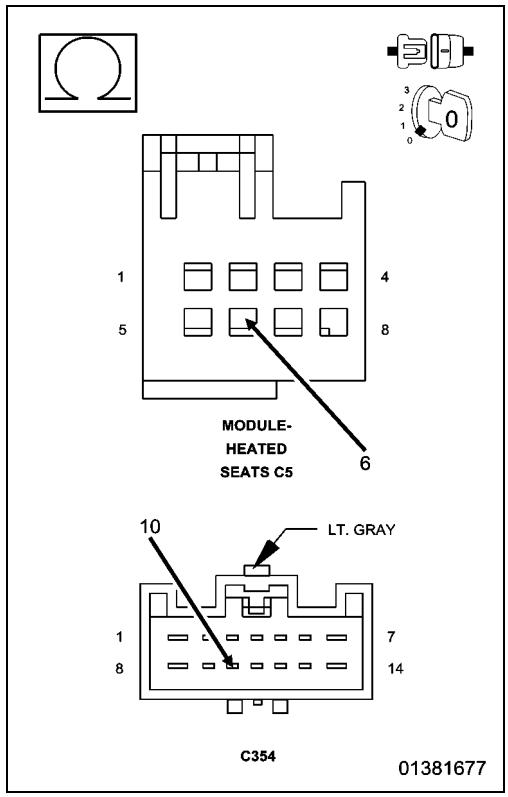

5. CHECK (P921) LEFT SEAT VENT RETURN CIRCUIT FOR AN OPEN

1. Measure the resistance of the (P921) Left Seat Vent Return circuit between the HSM C5 harness connector and the C354 in-line harness connector.

Is the resistance below 5.0 Ohms?

Yes

- Repair or replace the pigtail harness for an open or replace the open Seat Back Vent Motor in accordance with the Service Information.
- Perform the BODY VERIFICATION TEST. (Refer to 28 - DTC-Based Diagnostics/MODULE, Totally Integrated Power (TIPM) - Standard Procedure).

No

- Repair the (P921) Left Seat Vent Return circuit for an open.
- Perform the BODY VERIFICATION TEST. (Refer to 28 - DTC-Based Diagnostics/MODULE, Totally Integrated Power (TIPM) - Standard Procedure).

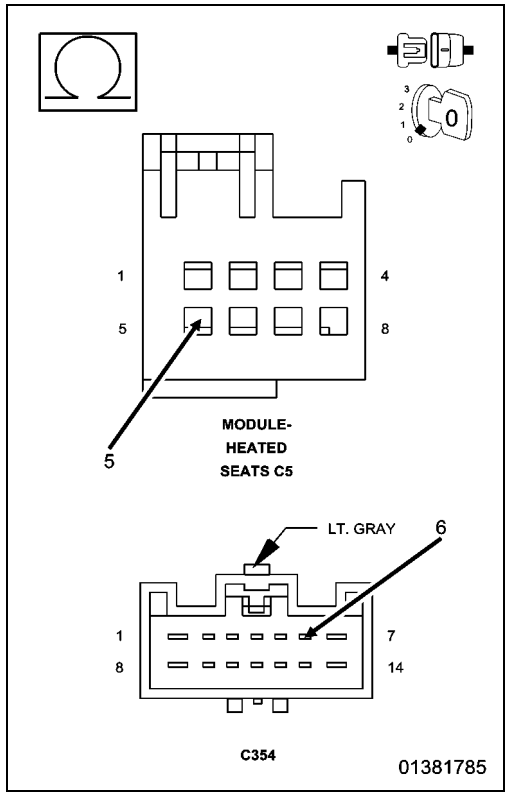

B1E9E-11-FRONT RIGHT VENT CONTROL CIRCUIT - CIRCUIT SHORT TO GROUND

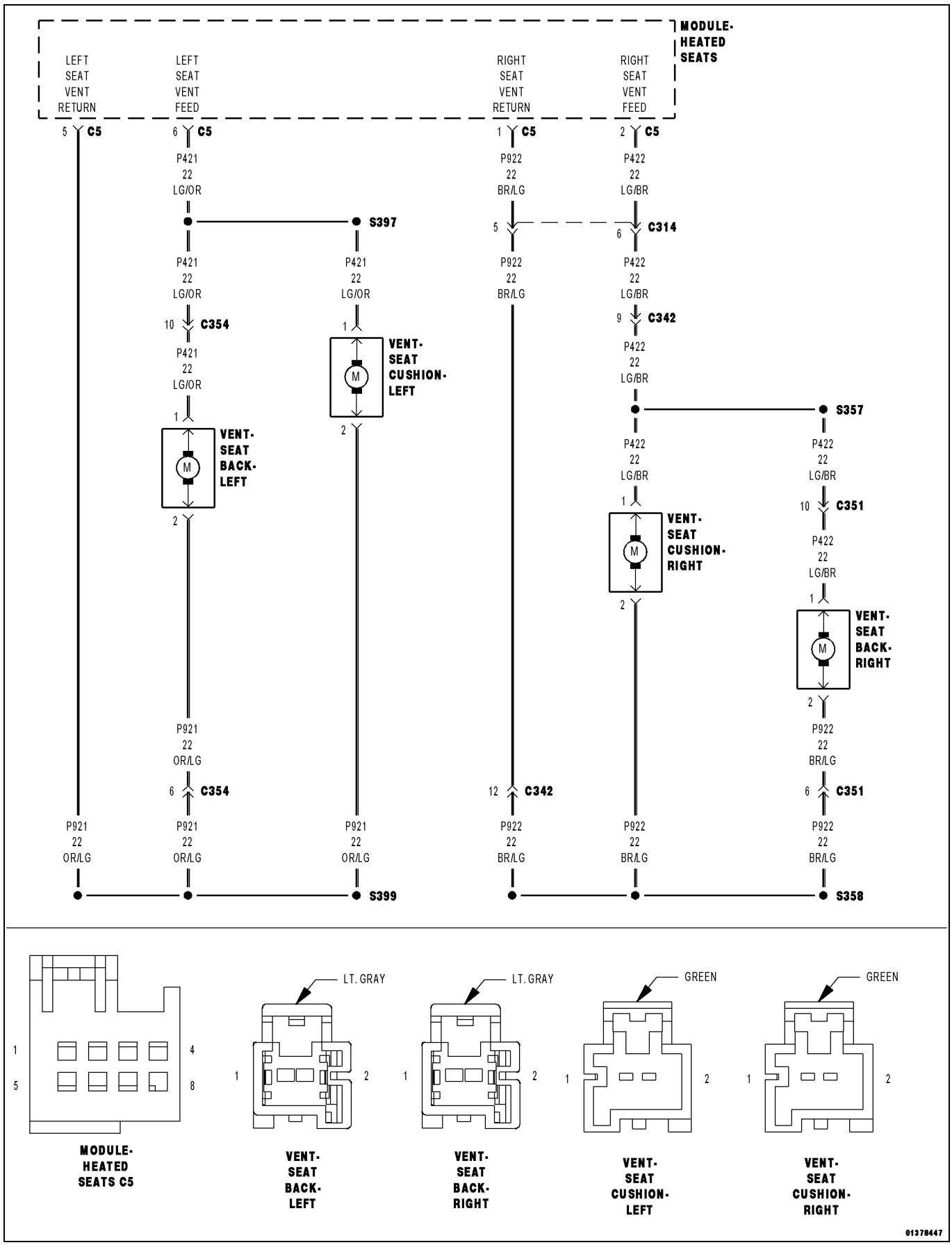

For a complete wiring diagram, **refer to the Wiring Information**.

- **When Monitored:**
  With the engine running.
- **Set Condition:**
  The Heated Seat Module (HSM) detects voltage below 1.0 volt or current above threshold on the (P422) Right Seat Vent Feed circuit for more than 12 seconds with the output turned on.

Possible Causes
(P422) RIGHT SEAT VENT FEED CIRCUIT SHORTED TO GROUND
(P422) RIGHT SEAT VENT FEED CIRCUIT SHORTED TO THE (P922) RIGHT SEAT VENT RETURN CIRCUIT
SEAT CUSHION VENT MOTOR SHORTED
SEAT BACK VENT MOTOR SHORTED
HEATED SEAT MODULE (HSM)

1. TEST FOR INTERMITTENT CONDITION

NOTE: Make sure the battery is fully charged and the charging system is operating properly before proceeding.

1. Turn the ignition on.
2. Using a scan tool, record and erase Diagnostic Trouble Codes (DTCs).
3. Turn the ignition off.
4. Start the engine and let it run.
5. Turn the Vented Seat on and wait at least 12 seconds before proceeding.
6. Using a scan tool, read DTCs.

Is the DTC active?

Yes

- Go To 2

No

- The conditions that caused this code to set are not present at this time. Verify seat harness is routed correctly to the HSM. Using the wiring diagram/schematic as a guide, inspect the wiring and connectors. Look for chafed, pierced, pinched, or partially broken wires and broken, bent, pushed out, spread, corroded, or contaminated terminals. Attempt to reproduce condition by adjusting the seat.
- Perform the BODY VERIFICATION TEST. (Refer to 28 - DTC-Based Diagnostics/MODULE, Totally Integrated Power (TIPM) - Standard Procedure).

2. CHECK (P422) RIGHT SEAT VENT FEED CIRCUIT AND VENT MOTORS FOR A SHORT TO GROUND

1. Turn the ignition off.
2. Disconnect the HSM C5 connector.

NOTE: Check connectors. Clean and repair as necessary.

3. Connect an ammeter between the (P922) Right Seat Vent Return circuit and ground at the HSM C5 connector.
4. Connect one end a fused jumper wire to Battery voltage and the other end to the (P422) Right Seat Vent Feed circuit at the HSM C5 harness connector.

NOTE: Both vent motors should be operational and the ammeter should read 720 to 880 ma.

Does the ammeter read 720 ma to 1.2 amps?

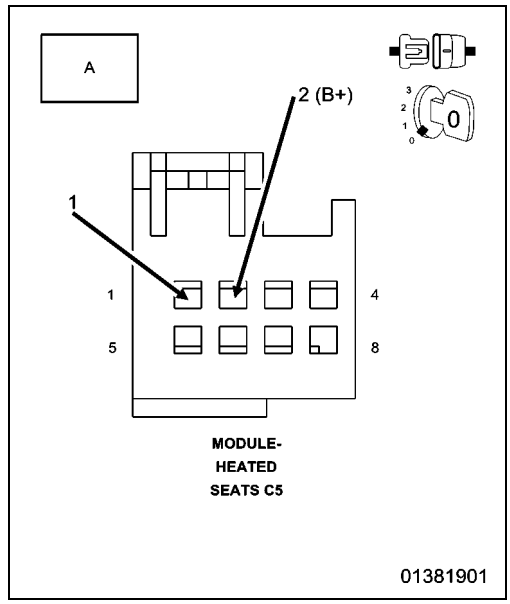

Yes

- Disconnect the fused jumper wire and ammeter. Replace the Heated Seat Module (HSM) in accordance with the Service Information.
- Perform the BODY VERIFICATION TEST. (Refer to 28 - DTC-Based Diagnostics/MODULE, Totally Integrated Power (TIPM) - Standard Procedure).

No

- Disconnect the fused jumper wire. Go To 3

3. CHECK (P422) RIGHT SEAT VENT FEED CIRCUIT AND SEAT BACK VENT MOTOR FOR A SHORT TO GROUND

1. Disconnect the Right Seat Cushion Vent connector.

NOTE: Check connectors. Clean and repair as necessary.

2. Connect an ammeter between the (P922) Right Seat Vent Return circuit and ground at the HSM C5 connector.
3. Connect one end of a fused jumper wire to Battery Voltage and the other end to the (P422) Right Seat Vent Feed circuit at the HSM C5 connector.

NOTE: The seat back vent motor should be operational and the ammeter should read 320 to 480 ma.

Does the ammeter read 320 to 600 ma?

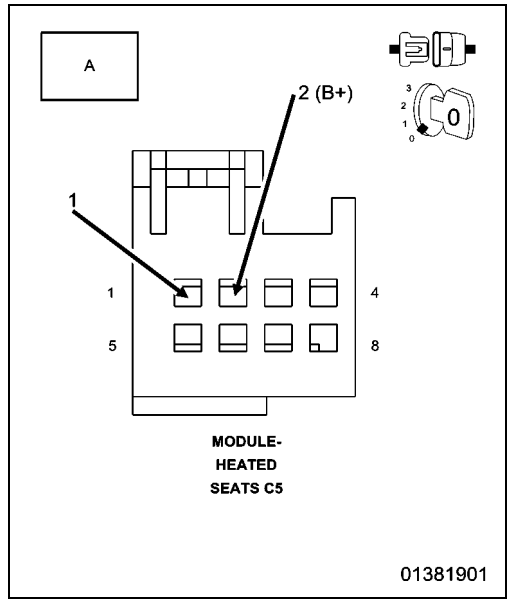

Yes

- Disconnect the fused jumper wire and ammeter. Replace the Seat Cushion Vent Motor in accordance with the Service Information.
- Perform the BODY VERIFICATION TEST. (Refer to 28 - DTC-Based Diagnostics/MODULE, Totally Integrated Power (TIPM) - Standard Procedure).

No

- Disconnect the fused jumper wire and ammeter. Go To 4

4. CHECK (P422) RIGHT SEAT VENT FEED CIRCUIT FOR A SHORT TO GROUND

1. Disconnect the C351 in-line harness connector.

NOTE: Check connectors. Clean and repair as necessary.

2. Measure the resistance of the (P422) Right Seat Vent Feed circuit between ground at the HSM C5 connector.

Is the resistance below 10K Ohms?

Yes

- Repair the (P422) Right Seat Vent Feed circuit for a short to ground.
- Perform the BODY VERIFICATION TEST. (Refer to 28 - DTC-Based Diagnostics/MODULE, Totally Integrated Power (TIPM) - Standard Procedure).

No

- Go To 5

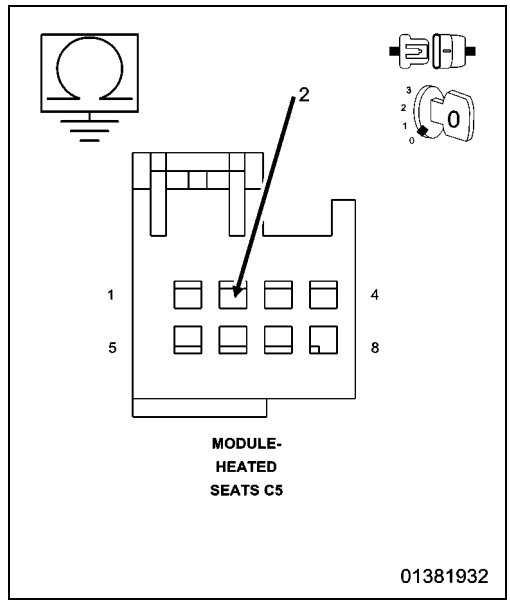

5. CHECK (P422) RIGHT SEAT VENT FEED CIRCUIT FOR A SHORT TO THE (P922) RIGHT SEAT VENT RETURN CIRCUIT

1. Measure the resistance between the (P422) Right Seat Vent Feed circuit and the (P922) Right Seat Vent Return circuit at the HSM C5 harness connector.

Is the resistance below 10K Ohms?

Yes

- Repair the (P422) Right Seat Vent Feed circuit for a short to the (P922) Right Seat Vent Return circuit.
- Perform the BODY VERIFICATION TEST. (Refer to 28 - DTC-Based Diagnostics/MODULE, Totally Integrated Power (TIPM) - Standard Procedure).

No

- Repair or replace the pigtail harness for a short to ground or replace the shorted Seat Back Vent Motor in accordance with the Service Information.
- Perform the BODY VERIFICATION TEST. (Refer to 28 - DTC-Based Diagnostics/MODULE, Totally Integrated Power (TIPM) - Standard Procedure).

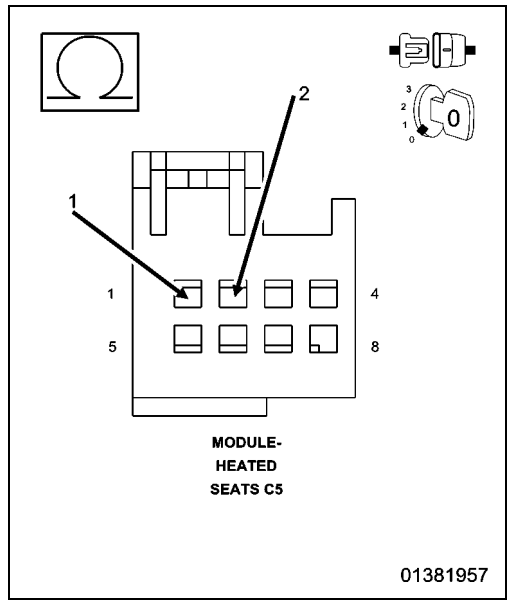

B1E9E-12-FRONT RIGHT VENT CONTROL CIRCUIT - CIRCUIT SHORT TO BATTERY

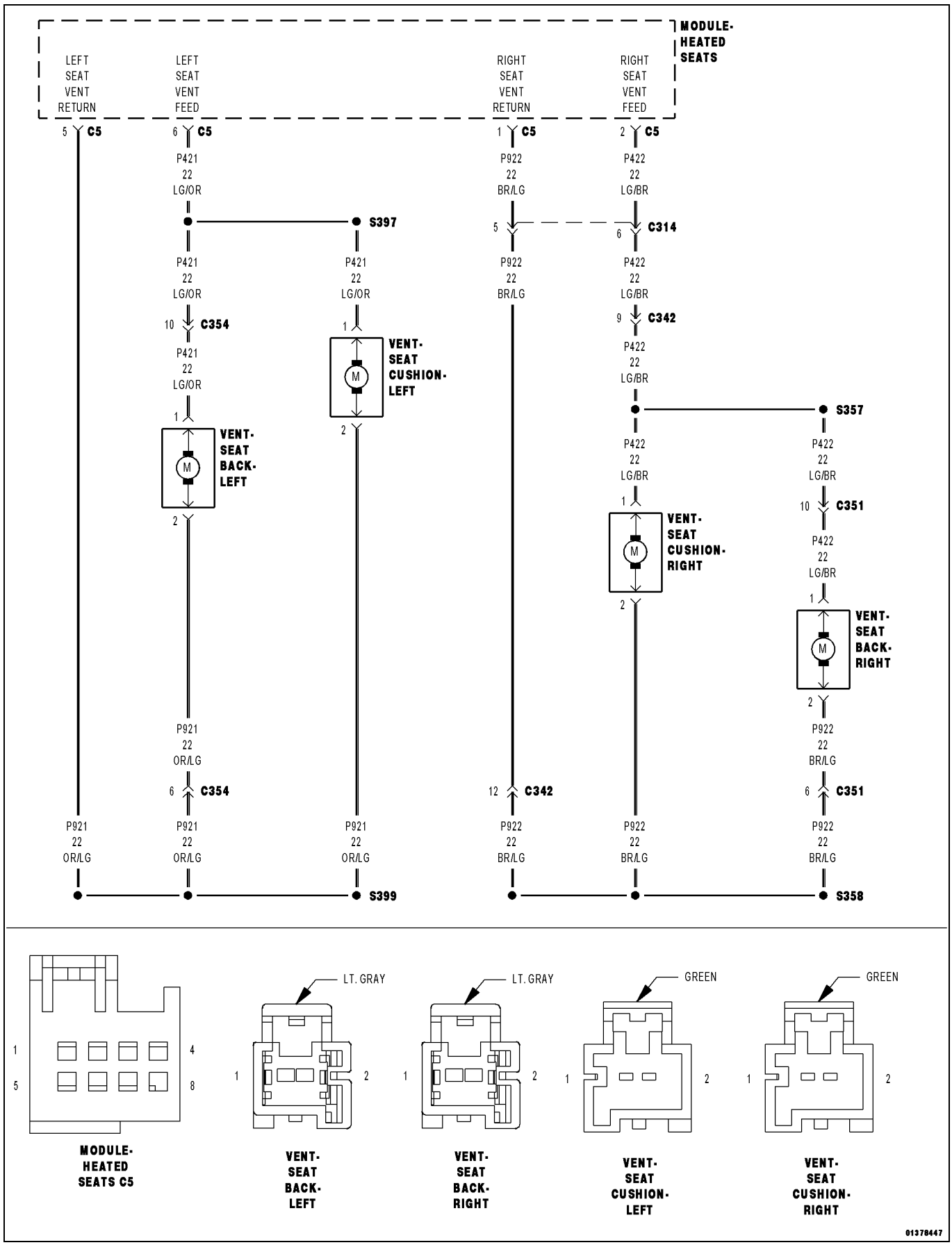

For a complete wiring diagram, **refer to the Wiring Information**.

- **When Monitored:**
  With the engine running.
- **Set Condition:**
  The Heated Seat Module (HSM) detects Voltage above 5.0 Volts on the (P422) Right Seat Vent Feed circuit for more than two seconds with the output turned off.

Possible Causes
(P422) RIGHT SEAT VENT FEED CIRCUIT SHORTED TO VOLTAGE
HEATED SEAT MODULE (HSM)

1. TEST FOR INTERMITTENT CONDITION

NOTE: Make sure the battery is fully charged and the charging system is operating properly before proceeding.

1. Turn the ignition on.
2. Using a scan tool, record and erase Diagnostic Trouble Codes (DTCs).
3. Turn the ignition off.
4. Start the engine and let it run.
5. Using a scan tool, read DTCs.

Is the DTC active?

Yes

- Go To 2

No

- The conditions that caused this code to set are not present at this time. Verify seat harness is routed correctly to the HSM. Using the wiring diagram/schematic as a guide, inspect the wiring and connectors. Look for chafed, pierced, pinched, or partially broken wires and broken, bent, pushed out, spread, corroded, or contaminated terminals. Attempt to reproduce condition by operating all HSM functions one at a time, except for the Right Front Vented Seat. Attempt to reproduce condition by adjusting the seat.
- Perform the BODY VERIFICATION TEST. (Refer to 28 - DTC-Based Diagnostics/MODULE, Totally Integrated Power (TIPM) - Standard Procedure).

2. CHECK (P422) RIGHT SEAT VENT FEED CIRCUIT FOR A SHORT TO VOLTAGE

1. Turn the ignition off.
2. Disconnect the HSM C5 harness connector.

NOTE: Check connectors. Clean and repair as necessary.

3. Start the engine and let it run.
4. Measure the voltage of the (P422) Right Seat Vent Feed circuit between the HSM C5 harness connector and ground.

Is there any voltage present?

Yes

- Repair the (P422) Right Seat Vent Feed circuit for a short to voltage.
- Perform the BODY VERIFICATION TEST. (Refer to 28 - DTC-Based Diagnostics/MODULE, Totally Integrated Power (TIPM) - Standard Procedure).

No

- Go To 3

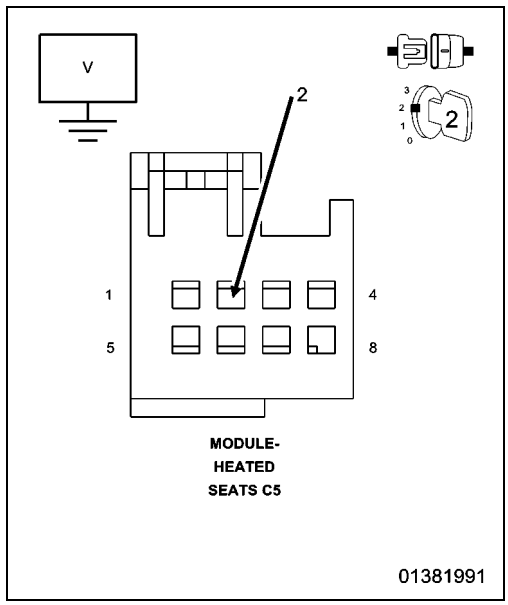

3. CHECK (P422) RIGHT SEAT VENT FEED CIRCUIT FOR A SHORT TO VOLTAGE DURING SEAT ADJUSTMENT

1. Measure the voltage of the (P422) Right Seat Vent Feed circuit between the HSM C5 harness connector and ground while adjusting the seat in all positions.

Is there any voltage present during the seat adjustment?

Yes

- Repair the (P422) Right Seat Vent Feed circuit for a short to voltage.
- Perform the BODY VERIFICATION TEST. (Refer to 28 - DTC-Based Diagnostics/MODULE, Totally Integrated Power (TIPM) - Standard Procedure).

No

- Replace the Heated Seat Module (HSM) in accordance with the Service Information.
- Perform the BODY VERIFICATION TEST. (Refer to 28 - DTC-Based Diagnostics/MODULE, Totally Integrated Power (TIPM) - Standard Procedure).

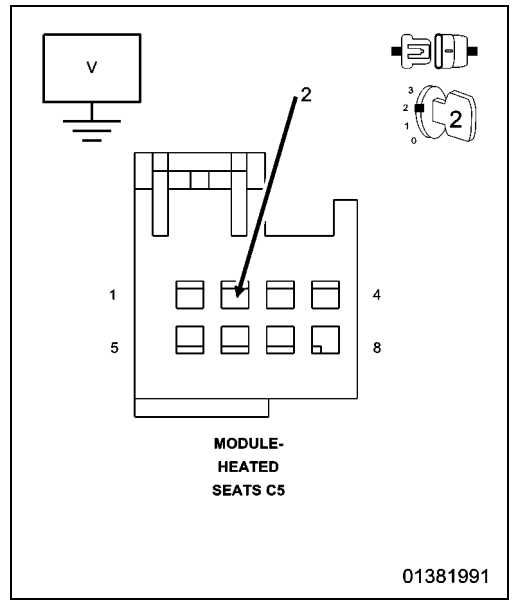

B1E9E-13-FRONT RIGHT VENT CONTROL CIRCUIT - CIRCUIT OPEN

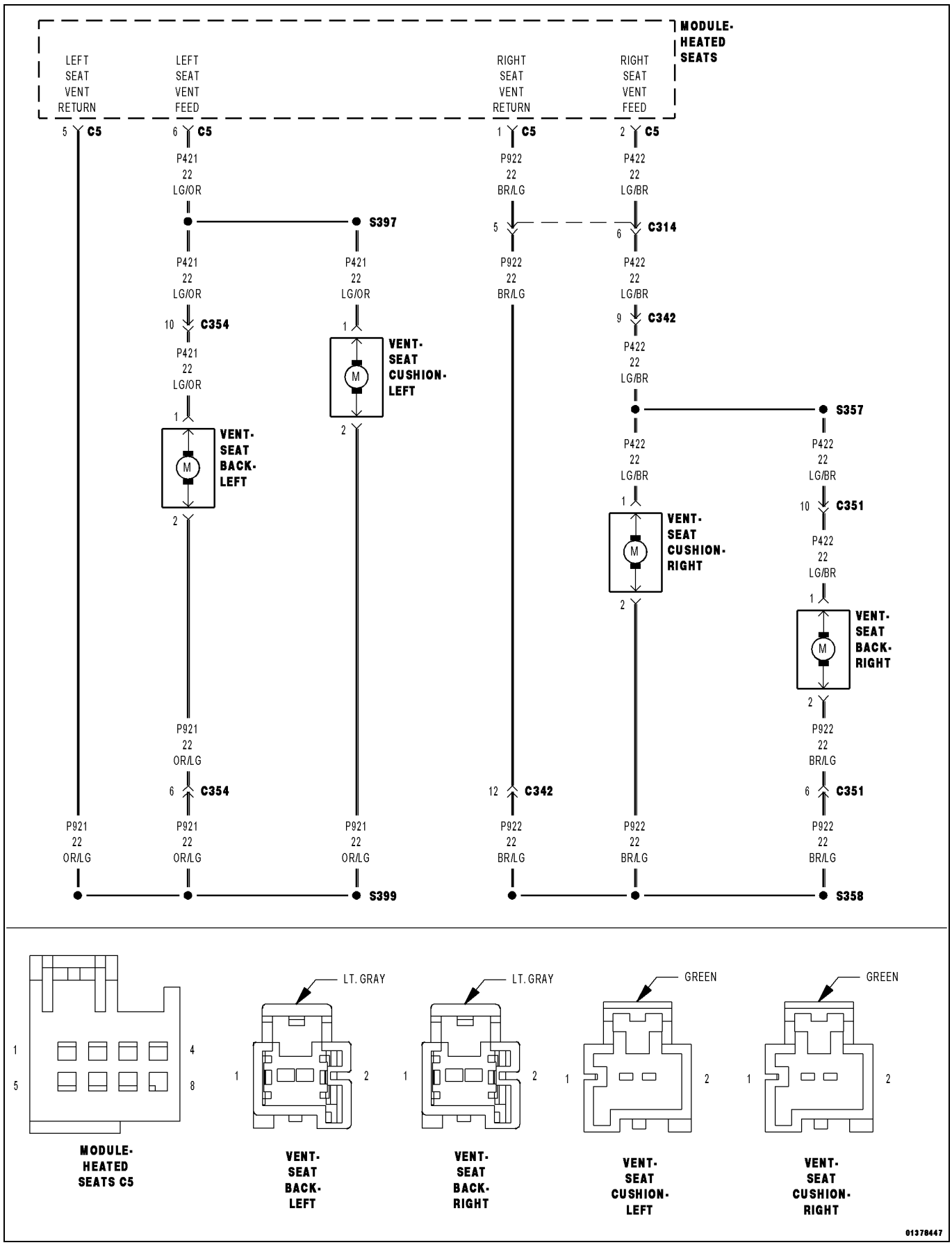

For a complete wiring diagram, **refer to the Wiring Information**.

- **When Monitored:**
  With the engine running.
- **Set Condition:**
  The Heated Seat Module (HSM) detects current below threshold on the (P422) Right Seat Vent Feed circuit for more than 12 seconds with the output turned on.

Possible Causes
(P422) RIGHT SEAT VENT FEED CIRCUIT OPEN
(P922) RIGHT SEAT VENT RETURN CIRCUIT OPEN
SEAT CUSHION VENT MOTOR OPEN
SEAT BACK VENT MOTOR OPEN
HEATED SEAT MODULE (HSM)

1. TEST FOR INTERMITTENT CONDITION

NOTE: Make sure the battery is fully charged and the charging system is operating properly before proceeding.

1. Turn the ignition on.
2. Using a scan tool, record and erase Diagnostic Trouble Codes (DTCs).
3. Turn the ignition off.
4. Start the engine and let it run.
5. Turn the Vented Seat on and wait at least 12 seconds before proceeding.
6. Using a scan tool, read DTCs.

Is the DTC active?

Yes

- Go To 2

No

- The conditions that caused this code to set are not present at this time. Verify seat harness is routed correctly to the HSM. Using the wiring diagram/schematic as a guide, inspect the wiring and connectors. Look for chafed, pierced, pinched, or partially broken wires and broken, bent, pushed out, spread, corroded, or contaminated terminals. Attempt to reproduce condition by adjusting the seat.
- Perform the BODY VERIFICATION TEST. (Refer to 28 - DTC-Based Diagnostics/MODULE, Totally Integrated Power (TIPM) - Standard Procedure).

2. CHECK RIGHT SEAT VENT MOTORS AND (P422) FEED AND (P922) RETURN CIRCUITS FOR AN OPEN

1. Turn the ignition off.
2. Disconnect the HSM C5 harness connector.

NOTE: Check connectors. Clean and repair as necessary.

3. Connect an ammeter between the (P922) Right Seat Vent Return circuit and ground at the HSM C5 harness connector.
4. Connect one end a fused jumper wire to Battery voltage and the other end to the (P422) Right Seat Vent Feed circuit at the HSM C5 harness connector.

NOTE: Both vent motors should be operational and the ammeter should read 720 to 880 ma.

Does the ammeter read 720 ma to 1.2 amps?

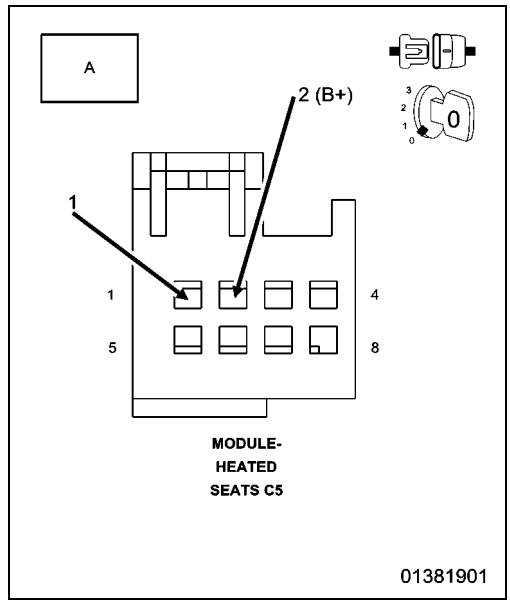

Yes

- Disconnect the fused jumper wire and ammeter. Replace the Heated Seat Module (HSM) in accordance with the Service Information.
- Perform the BODY VERIFICATION TEST. (Refer to 28 - DTC-Based Diagnostics/MODULE, Totally Integrated Power (TIPM) - Standard Procedure).

No

- Disconnect the fused jumper wire. Go To 3

3. CHECK RIGHT SEAT BACK VENT MOTOR AND (P422) FEED AND (P922) RETURN CIRCUITS FOR AN OPEN

1. Disconnect the Right Seat Cushion Vent harness connector.

NOTE: Check connectors. Clean and repair as necessary.

2. Connect an ammeter between the (P922) Right Seat Vent Return circuit and ground at the HSM C5 harness connector.
3. Connect one end a fused jumper wire to Battery voltage and the other end to the (P422) Right Seat Vent Feed circuit at the HSM C5 harness connector.

NOTE: The seat back vent motor should be operational and the ammeter should read 320 to 480 ma.

Does the ammeter read 320 to 600 ma?

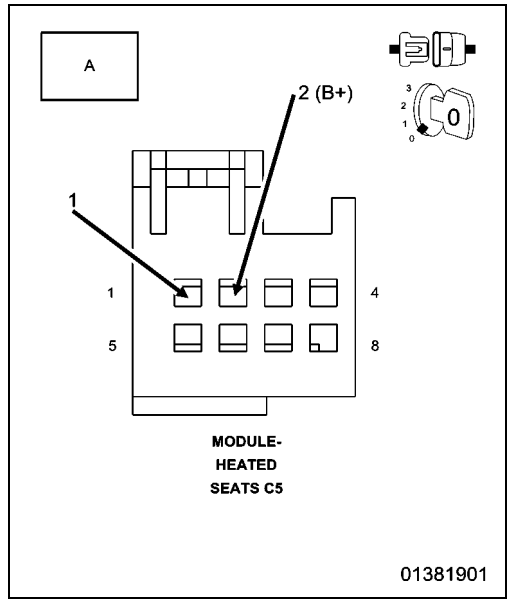

Yes

- Disconnect the fused jumper wire and ammeter. Repair or replace the pigtail harness for an open or replace the open Seat Cushion Vent Motor in accordance with the Service Information.
- Perform the BODY VERIFICATION TEST. (Refer to 28 - DTC-Based Diagnostics/MODULE, Totally Integrated Power (TIPM) - Standard Procedure).

No

- Disconnect the fused jumper wire and ammeter. Go To 4

4. CHECK (P422) RIGHT SEAT VENT FEED CIRCUIT FOR AN OPEN

1. Disconnect the C351 in-line harness connector.

NOTE: Check connectors. Clean and repair as necessary.

2. Measure the resistance of the (P422) Right Seat Vent Feed circuit between the HSM C5 connector and the C351 in-line harness connector.

Is the resistance below 5.0 Ohms?

Yes

- Go To 5

No

- Repair the (P422) Right Seat Vent Feed circuit for an open.
- Perform the BODY VERIFICATION TEST. (Refer to 28 - DTC-Based Diagnostics/MODULE, Totally Integrated Power (TIPM) - Standard Procedure).

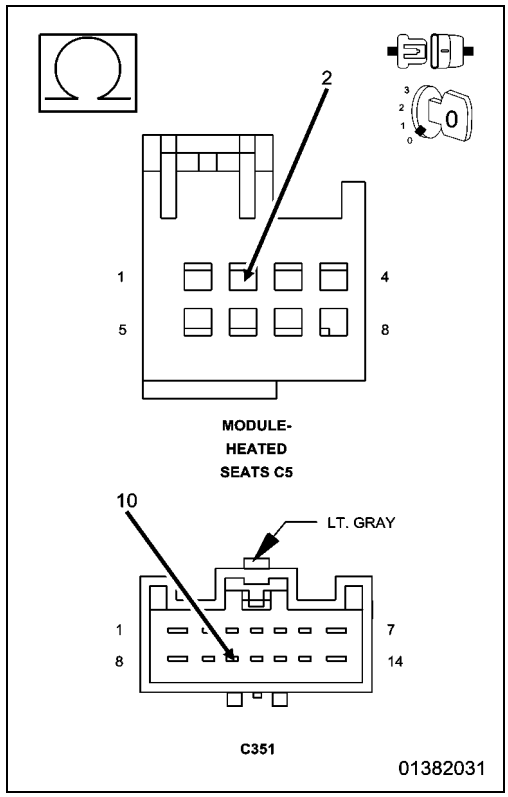

5. CHECK (P922) RIGHT SEAT VENT RETURN CIRCUIT FOR AN OPEN

1. Measure the resistance of the (P922) Right Seat Vent Return circuit between the HSM C5 connector and the C351 in-line harness connector.

Is the resistance below 5.0 Ohms?

Yes

- Repair or replace the pigtail harness for an open or replace the open Seat Back Vent Motor in accordance with the Service Information.
- Perform the BODY VERIFICATION TEST. (Refer to 28 - DTC-Based Diagnostics/MODULE, Totally Integrated Power (TIPM) - Standard Procedure).

No

- Repair the (P922) Right Seat Vent Return circuit for an open.
- Perform the BODY VERIFICATION TEST. (Refer to 28 - DTC-Based Diagnostics/MODULE, Totally Integrated Power (TIPM) - Standard Procedure).

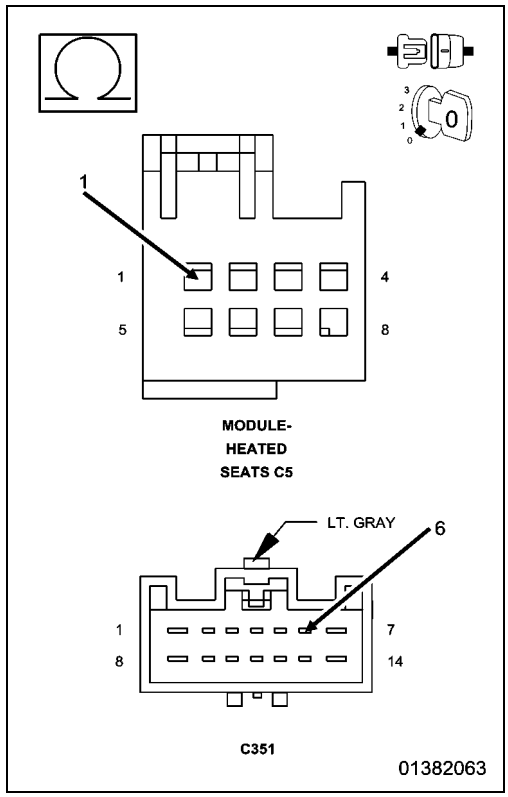

■ B1EB1-1A-FRONT LEFT SEAT HEATER SENSOR - CIRCUIT RESISTANCE BELOW THRESHOLD

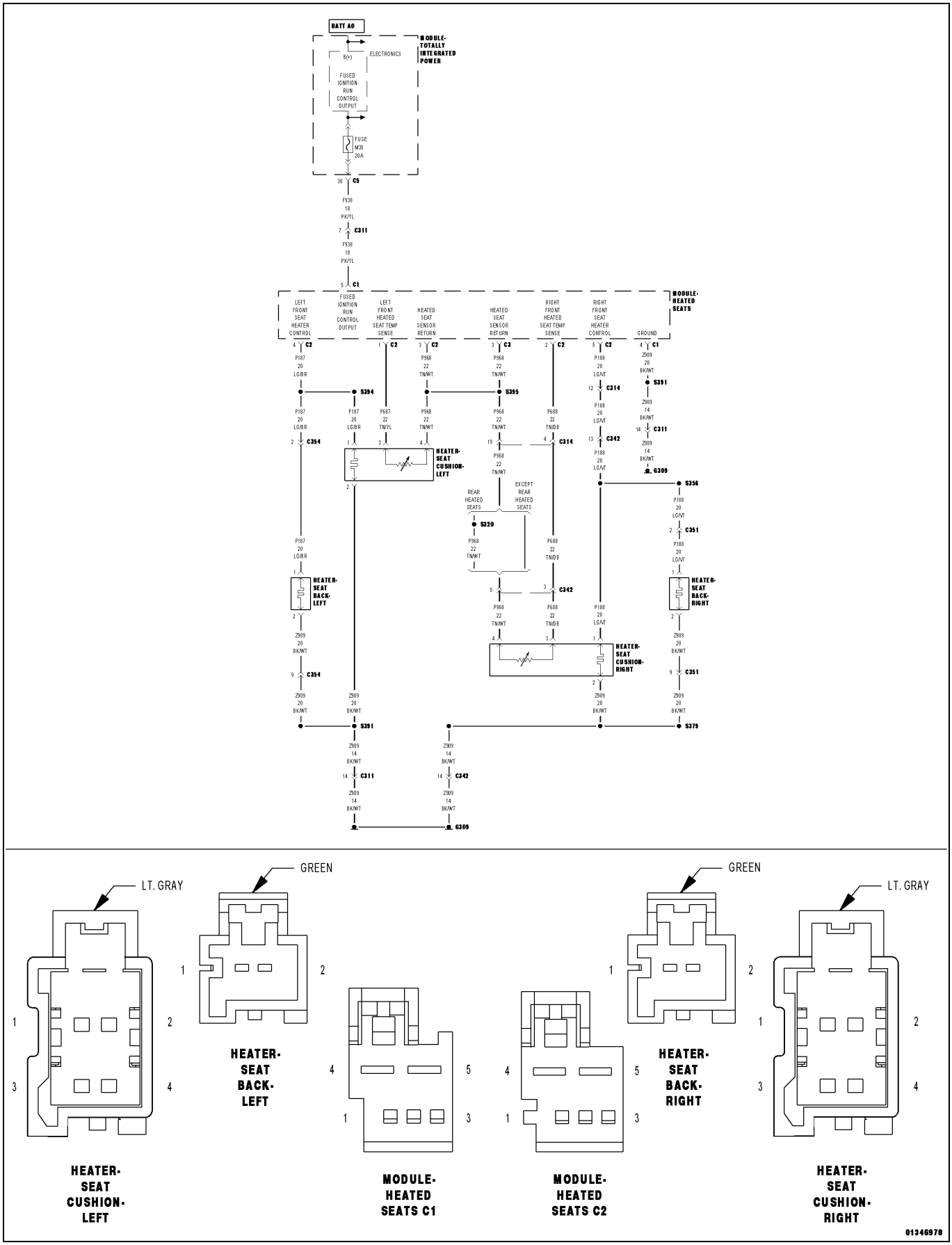

For a complete wiring diagram, **refer to the Wiring Information**.

- **When Monitored:**
  When Heated Seat Module (HSM) is powered.
- **Set Condition:**
  The Heated Seat Module (HSM) detects that the (P687) Left Front Heated Seat Temp Sense circuit NTC is below threshold for more than two seconds.

Possible Causes
(P687) LEFT FRONT HEATED SEAT TEMP SENSE CIRCUIT SHORTED TO GROUND
(P687) LEFT FRONT HEATED SEAT TEMP SENSE CIRCUIT SHORTED TO THE (Z909) GROUND CIRCUIT
(P687) LEFT FRONT HEATED SEAT TEMP SENSE CIRCUIT SHORTED TO THE (P968) HEATED SEAT SENSOR RETURN CIRCUIT
SEAT CUSHION HEATER ELEMENT SHORTED
HEATED SEAT MODULE (HSM)

1. TEST FOR INTERMITTENT CONDITION

NOTE: Make sure the battery is fully charged and the charging system is operating properly before proceeding.

1. Turn the ignition on.
2. Using a scan tool, record and erase Diagnostic Trouble Codes (DTCs).
3. Turn the ignition off.
4. Start the engine and let it run.
5. Using a scan tool, read DTCs.

Is the DTC active?

Yes

- Go To 2

No

- The conditions that caused this code to set are not present at this time. Verify seat harness is routed correctly to the HSM. Using the wiring diagram/schematic as a guide, inspect the wiring and connectors. Look for chafed, pierced, pinched, or partially broken wires and broken, bent, pushed out, spread, corroded, or contaminated terminals. Attempt to reproduce condition by adjusting the seat.
- Perform the BODY VERIFICATION TEST. (Refer to 28 - DTC-Based Diagnostics/MODULE, Totally Integrated Power (TIPM) - Standard Procedure).

2. CHECK (P687) LEFT FRONT HEATED SEAT TEMP SENSE CIRCUIT IN BODY HARNESS FOR A SHORT TO GROUND

1. Turn the ignition off.
2. Disconnect the Left Seat Cushion Heater harness connector.

NOTE: Check connectors. Clean and repair as necessary.

3. Turn the ignition on.
4. Using a scan tool, erase DTCs.
5. Turn the ignition off.
6. Start the engine and let it run.
7. Using a scan tool, read DTCs.

Is the same DTC active?

Yes

- Go To 3

No

- Replace the Seat Cushion Heater Element in accordance with the Service Information.
- Perform the BODY VERIFICATION TEST. (Refer to 28 - DTC-Based Diagnostics/MODULE, Totally Integrated Power (TIPM) - Standard Procedure).

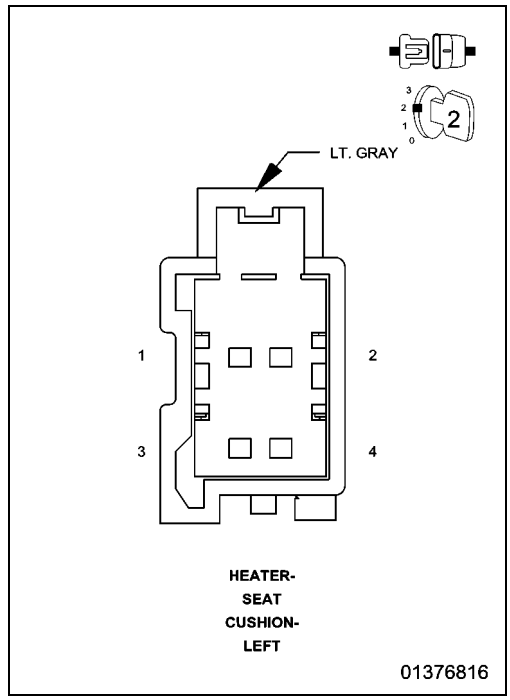

3. CHECK (P687) LEFT FRONT HEATED SEAT TEMP SENSE CIRCUIT FOR A SHORT TO GROUND

1. Turn the ignition off.
2. Disconnect the HSM C2 harness connector.

NOTE: Check connectors. Clean and repair as necessary.

3. Measure the resistance of the (P687) Left Front Heated Seat Temp Sense circuit between ground and the Left Seat Cushion Heater connector (harness side).

Is the resistance below 10K Ohms?

Yes

- Repair the (P687) Left Front Heated Seat Temp Sense circuit for a short to ground.
- Perform the BODY VERIFICATION TEST. (Refer to 28 - DTC-Based Diagnostics/MODULE, Totally Integrated Power (TIPM) - Standard Procedure).

No

- Go To 4

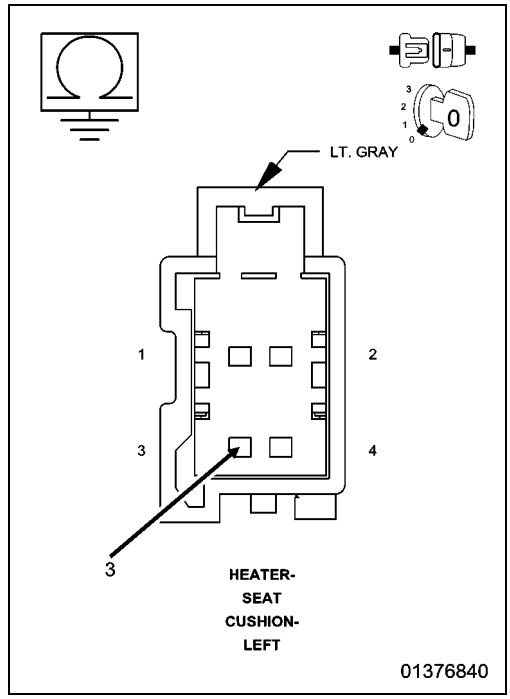

4. CHECK (P687) LEFT FRONT HEATED SEAT TEMP SENSE CIRCUIT FOR A SHORT TO THE (Z909) GROUND CIRCUIT OR TO (P968) HEATED SEAT SENSOR RETURN CIRCUIT

1. Measure the resistance between the (P687) Left Front Heated Seat Temp Sense circuit and the (Z909) Ground circuit at the Left Seat Cushion Heater harness connector.
2. Measure the resistance between the (P687) Left Front Heated Seat Temp Sense circuit and the (P968) Heated Seat Sensor Return circuit at the Left Seat Cushion Heater harness connector.

Is the resistance below 10K Ohms for either measurement?

Yes

- Repair all circuits with a resistance below 10K Ohms for a short to the (P687) Left Front Heated Seat Temp Sense circuit.
- Perform the BODY VERIFICATION TEST. (Refer to 28 - DTC-Based Diagnostics/MODULE, Totally Integrated Power (TIPM) - Standard Procedure).

No

- Replace the Seat Cushion Heater Element in accordance with the Service Information.
- Perform the BODY VERIFICATION TEST. (Refer to 28 - DTC-Based Diagnostics/MODULE, Totally Integrated Power (TIPM) - Standard Procedure).

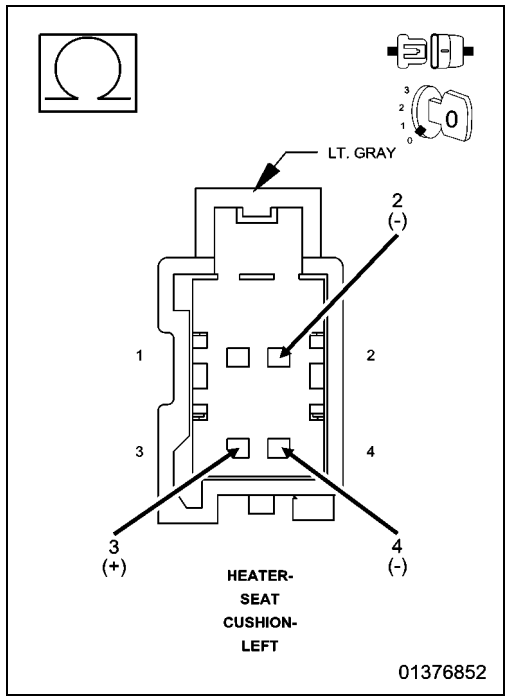

■ B1EB1-1B-FRONT LEFT SEAT HEATER SENSOR - CIRCUIT RESISTANCE ABOVE THRESHOLD

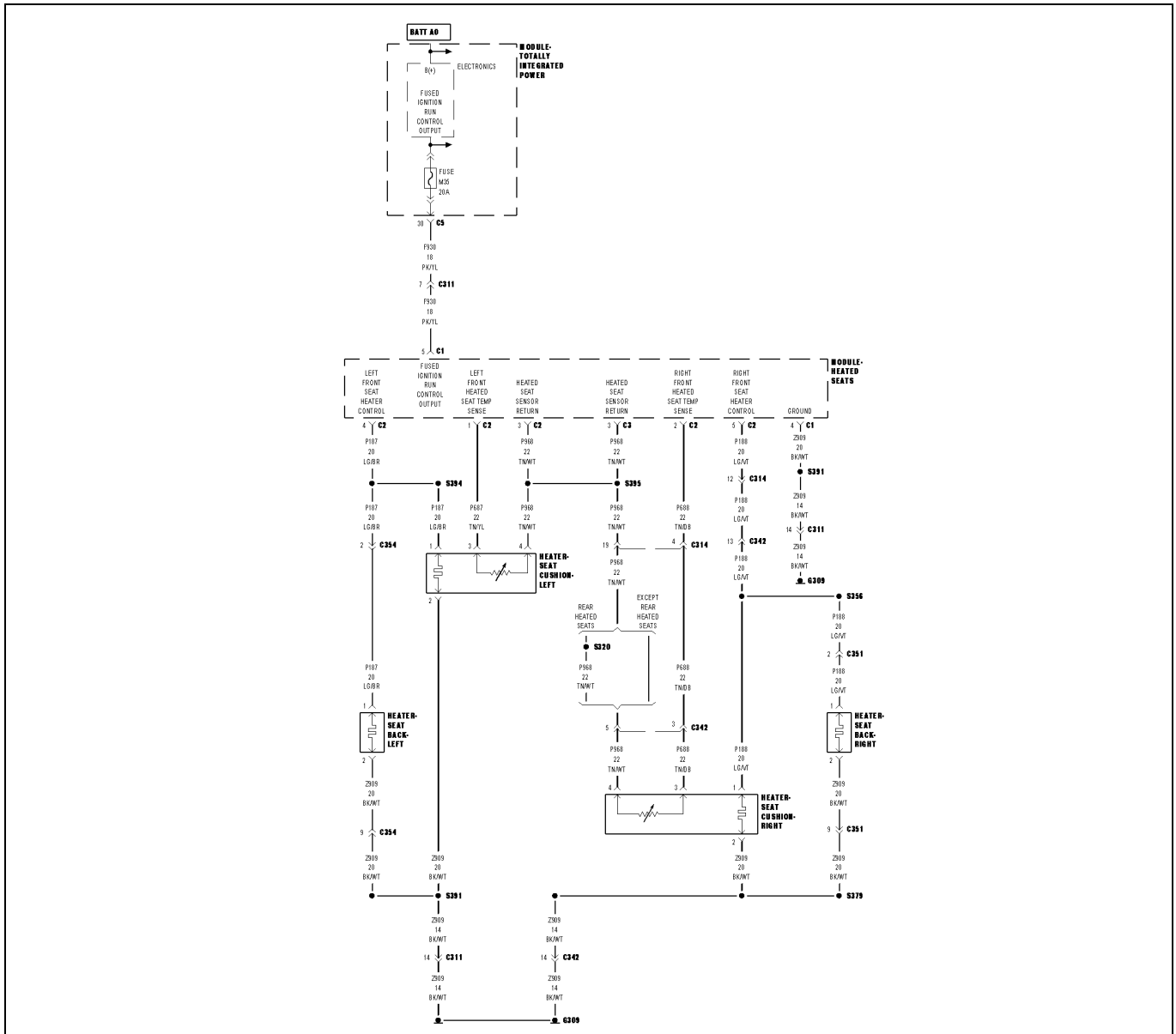

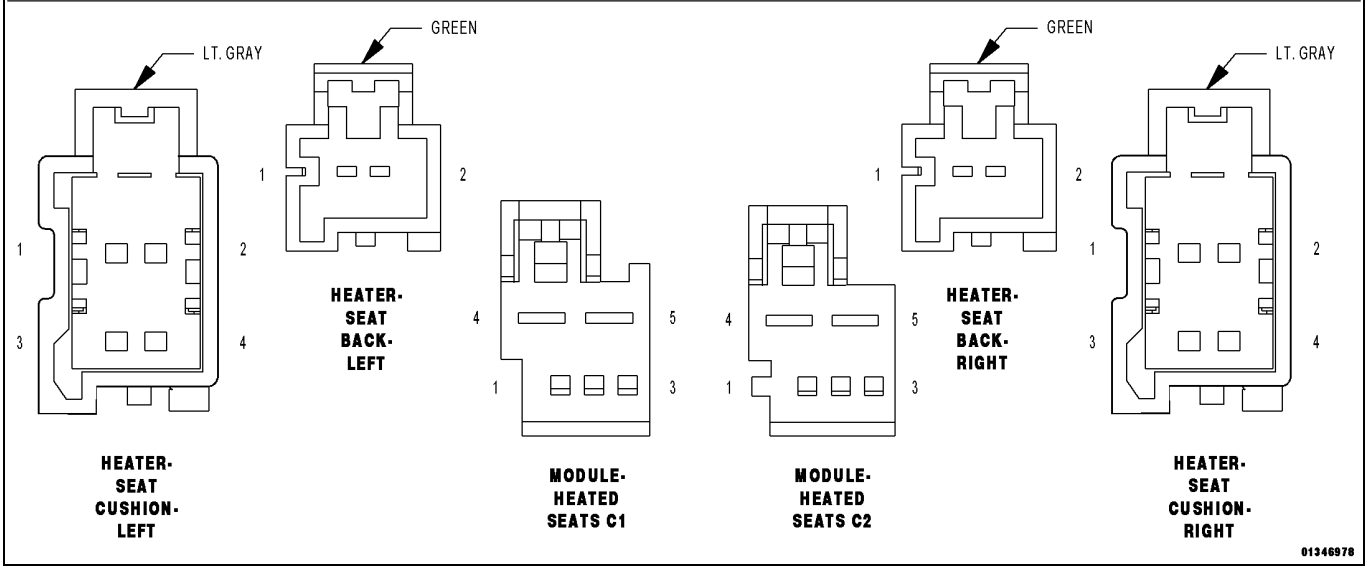

For a complete wiring diagram, **refer to the Wiring Information**.

- **When Monitored:**
  When Heated Seat Module (HSM) is powered.
- **Set Condition:**
  The Heated Seat Module (HSM) detects that the (P687) Left Front Heated Seat Temp Sense circuit NTC is above threshold for more than two seconds.

Possible Causes
(P687) LEFT FRONT HEATED SEAT TEMP SENSE CIRCUIT SHORTED TO VOLTAGE
(P687) LEFT FRONT HEATED SEAT TEMP SENSE CIRCUIT SHORTED TO THE (P187) LEFT FRONT SEAT HEATER CONTROL CIRCUIT
(P687) LEFT FRONT HEATED SEAT TEMP SENSE CIRCUIT SHORTED TO THE (P188) RIGHT FRONT SEAT HEATER CONTROL CIRCUIT
(P687) LEFT FRONT HEATED SEAT TEMP SENSE CIRCUIT OPEN
(P968) HEATED SEAT SENSOR RETURN CIRCUIT OPEN
SEAT CUSHION HEATER ELEMENT OPEN
HEATED SEAT MODULE (HSM)

1. TEST FOR INTERMITTENT CONDITION

NOTE: Make sure the battery is fully charged and the charging system is operating properly before proceeding.

1. Turn the ignition on.
2. Using a scan tool, record and erase Diagnostic Trouble Codes (DTCs).
3. Turn the ignition off.
4. Start the engine and let it run.
5. Using a scan tool, read DTCs.

Is the DTC active?

Yes

- Go To 2

No

- The conditions that caused this code to set are not present at this time. Verify seat harness is routed correctly to the HSM. Using the wiring diagram/schematic as a guide, inspect the wiring and connectors. Look for chafed, pierced, pinched, or partially broken wires and broken, bent, pushed out, spread, corroded, or contaminated terminals. Attempt to reproduce condition by operating all HSM functions one at a time. Attempt to reproduce condition by adjusting the seat.
- Perform the BODY VERIFICATION TEST. (Refer to 28 - DTC-Based Diagnostics/MODULE, Totally Integrated Power (TIPM) - Standard Procedure).

2. CHECK (P687) LEFT FRONT HEATED SEAT TEMP SENSE CIRCUIT FOR A SHORT TO VOLTAGE

1. Turn the ignition off.
2. Disconnect the HSM C2 harness connector.

NOTE: Check connectors. Clean and repair as necessary.

3. Start the engine and let it run.
4. Measure the voltage of the (P687) Left Front Heated Seat Temp Sense circuit between the HSM C2 harness connector and ground.

Is there any voltage present?

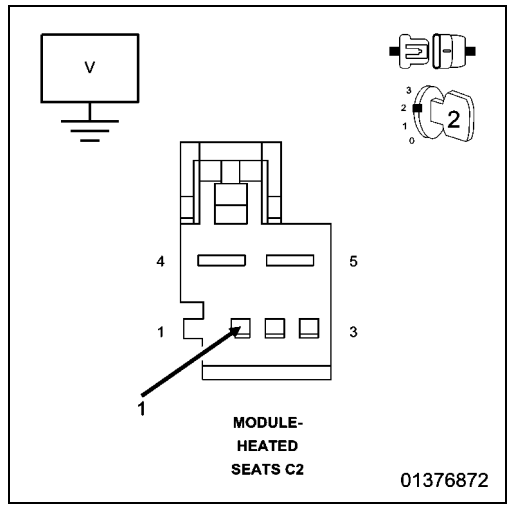

Yes

- Repair the (P687) Left Front Heated Seat Temp Sense circuit for a short to voltage.
- Perform the BODY VERIFICATION TEST. (Refer to 28 - DTC-Based Diagnostics/MODULE, Totally Integrated Power (TIPM) - Standard Procedure).

No

- Go To 3

3. CHECK (P687) LEFT FRONT HEATED SEAT TEMP SENSE CIRCUIT FOR A SHORT TO VOLTAGE DURING SEAT ADJUSTMENT

1. Measure the voltage of the (P687) Left Front Heated Seat Temp Sense circuit between the HSM C2 harness connector and ground while adjusting the seat in all positions.

Is there any voltage present during the seat adjustment?

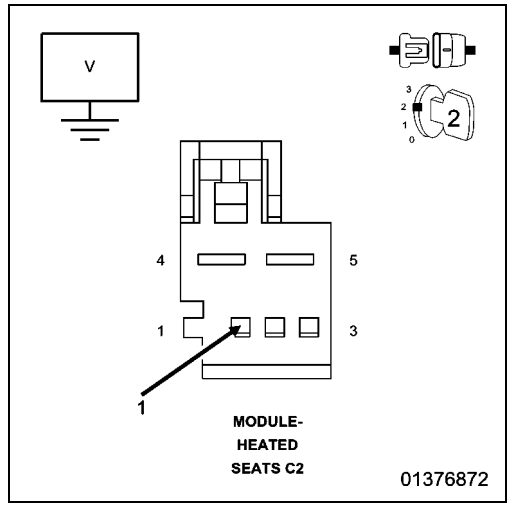

Yes

- Repair the (P687) Left Front Heated Seat Temp Sense circuit for a short to voltage.
- Perform the BODY VERIFICATION TEST. (Refer to 28 - DTC-Based Diagnostics/MODULE, Totally Integrated Power (TIPM) - Standard Procedure).

No

- Go To 4

4. CHECK (P687) LEFT FRONT HEATED SEAT TEMP SENSE CIRCUIT FOR A SHORT TO THE (P187) LEFT FRONT SEAT HEATER CONTROL CIRCUIT OR TO (P188) RIGHT FRONT SEAT HEATER CONTROL CIRCUIT

1. Turn the ignition off.
2. Disconnect the Left Seat Cushion Heater connector.
3. Disconnect the Right Seat Cushion Heater connector.

NOTE: Check connectors. Clean and repair as necessary.

4. Measure the resistance between the (P687) Left Front Heated Seat Temp Sense circuit and the (P187) Left Front Seat Heater Control circuit at the HSM C2 harness connector.
5. Measure the resistance between the (P687) Left Front Heated Seat Temp Sense circuit and the (P188) Right Front Seat Heater Control circuit at the HSM C2 harness connector.

Is the resistance below 10K Ohms for either measurement?

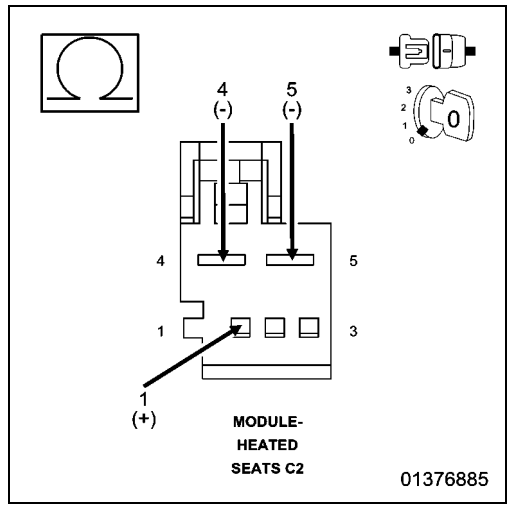

Yes

- Repair all circuits with a resistance below 10K Ohms for a short to the (P687) Left Front Heated Seat Temp Sense circuit.
- Perform the BODY VERIFICATION TEST. (Refer to 28 - DTC-Based Diagnostics/MODULE, Totally Integrated Power (TIPM) - Standard Procedure).

No

- Go To 5

5. CHECK (P687) LEFT FRONT HEATED SEAT TEMP SENSE CIRCUIT VOLTAGE TO LEFT SEAT CUSHION HEATER

1. Reconnect the HSM C2 harness connector.
2. Start the engine and let it run.
3. Measure the voltage between the (P687) Left Front Heated Seat Temp Sense circuit and the (P968) Heated Seat Sensor Return circuit at the Left Seat Cushion Heater harness connector.

Is the Voltage above 4.5 volts?

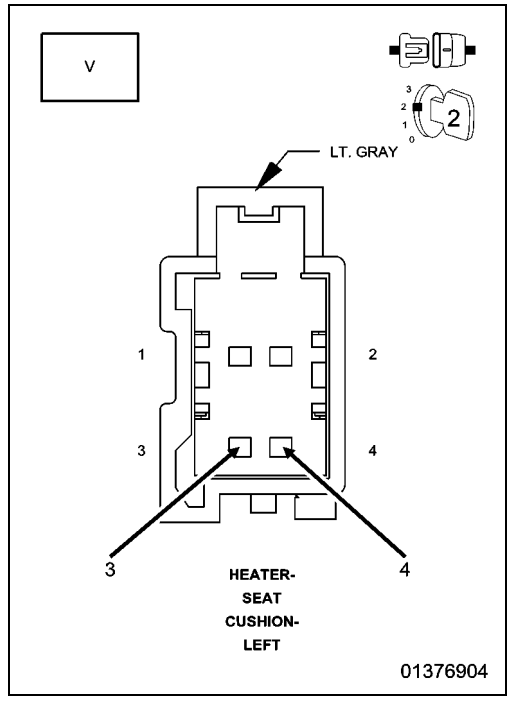

Yes

- Replace the Seat Cushion Heater Element in accordance with the Service Information.
- Perform the BODY VERIFICATION TEST. (Refer to 28 - DTC-Based Diagnostics/MODULE, Totally Integrated Power (TIPM) - Standard Procedure).

No

- Go To 6

6. CHECK (P687) LEFT FRONT HEATED SEAT TEMP SENSE CIRCUIT OR AN OPEN

1. Turn the ignition off.
2. Disconnect the HSM C2 harness connector.
3. Measure the resistance of the (P687) Left Front Heated Seat Temp Sense circuit between the HSM C2 connector and the Left Seat Cushion Heater connector (harness side).

Is the resistance below 5.0 Ohms?

Yes

- Go To 7

No

- Repair the (P687) Left Front Heated Seat Temp Sense circuit for an open.
- Perform the BODY VERIFICATION TEST. (Refer to 28 - DTC-Based Diagnostics/MODULE, Totally Integrated Power (TIPM) - Standard Procedure).

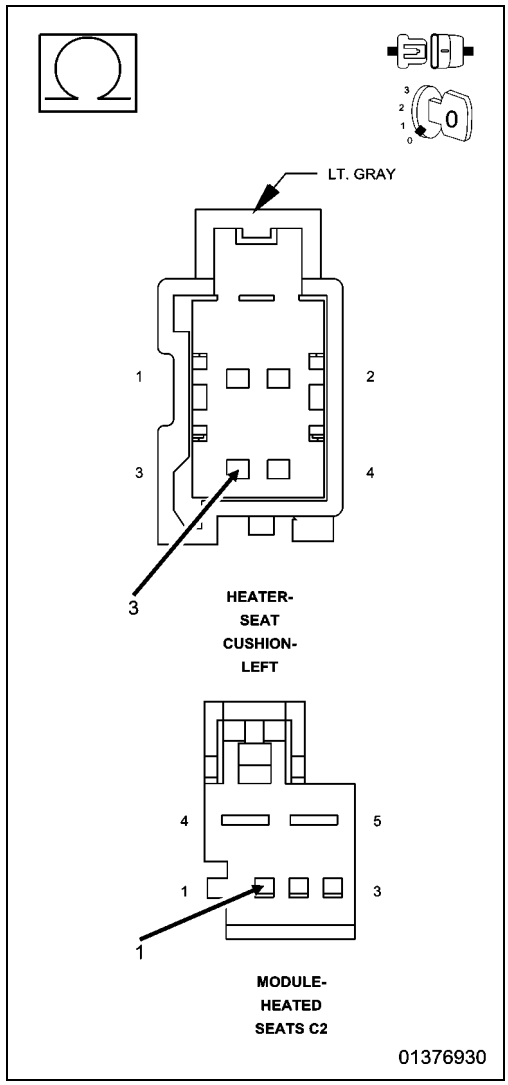

7. CHECK (P968) HEATED SEAT SENSOR RETURN CIRCUIT FOR AN OPEN

1. Measure the resistance of the (P968) Heated Seat Sensor Return circuit between the HSM C2 harness connector and the Left Seat Cushion Heater harness connector.

Is the resistance below 5.0 Ohms?

Yes

- Replace the Heated Seat Module (HSM) in accordance with the Service Information.
- Perform the BODY VERIFICATION TEST. (Refer to 28 - DTC-Based Diagnostics/MODULE, Totally Integrated Power (TIPM) - Standard Procedure).

No

- Repair the (P968) Heated Seat Sensor Return circuit for an open.
- Perform the BODY VERIFICATION TEST. (Refer to 28 - DTC-Based Diagnostics/MODULE, Totally Integrated Power (TIPM) - Standard Procedure).

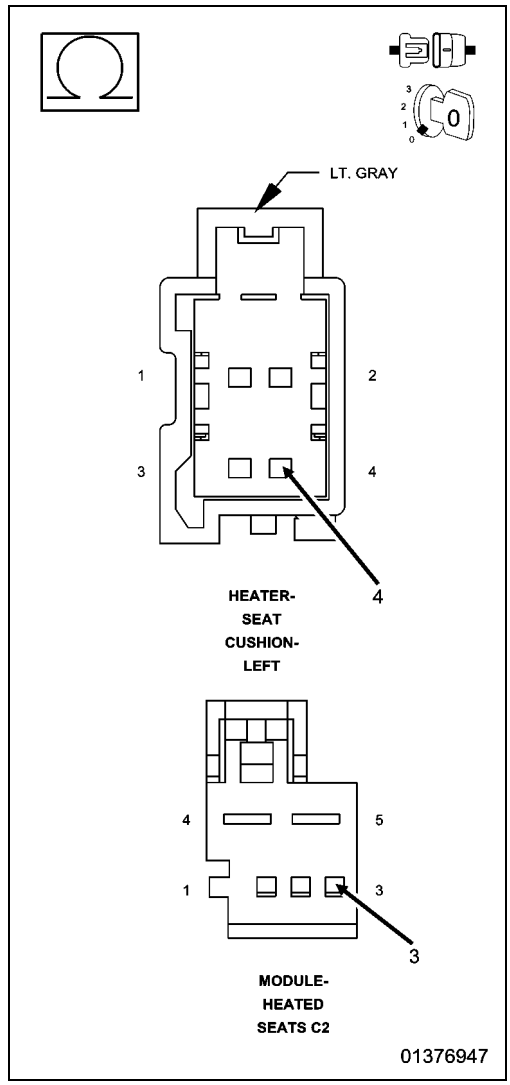

■ B1EB2-1A-FRONT RIGHT SEAT HEATER SENSOR - CIRCUIT RESISTANCE BELOW THRESHOLD

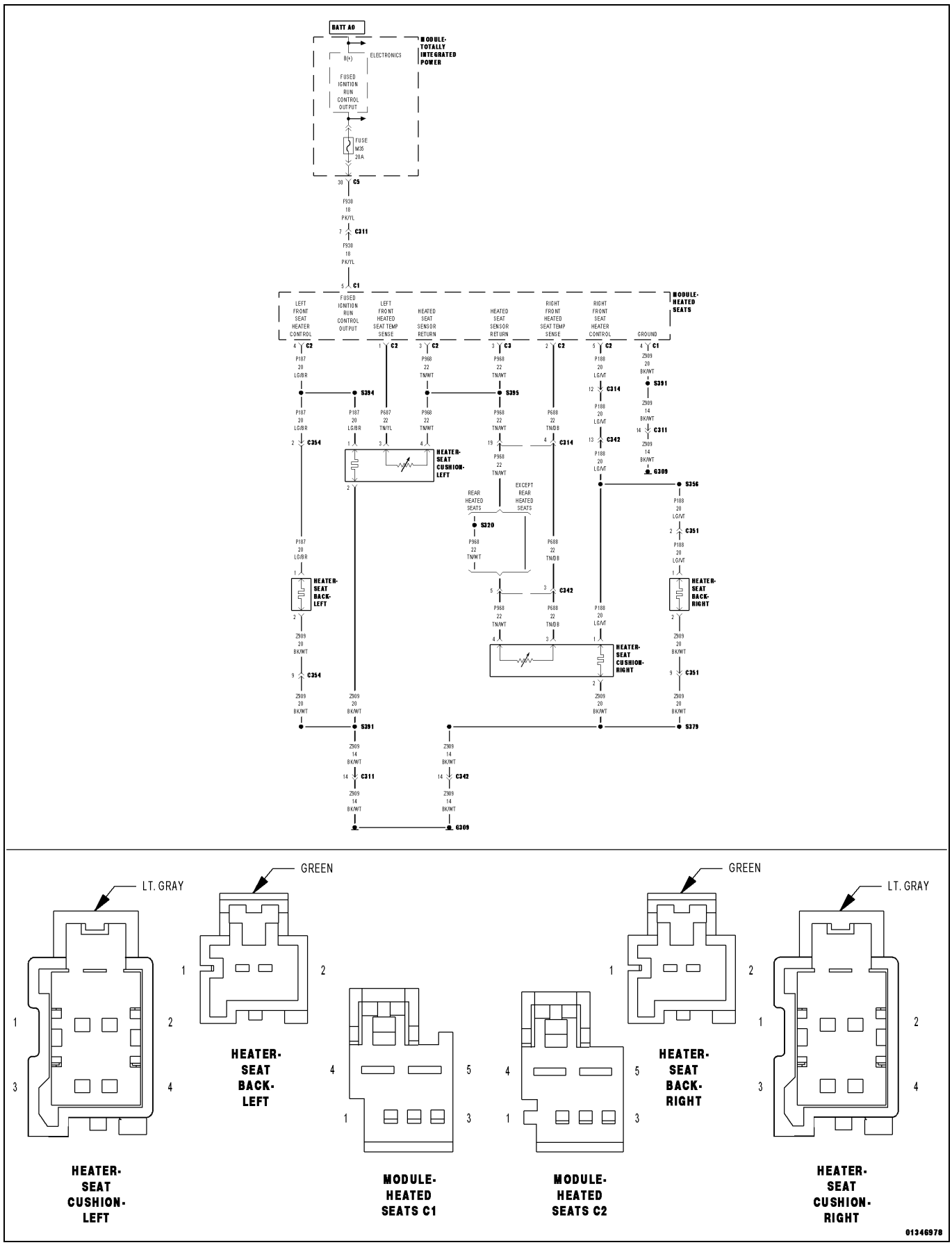

For a complete wiring diagram, **refer to the Wiring Information**.

- **When Monitored:**
  When Heated Seat Module (HSM) is powered.
- **Set Condition:**
  The Heated Seat Module (HSM) detects that the (P688) Right Front Heated Seat Temp Sense circuit NTC is below threshold for more than two seconds.

Possible Causes
(P688) RIGHT FRONT HEATED SEAT TEMP SENSE CIRCUIT SHORTED TO GROUND
(P688) RIGHT FRONT HEATED SEAT TEMP SENSE CIRCUIT SHORTED TO THE (Z909) GROUND CIRCUIT
(P688) RIGHT FRONT HEATED SEAT TEMP SENSE CIRCUIT SHORTED TO THE (P968) HEATED SEAT SENSOR RETURN CIRCUIT
SEAT CUSHION HEATER ELEMENT SHORTED
HEATED SEAT MODULE (HSM)

1. TEST FOR INTERMITTENT CONDITION

NOTE: Make sure the battery is fully charged and the charging system is operating properly before proceeding.

1. Turn the ignition on.
2. Using a scan tool, record and erase Diagnostic Trouble Codes (DTCs).
3. Turn the ignition off.
4. Start the engine and let it run.
5. Using a scan tool, read DTCs.

Is the DTC active?

Yes

- Go To 2

No

- The conditions that caused this code to set are not present at this time. Verify seat harness is routed correctly to the HSM. Using the wiring diagram/schematic as a guide, inspect the wiring and connectors. Look for chafed, pierced, pinched, or partially broken wires and broken, bent, pushed out, spread, corroded, or contaminated terminals. Attempt to reproduce condition by adjusting the seat.
- Perform the BODY VERIFICATION TEST. (Refer to 28 - DTC-Based Diagnostics/MODULE, Totally Integrated Power (TIPM) - Standard Procedure).

2. CHECK (P688) RIGHT FRONT HEATED SEAT TEMP SENSE CIRCUIT IN BODY HARNESS FOR A SHORT TO GROUND

1. Turn the ignition off.
2. Disconnect the Right Seat Cushion Heater harness connector.

NOTE: Check connectors. Clean and repair as necessary.

3. Turn the ignition on.
4. Using a scan tool, erase DTCs.
5. Turn the ignition off.
6. Start the engine and let it run.
7. Using a scan tool, read DTCs.

Is the same DTC active?

Yes

- Go To 3

No

- Replace the shorted Seat Cushion Heater Element in accordance with the Service Information. Replace the Seat Cushion Heater Element in accordance with the Service Information.
- Perform the BODY VERIFICATION TEST. (Refer to 28 - DTC-Based Diagnostics/MODULE, Totally Integrated Power (TIPM) - Standard Procedure).

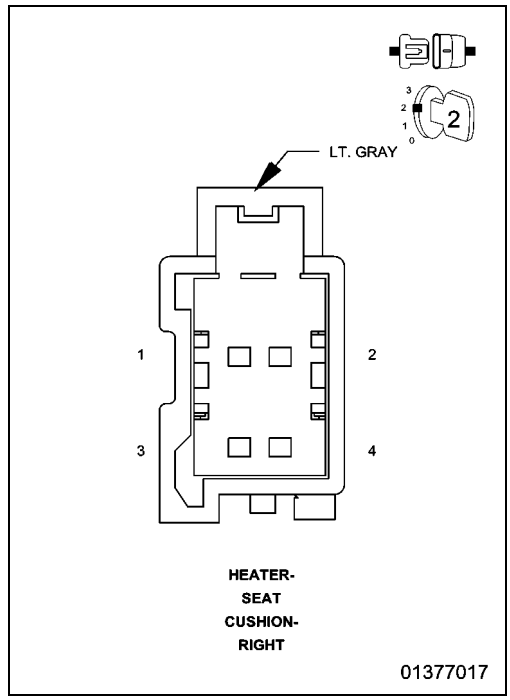

3. CHECK (P688) RIGHT FRONT HEATED SEAT TEMP SENSE CIRCUIT FOR A SHORT TO GROUND

1. Turn the ignition off.
2. Disconnect the HSM C2 harness connector.

NOTE: Check connectors. Clean and repair as necessary.

3. Measure the resistance of the (P688) Right Front Heated Seat Temp Sense circuit between ground and the Right Seat Cushion Heater connector (harness side).

Is the resistance below 10K Ohms?

Yes

- Repair the (P688) Right Front Heated Seat Temp Sense circuit for a short to ground.
- Perform the BODY VERIFICATION TEST. (Refer to 28 - DTC-Based Diagnostics/MODULE, Totally Integrated Power (TIPM) - Standard Procedure).

No

- Go To 4

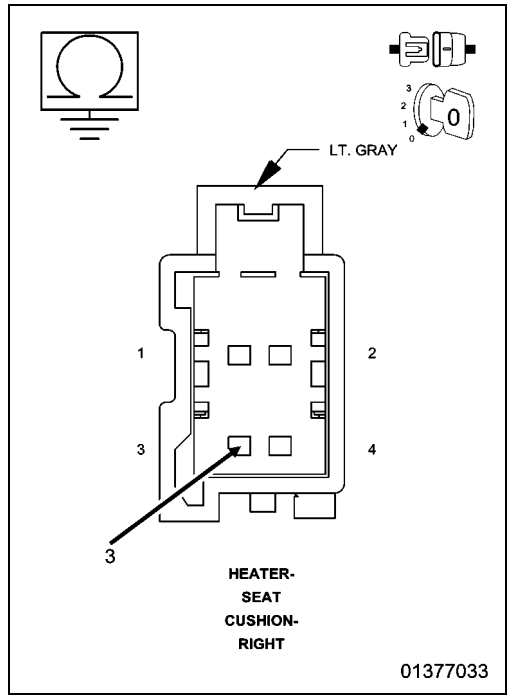

4. CHECK (P688) RIGHT FRONT HEATED SEAT TEMP SENSE CIRCUIT FOR A SHORT TO THE (Z909) GROUND CIRCUIT OR TO (P968) HEATED SEAT SENSOR RETURN CIRCUIT

1. Measure the resistance between the (P688) Right Front Heated Seat Temp Sense circuit and the (Z909) Ground circuit at the Right Seat Cushion Heater harness connector.
2. Measure the resistance between the (P688) Right Front Heated Seat Temp Sense circuit and the (P968) Heated Seat Sensor Return circuit at the Right Seat Cushion Heater harness connector.

Is the resistance below 10K Ohms for either measurement?

Yes

- Repair all circuits with a resistance below 10K Ohms for a short to the (P688) Right Front Heated Seat Temp Sense circuit.
- Perform the BODY VERIFICATION TEST. (Refer to 28 - DTC-Based Diagnostics/MODULE, Totally Integrated Power (TIPM) - Standard Procedure).

No

- Replace the Heated Seat Module (HSM) in accordance with the Service Information.
- Perform the BODY VERIFICATION TEST. (Refer to 28 - DTC-Based Diagnostics/MODULE, Totally Integrated Power (TIPM) - Standard Procedure).

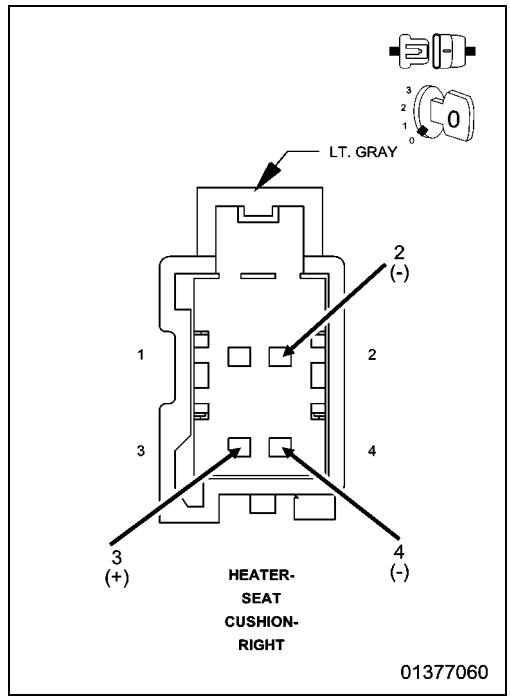

■ B1EB2-1B-FRONT RIGHT SEAT HEATER SENSOR - CIRCUIT RESISTANCE ABOVE THRESHOLD

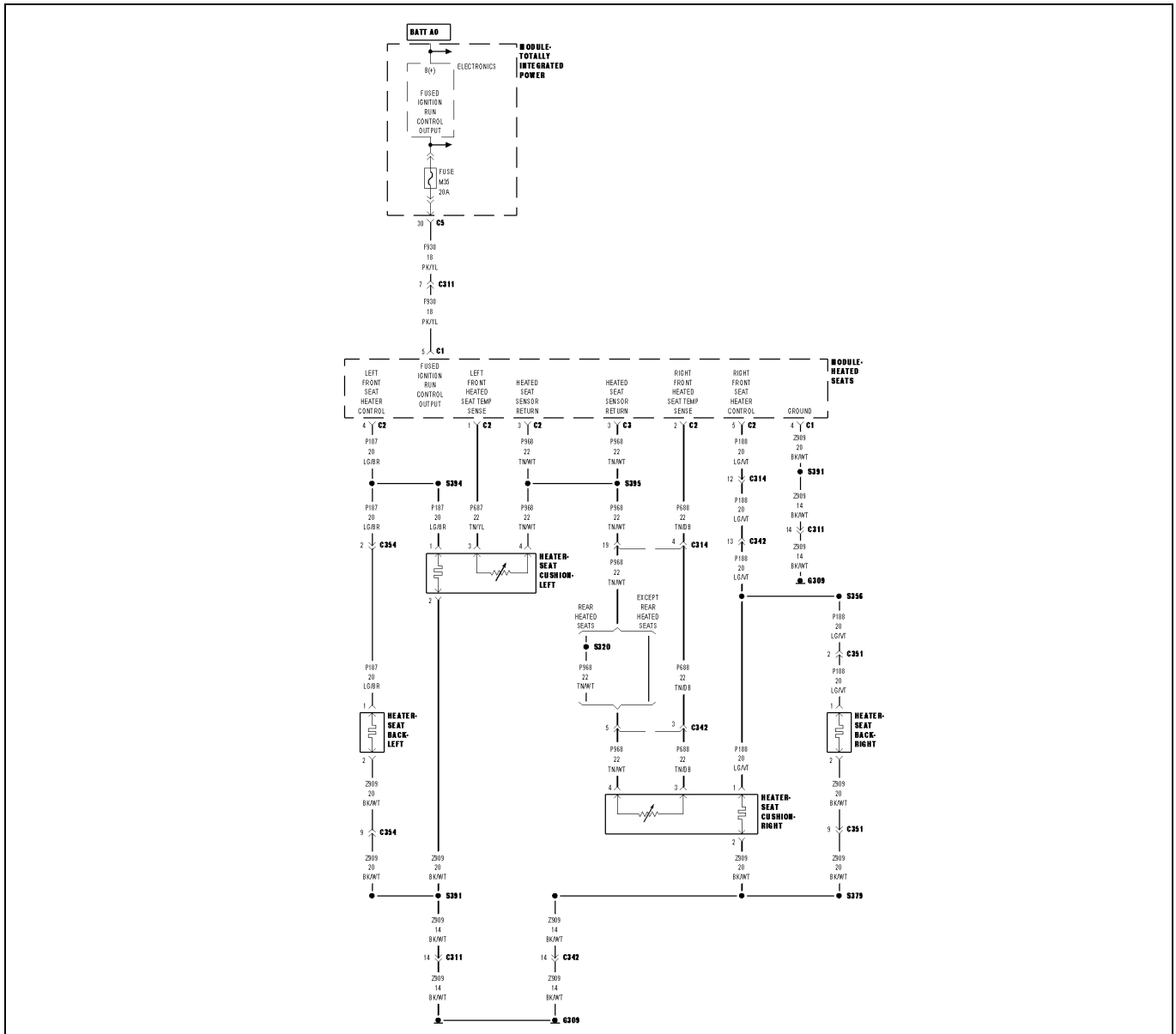

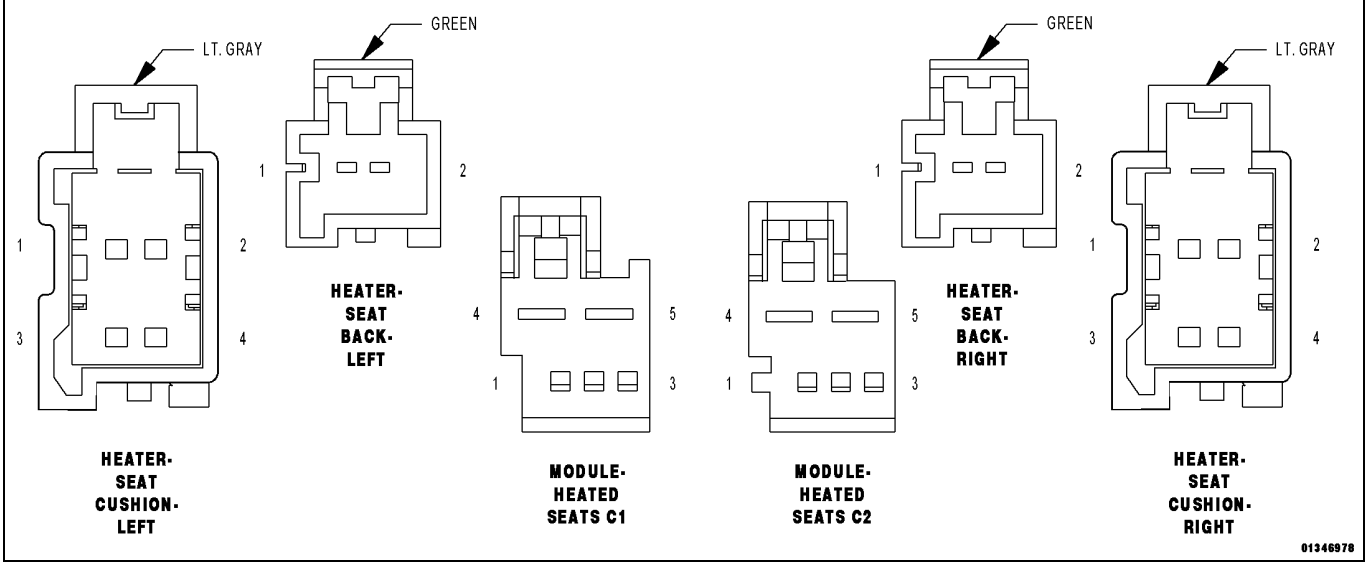

For a complete wiring diagram, **refer to the Wiring Information**.

- **When Monitored:**
  When Heated Seat Module (HSM) is powered.
- **Set Condition:**
  The Heated Seat Module (HSM) detects that the (P688) Right Front Heated Seat Temp Sense circuit NTC is above threshold for more than two seconds.

Possible Causes
(P688) RIGHT FRONT HEATED SEAT TEMP SENSE CIRCUIT SHORTED TO VOLTAGE
(P688) RIGHT FRONT HEATED SEAT TEMP SENSE CIRCUIT SHORTED TO THE (P188) RIGHT FRONT SEAT HEATER CONTROL CIRCUIT
(P688) RIGHT FRONT HEATED SEAT TEMP SENSE CIRCUIT SHORTED TO THE (P187) LEFT FRONT SEAT HEATER CONTROL CIRCUIT
(P688) RIGHT FRONT HEATED SEAT TEMP SENSE CIRCUIT OPEN
(P968) HEATED SEAT SENSOR RETURN CIRCUIT OPEN
SEAT CUSHION HEATER ELEMENT OPEN
HEATED SEAT MODULE (HSM)

1. TEST FOR INTERMITTENT CONDITION

NOTE: Make sure the battery is fully charged and the charging system is operating properly before proceeding.

1. Turn the ignition on.
2. Using a scan tool, record and erase Diagnostic Trouble Codes (DTCs).
3. Turn the ignition off.
4. Start the engine and let it run.
5. Using a scan tool, read DTCs.

Is the DTC active?

Yes

- Go To 2

No

- The conditions that caused this code to set are not present at this time. Verify seat harness is routed correctly to the HSM. Using the wiring diagram/schematic as a guide, inspect the wiring and connectors. Look for chafed, pierced, pinched, or partially broken wires and broken, bent, pushed out, spread, corroded, or contaminated terminals. Attempt to reproduce condition by operating all HSM functions one at a time. Attempt to reproduce condition by adjusting the seat.
- Perform the BODY VERIFICATION TEST. (Refer to 28 - DTC-Based Diagnostics/MODULE, Totally Integrated Power (TIPM) - Standard Procedure).

2. CHECK (P688) RIGHT FRONT HEATED SEAT TEMP SENSE CIRCUIT FOR A SHORT TO VOLTAGE

1. Turn the ignition off.
2. Disconnect the HSM C2 harness connector.

NOTE: Check connectors. Clean and repair as necessary.

3. Start the engine and let it run.
4. Measure the voltage of the (P688) Right Front Heated Seat Temp Sense circuit between the HSM C2 harness connector and ground.

Is there any voltage present?

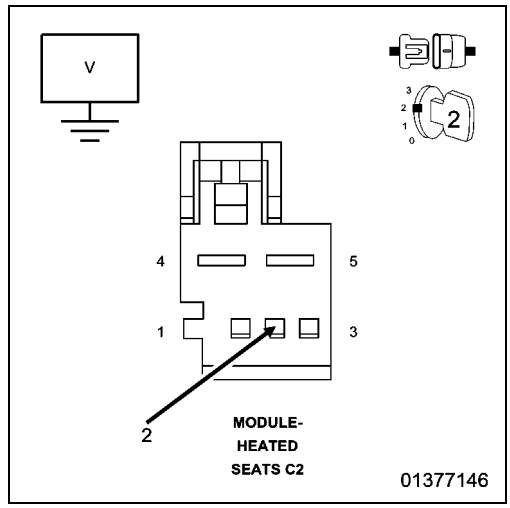

Yes

- Repair the (P688) Right Front Heated Seat Temp Sense circuit for a short to voltage.
- Perform the BODY VERIFICATION TEST. (Refer to 28 - DTC-Based Diagnostics/MODULE, Totally Integrated Power (TIPM) - Standard Procedure).

No

- Go To 3

3. CHECK (P688) RIGHT FRONT HEATED SEAT TEMP SENSE CIRCUIT FOR A SHORT TO VOLTAGE DURING SEAT ADJUSTMENT

1. Measure the voltage of the (P688) Right Front Heated Seat Temp Sense circuit between the HSM C2 harness connector and ground while adjusting the seat in all positions.

Is there any voltage present during the seat adjustment?

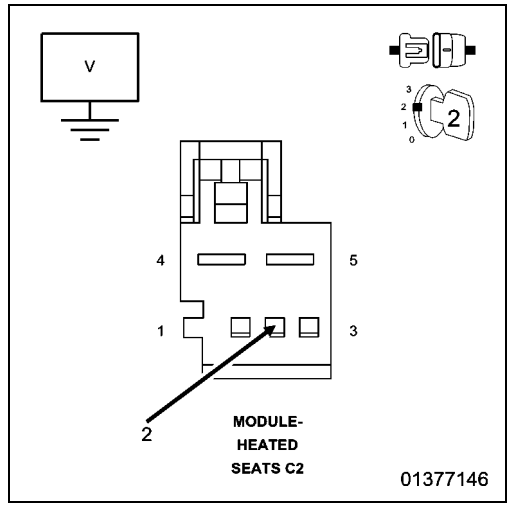

Yes

- Repair the (P688) Right Front Heated Seat Temp Sense circuit for a short to voltage.
- Perform the BODY VERIFICATION TEST. (Refer to 28 - DTC-Based Diagnostics/MODULE, Totally Integrated Power (TIPM) - Standard Procedure).

No

- Go To 4

4. CHECK (P688) RIGHT FRONT HEATED SEAT TEMP SENSE CIRCUIT FOR A SHORT TO THE (P188) RIGHT FRONT SEAT HEATER CONTROL CIRCUIT OR TO (P187) LEFT FRONT SEAT HEATER CONTROL CIRCUIT

1. Turn the ignition off.
2. Disconnect the Right Seat Cushion Heater harness connector.
3. Disconnect the Left Seat Cushion Heater harness connector.

NOTE: Check connectors. Clean and repair as necessary.

4. Measure the resistance between the (P688) Right Front Heated Seat Temp Sense circuit and the (P188) Right Front Seat Heater Control circuit at the HSM C2 connector.
5. Measure the resistance between the (P688) Right Front Heated Seat Temp Sense circuit and the (P187) Left Front Seat Heater Control circuit at the HSM C2 connector.

Is the resistance below 10K Ohms for either measurement?

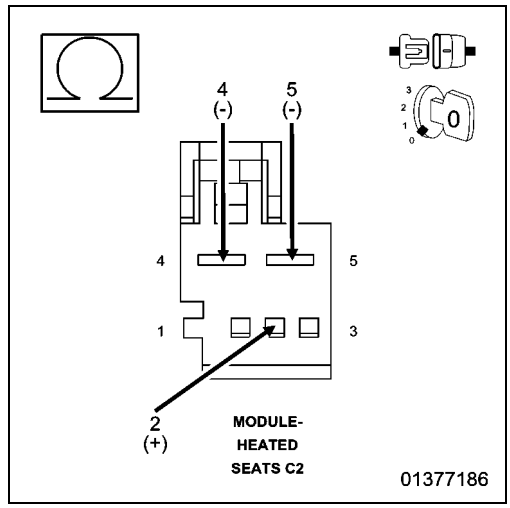

Yes

- Repair all circuits with a resistance below 10K Ohms for a short to the (P688) Right Front Heated Seat Temp Sense circuit.
- Perform the BODY VERIFICATION TEST. (Refer to 28 - DTC-Based Diagnostics/MODULE, Totally Integrated Power (TIPM) - Standard Procedure).

No

- Go To 5

5. CHECK (P688) RIGHT FRONT HEATED SEAT TEMP SENSE CIRCUIT VOLTAGE TO RIGHT SEAT CUSHION HEATER

1. Reconnect the HSM C2 harness connector.
2. Start the engine and let it run.
3. Measure the voltage between the (P688) Right Front Heated Seat Temp Sense circuit and the (P968) Heated Seat Sensor Return circuit at the Right Seat Cushion Heater harness connector.

Is the voltage above 4.5 volts?

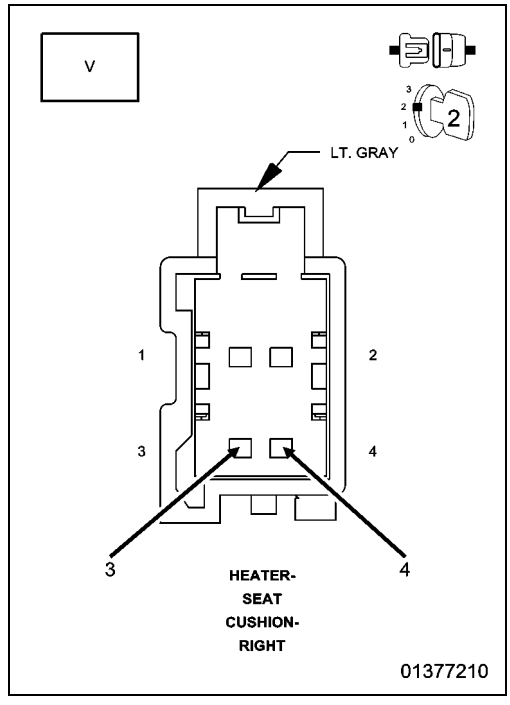

Yes

- Replace the shorted Seat Cushion Heater Element in accordance with the Service Information.Replace the Seat Cushion Heater Element in accordance with the Service Information.
- Perform the BODY VERIFICATION TEST. (Refer to 28 - DTC-Based Diagnostics/MODULE, Totally Integrated Power (TIPM) - Standard Procedure).

No

- Go To 6

6. CHECK (P688) RIGHT FRONT HEATED SEAT TEMP SENSE CIRCUIT OR AN OPEN

1. Turn the ignition off.
2. Disconnect the HSM C2 harness connector.
3. Measure the resistance of the (P688) Right Front Heated Seat Temp Sense circuit between the HSM C2 connector and the Right Seat Cushion Heater harness connector.

Is the resistance below 5.0 Ohms?

Yes

- Go To 7

No

- Repair the (P688) Right Front Heated Seat Temp Sense circuit for an open.
- Perform the BODY VERIFICATION TEST. (Refer to 28 - DTC-Based Diagnostics/MODULE, Totally Integrated Power (TIPM) - Standard Procedure).

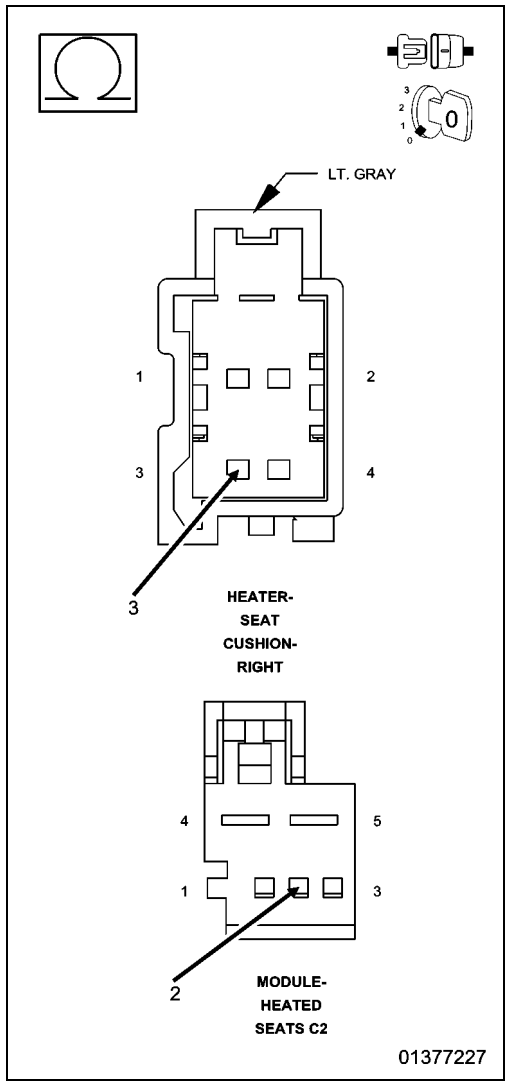

7. CHECK (P968) HEATED SEAT SENSOR RETURN CIRCUIT FOR AN OPEN

1. Measure the resistance of the (P968) Heated Seat Sensor Return circuit between the HSM C2 harness connector and the Right Seat Cushion Heater harness connector.

Is the resistance below 5.0 Ohms?

Yes

- Replace the Heated Seat Module (HSM) in accordance with the Service Information.
- Perform the BODY VERIFICATION TEST. (Refer to 28 - DTC-Based Diagnostics/MODULE, Totally Integrated Power (TIPM) - Standard Procedure).

No

- Repair the (P968) Heated Seat Sensor Return circuit for an open.
- Perform the BODY VERIFICATION TEST. (Refer to 28 - DTC-Based Diagnostics/MODULE, Totally Integrated Power (TIPM) - Standard Procedure).

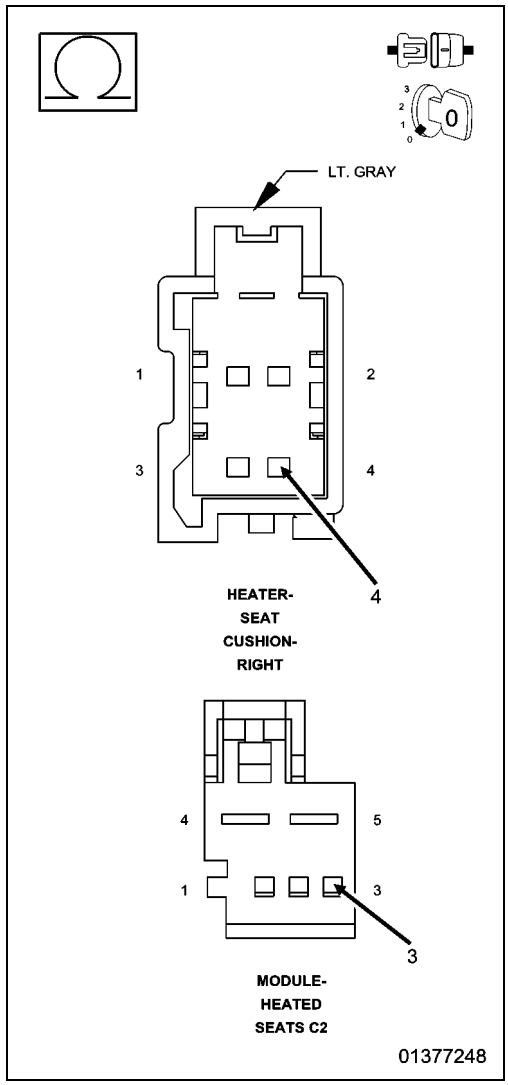

■ B1EB3-1A-REAR LEFT SEAT HEATER SENSOR - CIRCUIT RESISTANCE BELOW THRESHOLD

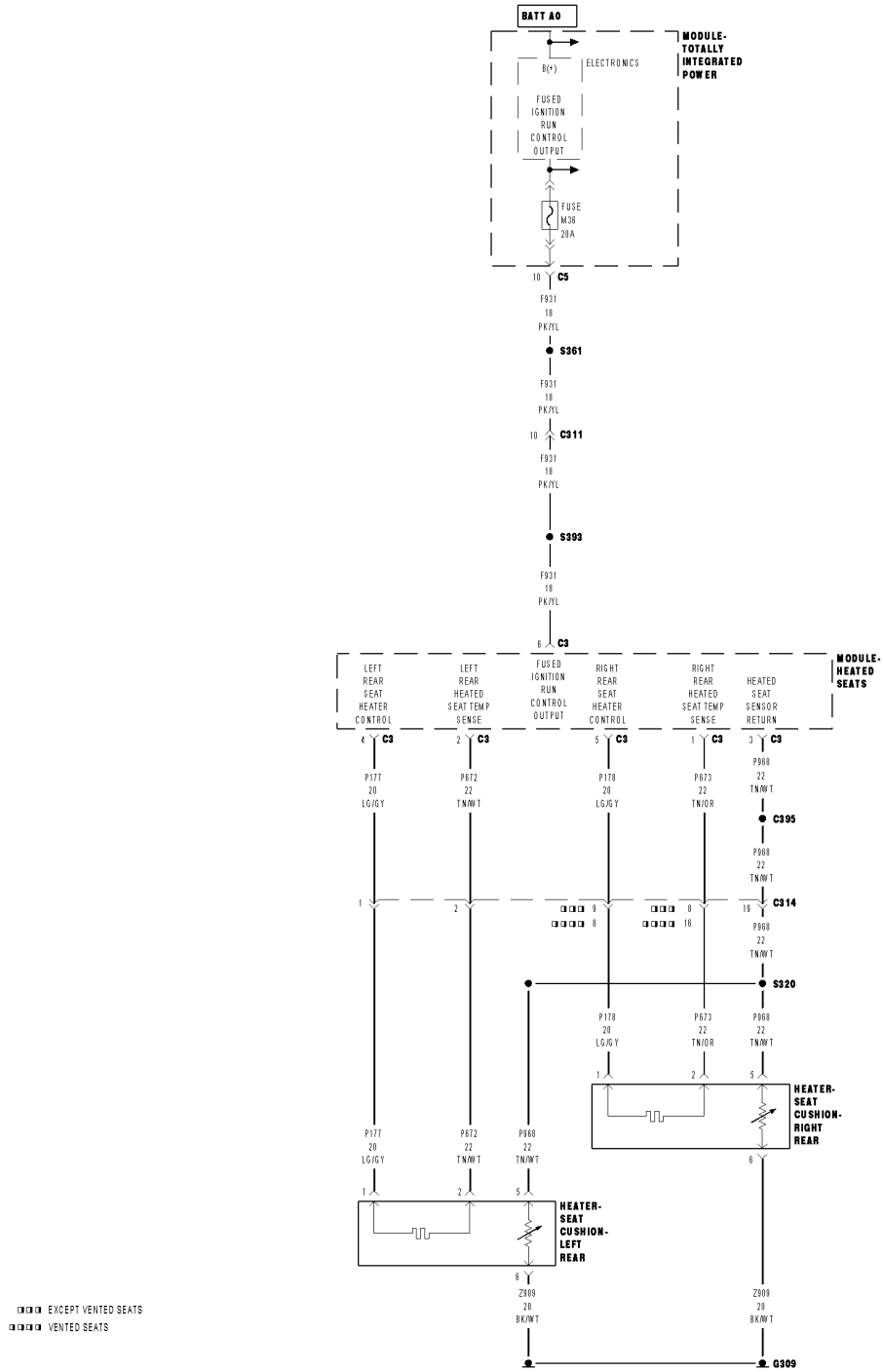

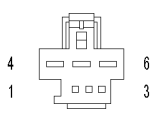

MODULE-HEATED SEATS C3

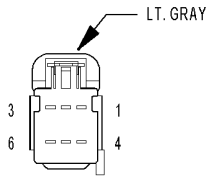

HEATER-SEAT CUSHION-LEFT REAR

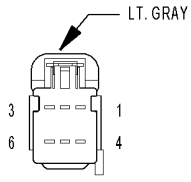

HEATER-SEAT CUSHION-RIGHT REAR

01375726

For a complete wiring diagram, **refer to the Wiring Information**.

- **When Monitored:**
  When Heated Seat Module (HSM) is powered.
- **Set Condition:**
  The Heated Seat Module (HSM) detects that the (P672) Left Rear Heated Seat Temp Sense circuit NTC is below threshold for more than two seconds.

Possible Causes
(P672) LEFT REAR HEATED SEAT TEMP SENSE CIRCUIT SHORTED TO GROUND
(P672) LEFT REAR HEATED SEAT TEMP SENSE CIRCUIT SHORTED TO THE (Z909) GROUND CIRCUIT
(P672) LEFT REAR HEATED SEAT TEMP SENSE CIRCUIT SHORTED TO THE (P968) HEATED SEAT SENSOR RETURN CIRCUIT
SEAT CUSHION HEATER ELEMENT SHORTED
HEATED SEAT MODULE (HSM)

1. TEST FOR INTERMITTENT CONDITION

NOTE: Make sure the battery is fully charged and the charging system is operating properly before proceeding.

1. Turn the ignition on.
2. Using a scan tool, record and erase Diagnostic Trouble Codes (DTCs).
3. Turn the ignition off.
4. Start the engine and let it run.
5. Using a scan tool, read DTCs.

Is the DTC active?

Yes

- Go To 2

No

- The conditions that caused this code to set are not present at this time. Verify seat harness is routed correctly to the HSM. Using the wiring diagram/schematic as a guide, inspect the wiring and connectors. Look for chafed, pierced, pinched, or partially broken wires and broken, bent, pushed out, spread, corroded, or contaminated terminals. Attempt to reproduce condition by adjusting the front seat.
- Perform the BODY VERIFICATION TEST. (Refer to 28 - DTC-Based Diagnostics/MODULE, Totally Integrated Power (TIPM) - Standard Procedure).

2. CHECK (P672) LEFT REAR HEATED SEAT TEMP SENSE CIRCUIT IN BODY HARNESS FOR A SHORT TO GROUND

1. Turn the ignition off.
2. Disconnect the Left Rear Seat Cushion Heater connector.

NOTE: Check connectors. Clean and repair as necessary.

3. Turn the ignition on.
4. Using a scan tool, erase DTCs.
5. Turn the ignition off.
6. Start the engine and let it run.
7. Using a scan tool, read DTCs.

Is the same DTC active?

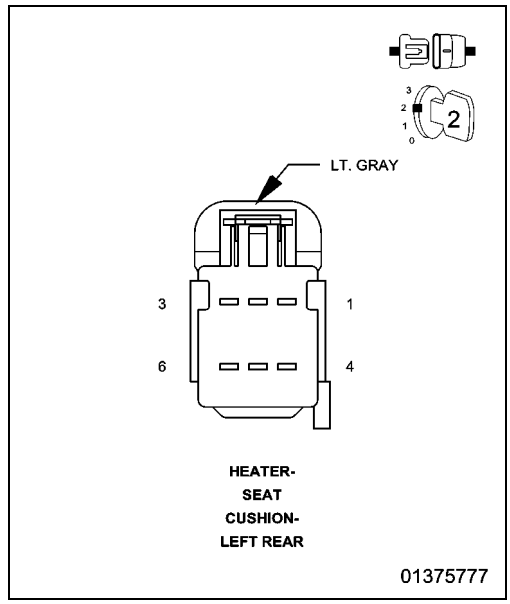

Yes

- Go To 3

No

- Replace the Seat Cushion Heater Element in accordance with the Service Information. (Refer to 08 - Electrical/8G - Heated/Cooled Systems/Heated Seats/PAD, Heater - Removal).
- Perform the BODY VERIFICATION TEST. (Refer to 28 - DTC-Based Diagnostics/MODULE, Totally Integrated Power (TIPM) - Standard Procedure).

3. CHECK (P672) LEFT REAR HEATED SEAT TEMP SENSE CIRCUIT FOR A SHORT TO GROUND

1. Turn the ignition off.
2. Disconnect the HSM C3 harness connector.

NOTE: Check connectors. Clean and repair as necessary.

3. Measure the resistance of the (P672) Left Rear Heated Seat Temp Sense circuit between ground and the Left Rear Seat Cushion Heater harness connector.

Is the resistance below 10K Ohms?

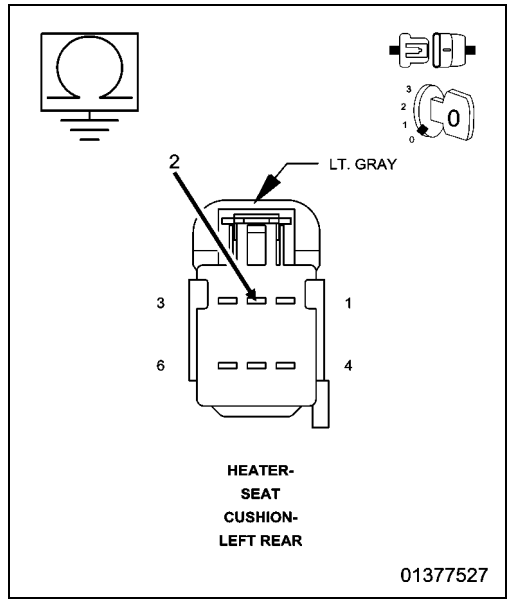

Yes

- Repair the (P672) Left Rear Heated Seat Temp Sense circuit for a short to ground.
- Perform the BODY VERIFICATION TEST. (Refer to 28 - DTC-Based Diagnostics/MODULE, Totally Integrated Power (TIPM) - Standard Procedure).

No

- Go To 4

4. CHECK (P672) LEFT REAR HEATED SEAT TEMP SENSE CIRCUIT FOR A SHORT TO THE (Z909) GROUND CIRCUIT OR TO (P968) HEATED SEAT SENSOR RETURN CIRCUIT

1. Measure the resistance between the (P672) Left Rear Heated Seat Temp Sense circuit and the (Z909) Ground circuit at the Left Rear Seat Cushion Heater connector (harness side).
2. Measure the resistance between the (P672) Left Rear Heated Seat Temp Sense circuit and the (P968) Heated Seat Sensor Return circuit at the Left Rear Seat Cushion Heater connector (harness side).

Is the resistance below 10K Ohms for either measurement?

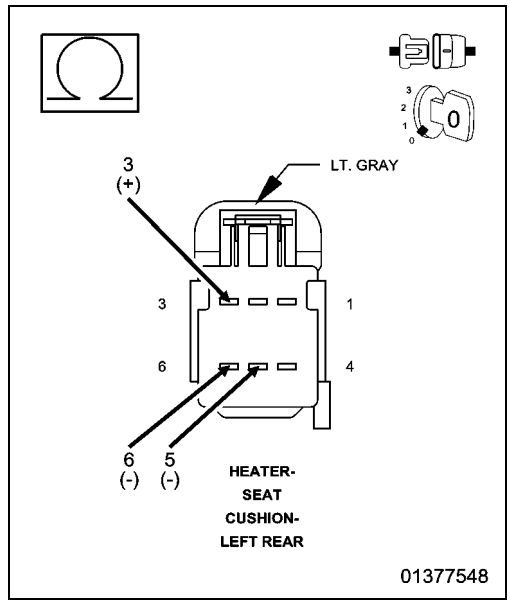

Yes

- Repair all circuits with a resistance below 10K Ohms for a short to the (P672) Left Rear Heated Seat Temp Sense circuit.
- Perform the BODY VERIFICATION TEST. (Refer to 28 - DTC-Based Diagnostics/MODULE, Totally Integrated Power (TIPM) - Standard Procedure).

No

- Replace the Heated Seat Module (HSM) in accordance with the Service Information.
- Perform the BODY VERIFICATION TEST. (Refer to 28 - DTC-Based Diagnostics/MODULE, Totally Integrated Power (TIPM) - Standard Procedure).

■ B1EB3-1B-REAR LEFT SEAT HEATER SENSOR - CIRCUIT RESISTANCE ABOVE THRESHOLD

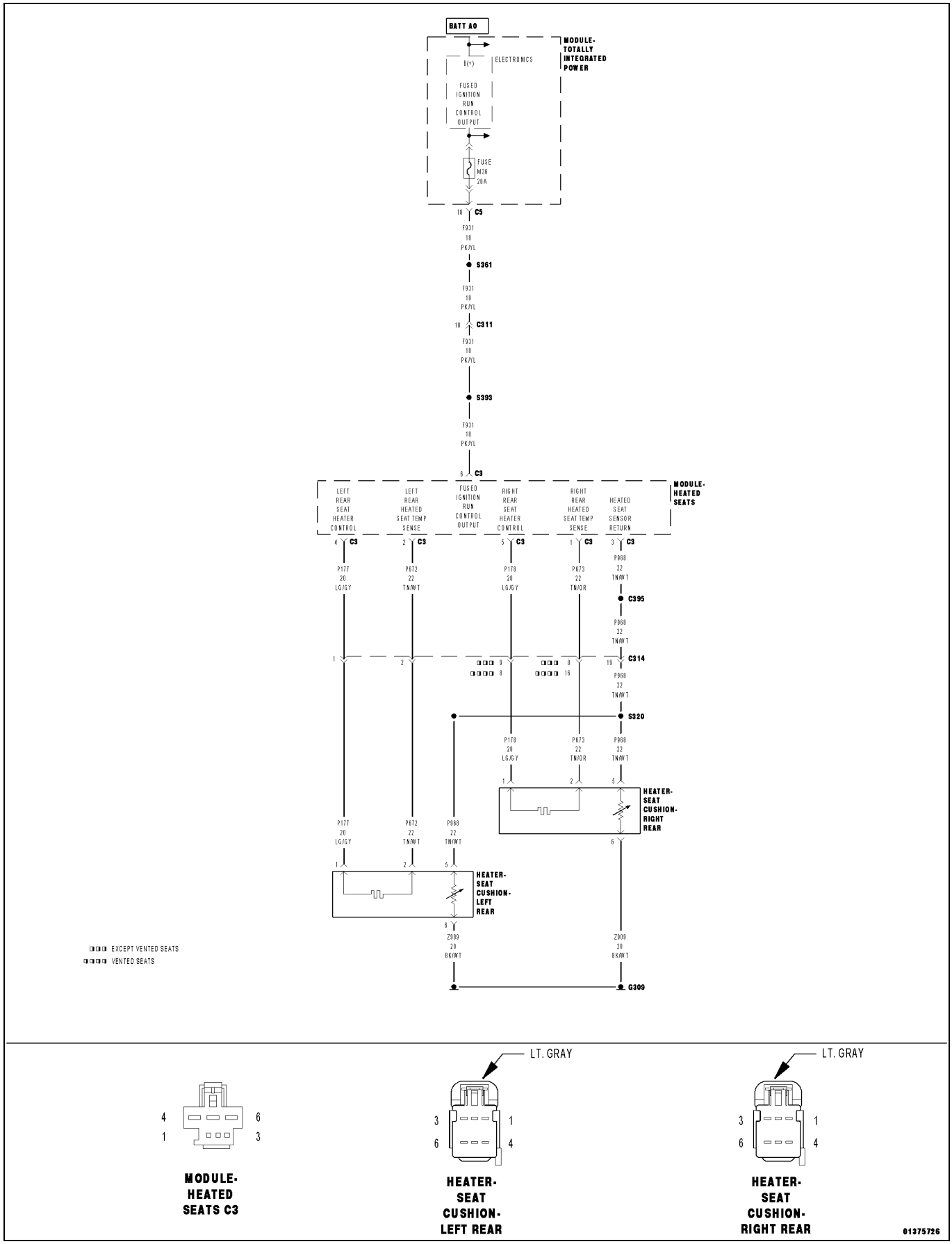

For a complete wiring diagram, **refer to the Wiring Information**.

- **When Monitored:**
  When Heated Seat Module (HSM) is powered.
- **Set Condition:**
  The Heated Seat Module (HSM) detects that the (P672) Left Rear Heated Seat Temp Sense circuit NTC is above threshold for more than two seconds.

Possible Causes
(P672) LEFT REAR HEATED SEAT TEMP SENSE CIRCUIT SHORTED TO VOLTAGE
(P672) LEFT REAR HEATED SEAT TEMP SENSE CIRCUIT SHORTED TO THE (F931) FUSED IGNITION RUN CONTROL OUTPUT CIRCUIT
(P672) LEFT REAR HEATED SEAT TEMP SENSE CIRCUIT SHORTED TO THE (P177) LEFT REAR SEAT HEATER CONTROL CIRCUIT
(P672) LEFT REAR HEATED SEAT TEMP SENSE CIRCUIT SHORTED TO THE (P178) RIGHT REAR SEAT HEATER CONTROL CIRCUIT
(P672) LEFT REAR HEATED SEAT TEMP SENSE CIRCUIT OPEN
(P968) HEATED SEAT SENSOR RETURN CIRCUIT OPEN
SEAT CUSHION HEATER ELEMENT OPEN
HEATED SEAT MODULE (HSM)

1. TEST FOR INTERMITTENT CONDITION

NOTE: Make sure the battery is fully charged and the charging system is operating properly before proceeding.

1. Turn the ignition on.
2. Using a scan tool, record and erase Diagnostic Trouble Codes (DTCs).
3. Turn the ignition off.
4. Start the engine and let it run.
5. Using a scan tool, read DTCs.

Is the DTC active?

Yes

- Go To 2

No

- The conditions that caused this code to set are not present at this time. Verify seat harness is routed correctly to the HSM. Using the wiring diagram/schematic as a guide, inspect the wiring and connectors. Look for chafed, pierced, pinched, or partially broken wires and broken, bent, pushed out, spread, corroded, or contaminated terminals. Attempt to reproduce condition by operating all HSM functions one at a time. Attempt to reproduce condition by adjusting the front seat.
- Perform the BODY VERIFICATION TEST. (Refer to 28 - DTC-Based Diagnostics/MODULE, Totally Integrated Power (TIPM) - Standard Procedure).

2. CHECK (P672) LEFT REAR HEATED SEAT TEMP SENSE CIRCUIT FOR A SHORT TO VOLTAGE

1. Turn the ignition off.
2. Disconnect the HSM C3 harness connector.

NOTE: Check connectors. Clean and repair as necessary.

3. Start the engine and let it run.
4. Measure the voltage of the (P672) Left Rear Heated Seat Temp Sense circuit between the HSM C3 harness connector and ground.

Is there any voltage present?

Yes

- Go To 3

No

- Go To 4

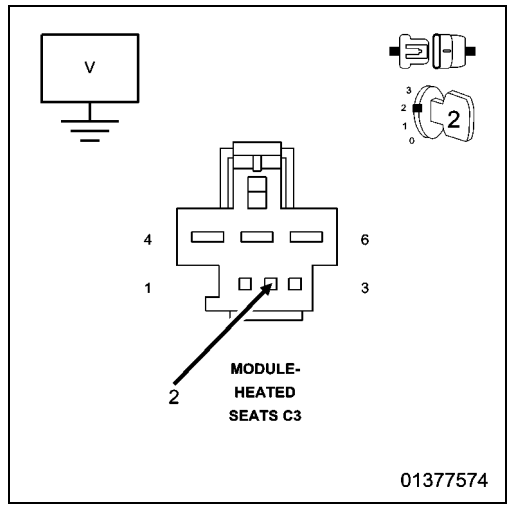

3. CHECK (P672) LEFT REAR HEATED SEAT TEMP SENSE CIRCUIT FOR A SHORT TO THE (F931) FUSED IGNITION RUN CONTROL OUTPUT CIRCUIT

1. Turn the ignition off.
2. Measure the resistance between the (P672) Left Rear Heated Seat Temp Sense circuit and the (F931) Fused Ignition Run Control Output circuit at HSM C3 harness connector.

Is the resistance below 10K Ohms?

Yes

- Repair the (P672) Left Rear Heated Seat Temp Sense circuit for a short to the (F931) Fused Ignition Run Control Output circuit.
- Perform the BODY VERIFICATION TEST. (Refer to 28 - DTC-Based Diagnostics/MODULE, Totally Integrated Power (TIPM) - Standard Procedure).

No

- Repair the (P672) Left Rear Heated Seat Temp Sense circuit for a short to voltage.
- Perform the BODY VERIFICATION TEST. (Refer to 28 - DTC-Based Diagnostics/MODULE, Totally Integrated Power (TIPM) - Standard Procedure).

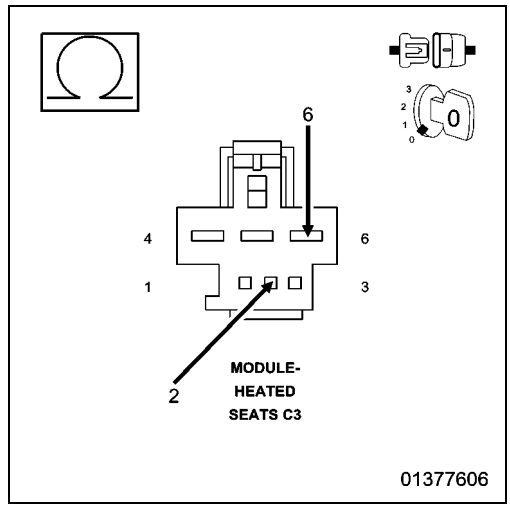

4. CHECK (P672) LEFT REAR HEATED SEAT TEMP SENSE CIRCUIT FOR A SHORT TO VOLTAGE DURING SEAT ADJUSTMENT

1. Measure the voltage of the (P672) Left Rear Heated Seat Temp Sense circuit between the HSM C3 harness connector and ground while adjusting the front seat.

Is there any voltage present during the seat adjustment?

Yes

- Repair the (P672) Left Rear Heated Seat Temp Sense circuit for a short to voltage.
- Perform the BODY VERIFICATION TEST. (Refer to 28 - DTC-Based Diagnostics/MODULE, Totally Integrated Power (TIPM) - Standard Procedure).

No

- Go To 5

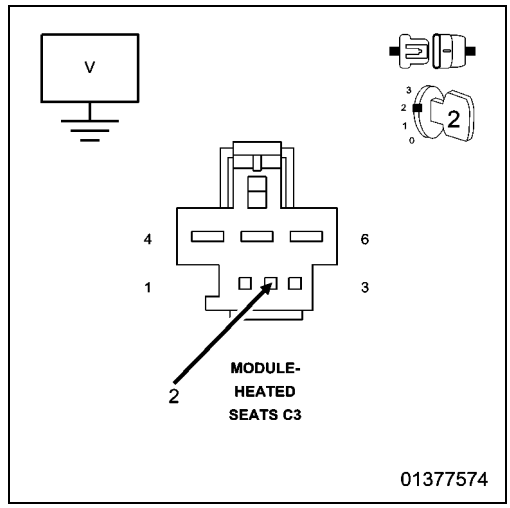

5. CHECK (P672) LEFT REAR HEATED SEAT TEMP SENSE CIRCUIT FOR A SHORT TO THE (P177) LEFT REAR SEAT HEATER CONTROL CIRCUIT OR TO (P178) RIGHT REAR SEAT HEATER CONTROL CIRCUIT

1. Turn the ignition off.
2. Disconnect the Left Rear Seat Cushion Heater harness connector.
3. Disconnect the Right Rear Seat Cushion Heater harness connector.

NOTE: Check connectors. Clean and repair as necessary.

4. Measure the resistance between the (P672) Left Rear Heated Seat Temp Sense circuit and the (P177) Left Rear Seat Heater Control circuit at the HSM C3 harness connector.
5. Measure the resistance between the (P672) Left Rear Heated Seat Temp Sense circuit and the (P178) Right Rear Seat Heater Control circuit at the HSM C3 harness connector.

Is the resistance below 10K Ohms for either measurement?

Yes

- Repair all circuits with a resistance below 10K Ohms for a short to the (P672) Left Rear Heated Seat Temp Sense circuit.
- Perform the BODY VERIFICATION TEST. (Refer to 28 - DTC-Based Diagnostics/MODULE, Totally Integrated Power (TIPM) - Standard Procedure).

No

- Go To 6

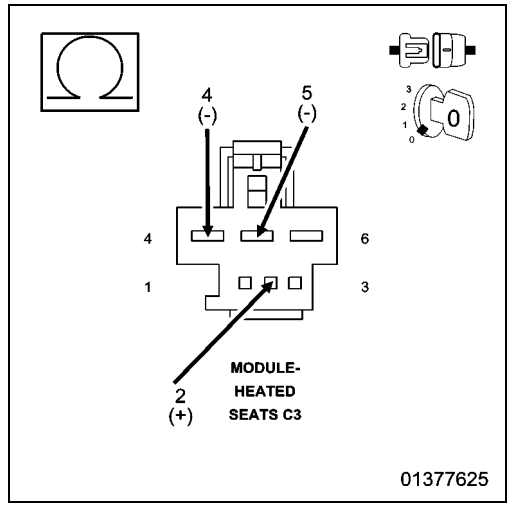

6. CHECK (P672) LEFT REAR HEATED SEAT TEMP SENSE CIRCUIT VOLTAGE TO LEFT REAR SEAT CUSHION HEATER

1. Reconnect the HSM C3 harness connector.
2. Start the engine and let it run.
3. Measure the voltage between the (P672) Left Rear Heated Seat Temp Sense circuit and the (P968) Heated Seat Sensor Return circuit at the Left Rear Seat Cushion Heater connector (harness side).

Is the voltage above 4.5-volts?

Yes

- Replace the Seat Cushion Heater Element in accordance with the Service Information. (Refer to 08 - Electrical/8G - Heated/Cooled Systems/Heated Seats/PAD, Heater - Removal).
- Perform the BODY VERIFICATION TEST. (Refer to 28 - DTC-Based Diagnostics/MODULE, Totally Integrated Power (TIPM) - Standard Procedure).

No

- Go To 7

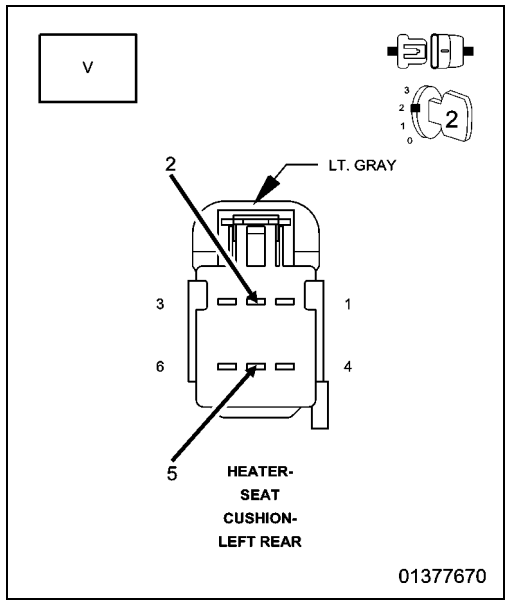

7. CHECK (P672) LEFT REAR HEATED SEAT TEMP SENSE CIRCUIT OR AN OPEN

1. Turn the ignition off.
2. Disconnect the HSM C3 harness connector.
3. Measure the resistance of the (P672) Left Rear Heated Seat Temp Sense circuit between the HSM C3 harness connector and the Left Rear Seat Cushion Heater harness connector.

Is the resistance below 5.0 Ohms?

Yes

- Go To 8

No

- Repair the (P672) Left Rear Heated Seat Temp Sense circuit for an open.
- Perform the BODY VERIFICATION TEST. (Refer to 28 - DTC-Based Diagnostics/MODULE, Totally Integrated Power (TIPM) - Standard Procedure).

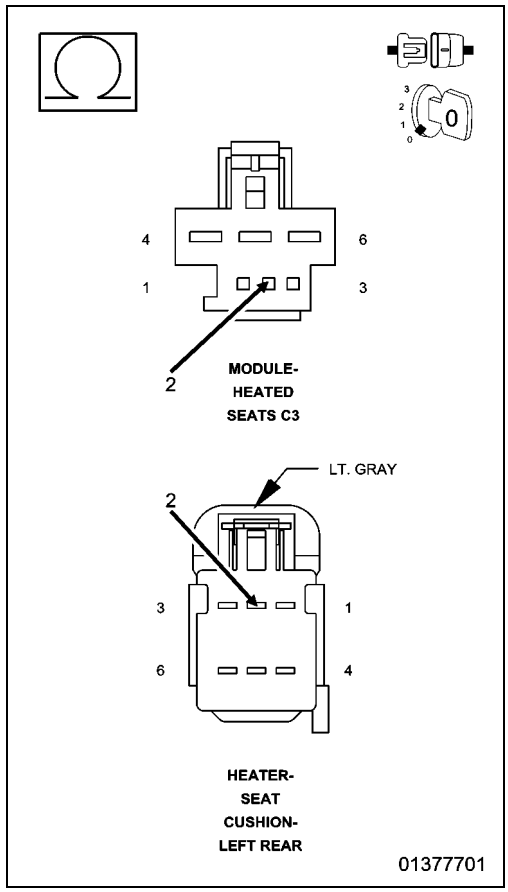

8. CHECK (P968) HEATED SEAT SENSOR RETURN CIRCUIT FOR AN OPEN

1. Measure the resistance of the (P968) Heated Seat Sensor Return circuit between the HSM C3 connector and the Left Rear Seat Cushion Heater connector (harness side).

Is the resistance below 5.0 Ohms?

Yes

- Replace the Heated Seat Module (HSM) in accordance with the Service Information. (Refer to 08 - Electrical/8E - Electronic Control Modules/MODULE, Heated Seat - Removal).
- Perform the BODY VERIFICATION TEST. (Refer to 28 - DTC-Based Diagnostics/MODULE, Totally Integrated Power (TIPM) - Standard Procedure).

No

- Repair the (P968) Heated Seat Sensor Return circuit for an open.
- Perform the BODY VERIFICATION TEST. (Refer to 28 - DTC-Based Diagnostics/MODULE, Totally Integrated Power (TIPM) - Standard Procedure).

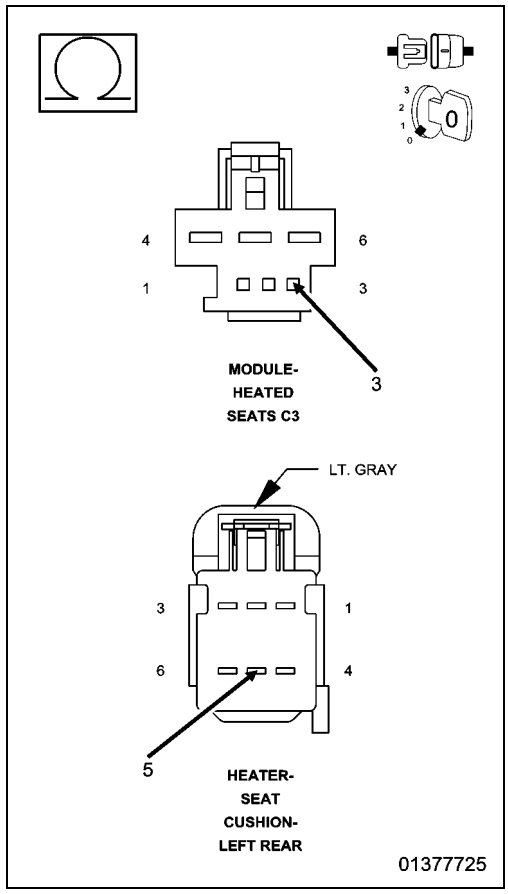

■ B1EB4-1A-REAR RIGHT SEAT HEATER SENSOR - CIRCUIT RESISTANCE BELOW THRESHOLD

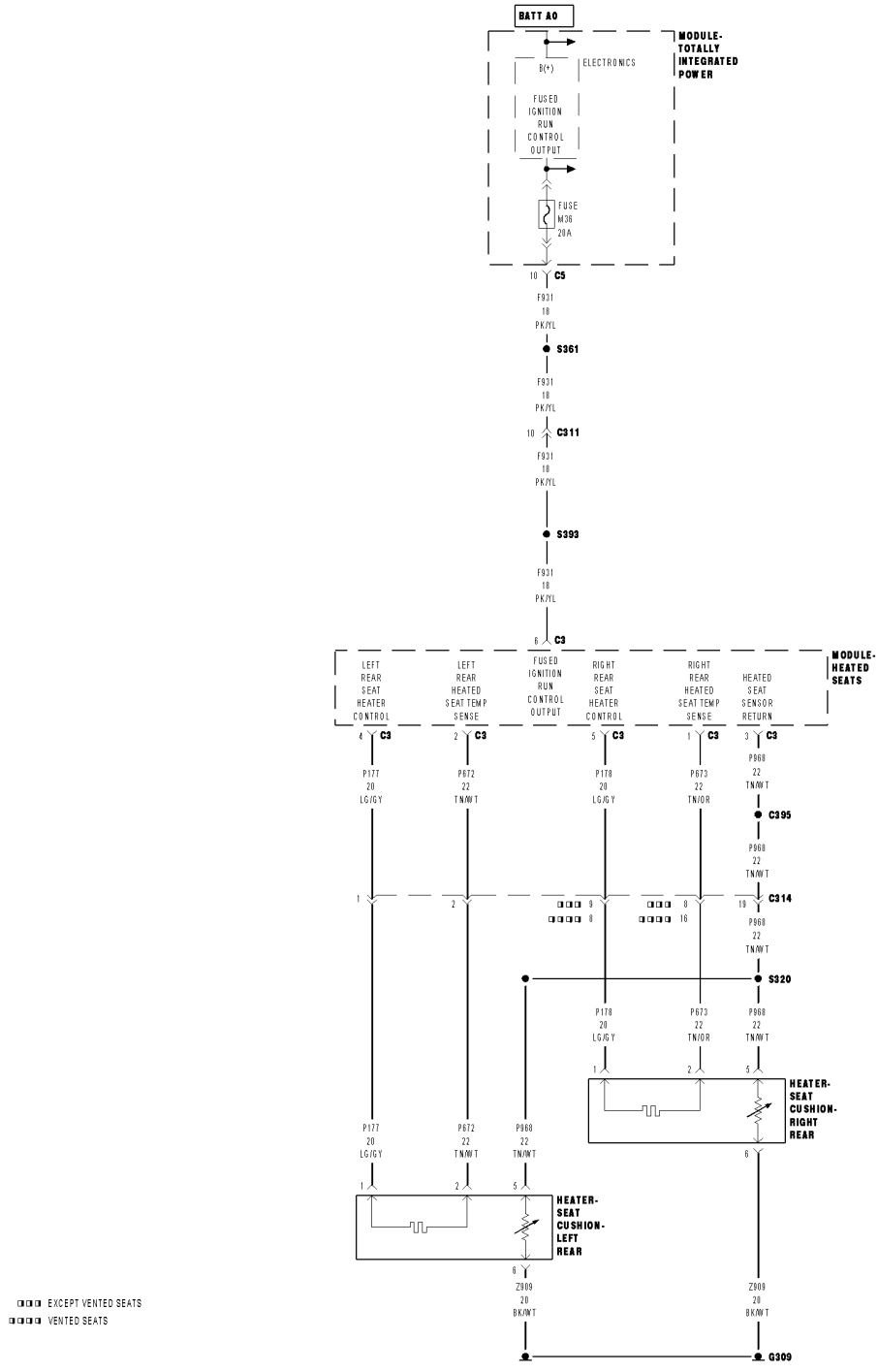

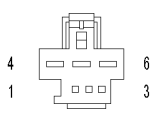

MODULE-HEATED SEATS C3

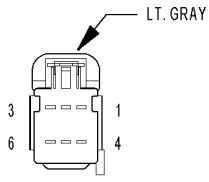

HEATER-SEAT CUSHION-LEFT REAR

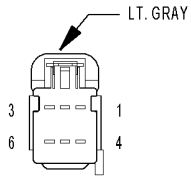

HEATER-SEAT CUSHION-RIGHT REAR

01375726

For a complete wiring diagram, **refer to the Wiring Information**.

- **When Monitored:**
  When Heated Seat Module (HSM) is powered.
- **Set Condition:**
  The Heated Seat Module (HSM) detects that the (P673) Right Rear Heated Seat Temp Sense circuit NTC is below threshold for more than two seconds.

Possible Causes
(P673) RIGHT REAR HEATED SEAT TEMP SENSE CIRCUIT SHORTED TO GROUND
(P673) RIGHT REAR HEATED SEAT TEMP SENSE CIRCUIT SHORTED TO THE (Z909) GROUND CIRCUIT
(P673) RIGHT REAR HEATED SEAT TEMP SENSE CIRCUIT SHORTED TO THE (P968) HEATED SEAT SENSOR RETURN CIRCUIT
SEAT CUSHION HEATER ELEMENT SHORTED
HEATED SEAT MODULE (HSM)

1. TEST FOR INTERMITTENT CONDITION

NOTE: Make sure the battery is fully charged and the charging system is operating properly before proceeding.

1. Turn the ignition on.
2. Using a scan tool, record and erase Diagnostic Trouble Codes (DTCs).
3. Turn the ignition off.
4. Start the engine and let it run.
5. Using a scan tool, read DTCs.

Is the DTC active?

Yes

- Go To 2

No

- The conditions that caused this code to set are not present at this time. Verify seat harness is routed correctly to the HSM. Using the wiring diagram/schematic as a guide, inspect the wiring and connectors. Look for chafed, pierced, pinched, or partially broken wires and broken, bent, pushed out, spread, corroded, or contaminated terminals. Attempt to reproduce condition by adjusting the front seat.
- Perform the BODY VERIFICATION TEST. (Refer to 28 - DTC-Based Diagnostics/MODULE, Totally Integrated Power (TIPM) - Standard Procedure).

2. CHECK (P673) RIGHT REAR HEATED SEAT TEMP SENSE CIRCUIT IN BODY HARNESS FOR A SHORT TO GROUND

1. Turn the ignition off.
2. Disconnect the Right Rear Seat Cushion Heater harness connector.

NOTE: Check connectors. Clean and repair as necessary.

3. Turn the ignition on.
4. Using a scan tool, erase DTCs.
5. Turn the ignition off.
6. Start the engine and let it run.
7. Using a scan tool, read DTCs.

Is the same DTC active?

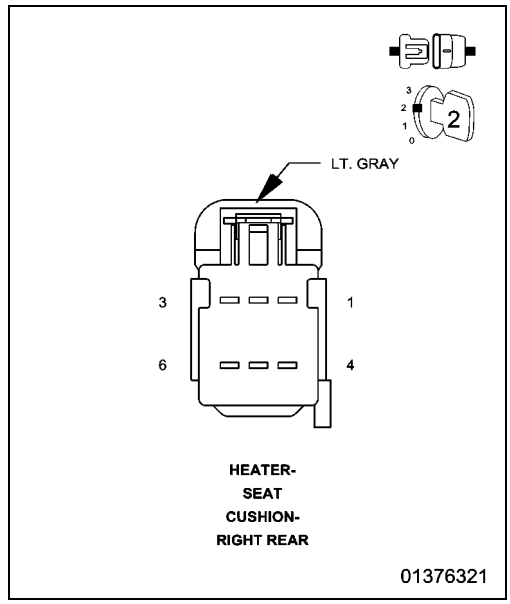

Yes

- Go To 3

No

- Replace the shorted Rear Seat Cushion Heater Element in accordance with the Service Information. (Refer to 08 - Electrical/8G - Heated/ Cooled Systems/Heated Seats/PAD, Heater - Removal).
- Perform the BODY VERIFICATION TEST. (Refer to 28 - DTC-Based Diagnostics/MODULE, Totally Integrated Power (TIPM) - Standard Procedure).

3. CHECK (P673) RIGHT REAR HEATED SEAT TEMP SENSE CIRCUIT FOR A SHORT TO GROUND

1. Turn the ignition off.
2. Disconnect the HSM C3 harness connector.

NOTE: Check connectors. Clean and repair as necessary.

3. Measure the resistance of the (P673) Right Rear Heated Seat Temp Sense circuit between ground and the Right Rear Seat Cushion Heater connector (harness side).

Is the resistance below 10K Ohms?

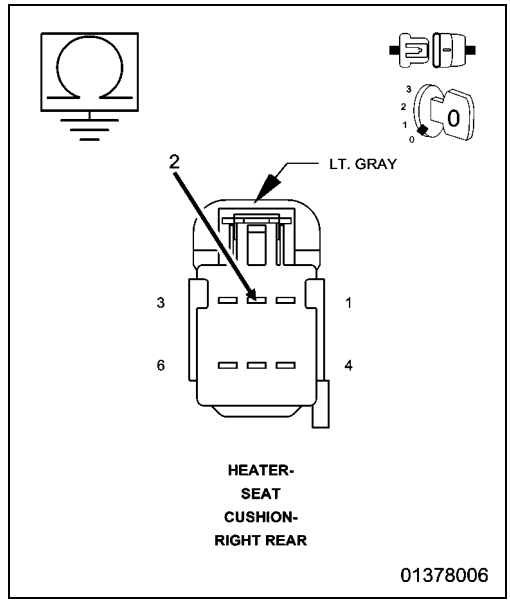

Yes

- Repair the (P673) Right Rear Heated Seat Temp Sense circuit for a short to ground.
- Perform the BODY VERIFICATION TEST. (Refer to 28 - DTC-Based Diagnostics/MODULE, Totally Integrated Power (TIPM) - Standard Procedure).

No

- Go To 4

4. CHECK (P673) RIGHT REAR HEATED SEAT TEMP SENSE CIRCUIT FOR A SHORT TO THE (Z909) GROUND CIRCUIT OR TO (P968) HEATED SEAT SENSOR RETURN CIRCUIT

1. Measure the resistance between the (P673) Right Rear Heated Seat Temp Sense circuit and the (Z909) Ground circuit at the Right Rear Seat Cushion Heater connector (harness side).
2. Measure the resistance between the (P673) Right Rear Heated Seat Temp Sense circuit and the (P968) Heated Seat Sensor Return circuit at the Right Rear Seat Cushion Heater connector (harness side).

Is the resistance below 10K Ohms for either measurement?

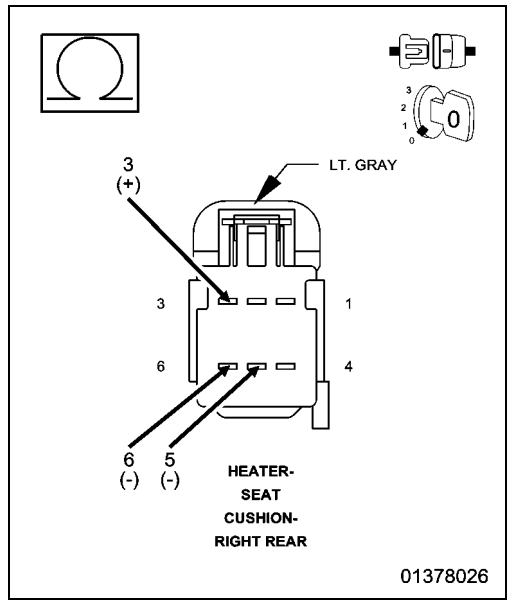

Yes

- Repair all circuits with a resistance below 10K Ohms for a short to the (P673) Right Rear Heated Seat Temp Sense circuit.
- Perform the BODY VERIFICATION TEST. (Refer to 28 - DTC-Based Diagnostics/MODULE, Totally Integrated Power (TIPM) - Standard Procedure).

No

- Replace the Heated Seat Module (HSM) in accordance with the Service Information. (Refer to 08 - Electrical/8E - Electronic Control Modules/MODULE, Heated Seat - Removal).
- Perform the BODY VERIFICATION TEST. (Refer to 28 - DTC-Based Diagnostics/MODULE, Totally Integrated Power (TIPM) - Standard Procedure).

■ B1EB4-1B-REAR RIGHT SEAT HEATER SENSOR - CIRCUIT RESISTANCE ABOVE THRESHOLD

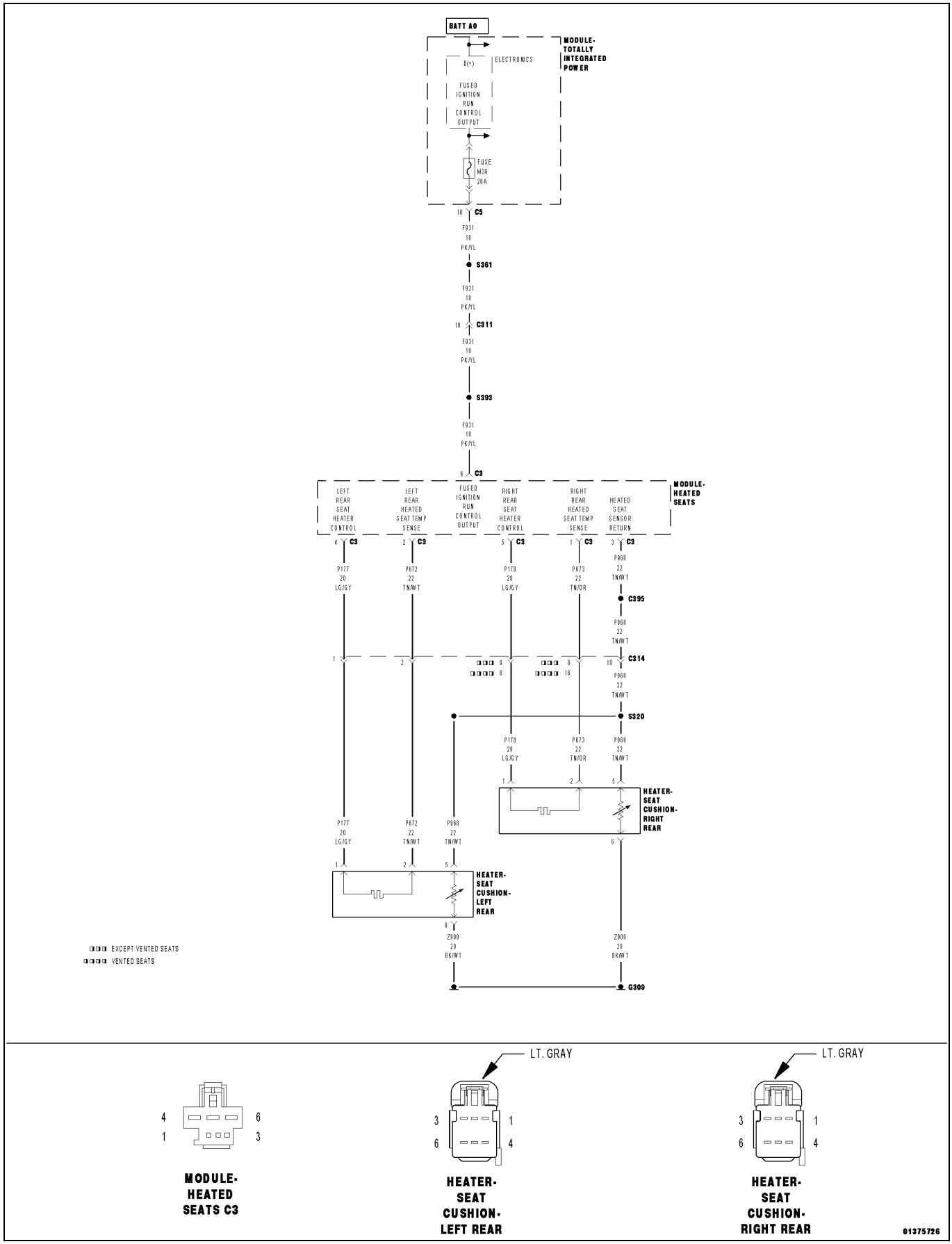

For a complete wiring diagram, **refer to the Wiring Information**.

- **When Monitored:**
  When Heated Seat Module (HSM) is powered.
- **Set Condition:**
  The Heated Seat Module (HSM) detects that the (P673) Right Rear Heated Seat Temp Sense circuit NTC is above threshold for more than two seconds.

Possible Causes
(P673) RIGHT REAR HEATED SEAT TEMP SENSE CIRCUIT SHORTED TO VOLTAGE
(P673) RIGHT REAR HEATED SEAT TEMP SENSE CIRCUIT SHORTED TO THE (F931) FUSED IGNITION RUN CONTROL OUTPUT CIRCUIT
(P673) RIGHT REAR HEATED SEAT TEMP SENSE CIRCUIT SHORTED TO THE (P178) RIGHT REAR SEAT HEATER CONTROL CIRCUIT
(P673) RIGHT REAR HEATED SEAT TEMP SENSE CIRCUIT SHORTED TO THE (P177) LEFT REAR SEAT HEATER CONTROL CIRCUIT
(P673) RIGHT REAR HEATED SEAT TEMP SENSE CIRCUIT OPEN
(P968) HEATED SEAT SENSOR RETURN CIRCUIT OPEN
SEAT CUSHION HEATER ELEMENT OPEN
HEATED SEAT MODULE (HSM)

1. TEST FOR INTERMITTENT CONDITION

NOTE: Make sure the battery is fully charged and the charging system is operating properly before proceeding.

1. Turn the ignition on.
2. Using a scan tool, record and erase Diagnostic Trouble Codes (DTCs).
3. Turn the ignition off.
4. Start the engine and let it run.
5. Using a scan tool, read DTCs.

Is the DTC active?

Yes

- Go To 2

No

- The conditions that caused this code to set are not present at this time. Verify seat harness is routed correctly to the HSM. Using the wiring diagram/schematic as a guide, inspect the wiring and connectors. Look for chafed, pierced, pinched, or partially broken wires and broken, bent, pushed out, spread, corroded, or contaminated terminals. Attempt to reproduce condition by operating all HSM functions one at a time. Attempt to reproduce condition by adjusting the front seat.
- Perform the BODY VERIFICATION TEST. (Refer to 28 - DTC-Based Diagnostics/MODULE, Totally Integrated Power (TIPM) - Standard Procedure).

2. CHECK (P673) RIGHT REAR HEATED SEAT TEMP SENSE CIRCUIT FOR A SHORT TO VOLTAGE

1. Turn the ignition off.
2. Disconnect the HSM C3 harness connector.

NOTE: Check connectors. Clean and repair as necessary.

3. Start the engine and let it run.
4. Measure the voltage of the (P673) Right Rear Heated Seat Temp Sense circuit between the HSM C3 harness connector and ground.

Is there any voltage present?

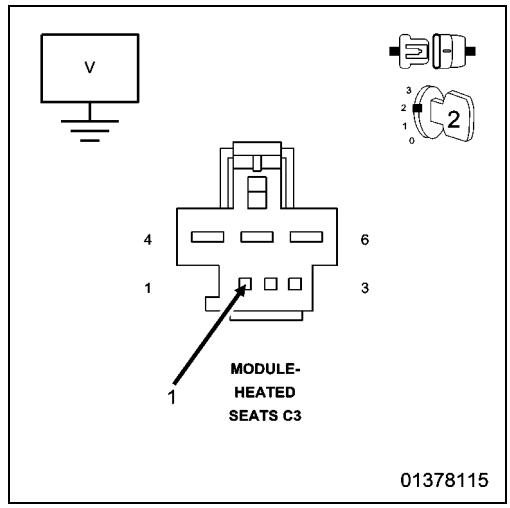

Yes

- Go To 3

No

- Go To 4

3. CHECK (P673) RIGHT REAR HEATED SEAT TEMP SENSE CIRCUIT FOR A SHORT TO THE (F931) FUSED IGNITION RUN CONTROL OUTPUT CIRCUIT

1. Turn the ignition off.
2. Measure the resistance between the (P673) Right Rear Heated Seat Temp Sense circuit and the (F931) Fused Ignition Run Control Output circuit at HSM C3 harness connector.

Is the resistance below 10K Ohms?

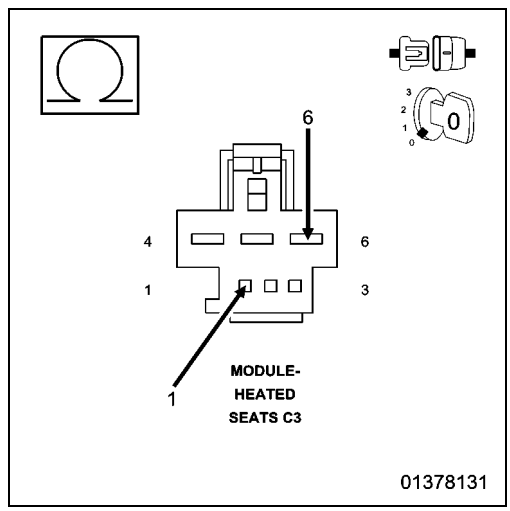

Yes

- Repair the (P673) Right Rear Heated Seat Temp Sense circuit for a short to the (F931) Fused Ignition Run Control Output circuit.
- Perform the BODY VERIFICATION TEST. (Refer to 28 - DTC-Based Diagnostics/MODULE, Totally Integrated Power (TIPM) - Standard Procedure).

No

- Repair the (P673) Right Rear Heated Seat Temp Sense circuit for a short to voltage.
- Perform the BODY VERIFICATION TEST. (Refer to 28 - DTC-Based Diagnostics/MODULE, Totally Integrated Power (TIPM) - Standard Procedure).

4. CHECK (P673) RIGHT REAR HEATED SEAT TEMP SENSE CIRCUIT FOR A SHORT TO VOLTAGE DURING SEAT ADJUSTMENT

1. Measure the Voltage of the (P673) Right Rear Heated Seat Temp Sense circuit between the HSM C3 harness connector and ground while adjusting the front seat.

Is there any Voltage present during the seat adjustment?

Yes

- Repair the (P673) Right Rear Heated Seat Temp Sense circuit for a short to voltage.
- Perform the BODY VERIFICATION TEST. (Refer to 28 - DTC-Based Diagnostics/MODULE, Totally Integrated Power (TIPM) - Standard Procedure).

No

- Go To 5

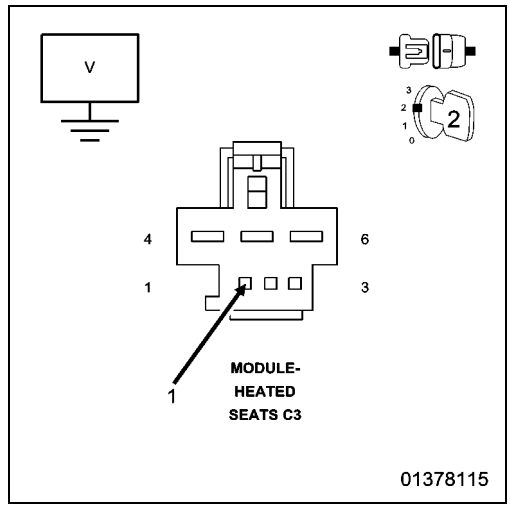

5. CHECK (P673) RIGHT REAR HEATED SEAT TEMP SENSE CIRCUIT FOR A SHORT TO (P178) RIGHT REAR SEAT HEATER CONTROL CIRCUIT OR TO (P177) LEFT REAR SEAT HEATER CONTROL CIRCUIT

1. Turn the ignition off.
2. Disconnect the Right Rear Seat Cushion Heater connector.
3. Disconnect the Left Rear Seat Cushion Heater connector.

NOTE: Check connectors. Clean and repair as necessary.

4. Measure the resistance between the (P673) Right Rear Heated Seat Temp Sense circuit and the (P178) Right Rear Seat Heater Control circuit at the HSM C3 harness connector.
5. Measure the resistance between the (P673) Right Rear Heated Seat Temp Sense circuit and the (P177) Left Rear Seat Heater Control circuit at the HSM C3 harness connector.

Is the resistance below 10K Ohms for either measurement?

Yes

- Repair all circuits with a resistance below 10K Ohms for a short to the (P673) Right Rear Heated Seat Temp Sense circuit.
- Perform the BODY VERIFICATION TEST. (Refer to 28 - DTC-Based Diagnostics/MODULE, Totally Integrated Power (TIPM) - Standard Procedure).

No

- Go To 6

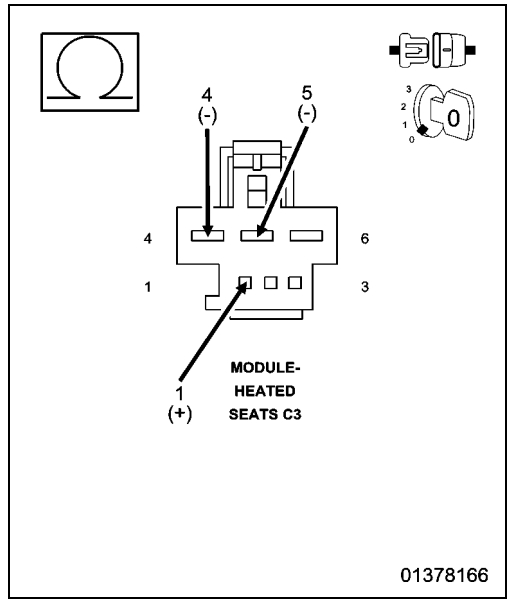

6. CHECK (P673) RIGHT REAR HEATED SEAT TEMP SENSE CIRCUIT VOLTAGE TO RIGHT REAR SEAT CUSHION HEATER

1. Reconnect the HSM C3 harness connector.
2. Start the engine and let it run.
3. Measure the voltage between the (P673) Right Rear Heated Seat Temp Sense circuit and the (P968) Heated Seat Sensor Return circuit at the Right Rear Seat Cushion Heater connector (harness side).

Is the voltage above 4.5 Volts?

Yes

- Replace the Rear Seat Cushion Heater Element in accordance with the Service Information.
- Perform the BODY VERIFICATION TEST. (Refer to 28 - DTC-Based Diagnostics/MODULE, Totally Integrated Power (TIPM) - Standard Procedure).

No

- Go To 7

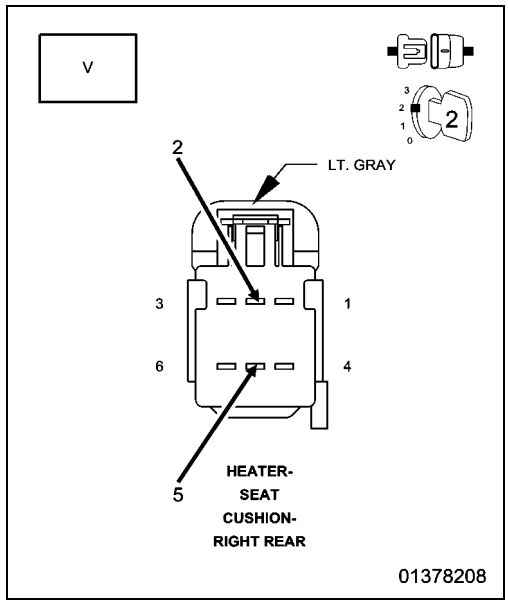

7. CHECK (P673) RIGHT REAR HEATED SEAT TEMP SENSE CIRCUIT FOR AN OPEN

1. Turn the ignition off.
2. Disconnect the HSM C3 harness connector.
3. Measure the resistance of the (P673) Right Rear Heated Seat Temp Sense circuit between the HSM C3 connector and the Right Rear Seat Cushion Heater connector (harness side).

Is the resistance below 5.0 Ohms?

Yes

- Go To 8

No

- Repair the (P673) Right Rear Heated Seat Temp Sense circuit for an open.
- Perform the BODY VERIFICATION TEST. (Refer to 28 - DTC-Based Diagnostics/MODULE, Totally Integrated Power (TIPM) - Standard Procedure).

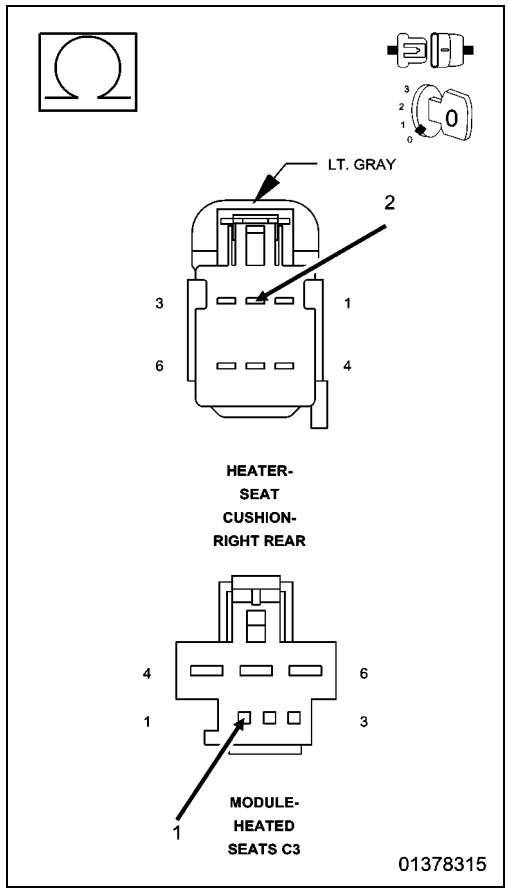

8. CHECK (P968) HEATED SEAT SENSOR RETURN CIRCUIT FOR AN OPEN

1. Measure the resistance of the (P968) Heated Seat Sensor Return circuit between the HSM C3 harness connector and the Right Rear Seat Cushion Heater connector (harness side).

Is the resistance below 5.0 Ohms?

Yes

- Replace the Heated Seat Module (HSM) in accordance with the Service Information.
- Perform the BODY VERIFICATION TEST. (Refer to 28 - DTC-Based Diagnostics/MODULE, Totally Integrated Power (TIPM) - Standard Procedure).

No

- Repair the (P968) Heated Seat Sensor Return circuit for an open.
- Perform the BODY VERIFICATION TEST. (Refer to 28 - DTC-Based Diagnostics/MODULE, Totally Integrated Power (TIPM) - Standard Procedure).

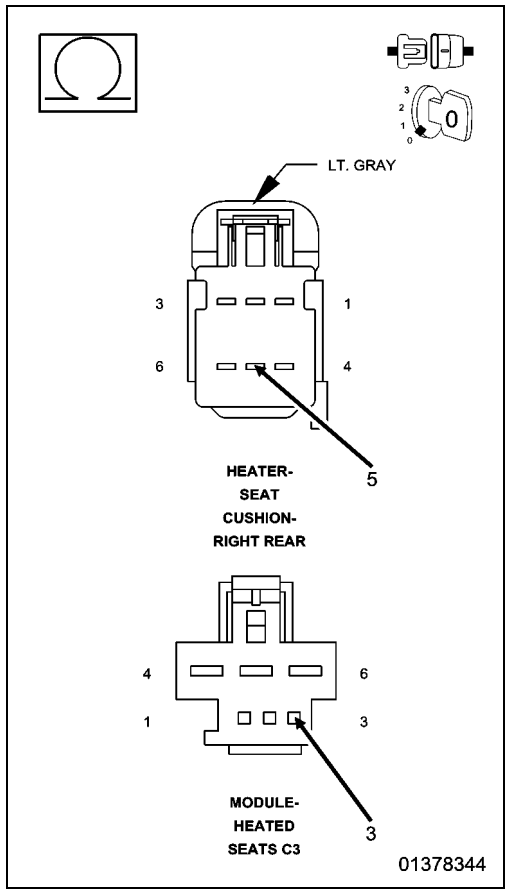

B210C-17-BATTERY VOLTAGE INPUT - CIRCUIT VOLTAGE ABOVE THRESHOLD

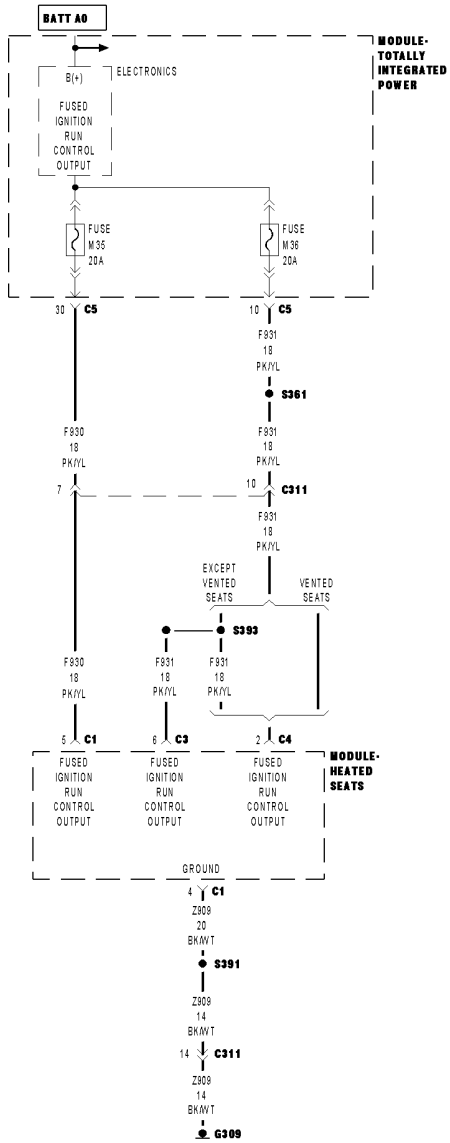

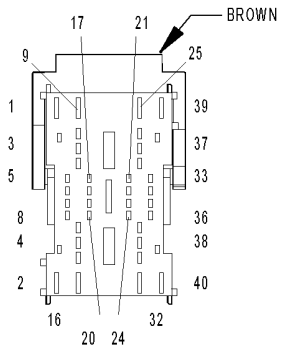

MODULE-
TOTALLY
INTEGRATED
POWER C5

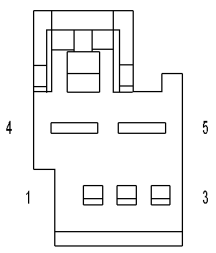

MODULE-
HEATED
SEATS C1

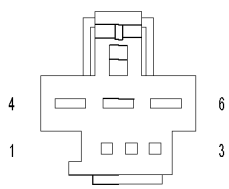

MODULE-
HEATED
SEATS C3

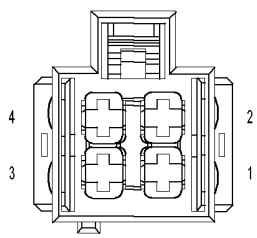

MODULE-
HEATED
SEATS C4

01301907

For a complete wiring diagram, **refer to the Wiring Information**.

- **When Monitored:**
  With the engine running.
- **Set Condition:**
  If the Heated Seat Module (HSM) detects Voltage above 16.0 volts on the (F930) Fused Ignition Run Control Output circuit.

Possible Causes
CHARGING SYSTEM VOLTAGE HIGH
(F930) FUSED IGNITION RUN CONTROL OUTPUT CIRCUIT
HEATED SEAT MODULE (HSM)

1. CHECK FOR CHARGING SYSTEM DIAGNOSTIC TROUBLE CODES (DTCs)

1. Turn the ignition on.
2. Using a scan tool, read Powertrain Control Module (PCM) DTCs.

Are there any Charging System DTCs set in the PCM?

Yes

- (Refer to 28 - DTC-Based Diagnostics/MODULE, Powertrain Control (PCM) - Diagnosis and Testing) for Charging System diagnostic procedures.

No

- Go To 2

2. VERIFY DTC IS ACTIVE

1. Using a scan tool, record and erase DTCs.
2. Turn the ignition off.
3. Start the engine and let run for one minute.
4. Using a scan tool, read DTCs.

Is the DTC active?

Yes

- Go To 3

No

- The conditions that caused this code to set are not present at this time. Verify seat harness is routed correctly to the HSM. Using the wiring diagram/schematic as a guide, inspect the wiring and connectors.
- Perform the BODY VERIFICATION TEST. (Refer to 28 - DTC-Based Diagnostics/MODULE, Totally Integrated Power (TIPM) - Standard Procedure).

3. CHECK (F930) FUSED IGNITION RUN CONTROL OUTPUT CIRCUIT VOLTAGE

1. Turn the ignition off.
2. Disconnect the HSM C1 harness connector.

NOTE: Check connectors. Clean and repair as necessary.

3. Start the engine and let idle.
4. Measure the voltage of the (F930) Fused Ignition Run Control Output circuit between the HSM C1 harness connector and ground and compare it to the voltage at the vehicle battery.

Is the Voltage measured at the HSM C1 connector the same as the voltage measured at the battery?

Yes

- Replace the Heated Seat Module (HSM) in accordance with the Service Information.
- Perform the BODY VERIFICATION TEST. (Refer to 28 - DTC-Based Diagnostics/MODULE, Totally Integrated Power (TIPM) - Standard Procedure).

No

- Repair the (F930) Fused Ignition Run Control Output circuit for the cause of the high voltage condition at the HSM.
- Perform the BODY VERIFICATION TEST. (Refer to 28 - DTC-Based Diagnostics/MODULE, Totally Integrated Power (TIPM) - Standard Procedure).

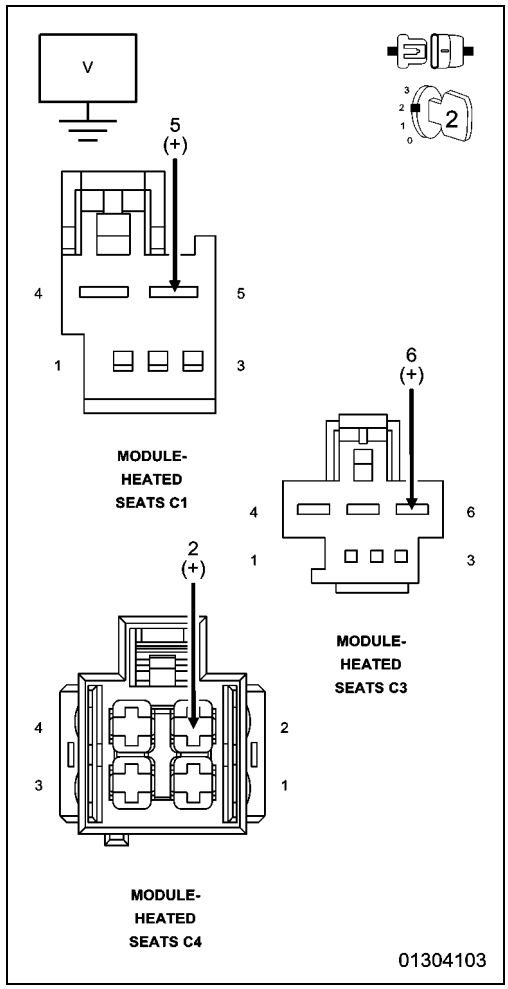

B210C-18-BATTERY VOLTAGE INPUT - CIRCUIT BELOW THRESHOLD

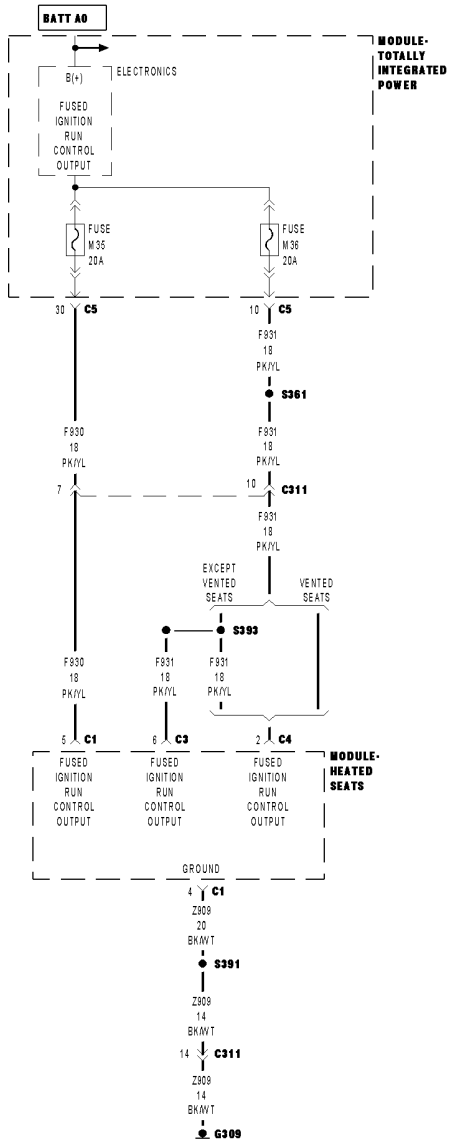

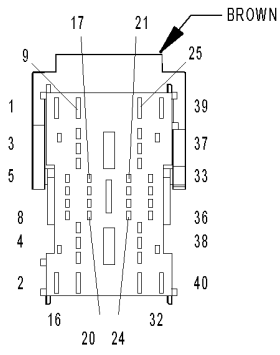

MODULE-
TOTALLY
INTEGRATED
POWER C5

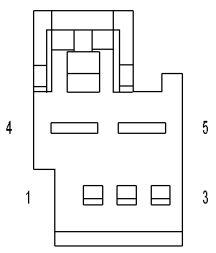

MODULE-
HEATED
SEATS C1

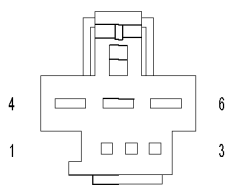

MODULE-
HEATED
SEATS C3

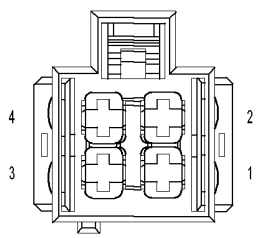

MODULE-
HEATED
SEATS C4

01301907

For a complete wiring diagram, **refer to the Wiring Information**.

- **When Monitored:**
  With engine running.
- **Set Condition:**
  The Heated Seat Module (HSM) detects Voltage below 10.0 volts on the (F930) Fused Ignition Run Control Output circuit.

Possible Causes
CHARGING SYSTEM VOLTAGE LOW
(F930) FUSED IGNITION RUN CONTROL OUTPUT CIRCUIT
HEATED SEAT MODULE (HSM)

1. CHECK FOR CHARGING SYSTEM DIAGNOSTIC TROUBLE CODES (DTCs)

1. Turn the ignition on.
2. Using a scan tool, read Powertrain Control Module (PCM) DTCs.

Are there any Charging System DTCs set in the PCM?

Yes

- (Refer to 28 - DTC-Based Diagnostics/MODULE, Powertrain Control (PCM) - Diagnosis and Testing) for Charging System diagnostic procedures.

No

- Go To 2

2. VERIFY DTC IS ACTIVE

1. Using a scan tool, record and erase DTCs.
2. Turn the ignition off.
3. Start the engine and let it run for one minute.
4. Using a scan tool, read DTCs.

Is the DTC active?

Yes

- Go To 3

No

- The conditions that caused this code to set are not present at this time. Verify seat harness is routed correctly to the HSM. Using the wiring diagram/schematic as a guide, inspect the wiring and connectors. Look for chafed, pierced, pinched, or partially broken wires and broken, bent, pushed out, spread, corroded, or contaminated terminals. Attempt to reproduce condition by adjusting the seat.
- Perform BODY VERIFICATION TEST. (Refer to 28 - DTC-Based Diagnostics/MODULE, Totally Integrated Power (TIPM) - Standard Procedure).

3. CHECK (F930) FUSED IGNITION RUN CONTROL OUTPUT CIRCUIT VOLTAGE

1. Turn the ignition off.
2. Disconnect the HSM C1 harness connector.

NOTE: Check connectors. Clean and repair as necessary.

3. Start the engine and let idle.
4. Measure the voltage of the (F930) Fused Ignition Run Control Output circuit between the HSM C1 harness connector and ground and compare it to the voltage at the vehicle battery.

Is the voltage measured at the HSM C1 connector the same as the voltage measured at the battery?

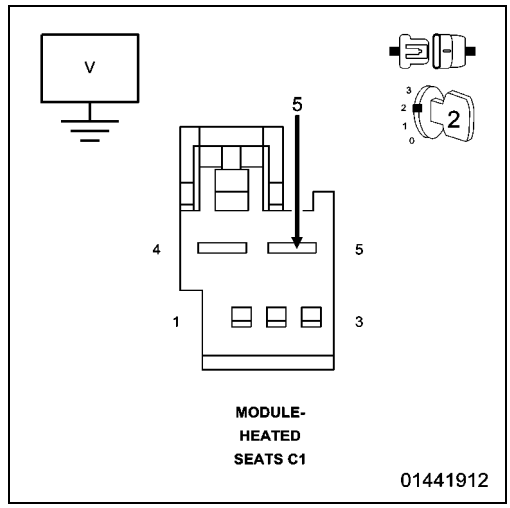

Yes

- Replace the Heated Seat Module (HSM) in accordance with the Service Information.
- Perform BODY VERIFICATION TEST. (Refer to 28 - DTC-Based Diagnostics/MODULE, Totally Integrated Power (TIPM) - Standard Procedure).

No

- Repair the (F930) Fused Ignition Run Control Output circuit for the cause of the low voltage condition at the HSM.
- Perform BODY VERIFICATION TEST. (Refer to 28 - DTC-Based Diagnostics/MODULE, Totally Integrated Power (TIPM) - Standard Procedure).

B21DD-84-SYSTEM VOLTAGE - SIGNAL BELOW ALLOWABLE RANGE

For a complete wiring diagram, **refer to the Wiring Information**.

- **When Monitored:**
  With the engine running.
- **Set Condition:**
  The Heated Seat Module (HSM) receives a battery Voltage below 10.0 volts status message through the CAN Bus.

Possible Causes
CHARGING SYSTEM VOLTAGE LOW
TOTALLLY INTEGRATED POWER MODULE (TIPM) DIAGNOSTIC TROUBLE CODES (DTCs) PRESENT
HEATED SEAT MODULE (HSM)

1. CHECK FOR CHARGING SYSTEM DTCs

NOTE: If present, diagnose and repair DTC U0141-00 Lost Communication With IPM (FCM/TIPM) before proceeding with this diagnostic procedure.

1. Turn the ignition on.
2. Using a scan tool, read Powertrain Control Module (PCM) DTCs.

Are there any Charging System DTCs set in the PCM?

Yes

- (Refer to 28 - DTC-Based Diagnostics/MODULE, Powertrain Control (PCM) - Diagnosis and Testing) for Charging System diagnostic procedures.

No

- Go To 2

2. CHECK FOR DTCs IN TIPM

1. Using a scan tool, read TIPM DTCs.

Are there any DTCs set in the TIPM?

Yes

- Diagnose and repair the DTC(s). (Refer to 28 - DTC-Based Diagnostics/MODULE, Totally Integrated Power (TIPM) - Diagnosis and Testing).

No

- Go To 3

3. CHECK FOR ACTIVE DTC B210C-18-BATTERY VOLTAGE INPUT - CIRCUIT BELOW THRESHOLD IN HSM

1. Using a scan tool, read HSM DTCs.

Is DTC B210C-18-BATTERY VOLTAGE INPUT - CIRCUIT BELOW THRESHOLD active?

Yes

- Diagnose and repair the DTC. (Refer to 28 - DTC-Based Diagnostics/MODULE, Heated Seat (HSM) - Diagnosis and Testing).

No

- Go To 4

4. VERIFY THIS DTC IS ACTIVE

NOTE:

- **Make sure the Battery is in good condition. Using a suitable Battery Tester, test the Battery before continuing.**
- **Make sure system voltage is in the normal operating range of approximately 12 to 14 volts before continuing.**
- **Inspect the vehicle for aftermarket accessories that may exceed the Generator System output.**
- **Make sure the generator drive belt is in good operating condition.**
- **Inspect the fuses. If an open fuse is found, use the wire diagram/schematic as a guide, inspect the wiring and connectors for damage.**

1. Using a scan tool, record and erase DTCs.
2. Turn the ignition off.
3. Start the engine and let it run for one minute.
4. Using a scan tool, read DTCs.

Is the DTC active?

Yes

- Replace the Heated Seat Module (HSM) in accordance with the Service Information.
- Perform the BODY VERIFICATION TEST. (Refer to 28 - DTC-Based Diagnostics/MODULE, Totally Integrated Power (TIPM) - Standard Procedure).

No

- The conditions that caused this code to set are not present at this time.
- Perform the BODY VERIFICATION TEST. (Refer to 28 - DTC-Based Diagnostics/MODULE, Totally Integrated Power (TIPM) - Standard Procedure).

■ B21DD-85-SYSTEM VOLTAGE - SIGNAL ABOVE ALLOWABLE RANGE

For a complete wiring diagram, **refer to the Wiring Information**.

- **When Monitored:**
  With the engine running.
- **Set Condition:**
  The Heated Seat Module (HSM) receives a system Voltage above 16.0 volts status message through the CAN Bus.

Possible Causes
CHARGING SYSTEM VOLTAGE HIGH
TIPM DIAGNOSTIC TROUBLE CODES (DTCs) PRESENT
HEATED SEAT MODULE (HSM)

1. CHECK FOR CHARGING SYSTEM DTCs

NOTE: If present, diagnose and repair DTC U0141-00 Lost Communication With IPM (FCM/TIPM) before proceeding with this diagnostic procedure.

1. Turn the ignition on.
2. Using a scan tool, read Powertrain Control Module (PCM) DTCs.

Are there any Charging System DTCs set in the PCM?

Yes

- (Refer to 28 - DTC-Based Diagnostics/MODULE, Powertrain Control (PCM) - Diagnosis and Testing) for Charging System diagnostic procedures.

No

- Go To 2

2. CHECK FOR DTCs IN TIPM

1. Using a scan tool, read TIPM DTCs.

Are there any DTCs set in the TIPM?

Yes

- Diagnose and repair the DTC(s). (Refer to 28 - DTC-Based Diagnostics/MODULE, Totally Integrated Power (TIPM) - Diagnosis and Testing).

No

- Go To 3

3. CHECK FOR ACTIVE DTC B210C-17-BATTERY VOLTAGE INPUT - CIRCUIT ABOVE THRESHOLD IN HSM

1. Using a scan tool, read HSM DTCs.

Is DTC B210C-17-BATTERY VOLTAGE INPUT - CIRCUIT ABOVE THRESHOLD active?

Yes

- Diagnose and repair the DTC. (Refer to 28 - DTC-Based Diagnostics/MODULE, Heated Seat (HSM) - Diagnosis and Testing).

No

- Go To 4

4. VERIFY THIS DTC IS ACTIVE

NOTE:

- **Make sure the Battery is in good condition. Using a suitable Battery Tester, test the Battery before continuing.**
- **Make sure system voltage is in the normal operating range of approximately 12 to 14 volts before continuing.**
- **Inspect the vehicle for aftermarket accessories that may exceed the Generator System output.**
- **Make sure the generator drive belt is in good operating condition.**
- **Inspect the fuses. If an open fuse is found, use the wire diagram/schematic as a guide, inspect the wiring and connectors for damage.**

1. Using a scan tool, record and erase DTCs.
2. Turn the ignition Off.
3. Start the engine and let run for one minute.
4. Using a scan tool, read DTCs.

Is the DTC active?

Yes

- Replace the Heated Seat Module (HSM) in accordance with the Service Information.
- Perform BODY VERIFICATION TEST. (Refer to 28 - DTC-Based Diagnostics/MODULE, Totally Integrated Power (TIPM) - Standard Procedure).

No

- The conditions that caused this code to set are not present at this time.
- Perform BODY VERIFICATION TEST. (Refer to 28 - DTC-Based Diagnostics/MODULE, Totally Integrated Power (TIPM) - Standard Procedure).

B221A-00-(HSM) HEATED SEAT MODULE INTERNAL

For a complete wiring diagram, **refer to the Wiring Information**.

- **When Monitored:**
  With the engine running.
- **Set Condition:**
  If the Heated Seat Module (HSM) detects an internal component failure.

Possible Causes
HEATED SEAT MODULE (HSM)

1. VERIFY DIAGNOSTIC TROUBLE CODE (DTC) IS ACTIVE

1. Turn the ignition on.
2. Using a scan tool, record and erase DTCs.
3. Turn the ignition off.
4. Start the engine and let it run.
5. Operate each of the heated and vented systems one at a time, as equipped.
6. Using a scan tool, read DTCs.

Is the DTC active?

Yes

- Replace the Heated Seat Module (HSM) in accordance with the Service Information.
- Perform the BODY VERIFICATION TEST. (Refer to 28 - DTC-Based Diagnostics/MODULE, Totally Integrated Power (TIPM) - Standard Procedure).

No

- The conditions that caused this code to set are not present at this time. Verify seat harness is routed correctly to the HSM. Using the wiring diagram/schematic as a guide, inspect the wiring and connectors. Look for chafed, pierced, pinched, or partially broken wires and broken, bent, pushed out, spread, corroded, or contaminated terminals. Attempt to reproduce condition by adjusting the seat.
- Perform the BODY VERIFICATION TEST. (Refer to 28 - DTC-Based Diagnostics/MODULE, Totally Integrated Power (TIPM) - Standard Procedure).

U0011-00-CAN B BUS PERFORMANCE

For a complete wiring diagram, **refer to the Wiring Information**.

- **When Monitored:**
  With the ignition on.
- **Set Condition:**
  The Heated Seat Module (HSM) detects that the (D265) CAN Interior Bus (125K)(+) circuit or (D264) CAN Interior Bus (125K)(-) circuit is shorted.

Possible Causes
(D265) CAN INTERIOR BUS (125K)(+) CIRCUIT SHORTED TO GROUND
(D264) CAN INTERIOR BUS (125K)(-) CIRCUIT SHORTED TO VOLTAGE
(D265) CAN INTERIOR BUS (125K)(+) CIRCUIT SHORTED TO THE (D264) CAN INTERIOR BUS (125K)(-) CIRCUIT
ANY CAN INTERIOR BUS MODULE
TOTALLY INTEGRATED POWER MODULE (TIPM)

This module will not be able to communicate when this fault is active and therefore will only display this DTC as stored. To diagnose this fault, use a scan tool and check for DTCs in the TIPM. If DTCs are active, (Refer to 28 - DTC-Based Diagnostics/MODULE, Totally Integrated Power (TIPM) - Diagnosis and Testing) and diagnose and repair the faults. If no DTCs are active, but there are stored Lost Communication DTCs set, (Refer to 29 - Non-DTC Diagnostics/Communication - Diagnosis and Testing) and diagnose and repair these faults. If no DTCs are set, perform BODY VERIFICATION TEST. (Refer to 28 - DTC-Based Diagnostics/MODULE, Totally Integrated Power (TIPM) - Standard Procedure).

U0141-00-LOST COMMUNICATION WITH IPM (FCM/TIPM)

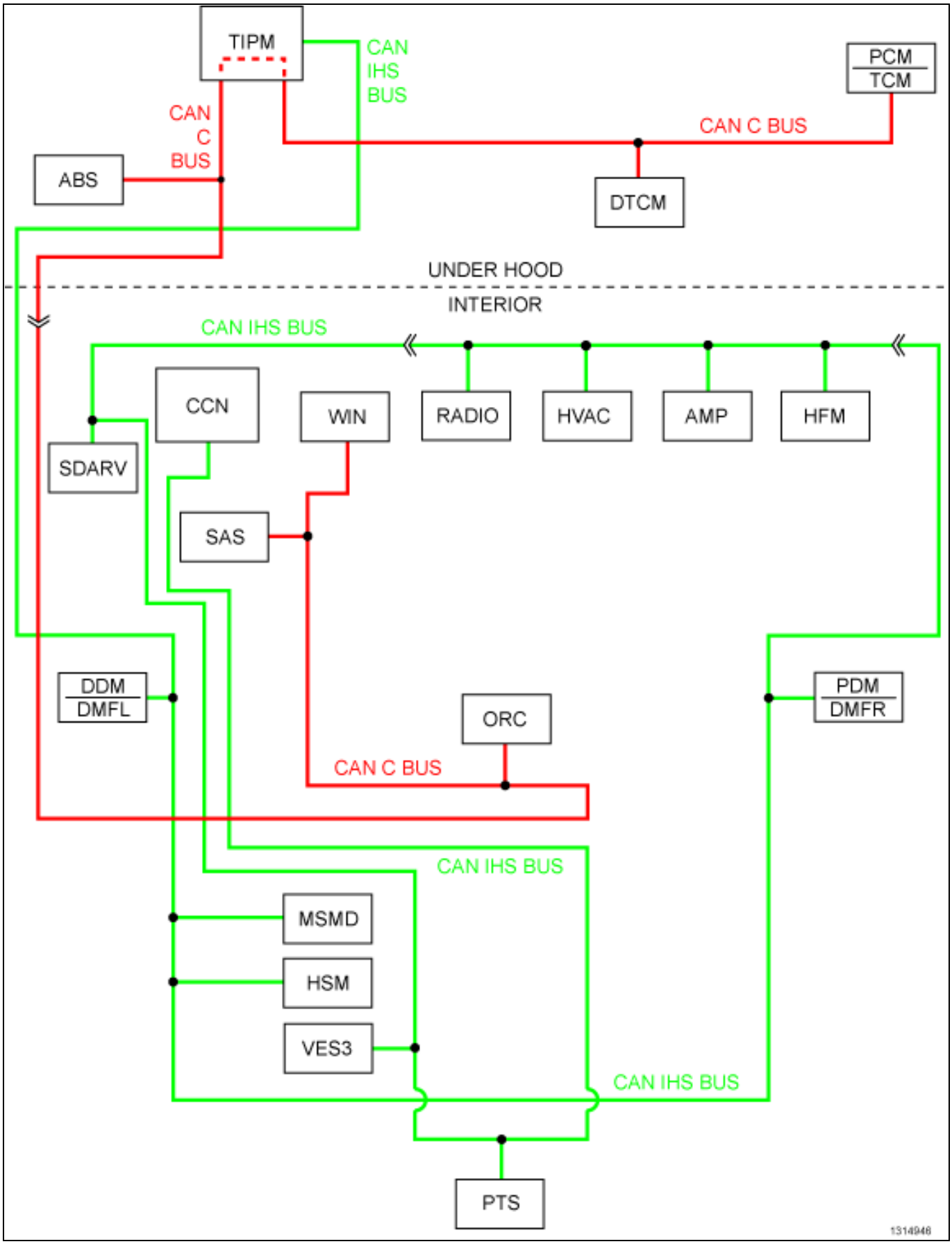

For a complete wiring diagram, **refer to the Wiring Information**.

- **When Monitored:**
  With the ignition on.
  Battery Voltage between 10 and 16 Volts.
  Ignition Off Draw (IOD) fuse installed.
  Totally Integrated Power Module (TIPM) is configured correctly.
- **Set Condition:**
  Bus messages not received from the TIPM for approximately two to five seconds.

Possible Causes
DIAGNOSTIC CAN C BUS CIRCUITS OPEN OR SHORTED
CAN INTERIOR BUS (125K) CIRCUITS OPEN OR SHORTED
DIAGNOSTIC TROUBLE CODES (DTCs) RELATED TO BATTERY VOLTAGE, IGNITION, OR VIN MESSAGES PRESENT
TIPM NOT CONFIGURED CORRECTLY
TIPM POWER AND GROUND
TOTALLY INTEGRATED POWER MODULE (TIPM)
HEATED SEAT MODULE (HSM)

1. VERIFY DIAGNOSTIC TROUBLE CODE (DTC) IS ACTIVE

NOTE: Make sure the IOD fuse is installed and battery Voltage is between 10 and 16 Volts before proceeding.

1. Turn the ignition on.
2. Using a scan tool, read DTCs.

Is the DTC active?

Yes

- Go To 2

No

- **(Refer to 29 - Non-DTC Diagnostics/Communication - Diagnosis and Testing)** and perform the Stored Lost Communication DTCs diagnostic procedure.

2. VERIFY TIPM IS COMMUNICATING WITH OTHER MODULES

1. Using a scan tool, read DTCs in all modules.

Is any other module reporting a loss of communication with the TIPM?

Yes

- **(Refer to 29 - Non-DTC Diagnostics/Communication - Diagnosis and Testing)** and perform the No Response from TIPM diagnostic procedure.

No

- Replace the Heated Seat Module (HSM) in accordance with the Service Information.
- Perform the BODY VERIFICATION TEST. (Refer to 28 - DTC-Based Diagnostics/MODULE, Totally Integrated Power (TIPM) - Standard Procedure).

U0155-00-LOST COMMUNICATION WITH CLUSTER/CCN

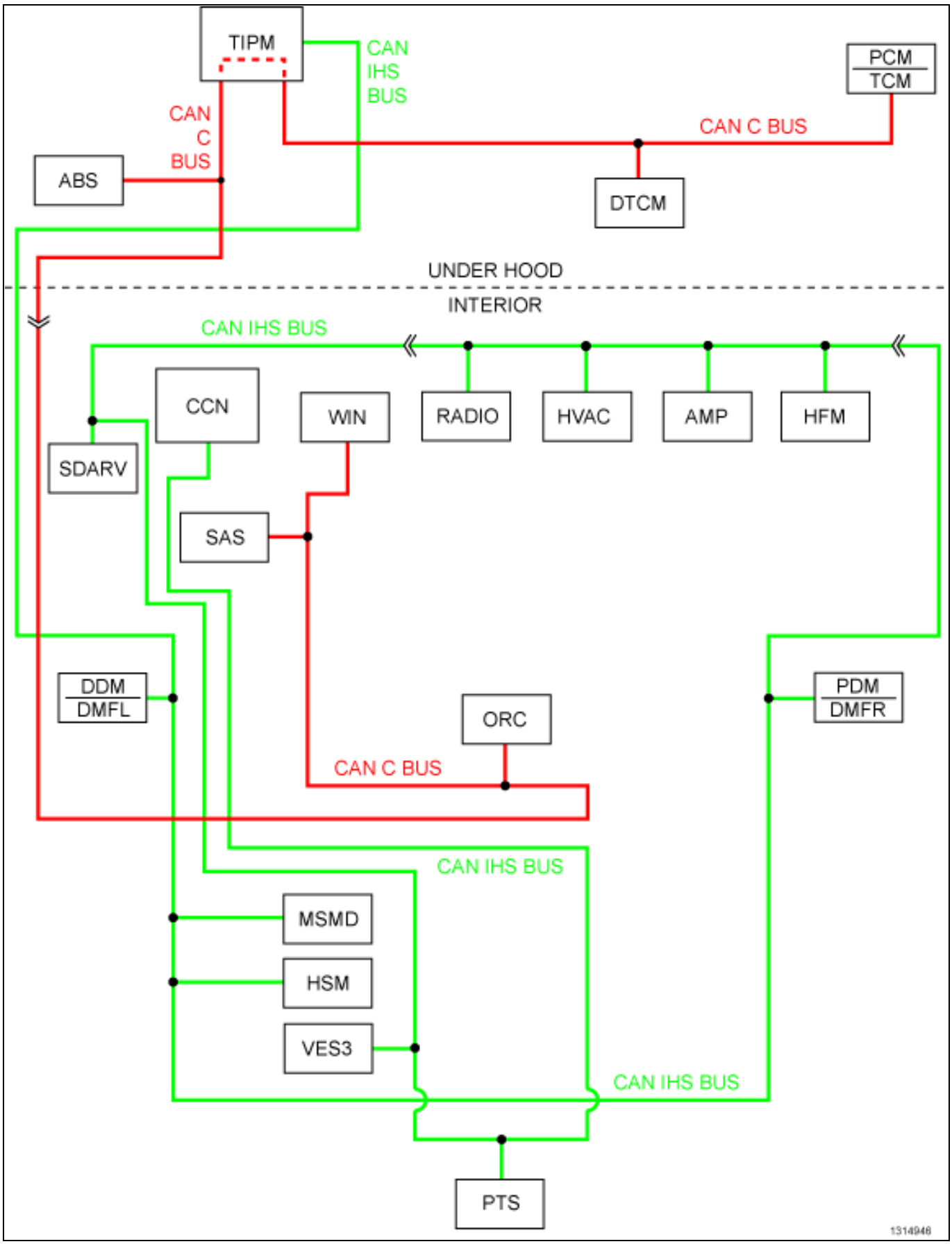

For a complete wiring diagram, **refer to the Wiring Information**.

- **When Monitored:**
  With the ignition on.
  Battery Voltage between 10 and 16 Volts.
  Ignition Off Draw (IOD) fuse installed.
  Totally Integrated Power Module (TIPM) is configured correctly.
- **Set Condition:**
  Bus messages not received from the Cluster (CCN) for approximately two to five seconds.

Possible Causes
DIAGNOSTIC CAN C BUS CIRCUITS OPEN OR SHORTED
CAN INTERIOR BUS (125K) CIRCUITS OPEN OR SHORTED
DIAGNOSTIC TROUBLE CODES (DTCs) RELATED TO BATTERY VOLTAGE, IGNITION, OR VIN MESSAGES PRESENT
TIPM NOT CONFIGURED CORRECTLY
CCN POWER AND GROUND
CCN
HEATED SEAT MODULE (HSM)

1. VERIFY DIAGNOSTIC TROUBLE CODE (DTC) IS ACTIVE

NOTE: Make sure the IOD fuse is installed and battery Voltage is between 10 and 16 Volts before proceeding.

1. Turn the ignition on.
2. Using a scan tool, read DTCs.

Is the DTC active?

Yes

- Go To 2

No

- **(Refer to 29 - Non-DTC Diagnostics/Communication - Diagnosis and Testing)** and perform the Stored Lost Communication DTCs diagnostic procedure.

2. VERIFY CCN IS COMMUNICATING WITH OTHER MODULES

1. Using a scan tool, read DTCs in all modules.

Is any other module reporting a loss of communication with the CCN?

Yes

- **(Refer to 29 - Non-DTC Diagnostics/Communication - Diagnosis and Testing)** and perform the No Response from CCN diagnostic procedure.

No

- Replace the Heated Seat Module (HSM) in accordance with the Service Information.
- Perform the BODY VERIFICATION TEST. (Refer to 28 - DTC-Based Diagnostics/MODULE, Totally Integrated Power (TIPM) - Standard Procedure).

■ U1446-00-IMPLAUSIBLE HEATED STEERING WHEEL TEMPERATURE MESSAGE RECEIVED (CCN)

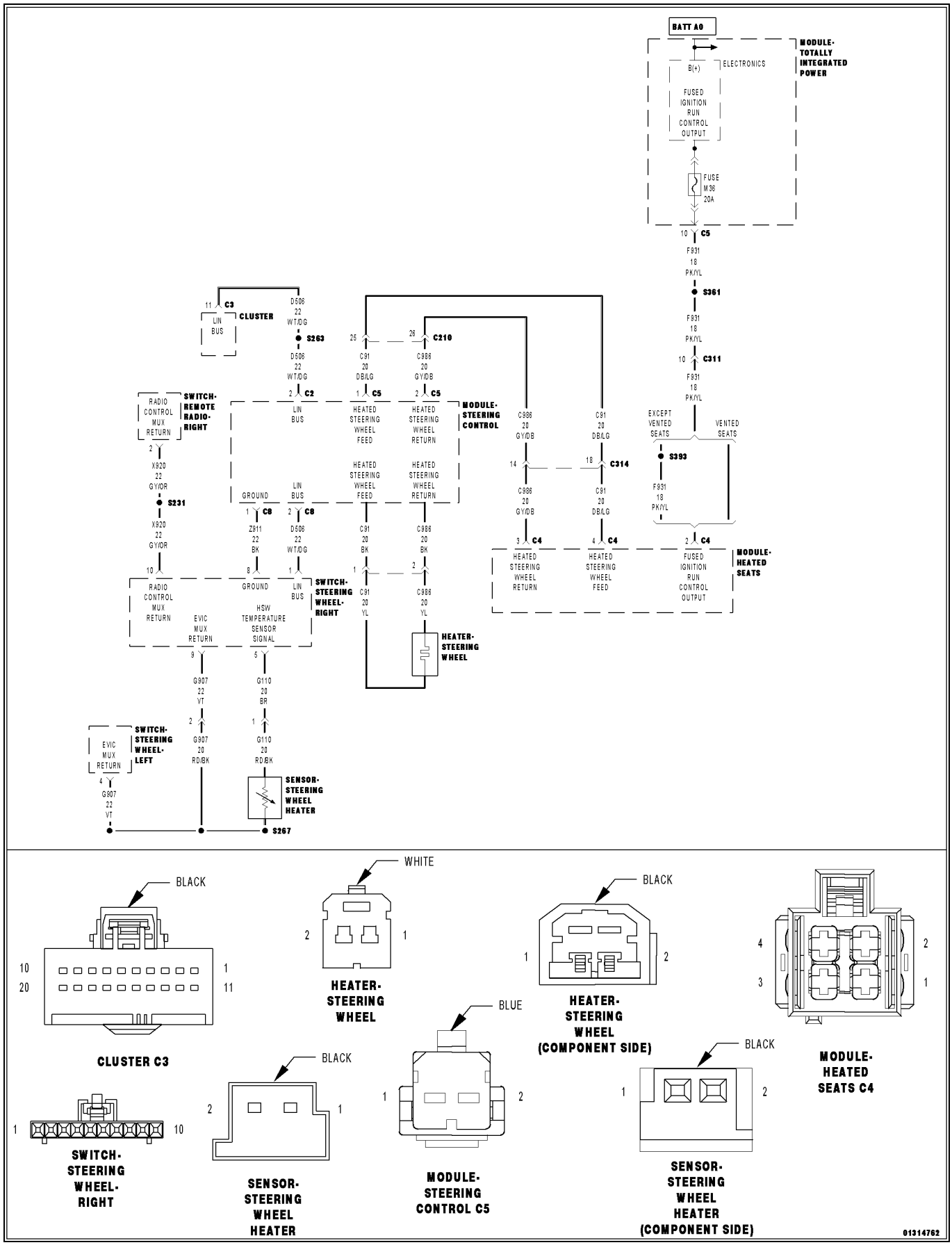

For a complete wiring diagram, **refer to the Wiring Information**.

Theory of Operation

The Heated Steering Wheel (HSW) Temperature Sensor is connected to the Right Steering Switch. The sensor data is transferred from the Right Steering Switch to the Cluster (CCN) by way of the LIN bus, a serial sub-bus.

- **When Monitored:**
  With the engine running.
- **Set Condition:**
  The Heated Seat Module (HSM) does not receive the Heated Steering Wheel (HSW) Temperature Sensor Fault Signal from the Cluster (CCN) for more than two seconds.

Possible Causes
(G110) HSW TEMPERATURE SENSOR SIGNAL CIRCUIT OPEN
(G110) HSW TEMPERATURE SENSOR SIGNAL CIRCUIT SHORTED TO GROUND
(G110) HSW TEMPERATURE SENSOR SIGNAL CIRCUIT SHORTED TO THE (G902) SWITCH MUX RETURN CIRCUIT
(G110) HSW TEMPERATURE SENSOR SIGNAL CIRCUIT SHORTED TO THE (G907) EVIC MUX RETURN CIRCUIT
(G110) HSW TEMPERATURE SENSOR SIGNAL CIRCUIT SHORTED TO THE (Z911) GROUND CIRCUIT
(G907) EVIC MUX RETURN CIRCUIT OPEN
HEATED STEERING WHEEL (HSW) TEMPERATURE SENSOR
RIGHT STEERING WHEEL SWITCH
STEERING CONTROL MODULE (SCM)

1. TEST FOR INTERMITTENT CONDITION

NOTE: Diagnose and repair all active Bus related Diagnostic Trouble Codes (DTCs) including Lost Communication DTCs before diagnosing this DTC.

1. Turn the ignition on.
2. Using a scan tool, record and erase DTCs.
3. Turn the ignition off.
4. Start the engine and let it run.
5. Using a scan tool, read DTCs.

Is the DTC active?

Yes

- Go To 2

No

- The conditions that caused this code to set are not present at this time. Using the wiring diagram/schematic as a guide, inspect the wiring and connectors. Look for chafed, pierced, pinched, or partially broken wires and broken, bent, pushed out, spread, corroded, or contaminated terminals. Attempt to reproduce condition by rotating the steering wheel.
- Perform the BODY VERIFICATION TEST. (Refer to 28 - DTC-Based Diagnostics/MODULE, Totally Integrated Power (TIPM) - Standard Procedure).

2. CHECK FOR AN OPEN OR SHORTED HSW TEMPERATURE SENSOR

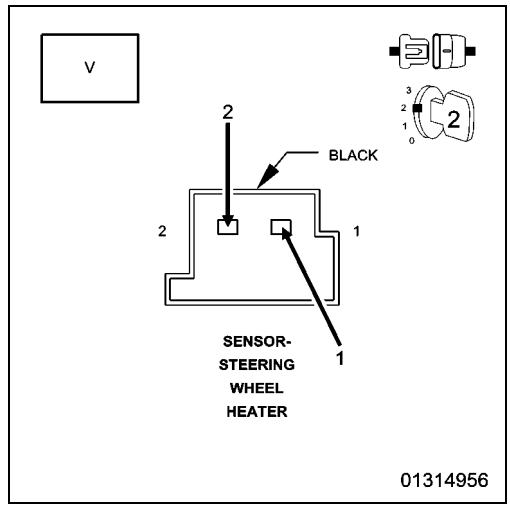

WARNING: Turn the ignition off, disconnect the 12-volt battery and wait two minutes before proceeding. Failure to follow these instructions may result in possible serious or fatal injury.

1. Remove the Driver Airbag in accordance with the Service Information.
2. Disconnect the Steering Wheel Heater Sensor connector.

NOTE: Before proceeding, thoroughly inspect the wiring harness and connectors between the HSW and the Right Steering Wheel Switch. Look for chafed, pierced, pinched, or partially broken wires and broken, bent, pushed out, spread, corroded, or contaminated terminals.

WARNING: Turn the ignition on, then reconnect the 12-volt battery and wait two minutes before proceeding. Failure to follow these instructions may result in possible serious or fatal injury.

3. Measure the Voltage between the (G110) HSW Temperature Sensor Signal circuit and the (G907) EVIC MUX Return circuit at the Steering Wheel Heater Sensor connector.

Is the Voltage above 3.5-volts?

Yes

- Replace the Heated Steering Wheel (HSW) in accordance with the Service Information.
- Perform the BODY VERIFICATION TEST. (Refer to 28 - DTC-Based Diagnostics/MODULE, Totally Integrated Power (TIPM) - Standard Procedure).

No

- Go To 3

3. CHECK (G110) HSW TEMPERATURE SENSOR SIGNAL CIRCUIT FOR AN OPEN

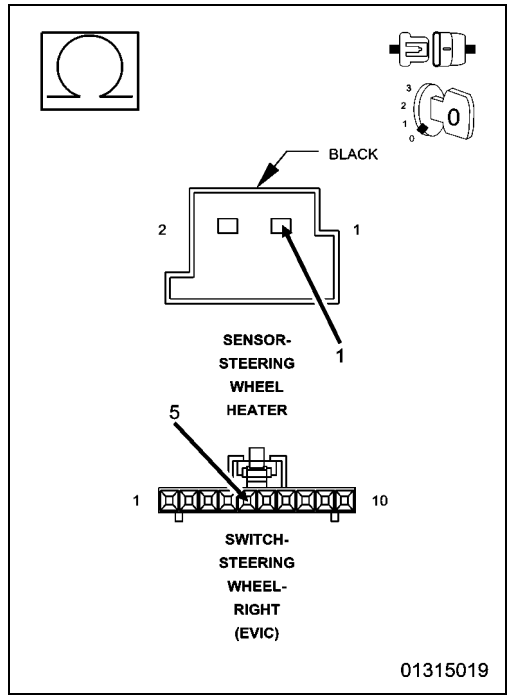

1. Turn the ignition off.
2. Disconnect the Right Steering Wheel Switch connector.

NOTE: Check connectors. Clean and repair as necessary.

3. Measure the resistance of the (G110) HSW Temperature Sensor Signal circuit between the Steering Wheel Heater Sensor connector and the Right Steering Wheel Switch connector.

Is the resistance below 5.0 Ohms?

Yes

- Go To 4

Yes

- Repair the (G110) HSW Temperature Sensor Signal circuit for an open.
- Perform the BODY VERIFICATION TEST. (Refer to 28 - DTC-Based Diagnostics/MODULE, Totally Integrated Power (TIPM) - Standard Procedure).

4. CHECK (G110) HSW TEMPERATURE SENSOR SIGNAL CIRCUIT FOR A SHORT TO GROUND

1. Measure the resistance of the (G110) HSW Temperature Sensor Signal circuit between ground and the Right Steering Wheel Switch connector.

Is the resistance below 10K Ohms?

Yes

- Repair the (G110) HSW Temperature Sensor Signal circuit for a short to ground.
- Perform the BODY VERIFICATION TEST. (Refer to 28 - DTC-Based Diagnostics/MODULE, Totally Integrated Power (TIPM) - Standard Procedure).

No

- Go To 5

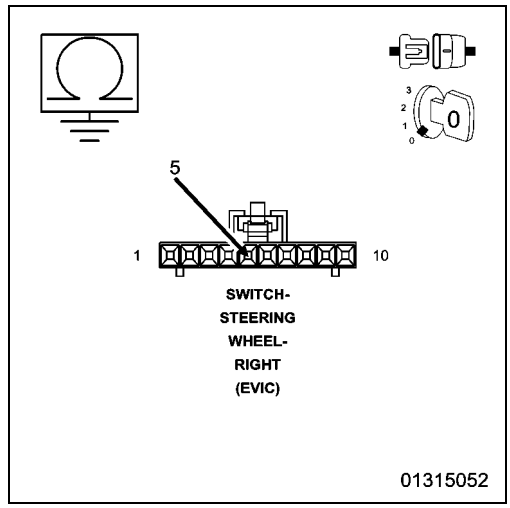

5. CHECK (G110) HSW TEMPERATURE SENSOR SIGNAL CIRCUIT FOR A SHORT TO (G902) SWITCH MUX RETURN CIRCUIT, (G907) EVIC MUX RETURN CIRCUIT, AND (Z911) GROUND CIRCUIT

1. Measure the resistance between the (G110) HSW Temperature Sensor Signal circuit and the (G902) Switch MUX Return circuit at the Right Steering Wheel Switch connector.
2. Measure the resistance between the (G110) HSW Temperature Sensor Signal circuit and the (G907) EVIC MUX Return circuit at the Right Steering Wheel Switch connector.
3. Measure the resistance between the (G110) HSW Temperature Sensor Signal circuit and the (Z911) Ground circuit at the Right Steering Wheel Switch connector.

Is the resistance below 10K Ohms between the (G110) HSW Temperature Sensor Signal circuit and any of the other circuits?

Yes

- Repair all circuits with a resistance below 10K Ohms for a short to the (G110) HSW Temperature Sensor Signal circuit.
- Perform the BODY VERIFICATION TEST. (Refer to 28 - DTC-Based Diagnostics/MODULE, Totally Integrated Power (TIPM) - Standard Procedure).

No

- Go To 6

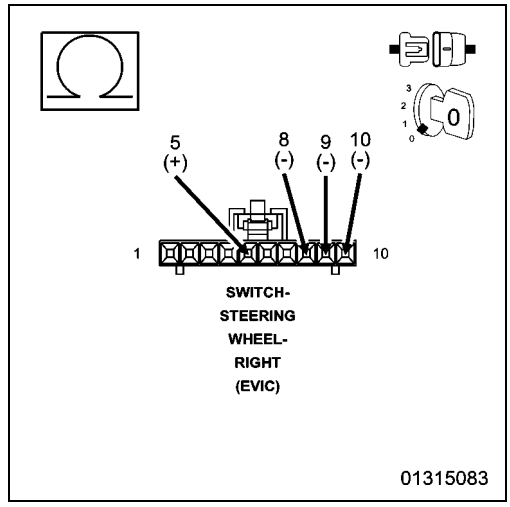

6. CHECK (G907) EVIC MUX RETURN CIRCUIT FOR AN OPEN

1. Measure the resistance of the (G907) EVIC MUX Return circuit between the Steering Wheel Heater Sensor connector and the Right Steering Wheel Switch connector.

Is the resistance below 5.0 Ohms?

Yes

- Go To 7

No

- Repair the (G907) EVIC MUX Return circuit for an open.
- Perform the BODY VERIFICATION TEST. (Refer to 28 - DTC-Based Diagnostics/MODULE, Totally Integrated Power (TIPM) - Standard Procedure).

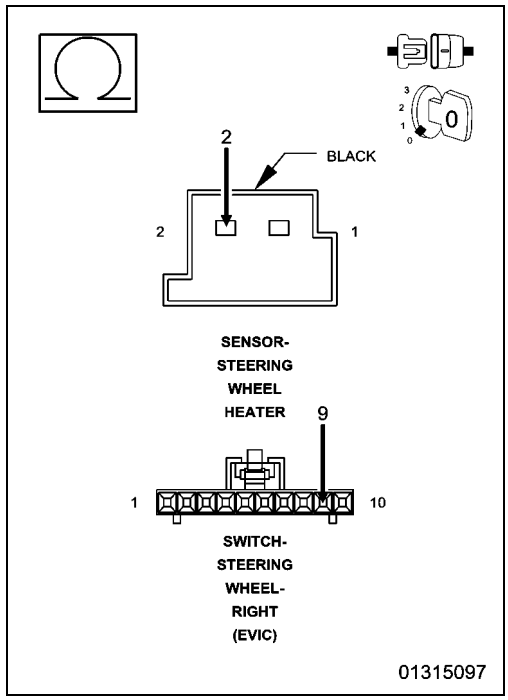

7. CHECK FOR AN OPEN OR SHORTED RIGHT STEERING WHEEL SWITCH

1. Replace the Right Steering Wheel Switch in accordance with the Service Information.
2. Reconnect the Steering Wheel Heater Sensor connector.
3. Turn the ignition on.
4. Using a scan tool, erase DTCs.
5. Turn the ignition off.
6. Start the engine and let it run.
7. Using a scan tool, read DTCs.

Is the DTC active?

Yes

- Replace the Steering Control Module (SCM) in accordance with the Service Information.
- Perform the BODY VERIFICATION TEST. (Refer to 28 - DTC-Based Diagnostics/MODULE, Totally Integrated Power (TIPM) - Standard Procedure).

No

- Test complete.
- Perform the BODY VERIFICATION TEST. (Refer to 28 - DTC-Based Diagnostics/MODULE, Totally Integrated Power (TIPM) - Standard Procedure).

MODULE, Memory Seat (MSMD)

Diagnosis and Testing

■ B1D56-ADJUSTABLE PEDAL SENSOR CIRCUIT LOW

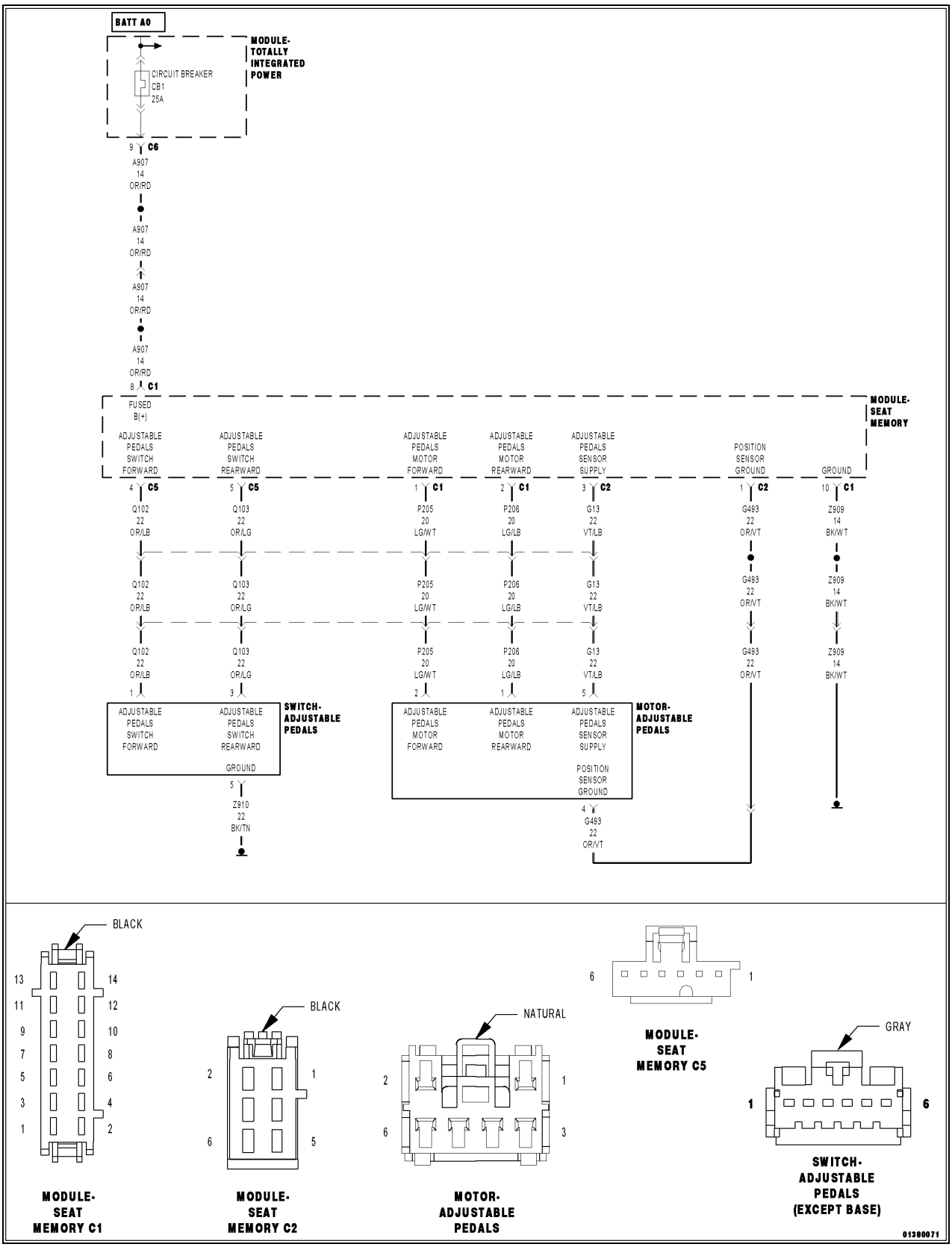

For a complete wiring diagram, **refer to the Wiring Information**.

- **When Monitored:**

  Continuously.

- **Set Condition:**

  The Voltage on the (G13) Adjustable Pedals Sensor Supply circuit is not within a specified range. The Memory Seat Module (MSM) will not be able to detect pedal position. When the Adjustable Pedals switch is pressed, the pedals will move for approximately two seconds then the module turns off the output.

Possible Causes
(G13) ADJUSTABLE PEDALS SENSOR SUPPLY CIRCUIT SHORTED TO GROUND
(G13) ADJUSTABLE PEDALS SENSOR SUPPLY CIRCUIT SHORTED TO THE (G493) POSITION SENSOR GROUND CIRCUIT
(G13) ADJUSTABLE PEDALS SENSOR SUPPLY CIRCUIT SHORTED TO THE (P205) ADJUSTABLE PEDALS MOTOR FORWARD CIRCUIT
(G13) ADJUSTABLE PEDALS SENSOR SUPPLY CIRCUIT SHORTED TO THE (P206) ADJUSTABLE PEDALS MOTOR REARWARD CIRCUIT
ADJUSTABLE PEDALS SENSOR
MEMORY SEAT MODULE (MSM)

1. CHECK FOR ACTIVE FAULT WITH PEDALS STATIONARY

1. Turn the ignition on.
2. Using a scan tool, record and erase DTCs.
3. Cycle the ignition from on to off.
4. Turn the ignition on.
5. Using a scan tool, read DTCs.

Does the scan tool display DTC B1D56-ADJUSTABLE PEDAL SENSOR CIRCUIT LOW?

Yes

- Go To 3

No

- Go To 2

2. CHECK FOR ACTIVE FAULT WHILE ADJUSTING THE PEDALS

1. Operate the Adjustable Pedals switch in both positions then wait five seconds.
2. Using a scan tool, read DTCs.

Does the scan tool display DTC B1D56-ADJUSTABLE PEDAL SENSOR CIRCUIT LOW?

Yes

- Go To 3

No

- The conditions that caused this code to set are not present at this time. Perform the APS INTERMITTENT CONDITION TEST. (Refer to 28 - DTC-Based Diagnostics/MODULE, Memory Seat (MSMD) - Standard Procedure).

3. CHECK THE (G13) ADJUSTABLE PEDALS SENSOR SUPPLY CIRCUIT FOR A SHORT TO GROUND

1. Turn the ignition off.
2. Disconnect the MSM C2 harness connector.
3. Disconnect the Adjustable Pedals Motor harness connector.

NOTE: Check connectors. Clean and repair as necessary.

4. Measure the resistance of the (G13) Adjustable Pedals Sensor Supply circuit between ground and the Adjustable Pedals Motor harness connector.

Is the resistance below 10K Ohms?

Yes

- Repair the (G13) Adjustable Pedals Sensor Supply circuit for a short to ground.
- Perform APS VERIFICATION TEST. (Refer to 28 - DTC-Based Diagnostics/MODULE, Memory Seat (MSMD) - Standard Procedure).

No

- Go To 4

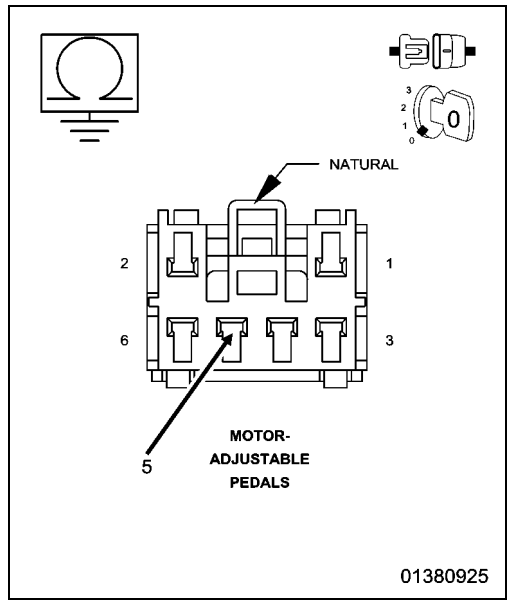

4. CHECK THE (G13) ADJUSTABLE PEDALS SENSOR SUPPLY CIRCUIT FOR A SHORT TO THE (G493) POSITION SENSOR GROUND CIRCUIT, THE (P205) ADJUSTABLE PEDALS MOTOR FORWARD CIRCUIT, OR THE (P206) ADJUSTABLE PEDALS MOTOR REARWARD CIRCUIT

1. Measure the resistance between the (G13) Adjustable Pedals Sensor Supply circuit and the (G493) Position Sensor Ground circuit at the Adjustable Pedals Motor harness connector.
2. Measure the resistance between the (G13) Adjustable Pedals Sensor Supply circuit and the (P205) Adjustable Pedals Motor Forward circuit at the Adjustable Pedals Motor harness connector.
3. Measure the resistance between the (G13) Adjustable Pedals Sensor Supply circuit and the (P206) Adjustable Pedals Motor Rearward circuit at the Adjustable Pedals Motor harness connector.

Is the resistance below 10K Ohms for any measurement?

Yes

- Repair all circuits with a resistance below 10K Ohms for a short to the (G13) Adjustable Pedals Sensor Supply circuit.
- Perform the APS VERIFICATION TEST. (Refer to 28 - DTC-Based Diagnostics/MODULE, Memory Seat (MSMD) - Standard Procedure).

No

- Go To 5

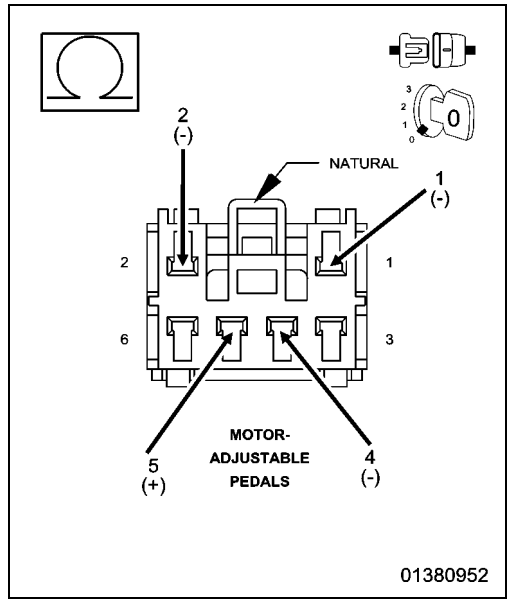

5. CHECK THE (G13) ADJUSTABLE PEDALS SENSOR SUPPLY AND (G493) POSITION SENSOR GROUND CIRCUIT FUNCTION

1. Reconnect the MSM C2 harness connector.
2. Disconnect the scan tool.
3. Turn off all vehicle interior and exterior lighting.
4. Mark sure all doors are closed then wait 10 seconds.
5. Connect a 12-Volt test light between the (G13) Adjustable Pedals Sensor Supply circuit and the (G493) Position Sensor Ground circuit at the Adjustable Pedals Motor harness connector.
6. While monitoring the test light, press the Adjustable Pedals switch in either direction then release the switch.

Does the test light illuminate for approximately six seconds then turn off?

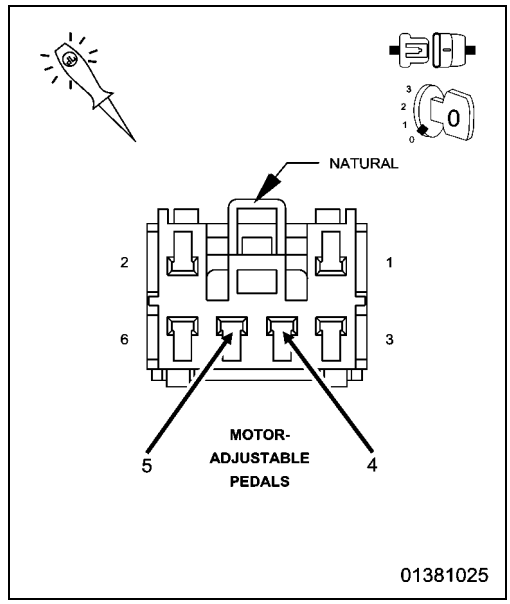

Yes

- Replace the Adjustable Pedals Sensor in accordance with the Service Information.
- Perform the APS VERIFICATION TEST. (Refer to 28 - DTC-Based Diagnostics/MODULE, Memory Seat (MSMD) - Standard Procedure).

No

- Replace the Memory Seat Module (MSM) in accordance with the Service Information.
- Perform the APS VERIFICATION TEST. (Refer to 28 - DTC-Based Diagnostics/MODULE, Memory Seat (MSMD) - Standard Procedure).

B1D57-ADJUSTABLE PEDAL SENSOR CIRCUIT HIGH

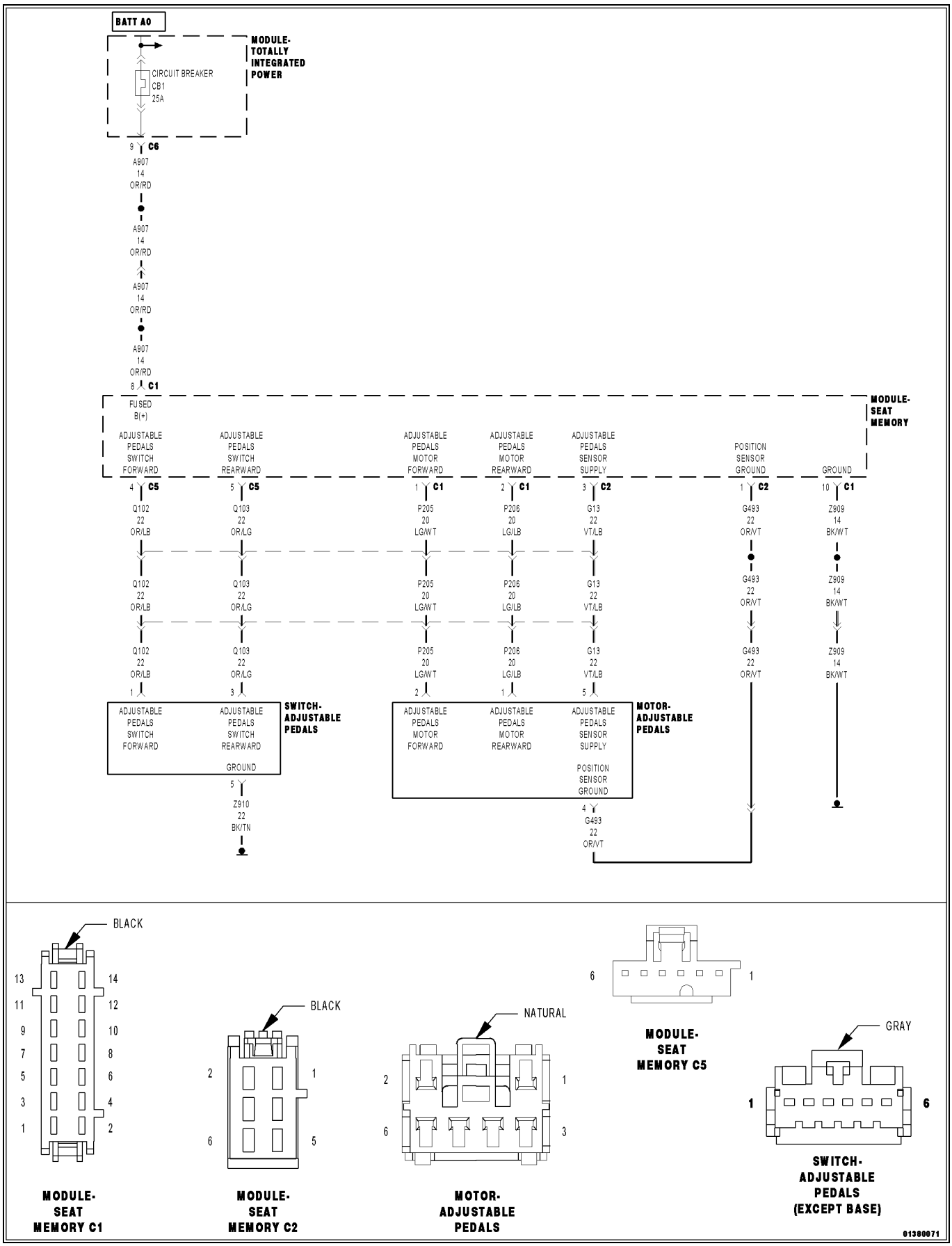

For a complete wiring diagram, **refer to the Wiring Information**.

- **When Monitored:**

  Continuously.

- **Set Condition:**

  If Voltage on the (G13) Adjustable Pedals Sensor Supply circuit is not within a specified range. The Memory Seat Module (MSM) will not be able to detect pedal position. When the Adjustable Pedals switch is pressed, the pedals will move for approximately two seconds then the module turns off the output.

Possible Causes
(G13) ADJUSTABLE PEDALS SENSOR SUPPLY CIRCUIT SHORTED TO VOLTAGE
(G13) ADJUSTABLE PEDALS SENSOR SUPPLY CIRCUIT SHORTED TO THE (P205) ADJUSTABLE PEDALS MOTOR FORWARD CIRCUIT
(G13) ADJUSTABLE PEDALS SENSOR SUPPLY CIRCUIT SHORTED TO THE (P206) ADJUSTABLE PEDALS MOTOR REARWARD CIRCUIT
(G13) ADJUSTABLE PEDALS SENSOR SUPPLY CIRCUIT OPEN
(G493) POSITION SENSOR GROUND CIRCUIT OPEN
ADJUSTABLE PEDALS SENSOR
MEMORY SEAT MODULE (MSM)

1. TEST FOR INTERMITTENT CONDITION

1. Turn the ignition on.
2. Using a scan tool, record and erase DTCs.
3. Cycle the ignition from on to off.
4. Turn the ignition on.
5. Operate the Adjustable Pedals switch in both positions then wait five seconds.
6. Using a scan tool read DTCs.

Does the scan tool display DTC B1D57-ADJUSTABLE PEDAL SENSOR CIRCUIT HIGH?

Yes

- Go To 2

No

- The conditions that caused this code to set are not present at this time. Perform the APS INTERMITTENT CONDITION TEST. (Refer to 28 - DTC-Based Diagnostics/MODULE, Memory Seat (MSMD) - Standard Procedure).

2. CHECK THE (G13) ADJUSTABLE PEDALS SENSOR SUPPLY CIRCUIT FOR A SHORT TO VOLTAGE

1. Turn the ignition off.
2. Disconnect the Adjustable Pedals Motor harness connector.
3. Disconnect the MSM C2 harness connector.

NOTE: Check connectors. Clean and repair as necessary.

4. Turn the ignition on.
5. Measure the Voltage of the (G13) Adjustable Pedals Sensor Supply circuit between the Adjustable Pedals Motor harness connector and ground.

Is there any Voltage present?

Yes

- Repair the (G13) Adjustable Pedals Sensor Supply circuit for a short to Voltage.
- Perform the APS VERIFICATION TEST. (Refer to 28 - DTC-Based Diagnostics/MODULE, Memory Seat (MSMD) - Standard Procedure).

No

- Go To 3

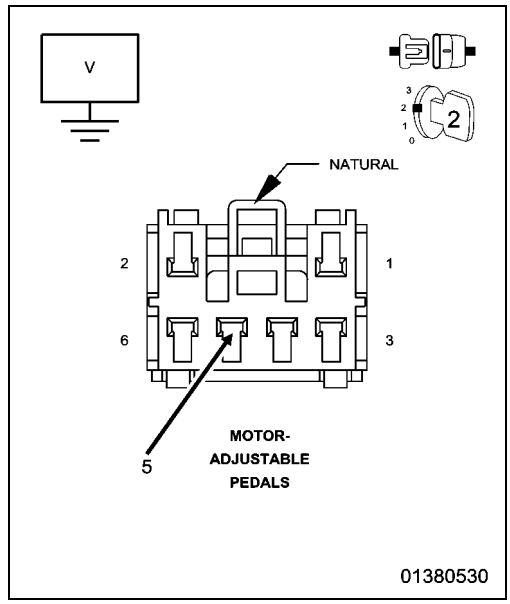

3. CHECK THE (G13) ADJUSTABLE PEDALS SENSOR SUPPLY CIRCUIT FOR A SHORT TO THE (P205) ADJUSTABLE PEDALS MOTOR FORWARD CIRCUIT OR THE (P206) ADJUSTABLE PEDALS MOTOR REARWARD CIRCUIT

1. Turn the ignition off.
2. Disconnect the MSM C1 harness connector.

NOTE: Check connectors. Clean and repair as necessary.

3. Measure the resistance between the (G13) Adjustable Pedals Sensor Supply circuit and the (P205) Adjustable Pedals Motor Forward circuit at the Adjustable Pedals Motor harness connector.
4. Measure the resistance between the (G13) Adjustable Pedals Sensor Supply circuit and the (P206) Adjustable Pedals Motor Rearward circuit at the Adjustable Pedals Motor harness connector.

Is the resistance below 10K Ohms for either measurement?

Yes

- Repair all circuits with a resistance below 10K Ohms for a short to the (G13) Adjustable Pedals Sensor Supply circuit.
- Perform the APS VERIFICATION TEST. (Refer to 28 - DTC-Based Diagnostics/MODULE, Memory Seat (MSMD) - Standard Procedure).

No

- Go To 4

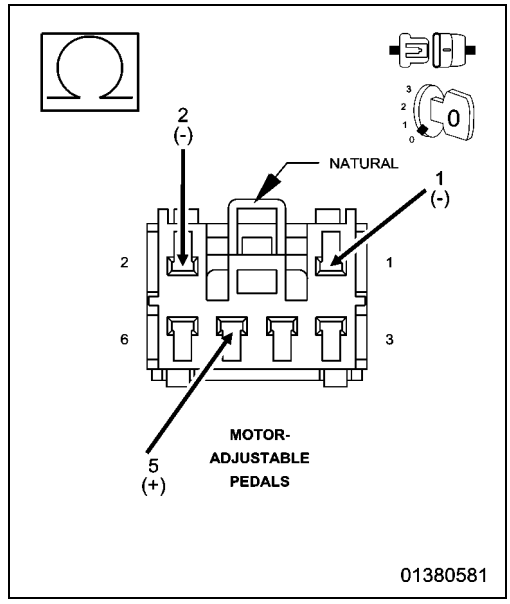

4. CHECK THE (G13) ADJUSTABLE PEDALS SENSOR SUPPLY CIRCUIT FOR AN OPEN

1. Measure the resistance of the (G13) Adjustable Pedals Sensor Supply circuit between the MSM C2 connector and the Adjustable Pedals Motor harness connector.

Is the resistance below 5.0 Ohms?

Yes

- Go To 5

No

- Repair the (G13) Adjustable Pedals Sensor Supply circuit for an open.
- Perform the APS VERIFICATION TEST. (Refer to 28 - DTC-Based Diagnostics/MODULE, Memory Seat (MSMD) - Standard Procedure).

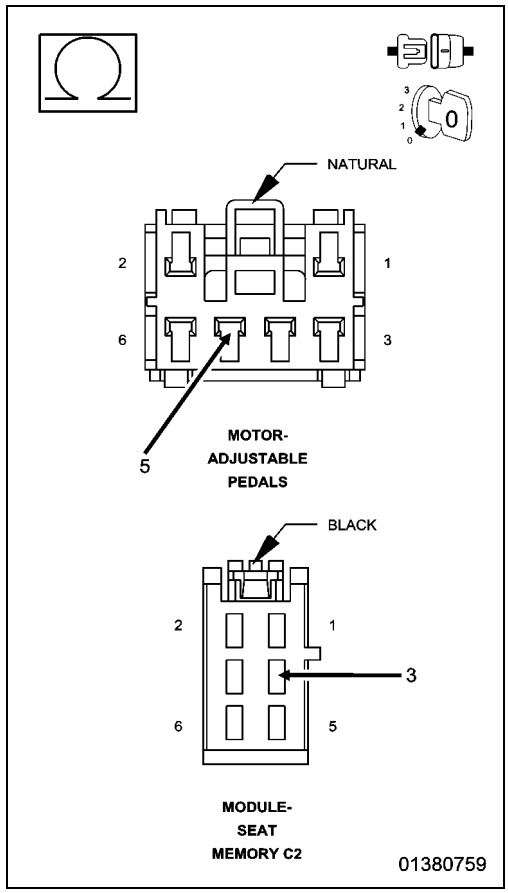

5. CHECK THE (G493) POSITION SENSOR GROUND CIRCUIT FOR AN OPEN

1. Measure the resistance of the (G493) Position Sensor Ground circuit between the MSM C2 connector and the Adjustable Pedals Motor harness connector.

Is the resistance below 5.0 Ohms?

Yes

- Go To 6

No

- Repair the (G493) Position Sensor Ground circuit for an open.
- Perform the APS VERIFICATION TEST. (Refer to 28 - DTC-Based Diagnostics/MODULE, Memory Seat (MSMD) - Standard Procedure).

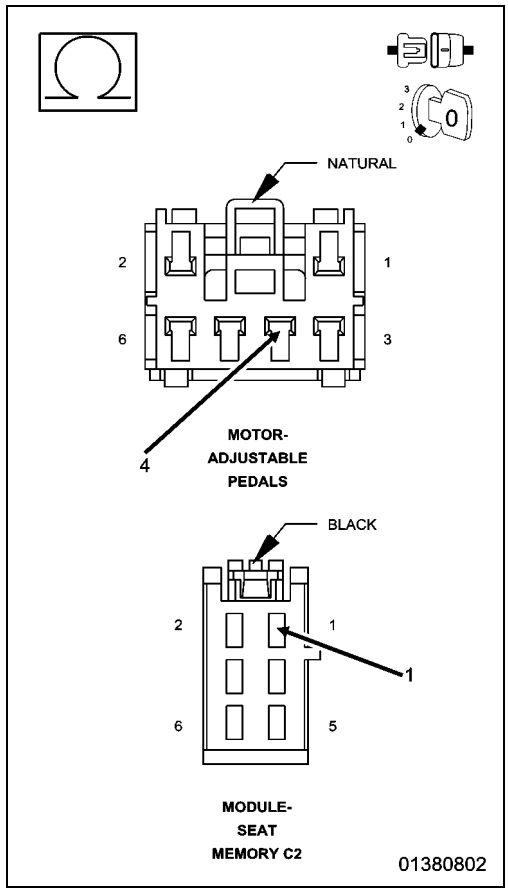

6. CHECK THE (G13) ADJUSTABLE PEDALS SENSOR SUPPLY CIRCUIT FUNCTION

1. Reconnect the MSM C1 harness connector.
2. Reconnect the MSM C2 harness connector.
3. Disconnect the scan tool.
4. Turn off all vehicle interior and exterior lighting.
5. Mark sure all doors are closed then wait 10 seconds.
6. Connect the positive lead of a voltmeter to the (G13) Adjustable Pedals Sensor Supply circuit and the negative lead to the (G493) Position Sensor Ground circuit at the Adjustable Pedals Motor harness connector.
7. While monitoring the voltmeter, press the Adjustable Pedals switch in either direction then release the switch.

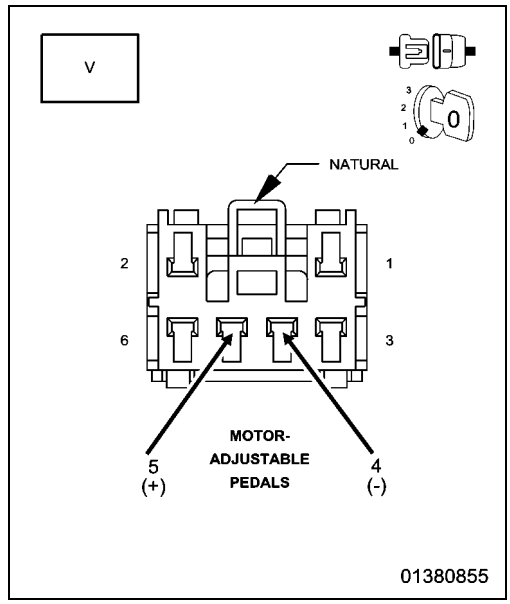

Does the Voltage drop to 0 Volts after approximately 6 second?

Yes

- Replace the Adjustable Pedals Sensor in accordance with the Service Information.
- Perform the APS VERIFICATION TEST. (Refer to 28 - DTC-Based Diagnostics/MODULE, Memory Seat (MSMD) - Standard Procedure).

No

- Check the (G13) Adjustable Pedals Sensor Supply circuit for a short to Voltage from another circuit and repair as necessary. If circuit is okay, replace the Memory Seat Module (MSM) in accordance with the Service Information.
- Perform the APS VERIFICATION TEST. (Refer to 28 - DTC-Based Diagnostics/MODULE, Memory Seat (MSMD) - Standard Procedure).

B1D5B-ADJUSTABLE PEDAL SWITCH CIRCUIT PERFORMANCE

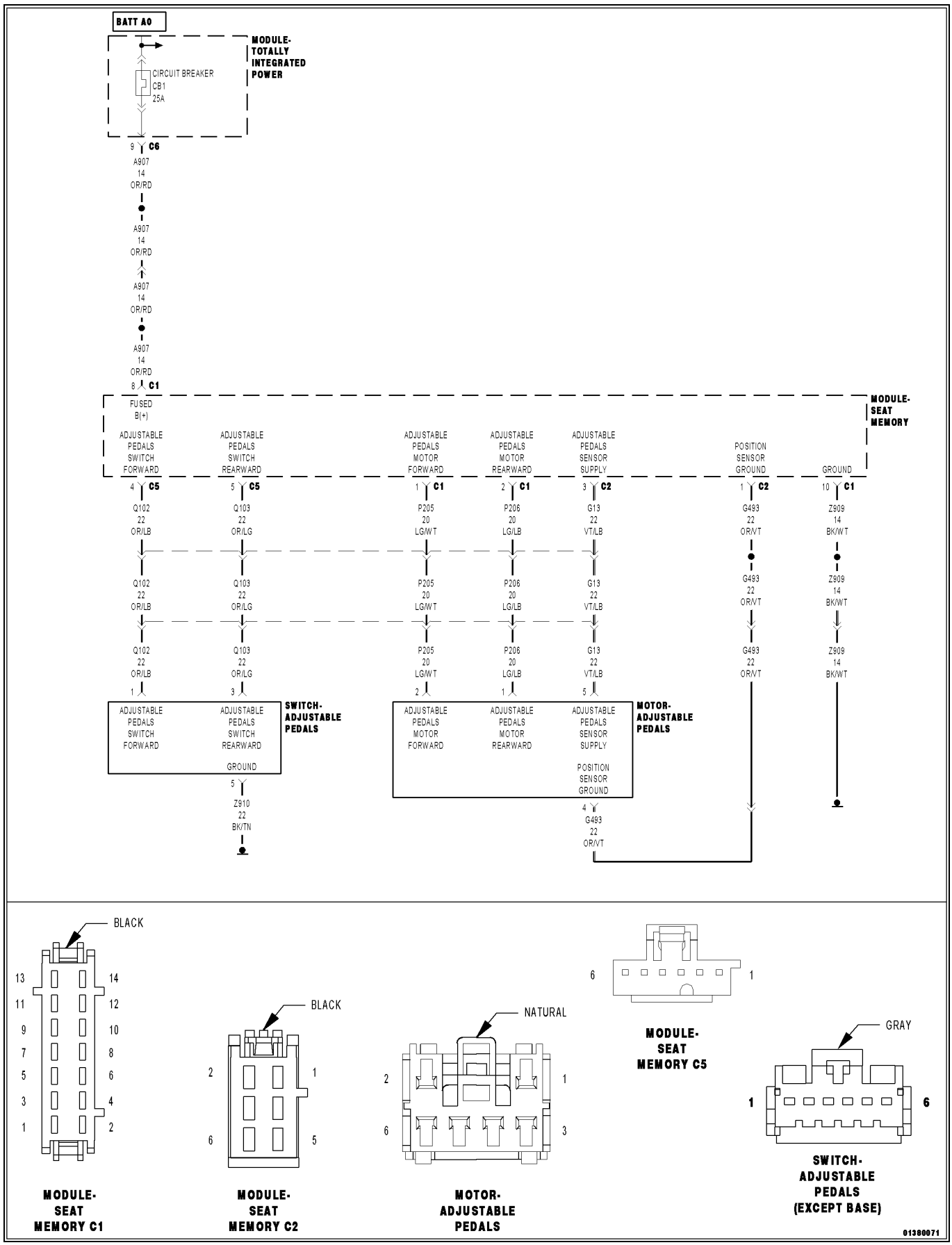

For a complete wiring diagram, **refer to the Wiring Information**.

- **When Monitored:**
  Continuously.
- **Set Condition:**
  The Memory Seat Module (MSM) receives a conflicting input from the Adjustable Pedals switch following an Adjustable Pedals switch activation.

Possible Causes
(Q102) ADJUSTABLE PEDALS SWITCH FORWARD CIRCUIT SHORTED TO THE (Q103) ADJUSTABLE PEDALS SWITCH REARWARD CIRCUIT AND TO GROUND OR TO (Z910) GROUND CIRCUIT
(Q103) ADJUSTABLE PEDALS SWITCH REARWARD CIRCUIT SHORTED TO THE (Q102) ADJUSTABLE PEDALS SWITCH FORWARD CIRCUIT
(Q103) ADJUSTABLE PEDALS SWITCH REARWARD CIRCUIT SHORTED TO GROUND
ADJUSTABLE PEDALS SWITCH
MEMORY SEAT MODULE (MSM)

1. TEST FOR INTERMITTENT CONDITION

1. Turn the ignition on.
2. Using a scan tool, record and erase Diagnostic Trouble Codes (DTCs).
3. Cycle the ignition from on to off.
4. Turn the ignition on.
5. Operate the Adjustable Pedals switch in both directions then wait 5 seconds.
6. With the scan tool, read DTCs.

Does the scan tool display DTC B1D5B-ADJUSTABLE PEDAL SWITCH CIRCUIT PERFORMANCE?

Yes

- Go To 2

No

- The conditions that caused this code to set are not present at this time. Perform the APS INTERMITTENT CONDITION TEST. (Refer to 28 - DTC-Based Diagnostics/MODULE, Memory Seat (MSMD) - Standard Procedure).

2. CHECK THE (Q102)/(Q103) ADJUSTABLE PEDALS SWITCH FORWARD/REARWARD CIRCUITS FOR A SHORT TOGETHER, TO GROUND, OR TO (Z910) GROUND CIRCUIT

1. Turn the ignition off.
2. Disconnect the MSM C5 harness connector.
3. Disconnect the Adjustable Pedals switch harness connector.

NOTE: Check connectors. Clean and repair as necessary.

4. Measure the resistance between the (Q102) Adjustable Pedals Switch Forward circuit and the (Q103) Adjustable Pedals Switch Rearward circuit at the Adjustable Pedals switch harness connector.
5. Measure the resistance of the (Q102) Adjustable Pedals Switch Forward circuit between ground and the Adjustable Pedals switch harness connector.
6. Measure the resistance of the (Q103) Adjustable Pedals Switch Rearward circuit between ground and the Adjustable Pedals switch harness connector.
7. Measure the resistance between the (Q102) Adjustable Pedals Switch Forward circuit and the (Z910) Ground circuit at the Adjustable Pedals switch harness connector.
8. Measure the resistance between the (Q103) Adjustable Pedals Switch Rearward circuit and the (Z910) Ground circuit at the Adjustable Pedals switch harness connector.

Is the resistance below 10K Ohms for any measurement?

Yes

- Repair all circuits with a resistance below 10K Ohms for a short to one another/to ground or (Z910) Ground circuit.
- Perform the APS VERIFICATION TEST. (Refer to 28 - DTC-Based Diagnostics/MODULE, Memory Seat (MSMD) - Standard Procedure).

No

- Go To 3

3. CHECK FOR A SHORTED ADJUSTABLE PEDALS SWITCH

1. Remove the Adjustable Pedals Switch in accordance with the Service Information.
2. Measure the resistance between the (Q102) Adjustable Pedals Switch Forward circuit and the (Q103) Adjustable Pedals Switch Rearward circuit at the Adjustable Pedals Switch (component) connector.
3. Measure the resistance between the (Q102) Adjustable Pedals Switch Forward circuit and the (Z910) Ground circuit at the Adjustable Pedals Switch (component) connector.
4. Measure the resistance between the (Q103) Adjustable Pedals Switch Rearward circuit and the (Z910) Ground circuit at the Adjustable Pedals Switch (component) connector.

Is the resistance below 10K Ohms for any measurement?

Yes

- Replace the Adjustable Pedals Switch in accordance with the Service Information.
- Perform the APS VERIFICATION TEST. (Refer to 28 - DTC-Based Diagnostics/MODULE, Memory Seat (MSMD) - Standard Procedure).

No

- Replace the Memory Seat Module (MSM) in accordance with the Service Information.
- Perform the APS VERIFICATION TEST. (Refer to 28 - DTC-Based Diagnostics/MODULE, Memory Seat (MSMD) - Standard Procedure).

B1D5C-ADJUSTABLE PEDAL SWITCH CIRCUIT STUCK FORWARD

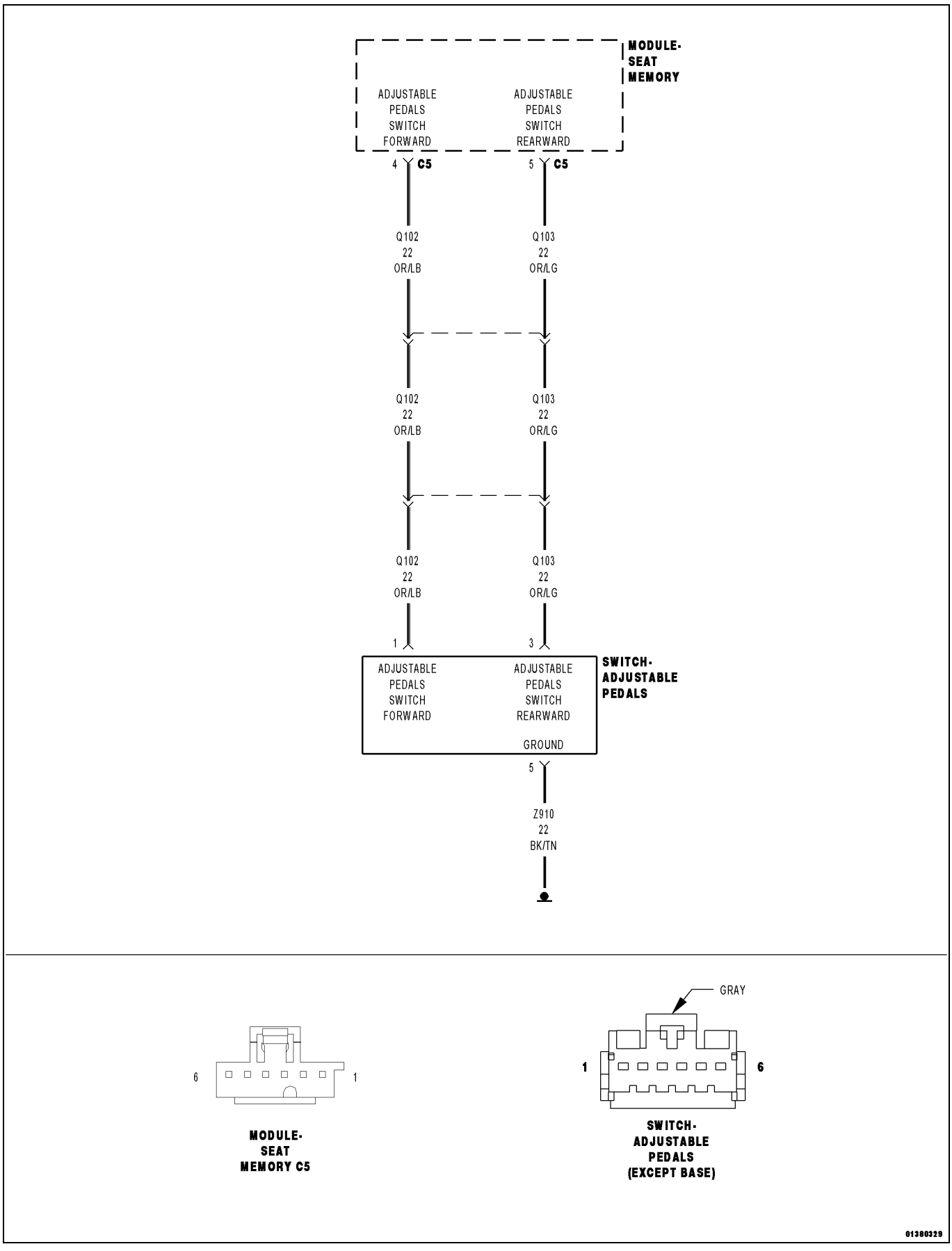

For a complete wiring diagram, **refer to the Wiring Information**.

- **When Monitored:**
  Continuously.
- **Set Condition:**
  The Memory Seat Module (MSM) detects that the Adjustable Pedals Switch has been activated for more than 50 seconds.

Possible Causes
OBJECT HOLDING ADJUSTABLE PEDALS SWITCH IN A PUSHED POSITION
SUBSTANCE CAUSING ADJUSTABLE PEDALS SWITCH TO GET STUCK IN A PUSHED POSITION
(Q102) ADJUSTABLE PEDALS SWITCH FORWARD CIRCUIT SHORTED TO GROUND
(Q102) ADJUSTABLE PEDALS SWITCH FORWARD CIRCUIT SHORTED TO THE (Z910) GROUND CIRCUIT
ADJUSTABLE PEDALS SWITCH
MEMORY SEAT MODULE (MSM)

1. INSPECT THE ADJUSTABLE PEDALS SWITCH FOR DAMAGE

1. Turn the ignition off.
2. Inspect the Adjustable Pedals switch for damage.

Is the switch damaged?

Yes

- Replace the Adjustable Pedals switch in accordance with the Service Information.
- Perform the APS VERIFICATION TEST. (Refer to 28 - DTC-Based Diagnostics/MODULE, Memory Seat (MSMD) - Standard Procedure).

No

- Go To 2

2. INSPECT FOR OBJECT OR SUBSTANCE CAUSING THE ADJUSTABLE PEDALS SWITCH TO STAY OR STICK IN A PUSHED POSITION

1. Inspect the Adjustable Pedals switch for anything that would cause it to stay or stick in a pushed position.

Is anything present that would cause the Adjustable Pedals switch to stay or stick in a pushed position?

Yes

- Repair as necessary.
- Perform he APS VERIFICATION TEST. (Refer to 28 - DTC-Based Diagnostics/MODULE, Memory Seat (MSMD) - Standard Procedure).

No

- Go To 3

3. TEST FOR INTERMITTENT CONDITION

1. Turn the ignition on.
2. Using a scan tool, record and erase Diagnostic Trouble Codes (DTCs).
3. Cycle the ignition from on to off.
4. Turn the ignition on.
5. Operate the Adjustable Pedals switch in both directions then wait one minute.
6. With the scan tool, read DTCs.

Does the scan tool display DTC B1D5-ADJUSTABLE PEDAL SWITCH CIRCUIT STUCK FORWARD?

Yes

- Go To 4

No

- The conditions that caused this code to set are not present at this time. Perform the APS INTERMITTENT CONDITION TEST. (Refer to 28 - DTC-Based Diagnostics/MODULE, Memory Seat (MSMD) - Standard Procedure).

4. CHECK THE (Q102) ADJUSTABLE PEDALS SWITCH FORWARD CIRCUIT FOR A SHORT TO GROUND

1. Turn the ignition off.
2. Disconnect the MSM C5 harness connector.
3. Disconnect the Adjustable Pedals switch harness connector.

NOTE: Check connectors. Clean and repair as necessary.

4. Measure the resistance of the (Q102) Adjustable Pedals Switch Forward circuit between ground and the Adjustable Pedals switch harness connector.

Is the resistance below 10K Ohms?

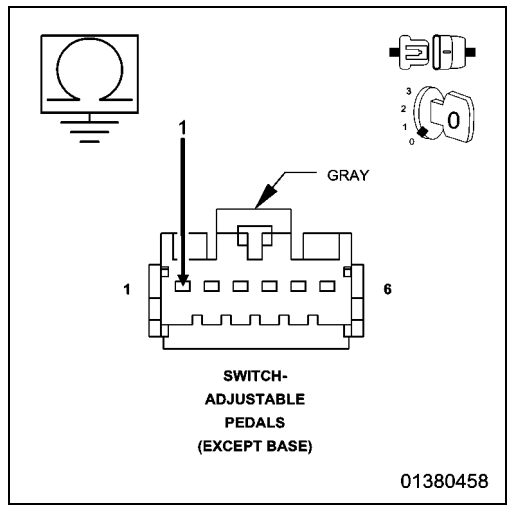

Yes

- Repair the (Q102) Adjustable Pedals Switch Forward circuit for a short to ground.
- Perform the APS VERIFICATION TEST. (Refer to 28 - DTC-Based Diagnostics/MODULE, Memory Seat (MSMD) - Standard Procedure).

No

- Go To 5

5. CHECK THE (Q102) ADJUSTABLE PEDALS SWITCH FORWARD CIRCUIT FOR A SHORT TO THE (Z910) GROUND CIRCUIT

1. Measure the resistance between the (Q102) Adjustable Pedals Switch Forward circuit and the (Z910) Ground circuit at the Adjustable Pedals switch harness connector.

Is the resistance below 10K Ohms?

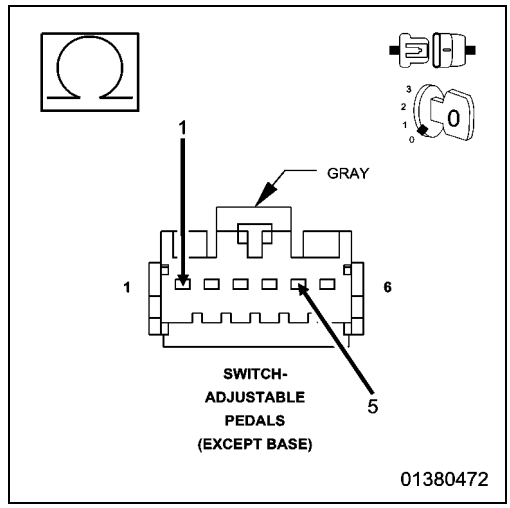

Yes

- Repair the short between the (Q102) Adjustable Pedals Switch Forward circuit and the (Z910) Ground circuit.
- Perform the APS VERIFICATION TEST. (Refer to 28 - DTC-Based Diagnostics/MODULE, Memory Seat (MSMD) - Standard Procedure).

No

- Go To 6

6. CHECK FOR A SHORTED ADJUSTABLE PEDALS SWITCH

1. Remove the Adjustable Pedals Switch in accordance with the Service Information.

NOTE: Adjustable Pedals Switch (harness) connector shown. Mirror image for Adjustable Pedals Switch (component) connector.

2. Measure the resistance between the (Q102) Adjustable Pedals Switch Forward circuit and the (Z910) Ground circuit at the Adjustable Pedals Switch (component) connector.

Is the resistance below 10K Ohms?

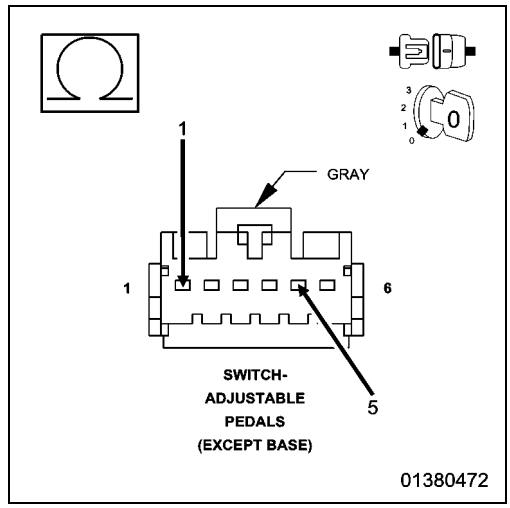

Yes

- Replace the Adjustable Pedals Switch in accordance with the Service Information.
- Perform the APS VERIFICATION TEST. (Refer to 28 - DTC-Based Diagnostics/MODULE, Memory Seat (MSMD) - Standard Procedure).

No

- Replace the Memory Seat Module (MSM) in accordance with the Service Information.
- Perform the APS VERIFICATION TEST. (Refer to 28 - DTC-Based Diagnostics/MODULE, Memory Seat (MSMD) - Standard Procedure).

B1D5D-ADJUSTABLE PEDAL SWITCH CIRCUIT STUCK REARWARD

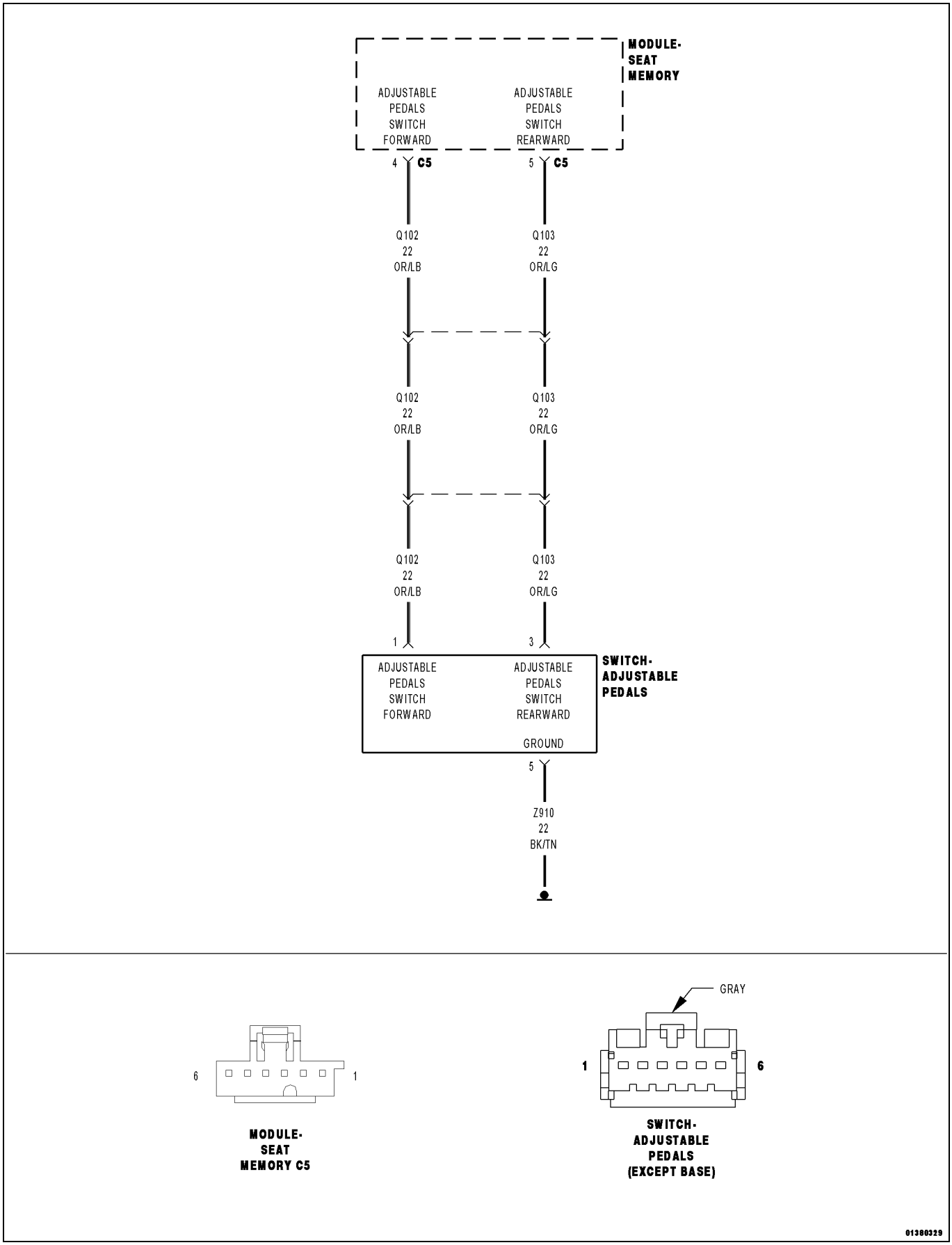

For a complete wiring diagram, **refer to the Wiring Information**.

- **When Monitored:**
  Continuously.
- **Set Condition:**
  The Memory Seat Module (MSM) detects that the Adjustable Pedals Switch has been activated for more than 50 seconds.

Possible Causes
OBJECT HOLDING ADJUSTABLE PEDALS SWITCH IN A PUSHED POSITION
SUBSTANCE CAUSING ADJUSTABLE PEDALS SWITCH TO GET STUCK IN A PUSHED POSITION
(Q103) ADJUSTABLE PEDALS SWITCH REARWARD CIRCUIT SHORTED TO GROUND
(Q103) ADJUSTABLE PEDALS SWITCH REARWARD CIRCUIT SHORTED TO (Z910) GROUND CIRCUIT
ADJUSTABLE PEDALS SWITCH
MEMORY SEAT MODULE (MSM)

1. INSPECT THE ADJUSTABLE PEDALS SWITCH FOR DAMAGE

1. Turn the ignition off.
2. Inspect the Adjustable Pedals switch for damage.

Is the switch damaged?

Yes

- Replace the Adjustable Pedals switch in accordance with the Service Information.
- Perform the APS VERIFICATION TEST. (Refer to 28 - DTC-Based Diagnostics/MODULE, Memory Seat (MSMD) - Standard Procedure).

No

- Go To 2

2. INSPECT FOR OBJECT OR SUBSTANCE CAUSING THE ADJUSTABLE PEDALS SWITCH TO STAY OR STICK IN A PUSHED POSITION

1. Inspect the Adjustable Pedals switch for anything that would cause it to stay or stick in a pushed position.

Is anything present that would cause the Adjustable Pedals switch to stay or stick in a pushed position?

Yes

- Repair as necessary.
- Perform the APS VERIFICATION TEST. (Refer to 28 - DTC-Based Diagnostics/MODULE, Memory Seat (MSMD) - Standard Procedure).

No

- Go To 3

3. TEST FOR INTERMITTENT CONDITION

1. Turn the ignition on.
2. Using a scan tool, record and erase Diagnostic Trouble Codes (DTCs).
3. Cycle the ignition from on to off.
4. Turn the ignition on.
5. Operate the Adjustable Pedals switch in both directions then wait one minute.
6. With the scan tool, read DTCs.

Does the scan tool display DTC B1D5D-ADJUSTABLE PEDAL SWITCH CIRCUIT STUCK REARWARD?

Yes

- Go To 4

No

- The conditions that caused this code to set are not present at this time. Perform the APS INTERMITTENT CONDITION TEST. (Refer to 28 - DTC-Based Diagnostics/MODULE, Memory Seat (MSMD) - Standard Procedure).

4. CHECK THE (Q103) ADJUSTABLE PEDALS SWITCH REARWARD CIRCUIT FOR A SHORT TO GROUND

1. Turn the ignition off.
2. Disconnect the MSM C5 harness connector.
3. Disconnect the Adjustable Pedals switch harness connector.

NOTE: Check connectors. Clean and repair as necessary.

4. Measure the resistance of the (Q103) Adjustable Pedals Switch Rearward circuit between ground and the Adjustable Pedals switch harness connector.

Is the resistance below 10K Ohms?

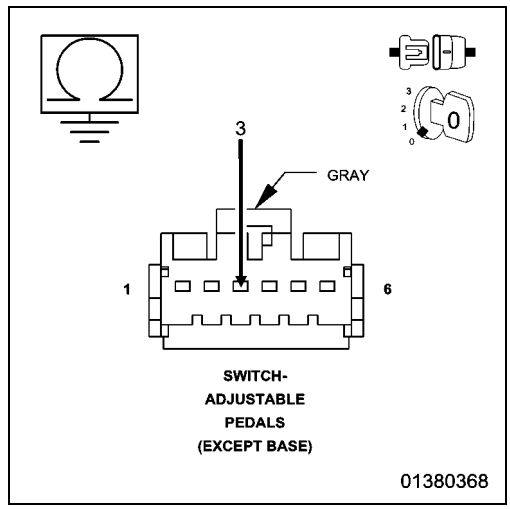

Yes

- Repair the (Q103) Adjustable Pedals Switch Rearward circuit for a short to ground.
- Perform the APS VERIFICATION TEST. (Refer to 28 - DTC-Based Diagnostics/MODULE, Memory Seat (MSMD) - Standard Procedure).

No

- Go To 5

5. CHECK THE (Q103) ADJUSTABLE PEDALS SWITCH REARWARD CIRCUIT FOR A SHORT TO THE (Z910) GROUND CIRCUIT

1. Measure the resistance between the (Q103) Adjustable Pedals Switch Rearward circuit and the (Z910) Ground circuit at the Adjustable Pedals switch connector.

Is the resistance below 10K Ohms?

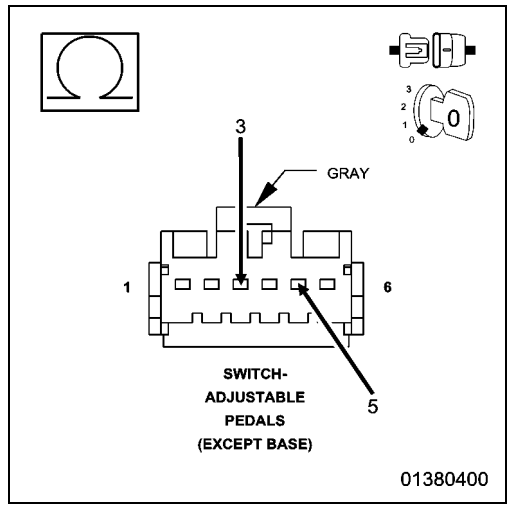

Yes

- Repair the (Q103) Adjustable Pedals Switch Rearward circuit for a short to the (Z910) Ground circuit.
- Perform the APS VERIFICATION TEST. (Refer to 28 - DTC-Based Diagnostics/MODULE, Memory Seat (MSMD) - Standard Procedure).

No

- Go To 6

6. CHECK FOR A SHORTED ADJUSTABLE PEDALS SWITCH

1. Remove the Adjustable Pedals Switch in accordance with the Service Information.

NOTE: Adjustable Pedals Switch (harness) connector shown. Mirror image for Adjustable Pedals Switch (component) connector.

2. Measure the resistance between the (Q103) Adjustable Pedals Switch Rearward circuit and the (Z910) Ground circuit at the Adjustable Pedals Switch (component) connector.

Is the resistance below 10K Ohms?

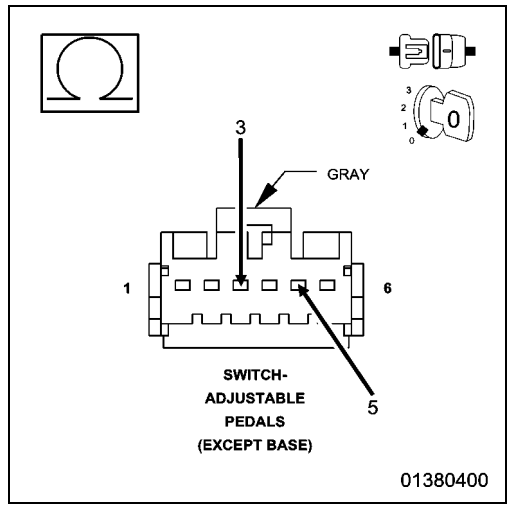

Yes

- Replace the Adjustable Pedals Switch in accordance with the Service Information.
- Perform the APS VERIFICATION TEST. (Refer to 28 - DTC-Based Diagnostics/MODULE, Memory Seat (MSMD) - Standard Procedure).

No

- Replace the Memory Seat Module (MSM) in accordance with the Service Information.
- Perform the APS VERIFICATION TEST. (Refer to 28 - DTC-Based Diagnostics/MODULE, Memory Seat (MSMD) - Standard Procedure).

B1D62-POWER SEAT SWITCH STUCK

For a complete wiring diagram, **refer to the Wiring Information**.

- **When Monitored:**

  Continuously.
- **Set Condition:**

  When the Memory Seat Module (MSM) detects the Driver Seat Switch engaged in an active position for more than 50 seconds.

Possible Causes
OBJECT HOLDING DRIVER SEAT SWITCH IN A PUSHED POSITION
SUBSTANCE CAUSING DRIVER SEAT SWITCH TO GET STUCK IN A PUSHED POSITION
DRIVER SEAT SWITCH

1. INSPECT DRIVER SEAT SWITCH FOR DAMAGE

1. Turn the ignition off.
2. Inspect the Driver Seat Switch for damage.

Is the switch damaged?

Yes

- Replace the Driver Seat Switch in accordance with the Service Information.
- Perform POWER SEAT SYSTEM VERIFICATION TEST. (Refer to 28 - DTC-Based Diagnostics/MODULE, Memory Seat (MSMD) - Standard Procedure).

No

- Go To 2

2. INSPECT FOR OBJECT OR SUBSTANCE CAUSING DRIVER SEAT SWITCH TO STAY OR STICK IN A PUSHED POSITION

1. Inspect the Driver Seat Switch for anything that would cause it to stay or stick in a pushed position.

Is anything present that would cause the switch to stay or stick in a pushed position?

Yes

- Repair as necessary.
- Perform POWER SEAT SYSTEM VERIFICATION TEST. (Refer to 28 - DTC-Based Diagnostics/MODULE, Memory Seat (MSMD) - Standard Procedure).

No

- Go To 3

3. TEST FOR INTERMITTENT CONDITION

1. Turn the ignition on.
2. Using a scan tool, record and erase Diagnostic Trouble Codes (DTCs).
3. Press the Driver Seat Switch in all directions several times then wait one minute.
4. Using a scan tool, read DTCs.

Does the scan tool display DTC B1D62-POWER SEAT SWITCH STUCK?

Yes

- Replace the Driver Seat Switch in accordance with the Service Information.
- Perform POWER SEAT SYSTEM VERIFICATION TEST. (Refer to 28 - DTC-Based Diagnostics/MODULE, Memory Seat (MSMD) - Standard Procedure).

No

- The conditions that caused this code to set are not present at this time. Verify seat harness is routed correctly. Using the wiring diagram/schematic as a guide, inspect the wiring and connectors. Look for chafed, pierced, pinched, or partially broken wires and broken, bent, pushed out, spread, corroded, or contaminated terminals.
- Perform POWER SEAT SYSTEM VERIFICATION TEST. (Refer to 28 - DTC-Based Diagnostics/MODULE, Memory Seat (MSMD) - Standard Procedure).

B1D63-POWER SEAT SWITCH OPEN

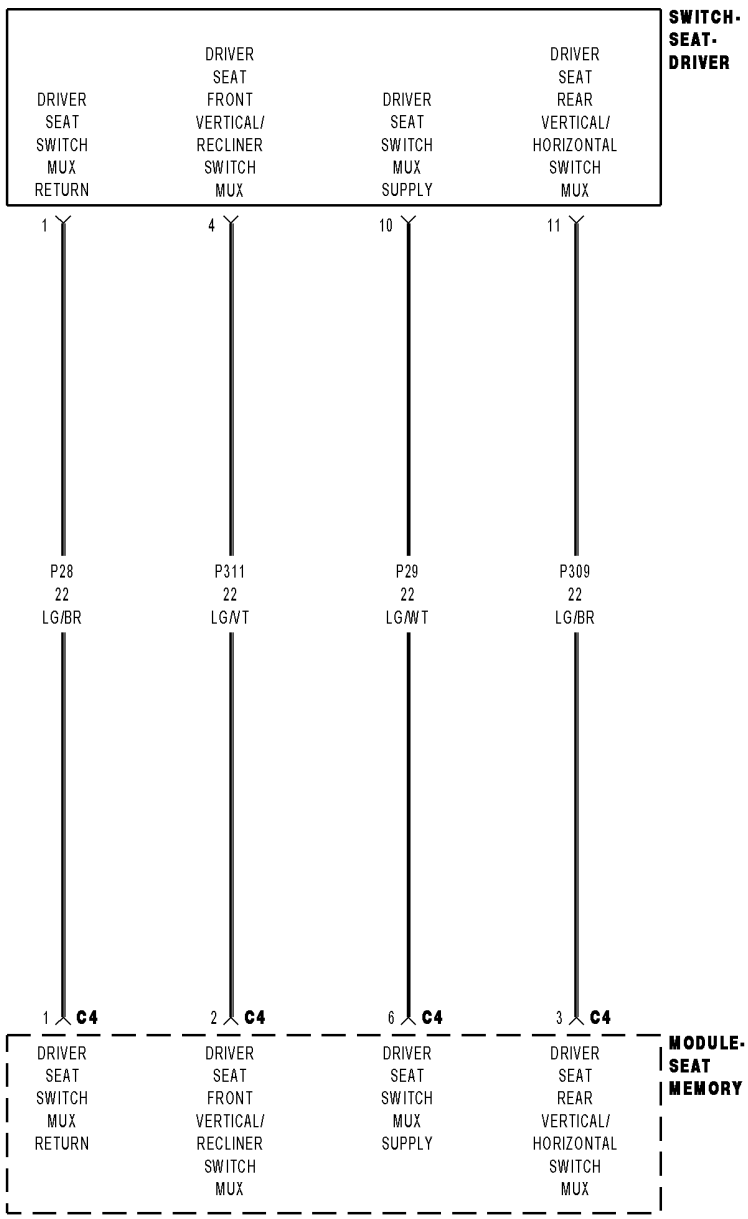

For a complete wiring diagram, **refer to the Wiring Information**.

- **When Monitored:**
  Continuously.
- **Set Condition:**
  When the Memory Seat Module (MSM) detects an open Driver Seat Switch MUX circuit.

Possible Causes
(P309) DRIVER SEAT REAR VERTICAL/HORIZONTAL SWITCH MUX CIRCUIT OPEN
(P311) DRIVER SEAT FRONT VERTICAL/RECLINER SWITCH MUX CIRCUIT OPEN
(P28) DRIVER SEAT SWITCH MUX RETURN CIRCUIT OPEN
DRIVER SEAT SWITCH
MEMORY SEAT MODULE (MSM)

1. TEST FOR INTERMITTENT CONDITION

1. Turn the ignition on.
2. Using a scan tool, record and erase Diagnostic Trouble Codes (DTCs).
3. Press the seat switch in all directions several times then wait one minute.
4. Using a scan tool, read DTCs.

Does the scan tool display DTC B1D63-POWER SEAT SWITCH OPEN?

Yes

- Go To 2

No

- The conditions that caused this code to set are not present at this time. Verify seat harness is routed correctly. Using the wiring diagram/schematic as a guide, inspect the wiring and connectors. Look for chafed, pierced, pinched, or partially broken wires and broken, bent, pushed out, spread, corroded, or contaminated terminals.
- Perform POWER SEAT SYSTEM VERIFICATION TEST. (Refer to 28 - DTC-Based Diagnostics/MODULE, Memory Seat (MSMD) - Standard Procedure).

2. CHECK THE (P309) DRIVER SEAT REAR VERTICAL/HORIZONTAL SWITCH MUX CIRCUIT RESISTANCE

1. Turn the ignition off.
2. Disconnect the Memory Seat Module C4 connector.

NOTE: Check connectors. Clean and repair as necessary.

3. Measure the resistance between the (P309) Driver Seat Rear Vertical/ Horizontal Switch MUX circuit and the (P28) Driver Seat Switch MUX Return circuit at the Memory Seat Module C4 connector.

Is the resistance 47.0 Ohms + or - 1.0?

Yes

- Go To 3

No

- Go To 5

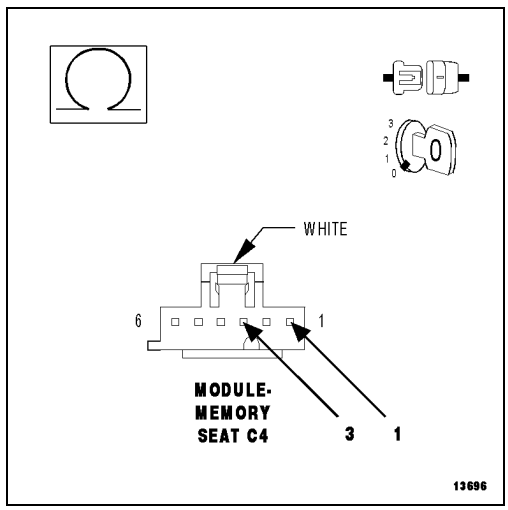

3. CHECK THE (P311) DRIVER SEAT FRONT VERTICAL/RECLINER SWITCH MUX CIRCUIT RESISTANCE

1. Measure the resistance between the (P311) Driver Seat Front Vertical/ Recliner Switch MUX circuit and the (P28) Driver Seat Switch MUX Return circuit at the Memory Seat Module C4 connector.

Is the resistance 47.0 Ohms + or - 1.0?

Yes

- Replace the Memory Seat Module (MSM) in accordance with the Service Information.
- Perform POWER SEAT SYSTEM VERIFICATION TEST. (Refer to 28 - DTC-Based Diagnostics/MODULE, Memory Seat (MSMD) - Standard Procedure).

No

- Go To 4

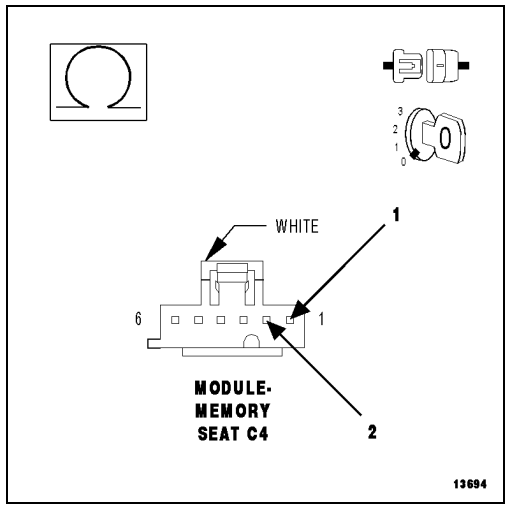

4. CHECK THE (P311) DRIVER SEAT FRONT VERTICAL/RECLINER SWITCH MUX CIRCUIT FOR AN OPEN

1. Disconnect the Driver Seat Switch connector.

NOTE: Check connectors. Clean and repair as necessary.

2. Measure the resistance of the (P311) Driver Seat Front Vertical/Recliner Switch MUX circuit between the Memory Seat Module C4 connector and the Driver Seat Switch connector.

Is the resistance below 5.0 Ohms?

Yes

- Replace the Driver Seat Switch in accordance with the Service Information.
- Perform POWER SEAT SYSTEM VERIFICATION TEST. (Refer to 28 - DTC-Based Diagnostics/MODULE, Memory Seat (MSMD) - Standard Procedure).

No

- Repair the (P311) Driver Seat Front Vertical/Recliner Switch MUX circuit for an open.
- Perform POWER SEAT SYSTEM VERIFICATION TEST. (Refer to 28 - DTC-Based Diagnostics/MODULE, Memory Seat (MSMD) - Standard Procedure).

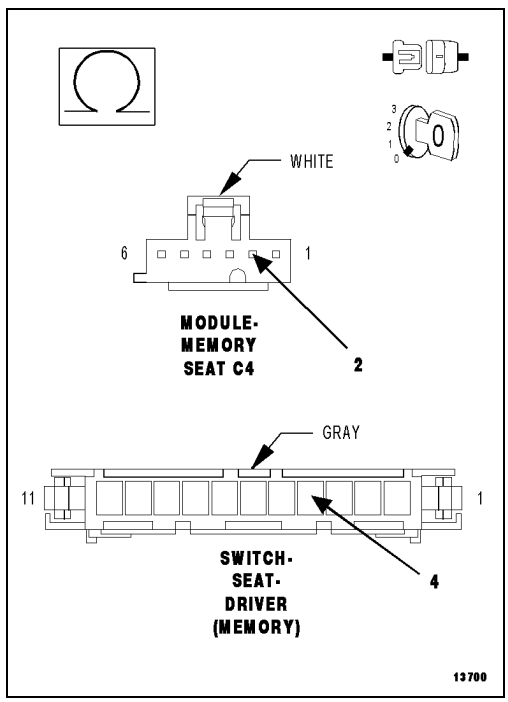

5. CHECK THE (P309) DRIVER SEAT REAR VERTICAL/HORIZONTAL SWITCH MUX CIRCUIT FOR AN OPEN

1. Measure the resistance of the (P309) Driver Seat Rear Vertical/ Horizontal Switch MUX circuit between the Memory Seat Module C4 connector and the Driver Seat Switch connector.

Is the resistance below 5.0 Ohms?

Yes

- Go To 6

No

- Repair the (P309) Driver Seat Rear Vertical/Horizontal Switch MUX circuit for an open.
- Perform POWER SEAT SYSTEM VERIFICATION TEST. (Refer to 28 - DTC-Based Diagnostics/MODULE, Memory Seat (MSMD) - Standard Procedure).

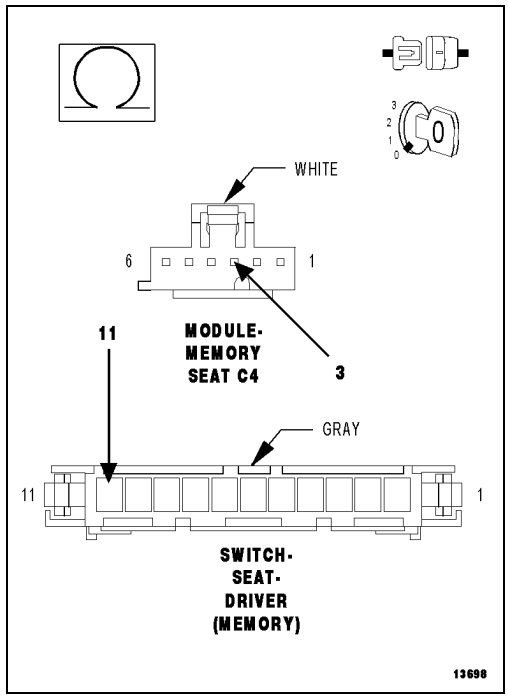

6. CHECK THE (P28) DRIVER SEAT SWITCH MUX RETURN CIRCUIT FOR AN OPEN

1. Measure the resistance of the (P28) Driver Seat Switch MUX Return circuit between the Memory Seat Module C4 connector and the Driver Seat Switch connector.

Is the resistance below 5.0 Ohms?

Yes

- Replace the Driver Seat Switch in accordance with the Service Information.
- Perform POWER SEAT SYSTEM VERIFICATION TEST. (Refer to 28 - DTC-Based Diagnostics/MODULE, Memory Seat (MSMD) - Standard Procedure).

No

- Repair the (P28) Driver Seat Switch MUX Return circuit for an open.
- Perform POWER SEAT SYSTEM VERIFICATION TEST. (Refer to 28 - DTC-Based Diagnostics/MODULE, Memory Seat (MSMD) - Standard Procedure).

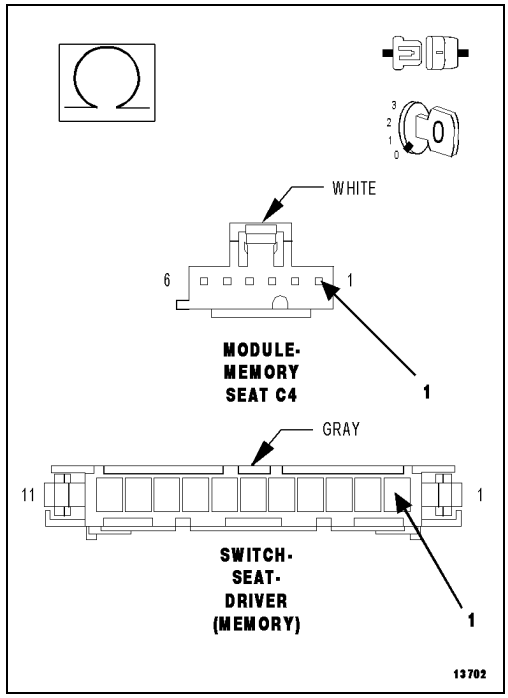

B1D67-ADJUSTABLE PEDAL CONTROL CIRCUIT PERFORMANCE

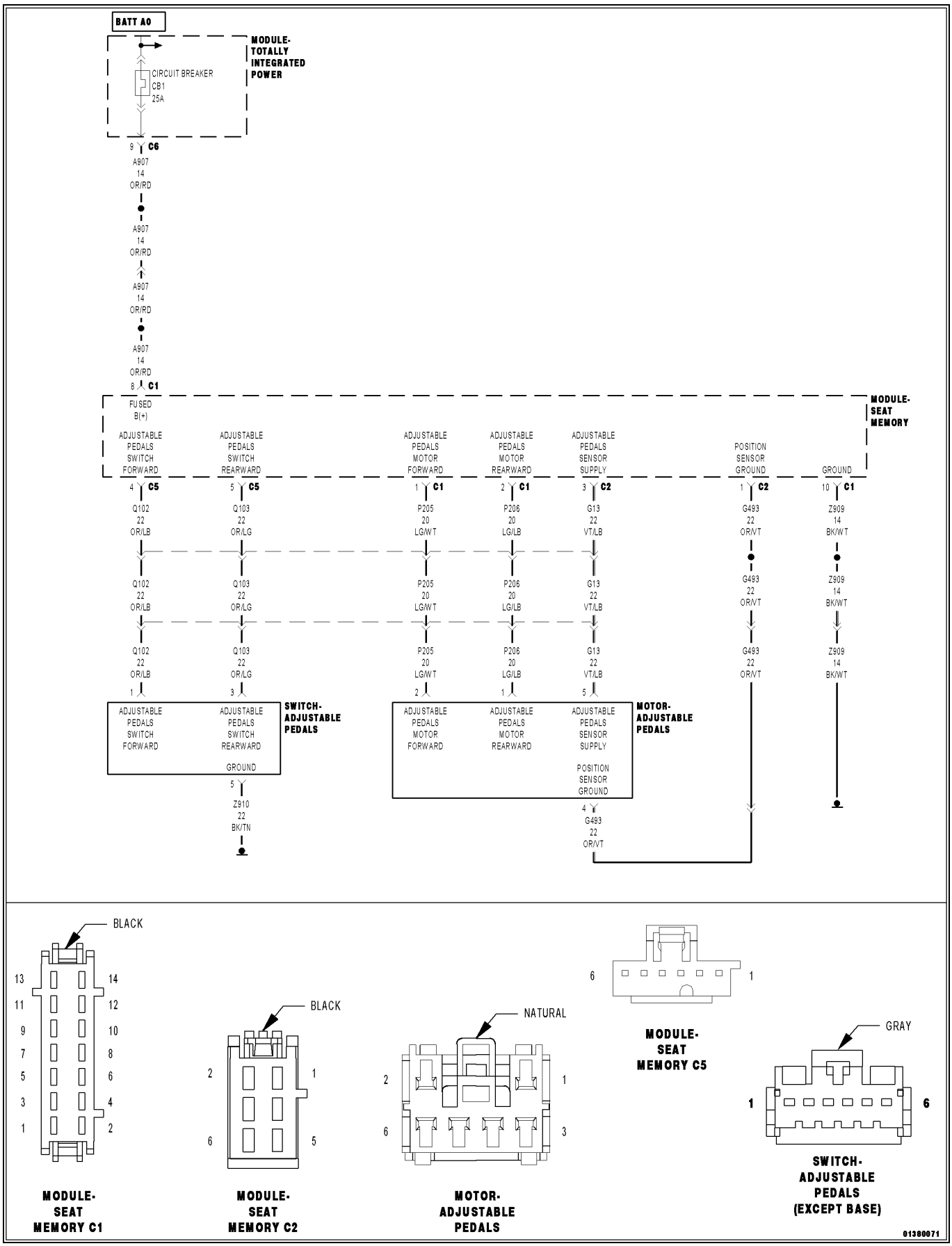

For a complete wiring diagram, **refer to the Wiring Information**.

- **When Monitored:**
  Continuously.
- **Set Condition:**
  The Adjustable Pedals switch is pressed three times in opposite directions (e.g. either, forward, rearward, forward, or rearward, forward, rearward) and each switch activation is for at least one second and the Memory Seat Module (MSM) does not detect Adjustable Pedals Motor rotation in either direction.

Possible Causes
ADJUSTABLE PEDALS ASSEMBLY DAMAGED
OBSTRUCTION IN PATH OF ADJUSTABLE PEDALS
(P205) ADJUSTABLE PEDALS MOTOR FORWARD CIRCUIT OPEN
(P206) ADJUSTABLE PEDALS MOTOR REARWARD CIRCUIT OPEN
ADJUSTABLE PEDALS SENSOR
ADJUSTABLE PEDALS MOTOR
MEMORY SEAT MODULE (MSM)

1. INSPECT THE ADJUSTABLE PEDALS ASSEMBLY FOR DAMAGE

NOTE: If present, diagnose and repair Diagnostic Trouble Code (DTC) B1D56-Adjustable Pedal Sensor Circuit Low or B1D57-Adjustable Pedal Sensor Circuit High before proceeding.

1. Turn the ignition off.
2. Inspect the Adjustable Pedals assembly for damage.

Is the assembly damaged?

Yes

- Replace the Adjustable Pedals assembly in accordance with the Service Information.
- Perform the APS VERIFICATION TEST. (Refer to 28 - DTC-Based Diagnostics/MODULE, Memory Seat (MSMD) - Standard Procedure).

No

- Go To 2

2. INSPECT FOR OBSTRUCTION IN PATH OF ADJUSTABLE PEDALS

1. Inspect for anything that would prevent the Adjustable Pedals from moving to each end-stop.

Is anything present that would prevent the Adjustable Pedals from moving to each end-stop?

Yes

- Repair as necessary.
- Perform the APS VERIFICATION TEST. (Refer to 28 - DTC-Based Diagnostics/MODULE, Memory Seat (MSMD) - Standard Procedure).

No

- Go To 3

3. TEST FOR INTERMITTENT CONDITION

1. Turn the ignition on.
2. Using a scan tool, record and erase DTCs.
3. Cycle the ignition from on to off.
4. Turn the ignition on.

NOTE: Do not adjust the pedals against an end-stop when performing the following.

5. Press the Adjustable Pedals switch in one direction for at least one second then release the switch. Repeat three times consecutively, but press the switch in the opposite direction each time.
6. Using a scan tool, read DTCs.

Does the scan tool display DTC B1D67-ADJUSTABLE PEDAL CONTROL CIRCUIT PERFORMANCE?

Yes

- Go To 4

No

- The conditions that caused this code to set are not present at this time. Repeat Step 5, beginning in direction opposite of that previously selected. If DTC now is active, Go To 4. Otherwise, perform the APS INTERMITTENT CONDITION TEST. (Refer to 28 - DTC-Based Diagnostics/MODULE, Memory Seat (MSMD) - Standard Procedure).

4. CHECK (P205) ADJUSTABLE PEDALS MOTOR FORWARD AND (P206) ADJUSTABLE PEDALS MOTOR REARWARD CIRCUIT FUNCTION

1. Turn the ignition off.
2. Disconnect the Adjustable Pedals Motor harness connector.

NOTE: Check connectors. Clean and repair as necessary.

3. Connect a 12-volt test light between the (P205) Adjustable Pedals Motor Forward circuit and the (P206) Adjustable Pedals Motor Rearward circuit at the Adjustable Pedals Motor harness connector.
4. Turn the ignition on.
5. While monitoring the test light, operate the Adjustable Pedals switch in both directions.

Does the test light illuminate with the Adjustable Pedals switch engaged?

Yes

- Go To 5

No

- Go To 8

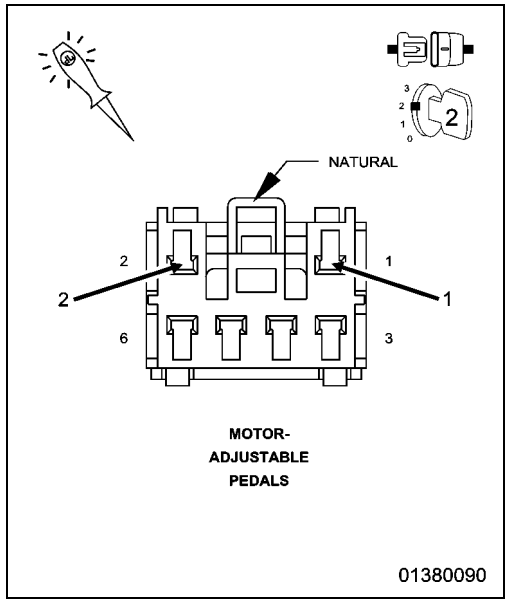

5. CHECK ADJUSTABLE PEDALS MOTOR OPERATION

1. Turn the ignition off.
2. Reconnect the Adjustable Pedals Motor harness connector.
3. Disconnect the MSM C1 connector.

NOTE: Check connectors. Clean and repair as necessary.

4. Check motor operation in both directions as follows:

NOTE: Do not adjust the pedals against an end-stop when performing the following.

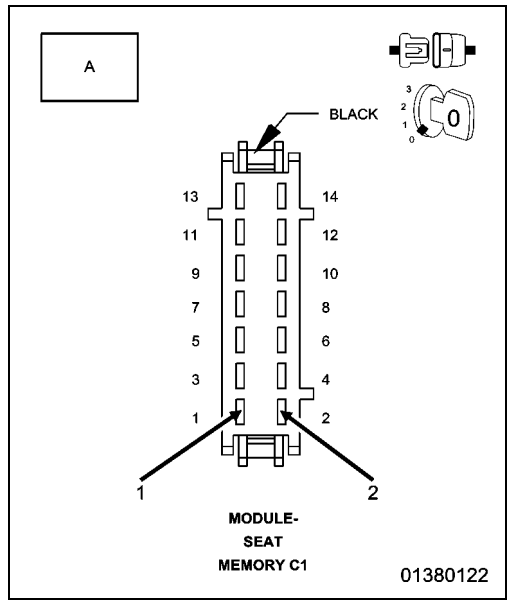

To drive pedals forward:

- Connect one end of a fused jumper wire to battery voltage and the other end to the (P205) Adjustable Pedals Motor Forward circuit at the MSM C1 harness connector.
- Connect an ammeter between ground and the (P206) Adjustable Pedals Motor Rearward circuit at the MSM C1 harness connector.
- Disconnect before reaching the end-stop.

To drive pedals rearward:

- Connect one end of a fused jumper wire to battery voltage and the other end to the (P206) Adjustable Pedals Motor Rearward circuit at the MSM C1 harness connector.
- Connect an ammeter between ground and the (P205) Adjustable Pedals Motor Forward circuit at the MSM C1 harness connector.
- Disconnect before reaching the end-stop.

NOTE: The Adjustable Pedals Motor should be operational in both directions and the ammeter should read 0.9 to 1.5 amps.

Does the motor operate as specified?

Yes

- Go To 6

No

- Check (P205) Adjustable Pedals Motor Forward circuit and (P206) Adjustable Pedals Motor Rearward circuit for high resistance. If circuits are okay, replace the Adjustable Pedals Motor in accordance with the Service Information.
- Perform the APS VERIFICATION TEST. (Refer to 28 - DTC-Based Diagnostics/MODULE, Memory Seat (MSMD) - Standard Procedure).

6. CHECK ADJUSTABLE PEDALS SENSOR OPERATION

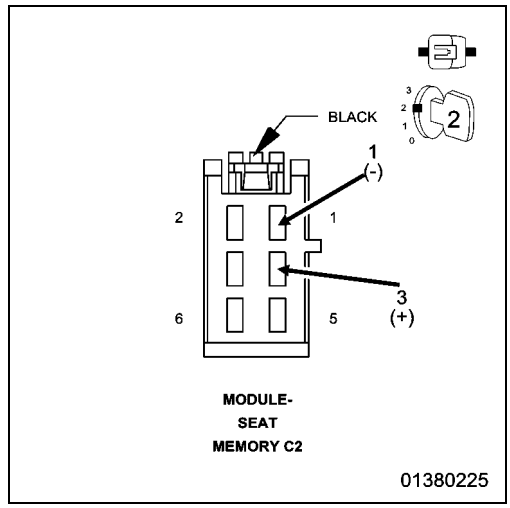

1. Reconnect the MSM C1 harness connector.
2. Turn the ignition on.
3. Using a scan tool, erase DTCs.
4. Cycle the ignition from on to off.
5. Connect the positive lead of a lab scope to the (G13) Adjustable Pedals Sensor Supply circuit and the negative lead to the (G493) Position Sensor Ground circuit the MSM C2 harness connector. Set the lab scope range to 20 volts and time to 20 ms divisions.
6. Turn the ignition on.

NOTE: Do not adjust the pedals against an end-stop when performing the following.

7. Operate the Adjustable Pedals switch in one direction.

NOTE: If the sensor is functioning normally the scope will display a continuously cycling square wave when operating the pedals. If the module fails to detect sensor operation it will stop pedal operation in approximately two seconds.

Does the sensor operate as specified?

Yes

- Leave Scope Connected. Go To 7

No

- Replace the Adjustable Pedals Sensor in accordance with the Service Information.
- Perform the APS VERIFICATION TEST. (Refer to 28 - DTC-Based Diagnostics/MODULE, Memory Seat (MSMD) - Standard Procedure).

7. CHECK ADJUSTABLE PEDALS SENSOR OPERATION IN OPPOSITE DIRECTION

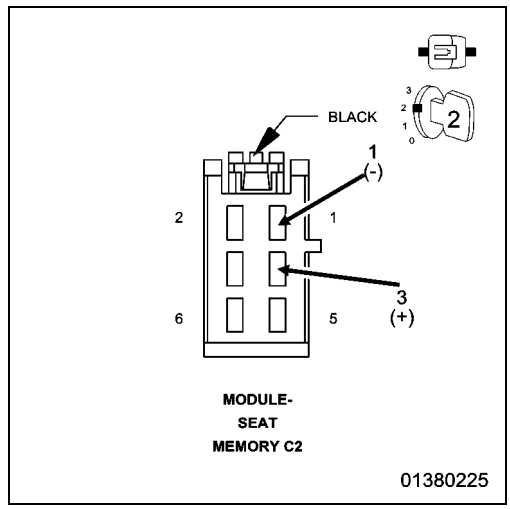

1. Using a scan tool, erase DTCs if present.
2. Cycle the ignition from on to off.
3. Turn the ignition on.

NOTE: Do not adjust the pedals against an end-stop when performing the following.

4. Operate the Adjustable Pedals switch in the direction opposite of that previously selected.

NOTE: If the sensor is functioning normally the scope will display a continuously cycling square wave when operating the pedals. If the module fails to detect sensor operation it will stop pedal operation in approximately two seconds.

Does the sensor operate as specified?

Yes

- Replace the Memory Seat Module (MSM) in accordance with the Service Information.
- Perform the APS VERIFICATION TEST. (Refer to 28 - DTC-Based Diagnostics/MODULE, Memory Seat (MSMD) - Standard Procedure).

No

- Replace the Adjustable Pedals Sensor in accordance with the Service Information.
- Perform the APS VERIFICATION TEST. (Refer to 28 - DTC-Based Diagnostics/MODULE, Memory Seat (MSMD) - Standard Procedure).

8. CHECK THE (P205) ADJUSTABLE PEDALS MOTOR FORWARD CIRCUIT FOR AN OPEN

1. Turn the ignition off.
2. Disconnect the MSM C1 harness connector.
3. Measure the resistance of the (P205) Adjustable Pedals Motor Forward circuit between the MSM C1 harness connector and the Adjustable Pedals Motor connector.

Is the resistance below 5.0 Ohms?

Yes

- Go To 9

No

- Repair the (P205) Adjustable Pedals Motor Forward circuit for an open.
- Perform the APS VERIFICATION TEST. (Refer to 28 - DTC-Based Diagnostics/MODULE, Memory Seat (MSMD) - Standard Procedure).

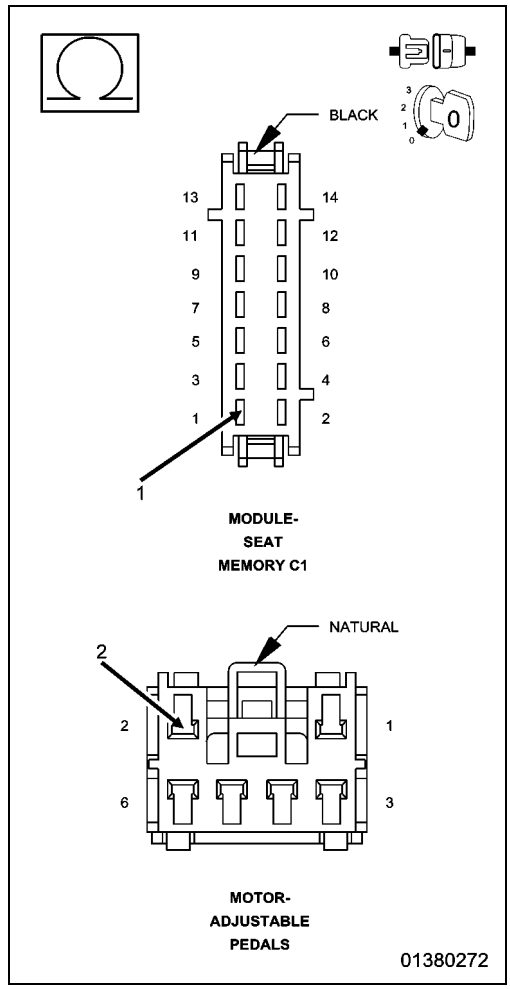

9. CHECK THE (P206) ADJUSTABLE PEDALS MOTOR REARWARD CIRCUIT FOR AN OPEN

1. Measure the resistance of the (P206) Adjustable Pedals Motor Rearward circuit between the MSM C1 connector and the Adjustable Pedals Motor connector.

Is the resistance below 5.0 Ohms?

Yes

- Replace the Memory Seat Module (MSM) in accordance with the Service Information.
- Perform the APS VERIFICATION TEST. (Refer to 28 - DTC-Based Diagnostics/MODULE, Memory Seat (MSMD) - Standard Procedure).

No

- Repair the (P206) Adjustable Pedals Motor Rearward circuit for an open.
- Perform the APS VERIFICATION TEST. (Refer to 28 - DTC-Based Diagnostics/MODULE, Memory Seat (MSMD) - Standard Procedure).

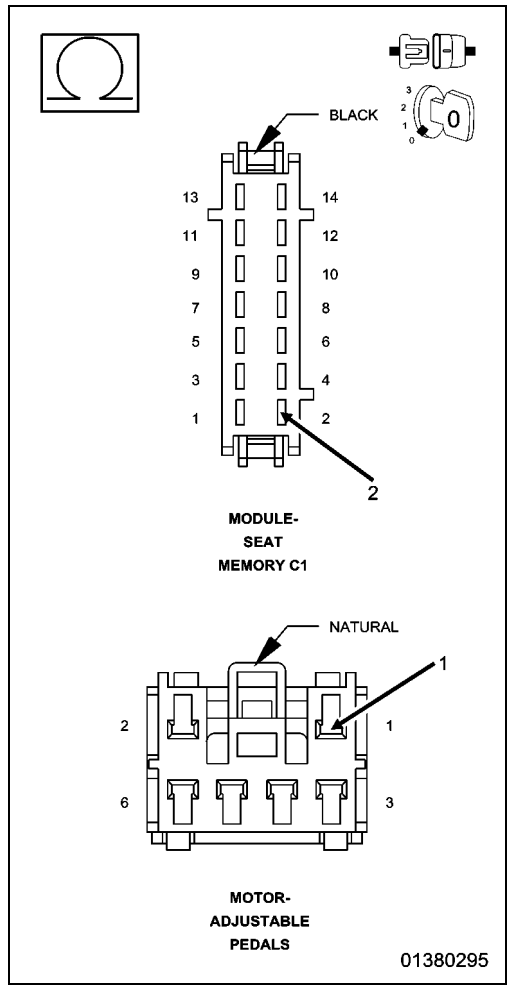

B1D6D-SEAT HORIZONTAL POSITION SENSOR CIRCUIT LOW

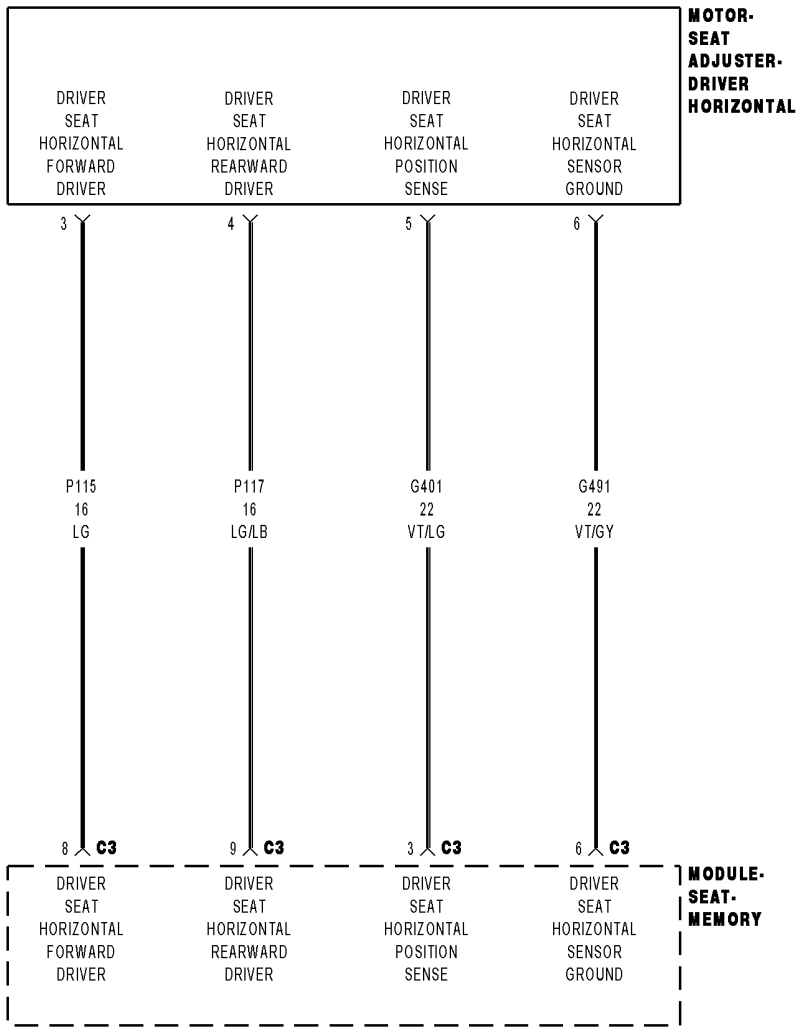

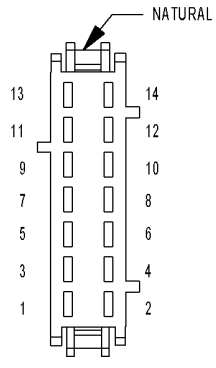

MODULE-
SEAT
MEMORY C3

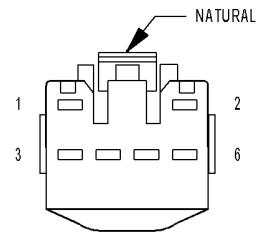

MOTOR-
SEAT
ADJUSTER-
DRIVER
HORIZONTAL

01378844

For a complete wiring diagram, **refer to the Wiring Information**.

- **When Monitored:**
  Continuously.
- **Set Condition:**
  If Voltage on the (G401) Driver Seat Horizontal Position Sense circuit is not within a specified range.

Possible Causes
(G401) DRIVER SEAT HORIZONTAL POSITION SENSE CIRCUIT SHORTED TO GROUND
(G401) DRIVER SEAT HORIZONTAL POSITION SENSE CIRCUIT SHORTED TO THE (G491) DRIVER SEAT HORIZONTAL SENSOR GROUND CIRCUIT
(G401) DRIVER SEAT HORIZONTAL POSITION SENSE CIRCUIT SHORTED TO THE (P115) DRIVER SEAT HORIZONTAL FORWARD DRIVER CIRCUIT
(G401) DRIVER SEAT HORIZONTAL POSITION SENSE CIRCUIT SHORTED TO THE (P117) DRIVER SEAT HORIZONTAL REARWARD DRIVER CIRCUIT
DRIVER HORIZONTAL SEAT ADJUSTER MOTOR
MEMORY SEAT MODULE (MSM)

1. CHECK FOR ACTIVE FAULT WITH SEAT STATIONARY

1. Turn the ignition on.
2. Using a scan tool, record and erase Diagnostic Trouble Codes (DTCs).
3. Cycle the ignition from on to off three times.
4. Turn the ignition on and wait 30 seconds.
5. Using a scan tool, read DTCs.

Is DTC B1D6D-SEAT HORIZONTAL POSITION SENSOR CIRCUIT LOW active?

Yes

- Go To 3

No

- Go To 2

2. CHECK FOR ACTIVE FAULT WHILE ADJUSTING THE SEAT

1. Move the seat switch in the horizontal adjust position three times.
2. Using a scan tool, read DTCs.

Is DTC B1D6D-SEAT HORIZONTAL POSITION SENSOR CIRCUIT LOW active?

Yes

- Go To 3

No

- The conditions that caused this code to set are not present at this time. Verify seat harness is routed correctly. Using the wiring diagram/schematic as a guide, inspect the wiring and connectors. Look for chafed, pierced, pinched, or partially broken wires and broken, bent, pushed out, spread, corroded, or contaminated terminals.
- Perform POWER SEAT SYSTEM VERIFICATION TEST. (Refer to 28 - DTC-Based Diagnostics/MODULE, Memory Seat (MSMD) - Standard Procedure).

3. CHECK THE (G401) DRIVER SEAT HORIZONTAL POSITION SENSE CIRCUIT FOR A SHORT TO GROUND

1. Turn the ignition off.
2. Disconnect the MSM C3 connector.
3. Disconnect the Driver Horizontal Seat Adjuster Motor connector.

NOTE: Check connectors. Clean and repair as necessary.

4. Measure the resistance of the (G401) Driver Seat Horizontal Position Sense circuit between ground and the Driver Horizontal Seat Adjuster Motor connector.

Is the resistance below 10K Ohms?

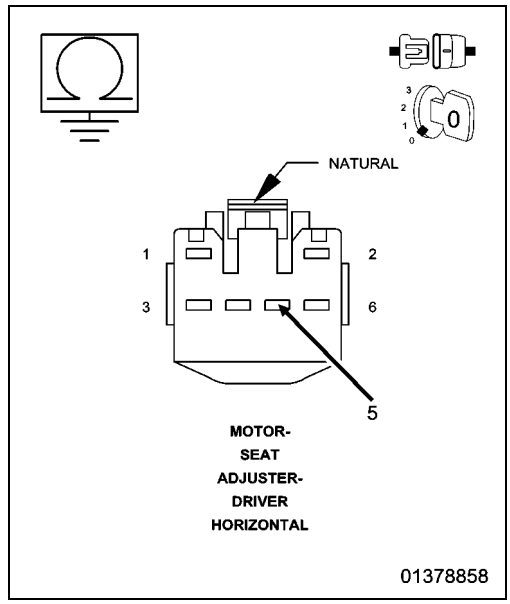

Yes

- Repair the (G401) Driver Seat Horizontal Position Sense circuit for a short to ground.
- Perform POWER SEAT SYSTEM VERIFICATION TEST. (Refer to 28 - DTC-Based Diagnostics/MODULE, Memory Seat (MSMD) - Standard Procedure).

No

- Go To 4

4. CHECK THE (G401) DRIVER SEAT HORIZONTAL POSITION SENSE CIRCUIT FOR A SHORT TO (G491) DRIVER SEAT HORIZONTAL SENSOR GROUND CIRCUIT, (P115) DRIVER SEAT HORIZONTAL FORWARD DRIVER CIRCUIT, AND (P117) DRIVER SEAT HORIZONTAL REARWARD DRIVER CIRCUIT

1. Measure the resistance between the (G401) Driver Seat Horizontal Position Sense circuit and the (G491) Driver Seat Horizontal Sensor Ground circuit at the Driver Horizontal Seat Adjuster Motor connector.
2. Measure the resistance between the (G401) Driver Seat Horizontal Position Sense circuit and the (P115) Driver Seat Horizontal Forward Driver circuit at the Driver Horizontal Seat Adjuster Motor connector.
3. Measure the resistance between the (G401) Driver Seat Horizontal Position Sense circuit and the (P117) Driver Seat Horizontal Rearward Driver circuit at the Driver Horizontal Seat Adjuster Motor connector.

Is the resistance below 10K Ohms for any measurement?

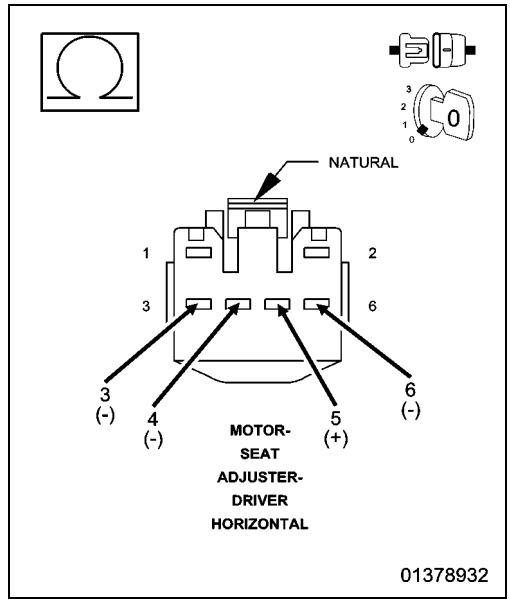

Yes

- Repair all circuits with a resistance below 10K Ohms for a short to the (G401) Driver Seat Horizontal Position Sense circuit.
- Perform POWER SEAT SYSTEM VERIFICATION TEST. (Refer to 28 - DTC-Based Diagnostics/MODULE, Memory Seat (MSMD) - Standard Procedure).

No

- Go To 5

5. CHECK THE (G401) DRIVER SEAT HORIZONTAL POSITION SENSE CIRCUIT AND THE (G491) DRIVER SEAT HORIZONTAL SENSOR GROUND CIRCUIT FUNCTION

1. Reconnect the MSM C3 connector.
2. Disconnect the scan tool.
3. Turn off all vehicle interior and exterior lighting.
4. Mark sure all doors are closed then wait 10 seconds.
5. Connect a 12-Volt test light between the (G401) Driver Seat Horizontal Position Sense circuit and the (G491) Driver Seat Horizontal Sensor Ground circuit at the Driver Horizontal Seat Adjuster Motor connector.
6. Move the seat switch in the horizontal adjust position then release the switch.

Does the test light illuminate for approximately five seconds then turn off?

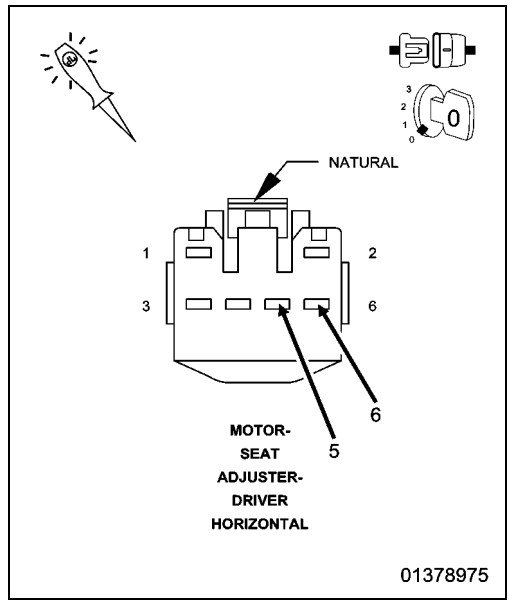

Yes

- Replace the Seat Track Horizontal Motor assembly in accordance with the Service Information.
- Perform POWER SEAT SYSTEM VERIFICATION TEST. (Refer to 28 - DTC-Based Diagnostics/MODULE, Memory Seat (MSMD) - Standard Procedure).

No

- Replace the Memory Seat Module (MSM) in accordance with the Service Information.
- Perform POWER SEAT SYSTEM VERIFICATION TEST. (Refer to 28 - DTC-Based Diagnostics/MODULE, Memory Seat (MSMD) - Standard Procedure).

B1D6E-SEAT HORIZONTAL POSITION SENSOR CIRCUIT HIGH

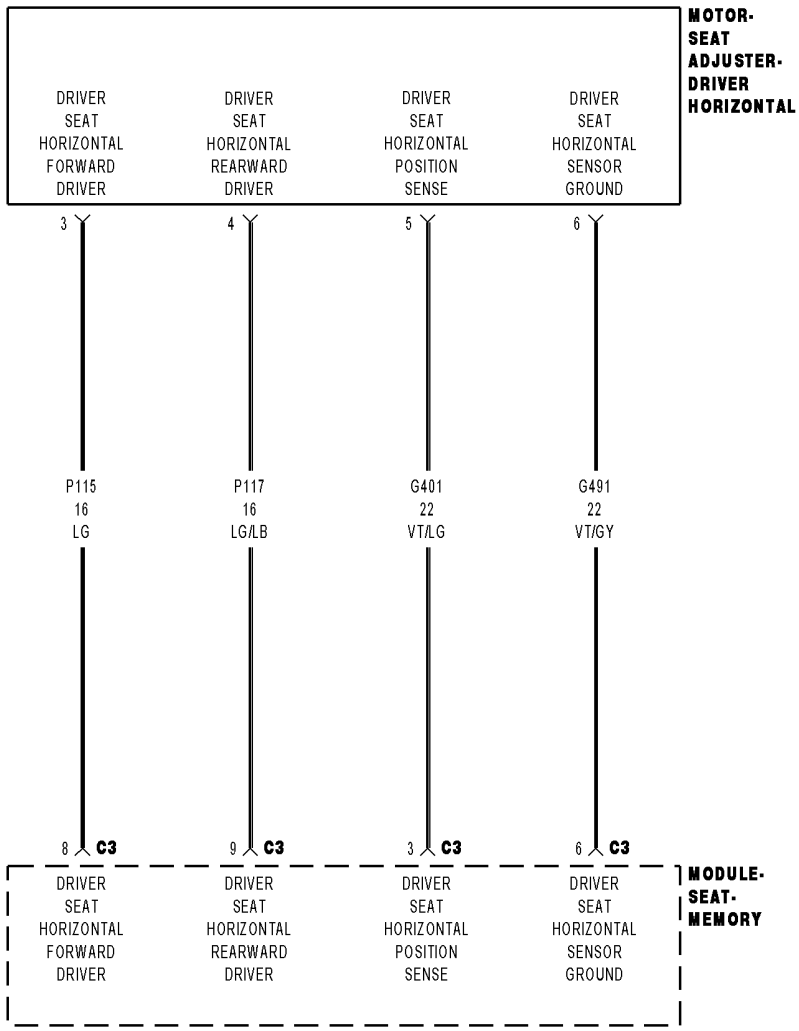

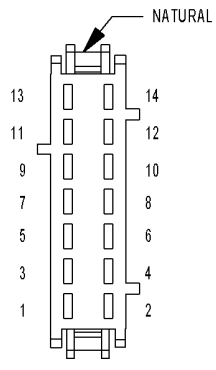

MODULE-
SEAT
MEMORY C3

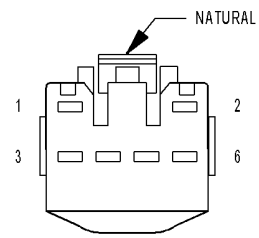

MOTOR-
SEAT
ADJUSTER-
DRIVER
HORIZONTAL

01378844

For a complete wiring diagram, **refer to the Wiring Information**.

- **When Monitored:**

  When the seat motor is activated (sensor supply Voltage is switched on whenever motor is activated).

- **Set Condition:**

  If the sensor Voltage is not within a specified range and the seat switch is moved in the same direction three consecutive times.

Possible Causes
(G401) DRIVER SEAT HORIZONTAL POSITION SENSE CIRCUIT SHORTED TO VOLTAGE
(G401) DRIVER SEAT HORIZONTAL POSITION SENSE CIRCUIT OPEN
(G491) DRIVER SEAT HORIZONTAL SENSOR GROUND CIRCUIT OPEN
DRIVER HORIZONTAL SEAT ADJUSTER MOTOR
MEMORY SEAT MODULE (MSM)

1. TEST FOR INTERMITTENT CONDITION

1. Turn the ignition on.
2. Using a scan tool, record and erase Diagnostic Trouble Codes (DTCs).
3. Move the seat switch in the horizontal adjust position three times.
4. Using a scan tool, read DTCs.

Does the scan tool display DTC B1D6E-SEAT HORIZONTAL POSITION SENSOR CIRCUIT HIGH?

Yes

- Go To 2

No

- The conditions that caused this code to set are not present at this time. Verify seat harness is routed correctly. Using the wiring diagram/schematic as a guide, inspect the wiring and connectors. Look for chafed, pierced, pinched, or partially broken wires and broken, bent, pushed out, spread, corroded, or contaminated terminals.
- Perform POWER SEAT SYSTEM VERIFICATION TEST. (Refer to 28 - DTC-Based Diagnostics/MODULE, Memory Seat (MSMD) - Standard Procedure).

2. CHECK THE (G401) DRIVER SEAT HORIZONTAL POSITION SENSE CIRCUIT FOR A SHORT TO VOLTAGE

1. Turn the ignition off.
2. Disconnect the Driver Horizontal Seat Adjuster Motor connector.
3. Disconnect the MSM C3 connector.

NOTE: Check connectors. Clean and repair as necessary.

4. Turn the ignition on.
5. Measure the Voltage of the (G401) Driver Seat Horizontal Position Sense circuit between the Driver Horizontal Seat Adjuster Motor connector and ground.

Is there any Voltage present?

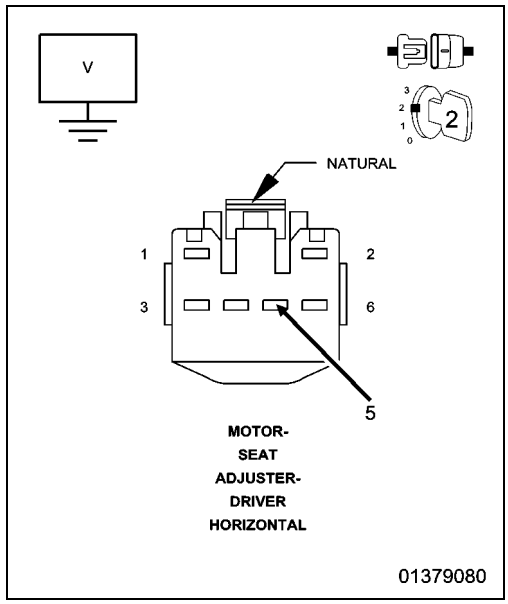

Yes

- Repair the (G401) Driver Seat Horizontal Position Sense circuit for a short to Voltage.
- Perform POWER SEAT SYSTEM VERIFICATION TEST. (Refer to 28 - DTC-Based Diagnostics/MODULE, Memory Seat (MSMD) - Standard Procedure).

No

- Go To 3

3. CHECK THE (G401) DRIVER SEAT HORIZONTAL POSITION SENSE CIRCUIT AND THE (G491) DRIVER SEAT HORIZONTAL SENSOR GROUND CIRCUIT FUNCTION

1. Turn the ignition off.
2. Reconnect the MSM C3 connector.
3. Disconnect the scan tool.
4. Turn off all vehicle interior and exterior lighting.
5. Mark sure all doors are closed then wait 10 seconds.
6. Connect a 12-Volt test light connect between the (G401) Driver Seat Horizontal Position Sense circuit and the (G491) Driver Seat Horizontal Sensor Ground circuit at the Driver Horizontal Seat Adjuster Motor connector.
7. Move the seat switch in the horizontal adjust position then release the switch.

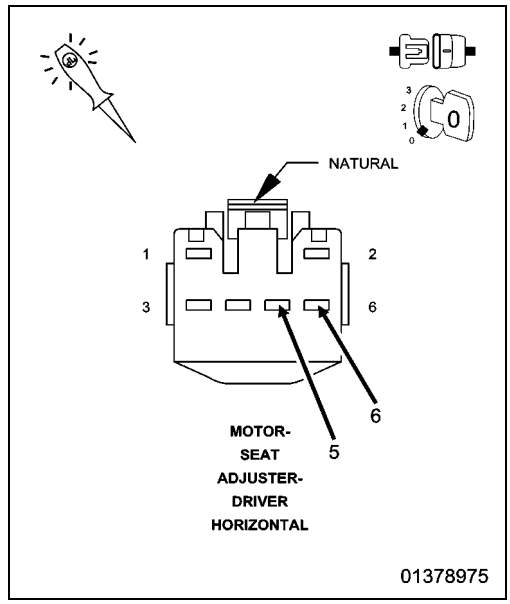

Does the test light illuminate for approximately five seconds then turn off?

Yes

- Replace the Seat Track Horizontal Motor Assembly in accordance with the Service Information.
- Perform POWER SEAT SYSTEM VERIFICATION TEST. (Refer to 28 - DTC-Based Diagnostics/MODULE, Memory Seat (MSMD) - Standard Procedure).

No

- Go To 4

4. CHECK THE (G401) DRIVER SEAT HORIZONTAL POSITION SENSE CIRCUIT FOR AN OPEN

1. Disconnect the MSM C3 connector.

NOTE: Check connectors. Clean and repair as necessary.

2. Measure the resistance of the (G401) Driver Seat Horizontal Position Sense circuit between the Driver Horizontal Seat Adjuster Motor connector and the MSM C3 connector.

Is the resistance below 5.0 Ohms?

Yes

- Go To 5

No

- Repair the (G401) Driver Seat Horizontal Position Sense circuit for an open.
- Perform POWER SEAT SYSTEM VERIFICATION TEST. (Refer to 28 - DTC-Based Diagnostics/MODULE, Memory Seat (MSMD) - Standard Procedure).

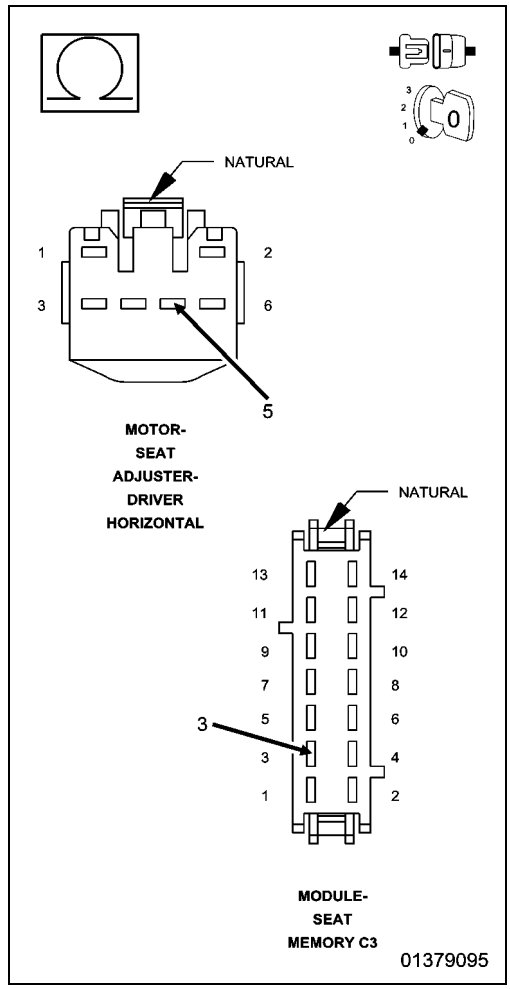

5. CHECK THE (G491) DRIVER SEAT HORIZONTAL SENSOR GROUND CIRCUIT FOR AN OPEN

1. Measure the resistance of the (G491) Driver Seat Horizontal Sensor Ground circuit between the Driver Horizontal Seat Adjuster Motor connector and the MSM C3 connector.

Is the resistance below 5.0 Ohms?

Yes

- Replace the Memory Seat Module (MSM) in accordance with the Service Information.
- Perform POWER SEAT SYSTEM VERIFICATION TEST. (Refer to 28 - DTC-Based Diagnostics/MODULE, Memory Seat (MSMD) - Standard Procedure).

No

- Repair the (G491) Driver Seat Horizontal Senor Ground circuit for an open.
- Perform POWER SEAT SYSTEM VERIFICATION TEST. (Refer to 28 - DTC-Based Diagnostics/MODULE, Memory Seat (MSMD) - Standard Procedure).

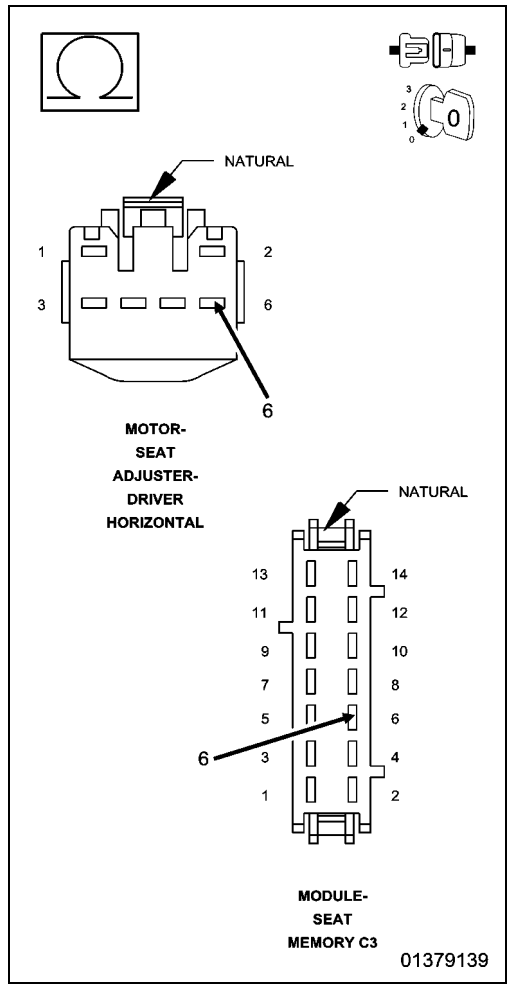

B1D71-SEAT FRONT VERTICAL POSITION SENSOR CIRCUIT LOW

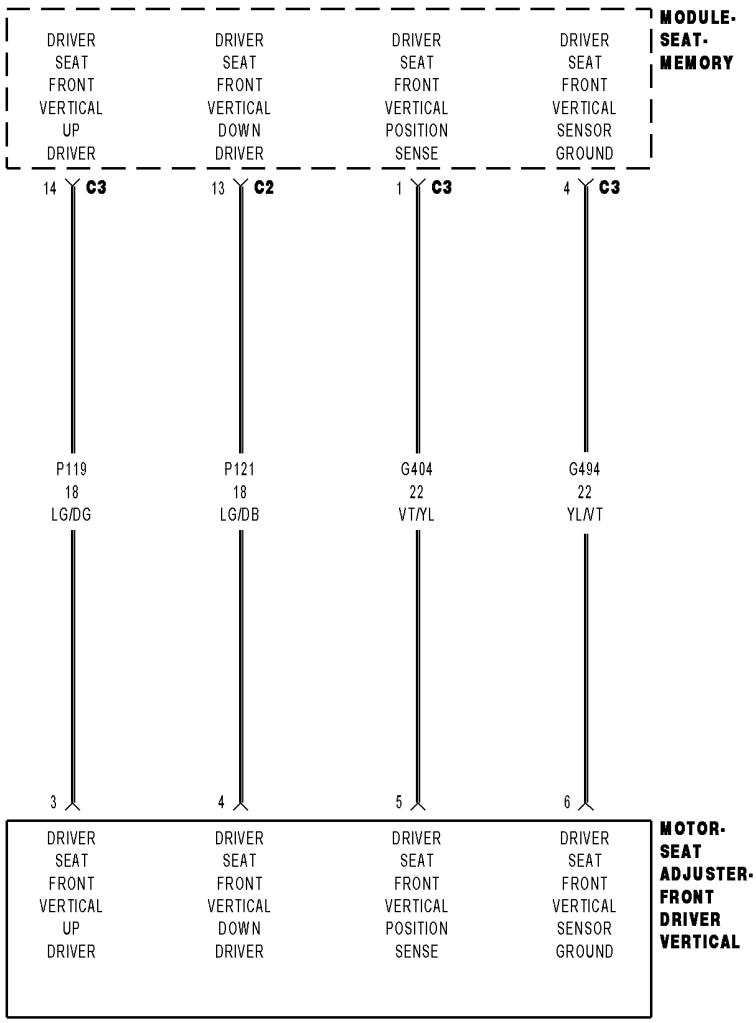

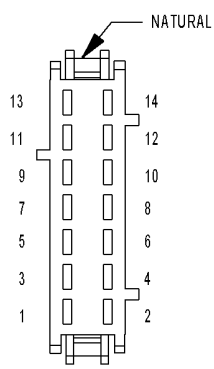

MODULE-
SEAT
MEMORY C3

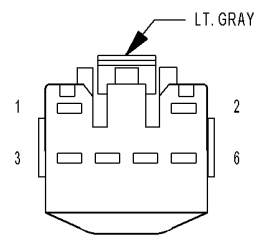

MOTOR-
SEAT
ADJUSTER-
FRONT
DRIVER
VERTICAL

01379203

For a complete wiring diagram, **refer to the Wiring Information**.

- **When Monitored:**
  Continuously.
- **Set Condition:**
  If Voltage on the (G404) Driver Seat Front Vertical Position Sense circuit is not within a specified range.

Possible Causes
(G404) DRIVER SEAT FRONT VERTICAL POSITION SENSE CIRCUIT SHORTED TO GROUND
(G404) DRIVER SEAT FRONT VERTICAL POSITION SENSE CIRCUIT SHORTED TO THE (G494) DRIVER SEAT FRONT VERTICAL SENSOR GROUND CIRCUIT
(G404) DRIVER SEAT FRONT VERTICAL POSITION SENSE CIRCUIT SHORTED TO THE (P119) DRIVER SEAT FRONT VERTICAL UP DRIVER CIRCUIT
(G404) DRIVER SEAT FRONT VERTICAL POSITION SENSE CIRCUIT SHORTED TO THE (P121) DRIVER SEAT FRONT VERTICAL DOWN DRIVER CIRCUIT
FRONT DRIVER VERTICAL SEAT ADJUSTER MOTOR
MEMORY SEAT MODULE (MSM)

1. CHECK FOR ACTIVE FAULT WITH SEAT STATIONARY

1. Turn the ignition on.
2. Using a scan tool, record and erase Diagnostic Trouble Codes (DTCs).
3. Cycle the ignition from on to off three times.
4. Turn the ignition on and wait 30 seconds.
5. Using a scan tool, read DTCs.

Is DTC B1D71-SEAT FRONT VERTICAL POSITION SENSOR CIRCUIT LOW active?

Yes

- Go To 3

No

- Go To 2

2. CHECK FOR ACTIVE FAULT WHILE ADJUSTING THE SEAT

1. Move the seat switch in the front vertical adjust position three times.
2. Using a scan tool, read DTCs.

Is DTC B1D71-SEAT FRONT VERTICAL POSITION SENSOR CIRCUIT LOW active?

Yes

- Go To 3

No

- The conditions that caused this code to set are not present at this time. Verify seat harness is routed correctly. Using the wiring diagram/schematic as a guide, inspect the wiring and connectors. Look for chafed, pierced, pinched, or partially broken wires and broken, bent, pushed out, spread, corroded, or contaminated terminals.
- Perform POWER SEAT SYSTEM VERIFICATION TEST. (Refer to 28 - DTC-Based Diagnostics/MODULE, Memory Seat (MSMD) - Standard Procedure).

3. CHECK THE (G404) DRIVER SEAT FRONT VERTICAL POSITION SENSE CIRCUIT FOR A SHORT TO GROUND

1. Turn the ignition off.
2. Disconnect the MSM C3 connector.
3. Disconnect the Front Driver Vertical Seat Adjuster Motor connector.

NOTE: Check connectors. Clean and repair as necessary.

4. Measure the resistance of the (G404) Driver Seat Front Vertical Position Sense circuit between ground and the Front Driver Vertical Seat Adjuster Motor connector.

Is the resistance below 10K Ohms?

Yes

- Repair the (G404) Driver Seat Front Vertical Position Sense circuit for a short to ground.
- Perform POWER SEAT SYSTEM VERIFICATION TEST. (Refer to 28 - DTC-Based Diagnostics/MODULE, Memory Seat (MSMD) - Standard Procedure).

No

- Go To 4

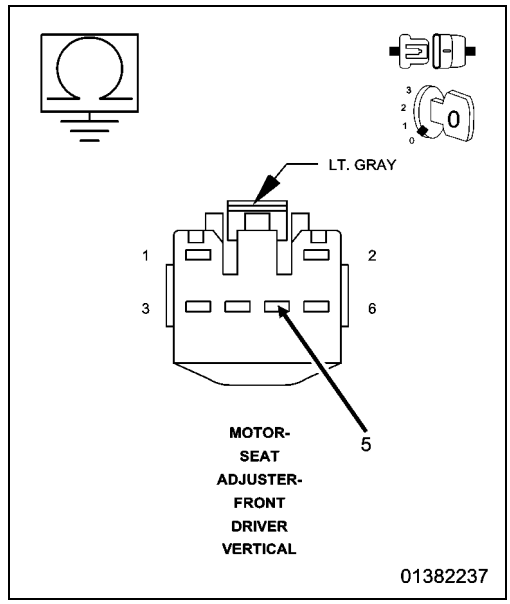

4. CHECK THE (G404) DRIVER SEAT FRONT VERTICAL POSITION SENSE CIRCUIT FOR A SHORT TO (G494) DRIVER SEAT FRONT VERTICAL SENSOR GROUND CIRCUIT, (P119) DRIVER SEAT FRONT VERTICAL UP DRIVER CIRCUIT, AND (P121) DRIVER SEAT FRONT VERTICAL DOWN DRIVER CIRCUIT

1. Measure the resistance between the (G404) Driver Seat Front Vertical Position Sense circuit and the (G494) Driver Seat Front Vertical Sensor Ground circuit at the Front Driver Vertical Seat Adjuster Motor connector.
2. Measure the resistance between the (G404) Driver Seat Front Vertical Position Sense circuit and the (P119) Driver Seat Front Vertical Up Driver circuit at the Front Driver Vertical Seat Adjuster Motor connector.
3. Measure the resistance between the (G404) Driver Seat Front Vertical Position Sense circuit and the (P121) Driver Seat Front Vertical Down Driver circuit at the Front Driver Vertical Seat Adjuster Motor connector.

Is the resistance below 10K Ohms for any measurement?

Yes

- Repair all circuits with a resistance below 10K Ohms for a short to the (G404) Driver Seat Front Vertical Position Sense circuit.
- Perform POWER SEAT SYSTEM VERIFICATION TEST. (Refer to 28 - DTC-Based Diagnostics/MODULE, Memory Seat (MSMD) - Standard Procedure).

No

- Go To 5

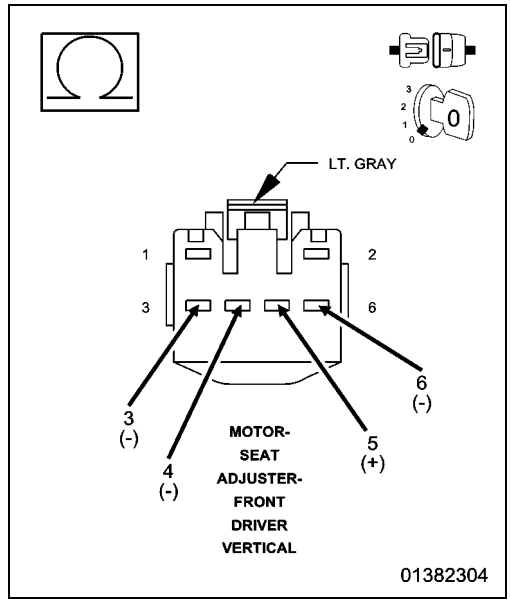

5. CHECK THE (G404) DRIVER SEAT FRONT VERTICAL POSITION SENSE CIRCUIT AND THE (G494) DRIVER SEAT FRONT VERTICAL SENSOR GROUND CIRCUIT FUNCTION

1. Reconnect the MSM C3 connector.
2. Disconnect the scan tool.
3. Turn off all vehicle interior and exterior lighting.
4. Mark sure all doors are closed then wait 10 seconds.
5. Connect a 12-Volt test light between the (G404) Driver Seat Front Vertical Position Sense circuit and the (G494) Driver Seat Front Vertical Sensor Ground circuit at the Front Driver Vertical Seat Adjuster Motor connector.
6. Move the seat switch in the front vertical adjust position then release the switch.

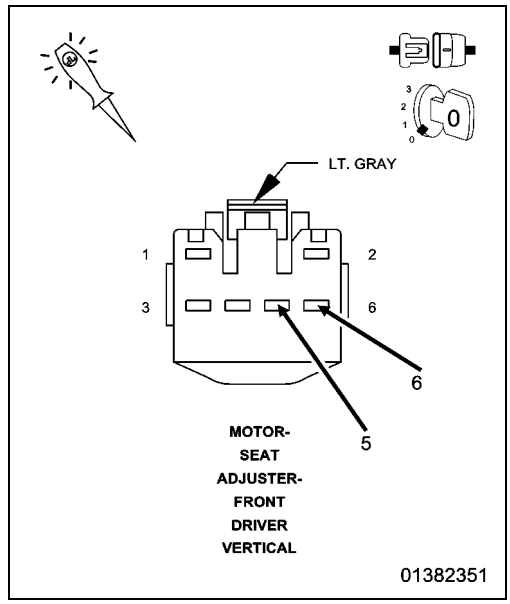

Does the test light illuminate for approximately five seconds then turn off?

Yes

- Replace the Front Driver Vertical Seat Adjuster Motor assembly in accordance with the Service Information.
- Perform POWER SEAT SYSTEM VERIFICATION TEST. (Refer to 28 - DTC-Based Diagnostics/MODULE, Memory Seat (MSMD) - Standard Procedure).

No

- Replace the Memory Seat Module (MSM) in accordance with the Service Information.
- Perform POWER SEAT SYSTEM VERIFICATION TEST. (Refer to 28 - DTC-Based Diagnostics/MODULE, Memory Seat (MSMD) - Standard Procedure).

B1D72-SEAT FRONT VERTICAL POSITION SENSOR CIRCUIT HIGH

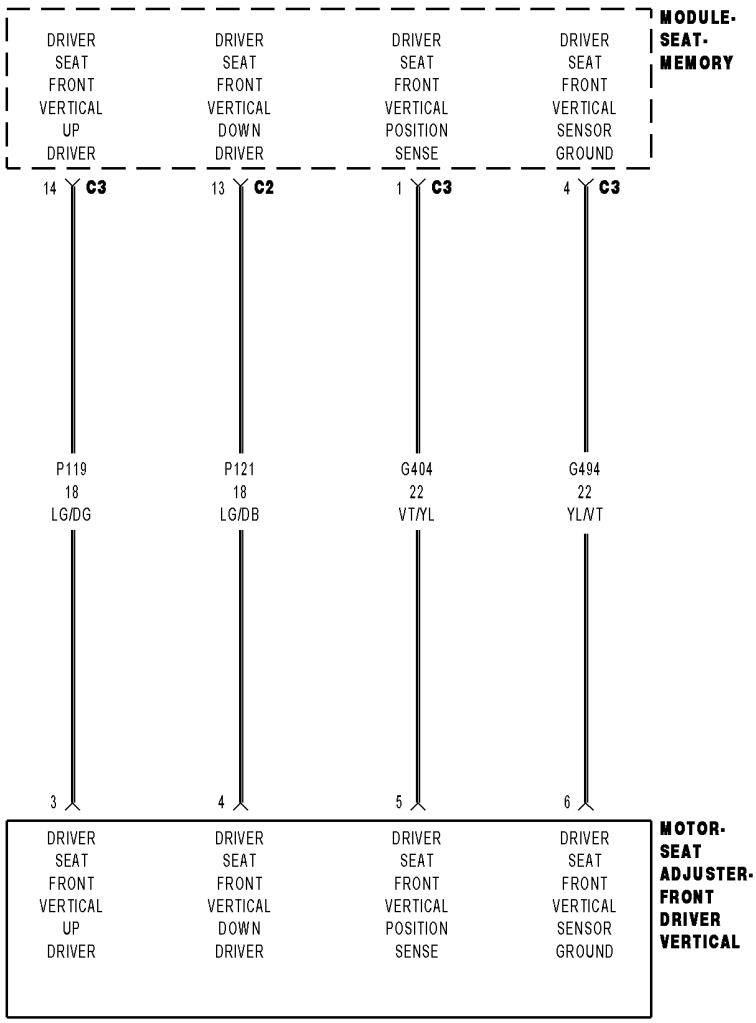

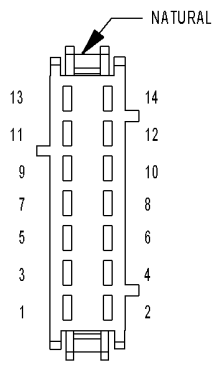

MODULE-
SEAT
MEMORY C3

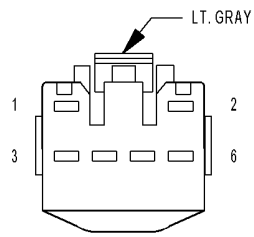

MOTOR-
SEAT
ADJUSTER-
FRONT
DRIVER
VERTICAL

01379203

For a complete wiring diagram, **refer to the Wiring Information**.

- **When Monitored:**
  When the seat motor is activated (sensor supply Voltage is switched on whenever motor is activated).
- **Set Condition:**
  If the sensor Voltage is not within a specified range and the seat switch is moved in the same direction three consecutive times.

Possible Causes
(G404) DRIVER SEAT FRONT VERTICAL POSITION SENSE CIRCUIT SHORTED TO VOLTAGE
(G404) DRIVER SEAT FRONT VERTICAL POSITION SENSE CIRCUIT OPEN
(G494) DRIVER SEAT FRONT VERTICAL SENSOR GROUND CIRCUIT OPEN
FRONT DRIVER VERTICAL SEAT ADJUSTER MOTOR
MEMORY SEAT MODULE (MSM)

1. TEST FOR INTERMITTENT CONDITION

1. Turn the ignition on.
2. Using a scan tool, record and erase Diagnostic Trouble Codes (DTCs).
3. Move the seat switch in the front vertical adjust position three times.
4. Using a scan tool, read DTCs.

Does the scan tool display DTC B1D72-SEAT FRONT VERTICAL POSITION SENSOR CIRCUIT HIGH?

Yes

- Go To 2

No

- The conditions that caused this code to set are not present at this time. Verify seat harness is routed correctly. Using the wiring diagram/schematic as a guide, inspect the wiring and connectors. Look for chafed, pierced, pinched, or partially broken wires and broken, bent, pushed out, spread, corroded, or contaminated terminals.
- Perform POWER SEAT SYSTEM VERIFICATION TEST. (Refer to 28 - DTC-Based Diagnostics/MODULE, Memory Seat (MSMD) - Standard Procedure).

2. CHECK THE (G404) DRIVER SEAT FRONT VERTICAL POSITION SENSE CIRCUIT FOR A SHORT TO VOLTAGE

1. Turn the ignition off.
2. Disconnect the Front Driver Vertical Seat Adjuster Motor connector.
3. Disconnect the MSM C3 connector.

NOTE: Check connectors. Clean and repair as necessary.

4. Turn the ignition on.
5. Measure the Voltage of the (G404) Driver Seat Front Vertical Position Sense circuit between the Driver Horizontal Seat Adjuster Motor connector and ground.

Is there any Voltage present?

Yes

- Repair the (G404) Driver Seat Front Vertical Position Sense circuit for a short to Voltage.
- Perform POWER SEAT SYSTEM VERIFICATION TEST. (Refer to 28 - DTC-Based Diagnostics/MODULE, Memory Seat (MSMD) - Standard Procedure).

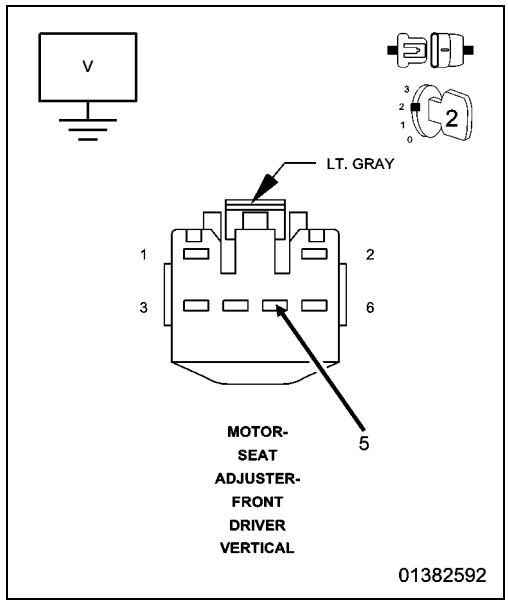

No

- Go To 3

3. CHECK THE (G404) DRIVER SEAT FRONT VERTICAL POSITION SENSE CIRCUIT AND THE (G494) DRIVER SEAT FRONT VERTICAL SENSOR GROUND CIRCUIT FUNCTION

1. Turn the ignition off.
2. Reconnect the MSM C3 connector.
3. Disconnect the scan tool.
4. Turn off all vehicle interior and exterior lighting.
5. Mark sure all doors are closed then wait 10 seconds.
6. Connect a 12-Volt test light between the (G404) Driver Seat Front Vertical Position Sense circuit and the (G494) Driver Seat Front Vertical Sensor Ground circuit at the Driver Front Vertical Seat Adjuster Motor connector.
7. Move the seat switch in the front vertical adjust position then release the switch.

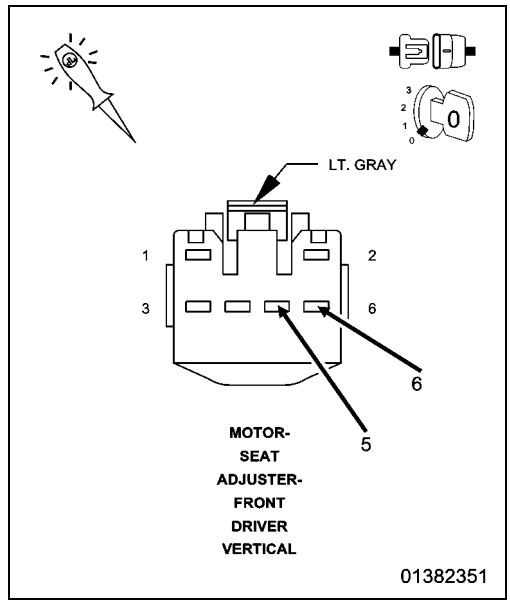

Does the test light illuminate for approximately five seconds then turn off?

Yes

- Replace the Front Driver Vertical Seat Adjuster Motor Assembly in accordance with the Service Information.
- Perform POWER SEAT SYSTEM VERIFICATION TEST. (Refer to 28 - DTC-Based Diagnostics/MODULE, Memory Seat (MSMD) - Standard Procedure).

No

- Go To 4

4. CHECK THE (G404) DRIVER SEAT FRONT VERTICAL POSITION SENSE CIRCUIT FOR AN OPEN

1. Disconnect the MSM C3 connector.

NOTE: Check connectors. Clean and repair as necessary.

2. Measure the resistance of the (G404) Driver Seat Front Vertical Position Sense circuit between the Front Driver Vertical Seat Adjuster Motor connector and the MSM C3 connector.

Is the resistance below 5.0 Ohms?

Yes

- Go To 5

No

- Repair the (G404) Driver Seat Front Vertical Position Sense circuit for an open.
- Perform POWER SEAT SYSTEM VERIFICATION TEST. (Refer to 28 - DTC-Based Diagnostics/MODULE, Memory Seat (MSMD) - Standard Procedure).

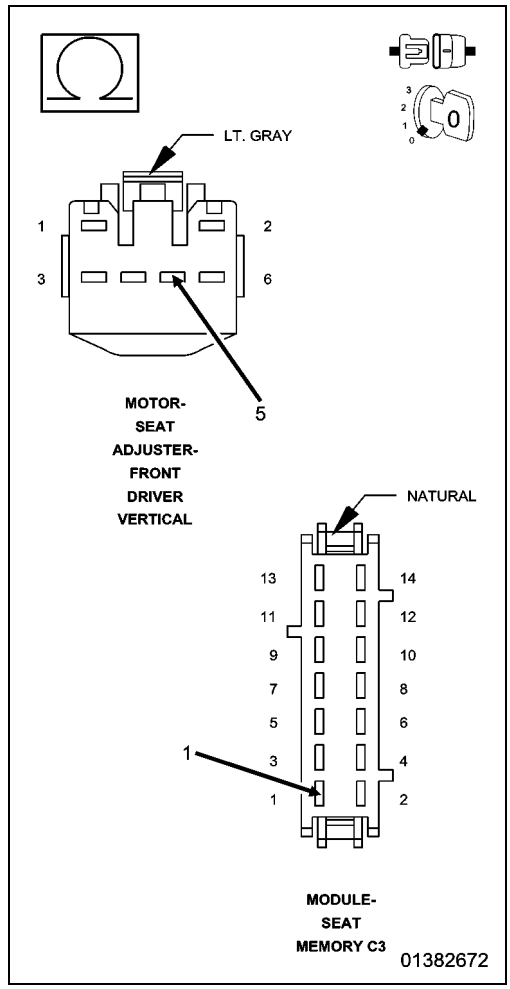

5. CHECK THE (G494) DRIVER SEAT FRONT VERTICAL SENSOR GROUND CIRCUIT FOR AN OPEN

1. Measure the resistance of the (G494) Driver Seat Front Vertical Sensor Ground circuit between the Driver Front Vertical Seat Adjuster Motor connector and the MSM C3 connector.

Is the resistance below 5.0 Ohms?

Yes

- Replace the Memory Seat Module (MSM) in accordance with the Service Information.
- Perform POWER SEAT SYSTEM VERIFICATION TEST. (Refer to 28 - DTC-Based Diagnostics/MODULE, Memory Seat (MSMD) - Standard Procedure).

No

- Repair the (G494) Driver Seat Front Vertical Senor Ground circuit for an open.
- Perform POWER SEAT SYSTEM VERIFICATION TEST. (Refer to 28 - DTC-Based Diagnostics/MODULE, Memory Seat (MSMD) - Standard Procedure).

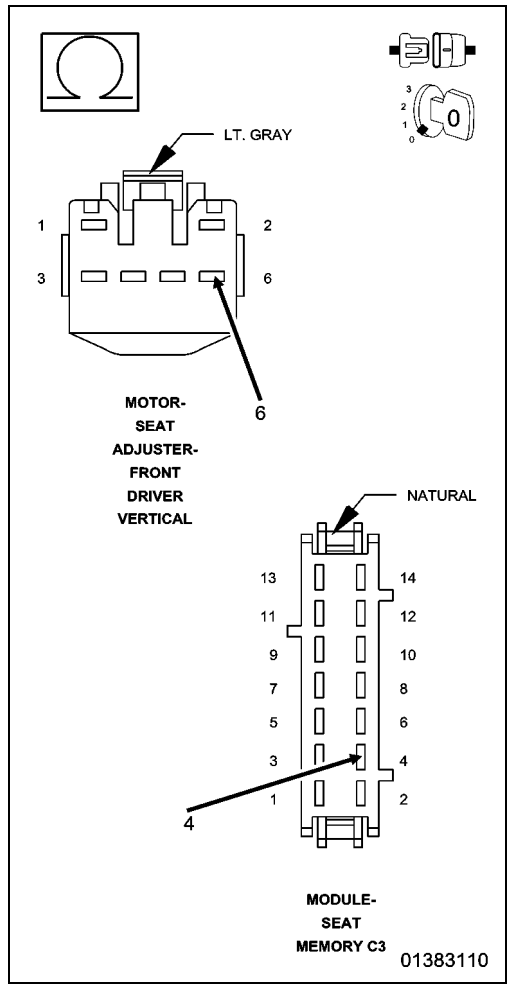

B1D75-SEAT REAR VERTICAL POSITION SENSOR CIRCUIT LOW

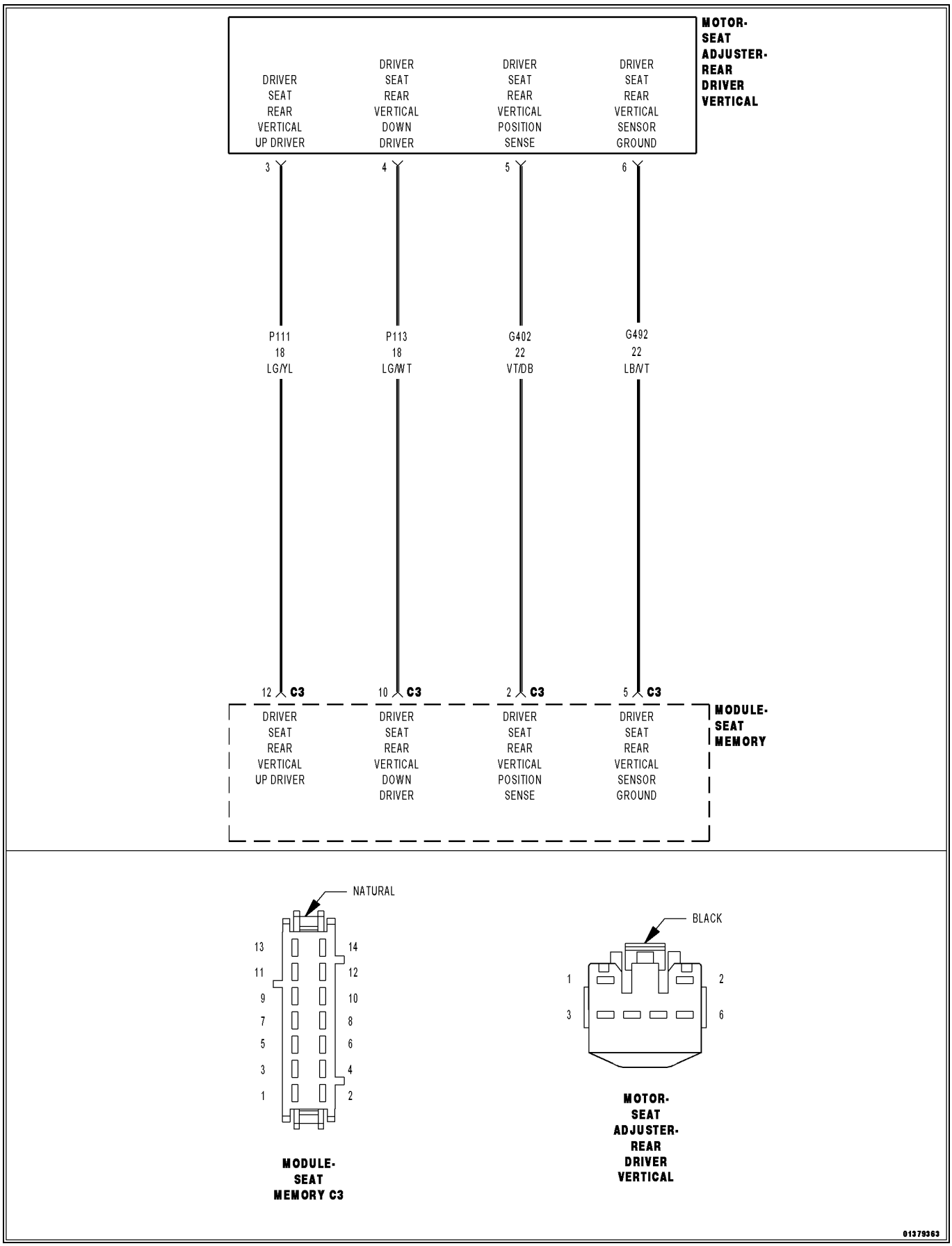

For a complete wiring diagram, **refer to the Wiring Information**.

- **When Monitored:**
  Continuously.
- **Set Condition:**
  If Voltage on the (G402) Driver Seat Rear Vertical Position Sense circuit is not within a specified range.

Possible Causes
(G402) DRIVER SEAT REAR VERTICAL POSITION SENSE CIRCUIT SHORTED TO GROUND
(G402) DRIVER SEAT REAR VERTICAL POSITION SENSE CIRCUIT SHORTED TO THE (G492) DRIVER SEAT REAR VERTICAL SENSOR GROUND CIRCUIT
(G402) DRIVER SEAT REAR VERTICAL POSITION SENSE CIRCUIT SHORTED TO THE (P111) DRIVER SEAT REAR VERTICAL UP DRIVER CIRCUIT
(G402) DRIVER SEAT REAR VERTICAL POSITION SENSE CIRCUIT SHORTED TO THE (P113) DRIVER SEAT REAR VERTICAL DOWN DRIVER CIRCUIT
REAR DRIVER VERTICAL SEAT ADJUSTER MOTOR
MEMORY SEAT MODULE (MSM)

1. CHECK FOR ACTIVE FAULT WITH SEAT STATIONARY

1. Turn the ignition on.
2. Using a scan tool, record and erase Diagnostic Trouble Codes (DTCs).
3. Cycle the ignition from on to off three times.
4. Turn the ignition on and wait 30 seconds.
5. Using a scan tool, read DTCs.

Is DTC B1D75-SEAT REAR VERTICAL POSITION SENSOR CIRCUIT LOW active?

Yes

- Go To 3

No

- Go To 2

2. CHECK FOR ACTIVE FAULT WHILE ADJUSTING THE SEAT

1. Move the seat switch in the rear vertical adjust position three times.
2. Using a scan tool, read DTCs.

Is DTC B1D75-SEAT REAR VERTICAL POSITION SENSOR CIRCUIT LOW active?

Yes

- Go To 3

No

- The conditions that caused this code to set are not present at this time. Verify seat harness is routed correctly. Using the wiring diagram/schematic as a guide, inspect the wiring and connectors. Look for chafed, pierced, pinched, or partially broken wires and broken, bent, pushed out, spread, corroded, or contaminated terminals.
- Perform POWER SEAT SYSTEM VERIFICATION TEST. (Refer to 28 - DTC-Based Diagnostics/MODULE, Memory Seat (MSMD) - Standard Procedure).

3. CHECK THE (G402) DRIVER SEAT REAR VERTICAL POSITION SENSE CIRCUIT FOR A SHORT TO GROUND

1. Turn the ignition off.
2. Disconnect the MSM C3 connector.
3. Disconnect the Rear Driver Vertical Seat Adjuster Motor connector.

NOTE: Check connectors. Clean and repair as necessary.

4. Measure the resistance of the (G402) Driver Seat Rear Vertical Position Sense circuit between ground and the Rear Driver Vertical Seat Adjuster Motor connector.

Is the resistance below 10K Ohms?

Yes

- Repair the (G402) Driver Seat Rear Vertical Position Sense circuit for a short to ground.
- Perform POWER SEAT SYSTEM VERIFICATION TEST. (Refer to 28 - DTC-Based Diagnostics/MODULE, Memory Seat (MSMD) - Standard Procedure).

No

- Go To 4

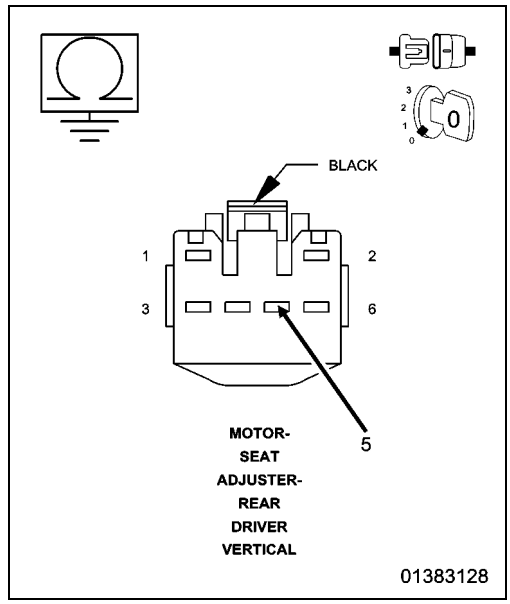

4. CHECK THE (G402) DRIVER SEAT REAR VERTICAL POSITION SENSE CIRCUIT FOR A SHORT TO (G492) DRIVER SEAT REAR VERTICAL SENSOR GROUND CIRCUIT, (P111) DRIVER SEAT REAR VERTICAL UP DRIVER CIRCUIT, AND (P113) DRIVER SEAT REAR VERTICAL DOWN DRIVER CIRCUIT

1. Measure the resistance between the (G402) Driver Seat Rear Vertical Position Sense circuit and the (G492) Driver Seat Rear Vertical Sensor Ground circuit at the Rear Driver Vertical Seat Adjuster Motor connector.
2. Measure the resistance between the (G402) Driver Seat Rear Vertical Position Sense circuit and the (P111) Driver Seat Rear Vertical Up Driver circuit at the Rear Driver Vertical Seat Adjuster Motor connector.
3. Measure the resistance between the (G402) Driver Seat Rear Vertical Position Sense circuit and the (P113) Driver Seat Rear Vertical Down Driver circuit at the Rear Driver Vertical Seat Adjuster Motor connector.

Is the resistance below 10K Ohms for any measurement?

Yes

- Repair all circuits with a resistance below 10K Ohms for a short to the (G402) Driver Seat Rear Vertical Position Sense circuit.
- Perform POWER SEAT SYSTEM VERIFICATION TEST. (Refer to 28 - DTC-Based Diagnostics/MODULE, Memory Seat (MSMD) - Standard Procedure).

No

- Go To 5

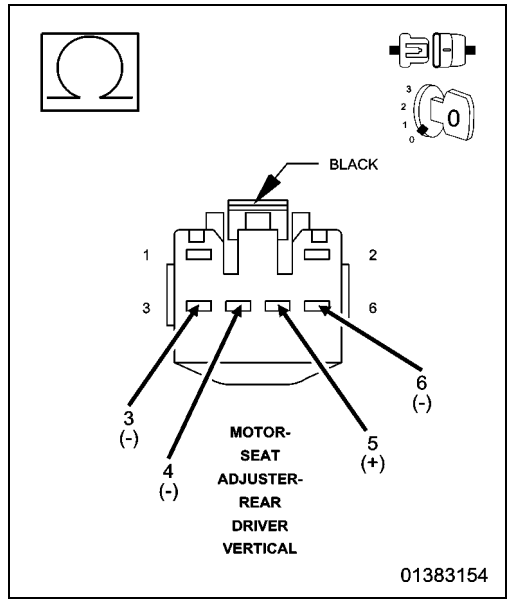

5. CHECK THE (G402) DRIVER SEAT REAR VERTICAL POSITION SENSE CIRCUIT AND THE (G492) DRIVER SEAT REAR VERTICAL SENSOR GROUND CIRCUIT FUNCTION

1. Reconnect the MSM C3 connector.
2. Disconnect the scan tool.
3. Turn off all vehicle interior and exterior lighting.
4. Mark sure all doors are closed then wait 10 seconds.
5. Connect a 12-Volt test light between the (G402) Driver Seat Rear Vertical Position Sense circuit and the (G492) Driver Seat Rear Vertical Sensor Ground circuit at the Rear Driver Vertical Seat Adjuster Motor connector.
6. Move the seat switch in the rear vertical adjust position then release the switch.

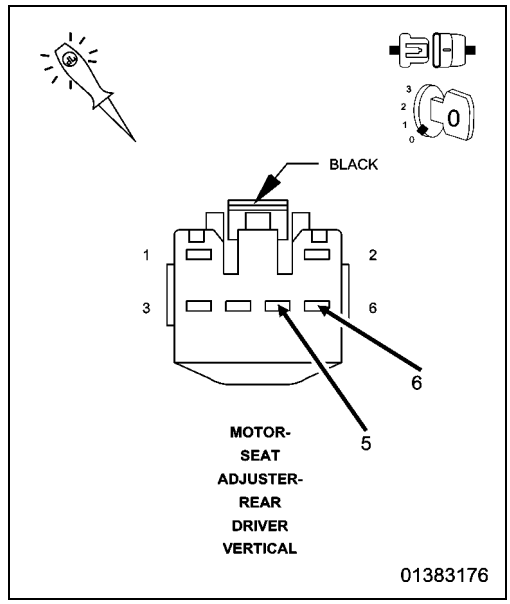

Does the test light illuminate for approximately five seconds then turn off?

Yes

- Replace the Rear Driver Vertical Seat Adjuster Motor assembly in accordance with the Service Information.
- Perform POWER SEAT SYSTEM VERIFICATION TEST. (Refer to 28 - DTC-Based Diagnostics/MODULE, Memory Seat (MSMD) - Standard Procedure).

No

- Replace the Memory Seat Module (MSM) in accordance with the Service Information.
- Perform POWER SEAT SYSTEM VERIFICATION TEST. (Refer to 28 - DTC-Based Diagnostics/MODULE, Memory Seat (MSMD) - Standard Procedure).

B1D76-SEAT REAR VERTICAL POSITION SENSOR CIRCUIT HIGH

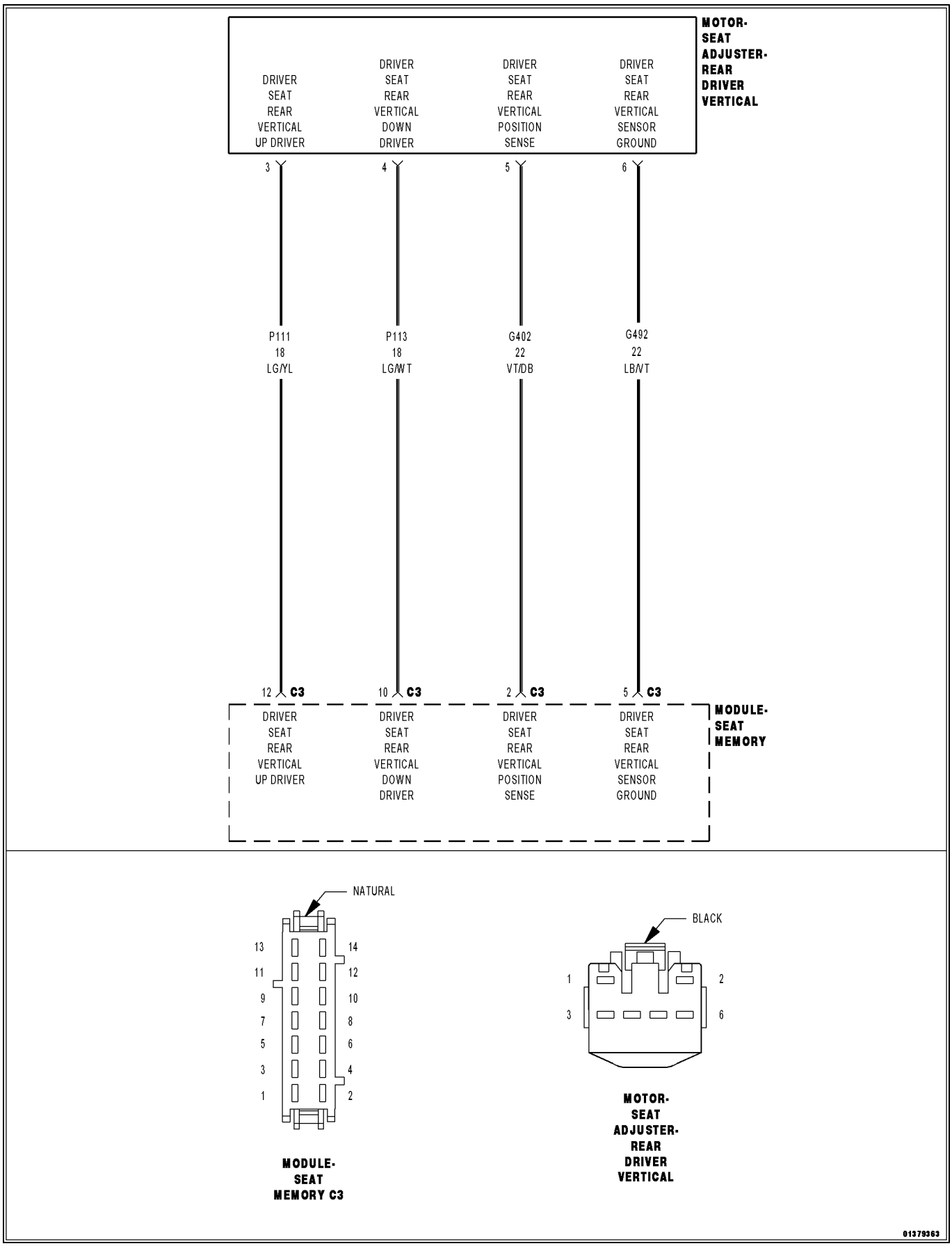

For a complete wiring diagram, **refer to the Wiring Information.**

- **When Monitored:**
  When the seat motor is activated (sensor supply voltage is switched on whenever motor is activated).
- **Set Condition:**
  If the sensor Voltage is not within a specified range and the seat switch is moved in the same direction three consecutive times.

Possible Causes
(G402) DRIVER SEAT REAR VERTICAL POSITION SENSE CIRCUIT SHORTED TO VOLTAGE
(G402) DRIVER SEAT REAR VERTICAL POSITION SENSE CIRCUIT OPEN
(G492) DRIVER SEAT REAR VERTICAL SENSOR GROUND CIRCUIT OPEN
REAR DRIVER VERTICAL SEAT ADJUSTER MOTOR
MEMORY SEAT MODULE (MSM)

1. TEST FOR INTERMITTENT CONDITION

1. Turn the ignition on.
2. Using a scan tool, record and erase Diagnostic Trouble Codes (DTCs).
3. Move the seat switch in the rear vertical adjust position three times.
4. Using a scan tool, read DTCs.

Does the scan tool display DTC B1D76–SEAT REAR VERTICAL POSITION SENSOR CIRCUIT HIGH?

Yes

- Go To 2

No

- The conditions that caused this code to set are not present at this time. Verify seat harness is routed correctly. Using the wiring diagram/schematic as a guide, inspect the wiring and connectors. Look for chafed, pierced, pinched, or partially broken wires and broken, bent, pushed out, spread, corroded, or contaminated terminals.
- Perform POWER SEAT SYSTEM VERIFICATION TEST. (Refer to 28 - DTC-Based Diagnostics/MODULE, Memory Seat (MSMD) - Standard Procedure).

2. CHECK THE (G402) DRIVER SEAT REAR VERTICAL POSITION SENSE CIRCUIT FOR A SHORT TO VOLTAGE

1. Turn the ignition off.
2. Disconnect the Rear Driver Vertical Seat Adjuster Motor connector.
3. Disconnect the MSM C3 connector.

NOTE: Check connectors. Clean and repair as necessary.

4. Turn the ignition on.
5. Measure the Voltage of the (G402) Driver Seat Rear Vertical Position Sense circuit between the Rear Driver Vertical Seat Adjuster Motor connector and ground.

Is there any Voltage present?

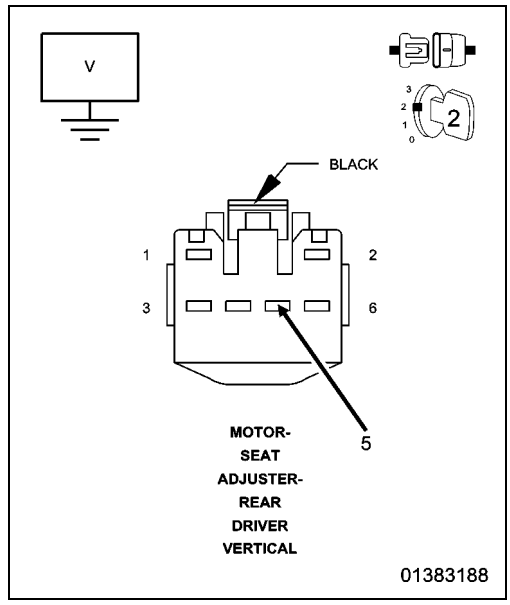

Yes

- Repair the (G402) Driver Seat Rear Vertical Position Sense circuit for a short to Voltage.
- Perform POWER SEAT SYSTEM VERIFICATION TEST. (Refer to 28 - DTC-Based Diagnostics/MODULE, Memory Seat (MSMD) - Standard Procedure).

No

- Go To 3

3. CHECK THE (G402) DRIVER SEAT REAR VERTICAL POSITION SENSE CIRCUIT AND THE (G492) DRIVER SEAT REAR VERTICAL SENSOR GROUND CIRCUIT FUNCTION

1. Turn the ignition off.
2. Reconnect the MSM C3 connector.
3. Disconnect the scan tool.
4. Turn off all vehicle interior and exterior lighting.
5. Mark sure all doors are closed then wait 10 seconds.
6. Connect a 12-Volt test light between the (G402) Driver Seat Rear Vertical Position Sense circuit and the (G492) Driver Seat Rear Vertical Sensor Ground circuit at the Driver Rear Vertical Seat Adjuster Motor connector.
7. Move the seat switch in the rear vertical adjust position then release the switch.

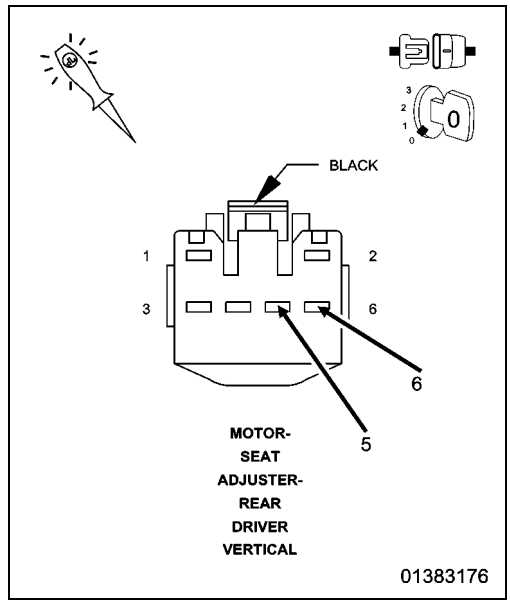

Does the test light illuminate for approximately five seconds then turn off?

Yes

- Replace the Rear Driver Vertical Seat Adjuster motor assembly in accordance with the Service Information.
- Perform POWER SEAT SYSTEM VERIFICATION TEST. (Refer to 28 - DTC-Based Diagnostics/MODULE, Memory Seat (MSMD) - Standard Procedure).

No

- Go To 4

4. CHECK THE (G402) DRIVER SEAT REAR VERTICAL POSITION SENSE CIRCUIT FOR AN OPEN

1. Disconnect the MSM C3 connector.

NOTE: Check connectors. Clean and repair as necessary.

2. Measure the resistance of the (G402) Driver Seat Rear Vertical Position Sense circuit between the Rear Driver Vertical Seat Adjuster Motor connector and the MSM C3 connector.

Is the resistance below 5.0 ohms?

Yes

- Go To 5

No

- Repair the (G402) Driver Seat Rear Vertical Position Sense circuit for an open.
- Perform POWER SEAT SYSTEM VERIFICATION TEST. (Refer to 28 - DTC-Based Diagnostics/MODULE, Memory Seat (MSMD) - Standard Procedure).

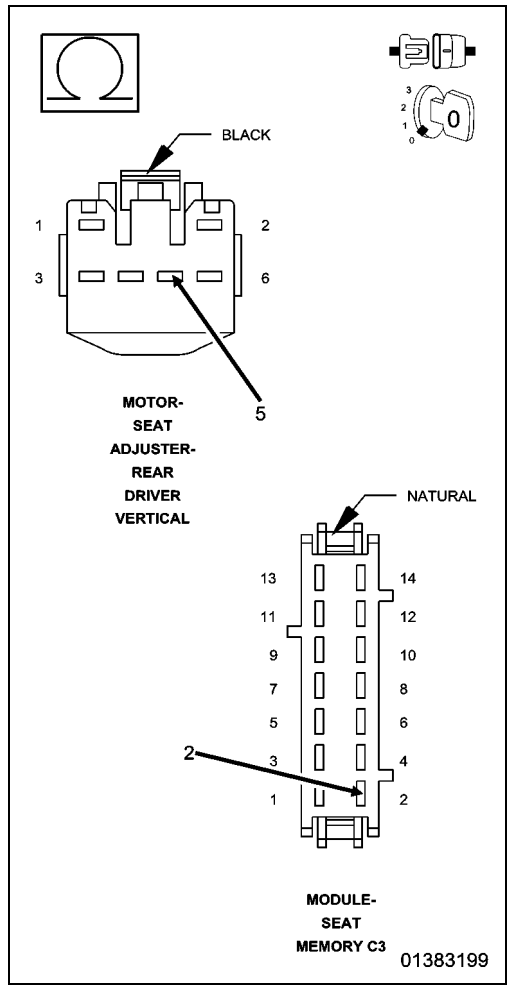

5. CHECK THE (G492) DRIVER SEAT REAR VERTICAL SENSOR GROUND CIRCUIT FOR AN OPEN

1. Measure the resistance of the (G492) Driver Seat Rear Vertical Sensor Ground circuit between the Driver Rear Vertical Seat Adjuster Motor connector and the MSM C3 connector.

Is the resistance below 5.0 ohms?

Yes

- Replace the Memory Seat Module (MSM) in accordance with the Service Information.
- Perform POWER SEAT SYSTEM VERIFICATION TEST. (Refer to 28 - DTC-Based Diagnostics/MODULE, Memory Seat (MSMD) - Standard Procedure).

No

- Repair the (G492) Driver Seat Rear Vertical Sensor Ground circuit for an open.
- Perform POWER SEAT SYSTEM VERIFICATION TEST. (Refer to 28 - DTC-Based Diagnostics/MODULE, Memory Seat (MSMD) - Standard Procedure).

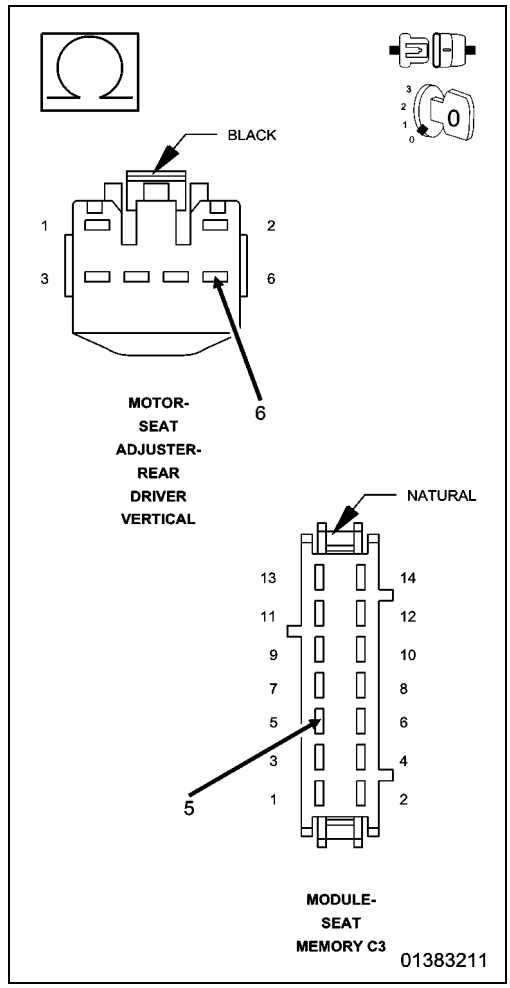

B1D79-SEAT RECLINER POSITION SENSOR CIRCUIT LOW

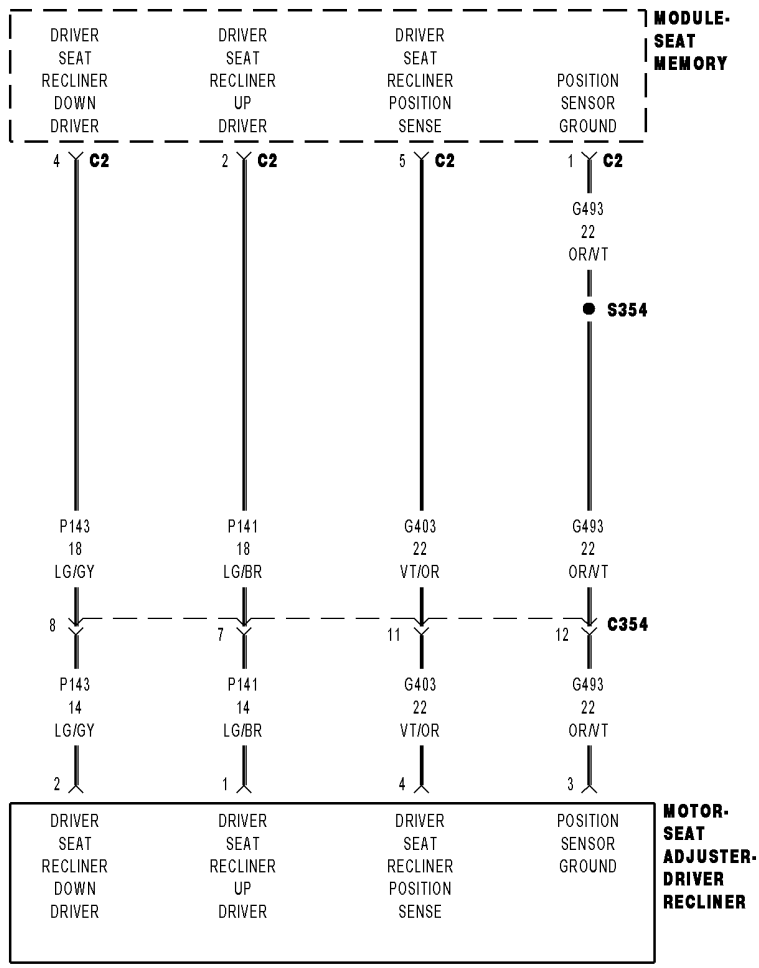

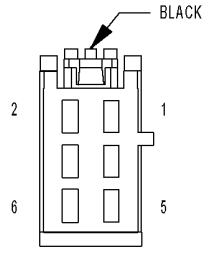

MODULE-
SEAT
MEMORY C2

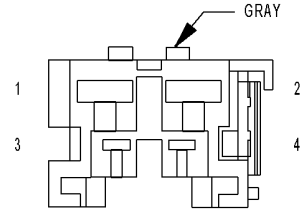

MOTOR-
SEAT
ADJUSTER-
DRIVER
RECLINER

01379474

For a complete wiring diagram, **refer to the Wiring Information**.

- **When Monitored:**
  Continuously.
- **Set Condition:**
  If Voltage on the (G403) Driver Seat Recliner Position Sense circuit is not within a specified range.

Possible Causes
(G403) DRIVER SEAT RECLINER POSITION SENSE CIRCUIT SHORTED TO GROUND
(G403) DRIVER SEAT RECLINER POSITION SENSE CIRCUIT SHORTED TO THE (G493) DRIVER SEAT RECLINER POSITION SENSOR GROUND CIRCUIT
(G403) DRIVER SEAT RECLINER POSITION SENSE CIRCUIT SHORTED TO THE (P141) DRIVER SEAT RECLINER UP DRIVER CIRCUIT
(G403) DRIVER SEAT RECLINER POSITION SENSE CIRCUIT SHORTED TO THE (P143) DRIVER SEAT RECLINER DOWN DRIVER CIRCUIT
DRIVER RECLINER SEAT ADJUSTER MOTOR
MEMORY SEAT MODULE (MSM)

1. CHECK FOR ACTIVE FAULT WITH SEAT STATIONARY

1. Turn the ignition on.
2. Using a scan tool, record and erase Diagnostic Trouble Codes (DTCs).
3. Cycle the ignition from on to off three times.
4. Turn the ignition on and wait 30 seconds.
5. Using a scan tool, read DTCs.

Is DTC B1D79-SEAT RECLINER POSITION SENSOR CIRCUIT LOW active?

Yes

- Go To 3

No

- Go To 2

2. CHECK FOR ACTIVE FAULT WHILE ADJUSTING THE SEAT

1. Move the seat switch in the recliner adjust position three times.
2. Using a scan tool, read DTCs.

Is DTC B1D79-SEAT RECLINER POSITION SENSOR CIRCUIT LOW active?

Yes

- Go To 3

No

- The conditions that caused this code to set are not present at this time. Verify seat harness is routed correctly. Using the wiring diagram/schematic as a guide, inspect the wiring and connectors. Look for chafed, pierced, pinched, or partially broken wires and broken, bent, pushed out, spread, corroded, or contaminated terminals.
- Perform POWER SEAT SYSTEM VERIFICATION TEST. (Refer to 28 - DTC-Based Diagnostics/MODULE, Memory Seat (MSMD) - Standard Procedure).

3. CHECK THE (G403) DRIVER SEAT RECLINER POSITION SENSE CIRCUIT FOR A SHORT TO GROUND

1. Turn the ignition off.
2. Disconnect the MSM C2 connector.
3. Disconnect the Driver Recliner Seat Adjuster Motor connector.

NOTE: Check connectors. Clean and repair as necessary.

4. Measure the resistance of the (G403) Driver Seat Recliner Position Sense circuit between ground and the Driver Recliner Seat Adjuster Motor connector.

Is the resistance below 10K Ohms?

Yes

- Repair the (G403) Driver Seat Recliner Position Sense circuit for a short to ground.
- Perform POWER SEAT SYSTEM VERIFICATION TEST. (Refer to 28 - DTC-Based Diagnostics/MODULE, Memory Seat (MSMD) - Standard Procedure).

No

- Go To 4

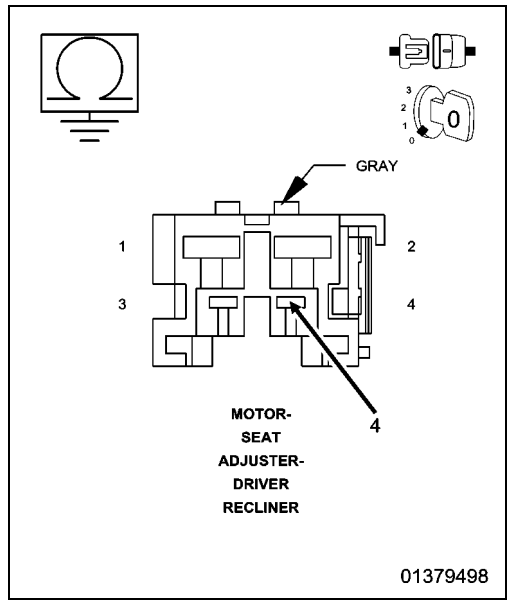

4. CHECK THE (G403) DRIVER SEAT RECLINER POSITION SENSE CIRCUIT FOR A SHORT TO THE (G493) DRIVER SEAT RECLINER POSITION SENSOR GROUND CIRCUIT, THE (P141) DRIVER SEAT RECLINER UP DRIVER CIRCUIT, AND THE (P143) DRIVER SEAT RECLINER DOWN DRIVER CIRCUIT

1. Measure the resistance between the (G403) Driver Seat Recliner Position Sense circuit and the (G493) Driver Seat Recliner Position Sensor Ground circuit at the Driver Recliner Seat Adjuster Motor connector.
2. Measure the resistance between the (G403) Driver Seat Recliner Position Sense circuit and the (P141) Driver Seat Recliner Up Driver circuit at the Driver Recliner Seat Adjuster Motor connector.
3. Measure the resistance between the (G403) Driver Seat Recliner Position Sense circuit and the (P143) Driver Seat Recliner Down Driver circuit at the Driver Recliner Seat Adjuster Motor connector.

Is the resistance below 10K Ohms for any measurement?

Yes

- Repair all circuits with a resistance below 10K Ohms for a short to the (G403) Driver Seat Recliner Position Sense circuit.
- Perform POWER SEAT SYSTEM VERIFICATION TEST. (Refer to 28 - DTC-Based Diagnostics/MODULE, Memory Seat (MSMD) - Standard Procedure).

No

- Go To 5

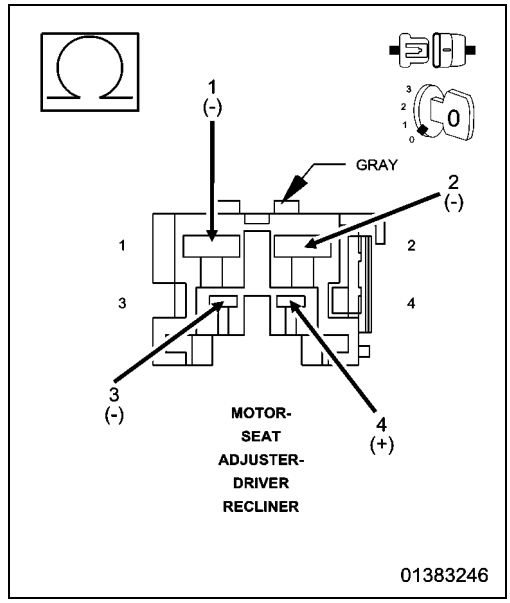

5. CHECK THE (G403) DRIVER SEAT RECLINER POSITION SENSE CIRCUIT AND THE (G493) DRIVER SEAT RECLINER POSITION SENSOR GROUND CIRCUIT FUNCTION

1. Reconnect the MSM C2 connector.
2. Disconnect the scan tool.
3. Turn off all vehicle interior and exterior lighting.
4. Mark sure all doors are closed then wait 10 seconds.
5. Connect a 12-Volt test light between the (G403) Driver Seat Recliner Position Sense circuit and the (G493) Driver Seat Recliner Position Sensor Ground circuit at the Driver Recliner Seat Adjuster Motor connector.
6. Move the seat switch in the recliner adjust position then release the switch.

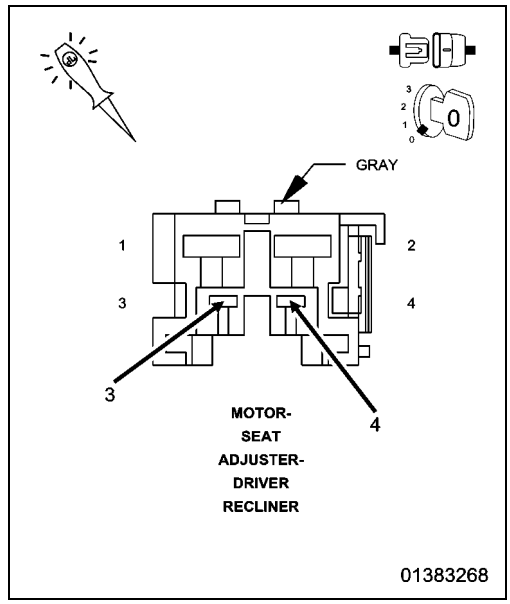

Does the test light illuminate for approximately five seconds then turn off?

Yes

- Replace the Driver Recliner Seat Adjuster Motor assembly in accordance with the Service Information.
- Perform POWER SEAT SYSTEM VERIFICATION TEST. (Refer to 28 - DTC-Based Diagnostics/MODULE, Memory Seat (MSMD) - Standard Procedure).

No

- Replace the Memory Seat Module (MSM) in accordance with the Service Information.
- Perform POWER SEAT SYSTEM VERIFICATION TEST. (Refer to 28 - DTC-Based Diagnostics/MODULE, Memory Seat (MSMD) - Standard Procedure).

B1D7A-SEAT RECLINER POSITION SENSOR CIRCUIT HIGH

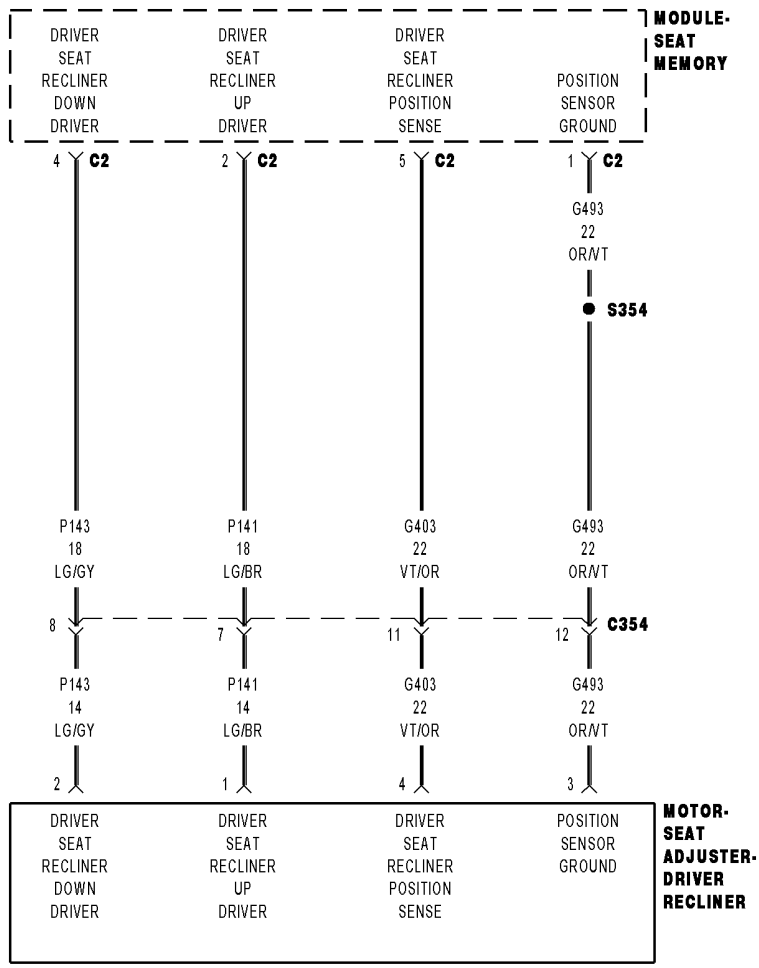

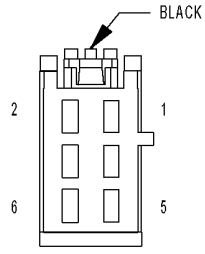

MODULE-
SEAT
MEMORY C2

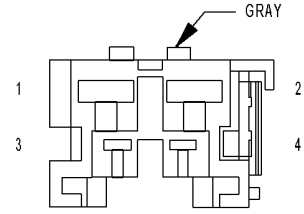

MOTOR-
SEAT
ADJUSTER-
DRIVER
RECLINER

01379474

For a complete wiring diagram, **refer to the Wiring Information**.

- **When Monitored:**

  When the seat motor is activated (sensor supply Voltage is switched on whenever motor is activated).

- **Set Condition:**

  If the sensor Voltage is not within a specified range and the seat switch is moved in the same direction three consecutive times.

Possible Causes
(G403) DRIVER SEAT RECLINER POSITION SENSE CIRCUIT SHORTED TO VOLTAGE
(G403) DRIVER SEAT RECLINER POSITION SENSE CIRCUIT OPEN
(G493) DRIVER SEAT RECLINER POSITION SENSOR GROUND CIRCUIT OPEN
DRIVER RECLINER SEAT ADJUSTER MOTOR
MEMORY SEAT MODULE (MSM)

1. TEST FOR INTERMITTENT CONDITION

1. Turn the ignition on.
2. Using a scan tool, record and erase Diagnostic Trouble Codes (DTCs).
3. Move the seat switch in the recliner adjust position three times.
4. Using a scan tool, read DTCs.

Does the scan tool display DTC B1D7A-SEAT RECLINER POSITION SENSOR CIRCUIT HIGH?

Yes

- Go To 2

No

- The conditions that caused this code to set are not present at this time. Verify seat harness is routed correctly. Using the wiring diagram/schematic as a guide, inspect the wiring and connectors. Look for chafed, pierced, pinched, or partially broken wires and broken, bent, pushed out, spread, corroded, or contaminated terminals.
- Perform POWER SEAT SYSTEM VERIFICATION TEST. (Refer to 28 - DTC-Based Diagnostics/MODULE, Memory Seat (MSMD) - Standard Procedure).

2. CHECK THE (G403) DRIVER SEAT RECLINER POSITION SENSE CIRCUIT FOR A SHORT TO VOLTAGE

1. Turn the ignition off.
2. Disconnect the Driver Recliner Seat Adjuster Motor connector.
3. Disconnect the MSM C2 connector.

NOTE: Check connectors. Clean and repair as necessary.

4. Turn the ignition on.
5. Measure the Voltage of the (G403) Driver Seat Recliner Position Sense circuit between the Driver Recliner Seat Adjuster Motor connector and ground.

Is there any Voltage present?

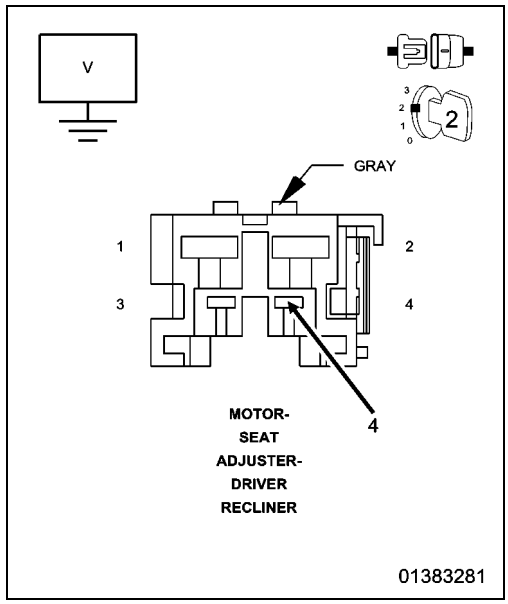

Yes

- Repair the (G403) Driver Seat Recliner Position Sense circuit for a short to Voltage.
- Perform POWER SEAT SYSTEM VERIFICATION TEST. (Refer to 28 - DTC-Based Diagnostics/MODULE, Memory Seat (MSMD) - Standard Procedure).

No

- Go To 3

3. CHECK THE (G403) DRIVER SEAT RECLINER POSITION SENSE CIRCUIT AND THE (G493) DRIVER SEAT RECLINER POSITION SENSOR GROUND CIRCUIT FUNCTION

1. Turn the ignition off.
2. Reconnect the MSM C3 connector.
3. Disconnect the scan tool.
4. Turn off all vehicle interior and exterior lighting.
5. Mark sure all doors are closed then wait 10 seconds.
6. Connect a 12-Volt test light between the (G403) Driver Seat Recliner Position Sense circuit and the (G493) Driver Seat Recliner Position Sensor Ground circuit at the Driver Recliner Seat Adjuster Motor connector.
7. Move the seat switch in the recliner adjust position then release the switch.

Does the test light illuminate for approximately five seconds then turn off?

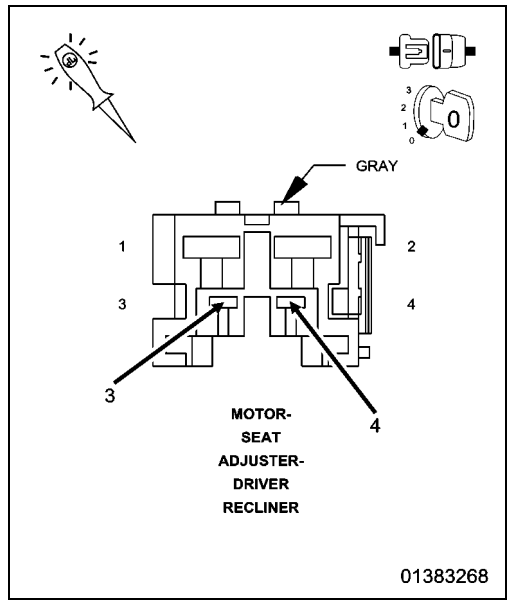

Yes

- Replace the Driver Recliner Seat Adjuster Motor Assembly in accordance with the Service Information.
- Perform POWER SEAT SYSTEM VERIFICATION TEST. (Refer to 28 - DTC-Based Diagnostics/MODULE, Memory Seat (MSMD) - Standard Procedure).

No

- Go To 4

4. CHECK THE (G403) DRIVER SEAT RECLINER POSITION SENSE CIRCUIT FOR AN OPEN

1. Disconnect the MSM C2 connector.

NOTE: Check connectors. Clean and repair as necessary.

2. Measure the resistance of the (G403) Driver Seat Recliner Position Sense circuit between the Driver Recliner Seat Adjuster Motor connector and the MSM C2 connector.

Is the resistance below 5.0 Ohms?

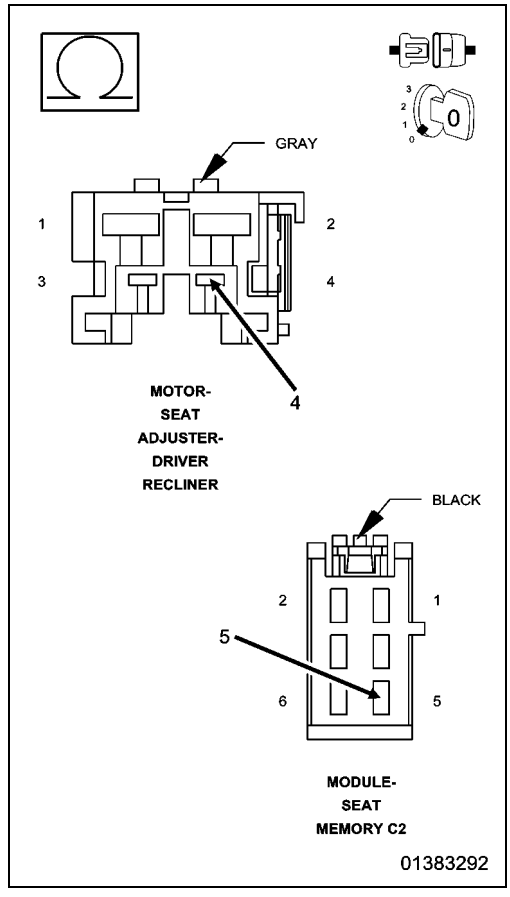

Yes

- Go To 5

No

- Repair the (G403) Driver Seat Recliner Position Sense circuit for an open.
- Perform POWER SEAT SYSTEM VERIFICATION TEST. (Refer to 28 - DTC-Based Diagnostics/MODULE, Memory Seat (MSMD) - Standard Procedure).

5. CHECK THE (G493) DRIVER SEAT RECLINER POSITION SENSOR GROUND CIRCUIT FOR AN OPEN

1. Measure the resistance of the (G493) Driver Seat Recliner Position Sensor Ground circuit between the Driver Recliner Seat Adjuster Motor connector and the MSM C2 connector.

Is the resistance below 5.0 Ohms?

Yes

- Replace the Memory Seat Module (MSM) in accordance with the Service Information.
- Perform POWER SEAT SYSTEM VERIFICATION TEST. (Refer to 28 - DTC-Based Diagnostics/MODULE, Memory Seat (MSMD) - Standard Procedure).

No

- Repair the (G493) Driver Seat Recliner Position Senor Ground circuit for an open.
- Perform POWER SEAT SYSTEM VERIFICATION TEST. (Refer to 28 - DTC-Based Diagnostics/MODULE, Memory Seat (MSMD) - Standard Procedure).

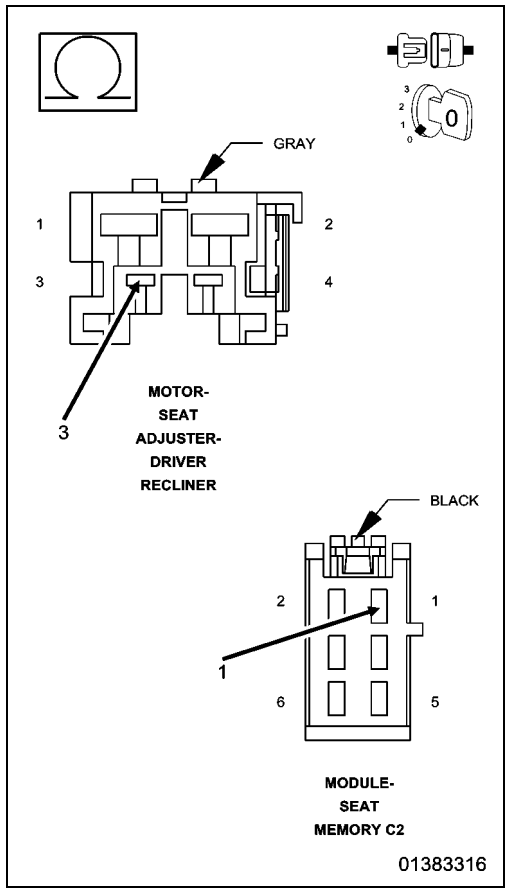

B1D7B-SEAT HORIZONTAL MOTOR CONTROL CIRCUIT PERFORMANCE

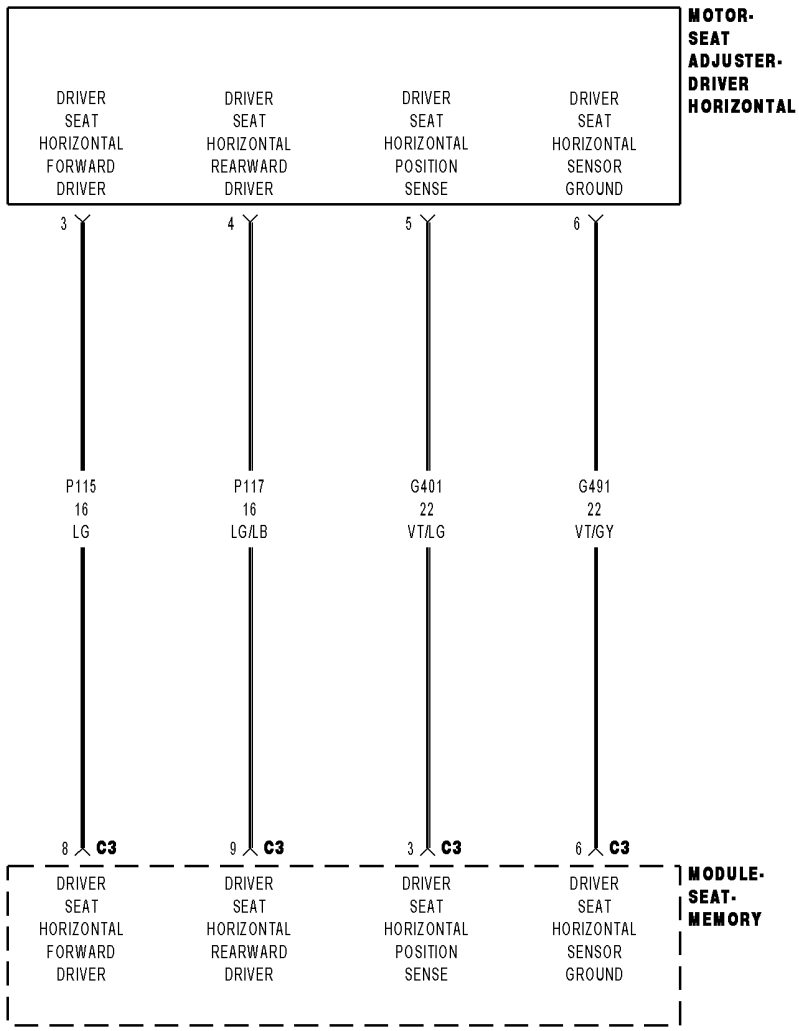

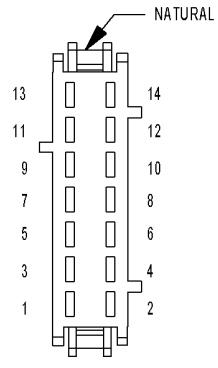

MODULE-
SEAT
MEMORY C3

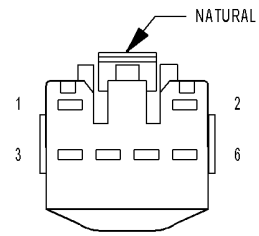

MOTOR-
SEAT
ADJUSTER-
DRIVER
HORIZONTAL

01378844

For a complete wiring diagram, **refer to the Wiring Information**.

- **When Monitored:**

  Whenever the seat motor is activated.

- **Set Condition:**

  The seat switch is pressed three times in opposite directions (e.g. either, horizontal forward, horizontal rearward, and horizontal forward, or horizontal rearward, horizontal forward, and horizontal rearward) and each switch activation is for at least one second and the Memory Seat Module (MSM) does not detect seat motor rotation in either direction.

Possible Causes
SEAT POSITION SENSOR DIAGNOSTIC TROUBLE CODES (DTCs) PRESENT
(G401) DRIVER SEAT HORIZONTAL POSITION SENSE CIRCUIT OPEN
(G491) DRIVER SEAT HORIZONTAL SENSOR GROUND CIRCUIT OPEN
(P115) DRIVER SEAT HORIZONTAL FORWARD DRIVER CIRCUIT OPEN
(P117) DRIVER SEAT HORIZONTAL REARWARD DRIVER CIRCUIT OPEN
DRIVER HORIZONTAL SEAT ADJUSTER MOTOR SENSOR
DRIVER HORIZONTAL SEAT ADJUSTER MOTOR
MEMORY SEAT MODULE (MSM)

1. INSPECT SEAT TRACK, MOTOR, AND HARNESS

1. Verify seat harness is routed correctly.
2. Inspect seat track and motor for damage.
3. Inspect for anything that would prevent the seat from moving to each end-stop.

Is anything present that would prevent the seat from moving to each end-stop?

Yes

- Repair as necessary.
- Perform POWER SEAT SYSTEM VERIFICATION TEST. (Refer to 28 - DTC-Based Diagnostics/MODULE, Memory Seat (MSMD) - Standard Procedure).

No

- Go To 2

2. CHECK FOR SEAT POSITION SENSOR DIAGNOSTIC TROUBLE CODES (DTCs)

1. Turn the ignition on.
2. Using a scan tool, read DTCs.

Does the scan tool display any seat position sensor DTCs?

Yes

- Diagnose and repair all seat position sensor DTCs. (Refer to 28 - DTC-Based Diagnostics/MODULE, Memory Seat (MSMD) - Diagnosis and Testing).

No

- Go To 3

3. TEST FOR INTERMITTENT CONDITION

1. Using a scan tool, record and erase DTCs.
2. Move the seat switch in one horizontal adjustment direction for at least one second then release the switch. Repeat three times consecutively, but move the switch in the opposite direction each time.
3. Using a scan tool, read DTCs.

Does the scan tool display DTC B1D7B-SEAT HORIZONTAL MOTOR CONTROL CIRCUIT PERFORMANCE?

Yes

- Go To 4

No

- The conditions that caused this code to set are not present at this time. Using the wiring diagram/schematic as a guide, inspect the wiring and connectors. Look for chafed, pierced, pinched, or partially broken wires and broken, bent, pushed out, spread, corroded, or contaminated terminals.
- Perform POWER SEAT SYSTEM VERIFICATION TEST. (Refer to 28 - DTC-Based Diagnostics/MODULE, Memory Seat (MSMD) - Standard Procedure).

4. CHECK THE (G401) DRIVER SEAT HORIZONTAL POSITION SENSE CIRCUIT AND THE (G491) DRIVER SEAT HORIZONTAL SENSOR GROUND CIRCUIT FUNCTION

1. Turn the ignition off.
2. Disconnect the Driver Horizontal Seat Adjuster Motor connector.

NOTE: Check connectors - Clean and repair as necessary.

3. Disconnect the scan tool.
4. Turn off all vehicle interior and exterior lighting.
5. Mark sure all doors are closed then wait 10 seconds.
6. Connect a 12-Volt test light connect between the (G401) Driver Seat Horizontal Position Sense circuit and the (G491) Driver Seat Horizontal Sensor Ground circuit at the Driver Horizontal Seat Adjuster Motor connector.
7. Move the seat switch in the horizontal adjust position then release the switch.

Does the test light illuminate for approximately five seconds then turn off?

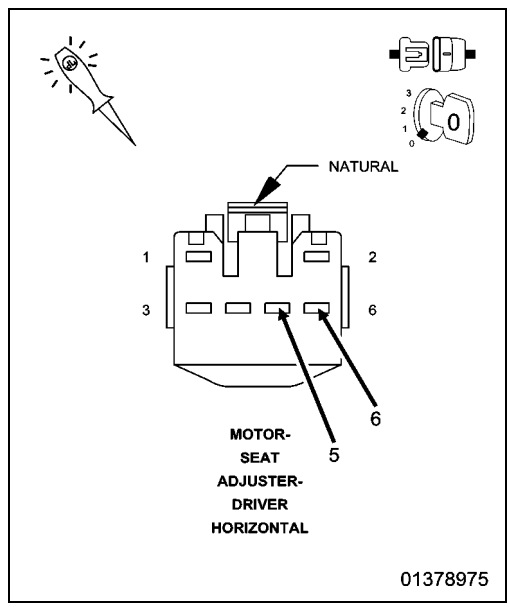

Yes

- Go To 5

No

- Go To 9

5. CHECK THE (P115) DRIVER SEAT HORIZONTAL FORWARD DRIVER CIRCUIT AND THE (P117) DRIVER SEAT HORIZONTAL REARWARD DRIVER CIRCUIT FUNCTION

1. Connect a 12-Volt test light between the (P115) Driver Seat Horizontal Forward Driver circuit and the (P117) Driver Seat Horizontal Rearward Driver circuit at the Driver Horizontal Seat Adjuster Motor connector.
2. Move the seat switch in the horizontal adjust position.

Does the test light illuminate with the seat switch engaged?

Yes

- Go To 6

No

- Go To 11

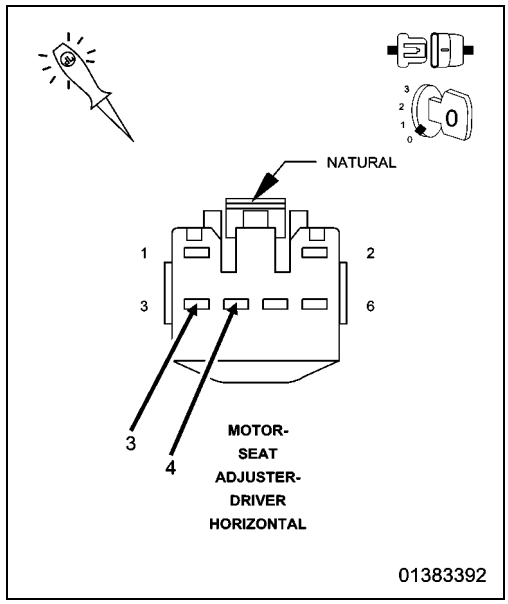

6. CHECK THE DRIVER HORIZONTAL SEAT ADJUSTER MOTOR OPERATION

1. Reconnect the Driver Horizontal Seat Adjuster Motor connector.
2. Disconnect the MSM C3 connector.

NOTE: Check connectors. Clean and repair as necessary.

3. Check motor operation in both directions as follows:

NOTE: Do not adjust the seat against an end-stop when performing the following.

To drive seat forward:

- Connect one end of a fused jumper wire to battery Voltage and the other end to the (P115) Driver Seat Horizontal Forward Driver circuit at the MSM C3 connector.
- Connect an ammeter between ground and the (P117) Driver Seat Horizontal Rearward Driver circuit at the MSM C3 connector.
- Disconnect before reaching the end-stop.

To drive seat rearward:

- Connect one end of a fused jumper wire to battery Voltage and the other end to the (P117) Driver Seat Horizontal Rearward Driver circuit at the MSM C3 connector.
- Connect an ammeter between ground and the (P115) Driver Seat Horizontal Forward Driver circuit at the MSM C3 connector.
- Disconnect before reaching the end-stop.

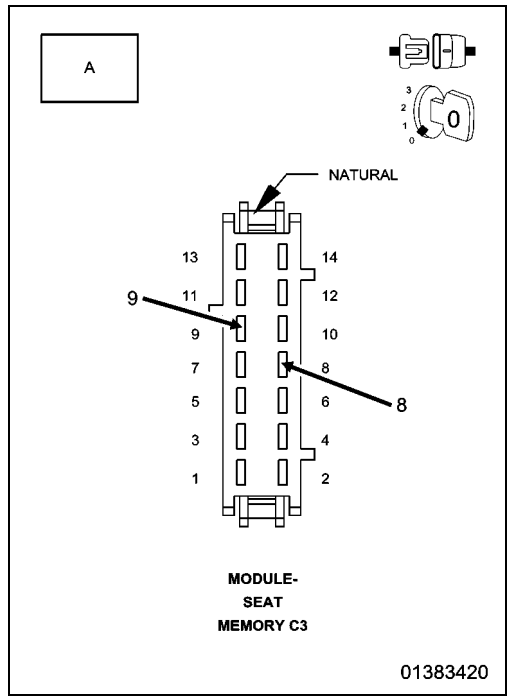

NOTE: The seat motor should be operational in both directions and the ammeter should read approximately 4.3 amps in the forward direction and 3.5 amps in the rearward direction.

Does the motor operate as specified?

Yes

- Go To 7

No

- Check (P115) Driver Seat Horizontal Forward Driver circuit and (P117) Driver Seat Horizontal Rearward Driver circuit for high resistance. If circuits are okay, replace the Seat Track Horizontal Motor assembly in accordance with the Service Information.
- Perform POWER SEAT SYSTEM VERIFICATION TEST. (Refer to 28 - DTC-Based Diagnostics/MODULE, Memory Seat (MSMD) - Standard Procedure).

7. CHECK THE DRIVER HORIZONTAL SEAT ADJUSTER MOTOR SENSOR OPERATION

1. Reconnect the MSM C3 connector.
2. Turn the ignition on.
3. Using a scan tool, erase DTCs.
4. Connect the positive lead of a lab scope to the (G401) Driver Seat Horizontal Position Sense circuit and the negative lead to the (G491) Driver Seat Horizontal Sensor Ground circuit at the MSM C3 connector. Set the lab scope range to 20 Volts and time to 20 ms divisions.

NOTE: Do not adjust the seat against an end-stop when performing the following.

5. Move the seat switch in one horizontal adjust position.

NOTE: If the sensor is functioning normally the scope will display a continuously cycling square wave when operating the seat. If the module fails to detect sensor operation it will stop seat operation in approximately two seconds.

Does the sensor operate as specified?

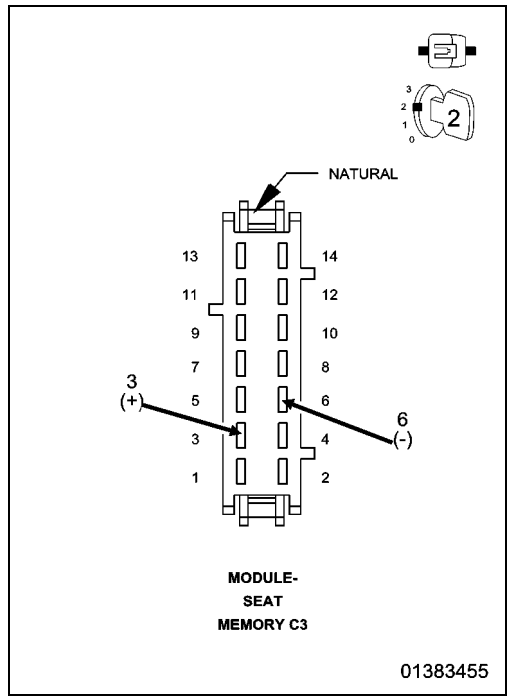

Yes

- Leave Scope Connected. Go To 8

No

- Replace the Seat Track Horizontal Motor assembly in accordance with the Service Information.
- Perform POWER SEAT SYSTEM VERIFICATION TEST. (Refer to 28 - DTC-Based Diagnostics/MODULE, Memory Seat (MSMD) - Standard Procedure).

8. CHECK THE DRIVER HORIZONTAL SEAT ADJUSTER MOTOR SENSOR OPERATION IN OPPOSITE DIRECTION

1. Using a scan tool, erase DTCs if present.

NOTE: Do not adjust the seat against an end-stop when performing the following.

2. Move the seat switch in the direction opposite of that previously selected.

NOTE: If the sensor is functioning normally the scope will display a continuously cycling square wave when operating the seat. If the module fails to detect sensor operation it will stop seat operation in approximately two seconds.

Does the sensor operate as specified?

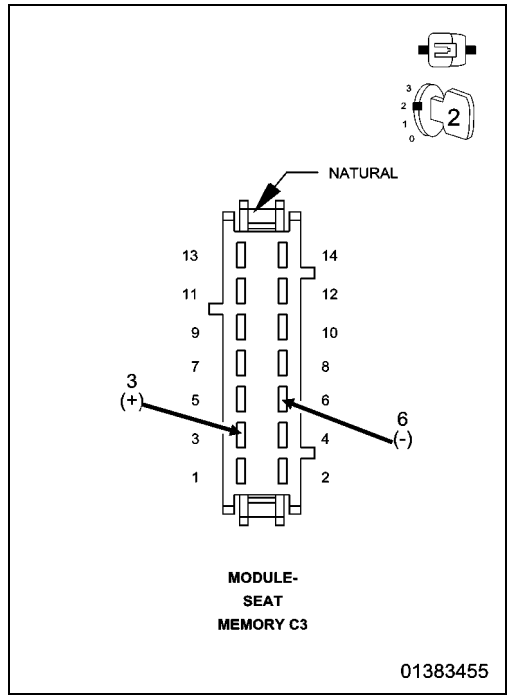

Yes

- Replace the Memory Seat Module (MSM) in accordance with the Service Information.
- Perform APS VERIFICATION TEST. (Refer to 28 - DTC-Based Diagnostics/MODULE, Memory Seat (MSMD) - Standard Procedure).

No

- Replace the Seat Track Horizontal Motor assembly in accordance with the Service Information.
- Perform POWER SEAT SYSTEM VERIFICATION TEST. (Refer to 28 - DTC-Based Diagnostics/MODULE, Memory Seat (MSMD) - Standard Procedure).

9. CHECK THE (G401) DRIVER SEAT HORIZONTAL POSITION SENSE CIRCUIT FOR AN OPEN

1. Disconnect the MSM C3 connector.

NOTE: Check connectors. Clean and repair as necessary.

2. Measure the resistance of the (G401) Driver Seat Horizontal Position Sense circuit between the Driver Horizontal Seat Adjuster Motor connector and the MSM C3 connector.

Is the resistance below 5.0 Ohms?

Yes

- Go To 10

No

- Repair the (G401) Driver Seat Horizontal Position Sense circuit for an open.
- Perform POWER SEAT SYSTEM VERIFICATION TEST. (Refer to 28 - DTC-Based Diagnostics/MODULE, Memory Seat (MSMD) - Standard Procedure).

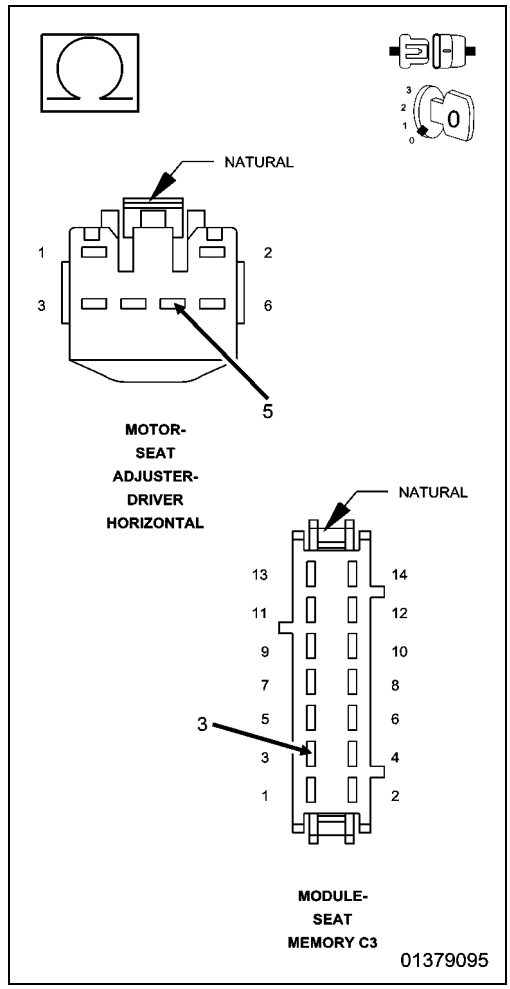

10. CHECK THE (G491) DRIVER SEAT HORIZONTAL SENSOR GROUND CIRCUIT FOR AN OPEN

1. Measure the resistance of the (G491) Driver Seat Horizontal Sensor Ground circuit between the Driver Horizontal Seat Adjuster Motor connector and the MSM C3 connector.

Is the resistance below 5.0 Ohms?

Yes

- Replace the Memory Seat Module (MSM) in accordance with the Service Information.
- Perform POWER SEAT SYSTEM VERIFICATION TEST. (Refer to 28 - DTC-Based Diagnostics/MODULE, Memory Seat (MSMD) - Standard Procedure).

No

- Repair the (G491) Driver Seat Horizontal Senor Ground circuit for an open.
- Perform POWER SEAT SYSTEM VERIFICATION TEST. (Refer to 28 - DTC-Based Diagnostics/MODULE, Memory Seat (MSMD) - Standard Procedure).

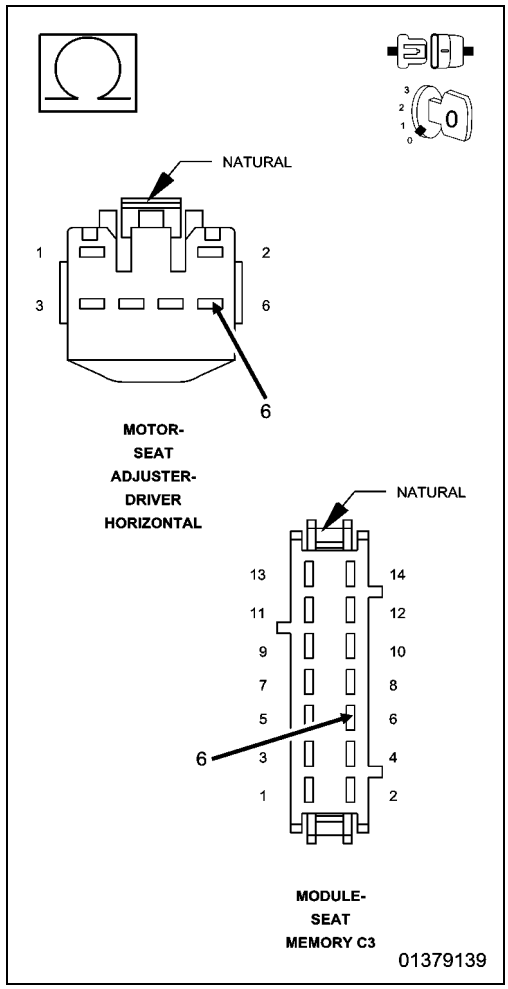

11. CHECK THE (P115) DRIVER SEAT HORIZONTAL FORWARD DRIVER CIRCUIT FOR AN OPEN

1. Disconnect the MSM C3 connector.

NOTE: Check connectors. Clean and repair as necessary.

2. Measure the resistance of the (P115) Driver Seat Horizontal Forward Driver circuit between the Driver Horizontal Seat Adjuster Motor connector and the MSM C3 connector.

Is the resistance below 5.0 Ohms?

Yes

- Go To 12

No

- Repair the (P115) Driver Seat Horizontal Forward Driver circuit for an open.
- Perform POWER SEAT SYSTEM VERIFICATION TEST. (Refer to 28 - DTC-Based Diagnostics/MODULE, Memory Seat (MSMD) - Standard Procedure).

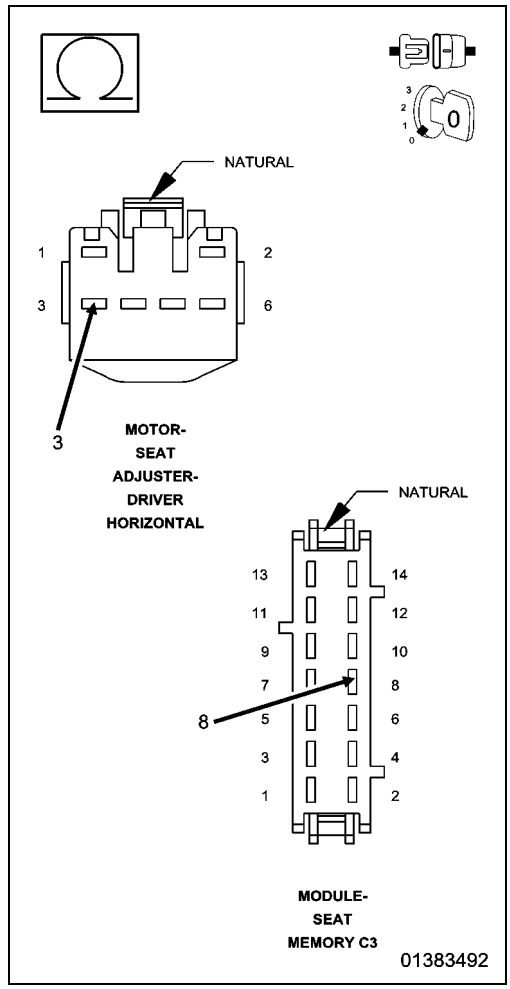

12. CHECK THE (P117) DRIVER SEAT HORIZONTAL REARWARD DRIVER CIRCUIT FOR AN OPEN

1. Measure the resistance of the (P117) Driver Seat Horizontal Rearward Driver circuit between the Driver Horizontal Seat Adjuster Motor connector and the MSM C3 connector.

Is the resistance below 5.0 Ohms?

Yes

- Replace the Memory Seat Module (MSM) in accordance with the Service Information.
- Perform POWER SEAT SYSTEM VERIFICATION TEST. (Refer to 28 - DTC-Based Diagnostics/MODULE, Memory Seat (MSMD) - Standard Procedure).

No

- Repair the (P117) Driver Seat Horizontal Rearward Driver circuit for an open.
- Perform POWER SEAT SYSTEM VERIFICATION TEST. (Refer to 28 - DTC-Based Diagnostics/MODULE, Memory Seat (MSMD) - Standard Procedure).

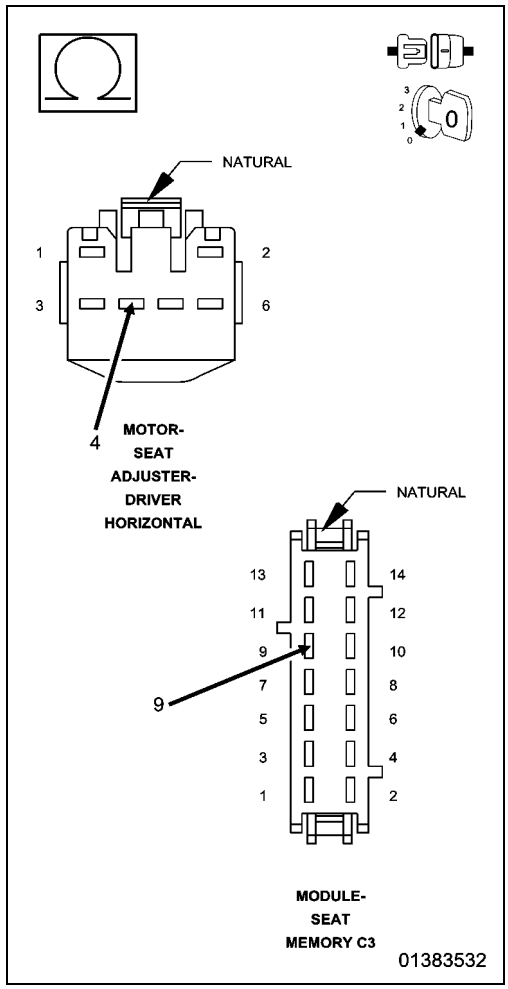

B1D7F-SEAT FRONT VERTICAL MOTOR CONTROL CIRCUIT PERFORMANCE

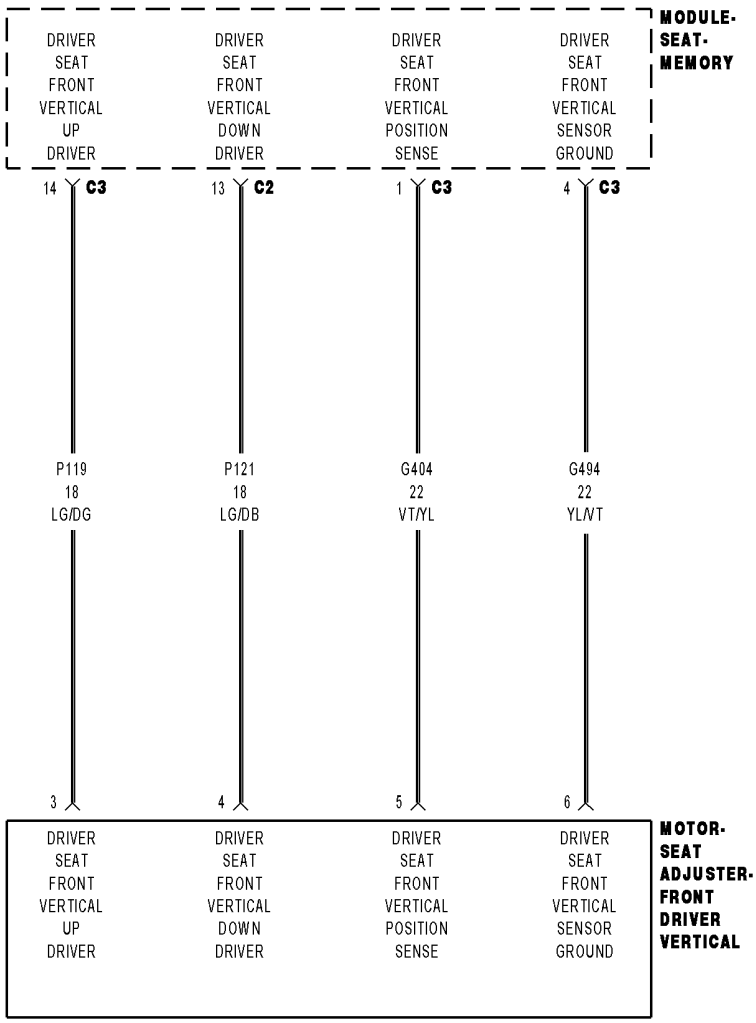

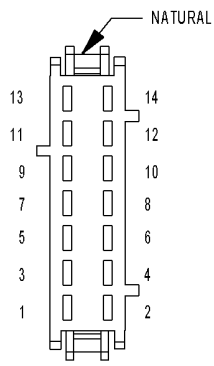

MODULE-
SEAT
MEMORY C3

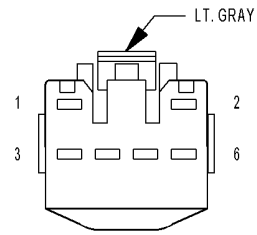

MOTOR-
SEAT
ADJUSTER-
FRONT
DRIVER
VERTICAL

01379203

For a complete wiring diagram, **refer to the Wiring Information**.

- **When Monitored:**

  Whenever the seat motor is activated.

- **Set Condition:**

  The seat switch is pressed three times in opposite directions (e.g. either, front vertical up, front vertical down, and front vertical up, or front vertical down, front vertical up, and front vertical down) and each switch activation is for at least one second and the Memory Seat Module (MSM) does not detect seat motor rotation in either direction.

Possible Causes
SEAT POSITION SENSOR DIAGNOSTIC TROUBLE CODES (DTCs) PRESENT
(G404) DRIVER SEAT FRONT VERTICAL POSITION SENSE CIRCUIT OPEN
(G494) DRIVER SEAT FRONT VERTICAL SENSOR GROUND CIRCUIT OPEN
(P119) DRIVER SEAT FRONT VERTICAL UP DRIVER CIRCUIT OPEN
(P121) DRIVER SEAT FRONT VERTICAL DOWN DRIVER CIRCUIT OPEN
FRONT DRIVER VERTICAL SEAT ADJUSTER MOTOR SENSOR
FRONT DRIVER VERTICAL SEAT ADJUSTER MOTOR
MEMORY SEAT MODULE (MSM)

1. INSPECT SEAT TRACK, MOTOR, AND HARNESS

1. Verify seat harness is routed correctly.
2. Inspect seat track and motor for damage.
3. Inspect for anything that would prevent the seat from moving to each end-stop.

Is anything present that would prevent the seat from moving to each end-stop?

Yes

- Repair as necessary.
- Perform POWER SEAT SYSTEM VERIFICATION TEST. (Refer to 28 - DTC-Based Diagnostics/MODULE, Memory Seat (MSMD) - Standard Procedure).

No

- Go To 2

2. CHECK FOR SEAT POSITION SENSOR DIAGNOSTIC TROUBLE CODES (DTCs)

1. Turn the ignition on.
2. Using a scan tool, read DTCs.

Does the scan tool display any seat position sensor DTCs?

Yes

- Diagnose and repair all seat position sensor DTCs. (Refer to 28 - DTC-Based Diagnostics/MODULE, Memory Seat (MSMD) - Diagnosis and Testing).

No

- Go To 3

3. TEST FOR INTERMITTENT CONDITION

1. Using a scan tool, record and erase DTCs.
2. Move the seat switch in one front vertical adjustment direction for at least one second then release the switch. Repeat three times consecutively, but move the switch in the opposite direction each time.
3. Using a scan tool, read DTCs.

Does the scan tool display DTC B1D7F-SEAT FRONT VERTICAL MOTOR CONTROL CIRCUIT PERFORMANCE?

Yes

- Go To 4

No

- The conditions that caused this code to set are not present at this time. Using the wiring diagram/schematic as a guide, inspect the wiring and connectors. Look for chafed, pierced, pinched, or partially broken wires and broken, bent, pushed out, spread, corroded, or contaminated terminals.
- Perform POWER SEAT SYSTEM VERIFICATION TEST. (Refer to 28 - DTC-Based Diagnostics/MODULE, Memory Seat (MSMD) - Standard Procedure).

4. CHECK THE (G404) DRIVER SEAT FRONT VERTICAL POSITION SENSE CIRCUIT AND THE (G494) DRIVER SEAT FRONT VERTICAL SENSOR GROUND CIRCUIT FUNCTION

1. Turn the ignition off.
2. Disconnect the Front Driver Vertical Seat Adjuster Motor connector.

NOTE: Check connectors. Clean and repair as necessary.

3. Disconnect the scan tool.
4. Turn off all vehicle interior and exterior lighting.
5. Mark sure all doors are closed then wait 10 seconds.
6. Connect a 12-Volt test light between the (G404) Driver Seat Front Vertical Position Sense circuit and the (G494) Driver Seat Front Vertical Sensor Ground circuit at the Driver Front Vertical Seat Adjuster Motor connector.
7. Move the seat switch in the front vertical adjust position then release the switch.

Does the test light illuminate for approximately five seconds then turn off?

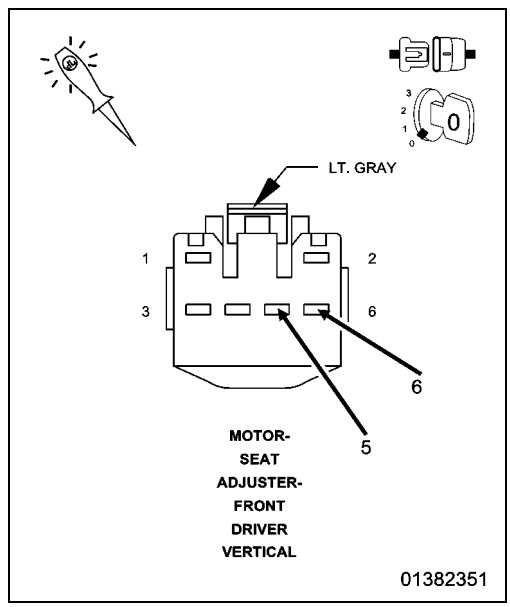

Yes

- Go To 5

No

- Go To 9

5. CHECK THE (P119) DRIVER SEAT FRONT VERTICAL UP DRIVER CIRCUIT THE (P121) DRIVER SEAT FRONT VERTICAL DOWN DRIVER CIRCUIT FUNCTION

1. Connect a 12-Volt test light between the (P119) Driver Seat Front Vertical Up Driver circuit and the (P121) Driver Seat Front Vertical Down Driver circuit at the Front Driver Vertical Seat Adjuster Motor connector.
2. Move the seat switch in the front vertical adjust position.

Does the test light illuminate with the seat switch engaged?

Yes

- Go To 6

No

- Go To 11

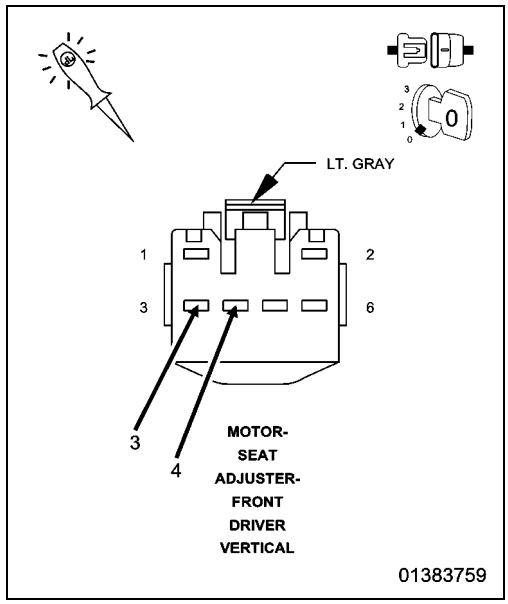

6. CHECK THE FRONT DRIVER VERTICAL SEAT ADJUSTER MOTOR OPERATION

1. Reconnect the Front Driver Vertical Seat Adjuster Motor connector.
2. Disconnect the MSM C3 connector.

NOTE: Check connectors. Clean and repair as necessary.

3. Check motor operation in both directions as follows:

NOTE: Do not adjust the seat against an end-stop when performing the following.

To drive seat upward:

- Connect one end of a fused jumper wire to battery Voltage and the other end to the (P119) Driver Seat Front Vertical Up Driver circuit at the MSM C3 connector.
- Connect an ammeter between ground and the (P121) Driver Seat Front Vertical Down Driver circuit at the MSM C3 connector.
- Disconnect before reaching the end-stop.

To drive seat downward:

- Connect one end of a fused jumper wire to battery Voltage and the other end to the (P121) Driver Seat Front Vertical Down Driver circuit at the MSM C3 connector.
- Connect an ammeter between ground and the (P119) Driver Seat Front Vertical Up Driver circuit at the MSM C3 connector.
- Disconnect before reaching the end-stop.

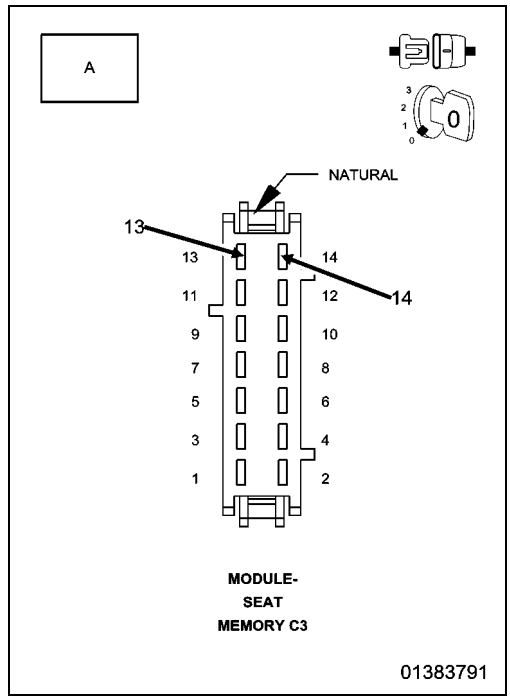

NOTE: The seat motor should be operational in both directions and the ammeter should read approximately 2.5 amps in the upward direction and 3.5 amps in the downward direction.

Does the motor operate as specified?

Yes

- Go To 7

No

- Check (P119) Driver Seat Front Vertical Up Driver circuit and (P121) Driver Seat Front Vertical Down Driver circuit for high resistance. If circuits are okay, replace the Front Driver Vertical Seat Adjuster motor assembly in accordance with the Service Information.
- Perform POWER SEAT SYSTEM VERIFICATION TEST. (Refer to 28 - DTC-Based Diagnostics/MODULE, Memory Seat (MSMD) - Standard Procedure).

7. CHECK THE FRONT DRIVER VERTICAL SEAT ADJUSTER MOTOR SENSOR OPERATION

1. Reconnect the MSM C3 connector.
2. Turn the ignition on.
3. Using a scan tool, erase DTCs.
4. Connect the positive lead of a lab scope to the (G404) Driver Seat Front Vertical Position Sense circuit and the negative lead to the (G494) Driver Seat Front Vertical Sensor Ground circuit at the MSM C3 connector. Set the lab scope range to 20 Volts and time to 20 ms divisions.

NOTE: Do not adjust the seat against an end-stop when performing the following.

5. Move the seat switch in one front vertical adjust position.

NOTE: If the sensor is functioning normally the scope will display a continuously cycling square wave when operating the seat. If the module fails to detect sensor operation it will stop seat operation in approximately two seconds.

Does the sensor operate as specified?

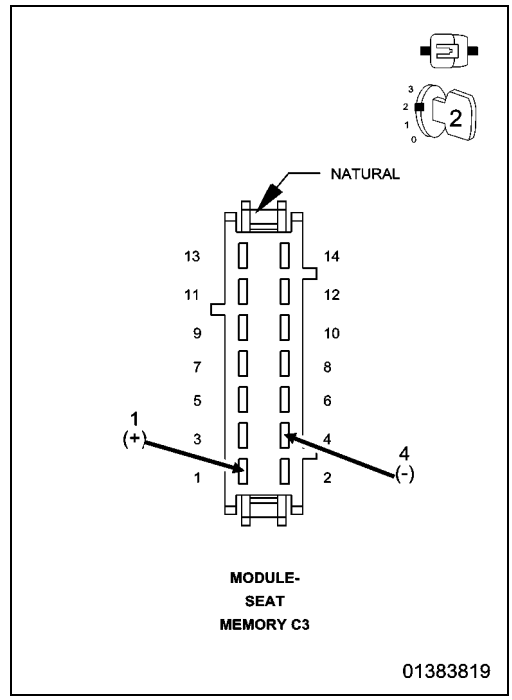

Yes

- Leave Scope Connected. Go To 8

No

- Replace the Front Driver Vertical Seat Adjuster motor assembly in accordance with the Service Information.
- Perform POWER SEAT SYSTEM VERIFICATION TEST. (Refer to 28 - DTC-Based Diagnostics/MODULE, Memory Seat (MSMD) - Standard Procedure).

8. CHECK THE FRONT DRIVER VERTICAL SEAT ADJUSTER MOTOR SENSOR OPERATION IN OPPOSITE DIRECTION

1. Using a scan tool, erase DTCs if present.

NOTE: Do not adjust the seat against an end-stop when performing the following.

2. Move the seat switch in the direction opposite of that previously selected.

NOTE: If the sensor is functioning normally the scope will display a continuously cycling square wave when operating the seat. If the module fails to detect sensor operation it will stop seat operation in approximately two seconds.

Does the sensor operate as specified?

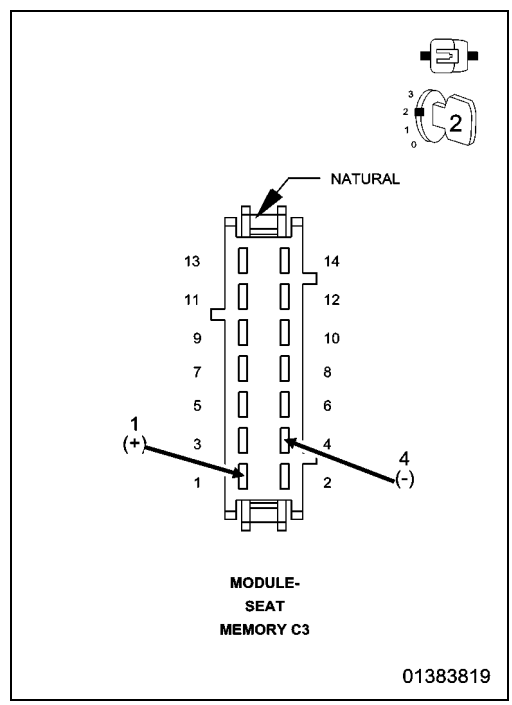

Yes

- Replace the Memory Seat Module (MSM) in accordance with the Service Information.
- Perform APS VERIFICATION TEST. (Refer to 28 - DTC-Based Diagnostics/MODULE, Memory Seat (MSMD) - Standard Procedure).

No

- Replace the Front Driver Vertical Seat Adjuster motor assembly in accordance with the Service Information.
- Perform POWER SEAT SYSTEM VERIFICATION TEST. (Refer to 28 - DTC-Based Diagnostics/MODULE, Memory Seat (MSMD) - Standard Procedure).

9. CHECK THE (G404) DRIVER SEAT FRONT VERTICAL POSITION SENSE CIRCUIT FOR AN OPEN

1. Disconnect the MSM C3 connector.

NOTE: Check connectors. Clean and repair as necessary.

2. Measure the resistance of the (G404) Driver Seat Front Vertical Position Sense circuit between the Front Driver Vertical Seat Adjuster Motor connector and the MSM C3 connector.

Is the resistance below 5.0 Ohms?

Yes

- Go To 10

No

- Repair the (G404) Driver Seat Front Vertical Position Sense circuit for an open.
- Perform POWER SEAT SYSTEM VERIFICATION TEST. (Refer to 28 - DTC-Based Diagnostics/MODULE, Memory Seat (MSMD) - Standard Procedure).

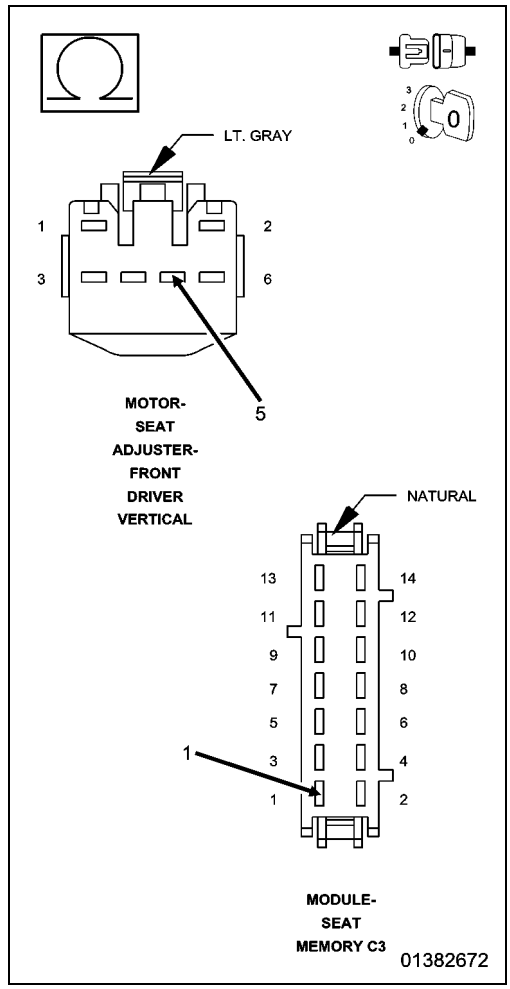

10. CHECK THE (G494) DRIVER SEAT FRONT VERTICAL SENSOR GROUND CIRCUIT FOR AN OPEN

1. Measure the resistance of the (G494) Driver Seat Front Vertical Sensor Ground circuit between the Driver Front Vertical Seat Adjuster Motor connector and the MSM C3 connector.

Is the resistance below 5.0 Ohms?

Yes

- Replace the Memory Seat Module (MSM) in accordance with the Service Information.
- Perform POWER SEAT SYSTEM VERIFICATION TEST. (Refer to 28 - DTC-Based Diagnostics/MODULE, Memory Seat (MSMD) - Standard Procedure).

No

- Repair the (G494) Driver Seat Front Vertical Senor Ground circuit for an open.
- Perform POWER SEAT SYSTEM VERIFICATION TEST. (Refer to 28 - DTC-Based Diagnostics/MODULE, Memory Seat (MSMD) - Standard Procedure).

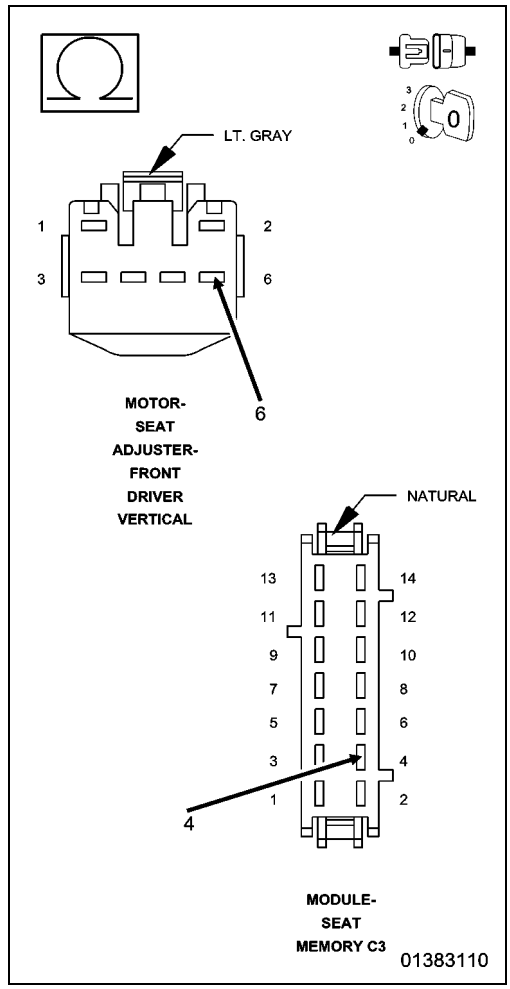

11. CHECK THE (P119) DRIVER SEAT FRONT VERTICAL UP DRIVER CIRCUIT FOR AN OPEN

1. Disconnect the MSM C3 connector.

NOTE: Check connectors. Clean and repair as necessary.

2. Measure the resistance of the (P119) Driver Seat Front Vertical Up Driver circuit between the Driver Front Vertical Seat Adjuster Motor connector and the MSM C3 connector.

Is the resistance below 5.0 Ohms?

Yes

- Go To 12

No

- Repair the (P119) Driver Seat Front Vertical Up Driver circuit for an open.
- Perform POWER SEAT SYSTEM VERIFICATION TEST. (Refer to 28 - DTC-Based Diagnostics/MODULE, Memory Seat (MSMD) - Standard Procedure).

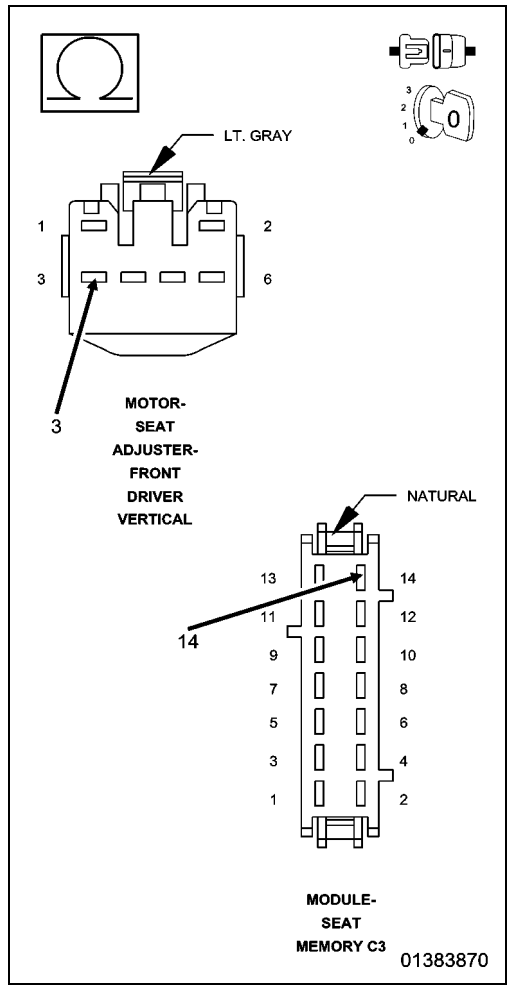

12. CHECK THE (P121) DRIVER SEAT FRONT VERTICAL DOWN DRIVER CIRCUIT FOR AN OPEN

1. Measure the resistance of the (P121) Driver Seat Front Vertical Down Driver circuit between the Driver Front Vertical Seat Adjuster Motor connector and the MSM C3 connector.

Is the resistance below 5.0 Ohms?

Yes

- Replace the Memory Seat Module (MSM) in accordance with the Service Information.
- Perform POWER SEAT SYSTEM VERIFICATION TEST. (Refer to 28 - DTC-Based Diagnostics/MODULE, Memory Seat (MSMD) - Standard Procedure).

No

- Repair the (P121) Driver Seat Front Vertical Down Driver circuit for an open.
- Perform POWER SEAT SYSTEM VERIFICATION TEST. (Refer to 28 - DTC-Based Diagnostics/MODULE, Memory Seat (MSMD) - Standard Procedure).

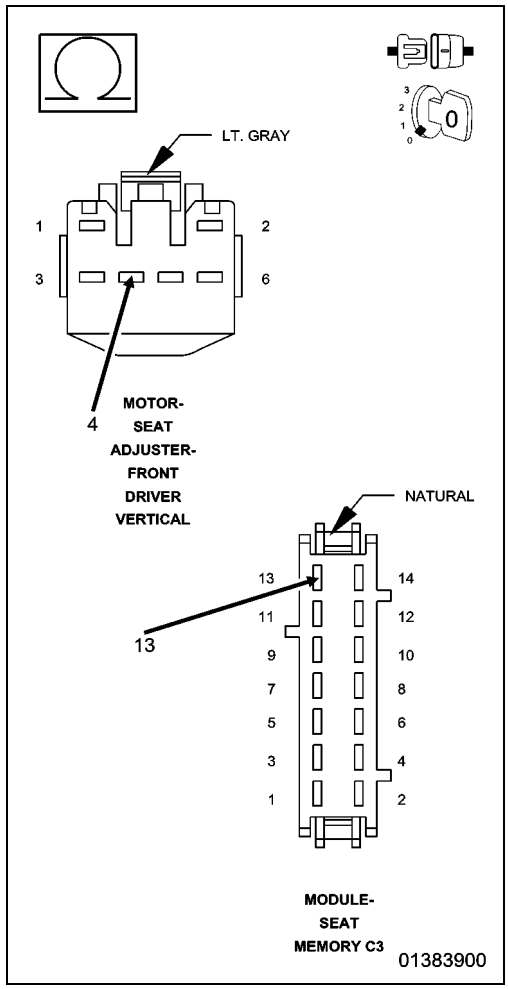

B1D83-SEAT REAR VERTICAL MOTOR CONTROL CIRCUIT PERFORMANCE

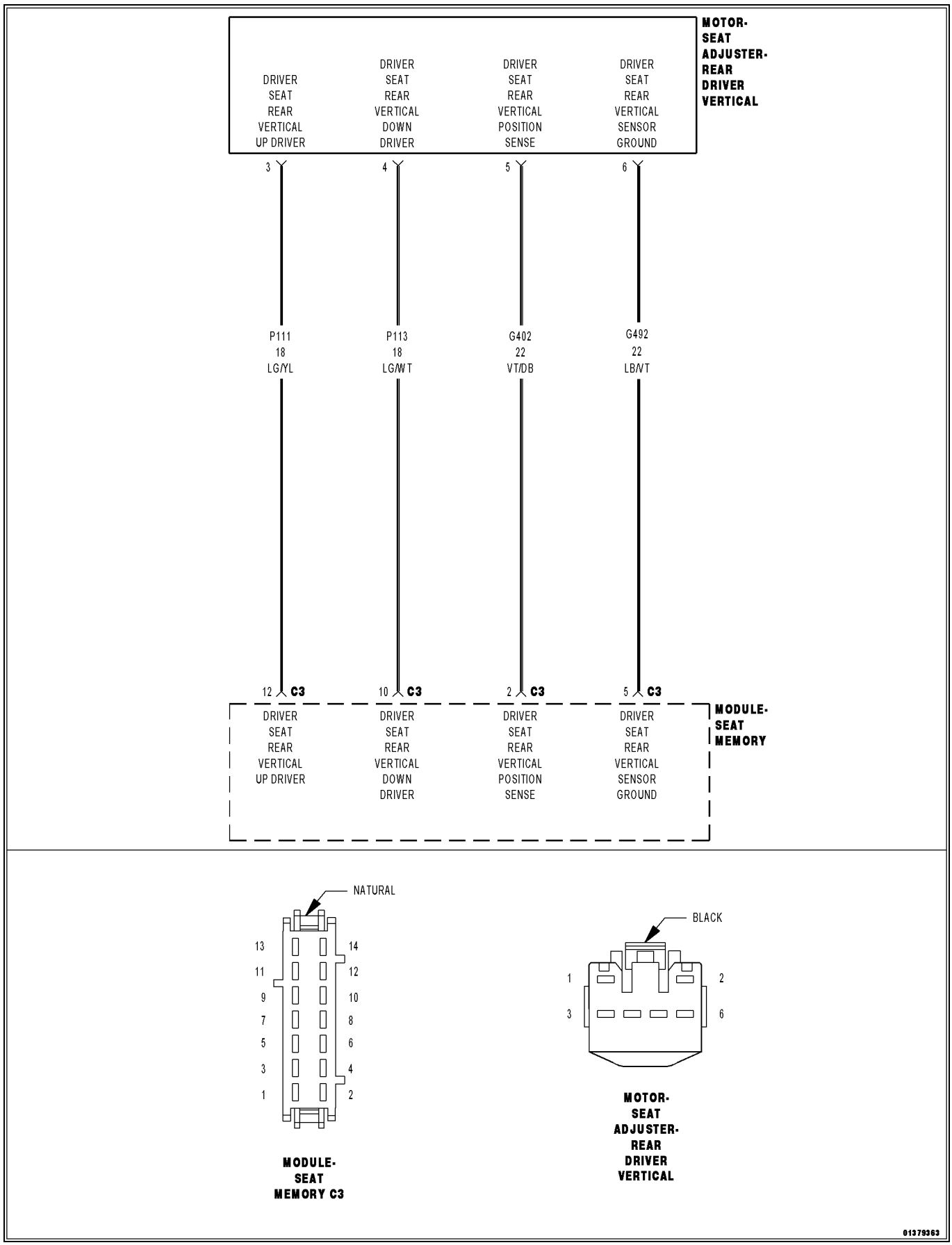

For a complete wiring diagram, **refer to the Wiring Information**.

- **When Monitored:**

  Whenever the seat motor is activated.

- **Set Condition:**

  The seat switch is pressed three times in opposite directions (e.g. either, rear vertical up, rear vertical down, and rear vertical up, or rear vertical down, rear vertical up, and rear vertical down) and each switch activation is for at least one second and the Memory Seat Module (MSM) does not detect seat motor rotation in either direction.

Possible Causes
SEAT POSITION SENSOR DIAGNOSTIC TROUBLE CODES (DTCs) PRESENT
(G402) DRIVER SEAT REAR VERTICAL POSITION SENSE CIRCUIT OPEN
(G492) DRIVER SEAT REAR VERTICAL SENSOR GROUND CIRCUIT OPEN
(P111) DRIVER SEAT REAR VERTICAL UP DRIVER CIRCUIT OPEN
(P113) DRIVER SEAT REAR VERTICAL DOWN DRIVER CIRCUIT OPEN
REAR DRIVER VERTICAL SEAT ADJUSTER MOTOR SENSOR
REAR DRIVER VERTICAL SEAT ADJUSTER MOTOR
MEMORY SEAT MODULE (MSM)

1. INSPECT SEAT TRACK, MOTOR, AND HARNESS

1. Verify seat harness is routed correctly.
2. Inspect seat track and motor for damage.
3. Inspect for anything that would prevent the seat from moving to each end-stop.

Is anything present that would prevent the seat from moving to each end-stop?

Yes

- Repair as necessary.
- Perform POWER SEAT SYSTEM VERIFICATION TEST. (Refer to 28 - DTC-Based Diagnostics/MODULE, Memory Seat (MSMD) - Standard Procedure).

No

- Go To 2

2. CHECK FOR SEAT POSITION SENSOR DIAGNOSTIC TROUBLE CODES (DTCs)

1. Turn the ignition on.
2. Using a scan tool, read DTCs.

Does the scan tool display any seat position sensor DTCs?

Yes

- Diagnose and repair all seat position sensor DTCs. (Refer to 28 - DTC-Based Diagnostics/MODULE, Memory Seat (MSMD) - Diagnosis and Testing).

No

- Go To 3

3. TEST FOR INTERMITTENT CONDITION

1. Using a scan tool, record and erase DTCs.
2. Move the seat switch in one rear vertical adjustment direction for at least one second then release the switch. Repeat three times consecutively, but move the switch in the opposite direction each time.
3. Using a scan tool, read DTCs.

Does the scan tool display DTC B1D83-SEAT REAR VERTICAL MOTOR CONTROL CIRCUIT PERFORMANCE?

Yes

- Go To 4

No

- The conditions that caused this code to set are not present at this time. Using the wiring diagram/schematic as a guide, inspect the wiring and connectors. Look for chafed, pierced, pinched, or partially broken wires and broken, bent, pushed out, spread, corroded, or contaminated terminals.
- Perform POWER SEAT SYSTEM VERIFICATION TEST. (Refer to 28 - DTC-Based Diagnostics/MODULE, Memory Seat (MSMD) - Standard Procedure).

4. CHECK THE (G402) DRIVER SEAT REAR VERTICAL POSITION SENSE CIRCUIT AND THE (G492) DRIVER SEAT REAR VERTICAL SENSOR GROUND CIRCUIT FUNCTION

1. Turn the ignition off.
2. Disconnect the Rear Driver Vertical Seat Adjuster Motor connector.

NOTE: Check connectors. Clean and repair as necessary.

3. Disconnect the scan tool.
4. Turn off all vehicle interior and exterior lighting.
5. Mark sure all doors are closed then wait 10 seconds.
6. Connect a 12-Volt test light between the (G402) Driver Seat Rear Vertical Position Sense circuit and the (G492) Driver Seat Rear Vertical Sensor Ground circuit at the Driver Rear Vertical Seat Adjuster Motor connector.
7. Move the seat switch in the rear vertical adjust position then release the switch.

Does the test light illuminate for approximately five seconds then turn off?

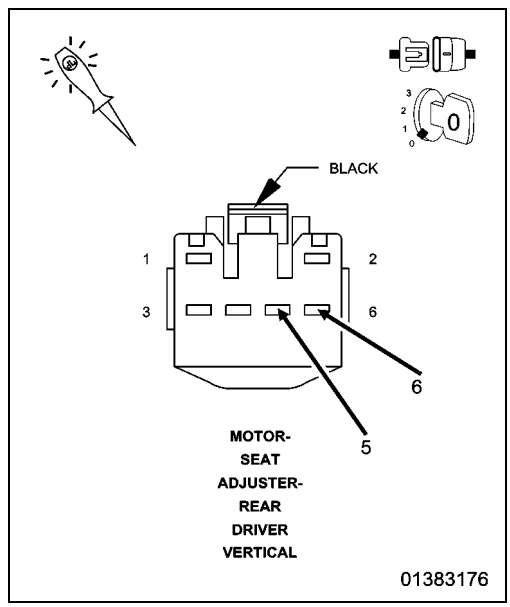

Yes

- Go To 5

No

- Go To 9

5. CHECK THE (P111) DRIVER SEAT REAR VERTICAL UP DRIVER CIRCUIT AND THE (P113) DRIVER SEAT REAR VERTICAL DOWN DRIVER CIRCUIT FUNCTION

1. Connect a 12-Volt test light between the (P111) Driver Seat Rear Vertical Up Driver circuit and the (P113) Driver Seat Rear Vertical Down Driver circuit at the Rear Driver Vertical Seat Adjuster Motor connector.
2. Move the seat switch in the rear vertical adjust position.

Does the test light illuminate with the seat switch engaged?

Yes

- Go To 6

No

- Go To 11

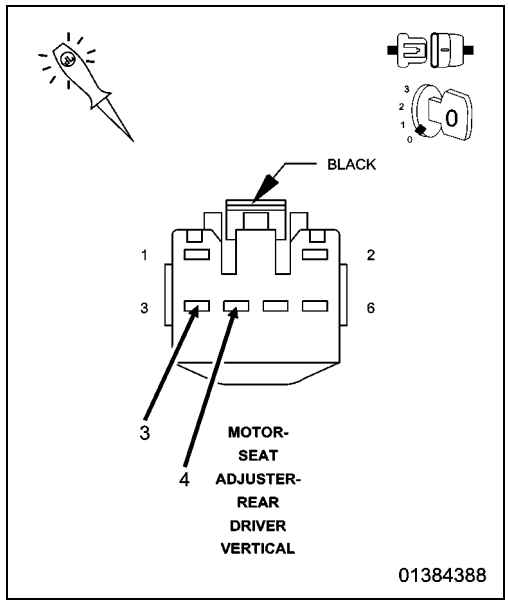

6. CHECK THE REAR DRIVER VERTICAL SEAT ADJUSTER MOTOR OPERATION

1. Reconnect the Rear Driver Vertical Seat Adjuster Motor connector.
2. Disconnect the MSM C3 connector.

NOTE: Check connectors. Clean and repair as necessary.

3. Check motor operation in both directions as follows:

NOTE: Do not adjust the seat against an end-stop when performing the following.

To drive seat upward:

- Connect one end of a fused jumper wire to battery Voltage and the other end to the (P111) Driver Seat Rear Vertical Up Driver circuit at the MSM C3 connector.
- Connect an ammeter between ground and the (P113) Driver Seat Rear Vertical Down Driver circuit at the MSM C3 connector.
- Disconnect before reaching the end-stop.

To drive seat downward:

- Connect one end of a fused jumper wire to battery Voltage and the other end to the (P113) Driver Seat Rear Vertical Down Driver circuit at the MSM C3 connector.
- Connect an ammeter between ground and the (P111) Driver Seat Rear Vertical Up Driver circuit at the MSM C3 connector.
- Disconnect before reaching the end-stop.

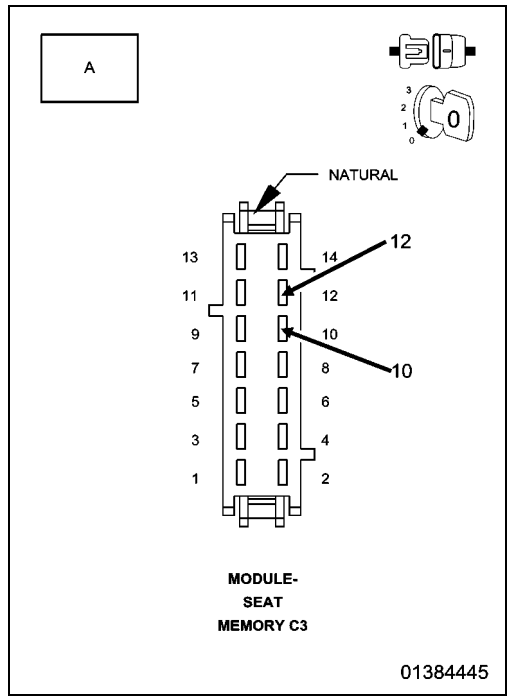

NOTE: The seat motor should be operational in both directions and the ammeter should read approximately 2.6 amps in the upward direction and 1.4 amps in the downward direction.

Does the motor operate as specified?

Yes

- Go To 7

No

- Check (P111) Driver Seat Rear Vertical Up Driver circuit and (P113) Driver Seat Rear Vertical Down Driver circuit for high resistance. If circuits are okay, replace the Rear Driver Vertical Seat Adjuster motor assembly in accordance with the Service Information.
- Perform POWER SEAT SYSTEM VERIFICATION TEST. (Refer to 28 - DTC-Based Diagnostics/MODULE, Memory Seat (MSMD) - Standard Procedure).

7. CHECK THE REAR DRIVER VERTICAL SEAT ADJUSTER MOTOR SENSOR OPERATION

1. Reconnect the MSM C3 connector.
2. Turn the ignition on.
3. Using a scan tool, erase DTCs.
4. Connect the positive lead of a lab scope to the (G402) Driver Seat Rear Vertical Position Sense circuit and the negative lead to the (G492) Driver Seat Rear Vertical Sensor Ground circuit at the MSM C3 connector. Set the lab scope range to 20 Volts and time to 20 ms divisions.

NOTE: Do not adjust the seat against an end-stop when performing the following.

5. Move the seat switch in one rear vertical adjust position.

NOTE: If the sensor is functioning normally the scope will display a continuously cycling square wave when operating the seat. If the module fails to detect sensor operation it will stop seat operation in approximately two seconds.

Does the sensor operate as specified?

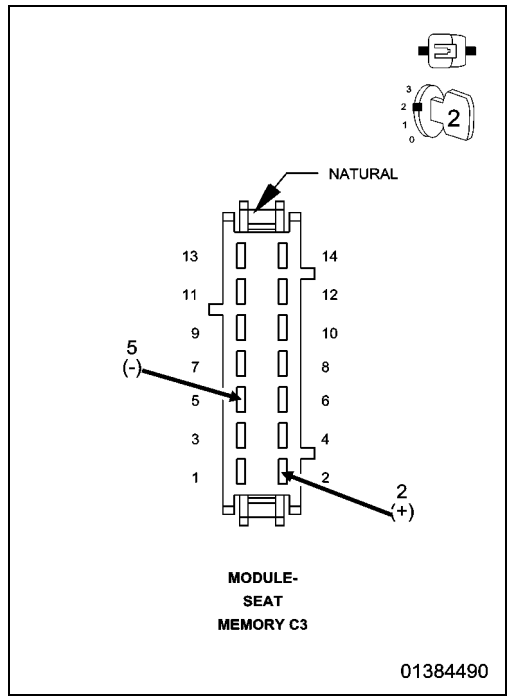

Yes

- Leave Scope Connected. Go To 8

No

- Replace the Rear Driver Vertical Seat Adjuster motor assembly in accordance with the Service Information.
- Perform POWER SEAT SYSTEM VERIFICATION TEST. (Refer to 28 - DTC-Based Diagnostics/MODULE, Memory Seat (MSMD) - Standard Procedure).

8. CHECK THE REAR DRIVER VERTICAL SEAT ADJUSTER MOTOR SENSOR OPERATION IN OPPOSITE DIRECTION

1. Using a scan tool, erase DTCs if present.

NOTE: Do not adjust the seat against an end-stop when performing the following.

2. Move the seat switch in the direction opposite of that previously selected.

NOTE: If the sensor is functioning normally the scope will display a continuously cycling square wave when operating the seat. If the module fails to detect sensor operation it will stop seat operation in approximately two seconds.

Does the sensor operate as specified?

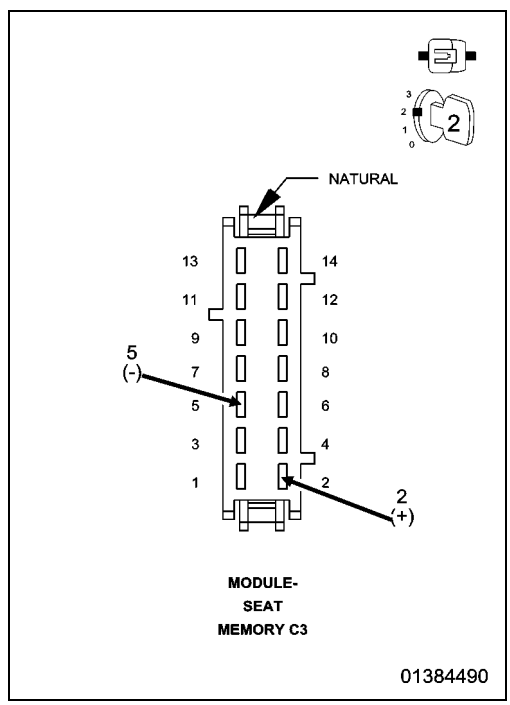

Yes

- Replace the Memory Seat Module (MSM) in accordance with the Service Information.
- Perform APS VERIFICATION TEST. (Refer to 28 - DTC-Based Diagnostics/MODULE, Memory Seat (MSMD) - Standard Procedure).

No

- Replace the Rear Driver Vertical Seat Adjuster motor assembly in accordance with the Service Information.
- Perform POWER SEAT SYSTEM VERIFICATION TEST. (Refer to 28 - DTC-Based Diagnostics/MODULE, Memory Seat (MSMD) - Standard Procedure).

9. CHECK THE (G402) DRIVER SEAT REAR VERTICAL POSITION SENSE CIRCUIT FOR AN OPEN

1. Disconnect the MSM C3 connector.

NOTE: Check connectors. Clean and repair as necessary.

2. Measure the resistance of the (G402) Driver Seat Rear Vertical Position Sense circuit between the Rear Driver Vertical Seat Adjuster Motor connector and the MSM C3 connector.

Is the resistance below 5.0 Ohms?

Yes

- Go To 10

No

- Repair the (G402) Driver Seat Rear Vertical Position Sense circuit for an open.
- Perform POWER SEAT SYSTEM VERIFICATION TEST. (Refer to 28 - DTC-Based Diagnostics/MODULE, Memory Seat (MSMD) - Standard Procedure).

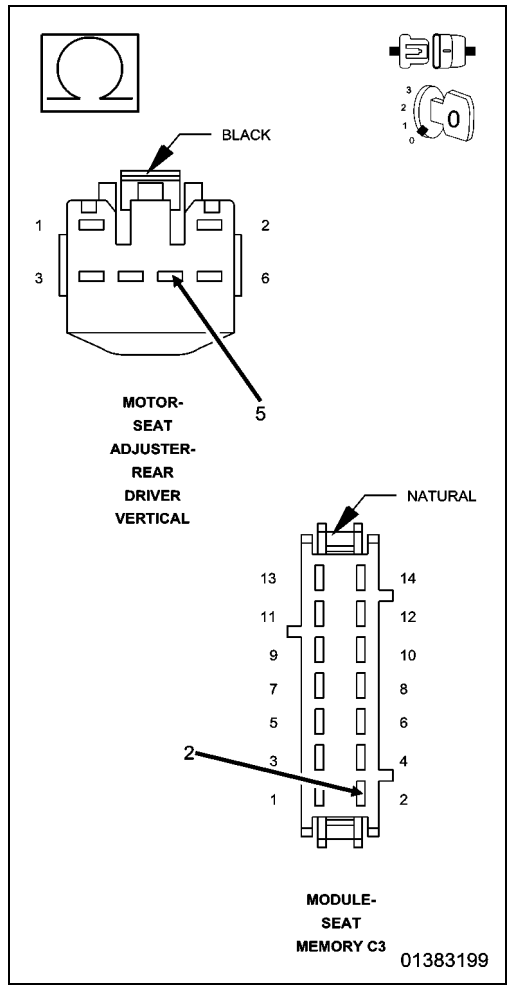

10. CHECK THE (G492) DRIVER SEAT REAR VERTICAL SENSOR GROUND CIRCUIT FOR AN OPEN

1. Measure the resistance of the (G492) Driver Seat Rear Vertical Sensor Ground circuit between the Driver Rear Vertical Seat Adjuster Motor connector and the MSM C3 connector.

Is the resistance below 5.0 Ohms?

Yes

- Replace the Memory Seat Module (MSM) in accordance with the Service Information.
- Perform POWER SEAT SYSTEM VERIFICATION TEST. (Refer to 28 - DTC-Based Diagnostics/MODULE, Memory Seat (MSMD) - Standard Procedure).

No

- Repair the (G492) Driver Seat Rear Vertical Sensor Ground circuit for an open.
- Perform POWER SEAT SYSTEM VERIFICATION TEST. (Refer to 28 - DTC-Based Diagnostics/MODULE, Memory Seat (MSMD) - Standard Procedure).

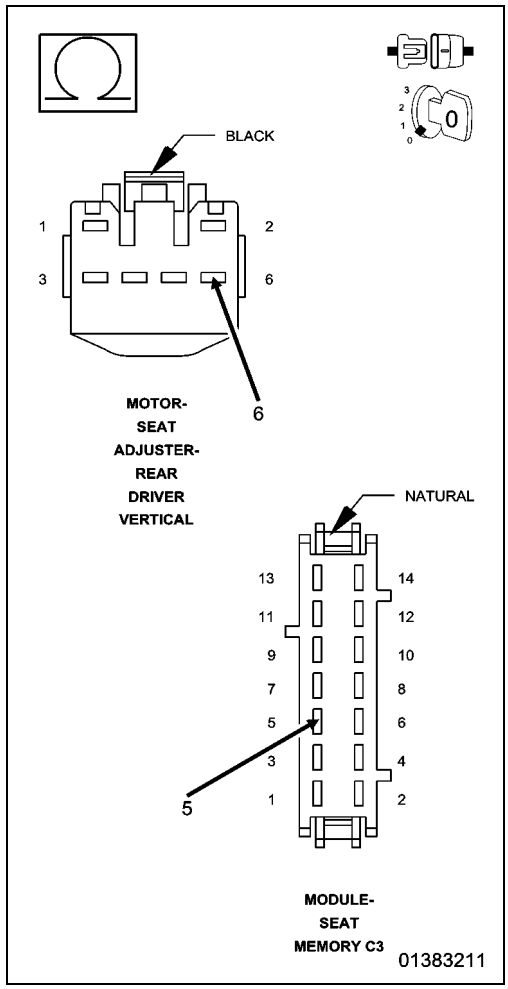

11. CHECK THE (P111) DRIVER SEAT REAR VERTICAL UP DRIVER CIRCUIT FOR AN OPEN

1. Disconnect the MSM C3 connector.

NOTE: Check connectors. Clean and repair as necessary.

2. Measure the resistance of the (P111) Driver Seat Rear Vertical Up Driver circuit between the Driver Rear Vertical Seat Adjuster Motor connector and the MSM C3 connector.

Is the resistance below 5.0 Ohms?

Yes

- Go To 12

No

- Repair the (P111) Driver Seat Rear Vertical Up Driver circuit for an open.
- Perform POWER SEAT SYSTEM VERIFICATION TEST. (Refer to 28 - DTC-Based Diagnostics/MODULE, Memory Seat (MSMD) - Standard Procedure).

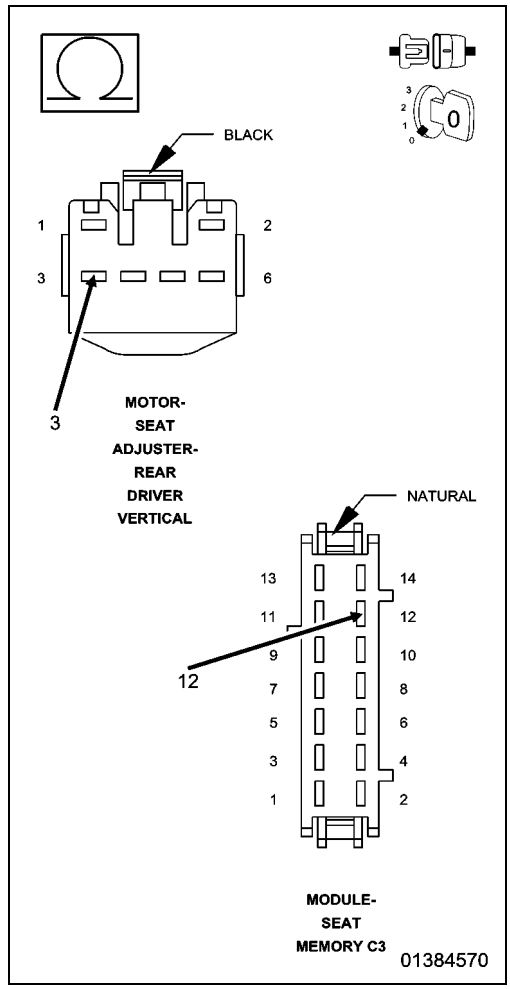

12. CHECK THE (P113) DRIVER SEAT REAR VERTICAL DOWN DRIVER CIRCUIT FOR AN OPEN

1. Measure the resistance of the (P113) Driver Seat Rear Vertical Down Driver circuit between the Driver Rear Vertical Seat Adjuster Motor connector and the MSM C3 connector.

Is the resistance below 5.0 Ohms?

Yes

- Replace the Memory Seat Module (MSM) in accordance with the Service Information.
- Perform POWER SEAT SYSTEM VERIFICATION TEST. (Refer to 28 - DTC-Based Diagnostics/MODULE, Memory Seat (MSMD) - Standard Procedure).

No

- Repair the (P113) Driver Seat Rear Vertical Down Driver circuit for an open.
- Perform POWER SEAT SYSTEM VERIFICATION TEST. (Refer to 28 - DTC-Based Diagnostics/MODULE, Memory Seat (MSMD) - Standard Procedure).

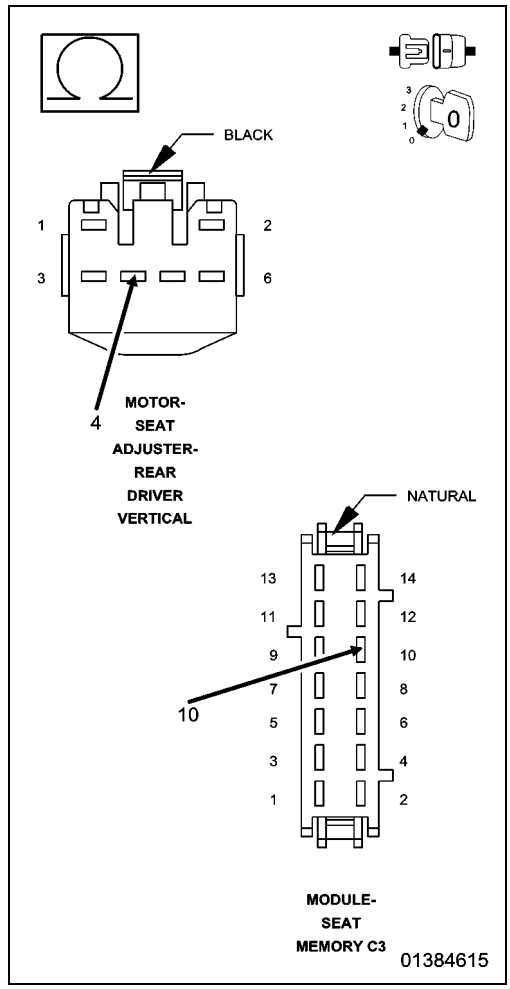

B1D87-SEAT BACKREST MOTOR CONTROL CIRCUIT PERFORMANCE

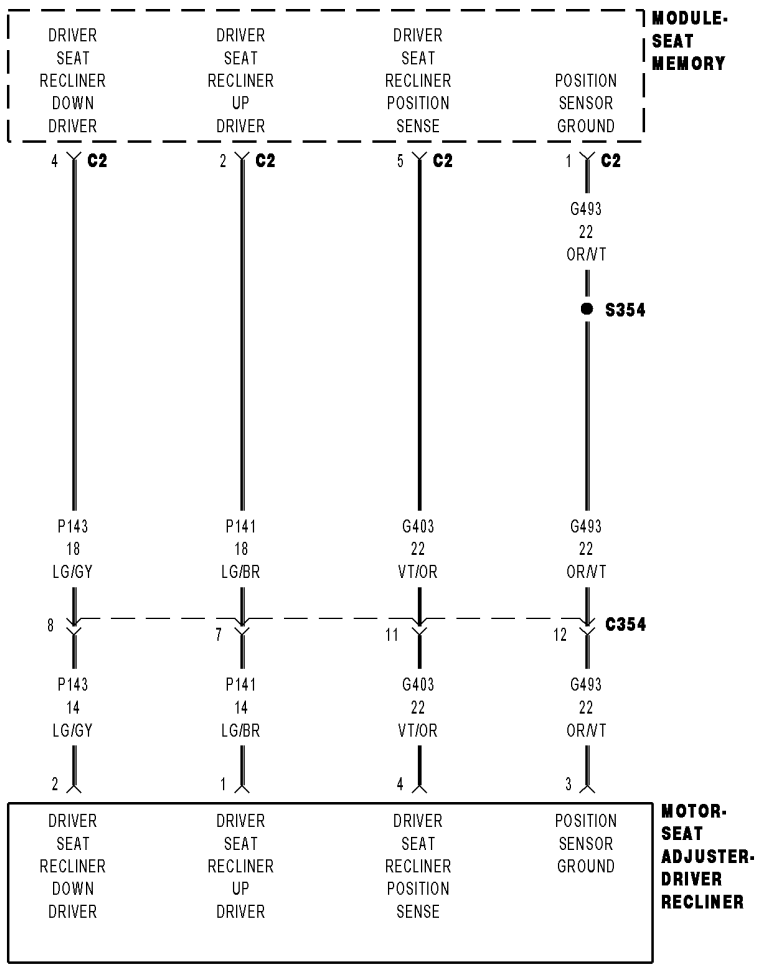

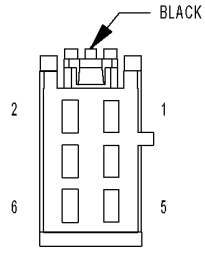

MODULE-
SEAT
MEMORY C2

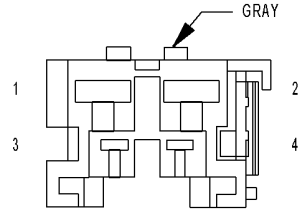

MOTOR-
SEAT
ADJUSTER-
DRIVER
RECLINER

01379474

For a complete wiring diagram, **refer to the Wiring Information**.

- **When Monitored:**

  Whenever the seat motor is activated.

- **Set Condition:**

  The seat switch is pressed three times in opposite directions (e.g. either, recliner forward, recliner rearward, and recliner forward, or recliner rearward, recliner forward, and recliner rearward) and each switch activation is for at least one second and the Memory Seat Module (MSM) does not detect seat motor rotation in either direction.

Possible Causes
SEAT POSITION SENSOR DIAGNOSTIC TROUBLE CODES (DTCs) PRESENT
(G403) DRIVER SEAT RECLINER POSITION SENSE CIRCUIT OPEN
(G493) DRIVER SEAT RECLINER POSITION SENSOR GROUND CIRCUIT OPEN
(P141) DRIVER SEAT RECLINER UP DRIVER CIRCUIT OPEN
(P143) DRIVER SEAT RECLINER DOWN DRIVER CIRCUIT OPEN
DRIVER RECLINER SEAT ADJUSTER MOTOR SENSOR
DRIVER RECLINER SEAT ADJUSTER MOTOR
MEMORY SEAT MODULE (MSM)

1. INSPECT FOR OBSTRUCTION IN SEAT PATH

1. Verify seat harness is routed correctly.
2. Inspect seat for damage.
3. Inspect for anything that would prevent the seat from moving to each end-stop.

Is anything present that would prevent the seat from moving to each end-stop?

Yes

- Repair as necessary.
- Perform POWER SEAT SYSTEM VERIFICATION TEST. (Refer to 28 - DTC-Based Diagnostics/MODULE, Memory Seat (MSMD) - Standard Procedure).

No

- Go To 2

2. CHECK FOR SEAT POSITION SENSOR DIAGNOSTIC TROUBLE CODES (DTCs)

1. Turn the ignition on.
2. Using a scan tool, read DTCs.

Does the scan tool display any seat position sensor DTCs?

Yes

- Diagnose and repair all seat position sensor DTCs. (Refer to 28 - DTC-Based Diagnostics/MODULE, Memory Seat (MSMD) - Diagnosis and Testing).

No

- Go To 3

3. TEST FOR INTERMITTENT CONDITION

1. Using a scan tool, record and erase DTCs.
2. Move the seat switch in one recliner adjustment direction for at least one second then release the switch. Repeat three times consecutively, but move the switch in the opposite direction each time.
3. Using a scan tool, read DTCs.

Does the scan tool display DTC B1D87-SEAT BACKREST MOTOR CONTROL CIRCUIT PERFORMANCE?

Yes

- Go To 4

No

- The conditions that caused this code to set are not present at this time. Using the wiring diagram/schematic as a guide, inspect the wiring and connectors. Look for chafed, pierced, pinched, or partially broken wires and broken, bent, pushed out, spread, corroded, or contaminated terminals.
- Perform POWER SEAT SYSTEM VERIFICATION TEST. (Refer to 28 - DTC-Based Diagnostics/MODULE, Memory Seat (MSMD) - Standard Procedure).

4. CHECK THE (G403) DRIVER SEAT RECLINER POSITION SENSE CIRCUIT AND THE (G493) DRIVER SEAT RECLINER POSITION SENSOR GROUND CIRCUIT FUNCTION

1. Turn the ignition off.
2. Disconnect the Driver Recliner Seat Adjuster Motor connector.

NOTE: Check connectors. Clean and repair as necessary.

3. Disconnect the scan tool.
4. Turn off all vehicle interior and exterior lighting.
5. Mark sure all doors are closed then wait 10 seconds.
6. Connect a 12-Volt test light between the (G403) Driver Seat Recliner Position Sense circuit and the (G493) Driver Seat Recliner Position Sensor Ground circuit at the Driver Recliner Seat Adjuster Motor connector.
7. Move the seat switch in the recliner adjust position then release the switch.

Does the test light illuminate for approximately five seconds then turn off?

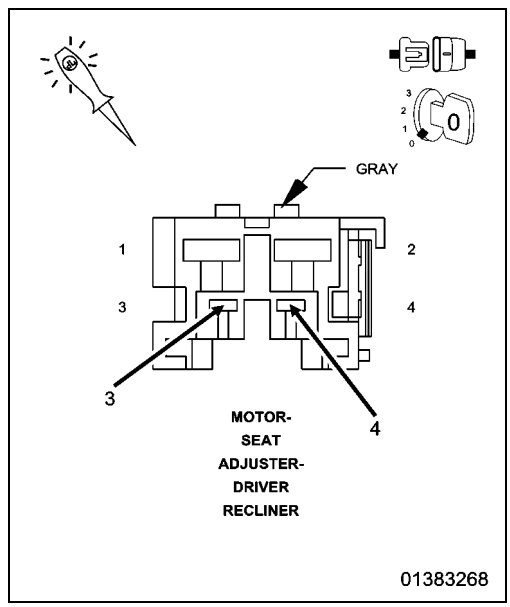

Yes

- Go To 5

No

- Go To 9

5. CHECK THE (P141) DRIVER SEAT RECLINER UP DRIVER CIRCUIT AND THE (P143) DRIVER SEAT RECLINER DOWN DRIVER CIRCUIT FUNCTION

1. Connect a 12-Volt test light between the (P141) Driver Seat Recliner Up Driver circuit and the (P143) Driver Seat Recliner Down Driver circuit at the Driver Recliner Seat Adjuster Motor connector.
2. Move the seat switch in the recliner adjust position.

Does the test light illuminate with the seat switch engaged?

Yes

- Go To 6

No

- Go To 11

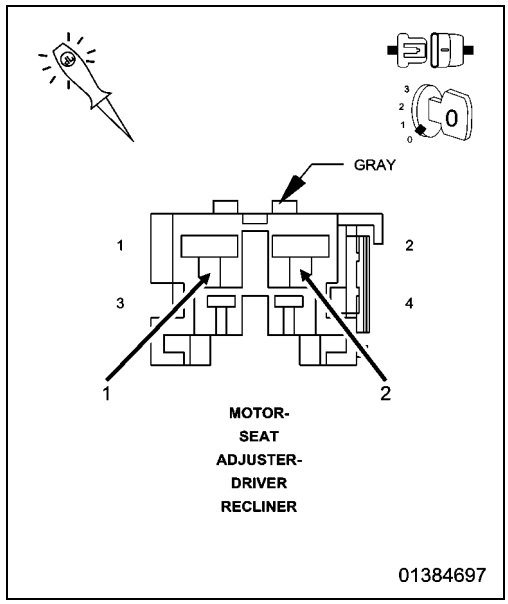

6. CHECK THE DRIVER SEAT RECLINER ADJUSTER MOTOR OPERATION

1. Turn the ignition off.
2. Reconnect the Driver Recliner Seat Adjuster Motor connector.
3. Disconnect the MSM C2 connector.

NOTE: Check connectors. Clean and repair as necessary.

4. Check motor operation in both directions as follows:

NOTE: Do not adjust the seat against an end-stop when performing the following.

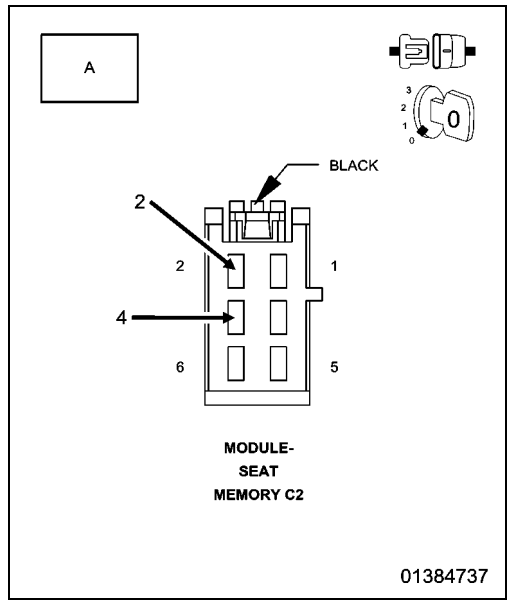

To drive seat back forward:

- Connect one end of a fused jumper wire to battery Voltage and the other end to the (P141) Driver Seat Recliner Up Driver circuit at the MSM C2 connector.
- Connect an ammeter between ground and the (P143) Driver Seat Recliner Down Driver circuit at the MSM C2 connector.
- Disconnect before reaching the end-stop.

To drive seat back rearward:

- Connect one end of a fused jumper wire to battery Voltage and the other end to the (P143) Driver Seat Recliner Down Driver circuit at the MSM C2 connector.
- Connect an ammeter between ground and the (P141) Driver Seat Recliner Up Driver circuit at the MSM C2 connector.
- Disconnect before reaching the end-stop.

NOTE: The seat motor should be operational in both directions and the ammeter should read approximately 2.0 amps reclining backward and 2.5 amps reclining forward.

Does the motor operate as specified?

Yes

- Go To 7

No

- Check (P141) Driver Seat Recliner Up Driver circuit and (P143) Driver Seat Recliner Down Driver circuit for high resistance. If circuits are okay, replace the Recliner motor assembly in accordance with the Service Information.
- Perform POWER SEAT SYSTEM VERIFICATION TEST. (Refer to 28 - DTC-Based Diagnostics/MODULE, Memory Seat (MSMD) - Standard Procedure).

7. CHECK THE DRIVER SEAT RECLINER ADJUSTER MOTOR SENSOR OPERATION

1. Reconnect the MSM C2 connector.
2. Turn the ignition on.
3. Using a scan tool, erase DTCs.
4. Connect the positive lead of a lab scope to the (G403) Driver Seat Recliner Position Sense circuit and the negative lead to the (G493) Driver Seat Recliner Position Sensor Ground circuit at the MSM C2 connector. Set the lab scope range to 20 Volts and time to 20 ms divisions.

NOTE: Do not adjust the seat against an end-stop when performing the following.

5. Move the seat switch in one recliner adjust position.

NOTE: If the sensor is functioning normally the scope will display a continuously cycling square wave when operating the seat. If the module fails to detect sensor operation it will stop seat operation in approximately two seconds.

Does the sensor operate as specified?

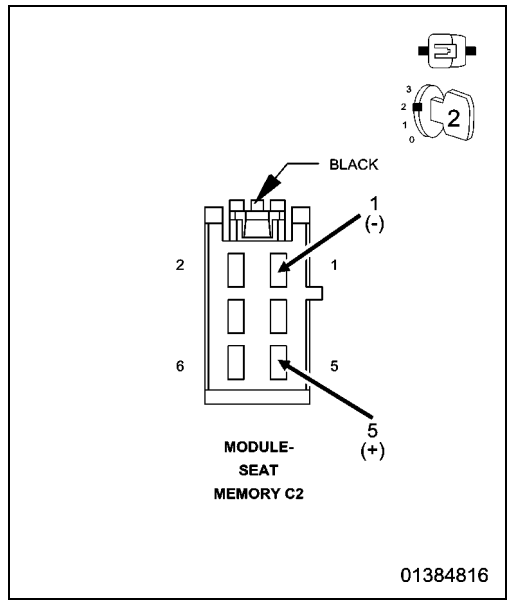

Yes

- Leave Scope Connected. Go To 8

No

- Replace the Recliner motor assembly in accordance with the Service Information.
- Perform POWER SEAT SYSTEM VERIFICATION TEST. (Refer to 28 - DTC-Based Diagnostics/MODULE, Memory Seat (MSMD) - Standard Procedure).

8. CHECK THE DRIVER SEAT RECLINER ADJUSTER MOTOR SENSOR OPERATION IN OPPOSITE DIRECTION

1. Using a scan tool, erase DTCs if present.

NOTE: Do not adjust the seat against an end-stop when performing the following.

2. Move the seat switch in the direction opposite of that previously selected.

NOTE: If the sensor is functioning normally the scope will display a continuously cycling square wave when operating the seat. If the module fails to detect sensor operation it will stop seat operation in approximately two seconds.

Does the sensor operate as specified?

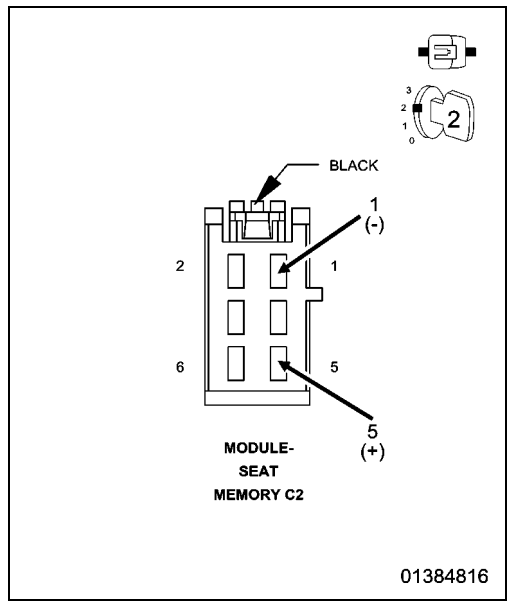

Yes

- Replace the Memory Seat Module (MSM) in accordance with the Service Information.
- Perform APS VERIFICATION TEST. (Refer to 28 - DTC-Based Diagnostics/MODULE, Memory Seat (MSMD) - Standard Procedure).

No

- Replace the Recliner motor assembly in accordance with the Service Information.
- Perform POWER SEAT SYSTEM VERIFICATION TEST. (Refer to 28 - DTC-Based Diagnostics/MODULE, Memory Seat (MSMD) - Standard Procedure).

9. CHECK THE (G403) DRIVER SEAT RECLINER POSITION SENSE CIRCUIT FOR AN OPEN

1. Disconnect the MSM C2 connector.

NOTE: Check connectors. Clean and repair as necessary.

2. Measure the resistance of the (G403) Driver Seat Recliner Position Sense circuit between the Driver Recliner Seat Adjuster Motor connector and the MSM C2 connector.

Is the resistance below 5.0 Ohms?

Yes

- Go To 10

No

- Repair the (G403) Driver Seat Recliner Position Sense circuit for an open.
- Perform POWER SEAT SYSTEM VERIFICATION TEST. (Refer to 28 - DTC-Based Diagnostics/MODULE, Memory Seat (MSMD) - Standard Procedure).

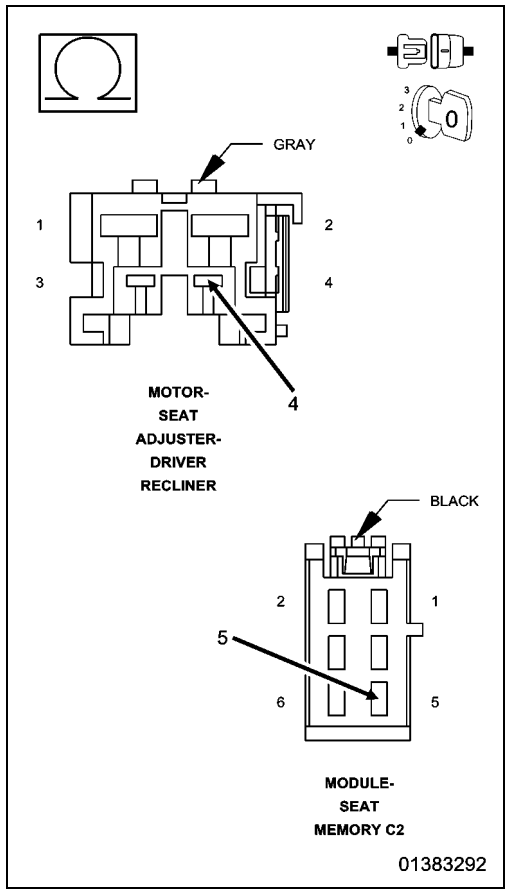

10. CHECK THE (G493) DRIVER SEAT RECLINER POSITION SENSOR GROUND CIRCUIT FOR AN OPEN

1. Measure the resistance of the (G493) Driver Seat Recliner Position Sensor Ground circuit between the Driver Recliner Seat Adjuster Motor connector and the MSM C2 connector.

Is the resistance below 5.0 Ohms?

Yes

- Replace the Memory Seat Module (MSM) in accordance with the Service Information.
- Perform POWER SEAT SYSTEM VERIFICATION TEST. (Refer to 28 - DTC-Based Diagnostics/MODULE, Memory Seat (MSMD) - Standard Procedure).

No

- Repair the (G493) Driver Seat Recliner Position Senor Ground circuit for an open.
- Perform POWER SEAT SYSTEM VERIFICATION TEST. (Refer to 28 - DTC-Based Diagnostics/MODULE, Memory Seat (MSMD) - Standard Procedure).

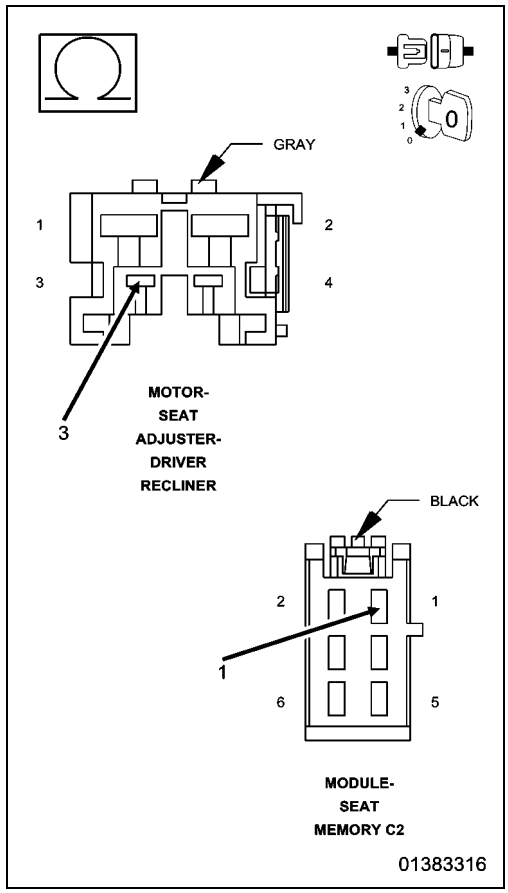

11. CHECK THE (P141) DRIVER SEAT RECLINER UP DRIVER CIRCUIT FOR AN OPEN

1. Disconnect the MSM C2 connector.

NOTE: Check connectors. Clean and repair as necessary.

2. Measure the resistance of the (P141) Driver Seat Recliner Up Driver circuit between the Driver Recliner Seat Adjuster Motor connector and the MSM C2 connector.

Is the resistance below 5.0 Ohms?

Yes

- Go To 12

No

- Repair the (P141) Driver Seat Recliner Up Driver circuit for an open.
- Perform POWER SEAT SYSTEM VERIFICATION TEST. (Refer to 28 - DTC-Based Diagnostics/MODULE, Memory Seat (MSMD) - Standard Procedure).

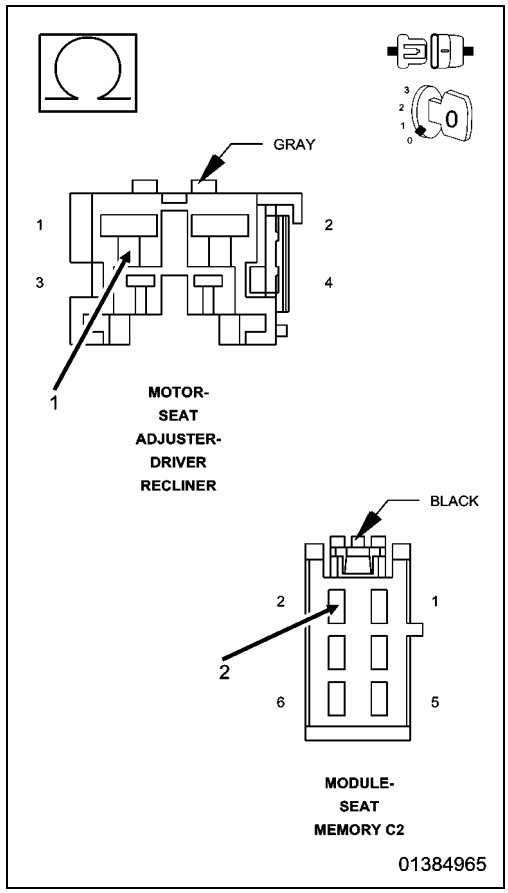

12. CHECK THE (P143) DRIVER SEAT RECLINER DOWN DRIVER CIRCUIT FOR AN OPEN

1. Measure the resistance of the (P143) Driver Seat Recliner Down Driver circuit between the Driver Recliner Seat Adjuster Motor connector and the MSM C2 connector.

Is the resistance below 5.0 Ohms?

Yes

- Replace the Memory Seat Module (MSM) in accordance with the Service Information.
- Perform POWER SEAT SYSTEM VERIFICATION TEST. (Refer to 28 - DTC-Based Diagnostics/MODULE, Memory Seat (MSMD) - Standard Procedure).

No

- Repair the (P143) Driver Seat Recliner Down Driver circuit for an open.
- Perform POWER SEAT SYSTEM VERIFICATION TEST. (Refer to 28 - DTC-Based Diagnostics/MODULE, Memory Seat (MSMD) - Standard Procedure).

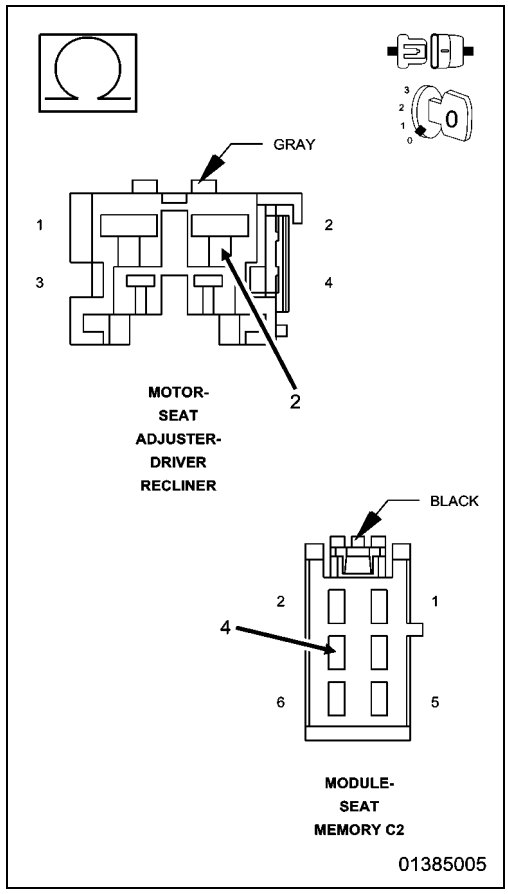

B1D9B-SEAT HORIZONTAL FRONT STOP NOT LEARNED

For a complete wiring diagram, **refer to the Wiring Information**.

- **When Monitored:**

  Whenever the seat motor is activated.

- **Set Condition:**

  If the seat is standardized and then it becomes de-standardized. The seat is standardized when the module learns the seat cushion horizontal front hard stop position. The seat is de-standardized if the seat cushion motor is 5% past the expected hard stop position or if a seat cushion hall sensor failure occurs. The seat must be standardized to perform an Easy Exit/Entry function.

Possible Causes
SEAT POSITION SENSOR DIAGNOSTIC TROUBLE CODES (DTCs) PRESENT
SEAT STANDARDIZATION ROUTINE NOT PERFORMED

1. CHECK FOR SEAT POSITION SENSOR AND CIRCUIT PERFORMANCE DIAGNOSTIC TROUBLE CODES (DTCs)

1. Turn the ignition on.
2. Using a scan tool, read DTCs.

Does the scan tool display any seat position sensor or circuit performance DTCs?

Yes

- Diagnose and repair all seat position sensor and circuit performance DTCs. (Refer to 28 - DTC-Based Diagnostics/MODULE, Memory Seat (MSMD) - Diagnosis and Testing).

No

- Go To 2

2. TEST FOR INTERMITTENT CONDITION

1. Using a scan tool, record and erase DTCs.
2. Move the seat switch in the full forward horizontal adjust position.
3. Using a scan tool, read DTCs.

Does the scan tool display DTC B1D9B-SEAT HORIZONTAL FRONT STOP NOT LEARNED?

Yes

- Using a scan tool, perform the MSM Standard Routine.
- Perform POWER SEAT SYSTEM VERIFICATION TEST. (Refer to 28 - DTC-Based Diagnostics/MODULE, Memory Seat (MSMD) - Standard Procedure).

No

- The conditions that caused this code to set are not present at this time. Using the wiring diagram/schematic as a guide, inspect the wiring and connectors.
- Perform POWER SEAT SYSTEM VERIFICATION TEST. (Refer to 28 - DTC-Based Diagnostics/MODULE, Memory Seat (MSMD) - Standard Procedure).

B210D-BATTERY VOLTAGE LOW

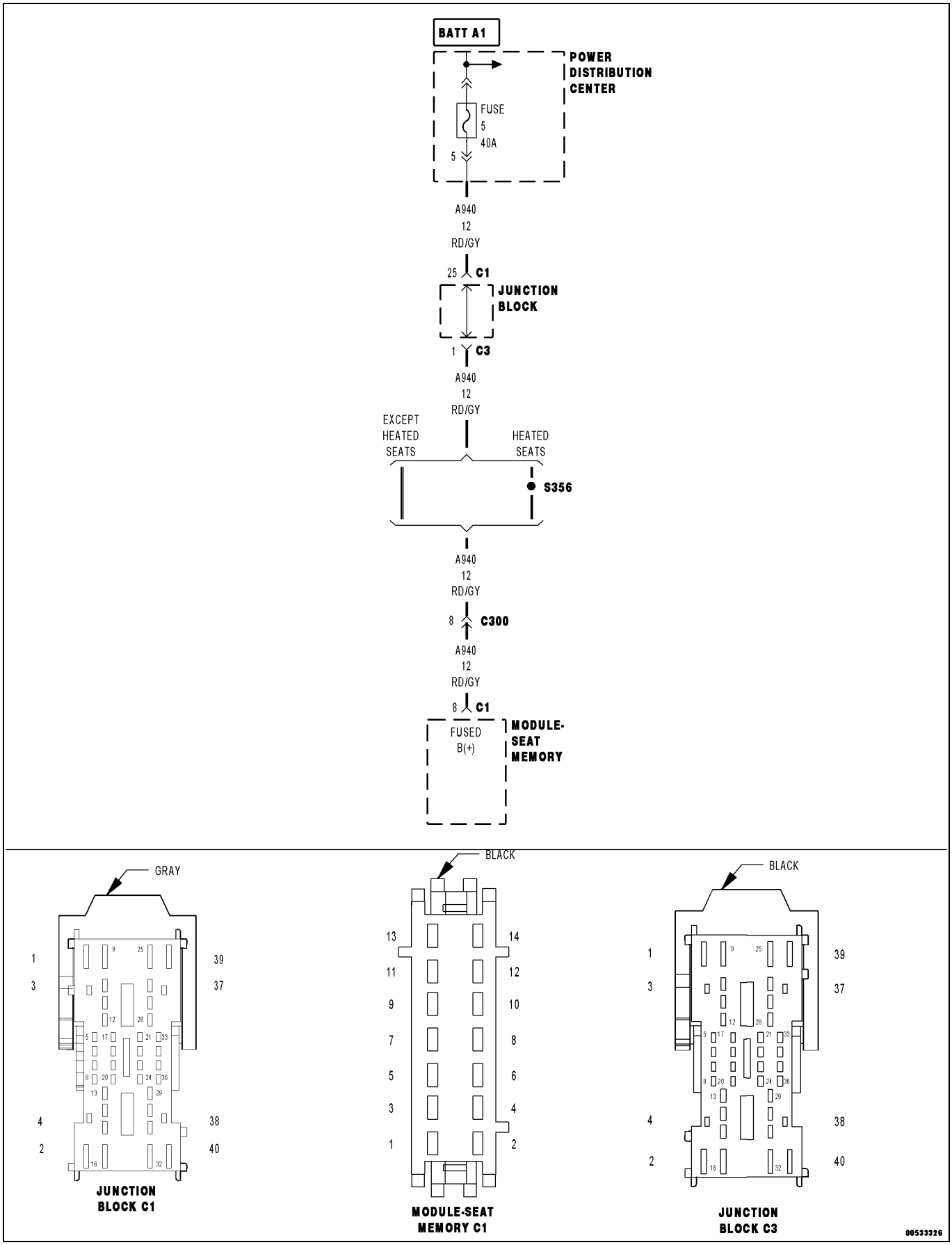

For a complete wiring diagram, **refer to the Wiring Information**.

- **When Monitored:**
  Whenever the Bus is awake or during seat motor operation.
- **Set Condition:**
  This code sets if the Memory Seat Module (MSM) detects Voltage under 9.5-volts on the (A907) Fused B(+) circuit.

Possible Causes
CHARGING SYSTEM VOLTAGE LOW
(A907) FUSED B(+) CIRCUIT
MEMORY SEAT MODULE (MSM)

1. CHECK FOR CHARGING SYSTEM DIAGNOSTIC TROUBLE CODES (DTCs)

1. Turn the ignition on.
2. Using a scan tool, read Powertrain Control Module (PCM) DTCs.

Are there any Charging System DTCs set in the PCM?

Yes

- (Refer to 08 - Electrical/8F - Engine Systems/Charging - Diagnosis and Testing) or (Refer to 28 - DTC-Based Diagnostics/MODULE, Powertrain Control (PCM) - Diagnosis and Testing) for Charging System diagnostic procedures.

No

- Go To 2

2. TEST FOR INTERMITTENT CONDITION

1. Using a scan tool, record and erase DTCs.
2. Turn the ignition off.
3. Start the engine and let run for one minute.
4. Operate the driver power seat.
5. Using a scan tool, read DTCs.

Does DTC B210D-BATTERY VOLTAGE LOW reset?

Yes

- Go To 3

No

- The conditions that caused this code to set are not present at this time. Using the wiring diagram/schematic as a guide, inspect the wiring and connectors. Look for chafed, pierced, pinched, or partially broken wires and broken, bent, pushed out, spread, corroded, or contaminated terminals.
- Perform POWER SEAT SYSTEM VERIFICATION TEST. (Refer to 28 - DTC-Based Diagnostics/MODULE, Memory Seat (MSMD) - Standard Procedure).

3. CHECK (A907) FUSED B(+) CIRCUIT VOLTAGE

1. Turn the ignition off.
2. Disconnect the Memory Seat Module C1 connector.

NOTE: Check connectors - Clean and repair as necessary.

3. Start the engine and let idle.
4. Measure the Voltage of the (A907) Fused B(+) circuit between the Memory Seat Module C1 connector and ground and compare it to the Voltage at the vehicle battery.

Is the Voltage measured at the Memory Seat Module C1 connector the same as the Voltage measured at the battery?

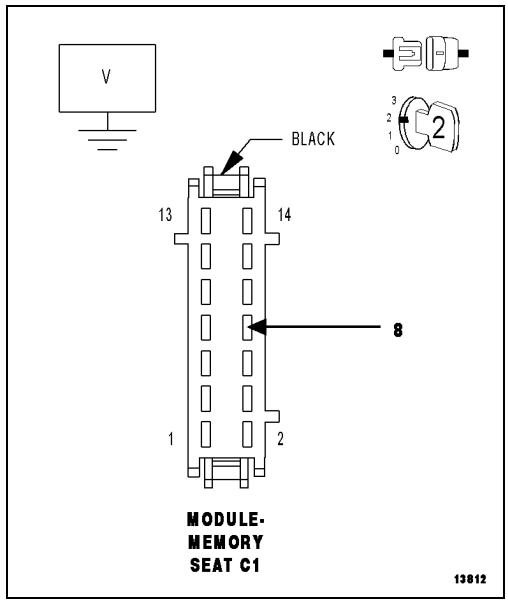

Yes

- Replace the Memory Seat Module (MSM) in accordance with the service information.
- Perform POWER SEAT SYSTEM VERIFICATION TEST. (Refer to 28 - DTC-Based Diagnostics/MODULE, Memory Seat (MSMD) - Standard Procedure).

No

- Repair the (A907) Fused B(+) circuit for the cause of the low Voltage condition at the Memory Seat Module (MSM).
- Perform POWER SEAT SYSTEM VERIFICATION TEST. (Refer to 28 - DTC-Based Diagnostics/MODULE, Memory Seat (MSMD) - Standard Procedure).

B210E-BATTERY VOLTAGE HIGH

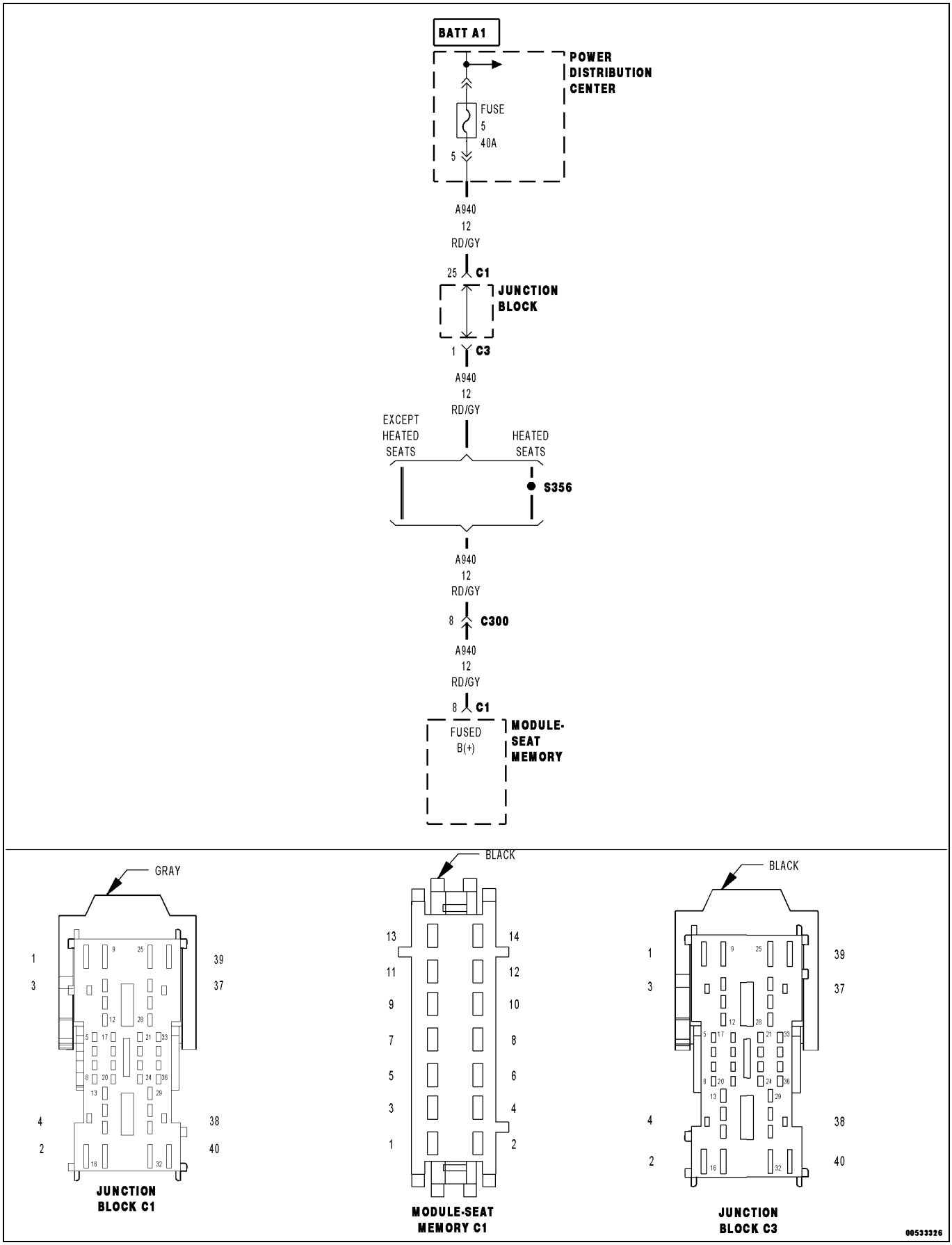

For a complete wiring diagram, **refer to the Wiring Information**.

- **When Monitored:**

  Whenever the Bus is awake or during seat operation.
- **Set Condition:**

  This code will set if the Memory Seat Module (MSM) detects Voltage over 16.5-volts on the (A907) Fused B(+) circuit.

Possible Causes
CHARGING SYSTEM VOLTAGE HIGH
(A907) FUSED B(+) CIRCUIT
MEMORY SEAT MODULE (MSM)

1. CHECK FOR CHARGING SYSTEM DIAGNOSTIC TROUBLE CODES (DTCs)

1. Turn the ignition on.
2. Using a scan tool, read Powertrain Control Module (PCM) DTCs.

Are there any Charging System DTCs set in the PCM?

Yes

- (Refer to 08 - Electrical/8F - Engine Systems/Charging - Diagnosis and Testing) or (Refer to 28 - DTC-Based Diagnostics/MODULE, Powertrain Control (PCM) - Diagnosis and Testing) for Charging System diagnostic procedures.

No

- Go To 2

2. TEST FOR INTERMITTENT CONDITION

1. Using a scan tool, record and erase DTCs.
2. Turn the ignition off.
3. Start the engine and let run for one minute.
4. Operate the driver power seat.
5. Using a scan tool, read DTCs.

Does DTC B210E-BATTERY VOLTAGE HIGH reset?

Yes

- Go To 3

No

- The conditions that caused this code to set are not present at this time. Using the wiring diagram/schematic as a guide, inspect the wiring and connectors.
- Perform POWER SEAT SYSTEM VERIFICATION TEST. (Refer to 28 - DTC-Based Diagnostics/MODULE, Memory Seat (MSMD) - Standard Procedure).

3. CHECK (A907) FUSED B(+) CIRCUIT VOLTAGE

1. Turn the ignition off.
2. Disconnect the Memory Seat Module C1 connector.

NOTE: Check connectors. Clean and repair as necessary.

3. Start the engine and let idle.
4. Measure the Voltage of the (A907) Fused B(+) circuit between the Memory Seat Module C1 connector and ground and compare it to the Voltage at the vehicle battery.

Is the Voltage measured at the Memory Seat Module C1 connector the same as the Voltage measured at the battery?

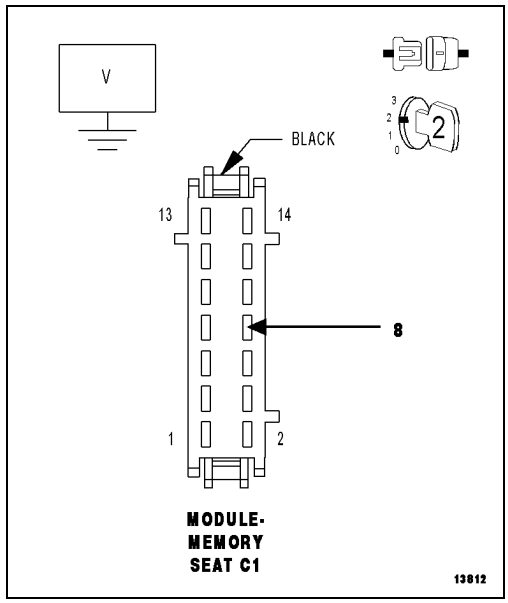

Yes

- Replace the Memory Seat Module (MSM) in accordance with the service information.
- Perform POWER SEAT SYSTEM VERIFICATION TEST. (Refer to 28 - DTC-Based Diagnostics/MODULE, Memory Seat (MSMD) - Standard Procedure).

No

- Repair the (A907) Fused B(+) circuit for the cause of the high Voltage condition at the Memory Seat Module (MSM).
- Perform POWER SEAT SYSTEM VERIFICATION TEST. (Refer to 28 - DTC-Based Diagnostics/MODULE, Memory Seat (MSMD) - Standard Procedure).

■ B221C-MEMORY SEAT MODULE INTERNAL

For a complete wiring diagram, **refer to the Wiring Information**.

- **When Monitored:**

  Ignition on.
- **Set Condition:**

  If the Memory Seat Module (MSM) internal self-test fails.

Possible Causes
MEMORY SEAT MODULE (MSM)

1. TEST FOR INTERMITTENT CONDITION

1. Turn the ignition on.
2. Using a scan tool, record and erase Diagnostic Trouble Codes (DTCs).
3. Cycle the ignition switch off and then on again.
4. Using a scan tool, read DTCs.

Does the scan tool display DTC B221C-MEMORY SEAT MODULE INTERNAL?

Yes

- Replace the Memory Seat Module (MSM) in accordance with the Service Information.
- Perform POWER SEAT SYSTEM VERIFICATION TEST. (Refer to 28 - DTC-Based Diagnostics/MODULE, Memory Seat (MSMD) - Standard Procedure).

No

- The conditions that caused this code to set are not present at this time. Using the wiring diagram/schematic as a guide, inspect the wiring and connectors.
- Perform POWER SEAT SYSTEM VERIFICATION TEST. (Refer to 28 - DTC-Based Diagnostics/MODULE, Memory Seat (MSMD) - Standard Procedure).

U0011-CAN INTERIOR BUS OFF PERFORMANCE

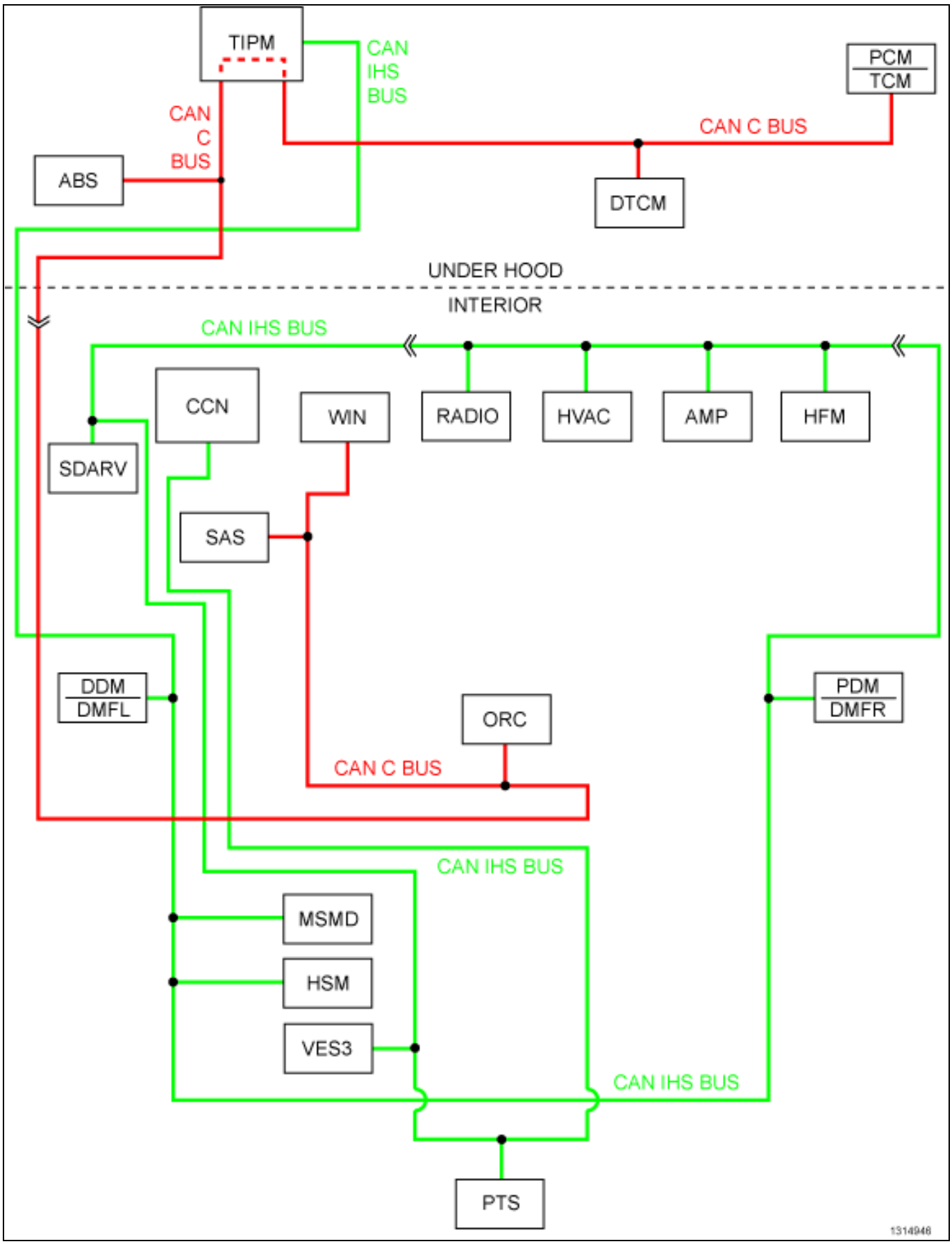

For a complete wiring diagram, **refer to the Wiring Information**.

- **When Monitored:**
  With the ignition on.
- **Set Condition:**
  The Memory Seat Module (MSM) detects that the (D265) CAN Interior Bus (125K)(+) circuit or (D264) CAN Interior Bus (125K)(-) circuit is shorted.

Possible Causes
(D265) CAN INTERIOR BUS (125K)(+) CIRCUIT SHORTED TO GROUND
(D264) CAN INTERIOR BUS (125K)(-) CIRCUIT SHORTED TO VOLTAGE
(D265) CAN INTERIOR BUS (125K)(+) CIRCUIT SHORTED TO (D264) CAN INTERIOR BUS (125K)(-) CIRCUIT
ANY CAN INTERIOR BUS MODULE
TOTALLY INTEGRATED POWER MODULE (TIPM)

This module will not be able to communicate when this fault is active and therefore will only display this DTC as stored. To diagnose this fault, use a scan tool and check for DTCs in the TIPM. If DTCs are active, (Refer to 28 - DTC-Based Diagnostics/MODULE, Totally Integrated Power (TIPM) - Diagnosis and Testing) and diagnose and repair the faults. If no DTCs are active, but there are stored Lost Communication DTCs set, (Refer to 29 - Non-DTC Diagnostics/Communication - Diagnosis and Testing) and diagnose and repair these faults. If no DTCs are set, perform BODY VERIFICATION TEST. (Refer to 28 - DTC-Based Diagnostics/MODULE, Totally Integrated Power (TIPM) - Standard Procedure).

U0014-CAN INTERIOR BUS (+) CIRCUIT HIGH

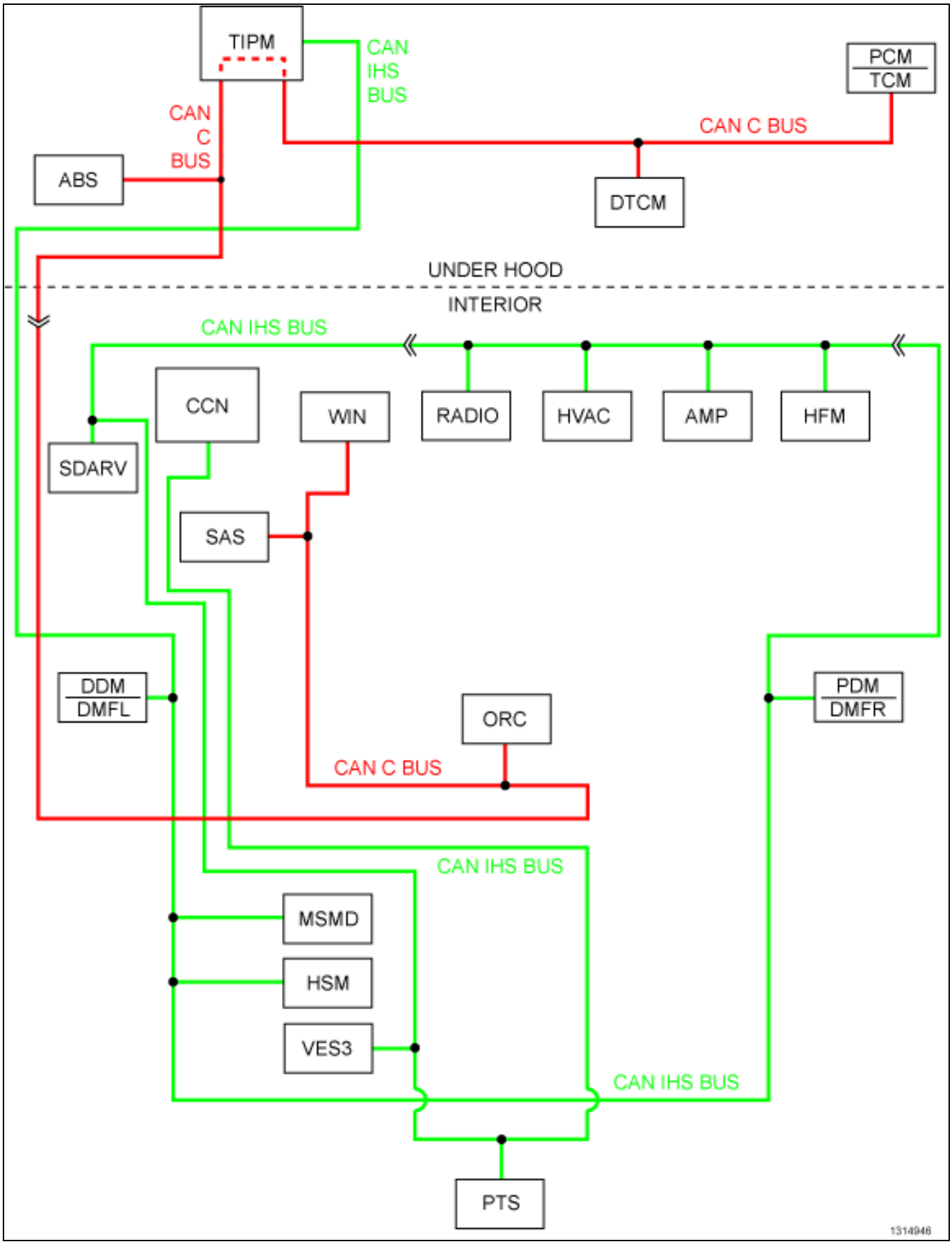

For a complete wiring diagram, **refer to the Wiring Information**.

- **When Monitored:**
  With the ignition on.
- **Set Condition:**
  The Memory Seat Module (MSM) detects that the (D265) CAN Interior Bus (125K)(+) circuit is shorted.

Possible Causes
(D265) CAN INTERIOR BUS (125K)(+) CIRCUIT SHORTED TO VOLTAGE
ANY CAN INTERIOR BUS MODULE
TOTALLY INTEGRATED POWER MODULE (TIPM)

This module will not be able to communicate when this fault is active and therefore will only display this DTC as stored. To diagnose this fault, use a scan tool and check for DTCs in the TIPM. If DTCs are active, (Refer to 28 - DTC-Based Diagnostics/MODULE, Totally Integrated Power (TIPM) - Diagnosis and Testing) and diagnose and repair the faults. If no DTCs are active, but there are stored Lost Communication DTCs set, (Refer to 29 - Non-DTC Diagnostics/Communication - Diagnosis and Testing) and diagnose and repair these faults. If no DTCs are set, perform BODY VERIFICATION TEST. (Refer to 28 - DTC-Based Diagnostics/MODULE, Totally Integrated Power (TIPM) - Standard Procedure).

U0016-CAN INTERIOR BUS (-) CIRCUIT LOW

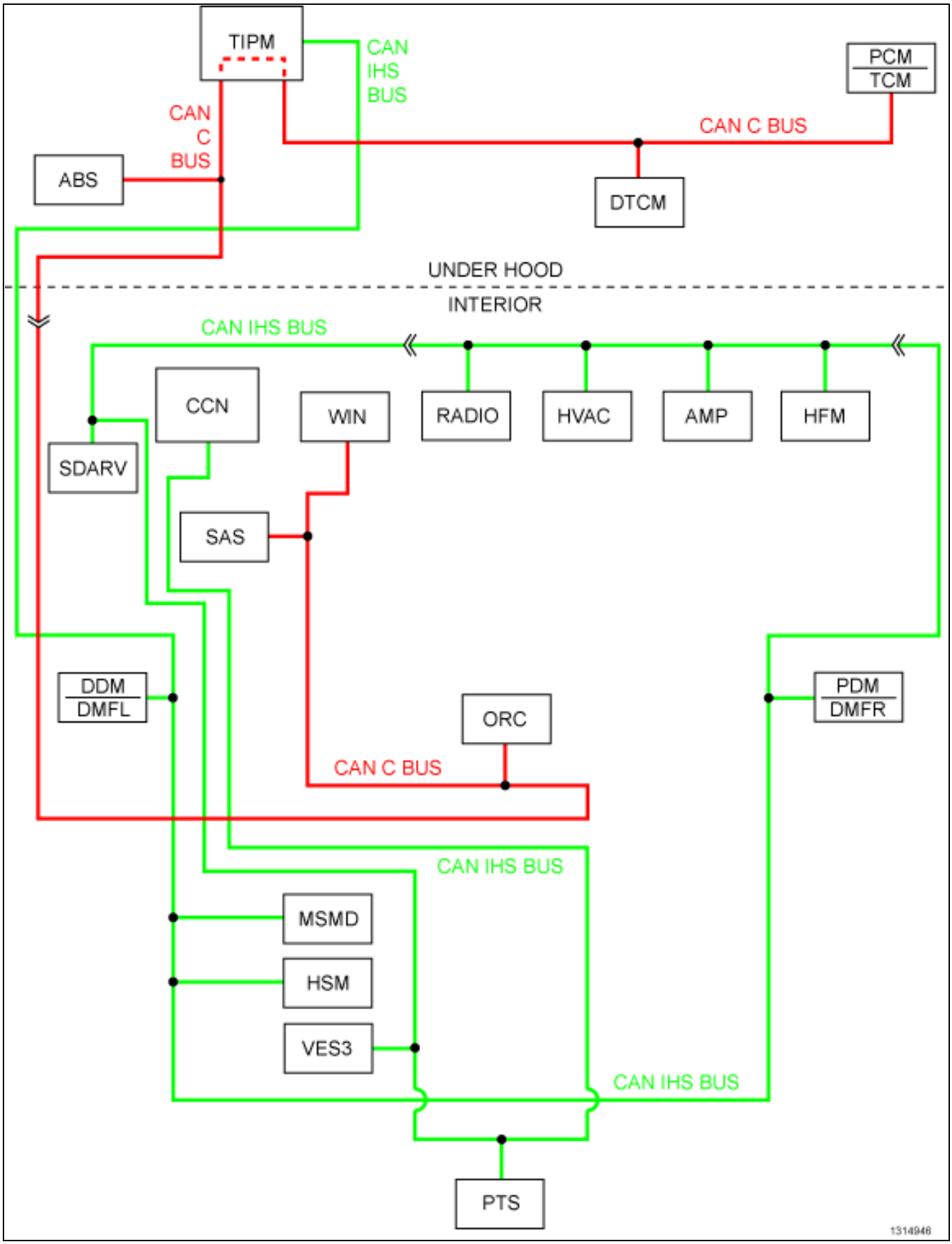

For a complete wiring diagram, **refer to the Wiring Information**.

- **When Monitored:**
  With the ignition on.
- **Set Condition:**
  The Memory Seat Module (MSM) detects that the (D264) CAN Interior Bus (125K)(-) circuit is shorted.

Possible Causes
(D264) CAN INTERIOR BUS (125K)(-) CIRCUIT SHORTED TO GROUND
ANY CAN INTERIOR BUS MODULE
TOTALLY INTEGRATED POWER MODULE (TIPM)

This module will not be able to communicate when this fault is active and therefore will only display this DTC as stored. To diagnose this fault, use a scan tool and check for DTCs in the TIPM. If DTCs are active, (Refer to 28 - DTC-Based Diagnostics/MODULE, Totally Integrated Power (TIPM) - Diagnosis and Testing) and diagnose and repair the faults. If no DTCs are active, but there are stored Lost Communication DTCs set, (Refer to 29 - Non-DTC Diagnostics/Communication - Diagnosis and Testing) and diagnose and repair these faults. If no DTCs are set, perform BODY VERIFICATION TEST. (Refer to 28 - DTC-Based Diagnostics/MODULE, Totally Integrated Power (TIPM) - Standard Procedure).

U0141-LOST COMMUNICATION WITH IPM (FCM/TIPM)

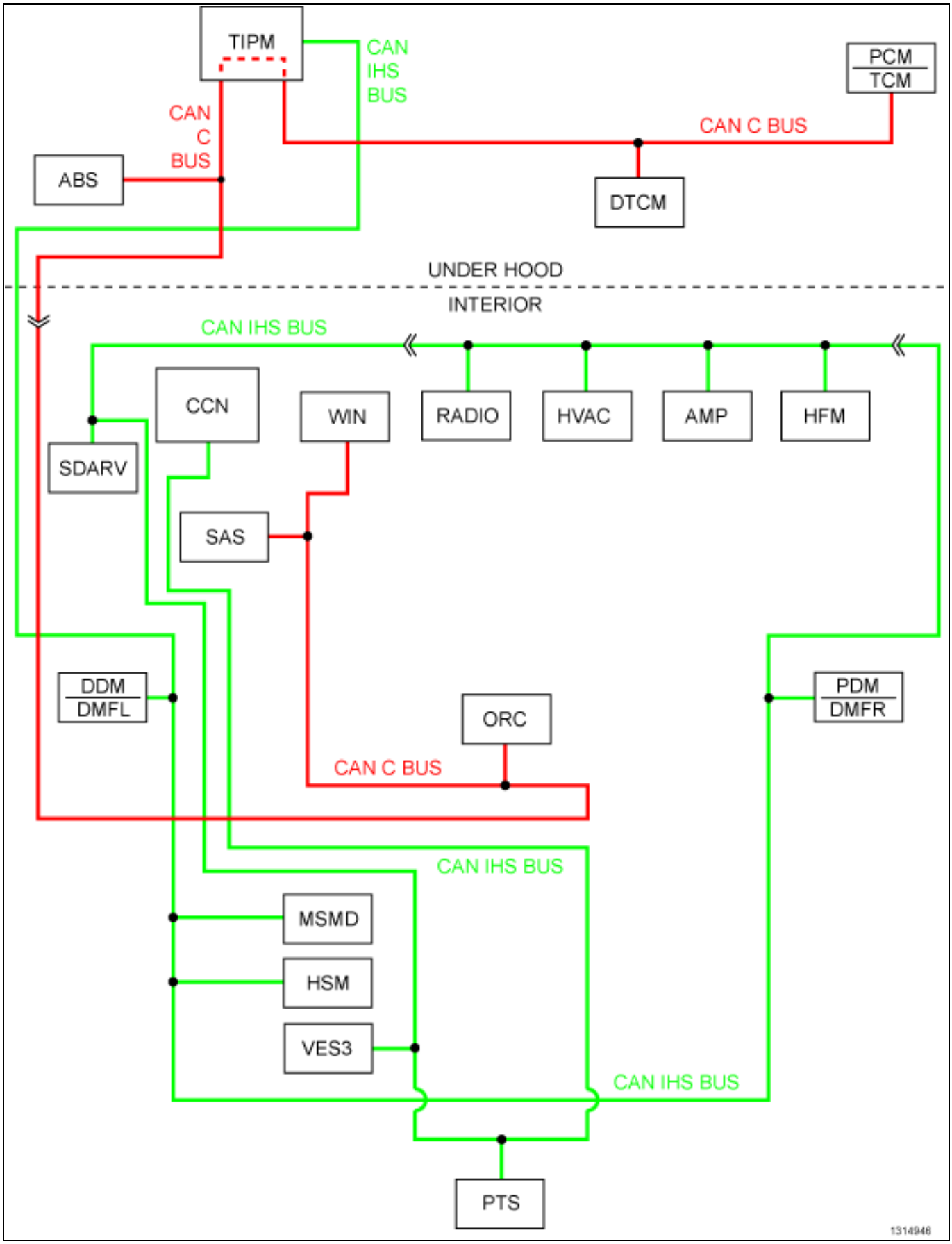

For a complete wiring diagram, **refer to the Wiring Information**.

- **When Monitored:**
  With the ignition on.
  Battery Voltage between 10 and 16 Volts.
  Ignition Off Draw (IOD) fuse installed.
  Totally Integrated Power Module (TIPM) is configured correctly.
- **Set Condition:**
  Bus messages not received from the Totally Integrated Power Module (TIPM) for approximately two to five seconds.

Possible Causes
DIAGNOSTIC CAN C BUS CIRCUITS OPEN OR SHORTED
CAN INTERIOR BUS (125K) CIRCUITS OPEN OR SHORTED
DIAGNOSTIC TROUBLE CODES (DTCs) RELATED TO BATTERY VOLTAGE, IGNITION, OR VIN MESSAGES PRESENT
TIPM NOT CONFIGURED CORRECTLY
TIPM POWER AND GROUND
TOTALLY INTEGRATED POWER MODULE (TIPM)
MEMORY SEAT MODULE (MSM)

1. VERIFY DIAGNOSTIC TROUBLE CODE (DTC) IS ACTIVE

NOTE: Make sure the IOD fuse is installed and battery Voltage is between 10 and 16 Volts before proceeding.

1. Turn the ignition on.
2. Using a scan tool, read DTCs.

Is this DTC active?

Yes

- Go To 2

No

- **(Refer to 29 - Non-DTC Diagnostics/Communication - Diagnosis and Testing)** and perform the Stored Lost Communication DTCs diagnostic procedure.

2. VERIFY TIPM IS COMMUNICATING WITH OTHER MODULES

1. Using a scan tool, read DTCs in all modules.

Is any other module reporting a loss of communication with the TIPM?

Yes

- **(Refer to 29 - Non-DTC Diagnostics/Communication - Diagnosis and Testing)** and perform the No Response from TIPM diagnostic procedure.

No

- Replace the Memory Seat Module (MSM) in accordance with the Service Information.
- Perform the BODY VERIFICATION TEST. (Refer to 28 - DTC-Based Diagnostics/MODULE, Totally Integrated Power (TIPM) - Standard Procedure).

U0155-LOST COMMUNICATION WITH CLUSTER/CCN

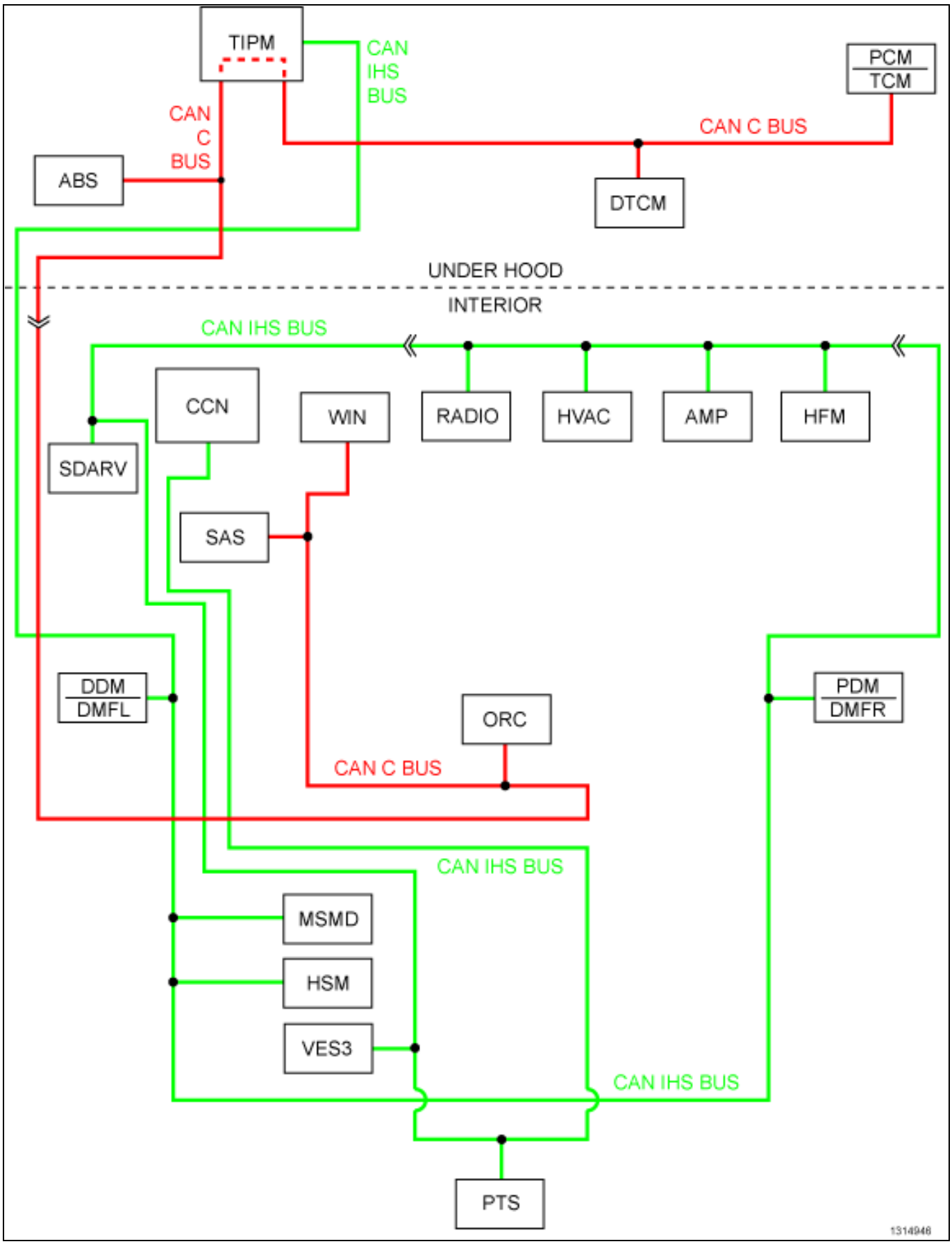

For a complete wiring diagram, **refer to the Wiring Information**.

- **When Monitored:**
  With the ignition on.
  Battery Voltage between 10 and 16 Volts.
  Ignition Off Draw (IOD) fuse installed.
  Totally Integrated Power Module (TIPM) is configured correctly.
- **Set Condition:**
  Bus messages not received from the Cluster (CCN) for approximately two to five seconds.

Possible Causes
CAN INTERIOR BUS (125K) CIRCUITS OPEN OR SHORTED
DIAGNOSTIC TROUBLE CODES (DTCs) RELATED TO BATTERY VOLTAGE, IGNITION, OR VIN MESSAGES PRESENT
TIPM NOT CONFIGURED CORRECTLY
CCN POWER AND GROUND
CCN
MODULE THAT SET THIS DTC

1. VERIFY DIAGNOSTIC TROUBLE CODE (DTC) IS ACTIVE

NOTE: Make sure the IOD fuse is installed and battery Voltage is between 10 and 16 Volts before proceeding.

1. Turn the ignition on.
2. Using a scan tool, read DTCs.

Is this DTC active?

Yes

- Go To 2

No

- **(Refer to 29 - Non-DTC Diagnostics/Communication - Diagnosis and Testing)** and perform the Stored Lost Communication DTCs diagnostic procedure.

2. VERIFY CCN IS COMMUNICATING WITH OTHER MODULES

1. Using a scan tool, read DTCs in all modules.

Are any other modules reporting a loss of communication with the CCN?

Yes

- **(Refer to 29 - Non-DTC Diagnostics/Communication - Diagnosis and Testing)** and perform the No Response from CCN diagnostic procedure.

No

- Replace the Memory Seat Module (MSM) in accordance with the Service Information.
- Perform the BODY VERIFICATION TEST. (Refer to 28 - DTC-Based Diagnostics/MODULE, Totally Integrated Power (TIPM) - Standard Procedure).

U0203-LOST COMMUNICATION WITH DOOR MODULE FRONT LEFT

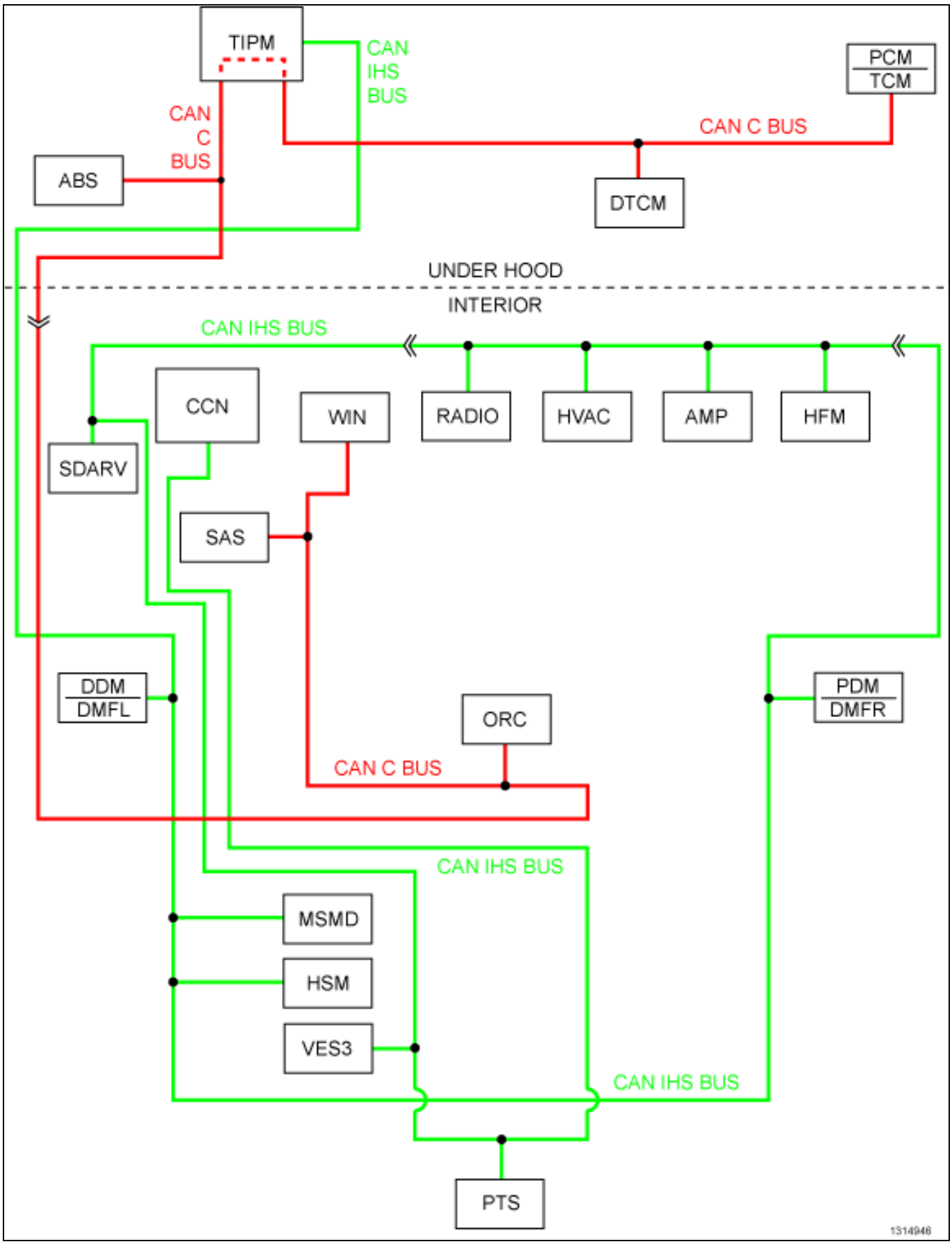

For a complete wiring diagram, **refer to the Wiring Information.**

- **When Monitored:**
  With the ignition on.
  Battery Voltage between 10 and 16 Volts.
  Ignition Off Draw (IOD) fuse installed.
  Totally Integrated Power Module (TIPM) is configured correctly.
- **Set Condition:**
  Bus messages not received from the Door Module Front Left (DMFL) for approximately two to five seconds.

Possible Causes
CAN INTERIOR BUS (125K) CIRCUITS OPEN OR SHORTED
DIAGNOSTIC TROUBLE CODES (DTCs) RELATED TO BATTERY VOLTAGE, IGNITION, OR VIN MESSAGES PRESENT
TIPM NOT CONFIGURED CORRECTLY
DMFL POWER AND GROUND
DMFL
MEMORY SEAT MODULE (MSM)

1. VERIFY DIAGNOSTIC TROUBLE CODE (DTC) IS ACTIVE

NOTE: Make sure the IOD fuse is installed and battery Voltage is between 10 and 16 Volts before proceeding.

1. Turn the ignition on.
2. Using a scan tool, read DTCs.

Is this DTC active?

Yes

- Go To 2

No

- **(Refer to 29 - Non-DTC Diagnostics/Communication - Diagnosis and Testing)** and perform the Stored Lost Communication DTCs diagnostic procedure.

2. VERIFY DMFL IS COMMUNICATING WITH OTHER MODULES

1. Using a scan tool, read DTCs in all modules.

Is any other module reporting a loss of communication with the DMFL?

Yes

- **(Refer to 29 - Non-DTC Diagnostics/Communication - Diagnosis and Testing)** and perform the No Response from DMFL diagnostic procedure.

No

- Replace the Memory Seat Module (MSM) in accordance with the Service Information.
- Perform the BODY VERIFICATION TEST. (Refer to 28 - DTC-Based Diagnostics/MODULE, Totally Integrated Power (TIPM) - Standard Procedure).

U0204-LOST COMMUNICATION WITH DOOR MODULE FRONT RIGHT

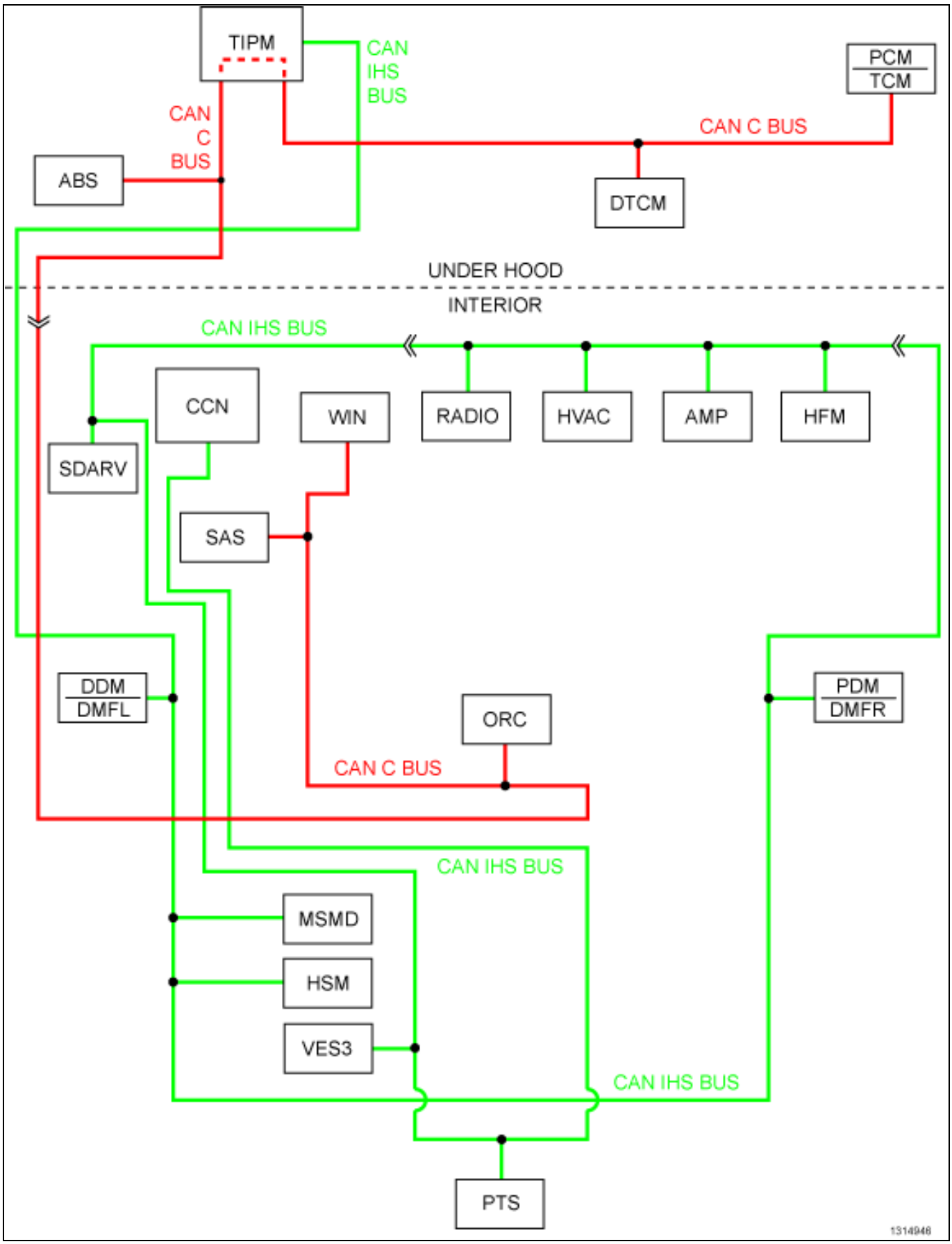

For a complete wiring diagram, **refer to the Wiring Information**.

- **When Monitored:**
  With the ignition on.
  Battery Voltage between 10 and 16 Volts.
  Ignition Off Draw (IOD) fuse installed.
  Totally Integrated Power Module (TIPM) is configured correctly.
- **Set Condition:**
  Bus messages not received from the Door Module Front Right (DMFR) for approximately two to five seconds.

Possible Causes
CAN INTERIOR BUS (125K) CIRCUITS OPEN OR SHORTED
DIAGNOSTIC TROUBLE CODES (DTCs) RELATED TO BATTERY VOLTAGE, IGNITION, OR VIN MESSAGES PRESENT
TIPM NOT CONFIGURED CORRECTLY
DMFR POWER AND GROUND
DMFR
MEMORY SEAT MODULE (MSM)

1. VERIFY DIAGNOSTIC TROUBLE CODE (DTC) IS ACTIVE

NOTE: Make sure the IOD fuse is installed and battery Voltage is between 10 and 16 Volts before proceeding.

1. Turn the ignition on.
2. Using a scan tool, read DTCs.

Is this DTC active?

Yes

- Go To 2

No

- **(Refer to 29 - Non-DTC Diagnostics/Communication - Diagnosis and Testing)** and perform the Stored Lost Communication DTCs diagnostic procedure.

2. VERIFY DMFR IS COMMUNICATING WITH OTHER MODULES

1. Using a scan tool, read DTCs in all modules.

Is any other module reporting a loss of communication with the DMFR?

Yes

- **(Refer to 29 - Non-DTC Diagnostics/Communication - Diagnosis and Testing)** and perform the No Response from DMFR diagnostic procedure.

No

- Replace the Memory Seat Module (MSM) in accordance with the Service Information.
- Perform the BODY VERIFICATION TEST. (Refer to 28 - DTC-Based Diagnostics/MODULE, Totally Integrated Power (TIPM) - Standard Procedure).

Standard Procedure

■ APS INTERMITTENT CONDITION TEST

For a complete wiring diagram, **refer to the Wiring Information**.

1. PERFORM APS INTERMITTENT CONDITION TEST

WARNING: When the engine is operating, do not stand in direct line with the fan. Do not put your hands near the pulleys, belts or fan. Do not wear loose clothing. Failure to follow these instructions may result in possible serious or fatal injury.

1. Refer to any Technical Service Bulletins (TSBs) that may apply.
2. Review the scan tool information. If possible, try to duplicate the conditions under which the DTC set.
3. Turn the ignition off.
4. Visually inspect the related wire harness. Disconnect all the related harness connectors. Look for any chafed, pierced, pinched, partially broken wires and broken, bent, pushed out, or corroded terminals.
5. Wiggle the wires while checking for shorts and open circuits.
6. Perform a voltage drop test on the related circuits between the suspected faulty component and the Memory Seat Module.
7. Inspect and clean all grounds that are related to the most current DTC.
8. If numerous trouble codes were set, use a wiring schematic and look for any common ground or supply circuits
9. Monitor with the scan tool and wiggle the related wire harness to try to interrupt the actuation.
10. Use the scan tool to perform a System Test if one applies to failing component.
11. A co-pilot, data recorder, and/or lab scope should be used to help diagnose intermittent conditions.

Were any problems found during the above inspections?

Yes

- Repair as necessary.
- Perform APS VERIFICATION TEST. (Refer to 28 - DTC-Based Diagnostics/MODULE, Memory Seat (MSMD) - Standard Procedure).

No

- Test Complete.

APS VERIFICATION TEST

1. PERFORM ADJUSTABLE PEDALS SYSTEM VERIFICATION TEST

1. Make sure all accessories are turned off and the battery is fully charged.
2. Connect all previously disconnected components and connectors.
3. If not done previously, turn the ignition on.
4. Using a scan tool, erase all Diagnostic Trouble Codes (DTCs) from all modules.
5. Cycle the ignition from on to off.
6. Turn the ignition on.
7. Operate the Adjustable Pedals in both directions.
8. Press the Adjustable Pedals switch in one direction for at least one second then release the switch. Repeat three times consecutively, but press the switch in the opposite direction each time.
9. Using a scan tool, read DTCs from all modules.

Are any DTCs present or is the original concern still present?

Yes

- Repair is not complete. Refer to appropriate system for the diagnostic procedure.

No

- Repair is complete.

■ POWER SEAT SYSTEM VERIFICATION TEST

1. PERFORM POWER SEAT SYSTEM VERIFICATION TEST

1. Disconnect all jumper wires and reconnect all previously disconnected components and connectors.
2. Make sure that all accessories are turned off.
3. Make sure that the battery is fully charged.
4. Turn the ignition on.
5. If either the Memory Seat Module (MSM) or the Driver Horizontal Seat Adjuster Motor/Seat Track was replaced, then the MSM Standard Routine must be performed using a scan tool.
6. Using a scan tool, record and erase Diagnostic Trouble Codes (DTCs) from all modules.
7. Operate the driver seat in all positions.
8. Using the Memory Switch on the driver's door, program the driver's seat number 1 Button to a desired position and driver's seat number 2 Button to a different position.
9. Verify both Memory positions can be recalled with the Remote Keyless Entry (RKE) transmitter and the Memory Switch on the driver's door.
10. Turn the ignition off, wait 10 seconds, then turn the ignition on.
11. Using a scan tool, select ECU View.
12. Check for DTCs in the modules.

Are DTCs present in any of the modules or is the original condition still present?

Yes

- The repair is not complete. Refer to the related category for the DTC or symptom that is still present.

No

- The repair is complete.

MODULE, Park Assist (PAM)

Diagnosis and Testing

■ B1295-11-PTS SENSOR 8 - CIRCUIT SHORT TO GROUND

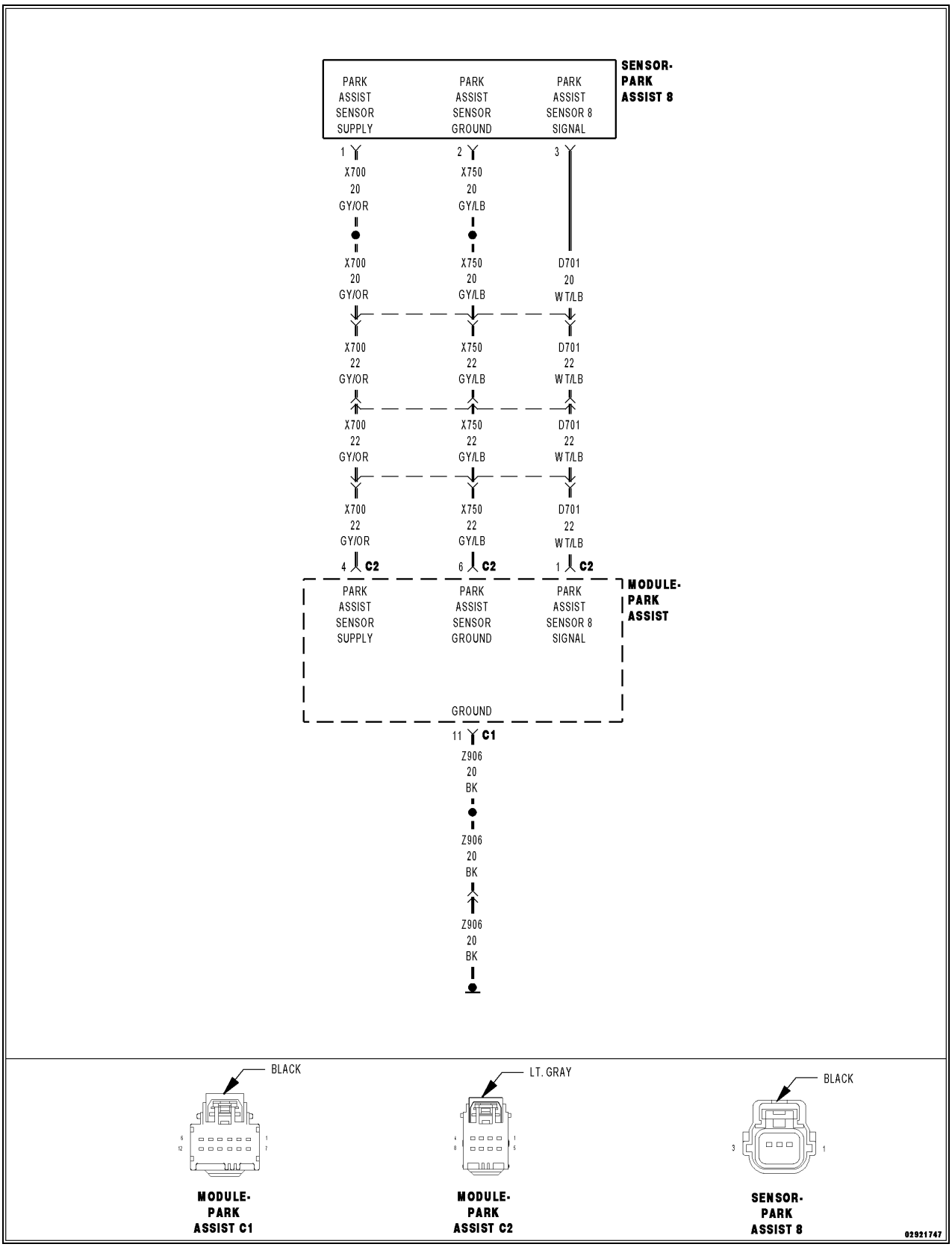

For a complete wiring diagram, **refer to the Wiring Information**.

Theory of Operation

The Park Assist Sensors are ultrasonic transceivers that are completely controlled by the Park Assist Module. The sensors transmit and receive ultrasonic signals. Each sensor has a voltage, signal, and return circuit to the module. The sensors communicate with the Park Assist Module using a dedicated serial bus communication circuit.

NOTE: The numbering system for the park assist sensors allows for up to twelve sensors on the vehicle, six front and six rear. The sensors are numbered in a clockwise manner starting at the left front bumper. The left front sensor (if equipped with front park assist) is the number 1 sensor. The numbering continues in a clockwise direction around the vehicle. Since Chrysler Group vehicles use only four rear sensors, sensor numbers 7 and 12 are omitted, so the left rear sensor is the number 11 sensor.

- **When Monitored:**
  Vehicle in reverse and during the self-test while vehicle is in drive between 18 km/h (11 mph) and 40 km/h (25 mph).
- **Set Condition:**
  The Park Assist Module detects a short to ground on the Park Assist Sensor Signal circuit.

Possible Causes
PARK ASSIST SENSOR DISCONNECTED
(D701) PARK ASSIST SENSOR 8 SIGNAL CIRCUIT SHORTED TO GROUND
(D701) PARK ASSIST SENSOR 8 SIGNAL CIRCUIT SHORTED TO THE (X750) PARK ASSIST SENSOR GROUND CIRCUIT
(D701) PARK ASSIST SENSOR 8 SIGNAL CIRCUIT OPEN
(X700) PARK ASSIST SENSOR SUPPLY CIRCUIT OPEN
PARK ASSIST SENSOR
PARK ASSIST MODULE

1. CHECK FOR AN ACTIVE DIAGNOSTIC TROUBLE CODE (DTC)

NOTE: A disconnected sensor will set this DTC. Verify the Park Assist Sensor is connected before proceeding with this diagnostic procedure.

1. Turn the ignition on.
2. With the scan tool, read DTCs.

Does the scan tool display this DTC as active?

Yes

- Go To 2

No

- Test complete, the condition or conditions that originally set this DTC are not present at this time. Using the wiring diagrams as a guide, check all related splices and connectors for signs of water intrusion, corrosion, pushed out or bent terminals, and correct pin tension.
- Perform the BODY VERIFICATION TEST. (Refer to 28 - DTC-Based Diagnostics/MODULE, Totally Integrated Power (TIPM) - Standard Procedure).

2. CHECK THE VOLTAGE OF THE (X700) PARK ASSIST SENSOR SUPPLY CIRCUIT

1. Turn the ignition off.
2. Disconnect the Park Assist Sensor harness connector.
3. Turn the ignition on.
4. Measure the voltage of the (X700) Park Assist Sensor Supply circuit.

Is the voltage above 8.0 volts?

Yes

- Go To 4

No

- Go To 3

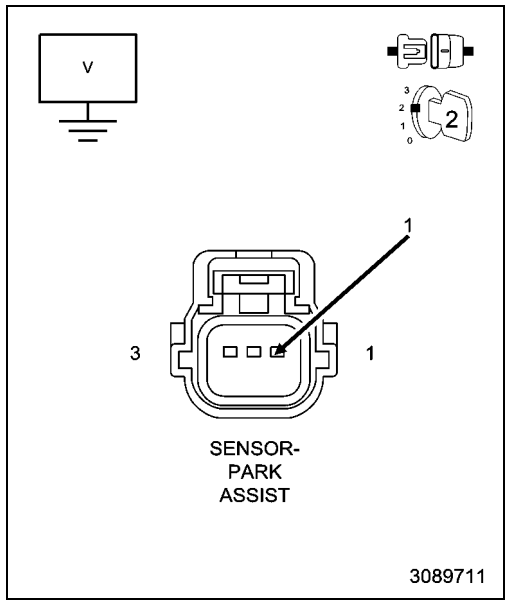

3. CHECK THE (X700) PARK ASSIST SENSOR SUPPLY CIRCUIT FOR AN OPEN OR HIGH RESISTANCE

1. Turn the ignition off.
2. Disconnect the Park Assist Module C2 harness connector.
3. Measure the resistance of the (X700) Park Assist Sensor Supply circuit.

Is the resistance below 5.0 Ohms?

Yes

- Replace the Park Assist Module in accordance with the Service Information. (Refer to 08 - Electrical/8B - Chime/Buzzer/MODULE, Park Assist - Removal).
- Perform the BODY VERIFICATION TEST. (Refer to 28 - DTC-Based Diagnostics/MODULE, Totally Integrated Power (TIPM) - Standard Procedure).

No

- Repair the open or high resistance in the (X700) Park Assist Sensor Supply circuit.
- Perform the BODY VERIFICATION TEST. (Refer to 28 - DTC-Based Diagnostics/MODULE, Totally Integrated Power (TIPM) - Standard Procedure).

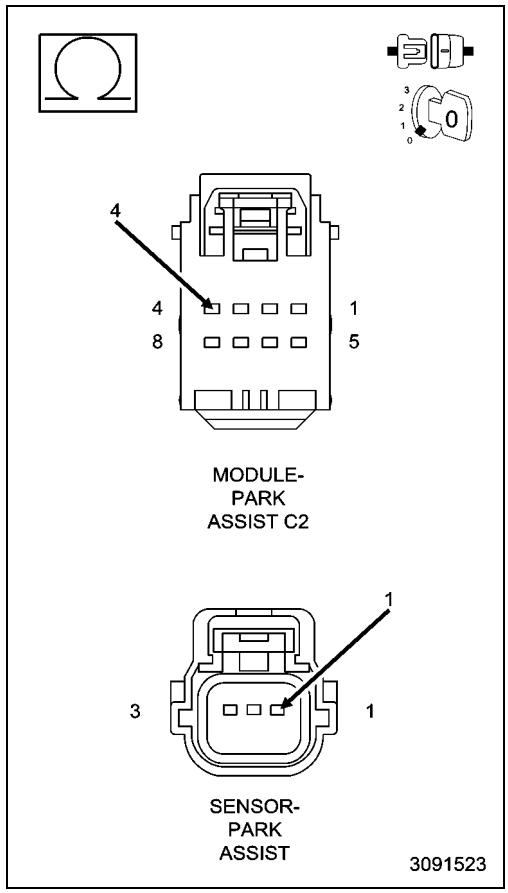

4. CHECK THE (D701) PARK ASSIST SENSOR 8 SIGNAL CIRCUIT FOR A SHORT TO GROUND WITH THE PARK ASSIST MODULE CONNECTED

NOTE: Perform this step with the Park Assist Module connected.

1. Measure the resistance between ground and the (D701) Park Assist Sensor 8 Signal circuit.

Is the resistance below 10K Ohms?

Yes

- Go To 5

No

- Go To 7

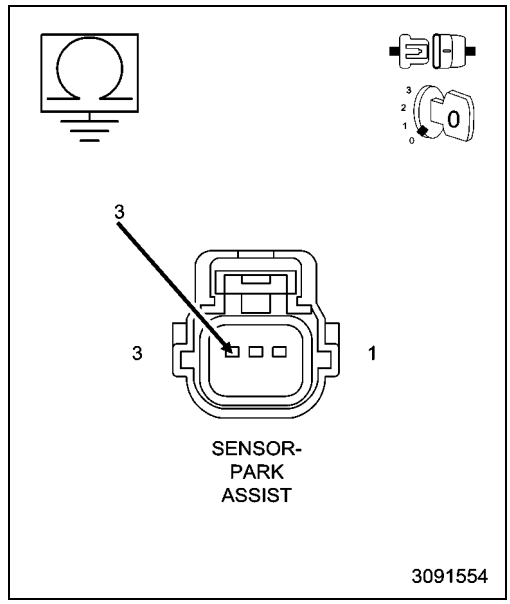

5. CHECK THE (D701) PARK ASSIST SENSOR 8 SIGNAL CIRCUIT FOR A SHORT TO GROUND WITH THE PARK ASSIST MODULE DISCONNECTED

1. Disconnect the Park Assist Module C2 harness connector.
2. Measure the resistance between ground and the (D701) Park Assist Sensor 8 Signal circuit.

Is the resistance below 10K Ohms?

Yes

- Repair the short to ground in the (D701) Park Assist Sensor 8 Signal circuit.
- Perform the BODY VERIFICATION TEST. (Refer to 28 - DTC-Based Diagnostics/MODULE, Totally Integrated Power (TIPM) - Standard Procedure).

No

- Go To 6

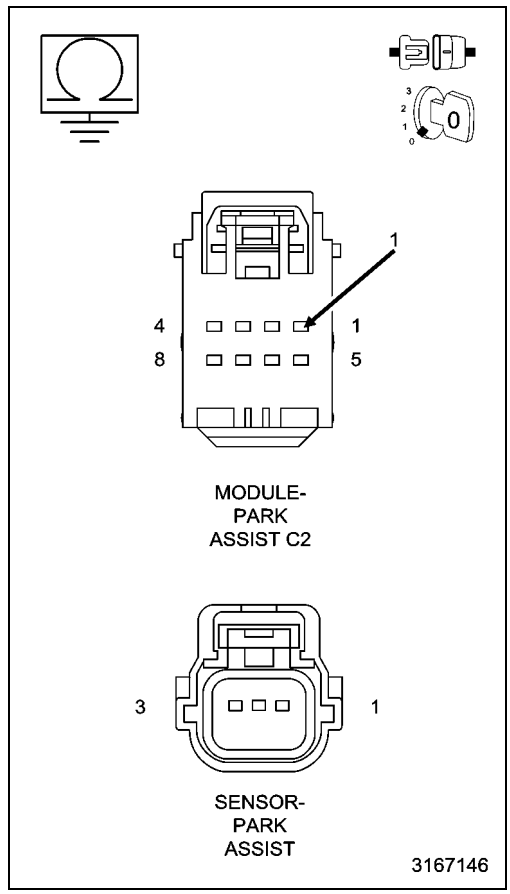

6. CHECK THE (D701) PARK ASSIST SENSOR 8 SIGNAL CIRCUIT FOR A SHORT TO THE (X750) PARK ASSIST SENSOR GROUND CIRCUIT

1. Measure the resistance between the (D701) Park Assist Sensor 8 Signal circuit and the (X750) Park Assist Sensor Ground circuit.

Is the resistance below 10K Ohms?

Yes

- Repair the short between the (D701) Park Assist Sensor 8 Signal circuit and the (X750) Park Assist Sensor Ground circuit.
- Perform the BODY VERIFICATION TEST. (Refer to 28 - DTC-Based Diagnostics/MODULE, Totally Integrated Power (TIPM) - Standard Procedure).

No

- Replace the Park Assist Module in accordance with the Service Information. (Refer to 08 - Electrical/8B - Chime/Buzzer/MODULE, Park Assist - Removal).
- Perform the BODY VERIFICATION TEST. (Refer to 28 - DTC-Based Diagnostics/MODULE, Totally Integrated Power (TIPM) - Standard Procedure).

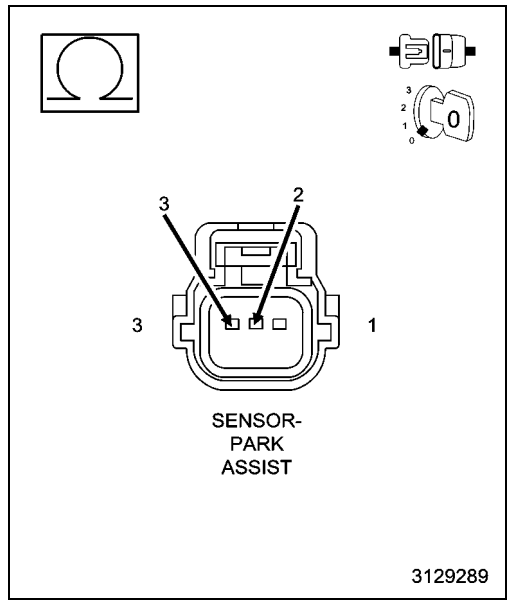

7. CHECK THE (D701) PARK ASSIST SENSOR 8 SIGNAL CIRCUIT FOR AN OPEN

1. Disconnect the Park Assist Module C2 harness connector.
2. Measure the resistance of the (D701) Park Assist Sensor 8 Signal circuit.

Is the resistance above 5.0 Ohms?

Yes

- Repair the open in the (D701) Park Assist Sensor 8 Signal circuit.
- Perform the BODY VERIFICATION TEST. (Refer to 28 - DTC-Based Diagnostics/MODULE, Totally Integrated Power (TIPM) - Standard Procedure).

No

- Go To 8

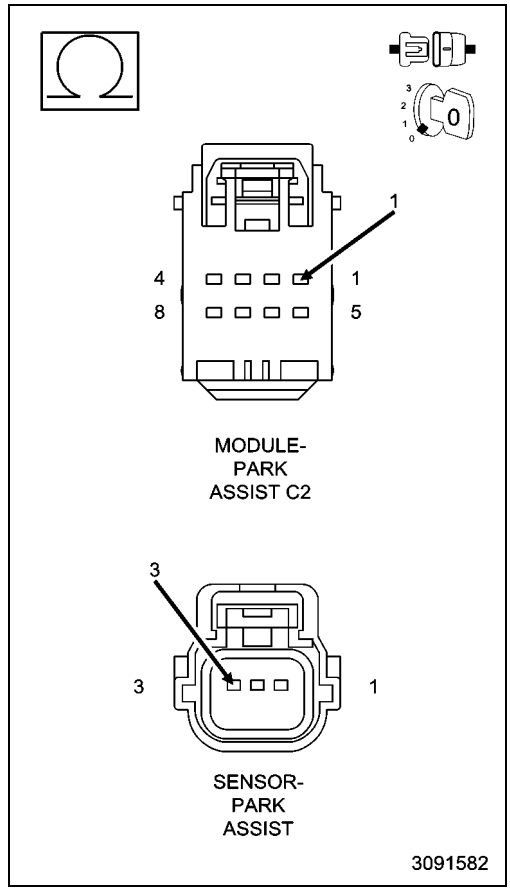

8. PARK ASSIST SENSOR

1. Turn the ignition on.
2. Reconnect the Park Assist Module C2 harness connector.
3. Connect a jumper wire across the (X700) Park Assist Sensor Supply and (D701) Park Assist Sensor 8 Signal circuits.
4. Turn the ignition on.
5. With the scan tool, read DTCs.

Does the scan tool display DTC: B1295-12-PTS SENSOR 8 - CIRCUIT SHORT TO BATTERY as active?

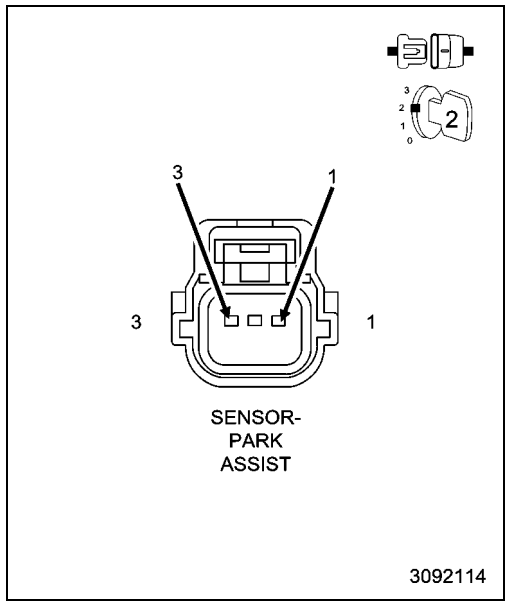

Yes

- Replace the Park Assist Sensor in accordance with the Service Information. (Refer to 08 - Electrical/8B - Chime/Buzzer/SENSOR, Park Assist - Removal).
- Perform the BODY VERIFICATION TEST. (Refer to 28 - DTC-Based Diagnostics/MODULE, Totally Integrated Power (TIPM) - Standard Procedure).

No

- Replace the Park Assist Module in accordance with the Service Information. (Refer to 08 - Electrical/8B - Chime/Buzzer/MODULE, Park Assist - Removal).
- Perform the BODY VERIFICATION TEST. (Refer to 28 - DTC-Based Diagnostics/MODULE, Totally Integrated Power (TIPM) - Standard Procedure).

B1295-12-PTS SENSOR 8 - CIRCUIT SHORT TO BATTERY

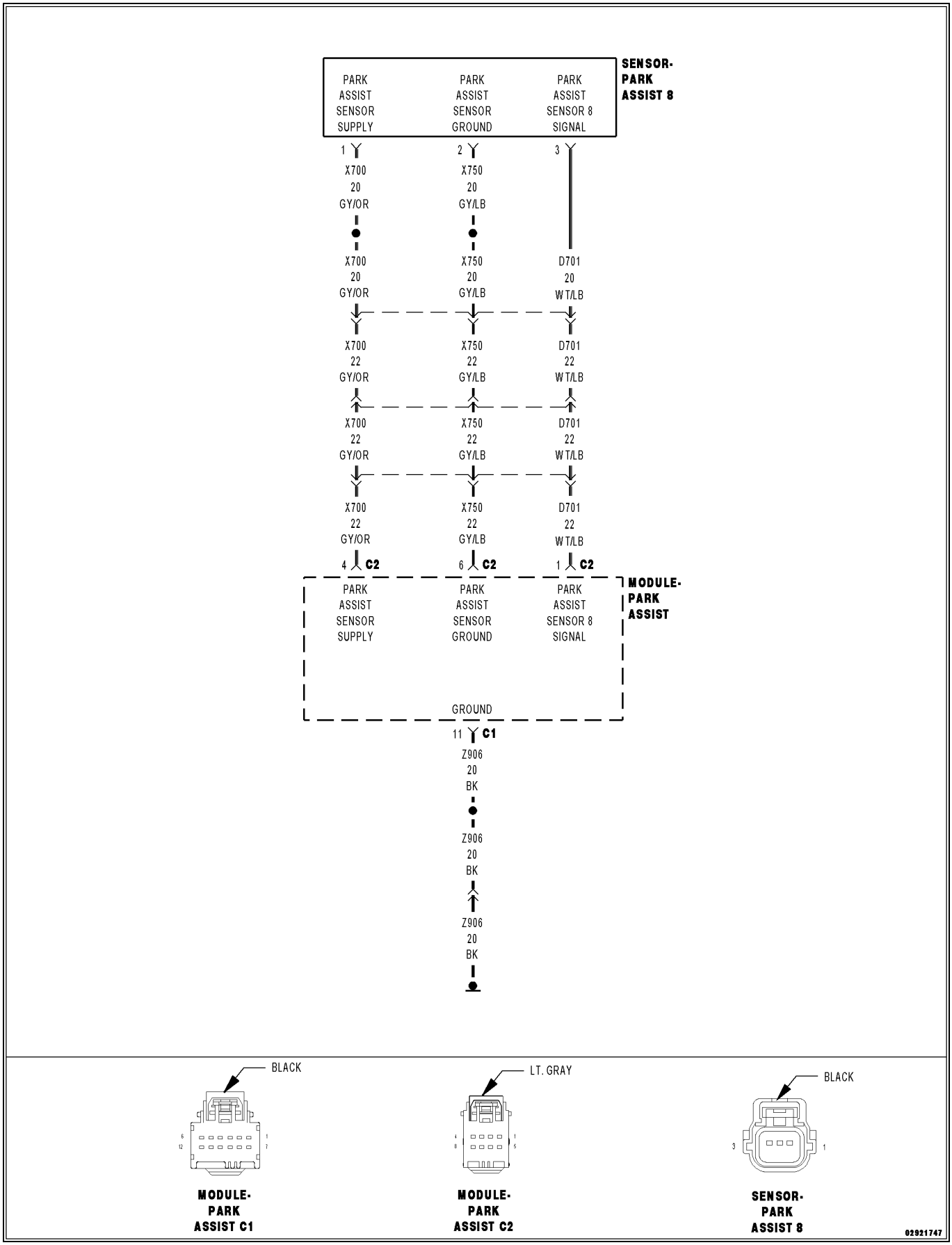

For a complete wiring diagram, **refer to the Wiring Information**.

Theory of Operation

The Park Assist Sensors are ultrasonic transceivers that are completely controlled by the Park Assist Module. The sensors transmit and receive ultrasonic signals. Each sensor has a voltage, signal, and return circuit to the module. The sensors communicate with the Park Assist Module using a dedicated serial bus communication circuit.

NOTE: The numbering system for the park assist sensors allows for up to twelve sensors on the vehicle, six front and six rear. The sensors are numbered in a clockwise manner starting at the left front bumper. The left front sensor (if equipped with front park assist) is the number 1 sensor. The numbering continues in a clockwise direction around the vehicle. Since Chrysler Group vehicles use only four rear sensors, sensor numbers 7 and 12 are omitted, so the left rear sensor is the number 11 sensor.

- **When Monitored:**
  Vehicle in reverse and during the self-test while vehicle is in drive between 18 km/h (11 mph) and 40 km/h (25 mph).
- **Set Condition:**
  The Park Assist Module detects an open or short to voltage on the Park Assist Sensor Signal circuit.

Possible Causes
(D701) PARK ASSIST SENSOR 8 SIGNAL CIRCUIT SHORTED TO VOLTAGE
(D701) PARK ASSIST SENSOR 8 SIGNAL CIRCUIT SHORTED TO THE (X700) PARK ASSIST SENSOR SUPPLY CIRCUIT
(X750) PARK ASSIST SENSOR GROUND CIRCUIT OPEN
PARK ASSIST SENSOR
PARK ASSIST MODULE

1. CHECK FOR AN ACTIVE DIAGNOSTIC TROUBLE CODE (DTC)

1. Turn the ignition on.
2. With the scan tool, read DTCs.

Does the scan tool display this DTC as active?

Yes

- Go To 2

No

- Test complete, the condition or conditions that originally set this DTC are not present at this time. Using the wiring diagrams as a guide, check all related splices and connectors for signs of water intrusion, corrosion, pushed out or bent terminals, and correct pin tension.
- Perform the BODY VERIFICATION TEST. (Refer to 28 - DTC-Based Diagnostics/MODULE, Totally Integrated Power (TIPM) - Standard Procedure).

2. (D701) PARK ASSIST SENSOR 8 SIGNAL CIRCUIT SHORTED TO BATTERY

1. Turn the ignition off.
2. Disconnect the Park Assist Module C2 harness connector.
3. Disconnect the Park Assist Sensor harness connector.
4. Turn the ignition on.
5. Measure the voltage of the (D701) Park Assist Sensor 8 Signal circuit.

Is the voltage above 10.0 volts?

Yes

- Repair the (D701) Park Assist Sensor 8 Signal circuit for a short to battery.
- Perform the BODY VERIFICATION TEST. (Refer to 28 - DTC-Based Diagnostics/MODULE, Totally Integrated Power (TIPM) - Standard Procedure).

No

- Go To 3

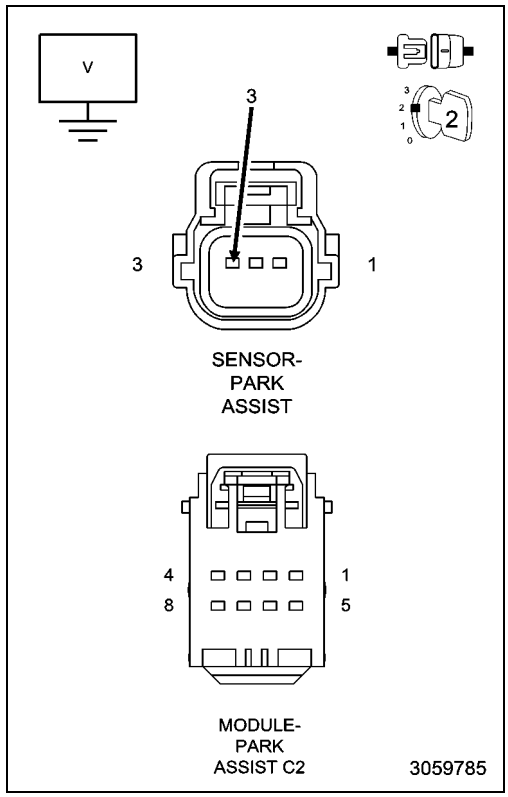

3. (D701) PARK ASSIST SENSOR 8 SIGNAL CIRCUIT SHORTED TO THE (X700) PARK ASSIST SENSOR SUPPLY CIRCUIT

1. Turn the ignition off.
2. Measure the resistance between the (D701) Park Assist Sensor 8 Signal circuit and the (X700) Park Assist Sensor Supply circuit.

Is the resistance below 10K Ohms?

Yes

- Repair the (D701) Park Assist Sensor 8 Signal circuit for a short to the (X700) Park Assist Sensor Supply circuit.
- Perform the BODY VERIFICATION TEST. (Refer to 28 - DTC-Based Diagnostics/MODULE, Totally Integrated Power (TIPM) - Standard Procedure).

No

- Go To 4

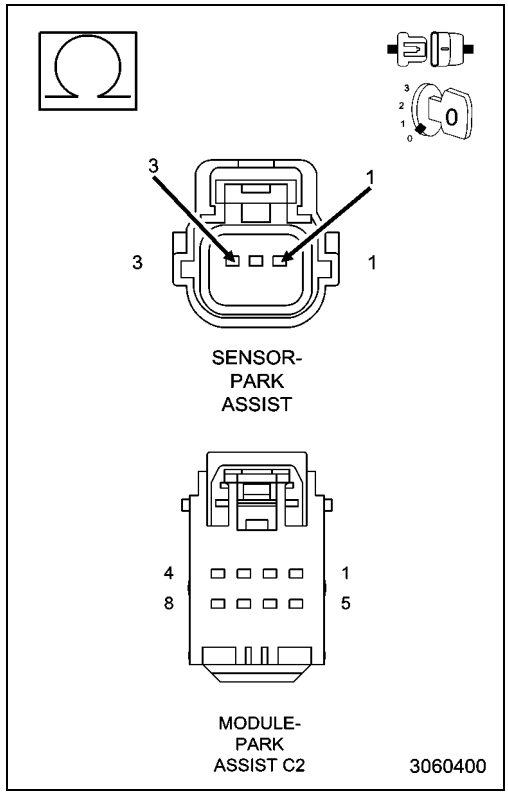

4. (X750) PARK ASSIST SENSOR GROUND CIRCUIT OPEN

1. Reconnect the Park Assist Module C2 harness connector.
2. Measure the resistance between ground and the (X750) Park Assist Sensor Ground circuit.

Is the resistance above 20.0 Ohms?

Yes

- Go To 5

No

- Replace the Park Assist Sensor in accordance with the Service Information. (Refer to 08 - Electrical/8B - Chime/Buzzer/SENSOR, Park Assist - Removal).
- Perform the BODY VERIFICATION TEST. (Refer to 28 - DTC-Based Diagnostics/MODULE, Totally Integrated Power (TIPM) - Standard Procedure).

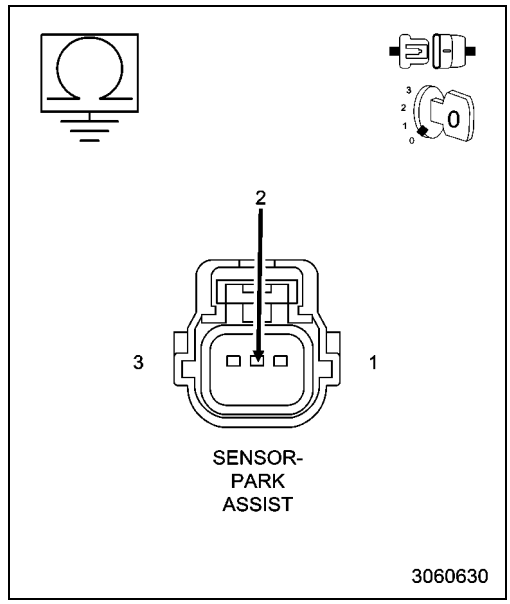

5. (X750) PARK ASSIST SENSOR GROUND CIRCUIT OPEN BETWEEN PARK ASSIST MODULE AND SENSOR

1. Disconnect the Park Assist Module C2 harness connector.
2. Measure the resistance of the (X750) Park Assist Sensor Ground circuit.

Is the resistance above 5.0 Ohms?

Yes

- Repair the open in the (X750) Park Assist Sensor Ground circuit.
- Perform the BODY VERIFICATION TEST. (Refer to 28 - DTC-Based Diagnostics/MODULE, Totally Integrated Power (TIPM) - Standard Procedure).

No

- Replace the Park Assist Module in accordance with the Service Information. (Refer to 08 - Electrical/8B - Chime/Buzzer/SENSOR, Park Assist - Removal).
- Perform the BODY VERIFICATION TEST. (Refer to 28 - DTC-Based Diagnostics/MODULE, Totally Integrated Power (TIPM) - Standard Procedure).

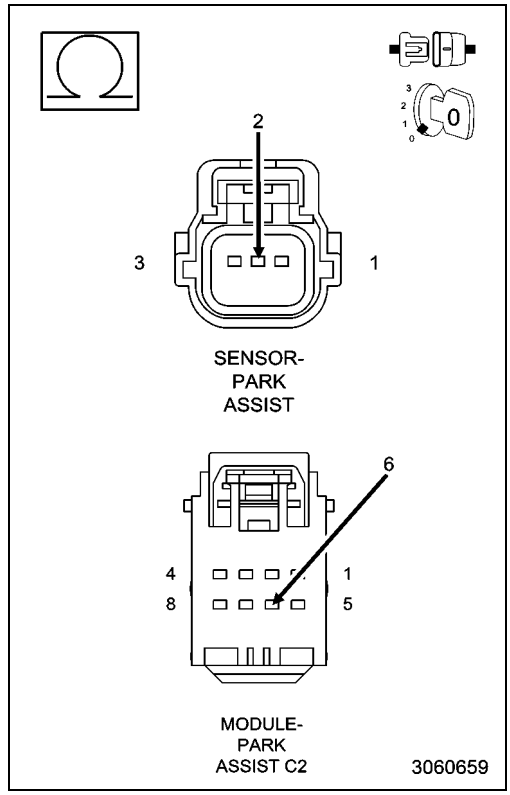

■ B1295-25-PTS SENSOR 8 - SIGNAL SHAPE / WAVEFORM FAILURE

For a complete wiring diagram, **refer to the Wiring Information**.

NOTE: The numbering system for the park assist sensors allows for up to twelve sensors on the vehicle, six front and six rear. The sensors are numbered in a clockwise manner starting at the left front bumper. The left front sensor (if equipped with front park assist) is the number 1 sensor. The numbering continues in a clockwise direction around the vehicle. Since Chrysler LLC vehicles use only four rear sensors, sensor numbers 7 and 12 are omitted, so the left rear sensor is the number 11 sensor.

- **When Monitored:**
  Vehicle in reverse.
  During the self-test while vehicle is in drive between 11 mph (18 km/h) and 25 mph (40 km/h).
- **Set Condition:**
  The Park Assist Module detects an internal Sensor error.

Possible Causes
PARK ASSIST SENSOR MEMBRANE OBSTRUCTION (ICE, SNOW, MUD, DIRT COVERING FASCIA)
PARK ASSIST SENSOR CONNECTOR OBSTRUCTION (ICE, SNOW, MUD, DIRT)
DECOUPLING RING MISSING/MOUNTED WRONG
OBJECTS - SUCH AS LICENSE PLATES - IN CLOSE RANGE TO THE SENSOR
PARK ASSIST SENSOR

1. CHECK FOR AN ACTIVE DTC

NOTE: Before proceeding with this diagnostic procedure, remove any ice, snow, mud, dirt, or other obstructions from the front/rear fascia/bumper. Also remove any ice, snow, dirt, mud, or other obstructions from the underside of the Fascia/Bumper surrounding the sensors.

1. Turn the ignition on.
2. With the scan tool, read DTCs.

Is this DTC active?

Yes

- Go To 2

No

- Test complete, the condition or conditions that originally set this DTC are not present at this time. Using the wiring diagrams as a guide, check all related splices and connectors for signs of water intrusion, corrosion, pushed out or bent terminals, and correct pin tension.

2. PARK ASSIST SENSOR

1. Verify that none of the possible causes mentioned above are present. Repair as necessary.

If none of the possible causes mentioned above are present, view repair.

Repair

- Replace the Park Assist Sensor in accordance with the Service Information.
- Perform the BODY VERIFICATION TEST. (Refer to 28 - DTC-Based Diagnostics/MODULE, Totally Integrated Power (TIPM) - Standard Procedure).

B1295-92-PTS SENSOR 8 - PERFORMANCE OR INCORRECT OPERATION

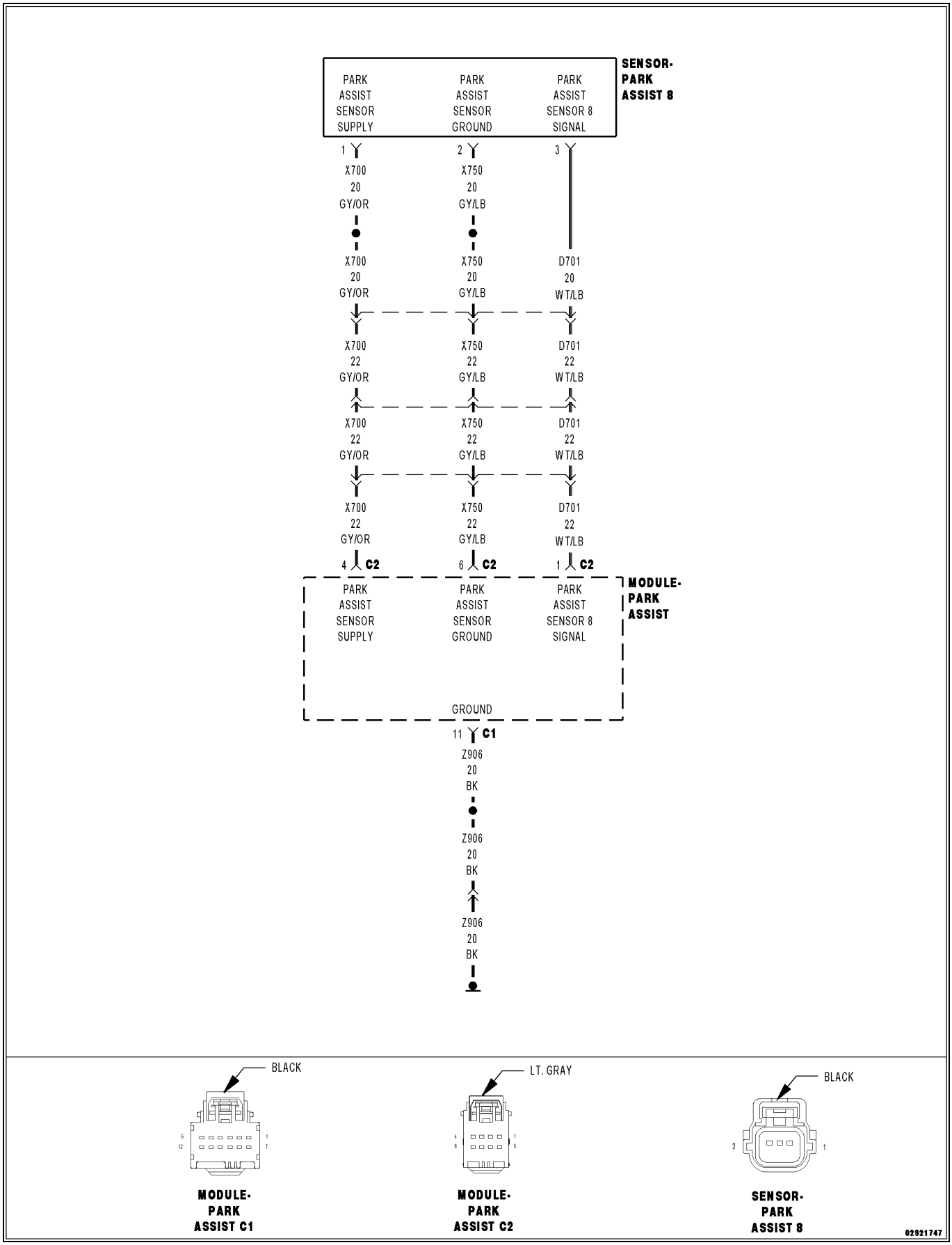

For a complete wiring diagram, **refer to the Wiring Information**.

Theory of Operation

The Park Assist Sensors are ultrasonic transceivers that are completely controlled by the Park Assist Module. The sensors transmit and receive ultrasonic signals. Each sensor has a voltage, signal, and return circuit to the module. The sensors communicate with the Park Assist Module using a dedicated serial bus communication circuit.

NOTE: The numbering system for the park assist sensors allows for up to twelve sensors on the vehicle, six front and six rear. The sensors are numbered in a clockwise manner starting at the left front bumper. The left front sensor (if equipped with front park assist) is the number 1 sensor. The numbering continues in a clockwise direction around the vehicle. Since Chrysler Group vehicles use only four rear sensors, sensor numbers 7 and 12 are omitted, so the left rear sensor is the number 11 sensor.

- **When Monitored:**
  During Reverse and during self test in Forward between 11 mph (18 km/h) and 25 mph (40 km/h).
- **Set Condition:**
  If the system detects data corruption in the transmission in the internal communication line between the module and sensors.

Possible Causes
(D701) PTS SENSOR 8 SIGNAL CIRCUIT SHORTED TO GROUND
(D701) PTS SENSOR 8 SIGNAL CIRCUIT SHORTED TO BATTERY
(D701) PTS SENSOR 8 SIGNAL CIRCUIT OPEN
PARK ASSIST SENSOR 8
PARK ASSIST MODULE

1. TEST FOR INTERMITTENT CONDITION

1. Turn the ignition on.
2. With the scan tool, read the active DTCs.

Does the scan tool display this DTC as active?

Yes

- Go To 2

No

- Test complete, the condition or conditions that originally set this DTC are not present at this time. Using the wiring diagrams as a guide, check all related splices and connectors for signs of water intrusion, corrosion, pushed out or bent terminals, and correct pin tension.
- Perform the BODY VERIFICATION TEST. (Refer to 28 - DTC-Based Diagnostics/MODULE, Totally Integrated Power (TIPM) - Standard Procedure).

2. CHECK PARK ASSIST SENSOR 8 FOR INTERNAL SHORT

1. Disconnect the Park Assist Sensor 8 harness connector.
2. With the scan tool, read the active DTCs.

Does the scan tool display this DTC as active?

Yes

- Go To 3

No

- Replace the Park Assist Sensor in accordance with the Service Information.
- Perform the BODY VERIFICATION TEST. (Refer to 28 - DTC-Based Diagnostics/MODULE, Totally Integrated Power (TIPM) - Standard Procedure).

3. CHECK THE (D701) PARK ASSIST SENSOR 8 SIGNAL CIRCUIT FOR A SHORT TO GROUND

1. Turn the ignition off.
2. Disconnect the Park Assist Module C2 harness connector.
3. Using a 12-volt test light connected to 12-volts, check the (D701) Park Assist Sensor 8 Signal circuit at the Park Assist Module C2 harness connector.

Does the test light illuminate brightly?

Yes

- Repair the short to ground in the (D701) Park Assist Sensor 8 Signal circuit.
- Perform the BODY VERIFICATION TEST. (Refer to 28 - DTC-Based Diagnostics/MODULE, Totally Integrated Power (TIPM) - Standard Procedure).

No

- Go To 4

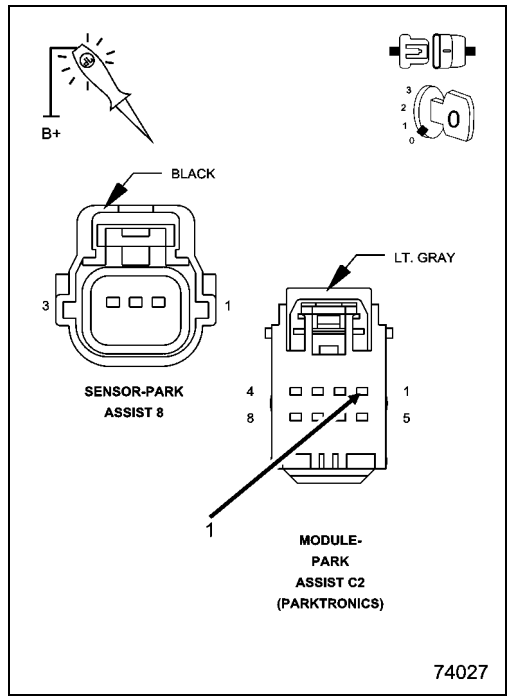

4. CHECK THE (D701) PARK ASSIST SENSOR 8 SIGNAL CIRCUIT FOR A SHORT TO BATTERY

1. Turn the ignition on.
2. Using a 12-volt test light connected to ground, check the (D701) Park Assist Sensor 8 Signal circuit at the Park Assist Module C2 harness connector.

Does the test light illuminate brightly?

Yes

- Repair the short to voltage (D701) Park Assist Sensor 8 Signal circuit.
- Perform the BODY VERIFICATION TEST. (Refer to 28 - DTC-Based Diagnostics/MODULE, Totally Integrated Power (TIPM) - Standard Procedure).

No

- Go To 5

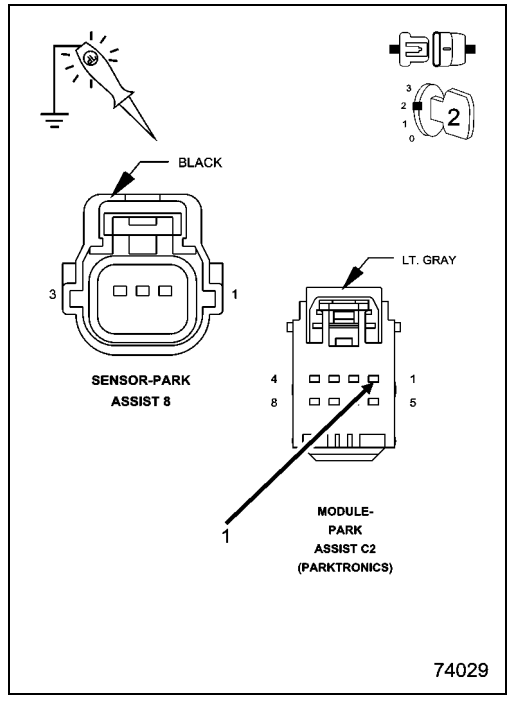

5. CHECK THE (D701) PARK ASSIST SENSOR 8 SIGNAL CIRCUIT FOR AN OPEN

1. Measure the resistance of the (D701) Park Assist Sensor 8 Signal circuit between the Park Assist Module C2 harness connector and the Park Assist Sensor 8 harness connector.

Is the resistance above 5.0 Ohms?

Yes

- Repair the open in the (D701) Park Assist Sensor 8 Signal circuit.
- Perform the BODY VERIFICATION TEST. (Refer to 28 - DTC-Based Diagnostics/MODULE, Totally Integrated Power (TIPM) - Standard Procedure).

No

- Replace the Park Assist Module in accordance with Service Information.
- Perform the BODY VERIFICATION TEST. (Refer to 28 - DTC-Based Diagnostics/MODULE, Totally Integrated Power (TIPM) - Standard Procedure).

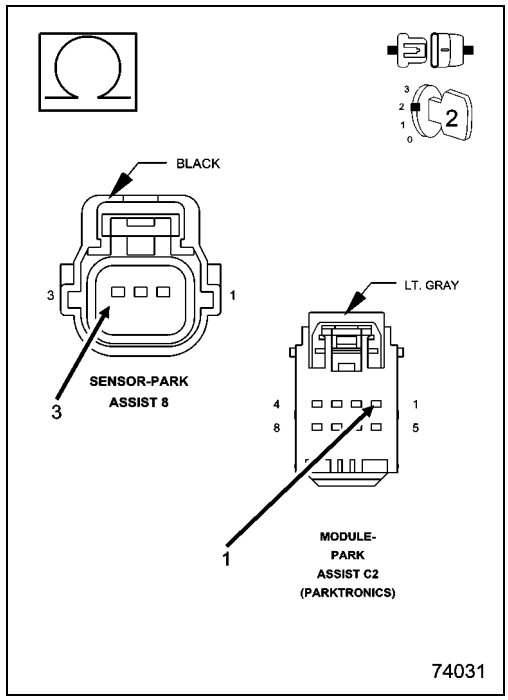

B1296-11-PTS SENSOR 9 - CIRCUIT SHORT TO GROUND



For a complete wiring diagram, **refer to the Wiring Information**.

Theory of Operation

The Park Assist Sensors are ultrasonic transceivers that are completely controlled by the Park Assist Module. The sensors transmit and receive ultrasonic signals. Each sensor has a voltage, signal, and return circuit to the module. The sensors communicate with the Park Assist Module using a dedicated serial bus communication circuit.

NOTE: The numbering system for the park assist sensors allows for up to twelve sensors on the vehicle, six front and six rear. The sensors are numbered in a clockwise manner starting at the left front bumper. The left front sensor (if equipped with front park assist) is the number 1 sensor. The numbering continues in a clockwise direction around the vehicle. Since Chrysler Group vehicles use only four rear sensors, sensor numbers 7 and 12 are omitted, so the left rear sensor is the number 11 sensor.

- **When Monitored:**
  Vehicle in reverse and during the self-test while vehicle is in drive between 18 km/h (11 mph) and 40 km/h (25 mph).
- **Set Condition:**
  The Park Assist Module detects a short to ground on the Park Assist Sensor Signal circuit.

Possible Causes
PARK ASSIST SENSOR DISCONNECTED
(D703) PARK ASSIST SENSOR 9 SIGNAL CIRCUIT SHORTED TO GROUND
(D703) PARK ASSIST SENSOR 9 SIGNAL CIRCUIT SHORTED TO THE (X750) PARK ASSIST SENSOR GROUND CIRCUIT
(D703) PARK ASSIST SENSOR 9 SIGNAL CIRCUIT OPEN
(X700) PARK ASSIST SENSOR SUPPLY CIRCUIT OPEN
PARK ASSIST SENSOR
PARK ASSIST MODULE

1. CHECK FOR AN ACTIVE DIAGNOSTIC TROUBLE CODE (DTC)

NOTE: A disconnected sensor will set this DTC. Verify the Park Assist Sensor is connected before proceeding with this diagnostic procedure.

1. Turn the ignition on.
2. With the scan tool, read DTCs.

Does the scan tool display this DTC as active?

Yes

- Go To 2

No

- Test complete, the condition or conditions that originally set this DTC are not present at this time. Using the wiring diagrams as a guide, check all related splices and connectors for signs of water intrusion, corrosion, pushed out or bent terminals, and correct pin tension.
- Perform the BODY VERIFICATION TEST. (Refer to 28 - DTC-Based Diagnostics/MODULE, Totally Integrated Power (TIPM) - Standard Procedure).

2. CHECK THE VOLTAGE OF THE (X700) PARK ASSIST SENSOR SUPPLY CIRCUIT

1. Turn the ignition off.
2. Disconnect the Park Assist Sensor.
3. Turn the ignition on.
4. Measure the voltage of the (X700) Park Assist Sensor Supply circuit.

Is the voltage above 8.0 volts?

Yes

- Go To 4

No

- Go To 3

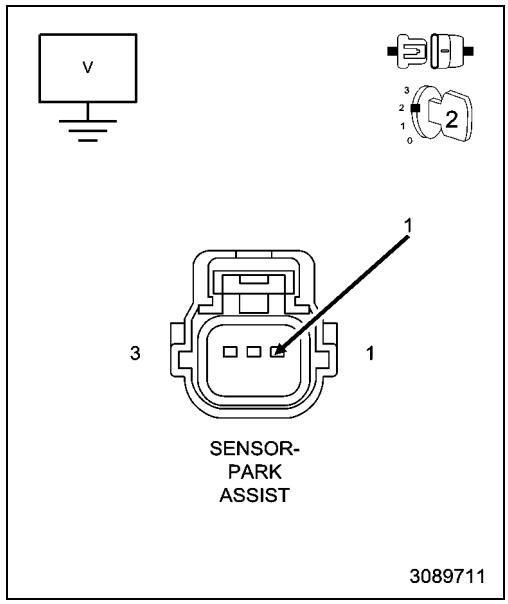

3. CHECK THE (X700) PARK ASSIST SENSOR SUPPLY CIRCUIT FOR AN OPEN OR HIGH RESISTANCE

1. Turn the ignition off.
2. Disconnect the Park Assist Module C2 harness connector.
3. Measure the resistance of the (X700) Park Assist Sensor Supply circuit.

Is the resistance below 5.0 Ohms?

Yes

- Replace the Park Assist Module in accordance with the Service Information. (Refer to 08 - Electrical/8B - Chime/Buzzer/MODULE, Park Assist - Removal).
- Perform the BODY VERIFICATION TEST. (Refer to 28 - DTC-Based Diagnostics/MODULE, Totally Integrated Power (TIPM) - Standard Procedure).

No

- Repair the open or high resistance in the (X700) Park Assist Sensor Supply circuit.
- Perform the BODY VERIFICATION TEST. (Refer to 28 - DTC-Based Diagnostics/MODULE, Totally Integrated Power (TIPM) - Standard Procedure).

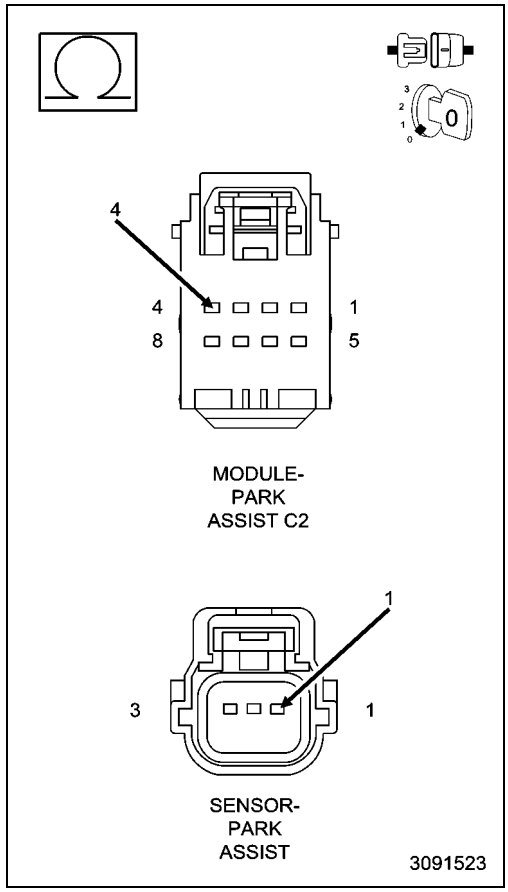

4. CHECK THE (D703) PARK ASSIST SENSOR 9 SIGNAL CIRCUIT FOR A SHORT TO GROUND WITH THE PARK ASSIST MODULE CONNECTED

NOTE: Perform this step with the Park Assist Module connected.

1. Measure the resistance between ground and the (D703) Park Assist Sensor 9 Signal circuit.

Is the resistance below 10K Ohms?

Yes

- Go To 5

No

- Go To 7

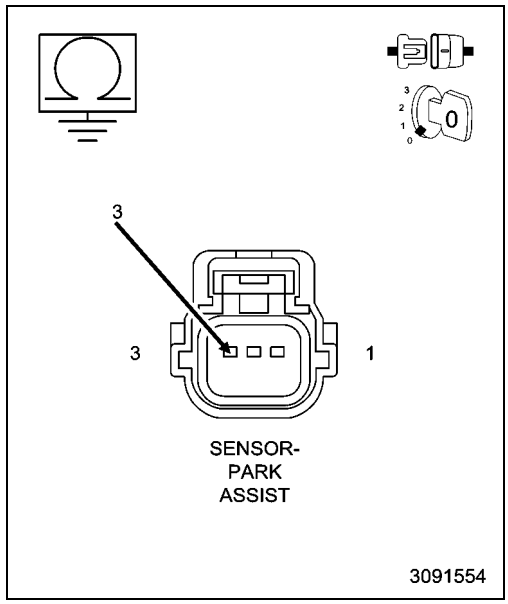

5. CHECK THE (D703) PARK ASSIST SENSOR 9 SIGNAL CIRCUIT FOR A SHORT TO GROUND WITH THE PARK ASSIST MODULE DISCONNECTED

1. Disconnect the Park Assist Module C2 harness connector.
2. Measure the resistance between ground and the (D703) Park Assist Sensor 9 Signal circuit.

Is the resistance below 10K Ohms?

Yes

- Repair the short to ground in the (D703) Park Assist Sensor 9 Signal circuit.
- Perform the BODY VERIFICATION TEST. (Refer to 28 - DTC-Based Diagnostics/MODULE, Totally Integrated Power (TIPM) - Standard Procedure).

No

- Go To 6

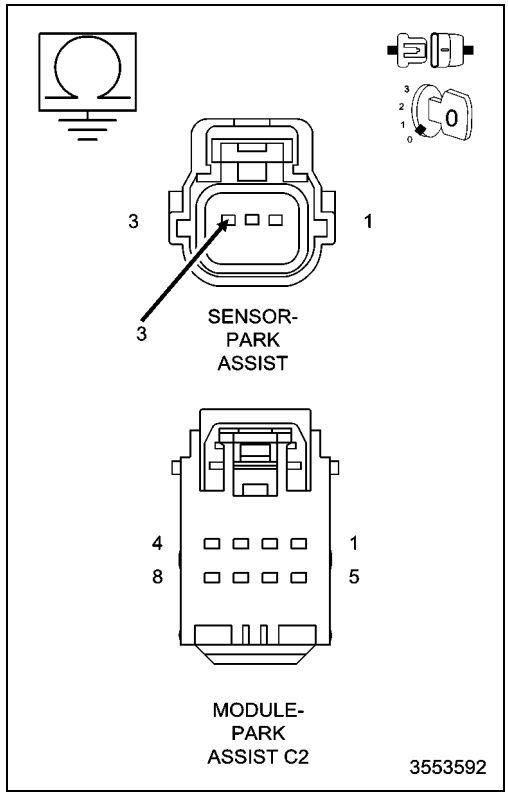

6. CHECK THE (D703) PARK ASSIST SENSOR 9 SIGNAL CIRCUIT FOR A SHORT TO THE (X750) PARK ASSIST SENSOR GROUND CIRCUIT

1. Measure the resistance between the (D703) Park Assist Sensor 9 Signal circuit and the (X750) Park Assist Sensor Ground circuit.

Is the resistance below 10K Ohms?

Yes

- Repair the short between the (D703) Park Assist Sensor 9 Signal circuit and the (X750) Park Assist Sensor Ground circuit.
- Perform the BODY VERIFICATION TEST. (Refer to 28 - DTC-Based Diagnostics/MODULE, Totally Integrated Power (TIPM) - Standard Procedure).

No

- Replace the Park Assist Module in accordance with the Service Information. (Refer to 08 - Electrical/8B - Chime/Buzzer/MODULE, Park Assist - Removal).
- Perform the BODY VERIFICATION TEST. (Refer to 28 - DTC-Based Diagnostics/MODULE, Totally Integrated Power (TIPM) - Standard Procedure).

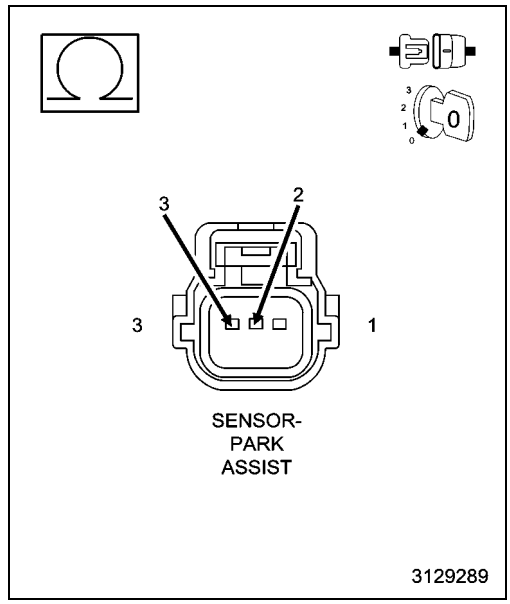

7. CHECK THE (D703) PARK ASSIST SENSOR 9 SIGNAL CIRCUIT FOR AN OPEN

1. Disconnect the Park Assist Module C2 harness connector.
2. Measure the resistance of the (D703) Park Assist Sensor 9 Signal circuit.

Is the resistance above 5.0 Ohms?

Yes

- Repair the open in the (D703) Park Assist Sensor 9 Signal circuit.
- Perform the BODY VERIFICATION TEST. (Refer to 28 - DTC-Based Diagnostics/MODULE, Totally Integrated Power (TIPM) - Standard Procedure).

No

- Go To 8

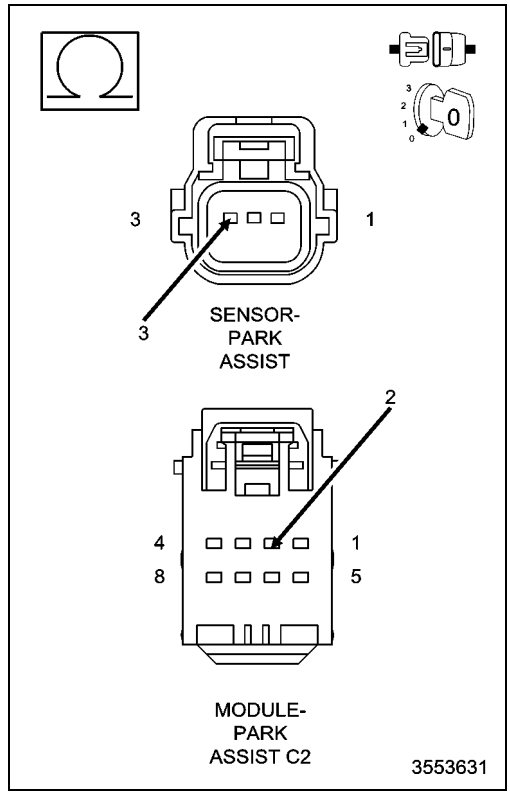

8. PARK ASSIST SENSOR

1. Turn the ignition on.
2. Reconnect the Park Assist Module C2 harness connector.
3. Connect a jumper wire across the (X700) Park Assist Sensor Supply and (D703) Park Assist Sensor 9 Signal circuits.
4. Turn the ignition on.
5. With the scan tool, read DTCs.

Does the scan tool display DTC: B1296-12-PTS SENSOR 9 - CIRCUIT SHORT TO BATTERY as active?

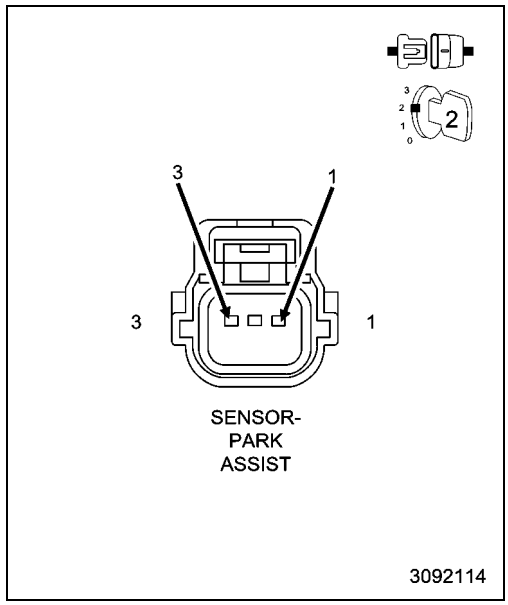

Yes

- Replace the Park Assist Sensor in accordance with the Service Information. (Refer to 08 - Electrical/8B - Chime/Buzzer/SENSOR, Park Assist - Removal).
- Perform the BODY VERIFICATION TEST. (Refer to 28 - DTC-Based Diagnostics/MODULE, Totally Integrated Power (TIPM) - Standard Procedure).

No

- Replace the Park Assist Module in accordance with the Service Information. (Refer to 08 - Electrical/8B - Chime/Buzzer/MODULE, Park Assist - Removal).
- Perform the BODY VERIFICATION TEST. (Refer to 28 - DTC-Based Diagnostics/MODULE, Totally Integrated Power (TIPM) - Standard Procedure).

B1296-12-PTS SENSOR 9 - CIRCUIT SHORT TO BATTERY



For a complete wiring diagram, **refer to the Wiring Information**.

Theory of Operation

The Park Assist Sensors are ultrasonic transceivers that are completely controlled by the Park Assist Module. The sensors transmit and receive ultrasonic signals. Each sensor has a voltage, signal, and return circuit to the module. The sensors communicate with the Park Assist Module using a dedicated serial bus communication circuit.

NOTE: The numbering system for the park assist sensors allows for up to twelve sensors on the vehicle, six front and six rear. The sensors are numbered in a clockwise manner starting at the left front bumper. The left front sensor (if equipped with front park assist) is the number 1 sensor. The numbering continues in a clockwise direction around the vehicle. Since Chrysler Group vehicles use only four rear sensors, sensor numbers 7 and 12 are omitted, so the left rear sensor is the number 11 sensor.

- **When Monitored:**
  Vehicle in reverse and during the self-test while vehicle is in drive between 18 km/h (11 mph) and 40 km/h (25 mph).
- **Set Condition:**
  The Park Assist Module detects an open or short to voltage on the Park Assist Sensor Signal circuit.

Possible Causes
(D703) PARK ASSIST SENSOR 9 SIGNAL CIRCUIT SHORTED TO VOLTAGE
(D703) PARK ASSIST SENSOR 9 SIGNAL CIRCUIT SHORTED TO THE (X700) PARK ASSIST SENSOR SUPPLY CIRCUIT
(X750) PARK ASSIST SENSOR GROUND CIRCUIT OPEN
PARK ASSIST SENSOR
PARK ASSIST MODULE

1. CHECK FOR AN ACTIVE DIAGNOSTIC TROUBLE CODE (DTC)

1. Turn the ignition on.
2. With the scan tool, read DTCs.

Does the scan tool display this DTC as active?

Yes

- Go To 2

No

- Test complete, the condition or conditions that originally set this DTC are not present at this time. Using the wiring diagrams as a guide, check all related splices and connectors for signs of water intrusion, corrosion, pushed out or bent terminals, and correct pin tension.
- Perform the BODY VERIFICATION TEST. (Refer to 28 - DTC-Based Diagnostics/MODULE, Totally Integrated Power (TIPM) - Standard Procedure).

2. (D703) PARK ASSIST SENSOR 9 SIGNAL CIRCUIT SHORTED TO BATTERY

1. Turn the ignition off.
2. Disconnect the Park Assist Module C2 harness connector.
3. Disconnect the Park Assist Sensor harness connector.
4. Turn the ignition on.
5. Measure the voltage of the (D703) Park Assist Sensor 9 Signal circuit.

Is the voltage above 10.0 volts?

Yes

- Repair the (D703) Park Assist Sensor 9 Signal circuit for a short to battery.
- Perform the BODY VERIFICATION TEST. (Refer to 28 - DTC-Based Diagnostics/MODULE, Totally Integrated Power (TIPM) - Standard Procedure).

No

- Go To 3

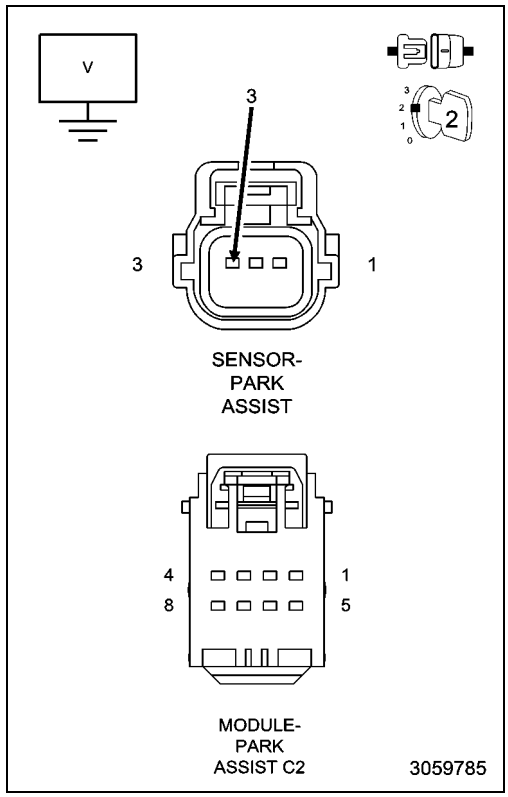

3. (D703) PARK ASSIST SENSOR 9 SIGNAL CIRCUIT SHORTED TO THE (X700) PARK ASSIST SENSOR SUPPLY CIRCUIT

1. Turn the ignition off.
2. Measure the resistance between the (D703) Park Assist Sensor 9 Signal circuit and the (X700) Park Assist Sensor Supply circuit.

Is the resistance below 10K Ohms?

Yes

- Repair the (D703) Park Assist Sensor 9 Signal circuit for a short to the (X700) Park Assist Sensor Supply circuit.
- Perform the BODY VERIFICATION TEST. (Refer to 28 - DTC-Based Diagnostics/MODULE, Totally Integrated Power (TIPM) - Standard Procedure).

No

- Go To 4

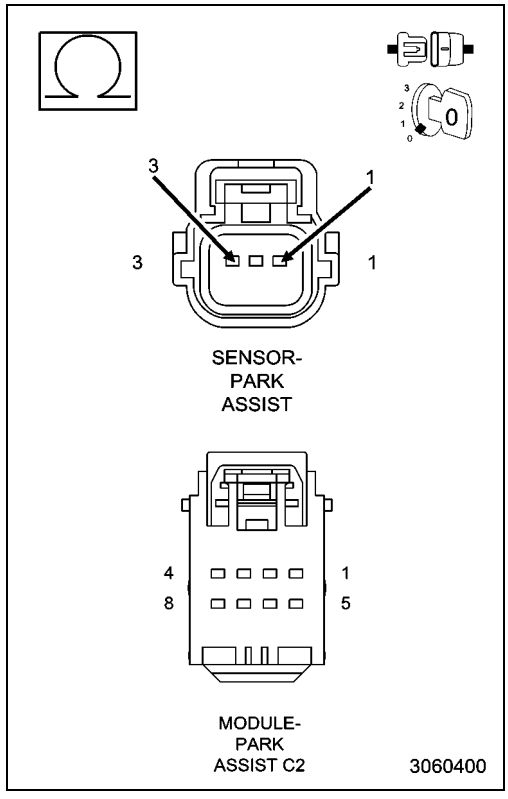

4. (X750) PARK ASSIST SENSOR GROUND CIRCUIT OPEN

1. Reconnect the Park Assist Module C2 harness connector.
2. Measure the resistance between ground and the (X750) Park Assist Sensor Ground circuit.

Is the resistance above 20.0 Ohms?

Yes

- Go To 5

No

- Replace the Park Assist Sensor that caused this DTC to change from active to stored after disconnecting it in accordance with the Service Information. (Refer to 08 - Electrical/8B - Chime/Buzzer/SENSOR, Park Assist - Removal).
- Perform the BODY VERIFICATION TEST. (Refer to 28 - DTC-Based Diagnostics/MODULE, Totally Integrated Power (TIPM) - Standard Procedure).

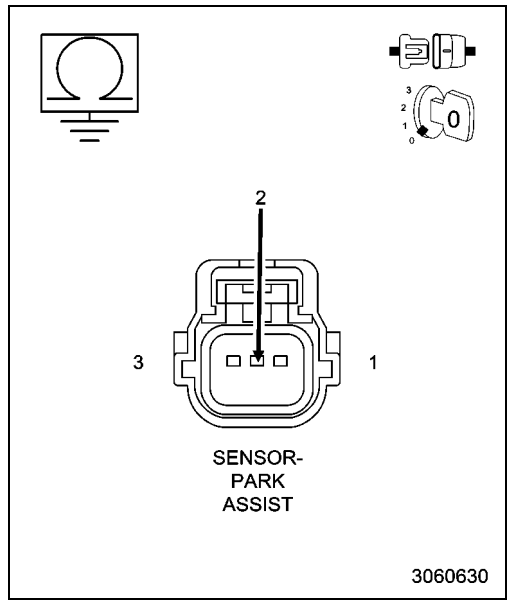

5. (X750) PARK ASSIST SENSOR GROUND CIRCUIT OPEN BETWEEN PARK ASSIST MODULE AND SENSOR

1. Disconnect the Park Assist Module C2 harness connector.
2. Measure the resistance of the (X750) Park Assist Sensor Ground circuit.

Is the resistance above 5.0 Ohms?

Yes

- Repair the open in the (X750) Park Assist Sensor Ground circuit.
- Perform the BODY VERIFICATION TEST. (Refer to 28 - DTC-Based Diagnostics/MODULE, Totally Integrated Power (TIPM) - Standard Procedure).

No

- Replace the Park Assist Module in accordance with the Service Information. (Refer to 08 - Electrical/8B - Chime/Buzzer/MODULE, Park Assist - Removal).
- Perform the BODY VERIFICATION TEST. (Refer to 28 - DTC-Based Diagnostics/MODULE, Totally Integrated Power (TIPM) - Standard Procedure).

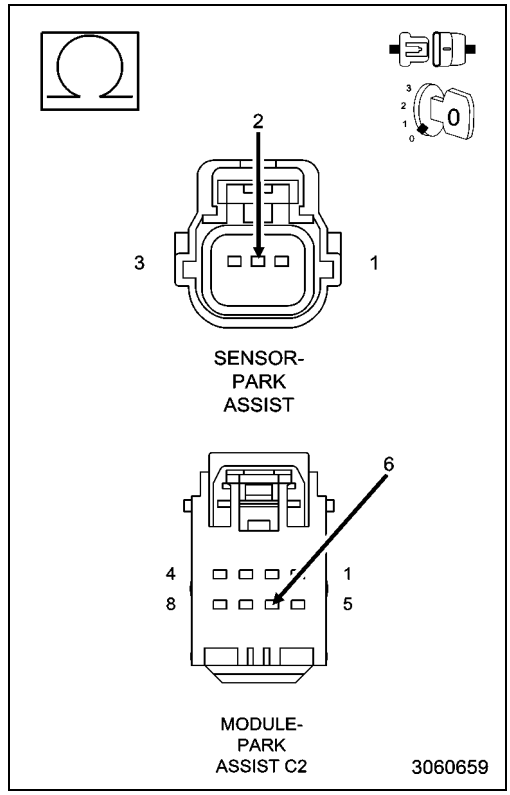

■ B1296-25-PTS SENSOR 9 - SIGNAL SHAPE / WAVEFORM FAILURE

For a complete wiring diagram, **refer to the Wiring Information**.

NOTE: The numbering system for the park assist sensors allows for up to twelve sensors on the vehicle, six front and six rear. The sensors are numbered in a clockwise manner starting at the left front bumper. The left front sensor (if equipped with front park assist) is the number 1 sensor. The numbering continues in a clockwise direction around the vehicle. Since Chrysler LLC vehicles use only four rear sensors, sensor numbers 7 and 12 are omitted, so the left rear sensor is the number 11 sensor.

- **When Monitored:**
  Vehicle in reverse.
  During the self-test while vehicle is in drive between 11 mph (18 km/h) and 25 mph (40 km/h).
- **Set Condition:**
  The Park Assist Module detects an internal Sensor error.

Possible Causes
PARK ASSIST SENSOR MEMBRANE OBSTRUCTION (ICE, SNOW, MUD, DIRT COVERING FASCIA)
PARK ASSIST SENSOR CONNECTOR OBSTRUCTION (ICE, SNOW, MUD, DIRT)
DECOUPLING RING MISSING/MOUNTED WRONG
OBJECTS - SUCH AS LICENSE PLATES - IN CLOSE RANGE TO THE SENSOR
PARK ASSIST SENSOR

1. CHECK FOR AN ACTIVE DTC

NOTE: Before proceeding with this diagnostic procedure, remove any ice, snow, mud, dirt, or other obstructions from the front/rear fascia/bumper. Also remove any ice, snow, dirt, mud, or other obstructions from the underside of the Fascia/Bumper surrounding the sensors.

1. Turn the ignition on.
2. With the scan tool, read DTCs.

Is this DTC active?

Yes

- Go To 2

No

- Test complete, the condition or conditions that originally set this DTC are not present at this time. Using the wiring diagrams as a guide, check all related splices and connectors for signs of water intrusion, corrosion, pushed out or bent terminals, and correct pin tension.

2. PARK ASSIST SENSOR

1. Verify that none of the possible causes mentioned above are present. Repair as necessary.

If none of the possible causes mentioned above are present, view repair.

Repair

- Replace the Park Assist Sensor in accordance with the Service Information.
- Perform the BODY VERIFICATION TEST. (Refer to 28 - DTC-Based Diagnostics/MODULE, Totally Integrated Power (TIPM) - Standard Procedure).

B1296-92-PTS SENSOR 9 - PERFORMANCE OR INCORRECT OPERATION



For a complete wiring diagram, **refer to the Wiring Information**.

Theory of Operation

The Park Assist Sensors are ultrasonic transceivers that are completely controlled by the Park Assist Module. The sensors transmit and receive ultrasonic signals. Each sensor has a voltage, signal, and return circuit to the module. The sensors communicate with the Park Assist Module using a dedicated serial bus communication circuit.

NOTE: The numbering system for the park assist sensors allows for up to twelve sensors on the vehicle, six front and six rear. The sensors are numbered in a clockwise manner starting at the left front bumper. The left front sensor (if equipped with front park assist) is the number 1 sensor. The numbering continues in a clockwise direction around the vehicle. Since Chrysler Group vehicles use only four rear sensors, sensor numbers 7 and 12 are omitted, so the left rear sensor is the number 11 sensor.

- **When Monitored:**
  During Reverse and during self test in Forward between 11 mph (18 km/h) and 25 mph (40 km/h).
- **Set Condition:**
  If the system detects data corruption in the transmission in the internal communication line between the module and sensors.

Possible Causes
(D703) PTS SENSOR 9 SIGNAL CIRCUIT SHORTED TO GROUND
(D703) PTS SENSOR 9 SIGNAL CIRCUIT SHORTED TO BATTERY
(D703) PTS SENSOR 9 SIGNAL CIRCUIT OPEN
PARK ASSIST SENSOR 9
PARK ASSIST MODULE

1. TEST FOR INTERMITTENT CONDITION

1. Turn the ignition on.
2. With the scan tool, read the active DTCs.

Does the scan tool display this DTC as active?

Yes

- Go To 2

No

- Test complete, the condition or conditions that originally set this DTC are not present at this time. Using the wiring diagrams as a guide, check all related splices and connectors for signs of water intrusion, corrosion, pushed out or bent terminals, and correct pin tension.
- Perform the BODY VERIFICATION TEST. (Refer to 28 - DTC-Based Diagnostics/MODULE, Totally Integrated Power (TIPM) - Standard Procedure).

2. CHECK PARK ASSIST SENSOR 9 FOR INTERNAL SHORT

1. Disconnect the Park Assist Sensor 9 harness connector.
2. With the scan tool, read the active DTCs.

Does the scan tool display this DTC as active?

Yes

- Go To 3

No

- Replace the Park Assist Sensor 9 in accordance with the Service Information.
- Perform the BODY VERIFICATION TEST. (Refer to 28 - DTC-Based Diagnostics/MODULE, Totally Integrated Power (TIPM) - Standard Procedure).

3. CHECK THE (D703) PARK ASSIST SENSOR 9 SIGNAL CIRCUIT FOR A SHORT TO GROUND

1. Turn the ignition off.
2. Disconnect the Park Assist Module C2 harness connector.
3. Using a 12-volt test light connected to 12-volts, check the (D703) Park Assist Sensor 9 Signal circuit at the Park Assist Module C2 harness connector.

Does the test light illuminate brightly?

Yes

- Repair the short to ground in the (D703) Park Assist Sensor 9 Signal circuit.
- Perform the BODY VERIFICATION TEST. (Refer to 28 - DTC-Based Diagnostics/MODULE, Totally Integrated Power (TIPM) - Standard Procedure).

No

- Go To 4

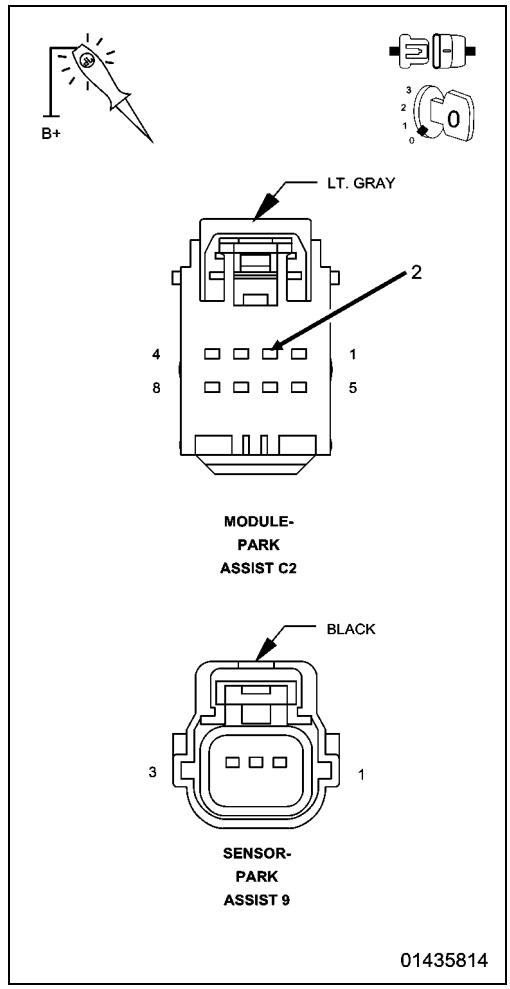

4. CHECK THE (D703) PARK ASSIST SENSOR 9 SIGNAL CIRCUIT FOR A SHORT TO BATTERY

1. Turn the ignition on.
2. Using a 12-volt test light connected to ground, check the (D703) Park Assist Sensor 9 Signal circuit at the Park Assist Module C2 harness connector.

Does the test light illuminate brightly?

Yes

- Repair the short to voltage in the (D703) Park Assist Sensor 9 Signal circuit.
- Perform the BODY VERIFICATION TEST. (Refer to 28 - DTC-Based Diagnostics/MODULE, Totally Integrated Power (TIPM) - Standard Procedure).

No

- Go To 5

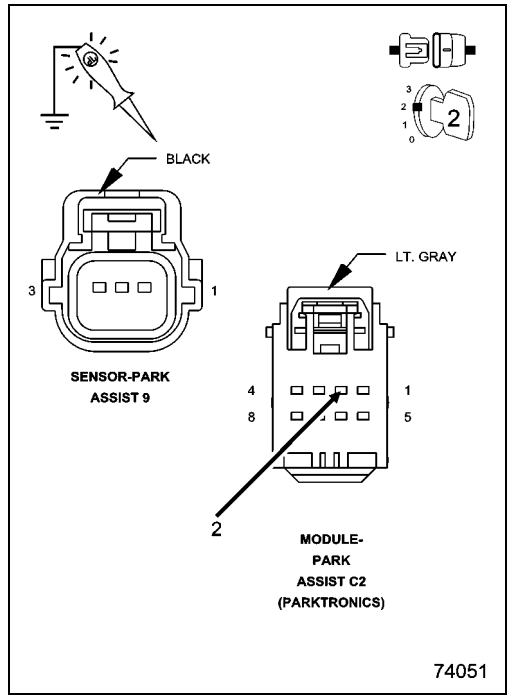

5. CHECK THE (D703) PARK ASSIST SENSOR 9 SIGNAL CIRCUIT FOR AN OPEN

1. Measure the resistance of the (D703) Park Assist Sensor 9 Signal circuit between the Park Assist Module C2 harness connector and the Park Assist Sensor 9 harness connector.

Is the resistance above 5.0 Ohms?

Yes

- Repair the open in the (D703) Park Assist Sensor 9 Signal circuit.
- Perform the BODY VERIFICATION TEST. (Refer to 28 - DTC-Based Diagnostics/MODULE, Totally Integrated Power (TIPM) - Standard Procedure).

No

- Replace the Park Assist Module in accordance with Service Information.
- Perform the BODY VERIFICATION TEST. (Refer to 28 - DTC-Based Diagnostics/MODULE, Totally Integrated Power (TIPM) - Standard Procedure).

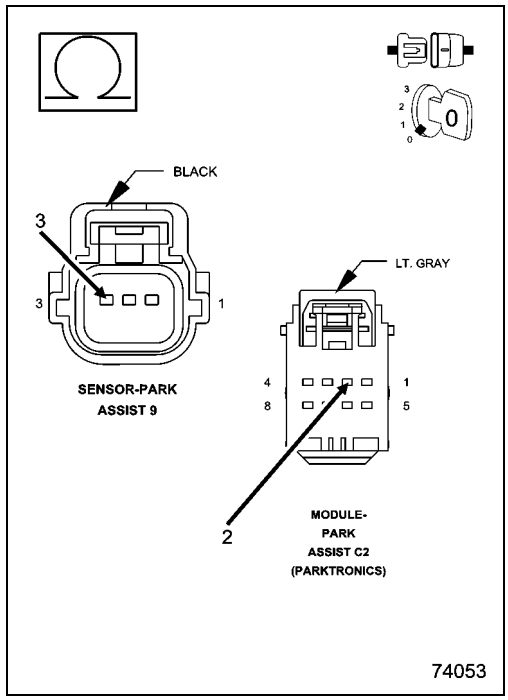

B1297-11-PTS SENSOR 10 - CIRCUIT SHORT TO GROUND

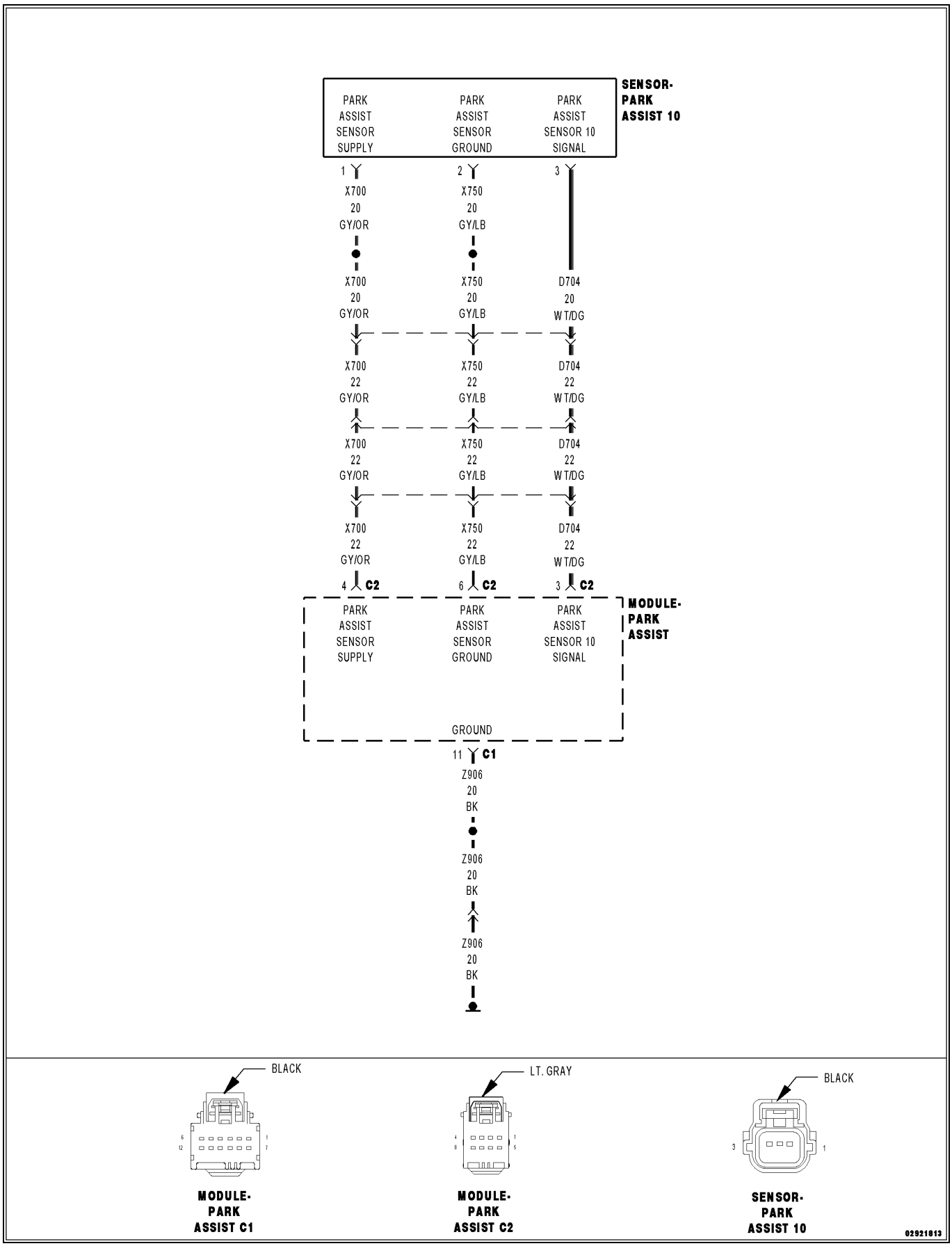

For a complete wiring diagram, **refer to the Wiring Information**.

Theory of Operation

The Park Assist Sensors are ultrasonic transceivers that are completely controlled by the Park Assist Module. The sensors transmit and receive ultrasonic signals. Each sensor has a voltage, signal, and return circuit to the module. The sensors communicate with the Park Assist Module using a dedicated serial bus communication circuit.

NOTE: The numbering system for the park assist sensors allows for up to twelve sensors on the vehicle, six front and six rear. The sensors are numbered in a clockwise manner starting at the left front bumper. The left front sensor (if equipped with front park assist) is the number 1 sensor. The numbering continues in a clockwise direction around the vehicle. Since Chrysler Group vehicles use only four rear sensors, sensor numbers 7 and 12 are omitted, so the left rear sensor is the number 11 sensor.

- **When Monitored:**
  Vehicle in reverse and during the self-test while vehicle is in drive between 18 km/h (11 mph) and 40 km/h (25 mph).
- **Set Condition:**
  The Park Assist Module detects a short to ground on the Park Assist Sensor Signal circuit.

Possible Causes
PARK ASSIST SENSOR DISCONNECTED
(D704) PARK ASSIST SENSOR 10 SIGNAL CIRCUIT SHORTED TO GROUND
(D704) PARK ASSIST SENSOR 10 SIGNAL CIRCUIT SHORTED TO THE (X750) PARK ASSIST SENSOR GROUND CIRCUIT
(D704) PARK ASSIST SENSOR 10 SIGNAL CIRCUIT OPEN
(X700) PARK ASSIST SENSOR SUPPLY CIRCUIT OPEN
PARK ASSIST SENSOR
PARK ASSIST MODULE

1. CHECK FOR AN ACTIVE DIAGNOSTIC TROUBLE CODE (DTC)

NOTE: A disconnected sensor will set this DTC. Verify the Park Assist Sensor is connected before proceeding with this diagnostic procedure.

1. Turn the ignition on.
2. With the scan tool, read DTCs.

Does the scan tool display this DTC as active?

Yes

- Go To 2

No

- Test complete, the condition or conditions that originally set this DTC are not present at this time. Using the wiring diagrams as a guide, check all related splices and connectors for signs of water intrusion, corrosion, pushed out or bent terminals, and correct pin tension.
- Perform the BODY VERIFICATION TEST. (Refer to 28 - DTC-Based Diagnostics/MODULE, Totally Integrated Power (TIPM) - Standard Procedure).

2. CHECK THE VOLTAGE OF THE (X700) PARK ASSIST SENSOR SUPPLY CIRCUIT

1. Turn the ignition off.
2. Disconnect the Park Assist Sensor harness connector.
3. Turn the ignition on.
4. Measure the voltage of the (X700) Park Assist Sensor Supply circuit.

Is the voltage above 8.0 volts?

Yes

- Go To 4

No

- Go To 3

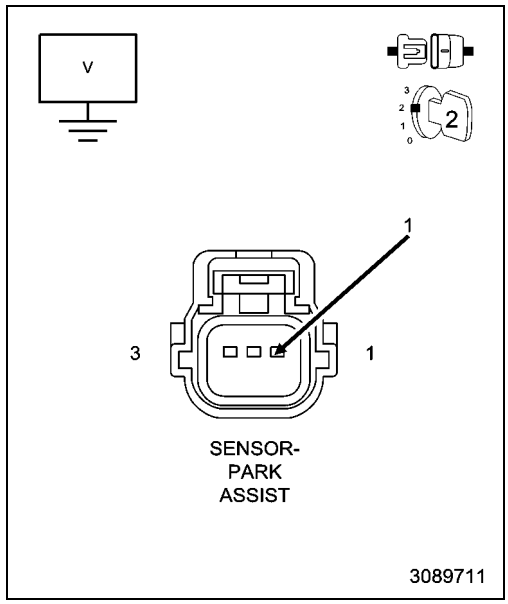

3. CHECK THE (X700) PARK ASSIST SENSOR SUPPLY CIRCUIT FOR AN OPEN OR HIGH RESISTANCE

1. Turn the ignition off.
2. Disconnect the Park Assist Module C2 harness connector.
3. Measure the resistance of the (X700) Park Assist Sensor Supply circuit.

Is the resistance below 5.0 Ohms?

Yes

- Replace the Park Assist Module in accordance with the Service Information. (Refer to 08 - Electrical/8B - Chime/Buzzer/MODULE, Park Assist - Removal).
- Perform the BODY VERIFICATION TEST. (Refer to 28 - DTC-Based Diagnostics/MODULE, Totally Integrated Power (TIPM) - Standard Procedure).

No

- Repair the open or high resistance in the (X700) Park Assist Sensor Supply circuit.
- Perform the BODY VERIFICATION TEST. (Refer to 28 - DTC-Based Diagnostics/MODULE, Totally Integrated Power (TIPM) - Standard Procedure).

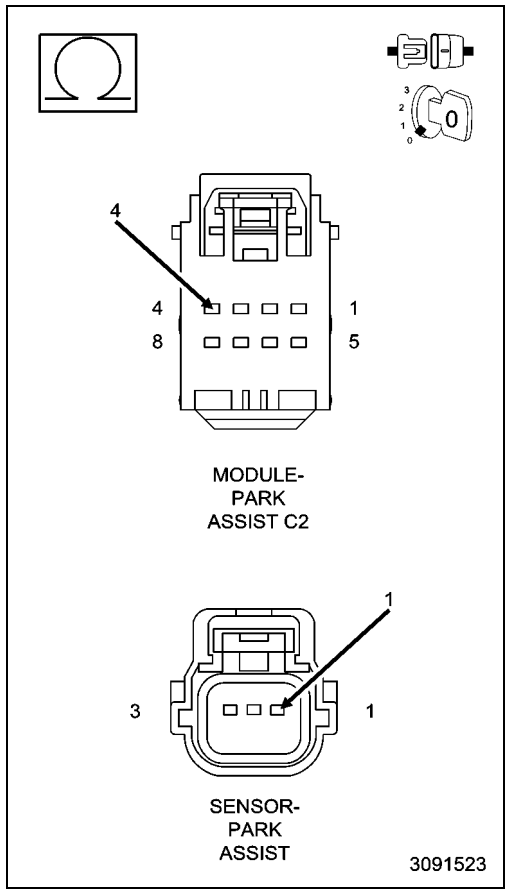

4. CHECK THE (D704) PARK ASSIST SENSOR 10 SIGNAL CIRCUIT FOR A SHORT TO GROUND WITH THE PARK ASSIST MODULE CONNECTED

NOTE: Perform this step with the Park Assist Module connected.

1. Measure the resistance between ground and the (D704) Park Assist Sensor 10 Signal circuit.

Is the resistance below 10K Ohms?

Yes

- Go To 5

No

- Go To 7

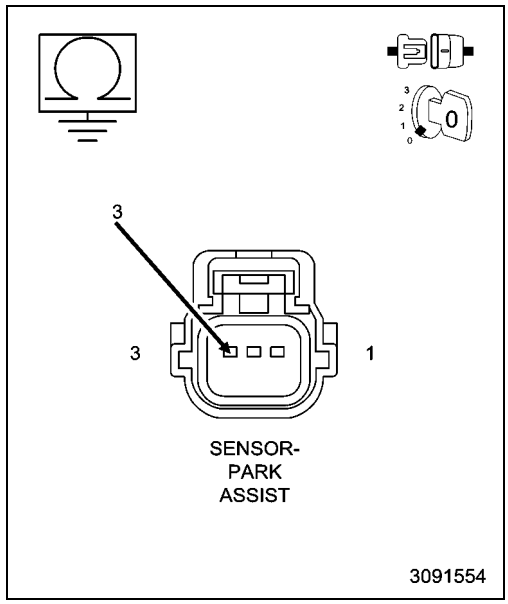

5. CHECK THE (D704) PARK ASSIST SENSOR 10 SIGNAL CIRCUIT FOR A SHORT TO GROUND WITH THE PARK ASSIST MODULE DISCONNECTED

1. Disconnect the Park Assist Module C2 harness connector.
2. Measure the resistance between ground and the (D704) Park Assist Sensor 10 Signal circuit.

Is the resistance below 10K Ohms?

Yes

- Repair the short to ground in the (D704) Park Assist Sensor 10 Signal circuit.
- Perform the BODY VERIFICATION TEST. (Refer to 28 - DTC-Based Diagnostics/MODULE, Totally Integrated Power (TIPM) - Standard Procedure).

No

- Go To 6

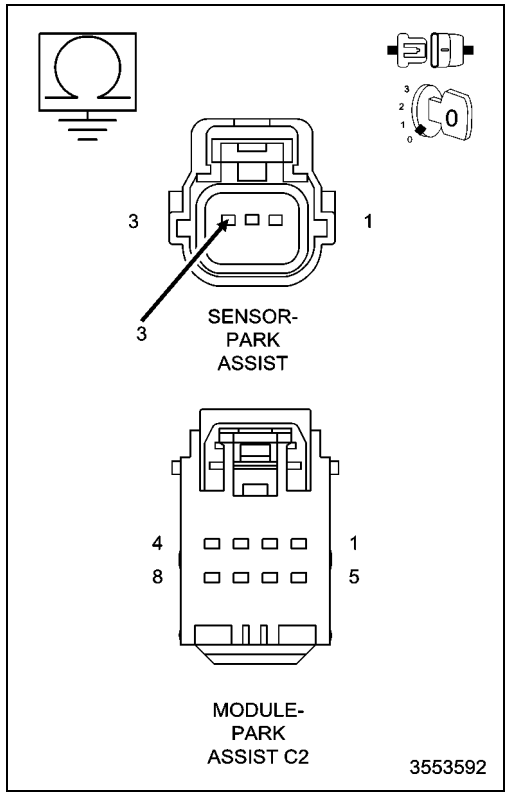

6. CHECK THE (D704) PARK ASSIST SENSOR 10 SIGNAL CIRCUIT FOR A SHORT TO THE (X750) PARK ASSIST SENSOR GROUND CIRCUIT

1. Measure the resistance between the (D704) Park Assist Sensor 10 Signal circuit and the (X750) Park Assist Sensor Ground circuit.

Is the resistance below 10K Ohms?

Yes

- Repair the short between the (D704) Park Assist Sensor 10 Signal circuit and the (X750) Park Assist Sensor Ground circuit.
- Perform the BODY VERIFICATION TEST. (Refer to 28 - DTC-Based Diagnostics/MODULE, Totally Integrated Power (TIPM) - Standard Procedure).

No

- Replace the Park Assist Module in accordance with the Service Information. (Refer to 08 - Electrical/8B - Chime/Buzzer/MODULE, Park Assist - Removal).
- Perform the BODY VERIFICATION TEST. (Refer to 28 - DTC-Based Diagnostics/MODULE, Totally Integrated Power (TIPM) - Standard Procedure).

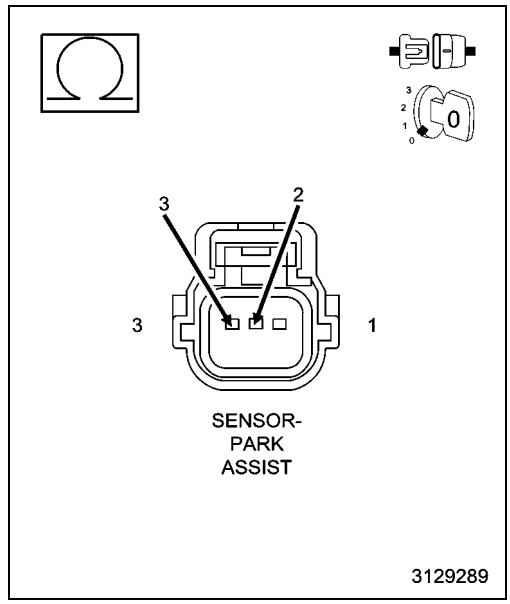

7. CHECK THE (D704) PARK ASSIST SENSOR 10 SIGNAL CIRCUIT FOR AN OPEN

1. Disconnect the Park Assist Module C2 harness connector.
2. Measure the resistance of the (D704) Park Assist Sensor 10 Signal circuit.

Is the resistance above 5.0 Ohms?

Yes

- Repair the open in the (D704) Park Assist Sensor 10 Signal circuit.
- Perform the BODY VERIFICATION TEST. (Refer to 28 - DTC-Based Diagnostics/MODULE, Totally Integrated Power (TIPM) - Standard Procedure).

No

- Go To 8

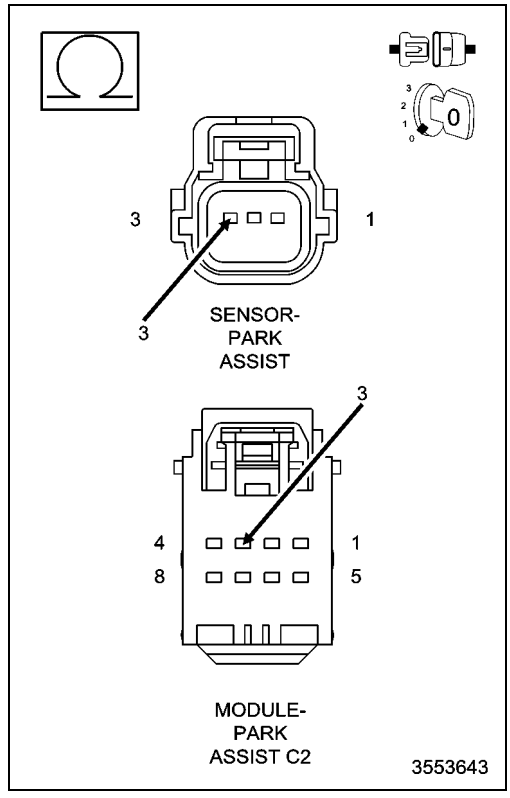

8. PARK ASSIST SENSOR

1. Turn the ignition on.
2. Reconnect the Park Assist Module C2 harness connector.
3. Connect a jumper wire across the (X700) Park Assist Sensor Supply and (D704) Park Assist Sensor 10 Signal circuits.
4. Turn the ignition on.
5. With the scan tool, read DTCs.

Does the scan tool display DTC: B1297-12-PTS SENSOR 10 - CIRCUIT SHORT TO BATTERY as active?

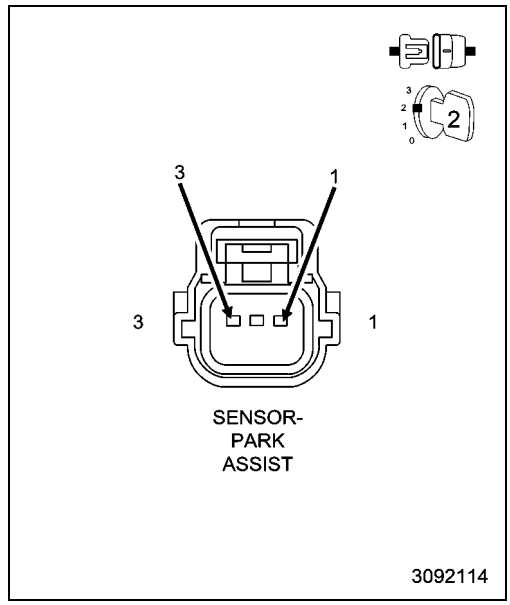

Yes

- Replace the Park Assist Sensor in accordance with the Service Information. (Refer to 08 - Electrical/8B - Chime/Buzzer/SENSOR, Park Assist - Removal).
- Perform the BODY VERIFICATION TEST. (Refer to 28 - DTC-Based Diagnostics/MODULE, Totally Integrated Power (TIPM) - Standard Procedure).

No

- Replace the Park Assist Module in accordance with the Service Information. (Refer to 08 - Electrical/8B - Chime/Buzzer/MODULE, Park Assist - Removal).
- Perform the BODY VERIFICATION TEST. (Refer to 28 - DTC-Based Diagnostics/MODULE, Totally Integrated Power (TIPM) - Standard Procedure).

B1297-12-PTS SENSOR 10 - CIRCUIT SHORT TO BATTERY

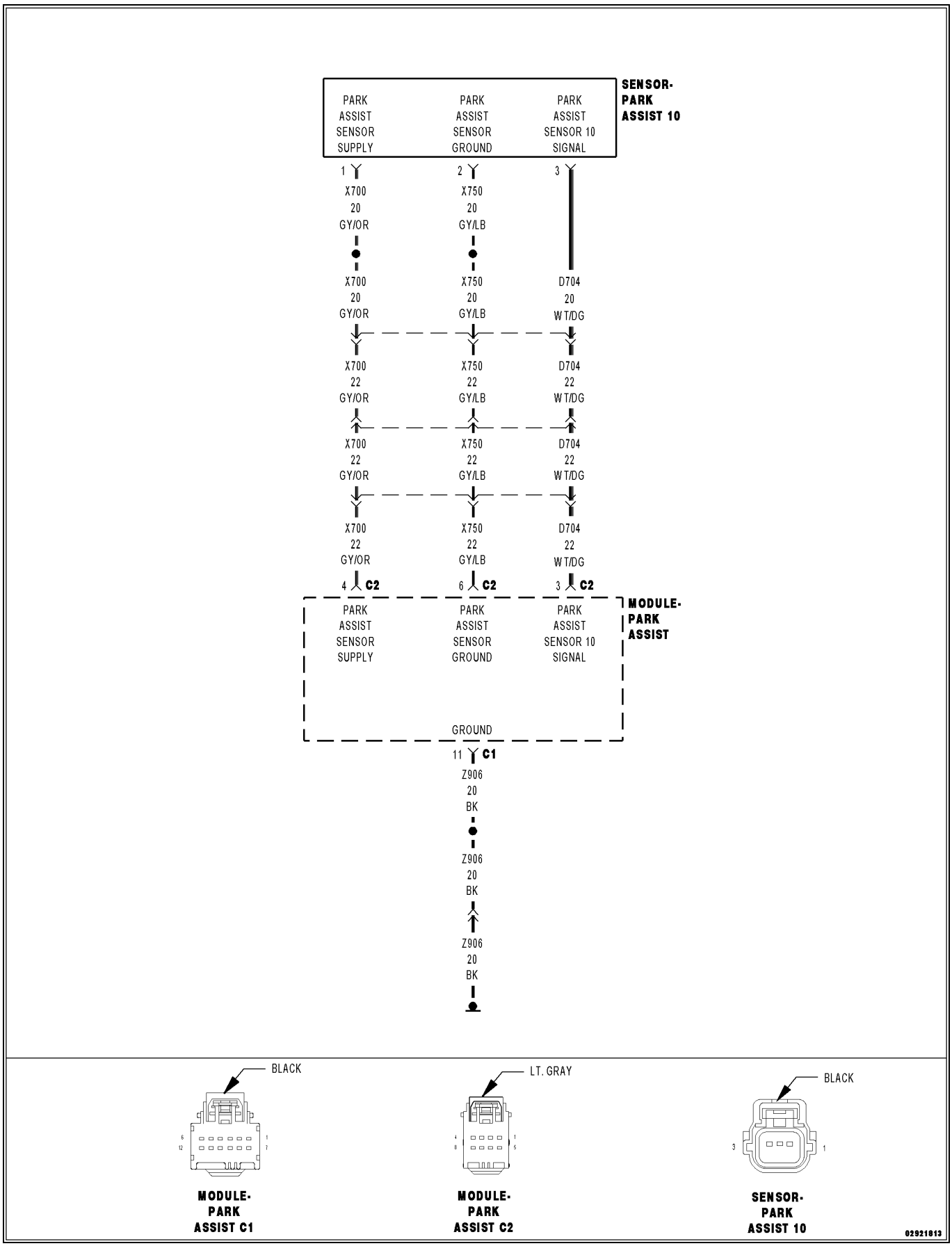

For a complete wiring diagram, **refer to the Wiring Information**.

Theory of Operation

The Park Assist Sensors are ultrasonic transceivers that are completely controlled by the Park Assist Module. The sensors transmit and receive ultrasonic signals. Each sensor has a voltage, signal, and return circuit to the module. The sensors communicate with the Park Assist Module using a dedicated serial bus communication circuit.

NOTE: The numbering system for the park assist sensors allows for up to twelve sensors on the vehicle, six front and six rear. The sensors are numbered in a clockwise manner starting at the left front bumper. The left front sensor (if equipped with front park assist) is the number 1 sensor. The numbering continues in a clockwise direction around the vehicle. Since Chrysler Group vehicles use only four rear sensors, sensor numbers 7 and 12 are omitted, so the left rear sensor is the number 11 sensor.

- **When Monitored:**

  Vehicle in reverse and during the self-test while vehicle is in drive between 18 km/h (11 mph) and 40 km/h (25 mph).
- **Set Condition:**

  The Park Assist Module detects an open or short to voltage on the Park Assist Sensor Signal circuit.

Possible Causes
(D704) PARK ASSIST SENSOR 10 SIGNAL CIRCUIT SHORTED TO VOLTAGE
(D704) PARK ASSIST SENSOR 10 SIGNAL CIRCUIT SHORTED TO THE (X700) PARK ASSIST SENSOR SUPPLY CIRCUIT
(X750) PARK ASSIST SENSOR GROUND CIRCUIT OPEN
PARK ASSIST SENSOR
PARK ASSIST MODULE

1. CHECK FOR AN ACTIVE DIAGNOSTIC TROUBLE CODE (DTC)

1. Turn the ignition on.
2. With the scan tool, read DTCs.

Does the scan tool display this DTC as active?

Yes

- Go To 2

No

- Test complete, the condition or conditions that originally set this DTC are not present at this time. Using the wiring diagrams as a guide, check all related splices and connectors for signs of water intrusion, corrosion, pushed out or bent terminals, and correct pin tension.
- Perform the BODY VERIFICATION TEST. (Refer to 28 - DTC-Based Diagnostics/MODULE, Totally Integrated Power (TIPM) - Standard Procedure).

2. (D704) PARK ASSIST SENSOR 10 SIGNAL CIRCUIT SHORTED TO BATTERY

1. Turn the ignition off.
2. Disconnect the Park Assist Module C2 harness connector.
3. Disconnect the Park Assist Sensor harness connector.
4. Turn the ignition on.
5. Measure the voltage of the (D704) Park Assist Sensor 10 Signal circuit.

Is the voltage above 10.0 volts?

Yes

- Repair the (D704) Park Assist Sensor 10 Signal circuit for a short to battery.
- Perform the BODY VERIFICATION TEST. (Refer to 28 - DTC-Based Diagnostics/MODULE, Totally Integrated Power (TIPM) - Standard Procedure).

No

- Go To 3

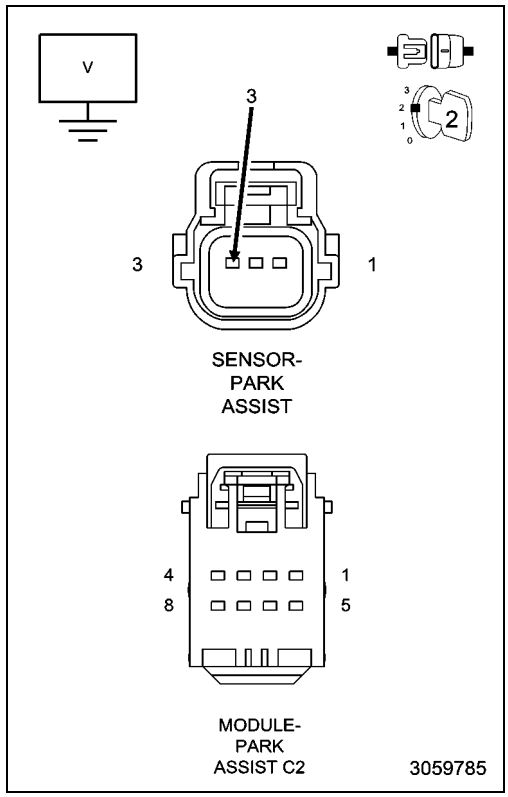

3. (D704) PARK ASSIST SENSOR 10 SIGNAL CIRCUIT SHORTED TO THE (X700) PARK ASSIST SENSOR SUPPLY CIRCUIT

1. Turn the ignition off.
2. Measure the resistance between the (D704) Park Assist Sensor 10 Signal circuit and the (X700) Park Assist Sensor Supply circuit.

Is the resistance below 10K Ohms?

Yes

- Repair the (D704) Park Assist Sensor 10 Signal circuit for a short to the (X700) Park Assist Sensor Supply circuit.
- Perform the BODY VERIFICATION TEST. (Refer to 28 - DTC-Based Diagnostics/MODULE, Totally Integrated Power (TIPM) - Standard Procedure).

No

- Go To 4

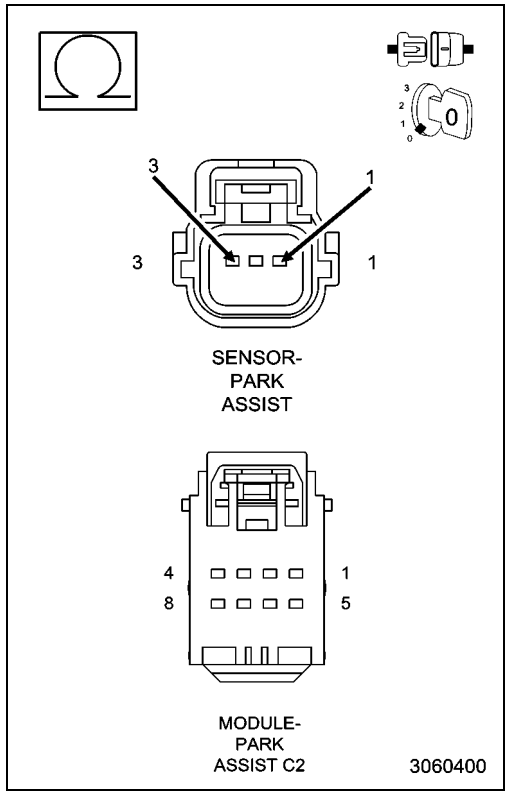

4. (X750) PARK ASSIST SENSOR GROUND CIRCUIT OPEN

1. Reconnect the Park Assist Module C2 harness connector.
2. Measure the resistance between ground and the (X750) Park Assist Sensor Ground circuit.

Is the resistance above 20.0 Ohms?

Yes

- Go To 5

No

- Replace the Park Assist Sensor in accordance with the Service Information. (Refer to 08 - Electrical/8B - Chime/Buzzer/SENSOR, Park Assist - Removal).
- Perform the BODY VERIFICATION TEST. (Refer to 28 - DTC-Based Diagnostics/MODULE, Totally Integrated Power (TIPM) - Standard Procedure).

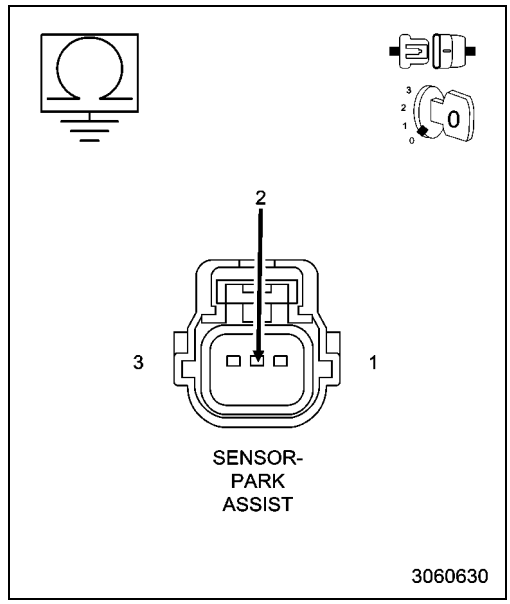

5. (X750) PARK ASSIST SENSOR GROUND CIRCUIT OPEN BETWEEN PARK ASSIST MODULE AND SENSOR

1. Disconnect the Park Assist Module C2 harness connector.
2. Measure the resistance of the (X750) Park Assist Sensor Ground circuit.

Is the resistance above 5.0 Ohms?

Yes

- Repair the open in the (X750) Park Assist Sensor Ground circuit.
- Perform the BODY VERIFICATION TEST. (Refer to 28 - DTC-Based Diagnostics/MODULE, Totally Integrated Power (TIPM) - Standard Procedure).

No

- Replace the Park Assist Module in accordance with the Service Information. (Refer to 08 - Electrical/8B - Chime/Buzzer/SENSOR, Park Assist - Removal).
- Perform the BODY VERIFICATION TEST. (Refer to 28 - DTC-Based Diagnostics/MODULE, Totally Integrated Power (TIPM) - Standard Procedure).

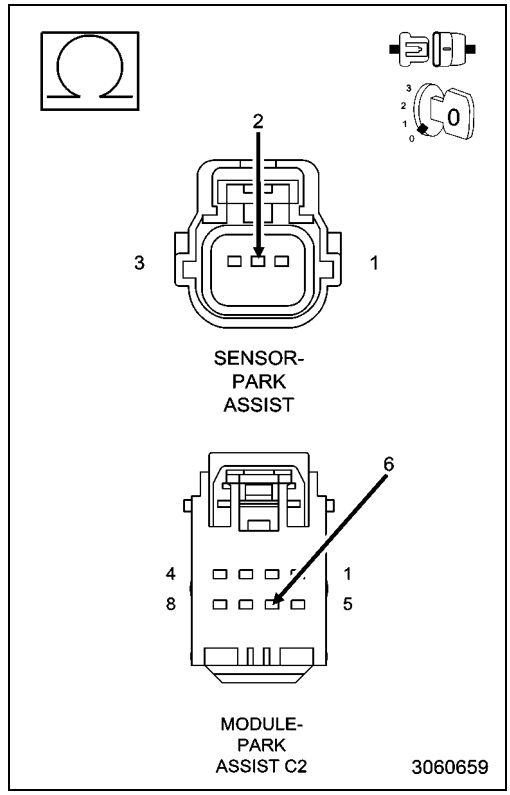

■ B1297-25-PTS SENSOR 10 - SIGNAL SHAPE / WAVEFORM FAILURE

For a complete wiring diagram, **refer to the Wiring Information**.

NOTE: The numbering system for the park assist sensors allows for up to twelve sensors on the vehicle, six front and six rear. The sensors are numbered in a clockwise manner starting at the left front bumper. The left front sensor (if equipped with front park assist) is the number 1 sensor. The numbering continues in a clockwise direction around the vehicle. Since Chrysler LLC vehicles use only four rear sensors, sensor numbers 7 and 12 are omitted, so the left rear sensor is the number 11 sensor.

- **When Monitored:**
  Vehicle in reverse.
  During the self-test while vehicle is in drive between 11 mph (18 km/h) and 25 mph (40 km/h).
- **Set Condition:**
  The Park Assist Module detects an internal Sensor error.

Possible Causes
PARK ASSIST SENSOR MEMBRANE OBSTRUCTION (ICE, SNOW, MUD, DIRT COVERING FASCIA)
PARK ASSIST SENSOR CONNECTOR OBSTRUCTION (ICE, SNOW, MUD, DIRT)
DECOUPLING RING MISSING/MOUNTED WRONG
OBJECTS - SUCH AS LICENSE PLATES - IN CLOSE RANGE TO THE SENSOR
PARK ASSIST SENSOR

1. CHECK FOR AN ACTIVE DTC

NOTE: Before proceeding with this diagnostic procedure, remove any ice, snow, mud, dirt, or other obstructions from the front/rear fascia/bumper. Also remove any ice, snow, dirt, mud, or other obstructions from the underside of the Fascia/Bumper surrounding the sensors.

1. Turn the ignition on.
2. With the scan tool, read DTCs.

Is this DTC active?

Yes

- Go To 2

No

- Test complete, the condition or conditions that originally set this DTC are not present at this time. Using the wiring diagrams as a guide, check all related splices and connectors for signs of water intrusion, corrosion, pushed out or bent terminals, and correct pin tension.

2. PARK ASSIST SENSOR

1. Verify that none of the possible causes mentioned above are present. Repair as necessary.

If none of the possible causes mentioned above are present, view repair.

Repair

- Replace the Park Assist Sensor in accordance with the Service Information.
- Perform the BODY VERIFICATION TEST. (Refer to 28 - DTC-Based Diagnostics/MODULE, Totally Integrated Power (TIPM) - Standard Procedure).

B1297-92-PTS SENSOR 10 - PERFORMANCE OR INCORRECT OPERATION

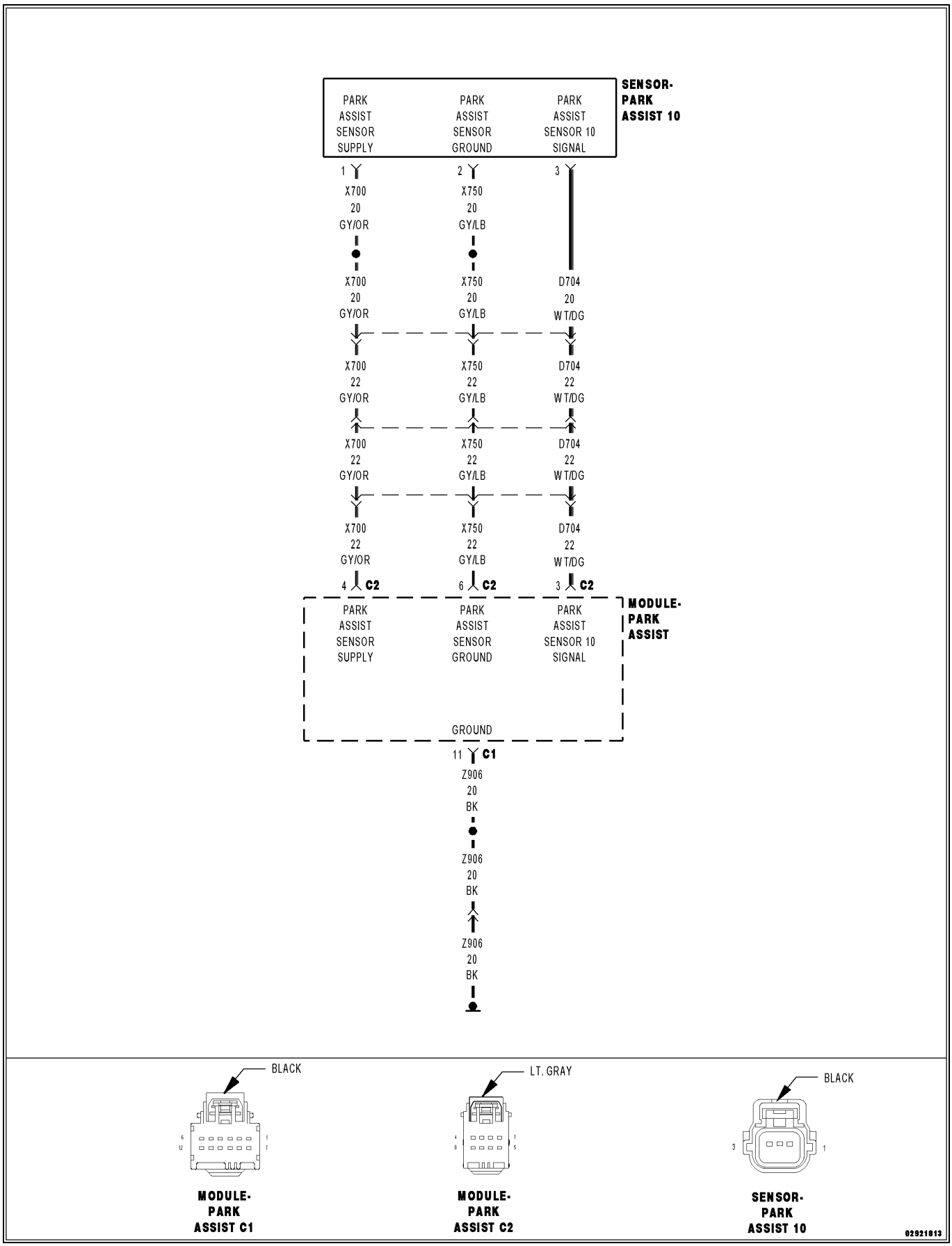

For a complete wiring diagram, **refer to the Wiring Information**.

Theory of Operation

The Park Assist Sensors are ultrasonic transceivers that are completely controlled by the Park Assist Module. The sensors transmit and receive ultrasonic signals. Each sensor has a voltage, signal, and return circuit to the module. The sensors communicate with the Park Assist Module using a dedicated serial bus communication circuit.

NOTE: The numbering system for the park assist sensors allows for up to twelve sensors on the vehicle, six front and six rear. The sensors are numbered in a clockwise manner starting at the left front bumper. The left front sensor (if equipped with front park assist) is the number 1 sensor. The numbering continues in a clockwise direction around the vehicle. Since Chrysler Group vehicles use only four rear sensors, sensor numbers 7 and 12 are omitted, so the left rear sensor is the number 11 sensor.

- **When Monitored:**
  During Reverse and during self test in Forward between 11 mph (18 km/h) and 25 mph (40 km/h).
- **Set Condition:**
  If the system detects data corruption in the transmission in the internal communication line between the module and sensors.

Possible Causes
(D704) PTS SENSOR 10 SIGNAL CIRCUIT SHORTED TO GROUND
(D704) PTS SENSOR 10 SIGNAL CIRCUIT SHORTED TO BATTERY
(D704) PTS SENSOR 10 SIGNAL CIRCUIT OPEN
PARK ASSIST SENSOR 10
PARK ASSIST MODULE

1. TEST FOR INTERMITTENT CONDITION

1. Turn the ignition on.
2. Using the scan tool, read the active DTCs.

Does the scan tool display this DTC as active?

Yes

- Go To 2

No

- Test complete, the condition or conditions that originally set this DTC are not present at this time. Using the wiring diagrams as a guide, check all related splices and connectors for signs of water intrusion, corrosion, pushed out or bent terminals, and correct pin tension.
- Perform the BODY VERIFICATION TEST. (Refer to 28 - DTC-Based Diagnostics/MODULE, Totally Integrated Power (TIPM) - Standard Procedure).

2. CHECK PARK ASSIST SENSOR 10 FOR INTERNAL SHORT

1. Disconnect the Park Assist Sensor 10 harness connector.
2. Using the scan tool, read the active DTCs.

Does the scan tool display this DTC as active?

Yes

- Go To 3

No

- Replace the Park Assist Sensor 10 in accordance with the Service Information.
- Perform the BODY VERIFICATION TEST. (Refer to 28 - DTC-Based Diagnostics/MODULE, Totally Integrated Power (TIPM) - Standard Procedure).

3. CHECK THE (D704) PARK ASSIST SENSOR 10 SIGNAL CIRCUIT FOR A SHORT TO GROUND

1. Turn the ignition off.
2. Disconnect the Park Assist Module C2 harness connector.
3. Measure the resistance between ground and the (D704) Park Assist Sensor 10 Signal circuit.

Is the resistance below 5 Ohms?

Yes

- Repair the short to ground (D704) Park Assist Sensor 10 Signal circuit.
- Perform the BODY VERIFICATION TEST. (Refer to 28 - DTC-Based Diagnostics/MODULE, Totally Integrated Power (TIPM) - Standard Procedure).

No

- Go To 4

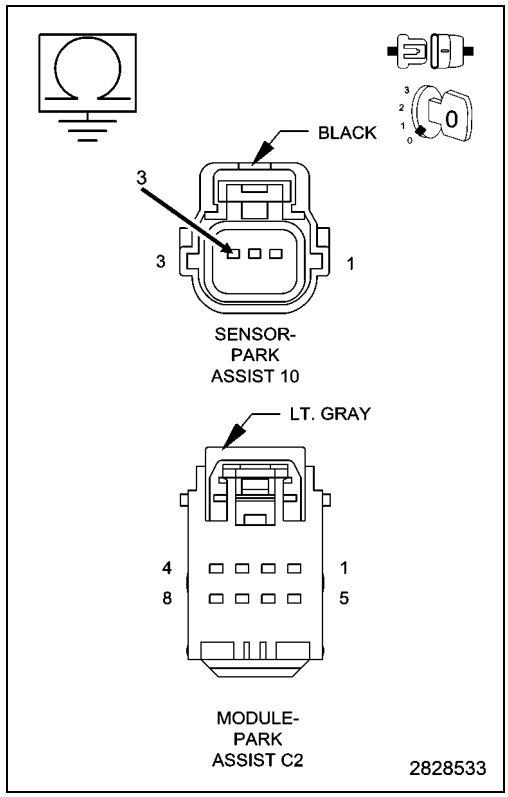

4. CHECK THE (D704) PARK ASSIST SENSOR 10 SIGNAL CIRCUIT FOR A SHORT TO BATTERY

1. Turn the ignition on.
2. Measure the voltage of the (D704) Park Assist Sensor 10 Signal circuit.

Is the voltage above 10 volts?

Yes

- Repair the short to voltage (D704) Park Assist Sensor 10 Signal circuit.
- Perform the BODY VERIFICATION TEST. (Refer to 28 - DTC-Based Diagnostics/MODULE, Totally Integrated Power (TIPM) - Standard Procedure).

No

- Go To 5

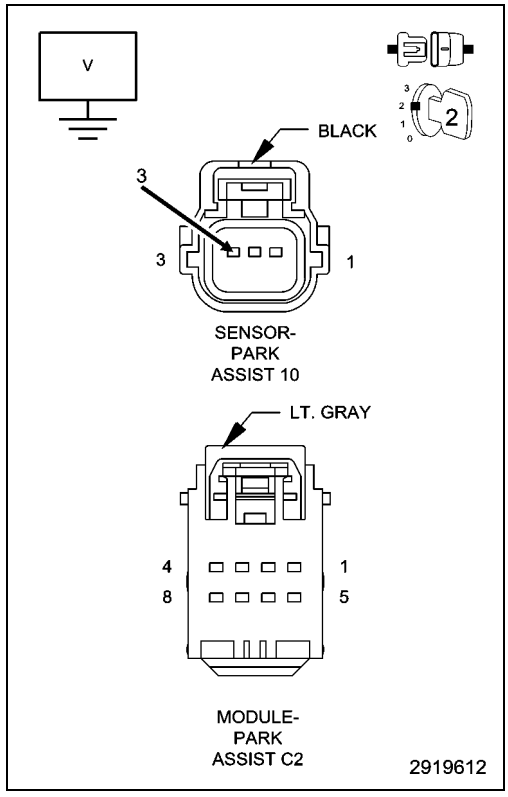

5. CHECK THE (D704) PARK ASSIST SENSOR 10 SIGNAL CIRCUIT FOR AN OPEN

1. Measure the resistance of the (D704) Park Assist Sensor 10 Signal circuit between the Park Assist Module C2 harness connector and the Park Assist Sensor 10 harness connector.

Is the resistance above 5.0 Ohms?

Yes

- Repair the open in the (D704) Park Assist Sensor 10 Signal circuit.
- Perform the BODY VERIFICATION TEST. (Refer to 28 - DTC-Based Diagnostics/MODULE, Totally Integrated Power (TIPM) - Standard Procedure).

No

- Replace the Park Assist Module in accordance with Service Information.
- Perform the BODY VERIFICATION TEST. (Refer to 28 - DTC-Based Diagnostics/MODULE, Totally Integrated Power (TIPM) - Standard Procedure).

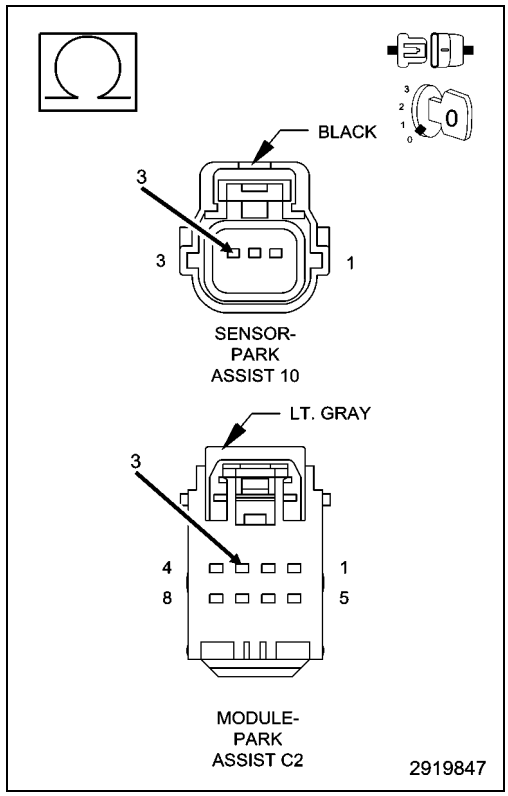

B1298-11-PTS SENSOR 11 - CIRCUIT SHORT TO GROUND

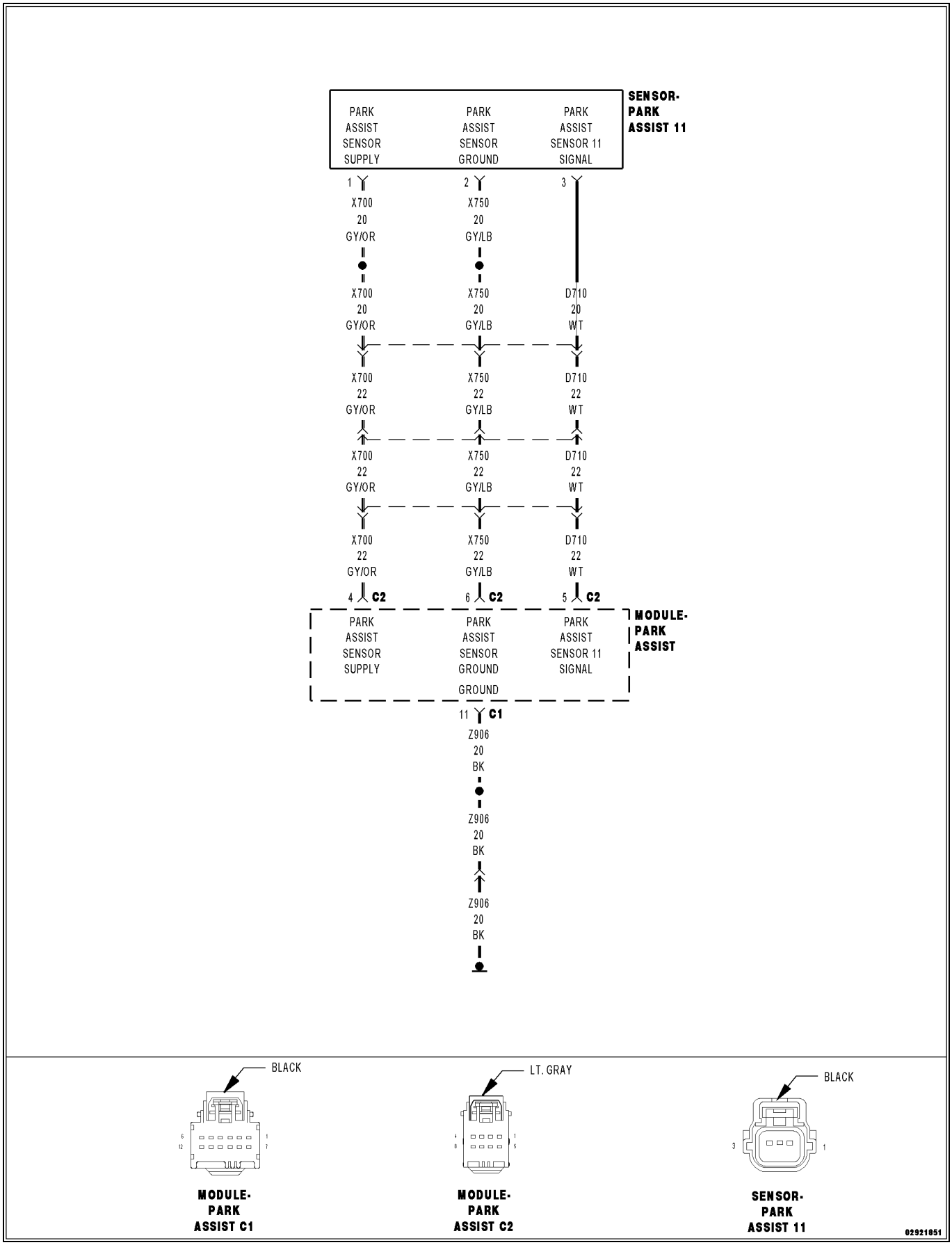

For a complete wiring diagram, **refer to the Wiring Information**.

Theory of Operation

The Park Assist Sensors are ultrasonic transceivers that are completely controlled by the Park Assist Module. The sensors transmit and receive ultrasonic signals. Each sensor has a voltage, signal, and return circuit to the module. The sensors communicate with the Park Assist Module using a dedicated serial bus communication circuit.

NOTE: The numbering system for the park assist sensors allows for up to twelve sensors on the vehicle, six front and six rear. The sensors are numbered in a clockwise manner starting at the left front bumper. The left front sensor (if equipped with front park assist) is the number 1 sensor. The numbering continues in a clockwise direction around the vehicle. Since Chrysler Group vehicles use only four rear sensors, sensor numbers 7 and 12 are omitted, so the left rear sensor is the number 11 sensor.

- **When Monitored:**
  Vehicle in reverse and during the self-test while vehicle is in drive between 18 km/h (11 mph) and 40 km/h (25 mph).
- **Set Condition:**
  The Park Assist Module detects a short to ground on the Park Assist Sensor Signal circuit.

Possible Causes
PARK ASSIST SENSOR DISCONNECTED
(D710) PARK ASSIST SENSOR 11 SIGNAL CIRCUIT SHORTED TO GROUND
(D710) PARK ASSIST SENSOR 11 SIGNAL CIRCUIT SHORTED TO THE (X750) PARK ASSIST SENSOR GROUND CIRCUIT
(D710) PARK ASSIST SENSOR 11 SIGNAL CIRCUIT OPEN
(X700) PARK ASSIST SENSOR SUPPLY CIRCUIT OPEN
PARK ASSIST SENSOR
PARK ASSIST MODULE

1. CHECK FOR AN ACTIVE DIAGNOSTIC TROUBLE CODE (DTC)

NOTE: A disconnected sensor will set this DTC. Verify the Park Assist Sensor is connected before proceeding with this diagnostic procedure.

1. Turn the ignition on.
2. With the scan tool, read DTCs.

Does the scan tool display this DTC as active?

Yes

- Go To 2

No

- Test complete, the condition or conditions that originally set this DTC are not present at this time. Using the wiring diagrams as a guide, check all related splices and connectors for signs of water intrusion, corrosion, pushed out or bent terminals, and correct pin tension.
- Perform the BODY VERIFICATION TEST. (Refer to 28 - DTC-Based Diagnostics/MODULE, Totally Integrated Power (TIPM) - Standard Procedure).

2. CHECK THE VOLTAGE OF THE (X700) PARK ASSIST SENSOR SUPPLY CIRCUIT

1. Turn the ignition off.
2. Disconnect the Park Assist Sensor 11 harness connector.
3. Turn the ignition on.
4. Measure the voltage of the (X700) Park Assist Sensor Supply circuit.

Is the voltage above 8.0 volts?

Yes

- Go To 4

No

- Go To 3

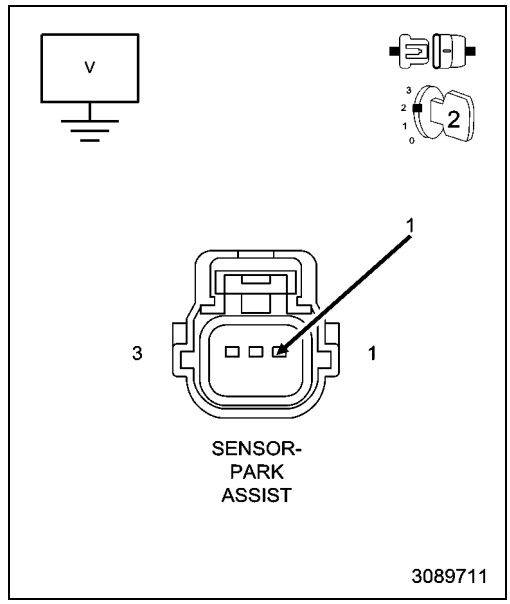

3. CHECK THE (X700) PARK ASSIST SENSOR SUPPLY CIRCUIT FOR AN OPEN OR HIGH RESISTANCE

1. Turn the ignition off.
2. Disconnect the Park Assist Module C2 harness connector.
3. Measure the resistance of the (X700) Park Assist Sensor Supply circuit.

Is the resistance below 5.0 Ohms?

Yes

- Replace the Park Assist Module in accordance with the Service Information. (Refer to 08 - Electrical/8B - Chime/Buzzer/MODULE, Park Assist - Removal).
- Perform the BODY VERIFICATION TEST. (Refer to 28 - DTC-Based Diagnostics/MODULE, Totally Integrated Power (TIPM) - Standard Procedure).

No

- Repair the open or high resistance in the (X700) Park Assist Sensor Supply circuit.
- Perform the BODY VERIFICATION TEST. (Refer to 28 - DTC-Based Diagnostics/MODULE, Totally Integrated Power (TIPM) - Standard Procedure).

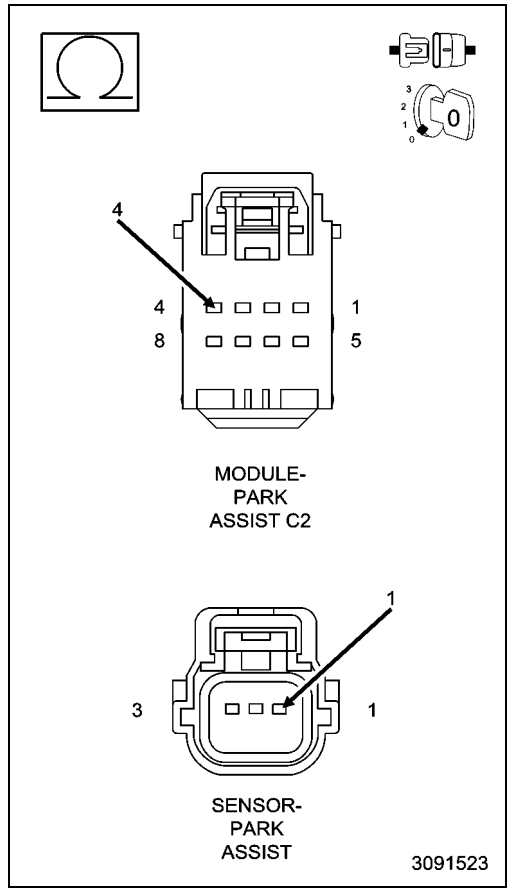

4. CHECK THE (D710) PARK ASSIST SENSOR 11 SIGNAL CIRCUIT FOR A SHORT TO GROUND WITH THE PARK ASSIST MODULE CONNECTED

NOTE: Perform this step with the Park Assist Module connected.

1. Measure the resistance between ground and the (D710) Park Assist Sensor 11 Signal circuit.

Is the resistance below 10K Ohms?

Yes

- Go To 5

No

- Go To 7

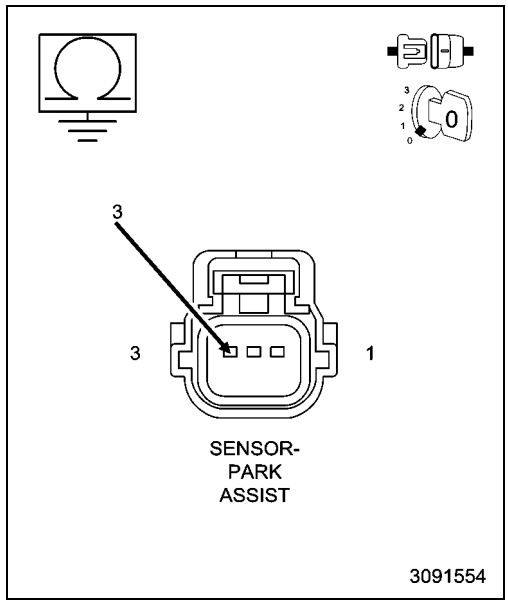

5. CHECK THE (D710) PARK ASSIST SENSOR 11 SIGNAL CIRCUIT FOR A SHORT TO GROUND WITH THE PARK ASSIST MODULE DISCONNECTED

1. Disconnect the Park Assist Module C2 harness connector.
2. Measure the resistance between ground and the (D710) Park Assist Sensor 11 Signal circuit.

Is the resistance below 10K Ohms?

Yes

- Repair the short to ground in the (D710) Park Assist Sensor 11 Signal circuit.
- Perform the BODY VERIFICATION TEST. (Refer to 28 - DTC-Based Diagnostics/MODULE, Totally Integrated Power (TIPM) - Standard Procedure).

No

- Go To 6

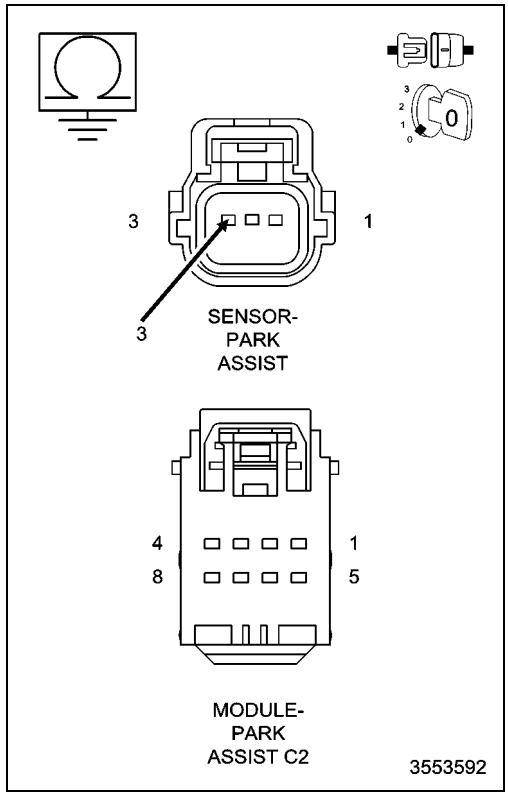

6. CHECK THE (D710) PARK ASSIST SENSOR 11 SIGNAL CIRCUIT FOR A SHORT TO THE (X750) PARK ASSIST SENSOR GROUND CIRCUIT

1. Measure the resistance between the (D710) Park Assist Sensor 11 Signal circuit and the (X750) Park Assist Sensor Ground circuit.

Is the resistance below 10K Ohms?

Yes

- Repair the short between the (D710) Park Assist Sensor 11 Signal circuit and the (X750) Park Assist Sensor Ground circuit.
- Perform the BODY VERIFICATION TEST. (Refer to 28 - DTC-Based Diagnostics/MODULE, Totally Integrated Power (TIPM) - Standard Procedure).

No

- Replace the Park Assist Module in accordance with the Service Information. (Refer to 08 - Electrical/8B - Chime/Buzzer/MODULE, Park Assist - Removal).
- Perform the BODY VERIFICATION TEST. (Refer to 28 - DTC-Based Diagnostics/MODULE, Totally Integrated Power (TIPM) - Standard Procedure).

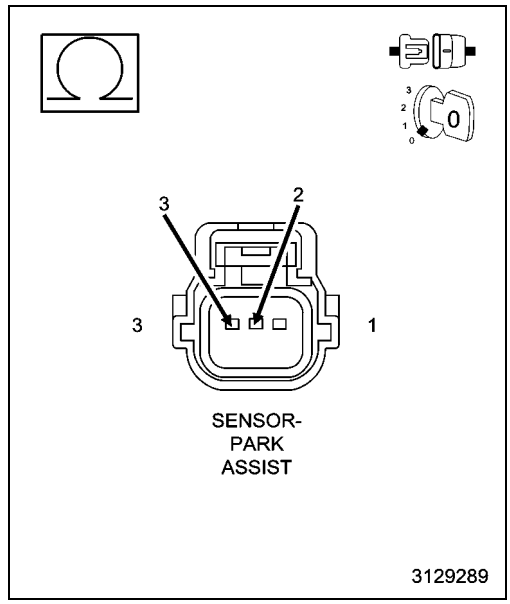

7. CHECK THE (D710) PARK ASSIST SENSOR 11 SIGNAL CIRCUIT FOR AN OPEN

1. Disconnect the Park Assist Module C2 harness connector.
2. Measure the resistance of the (D710) Park Assist Sensor 11 Signal circuit.

Is the resistance above 5.0 Ohms?

Yes

- Repair the open in the (D710) Park Assist Sensor 11 Signal circuit.
- Perform the BODY VERIFICATION TEST. (Refer to 28 - DTC-Based Diagnostics/MODULE, Totally Integrated Power (TIPM) - Standard Procedure).

No

- Go To 8

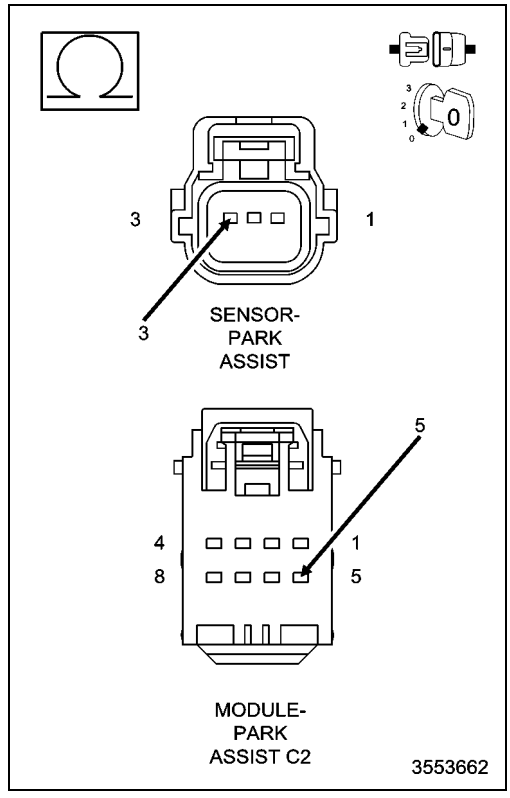

8. PARK ASSIST SENSOR

1. Turn the ignition on.
2. Reconnect the Park Assist Module C2 harness connector.
3. Connect a jumper wire across the (X700) Park Assist Sensor Supply and (D710) Park Assist Sensor 11 Signal circuits.
4. Turn the ignition on.
5. With the scan tool, read DTCs.

Does the scan tool display DTC: B1298-12-PTS SENSOR 11 - CIRCUIT SHORT TO BATTERY as active?

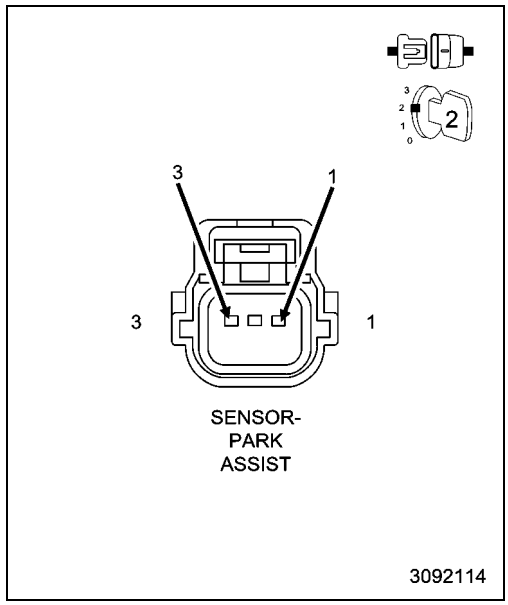

Yes

- Replace the Park Assist Sensor in accordance with the Service Information. (Refer to 08 - Electrical/8B - Chime/Buzzer/SENSOR, Park Assist - Removal).
- Perform the BODY VERIFICATION TEST. (Refer to 28 - DTC-Based Diagnostics/MODULE, Totally Integrated Power (TIPM) - Standard Procedure).

No

- Replace the Park Assist Module in accordance with the Service Information. (Refer to 08 - Electrical/8B - Chime/Buzzer/MODULE, Park Assist - Removal).
- Perform the BODY VERIFICATION TEST. (Refer to 28 - DTC-Based Diagnostics/MODULE, Totally Integrated Power (TIPM) - Standard Procedure).

B1298-12-PTS SENSOR 11 - CIRCUIT SHORT TO BATTERY

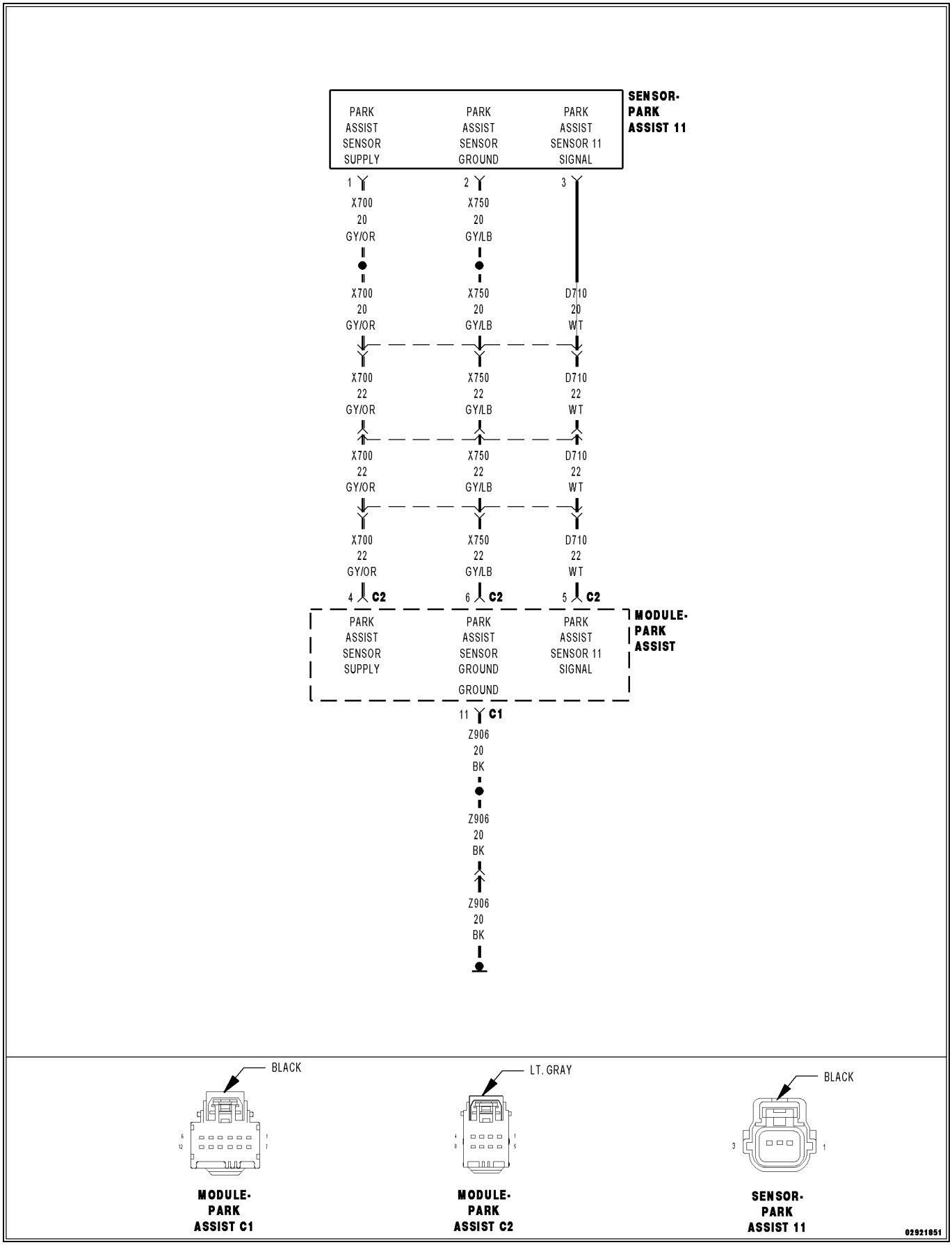

For a complete wiring diagram, **refer to the Wiring Information**.

Theory of Operation

The Park Assist Sensors are ultrasonic transceivers that are completely controlled by the Park Assist Module. The sensors transmit and receive ultrasonic signals. Each sensor has a voltage, signal, and return circuit to the module. The sensors communicate with the Park Assist Module using a dedicated serial bus communication circuit.

NOTE: The numbering system for the park assist sensors allows for up to twelve sensors on the vehicle, six front and six rear. The sensors are numbered in a clockwise manner starting at the left front bumper. The left front sensor (if equipped with front park assist) is the number 1 sensor. The numbering continues in a clockwise direction around the vehicle. Since Chrysler Group vehicles use only four rear sensors, sensor numbers 7 and 12 are omitted, so the left rear sensor is the number 11 sensor.

- **When Monitored:**

  Vehicle in reverse and during the self-test while vehicle is in drive between 18 km/h (11 mph) and 40 km/h (25 mph).
- **Set Condition:**

  The Park Assist Module detects an open or short to voltage on the Park Assist Sensor Signal circuit.

Possible Causes
(D710) PARK ASSIST SENSOR 11 SIGNAL CIRCUIT SHORTED TO VOLTAGE
(D710) PARK ASSIST SENSOR 11 SIGNAL CIRCUIT SHORTED TO THE (X700) PARK ASSIST SENSOR SUPPLY CIRCUIT
(X750) PARK ASSIST SENSOR GROUND CIRCUIT OPEN
PARK ASSIST SENSOR
PARK ASSIST MODULE

1. CHECK FOR AN ACTIVE DIAGNOSTIC TROUBLE CODE (DTC)

1. Turn the ignition on.
2. With the scan tool, read DTCs.

Does the scan tool display this DTC as active?

Yes

- Go To 2

No

- Test complete, the condition or conditions that originally set this DTC are not present at this time. Using the wiring diagrams as a guide, check all related splices and connectors for signs of water intrusion, corrosion, pushed out or bent terminals, and correct pin tension.
- Perform the BODY VERIFICATION TEST. (Refer to 28 - DTC-Based Diagnostics/MODULE, Totally Integrated Power (TIPM) - Standard Procedure).

2. (D710) PARK ASSIST SENSOR 11 SIGNAL CIRCUIT SHORTED TO BATTERY

1. Turn the ignition off.
2. Disconnect the Park Assist Module C2 harness connector.
3. Disconnect the Park Assist Sensor 11 harness connector.
4. Turn the ignition on.
5. Measure the voltage of the (D710) Park Assist Sensor 11 Signal circuit.

Is the voltage above 10.0 volts?

Yes

- Repair the (D710) Park Assist Sensor 11 Signal circuit for a short to battery.
- Perform the BODY VERIFICATION TEST. (Refer to 28 - DTC-Based Diagnostics/MODULE, Totally Integrated Power (TIPM) - Standard Procedure).

No

- Go To 3

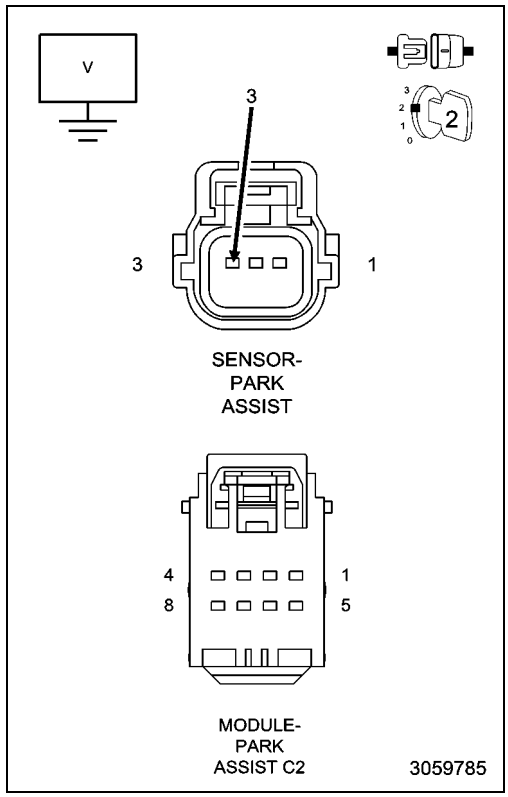

3. (D710) PARK ASSIST SENSOR 11 SIGNAL CIRCUIT SHORTED TO THE (X700) PARK ASSIST SENSOR SUPPLY CIRCUIT

1. Turn the ignition off.
2. Measure the resistance between the (D710) Park Assist Sensor 11 Signal circuit and the (X700) Park Assist Sensor Supply circuit.

Is the resistance below 10K Ohms?

Yes

- Repair the (D710) Park Assist Sensor 11 Signal circuit for a short to the (X700) Park Assist Sensor Supply circuit.
- Perform the BODY VERIFICATION TEST. (Refer to 28 - DTC-Based Diagnostics/MODULE, Totally Integrated Power (TIPM) - Standard Procedure).

No

- Go To 4

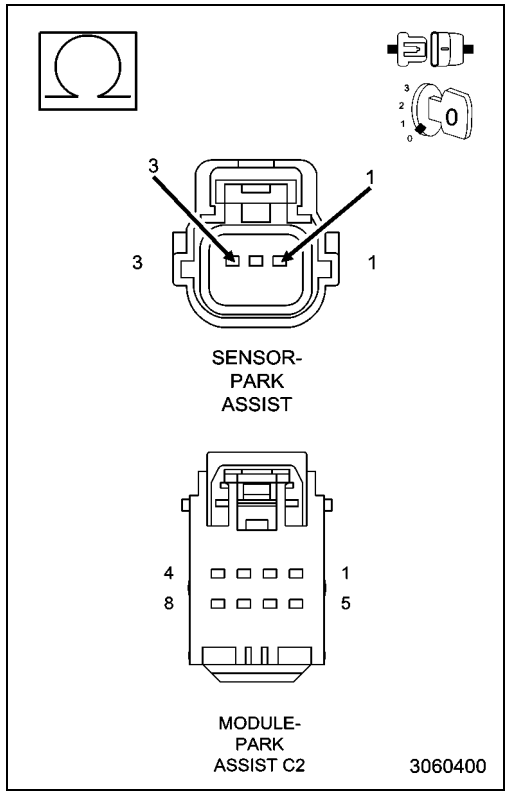

4. (X750) PARK ASSIST SENSOR GROUND CIRCUIT OPEN

1. Reconnect the Park Assist Module C2 harness connector.
2. Measure the resistance between ground and the (X750) Park Assist Sensor Ground circuit.

Is the resistance above 20.0 Ohms?

Yes

- Go To 5

No

- Replace the Park Assist Sensor in accordance with the Service Information. (Refer to 08 - Electrical/8B - Chime/Buzzer/SENSOR, Park Assist - Removal).
- Perform the BODY VERIFICATION TEST. (Refer to 28 - DTC-Based Diagnostics/MODULE, Totally Integrated Power (TIPM) - Standard Procedure).

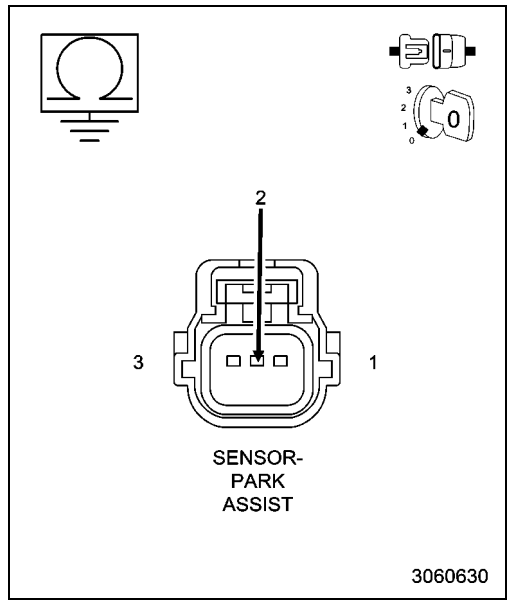

5. (X750) PARK ASSIST SENSOR GROUND CIRCUIT OPEN BETWEEN PARK ASSIST MODULE AND SENSOR

1. Disconnect the Park Assist Module C2 harness connector.
2. Measure the resistance of the (X750) Park Assist Sensor Ground circuit.

Is the resistance above 5.0 Ohms?

Yes

- Repair the open in the (X750) Park Assist Sensor Ground circuit.
- Perform the BODY VERIFICATION TEST. (Refer to 28 - DTC-Based Diagnostics/MODULE, Totally Integrated Power (TIPM) - Standard Procedure).

No

- Replace the Park Assist Module in accordance with the Service Information. (Refer to 08 - Electrical/8B - Chime/Buzzer/SENSOR, Park Assist - Removal).
- Perform the BODY VERIFICATION TEST. (Refer to 28 - DTC-Based Diagnostics/MODULE, Totally Integrated Power (TIPM) - Standard Procedure).

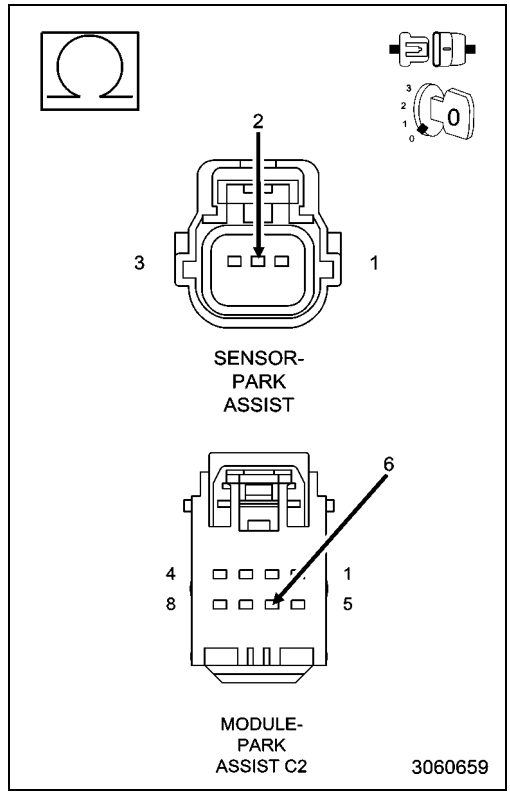

■ B1298-25-PTS SENSOR 11 - SIGNAL SHAPE / WAVEFORM FAILURE

For a complete wiring diagram, **refer to the Wiring Information**.

NOTE: The numbering system for the park assist sensors allows for up to twelve sensors on the vehicle, six front and six rear. The sensors are numbered in a clockwise manner starting at the left front bumper. The left front sensor (if equipped with front park assist) is the number 1 sensor. The numbering continues in a clockwise direction around the vehicle. Since Chrysler LLC vehicles use only four rear sensors, sensor numbers 7 and 12 are omitted, so the left rear sensor is the number 11 sensor.

- **When Monitored:**
  Vehicle in reverse.
  During the self-test while vehicle is in drive between 11 mph (18 km/h) and 25 mph (40 km/h).
- **Set Condition:**
  The Park Assist Module detects an internal Sensor error.

Possible Causes
PARK ASSIST SENSOR MEMBRANE OBSTRUCTION (ICE, SNOW, MUD, DIRT COVERING FASCIA)
PARK ASSIST SENSOR CONNECTOR OBSTRUCTION (ICE, SNOW, MUD, DIRT)
DECOUPLING RING MISSING/MOUNTED WRONG
OBJECTS - SUCH AS LICENSE PLATES - IN CLOSE RANGE TO THE SENSOR
PARK ASSIST SENSOR

1. CHECK FOR AN ACTIVE DTC

NOTE: Before proceeding with this diagnostic procedure, remove any ice, snow, mud, dirt, or other obstructions from the front/rear fascia/bumper. Also remove any ice, snow, dirt, mud, or other obstructions from the underside of the Fascia/Bumper surrounding the sensors.

1. Turn the ignition on.
2. With the scan tool, read DTCs.

Is this DTC active?

Yes

- Go To 2

No

- Test complete, the condition or conditions that originally set this DTC are not present at this time. Using the wiring diagrams as a guide, check all related splices and connectors for signs of water intrusion, corrosion, pushed out or bent terminals, and correct pin tension.

2. PARK ASSIST SENSOR

1. Verify that none of the possible causes mentioned above are present. Repair as necessary.

If none of the possible causes mentioned above are present, view repair.

Repair

- Replace the Park Assist Sensor in accordance with the Service Information.
- Perform the BODY VERIFICATION TEST. (Refer to 28 - DTC-Based Diagnostics/MODULE, Totally Integrated Power (TIPM) - Standard Procedure).

B1298-92-PTS SENSOR 11 - PERFORMANCE OR INCORRECT OPERATION

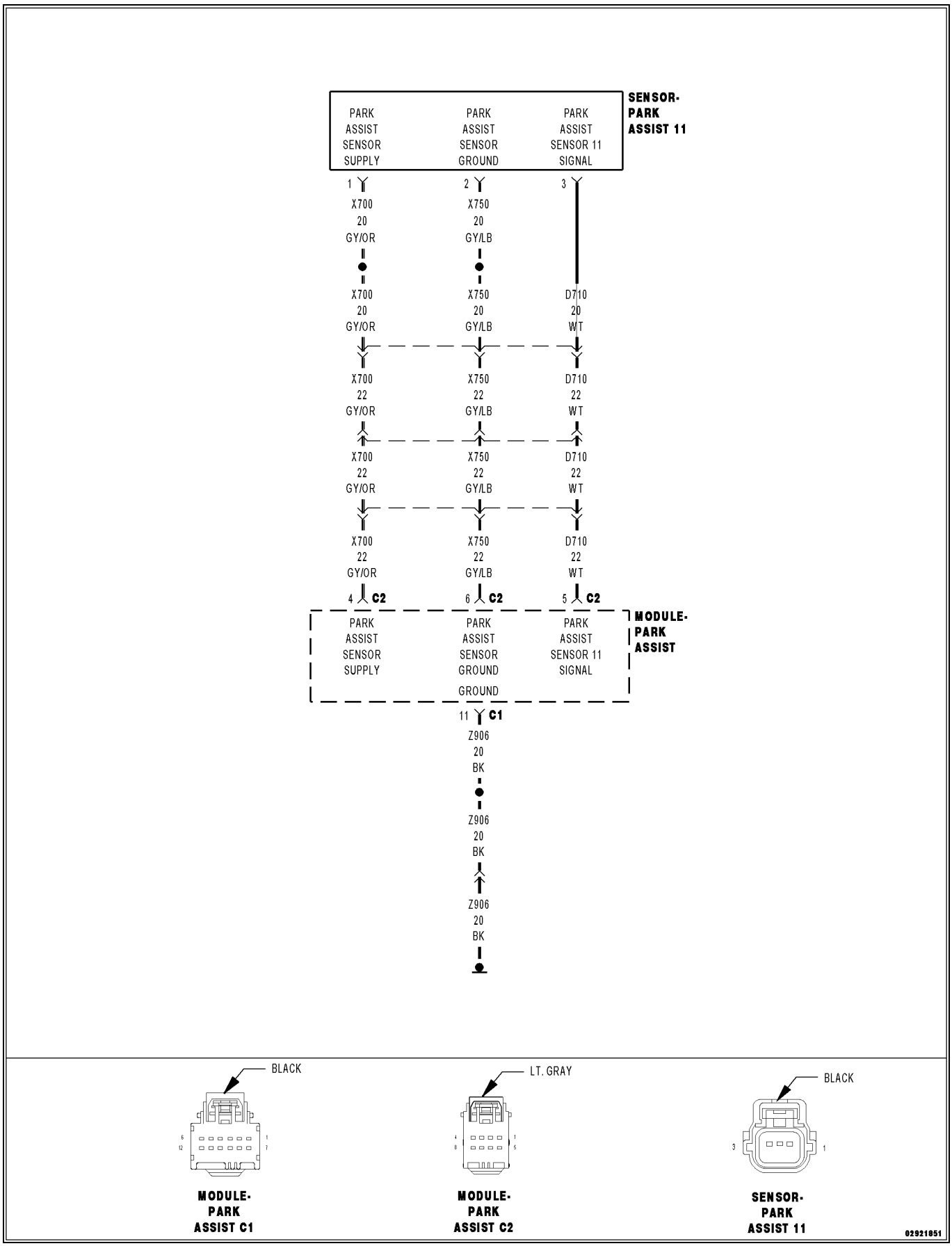

For a complete wiring diagram, **refer to the Wiring Information**.

Theory of Operation

The Park Assist Sensors are ultrasonic transceivers that are completely controlled by the Park Assist Module. The sensors transmit and receive ultrasonic signals. Each sensor has a voltage, signal, and return circuit to the module. The sensors communicate with the Park Assist Module using a dedicated serial bus communication circuit.

NOTE: The numbering system for the park assist sensors allows for up to twelve sensors on the vehicle, six front and six rear. The sensors are numbered in a clockwise manner starting at the left front bumper. The left front sensor (if equipped with front park assist) is the number 1 sensor. The numbering continues in a clockwise direction around the vehicle. Since Chrysler Group vehicles use only four rear sensors, sensor numbers 7 and 12 are omitted, so the left rear sensor is the number 11 sensor.

- **When Monitored:**
  During Reverse and during self test in Forward between 11 mph (18 km/h) and 25 mph (40 km/h).
- **Set Condition:**
  If the system detects data corruption in the transmission in the internal communication line between the module and sensors.

Possible Causes
(D710) PTS SENSOR 11 SIGNAL CIRCUIT SHORTED TO GROUND
(D710) PTS SENSOR 11 SIGNAL CIRCUIT SHORTED TO BATTERY
(D710) PTS SENSOR 11 SIGNAL CIRCUIT OPEN
PARK ASSIST SENSOR 11
PARK ASSIST MODULE

1. TEST FOR INTERMITTENT CONDITION

1. Turn the ignition on.
2. With the scan tool, read the active DTCs.

Does the scan tool display this DTC as active?

Yes

- Go To 2

No

- Test complete, the condition or conditions that originally set this DTC are not present at this time. Using the wiring diagrams as a guide, check all related splices and connectors for signs of water intrusion, corrosion, pushed out or bent terminals, and correct pin tension.
- Perform the BODY VERIFICATION TEST. (Refer to 28 - DTC-Based Diagnostics/MODULE, Totally Integrated Power (TIPM) - Standard Procedure).

2. CHECK PARK ASSIST SENSOR 11 FOR INTERNAL SHORT

1. Disconnect the Park Assist Sensor 11 harness connector.
2. With the scan tool, read the active DTCs.

Does the scan tool display this DTC as active?

Yes

- Go To 3

No

- Replace the Park Assist Sensor 11 in accordance with the Service Information.
- Perform the BODY VERIFICATION TEST. (Refer to 28 - DTC-Based Diagnostics/MODULE, Totally Integrated Power (TIPM) - Standard Procedure).

3. CHECK THE (D710) PARK ASSIST SENSOR 11 SIGNAL CIRCUIT FOR A SHORT TO GROUND

1. Turn the ignition off.
2. Disconnect the Park Assist Module C2 harness connector.
3. Using a 12-volt test light connected to 12-volts, check the (D710) Park Assist Sensor 11 Signal circuit at the Park Assist Module C2 harness connector.

Does the test light illuminate brightly?

Yes

- Repair the short to ground in the (D710) Park Assist Sensor 11 Signal circuit.
- Perform the BODY VERIFICATION TEST. (Refer to 28 - DTC-Based Diagnostics/MODULE, Totally Integrated Power (TIPM) - Standard Procedure).

No

- Go To 4

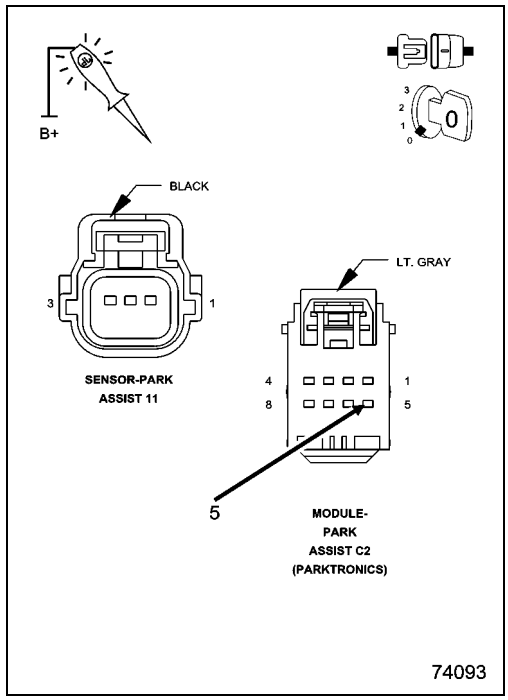

4. CHECK THE (D710) PARK ASSIST SENSOR 11 SIGNAL CIRCUIT FOR A SHORT TO BATTERY

1. Turn the ignition on.
2. Using a 12-volt test light connected to ground, check the (D710) Park Assist Sensor 11 Signal circuit at the Park Assist module C2 harness connector.

Does the test light illuminate brightly?

Yes

- Repair the short to voltage in the (D710) Park Assist Sensor 11 Signal circuit.
- Perform the BODY VERIFICATION TEST. (Refer to 28 - DTC-Based Diagnostics/MODULE, Totally Integrated Power (TIPM) - Standard Procedure).

No

- Go To 5

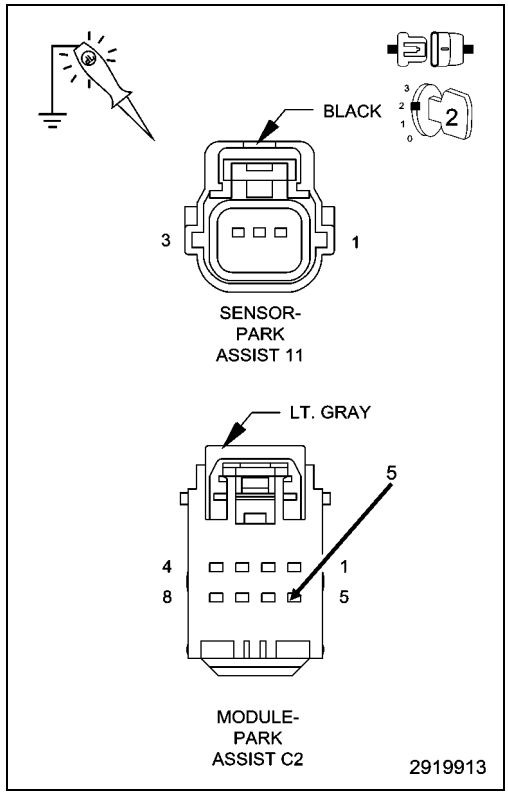

5. CHECK THE (D710) PARK ASSIST SENSOR 11 SIGNAL CIRCUIT FOR AN OPEN

1. Measure the resistance of the (D710) Park Assist Sensor 11 Signal circuit between the Park Assist Module C2 harness connector and the Park Assist Sensor 11 harness connector.

Is the resistance above 5.0 Ohms?

Yes

- Repair the open in the (D710) Park Assist Sensor 11 Signal circuit.
- Perform the BODY VERIFICATION TEST. (Refer to 28 - DTC-Based Diagnostics/MODULE, Totally Integrated Power (TIPM) - Standard Procedure).

No

- Replace the Park Assist Module in accordance with Service Information.
- Perform the BODY VERIFICATION TEST. (Refer to 28 - DTC-Based Diagnostics/MODULE, Totally Integrated Power (TIPM) - Standard Procedure).

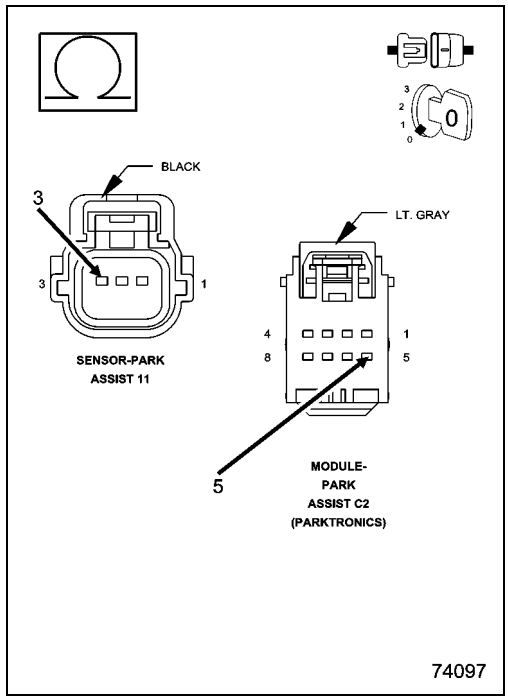

■ B210C-16-BATTERY VOLTAGE INPUT-CIRCUIT VOLTAGE BELOW THRESHOLD

For a complete wiring diagram, **refer to the Wiring Information**.

- **When Monitored:**
  While the vehicle is in reverse for speeds less than 10 mph (16km/h).
- **Set Condition:**
  Park Assist Module supply voltage less than 6.5 volts.

Possible Causes
VEHICLE CHARGING SYSTEM
PARK ASSIST MODULE

1. CHECK FOR ACTIVE DTC

1. Turn the ignition on.
2. Apply the vehicle park brake.
3. Shift the transmission into reverse.
4. With the scan tool, record and erase Park Assist Module DTCs.
5. Wait 30 seconds.
6. With the scan tool, read Park Assist Module DTCs.

Is this DTC active?

Yes

- Go To 2

No

- The condition that caused this code to set is not present at this time. Check for an intermittent condition by inspecting the related wiring harness for chafed, pierced, pinched, and partially broken wires. Also inspect the related connectors for broken, bent, pushed out, spread, corroded, or contaminated terminals.
- Perform the BODY VERIFICATION TEST. (Refer to 28 - DTC-Based Diagnostics/MODULE, Totally Integrated Power (TIPM) - Standard Procedure).

2. VERIFY OPERATION OF THE VEHICLE CHARGING SYSTEM

NOTE: Troubleshoot any Powertrain Control Module (PCM) charging/cranking DTCs before proceeding.

NOTE: Make sure the battery is fully charged.

Are any charging system DTCs present?

Yes

- (Refer to 28 - DTC-Based Diagnostics/MODULE, Powertrain Control (PCM) - Diagnosis and Testing) and perform the active charging system or battery diagnostic procedure.

No

- Replace the Park Assist Module in accordance with the Service Information.
- Perform the BODY VERIFICATION TEST. (Refer to 28 - DTC-Based Diagnostics/MODULE, Totally Integrated Power (TIPM) - Standard Procedure).

■ B210C-17-BATTERY VOLTAGE INPUT-CIRCUIT VOLTAGE ABOVE THRESHOLD

For a complete wiring diagram, **refer to the Wiring Information**.

- **When Monitored:**
  While the vehicle is in reverse for speeds less than 16km/h (10 mph).
- **Set Condition:**
  Park Assist Module supply voltage greater than 16.0 volts.

Possible Causes
VEHICLE CHARGING SYSTEM
PARK ASSIST MODULE

1. CHECK FOR ACTIVE DTC

1. Turn the ignition on.
2. Apply the vehicle park brake.
3. Shift the transmission into reverse.
4. With the scan tool, record and erase Park Assist Module DTCs.
5. Wait 30 seconds.
6. With the scan tool, read Park Assist Module DTCs.

Is this DTC active?

Yes

- Go To 2

No

- The condition that caused this code to set is not present at this time. Check for an intermittent condition by inspecting the related wiring harness for chafed, pierced, pinched, and partially broken wires. Also inspect the related connectors for broken, bent, pushed out, spread, corroded, or contaminated terminals.
- Perform the BODY VERIFICATION TEST. (Refer to 28 - DTC-Based Diagnostics/MODULE, Totally Integrated Power (TIPM) - Standard Procedure).

2. VERIFY OPERATION OF THE VEHICLE CHARGING SYSTEM

NOTE: Troubleshoot any Powertrian Control Module (PCM) charging/cranking DTCs before proceeding.

NOTE: Make sure the battery is fully charged.

Are any charging system DTCs present?

Yes

- (Refer to 28 - DTC-Based Diagnostics/MODULE, Powertrain Control (PCM) - Diagnosis and Testing) and perform the active charging system or battery diagnostic procedures.

No

- Replace the Park Assist Module in accordance with the Service Information.
- Perform the BODY VERIFICATION TEST. (Refer to 28 - DTC-Based Diagnostics/MODULE, Totally Integrated Power (TIPM) - Standard Procedure).

B2128-16-SENSOR SUPPLY VOLTAGE-CIRCUIT VOLTAGE BELOW THRESHOLD

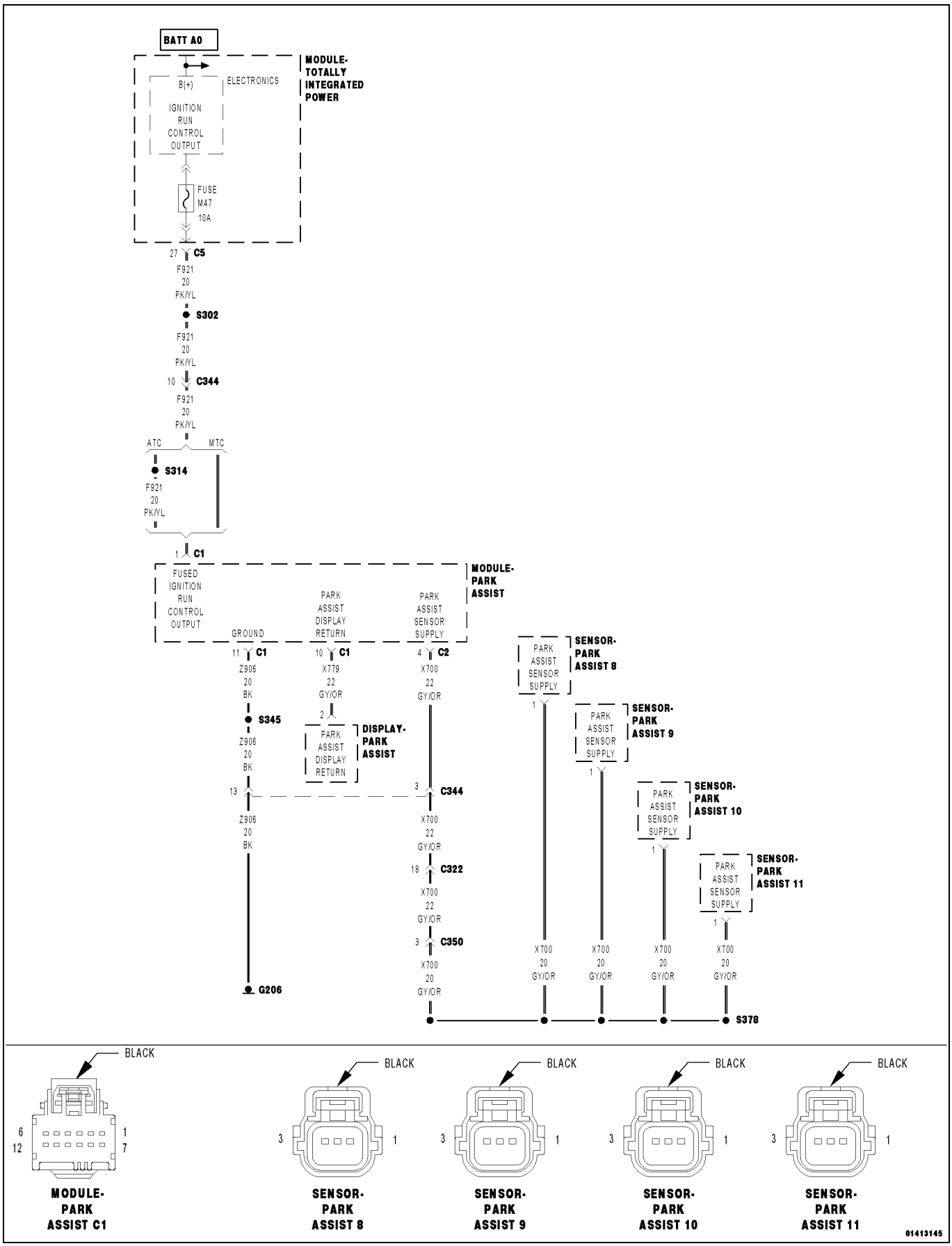

For a complete wiring diagram, **refer to the Wiring Information**.

NOTE: The numbering system for the park assist sensors allows for up to twelve sensors on the vehicle, six front and six rear. The sensors are numbered in a clockwise manner starting at the left front bumper. The left front sensor (if equipped with front park assist) is the number 1 sensor. The numbering continues in a clockwise direction around the vehicle. Since Chrysler LLC vehicles use only four rear sensors, sensor numbers 7 and 12 are omitted, so the left rear sensor is the number 11 sensor.

- **When Monitored:**
  While the vehicle is in reverse for speeds less than 10 mph (16km/h).
- **Set Condition:**
  Park Assist Sensor supply voltage less than 7.2 volts.

Possible Causes
(X700) PARK ASSIST SENSOR SUPPLY CIRCUIT SHORTED TO (X750) PARK ASSIST SENSOR GROUND CIRCUIT
(X700) PARK ASSIST SENSOR SUPPLY CIRCUIT SHORTED TO (X772) PARK ASSIST DISPLAY GROUND CIRCUIT
(X700) PARK ASSIST SENSOR SUPPLY CIRCUIT SHORTED TO (Z910) PARK ASSIST MODULE GROUND CIRCUIT
(X700) PARK ASSIST SENSOR SUPPLY CIRCUIT SHORTED TO GROUND
PARK ASSIST SENSOR
PARK ASSIST MODULE

1. CHECK FOR AN ACTIVE DTC

1. Turn the ignition on.
2. Apply the park brake.
3. Shift the transmission into Reverse.
4. With the scan tool, record and erase DTCs.
5. Wait 30 seconds.
6. With the scan tool, read DTCs.

Is this DTC active?

Yes

- Go To 2

No

- The condition that caused this code to set is not present at this time. Check for an intermittent condition by inspecting the related wiring harness for chafed, pierced, pinched, and partially broken wires. Also inspect the related connectors for broken, bent, pushed out, spread, corroded, or contaminated terminals.
- Perform the BODY VERIFICATION TEST. (Refer to 28 - DTC-Based Diagnostics/MODULE, Totally Integrated Power (TIPM) - Standard Procedure).

2. CHECK EACH PARK ASSIST SENSOR FOR A SHORT TO GROUND

1. Turn the ignition off.
2. Disconnect one Park Assist Sensor.
3. Turn the ignition on.
4. With the scan tool, read Park Assist Module DTCs. If this DTC is still active, repeat this procedure by disconnecting another park assist sensor. However, if this DTC changes from active to stored, or if all four sensors have been disconnected, proceed as follows:

Is this DTC still active?

Yes

- Go To 3

No

- Replace the Park Assist Sensor that caused this DTC to change from active to stored after disconnecting it in accordance with the Service Information.
- Perform the BODY VERIFICATION TEST. (Refer to 28 - DTC-Based Diagnostics/MODULE, Totally Integrated Power (TIPM) - Standard Procedure).

3. CHECK THE (X700) PARK ASSIST SENSOR SUPPLY CIRCUIT FOR A SHORT TO (X750) PARK ASSIST SENSOR GROUND CIRCUIT

NOTE: Perform this test with all Park Assist Sensors disconnected.

1. Turn the ignition off.
2. Disconnect the Park Assist Module harness connector.
3. Measure the resistance between the (X700) Park Assist Sensor Supply circuit and the (X750) Park Assist Sensor Ground circuit.

Is the resistance below 10K Ohms?

Yes

- Repair the (X700) Park Assist Sensor Supply circuit for a short to the (X750) Park Assist Sensor Ground circuit.
- Perform the BODY VERIFICATION TEST. (Refer to 28 - DTC-Based Diagnostics/MODULE, Totally Integrated Power (TIPM) - Standard Procedure).

No

- Go To 4

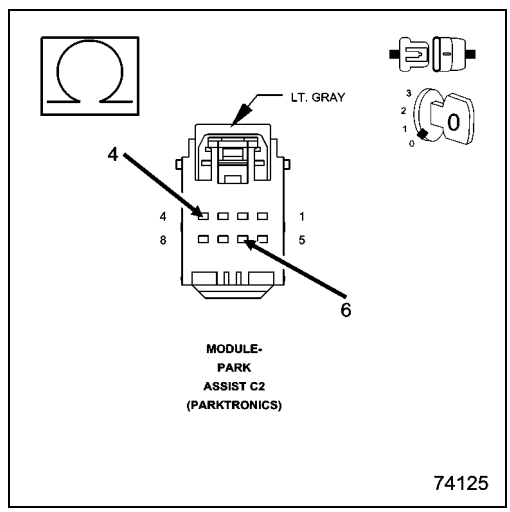

4. CHECK THE (X700) PARK ASSIST SENSOR SUPPLY CIRCUIT FOR A SHORT TO THE (X772) PARK ASSIST DISPLAY GROUND CIRCUIT

NOTE: Perform this test with all Park Assist Sensors disconnected.

1. Measure the resistance between the (X700) Park Assist Sensor Supply circuit and the (X772) Park Assist Display Ground circuit.

Is the resistance below 10K Ohms?

Yes

- Repair the (X700) Park Assist Sensor Supply circuit for a short to the (X772) Park Assist Display Ground circuit.
- Perform the BODY VERIFICATION TEST. (Refer to 28 - DTC-Based Diagnostics/MODULE, Totally Integrated Power (TIPM) - Standard Procedure).

No

- Go To 5

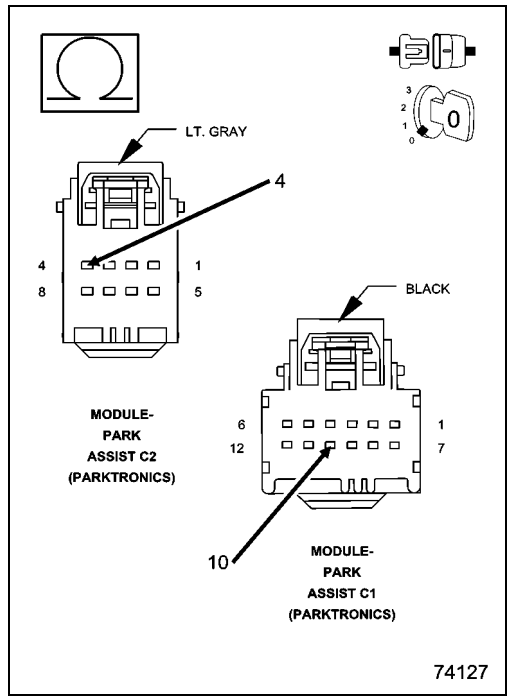

5. CHECK THE (X700) PARK ASSIST SENSOR SUPPLY CIRCUIT FOR A SHORT TO (Z910) PARK ASSIST MODULE GROUND CIRCUIT

NOTE: Perform this test with all Park Assist Sensors disconnected.

1. Measure the resistance between the (X700) Park Assist Sensor Supply circuit and the (Z910) Park Assist Module Ground circuit.

Is the resistance below 10K Ohms?

Yes

- Repair the (X700) Park Assist Sensor Supply circuit for a short to the (Z910) Park Assist Module Ground circuit.
- Perform the BODY VERIFICATION TEST. (Refer to 28 - DTC-Based Diagnostics/MODULE, Totally Integrated Power (TIPM) - Standard Procedure).

No

- Go To 6

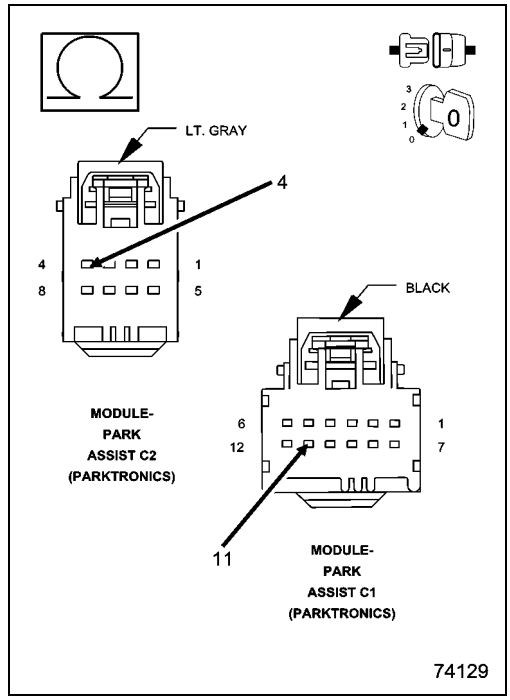

6. CHECK THE (X700) PARK ASSIST SENSOR SUPPLY CIRCUIT FOR A SHORT TO GROUND

NOTE: Perform this test with all Park Assist Sensors disconnected.

1. Measure the resistance between ground and the (X700) Park Assist Sensor Supply circuit.

Is the resistance below 10K Ohms?

Yes

- Repair the (X700) Park Assist Sensor Supply circuit for a short to ground.
- Perform the BODY VERIFICATION TEST. (Refer to 28 - DTC-Based Diagnostics/MODULE, Totally Integrated Power (TIPM) - Standard Procedure).

No

- Replace the Park Assist Module in accordance with the Service Information.
- Perform the BODY VERIFICATION TEST. (Refer to 28 - DTC-Based Diagnostics/MODULE, Totally Integrated Power (TIPM) - Standard Procedure).

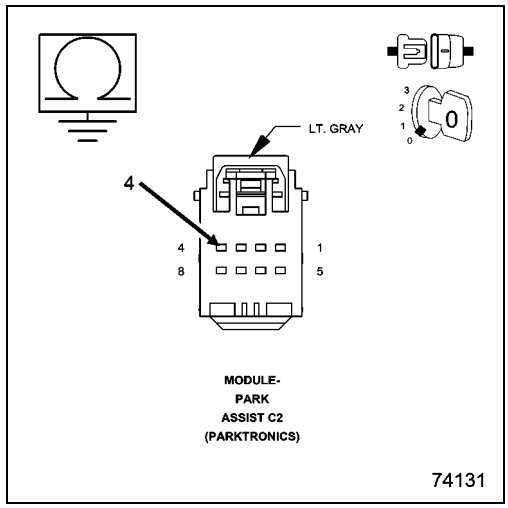

B2128-17-SENSOR SUPPLY VOLTAGE-CIRCUIT VOLTAGE ABOVE THRESHOLD

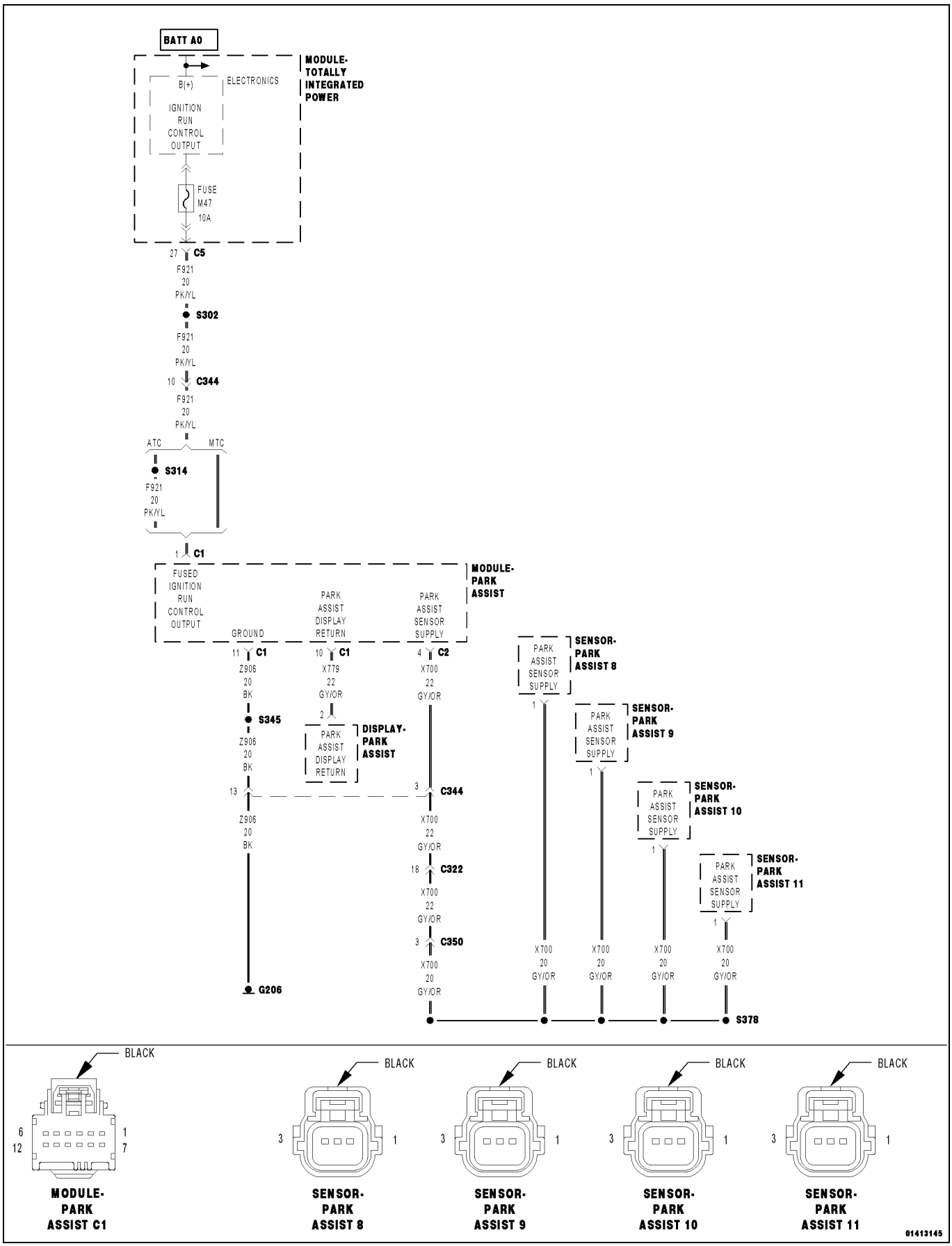

For a complete wiring diagram, **refer to the Wiring Information**.

NOTE: The numbering system for the park assist sensors allows for up to twelve sensors on the vehicle, six front and six rear. The sensors are numbered in a clockwise manner starting at the left front bumper. The left front sensor (if equipped with front park assist) is the number 1 sensor. The numbering continues in a clockwise direction around the vehicle. Since Chrysler LLC vehicles use only four rear sensors, sensor numbers 7 and 12 are omitted, so the left rear sensor is the number 11 sensor.

- **When Monitored:**
  While the vehicle is in reverse for speeds less than 10 mph (16km/h).
- **Set Condition:**
  Park Assist Sensor supply voltage greater than 9.2 volts.

Possible Causes
(X700) PARK ASSIST SENSOR SUPPLY CIRCUIT SHORT TO VOLTAGE
PARK ASSIST MODULE

1. CHECK FOR ACTIVE DTC

1. Turn the ignition on.
2. Apply the vehicle park brake.
3. Shift the transmission into Reverse.
4. With the scan tool, record and erase Park Assist Module DTCs.
5. Wait 30 seconds.
6. With the scan tool, read Park Assist Module DTCs.

Is this DTC active?

Yes

- Go To 2

No

- The condition that caused this code to set is not present at this time. Check for an intermittent condition by inspecting the related wiring harness for chafed, pierced, pinched, and partially broken wires. Also inspect the related connectors for broken, bent, pushed out, spread, corroded, or contaminated terminals.
- Perform the BODY VERIFICATION TEST. (Refer to 28 - DTC-Based Diagnostics/MODULE, Totally Integrated Power (TIPM) - Standard Procedure).

2. CHECK THE (X700) PARK ASSIST SENSOR SUPPLY CIRCUIT FOR A SHORT TO VOLTAGE

1. Turn the ignition off.
2. Disconnect the Park Assist Module harness connector.
3. Turn the ignition on.
4. Measure the voltage on the (X700) Park Assist Sensor Supply circuit.

Is the voltage above 9.2 volts?

Yes

- Repair the (X700) Park Assist Sensor Supply circuit for a short to voltage.
- Perform the BODY VERIFICATION TEST. (Refer to 28 - DTC-Based Diagnostics/MODULE, Totally Integrated Power (TIPM) - Standard Procedure).

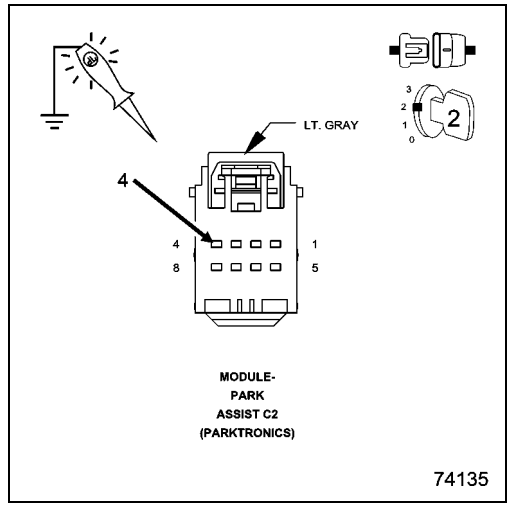

No

- Replace the Park Assist Module in accordance with the Service Information.
- Perform the BODY VERIFICATION TEST. (Refer to 28 - DTC-Based Diagnostics/MODULE, Totally Integrated Power (TIPM) - Standard Procedure).

■ B2129-16-PTS DISPLAY SUPPLY VOLTAGE-CIRCUIT VOLTAGE BELOW THRESHOLD

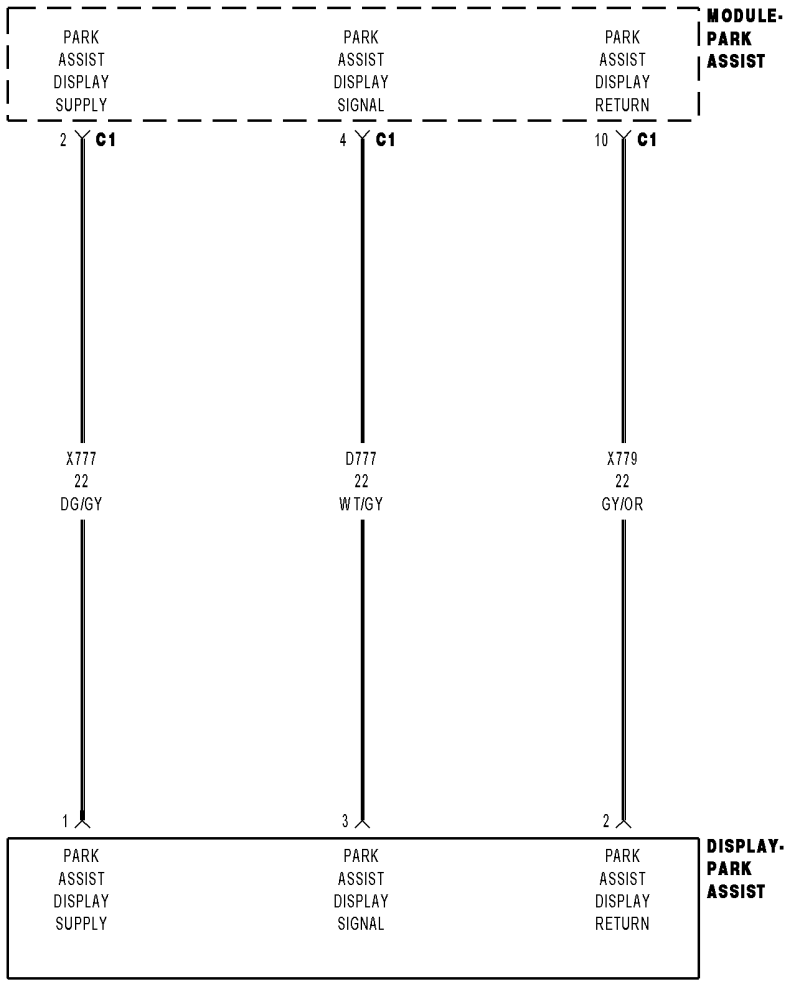

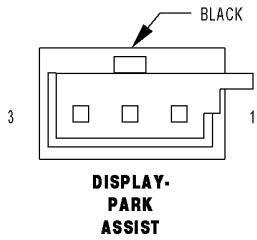

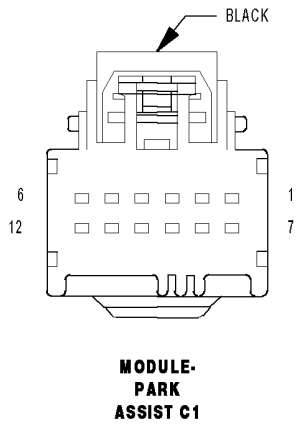

01379117

For a complete wiring diagram, **refer to the Wiring Information**.

- **When Monitored:**
  While the vehicle is in reverse for speeds less than 10 mph (16km/h).
- **Set Condition:**
  Park Assist Sensor Display voltage less than 8.0 volts.

Possible Causes
(X777) PARK ASSIST DISPLAY SUPPLY CIRCUIT SHORT TO GROUND
PARK ASSIST DISPLAY
PARK ASSIST MODULE

1. CHECK FOR ACTIVE DTC

1. Turn the ignition on.
2. Apply the vehicle park brake.
3. Shift the transmission into Reverse.
4. With the scan tool, record and erase Park Assist Module DTCs.
5. Wait 30 seconds.
6. With the scan tool, read Park Assist Module DTCs.

Is this DTC active?

Yes

- Go To 2

No

- The condition that caused this code to set is not present at this time. Check for an intermittent condition by inspecting the related wiring harness for chafed, pierced, pinched, and partially broken wires. Also inspect the related connectors for broken, bent, pushed out, spread, corroded, or contaminated terminals.
- Perform the BODY VERIFICATION TEST (Refer to 28 - DTC-Based Diagnostics/MODULE, Totally Integrated Power (TIPM) - Standard Procedure).

2. CHECK PARK ASSIST DISPLAY FOR AN INTERNAL SHORT TO GROUND

1. Turn the ignition off.
2. Disconnect the Park Assist Display Module harness connector.
3. Turn the ignition on.
4. With the scan tool, record and erase Park Assist Module DTCs.
5. Wait 30 seconds.
6. With the scan tool, read Park Assist Module DTCs.

Is this DTC still active?

Yes

- Go To 3

No

- Replace the Park Assist Display Module in accordance with the Service Information.
- Perform the BODY VERIFICATION TEST. (Refer to 28 - DTC-Based Diagnostics/MODULE, Totally Integrated Power (TIPM) - Standard Procedure)

3. CHECK THE (X777) PARK ASSIST DISPLAY SUPPLY CIRCUIT FOR A SHORT GROUND

1. Using a 12-volt test light connected to 12-volts check the (X777) Park Assist Display Supply circuit.

Does the test light illuminate brightly?

Yes

- Repair the (X777) Park Assist Display Supply circuit for a short to ground.
- Perform the BODY VERIFICATION TEST. (Refer to 28 - DTC-Based Diagnostics/MODULE, Totally Integrated Power (TIPM) - Standard Procedure).

No

- Replace the Park Assist Module in accordance with the Service Information.
- Perform the BODY VERIFICATION TEST. (Refer to 28 - DTC-Based Diagnostics/MODULE, Totally Integrated Power (TIPM) - Standard Procedure).

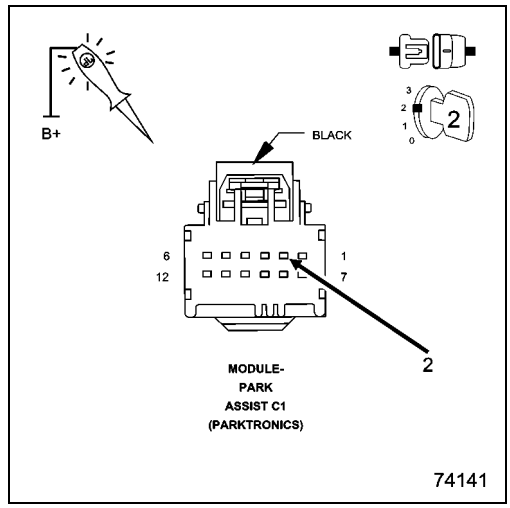

B222A-00-VEHICLE LINE MISMATCH

For a complete wiring diagram, **refer to the Wiring Information**.

- **When Monitored:**
  With the ignition on.
- **Set Condition:**
  If the Vehicle Line data transmitted on the bus doesn't correspond with the data stored in the Park Assist Module.

Possible Causes
PARK ASSIST MODULE

1. CHECK VEHICLE LINE IN THE PCM

1. With the scan tool, compare the vehicle line that is programmed in to the Powertrain Control Module (PCM) to the vehicle line of the vehicle.

Does the vehicle line programmed into the PCM match the vehicle?

Yes

- Replace the Park Assist Module in accordance with the Service Information.
- Perform the BODY VERIFICATION TEST. (Refer to 28 - DTC-Based Diagnostics/MODULE, Totally Integrated Power (TIPM) - Standard Procedure).

No

- The condition that caused this code to set is not present at this time. Check for an intermittent condition by inspecting the related wiring harness for chafed, pierced, pinched, and partially broken wires. Also inspect the related connectors for broken, bent, pushed out, spread, corroded, or contaminated terminals.
- Perform the BODY VERIFICATION TEST. (Refer to 28 - DTC-Based Diagnostics/MODULE, Totally Integrated Power (TIPM) - Standard Procedure).

B2232-00-(PTS) PARKTRONICS INTERNAL

For a complete wiring diagram, **refer to the Wiring Information**.

- **When Monitored:**
  With the ignition on.
- **Set Condition:**
  The Park Assist Module detects an internal failure.

Possible Causes
PARK ASSIST MODULE

1. REPLACE THE PARK ASSIST MODULE

View Repair

Repair

- Replace the Park Assist Module in accordance with the Service Information.
- Perform the BODY VERIFICATION TEST. (Refer to 28 - DTC-Based Diagnostics/MODULE, Totally Integrated Power (TIPM) - Standard Procedure).

■ B2234-00-(PTS) PARKTRONICS REAR DISPLAY INTERNAL

For a complete wiring diagram, **refer to the Wiring Information**.

- **When Monitored:**
  While the vehicle is in reverse for speeds less than 16km/h (10 mph).
- **Set Condition:**
  The Park Assist Module detects an internal Park Assist Display failure.

Possible Causes
PARK ASSIST DISPLAY

1. REPLACE THE PARK ASSIST DISPLAY

View Repair

Repair

- Replace the Park Assist Display in accordance with the Service Information.
- Perform the BODY VERIFICATION TEST. (Refer to 28 - DTC-Based Diagnostics/MODULE, Totally Integrated Power (TIPM) - Standard Procedure).

U0010-00-CAN INTERIOR BUS

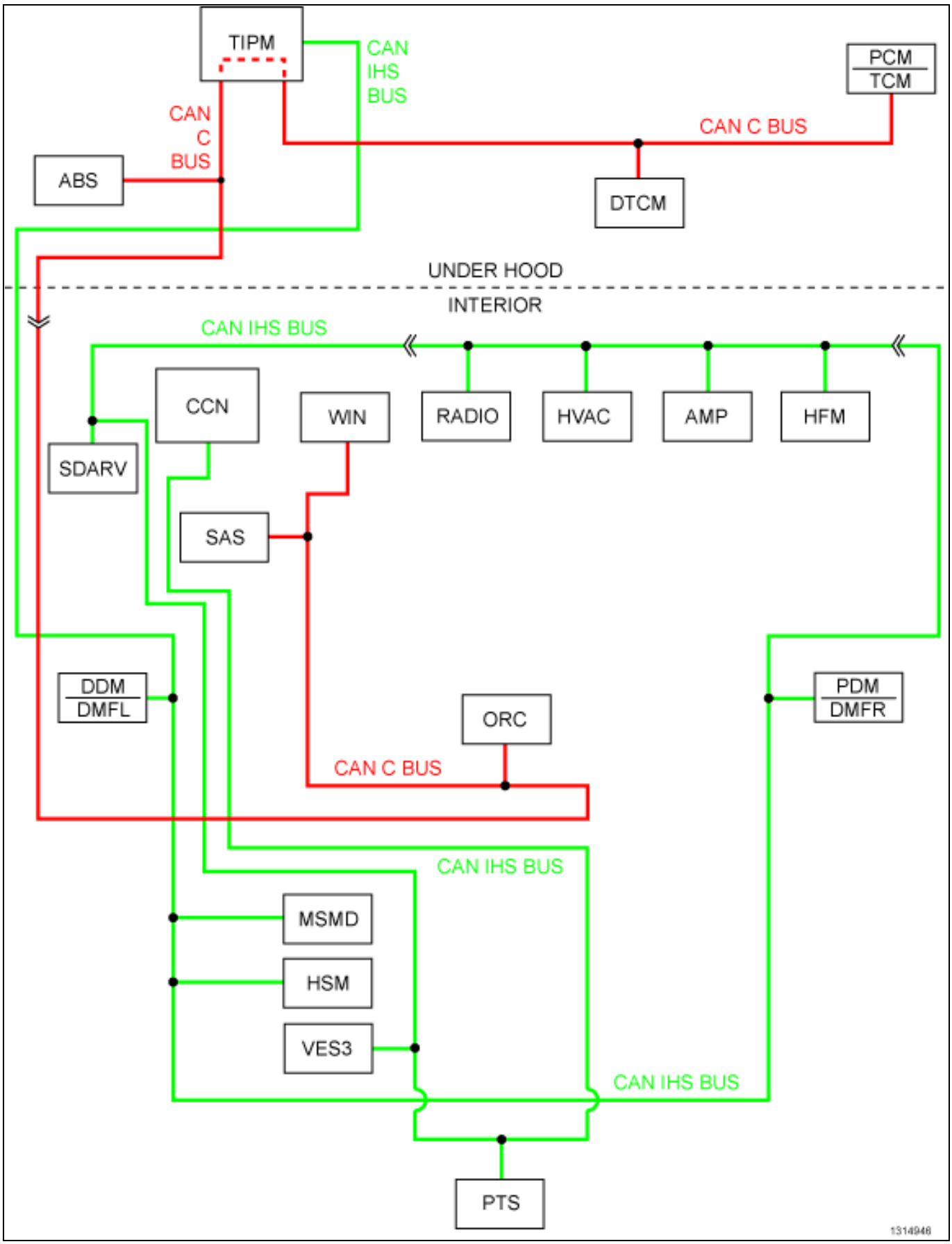

For a complete wiring diagram, **refer to the Wiring Information**.

- **When Monitored:**
  Continuously when the ignition is on.
  Battery voltage between 10 and 16 volts.
  Ignition Off Draw (IOD) fuse installed.
  Totally Integrated Power Module (TIPM) is configured correctly.
- **Set Condition:**
  The Park Assist Module detects a short to ground on the CAN Interior Bus (125K) (+) circuit or a short to voltage on the CAN Interior Bus (125K) (-) circuit.

Possible Causes
BUS CIRCUITS SHORTED TO GROUND OR VOLTAGE
DTCS RELATED TO BATTERY VOLTAGE, IGNITION, OR VIN MESSAGES
TIPM NOT CONFIGURED CORRECTLY
TOTALLY INTEGRATED POWER MODULE (TIPM)
TIPM POWER AND GROUND
MODULE THAT SET THIS DTC

1. VERIFY DIAGNOSTIC TROUBLE CODE (DTC) IS ACTIVE

NOTE: Make sure the IOD fuse is installed and battery voltage is between 10 and 16 volts before proceeding.

1. With the scan tool, read active Park Assist Module DTCs.

Is this DTC active?

Yes

- (Refer to 28 - DTC-Based Diagnostics/MODULE, Totally Integrated Power (TIPM) - Diagnosis and Testing) and perform the U0141-Lost Communication with IPM (FCM/TIPM) diagnostic procedure.

No

- (Refer to 29 - Non-DTC Diagnostics/Communication - Diagnosis and Testing) and perform the Stored Lost Communication DTCs diagnostic procedure.

U0423-00-IMPLAUSIBLE DATA RECEIVED FROM CLUSTER/CCN

For a complete wiring diagram, **refer to the Wiring Information**.

- **When Monitored:**
  Park Assist Module supply voltage between 9-16 volts. Ignition in Run/Start.
- **Set Condition:**
  Ignition status = 7h

Possible Causes
NO COMMUNICATION WITH INSTRUMENT CLUSTER
DTCS STORED OR ACTIVE IN THE INSTRUMENT CLUSTER
ACTIVE DTCS IN THE TIPM
PARK ASSIST MODULE

1. CHECK FOR ACTIVE DTC

1. Turn the ignition on.
2. With the scan tool, record and erase Park Assist Module DTCs.
3. Wait 30 seconds.
4. With the scan tool, read Park Assist Module DTCs.

Is this DTC active?

Yes

- Go To 2

No

- The condition that caused this code to set is not present at this time. Check for an intermittent condition by inspecting the related wiring harness for chafed, pierced, pinched, and partially broken wires. Also inspect the related connectors for broken, bent, pushed out, spread, corroded, or contaminated terminals.
- Perform the BODY VERIFICATION TEST. (Refer to 28 - DTC-Based Diagnostics/MODULE, Totally Integrated Power (TIPM) - Standard Procedure).

2. INSTRUMENT CLUSTER IS ACTIVE ON THE CAN C INTERIOR BUS

1. With the scan tool, select ECU View.
2. Verify that the Instrument Cluster is active on the bus.

Is the Instrument Cluster active on the bus?

Yes

- Go To 3

No

- (Refer to 29 - Non-DTC Diagnostics/Communication - Diagnosis and Testing) and perform the No Response from Cluster/CCN diagnostic procedure.

3. DTCS STORED OR ACTIVE IN THE INSTRUMENT CLUSTER

1. Check for Ignition Switch DTCs in the Instrument Cluster.

Are any DTCs active or stored in the Instrument Cluster?

Yes

- (Refer to 28 - DTC-Based Diagnostics/NODE, Cabin Compartment (CCN) - Diagnosis and Testing) and perform the appropriate diagnostic procedure.

No

- Go To 4

4. ACTIVE DTCS IN THE TIPM

1. With the scan tool, select ECU View and select TIPM.
2. With the scan tool, read active DTCs.

Are any Communication DTCs active in the TIPM Park Assist System?

Yes

- (Refer to 28 - DTC-Based Diagnostics/MODULE, Totally Integrated Power (TIPM) - Diagnosis and Testing) and perform the appropriate diagnostic procedure.

No

- Replace and program the Park Assist Module in accordance with the Service Information.
- Perform the BODY VERIFICATION TEST. (Refer to 28 - DTC-Based Diagnostics/MODULE, Totally Integrated Power (TIPM) - Standard Procedure).

U1101-00-LOST COMMUNICATION WITH PTS DISPLAY-REAR 1

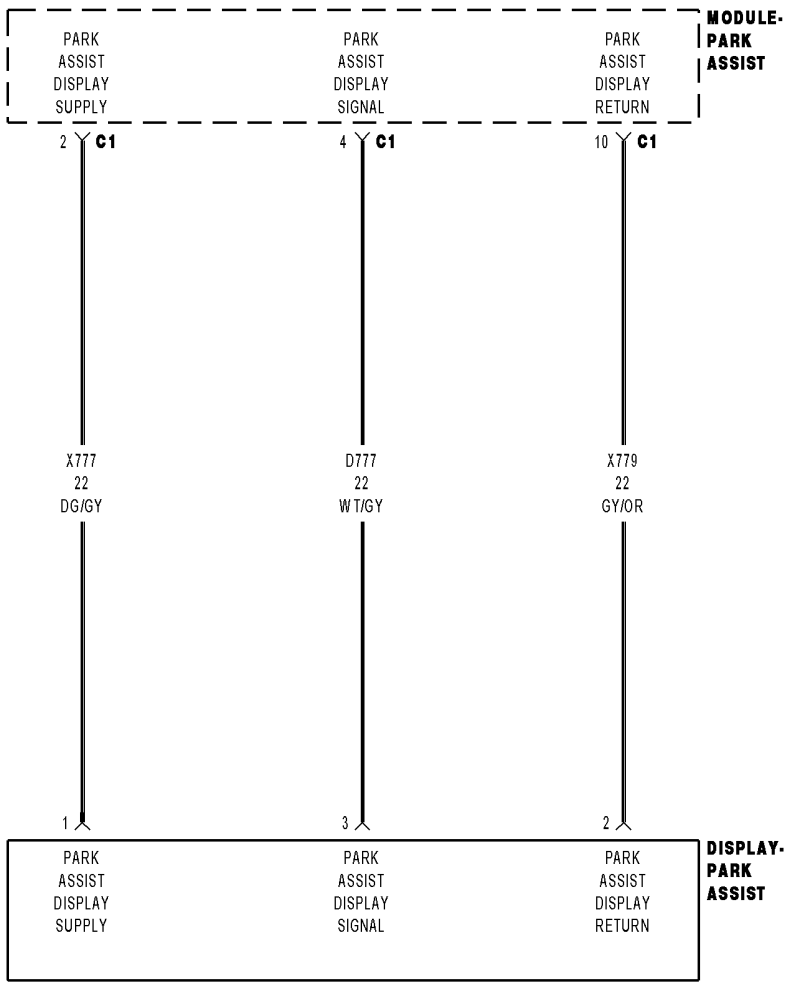

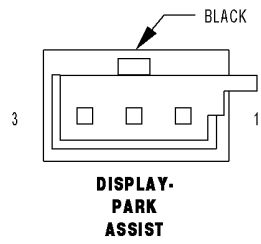

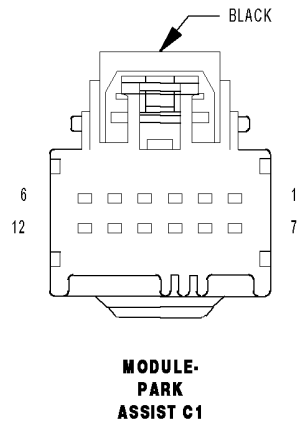

01379117

For a complete wiring diagram, **refer to the Wiring Information**.

- **When Monitored:**
  While the vehicle is in reverse for speeds less than 10 mph (16km/h).
- **Set Condition:**
  Data display line open.

Possible Causes
(D777) PARK ASSIST DISPLAY SIGNAL CIRCUIT OPEN
(X777) PARK ASSIST DISPLAY SUPPLY CIRCUIT OPEN
(X772) PARK ASSIST DISPLAY GROUND CIRCUIT OPEN
PARK ASSIST DISPLAY
PARK ASSIST MODULE

1. CHECK FOR ACTIVE DTC

1. Turn the ignition on.
2. Apply the vehicle park brake.
3. Shift the transmission into Reverse.
4. With the scan tool, record and erase Park Assist Module DTCs.
5. Wait 30 seconds.
6. With the scan tool, read Park Assist Module DTCs.

Is this DTC active?

Yes

- Go To 2

No

- The condition that caused this code to set is not present at this time. Check for an intermittent condition by inspecting the related wiring harness for chafed, pierced, pinched, and partially broken wires. Also inspect the related connectors for broken, bent, pushed out, spread, corroded, or contaminated terminals.
- Perform the BODY VERIFICATION TEST. (Refer to 28 - DTC-Based Diagnostics/MODULE, Totally Integrated Power (TIPM) - Standard Procedure).

2. CHECK THE (D777) PARK ASSIST DISPLAY SIGNAL CIRCUIT FOR AN OPEN

1. Turn the ignition off.
2. Disconnect the Park Assist Module harness connector.
3. Disconnect the Park Assist Display Module harness connector.
4. Measure the resistance of the (D777) Park Assist Display Signal circuit between the Park Assist Module harness connector and the Park Assist Display harness connector.

Is the resistance below 10.0 Ohms?

Yes

- Go To 3

No

- Repair the (D777) Park Assist Display Signal circuit for an open.
- Perform the BODY VERIFICATION TEST. (Refer to 28 - DTC-Based Diagnostics/MODULE, Totally Integrated Power (TIPM) - Standard Procedure).

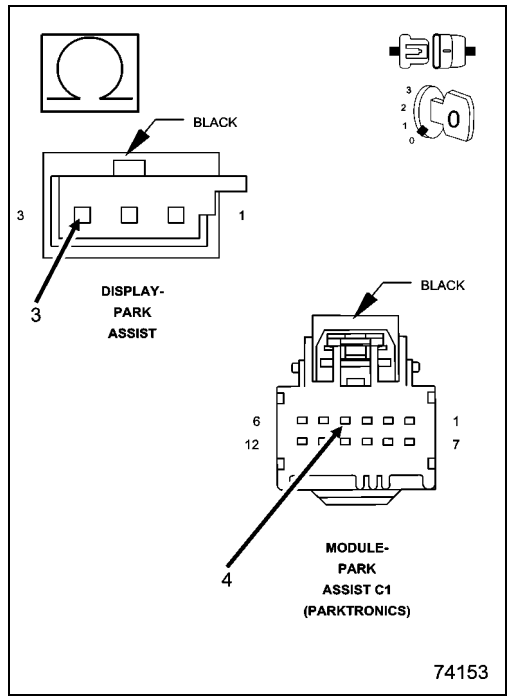

3. CHECK THE (X777) PARK ASSIST DISPLAY SUPPLY CIRCUIT FOR AN OPEN

1. Measure the resistance of the (X777) Park Assist Display Supply circuit between the Park Assist Module harness connector and the Park Assist Display harness connector.

Is the resistance below 10.0 Ohms?

Yes

- Go To 4

No

- Repair the (X777) Park Assist Display Supply circuit for an open.
- Perform the BODY VERIFICATION TEST. (Refer to 28 - DTC-Based Diagnostics/MODULE, Totally Integrated Power (TIPM) - Standard Procedure).

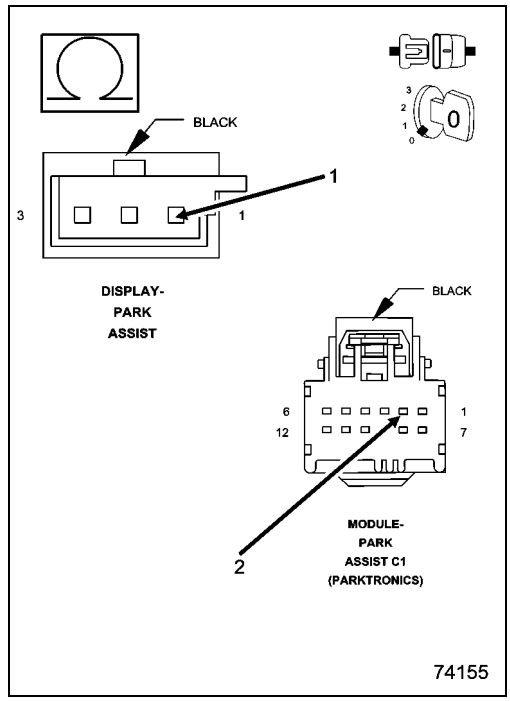

4. CHECK THE (X772) PARK ASSIST DISPLAY GROUND CIRCUIT FOR AN OPEN

1. Using a 12-volt test light connected to 12-volts check the (X772) Park Assist Display Ground circuit at the Park Assist Display harness connector.

Does the test light illuminate brightly?

Yes

- Go To 5

No

- Repair the (X772) Park Assist Display Ground circuit for an open.
- Perform the BODY VERIFICATION TEST. (Refer to 28 - DTC-Based Diagnostics/MODULE, Totally Integrated Power (TIPM) - Standard Procedure).

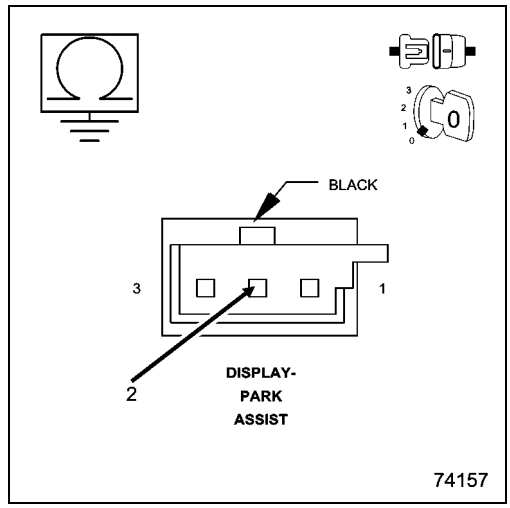

5. CHECK THE OPERATION OF THE PARK ASSIST DISPLAY

1. Replace the Park Assist Display in accordance with the Service Information.
2. Reconnect the Park Assist Module harness connector.
3. Turn the ignition on.
4. With the scan tool, read DTCs.

Does the scan tool display U1101-LOST COMMUNICATION WITH PTS DISPLAY?

Yes

- Replace the Park Assist Module in accordance with the Service Information.
- Perform the BODY VERIFICATION TEST. (Refer to 28 - DTC-Based Diagnostics/MODULE, Totally Integrated Power (TIPM) - Standard Procedure).

No

- Test Complete.
- Perform the BODY VERIFICATION TEST. (Refer to 28 - DTC-Based Diagnostics/MODULE, Totally Integrated Power (TIPM) - Standard Procedure).

U0141-00-LOST COMMUNICATION WITH IPM (FCM/TIPM)

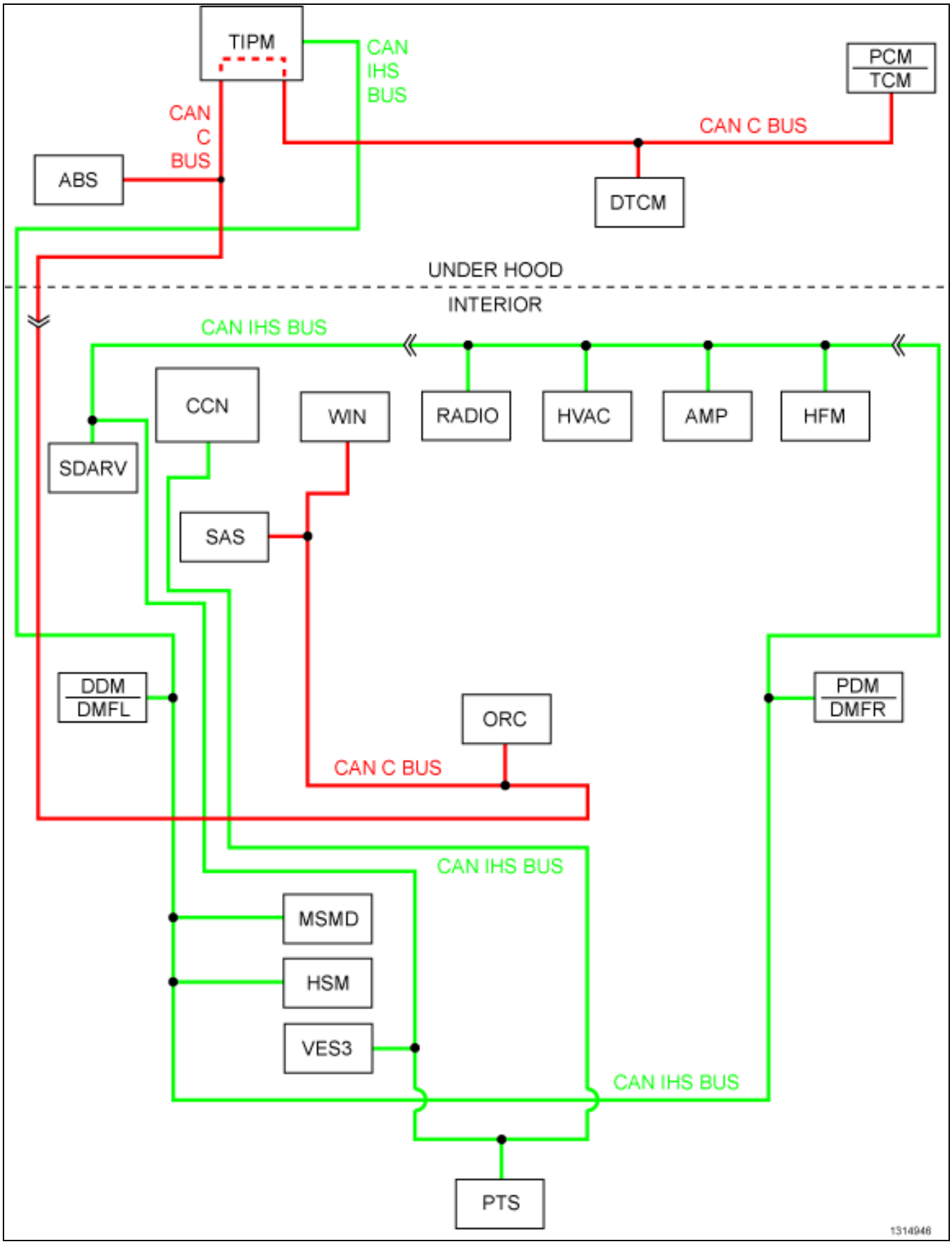

For a complete wiring diagram, **refer to the Wiring Information**.

- **When Monitored:**
  Continuously when the ignition is on.
  Battery voltage between 10 and 16 volts.
  Ignition Off Draw (IOD) fuse installed.
  Totally Integrated Power Module (TIPM) is configured correctly.
- **Set Condition:**
  Bus messages not received from the Totally Integrated Power Module (TIPM) for approximately two to five seconds.

Possible Causes
BUS CIRCUITS OPEN OR SHORTED
DTCS RELATED TO BATTERY VOLTAGE, IGNITION, OR VIN MESSAGES
TIPM NOT CONFIGURED CORRECTLY
TOTALLY INTEGRATED POWER MODULE (TIPM)
TIPM POWER AND GROUND
MODULE THAT SET THIS DTC

1. VERIFY DIAGNOSTIC TROUBLE CODE (DTC) IS ACTIVE

NOTE: Make sure the IOD fuse is installed and battery voltage is between 10 and 16 volts before proceeding.

1. With the scan tool, read active Park Assist Module DTCs.

Is this DTC active?

Yes

- (Refer to 28 - DTC-Based Diagnostics/MODULE, Totally Integrated Power (TIPM) - Diagnosis and Testing) and perform the U0141-Lost Communication with IPM (FCM/TIPM) diagnostic procedure.

No

- (Refer to 29 - Non-DTC Diagnostics/Communication - Diagnosis and Testing) and perform the Stored Lost Communication DTCs diagnostic procedure.

U0155-00-LOST COMMUNICATION WITH CLUSTER/CCN

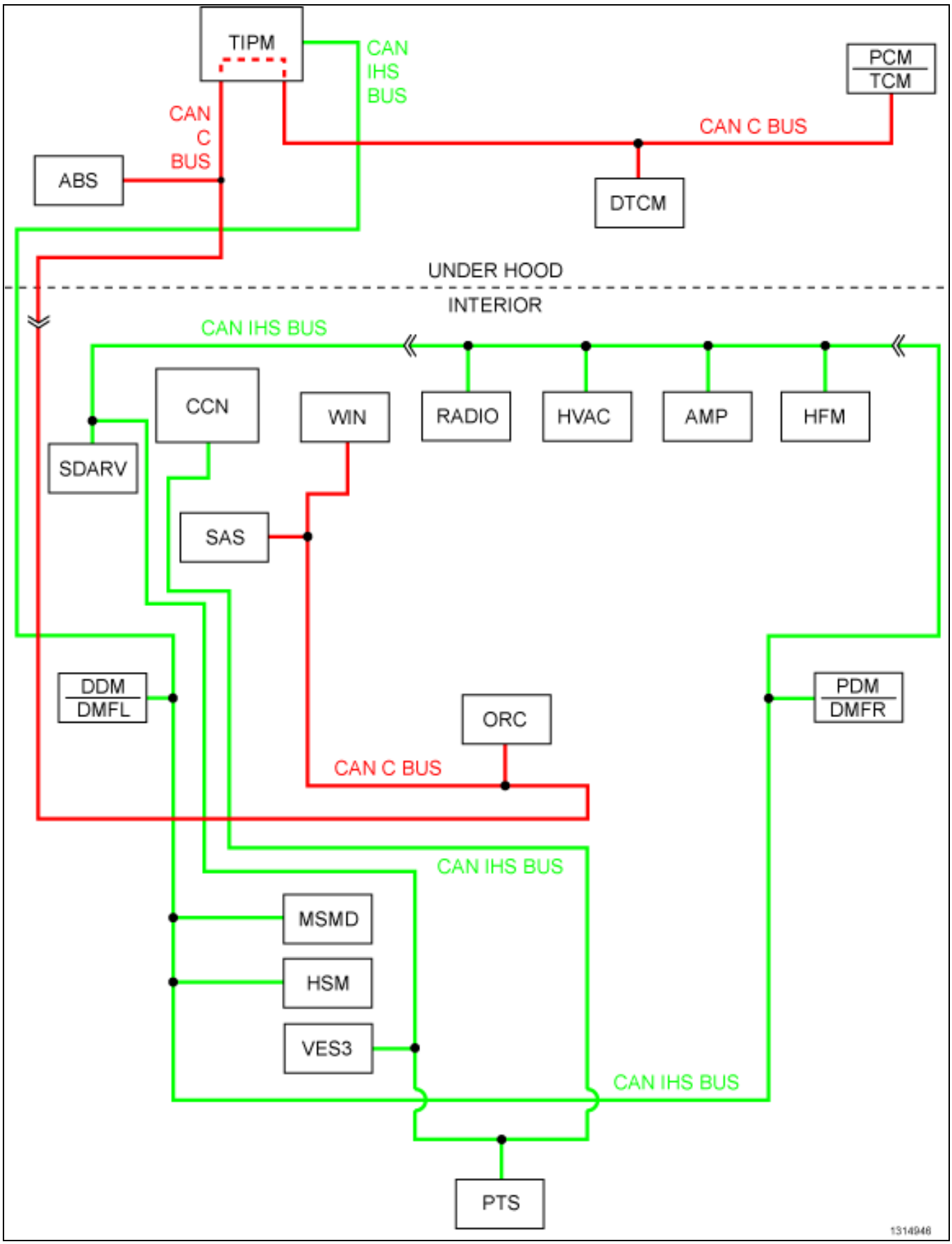

For a complete wiring diagram, **refer to the Wiring Information**.

- **When Monitored:**
  Continuously when the ignition is on.
  Battery voltage between 10 and 16 volts.
  Ignition Off Draw (IOD) fuse installed.
  Totally Integrated Power Module (TIPM) is configured correctly.
- **Set Condition:**
  Bus messages not received from the Cluster for approximately two to five seconds.

Possible Causes
BUS CIRCUITS OPEN OR SHORTED
DTCS RELATED TO BATTERY VOLTAGE, IGNITION, OR VIN MESSAGES
TIPM NOT CONFIGURED CORRECTLY
CLUSTER
CLUSTER POWER AND GROUND
MODULE THAT SET THIS DTC

1. VERIFY DIAGNOSTIC TROUBLE CODE (DTC) IS ACTIVE

NOTE: Make sure the IOD fuse is installed and battery voltage is between 10 and 16 volts before proceeding.

1. With the scan tool, read active Park Assist Module DTCs.

Is this DTC active?

Yes

- (Refer to 28 - DTC-Based Diagnostics/MODULE, Totally Integrated Power (TIPM) - Diagnosis and Testing) and perform the U0155-Lost Communication with Cluster/CCN diagnostic procedure.

No

- (Refer to 29 - Non-DTC Diagnostics/Communication - Diagnosis and Testing) and perform the Stored Lost Communication DTCs diagnostic procedure.

MODULE, Passenger Door (PDM), (DMFR)

Diagnosis and Testing

■ B164E-11-PASSENGER MIRROR SIGNAL LAMP CONTROL - CIRCUIT SHORT TO GROUND

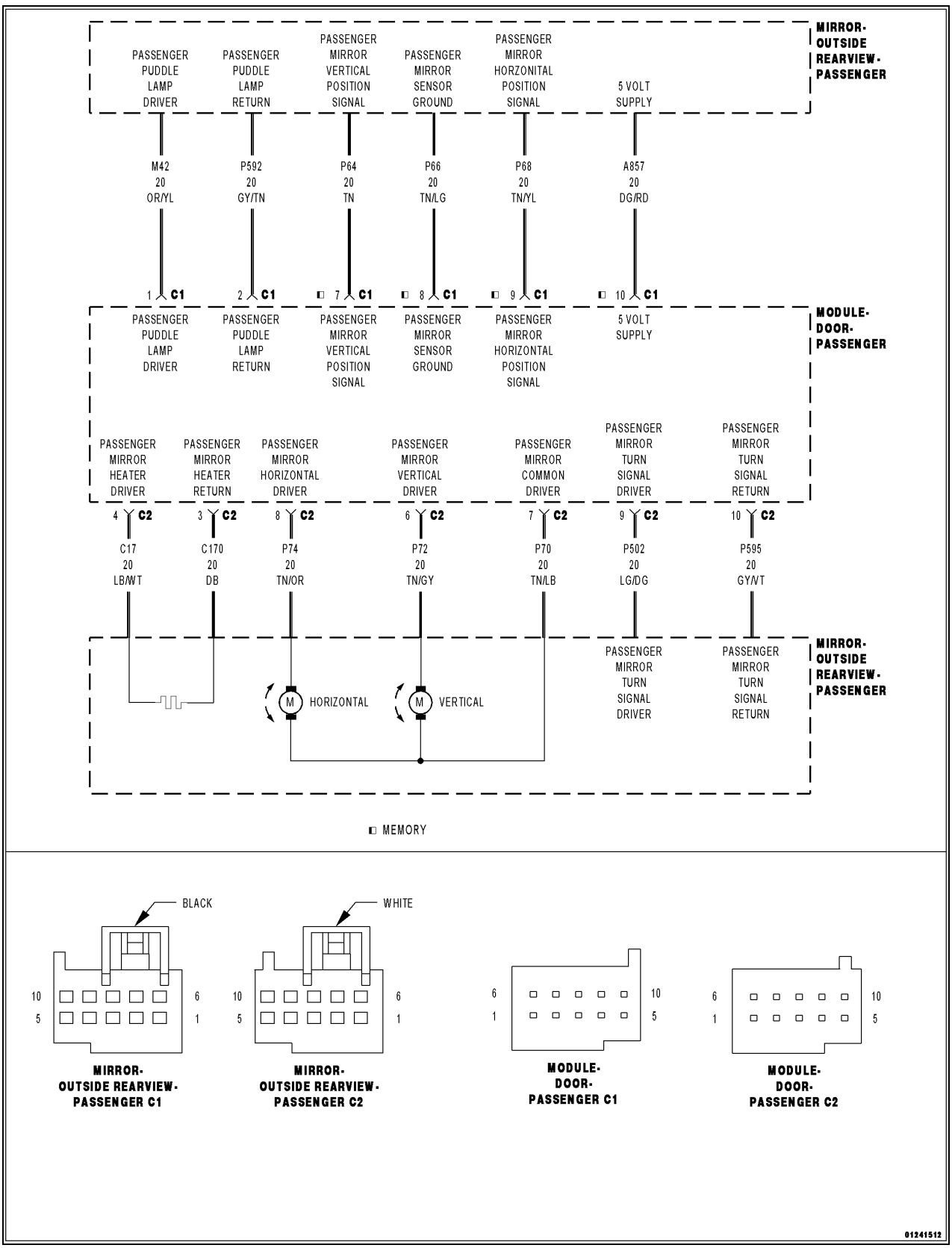

For a complete wiring diagram, **refer to the Wiring Information**.

- **When Monitored:**
  Continuously.
- **Set Condition:**
  The Door Module senses a short low on the (P502) Passenger Mirror Turn Signal Driver circuit for more than two seconds with the turn signal switched on.

Possible Causes
(P502) PASSENGER MIRROR TURN SIGNAL DRIVER CIRCUIT SHORTED TO GROUND
(P502) PASSENGER MIRROR TURN SIGNAL DRIVER CIRCUIT SHORTED TO THE (P72) PASSENGER MIRROR VERTICAL DRIVER CIRCUIT
(P502) PASSENGER MIRROR TURN SIGNAL DRIVER CIRCUIT SHORTED TO THE (P70) PASSENGER MIRROR COMMON DRIVER CIRCUIT
(P502) PASSENGER MIRROR TURN SIGNAL DRIVER CIRCUIT SHORTED TO THE (P74) PASSENGER MIRROR HORIZONTAL DRIVER CIRCUIT
(P502) PASSENGER MIRROR TURN SIGNAL DRIVER CIRCUIT SHORTED TO THE (C170) PASSENGER MIRROR HEATER RETURN CIRCUIT
(P502) PASSENGER MIRROR TURN SIGNAL DRIVER CIRCUIT SHORTED TO THE (P595) PASSENGER MIRROR TURN SIGNAL RETURN CIRCUIT
(P502) PASSENGER MIRROR TURN SIGNAL DRIVER CIRCUIT SHORTED TO THE (P66) PASSENGER MIRROR SENSOR GROUND CIRCUIT
(P502) PASSENGER MIRROR TURN SIGNAL DRIVER CIRCUIT SHORTED TO THE (P592) PASSENGER PUDDLE LAMP RETURN CIRCUIT
PASSENGER OUTSIDE REARVIEW MIRROR SHORTED
DOOR MODULE

1. TEST FOR INTERMITTENT CONDITION

1. Turn the ignition on.
2. Using a scan tool, record and erase Diagnostic Trouble Codes (DTCs).
3. Turn the turn signal on.
4. Turn the puddle lamps on, if equipped with puddle lamp mirror.
5. Turn the rear defogger on, if equipped with heated mirror.
6. Press and release the Mirror Select switch to select the Passenger Outside Rearview Mirror.
7. Operate the Mirror Adjust switch in all directions several times while monitoring the scan tool for DTCs.

NOTE: After adjusting the mirror in one direction wait at least two seconds before adjusting the mirror in the opposite direction as this will allow time for an active fault to set if present.

Is the DTC active?

Yes

- Go To 2

No

- The conditions that caused this code to set are not present at this time. For vehicle's equipped with folding outside rearview mirrors, repeat test with mirror folded. If DTC is now active, Go To 2. Otherwise, use the wiring diagram/ schematic as a guide and inspect the wiring and connectors.
- Perform the BODY VERIFICATION TEST. (Refer to 28 - DTC-Based Diagnostics/MODULE, Totally Integrated Power (TIPM) - Standard Procedure).

2. CHECK (P502) PASSENGER MIRROR TURN SIGNAL DRIVER CIRCUIT FOR A SHORT TO GROUND

1. Turn the ignition off.
2. Disconnect the Passenger Outside Rearview Mirror C2 (Component Side) connector from the Door Module C2 connector.
3. Measure the resistance of the (P502) Passenger Mirror Turn Signal Driver circuit between ground and the Passenger Outside Rearview Mirror C2 (Component Side) connector.

Is the resistance below 10K Ohms?

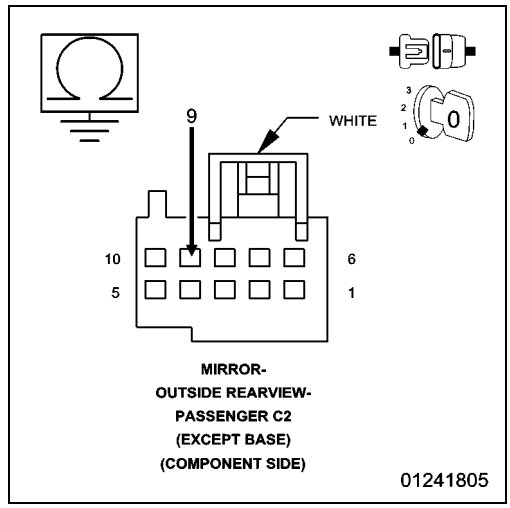

Yes

- Repair the (P502) Passenger Mirror Turn Signal Driver circuit for a short to ground. If the wiring harness and connector are okay, replace the Passenger Outside Rearview Mirror in accordance with the Service Information.
- Perform the BODY VERIFICATION TEST. (Refer to 28 - DTC-Based Diagnostics/MODULE, Totally Integrated Power (TIPM) - Standard Procedure).

No

- Go To 3

3. CHECK (P502) PASSENGER MIRROR TURN SIGNAL DRIVER CIRCUIT FOR A SHORT TO THE (P72) PASSENGER MIRROR VERTICAL DRIVER CIRCUIT, (P70) PASSENGER MIRROR COMMON DRIVER CIRCUIT, OR TO THE (P74) PASSENGER MIRROR HORIZONTAL DRIVER CIRCUIT

1. Measure the resistance between the (P502) Passenger Mirror Turn Signal Driver circuit and the (P72) Passenger Mirror Vertical Driver circuit at the Passenger Outside Rearview Mirror C2 (Component Side) connector.
2. Measure the resistance between the (P502) Passenger Mirror Turn Signal Driver circuit and the (P70) Passenger Mirror Common Driver circuit at the Passenger Outside Rearview Mirror C2 (Component Side) connector.
3. Measure the resistance between the (P502) Passenger Mirror Turn Signal Driver circuit and the (P74) Passenger Mirror Horizontal Driver circuit at the Passenger Outside Rearview Mirror C2 (Component Side) connector.

Is the resistance below 10K Ohms for any measurement?

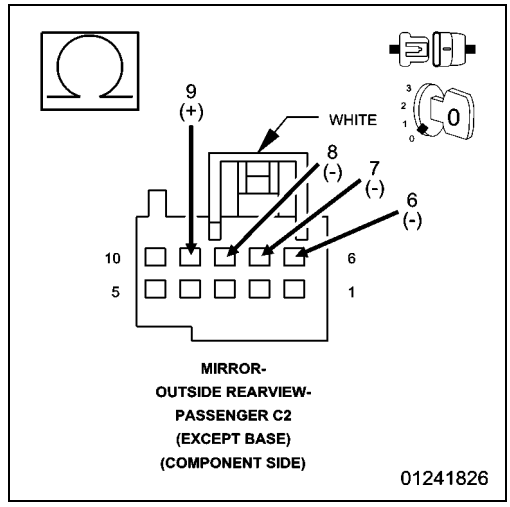

Yes

- Repair all circuits with a resistance below 10K Ohms for a short to the (P502) Passenger Mirror Turn Signal Driver circuit. If the wiring harness and connector are okay, replace the Passenger Outside Rearview Mirror in accordance with the Service Information.
- Perform the BODY VERIFICATION TEST. (Refer to 28 - DTC-Based Diagnostics/MODULE, Totally Integrated Power (TIPM) - Standard Procedure).

No, with Heated Mirror

- Go To 4

No, without Heated Mirror

- Go To 5

4. CHECK (P502) PASSENGER MIRROR TURN SIGNAL DRIVER CIRCUIT FOR A SHORT TO THE (C170) PASSENGER MIRROR HEATER RETURN CIRCUIT

1. Measure the resistance between the (P502) Passenger Mirror Turn Signal Driver circuit and the (C170) Passenger Mirror Heater Return circuit at the Passenger Outside Rearview Mirror C2 (Component Side) connector.

Is the resistance below 10K Ohms?

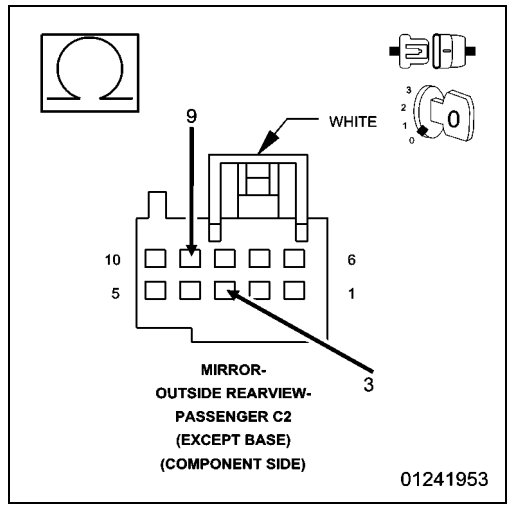

Yes

- Repair the (P502) Passenger Mirror Turn Signal Driver circuit for a short to the (C170) Passenger Mirror Heater Return circuit. If the wiring harness and connector are okay, replace the Passenger Outside Rearview Mirror in accordance with the Service Information.
- Perform the BODY VERIFICATION TEST. (Refer to 28 - DTC-Based Diagnostics/MODULE, Totally Integrated Power (TIPM) - Standard Procedure).

No

- Go To 5

5. CHECK (P502) PASSENGER MIRROR TURN SIGNAL DRIVER CIRCUIT FOR A SHORT TO THE (P595) PASSENGER MIRROR TURN SIGNAL RETURN CIRCUIT

NOTE: The Ohmmeter positive lead must be connected to the (P595) Passenger Mirror Turn Signal Return circuit and the negative lead to the (P502) Passenger Mirror Turn Signal Driver circuit for the test results to be valid.

1. Measure the resistance between the (P502) Passenger Mirror Turn Signal Driver circuit and the (P595) Passenger Mirror Turn Signal Return circuit at the Passenger Outside Rearview Mirror C2 (Component Side) connector.

Is there any resistance present?

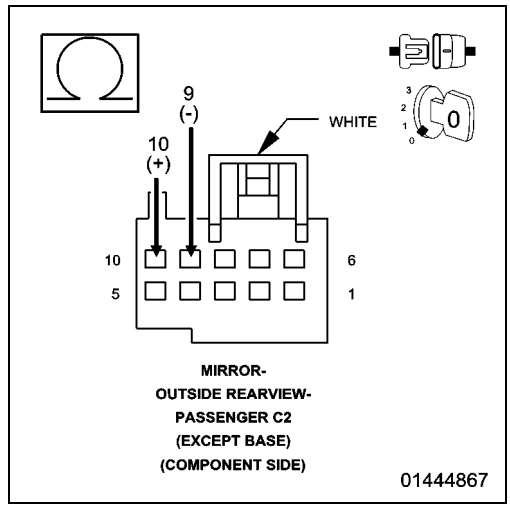

Yes

- Repair the (P502) Passenger Mirror Turn Signal Driver circuit for a short to the (P595) Passenger Mirror Turn Signal Return circuit. If the wiring harness and connector are okay, replace the Passenger Outside Rearview Mirror in accordance with the Service Information.
- Perform the BODY VERIFICATION TEST. (Refer to 28 - DTC-Based Diagnostics/MODULE, Totally Integrated Power (TIPM) - Standard Procedure).

No

- Go To 6

6. CHECK (P502) PASSENGER MIRROR TURN SIGNAL DRIVER CIRCUIT FOR A SHORT TO THE (P66) PASSENGER MIRROR SENSOR GROUND CIRCUIT

1. Disconnect the Passenger Outside Rearview Mirror C1 (Component Side) connector from the Door Module C1 connector.
2. Measure the resistance between the (P502) Passenger Mirror Turn Signal Driver circuit and the (P66) Passenger Mirror Sensor Ground circuit at the Passenger Outside Rearview Mirror C2 and C1 (Component Side) connectors.

Is the resistance below 10K Ohms?

Yes

- Repair the (P502) Passenger Mirror Turn Signal Driver circuit for a short to the (P66) Passenger Mirror Sensor Ground circuit. If the wiring harness and connector are okay, replace the Passenger Outside Rearview Mirror in accordance with the Service Information.
- Perform the BODY VERIFICATION TEST. (Refer to 28 - DTC-Based Diagnostics/MODULE, Totally Integrated Power (TIPM) - Standard Procedure).

No, with Puddle Lamp Mirror

- Go To 7

No, without Puddle Lamp Mirror

- Inspect the wiring and connectors for damage and repair as necessary. If the wiring and connectors are okay, replace the Door Module in accordance with the Service Information.
- Perform the BODY VERIFICATION TEST. (Refer to 28 - DTC-Based Diagnostics/MODULE, Totally Integrated Power (TIPM) - Standard Procedure).

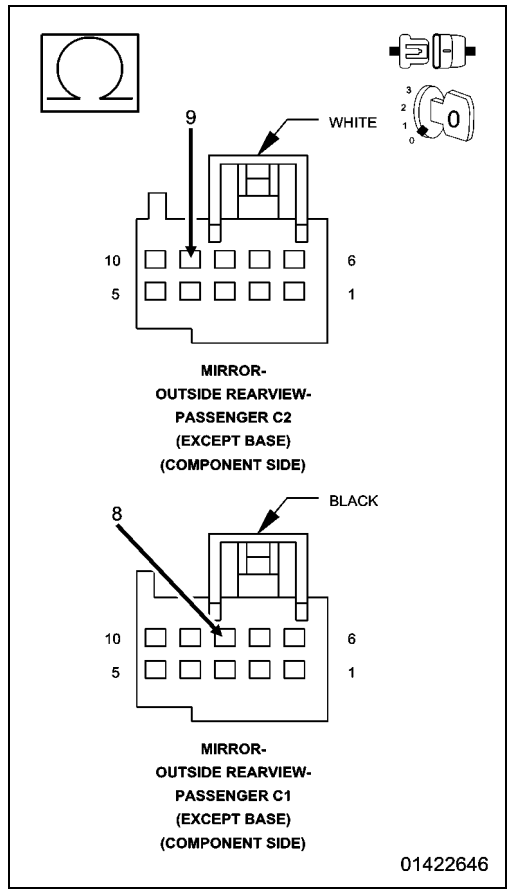

7. CHECK (P502) PASSENGER MIRROR TURN SIGNAL DRIVER CIRCUIT FOR A SHORT TO THE (P592) PASSENGER PUDDLE LAMP RETURN CIRCUIT

1. Measure the resistance between the (P502) Passenger Mirror Turn Signal Driver circuit and the (P592) Passenger Puddle Lamp Return circuit at the Passenger Outside Rearview Mirror C2 and C1 (Component Side) connectors.

Is the resistance below 10K Ohms?

Yes

- Repair the (P502) Passenger Mirror Turn Signal Driver circuit for a short to the (P592) Passenger Puddle Lamp Return circuit. If the wiring harness and connector are okay, replace the Passenger Outside Rearview Mirror in accordance with the Service Information.
- Perform the BODY VERIFICATION TEST. (Refer to 28 - DTC-Based Diagnostics/MODULE, Totally Integrated Power (TIPM) - Standard Procedure).

No

- Inspect the wiring and connectors for damage and repair as necessary. If the wiring and connectors are okay, replace the Door Module in accordance with the Service Information.
- Perform the BODY VERIFICATION TEST. (Refer to 28 - DTC-Based Diagnostics/MODULE, Totally Integrated Power (TIPM) - Standard Procedure).

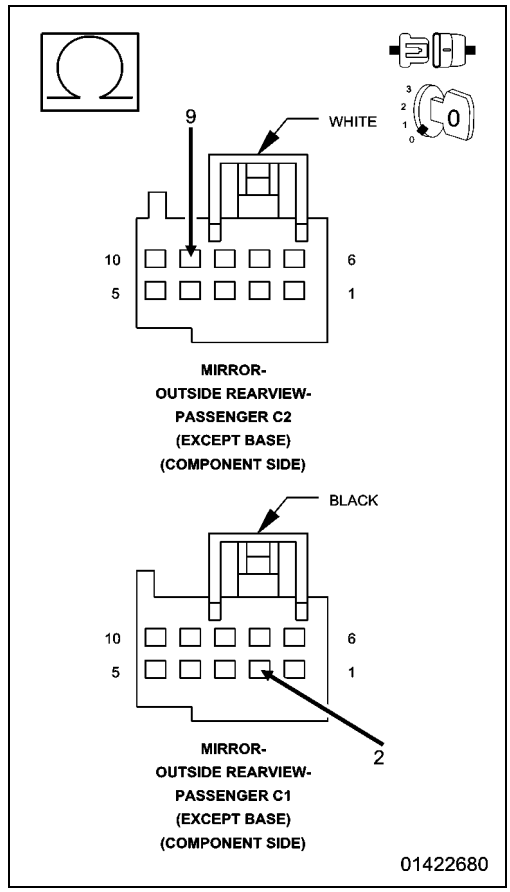

■ B164E-15-PASSENGER MIRROR SIGNAL LAMP CONTROL - CIRCUIT SHORT TO BATTERY OR OPEN

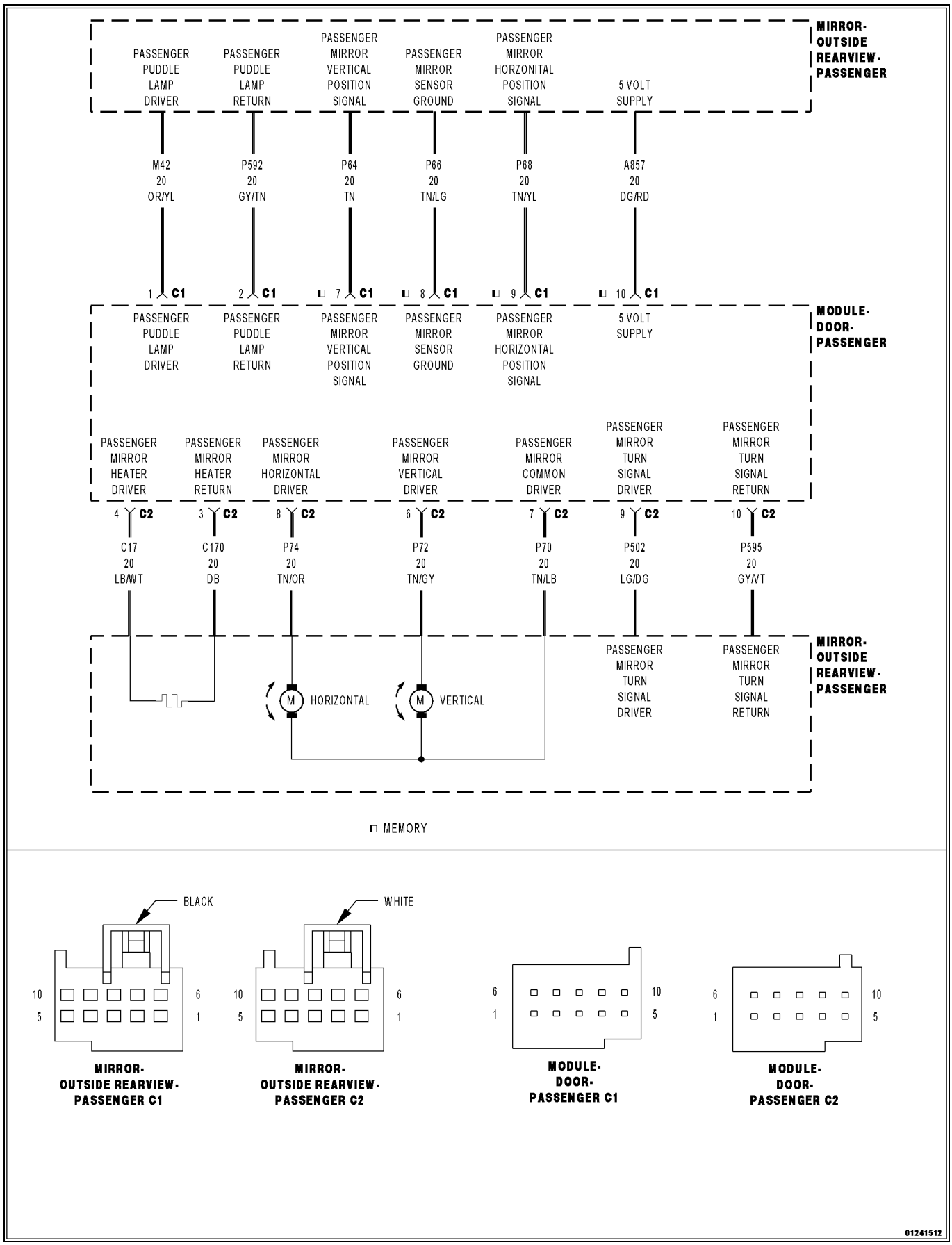

01241512

For a complete wiring diagram, **refer to the Wiring Information**.

- **When Monitored:**
  Continuously.
- **Set Condition:**
  The Door Module senses current greater than 100 mA or an open on the (P502) Passenger Mirror Turn Signal Driver circuit for more than two seconds with the turn signal switched on.

Possible Causes
(P502) PASSENGER MIRROR TURN SIGNAL DRIVER CIRCUIT SHORTED TO VOLTAGE
(P502) PASSENGER MIRROR TURN SIGNAL DRIVER CIRCUIT SHORTED TO THE (P72) PASSENGER MIRROR VERTICAL DRIVER CIRCUIT
(P502) PASSENGER MIRROR TURN SIGNAL DRIVER CIRCUIT SHORTED TO THE (P70) PASSENGER MIRROR COMMON DRIVER CIRCUIT
(P502) PASSENGER MIRROR TURN SIGNAL DRIVER CIRCUIT SHORTED TO THE (P74) PASSENGER MIRROR HORIZONTAL DRIVER CIRCUIT
(P502) PASSENGER MIRROR TURN SIGNAL DRIVER CIRCUIT SHORTED TO THE (C17) PASSENGER MIRROR HEATER DRIVER CIRCUIT
(P502) PASSENGER MIRROR TURN SIGNAL DRIVER CIRCUIT OPEN
(P595) PASSENGER MIRROR TURN SIGNAL RETURN CIRCUIT OPEN
(P502) PASSENGER MIRROR TURN SIGNAL DRIVER CIRCUIT SHORTED TO THE (M42) PASSENGER PUDDLE LAMP DRIVER CIRCUIT
PASSENGER OUTSIDE REARVIEW MIRROR
DOOR MODULE

1. TEST FOR INTERMITTENT CONDITION

1. Turn the ignition on.
2. Using a scan tool, record and erase Diagnostic Trouble Codes (DTCs).
3. Turn the turn signal on.
4. Turn the puddle lamps on, if equipped with puddle lamp mirror.
5. Turn the rear defogger on, if equipped with heated mirror.
6. Press and release the Mirror Select switch to select the Passenger Outside Rearview Mirror.
7. Operate the Mirror Adjust switch in all directions several times while monitoring the scan tool for DTCs.

NOTE: After adjusting the mirror in one direction wait at least two seconds before adjusting the mirror in the opposite direction, as this will allow time for an active fault to set if present.

Is the DTC active?

Yes

- Go To 2

No

- The conditions that caused this code to set are not present at this time. For vehicle's equipped with folding outside rearview mirrors, repeat test with mirror folded. If DTC is now active, Go To 2. Otherwise, use the wiring diagram/ schematic as a guide and inspect the wiring and connectors.
- Perform the BODY VERIFICATION TEST. (Refer to 28 - DTC-Based Diagnostics/MODULE, Totally Integrated Power (TIPM) - Standard Procedure).

2. CHECK (P502) PASSENGER MIRROR TURN SIGNAL DRIVER CIRCUIT FOR A SHORT TO VOLTAGE

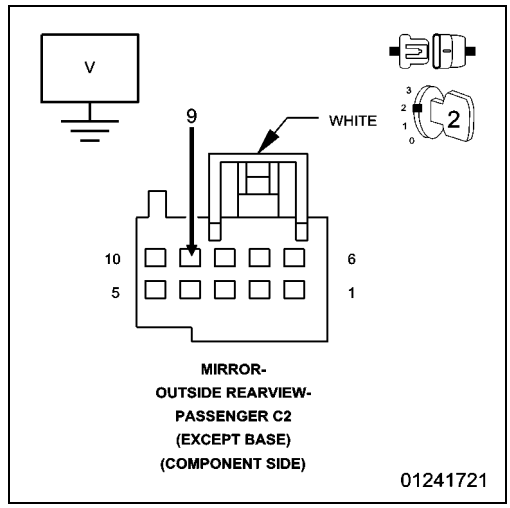

1. Turn the ignition off.
2. Disconnect the Passenger Outside Rearview Mirror C2 (Component Side) connector from the Door Module C2 connector.
3. Turn the ignition on.
4. Measure the voltage of the (P502) Passenger Mirror Turn Signal Driver circuit between the Passenger Outside Rearview Mirror C2 (Component Side) connector and ground.

Is there any voltage present?

Yes

- Repair the (P502) Passenger Mirror Turn Signal Driver circuit for a short to voltage. If the wiring harness and connector are okay, replace the Passenger Outside Rearview Mirror in accordance with the Service Information.
- Perform the BODY VERIFICATION TEST. (Refer to 28 - DTC-Based Diagnostics/MODULE, Totally Integrated Power (TIPM) - Standard Procedure).

No

- Go To 3

3. CHECK (P502) PASSENGER MIRROR TURN SIGNAL DRIVER CIRCUIT FOR A SHORT TO THE (P72) PASSENGER MIRROR VERTICAL DRIVER CIRCUIT, (P70) PASSENGER MIRROR COMMON DRIVER CIRCUIT, OR TO THE (P74) PASSENGER MIRROR HORIZONTAL DRIVER CIRCUIT

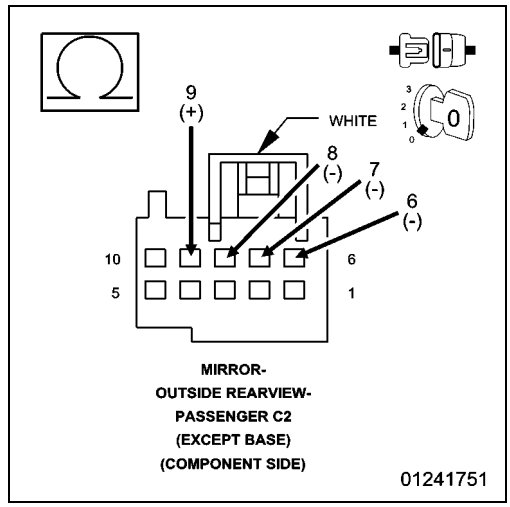

1. Turn the ignition off.
2. Measure the resistance between the (P502) Passenger Mirror Turn Signal Driver circuit and the (P72) Passenger Mirror Vertical Driver circuit at the Passenger Outside Rearview Mirror C2 (Component Side) connector.
3. Measure the resistance between the (P502) Passenger Mirror Turn Signal Driver circuit and the (P70) Passenger Mirror Common Driver circuit at the Passenger Outside Rearview Mirror C2 (Component Side) connector.
4. Measure the resistance between the (P502) Passenger Mirror Turn Signal Driver circuit and the (P74) Passenger Mirror Horizontal Driver circuit at the Passenger Outside Rearview Mirror C2 (Component Side) connector.

Is the resistance below 10K Ohms for any measurement?

Yes

- Repair all circuits with a resistance below 10K Ohms for a short to the (P502) Passenger Mirror Turn Signal Driver circuit. If the wiring harness and connector are okay, replace the Passenger Outside Rearview Mirror in accordance with the Service Information.
- Perform the BODY VERIFICATION TEST. (Refer to 28 - DTC-Based Diagnostics/MODULE, Totally Integrated Power (TIPM) - Standard Procedure).

No, with Heated Mirror

- Go To 4

No, without Heated Mirror

- Go To 5

4. CHECK (P502) PASSENGER MIRROR TURN SIGNAL DRIVER CIRCUIT FOR A SHORT TO THE (C17) PASSENGER MIRROR HEATER DRIVER CIRCUIT

1. Measure the resistance between the (P502) Passenger Mirror Turn Signal Driver circuit and the (C17) Passenger Mirror Heater Driver circuit at the Passenger Outside Rearview Mirror C2 (Component Side) connector.

Is the resistance below 10K Ohms?

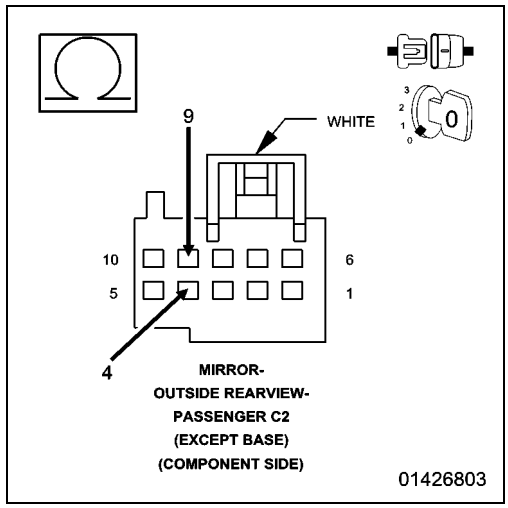

Yes

- Repair the (P502) Passenger Mirror Turn Signal Driver circuit for a short to the (C17) Passenger Mirror Heater Driver circuit. If the wiring harness and connector are okay, replace the Passenger Outside Rearview Mirror in accordance with the Service Information.
- Perform the BODY VERIFICATION TEST. (Refer to 28 - DTC-Based Diagnostics/MODULE, Totally Integrated Power (TIPM) - Standard Procedure).

No

- Go To 5

5. CHECK (P502) PASSENGER MIRROR TURN SIGNAL DRIVER CIRCUIT AND (P595) PASSENGER MIRROR TURN SIGNAL RETURN CIRCUIT FOR AN OPEN

NOTE: The Ohmmeter positive lead must be connected to the (P502) Passenger Mirror Turn Signal Driver circuit and the negative lead to the (P595) Passenger Mirror Turn Signal Return circuit for the test results to be valid.

1. Measure the resistance between the (P502) Passenger Mirror Turn Signal Driver circuit and the (P595) Passenger Mirror Turn Signal Return circuit at the Passenger Outside Rearview Mirror C2 (Component Side) connector.

Is the resistance above 1K Ohm?

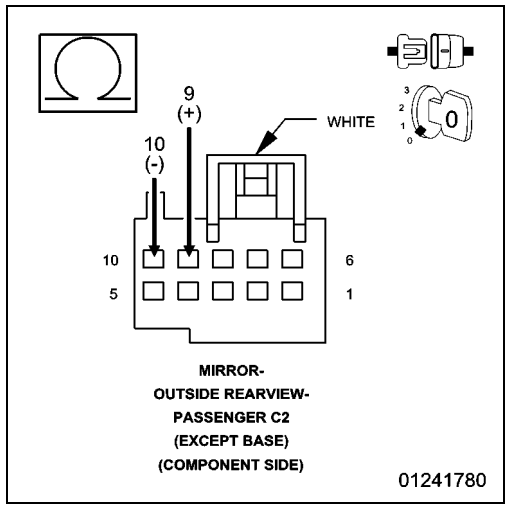

Yes

- Repair the (P502) Passenger Mirror Turn Signal Driver circuit or the (P595) Passenger Mirror Turn Signal Return circuit for an open. If the wiring harness and connector are okay, replace the Passenger Outside Rearview Mirror in accordance with the Service Information.
- Perform the BODY VERIFICATION TEST. (Refer to 28 - DTC-Based Diagnostics/MODULE, Totally Integrated Power (TIPM) - Standard Procedure).

No, with Puddle Lamp Mirror

- Go To 6

No, without Puddle Lamp Mirror

- Inspect the wiring and connectors for damage and repair as necessary. If the wiring and connectors are okay, replace the Door Module in accordance with the Service Information.
- Perform the BODY VERIFICATION TEST. (Refer to 28 - DTC-Based Diagnostics/MODULE, Totally Integrated Power (TIPM) - Standard Procedure).

6. CHECK (P502) PASSENGER MIRROR TURN SIGNAL DRIVER CIRCUIT FOR A SHORT TO THE (M42) PASSENGER PUDDLE LAMP DRIVER CIRCUIT

1. Disconnect the Passenger Outside Rearview Mirror C1 (Component Side) connector from the Door Module C1 connector.
2. Measure the resistance between the (P502) Passenger Mirror Turn Signal Driver circuit and the (M42) Passenger Puddle Lamp Driver circuit at the Passenger Outside Rearview Mirror C2 and C1 (Component Side) connectors.

Is the resistance below 10K Ohms?

Yes

- Repair the (P502) Passenger Mirror Turn Signal Driver circuit for a short to the (M42) Passenger Puddle Lamp Driver circuit. If the wiring harness and connector are okay, replace the Passenger Outside Rearview Mirror in accordance with the Service Information.
- Perform the BODY VERIFICATION TEST. (Refer to 28 - DTC-Based Diagnostics/MODULE, Totally Integrated Power (TIPM) - Standard Procedure).

No

- Inspect the wiring and connectors for damage and repair as necessary. If the wiring and connectors are okay, replace the Door Module in accordance with the Service Information.
- Perform the BODY VERIFICATION TEST. (Refer to 28 - DTC-Based Diagnostics/MODULE, Totally Integrated Power (TIPM) - Standard Procedure).

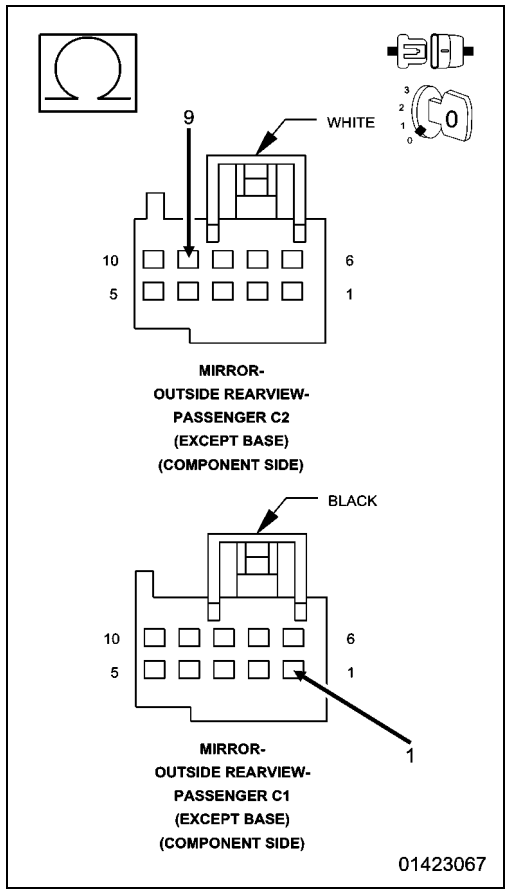

■ B16A3-11-PASSENGER WINDOW SWITCH BACKLIGHTING - CIRCUIT SHORT TO GROUND

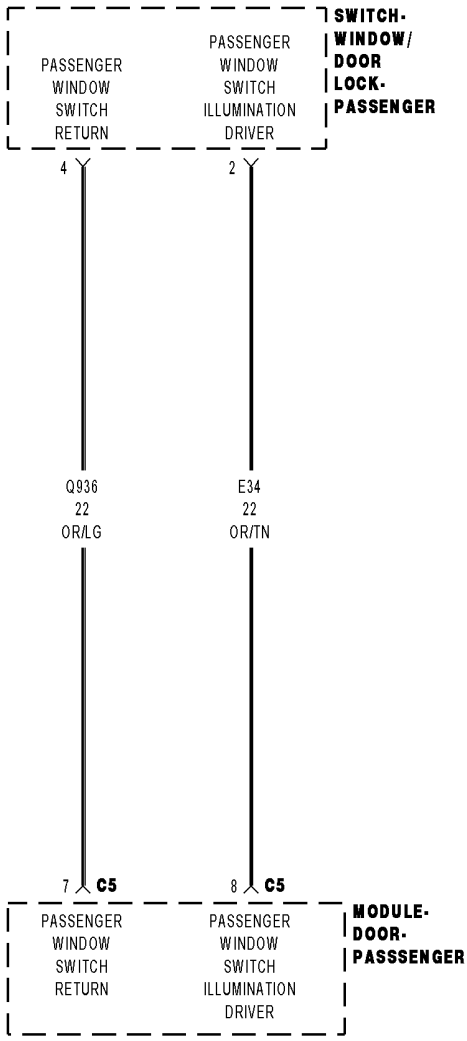

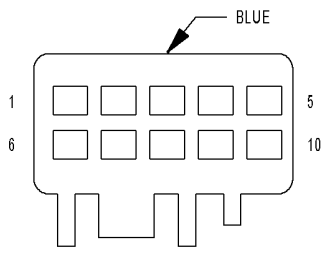

MODULE-
DOOR-
PASSENGER C5

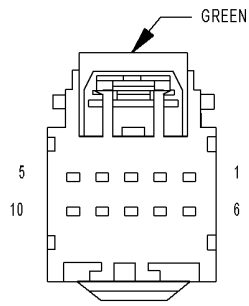

SWITCH-
WINDOW/
DOOR
LOCK-
PASSENGER

01217901

For a complete wiring diagram, **refer to the Wiring Information**.

- **When Monitored:**
  Whenever the module is awake, the park lamps are on and the window lock out switch is on.
- **Set Condition:**
  When the Passenger Window Switch Illumination Driver circuit falls below 3.0 Volts for over 25 ms. and the above conditions are met.

Possible Causes
(E34) PASSENGER WINDOW SWITCH ILLUMINATION DRIVER CIRCUIT SHORTED TO GROUND
(E34) PASSENGER WINDOW SWITCH ILLUMINATION DRIVER CIRCUIT SHORTED TO THE (Q936) PASSENGER WINDOW SWITCH RETURN
WINDOW/DOOR LOCK SWITCH SHORTED
PASSENGER DOOR MODULE (PDM)

1. TEST FOR INTERMITTENT CONDITION

1. Turn the ignition on.
2. With the scan tool, record and erase DTCs.
3. Make sure the passenger window lock out switch is on.
4. Turn the park lights on.
5. Wait 30 seconds.
6. With the scan tool, read the active DTCs.

Does the scan tool display B16A3-11-PASSENGER WINDOW SWITCH BACKLIGHTING - CIRCUIT SHORT TO GROUND?

Yes

- Go To 2

No

- Test complete, the condition or conditions that originally set this DTC are not present at this time. Using the wiring diagrams as a guide, check all related splices and connectors for signs of water intrusion, corrosion, pushed out or bent terminals, and correct pin tension.
- Perform the BODY VERIFICATION TEST. (Refer to 28 - DTC-Based Diagnostics/MODULE, Totally Integrated Power (TIPM) - Standard Procedure).

2. WINDOW/DOOR LOCK SWITCH SHORTED

1. With the scan tool, erase DTCs.
2. Turn the ignition off.
3. Disconnect the Passenger Window/Door Lock Switch harness connector.
4. Make sure the passenger window lock out switch is on and the park lamps are still on.
5. Turn the ignition on.
6. With the scan tool, read the active DTCs.

Does the scan tool display B16A3-11-PASSENGER WINDOW SWITCH BACKLIGHTING - CIRCUIT SHORT TO GROUND?

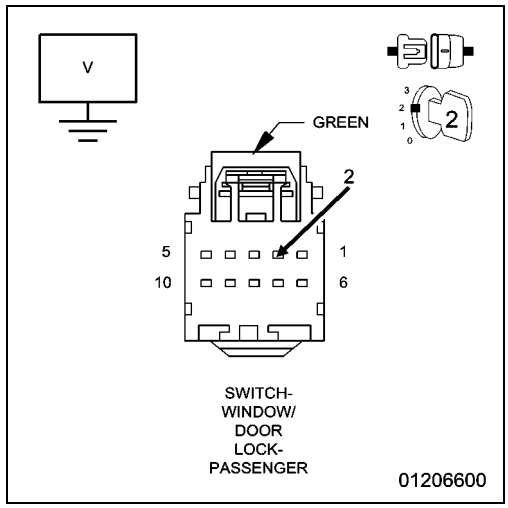

Yes

- Go To 3

No

- Replace the Window/Door Lock Switch in accordance with the Service Information.
- Perform the BODY VERIFICATION TEST. (Refer to 28 - DTC-Based Diagnostics/MODULE, Totally Integrated Power (TIPM) - Standard Procedure).

3. (E34) PASSENGER WINDOW SWITCH ILLUMINATION DRIVER CIRCUIT SHORT TO GROUND

1. Turn the ignition off.
2. Turn the park lamps off.
3. Disconnect the Passenger Door Module C5 harness connector.
4. Measure the resistance between ground and the (E34) Passenger Window Switch Illumination Driver circuit.

Is the resistance below 10,000 Ohms?

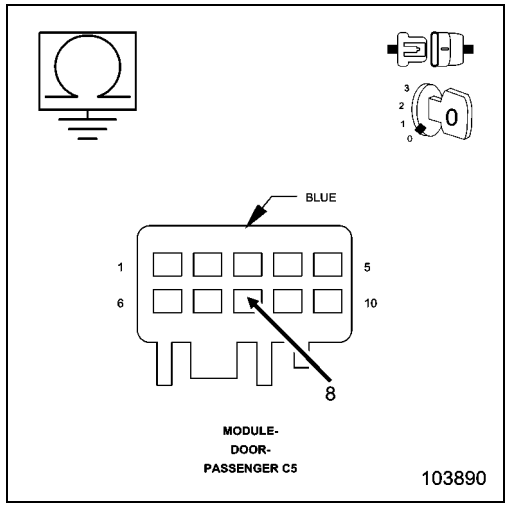

Yes

- Repair the short to ground in the (E34) Passenger Window Switch Illumination Driver circuit.
- Perform the BODY VERIFICATION TEST. (Refer to 28 - DTC-Based Diagnostics/MODULE, Totally Integrated Power (TIPM) - Standard Procedure).

No

- Go To 4

4. (E34) PASSENGER WINDOW SWITCH ILLUMINATION DRIVER CIRCUIT SHORT TO (Q936) PASSENGER WINDOW SWITCH RETURN CIRCUIT

1. Measure the resistance between the (E34) Passenger Window Switch Illumination Driver circuit and the (Q936) Passenger Window Switch Return circuit.

Is the resistance below 10,000 Ohms?

Yes

- Repair the (E34) Passenger Window Switch Illumination Driver circuit for a short to the (Q936) Passenger Window Switch Return circuit.
- Perform the BODY VERIFICATION TEST. (Refer to 28 - DTC-Based Diagnostics/MODULE, Totally Integrated Power (TIPM) - Standard Procedure).

No

- Replace the Passenger Door Module in accordance with the Service Information.
- Perform the BODY VERIFICATION TEST. (Refer to 28 - DTC-Based Diagnostics/MODULE, Totally Integrated Power (TIPM) - Standard Procedure).

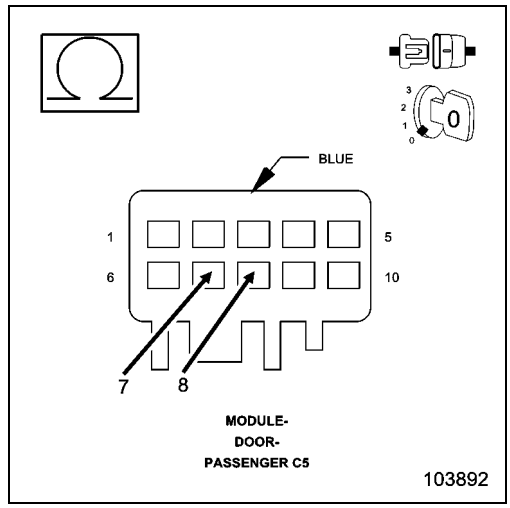

■ B16A3-15-PASSENGER WINDOW SWITCH BACKLIGHTING - CIRCUIT SHORT TO BATTERY OR OPEN

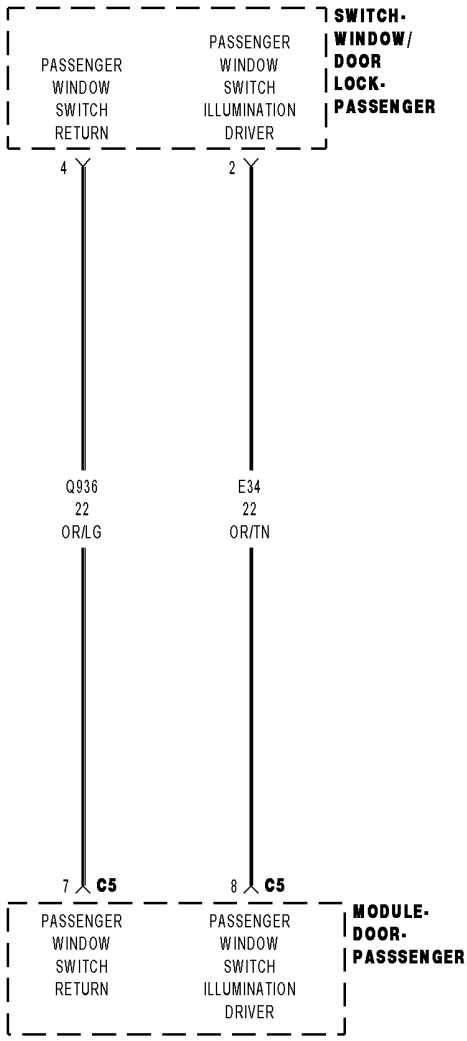

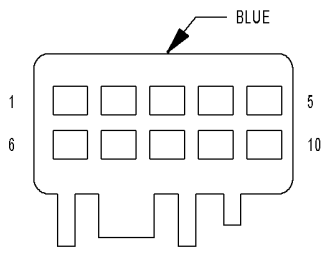

MODULE-
DOOR-
PASSENGER C5

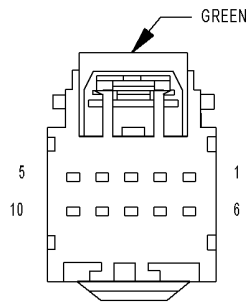

SWITCH-
WINDOW/
DOOR
LOCK-
PASSENGER

01217901

For a complete wiring diagram, **refer to the Wiring Information**.

- **When Monitored:**
  Whenever the module is awake.
- **Set Condition:**
  When the Passenger Window Switch Illumination Driver circuit current draw is greater than 120mA for over 2000 ms. and the switch illumination output is turned off or there is no current draw when the switch illumination is turn on.

Possible Causes
(E34) PASSENGER WINDOW SWITCH ILLUMINATION DRIVER CIRCUIT SHORTED TO VOLTAGE
(E34) PASSENGER WINDOW SWITCH ILLUMINATION DRIVER CIRCUIT OPEN
(Q936) PASSENGER WINDOW SWITCH RETURN CIRCUIT OPEN
WINDOW/DOOR LOCK SWITCH
PASSENGER DOOR MODULE (PDM)

1. CHECK FOR OPEN CIRCUIT

1. With the scan tool, record and erase DTCs.
2. Make sure the passenger window lock out switch is on.
3. Make sure the ignition is on.
4. Turn the park lamps are on.
5. Wait 30 seconds.
6. With the scan tool, read the active DTCs.

Does the scan tool display B16A3-15-PASSENGER WINDOW SWITCH BACKLIGHTING - CIRCUIT SHORT TO BATTERY OR OPEN?

Yes

- Go To 2

No

- Test complete, the condition or conditions that originally set this DTC are not present at this time. Using the wiring diagrams as a guide, check all related splices and harness connectors for signs of water intrusion, corrosion, pushed out or bent terminals, and correct pin tension.
- Perform the BODY VERIFICATION TEST. (Refer to 28 - DTC-Based Diagnostics/MODULE, Totally Integrated Power (TIPM) - Standard Procedure).

2. (E34) PASSENGER WINDOW SWITCH ILLUMINATION DRIVER CIRCUIT OPEN

1. Turn the ignition off.
2. Disconnect the Passenger Window/Door Lock Switch harness connector.
3. Turn the ignition on.
4. Make sure the park lamps and the lock out switch are still on.
5. Turn the panel lamps fully on.
6. Measure the voltage between the (E34) Passenger Window Switch Illumination Driver circuit and ground.

Is the voltage above 10.0 Volts?

Yes

- Go To 4

No

- Go To 3

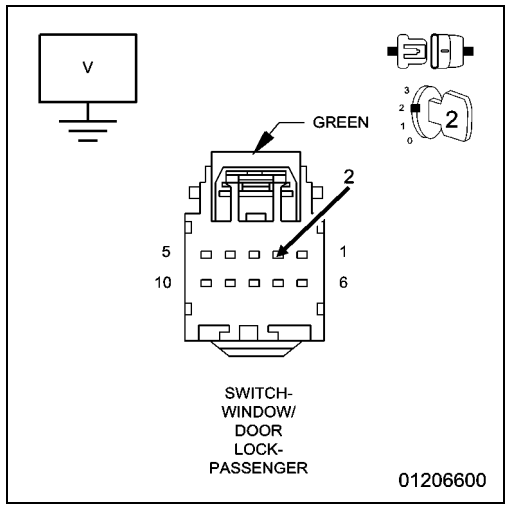

3. (E34) PASSENGER WINDOW SWITCH ILLUMINATION DRIVER WIRE OPEN

1. Turn the ignition off.
2. Disconnect the Passenger Door Module C5 harness connector.
3. Measure the resistance of the (E34) Passenger Window Switch Illumination Driver circuit between the Passenger Door Module C5 harness connector and the Passenger Window/Door Lock Switch harness connector.

Is the resistance above 2.0 Ohms?

Yes

- Repair the open in the (E34) Passenger Window Switch Illumination Driver circuit.
- Perform the BODY VERIFICATION TEST. (Refer to 28 - DTC-Based Diagnostics/MODULE, Totally Integrated Power (TIPM) - Standard Procedure).

No

- Replace the Passenger Door Module in accordance with the Service Information.
- Perform the BODY VERIFICATION TEST. (Refer to 28 - DTC-Based Diagnostics/MODULE, Totally Integrated Power (TIPM) - Standard Procedure).

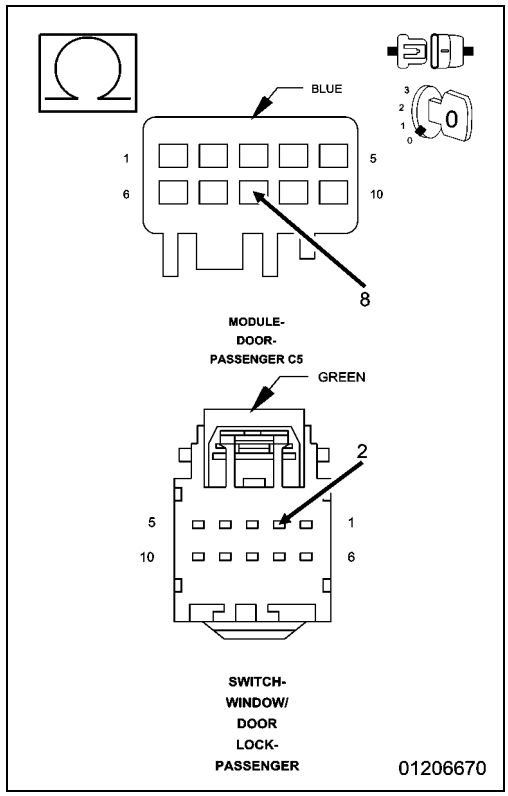

4. (Q936) PASSENGER WINDOW SWITCH RETURN CIRCUIT OPEN

1. Measure the resistance of the (Q936) Passenger Window Switch Return circuit between the Passenger Door Module C5 harness connector and the Passenger Window/Door Lock Switch harness connector.

Is the resistance above 2.0 Ohms?

Yes

- Repair the open in the (Q936) Passenger Window Switch Return circuit.
- Perform the BODY VERIFICATION TEST. (Refer to 28 - DTC-Based Diagnostics/MODULE, Totally Integrated Power (TIPM) - Standard Procedure).

No

- Go To 5

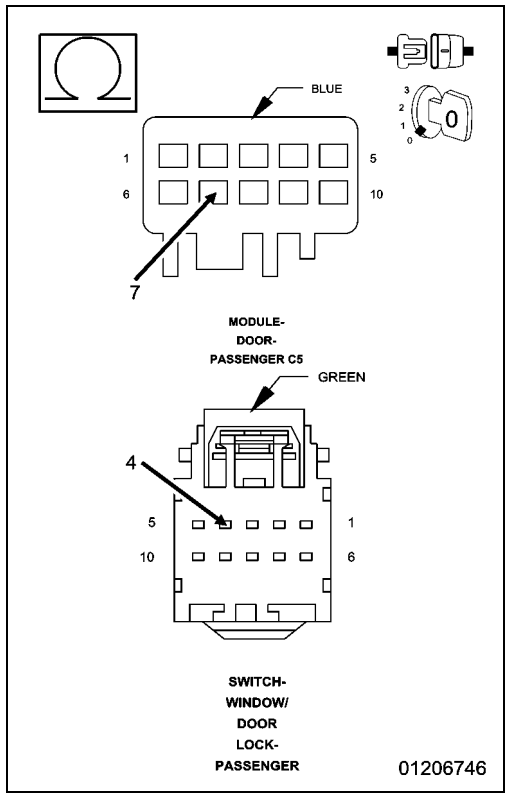

5. (E34) PASSENGER WINDOW SWITCH ILLUMINATION DRIVER CIRCUIT SHORTED TO VOLTAGE

1. Turn the ignition on.
2. Measure the voltage between the (E34) Passenger Window Switch Illumination Driver circuit and ground.

Is there any voltage present?

Yes

- Repair the short to voltage in the (E34) Passenger Window Switch Illumination Driver circuit.
- Perform the BODY VERIFICATION TEST. (Refer to 28 - DTC-Based Diagnostics/MODULE, Totally Integrated Power (TIPM) - Standard Procedure).

No

- Replace the Passenger Door Module in accordance with the Service Information.
- Perform the BODY VERIFICATION TEST. (Refer to 28 - DTC-Based Diagnostics/MODULE, Totally Integrated Power (TIPM) - Standard Procedure).

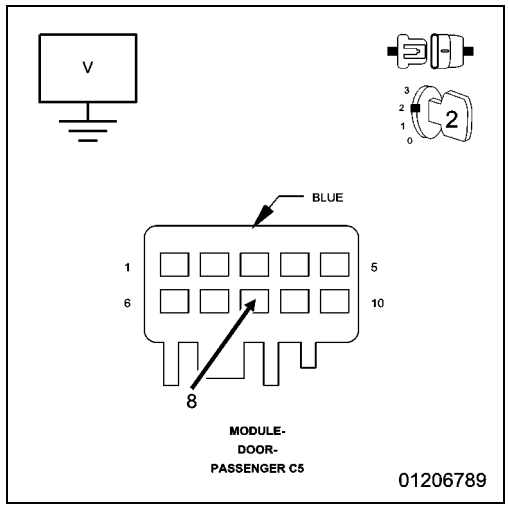

■ B1805-2A-PASSENGER DOOR LOCK/UNLOCK SWITCH - SIGNAL STUCK IN RANGE

For a complete wiring diagram, **refer to the Wiring Information**.

- **When Monitored:**
  Continuously
- **Set Condition:**
  When the Door Lock/Unlock Switch is stuck for over 30 seconds, this code will set.

Possible Causes
OBSTRUCTION IN SWITCH
DOOR LOCK SWITCH

1. TEST FOR INTERMITTENT CONDITION

1. With the scan tool, record and erase the DTCs.
2. Operate the Passenger Door Lock Switch in all positions several times.
3. Cycle the ignition from on to off.
4. Turn the ignition on.
5. With the scan tool, read the DTCs.

Does the scan tool display B1805-2A-PASSENGER DOOR LOCK/UNLOCK SWITCH - SIGNAL STUCK IN RANGE?

Yes

- Go To 2

No

- The conditions that caused this code to set are not present at this time. Using the wiring diagram/schematic as a guide, inspect the wiring and connectors.
- Perform the BODY VERIFICATION TEST. (Refer to 28 - DTC-Based Diagnostics/MODULE, Totally Integrated Power (TIPM) - Standard Procedure).

2. DOOR LOCK SWITCH

1. Check the switch for any objects that could cause a sticking condition.

Was anything found that could cause a sticking condition?

Yes

- Clean or remove the object as necessary.
- Perform the BODY VERIFICATION TEST. (Refer to 28 - DTC-Based Diagnostics/MODULE, Totally Integrated Power (TIPM) - Standard Procedure).

No

- Replace the Door Lock Switch.
- Perform the BODY VERIFICATION TEST. (Refer to 28 - DTC-Based Diagnostics/MODULE, Totally Integrated Power (TIPM) - Standard Procedure).

B185E-11-PASSENGER WINDOW CONTROL - CIRCUIT SHORT TO GROUND

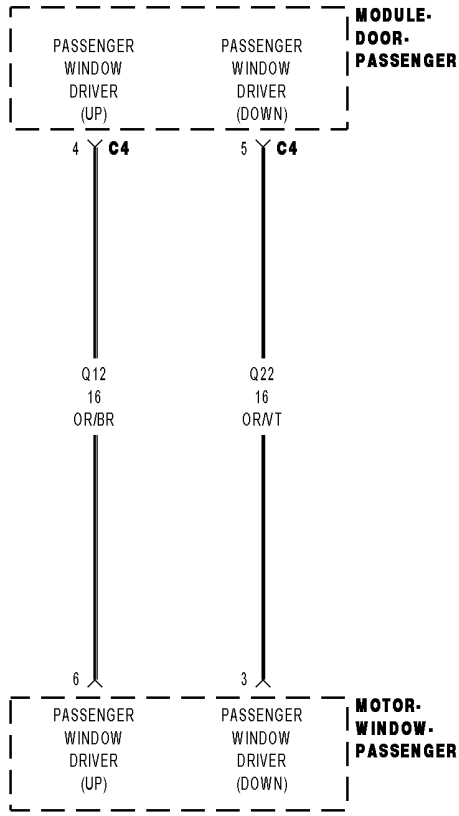

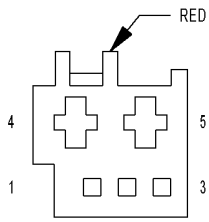

MODULE-
DOOR-
PASSENGER C4

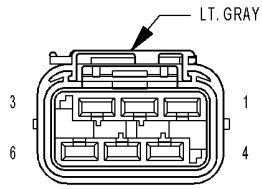

MOTOR-
WINDOW-
PASSENGER

01217949

For a complete wiring diagram, **refer to the Wiring Information**.

- **When Monitored:**
  Whenever the module is awake.
- **Set Condition:**
  When both Passenger Window Driver circuits (Up and Down) are grounded during a window movement command.

Possible Causes
(Q22) PASSENGER WINDOW DRIVER (DOWN) CIRCUIT SHORTED TO GROUND
(Q12) PASSENGER WINDOW DRIVER (UP) CIRCUIT SHORTED TO GROUND
(Q22) PASSENGER WINDOW DRIVER (DOWN) CIRCUIT SHORTED TO THE (Q12) PASSENGER WINDOW DRIVER (UP) CIRCUIT
WINDOW MOTOR SHORTED
PASSENGER DOOR MODULE (PDM)

1. TEST FOR INTERMITTENT CONDITION

1. Turn the ignition on.
2. With the scan tool, record and erase DTCs.
3. Operate the Passenger Window switch up and down several times.
4. Wait 30 seconds.
5. With the scan tool, read the active DTCs.

Does the scan tool display B185E-11-PASSENGER WINDOW CONTROL - CIRCUIT SHORT TO GROUND?

Yes

- Go To 2

No

- Test complete, the condition or conditions that originally set this DTC are not present at this time. Using the wiring diagrams as a guide, check all related splices and connectors for signs of water intrusion, corrosion, pushed out or bent terminals, and correct pin tension.
- Perform the BODY VERIFICATION TEST. (Refer to 28 - DTC-Based Diagnostics/MODULE, Totally Integrated Power (TIPM) - Standard Procedure).

2. WINDOW MOTOR SHORTED

1. With the scan tool, erase DTCs.
2. Turn the ignition off.
3. Disconnect the Passenger Window Motor harness connector.
4. Turn the ignition on.
5. Operate the Passenger Window switch up and down several times.
6. With the scan tool, read the active DTCs.

Does the scan tool display B185E-11-PASSENGER WINDOW CONTROL - CIRCUIT SHORT TO GROUND?

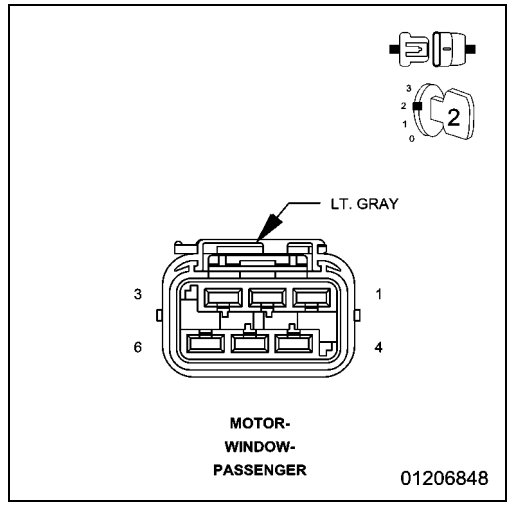

Yes

- Go To 3

No

- Replace the Passenger Window Motor in accordance with the Service Information.
- Perform the BODY VERIFICATION TEST. (Refer to 28 - DTC-Based Diagnostics/MODULE, Totally Integrated Power (TIPM) - Standard Procedure).

3. (Q22) PASSENGER WINDOW DRIVER (DOWN) CIRCUIT SHORTED TO GROUND

1. Turn the ignition off.
2. Disconnect the Passenger Door Module C4 harness connector.
3. Measure the resistance between ground and the (Q22) Passenger Window Driver (Down) circuit.

Is the resistance below 10,000 Ohms?

Yes

- Repair the short to ground in the (Q22) Passenger Window Driver (Down) circuit.
- Perform the BODY VERIFICATION TEST. (Refer to 28 - DTC-Based Diagnostics/MODULE, Totally Integrated Power (TIPM) - Standard Procedure).

No

- Go To 4

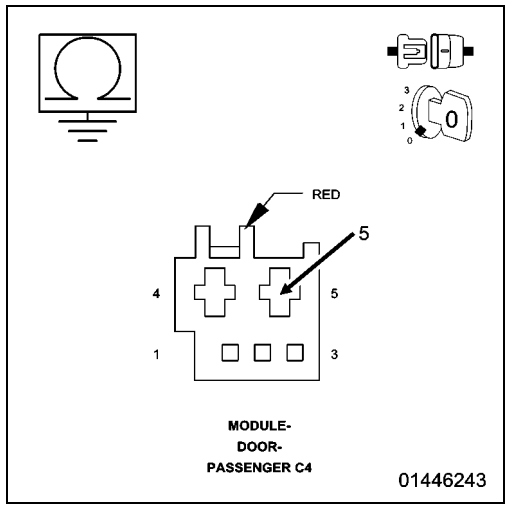

4. (Q12) PASSENGER WINDOW DRIVER (UP) CIRCUIT SHORTED TO GROUND

1. Measure the resistance between ground and the (Q12) Passenger Window Driver (Up) circuit.

Is the resistance below 10,000 Ohms?

Yes

- Repair the short to ground in the (Q12) Passenger Window Driver (Up) circuit.
- Perform the BODY VERIFICATION TEST. (Refer to 28 - DTC-Based Diagnostics/MODULE, Totally Integrated Power (TIPM) - Standard Procedure).

No

- Go To 5

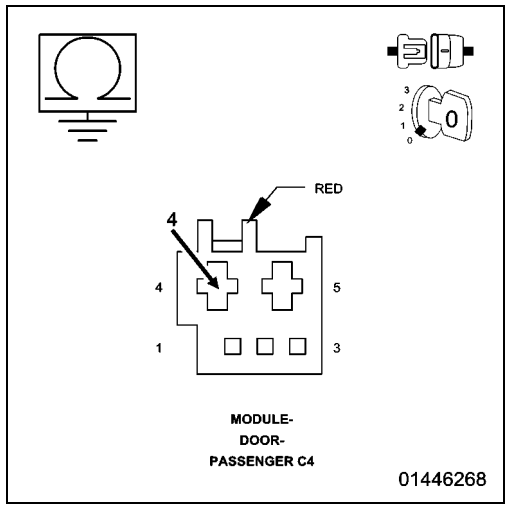

5. (Q22) DRIVER WINDOW DRIVER (DOWN) CIRCUIT SHORTED TO THE (Q12) PASSENGER WINDOW DRIVER (UP) CIRCUIT

1. Measure the resistance between the (Q22) Passenger Window Driver (Down) circuit and the (Q12) Passenger Window Driver (Up) circuit.

Is the resistance below 10,000 Ohms?

Yes

- Repair the (Q22) Passenger Window Driver (Down) circuit for a short to the (Q12) Passenger Window Driver (Up) circuit.
- Perform the BODY VERIFICATION TEST. (Refer to 28 - DTC-Based Diagnostics/MODULE, Totally Integrated Power (TIPM) - Standard Procedure).

No

- Replace the Passenger Door Module in accordance with the Service Information.
- Perform the BODY VERIFICATION TEST. (Refer to 28 - DTC-Based Diagnostics/MODULE, Totally Integrated Power (TIPM) - Standard Procedure).

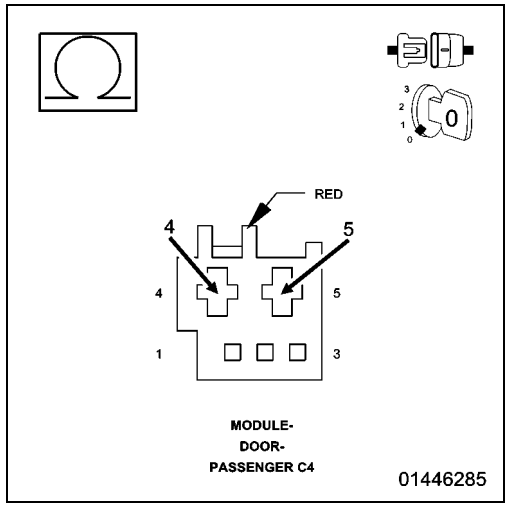

B185E-13-PASSENGER WINDOW CONTROL - CIRCUIT OPEN

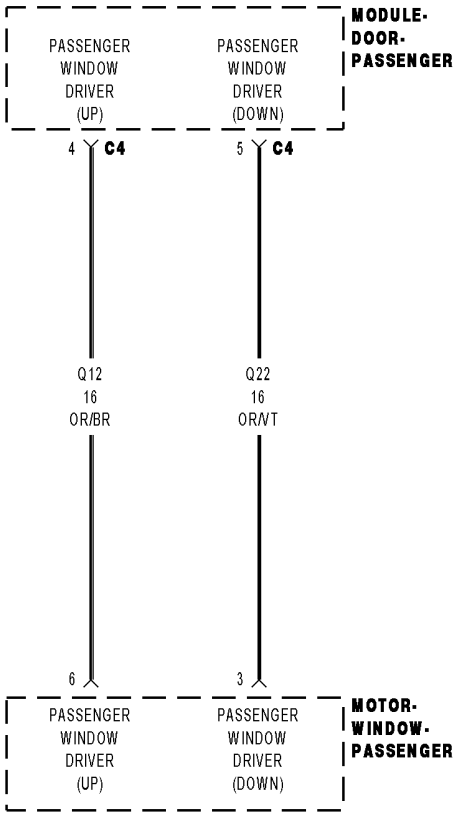

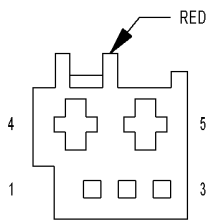

MODULE-
DOOR-
PASSENGER C4

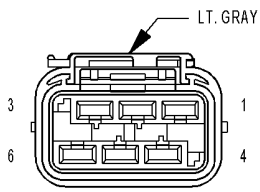

MOTOR-
WINDOW-
PASSENGER

01217949

For a complete wiring diagram, **refer to the Wiring Information**.

- **When Monitored:**
  Whenever the module is awake.
- **Set Condition:**
  When one or both Driver Window Driver circuits (Up and Down) are not supplied with voltage, when they should be, during a window movement command for more than 2000 ms.

Possible Causes
(Q22) PASSENGER WINDOW DRIVER (DOWN) CIRCUIT OPEN
(Q12) PASSENGER WINDOW DRIVER (UP) CIRCUIT OPEN
WINDOW MOTOR (REGULATOR)
PASSENGER DOOR MODULE (PDM)

1. TEST FOR INTERMITTENT CONDITION

1. Turn the ignition on.
2. With the scan tool, record and erase DTCs.
3. Operate the Passenger Window switch up and down several times.
4. Wait 30 seconds.
5. With the scan tool, read the active DTCs.

Does the scan tool display B185E-13-PASSENGER WINDOW CONTROL - CIRCUIT OPEN?

Yes

- Go To 2

No

- Test complete, the condition or conditions that originally set this DTC are not present at this time. Using the wiring diagrams as a guide, check all related splices and connectors for signs of water intrusion, corrosion, pushed out or bent terminals, and correct pin tension.
- Perform the BODY VERIFICATION TEST. (Refer to 28 - DTC-Based Diagnostics/MODULE, Totally Integrated Power (TIPM) - Standard Procedure).

2. WINDOW MOTOR OR CIRCUIT OPEN

1. Turn the ignition off.
2. Disconnect the Passenger Window Motor harness connector.
3. Connect a test light between the (Q12) Passenger Window Driver (Up) circuit and the (Q22) Passenger Window Driver (Down) circuit.
4. Turn the ignition on.
5. Trip the driver door latch to the closed position.
6. Operate the Passenger Window switch up and down several times while observing the test light.

Does the test light illuminate brightly when the switch is pressed in both directions? With the express up window, the test light will only flash momentarily each time the switch is activated.

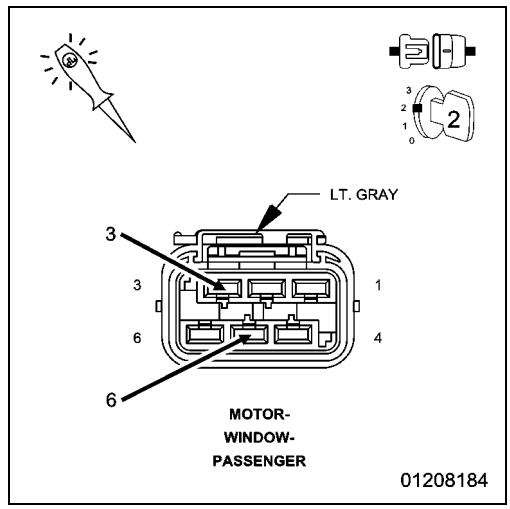

Yes

- Replace the Passenger Window Motor (regulator) in accordances with the Service Information.
- Perform the BODY VERIFICATION TEST. (Refer to 28 - DTC-Based Diagnostics/MODULE, Totally Integrated Power (TIPM) - Standard Procedure).

No

- Go To 3

3. (Q22) PASSENGER WINDOW DRIVER (DOWN) CIRCUIT OPEN

1. Turn the ignition off.
2. Disconnect the Passenger Door Module C4 harness connector.
3. Measure the resistance of the (Q22) Passenger Window Driver (Down) circuit between the Passenger Door Module C4 module harness connector and the Passenger Window Motor harness connector.

Is the resistance above 2.0 Ohms?

Yes

- Repair the open in the (Q22) Passenger Window Driver (Down) circuit.
- Perform the BODY VERIFICATION TEST. (Refer to 28 - DTC-Based Diagnostics/MODULE, Totally Integrated Power (TIPM) - Standard Procedure).

No

- Go To 4

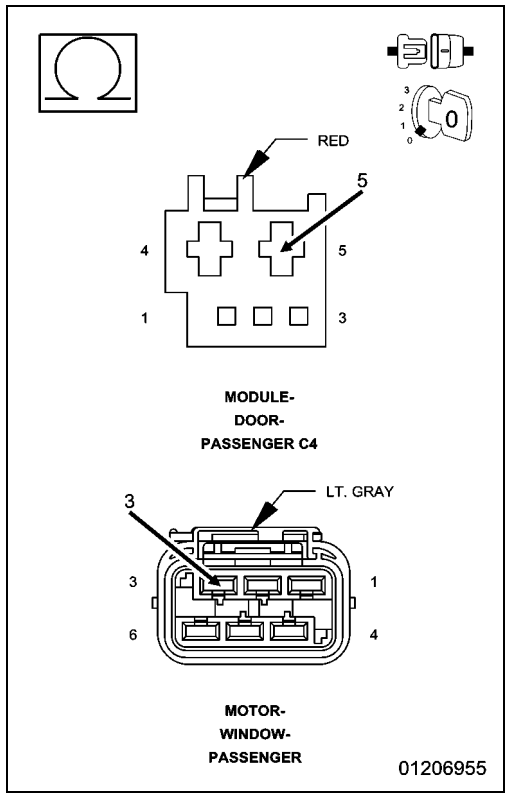

4. (Q12) PASSENGER WINDOW DRIVER (UP) CIRCUIT OPEN

1. Measure the resistance of the (Q12) Passenger Window Driver (Up) circuit between the Passenger Door Module C4 module harness connector and the Passenger Window Motor harness connector.

Is the resistance above 2.0 Ohms?

Yes

- Repair the open in the (Q12) Passenger Window Driver (Up) circuit.
- Perform the BODY VERIFICATION TEST. (Refer to 28 - DTC-Based Diagnostics/MODULE, Totally Integrated Power (TIPM) - Standard Procedure).

Yes

- Replace the Passenger Door Module in accordance with the Service Information.
- Perform the BODY VERIFICATION TEST. (Refer to 28 - DTC-Based Diagnostics/MODULE, Totally Integrated Power (TIPM) - Standard Procedure).

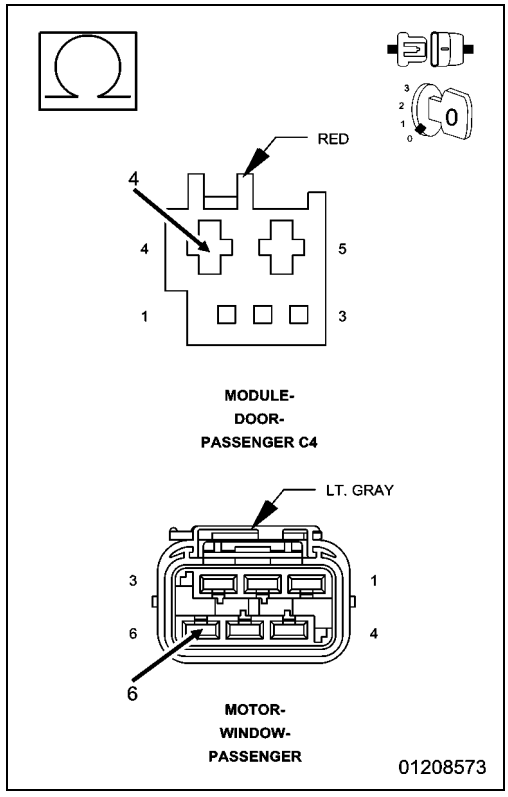

■ B1862-11-PASSENGER WINDOW POSITION SENSOR POWER SUPPLY - CIRCUIT SHORT TO GROUND

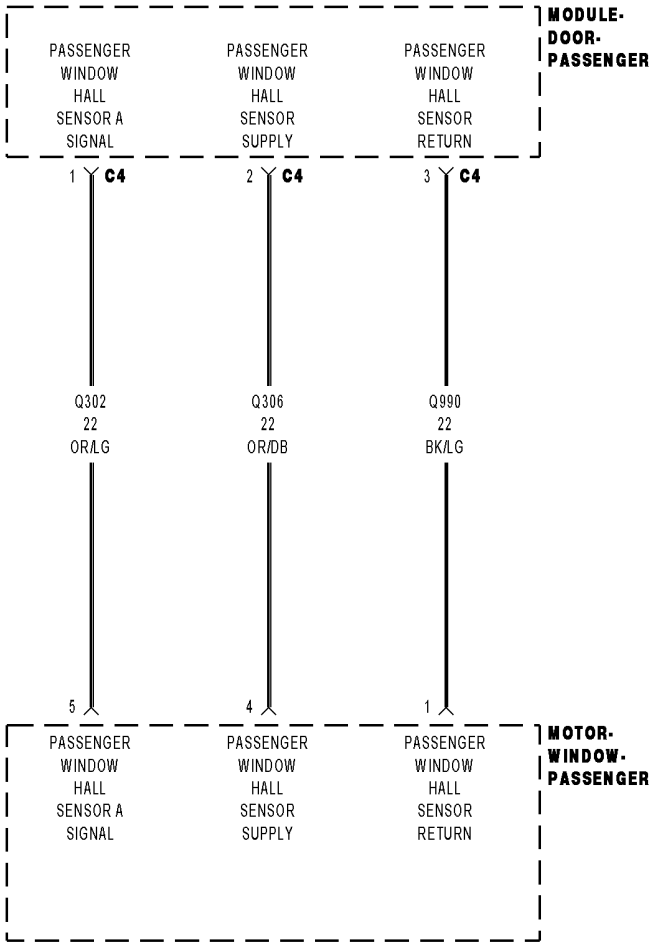

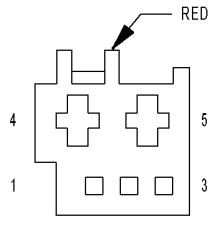

MODULE-
DOOR-
PASSENGER C4

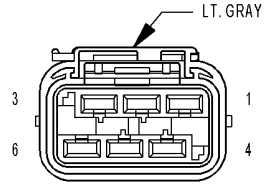

MOTOR-
WINDOW-
PASSENGER

01217990

For a complete wiring diagram, **refer to the Wiring Information**.

- **When Monitored:**
  Whenever the module is awake.
- **Set Condition:**
  When the Passenger Window Hall Sensor Supply circuit falls below 0.8 of a Volt for over two seconds.

Possible Causes
(Q306) PASSENGER WINDOW HALL SENSOR SUPPLY CIRCUIT SHORTED TO GROUND
WINDOW MOTOR SHORTED
PASSENGER DOOR MODULE (PDM)

1. TEST FOR INTERMITTENT CONDITION

1. Turn the ignition on.
2. With the scan tool, record and erase DTCs.
3. Operate the Passenger Window switch up and down several times.
4. Wait 30 seconds.
5. With the scan tool, read the active DTCs.

Does the scan tool display B1862-11-PASSENGER WINDOW POSITION SENSOR POWER SUPPLY - CIRCUIT SHORT TO GROUND?

Yes

- Go To 2

No

- Test complete, the condition or conditions that originally set this DTC are not present at this time. Using the wiring diagrams as a guide, check all related splices and connectors for signs of water intrusion, corrosion, pushed out or bent terminals, and correct pin tension.
- Perform the BODY VERIFICATION TEST. (Refer to 28 - DTC-Based Diagnostics/MODULE, Totally Integrated Power (TIPM) - Standard Procedure).

2. WINDOW MOTOR SHORTED

1. With the scan tool, erase DTCs.
2. Turn the ignition off.
3. Disconnect the Passenger Window Motor harness connector.
4. Turn the ignition on.
5. Operate the Passenger Window switch up and down several times.
6. With the scan tool, read the active DTCs.

Does the scan tool display B1862-11-PASSENGER WINDOW POSITION SENSOR POWER SUPPLY - CIRCUIT SHORT TO GROUND?

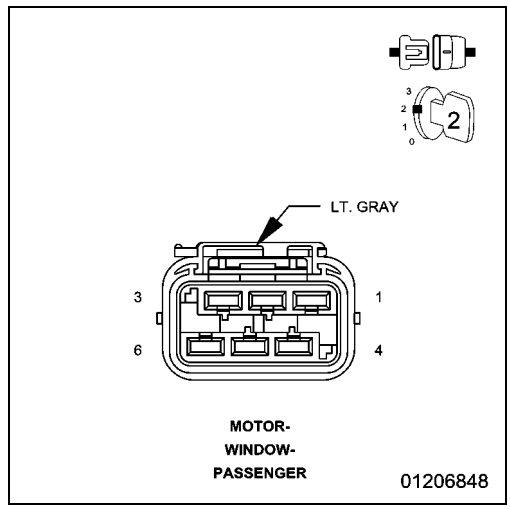

Yes

- Go To 3

No

- Replace the Window Motor (regulator) in accordance with the Service Information.
- Perform the BODY VERIFICATION TEST. (Refer to 28 - DTC-Based Diagnostics/MODULE, Totally Integrated Power (TIPM) - Standard Procedure).

3. (Q306) PASSENGER WINDOW HALL SENSOR SUPPLY CIRCUIT SHORTED TO GROUND

1. Turn the ignition off.
2. Disconnect the Passenger Door Module C4 harness connector.
3. Measure the resistance between ground and the (Q306) Passenger Window Hall Sensor Supply circuit.

Is the resistance below 10,000 Ohms?

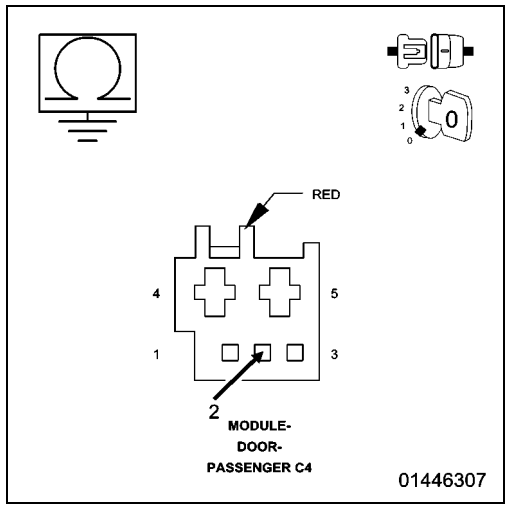

Yes

- Repair the short to ground in the (Q306) Passenger Window Hall Sensor Supply circuit.
- Perform the BODY VERIFICATION TEST. (Refer to 28 - DTC-Based Diagnostics/MODULE, Totally Integrated Power (TIPM) - Standard Procedure).

No

- Replace the Passenger Door Module in accordance with the Service Information.
- Perform the BODY VERIFICATION TEST. (Refer to 28 - DTC-Based Diagnostics/MODULE, Totally Integrated Power (TIPM) - Standard Procedure).

■ B1862-15-PASSENGER WINDOW POSITION SENSOR POWER SUPPLY - CIRCUIT SHORT TO BATTERY OR OPEN - EXPRESS MOTOR ONLY

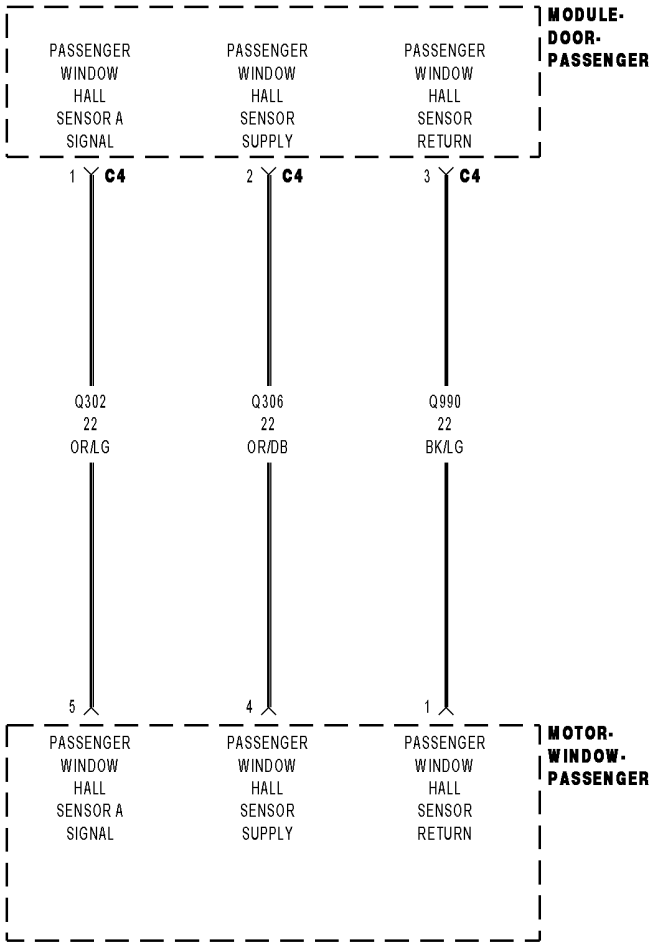

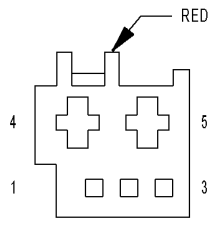

MODULE-
DOOR-
PASSENGER C4

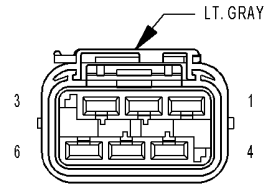

MOTOR-
WINDOW-
PASSENGER

01217990

For a complete wiring diagram, **refer to the Wiring Information**.

- **When Monitored:**
  Whenever the module is awake.
- **Set Condition:**
  When the Passenger Window Hall Sensor Supply circuit is above 1.5 Volts for over 2000 ms. and the power to the module has been turned off.

Possible Causes
(Q306) PASSENGER WINDOW HALL SENSOR SUPPLY CIRCUIT SHORTED TO VOLTAGE
(Q306) PASSENGER WINDOW HALL SENSOR SUPPLY CIRCUIT OPEN
(Q990) PASSENGER WINDOW HALL SENSOR RETURN CIRCUIT OPEN
PASSENGER WINDOW MOTOR
PASSENGER DOOR MODULE (PDM)

1. TEST FOR INTERMITTENT CONDITION

1. Turn the ignition on.
2. With the scan tool, record and erase DTCs.
3. Wait 30 seconds.
4. Operate the Passenger Window switch in both directions several times.
5. With the scan tool, read the active DTCs.

Does the scan tool display B1862-15-PASSENGER WINDOW POSITION SENSOR POWER SUPPLY - CIRCUIT SHORT TO BATTERY OR OPEN?

Yes

- Go To 2

No

- Test complete, the condition or conditions that originally set this DTC are not present at this time. Using the wiring diagrams as a guide, check all related splices and connectors for signs of water intrusion, corrosion, pushed out or bent terminals, and correct pin tension.
- Perform the BODY VERIFICATION TEST. (Refer to 28 - DTC-Based Diagnostics/MODULE, Totally Integrated Power (TIPM) - Standard Procedure).

2. (Q306) PASSENGER WINDOW HALL SENSOR SUPPLY CIRCUIT SHORTED TO VOLTAGE

1. Turn the ignition off.
2. Disconnect the Passenger Door Module C4 harness connector.
3. Disconnect the Passenger Window Motor harness connector.
4. Turn the ignition on.
5. Measure the voltage between the (Q306) Passenger Window Hall Sensor Supply circuit and ground.

Is there any voltage present?

Yes

- Repair the short to the voltage in the (Q306) Passenger Window Hall Sensor Supply circuit.
- Perform the BODY VERIFICATION TEST. (Refer to 28 - DTC-Based Diagnostics/MODULE, Totally Integrated Power (TIPM) - Standard Procedure).

No

- Go To 3

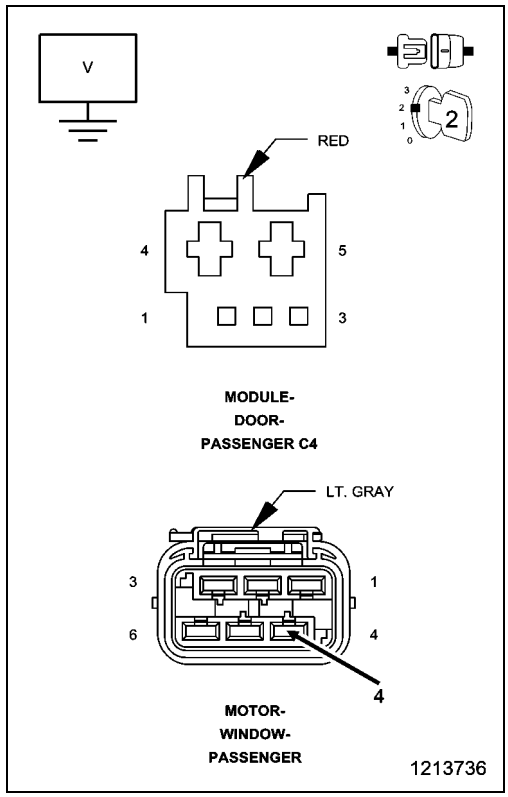

3. (Q306) PASSENGER WINDOW HALL SENSOR SUPPLY CIRCUIT OPEN

1. Turn the ignition off.
2. Measure the resistance of the (Q306) Passenger Window Hall Sensor Supply circuit between the Passenger Door Module C4 harness connector and the Passenger Window Motor harness connector.

Is the resistance above 2.0 Ohms?

Yes

- Repair the open in the (Q306) Passenger Window Hall Sensor Supply circuit.
- Perform the BODY VERIFICATION TEST. (Refer to 28 - DTC-Based Diagnostics/MODULE, Totally Integrated Power (TIPM) - Standard Procedure).

No

- Go To 4

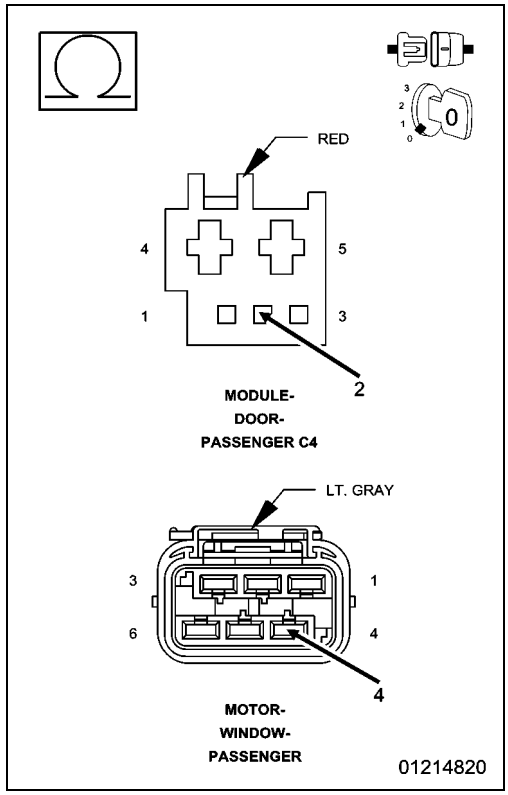

4. (Q990) PASSENGER WINDOW HALL SENSOR RETURN CIRCUIT OPEN

1. Measure the resistance of the (Q990) Passenger Window Hall Sensor Return circuit between the Passenger Door Module C4 harness connector and the Passenger Window Motor harness connector.

Is the resistance above 2.0 Ohms?

Yes

- Repair the open in the (Q990) Passenger Window Hall Sensor Return circuit.
- Perform the BODY VERIFICATION TEST. (Refer to 28 - DTC-Based Diagnostics/MODULE, Totally Integrated Power (TIPM) - Standard Procedure).

No

- Go To 5

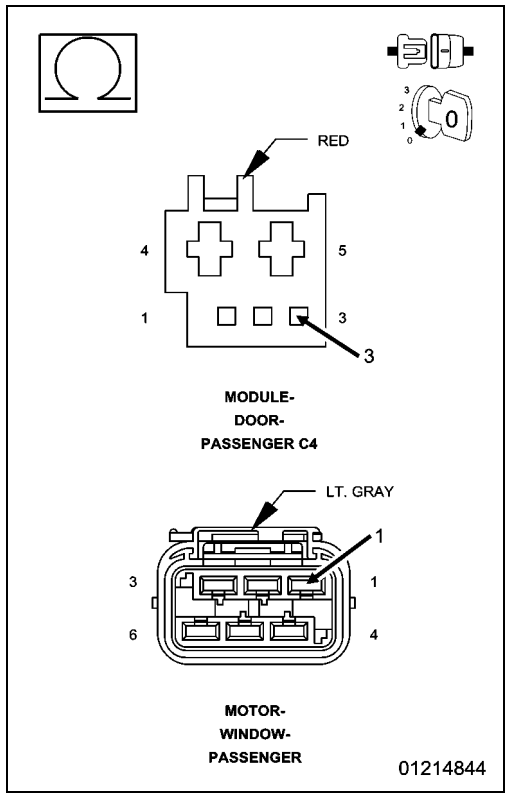

5. PASSENGER WINDOW MOTOR HALL SENSOR OPEN

1. Reconnect the Passenger Window Motor harness connector.
2. Measure the resistance between the (Q990) Passenger Window Hall Sensor Return circuit and the (Q306) Passenger Window Hall Sensor Supply circuit in the Passenger Door Module C4 harness connector.

NOTE: If the Ohmmeter shows "OL", reconnect the Passenger Door Module C4 harness connector and move the motor to a different position. Disconnect the Passenger Door Module C4 harness connector and check the resistance again. If the Ohmmeter still shows "OL", re-try moving the motor again and re-check.

Is the resistance between 500,000 and 650,000 (500k and 650k) Ohms?

Yes

- Replace the Passenger Door Module in accordance with the Service Information
- Perform the BODY VERIFICATION TEST. (Refer to 28 - DTC-Based Diagnostics/MODULE, Totally Integrated Power (TIPM) - Standard Procedure).

No

- Replace the Window Motor in accordance with the Service Information.
- Perform the BODY VERIFICATION TEST. (Refer to 28 - DTC-Based Diagnostics/MODULE, Totally Integrated Power (TIPM) - Standard Procedure).

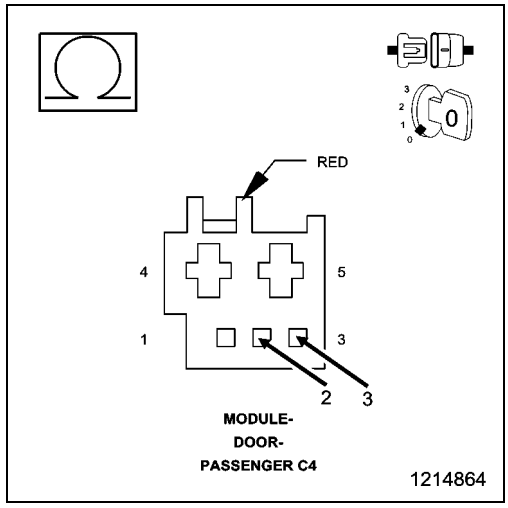

B1865-31-PASSENGER WINDOW POSITION SENSOR - NO SIGNAL

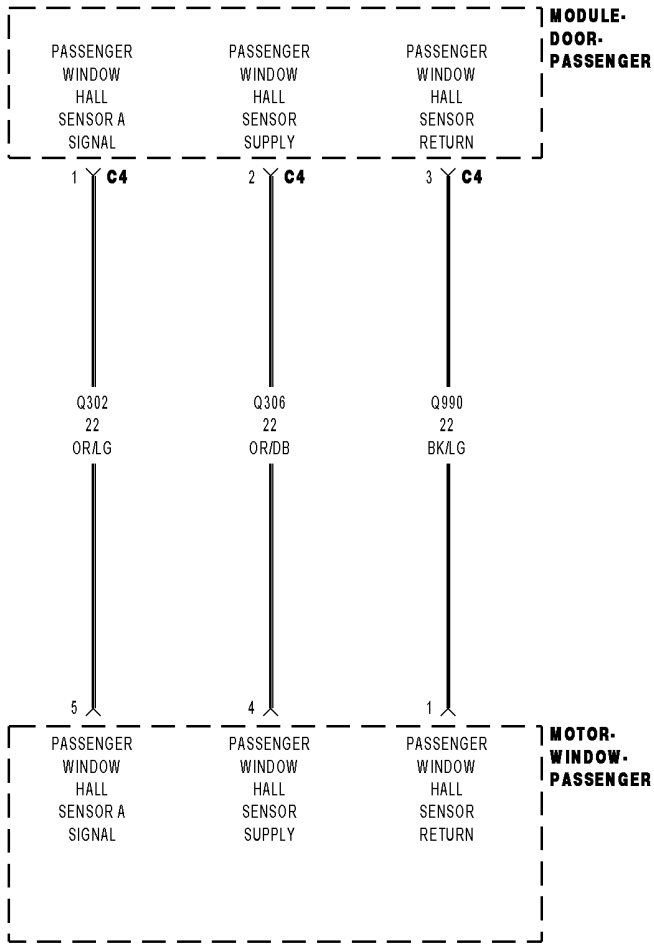

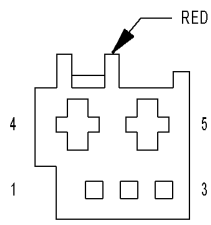

MODULE-
DOOR-
PASSENGER C4

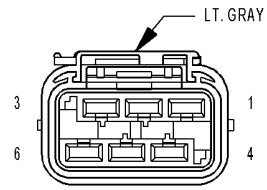

MOTOR-
WINDOW-
PASSENGER

01217990

For a complete wiring diagram, **refer to the Wiring Information**.

- **When Monitored:**
  Whenever the module is awake.
- **Set Condition:**
  When the Passenger Window Motor Hall Sensor does not generate a signal during a window movement.

Possible Causes
(Q302) PASSENGER WINDOW HALL SENSOR A SIGNAL CIRCUIT SHORTED TO GROUND
(Q990) PASSENGER WINDOW HALL SENSOR RETURN CIRCUIT OPEN
(Q302) PASSENGER WINDOW HALL SENSOR A SIGNAL CIRCUIT SHORTED TO THE (Q990) PASSENGER WINDOW HALL SENSOR RETURN CIRCUIT
(Q302) PASSENGER WINDOW HALL SENSOR A SIGNAL CIRCUIT OPEN
WINDOW MOTOR

1. TEST FOR INTERMITTENT CONDITION

1. Turn the ignition on.
2. With the scan tool, record and erase DTCs.
3. Operate the Passenger Window switch up and down several times.
4. Wait 30 seconds.
5. With the scan tool, read the active DTCs.

Does the scan tool display B1865-31-PASSENGER WINDOW POSITION SENSOR - NO SIGNAL?

Yes

- Go To 2

No

- Test complete, the condition or conditions that originally set this DTC are not present at this time. Using the wiring diagrams as a guide, check all related splices and connectors for signs of water intrusion, corrosion, pushed out or bent terminals, and correct pin tension.
- Perform the BODY VERIFICATION TEST. (Refer to 28 - DTC-Based Diagnostics/MODULE, Totally Integrated Power (TIPM) - Standard Procedure).

2. (Q302) PASSENGER WINDOW HALL SENSOR A SIGNAL SHORTED TO GROUND

1. Turn the ignition off.
2. Disconnect the Passenger Window Motor harness connector.
3. Disconnect the Passenger Door Module C4 harness connector.
4. Measure the resistance between ground and the (Q302) Passenger Window Hall Sensor A Signal circuit.

Is the resistance below 10,000 Ohms?

Yes

- Repair the short to ground in the Passenger Window Hall Sensor A signal circuit.
- Perform the BODY VERIFICATION TEST. (Refer to 28 - DTC-Based Diagnostics/MODULE, Totally Integrated Power (TIPM) - Standard Procedure).

No

- Go To 3

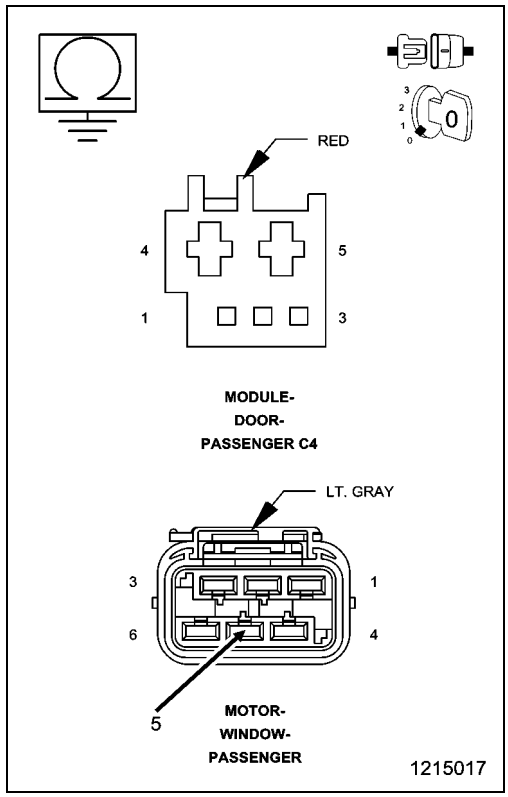

3. (Q990) PASSENGER WINDOW HALL SENSOR RETURN CIRCUIT OPEN

1. Measure the resistance of the (Q990) Passenger Window Hall Sensor Return circuit between the Passenger Door Module C4 harness connector and the Passenger Window Motor harness connector.

Is the resistance above 2.0 Ohms?

Yes

- Repair the open in the (Q990) Passenger Window Hall Sensor Return circuit.
- Perform the BODY VERIFICATION TEST. (Refer to 28 - DTC-Based Diagnostics/MODULE, Totally Integrated Power (TIPM) - Standard Procedure).

No

- Go To 4

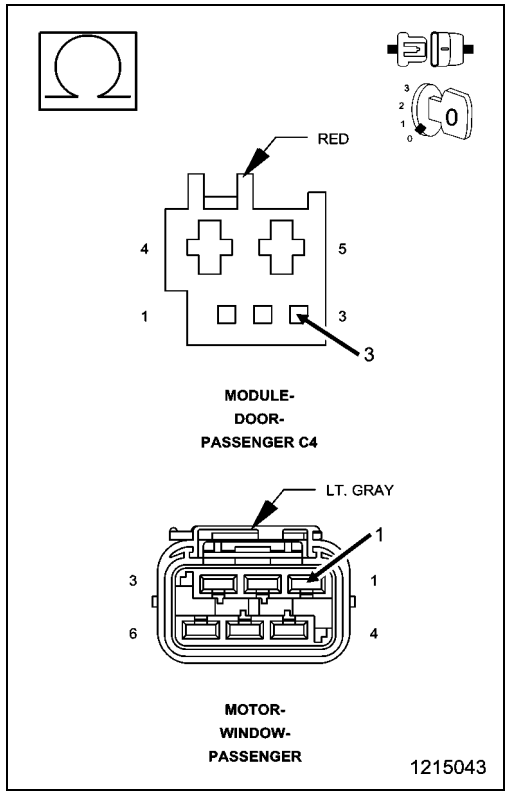

4. (Q302) PASSENGER WINDOW HALL SENSOR A SIGNAL CIRCUIT OPEN

1. Measure the resistance of the (Q302) Passenger Window Hall Sensor A Signal circuit between the Passenger Door Module C4 harness connector and the Passenger Window Motor harness connector.

Is the resistance above 2.0 Ohms?

Yes

- Repair the open in the (Q302) Passenger Window Hall Sensor A Signal circuit.
- Perform the BODY VERIFICATION TEST. (Refer to 28 - DTC-Based Diagnostics/MODULE, Totally Integrated Power (TIPM) - Standard Procedure).

No

- Go To 5

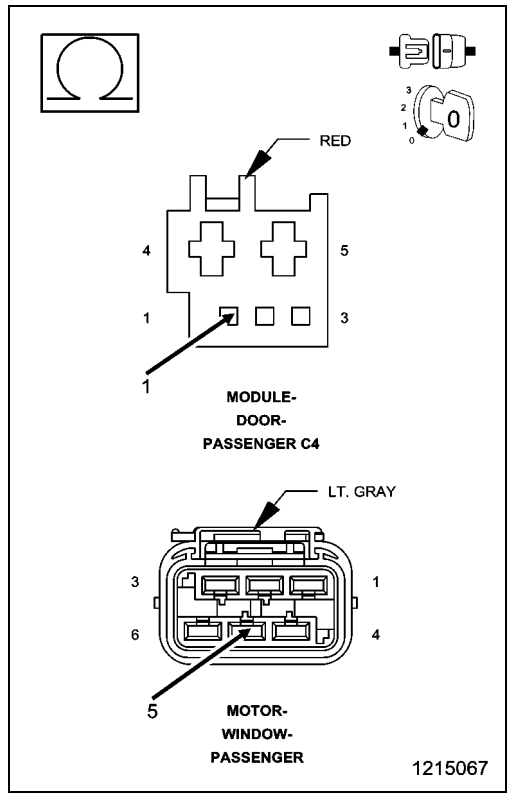

5. (Q302) PASSENGER WINDOW HALL SENSOR A SIGNAL CIRCUIT SHORTED TO THE (Q990) PASSENGER WINDOW HALL SENSOR RETURN CIRCUIT

1. Measure the resistance between the (Q302) Passenger Window Hall Sensor A Signal circuit and the (Q990) Passenger Window Hall Sensor Return circuit.

Is the resistance below 10,000 Ohms?

Yes

- Repair the (Q302) Passenger Window Hall Sensor A Signal circuit for a short to the (Q990) Passenger Window Hall Sensor Return circuit.
- Perform the BODY VERIFICATION TEST. (Refer to 28 - DTC-Based Diagnostics/MODULE, Totally Integrated Power (TIPM) - Standard Procedure).

No

- Replace the Window Motor in accordance with the Service Information.
- Perform the BODY VERIFICATION TEST. (Refer to 28 - DTC-Based Diagnostics/MODULE, Totally Integrated Power (TIPM) - Standard Procedure).

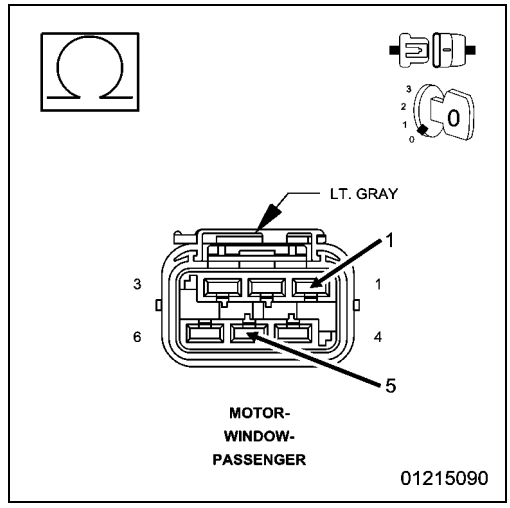

■ B1910-2A-PASSENGER WINDOW SWITCH - SIGNAL STUCK IN RANGE

For a complete wiring diagram, **refer to the Wiring Information**.

- **When Monitored:**
  Continuously
- **Set Condition:**
  When the Passenger Window Switch is stuck for over 30 seconds, this code will set.

Possible Causes
OBSTRUCTION IN SWITCH
PASSENGER WINDOW SWITCH

1. TEST FOR INTERMITTENT CONDITION

1. With the scan tool, record and erase the DTCs.
2. Operate the Passenger Window Switch in all positions several times.
3. Cycle the ignition from on to off.
4. Turn the ignition on.
5. With the scan tool, read the DTCs.

Does the scan tool display B1910-2A-PASSENGER WINDOW SWITCH - SIGNAL STUCK IN RANGE?

Yes

- Go To 2

No

- The conditions that caused this code to set are not present at this time. Using the wiring diagram/schematic as a guide, inspect the wiring and connectors.
- Perform the BODY VERIFICATION TEST. (Refer to 28 - DTC-Based Diagnostics/MODULE, Totally Integrated Power (TIPM) - Standard Procedure).

2. WINDOW SWITCH

1. Check the switch for any objects that could cause a sticking condition.

Was anything found that could cause a sticking condition?

Yes

- Clean or remove the object as necessary.
- Perform the BODY VERIFICATION TEST. (Refer to 28 - DTC-Based Diagnostics/MODULE, Totally Integrated Power (TIPM) - Standard Procedure).

No

- Replace the Passenger Window Switch.
- Perform the BODY VERIFICATION TEST. (Refer to 28 - DTC-Based Diagnostics/MODULE, Totally Integrated Power (TIPM) - Standard Procedure).

■ B1D11-11-PASSENGER MIRROR POSITION SENSOR POWER SUPPLY - CIRCUIT SHORT TO GROUND

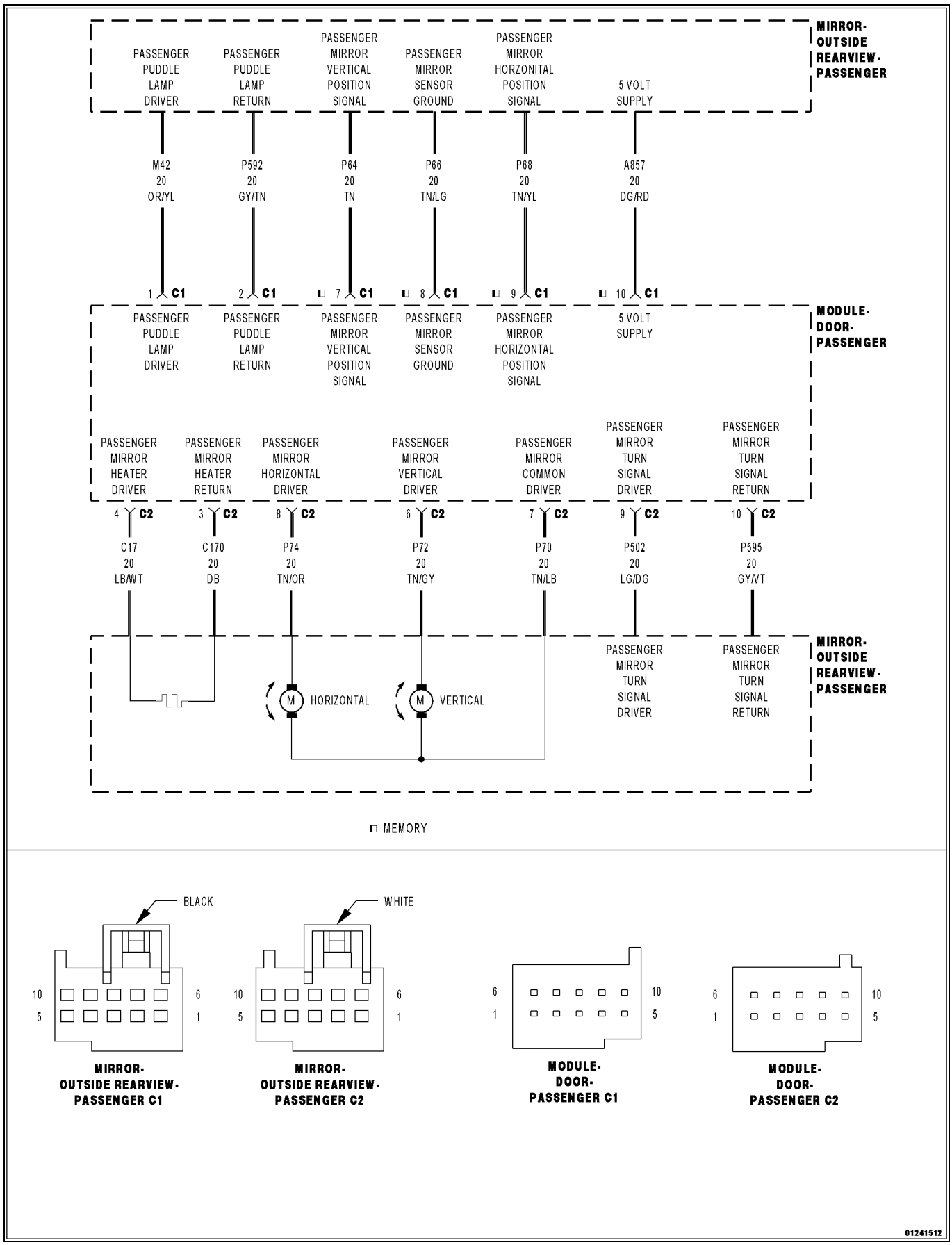

For a complete wiring diagram, **refer to the Wiring Information**.

- **When Monitored:**
  Continuously.
- **Set Condition:**
  The Door Module senses a short low on the (A857) 5-volt Supply circuit for more than two seconds with the output turned on.

Possible Causes
(A857) 5-VOLT SUPPLY CIRCUIT SHORTED TO GROUND
(A857) 5-VOLT SUPPLY CIRCUIT SHORTED TO THE (P66) PASSENGER MIRROR SENSOR GROUND CIRCUIT
(A857) 5-VOLT SUPPLY CIRCUIT SHORTED TO THE (P592) PASSENGER PUDDLE LAMP RETURN CIRCUIT
(A857) 5-VOLT SUPPLY CIRCUIT SHORTED TO THE (P72) PASSENGER MIRROR VERTICAL DRIVER CIRCUIT
(A857) 5-VOLT SUPPLY CIRCUIT SHORTED TO THE (P70) PASSENGER MIRROR COMMON DRIVER CIRCUIT
(A857) 5-VOLT SUPPLY CIRCUIT SHORTED TO THE (P74) PASSENGER MIRROR HORIZONTAL DRIVER CIRCUIT
(A857) 5-VOLT SUPPLY CIRCUIT SHORTED TO THE (C170) PASSENGER MIRROR HEATER RETURN CIRCUIT
(A857) 5-VOLT SUPPLY CIRCUIT SHORTED TO THE (P595) PASSENGER MIRROR TURN SIGNAL RETURN CIRCUIT
PASSENGER OUTSIDE REARVIEW MIRROR SHORTED
DOOR MODULE

1. TEST FOR INTERMITTENT CONDITION

1. Turn the ignition on.
2. Using a scan tool, record and erase Diagnostic Trouble Codes (DTCs).
3. Turn the turn signal on, if equipped with turn signal mirror.
4. Turn the puddle lamps on, if equipped puddle lamp mirror.
5. Turn the rear defogger on, if equipped with heated mirror.
6. Press and release the Mirror Select switch to select the Passenger Outside Rearview Mirror.
7. Operate the Mirror Adjust switch in all directions several times while monitoring the scan tool for DTCs.

NOTE: After adjusting the mirror in one direction wait at least two seconds before adjusting the mirror in the opposite direction as this will allow time for an active fault to set if present.

Is the DTC active?

Yes

- Go To 2

No

- The conditions that caused this code to set are not present at this time. For vehicle's equipped with folding outside rearview mirrors, repeat test with mirror folded. If DTC is now active, Go To 2. Otherwise, use the wiring diagram/ schematic as a guide and inspect the wiring and connectors.
- Perform the BODY VERIFICATION TEST. (Refer to 28 - DTC-Based Diagnostics/MODULE, Totally Integrated Power (TIPM) - Standard Procedure).

2. CHECK (A857) 5-VOLT SUPPLY CIRCUIT FOR A SHORT TO GROUND

1. Turn the ignition off.
2. Disconnect the Passenger Outside Rearview Mirror C1 (Component Side) connector from the Door Module C1 connector.
3. Measure the resistance of the (A857) 5-volt Supply circuit between ground and the Passenger Outside Rearview Mirror C1 (Component Side) connector.

Is the resistance below 10K Ohms?

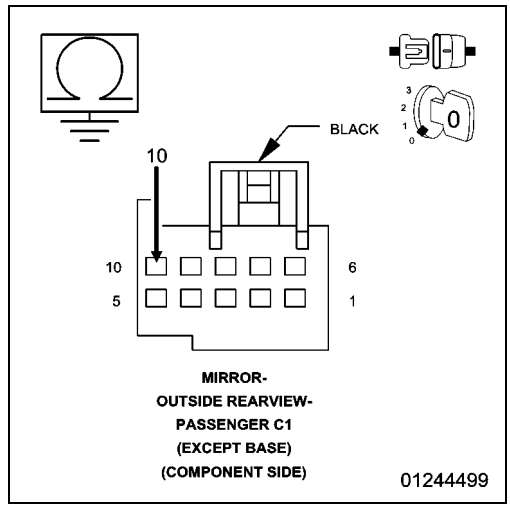

Yes

- Repair the (A857) 5-volt Supply circuit for a short to ground. If the wiring harness and connector are okay, replace the Passenger Outside Rearview Mirror in accordance with the Service Information
- Perform the BODY VERIFICATION TEST. (Refer to 28 - DTC-Based Diagnostics/MODULE, Totally Integrated Power (TIPM) - Standard Procedure).

No

- Go To 3

3. CHECK (A857) 5-VOLT SUPPLY CIRCUIT FOR A SHORT TO (P66) PASSENGER MIRROR SENSOR GROUND CIRCUIT

1. Measure the residence between the (A857) 5-volt Supply circuit and the (P66) Passenger Mirror Sensor Ground circuit at the Passenger Outside Rearview Mirror C1 (Component Side) connector.

Is the resistance below 1.0 Ohm?

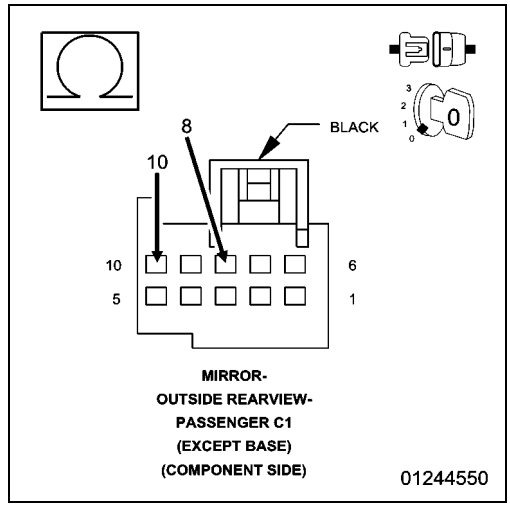

Yes

- Repair the (A857) 5-volt Supply circuit for a short to the (P66) Passenger Mirror Sensor Ground circuit. If the wiring harness and connector are okay, replace the Passenger Outside Rearview Mirror in accordance with the Service Information.
- Perform the BODY VERIFICATION TEST. (Refer to 28 - DTC-Based Diagnostics/MODULE, Totally Integrated Power (TIPM) - Standard Procedure).

No, with Puddle Lamp Mirror

- Go To 4

No, without Puddle Lamp Mirror

- Go To 5

4. CHECK (A857) 5-VOLT SUPPLY CIRCUIT FOR A SHORT TO (P592) PASSENGER PUDDLE LAMP RETURN CIRCUIT

1. Measure the residence between the (A857) 5-volt Supply circuit and the (P592) Passenger Puddle Lamp Return circuit at the Passenger Outside Rearview Mirror C1 (Component Side) connector.

Is the resistance below 10K Ohms?

Yes

- Repair the (A857) 5-volt Supply circuit for a short to the (P592) Passenger Puddle Lamp Return circuit. If the wiring harness and connector are okay, replace the Passenger Outside Rearview Mirror in accordance with the Service Information.
- Perform the BODY VERIFICATION TEST. (Refer to 28 - DTC-Based Diagnostics/MODULE, Totally Integrated Power (TIPM) - Standard Procedure).

No

- Go To 5

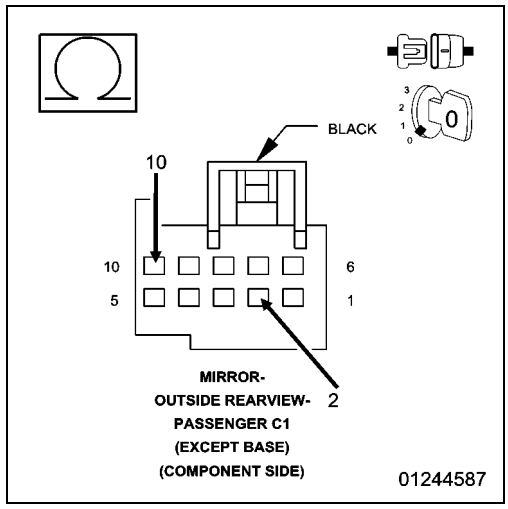

5. CHECK (A857) 5-VOLT SUPPLY CIRCUIT FOR A SHORT TO (P72) PASSENGER MIRROR VERTICAL DRIVER CIRCUIT, (P70) PASSENGER MIRROR COMMON DRIVER CIRCUIT, OR TO (P74) PASSENGER MIRROR HORIZONTAL DRIVER CIRCUIT

1. Disconnect the Passenger Outside Rearview Mirror C2 (Component Side) connector from the Door Module C2 connector.
2. Measure the resistance between the (A857) 5-volt Supply circuit and the (P72) Passenger Mirror Vertical Driver circuit at the Passenger Outside Rearview Mirror C1 and C2 (Component Side) connectors.
3. Measure the resistance between the (A857) 5-volt Supply circuit and the (P70) Passenger Mirror Common Driver circuit at the Passenger Outside Rearview Mirror C1 and C2 (Component Side) connectors.
4. Measure the resistance between the (A857) 5-volt Supply circuit and the (P74) Passenger Mirror Horizontal Driver circuit at the Passenger Outside Rearview Mirror C1 and C2 (Component Side) connectors.

Is the resistance below 10K Ohms for any measurement?

Yes

- Repair all circuits with a resistance below 10K Ohms for a short to the (A857) 5-volt Supply circuit. If the wiring harness and connector are okay, replace the Passenger Outside Rearview Mirror in accordance with the Service Information.
- Perform the BODY VERIFICATION TEST. (Refer to 28 - DTC-Based Diagnostics/MODULE, Totally Integrated Power (TIPM) - Standard Procedure).

No, with Heated/Turn Signal Mirror

- Go To 6

No, without Heated/Turn Signal Mirror

- Inspect the wiring and connectors for damage and repair as necessary. If the wiring and connectors are okay, replace the Door Module in accordance with the Service Information.
- Perform the BODY VERIFICATION TEST. (Refer to 28 - DTC-Based Diagnostics/MODULE, Totally Integrated Power (TIPM) - Standard Procedure).

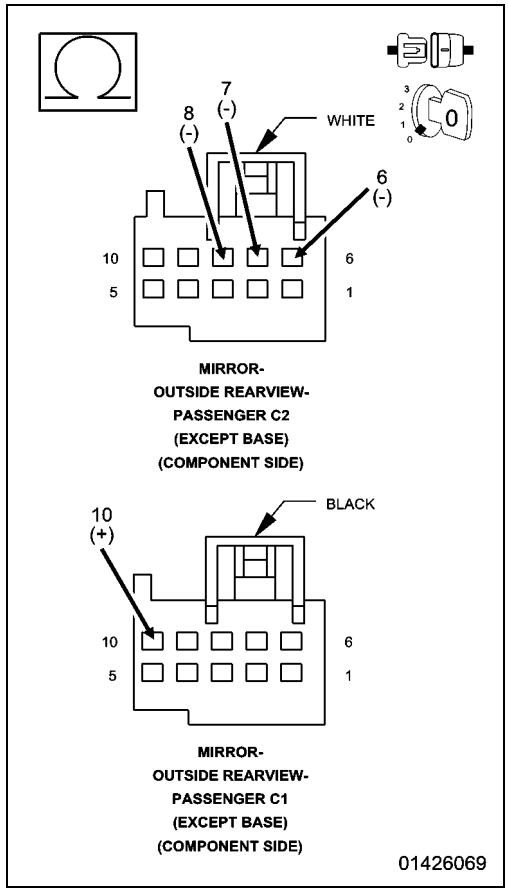

6. CHECK (A857) 5-VOLT SUPPLY CIRCUIT FOR A SHORT TO (C170) PASSENGER MIRROR HEATER RETURN CIRCUIT OR TO (P595) PASSENGER MIRROR TURN SIGNAL RETURN CIRCUIT

1. For Heated Mirror, measure the resistance between the (A857) 5-volt Supply circuit and the (C170) Passenger Mirror Heater Return circuit at the Passenger Outside Rearview Mirror C1 and C2 (Component Side) connectors.
2. For Turn Signal Mirror, measure the resistance between the (A857) 5-volt Supply circuit and the (P595) Passenger Mirror Turn Signal Return circuit at the Passenger Outside Rearview Mirror C1 and C2 (Component Side) connectors.

Is the resistance below 10K Ohms for either measurement?

Yes

- Repair all circuits with a resistance below 10K Ohms for a short to the (A857) 5-volt Supply circuit. If the wiring harness and connector are okay, replace the Passenger Outside Rearview Mirror in accordance with the Service Information.
- Perform the BODY VERIFICATION TEST. (Refer to 28 - DTC-Based Diagnostics/MODULE, Totally Integrated Power (TIPM) - Standard Procedure).

No

- Inspect the wiring and connectors for damage and repair as necessary. If the wiring and connectors are okay, replace the Door Module in accordance with the Service Information.
- Perform the BODY VERIFICATION TEST. (Refer to 28 - DTC-Based Diagnostics/MODULE, Totally Integrated Power (TIPM) - Standard Procedure).

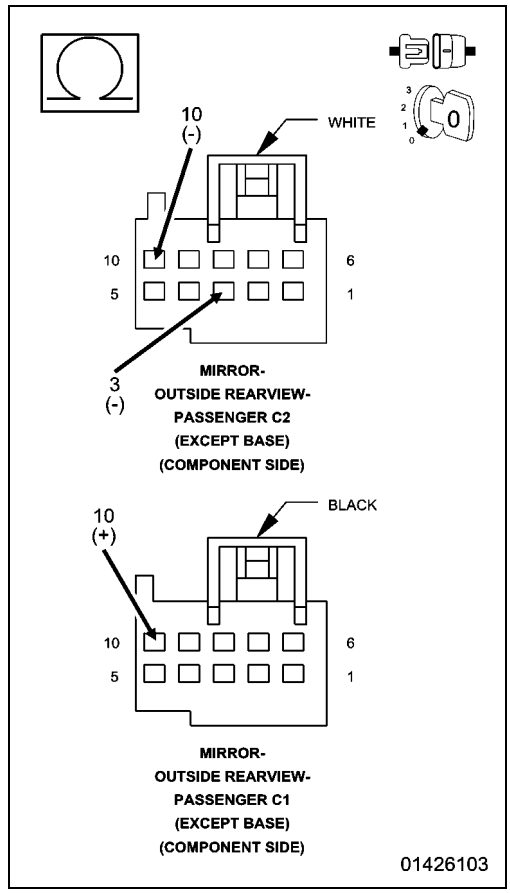

■ B1D14-11-PASSENGER MIRROR VERTICAL POSITION SENSOR INPUT - CIRCUIT SHORT TO GROUND

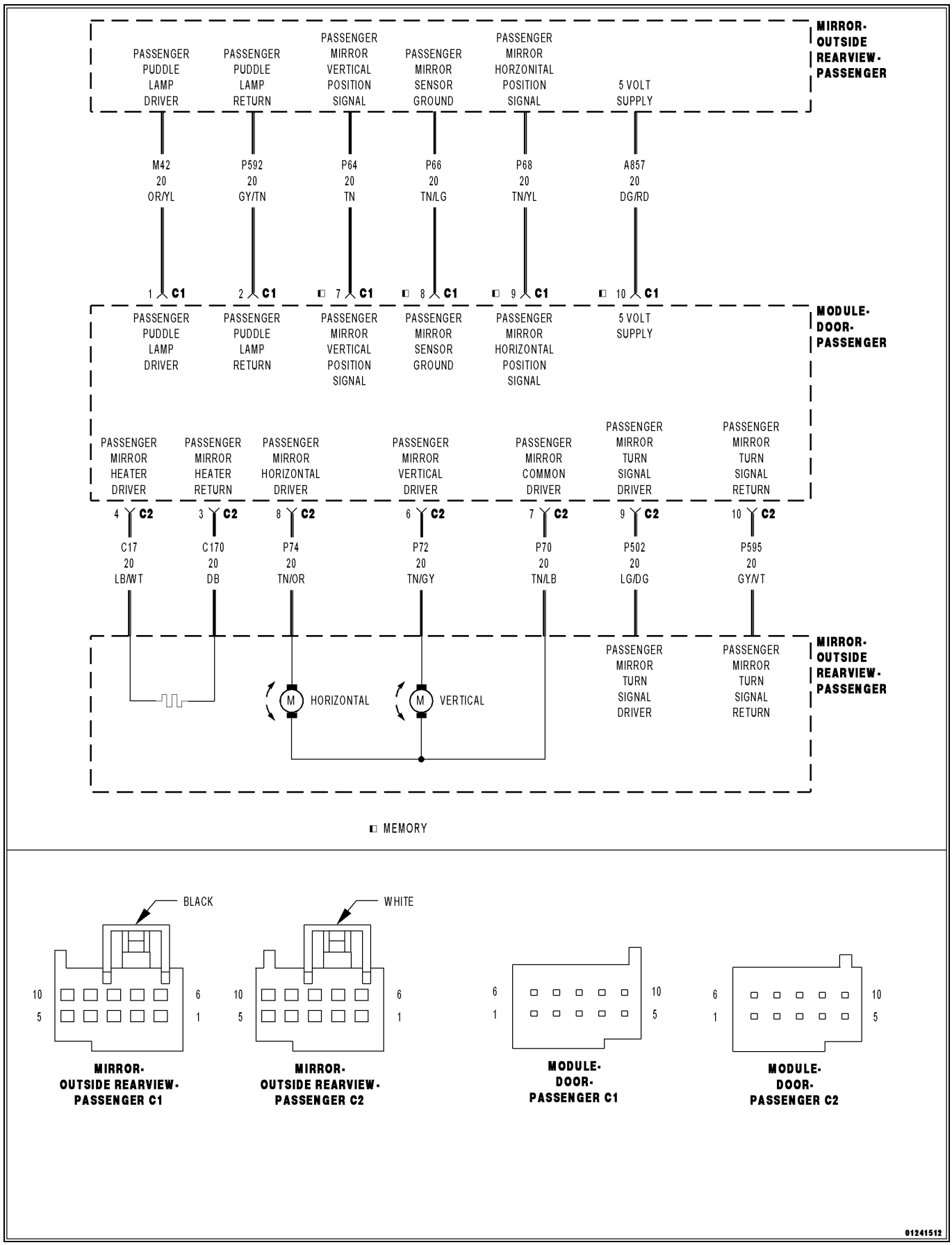

For a complete wiring diagram, **refer to the Wiring Information**.

- **When Monitored:**
  Continuously.
- **Set Condition:**
  The Door Module senses a short low on the (P64) Passenger Mirror Vertical Position Signal circuit for more than two seconds.

Possible Causes
(P64) PASSENGER MIRROR VERTICAL POSITION SIGNAL CIRCUIT SHORTED TO GROUND
(P64) PASSENGER MIRROR VERTICAL POSITION SIGNAL CIRCUIT SHORTED TO THE (P66) PASSENGER MIRROR SENSOR GROUND CIRCUIT
(P64) PASSENGER MIRROR VERTICAL POSITION SIGNAL CIRCUIT SHORTED TO THE (P592) PASSENGER PUDDLE LAMP RETURN CIRCUIT
(P64) PASSENGER MIRROR VERTICAL POSITION SIGNAL CIRCUIT SHORTED TO THE (P72) PASSENGER MIRROR VERTICAL DRIVER CIRCUIT
(P64) PASSENGER MIRROR VERTICAL POSITION SIGNAL CIRCUIT SHORTED TO THE (P70) PASSENGER MIRROR COMMON DRIVER CIRCUIT
(P64) PASSENGER MIRROR VERTICAL POSITION SIGNAL CIRCUIT SHORTED TO THE (P74) PASSENGER MIRROR HORIZONTAL DRIVER CIRCUIT
(P64) PASSENGER MIRROR VERTICAL POSITION SIGNAL CIRCUIT SHORTED TO THE (C170) PASSENGER MIRROR HEATER RETURN CIRCUIT
(P64) PASSENGER MIRROR VERTICAL POSITION SIGNAL CIRCUIT SHORTED TO THE (P595) PASSENGER MIRROR TURN SIGNAL RETURN CIRCUIT
PASSENGER OUTSIDE REARVIEW MIRROR SHORTED
DOOR MODULE

1. TEST FOR INTERMITTENT CONDITION

1. Turn the ignition on.
2. Using a scan tool, record and erase Diagnostic Trouble Codes (DTCs).
3. Turn the turn signal on, if equipped with turn signal mirror.
4. Turn the puddle lamps on, if equipped with puddle lamp mirror.
5. Turn the rear defogger on, if equipped with heated mirror.
6. Press and release the Mirror Select switch to select the Passenger Outside Rearview Mirror.
7. Operate the Mirror Adjust switch in all directions several times while monitoring the scan tool for DTCs.

NOTE: After adjusting the mirror in one direction wait at least two seconds before adjusting the mirror in the opposite direction, as this will allow time for an active fault to set if present.

Is the DTC active?

Yes

- Go To 2

No

- The conditions that caused this code to set are not present at this time. For vehicle's equipped with folding outside rearview mirrors, repeat test with mirror folded. If DTC is now active, Go To 2. Otherwise, use the wiring diagram/ schematic as a guide and inspect the wiring and connectors.
- Perform the BODY VERIFICATION TEST. (Refer to 28 - DTC-Based Diagnostics/MODULE, Totally Integrated Power (TIPM) - Standard Procedure).

2. CHECK (P64) PASSENGER MIRROR VERTICAL POSITION SIGNAL CIRCUIT FOR A SHORT TO GROUND

1. Turn the ignition off.
2. Disconnect the Passenger Outside Rearview Mirror C1 (Component Side) connector from the Door Module C1 connector.
3. Measure the resistance of the (P64) Passenger Mirror Vertical Position Signal circuit between ground and the Passenger Outside Rearview Mirror C1 (Component Side) connector.

Is the resistance below 10K Ohms?

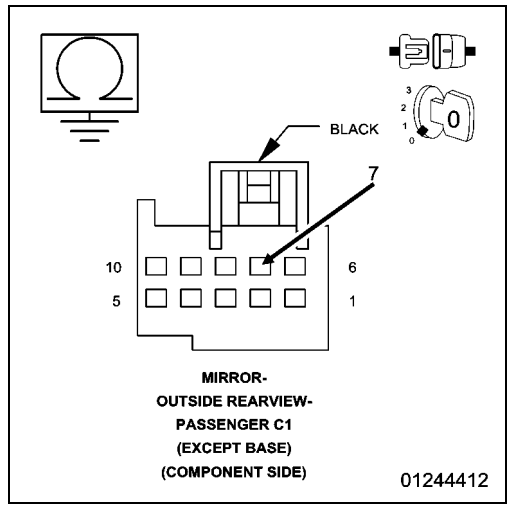

Yes

- Repair the (P64) Passenger Mirror Vertical Position Signal circuit for a short to ground. If the wiring harness and connector are okay, replace the Passenger Outside Rearview Mirror in accordance with the Service Information.
- Perform the BODY VERIFICATION TEST. (Refer to 28 - DTC-Based Diagnostics/MODULE, Totally Integrated Power (TIPM) - Standard Procedure).

No

- Go To 3

3. CHECK (P64) PASSENGER MIRROR VERTICAL POSITION SIGNAL CIRCUIT FOR A SHORT TO (P66) PASSENGER MIRROR SENSOR GROUND CIRCUIT

1. Measure the residence between the (P64) Passenger Mirror Vertical Position Signal circuit and the (P66) Passenger Mirror Sensor Ground circuit at the Passenger Outside Rearview Mirror C1 (Component Side) connector.

Is the resistance below 1.0 Ohm?

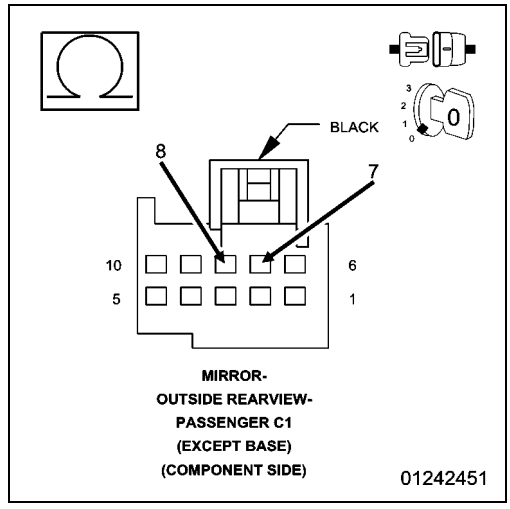

Yes

- Repair the (P64) Passenger Mirror Vertical Position Signal circuit for a short to the (P66) Passenger Mirror Sensor Ground circuit. If the wiring harness and connector are okay, replace the Passenger Outside Rearview Mirror in accordance with the Service Information.
- Perform the BODY VERIFICATION TEST. (Refer to 28 - DTC-Based Diagnostics/MODULE, Totally Integrated Power (TIPM) - Standard Procedure).

No, with Puddle Lamp Mirror

- Go To 4

No, without Puddle Lamp Mirror

- Go To 5

4. CHECK (P64) PASSENGER MIRROR VERTICAL POSITION SIGNAL CIRCUIT FOR A SHORT TO (P592) PASSENGER PUDDLE LAMP RETURN CIRCUIT

1. Measure the residence between the (P64) Passenger Mirror Vertical Position Signal circuit and the (P592) Passenger Puddle Lamp Return circuit at the Passenger Outside Rearview Mirror C1 (Component Side) connector.

Is the resistance below 10K Ohms?

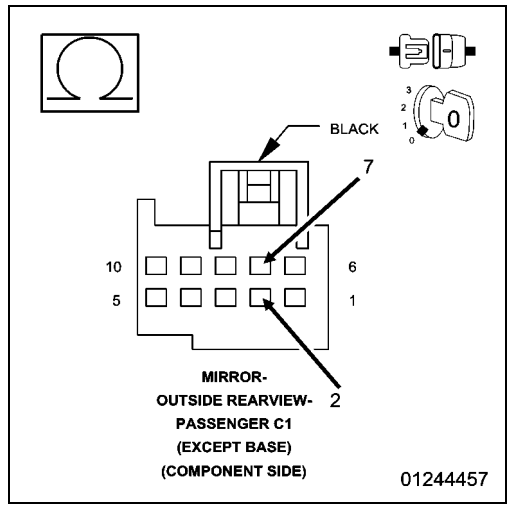

Yes

- Repair the (P64) Passenger Mirror Vertical Position Signal circuit for a short to the (P592) Passenger Puddle Lamp Return circuit. If the wiring harness and connector are okay, replace the Passenger Outside Rearview Mirror in accordance with the Service Information.
- Perform the BODY VERIFICATION TEST. (Refer to 28 - DTC-Based Diagnostics/MODULE, Totally Integrated Power (TIPM) - Standard Procedure).

No

- Go To 5

5. CHECK (P64) PASSENGER MIRROR VERTICAL POSITION SIGNAL CIRCUIT FOR A SHORT TO (P72) PASSENGER MIRROR VERTICAL DRIVER CIRCUIT, (P70) PASSENGER MIRROR COMMON DRIVER CIRCUIT, OR TO (P74) PASSENGER MIRROR HORIZONTAL DRIVER CIRCUIT

1. Disconnect the Passenger Outside Rearview Mirror C2 (Component Side) connector from the Door Module C2 connector.
2. Measure the resistance between the (P64) Passenger Mirror Vertical Position Signal circuit and the (P72) Passenger Mirror Vertical Driver circuit at the Passenger Outside Rearview Mirror C1 and C2 (Component Side) connectors.
3. Measure the resistance between the (P64) Passenger Mirror Vertical Position Signal circuit and the (P70) Passenger Mirror Common Driver circuit at the Passenger Outside Rearview Mirror C1 and C2 (Component Side) connectors.
4. Measure the resistance between the (P64) Passenger Mirror Vertical Position Signal circuit and the (P74) Passenger Mirror Horizontal Driver circuit at the Passenger Outside Rearview Mirror C1 and C2 (Component Side) connectors.

Is the resistance below 10K Ohms for any measurement?

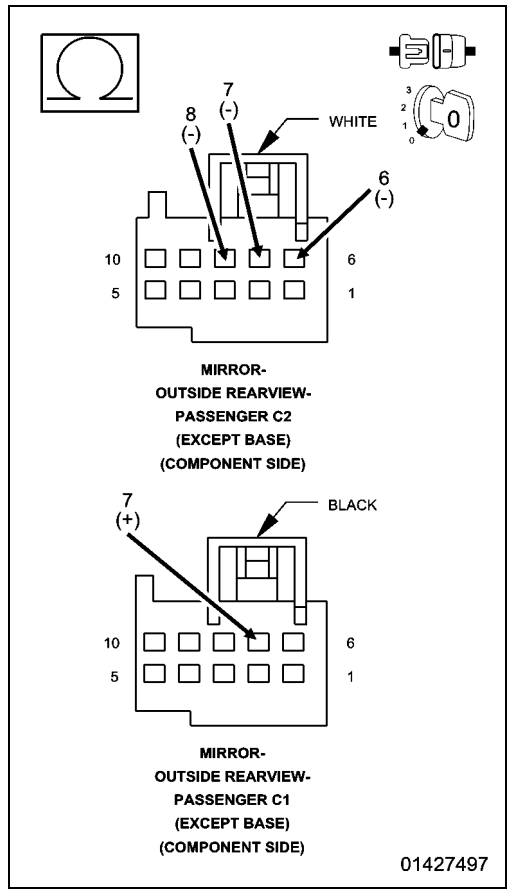

Yes

- Repair all circuits with a resistance below 10K Ohms for a short to the (P64) Passenger Mirror Vertical Position Signal circuit. If the wiring harness and connector are okay, replace the Passenger Outside Rearview Mirror in accordance with the Service Information.
- Perform the BODY VERIFICATION TEST. (Refer to 28 - DTC-Based Diagnostics/MODULE, Totally Integrated Power (TIPM) - Standard Procedure).

No, with Heated/Turn Signal Mirror

- Go To 6

No, without Heated/Turn Signal Mirror

- Inspect the wiring and connectors for damage and repair as necessary. If the wiring and connectors are okay, replace the Door Module in accordance with the Service Information.
- Perform the BODY VERIFICATION TEST. (Refer to 28 - DTC-Based Diagnostics/MODULE, Totally Integrated Power (TIPM) - Standard Procedure).

6. CHECK (P64) PASSENGER MIRROR VERTICAL POSITION SIGNAL CIRCUIT FOR A SHORT TO (C170) PASSENGER MIRROR HEATER RETURN CIRCUIT OR TO (P595) PASSENGER MIRROR TURN SIGNAL RETURN CIRCUIT

1. For Heated Mirror, measure the resistance between the (P64) Passenger Mirror Vertical Position Signal circuit and the (C170) Passenger Mirror Heater Return circuit at the Passenger Outside Rearview Mirror C1 and C2 (Component Side) connectors.
2. For Turn Signal Mirror, measure the resistance between the (P64) Passenger Mirror Vertical Position Signal circuit and the (P595) Passenger Mirror Turn Signal Return circuit at the Passenger Outside Rearview Mirror C1 and C2 (Component Side) connectors.

Is the resistance below 10K Ohms for either measurement?

Yes

- Repair all circuits with a resistance below 10K Ohms for a short to the (P64) Passenger Mirror Vertical Position Signal circuit. If the wiring harness and connector are okay, replace the Passenger Outside Rearview Mirror in accordance with the Service Information.
- Perform the BODY VERIFICATION TEST. (Refer to 28 - DTC-Based Diagnostics/MODULE, Totally Integrated Power (TIPM) - Standard Procedure).

No

- Inspect the wiring and connectors for damage and repair as necessary. If the wiring and connectors are okay, replace the Door Module in accordance with the Service Information.
- Perform the BODY VERIFICATION TEST. (Refer to 28 - DTC-Based Diagnostics/MODULE, Totally Integrated Power (TIPM) - Standard Procedure).

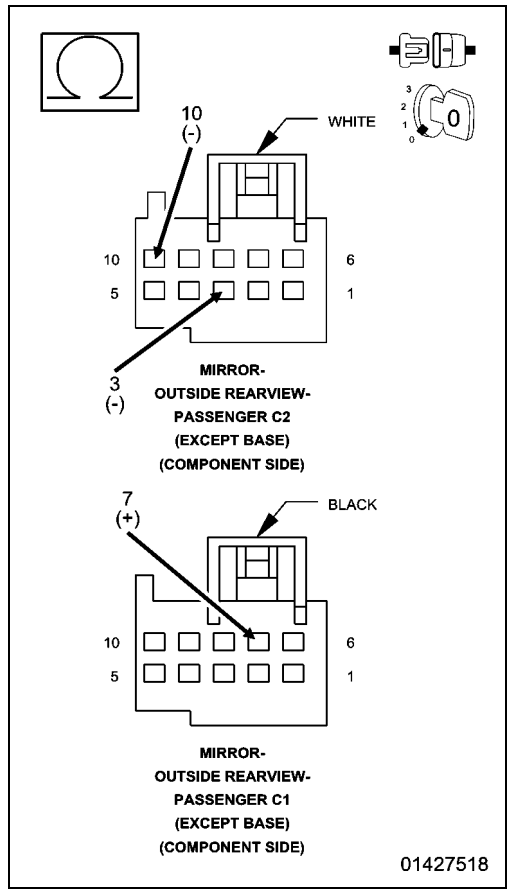

■ B1D14-12-PASSENGER MIRROR VERTICAL POSITION SENSOR INPUT - CIRCUIT SHORT TO BATTERY

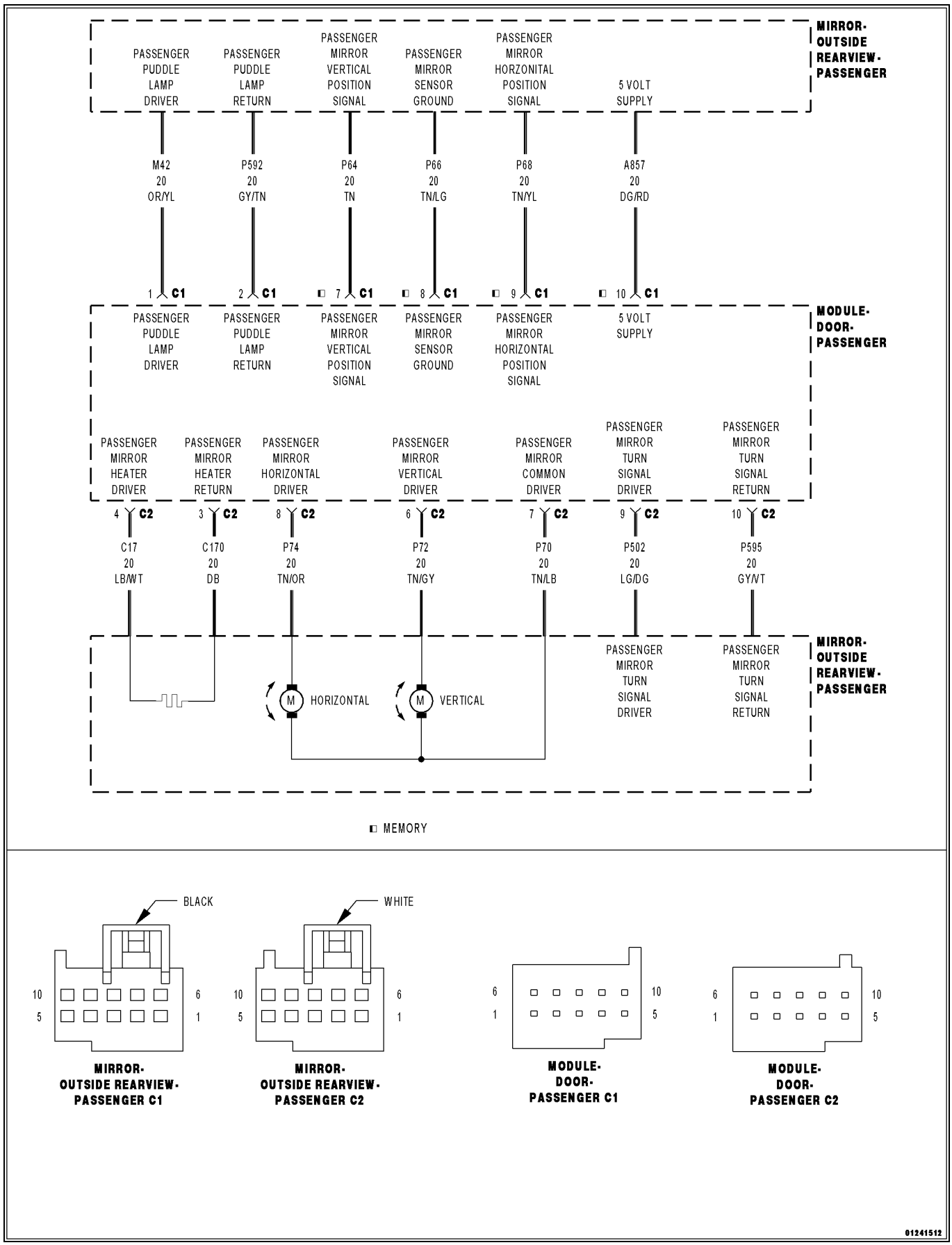

01241512

For a complete wiring diagram, **refer to the Wiring Information**.

- **When Monitored:**
  Continuously.
- **Set Condition:**
  The Door Module senses more than 400 mA current on the (A857) 5-volt Supply circuit or an open or a short high on the (P64) Passenger Mirror Vertical Position Signal circuit for more than two seconds.

Possible Causes
(P64) PASSENGER MIRROR VERTICAL POSITION SIGNAL CIRCUIT SHORTED TO VOLTAGE
(P64) PASSENGER MIRROR VERTICAL POSITION SIGNAL CIRCUIT SHORTED TO THE (M42) PASSENGER PUDDLE LAMP DRIVER CIRCUIT
(P64) PASSENGER MIRROR VERTICAL POSITION SIGNAL CIRCUIT OPEN
(P66) PASSENGER MIRROR SENSOR GROUND CIRCUIT OPEN
(P64) PASSENGER MIRROR VERTICAL POSITION SIGNAL CIRCUIT SHORTED TO THE (P72) PASSENGER MIRROR VERTICAL DRIVER CIRCUIT
(P64) PASSENGER MIRROR VERTICAL POSITION SIGNAL CIRCUIT SHORTED TO THE (P70) PASSENGER MIRROR COMMON DRIVER CIRCUIT
(P64) PASSENGER MIRROR VERTICAL POSITION SIGNAL CIRCUIT SHORTED TO THE (P74) PASSENGER MIRROR HORIZONTAL DRIVER CIRCUIT
(P64) PASSENGER MIRROR VERTICAL POSITION SIGNAL CIRCUIT SHORTED TO THE (C17) PASSENGER MIRROR HEATER DRIVER CIRCUIT
(P64) PASSENGER MIRROR VERTICAL POSITION SIGNAL CIRCUIT SHORTED TO THE (P502) PASSENGER MIRROR TURN SIGNAL DRIVER CIRCUIT
(A857) 5-VOLT SUPPLY CIRCUIT SHORTED TO VOLTAGE
(A857) 5-VOLT SUPPLY CIRCUIT SHORTED TO THE (M42) PASSENGER PUDDLE LAMP DRIVER CIRCUIT
(A857) 5-VOLT SUPPLY CIRCUIT SHORTED TO THE (P72) PASSENGER MIRROR VERTICAL DRIVER CIRCUIT
(A857) 5-VOLT SUPPLY CIRCUIT SHORTED TO THE (P70) PASSENGER MIRROR COMMON DRIVER CIRCUIT
(A857) 5-VOLT SUPPLY CIRCUIT SHORTED TO THE (P74) PASSENGER MIRROR HORIZONTAL DRIVER CIRCUIT
(A857) 5-VOLT SUPPLY CIRCUIT SHORTED TO THE (C17) PASSENGER MIRROR HEATER DRIVER CIRCUIT
(A857) 5-VOLT SUPPLY CIRCUIT SHORTED TO THE (P502) PASSENGER MIRROR TURN SIGNAL DRIVER CIRCUIT
PASSENGER OUTSIDE REARVIEW MIRROR SHORTED
DOOR MODULE

1. TEST FOR INTERMITTENT CONDITION

1. Turn the ignition on.
2. Using a scan tool, record and erase Diagnostic Trouble Codes (DTCs).
3. Turn the turn signal on, if equipped with turn signal mirror.
4. Turn the puddle lamps on, if equipped with puddle lamp mirror.
5. Turn the rear defogger on, if equipped with heated mirror.
6. Press and release the Mirror Select switch to select the Passenger Outside Rearview Mirror.
7. Operate the Mirror Adjust switch in all directions several times while monitoring the scan tool for DTCs.

NOTE: After adjusting the mirror in one direction wait at least two seconds before adjusting the mirror in the opposite direction, as this will allow time for an active fault to set if present.

Is the DTC active?

Yes

- Go To 2

No

- The conditions that caused this code to set are not present at this time. For vehicle's equipped with folding outside rearview mirrors, repeat test with mirror folded. If DTC is now active, Go To 2. Otherwise, use the wiring diagram/ schematic as a guide and inspect the wiring and connectors.
- Perform the BODY VERIFICATION TEST. (Refer to 28 - DTC-Based Diagnostics/MODULE, Totally Integrated Power (TIPM) - Standard Procedure).

2. CHECK (P64) PASSENGER MIRROR VERTICAL POSITION SIGNAL CIRCUIT AND (A857) 5-VOLT SUPPLY CIRCUIT FOR A SHORT TO VOLTAGE

1. Turn the ignition off.
2. Disconnect the Passenger Outside Rearview Mirror C1 (Component Side) connector from the Door Module C1 connector.
3. Turn the ignition on.
4. Measure the voltage of the (P64) Passenger Mirror Vertical Position Signal circuit between the Passenger Outside Rearview Mirror C1 (Component Side) connector and ground.
5. Measure the voltage of the (A857) 5-volt Supply circuit between the Passenger Outside Rearview Mirror C1 (Component Side) connector and ground.

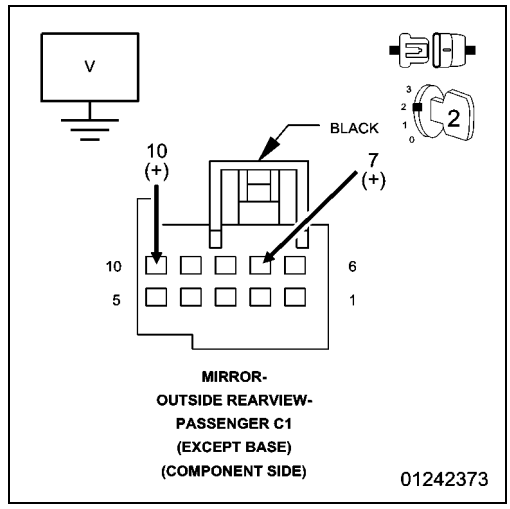

Is there any Voltage present on either circuit?

Yes

- Repair all circuits with Voltage present for a short to Voltage. If the wiring harness and connector are okay, replace the Passenger Outside Rearview Mirror in accordance with the Service Information.
- Perform the BODY VERIFICATION TEST. (Refer to 28 - DTC-Based Diagnostics/MODULE, Totally Integrated Power (TIPM) - Standard Procedure).

No, with Puddle Lamp Mirror

- Go To 3

No, without Puddle Lamp Mirror

- Go To 4

3. CHECK (P64) PASSENGER MIRROR VERTICAL POSITION SIGNAL CIRCUIT AND (A857) 5-VOLT SUPPLY CIRCUIT FOR A SHORT TO (M42) PASSENGER PUDDLE LAMP DRIVER CIRCUIT

1. Turn the ignition off.
2. Measure the resistance between the (M42) Passenger Puddle Lamp Driver circuit and the (P64) Passenger Mirror Vertical Position Signal circuit at the Passenger Outside Rearview Mirror C1 (Component Side) connector.
3. Measure the resistance between the (M42) Passenger Puddle Lamp Driver circuit and the (A857) 5-volt Supply circuit at the Passenger Outside Rearview Mirror C1 (Component Side) connector.

Is the resistance below 10K Ohms for either measurement?

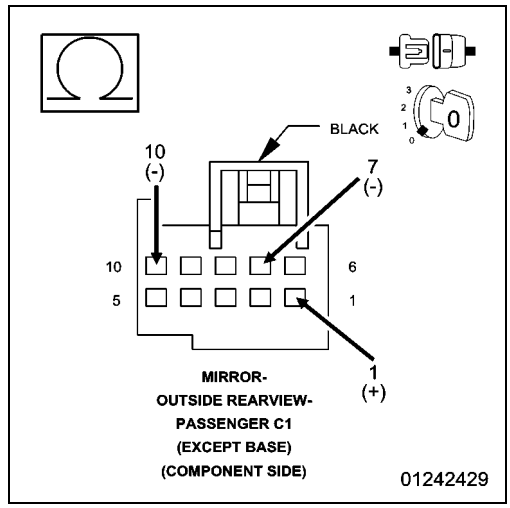

Yes

- Repair all circuits with a resistance below 10K Ohms for a short to the (M42) Passenger Puddle Lamp Driver circuit. If the wiring harness and connector are okay, replace the Passenger Outside Rearview Mirror in accordance with the Service Information.
- Perform the BODY VERIFICATION TEST. (Refer to 28 - DTC-Based Diagnostics/MODULE, Totally Integrated Power (TIPM) - Standard Procedure).

No

- Go To 4

4. CHECK (P64) PASSENGER MIRROR VERTICAL POSITION SIGNAL CIRCUIT AND (P66) PASSENGER MIRROR SENSOR GROUND CIRCUIT FOR AN OPEN

1. If not done previously, turn the ignition off.
2. Measure the resistance between the (P64) Passenger Mirror Vertical Position Signal circuit and the (P66) Passenger Mirror Sensor Ground circuit at the Passenger Outside Rearview Mirror C1 (Component Side) connector.

Is the resistance below 3.0 Ohms?

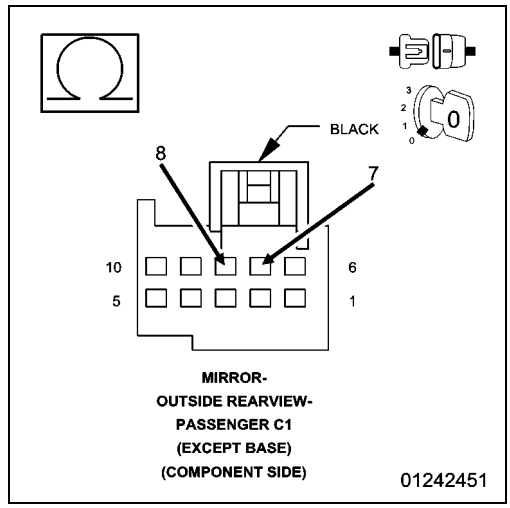

Yes

- Go To 5

No

- Repair (P64) Passenger Mirror Vertical Position Signal circuit or the (P66) Passenger Mirror Sensor Ground circuit for an open. If the wiring harness and connector are okay, replace the Passenger Outside Rearview Mirror in accordance with the Service Information.
- Perform the BODY VERIFICATION TEST. (Refer to 28 - DTC-Based Diagnostics/MODULE, Totally Integrated Power (TIPM) - Standard Procedure).

5. CHECK (P64) PASSENGER MIRROR VERTICAL POSITION SIGNAL CIRCUIT FOR A SHORT TO (P72) PASSENGER MIRROR VERTICAL DRIVER CIRCUIT, (P70) PASSENGER MIRROR COMMON DRIVER CIRCUIT, OR TO (P74) PASSENGER MIRROR HORIZONTAL DRIVER CIRCUIT

1. Disconnect the Passenger Outside Rearview Mirror C2 (Component Side) connector from the Door Module C2 connector.
2. Measure the resistance between the (P64) Passenger Mirror Vertical Position Signal circuit and the (P72) Passenger Mirror Vertical Driver circuit at the Passenger Outside Rearview Mirror C1 and C2 (Component Side) connectors.
3. Measure the resistance between the (P64) Passenger Mirror Vertical Position Signal circuit and the (P70) Passenger Mirror Common Driver circuit at the Passenger Outside Rearview Mirror C1 and C2 (Component Side) connectors.
4. Measure the resistance between the (P64) Passenger Mirror Vertical Position Signal circuit and the (P74) Passenger Mirror Horizontal Driver circuit at the Passenger Outside Rearview Mirror C1 and C2 (Component Side) connectors.

Is the resistance below 10K Ohms for any measurement?

Yes

- Repair all circuits with a resistance below 10K Ohms for a short to the (P64) Passenger Mirror Vertical Position Signal circuit. If the wiring harness and connector are okay, replace the Passenger Outside Rearview Mirror in accordance with the Service Information.
- Perform the BODY VERIFICATION TEST. (Refer to 28 - DTC-Based Diagnostics/MODULE, Totally Integrated Power (TIPM) - Standard Procedure).

No, with Heated/Turn Signal Mirror

- Go To 6

No, without Heated/Turn Signal Mirror

- Go To 7

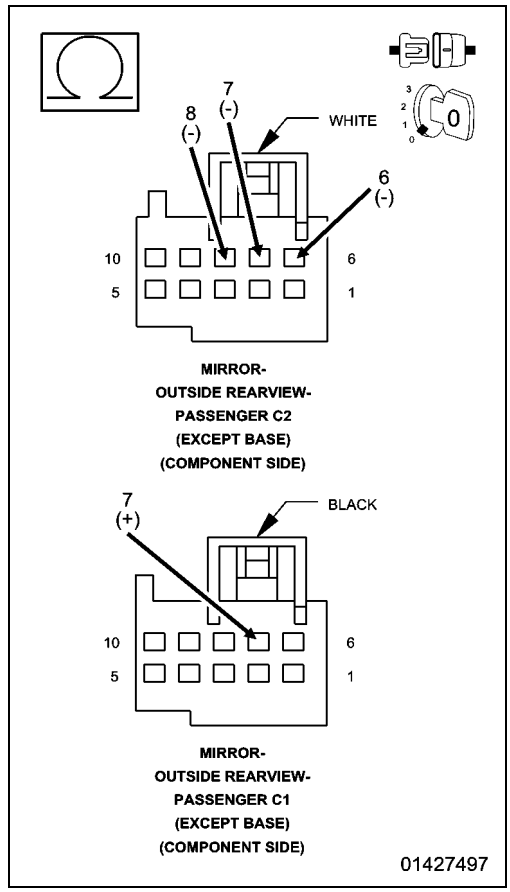

6. CHECK (P64) PASSENGER MIRROR VERTICAL POSITION SIGNAL CIRCUIT FOR A SHORT TO (C17) PASSENGER MIRROR HEATER DRIVER CIRCUIT OR TO (P502) PASSENGER MIRROR TURN SIGNAL DRIVER CIRCUIT

1. For Heated Mirror, measure the resistance between the (P64) Passenger Mirror Vertical Position Signal circuit and the (C17) Passenger Mirror Heater Driver circuit at the Passenger Outside Rearview Mirror C1 and C2 (Component Side) connectors.
2. For Turn Signal Mirror, measure the resistance between the (P64) Passenger Mirror Vertical Position Signal circuit and the (P502) Passenger Mirror Turn Signal Driver circuit at the Passenger Outside Rearview Mirror C1 and C2 (Component Side) connectors.

Is the resistance below 10K Ohms for either measurement?

Yes

- Repair all circuits with a resistance below 10K Ohms for a short to the (P64) Passenger Mirror Vertical Position Signal circuit. If the wiring harness and connector are okay, replace the Passenger Outside Rearview Mirror in accordance with the Service Information.
- Perform the BODY VERIFICATION TEST. (Refer to 28 - DTC-Based Diagnostics/MODULE, Totally Integrated Power (TIPM) - Standard Procedure).

No

- Go To 7

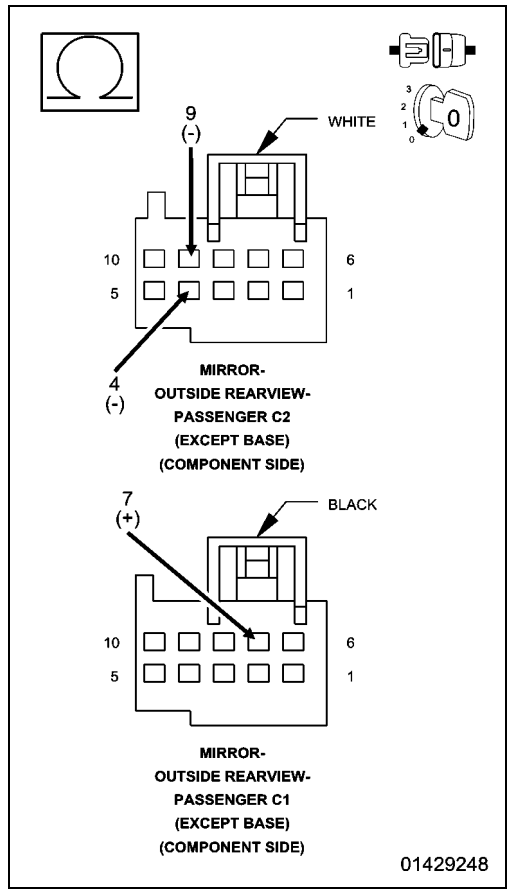

7. CHECK (A857) 5-VOLT SUPPLY CIRCUIT FOR A SHORT TO (P72) PASSENGER MIRROR VERTICAL DRIVER CIRCUIT, (P70) PASSENGER MIRROR COMMON DRIVER CIRCUIT, OR TO (P74) PASSENGER MIRROR HORIZONTAL DRIVER CIRCUIT

1. Measure the resistance between the (A857) 5-volt Supply circuit and the (P72) Passenger Mirror Vertical Driver circuit at the Passenger Outside Rearview Mirror C1 and C2 (Component Side) connectors.
2. Measure the resistance between the (A857) 5-volt Supply circuit and the (P70) Passenger Mirror Common Driver circuit at the Passenger Outside Rearview Mirror C1 and C2 (Component Side) connectors.
3. Measure the resistance between the (A857) 5-volt Supply circuit and the (P74) Passenger Mirror Horizontal Driver circuit at the Passenger Outside Rearview Mirror C1 and C2 (Component Side) connectors.

Is the resistance below 10K Ohms for any measurement?

Yes

- Repair all circuits with a resistance below 10K Ohms for a short to the (A857) 5-volt Supply circuit. If the wiring harness and connector are okay, replace the Passenger Outside Rearview Mirror in accordance with the Service Information.
- Perform the BODY VERIFICATION TEST. (Refer to 28 - DTC-Based Diagnostics/MODULE, Totally Integrated Power (TIPM) - Standard Procedure).

No, with Heated/Turn Signal Mirror

- Go To 8

No, without Heated/Turn Signal Mirror

- Inspect the wiring and connectors for damage and repair as necessary. If the wiring and connectors are okay, replace the Door Module in accordance with the Service Information.
- Perform the BODY VERIFICATION TEST. (Refer to 28 - DTC-Based Diagnostics/MODULE, Totally Integrated Power (TIPM) - Standard Procedure).

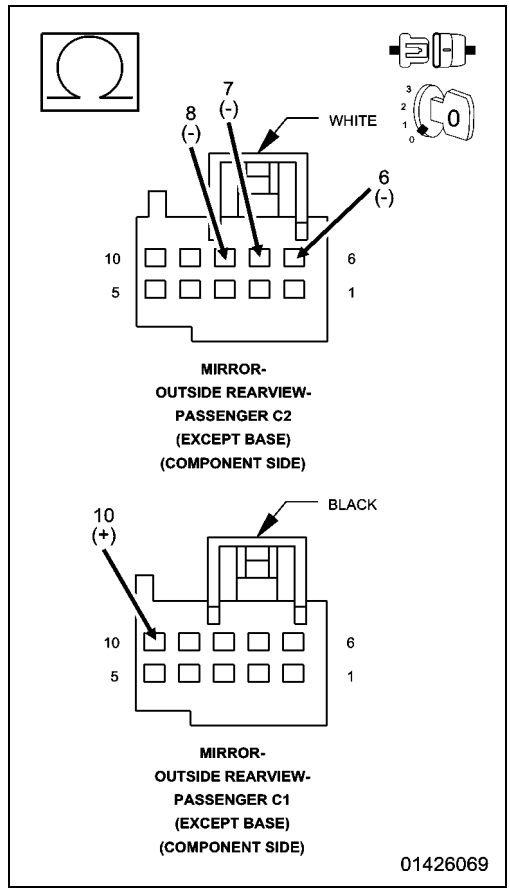

8. CHECK (A857) 5-VOLT SUPPLY CIRCUIT FOR A SHORT TO (C17) PASSENGER MIRROR HEATER DRIVER CIRCUIT OR TO (P502) PASSENGER MIRROR TURN SIGNAL DRIVER CIRCUIT

1. For Heated Mirror, measure the resistance between the (A857) 5-volt Supply circuit and the (C17) Passenger Mirror Heater Driver circuit at the Passenger Outside Rearview Mirror C1 and C2 (Component Side) connectors.
2. For Turn Signal Mirror, measure the resistance between the (A857) 5-volt Supply circuit and the (P502) Passenger Mirror Turn Signal Driver circuit at the Passenger Outside Rearview Mirror C1 and C2 (Component Side) connectors.

Is the resistance below 10K Ohms for either measurement?

Yes

- Repair all circuits with a resistance below 10K Ohms for a short to the (A857) 5-volt Supply circuit. If the wiring harness and connector are okay, replace the Passenger Outside Rearview Mirror in accordance with the Service Information.
- Perform the BODY VERIFICATION TEST. (Refer to 28 - DTC-Based Diagnostics/MODULE, Totally Integrated Power (TIPM) - Standard Procedure).

No

- Inspect the wiring and connectors for damage and repair as necessary. If the wiring and connectors are okay, replace the Door Module in accordance with the Service Information.
- Perform the BODY VERIFICATION TEST. (Refer to 28 - DTC-Based Diagnostics/MODULE, Totally Integrated Power (TIPM) - Standard Procedure).

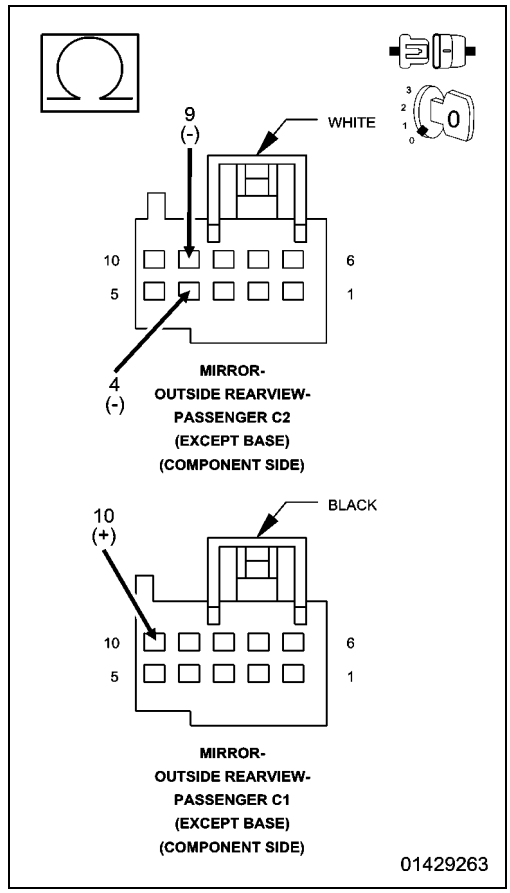

■ B1D17-11-PASSENGER MIRROR HORIZONTAL POSITION SENSOR INPUT - CIRCUIT SHORT TO GROUND

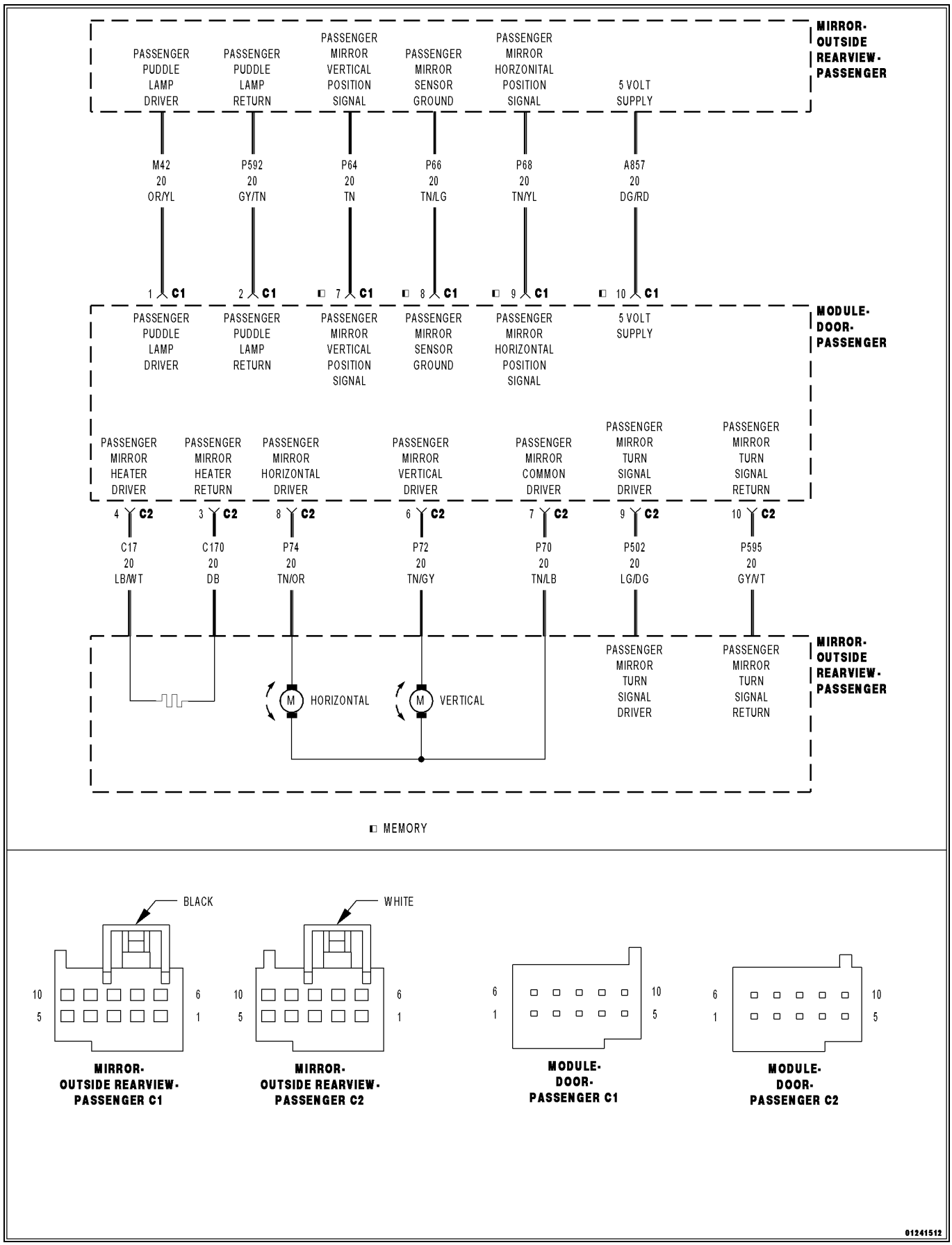

01241512

For a complete wiring diagram, **refer to the Wiring Information**.

- **When Monitored:**
  Continuously.
- **Set Condition:**
  The Door Module senses a short low on the (P68) Passenger Mirror Horizontal Position Signal circuit for more than two seconds.

Possible Causes
(P68) PASSENGER MIRROR HORIZONTAL POSITION SIGNAL CIRCUIT SHORTED TO GROUND
(P68) PASSENGER MIRROR HORIZONTAL POSITION SIGNAL CIRCUIT SHORTED TO THE (P66) PASSENGER MIRROR SENSOR GROUND CIRCUIT
(P68) PASSENGER MIRROR HORIZONTAL POSITION SIGNAL CIRCUIT SHORTED TO THE (P592) PASSENGER PUDDLE LAMP RETURN CIRCUIT
(P68) PASSENGER MIRROR HORIZONTAL POSITION SIGNAL CIRCUIT SHORTED TO THE (P72) PASSENGER MIRROR VERTICAL DRIVER CIRCUIT
(P68) PASSENGER MIRROR HORIZONTAL POSITION SIGNAL CIRCUIT SHORTED TO THE (P70) PASSENGER MIRROR COMMON DRIVER CIRCUIT
(P68) PASSENGER MIRROR HORIZONTAL POSITION SIGNAL CIRCUIT SHORTED TO THE (P74) PASSENGER MIRROR HORIZONTAL DRIVER CIRCUIT
(P68) PASSENGER MIRROR HORIZONTAL POSITION SIGNAL CIRCUIT SHORTED TO THE (C170) PASSENGER MIRROR HEATER RETURN CIRCUIT
(P68) PASSENGER MIRROR HORIZONTAL POSITION SIGNAL CIRCUIT SHORTED TO THE (P595) PASSENGER MIRROR TURN SIGNAL RETURN CIRCUIT
PASSENGER OUTSIDE REARVIEW MIRROR SHORTED
DOOR MODULE

1. TEST FOR INTERMITTENT CONDITION

1. Turn the ignition on.
2. With the can tool, record and erase DTCs.
3. Turn the turn signal on, if equipped with turn signal mirror.
4. Turn the puddle lamps on, if equipped with puddle lamp mirror.
5. Turn the rear defogger on, if equipped with heated mirror.
6. Press and release the Mirror Select switch to select the Passenger Outside Rearview Mirror.
7. Operate the Mirror Adjust switch in all directions several times while monitoring the scan tool for DTCs.

NOTE: After adjusting the mirror in one direction wait at least two seconds before adjusting the mirror in the opposite direction, as this will allow time for an active fault to set if present.

Does the scan tool display B1D17-11-PASSENGER MIRROR HORIZONTAL POSITION SENSOR INPUT - CIRCUIT SHORT TO GROUND?

Yes

- Go To 2

No

- Test complete, the condition or conditions that originally set this DTC are not present at this time. Using the wiring diagrams as a guide, check all related splices and connectors for signs of water intrusion, corrosion, pushed out or bent terminals, and correct pin tension. For vehicle's equipped with folding outside rearview mirrors, repeat test with mirror folded. If DTC is now active, Go To 2.
- Perform the BODY VERIFICATION TEST. (Refer to 28 - DTC-Based Diagnostics/MODULE, Totally Integrated Power (TIPM) - Standard Procedure).

2. CHECK (P68) PASSENGER MIRROR HORIZONTAL POSITION SIGNAL CIRCUIT FOR A SHORT TO GROUND

1. Turn the ignition off.
2. Disconnect the Passenger Outside Rearview Mirror C1 (Component Side) harness connector from the Door Module.
3. Measure the resistance between ground and the (P68) Passenger Mirror Horizontal Position Signal circuit.

Is the resistance below 10K Ohms?

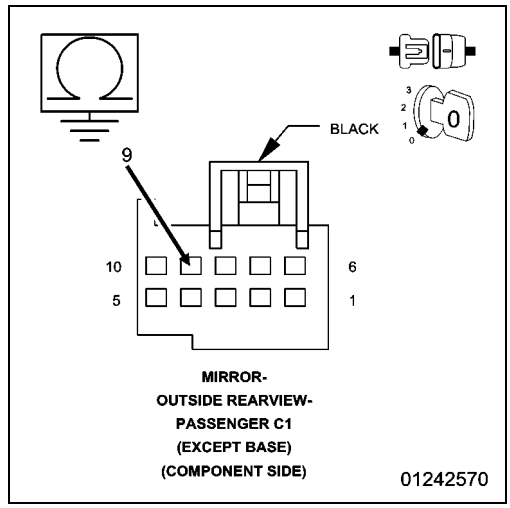

Yes

- Repair the short to ground in the (P68) Passenger Mirror Horizontal Position Signal circuit. If the wiring harness and harness connector are okay, replace the Passenger Outside Rearview Mirror in accordance with the Service Information.
- Perform the BODY VERIFICATION TEST. (Refer to 28 - DTC-Based Diagnostics/MODULE, Totally Integrated Power (TIPM) - Standard Procedure).

No

- Go To 3

3. CHECK (P68) PASSENGER MIRROR HORIZONTAL POSITION SIGNAL CIRCUIT FOR A SHORT TO (P66) PASSENGER MIRROR SENSOR GROUND CIRCUIT

1. Measure the residence between the (P68) Passenger Mirror Horizontal Position Signal circuit and the (P66) Passenger Mirror Sensor Ground circuit.

Is the resistance below 1.0 Ohm?

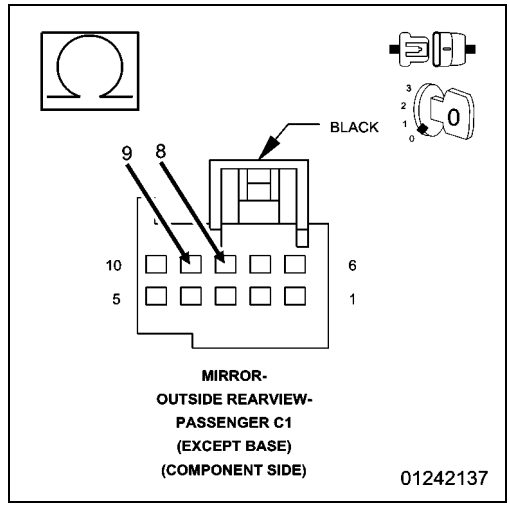

Yes

- Repair the (P68) Passenger Mirror Horizontal Position Signal circuit for a short to the (P66) Passenger Mirror Sensor Ground circuit. If the wiring harness and harness connector are okay, replace the Passenger Outside Rearview Mirror in accordance with the Service Information.
- Perform the BODY VERIFICATION TEST. (Refer to 28 - DTC-Based Diagnostics/MODULE, Totally Integrated Power (TIPM) - Standard Procedure).

No, with Puddle Lamp Mirror

- Go To 4

No, without Puddle Lamp Mirror

- Go To 5

4. CHECK (P68) PASSENGER MIRROR HORIZONTAL POSITION SIGNAL CIRCUIT FOR A SHORT TO (P592) PASSENGER PUDDLE LAMP RETURN CIRCUIT

1. Measure the residence between the (P68) Passenger Mirror Horizontal Position Signal circuit and the (P592) Passenger Puddle Lamp Return circuit.

Is the resistance below 10K Ohms?

Yes

- Repair the (P68) Passenger Mirror Horizontal Position Signal circuit for a short to the (P592) Passenger Puddle Lamp Return circuit. If the wiring harness and harness connector are okay, replace the Passenger Outside Rearview Mirror in accordance with the Service Information.
- Perform the BODY VERIFICATION TEST. (Refer to 28 - DTC-Based Diagnostics/MODULE, Totally Integrated Power (TIPM) - Standard Procedure).

No

- Go To 5

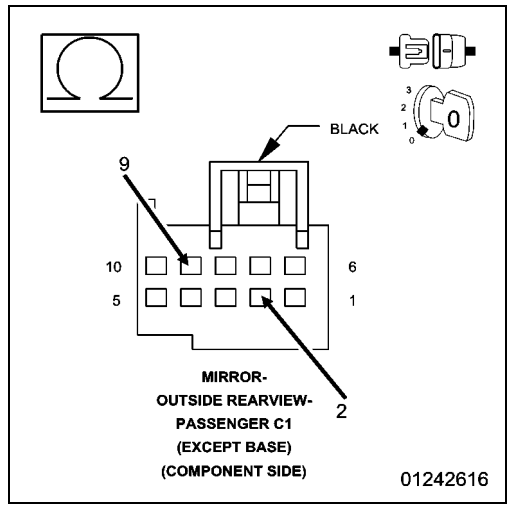

5. CHECK (P68) PASSENGER MIRROR HORIZONTAL POSITION SIGNAL CIRCUIT FOR A SHORT TO (P72) PASSENGER MIRROR VERTICAL DRIVER CIRCUIT, (P70) PASSENGER MIRROR COMMON DRIVER CIRCUIT, OR TO (P74) PASSENGER MIRROR HORIZONTAL DRIVER CIRCUIT

1. Disconnect the Passenger Outside Rearview Mirror C2 (Component Side) harness connector from the Door Module.
2. Measure the resistance between the (P68) Passenger Mirror Horizontal Position Signal circuit and the (P72) Passenger Mirror Vertical Driver circuit at the Passenger Outside Rearview Mirror C1 and C2 (Component Side) harness connectors.
3. Measure the resistance between the (P68) Passenger Mirror Horizontal Position Signal circuit and the (P70) Passenger Mirror Common Driver circuit at the Passenger Outside Rearview Mirror C1 and C2 (Component Side) harness connectors.
4. Measure the resistance between the (P68) Passenger Mirror Horizontal Position Signal circuit and the (P74) Passenger Mirror Horizontal Driver circuit at the Passenger Outside Rearview Mirror C1 and C2 (Component Side) harness connectors.

Is the resistance below 10K Ohms for any measurement?

Yes

- Repair all circuits with a resistance below 10K Ohms for a short to the (P68) Passenger Mirror Horizontal Position Signal circuit. If the wiring harness and harness connector are okay, replace the Passenger Outside Rearview Mirror in accordance with the Service Information.
- Perform the BODY VERIFICATION TEST. (Refer to 28 - DTC-Based Diagnostics/MODULE, Totally Integrated Power (TIPM) - Standard Procedure).

No, with Heated/Turn Signal Mirror

- Go To 6

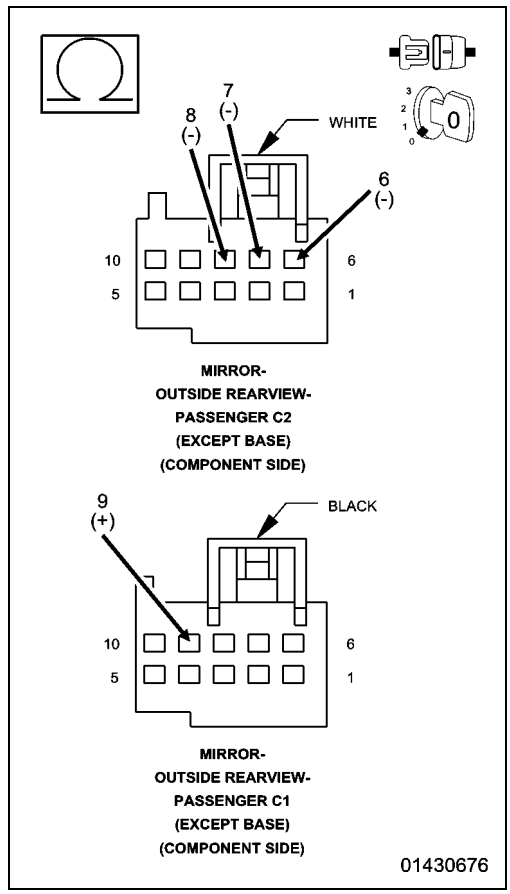

No, without Heated/Turn Signal Mirror

- Inspect the wiring and harness connectors for damage and repair as necessary. If the wiring and harness connectors are okay, replace the Door Module in accordance with the Service Information.
- Perform the BODY VERIFICATION TEST. (Refer to 28 - DTC-Based Diagnostics/MODULE, Totally Integrated Power (TIPM) - Standard Procedure).

6. CHECK (P68) PASSENGER MIRROR HORIZONTAL POSITION SIGNAL CIRCUIT FOR A SHORT TO (C170) PASSENGER MIRROR HEATER RETURN CIRCUIT OR TO (P595) PASSENGER MIRROR TURN SIGNAL RETURN CIRCUIT

1. For Heated Mirror, measure the resistance between the (P68) Passenger Mirror Horizontal Position Signal circuit and the (C170) Passenger Mirror Heater Return circuit at the Passenger Outside Rearview Mirror C1 and C2 (Component Side) harness connectors.
2. For Turn Signal Mirror, measure the resistance between the (P68) Passenger Mirror Horizontal Position Signal circuit and the (P595) Passenger Mirror Turn Signal Return circuit at the Passenger Outside Rearview Mirror C1 and C2 (Component Side) harness connectors.

Is the resistance below 10K Ohms for either measurement?

Yes

- Repair all circuits with a resistance below 10K Ohms for a short to the (P68) Passenger Mirror Horizontal Position Signal circuit. If the wiring harness and harness connector are okay, replace the Passenger Outside Rearview Mirror in accordance with the Service Information.
- Perform the BODY VERIFICATION TEST. (Refer to 28 - DTC-Based Diagnostics/MODULE, Totally Integrated Power (TIPM) - Standard Procedure).

No

- Inspect the wiring and harness connectors for damage and repair as necessary. If the wiring and harness connectors are okay, replace the Door Module in accordance with the Service Information.
- Perform the BODY VERIFICATION TEST. (Refer to 28 - DTC-Based Diagnostics/MODULE, Totally Integrated Power (TIPM) - Standard Procedure).

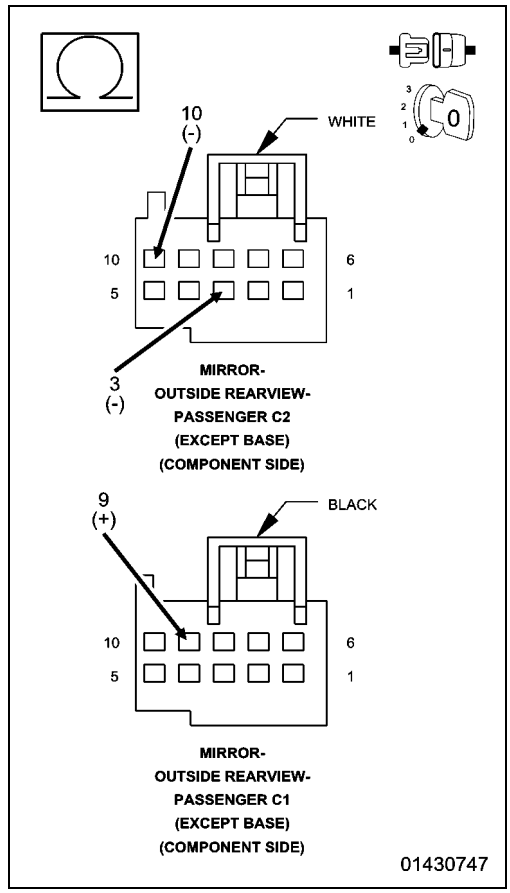

■ B1D17-12-PASSENGER MIRROR HORIZONTAL POSITION SENSOR INPUT - CIRCUIT SHORT TO BATTERY

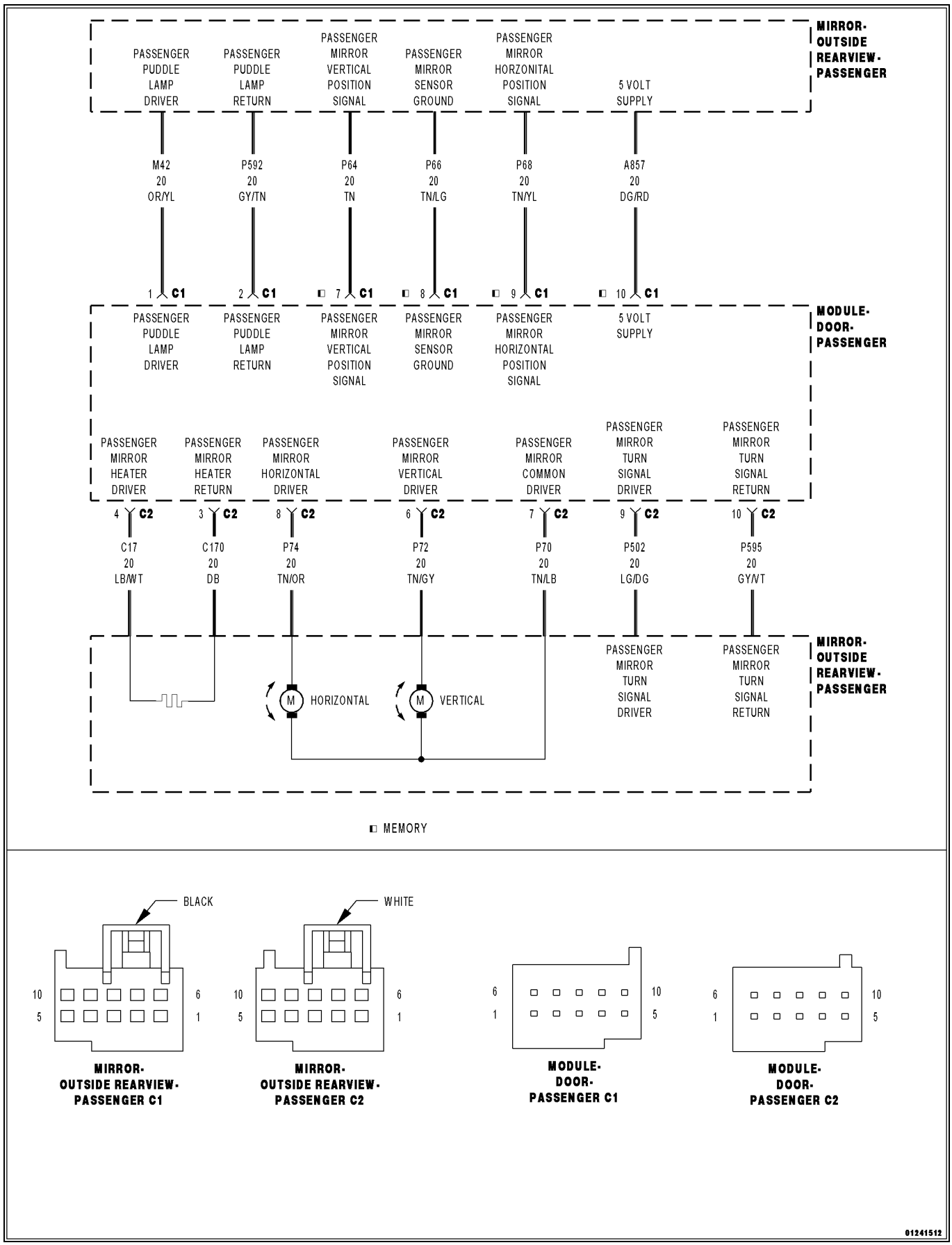

01241512

For a complete wiring diagram, **refer to the Wiring Information**.

- **When Monitored:**
  Continuously.
- **Set Condition:**
  The Door Module senses more than 400 mA current on the (A857) 5-volt Supply circuit or an open or a short high on the (P68) Passenger Mirror Horizontal Position Signal circuit for more than two seconds.

Possible Causes
(P68) PASSENGER MIRROR HORIZONTAL POSITION SIGNAL CIRCUIT SHORTED TO VOLTAGE
(P68) PASSENGER MIRROR HORIZONTAL POSITION SIGNAL CIRCUIT SHORTED TO THE (M42) PASSENGER PUDDLE LAMP DRIVER CIRCUIT
(P68) PASSENGER MIRROR HORIZONTAL POSITION SIGNAL CIRCUIT OPEN
(P66) PASSENGER MIRROR SENSOR GROUND CIRCUIT OPEN
(P68) PASSENGER MIRROR HORIZONTAL POSITION SIGNAL CIRCUIT SHORTED TO THE (P72) PASSENGER MIRROR VERTICAL DRIVER CIRCUIT
(P68) PASSENGER MIRROR HORIZONTAL POSITION SIGNAL CIRCUIT SHORTED TO THE (P70) PASSENGER MIRROR COMMON DRIVER CIRCUIT
(P68) PASSENGER MIRROR HORIZONTAL POSITION SIGNAL CIRCUIT SHORTED TO THE (P74) PASSENGER MIRROR HORIZONTAL DRIVER CIRCUIT
(P68) PASSENGER MIRROR HORIZONTAL POSITION SIGNAL CIRCUIT SHORTED TO THE (C17) PASSENGER MIRROR HEATER DRIVER CIRCUIT
(P68) PASSENGER MIRROR HORIZONTAL POSITION SIGNAL CIRCUIT SHORTED TO THE (P502) PASSENGER MIRROR TURN SIGNAL DRIVER CIRCUIT
(A857) 5-VOLT SUPPLY CIRCUIT SHORTED TO VOLTAGE
(A857) 5-VOLT SUPPLY CIRCUIT SHORTED TO THE (M42) PASSENGER PUDDLE LAMP DRIVER CIRCUIT
(A857) 5-VOLT SUPPLY CIRCUIT SHORTED TO THE (P72) PASSENGER MIRROR VERTICAL DRIVER CIRCUIT
(A857) 5-VOLT SUPPLY CIRCUIT SHORTED TO THE (P70) PASSENGER MIRROR COMMON DRIVER CIRCUIT
(A857) 5-VOLT SUPPLY CIRCUIT SHORTED TO THE (P74) PASSENGER MIRROR HORIZONTAL DRIVER CIRCUIT
(A857) 5-VOLT SUPPLY CIRCUIT SHORTED TO THE (C17) PASSENGER MIRROR HEATER DRIVER CIRCUIT
(A857) 5-VOLT SUPPLY CIRCUIT SHORTED TO THE (P502) PASSENGER MIRROR TURN SIGNAL DRIVER CIRCUIT
PASSENGER OUTSIDE REARVIEW MIRROR SHORTED
DOOR MODULE

1. TEST FOR INTERMITTENT CONDITION

1. Turn the ignition on.
2. Using a scan tool, record and erase Diagnostic Trouble Codes (DTCs).
3. Turn the turn signal on, if equipped with turn signal mirror.
4. Turn the puddle lamps on, if equipped with puddle lamp mirror.
5. Turn the rear defogger on, if equipped with heated mirror.
6. Press and release the Mirror Select switch to select the Passenger Outside Rearview Mirror.
7. Operate the Mirror Adjust switch in all directions several times while monitoring the scan tool for DTCs.

NOTE: After adjusting the mirror in one direction wait at least two seconds before adjusting the mirror in the opposite direction, as this will allow time for an active fault to set if present.

Is the DTC active?

Yes

- Go To 2

No

- The conditions that caused this code to set are not present at this time. For vehicle's equipped with folding outside rearview mirrors, repeat test with mirror folded. If DTC is now active, Go To 2. Otherwise, use the wiring diagram/ schematic as a guide and inspect the wiring and connectors.
- Perform the BODY VERIFICATION TEST. (Refer to 28 - DTC-Based Diagnostics/MODULE, Totally Integrated Power (TIPM) - Standard Procedure).

2. CHECK (P68) PASSENGER MIRROR HORIZONTAL POSITION SIGNAL CIRCUIT AND (A857) 5-VOLT SUPPLY CIRCUIT FOR A SHORT TO VOLTAGE

1. Turn the ignition off.
2. Disconnect the Passenger Outside Rearview Mirror C1 (Component Side) connector from the Door Module C1 connector.
3. Turn the ignition on.
4. Measure the Voltage of the (P68) Passenger Mirror Horizontal Position Signal circuit between the Passenger Outside Rearview Mirror C1 (Component Side) connector and ground.
5. Measure the voltage of the (A857) 5-volt Supply circuit between the Passenger Outside Rearview Mirror C1 (Component Side) connector and ground.

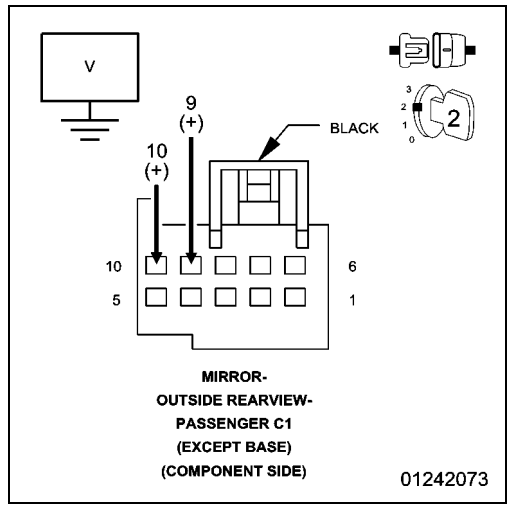

Is there any Voltage present on either circuit?

Yes

- Repair all circuits with Voltage present for a short to Voltage. If the wiring harness and connector are okay, replace the Passenger Outside Rearview Mirror in accordance with the Service Information.
- Perform the BODY VERIFICATION TEST. (Refer to 28 - DTC-Based Diagnostics/MODULE, Totally Integrated Power (TIPM) - Standard Procedure).

No, with Puddle Lamp Mirror

- Go To 3

No, without Puddle Lamp Mirror

- Go To 4

3. CHECK (P68) PASSENGER MIRROR HORIZONTAL POSITION SIGNAL CIRCUIT AND (A857) 5-VOLT SUPPLY CIRCUIT FOR A SHORT TO (M42) PASSENGER PUDDLE LAMP DRIVER CIRCUIT

1. Turn the ignition off.
2. Measure the resistance between the (M42) Passenger Puddle Lamp Driver circuit and the (P68) Passenger Mirror Horizontal Position Signal circuit at the Passenger Outside Rearview Mirror C1 (Component Side) connector.
3. Measure the resistance between the (M42) Passenger Puddle Lamp Driver circuit and the (A857) 5-volt Supply circuit at the Passenger Outside Rearview Mirror C1 (Component Side) connector.

Is the resistance below 10K Ohms for either measurement?

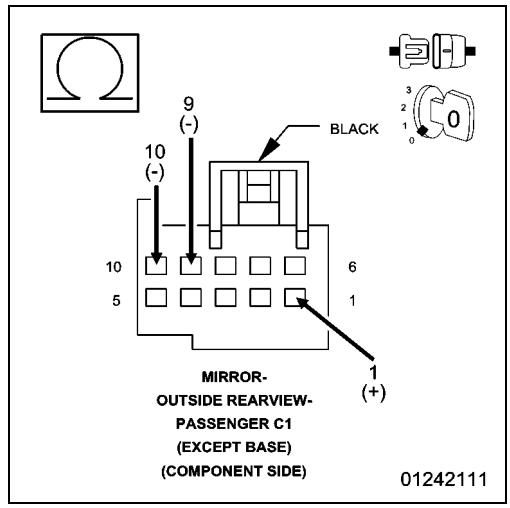

Yes

- Repair all circuits with a resistance below 10K Ohms for a short to the (M42) Passenger Puddle Lamp Driver circuit. If the wiring harness and connector are okay, replace the Passenger Outside Rearview Mirror in accordance with the Service Information.
- Perform the BODY VERIFICATION TEST. (Refer to 28 - DTC-Based Diagnostics/MODULE, Totally Integrated Power (TIPM) - Standard Procedure).

No

- Go To 4

4. CHECK (P68) PASSENGER MIRROR HORIZONTAL POSITION SIGNAL CIRCUIT AND (P66) PASSENGER MIRROR SENSOR GROUND CIRCUIT FOR AN OPEN

1. If not done previously, turn the ignition off.
2. Measure the resistance between the (P68) Passenger Mirror Horizontal Position Signal circuit and the (P66) Passenger Mirror Sensor Ground circuit at the Passenger Outside Rearview Mirror C1 (Component Side) connector.

Is the resistance below 3.0 Ohms?

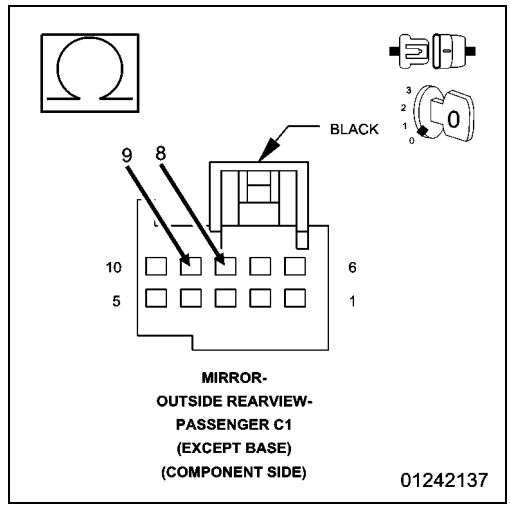

Yes

- Go To 5

No

- Repair the (P68) Passenger Mirror Horizontal Position Signal circuit or the (P66) Passenger Mirror Sensor Ground circuit for an open. If the wiring harness and connector are okay, replace the Passenger Outside Rearview Mirror in accordance with the Service Information.
- Perform the BODY VERIFICATION TEST. (Refer to 28 - DTC-Based Diagnostics/MODULE, Totally Integrated Power (TIPM) - Standard Procedure).

5. CHECK (P68) PASSENGER MIRROR HORIZONTAL POSITION SIGNAL CIRCUIT FOR A SHORT TO (P72) PASSENGER MIRROR VERTICAL DRIVER CIRCUIT, (P70) PASSENGER MIRROR COMMON DRIVER CIRCUIT, OR TO (P74) PASSENGER MIRROR HORIZONTAL DRIVER CIRCUIT

1. Disconnect the Passenger Outside Rearview Mirror C2 (Component Side) connector from the Door Module C2 connector.
2. Measure the resistance between the (P68) Passenger Mirror Horizontal Position Signal circuit and the (P72) Passenger Mirror Vertical Driver circuit at the Passenger Outside Rearview Mirror C1 and C2 (Component Side) connectors.
3. Measure the resistance between the (P68) Passenger Mirror Horizontal Position Signal circuit and the (P70) Passenger Mirror Common Driver circuit at the Passenger Outside Rearview Mirror C1 and C2 (Component Side) connectors.
4. Measure the resistance between the (P68) Passenger Mirror Horizontal Position Signal circuit and the (P74) Passenger Mirror Horizontal Driver circuit at the Passenger Outside Rearview Mirror C1 and C2 (Component Side) connectors.

Is the resistance below 10K Ohms for any measurement?

Yes

- Repair all circuits with a resistance below 10K Ohms for a short to the (P68) Passenger Mirror Horizontal Position Signal circuit. If the wiring harness and connector are okay, replace the Passenger Outside Rearview Mirror in accordance with the Service Information.
- Perform the BODY VERIFICATION TEST. (Refer to 28 - DTC-Based Diagnostics/MODULE, Totally Integrated Power (TIPM) - Standard Procedure).

No, with Heated/Turn Signal Mirror

- Go To 6

No, without Heated/Turn Signal Mirror

- Go To 7

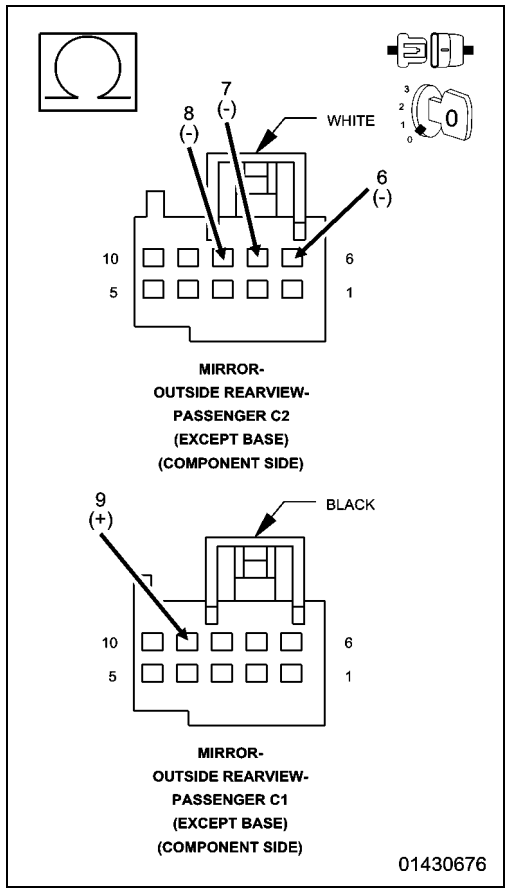

6. CHECK (P68) PASSENGER MIRROR HORIZONTAL POSITION SIGNAL CIRCUIT FOR A SHORT TO (C17) PASSENGER MIRROR HEATER DRIVER CIRCUIT OR TO (P502) PASSENGER MIRROR TURN SIGNAL DRIVER CIRCUIT

1. For Heated Mirror, measure the resistance between the (P68) Passenger Mirror Horizontal Position Signal circuit and the (C17) Passenger Mirror Heater Driver circuit at the Passenger Outside Rearview Mirror C1 and C2 (Component Side) connectors.
2. For Turn Signal Mirror, measure the resistance between the (P68) Passenger Mirror Horizontal Position Signal circuit and the (P502) Passenger Mirror Turn Signal Driver circuit at the Passenger Outside Rearview Mirror C1 and C2 (Component Side) connectors.

Is the resistance below 10K Ohms for either measurement?

Yes

- Repair all circuits with a resistance below 10K Ohms for a short to the (P68) Passenger Mirror Horizontal Position Signal circuit. If the wiring harness and connector are okay, replace the Passenger Outside Rearview Mirror in accordance with the Service Information.
- Perform the BODY VERIFICATION TEST. (Refer to 28 - DTC-Based Diagnostics/MODULE, Totally Integrated Power (TIPM) - Standard Procedure).

No

- Go To 7

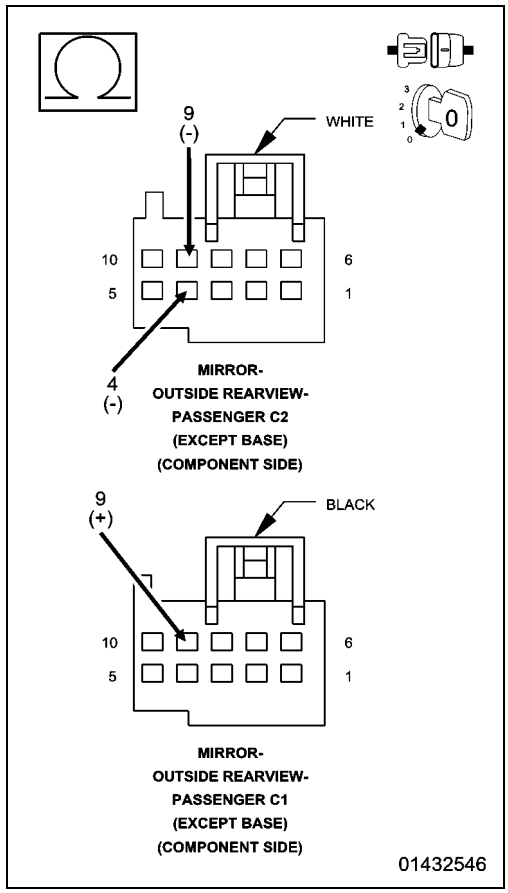

7. CHECK (A857) 5-VOLT SUPPLY CIRCUIT FOR A SHORT TO (P72) PASSENGER MIRROR VERTICAL DRIVER CIRCUIT, (P70) PASSENGER MIRROR COMMON DRIVER CIRCUIT, OR TO (P74) PASSENGER MIRROR HORIZONTAL DRIVER CIRCUIT

1. Measure the resistance between the (A857) 5-volt Supply circuit and the (P72) Passenger Mirror Vertical Driver circuit at the Passenger Outside Rearview Mirror C1 and C2 (Component Side) connectors.
2. Measure the resistance between the (A857) 5-volt Supply circuit and the (P70) Passenger Mirror Common Driver circuit at the Passenger Outside Rearview Mirror C1 and C2 (Component Side) connectors.
3. Measure the resistance between the (A857) 5-volt Supply circuit and the (P74) Passenger Mirror Horizontal Driver circuit at the Passenger Outside Rearview Mirror C1 and C2 (Component Side) connectors.

Is the resistance below 10K Ohms for any measurement?

Yes

- Repair all circuits with a resistance below 10K Ohms for a short to the (A857) 5-volt Supply circuit. If the wiring harness and connector are okay, replace the Passenger Outside Rearview Mirror in accordance with the Service Information.
- Perform the BODY VERIFICATION TEST. (Refer to 28 - DTC-Based Diagnostics/MODULE, Totally Integrated Power (TIPM) - Standard Procedure).

No, with Heated/Turn Signal Mirror

- Go To 8

No, without Heated/Turn Signal Mirror

- Inspect the wiring and connectors for damage and repair as necessary. If the wiring and connectors are okay, replace the Door Module in accordance with the Service Information.
- Perform the BODY VERIFICATION TEST. (Refer to 28 - DTC-Based Diagnostics/MODULE, Totally Integrated Power (TIPM) - Standard Procedure).

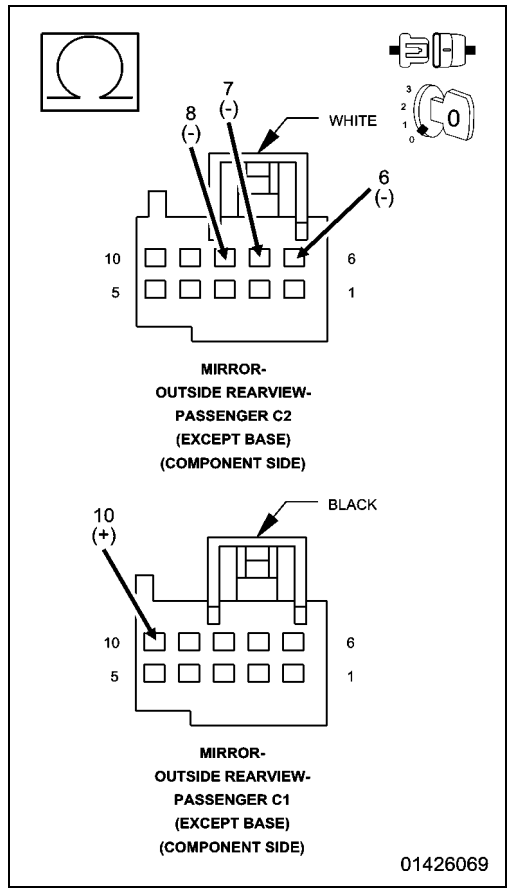

8. CHECK (A857) 5-VOLT SUPPLY CIRCUIT FOR A SHORT TO (C17) PASSENGER MIRROR HEATER DRIVER CIRCUIT OR TO (P502) PASSENGER MIRROR TURN SIGNAL DRIVER CIRCUIT

1. For Heated Mirror, measure the resistance between the (A857) 5-volt Supply circuit and the (C17) Passenger Mirror Heater Driver circuit at the Passenger Outside Rearview Mirror C1 and C2 (Component Side) connectors.
2. For Turn Signal Mirror, measure the resistance between the (A857) 5-volt Supply circuit and the (P502) Passenger Mirror Turn Signal Driver circuit at the Passenger Outside Rearview Mirror C1 and C2 (Component Side) connectors.

Is the resistance below 10K Ohms for either measurement?

Yes

- Repair all circuits with a resistance below 10K Ohms for a short to the (A857) 5-volt Supply circuit. If the wiring harness and connector are okay, replace the Passenger Outside Rearview Mirror in accordance with the Service Information.
- Perform the BODY VERIFICATION TEST. (Refer to 28 - DTC-Based Diagnostics/MODULE, Totally Integrated Power (TIPM) - Standard Procedure).

No

- Inspect the wiring and connectors for damage and repair as necessary. If the wiring and connectors are okay, replace the Door Module in accordance with the Service Information.
- Perform the BODY VERIFICATION TEST. (Refer to 28 - DTC-Based Diagnostics/MODULE, Totally Integrated Power (TIPM) - Standard Procedure).

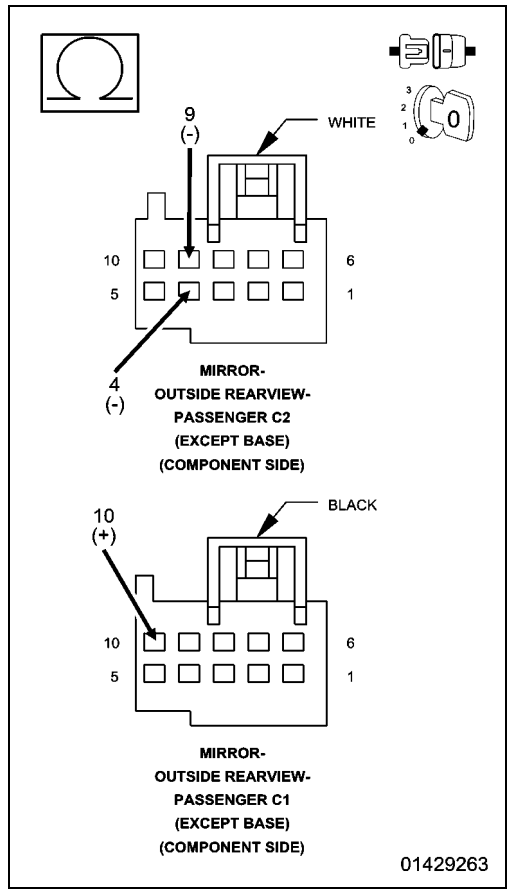

■ B1D2A-11-PASSENGER MIRROR VERTICAL MOTOR CONTROL - CIRCUIT SHORT TO GROUND

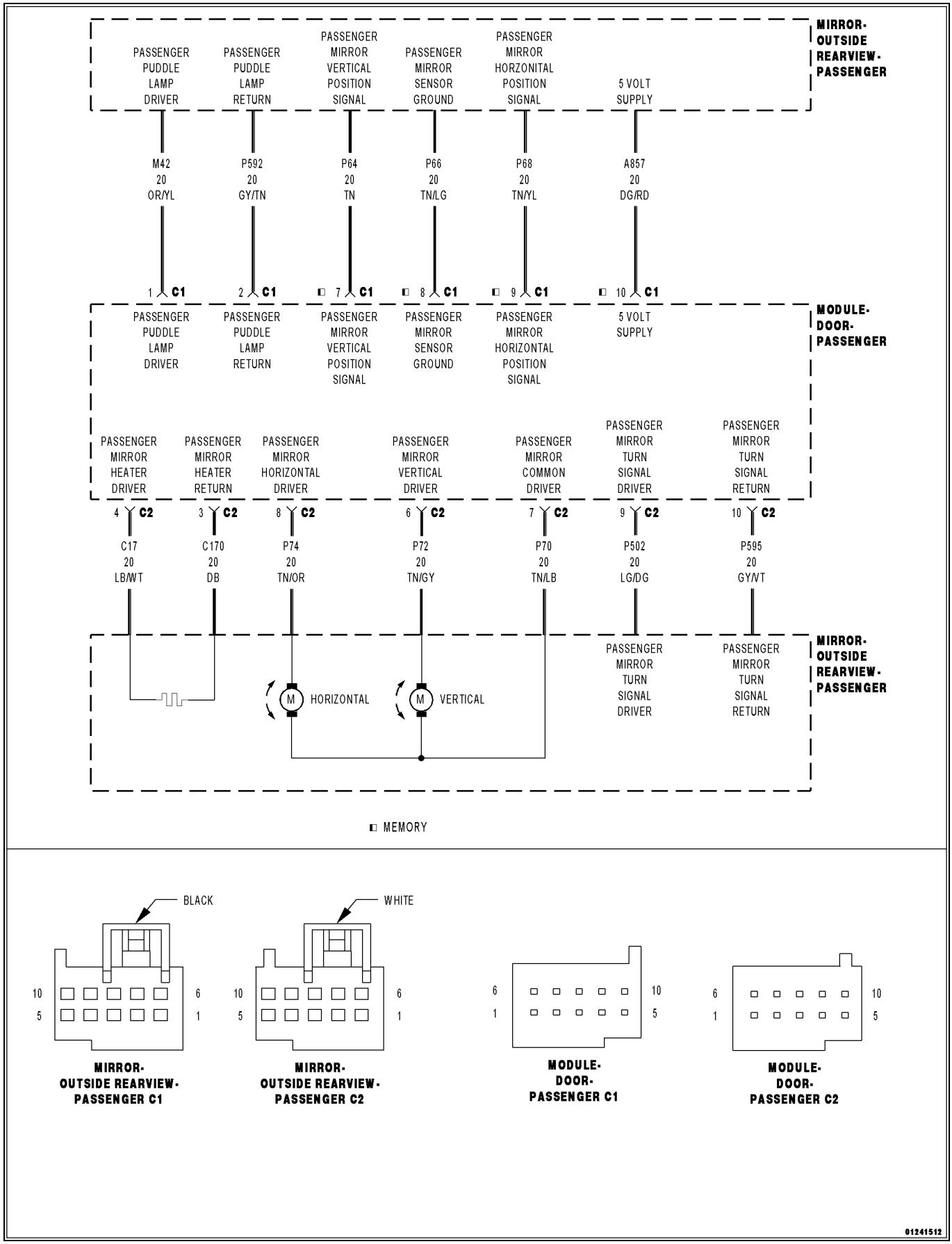

For a complete wiring diagram, **refer to the Wiring Information**.

- **When Monitored:**
  Continuously.
- **Set Condition:**
  The Door Module senses a short low on the (P72) Passenger Mirror Vertical Driver circuit for more than two seconds.

Possible Causes
(P72) PASSENGER MIRROR VERTICAL DRIVER CIRCUIT SHORTED TO GROUND
(P72) PASSENGER MIRROR VERTICAL DRIVER CIRCUIT SHORTED TO THE (C170) PASSENGER MIRROR HEATER RETURN CIRCUIT
(P72) PASSENGER MIRROR VERTICAL DRIVER CIRCUIT SHORTED TO THE (P595) PASSENGER MIRROR TURN SIGNAL RETURN CIRCUIT
(P72) PASSENGER MIRROR VERTICAL DRIVER CIRCUIT SHORTED TO THE (P66) PASSENGER MIRROR SENSOR GROUND CIRCUIT
(P72) PASSENGER MIRROR VERTICAL DRIVER CIRCUIT SHORTED TO THE (P592) PASSENGER PUDDLE LAMP RETURN CIRCUIT
PASSENGER OUTSIDE REARVIEW MIRROR SHORTED
DOOR MODULE

1. TEST FOR INTERMITTENT CONDITION

1. Turn the ignition on.
2. Using a scan tool, record and erase Diagnostic Trouble Codes (DTCs).
3. Turn the turn signal on, if equipped with turn signal mirror.
4. Turn the puddle lamps on, if equipped with puddle lamp mirror.
5. Turn the rear defogger on, if equipped with heated mirror.
6. Press and release the Mirror Select switch to select the Passenger Outside Rearview Mirror.
7. Operate the Mirror Adjust switch in all directions several times while monitoring the scan tool for DTCs.

NOTE: After adjusting the mirror in one direction wait at least two seconds before adjusting the mirror in the opposite direction as this will allow time for an active fault to set if present.

Is the DTC active?

Yes

- Go To 2

No

- The conditions that caused this code to set are not present at this time. For vehicle's equipped with folding outside rearview mirrors, repeat test with mirror folded. If DTC is now active, Go To 2. Otherwise, use the wiring diagram/schematic as a guide and inspect the wiring and connectors.
- Perform the BODY VERIFICATION TEST. (Refer to 28 - DTC-Based Diagnostics/MODULE, Totally Integrated Power (TIPM) - Standard Procedure).

2. CHECK (P72) PASSENGER MIRROR VERTICAL DRIVER CIRCUIT FOR A SHORT TO GROUND

1. Turn the ignition off.
2. Disconnect the Passenger Outside Rearview Mirror C2 (Component Side) connector from the Door Module C2 connector.
3. Measure the resistance of the (P72) Passenger Mirror Vertical Driver circuit between ground and the Passenger Outside Rearview Mirror C2 (Component Side) connector.

Is the resistance below 10K Ohms?

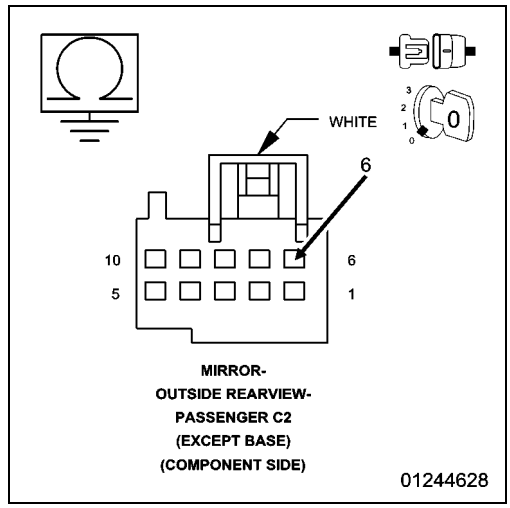

Yes

- Repair the (P72) Passenger Mirror Vertical Driver circuit for a short to ground. If the wiring harness and connector are okay, replace the Passenger Outside Rearview Mirror in accordance with the Service Information.
- Perform the BODY VERIFICATION TEST. (Refer to 28 - DTC-Based Diagnostics/MODULE, Totally Integrated Power (TIPM) - Standard Procedure).

No, with Heated/Turn Signal Mirror

- Go To 3

No, without Heated/Turn Signal Mirror

- Go To 4

3. CHECK (P72) PASSENGER MIRROR VERTICAL DRIVER CIRCUIT FOR A SHORT TO (C170) PASSENGER MIRROR HEATER RETURN CIRCUIT OR TO (P595) PASSENGER MIRROR TURN SIGNAL RETURN CIRCUIT

1. For heated mirror, measure the resistance between the (P72) Passenger Mirror Vertical Driver circuit and the (C170) Passenger Mirror Heater Return circuit at the Passenger Outside Rearview Mirror C2 (Component Side) connector.
2. For turn signal mirror, measure the resistance between the (P72) Passenger Mirror Vertical Driver circuit and the (P595) Passenger Mirror Turn Signal Return circuit at the Passenger Outside Rearview Mirror C2 (Component Side) connector.

Is the resistance below 10K Ohms for either measurement?

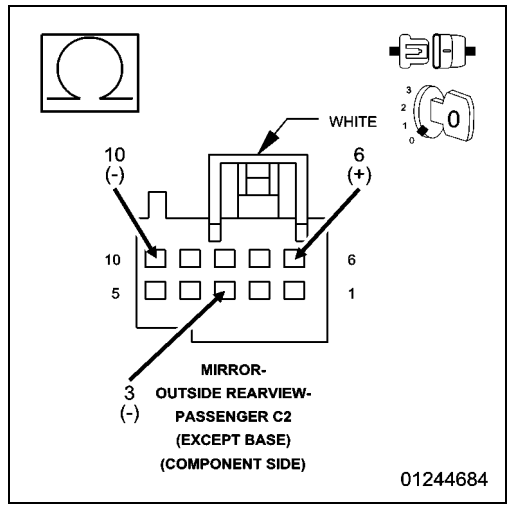

Yes

- Repair all circuits with a resistance below 10K Ohms for a short to the (P72) Passenger Mirror Vertical Driver circuit. If the wiring harness and connector are okay, replace the Passenger Outside Rearview Mirror in accordance with the Service Information.
- Perform the BODY VERIFICATION TEST. (Refer to 28 - DTC-Based Diagnostics/MODULE, Totally Integrated Power (TIPM) - Standard Procedure).

No

- Go To 4

4. CHECK (P72) PASSENGER MIRROR VERTICAL DRIVER CIRCUIT FOR A SHORT TO (P66) PASSENGER MIRROR SENSOR GROUND CIRCUIT

1. Disconnect the Passenger Outside Rearview Mirror C1 (Component Side) connector from the Door Module C1 connector.
2. Measure the resistance between the (P72) Passenger Mirror Vertical Driver circuit and the (P66) Passenger Mirror Sensor Ground circuit at the Passenger Outside Rearview Mirror C2 and C1 (Component Side) connectors.

Is the resistance below 10K Ohms?

Yes

- Repair the (P72) Passenger Mirror Vertical Driver circuit for a short to the (P66) Passenger Mirror Sensor Ground circuit. If the wiring harness and connector are okay, replace the Passenger Outside Rearview Mirror in accordance with the Service Information.
- Perform the BODY VERIFICATION TEST. (Refer to 28 - DTC-Based Diagnostics/MODULE, Totally Integrated Power (TIPM) - Standard Procedure).

No, with Puddle Lamp Mirror

- Go To 5

No, without Puddle Lamp Mirror

- Inspect the wiring and connectors for damage and repair as necessary. If the wiring and connectors are okay, replace the Door Module in accordance with the Service Information.
- Perform the BODY VERIFICATION TEST. (Refer to 28 - DTC-Based Diagnostics/MODULE, Totally Integrated Power (TIPM) - Standard Procedure).

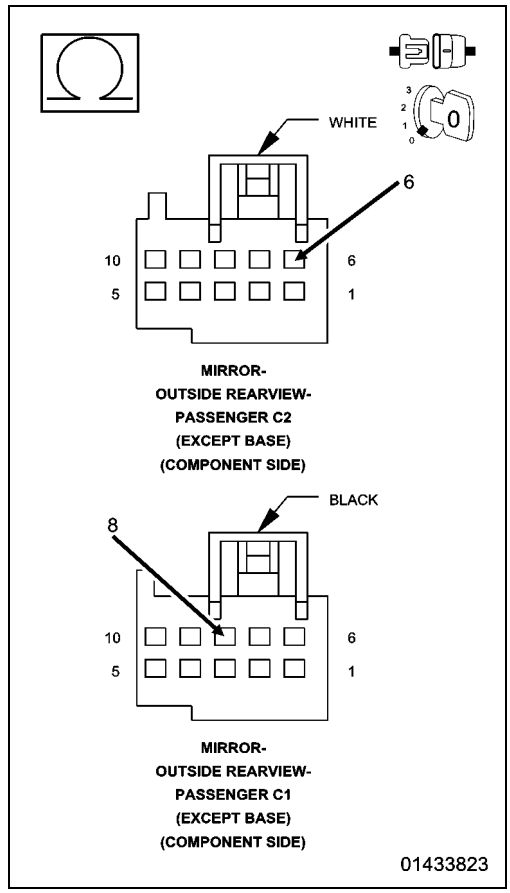

5. CHECK (P72) PASSENGER MIRROR VERTICAL DRIVER CIRCUIT FOR A SHORT TO (P592) PASSENGER PUDDLE LAMP RETURN CIRCUIT

1. Measure the resistance between the (P72) Passenger Mirror Vertical Driver circuit and the (P592) Passenger Puddle Lamp Return circuit at the Passenger Outside Rearview Mirror C2 and C1 (Component Side) connectors.

Is the resistance below 10K Ohms?

Yes

- Repair the (P72) Passenger Mirror Vertical Driver circuit for a short to the (P592) Passenger Puddle Lamp Return circuit. If the wiring harness and connector are okay, replace the Passenger Outside Rearview Mirror in accordance with the Service Information.
- Perform the BODY VERIFICATION TEST. (Refer to 28 - DTC-Based Diagnostics/MODULE, Totally Integrated Power (TIPM) - Standard Procedure).

No

- Inspect the wiring and connectors for damage and repair as necessary. If the wiring and connectors are okay, replace the Door Module in accordance with the Service Information.
- Perform the BODY VERIFICATION TEST. (Refer to 28 - DTC-Based Diagnostics/MODULE, Totally Integrated Power (TIPM) - Standard Procedure).

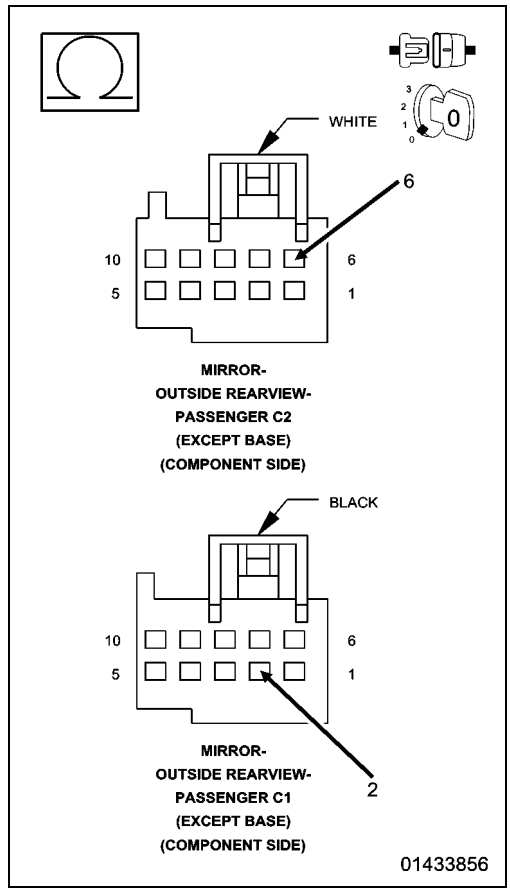

■ B1D2E-11-PASSENGER MIRROR HORIZONTAL MOTOR CONTROL - CIRCUIT SHORT TO GROUND

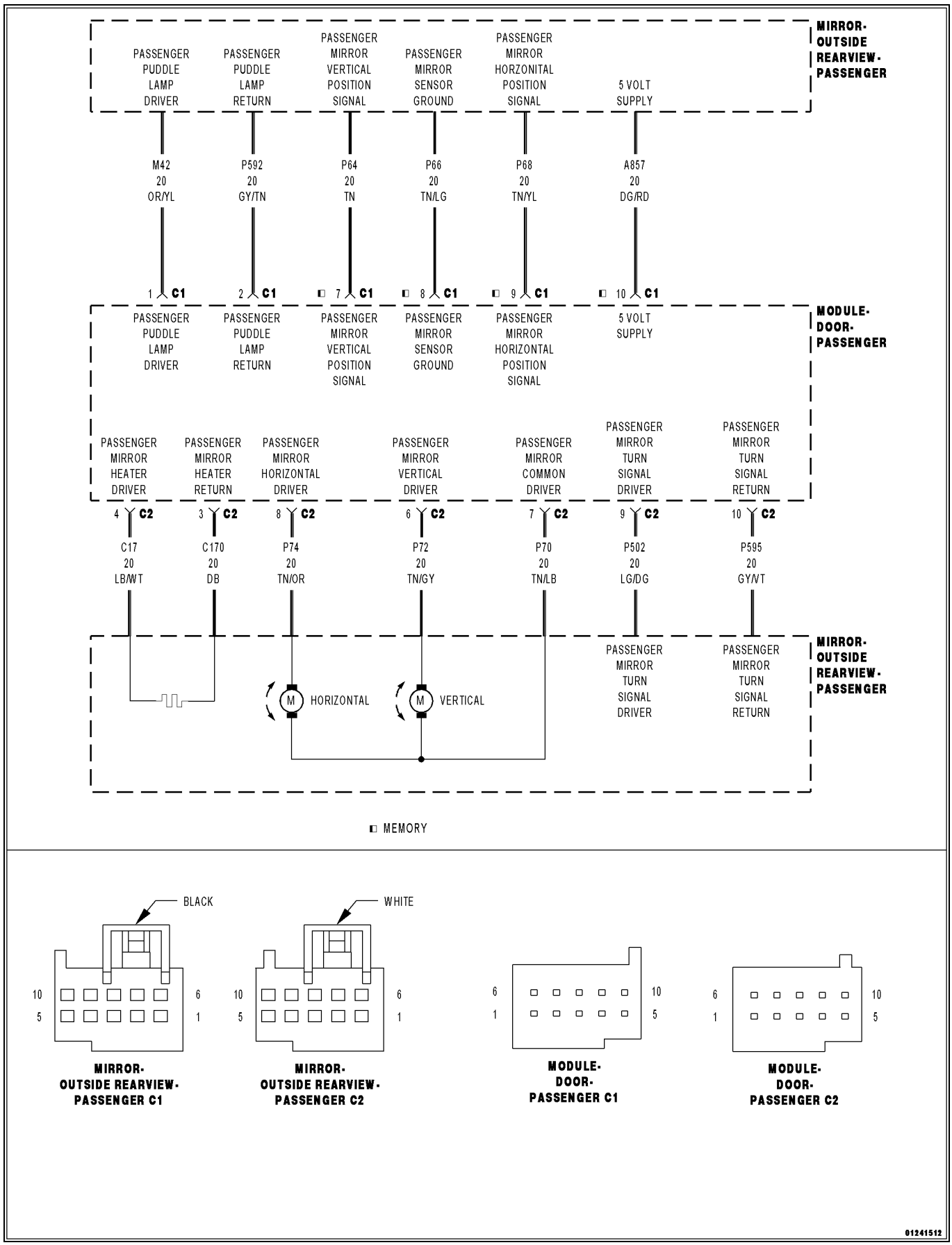

01241512

For a complete wiring diagram, **refer to the Wiring Information**.

- **When Monitored:**
  Continuously.
- **Set Condition:**
  The Door Module senses a short low on the (P74) Passenger Mirror Horizontal Driver circuit for more than two seconds.

Possible Causes
(P74) PASSENGER MIRROR HORIZONTAL DRIVER CIRCUIT SHORTED TO GROUND
(P74) PASSENGER MIRROR HORIZONTAL DRIVER CIRCUIT SHORTED TO THE (C170) PASSENGER MIRROR HEATER RETURN CIRCUIT
(P74) PASSENGER MIRROR HORIZONTAL DRIVER CIRCUIT SHORTED TO THE (P595) PASSENGER MIRROR TURN SIGNAL RETURN CIRCUIT
(P74) PASSENGER MIRROR HORIZONTAL DRIVER CIRCUIT SHORTED TO THE (P66) PASSENGER MIRROR SENSOR GROUND CIRCUIT
(P74) PASSENGER MIRROR HORIZONTAL DRIVER CIRCUIT SHORTED TO THE (P592) PASSENGER PUDDLE LAMP RETURN CIRCUIT
PASSENGER OUTSIDE REARVIEW MIRROR SHORTED
DOOR MODULE

1. TEST FOR INTERMITTENT CONDITION

1. Turn the ignition on.
2. Using a scan tool, record and erase Diagnostic Trouble Codes (DTCs).
3. Turn the turn signal on, if equipped with turn signal mirror.
4. Turn the puddle lamps on, if equipped with puddle lamp mirror.
5. Turn the rear defogger on, if equipped with heated mirror.
6. Press and release the Mirror Select switch to select the Passenger Outside Rearview Mirror.
7. Operate the Mirror Adjust switch in all directions several times while monitoring the scan tool for DTCs.

NOTE: After adjusting the mirror in one direction wait at least two seconds before adjusting the mirror in the opposite direction, as this will allow time for an active fault to set if present.

Is the DTC active?

Yes

- Go To 2

No

- The conditions that caused this code to set are not present at this time. For vehicle's equipped with folding outside rearview mirrors, repeat test with mirror folded. If DTC is now active, Go To 2. Otherwise, use the wiring diagram/ schematic as a guide and inspect the wiring and connectors.
- Perform the BODY VERIFICATION TEST. (Refer to 28 - DTC-Based Diagnostics/MODULE, Totally Integrated Power (TIPM) - Standard Procedure).

2. CHECK (P74) PASSENGER MIRROR HORIZONTAL DRIVER CIRCUIT FOR A SHORT TO GROUND

1. Turn the ignition off.
2. Disconnect the Passenger Outside Rearview Mirror C2 (Component Side) connector from the Door Module C2 connector.
3. Measure the resistance of the (P74) Passenger Mirror Horizontal Driver circuit between ground and the Passenger Outside Rearview Mirror C2 (Component Side) connector.

Is the resistance below 10K Ohms?

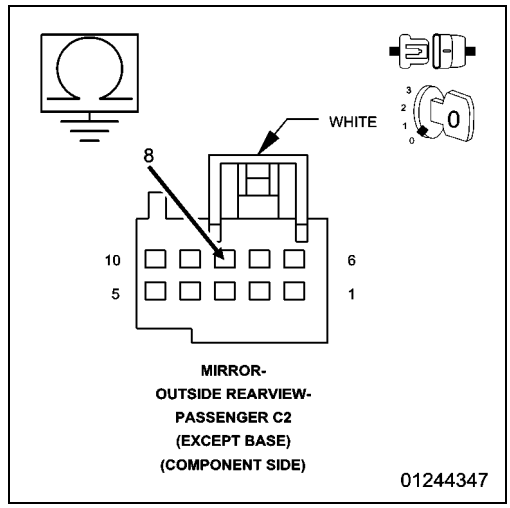

Yes

- Repair the (P74) Passenger Mirror Horizontal Driver circuit for a short to ground. If the wiring harness and connector are okay, replace the Passenger Outside Rearview Mirror in accordance with the Service Information.
- Perform the BODY VERIFICATION TEST. (Refer to 28 - DTC-Based Diagnostics/MODULE, Totally Integrated Power (TIPM) - Standard Procedure).

No, with Heated/Turn Signal Mirror

- Go To 3

No, without Heated/Turn Signal Mirror

- Go To 4

3. CHECK (P74) PASSENGER MIRROR HORIZONTAL DRIVER CIRCUIT FOR A SHORT TO (C170) PASSENGER MIRROR HEATER RETURN CIRCUIT OR TO (P595) PASSENGER MIRROR TURN SIGNAL RETURN CIRCUIT

1. For heated mirror, measure the resistance between the (P74) Passenger Mirror Horizontal Driver circuit and the (C170) Passenger Mirror Heater Return circuit at the Passenger Outside Rearview Mirror C2 (Component Side) connector.
2. For turn signal mirror, measure the resistance between the (P74) Passenger Mirror Horizontal Driver circuit and the (P595) Passenger Mirror Turn Signal Return circuit at the Passenger Outside Rearview Mirror C2 (Component Side) connector.

Is the resistance below 10K Ohms for either measurement?

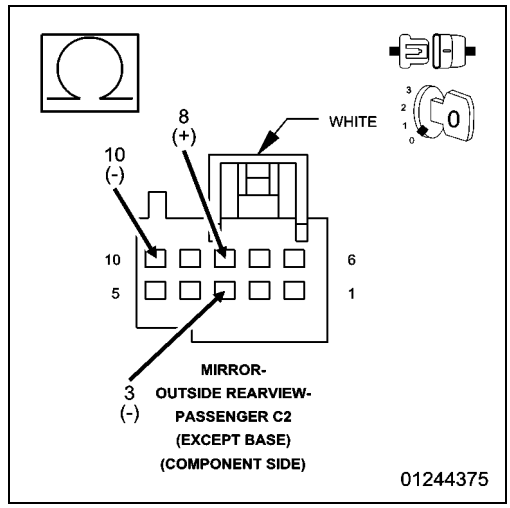

Yes

- Repair all circuits with a resistance below 10K Ohms for a short to the (P74) Passenger Mirror Horizontal Driver circuit. If the wiring harness and connector are okay, replace the Passenger Outside Rearview Mirror in accordance with the Service Information.
- Perform the BODY VERIFICATION TEST. (Refer to 28 - DTC-Based Diagnostics/MODULE, Totally Integrated Power (TIPM) - Standard Procedure).

No

- Go To 4

4. CHECK (P74) PASSENGER MIRROR HORIZONTAL DRIVER CIRCUIT FOR A SHORT TO (P66) PASSENGER MIRROR SENSOR GROUND CIRCUIT

1. Disconnect the Passenger Outside Rearview Mirror C1 (Component Side) connector from the Door Module C1 connector.
2. Measure the resistance between the (P74) Passenger Mirror Horizontal Driver circuit and the (P66) Passenger Mirror Sensor Ground circuit at the Passenger Outside Rearview Mirror C2 and C1 (Component Side) connectors.

Is the resistance below 10K Ohms?

Yes

- Repair the (P74) Passenger Mirror Horizontal Driver circuit for a short to the (P66) Passenger Mirror Sensor Ground circuit. If the wiring harness and connector are okay, replace the Passenger Outside Rearview Mirror in accordance with the Service Information.
- Perform the BODY VERIFICATION TEST. (Refer to 28 - DTC-Based Diagnostics/MODULE, Totally Integrated Power (TIPM) - Standard Procedure).

No, with Puddle Lamp Mirror

- Go To 5

No, without Puddle Lamp Mirror

- Inspect the wiring and connectors for damage and repair as necessary. If the wiring and connectors are okay, replace the Door Module in accordance with the Service Information.
- Perform the BODY VERIFICATION TEST. (Refer to 28 - DTC-Based Diagnostics/MODULE, Totally Integrated Power (TIPM) - Standard Procedure).

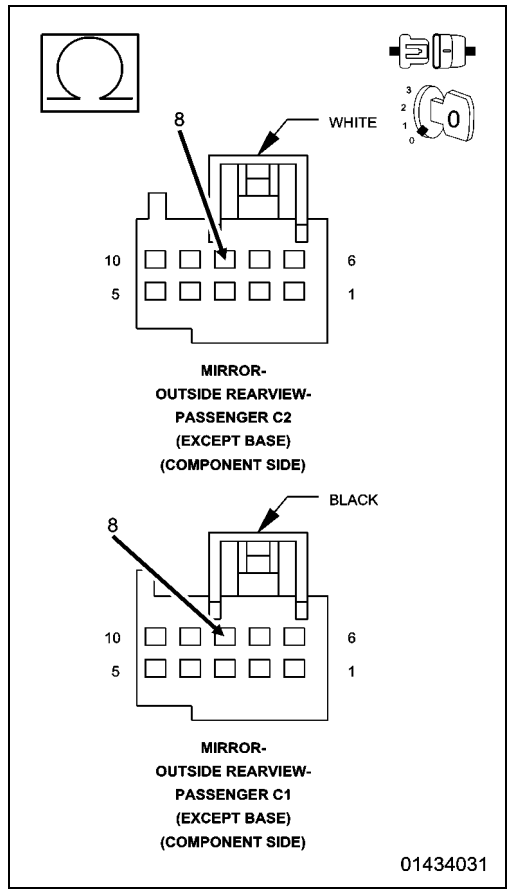

5. CHECK (P74) PASSENGER MIRROR HORIZONTAL DRIVER CIRCUIT FOR A SHORT TO (P592) PASSENGER PUDDLE LAMP RETURN CIRCUIT

1. Measure the resistance between the (P74) Passenger Mirror Horizontal Driver circuit and the (P592) Passenger Puddle Lamp Return circuit at the Passenger Outside Rearview Mirror C2 and C1 (Component Side) connectors.

Is the resistance below 10K Ohms?

Yes

- Repair the (P74) Passenger Mirror Horizontal Driver circuit for a short to the (P592) Passenger Puddle Lamp Return circuit. If the wiring harness and connector are okay, replace the Passenger Outside Rearview Mirror in accordance with the Service Information.
- Perform the BODY VERIFICATION TEST. (Refer to 28 - DTC-Based Diagnostics/MODULE, Totally Integrated Power (TIPM) - Standard Procedure).

No

- Inspect the wiring and connectors for damage and repair as necessary. If the wiring and connectors are okay, replace the Door Module in accordance with the Service Information.
- Perform the BODY VERIFICATION TEST. (Refer to 28 - DTC-Based Diagnostics/MODULE, Totally Integrated Power (TIPM) - Standard Procedure).

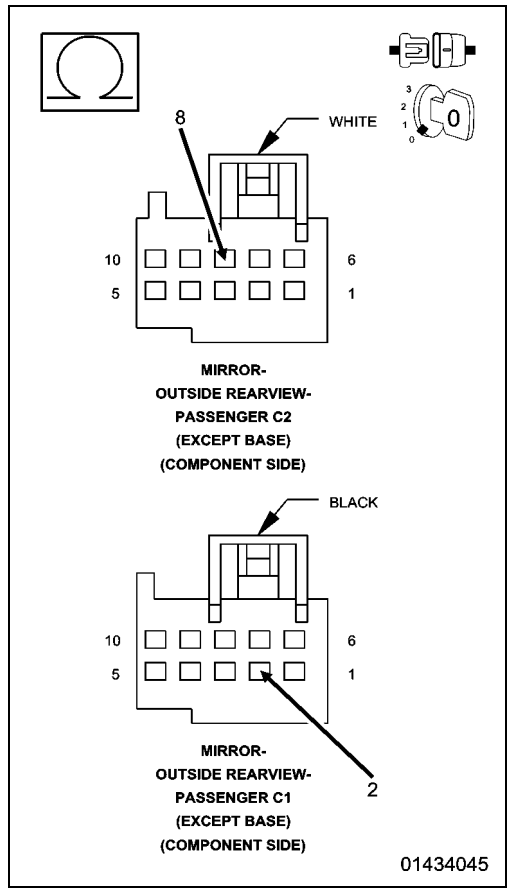

■ B1D36-11-PASSENGER MIRROR HEATER CONTROL - CIRCUIT SHORT TO GROUND

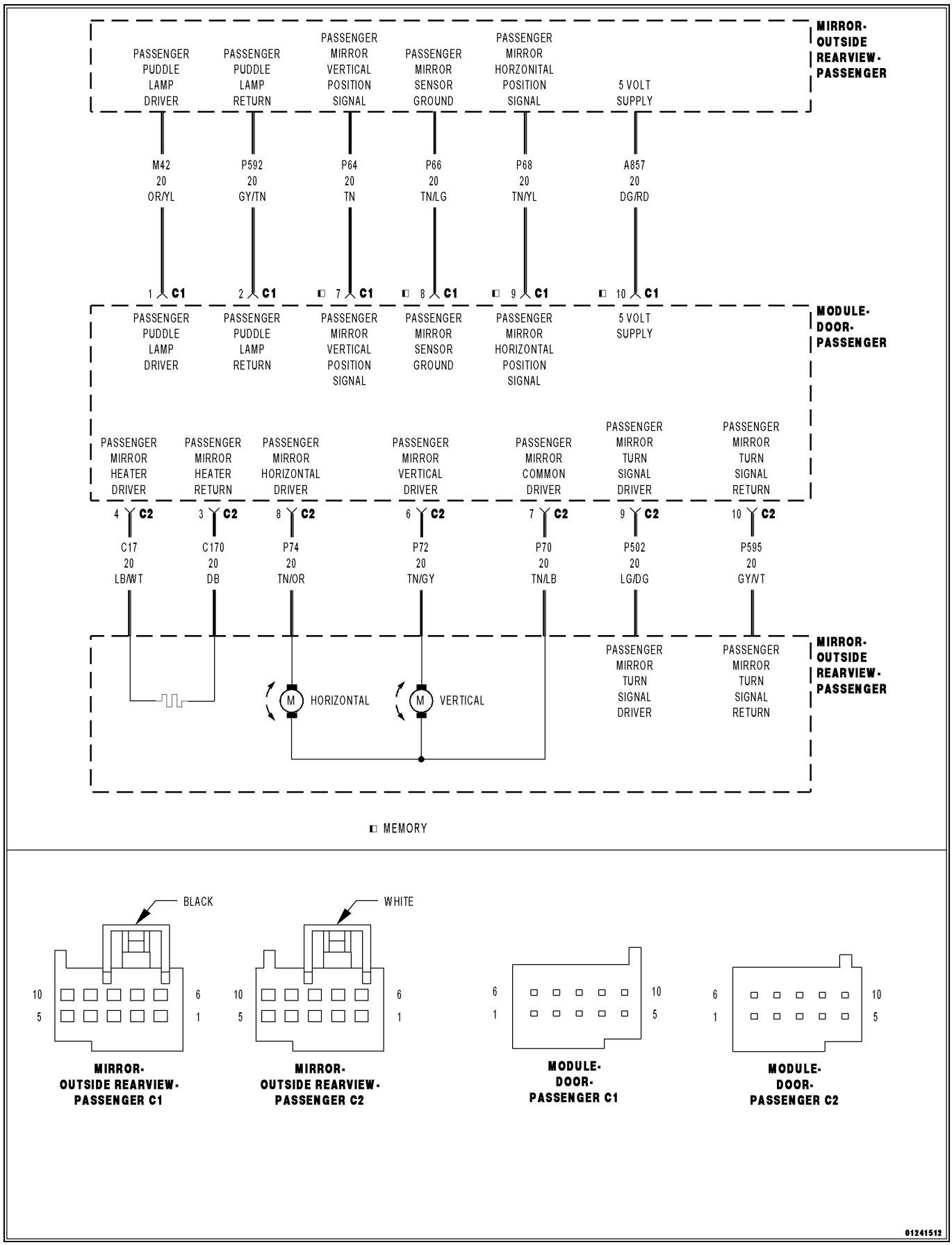

01241512

For a complete wiring diagram, **refer to the Wiring Information**.

- **When Monitored:**
  Continuously.
- **Set Condition:**
  The Door Module senses a short low on the (C17) Passenger Mirror Heater Driver circuit for more than two seconds with the heater switched on.

Possible Causes
(C17) PASSENGER MIRROR HEATER DRIVER CIRCUIT SHORT TO GROUND
(C17) PASSENGER MIRROR HEATER DRIVER CIRCUIT SHORTED TO THE (P74) PASSENGER MIRROR HORIZONTAL DRIVER CIRCUIT
(C17) PASSENGER MIRROR HEATER DRIVER CIRCUIT SHORTED TO THE (P72) PASSENGER MIRROR VERTICAL DRIVER CIRCUIT
(C17) PASSENGER MIRROR HEATER DRIVER CIRCUIT SHORTED TO THE (P70) PASSENGER MIRROR COMMON DRIVER CIRCUIT
(C17) PASSENGER MIRROR HEATER DRIVER CIRCUIT SHORTED TO THE (P595) PASSENGER MIRROR TURN SIGNAL RETURN CIRCUIT
(C17) PASSENGER MIRROR HEATER DRIVER CIRCUIT SHORTED TO THE (C170) PASSENGER MIRROR HEATER RETURN CIRCUIT
(C17) PASSENGER MIRROR HEATER DRIVER CIRCUIT SHORTED TO THE (P66) PASSENGER MIRROR SENSOR GROUND CIRCUIT
(C17) PASSENGER MIRROR HEATER DRIVER CIRCUIT SHORTED TO THE (P592) PASSENGER PUDDLE LAMP DRIVER CIRCUIT
PASSENGER OUTSIDE REARVIEW MIRROR SHORTED
DOOR MODULE

1. TEST FOR INTERMITTENT CONDITION

1. Turn the ignition on.
2. Using a scan tool, record and erase Diagnostic Trouble Codes (DTCs).
3. Turn the turn signal on, if equipped with turn signal mirror.
4. Turn the puddle lamps on, if equipped with puddle lamp mirror.
5. Turn the rear defogger on.
6. Press and release the Mirror Select switch to select the Passenger Outside Rearview Mirror.
7. Operate the Mirror Adjust switch in all directions several times while monitoring the scan tool for DTCs.

NOTE: After adjusting the mirror in one direction wait at least two seconds before adjusting the mirror in the opposite direction, as this will allow time for an active fault to set if present.

Is the DTC active?

Yes

- Go To 2

No

- The conditions that caused this code to set are not present at this time. For vehicle's equipped with folding outside rearview mirrors, repeat test with mirror folded. If DTC is now active, Go To 2. Otherwise, use the wiring diagram/ schematic as a guide and inspect the wiring and connectors.
- Perform the BODY VERIFICATION TEST. (Refer to 28 - DTC-Based Diagnostics/MODULE, Totally Integrated Power (TIPM) - Standard Procedure).

2. CHECK (C17) PASSENGER MIRROR HEATER DRIVER CIRCUIT FOR A SHORT TO GROUND

1. Turn the ignition off.
2. Disconnect the Passenger Outside Rearview Mirror C2 (Component Side) connector from the Door Module C2 connector.
3. Measure the resistance of the (C17) Passenger Mirror Heater Driver circuit between ground and the Passenger Outside Rearview Mirror C2 (Component Side) connector.

Is the resistance below 10K Ohms?

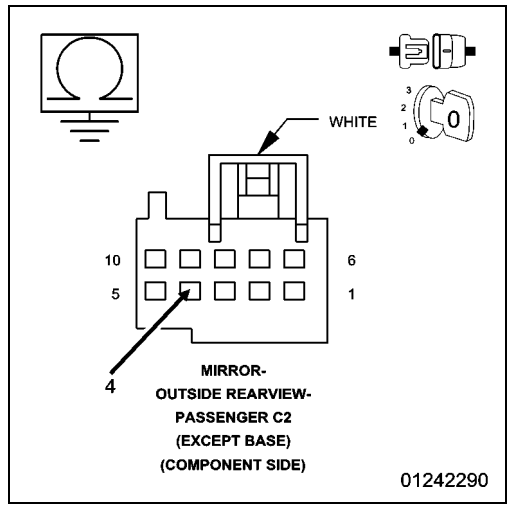

Yes

- Repair the (C17) Passenger Mirror Heater Driver circuit for a short to ground. If the wiring harness and connector are okay, replace the Passenger Outside Rearview Mirror in accordance with the Service Information.
- Perform the BODY VERIFICATION TEST. (Refer to 28 - DTC-Based Diagnostics/MODULE, Totally Integrated Power (TIPM) - Standard Procedure).

No

- Go To 3

3. CHECK (C17) PASSENGER MIRROR HEATER DRIVER CIRCUIT FOR A SHORT TO (P74) PASSENGER MIRROR HORIZONTAL DRIVER CIRCUIT, (P72) PASSENGER MIRROR VERTICAL DRIVER CIRCUIT, OR TO (P70) PASSENGER MIRROR COMMON DRIVER CIRCUIT

1. Measure the resistance between the (C17) Passenger Mirror Heater Driver circuit and the (P74) Passenger Mirror Horizontal Driver circuit at the Passenger Outside Rearview Mirror C2 (Component Side) connector.
2. Measure the resistance between the (C17) Passenger Mirror Heater Driver circuit and the (P72) Passenger Mirror Vertical Driver circuit at the Passenger Outside Rearview Mirror C2 (Component Side) connector.
3. Measure the resistance between the (C17) Passenger Mirror Heater Driver circuit and the (P70) Passenger Mirror Common Driver circuit at the Passenger Outside Rearview Mirror C2 (Component Side) connector.

Is the resistance below 10K Ohms for any measurement?

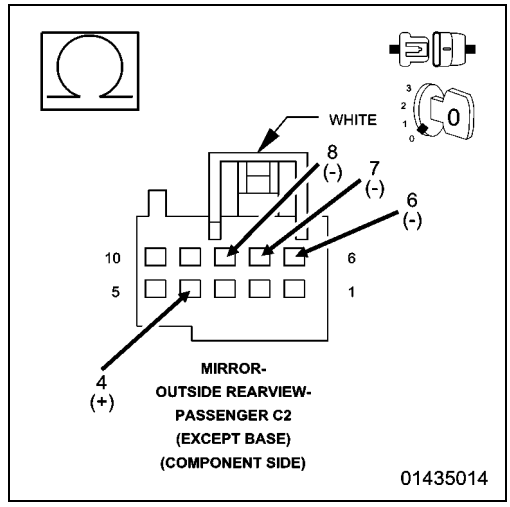

Yes

- Repair all circuits with a resistance below 10K Ohms for a short to the (C17) Passenger Mirror Heater Driver circuit. If the wiring harness and connector are okay, replace the Passenger Outside Rearview Mirror in accordance with the Service Information.
- Perform the BODY VERIFICATION TEST. (Refer to 28 - DTC-Based Diagnostics/MODULE, Totally Integrated Power (TIPM) - Standard Procedure).

No, with Turn Signal Mirror

- Go To 4

No, without Turn Signal Mirror

- Go To 5

4. CHECK (C17) PASSENGER MIRROR HEATER DRIVER CIRCUIT FOR A SHORT TO (P595) PASSENGER MIRROR TURN SIGNAL RETURN CIRCUIT

1. Measure the resistance between the (C17) Passenger Mirror Heater Driver circuit and the (P595) Passenger Mirror Turn Signal Return circuit at the Passenger Outside Rearview Mirror C2 (Component Side) connector.

Is the resistance below 10K Ohms?

Yes

- Repair the (C17) Passenger Mirror Heater Driver circuit for a short to the (P595) Passenger Mirror Turn Signal Return circuit. If the wiring harness and connector are okay, replace the Passenger Outside Rearview Mirror in accordance with the Service Information.
- Perform the BODY VERIFICATION TEST. (Refer to 28 - DTC-Based Diagnostics/MODULE, Totally Integrated Power (TIPM) - Standard Procedure).

No

- Go To 5

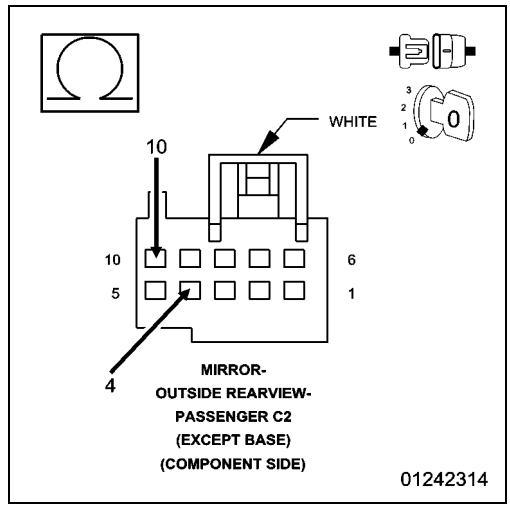

5. CHECK (C17) PASSENGER MIRROR HEATER DRIVER CIRCUIT FOR A SHORT TO (C170) PASSENGER MIRROR HEATER RETURN CIRCUIT

1. Measure the resistance between the (C17) Passenger Mirror Heater Driver circuit and the (C170) Passenger Mirror Heater Return circuit at the Passenger Outside Rearview Mirror C2 (Component Side) connector.

Is the resistance below 1.0 Ohm?

Yes

- Repair the (C17) Passenger Mirror Heater Driver circuit for a short to the (C170) Passenger Mirror Heater Return circuit. If the wiring harness and connector are okay, replace the Passenger Outside Rearview Mirror in accordance with the Service Information.
- Perform the BODY VERIFICATION TEST. (Refer to 28 - DTC-Based Diagnostics/MODULE, Totally Integrated Power (TIPM) - Standard Procedure).

No

- Go To 6

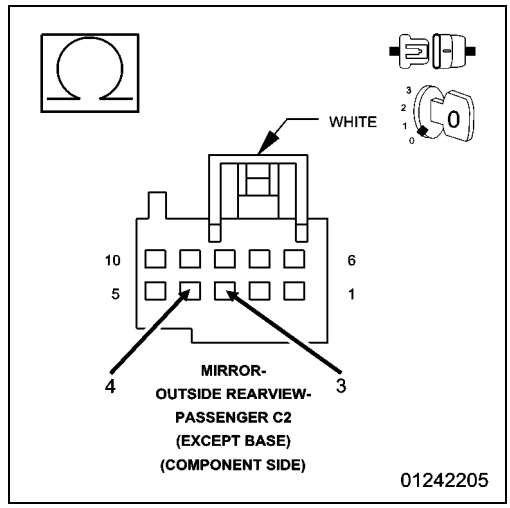

6. CHECK (C17) PASSENGER MIRROR HEATER DRIVER CIRCUIT FOR A SHORT TO (66) PASSENGER MIRROR SENSOR GROUND CIRCUIT

1. Disconnect the Passenger Outside Rearview Mirror C1 (Component Side) connector from the Door Module C1 connector.
2. Measure the resistance between the (C17) Passenger Mirror Heater Driver circuit and the (P66) Passenger Mirror Sensor Ground circuit at the Passenger Outside Rearview Mirror C2 and C1 (Component Side) connectors.

Is the resistance below 10K Ohms?

Yes

- Repair the (C17) Passenger Mirror Heater Driver circuit for a short to the (P66) Passenger Mirror Sensor Ground circuit. If the wiring harness and connector are okay, replace the Passenger Outside Rearview Mirror in accordance with the Service Information.
- Perform the BODY VERIFICATION TEST. (Refer to 28 - DTC-Based Diagnostics/MODULE, Totally Integrated Power (TIPM) - Standard Procedure).

No, with Puddle Lamp Mirror

- Go To 7

No, without Puddle Lamp Mirror

- Inspect the wiring and connectors for damage and repair as necessary. If the wiring and connectors are okay, replace the Door Module in accordance with the Service Information.
- Perform the BODY VERIFICATION TEST. (Refer to 28 - DTC-Based Diagnostics/MODULE, Totally Integrated Power (TIPM) - Standard Procedure).

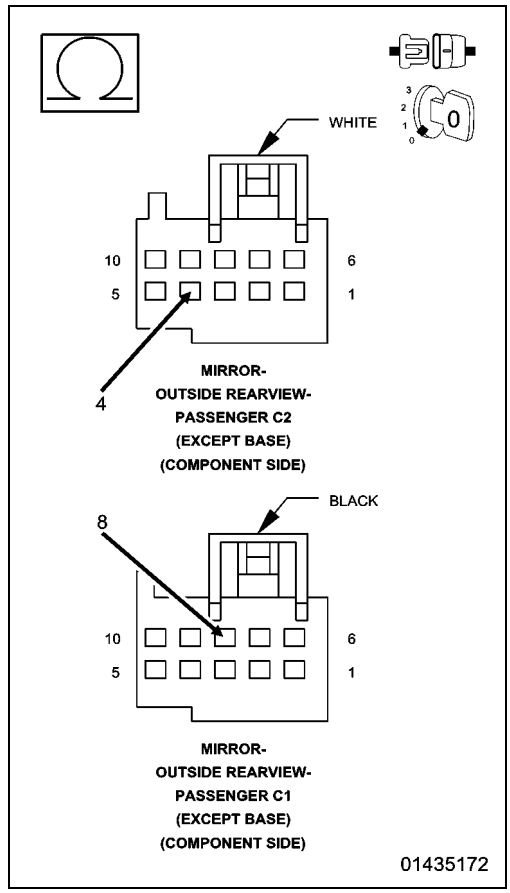

7. CHECK (C17) PASSENGER MIRROR HEATER DRIVER CIRCUIT FOR A SHORT TO (P592) PASSENGER PUDDLE LAMP RETURN CIRCUIT

1. Measure the resistance between the (C17) Passenger Mirror Heater Driver circuit and the (P592) Passenger Puddle Lamp Return circuit at the Passenger Outside Rearview Mirror C2 and C1 (Component Side) connectors.

Is the resistance below 10K Ohms?

Yes

- Repair the (C17) Passenger Mirror Heater Driver circuit for a short to the (P592) Passenger Puddle Lamp Return circuit. If the wiring harness and connector are okay, replace the Passenger Outside Rearview Mirror in accordance with the Service Information.
- Perform the BODY VERIFICATION TEST. (Refer to 28 - DTC-Based Diagnostics/MODULE, Totally Integrated Power (TIPM) - Standard Procedure).

No

- Inspect the wiring and connectors for damage and repair as necessary. If the wiring and connectors are okay, replace the Door Module in accordance with the Service Information.
- Perform the BODY VERIFICATION TEST. (Refer to 28 - DTC-Based Diagnostics/MODULE, Totally Integrated Power (TIPM) - Standard Procedure).

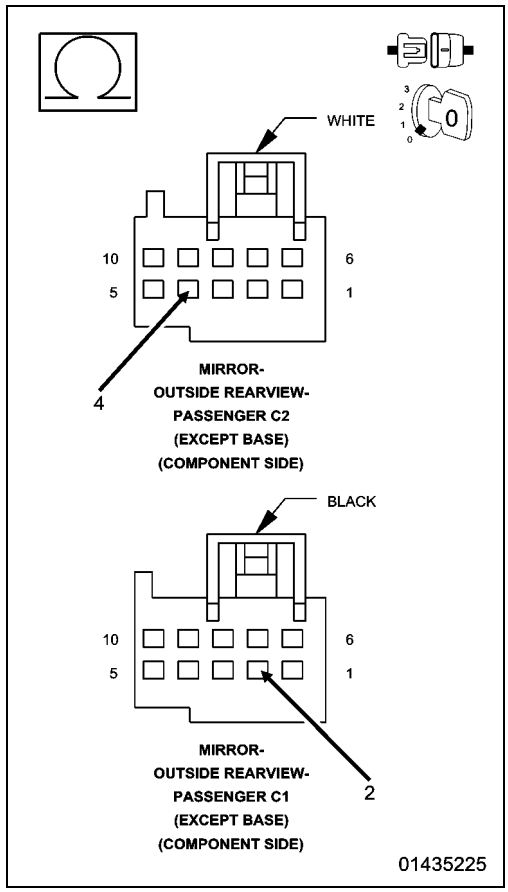

■ B1D36-15-PASSENGER MIRROR HEATER CONTROL - CIRCUIT SHORT TO BATTERY OR OPEN

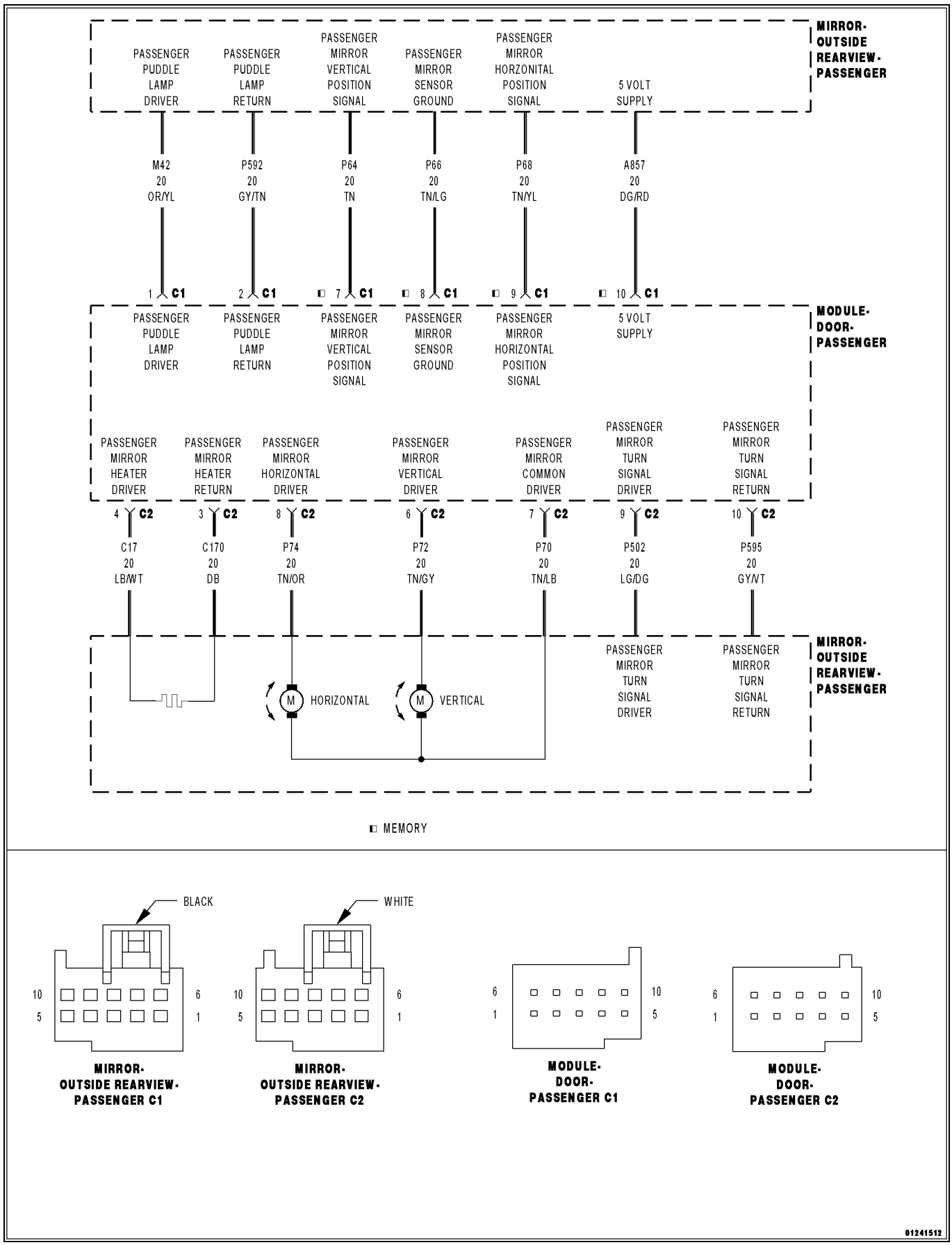

01241512

For a complete wiring diagram, **refer to the Wiring Information**.

- **When Monitored:**
  Continuously.
- **Set Condition:**
  The Door Module senses an open or a short high on the (C17) Passenger Mirror Heater Driver circuit for more than two seconds.

Possible Causes
(C17) PASSENGER MIRROR HEATER DRIVER CIRCUIT SHORTED TO VOLTAGE
(C17) PASSENGER MIRROR HEATER DRIVER CIRCUIT OPEN
(C170) PASSENGER MIRROR HEATER RETURN CIRCUIT OPEN
(C17) PASSENGER MIRROR HEATER DRIVER CIRCUIT SHORTED TO THE (P74) PASSENGER MIRROR HORIZONTAL DRIVER CIRCUIT
(C17) PASSENGER MIRROR HEATER DRIVER CIRCUIT SHORTED TO THE (P72) PASSENGER MIRROR VERTICAL DRIVER CIRCUIT
(C17) PASSENGER MIRROR HEATER DRIVER CIRCUIT SHORTED TO THE (P70) PASSENGER MIRROR COMMON DRIVER CIRCUIT
(C17) PASSENGER MIRROR HEATER DRIVER CIRCUIT SHORTED TO THE (P502) PASSENGER MIRROR TURN SIGNAL DRIVER CIRCUIT
(C17) PASSENGER MIRROR HEATER DRIVER CIRCUIT SHORTED TO THE (M42) PASSENGER PUDDLE LAMP DRIVER CIRCUIT
PASSENGER OUTSIDE REARVIEW MIRROR
DOOR MODULE

1. TEST FOR INTERMITTENT CONDITION - HEATER OFF

1. Turn the ignition on.
2. Using a scan tool, record and erase Diagnostic Trouble Codes (DTCs).
3. Turn the turn signal on, if equipped with turn signal mirror.
4. Turn the puddle lamps on, if equipped with puddle lamp mirror.
5. Press and release the Mirror Select switch to select the Passenger Outside Rearview Mirror.
6. Operate the Mirror Adjust switch in all directions several times while monitoring the scan tool for DTCs.

NOTE: After adjusting the mirror in one direction wait at least two seconds before adjusting the mirror in the opposite direction, as this will allow time for an active fault to set if present.

Is the DTC active?

Yes

- Go To 3

No

- Go To 2

2. TEST FOR INTERMITTENT CONDITION - HEATER ON

1. Turn the rear defogger on.
2. Operate the Mirror Adjust switch in all directions several times while monitoring the scan tool for DTCs.

NOTE: After adjusting the mirror in one direction wait at least two seconds before adjusting the mirror in the opposite direction, as this will allow time for an active fault to set if present.

Is the DTC active?

Yes

- Go To 3

No

- The conditions that caused this code to set are not present at this time. For vehicle's equipped with folding outside rearview mirrors, repeat test with mirror folded. If DTC is now active, Go To 3. Otherwise, use the wiring diagram/ schematic as a guide and inspect the wiring and connectors.
- Perform the BODY VERIFICATION TEST. (Refer to 28 - DTC-Based Diagnostics/MODULE, Totally Integrated Power (TIPM) - Standard Procedure).

3. CHECK (C17) PASSENGER MIRROR HEATER DRIVER CIRCUIT FOR A SHORT TO VOLTAGE

1. Turn the ignition off.
2. Disconnect the Passenger Outside Rearview Mirror C2 (Component Side) connector from the Door Module C2 connector.
3. Turn the ignition on.
4. Measure the voltage of the (C17) Passenger Mirror Heater Driver circuit between the Passenger Outside Rearview Mirror C2 (Component Side) connector and ground.

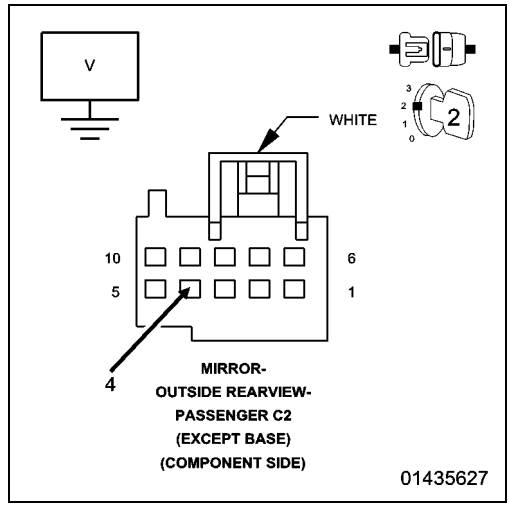

Is there any voltage present?

Yes

- Repair the (C17) Passenger Mirror Heater Driver circuit for a short to voltage. If the wiring harness and connector are okay, replace the Passenger Outside Rearview Mirror in accordance with the Service Information.
- Perform the BODY VERIFICATION TEST. (Refer to 28 - DTC-Based Diagnostics/MODULE, Totally Integrated Power (TIPM) - Standard Procedure).

No

- Go To 4

4. CHECK (C17) PASSENGER MIRROR HEATER DRIVER CIRCUIT AND (C170) PASSENGER MIRROR HEATER RETURN CIRCUIT FOR AN OPEN

1. Turn the ignition off.
2. Measure the resistance between the (C17) Passenger Mirror Heater Driver circuit and the (C170) Passenger Mirror Heater Return circuit at the Passenger Outside Rearview Mirror C2 (Component Side) connector.

Is the resistance below 9.0 Ohms?

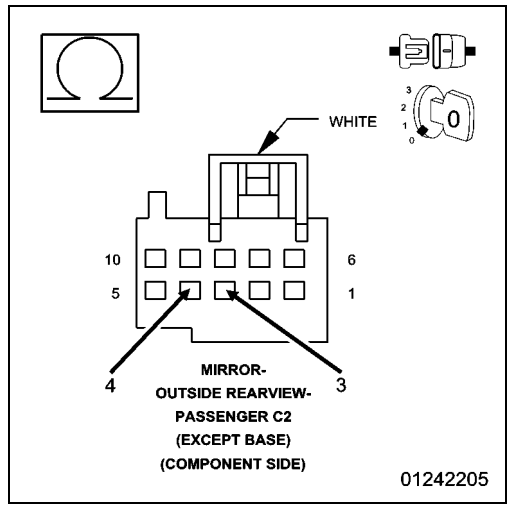

Yes

- Go To 5

No

- Repair the (C17) Passenger Mirror Heater Driver circuit or the (C170) Passenger Mirror Heater Return circuit for an open. If the wiring harness and connector are okay, replace the Passenger Outside Rearview Mirror in accordance with the Service Information.
- Perform the BODY VERIFICATION TEST. (Refer to 28 - DTC-Based Diagnostics/MODULE, Totally Integrated Power (TIPM) - Standard Procedure).

5. CHECK (C17) PASSENGER MIRROR HEATER DRIVER CIRCUIT FOR A SHORT TO (P74) PASSENGER MIRROR HORIZONTAL DRIVER CIRCUIT, (P72) PASSENGER MIRROR VERTICAL DRIVER CIRCUIT, OR TO (P70) PASSENGER MIRROR COMMON DRIVER CIRCUIT

1. Measure the resistance between the (C17) Passenger Mirror Heater Driver circuit and the (P74) Passenger Mirror Horizontal Driver circuit at the Passenger Outside Rearview Mirror C2 (Component Side) connector.
2. Measure the resistance between the (C17) Passenger Mirror Heater Driver circuit and the (P72) Passenger Mirror Vertical Driver circuit at the Passenger Outside Rearview Mirror C2 (Component Side) connector.
3. Measure the resistance between the (C17) Passenger Mirror Heater Driver circuit and the (P70) Passenger Mirror Common Driver circuit at the Passenger Outside Rearview Mirror C2 (Component Side) connector.

Is the resistance below 10K Ohms for any measurement?

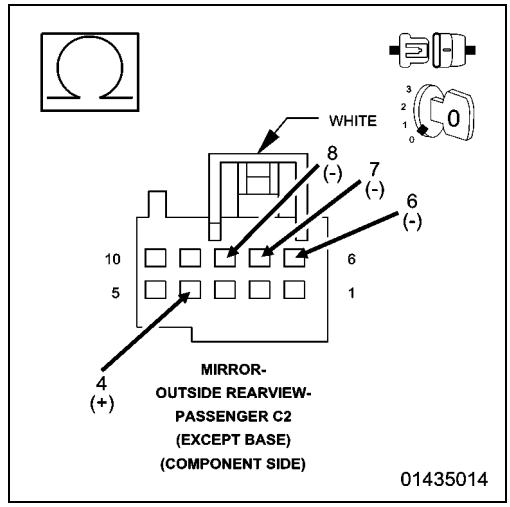

Yes

- Repair all circuits with a resistance below 10K Ohms for a short to the (C17) Passenger Mirror Heater Driver circuit. If the wiring harness and connector are okay, replace the Passenger Outside Rearview Mirror in accordance with the Service Information.
- Perform the BODY VERIFICATION TEST. (Refer to 28 - DTC-Based Diagnostics/MODULE, Totally Integrated Power (TIPM) - Standard Procedure).

No, with Turn Signal Mirror

- Go To 6

No, without Turn Signal Mirror

- Go To 7

6. CHECK (C17) PASSENGER MIRROR HEATER DRIVER CIRCUIT FOR A SHORT TO (P502) PASSENGER MIRROR TURN SIGNAL DRIVER CIRCUIT

1. Measure the resistance between the (C17) Passenger Mirror Heater Driver circuit and the (P502) Passenger Mirror Turn Signal Driver circuit at the Passenger Outside Rearview Mirror C2 (Component Side) connector.

Is the resistance below 10K Ohms?

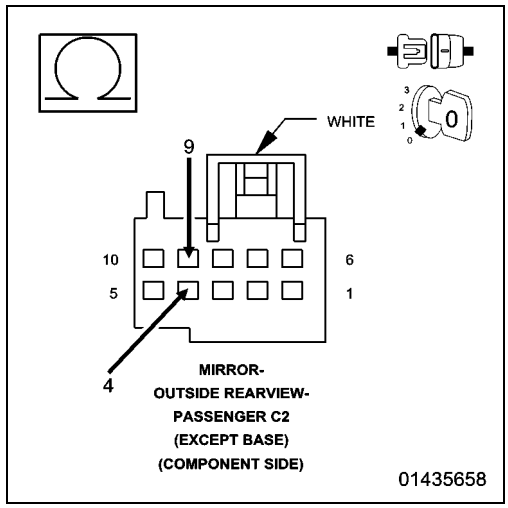

Yes

- Repair the (C17) Passenger Mirror Heater Driver circuit for a short to the (P502) Passenger Mirror Turn Signal Driver circuit. If the wiring harness and connector are okay, replace the Passenger Outside Rearview Mirror in accordance with the Service Information.
- Perform the BODY VERIFICATION TEST. (Refer to 28 - DTC-Based Diagnostics/MODULE, Totally Integrated Power (TIPM) - Standard Procedure).

No, with Puddle Lamp Mirror

- Go To 7

No, without Puddle Lamp Mirror

- Inspect the wiring and connectors for damage and repair as necessary. If the wiring and connectors are okay, replace the Door Module in accordance with the Service Information.
- Perform the BODY VERIFICATION TEST. (Refer to 28 - DTC-Based Diagnostics/MODULE, Totally Integrated Power (TIPM) - Standard Procedure).

7. CHECK (C17) PASSENGER MIRROR HEATER DRIVER CIRCUIT FOR A SHORT TO (M42) PASSENGER PUDDLE LAMP DRIVER CIRCUIT

1. Disconnect the Passenger Outside Rearview Mirror C1 (Component Side) connector from the Door Module C1 connector.
2. Measure the resistance between the (C17) Passenger Mirror Heater Driver circuit and the (M42) Passenger Puddle Lamp Driver circuit at the Passenger Outside Rearview Mirror C2 and C1 (Component Side) connectors.

Is the resistance below 10K Ohms?

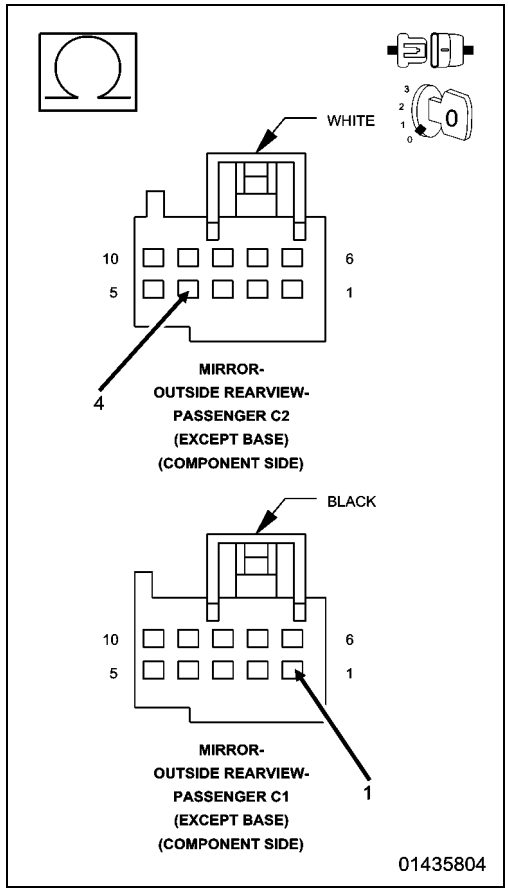

Yes

- Repair the (C17) Passenger Mirror Heater Driver circuit for a short to the (M42) Passenger Puddle Lamp Driver circuit. If the wiring harness and connector are okay, replace the Passenger Outside Rearview Mirror in accordance with the Service Information.
- Perform the BODY VERIFICATION TEST. (Refer to 28 - DTC-Based Diagnostics/MODULE, Totally Integrated Power (TIPM) - Standard Procedure).

No

- Inspect the wiring and connectors for damage and repair as necessary. If the wiring and connectors are okay, replace the Door Module in accordance with the Service Information.
- Perform the BODY VERIFICATION TEST. (Refer to 28 - DTC-Based Diagnostics/MODULE, Totally Integrated Power (TIPM) - Standard Procedure).

B210C-16-BATTERY VOLTAGE INPUT - CIRCUIT VOLTAGE BELOW THRESHOLD

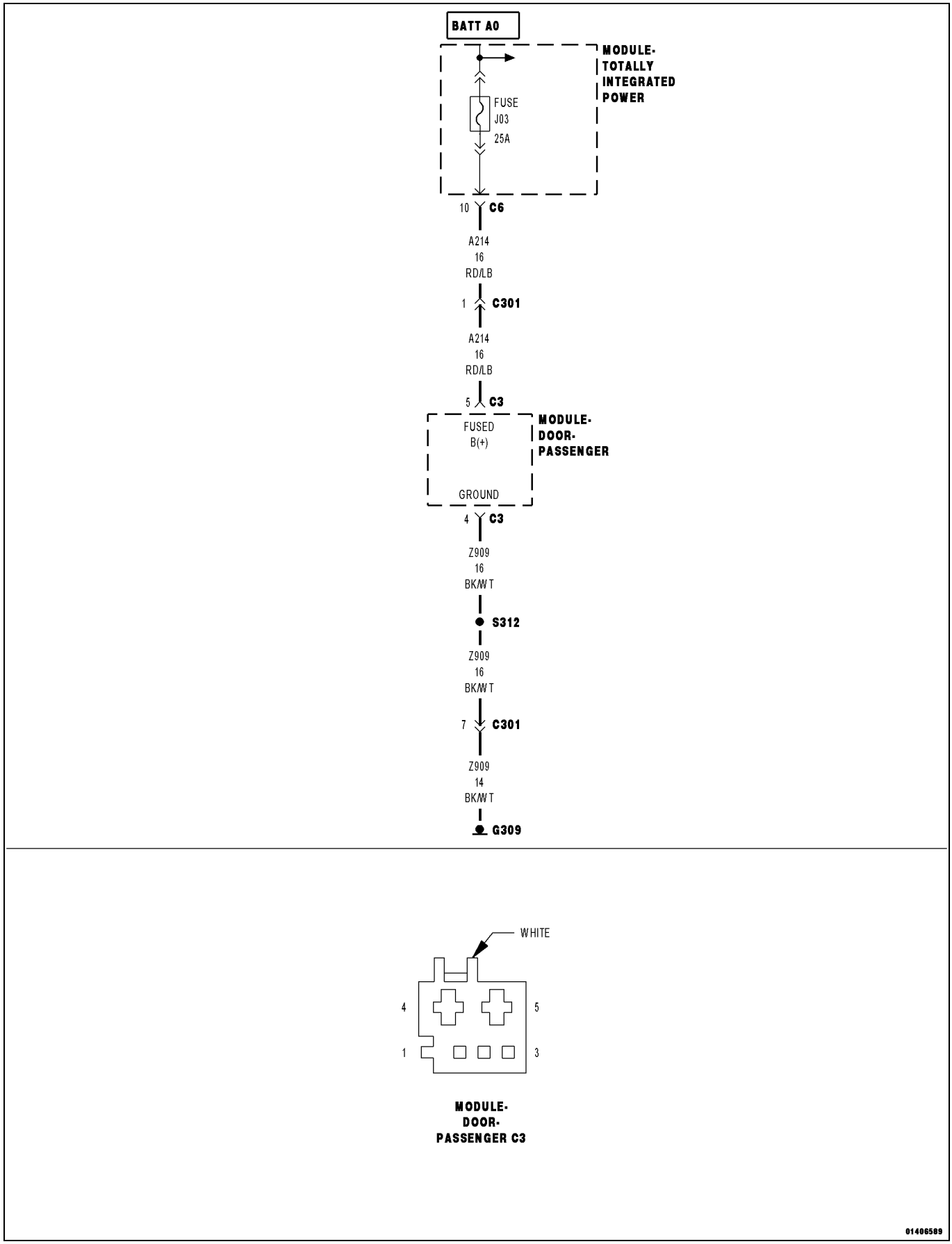

For a complete wiring diagram, **refer to the Wiring Information**.

- **When Monitored:**
  At all times.
- **Set Condition:**
  Anytime the module senses voltage input below 8.0 Volts for more than four seconds, this code will set.

POSSIBLE CAUSES
LOW VOLTAGE ENGINE DTC
(A214) FUSED B(+) CIRCUIT HAS HIGH RESISTANCE
(Z909) GROUND CIRCUIT HAS HIGH RESISTANCE
PASSENGER DOOR MODULE

1. CHECK ENGINE DTCs

1. Using the scan tool, read the active ENGINE DTCs.

Are there any ENGINE Charging or Battery DTCs present?

No

- Go To 2

Yes

- (Refer to 28 - DTC-Based Diagnostics/MODULE, Powertrain Control (PCM) - Diagnosis and Testing) and perform the appropriate diagnostic procedure.

2. TEST FOR INTERMITTENT CONDITION

1. Using the scan tool, record and erase the DTCs.
2. Start the engine and run for two minutes.
3. Using the scan tool, read the active DTCs in the Door Module.

Does the scan tool display B210C-16-BATTERY VOLTAGE INPUT - CIRCUIT VOLTAGE BELOW THRESHOLD?

Yes

- Go To 3

No

- Test complete, the condition or conditions that originally set this DTC are not present at this time. Using the wiring diagrams as a guide, check all related splices and connectors for signs of water intrusion, corrosion, pushed out or bent terminals and correct pin tension.
- Perform the BODY VERIFICATION TEST. (Refer to 28 - DTC-Based Diagnostics/MODULE, Totally Integrated Power (TIPM) - Standard Procedure).

3. (A214) FUSED B(+) OR (Z909) GROUND CIRCUITS RESISTED

1. Turn the ignition off.
2. Disconnect the Passenger Door Module C3 connector.
3. Turn the ignition on.
4. Test the (A214) Fused B(+) circuits by connecting a 12-volt test light between the Fused B(+) circuit and the (Z909) Ground circuits in the door module C3 connector. The test light must illuminate brightly. Compare the brightness to that of a direct connection to the battery.

Does the test light illuminate brightly?

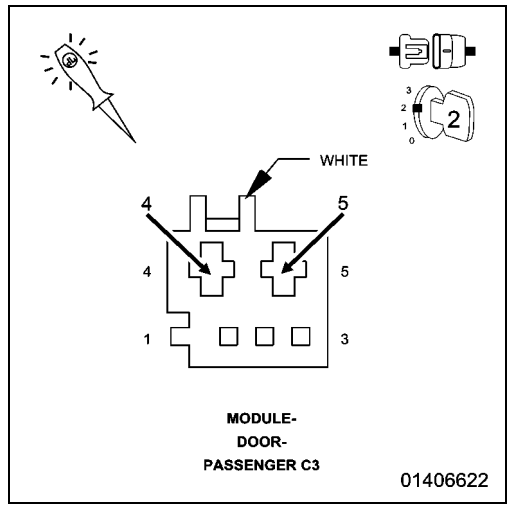

Yes

- Replace the Passenger Door Module in accordance with the Service Information.
- Perform the BODY VERIFICATION TEST. (Refer to 28 - DTC-Based Diagnostics/MODULE, Totally Integrated Power (TIPM) - Standard Procedure).

No

- Test the (A214) Fused B(+) and the (Z909) Ground circuits to determine which one has the high resistance. Repair the necessary circuit for high resistance.
- Perform the BODY VERIFICATION TEST. (Refer to 28 - DTC-Based Diagnostics/MODULE, Totally Integrated Power (TIPM) - Standard Procedure).

B210C-17-BATTERY VOLTAGE INPUT - CIRCUIT VOLTAGE ABOVE THRESHOLD

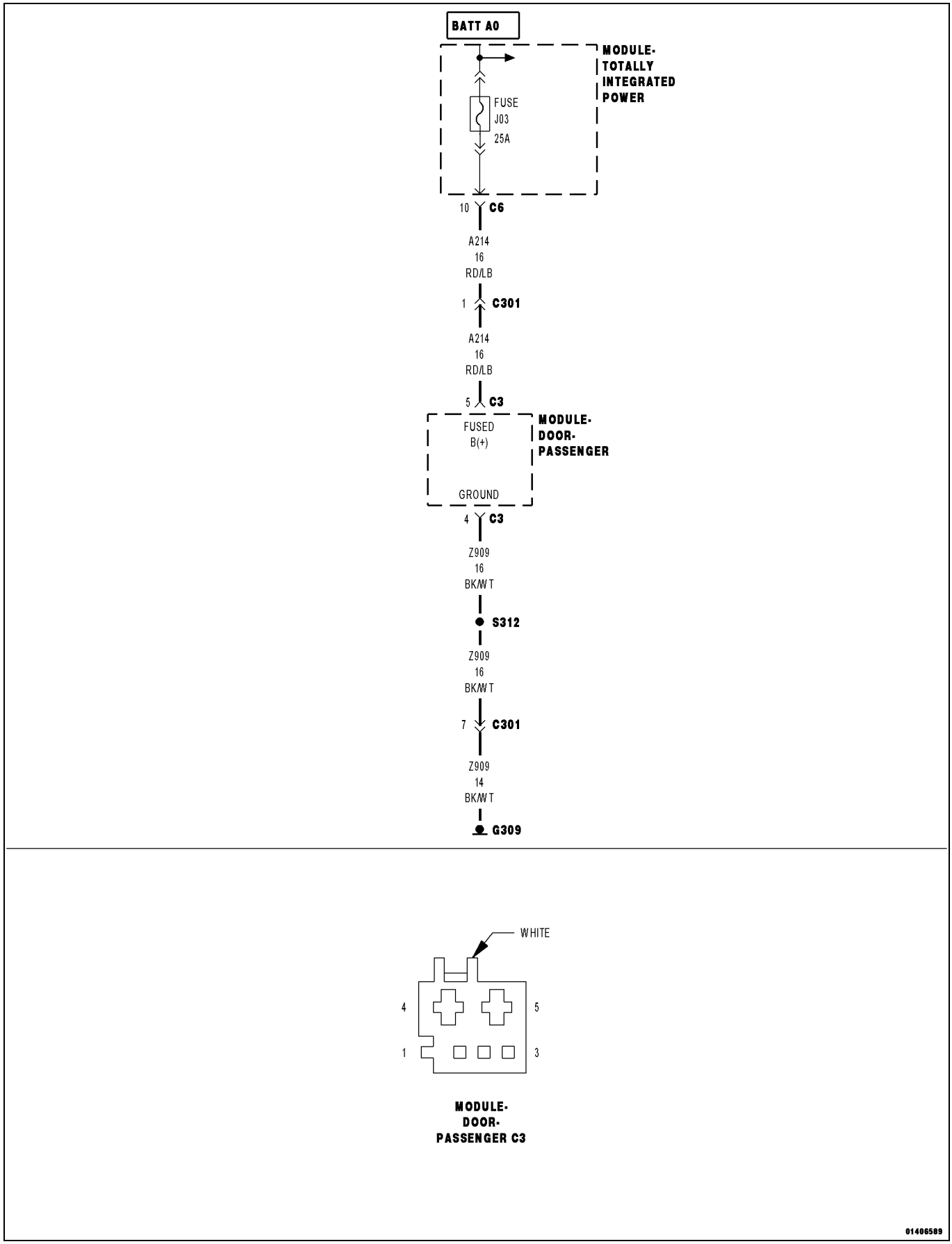

For a complete wiring diagram, **refer to the Wiring Information**.

- **When Monitored:**
  At all times.
- **Set Condition:**
  Anytime the module senses voltage input above 16.0 volts for for more than four seconds, this code will set.

POSSIBLE CAUSES
HIGH VOLTAGE ENGINE DTC
PASSENGER DOOR MODULE

1. CHECK ENGINE DTCs

1. With the scan tool, read the active ENGINE DTCs.

Are there any active Engine Charging or Battery DTCs present?

No

- Go To 2

Yes

- (Refer to 28 - DTC-Based Diagnostics/MODULE, Powertrain Control (PCM) - Diagnosis and Testing) and perform the appropriate diagnostic procedure.

2. TEST FOR INTERMITTENT CONDITION

1. With the scan tool, record and erase the DTCs.
2. Start the engine and run for two minutes.
3. With the scan tool, read the active door module DTCs.

Does the scan tool display B210C-17-BATTERY VOLTAGE INPUT - CIRCUIT VOLTAGE ABOVE THRESHOLD?

Yes

- Replace the Passenger Door Module in accordance with the Service Information.
- Perform the BODY VERIFICATION TEST. (Refer to 28 - DTC-Based Diagnostics/MODULE, Totally Integrated Power (TIPM) - Standard Procedure).

No

- Test complete, the condition or conditions that originally set this DTC are not present at this time. Using the wiring diagrams as a guide, check all related splices and connectors for signs of water intrusion, corrosion, pushed out or bent terminals and correct pin tension.
- Perform the BODY VERIFICATION TEST. (Refer to 28 - DTC-Based Diagnostics/MODULE, Totally Integrated Power (TIPM) - Standard Procedure).

■ B21A1-00-ECU RESET/RECOVERY OCCURRED

For a complete wiring diagram, **refer to the Wiring Information**.

- **When Monitored:**
  At all times.
- **Set Condition:**
  Whenever the module detects a power on reset or a reflash, this code will set. This code is for information only. No repair is necessary.

POSSIBLE CAUSES
MODULE WAS RE-FLASHED
MODULE WAS RESET

This DTC is for information only. At some time the module was re-flashed or was reset during a power on operation. No repair is necessary.

B21DD-84-SYSTEM VOLTAGE - SIGNAL BELOW ALLOWABLE RANGE

For a complete wiring diagram, **refer to the Wiring Information**.

- **When Monitored:**
  At all times.
- **Set Condition:**
  This is a CAN message that the battery voltage was below 10.0 volts for over four seconds.

POSSIBLE CAUSES
LOW SYSTEM VOLTAGE
BATTERY OR CHARGING SYSTEM

1. CHECK ENGINE DTCs

1. With the scan tool, read Powertrain Control Module DTCs

Are there any Charging or Battery DTCs present?

Yes

- Perform the appropriate diagnostic procedure. (Refer to 28 - DTC-Based Diagnostics/MODULE, Powertrain Control (PCM) - Diagnosis and Testing) and perform the active charging system or battery DTC diagnostic procedure.

No

- This code is for information only. At some time there was a low battery system voltage. Check the battery and charging system in accordance with the Service Information.

B21DD-85-SYSTEM VOLTAGE - SIGNAL ABOVE ALLOWABLE RANGE

For a complete wiring diagram, **refer to the Wiring Information**.

- **When Monitored:**
  At all times.
- **Set Condition:**
  This is a CAN message that the system voltage was above 16.0 volts for over four seconds.

POSSIBLE CAUSES
HIGH BATTERY SYSTEM VOLTAGE
CHARGING SYSTEM

1. CHECK ENGINE DTCs

1. With the scan tool, read Powertrain Control Module DTCs

Are there any Charging or Battery DTCs present?

Yes

- (Refer to 28 - DTC-Based Diagnostics/MODULE, Powertrain Control (PCM) - Diagnosis and Testing) and perform the active charging system or battery DTC diagnostic procedure.

No

- This code is a CAN system message for information only. Check the charging system in accordance with the Service Information.

B2599-54-DOOR MODULE FRONT RIGHT - MISSING CALIBRATION - QUAD/CREW CAB ONLY

For a complete wiring diagram, **refer to the Wiring Information**.

Theory of Operation

This code can set anytime the battery or the door module connector is disconnected.

- **When Monitored:**
  Whenever the window motor is operating.
- **Set Condition:**
  When the Door Module has lost the parameters for window travel.

Possible Causes
MODULE NOT CALIBRATED
EXPRESS WINDOW SWITCH
PASSENGER DOOR MODULE (PDM)

1. TEST FOR INTERMITTENT CONDITION

NOTE: If there are any other Power Window DTCs, repair them before continuing.

1. Turn the ignition on.
2. With the scan tool, record and erase DTCs.
3. Operate the Passenger Window switch up and down several times.
4. Wait 30 seconds.
5. With the scan tool, read the active DTCs.

Does the scan tool display B2599-54-DOOR MODULE FRONT RIGHT - MISSING CALIBRATION?

Yes

- Go To 2

No

- Test complete, the condition or conditions that originally set this DTC are not present at this time. Using the wiring diagrams as a guide, check all related splices and connectors for signs of water intrusion, corrosion, pushed out or bent terminals, and correct pin tension.
- Perform the BODY VERIFICATION TEST. (Refer to 28 - DTC-Based Diagnostics/MODULE, Totally Integrated Power (TIPM) - Standard Procedure).

2. WINDOW MODULE NOT CALIBRATED

1. Operate the window to the full up position and continue to hold the switch for an additional two seconds.
2. Operate the window to the full down position and continue to hold the switch for an additional two seconds.
3. Again operate the window to the full up position and continue to hold the switch for an additional two seconds.
4. Lower the window all the way down then press and release the switch to the express up position.

Did the window move to the full up position?

Yes

- Test complete.
- Perform the BODY VERIFICATION TEST. (Refer to 28 - DTC-Based Diagnostics/MODULE, Totally Integrated Power (TIPM) - Standard Procedure).

No

- Go To 3

3. EXPRESS WINDOW SWITCH

1. Turn the ignition off.
2. Move the Passenger Express Window Switch from the idle position to the up position and then to the express up position.

Is there two definite detent positions felt?

Yes

- Replace the Passenger Door Module in accordance with the Service Information.
- Perform the BODY VERIFICATION TEST. (Refer to 28 - DTC-Based Diagnostics/MODULE, Totally Integrated Power (TIPM) - Standard Procedure).

No

- Replace the Passenger Express Window Switch in accordance with the Service Information.
- Perform the BODY VERIFICATION TEST. (Refer to 28 - DTC-Based Diagnostics/MODULE, Totally Integrated Power (TIPM) - Standard Procedure).

B2599-96-DOOR MODULE FRONT RIGHT - COMPONENT INTERNAL FAILURE

For a complete wiring diagram, **refer to the Wiring Information**.

- **When Monitored:**
  At all times.
- **Set Condition:**
  When the door module senses an internal fault, this code will set.

Possible Causes
PASSENGER DOOR MODULE (PDM)

1. TEST FOR INTERMITTENT CONDITION

1. Turn the ignition on.
2. With the scan tool, record and erase the DTCs.
3. Operate the Passenger Window up and down several times.
4. Wait 30 seconds.
5. With the scan tool, read the active DTCs.

Does the scan tool display B2599-96-DOOR MODULE FRONT RIGHT - COMPONENT INTERNAL FAILURE ?

Yes

- Replace the Door Module in accordance with the Service Information.
- Perform the BODY VERIFICATION TEST. (Refer to 28 - DTC-Based Diagnostics/MODULE, Totally Integrated Power (TIPM) - Standard Procedure).

No

- The conditions that caused this code to set are not present at this time. If this code ever repeats, replace the door module in accordance with the Service Information.
- Perform the BODY VERIFICATION TEST. (Refer to 28 - DTC-Based Diagnostics/MODULE, Totally Integrated Power (TIPM) - Standard Procedure).

B282F-11-PASSENGER PUDDLE LAMP CONTROL - CIRCUIT SHORT TO GROUND

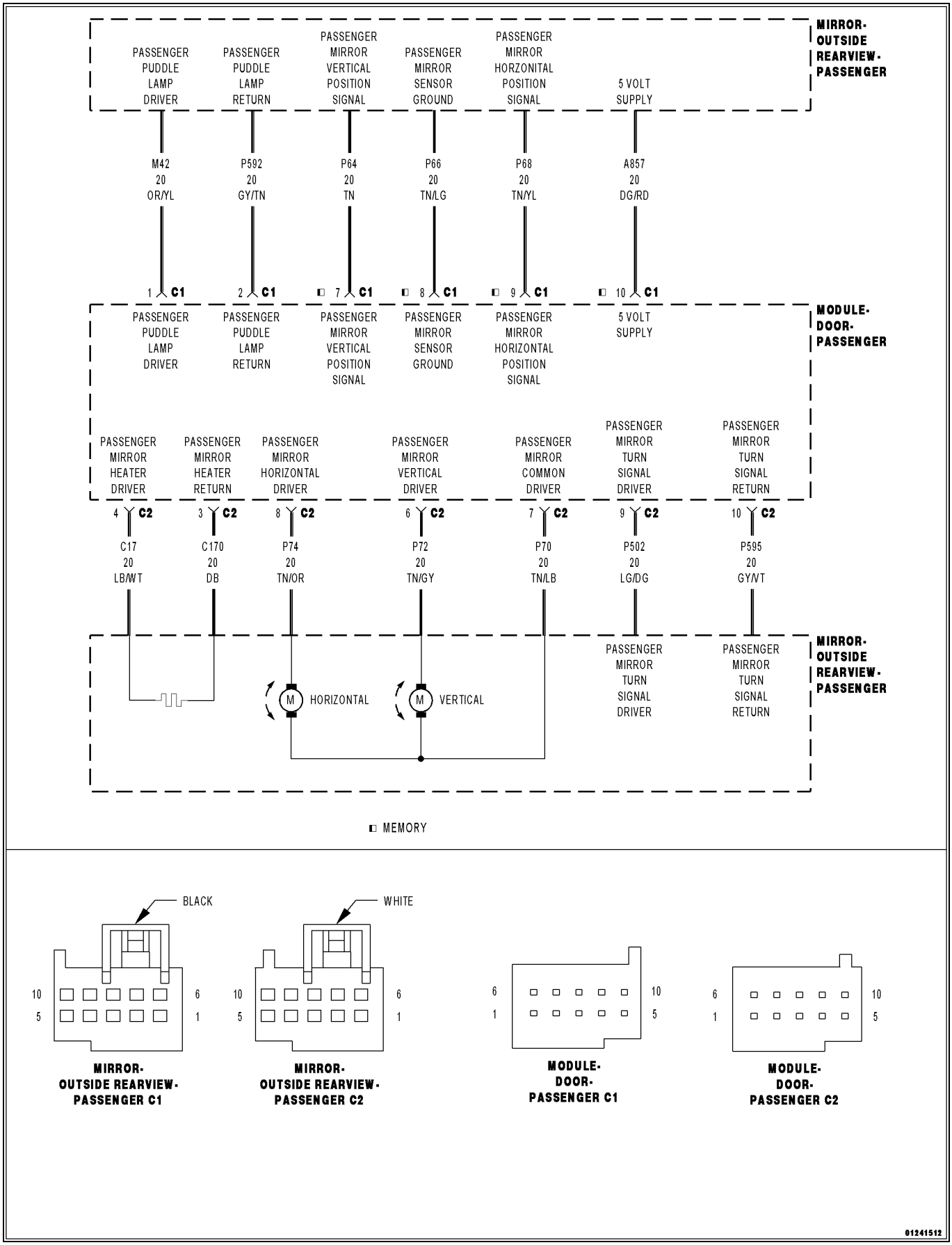

For a complete wiring diagram, **refer to the Wiring Information**.

- **When Monitored:**

  Continuously.
- **Set Condition:**

  The Door Module senses a short low on the (M42) Passenger Puddle Lamp Driver circuit for more than two seconds with the lamp switched on.

Possible Causes
(M42) PASSENGER PUDDLE LAMP DRIVER CIRCUIT SHORTED TO GROUND
(M42) PASSENGER PUDDLE LAMP DRIVER CIRCUIT SHORTED TO THE (P66) PASSENGER MIRROR SENSOR GROUND CIRCUIT
(M42) PASSENGER PUDDLE LAMP DRIVER CIRCUIT SHORTED TO THE (P592) PASSENGER PUDDLE LAMP RETURN CIRCUIT
(M42) PASSENGER PUDDLE LAMP DRIVER CIRCUIT SHORTED TO THE (P72) PASSENGER MIRROR VERTICAL DRIVER CIRCUIT
(M42) PASSENGER PUDDLE LAMP DRIVER CIRCUIT SHORTED TO THE (P70) PASSENGER MIRROR COMMON DRIVER CIRCUIT
(M42) PASSENGER PUDDLE LAMP DRIVER CIRCUIT SHORTED TO THE (P74) PASSENGER MIRROR HORIZONTAL DRIVER CIRCUIT
(M42) PASSENGER PUDDLE LAMP DRIVER CIRCUIT SHORTED TO THE (C170) PASSENGER MIRROR HEATER RETURN CIRCUIT
(M42) PASSENGER PUDDLE LAMP DRIVER CIRCUIT SHORTED TO THE (P595) PASSENGER MIRROR TURN SIGNAL RETURN CIRCUIT
PASSENGER OUTSIDE REARVIEW MIRROR SHORTED
DOOR MODULE

1. TEST FOR INTERMITTENT CONDITION

1. Turn the ignition on.
2. Using a scan tool, record and erase Diagnostic Trouble Codes (DTCs).
3. Turn the turn signal on, if equipped with turn signal mirror.
4. Turn the puddle lamps on.

NOTE: Verify the panel lamps dimmer switch is not in the defeat (off) position.

5. Turn the rear defogger on, if equipped with heated mirror.
6. Press and release the Mirror Select switch to select the Passenger Outside Rearview Mirror.
7. Operate the Mirror Adjust switch in all directions several times while monitoring the scan tool for DTCs.

NOTE: After adjusting the mirror in one direction wait at least two seconds before adjusting the mirror in the opposite direction, as this will allow time for an active fault to set if present.

Is the DTC active?

Yes

- Go To 2

No

- The conditions that caused this code to set are not present at this time. For vehicle's equipped with folding outside rearview mirrors, repeat test with mirror folded. If DTC is now active, Go To 2. Otherwise, use the wiring diagram/ schematic as a guide and inspect the wiring and connectors.
- Perform the BODY VERIFICATION TEST. (Refer to 28 - DTC-Based Diagnostics/MODULE, Totally Integrated Power (TIPM) - Standard Procedure).

2. CHECK (M42) PASSENGER PUDDLE LAMP DRIVER CIRCUIT FOR A SHORT TO GROUND

1. Turn the ignition off.
2. Disconnect the Passenger Outside Rearview Mirror C1 (Component Side) connector from the Door Module C1 connector.
3. Measure the resistance of the (M42) Passenger Puddle Lamp Driver circuit between ground and the Passenger Outside Rearview Mirror C1 (Component Side) connector.

Is the resistance below 10K Ohms?

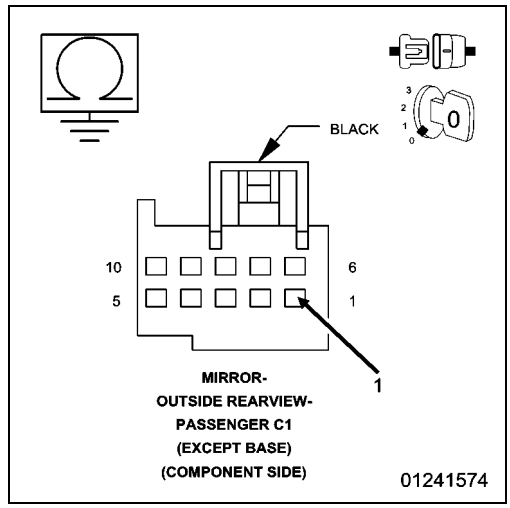

Yes

- Repair the (M42) Passenger Puddle Lamp Driver circuit for a short to ground. If the wiring harness and connector are okay, replace the Passenger Outside Rearview Mirror in accordance with the Service Information.
- Perform the BODY VERIFICATION TEST. (Refer to 28 - DTC-Based Diagnostics/MODULE, Totally Integrated Power (TIPM) - Standard Procedure).

No

- Go To 3

3. CHECK (M42) PASSENGER PUDDLE LAMP DRIVER CIRCUIT FOR A SHORT TO (P66) PASSENGER MIRROR SENSOR GROUND CIRCUIT

1. Measure the resistance between the (M42) Passenger Puddle Lamp Driver circuit and the (P66) Passenger Mirror Sensor Ground circuit at the Passenger Outside Rearview Mirror C1 (Component Side) connector.

Is the resistance below 10K Ohms?

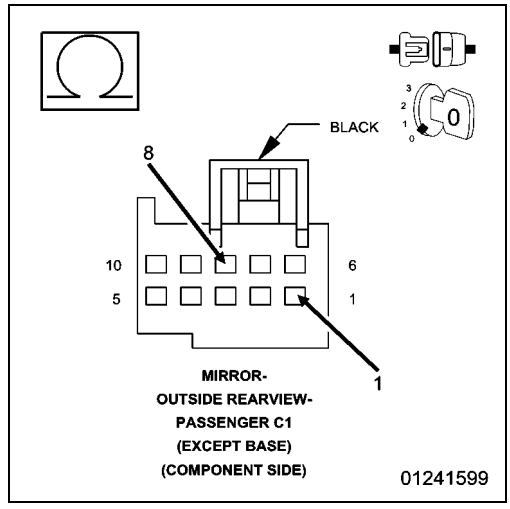

Yes

- Repair the (M42) Passenger Puddle Lamp Driver circuit for a short to the (P66) Passenger Mirror Sensor Ground circuit. If the wiring harness and connector are okay, replace the Passenger Outside Rearview Mirror in accordance with the Service Information.
- Perform the BODY VERIFICATION TEST. (Refer to 28 - DTC-Based Diagnostics/MODULE, Totally Integrated Power (TIPM) - Standard Procedure).

No

- Go To 4

4. CHECK (M42) PASSENGER PUDDLE LAMP DRIVER CIRCUIT FOR A SHORT TO (P592) PASSENGER PUDDLE LAMP RETURN CIRCUIT

NOTE: The Ohmmeter positive lead must be connected to the (P592) Passenger Puddle Lamp Return circuit and the negative lead to the (M42) Passenger Puddle Lamp Driver circuit for the test results to be valid.

1. Measure the resistance between the (M42) Passenger Puddle Lamp Driver circuit and the (P592) Passenger Puddle Lamp Return circuit at the Passenger Outside Rearview Mirror C1 (Component Side) connector.

Is there any resistance present?

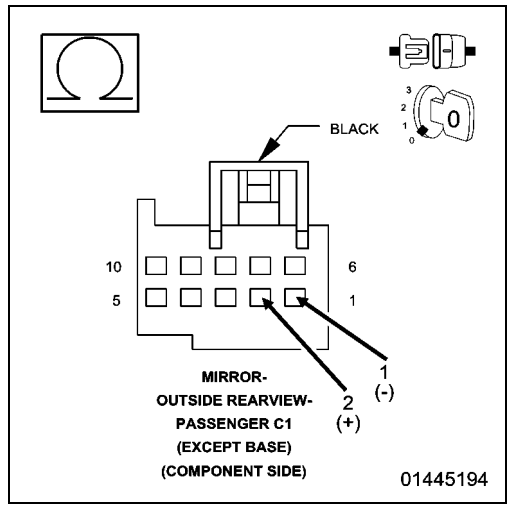

Yes

- Repair the (M42) Passenger Puddle Lamp Driver circuit for a short to the (P592) Passenger Puddle Lamp Return circuit. If the wiring harness and connector are okay, replace the Passenger Outside Rearview Mirror in accordance with the Service Information.
- Perform the BODY VERIFICATION TEST. (Refer to 28 - DTC-Based Diagnostics/MODULE, Totally Integrated Power (TIPM) - Standard Procedure).

No

- Go To 5

5. CHECK (M42) PASSENGER PUDDLE LAMP DRIVER CIRCUIT FOR A SHORT TO (P72) PASSENGER MIRROR VERTICAL DRIVER CIRCUIT, (P70) PASSENGER MIRROR COMMON DRIVER CIRCUIT, OR TO (P74) PASSENGER MIRROR HORIZONTAL DRIVER CIRCUIT

1. Disconnect the Passenger Outside Rearview Mirror C2 (Component Side) connector from the Door Module C2 connector.
2. Measure the resistance between the (M42) Passenger Puddle Lamp Driver circuit and the (P72) Passenger Mirror Vertical Driver circuit at the Passenger Outside Rearview Mirror C1 and C2 (Component Side) connectors.
3. Measure the resistance between the (M42) Passenger Puddle Lamp Driver circuit and the (P70) Passenger Mirror Common Driver circuit at the Passenger Outside Rearview Mirror C1 and C2 (Component Side) connectors.
4. Measure the resistance between the (M42) Passenger Puddle Lamp Driver circuit and the (P74) Passenger Mirror Horizontal Driver circuit at the Passenger Outside Rearview Mirror C1 and C2 (Component Side) connectors.

Is the resistance below 10K Ohms for any measurement?

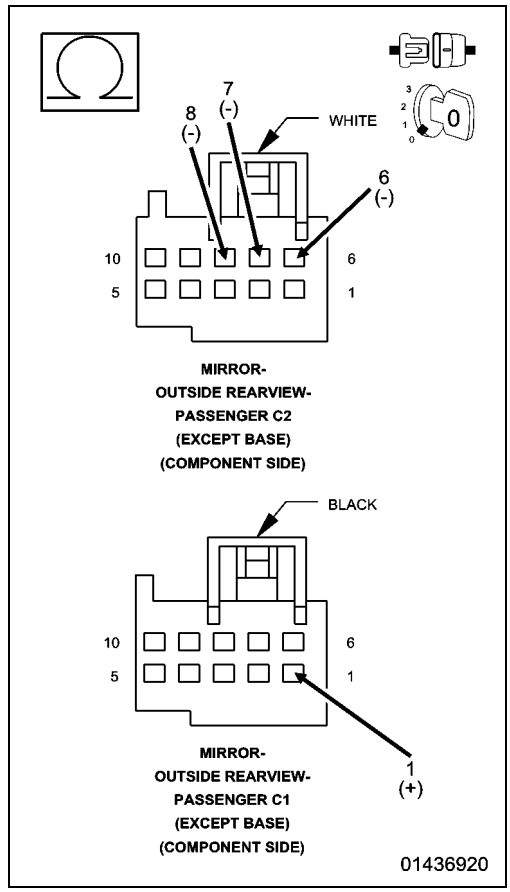

Yes

- Repair all circuits with a resistance below 10K Ohms for a short to the (M42) Passenger Puddle Lamp Driver circuit. If the wiring harness and connector are okay, replace the Passenger Outside Rearview Mirror in accordance with the Service Information.
- Perform the BODY VERIFICATION TEST. (Refer to 28 - DTC-Based Diagnostics/MODULE, Totally Integrated Power (TIPM) - Standard Procedure).

No, with Heated/Turn Signal Mirror

- Go To 6

No, without Heated/Turn Signal Mirror

- Inspect the wiring and connectors for damage and repair as necessary. If the wiring and connectors are okay, replace the Door Module in accordance with the Service Information.
- Perform the BODY VERIFICATION TEST. (Refer to 28 - DTC-Based Diagnostics/MODULE, Totally Integrated Power (TIPM) - Standard Procedure).

6. CHECK (M42) PASSENGER PUDDLE LAMP DRIVER CIRCUIT FOR A SHORT TO (C170) PASSENGER MIRROR HEATER RETURN CIRCUIT OR TO (P595) PASSENGER MIRROR TURN SIGNAL RETURN CIRCUIT

1. For Heated Mirror, measure the resistance between the (M42) Passenger Puddle Lamp Driver circuit and the (C170) Passenger Mirror Heater Return circuit at the Passenger Outside Rearview Mirror C1 and C2 (Component Side) connectors.
2. For Turn Signal Mirror, measure the resistance between the (M42) Passenger Puddle Lamp Driver circuit and the (P595) Passenger Mirror Turn Signal Return circuit at the Passenger Outside Rearview Mirror C1 and C2 (Component Side) connectors.

Is the resistance below 10K Ohms for either measurement?

Yes

- Repair all circuits with a resistance below 10K Ohms for a short to the (M42) Passenger Puddle Lamp Driver circuit. If the wiring harness and connector are okay, replace the Passenger Outside Rearview Mirror in accordance with the Service Information.
- Perform the BODY VERIFICATION TEST. (Refer to 28 - DTC-Based Diagnostics/MODULE, Totally Integrated Power (TIPM) - Standard Procedure).

No

- Inspect the wiring and connectors for damage and repair as necessary. If the wiring and connectors are okay, replace the Door Module in accordance with the Service Information.
- Perform the BODY VERIFICATION TEST. (Refer to 28 - DTC-Based Diagnostics/MODULE, Totally Integrated Power (TIPM) - Standard Procedure).

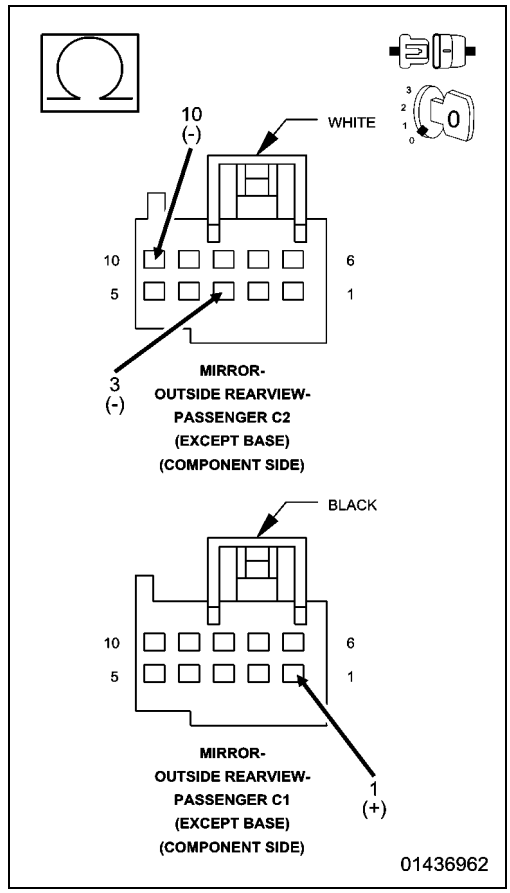

■ B282F-15-PASSENGER PUDDLE LAMP CONTROL - CIRCUIT SHORT TO BATTERY OR OPEN

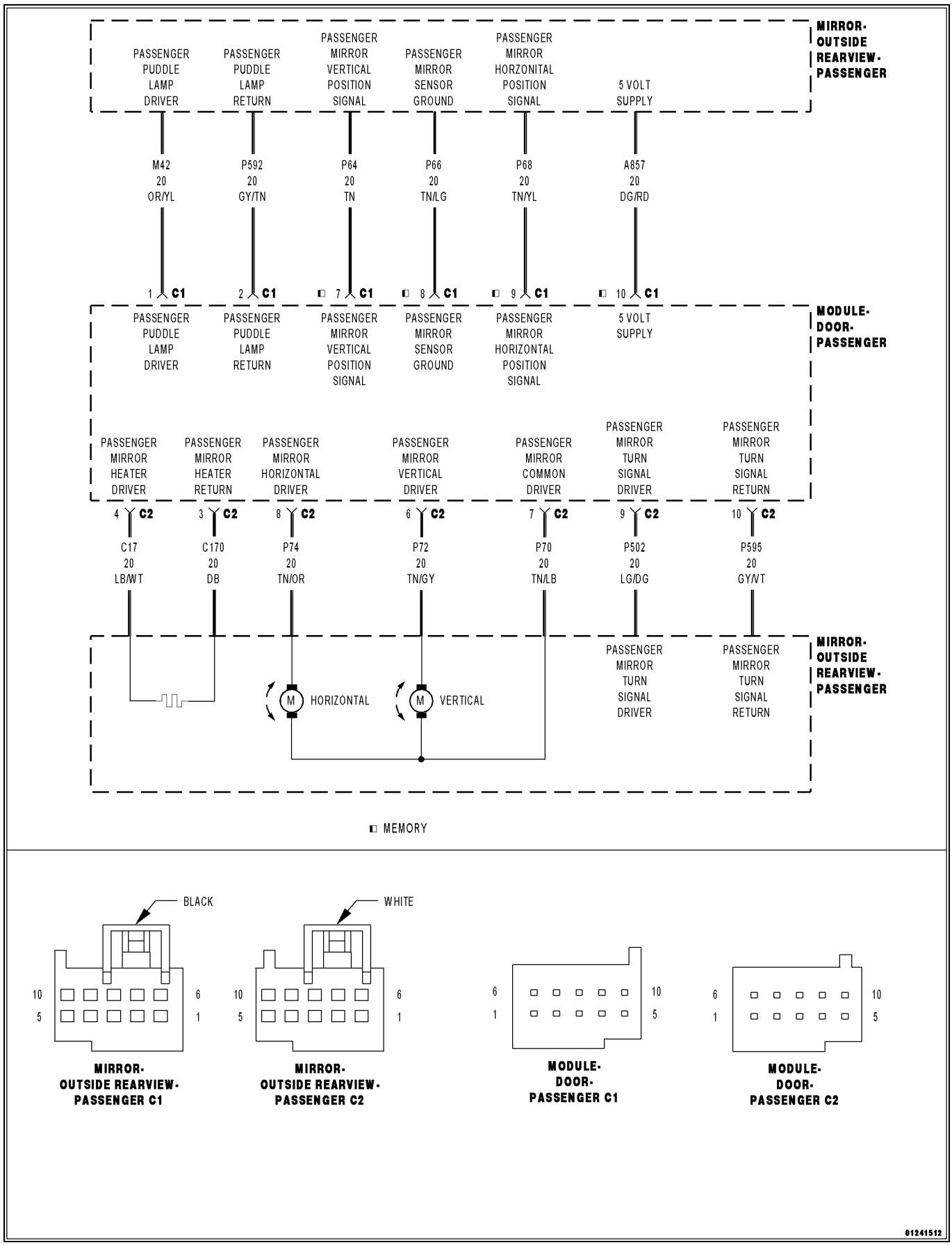

01241512

For a complete wiring diagram, **refer to the Wiring Information**.

- **When Monitored:**
  Continuously.
- **Set Condition:**
  The Door Module senses a short high or an open on the (M42) Passenger Puddle Lamp Driver circuit for more than two seconds with the lamp switched on.

Possible Causes
(M42) PASSENGER PUDDLE LAMP DRIVER CIRCUIT SHORTED TO VOLTAGE
(M42) PASSENGER PUDDLE LAMP DRIVER CIRCUIT OPEN
(P592) PASSENGER PUDDLE LAMP RETURN CIRCUIT OPEN
(M42) PASSENGER PUDDLE LAMP DRIVER CIRCUIT SHORTED TO THE (P72) PASSENGER MIRROR VERTICAL DRIVER CIRCUIT
(M42) PASSENGER PUDDLE LAMP DRIVER CIRCUIT SHORTED TO THE (P70) PASSENGER MIRROR COMMON DRIVER CIRCUIT
(M42) PASSENGER PUDDLE LAMP DRIVER CIRCUIT SHORTED TO THE (P74) PASSENGER MIRROR HORIZONTAL DRIVER CIRCUIT
(M42) PASSENGER PUDDLE LAMP DRIVER CIRCUIT SHORTED TO THE (C17) PASSENGER MIRROR HEATER DRIVER CIRCUIT
(M42) PASSENGER PUDDLE LAMP DRIVER CIRCUIT SHORTED TO THE (P502) PASSENGER MIRROR TURN SIGNAL DRIVER CIRCUIT
PASSENGER OUTSIDE REARVIEW MIRROR
DOOR MODULE

1. TEST FOR INTERMITTENT CONDITION

1. Turn the ignition on.
2. With a scan tool, record and erase DTCs.
3. Turn the turn signal on, if equipped with turn signal mirror.
4. Turn the puddle lamps on.

NOTE: Verify the panel lamps dimmer switch is not in the defeat (off) position.

5. Turn the rear defogger on, if equipped with heated mirror.
6. Press and release the Mirror Select switch to select the Passenger Outside Rearview Mirror.
7. Operate the Mirror Adjust switch in all directions several times while monitoring the scan tool for DTCs.

NOTE: After adjusting the mirror in one direction wait at least two seconds before adjusting the mirror in the opposite direction, as this will allow time for an active fault to set if present.

Does the scan tool display B282F-15-PASSENGER PUDDLE LAMP CONTROL - CIRCUIT SHORT TO BATTERY OR OPEN?

Yes

- Go To 2

No

- Test complete, the condition or conditions that originally set this DTC are not present at this time. Using the wiring diagrams as a guide, check all related splices and connectors for signs of water intrusion, corrosion, pushed out or bent terminals, and correct pin tension. For vehicle's equipped with folding outside rearview mirrors, repeat test with mirror folded. If DTC is now active, Go To 2.
- Perform the BODY VERIFICATION TEST. (Refer to 28 - DTC-Based Diagnostics/MODULE, Totally Integrated Power (TIPM) - Standard Procedure).

2. CHECK (M42) PASSENGER PUDDLE LAMP DRIVER CIRCUIT FOR A SHORT TO VOLTAGE

1. Turn the ignition off.
2. Disconnect Passenger Outside Rearview Mirror C1 (Component Side) harness connector from the Door Module.
3. Turn the ignition on.
4. Measure the voltage between the (M42) Passenger Puddle Lamp Driver circuit and ground.

Is there any voltage present?

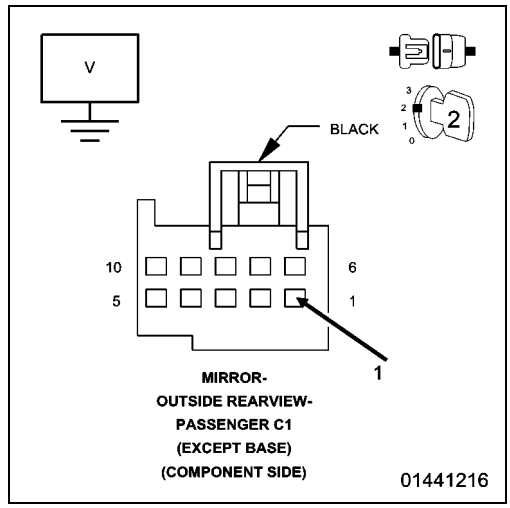

Yes

- Repair the short to voltage in the (M42) Passenger Puddle Lamp Driver circuit. If the wiring harness and harness connector are okay, replace the Passenger Outside Rearview Mirror in accordance with the Service Information.
- Perform the BODY VERIFICATION TEST. (Refer to 28 - DTC-Based Diagnostics/MODULE, Totally Integrated Power (TIPM) - Standard Procedure).

No

- Go To 3

3. CHECK (M42) PASSENGER PUDDLE LAMP DRIVER CIRCUIT AND (P592) PASSENGER PUDDLE LAMP RETURN CIRCUIT FOR AN OPEN

1. Turn the ignition off.

NOTE: The Ohmmeter positive lead must be connected to the (M42) Passenger Puddle Lamp Driver circuit and the negative lead to the (P592) Passenger Puddle Lamp Return circuit for the test results to be valid.

2. Measure the resistance between the (M42) Passenger Puddle Lamp Driver circuit and the (P592) Passenger Puddle Lamp Return circuit.

Is the resistance above 1000 Ohms?

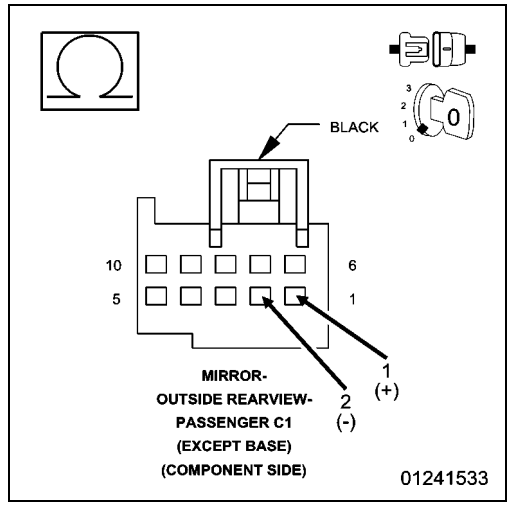

Yes

- Repair the open in the (M42) Passenger Puddle Lamp Driver circuit or the (P592) Passenger Puddle Lamp Return circuit. If the wiring harness and harness connector are okay, replace the Passenger Outside Rearview Mirror in accordance with the Service Information.
- Perform the BODY VERIFICATION TEST. (Refer to 28 - DTC-Based Diagnostics/MODULE, Totally Integrated Power (TIPM) - Standard Procedure).

No

- Go To 4

4. CHECK (M42) PASSENGER PUDDLE LAMP DRIVER CIRCUIT FOR A SHORT TO (P72) PASSENGER MIRROR VERTICAL DRIVER CIRCUIT, (P70) PASSENGER MIRROR COMMON DRIVER CIRCUIT, OR TO (P74) PASSENGER MIRROR HORIZONTAL DRIVER CIRCUIT

1. Disconnect the Passenger Outside Rearview Mirror C2 (Component Side) harness connector from the Door Module.
2. Measure the resistance between the (M42) Passenger Puddle Lamp Driver circuit and the (P72) Passenger Mirror Vertical Driver circuit at the Passenger Outside Rearview Mirror C1 and C2 (Component Side) harness connectors.
3. Measure the resistance between the (M42) Passenger Puddle Lamp Driver circuit and the (P70) Passenger Mirror Common Driver circuit at the Passenger Outside Rearview Mirror C1 and C2 (Component Side) harness connectors.
4. Measure the resistance between the (M42) Passenger Puddle Lamp Driver circuit and the (P74) Passenger Mirror Horizontal Driver circuit at the Passenger Outside Rearview Mirror C1 and C2 (Component Side) harness connectors.

Is the resistance below 10K Ohms for any measurement?

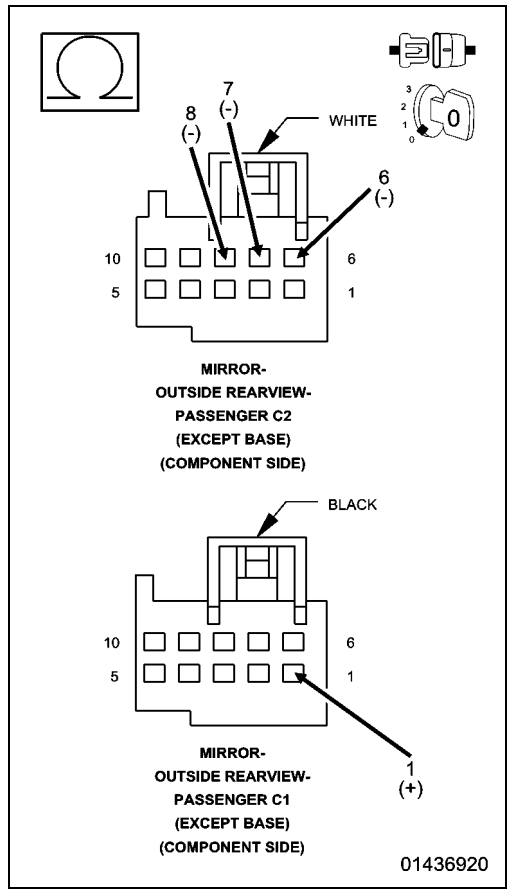

Yes

- Repair all circuits with a resistance below 10K Ohms for a short to the (M42) Passenger Puddle Lamp Driver circuit. If the wiring harness and harness connector are okay, replace the Passenger Outside Rearview Mirror in accordance with the Service Information.
- Perform the BODY VERIFICATION TEST. (Refer to 28 - DTC-Based Diagnostics/MODULE, Totally Integrated Power (TIPM) - Standard Procedure).

No, with Heated/Turn Signal Mirror

- Go To 5

No, without Heated/Turn Signal Mirror

- Inspect the wiring and harness connectors for damage and repair as necessary. If the wiring and harness connectors are okay, replace the Door Module in accordance with the Service Information.
- Perform the BODY VERIFICATION TEST. (Refer to 28 - DTC-Based Diagnostics/MODULE, Totally Integrated Power (TIPM) - Standard Procedure).

5. CHECK (M42) PASSENGER PUDDLE LAMP DRIVER CIRCUIT FOR A SHORT TO (C17) PASSENGER MIRROR HEATER DRIVER CIRCUIT OR TO (P502) PASSENGER MIRROR TURN SIGNAL DRIVER CIRCUIT

1. For Heated Mirror, measure the resistance between the (M42) Passenger Puddle Lamp Driver circuit and the (C17) Passenger Mirror Heater Driver circuit at the Passenger Outside Rearview Mirror C1 and C2 (Component Side) harness connectors.
2. For Turn Signal Mirror, measure the resistance between the (M42) Passenger Puddle Lamp Driver circuit and the (P502) Passenger Mirror Turn Signal Driver circuit at the Passenger Outside Rearview Mirror C1 and C2 (Component Side) harness connectors.

Is the resistance below 10K Ohms for either measurement?

Yes

- Repair all circuits with a resistance below 10K Ohms for a short to the (M42) Passenger Puddle Lamp Driver circuit. If the wiring harness and harness connector are okay, replace the Passenger Outside Rearview Mirror in accordance with the Service Information.
- Perform the BODY VERIFICATION TEST. (Refer to 28 - DTC-Based Diagnostics/MODULE, Totally Integrated Power (TIPM) - Standard Procedure).

No

- Inspect the wiring and harness connectors for damage and repair as necessary. If the wiring and harness connectors are okay, replace the Door Module in accordance with the Service Information.
- Perform the BODY VERIFICATION TEST. (Refer to 28 - DTC-Based Diagnostics/MODULE, Totally Integrated Power (TIPM) - Standard Procedure).

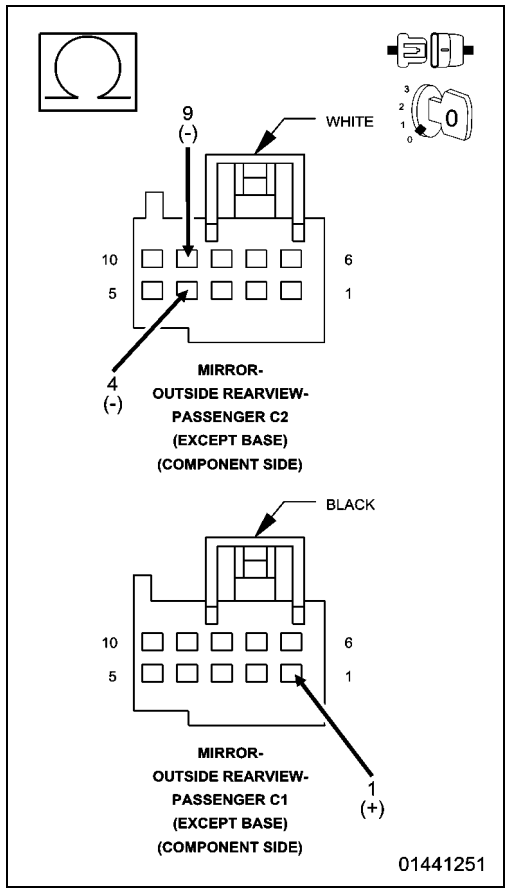

U0141-00-LOST COMMUNICATION WITH IPM (FCM/TIPM)

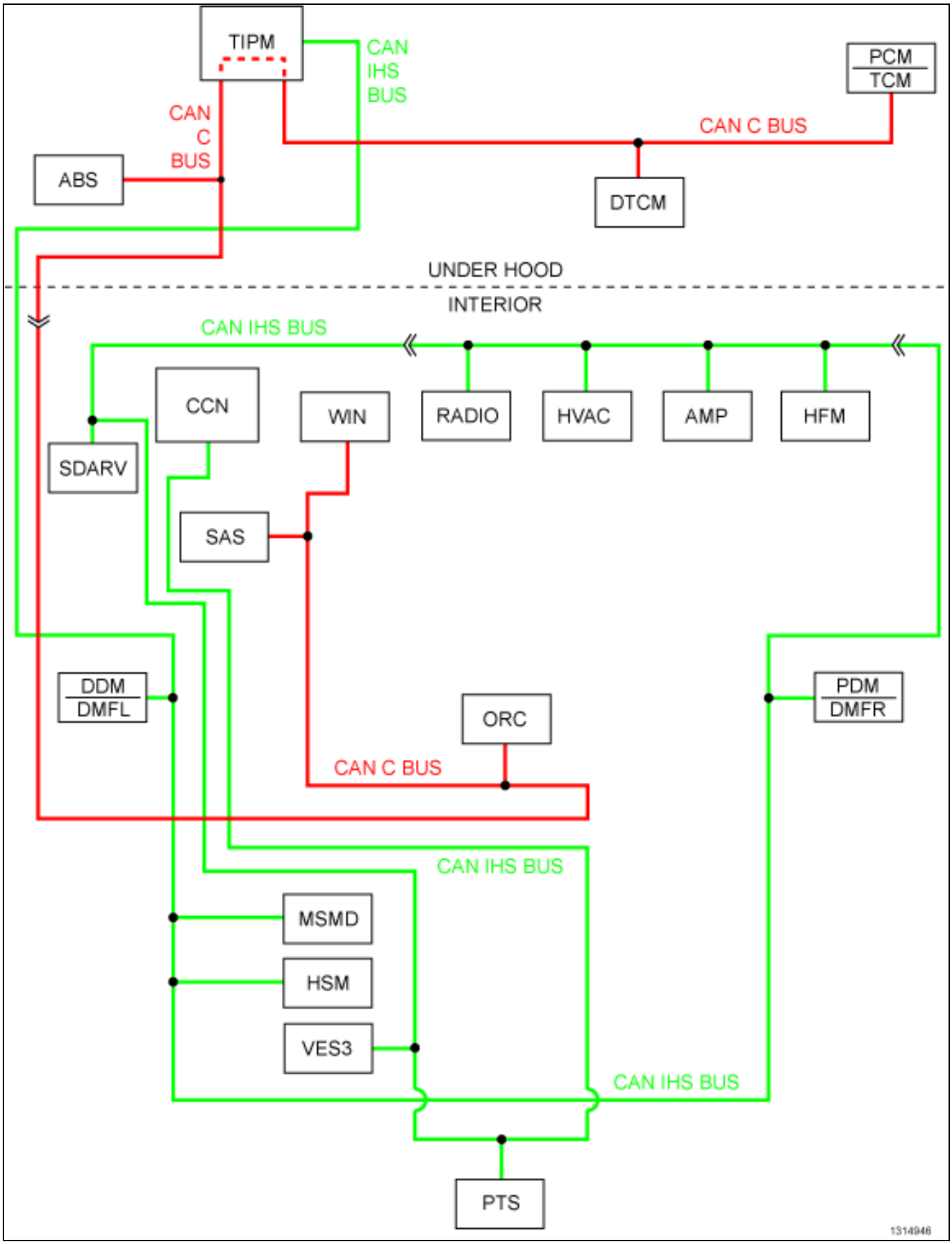

For a complete wiring diagram, **refer to the Wiring Information.**.

- **When Monitored:**
  Continuously when the ignition is on.
  Battery voltage between 10 and 16 volts.
  Ignition Off Draw (IOD) fuse installed.
  Totally Integrated Power Module (TIPM) is configured correctly.
- **Set Condition:**
  Bus messages not received from the Totally Integrated Power Module (TIPM) for approximately two to five seconds.

Possible Causes
(D265) CAN INTERIOR BUS(+) (125k) CIRCUIT SHORTED TO VOLTAGE
(D264) CAN INTERIOR BUS(-) (125k) CIRCUIT SHORTED TO GROUND
TOTALLY INTEGRATED POWER MODULE (TIPM) POWER AND GROUND
TIPM NOT CONFIGURED CORRECTLY
TOTALLY INTEGRATED POWER MODULE (TIPM)
MODULE THAT SET THIS DTC

1. VERIFY DTC IS ACTIVE

NOTE: Ensure the IOD fuse is installed and the battery is fully charged before proceeding.

1. Turn the ignition on.
2. With the scan tool, read active Door Module DTCs.

Is this DTC active?

Yes

- **(Refer to 28 - DTC-Based Diagnostics/MODULE, Totally Integrated Power (TIPM) - Diagnosis and Testing)** and perform the U0141-Lost Communication with IPM (FCM/TIPM) diagnostic procedure.

No

- **(Refer to 29 - Non-DTC Diagnostics/Communication - Diagnosis and Testing)** and perform the Stored Lost Communication DTCs diagnostic procedure.

U0155-00-LOST COMMUNICATION WITH CLUSTER/CCN

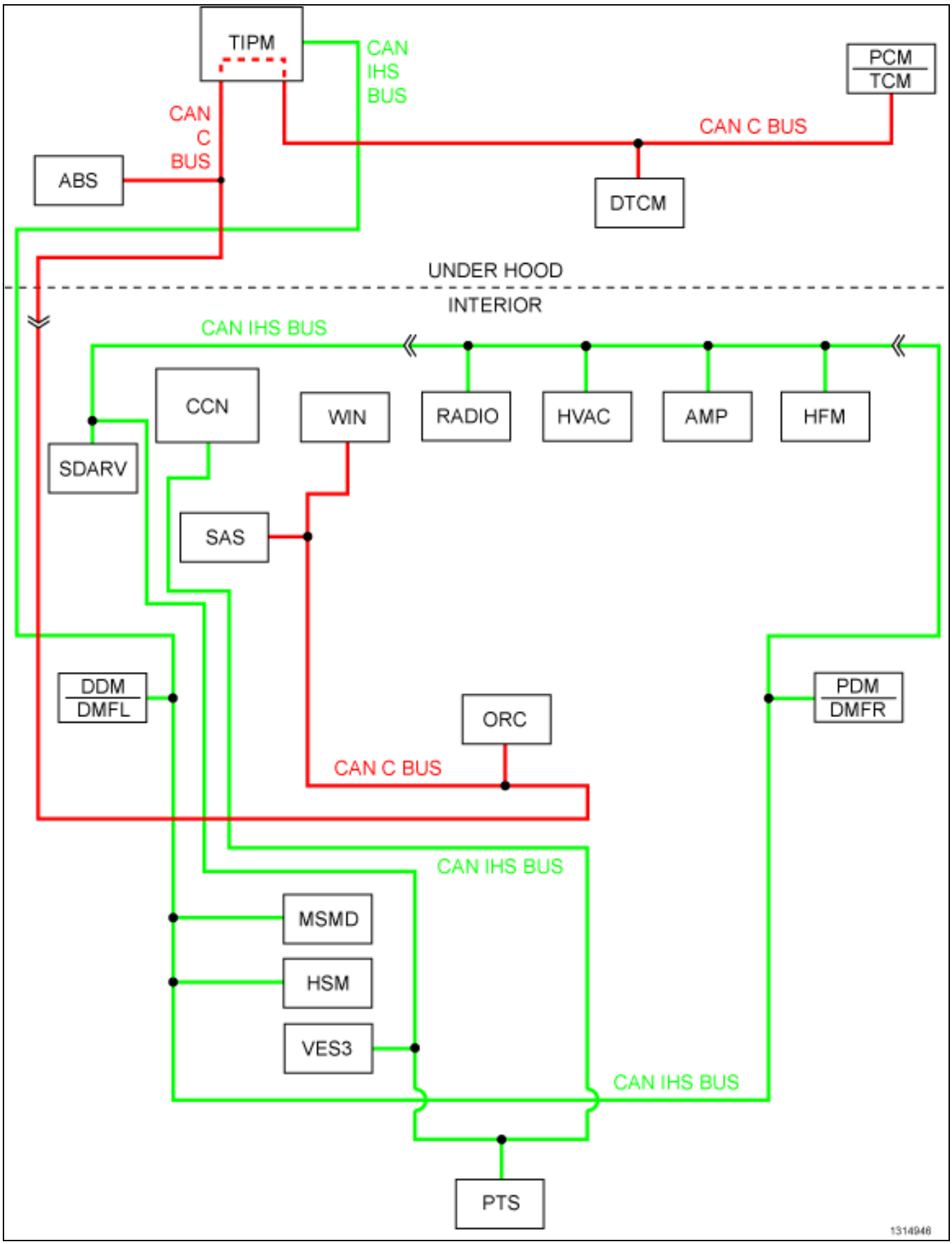

For a complete wiring diagram, **refer to the Wiring Information.**.

- **When Monitored:**
  Continuously when the ignition is on.
  Battery voltage between 10 and 16 volts.
  Ignition Off Draw (IOD) fuse installed.
  Totally Integrated Power Module (TIPMP is configured correctly.
- **Set Condition:**
  Bus messages not received from the Instrument Cluster (CCN) for approximately two to five seconds.

Possible Causes
(D265) CAN INTERIOR BUS(+) (125k) CIRCUIT SHORTED TO VOLTAGE
(D264) CAN INTERIOR BUS(-) (125k) CIRCUIT SHORTED TO GROUND
INSTRUMENT CLUSTER POWER AND GROUND
TIPM NOT CONFIGURED CORRECTLY
INSTRUMENT CLUSTER (CCN)
MODULE THAT SET THIS DTC

1. VERIFY DTC IS ACTIVE

NOTE: Ensure the IOD fuse is installed and the battery is fully charged before proceeding.

1. Turn the ignition on.
2. With the scan tool, read active Door Module DTCs.

Is this DTC active?

Yes

- **(Refer to 28 - DTC-Based Diagnostics/MODULE, Totally Integrated Power (TIPM) - Diagnosis and Testing)** and perform the U0155-Lost Communication with Cluster/CCNdiagnostic procedure.

No

- **(Refer to 29 - Non-DTC Diagnostics/Communication - Diagnosis and Testing)** and perform the Stored Lost Communication DTCs diagnostic procedure.

■ U0164-00-LOST COMMUNICATION WITH HVAC CONTROL MODULE

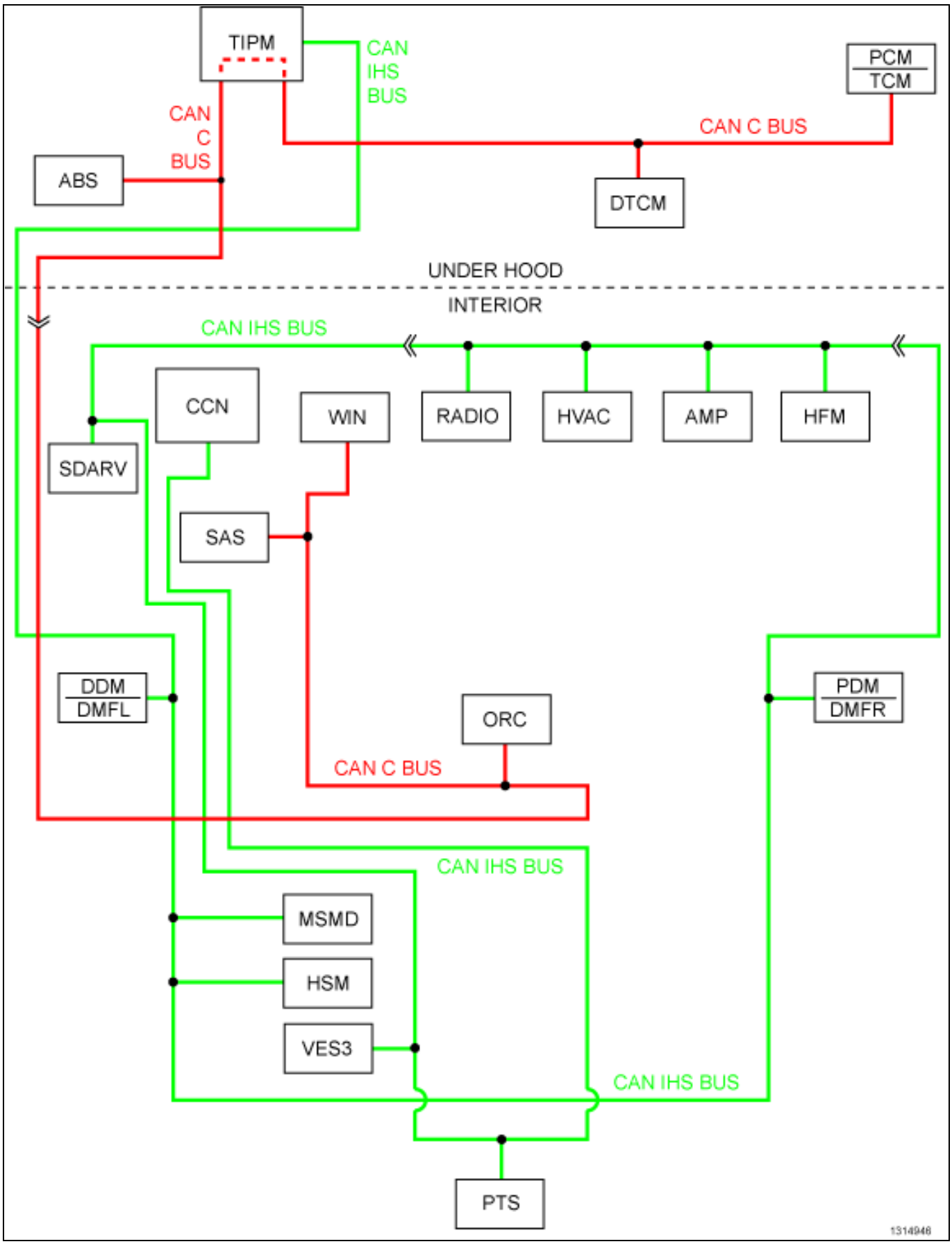

For a complete wiring diagram, **refer to the Wiring Information**.

- **When Monitored:**
  Continuously when the ignition is on.
  Battery voltage between 10 and 16 volts.
  Ignition Off Draw (IOD) fuse installed.
- **Set Condition:**
  Bus messages not received from the HVAC Control Module for approximately two to tive seconds.

Possible Causes
(D265) CAN INTERIOR BUS(+) (125k) CIRCUIT SHORTED TO VOLTAGE
(D264) CAN INTERIOR BUS(-) (125k) CIRCUIT SHORTED TO GROUND
DTCS RELATED TO BATTERY VOLTAGE, IGNITION, OR VIN MESSAGES
TIPM NOT CONFIGURED CORRECTLY
HVAC POWER AND GROUND
HVAC CONTROL MODULE
MODULE THAT SET THE DTC

1. VERIFY DTC IS ACTIVE

NOTE: Make sure the IOD fuse is installed and the battery is fully charged before proceeding.

1. Turn the ignition on.
2. With the scan tool, read active Door Module DTCs.

Is this DTC active?

Yes

- **(Refer to 28 - DTC-Based Diagnostics/MODULE, Totally Integrated Power (TIPM) - Diagnosis and Testing)** and perform the U0164-Lost Communication with HVAC Control Module.

No

- **(Refer to 29 - Non-DTC Diagnostics/Communication - Diagnosis and Testing)** and perform the Stored Lost Communication DTCs diagnostic procedure.

U0203-00-LOST COMMUNICATION WITH DOOR MODULE FRONT LEFT

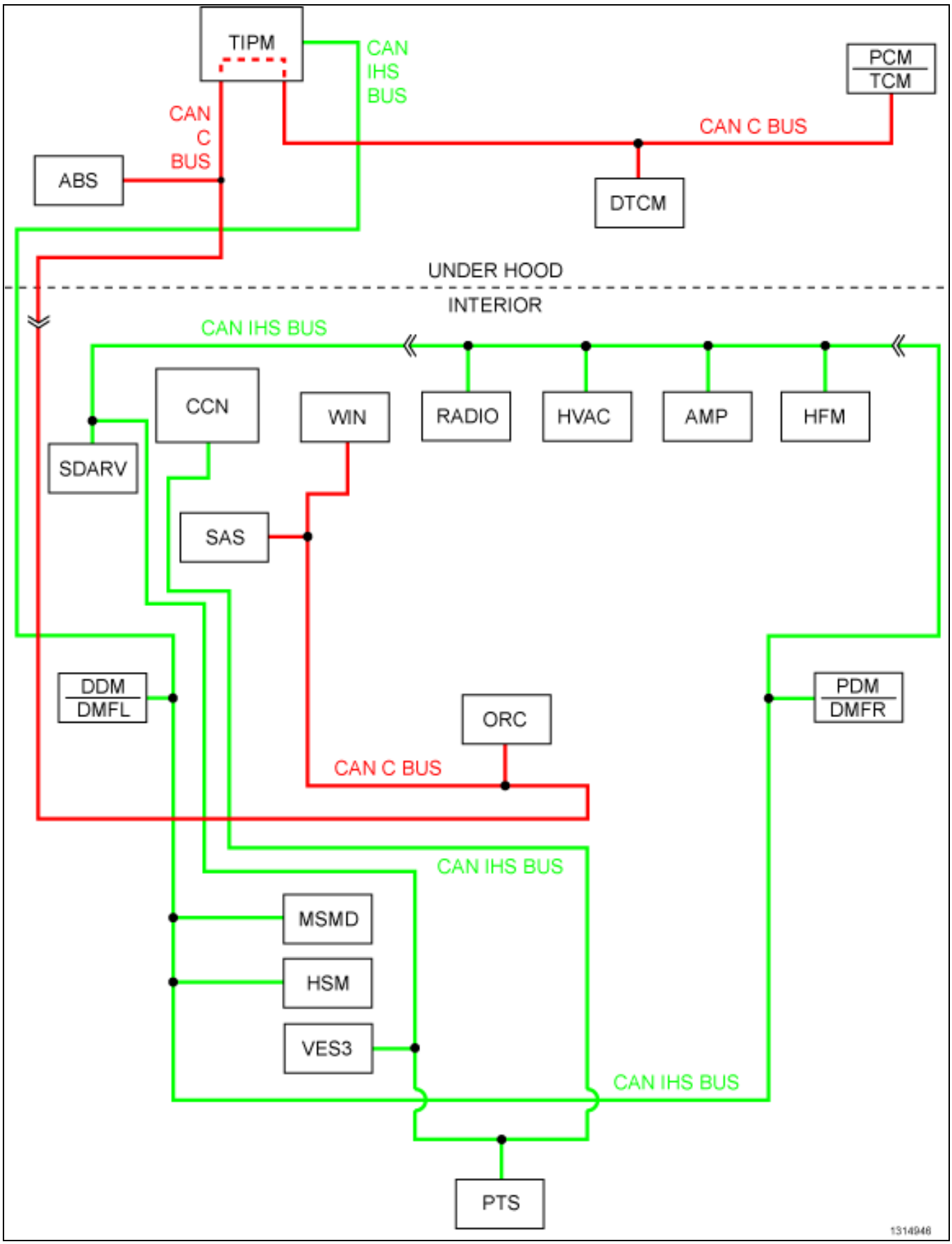

For a complete wiring diagram, **refer to the Wiring Information**.

- **When Monitored:**
  Continuously when the ignition is on.
  Battery voltage between 10 and 16 volts.
  Ignition Off Draw (IOD) fuse installed.
- **Set Condition:**
  Bus messages not received from the Left Front Door Module (DMFL) for approximately two to five seconds.

Possible Causes
(D265) CAN INTERIOR BUS(+) (125k) CIRCUIT SHORTED TO VOLTAGE
(D264) CAN INTERIOR BUS(-) (125k) CIRCUIT SHORTED TO GROUND
DTCS RELATED TO BATTERY VOLTAGE, IGNITION, OR VIN MESSAGES
TIPM NOT CONFIGURED CORRECTLY
DOOR MODULE POWER AND GROUND
LEFT FRONT DOOR MODULE
CONTROL MODULE MODULE THAT SET THE DTC

1. VERIFY DTC IS ACTIVE

NOTE: Ensure the IOD fuse is installed and the battery is fully charged before proceeding.

1. Turn the ignition on.
2. With the scan tool, read active Door Module DTCs.

Is this DTC active?

Yes

- **(Refer to 28 - DTC-Based Diagnostics/MODULE, Totally Integrated Power (TIPM) - Diagnosis and Testing)** and perform the U0203-Lost Communication with Door Module Front Left diagnostic procedure.

No

- **(Refer to 29 - Non-DTC Diagnostics/Communication - Diagnosis and Testing)** and perform the Stored Lost Communication DTCs diagnostic procedure.

U0204-00-LOST COMMUNICATION WITH DOOR MODULE FRONT RIGHT

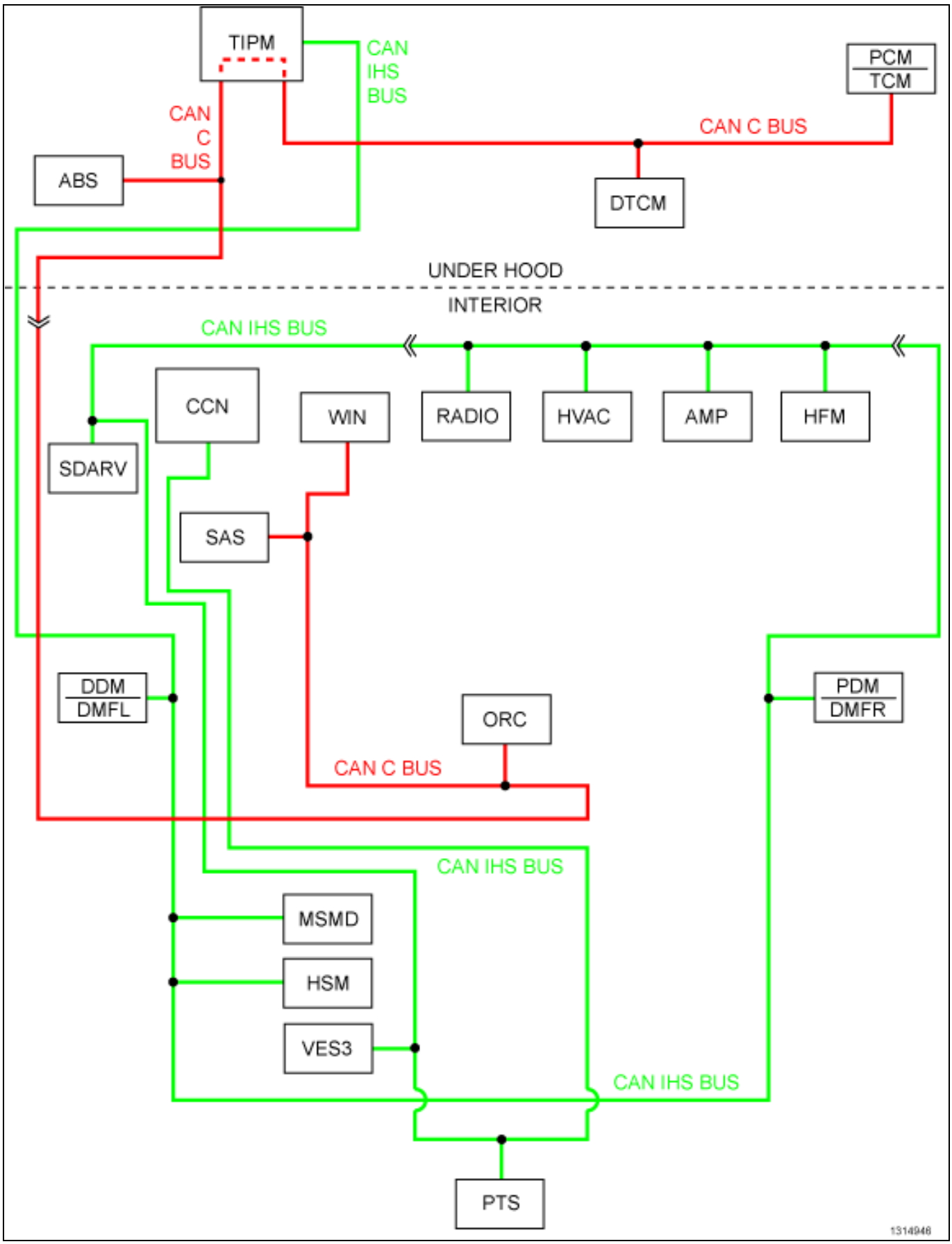

For a complete wiring diagram, **refer to the Wiring Information**.

- **When Monitored:**
  Continuously when the ignition is on.
  Battery voltage between 10 and 16 volts.
  Ignition Off Draw (IOD) fuse installed.
- **Set Condition:**
  Bus messages not received from the Right Front Door Module (DMFR) for approximately two to five seconds.

Possible Causes
(D265) CAN INTERIOR BUS(+) (125k) CIRCUIT SHORTED TO VOLTAGE
(D264) CAN INTERIOR BUS(-) (125k) CIRCUIT SHORTED TO GROUND
DTCS RELATED TO BATTERY VOLTAGE, IGNITION, OR VIN MESSAGES
TIPM NOT CONFIGURED CORRECTLY
DOOR MODULE POWER AND GROUND
RIGHT FRONT DOOR MODULE
CONTROL MODULE MODULE THAT SET THE DTC

1. VERIFY DTC IS ACTIVE

NOTE: Make sure the IOD fuse is installed and the battery is fully charged before proceeding.

1. Turn the ignition on.
2. With the scan tool, read active Door Module DTCs.

Is this DTC active?

Yes

- **(Refer to 28 - DTC-Based Diagnostics/MODULE, Totally Integrated Power (TIPM) - Diagnosis and Testing)** and perform the U0204-Lost Communication with Door Module Front Right diagnostic procedure.

No

- **(Refer to 29 - Non-DTC Diagnostics/Communication - Diagnosis and Testing)** and perform the Stored Lost Communication DTCs diagnostic procedure.

U0209-00-LOST COMMUNICATION WITH MEMORY SEAT CONTROL MODULE

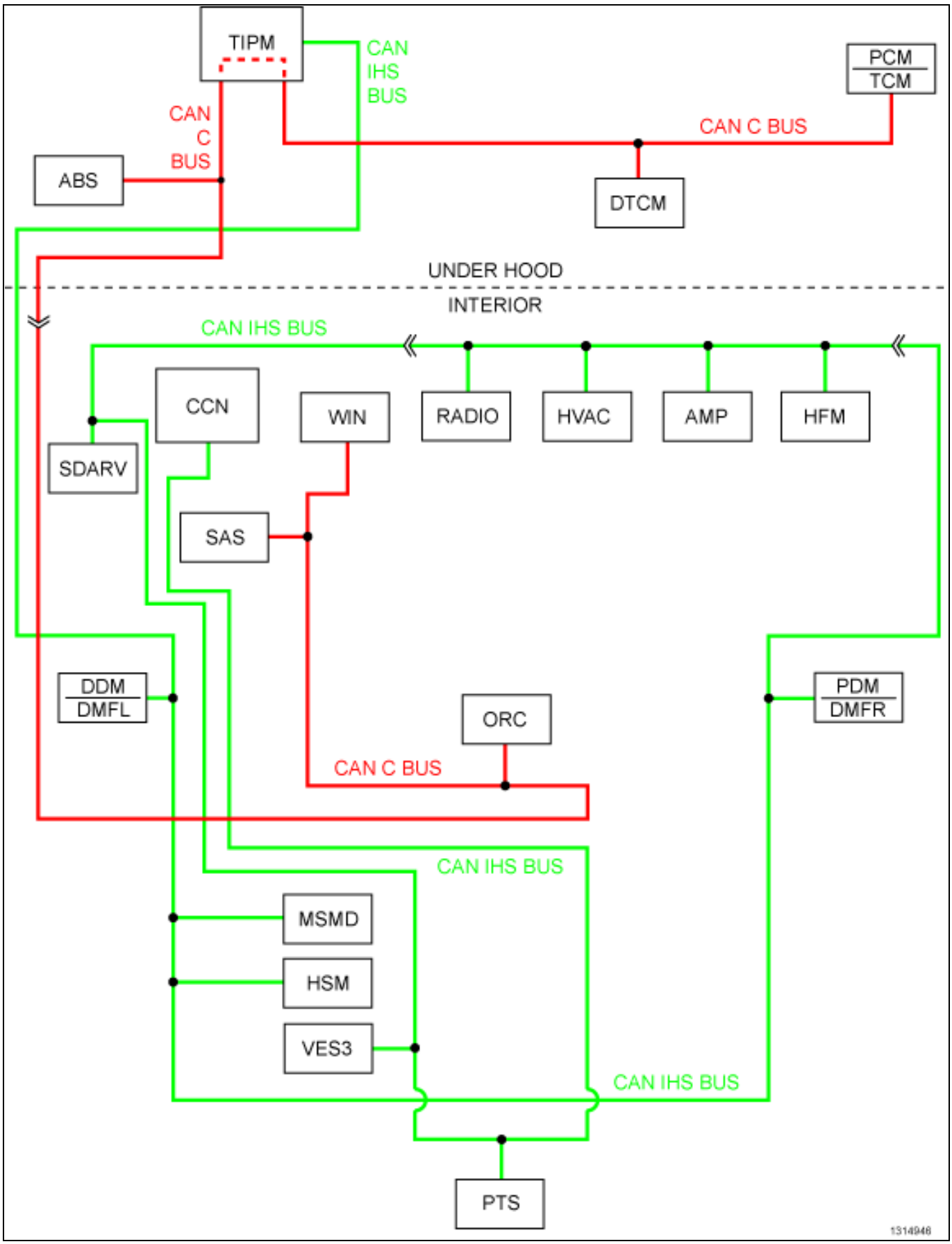

For a complete wiring diagram, **refer to the Wiring Information**.

- **When Monitored:**
  Continuously when the ignition is on.
  Battery voltage between 10 and 16 volts.
  Ignition Off Draw (IOD) fuse installed.
  Totallly Integrated Power Module (TIPM) is configured correctly.
- **Set Condition:**
  Bus messages not received from the Memory Seat Module for approximately two to five seconds.

Possible Causes
(D265) CAN INTERIOR BUS(+) (125k) CIRCUIT SHORTED TO VOLTAGE
(D264) CAN INTERIOR BUS(-) (125k) CIRCUIT SHORTED TO GROUND
MEMORY SEAT MODULE POWER AND GROUND
TIPM NOT CONFIGURED CORRECTLY
MEMORY SEAT MODULE
MODULE THAT SET THIS DTC

1. VERIFY DTC IS ACTIVE

NOTE: Make sure the IOD fuse is installed and the battery is fully charged before proceeding.

1. Turn the ignition on.
2. With the scan tool, read active Door Module DTCs.

Is this DTC active?

Yes

- **(Refer to 28 - DTC-Based Diagnostics/MODULE, Totally Integrated Power (TIPM) - Diagnosis and Testing)** and perform the U0209-Lost Communication with Memory Seat Control Module diagnostic procedure.

No

- **(Refer to 29 - Non-DTC Diagnostics/Communication - Diagnosis and Testing)** and perform the Stored Lost Communication DTCs diagnostic procedure.

MODULE, Powertrain Control (PCM), 42RLE

Diagnosis and Testing

■ P0122-TPS/APP CIRCUIT LOW

For a complete wiring diagram **Refer to the Wiring Information**.

Theory of Operation

The powertrain controller receives the throttle position signal from the Throttle Position Sensor (TPS). The controller provides the TPS with a 5 volt pull up and a sensor ground. The signal is checked for being out of range as well as for intermittent operation (excessive signal changes). The engine controller transmits the throttle value onto the Bus. Most engine controllers will calculate the throttle value if the throttle signal is lost. If an error is detected by the transmission controller and the throttle value is available on the Bus, the Bus value will be used, normal operation will continue, and a TPS code will be set. If an error is detected and the throttle value is not available on the Bus, normal operation will be discontinued, a TPS DTC will be set, and the MIL will be turned on after 5 minutes of calculated operation.

- **When Monitored:**
  Continuously with the ignition on and engine running.
- **Set Condition:**
  This DTC will set if the monitored TPS voltage drops below .078 volts for the period of 0.48 seconds.

Possible Causes
RELATED TPS ENGINE DTCS PRESENT
POWERTRAIN CONTROL MODULE

Always perform the Pre-Diagnostic Troubleshooting procedure before proceeding. (Refer to 28 - DTC-Based Diagnostics/MODULE, Powertrain Control (PCM) - Standard Procedure)

1. DETERMINING IF RELATED ENGINE TPS DTCS ARE PRESENT

1. With the scan tool, check Engine DTCs, including pending DTCs and one trip failures.

Are there any Engine TPS DTCs present?

Yes

- Refer to the Driveability category and perform the appropriate diagnostic procedure.
- Perform 42RLE TRANSMISSION VERIFICATION TEST. (Refer to 28 - DTC-Based Diagnostics/MODULE, Powertrain Control (PCM) - Standard Procedure)

No

- Go to 2

2. CHECK IF THE DTC IS CURRENT

1. With the scan tool, record the Event Data to help identify the conditions in which the DTC was set.
2. With the scan tool, erase Transmission DTCs.

NOTE: Clearing DTCs does NOT erase the Event Data. To erase the Event Data you must either perform a Quick Learn procedure or battery disconnect (if available) with the scan tool, or manually disconnect the battery. Whatever method used might reset certain learned transmission values to controller defaults and may cause poor shift quality until those values are relearned.

3. Drive the vehicle and try to duplicate the conditions in which the DTC was reported by the Event Data.
4. With the scan tool, read Transmission DTCs.

Does this DTC reset?

Yes

- Using the schematics as a guide, check the Powertrain Control Module (PCM) terminals for corrosion, damage, or terminal push out. Pay particular attention to all power and ground circuits. Check for Service Information Tune-ups or Service Bulletins for any possible causes that may apply. If no problems are found, replace and program the PCM per the Service Information. With the scan tool, perform Quick Learn.
- Perform 42RLE TRANSMISSION VERIFICATION TEST. (Refer to 28 - DTC-Based Diagnostics/MODULE, Powertrain Control (PCM) - Standard Procedure)

No

- Go to 3

3. CHECK THE WIRING AND CONNECTORS

1. The conditions necessary to set this DTC are not present at this time.
2. Using the schematics as a guide, inspect the wiring and connectors specific to this circuit.
3. Wiggle the wires while checking for shorted and open circuits.
4. Pay particular attention to the TPS signal and sensor ground circuits.
5. With the scan tool, check the Event Data to help identify the conditions in which the DTC was set.
6. Check for any Service Information Tune-ups or Service Bulletins for any possible causes that may apply.

Were there any problems found?

Yes

- Repair as necessary.
- Perform 42RLE TRANSMISSION VERIFICATION TEST. (Refer to 28 - DTC-Based Diagnostics/MODULE, Powertrain Control (PCM) - Standard Procedure)

No

- Test Complete.

■ P0123-TPS/APP CIRCUIT HIGH

For a complete wiring diagram, **refer to the Wiring Information**.

Theory of Operation

The powertrain controller receives the throttle position signal from the Throttle Position Sensor (TPS). The controller provides the TPS with a 5 volt pull up and a sensor ground. The signal is checked for being out of range as well as for intermittent operation (excessive signal changes). The engine controller transmits the throttle value onto the Bus. Most engine controllers will calculate the throttle value if the throttle signal is lost. If an error is detected by the transmission controller and the throttle value is available on the Bus, the Bus value will be used, normal operation will continue, and a TPS code will be set. If an error is detected and the throttle value is not available on the Bus, normal operation will be discontinued, a TPS DTC will be set, and the MIL will be turned on after 5 minutes of calculated operation.

- **When Monitored:**
  Continuously with the ignition on and engine running.
- **Set Condition:**
  This DTC will set if the monitored TPS voltage rises above 4.94 volts for the period of 0.48 seconds.

Possible Causes
RELATED TPS ENGINE DTCS PRESENT
POWERTRAIN CONTROL MODULE

Always perform the Pre-Diagnostic Troubleshooting procedure before proceeding. (Refer to 28 - DTC-Based Diagnostics/MODULE, Powertrain Control (PCM) - Standard Procedure)

1. DETERMINING IF RELATED ENGINE TPS DTCS ARE PRESENT

1. With the scan tool, check Engine DTCs, including pending DTCs and one trip failures.

Are there any Engine TPS DTCs present?

Yes

- Refer to DTC Based Diagnostics and perform the appropriate diagnostic procedure.
- Perform 42RLE TRANSMISSION VERIFICATION TEST. (Refer to 28 - DTC-Based Diagnostics/MODULE, Powertrain Control (PCM) - Standard Procedure)

No

- Go To 2

2. CHECK TO SEE IF DTC IS CURRENT

1. With the scan tool, record the Event Data to help identify the conditions in which the DTC was set.
2. With the scan tool, erase Transmission DTCs.

NOTE: Clearing DTCs does NOT erase the Event Data. To erase the Event Data you must either perform a Quick Learn procedure, battery disconnect (if available) with the scan tool, or manually disconnect the battery.

3. Drive the vehicle and try to duplicate the conditions in which the DTC was reported by the Event Data.
4. With the scan tool, read Transmission DTCs.

Does this DTC reset?

Yes

- Using the schematics as a guide, check the Powertrain Control Module (PCM) terminals for corrosion, damage, or terminal push out. Pay particular attention to all power and ground circuits. Check for Service Information Tune-ups or Service Bulletins for any possible causes that may apply. If no problems are found, replace and program the PCM in accordance with the Service Information. With the scan tool, perform Quick Learn.
- Perform 42RLE TRANSMISSION VERIFICATION TEST. (Refer to 28 - DTC-Based Diagnostics/MODULE, Powertrain Control (PCM) - Standard Procedure)

No

- Go To 3

3. CHECK THE WIRING AND CONNECTORS

1. The conditions necessary to set this DTC are not present at this time.
2. Using the schematics as a guide, inspect the wiring and connectors specific to this circuit.
3. Wiggle the wires while checking for shorted and open circuits.
4. Pay particular attention to the TPS signal and sensor ground circuits.
5. With the scan tool, check the Event Data to help identify the conditions in which the DTC was set.
6. Check for any Service Information Tune-ups or Service Bulletins for any possible causes that may apply.

Were there any problems found?

Yes

- Repair as necessary.
- Perform 42RLE TRANSMISSION VERIFICATION TEST. (Refer to 28 - DTC-Based Diagnostics/MODULE, Powertrain Control (PCM) - Standard Procedure)

No

- Test Complete.

■ P0124-TPS/APP INTERMITTENT

For a complete wiring diagram, **refer to the Wiring Information**.

Theory of Operation

The powertrain controller receives the throttle position signal from the Throttle Position Sensor (TPS). The controller provides the TPS with a 5 volt pull up and a sensor ground. The signal is checked for being out of range as well as for intermittent operation (excessive signal changes). The engine controller transmits the throttle value onto the Bus. Most engine controllers will calculate the throttle value if the throttle signal is lost. If an error is detected by the transmission controller and the throttle value is available on the Bus, the Bus value will be used, normal operation will continue, and a TPS code will be set. If an error is detected and the throttle value is not available on the Bus, normal operation will be discontinued, a TPS DTC will be set, and the MIL will be turned on after 5 minutes of calculated operation.

- **When Monitored:**
  Continuously with the ignition on and engine running.
- **Set Condition:**
  This DTC will set if the monitored TPS throttle angle between the angles of 6° and 120° and the degree change is greater than 5° within a period of less than 7.0 ms.

Possible Causes
RELATED TPS ENGINE DTCS PRESENT
THROTTLE POSITION SENSOR
POWERTRAIN CONTROL MODULE

Always perform the Pre-Diagnostic Troubleshooting procedure before proceeding. (Refer to 28 - DTC-Based Diagnostics/MODULE, Powertrain Control (PCM) - Standard Procedure).

1. CHECK IF RELATED ENGINE TPS DTCS ARE PRESENT

1. With the scan tool, check Engine DTCs, including pending DTCs and one trip failures.

Are there any Engine TPS DTCs present?

Yes
- Perform the appropriate diagnostic procedure.

No
- Go To 2

2. CHECK IF THE DTC IS CURRENT

1. With the scan tool, record the Event Data to help identify the conditions in which the DTC was set.
2. With the scan tool, erase Transmission DTCs.

NOTE: Clearing DTCs does NOT erase the Event Data. To erase the Event Data you must either perform a Quick Learn procedure or battery disconnect (if available) with the scan tool, or manually disconnect the battery. Whatever method used might reset certain learned transmission values to controller defaults and may cause poor shift quality until those values are relearned.

3. Drive the vehicle and try to duplicate the conditions in which the DTC was reported by the Event Data.
4. With the scan tool, read Transmission DTCs.

Does this DTC reset?

Yes
- Go To 3

No
- Go To 4

3. CHECK THE THROTTLE POSITION SENSOR OPERATION

1. Ignition on, engine not running.
2. With the scan tool, under Transmission Sensors, monitor the TPS voltage in the following step.
3. Slowly open and close the throttle while checking for erratic voltage changes.

Did the TPS voltage change smooth and consistent?

Yes

- Using the schematics as a guide, check the Powertrain Control Module (PCM) terminals for corrosion, damage, or terminal push out. Pay particular attention to all power and ground circuits. Check for Service Information Tune-ups or Service Bulletins for any possible causes that may apply. If no problems are found, replace and program xthe PCM in accordance with the Service Information. With the scan tool, perform Quick Learn.
- Perform 42RLE TRANSMISSION VERIFICATION TEST. (Refer to 28 - DTC-Based Diagnostics/MODULE, Powertrain Control (PCM) - Standard Procedure).

No

- Replace the Throttle Position Sensor in accordance with the Service Information.
- Perform 42RLE TRANSMISSION VERIFICATION TEST. (Refer to 28 - DTC-Based Diagnostics/MODULE, Powertrain Control (PCM) - Standard Procedure).

4. CHECK THE WIRING AND CONNECTORS

1. The conditions necessary to set this DTC are not present at this time.
2. Using the schematics as a guide, inspect the wiring and connectors specific to this circuit.
3. Wiggle the wires while checking for shorted and open circuits.
4. Pay particular attention to the TPS signal and sensor ground circuits.
5. With the scan tool, check the Event Data to help identify the conditions in which the DTC was set.

Were there any problems found?

Yes

- Repair as necessary.
- Perform 42RLE TRANSMISSION VERIFICATION TEST. (Refer to 28 - DTC-Based Diagnostics/MODULE, Powertrain Control (PCM) - Standard Procedure).

No

- Test Complete.

■ P0218-HIGH TEMPERATURE OPERATION ACTIVATED

For a complete wiring diagram, **refer to the Wiring Information**.

Theory of Operation

The DTC is an informational code only and is being set to aid the technician in determining root cause of a customer driveability issue. The code is also intended to alert the technician to determine if a cooling system malfunction has occurred or if an additional transmission air to oil cooler should be added to the vehicle if the customer regularly drives in a manner that overheats the transmission.

- **When Monitored:**
  Whenever the engine is running.
- **Set Condition:**
  Immediately when an Overheat shift schedule is activated when the Transmission Oil Temperature reaches 115° C (240° F).

Possible Causes
ENGINE COOLING SYSTEM OPERATION
TRANSMISSION OIL COOLER PLUGGED
HIGH TEMPERATURE OPERATIONS ACTIVATED

Always perform the Pre-Diagnostic Troubleshooting procedure before proceeding. (Refer to 28 - DTC-Based Diagnostics/MODULE, Powertrain Control (PCM) - Standard Procedure)

1. CHECK ENGINE COOLING SYSTEM

1. Perform Engine Cooling System diagnostics in accordance with the Service Information.

Is the Engine Cooling System functioning properly?

Yes

- Go To 2

No

- Repair the cause of the engine overheating. Refer to the Service Information for the related diagnostic or repair procedures.
- Perform 42RLE TRANSMISSION VERIFICATION TEST. (Refer to 28 - DTC-Based Diagnostics/MODULE, Powertrain Control (PCM) - Standard Procedure)

2. TRANSMISSION OIL COOLER RESTRICTED

1. Check the Transmission Oil Cooler Flow in accordance with the Service Information.

Is the transmission oil cooler restricted or plugged?

Yes

- Repair the cause of the plugged Transmission Oil Cooler as necessary and repair or replace the Transmission Oil Cooler in accordance with the Service Information.
- Perform 42RLE TRANSMISSION VERIFICATION TEST. (Refer to 28 - DTC-Based Diagnostics/MODULE, Powertrain Control (PCM) - Standard Procedure)

No

- Go To 3

3. HIGH TEMPERATURE OPERATION

1. This DTC is an informational DTC designed to aid the Technician in diagnosing shift quality complaints.
2. This DTC indicates that the transmission has been operating in the "Overheat" shift schedule which may generate a customer complaint.
3. The customer driving patterns may indicate the need for an additional transmission oil cooler.
4. With the scan tool, check the Event Data to help identify the conditions in which the DTC was set.
5. Check for any Service Information Tune-ups or Service Bulletins for any possible causes that may apply.

Repair

- Repair the cause of transmission overheating in accordance with the Service Information.
- Perform 42RLE TRANSMISSION VERIFICATION TEST. (Refer to 28 - DTC-Based Diagnostics/MODULE, Powertrain Control (PCM) - Standard Procedure)

P0562-BATTERY VOLTAGE LOW

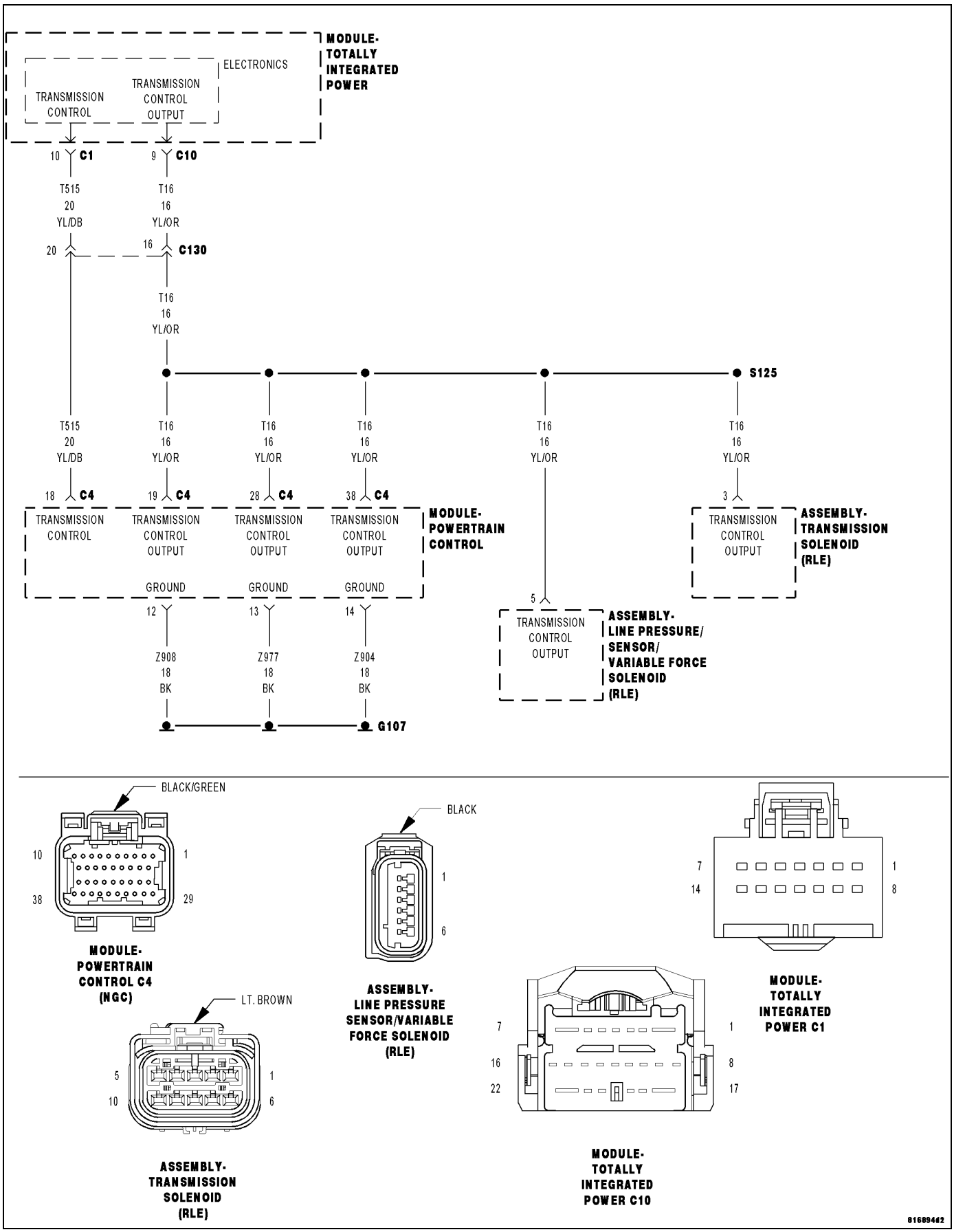

For a complete wiring diagram, **refer to the Wiring Information**.

Theory of Operation

Transmission damage may occur if there is insufficient supply voltage to properly control the solenoids. To prevent this possibility, the battery voltage is monitored and the system is placed in logical limp-in if the battery voltage drops below the limit.

- **When Monitored:**
  With the engine running and the PCM has closed the Transmission Control Relay.
- **Set Condition:**
  If the battery voltage of the Transmission Control Relay Output Sense circuit(s) to the PCM is less than 10.0 Volts for the period of 15 seconds. Note: P0562 generally indicates a gradually falling battery voltage or a resistive connection(s) to the PCM. The DTC will also set if the battery voltage sensed at the PCM is less than 6.5 Volts for 200ms or when Transmission Control Relay Output circuits are less than 7.2 Volts for 200ms.

Possible Causes
RELATED CHARGING SYSTEM DTCS
(Z908) OR (Z977) GROUND CIRCUIT OPEN OR HIGH RESISTANCE
(A104) FUSED B(+) CIRCUIT OPEN OR HIGH RESISTANCE
(T16) TRANSMISSION CONTROL OUTPUT TO TCM OPEN OR HIGH RESISTANCE
TOTALLY INTEGRATED POWER MODULE (TIPM)
POWERTRAIN CONTROL MODULE

Always perform the Pre-Diagnostic Troubleshooting procedure before proceeding. (Refer to 28 - DTC-Based Diagnostics/MODULE, Powertrain Control (PCM) - Standard Procedure)

1. CHECK FOR RELATED CHARGING SYSTEM DTCS

1. Using the scan tool, read the Engine DTCs.

Are there any Charging System related DTCs present?

Yes

- (Refer to 28 - DTC-Based Diagnostics/MODULE, Powertrain Control (PCM) - Diagnosis and Testing) and perform the appropriate diagnostic procedure.
- Perform the 42RLE TRANSMISSION VERIFICATION TEST. (Refer to 28 - DTC-Based Diagnostics/MODULE, Powertrain Control (PCM) - Standard Procedure).

No

- Go To 2

2. CHECK FOR TIPM DTCS

NOTE: Generator, battery, and charging system must be fully functional before performing this test.

1. Using the scan tool, read TIPM DTCs.

Are there any TIPM TCM Power Control Circuit DTCs present also?

Yes

- (Refer to 28 - DTC-Based Diagnostics/MODULE, Totally Integrated Power (TIPM) - Diagnosis and Testing) and perform the appropriate diagnostic procedure.

No

- Go To 3

3. CHECK IF THE DTC IS CURRENT

1. Using the scan tool, read DTCs.

Is the status Active or is the Starts Since Set counter 0 for this DTC?

Yes

- Go To 4

No

- Go To 6

4. CHECK THE (Z908) AND (Z977) GROUND CIRCUITS FOR AN OPEN

1. Turn the ignition off to the lock position.
2. Disconnect the PCM C4 harness connector.

NOTE: Check connectors - Clean/repair as necessary.

CAUTION: Do not probe the PCM harness connectors. Probing the PCM harness connectors will damage the PCM terminals resulting in poor terminal to pin connection. Install the Kit, NGC, 38 Position 8815A to perform diagnosis.

3. Using a 12-volt test light connected to 12-volts, check the (Z908) and (Z977) Ground circuits in the appropriate terminals of Miller tool #8815A.

NOTE: The test light must illuminate brightly. Compare the brightness to that of a direct connection to the battery.

Does the test light illuminate brightly for all the Ground circuits?

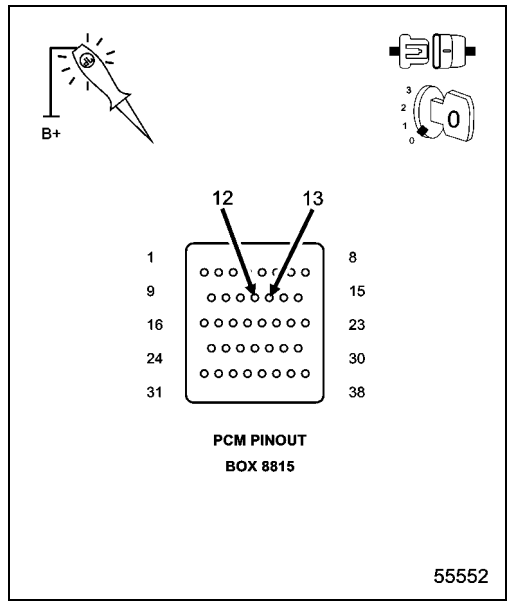

Yes

- Go To 5

No

- Repair the (Z908) and/or (Z977) Ground circuit for an open circuit or high resistance.
- Perform the 42RLE TRANSMISSION VERIFICATION TEST. (Refer to 28 - DTC-Based Diagnostics/MODULE, Powertrain Control (PCM) - Standard Procedure).

5. CHECK THE (T16) TRANSMISSION CONTROL OUTPUT CIRCUIT FOR AN OPEN

1. Turn the ignition off to the lock position.
2. Disconnect the Transmission Solenoid/pressure Switch Assembly harness connector.
3. Disconnect the Line Pressure Sensor/Variable Force Solenoid Assembly harness connector (if equipped).
4. Ignition on, engine not running.
5. With the scan tool under TIPM, actuate the Transmission.
6. Using a 12-volt test light connected to ground, check all (T16) Transmission Control Output circuits.

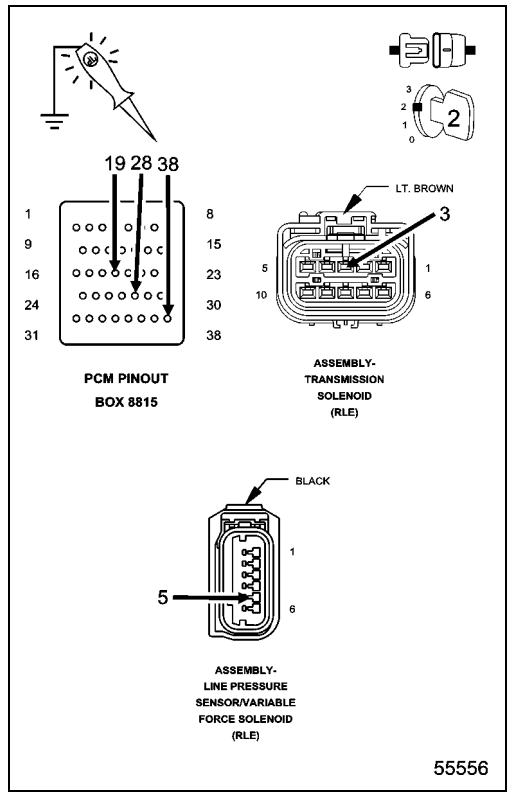

NOTE: The (T16) Transmission Control Output circuit branches off to both Transmission Solenoid/Pressure Switch Assembly, PCM and (if equipped) the Line Pressure Sensor/Variable Force Solenoid Assembly.

Does the test light illuminate brightly while cycling on and off on all (T16) Transmission Control Output circuits?

Yes

- Using the schematics as a guide, check the Powertrain Control Module (PCM) terminals for corrosion, damage, or terminal push out. Pay particular attention to all power and ground circuits. If no problems are found, replace and program the PCM in accordance with the Service Information. Using the scan tool, perform Quick Learn.
- Perform the 42RLE TRANSMISSION VERIFICATION TEST. (Refer to 28 - DTC-Based Diagnostics/MODULE, Powertrain Control (PCM) - Standard Procedure).

No

- Repair the (T16) Transmission Control Relay Output circuit(s) for an open or high resistance.
- Perform the 42RLE TRANSMISSION VERIFICATION TEST. (Refer to 28 - DTC-Based Diagnostics/MODULE, Powertrain Control (PCM) - Standard Procedure).

6. CHECK THE WIRING AND CONNECTORS

1. The conditions necessary to set the DTC are not present at this time.
2. Using the schematics as a guide, inspect the wiring and connectors specific to this circuit.
3. Wiggle the wiring and connectors while checking for shorts and open circuits.
4. Using the scan tool, check the Event Data to help identify the conditions in which the DTC was set.

Were there any problems found?

Yes

- Repair as necessary.
- Perform the 42RLE TRANSMISSION VERIFICATION TEST. (Refer to 28 - DTC-Based Diagnostics/MODULE, Powertrain Control (PCM) - Standard Procedure).

No

- Test Complete.

■ P0602-CONTROL MODULE PROGRAMMING ERROR/NOT PROGRAMMED

For a complete wiring diagram, **refer to the Wiring Information**.

Theory of Operation

The controller is programmed during manufacturing with generic software to facilitate testing. This software does not have the proper calibrations to control a transmission in a vehicle. The check for generic software is made at power-up. If generic software is found, the MIL will light immediately and the MIL will stay on even if the fault is cleared, until the proper software is installed. Note: Transmission will be placed in limp-in mode.

- **When Monitored:**
  Check for generic software is made at power-up.
- **Set Condition:**
  If generic software is found, the MIL will light immediately. This DTC is designed to signal the technician that the controller still has generic software installed.

Possible Causes
PCM - PROGRAMMING ERROR

Always perform the Pre-Diagnostic Troubleshooting procedure before proceeding. (Refer to 28 - DTC-Based Diagnostics/MODULE, Powertrain Control (PCM) - Standard Procedure)

1. CONTROL MODULE PROGRAMMING ERROR

NOTE: Controller is programmed with generic software and will not allow the correct vehicle Powertrain management.

1. Record the controller part number.
2. Update the controller with the correct software in accordance with the Service Information.

Verify that the controller updated successfully.

- Perform 42RLE TRANSMISSION VERIFICATION TEST. (Refer to 28 - DTC-Based Diagnostics/MODULE, Powertrain Control (PCM) - Standard Procedure)

■ P0604-INTERNAL CONTROL MODULE RAM

For a complete wiring diagram, **refer to the Wiring Information**.

Theory of Operation

After the controller is reset, the microprocessor checks the integrity of each RAM location by writing to it and reading back from it. The read value should be the same as the written value. MIL on after 10 seconds of vehicle operation and transmission will be placed in limp-in.

- **When Monitored:**
  One time after the ignition key is turned to the run position.
- **Set Condition:**
  The read value does not match the written value in any RAM location.

Possible Causes
PCM - INTERNAL ERROR

Always perform the Pre-Diagnostic Troubleshooting procedure before proceeding. (Refer to 28 - DTC-Based Diagnostics/MODULE, Powertrain Control (PCM) - Standard Procedure)

1. PCM - INTERNAL ERROR

Repair

- Using the schematics as a guide, check the Powertrain Control Module (PCM) terminals for corrosion, damage, or terminal push out. Pay particular attention to all power and ground circuits. Check for Service Information Tune-ups or Service Bulletins for any possible causes that may apply. If no problems are found, replace and program the PCM in accordance with the Service Information. With the scan tool, perform Quick Learn.
- Perform 42RLE TRANSMISSION VERIFICATION TEST. (Refer to 28 - DTC-Based Diagnostics/MODULE, Powertrain Control (PCM) - Standard Procedure)

■ P0605-INTERNAL CONTROL MODULE ROM

For a complete wiring diagram, **refer to the Wiring Information**.

Theory of Operation

After the controller is reset, the microprocessor checks the integrity of the program memory (ROM). A checksum is calculated by adding all used bytes in the program memory. The sum should be the same as a known constant stored in memory. MIL on after 10 seconds of vehicle operation and transmission will be placed in limp-in.

- **When Monitored:**
  One time after the ignition key is turned to the run position.
- **Set Condition:**
  If the ROM checksum does not match a known constant.

Possible Causes
PCM - INTERNAL ERROR

Always perform the Pre-Diagnostic Troubleshooting procedure before proceeding. (Refer to 28 - DTC-Based Diagnostics/MODULE, Powertrain Control (PCM) - Standard Procedure)

1. PCM - INTERNAL ERROR

Repair

- Using the schematics as a guide, check the Powertrain Control Module (PCM) terminals for corrosion, damage, or terminal push out. Pay particular attention to all power and ground circuits. Check for Service Information Tune-ups or Service Bulletins for any possible causes that may apply. If no problems are found, replace and program the PCM in accordance with the Service Information. With the scan tool, perform Quick Learn.
- Perform 42RLE TRANSMISSION VERIFICATION TEST. (Refer to 28 - DTC-Based Diagnostics/MODULE, Powertrain Control (PCM) - Standard Procedure)

■ P0613-INTERNAL TRANSMISSION PROCESSOR

For a complete wiring diagram, **refer to the Wiring Information**.

Theory of Operation

The internal watchdog is a separate hardware circuit which continuously monitors the microprocessor. To make sure the transmission is operating properly, the watchdog must receive a signal from the microprocessor within a specific time window. MIL on after 10 seconds of vehicle operation and transmission will be placed in limp-in.

- **When Monitored:**
  After the ignition key is turned to the run position and 60 seconds thereafter.
- **Set Condition:**
  Either of the following conditions occur 3 times in less than 590 milliseconds: The watchdog line remains high after the watchdog test or the transmission relay coil is energized and remains on after the watchdog delay expires.

Possible Causes
PCM - INTERNAL ERROR

Always perform the Pre-Diagnostic Troubleshooting procedure before proceeding. (Refer to 28 - DTC-Based Diagnostics/MODULE, Powertrain Control (PCM) - Standard Procedure)

1. PCM - INTERNAL ERROR

1. Using the schematics as a guide, inspect the wiring and connectors. Repair as necessary. Pay particular attention to all power and ground circuits.

Repair

- Using the schematics as a guide, check the Powertrain Control Module (PCM) terminals for corrosion, damage, or terminal push out. Pay particular attention to all power and ground circuits. Check for Service Information Tune-ups or Service Bulletins for any possible causes that may apply. If no problems are found, replace and program the PCM in accordance with the Service Information. With the scan tool, perform Quick Learn.
- Perform 42RLE TRANSMISSION VERIFICATION TEST. (Refer to 28 - DTC-Based Diagnostics/MODULE, Powertrain Control (PCM) - Standard Procedure)

P0706-TRANSMISSION RANGE SENSOR RATIONALITY

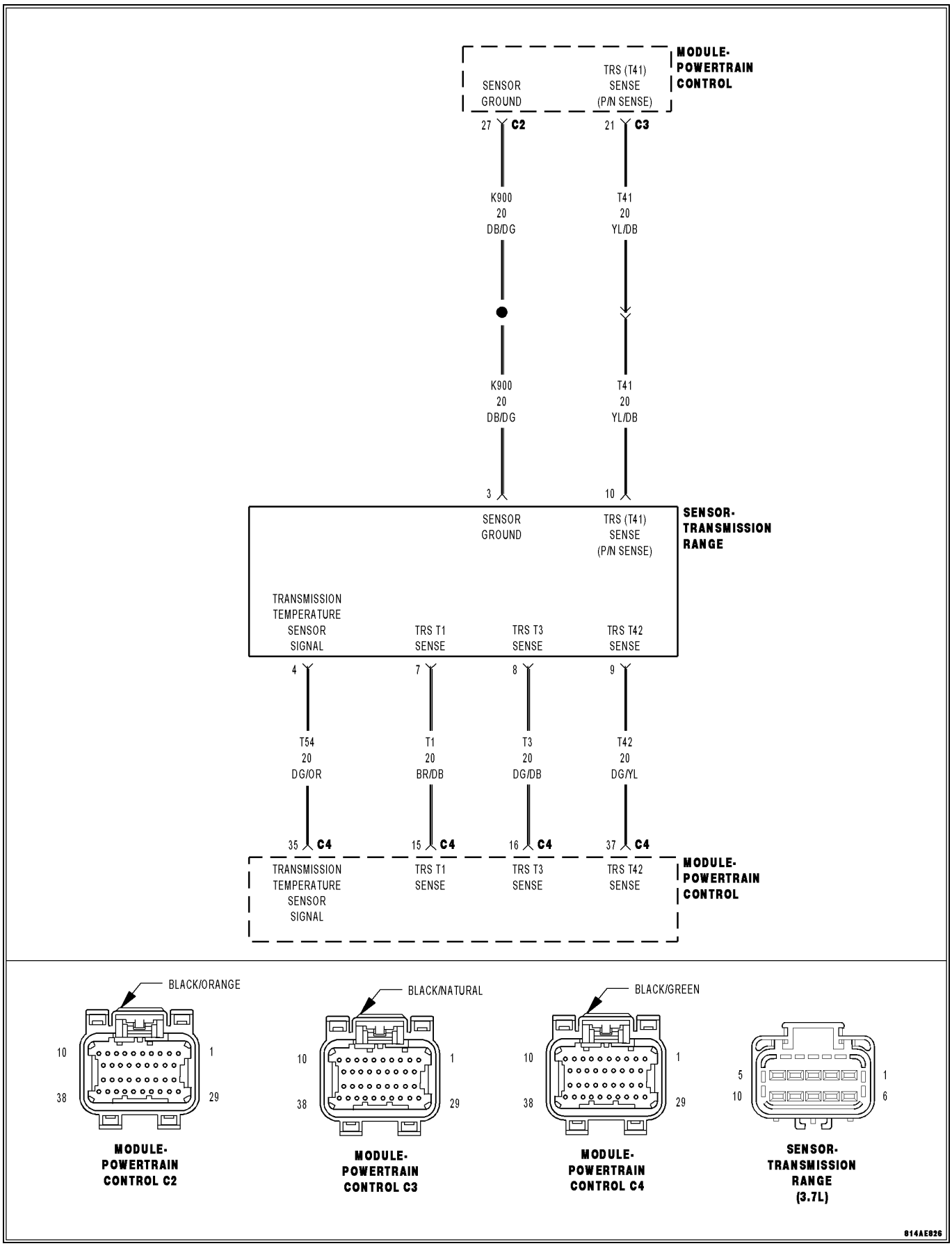

For a complete wiring diagram, **refer to the Wiring Information**.

Theory of Operation

The C1 through C4 (T41, T42, T3, and T1) sense circuits communicate the shift lever position to the PCM. Each circuit is terminated at the transmission with a switch. Each switch can be either open or closed, depending on the shift lever position. The PCM can decode this information and determine the shift lever position. Each shift lever position has a certain combination of switches, which will be open and closed, this is called a PRNDL code. There are 4 switches, therefore: there are many possible combinations of open and closed switches (codes). However, there are only 9 valid codes (8 for AutoStick), one for each gear position and three recognized between gear codes. The remainder of the codes should never occur, these are called invalid codes. The following chart shows the normal switch states for each shift lever position.

- **When Monitored:**
  Continuously with the ignition on.
- **Set Condition:**
  The DTC will set if the controller detects an invalid PRNDL code which lasts for more than 0.042 seconds.

Possible Causes
SHIFTER OUT OF ADJUSTMENT
TRS SENSE CIRCUIT OPEN
TRS SENSE CIRCUIT SHORT TO GROUND
TRS SENSE CIRCUIT SHORT TO VOLTAGE
METAL DEBRIS IN OIL PAN
TRANSMISSION RANGE SENSOR
POWERTRAIN CONTROL MODULE

Always perform the 42RLE Pre-Diagnostic Troubleshooting procedure before proceeding. (Refer to 28 - DTC-Based Diagnostics/MODULE, Powertrain Control (PCM) - Standard Procedure)

TRS SWITCH STATES

SLP	T41 (C1)	T42 (C2)	T3 (C3)	T1 (C4)
P	CLOSED	CLOSED	CLOSED	OPEN
R	OPEN	CLOSED	OPEN	OPEN
N	CLOSED	CLOSED	OPEN	CLOSED
OD	OPEN	OPEN	OPEN	CLOSED
3 (or AUTOSTICK (ERS) if equipped)	OPEN	OPEN	CLOSED	OPEN
L	OPEN	CLOSED	CLOSED	CLOSED

SHIFT LEVER ERROR CODES REPORTED BY SCAN TOOL

ERROR CODE	SWITCH CIRCUIT STUCK	SWITCH POSITION
1	T1 (C4)	OPEN
2	T1 (C4)	CLOSED
3	T3 (C3)	OPEN
4	T3 (C3)	CLOSED
5	T42 (C2)	OPEN
6	T42 (C2)	CLOSED
7	T41 (C1)	OPEN

SHIFT LEVER ERROR CODES REPORTED BY SCAN TOOL, continued

ERROR CODE	SWITCH CIRCUIT STUCK	SWITCH POSITION
8	T41 (C1)	CLOSED
11	OD/TOW HAUL (if equipped)	OPEN
12	OD/TOW HAUL (if equipped)	CLOSED

1. CHECK IF THE DTC IS CURRENT

1. With the scan tool, perform the Shift Lever Position Test.

Select the test outcome from the following:

Test passes:

- Go To 6

Test fails with Error Code:

- Go To 2

Test fails without Error Code:

- Perform the Gearshift Adjustment Procedure in accordance with the Service Information.
- Perform the PRNDL FAULT CLEARING PROCEDURE (Refer to 28 - DTC-Based Diagnostics/MODULE, Powertrain Control (PCM) - Standard Procedure)

2. CHECK THE TRANSMISSION SOLENOID/TRS ASSEMBLY

1. Turn the ignition off to the lock position.
2. Remove the Ignition Switch Feed fuse from the TIPM.

CAUTION: Removal of the Ignition Switch Feed fuse from the TIPM will prevent the vehicle from being started in gear.

WARNING: The Ignition Switch Feed fuse must be removed from the TIPM. Failure to do so can result in possible serious or fatal injury.

3. Install the Transmission Simulator, Miller tool #8333A and the Electronic Transmission Adapter kit.
4. Ignition on, engine not running.
5. With the scan tool, perform the Shift Lever Position Test.
6. When the scan tool instructs you to put the Gear Selector in a particular position, you must do so using the selector switch on the Transmission Simulator.
7. The LED for the gear position in question must be illuminated on the Transmission Simulator prior to pressing "ENTER" on the scan tool.

NOTE: When the scan tool requests the O/D off button be depressed (if equipped) , you must use the O/D OFF button in the vehicle or you will fail the Shift Lever Position Test with an error code 11 or OD-TOW/HALL STUCK OPEN.

NOTE: If the Shift Lever Position test fails, make sure to note the identification of the TRS Sense circuit for future reference.

Did the Shift Lever Position test pass?

Yes

- Remove the Oil Pan and Main Valve Body Assembly in accordance with the Service Information. Check for metal debris on top of the TRS Assembly. If debris is present, determine the cause of the debris and repair the transmission as necessary. If no problems are found, replace the Transmission TRS Assembly in accordance with the Service Information.
- Perform the PRNDL FAULT CLEARING PROCEDURE (Refer to 28 - DTC-Based Diagnostics/MODULE, Powertrain Control (PCM) - Standard Procedure)

No

- Go To 3

3. TRS SENSE CIRCUIT OPEN

1. Turn the ignition off to the lock position.
2. Disconnect the Transmission Simulator, Miller tool #8333A.
3. Disconnect the PCM harness connectors and install Miller tool #8815A.

CAUTION: Do not probe the PCM harness connectors. Probing the PCM harness connectors will damage the PCM terminals resulting in poor terminal to pin connection. Install the Kit, NGC, 38 Position 8815A to perform diagnosis.

4. Measure the resistance of the identified (T41, T42, T3, or T1) TRS Sense circuit, from the Transmission Solenoid/ TRS Assembly harness connector to the appropriate terminal of Miller tool #8815A.

Is the resistance above 5.0 ohms?

Yes

- Repair the identified (T41, T42, T3, or T1) TRS Sense circuit for an open.
- Perform the PRNDL FAULT CLEARING PROCEDURE (Refer to 28 - DTC-Based Diagnostics/MODULE, Powertrain Control (PCM) - Standard Procedure)

No

- Go To 4

4. TRS SENSE CIRCUIT SHORT TO GROUND

1. Measure the resistance between ground and the identified (T41, T42, T3, or T1) TRS Sense circuit.

Is the resistance below 5.0 ohms?

Yes

- Repair the identified (T41, T42, T3, or T1)TRS Sense circuit for a short to ground.
- Perform the PRNDL FAULT CLEARING PROCEDURE (Refer to 28 - DTC-Based Diagnostics/MODULE, Powertrain Control (PCM) - Standard Procedure)

No

- Go To 5

5. TRS SENSE CIRCUIT SHORT TO ANOTHER CIRCUIT

1. Measure the resistance between the identified (T41, T42, T3, or T1) TRS Sense circuit and all other circuits in the Transmission Solenoid/TRS Assembly harness connector.

Is the resistance below 100k ohms between the identified (T41, T42, T3, or T1) TRS Sense circuit and any other circuit(s) in the Transmission Solenoid/TRS Assembly harness connector?

Yes

- Repair the identified (T41, T42, T3, or T1) TRS Sense circuit for a short to another circuit(s).
- Perform the PRNDL FAULT CLEARING PROCEDURE (Refer to 28 - DTC-Based Diagnostics/MODULE, Powertrain Control (PCM) - Standard Procedure)

No

- Using the schematics as a guide, check the Powertrain Control Module (PCM) terminals for corrosion, damage, or terminal push out. Pay particular attention to all power and ground circuits. If no problems are found, replace and program the PCM in accordance with the Service Information. With the scan tool, perform Quick Learn.
- Perform the PRNDL FAULT CLEARING PROCEDURE (Refer to 28 - DTC-Based Diagnostics/MODULE, Powertrain Control (PCM) - Standard Procedure)

6. CHECK THE WIRING AND CONNECTORS

1. The conditions necessary to set the DTC are not present at this time.
2. Using the schematics as a guide, inspect the wiring and connectors specific to this circuit.
3. Wiggle the wiring and connectors while checking for shorted and open circuits.
4. With the scan tool, check the Event Data to help identify the conditions in which the DTC was set.

Were there any problems found?

Yes

- Repair as necessary.
- Perform the PRNDL FAULT CLEARING PROCEDURE (Refer to 28 - DTC-Based Diagnostics/MODULE, Powertrain Control (PCM) - Standard Procedure)

No

- Test Complete.

P0711-TRANSMISSION TEMPERATURE SENSOR PERFORMANCE

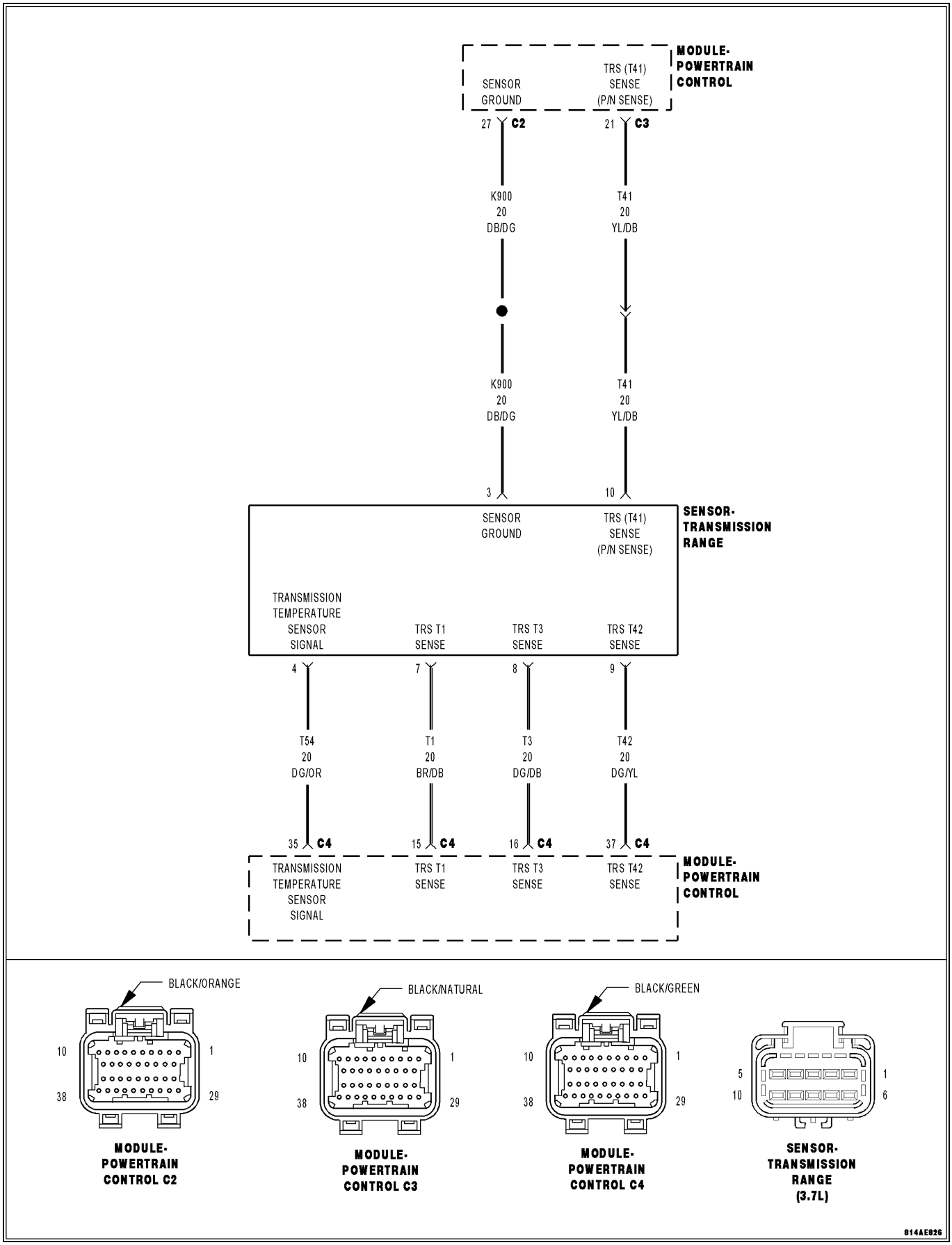

For a complete wiring diagram, **refer to the Wiring Information**.

Theory of Operation

The temperature sensor is used to sense the temperature of the transmission fluid. Transmission fluid temperature can affect shift quality, torque converter operation and when or if some diagnostics are run. A failed temperature sensor could affect the OBD diagnostics. If a problem occurs in the transmission temperature sensor circuit, transmission temperature will be based on a calculated value.

- **When Monitored:**
  Continuously with the ignition on and engine running.
- **Set Condition:**
  DTC will set when the transmission temperature does not reach a normal operating temperature within a given time frame. Time is variable due to ambient temperature. Approximate DTC set time is 10 to 35 minutes. The following are starting temperature to warm up times to set this DTC: starting temperature -40° C (-40° F) warm up time 35 minutes, starting temperature -28° C (-20° F) 25 minutes, starting temperature -6.6° C (20° F) 20 minutes, starting temperature 15.5 ° C (60° F) 10 minutes. When the fault is set, calculated temperature is substituted for measured temperature, however the DTC is stored only after three consecutive occurrences.

Possible Causes
RELATED TRANSMISSION TEMPERATURE DTCS PRESENT
TRANSMISSION TEMPERATURE SENSOR
POWERTRAIN CONTROL MODULE

Always perform the Pre-Diagnostic Troubleshooting procedure before proceeding. (Refer to 28 - DTC-Based Diagnostics/MODULE, Powertrain Control (PCM) - Standard Procedure)

1. DETERMINE IF RELATED TRANSMISSION TEMPERATURE DTCS ARE PRESENT

1. With the scan tool, check Transmission DTCs.

Are there any other Transmission Temperature Sensor related DTCs present?

Yes

- Refer to DTC Based Diagnostics and perform the appropriate diagnostic procedure.

No

- Go To 2

2. CHECK IF THE DTC IS CURRENT

1. With the scan tool, read DTCs.

Is the status Active or is the Starts Since Set counter 2 or less for this DTC?

Yes

- Go To 3

No

- Go To 4

3. PCM AND WIRING

1. Turn the ignition off to the lock position.
2. Remove the Ignition Switch Feed fuse from the TIPM.

CAUTION: Removal of the Ignition Switch Feed fuse from the TIPM will prevent the vehicle from being started in gear.

WARNING: The Ignition Switch Feed fuse must be removed from the TIPM. Failure to do so can result in possible serious or fatal injury.

3. Install the Transmission Simulator, Miller tool #8333A and the Electronic Transmission Adapter kit.
4. Ignition on, engine not running.
5. With the Transmission Simulator, turn the Input/Output switch to OFF.
6. With the scan tool, monitor the Transmission Temperature voltage while turning the Thermistor Voltage switch to all three positions on the Transmission Simulator.
7. Compare the scan tool readings with the numbers listed on the Transmission Simulator.

Do the readings on the Transmission Simulator match the scan tool readings ± 0.2 volts?

Yes

- Replace Transmission Temperature Sensor (TRS Assembly) in accordance with the Service Information.
- Perform 42RLE TRANSMISSION VERIFICATION TEST. (Refer to 28 - DTC-Based Diagnostics/MODULE, Powertrain Control (PCM) - Standard Procedure)

No

- Using the schematics as a guide, check the Powertrain Control Module (PCM) terminals for corrosion, damage, or terminal push out. Pay particular attention to all power and ground circuits. Check for any Service Bulletins and S.T.A.R. ON-LINE for any possible causes that may apply. If no problems are found, replace and program the PCM in accordance with the Service Information. With the scan tool, perform Quick Learn.
- Perform 42RLE TRANSMISSION VERIFICATION TEST. (Refer to 28 - DTC-Based Diagnostics/MODULE, Powertrain Control (PCM) - Standard Procedure)

4. CHECK THE WIRING AND CONNECTORS

1. The conditions necessary to set this DTC are not present at this time.
2. Using the schematics as a guide, inspect the wiring and connectors specific to this circuit.
3. Wiggle the wires while checking for shorted and open circuits.
4. With the scan tool, check the Event Data to help identify the conditions in which the DTC was set.

Were there any problems found?

Yes

- Repair as necessary.
- Perform 42RLE TRANSMISSION VERIFICATION TEST. (Refer to 28 - DTC-Based Diagnostics/MODULE, Powertrain Control (PCM) - Standard Procedure)

No

- Test Complete.

P0712-TRANSMISSION TEMPERATURE SENSOR LOW

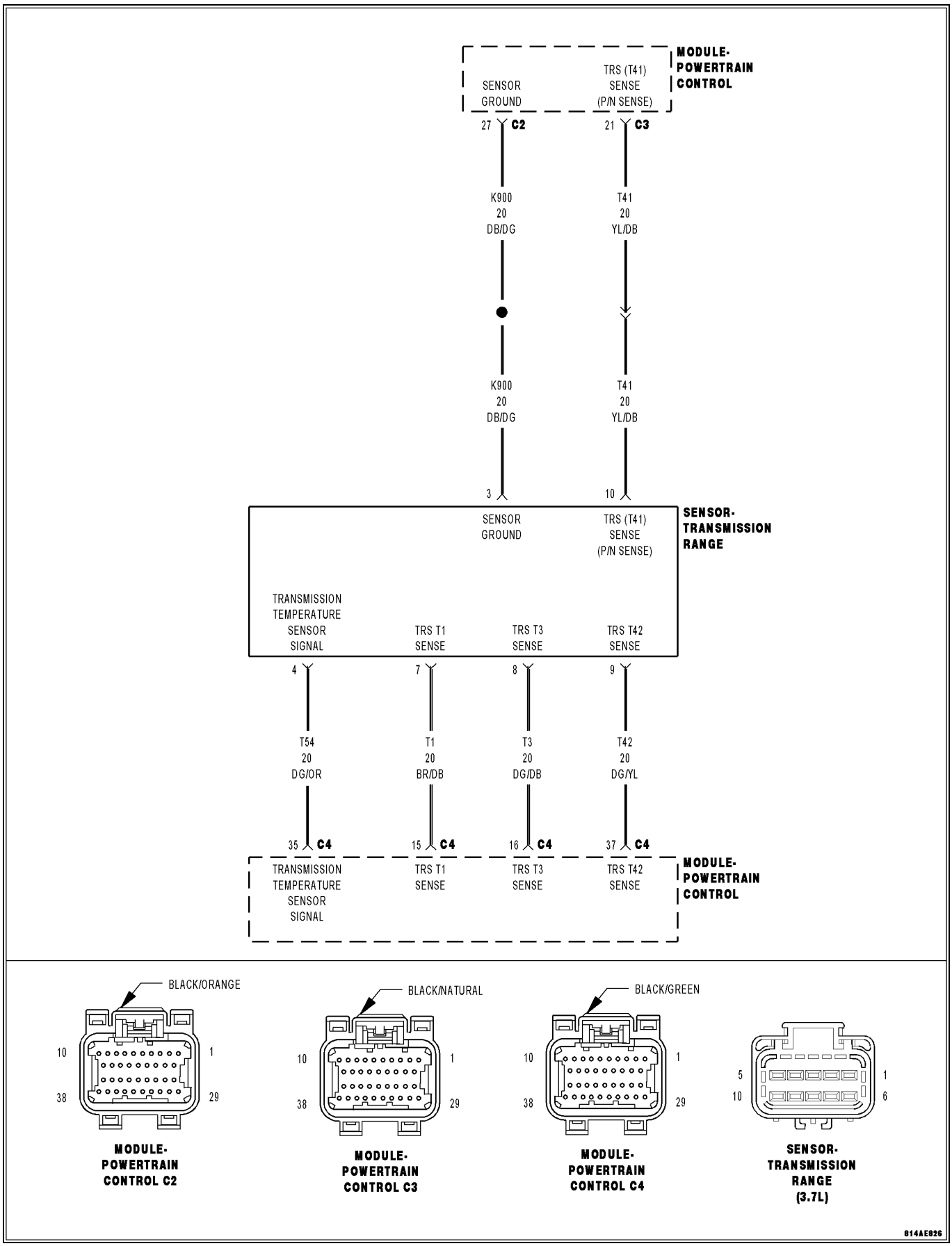

For a complete wiring diagram, **refer to the Wiring Information**.

Theory of Operation

The temperature sensor is used to sense the temperature of the transmission fluid. Transmission fluid temperature can affect shift quality, torque converter operation and when or if some diagnostics are run. A failed temperature sensor could affect the OBD diagnostics. If a problem occurs in the transmission temperature sensor circuit, transmission temperature will be based on a calculated value.

- **When Monitored:**
  Continuously with the ignition on and engine running.
- **Set Condition:**
  The DTC will set when the monitored Temperature Sensor voltage drops below 0.078 volts for the period of 1.45 seconds. When the fault is set, calculated temperature is substituted for measured temperature, however the fault code is stored only after three consecutive occurrences of the fault.

Possible Causes
RELATED DTCS PRESENT
(T54) TRANSMISSION TEMPERATURE SENSOR SIGNAL CIRCUIT SHORT TO GROUND
TRANSMISSION TEMPERATURE SENSOR
POWERTRAIN CONTROL MODULE

Always perform the Pre-Diagnostic Troubleshooting procedure before proceeding. (Refer to 28 - DTC-Based Diagnostics/MODULE, Powertrain Control (PCM) - Standard Procedure)

1. DETERMINE IF RELATED DTCS ARE PRESENT

1. With the scan tool, check Transmission DTCs.

Are there any Speed Sensor DTCs present?

Yes

- Refer to DTC Based Diagnostics and perform the appropriate diagnostic procedure.

No

- Go To 2

2. CHECK IF THE DTC IS CURRENT

1. With the scan tool, read DTCs.

Is the status Active or is the Starts Since Set counter 2 or less for this DTC?

Yes

- Go To 3

No

- Go To 5

3. CHECK THE PCM AND WIRING WITH THE TRANSMISSION SIMULATOR

1. Turn the ignition off to the lock position.
2. Remove the Ignition Switch Feed fuse from the TIPM.

CAUTION: Removal of the Ignition Switch Feed fuse from the TIPM will prevent the vehicle from being started in gear.

WARNING: The Ignition Switch Feed fuse must be removed from the TIPM. Failure to do so can result in possible serious or fatal injury.

3. Install the Transmission Simulator, Miller tool #8333A and the Electronic Transmission Adapter kit.
4. Ignition on, engine not running.
5. With the Transmission Simulator, turn the Input/Output switch to OFF.
6. With the scan tool, monitor the Transmission Temperature voltage while turning the Thermistor Voltage switch to all three positions on the Transmission Simulator.
7. Compare the scan tool readings with the numbers listed on the Transmission Simulator.

Do the readings on the Transmission Simulator match the scan tool readings ± 0.2 volts?

Yes

- Replace Transmission Temperature Sensor (TRS Assembly) in accordance with the Service Information.
- Perform 42RLE TRANSMISSION VERIFICATION TEST. (Refer to 28 - DTC-Based Diagnostics/MODULE, Powertrain Control (PCM) - Standard Procedure)

No

- Go To 4

4. CHECK THE (T54) TRANSMISSION TEMPERATURE SENSOR SIGNAL CIRCUIT FOR A SHORT TO GROUND

1. Turn the ignition off to the lock position.
2. Disconnect the PCM C4 harness connector.
3. Disconnect the TRS harness connector.

CAUTION: Do not probe the PCM harness connectors. Probing the PCM harness connectors will damage the PCM terminals resulting in poor terminal to pin connection. Install the Kit, NGC, 38 Position 8815A to perform diagnosis.

4. Measure the resistance between ground and the (T54) Transmission Temperature Sensor Signal circuit.

Is the resistance below 5.0 ohms?

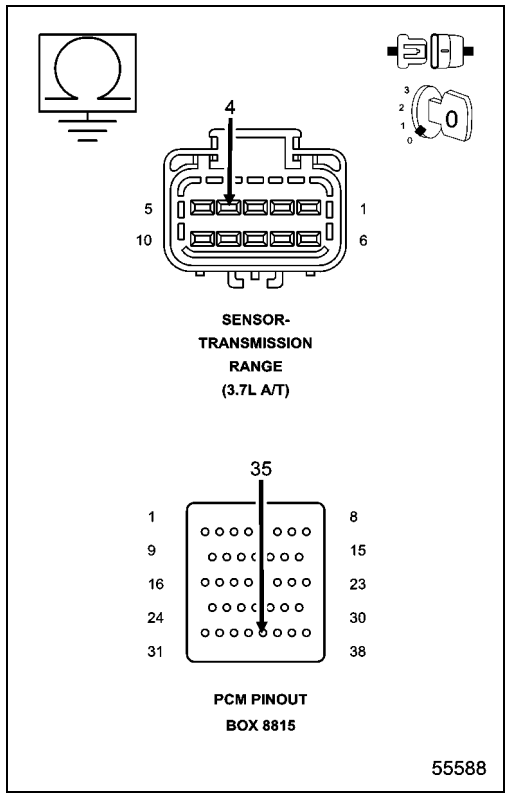

Yes

- Repair the (T54) Transmission Temperature Sensor Signal circuit for a short to ground.
- Perform 42RLE TRANSMISSION VERIFICATION TEST. (Refer to 28 - DTC-Based Diagnostics/MODULE, Powertrain Control (PCM) - Standard Procedure)

No

- Using the schematics as a guide, check the Powertrain Control Module (PCM) terminals for corrosion, damage, or terminal push out. Pay particular attention to all power and ground circuits. Check for Service Information Tune-ups or Service Bulletins for any possible causes that may apply. If no problems are found, replace and program the PCM in accordance with the Service Information. With the scan tool, perform Quick Learn.
- Perform 42RLE TRANSMISSION VERIFICATION TEST. (Refer to 28 - DTC-Based Diagnostics/MODULE, Powertrain Control (PCM) - Standard Procedure)

5. CHECK THE WIRING AND CONNECTORS

1. The conditions necessary to set this DTC are not present at this time.
2. Using the schematics as a guide, inspect the wiring and connectors specific to this circuit.
3. Wiggle the wires while checking for shorted and open circuits.
4. With the scan tool, check the Event Data to help identify the conditions in which the DTC was set.
5. Check for any Service Information Tune-ups or Service Bulletins for any possible causes that may apply.

Were there any problems found?

Yes

- Repair as necessary.
- Perform 42RLE TRANSMISSION VERIFICATION TEST. (Refer to 28 - DTC-Based Diagnostics/MODULE, Powertrain Control (PCM) - Standard Procedure)

No

- Test Complete.

P0713-TRANSMISSION TEMPERATURE SENSOR HIGH

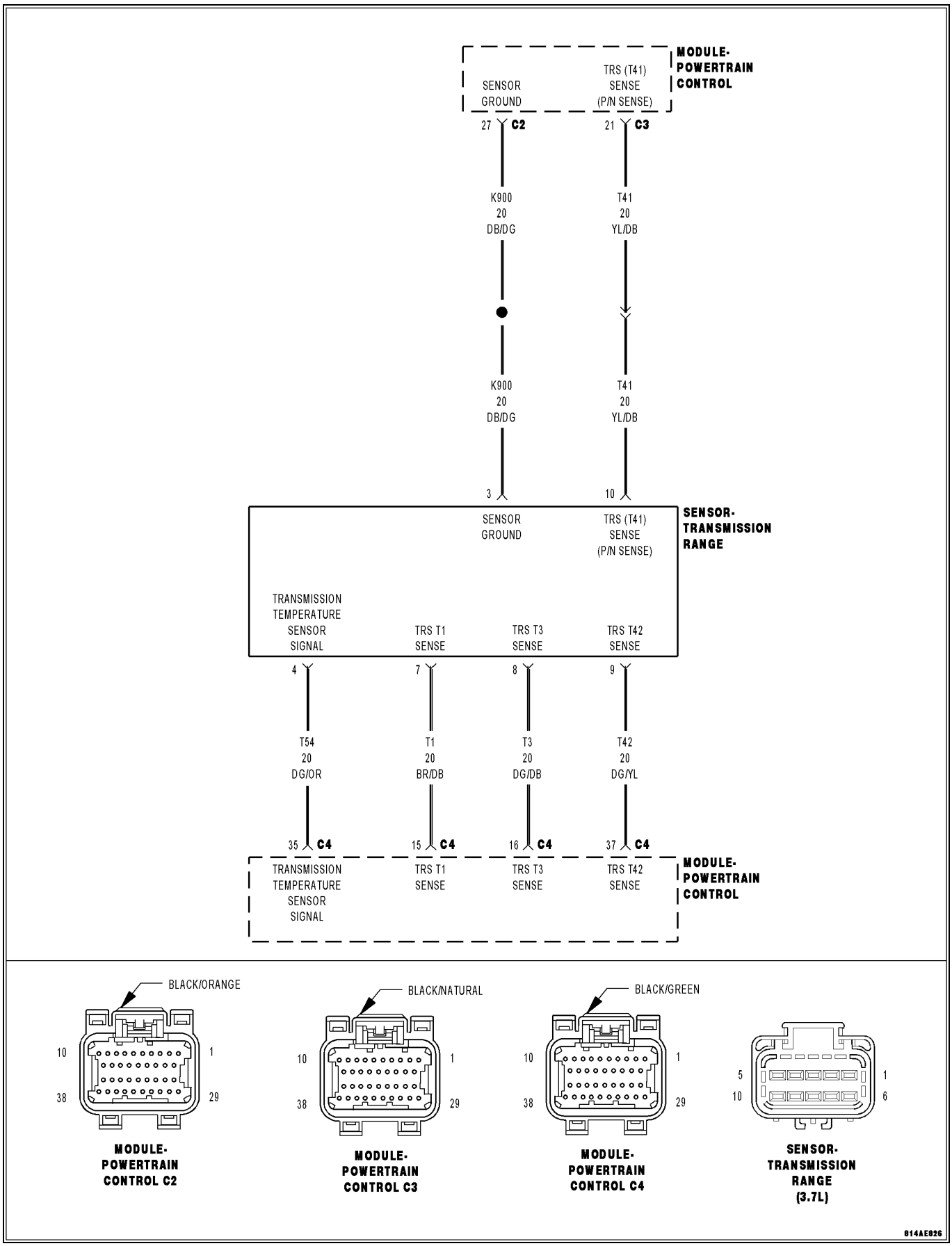

For a complete wiring diagram, **refer to the Wiring Information**.

Theory of Operation

The temperature sensor is used to sense the temperature of the transmission fluid. Transmission fluid temperature can affect shift quality, torque converter operation and when or if some diagnostics are run. A failed temperature sensor could affect the OBD diagnostics. If a problem occurs in the transmission temperature sensor circuit, transmission temperature will be based on a calculated value.

- **When Monitored:**
  Continuously with the ignition on and engine running.
- **Set Condition:**
  The DTC will set when the monitored Temperature Sensor voltage rises above 4.94 volts for the period of 1.45 seconds. When the fault is set, calculated temperature is substituted for measured temperature, however the fault code is stored only after three consecutive occurrences of the fault.

Possible Causes
(K900) SENSOR GROUND OPEN
(T54) TRANSMISSION TEMPERATURE SENSOR SIGNAL CIRCUIT OPEN
(T54) TRANSMISSION TEMPERATURE SENSOR SIGNAL CIRCUIT SHORT TO VOLTAGE
TRANSMISSION TEMPERATURE SENSOR
POWERTRAIN CONTROL MODULE

Always perform the Pre-Diagnostic Troubleshooting procedure before proceeding. (Refer to 28 - DTC-Based Diagnostics/MODULE, Powertrain Control (PCM) - Standard Procedure)

1. CHECK IF THE DTC IS CURRENT

1. With the scan tool, read DTCs.

Is the status Active or is the Starts Since Set counter 2 or less for this DTC?

Yes

- Go To 2

No

- Go To 6

2. CHECK THE PCM AND WIRING WITH THE TRANSMISSION SIMULATOR

1. Turn the ignition off to the lock position.
2. Remove the Ignition Switch Feed fuse from the TIPM.

CAUTION: Removal of the Ignition Switch Feed fuse from the TIPM will prevent the vehicle from being started in gear.

WARNING: The Ignition Switch Feed fuse must be removed from the TIPM. Failure to do so can result in possible serious or fatal injury.

3. Install the Transmission Simulator, Miller tool #8333A and the Electronic Transmission Adapter kit 8333-1A.
4. Ignition on, engine not running.
5. With the Transmission Simulator, turn the Input/Output switch to OFF.
6. With the scan tool, monitor the Transmission Temperature voltage while turning the Thermistor Voltage switch to all three positions on the Transmission Simulator.
7. Compare the scan tool readings with the numbers listed on the Transmission Simulator.

Do the readings on the Transmission Simulator match the scan tool readings ± 0.2 volts?

Yes

- Replace Transmission Temperature Sensor (TRS Assembly) in accordance with the Service Information.
- Perform 42RLE TRANSMISSION VERIFICATION TEST. (Refer to 28 - DTC-Based Diagnostics/MODULE, Powertrain Control (PCM) - Standard Procedure)

No

- Go To 3

3. CHECK THE (T54) TRANSMISSION TEMPERATURE SENSOR SIGNAL CIRCUIT FOR AN OPEN

1. Turn the ignition off to the lock position.
2. Disconnect the PCM C4 harness connector.
3. Disconnect the TRS harness connector

CAUTION: Do not probe the PCM harness connectors. Probing the PCM harness connectors will damage the PCM terminals resulting in poor terminal to pin connection. Install the Kit, NGC, 38 Position 8815A to perform diagnosis.

4. Measure the resistance of the Transmission Temperature Sensor Signal circuit between the TRS harness connector and the appropriate terminal of Miller tool #8815A.

Is the resistance above 5.0 ohms?

Yes

- Repair the Transmission Temperature Sensor Signal circuit for an open.
- Perform 42RLE TRANSMISSION VERIFICATION TEST. (Refer to 28 - DTC-Based Diagnostics/MODULE, Powertrain Control (PCM) - Standard Procedure)

No

- Go To 4

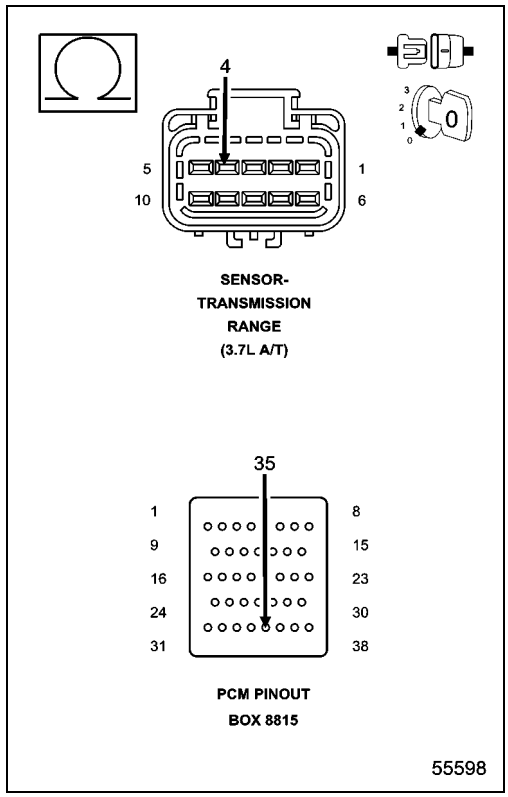

4. CHECK THE (K900) SENSOR GROUND CIRCUIT FOR AN OPEN

1. Disconnect the PCM C2 harness connector.
2. Measure the resistance of the (K900) Sensor Ground circuit between the TRS harness connector and the appropriate terminal of Miller tool #8815A.

Is the resistance above 5.0 ohms?

Yes

- Repair the (K900) Sensor Ground circuit for an open.
- Perform 42RLE TRANSMISSION VERIFICATION TEST. (Refer to 28 - DTC-Based Diagnostics/MODULE, Powertrain Control (PCM) - Standard Procedure)

No

- Go To 5

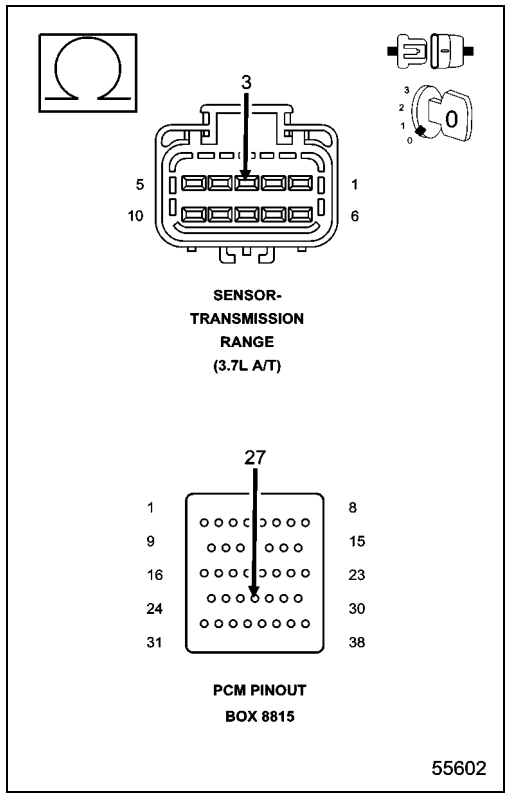

5. CHECK THE (T54) TRANSMISSION TEMPERATURE SENSOR SIGNAL CIRCUIT FOR A SHORT TO VOLTAGE

1. Ignition on, engine not running.
2. With the scan tool under TIPM, actuate the Transmission.
3. Measure the voltage of the (T54) Transmission Temperature Sensor Signal circuit in the appropriate terminal of Miller tool #8815A.

Is the voltage above 0.5 volts?

Yes

- Repair the (T54) Transmission Temperature Sensor Signal circuit for a short to voltage.
- Perform 42RLE TRANSMISSION VERIFICATION TEST. (Refer to 28 - DTC-Based Diagnostics/MODULE, Powertrain Control (PCM) - Standard Procedure)

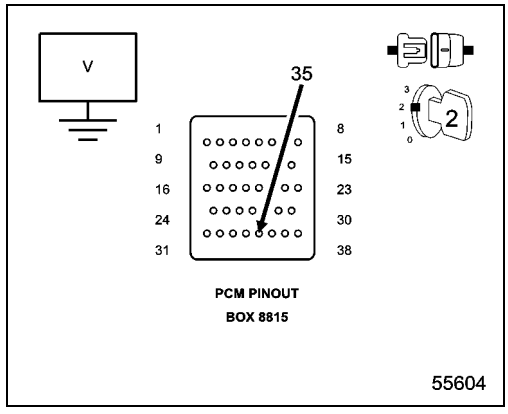

No

- Using the schematics as a guide, check the Powertrain Control Module (PCM) terminals for corrosion, damage, or terminal push out. Pay particular attention to all power and ground circuits. Check for Service Information Tune-ups or Service Bulletins for any possible causes that may apply. If no problems are found, replace and program the PCM in accordance with the Service Information. With the scan tool, perform Quick Learn.
- Perform 42RLE TRANSMISSION VERIFICATION TEST. (Refer to 28 - DTC-Based Diagnostics/MODULE, Powertrain Control (PCM) - Standard Procedure)

6. CHECK THE WIRING AND CONNECTORS

1. The conditions necessary to set this DTC are not present at this time.
2. Using the schematics as a guide, inspect the wiring and connectors specific to this circuit.
3. Wiggle the wires while checking for shorted and open circuits.
4. With the scan tool, check the Event Data to help identify the conditions in which the DTC was set.
5. Check for any Service Information Tune-ups or Service Bulletins for any possible causes that may apply.

Were there any problems found?

Yes

- Repair as necessary.
- Perform 42RLE TRANSMISSION VERIFICATION TEST. (Refer to 28 - DTC-Based Diagnostics/MODULE, Powertrain Control (PCM) - Standard Procedure)

No

- Test Complete.

■ P0714-TRANSMISSION TEMPERATURE SENSOR INTERMITTENT

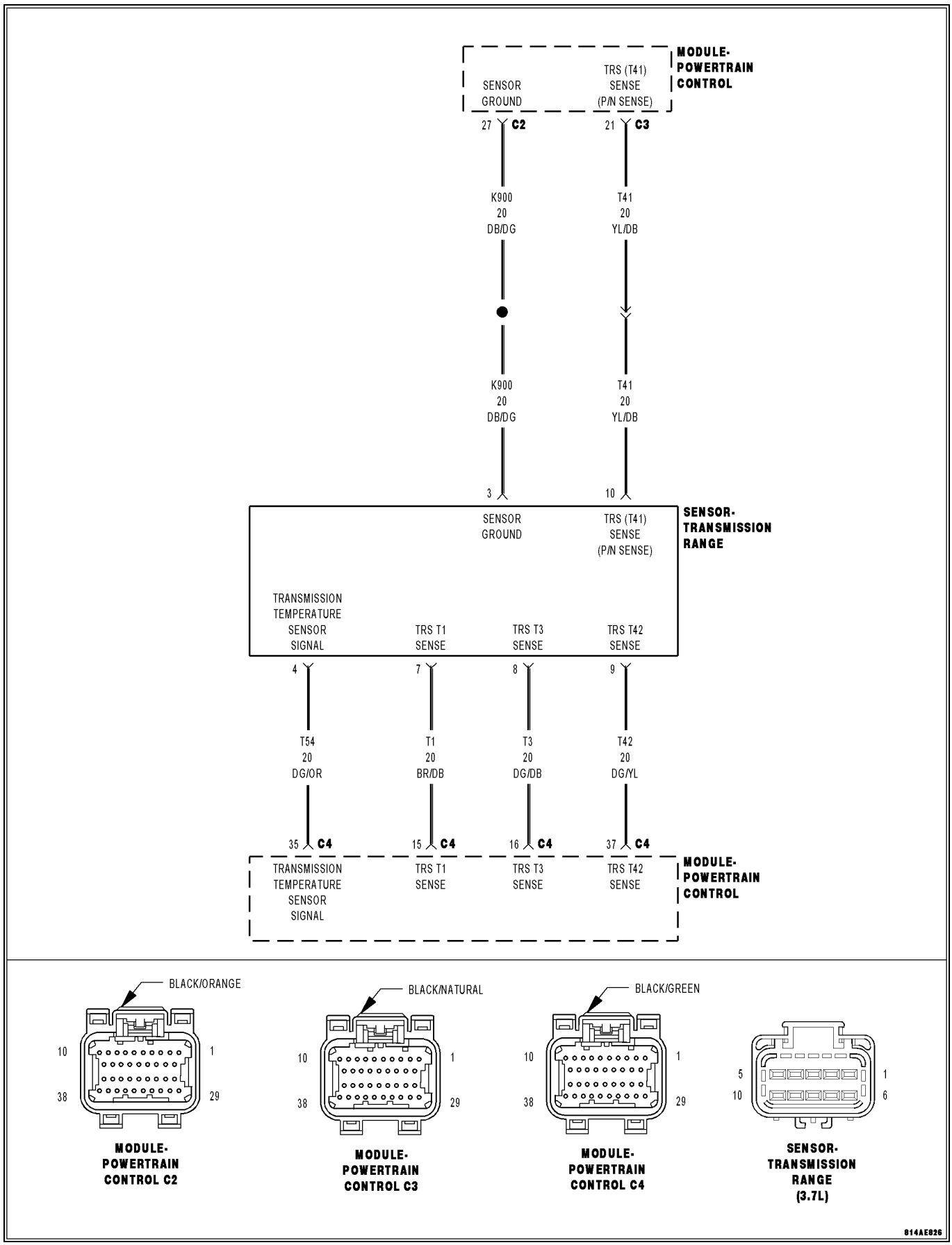

For a complete wiring diagram, **refer to the Wiring Information**.

Theory of Operation

The temperature sensor is used to sense the temperature of the transmission fluid. Transmission fluid temperature can affect shift quality, torque converter operation and when or if some diagnostics are run. A failed temperature sensor could affect the OBD diagnostics. If a problem occurs in the transmission temperature sensor circuit, transmission temperature will be based on a calculated value.

- **When Monitored:**
  Continuously with the ignition on and engine running.
- **Set Condition:**
  The DTC will set when the monitored Temperature Sensor voltage fluctuates or changes abruptly within a predetermined period of time.

Possible Causes
TRANSMISSION TEMPERATURE SENSOR
POWERTRAIN CONTROL MODULE

Always perform the Pre-Diagnostic Troubleshooting procedure before proceeding. (Refer to 28 - DTC-Based Diagnostics/MODULE, Powertrain Control (PCM) - Standard Procedure)

1. CHECK IF THE DTC IS CURRENT

1. With the scan tool, read DTCs.

Is the status Active or is the Starts Since Set counter 2 or less for this DTC?

Yes

- Go To 2

No

- Go To 3

2. CHECK THE PCM AND WIRING WITH THE TRANSMISSION SIMULATOR

1. Turn the ignition off to the lock position.
2. Remove the Ignition Switch Feed fuse from the TIPM.

CAUTION: Removal of the Ignition Switch Feed fuse from the TIPM will prevent the vehicle from being started in gear.

WARNING: The Ignition Switch Feed fuse must be removed from the TIPM. Failure to do so can result in possible serious or fatal injury.

3. Install the Transmission Simulator, Miller tool #8333A and the Electronic Transmission Adapter kit.
4. Ignition on, engine not running.
5. With the Transmission Simulator, turn the Input/Output switch to OFF.
6. With the scan tool , monitor the Transmission Temperature voltage while turning the Thermistor Voltage switch to all three positions on the Transmission Simulator.
7. Compare the scan tool readings with the numbers listed on the Transmission Simulator.

Do the readings on the Transmission Simulator match a non-fluctuating scan tool reading ± 0.2 volts?

Yes

- Replace Transmission Solenoid/Pressure Switch Assembly in accordance with the Service Information.
- Perform 42RLE TRANSMISSION VERIFICATION TEST. (Refer to 28 - DTC-Based Diagnostics/MODULE, Powertrain Control (PCM) - Standard Procedure)

No

- Using the schematics as a guide, check the Powertrain Control Module (PCM) terminals for corrosion, damage, or terminal push out. Pay particular attention to all power and ground circuits. Check for any Service Information Tune-ups or Service Bulletins for any possible causes that may apply. If no problems are found, replace and program the PCM in accordance with the Service Information. With the scan tool, perform Quick Learn.
- Perform 42RLE TRANSMISSION VERIFICATION TEST. (Refer to 28 - DTC-Based Diagnostics/MODULE, Powertrain Control (PCM) - Standard Procedure)

3. CHECK THE WIRING AND CONNECTORS

1. The conditions necessary to set this DTC are not present at this time.
2. Using the schematics as a guide, inspect the wiring and connectors specific to this circuit.
3. Wiggle the wires while checking for shorted and open circuits.
4. With the scan tool , check the Event Data to help identify the conditions in which the DTC was set.
5. Check for any Service Information Tune-ups or Service Bulletins for any possible causes that may apply.

Were there any problems found?

Yes

- Repair as necessary.
- Perform 42RLE TRANSMISSION VERIFICATION TEST. (Refer to 28 - DTC-Based Diagnostics/MODULE, Powertrain Control (PCM) - Standard Procedure)

No

- Test Complete.

P0716-INPUT SPEED SENSOR 1 CIRCUIT PERFORMANCE

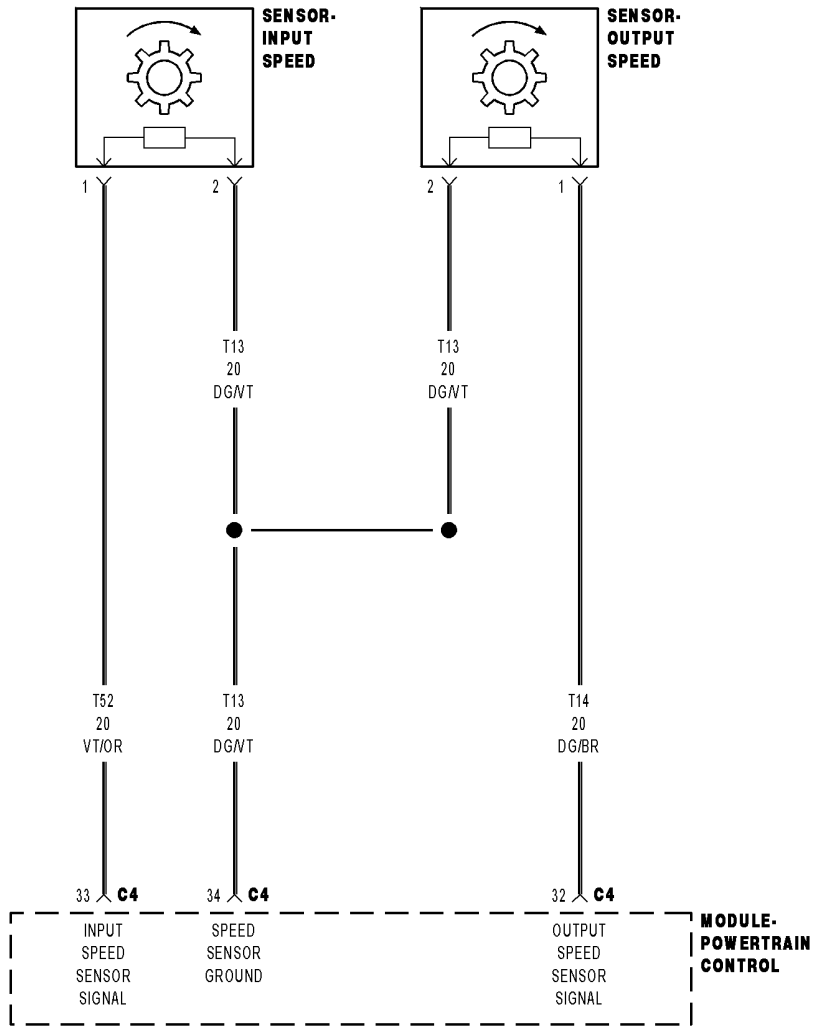

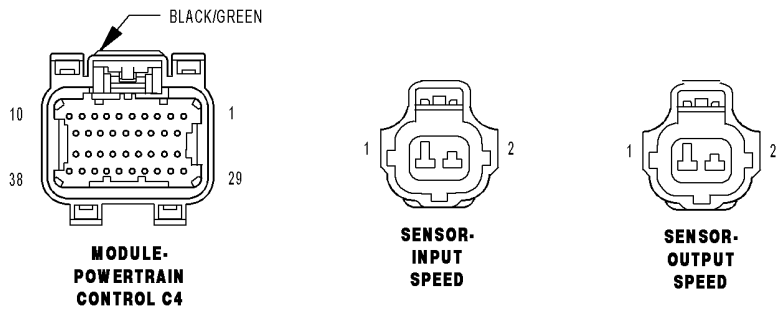

814AE032

For a complete wiring diagram, **refer to the Wiring Information**.

Theory of Operation

The transmission control system uses two speed sensors, one to measure input rpm and one to measure output rpm. These inputs are essential for proper transmission operation. Therefore, the integrity of this data is verified through system checks.

- **When Monitored:**
  The transmission gear ratio is monitored continuously while the transmission is in gear.
- **Set Condition:**
  If there is an excessive change in the Input rpm in any valid gear (R, 1st, 2nd, 3rd, or 4th).

Possible Causes
(T52) INPUT SPEED SENSOR SIGNAL CIRCUIT OPEN
(T13) SPEED SENSOR GROUND CIRCUIT OPEN
(T52) INPUT SPEED SENSOR SIGNAL CIRCUIT SHORTED TO GROUND
(T52) INPUT SPEED SENSOR SIGNAL CIRCUIT SHORTED TO VOLTAGE
(T13) SPEED SENSOR GROUND CIRCUIT SHORTED TO VOLTAGE
INPUT SPEED SENSOR
POWERTRAIN CONTROL MODULE (PCM)

Always perform the Pre-Diagnostic Troubleshooting procedure before proceeding. (Refer to 28 - DTC-Based Diagnostics/MODULE, Powertrain Control (PCM) - Standard Procedure).

1. CHECK TO SEE IF DTC P0716 IS CURRENT

1. Start the engine.
2. Place the shifter in park.
3. With the scan tool , read the Input Speed Sensor rpm.

Is the Input Speed Sensor reading below 400 rpm?

Yes

- Go To 2

No

- Go To 8

2. CHECK THE PCM AND WIRING WITH THE TRANSMISSION SIMULATOR

1. Turn the ignition off to the lock position.
2. Remove the Ignition Switch Feed fuse from the TIPM.

CAUTION: Removal of the Ignition Switch Feed fuse from the TIPM will prevent the vehicle from being started in gear.

WARNING: The Ignition Switch Feed fuse must be removed from the TIPM. Failure to do so can result in possible serious or fatal injury.

3. Install the Transmission Simulator 8333A and the Electronic Transmission Adapter kit.
4. Ignition on, engine not running.
5. With the Transmission Simulator, set the "Input/Output Speed" switch to "ON" and the rotary switch to the "3000/1250" position.
6. With the scan tool, read the Input and Output rpm.

Does the Input speed read 3000 rpm and the Output speed read 1250 rpm ± 50 rpm?

Yes

- Replace the Input Speed Sensor in accordance with the Service Information.
- Perform the 42RLE TRANSMISSION VERIFICATION TEST. (Refer to 28 - DTC-Based Diagnostics/MODULE, Powertrain Control (PCM) - Standard Procedure).

No

- Go To 3

3. CHECK THE (T52) INPUT SPEED SENSOR SIGNAL CIRCUIT FOR AN OPEN

1. Turn the ignition off to the lock position.
2. Disconnect the PCM C4 harness connector.
3. Disconnect the Input Speed Sensor harness connector.

CAUTION: Do not probe the PCM harness connectors. Probing the PCM harness connectors will damage the PCM terminals resulting in poor terminal to pin connection. Install the Kit, NGC, 38 Position 8815A to perform diagnosis.

4. Measure the resistance of the (T52) Input Speed Sensor Signal circuit between the Input Speed Sensor harness connector and the appropriate terminal of the PCM Pinout Box 8815A.

Is the resistance above 5.0 Ohms?

Yes

- Repair the (T52) Input Speed Sensor Signal circuit for an open.
- Perform the 42RLE TRANSMISSION VERIFICATION TEST. (Refer to 28 - DTC-Based Diagnostics/MODULE, Powertrain Control (PCM) - Standard Procedure).

No

- Go To 4

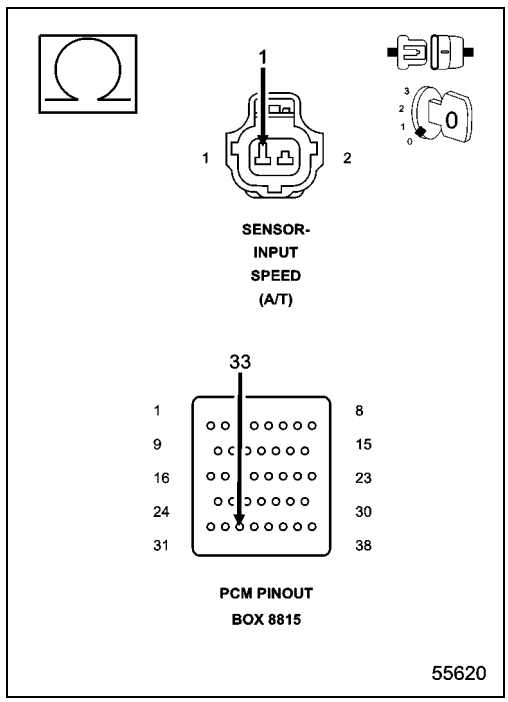

4. CHECK THE (T13) SPEED SENSOR GROUND CIRCUIT FOR AN OPEN

1. Measure the resistance of the (T13) Speed Sensor Ground circuit between the Input Speed Sensor harness connector and the appropriate terminal of the PCM Pinout Box 8815A.

Is the resistance above 5.0 Ohms?

Yes

- Repair the (T13) Speed Sensor Ground circuit for an open.
- Perform the 42RLE TRANSMISSION VERIFICATION TEST. (Refer to 28 - DTC-Based Diagnostics/MODULE, Powertrain Control (PCM) - Standard Procedure).

No

- Go To 5

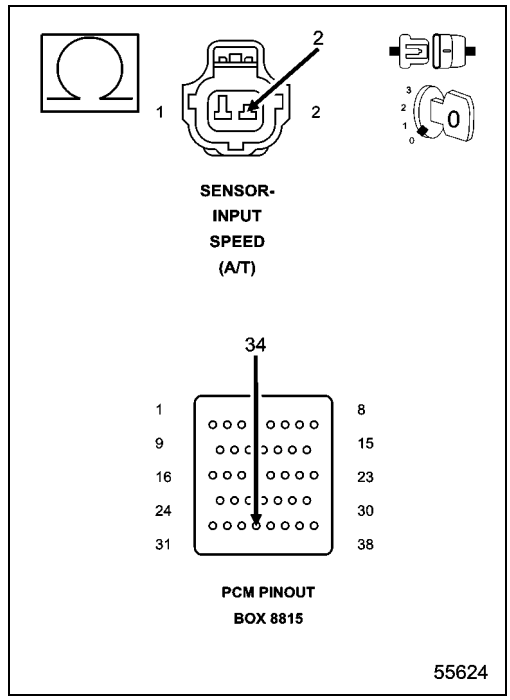

5. CHECK THE (T52) INPUT SPEED SENSOR SIGNAL CIRCUIT FOR A SHORT TO GROUND

1. Measure the resistance between ground and the (T52) Input Speed Sensor Signal circuit.

Is the resistance Below 5.0 Ohms?

Yes

- Repair the (T52) Input Speed Sensor Signal circuit for a short to ground.
- Perform the 42RLE TRANSMISSION VERIFICATION TEST. (Refer to 28 - DTC-Based Diagnostics/MODULE, Powertrain Control (PCM) - Standard Procedure).

No

- Go To 6

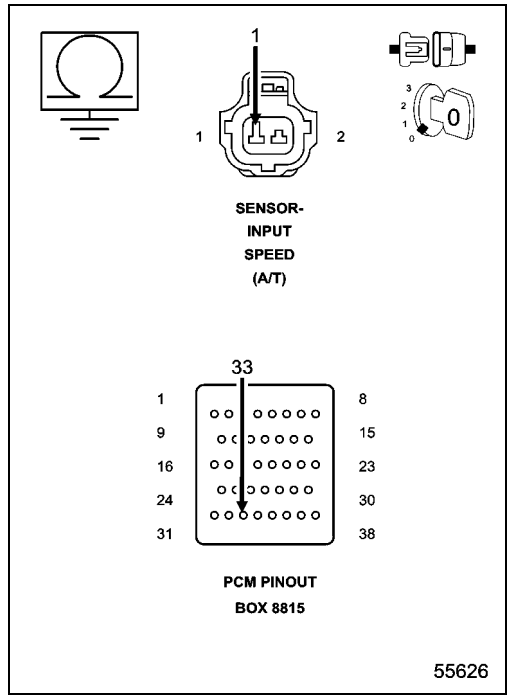

6. CHECK THE (T52) INPUT SPEED SENSOR SIGNAL CIRCUIT FOR A SHORT TO VOLTAGE

1. Disconnect the Output Speed Sensor harness connector.
2. Ignition on, engine not running.
3. With the scan tool under TIPM, actuate the Transmission.
4. Measure the voltage of the (T52) Input Speed Sensor Signal circuit.

Is the voltage above 0.5 volt?

Yes

- Repair the (T52) Input Speed Sensor Signal circuit for a short to voltage.
- Perform the 42RLE TRANSMISSION VERIFICATION TEST. (Refer to 28 - DTC-Based Diagnostics/MODULE, Powertrain Control (PCM) - Standard Procedure).

No

- Go To 7

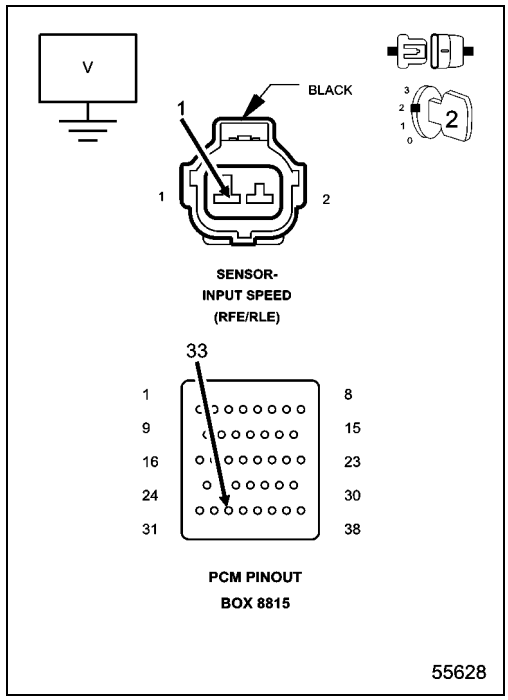

7. CHECK THE (T13) SPEED SENSOR GROUND CIRCUIT FOR A SHORT TO VOLTAGE

1. With the scan tool under TIPM, actuate the Transmission.
2. Measure the voltage of the (T13) Speed Sensor Ground circuit.

Is the voltage above 0.5 of a volt?

Yes

- Repair the (T13) Speed Sensor Ground circuit for a short to voltage.
- Perform the 42RLE TRANSMISSION VERIFICATION TEST. (Refer to 28 - DTC-Based Diagnostics/MODULE, Powertrain Control (PCM) - Standard Procedure).

No

- Using the schematics as a guide, check the Powertrain Control Module (PCM) terminals for corrosion, damage, or terminal push out. Pay particular attention to all power and ground circuits. Check for Service Information Tune-ups or Service Bulletins for any possible causes that may apply. If no problems are found, replace and program the PCM in accordance with the Service Information. With the scan tool, perform Quick Learn.
- Perform the 42RLE TRANSMISSION VERIFICATION TEST. (Refer to 28 - DTC-Based Diagnostics/MODULE, Powertrain Control (PCM) - Standard Procedure).

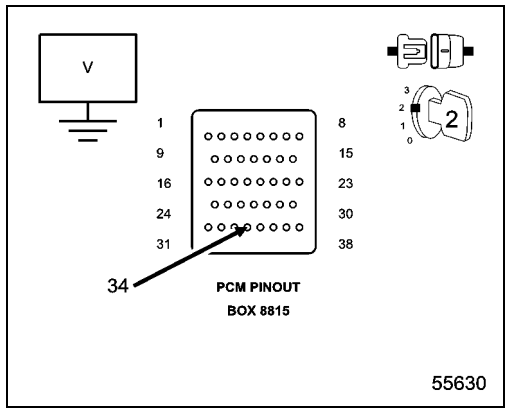

8. CHECK THE WIRING AND CONNECTORS

1. The conditions necessary to set the DTC are not present at this time.
2. Using the schematics as a guide, inspect the wiring and connectors specific to this circuit.
3. Wiggle the wiring and connectors while checking for shorted and open circuits.
4. With the scan tool , check the Event Data to help identify the conditions in which the DTC was set.
5. Check for Service Information Tune-ups or Service Bulletins for any possible causes that may apply.

Were there any problems found?

Yes

- Repair as necessary.
- Perform the 42RLE TRANSMISSION VERIFICATION TEST. (Refer to 28 - DTC-Based Diagnostics/MODULE, Powertrain Control (PCM) - Standard Procedure).

No

- Test Complete.

P0721-OUTPUT SPEED SENSOR CIRCUIT PERFORMANCE

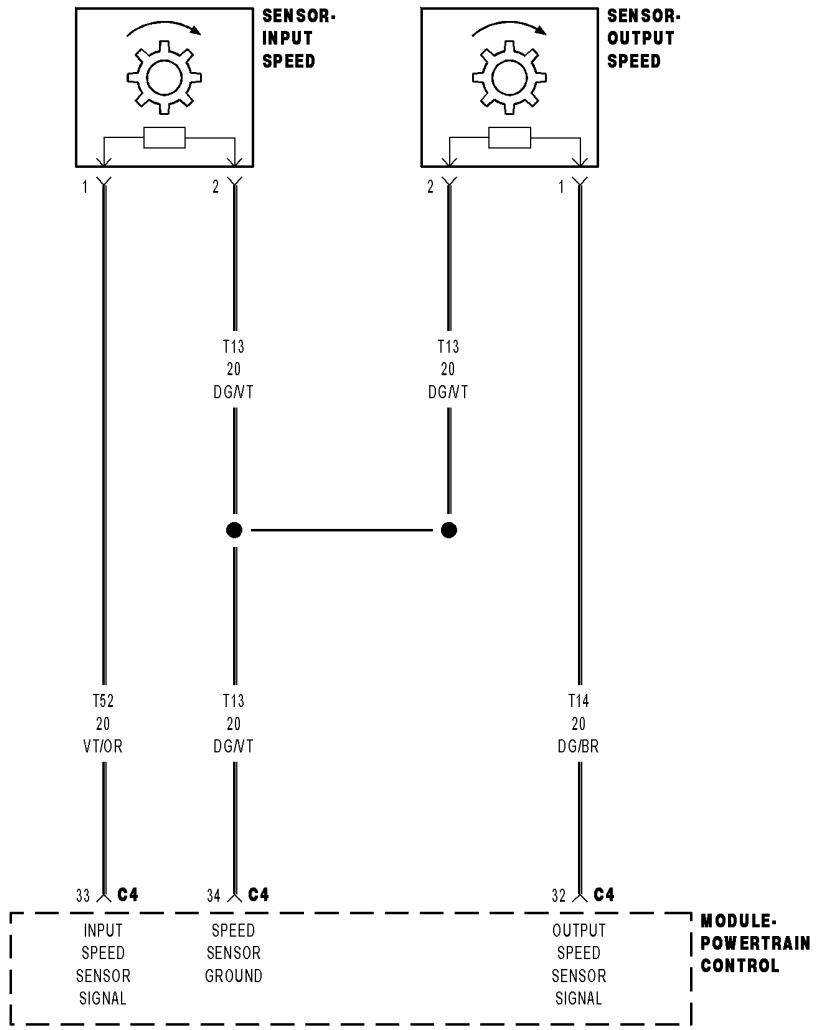

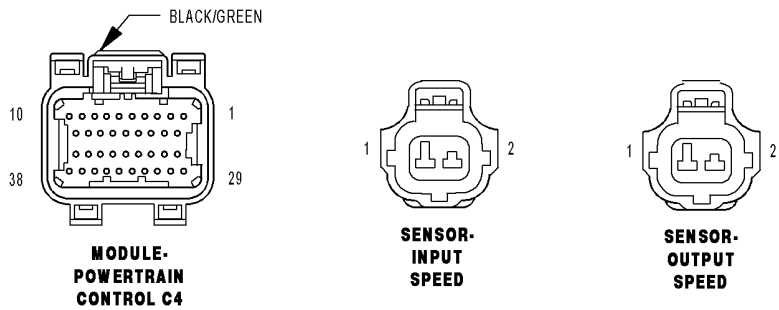

814AE032

For a complete wiring diagram, **refer to the Wiring Information**.

Theory of Operation

The transmission system uses two speed sensors, one to measure input rpm and one to measure output rpm. These inputs are essential for proper transmission operation. Therefore, the integrity of this data is verified through system checks.

- **When Monitored:**
  The transmission gear ratio is monitored continuously while the transmission is in gear.
- **Set Condition:**
  If there is an excessive change in the Output rpm in any gear.

Possible Causes
(T14) OUTPUT SPEED SENSOR SIGNAL CIRCUIT OPEN
(T13) SPEED SENSOR GROUND CIRCUIT OPEN
(T14) OUTPUT SPEED SENSOR SIGNAL CIRCUIT SHORT TO GROUND
(T14) OUTPUT SPEED SENSOR SIGNAL CIRCUIT SHORT TO VOLTAGE
(T13) SPEED SENSOR GROUND CIRCUIT SHORT TO VOLTAGE
OUTPUT SPEED SENSOR
POWERTRAIN CONTROL MODULE

Always perform the Pre-Diagnostic Troubleshooting procedure before proceeding. (Refer to 28 - DTC-Based Diagnostics/MODULE, Powertrain Control (PCM) - Standard Procedure)

1. CHECK IF THE DTC IS CURRENT

1. Start the engine in park.
2. Raise the drive wheels off of the ground.

WARNING: Properly support the vehicle.

3. Firmly apply the brakes and place the transmission selector in drive.

WARNING: Be sure to keep hands and feet clear of rotating wheels.

4. Release the brakes and allow the drive wheels to spin freely.

NOTE: The drive wheels must be turning at this point.

5. With the scan tool, read the Output rpm

Is the Output rpm below 100?

Yes

- Go To 2

No

- Go To 8

2. CHECK THE PCM AND WIRING USING THE TRANSMISSION SIMULATOR

1. Turn the ignition off to the lock position.
2. Remove the Ignition Switch Feed fuse from the TIPM.

CAUTION: Removal of the Ignition Switch Feed fuse from the TIPM will prevent the vehicle from being started in gear.

WARNING: The Ignition Switch Feed fuse must be removed from the TIPM. Failure to do so can result in possible serious or fatal injury.

3. Install the Transmission Simulator, Miller tool #8333A and the Electronic Transmission Adapter kit.
4. Ignition on, engine not running.
5. With the Transmission Simulator, set the "Input/Output Speed" switch to "ON" and the rotary switch to the "3000/1250" position.
6. With the scan tool , read the Input and Output rpm.

Does the Input rpm read 3000 and the Output rpm read 1250 (within 50 rpm)?

Yes

- Replace the Output Speed Sensor in accordance with the Service Information.
- Perform 42RLE TRANSMISSION VERIFICATION TEST. (Refer to 28 - DTC-Based Diagnostics/MODULE, Powertrain Control (PCM) - Standard Procedure)

No

- Go To 3

3. CHECK THE (T14) OUTPUT SPEED SENSOR SIGNAL CIRCUIT FOR AN OPEN

1. Turn the ignition off to the lock position.
2. Disconnect the PCM C4 harness connector.
3. Disconnect the Output Speed Sensor harness connector.

NOTE: Check connectors - Clean/repair as necessary.

CAUTION: Do not probe the PCM harness connectors. Probing the PCM harness connectors will damage the PCM terminals resulting in poor terminal to pin connection. Install the Kit, NGC, 38 Position 8815A to perform diagnosis.

4. Measure the resistance of the (T14) Output Speed Sensor Signal circuit between the Output Speed Sensor harness connector and the appropriate terminal of Miller tool #8815A.

Is the resistance above 5.0 ohms?

Yes

- Repair the (T14) Output Speed Sensor Signal circuit for an open.
- Perform 42RLE TRANSMISSION VERIFICATION TEST. (Refer to 28 - DTC-Based Diagnostics/MODULE, Powertrain Control (PCM) - Standard Procedure)

No

- Go To 4

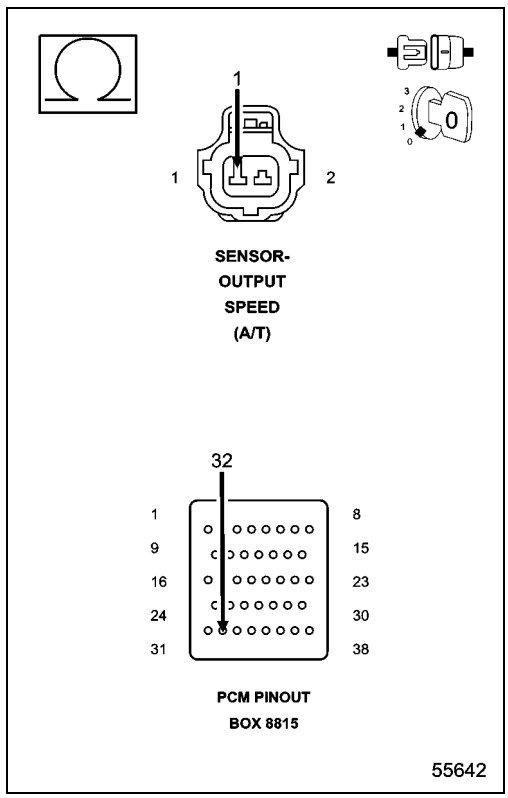

4. CHECK THE (T13) SPEED SENSOR GROUND CIRCUIT FOR AN OPEN

1. Measure the resistance of the Speed Sensor Ground circuit between the Output Speed Sensor harness connector and the appropriate terminal of Miller tool #8815A.

Is the resistance above 5.0 ohms?

Yes

- Repair the (T13) Speed Sensor Ground circuit for an open.
- Perform 42RLE TRANSMISSION VERIFICATION TEST. (Refer to 28 - DTC-Based Diagnostics/MODULE, Powertrain Control (PCM) - Standard Procedure)

No

- Go To 5

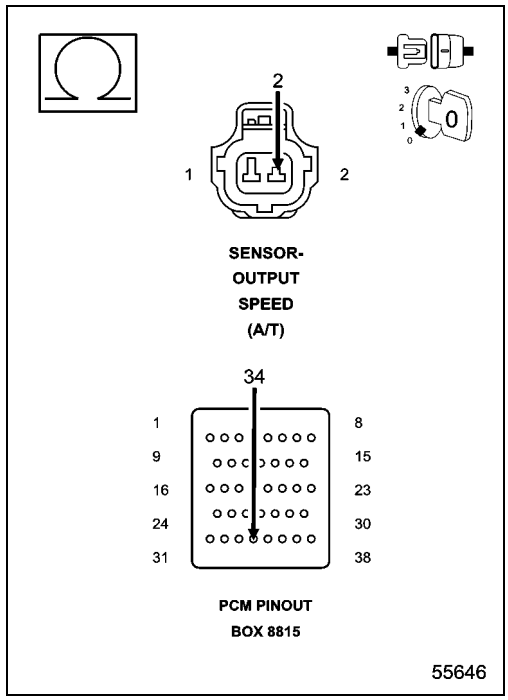

5. CHECK THE (T14) OUTPUT SPEED SENSOR SIGNAL CIRCUIT FOR A SHORT TO GROUND

1. Measure the resistance between ground and the (T14) Output Speed Sensor Signal circuit.

Is the resistance below 5.0 ohms?

Yes

- Repair the (T14) Output Speed Sensor Signal circuit for a short to ground.
- Perform 42RLE TRANSMISSION VERIFICATION TEST. (Refer to 28 - DTC-Based Diagnostics/MODULE, Powertrain Control (PCM) - Standard Procedure)

No

- Go To 6

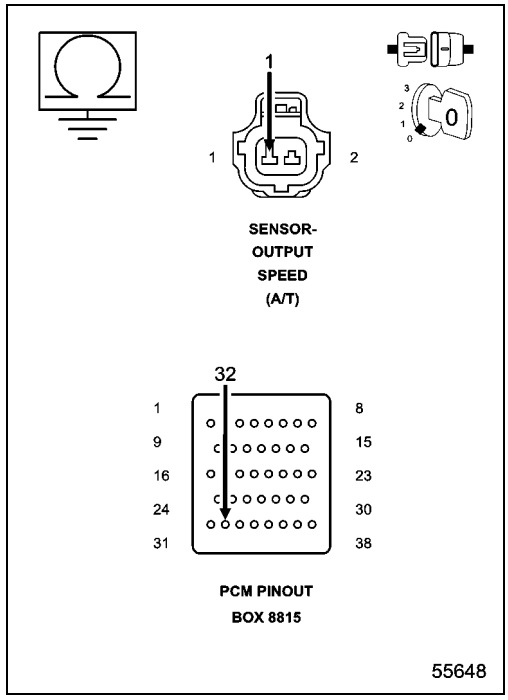

6. CHECK THE (T14) OUTPUT SPEED SENSOR SIGNAL CIRCUIT FOR A SHORT TO VOLTAGE

1. Ignition on, engine not running.
2. With the scan tool under TIPM, actuate the Transmission.
3. Measure the voltage of the (T14) Output Speed Sensor Signal circuit.

Is the voltage above 0.5 volt?

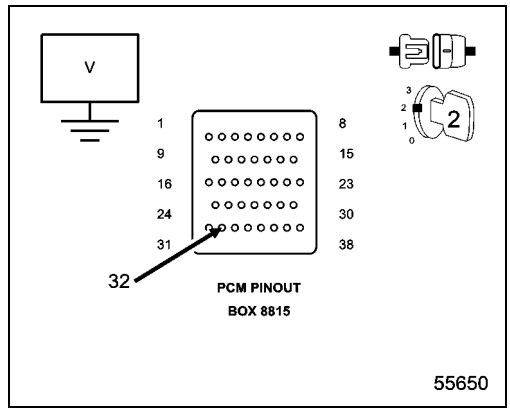

Yes

- Repair the (T14) Output Speed Sensor Signal circuit for a short to voltage.
- Perform 42RLE TRANSMISSION VERIFICATION TEST. (Refer to 28 - DTC-Based Diagnostics/MODULE, Powertrain Control (PCM) - Standard Procedure)

No

- Go To 7

7. CHECK THE (T13) SPEED SENSOR GROUND CIRCUIT FOR A SHORT TO VOLTAGE

1. With the scan tool under TIPM, actuate the Transmission.
2. Measure the voltage of the (T13) Speed Sensor Ground circuit.

Is the voltage above 0.5 volts?

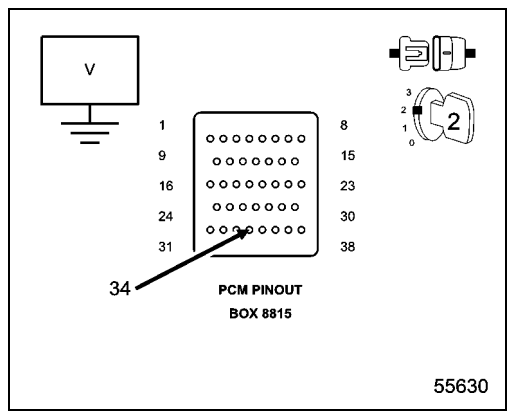

Yes

- Repair the (T13) Speed Sensor Ground circuit for a short to voltage.
- Perform 42RLE TRANSMISSION VERIFICATION TEST. (Refer to 28 - DTC-Based Diagnostics/MODULE, Powertrain Control (PCM) - Standard Procedure)

No

- Using the schematics as a guide, check the Powertrain Control Module (PCM) terminals for corrosion, damage, or terminal push out. Pay particular attention to all power and ground circuits. Check for Service Information Tune-ups or Service Bulletins for any possible causes that may apply. If no problems are found, replace and program the PCM in accordance with the Service Information. With the scan tool, perform Quick Learn.
- Perform 42RLE TRANSMISSION VERIFICATION TEST. (Refer to 28 - DTC-Based Diagnostics/MODULE, Powertrain Control (PCM) - Standard Procedure)

8. CHECK THE WIRING AND CONNECTORS

1. The conditions necessary to set the DTC are not present at this time.
2. Using the schematics as a guide, inspect the wiring and connectors specific to this circuit.
3. Wiggle the wiring and connectors while checking for shorted and open circuits.
4. With the scan tool , check the Event Data to help identify the conditions in which the DTC was set.
5. Check for Service Information Tune-ups or Service Bulletins for any possible causes that may apply.

Were there any problems found?

Yes

- Repair as necessary.
- Perform 42RLE TRANSMISSION VERIFICATION TEST. (Refer to 28 - DTC-Based Diagnostics/MODULE, Powertrain Control (PCM) - Standard Procedure)

No

- Test Complete.

■ P0726-ENGINE SPEED INPUT CIRCUIT RANGE/PERFORMANCE

For a complete wiring diagram, **refer to the Wiring Information**.

Theory of Operation

The PCM uses a dual port RAM internal to the controller to send the engine speed signal to the Transmission Control System. The calculated engine RPM is compared to a minimum and maximum value. If the PCM interprets this signal to be out of range when the engine is running the code is set. The MIL illuminates after 10 seconds of vehicle operation and the transmission system defaults to limp-in mode.

- **When Monitored:**
  Whenever the engine is running.
- **Set Condition:**
  The Engine rpm is less than 390 or greater than 8000 for more than 2 seconds while the engine is running.

Possible Causes
ENGINE DTCS PRESENT
POWERTRAIN CONTROL MODULE

Always perform the Pre-Diagnostic Troubleshooting procedure before proceeding. (Refer to 28 - DTC-Based Diagnostics/MODULE, Powertrain Control (PCM) - Standard Procedure)

1. CHECK IF THE DTC IS CURRENT

1. Start the engine.

NOTE: This DTC is not a Transmission Input Speed Sensor DTC.

2. With the scan tool, read DTCs.

Is the status Active or is the Starts Since Set counter set at 0 for this DTC ?

Yes

- Go To 2

No

- Go To 3

2. CHECK IF ENGINE DTCS ARE PRESENT

1. With the scan tool, read engine DTCs.

Are there any engine DTCs present?

Yes

- Refer to DTC Based Diagnostics and perform the appropriate diagnostic procedure.
- Perform 42RLE TRANSMISSION VERIFICATION TEST. (Refer to 28 - DTC-Based Diagnostics/MODULE, Powertrain Control (PCM) - Standard Procedure)

No

- Using the schematics as a guide, check the Powertrain Control Module (PCM) terminals for corrosion, damage, or terminal push out. Pay particular attention to all power and ground circuits. Check for Service Information Tune-ups or Service Bulletins for any possible causes that may apply. If no problems are found, replace and program the PCM in accordance with the Service Information. With the scan tool, perform Quick Learn.
- Perform 42RLE TRANSMISSION VERIFICATION TEST. (Refer to 28 - DTC-Based Diagnostics/MODULE, Powertrain Control (PCM) - Standard Procedure)

3. CHECK THE WIRING AND CONNECTORS

1. The conditions necessary to set the DTC are not present at this time.
2. Using the schematics as a guide, inspect the wiring and connectors specific to this circuit.
3. Wiggle the wiring and connectors while checking for shorted and open circuits.
4. With the scan tool, check the Event Data to help identify the conditions in which the DTC was set.
5. Check for Service Information Tune-ups or Service Bulletins for any possible causes that may apply.

Were there any problems found?

Yes

- Repair as necessary.
- Perform 42RLE TRANSMISSION VERIFICATION TEST. (Refer to 28 - DTC-Based Diagnostics/MODULE, Powertrain Control (PCM) - Standard Procedure)

No

- Test Complete.

P0731-GEAR RATIO ERROR IN 1ST

For a complete wiring diagram, **refer to the Wiring Information**.

Theory of Operation

The transmission system uses two speed sensors, one to measure input rpm and one to measure output rpm. These inputs are essential for proper transmission operation. Therefore, the integrity of this data is verified through data checks. When in gear, if the gear ratio does not compare to a known gear ratio, the corresponding gear ratio error trouble code is set. The transmission will go into limp-in mode after four gear ratio error events occur in a given driving cycle.

- **When Monitored:**
  The Transmission gear ratio is monitored continuously while the transmission is in gear.
- **Set Condition:**
  If the ratio of the Input rpm to the Output rpm does not match the current gear ratio when compared to the known gear ratio.

Possible Causes
RELATED TRANSMISSION DTCS PRESENT
INPUT OR OUTPUT SPEED SENSOR ERRORS
INTERMITTENT GEAR RATIO ERRORS
INTERNAL TRANSMISSION

Always perform the 42RLE Pre-Diagnostic Troubleshooting procedure before proceeding. (Refer to 28 - DTC-Based Diagnostics/MODULE, Powertrain Control (PCM) - Standard Procedure).

1. CHECK FOR RELATED TRANSMISSION DTCS

1. With the scan tool, read Transmission DTCs.
2. If any of these DTCs are present, perform their respective tests first.

Are there any Loss of Prime, Line Pressure Sensor and/or Speed Sensor DTCs present?

Yes

- Refer to DTC Based Diagnostics and perform the appropriate diagnostic procedure. If any of these DTCs are present, they will cause a gear ratio error. Perform the test for Loss of Prime first if it is present.

No

- Go To 2

2. CHECK TO SEE IF P0731 IS CURRENT

1. With the scan tool, perform the 1st gear clutch test. Follow the instructions on the scan tool.
2. Increase the throttle angle or TPS Degree to 30° for no more than a few seconds.

CAUTION: Do not overheat the transmission.

Did the Clutch Test pass, Input Speed remain at zero?

Yes

- Go To 3

No

- Repair internal Transmission as necessary. Check all of the components related to the UD and LR clutches. Inspect the Oil Pump and repair or replace as necessary. Refer to the Service Information for the proper repair procedures.
- Perform the 42RLE TRANSMISSION VERIFICATION TEST. (Refer to 28 - DTC-Based Diagnostics/MODULE, Powertrain Control (PCM) - Standard Procedure).

3. CHECK FOR INTERMITTENT OPERATION

1. The conditions to set this DTC are not current at this time.
2. Check the gearshift linkage adjustment.
3. Gear ratio DTCs can be set by problems in the Input and Output Speed Sensor circuits. If the vehicle passes the Clutch Test and still sets Gear Ratio DTC, check the Speed Sensors for proper operation.
4. Remove the Ignition Switch Feed fuse from the TIPM.

CAUTION: Removal of the Ignition Switch Feed fuse from the TIPM will prevent the vehicle from being started in gear.

WARNING: The Ignition Switch Feed fuse must be removed from the TIPM. Failure to do so can result in possible serious or fatal injury.

5. Install the Transmission Simulator 8333A and the Electronic Transmission Adapter kit.
6. Check the wiring and connectors for the Speed Sensors for a good connection, then perform a wiggle test using the Transmission Simulator.
7. This DTC can also be set under extreme temperature conditions. This is usually caused by an internal problem. Verify if the problem is only experienced under extreme hot or cold conditions.
8. With the scan tool, check the Event Data to help identify the conditions in which the DTC was set.
9. Check for Service Information Tune-ups or Service Bulletins for any possible causes that may apply.

Were there any problems found?

Yes

- Repair as necessary.
- Perform the 42RLE TRANSMISSION VERIFICATION TEST. (Refer to 28 - DTC-Based Diagnostics/MODULE, Powertrain Control (PCM) - Standard Procedure).

No

- Test Complete.

■ P0732-GEAR RATIO ERROR IN 2ND

For a complete wiring diagram, **refer to the Wiring Information**.

Theory of Operation

The transmission system uses two speed sensors, one to measure input rpm and one to measure output rpm. These inputs are essential for proper transmission operation. Therefore, the integrity of this data is verified through data checks. When in gear, if the gear ratio does not compare to a known gear ratio, the corresponding gear ratio error trouble code is set. The transmission will go into limp-in mode after four gear ratio error events occur in a given driving cycle.

- **When Monitored:**
  The Transmission gear ratio is monitored continuously while the transmission is in gear.
- **Set Condition:**
  If the ratio of the Input rpm to the Output rpm does not match the current gear ratio when compared to the known gear ratio.

Possible Causes
RELATED TRANSMISSION DTCS PRESENT
INPUT OR OUTPUT SPEED SENSOR ERRORS
TRANSMISSION SOLENOID/PRESSURE SWITCH ASSEMBLY
INTERMITTENT GEAR RATIO ERRORS
INTERNAL TRANSMISSION

Always perform the Pre-Diagnostic Troubleshooting procedure before proceeding. (Refer to 28 - DTC-Based Diagnostics/MODULE, Powertrain Control (PCM) - Standard Procedure).

1. CHECK IF RELATED TRANSMISSION DTCS ARE PRESENT

1. With the scan tool, read Transmission DTCs.
2. If any of these DTCs are present, perform their respective tests first.

Are there any Loss of Prime, Line Pressure Sensor and/or Speed Sensor DTCs present?

Yes

- Refer to DTC Based Diagnostics and perform the appropriate diagnostic procedure. If any of these DTCs are present, they will cause a gear ratio error. Perform the test for Loss of Prime first if it is present.

No

- Go To 2

2. CHECK IF THE DTC IS CURRENT

1. With the scan tool, perform the 2nd gear clutch test. Follow the instructions on the scan tool.
2. Increase the throttle angle or TPS Degree to 30° for no more than a few seconds.

CAUTION: Do not overheat the transmission.

Did the Clutch Test pass, Input Speed remain at zero?

Yes

- Go To 3

No

- Go To 4

3. CHECK FOR INTERMITTENT OPERATION

1. The conditions to set this DTC are not current at this time.
2. Check the gearshift linkage adjustment.
3. Gear ratio DTCs can be set by problems in the Input and Output Speed Sensor circuits. If the vehicle passes the Clutch Test and still sets Gear Ratio DTC, check the Speed Sensors for proper operation.
4. Remove the Ignition Switch Feed fuse from the TIPM.

CAUTION: Removal of the Ignition Switch Feed fuse from the TIPM will prevent the vehicle from being started in gear.

WARNING: The Ignition Switch Feed fuse must be removed from the TIPM. Failure to do so can result in possible serious or fatal injury.

5. Install the Transmission Simulator 8333A and the Electronic Transmission Adapter kit.
6. Check the wiring and connectors to the Speed Sensors for a good connection, then perform a wiggle test using the Transmission Simulator.
7. This DTC can also be set under extreme temperature conditions. This is usually caused by an internal problem. Verify if the problem is only experienced under extreme hot or cold conditions.
8. With the scan tool, check the Event Data to help identify the conditions in which the DTC was set.

Were there any problems found?

Yes

- Repair as necessary.
- Perform the 42RLE TRANSMISSION VERIFICATION TEST. (Refer to 28 - DTC-Based Diagnostics/MODULE, Powertrain Control (PCM) - Standard Procedure).

No

- Test Complete.

4. CHECK FOR RELATED PRESSURE SWITCH DTCS

1. With the scan tool, read Transmission DTCs.

Are the DTCs P0845 and/or P0846 present also?

Yes

- Replace the Transmission Solenoid/Pressure Switch Assembly in accordance with the Service Information.
- Perform the 42RLE TRANSMISSION VERIFICATION TEST. (Refer to 28 - DTC-Based Diagnostics/MODULE, Powertrain Control (PCM) - Standard Procedure).

No

- Repair internal Transmission in accordance with the Service Information. Check all of the components related to the UD and 2/4 clutches. Inspect the Oil Pump and repair or replace as necessary.
- Perform the 42RLE TRANSMISSION VERIFICATION TEST. (Refer to 28 - DTC-Based Diagnostics/MODULE, Powertrain Control (PCM) - Standard Procedure).

■ P0733-GEAR RATIO ERROR IN 3RD

For a complete wiring diagram, **refer to the Wiring Information**.

Theory of Operation

The transmission system uses two speed sensors, one to measure input rpm and one to measure output rpm. These inputs are essential for proper transmission operation. Therefore, the integrity of this data is verified through data checks. When in gear, if the gear ratio does not compare to a known gear ratio, the corresponding gear ratio error trouble code is set. The transmission will go into limp-in mode after four gear ratio error events occur in a given driving cycle.

- **When Monitored:**
  The Transmission gear ratio is monitored continuously while the transmission is in gear.
- **Set Condition:**
  If the ratio of the Input rpm to the Output rpm does not match the current gear ratio when compared to the known gear ratio.

Possible Causes
RELATED TRANSMISSION DTCS PRESENT
INPUT OR OUTPUT SPEED SENSOR ERRORS
INTERMITTENT GEAR RATIO ERRORS
TRANSMISSION SOLENOID/PRESSURE SWITCH ASSEMBLY
INTERNAL TRANSMISSION

Always perform the Pre-Diagnostic Troubleshooting procedure before proceeding. (Refer to 28 - DTC-Based Diagnostics/MODULE, Powertrain Control (PCM) - Standard Procedure).

1. CHECK IF RELATED TRANSMISSION DTCS ARE PRESENT

1. With the scan tool, read Transmission DTCs.
2. If any of these DTCs are present, perform their respective tests first.

Are there any Loss of Prime, Line Pressure Sensor and/or Speed Sensor DTCs present?

Yes

- Refer to DTC Based Diagnostics and perform the appropriate diagnostic procedure. If any of these DTCs are present, they will cause a gear ratio error. Perform the test for Loss of Prime first if it is present.
- Perform the 42RLE TRANSMISSION VERIFICATION TEST. (Refer to 28 - DTC-Based Diagnostics/MODULE, Powertrain Control (PCM) - Standard Procedure).

No

- Go To 2

2. CHECK IF THE DTC IS CURRENT

1. With the scan tool, perform the 3rd gear clutch test. Follow the instructions on the scan tool.
2. Increase the throttle angle or TPS Degree to 30° for no more than a few seconds.

CAUTION: Do not overheat the transmission.

Did the Clutch Test pass, Input Speed remain at zero?

Yes

- Go To 3

No

- Go To 4

3. CHECK FOR INTERMITTENT OPERATION

1. The conditions to set this DTC are not current at this time.
2. Check the gearshift linkage adjustment.
3. Gear ratio DTCs can be set by problems in the Input and Output Speed Sensor circuits. If the vehicle passes the Clutch Test and still sets Gear Ratio DTC, check the Speed Sensors for proper operation.
4. Remove the Ignition Switch Feed fuse from the TIPM.

CAUTION: Removal of the Ignition Switch Feed fuse from the TIPM will prevent the vehicle from being started in gear.

WARNING: The Ignition Switch Feed fuse must be removed from the TIPM. Failure to do so can result in possible serious or fatal injury.

5. Install the Transmission Simulator 8333A and the Electronic Transmission Adapter kit.
6. Check the wiring and connectors for the Speed Sensors for a good connection, then perform a wiggle test using the Transmission Simulator.
7. This DTC can also be set under extreme temperature conditions, this is usually caused by an internal problem. Verify if the problem is only experienced under extreme hot or cold conditions.
8. With the scan tool, check the Event Data to help identify the conditions in which the DTC was set.

Were there any problems found?

Yes

- Repair as necessary.
- Perform the 42RLE TRANSMISSION VERIFICATION TEST. (Refer to 28 - DTC-Based Diagnostics/MODULE, Powertrain Control (PCM) - Standard Procedure).

No

- Test Complete.

4. CHECK FOR RELATED PRESSURE SWITCH DTCS

1. With the scan tool, read Transmission DTCs.

Are the DTCs P0870 and/or P0871 present also?

Yes

- Replace the Transmission Solenoid/Pressure Switch Assembly in accordance with the Service Information.
- Perform the 42RLE TRANSMISSION VERIFICATION TEST. (Refer to 28 - DTC-Based Diagnostics/MODULE, Powertrain Control (PCM) - Standard Procedure).

No

- Repair internal Transmission in accordance with the Service Information. Check all of the components related to the UD and O/D clutches. Inspect the Oil Pump and repair or replace as necessary.
- Perform the 42RLE TRANSMISSION VERIFICATION TEST. (Refer to 28 - DTC-Based Diagnostics/MODULE, Powertrain Control (PCM) - Standard Procedure).

■ P0734-GEAR RATIO ERROR IN 4TH

For a complete wiring diagram, **refer to the Wiring Information**.

Theory of Operation

The transmission system uses two speed sensors, one to measure input rpm and one to measure output rpm. These inputs are essential for proper transmission operation. Therefore, the integrity of this data is verified through data checks. When in gear, if the gear ratio does not compare to a known gear ratio, the corresponding gear ratio error trouble code is set. The transmission will go into limp-in mode after four gear ratio error events occur in a given driving cycle.

- **When Monitored:**
  The Transmission gear ratio is monitored continuously while the transmission is in gear.
- **Set Condition:**
  If the ratio of the Input rpm to the Output rpm does not match the current gear ratio when compared to the known gear ratio.

Possible Causes
RELATED TRANSMISSION DTCS PRESENT
INPUT OR OUTPUT SPEED SENSOR ERRORS
INTERMITTENT GEAR RATIO ERRORS
TRANSMISSION SOLENOID/PRESSURE SWITCH ASSEMBLY
INTERNAL TRANSMISSION

Always perform the Pre-Diagnostic Troubleshooting procedure before proceeding. (Refer to 28 - DTC-Based Diagnostics/MODULE, Powertrain Control (PCM) - Standard Procedure).

1. CHECK IF RELATED TRANSMISSION DTCS ARE PRESENT

1. Using the scan tool, read Transmission DTCs.
2. If any of these DTCs are present, perform their respective tests first.

Are there any Loss of Prime, Line Pressure Sensor and/or Speed Sensor DTCs present?

Yes

- Refer to DTC Based Diagnostics and perform the appropriate diagnostic procedure. If any of these DTCs are present, they will cause a gear ratio error. Perform the test for Loss of Prime first if it is present.

No

- Go To 2

2. CHECK IF THE DTC IS CURRENT

1. Using the scan tool, perform the 4th (2nd and 3rd) gear clutch test. Follow the instructions on the scan tool.

NOTE: Due to that there is no actual 4th gear clutch test, to check the OD and 2/4 clutches perform the 2nd and 3rd gear clutch test.

2. Increase the throttle angle or TPS Degree to 30° for no more than a few seconds.

CAUTION: Do not overheat the transmission.

Did both Clutch Test pass, Input Speed remain at zero?

Yes

- Go To 3

No

- Go To 4

3. CHECK FOR INTERMITTENT OPERATION

1. The conditions to set this DTC are not current at this time.
2. Check the gearshift linkage adjustment.
3. Gear ratio DTCs can be set by problems in the Input and Output Speed Sensor circuits. If the vehicle passes the Clutch Test and still sets a Gear Ratio DTC, check the Speed Sensors for proper operation.
4. Remove the Ignition Switch Feed fuse from the TIPM.

CAUTION: Removal of the Ignition Switch Feed fuse from the TIPM will prevent the vehicle from being started in gear.

WARNING: The Ignition Switch Feed fuse must be removed from the TIPM. Failure to do so can result in possible serious or fatal injury.

5. Install the Transmission Simulator 8333A and the Electronic Transmission Adapter kit.
6. Check the wiring and connectors for the Speed Sensors for a good connection, then perform a wiggle test using the Transmission Simulator.
7. This DTC can also be set under extreme temperature conditions, this is usually caused by an internal problem. Verify if the problem is only experienced under extreme hot or cold conditions.
8. Using the scan tool, check the Event Data to help identify the conditions in which the DTC was set.
9. Check for Service Information Tune-ups or Service Bulletins for any possible causes that may apply.

Were there any problems found?

Yes

- Repair as necessary.
- Perform the 42RLE TRANSMISSION VERIFICATION TEST. (Refer to 28 - DTC-Based Diagnostics/MODULE, Powertrain Control (PCM) - Standard Procedure).

No

- Test Complete.

4. CHECK FOR RELATED PRESSURE SWITCH DTCS

1. Using the scan tool, read Transmission DTCs.

Are the DTCs P0870 and/or P0871 present also?

Yes

- Replace the Transmission Solenoid/Pressure Switch Assembly in accordance with the Service Information.
- Perform the 42RLE TRANSMISSION VERIFICATION TEST. (Refer to 28 - DTC-Based Diagnostics/MODULE, Powertrain Control (PCM) - Standard Procedure).

No

- Repair internal Transmission in accordance with the Service Information. Check all of the components related to the O/D and 2/4 clutches. Inspect the Oil Pump and repair or replace as necessary.
- Perform the 42RLE TRANSMISSION VERIFICATION TEST. (Refer to 28 - DTC-Based Diagnostics/MODULE, Powertrain Control (PCM) - Standard Procedure).

■ P0736-GEAR RATIO ERROR IN REVERSE

For a complete wiring diagram, **refer to the Wiring Information**.

Theory of Operation

The transmission system uses two speed sensors, one to measure input rpm and one to measure output rpm. These inputs are essential for proper transmission operation. Therefore, the integrity of this data is verified through data checks. When in gear, if the gear ratio does not compare to a known gear ratio, the corresponding gear ratio error trouble code is set. The transmission will go into limp-in mode after four gear ratio error events occur in a given driving cycle.

- **When Monitored:**
  The Transmission gear ratio is monitored continuously while the transmission is in gear.
- **Set Condition:**
  If the ratio of the Input rpm to the Output rpm does not match the current gear ratio when compared to the known gear ratio.

Possible Causes
RELATED TRANSMISSION DTCS PRESENT
INPUT OR OUTPUT SPEED SENSOR ERRORS
INTERMITTENT GEAR RATIO ERRORS
INTERNAL TRANSMISSION

Always perform the Pre-Diagnostic Troubleshooting procedure before proceeding. (Refer to 28 - DTC-Based Diagnostics/MODULE, Powertrain Control (PCM) - Standard Procedure).

1. DETERMINING IF RELATED TRANSMISSION DTCS ARE PRESENT

1. Using the scan tool, read Transmission DTCs.
2. If any of these DTCs are present, perform their respective tests first.

Are there any Loss of Prime, Line Pressure Sensor and/or Speed Sensor DTCs present?

Yes

- Refer to DTC Based Diagnostics and perform the appropriate diagnostic procedure. If any of these DTCs are present, they will cause a gear ratio error. Perform the test for Loss of Prime first if it is present.

No

- Go To 2

2. CHECK TO SEE IF P0731 IS CURRENT

1. Using the scan tool, perform the Reverse gear clutch test. Follow the instructions on the scan tool.
2. Increase the throttle angle or TPS Degree to 30° for no more than a few seconds.

CAUTION: Do not overheat the transmission.

Did the Clutch Test pass, Input Speed remain at zero?

Yes

- Go To 3

No

- Repair internal Transmission in accordance with the Service Information. Check all of the components related to the Reverse and L/R clutches. Inspect the Oil Pump and repair or replace as necessary.
- Perform the 42RLE TRANSMISSION VERIFICATION TEST. (Refer to 28 - DTC-Based Diagnostics/MODULE, Powertrain Control (PCM) - Standard Procedure).

3. CHECK FOR INTERMITTENT OPERATION

1. The conditions to set this DTC are not current at this time.
2. Check the gearshift linkage adjustment.
3. Gear ratio DTCs can be set by problems in the Input and Output Speed Sensor circuits. If the vehicle passes the Clutch Test and still sets Gear Ratio DTC, check the Speed Sensors for proper operation.
4. Remove the Ignition Switch Feed fuse from the TIPM.

CAUTION: Removal of the Ignition Switch Feed fuse from the TIPM will prevent the vehicle from being started in gear.

WARNING: The Ignition Switch Feed fuse must be removed from the TIPM. Failure to do so can result in possible serious or fatal injury.

5. Install the Transmission Simulator 8333A and the Electronic Transmission Adapter kit.
6. Check the wiring and connectors related to the Speed Sensors for a good connection, then perform a wiggle test using the Transmission Simulator.
7. This DTC can also be set under extreme temperature conditions, this is usually caused by an internal problem. Verify if the problem is only experienced under extreme hot or cold conditions.
8. Using the scan tool, check the Event Data to help identify the conditions in which the DTC was set.
9. Check for Service Information Tune-ups or Service Bulletins for any possible causes that may apply.

Were there any problems found?

Yes

- Repair as necessary.
- Perform the 42RLE TRANSMISSION VERIFICATION TEST. (Refer to 28 - DTC-Based Diagnostics/MODULE, Powertrain Control (PCM) - Standard Procedure).

No

- Test Complete.

■ P0740-TCC OUT OF RANGE

For a complete wiring diagram, **refer to the Wiring Information**.

Theory of Operation

When in 2nd, 3rd, or 4th gear, the Torque Converter Clutch (TCC) can be locked or partially locked when certain conditions are met. The TCC piston is electronically modulated by increasing the duty cycle of the LR/TCC solenoid until the torque converter slip difference (difference between engine and turbine speed) is within 60 rpm. Then the LR/TCC solenoid is fully energized (FEMCC / 100% duty cycle). Torque converter slip is monitored in FEMCC to ensure adequate clutch capacity. The transmission will attempt normal EMCC operation (not in limp-in) even after the MIL is illuminated. MIL will illuminate after 5 minutes of accumulated slip in FEMCC.

- **When Monitored:**

  The Torque Converter Clutch (TCC) is in FEMCC or PEMCC, Transmission temperature is hot, Engine temperature is greater than 38° C or 100° F, Transmission Input Speed greater than engine speed, TPS less than 30°, and brake not applied.
- **Set Condition:**

  The TCC is modulated by controlling the duty cycle of the L/R Solenoid until the difference between the Engine rpm and the Transmission Input Speed rpm or duty cycle is within a desired range. The DTC is set after the period of 10 seconds and 3 occurrences of either: FEMCC - with slip greater than 100 rpm or PEMCC - duty cycle greater than 85%.

Possible Causes
RELATED L/R SOLENOID OR PRESSURE SWITCH DTCS PRESENT
INTERNAL TRANSMISSION

Always perform the Pre-Diagnostic Troubleshooting procedure before proceeding. (Refer to 28 - DTC-Based Diagnostics/MODULE, Powertrain Control (PCM) - Standard Procedure)

1. CHECK FOR RELATED DTCS

1. With the scan tool, read DTCs.

Are the DTCs P0750 and/or P0841 present also?

Yes

- Refer to DTC Based Diagnostics and perform the appropriate diagnostic procedure.

No

- Go To 2

2. CHECK IF THE DTC IS CURRENT

1. Ignition on, engine not running.
2. With the scan tool, record and erase DTCs.
3. Drive the vehicle until it is fully warmed up to at least 43° C (110° F).
4. Perform the following step 3 times.
5. Drive the vehicle at 80 km/h (50 mph) and allow 4th gear to engage for at least 10 seconds. Close the throttle, then tip back in until the throttle angle is between 25 and 29 degrees. Note that if you go over 30 degrees, you must back off of the throttle and retry.

Did the TCC engage during any of the attempts?

Yes

- Go To 3

No

- Perform the Hydraulic Pressure test in accordance with the Service Information and repair the internal transmission components and Torque convertor as necessary.
- Perform 42RLE TRANSMISSION VERIFICATION TEST. (Refer to 28 - DTC-Based Diagnostics/MODULE, Powertrain Control (PCM) - Standard Procedure)

3. CHECK THE WIRING AND CONNECTORS

1. The conditions necessary to set the DTC are not present at this time.
2. Using the schematics as a guide, inspect the wiring and connectors specific to this circuit.
3. Wiggle the wiring and connectors while checking for shorted and open circuits.
4. This DTC can also be set under extreme temperature conditions. This is usually caused by an internal problem. Verify if the problem is only experienced under extreme hot or cold conditions.
5. With the scan tool, check the Event Data to help identify the conditions in which the DTC was set.
6. Check for Service Information Tune-ups or Service Bulletins for any possible causes that may apply.

Were there any problems found?

Yes

- Repair as necessary.
- Perform 42RLE TRANSMISSION VERIFICATION TEST. (Refer to 28 - DTC-Based Diagnostics/MODULE, Powertrain Control (PCM) - Standard Procedure)

No

- Test Complete.

P0750-LR SOLENOID CIRCUIT

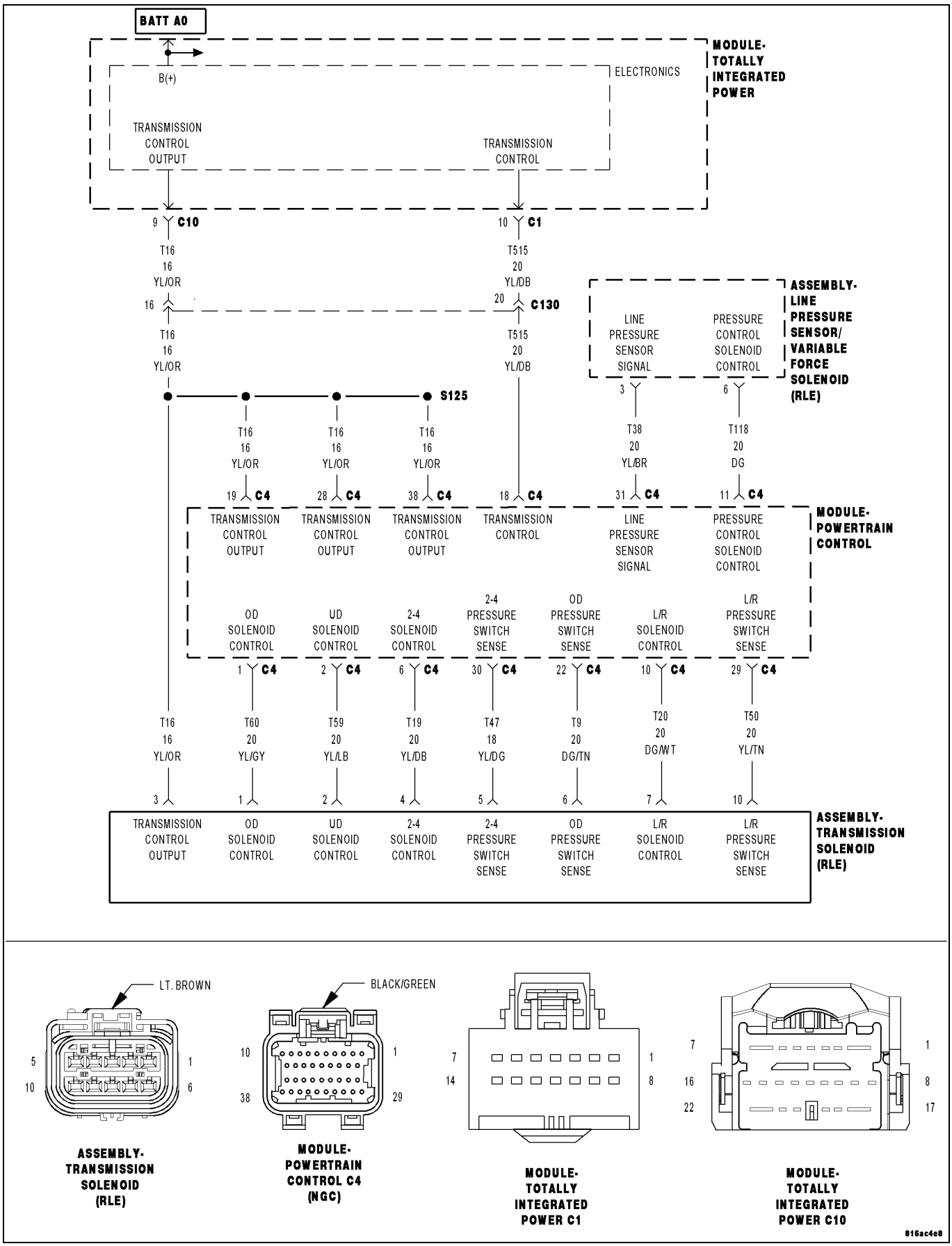

For a complete wiring diagram, **refer to the Wiring Information**.

Theory of Operation

Four solenoids are used to control the friction elements (clutches). The continuity of the solenoids circuits are periodically tested. Each solenoid is turned on or off depending on its current state. An inductive spike should be detected by the PCM during this test. If no spike is detected, the circuit is tested again to verify the failure. In addition to the periodic testing, the solenoid circuits are tested if a gear ratio or pressure switch error occurs. In this case, one failure will result in the appropriate DTC being set. The MIL will illuminate and the transmission goes into neutral, if the DTC is set above 35 km/h (22 mph), Limp-in mode when vehicle speed is below 35 km/h (22 mph).

- **When Monitored:**
  Initially at ignition on, then every 10 seconds thereafter. The solenoids will also be tested immediately after a gear ratio error or pressure switch error is detected.
- **Set Condition:**
  Three consecutive solenoid continuity test failures, or one failure if test is run in response to a gear ratio or pressure switch error.

Possible Causes
RELATED TIPM TCM POWER CONTROL CIRCUIT DTCS PRESENT
(T20) L/R SOLENOID CONTROL CIRCUIT OPEN
(T20) L/R SOLENOID CONTROL CIRCUIT SHORT TO GROUND
(T20) L/R SOLENOID CONTROL CIRCUIT SHORT TO VOLTAGE
TRANSMISSION SOLENOID/PRESSURE SWITCH ASSEMBLY
POWERTRAIN CONTROL MODULE

Always perform the Pre-Diagnostic Troubleshooting procedure before proceeding. (Refer to 28 - DTC-Based Diagnostics/MODULE, Powertrain Control (PCM) - Standard Procedure)

1. DETERMINING IF RELATED TIPM TCM POWER CONTROL CIRCUIT DTCS PRESENT

1. With the scan tool, read TIPM DTCs.

Are there any TIPM TCM Power Control Circuit DTCs present also?

Yes

- Refer to DTC Based Diagnostics and perform the appropriate diagnostic procedure.

No

- Go To 2

2. CHECK IF THE DTC IS CURRENT

1. With the scan tool, read DTCs.

Is the status Active or is Starts Since Set counter set at 0 for this DTC?

Yes

- Go To 3

No

- Go To 8

3. CHECK THE PCM AND WIRING USING THE TRANSMISSION SIMULATOR

1. Turn the ignition off to the lock position.
2. Remove the Ignition Switch Feed fuse from the TIPM.

CAUTION: Removal of the Ignition Switch Feed fuse from the TIPM will prevent the vehicle from being started in gear.

WARNING: The Ignition Switch Feed fuse must be removed from the TIPM. Failure to do so can result in possible serious or fatal injury.

3. Install the Transmission Simulator, Miller tool #8333A and the Electronic Transmission Adapter kit.
4. Ignition on, engine not running.
5. With the scan tool, actuate the L/R Solenoid.
6. Monitor the L/R Solenoid LED on the Transmission Simulator.

Did the L/R Solenoid LED on the Transmission Simulator blink on and off during actuation?

Yes

- Go To 4

No

- Go To 5

4. CHECK WIRING USING THE TRANSMISSION SIMULATOR

1. With the scan tool, continue to actuate the L/R Solenoid.
2. While monitoring the L/R Solenoid LED on the Transmission Simulator, wiggle the related wiring harness and connectors.

Did the L/R Solenoid LED on the Transmission Simulator continue to blink on and off during the wiggle test?

Yes

- Replace the Transmission Solenoid/Pressure Switch Assembly in accordance with the Service Information.
- Perform 42RLE TRANSMISSION VERIFICATION TEST. (Refer to 28 - DTC-Based Diagnostics/MODULE, Powertrain Control (PCM) - Standard Procedure)

No

- Repair wiring or connectors as necessary.
- Perform 42RLE TRANSMISSION VERIFICATION TEST. (Refer to 28 - DTC-Based Diagnostics/MODULE, Powertrain Control (PCM) - Standard Procedure)

5. CHECK THE (T20) L/R SOLENOID CONTROL CIRCUIT FOR AN OPEN

1. Turn the ignition off to the lock position.
2. Disconnect the PCM C4 harness connector.
3. Disconnect the Transmission Solenoid/Pressure Switch Assembly harness connector.

CAUTION: Do not probe the PCM harness connectors. Probing the PCM harness connectors will damage the PCM terminals resulting in poor terminal to pin connection. Install the Kit, NGC, 38 Position 8815A to perform diagnosis.

4. Measure the resistance of the (T20) L/R Solenoid Control circuit between the Solenoid/Pressure Switch Assembly harness connector and the appropriate terminal of Miller tool #8815A.

Is the resistance above 5.0 ohms?

Yes

- Repair the (T20) L/R Solenoid Control circuit for an open.
- Perform 42RLE TRANSMISSION VERIFICATION TEST. (Refer to 28 - DTC-Based Diagnostics/MODULE, Powertrain Control (PCM) - Standard Procedure)

No

- Go To 6

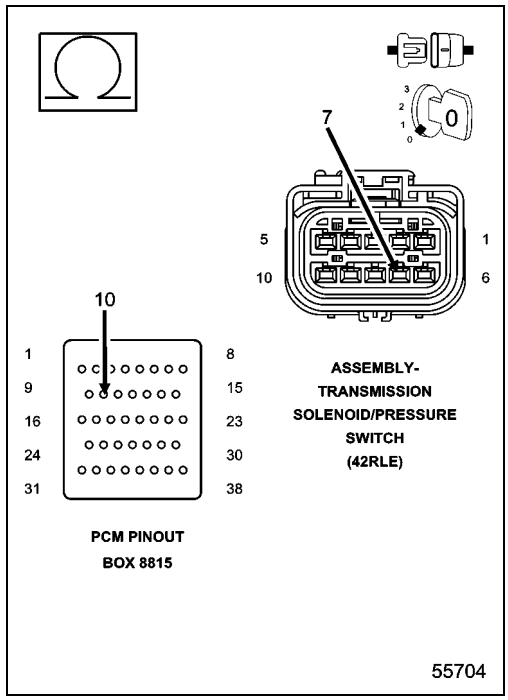

6. CHECK THE (T20) L/R SOLENOID CONTROL CIRCUIT FOR A SHORT TO GROUND

1. Measure the resistance between ground and the (T20) L/R Solenoid Control circuit.

Is the resistance below 5.0 ohms?

Yes

- Repair the (T20) L/R Solenoid Control circuit for a short to ground.
- Perform 42RLE TRANSMISSION VERIFICATION TEST. (Refer to 28 - DTC-Based Diagnostics/MODULE, Powertrain Control (PCM) - Standard Procedure)

No

- Go To 7

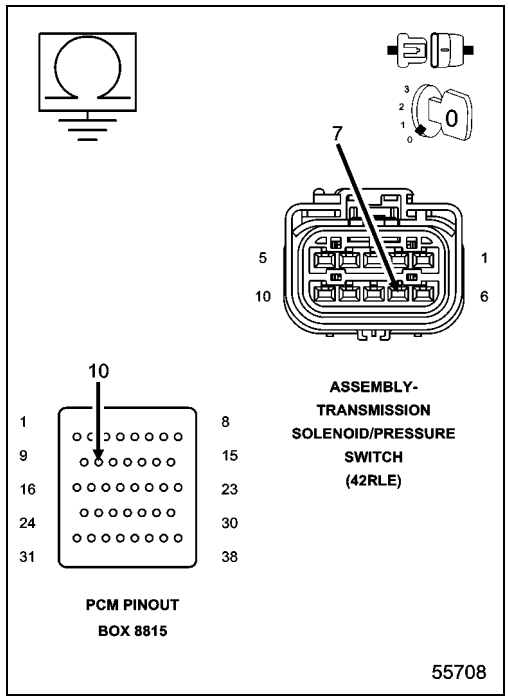

7. CHECK THE (T20) L/R SOLENOID CONTROL CIRCUIT FOR A SHORT TO VOLTAGE

1. Ignition on, engine not running.
2. With the scan tool under TIPM, actuate the Transmission.
3. Measure the voltage of the (T20) L/R Solenoid Control circuit.

Is the voltage above 0.5 volts?

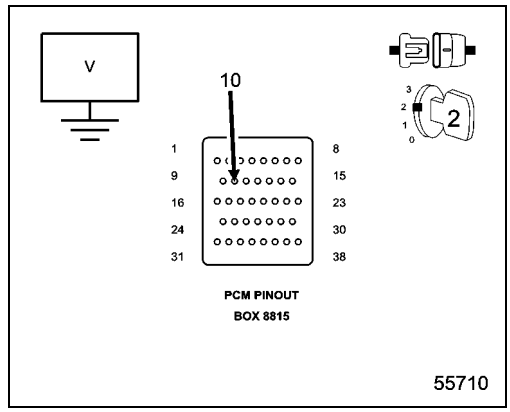

Yes

- Repair the (T20) L/R Solenoid Control circuit for a short to voltage.
- Perform 42RLE TRANSMISSION VERIFICATION TEST. (Refer to 28 - DTC-Based Diagnostics/MODULE, Powertrain Control (PCM) - Standard Procedure)

No

- Using the schematics as a guide, check the Powertrain Control Module (PCM) terminals for corrosion, damage, or terminal push out. Pay particular attention to all power and ground circuits. Check for Service Information Tune-ups or Service Bulletins for any possible causes that may apply. If no problems are found, replace and program the PCM in accordance with the Service Information. With the scan tool, perform Quick Learn.
- Perform 42RLE TRANSMISSION VERIFICATION TEST. (Refer to 28 - DTC-Based Diagnostics/MODULE, Powertrain Control (PCM) - Standard Procedure)

8. CHECK THE WIRING AND CONNECTORS

1. The conditions necessary to set the DTC are not present at this time.
2. Using the schematics as a guide, inspect the wiring and connectors specific to this circuit.
3. Wiggle the wires while checking for shorted and open circuits.
4. With the scan tool, check the Event Data to help identify the conditions in which the DTC was set.
5. Check for Service Information Tune-ups or Service Bulletins for any possible causes that may apply.

Were there any problems found?

Yes

- Repair as necessary.
- Perform 42RLE TRANSMISSION VERIFICATION TEST. (Refer to 28 - DTC-Based Diagnostics/MODULE, Powertrain Control (PCM) - Standard Procedure)

No

- Test Complete.

P0755-2/4 SOLENOID CIRCUIT

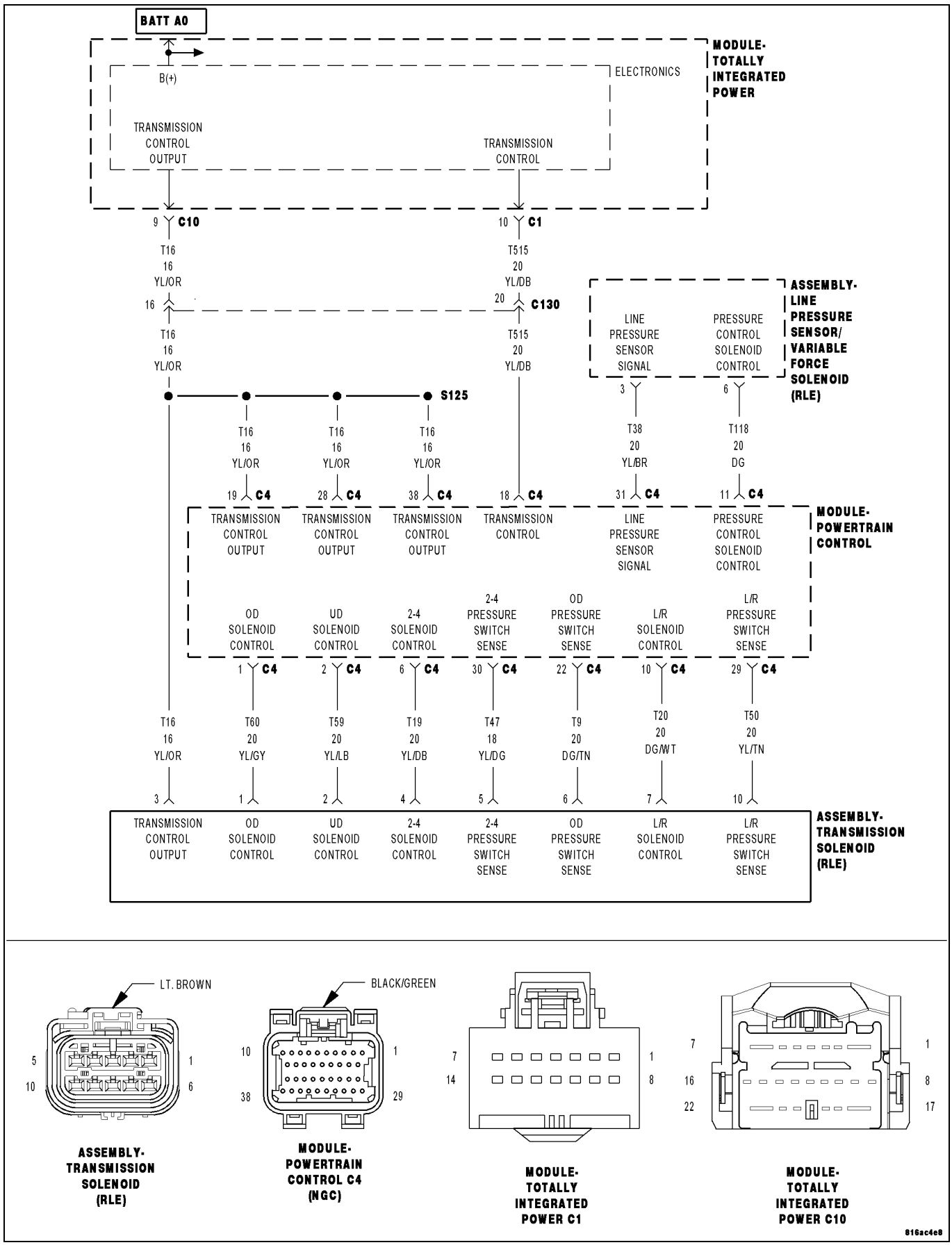

For a complete wiring diagram, **refer to the Wiring Information**.

Theory of Operation

Four solenoids are used to control the friction elements (clutches). The continuity of the solenoids circuits are periodically tested. Each solenoid is turned on or off depending on its current state. An inductive spike should be detected by the PCM during this test. If no spike is detected, the circuit is tested again to verify the failure. In addition to the periodic testing, the solenoid circuits are tested if a gear ratio or pressure switch error occurs. In this case, one failure will result in the appropriate DTC being set. The MIL will illuminate and the transmission goes into neutral, if the DTC is set above 35 km/h (22 mph), Limp-in mode when vehicle speed is below 35 km/h (22 mph).

- **When Monitored:**
  Initially at ignition on, then every 10 seconds thereafter. The solenoids will also be tested immediately after a gear ratio error or pressure switch error is detected.
- **Set Condition:**
  Three consecutive solenoid continuity test failures, or one failure if test is run in response to a gear ratio or pressure switch error.

Possible Causes
RELATED TIPM TCM POWER CONTROL CIRCUIT DTCS PRESENT
(T19) 2/4 SOLENOID CONTROL CIRCUIT OPEN
(T19) 2/4 SOLENOID CONTROL CIRCUIT SHORT TO GROUND
(T19) 2/4 SOLENOID CONTROL CIRCUIT SHORT TO VOLTAGE
TRANSMISSION SOLENOID/PRESSURE SWITCH ASSEMBLY
POWERTRAIN CONTROL MODULE

Always perform the Pre-Diagnostic Troubleshooting procedure before proceeding. (Refer to 28 - DTC-Based Diagnostics/MODULE, Powertrain Control (PCM) - Standard Procedure)

1. DETERMINING IF RELATED TIPM TCM POWER CONTROL CIRCUIT DTCS PRESENT

1. With the scan tool, read TIPM DTCs.

Are there any TIPM TCM Power Control Circuit DTCs present also?

Yes

- Refer to DTC Based Diagnostics and perform the appropriate diagnostic procedure.

No

- Go To 2

2. CHECK TO SEE IF P0755 IS CURRENT

1. With the scan tool, read DTCs.

Is the status Active or is the Starts Since Set counter set at 0 for this DTC?

Yes

- Go To 3

No

- Go To 8

3. CHECK THE PCM AND WIRING USING THE TRANSMISSION SIMULATOR

1. Turn the ignition off to the lock position.
2. Remove the Ignition Switch Feed fuse from the TIPM.

CAUTION: Removal of the Ignition Switch Feed fuse from the TIPM will prevent the vehicle from being started in gear.

WARNING: The Ignition Switch Feed fuse must be removed from the TIPM. Failure to do so can result in possible serious or fatal injury.

3. Install the Transmission Simulator, Miller tool #8333A and the Electronic Transmission Adapter kit.
4. Ignition on, engine not running.
5. With the scan tool, actuate the 2/4 Solenoid.
6. Monitor the 2/4 Solenoid LED on the Transmission Simulator.

Did the 2/4 Solenoid LED on the Transmission Simulator blink on and off during actuation?

Yes

- Go To 4

No

- Go To 5

4. CHECK WIRING USING THE TRANSMISSION SIMULATOR

1. With the scan tool, continue to actuate the 2/4 Solenoid.
2. While monitoring the 2/4 Solenoid LED on the Transmission Simulator, wiggle the related wiring harness and connectors.

Did the 2/4 Solenoid LED on the Transmission Simulator continue to blink on and off during the wiggle test?

Yes

- Replace the Transmission Solenoid/Pressure Switch Assembly in accordance with the Service Information.
- Perform 42RLE TRANSMISSION VERIFICATION TEST. (Refer to 28 - DTC-Based Diagnostics/MODULE, Powertrain Control (PCM) - Standard Procedure)

No

- Repair wiring or connectors as necessary.
- Perform 42RLE TRANSMISSION VERIFICATION TEST. (Refer to 28 - DTC-Based Diagnostics/MODULE, Powertrain Control (PCM) - Standard Procedure)

5. CHECK THE (T19) 2/4 SOLENOID CONTROL CIRCUIT FOR AN OPEN

1. Turn the ignition off to the lock position.
2. Disconnect the PCM C4 harness connector.
3. Disconnect the Transmission Solenoid/Pressure Switch Assembly harness connector.

CAUTION: Do not probe the PCM harness connectors. Probing the PCM harness connectors will damage the PCM terminals resulting in poor terminal to pin connection. Install the Kit, NGC, 38 Position 8815A to perform diagnosis.

4. Measure the resistance of the (T19) 2/4 Solenoid Control circuit between the Solenoid/Pressure Switch Assembly harness connector and the appropriate terminal of Miller tool #8815A.

Is the resistance above 5.0 ohms?

Yes

- Repair the (T19) 2/4 Solenoid Control circuit for an open.
- Perform 42RLE TRANSMISSION VERIFICATION TEST. (Refer to 28 - DTC-Based Diagnostics/MODULE, Powertrain Control (PCM) - Standard Procedure)

No

- Go To 6

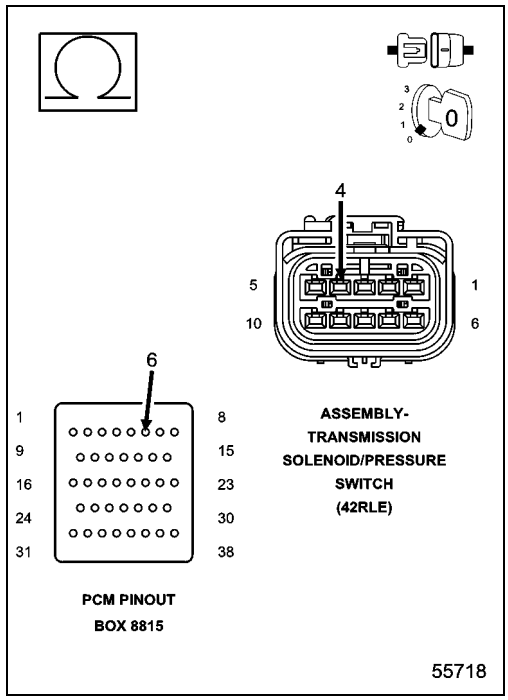

6. CHECK THE (T19) 2/4 SOLENOID CONTROL CIRCUIT FOR A SHORT TO GROUND

1. Measure the resistance between ground and the (T19) 2/4 Solenoid Control circuit.

Is the resistance below 5.0 ohms?

Yes

- Repair the (T19) 2/4 Solenoid Control circuit for a short to ground.
- Perform 42RLE TRANSMISSION VERIFICATION TEST. (Refer to 28 - DTC-Based Diagnostics/MODULE, Powertrain Control (PCM) - Standard Procedure)

No

- Go To 7

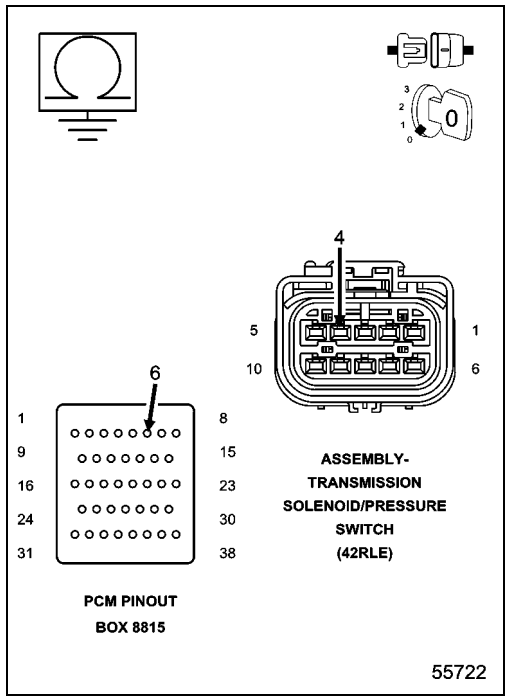

7. CHECK THE (T19) 2/4 SOLENOID CONTROL CIRCUIT FOR A SHORT TO VOLTAGE

1. Ignition on, engine not running.
2. With the scan tool under TIPM, actuate the Transmission.
3. Measure the voltage of the (T19) 2/4 Solenoid Control circuit.

Is the voltage above 0.5 volts?

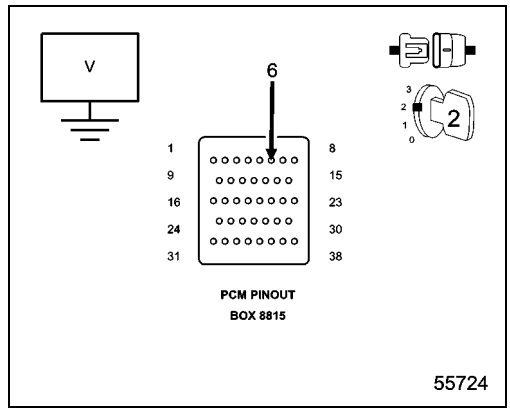

Yes

- Repair the (T19) 2/4 Solenoid Control circuit for a short to voltage.
- Perform 42RLE TRANSMISSION VERIFICATION TEST. (Refer to 28 - DTC-Based Diagnostics/MODULE, Powertrain Control (PCM) - Standard Procedure)

No

- Using the schematics as a guide, check the Powertrain Control Module (PCM) terminals for corrosion, damage, or terminal push out. Pay particular attention to all power and ground circuits. Check for Service Information Tune-ups or Service Bulletins for any possible causes that may apply. If no problems are found, replace and program the PCM in accordance with the Service Information. With the scan tool, perform Quick Learn.
- Perform 42RLE TRANSMISSION VERIFICATION TEST. (Refer to 28 - DTC-Based Diagnostics/MODULE, Powertrain Control (PCM) - Standard Procedure)

8. CHECK THE WIRING AND CONNECTORS

1. The conditions necessary to set the DTC are not present at this time.
2. Using the schematics as a guide, inspect the wiring and connectors specific to this circuit.
3. Wiggle the wires while checking for shorted and open circuits.
4. With the scan tool, check the Event Data to help identify the conditions in which the DTC was set.
5. Check for Service Information Tune-ups or Service Bulletins for any possible causes that may apply.

Were there any problems found?

Yes

- Repair as necessary.
- Perform 42RLE TRANSMISSION VERIFICATION TEST. (Refer to 28 - DTC-Based Diagnostics/MODULE, Powertrain Control (PCM) - Standard Procedure)

No

- Test Complete.

P0760-OD SOLENOID CIRCUIT

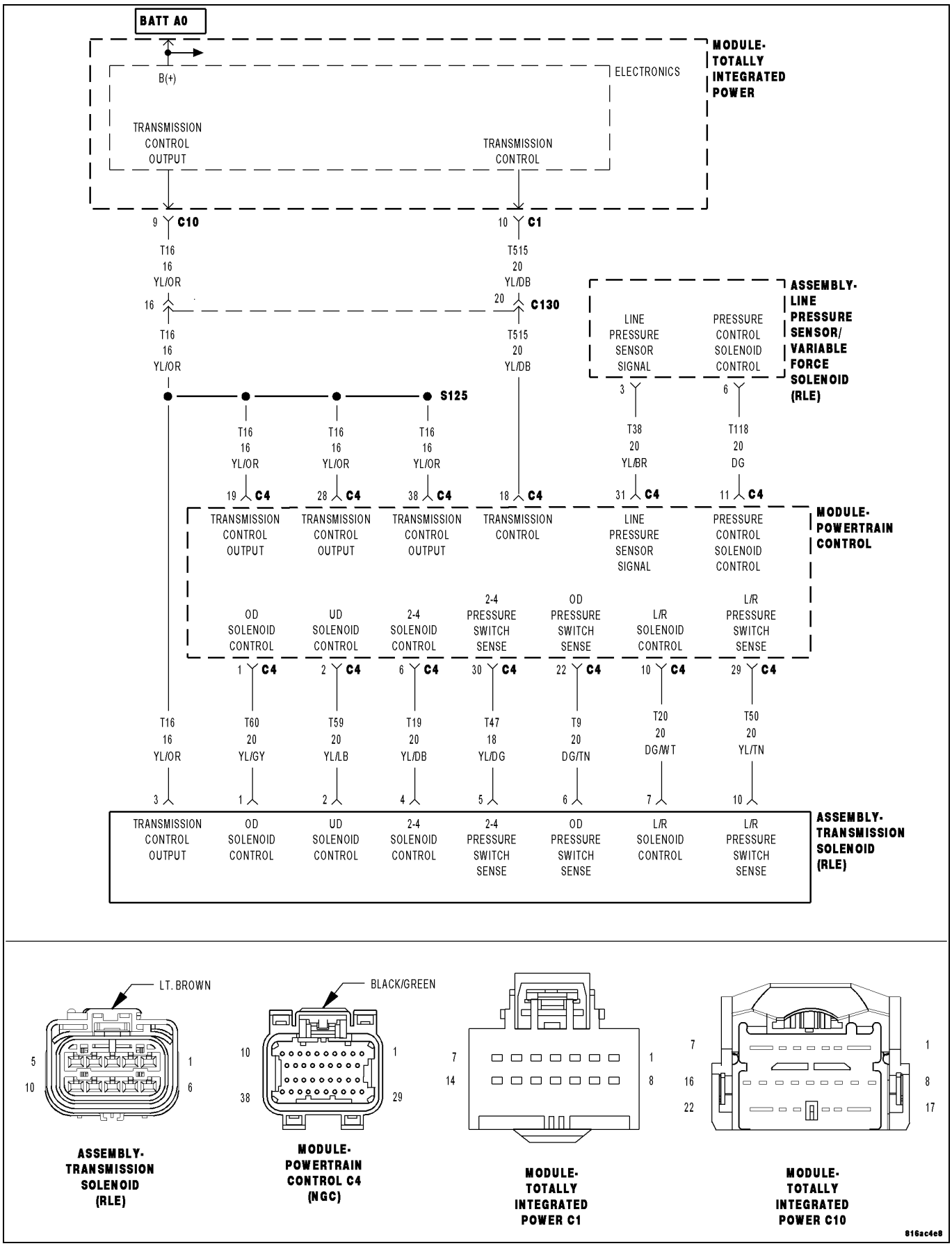

For a complete wiring diagram, **refer to the Wiring Information**.

Theory of Operation

Four solenoids are used to control the friction elements (clutches). The continuity of the solenoid circuits is periodically tested. Each solenoid is turned on or off depending on its current state. An inductive spike should be detected by the PCM during this test. If no spike is detected, the circuit is tested again to verify the failure. In addition to the periodic testing, the solenoid circuits are tested if a gear ratio or pressure switch error occurs. In this case, one failure will result in the appropriate DTC being set. The MIL will illuminate and the transmission goes into neutral, if the DTC is set above 35 km/h (22 mph), Limp-in mode when vehicle speed is below 35 km/h (22 mph).

- **When Monitored:**
  Initially at ignition on, then every 10 seconds thereafter. The solenoids will also be tested immediately after a gear ratio error or pressure switch error is detected.
- **Set Condition:**
  Three consecutive solenoid continuity test failures, or one failure if test is run in response to a gear ratio or pressure switch error.

Possible Causes
RELATED TIPM TCM POWER CONTROL CIRCUIT DTCS PRESENT
(T60) OD SOLENOID CONTROL CIRCUIT OPEN
(T60) OD SOLENOID CONTROL CIRCUIT SHORT TO GROUND
(T60) OD SOLENOID CONTROL CIRCUIT SHORT TO VOLTAGE
TRANSMISSION SOLENOID/PRESSURE SWITCH ASSEMBLY
POWERTRAIN CONTROL MODULE

Always perform the 42RLE Pre-Diagnostic Troubleshooting procedure before proceeding. (Refer to 28 - DTC-Based Diagnostics/MODULE, Powertrain Control (PCM) - Standard Procedure)

1. DETERMINING IF RELATED TIPM TCM POWER CONTROL CIRCUIT DTCS PRESENT

1. With the scan tool, read TIPM DTCs.

Are there any TIPM TCM Power Control Circuit DTCs present also?

Yes

- Refer to DTC Based Diagnostics and perform the appropriate diagnostic procedure.

No

- Go To 2

2. CHECK IF DTC IS CURRENT

1. With the scan tool, read DTCs.

Is the status Active or is the Starts Since Set counter set at 0 for this DTC?

Yes

- Go To 3

No

- Go To 8

3. CHECK THE PCM AND WIRING USING THE TRANSMISSION SIMULATOR

1. Turn the ignition off to the lock position.
2. Remove the Ignition Switch Feed fuse from the TIPM.

CAUTION: Removal of the Ignition Switch Feed fuse from the TIPM will prevent the vehicle from being started in gear.

WARNING: The Ignition Switch Feed fuse must be removed from the TIPM. Failure to do so can result in possible serious or fatal injury.

3. Install the Transmission Simulator, Miller tool #8333A and the Electronic Transmission Adapter kit.
4. Ignition on, engine not running.
5. With the scan tool, actuate the OD Solenoid.
6. Monitor the OD Solenoid LED on the Transmission Simulator.

Did the OD Solenoid LED on the Transmission Simulator blink on and off during actuation?

Yes

- Go To 4

No

- Go To 5

4. CHECK WIRING USING THE TRANSMISSION SIMULATOR

1. With the scan tool, continue to actuate the OD Solenoid.
2. While monitoring the OD Solenoid LED on the Transmission Simulator, wiggle the related wiring harness and connectors.

Did the OD Solenoid LED on the Transmission Simulator continue to blink on and off during the wiggle test?

Yes

- Replace the Transmission Solenoid/Pressure Switch Assembly in accordance with the Service Information.
- Perform 42RLE TRANSMISSION VERIFICATION TEST. (Refer to 28 - DTC-Based Diagnostics/MODULE, Powertrain Control (PCM) - Standard Procedure)

No

- Repair wiring or connectors as necessary.
- Perform 42RLE TRANSMISSION VERIFICATION TEST. (Refer to 28 - DTC-Based Diagnostics/MODULE, Powertrain Control (PCM) - Standard Procedure)

5. CHECK THE (T60) OD SOLENOID CONTROL CIRCUIT FOR AN OPEN

1. Turn the ignition off to the lock position.
2. Disconnect the PCM C4 harness connector.
3. Disconnect the Transmission Solenoid/Pressure Switch Assembly harness connector.

CAUTION: Do not probe the PCM harness connectors. Probing the PCM harness connectors will damage the PCM terminals resulting in poor terminal to pin connection. Install the Kit, NGC, 38 Position 8815A to perform diagnosis.

4. Measure the resistance of the (T60) OD Solenoid Control circuit between the Solenoid/Pressure Switch Assembly harness connector and the appropriate terminal of Miller tool #8815A.

Is the resistance above 5.0 ohms?

Yes

- Repair the (T60) OD Solenoid Control circuit for an open.
- Perform 42RLE TRANSMISSION VERIFICATION TEST. (Refer to 28 - DTC-Based Diagnostics/MODULE, Powertrain Control (PCM) - Standard Procedure)

No

- Go To 6

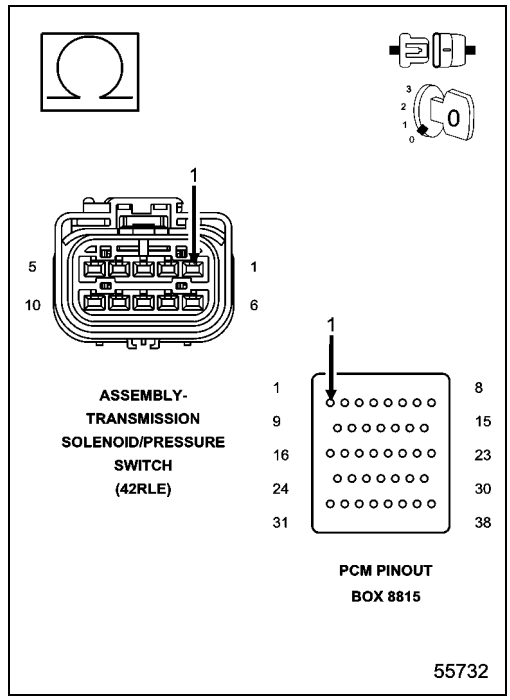

6. CHECK THE (T60) OD SOLENOID CONTROL CIRCUIT FOR A SHORT TO GROUND

1. Measure the resistance between ground and the (T60) OD Solenoid Control circuit.

Is the resistance below 5.0 ohms?

Yes

- Repair the (T60) OD Solenoid Control circuit for a short to ground.
- Perform 42RLE TRANSMISSION VERIFICATION TEST. (Refer to 28 - DTC-Based Diagnostics/MODULE, Powertrain Control (PCM) - Standard Procedure)

No

- Go To 7

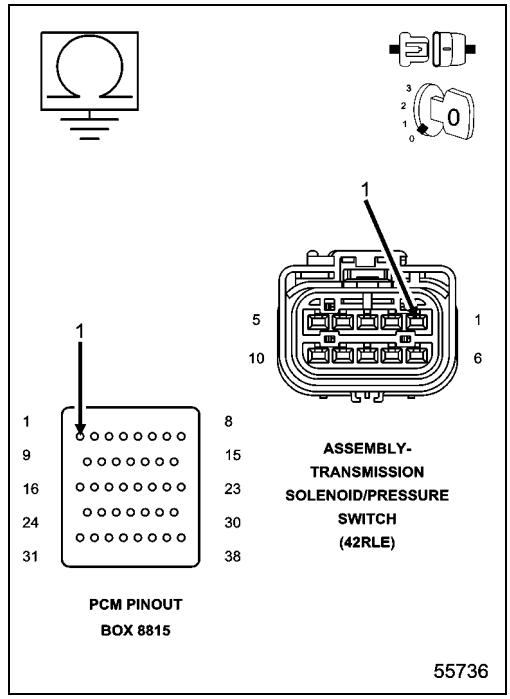

7. CHECK THE (T60) OD SOLENOID CONTROL CIRCUIT FOR A SHORT TO VOLTAGE

1. Ignition on, engine not running.
2. With the scan tool under TIPM, actuate the Transmission.
3. Measure the voltage of the (T60) OD Solenoid Control circuit.

Is the voltage above 0.5 volts?

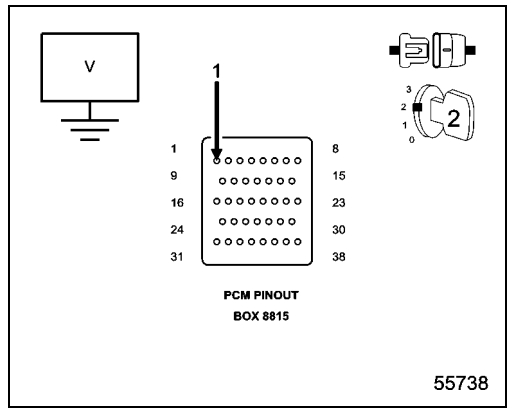

Yes

- Repair the (T60) OD Solenoid Control circuit for a short to voltage.
- Perform 42RLE TRANSMISSION VERIFICATION TEST. (Refer to 28 - DTC-Based Diagnostics/MODULE, Powertrain Control (PCM) - Standard Procedure)

No

- Using the schematics as a guide, check the Powertrain Control Module (PCM) terminals for corrosion, damage, or terminal push out. Pay particular attention to all power and ground circuits. Check for Service Information Tune-ups or Service Bulletins for any possible causes that may apply. If no problems are found, replace and program the PCM in accordance with the Service Information. With the scan tool, perform Quick Learn.
- Perform 42RLE TRANSMISSION VERIFICATION TEST. (Refer to 28 - DTC-Based Diagnostics/MODULE, Powertrain Control (PCM) - Standard Procedure)

8. CHECK THE WIRING AND CONNECTORS

1. The conditions necessary to set the DTC are not present at this time.
2. Using the schematics as a guide, inspect the wiring and connectors specific to this circuit.
3. Wiggle the wires while checking for shorted and open circuits.
4. With the scan tool, check the Event Data to help identify the conditions in which the DTC was set.

Were there any problems found?

Yes

- Repair as necessary.
- Perform 42RLE TRANSMISSION VERIFICATION TEST. (Refer to 28 - DTC-Based Diagnostics/MODULE, Powertrain Control (PCM) - Standard Procedure)

No

- Test Complete.

P0765-UD SOLENOID CIRCUIT

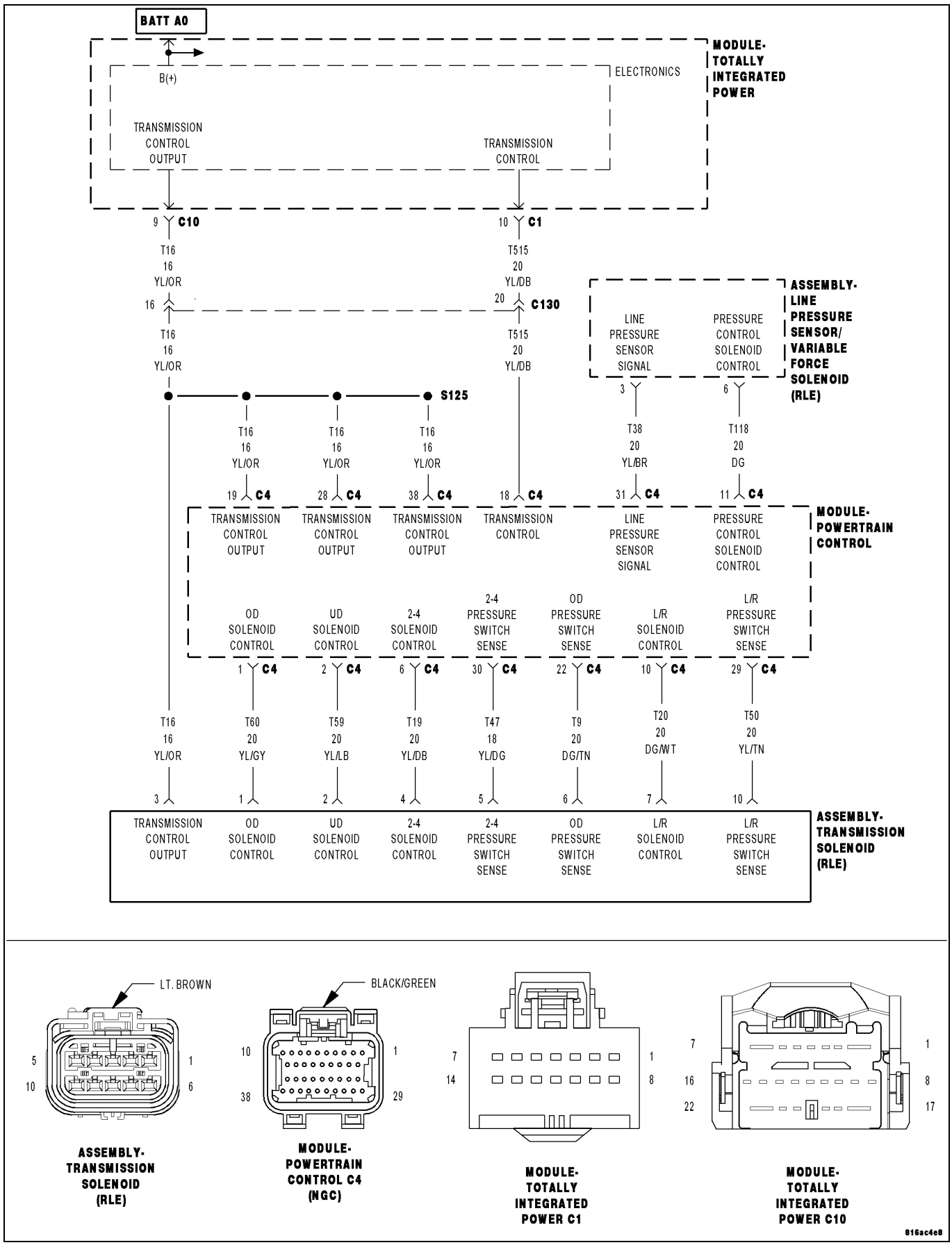

For a complete wiring diagram, **refer to the Wiring Information**.

Theory of Operation

Four solenoids are used to control the friction elements (clutches). The continuity of the solenoid circuits is periodically tested. Each solenoid is turned on or off depending on its current state. An inductive spike should be detected by the PCM during this test. If no spike is detected, the circuit is tested again to verify the failure. In addition to the periodic testing, the solenoid circuits are tested if a gear ratio or pressure switch error occurs. In this case, one failure will result in the appropriate DTC being set. The MIL will illuminate and the transmission goes into neutral, if the DTC is set above 35 km/h (22 mph), Limp-in mode when vehicle speed is below 35 km/h (22 mph).

- **When Monitored:**
  Initially at ignition on, then every 10 seconds thereafter. The solenoids will also be tested immediately after a gear ratio error or pressure switch error is detected.
- **Set Condition:**
  Three consecutive solenoid continuity test failures, or one failure if test is run in response to a gear ratio or pressure switch error.

Possible Causes
RELATED TIPM TCM POWER CONTROL CIRCUIT DTCS PRESENT
(T59) UD SOLENOID CONTROL CIRCUIT OPEN
(T59) UD SOLENOID CONTROL CIRCUIT SHORT TO GROUND
(T59) UD SOLENOID CONTROL CIRCUIT SHORT TO VOLTAGE
TRANSMISSION SOLENOID/PRESSURE SWITCH ASSEMBLY
POWERTRAIN CONTROL MODULE

Always perform the 42RLE Pre-Diagnostic Troubleshooting procedure before proceeding. (Refer to 28 - DTC-Based Diagnostics/MODULE, Powertrain Control (PCM) - Standard Procedure)

1. DETERMINING IF RELATED TIPM TCM POWER CONTROL CIRCUIT DTCS PRESENT

1. With the scan tool, read TIPM DTCs.

Are there any TIPM TCM Power Control Circuit DTCs present also?

Yes

- Refer to DTC Based Diagnostics and perform the appropriate diagnostic procedure.

No

- Go To 2

2. CHECK IF THE DTC IS CURRENT

1. With the scan tool, read DTCs.

Is the status Active or is the Starts Since Set counter set at 0 for this DTC?

Yes

- Go To 3

No

- Go To 8

3. CHECK THE PCM AND WIRING USING THE TRANSMISSION SIMULATOR

1. Turn the ignition off to the lock position.
2. Remove the Ignition Switch Feed fuse from the TIPM.

CAUTION: Removal of the Ignition Switch Feed fuse from the TIPM will prevent the vehicle from being started in gear.

WARNING: The Ignition Switch Feed fuse must be removed from the TIPM. Failure to do so can result in possible serious or fatal injury.

3. Install the Transmission Simulator, Miller tool #8333A and the Electronic Transmission Adapter kit.
4. Ignition on, engine not running.
5. With the scan tool, actuate the UD Solenoid.
6. Monitor the UD Solenoid LED on the Transmission Simulator.

Did the UD Solenoid LED on the Transmission Simulator blink on and off during actuation?

Yes

- Go To 4

No

- Go To 5

4. CHECK WIRING USING THE TRANSMISSION SIMULATOR

1. With the scan tool, continue to actuate the UD Solenoid.
2. While monitoring the UD Solenoid LED on the Transmission Simulator, wiggle the related wiring harness and connectors.

Did the UD Solenoid LED on the Transmission Simulator continue to blink on and off during the wiggle test?

Yes

- Replace the Transmission Solenoid/Pressure Switch Assembly in accordance with the Service Information.
- Perform 42RLE TRANSMISSION VERIFICATION TEST. (Refer to 28 - DTC-Based Diagnostics/MODULE, Powertrain Control (PCM) - Standard Procedure)

No

- Repair wiring or connectors as necessary.
- Perform 42RLE TRANSMISSION VERIFICATION TEST. (Refer to 28 - DTC-Based Diagnostics/MODULE, Powertrain Control (PCM) - Standard Procedure)

5. CHECK THE (T59) UD SOLENOID CONTROL CIRCUIT FOR AN OPEN

1. Turn the ignition off to the lock position.
2. Disconnect the PCM C4 harness connector.
3. Disconnect the Transmission Solenoid/Pressure Switch Assembly harness connector.

CAUTION: Do not probe the PCM harness connectors. Probing the PCM harness connectors will damage the PCM terminals resulting in poor terminal to pin connection. Install the Kit, NGC, 38 Position 8815A to perform diagnosis.

4. Measure the resistance of the (T59) UD Solenoid Control circuit between the Solenoid/Pressure Switch Assembly harness connector and the appropriate terminal of Miller tool #8815A.

Is the resistance above 5.0 ohms?

Yes

- Repair the (T59) UD Solenoid Control circuit for an open.
- Perform 42RLE TRANSMISSION VERIFICATION TEST. (Refer to 28 - DTC-Based Diagnostics/MODULE, Powertrain Control (PCM) - Standard Procedure)

No

- Go To 6

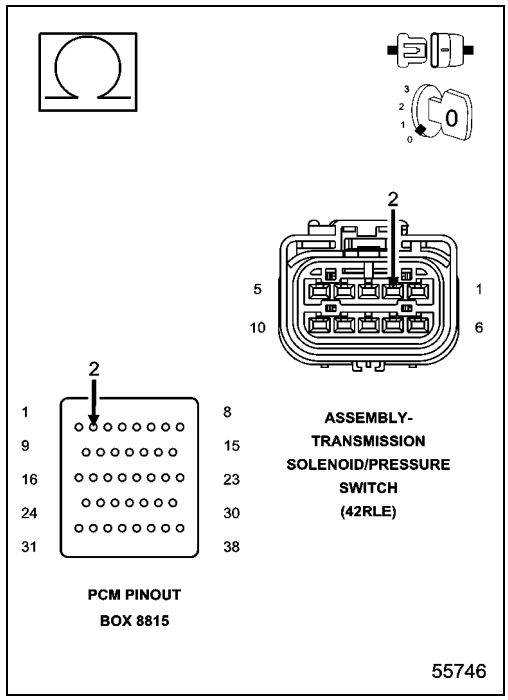

6. CHECK THE (T59) UD SOLENOID CONTROL CIRCUIT FOR A SHORT TO GROUND

1. Measure the resistance between ground and the (T59) UD Solenoid Control circuit.

Is the resistance below 5.0 ohms?

Yes

- Repair the (T59) UD Solenoid Control circuit for a short to ground.
- Perform 42RLE TRANSMISSION VERIFICATION TEST. (Refer to 28 - DTC-Based Diagnostics/MODULE, Powertrain Control (PCM) - Standard Procedure)

No

- Go To 7

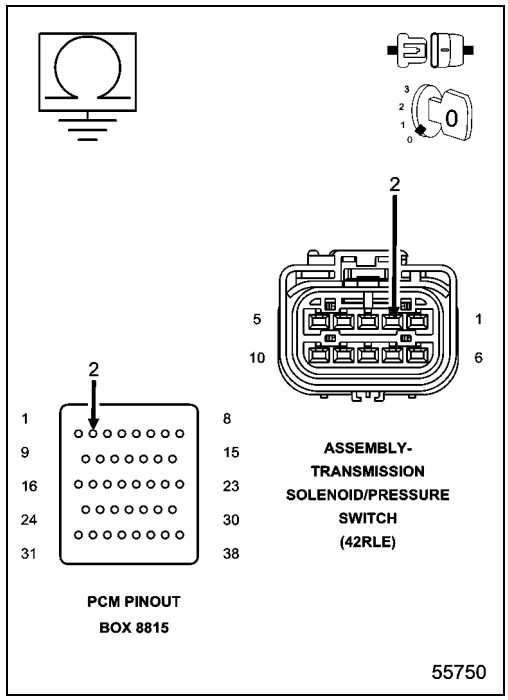

7. CHECK THE (T59) UD SOLENOID CONTROL CIRCUIT FOR A SHORT TO VOLTAGE

1. Ignition on, engine not running.
2. With the scan tool under TIPM, actuate the Transmission.
3. Measure the voltage of the (T59) UD Solenoid Control circuit.

Is the voltage above 0.5 volts?

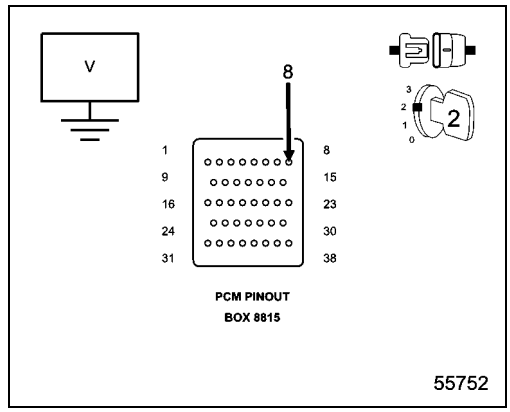

Yes

- Repair the (T59) UD Solenoid Control circuit for a short to voltage.
- Perform 42RLE TRANSMISSION VERIFICATION TEST. (Refer to 28 - DTC-Based Diagnostics/MODULE, Powertrain Control (PCM) - Standard Procedure)

No

- Using the schematics as a guide, check the Powertrain Control Module (PCM) terminals for corrosion, damage, or terminal push out. Pay particular attention to all power and ground circuits. Check for Service Information Tune-ups or Service Bulletins for any possible causes that may apply. If no problems are found, replace and program the PCM in accordance with the Service Information. With the scan tool, perform Quick Learn.
- Perform 42RLE TRANSMISSION VERIFICATION TEST. (Refer to 28 - DTC-Based Diagnostics/MODULE, Powertrain Control (PCM) - Standard Procedure)

8. CHECK THE WIRING AND CONNECTORS

1. The conditions necessary to set the DTC are not present at this time.
2. Using the schematics as a guide, inspect the wiring and connectors specific to this circuit.
3. Wiggle the wires while checking for shorted and open circuits.
4. With the scan tool, check the Event Data to help identify the conditions in which the DTC was set.

Were there any problems found?

Yes

- Repair as necessary.
- Perform 42RLE TRANSMISSION VERIFICATION TEST. (Refer to 28 - DTC-Based Diagnostics/MODULE, Powertrain Control (PCM) - Standard Procedure)

No

- Test Complete.

P0841-LR PRESSURE SWITCH RATIONALITY

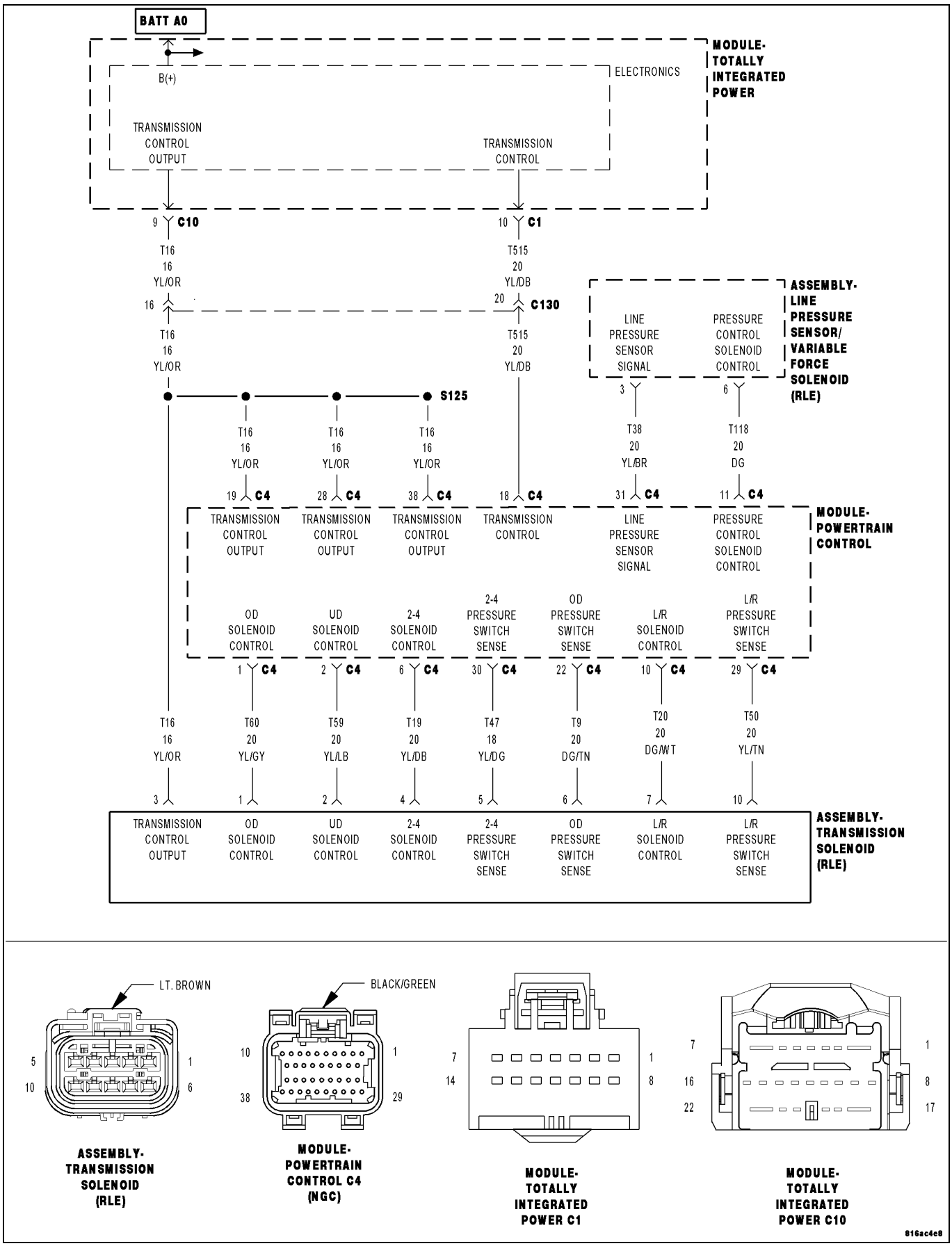

For a complete wiring diagram **Refer to the Wiring Information**.

Theory of Operation

The Transmission system uses three pressure switches to monitor the fluid pressure in the LR, 2/4, and OD elements. The pressure switches are continuously monitored for the correct states in each gear. If a set condition is identified, 1st gear and torque converter lock-up (EMCC) will be inhibited. The vehicle will launch in 2nd gear and shift normally through the gears without allowing EMCC. If during the same key start, the set condition is no longer valid, the transmission will return to normal operation (1st and EMCC available). Limp-in will not occur unless DTC P0841 is accompanied by a code P0706 and the MIL will illuminate after 5 minutes of substituted operation.

- **When Monitored:**
  Whenever the engine is running.
- **Set Condition:**
  The DTC is set if one of the pressure switches are open or closed at the wrong time in a given gear. If the problem is identified for 3 successive key starts, the transmission will go into Limp-in mode and the MIL will turn on after 10 seconds of vehicle operation.

Possible Causes
RELATED TIPM TCM POWER CONTROL CIRCUIT DTCS PRESENT
LOSS OF PRIME DTC PRESENT
(T50) L/R PRESSURE SWITCH SENSE CIRCUIT OPEN
(T50) L/R PRESSURE SWITCH SENSE CIRCUIT SHORT TO GROUND
(T50) L/R PRESSURE SWITCH SENSE CIRCUIT SHORT TO VOLTAGE
TRANSMISSION SOLENOID/PRESSURE SWITCH ASSEMBLY
POWERTRAIN CONTROL MODULE

Always perform the 42RLE Pre-Diagnostic Troubleshooting procedure before proceeding. (Refer to 28 - DTC-Based Diagnostics/MODULE, Powertrain Control (PCM) - Standard Procedure)

PRESSURE SWITCH STATES

GEAR	L/R	2/4	OD
R	OP	OP	OP
P/N	CL	OP	OP
1st	CL	OP	OP
2nd	OP	CL	OP
D	OP	OP	CL
OD	OP	CL	CL
OP = OPEN			
CL = CLOSED			

1. DETERMINING IF RELATED TIPM TCM POWER CONTROL CIRCUIT DTCS PRESENT

1. With the scan tool, read TIPM DTCs.

Are there any TIPM TCM Power Control Circuit DTCs present also?

Yes

- Refer to the Transmission category and perform the appropriate symptom.

No

- Go to 2

2. CHECK FOR LOSS OF PRIME DTC

1. With the scan tool, check for other Transmission DTCs.

Is the DTC P0944 present also?

Yes

- Refer to the Transmission category and perform the appropriate symptom.

No

- Go to 3

3. CHECK IF THE DTC IS CURRENT

1. With the scan tool, read DTCs.

Is the status Active or is the Starts Since Set counter 2 or less for this DTC?

Yes

- Go to 4

No

- Go to 8

4. PCM AND WIRING

1. Turn the ignition off to the lock position.
2. Remove the Ignition Switch Feed fuse from the TIPM.

CAUTION: Removal of the Ignition Switch Feed fuse from the TIPM will prevent the vehicle from being started in gear.

WARNING: The Ignition Switch Feed fuse must be removed from the TIPM. Failure to do so can result in possible serious or fatal injury.

3. Install the Transmission Simulator, Miller tool #8333A and the Electronic Transmission Adapter kit.
4. Ignition on, engine not running.
5. With the Transmission Simulator, turn the Pressure Switch selector to L/R.
6. With the scan tool , monitor the L/R Pressure Switch state while pressing the Pressure Switch Test button on the Transmission Simulator.

Did the L/R Pressure Switch state change?

Yes

- Replace the Transmission Solenoid/Pressure Switch Assembly per the Service Information.
- Perform 42RLE TRANSMISSION VERIFICATION TEST. (Refer to 28 - DTC-Based Diagnostics/MODULE, Powertrain Control (PCM) - Standard Procedure)

No

- Go to 5

5. (T50) L/R PRESSURE SWITCH SENSE CIRCUIT OPEN

1. Turn the ignition off to the lock position.
2. Disconnect the PCM C4 harness connector.
3. Disconnect the Transmission Solenoid/Pressure Switch Assembly harness connector.

CAUTION: Do not probe the PCM harness connectors. Probing the PCM harness connectors will damage the PCM terminals resulting in poor terminal to pin connection. Install the Kit, NGC, 38 Position 8815A to perform diagnosis.

4. Measure the resistance of the (T50) L/R Pressure Switch Sense circuit between the Transmission Solenoid/Pressure Switch Assembly harness connector and the appropriate terminal of Miller tool #8815A.

Is the resistance above 5.0 ohms?

Yes

- Repair the (T50) L/R Pressure Switch Sense circuit for an open.
- Perform 42RLE TRANSMISSION VERIFICATION TEST. (Refer to 28 - DTC-Based Diagnostics/MODULE, Powertrain Control (PCM) - Standard Procedure)

No

- Go to 6

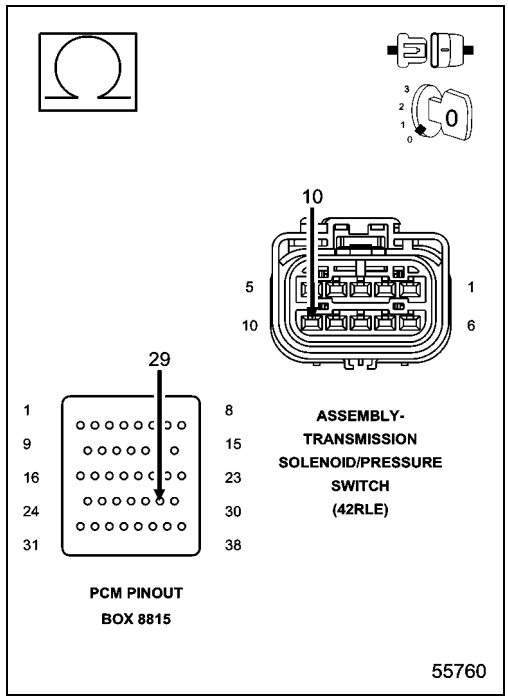

6. (T50) L/R PRESSURE SWITCH SENSE CIRCUIT SHORT TO GROUND

1. Measure the resistance between ground and the (T50) L/R Pressure Switch Sense circuit.

Is the resistance below 5.0 ohms?

Yes

- Repair the (T50) L/R Pressure Switch Sense circuit for a short to ground.
- Perform 42RLE TRANSMISSION VERIFICATION TEST. (Refer to 28 - DTC-Based Diagnostics/MODULE, Powertrain Control (PCM) - Standard Procedure)

No

- Go to 7

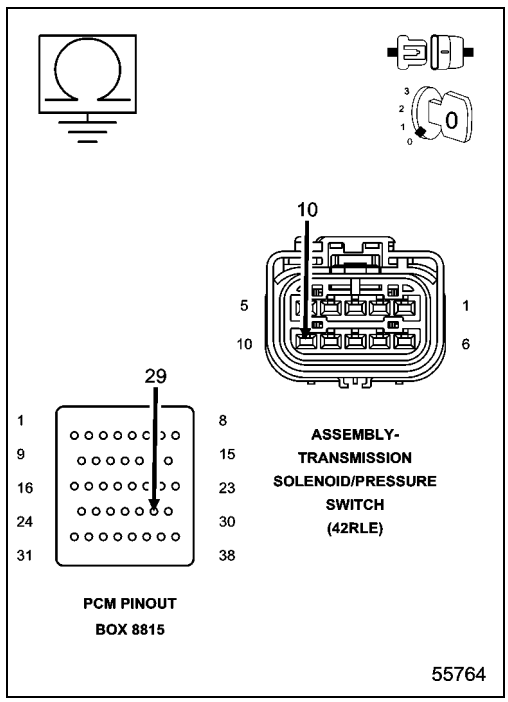

7. (T50) L/R PRESSURE SWITCH SENSE CIRCUIT SHORT TO VOLTAGE

1. Ignition on, engine not running.
2. With the scan tool under TIPM, actuate the Transmission.
3. Measure the voltage of the (T50) L/R Pressure Switch Sense circuit.

Is the voltage above 0.5 volts?

Yes

- Repair the (T50) L/R Pressure Switch Sense circuit for a short to voltage.
- Perform 42RLE TRANSMISSION VERIFICATION TEST. (Refer to 28 - DTC-Based Diagnostics/MODULE, Powertrain Control (PCM) - Standard Procedure)

No

- Using the schematics as a guide, check the Powertrain Control Module (PCM) terminals for corrosion, damage, or terminal push out. Pay particular attention to all power and ground circuits. If no problems are found, replace the PCM per the Service Information. With the scan tool, perform Quick Learn
- Perform 42RLE TRANSMISSION VERIFICATION TEST. (Refer to 28 - DTC-Based Diagnostics/MODULE, Powertrain Control (PCM) - Standard Procedure)

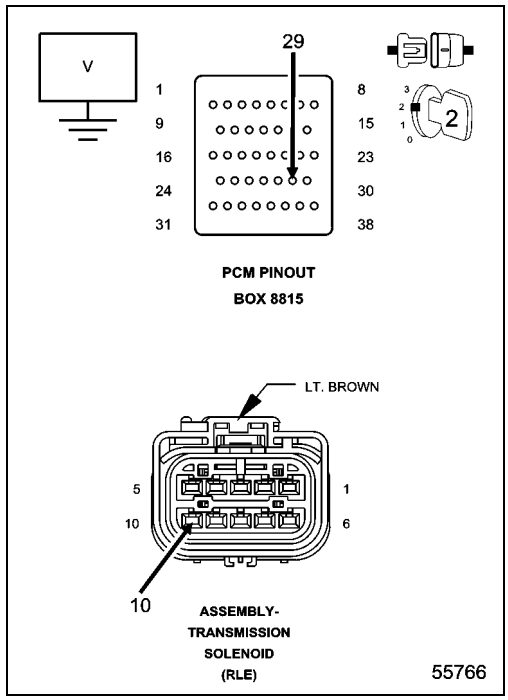

8. CHECK THE WIRING AND CONNECTORS

1. The conditions necessary to set the DTC are not present at this time.
2. Using the schematics as a guide, inspect the wiring and connectors specific to this circuit.
3. Wiggle the wires while checking for shorted and open circuits.
4. With the scan tool, check the Event Data to help identify the conditions in which the DTC was set.

Were there any problems found?

Yes

- Repair as necessary.
- Perform 42RLE TRANSMISSION VERIFICATION TEST. (Refer to 28 - DTC-Based Diagnostics/MODULE, Powertrain Control (PCM) - Standard Procedure)

No

- Test Complete.

P0845-2/4 HYDRAULIC PRESSURE TEST

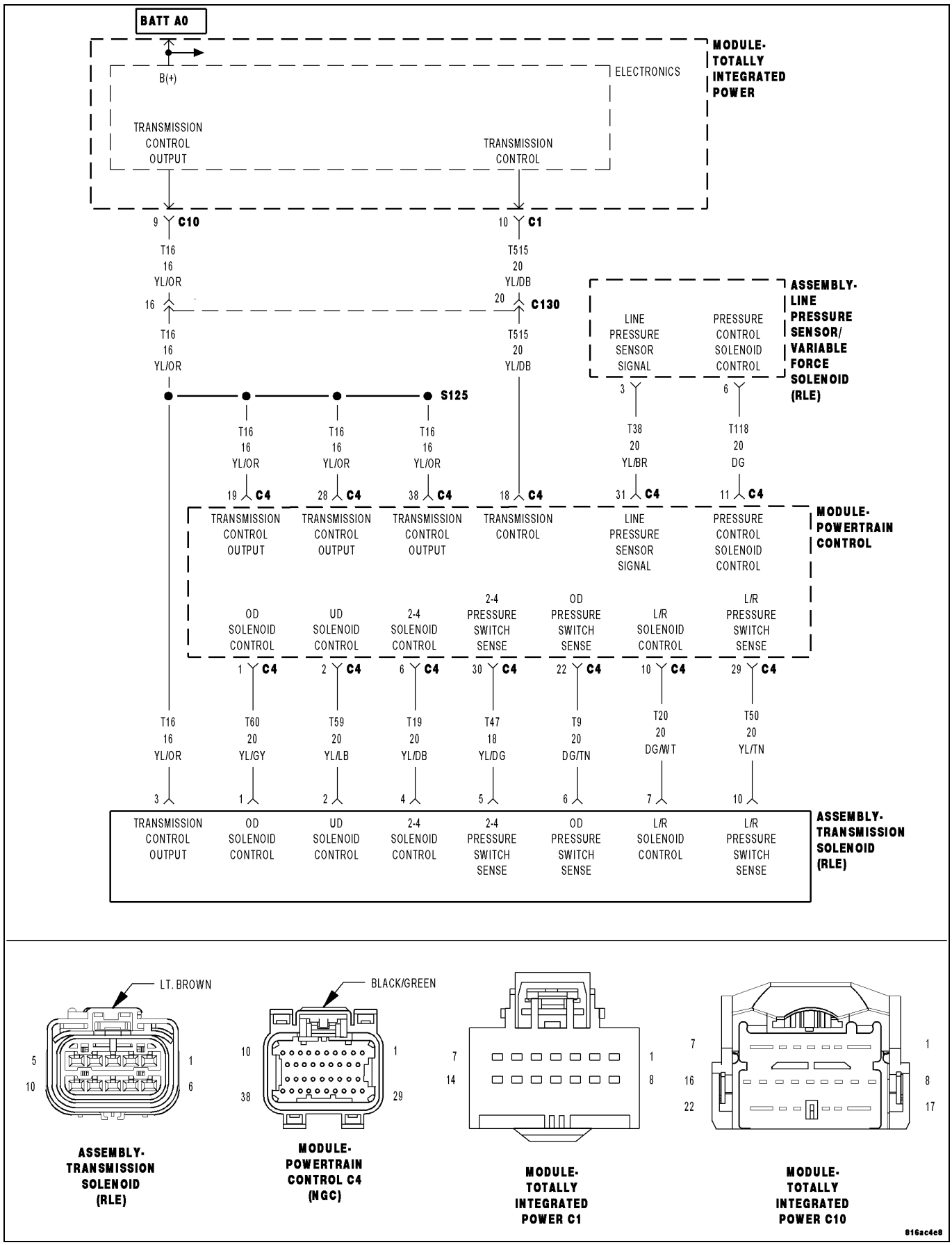

For a complete wiring diagram, **refer to the Wiring Information**.

Theory of Operation

Pressure switches are normally off or open (no pressure applied) and read high (+12 volts). When an element is applied, the corresponding pressure switch closes to ground (0 volts) or turns on. The controller tests the OD and 24 pressure switches when they are off (when the corresponding friction element is not applied) by briefly applying the OD and 24 elements which will cause the corresponding pressure switch to close. The test verifies that the switches are operational and that the switch will close when the corresponding element is applied. If a switch fails to respond, it is re-tested. The MIL illuminates and the transmission system defaults to Limp-in mode.

- **When Monitored:**
  In any forward gear with engine speed above 1000 rpm, shortly after a shift and every minute thereafter.
- **Set Condition:**
  After a shift into a forward gear, with engine speed greater than 1000 rpm, the PCM momentarily turns on element pressure to the clutch circuits that don't have pressure to verify that the correct pressure switch closes. If the pressure switch does not close 2 times the DTC sets

Possible Causes
LOSS OF PRIME P0944 PRESENT
(T16) TRANSMISSION CONTROL OUTPUT CIRCUIT OPEN
(T47) 2/4 PRESSURE SWITCH SENSE CIRCUIT OPEN
(T47) 2/4 PRESSURE SWITCH CIRCUIT SHORT TO GROUND
(T47) 2/4 PRESSURE SWITCH SENSE CIRCUIT SHORT TO VOLTAGE
TRANSMISSION SOLENOID/PRESSURE SWITCH ASSEMBLY
INTERNAL TRANSMISSION
POWERTRAIN CONTROL MODULE

Always perform the 42RLE Pre-Diagnostic Troubleshooting procedure before proceeding. (Refer to 28 - DTC-Based Diagnostics/MODULE, Powertrain Control (PCM) - Standard Procedure)

1. CHECKING FOR LOSS OF PRIME DTC

1. With the scan tool, check for other Transmission DTCs.

Is the DTC P0944 present also?

Yes

- Refer to DTC Based Diagnostics and perform the appropriate diagnostic procedure.

No

- Go To 2

2. CHECK FOR RELATED TRANSMISSION DTCS

1. With the scan tool, read DTCs.

Are any of the DTCs P0732, P0734 and/or P0846 present also?

Yes

- Replace the Transmission Solenoid/Pressure Switch Assembly in accordance with the Service Information.
- Perform 42RLE TRANSMISSION VERIFICATION TEST. (Refer to 28 - DTC-Based Diagnostics/MODULE, Powertrain Control (PCM) - Standard Procedure)

No

- Go To 3

3. CHECK IF THE DTC IS CURRENT

1. With the scan tool, read DTCs.

Is the status Active or is the Starts Since Set counter 2 or less for this DTC?

Yes

- Go To 4

No

- Go To 9

4. PCM AND WIRING

1. Turn the ignition off to the lock position.
2. Remove the Ignition Switch Feed fuse from the TIPM.

CAUTION: Removal of the Ignition Switch Feed fuse from the TIPM will prevent the vehicle from being started in gear.

WARNING: The Ignition Switch Feed fuse must be removed from the TIPM. Failure to do so can result in possible serious or fatal injury.

3. Install the Transmission Simulator, Miller tool #8333A and the Electronic Transmission Adapter kit.
4. Ignition on, engine not running.
5. With the Transmission Simulator, turn the Pressure Switch selector switch to 2/4.
6. With the scan tool, monitor the UD Pressure Switch state while pressing the Pressure Switch Test button on the Transmission Simulator.
7. Wiggle the wires leading to the PCM while pressing and holding the Pressure Switch Test button.

Did the 2/4 Pressure Switch state change to closed and remain closed while wiggling the wires?

Yes

- Disassemble and inspect the Valve Body in accordance with the Service Information and repair or replace as necessary. If no problems are found in the Valve Body, replace the Transmission Solenoid/Pressure Switch Assembly.
- Perform 42RLE TRANSMISSION VERIFICATION TEST. (Refer to 28 - DTC-Based Diagnostics/MODULE, Powertrain Control (PCM) - Standard Procedure)

No

- Go To 5

5. (T47) 2/4 PRESSURE SWITCH SENSE CIRCUIT OPEN

1. Turn the ignition off to the lock position.
2. Disconnect the PCM C4 harness connector.
3. Disconnect the Transmission Solenoid/Pressure Switch Assembly harness connector.

CAUTION: Do not probe the PCM harness connectors. Probing the PCM harness connectors will damage the PCM terminals resulting in poor terminal to pin connection. Install the Kit, NGC, 38 Position 8815A to perform diagnosis.

4. Measure the resistance of the (T47) 2/4 Pressure Switch Sense circuit between the Transmission Solenoid/Pressure Switch Assembly harness connector and the appropriate terminal of Miller tool #8815A.

Is the resistance above 5.0 ohms?

Yes

- Repair the (T47) 2/4 Pressure Switch Sense circuit for an open.
- Perform 42RLE TRANSMISSION VERIFICATION TEST. (Refer to 28 - DTC-Based Diagnostics/MODULE, Powertrain Control (PCM) - Standard Procedure)

No

- Go To 6

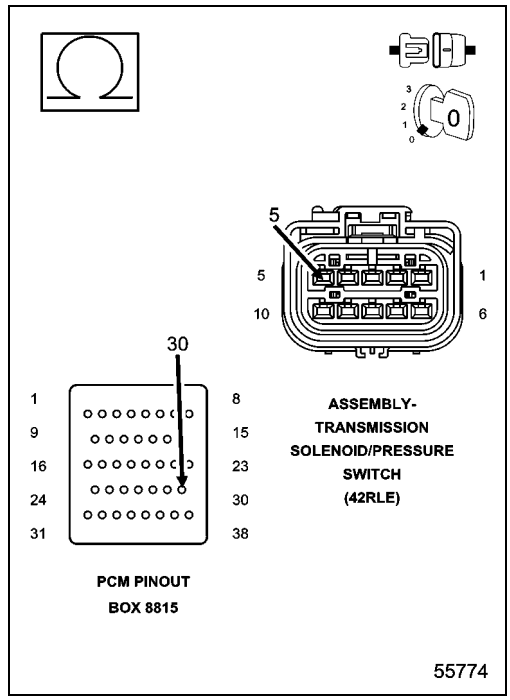

6. (T47) 2/4 PRESSURE SWITCH SENSE CIRCUIT SHORT TO GROUND

1. Measure the resistance between ground and the (T47) 2/4 Pressure Switch Sense circuit.

Is the resistance below 5.0 ohms?

Yes

- Repair the (T47) 2/4 Pressure Switch Sense circuit for a short to ground.
- Perform 42RLE TRANSMISSION VERIFICATION TEST. (Refer to 28 - DTC-Based Diagnostics/MODULE, Powertrain Control (PCM) - Standard Procedure)

No

- Go To 7

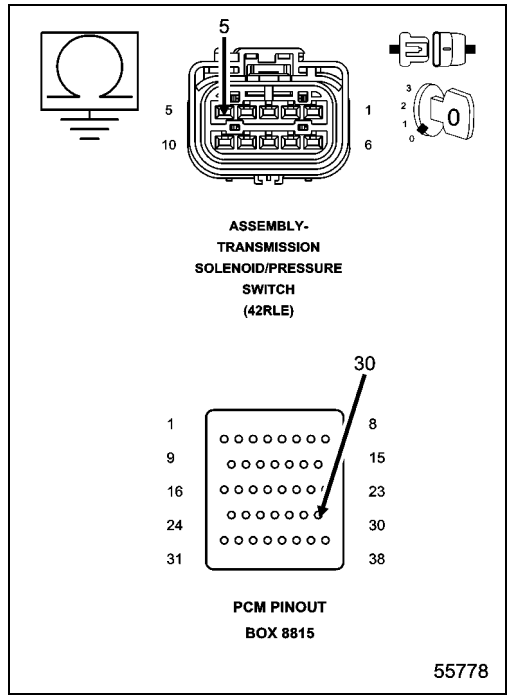

7. (T47) 2/4 PRESSURE SWITCH SENSE CIRCUIT SHORT TO VOLTAGE

1. Ignition on, engine not running.
2. With the scan tool under TIPM, actuate the Transmission.
3. Measure the voltage of the (T47) 2/4 Pressure Switch Sense circuit.

Is the voltage above 0.5 volts?

Yes

- Repair the (T47) 2/4 Pressure Switch Sense circuit for a short to voltage.
- Perform 42RLE TRANSMISSION VERIFICATION TEST. (Refer to 28 - DTC-Based Diagnostics/MODULE, Powertrain Control (PCM) - Standard Procedure)

No

- Go To 8

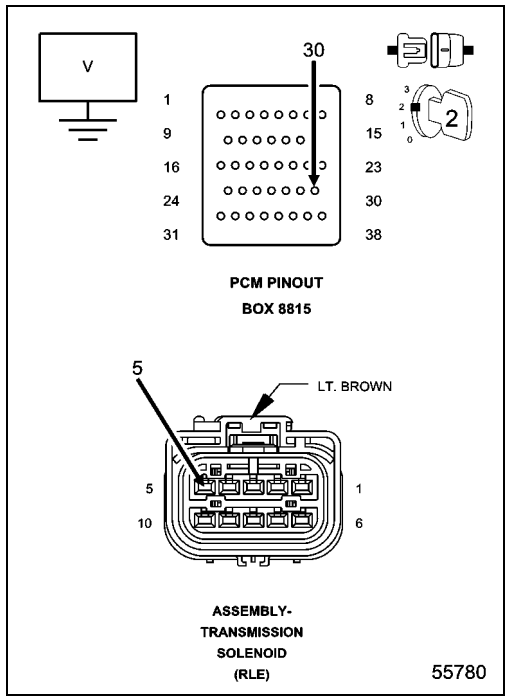

8. TRANSMISSION CONTROL OUTPUT CIRCUIT OPEN

1. With the scan tool under TIPM, actuate the Transmission.
2. Using a 12-volt test light connected to ground, check (T16) Transmission Control Relay Output circuit in the Transmission Solenoid/Pressure Switch Assembly harness connector.

NOTE: The test light must illuminate brightly. Compare the brightness to that of a direct connection to the battery.

Does the test light illuminate brightly?

Yes

- Using the schematics as a guide, check the Powertrain Control Module (PCM) terminals for corrosion, damage, or terminal push out. Pay particular attention to all power and ground circuits. If no problems are found, replace and program the PCM in accordance with the Service Information. With the scan tool, perform Quick Learn
- Perform 42RLE TRANSMISSION VERIFICATION TEST. (Refer to 28 - DTC-Based Diagnostics/MODULE, Powertrain Control (PCM) - Standard Procedure)

No

- Repair the Transmission Control Relay Output circuit for an open or high resistance. If the fuse is open make sure to check for a short to ground.
- Perform 42RLE TRANSMISSION VERIFICATION TEST. (Refer to 28 - DTC-Based Diagnostics/MODULE, Powertrain Control (PCM) - Standard Procedure)

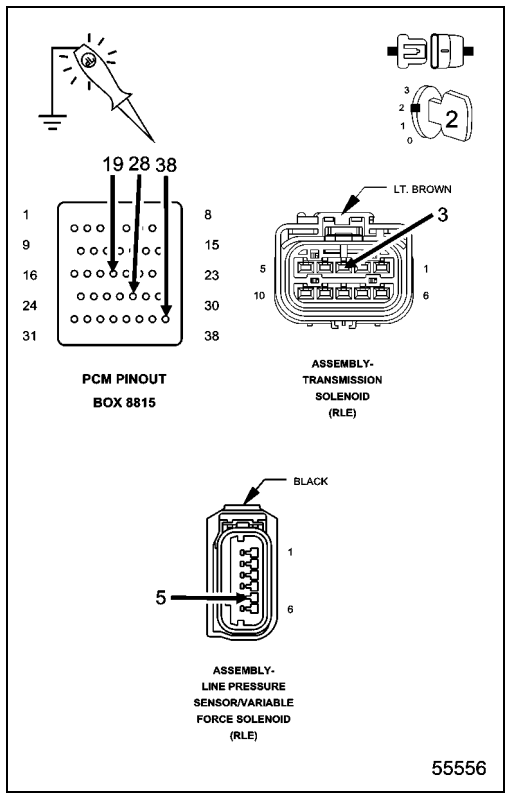

9. CHECK THE WIRING AND CONNECTORS

1. The conditions necessary to set the DTC are not present at this time.
2. Using the schematics as a guide, inspect the wiring and connectors specific to this circuit.
3. Wiggle the wires while checking for shorted and open circuits.
4. With the scan tool, check the Event Data to help identify the conditions in which the DTC was set.

Were there any problems found?

Yes

- Repair as necessary.
- Perform 42RLE TRANSMISSION VERIFICATION TEST. (Refer to 28 - DTC-Based Diagnostics/MODULE, Powertrain Control (PCM) - Standard Procedure)

No

- Test Complete.

P0846-2/4 PRESSURE SWITCH RATIONALITY

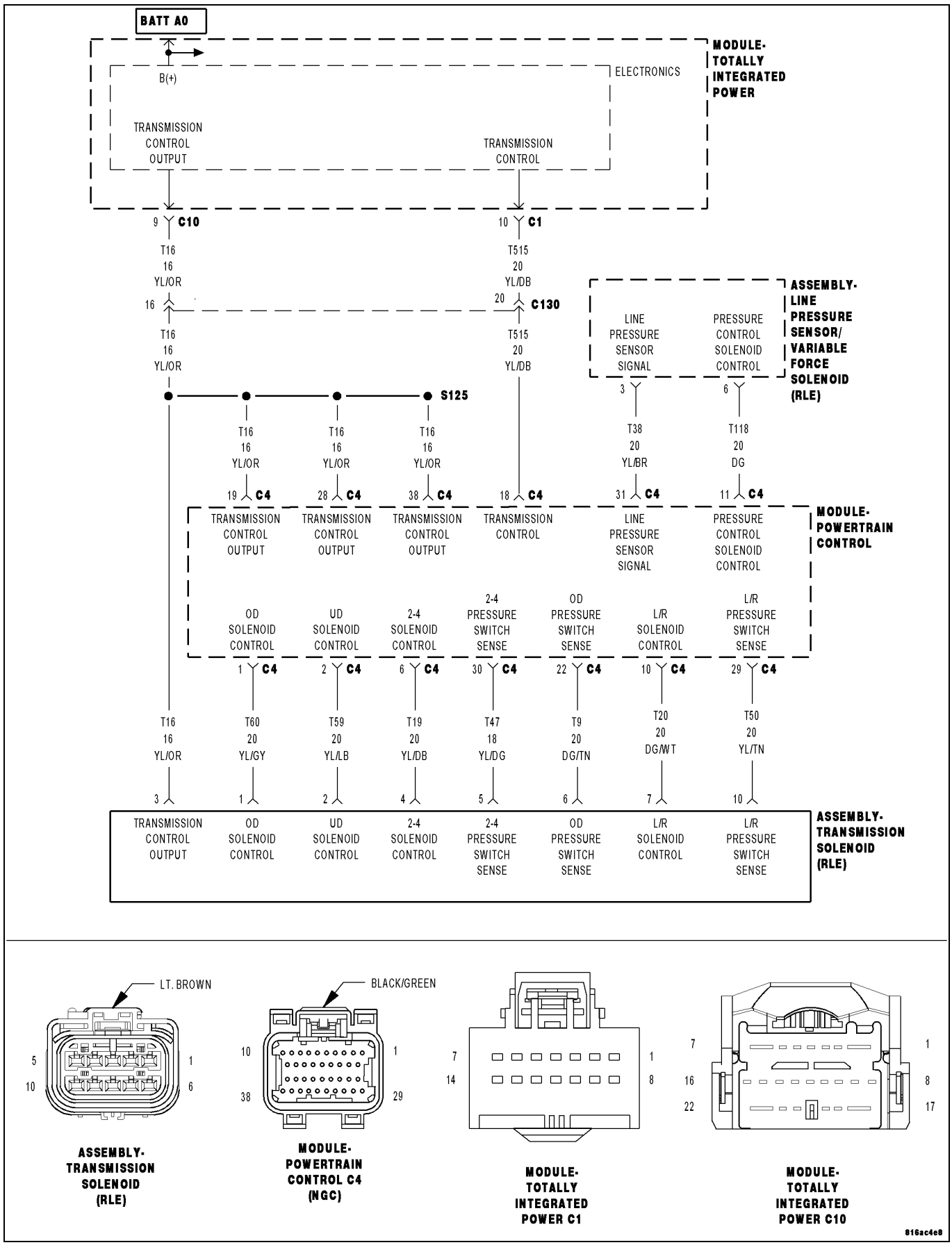

For a complete wiring diagram, **refer to the Wiring Information**.

Theory of Operation

The Transmission system uses three pressure switches to monitor the fluid pressure in the LR, 2/4, and OD elements. The pressure switches are continuously monitored for the correct states in each gear. The 2/4 pressure switch monitors the fluid pressure to the 2/4 clutch to confirm proper operation of the 2/4 solenoid. If the 2/4 pressure switch is identified as closed in P or N, the code will immediately be set and normal operation will be allowed for that given key start. If the problem is identified for 3 successive ignition cycles, the transmission will go into Limp-in mode.

- **When Monitored:**
  Whenever the engine is running.
- **Set Condition:**
  The DTC is set if one of the pressure switches are open or closed at the wrong time in a given gear. If the problem is identified for 3 successive key starts, the transmission will go into Limp-in mode and the MIL will turn on after 10 seconds of vehicle operation.

Possible Causes
RELATED TIPM TCM POWER CONTROL CIRCUIT DTCS PRESENT
LOSS OF PRIME DTC PRESENT
(T47) 2/4 PRESSURE SWITCH SENSE CIRCUIT OPEN
(T47) 2/4 PRESSURE SWITCH SENSE CIRCUIT SHORT TO GROUND
(T47) 2/4 PRESSURE SWITCH SENSE CIRCUIT SHORT TO VOLTAGE
TRANSMISSION SOLENOID/PRESSURE SWITCH ASSEMBLY
POWERTRAIN CONTROL MODULE

Always perform the 42RLE Pre-Diagnostic Troubleshooting procedure before proceeding. (Refer to 28 - DTC-Based Diagnostics/MODULE, Powertrain Control (PCM) - Standard Procedure)

PRESSURE SWITCH STATES

GEAR	L/R	2/4	OD
R	OP	OP	OP
P/N	CL	OP	OP
1st	CL	OP	OP
2nd	OP	CL	OP
D	OP	OP	CL
OD	OP	CL	CL
OP = OPEN			
CL = CLOSED			

1. DETERMINING IF RELATED TIPM TCM POWER CONTROL CIRCUIT DTCS PRESENT

1. With the scan tool, read TIPM DTCs.

Are there any TIPM TCM Power Control Circuit DTCs present also?

Yes

- Refer to DTC Based Diagnostics and perform the appropriate diagnostic procedure.

No

- Go To 2

2. CHECK FOR LOSS OF PRIME DTC

1. With the scan tool, check for other Transmission DTCs.

Is the DTC P0944 present also?

Yes

- Refer to DTC Based Diagnostics and perform the appropriate diagnostic procedure.

No

- Go To 3

3. CHECK IF THE DTC IS CURRENT

1. With the scan tool, read DTCs.

Is the status Active or is the Starts Since Set counter 2 or less for this DTC?

Yes

- Go To 4

No

- Go To 8

4. PCM AND WIRING

1. Turn the ignition off to the lock position.
2. Remove the Ignition Switch Feed fuse from the TIPM.

CAUTION: Removal of the Ignition Switch Feed fuse from the TIPM will prevent the vehicle from being started in gear.

WARNING: The Ignition Switch Feed fuse must be removed from the TIPM. Failure to do so can result in possible serious or fatal injury.

3. Install the Transmission Simulator, Miller tool #8333A and the Electronic Transmission Adapter kit.
4. Ignition on, engine not running.
5. With the Transmission Simulator, turn the Pressure Switch selector to 2/4.
6. With the scan tool , monitor the 2/4 Pressure Switch state while pressing the Pressure Switch Test button on the Transmission Simulator.

Did the 2/4 Pressure Switch state change?

Yes

- Replace the Transmission Solenoid/Pressure Switch Assembly in accordance with the Service Information.
- Perform 42RLE TRANSMISSION VERIFICATION TEST. (Refer to 28 - DTC-Based Diagnostics/MODULE, Powertrain Control (PCM) - Standard Procedure)

No

- Go To 5

5. (T47) 2/4 PRESSURE SWITCH SENSE CIRCUIT OPEN

1. Turn the ignition off to the lock position.
2. Disconnect the PCM C4 harness connector.
3. Disconnect the Transmission Solenoid/Pressure Switch Assembly harness connector.

NOTE: Check connectors - Clean/repair as necessary.

CAUTION: Do not probe the PCM harness connectors. Probing the PCM harness connectors will damage the PCM terminals resulting in poor terminal to pin connection. Install the Kit, NGC, 38 Position 8815A to perform diagnosis.

4. Measure the resistance of the (T47) 2/4 Pressure Switch Sense circuit between the Transmission Solenoid/Pressure Switch Assembly harness connector and the appropriate terminal of Miller tool #8815A.

Is the resistance above 5.0 ohms?

Yes

- Repair the (T47) 2/4 Pressure Switch Sense circuit for an open.
- Perform 42RLE TRANSMISSION VERIFICATION TEST. (Refer to 28 - DTC-Based Diagnostics/MODULE, Powertrain Control (PCM) - Standard Procedure)

No

- Go To 6

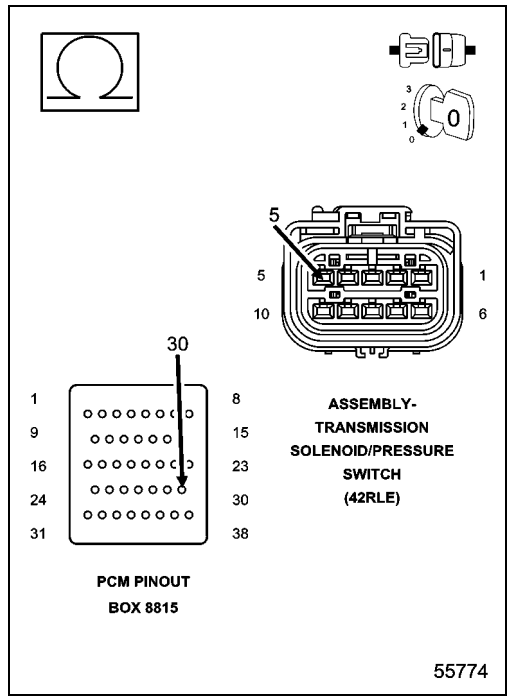

6. (T47) 2/4 PRESSURE SWITCH SENSE CIRCUIT SHORT TO GROUND

1. Measure the resistance between ground and the (T47) 2/4 Pressure Switch Sense circuit.

Is the resistance below 5.0 ohms?

Yes

- Repair the (T47) 2/4 Pressure Switch Sense circuit for a short to ground.
- Perform 42RLE TRANSMISSION VERIFICATION TEST. (Refer to 28 - DTC-Based Diagnostics/MODULE, Powertrain Control (PCM) - Standard Procedure)

No

- Go To 7

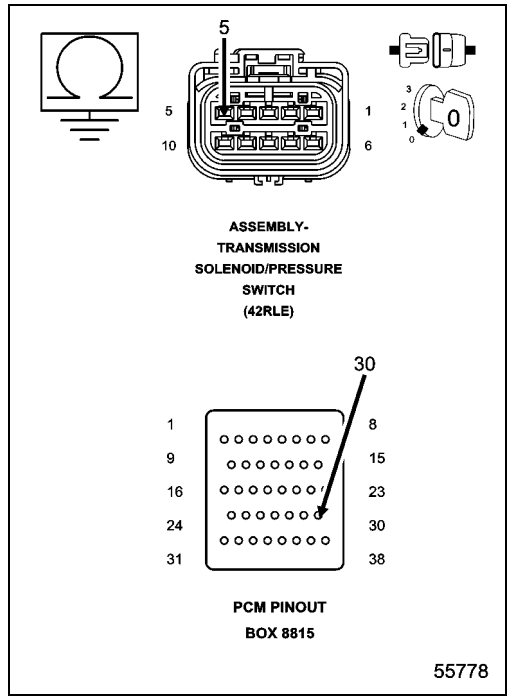

7. (T47) 2/4 PRESSURE SWITCH SENSE CIRCUIT SHORT TO VOLTAGE

1. Ignition on, engine not running.
2. With the scan tool under TIPM, actuate the Transmission.
3. Measure the voltage of the (T47) 2/4 Pressure Switch Sense circuit.

Is the voltage above 0.5 volts?

Yes

- Repair the (T47) 2/4 Pressure Switch Sense circuit for a short to voltage.
- Perform 42RLE TRANSMISSION VERIFICATION TEST. (Refer to 28 - DTC-Based Diagnostics/MODULE, Powertrain Control (PCM) - Standard Procedure)

No

- Using the schematics as a guide, check the Powertrain Control Module (PCM) terminals for corrosion, damage, or terminal push out. Pay particular attention to all power and ground circuits. If no problems are found, replace and program the PCM in accordance with the Service Information. With the scan tool, perform Quick Learn
- Perform 42RLE TRANSMISSION VERIFICATION TEST. (Refer to 28 - DTC-Based Diagnostics/MODULE, Powertrain Control (PCM) - Standard Procedure)

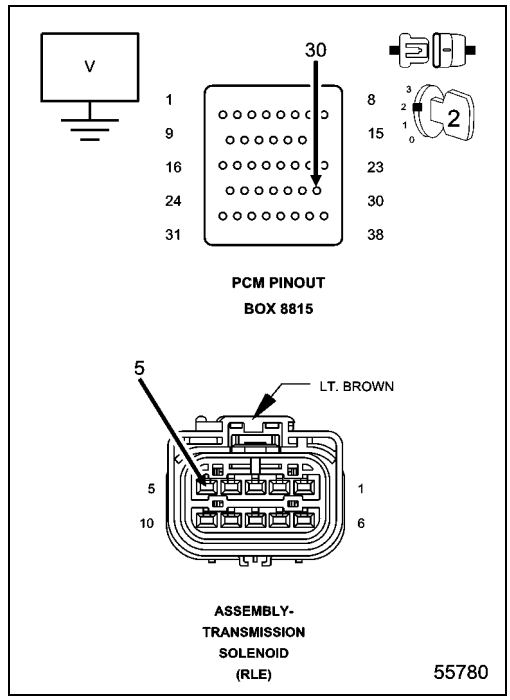

8. CHECK THE WIRING AND CONNECTORS

1. The conditions necessary to set the DTC are not present at this time.
2. Using the schematics as a guide, inspect the wiring and connectors specific to this circuit.
3. Wiggle the wires while checking for shorted and open circuits.
4. With the scan tool, check the Event Data to help identify the conditions in which the DTC was set.

Were there any problems found?

Yes

- Repair as necessary.
- Perform 42RLE TRANSMISSION VERIFICATION TEST. (Refer to 28 - DTC-Based Diagnostics/MODULE, Powertrain Control (PCM) - Standard Procedure)

No

- Test Complete.

P0868-LINE PRESSURE LOW

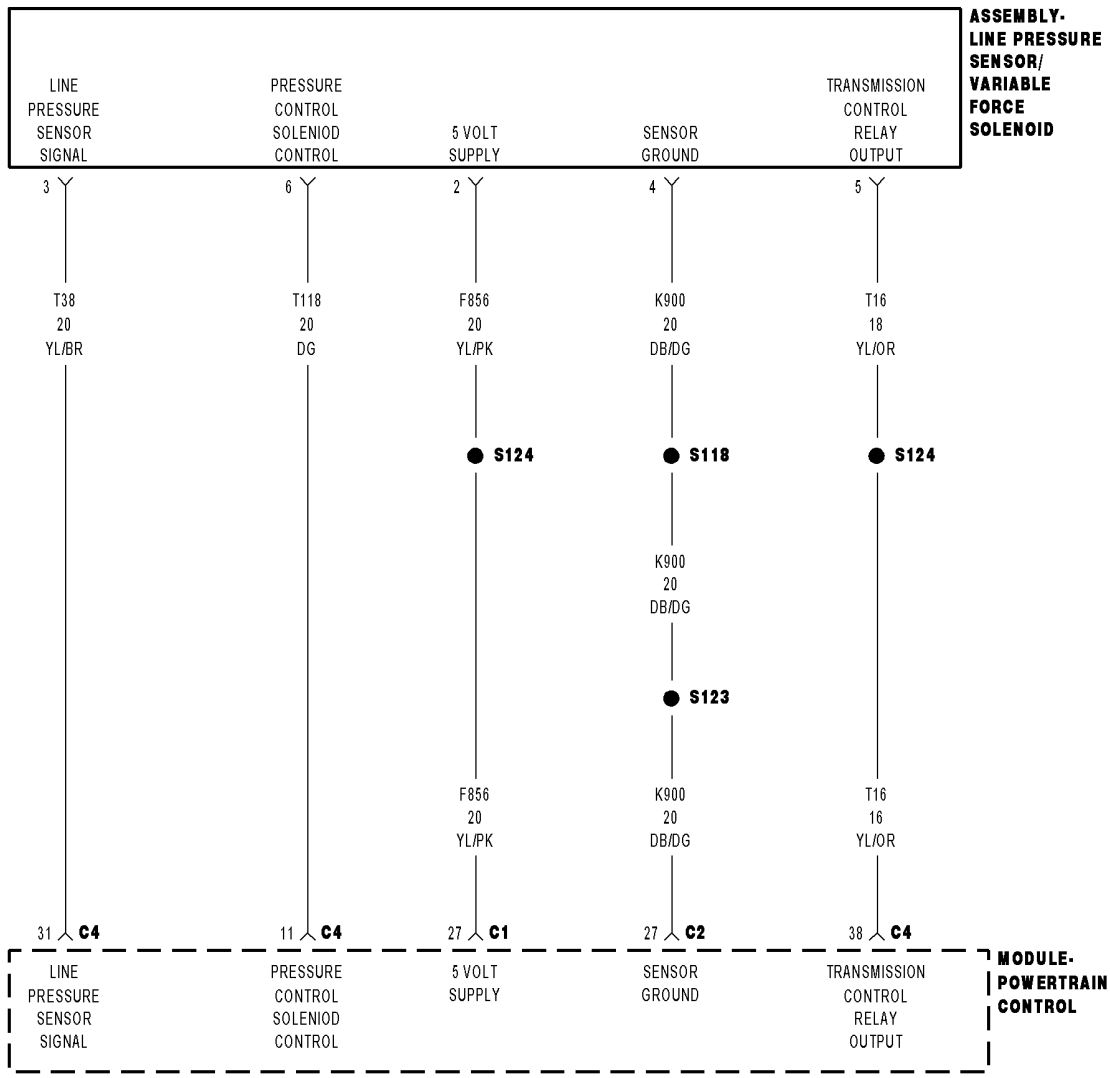

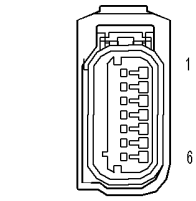

ASSEMBLY-
LINE PRESSURE SOLENOID/
VARIABLE FROCE
SOLENOID

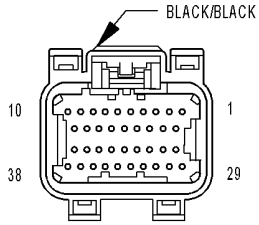

MODULE-
POWERTRAIN
CONTROL C1

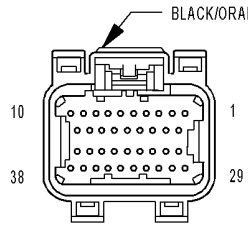

MODULE-
POWERTRAIN
CONTROL C2

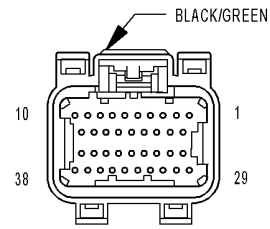

MODULE-
POWERTRAIN
CONTROL C4
(42RLE)

816895fc

For a complete wiring diagram, **refer to the Wiring Information**

Theory of Operation

Line pressure is measured by the Line Pressure Sensor (LPS) and regulation is achieved by changing the duty cycle of the Pressure Control Solenoid (PCS) controlled by the Transmission Control System. (5% duty cycle = solenoid off = Max line pressure, 62% duty cycle = solenoid on = Min line pressure). The Transmission Control System calculates the desired line pressure based on inputs from both the engine and transmission.

The Transmission Control System calculates torque input to the transmission and uses it as the primary input to the desired line pressure calculation. This is called Torque Based Line Pressure. In addition, the line pressure is set to a preset level 827 or 931 kPa (120 or 135 psi) during shifts and in Park and Neutral to ensure consistent shift quality. The desired line pressure is continuously being compared to the actual line pressure. If the actual line pressure is consistently lower than the target while driving, the line pressure low DTC P0868 will set.

- **When Monitored:**
  Continuously while driving in a forward gear.
- **Set Condition:**
  The PCM continuously monitors Actual Line Pressure and compares it to Desired Line Pressure. If the Actual Line Pressure is more than 10 psi below Desired Line Pressure, this DTC will set.

Possible Causes
CHECK FOR RELATED DTCS
LOW FLUID LEVEL
(F856) 5-VOLT SUPPLY CIRCUIT OPEN
(F856) 5-VOLT SUPPLY CIRCUIT SHORT TO GROUND
(F856) 5-VOLT SUPPLY CIRCUIT SHORT TO VOLTAGE
(T118) PRESSURE CONTROL SOLENOID CONTROL CIRCUIT SHORT TO ANOTHER CIRCUIT
INTERNAL TRANSMISSION
LINE PRESSURE SENSOR
CRACKED, PLUGGED, OR MIS-INSTALLED PRIMARY OIL FILTER
STUCK OR STICKING MAIN REGULATOR VALVE
POWERTRAIN CONTROL MODULE

Always perform the 42RLE Pre-Diagnostic Troubleshooting procedure before proceeding. (Refer to 28 - DTC-Based Diagnostics/MODULE, Powertrain Control (PCM) - Standard Procedure)

1. CHECK FOR RELATED DTCS

1. With the scan tool, check for other transmission DTCs

Is the DTC P0933 present also?

Yes

- Refer to DTC Based Diagnostics and perform the appropriate diagnostic procedure.

No

- Go To 2

2. CHECK IF THE DTC IS CURRENT

1. With the scan tool, read DTCs.

Is the status Active or is the Starts Since Set counter 2 or less for this DTC?

Yes

- Go To 3

No

- Go To 10

3. CHECK THE PCM AND WIRING

1. Turn the ignition off to the lock position.
2. Remove the Ignition Switch Feed fuse from the TIPM.

CAUTION: Removal of the Ignition Switch Feed fuse from the TIPM will prevent the vehicle from being started in gear.

WARNING: The Ignition Switch Feed fuse must be removed from the TIPM. Failure to do so can result in possible serious or fatal injury.

3. Install the Transmission Simulator, Miller tool #8333A and the Electronic Transmission Adapter kit.
4. On the Transmission Simulator select the "OFF" position of the "Input/Output Speed" switch.
5. Ignition on, engine not running.
6. With the scan tool, monitor the Line Pressure during the following steps.
7. Using the Transmission Simulator, set the rotary knob to each of the 3 line pressure positions.

NOTE: All three scan tool Line Pressure readings should be steady and ± 14 kPa (2.0 psi) or 0.1 volts of the reading specified on the Transmission Simulator.

Did the Line Pressure read within ± 14 kPa (2.0 psi) or 0.1 volts in all three positions?

Yes

- Go To 4

No

- Go To 6

4. CHECK THE LINE PRESSURE SENSOR

1. Turn the ignition off to the lock position.
2. Disconnect the Transmission Simulator, Miller tool #8333A and reconnect all previously disconnected connectors.
3. Install a Pressure Gauge, 0 to 2000 kPa or 0 to 300 psi to the L/R test port.
4. Start the engine in park.
5. Monitor the line pressure readings of both the scan tool and the pressure gauge and compare the two readings.

Is the line pressure gauge reading within 34 kPa or 5 psi of the scan tool reading?

Yes

- Go To 5

No

- Replace the Line Pressure Sensor in accordance with the Service Information.
- Perform 42RLE TRANSMISSION VERIFICATION TEST. (Refer to 28 - DTC-Based Diagnostics/MODULE, Powertrain Control (PCM) - Standard Procedure)

5. CHECK FOR A PLUGGED TRANSMISSION OIL FILTER

1. Turn the ignition off to the lock position.
2. Remove and inspect the Transmission Oil Pan for excessive debris in accordance with the Service Information.
3. Remove and inspect the Transmission Oil Filter in accordance with the Service Information.

Does the Oil Pan contain excessive debris and/or is the Transmission Oil Filter plugged?

Yes

- Repair as necessary. If the Transmission Oil Filter is plugged or there is excessive debris, refer to the Service Information for the proper Hydraulic repair procedure.
- Perform 42RLE TRANSMISSION VERIFICATION TEST. (Refer to 28 - DTC-Based Diagnostics/MODULE, Powertrain Control (PCM) - Standard Procedure)

No

- Repair internal transmission and inspect the Transmission Oil Pump in accordance with the Service Information and replace if necessary.
- Perform 42RLE TRANSMISSION VERIFICATION TEST. (Refer to 28 - DTC-Based Diagnostics/MODULE, Powertrain Control (PCM) - Standard Procedure)

6. CHECK THE (F856) 5-VOLT SUPPLY CIRCUIT FOR A SHORT TO VOLTAGE

1. Disconnect the Transmission Simulator, Miller tool #8333A and the Electronic Transmission Adapter kit.
2. Reconnect all previously disconnected connectors except the Line Pressure Sensor/Variable Force Solenoid Assembly harness connector.
3. Ignition on, engine not running.
4. Measure the voltage of the (F856) 5-volt Supply circuit.

Is the voltage above 5.5 volts?

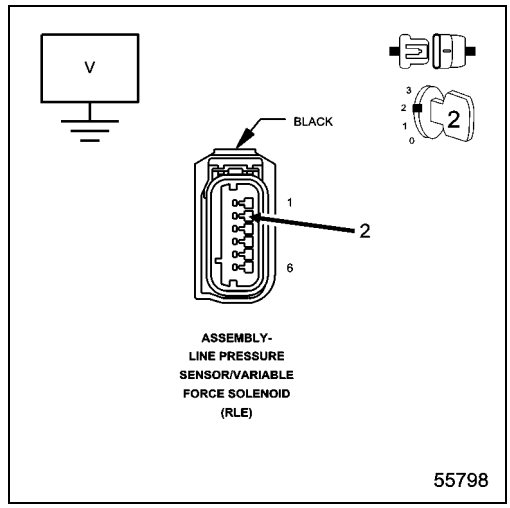

Yes

- Repair the (F856) 5-volt Supply circuit for a short to voltage.
- Perform 42RLE TRANSMISSION VERIFICATION TEST. (Refer to 28 - DTC-Based Diagnostics/MODULE, Powertrain Control (PCM) - Standard Procedure)

No

- Go To 7

7. CHECK THE (F856) 5-VOLT SUPPLY CIRCUIT FOR AN OPEN

1. Turn the ignition off to the lock position.
2. Disconnect the PCM C1 harness connector and connect Miller tool #8815A.

CAUTION: Do not probe the PCM harness connectors. Probing the PCM harness connectors will damage the PCM terminals resulting in poor terminal to pin connection. Install the Kit, NGC, 38 Position 8815A to perform diagnosis.

3. Measure the resistance of the (F856) 5-volt Supply circuit between the Line Pressure Sensor/Variable Force Solenoid Assembly harness connector and the appropriate terminal of Miller tool #8815A.

Is the resistance above 5.0 ohms?

Yes

- Repair the (F856) 5-volt Supply circuit for an open.
- Perform 42RLE TRANSMISSION VERIFICATION TEST. (Refer to 28 - DTC-Based Diagnostics/MODULE, Powertrain Control (PCM) - Standard Procedure)

No

- Go To 8

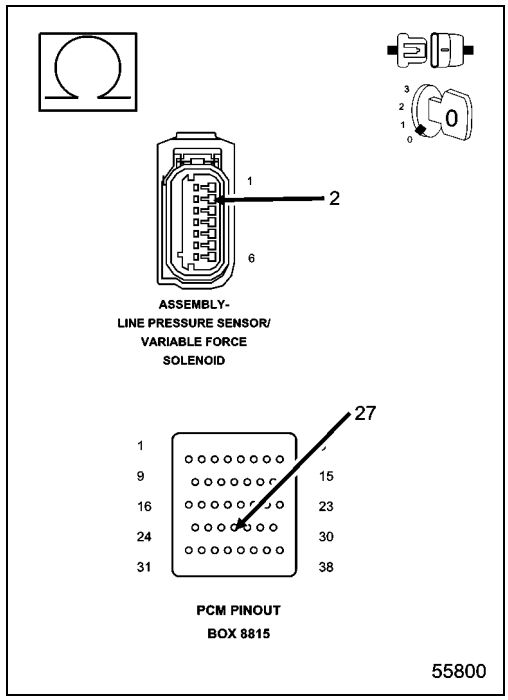

8. CHECK THE (F856) 5-VOLT SUPPLY CIRCUIT FOR A SHORT TO GROUND

1. Measure the resistance between ground and the (F856) 5-volt Supply circuit.

Is the resistance below 5.0 ohms?

Yes

- Repair the (F856) 5-volt Supply circuit for a short to ground.
- Perform 42RLE TRANSMISSION VERIFICATION TEST. (Refer to 28 - DTC-Based Diagnostics/MODULE, Powertrain Control (PCM) - Standard Procedure)

No

- Go To 9

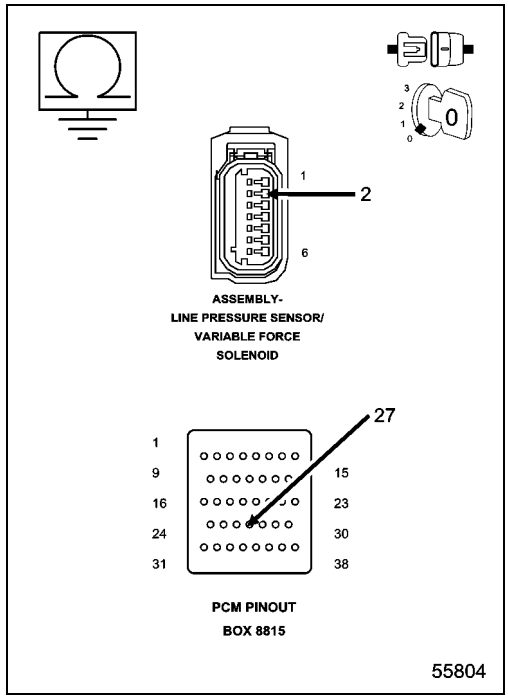

9. CHECK THE (T118) PRESSURE CONTROL SOLENOID CONTROL CIRCUIT FOR A SHORT TO ANOTHER CIRCUIT

1. Turn the ignition off to the lock position.
2. Disconnect the Line Pressure Sensor/Variable Force Solenoid Assembly harness connector.
3. Disconnect all PCM harness connectors.
4. Measure the resistance between the (T118) Pressure Control Solenoid Control circuit and all other circuits in the Line Pressure Sensor/Variable Force Solenoid Assembly harness connector.

Is the resistance below 5.0 ohms between the (T118) Pressure Control Solenoid Control circuit and any other circuit(s) in the Line Pressure Sensor/Variable Force Solenoid Assembly harness connector?

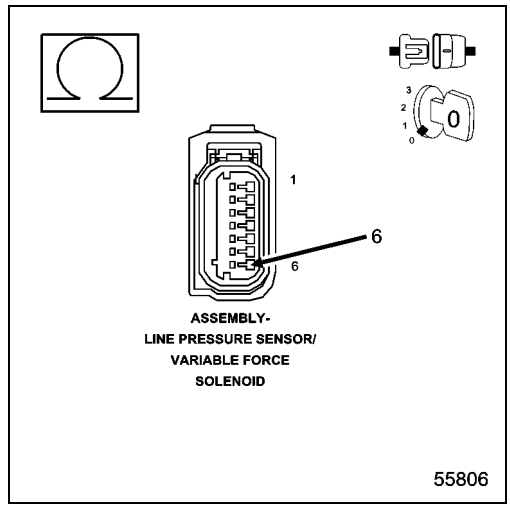

Yes

- Repair the (T118) Pressure Control Solenoid Control circuit for a short to another circuit(s).
- Perform 42RLE TRANSMISSION VERIFICATION TEST. (Refer to 28 - DTC-Based Diagnostics/MODULE, Powertrain Control (PCM) - Standard Procedure)

No

- Using the schematics as a guide, check the Powertrain Control Module (PCM) terminals for corrosion, damage, or terminal push out. Pay particular attention to all power and ground circuits. If no problems are found, replace and program the PCM in accordance with the Service Information. With the scan tool, perform Quick Learn.
- Perform 42RLE TRANSMISSION VERIFICATION TEST. (Refer to 28 - DTC-Based Diagnostics/MODULE, Powertrain Control (PCM) - Standard Procedure)

10. CHECK THE WIRING AND CONNECTORS

1. The conditions necessary to set this DTC are not present at this time.
2. Using the schematics as a guide, inspect the wiring and connectors specific to this circuit.
3. Wiggle the wires while checking for shorted and open circuits.
4. With the scan tool, check the Event Data to help identify the conditions in which the DTC was set.

Where there any problems found?

Yes

- Repair as necessary.
- Perform 42RLE TRANSMISSION VERIFICATION TEST. (Refer to 28 - DTC-Based Diagnostics/MODULE, Powertrain Control (PCM) - Standard Procedure)

No

- Test Complete.

P0869-LINE PRESSURE HIGH

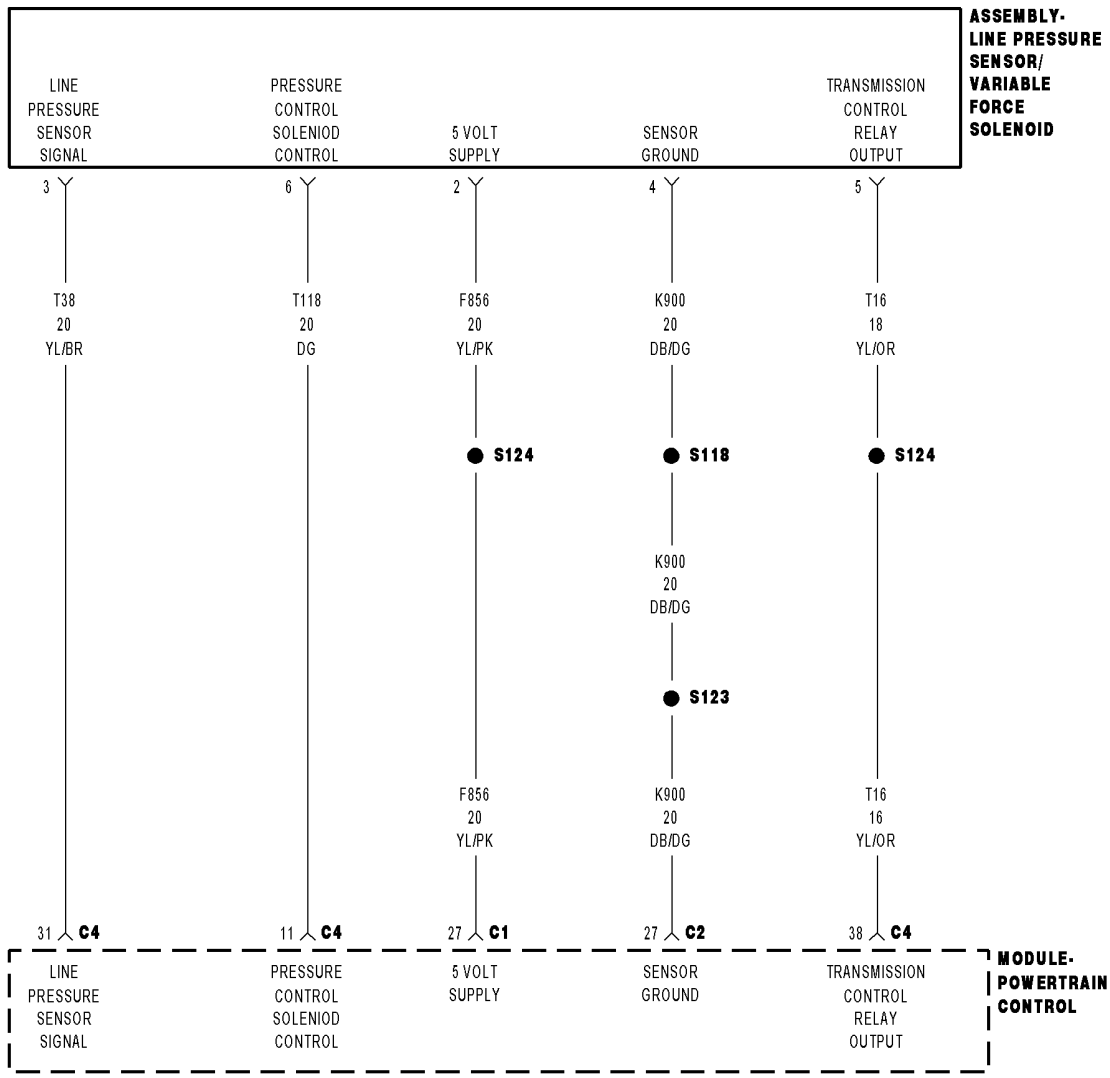

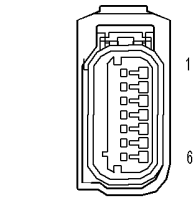

ASSEMBLY-
LINE PRESSURE SOLENOID/
VARIABLE FROCE
SOLENOID

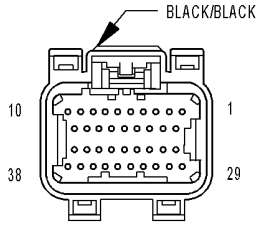

MODULE-
POWERTRAIN
CONTROL C1

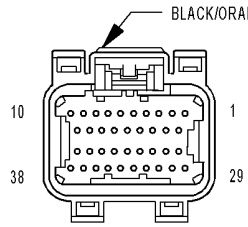

MODULE-
POWERTRAIN
CONTROL C2

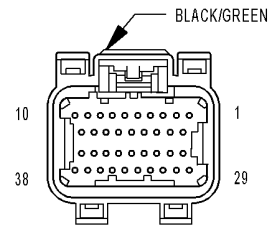

MODULE-
POWERTRAIN
CONTROL C4
(42RLE)

816895fc

For a complete wiring diagram, **refer to the Wiring Information**

Theory of Operation

Line pressure is measured by the Line Pressure Sensor (LPS) and regulation is achieved by changing the duty cycle of the Pressure Control Solenoid (PCS) controlled by the Transmission Control System. (5% duty cycle = solenoid off = Max line pressure, 62% duty cycle = solenoid on = Min line pressure). The Transmission Control System calculates the desired line pressure based on inputs from both the engine and transmission.

The Transmission Control System calculates torque input to the transmission and uses it as the primary input to the desired line pressure calculation. This is called Torque Based Line Pressure. In addition, the line pressure is set to a preset level 827 or 931 kPa (120 or 135 psi) during shifts and in Park and Neutral to ensure consistent shift quality. The desired line pressure is continuously being compared to the actual line pressure. If the actual line pressure is consistently higher than the highest desired line pressure ever used in the current gear, the line pressure high DTC P0869 will set.

- **When Monitored:**
  Continuously while driving in a forward gear.
- **Set Condition:**
  The PCM continuously monitors Actual Line Pressure. If the Actual Line Pressure reading is greater than the highest Desired Line Pressure ever used in the current gear, while the Pressure Control Solenoid duty cycle is at or near its maximum value (which should result in minimum line pressure), the DTC will set.

Possible Causes
(F856) 5-VOLT SUPPLY CIRCUIT OPEN
LINE PRESSURE SENSOR CONNECTION
(T118) PRESSURE CONTROL SOLENOID CONTROL CIRCUIT OPEN
(F856) 5-VOLT SUPPLY CIRCUIT SHORT TO GROUND
(T118) PRESSURE CONTROL SOLENOID CONTROL CIRCUIT SHORT TO GROUND
TRANSMISSION CONTROL OUTPUT CIRCUIT
LINE PRESSURE SENSOR
STUCK OR STICKING MAIN REGULATOR VALVE
POWERTRAIN CONTROL MODULE

Always perform the 42RLE Pre-Diagnostic Troubleshooting procedure before proceeding. (Refer to 28 - DTC-Based Diagnostics/MODULE, Powertrain Control (PCM) - Standard Procedure)

1. CHECK FOR RELATED DTCS

1. With the scan tool, check for other Transmission DTCs

Are there any line pressure sensor or transmission relay output DTCs present also?

Yes

- Refer to DTC Based Diagnostics and perform the appropriate diagnostic procedure.

No

- Go To 2

2. CHECK IF THE DTC IS CURRENT

1. With the scan tool, read DTCs.

Is the status Active or is the Starts Since Set counter 2 or less for this DTC?

Yes

- Go To 3

No

- Go To 9

3. CHECK THE PCM AND WIRING

1. Turn the ignition off to the lock position.
2. Remove the Ignition Switch Feed fuse from the TIPM.

CAUTION: Removal of the Ignition Switch Feed fuse from the TIPM will prevent the vehicle from being started in gear.

WARNING: The Ignition Switch Feed fuse must be removed from the TIPM. Failure to do so can result in possible serious or fatal injury.

3. Install the Transmission Simulator, Miller tool #8333A and the Electronic Transmission Adapter kit.
4. With the Transmission Simulator select the "OFF" position on the "Input/Output Speed" switch.
5. Ignition on, engine not running.
6. With the scan tool, monitor the Line Pressure during the following step.
7. Using the Transmission Simulator, set the rotary switch to each of the 3 line pressure positions.

NOTE: All three scan tool Line Pressure readings should be steady and ± 14 kPa (2.0 psi) or 0.1 volts of the reading specified on the Transmission Simulator.

Did the Line Pressure read within ± 14 kPa (2.0 psi) or 0.1 volts in all three positions?

Yes

- Go To 4

No

- Go To 5

4. CHECK THE LINE PRESSURE SENSOR CALIBRATION

1. Turn the ignition off to the lock position.
2. Disconnect the Transmission Simulator, Miller tool #8333A and the Electronic Transmission Adapter kit and reconnect all previously disconnected connectors.
3. Install the Line Pressure Gauge, Miller tool #C-3293-SP, 0 to 2000 kPa or 0 to 300 psi in the L/R pressure port.
4. Start the engine in park.
5. Monitor the Line Pressure readings on the scan tool and the pressure gauge.
6. Compare the Line Pressure readings between the scan tool and the pressure gauge.

Is the pressure gauge reading within 34 kPa or 5 psi of the scan tool reading?

Yes

- Repair the internal transmission and inspect the Transmission Oil Pump in accordance with the Service Information and replace if necessary. If no problem is found, replace the Pressure Control Solenoid.
- Perform 42RLE TRANSMISSION VERIFICATION TEST. (Refer to 28 - DTC-Based Diagnostics/MODULE, Powertrain Control (PCM) - Standard Procedure)

No

- Replace the Line Pressure Sensor in accordance with the Service Information.
- Perform 42RLE TRANSMISSION VERIFICATION TEST. (Refer to 28 - DTC-Based Diagnostics/MODULE, Powertrain Control (PCM) - Standard Procedure)

5. CHECK THE (T118) PRESSURE CONTROL SOLENOID CONTROL CIRCUIT FOR AN OPEN

1. Turn the ignition off to the lock position.
2. Disconnect the Transmission Simulator, Miller tool #8333A.
3. Disconnect the Powertrain Control Module C4 harness connector.

CAUTION: Do not probe the PCM harness connectors. Probing the PCM harness connectors will damage the PCM terminals resulting in poor terminal to pin connection. Install the Kit, NGC, 38 Position 8815A to perform diagnosis.

4. Measure the resistance of the (T118) Pressure Control Solenoid Control circuit between the Line Pressure Sensor/Variable Force Solenoid Assembly harness connector and the appropriate terminal of Miller tool #8815A.

Is the resistance above 5.0 ohms?

Yes

- Repair the (T118) Pressure Control Solenoid Control circuit for an open.
- Perform 42RLE TRANSMISSION VERIFICATION TEST. (Refer to 28 - DTC-Based Diagnostics/MODULE, Powertrain Control (PCM) - Standard Procedure)

No

- Go To 6

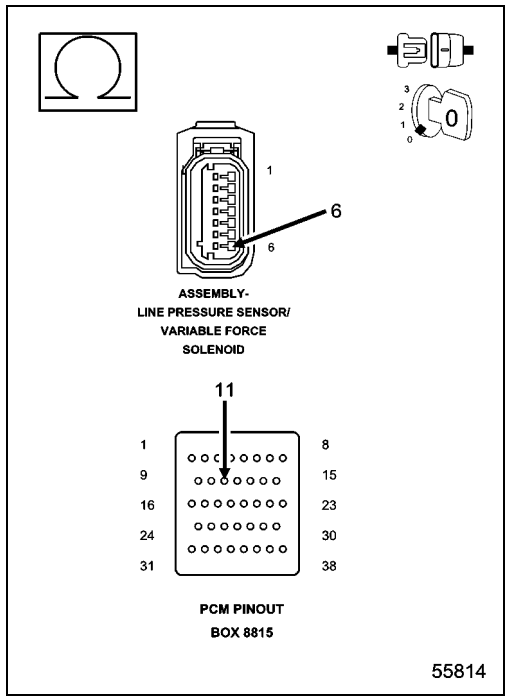

6. CHECK THE (T118) PRESSURE CONTROL SOLENOID CONTROL CIRCUIT FOR A SHORT TO GROUND

1. Measure the resistance between ground and the (T118) Pressure Control Solenoid Control circuit.

Is the resistance below 5.0 ohms?

Yes

- Repair the (T118) Pressure Control Solenoid Control circuit for a short to ground.
- Perform 42RLE TRANSMISSION VERIFICATION TEST. (Refer to 28 - DTC-Based Diagnostics/MODULE, Powertrain Control (PCM) - Standard Procedure)

No

- Go To 7

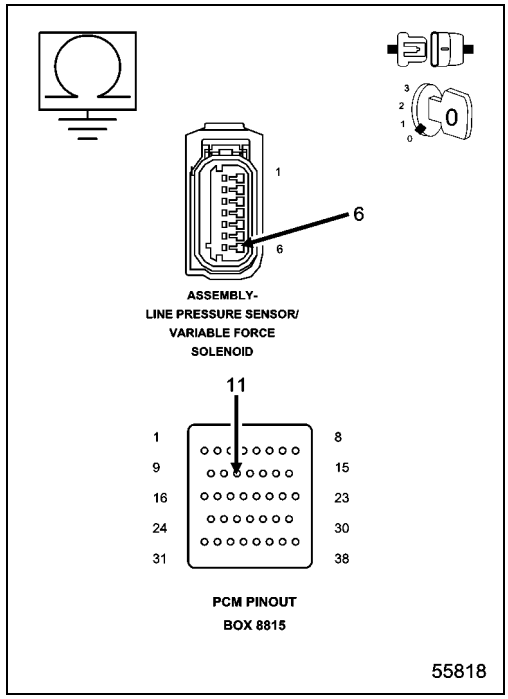

7. CHECK THE (F856) 5-VOLT SUPPLY CIRCUIT FOR AN OPEN

1. Measure the resistance of the (F856) 5-volt Supply circuit between the Line Pressure Sensor/Variable Force Solenoid Assembly harness connector and the appropriate terminal of Miller tool #8815A.

Is the resistance above 5.0 ohms?

Yes

- Repair the (F856) 5-volt Supply circuit for an open.
- Perform 42RLE TRANSMISSION VERIFICATION TEST. (Refer to 28 - DTC-Based Diagnostics/MODULE, Powertrain Control (PCM) - Standard Procedure)

No

- Go To 8

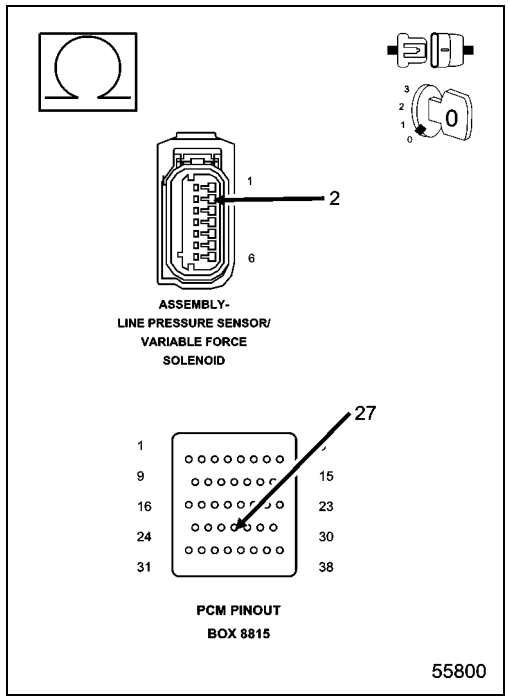

8. CHECK THE (F856) 5-VOLT SUPPLY CIRCUIT FOR A SHORT TO GROUND

1. Disconnect the PCM C1 harness connector.
2. Disconnect the Line Pressure Sensor/Variable Force Solenoid Assembly harness connector.

CAUTION: Do not probe the PCM harness connectors. Probing the PCM harness connectors will damage the PCM terminals resulting in poor terminal to pin connection. Install the Kit, NGC, 38 Position 8815A to perform diagnosis.

3. Measure the resistance between ground and the (F856) 5-volt Supply circuit.

Is the resistance below 5.0 ohms?

Yes

- Repair the (F856) 5-volt Supply circuit for a short to ground.
- Perform 42RLE TRANSMISSION VERIFICATION TEST. (Refer to 28 - DTC-Based Diagnostics/MODULE, Powertrain Control (PCM) - Standard Procedure)

No

- Using the schematics as a guide, check the Powertrain Control Module (PCM) terminals for corrosion, damage, or terminal push out. Pay particular attention to all power and ground circuits. If no problems are found, replace and program the PCM in accordance with the Service Information. With the scan tool, perform Quick Learn.
- Perform 42RLE TRANSMISSION VERIFICATION TEST. (Refer to 28 - DTC-Based Diagnostics/MODULE, Powertrain Control (PCM) - Standard Procedure)

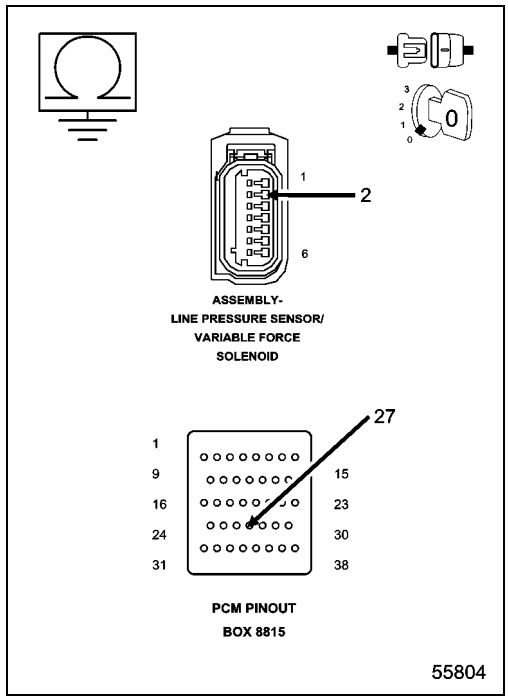

9. CHECK THE WIRING AND CONNECTORS

1. The conditions necessary to set this DTC are not present at this time.
2. Using the schematics as a guide, inspect the wiring and connectors specific to this circuit.
3. Wiggle the wires while checking for shorted and open circuits.
4. With the scan tool, check the Event Data to help identify the conditions in which the DTC was set.

Where there any problems found?

Yes

- Repair as necessary.
- Perform 42RLE TRANSMISSION VERIFICATION TEST. (Refer to 28 - DTC-Based Diagnostics/MODULE, Powertrain Control (PCM) - Standard Procedure)

No

- Test Complete.

P0870-OD HYDRAULIC PRESSURE TEST

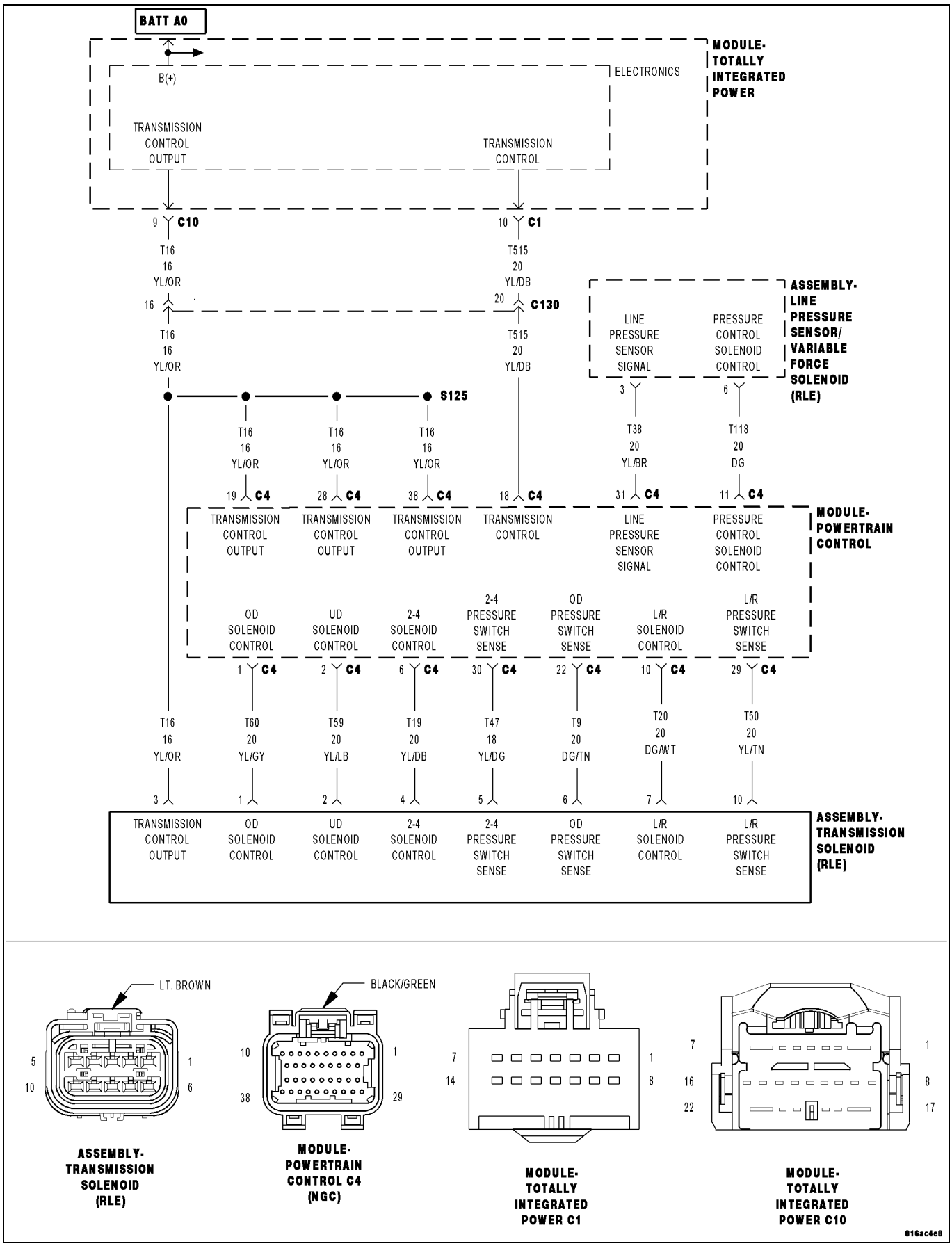

For a complete wiring diagram, **refer to the Wiring Information**.

Theory of Operation

Pressure switches are normally off or open (no pressure applied) and read high (+12 volts). When an element is applied, the corresponding pressure switch closes to ground (0 volts) or turns on. The controller tests the OD and 2/4 pressure switches when they are off (when the corresponding friction element is not applied) by briefly applying the OD and 2/4 elements which will cause the corresponding pressure switch to close. The test verifies that the switches are operational and that the switch will close when the corresponding element is applied. If a switch fails to respond, it is re-tested. The MIL illuminates and the transmission system defaults to Limp-in mode.

- **When Monitored:**
  In any forward gear with engine speed above 1000 rpm, shortly after a shift and every minute thereafter.
- **Set Condition:**
  After a shift into a forward gear, with engine speed greater than 1000 rpm, the PCM momentarily turns on element pressure to the clutch circuits that don't have pressure to identify the correct pressure switch closes. If the pressure switch does not close 2 times the DTC sets.

Possible Causes
LOSS OF PRIME P0944 PRESENT
(T16) TRANSMISSION CONTROL OUTPUT CIRCUIT OPEN
(T9) OD PRESSURE SWITCH SENSE CIRCUIT OPEN
(T9) OD PRESSURE SWITCH CIRCUIT SHORT TO GROUND
(T9) OD PRESSURE SWITCH SENSE CIRCUIT SHORT TO VOLTAGE
TRANSMISSION SOLENOID/PRESSURE SWITCH ASSEMBLY
INTERNAL TRANSMISSION
POWERTRAIN CONTROL MODULE

Always perform the 42RLE Pre-Diagnostic Troubleshooting procedure before proceeding. (Refer to 28 - DTC-Based Diagnostics/MODULE, Powertrain Control (PCM) - Standard Procedure)

1. CHECKING FOR LOSS OF PRIME DTC

1. With the scan tool, check for other Transmission DTCs.

Is the DTC P0944 present also?

Yes

- Refer to DTC Based Diagnostics and perform the appropriate diagnostic procedure.

No

- Go To 2

2. CHECK FOR RELATED TRANSMISSION DTCS

1. With the scan tool, read Transmission DTCs.

Are any of the DTCs P0732, P0734 and/or P0846 present also?

Yes

- Replace the Transmission Solenoid/Pressure Switch Assembly in accordance with the Service Information.
- Perform 42RLE TRANSMISSION VERIFICATION TEST. (Refer to 28 - DTC-Based Diagnostics/MODULE, Powertrain Control (PCM) - Standard Procedure)

No

- Go To 3

3. CHECK IF THE DTC IS CURRENT

1. With the scan tool, read DTCs.

Is the status Active or is the Starts Since Set counter 2 or less for this DTC?

Yes

- Go To 4

No

- Go To 9

4. CHECK THE PCM AND WIRING USING THE TRANSMISSION SIMULATOR

1. Turn the ignition off to the lock position.
2. Remove the Ignition Switch Feed fuse from the TIPM.

CAUTION: Removal of the Ignition Switch Feed fuse from the TIPM will prevent the vehicle from being started in gear.

WARNING: The Ignition Switch Feed fuse must be removed from the TIPM. Failure to do so can result in possible serious or fatal injury.

3. Install the Transmission Simulator, Miller tool #8333A and the Electronic Transmission Adapter kit.
4. Ignition on, engine not running.
5. With the Transmission Simulator, turn the Pressure Switch selector switch to OD.
6. With the scan tool, monitor the UD Pressure Switch state while pressing the Pressure Switch Test button on the Transmission Simulator.
7. Wiggle the wires leading to the PCM while pressing and holding the Pressure Switch Test button.

Did the OD Pressure Switch state change to closed and remain closed while wiggling the wires?

Yes

- Disassemble and inspect the Valve Body in accordance with the Service Information and repair or replace as necessary. If no problems are found in the Valve Body, replace the Transmission Solenoid/Pressure Switch Assembly.
- Perform 42RLE TRANSMISSION VERIFICATION TEST. (Refer to 28 - DTC-Based Diagnostics/MODULE, Powertrain Control (PCM) - Standard Procedure)

No

- Go To 5

5. CHECK THE (T9) OD PRESSURE SWITCH SENSE CIRCUIT FOR AN OPEN

1. Turn the ignition off to the lock position.
2. Disconnect the PCM C4 harness connector.
3. Disconnect the Transmission Solenoid/Pressure Switch Assembly harness connector.

NOTE: Check connectors - Clean/repair as necessary.

CAUTION: Do not probe the PCM harness connectors. Probing the PCM harness connectors will damage the PCM terminals resulting in poor terminal to pin connection. Install the Kit, NGC, 38 Position 8815A to perform diagnosis.

4. Measure the resistance of the (T9) OD Pressure Switch Sense circuit between the Transmission Solenoid/Pressure Switch Assembly harness connector and the appropriate terminal of Miller tool #8815A.

Is the resistance above 5.0 ohms?

Yes

- Repair the (T9) OD Pressure Switch Sense circuit for an open.
- Perform 42RLE TRANSMISSION VERIFICATION TEST. (Refer to 28 - DTC-Based Diagnostics/MODULE, Powertrain Control (PCM) - Standard Procedure)

No

- Go To 6

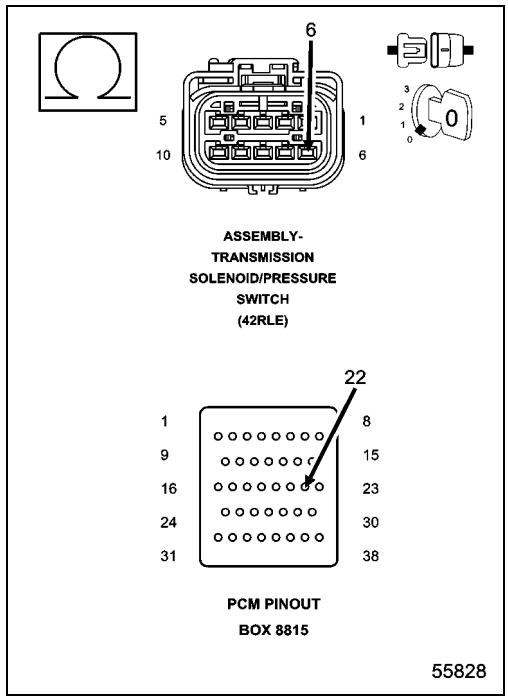

6. CHECK THE (T9) OD PRESSURE SWITCH SENSE CIRCUIT FOR A SHORT TO GROUND

1. Measure the resistance between ground and the (T9) OD Pressure Switch Sense circuit.

Is the resistance below 5.0 ohms?

Yes

- Repair the (T9) OD Pressure Switch Sense circuit for a short to ground.
- Perform 42RLE TRANSMISSION VERIFICATION TEST. (Refer to 28 - DTC-Based Diagnostics/MODULE, Powertrain Control (PCM) - Standard Procedure)

No

- Go To 7

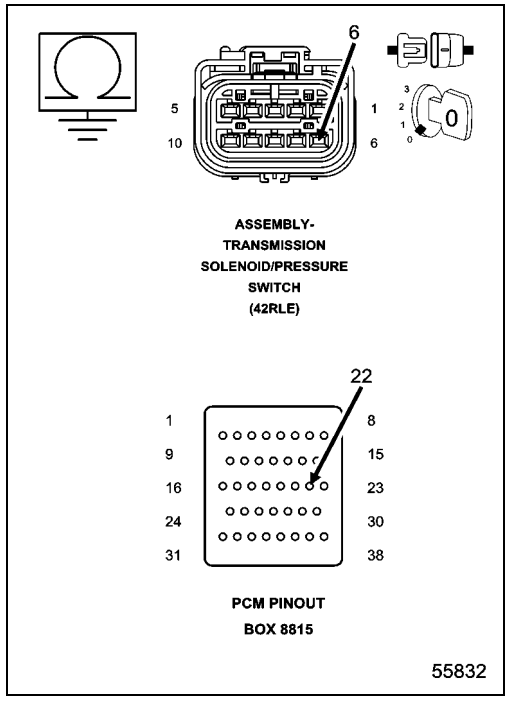

7. CHECK THE (T9) OD PRESSURE SWITCH SENSE CIRCUIT FOR A SHORT TO VOLTAGE

1. Ignition on, engine not running.
2. With the scan tool under TIPM, actuate the Transmission.
3. Measure the voltage of the (T9) OD Pressure Switch Sense circuit.

Is the voltage above 0.5 volts?

Yes

- Repair the (T9) OD Pressure Switch Sense circuit for a short to voltage.
- Perform 42RLE TRANSMISSION VERIFICATION TEST. (Refer to 28 - DTC-Based Diagnostics/MODULE, Powertrain Control (PCM) - Standard Procedure)

No

- Go To 8

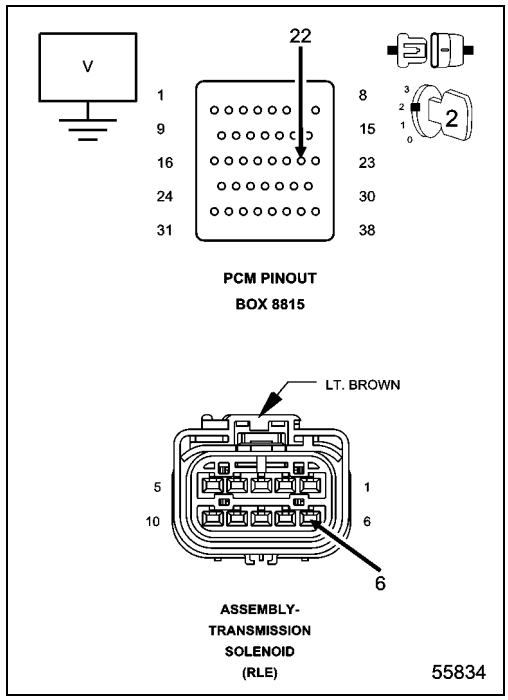

8. (T16) TRANSMISSION CONTROL OUTPUT CIRCUIT OPEN

1. With the scan tool under TIPM, actuate the Transmission.
2. Using a 12-volt test light connected to ground, check (T16) Transmission Control Output circuit in the Transmission Solenoid/ Pressure Switch Assembly harness connector.

NOTE: The test light must illuminate brightly. Compare the brightness to that of a direct connection to the battery.

Does the test light illuminate brightly?

Yes

- Using the schematics as a guide, check the Powertrain Control Module (PCM) terminals for corrosion, damage, or terminal push out. Pay particular attention to all power and ground circuits. If no problems are found, replace and program the PCM in accordance with the Service Information. With the scan tool, perform Quick Learn
- Perform 42RLE TRANSMISSION VERIFICATION TEST. (Refer to 28 - DTC-Based Diagnostics/MODULE, Powertrain Control (PCM) - Standard Procedure)

No

- Repair the (T16) Transmission Control Relay Output circuit for an open. If the fuse is open make sure to check for a short to ground.
- Perform 42RLE TRANSMISSION VERIFICATION TEST. (Refer to 28 - DTC-Based Diagnostics/MODULE, Powertrain Control (PCM) - Standard Procedure)

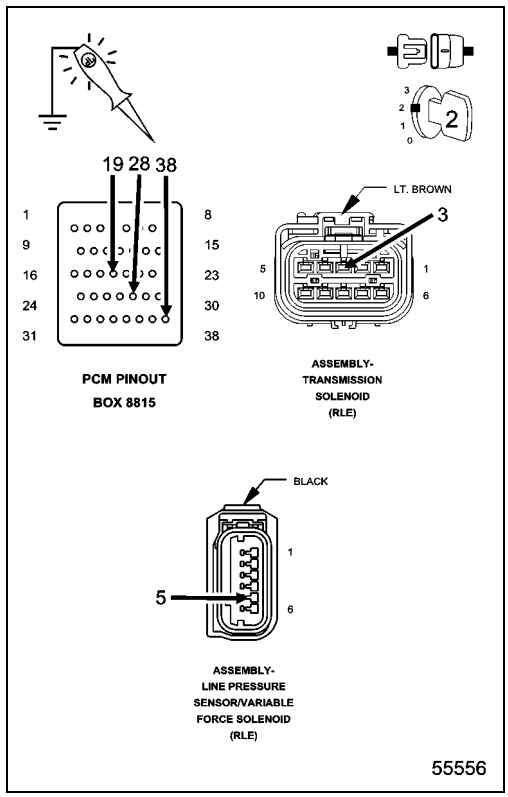

9. CHECK THE WIRING AND CONNECTORS

1. The conditions necessary to set the DTC are not present at this time.
2. Using the schematics as a guide, inspect the wiring and connectors specific to this circuit.
3. Wiggle the wires while checking for shorted and open circuits.
4. With the scan tool, check the Event Data to help identify the conditions in which the DTC was set.

Were there any problems found?

Yes

- Repair as necessary.
- Perform 42RLE TRANSMISSION VERIFICATION TEST. (Refer to 28 - DTC-Based Diagnostics/MODULE, Powertrain Control (PCM) - Standard Procedure)

No

- Test Complete.

P0871-OD PRESSURE SWITCH RATIONALITY

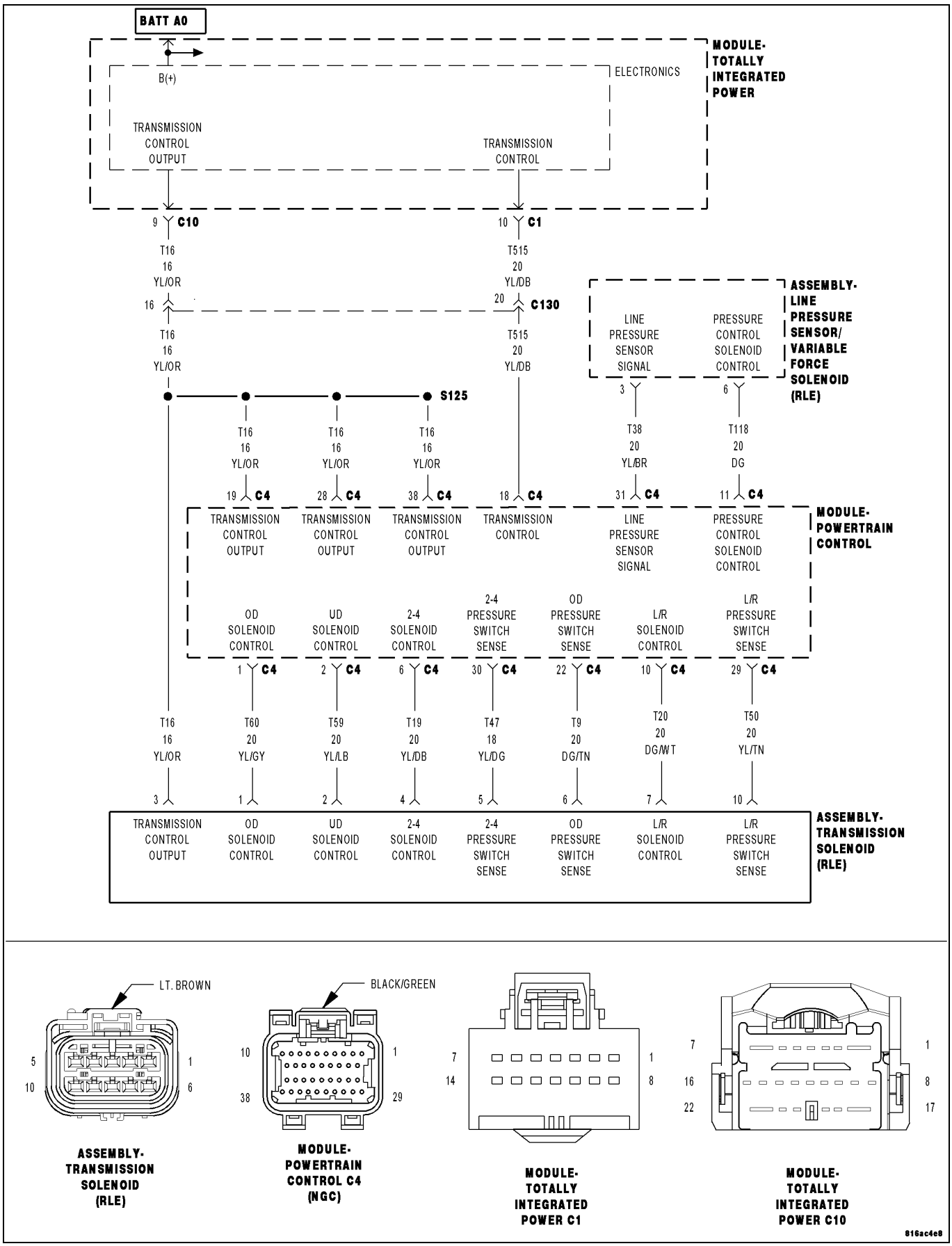

For a complete wiring diagram, **refer to the Wiring Information**.

Theory of Operation

The Transmission system uses three pressure switches to monitor the fluid pressure in the L/R, 2/4, and OD elements. The pressure switches are continuously monitored for the correct states in each gear. Normal operation will be experienced if no other codes are present. Transmission Control System will ignore the code. Limp-in condition will only occur if DTC P0871 is present with a DTC P0706.

- **When Monitored:**
  Whenever the engine is running.
- **Set Condition:**
  The DTC is set if one of the pressure switches are open or closed at the wrong time in a given gear. If the problem is identified for 3 successive key starts, the transmission will go into Limp-in mode and the MIL will turn on after 10 seconds of vehicle operation.

Possible Causes
RELATED TIPM TCM POWER INPUT DTCS PRESENT
LOSS OF PRIME DTC PRESENT
(T9) OD PRESSURE SWITCH SENSE CIRCUIT OPEN
(T9) OD PRESSURE SWITCH SENSE CIRCUIT SHORT TO GROUND
(T9) OD PRESSURE SWITCH SENSE CIRCUIT SHORT TO VOLTAGE
TRANSMISSION SOLENOID/PRESSURE SWITCH ASSEMBLY
POWERTRAIN CONTROL MODULE

Always perform the 42RLE Pre-Diagnostic Troubleshooting procedure before proceeding. (Refer to 28 - DTC-Based Diagnostics/MODULE, Powertrain Control (PCM) - Standard Procedure)

PRESSURE SWITCH STATES

GEAR	L/R	2/4	OD
R	OP	OP	OP
P/N	CL	OP	OP
1st	CL	OP	OP
2nd	OP	CL	OP
D	OP	OP	CL
OD	OP	CL	CL
OP = OPEN			
CL = CLOSED			

1. CHECK FOR TIPM TCM POWER INPUT DTCS

1. With the scan tool under TIPM, check for TCM Power Input DTCs.

Are there any TIPM TCM Power Input DTCs present?

Yes

- Refer to DTC Based Diagnostics and perform the appropriate diagnostic procedure.

No

- Go To 2

2. CHECK FOR LOSS OF PRIME DTC

1. With the scan tool, check for other Transmission DTCs.

Is the DTC P0944 present also?

Yes

- Refer to DTC Based Diagnostics and perform the appropriate diagnostic procedure.

No

- Go To 3

3. CHECK IF THE DTC IS CURRENT

1. With the scan tool, read DTCs.

Is the status Active or is the Starts Since Set counter 2 or less for this DTC?

Yes

- Go To 4

No

- Go To 8

4. CHECK THE PCM AND WIRING USING THE TRANSMISSION SIMULATOR

1. Turn the ignition off to the lock position.
2. Remove the Ignition Switch Feed fuse from the TIPM.

CAUTION: Removal of the Ignition Switch Feed fuse from the TIPM will prevent the vehicle from being started in gear.

WARNING: The Ignition Switch Feed fuse must be removed from the TIPM. Failure to do so can result in possible serious or fatal injury.

3. Install the Transmission Simulator, Miller tool #8333A and the Electronic Transmission Adapter kit.
4. Ignition on, engine not running.
5. With the Transmission Simulator, turn the Pressure Switch selector to OD.
6. With the scan tool , monitor the OD Pressure Switch state while pressing the Pressure Switch Test button on the Transmission Simulator.

Did the OD Pressure Switch state change?

Yes

- Replace the Transmission Solenoid/Pressure Switch Assembly in accordance with the Service Information.
- Perform 42RLE TRANSMISSION VERIFICATION TEST. (Refer to 28 - DTC-Based Diagnostics/MODULE, Powertrain Control (PCM) - Standard Procedure)

No

- Go To 5

5. (T9) OD PRESSURE SWITCH SENSE CIRCUIT OPEN

1. Turn the ignition off to the lock position.
2. Disconnect the PCM C4 harness connector.
3. Disconnect the Transmission Solenoid/Pressure Switch Assembly harness connector.

NOTE: Check connectors - Clean/repair as necessary.

CAUTION: Do not probe the PCM harness connectors. Probing the PCM harness connectors will damage the PCM terminals resulting in poor terminal to pin connection. Install the PCM Pinout Box 8815A **to perform diagnosis.**

4. Measure the resistance of the (T9) OD Pressure Switch Sense circuit between the Transmission Solenoid/Pressure Switch Assembly harness connector and the appropriate terminal of Miller tool #8815A.

Is the resistance above 5.0 ohms?

Yes

- Repair the (T9) OD Pressure Switch Sense circuit for an open.
- Perform 42RLE TRANSMISSION VERIFICATION TEST. (Refer to 28 - DTC-Based Diagnostics/MODULE, Powertrain Control (PCM) - Standard Procedure)

No

- Go To 6

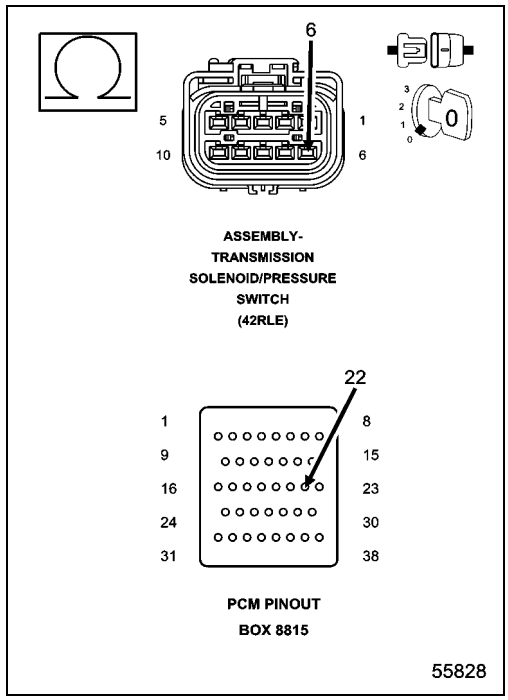

6. (T9) OD PRESSURE SWITCH SENSE CIRCUIT SHORT TO GROUND

1. Measure the resistance between ground and the (T9) OD Pressure Switch Sense circuit.

Is the resistance below 5.0 ohms?

Yes

- Repair the (T9) OD Pressure Switch Sense circuit for a short to ground.
- Perform 42RLE TRANSMISSION VERIFICATION TEST. (Refer to 28 - DTC-Based Diagnostics/MODULE, Powertrain Control (PCM) - Standard Procedure)

No

- Go To 7

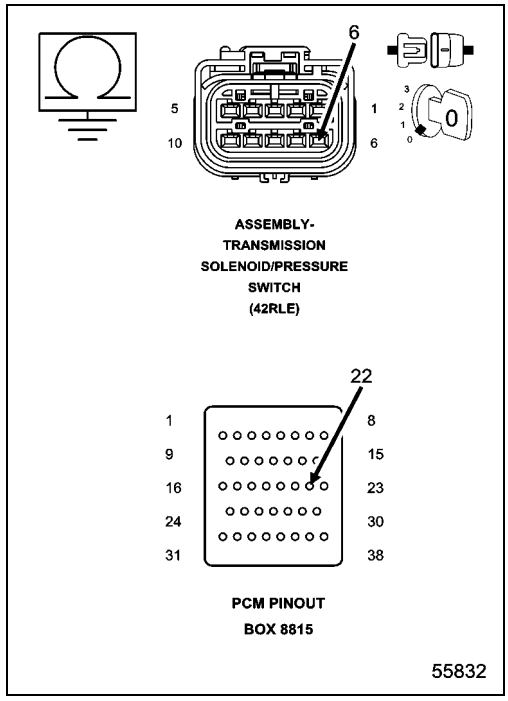

7. (T9) OD PRESSURE SWITCH SENSE CIRCUIT SHORT TO VOLTAGE

1. Ignition on, engine not running.
2. With the scan tool under TIPM, actuate the Transmission.
3. Measure the voltage of the (T9) OD Pressure Switch Sense circuit.

Is the voltage above 0.5 volts?

Yes

- Repair the (T9) OD Pressure Switch Sense circuit for a short to voltage.
- Perform 42RLE TRANSMISSION VERIFICATION TEST. (Refer to 28 - DTC-Based Diagnostics/MODULE, Powertrain Control (PCM) - Standard Procedure)

No

- Using the schematics as a guide, check the Powertrain Control Module (PCM) terminals for corrosion, damage, or terminal push out. Pay particular attention to all power and ground circuits. If no problems are found, replace and program the PCM in accordance with the Service Information. With the scan tool, perform Quick Learn
- Perform 42RLE TRANSMISSION VERIFICATION TEST. (Refer to 28 - DTC-Based Diagnostics/MODULE, Powertrain Control (PCM) - Standard Procedure)

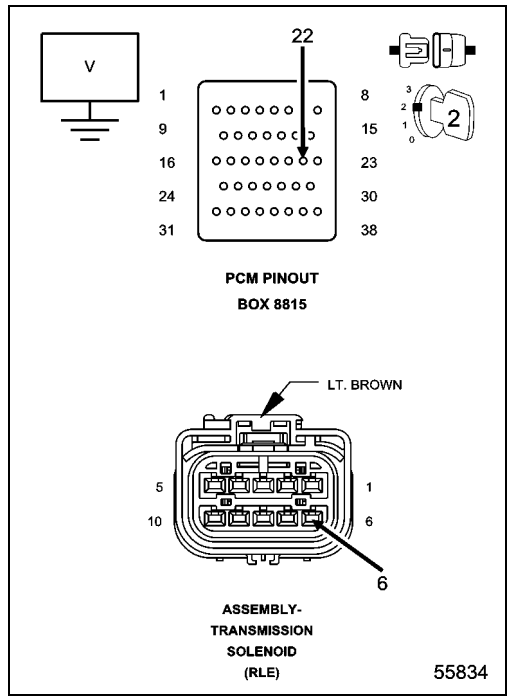

8. CHECK THE WIRING AND CONNECTORS

1. The conditions necessary to set the DTC are not present at this time.
2. Using the schematics as a guide, inspect the wiring and connectors specific to this circuit.
3. Wiggle the wires while checking for shorted and open circuits.
4. With the scan tool, check the Event Data to help identify the conditions in which the DTC was set.

Were there any problems found?

Yes

- Repair as necessary.
- Perform 42RLE TRANSMISSION VERIFICATION TEST. (Refer to 28 - DTC-Based Diagnostics/MODULE, Powertrain Control (PCM) - Standard Procedure)

No

- Test Complete.

P0882-TCM POWER INPUT LOW

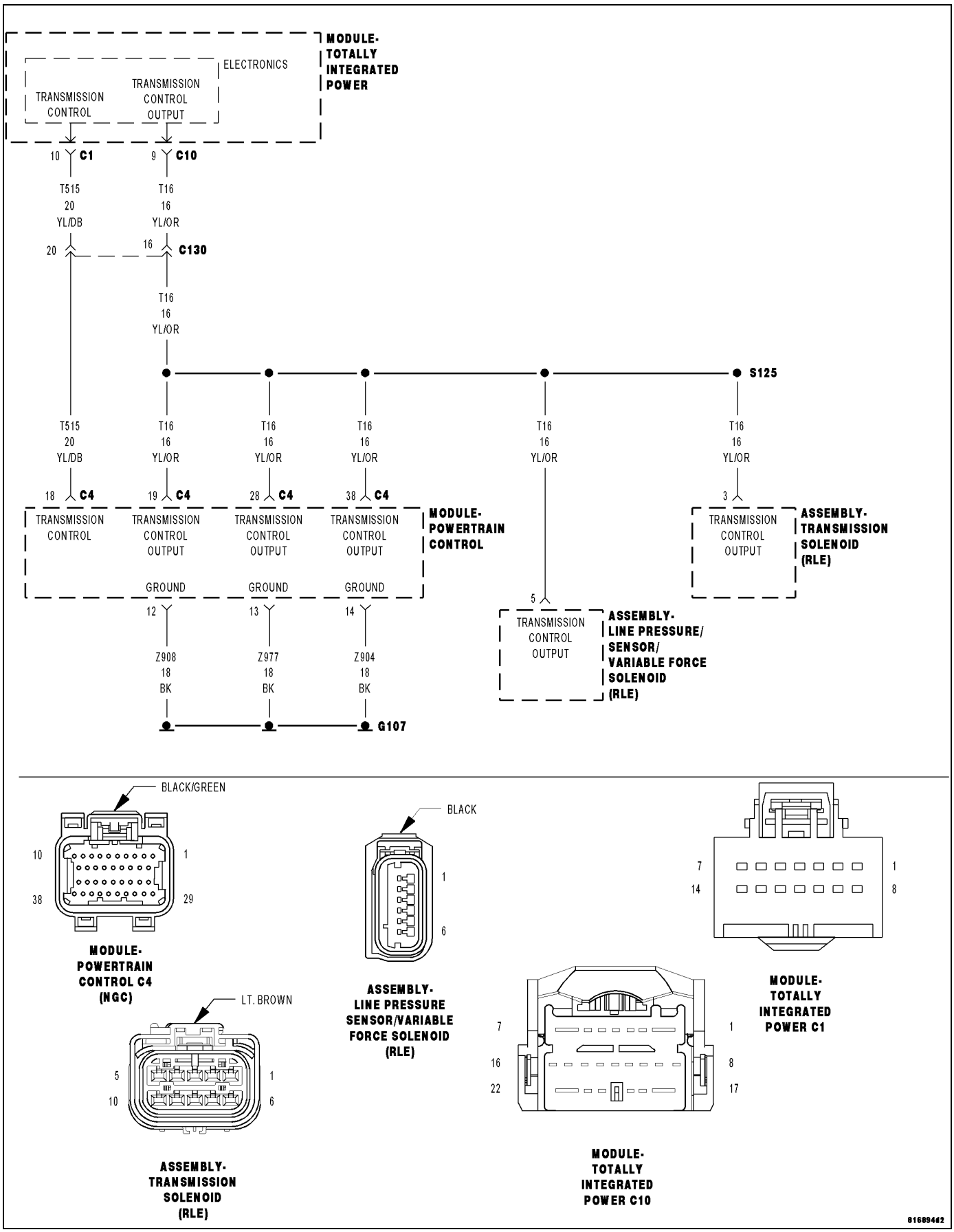

For a complete wiring diagram, **refer to the Wiring Information**

Theory of Operation

The Transmission Control Output circuit is used to supply power to the Transmission Solenoid/TRS Assembly and to the PCM when in normal operating mode. The purpose of the Transmission Output circuit is to allow the Transmission Control System to turn off the power to the Transmission Solenoid/TRS Assembly in event that the transmission should need to be placed into “limp-in” mode due to a DTC.

After a PCM reset, (ignition switch turned to the run position, or after cranking the engine) the Transmission Control System verifies that the Transmission Output circuit is open by checking for voltage on the Transmission Output circuits before the Transmission Control System request for the circuit to be powered up. The request is sent by a direct circuit control from the PCM to the TIPM. If the Transmission Control System detects less that 3.0 volts when the output is commanded on, the DTC will set.**Note: Inadequate Transmission Control Output voltage can also cause DTCs P0846, P0869, or P0871 to set. Repairing the P0882 fault should also eliminate the related DTCs.**

- **When Monitored:**
  When the ignition is turned from "OFF" position to "RUN" position and/or the ignition is turned from "START" position to "RUN" position.
- **Set Condition:**
  This DTC is set when there is less than 3.0 volts present at the transmission control output circuits located in the Powertrain Control Module (PCM) when the Transmission Control System request the power up of those circuits.

Possible Causes
RELATED TIPM DTCS
(T515) TRANSMISSION CONTROL CIRCUIT SHORT TO GROUND
(T515) TRANSMISSION CONTROL CIRCUIT OPEN
POWERTRAIN CONTROL MODULE

Always perform the 42RLE Pre-Diagnostic Troubleshooting procedure before proceeding. (Refer to 28 - DTC-Based Diagnostics/MODULE, Powertrain Control (PCM) - Standard Procedure)

1. CHECK IF THE DTC IS CURRENT

1. With the scan tool, read DTCs.

Is the status Active or is the Starts Since Set counter 0 for this DTC?

Yes

- Go To 2

No

- Go To 5

2. CHECK FOR TIPM RELATED DTCS

1. With the scan tool, check TIPM DTCs.

Are there any TIPM TCM Power Control circuit DTCs present?

Yes

- Refer to DTC Based Diagnostics and perform the appropriate diagnostic procedure.

No

- Go To 3

3. CHECK THE (T515) TRANSMISSION CONTROL CIRCUIT FOR A SHORT TO GROUND

1. Turn the ignition off to the lock position.
2. Disconnect the PCM C4 harness connector and connect Miller tool #8815A.

CAUTION: Do not probe the PCM harness connectors. Probing the PCM harness connectors will damage the PCM terminals resulting in poor terminal to pin connection. Install the Kit, NGC, 38 Position 8815A to perform diagnosis.

3. Disconnect the TIPM C1 harness connector.
4. Measure the resistance between ground and the (T515) Transmission Control circuit.

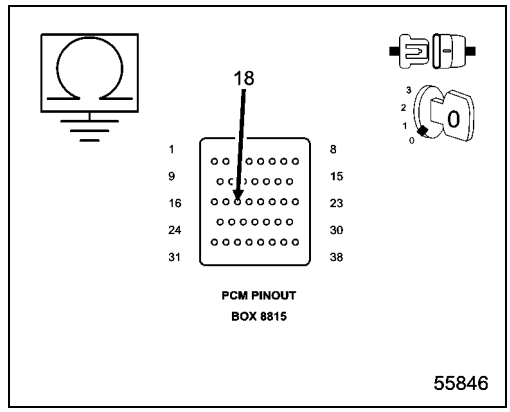

Is the resistance below 5.0 ohms?

Yes

- Repair the (T515) Transmission Control circuit for a short to ground.
- Perform 42RLE TRANSMISSION VERIFICATION TEST. (Refer to 28 - DTC-Based Diagnostics/MODULE, Powertrain Control (PCM) - Standard Procedure)

No

- Go To 4

4. CHECK THE (T515) TRANSMISSION CONTROL CIRCUIT FOR AN OPEN

1. Measure the resistance of the (T515) Transmission Control circuit between the TIPM C1 harness connector and the appropriate terminal of Miller tool #8815A.

Is the resistance above 5.0 ohms?

Yes

- Repair the (T515) Transmission Control circuit for an open.
- Perform 42RLE TRANSMISSION VERIFICATION TEST. (Refer to 28 - DTC-Based Diagnostics/MODULE, Powertrain Control (PCM) - Standard Procedure)

No

- Using the schematics as a guide, check the Powertrain Control Module (PCM) terminals for corrosion, damage, or terminal push out. Pay particular attention to all power and ground circuits. If no problems are found, replace and program the PCM in accordance with the Service Information. With the scan tool, perform Quick Learn
- Perform 42RLE TRANSMISSION VERIFICATION TEST. (Refer to 28 - DTC-Based Diagnostics/MODULE, Powertrain Control (PCM) - Standard Procedure)

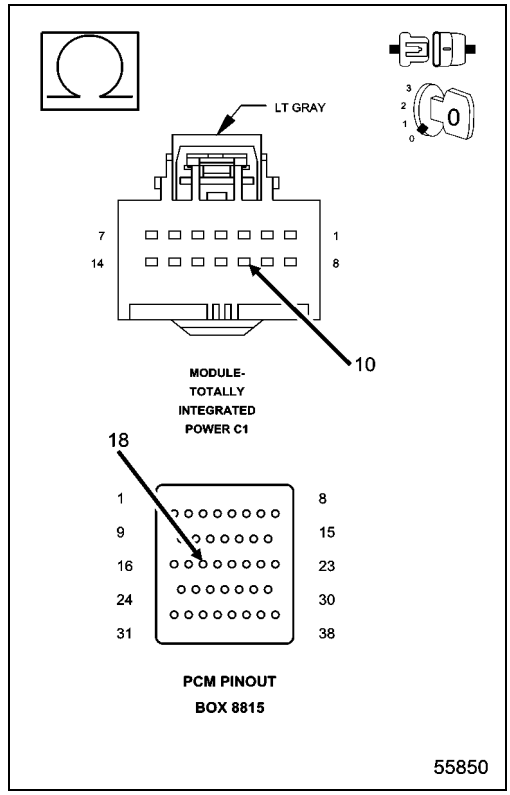

5. CHECK THE WIRING AND CONNECTORS

1. The conditions necessary to set this DTC are not present at this time.
2. Using the schematics as a guide, inspect the wiring and connectors specific to this circuit.
3. Wiggle the wires while checking for shorted and open circuits.
4. With the scan tool, check the Event Data to help identify the conditions in which the DTC was set.

Where there any problems found?

Yes

- Repair as necessary.
- Perform 45RFE/545RFE TRANSMISSION VERIFICATION TEST. (Refer to 28 - DTC-Based Diagnostics/MODULE, Powertrain Control (PCM) - Standard Procedure)

No

- Test Complete.

P0883-TCM POWER INPUT HIGH

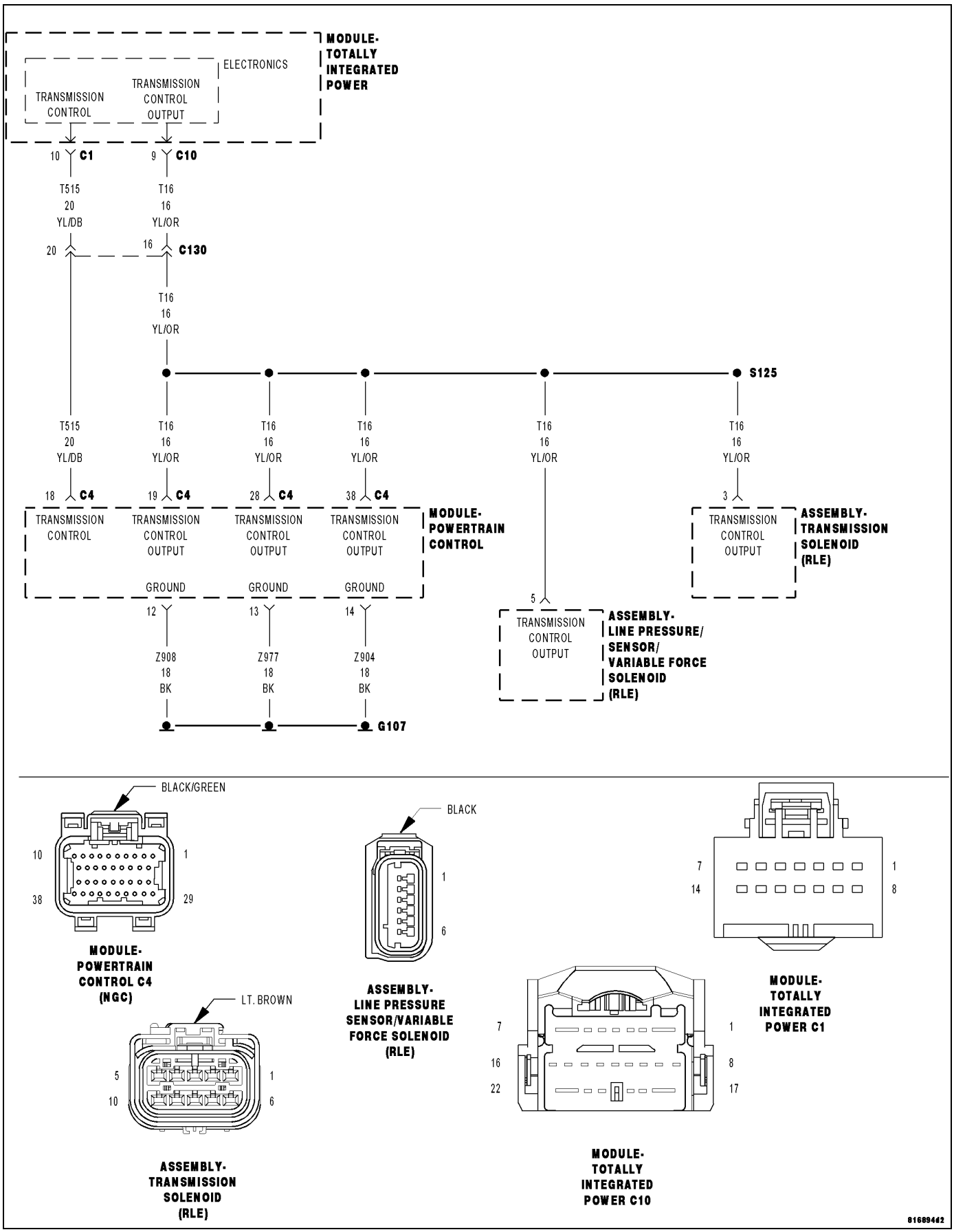

For a complete wiring diagram, **refer to the Wiring Information**.

Theory of Operation

The Transmission Control Output circuit is used to supply power to the Transmission Solenoid/TRS Assembly and to the PCM when in normal operating mode. The purpose of the Transmission Output circuit is to allow the Transmission Control System to turn off the power to the Transmission Solenoid/TRS Assembly in event that the transmission should need to be placed into “limp-in” mode due to a DTC.

After a PCM reset, (ignition switch turned to the run position, or after cranking the engine) the Transmission Control System verifies that the Transmission Output circuit is open by checking for voltage on the Transmission Output circuits before the Transmission Control System request for the circuit to be powered up. The request is sent by a direct circuit control from the PCM to the TIPM. If voltage is detected on the Transmission Output circuits before the request is sent, the DTC will set.

- **When Monitored:**

  When the ignition is turned from "OFF" position to "RUN" position and/or the ignition is turned from "START" position to "RUN" position.
- **Set Condition:**

  This DTC is set if the Powertrain Control Module senses greater than 3.0 volts on the Transmission Control Relay Output circuits prior to a request from the PCM to TIPM to energize the Transmission Output circuits.

Possible Causes
TIPM DTCS PRESENT
(T515) TRANSMISSION CONTROL CIRCUIT SHORT TO VOLTAGE
(T16) TRANSMISSION CONTROL OUTPUT CIRCUIT SHORT VOLTAGE
TRANSMISSION SOLENOID/TRS ASSEMBLY
POWERTRAIN CONTROL MODULE

Always perform the 42RLE Pre-Diagnostic Troubleshooting procedure before proceeding. (Refer to 28 - DTC-Based Diagnostics/MODULE, Powertrain Control (PCM) - Standard Procedure)

1. CHECK FOR TCM TIPM DTCS

1. With the scan tool under TIPM, check for TCM Power Control circuit DTCs.

Are there any TIPM TCM Power Control circuit DTCS present?

Yes

- Refer to DTC Based Diagnostics and perform the appropriate diagnostic procedure.

No

- Go To 2

2. CHECK IF THE DTC IS CURRENT

1. With the scan tool, read DTCs.

Is the status Active or is the Starts Since Set counter 0 for this DTC?

Yes

- Go To 3

No

- Go To 6

3. (T16) TRANSMISSION OUTPUT CIRCUIT SHORT TO VOLTAGE

1. Turn the ignition off to the lock position.
2. Disconnect the PCM C4 harness connector and connect Miller tool #8815A.
3. Disconnect the TIPM C10 harness connector.

CAUTION: Do not probe the PCM harness connectors. Probing the PCM harness connectors will damage the PCM terminals resulting in poor terminal to pin connection. Install the Kit, NGC, 38 Position 8815A to perform diagnosis.

4. Ignition on, engine not running.
5. Measure the voltage of the (T16) Transmission Control Output circuits in the Miller tool #8815A.

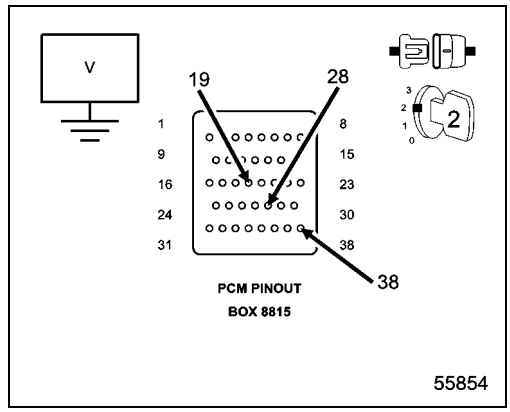

Is the voltage above 0.5 volts on any (T16) Transmission Control Output circuit?

Yes

- Go To 4

No

- Go To 5

4. CHECK THE TRANSMISSION SOLENOID/TRS ASSEMBLY

1. Turn the ignition off to the lock position.
2. Disconnect the Transmission Solenoid/TRS Assembly harness connector.
3. Ignition on, engine not running.
4. Measure the voltage of the (T16) Transmission Control Output circuits in the Miller tool #8815A.

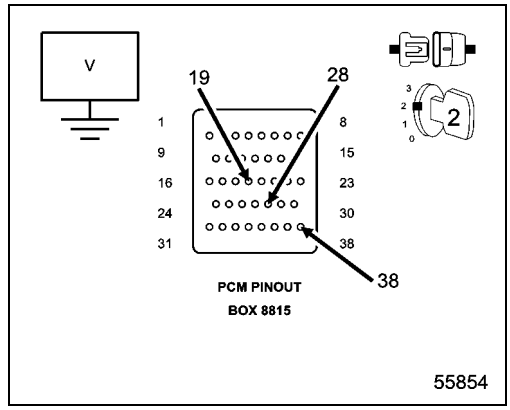

Is the voltage above 0.5 volts?

Yes

- Repair the (T16) Transmission Control Output circuit for a short to voltage.
- Perform 42RLE TRANSMISSION VERIFICATION TEST. (Refer to 28 - DTC-Based Diagnostics/MODULE, Powertrain Control (PCM) - Standard Procedure)

No

- Replace the Transmission Solenoid/TRS Assembly in accordance with the Service Information.
- Perform 42RLE TRANSMISSION VERIFICATION TEST. (Refer to 28 - DTC-Based Diagnostics/MODULE, Powertrain Control (PCM) - Standard Procedure)

5. CHECK THE (T515) TRANSMISSION CONTROL CIRCUIT FOR A SHORT TO VOLTAGE

1. Measure the voltage of the (T515) Transmission Control circuit.

Is the voltage above 0.5 volts?

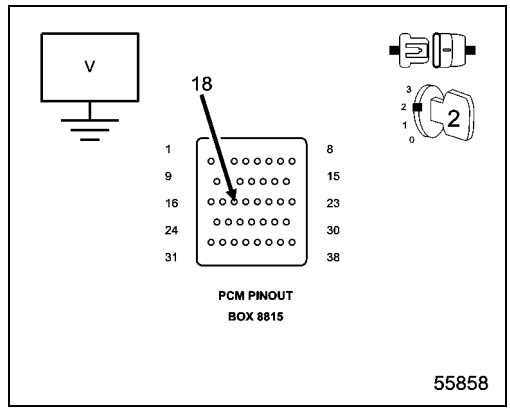

Yes

- Repair the (T515) Transmission Control circuit for a short to voltage.
- Perform 42RLE TRANSMISSION VERIFICATION TEST. (Refer to 28 - DTC-Based Diagnostics/MODULE, Powertrain Control (PCM) - Standard Procedure)

No

- Using the schematics as a guide, check the Powertrain Control Module (PCM) terminals for corrosion, damage, or terminal push out. Pay particular attention to all power and ground circuits. If no problems are found, replace and program the PCM in accordance with the Service Information. With the scan tool, perform Quick Learn
- Perform 42RLE TRANSMISSION VERIFICATION TEST. (Refer to 28 - DTC-Based Diagnostics/MODULE, Powertrain Control (PCM) - Standard Procedure)

6. CHECK WIRING AND CONNECTORS

1. The conditions necessary to set this DTC are not present at this time.
2. Using the schematics as a guide, inspect the wiring and connectors specific to this circuit.
3. Wiggle the wires while checking for shorted and open circuits.
4. With the scan tool, check the Event Data to help identify the conditions in which the DTC was set.

Where there any problems found?

Yes

- Repair as necessary.
- Perform 42RLE TRANSMISSION VERIFICATION TEST. (Refer to 28 - DTC-Based Diagnostics/MODULE, Powertrain Control (PCM) - Standard Procedure)

No

- Test Complete.

■ P0884-POWER UP AT SPEED

For a complete wiring diagram, **refer to the Wiring Information**.

Theory of Operation

If a vehicle loses power to the PCM, the vehicle will go to the 2nd gear mode since there is no power available to control the transmission solenoids. However if power is restored, the PCM will power-up and normal operation will be restored. This DTC identifies that power to the PCM was restored when the gear selector was in a "Drive" position while the vehicle was moving at speeds above 32 km/h (20 mph). If a customer shifts to Neutral and cycles the ignition key and quickly shifts to "Drive" while moving before the PCM comes out of its START ROUTINE, the DTC can be set. Therefore it is critical that this DTC diagnosis repair procedure should only be used if the vehicle is experiencing intermittent 2nd gear operation and subsequently a return to normal operation during normal driving. The transmission will not be placed in limp-in. This is an informational DTC to be used when attempting to diagnose an intermittent 2nd gear operation and subsequent return to normal transmission operation.

- **When Monitored:**

  One time after each controller reset. Note: the Transmission Control Module is integrated with Powertrain Control Module. The Transmission Control Module has separate powers and grounds specifically to its portion of the PCM.
- **Set Condition:**

  This DTC will set if the PCM powers up and senses the vehicle in a valid forward gear (no PRNDL DTCs) with an output speed above 800 rpm, approximately 32 km/h or 20 mph.

Possible Causes
INTERMITTENT POWER AND GROUND CIRCUITS

Always perform the 42RLE Pre-Diagnostic Troubleshooting procedure before proceeding. (Refer to 28 - DTC-Based Diagnostics/MODULE, Powertrain Control (PCM) - Standard Procedure)

1. CHECK THE POWER AND GROUND CIRCUITS

1. This DTC is set when the PCM is initialized while the vehicle is moving in a valid forward gear. This is usually caused by a momentary loss of power to the Transmission portion of the PCM.

CAUTION: Do not probe the PCM harness connectors. Probing the PCM harness connectors will damage the PCM terminals resulting in poor terminal to pin connection. Install Miller tool #8815A **to perform diagnosis.**

2. Check all of the Fused B(+), Fused Ignition Switch Output, and Ground circuits related to the PCM for an intermittent open or short to ground.
3. Perform a wiggle test on all wiring and connectors pertaining to the PCM while looking for shorted or open circuits.
4. With the scan tool, check the Event Data to help identify the conditions in which the DTC was set.

Repair

- Repair as necessary.
- Perform 42RLE TRANSMISSION VERIFICATION TEST. (Refer to 28 - DTC-Based Diagnostics/MODULE, Powertrain Control (PCM) - Standard Procedure)

P0890-SWITCHED BATTERY

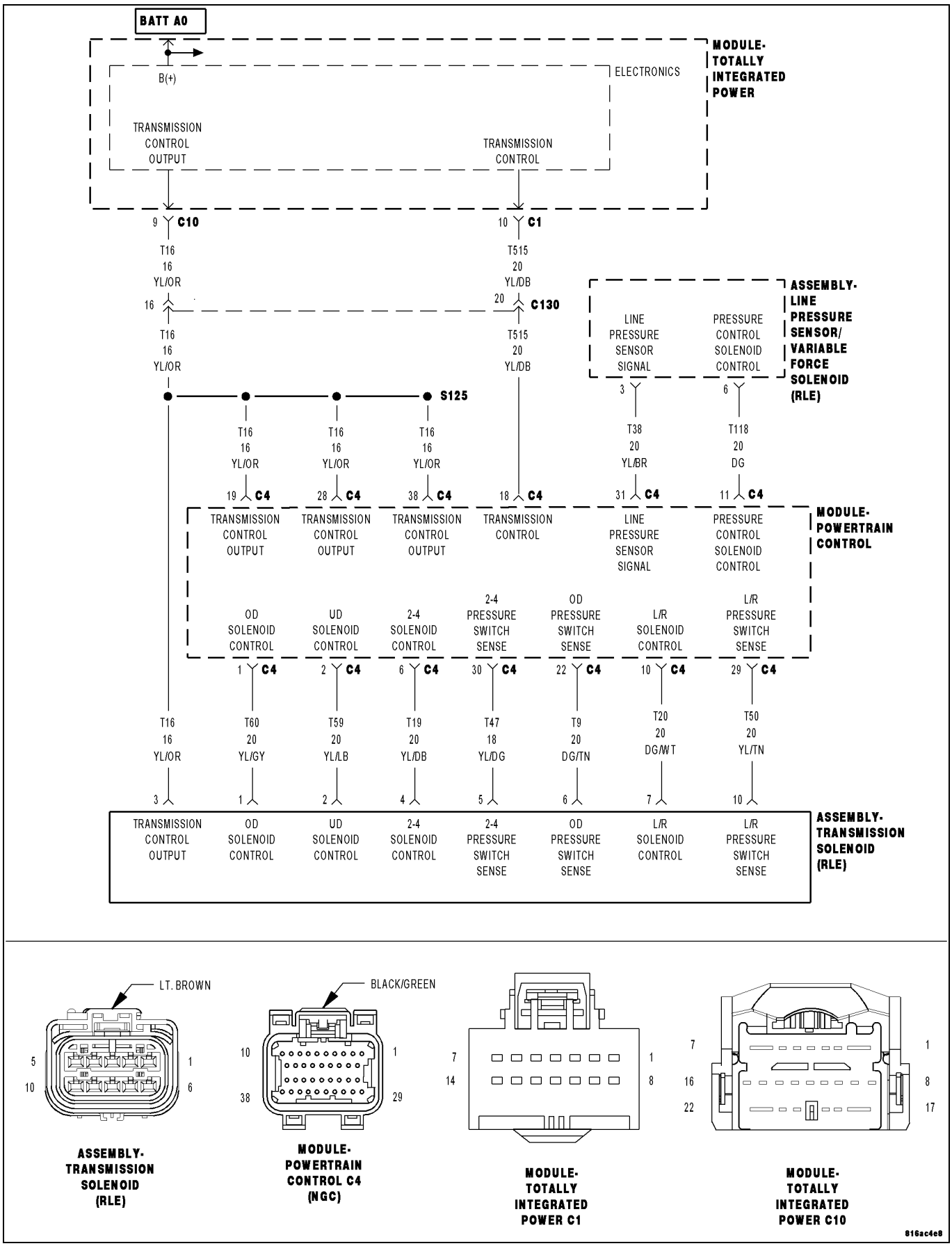

For a complete wiring diagram, **refer to the Wiring Information**.

Theory of Operation

The transmission relay is used to supply power to the solenoid pack when in normal operating mode and to turn off power to produce transmission "limp-in" mode. The relay output (which supplies power to the solenoid pack) is fed back to the controller. It is referred to as SWITCHED BATTERY. After a controller reset (ignition key turned to the RUN position or after cranking engine), the controller verifies that the relay contacts are open by checking for no voltage on Switched battery line (transmission control relay output) before the relay is energized. After switched battery is verified for no voltage, the voltage of each of the solenoid pack pressure switches is also checked. Since the solenoid pack is not powered up, there should be no voltage on any of the pressure switches.

- **When Monitored:**
  One time after a reset (ignition key turned to the RUN position or after cranking engine).
- **Set Condition:**
  A fault is set if voltage greater than 4.5 volts is detected for 7 msec on any of the pressure switch circuits before the relay is energized. The transmission is placed in Limp-In. The MIL is on after 10 seconds. of vehicle operation.

Possible Causes
(T47) 2/4 PRESSURE SIGNAL CIRCUIT SHORT TO VOLTAGE
(T50) L/R PRESSURE SIGNAL CIRCUIT SHORT TO VOLTAGE
(T9) OD PRESSURE SIGNAL CIRCUIT SHORT TO VOLTAGE
POWERTRAIN CONTROL MODULE

Always perform the 42RLE Pre-Diagnostic Troubleshooting procedure before proceeding. (Refer to 28 - DTC-Based Diagnostics/MODULE, Powertrain Control (PCM) - Standard Procedure)

1. CHECK IF THE DTC IS CURRENT

1. With the scan tool, read DTCs.

Is the status Active or is the Starts Since Set counter 2 or less for this DTC?

Yes

- Go To 2

No

- Go To 5

2. (T9) OD PRESSURE SIGNAL CIRCUIT SHORT TO VOLTAGE

1. Turn the ignition off to the lock position.
2. Disconnect the PCM C4 harness connector.
3. Disconnect the Transmission Solenoid/Pressure Switch Assembly harness connector.
4. Ignition on, engine not running.
5. With the scan tool under TIPM, actuate the Transmission.

CAUTION: Do not probe the PCM harness connectors. Probing the PCM harness connectors will damage the PCM terminals resulting in poor terminal to pin connection. Install the PCM Pinout Box Kit, NGC, 38 Position 8815A to perform diagnosis.

6. Measure the voltage of the (T9) OD Pressure Signal circuit.

Is the voltage above 0.5 volt?

Yes

- Repair the (T9) OD Pressure Signal circuit for a short to voltage.
- Perform 42RLE TRANSMISSION VERIFICATION TEST. (Refer to 28 - DTC-Based Diagnostics/MODULE, Powertrain Control (PCM) - Standard Procedure)

No

- Go To 3

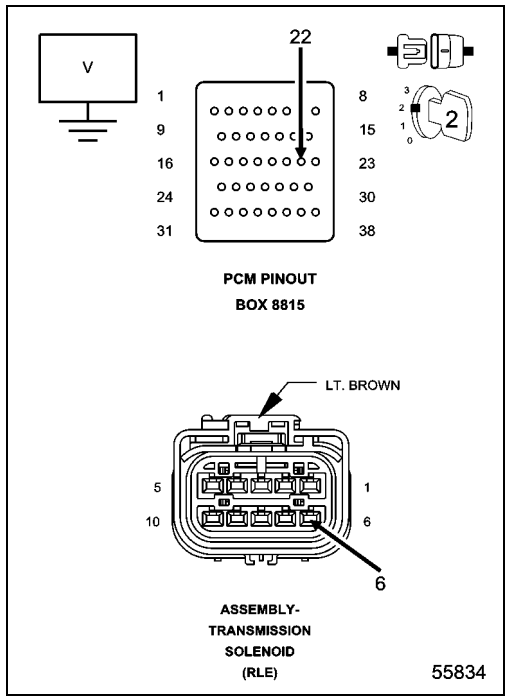

3. (T47) 2/4 PRESSURE SIGNAL CIRCUIT SHORT TO VOLTAGE

1. With the scan tool under TIPM, actuate the Transmission.
2. Measure the voltage of the (T47) 2/4 Pressure Signal circuit.

Is the voltage above 0.5 volt?

Yes

- Repair the (T47) 2/4 Pressure Signal circuit for a short to voltage.
- Perform 42RLE TRANSMISSION VERIFICATION TEST. (Refer to 28 - DTC-Based Diagnostics/MODULE, Powertrain Control (PCM) - Standard Procedure)

No

- Go To 4

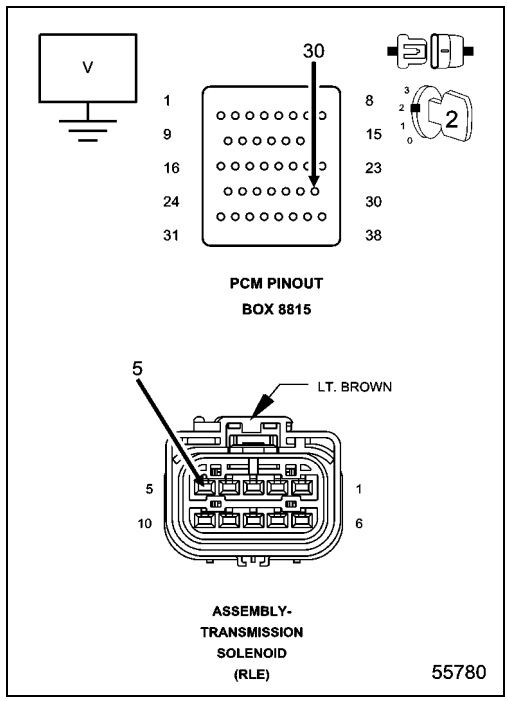

4. (T50) L/R PRESSURE SIGNAL CIRCUIT SHORT TO VOLTAGE

1. With the scan tool under TIPM, actuate the Transmission.
2. Measure the voltage of the (T50) L/R Pressure Signal circuit.

Is the voltage above 0.5 volts?

Yes

- Repair the (T50) L/R Pressure Signal circuit for a short to voltage.
- Perform 42RLE TRANSMISSION VERIFICATION TEST. (Refer to 28 - DTC-Based Diagnostics/MODULE, Powertrain Control (PCM) - Standard Procedure)

No

- Using the schematics as a guide, check the Powertrain Control Module (PCM) terminals for corrosion, damage, or terminal push out. Pay particular attention to all power and ground circuits. If no problems are found, replace and program the PCM in accordance with the Service Information. With the scan tool, perform Quick Learn
- Perform 42RLE TRANSMISSION VERIFICATION TEST. (Refer to 28 - DTC-Based Diagnostics/MODULE, Powertrain Control (PCM) - Standard Procedure)

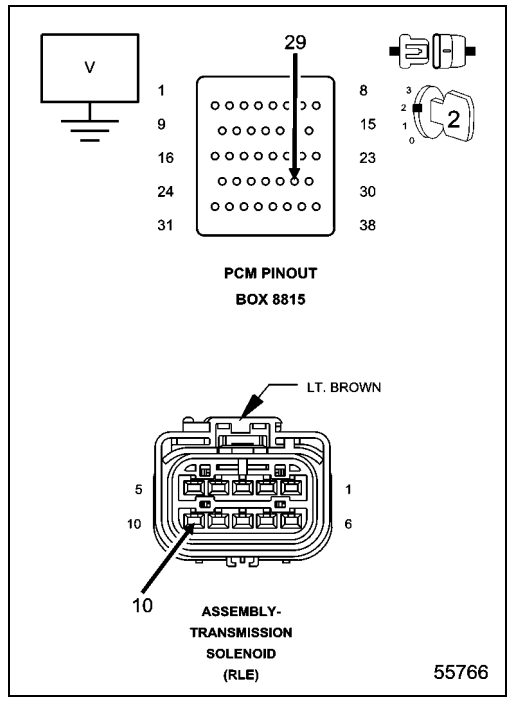

5. CHECK THE WIRING AND CONNECTORS

1. The conditions necessary to set the DTC are not present at this time.
2. Using the schematics as a guide, inspect the wiring and connectors specific to this circuit.
3. Wiggle the wiring and connectors while checking for shorted and open circuits.
4. With the scan tool, check the Event Data to help identify the conditions in which the DTC was set.

Were there any problems found?

Yes

- Repair as necessary.
- Perform 42RLE TRANSMISSION VERIFICATION TEST. (Refer to 28 - DTC-Based Diagnostics/MODULE, Powertrain Control (PCM) - Standard Procedure)

No

- Test Complete.

■ P0897-TRANSMISSION FLUID DETERIORATED

For a complete wiring diagram, **refer to the Wiring Information**.

Theory of Operation

To prevent a bump due to A/C clutch engagement, a temporary torque converter partial EMCC condition is established prior to A/C clutch engagement. A message is received over the bus indicating that A/C clutch engagement is imminent. Partial EMCC is then established and a reply message, "OK to engage A/C clutch" is sent via the bus. Partial EMCC will be held for 450 ms before returning to full EMCC. During the transition from full to partial EMCC, a turbine acceleration sum is calculated, if this value exceeds a threshold value for several transitions, degraded transmission fluid is indicated.

- **When Monitored:**
  Each transition from full EMCC to partial EMCC for A/C bump prevention.
- **Set Condition:**
  DTC set if 20 occurrences of a turbine acceleration sum. Fault Set Time: 20 transitions from full EMCC to partial EMCC. Transmission will not use partial EMCC. Established for A/C bump prevention.

Possible Causes
WORN OUT/ BURNT TRANSAXLE FLUID

Always perform the 42RLE Pre-Diagnostic Troubleshooting procedure before proceeding. (Refer to 28 - DTC-Based Diagnostics/MODULE, Powertrain Control (PCM) - Standard Procedure)

1. WORN OUT/ BURNT TRANSMISSION FLUID

1. Turn the ignition off to the lock position.
2. Flush the Transmission Oil Cooler and lines, replace the Transmission Oil Filter, refill with new Transmission Fluid, start the engine, and adjust the fluid in accordance with the Service Information.

NOTE: The Transmission Cooler must be flushed before proceeding.

3. Allow the engine to idle for 10 minutes, in Park.
4. Turn the ignition off to the lock position.
5. Again, flush the Transmission Oil Cooler and lines, replace the Transmission Oil Filter, refill with new Transmission Fluid, start the engine, and adjust the fluid in accordance with the Service Information.
6. With the scan tool, perform a Battery Disconnect.

NOTE: The Battery Disconnect (actual or with the scan tool if equipped) must be done to re-enable EMCC during an A/C Clutch engagement.

NOTE: The vehicle may exhibit intermittent shudder during the first few hundred miles. The new Transmission Fluid will gradually penetrate the Torque Convertor Clutch friction material and the shudder should disappear.

7. Erase the DTC and return the vehicle to the customer.

Did the DTC reset and/or does the vehicle still shudder after a few thousand miles?

Yes

- Replace the Torque Converter in accordance with the Service Information.
- Perform 42RLE TRANSMISSION VERIFICATION TEST. (Refer to 28 - DTC-Based Diagnostics/MODULE, Powertrain Control (PCM) - Standard Procedure)

No

- Test Complete.

P0933-HYDRAULIC PRESSURE SENSOR RANGE/PERFORMANCE

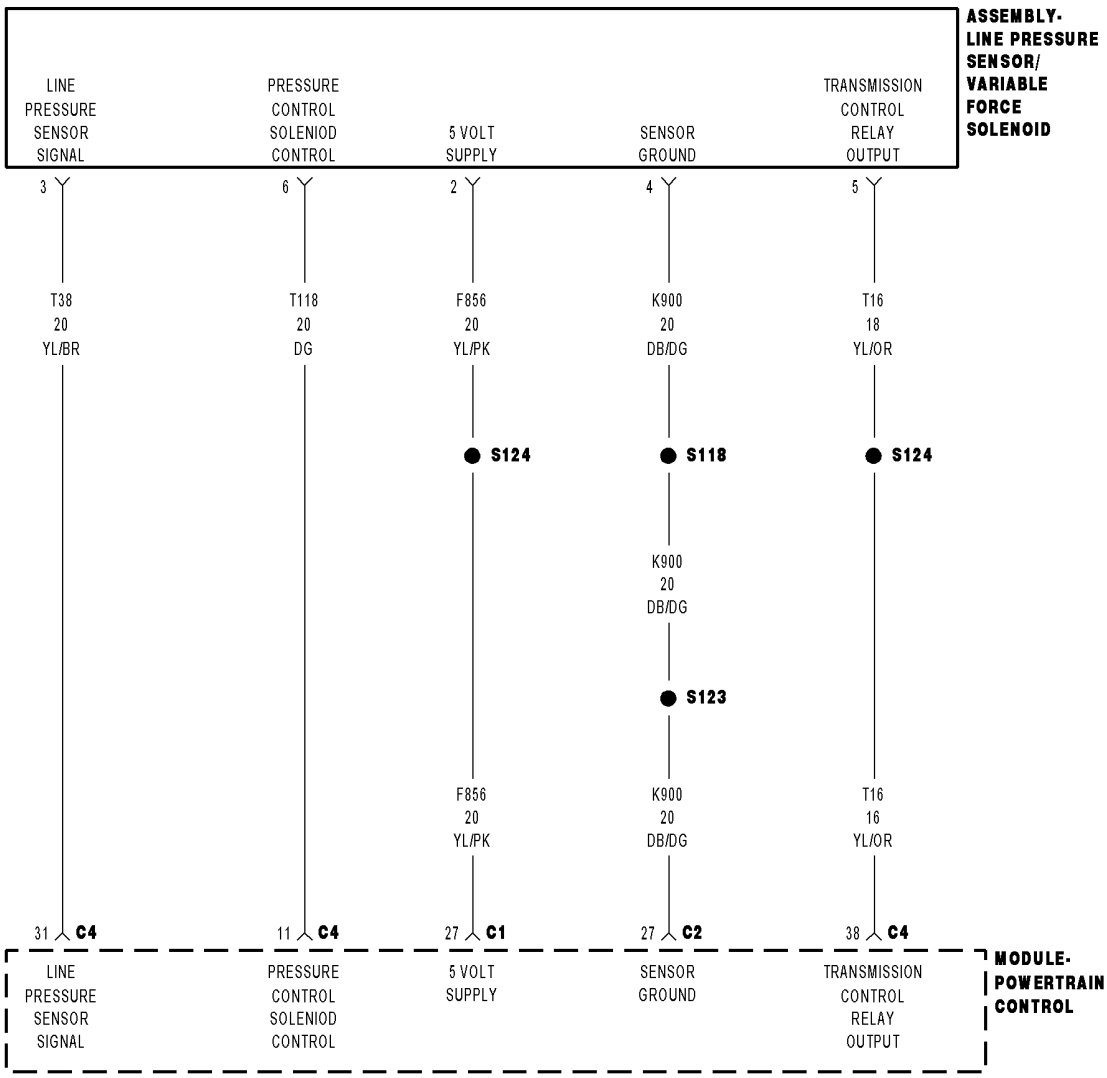

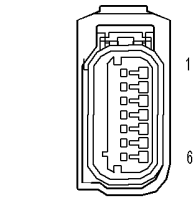

ASSEMBLY-
LINE PRESSURE SOLENOID/
VARIABLE FROCE
SOLENOID

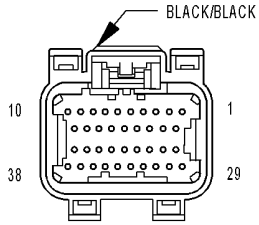

MODULE-
POWERTRAIN
CONTROL C1

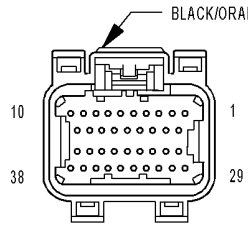

MODULE-
POWERTRAIN
CONTROL C2

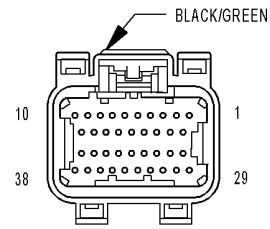

MODULE-
POWERTRAIN
CONTROL C4
(42RLE)

816895fc

For a complete wiring diagram, **refer to the Wiring Information**.

Theory of Operation

Line pressure is electronically controlled by the Transmission Control System and is measured by the Line Pressure Sensor (LPS). The desired line pressure is continuously being compared to the actual line pressure and is regulated by electronically changing the duty cycle of the Pressure Control Solenoid (PCS). (5% duty cycle = solenoid off = max line pressure, 62% duty cycle = solenoid on = min line pressure).

The Transmission Control System calculates the desired line pressure based on inputs from the transmission and engine. A calculated torque input to the transmission is used as the primary input of the desired line pressure calculation and is called Torque Based Line Pressure. In addition, the line pressure is set to a preset level 827 to 931 kPa (120 to 135 psi) during shifts and in Park and Neutral to ensure consistent shift quality.

- **When Monitored:**

  Continuously with the ignition on, engine running, with the transmission in gear.
- **Set Condition:**

  The PCM continuously monitors Actual Line Pressure and compares it to Desired Line Pressure. If the Actual Line Pressure reading is more than 172.4 kPa (25 psi) higher than the Desired Line Pressure, but is less than the highest Line Pressure ever used in the current gear, the DTC sets.

Possible Causes
RELATED DTCS PRESENT
LINE PRESSURE CONNECTOR AND WIRING
INTERNAL TRANSMISSION
POWERTRAIN CONTROL MODULE

Always perform the 42RLE Pre-Diagnostic Troubleshooting procedure before proceeding. (Refer to 28 - DTC-Based Diagnostics/MODULE, Powertrain Control (PCM) - Standard Procedure)

1. DETERMINING IF RELATED DTCS ARE PRESENT

1. With the scan tool, check for other transmission DTCs.

Are there any other line pressure related DTCs present?

Yes

- Refer to DTC Based Diagnostics and perform the appropriate diagnostic procedure. Perform the test for P0934 and/or P0935 first if present.

No

- Go To 2

2. COMPARE ACTUAL LINE PRESSURE TO DESIRED LINE PRESSURE

CAUTION: Apply Parking Brake

1. Start the engine.

CAUTION: Firmly apply the brakes.

2. With the scan tool, monitor the Line Pressure, Desired Line Pressure and the TPS degrees.
3. While firmly applying the brakes, place the shifter in reverse, then slowly press the accelerator pedal to a TPS degree of 15°.
4. Compare the Line Pressure reading to the Desired Line Pressure reading on the scan tool.

Does the Line Pressure stay within ± 34 kPa or 5 psi of the Desired Line Pressure?

No

- Go To 3

Yes

- Go To 5

3. CHECK LINE PRESSURE CONNECTOR AND WIRING

1. Ignition on, engine not running.
2. With the scan tool, monitor the Line Pressure Sensor voltage while wiggling the wiring harness and connectors pertaining to the Line Pressure Sensor/Variable Force Solenoid Assembly.

Did the voltage remain steady while wiggling the wiring harness and connectors?

Yes

- Go To 4

No

- Disconnect and properly reconnect the Line Pressure Sensor/Variable Force Solenoid Assembly connector. Inspect terminals and repair as necessary.
- Perform 42RLE TRANSMISSION VERIFICATION TEST. (Refer to 28 - DTC-Based Diagnostics/MODULE, Powertrain Control (PCM) - Standard Procedure)

4. CHECK PCM AND WIRING

1. Turn the ignition off to the lock position.
2. Remove the Ignition Switch Feed fuse from the TIPM.

CAUTION: Removal of the Ignition Switch Feed fuse from the TIPM will prevent the vehicle from being started in gear.

WARNING: The Ignition Switch Feed fuse must be removed from the TIPM. Failure to do so can result in possible serious or fatal injury.

3. Install the Transmission Simulator, Miller tool #8333A and the Electronic Transmission Adapter kit.
4. With the Transmission Simulator select the "OFF" position on the "Input/Output Speed" switch.
5. Ignition on, engine not running.
6. With the scan tool, monitor the Line Pressure during the following step.
7. With the Transmission Simulator, turn the selector switch to each of the 3 Line Pressure positions.

NOTE: All three scan tool Line Pressure readings should be steady and ± 14 kPa (2.0 psi) or 0.1 volts of the reading specified on the Transmission Simulator.

Did the Line Pressure read within ± 14 kPa (2.0 psi) or 0.1 volts in all three positions?

Yes

- Using the schematics as a guide, check the Powertrain Control Module (PCM) terminals for corrosion, damage, or terminal push out. Pay particular attention to all power and ground circuits. If no problems are found, replace and program the PCM in accordance with the Service Information. With the scan tool, perform Quick Learn.
- Perform 42RLE TRANSMISSION VERIFICATION TEST. (Refer to 28 - DTC-Based Diagnostics/MODULE, Powertrain Control (PCM) - Standard Procedure)

No

- Repair internal transmission and inspect the oil pump per the Service information and replace if necessary. If no problems are found, replace the Line Pressure Sensor/Variable Force Solenoid Assembly — possible cause is the Pressure Control Solenoid is stuck.
- Perform 42RLE TRANSMISSION VERIFICATION TEST. (Refer to 28 - DTC-Based Diagnostics/MODULE, Powertrain Control (PCM) - Standard Procedure)

5. CHECK WIRING AND CONNECTORS

1. The conditions necessary to set this DTC are not present at this time.
2. Using the schematics as a guide, inspect the wiring and connectors specific to this circuit.
3. Wiggle the wires while checking for shorted and open circuits.
4. With the scan tool, check the Event Data to help identify the conditions in which the DTC was set.

Where there any problems found?

Yes

- Repair as necessary.
- Perform 42RLE TRANSMISSION VERIFICATION TEST. (Refer to 28 - DTC-Based Diagnostics/MODULE, Powertrain Control (PCM) - Standard Procedure)

No

- Test Complete.

P0934-LINE PRESSURE SENSOR CIRCUIT LOW

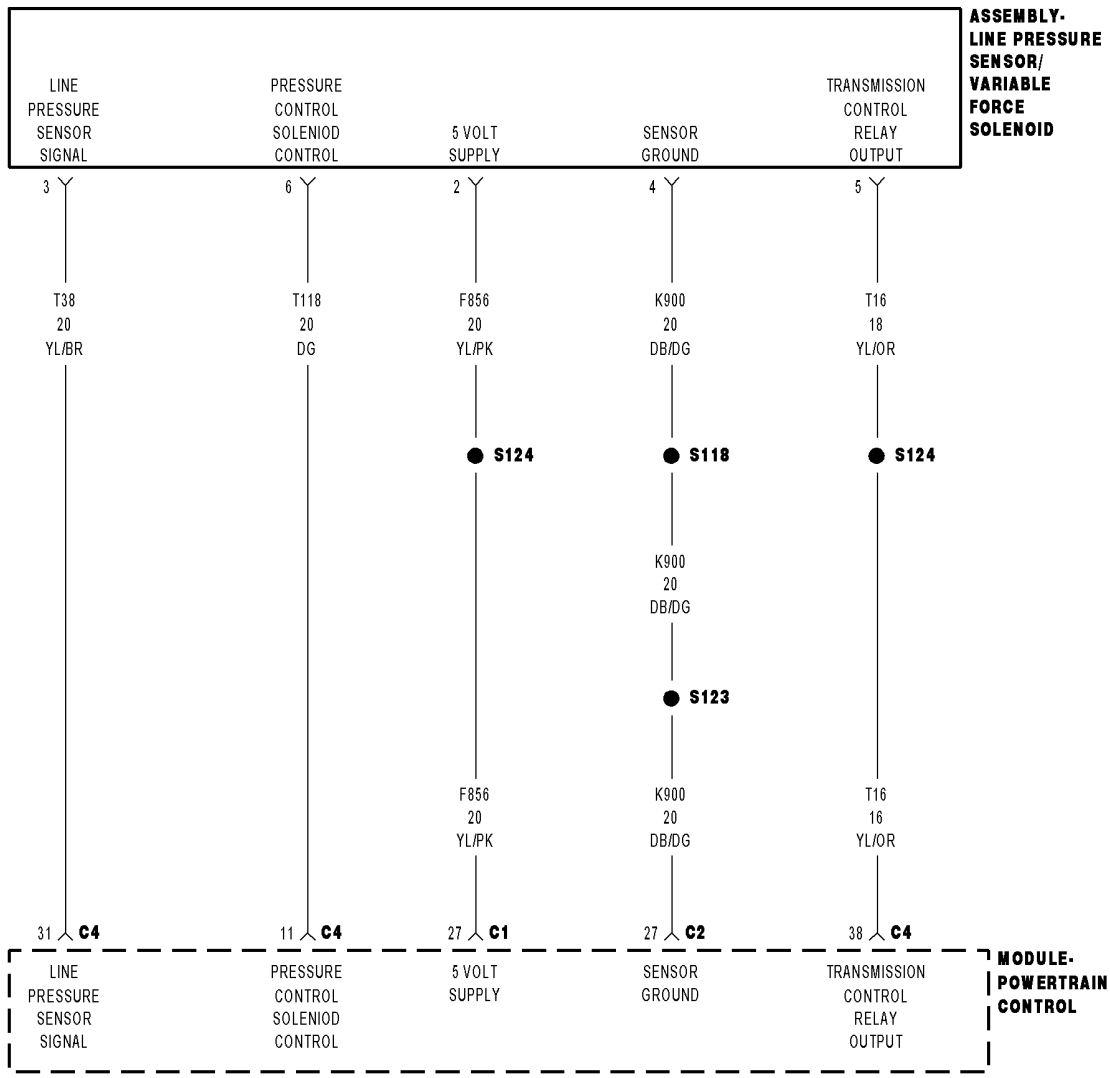

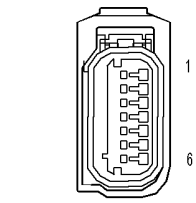

ASSEMBLY-
LINE PRESSURE SOLENOID/
VARIABLE FROCE
SOLENOID

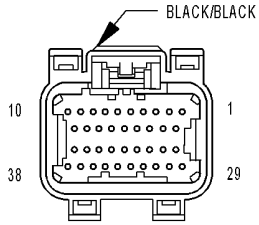

MODULE-
POWERTRAIN
CONTROL C1

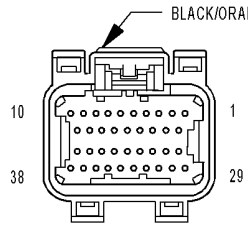

MODULE-
POWERTRAIN
CONTROL C2

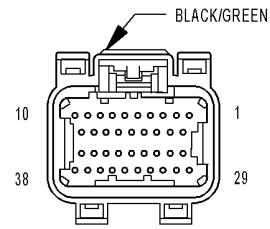

MODULE-
POWERTRAIN
CONTROL C4
(42RLE)

816895fc

For a complete wiring diagram, **refer to the Wiring Information**.

Theory of Operation

Line pressure is electronically controlled by the Transmission Control System and is measured by the Line Pressure Sensor (LPS). The desired line pressure is continuously being compared to the actual line pressure and is regulated by electronically changing the duty cycle of the Pressure Control Solenoid (PCS). (5% duty cycle = solenoid off = max line pressure, 62% duty cycle = solenoid on = min line pressure).

The Transmission Control System calculates the desired line pressure based on inputs from the transmission and engine. A calculated torque input to the transmission is used as the primary input of the desired line pressure calculation and is called Torque Based Line Pressure. In addition, the line pressure is set to a preset level 827 to 931 kPa (120 to 135 PSI) during shifts and in Park and Neutral to ensure consistent shift quality.

The monitored Line Pressure Sensor voltage should always be between 0.35 and 4.75 volts. Any monitored voltages outside these parameters indicate an Line Pressure Sensor or wiring problem and will cause either DTC P0934 or P0935 to set.

- **When Monitored:**
  Continuously with the ignition on and engine running.
- **Set Condition:**
  This DTC will set when the monitored Line Pressure Sensor voltage is less than or equal to 0.35 volts for 0.18 seconds.

Possible Causes
(F856) 5-VOLT SUPPLY CIRCUIT OPEN
(F856) 5-VOLT SUPPLY CIRCUIT SHORT TO GROUND
(T38) LINE PRESSURE SENSOR SIGNAL CIRCUIT SHORT TO GROUND
LINE PRESSURE SENSOR
POWERTRAIN CONTROL MODULE

Always perform the 42RLE Pre-Diagnostic Troubleshooting procedure before proceeding. (Refer to 28 - DTC-Based Diagnostics/MODULE, Powertrain Control (PCM) - Standard Procedure)

1. CHECK IF THE DTC IS CURRENT

1. With the scan tool, read DTCs.

Is the status Active or is the Starts Since Set counter 2 or less for this DTC?

Yes

- Go To 2

No

- Go To 6

2. CHECK THE PCM AND WIRING

1. Turn the ignition off to the lock position.
2. Remove the Ignition Switch Feed fuse from the TIPM.

CAUTION: Removal of the Ignition Switch Feed fuse from the TIPM will prevent the vehicle from being started in gear.

WARNING: The Ignition Switch Feed fuse must be removed from the TIPM. Failure to do so can result in possible serious or fatal injury.

3. Install the Transmission Simulator, Miller tool #8333A and the Electronic Transmission Adapter kit.
4. Ignition on, engine not running.
5. With the scan tool, under Transmission Sensors, monitor the Line Pressure.
6. Using the Transmission Simulator, set the rotary switch to each of the 3 line pressure positions.

NOTE: All three scan tool Line Pressure readings should be steady and ± 14 kPa (2.0 psi) or 0.1 volts of the reading specified on the Transmission Simulator.

Did the Line Pressure read within ± 14 kPa (2.0 psi) or 0.1 volts in all three positions?

Yes

- Replace the Line Pressure Sensor in accordance with the Service Information.
- Perform 42RLE TRANSMISSION VERIFICATION TEST. (Refer to 28 - DTC-Based Diagnostics/MODULE, Powertrain Control (PCM) - Standard Procedure)

No

- Go To 3

3. CHECK THE (T38) LINE PRESSURE SENSOR SIGNAL CIRCUIT FOR A SHORT TO GROUND

1. Turn the ignition off to the lock position.
2. Disconnect the PCM C4 harness connector and connect Miller tool #8815A.
3. Disconnect the Transmission Simulator, Miller tool #8333A and the Electronic Transmission Adapter kit.

CAUTION: Do not probe the PCM harness connectors. Probing the PCM harness connectors will damage the PCM terminals resulting in poor terminal to pin connection. Install the Kit, NGC, 38 Position 8815A to perform diagnosis.

4. Measure the resistance between ground and the (T38) Line Pressure Sensor Signal circuit.

Is the resistance below 5.0 ohms?

Yes

- Repair the (T38) Line Pressure Sensor Signal circuit for a short to ground.
- Perform 42RLE TRANSMISSION VERIFICATION TEST. (Refer to 28 - DTC-Based Diagnostics/MODULE, Powertrain Control (PCM) - Standard Procedure)

No

- Go To 4

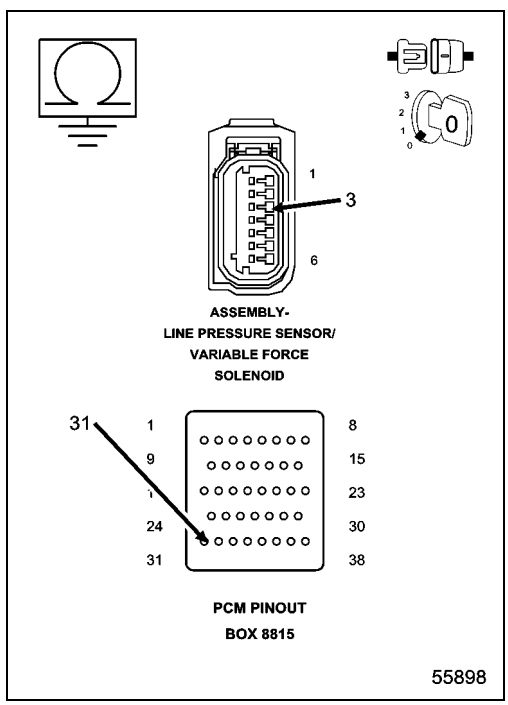

4. CHECK THE (F856) 5-VOLT SUPPLY CIRCUIT FOR AN OPEN

1. Disconnect the PCM C1 harness connector and connect Miller tool #8815A.
2. Measure the resistance of the (F856) 5-volt Supply circuit between Line Pressure Sensor/Variable Force Solenoid Assembly harness connector and the appropriate terminal of Miller tool #8815A.

Is the resistance below 5.0 ohms?

Yes

- Go To 5

No

- Repair the (F856) 5-volt Supply circuit for an open.
- Perform 42RLE TRANSMISSION VERIFICATION TEST. (Refer to 28 - DTC-Based Diagnostics/MODULE, Powertrain Control (PCM) - Standard Procedure)

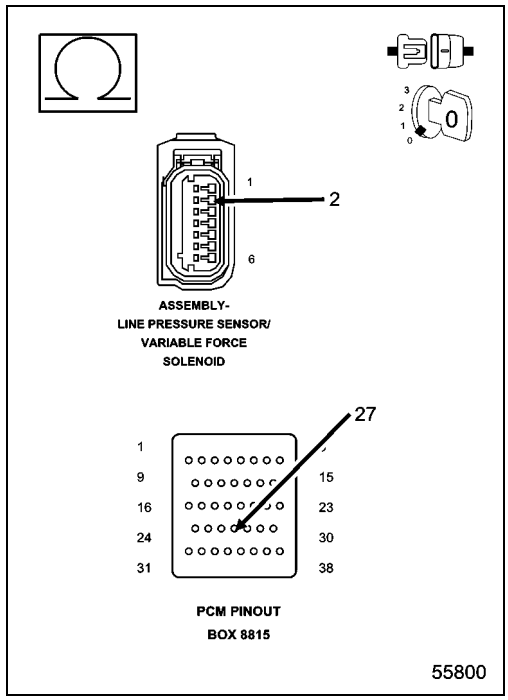

5. CHECK THE (F856) 5-VOLT SUPPLY CIRCUIT FOR A SHORT TO GROUND

1. Disconnect the PCM C1 harness connector and connect Miller tool #8815A.
2. Measure the resistance between ground and the (F856) 5-volt Supply circuit.

Is the resistance below 5.0 ohms?

Yes

- Repair the (F856) 5-volt Supply circuit for a short to ground.
- Perform 42RLE TRANSMISSION VERIFICATION TEST. (Refer to 28 - DTC-Based Diagnostics/MODULE, Powertrain Control (PCM) - Standard Procedure)

No

- Using the schematics as a guide, check the Powertrain Control Module (PCM) terminals for corrosion, damage, or terminal push out. Pay particular attention to all power and ground circuits. If no problems are found, replace and program the PCM in accordance with the Service Information. With the scan tool, perform Quick Learn.
- Perform 42RLE TRANSMISSION VERIFICATION TEST. (Refer to 28 - DTC-Based Diagnostics/MODULE, Powertrain Control (PCM) - Standard Procedure)

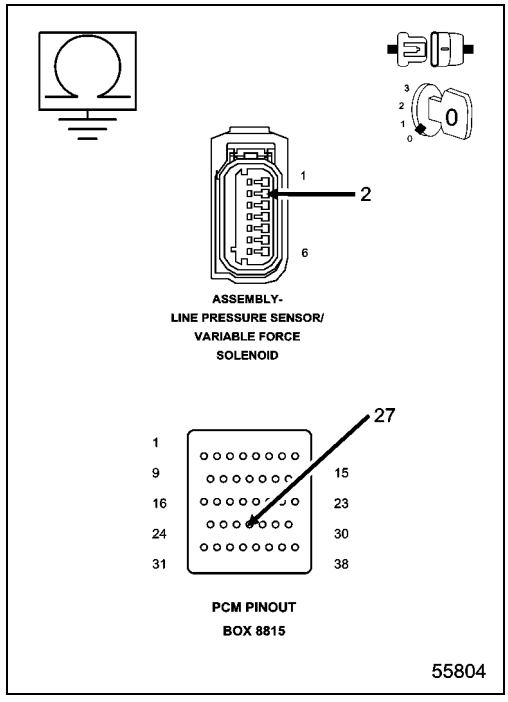

6. CHECK THE WIRING AND CONNECTORS

1. The conditions necessary to set this DTC are not present at this time.
2. Using the schematics as a guide, inspect the wiring and connectors specific to this circuit.
3. Wiggle the wires while checking for shorted and open circuits.
4. With the scan tool, check the Event Data to help identify the conditions in which the DTC was set.

Where there any problems found?

Yes

- Repair as necessary.
- Perform 42RLE TRANSMISSION VERIFICATION TEST. (Refer to 28 - DTC-Based Diagnostics/MODULE, Powertrain Control (PCM) - Standard Procedure)

No

- Test Complete.

P0935-LINE PRESSURE SENSOR CIRCUIT HIGH

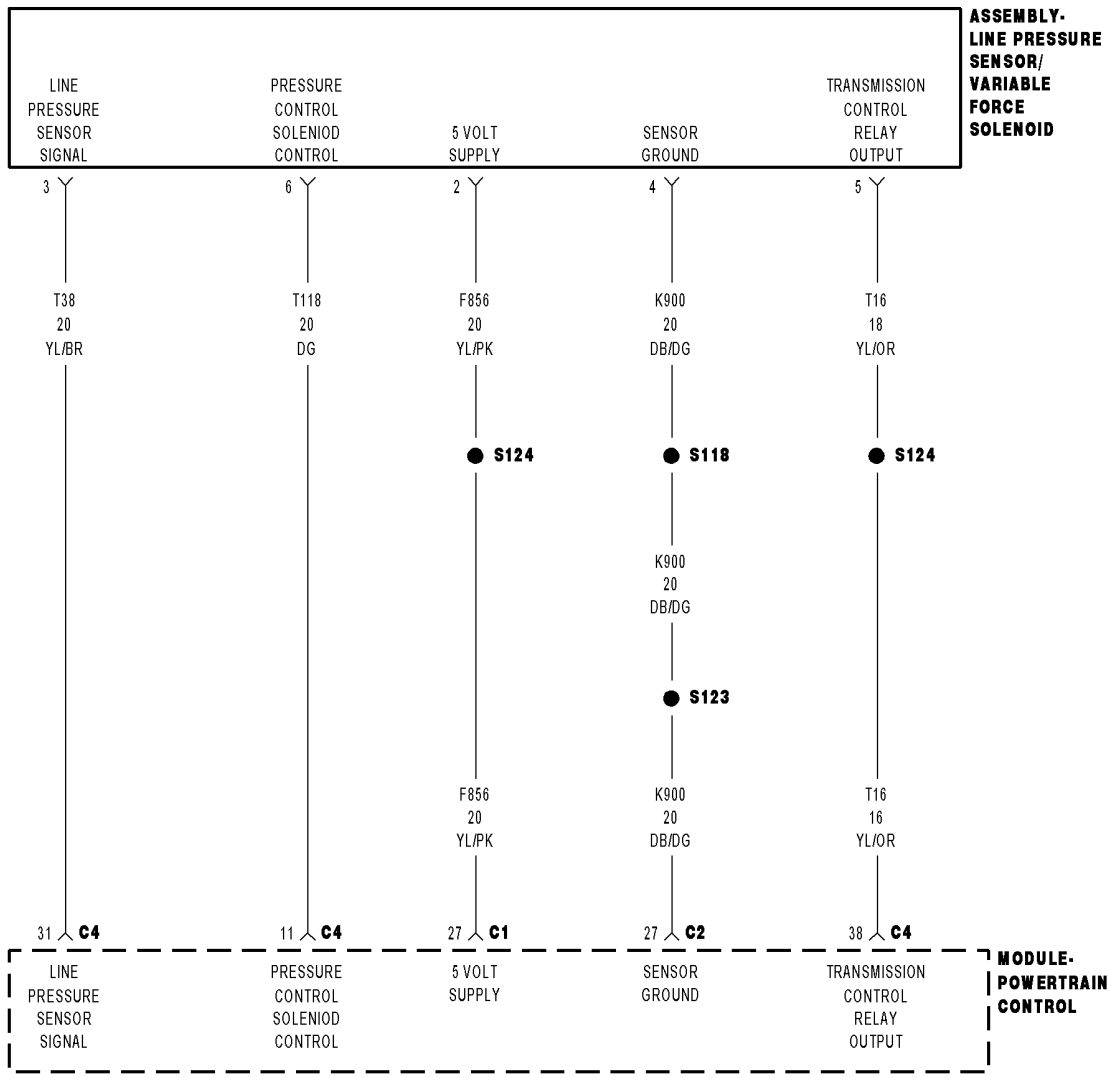

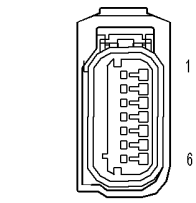

ASSEMBLY-
LINE PRESSURE SOLENOID/
VARIABLE FROCE
SOLENOID

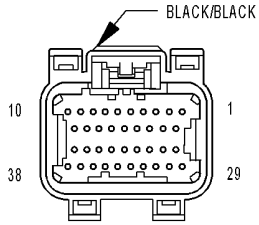

MODULE-
POWERTRAIN
CONTROL C1

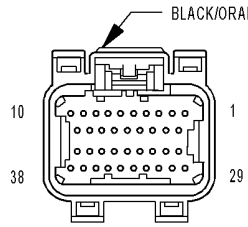

MODULE-
POWERTRAIN
CONTROL C2

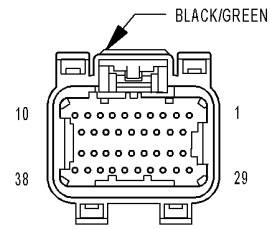

MODULE-
POWERTRAIN
CONTROL C4
(42RLE)

816895fc

For a complete wiring diagram, **refer to the Wiring Information**

Theory of Operation

Line pressure is electronically controlled by the Transmission Control System and is measured by the Line Pressure Sensor (LPS). The desired line pressure is continuously being compared to the actual line pressure and is regulated by electronically changing the duty cycle of the Pressure Control Solenoid (PCS). (5% duty cycle = solenoid off = max line pressure, 62% duty cycle = solenoid on = min line pressure).

The Transmission Control System calculates the desired line pressure based on inputs from the transmission and engine. A calculated torque input to the transmission is used as the primary input of the desired line pressure calculation and is called Torque Based Line Pressure. In addition, the line pressure is set to a preset level 827 to 931 kPa (120 to 135 PSI) during shifts and in Park and Neutral to ensure consistent shift quality.

The monitored Line Pressure Sensor voltage should always be between 0.35 and 4.75 volts. Any monitored voltages outside these parameters indicate an Line Pressure Sensor or wiring problem and will cause either DTC P0934 or P0935 to set.

- **When Monitored:**
  Continuously with ignition on and engine running.
- **Set Condition:**
  This DTC will set if the monitored Line Pressure Sensor voltage is greater than or equal to 4.75 volts for the period of 0.18 seconds

Possible Causes
(T38) LINE PRESSURE SENSOR SIGNAL CIRCUIT OPEN
(K900) SENSOR GROUND CIRCUIT OPEN
(T38) LINE PRESSURE SENSOR SIGNAL CIRCUIT SHORT TO VOLTAGE
LINE PRESSURE SENSOR
POWERTRAIN CONTROL MODULE

Always perform the 42RLE Pre-Diagnostic Troubleshooting procedure before proceeding. (Refer to 28 - DTC-Based Diagnostics/MODULE, Powertrain Control (PCM) - Standard Procedure)

1. CHECK IF THE DTC IS CURRENT

1. With the scan tool, read DTCs.

Is the status Active or is the Starts Since Set counter 2 or less for this DTC?

Yes

- Go To 2

No

- Go To 6

2. CHECK THE PCM AND WIRING

1. Turn the ignition off to the lock position.
2. Remove the Starter Relay.
3. Remove the Ignition Switch Feed fuse from the TIPM.

CAUTION: Removal of the Ignition Switch Feed fuse from the TIPM will prevent the vehicle from being started in gear.

WARNING: The Ignition Switch Feed fuse must be removed from the TIPM. Failure to do so can result in possible serious or fatal injury.

4. Install the Transmission Simulator, Miller tool #8333A and the Electronic Transmission Adapter kit.
5. Ignition on, engine not running.
6. With the scan tool, monitor the Line Pressure.
7. Using the Transmission Simulator, set the rotary switch to each of the 3 line pressure positions.

NOTE: All three scan tool Line Pressure readings should be steady and ± 14 kPa (2.0 psi) or 0.1 volts of the reading specified on the Transmission Simulator.

Did the Line Pressure read within ± 14 kPa (2.0 psi) or 0.1 volts in all three positions?

Yes

- Replace the Line Pressure Sensor in accordance with the Service Information.
- Perform 42RLE TRANSMISSION VERIFICATION TEST. (Refer to 28 - DTC-Based Diagnostics/MODULE, Powertrain Control (PCM) - Standard Procedure)

No

- Go To 3

3. CHECK THE (K900) SENSOR GROUND CIRCUIT FOR AN OPEN

1. Turn the ignition off to the lock position.
2. Disconnect the Transmission Simulator, Miller tool #8333A and the Electronic Transmission Adapter kit.
3. Disconnect the PCM C2 harness connector and connect Miller tool #8815A.

CAUTION: Do not probe the PCM harness connectors. Probing the PCM harness connectors will damage the PCM terminals resulting in poor terminal to pin connection. Install the Kit, NGC, 38 Position 8815A to perform diagnosis.

4. Measure the resistance of the (K900) Sensor Ground circuit from the Line Pressure Sensor/Variable Force Solenoid Assembly harness connector to the appropriate terminal of Miller tool #8815A.

Is the resistance above 5.0 ohms?

Yes

- Repair the (K900) Sensor Ground circuit for an open.
- Perform 42RLE TRANSMISSION VERIFICATION TEST. (Refer to 28 - DTC-Based Diagnostics/MODULE, Powertrain Control (PCM) - Standard Procedure)

No

- Go To 4

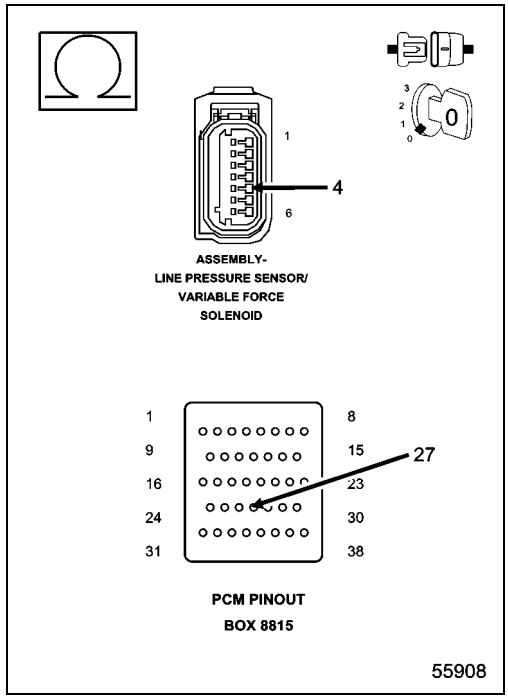

4. CHECK THE (T38) LINE PRESSURE SENSOR SIGNAL CIRCUIT FOR AN OPEN

1. Disconnect the PCM C4 harness connector and connect Miller tool #8815A.
2. Measure the resistance of the (T38) Line Pressure Sensor Signal circuit from the Line Pressure Sensor/Variable Force Solenoid Assembly harness connector to the appropriate terminal of Miller tool #8815A.

Is the resistance above 5.0 ohms?

Yes

- Repair the (T38) Line Pressure Sensor Signal circuit for an open.
- Perform 42RLE TRANSMISSION VERIFICATION TEST. (Refer to 28 - DTC-Based Diagnostics/MODULE, Powertrain Control (PCM) - Standard Procedure)

No

- Go To 5

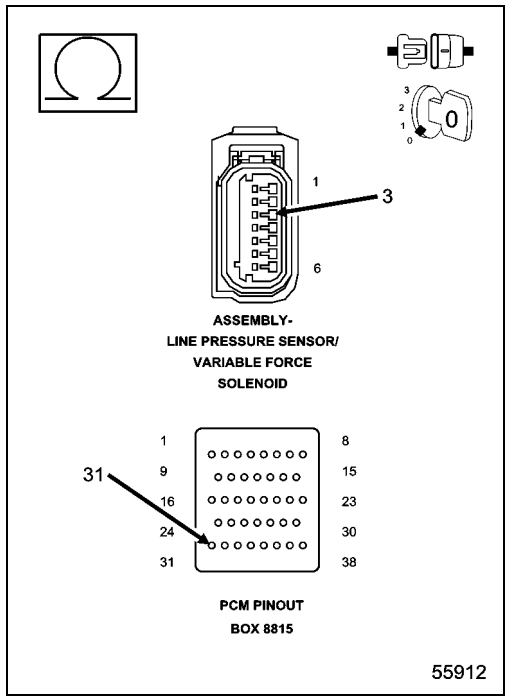

5. CHECK THE (T38) LINE PRESSURE SENSOR SIGNAL CIRCUIT FOR A SHORT TO VOLTAGE

1. Ignition on, engine not running.
2. With the scan tool under TIPM, actuate the Transmission.
3. Measure the voltage of the (T38) Line Pressure Sensor Signal circuit.

Is the voltage above 5.5 volts?

Yes

- Repair the (T38) Line Pressure Sensor Signal circuit for a short to voltage.
- Perform 42RLE TRANSMISSION VERIFICATION TEST. (Refer to 28 - DTC-Based Diagnostics/MODULE, Powertrain Control (PCM) - Standard Procedure)

No

- Using the schematics as a guide, check the Powertrain Control Module (PCM) terminals for corrosion, damage, or terminal push out. Pay particular attention to all power and ground circuits. If no problems are found, replace and program the PCM in accordance with the Service Information. With the scan tool, perform Quick Learn.
- Perform 42RLE TRANSMISSION VERIFICATION TEST. (Refer to 28 - DTC-Based Diagnostics/MODULE, Powertrain Control (PCM) - Standard Procedure)

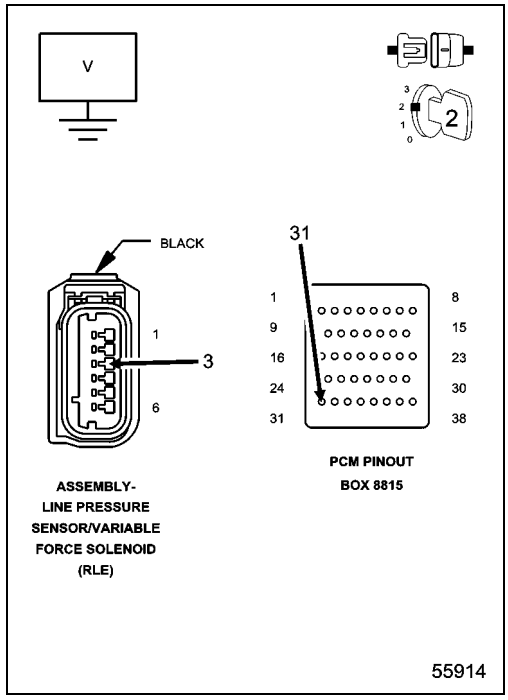

6. CHECK WIRING AND CONNECTORS

1. The conditions necessary to set this DTC are not present at this time.
2. Using the schematics as a guide, inspect the wiring and connectors specific to this circuit.
3. Wiggle the wires while checking for shorted and open circuits.
4. With the scan tool, check the Event Data to help identify the conditions in which the DTC was set.

Where there any problems found?

Yes

- Repair as necessary.
- Perform 42RLE TRANSMISSION VERIFICATION TEST. (Refer to 28 - DTC-Based Diagnostics/MODULE, Powertrain Control (PCM) - Standard Procedure)

No

- Test Complete.

■ P0944-LOSS OF HYDRAULIC PUMP PRIME

For a complete wiring diagram, **refer to the Wiring Information**.

Theory of Operation

The Loss of Prime Test is used to prevent transmission defaults and erroneous fault codes during temporary loss of pump prime that may occur with low transmission fluid under severe braking conditions, start-up, etc. and to point towards more subtle problems such as a plugged or ruptured oil filter. The Loss of Prime fault is set by a loss of hydraulic pressure in the transmission system. This condition, if sustained, will result in the vehicle being unable to move.

- **When Monitored:**

  Every 350 msec.
- **Set Condition:**

  If the transmission begins to slip in any forward gear, and the pressure switch or switches that should be closed for a given gear are open, a loss of prime test begins. All available elements (in 1st gear LR, 2/4 and OD, in 2nd, 3rd, and 4th gear 2/4 and OD) are turned on by the PCM to see if pump prime exists. The code is set if none of the pressure switches respond. The PCM will continue to run the loss of prime test until pump pressure returns. The vehicle will not move or the transmission will slip. Normal operation will continue if pump prime returns.

Possible Causes
LOW TRANSMISSION FLUID LEVEL
SHIFT LEVER POSITION
PLUGGED TRANSMISSION FILTER
TRANSMISSION OIL PUMP

Always perform the 42RLE Pre-Diagnostic Troubleshooting procedure before proceeding. (Refer to 28 - DTC-Based Diagnostics/MODULE, Powertrain Control (PCM) - Standard Procedure)

1. CHECK IF THE DTC IS CURRENT

1. Place the gear selector in Park.
2. Start the engine.

NOTE: The Transmission Temperature must be at least 43° C (110° F) before performing the following steps.

3. The Transmission must be at operating temperature prior to checking pressure. Cold transmission fluid will result in higher pressure readings.
4. Place the Transmission in Reverse.
5. With the scan tool, observe the Transmission Pressure Switch states.

Are any of the Pressure Switches closed?

Yes

- Go To 2

No

- Go To 4

2. INTERMITTENT OPERATION

1. The conditions necessary to set this DTC are not present at this time.
2. Test drive the vehicle. Allow the Transmission to shift through all gears and ranges.

Was a delayed engagement and/or a no drive condition present during the test drive?

Yes

- Go To 4

No

- Go To 3

3. CHECK THE WIRING AND CONNECTORS

1. The conditions necessary to set this DTC are not present at this time.
2. Using the schematics as a guide, inspect the wiring and connectors specific to this circuit.
3. Wiggle the wiring while checking for shorted and open circuits.
4. With the scan tool, check the Event Data to help identify the conditions in which the DTC was set.

Were there any problems found?

Yes

- Repair as necessary.
- Perform 42RLE TRANSMISSION VERIFICATION TEST. (Refer to 28 - DTC-Based Diagnostics/MODULE, Powertrain Control (PCM) - Standard Procedure)

No

- Test Complete.

4. SHIFT LEVER POSITION TEST

1. With the scan tool, perform a Shift Lever Position test. Follow the instructions on the screen.

Did the Shift Lever Position Test pass?

Yes

- Go To 5

No

- Perform the diagnostic procedure for P0706-TRANSMISSION RANGE SENSOR RATIONALITY.
- Perform 42RLE TRANSMISSION VERIFICATION TEST. (Refer to 28 - DTC-Based Diagnostics/MODULE, Powertrain Control (PCM) - Standard Procedure)

5. CHECK FOR PLUGGED TRANSMISSION FILTER

1. Remove the Transmission Pan and inspect the Transmission Fluid and Transmission Filter in accordance with the Service Information.

Does the Transmission Oil Pan contain excessive debris and/or is the Oil Filter plugged?

Yes

- Repair the cause of the plugged Transmission Filter. Refer to the Service Information for the proper repair procedure.
- Perform 42RLE TRANSMISSION VERIFICATION TEST. (Refer to 28 - DTC-Based Diagnostics/MODULE, Powertrain Control (PCM) - Standard Procedure)

No

- Replace the Transmission Oil Pump in accordance with the Service Information.
- Perform 42RLE TRANSMISSION VERIFICATION TEST. (Refer to 28 - DTC-Based Diagnostics/MODULE, Powertrain Control (PCM) - Standard Procedure)

P0957-AUTOSTICK CIRCUIT LOW (ERS)

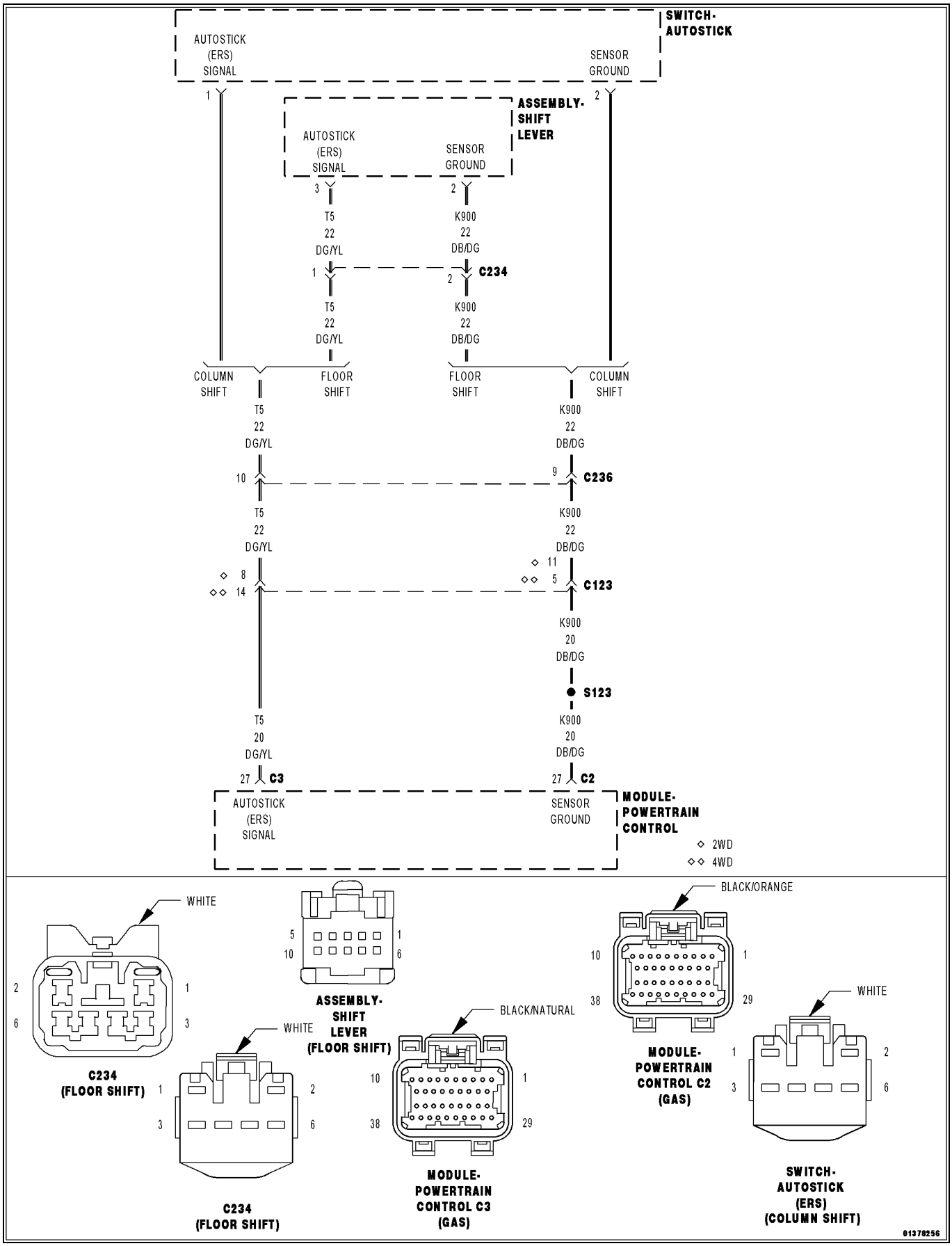

For a complete wiring diagram, **refer to the Wiring Information**.

Theory of Operation

Electronic Range Select (ERS) is an electronic gear selector. In ERS mode the transmission will upshift and downshift normally only up to the selected gear.

The AutoStick® (ERS) switch uses a MUX (multiplex) switch. The Powertrain Control Module (PCM) monitors the AutoStick® (ERS) Signal circuit for voltage changes in respect to the position of the switch. If the PCM detects an improper voltage during upshift, downshift, or in its neutral state, a DTC will set.

- **When Monitored:**
  Whenever the engine is running.
- **Set Condition:**
  The Powertrain Control Module (PCM) detects a voltage below 0.35 volts for the period of five seconds on the AutoStick® (ERS) Signal circuit.

Possible Causes
(T5) AUTOSTICK® (ERS) SIGNAL CIRCUIT SHORT TO GROUND
AUTOSTICK® (ERS) SWITCH
POWERTRAIN CONTROL MODULE (PCM)

Always perform the 42RLE Pre-Diagnostic Troubleshooting procedure before proceeding. (Refer to 28 - DTC-Based Diagnostics/MODULE, Powertrain Control (PCM) - Standard Procedure).

1. CHECK IF THE DTC IS CURRENT

NOTE: For vehicles with a floor mounted shift lever assembly, the AutoStick® switch is integral to the Shift Lever assembly.

1. With the scan tool, read DTCs.

Is the status Active or is the Starts Since Set counter 2 or less for this DTC?

Yes

- Go To 2

No

- Go To 5

2. CHECK THE AUTOSTICK® (ERS) SIGNAL CIRCUIT

SWITCH POSITION	SCAN TOOL VALUE	AUTOSTICK® (ERS) VOLTAGE
NEUTRAL	OPEN	4.45 TO 4.55 VOLTS
UPSHIFT	CLOSED	2.13 TO 2.23 VOLTS
DOWNSHIFT	CLOSED	0.84 TO 0.94 VOLTS

1. With the scan tool, monitor the AutoStick voltage in the following steps:
2. With the ignition on, engine not running and the vehicle in drive, using the AutoStick® (ERS) switch, switch to all shift positions while noting the scan tool values and voltages.

Pick one of the following that best describes your findings.

Voltage is below 0.35 of a volt in ALL three switch positions and no values change.

- Go To 3

Voltage is below 0.35 of a volt in ONE of three switch positions.

- Go To 4

All shift values and voltages are within limits.

- Go To 5

3. CHECK THE (T5) AUTOSTICK® (ERS) SIGNAL CIRCUIT FOR A SHORT TO GROUND

1. Turn the ignition off to the lock position.
2. Disconnect the PCM C3 harness connector.
3. Disconnect the AutoStick® (ERS) Switch harness connector (column shift).
4. Disconnect the Shift Lever assembly harness connector (floor shift).

CAUTION: Do not probe the PCM harness connectors. Probing the PCM harness connectors will damage the PCM terminals resulting in poor terminal to pin connection. Install the PCM Pinout Box Kit, NGC, 38 Position 8815A to perform diagnosis.

5. Measure the resistance between ground and the (T5) AutoStick® (ERS) Signal circuit.

Is the resistance below 5.0 Ohms?

Yes

- Repair the (T5) AutoStick® (ERS) Signal circuit for a short to ground.
- Perform the 42RLE TRANSMISSION VERIFICATION TEST. (Refer to 28 - DTC-Based Diagnostics/MODULE, Powertrain Control (PCM) - Standard Procedure).

No

- Go To 4

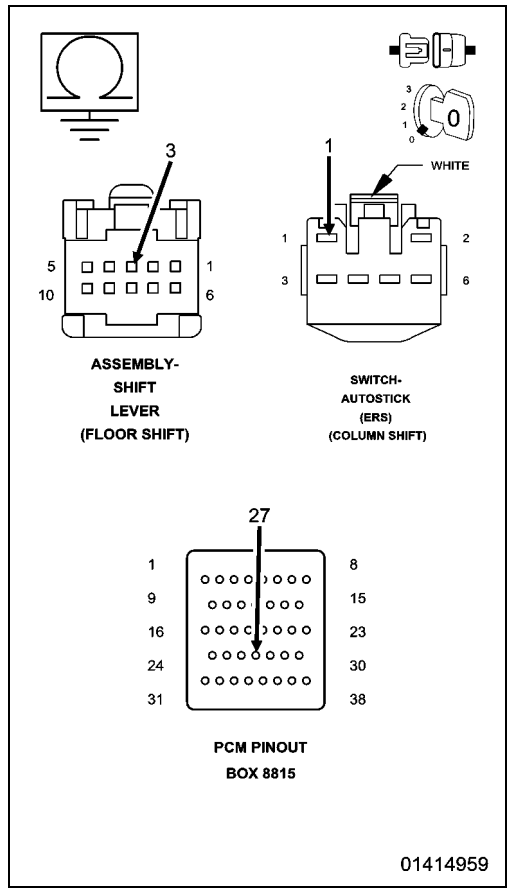

4. CHECK THE AUTOSTICK® (ERS) SWITCH

1. Turn the ignition off to the lock position.
2. Disconnect the AutoStick® (ERS) Switch harness connector (column shift).
3. Disconnect the Shift Lever assembly harness connector (floor shift).

SWITCH POSITION	RESISTIVE VALUE (±1%)
NEUTRAL	18.68 k Ohms
UPSHIFT	1.65 k Ohms
DOWNSHIFT	0.46 k Ohms

4. Measure the resistance of the AutoStick® (ERS) switch between the (T5) AutoStick® (ERS) Signal circuit and the (K900) Sensor Ground circuit in all three shift positions. Use the above chart to verify your findings.

Are the resistances of the AutoStick® (ERS) switch within limits?

Yes

- Using the schematics as a guide, check the Powertrain Control Module (PCM) terminals for corrosion, damage, or terminal push out. Pay particular attention to all power and ground circuits. Check for Service Information Tune-ups or Service Bulletins for any possible causes that may apply. If no problems are found, replace and program the PCM in accordance with the Service Information. With the scan tool, perform Quick Learn.
- Perform the 42RLE TRANSMISSION VERIFICATION TEST. (Refer to 28 - DTC-Based Diagnostics/MODULE, Powertrain Control (PCM) - Standard Procedure).

No

- Replace the AutoStick® (ERS) switch in accordance with the Service Information.
- Perform the 42RLE TRANSMISSION VERIFICATION TEST. (Refer to 28 - DTC-Based Diagnostics/MODULE, Powertrain Control (PCM) - Standard Procedure).

5. CHECK THE WIRING AND CONNECTORS

1. The conditions necessary to set this DTC are not present at this time.
2. Using the schematics as a guide, inspect the wiring and connectors specific to this circuit.
3. Wiggle the wires while checking for shorted and open circuits.
4. With the scan tool, check the Event Data to help identify the conditions in which the DTC was set.

NOTE: It may be necessary to test drive the vehicle to enable or cause the DTC to set.

5. Check for any Service bulletins that may apply.

Were there any problems found?

Yes

- Repair as necessary.
- Perform the 42RLE TRANSMISSION VERIFICATION TEST. (Refer to 28 - DTC-Based Diagnostics/MODULE, Powertrain Control (PCM) - Standard Procedure).

No

- Test Complete.

P0958-AUTOSTICK CIRCUIT HIGH (ERS)

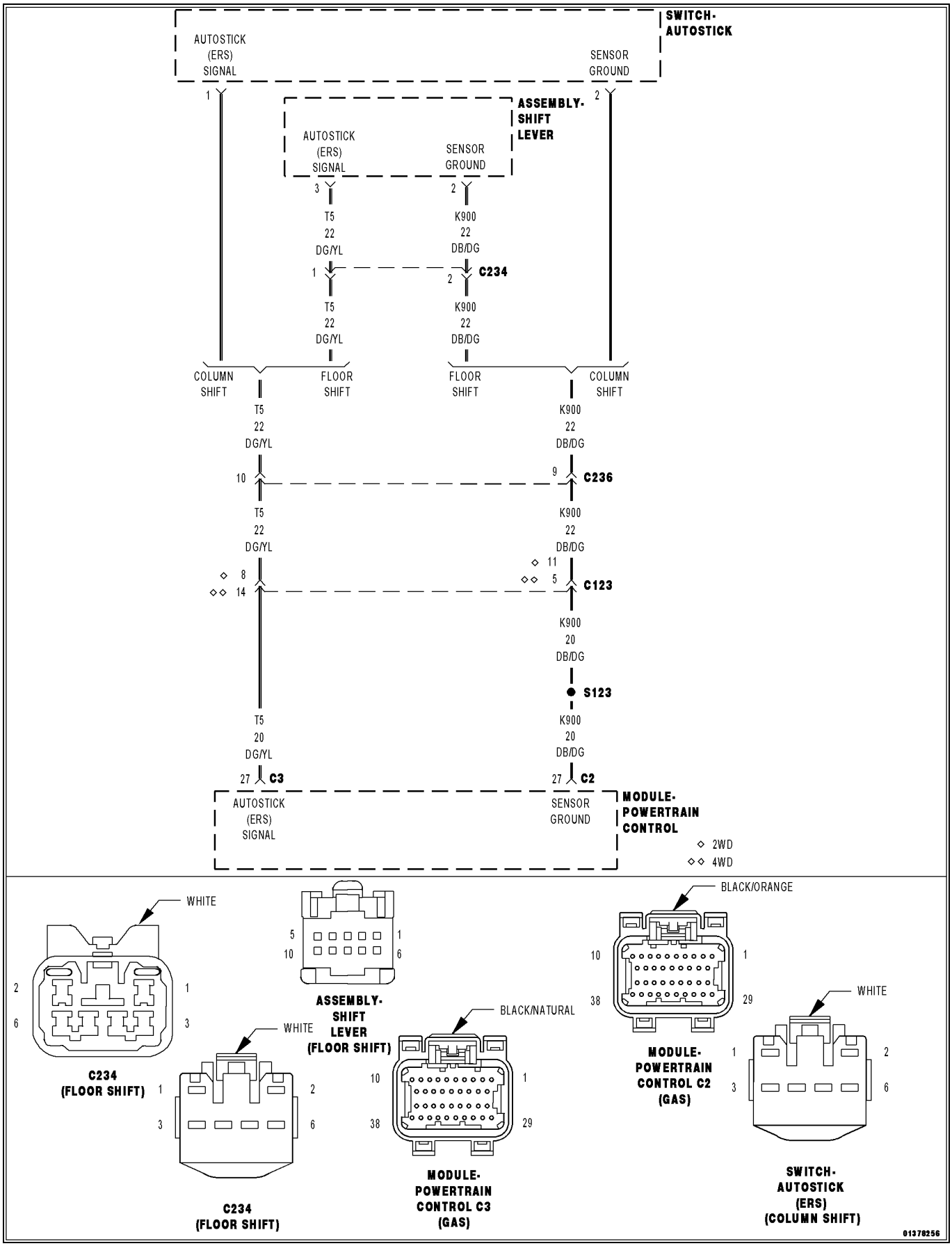

For a complete wiring diagram, **refer to the Wiring Information**.

Theory of Operation

Electronic Range Select (ERS) is an electronic gear selector. In ERS mode the transmission will upshift and downshift normally only up to the selected gear.

The AutoStick® (ERS) switch uses a MUX (multiplex) switch. The Powertrain Control Module (PCM) monitors the AutoStick® (ERS) Signal circuit for voltage changes in respect to the position of the switch. If the PCM detects an improper voltage during upshift, downshift, or in its neutral state, a DTC will set.

- **When Monitored:**
  Whenever the engine is running.
- **Set Condition:**
  The Powertrain Control Module (PCM) detects a voltage above 4.75 volts for the period of five seconds on the AutoStick® (ERS) Signal circuit.

Possible Causes
(T5) AUTOSTICK® (ERS) SIGNAL CIRCUIT OPEN
(K900) SENSOR GROUND CIRCUIT OPEN
(T5) AUTOSTICK® (ERS) SIGNAL CIRCUIT SHORT TO VOLTAGE
AUTOSTICK® (ERS) SWITCH
POWERTRAIN CONTROL MODULE (PCM)

Always perform the 42RLE Pre-Diagnostic Troubleshooting procedure before proceeding. (Refer to 28 - DTC-Based Diagnostics/MODULE, Powertrain Control (PCM) - Standard Procedure).

1. CHECK IF THE DTC IS CURRENT

NOTE: For vehicles with a floor mounted shift lever assembly, the AutoStick® switch is integral to the Shift Lever assembly.

1. With the scan tool, read DTCs.

Is the status Active or is the Starts Since Set counter 0 for this DTC?

Yes

- Go To 2

No

- Go To 7

2. CHECK THE (T5) AUTOSTICK® (ERS) SIGNAL CIRCUIT

1. Turn the ignition off to the lock position.
2. Ignition on, engine running.
3. With the scan tool, read the AutoStick (ERS) voltage.

Is the voltage above 4.75 volts?

Yes

- Go To 3

No

- Go To 6

3. (T5) AUTOSTICK® (ERS) SIGNAL CIRCUIT SHORT TO VOLTAGE

1. Turn the ignition off to the lock position.
2. Disconnect the PCM C3 harness connector.

CAUTION: Do not probe the PCM harness connectors. Probing the PCM harness connectors will damage the PCM terminals resulting in poor terminal to pin connection. Install the PCM Pinout Box Kit, NGC, 38 Position 8815A to perform diagnosis.

3. Ignition on, engine not running.
4. Measure the voltage between the (T5) AutoStick® (ERS) Signal circuit and ground.

Is the voltage above 0.5 of a volt?

Yes

- Repair the (T5) AutoStick® (ERS) Signal circuit for a short to voltage.
- Perform the 42RLE TRANSMISSION VERIFICATION TEST. (Refer to 28 - DTC-Based Diagnostics/MODULE, Powertrain Control (PCM) - Standard Procedure).

No

- Go To 4

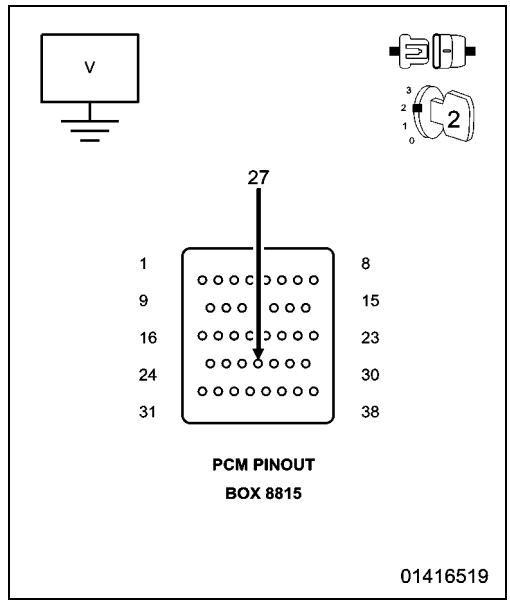

4. CHECK THE (T5) AUTOSTICK® (ERS) SIGNAL CIRCUIT FOR AN OPEN

1. Turn the ignition off to the lock position.
2. Disconnect the AutoStick® (ERS) switch harness connector (column shift).
3. Disconnect the Shift Lever assembly harness connector (floor shift).
4. Measure the resistance of the (T5) AutoStick® (ERS) Signal circuit from the AutoStick® (ERS) switch (column shift) or Shift Lever assembly (floor shift) harness connector to the appropriate terminal of PCM Pinout Box 8815A.

Is the resistance above 5.0 Ohms?

Yes

- Repair the (T5) AutoStick® (ERS) Signal circuit for an open.
- Perform the 42RLE TRANSMISSION VERIFICATION TEST. (Refer to 28 - DTC-Based Diagnostics/MODULE, Powertrain Control (PCM) - Standard Procedure).

No

- Go To 5

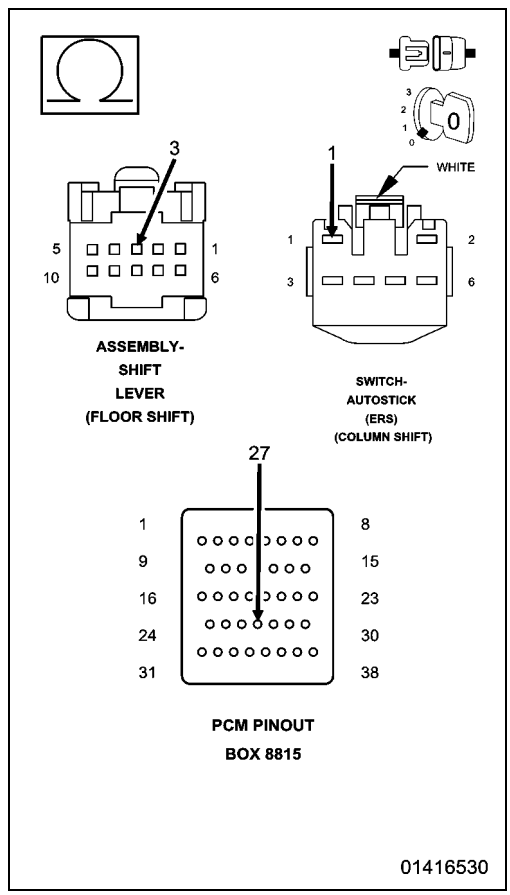

5. CHECK THE (K900) SENSOR GROUND CIRCUIT FOR AN OPEN

1. Disconnect the PCM C2 harness connector.
2. Measure the resistance of the (K900) Sensor Ground circuit from the AutoStick® (ERS) switch (column shift) or Shift Lever assembly (floor shift) harness connector to the appropriate terminal of PCM Pinout Box 8815A.

Is the resistance above 5.0 Ohms?

Yes

- Repair the (K900) Sensor Ground circuit for an open.
- Perform the 42RLE TRANSMISSION VERIFICATION TEST. (Refer to 28 - DTC-Based Diagnostics/MODULE, Powertrain Control (PCM) - Standard Procedure).

No

- Go To 6

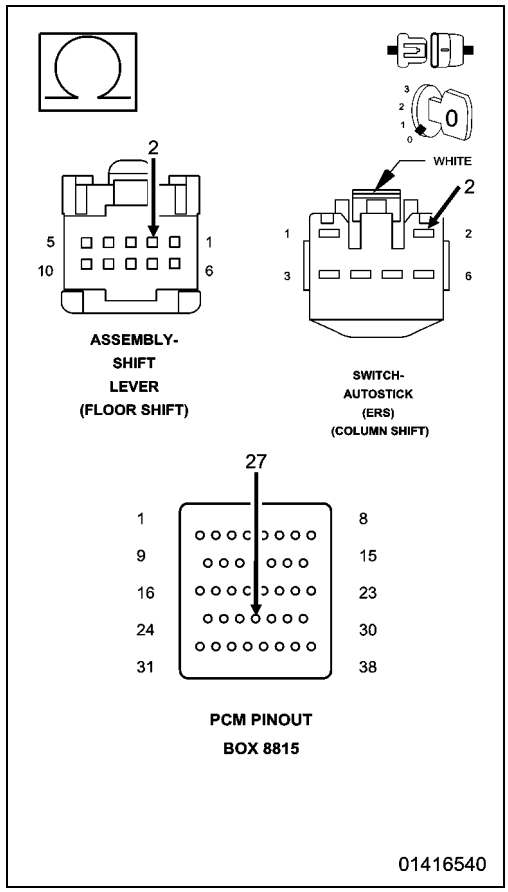

6. CHECK THE AUTOSTICK® (ERS) SWITCH

1. Turn the ignition off to the lock position.
2. Disconnect the AutoStick® (ERS) switch harness connector (column shift).
3. Disconnect the Shift Lever assembly harness connector (floor shift).

SWITCH POSITION	RESISTIVE VALUE (±1%)
NEUTRAL	18.68 k Ohms
UPSHIFT	1.65 k Ohms
DOWNSHIFT	0.46 k Ohms

4. Measure the resistance of the AutoStick® (ERS) switch between the (T5) AutoStick® (ERS) Signal circuit and the (K900) Sensor Ground circuit in all three shift positions. Use the above chart to verify your findings.

Are the resistances of the AutoStick® (ERS) switch within limits?

Yes

- Using the schematics as a guide, check the Powertrain Control Module (PCM) terminals for corrosion, damage, or terminal push out. Pay particular attention to all power and ground circuits. Check for Service Information Tune-ups or Service Bulletins for any possible causes that may apply. If no problems are found, replace and program the PCM in accordance with the Service Information. With the scan tool, perform Quick Learn.
- Perform the 42RLE TRANSMISSION VERIFICATION TEST. (Refer to 28 - DTC-Based Diagnostics/MODULE, Powertrain Control (PCM) - Standard Procedure).

No

- Replace the AutoStick® (ERS) switch in accordance with the Service Information.
- Perform the 42RLE TRANSMISSION VERIFICATION TEST. (Refer to 28 - DTC-Based Diagnostics/MODULE, Powertrain Control (PCM) - Standard Procedure).

7. CHECK THE WIRING AND CONNECTORS

1. The conditions necessary to set this DTC are not present at this time.
2. Using the schematics as a guide, inspect the wiring and connectors specific to this circuit.
3. Wiggle the wires while checking for shorted and open circuits.
4. With the scan tool, check the Event Data to help identify the conditions in which the DTC was set.

NOTE: It may be necessary to test drive the vehicle to enable or cause the DTC to set.

5. Check for any Service bulletins that may apply.

Were there any problems found?

Yes

- Repair as necessary.
- Perform the 42RLE TRANSMISSION VERIFICATION TEST. (Refer to 28 - DTC-Based Diagnostics/MODULE, Powertrain Control (PCM) - Standard Procedure).

No

- Test Complete.

■ P0992-2/4/OD HYDRAULIC PRESSURE TEST

For a complete wiring diagram **Refer to the Wiring Information**.

Theory of Operation

Pressure switches are normally off or open (no pressure applied) and read high (+12 volts). When an element is applied, the corresponding pressure switch closes to ground (0 volts) or turns on. The controller tests the OD and 2/4 pressure switches when they are off (when the corresponding friction element is not applied) by briefly applying the OD and 2/4 elements which will cause the corresponding pressure switch to close. The test verifies that the switches are operational and that the switch will close when the corresponding element is applied. If a switch fails to respond, it is re-tested. The MIL illuminates and the transmission system defaults to limp-in mode.

- **When Monitored:**
  In any forward gear with engine speed above 1000 rpm, shortly after a shift and every minute thereafter.
- **Set Condition:**
  After a shift into a forward gear, with engine speed greater than 1000 rpm, the PCM momentarily turns on element pressure to the clutch circuits that do not have pressure to identify that the correct pressure switch closes. If the pressure switch does not close 2 times the DTC sets.

Possible Causes
CONDITION P0992 PRESENT

Always perform the 42RLE Pre-Diagnostic Troubleshooting procedure before proceeding. (Refer to 28 - DTC-Based Diagnostics/MODULE, Powertrain Control (PCM) - Standard Procedure)

1. CHECK IF THE DTC IS CURRENT

NOTE: The vehicle must be driven to set this DTC. The transmission must be at operating temperature with the Engine rpm above 1000 rpm.

1. This DTC is an indication of both the 2/4 and the O/D Hydraulic Pressure Switch DTCs being present.
2. Perform the diagnostic procedures for both P0845 and P0870.
3. With the scan tool, check the Event Data to help identify the conditions in which the DTC was set.

If there are no possible causes remaining, view repair.

Repair

- Refer to the Transmission category and perform the diagnostic procedures for P0845 and P0870.

P1684-BATTERY WAS DISCONNECTED

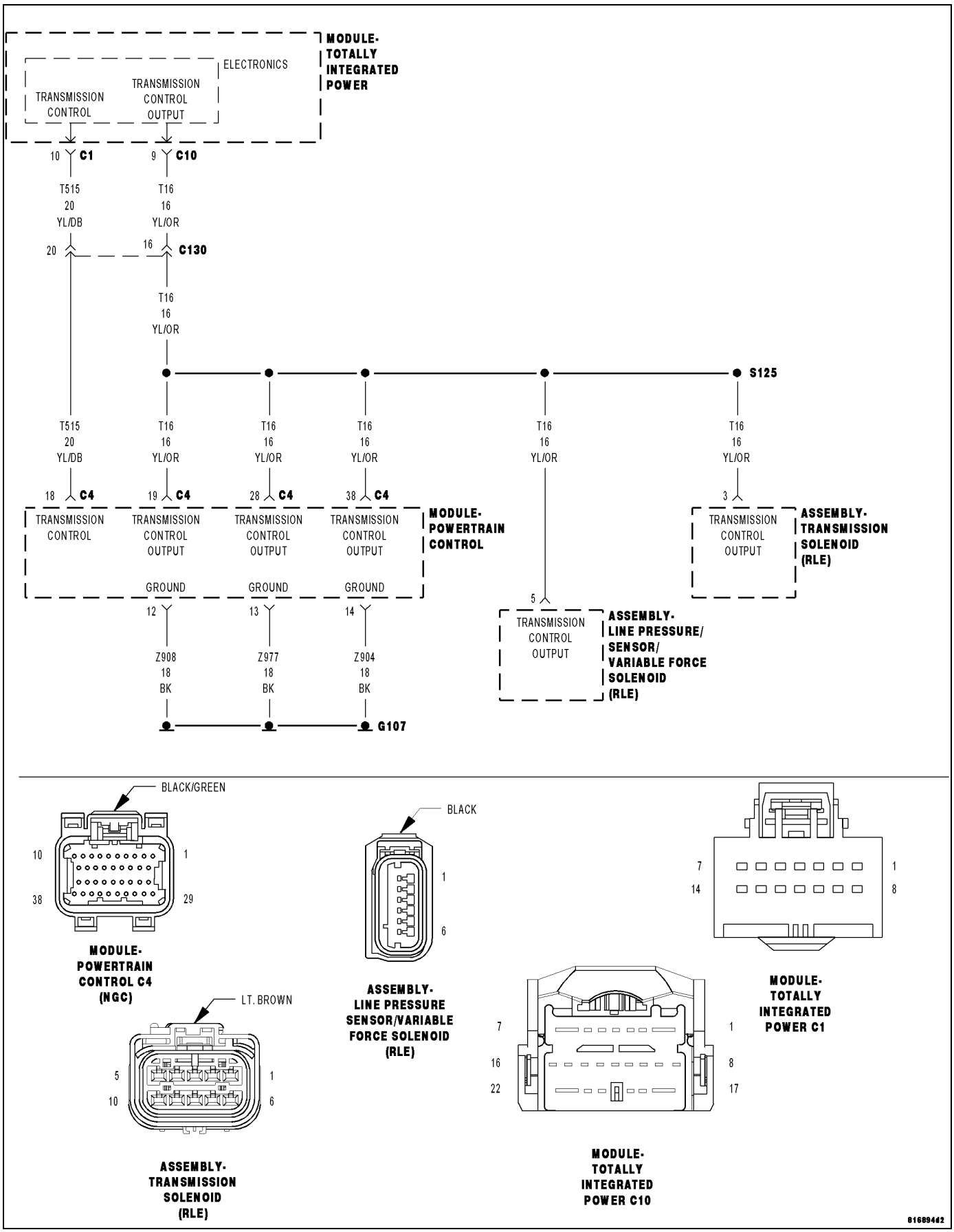

For a complete wiring diagram, **refer to the Wiring Information**.

Theory of Operation

Note: This is not a fault code. It exists to provide reference information only. A battery backed RAM is used to maintain some learned values. When the battery is disconnected, this memory is lost. When the battery is reconnected, the loss of learned values will be detected by the controller. The code will be set and the learned values will be initialized to known constants and the learning process will continue. Setting the code has no effect except for re-initialization of learned values.

- **When Monitored:**
  After a reset (ignition key turned to the RUN position).
- **Set Condition:**
  The checksum of the battery backed RAM does not match the stored checksum. Set Time: Less than 7 msec.

Possible Causes
BATTERY WAS DISCONNECTED
PCM WAS REPLACED OR DISCONNECTED
Quick Learn WAS PERFORMED
(A919) FUSED B(+) CIRCUIT TO PCM OPEN
(Z908 and Z977) GROUND CIRCUIT OPEN

Always perform the 42RLE Pre-Diagnostic Troubleshooting procedure before proceeding. (Refer to 28 - DTC-Based Diagnostics/MODULE, Powertrain Control (PCM) - Standard Procedure)

1. BATTERY WAS DISCONNECTED

Has the battery been disconnected, lost it's charge, or been replaced recently?

Yes

- Disconnecting or replacing the battery will set this DTC. Erase the DTC.
- Perform 42RLE TRANSMISSION VERIFICATION TEST. (Refer to 28 - DTC-Based Diagnostics/MODULE, Powertrain Control (PCM) - Standard Procedure)

No

- Go To 2

2. WAS Quick Learn PERFORMED

Has a Quick Learn procedure been performed?

Yes

- Performing Quick Learn will set this DTC. Erase the DTC.
- Perform 42RLE TRANSMISSION VERIFICATION TEST. (Refer to 28 - DTC-Based Diagnostics/MODULE, Powertrain Control (PCM) - Standard Procedure)

No

- Go To 3

3. PCM REPLACED OR DISCONNECTED

Has the PCM been replaced or disconnected?

Yes

- Replacing or disconnecting the PCM will set this DTC. Erase the DTC.
- Perform 42RLE TRANSMISSION VERIFICATION TEST. (Refer to 28 - DTC-Based Diagnostics/MODULE, Powertrain Control (PCM) - Standard Procedure)

No

- Go To 4

4. (A919) FUSED B(+) CIRCUIT

1. Turn the ignition off to the lock position.
2. Disconnect the PCM C1 harness connector.

NOTE: Check connectors - Clean/repair as necessary.

CAUTION: Do not probe the PCM harness connectors. Probing the PCM harness connectors will damage the PCM terminals resulting in poor terminal to pin connection. Install the PCM Pinout Box Kit, NGC, 38 Position 8815A to perform diagnosis.

3. Using a 12-volt test light connected to ground, check the (A919) Fused B(+) circuit.

NOTE: The test light must illuminate brightly. Compare the brightness to that of a direct connection to the battery.

Does the test light illuminate brightly?

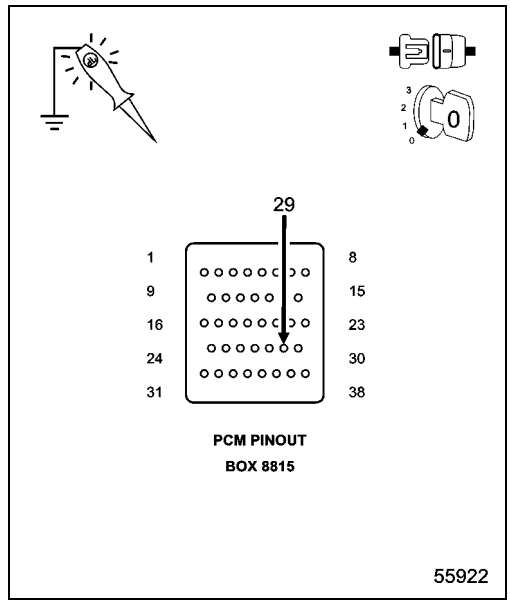

Yes

- Go To 5

No

- Repair the Fused B(+) circuit for an open. If the fuse is open make sure to check for a short to ground.
- Perform 42RLE TRANSMISSION VERIFICATION TEST. (Refer to 28 - DTC-Based Diagnostics/MODULE, Powertrain Control (PCM) - Standard Procedure)

5. (Z908) AND (Z977) GROUND CIRCUITS

1. Turn the ignition off to the lock position.
2. Disconnect the PCM C4 harness connector.

NOTE: Check connectors - Clean/repair as necessary.

3. Using a 12-volt test light connected to 12-volts, check the (Z908) and (Z977) Ground circuits in the appropriate terminal of Miller tool #8815A.

NOTE: The test light must illuminate brightly. Compare the brightness to that of a direct connection to the battery.

Does the test light illuminate brightly for all of the ground circuits?

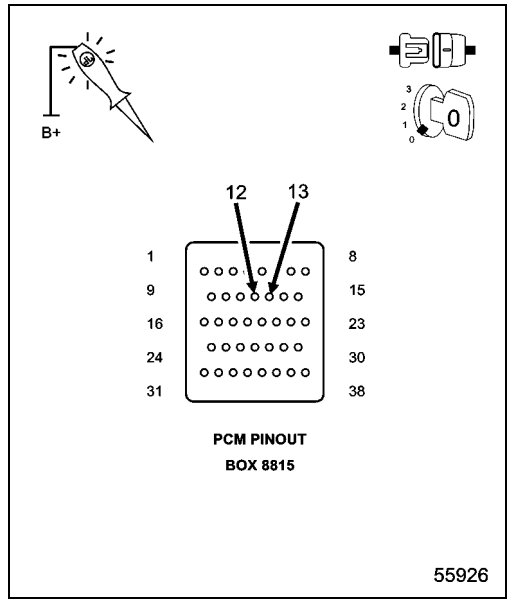

Yes

- Go To 6

No

- Repair the Ground circuits for an open.
- Perform 42RLE TRANSMISSION VERIFICATION TEST. (Refer to 28 - DTC-Based Diagnostics/MODULE, Powertrain Control (PCM) - Standard Procedure)

6. CHECK THE WIRING AND CONNECTORS

1. The conditions necessary to set the DTC are not present at this time.
2. Using the schematics as a guide, inspect the wiring and connectors specific to this circuit.
3. Wiggle the wires while checking for shorted and open circuits.
4. With the scan tool, check the Event Data to help identify the conditions in which the DTC was set.

Were there any problems found?

Yes

- Repair as necessary.
- Perform 42RLE TRANSMISSION VERIFICATION TEST. (Refer to 28 - DTC-Based Diagnostics/MODULE, Powertrain Control (PCM) - Standard Procedure)

No

- Test Complete.

■ P1713-RESTRICTED MANUAL VALVE IN T2 RANGE

For a complete wiring diagram, **refer to the Wiring Information**.

- **When Monitored:**
  Ignition on, engine running with the gear shift selector in a valid forward gear.
- **Set Condition:**
  This DTC sets whenever Transmission control system detects the manual valve is in the T2 range when it should be in OD. This is mainly an informational DTC.

Possible Causes
RELATED TRANSMISSION DTCS PRESENT
CUSTOMER DRIVING HABITS
MIS-ADJUSTED SHIFTER CABLE

Always perform the Pre-Diagnostic Troubleshooting procedure before proceeding. (Refer to 28 - DTC-Based Diagnostics/MODULE, Powertrain Control (PCM) - Standard Procedure).

1. DETERMINING IF RELATED DTCS ARE PRESENT

1. With the scan tool, check for other transmission DTCs.

Are there any speed sensor or gear ratio DTCs present?

Yes

- Refer to the Transmission category and perform the appropriate symptom.

No

- Go to 2

2. CHECK THE GEAR SHIFT CABLE FOR PROPER ADJUSTMENT

1. Check the Gear shift cable adjustment per the Service Information.
2. Also check the cable for possible binding or improperly routed.

Is the Gear shift cable properly adjusted and not binding or improperly routed?

Yes

- Go to 3

No

- Adjust the Shifter Assembly per the Service Information.
- Perform the 42RLE TRANSMISSION VERIFICATION TEST. (Refer to 28 - DTC-Based Diagnostics/MODULE, Powertrain Control (PCM) - Standard Procedure).

3. CHECK CUSTOMER DRIVING HABIT

1. This DTC can be set if the customer does not move the shift lever completely into the OD position (in between gears) causing the manual valve to be in the T2 position.
2. When this occurs, the feed port to the clutch is restricted, the transmission will declare Neutral, and this DTC will set.
3. This DTC can also be set by simply bumping the shift lever toward Neutral while accelerating.
4. With the scan tool, check the Event Data to help identify the conditions in which the DTC was set.

If there are no possible causes remaining, view repair.

Repair

- This DTC can be set by the shift lever in the wrong position or not completely in the OD position. Make sure the customer is properly informed.
- Perform the 42RLE TRANSMISSION VERIFICATION TEST.(Refer to 28 - DTC-Based Diagnostics/MODULE, Powertrain Control (PCM) - Standard Procedure).

■ P1745-TRANSMISSION LINE PRESSURE TOO HIGH FOR TOO LONG

For a complete wiring diagram, **refer to the Wiring Information**.

Theory of Operation

This DTC is an informational DTC to inform the technician that transmission has been operating in an open-loop line pressure control for 3220 kilometers (2000 miles) or 1000 2-3 upshifts resulting from a Line Pressure DTC. The 42RLE Transmission is not designed to operate in open-loop line pressure control for an extended period time. This DTC is intended to protect the transmission. If the DTC sets, the transmission controller will place the transmission into limp-in mode.

- **When Monitored:**

  Continuously with ignition on.
- **Set Condition:**

  If the transmission has been operating in an open-loop line pressure control for 3220 kilometers (2000 miles) or 1000 2-3 upshifts.

Possible Causes
LINE PRESSURE DTCS PRESENT

Always perform the 42RLE Pre-Diagnostic Troubleshooting procedure before proceeding. (Refer to 28 - DTC-Based Diagnostics/MODULE, Powertrain Control (PCM) - Standard Procedure)

1. CHECK FOR RELATED DTCS

1. With the scan tool, check for Transmission Line Pressure DTCs.

NOTE: In order to erase this DTC you must reset (erase) the VLP Shift Counter and the Output tooth counter. This is a single procedure in the scan tool called “Clear Variable Line Pressure (VLP) counters".

Repair

- Refer to DTC Based Diagnostics and perform the appropriate diagnostic procedure. (Refer to 28 - DTC-Based Diagnostics/MODULE, Powertrain Control (PCM) - Diagnosis and Testing)

P1775-SOLENOID SWITCH VALVE LATCHED IN TCC POSITION

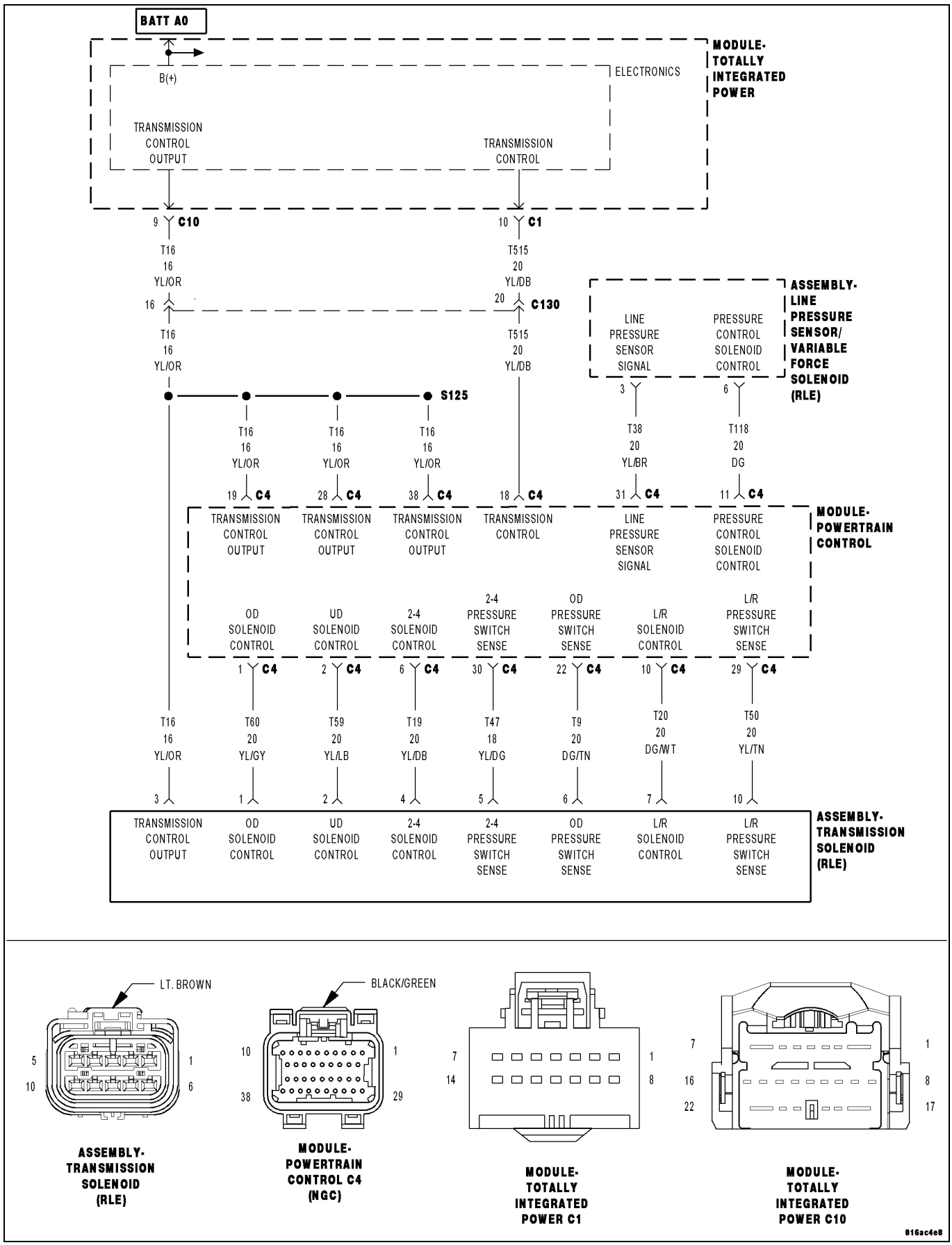

For a complete wiring diagram, **refer to the Wiring Information**.

Theory of Operation

The Solenoid Switch Valve, an internal, hydraulically operated valve, controls the direction of the transmission fluid when the LR solenoid is energized. When the solenoid switch valve is in the downshifted position and the LR solenoid is energized, fluid is directed to the LR element for 1st gear. When the solenoid switch valve is In the up-shifted position (2nd, 3rd, and 4th gear) and the LR solenoid is energized, fluid is directed into the Lockup Switch Valve which controls the Torque Converter Clutch. When shifting into 1st gear, a special sequence is followed to insure solenoid switch valve movement into the downshifted position. The LR pressure switch is monitored to confirm switch valve movement. If the solenoid switch valve movement is not confirmed (i.e. no LR pressure when the LR solenoid is energized), 2nd gear is substituted for 1st. No 1st gear (2nd gear is substituted). The transmission Torque converter FEMCC operation is inhibited. MIL on after 5 min. of substituted operation.

- **When Monitored:**
  Prior to a shift into 1st gear.
- **Set Condition:**
  Transmission temperature must be hot. DTC is set after six unsuccessful attempts to shift into 1st gear.

Possible Causes
RELATED DTC P0841 PRESENT
(T16) TRANSMISSION CONTROL OUTPUT CIRCUIT OPEN
(T50) L/R PRESSURE SWITCH SENSE CIRCUIT OPEN
(T50) L/R PRESSURE SWITCH SENSE CIRCUIT SHORT TO GROUND
(T50) L/R PRESSURE SWITCH SENSE CIRCUIT SHORT TO VOLTAGE
INTERNAL TRANSMISSION
POWERTRAIN CONTROL MODULE

Always perform the 42RLE Pre-Diagnostic Troubleshooting procedure before proceeding. (Refer to 28 - DTC-Based Diagnostics/MODULE, Powertrain Control (PCM) - Standard Procedure)

1. DETERMINING IF RELATED DTCS ARE PRESENT

1. With the scan tool, check for other Transmission DTCs

Is the DTC P0841 present also?

Yes

- Refer to DTC Based Diagnostics and perform the appropriate diagnostic procedure.

No

- Go To 2

2. CHECK IF THE DTC IS CURRENT

1. With the scan tool, read DTCs.

Is the status Active or is the Starts Since Set counter 2 or less for this DTC?

Yes

- Go To 3

No

- Go To 8

3. PCM AND WIRING

1. Turn the ignition off to the lock position.
2. Remove the Ignition Switch Feed fuse from the TIPM.

CAUTION: Removal of the Ignition Switch Feed fuse from the TIPM will prevent the vehicle from being started in gear.

WARNING: The Ignition Switch Feed fuse must be removed from the TIPM. Failure to do so can result in possible serious or fatal injury.

3. Install the Transmission Simulator, Miller tool #8333A and the Electronic Transmission Adapter kit.
4. Ignition on, engine not running.
5. With the Transmission Simulator, turn the Pressure Switch selector switch to L/R.
6. With the scan tool, monitor the L/R Pressure Switch State while pressing the Pressure Switch Test button.

Did the Pressure Switch state change from open to closed when the test button was pressed?

Yes

- Repair internal transmission as necessary in accordance with the Service Information. Inspect the Solenoid Switch Valve in accordance with the Service Information and repair or replace as necessary. If no problems are found, replace the Transmission Solenoid/Pressure Switch Assembly.
- Perform 42RLE TRANSMISSION VERIFICATION TEST. (Refer to 28 - DTC-Based Diagnostics/MODULE, Powertrain Control (PCM) - Standard Procedure)

No

- Go To 4

4. (T16) TRANSMISSION CONTROL OUTPUT CIRCUIT OPEN

1. Turn the ignition off to the lock position.
2. Disconnect the Transmission Solenoid/Pressure Switch Assembly harness connector.
3. Disconnect the PCM C4 harness connector.
4. With the scan tool under TIPM, actuate the Transmission.

CAUTION: Do not probe the PCM harness connectors. Probing the PCM harness connectors will damage the PCM terminals resulting in poor terminal to pin connection. Install the Kit, NGC, 38 Position 8815A to perform diagnosis.

5. Using a 12-volt test light connected to ground, check all (T16) Transmission Control Relay Output circuits in the appropriate terminals of Miller tool #8815A.

NOTE: The test light must illuminate brightly. Compare the brightness to that of a direct connection to the battery.

Does the test light illuminate brightly on all (T16) Transmission Control Output circuits?

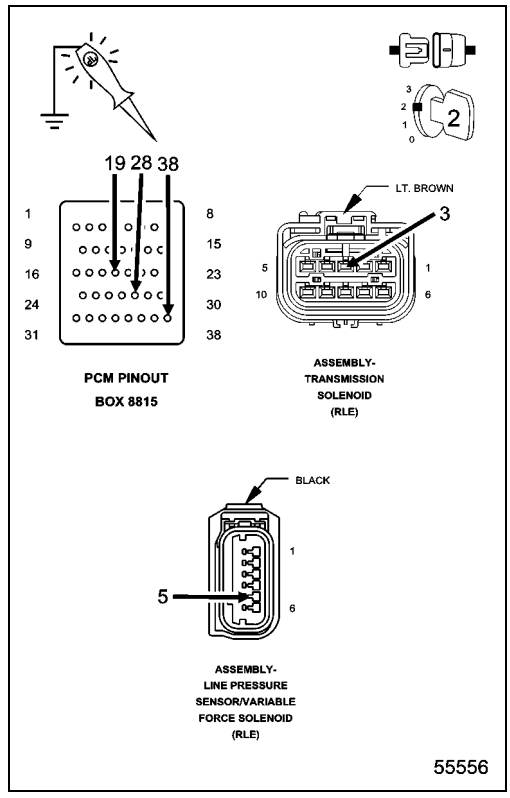

Yes

- Go To 5

No

- Repair the (T16) Transmission Control Relay Output circuit for an open.
- Perform 42RLE TRANSMISSION VERIFICATION TEST. (Refer to 28 - DTC-Based Diagnostics/MODULE, Powertrain Control (PCM) - Standard Procedure)

5. (T50) L/R PRESSURE SWITCH SENSE CIRCUIT OPEN

1. With the scan tool under TIPM, stop the Transmission actuation.
2. Turn the ignition off to the lock position.
3. Measure the resistance of the (T50) L/R Pressure Switch Sense circuit between the Transmission Solenoid/Pressure Switch Assembly harness connector and the appropriate terminal of Miller tool #8815A.

Is the resistance above 5.0 ohms?

Yes

- Repair the (T50) L/R Pressure Switch Sense circuit for an open.
- Perform 42RLE TRANSMISSION VERIFICATION TEST. (Refer to 28 - DTC-Based Diagnostics/MODULE, Powertrain Control (PCM) - Standard Procedure)

No

- Go To 6

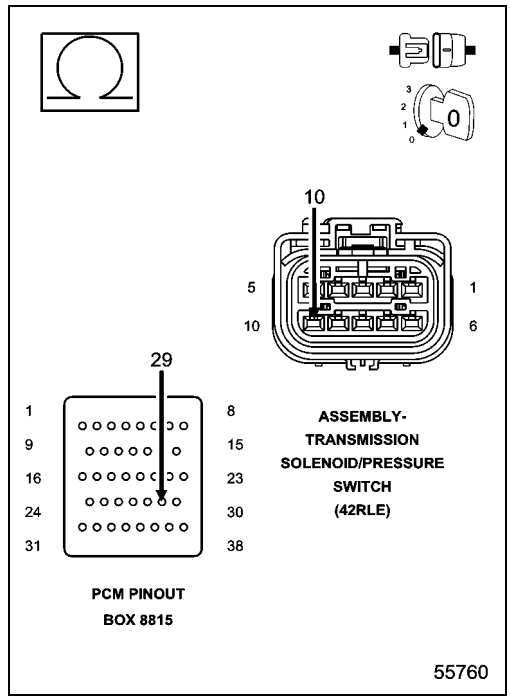

6. (T50) L/R PRESSURE SWITCH SENSE CIRCUIT SHORT TO GROUND

1. Measure the resistance between ground and the (T50) L/R Pressure Switch Sense circuit.

Is the resistance below 5.0 ohms?

Yes

- Repair the (T50) L/R Pressure Switch Sense circuit for a short to ground.
- Perform 42RLE TRANSMISSION VERIFICATION TEST. (Refer to 28 - DTC-Based Diagnostics/MODULE, Powertrain Control (PCM) - Standard Procedure)

No

- Go To 7

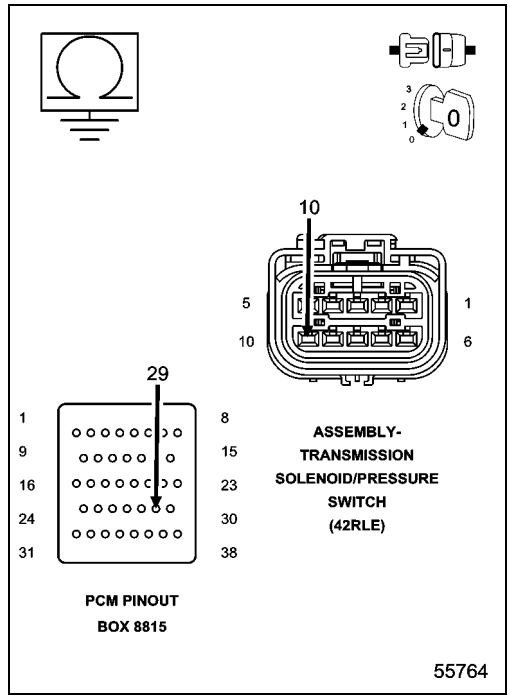

7. (T50) L/R PRESSURE SWITCH SENSE CIRCUIT SHORT TO VOLTAGE

1. Ignition on, engine not running.
2. With the scan tool under TIPM, actuate the Transmission.
3. Measure the voltage of the (T50) L/R Pressure Switch Sense circuit.

Is the voltage above 0.5 volts?

Yes

- Repair the (T50) L/R Pressure Switch Sense circuit for a short to voltage.
- Perform 42RLE TRANSMISSION VERIFICATION TEST.

No

- Using the schematics as a guide, check the Powertrain Control Module (PCM) terminals for corrosion, damage, or terminal push out. Pay particular attention to all power and ground circuits. If no problems are found, replace and program the PCM in accordance with the Service Information. With the scan tool, perform Quick Learn
- Perform 42RLE TRANSMISSION VERIFICATION TEST. (Refer to 28 - DTC-Based Diagnostics/MODULE, Powertrain Control (PCM) - Standard Procedure)

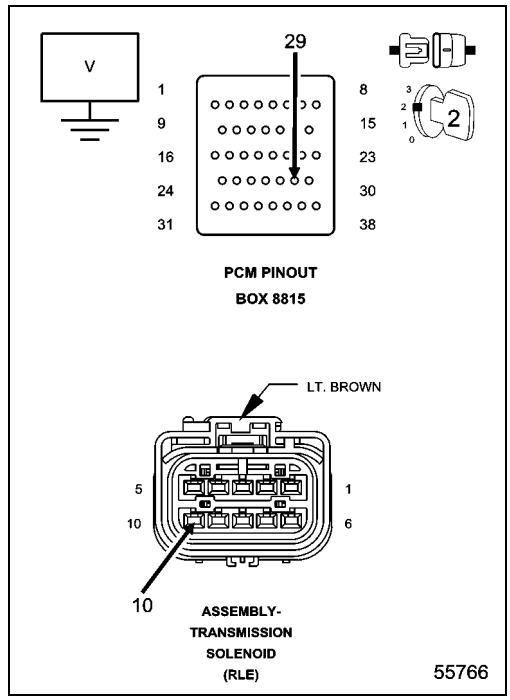

8. CHECK THE WIRING AND CONNECTORS

1. The conditions necessary to set this DTC are not present at this time.
2. Test drive and verify if the transmission is launching in 2nd gear and/or no TCC engagement.
3. With the scan tool, check the Event Data to help identify the conditions in which the DTC was set.

Are there 2nd gear launches and/or no TCC engagement?

Yes

- Disassemble and inspect the Valve Body in accordance with the Service Information and repair or replace as necessary. If no problems are found in the Valve Body, replace the Transmission Solenoid Pressure Switch Assembly.
- Perform 42RLE TRANSMISSION VERIFICATION TEST. (Refer to 28 - DTC-Based Diagnostics/MODULE, Powertrain Control (PCM) - Standard Procedure)

No

- Test Complete.

P1776-SOLENOID SWITCH VALVE LATCHED IN LR POSITION

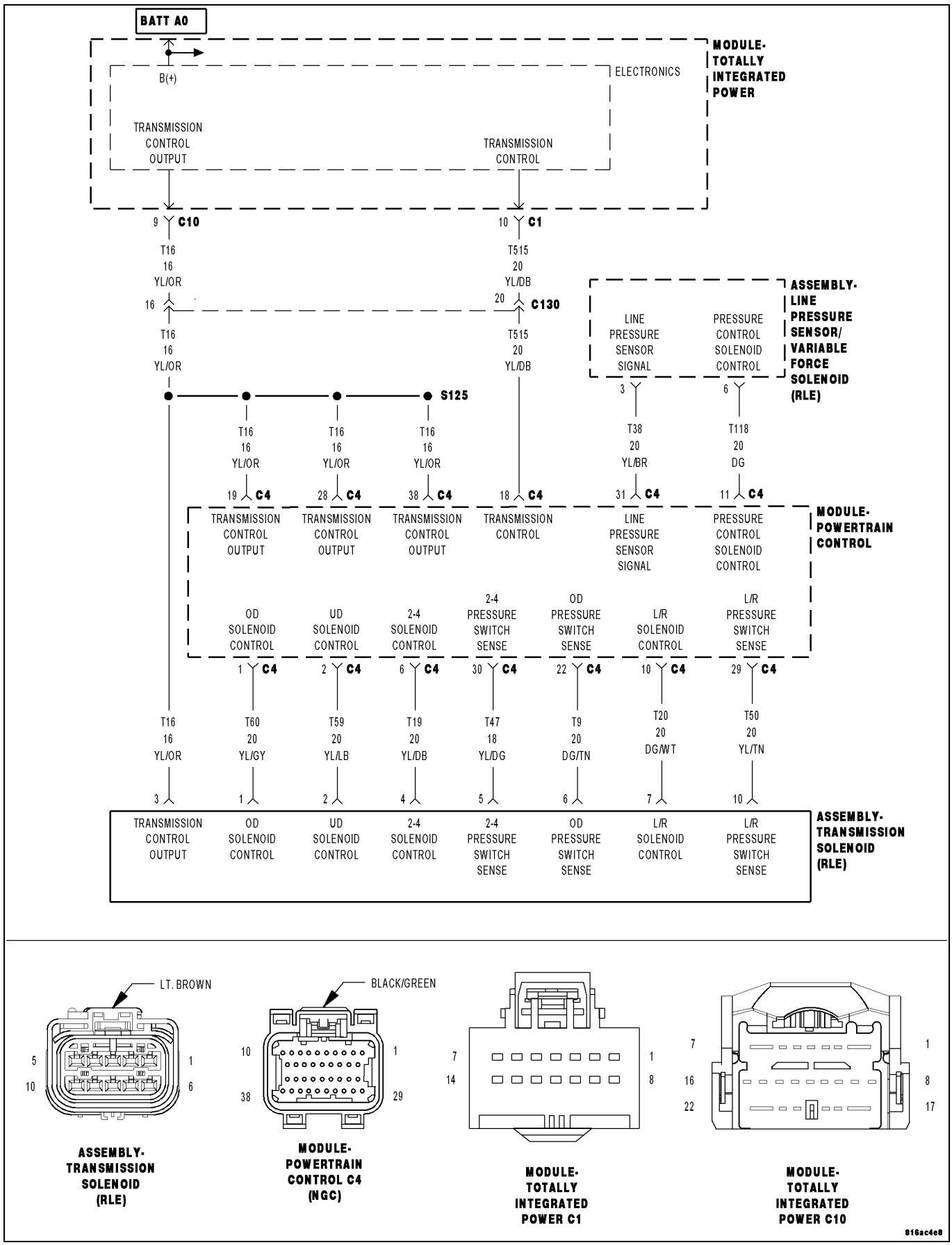

For a complete wiring diagram, **refer to the Wiring Information**.

Theory of Operation

The Solenoid Switch Valve, an internal, hydraulically operated valve, controls the direction of the transmission fluid when the L/R solenoid is energized. When the solenoid switch valve is in the downshifted position and the L/R solenoid is energized, fluid is directed to the L/R element for 1st gear. When the solenoid switch valve is In the up-shifted position (2nd, 3rd, and 4th gear) and the L/R solenoid is energized, fluid is directed into the Lockup Switch Valve which controls the Torque Converter Clutch. When doing PEMCC or FEMCC, the L/R pressure switch should indicate no pressure if the solenoid switch valve is in the L/R position. If the L/R pressure switch indicates pressure for some time while in partial or full EMCC, the EMCC operation is aborted and momentarily inhibited to avoid accidental application of the L/R clutch. EMCC is attempted again when there is no L/R pressure. The fourth detection of L/R pressure while in PEMCC or FEMCC will result in setting the DTC. Torque converter EMCC operation inhibited. MIL on after 5 min. of substituted operation.

- **When Monitored:**
  Every 7 ms when doing PEMCC or FEMCC.
- **Set Condition:**
  Must be in partial or full EMCC. The DTC is set if L/R pressure is detected high for the fourth time.

Possible Causes
RELATED DTC P0841 PRESENT
EVENT DATA SHOWS TRS CODE TR2 - SHIFT LEVER OR MANUAL CONTROL VALVE IN A INVALID POSITION
SHIFTER CABLE OUT OF ADJUSTMENT
SOLENOID SWITCH VALVE STICKING IN ITS BORE
(T50) L/R PRESSURE SWITCH SENSE CIRCUIT OPEN
(T50) L/R PRESSURE SWITCH SENSE CIRCUIT SHORT TO GROUND
(T50) L/R PRESSURE SWITCH SENSE CIRCUIT SHORT TO VOLTAGE
VALVE BODY
POWERTRAIN CONTROL MODULE

Always perform the Pre-Diagnostic Troubleshooting procedure before proceeding. (Refer to 28 - DTC-Based Diagnostics/MODULE, Powertrain Control (PCM) - Standard Procedure)

1. DETERMINING IF RELATED DTCS ARE PRESENT

1. With the scan tool, check for other Transmission DTCs

Is the DTC P0841 present also?

Yes

- Refer to DTC Based Diagnostics and perform the appropriate diagnostic procedure.

No

- Go To 2

2. CHECK THE EVENT DATA FOR TRS CODE TR2

1. With the scan tool, check the Event Data for P1776.

Does the Event Data show a TRS Code of TR2?

Yes

- This indicates the shift lever and the manual control valve were in an invalid position between Neutral and OD. Check the shifter cable for: proper adjustment, binding, friction, improper routing, or the shifter was moved in transit. Repair as necessary.
- Perform 42RLE TRANSMISSION VERIFICATION TEST. (Refer to 28 - DTC-Based Diagnostics/MODULE, Powertrain Control (PCM) - Standard Procedure)

No

- Go To 3

3. CHECK IF THE DTC IS CURRENT

1. With the scan tool, read DTCs.

Is the status Active or is the Starts Since Set counter 2 or less for this DTC?

Yes

- Go To 4

No

- Go To 9

4. CHECK THE PCM AND WIRING USING THE TRANSMISSION SIMULATOR

1. Turn the ignition off to the lock position.
2. Remove the Ignition Switch Feed fuse from the TIPM.

CAUTION: Removal of the Ignition Switch Feed fuse from the TIPM will prevent the vehicle from being started in gear.

WARNING: The Ignition Switch Feed fuse must be removed from the TIPM. Failure to do so can result in possible serious or fatal injury.

3. Install the Transmission Simulator, Miller tool #8333A and the Electronic Transmission Adapter kit.
4. Ignition on, engine not running.
5. With the Transmission Simulator, turn the Pressure Switch selector switch to L/R.
6. With the scan tool, monitor the L/R Pressure Switch State while pressing the Pressure Switch Test button.

Did the Pressure Switch state change from open to closed when the test button was pressed?

Yes

- Go To 5

No

- Go To 6

5. CHECK THE SOLENOID SWITCH VALVE FOR STICKING

1. Remove the transmission oil pan and Valve body and inspect the Solenoid Switch Valve for sticking in its bore, repair or replace as necessary.

NOTE: This DTC may be caused by debris lodged in the Transmission Solenoid Switch Valve bore. If debris is found, clean the valve body and reassemble the transmission in accordance with the Service Information.

2. With the scan tool, record the Event Data for P1776 and erase DTCs.
3. Reassemble the transmission and test drive the vehicle. Try to duplicate the original set conditions using the Event Data recorded earlier.
4. With the scan tool, check Transmission DTCs.

Did the DTC P1776 reset?

Yes

- Replace the Transmission Solenoid Assembly in accordance with the Service Information.
- Perform 42RLE TRANSMISSION VERIFICATION TEST. (Refer to 28 - DTC-Based Diagnostics/MODULE, Powertrain Control (PCM) - Standard Procedure)

No

- Test Complete
- Perform 42RLE TRANSMISSION VERIFICATION TEST. (Refer to 28 - DTC-Based Diagnostics/MODULE, Powertrain Control (PCM) - Standard Procedure)

6. CHECK THE (T50) L/R PRESSURE SWITCH SENSE CIRCUIT FOR AN OPEN

1. Turn the ignition off to the lock position.
2. Disconnect the PCM C4 harness connector.
3. Disconnect the Transmission Solenoid/Pressure Switch Assembly harness connector.

CAUTION: Do not probe the PCM harness connectors. Probing the PCM harness connectors will damage the PCM terminals resulting in poor terminal to pin connection. Install the Kit, NGC, 38 Position 8815A to perform diagnosis.

4. Measure the resistance of the (T50) L/R Pressure Switch Sense circuit between the Transmission Solenoid/Pressure Switch Assembly harness connector and the appropriate terminal of Miller tool #8815A.

Is the resistance above 5.0 ohms?

Yes

- Repair the (T50) L/R Pressure Switch Sense circuit for an open.
- Perform 42RLE TRANSMISSION VERIFICATION TEST. (Refer to 28 - DTC-Based Diagnostics/MODULE, Powertrain Control (PCM) - Standard Procedure)

No

- Go To 7

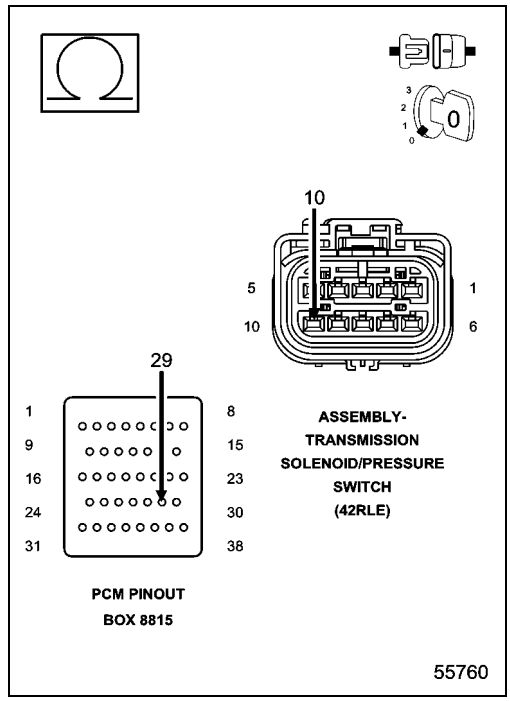

7. CHECK THE (T50) L/R PRESSURE SWITCH SENSE CIRCUIT FOR A SHORT TO GROUND

1. Measure the resistance between ground and the (T50) L/R Pressure Switch Sense circuit.

Is the resistance below 5.0 ohms?

Yes

- Repair the (T50) L/R Pressure Switch Sense circuit for a short to ground.
- Perform 42RLE TRANSMISSION VERIFICATION TEST. (Refer to 28 - DTC-Based Diagnostics/MODULE, Powertrain Control (PCM) - Standard Procedure)

No

- Go To 8

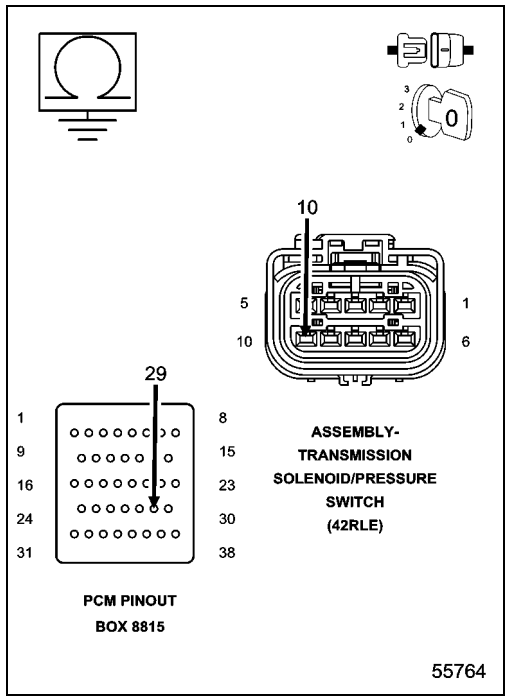

8. CHECK THE (T50) L/R PRESSURE SWITCH SENSE CIRCUIT FOR A SHORT TO VOLTAGE

1. Ignition on, engine not running.
2. With the scan tool under TIPM, actuate the Transmission.
3. Measure the voltage of the (T50) L/R Pressure Switch Sense circuit.

Is the voltage above 0.5 volts?

Yes

- Repair the (T50) L/R Pressure Switch Sense circuit for a short to voltage.
- Perform 42RLE TRANSMISSION VERIFICATION TEST. (Refer to 28 - DTC-Based Diagnostics/MODULE, Powertrain Control (PCM) - Standard Procedure)

No

- Using the schematics as a guide, check the Powertrain Control Module (PCM) terminals for corrosion, damage, or terminal push out. Pay particular attention to all power and ground circuits. Check for Service Information Tune-ups or Service Bulletins for any possible causes that may apply. If no problems are found, replace and program the PCM in accordance with the Service Information. With the scan tool, perform Quick Learn.
- Perform 42RLE TRANSMISSION VERIFICATION TEST. (Refer to 28 - DTC-Based Diagnostics/MODULE, Powertrain Control (PCM) - Standard Procedure)

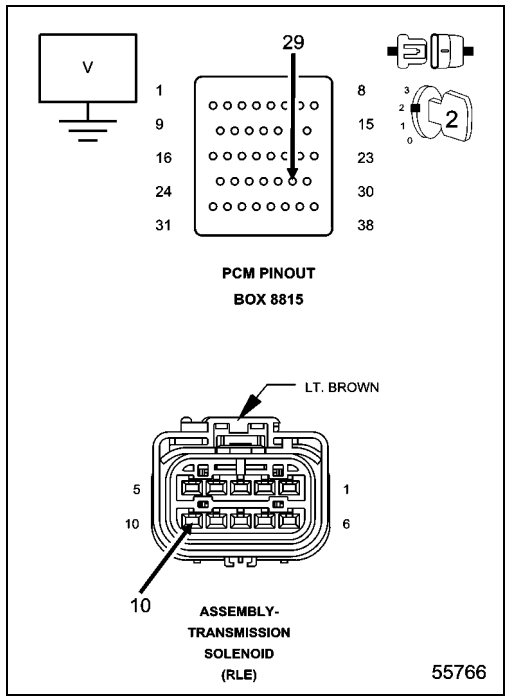

9. CHECK THE WIRING AND CONNECTORS

1. The conditions necessary to set this DTC are not present at this time.
2. Test Drive the vehicle and verify if the transmission is launching in 2nd gear and/or there is no TCC engagement.
3. With the scan tool, check the Event Data to help identify the conditions in which the DTC was set.
4. Check for any Service Information Tune-ups or Service Bulletins for possible causes that may apply.

Are there 2nd gear launches and/or no TCC engagement?

Yes

- Disassemble and inspect the Valve Body in accordance with the Service Information Inspect the Solenoid Switch Valve for sticking in its bore and repair or replace as necessary.
- Perform 42RLE TRANSMISSION VERIFICATION TEST. (Refer to 28 - DTC-Based Diagnostics/MODULE, Powertrain Control (PCM) - Standard Procedure)

No

- Test Complete.

P1790-FAULT IMMEDIATELY AFTER SHIFT

For a complete wiring diagram, **refer to the Wiring Information**.

Theory of Operation

This DTC is not stored alone. It is stored if a Gear Ratio DTC is detected immediately after shift. The existence of DTC P1790 indicates a mechanical or hydraulic (not electrical) related problems. It should be noted, however, that all mechanical problems don't necessarily result in DTC P1790. When this DTC exists, diagnosing the system should be based on the associated DTC and only mechanical causes should be considered.

- **When Monitored:**
  After a Gear Ratio Error code is stored.
- **Set Condition:**
  After a Gear Ratio Error DTC has already been set. The DTC is set if the fault happened within 1.3 seconds of a shift. The DTC set time will vary from 1.214 seconds to 15 seconds.

Possible Causes
FAULT AFTER SHIFT

Always perform the 42RLE Pre-Diagnostic Troubleshooting procedure before proceeding. (Refer to 28 - DTC-Based Diagnostics/MODULE, Powertrain Control (PCM) - Standard Procedure)

1. FAULT AFTER SHIFT

1. This DTC is set along with a Gear Ratio DTC. Perform the appropriate test for the Gear Ratio DTC stored.

NOTE: Check Pending DTCs or 1 trip failures if there are no Active or Stored Gear Ratio DTCs.

Repair

- Refer to DTC Based Diagnostics and perform the appropriate diagnostic procedure.
- Perform 42RLE TRANSMISSION VERIFICATION TEST. (Refer to 28 - DTC-Based Diagnostics/MODULE, Powertrain Control (PCM) - Standard Procedure)

P1794-SPEED SENSOR GROUND ERROR

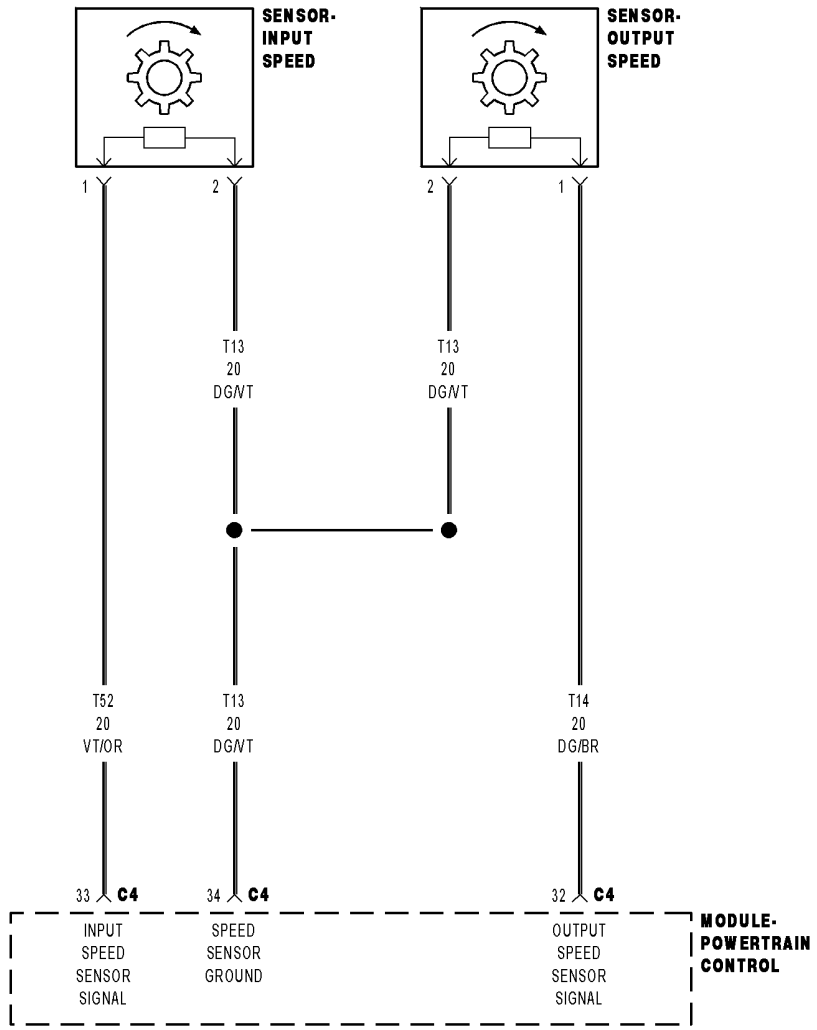

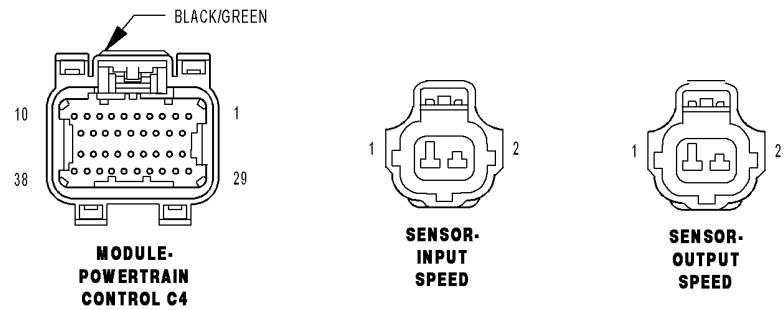

814AE032

For a complete wiring diagram, **refer to the Wiring Information**.

Theory of Operation

The input and output speed sensors use a common ground circuit. The loss of this common ground results in the input signal being sensed for both. After a reset in neutral, and after observing a specific ratio, the Speed Check Fault Counter will increment. Because the speed sensors and the thermistor share the same ground circuit, this DTC may indicate a loss of the common speed sensor ground. In some cases this fault will cause a Gear Ratio Error DTC to be set.

- **When Monitored:**
  Every 7msec after a controller reset with transmission in neutral.
- **Set Condition:**
  After a PCM reset in neutral and Input and Output sensor ratio equals 2.50 to 1.0 ± 50.0 rpm.

Possible Causes
SPEED SENSOR GROUND CIRCUIT OPEN
POWERTRAIN CONTROL MODULE

Always perform the 42RLE Pre-Diagnostic Troubleshooting procedure before proceeding. (Refer to 28 - DTC-Based Diagnostics/MODULE, Powertrain Control (PCM) - Standard Procedure)

1. PCM AND WIRING

1. Turn the ignition off to the lock position.
2. Remove the Ignition Switch Feed fuse from the TIPM.

CAUTION: Removal of the Ignition Switch Feed fuse from the TIPM will prevent the vehicle from being started in gear.

WARNING: The Ignition Switch Feed fuse must be removed from the TIPM. Failure to do so can result in possible serious or fatal injury.

3. Install the Transmission Simulator, Miller tool #8333A and the Electronic Transmission Adapter kit 8333-1A.
4. Ignition on, engine not running.
5. With the Transmission Simulator, set the "Input/Output Speed" switch to "ON" and the rotary switch to the "3000/1250" position.
6. With the scan tool, monitor the Input and Output Speed Sensor readings.

Does the Input Speed read 3000 rpm and the Output Speed read 1250 rpm, ± 50 rpm?

Yes

- Go To 2

No

- Go To 3

2. (T13) SPEED SENSOR GROUND CIRCUIT OPEN

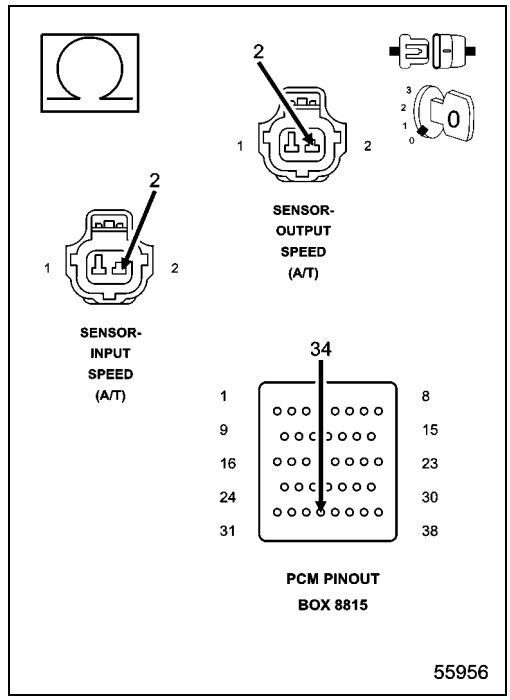

1. Turn the ignition off to the lock position.
2. Disconnect the PCM C4 harness connector.
3. Disconnect the Input and Output Speed Sensor harness connectors.

CAUTION: Do not probe the PCM harness connectors. Probing the PCM harness connectors will damage the PCM terminals resulting in poor terminal to pin connection. Install the Kit, NGC, 38 Position 8815A to perform diagnosis.

4. Measure the resistance of both of the (T13) Speed Sensor Ground circuits from the appropriate terminal of special tool #8815A to the Input and Output Speed Sensor harness connectors.

Is the resistance above 5.0 ohms on either circuit?

Yes

- Repair the (T13) Speed Sensor Ground circuit for an open.
- Perform 42RLE TRANSMISSION VERIFICATION TEST. (Refer to 28 - DTC-Based Diagnostics/MODULE, Powertrain Control (PCM) - Standard Procedure)

No

- Using the schematics as a guide, check the Powertrain Control Module (PCM) terminals for corrosion, damage, or terminal push out. Pay particular attention to all power and ground circuits. If no problems are found, replace and program the PCM in accordance with the Service Information. With the scan tool, perform Quick Learn
- Perform 42RLE TRANSMISSION VERIFICATION TEST. (Refer to 28 - DTC-Based Diagnostics/MODULE, Powertrain Control (PCM) - Standard Procedure)

3. CHECK THE WIRING AND CONNECTORS

1. The conditions necessary to set the DTC are not present at this time.
2. Using the schematics as a guide, inspect the wiring and connectors specific to this circuit.
3. Wiggle the wires while checking for shorted and open circuits.
4. With the scan tool, check the Event Data to help identify the conditions in which the DTC was set.

Were there any problems found?

Yes

- Repair as necessary.
- Perform 42RLE TRANSMISSION VERIFICATION TEST. (Refer to 28 - DTC-Based Diagnostics/MODULE, Powertrain Control (PCM) - Standard Procedure)

No

- Test Complete.

■ P1797-MANUAL SHIFT OVERHEAT

For a complete wiring diagram, **refer to the Wiring Information**.

Theory of Operation

The major cause of heat build up in the transmission is torque converter slip. With the transmission in the AutoStick® mode, the torque converter can slip during aggressive driving or heavy loading conditions such as trailer towing or driving up steep grades. In the non AutoStick® mode, internal controller logic prevents the transmission from overheating by managing the shift and EMCC schedule. In the AutoStick® mode, when the transmission or engine temperature approaches an overheat condition, the manual shift overheat DTC sets and the AutoStick® mode is temporarily suspended until the temperature returns to normal.

- **When Monitored:**
  Continuously with engine running.
- **Set Condition:**
  If the Engine Temperature exceeds 123° C (255° F) or the Transmission Temperature exceeds 135° C (275° F) while in AutoStick® mode. Note: Aggressive driving or driving in Low for extended periods of time will set this DTC.

Possible Causes
MANUAL SHIFT OVERHEAT

Always perform the 42RLE Pre-Diagnostic Troubleshooting procedure before proceeding. (Refer to 28 - DTC-Based Diagnostics/MODULE, Powertrain Control (PCM) - Standard Procedure)

1. MANUAL SHIFT OVERHEAT

1. This is an informational DTC only.
2. With the scan tool, check the Event Data to help identify the conditions in which the DTC was set.
3. Check the engine and transmission cooling system for proper operation.
4. Check the Radiator Cooling Fan operation.
5. Check the Transmission Cooling operation.
6. Check the Transmission Fluid Level in accordance with the Service Information to verify that it is not overfilled.

NOTE: Aggressive driving or driving in Low for extended periods of time will set this DTC.

Repair

- If the Transmission Fluid is low, repair any Transmission Fluid leak as necessary and adjust the Transmission Fluid Level in accordance with the Service Information. Refer to Service Information for the related symptoms and repair as necessary.
- Perform 42RLE TRANSMISSION VERIFICATION TEST. (Refer to 28 - DTC-Based Diagnostics/MODULE, Powertrain Control (PCM) - Standard Procedure)

■ U0002-CAN C BUS OFF PERFORMANCE

For a complete wiring diagram, **refer to the Wiring Information**.

- **When Monitored:**
  Ignition run time is greater than one second.
  Battery voltage between 9 and 16 volts.
  Engine run time greater than three seconds.
- **Set Condition:**
  Bus messages not received from the Totally Integrated Power Module (TIPM) for approximately two to five seconds.

Possible Causes
CAN BUS CIRCUITS OPEN OR SHORTED
DTCS RELATED TO BATTERY VOLTAGE, IGNITION, OR VIN MESSAGES
TOTALLY INTEGRATED POWER MODULE POWER AND GROUND
TIPM NOT CONFIGURED CORRECTLY
TOTALLY INTEGRATED POWER MODULE (TIPM)
MODULE THAT SET THIS DTC

1. ACTIVE DTC

1. Ignition on, engine not running.
2. With the scan tool, select view DTCs.

Is the DTC Active at this time?

Yes

- **Diagnose the U0002-CAN C BUS OFF PERFORMANCE as the U0001-CAN C BUS CIRCUIT test. (Refer to 28 - DTC-Based Diagnostics/MODULE, Totally Integrated Power (TIPM) - Diagnosis and Testing)** and perform the U0001-CAN C Bus diagnostic procedure.

No

- **(Refer to 29 - Non-DTC Diagnostics/Communication - Diagnosis and Testing)** and perform the Stored Lost Communication DTCs diagnostic procedure.

U0100-LOST COMMUNICATION WITH THE ECM/PCM

For a complete wiring diagram, **refer to the Wiring Information**.

- **When Monitored:**
  Ignition run time is greater than one second.
  Battery voltage between 9 and 16 volts.
  Engine run time greater than three seconds.
- **Set Condition:**
  Bus messages not received from the Powertrain Control Module (ECM/PCM) for approximately two to five seconds.

Possible Causes
CAN BUS CIRCUITS OPEN OR SHORTED
DTCS RELATED TO BATTERY VOLTAGE, IGNITION, OR VIN MESSAGES
POWERTRAIN CONTROL MODULE POWER AND GROUND
TIPM NOT CONFIGURED CORRECTLY
POWERTRAIN CONTROL MODULE (ECM/PCM)
MODULE THAT SET THIS DTC

1. ACTIVE DTC

1. Ignition on, engine not running.
2. With the scan tool, select view DTCs.

Is the DTC Active at this time?

Yes

- **(Refer to 28 - DTC-Based Diagnostics/MODULE, Totally Integrated Power (TIPM) - Diagnosis and Testing)** and perform the U0100-Lost Communication with ECM/PCM diagnostic procedure.

No

- **(Refer to 29 - Non-DTC Diagnostics/Communication - Diagnosis and Testing)** and perform the Stored Lost Communication DTCs diagnostic procedure.

U0121-LOST COMMUNICATION WITH ABS

For a complete wiring diagram, **refer to the Wiring Information**.

- **When Monitored:**
  Ignition run time is greater than one second.
  Battery voltage between 9 and 16 volts.
  Engine run time greater than three seconds.
- **Set Condition:**
  Bus messages not received from the Totally Integrated Power Module (TIPM) for approximately two to five seconds.

Possible Causes
CAN BUS CIRCUITS OPEN OR SHORTED
ABS MODULE
DTCS RELATED TO BATTERY VOLTAGE, IGNITION, OR VIN MESSAGES
TOTALLY INTEGRATED POWER MODULE POWER AND GROUND
TIPM NOT CONFIGURED CORRECTLY
TOTALLY INTEGRATED POWER MODULE (TIPM)
MODULE THAT SET THIS DTC

1. ACTIVE DTC

1. Ignition on, engine not running.
2. With the scan tool, select view DTCs.

Is the DTC Active at this time?

Yes

- **(Refer to 28 - DTC-Based Diagnostics/MODULE, Totally Integrated Power (TIPM) - Diagnosis and Testing)** and perform the U0121-Lost Communication with Anti-Lock Brake Module diagnostic procedure.

No

- **(Refer to 29 - Non-DTC Diagnostics/Communication - Diagnosis and Testing)** and perform the Stored Lost Communication DTCs diagnostic procedure.

U0141-LOST COMMUNICATION WITH IPM (FCM/TIPM)

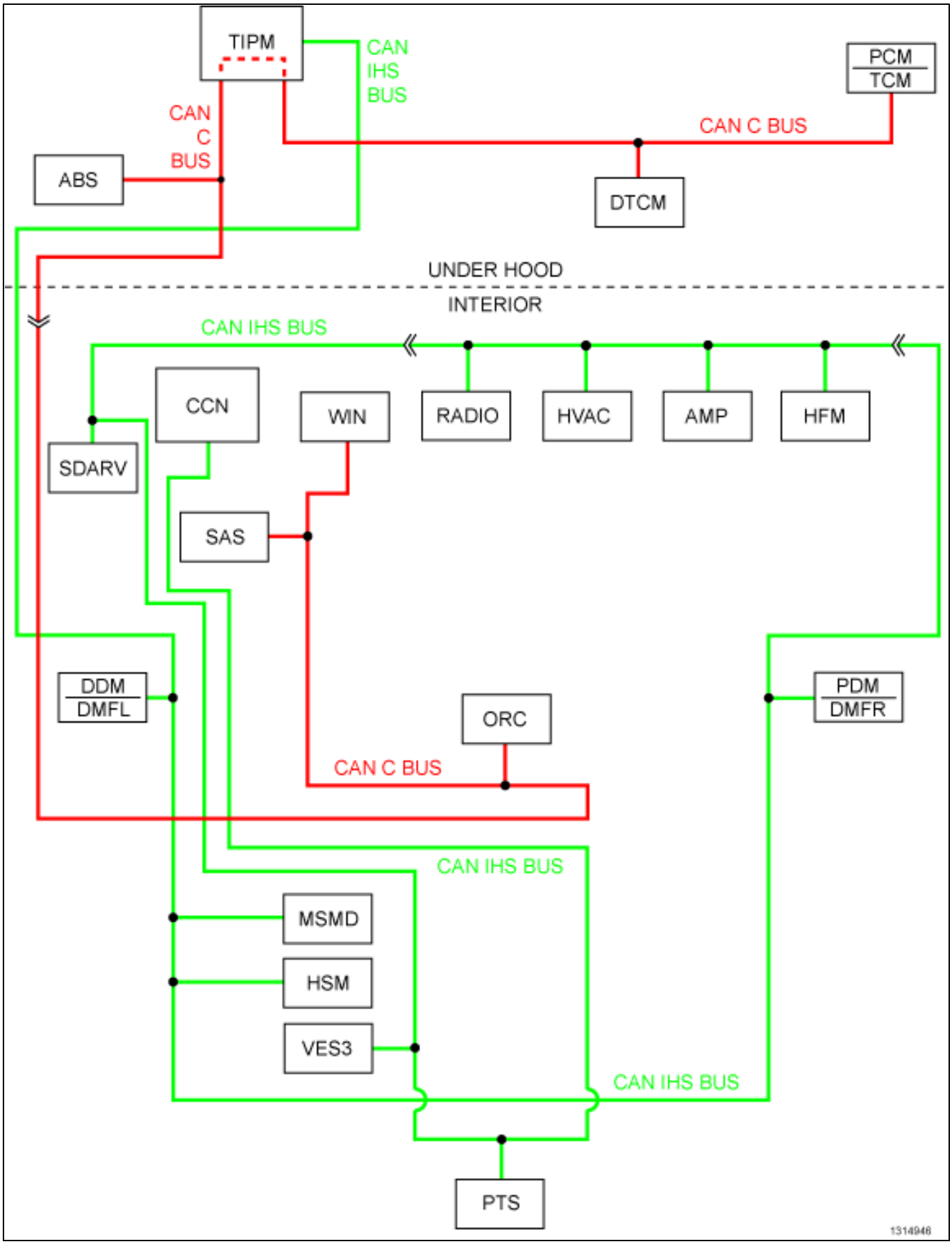

For a complete wiring diagram, **refer to the Wiring Information**.

- **When Monitored:**

  Ignition run time is greater than one second. Battery voltage between 9 and 16 volts. Engine run time greater than three seconds.
- **Set Condition:**

  The Transmission Control Module (TCM) loses communication over the CAN C Bus circuit. The circuit is continuously monitored. One Trip fault.

Possible Causes
CAN C BUS OPEN OR SHORTED CONDITION
TOTALLY INTEGRATED POWER MODULE (TIPM)
TRANSMISSION CONTROL MODULE (TCM)

1. ACTIVE DTC

1. Ignition on, engine not running.
2. With the scan tool, select view TCM DTCs.

Is the DTC Active at this time?

Yes

- (Refer to 28 - DTC-Based Diagnostics/MODULE, Totally Integrated Power (TIPM) - Diagnosis and Testing) and perform the U0141-Lost Communication with IPM (FCM/TIPM) diagnostic procedure.

No

- (Refer to 29 - Non-DTC Diagnostics/Communication - Diagnosis and Testing) and perform the Stored Lost Communication DTCs diagnostic procedure.

Standard Procedure

■ PRNDL FAULT CLEARING PROCEDURE

1. With the scan tool, erase Transmission DTCs.
2. Cycle the ignition off, then start the vehicle.
3. Firmly apply the brakes and shift into Overdrive.

NOTE: Vehicle must remain in Overdrive for at least 3.0 seconds.

4. With the brakes firmly applied, shift slowly through all gears (PRNDL) as least three times, pausing momentarily in each gear.

NOTE: If all the PRNDL lights box individually then the error was cleared.

5. Shift into park and turn the ignition off to the lock position.
6. With the ignition on, engine not running, using the scan tool, read DTCs.

Does the DTC P0706 reset, or do all the PRNDL indicators remain boxed in park or neutral?

Yes

- Refer to DTC Based Diagnostics and perform the diagnostic procedure for P0706-TRANSMISSION RANGE SENSOR RATIONALITY.

No

- Test Complete.
- Perform 42RLE TRANSMISSION VERIFICATION TEST. (Refer to 28 - DTC-Based Diagnostics/MODULE, Powertrain Control (PCM) - Standard Procedure)

■ 42RLE TRANSMISSION VERIFICATION TEST

Perform the following after completion of a diagnostic repair:

NOTE: After completion of the Transmission Verification Test, the Powertrain Verification Test must be performed. (Refer to 28 - DTC-Based Diagnostics/MODULE, Powertrain Control (PCM) - Diagnosis and Testing).

1. Reconnect any disconnected components.
2. With the scan tool, erase all Transmission and Engine DTCs.
3. With the scan tool check pinion factor (if equipped) for proper tire identification and program or reprogram if necessary.
4. Erase DTC P0700 under engine to turn the MIL off after completion of transmission repairs.
5. Perform a PRNDL FAULT CLEARING PROCEDURE after completion of repairs for P0706-TRANSMISSION RANGE SENSOR RATIONALITY. (Refer to 28 - DTC-Based Diagnostics/MODULE, Powertrain Control (PCM) - Standard Procedure)
6. If the Powertrain Control Module or the Transmission has been repaired or replaced, it is necessary to perform the scan tool Quick Learn Procedure.
7. If the Torque converter has been replaced, with the scan tool perform TCC BREAK-IN.
8. If the Powertrain Control Module or the Totally Integrated Power Module (Front Control Module if equipped) has been replaced you must reset the Pinion Factor in the Totally Integrated Power Module (Front Control Module if equipped).
9. With the scan tool, display Transmission Temperature. Start and run the engine until the Transmission Temperature is HOT, above 43° C or 110° F.
10. Check the transmission fluid and adjust if necessary. Refer to the Service Information for the Fluid Fill procedure.
11. Road test the vehicle. With the scan tool, monitor the engine rpm. Make 15 to 20 1-2, 2-3, 3-4 upshifts. Perform these shifts from a standing start to 72 km/h (45 mph) with a constant throttle opening of 20 to 25 degrees.
12. With speeds below 40 km/h (25 mph), make 5 to 8 wide open throttle kickdowns to 1st gear. Allow at least five seconds each in 2nd and 3rd gear between each kickdown.
13. For a specific DTC, drive the vehicle to the Symptom's When Monitored/When Set conditions to verify the DTC is repaired.
14. If equipped with AutoStick®, upshift and downshift several times using the AutoStick® feature during the road test.

NOTE: Use the OBDII task manager to run a Good Trip in each gear, this will confirm the repair and to make sure that the DTC has not re-matured.

15. Check for any Diagnostic Trouble Codes (DTCs) during and after the road test.

Did any Diagnostic Trouble Codes set during the road test?

Yes

- (Refer to 28 - DTC-Based Diagnostics/MODULE, Powertrain Control (PCM) - Diagnosis and Testing) and perform the appropriate diagnostic procedure.

No

- Repair is complete.

42RLE - PRE-DIAGNOSTIC TROUBLESHOOTING PROCEDURE

For a complete wiring diagram, **refer to the Wiring Information**.

Perform the following steps prior to any diagnostic procedure(s).

NOTE: Due to different power control configurations, the Transmission Control Relay (if equipped) may be referred to as a PCM relay.

1. Many transmission symptoms can be caused by a low fluid level. If the fluid level is low, locate and repair any leaks and fill the transmission to the proper fluid level. Refer to the Service Information for the proper repair and fluid fill procedures.
2. Testing should only be performed with the battery fully charged to avoid false diagnosis.
3. With the scan tool check pinion factor (if equipped) for proper tire identification and program or reprogram if necessary.
4. With the scan tool, read Engine (PCM) DTCs. If Engine DTCs are present, perform to the appropriate diagnostic procedure(s) before proceeding.
5. With the scan tool, read Transmission (TCM) DTCs. Record all Stored, Active, and Pending DTC information. Diagnose any Pending DTC as a matured DTC.
6. With the scan tool, read Event Data. Use this data to identify the conditions in which the DTC was set.

NOTE: Event Data may exist even if no DTCs are stored. Event Data is only erased by a Battery Disconnect, reflash, or QuickLearn procedure. Clearing DTCs does NOT erase the Event Data. Some DTCs require two "bad

trips" before they are stored (and the MIL illuminates). The transmission may enter "limp-in" mode during the first "bad trip," but if the fault condition is not present after the vehicle is restarted, the pending DTC may be cleared without lighting the MIL. Nevertheless, the Event Data for the pending DTC will remain stored and can still be retrieved with the scan tool. If the customer reports a "limp-in" event but no DTCs are present, check the Event Data.

NOTE: Performing a Battery Disconnect will clear all Event Data and reset all learned Transmission values to the controllers default values which may temporarily result in erratic shift schedules.

7. With the scan tool, perform the Shift Lever Position Test. If the test does not pass, perform the diagnostic procedure for P0706-TRANSMISSION RANGE SENSOR RATIONALITY.(Refer to 28 - DTC-Based Diagnostics/MODULE, Powertrain Control (PCM) - Diagnosis and Testing)
8. For Gear Ratio Error DTCs, use the scan tool to read and record the Clutch Volume Index (CVI) information.
9. Use the wiring diagram as a guide, inspect the wiring and connectors related to this circuit and repair as necessary.
10. Refer to the When Monitored and Set Conditions for this DTC. DTCs can set at ignition on, at start up, driving under specific conditions, and after controller diagnostic monitors have run.
11. Refer to applicable Technical Service Bulletins (TSBs) for controller software update information. Some conditions can be corrected by upgrading the Engine (PCM) or Transmission (TCM) controller software.
12. Check for any Service Information Tune-ups or Service Bulletins for any possible causes that may apply.

Did any of the above procedures repair the vehicle?

Yes

- Testing is complete.
- Perform 42RLE VERIFICATION TEST. (Refer to 28 - DTC-Based Diagnostics/MODULE, Powertrain Control (PCM) - Standard Procedure)

No

- Perform the appropriate transmission diagnostic procedure(s).
- (Refer to 28 - DTC-Based Diagnostics/MODULE, Powertrain Control (PCM) - Diagnosis and Testing)

MODULE, Powertrain Control (PCM), 545RFE

Diagnosis and Testing

■ P0122-TPS/APP CIRCUIT LOW

For a complete wiring diagram, **refer to the Wiring Information**.

Theory of Operation

The three wire (Throttle Position Sensor (TPS) provides the Powertrain Control Module (PCM) with an input signal voltage that represents the throttle blade position of the throttle body. The Throttle Position Sensor (TPS) is connected to the throttle blade shaft. As the position of the throttle blade changes, the output voltage of the TPS changes.

The PCM supplies approximately 5.0 volts to the TPS. The TPS output voltage (input signal to the PCM) represents the throttle blade position. The PCM receives an input signal voltage from the TPS. This will vary in an approximate range from 0.26 of a volt at minimum throttle opening (idle), to 4.49 volts at maximum opening (wide open throttle).

The Accelerator Pedal Position Sensor (APPS) is a linear potentiometer. It provides the PCM/ECM with a voltage signal proportional to the angle, or position of the accelerator pedal. The APPS signal along with inputs from other sensors is used by the PCM/ECM to calculate the throttle plate position.

- **When Monitored:**
  Continuously with the ignition on and engine running.
- **Set Condition:**
  This DTC will set if the monitored TPS voltage drops below .078 of a volt for the period of 0.48 of a second.

Possible Causes
RELATED ENGINE TPS/APPS DTCS PRESENT
POWERTRAIN CONTROL MODULE (PCM)

Always perform the Pre-Diagnostic Troubleshooting procedure before proceeding. (Refer to 28 - DTC-Based Diagnostics/MODULE, Powertrain Control (PCM) - Standard Procedure).

1. CHECK IF RELATED ENGINE TPS/APPS DTCS ARE PRESENT

1. With the scan tool, read Engine DTCs.

Are there any Engine TPS/APPS DTCs present?

Yes

- (Refer to 28 - DTC-Based Diagnostics/MODULE, Powertrain Control (PCM) - Diagnosis and Testing) and perform the appropriate diagnostic procedure.

No

- Go To 2

2. CHECK IF THE DTC IS CURRENT

1. With the scan tool, record the Event Data to help identify the conditions in which the DTC was set.
2. With the scan tool, erase PCM DTCs and the Event Data.

NOTE: Clearing DTCs does NOT erase the Event Data. To erase the Event Data you must either perform a Quick Learn procedure or battery disconnect (if available) with the scan tool, or manually disconnect the battery. Whatever method used might reset certain learned transmission values to controller defaults and may cause poor shift quality until those values are relearned.

3. Using the Event Data recorded earlier, test drive the vehicle while trying to duplicate the operating conditions in which the DTC originally set.
4. With the scan tool, read DTCs.

Did this DTC reset during the road test?

Yes

- Using the schematics as a guide, check the Powertrain Control Module (PCM) terminals for corrosion, damage, or terminal push out. Pay particular attention to all power and ground circuits. If no problems are found, replace and program the PCM in accordance with the Service Information. With the scan tool, perform Quick Learn. (Refer to 08 - Electrical/8E - Electronic Control Modules/MODULE, Powertrain Control - Removal).
- Perform the 545RFE TRANSMISSION VERIFICATION TEST. (Refer to 28 - DTC-Based Diagnostics/MODULE, Powertrain Control (PCM) - Standard Procedure).

No

- Go To 3

3. CHECK THE WIRING AND CONNECTORS

1. The conditions necessary to set the DTC are not present at this time.
2. Using the schematics as a guide, inspect the wiring and connectors specific to this circuit.
3. Wiggle the wiring and connectors while checking for shorted and open circuits.
4. With the scan tool, check the Event Data to help identify the conditions in which the DTC was set.

Were there any problems found?

Yes

- Repair as necessary.
- Perform the 545RFE TRANSMISSION VERIFICATION TEST. (Refer to 28 - DTC-Based Diagnostics/MODULE, Powertrain Control (PCM) - Standard Procedure).

No

- Test Complete.

P0123-TPS/APP CIRCUIT HIGH

For a complete wiring diagram, **refer to the Wiring Information**.

Theory of Operation

The three wire Throttle Position Sensor (TPS) provides the PCM with an input signal voltage that represents the throttle blade position of the throttle body. The Throttle Position Sensor (TPS) is connected to the throttle blade shaft. As the position of the throttle blade changes, the output voltage of the TPS changes.

The PCM supplies approximately 5.0 volts to the TPS. The TPS output voltage (input signal to the PCM) represents the throttle blade position. The PCM receives an input signal voltage from the TPS. This will vary in an approximate range from 0.26 of a volt at minimum throttle opening (idle), to 4.49 volts at maximum opening (wide open throttle).

The Accelerator Pedal Position Sensor (APPS) is a linear potentiometer. It provides the PCM/ECM with a voltage signal proportional to the angle, or position of the accelerator pedal. The APPS signal along with inputs from other sensors is used by the PCM/ECM to calculate the throttle plate position.

- **When Monitored:**
  Continuously with the ignition on and engine running.
- **Set Condition:**
  This DTC will set if the monitored TPS voltage rises above 4.94 volts for the period of 0.48 of a second.

Possible Causes
RELATED ENGINE TPS/APPS DTCS PRESENT
POWERTRAIN CONTROL MODULE (PCM)

Always perform the Pre-Diagnostic Troubleshooting procedure before proceeding. (Refer to 28 - DTC-Based Diagnostics/MODULE, Powertrain Control (PCM) - Standard Procedure).

1. DETERMINING IF RELATED ENGINE TPS/APPS DTCS ARE PRESENT

1. With the scan tool, check Engine DTCs, this includes all one trip failures.

Are there any Engine TPS/APPS DTCs present?

Yes

- (Refer to 28 - DTC-Based Diagnostics/MODULE, Powertrain Control (PCM) - Diagnosis and Testing) and perform the appropriate diagnostic procedure.

No

- Go To 2

2. CHECK IF THE DTC IS CURRENT

1. With the scan tool, record the Event Data to help identify the conditions in which the DTC was set.
2. With the scan tool, erase PCM DTCs and the Event Data.

NOTE: Clearing DTCs does NOT erase the Event Data. To erase the Event Data you must either perform a Quick Learn procedure or battery disconnect (if available) with the scan tool, or manually disconnect the battery. Whatever method used might reset certain learned transmission values to controller defaults and may cause poor shift quality until those values are relearned.

3. Using the Event Data recorded earlier, test drive the vehicle while trying to duplicate the operating conditions in which the DTC originally set.
4. With the scan tool, read DTCs.

Did this DTC reset during the road test?

Yes

- Using the schematics as a guide, check the Powertrain Control Module (PCM) terminals for corrosion, damage, or terminal push out. Pay particular attention to all power and ground circuits. If no problems are found, replace and program the PCM in accordance with the Service Information. With the scan tool, perform Quick Learn. (Refer to 08 - Electrical/8E - Electronic Control Modules/MODULE, Powertrain Control - Removal).
- Perform the 545RFE TRANSMISSION VERIFICATION TEST. (Refer to 28 - DTC-Based Diagnostics/MODULE, Powertrain Control (PCM) - Standard Procedure).

No

- Go To 3

3. CHECK THE WIRING AND CONNECTORS

1. The conditions necessary to set the DTC are not present at this time.
2. Using the schematics as a guide, inspect the wiring and connectors specific to this circuit.
3. Wiggle the wiring and connectors while checking for shorted and open circuits.
4. With the scan tool, check the Event Data to help identify the conditions in which the DTC was set.

Were there any problems found?

Yes

- Repair as necessary.
- Perform the 545RFE TRANSMISSION VERIFICATION TEST. (Refer to 28 - DTC-Based Diagnostics/MODULE, Powertrain Control (PCM) - Standard Procedure).

No

- Test Complete.

■ P0124-TPS/APP INTERMITTENT

For a complete wiring diagram, **refer to the Wiring Information**.

Theory of Operation

The three wire Throttle Position Sensor (TPS) provides the Powertrain Control Module (PCM) with an input signal voltage that represents the throttle blade position of the throttle body. The Throttle Position Sensor (TPS) is connected to the throttle blade shaft. As the position of the throttle blade changes, the output voltage of the TPS changes.

The PCM supplies approximately 5.0 volts to the TPS. The TPS output voltage (input signal to the PCM) represents the throttle blade position. The PCM receives an input signal voltage from the TPS. This will vary in an approximate range from 0.26 of a volt at minimum throttle opening (idle), to 4.49 volts at maximum opening (wide open throttle).

The Accelerator Pedal Position Sensor (APPS) is a linear potentiometer. It provides the PCM/ECM with a voltage signal proportional to the angle, or position of the accelerator pedal. The APPS signal along with inputs from other sensors is used by the PCM/ECM to calculate the throttle plate position.

- **When Monitored:**
  Continuously with the ignition on and engine running.
- **Set Condition:**
  This DTC will set if the monitored TPS throttle angle between the angles of 6° and 120° and the degree change is greater than 5° within a period of less than 7.0 msec.

Possible Causes
RELATED TPS ENGINE DTCS PRESENT
THROTTLE POSITION SENSOR (TPS)
POWERTRAIN CONTROL MODULE (PCM)

Always perform the Pre-Diagnostic Troubleshooting Procedure before proceeding. (Refer to 28 - DTC-Based Diagnostics/MODULE, Powertrain Control (PCM) - Standard Procedure).

1. DETERMINING IF RELATED ENGINE TPS DTCS ARE PRESENT

1. With the scan tool, read Engine DTCs.

Are there any Engine TPS/APPS DTCs present?

Yes

- (Refer to 28 - DTC-Based Diagnostics/MODULE, Powertrain Control (PCM) - Diagnosis and Testing) and perform the appropriate diagnostic procedure.

No

- Go To 2

2. CHECK IF THE DTC IS CURRENT

1. With the scan tool, record the Event Data to help identify the conditions in which the DTC was set.
2. With the scan tool, erase PCM DTCs and the Event Data.

NOTE: Clearing DTCs does NOT erase the Event Data. To erase the Event Data you must either perform a Quick Learn procedure or battery disconnect (if available) with the scan tool, or manually disconnect the battery. Whatever method used might reset certain learned transmission values to controller defaults and may cause poor shift quality until those values are relearned.

3. Using the Event Data recorded earlier, test drive the vehicle while trying to duplicate the operating conditions in which the DTC originally set.
4. With the scan tool, read DTCs.

Did this DTC reset during the road test?

Yes

- Go To 3

No

- Go To 4

3. CHECK THROTTLE POSITION SENSOR OPERATION

1. Ignition On, Engine Not Running.
2. With the scan tool, under Transmission Sensors, monitor the TPS voltage in the following step.
3. Slowly open and close the throttle while checking for erratic voltage changes.
4. If equipped with ETC, use the ETC Throttle Follower test in the scan tool to check for erratic voltage changes.

Was the TPS voltage change smooth and consistent?

Yes

- Using the schematics as a guide, check the Powertrain Control Module (PCM) terminals for corrosion, damage, or terminal push out. Pay particular attention to all power and ground circuits. If no problems are found, replace and program the PCM in accordance with the Service Information. With the scan tool, perform Quick Learn. (Refer to 08 - Electrical/8E - Electronic Control Modules/MODULE, Powertrain Control - Removal).
- Perform the 545RFE TRANSMISSION VERIFICATION TEST. (Refer to 28 - DTC-Based Diagnostics/MODULE, Powertrain Control (PCM) - Standard Procedure).

No

- Replace the Throttle Position Sensor in accordance with the Service Information.
- Perform the 545RFE TRANSMISSION VERIFICATION TEST. (Refer to 28 - DTC-Based Diagnostics/MODULE, Powertrain Control (PCM) - Standard Procedure).

4. CHECK THE WIRING AND CONNECTORS

1. The conditions necessary to set the DTC are not present at this time.
2. Using the schematics as a guide, inspect the wiring and connectors specific to this circuit.
3. Wiggle the wiring and connectors while checking for shorted and open circuits.
4. With the scan tool, check the Event Data to help identify the conditions in which the DTC was set.

Were there any problems found?

Yes

- Repair as necessary.
- Perform the 545RFE TRANSMISSION VERIFICATION TEST. (Refer to 28 - DTC-Based Diagnostics/MODULE, Powertrain Control (PCM) - Standard Procedure).

No

- Test Complete.

■ P0218-HIGH TEMPERATURE OPERATION ACTIVATED

For a complete wiring diagram, **refer to the Wiring Information**.

Theory of Operation

The DTC is intended as an informational DTC to aid the technician in determining the root cause of a customer dirveability issue. The DTC is also intended to alert the technician to determine if a cooling system malfunction has occurred or if an additional transmission air to oil cooler is needed to support the customers driving behavior.

- **When Monitored:**
  Whenever the engine is running.
- **Set Condition:**
  Immediately after a Overheat shift schedule is activated when the Transmission temperature exceeds 127° C or 260° F.

Possible Causes
HIGH TEMPERATURE OPERATION ACTIVATED
TORQUE CONVERTER CLUTCH SLIPPING / NOT ACTIVATING
OPERATING VEHICLE WITH TRANSMISSION IN LIMP-IN MODE FOR AN EXTENDED PERIOD OF TIME
EXCESSIVE TIME IDLING IN GEAR

Always perform the Pre-Diagnostic Troubleshooting procedure before proceeding. (Refer to 28 - DTC-Based Diagnostics/MODULE, Powertrain Control (PCM) - Standard Procedure).

1. HIGH TEMPERATURE OPERATION

1. This DTC is an informational DTC designed to aid the Technician in diagnosing shift quality complaints.
2. This DTC indicates that the transmission has been operating in the "Overheat" shift schedule which may generate a customer complaint.
3. The customer driving patterns may indicate the need for an additional transmission oil cooler.
4. Verify proper Engine cooling system operation which would affect proper transmission operation.
5. Verify proper torque converter clutch operation.
6. With the scan tool, check the Event Data to help identify the conditions in which the DTC was set.

Repair

- Repair the cause of transmission overheating. Refer to the Service Information for the proper repair procedure. Make sure to check for any Service Bulletins pertaining to this problem. (Refer to 07 - Cooling - Diagnosis and Testing).
- Perform the 545RFE TRANSMISSION VERIFICATION TEST. (Refer to 28 - DTC-Based Diagnostics/MODULE, Powertrain Control (PCM) - Standard Procedure).

P0562-BATTERY VOLTAGE LOW

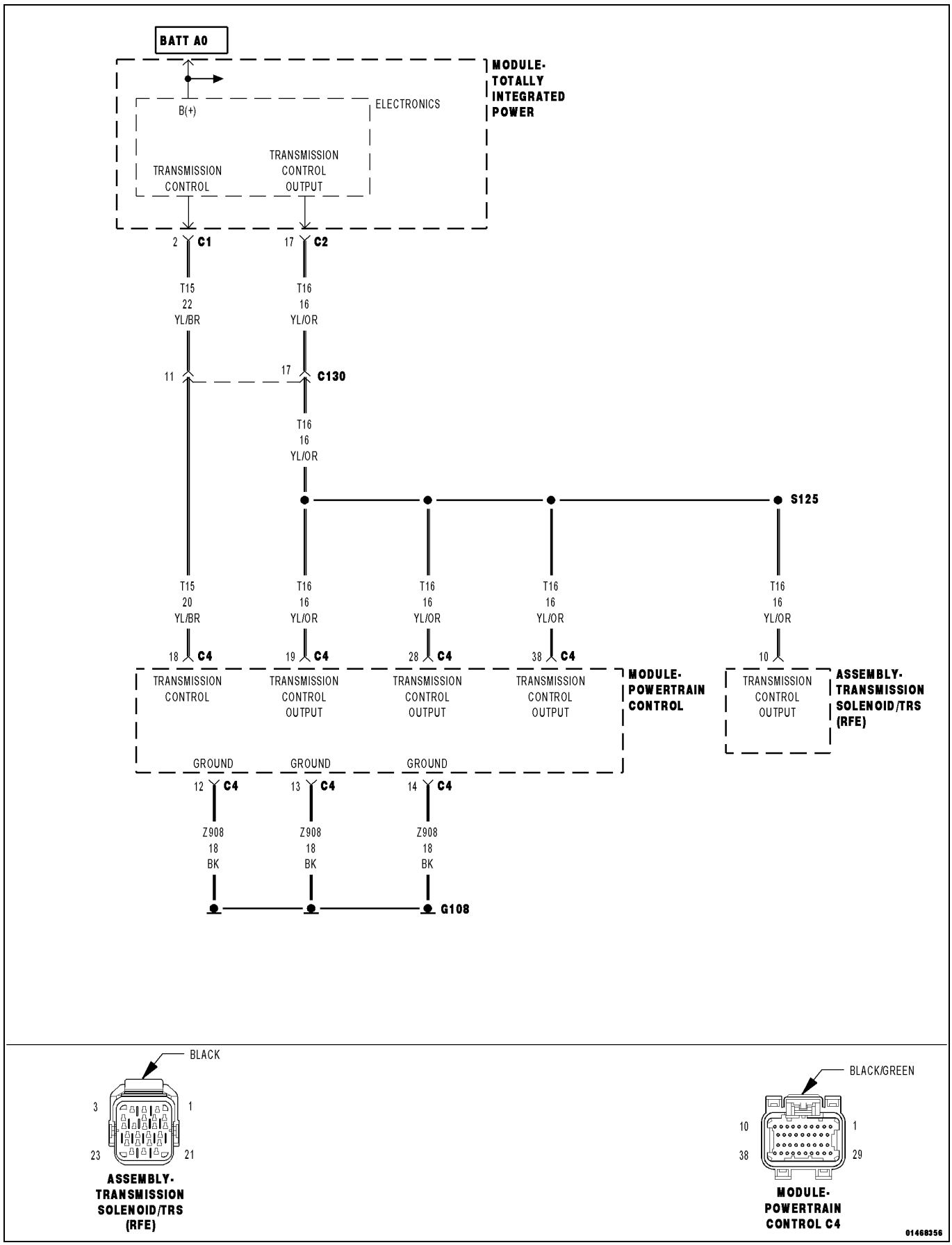

For a complete wiring diagram, **refer to the Wiring Information**.

Theory of Operation

Friction element distress could result from an insufficient supply voltage to properly control the solenoids. To prevent this possibility, the battery voltage is monitored and the system is placed in logical limp-in if the battery voltage drops below the limit.

- **When Monitored:**
  With the engine running and the Powertrain Control Module (PCM) has requested the Totally Integrated Power Module (TIPM) to activate the Transmission Control Output circuit.
- **Set Condition:**
  If the battery voltage of the Transmission Output circuit(s) to the PCM is less than 10.0 volts for the period of 15 seconds. Note: P0562 generally indicates a gradually falling battery voltage or a resistive connection(s) to the PCM. The DTC will also set if the battery voltage sensed at the PCM is less than 6.5-volts for 200ms or where the Transmission Output circuits are less than 7.2-volts for 200ms.

Possible Causes
RELATED CHARGING SYSTEM DTCS
(Z908) GROUND CIRCUITS OPEN OR HIGH RESISTANCE
(T16) TRANSMISSION CONTROL OUTPUT CIRCUIT OPEN OR HIGH RESISTANCE
TOTALLY INTEGRATED POWER MODULE (TIPM)
POWERTRAIN CONTROL MODULE (PCM)

Always perform the Pre-Diagnostic Troubleshooting Procedure before proceeding. (Refer to 28 - DTC-Based Diagnostics/MODULE, Powertrain Control (PCM) - Standard Procedure).

1. RELATED CHARGING SYSTEM DTCS

1. With the scan tool, read Powertrain Control Module (PCM) DTCs.

Are there any related Charging System DTCs also present?

Yes

- (Refer to 28 - DTC-Based Diagnostics/MODULE, Powertrain Control (PCM) - Diagnosis and Testing) and perform the appropriate diagnostic procedure. NOTE: After repairing the Engine Charging System DTCs, perform the Transmission Verification test to verify the transmission control system was not damaged.
- Perform the 545RFE TRANSMISSION VERIFICATION TEST. (Refer to 28 - DTC-Based Diagnostics/MODULE, Powertrain Control (PCM) - Standard Procedure).

No

- Go To 2

2. CHECK FOR TIPM DTCS

NOTE: Generator, battery, and charging system must be fully functional before performing this test.

1. With the scan tool, read TIPM DTCs.

Are there any TIPM TCM Power Control Circuit DTCs present.

Yes

- (Refer to 28 - DTC-Based Diagnostics/MODULE, Totally Integrated Power (TIPM) - Diagnosis and Testing) and perform the appropriate diagnostic procedure.

No

- Go To 3

3. CHECK IF THE DTC IS CURRENT

1. With the scan tool, read DTCs.

Is the status Active or is the Starts Since Set counter set at 0 for this DTC?

Yes

- Go To 4

No

- Go To 7

4. CHECK THE (Z908) GROUND CIRCUITS

1. Turn the ignition off to the lock position.
2. Disconnect the PCM C4 harness connector and connect the PCM Pinout Box 8815A.

NOTE: Check connectors - Clean/repair as necessary.

CAUTION: Do not probe the PCM harness connectors. Probing the PCM harness connectors will damage the PCM terminals resulting in poor terminal to pin connection. Install the Kit, NGC, 38 Position 8815A to perform diagnosis.

3. Using a 12-volt test light connected to 12-volts, check the PCM (Z908) Ground circuits at the appropriate terminals of the PCM Pinout Box 8815A.

NOTE: The test light must illuminate brightly. Compare the brightness to that of a direct connection to the battery.

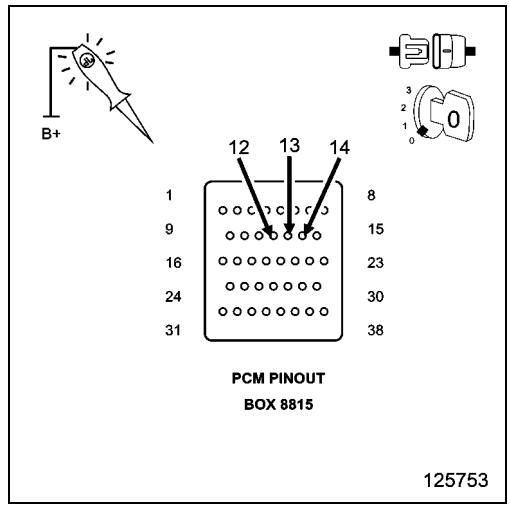

Does the test light illuminate brightly for all of the Ground circuits?

Yes

- Go To 5

No

- Repair the (Z908) Ground circuit(s) for an open or high resistance.
- Perform the 545RFE TRANSMISSION VERIFICATION TEST. (Refer to 28 - DTC-Based Diagnostics/MODULE, Powertrain Control (PCM) - Standard Procedure).

5. CHECK THE (T16) TRANSMISSION CONTROL OUTPUT CIRCUIT

1. Turn the ignition off to the lock position.
2. Disconnect the Transmission Solenoid/TRS Assembly harness connector.
3. Ignition on, engine not running.
4. With the scan tool under TIPM, actuate the Transmission.
5. Using a 12-volt test light connected to ground, check all (T16) Transmission Control Output circuits at the Transmission Solenoid/TRS Assembly harness connector and the appropriate terminals of the PCM Pinout Box 8815A.

NOTE: The (T16) Transmission Control Output circuit branches off to both Transmission Solenoid/TRS Assembly and the PCM.

Does the test light illuminate brightly while cycling on and off on all (T16) Transmission Control Output circuits?

Yes

- Go To 6

No

- Repair the (T16) Transmission Control Output circuit for an open or high resistance.
- Perform the 545RFE TRANSMISSION VERIFICATION TEST. (Refer to 28 - DTC-Based Diagnostics/MODULE, Powertrain Control (PCM) - Standard Procedure).

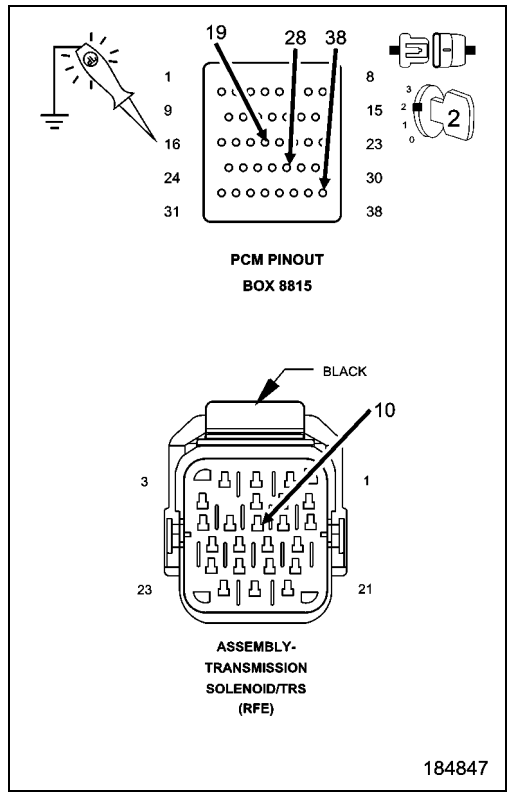

6. CHECK THE (T16) TRANSMISSION CONTROL OUTPUT CIRCUIT FOR AN OPEN

1. Turn the ignition off to the lock position.
2. Disconnect the TIPM C2 harness connector.
3. Measure the resistance of the (T16) Transmission Control Output circuit between the TIPM C2 harness connector and both the Transmission Solenoid/TRS Assembly harness connector and the appropriate terminals of the PCM Pinout Box 8815A.

Is the resistance above 5.0 Ohms on any circuit?

Yes

- Repair the (T16) Transmission Control Output circuit for an open or high resistance.
- Perform the 545RFE TRANSMISSION VERIFICATION TEST. (Refer to 28 - DTC-Based Diagnostics/MODULE, Powertrain Control (PCM) - Standard Procedure).

No

- Using the schematics as a guide, check the Powertrain Control Module (PCM) terminals for corrosion, damage, or terminal push out. Pay particular attention to all power and ground circuits. If no problems are found, replace and program the PCM in accordance with the Service Information. With the scan tool, perform Quick Learn.
- Perform the 545RFE TRANSMISSION VERIFICATION TEST. (Refer to 28 - DTC-Based Diagnostics/MODULE, Powertrain Control (PCM) - Standard Procedure).

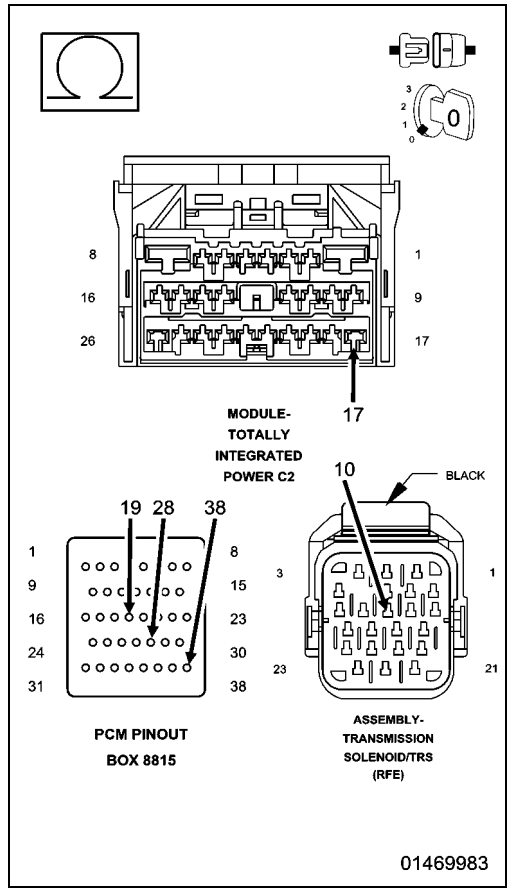

7. CHECK THE WIRING AND CONNECTORS

1. The conditions necessary to set this DTC are not present at this time.
2. Using the schematics as a guide, inspect the wiring and connectors specific to this circuit.
3. Wiggle the wires while checking for shorted and open circuits.
4. With the scan tool, check the Event Data to help identify the conditions in which the DTC was set.

Where there any problems found?

Yes

- Repair as necessary.
- Perform the 545RFE TRANSMISSION VERIFICATION TEST. (Refer to 28 - DTC-Based Diagnostics/MODULE, Powertrain Control (PCM) - Standard Procedure).

No

- Test Complete.

P0602-CONTROL MODULE PROGRAMMING ERROR/NOT PROGRAMMED

For a complete wiring diagram, **refer to the Wiring Information**.

Theory of Operation

The controller is programmed during manufacturing with generic software to facilitate testing. However, generic software does not have the proper calibrations to control a transmission in a vehicle. The check for generic software is made at power-up. If generic software is found , the MIL will light immediately and the MIL will stay on even if the fault is cleared, until the proper software is installed. Note: Transmission will be placed in limp-in mode.

- **When Monitored:**
  Check for generic software is made at power-up
- **Set Condition:**
  If generic software is found, the MIL will light immediately. This DTC is designed to inform the technician that the controller still has generic software installed.

Possible Causes
PCM - PROGRAMMING ERROR

Always perform the Pre-Diagnostic Troubleshooting procedure before proceeding. (Refer to 28 - DTC-Based Diagnostics/MODULE, Powertrain Control (PCM) - Standard Procedure).

1. CONTROL MODULE PROGRAMMING ERROR

NOTE: Controller is programmed with generic software and will not allow the correct vehicle Powertrain management.

1. With the scan tool.
2. Record the vehicles controller part number.
3. Select Use Controller Part Number under the Flash Tab.
4. Flash the controller with the correct software. (Refer to 08 - Electrical/8E - Electronic Control Modules/MODULE, Powertrain Control - Standard Procedure).

Verify the controller flashed successfully.

Test Complete

- Perform the 545RFE TRANSMISSION VERIFICATION TEST. (Refer to 28 - DTC-Based Diagnostics/MODULE, Powertrain Control (PCM) - Standard Procedure).

P0604-INTERNAL CONTROL MODULE RAM

For a complete wiring diagram, **refer to the Wiring Information**.

Theory of Operation

After the controller is reset (ignition turned to the RUN position), the microprocessor checks the integrity of each RAM location by writing to it and reading back from it. The read value should be same as value written.

- **When Monitored:**
  One time after the controller is reset (ignition turned to the RUN position).
- **Set Condition:**
  Whenever the Powertrain Control Module (PCM) detects an internal controller problem.

Possible Causes
POWER OR GROUND CIRCUIT
POWERTRAIN CONTROL MODULE (PCM)

Always perform the Pre-Diagnostic Troubleshooting procedure before proceeding. (Refer to 28 - DTC-Based Diagnostics/MODULE, Powertrain Control (PCM) - Standard Procedure).

1. CHECK WIRING AND CONNECTORS FOR INTERMITTENT OPERATION

1. Using the schematics as a guide, check the Powertrain Control Module (PCM) terminals for corrosion, damage, or terminal push out. Pay particular attention to all power and ground circuits.
2. Wiggle the wires while checking for shorted and open circuits.
3. Check for any Service Bulletins that may apply.

Were there any problems found?

Yes

- Repair the power and/or ground circuits to the PCM and Transmission Control Relay or TIPM (if equipped) as necessary.
- Perform the 545RFE TRANSMISSION VERIFICATION TEST. (Refer to 28 - DTC-Based Diagnostics/MODULE, Powertrain Control (PCM) - Standard Procedure).

No

- Replace the PCM in accordance with the Service Information. With the scan tool, perform Quick Learn. (Refer to 08 - Electrical/8E - Electronic Control Modules/MODULE, Powertrain Control - Removal).
- Perform the 545RFE TRANSMISSION VERIFICATION TEST. (Refer to 28 - DTC-Based Diagnostics/MODULE, Powertrain Control (PCM) - Standard Procedure).

■ P0605-INTERNAL CONTROL MODULE ROM

For a complete wiring diagram, **refer to the Wiring Information**.

Theory of Operation

After the controller is reset (ignition turned to the RUN position) the microprocessor checks the integrity of the program memory (ROM). A checksum is calculated by adding all used bytes in the program memory. The sum should be the same as a known constant stored in the program memory.

- **When Monitored:**
  One time after the controller is reset (ignition turned to the RUN position).
- **Set Condition:**
  Whenever the Powertrain Control Module (PCM) detects an internal controller problem.

Possible Causes
POWER OR GROUND CIRCUIT
POWERTRAIN CONTROL MODULE (PCM)

Always perform the Pre-Diagnostic Troubleshooting procedure before proceeding. (Refer to 28 - DTC-Based Diagnostics/MODULE, Powertrain Control (PCM) - Standard Procedure).

1. CHECK WIRING AND CONNECTORS FOR INTERMITTENT OPERATION

1. Using the schematics as a guide, check the Powertrain Control Module (PCM) terminals for corrosion, damage, or terminal push out. Pay particular attention to all power and ground circuits.
2. Wiggle the wires while checking for shorted and open circuits.
3. Check for any Service Bulletins that may apply.

Were there any problems found?

Yes

- Repair the power and/or ground circuits as necessary.
- Perform the 545RFE TRANSMISSION VERIFICATION TEST. (Refer to 28 - DTC-Based Diagnostics/MODULE, Powertrain Control (PCM) - Standard Procedure).

No

- Replace the PCM in accordance with the Service Information. With the scan tool, perform Quick Learn. (Refer to 08 - Electrical/8E - Electronic Control Modules/MODULE, Powertrain Control - Removal).
- Perform the 545RFE TRANSMISSION VERIFICATION TEST. (Refer to 28 - DTC-Based Diagnostics/MODULE, Powertrain Control (PCM) - Standard Procedure).

■ P0613-INTERNAL TRANSMISSION PROCESSOR

For a complete wiring diagram, **refer to the Wiring Information**.

Theory of Operation

The internal Watchdog (WD) is a separate hardware circuit that continuously monitors the microprocessor. To insure the proper operation of the Transmission controller the watchdog must receive a signal from the microprocessor within a specific time window (14 msec ± 1 msec) to prevent a system shutdown after a short delay (570 msec). The microprocessor periodically tests the WDs ability to provide this shutdown function using a three phase test;

1) Send the signal too late > 15 msec

2) Send the signal too early < 13 msec

3) Delay test < 590 msec

If the watchdog input signal arrives too early or too late, the Watchdog Fault line will go low and the watchdog delay will start to time out. The delay will be reset by the correct timing of watchdog signal sent during subsequent operations.

The Delay Test checks the delay time out. The Delay Monitor line is pulled low, which forces the delay to start timing out. At the end of the delay time the Transmission Relay will be turned off. The delay test, upon detection of the relay turning off, will immediately turn the relay back on before shutdown can occur.

- **When Monitored:**

  1) One time after the controller is reset (ignition turned to the RUN position) and every 60 seconds thereafter. The Delay Test is executed after a reset only.

  2) Two seconds after an invalid test.

- **Set Condition:**

  If either of the following conditions occur three times:

  1) The watchdog fault line remains high after the period has elapsed for the too early - too late watchdog test.

  2) The Transmission Control Relay remains on after the watchdog delay expired.

Possible Causes
POWER OR GROUND CIRCUIT
POWERTRAIN CONTROL MODULE (PCM)

Always perform the Pre-Diagnostic Troubleshooting procedure before proceeding. (Refer to 28 - DTC-Based Diagnostics/MODULE, Powertrain Control (PCM) - Standard Procedure).

1. CHECK THE WIRING AND CONNECTORS

1. Using the schematics as a guide, check the Powertrain Control Module (PCM) terminals for corrosion, damage, or terminal push out. Pay particular attention to all power and ground circuits.
2. Wiggle the wires while checking for shorted and open circuits.
3. Check for any Service Bulletins that may apply.

Were there any problems found?

Yes

- Repair the power and/or ground circuits as necessary.
- Perform the 545RFE TRANSMISSION VERIFICATION TEST. (Refer to 28 - DTC-Based Diagnostics/MODULE, Powertrain Control (PCM) - Standard Procedure).

No

- Replace the PCM in accordance with the Service Information. With the scan tool, perform Quick Learn. (Refer to 08 - Electrical/8E - Electronic Control Modules/MODULE, Powertrain Control - Removal).
- Perform the 545RFE TRANSMISSION VERIFICATION TEST. (Refer to 28 - DTC-Based Diagnostics/MODULE, Powertrain Control (PCM) - Standard Procedure).

P0706-TRANSMISSION RANGE SENSOR RATIONALITY

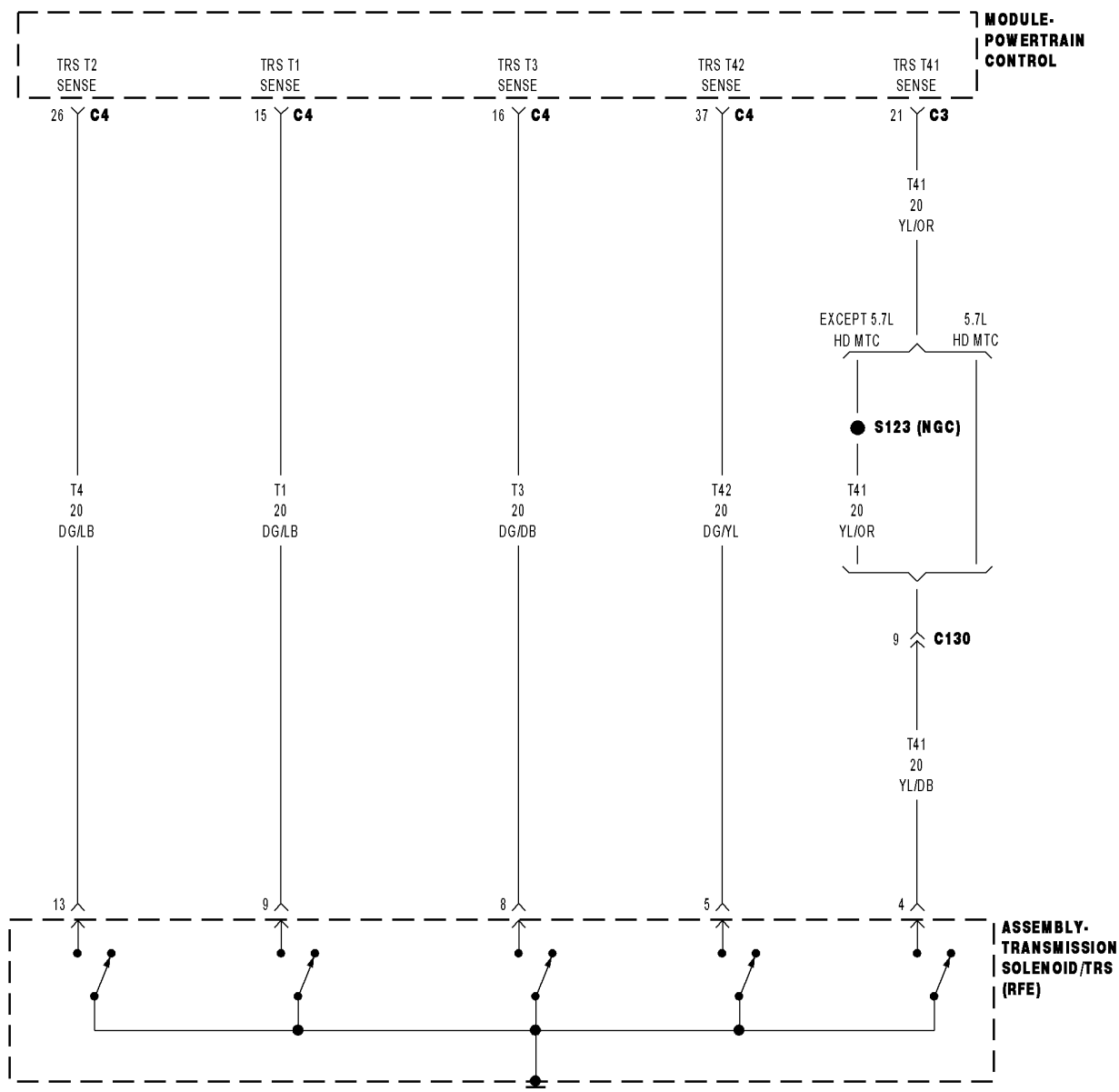

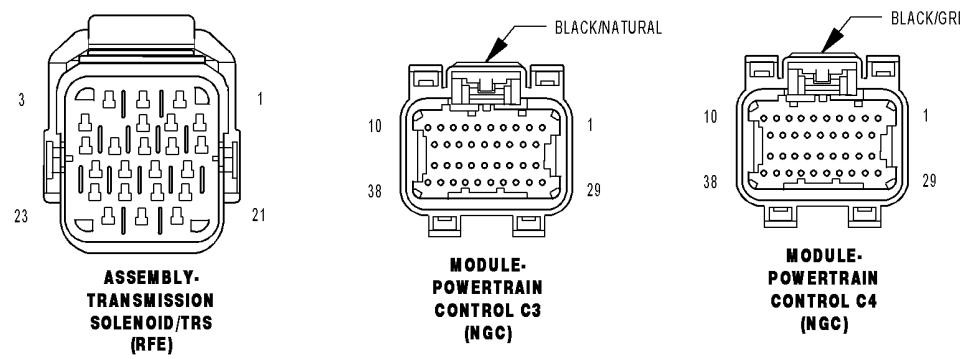

8162cb02

For a complete wiring diagram, **refer to the Wiring Information**.

Theory of Operation

The T41 (C1), T42 (C2), T3 (C3), T1 (C4), T2 (C5) Sense circuits communicate the shift lever position to the Transmission Control System. Each circuit is terminated at the transmission by a switch (TRS). Each switch can be either open or closed, depending on the shift lever position. The Powertrain Control Module (PCM) can decode this information and determine the shift lever position.

Each shift lever position has it own unique combination of closed and open switches. This is called a PRNDL code. There are five switches, therefore: there are many possible combinations of open and closed switches (codes). There are 12 valid codes: two for neutral, one for each other gear position (5), and five temporary (transition zone) codes. The remainder of the codes should never occur, these are called invalid codes.

- **When Monitored:**
  Continuously with the ignition on.
- **Set Condition:**
  The DTC will set if the controller detects an invalid PRNDL code which lasts for more than 0.042 of a second.

Possible Causes
TRS SENSE CIRCUIT OPEN
TRS SENSE CIRCUIT SHORTED TO GROUND
TRS SENSE CIRCUIT SHORTED TO VOLTAGE
METAL DEBRIS IN OIL PAN
TRANSMISSION RANGE SENSOR (TRS)
POWERTRAIN CONTROL MODULE (PCM)

Always perform the Pre-Diagnostic Troubleshooting Procedure before proceeding. (Refer to 28 - DTC-Based Diagnostics/MODULE, Powertrain Control (PCM) - Standard Procedure).

SHIFT LEVER ERROR CODES

ERROR CODE	SWITCH STUCK	POSITION
1	T41 (C1)	OPEN
2	T41 (C1)	CLOSED
3	T42 (C2)	OPEN
4	T42 (C2)	CLOSED
5	T3 (C3)	OPEN
6	T3 (C3)	CLOSED
7	T1 (C4)	OPEN
8	T1 (C4)	CLOSED
9	T2 (C5)	OPEN
10	T2 (C5)	CLOSED
11	OD LOCKOUT	OPEN
12	OD LOCKOUT	CLOSED

TRS SWITCH STATES

	PARK	TMP 1	REV	TMP 2	N1	N2	TMP 3	D	TMP 4	2	TMP 5	L
T41 (C1)	CL	OP	OP	OP	CL	CL	OP	OP	OP	OP	OP	OP

TRS SWITCH STATES, continued

	PARK	TMP 1	REV	TMP 2	N1	N2	TMP 3	D	TMP 4	2	TMP 5	L
T42 (C2)	CL	CL	CL	CL	CL	CL	CL	OP	OP	OP	OP	OP
T3 (C3)	OP	OP	OP	CL	CL	CL	CL	CL	OP	OP	OP	CL
T1 (C4)	OP	OP	OP	OP	OP	CL	CL	CL	CL	CL	OP	OP
T2 (C5)	CL	CL	OP	OP	OP	OP	OP	OP	OP	CL	CL	CL

Note:
CL indicates that CLOSED should appear on the scan tool
OP indicates that OPEN should appear on the scan tool

1. CHECK TO SEE IF P0706 DTC IS CURRENT

1. With the scan tool, perform the Shift Lever Position Test.

Select the test outcome from the following:

Test passes:

- Go To 6

Test fails with Error Code:

- Go To 2

Test fails without Error Code:

- Perform the Gearshift Adjustment Procedure in accordance with the Service Information.
- Perform the 545RFE TRANSMISSION VERIFICATION TEST. (Refer to 28 - DTC-Based Diagnostics/MODULE, Powertrain Control (PCM) - Standard Procedure).

2. CHECK THE TRANSMISSION SOLENOID/TRS ASSEMBLY

1. Turn the ignition off to the lock position.
2. Remove the Ignition Switch Feed fuse from the TIPM.

CAUTION: Removal of the Ignition Switch Feed fuse from the TIPM will prevent the vehicle from being started in gear.

WARNING: The Ignition Switch Feed fuse must be removed from the TIPM. Failure to do so can result in possible serious or fatal injury.

3. Install Transmission Simulator 8333A.
4. Ignition on, engine not running.
5. With the scan tool, perform the Shift Lever Position Test.
6. When the scan tool instructs you to put the Gear Selector in a particular position, you must do so using the selector switch on the Transmission Simulator.
7. The LED for the gear position in question must be illuminated on the Transmission Simulator prior to pressing "ENTER" on the scan tool.

NOTE: When the scan tool requests the O/D off button be depressed, you must use the O/D OFF button in the vehicle or you will fail the Shift Lever Position Test with an error code 11 or OD-TOW/HALL STUCK OPEN.

NOTE: If the Shift Lever Position test fails, make sure to note the identification of the TRS Sense circuit for future reference.

Did the Shift Lever Position test pass?

Yes

- Remove the Oil Pan and Main Valve Body Assembly in accordance with the Service Information. Check for metal debris on top of the Solenoid/TRS Assembly and the manual valve code plate. If debris is present, determine the cause of the debris and repair the transmission as necessary. If no problems are found, replace the Transmission Solenoid/TRS Assembly in accordance with the Service Information.
- Perform the 545RFE TRANSMISSION VERIFICATION TEST. (Refer to 28 - DTC-Based Diagnostics/MODULE, Powertrain Control (PCM) - Standard Procedure).

No

- Go To 3

3. TRS SENSE CIRCUIT OPEN

1. Turn the ignition off to the lock position.
2. Disconnect the Transmission Simulator 8333A.
3. Disconnect the PCM harness connectors and install the PCM Pinout Box 8815A.

CAUTION: Do not probe the PCM harness connectors. Probing the PCM harness connectors will damage the PCM terminals resulting in poor terminal to pin connection. Install the Kit, NGC, 38 Position 8815A to perform diagnosis.

4. Measure the resistance of the identified (T1, T2, T3, T41, or T42) TRS Sense circuit, from the Transmission Solenoid/TRS Assembly harness connector to the appropriate terminal of the PCM Pinout Box 8815A.

Is the resistance above 5.0 Ohms?

Yes

- Repair the identified (T41, T42, T3, T1, or T2 (C1-C5) TRS Sense circuit for an open.
- Perform the 545RFE TRANSMISSION VERIFICATION TEST. (Refer to 28 - DTC-Based Diagnostics/MODULE, Powertrain Control (PCM) - Standard Procedure).

No

- Go To 4

4. TRS SENSE CIRCUIT SHORT TO GROUND

1. Measure the resistance between ground and the identified (T41, T42, T3, T1, or T2 (C1-C5) TRS Sense circuit.

Is the resistance below 5.0 Ohms?

Yes

- Repair the identified (T41, T42, T3, T1, or T2 (C1-C5) TRS Sense circuit for a short to ground.
- Perform the 545RFE TRANSMISSION VERIFICATION TEST. (Refer to 28 - DTC-Based Diagnostics/MODULE, Powertrain Control (PCM) - Standard Procedure).

No

- Go To 5

5. TRS SENSE CIRCUIT SHORT TO OTHER CIRCUITS

1. Measure the resistance between the identified (T1, T2, T3, T41, or T42) TRS Sense circuit and all other circuits in the Transmission Solenoid/TRS Assembly harness connector.

Is the resistance below 100k Ohms between the identified (T41, T42, T3, T1, or T2 (C1-C5) TRS Sense circuit and any other circuit(s) in the Transmission Solenoid/TRS Assembly harness connector?

Yes

- Repair the identified (T41, T42, T3, T1, or T2 (C1-C5) TRS Sense circuit for a short to other circuit(s).
- Perform the 545RFE TRANSMISSION VERIFICATION TEST. (Refer to 28 - DTC-Based Diagnostics/MODULE, Powertrain Control (PCM) - Standard Procedure).

No

- Using the schematics as a guide, check the Powertrain Control Module (PCM) terminals for corrosion, damage, or terminal push out. Pay particular attention to all power and ground circuits. If no problems are found, replace and program the PCM in accordance with the Service Information. With the scan tool, perform Quick Learn.
- Perform the 545RFE TRANSMISSION VERIFICATION TEST. (Refer to 28 - DTC-Based Diagnostics/MODULE, Powertrain Control (PCM) - Standard Procedure).

6. CHECK THE WIRING AND CONNECTORS

1. The conditions necessary to set the DTC are not present at this time.
2. Using the schematics as a guide, inspect the wiring and connectors specific to this circuit.
3. Wiggle the wiring and connectors while checking for shorted and open circuits.
4. With the scan tool, check the Event Data to help identify the conditions in which the DTC was set.

Were there any problems found?

Yes

- Repair as necessary.
- Perform the 545RFE TRANSMISSION VERIFICATION TEST. (Refer to 28 - DTC-Based Diagnostics/MODULE, Powertrain Control (PCM) - Standard Procedure).

No

- Test Complete.

P0711-TRANSMISSION TEMPERATURE SENSOR PERFORMANCE

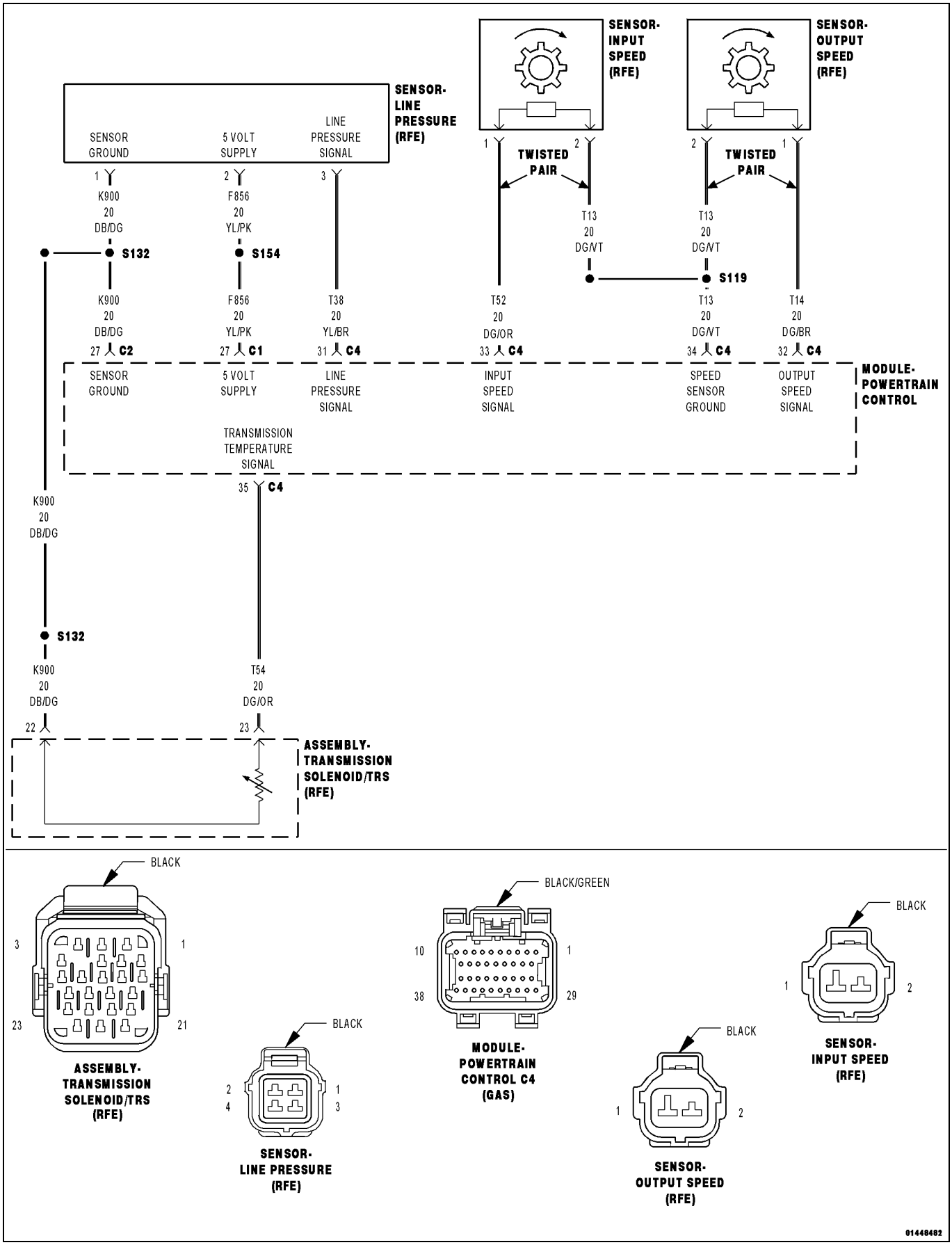

For a complete wiring diagram, **refer to the Wiring Information**.

Theory of Operation

The Transmission Temperature Sensor is a variable resistor that changes with temperature, or otherwise known as a thermistor. The temperature of the transmission fluid can affect a variety of electronically controlled transmission operations such as shift quality, torque converter lock-up, and when and/or if certain OBDII or system self-diagnostic test are performed. The Powertrain Control Module (PCM) substitutes a calculated transmission temperature value if a fault is detected in the Transmission Temperature Sensor circuit.

- **When Monitored:**
  Continuously with the ignition on and engine running.
- **Set Condition:**
  This DTC will set when the desired transmission temperature does not reach a normal operating temperature within a given time frame. Time is variable due to ambient temperature. Approximate times are starting temperature to warm up time: (-40°C [-40°F] - 35 min) (-28°C [-20°F] - 25 min) (-6.6°C [20°F] - 20 min) (15.5°C [60°F] - 10 min)

Possible Causes
RELATED DTCS PRESENT
TRANSMISSION TEMPERATURE SENSOR (TRS)
POWERTRAIN CONTROL MODULE (PCM)

Always perform the Pre-Diagnostic Troubleshooting Procedure before proceeding. (Refer to 28 - DTC-Based Diagnostics/MODULE, Powertrain Control (PCM) - Standard Procedure).

1. DETERMINE IF RELATED DTCS ARE PRESENT

1. With the scan tool, check Transmission DTCs.

Are there any other related Transmission Temperature Sensor DTCs present?

Yes

- Refer to DTC Based Diagnostics and perform the appropriate diagnostic procedure.

No

- Go To 2

2. CHECK IF THE DTC IS CURRENT

1. With the scan tool, read DTCs.

Is the status Active or is the Starts Since Set counter 2 or less for this DTC?

Yes

- Go To 3

No

- Go To 4

3. TRANSMISSION TEMPERATURE SENSOR

1. Turn the ignition off to the lock position.
2. Remove the Ignition Switch Feed fuse from the TIPM.

CAUTION: Removal of the Ignition Switch Feed fuse from the TIPM will prevent the vehicle from being started in gear.

WARNING: The Ignition Switch Feed fuse must be removed from the TIPM. Failure to do so can result in possible serious or fatal injury.

3. Install the Transmission Simulator 8333A.
4. Ignition on, engine not running.
5. With the Transmission Simulator, turn the Input/Output switch to OFF.
6. With the scan tool, monitor the TRANS TEMP VOLTS while turning the Thermistor Voltage switch to all three positions on the Transmission Simulator.
7. Compare the scan tool readings to the voltage readings listed on the Transmission Simulator.

Do the readings on the scan tool match the Transmission Simulator readings ± 0.2 of a volt?

Yes

- Replace Transmission Solenoid/TRS Assembly in accordance with the Service Information.
- Perform the 545RFE TRANSMISSION VERIFICATION TEST. (Refer to 28 - DTC-Based Diagnostics/MODULE, Powertrain Control (PCM) - Standard Procedure).

No

- Using the schematics as a guide, check the Powertrain Control Module (PCM) terminals for corrosion, damage, or terminal push out. Pay particular attention to all power and ground circuits. If no problems are found, replace and program the PCM in accordance with the Service Information. With the scan tool, perform Quick Learn.
- Perform the 545RFE TRANSMISSION VERIFICATION TEST. (Refer to 28 - DTC-Based Diagnostics/MODULE, Powertrain Control (PCM) - Standard Procedure).

4. CHECK THE WIRING AND CONNECTORS

1. The conditions necessary to set this DTC are not present at this time.
2. Using the schematics as a guide, inspect the wiring and connectors specific to this circuit.
3. Wiggle the wires while checking for shorted and open circuits.
4. With the scan tool, check the Event Data to help identify the conditions in which the DTC was set.

Were there any problems found?

Yes

- Repair as necessary.
- Perform the 545RFE TRANSMISSION VERIFICATION TEST. (Refer to 28 - DTC-Based Diagnostics/MODULE, Powertrain Control (PCM) - Standard Procedure).

No

- Test Complete.

P0712-TRANSMISSION TEMPERATURE SENSOR LOW

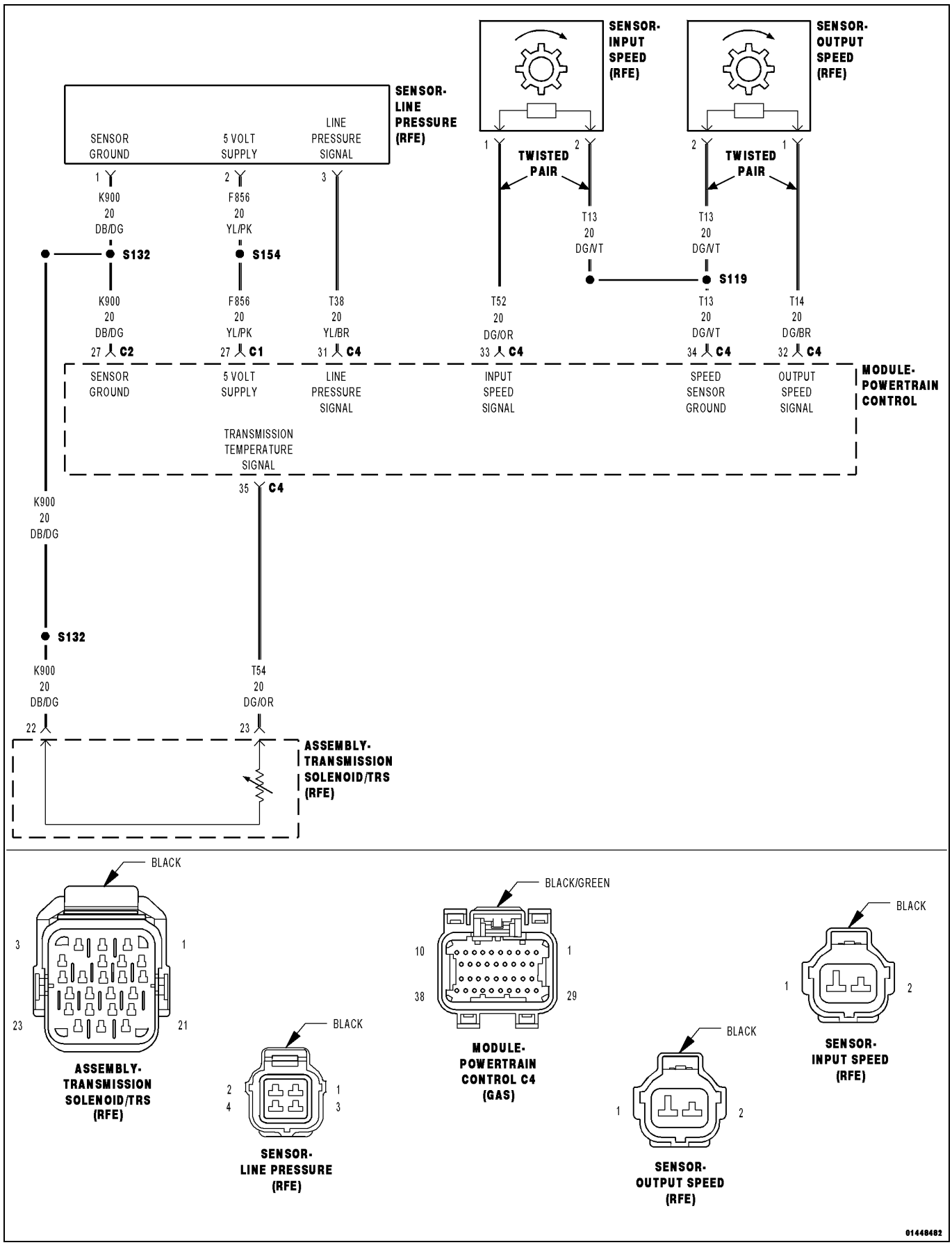

For a complete wiring diagram, **refer to the Wiring Information**.

Theory of Operation

The Transmission Temperature Sensor is a variable resistor that changes with temperature, or otherwise known as a thermistor. The temperature of the transmission fluid can affect a variety of electronically controlled transmission operations such as shift quality, torque converter lock-up, and when and/or if certain OBDII or system self-diagnostic test are performed. The Powertrain Control Module (PCM) substitutes a calculated transmission temperature value if a fault is detected in the Transmission Temperature Sensor circuit.

- **When Monitored:**
  Continuously with the ignition on and engine running.
- **Set Condition:**
  The DTC will set when the monitored Temperature Sensor voltage drops below 0.078 of a volt for the period of 0.45 of a second.

Possible Causes
RELATED DTCS PRESENT
(T54) TRANSMISSION TEMPERATURE SENSOR SIGNAL CIRCUIT SHORTED TO GROUND
TRANSMISSION TEMPERATURE SENSOR (TRS)
POWERTRAIN CONTROL MODULE (PCM)

Always perform the Pre-Diagnostic Troubleshooting Procedure before proceeding. (Refer to 28 - DTC-Based Diagnostics/MODULE, Powertrain Control (PCM) - Standard Procedure).

1. DETERMINE IF RELATED DTCS ARE PRESENT

1. With the scan tool, read DTCs.

Are there any line pressure sensor or throttle position sensor DTCs present?

Yes
- Perform the appropriate diagnostic procedure.

No
- Go To 2

2. CHECK IF THE DTC IS CURRENT

1. With the scan tool, read DTCs.

Is the status Active or is the Starts Since Set counter 2 or less for this DTC?

Yes
- Go To 3

No
- Go To 5

3. TRANSMISSION TEMPERATURE SENSOR

1. Turn the ignition off to the lock position.
2. Remove the Ignition Switch Feed fuse from the TIPM.

CAUTION: Removal of the Ignition Switch Feed fuse from the TIPM will prevent the vehicle from being started in gear.

WARNING: The Ignition Switch Feed fuse must be removed from the TIPM. Failure to do so can result in possible serious or fatal injury.

3. Install the Transmission Simulator 8333A.
4. Ignition on, engine not running.
5. With the Transmission Simulator, turn the Input/Output switch to OFF.
6. With the scan tool, monitor the TRANS TEMP VOLTS while turning the Thermistor Voltage switch to all three positions on the Transmission Simulator.
7. Compare the scan tool readings with the numbers listed on the Transmission Simulator.

Do the readings on the Transmission Simulator match the scan tool readings ± 0.2 of a volt?

Yes

- Replace Transmission Solenoid/TRS Assembly in accordance with the Service Information.
- Perform the 545RFE TRANSMISSION VERIFICATION TEST. (Refer to 28 - DTC-Based Diagnostics/MODULE, Powertrain Control (PCM) - Standard Procedure).

No

- Go To 4

4. (T54) TRANSMISSION TEMPERATURE SENSOR SIGNAL CIRCUIT SHORTED TO GROUND

1. Turn the ignition off to the lock position.
2. Disconnect the Transmission Simulator 8333A.
3. Disconnect the PCM C4 harness connector and connect the PCM Pinout Box 8815A.

NOTE: Check connectors - Clean/repair as necessary.

CAUTION: Do not probe the PCM harness connectors. Probing the PCM harness connectors will damage the PCM terminals resulting in poor terminal to pin connection. Install the Kit, NGC, 38 Position 8815A to perform diagnosis.

4. Measure the resistance between ground and the (T54) Transmission Temperature Sensor Signal circuit.

Is the resistance below 5.0 Ohms?

Yes

- Repair the (T54) Transmission Temperature Sensor Signal circuit for a short to ground.
- Perform the 545RFE TRANSMISSION VERIFICATION TEST. (Refer to 28 - DTC-Based Diagnostics/MODULE, Powertrain Control (PCM) - Standard Procedure).

No

- Using the schematics as a guide, check the Powertrain Control Module (PCM) terminals for corrosion, damage, or terminal push out. Pay particular attention to all power and ground circuits. If no problems are found, replace and program the PCM in accordance with the Service Information. With the scan tool, perform Quick Learn.
- Perform the 545RFE TRANSMISSION VERIFICATION TEST. (Refer to 28 - DTC-Based Diagnostics/MODULE, Powertrain Control (PCM) - Standard Procedure).

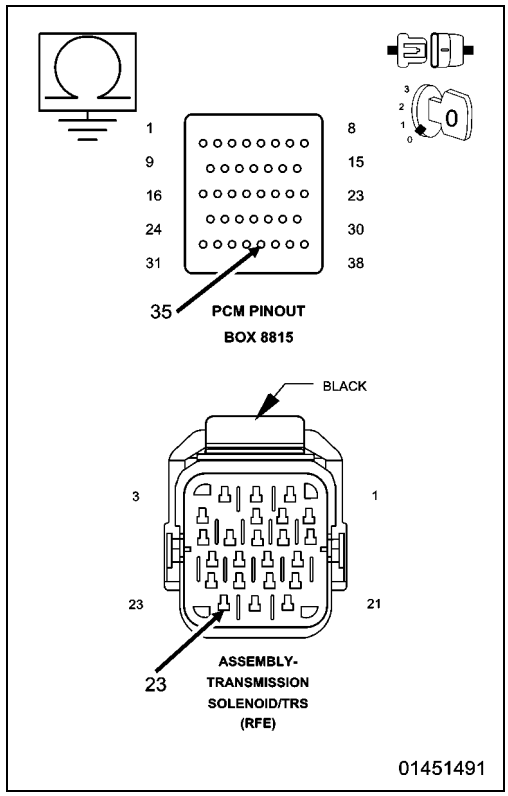

5. CHECK THE WIRING AND CONNECTORS

1. The conditions necessary to set this DTC are not present at this time.
2. Using the schematics as a guide, inspect the wiring and connectors specific to this circuit.
3. Wiggle the wires while checking for shorted and open circuits.
4. With the scan tool, check the Event Data to help identify the conditions in which the DTC was set.

Were there any problems found?

Yes

- Repair as necessary.
- Perform the 545RFE TRANSMISSION VERIFICATION TEST. (Refer to 28 - DTC-Based Diagnostics/MODULE, Powertrain Control (PCM) - Standard Procedure).

No

- Test Complete.

P0713-TRANSMISSION TEMPERATURE SENSOR HIGH

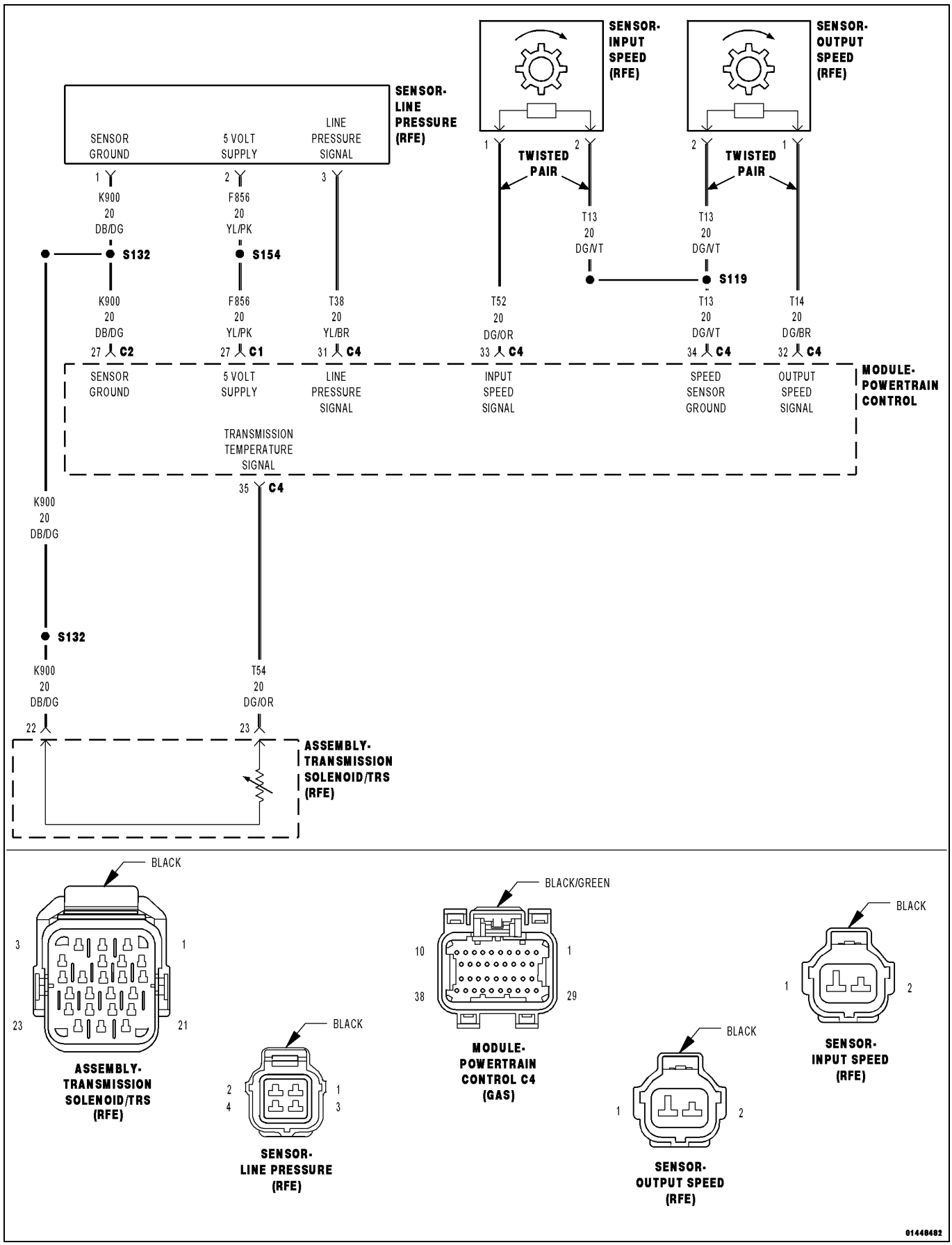

For a complete wiring diagram, **refer to the Wiring Information**.

Theory of Operation

The Transmission Temperature Sensor is a variable resistor that changes with temperature, or otherwise known as a thermistor. The temperature of the transmission fluid can affect a variety of electronically controlled transmission operations such as shift quality, torque converter lock-up, and when and/or if certain OBDII or system self-diagnostic test are performed. The Powertrain Control Module (PCM) substitutes a calculated transmission temperature value if a fault is detected in the Transmission Temperature Sensor circuit.

- **When Monitored:**
  Continuously with the ignition on and engine running.
- **Set Condition:**
  The DTC will set when the monitored Temperature Sensor voltage rises above 4.94 volts for the period of 0.45 of a second.

Possible Causes
RELATED DTCS PRESENT
(T54) TRANSMISSION TEMPERATURE SENSOR SIGNAL CIRCUIT SHORTED TO OTHER CIRCUITS
TRANSMISSION TEMPERATURE SENSOR (TRS)
POWERTRAIN CONTROL MODULE (PCM)

Always perform the Pre-Diagnostic Troubleshooting Procedure before proceeding. (Refer to 28 - DTC-Based Diagnostics/MODULE, Powertrain Control (PCM) - Standard Procedure).

1. DETERMINE IF RELATED DTCS ARE PRESENT

1. With the scan tool, read DTCs.

Are there any line pressure sensor or throttle position sensor DTCs present?

Yes

- Perform the appropriate diagnostic procedure.

No

- Go To 2

2. CHECK IF THE DTC IS CURRENT

1. With the scan tool, read DTCs.

Is the status Active or is the Starts Since Set counter 2 or less for this DTC?

Yes

- Go To 3

No

- Go To 5

3. TRANSMISSION TEMPERATURE SENSOR

1. Turn the ignition off to the lock position.
2. Remove the Ignition Switch Feed fuse from the TIPM.

CAUTION: Removal of the Ignition Switch Feed fuse from the TIPM will prevent the vehicle from being started in gear.

WARNING: The Ignition Switch Feed fuse must be removed from the TIPM. Failure to do so can result in possible serious or fatal injury.

3. Install the Transmission Simulator 8333A.
4. Ignition on, engine not running.
5. With the Transmission Simulator, turn the Input/Output switch to OFF.
6. With the scan tool, monitor the TRANS TEMP VOLTS while turning the Thermistor Voltage switch to all three positions on the Transmission Simulator.
7. Compare the scan tool readings with the numbers listed on the Transmission Simulator.

Do the readings on the Transmission Simulator match the scan tool readings ± 0.2 of a volt?

Yes

- Replace Transmission Solenoid/TRS assembly in accordance with the Service Information.
- Perform the 545RFE TRANSMISSION VERIFICATION TEST. (Refer to 28 - DTC-Based Diagnostics/MODULE, Powertrain Control (PCM) - Standard Procedure).

No

- Go To 4

4. (T54) TRANSMISSION SENSOR SIGNAL CIRCUIT SHORTED TO ANOTHER CIRCUIT

1. Turn the ignition off to the lock position.
2. Disconnect the Transmission Simulator 8333A.
3. Disconnect the PCM harness connectors.
4. Measure the resistance between the (T54) Transmission Temperature Sensor Signal circuit and all other circuits in the Transmission Solenoid/TRS Assembly harness connector.

Is the resistance below 5.0 Ohms between the (T54) Transmission Temperature Sensor Signal circuit and any other circuit(s) in the Transmission Solenoid/TRS Assembly harness connector?

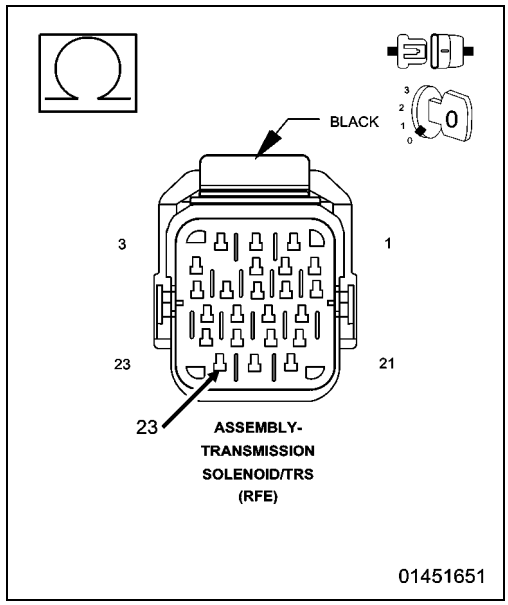

Yes

- Repair the Transmission Temperature Sensor Signal circuit for a short to another circuit(s).
- Perform the 545RFE TRANSMISSION VERIFICATION TEST. (Refer to 28 - DTC-Based Diagnostics/MODULE, Powertrain Control (PCM) - Standard Procedure).

No

- Using the schematics as a guide, check the Powertrain Control Module (PCM) terminals for corrosion, damage, or terminal push out. Pay particular attention to all power and ground circuits. If no problems are found, replace and program the PCM in accordance with the Service Information. With the scan tool, perform Quick Learn.
- Perform the 545RFE TRANSMISSION VERIFICATION TEST. (Refer to 28 - DTC-Based Diagnostics/MODULE, Powertrain Control (PCM) - Standard Procedure).

5. CHECK THE WIRING AND CONNECTORS

1. The conditions necessary to set this DTC are not present at this time.
2. Using the schematics as a guide, inspect the wiring and connectors specific to this circuit.
3. Wiggle the wires while checking for shorted and open circuits.
4. With the scan tool, check the Event Data to help identify the conditions in which the DTC was set.

Were there any problems found?

Yes

- Repair as necessary.
- Perform the 545RFE TRANSMISSION VERIFICATION TEST. (Refer to 28 - DTC-Based Diagnostics/MODULE, Powertrain Control (PCM) - Standard Procedure).

No

- Test Complete.

P0714-TRANSMISSION TEMPERATURE SENSOR INTERMITTENT

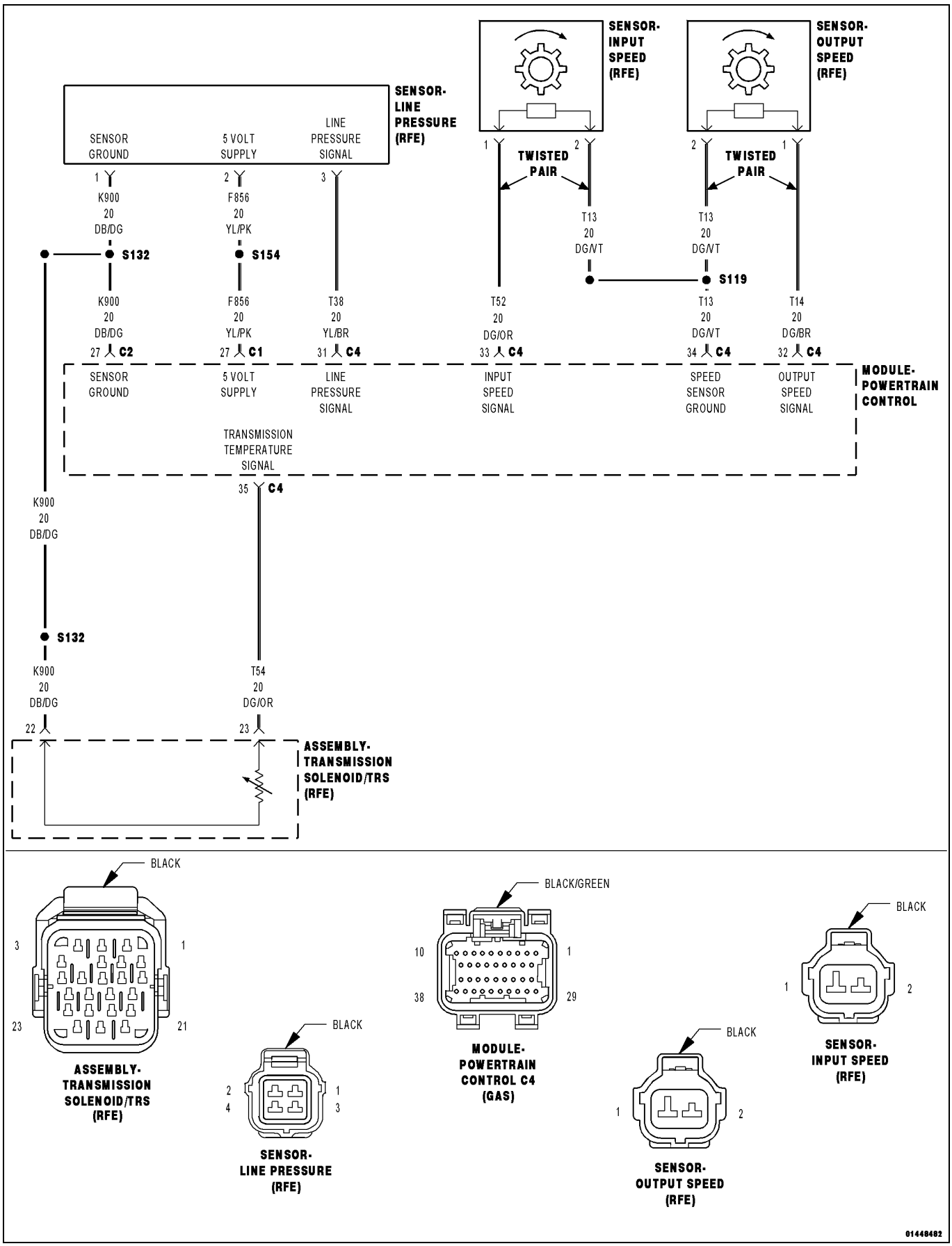

For a complete wiring diagram, **refer to the Wiring Information**.

Theory of Operation

The Transmission Temperature Sensor is a variable resistor that changes with temperature, or otherwise known as a thermistor. The temperature of the transmission fluid can affect a variety of electronically controlled transmission operations such as shift quality, torque converter lock-up, and when and/or if certain OBDII or system self-diagnostic test are performed. The Powertrain Control Module (PCM) substitutes a calculated transmission temperature value if a fault is detected in the Transmission Temperature Sensor circuit.

- **When Monitored:**
  Continuously with the ignition on and engine running.
- **Set Condition:**
  The DTC will set when the monitored Temperature Sensor voltage fluctuates or changes abruptly within a predetermined period of time.

Possible Causes
RELATED DTCS PRESENT
TRANSMISSION TEMPERATURE SENSOR (TRS)
POWERTRAIN CONTROL MODULE (PCM)

Always perform the Pre-Diagnostic Troubleshooting Procedure before proceeding. (Refer to 28 - DTC-Based Diagnostics/MODULE, Powertrain Control (PCM) - Standard Procedure).

1. DETERMINE IF RELATED DTCS ARE PRESENT

1. With the scan tool, read DTCs.

Are there any line pressure sensor or throttle position sensor DTCs present?

Yes
Perform the appropriate diagnostic procedure.

No
- Go To 2

2. CHECK IF THE DTC IS CURRENT

1. With the scan tool, read DTCs.

Is the status Active or is the Starts Since Set counter 2 or less for this DTC?

Yes
- Go To 3

No
- Go To 4

3. TRANSMISSION TEMPERATURE SENSOR

1. Turn the ignition off to the lock position.
2. Remove the Ignition Switch Feed fuse from the TIPM.

CAUTION: Removal of the Ignition Switch Feed fuse from the TIPM will prevent the vehicle from being started in gear.

WARNING: The Ignition Switch Feed fuse must be removed from the TIPM. Failure to do so can result in possible serious or fatal injury.

3. Install the Transmission Simulator 8333A.
4. Ignition on, engine not running.
5. With the Transmission Simulator, turn the Input/Output switch to OFF.
6. With the scan tool, monitor the TRANS TEMP VOLTS while turning the Thermistor Voltage switch to all three positions on the Transmission Simulator.
7. Compare the scan tool readings with the numbers listed on the Transmission Simulator.

Do the readings on the Transmission Simulator match a non-fluctuating scan tool reading ± 0.2 of a volt?

Yes

- Replace the Transmission Solenoid/TRS Assembly in accordance with the Service Information.
- Perform the 545RFE TRANSMISSION VERIFICATION TEST. (Refer to 28 - DTC-Based Diagnostics/MODULE, Powertrain Control (PCM) - Standard Procedure).

No

- Using the schematics as a guide, check the Powertrain Control Module (PCM) terminals for corrosion, damage, or terminal push out. Pay particular attention to all power and ground circuits. If no problems are found, replace and program the PCM in accordance with the Service Information. With the scan tool, perform Quick Learn.
- Perform the 545RFE TRANSMISSION VERIFICATION TEST. (Refer to 28 - DTC-Based Diagnostics/MODULE, Powertrain Control (PCM) - Standard Procedure).

4. CHECK THE WIRING AND CONNECTORS

1. The conditions necessary to set this DTC are not present at this time.
2. Using the schematics as a guide, inspect the wiring and connectors specific to this circuit.
3. Wiggle the wires while checking for shorted and open circuits.
4. With the scan tool, check the Event Data to help identify the conditions in which the DTC was set.

Were there any problems found?

Yes

- Repair as necessary.
- Perform the 545RFE TRANSMISSION VERIFICATION TEST. (Refer to 28 - DTC-Based Diagnostics/MODULE, Powertrain Control (PCM) - Standard Procedure).

No

- Test Complete.

P0716-INPUT SPEED SENSOR 1 CIRCUIT PERFORMANCE

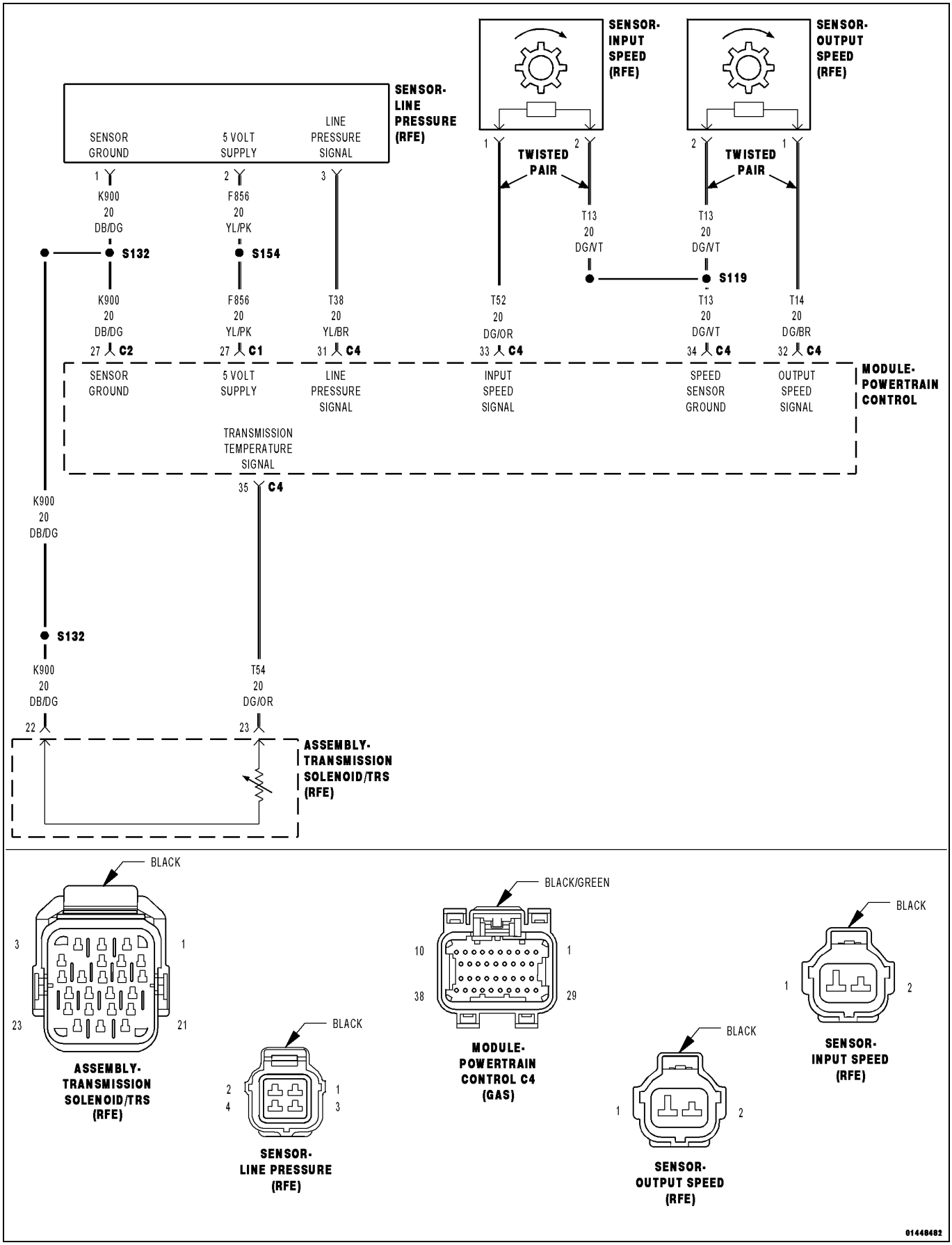

For a complete wiring diagram, **refer to the Wiring Information**.

Theory of Operation

The transmission system uses two speed sensors, one to measure input rpm and one to measure output rpm. These inputs are essential for proper transmission operation. Therefore, the integrity of this data is verified through the following checks:

1) When in gear, if the gear ratio does not compare to a known gear ratio, the corresponding in-gear trouble code is set (DTCs P0731-36 and P1736).

2) An excessive change in input or output speeds indicating signal intermittent which will result in the DTCs P0716 and/or P0721 being set.

3) If the common speed sensor ground circuit is lost, both sensor inputs will read the signal from the input speed sensor at idle in neutral. Since the input speed sensor reads 60 teeth from the input clutch hub and the output speed sensor reads 30 teeth from the park gear, the result is an apparent speed ratio of 1:2 and may cause the DTC P1794 to set when at a stop.

- **When Monitored:**

  The transmission gear ratio is monitored continuously while the transmission is in gear.
- **Set Condition:**

  If there is an excessive change in input rpm in any gear. This DTC can take up to five minutes of problem identification before illuminating the MIL.

Possible Causes
(T52) INPUT SPEED SENSOR SIGNAL CIRCUIT OPEN
(T13) SPEED SENSOR GROUND CIRCUIT OPEN
(T52) INPUT SPEED SENSOR SIGNAL CIRCUIT SHORTED TO GROUND
(T13) SPEED SENSOR GROUND CIRCUIT SHORTED TO GROUND
(T52) INPUT SPEED SENSOR SIGNAL CIRCUIT SHORTED TO VOLTAGE
(T13) SPEED SENSOR GROUND CIRCUIT SHORTED TO VOLTAGE
INPUT SPEED SENSOR
POWERTRAIN CONTROL MODULE (PCM)

Always perform the Pre-Diagnostic Troubleshooting Procedure before proceeding. (Refer to 28 - DTC-Based Diagnostics/MODULE, Powertrain Control (PCM) - Standard Procedure).

1. CHECK TO SEE IF DTC P0716 IS CURRENT

1. Start the engine in park.
2. With the scan tool, monitor the Input Speed Sensor rpm.

Is the Input Speed Sensor rpm below 400 rpm?

Yes

- Go To 2

No

- Go To 9

2. INPUT SPEED SENSOR

1. Turn the ignition off to the lock position.
2. Remove the Ignition Switch Feed fuse from the TIPM.

CAUTION: Removal of the Ignition Switch Feed fuse from the TIPM will prevent the vehicle from being started in gear.

WARNING: The Ignition Switch Feed fuse must be removed from the TIPM. Failure to do so can result in possible serious or fatal injury.

3. Install the Transmission Simulator 8333A.
4. Ignition on, engine not running.
5. With the Transmission Simulator, set the selector switch to 3000/1000 and the Input/Output switch to ON.
6. With the scan tool, monitor the Input and Output Speed Sensor rpm.

Does the Input speed read 3,000 rpm and the Output speed read 1,000 rpm ± 50 rpm?

Yes

- Replace the Input Speed Sensor in accordance with the Service Information.
- Perform the 545RFE TRANSMISSION VERIFICATION TEST. (Refer to 28 - DTC-Based Diagnostics/MODULE, Powertrain Control (PCM) - Standard Procedure).

No

- Go To 3

3. (T52) INPUT SPEED SENSOR SIGNAL CIRCUIT SHORTED TO VOLTAGE

1. Turn the ignition off to the lock position.
2. Disconnect the PCM C4 harness connector and connect the PCM Pinout Box 8815A.

NOTE: Make sure to leave the Speed Sensor, Transmission Solenoid/ TRS Assembly, and Line Pressure Sensor harness connectors disconnected.

CAUTION: Do not probe the PCM harness connectors. Probing the PCM harness connectors will damage the PCM terminals resulting in poor terminal to pin connection. Install the Kit, NGC, 38 Position 8815A to perform diagnosis.

3. Ignition on, engine not running.
4. With the scan tool in TIPM, actuate the TCM output.
5. Measure the voltage of the (T52) Input Speed Sensor Signal circuit.

Is the voltage above 0.5 of a volt?

Yes

- Repair the (T52) Input Speed Sensor Signal circuit for a short to voltage.
- Perform the 545RFE TRANSMISSION VERIFICATION TEST. (Refer to 28 - DTC-Based Diagnostics/MODULE, Powertrain Control (PCM) - Standard Procedure).

No

- Go To 4

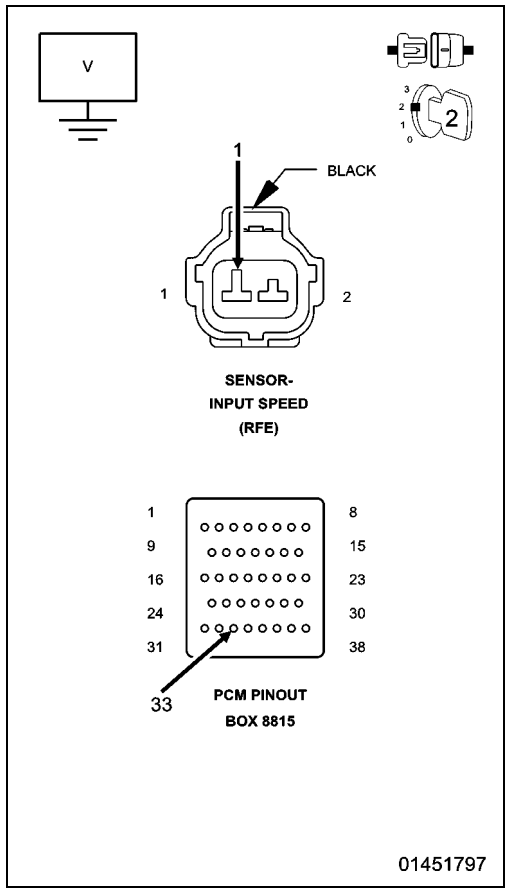

4. (T13) SPEED SENSOR GROUND CIRCUIT SHORT TO VOLTAGE

1. With the scan tool in TIPM, actuate the TCM output.
2. Measure the voltage of the (T13) Speed Sensor Ground circuit.

Is the voltage above 0.5 of a volt?

Yes

- Repair the (T13) Speed Sensor Ground circuit for a short to voltage.
- Perform the 545RFE TRANSMISSION VERIFICATION TEST. (Refer to 28 - DTC-Based Diagnostics/MODULE, Powertrain Control (PCM) - Standard Procedure).

No

- Go To 5

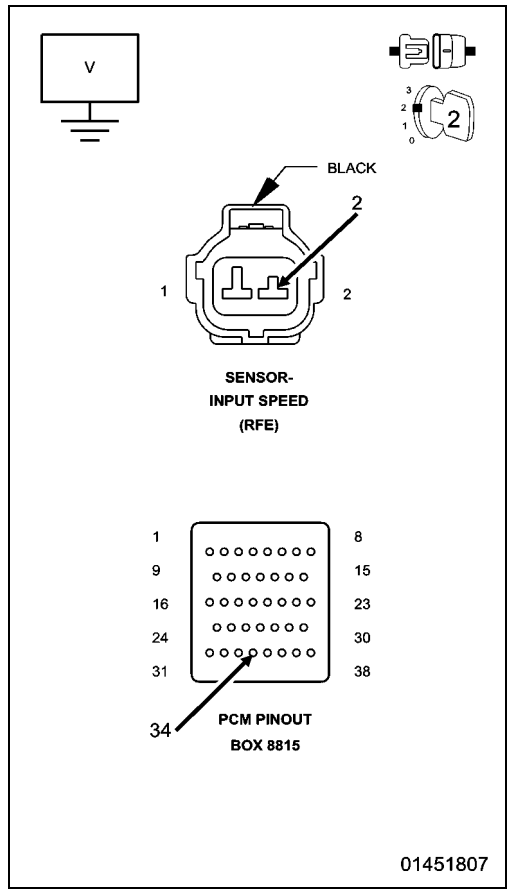

5. (T52) INPUT SPEED SENSOR SIGNAL CIRCUIT OPEN

1. With the scan tool in TIPM, stop the actuation the TCM output.
2. Turn the ignition off to the lock position.
3. Measure the resistance of the (T52) Input Speed Sensor Signal circuit between the Input Speed Sensor harness connector and the appropriate terminal of the PCM Pinout Box 8815A.

Is the resistance above 5.0 Ohms?

Yes

- Repair the (T52) Input Speed Sensor Signal circuit for an open.
- Perform the 545RFE TRANSMISSION VERIFICATION TEST. (Refer to 28 - DTC-Based Diagnostics/MODULE, Powertrain Control (PCM) - Standard Procedure).

No

- Go To 6

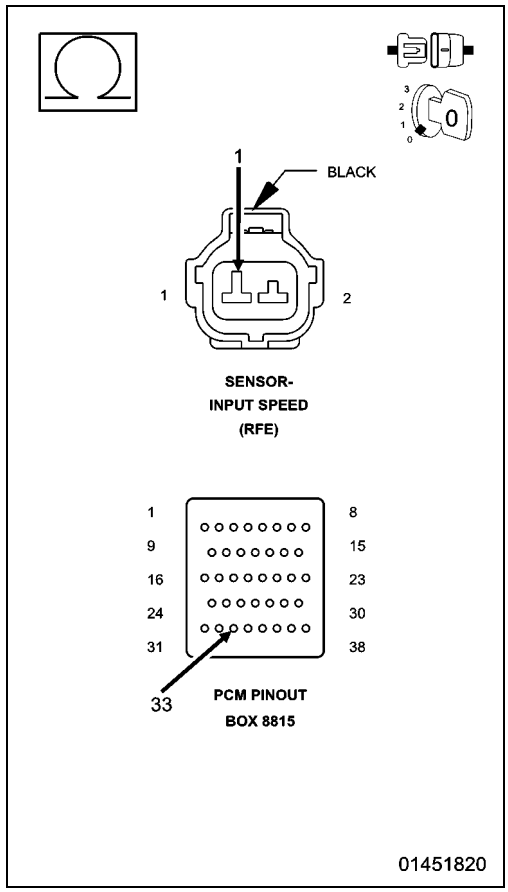

6. (T13) SPEED SENSOR GROUND CIRCUIT OPEN

1. Measure the resistance of the (T13) Speed Sensor Ground circuit between the Input Speed Sensor harness connector and the appropriate terminal of the PCM Pinout Box 8815A.

Is the resistance above 5.0 Ohms?

Yes

- Repair the (T13) Speed Sensor Ground circuit for an open.
- Perform the 545RFE TRANSMISSION VERIFICATION TEST. (Refer to 28 - DTC-Based Diagnostics/MODULE, Powertrain Control (PCM) - Standard Procedure).

No

- Go To 7

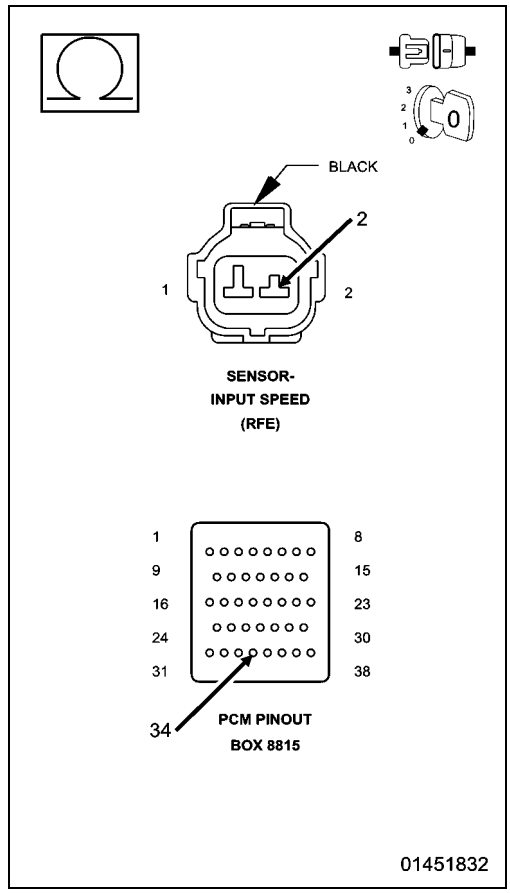

7. (T52) INPUT SPEED SENSOR SIGNAL CIRCUIT SHORT TO GROUND

1. Measure the resistance between ground and the Input Speed Sensor Signal circuit.

Is the resistance below 5.0 Ohms?

Yes

- Repair the (T52) Input Speed Sensor Signal circuit for a short to ground.
- Perform the 545RFE TRANSMISSION VERIFICATION TEST. (Refer to 28 - DTC-Based Diagnostics/MODULE, Powertrain Control (PCM) - Standard Procedure).

No

- Go To 8

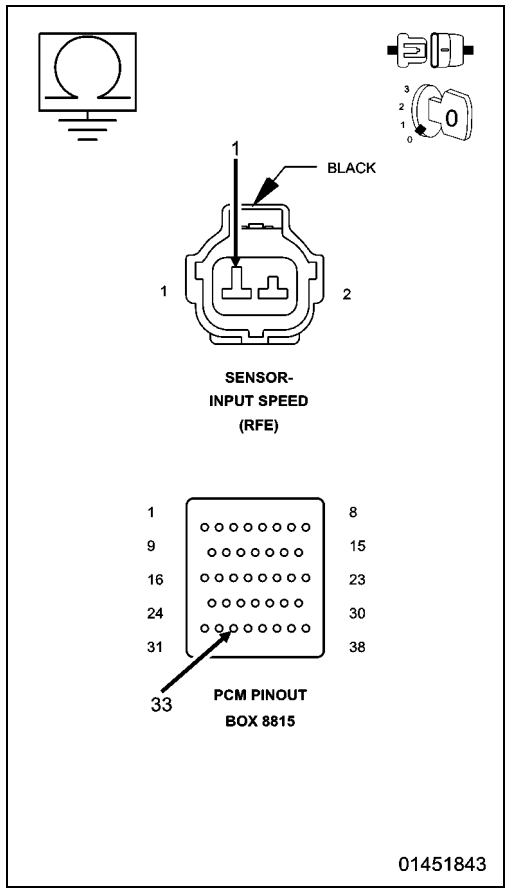

8. (T13) SPEED SENSOR GROUND CIRCUIT SHORTED TO GROUND

1. Measure the resistance between ground and the (T13) Speed Sensor Ground circuit.

Is the resistance below 5.0 Ohms?

Yes

- Repair the (T13) Speed Sensor Ground circuit for a short to ground.
- Perform the 545RFE TRANSMISSION VERIFICATION TEST. (Refer to 28 - DTC-Based Diagnostics/MODULE, Powertrain Control (PCM) - Standard Procedure).

No

- Using the schematics as a guide, check the Powertrain Control Module (PCM) terminals for corrosion, damage, or terminal push out. Pay particular attention to all power and ground circuits. If no problems are found, replace and program the PCM in accordance with the Service Information. With the scan tool, perform Quick Learn.
- Perform the 545RFE TRANSMISSION VERIFICATION TEST. (Refer to 28 - DTC-Based Diagnostics/MODULE, Powertrain Control (PCM) - Standard Procedure).

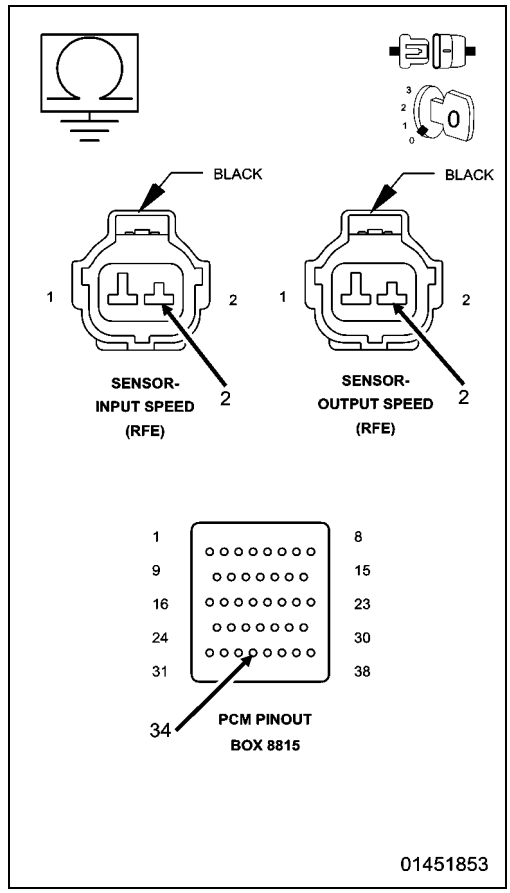

9. CHECK THE WIRING AND CONNECTORS

1. The conditions necessary to set this DTC are not present at this time.
2. Using the schematics as a guide, inspect the wiring and connectors specific to this circuit.
3. Wiggle the wires while checking for shorted and open circuits.
4. With the scan tool, check the Event Data to help identify the conditions in which the DTC was set.

Were there any problems found?

Yes

- Repair as necessary.
- Perform the 545RFE TRANSMISSION VERIFICATION TEST. (Refer to 28 - DTC-Based Diagnostics/MODULE, Powertrain Control (PCM) - Standard Procedure).

No

- Test Complete.

P0721-OUTPUT SPEED SENSOR CIRCUIT PERFORMANCE

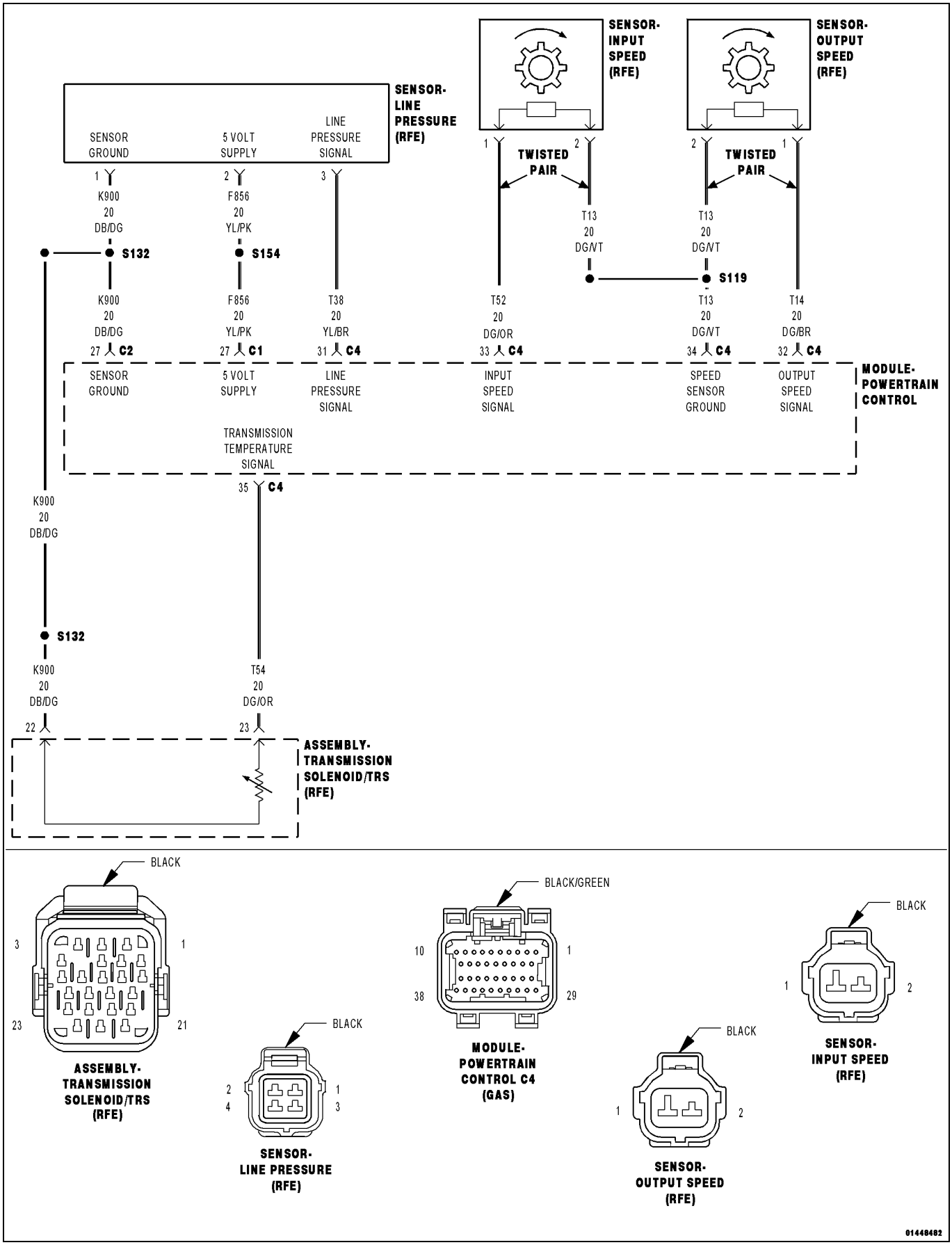

For a complete wiring diagram, **refer to the Wiring Information**.

Theory of Operation

The transmission system uses two speed sensors, one to measure input rpm and one to measure output rpm. These inputs are essential for proper transmission operation. Therefore, the integrity of this data is verified through the following checks:

1) When in gear, if the gear ratio does not compare to a known gear ratio, the corresponding in-gear trouble code is set (DTCs P0731-36, P1736 and P1776).

2) An excessive change in input or output speeds indicating signal intermittent will result in codes P0716 and/or P0721 being set.

3) If the common speed sensor ground circuit is lost, both sensor inputs will read the signal from the input speed sensor at idle in neutral. Since the input speed sensor has 60 teeth and the output speed sensor has 30 teeth, this results in a an apparent speed ratio of 1:2 and may cause the DTC P1794 to set.

- **When Monitored:**
  The transmission gear ratio is monitored continuously while the transmission is in gear.
- **Set Condition:**
  If there is an excessive change in output rpm in any gear. This DTC can take up to five minutes of problem identification before illuminating the MIL.

Possible Causes
(T14) OUTPUT SPEED SENSOR SIGNAL CIRCUIT OPEN
(T13) SPEED SENSOR GROUND CIRCUIT OPEN
(T14) OUTPUT SPEED SENSOR SIGNAL CIRCUIT SHORTED TO GROUND
(T13) SPEED SENSOR GROUND CIRCUIT SHORTED TO GROUND
(T14) OUTPUT SPEED SENSOR SIGNAL CIRCUIT SHORTED TO VOLTAGE
(T13) SPEED SENSOR GROUND CIRCUIT SHORTED TO VOLTAGE
OUTPUT SPEED SENSOR
POWERTRAIN CONTROL MODULE (PCM)

Always perform the Pre-Diagnostic Troubleshooting Procedure before proceeding. (Refer to 28 - DTC-Based Diagnostics/MODULE, Powertrain Control (PCM) - Standard Procedure).

1. CHECK TO SEE IF DTC P0721 IS CURRENT

1. Turn the ignition off to the lock position.

CAUTION: Properly support the vehicle and raise all drive wheels off the ground.

2. Release the parking brake.
3. Start the engine in park.
4. Place the transmission gear selector in drive, release foot from brake.

WARNING: Be sure to keep hands and feet clear of rotating wheels.

5. With the scan tool, monitor the Output Speed Sensor rpm.

Is the Output Speed Sensor rpm below 100 rpm?

Yes

- Go To 2

No

- Go To 9

2. OUTPUT SPEED SENSOR

1. Turn the ignition off to the lock position.
2. Remove the Ignition Switch Feed fuse from the TIPM.

CAUTION: Removal of the Ignition Switch Feed fuse from the TIPM will prevent the vehicle from being started in gear.

WARNING: The Ignition Switch Feed fuse must be removed from the TIPM. Failure to do so can result in possible serious or fatal injury.

3. Install the Transmission Simulator 8333A.
4. Ignition on, engine not running.
5. With the Transmission Simulator, set the selector switch to 3000/1000 and the Input/Output switch to ON.
6. With the scan tool, monitor the Input and Output Speed Sensor rpm

Does the Input Speed read 3,000 rpm and the Output Speed read 1,000 rpm, ± 50 rpm?

Yes

- Replace the Output Speed Sensor in accordance with the Service Information.
- Perform the 545RFE TRANSMISSION VERIFICATION TEST. (Refer to 28 - DTC-Based Diagnostics/MODULE, Powertrain Control (PCM) - Standard Procedure).

No

- Go To 3

3. CHECK THE (T14) OUTPUT SPEED SENSOR SIGNAL CIRCUIT FOR AN OPEN

1. Turn the ignition off to the lock position.
2. Disconnect the Transmission Simulator 8333A.
3. Disconnect the PCM harness connectors and connect the PCM Pinout Box 8815A.

CAUTION: Do not probe the PCM harness connectors. Probing the PCM harness connectors will damage the PCM terminals resulting in poor terminal to pin connection. Install the Kit, NGC, 38 Position 8815A to perform diagnosis.

4. Measure the resistance of the (T14) Output Speed Sensor Signal circuit from the Output Speed Sensor harness connector to the appropriate terminal of the PCM Pinout Box 8815A.

Is the resistance above 5.0 Ohms?

Yes

- Repair the (T14) Output Speed Sensor Signal circuit for an open.
- Perform the 545RFE TRANSMISSION VERIFICATION TEST. (Refer to 28 - DTC-Based Diagnostics/MODULE, Powertrain Control (PCM) - Standard Procedure).

No

- Go To 4

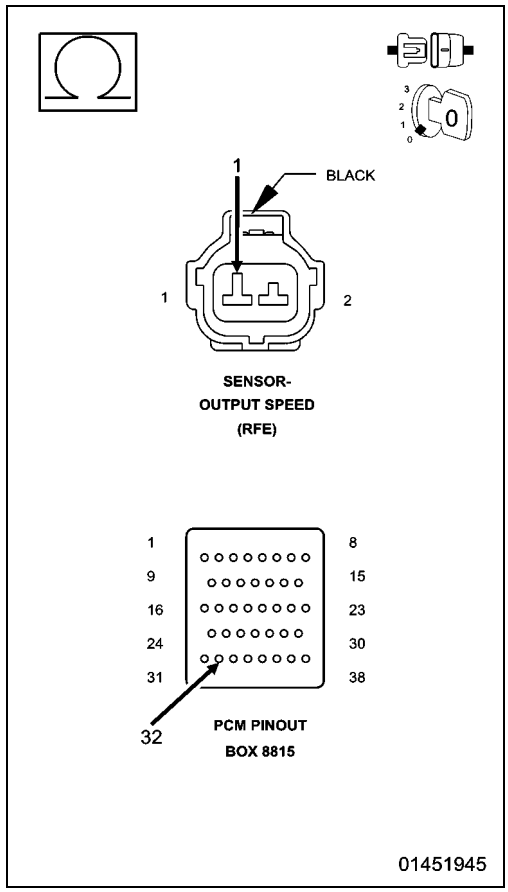

4. CHECK THE (T13) SPEED SENSOR GROUND CIRCUIT FOR AN OPEN

1. Measure the resistance of the (T13) Speed Sensor Ground circuit from the Output Speed Sensor harness connector to the appropriate terminal in the PCM Pinout Box 8815A.

Is the resistance above 5.0 Ohms?

Yes

- Repair the (T13) Speed Sensor Ground circuit for an open.
- Perform the 545RFE TRANSMISSION VERIFICATION TEST. (Refer to 28 - DTC-Based Diagnostics/MODULE, Powertrain Control (PCM) - Standard Procedure).

No

- Go To 5

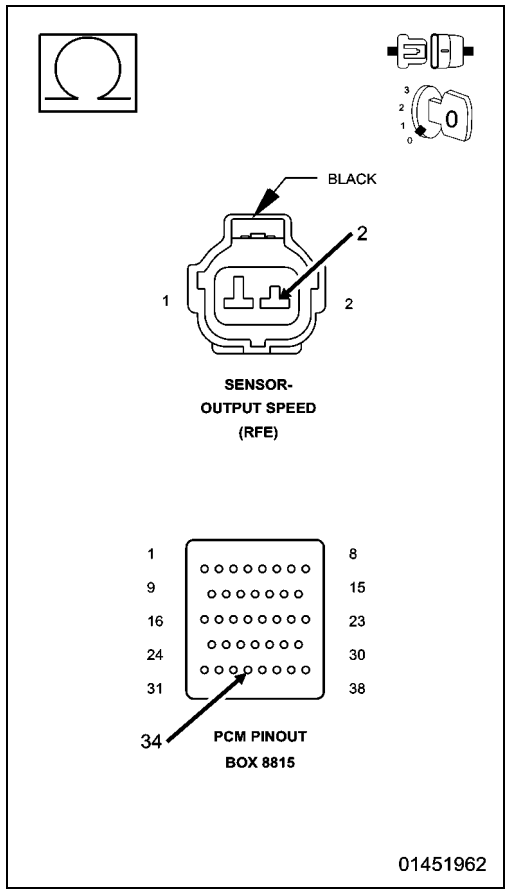

5. CHECK THE (T14) OUTPUT SPEED SENSOR SIGNAL CIRCUIT FOR A SHORT TO GROUND

1. Measure the resistance between ground and the (T14) Output Speed Sensor Signal circuit.

Is the resistance below 5.0 Ohms?

Yes

- Repair the (T14) Output Speed Sensor Signal circuit for a short to ground.
- Perform the 545RFE TRANSMISSION VERIFICATION TEST. (Refer to 28 - DTC-Based Diagnostics/MODULE, Powertrain Control (PCM) - Standard Procedure).

No

- Go To 6

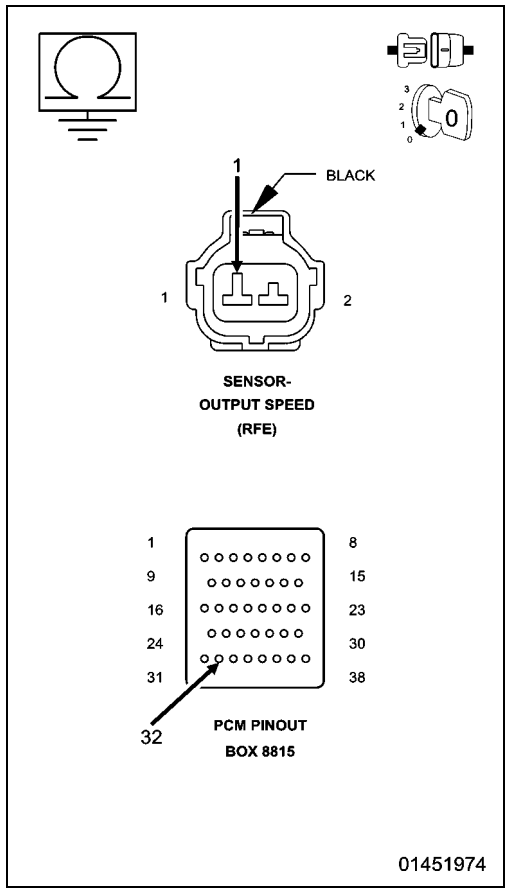

6. CHECK THE (T13) SPEED SENSOR GROUND CIRCUIT FOR A SHORT TO GROUND

1. Measure the resistance between ground and the (T13) Speed Sensor Ground circuit.

Is the resistance below 5.0 Ohms?

Yes

- Repair the (T13) Speed Sensor Ground circuit for a short to ground.
- Perform the 545RFE TRANSMISSION VERIFICATION TEST. (Refer to 28 - DTC-Based Diagnostics/MODULE, Powertrain Control (PCM) - Standard Procedure).

No

- Go To 7

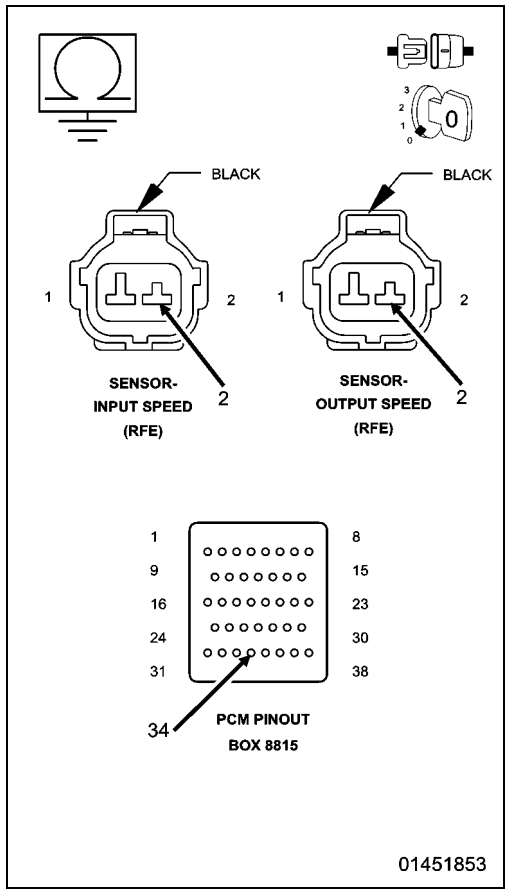

7. CHECK THE (T14) OUTPUT SPEED SENSOR SIGNAL CIRCUIT SHORT TO VOLTAGE

1. Ignition on, engine not running.
2. With the scan tool in TIPM, actuate the TCM output.
3. Measure the voltage of the (T14) Output Speed Sensor Signal circuit.

Is the voltage above 0.5 of a volt?

Yes

- Repair the (T14) Output Speed Sensor Signal circuit for a short to voltage.
- Perform the 545RFE TRANSMISSION VERIFICATION TEST. (Refer to 28 - DTC-Based Diagnostics/MODULE, Powertrain Control (PCM) - Standard Procedure).

No

- Go To 8

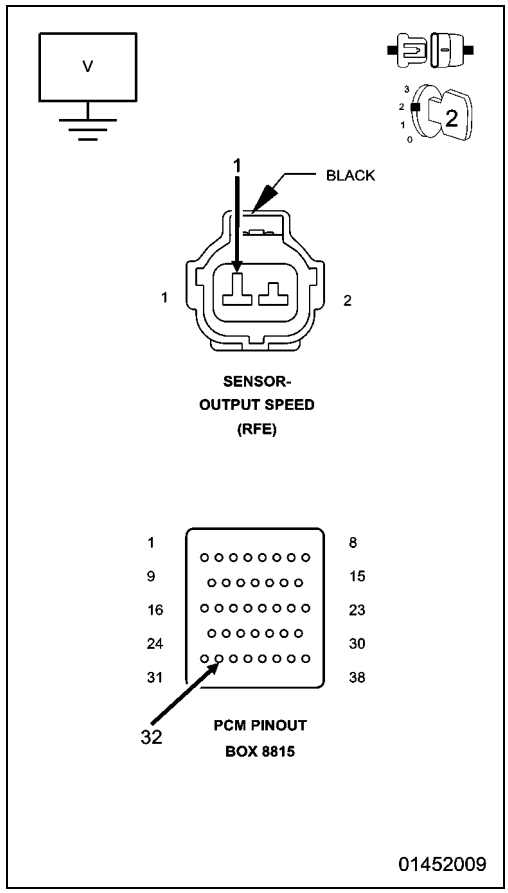

8. CHECK THE (T13) SPEED SENSOR GROUND CIRCUIT FOR A SHORT TO VOLTAGE

1. With the scan tool in TIPM, actuate the TCM output.
2. Measure the voltage of the (T13) Speed Sensor Ground circuit.

Is the voltage above 0.5 of a volt?

Yes

- Repair the (T13) Speed Sensor Ground circuit for a short to voltage.
- Perform the 545RFE TRANSMISSION VERIFICATION TEST. (Refer to 28 - DTC-Based Diagnostics/MODULE, Powertrain Control (PCM) - Standard Procedure).

No

- Using the schematics as a guide, check the Powertrain Control Module (PCM) terminals for corrosion, damage, or terminal push out. Pay particular attention to all power and ground circuits. If no problems are found, replace and program the PCM in accordance with the Service Information. With the scan tool, perform Quick Learn.
- Perform the 545RFE TRANSMISSION VERIFICATION TEST. (Refer to 28 - DTC-Based Diagnostics/MODULE, Powertrain Control (PCM) - Standard Procedure).

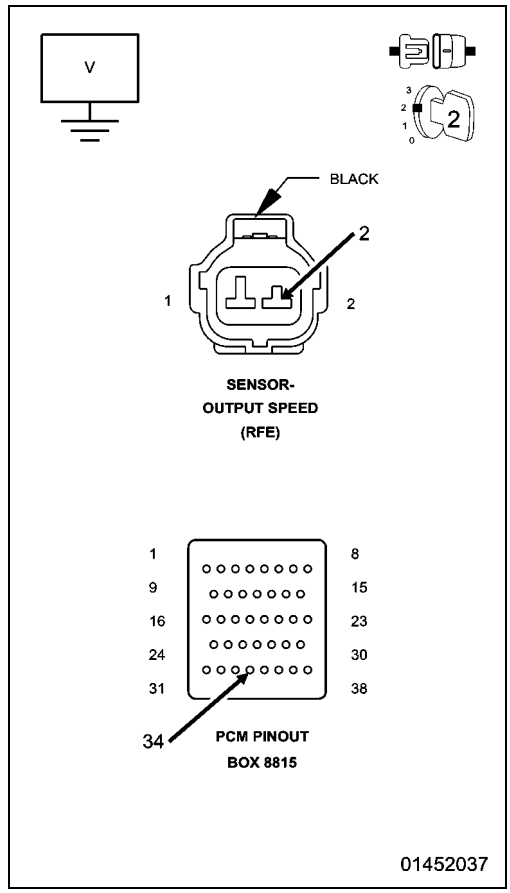

9. CHECK THE WIRING AND CONNECTORS

1. The conditions necessary to set this DTC are not present at this time.
2. Using the schematics as a guide, inspect the wiring and connectors specific to this circuit.
3. Wiggle the wires while checking for shorted and open circuits.
4. With the scan tool, check the Event Data to help identify the conditions in which the DTC was set.

Were there any problems found?

Yes

- Repair as necessary.
- Perform the 545RFE TRANSMISSION VERIFICATION TEST. (Refer to 28 - DTC-Based Diagnostics/MODULE, Powertrain Control (PCM) - Standard Procedure).

No

- Test Complete.

■ P0726-ENGINE SPEED INPUT CIRCUIT RANGE/PERFORMANCE

For a complete wiring diagram, **refer to the Wiring Information**.

Theory of Operation

The Transmission Control System calculates the engine rpm by directly reading the engine crank position sensor. It compares the calculated value to the engine speed sensor signal transmitted from the Engine Control System over the controllers internal BUS. The calculated engine rpm is also compared to a minimum and a maximum value. **Note: Due to the integration of the Powertrain Control Module (PCM) and Transmission Control Module (TCM), BUS communication between the modules is internal and unserviceable.**

- **When Monitored:**
  Continuously every 7 msec with the ignition on and engine running.
- **Set Condition:**
  This DTC will set when the calculated engine speed is less than 390 rpm with the engine running, or greater than 8000 rpm, for the period of 2.0 seconds. The PCM will place the Transmission in Limp-in when this DTC is set. **Note: This is not a Transmission Input Speed Sensor DTC.**

Possible Causes
RELATED ENGINE DTCS PRESENT
CRANK POSITION SENSOR OR WIRING
POWERTRAIN CONTROL MODULE (PCM)

Always perform the Pre-Diagnostic Troubleshooting Procedure before proceeding. (Refer to 28 - DTC-Based Diagnostics/MODULE, Powertrain Control (PCM) - Standard Procedure).

1. CHECK FOR RELATED ENGINE DTCS

NOTE: This is not a Transmission Input Speed Sensor DTC.

1. Ignition on, engine not running.
2. With the scan tool, read all Engine DTCs. This includes any active or stored or one trip DTCs.

Are there any engine rpm related DTCs present?

Yes

- (Refer to 28 - DTC-Based Diagnostics/MODULE, Powertrain Control (PCM) - Diagnosis and Testing) and perform the appropriate diagnostic procedure.

No

- Go To 2

2. CHECK IF DTC IS CURRENT

1. Ignition on, engine not running.
2. With a scan tool, read and record all Event Data.
3. With the scan tool, erase all active and stored transmission DTCs.

NOTE: It may be necessary to perform a battery disconnect with the scan tool to clear Event Data.

4. Using the Event Data, duplicate the conditions in which the original DTC set.
5. With the scan tool, read transmission and engine DTCs.

NOTE: Refer to all engine DTCs first in the following question.

Pick the answer below that best describes your findings, (this includes one trip failures).

Transmission DTC P0726 set

- Using the schematics as a guide, check the Powertrain Control Module (PCM) terminals for corrosion, damage, or terminal push out. Also check the Crank Position sensor and wiring. Pay particular attention to all power and ground circuits. If no problems are found, replace and program the PCM in accordance with the Service Information. With the scan tool, perform Quick Learn. (Refer to 08 - Electrical/8E - Electronic Control Modules/MODULE, Powertrain Control - Removal).
- Perform the 545RFE TRANSMISSION VERIFICATION TEST. (Refer to 28 - DTC-Based Diagnostics/MODULE, Powertrain Control (PCM) - Standard Procedure).

Engine DTC set

- (Refer to 28 - DTC-Based Diagnostics/MODULE, Powertrain Control (PCM) - Diagnosis and Testing) and perform the appropriate diagnostic procedure.
- Perform the 545RFE TRANSMISSION VERIFICATION TEST. (Refer to 28 - DTC-Based Diagnostics/MODULE, Powertrain Control (PCM) - Standard Procedure).

No DTC set at all

- Go To 3

3. CHECK WIRING AND CONNECTORS

1. The conditions necessary to set this DTC are not present at this time.
2. Using the schematics as a guide, inspect the wiring and connectors specific to this circuit.
3. Wiggle the wires while checking for shorted and open circuits.
4. With the scan tool, check the Event Data to help identify the conditions in which the DTC was set.

Were there any problems found?

Yes

- Repair as necessary.
- Perform the 545RFE TRANSMISSION VERIFICATION TEST. (Refer to 28 - DTC-Based Diagnostics/MODULE, Powertrain Control (PCM) - Standard Procedure).

No

- Test Complete.

■ P0731-GEAR RATIO ERROR IN 1ST

For a complete wiring diagram, **refer to the Wiring Information**.

Theory of Operation

The transmission system uses two speed sensors, one to measure input rpm and one to measure output rpm. These inputs are essential for proper transmission operation. Therefore, the integrity of this data is verified through the following checks:

NOTE: Various Gear Ratio Error DTCs will set only if the transmission slips after first achieving the correct ratio. Therefore, a transmission with no drive (or reverse) may not set any Gear Ratio Error DTC because it never achieves a correct gear ratio.

1) Once in a particular gear, if the gear ratio varies from the correct gear ratio, the corresponding in-gear trouble code is set (DTCs P0731-36 and P1736).

2) An excessive change in input or output speeds indicating signal intermittent which will result in the DTCs P0716 and/or P0721 being set.

3) If the common speed sensor ground circuit is lost, both sensor inputs will read the pulses from the input speed sensor when at a stop in neutral. Since the input speed sensor reads 60 teeth from the input clutch hub and the output speed sensor reads 30 teeth from the park gear, the result is an apparent speed ratio of 1:2 and may cause the DTC P1794 to set.

- **When Monitored:**
  Continuously with the ignition on, engine running, and after the transmission has achieved the proper gear ratio.
- **Set Condition:**
  If the ratio of the Input rpm to the Output rpm does not match the current gear ratio. This DTC can take up to five minutes of problem identification before illuminating the MIL

Possible Causes
CUT UD PISTON SEAL
LOW FLUID LEVEL
CRACKED OR MIS-INSTALLED PRIMARY OIL FILTER OR SEAL
STUCK OR STICKING MAIN REGULATOR VALVE
FAILED OVERRUNNING CLUTCH
CUT UD ACCUMULATOR SEAL RING
BROKEN UD ACCUMULATOR PISTON
BROKEN REACTION SHAFT SUPPORT SEAL RING
LOW LINE PRESSURE
BROKEN / MISSING MAIN VALVE BODY BLEED ORIFICE
BROKEN / MISSING DRIBBLER ORIFICE ASSEMBLY IN REACTION SHAFT SUPPORT
POOR MACHINING ON PUMP VALVE BODY FACE
INPUT OR OUTPUT SPEED SENSOR AND RELATED WIRING
TRANSMISSION SOLENOID/TRS ASSEMBLY
POWERTRAIN CONTROL MODULE (PCM)

Always perform the Pre-Diagnostic Troubleshooting procedure before proceeding. (Refer to 28 - DTC-Based Diagnostics/MODULE, Powertrain Control (PCM) - Standard Procedure).

1. CHECK FOR RELATED DTCS

1. With the scan tool, check for other transmission DTCs.
2. If any of these DTCs are present, perform their respective tests first.

Are there any Transmission solenoid, line pressure, speed sensor, and/or loss of prime DTCs present?

Yes

- Perform the appropriate diagnostic procedure. If any of these DTCs are present, they may cause a Gear Ratio Error. Perform the test for P0944 first if it is present.

No

- Go To 2

2. CHECK IF DTC P0731 IS CURRENT

1. With the scan tool, perform the 1st Gear Clutch Test. Follow the instructions on the scan tool.
2. Increase the throttle angle or TPS Degree to 30° for no more than a few seconds.

CAUTION: Do not overheat the transmission.

Did the Clutch Test pass, Input Speed remain at zero?

Yes

- Go To 3

No

- Go To 4

3. CHECK FOR INTERMITTENT OPERATION

1. The conditions to set this DTC are not currently present.
2. With the scan tool, check the Event Data to help identify the conditions in which the DTC was set.
   - If the Event Data shows fault P0731 was set in Park, Reverse, or Neutral, replace the Powertrain Control Module.
   - If the Event Data shows fault P0731 set with input rpm = zero, check the input speed sensor and related wiring.
   - If the Event Data shows fault P0731 set with line pressure significantly below desired line pressure, check for the cause of low line pressure (i.e., oil level, mis-installed or damaged primary filter or filter seal, sticking main regulator valve in pump, etc.).
   - If the Event Data shows fault P0731 set with the UD pressure switch open (but line pressure matches Desired Line Pressure), air check the UD hydraulic clutch circuit for leakage in accordance with the Service Information. If the UD hydraulic clutch circuit is OK, replace the solenoid/TRS assembly.
3. Check the gearshift linkage adjustment.
4. Intermittent Gear Ratio DTCs can be set by problems in the Input and Output Speed Sensor circuits and/or Speed Sensor Ground circuit.
5. Remove the Ignition Switch Feed fuse from the TIPM.

CAUTION: Removal of the Ignition Switch Feed fuse from the TIPM will prevent the vehicle from being started in gear.

WARNING: The Ignition Switch Feed fuse must be removed from the TIPM. Failure to do so can result in possible serious or fatal injury.

6. Install the Transmission Simulator 8333A.
7. Wiggle wiring and connectors while checking for intermittent operation with the Transmission Simulator.
8. Gear ratio DTCs can also be set under extreme temperature conditions.
9. Verify if the problem is only experienced under extreme hot or cold conditions.

Were there any problems found.

Yes

- Repair as necessary.
- Perform the 545RFE TRANSMISSION VERIFICATION TEST. (Refer to 28 - DTC-Based Diagnostics/MODULE, Powertrain Control (PCM) - Standard Procedure).

No

- Test Complete.

4. CHECK INTERNAL TRANSMISSION

1. Repair internal transmission as necessary. Refer to the Service Information.
2. If there were any line pressure DTCs present along with this DTC, make sure to inspect the: Primary oil filter and seal, Transmission Oil Pump, and the Main regulator valve in accordance with the Service Information.
3. If DTCs P0876 and/or P0875 were present in addition to the P0731, replace the Transmission Solenoid/TRS Assembly in addition to necessary internal repairs.
4. Pay particular attention to the following list of possible causes when repairing the transmission:
   - Cut UD piston seal
   - Failed overrunning clutch
   - Cut UD accumulator seal ring
   - Burned UD clutch
   - Broken UD accumulator piston
   - Low line pressure
   - Broken/missing main valve body bleed orifice
   - Broken/missing dribbler orifice assembly in reaction shaft support
   - Poor machining on pump valve body face
   - Transmission Solenoid/TRS Assembly

Repair

•

NOTE: If the UD clutch has failed but no obvious cause is found (such as a cut piston seal, broken seal ring, stuck regulator valve, low line pressure in Event Data, etc.) replace the Transmission Solenoid/TRS Assembly in addition to any necessary internal repairs.

Repair internal transmission in accordance with the Service Information.

- Perform the 545RFE TRANSMISSION VERIFICATION TEST. (Refer to 28 - DTC-Based Diagnostics/MODULE, Powertrain Control (PCM) - Standard Procedure).

■ P0732-GEAR RATIO ERROR IN 2ND

For a complete wiring diagram, **refer to the Wiring Information**.

Theory of Operation

The transmission system uses two speed sensors, one to measure input rpm and one to measure output rpm. These inputs are essential for proper transmission operation. Therefore, the integrity of this data is verified through the following checks:

1) Once in a particular gear, if the gear ratio varies from the correct gear ratio, the corresponding in-gear trouble code is set (DTCs P0731-36 and P1736).

2) An excessive change in input or output speeds indicating signal intermittent may result in the DTCs P0716 and/or P0721 being set.

3) If the common speed sensor ground circuit is lost, both sensor inputs will read the pulses from the input speed sensor when at a stop in neutral. Since the input speed sensor reads 60 teeth from the input clutch hub and the output speed sensor reads 30 teeth from the park gear, the result is an apparent speed ratio of 1:2 and may cause the DTC P1794 to set.

- **When Monitored:**
  Continuously with the ignition on, engine running, and after the transmission has achieved the proper gear ratio.
- **Set Condition:**
  If the ratio of the Input rpm to the Output rpm does not match the current gear ratio. This DTC can take up to five minutes of problem identification before illuminating the MIL

Possible Causes
RELATED DTCS PRESENT
INPUT OR OUTPUT SPEED SENSOR OR WIRING
LOW FLUID LEVEL
CRACKED OR MIS-INSTALLED PRIMARY OIL FILTER OR SEAL
WORN SOLENOID SWITCH VALVE OR PLUGS
STUCK OR STICKING MAIN REGULATOR VALVE
BURNED UD OR 2C CLUTCH
CUT 2C OR UD PISTON SEAL
BROKEN 2C PISTON CASTING
BROKEN OR MISSING 2C BLEED ORIFICE
BROKEN OR MISSING UD BLEED ORIFICE
CUT 2C OR UD ACCUMULATOR PISTON SEAL
CRACKED 2C OR UD ACCUMULATOR PISTON
CUT OR MISSING #5 OR #7 CHECK BALL
TRANSMISSION SOLENOID/TRS ASSEMBLY
BROKEN WELD - REACTION CARRIER TO REVERSE SUN GEAR
MISSING TEETH ON INPUT CLUTCH HUB TONE WHEEL

Always perform the Pre-Diagnostic Troubleshooting procedure before proceeding. (Refer to 28 - DTC-Based Diagnostics/MODULE, Powertrain Control (PCM) - Standard Procedure).

1. CHECK FOR RELATED DTCS

1. Using the scan tool, read DTCs.

Are there any Transmission solenoid, line pressure, speed sensor, and/or loss of prime DTCs present?

Yes

- Perform the appropriate diagnostic procedure. Perform the test for P0944-LOSS OF PRIME first if it is present.

No

- Go To 2

2. CHECK IF DTC IS CURRENT

1. Using the scan tool, read and record the Event Data.

NOTE: Make sure to record all Event Data stored in the scan tool for future reference in this test procedure.

Does the Event Data display information for the DTC P0732?

Yes

- Go To 4

No

- Go To 3

3. CHECK EVENT DATA

1. In the Event Data, identify the DTC that was recorded earlier.

Does the Event Data display information for the DTC P1790, with target gear = 2nd, or with both 2C and UD clutches applying?

Yes

- Go To 4

No

- Go To 7

4. CHECK RPM IN THE EVENT DATA

1. Refer to the Event Data recorded earlier.

Does the Input rpm read zero?

Yes

- Check the input speed sensor and wiring. Refer to test P0716 and diagnose as if the DTC is current.

No

- Go To 5

5. CHECK LINE PRESSURE READING

1. Refer to the Event Data recorded earlier.

Is the line pressure reading more than 10 psi below the desired line pressure?

Yes

- Go To 6

No

- Go To 7

6. CHECK TRANSMISSION OIL FILTER

1. Turn the ignition off to the lock position.
2. Remove and inspect the Transmission Oil Pan for excessive debris in accordance with the Service Information.
3. Remove and inspect the Primary Oil Filter in accordance with the Service Information.

NOTE: Make sure the Primary Transmission Oil Filter and seal are properly installed and are not cracked or split.

Does the Oil Pan contain excessive debris and/or is the Primary Oil Filter cracked, plugged or mis-installed?

Yes

- Repair the plugged, cracked, or split Primary Transmission Oil Filter and/or seal. If excessive clutch debris is present, check the clutches for damage. Refer to the Service Information for the proper hydraulic clutch repair procedure.
- Perform the 545RFE TRANSMISSION VERIFICATION TEST. (Refer to 28 - DTC-Based Diagnostics/MODULE, Powertrain Control (PCM) - Standard Procedure).

No

- Remove the Transmission Oil Pump in accordance with the Service Information. Check the main Regulator Valve for sticking in its bore, scoring, and/or damage and clean and repair as necessary. If no problem is found, replace the Transmission Solenoid/TRS Assembly.
- Perform the 545RFE TRANSMISSION VERIFICATION TEST. (Refer to 28 - DTC-Based Diagnostics/MODULE, Powertrain Control (PCM) - Standard Procedure).

7. CHECK IF THE DTC P0732 IS CURRENT

1. With the scan tool, perform the 2nd Gear Clutch Test. Follow the instructions on the scan tool.
2. Increase the throttle angle, TPS Degree, to 30° for no more than a few seconds.

CAUTION: Do not overheat the transmission.

NOTE: If the 2C clutch is faulty, the overrunning clutch will hold and the slip test will pass. The 2nd gear clutch test will not detect a faulty 2C clutch. However, it will detect a faulty UD clutch.

Did the clutch test pass, did the Input Speed remain at zero?

Yes

- Go To 8

No

- Go To 10

8. CHECK FOR INTERMITTENT OPERATION

1. Check the Shifter adjustment in accordance with the Service Information.
2. Intermittent gear ratio DTCs can be set by problems in the Input and Output Speed Sensor circuits and/or Speed Sensor Ground circuit.
3. Check the Speed Sensor wiring and connectors for good connection, then perform a wiggle test using the Transmission Simulator 8333A.

Were there any problems found?

Yes

- Repair as necessary.
- Perform the 545RFE TRANSMISSION VERIFICATION TEST. (Refer to 28 - DTC-Based Diagnostics/MODULE, Powertrain Control (PCM) - Standard Procedure).

No

- Go To 9

9. CHECK FOR SLIPPAGE

1. Using the scan tool, erase Transmission DTCs.
2. Road test the vehicle.

Is there an obvious slippage noticed in 2nd gear, or runaway on the 1-2 shift?

Yes

- Go To 12

No

- Go To 15

10. CHECK THE UD HYDRAULIC CLUTCH CIRCUIT

1. Remove Transmission Oil Pan and check for excessive debris.
2. Remove the Valve Body and air check the UD hydraulic clutch circuit (in the case) in accordance with the Service Information.

NOTE: The UD clutch passage contains a small bleed orifice, a small amount of air leakage is normal.

Were there any problems found, excessive debris and/or excessive air leakage in the UD clutch hydraulic circuit?

Yes

- Repair as necessary. Check the UD clutch piston seals, reaction shaft support seal rings and the dribbler assembly, and the flatness of the pump valve body and pump housing faces. Check main regulator valve for sticking in the bore.

NOTE: If the UD clutch has failed but no obvious cause is found (such as a cut piston seal, broken seal ring, stuck regulator valve or any other items listed above) replace the Transmission Solenoid/TRS Assembly in addition to any necessary internal repairs.

- Perform the 545RFE TRANSMISSION VERIFICATION TEST. (Refer to 28 - DTC-Based Diagnostics/MODULE, Powertrain Control (PCM) - Standard Procedure).

No

- Go To 11

11. CHECK THE UD ACCUMULATOR PISTON

1. Check the UD bleed orifice, accumulator piston, and accumulator piston seal in the main valve body.

Were there any problems found?

Yes

- Repair as necessary. Refer to the Service Information for proper repair procedures.
- Perform the 545RFE TRANSMISSION VERIFICATION TEST. (Refer to 28 - DTC-Based Diagnostics/MODULE, Powertrain Control (PCM) - Standard Procedure).

No

- Replace Transmission Solenoid/TRS Assembly in accordance with the Service Information. (Refer to 21 - Transmission and Transfer Case/Automatic - 545RFE/ASSEMBLY, Transmission Solenoid and TRS - Removal).
- Perform the 545RFE TRANSMISSION VERIFICATION TEST. (Refer to 28 - DTC-Based Diagnostics/MODULE, Powertrain Control (PCM) - Standard Procedure).

12. CHECK FOR EXCESSIVE DEBRIS

1. Remove the Transmission Oil Pan and check for excessive debris.
2. If grey sludge is present, check for a improperly assembled 2C clutch with the thick reaction plate not against the case.
3. Remove the valve body and air check the 2C hydraulic clutch circuit (in the 2C/4C clutch retainer) in accordance with the Service Information.

NOTE: The 2C clutch passage contains a small bleed orifice, a small amount of air leakage is normal.

Were there any problems found, excessive debris, improperly assembled 2C clutch and/or excessive air leakage in the 2C hydraulic clutch circuit?

Yes

- Repair as necessary. Refer to the Service Information for proper repair procedures. Note: Check the 2C piston seals and bleed orifice.

NOTE: If the 2C clutch has failed but no obvious cause is found (such as a cut piston seal, stuck regulator valve or any other items listed above) replace the Transmission Solenoid/TRS Assembly in addition to any necessary internal repairs.

- Perform the 545RFE TRANSMISSION VERIFICATION TEST. (Refer to 28 - DTC-Based Diagnostics/MODULE, Powertrain Control (PCM) - Standard Procedure).

No

- Go To 13

13. CHECK THE 2C ACCUMULATOR

1. Check the 2C Accumulator piston for cracks or a cut seal.
2. Check for a cut or missing #7 or #5 check ball.
3. Check the Solenoid Switch Valve and its plugs for sticking in its bore or excessive wear.

Were there any problems found

Yes

- Repair as necessary. Refer to the Service Information for proper repair procedures.
- Perform the 545RFE TRANSMISSION VERIFICATION TEST. (Refer to 28 - DTC-Based Diagnostics/MODULE, Powertrain Control (PCM) - Standard Procedure).

No

- Go To 14

14. CHECK FOR BROKEN REVERSE SUN GEAR WELD

1. Working through the windows in the bottom of the case, check for a broken Reverse Sun gear weld to the reaction carrier as follows:
   - Hold the Transmission Output Shaft by holding the Transmission Manual Lever in the park position.
   - Rotate the Input Annulus gear and drive shell (the drum that encloses the two rearmost carriers).
   - Check to see if the reaction carrier (the front-most carrier, whose outer shell is splined to the 2C clutch) is rotating faster than the drive shell is being turned.

Is the reaction carrier turning faster than the drive shell?

Yes

- Replace Transmission Solenoid/TRS Assembly in accordance with the Service Information. (Refer to 21 - Transmission and Transfer Case/Automatic - 545RFE/ASSEMBLY, Transmission Solenoid and TRS - Removal)
- Perform the 545RFE TRANSMISSION VERIFICATION TEST. (Refer to 28 - DTC-Based Diagnostics/MODULE, Powertrain Control (PCM) - Standard Procedure).

No

- Replace the reaction carrier in accordance with the Service Information.
- Perform the 545RFE TRANSMISSION VERIFICATION TEST. (Refer to 28 - DTC-Based Diagnostics/MODULE, Powertrain Control (PCM) - Standard Procedure).

15. CHECK IF DTC RESETS

Did the DTC P0732 reset during the road test?

Yes

- Go To 16

No

- Go To 17

16. LIST OF POSSIBLE CAUSES

1. If any other DTCs set during the road test, refer to the appropriate symptom in the Transmission category.
2. If no other DTCs set during the road test, below is a list of possible causes, but not strictly limited to those:
   - Check for excessive debris in the Transmission Oil pan, plugged, cracked, or misinstalled Primary Transmission Oil Filter and/or seal.
   - Check for cut and/or missing #7 and #5 check balls in the main valve body.
   - Check the 2C and UD accumulator pistons and seals, UD bleed orifice, and the Solenoid Switch Valve and Plugs in the main valve body.
   - Check the UD clutch piston seals, reaction shaft support seal rings and dribbler assembly.
   - Check the 2C clutch piston seals, and bleed orifice.
   - Check the main regulator valve for sticking in its bore and the flatness of the pump valve body and pump housing faces.
   - Check for a improperly assembled 2C clutch with the thick reaction plate not against the case.

Repair

- Repair as necessary. Refer to the Service Information for proper repair procedures.

NOTE: If the UD or 2C clutch has failed but no obvious cause is found (such as a cut piston seal, broken seal ring, stuck regulator valve or any other items listed above) replace the Transmission Solenoid/TRS Assembly in addition to any necessary internal repairs.

- Perform the 545RFE TRANSMISSION VERIFICATION TEST. (Refer to 28 - DTC-Based Diagnostics/MODULE, Powertrain Control (PCM) - Standard Procedure).

17. INTERMITTENT DTC

1. The conditions to set this DTC are not currently present.
2. Using the scan tool, check the Event Data to help identify the conditions in which the DTC was set.
   - If the Event Data shows fault P0732 was set in Park, Reverse, or Neutral, replace the Powertrain Control Module.
   - If the Event Data shows fault P0732 set with input rpm = zero, check the input speed sensor and related wiring.
   - If the Event Data shows fault P0732 set with line pressure significantly below desired line pressure, check for the cause of low line pressure (i.e., oil level, misinstalled or damaged primary filter or filter seal, sticking main regulator valve in pump, etc.).
   - If the Event Data shows fault P0732 set with the UD or 2C pressure switch open (but line pressure matches Desired Line Pressure), air check the UD and 2C hydraulic clutch circuits for leakage in accordance with the Service Information. If the UD and 2C hydraulic clutch circuits are OK, replace the Transmission Solenoid/TRS assembly.
3. Check the gearshift linkage adjustment.
4. Intermittent Gear Ratio DTCs can be set by problems in the Input and Output Speed Sensor circuits and/or Speed Sensor Ground circuit.
5. Remove the Ignition Switch Feed fuse from the TIPM.

CAUTION: Removal of the Ignition Switch Feed fuse from the TIPM will prevent the vehicle from being started in gear.

WARNING: The Ignition Switch Feed fuse must be removed from the TIPM. Failure to do so can result in possible serious or fatal injury.

6. Install the Transmission Simulator 8333A.
7. Wiggle wiring and connectors while checking for intermittent operation with the Transmission Simulator.
8. Gear ratio DTCs can also be set under extreme temperature conditions.
9. Verify if the problem is only experienced under extreme hot or cold conditions.

Were there any problems found.

Yes

- Repair as necessary.
- Perform the 545RFE TRANSMISSION VERIFICATION TEST. (Refer to 28 - DTC-Based Diagnostics/MODULE, Powertrain Control (PCM) - Standard Procedure).

No

- Test Complete.

■ P0733-GEAR RATIO ERROR IN 3RD

For a complete wiring diagram, **refer to the Wiring Information**.

Theory of Operation

The transmission system uses two speed sensors, one to measure input rpm and one to measure output rpm. These inputs are essential for proper transmission operation. Therefore, the integrity of this data is verified through the following checks:

1) Once in a particular gear, if the gear ratio varies from the correct gear ratio, the corresponding in-gear trouble code is set (DTCs P0731-36 and P1736).

2) An excessive change in input or output speeds indicating signal intermittent will result in the DTCs P0716 and/or P0721 being set.

3) If the common speed sensor ground circuit is lost, both sensor inputs will read the pulses from the input speed sensor when at a stop in neutral. Since the input speed sensor reads 60 teeth from the input clutch hub and the output speed sensor reads 30 teeth from the park gear, the result is an apparent speed ratio of 1:2 and may cause the DTC P1794 to set.

- **When Monitored:**
  Continuously with the ignition on, engine running, and after the transmission has achieved the proper gear ratio.
- **Set Condition:**
  If the ratio of the Input rpm to the Output rpm does not match the current gear ratio. This DTC can take up to five minutes of problem identification before illuminating the MIL

Possible Causes
RELATED DTCS PRESENT
INPUT OR OUTPUT SPEED SENSOR ERRORS
INPUT SPEED SENSOR OR WIRING
LOW FLUID LEVEL
CRACKED OR MIS-INSTALLED PRIMARY OIL FILTER OR SEAL
BENT OR BROKEN ACCUMULATOR COVER ON MAIN VALVE BODY
WORN SOLENOID SWITCH VALVE OR PLUGS
STUCK OR STICKING MAIN REGULATOR VALVE
BURNED UD OR OD CLUTCH
CUT OD OR UD PISTON SEAL
BROKEN OR MISSING UD OR OD BLEED ORIFICE IN MAIN VALVE BODY
BROKEN OR MISSING BLEED ORIFICE IN UD OR OD CLUTCH PISTON
CUT OD OR UD ACCUMULATOR PISTON SEAL
CRACKED OD OR UD ACCUMULATOR PISTON
CUT OR MISSING NO. 6 CHECK BALL
TRANSMISSION SOLENOID/TRS ASSEMBLY
BROKEN WELD - REVERSE CARRIER HUB TO CARRIER
BROKEN REACTION SHAFT SUPPORT SEAL RING
POOR MACHINING ON PUMP VALVE BODY FACE

Always perform the Pre-Diagnostic Troubleshooting Procedure before proceeding. (Refer to 28 - DTC-Based Diagnostics/MODULE, Powertrain Control (PCM) - Standard Procedure).

1. CHECK IF RELATED DTCS ARE PRESENT

1. Using the scan tool, read DTCs

Are there any Transmission solenoid, line pressure, speed sensor, and/or loss of prime DTCs present?

Yes

- Refer to appropriate symptom in the Transmission category. Perform the test for P0944-LOSS OF PRIME first if it is present.

No

- Go To 2

2. CHECK EVENT DATA

1. Using the scan tool, read and record the Event Data.

NOTE: Make sure to record all Event Data stored in the scan tool for future reference in this test procedure.

Does the Event Data display information for the DTC P0733?

Yes

- Go To 4

No

- Go To 3

3. CHECK THE TARGET GEAR IN THE EVENT DATA

1. In the Event Data, identify the DTC that was recorded earlier.

Does the Event Data display information for the DTC P1790, with target gear = 3rd, or with both OD and UD clutches applying?

Yes

- Go To 4

No

- Go To 7

4. CHECK THE INPUT RPM IN THE EVENT DATA

1. Refer to the Event Data recorded earlier.

Does the Input rpm read zero?

Yes

- Check the input speed sensor and wiring. Refer to test P0716 and diagnose as if the DTC is current.

No

- Go To 5

5. CHECK LINE PRESSURE READING

1. Refer to the Event Data recorded earlier.

Is the line pressure reading more than 10 psi below the desired line pressure?

Yes

- Go To 6

No

- Go To 7

6. CHECK TRANSMISSION OIL FILTER

1. Turn the ignition off to the lock position.
2. Remove and inspect the Transmission Oil Pan for excessive debris in accordance with the Service Information.
3. Remove and inspect the Primary Oil Filter in accordance with the Service Information.

NOTE: Make sure the Primary Transmission Oil Filter and seal are properly installed and are not cracked or split.

Does the Oil Pan contain excessive debris and/or is the Primary Oil Filter cracked, plugged or mis-installed?

Yes

- Repair the plugged, cracked, or split Primary Transmission Oil Filter and/or seal. If excessive clutch debris is present, check the clutches for damage. Refer to the Service Information for the proper hydraulic clutch repair procedure.
- Perform the 545RFE TRANSMISSION VERIFICATION TEST. (Refer to 28 - DTC-Based Diagnostics/MODULE, Powertrain Control (PCM) - Standard Procedure).

No

- Remove the Transmission Oil Pump in accordance with the Service Information. Check the main Regulator Valve for sticking in its bore, scoring, and/or damage and clean and repair as necessary. If no problem is found, replace the Transmission Solenoid/TRS Assembly.
- Perform the 545RFE TRANSMISSION VERIFICATION TEST. (Refer to 28 - DTC-Based Diagnostics/MODULE, Powertrain Control (PCM) - Standard Procedure).

7. CHECK IF DTC P0733 IS CURRENT

1. With the scan tool, perform the 3rd Gear Clutch Test. Follow the instructions on the scan tool.
2. Increase the throttle angle, TPS Degree, to 30° for no more than a few seconds.

CAUTION: Do not overheat the transmission.

NOTE: If the OD clutch is faulty, the overrunning clutch will hold and the slip test will pass. The 3rd gear clutch test will not detect a faulty OD clutch. However, it will detect a faulty UD clutch.

Did the clutch test pass, did the Input Speed remain at zero?

Yes

- Go To 8

No

- Go To 10

8. CHECK FOR INTERMITTENT OPERATION

1. Check the Shifter adjustment in accordance with the Service Information.
2. Intermittent gear ratio DTCs can be set by problems in the Input and Output Speed Sensor circuits and/or Speed Sensor Ground circuit.
3. Remove the Ignition Switch Feed fuse from the TIPM.

CAUTION: Removal of the Ignition Switch Feed fuse from the TIPM will prevent the vehicle from being started in gear.

WARNING: The Ignition Switch Feed fuse must be removed from the TIPM. Failure to do so can result in possible serious or fatal injury.

4. Install the Transmission Simulator 8333A.
5. Check the Speed Sensor wiring and connectors for good connection, then perform a wiggle test using the Transmission Simulator 8333A.

Were there any problems found?

Yes

- Repair as necessary.
- Perform the 545RFE TRANSMISSION VERIFICATION TEST. (Refer to 28 - DTC-Based Diagnostics/MODULE, Powertrain Control (PCM) - Standard Procedure).

No

- Go To 9

9. CHECK FOR SLIPPAGE

1. Using the scan tool, erase Transmission DTCs.
2. Road test the vehicle. Check operation in 3rd gear, 4th gear, and Reverse.

Is there an obvious slippage noticed in 3rd gear, or runaway on the 2-3 shift?

Yes

- Go To 12

No

- Go To 16

10. CHECK THE UD HYDRAULIC CLUTCH CIRCUIT

1. Remove Transmission Oil Pan and check for excessive debris.
2. Remove the Valve Body and air check the UD hydraulic clutch circuit (in the case) in accordance with the Service Information.

NOTE: The UD clutch passage contains a small bleed orifice, a small amount of air leakage is normal.

Were there any problems found, excessive debris and/or excessive air leakage in the UD hydraulic clutch circuit?

Yes

- Repair as necessary. Check the UD clutch piston seals, reaction shaft support seal rings and dribbler assemblies, and the flatness of the pump valve body and pump housing faces. Check main regulator valve for sticking in the bore.

NOTE: If the UD clutch has failed but no obvious cause is found (such as a cut piston seal, broken seal ring, stuck regulator valve or any other items listed above) replace the Transmission Solenoid/TRS Assembly in addition to any necessary internal repairs.

- Perform the 545RFE TRANSMISSION VERIFICATION TEST. (Refer to 28 - DTC-Based Diagnostics/MODULE, Powertrain Control (PCM) - Standard Procedure).

No

- Go To 11

11. CHECK UD ACCUMULATOR PISTON

1. Check the UD bleed orifice, accumulator piston, and accumulator piston seal in the main valve body.

Were there any problems found?

Yes

- Repair as necessary. Refer to the Service Information for proper repair procedures.

No

- Replace Transmission Solenoid/TRS Assembly in accordance with the Service Information. (Refer to 21 - Transmission and Transfer Case/Automatic - 545RFE/ASSEMBLY, Transmission Solenoid and TRS - Removal)
- Perform the 545RFE TRANSMISSION VERIFICATION TEST. (Refer to 28 - DTC-Based Diagnostics/MODULE, Powertrain Control (PCM) - Standard Procedure).

12. CHECK FOR EXCESSIVE DEBRIS

1. Remove the Transmission Oil Pan and check for excessive debris.
2. Remove the valve body and check if the accumulator cover is intact.
3. Air check the OD hydraulic clutch circuit (in the case) in accordance with the Service Information.

NOTE: The OD clutch passage contains a small bleed orifice which connects to the Reverse clutch hydraulic circuit, a small amount of air leakage into the Reverse clutch passage is normal.

Were there any problems found, excessive debris, and/or excessive air leakage in the OD hydraulic clutch circuit?

Yes

- Repair as necessary. Refer to the Service Information for proper repair procedures. Note: Check the bleed orifice in the OD/Reverse clutch piston.

NOTE: If the OD clutch has failed but no obvious cause is found (such as a cut piston seal, broken seal ring, stuck regulator valve or any other items listed above) replace the Transmission Solenoid/TRS Assembly in addition to any necessary internal repairs.

- Perform the 545RFE TRANSMISSION VERIFICATION TEST. (Refer to 28 - DTC-Based Diagnostics/MODULE, Powertrain Control (PCM) - Standard Procedure).

No

- Go To 13

13. CHECK THE OD ACCUMULATOR

1. Check the OD Accumulator piston for cracks or a cut seal.
2. Check for a cut or missing No. 6 check ball.
3. Check the Solenoid Switch Valve and its plugs for sticking in its bore or excessive wear.

Were there any problems found?

Yes

- Repair as necessary. Refer to the Service Information for proper repair procedures.
- Perform the 545RFE TRANSMISSION VERIFICATION TEST. (Refer to 28 - DTC-Based Diagnostics/MODULE, Powertrain Control (PCM) - Standard Procedure).

No

- Go To 14

14. CHECK FOR NO REVERSE

During the road test on a previous test, did the vehicle have no reverse and no 3rd gear, but 1st and 2nd gears were OK?

Yes

- Go To 15

No

- Replace Transmission Solenoid/TRS Assembly in accordance with the Service Information. (Refer to 21 - Transmission and Transfer Case/Automatic - 545RFE/ASSEMBLY, Transmission Solenoid and TRS - Removal).
- Perform the 545RFE TRANSMISSION VERIFICATION TEST. (Refer to 28 - DTC-Based Diagnostics/MODULE, Powertrain Control (PCM) - Standard Procedure).

15. CHECK FOR BROKEN REVERSE CARRIER WELD

1. Remove the Transmission in accordance with the Service Information and inspect the weld on the reverse carrier hub.

Were there any problems found?

Yes

- Repair as necessary.

No

- Disassemble and inspect the input clutch assembly. Check the OD and Reverse clutch seals, discs, and bleed orifice (in the OD/Reverse clutch piston). Check the OD hub and shaft. Repair as necessary. Refer to the Service Information for proper repair procedures.
- Perform the 545RFE TRANSMISSION VERIFICATION TEST. (Refer to 28 - DTC-Based Diagnostics/MODULE, Powertrain Control (PCM) - Standard Procedure).

16. CHECK IF DTC RESETS

Did the DTC P0733 reset during the road test?

Yes

- Go To 17

No

- Go To 18

17. LIST OF POSSIBLE CAUSES

1. If any other DTCs set during the road test, refer to the appropriate symptom in the Transmission category.
2. If no other DTCs set during the road test, below is a list of possible causes, but not strictly limited to those.
3. Check for:
   - Excessive debris in the Transmission Oil pan, plugged, cracked, or mis-installed Primary Transmission Oil Filter and/or seal.
   - Cut or missing No. 6 check ball in the main valve body.
   - OD and UD accumulator pistons and seals and bleed orifices, and the Solenoid Switch Valve and Plugs in the main valve body.
   - OD and UD clutch piston seals, reaction shaft support seal rings and dribbler assemblies, and the flatness of the pump valve body and pump housing faces.
   - Main regulator valve for sticking in its bore.

Repair

- Repair as necessary. Refer to the Service Information for proper repair procedures.

NOTE: If the OD or UD clutch has failed but no obvious cause is found (such as a cut piston seal, broken seal ring, stuck regulator valve or any other items listed above) replace the Transmission Solenoid/TRS Assembly in addition to any necessary internal repairs.

- Perform the 545RFE TRANSMISSION VERIFICATION TEST. (Refer to 28 - DTC-Based Diagnostics/MODULE, Powertrain Control (PCM) - Standard Procedure).

18. CHECK FOR INTERMITTENT OPERATION

1. The conditions to set this DTC are not currently present.
2. Using the scan tool, check the Event Data to help identify the conditions in which the DTC was set.
   - If the Event Data shows fault P0733 was set in the Park, Reverse, or Neutral, replace the Powertrain Control Module.
   - If the Event Data shows fault P0733 set with input rpm = zero, check the input speed sensor and related wiring.
   - If the Event Data shows fault P0733 set with line pressure significantly below desired line pressure, check for the cause of low line pressure (i.e., oil level, misinstalled or damaged primary filter or filter seal, sticking main regulator valve in pump, etc.).
   - If the Event Data shows fault P0733 set with the OD or UD pressure switch open (but line pressure matches Desired Line Pressure), air check the OD and UD hydraulic clutch circuits for leakage in accordance with the Service Information. If the OD and UD hydraulic clutch circuits are OK, replace the Transmission Solenoid/TRS assembly.
3. Check the gearshift linkage adjustment.
4. Intermittent Gear Ratio DTCs can be set by problems in the Input and Output Speed Sensor circuits and/or Speed Sensor Ground circuit.
5. Remove the Ignition Switch Feed fuse from the TIPM.

CAUTION: Removal of the Ignition Switch Feed fuse from the TIPM will prevent the vehicle from being started in gear.

WARNING: The Ignition Switch Feed fuse must be removed from the TIPM. Failure to do so can result in possible serious or fatal injury.

6. Install the Transmission Simulator 8333A.
7. Wiggle wiring and connectors while checking for intermittent operation with the Transmission Simulator.
8. Gear ratio DTCs can also be set under extreme temperature conditions.
9. Verify if the problem is only experienced under extreme hot or cold conditions.

Were there any problems found.

Yes

- Repair as necessary.
- Perform the 545RFE TRANSMISSION VERIFICATION TEST. (Refer to 28 - DTC-Based Diagnostics/MODULE, Powertrain Control (PCM) - Standard Procedure).

No

- Test Complete.

■ P0734-GEAR RATIO ERROR IN 4TH

For a complete wiring diagram, **refer to the Wiring Information**.

Theory of Operation

The transmission system uses two speed sensors, one to measure input rpm and one to measure output rpm. These inputs are essential for proper transmission operation. Therefore, the integrity of this data is verified through the following checks:

1) Once in a particular gear, if the gear ratio varies from the correct gear ratio, the corresponding in-gear trouble code is set (DTCs P0731-36 and P01736).

2) An excessive change in input or output speeds indicating signal intermittent will result in the DTCs P0716 and/or P0721 being set.

3) If the common speed sensor ground circuit is lost, both sensor inputs will read the pulses from the input speed sensor when at a stop in neutral. Since the input speed sensor reads 60 teeth from the input clutch hub and the output speed sensor reads 30 teeth from the park gear, the result is an apparent speed ratio of 1:2 and may cause the DTC P1794 to set.

- **When Monitored:**
  Continuously with the ignition on, engine running, and after the transmission has achieved the proper gear ratio.
- **Set Condition:**
  If the ratio of the Input rpm to the Output rpm does not match the current gear ratio. This DTC can take up to five minutes of problem identification before illuminating the MIL.

Possible Causes
LOW FLUID LEVEL
INPUT SPEED SENSOR OR WIRING
VALVE BODY ACCUMULATOR COVER FAILED
CUT OD OR 4C ACCUMULATOR SEAL
CRACKED OD OR 4C ACCUMULATOR PISTON
BROKEN OR MISSING OD BLEED ORIFICE IN MAIN VALVE BODY
CUT 4C TOWER SEAL
TRANSMISSION SOLENOID/TRS ASSEMBLY
CUT OR MISSING NO. 5 OR NO. 6 CHECK BALL
WORN SOLENOID SWITCH VALVE OR PLUGS
CUT OD OR 4C PISTON SEAL
STUCK MAIN REGULATOR VALVE
BURNED OD OR 4C CLUTCH
BROKEN OR MISSING 4C BLEED ORIFICE IN 2C/4C RETAINER
BROKEN REACTION SHAFT SUPPORT SEAL RING
POOR MACHINING ON PUMP VALVE BODY FACE
LOOSE / MISSING DRIBBLER ORIFICE ASSEMBLY IN REACTION SHAFT SUPPORT
CRACKED / LOOSE / MISSING OD/REVERSE PISTON BLEED ORIFICE
BROKEN REVERSE CARRIER HUB WELD
BROKEN REVERSE SUN GEAR WELD TO REACTION CARRIER

Always perform the Pre-Diagnostic Troubleshooting Procedure before proceeding. (Refer to 28 - DTC-Based Diagnostics/MODULE, Powertrain Control (PCM) - Standard Procedure).

1. CHECK FOR RELATED DTCS

1. With the scan tool, check for other transmission DTCs
2. If any of these DTCs are present, perform their respective tests first.

Are there any Transmission solenoid, line pressure, speed sensor, and/or loss of prime DTCs present?

Yes

- (Refer to 28 - DTC-Based Diagnostics/MODULE, Powertrain Control (PCM) - Diagnosis and Testing) and perform the appropriate diagnostic procedure. If any of these DTCs are present, they may cause a Gear Ratio Error. Perform the test for P0944 first if it is present.

No

- Go To 2

2. CHECK EVENT DATA

1. With the scan tool, read and record the Event Data.

NOTE: Make sure to record all Event Data stored in the scan tool for future reference in this test procedure.

Does the Event Data display information for the DTC P0734?

Yes

- Go To 4

No

- Go To 3

3. CHECK FOR ANOTHER DTC

In the Event Data recorded earlier, does the Event Data show the DTC P1790, with Target Gear = 4th, or with both the 4C and OD clutches applying?

Yes

- Go To 4

No

- Go To 6

4. CHECK INPUT RPM

In the Event Data recorded earlier, does the Input rpm read zero?

Yes

- (Refer to 28 - DTC-Based Diagnostics/MODULE, Powertrain Control (PCM) - Diagnosis and Testing) and perform the diagnostic procedure for P0715 (Input Speed Sensor Error). Diagnose the DTC as if it is set and current.

No

- Go To 5

5. CHECK LINE PRESSURE READING

In the Event Data recorded earlier, is the line pressure reading more than 10 PSI below the desired line pressure reading?

Yes

- Remove the Transmission Oil pan and check the Transmission Oil filter for improper installation or plugged, if Primary oil filter is OK, check the main regulator valve in pump. If excessive debris is in the oil pan, check clutches and repair as necessary. (Refer to 21 - Transmission and Transfer Case/Automatic - 545RFE - Removal).
- Perform the 545RFE TRANSMISSION VERIFICATION TEST. (Refer to 28 - DTC-Based Diagnostics/MODULE, Powertrain Control (PCM) - Standard Procedure).

No

- Go To 6

6. CHECK TRANSMISSION FOR SLIPPAGE

1. Erase DTCs and road test the vehicle.
2. Check the transmission operation in reverse and all forward gears.

During the road test, was there any obvious slippage noted in 4th gear or a runaway during the 3-4 shift?

Yes

- Go To 8

No

- Go To 7

7. CHECK IF DTC RESETS

1. With the scan tool, check for Transmission DTCs after the road test.

Did the DTC P0734 reset?

Yes

- Go To 8

No

- Test Complete.

8. CHECK INTERNAL TRANSMISSION

1. Remove the Transmission Oil Pan and Valve Body in accordance with the Service Information and check for the following:
   - Excessive debris in the oil pan.
   - Remove the Valve Body and check if the accumulator cover is intact and the 4C tower seal is not cut or split.
   - OD and 4C accumulator pistons for cracks and/or cut seals.
   - Solenoid Switch Valve and its plugs for stickiness or wear.
   - Cut or missing No. 5 and/or No. 6 check ball.
   - OD bleed orifice on top of the Valve Body
   - Air check the OD and 4C hydraulic clutch circuits for excessive leakage. Refer to the Service information.

NOTE: Both the OD and 4C hydraulic clutch circuits contain a small bleed orifice. A small amount of air leakage is considered normal. The OD hydraulic clutch circuit bleed orifice connects to the Reverse input clutch hydraulic cavity. A small amount of air leakage into the Reverse hydraulic clutch circuit is considered normal.

Were there any problems found?

Yes

- Repair as necessary. (Refer to 21 - Transmission and Transfer Case/Automatic - 545RFE - Removal).

NOTE: If the OD or 4C clutch has failed but no obvious cause is found (such as a cut piston seal, broken seal ring, stuck regulator valve or any other items listed above) replace the Transmission Solenoid/TRS Assembly in addition to any necessary internal repairs.

- Perform the 545RFE TRANSMISSION VERIFICATION TEST. (Refer to 28 - DTC-Based Diagnostics/MODULE, Powertrain Control (PCM) - Standard Procedure).

No

- Go To 9

9. CHECK REVERSE GEAR

Was there no reverse gear during the road test?

Yes (no reverse)

- Go To 10

No (reverse gear OK)

- Replace Transmission Solenoid/TRS Assembly in accordance with the Service Information. (Refer to 21 - Transmission and Transfer Case/Automatic - 545RFE/ASSEMBLY, Transmission Solenoid and TRS - Removal).
- Perform the 545RFE TRANSMISSION VERIFICATION TEST. (Refer to 28 - DTC-Based Diagnostics/MODULE, Powertrain Control (PCM) - Standard Procedure).

10. CHECK ROAD TEST RESULTS

During the road test, was there no 2nd gear and no 4th gear, but 3rd gear (limp-in) was OK?

Yes

- Go To 11

No

- Go To 12

11. CHECK FOR BROKEN REVERSE SUN GEAR WELD

1. Working through the windows in the bottom of the case, check for a broken Reverse Sun gear weld to the reaction carrier as follows:

   Hold the Transmission Output Shaft by holding the Transmission Manual Lever in the park position.

   Rotate the Input Annulus gear and drive shell (the drum that encloses the two rearmost carriers).

   Check to see if the reaction carrier (the front most carrier, whose outer shell is splined to the 2C clutch) is rotating faster than the drive shell is being turned.

Is the reaction carrier turning faster than the drive shell?

Yes

- Replace Transmission Solenoid/TRS Assembly in accordance with the Service Information. (Refer to 21 - Transmission and Transfer Case/Automatic - 545RFE/ASSEMBLY, Transmission Solenoid and TRS - Removal).
- Perform the 545RFE TRANSMISSION VERIFICATION TEST. (Refer to 28 - DTC-Based Diagnostics/MODULE, Powertrain Control (PCM) - Standard Procedure).

No

- Replace the reaction carrier in accordance with the Service Information. (Refer to 21 - Transmission and Transfer Case/Automatic - 545RFE - Removal).
- Perform the 545RFE TRANSMISSION VERIFICATION TEST. (Refer to 28 - DTC-Based Diagnostics/MODULE, Powertrain Control (PCM) - Standard Procedure).

12. CHECK REVERSE CARRIER HUB WELD

1. Remove the Transmission in accordance with the Service Information and inspect the weld on the reverse carrier hub.

Were there any problems found?

Yes

- Repair as necessary. (Refer to 21 - Transmission and Transfer Case/Automatic - 545RFE - Removal).
- Perform the 545RFE TRANSMISSION VERIFICATION TEST. (Refer to 28 - DTC-Based Diagnostics/MODULE, Powertrain Control (PCM) - Standard Procedure).

No

- Disassemble and inspect the input clutch assembly. Check the OD and Reverse clutch seals, discs, and bleed orifice (in the OD/Reverse clutch piston). Check the OD hub and shaft. Repair as necessary. (Refer to 21 - Transmission and Transfer Case/Automatic - 545RFE - Removal).
- Perform the 545RFE TRANSMISSION VERIFICATION TEST. (Refer to 28 - DTC-Based Diagnostics/MODULE, Powertrain Control (PCM) - Standard Procedure).

■ P0735-GEAR RATIO ERROR IN 5TH

For a complete wiring diagram, **refer to the Wiring Information**.

Theory of Operation

The transmission system uses two speed sensors, one to measure input rpm and one to measure output rpm. These inputs are essential for proper transmission operation. Therefore, the integrity of this data is verified through the following checks:

1) Once in a particular gear, if the gear ratio varies from the correct gear ratio, the corresponding in-gear trouble code is set (DTCs P0731-36 and P1736).

2) An excessive change in input or output speeds indicating signal intermittent will result in the DTCs P0716 and/or P0721 being set.

3) If the common speed sensor ground circuit is lost, both sensor inputs will read the pulses from the input speed sensor when at a stop in neutral. Since the input speed sensor reads 60 teeth from the input clutch hub and the output speed sensor reads 30 teeth from the park gear, the result is an apparent speed ratio of 1:2 and may cause the DTC P1794 to set.

- **When Monitored:**
  Continuously with the ignition on, engine running, and after the transmission has achieved the proper gear ratio.
- **Set Condition:**
  If the ratio of the Input rpm to the Output rpm does not match the current gear ratio. This DTC can take up to five minutes of problem identification before illuminating the MIL.

Possible Causes
LOW FLUID LEVEL
INPUT SPEED SENSOR OR WIRING
VALVE BODY ACCUMULATOR COVER FAILED
CUT OD OR 2C ACCUMULATOR SEAL
CRACKED OD OR 2C ACCUMULATOR PISTON
BROKEN OR MISSING OD BLEED ORIFICE IN MAIN VALVE BODY
CUT 2C TOWER SEAL
TRANSMISSION SOLENOID/TRS ASSEMBLY
CUT OR MISSING NO. 5, NO. 6, OR NO. 7 CHECK BALL
WORN SOLENOID SWITCH VALVE OR PLUGS
CUT OD OR 2C PISTON SEAL
STUCK MAIN REGULATOR VALVE
BURNED OD OR 2C CLUTCH
BROKEN OR MISSING 2C BLEED ORIFICE IN 2C/4C RETAINER
BROKEN REACTION SHAFT SUPPORT SEAL RING
POOR MACHINING ON PUMP VALVE BODY FACE
LOOSE / MISSING DRIBBLER ORIFICE ASSEMBLY IN REACTION SHAFT SUPPORT
CRACKED / LOOSE / MISSING OD/REVERSE PISTON BLEED ORIFICE
BROKEN REVERSE CARRIER HUB WELD
BROKEN REVERSE SUN GEAR WELD TO REACTION CARRIER

Always perform the Pre-Diagnostic Troubleshooting Procedure before proceeding. (Refer to 28 - DTC-Based Diagnostics/MODULE, Powertrain Control (PCM) - Standard Procedure).

1. CHECK FOR RELATED DTCS

1. With the scan tool, check for other transmission DTCs.
2. If any of these DTCs are present, perform their respective tests first.

Are there any Transmission solenoid, line pressure, speed sensor, and/or loss of prime DTCs present?

Yes

- (Refer to 28 - DTC-Based Diagnostics/MODULE, Powertrain Control (PCM) - Diagnosis and Testing) and perform the appropriate diagnostic procedure. If any of these DTCs are present, they may cause a Gear Ratio Error. Perform the test for P0944 first if it is present.

No

- Go To 2

2. CHECK EVENT DATA

1. With the scan tool, read and record the Event Data.

NOTE: Make sure to record all Event Data stored in the scan tool for future reference in this test procedure.

Does the Event Data display information for the DTC P0735?

Yes

- Go To 4

No

- Go To 3

3. CHECK THE TARGET GEAR

In the Event Data recorded earlier, does the Event Data show the DTC P1790, with Target gear = 5th, or with both the 2C and OD clutches applying?

Yes

- Go To 4

No

- Go To 6

4. CHECK INPUT RPM

In the Event Data recorded earlier, does the Input rpm read zero?

Yes

- (Refer to 28 - DTC-Based Diagnostics/MODULE, Powertrain Control (PCM) - Diagnosis and Testing) . Perform the diagnostic procedure for P0716. Diagnose the DTC as if it is set and current.

No

- Go To 5

5. CHECK LINE PRESSURE READING

In the Event Data recorded earlier, is the line pressure reading more than 10 psi below the desired line pressure reading?

Yes

- Remove the Transmission Oil pan and check the Transmission Oil filter for improper installation or plugged, if Primary oil filter is OK, check the main regulator valve in pump. If excessive debris is in the oil pan, check clutches and repair as necessary. (Refer to 21 - Transmission and Transfer Case/Automatic - 545RFE/PUMP, Transmission Oil - Disassembly).
- Perform the 545RFE TRANSMISSION VERIFICATION TEST. (Refer to 28 - DTC-Based Diagnostics/MODULE, Powertrain Control (PCM) - Standard Procedure).

No

- Go To 6

6. CHECK TRANSMISSION FOR SLIPPAGE

1. Erase DTCs and road test the vehicle.
2. Check the transmission operation in reverse and all forward gears.

During the road test, was there any obvious slippage noted in 5th gear or a runaway during the 4-5 shift?

Yes

- Go To 8

No

- Go To 7

7. CHECK IF DTC RESETS

1. With the scan tool, check for Transmission DTCs after the road test.

Did the DTC P0735 reset?

Yes

- Go To 8

No

- Test Complete.
- Perform the 545RFE TRANSMISSION VERIFICATION TEST. (Refer to 28 - DTC-Based Diagnostics/MODULE, Powertrain Control (PCM) - Standard Procedure).

8. CHECK INTERNAL TRANSMISSION

1. Remove the Transmission Oil Pan and Valve Body, in accordance with the Service Information, and check for the following:
   - Excessive clutch and or metal debris in the oil pan.
   - If the accumulator cover is intact and the 2C tower seal is not cut or split.
   - OD and 2C accumulator pistons for cracks or cut seals.
   - Solenoid Switch Valve and its plugs for stickiness or wear.
   - Cut or missing No. 5, No. 6, or No. 7 check ball.
   - OD bleed orifice on top of the valve body.
   - Air check the OD and 2C hydraulic clutch circuits for excessive leakage. Refer to the Service information.

NOTE: Both the OD and 2C hydraulic clutch circuits contain a small bleed orifice. A small amount of air leakage is considered normal. The OD hydraulic clutch circuit bleed orifice connects to the Reverse input clutch hydraulic cavity. A small amount of air leakage into the Reverse hydraulic clutch circuit is considered normal.

Were there any problems found?

Yes

- Repair as necessary. (Refer to 21 - Transmission and Transfer Case/Automatic - 545RFE - Removal).

NOTE: If the OD or 2C clutch has failed but no obvious cause is found (such as a cut piston seal, broken seal ring, stuck regulator valve or any other items listed above) replace the Transmission Solenoid/TRS Assembly in addition to any necessary internal repairs.

- Perform the 545RFE TRANSMISSION VERIFICATION TEST. (Refer to 28 - DTC-Based Diagnostics/MODULE, Powertrain Control (PCM) - Standard Procedure).

No

- Replace Transmission Solenoid/TRS Assembly in accordance with the Service Information. (Refer to 21 - Transmission and Transfer Case/Automatic - 545RFE/ASSEMBLY, Transmission Solenoid and TRS - Removal).
- Perform the 545RFE TRANSMISSION VERIFICATION TEST. (Refer to 28 - DTC-Based Diagnostics/MODULE, Powertrain Control (PCM) - Standard Procedure).

P0736-GEAR RATIO ERROR IN REVERSE

For a complete wiring diagram, **refer to the Wiring Information**.

Theory of Operation

The transmission system uses two speed sensors, one to measure input rpm and one to measure output rpm. These inputs are essential for proper transmission operation. Therefore, the integrity of this data is verified through the following checks:

NOTE: Various Gear Ratio Error DTCs will set only if the transmission slips after first achieving the correct ratio. Therefore, a transmission with no drive (or reverse) may not set any Gear Ratio Error DTC because it never achieves a correct gear ratio.

1) Once in a particular gear, if the gear ratio varies from the correct gear ratio, the corresponding in-gear trouble code is set (DTCs P0731-36 and P1736).

2) An excessive change in input or output speeds indicating signal intermittent which will result in the DTCs P0716 and/or P0721 being set.

3) If the common speed sensor ground circuit is lost, both sensor inputs will read the pulses from the input speed sensor when at a stop in neutral. Since the input speed sensor reads 60 teeth from the input clutch hub and the output speed sensor reads 30 teeth from the park gear, the result is an apparent speed ratio of 1:2 and may cause the DTC P1794 to set.

- **When Monitored:**
  Continuously with the ignition on, engine running, and after the transmission has achieved the proper gear ratio.
- **Set Condition:**
  If the ratio of the Input rpm to the Output rpm does not match the current gear ratio. This DTC can take up to five minutes of problem identification before illuminating the MIL.

Possible Causes
INPUT OR OUTPUT SPEED SENSOR ERRORS
LOW FLUID LEVEL
CUT L/R TOWER SEAL ON MAIN VALVE BODY
CUT L/R CLUTCH PISTON SEALS
BROKEN OR MISSING L/R CLUTCH BLEED ORIFICE (IN L/R CLUTCH RETAINER)
CUT L/R ACCUMULATOR PISTON SEAL IN MAIN VALVE BODY
CRACKED L/R ACCUMULATOR PISTON IN MAIN VALVE BODY
CUT OD/REV PISTON SEALS
BROKEN OR MISSING OD/REV BLEED ORIFICE (IN OD/REV CLUTCH PISTON)
BROKEN REVERSE CARRIER HUB WELD
BROKEN REVERSE SUN GEAR WELD TO THE REACTION CARRIER

Always perform the Pre-Diagnostic Troubleshooting procedure before proceeding. (Refer to 28 - DTC-Based Diagnostics/MODULE, Powertrain Control (PCM) - Standard Procedure).

1. CHECK FOR RELATED DTCS

1. Using the scan tool, check for other transmission DTCs.

Are there any Transmission solenoid, line pressure, speed sensor, and/or loss of prime DTCs present?

Yes

- Refer to DTC Based Diagnostics and perform the appropriate diagnostic procedure. Perform the test for P0944-LOSS OF PRIME first if it is present.

No

- Go To 2

2. CHECK IF DTC IS CURRENT

1. Using the scan tool, perform the Reverse Gear Clutch test. Follow the instructions on the scan tool.
2. Increase the throttle angle, TPS degree, to 30°, for no more than a few seconds.

CAUTION: Do not overheat the transmission.

NOTE: Make sure to record all Event Data stored in the scan tool for future reference in this test procedure.

Did the clutch test pass, input speed remain at zero?

Yes

- Go To 3

No

- Go To 4

3. CHECK EVENT DATA

1. The conditions necessary to set this DTC are not currently present.
2. Using the scan tool, check the Event Data to help identify the conditions in which the DTC was set.

Does the Event Data show an input speed reading of zero?

Yes

- Go To 8

No

- Go To 4

4. POSSIBLE INTERNAL TRANSMISSION CAUSES

1. Remove the Transmission Oil Pan and Valve Body and check the following in accordance with the Service Information:
   - Clutch or metal debris in the pan
   - L/R clutch tower seal on the main valve body for cuts and the L/R accumulator piston and seals.
   - Air check the Reverse and L/R Hydraulic Clutch circuits (in the case) for excessive air leakage.

NOTE: Both Hydraulic Clutch circuits contain a small bleed orifice , a small amount of air leakage is normal. The Reverse hydraulic clutch circuit bleed orifice connects to the OD hydraulic clutch cavity. A small amount of air leakage into the OD hydraulic clutch circuit is considered normal.

Were there any problems found?

Yes

- Repair as necessary. If clutch debris is present, remove the transmission and inspect the Reverse and L/R clutches, and inspect the Transmission Oil Pump and Main Regulator Valve for damage or sticking in its bore.

NOTE: If the L/R clutch has failed but no obvious cause is found (such as a cut piston seal, stuck regulator valve, low line pressure reading in the Event Data, or any other items listed above) replace the Transmission Solenoid/TRS Assembly in addition to any necessary internal repairs.

- Perform the 545RFE TRANSMISSION VERIFICATION TEST. (Refer to 28 - DTC-Based Diagnostics/MODULE, Powertrain Control (PCM) - Standard Procedure).

No

- Go To 5

5. CLUTCH TEST FAILURE

Did the clutch test fail in reverse?

Yes

- Go To 6

No

- Test complete.
- Perform the 545RFE TRANSMISSION VERIFICATION TEST. (Refer to 28 - DTC-Based Diagnostics/MODULE, Powertrain Control (PCM) - Standard Procedure).

6. CHECK FOR BROKEN REVERSE SUN GEAR WELD

1. Working through the windows in the bottom of the case, check for a broken Reverse Sun gear weld to the reaction carrier as follows:
   - Hold the Transmission Output Shaft by holding the Transmission Manual Lever in the park position.
   - Rotate the Input Annulus gear and drive shell, (the drum that encloses the two rearmost carriers).
   - Check to see if the reaction carrier (the front-most carrier, whose outer shell is splined to the 2C clutch) is rotating faster than the drive shell is being turned.

Is the reaction carrier turning faster than the drive shell?

Yes

- Go To 7

No

- Replace the reaction carrier in accordance with the Service Information.
- Perform the 545RFE TRANSMISSION VERIFICATION TEST. (Refer to 28 - DTC-Based Diagnostics/MODULE, Powertrain Control (PCM) - Standard Procedure).

7. CHECK REVERSE CARRIER HUB

1. Remove the Transmission in accordance with the Service Information and inspect the weld on the reverse carrier hub.

Were there any problems found?

Yes

- Repair as necessary. Refer to the Service Information for proper repair procedures.
- Perform the 545RFE TRANSMISSION VERIFICATION TEST. (Refer to 28 - DTC-Based Diagnostics/MODULE, Powertrain Control (PCM) - Standard Procedure).

No

- Disassemble and inspect the input clutch assembly. Check the Reverse clutch reaction plate snap ring. Check the OD and Reverse clutch seals, discs, and bleed orifice (in the OD/Reverse clutch piston). Check the Reverse hub and shaft. Repair as necessary. Refer to the Service Information for proper repair procedures.
- Perform the 545RFE TRANSMISSION VERIFICATION TEST. (Refer to 28 - DTC-Based Diagnostics/MODULE, Powertrain Control (PCM) - Standard Procedure).

8. CHECK FOR INTERMITTENT OPERATION

1. Intermittent gear ratio DTCs can be set by problems in the Input and Output Speed Sensor circuits and/or Speed Sensor Ground circuit.
2. Remove the Ignition Switch Feed fuse from the TIPM.

CAUTION: Removal of the Ignition Switch Feed fuse from the TIPM will prevent the vehicle from being started in gear.

WARNING: The Ignition Switch Feed fuse must be removed from the TIPM. Failure to do so can result in possible serious or fatal injury.

3. Install the Transmission Simulator 8333A.
4. Check the Speed Sensor wiring and connectors for good connection, then perform a wiggle test using the Transmission Simulator 8333A.

Were there any problems found?

Yes

- Repair as necessary.
- Perform the 545RFE TRANSMISSION VERIFICATION TEST. (Refer to 28 - DTC-Based Diagnostics/MODULE, Powertrain Control (PCM) - Standard Procedure).

No

- Test complete.

■ P0740-TCC OUT OF RANGE

For a complete wiring diagram, **refer to the Wiring Information**.

Theory of Operation

When in 2nd, through 5th gear, the torque converter clutch (TCC) can be engaged when certain conditions are met. The L/R-TCC piston is electronically modulated by increasing the duty cycle of the L/R-TCC Solenoid until the torque converter slip difference (difference between engine and transmission input speed) is within 60 rpm. Then the L/R-TCC solenoid is fully energized (FEMCC – 100% duty cycle). Torque converter slip is monitored in FEMCC to ensure adequate clutch capacity.

- **When Monitored:**
  During Electronically Modulated Converter Clutch (EMCC) Operation.
- **Set Condition:**
  Transmission must be in EMCC, with input speed greater than 1750 rpm. L/R-TCC Solenoid achieves the maximum duty cycle and can not pull engine speed within 60 rpm of input speed. Also when the transmission is in FEMCC and the engine slips TCC more than 100 rpm for 10 seconds. This DTC can take up to five minutes of problem identification before illuminating the MIL.

Possible Causes
RELATED DTC P0750 PRESENT
L/R-TCC SOLENOID
TCC SWITCH VALVE STUCK
TCC REGULATOR VALVE STUCK
INPUT SHAFT SEAL RING CUT
TORQUE CONVERTER AND/OR INTERNAL TRANSMISSION

Always perform the Pre-Diagnostic Troubleshooting Procedure before proceeding. (Refer to 28 - DTC-Based Diagnostics/MODULE, Powertrain Control (PCM) - Standard Procedure).

1. CHECK FOR RELATED DTC P0750

1. With the scan tool, read transmission DTCs.

Is the DTC P0750 present also?

Yes

- (Refer to 28 - DTC-Based Diagnostics/MODULE, Powertrain Control (PCM) - Diagnosis and Testing) and perform the appropriate diagnostic procedure.

No

- Go To 2

2. CHECK IF DTC P0740 IS CURRENT

1. With the scan tool, Read and RECORD ALL Transmission DTCs. After recording DTCs, erase DTCs.
2. Drive the vehicle until the transmission temperature is at least 43° C or 110° F and the engine temperature at least 49° C or 120° F.
3. Perform the following steps 3 times.
4. Drive the vehicle to the speed of at least 88 Kmh or 55 mph.
5. Allow 4th or 5th gear to engage for at least 10 seconds.
6. Close the throttle.
7. Tip back into the throttle until the TPS angle is between 25 and 29 degrees.

NOTE: If the throttle angle goes over 30 degrees, you must close the throttle and try again.

Did the TCC engage during any of the attempts, Engine speed approximately equal to input speed?

Yes

- Go To 3

No

- Go To 4

3. CHECK WIRING AND CONNECTORS

1. The conditions necessary to set this DTC are not present at this time. Using the schematics as a guide, inspect the wiring and connectors specific to this circuit. Wiggle the wires while checking for shorts and open circuits.
2. Using the schematics as a guide, inspect the wiring and connectors specific to this circuit.
3. Wiggle the wires while checking for shorts and open circuits.
4. With the scan tool, check the Event Data to help identify the conditions in which the DTC was set.

Were there any problems found?

Yes

- Repair as necessary.
- Perform the TRANSMISSION VERIFICATION TEST. (Refer to 28 - DTC-Based Diagnostics/MODULE, Powertrain Control (PCM) - Standard Procedure).

No

- Test Complete.

4. CHECK THE L/R-TCC SOLENOID

1. With the scan tool, check for other transmission DTCs.

Are the DTCs P1775 and P0841 present also?

Yes

- Replace Transmission Solenoid/TRS Assembly in accordance with the Service Information.
- Perform the TRANSMISSION VERIFICATION TEST. (Refer to 28 - DTC-Based Diagnostics/MODULE, Powertrain Control (PCM) - Standard Procedure).

No

- Go To 5

5. CHECK THE TORQUE CONVERTER AND/OR INTERNAL TRANSMISSION

1. Repair internal transmission as necessary.
2. Check for the following possible causes.
3. Inspect the Transmission Oil Pump Assembly.
4. Check the Torque Converter Switch Valve and the Torque Converter Clutch Control Valve for sticking in the bore.
5. Check the Teflon seal rings on the input shaft.

NOTE: If one of the seal rings is cut, the loose piece will often lodge in the TCC switch valve, causing it to stick in its bore.

6. If no problems are found, replace the Transmission Solenoid/TRS Assembly.

Repair

- In all cases, replace the Torque Converter. Make sure to check all other possible causes in addition to the Torque Converter.
- Perform the TRANSMISSION VERIFICATION TEST. (Refer to 28 - DTC-Based Diagnostics/MODULE, Powertrain Control (PCM) - Standard Procedure).

P0750-LR SOLENOID CIRCUIT

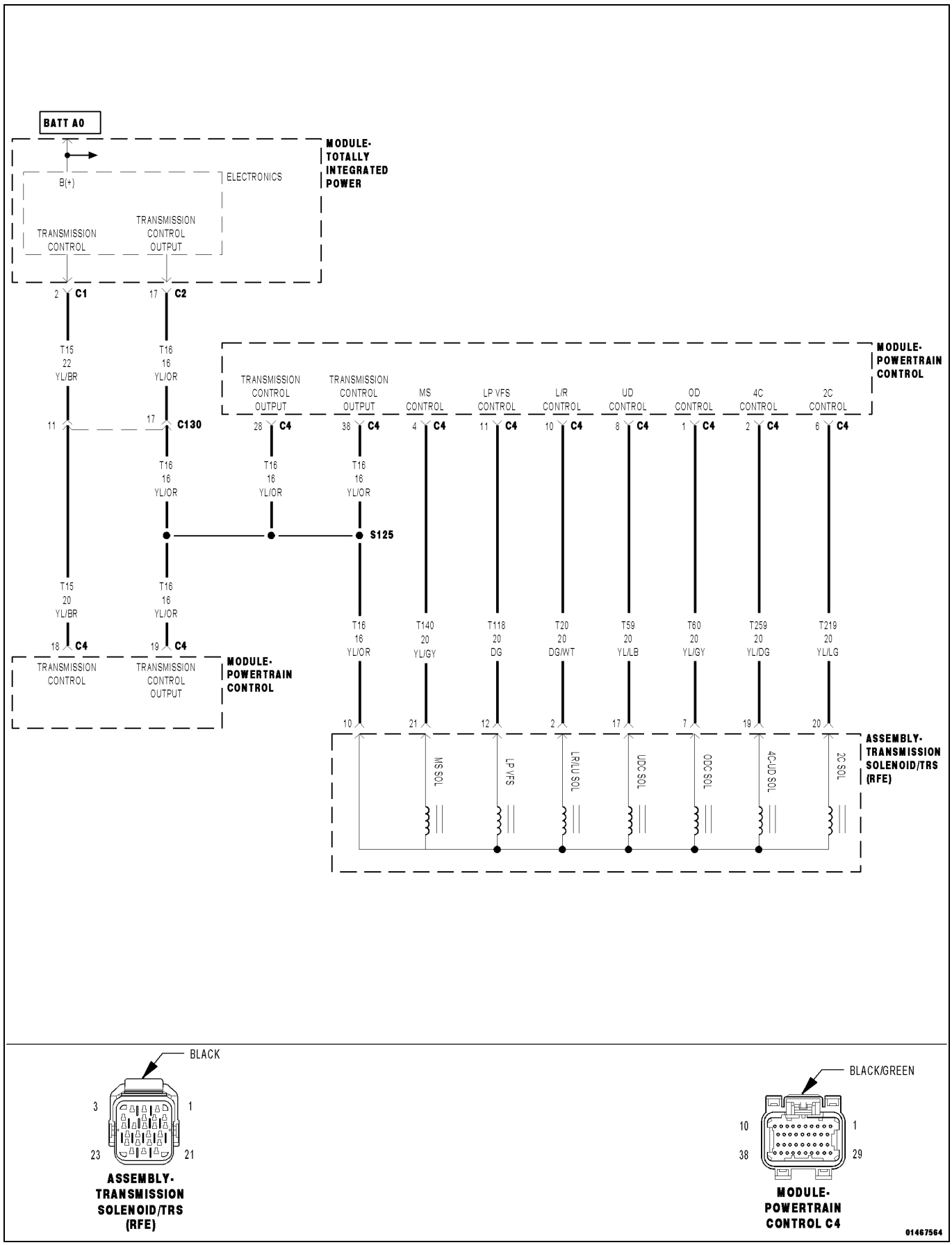

For a complete wiring diagram, **refer to the Wiring Information**.

Theory of Operation

The Transmission Control System uses six electronically controlled solenoids that allow hydraulic fluid to be applied to various friction elements (clutches), which enables the gear requested. The continuity of each solenoid circuit is periodically tested. Each inactive solenoid is turned on for a few milliseconds, then off. Each active solenoid is turned off for a few milliseconds, then on. This pulsing of voltage to the solenoid causes an inductive spike which can be sensed by the Transmission Control System. If an inductive spike is not sensed by the Transmission Control System during the continuity check, it is tested again. If the test fails three consecutive times, the appropriate Diagnostic Trouble Code (DTC) is set. If the solenoid test is run in response to a gear ratio or pressure switch error, one failure will result in setting the appropriate DTC.

- **When Monitored:**

  Initially at power-up, then every 10 seconds thereafter. The solenoid circuits will also be tested immediately after a gear ratio or pressure switch error is detected.
- **Set Condition:**

  After three consecutive solenoid continuity test failures, or one failure if test is run in response to a gear ratio or pressure switch error.

NOTE: This DTC is strictly an electrical fault and cannot be caused by any internal transmission failure other than an open in the Transmission Solenoid/TRS Assembly. If the Transmission Solenoid/TRS Assembly is in need of replacement - do not replace the Valve Body.

Possible Causes
RELATED DTCS PRESENT
(T20) L/R SOLENOID CONTROL CIRCUIT SHORTED TO OTHER CIRCUITS
(T20) L/R SOLENOID CONTROL CIRCUIT OPEN
(T20) L/R SOLENOID CONTROL CIRCUIT SHORTED TO GROUND
TRANSMISSION SOLENOID/TRS ASSEMBLY
POWERTRAIN CONTROL MODULE (PCM)

Always perform the Pre-Diagnostic Troubleshooting Procedure before proceeding. (Refer to 28 - DTC-Based Diagnostics/MODULE, Powertrain Control (PCM) - Standard Procedure).

1. CHECK DTCS

1. With the scan tool, check DTCs.

Are there any TIPM TCM Power Control Circuit or TCM Power Input DTCs present?

Yes

- (Refer to 28 - DTC-Based Diagnostics/MODULE, Totally Integrated Power (TIPM) - Diagnosis and Testing) and perform the appropriate diagnostic procedure.

No

- Go To 2

2. CHECK TO SEE IF P0750 IS PRESENT

1. Ignition on, engine not running.
2. With the scan tool, erase all Transmission DTCs.
3. Turn the ignition off to the lock position.
4. Remove the Ignition Switch Feed fuse from the TIPM.

CAUTION: Removal of the Ignition Switch Feed fuse from the TIPM will prevent the vehicle from being started in gear.

WARNING: The Ignition Switch Feed fuse must be removed from the TIPM. Failure to do so can result in possible serious or fatal injury.

5. Install the Transmission Simulator 8333A.
6. Ignition on, engine not running.
7. With the scan tool, actuate the L/R Solenoid.
8. Monitor the L/R Solenoid LED on the Transmission Simulator.

Did the L/R Solenoid LED on the Transmission Simulator blink on and off?

Yes

- Go To 3

No

- Go To 5

3. CHECK THE TRANSMISSION SOLENOID/TRS ASSEMBLY

1. With the Transmission simulator still connected, continue to actuate the L/R solenoid for two minutes.
2. After two minutes of actuation, with the scan tool, stop the actuation and check for transmission DTCs.

Did the DTC P0750 reset during the actuation test?

Yes

- Go To 5

No

- Go To 4

4. WIGGLE TEST WITH TRANSMISSION SIMULATOR

1. With the Transmission simulator still connected, continue to actuate the L/R solenoid for another two minutes while wiggling the related wiring harness and connectors.
2. With the scan tool, stop the actuation and check for transmission DTCs.

Did the DTC P0750 reset during the actuation test?

Yes

- Repair wiring harness or connectors as necessary.
- Perform the 545RFE TRANSMISSION VERIFICATION TEST. (Refer to 28 - DTC-Based Diagnostics/MODULE, Powertrain Control (PCM) - Standard Procedure).

No

- Replace the Transmission Solenoid/TRS Assembly in accordance with the Service Information. **Note: Do NOT replace the entire Valve Body.**(Refer to 21 - Transmission and Transfer Case/Automatic - 545RFE/ASSEMBLY, Transmission Solenoid and TRS - Removal).
- Perform the 545RFE TRANSMISSION VERIFICATION TEST. (Refer to 28 - DTC-Based Diagnostics/MODULE, Powertrain Control (PCM) - Standard Procedure).

5. CHECK THE (T20) L/R SOLENOID CONTROL CIRCUIT FOR A SHORT TO ANOTHER CIRCUIT

1. Turn the ignition off to the lock position.
2. Disconnect the Transmission Simulator 8333A.
3. Disconnect the PCM harness connectors.
4. Measure the resistance between the (T20) L/R Solenoid Control circuit and all other circuits in the Transmission Solenoid/TRS Assembly harness connector.

Is the resistance below 5.0 Ohms between the (T20) L/R Solenoid Control circuit and any other circuit(s) in the Transmission Solenoid/TRS Assembly harness connector?

Yes

- Repair the (T20) L/R Solenoid Control circuit for a short to another circuit(s).
- Perform the 545RFE TRANSMISSION VERIFICATION TEST. (Refer to 28 - DTC-Based Diagnostics/MODULE, Powertrain Control (PCM) - Standard Procedure).

No

- Go To 6

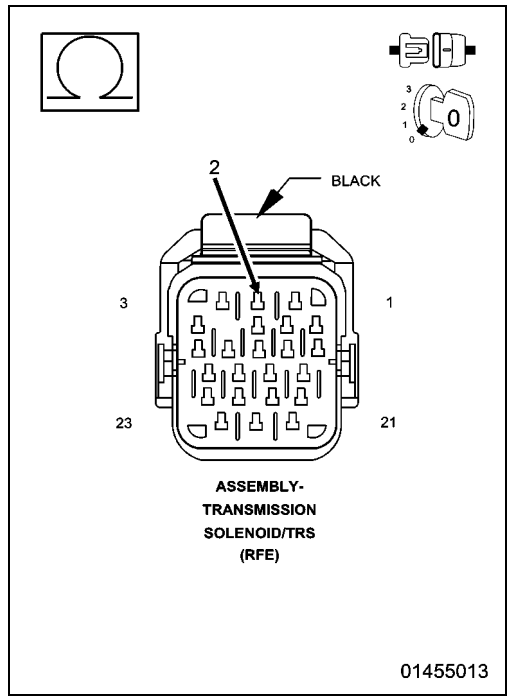

6. CHECK THE (T20) L/R SOLENOID CONTROL CIRCUIT FOR AN OPEN

1. Connect the PCM Pinout Box 8815A to the PCM C4 harness connector.

CAUTION: Do not probe the PCM harness connectors. Probing the PCM harness connectors will damage the PCM terminals resulting in poor terminal to pin connection. Install the Kit, NGC, 38 Position 8815A to perform diagnosis.

2. Measure the resistance of the (T20) L/R Solenoid Control circuit between the Transmission Solenoid/TRS Assembly harness connector and the appropriate terminal of the PCM Pinout Box 8815A.

Is the resistance above 5.0 Ohms?

Yes

- Repair the (T20) L/R Solenoid Control circuit for an open.
- Perform the 545RFE TRANSMISSION VERIFICATION TEST. (Refer to 28 - DTC-Based Diagnostics/MODULE, Powertrain Control (PCM) - Standard Procedure).

No

- Go To 7

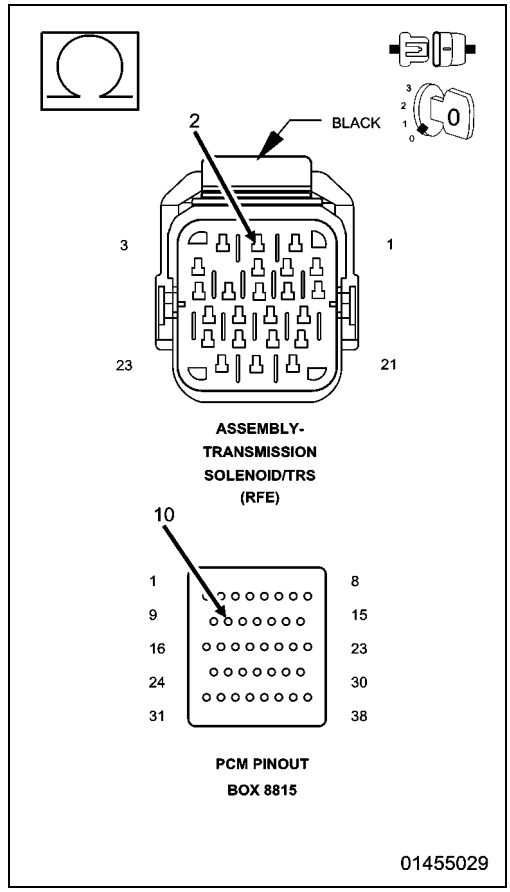

7. CHECK THE (T20) L/R SOLENOID CONTROL CIRCUIT FOR A SHORT TO GROUND

1. Measure the resistance between ground and the (T20) L/R Solenoid Control circuit.

Is the resistance below 5.0 Ohms?

Yes

- Repair the (T20) L/R Solenoid Control circuit for a short to ground.
- Perform the 545RFE TRANSMISSION VERIFICATION TEST. (Refer to 28 - DTC-Based Diagnostics/MODULE, Powertrain Control (PCM) - Standard Procedure).

No

- Using the schematics as a guide, check the Powertrain Control Module (PCM) terminals for corrosion, damage, or terminal push out. Pay particular attention to all power and ground circuits. If no problems are found, replace and program the PCM in accordance with the Service Information. With the scan tool, perform Quick Learn.
- Perform the 545RFE TRANSMISSION VERIFICATION TEST. (Refer to 28 - DTC-Based Diagnostics/MODULE, Powertrain Control (PCM) - Standard Procedure).

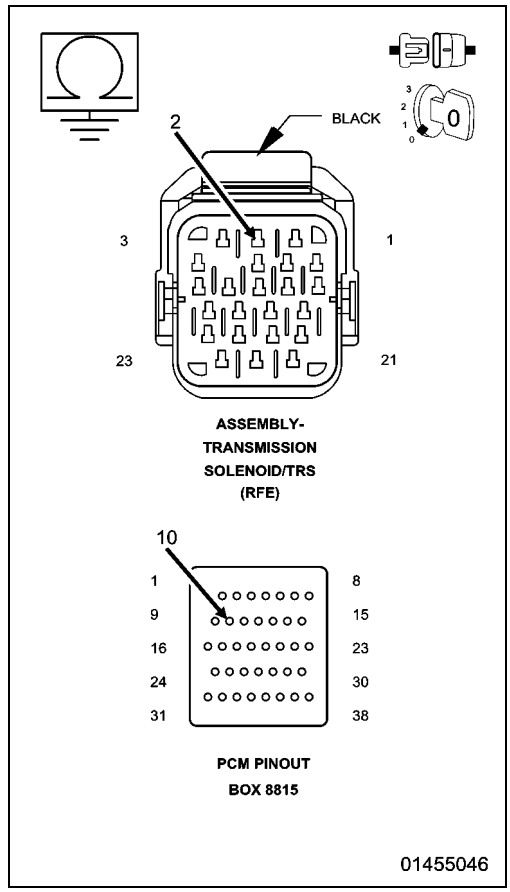

P0755-2C SOLENOID CIRCUIT

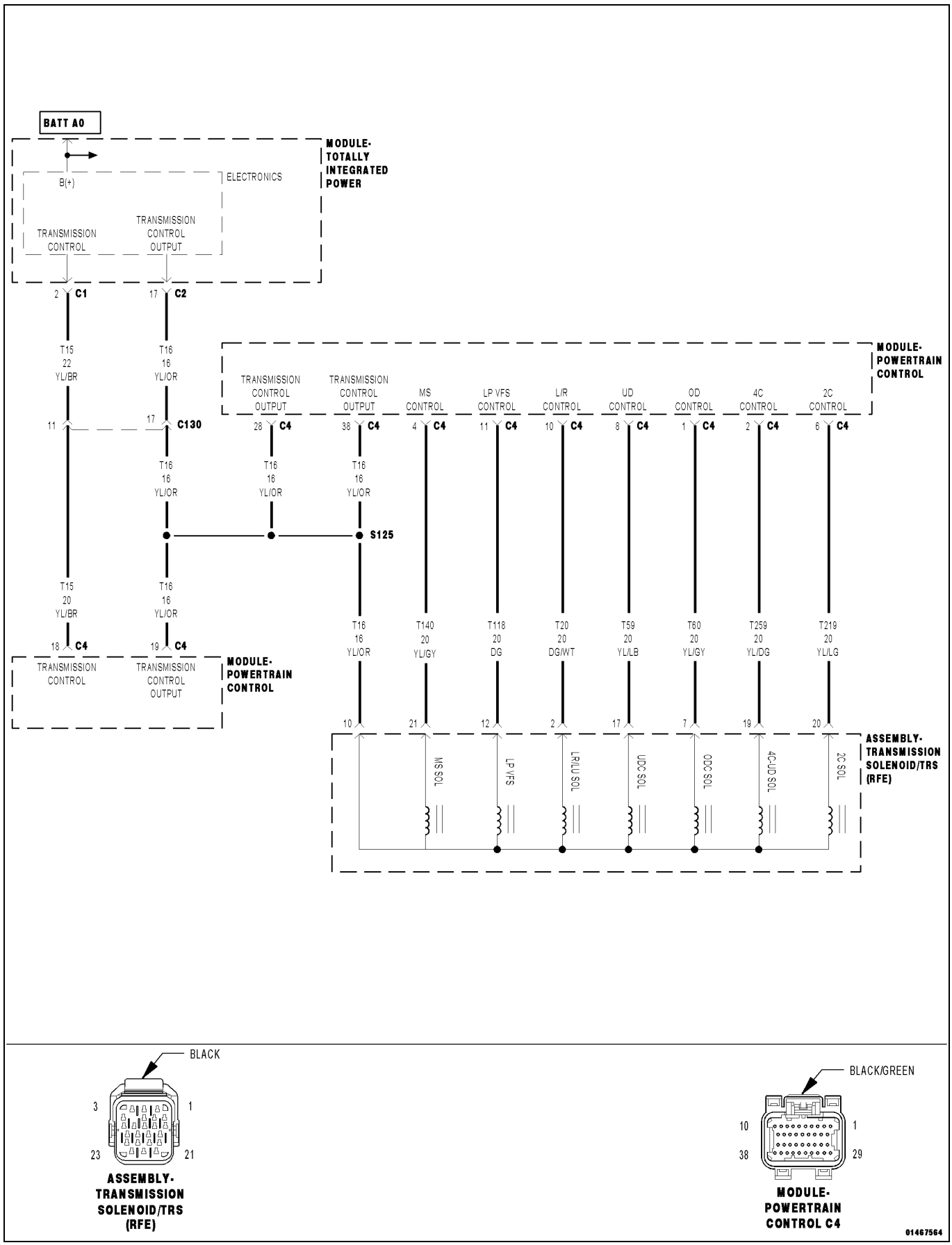

Theory of Operation

The Transmission Control System uses six electronically controlled solenoids that allow hydraulic fluid to be applied to various friction elements (clutches), which enables the gear requested. The continuity of each solenoid circuit is periodically tested. Each inactive solenoid is turned on for a few milliseconds, then off. Each active solenoid is turned off for a few milliseconds, then on. This pulsing of voltage to the solenoid causes an inductive spike which can be sensed by the Transmission Control System. If an inductive spike is not sensed by the Transmission Control System during the continuity check, it is tested again. If the test fails three consecutive times, the appropriate Diagnostic Trouble Code (DTC) is set. If the solenoid test is run in response to a gear ratio or pressure switch error, one failure will result in setting the appropriate DTC.

- **When Monitored:**

  Initially at power-up, then every 10 seconds thereafter. The solenoid circuits will also be tested immediately after a gear ratio or pressure switch error is detected.
- **Set Condition:**

  After three consecutive solenoid continuity test failures, or one failure if test is run in response to a gear ratio or pressure switch error.

NOTE: This DTC is strictly an electrical fault and cannot be caused by any internal transmission failure other than an open in the Transmission Solenoid/TRS Assembly. If the Transmission Solenoid/TRS Assembly is in need of replacement — do not replace the Valve Body.

Possible Causes
RELATED DTCS PRESENT
(T219) 2C SOLENOID CONTROL CIRCUIT SHORTED TO OTHER CIRCUITS
(T219) 2C SOLENOID CONTROL CIRCUIT OPEN
(T219) 2C SOLENOID CONTROL CIRCUIT SHORTED TO GROUND
TRANSMISSION SOLENOID/TRS ASSEMBLY
POWERTRAIN CONTROL MODULE (PCM)

Always perform the Pre-Diagnostic Troubleshooting Procedure before proceeding. (Refer to 28 - DTC-Based Diagnostics/MODULE, Powertrain Control (PCM) - Standard Procedure).

1. CHECK DTCS

1. With the scan tool, check DTCs.

Are there any TIPM TCM Power Control Circuit or TCM Power Input DTCs present?

Yes

- (Refer to 28 - DTC-Based Diagnostics/MODULE, Totally Integrated Power (TIPM) - Diagnosis and Testing) and perform the appropriate diagnostic procedure.

No

- Go To 2

2. CHECK TO SEE IF P0755 IS PRESENT

1. Turn the ignition off to the lock position.
2. Remove the Ignition Switch Feed fuse from the TIPM.

CAUTION: Removal of the Ignition Switch Feed fuse from the TIPM will prevent the vehicle from being started in gear.

WARNING: The Ignition Switch Feed fuse must be removed from the TIPM. Failure to do so can result in possible serious or fatal injury.

3. Install the Transmission Simulator 8333A.
4. Ignition on, engine not running.
5. With the scan tool, actuate the 2C Solenoid.

Did the 2C Solenoid LED blink on and off on the Transmission Simulator?

Yes

- Go To 3

No

- Go To 5

3. CHECK THE TRANSMISSION SOLENOID/TRS ASSEMBLY

1. With the Transmission simulator still connected, continue to actuate the 2C solenoid for two minutes.
2. After two minutes of actuation, with the scan tool, stop the actuation and check for transmission DTCs.

Did the DTC P0755 reset during the actuation test?

Yes

- Go To 5

No

- Go To 4

4. WIGGLE TEST WITH TRANSMISSION SIMULATOR

1. With the Transmission simulator still connected, continue to actuate the 2C solenoid for another two minutes while wiggling the related wiring harness and connectors.
2. With the scan tool, stop the actuation and check for transmission DTCs.

Did the DTC P0755 reset during the actuation test?

Yes

- Repair wiring harness or connectors as necessary.
- Perform the 545RFE TRANSMISSION VERIFICATION TEST. (Refer to 28 - DTC-Based Diagnostics/MODULE, Powertrain Control (PCM) - Standard Procedure).

No

- Replace the Transmission Solenoid/TRS Assembly in accordance with the Service Information. **Note: Do NOT replace the entire Valve Body.** (Refer to 21 - Transmission and Transfer Case/Automatic - 545RFE/ASSEMBLY, Transmission Solenoid and TRS - Removal)
- Perform the 545RFE TRANSMISSION VERIFICATION TEST. (Refer to 28 - DTC-Based Diagnostics/MODULE, Powertrain Control (PCM) - Standard Procedure).

5. CHECK THE (T219) 2C SOLENOID CONTROL CIRCUIT FOR A SHORT TO ANOTHER CIRCUIT

1. Turn the ignition off to the lock position.
2. Disconnect the Transmission Simulator 8333A.
3. Disconnect the PCM harness connectors.
4. Measure the resistance between the (T219) 2C Solenoid Control circuit and all other circuits in the Transmission Solenoid/TRS Assembly harness connector.

Is the resistance below 5.0 Ohms between the (T219) 2C Solenoid Control circuit and any other circuit(s) in the Transmission Solenoid/TRS Assembly harness connector?

Yes

- Repair the (T219) 2C Solenoid Control circuit for a short to another circuit(s).
- Perform the 545RFE TRANSMISSION VERIFICATION TEST. (Refer to 28 - DTC-Based Diagnostics/MODULE, Powertrain Control (PCM) - Standard Procedure).

No

- Go To 6

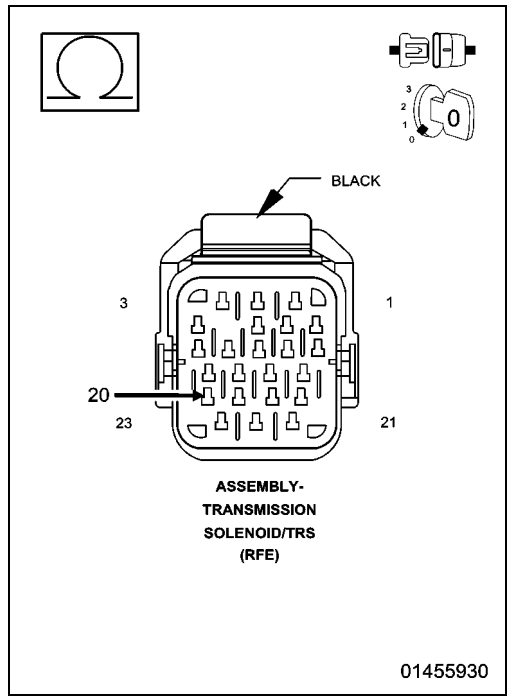

6. CHECK THE (T219) 2C SOLENOID CONTROL CIRCUIT FOR AN OPEN

1. Connect the PCM Pinout Box 8815A to the PCM C4 harness connector.

CAUTION: Do not probe the PCM harness connectors. Probing the PCM harness connectors will damage the PCM terminals resulting in poor terminal to pin connection. Install the Kit, NGC, 38 Position 8815A to perform diagnosis.

2. Measure the resistance of the (T219) 2C Solenoid Control circuit between the Transmission Solenoid/TRS Assembly harness connector and the appropriate terminal of the PCM Pinout Box 8815A.

Is the resistance above 5.0 Ohms?

Yes

- Repair the (T219) 2C Solenoid Control circuit for an open.
- Perform the 545RFE TRANSMISSION VERIFICATION TEST. (Refer to 28 - DTC-Based Diagnostics/MODULE, Powertrain Control (PCM) - Standard Procedure).

No

- Go To 7

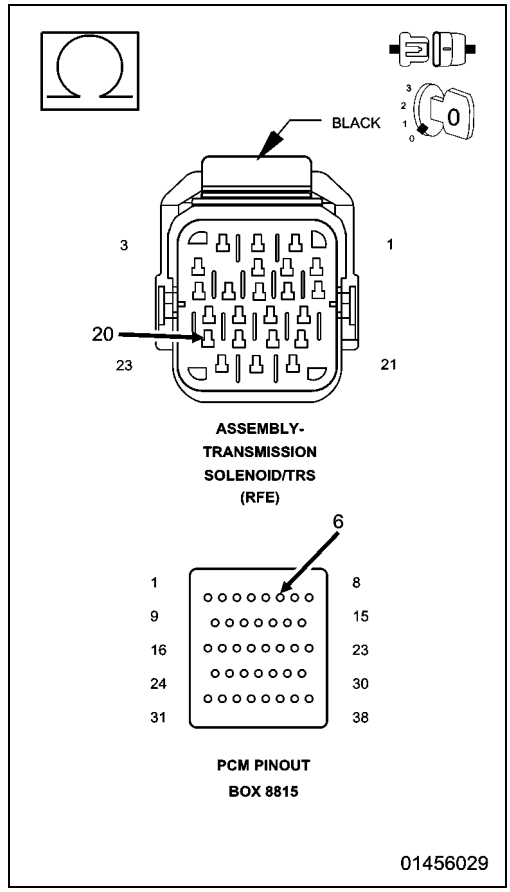

7. CHECK THE (T219) 2C SOLENOID CONTROL CIRCUIT FOR A SHORT TO GROUND

1. Measure the resistance between ground and the (T219) 2C Solenoid Control circuit.

Is the resistance below 5.0 Ohms?

Yes

- Repair the (T219) 2C Solenoid Control circuit for a short to ground.
- Perform the 545RFE TRANSMISSION VERIFICATION TEST. (Refer to 28 - DTC-Based Diagnostics/MODULE, Powertrain Control (PCM) - Standard Procedure).

No

- Using the schematics as a guide, check the Powertrain Control Module (PCM) terminals for corrosion, damage, or terminal push out. Pay particular attention to all power and ground circuits. If no problems are found, replace and program the PCM in accordance with the Service Information. With the scan tool, perform Quick Learn.
- Perform the 545RFE TRANSMISSION VERIFICATION TEST. (Refer to 28 - DTC-Based Diagnostics/MODULE, Powertrain Control (PCM) - Standard Procedure).

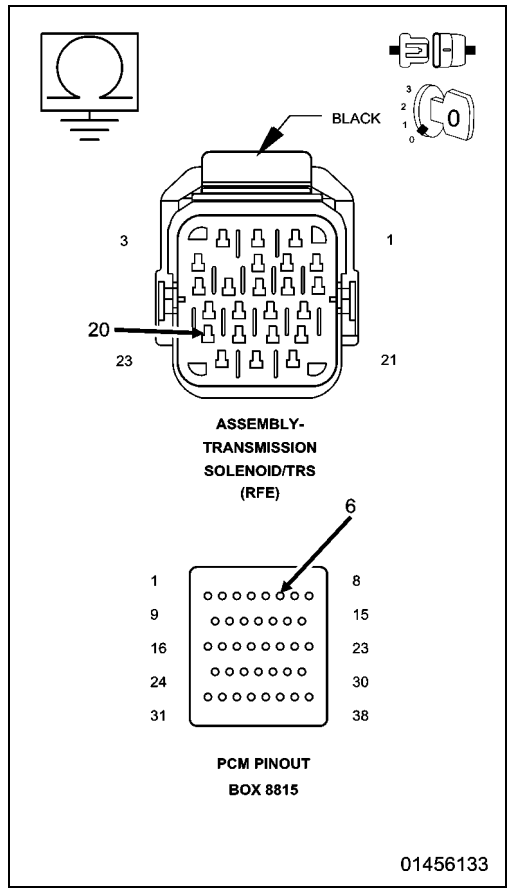

P0760-OD SOLENOID CIRCUIT

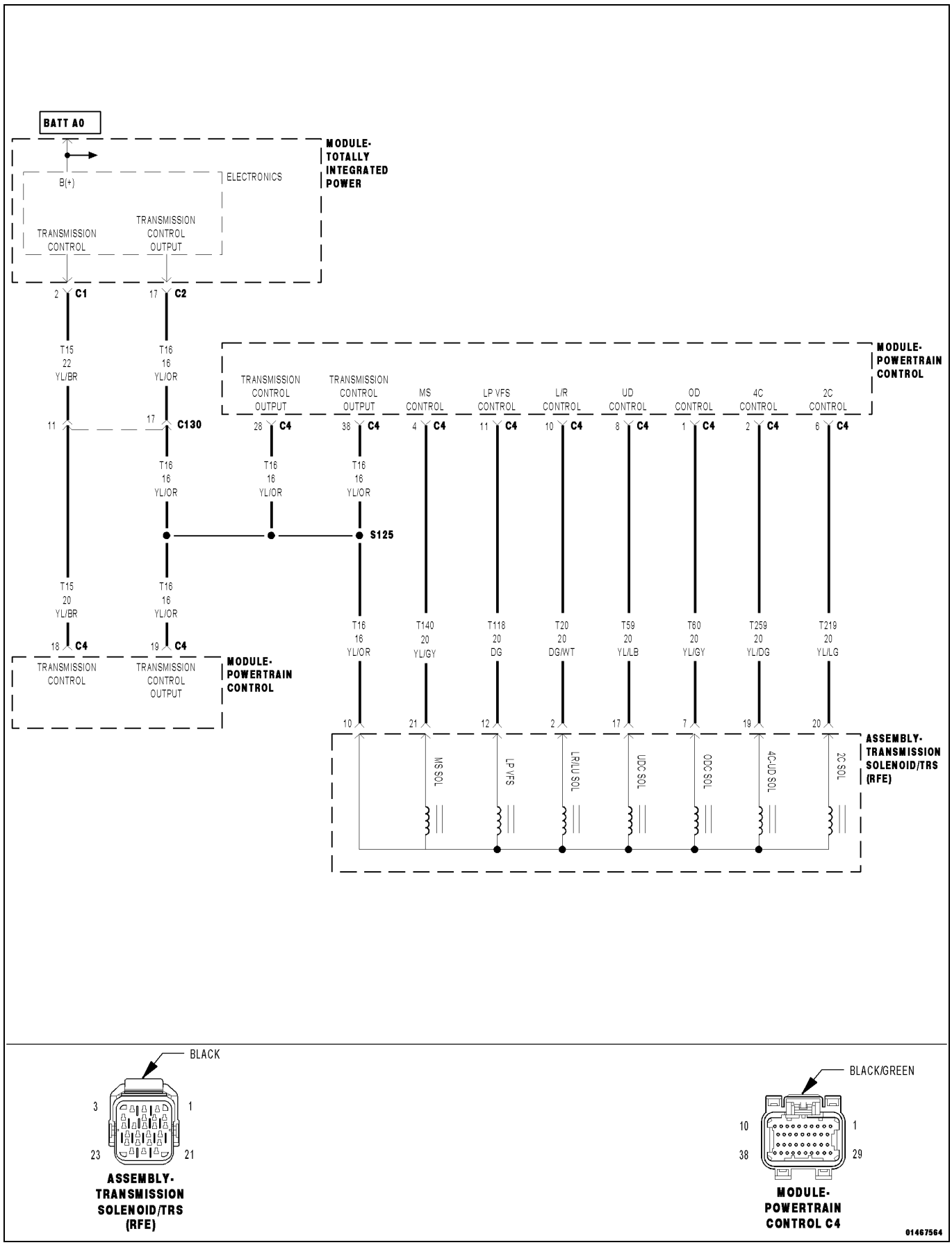

For a complete wiring diagram, **refer to the Wiring Information**.

Theory of Operation

The Transmission Control System uses six electronically controlled solenoids that allow hydraulic fluid to be applied to various friction elements (clutches), which enables the gear requested. The continuity of each solenoid circuit is periodically tested. Each inactive solenoid is turned on for a few milliseconds, then off. Each active solenoid is turned off for a few milliseconds, then on. This pulsing of voltage to the solenoid causes an inductive spike which can be sensed by the Transmission Control System. If an inductive spike is not sensed by the Transmission Control System during the continuity check, it is tested again. If the test fails three consecutive times, the appropriate Diagnostic Trouble Code (DTC) is set. If the solenoid test is run in response to a gear ratio or pressure switch error, one failure will result in setting the appropriate DTC.

- **When Monitored:**

  Initially at power-up, then every 10 seconds thereafter. The solenoid circuits will also be tested immediately after a gear ratio or pressure switch error is detected.
- **Set Condition:**

  After three consecutive solenoid continuity test failures, or one failure if test is run in response to a gear ratio or pressure switch error.

NOTE: This DTC is strictly an electrical fault and cannot be caused by any internal transmission failure other than an open in the Transmission Solenoid/TRS Assembly. If the Transmission Solenoid/TRS Assembly is in need of replacement - do not replace the Valve Body.

Possible Causes
RELATED DTCS PRESENT
(T60) OD SOLENOID CONTROL CIRCUIT SHORTED TO OTHER CIRCUITS
(T60) OD SOLENOID CONTROL CIRCUIT OPEN
(T60) OD SOLENOID CONTROL CIRCUIT SHORTED TO GROUND
TRANSMISSION SOLENOID/TRS ASSEMBLY
POWERTRAIN CONTROL MODULE (PCM)

Always perform the Pre-Diagnostic Troubleshooting Procedure before proceeding. (Refer to 28 - DTC-Based Diagnostics/MODULE, Powertrain Control (PCM) - Standard Procedure).

1. CHECK DTCS

1. With the scan tool, check DTCs.

Are there any TIPM TCM Power Control Circuit or TCM Power Input DTCs present?

Yes

- (Refer to 28 - DTC-Based Diagnostics/MODULE, Totally Integrated Power (TIPM) - Diagnosis and Testing) and perform the appropriate diagnostic procedure.

No

- Go To 2

2. CHECK TO SEE IF P0760 IS PRESENT

1. Turn the ignition off to the lock position.
2. Remove the Ignition Switch Feed fuse from the TIPM.

CAUTION: Removal of the Ignition Switch Feed fuse from the TIPM will prevent the vehicle from being started in gear.

WARNING: The Ignition Switch Feed fuse must be removed from the TIPM. Failure to do so can result in possible serious or fatal injury.

3. Install Transmission Simulator 8333A.
4. Ignition on, engine not running.
5. With the scan tool, clear Transmission DTCs.
6. With the scan tool, actuate the OD Solenoid.
7. Monitor the OD Solenoid LED on the Transmission Simulator.

Did the OD Solenoid LED on the Transmission Simulator blink on and off?

Yes

- Go To 3

No

- Go To 5

3. CHECK THE TRANSMISSION SOLENOID/TRS ASSEMBLY

1. With the Transmission simulator still connected, continue to actuate the OD solenoid for two minutes.
2. After two minutes of actuation, with the scan tool, stop the actuation and check for transmission DTCs.

Did the DTC P0760 reset during the actuation test?

Yes

- Go To 5

No

- Go To 4

4. WIGGLE TEST WITH TRANSMISSION SIMULATOR

1. With the Transmission simulator still connected, continue to actuate the OD solenoid for another two minutes while wiggling the related wiring harness and connectors.
2. With the scan tool, stop the actuation and check for transmission DTCs.

Did the DTC P0760 reset during the actuation test?

Yes

- Repair wiring harness or connectors as necessary.
- Perform the 545RFE TRANSMISSION VERIFICATION TEST. (Refer to 28 - DTC-Based Diagnostics/MODULE, Powertrain Control (PCM) - Standard Procedure).

No

- Replace the Transmission Solenoid/TRS Assembly in accordance with the Service Information. **Note: Do NOT replace the entire Valve Body.** (Refer to 21 - Transmission and Transfer Case/Automatic - 545RFE/ASSEMBLY, Transmission Solenoid and TRS - Removal)
- Perform the 545RFE TRANSMISSION VERIFICATION TEST. (Refer to 28 - DTC-Based Diagnostics/MODULE, Powertrain Control (PCM) - Standard Procedure).

5. CHECK THE (T60) OD SOLENOID CONTROL CIRCUIT FOR A SHORT TO ANOTHER CIRCUIT

1. Turn the ignition off to the lock position.
2. Disconnect the Transmission Simulator 8333A.
3. Disconnect the PCM harness connectors.
4. Measure the resistance between the (T60) OD Solenoid Control circuit and all other circuits in the Transmission Solenoid/TRS Assembly harness connector.

Is the resistance below 5.0 Ohms between the (T60) OD Solenoid Control circuit and any other circuit(s) in the Transmission Solenoid/TRS Assembly harness connector?

Yes

- Repair the (T60) OD Solenoid Control circuit for a short to another circuit(s).
- Perform the 545RFE TRANSMISSION VERIFICATION TEST. (Refer to 28 - DTC-Based Diagnostics/MODULE, Powertrain Control (PCM) - Standard Procedure).

No

- Go To 6

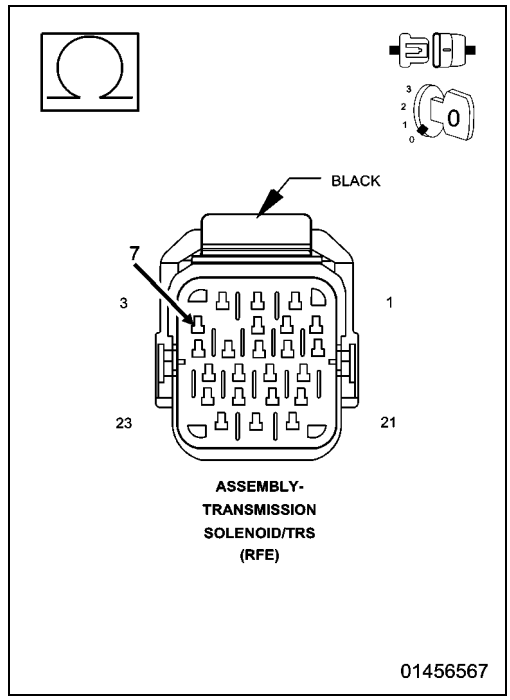

6. CHECK THE (T60) OD SOLENOID CONTROL CIRCUIT FOR AN OPEN

1. Connect the PCM Pinout Box 8815A to the PCM C4 harness connector.

CAUTION: Do not probe the PCM harness connectors. Probing the PCM harness connectors will damage the PCM terminals resulting in poor terminal to pin connection. Install the Kit, NGC, 38 Position 8815A to perform diagnosis.

2. Measure the resistance of the (T60) OD Solenoid Control circuit between the Transmission Solenoid/TRS Assembly harness connector to the appropriate terminal of the PCM Pinout Box 8815A.

Is the resistance above 5.0 Ohms?

Yes

- Repair the (T60) OD Solenoid Control circuit for an open.
- Perform the 545RFE TRANSMISSION VERIFICATION TEST. (Refer to 28 - DTC-Based Diagnostics/MODULE, Powertrain Control (PCM) - Standard Procedure).

No

- Go To 7

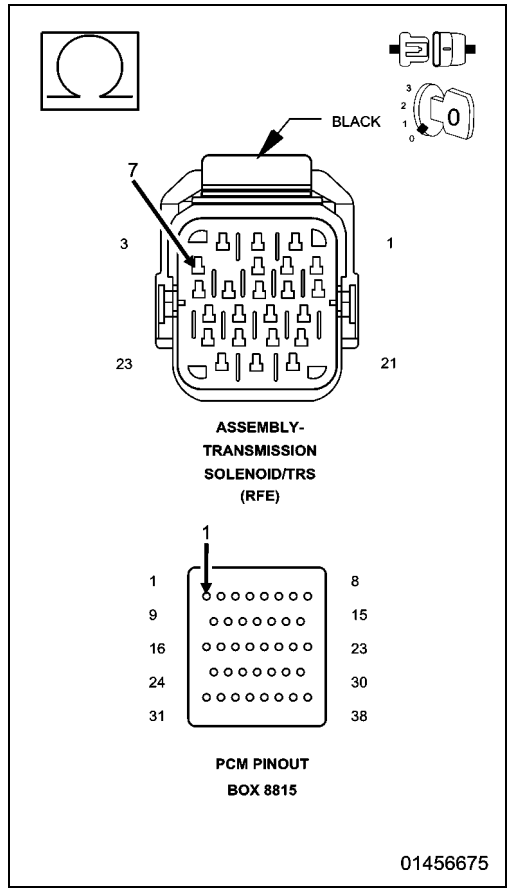

7. CHECK THE (T60) OD SOLENOID CONTROL CIRCUIT FOR A SHORT TO GROUND

1. Measure the resistance between ground and the (T60) OD Solenoid Control circuit.

Is the resistance below 5.0 Ohms?

Yes

- Repair the (T60) OD Solenoid Control circuit for a short to ground.
- Perform the 545RFE TRANSMISSION VERIFICATION TEST. (Refer to 28 - DTC-Based Diagnostics/MODULE, Powertrain Control (PCM) - Standard Procedure).

No

- Using the schematics as a guide, check the Powertrain Control Module (PCM) terminals for corrosion, damage, or terminal push out. Pay particular attention to all power and ground circuits. If no problems are found, replace and program the PCM in accordance with the Service Information. With the scan tool, perform Quick Learn.
- Perform the 545RFE TRANSMISSION VERIFICATION TEST. (Refer to 28 - DTC-Based Diagnostics/MODULE, Powertrain Control (PCM) - Standard Procedure).

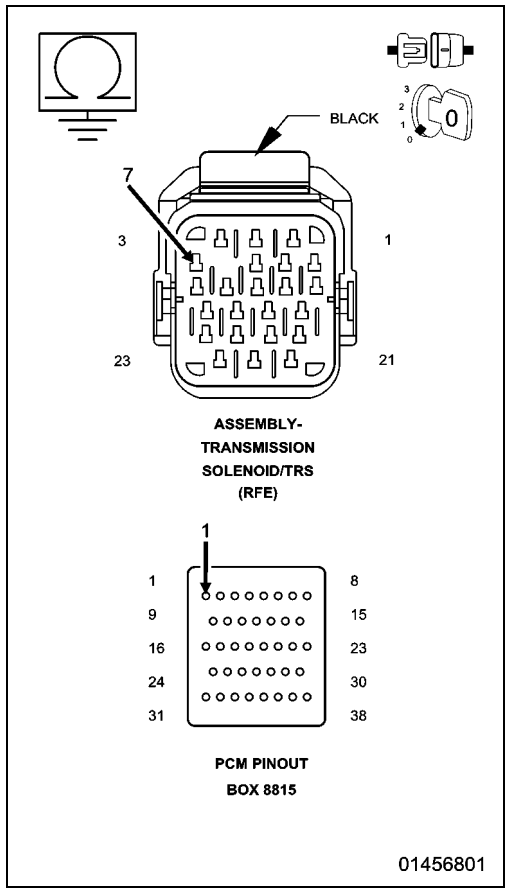

P0765-UD SOLENOID CIRCUIT

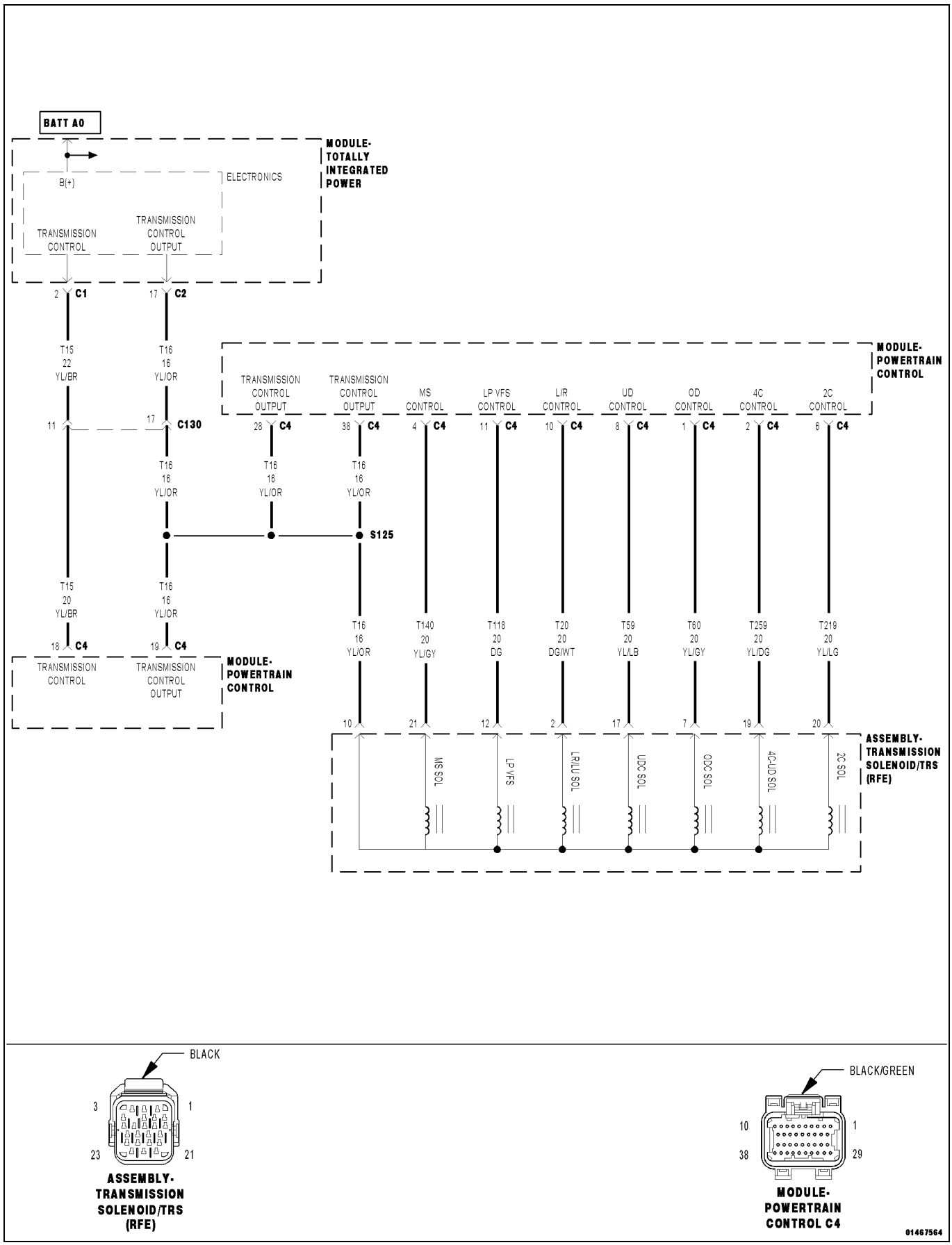

For a complete wiring diagram, **refer to the Wiring Information**.

Theory of Operation

The Transmission Control System uses six electronically controlled solenoids that allow hydraulic fluid to be applied to various friction elements (clutches), which enables the gear requested. The continuity of each solenoid circuit is periodically tested. Each inactive solenoid is turned on for a few milliseconds, then off. Each active solenoid is turned off for a few milliseconds, then on. This pulsing of voltage to the solenoid causes an inductive spike which can be sensed by the Transmission Control System. If an inductive spike is not sensed by the Transmission Control System during the continuity check, it is tested again. If the test fails three consecutive times, the appropriate Diagnostic Trouble Code (DTC) is set. If the solenoid test is run in response to a gear ratio or pressure switch error, one failure will result in setting the appropriate DTC.

- **When Monitored:**

  Initially at power-up, then every 10 seconds thereafter. The solenoid circuits will also be tested immediately after a gear ratio or pressure switch error is detected.
- **Set Condition:**

  After three consecutive solenoid continuity test failures, or one failure if test is run in response to a gear ratio or pressure switch error.

NOTE: This DTC is strictly an electrical fault and cannot be caused by any internal transmission failure other than an open in the Transmission Solenoid/TRS Assembly. If the Transmission Solenoid/TRS Assembly is in need of replacement - do not replace the Valve Body.

Possible Causes
RELATED DTCS PRESENT
(T59) UD SOLENOID CONTROL CIRCUIT SHORTED TO OTHER CIRCUITS
(T59) UD SOLENOID CONTROL CIRCUIT OPEN
(T59) UD SOLENOID CONTROL CIRCUIT SHORTED TO GROUND
TRANSMISSION SOLENOID/TRS ASSEMBLY
POWERTRAIN CONTROL MODULE (PCM)

Always perform the Pre-Diagnostic Troubleshooting Procedure before proceeding. (Refer to 28 - DTC-Based Diagnostics/MODULE, Powertrain Control (PCM) - Standard Procedure).

1. CHECK DTCS

1. With the scan tool, check DTCs.

Are there any TIPM TCM Power Control Circuit or TCM Power Input DTCs present?

Yes

- (Refer to 28 - DTC-Based Diagnostics/MODULE, Totally Integrated Power (TIPM) - Diagnosis and Testing) and perform the appropriate diagnostic procedure.

No

- Go To 2

2. CHECK IF P0765 IS PRESENT

1. Turn the ignition off to the lock position.
2. Remove the Ignition Switch Feed fuse from the TIPM.

CAUTION: Removal of the Ignition Switch Feed fuse from the TIPM will prevent the vehicle from being started in gear.

WARNING: The Ignition Switch Feed fuse must be removed from the TIPM. Failure to do so can result in possible serious or fatal injury.

3. Install Transmission Simulator 8333A.
4. Ignition on, engine not running.
5. With the scan tool, clear Transmission DTCs.
6. With the scan tool, actuate the UD Solenoid.
7. Monitor the UD Solenoid LED on the Transmission Simulator.

Did the UD Solenoid LED on the Transmission Simulator blink on and off?

Yes

- Go To 3

No

- Go To 5

3. CHECK THE TRANSMISSION SOLENOID/TRS ASSEMBLY

1. With the Transmission simulator still connected, continue to actuate the UD solenoid for two minutes.
2. After two minutes of actuation, with the scan tool, stop the actuation and check for transmission DTCs.

Did the DTC P0765 reset during the actuation test?

Yes

- Go To 5

No

- Go To 4

4. WIGGLE TEST WITH TRANSMISSION SIMULATOR

1. With the Transmission simulator still connected, continue to actuate the UD solenoid for another two minutes while wiggling the related wiring harness and connectors.
2. With the scan tool, stop the actuation and check for transmission DTCs.

Did the DTC P0765 reset during the actuation test?

Yes

- Repair wiring harness or connectors as necessary.
- Perform the 545RFE TRANSMISSION VERIFICATION TEST. (Refer to 28 - DTC-Based Diagnostics/MODULE, Powertrain Control (PCM) - Standard Procedure).

No

- Replace the Transmission Solenoid/TRS Assembly in accordance with the Service Information. **Note: Do NOT replace the entire Valve Body.** (Refer to 21 - Transmission and Transfer Case/Automatic - 545RFE/ASSEMBLY, Transmission Solenoid and TRS - Removal).
- Perform the 545RFE TRANSMISSION VERIFICATION TEST. (Refer to 28 - DTC-Based Diagnostics/MODULE, Powertrain Control (PCM) - Standard Procedure).

5. CHECK THE (T59) UD SOLENOID CONTROL CIRCUIT FOR A SHORT TO ANOTHER CIRCUIT

1. Turn the ignition off to the lock position.
2. Disconnect the Transmission Simulator 8333A.
3. Disconnect the PCM harness connectors.
4. Measure the resistance between the (T59) UD Solenoid Control circuit and all other circuits in the Transmission Solenoid/TRS Assembly harness connector.

Is the resistance below 5.0 Ohms between the (T59) UD Solenoid Control circuit and any other circuit(s) in the Transmission Solenoid/TRS Assembly harness connector?

Yes

- Repair the (T59) UD Solenoid Control circuit for a short to another circuit(s).
- Perform the 545RFE TRANSMISSION VERIFICATION TEST. (Refer to 28 - DTC-Based Diagnostics/MODULE, Powertrain Control (PCM) - Standard Procedure).

No

- Go To 6

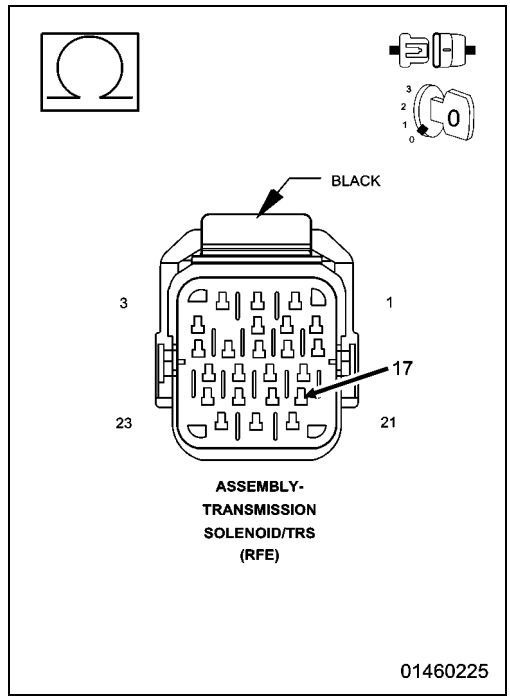

6. CHECK THE (T59) UD SOLENOID CONTROL CIRCUIT FOR AN OPEN

1. Connect the PCM Pinout Box 8815A to the PCM C4 harness connector.

CAUTION: Do not probe the PCM harness connectors. Probing the PCM harness connectors will damage the PCM terminals resulting in poor terminal to pin connection. Install the Kit, NGC, 38 Position 8815A to perform diagnosis.

2. Measure the resistance of the (T59) UD Solenoid Control circuit between the Transmission Solenoid/TRS Assembly harness connector and the appropriate terminal of the PCM Pinout Box 8815A.

Is the resistance above 5.0 Ohms?

Yes

- Repair the (T59) UD Solenoid Control circuit for an open.
- Perform the 545RFE TRANSMISSION VERIFICATION TEST. (Refer to 28 - DTC-Based Diagnostics/MODULE, Powertrain Control (PCM) - Standard Procedure).

No

- Go To 7

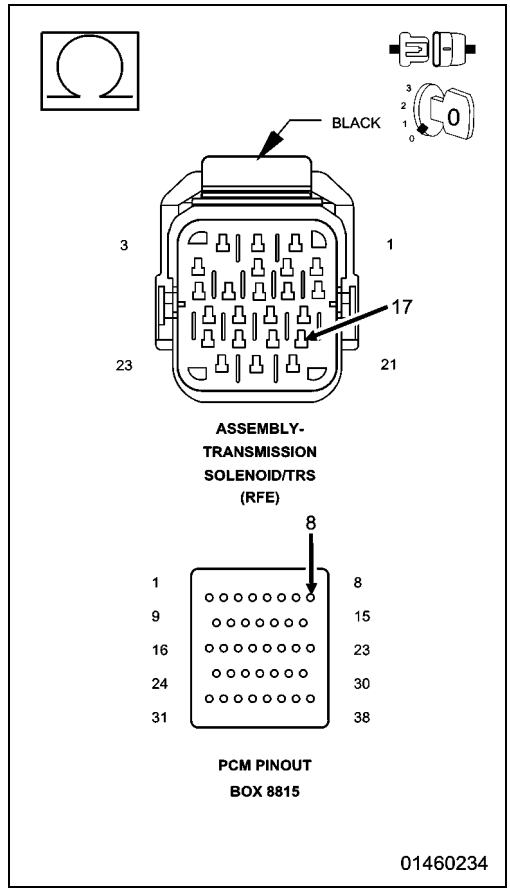

7. CHECK THE (T59) UD SOLENOID CONTROL CIRCUIT FOR A SHORT TO GROUND

1. Measure the resistance between ground and the (T59) UD Solenoid Control circuit.

Is the resistance below 5.0 Ohms?

Yes

- Repair the (T59) UD Solenoid Control circuit for a short to ground.
- Perform the 545RFE TRANSMISSION VERIFICATION TEST. (Refer to 28 - DTC-Based Diagnostics/MODULE, Powertrain Control (PCM) - Standard Procedure).

No

- Using the schematics as a guide, check the Powertrain Control Module (PCM) terminals for corrosion, damage, or terminal push out. Pay particular attention to all power and ground circuits. If no problems are found, replace and program the PCM in accordance with the Service Information. With the scan tool, perform Quick Learn.
- Perform the 545RFE TRANSMISSION VERIFICATION TEST. (Refer to 28 - DTC-Based Diagnostics/MODULE, Powertrain Control (PCM) - Standard Procedure).

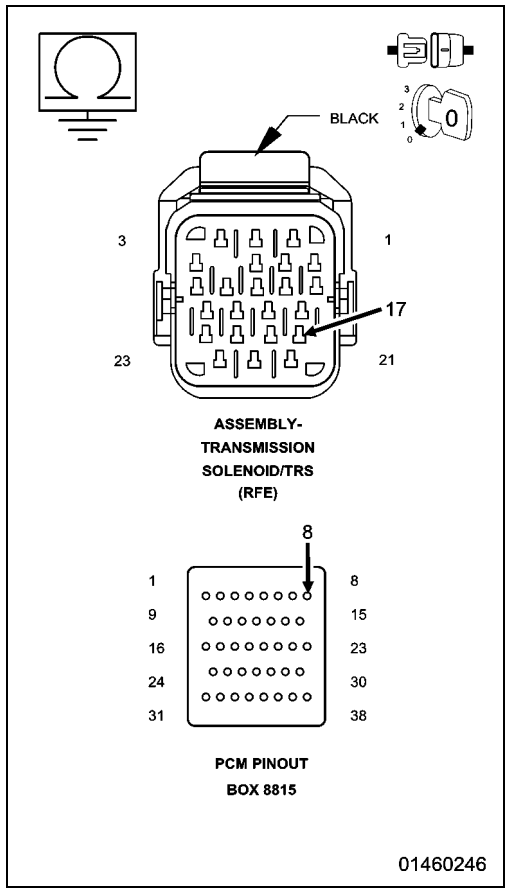

P0770-4C SOLENOID CIRCUIT

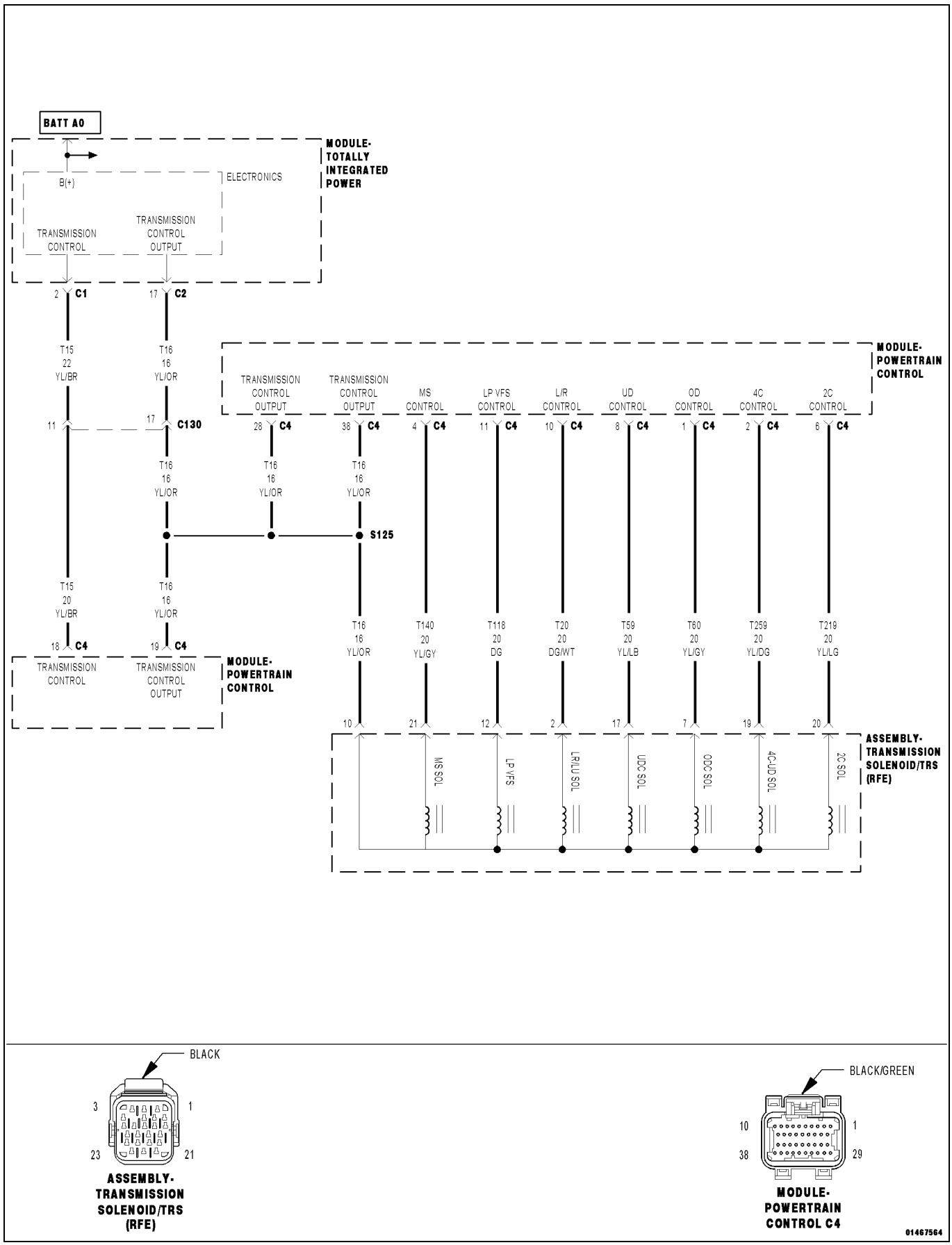

For a complete wiring diagram, **refer to the Wiring Information**.

Theory of Operation

The Transmission Control System uses six electronically controlled solenoids that allow hydraulic fluid to be applied to various friction elements (clutches), which enables the gear requested. The continuity of each solenoid circuit is periodically tested. Each inactive solenoid is turned on for a few milliseconds, then off. Each active solenoid is turned off for a few milliseconds, then on. This pulsing of voltage to the solenoid causes an inductive spike which can be sensed by the Transmission Control System. If an inductive spike is not sensed by the Transmission Control System during the continuity check, it is tested again. If the test fails three consecutive times, the appropriate Diagnostic Trouble Code (DTC) is set. If the solenoid test is run in response to a gear ratio or pressure switch error, one failure will result in setting the appropriate DTC.

- **When Monitored:**

  Initially at power-up, then every 10 seconds thereafter. The solenoid circuits will also be tested immediately after a gear ratio or pressure switch error is detected.
- **Set Condition:**

  After three consecutive solenoid continuity test failures, or one failure if test is run in response to a gear ratio or pressure switch error.

NOTE: This DTC is strictly an electrical fault and cannot be caused by any internal transmission failure other than an open in the Transmission Solenoid/TRS Assembly. If the Transmission Solenoid/TRS Assembly is in need of replacement - do not replace the Valve Body.

Possible Causes
RELATED DTCS PRESENT
(T259) 4C SOLENOID CONTROL CIRCUIT SHORTED TO OTHER CIRCUITS
(T259) 4C SOLENOID CONTROL CIRCUIT OPEN
(T259) 4C SOLENOID CONTROL CIRCUIT SHORTED TO GROUND
TRANSMISSION SOLENOID/TRS ASSEMBLY
POWERTRAIN CONTROL MODULE (PCM)

Always perform the Pre-Diagnostic Troubleshooting Procedure before proceeding. (Refer to 28 - DTC-Based Diagnostics/MODULE, Powertrain Control (PCM) - Standard Procedure).

1. CHECK DTCS

1. With the scan tool, check DTCs.

Are there any TIPM TCM Power Control Circuit or TCM Power Input DTCs present?

Yes

- (Refer to 28 - DTC-Based Diagnostics/MODULE, Totally Integrated Power (TIPM) - Diagnosis and Testing) and perform the appropriate diagnostic procedure.

No

- Go To 2

2. CHECK TO SEE IF P0770 IS PRESENT

1. Turn the ignition off to the lock position.
2. Remove the Ignition Switch Feed fuse from the TIPM.

CAUTION: Removal of the Ignition Switch Feed fuse from the TIPM will prevent the vehicle from being started in gear.

WARNING: The Ignition Switch Feed fuse must be removed from the TIPM. Failure to do so can result in possible serious or fatal injury.

3. Install Transmission Simulator 8333A.
4. Ignition on, engine not running.
5. With the scan tool, clear Transmission DTCs.
6. With the scan tool, actuate the 4C Solenoid.
7. Monitor the 4C Solenoid LED on the Transmission Simulator.

Did the 4C Solenoid LED on the Transmission Simulator blink on and off?

Yes

- Go To 3

No

- Go To 5

3. CHECK THE TRANSMISSION SOLENOID/TRS ASSEMBLY

1. With the Transmission simulator still connected, continue to actuate the 4C solenoid for two minutes.
2. After two minutes of actuation, with the scan tool, stop the actuation and check for transmission DTCs.

Did the DTC P0770 reset during the actuation test?

Yes

- Go To 5

No

- Go To 4

4. WIGGLE TEST WITH TRANSMISSION SIMULATOR

1. With the Transmission simulator still connected, continue to actuate the 4C solenoid for another two minutes while wiggling the related wiring harness and connectors.
2. With the scan tool, stop the actuation and check for transmission DTCs.

Did the DTC P0770 reset during the actuation test?

Yes

- Repair wiring harness or connectors as necessary.
- Perform the 545RFE TRANSMISSION VERIFICATION TEST. (Refer to 28 - DTC-Based Diagnostics/MODULE, Powertrain Control (PCM) - Standard Procedure).

No

- Replace the Transmission Solenoid/TRS Assembly in accordance with the Service Information. **Note: Do NOT replace the entire Valve Body.** (Refer to 21 - Transmission and Transfer Case/Automatic - 545RFE/ASSEMBLY, Transmission Solenoid and TRS - Removal)
- Perform the 545RFE TRANSMISSION VERIFICATION TEST. (Refer to 28 - DTC-Based Diagnostics/MODULE, Powertrain Control (PCM) - Standard Procedure).

5. CHECK THE (T259) 4C SOLENOID CONTROL CIRCUIT FOR A SHORT TO ANOTHER CIRCUIT

1. Turn the ignition off to the lock position.
2. Disconnect the Transmission Simulator 8333A.
3. Disconnect the PCM harness connectors.
4. Measure the resistance between the (T259) 4C Solenoid Control circuit and all other circuits in the Transmission Solenoid/TRS Assembly harness connector.

Is the resistance below 5.0 Ohms between the (T259) 4C Solenoid Control circuit and any other circuit(s) in the Transmission Solenoid/TRS Assembly harness connector?

Yes

- Repair the (T259) 4C Solenoid Control circuit for a short to another circuit(s).
- Perform the 545RFE TRANSMISSION VERIFICATION TEST. (Refer to 28 - DTC-Based Diagnostics/MODULE, Powertrain Control (PCM) - Standard Procedure).

No

- Go To 6

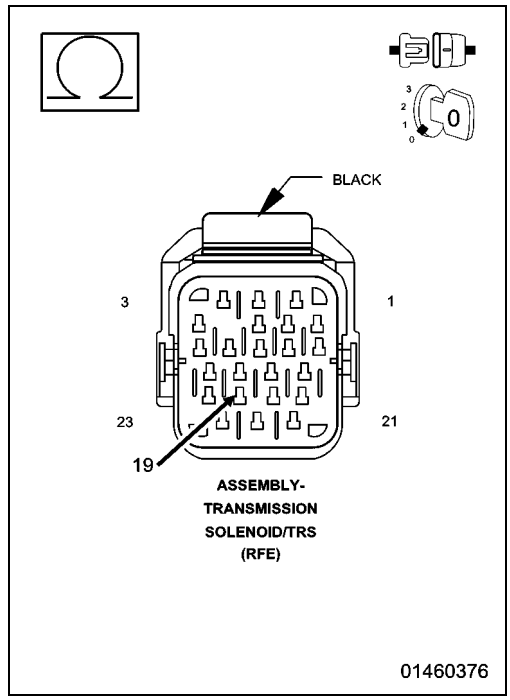

6. CHECK THE (T259) 4C SOLENOID CONTROL CIRCUIT FOR AN OPEN

1. Connect the PCM Pinout Box 8815A to the PCM C4 harness connector.

CAUTION: Do not probe the PCM harness connectors. Probing the PCM harness connectors will damage the PCM terminals resulting in poor terminal to pin connection. Install the Kit, NGC, 38 Position 8815A to perform diagnosis.

2. Measure the resistance of the (T259) 4C Solenoid Control circuit between the Transmission Solenoid/TRS Assembly harness connector and the appropriate terminal of PCM Pinout Box 8815A.

Is the resistance above 5.0 Ohms?

Yes

- Repair the (T259) 4C Solenoid Control circuit for an open.
- Perform the 545RFE TRANSMISSION VERIFICATION TEST. (Refer to 28 - DTC-Based Diagnostics/MODULE, Powertrain Control (PCM) - Standard Procedure).

No

- Go To 7

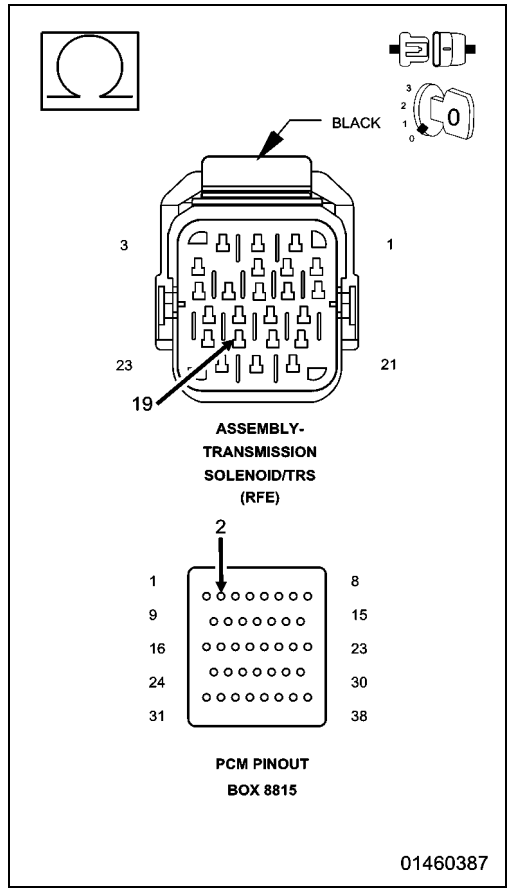

7. CHECK THE (T259) 4C SOLENOID CONTROL CIRCUIT FOR A SHORT TO GROUND

1. Measure the resistance between ground and the (T259) 4C Solenoid Control circuit.

Is the resistance below 5.0 Ohms?

Yes

- Repair the (T259) 4C Solenoid Control circuit for a short to ground.
- Perform the 545RFE TRANSMISSION VERIFICATION TEST. (Refer to 28 - DTC-Based Diagnostics/MODULE, Powertrain Control (PCM) - Standard Procedure).

No

- Using the schematics as a guide, check the Powertrain Control Module (PCM) terminals for corrosion, damage, or terminal push out. Pay particular attention to all power and ground circuits. If no problems are found, replace and program the PCM in accordance with the Service Information. With the scan tool, perform Quick Learn.
- Perform the 545RFE TRANSMISSION VERIFICATION TEST. (Refer to 28 - DTC-Based Diagnostics/MODULE, Powertrain Control (PCM) - Standard Procedure).

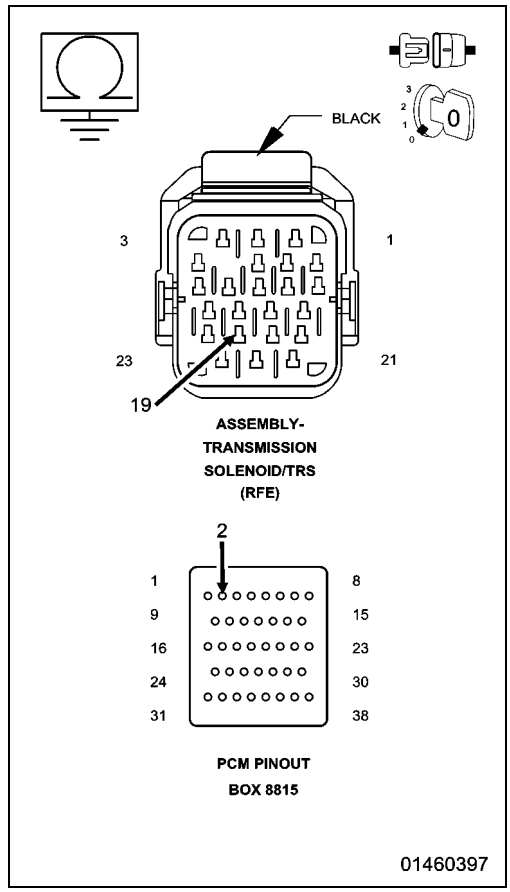

P0841-LR PRESSURE SWITCH RATIONALITY

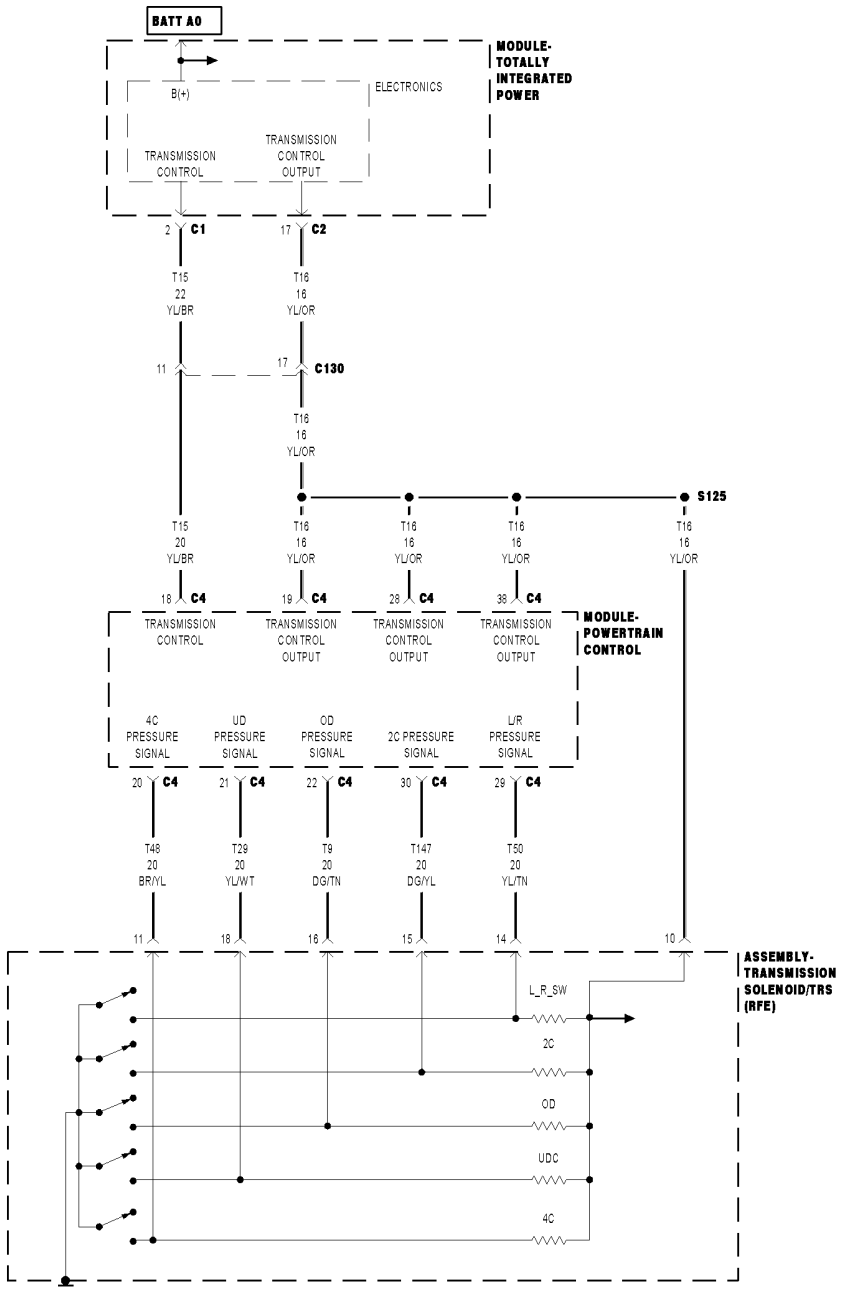

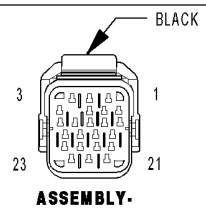

ASSEMBLY-
TRANSMISSION
SOLENOID/TRS
(RFE)

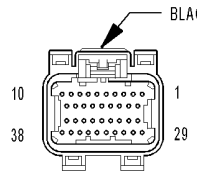

MODULE-
POWERTRAIN
CONTROL C4

01468388

For a complete wiring diagram, **refer to the Wiring Information**.

Theory of Operation

The Transmission system uses five pressure switches to monitor the fluid pressure in the L/R, 2C, 4C, UD, and OD clutch circuits. The pressure switches are continuously monitored for the correct states in each gear as shown.

- **When Monitored:**
  Continuously with the ignition on and engine running.
- **Set Condition:**
  The DTC will set if the L/R Pressure Switch reads open or closed at the wrong time in a given gear.

Possible Causes
LOSS OF PRIME AND/OR TIPM DTC PRESENT
LOW FLUID LEVEL
LOW LINE PRESSURE
REVERSE CARRIER SNAP RING DISLODGED
CRACKED OR IMPROPERLY INSTALLED PRIMARY OIL FILTER OR FILTER SEAL
STICKING MAIN REGULATOR VALVE IN PUMP VALVE BODY
NO. 1 CHECK BALL CUT OR DAMAGED
WIRING AND CONNECTORS
(T50) L/R PRESSURE SWITCH SENSE CIRCUIT OPEN
(T50) L/R PRESSURE SWITCH SENSE CIRCUIT SHORTED TO GROUND
(T50) L/R PRESSURE SWITCH SENSE CIRCUIT SHORTED TO VOLTAGE
TRANSMISSION SOLENOID/TRS ASSEMBLY
POWERTRAIN CONTROL MODULE (PCM)

Always perform the Pre-Diagnostic Troubleshooting Procedure before proceeding. (Refer to 28 - DTC-Based Diagnostics/MODULE, Powertrain Control (PCM) - Standard Procedure).

GEAR	L/R	2C	4C	UD	OD
REVERSE	OPEN	OPEN	OPEN	OPEN	OPEN
P/N	CLOSED**	OPEN	OPEN	OPEN	OPEN
1ST	CLOSED*	OPEN	OPEN	CLOSED	OPEN
2ND	OPEN	CLOSED	OPEN	CLOSED	OPEN
2ND PRIME	OPEN	OPEN	CLOSED	CLOSED	OPEN
3RD	OPEN	OPEN	OPEN	CLOSED	CLOSED
4TH	OPEN	OPEN	CLOSED	OPEN	CLOSED
5TH	OPEN	CLOSED	OPEN	OPEN	CLOSED
*L/R is closed if output speed is below 100 rpm in Drive and Manual 2. L/R is closed in Manual 1.					
**May be open when rolling in Neutral or at low oil temperatures.					

1. CHECK FOR RELATED DTCS

1. Ignition on, engine not running.
2. With the scan tool, read DTCs.

Are there any Loss of Prime and/or TIPM TCM Power Control Circuit DTCs present?

Yes

- Perform the appropriate diagnostic procedure. If the DTC P0944 is present, perform its respective test first.

No

- Go To 2

2. CHECK IF THE CONDITION P0841 IS PRESENT

1. With the scan tool, check the Event Data for P0841.

NOTE: Make sure to record all Event Data stored in the scan tool for future reference in this test procedure.

Does the Event Data show the DTC P0841?

Yes

- Go To 3

No

- Perform the appropriate diagnostics for the DTC reported in the Event Data.

3. CHECK IF THE DTC SET IN REVERSE

In the Event Data recorded earlier, does the Event Data show the DTC P0841 set while in Reverse?

Yes

- Go To 10

No

- Go To 4

4. CHECK IF THE L/R PRESSURE SWITCH IS CLOSED

In the Event Data recorded earlier, does the Event Data show the L/R Pressure Switch reading CLOSED when the DTC P0841 was set?

Yes

- Go To 5

No

- Go To 14

5. CHECK THE PCM AND WIRING

1. Turn the ignition off to the lock position.
2. Remove the Ignition Switch Feed fuse from the TIPM.

CAUTION: Removal of the Ignition Switch Feed fuse from the TIPM will prevent the vehicle from being started in gear.

WARNING: The Ignition Switch Feed fuse must be removed from the TIPM. Failure to do so can result in possible serious or fatal injury.

3. Install the Transmission Simulator 8333A.
4. Ignition on, engine not running.
5. Turn the Pressure Switch selector to L/R on the Transmission Simulator.
6. With the scan tool, monitor the L/R Pressure Switch state while pressing the Pressure Switch Test button on the Transmission Simulator.

Did the L/R Pressure Switch state change from open to closed while pressing the Pressure Switch Test button on the Transmission Simulator?

Yes

- Go To 6

No

- Go To 10

6. CHECK FOR POOR WIRING AND CONNECTIONS

1. Using the schematics as a guide, inspect the wiring and connectors specific to this circuit.
2. Wiggle the wires while checking for shorted and open circuits.

Were there any problems found?

Yes

- Repair as necessary.
- Perform the 545RFE TRANSMISSION VERIFICATION TEST. (Refer to 28 - DTC-Based Diagnostics/MODULE, Powertrain Control (PCM) - Standard Procedure).

No

- Go To 7

7. CHECK IF THE DTC SET IN FIRST GEAR

In the Event Data recorded earlier, does the Event Data show the Present Gear as first gear when the DTC P0841 was set ?

Yes

- Go To 8

No

- Replace the Transmission Solenoid/TRS Assembly in accordance with the Service Information.
- Perform the 545RFE TRANSMISSION VERIFICATION TEST. (Refer to 28 - DTC-Based Diagnostics/MODULE, Powertrain Control (PCM) - Standard Procedure).

8. CHECK IF THE NO. 1 CHECK BALL IS CUT OR DAMAGED

1. Turn the ignition off to the lock position.
2. Remove the Transmission Valve Body in accordance with the Service Information.
3. Check the No. 1 Check Ball for any possible cuts or damage.

Is the No. 1 Check Ball cut or damaged?

Yes

- Replace the No. 1 Check Ball and check for clutch debris in the transmission oil pan. If there is excessive debris, perform internal repairs to the L/R Clutch assembly. Refer to the Service Information for proper repair procedures.
- Perform the 545RFE TRANSMISSION VERIFICATION TEST. (Refer to 28 - DTC-Based Diagnostics/MODULE, Powertrain Control (PCM) - Standard Procedure).

No

- Go To 9

9. CHECK IF THE REVERSE CARRIER SNAP RING IS DISLODGED AND THE TRANSMISSION SOLENOID/TRS ASSEMBLY

1. Looking through the windows in the bottom of the case, check whether the snap ring at the front of the Reverse (center) Carrier has dislodged.

NOTE: It may be necessary to pry the Input Annulus Gear Shell rearward to check this snap ring.

Is the Reverse Carrier Snap Ring dislodged?

Yes

- Repair as necessary.
- Perform the 545RFE TRANSMISSION VERIFICATION TEST. (Refer to 28 - DTC-Based Diagnostics/MODULE, Powertrain Control (PCM) - Standard Procedure).

No

- Replace the Transmission Solenoid/TRS Assembly in accordance with the Service Information.
- Perform the 545RFE TRANSMISSION VERIFICATION TEST. (Refer to 28 - DTC-Based Diagnostics/MODULE, Powertrain Control (PCM) - Standard Procedure).

10. CHECK THE (T50) L/R PRESSURE SWITCH SENSE CIRCUIT FOR AN OPEN

1. Turn the ignition off to the lock position.
2. Disconnect the Transmission Simulator 8333A if connected in a previous step or disconnect the Transmission Solenoid/TRS Assembly harness connector.
3. Disconnect the PCM C4 harness connector and connect the PCM Pinout Box 8815A.

NOTE: Check connectors - Clean/repair as necessary.

CAUTION: Do not probe the PCM harness connectors. Probing the PCM harness connectors will damage the PCM terminals resulting in poor terminal to pin connection. Install the Kit, NGC, 38 Position 8815A to perform diagnosis.

4. Measure the resistance of the (T50) L/R Pressure Switch Sense circuit between the Solenoid/TRS Assembly harness connector and the appropriate terminal of the PCM Pinout Box 8815A.

Is the resistance above 5.0 Ohms?

Yes

- Repair the (T50) L/R Pressure Switch Sense circuit for an open.
- Perform the 545RFE TRANSMISSION VERIFICATION TEST. (Refer to 28 - DTC-Based Diagnostics/MODULE, Powertrain Control (PCM) - Standard Procedure).

No

- Go To 11

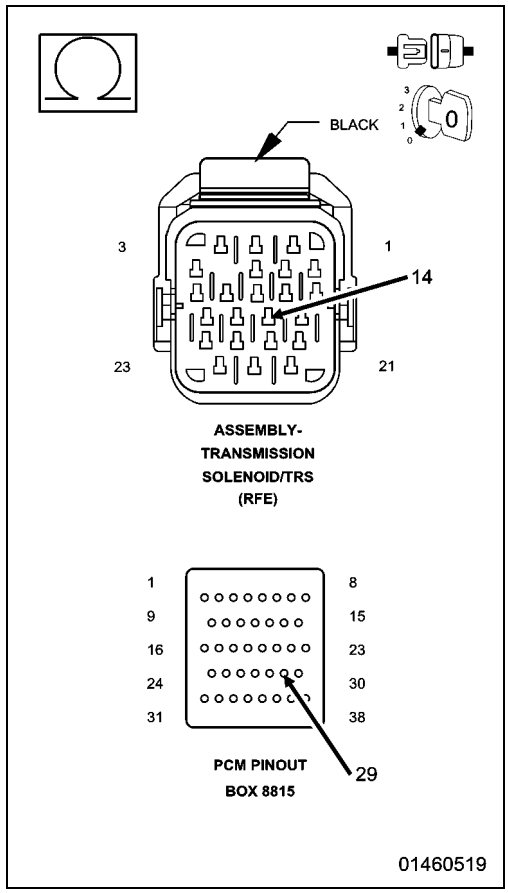

11. CHECK THE (T50) L/R PRESSURE SWITCH SENSE CIRCUIT FOR A SHORT TO GROUND

1. Measure the resistance between ground and the (T50) L/R Pressure Switch Sense circuit.

Is the resistance below 5.0 Ohms?

Yes

- Repair the (T50) L/R Pressure Switch Sense circuit for a short to ground.
- Perform the 545RFE TRANSMISSION VERIFICATION TEST. (Refer to 28 - DTC-Based Diagnostics/MODULE, Powertrain Control (PCM) - Standard Procedure).

No

- Go To 12

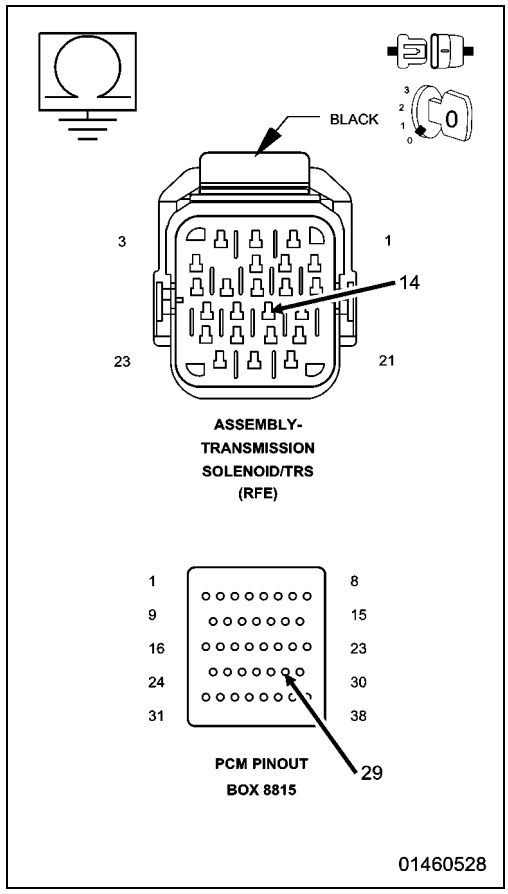

12. CHECK THE PCM POWERS AND GROUNDS

1. Using the schematics as a guide, check the Powertrain Control Module (PCM) terminals for corrosion, damage, or terminal push out. Pay particular attention to all power and ground circuits.

Were there any problems found?

Yes

- Repair as necessary.
- Perform the 545RFE TRANSMISSION VERIFICATION TEST. (Refer to 28 - DTC-Based Diagnostics/MODULE, Powertrain Control (PCM) - Standard Procedure).

No

- Go To 13

13. ROAD TEST THE VEHICLE

1. With the scan tool, clear the DTC and road test the vehicle.
2. Try to duplicate the conditions in which the DTC originally set using the Event Data recorded earlier.

Did the DTC P0841 reset?

Yes

- Using the schematics as a guide, check the Powertrain Control Module (PCM) terminals for corrosion, damage, or terminal push out. Pay particular attention to all power and ground circuits. If no problems are found, replace and program the PCM in accordance with the Service Information. With the scan tool, perform Quick Learn.
- Perform the 545RFE TRANSMISSION VERIFICATION TEST. (Refer to 28 - DTC-Based Diagnostics/MODULE, Powertrain Control (PCM) - Standard Procedure).

No

- Go To 17

14. CHECK FOR LOW LINE PRESSURE

1. In the Event Data recorded earlier, compare the Line Pressure and the Desired Line Pressure.

Is the Line Pressure less than 40 psi, and significantly below the Desired Line Pressure?

Yes

- Repair as necessary to correct low line pressure. Check for low fluid level. Check the Primary Oil Filter seal for a split, crack, or improperly installed. Refer to the Service Information for the proper installation procedure. If the fluid level and Primary Oil Filter are OK, check the Main Regulator Valve in the Oil Pump in accordance with the Service Information.
- Perform the 545RFE TRANSMISSION VERIFICATION TEST. (Refer to 28 - DTC-Based Diagnostics/MODULE, Powertrain Control (PCM) - Standard Procedure).

No

- Go To 15

15. CHECK THE (T50) L/R PRESSURE SWITCH SENSE CIRCUIT FOR A SHORT TO ANOTHER CIRCUIT

1. Turn the ignition off to the lock position.
2. Disconnect the Transmission Solenoid/TRS Assembly harness connector.
3. Disconnect all PCM harness connectors.
4. Measure the resistance between the (T50) L/R Pressure Switch Sense circuit and all other circuits in the Transmission Solenoid/TRS Assembly harness connector.

Is the resistance below 5.0 Ohms between the (T50) L/R Pressure Switch Sense circuit and any other circuit(s) in the Transmission Solenoid/TRS Assembly harness connector?

Yes

- Repair the (T50) L/R Pressure Switch Sense circuit for a short to another circuit(s).
- Perform the 545RFE TRANSMISSION VERIFICATION TEST. (Refer to 28 - DTC-Based Diagnostics/MODULE, Powertrain Control (PCM) - Standard Procedure).

No

- Go To 16

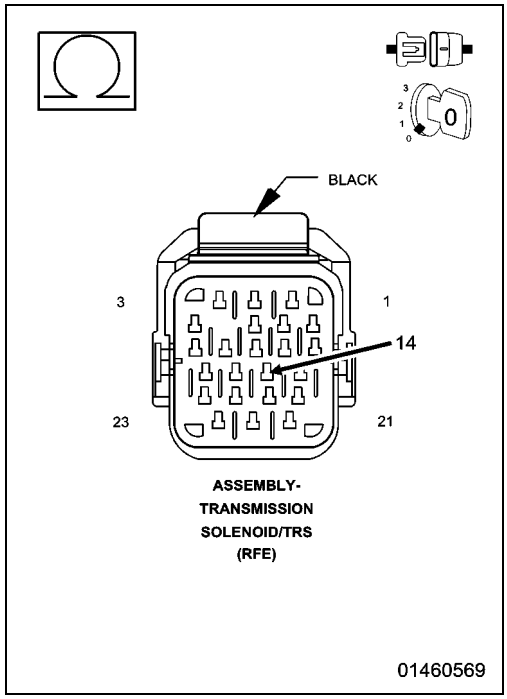

16. ROAD TEST THE VEHICLE

1. With the scan tool, clear the DTC and road test the vehicle.
2. Try to duplicate the conditions in which the DTC originally set using the Event Data recorded earlier.

Did the DTC P0841 reset?

Yes

- Replace the Transmission Solenoid/TRS Assembly in accordance with the Service Information.
- Perform the 545RFE TRANSMISSION VERIFICATION TEST. (Refer to 28 - DTC-Based Diagnostics/MODULE, Powertrain Control (PCM) - Standard Procedure).

No

- Go To 17

17. CHECK THE WIRING AND CONNECTORS

1. The conditions necessary to set this DTC are not present at this time.
2. Using the schematics as a guide, inspect the wiring and connectors specific to this circuit.
3. Wiggle the wires while checking for shorted and open circuits.
4. With the scan tool, check the Event Data to help identify the conditions in which the DTC was set.

Were there any problems found?

Yes

- Repair as necessary.
- Perform the 545RFE TRANSMISSION VERIFICATION TEST. (Refer to 28 - DTC-Based Diagnostics/MODULE, Powertrain Control (PCM) - Standard Procedure).

No

- Test Complete.

P0845-2C HYDRAULIC PRESSURE TEST

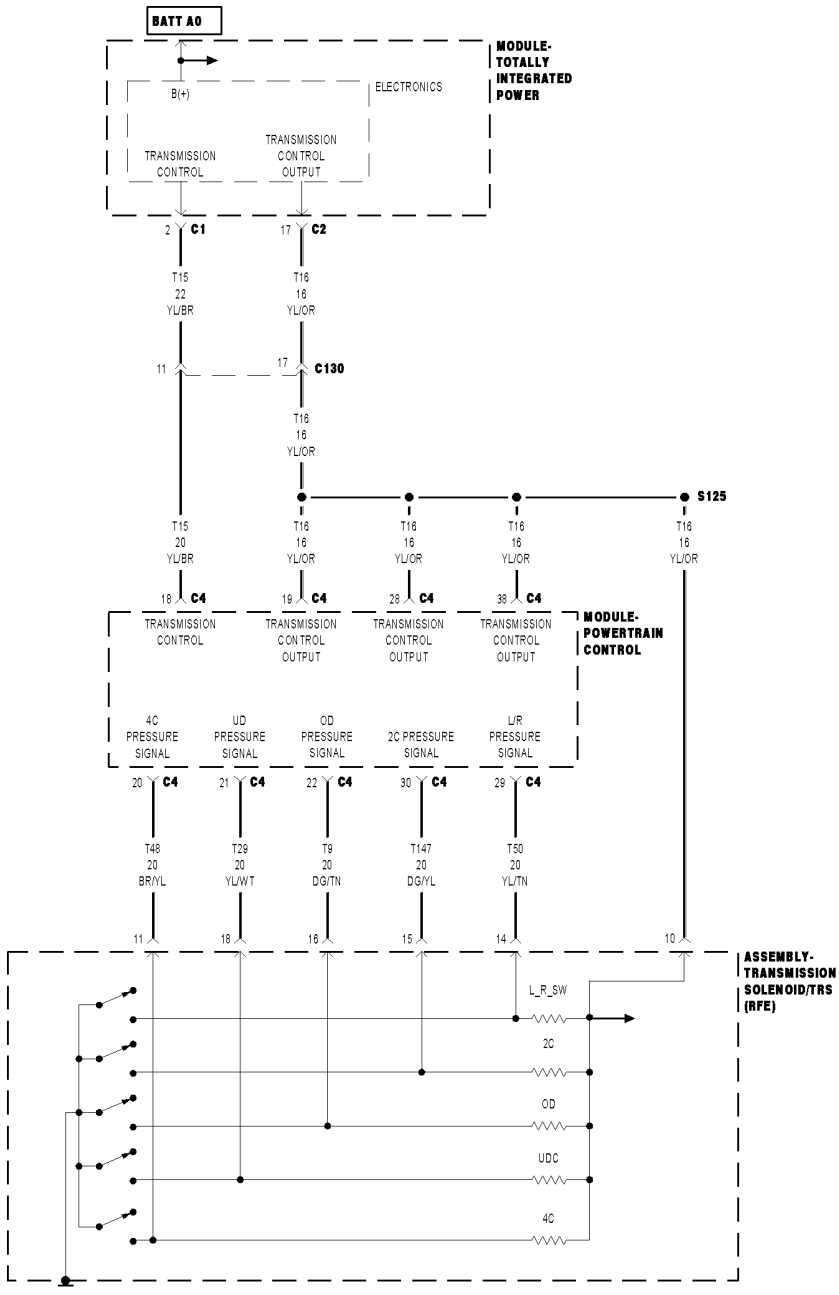

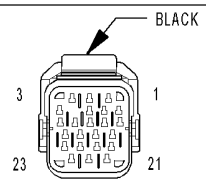

ASSEMBLY-
TRANSMISSION
SOLENOID/TRS
(RFE)

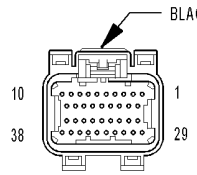

MODULE-
POWERTRAIN
CONTROL C4

01468388

For a complete wiring diagram, **refer to the Wiring Information**.

Theory of Operation

The Transmission Control System tests the pressure switches when they are off. The test verifies that the switches are operational (They will close with pressure applied). The Transmission Control System verifies that the switch closes when the corresponding element is applied. If a switch fails to close, it is re-tested. If it fails the second test, the DTC will set, the MIL will illuminate and the transmission system will default to the orderly Shutdown routine.

- **When Monitored:**
  In any forward gear with engine speed above 1000 rpm shortly after a shift and every minute thereafter.
- **Set Condition:**
  After a shift into a forward gear, with engine speed above 1000 rpm, the Powertrain Control Module (PCM) momentarily turns on element pressure to the Clutch circuits that don't have pressure to identify the correct Pressure Switch closes. If the Pressure Switch does not close 2 times, the DTC sets.

Possible Causes
LINE PRESSURE SENSOR
TRANSMISSION FLUID CONTAMINATION
RELATED DTCS PRESENT
EXCESSIVE DEBRIS IN OIL PAN
POOR LINE PRESSURE SENSOR CONNECTION
(T147) 2C PRESSURE SWITCH SENSE CIRCUIT SHORTED TO VOLTAGE
(T147) 2C PRESSURE SWITCH SENSE CIRCUIT SHORTED TO ANOTHER CIRCUIT
(F856) 5-VOLT SUPPLY CIRCUIT OPEN
(F856) 5-VOLT SUPPLY CIRCUIT SHORTED TO GROUND
EXTRA CHECK BALL IN PASSAGE DOWNSTREAM FROM #7 BALL POCKET
TRANSMISSION SOLENOID/TRS ASSEMBLY
INTERNAL TRANSMISSION
POWERTRAIN CONTROL MODULE (PCM)

Always perform the Pre-Diagnostic Troubleshooting Procedure before proceeding. (Refer to 28 - DTC-Based Diagnostics/MODULE, Powertrain Control (PCM) - Standard Procedure).

1. DETERMINING IF RELATED DTCS ARE PRESENT

1. With the scan tool, read DTCs.

   Are there any Loss of Prime, TCM Power Input, Line Pressure Sensor and/or TIPM TCM Power Control circuit DTCs present?

Yes

- Perform the appropriate diagnostic procedure. If the DTC P0944-LOSS OF PRIME is present, perform its respective test first.

No

- Go To 2

2. CHECK IF THE DTC P0755 IS PRESENT

1. With the scan tool, read DTCs.

Is the DTC P0755 also present?

Yes

- (Refer to 28 - DTC-Based Diagnostics/MODULE, Powertrain Control (PCM) - Diagnosis and Testing) and perform diagnostics for P0755-2C SOLENOID CIRCUIT.

No

- Go To 3

3. CHECK IF THE DTCS P0732, P0733 AND/OR P0846 ARE PRESENT

1. With the scan tool, read DTCs.

Are the DTCs P0732, P0733, and/or P0846 present also?

Yes

- Go To 12

No

- Go To 4

4. CHECK IF THE DTC IS CURRENT

1. With the scan tool, read DTCs.

Is the status Active or is the Starts Since Set counter 2 or less for this DTC?

Yes

- Go To 5

No

- Go To 15

5. CHECK IF THE LINE PRESSURE STAYS THE SAME

1. Start the engine.
2. Warm the transmission to 82° C or 180° F.
3. Firmly apply the brakes.
4. With the scan tool, monitor the Line Pressure during the following step.
5. Move the shift lever to each gear position, pausing momentarily in each position and record the line pressure reading. Allow the pressure to stabilize for at least 5 seconds in each range.

Did the line pressure remain at a steady value between 585 and 655 kPa (85 and 95 psi) in each position?

Yes

- Go To 6

No

- Go To 10

6. CHECK THE LINE PRESSURE SENSOR CONNECTION

1. Ignition on, **engine not running.**
2. With the scan tool, monitor the Line Pressure while firmly pushing the Transmission Line Pressure Sensor connector inwards towards the Transmission.

Did the Line Pressure reading on the scan tool CHANGE to about 207 kPa (30 psi) or 0.7 of a volt when the connector was pushed inward?

Yes

- Disconnect and properly reconnect the Line Pressure Sensor connector. Inspect terminals and repair as necessary.
- Perform the 545RFE TRANSMISSION VERIFICATION TEST. (Refer to 28 - DTC-Based Diagnostics/MODULE, Powertrain Control (PCM) - Standard Procedure).

No

- Go To 7

7. CHECK THE LINE PRESSURE SENSOR OPERATION

1. Turn the ignition off to the lock position.
2. Remove the Ignition Switch Feed fuse from the TIPM.

CAUTION: Removal of the Ignition Switch Feed fuse from the TIPM will prevent the vehicle from being started in gear.

WARNING: The Ignition Switch Feed fuse must be removed from the TIPM. Failure to do so can result in possible serious or fatal injury.

3. Install the Transmission Simulator 8333A.
4. With the Transmission Simulator select the "OFF" position on the "Input/Output Speed" switch.
5. Ignition on, engine not running.
6. With the scan tool, monitor the Line Pressure while turning the Pressure Switch selector to each of three line pressure positions on the Transmission Simulator.

NOTE: All three scan tool Line Pressure readings should be steady and ±14 kPa (2.0 psi) of the reading specified on the Transmission Simulator.

Did the scan tool Line Pressure readings match the specified readings on the Transmission Simulator and remain steady in all three positions?

Yes

- Replace the Line Pressure Sensor in accordance with the Service Information.
- Perform the 545RFE TRANSMISSION VERIFICATION TEST. (Refer to 28 - DTC-Based Diagnostics/MODULE, Powertrain Control (PCM) - Standard Procedure).

No

- Go To 8

8. CHECK THE (F856) 5-VOLT SUPPLY CIRCUIT FOR AN OPEN

1. Turn the ignition off to the lock position.
2. Disconnect Transmission Simulator.
3. Disconnect the PCM C1 harness connector and connect the PCM Pinout Box 8815A.

CAUTION: Do not probe the PCM harness connectors. Probing the PCM harness connectors will damage the PCM terminals resulting in poor terminal to pin connection. Install the Kit, NGC, 38 Position 8815A to perform diagnosis.

4. Measure the resistance of the (F856) 5-volt Supply circuit between the Line Pressure Sensor harness connector and the appropriate terminal of the PCM Pinout Box 8815A.

Is the resistance above 5.0 Ohms?

Yes

- Repair the (F856) 5-volt Supply circuit for an open.
- Perform the 545RFE TRANSMISSION VERIFICATION TEST. (Refer to 28 - DTC-Based Diagnostics/MODULE, Powertrain Control (PCM) - Standard Procedure).

No

- Go To 9

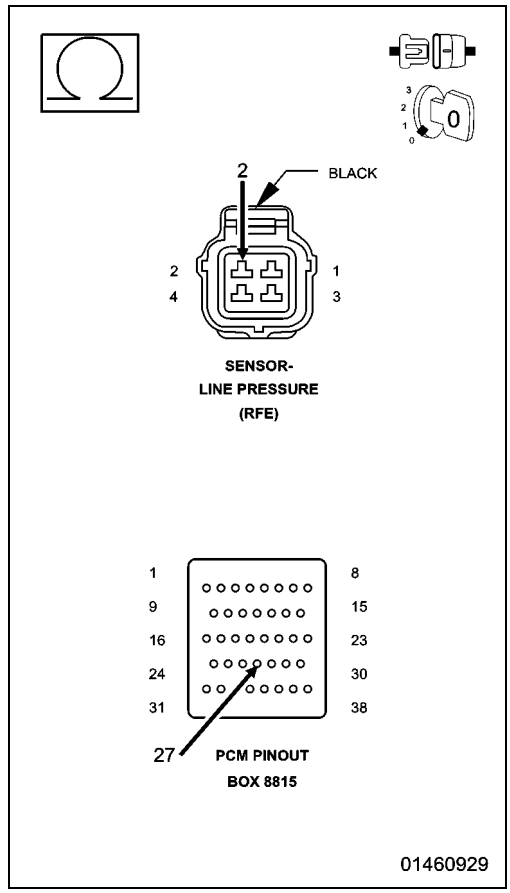

9. CHECK THE (F856) 5-VOLT SUPPLY CIRCUIT FOR A SHORT TO GROUND

1. Measure the resistance between ground and the (F856) 5-volt Supply circuit.

Is the resistance below 5.0 Ohms?

Yes

- Repair the (F856) 5-volt Supply circuit for a short to ground.
- Perform the 545RFE TRANSMISSION VERIFICATION TEST. (Refer to 28 - DTC-Based Diagnostics/MODULE, Powertrain Control (PCM) - Standard Procedure).

No

- Using the schematics as a guide, check the Powertrain Control Module (PCM) terminals for corrosion, damage, or terminal push out. Pay particular attention to all power and ground circuits. If no problems are found, replace and program the PCM in accordance with the Service Information. With the scan tool, perform Quick Learn.
- Perform the 545RFE TRANSMISSION VERIFICATION TEST. (Refer to 28 - DTC-Based Diagnostics/MODULE, Powertrain Control (PCM) - Standard Procedure).

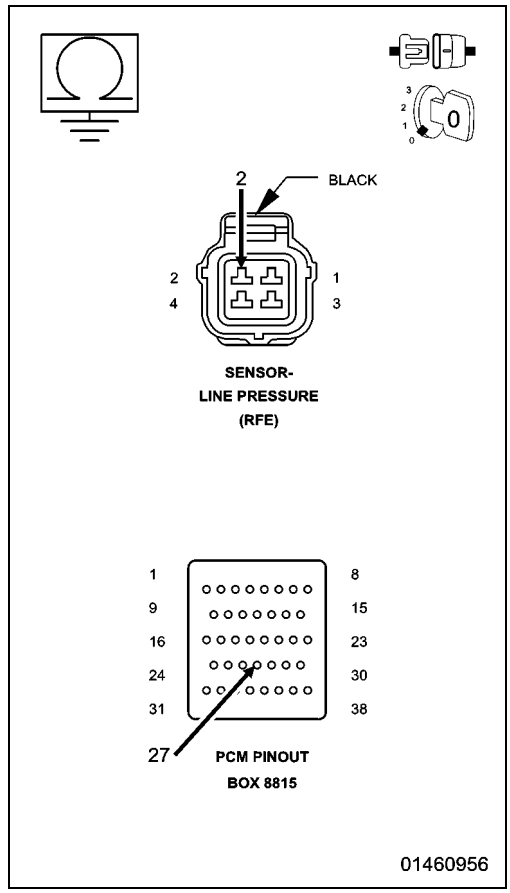

10. COMPARE SCAN TOOL TO PRESSURE GAUGE

1. Turn the ignition off to the lock position.
2. Connect the Line Pressure Adapter 8259 and 0-300 psi Test Gauge C-3293-SP. Refer to the Service Information for proper installation procedure.

CAUTION: Apply parking brake.

3. Start the engine.
4. In the following steps, compare the scan tool Line Pressure to the Pressure Gauge readings in each gear.

CAUTION: Do not overheat transmission.

5. With the gear selector in park, raise the rpm to 1500, and compare line pressure readings.
6. Firmly apply the brakes, move the gear selector into reverse, raise the rpm to 1500, and compare the line pressure readings.
7. Firmly apply the brakes, move the gear selector into drive, raise the rpm to 1500, and compare the line pressure readings.

Did the scan tool Line Pressure readings match the Pressure Gauge readings ± 10 psi?

Yes

- Go To 11

No

- Replace the Line Pressure Sensor in accordance with the Service Information.
- Perform the 545RFE TRANSMISSION VERIFICATION TEST. (Refer to 28 - DTC-Based Diagnostics/MODULE, Powertrain Control (PCM) - Standard Procedure).

11. CHECK THE WIRING AND CONNECTORS

1. Turn the ignition off to the lock position.
2. Remove the Ignition Switch Feed fuse from the TIPM.

CAUTION: Removal of the Ignition Switch Feed fuse from the TIPM will prevent the vehicle from being started in gear.

WARNING: The Ignition Switch Feed fuse must be removed from the TIPM. Failure to do so can result in possible serious or fatal injury.

3. Remove the Line Pressure Adapter 8259 and 0-300 psi Test Gauge C-3293-SP.
4. Install the Transmission Simulator 8333A.
5. On the Transmission Simulator, turn the Pressure Switch selector switch to 2C.
6. Ignition on, engine not running.
7. With the scan tool, monitor the 2C Pressure Switch state while pressing and holding the Pressure Switch test button and wiggling the wire harness and connectors that pertain to the 2C Pressure Switch.

Did the 2C Pressure Switch state change to closed and remain closed while wiggling the wires?

Yes

- Go To 12

No

- Go To 14

12. CHECK FOR EXCESSIVE DEBRIS

1. Turn the ignition off to the lock position.
2. Remove the Transmission Simulator 8333A.
3. Remove and inspect the Transmission Oil Pan in accordance with the Service Information.

Does the Transmission Oil Pan contain excessive debris or contamination?

Yes

- Repair the cause of the excessive debris in the Transmission Oil Pan. Refer to the Service Information for the proper procedures.
- Perform the 545RFE TRANSMISSION VERIFICATION TEST. (Refer to 28 - DTC-Based Diagnostics/MODULE, Powertrain Control (PCM) - Standard Procedure).

No

- Go To 13

13. CHECK THE 2C HYDRAULIC CLUTCH CIRCUIT

1. Remove the Valve Body and air check the 2C clutch hydraulic circuit, in the 2C/4C clutch retainer, for leakage in accordance with the Service Information.

NOTE: The 2C hydraulic clutch circuit contains a small bleed orifice, a small amount of air leakage is normal.

Was there excessive air leakage noticed during the air check?

Yes

- Repair as necessary. Check the 2C clutch piston, piston seals and bleed orifice assembly.
- Perform the 545RFE TRANSMISSION VERIFICATION TEST. (Refer to 28 - DTC-Based Diagnostics/MODULE, Powertrain Control (PCM) - Standard Procedure).

No

- Disassemble and inspect the Valve Body and repair as necessary. Inspect the 2C Accumulator piston and seals. Check for an extra check ball downstream from the #7 check ball pocket and repair as necessary. If no problems are found in the Valve Body, replace the Transmission Solenoid/TRS Assembly in accordance with the Service Information.
- Perform the 545RFE TRANSMISSION VERIFICATION TEST. (Refer to 28 - DTC-Based Diagnostics/MODULE, Powertrain Control (PCM) - Standard Procedure).

14. CHECK THE (T147) 2C PRESSURE SWITCH SENSE CIRCUIT FOR A SHORT TO ANOTHER CIRCUIT

1. Disconnect all PCM harness connectors.
2. Disconnect the Transmission Solenoid/TRS Assembly harness connector.

NOTE: Make sure the Transmission Solenoid/TRS Assembly harness connector is disconnected.

3. Measure the resistance between the (T147) 2C Pressure Switch Sense circuit and all other circuits in the Transmission Solenoid/TRS Assembly harness connector.

Is the resistance below 5.0 Ohms between the (T147) 2C Pressure Switch Sense circuit and any other circuit(s) in the Transmission Solenoid/TRS Assembly harness connector?

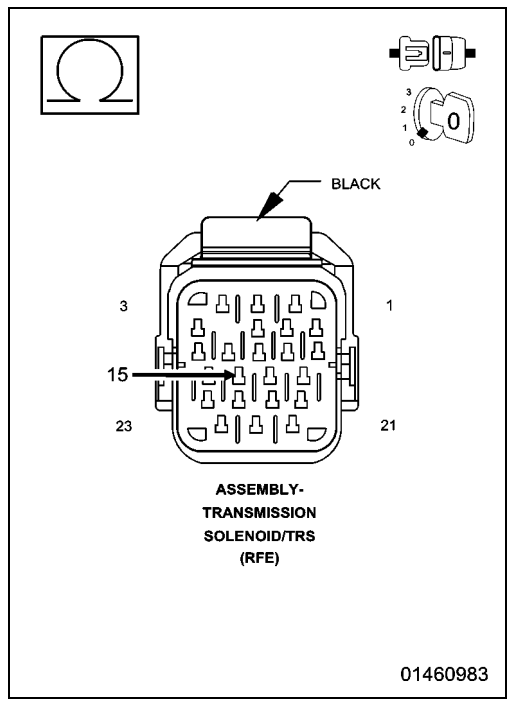

Yes

- Repair the (T147) 2C Pressure Switch Sense circuit for a short to another circuit(s).
- Perform the 545RFE TRANSMISSION VERIFICATION TEST. (Refer to 28 - DTC-Based Diagnostics/MODULE, Powertrain Control (PCM) - Standard Procedure).

No

- Using the schematics as a guide, check the Powertrain Control Module (PCM) terminals for corrosion, damage, or terminal push out. Pay particular attention to all power and ground circuits. If no problems are found, replace and program the PCM in accordance with the Service Information. With the scan tool, perform Quick Learn.
- Perform the 545RFE TRANSMISSION VERIFICATION TEST. (Refer to 28 - DTC-Based Diagnostics/MODULE, Powertrain Control (PCM) - Standard Procedure).

15. CHECK THE WIRING AND CONNECTORS

1. The conditions necessary to set this DTC are not present at this time.
2. Using the schematics as a guide, inspect the wiring and connectors specific to this circuit.
3. Wiggle the wires while checking for shorted and open circuits.
4. With the scan tool, check the Event Data to help identify the conditions in which the DTC was set.
5. If the Event Data shows the DTC P0845 set while the Line Pressure was significantly below the Desired Line Pressure reading, check for causes of low line pressure (low fluid level, broken or improperly installed primary oil filter or filter seal, sticking Main Regulator Valve in the Pump Valve Body etc.). If the data shows the DTC set while the Line Pressure reading was significantly higher than the Desired Line Pressure, check the Line Pressure Sensor and related wiring.

Where there any problems found?

Yes

- Repair as necessary.
- Perform the 545RFE TRANSMISSION VERIFICATION TEST. (Refer to 28 - DTC-Based Diagnostics/MODULE, Powertrain Control (PCM) - Standard Procedure).

No

- Test Complete.

P0846-2C PRESSURE SWITCH RATIONALITY

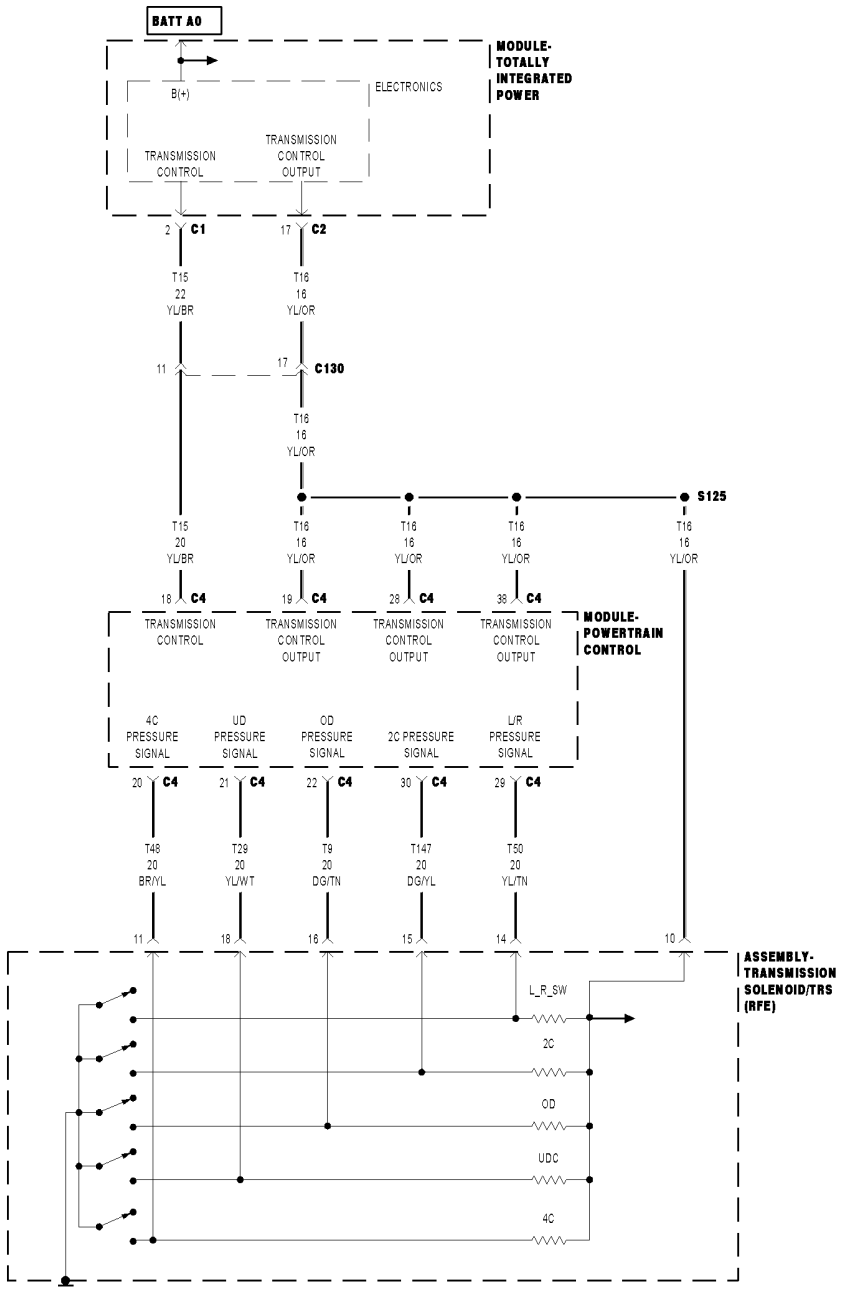

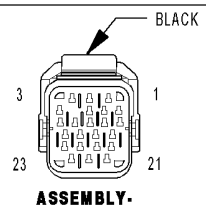

**ASSEMBLY-
TRANSMISSION
SOLENOID/TRS
(RFE)**

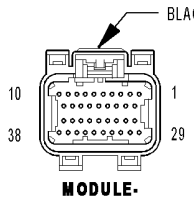

**MODULE-
POWERTRAIN
CONTROL C4**

01468388

For a complete wiring diagram, **refer to the Wiring Information**.

Theory of Operation

The Transmission system uses five pressure switches to monitor the fluid pressure in the L/R, 2C, 4C, UD, and OD clutch circuits. The pressure switches are continuously monitored for the correct states in each gear as shown.

- **When Monitored:**
  Continuously with the ignition on, engine running, with the transmission in gear.
- **Set Condition:**
  The DTC is set if the 2C Pressure Switch reads open or closed at the wrong time in a given gear .

Possible Causes
RELATED DTCS PRESENT
(T147) 2C PRESSURE SWITCH SENSE CIRCUIT OPEN
(T147) 2C PRESSURE SWITCH SENSE CIRCUIT SHORTED TO GROUND
(T147) 2C PRESSURE SWITCH SENSE CIRCUIT SHORTED TO OTHER CIRCUITS
EXCESSIVE FLUID LEAKAGE IN 2C CLUTCH CIRCUIT
NO. 5 AND/OR NO. 7 CHECK BALL CUT OR DAMAGED
EXTRA CHECK BALL DOWNSTREAM OF THE NO. 7 CHECK BALL POCKET
LOW LINE PRESSURE
TRANSMISSION SOLENOID/TRS ASSEMBLY
POWERTRAIN CONTROL MODULE (PCM)
WIRING AND CONNECTORS (PCM)

Always perform the Pre-Diagnostic Troubleshooting Procedure before proceeding. (Refer to 28 - DTC-Based Diagnostics/MODULE, Powertrain Control (PCM) - Standard Procedure).

GEAR	L/R	2C	4C	UD	OD
REVERSE	OPEN	OPEN	OPEN	OPEN	OPEN
P/N	CLOSED**	OPEN	OPEN	OPEN	OPEN
1ST	CLOSED*	OPEN	OPEN	CLOSED	OPEN
2ND	OPEN	CLOSED	OPEN	CLOSED	OPEN
2ND PRIME	OPEN	OPEN	CLOSED	CLOSED	OPEN
3RD	OPEN	OPEN	OPEN	CLOSED	CLOSED
4TH	OPEN	OPEN	CLOSED	OPEN	CLOSED
5TH	OPEN	CLOSED	OPEN	OPEN	CLOSED
*L/R is closed if output speed is below 100 rpm in Drive and Manual 2. L/R is closed in Manual 1.					
**May be open when rolling in Neutral or at low oil temperatures.					

1. CHECK FOR RELATED DTCS

1. With the scan tool, read DTCs.

Are there any TCM Power Input or TIPM TCM Power Control Circuit DTCs present?

Yes

- (Refer to 28 - DTC-Based Diagnostics/MODULE, Totally Integrated Power (TIPM) - Diagnosis and Testing) and perform the appropriate diagnostic procedure.

No

- Go To 2

2. CHECK IF THE DTC DATA SHOWS THE CURRENT DTC

1. With the scan tool, read and record the Transmission Event Data.

NOTE: Make sure to record all Event Data stored in the scan tool for future reference in this test procedure.

Does the Event Data show data for DTC P0846?

Yes

- Go To 3

No

- (Refer to 28 - DTC-Based Diagnostics/MODULE, Powertrain Control (PCM) - Diagnosis and Testing) and perform the appropriate diagnostic procedure shown in the Event Data.
- Perform the 545RFE TRANSMISSION VERIFICATION TEST. (Refer to 28 - DTC-Based Diagnostics/MODULE, Powertrain Control (PCM) - Standard Procedure).

3. CHECK IF MULTIPLE DTCS ARE PRESENT

1. With the scan tool, check for other transmission DTCs.

Are there two or more related pressure switch rationality DTCs present in addition to P0846?

Yes

- Go To 4

No

- Go To 7

4. CHECK IF ALL THE PRESSURE SWITCHES READ CLOSED

In the Event Data recorded earlier, do all the pressure switches read CLOSED in the Event Data for P0846?

Yes

- (Refer to 28 - DTC-Based Diagnostics/MODULE, Powertrain Control (PCM) - Diagnosis and Testing) and perform the diagnostic procedure for P0882.

No

- Go To 5

5. CHECK IF ALL THE PRESSURE SWITCHES READ OPEN

In the Event Data recorded earlier, do all the pressure switches read OPEN?

Yes

- Go To 6

No

- Go To 7

6. CHECK FOR LOW LINE PRESSURE

In the Event Data recorded earlier, is the Line Pressure less than 276 kPa (40 psi), and significantly below the Desired Line Pressure?

Yes

- Repair as necessary to correct low line pressure. Check fluid level and adjust as necessary. If fluid level is OK, check the Primary Oil Filter seal for a split, crack, or improperly installed. If the filter and seal are OK, check the Main Regulator Valve in the Oil Pump. Refer to the Service Information for the above procedures.
- Perform the 545RFE TRANSMISSION VERIFICATION TEST. (Refer to 28 - DTC-Based Diagnostics/MODULE, Powertrain Control (PCM) - Standard Procedure).

No

- Replace the Transmission Solenoid/TRS Assembly in accordance with the Service Information.
- Perform the 545RFE TRANSMISSION VERIFICATION TEST. (Refer to 28 - DTC-Based Diagnostics/MODULE, Powertrain Control (PCM) - Standard Procedure).

7. CHECK IF THE DTC SET IN PARK, NEUTRAL, OR REVERSE

In the Event Data recorded earlier, does the Event Data show the DTC P0846 set in Park, Neutral, or Reverse?

Yes

- Go To 12

No

- Go To 8

8. CHECK IF THE 2C PRESSURE SWITCH READS CLOSED

In the Event Data recorded earlier, does the Event Data show the 2C Pressure Switch reading CLOSED?

Yes

- Go To 10

No

- Go To 9

9. CHECK THE LINE PRESSURE

In the Event Data recorded earlier, is the Line Pressure less than 276 kPa (40 psi), and significantly below the Desired Line Pressure?

Yes

- Repair as necessary to correct low line pressure. Check fluid level and adjust as necessary. If fluid level is OK, check the Primary Oil Filter seal for a split, crack, or improperly installed. If the filter and seal are OK, check the Main Regulator Valve in the Oil Pump. Refer to the Service Information for the above procedures.
- Perform the 545RFE TRANSMISSION VERIFICATION TEST. (Refer to 28 - DTC-Based Diagnostics/MODULE, Powertrain Control (PCM) - Standard Procedure).

No

- Go To 15

10. CHECK THE PCM AND WIRING

1. Turn the ignition off to the lock position.
2. Remove the Ignition Switch Feed fuse from the TIPM.

CAUTION: Removal of the Ignition Switch Feed fuse from the TIPM will prevent the vehicle from being started in gear.

WARNING: The Ignition Switch Feed fuse must be removed from the TIPM. Failure to do so can result in possible serious or fatal injury.

3. Install the Transmission Simulator 8333A.
4. Ignition on, engine not running.
5. With the Transmission Simulator, turn the Pressure Switch selector switch to the 2C position.
6. With the scan tool, monitor the 2C Pressure Switch while pressing the Pressure Switch test button on the Transmission Simulator.

Did the state of the 2C Pressure Switch change while pressing the Pressure Switch Test button?

Yes

- Go To 11

No

- Go To 12

11. CHECK THE TRANSMISSION SOLENOID/TRS ASSEMBLY

1. Using the schematics as a guide, inspect the wiring and connectors specific to this circuit.
2. Wiggle the wires while checking for shorted and open circuits.

Where there any problems found?

Yes

- Repair as necessary.
- Perform the 545RFE TRANSMISSION VERIFICATION TEST. (Refer to 28 - DTC-Based Diagnostics/MODULE, Powertrain Control (PCM) - Standard Procedure).

No

- Replace the Transmission Solenoid/TRS Assembly in accordance with the Service Information.
- Perform the 545RFE TRANSMISSION VERIFICATION TEST. (Refer to 28 - DTC-Based Diagnostics/MODULE, Powertrain Control (PCM) - Standard Procedure).

12. CHECK THE (T147) 2C PRESSURE SWITCH SENSE CIRCUIT FOR AN OPEN

1. Turn the ignition off to the lock position.
2. Disconnect the Transmission Simulator 8333A.
3. Disconnect the PCM C4 harness connector.
4. Connect the PCM Pinout Box 8815A to the PCM C4 harness connector.

CAUTION: Do not probe the PCM harness connectors. Probing the PCM harness connectors will damage the PCM terminals resulting in poor terminal to pin connection. Install the Kit, NGC, 38 Position 8815A to perform diagnosis.

5. Measure the resistance of the (T147) 2C Pressure Switch Sense circuit between the Transmission Solenoid/TRS Assembly harness connect and the appropriate terminal of the PCM Pinout Box 8815A.

Is the resistance above 5.0 Ohms?

Yes

- Repair the (T147) 2C Pressure Switch Sense circuit for an open.
- Perform the 545RFE TRANSMISSION VERIFICATION TEST. (Refer to 28 - DTC-Based Diagnostics/MODULE, Powertrain Control (PCM) - Standard Procedure).

No

- Go To 13

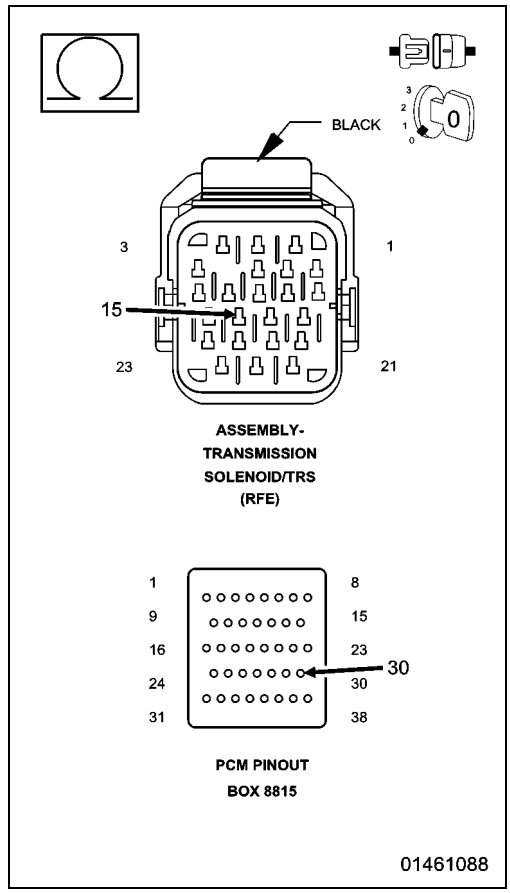

13. CHECK THE (T147) 2C PRESSURE SWITCH SENSE CIRCUIT FOR A SHORT TO GROUND

1. Measure the resistance between ground and the (T147) 2C Pressure Switch Sense circuit.

Is the resistance below 5.0 Ohms?

Yes

- Repair the (T147) 2C Pressure Switch Sense circuit for a short to ground.
- Perform the 545RFE TRANSMISSION VERIFICATION TEST. (Refer to 28 - DTC-Based Diagnostics/MODULE, Powertrain Control (PCM) - Standard Procedure).

No

- Go To 14

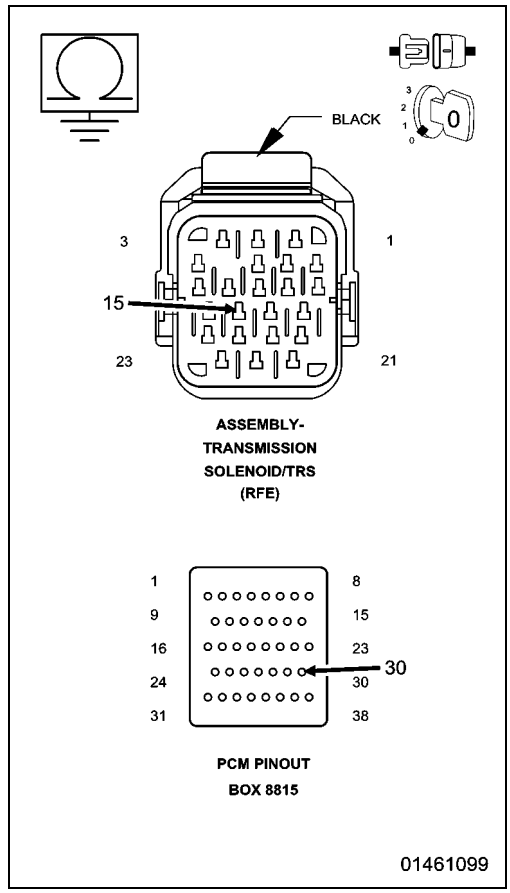

14. CHECK THE (T147) 2C PRESSURE SWITCH SENSE CIRCUIT FOR A SHORT TO ANOTHER CIRCUIT

1. Measure the resistance between the (T147) 2C Pressure Switch Sense circuit and all the other circuits in the Transmission Solenoid/TRS Assembly harness connector.

Is the resistance below 5.0 Ohms?

Yes

- Repair the (T147) 2C Pressure Switch Sense circuit for a short to another circuit(s).
- Perform the 545RFE TRANSMISSION VERIFICATION TEST. (Refer to 28 - DTC-Based Diagnostics/MODULE, Powertrain Control (PCM) - Standard Procedure).

No

- Using the schematics as a guide, check the Powertrain Control Module (PCM) terminals for corrosion, damage, or terminal push out. Pay particular attention to all power and ground circuits. If no problems are found, replace and program the PCM in accordance with the Service Information. With the scan tool, perform Quick Learn.
- Perform the 545RFE TRANSMISSION VERIFICATION TEST. (Refer to 28 - DTC-Based Diagnostics/MODULE, Powertrain Control (PCM) - Standard Procedure).

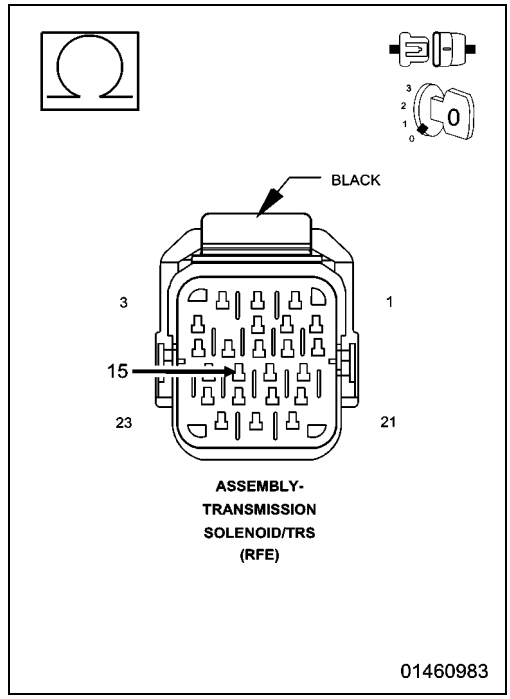

15. CHECK IF THE #5 AND/OR #7 CHECK BALL IS CUT OR DAMAGED

1. Turn the Ignition off to the lock position.
2. Remove the Valve Body Assembly in accordance with the Service Information.
3. Inspect the No. 5 and No. 7 check balls for any cuts or damage.
4. Check for an extra check ball in the passage downstream from the #7 check ball pocket.
5. Inspect the 2C accumulator piston and seals and also the 2C tower seal on top of the valve body. Refer to the Service Information.

Where there any problems found?

Yes

- Repair as necessary. Check for excessive clutch debris in the transmission oil pan. If excessive clutch debris is present, repair 2C clutch as necessary. Refer to the Service Information for proper repair procedures.
- Perform the 545RFE TRANSMISSION VERIFICATION TEST. (Refer to 28 - DTC-Based Diagnostics/MODULE, Powertrain Control (PCM) - Standard Procedure).

No

- Go To 16

16. CHECK FOR EXCESSIVE FLUID LEAKAGE WITHIN THE 2C CLUTCH CIRCUIT

1. Air check the 2C Clutch hydraulic circuit. Refer to the Service Information.

NOTE: This hydraulic clutch circuit contains a small bleed orifice. Small leakage is considered normal.

Was there excessive air leakage in the 2C Clutch hydraulic circuit?

Yes

- Repair as necessary. Refer to the Service Information.
- Perform the 545RFE TRANSMISSION VERIFICATION TEST. (Refer to 28 - DTC-Based Diagnostics/MODULE, Powertrain Control (PCM) - Standard Procedure).

No

- Replace the Transmission Solenoid/TRS Assembly in accordance with the Service Information.
- Perform the 545RFE TRANSMISSION VERIFICATION TEST. (Refer to 28 - DTC-Based Diagnostics/MODULE, Powertrain Control (PCM) - Standard Procedure).

P0868-LINE PRESSURE LOW

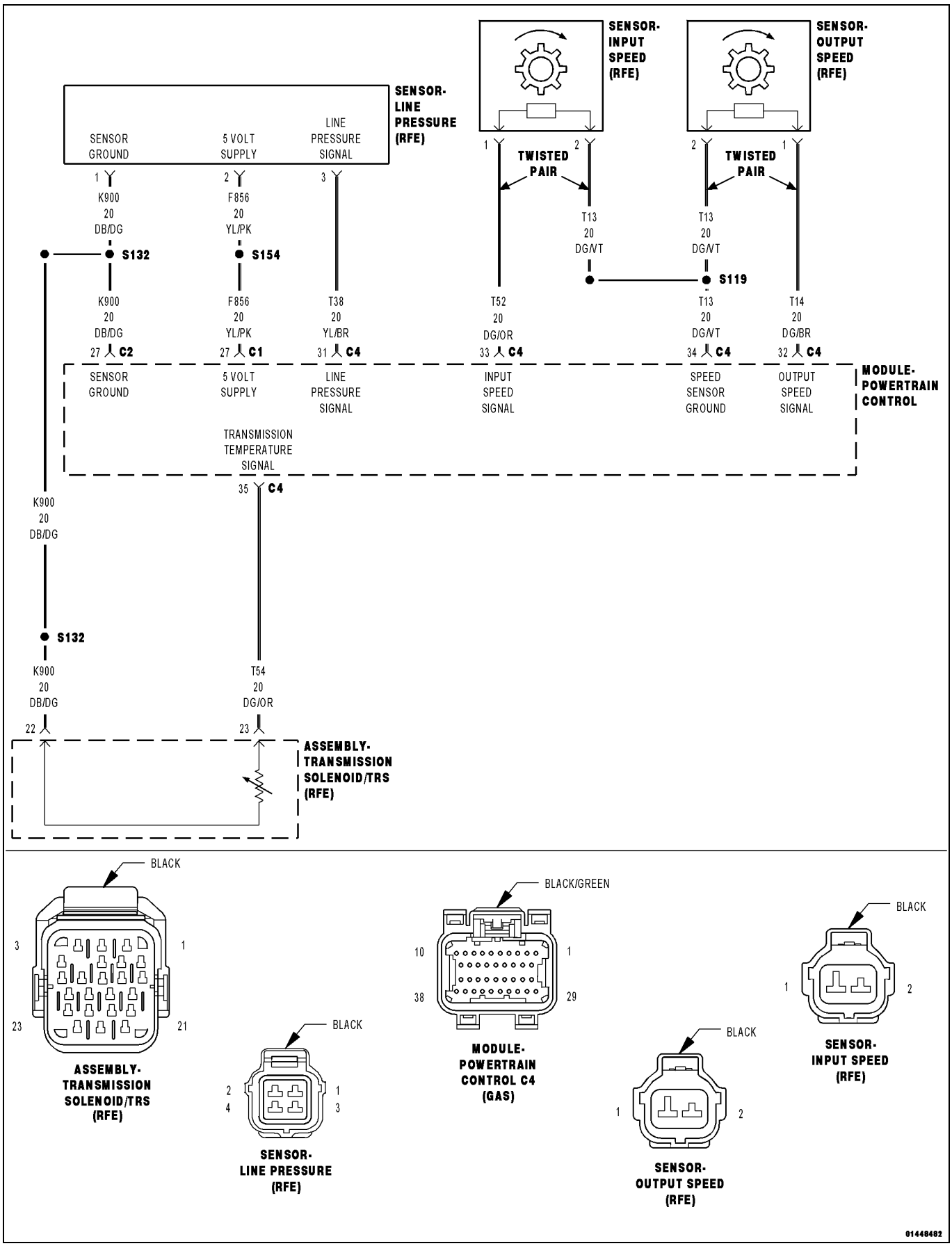

For a complete wiring diagram, **refer to the Wiring Information**.

Theory of Operation

Line pressure is measured by the Line Pressure Sensor (LPS) and regulation is achieved by changing the duty cycle of the Pressure Control Solenoid (PCS) controlled by the Transmission Control System. (5% duty cycle = solenoid off = Max line pressure, 62% duty cycle = solenoid on = Min line pressure). The Transmission Control System calculates the desired line pressure based on inputs from both the engine and transmission.

The Transmission Control System calculates torque input to the transmission and uses it as the primary input to the desired line pressure calculation. This is called Torque Based Line Pressure. In addition, the line pressure is set to a preset level 827 or 931 kPa (120 or 135 psi) during shifts and in Park and Neutral to ensure consistent shift quality. The actual line pressure is continuously being compared to the desired (target) line pressure. If the actual line pressure is consistently lower than the target while driving, the line pressure low DTC P0868 will set.

- **When Monitored:**
  Continuously while driving in a forward gear.
- **Set Condition:**
  The powertrain Control Module (PCM) continuously monitors Actual Line Pressure and compares it to Desired Line Pressure. If the Actual Line Pressure is more than 15 psi below Desired Line Pressure for 3.5 seconds continuously, this DTC will set.

Possible Causes
CHECK FOR RELATED DTCS
LOW FLUID LEVEL
(F856) 5-VOLT SUPPLY CIRCUIT OPEN
POOR LINE PRESSURE SENSOR CONNECTION
(F856) 5-VOLT SUPPLY CIRCUIT SHORTED TO GROUND
(F856) 5-VOLT SUPPLY CIRCUIT SHORTED TO VOLTAGE
(T118) LINE PRESSURE VARIABLE FORCE SOLENOID CONTROL CIRCUIT SHORTED TO ANOTHER CIRCUIT
INTERNAL TRANSMISSION
LINE PRESSURE SENSOR
CRACKED, PLUGGED, OR MIS-INSTALLED PRIMARY OIL FILTER
LOOSE COOLER RETURN SPIN ON FILTER (IF EQUIPPED)
STUCK OR STICKING MAIN REGULATOR VALVE
POWERTRAIN CONTROL MODULE (PCM)

Always perform the Pre-Diagnostic Troubleshooting Procedure before proceeding. (Refer to 28 - DTC-Based Diagnostics/MODULE, Powertrain Control (PCM) - Standard Procedure).

1. CHECK FOR RELATED DTCS

1. With the scan tool, read DTCs.

Is the DTC P0933 present also?

Yes

- (Refer to 28 - DTC-Based Diagnostics/MODULE, Powertrain Control (PCM) - Diagnosis and Testing) and perform the appropriate diagnostic procedure for DTC P0933.

No

- Go To 2

2. CHECK IF THE DTC IS CURRENT

1. With the scan tool, read DTCs.

Is the status Active or is the Starts Since Set counter 2 or less for this DTC?

Yes

- Go To 3

No

- Go To 11

3. CHECK THE LINE PRESSURE SENSOR CONNECTION

1. Ignition on, **engine not running.**
2. With the scan tool, monitor the Line Pressure while firmly pushing the Transmission Line Pressure Sensor connector inwards towards the Transmission.

Did the Line Pressure reading on the scan tool CHANGE to about 207 kPa (30 psi) or 0.7 of a volt when the connector was pushed inward?

Yes (value was higher and changed to 207 kPa (30 psi) or 0.7 of a volt)

- Disconnect and properly reconnect the Line Pressure Sensor connector. Inspect terminals and repair as necessary.
- Perform the 545RFE TRANSMISSION VERIFICATION TEST. (Refer to 28 - DTC-Based Diagnostics/MODULE, Powertrain Control (PCM) - Standard Procedure).

No (value is higher than 207 kPa (30 psi) or 0.7 of a volt and did not change or the value was already 207 kPa (30 psi) or 0.7 of a volt and did not change)

- Go To 4

4. CHECK THE PCM AND WIRING

1. Turn the ignition off to the lock position.
2. Remove the Ignition Switch Feed fuse from the TIPM.

CAUTION: Removal of the Ignition Switch Feed fuse from the TIPM will prevent the vehicle from being started in gear.

WARNING: The Ignition Switch Feed fuse must be removed from the TIPM. Failure to do so can result in possible serious or fatal injury.

3. Install the Transmission Simulator 8333A.
4. With the Transmission Simulator select the "OFF" position on the "Input/Output Speed" switch.
5. Ignition on, engine not running.
6. With the scan tool, monitor the Line Pressure during the following steps.
7. Using the Transmission Simulator, set the rotary knob to each of the three line pressure positions.

NOTE: All three scan tool Line Pressure readings should be steady and ± 14 kPa (2.0 psi) or 0.1 of a volt of the reading specified on the Transmission Simulator.

Did the Line Pressure read within ± 14 kPa (2.0 psi) or 0.1 of a volt in all three positions?

Yes

- Go To 5

No

- Go To 7

5. CHECK THE LINE PRESSURE SENSOR

1. Turn the ignition off to the lock position.
2. Disconnect the Transmission Simulator 8333A and reconnect all previously disconnected connectors.
3. Install the Line Pressure Adaptor 8259, and the Pressure Gauge C-3293-SP, 0 to 2,000 kPa (0 to 300 psi).
4. Start the engine in park.
5. Monitor the line pressure readings of both the scan tool and the pressure gauge and compare the two readings.

Is the line pressure gauge reading within 34 kPa (5 psi) of the scan tool reading?

Yes

- Go To 6

No

- Replace the Line Pressure Sensor in accordance with the Service Information.
- Perform the 545RFE TRANSMISSION VERIFICATION TEST. (Refer to 28 - DTC-Based Diagnostics/MODULE, Powertrain Control (PCM) - Standard Procedure).

6. CHECK FOR A PLUGGED TRANSMISSION OIL FILTER

1. Turn the ignition off to the lock position.
2. Remove and inspect the Transmission Oil Pan for excessive debris in accordance with the Service Information.
3. Remove and inspect the Primary Oil Filter in accordance with the Service Information.

NOTE: Make sure the Primary Transmission Oil Filter and/or O-ring is not cracked or split.

Does the Oil Pan contain excessive debris and/or is the Primary Oil Filter cracked or plugged?

Yes

- Repair the plugged, cracked, or split Primary Transmission Oil Filter and/or O-ring. If the Primary Transmission Oil Filter is plugged refer to the Service Information for the proper Hydraulic repair procedure.
- Perform the 545RFE TRANSMISSION VERIFICATION TEST. (Refer to 28 - DTC-Based Diagnostics/MODULE, Powertrain Control (PCM) - Standard Procedure).

No

- Repair internal transmission and inspect the Transmission Oil Pump in accordance with the Service Information and replace if necessary. If no problem is found, replace the Solenoid/TRS Assembly.
- Perform the 545RFE TRANSMISSION VERIFICATION TEST. (Refer to 28 - DTC-Based Diagnostics/MODULE, Powertrain Control (PCM) - Standard Procedure).

7. CHECK THE (F856) 5-VOLT SUPPLY CIRCUIT FOR A SHORT TO VOLTAGE

1. Disconnect the Transmission Simulator 8333A.
2. Reconnect all previously disconnected connectors except the Line Pressure Sensor harness connector.
3. Ignition on, engine not running.
4. Measure the voltage of the (F856) 5-volt Supply circuit in the Line Pressure Sensor harness connector.

Is the voltage above 5.5 volts?

Yes

- Repair the (F856) 5-volt Supply circuit for a short to voltage.
- Perform the 545RFE TRANSMISSION VERIFICATION TEST. (Refer to 28 - DTC-Based Diagnostics/MODULE, Powertrain Control (PCM) - Standard Procedure).

No

- Go To 8

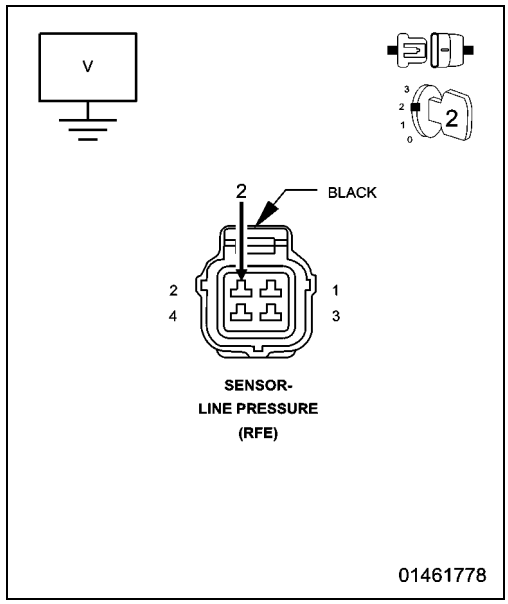

8. CHECK THE (F856) 5-VOLT SUPPLY CIRCUIT FOR AN OPEN

1. Turn the ignition off to the lock position.
2. Disconnect the PCM C1 harness connector and connect the PCM Pinout Box 8815A.

CAUTION: Do not probe the PCM harness connectors. Probing the PCM harness connectors will damage the PCM terminals resulting in poor terminal to pin connection. Install the Kit, NGC, 38 Position 8815A to perform diagnosis.

3. Measure the resistance of the (F856) 5-volt Supply circuit between the Line Pressure Sensor harness connector and the appropriate terminal of the PCM Pinout Box 8815A.

Is the resistance above 5.0 Ohms?

Yes

- Repair the (F856) 5-volt Supply circuit for an open.
- Perform the 545RFE TRANSMISSION VERIFICATION TEST. (Refer to 28 - DTC-Based Diagnostics/MODULE, Powertrain Control (PCM) - Standard Procedure).

No

- Go To 9

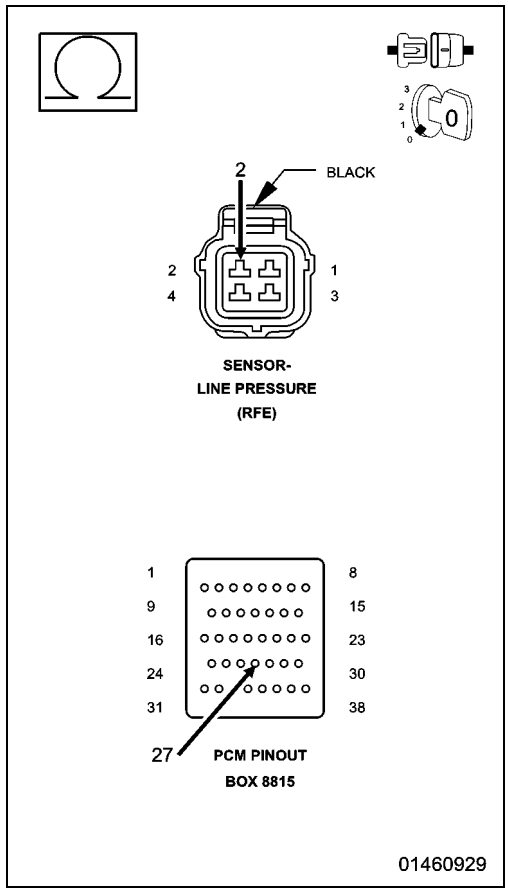

9. CHECK THE (F856) 5-VOLT SUPPLY CIRCUIT FOR A SHORT TO GROUND

1. Measure the resistance between ground and the (F856) 5-volt Supply circuit.

Is the resistance below 5.0 Ohms?

Yes

- Repair the (F856) 5-volt Supply circuit for a short to ground.
- Perform the 545RFE TRANSMISSION VERIFICATION TEST. (Refer to 28 - DTC-Based Diagnostics/MODULE, Powertrain Control (PCM) - Standard Procedure).

No

- Go To 10

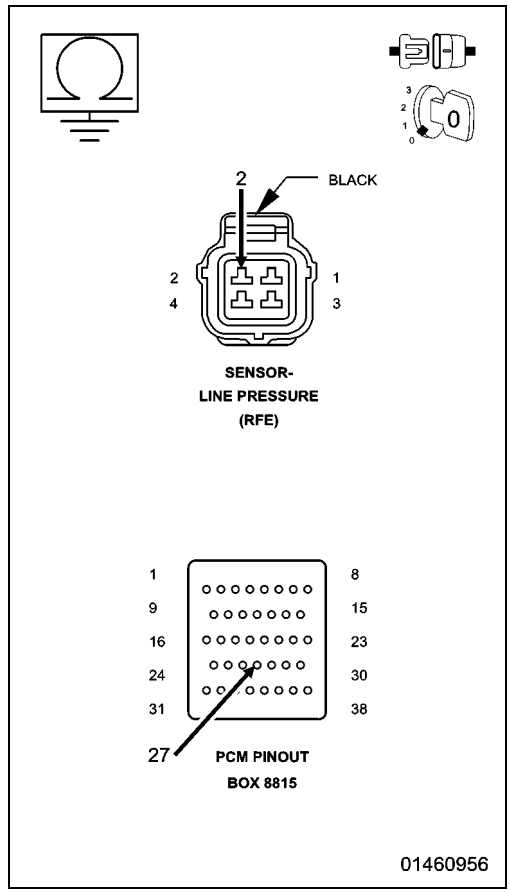

10. CHECK THE (T118) LINE PRESSURE VARIABLE FORCE SOLENOID CONTROL CIRCUIT FOR A SHORT TO ANOTHER CIRCUIT

1. Turn the ignition off to the lock position.
2. Disconnect the Transmission Solenoid/TRS Assembly harness connector.
3. Disconnect all PCM harness connectors.
4. Measure the resistance between the (T118) Line Pressure Variable Force Solenoid Control circuit and all other circuits in the Transmission Solenoid/TRS Assembly harness connector.

Is the resistance below 5.0 Ohms between the (T118) Line Pressure Variable Force Solenoid Control circuit and any other circuit(s) in the Transmission Solenoid/TRS Assembly harness connector?

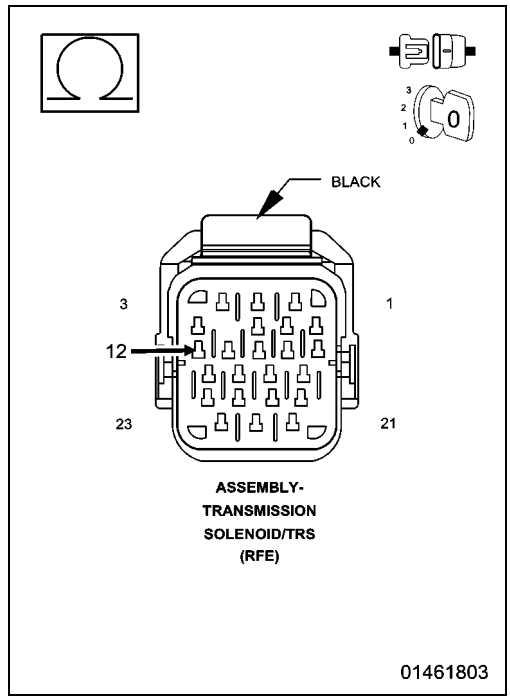

Yes

- Repair the (T118) Line Pressure Variable Force Solenoid Control circuit for a short to another circuit(s).
- Perform the 545RFE TRANSMISSION VERIFICATION TEST. (Refer to 28 - DTC-Based Diagnostics/MODULE, Powertrain Control (PCM) - Standard Procedure).

No

- Using the schematics as a guide, check the Powertrain Control Module (PCM) terminals for corrosion, damage, or terminal push out. Pay particular attention to all power and ground circuits. If no problems are found, replace and program the PCM in accordance with the Service Information. With the scan tool, perform Quick Learn.
- Perform the 545RFE TRANSMISSION VERIFICATION TEST. (Refer to 28 - DTC-Based Diagnostics/MODULE, Powertrain Control (PCM) - Standard Procedure).

11. CHECK THE WIRING AND CONNECTORS

1. The conditions necessary to set this DTC are not present at this time.
2. Using the schematics as a guide, inspect the wiring and connectors specific to this circuit.
3. Wiggle the wires while checking for shorted and open circuits.
4. With the scan tool, check the Event Data to help identify the conditions in which the DTC was set.

Were there any problems found?

Yes

- Repair as necessary.
- Perform the 545RFE TRANSMISSION VERIFICATION TEST. (Refer to 28 - DTC-Based Diagnostics/MODULE, Powertrain Control (PCM) - Standard Procedure).

No

- Test Complete.

P0869-LINE PRESSURE HIGH

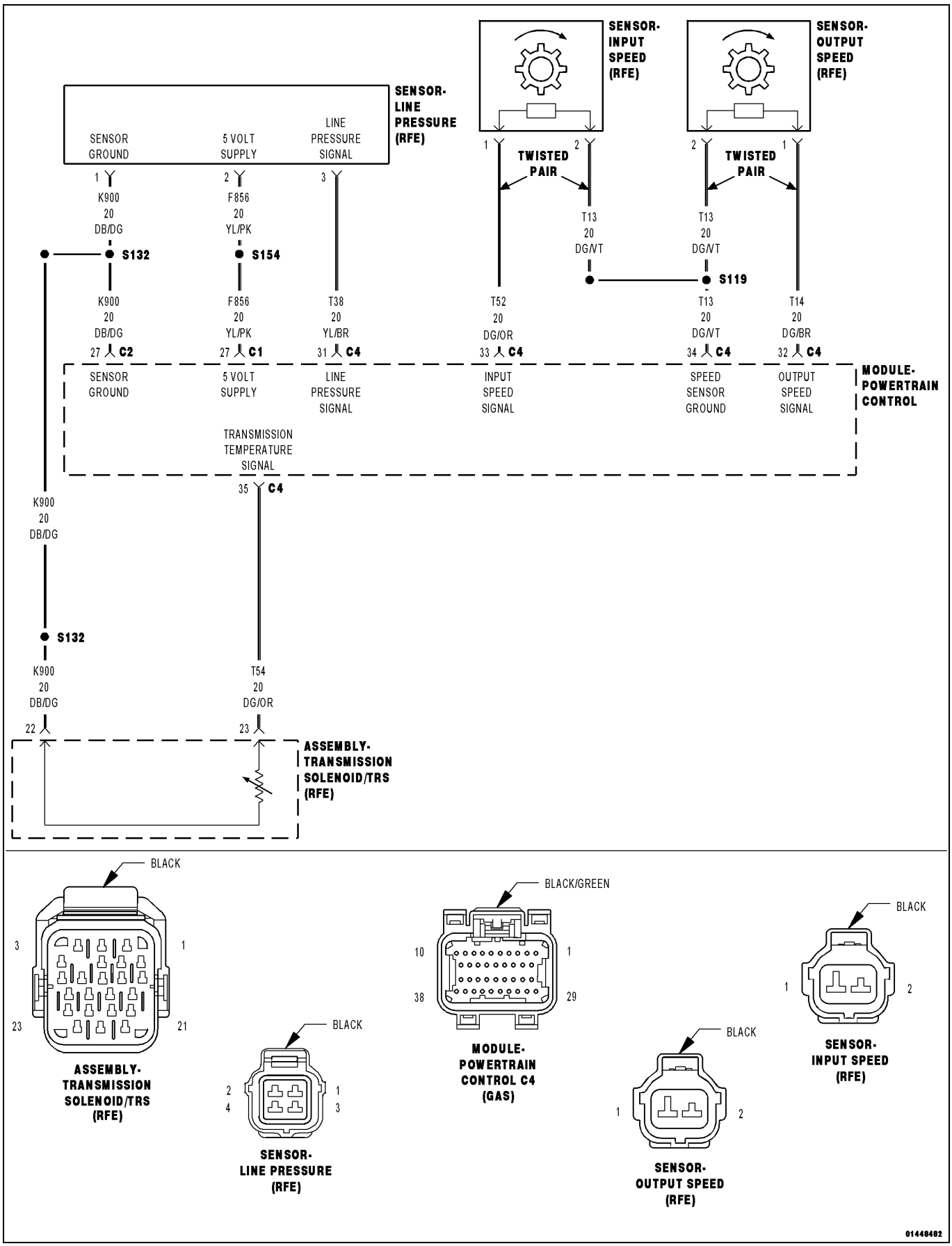

For a complete wiring diagram, **refer to the Wiring Information**.

Theory of Operation

Line pressure is measured by the Line Pressure Sensor (LPS) and regulation is achieved by changing the duty cycle of the Pressure Control Solenoid (PCS) controlled by the Transmission Control System. (5% duty cycle = solenoid off = Max line pressure, 62% duty cycle = solenoid on = Min line pressure). The Transmission Control System calculates the desired line pressure based on inputs from both the engine and transmission.

The Transmission Control System calculates torque input to the transmission and uses it as the primary input to the desired line pressure calculation. This is called Torque Based Line Pressure. In addition, the line pressure is set to a preset level 827 or 931 kPa (120 or 135 psi) during shifts and in Park and Neutral to ensure consistent shift quality. The actual line pressure is continuously being compared to the desired (target) line pressure. If the actual line pressure is consistently higher than the highest desired line pressure ever used in the current gear, the line pressure high DTC P0869 will set.

- **When Monitored:**
  Continuously while driving in a forward gear.
- **Set Condition:**
  The Powertrain Control Module (PCM) continuously monitors Actual Line Pressure. If the Actual Line Pressure reading is greater than the maximum desired line pressure ever used in the current gear, while the Pressure Control Solenoid duty cycle is at or near its maximum value (which should result in minimum line pressure) for 3.5 seconds continuously, the DTC will set.

Possible Causes
LINE PRESSURE SENSOR CONNECTION
(F856) 5-VOLT SUPPLY CIRCUIT OPEN
(T118) LINE PRESSURE VARIABLE FORCE SOLENOID CONTROL CIRCUIT OPEN
(F856) 5-VOLT SUPPLY CIRCUIT SHORTED TO GROUND
(T118) LINE PRESSURE VARIABLE FORCE SOLENOID CONTROL CIRCUIT SHORTED TO GROUND
TRANSMISSION CONTROL RELAY OUTPUT CIRCUIT
LINE PRESSURE SENSOR
STUCK OR STICKING MAIN REGULATOR VALVE
POWERTRAIN CONTROL MODULE (PCM)

Always perform the Pre-Diagnostic Troubleshooting Procedure before proceeding. (Refer to 28 - DTC-Based Diagnostics/MODULE, Powertrain Control (PCM) - Standard Procedure).

1. CHECK FOR RELATED DTCS

1. With the scan tool, read DTCs.

Is the DTC P0882 or P0933 present also?

Yes

- (Refer to 28 - DTC-Based Diagnostics/MODULE, Powertrain Control (PCM) - Diagnosis and Testing) and perform the appropriate diagnostic procedure for DTC P0882 or P0933.

No

- Go To 2

2. CHECK IF THE DTC IS CURRENT

1. With the scan tool, read DTCs.

Is the status Active or is the Starts Since Set counter 2 or less for this DTC?

Yes

- Go To 3

No

- Go To 10

3. CHECK THE LINE PRESSURE SENSOR CONNECTION

1. Ignition on, **engine not running.**
2. With the scan tool, monitor the Line Pressure while firmly pushing the Transmission Line Pressure Sensor connector inwards towards the Transmission.

Did the Line Pressure reading on the scan tool CHANGE to about 207 kPa (30 psi) or 0.7 of a volt when the connector was pushed inward?

Yes (value was higher and changed to 207 kPa (30 psi) or 0.7 of a volt)

- Disconnect and properly reconnect the Line Pressure Sensor connector. Inspect terminals and repair as necessary.
- Perform the 545RFE TRANSMISSION VERIFICATION TEST. (Refer to 28 - DTC-Based Diagnostics/MODULE, Powertrain Control (PCM) - Standard Procedure).

No (value is higher than 207 kPa (30 psi) or 0.7 of a volt and did not change or the value was already 207 kPa (30 psi) or 0.7 of a volt and did not change)

- Go To 4

4. CHECK THE PCM AND WIRING

1. Turn the ignition off to the lock position.
2. Remove the Ignition Switch Feed fuse from the TIPM.

CAUTION: Removal of the Ignition Switch Feed fuse from the TIPM will prevent the vehicle from being started in gear.

WARNING: The Ignition Switch Feed fuse must be removed from the TIPM. Failure to do so can result in possible serious or fatal injury.

3. Install the Transmission Simulator 8333A.
4. With the Transmission Simulator select the "OFF" position on the "Input/Output Speed" switch.
5. Ignition on, engine not running.
6. With the scan tool, monitor the Line Pressure during the following step.
7. Using the Transmission Simulator, set the rotary switch to each of the 3 line pressure positions.

NOTE: All three scan tool Line Pressure readings should be steady and ±14 kPa (2.0 psi) or 0.1 of a volt of the reading specified on the Transmission Simulator.

Did the Line Pressure read within ±14 kPa (2.0 psi) or 0.1 of a volt in all three positions?

Yes

- Go To 5

No

- Go To 6

5. CHECK THE LINE PRESSURE SENSOR CALIBRATION

1. Turn the ignition off to the lock position.
2. Disconnect the Transmission Simulator 8333A and reconnect all previously disconnected connectors.
3. Install the Line Pressure Adaptor 8259, and Pressure Gauge C-3293-SP, 0 to 2,000 kPa (0 to 300 psi).
4. Start the engine in park.
5. Monitor the Line Pressure readings on the scan tool and the pressure gauge.
6. Compare the Line Pressure readings between the scan tool and the pressure gauge.

Is the pressure gauge reading within 34 kPa (5 psi) of the scan tool reading?

Yes

- Repair the internal transmission and inspect the Transmission Oil Pump in accordance with the Service Information and replace if necessary. If no problem is found, replace the Transmission Solenoid/TRS Assembly, possible cause is a stuck Pressure Control Solenoid.
- Perform the 545RFE TRANSMISSION VERIFICATION TEST. (Refer to 28 - DTC-Based Diagnostics/MODULE, Powertrain Control (PCM) - Standard Procedure).

No

- Replace the Line Pressure Sensor per the Service information.
- Perform the 545RFE TRANSMISSION VERIFICATION TEST. (Refer to 28 - DTC-Based Diagnostics/MODULE, Powertrain Control (PCM) - Standard Procedure).

6. CHECK THE (T118) LINE PRESSURE VARIABLE FORCE SOLENOID CONTROL CIRCUIT FOR AN OPEN

1. Turn the ignition off to the lock position.
2. Disconnect the Transmission Simulator 8333A.
3. Disconnect the Powertrain Control Module C4 harness connector.

CAUTION: Do not probe the PCM harness connectors. Probing the PCM harness connectors will damage the PCM terminals resulting in poor terminal to pin connection. Install the Kit, NGC, 38 Position 8815A to perform diagnosis.

4. Measure the resistance of the (T118) Line Pressure Variable Force Solenoid Control circuit between the Solenoid/TRS Assembly harness connector and the appropriate terminal of the PCM Pinout Box 8815A.

Is the resistance above 5.0 Ohms?

Yes

- Repair the (T118) Line Pressure Variable Force Solenoid Control circuit for an open.
- Perform the 545RFE TRANSMISSION VERIFICATION TEST. (Refer to 28 - DTC-Based Diagnostics/MODULE, Powertrain Control (PCM) - Standard Procedure).

No

- Go To 7

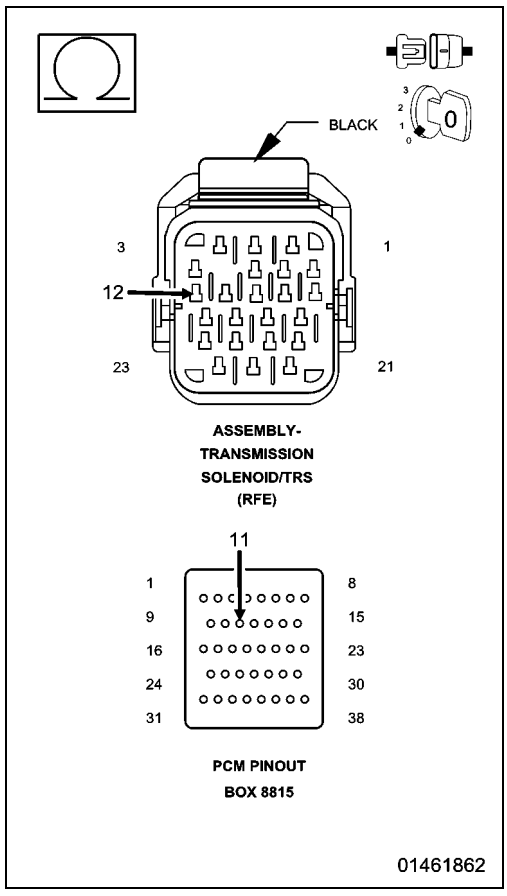

7. CHECK THE (T118) LINE PRESSURE VARIABLE FORCE SOLENOID CONTROL CIRCUIT FOR A SHORT TO GROUND

1. Measure the resistance between ground and the (T118) Line Pressure Variable Force Solenoid Control circuit.

Is the resistance below 5.0 Ohms?

Yes

- Repair the (T118) Line Pressure Variable Force Solenoid Control circuit for a short to ground.
- Perform the 545RFE TRANSMISSION VERIFICATION TEST. (Refer to 28 - DTC-Based Diagnostics/MODULE, Powertrain Control (PCM) - Standard Procedure).

No

- Go To 8

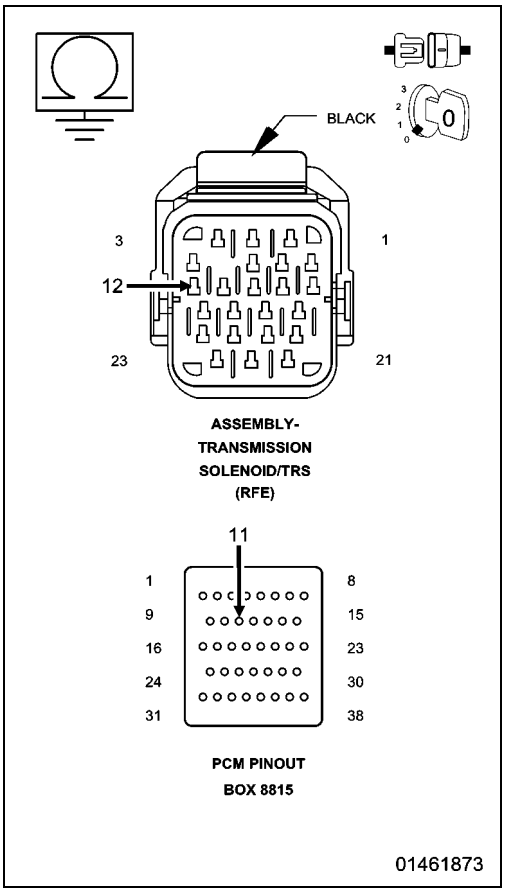

8. CHECK THE (F856) 5-VOLT SUPPLY CIRCUIT FOR AN OPEN

1. Measure the resistance of the (F856) 5-volt Supply circuit between the Line Pressure Sensor harness connector and the appropriate terminal of the PCM Pinout Box 8815A.

Is the resistance above 5.0 Ohms?

Yes

- Repair the (F856) 5-volt Supply circuit for an open.
- Perform the 545RFE TRANSMISSION VERIFICATION TEST. (Refer to 28 - DTC-Based Diagnostics/MODULE, Powertrain Control (PCM) - Standard Procedure).

No

- Go To 9

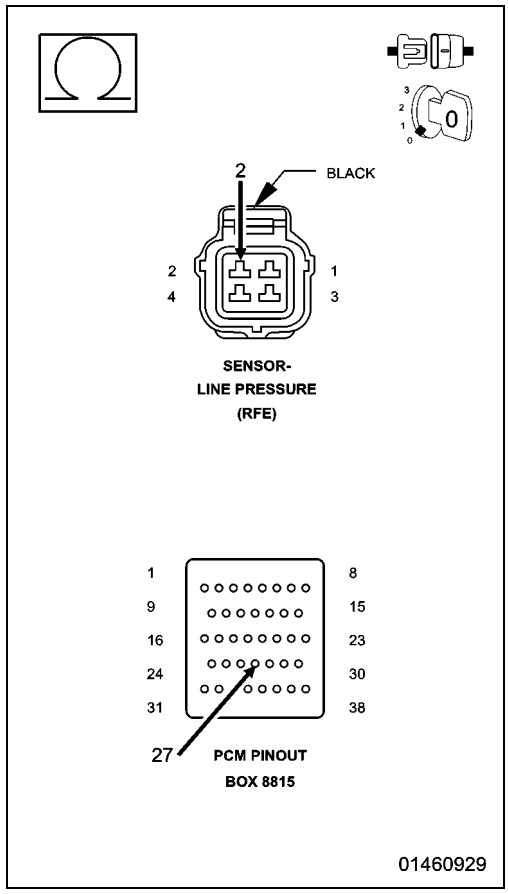

9. CHECK THE (F856) 5-VOLT SUPPLY CIRCUIT FOR A SHORT TO GROUND

1. Disconnect the PCM C1 harness connector.
2. Disconnect the Line Pressure Sensor harness connector.

CAUTION: Do not probe the PCM harness connectors. Probing the PCM harness connectors will damage the PCM terminals resulting in poor terminal to pin connection. Install the Kit, NGC, 38 Position 8815A to perform diagnosis.

3. Measure the resistance between ground and the (F856) 5-volt Supply circuit.

Is the resistance below 5.0 Ohms?

Yes

- Repair the (F856) 5-volt Supply circuit for a short to ground.
- Perform the 545RFE TRANSMISSION VERIFICATION TEST. (Refer to 28 - DTC-Based Diagnostics/MODULE, Powertrain Control (PCM) - Standard Procedure).

No

- Using the schematics as a guide, check the Powertrain Control Module (PCM) terminals for corrosion, damage, or terminal push out. Pay particular attention to all power and ground circuits. If no problems are found, replace and program the PCM in accordance with the Service Information. With the scan tool, perform Quick Learn.
- Perform the 545RFE TRANSMISSION VERIFICATION TEST. (Refer to 28 - DTC-Based Diagnostics/MODULE, Powertrain Control (PCM) - Standard Procedure).

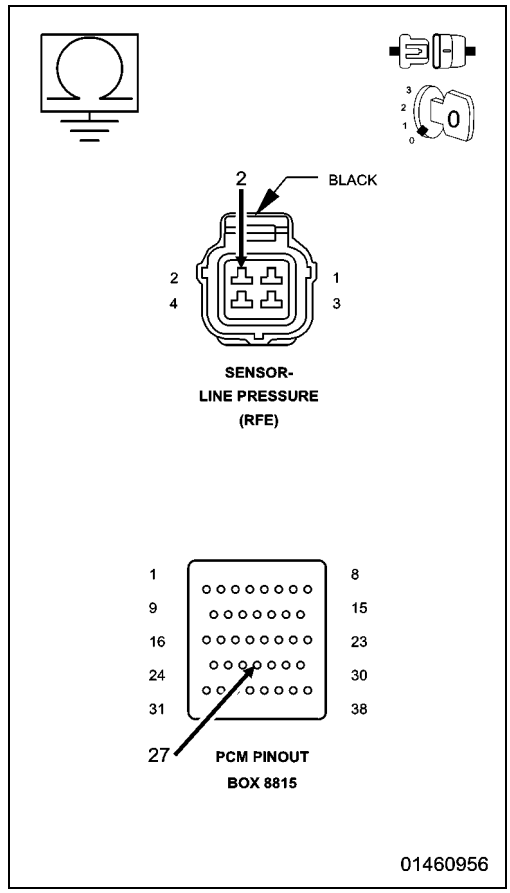

10. CHECK THE WIRING AND CONNECTORS

1. The conditions necessary to set this DTC are not present at this time.
2. Using the schematics as a guide, inspect the wiring and connectors specific to this circuit.
3. Wiggle the wires while checking for shorted and open circuits.
4. With the scan tool, check the Event Data to help identify the conditions in which the DTC was set.

Where there any problems found?

Yes

- Repair as necessary.
- Perform the 545RFE TRANSMISSION VERIFICATION TEST. (Refer to 28 - DTC-Based Diagnostics/MODULE, Powertrain Control (PCM) - Standard Procedure).

No

- Test Complete.

P0870-OD HYDRAULIC PRESSURE TEST

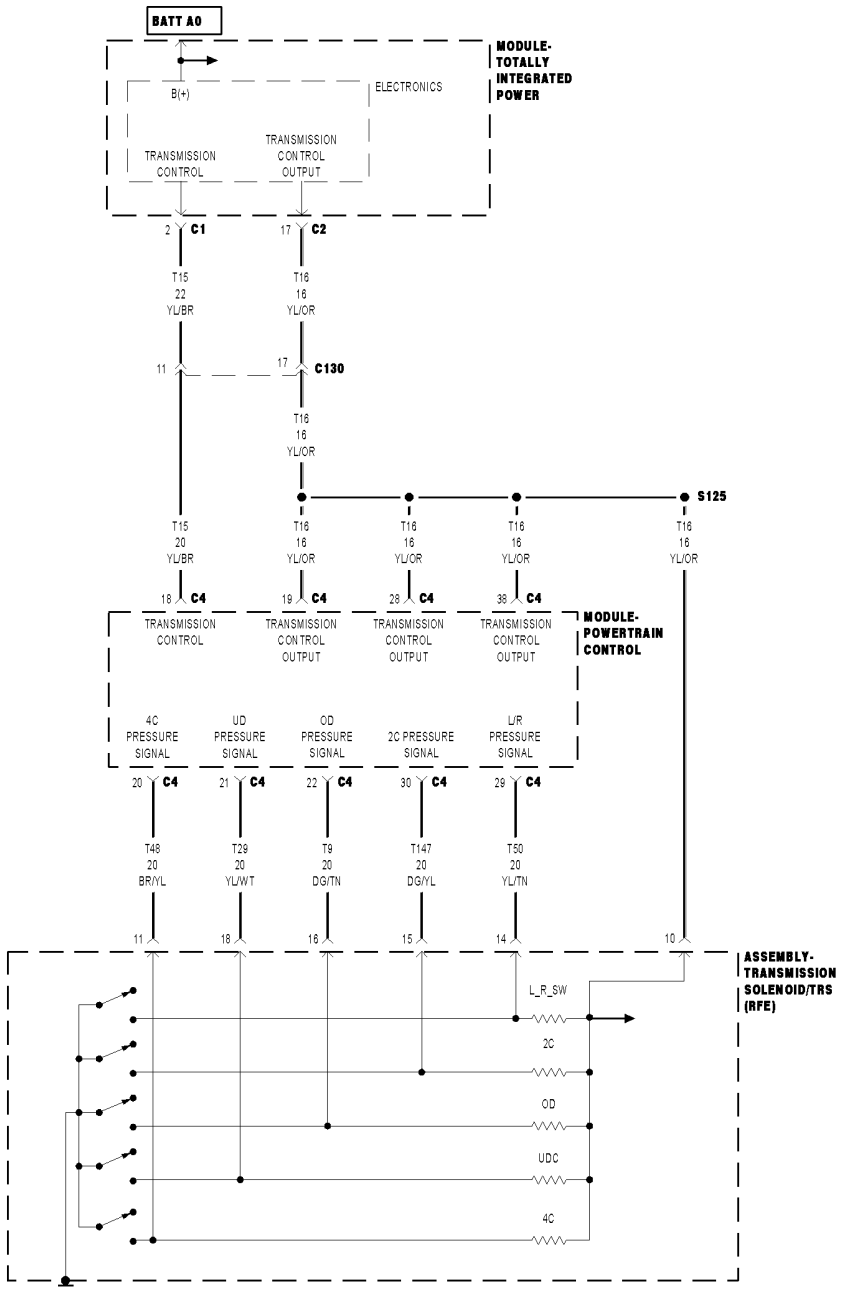

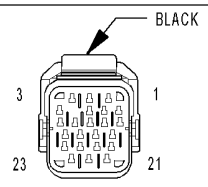

ASSEMBLY-
TRANSMISSION
SOLENOID/TRS
(RFE)

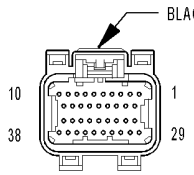

MODULE-
POWERTRAIN
CONTROL C4

01468388

For a complete wiring diagram, **refer to the Wiring Information**.

Theory of Operation

The Transmission Control System tests the pressure switches when they are off. The test verifies that the switches are operational (They will close with pressure applied). The Transmission Control System verifies that the switch closes when the corresponding element is applied. If a switch fails to close, it is re-tested. If it fails the second test, the DTC will set, the MIL will illuminate and the transmission system will default to the orderly Shutdown routine.

- **When Monitored:**
  In any forward gear with engine speed above 1000 rpm shortly after a shift and every minute thereafter.
- **Set Condition:**
  After a shift into a forward gear, with engine speed above 1000 rpm, the Powertrain Control Module (PCM) momentarily turns on element pressure to the Clutch circuits that don't have pressure to identify the correct Pressure Switch closes. If the Pressure Switch does not close two times, the DTC sets.

Possible Causes
LINE PRESSURE SENSOR
TRANSMISSION FLUID CONTAMINATION
RELATED DTCS PRESENT
EXCESSIVE DEBRIS IN OIL PAN
POOR LINE PRESSURE SENSOR CONNECTION
TRANSMISSION CONTROL RELAY DTCS PRESENT
(F856) 5-VOLT SUPPLY CIRCUIT OPEN
TRANSMISSION CONTROL RELAY OUTPUT CIRCUIT OPEN
(F856) 5-VOLT SUPPLY CIRCUIT SHORTED TO GROUND
(T9) OD PRESSURE SWITCH SENSE CIRCUIT SHORTED TO OTHER CIRCUITS
TRANSMISSION SOLENOID/TRS ASSEMBLY
INTERNAL TRANSMISSION
POWERTRAIN CONTROL MODULE (PCM)

Always perform the Pre-Diagnostic Troubleshooting Procedure before proceeding. (Refer to 28 - DTC-Based Diagnostics/MODULE, Powertrain Control (PCM) - Standard Procedure).

1. CHECK IF RELATED DTCS ARE PRESENT

1. With the scan tool, check DTCs.

   Is there any Loss of Prime, TCM Power Input, Line Pressure Sensor and/or TIPM TCM Power Control Circuit DTCs present?

Yes

- (Refer to 28 - DTC-Based Diagnostics/MODULE, Totally Integrated Power (TIPM) - Diagnosis and Testing) and perform the appropriate diagnostic procedure. If the DTC P0944-LOSS OF PRIME is present, perform its respective test first. (Refer to 28 - DTC-Based Diagnostics/MODULE, Powertrain Control (PCM) - Diagnosis and Testing).

No

- Go To 2

2. CHECK IF THE DTC P0760 IS PRESENT

1. With the scan tool, check DTCs.

Is the DTC P0760 also present?

Yes

- (Refer to 28 - DTC-Based Diagnostics/MODULE, Powertrain Control (PCM) - Diagnosis and Testing) and perform the diagnostics for P0760-OD SOLENOID CIRCUIT.

No

- Go To 3

3. CHECK IF OTHER DTCS ARE PRESENT

1. With the scan tool, check DTCs.

Are any of the DTCs P0733, P0734, P0735, and/or P0871 present also?

Yes

- Go To 12

No

- Go To 4

4. CHECK IF THE DTC IS CURRENT

1. With the scan tool, read DTCs.

Is the status Active or is the Starts Since Set counter 2 or less for this DTC?

Yes

- Go To 5

No

- Go To 15

5. CHECK IF THE LINE PRESSURE STAYS THE SAME

1. Start the engine.
2. Warm the transmission to 82° C (180° F).
3. Firmly apply the brakes.
4. With the scan tool, monitor the Line Pressure during the following step.
5. Move the shift lever to each gear position, pausing momentarily in each position and record the line pressure reading. Allow the pressure to stabilize for at least 5 seconds in each range.

Did the line pressure remain at a steady value between 585 and 655 kPa (85 and 95 psi) in each position?

Yes

- Go To 6

No

- Go To 10

6. CHECK THE LINE PRESSURE SENSOR CONNECTION

1. Ignition on, **engine not running.**
2. With the scan tool, monitor the Line Pressure while firmly pushing the Transmission Line Pressure Sensor connector inwards towards the Transmission.

Did the Line Pressure reading on the scan tool CHANGE to about 207 kPa (30 psi) or 0.7 of a volt when the connector was pushed inward?

Yes (value was higher and changed to 207 kPa (30 psi) or 0.7 of a volt)

- Disconnect and properly reconnect the Line Pressure Sensor connector. Inspect terminals and repair as necessary.
- Perform the 545RFE TRANSMISSION VERIFICATION TEST. (Refer to 28 - DTC-Based Diagnostics/MODULE, Powertrain Control (PCM) - Standard Procedure).

No (value is higher than 207 kPa (30 psi) or 0.7 volts and did not change or the value was already 207 kPa (30 psi) or 0.7 volts and did not change)

- Go To 7

7. CHECK THE LINE PRESSURE SENSOR OPERATION

1. Turn the ignition off to the lock position.
2. Remove the Ignition Switch Feed fuse from the TIPM.

CAUTION: Removal of the Ignition Switch Feed fuse from the TIPM will prevent the vehicle from being started in gear.

WARNING: The Ignition Switch Feed fuse must be removed from the TIPM. Failure to do so can result in possible serious or fatal injury.

3. Install the Transmission Simulator 8333A.
4. With the Transmission Simulator select the "OFF" position on the "Input/Output Speed" switch.
5. Ignition on, engine not running.
6. With the scan tool, monitor the Line Pressure while turning the Pressure Switch selector to each of the 3 line pressure positions on the Transmission Simulator.

NOTE: All three scan tool Line Pressure readings should be steady and ±14 kPa (2.0 psi) or 0.1 of a volt of the reading specified on the Transmission Simulator.

Did the scan tool Line Pressure readings match the specified readings on the Transmission Simulator and remain steady in all three positions?

Yes

- Replace the Line Pressure Sensor in accordance with the Service Information.
- Perform the 545RFE TRANSMISSION VERIFICATION TEST. (Refer to 28 - DTC-Based Diagnostics/MODULE, Powertrain Control (PCM) - Standard Procedure).

No

- Go To 8

8. CHECK THE (F856) 5-VOLT SUPPLY CIRCUIT FOR AN OPEN

1. Turn the ignition off to the lock position.
2. Disconnect Transmission Simulator.
3. Disconnect the PCM C4 harness connector and connect the PCM Pinout Box 8815A.

CAUTION: Do not probe the PCM harness connectors. Probing the PCM harness connectors will damage the PCM terminals resulting in poor terminal to pin connection. Install the Kit, NGC, 38 Position 8815A to perform diagnosis.

4. Measure the resistance of the (F856) 5-volt Supply circuit between the Line Pressure Sensor harness connector and the appropriate terminal of the PCM Pinout Box 8815A.

Is the resistance above 5.0 Ohms?

Yes

- Repair the (F856) 5-volt Supply circuit for an open.
- Perform the 545RFE TRANSMISSION VERIFICATION TEST. (Refer to 28 - DTC-Based Diagnostics/MODULE, Powertrain Control (PCM) - Standard Procedure).

No

- Go To 9

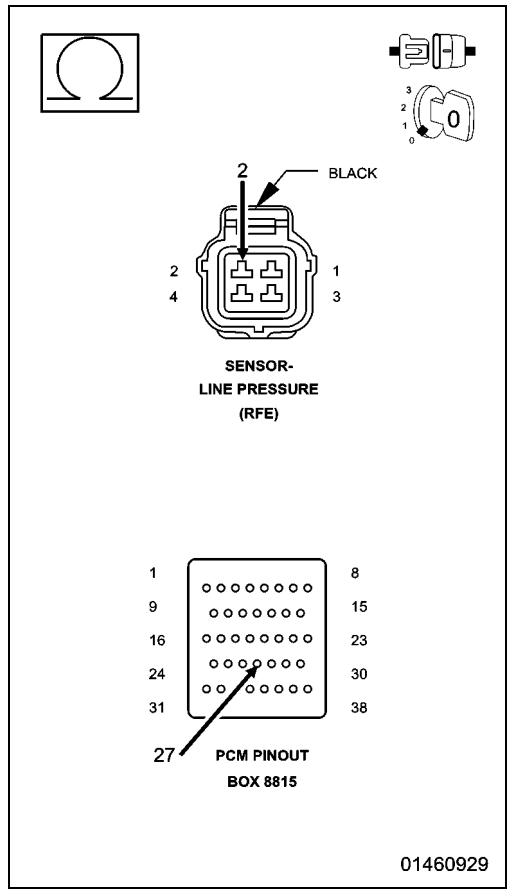

9. CHECK THE (F856) 5-VOLT SUPPLY CIRCUIT FOR A SHORT TO GROUND

1. Measure the resistance between ground and the (F856) 5-volt Supply circuit.

Is the resistance below 5.0 Ohms?

Yes

- Repair the (F856) 5-volt Supply circuit for a short to ground.
- Perform the 545RFE TRANSMISSION VERIFICATION TEST. (Refer to 28 - DTC-Based Diagnostics/MODULE, Powertrain Control (PCM) - Standard Procedure).

No

- Using the schematics as a guide, check the Powertrain Control Module (PCM) terminals for corrosion, damage, or terminal push out. Pay particular attention to all power and ground circuits. If no problems are found, replace and program the PCM in accordance with the Service Information. With the scan tool, perform Quick Learn.
- Perform the 545RFE TRANSMISSION VERIFICATION TEST. (Refer to 28 - DTC-Based Diagnostics/MODULE, Powertrain Control (PCM) - Standard Procedure).

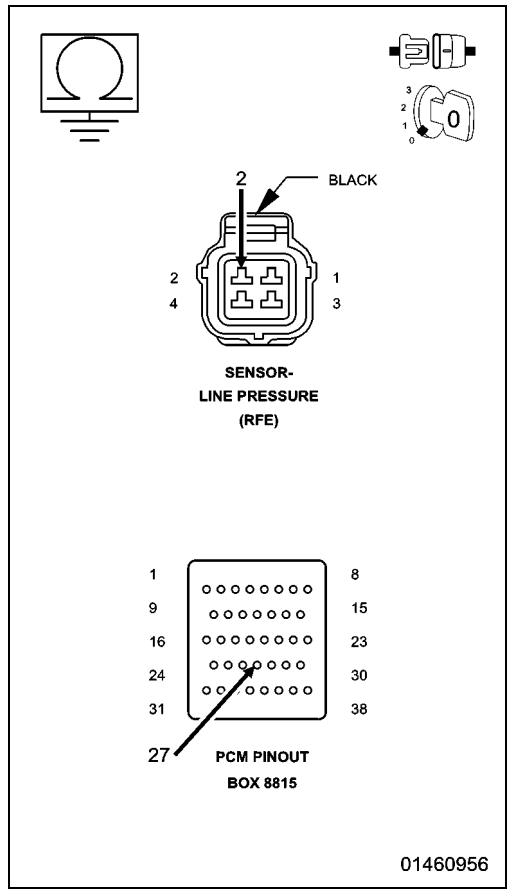

10. COMPARE THE SCAN TOOL TO THE PRESSURE GAUGE

1. Turn the ignition off to the lock position.
2. Connect the Line Pressure Adapter 8259 and 0-300 psi Test Gauge C-3293-SP. Refer to the Service Information for proper installation procedure.

CAUTION: Apply parking brake.

3. Start the engine.
4. In the following steps, compare the scan tool Line Pressure to the Pressure Gauge readings in each gear.

CAUTION: Do not overheat transmission.

5. With the gear selector in park, raise the rpm to 1500, and compare line pressure readings.
6. Firmly apply the brakes, move the gear selector into reverse, raise the rpm to 1500, and compare the line pressure readings.
7. Firmly apply the brakes, move the gear selector into drive, raise the rpm to 1500, and compare the line pressure readings.

Did the scan tool Line Pressure readings match the Pressure Gauge readings ± 10 psi?

Yes

- Go To 11

No

- Replace the Line Pressure Sensor in accordance with the Service Information.
- Perform the 545RFE TRANSMISSION VERIFICATION TEST. (Refer to 28 - DTC-Based Diagnostics/MODULE, Powertrain Control (PCM) - Standard Procedure).

11. CHECK THE WIRING AND CONNECTORS

1. Turn the ignition off to the lock position.
2. Remove the Line Pressure Adapter 8259 and 0-300 psi Test Gauge C-3293-SP.
3. Remove the Ignition Switch Feed fuse from the TIPM.

CAUTION: Removal of the Ignition Switch Feed fuse from the TIPM will prevent the vehicle from being started in gear.

WARNING: The Ignition Switch Feed fuse must be removed from the TIPM. Failure to do so can result in possible serious or fatal injury.

4. Install the Transmission Simulator 8333A.
5. On the Transmission Simulator, turn the Pressure Switch selector switch to OD.
6. Ignition on, engine not running.
7. With the scan tool, monitor the OD Pressure Switch state while pressing and holding the Pressure Switch test button and wiggling the wire harness and connectors that pertain to the OD Pressure Switch.

Did the OD Pressure Switch state change to closed and remain closed while wiggling the wires?

Yes

- Go To 12

No

- Go To 14

12. CHECK FOR EXCESSIVE DEBRIS

1. Turn the ignition off to the lock position.
2. Remove the Transmission Simulator 8333A.
3. Remove and inspect the Transmission Oil Pan in accordance with the Service Information.

Does the Transmission Oil Pan contain excessive debris or contamination?

Yes

- Repair the cause of the excessive debris in the Transmission Oil Pan. Refer to the Service Information for the proper procedures.
- Perform the 545RFE TRANSMISSION VERIFICATION TEST. (Refer to 28 - DTC-Based Diagnostics/MODULE, Powertrain Control (PCM) - Standard Procedure).

No

- Go To 13

13. CHECK THE OD HYDRAULIC CLUTCH CIRCUIT

1. Remove the Valve Body and air check the OD hydraulic clutch circuit (in the case) for leakage in accordance with the Service Information.

NOTE: The OD hydraulic clutch circuit contains a small bleed orifice which connects to the Reverse hydraulic clutch circuit. A small amount of air leakage is normal.

Was there excessive air leakage noticed during the air check?

Yes

- Repair as necessary. Check the OD/Rev clutch piston seals, bleed orifice assembly, reaction shaft support seal rings, and machining of the main mating faces on the pump housing, pump valve body, and reaction shaft support.
- Perform the 545RFE TRANSMISSION VERIFICATION TEST. (Refer to 28 - DTC-Based Diagnostics/MODULE, Powertrain Control (PCM) - Standard Procedure).

No

- Disassemble and inspect the Valve Body and repair as necessary. Inspect the OD Accumulator piston and seals. Check for an extra check ball downstream from the #6 check ball pocket and repair as necessary. If no problems are found in the Valve Body, replace the Transmission Solenoid/TRS Assembly in accordance with the Service Information.
- Perform the 545RFE TRANSMISSION VERIFICATION TEST. (Refer to 28 - DTC-Based Diagnostics/MODULE, Powertrain Control (PCM) - Standard Procedure).

14. CHECK THE (T9) OD PRESSURE SWITCH SENSE CIRCUIT FOR A SHORT TO ANOTHER CIRCUIT

1. Disconnect all PCM harness connectors.
2. Disconnect the Transmission Solenoid/TRS Assembly harness connector.

NOTE: Make sure the Transmission Solenoid/TRS Assembly harness connector is disconnected.

NOTE: Check connectors - Clean/repair as necessary.

3. Measure the resistance between the (T9) OD Pressure Switch Sense circuit and all other circuits in the Transmission Solenoid/TRS Assembly harness connector.

Is the resistance below 5.0 Ohms between the (T9) OD Pressure Switch Sense circuit and any other circuit(s) in the Transmission Solenoid/TRS Assembly harness connector?

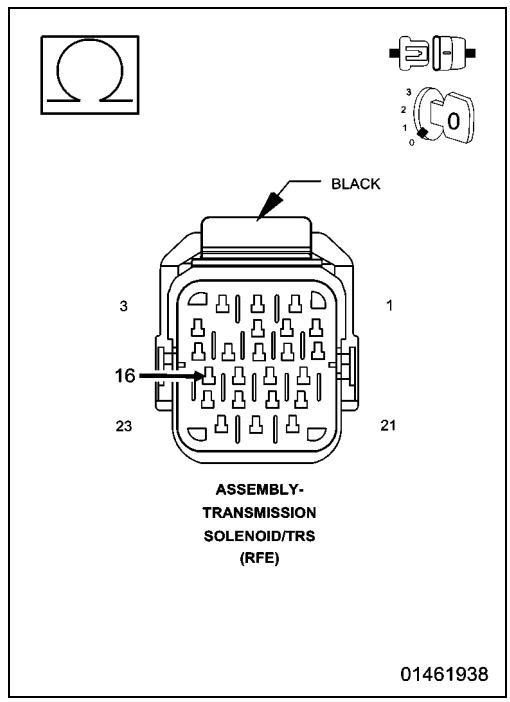

Yes

- Repair the (T9) OD Pressure Switch Sense circuit for a short to another circuit(s).
- Perform the 545RFE TRANSMISSION VERIFICATION TEST. (Refer to 28 - DTC-Based Diagnostics/MODULE, Powertrain Control (PCM) - Standard Procedure).

No

- Using the schematics as a guide, check the Powertrain Control Module (PCM) terminals for corrosion, damage, or terminal push out. Pay particular attention to all power and ground circuits. If no problems are found, replace and program the PCM in accordance with the Service Information. With the scan tool, perform Quick Learn.
- Perform the 545RFE TRANSMISSION VERIFICATION TEST. (Refer to 28 - DTC-Based Diagnostics/MODULE, Powertrain Control (PCM) - Standard Procedure).

15. CHECK THE WIRING AND CONNECTORS

1. The conditions necessary to set this DTC are not present at this time.
2. Using the schematics as a guide, inspect the wiring and connectors specific to this circuit.
3. Wiggle the wires while checking for shorted and open circuits.
4. With the scan tool, check the Event Data to help identify the conditions in which the DTC was set.
5. If the Event Data shows the DTC P0870 set while the Line Pressure was significantly below the Desired Line Pressure reading, check for causes of low line pressure (low fluid level, broken or improperly installed primary oil filter or filter seal, sticking Main Regulator Valve in the Pump Valve Body etc.). If the data shows the DTC set while the Line Pressure reading was significantly higher than the Desired Line Pressure, check the Line Pressure Sensor and related wiring.

Where there any problems found?

Yes

- Repair as necessary.
- Perform the 545RFE TRANSMISSION VERIFICATION TEST. (Refer to 28 - DTC-Based Diagnostics/MODULE, Powertrain Control (PCM) - Standard Procedure).

No

- Test Complete.

P0871-OD PRESSURE SWITCH RATIONALITY

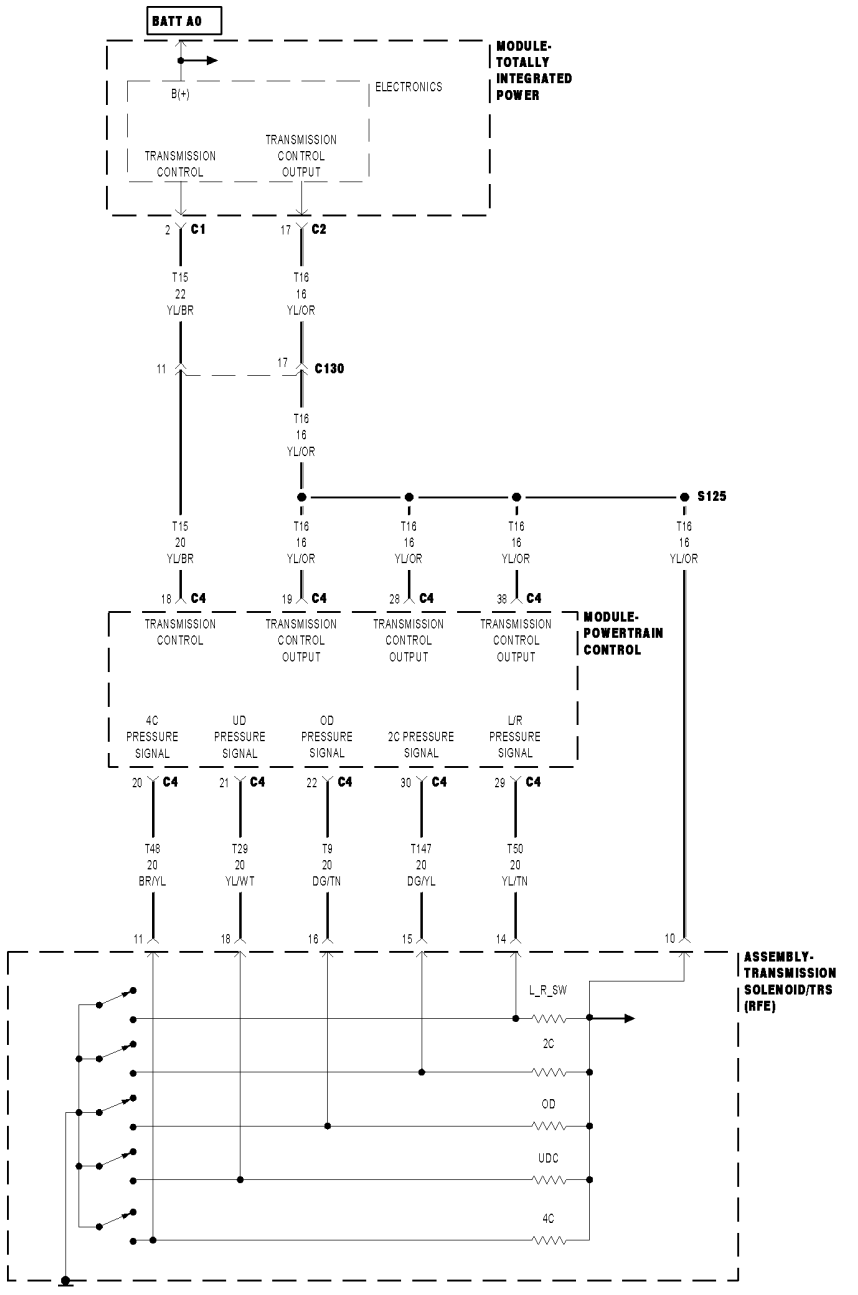

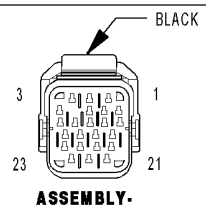

ASSEMBLY-
TRANSMISSION
SOLENOID/TRS
(RFE)

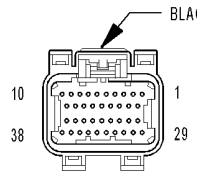

MODULE-
POWERTRAIN
CONTROL C4

01468388

For a complete wiring diagram, **refer to the Wiring Information**.

Theory of Operation

The Transmission system uses five pressure switches to monitor the fluid pressure in the L/R, 2C, 4C, UD, and OD clutch circuits. The pressure switches are continuously monitored for the correct states in each gear as shown.

- **When Monitored:**
  Continuously with the ignition on and engine running.
- **Set Condition:**
  The appropriate DTC is set if one of the pressure switches are open or closed at the wrong time in a given gear.

Possible Causes
RELATED TCM POWER INPUT DTCS PRESENT
LINE PRESSURE DTCS PRESENT
NO. 4 OR 6 CHECK BALL CUT OR DAMAGED
(T9) OD PRESSURE SWITCH SENSE CIRCUIT OPEN
(T9) OD PRESSURE SWITCH SENSE CIRCUIT SHORTED TO GROUND
(T9) OD PRESSURE SWITCH SENSE CIRCUIT SHORTED TO OTHER CIRCUITS
LOW LINE PRESSURE
WIRING AND CONNECTORS
CUT OD/REV PISTON SEAL
BROKEN OR MISSING OD/REV PISTON BLEED ORIFICE
BROKEN REACTION SHAFT SUPPORT SEAL RING
POOR MACHINING ON PUMP VALVE BODY FACE
BROKEN OR MISSING DRIBBLER ORIFICE ASSEMBLY IN REACTION SHAFT SUPPORT
TRANSMISSION SOLENOID/TRS ASSEMBLY
CUT OD ACCUMULATOR PISTON SEAL
CRACKED OD ACCUMULATOR PISTON
BROKEN OR MISSING OD BLEED ORIFICE IN MAIN VALVE BODY
POWERTRAIN CONTROL MODULE (PCM)

Always perform the Pre-Diagnostic Troubleshooting Procedure before proceeding. (Refer to 28 - DTC-Based Diagnostics/MODULE, Powertrain Control (PCM) - Standard Procedure).

GEAR	L/R	2C	4C	UD	OD
REVERSE	OPEN	OPEN	OPEN	OPEN	OPEN
P/N	CLOSED**	OPEN	OPEN	OPEN	OPEN
1ST	CLOSED*	OPEN	OPEN	CLOSED	OPEN
2ND	OPEN	CLOSED	OPEN	CLOSED	OPEN
2ND PRIME	OPEN	OPEN	CLOSED	CLOSED	OPEN
3RD	OPEN	OPEN	OPEN	CLOSED	CLOSED
4TH	OPEN	OPEN	CLOSED	OPEN	CLOSED
5TH	OPEN	CLOSED	OPEN	OPEN	CLOSED
*L/R is closed if output speed is below 100 rpm in Drive and Manual 2. L/R is closed in Manual 1.					
**May be open when rolling in Neutral or at low oil temperatures.					

1. CHECK FOR RELATED DTCS

1. With the scan tool, read DTCs.

Are there any TIPM TCM Power Control Circuit or TCM Power Input DTCs present?

Yes

- (Refer to 28 - DTC-Based Diagnostics/MODULE, Totally Integrated Power (TIPM) - Diagnosis and Testing) and perform the appropriate diagnostic procedure.

No

- Go To 2

2. CHECK IF LINE PRESSURE DTCS ARE PRESENT

1. With the scan tool, read DTCs.

Are there any Line Pressure DTCs present?

Yes

- (Refer to 28 - DTC-Based Diagnostics/MODULE, Powertrain Control (PCM) - Diagnosis and Testing) and perform the appropriate diagnostic procedure.

No

- Go To 3

3. CHECK FOR OTHER PRESSURE SWITCH DTCS

1. With the scan tool, read DTCs.

Are there two or more other pressure switch rationality DTCs present in addition to P0871?

Yes

- Go To 5

No

- Go To 4

4. CHECK IF DTC IS CURRENT

1. With the scan tool, read and record the Event Data.

NOTE: Make sure to record all Event Data stored in the scan tool for future reference in this test procedure.

Does the Event Data show data for P0871?

Yes

- Go To 8

No

- (Refer to 28 - DTC-Based Diagnostics/MODULE, Powertrain Control (PCM) - Diagnosis and Testing) and perform the appropriate diagnostic procedure.

5. CHECK IF RELATED DTC IS PRESENT

1. With the scan tool, read and record the Event Data.

NOTE: Make sure to record all Event Data stored in the scan tool for future reference in this test procedure.

Do all the pressure switches read CLOSED in the Event Data?

Yes

- (Refer to 28 - DTC-Based Diagnostics/MODULE, Powertrain Control (PCM) - Diagnosis and Testing) and perform the diagnostic procedure for DTC P0882. Follow instructions as if the DTC is current.

No

- Go To 6

6. CHECK IF PRESSURE SWITCHES READ OPEN

In the Event Data recorded earlier, do all the pressure switches read open?

Yes

- Go To 7

No

- Go To 8

7. CHECK FOR LOW LINE PRESSURE

In the Event Data recorded earlier, is the Line Pressure less than 40 psi, and significantly below the Desired Line Pressure?

Yes

- Repair as necessary to correct low line pressure. Check fluid level and adjust as necessary. If fluid level is OK, check the Primary Oil Filter weal for a spit, crack , or improperly installed. If the filer and seal are OK, check the Main Regulator Valve in the Oil Pump. Refer to the Service Information for the above procedures.
- Perform the 545RFE TRANSMISSION VERIFICATION TEST. (Refer to 28 - DTC-Based Diagnostics/MODULE, Powertrain Control (PCM) - Standard Procedure).

No

- Replace the Transmission Solenoid/TRS Assembly in accordance with the Service Information.
- Perform the 545RFE TRANSMISSION VERIFICATION TEST. (Refer to 28 - DTC-Based Diagnostics/MODULE, Powertrain Control (PCM) - Standard Procedure).

8. CHECK IF IN PARK, NEUTRAL, OR REVERSE

In the Event Data recorded earlier, does the Event Data show the OD Pressure Switch DTC set while in Park, Neutral, or Reverse?

Yes

- Go To 18

No

- Go To 9

9. CHECK IF THE OD PRESSURE SWITCH WAS OPEN

In the Event Data recorded earlier, did the OD Pressure Switch read OPEN?

Yes

- Go To 10

No

- Go To 15

10. CHECK FOR LOW LINE PRESSURE

In the Event Data recorded earlier, is the Line Pressure less than 40 psi, and significantly below the Desired Line Pressure?

Yes

- Repair as necessary to correct low line pressure. Check the fluid level. Check the Primary Oil Filter seal for a split, crack, or improperly installed. Refer to the Service Information for the proper installation procedure. If the fluid level and filter are OK, check the Main Regulator Valve in the Oil Pump.
- Perform the 545RFE TRANSMISSION VERIFICATION TEST. (Refer to 28 - DTC-Based Diagnostics/MODULE, Powertrain Control (PCM) - Standard Procedure).

No

- Go To 11

11. CHECK THE (T9) OD PRESSURE SWITCH SENSE CIRCUIT FOR A SHORT TO ANOTHER CIRCUIT

1. Turn the ignition off to the lock position.
2. Disconnect all PCM harness connectors.
3. Disconnect the Transmission Solenoid/TRS Assembly harness connector.
4. Measure the resistance between the (T9) OD Pressure Switch Sense circuit and all other circuits in the Transmission Solenoid/TRS Assembly harness connector.

Is the resistance below 5.0 Ohms between the (T9) OD Pressure Switch Sense circuit and any other circuit(s) in the Transmission Solenoid/TRS Assembly harness connector?

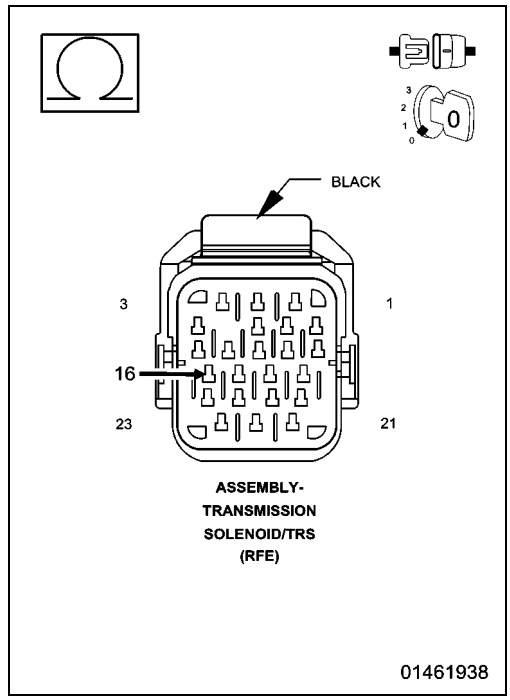

Yes

- Repair the (T9) OD Pressure Switch Sense circuit for a short to another circuit(s).
- Perform the 545RFE TRANSMISSION VERIFICATION TEST. (Refer to 28 - DTC-Based Diagnostics/MODULE, Powertrain Control (PCM) - Standard Procedure).

No

- Go To 12

12. CHECK IF THE DTC RESETS

1. Reconnect all previously disconnected connectors.
2. With the scan tool, erase transmission DTCs.
3. Test drive the vehicle, use the Event Data recorded earlier to help duplicate the conditions when the DTC originality set.

Does the DTC P0871 reset?

Yes

- Go To 13

No

- Go To 22

13. CHECK THE POWERTRAIN CONTROL MODULE

1. Remove the Transmission Control Relay.
2. Operate the vehicle in Drive.

Is the transmission slipping while in Drive?

Yes

- Go To 14

No

- Using the schematics as a guide, check the Powertrain Control Module (PCM) terminals for corrosion, damage, or terminal push out. Pay particular attention to all power and ground circuits. If no problems are found, replace and program the PCM in accordance with the Service Information. With the scan tool, perform Quick Learn.
- Perform the 545RFE TRANSMISSION VERIFICATION TEST. (Refer to 28 - DTC-Based Diagnostics/MODULE, Powertrain Control (PCM) - Standard Procedure).

14. AIR CHECK TRANSMISSION CLUTCH OPERATION

1. Perform an Air Check Transmission Clutch Operation procedure in accordance with the Service Information.

NOTE: The OD/Rev piston contains a small bleed orifice, a small amount of leakage between the OD and Reverse hydraulic clutch circuits is considered normal.

Is there excessive air leakage in any clutch circuit?

Yes

- Check the OD/Rev piston seals and bleed orifice, reaction shaft support seal rings, dribbler orifice assemblies in the reaction shaft support and for poor machine on the pump valve body faces. Refer to the Service Information.
- Perform the 545RFE TRANSMISSION VERIFICATION TEST. (Refer to 28 - DTC-Based Diagnostics/MODULE, Powertrain Control (PCM) - Standard Procedure).

No

- Repair the Valve Body. Check the OD Accumulator piston and seals, OD bleed orifice, and No. 6 check ball for cuts or damage. If no problems are found in the Valve Body, replace the Transmission Solenoid/TRS Assembly. Refer to the Service Information for proper repair procedures.
- Perform the 545RFE TRANSMISSION VERIFICATION TEST. (Refer to 28 - DTC-Based Diagnostics/MODULE, Powertrain Control (PCM) - Standard Procedure).

15. CHECK THE PCM AND WIRING

1. Turn the ignition off to the lock position.
2. Remove the Ignition Switch Feed fuse from the TIPM.

CAUTION: Removal of the Ignition Switch Feed fuse from the TIPM will prevent the vehicle from being started in gear.

WARNING: The Ignition Switch Feed fuse must be removed from the TIPM. Failure to do so can result in possible serious or fatal injury.

3. Install Transmission Simulator 8333A.
4. Ignition on, engine not running.
5. With the Transmission Simulator, turn the Pressure Switch selector switch to OD.
6. With the scan tool, monitor the OD Pressure Switch state while pressing the Pressure Switch Test button on the Transmission Simulator.

Did the state of the OD Pressure Switch change from OPEN to CLOSED while pressing the Test button?

Yes

- Go To 16

No

- Go To 18

16. CHECK IF THE NO. 4 AND/OR NO. 6 CHECK BALL IS CUT OR DAMAGED

1. With the scan tool, erase previously stored DTCs and test drive the vehicle, use the Event Data to help duplicate the conditions when the DTC originality set. Note any DTCs that may set.
2. Remove the Transmission Valve Body in accordance with the Service Information.
3. Check the No. 4 and No. 6 Check Balls for cuts or damage.

Is the No. 4 and/or No. 6 Check Ball cut or damaged?

Yes

- Replace the No. 4 and/or No. 6 Check Ball and check for clutch debris in the transmission oil pan. If there is excessive debris, perform internal repairs to the OD Clutch Assembly. Refer to the Service Information for proper repair procedures.
- Perform the 545RFE TRANSMISSION VERIFICATION TEST. (Refer to 28 - DTC-Based Diagnostics/MODULE, Powertrain Control (PCM) - Standard Procedure).

No

- Go To 17

17. CHECK THE TRANSMISSION SOLENOID/TRS ASSEMBLY

Did the DTC P0871 reset during the test drive in the previous step?

Yes

- Replace the Transmission Solenoid/TRS Assembly in accordance with the Service Information.
- Perform the 545RFE TRANSMISSION VERIFICATION TEST. (Refer to 28 - DTC-Based Diagnostics/MODULE, Powertrain Control (PCM) - Standard Procedure).

No

- Go To 22

18. CHECK THE (T9) OD PRESSURE SWITCH SENSE CIRCUIT FOR AN OPEN

1. Turn the ignition off to the lock position.
2. Disconnect the PCM C4 harness connector and connect the PCM Pinout Box 8815A.
3. Disconnect the Transmission Solenoid /TRS Assembly harness connector

CAUTION: Do not probe the PCM harness connectors. Probing the PCM harness connectors will damage the PCM terminals resulting in poor terminal to pin connection. Install the Kit, NGC, 38 Position 8815A to perform diagnosis.

4. Measure the resistance of the (T9) OD Pressure Switch Sense circuit from the appropriate terminal of the PCM Pinout Box 8815A to the Solenoid/TRS Assembly harness connector.

Is the resistance above 5.0 Ohms?

Yes

- Repair the (T9) OD Pressure Switch Sense circuit for an open.
- Perform the 545RFE TRANSMISSION VERIFICATION TEST. (Refer to 28 - DTC-Based Diagnostics/MODULE, Powertrain Control (PCM) - Standard Procedure).

No

- Go To 19

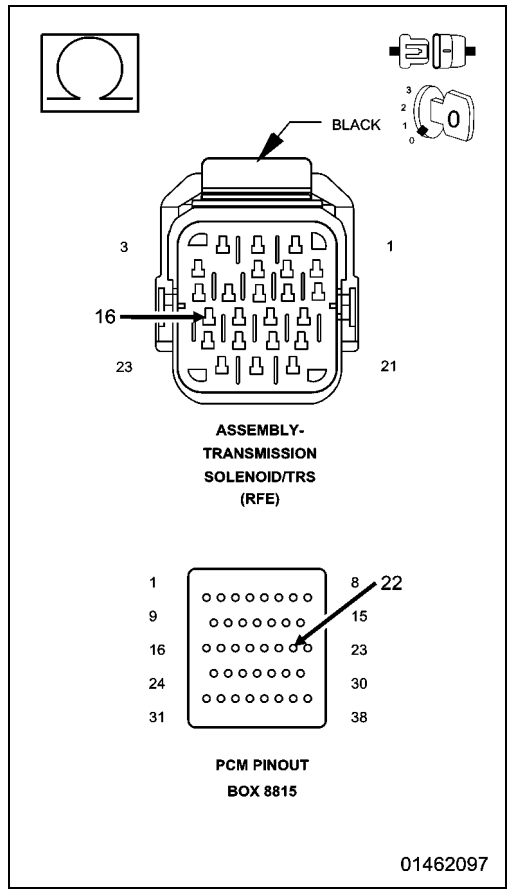

19. CHECK THE (T9) OD PRESSURE SWITCH SENSE CIRCUIT FOR A SHORT TO GROUND

1. Measure the resistance between ground and the (T9) OD Pressure Switch Sense circuit.

Is the resistance below 5.0 Ohms?

Yes

- Repair the (T9) OD Pressure Switch Sense circuit for a short to ground.
- Perform the 545RFE TRANSMISSION VERIFICATION TEST. (Refer to 28 - DTC-Based Diagnostics/MODULE, Powertrain Control (PCM) - Standard Procedure).

No

- Go To 20

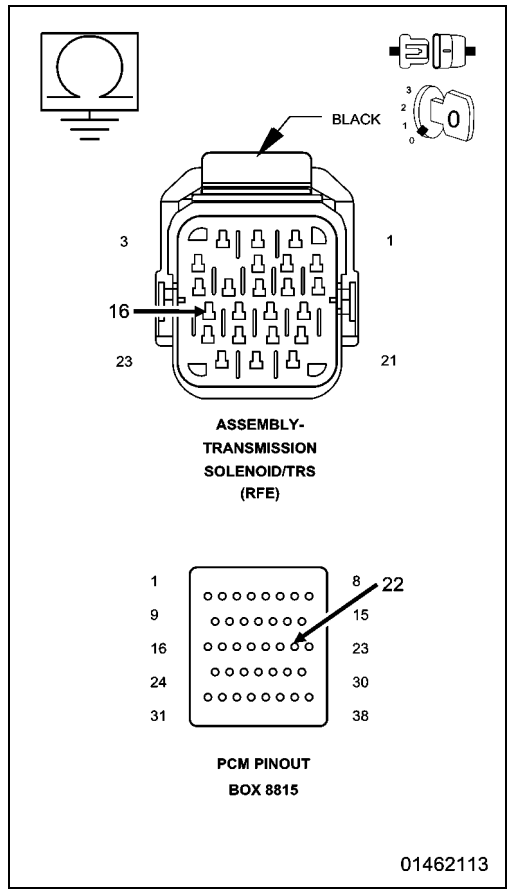

20. CHECK WIRING AND CONNECTORS

1. Using the schematics as a guide, inspect the wiring and connectors. Pay particular attention to all power and ground circuits.

Were there any problems found

Yes

- Repair as necessary.
- Perform the 545RFE TRANSMISSION VERIFICATION TEST. (Refer to 28 - DTC-Based Diagnostics/MODULE, Powertrain Control (PCM) - Standard Procedure).

No

- Go To 21

21. CHECK THE POWERTRAIN CONTROL MODULE

1. Reconnect all previously disconnected connectors.
2. Make sure all Event Data is recorded.
3. With the scan tool, erase previously stored DTCs and test drive the vehicle, use the Event Data to help duplicate the conditions when the DTC originality set.

Does the DTC P0871 reset?

Yes

- Using the schematics as a guide, check the Powertrain Control Module (PCM) terminals for corrosion, damage, or terminal push out. Pay particular attention to all power and ground circuits. If no problems are found, replace and program the PCM in accordance with the Service Information. With the scan tool, perform Quick Learn.
- Perform the 545RFE TRANSMISSION VERIFICATION TEST. (Refer to 28 - DTC-Based Diagnostics/MODULE, Powertrain Control (PCM) - Standard Procedure).

No

- Go To 22

22. CHECK THE WIRING AND CONNECTORS

1. The conditions necessary to set this DTC are not present at this time.
2. Using the schematics as a guide, inspect the wiring and connectors specific to this circuit.
3. Wiggle the wires while checking for shorted and open circuits.
4. With the scan tool, check the Event Data to help identify the conditions in which the DTC was set.

Where there any problems found?

Yes

- Repair as necessary.
- Perform the 545RFE TRANSMISSION VERIFICATION TEST. (Refer to 28 - DTC-Based Diagnostics/MODULE, Powertrain Control (PCM) - Standard Procedure).

No

- Test Complete.

P0875-UD HYDRAULIC PRESSURE TEST

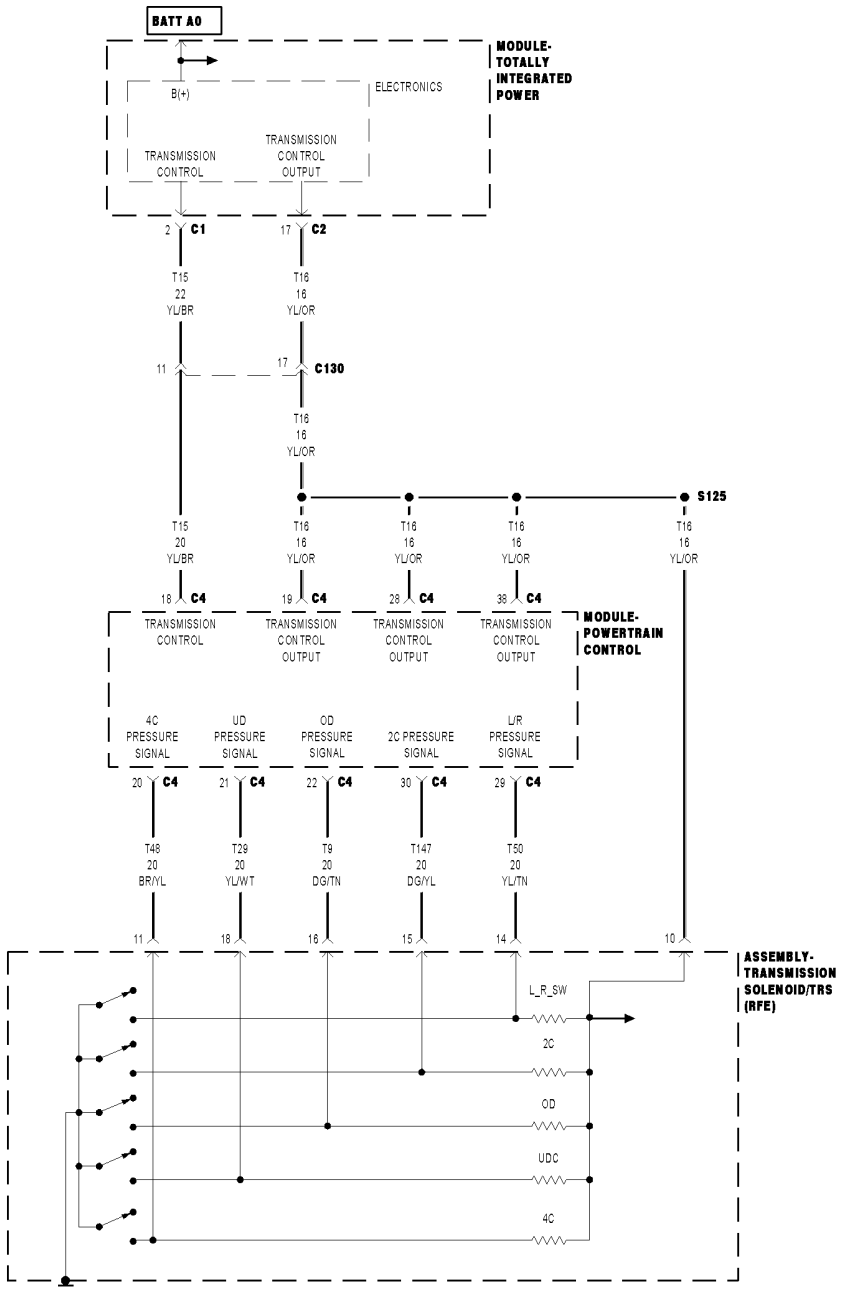

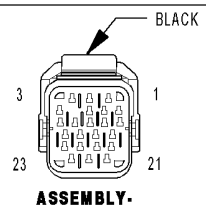

ASSEMBLY-
TRANSMISSION
SOLENOID/TRS
(RFE)

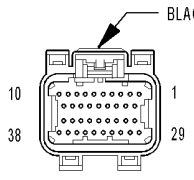

MODULE-
POWERTRAIN
CONTROL C4

01468388

For a complete wiring diagram, **refer to the Wiring Information**.

Theory of Operation

The Transmission Control System tests the pressure switches when they are off. The test verifies that the switches are operational (They will close with pressure applied). The Transmission Control System verifies that the switch closes when the corresponding element is applied. If a switch fails to close, it is re-tested. If it fails the second test, the DTC will set, the MIL will illuminate and the transmission system will default to the orderly Shutdown routine.

- **When Monitored:**
  In any forward gear with engine speed above 1000 rpm shortly after a shift and every minute thereafter.
- **Set Condition:**
  After a shift into a forward gear, with engine speed above 1000 rpm, the Powertrain Control Module (PCM) momentarily turns on element pressure to the Clutch circuits that don't have pressure to identify the correct Pressure Switch closes. If the Pressure Switch does not close two times, the DTC sets.

Possible Causes
LINE PRESSURE SENSOR
TRANSMISSION FLUID CONTAMINATION
RELATED DTCS PRESENT
EXCESSIVE DEBRIS IN OIL PAN
POOR LINE PRESSURE SENSOR CONNECTION
(T29) UD PRESSURE SWITCH SENSE CIRCUIT OPEN
TRANSMISSION CONTROL RELAY DTCS PRESENT
(T29) UD PRESSURE SWITCH SENSE CIRCUIT OPEN
(F856) 5-VOLT SUPPLY CIRCUIT OPEN
(T29) UD PRESSURE SWITCH SENSE CIRCUIT SHORTED TO GROUND
(F856) 5-VOLT SUPPLY CIRCUIT SHORTED TO GROUND
(T29) UD PRESSURE SWITCH SENSE CIRCUIT SHORTED TO VOLTAGE
TRANSMISSION SOLENOID/TRS ASSEMBLY
INTERNAL TRANSMISSION
POWERTRAIN CONTROL MODULE (PCM)

Always perform the Pre-Diagnostic Troubleshooting Procedure before proceeding. (Refer to 28 - DTC-Based Diagnostics/MODULE, Powertrain Control (PCM) - Standard Procedure).

1. CHECK IF RELATED DTCS ARE PRESENT

1. With the scan tool, read DTCs.

   Is there any Loss of Prime, TCM Power Input, TIPM TCM Power Control Circuit and/or Line Pressure Sensor DTCs present?

Yes

- Perform the appropriate diagnostic procedure. If the DTC, P0944-LOSS OF PRIME is present, perform its respective test first. (Refer to 28 - DTC-Based Diagnostics/MODULE, Powertrain Control (PCM) - Diagnosis and Testing).

No

- Go To 2

2. CHECK IF THE DTC P0765 IS PRESENT

1. With the scan tool, read DTCs.

Is the DTC P0765 also present?

Yes

- (Refer to 28 - DTC-Based Diagnostics/MODULE, Powertrain Control (PCM) - Diagnosis and Testing) and perform the diagnostic procedure for DTC P0765-UD SOLENOID CIRCUIT.

No

- Go To 3

3. CHECK IF OTHER DTCS ARE PRESENT

1. With the scan tool, read DTCs.

Are any of the DTCs, P0729, P0731, P0732, P0733, and/or P0876 present also?

Yes

- Go To 12

No

- Go To 4

4. CHECK IF THE DTC IS CURRENT

1. With the scan tool, read DTCs.

Is the status Active or is the Starts Since Set counter 2 or less for this DTC?

Yes

- Go To 5

No

- Go To 17

5. CHECK IF THE LINE PRESSURE STAYS THE SAME

1. Start the engine.
2. Warm the transmission to 82° C or 180° F.
3. Firmly apply the brakes.
4. With the scan tool, monitor the Line Pressure during the following step.
5. Move the shift lever to each gear position, pausing momentarily in each position and record the line pressure reading. Allow the pressure to stabilize for at least 5 seconds in each range.

Did the line pressure remain at a steady value between 585 and 655 kPa or 85 and 95 psi in each position?

Yes

- Go To 6

No

- Go To 10

6. CHECK THE LINE PRESSURE SENSOR CONNECTION

1. Ignition on, **engine not running.**
2. With the scan tool, monitor the Line Pressure while firmly pushing the Transmission Line Pressure Sensor connector inwards towards the Transmission.

Did the Line Pressure reading on the scan tool change to about 207 kPa or 30 psi when the connector was pushed inward?

Yes

- Disconnect and properly reconnect the Line Pressure Sensor connector. Inspect terminals and repair as necessary.
- Perform the 545RFE TRANSMISSION VERIFICATION TEST. (Refer to 28 - DTC-Based Diagnostics/MODULE, Powertrain Control (PCM) - Standard Procedure).

No

- Go To 7

7. CHECK THE LINE PRESSURE SENSOR OPERATION

1. Turn the ignition off to the lock position.
2. Remove the Ignition Switch Feed fuse from the TIPM.

CAUTION: Removal of the Ignition Switch Feed fuse from the TIPM will prevent the vehicle from being started in gear.

WARNING: The Ignition Switch Feed fuse must be removed from the TIPM. Failure to do so can result in possible serious or fatal injury.

3. Install the Transmission Simulator 8333A.
4. With the Transmission Simulator select the "OFF" position on the "Input/Output Speed" switch.
5. Ignition on, engine not running.
6. With the scan tool, monitor the Line Pressure while turning the Pressure Switch selector to each of the 3 line pressure positions on the Transmission Simulator.

NOTE: All three scan tool Line Pressure readings should be steady and ±14 kPa or 2.0 psi of the reading specified on the Transmission Simulator.

Did the scan tool Line Pressure readings match the specified readings on the Transmission Simulator and remain steady in all three positions?

Yes

- Replace the Line Pressure Sensor in accordance with the Service Information.
- Perform the 545RFE TRANSMISSION VERIFICATION TEST. (Refer to 28 - DTC-Based Diagnostics/MODULE, Powertrain Control (PCM) - Standard Procedure).

No

- Go To 8

8. CHECK THE (F856) 5-VOLT SUPPLY CIRCUIT FOR AN OPEN

1. Turn the ignition off to the lock position.
2. Disconnect Transmission Simulator.
3. Disconnect the PCM C1 harness connector and connect the PCM Pinout Box 8815A.

CAUTION: Do not probe the PCM harness connectors. Probing the PCM harness connectors will damage the PCM terminals resulting in poor terminal to pin connection. Install the Kit, NGC, 38 Position 8815A to perform diagnosis.

4. Measure the resistance of the (F856) 5-volt Supply circuit from the Line Pressure Sensor harness connector to the appropriate terminal of the PCM Pinout Box 8815A.

Is the resistance above 5.0 Ohms?

Yes

- Repair the (F856) 5-volt Supply circuit for an open.
- Perform the 545RFE TRANSMISSION VERIFICATION TEST. (Refer to 28 - DTC-Based Diagnostics/MODULE, Powertrain Control (PCM) - Standard Procedure).

No

- Go To 9

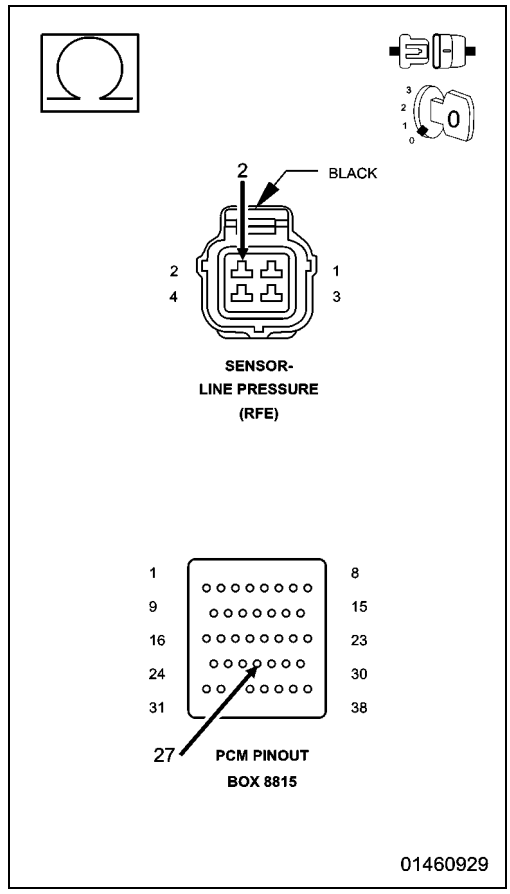

9. CHECK THE (F856) 5-VOLT SUPPLY CIRCUIT FOR A SHORT TO GROUND

1. Measure the resistance between ground and the (F856) 5-volt Supply circuit.

Is the resistance below 5.0 Ohms?

Yes

- Repair the (F856) 5-volt Supply circuit for a short to ground.
- Perform the 545RFE TRANSMISSION VERIFICATION TEST. (Refer to 28 - DTC-Based Diagnostics/MODULE, Powertrain Control (PCM) - Standard Procedure).

No

- Using the schematics as a guide, check the Powertrain Control Module (PCM) terminals for corrosion, damage, or terminal push out. Pay particular attention to all power and ground circuits. If no problems are found, replace and program the PCM in accordance with the Service Information. With the scan tool, perform Quick Learn.
- Perform the 545RFE TRANSMISSION VERIFICATION TEST. (Refer to 28 - DTC-Based Diagnostics/MODULE, Powertrain Control (PCM) - Standard Procedure).

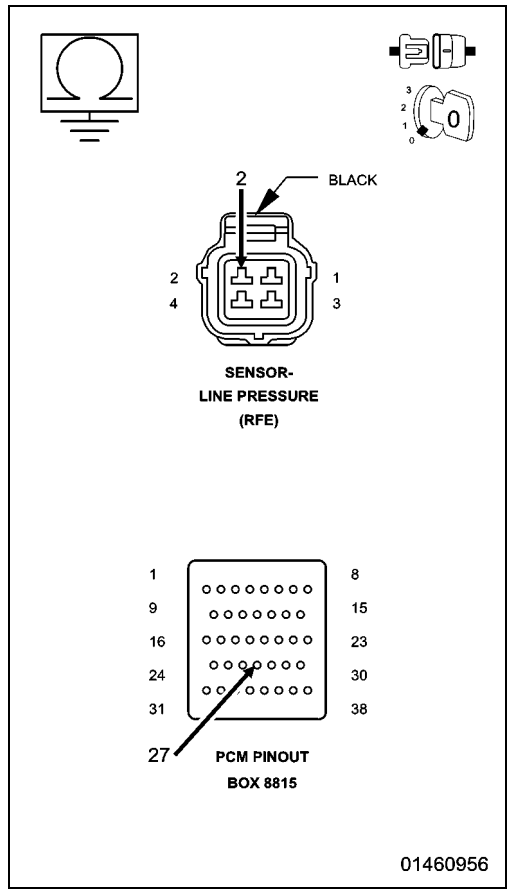

10. COMPARE THE SCAN TOOL READING TO PRESSURE GAUGE READING

1. Turn the ignition off to the lock position.
2. Connect the Line Pressure Adapter 8259 and 0-300 psi Test Gauge C-3293-SP. Refer to the Service Information for proper installation procedure.

CAUTION: Apply parking brake.

3. Start the engine.
4. In the following steps, compare the scan tool Line Pressure to the Pressure Gauge readings in each gear.

CAUTION: Do not overheat transmission.

5. With the gear selector in park, raise the rpm to 1500, and compare line pressure readings.
6. Firmly apply the brakes, move the gear selector into reverse, raise the rpm to 1500, and compare the line pressure readings.
7. Firmly apply the brakes, move the gear selector into drive, raise the rpm to 1500, and compare the line pressure readings.

Did the scan tool Line Pressure readings match the Pressure Gauge readings ± 10 psi?

Yes

- Go To 11

No

- Replace the Line Pressure Sensor in accordance with the Service Information.
- Perform the 545RFE TRANSMISSION VERIFICATION TEST. (Refer to 28 - DTC-Based Diagnostics/MODULE, Powertrain Control (PCM) - Standard Procedure).

11. CHECK THE WIRING AND CONNECTORS

1. Turn the ignition off to the lock position.
2. Remove the Ignition Switch Feed fuse from the TIPM.

CAUTION: Removal of the Ignition Switch Feed fuse from the TIPM will prevent the vehicle from being started in gear.

WARNING: The Ignition Switch Feed fuse must be removed from the TIPM. Failure to do so can result in possible serious or fatal injury.

3. Remove the Line Pressure Adapter 8259 and 0-300 psi Test Gauge C-3293-SP.
4. Install the Transmission Simulator 8333A.
5. On the Transmission Simulator, turn the Pressure Switch selector switch to UD.
6. Ignition on, engine not running.
7. With the scan tool, monitor the UD Pressure Switch state while pressing and holding the Pressure Switch test button and wiggling the wire harness and connectors that pertain to the UD Pressure Switch.

Did the UD Pressure Switch state change to closed and remain closed while wiggling the wires?

Yes

- Go To 12

No

- Go To 14

12. CHECK FOR EXCESSIVE DEBRIS

1. Turn the ignition off to the lock position.
2. Remove the Transmission Simulator 8333A.
3. Remove and inspect the Transmission Oil Pan in accordance with the Service Information.

Does the Transmission Oil Pan contain excessive debris or contamination?

Yes

- Repair the cause of the excessive debris in the Transmission Oil Pan. Refer to the Service Information for the proper procedures.
- Perform the 545RFE TRANSMISSION VERIFICATION TEST. (Refer to 28 - DTC-Based Diagnostics/MODULE, Powertrain Control (PCM) - Standard Procedure).

No

- Go To 13

13. CHECK THE UD HYDRAULIC CLUTCH CIRCUIT

1. Remove the Valve Body and air check the UD hydraulic clutch circuit (in the case) for leakage in accordance with the Service Information.

NOTE: The UD hydraulic clutch circuit contains a small bleed orifice. A small amount of air leakage is normal.

Was there excessive air leakage noticed during the air check?

Yes

- Repair as necessary. Check the UD clutch piston, piston seals and bleed orifice, reaction shaft support seal rings, and machining of the main mating faces of the pump housing, pump valve body, and reaction shaft support.
- Perform the 545RFE TRANSMISSION VERIFICATION TEST. (Refer to 28 - DTC-Based Diagnostics/MODULE, Powertrain Control (PCM) - Standard Procedure).

No

- Disassemble and inspect the Valve Body and repair as necessary. Inspect the UD Accumulator piston and seals. If no problems are found in the Valve Body, replace the Transmission Solenoid/TRS Assembly in accordance with the Service Information.
- Perform the 545RFE TRANSMISSION VERIFICATION TEST. (Refer to 28 - DTC-Based Diagnostics/MODULE, Powertrain Control (PCM) - Standard Procedure).

14. CHECK THE (T29) UD PRESSURE SWITCH SENSE CIRCUIT FOR AN OPEN

1. Turn the ignition off to the lock position.
2. Remove the Transmission Simulator 8333A.
3. Disconnect the PCM C4 harness connector and connect the PCM Pinout Box 8815A.
4. Measure the resistance of the (T29) UD Pressure Switch Sense circuit between the Transmission Solenoid/TRS Assembly harness connector and the appropriate terminal of the PCM Pinout Box 8815A.

Is the resistance above 5.0 Ohms?

Yes

- Repair the (T29) UD Pressure Switch Sense circuit for an open.
- Perform the 545RFE TRANSMISSION VERIFICATION TEST. (Refer to 28 - DTC-Based Diagnostics/MODULE, Powertrain Control (PCM) - Standard Procedure).

No

- Go To 15

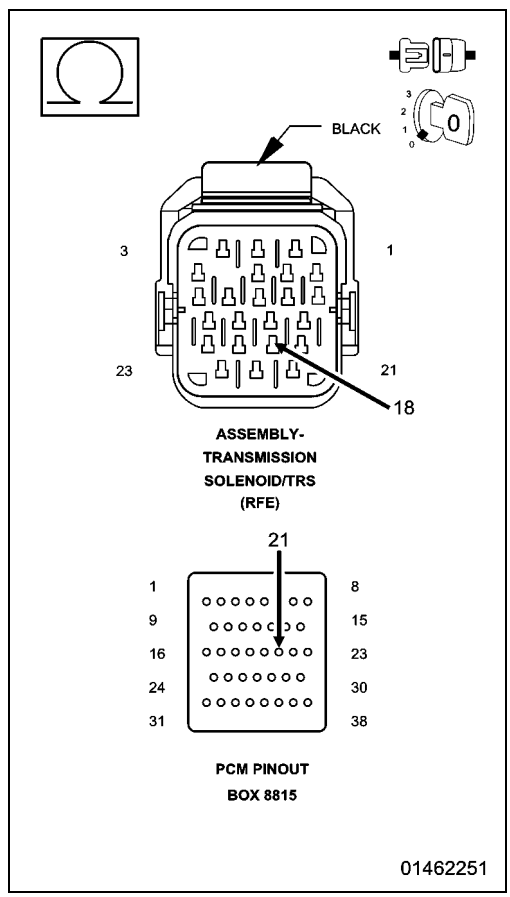

15. CHECK THE (T29) UD PRESSURE SWITCH SENSE CIRCUIT FOR A SHORT TO GROUND

1. Measure the resistance between ground and the (T29) UD Pressure Switch Sense circuit.

Is the resistance below 5.0 Ohms?

Yes

- Repair the (T29) UD Pressure Switch Sense circuit for a short to ground.
- Perform the 545RFE TRANSMISSION VERIFICATION TEST. (Refer to 28 - DTC-Based Diagnostics/MODULE, Powertrain Control (PCM) - Standard Procedure).

No

- Go To 16

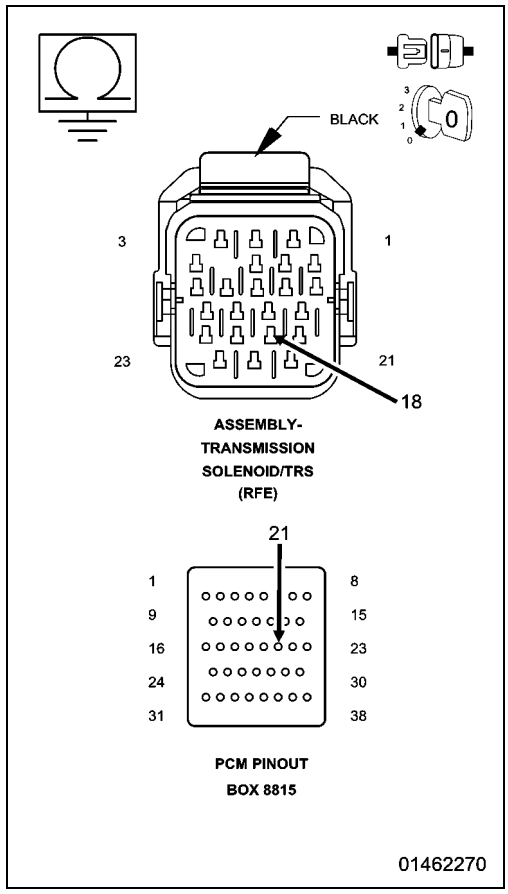

16. CHECK THE (T29) UD PRESSURE SWITCH SENSE CIRCUIT FOR A SHORT TO ANOTHER CIRCUIT

1. Disconnect all PCM harness connectors.
2. Disconnect the Transmission Solenoid/TRS Assembly harness connector.

NOTE: Make sure the Transmission Solenoid/TRS Assembly harness connector is disconnected.

3. Measure the resistance between the (T29) UD Pressure Switch Sense circuit and all other circuits in the Transmission Solenoid/TRS Assembly harness connector.

Is the resistance below 5.0 Ohms between the (T29) UD Pressure Switch Sense circuit and any other circuit(s) in the Transmission Solenoid/TRS Assembly harness connector?

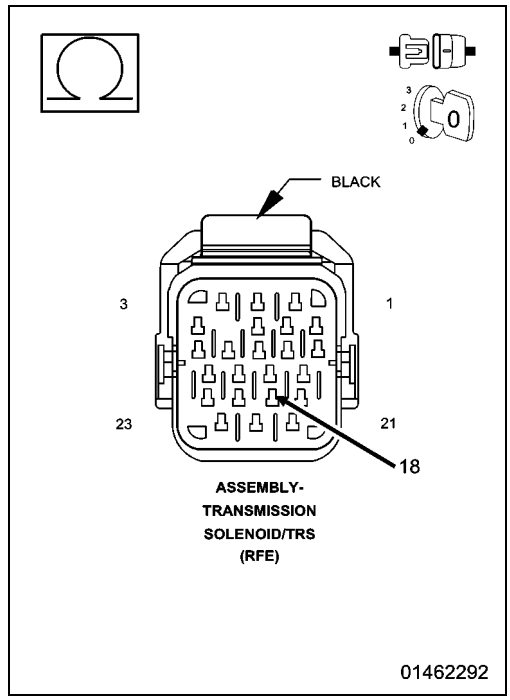

Yes

- Repair the (T29) UD Pressure Switch Sense circuit for a short to another circuit(s).
- Perform the 545RFE TRANSMISSION VERIFICATION TEST. (Refer to 28 - DTC-Based Diagnostics/MODULE, Powertrain Control (PCM) - Standard Procedure).

No

- Using the schematics as a guide, check the Powertrain Control Module (PCM) terminals for corrosion, damage, or terminal push out. Pay particular attention to all power and ground circuits. If no problems are found, replace and program the PCM in accordance with the Service Information. With the scan tool, perform Quick Learn.
- Perform the 545RFE TRANSMISSION VERIFICATION TEST. (Refer to 28 - DTC-Based Diagnostics/MODULE, Powertrain Control (PCM) - Standard Procedure).

17. CHECK THE WIRING AND CONNECTORS

1. The conditions necessary to set this DTC are not present at this time.
2. Using the schematics as a guide, inspect the wiring and connectors specific to this circuit.
3. Wiggle the wires while checking for shorted and open circuits.
4. With the scan tool, check the Event Data to help identify the conditions in which the DTC was set.
5. If the Event Data shows the DTC P0875 set while the Line Pressure was significantly below the Desired Line Pressure reading, check for causes of low line pressure (low fluid level, broken or improperly installed primary oil filter or filter seal, sticking Main Regulator Valve in the Pump Valve Body etc.). If the data shows the DTC set while the Line Pressure reading was significantly higher than the Desired Line Pressure, check the Line Pressure Sensor and related wiring.

Where there any problems found?

Yes

- Repair as necessary.
- Perform the 545RFE TRANSMISSION VERIFICATION TEST. (Refer to 28 - DTC-Based Diagnostics/MODULE, Powertrain Control (PCM) - Standard Procedure).

No

- Test Complete.

P0876-UD PRESSURE SWITCH RATIONALITY

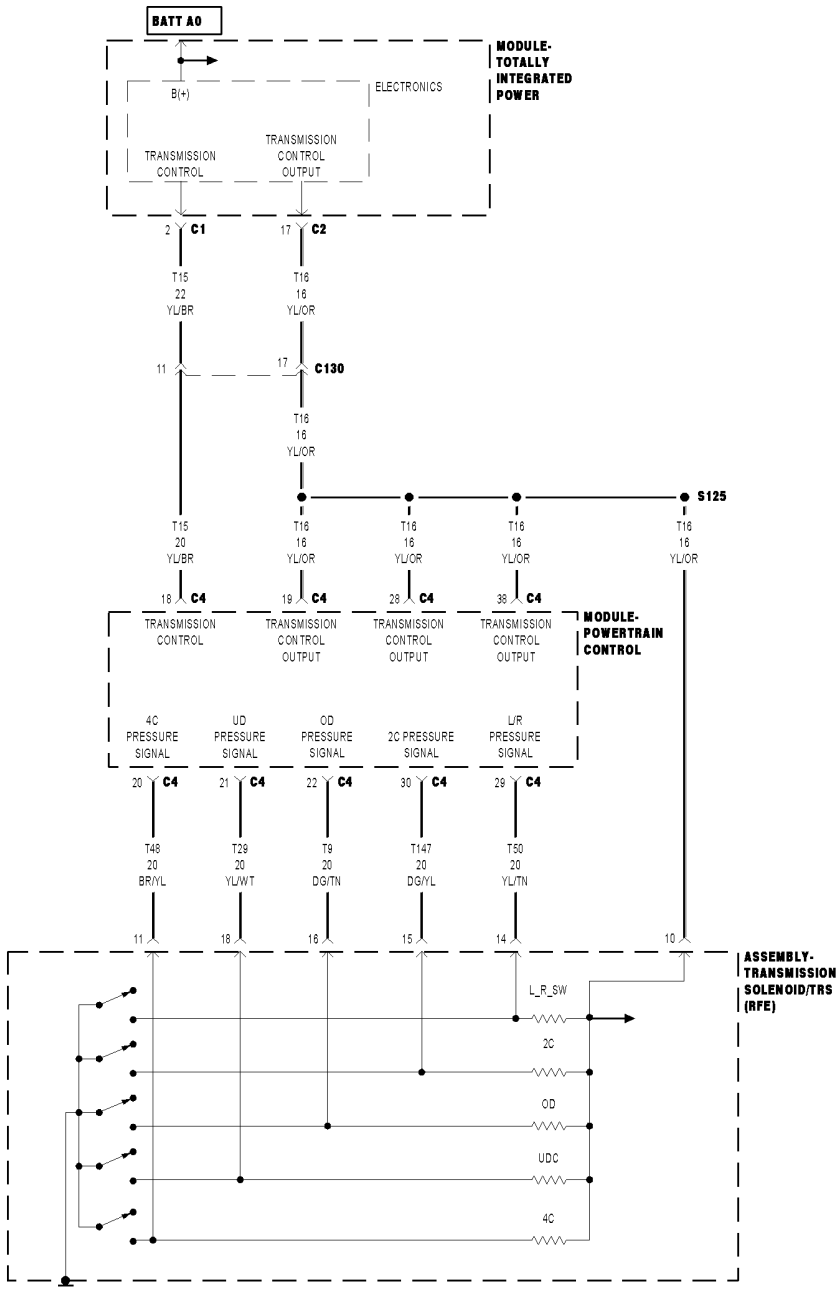

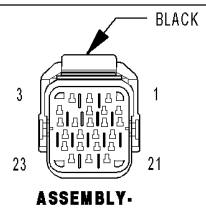

ASSEMBLY-
TRANSMISSION
SOLENOID/TRS
(RFE)

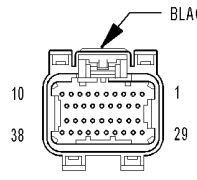

MODULE-
POWERTRAIN
CONTROL C4

01468388

For a complete wiring diagram, **refer to the Wiring Information**.

Theory of Operation

The Transmission system uses five pressure switches to monitor the fluid pressure in the L/R, 2C, 4C, UD, and OD clutch circuits. The pressure switches are continuously monitored for the correct states in each gear as shown.

- **When Monitored:**
  Continuously with the ignition on and engine running.
- **Set Condition:**
  This DTC is set if the UD pressure switch is in the wrong state for the current gear. For example, this code would be set if the UD pressure switch remained off while the transmission was in second gear.

Possible Causes
RELATED DTCS PRESENT
LOW FLUID LEVEL
NO. 2 CHECK BALL CUT OR DAMAGED
LOW LINE PRESSURE
CRACKED OR MIS-INSTALLED SUMP FILTER OR SEAL
LOOSE COOLER RETURN SPIN ON FILTER (IF EQUIPPED)
STICKING MAIN REGULATOR VALVE IN PUMP VALVE BODY
(T29) UD PRESSURE SWITCH SENSE CIRCUIT OPEN
(T29) UD PRESSURE SWITCH CIRCUIT SHORTED TO GROUND
(T29) UD PRESSURE SWITCH SENSE CIRCUIT SHORTED TO ANOTHER CIRCUITS
TRANSMISSION SOLENOID/TRS ASSEMBLY
POWERTRAIN CONTROL MODULE (PCM)

Always perform the Pre-Diagnostic Troubleshooting Procedure before proceeding. (Refer to 28 - DTC-Based Diagnostics/MODULE, Powertrain Control (PCM) - Standard Procedure).

GEAR	L/R	2C	4C	UD	OD
REVERSE	OPEN	OPEN	OPEN	OPEN	OPEN
P/N	CLOSED**	OPEN	OPEN	OPEN	OPEN
1ST	CLOSED*	OPEN	OPEN	CLOSED	OPEN
2ND	OPEN	CLOSED	OPEN	CLOSED	OPEN
2ND PRIME	OPEN	OPEN	CLOSED	CLOSED	OPEN
3RD	OPEN	OPEN	OPEN	CLOSED	CLOSED
4TH	OPEN	OPEN	CLOSED	OPEN	CLOSED
5TH	OPEN	CLOSED	OPEN	OPEN	CLOSED
*L/R is closed if output speed is below 100 rpm in Drive and Manual 2. L/R is closed in Manual 1.					
**May be open when rolling in Neutral or at low oil temperatures.					

1. CHECK IF RELATED DTCS ARE PRESENT

1. With the scan tool, read DTCs.

Are there any Loss of Prime, TCM Power Input, Line Pressure, and/or TIPM TCM Power Control DTCs present?

Yes

- Perform the appropriate diagnostic procedure. If a Loss of Prime DTC is present, perform its respective test first. (Refer to 28 - DTC-Based Diagnostics/MODULE, Powertrain Control (PCM) - Diagnosis and Testing).

No

- Go To 2

2. CHECK FOR PRESSURE SWITCH DTCS

Are there two or more other pressure switch rationality DTCs present in addition to P0876?

Yes

- Go To 3

No

- Go To 4

3. CHECK IF ALL PRESSURE SWITCHES READ CLOSED

1. With the scan tool, read and record all Event Data.

NOTE: Make sure to record all Event Data stored in the scan tool for future reference in this test procedure.

Does the Event Data show all pressure switches reading CLOSED?

Yes

- (Refer to 28 - DTC-Based Diagnostics/MODULE, Powertrain Control (PCM) - Diagnosis and Testing) and perform the diagnostic procedure for DTC P0882. Diagnose as if the DTC is current.

No

- Go To 4

4. CHECK FOR OTHER DTCS

1. With the scan tool, check DTCs.

Is the DTC P2704 present also?

Yes

- Replace the Transmission Solenoid/TRS Assembly in accordance with the Service Information.
- Perform the 545RFE TRANSMISSION VERIFICATION TEST. (Refer to 28 - DTC-Based Diagnostics/MODULE, Powertrain Control (PCM) - Standard Procedure).

No

- Go To 5

5. CHECK THE EVENT DATA

1. With the scan tool, read and record the Event Data.

NOTE: Make sure to record all Event Data stored in the scan tool for future reference in this test procedure.

Does the Event Data display information for the DTC P0876?

Yes

- Go To 6

No

- (Refer to 28 - DTC-Based Diagnostics/MODULE, Powertrain Control (PCM) - Diagnosis and Testing) and perform the diagnostic procedure for the DTC listed in the Event Data.

6. CHECK IF EVENT DATA WAS SET IN PARK, NEUTRAL OR REVERSE

In the Event Data recorded earlier, did the DTC P0876 set in Park, Neutral, or Reverse?

Yes

- Go To 10

No

- Go To 7

7. CHECK THE UD PRESSURE SWITCH STATUS

In the Event Data recorded earlier, did the DTC P0876 set with the UD Pressure Switch closed?

Yes

- Go To 10

No

- Go To 8

8. CHECK THE LINE PRESSURE

In the Event Data recorded earlier, is the Line Pressure less than 40 psi, and significantly below the Desired Line Pressure?

Yes

- Repair as necessary to correct low line pressure. Check fluid level and adjust as necessary. If fluid level is OK, check the Primary Oil Filter seal for a split, crack, or improperly installed. If the filter and seal are OK, check the Main Regulator Valve in the Oil Pump. Refer to the Service Information for the above procedures.
- Perform the 545RFE TRANSMISSION VERIFICATION TEST. (Refer to 28 - DTC-Based Diagnostics/MODULE, Powertrain Control (PCM) - Standard Procedure).

No

- Go To 9

9. CHECK THE (T29) UD PRESSURE SWITCH SENSE CIRCUIT FOR A SHORT TO ANOTHER CIRCUIT

1. Turn the ignition off to the lock position.
2. Disconnect all PCM harness connectors.
3. Disconnect the Transmission Solenoid/TRS Assembly harness connector.
4. Measure the resistance between the (T29) UD Pressure Switch Sense circuit and all other circuits in the Transmission Solenoid/TRS Assembly harness connector.

Is the resistance below 5.0 Ohms between the (T29) UD Pressure Switch Sense circuit and any other circuit(s) in the Transmission Solenoid/TRS Assembly harness connector?

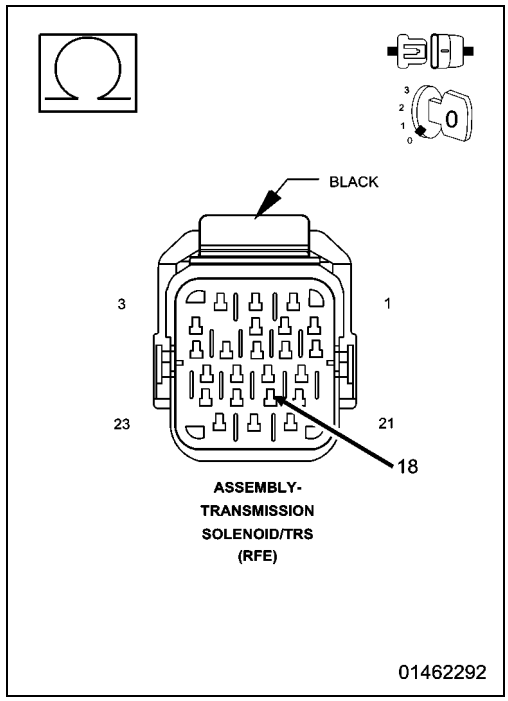

Yes

- Repair the (T29) UD Pressure Switch Sense circuit for a short to another circuit(s).
- Perform the 545RFE TRANSMISSION VERIFICATION TEST. (Refer to 28 - DTC-Based Diagnostics/MODULE, Powertrain Control (PCM) - Standard Procedure).

No

- Replace the Transmission Solenoid/TRS Assembly in accordance with the Service Information.
- Perform the 545RFE TRANSMISSION VERIFICATION TEST. (Refer to 28 - DTC-Based Diagnostics/MODULE, Powertrain Control (PCM) - Standard Procedure).

10. CHECK THE PCM AND WIRING

1. Turn the ignition off to the lock position.
2. Remove the Ignition Switch Feed fuse from the TIPM.

CAUTION: Removal of the Ignition Switch Feed fuse from the TIPM will prevent the vehicle from being started in gear.

WARNING: The Ignition Switch Feed fuse must be removed from the TIPM. Failure to do so can result in possible serious or fatal injury.

3. Install the Transmission Simulator 8333A.
4. Ignition on, engine not running.
5. With the Transmission Simulator, turn the Pressure Switch selector switch to the UD position.
6. With the scan tool, monitor the UD Pressure Switch state while pressing the Pressure Switch Test button on the Transmission Simulator.

Did the state of the UD Pressure Switch change while pressing the Pressure Switch Test button?

Yes

- Go To 14

No

- Go To 11

11. CHECK THE (T29) UD PRESSURE SWITCH SENSE CIRCUIT FOR AN OPEN

1. Turn the ignition off to the lock position.
2. Disconnect the Transmission Simulator 8333A.
3. Disconnect the PCM C4 harness connector and connect the PCM Pinout Box 8815A.

CAUTION: Do not probe the PCM harness connectors. Probing the PCM harness connectors will damage the PCM terminals resulting in poor terminal to pin connection. Install the Kit, NGC, 38 Position 8815A to perform diagnosis.

4. Measure the resistance of the (T29) UD Pressure Switch Sense circuit between the Transmission Solenoid/TRS Assembly harness connector and the appropriate terminal of the PCM Pinout Box 8815A.

Is the resistance above 5.0 Ohms?

Yes

- Repair the (T29) UD Pressure Switch Sense circuit for an open.
- Perform the 545RFE TRANSMISSION VERIFICATION TEST. (Refer to 28 - DTC-Based Diagnostics/MODULE, Powertrain Control (PCM) - Standard Procedure).

No

- Go To 12

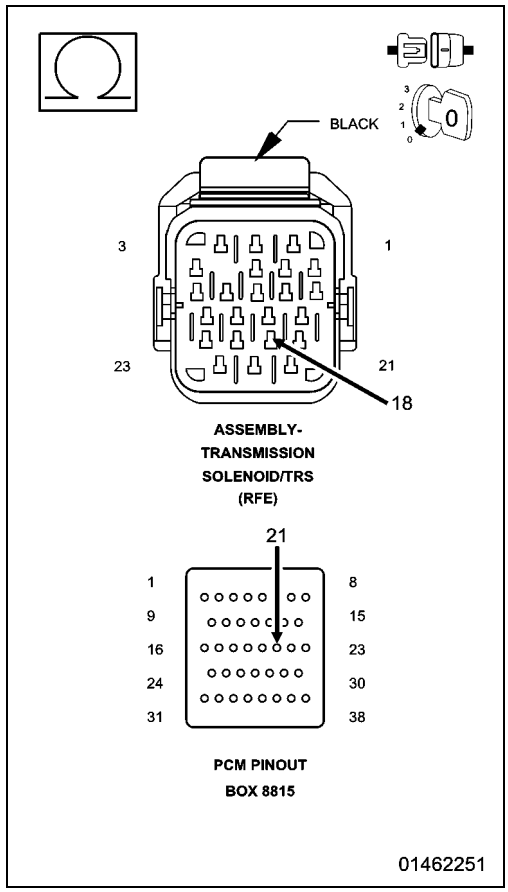

12. CHECK THE (T29) UD PRESSURE SWITCH SENSE CIRCUIT FOR A SHORT TO GROUND

1. Measure the resistance between ground and the (T29) UD Pressure Switch Sense circuit.

Is the resistance below 5.0 Ohms?

Yes

- Repair the (T29) UD Pressure Switch Sense circuit for a short to ground.
- Perform the 545RFE TRANSMISSION VERIFICATION TEST. (Refer to 28 - DTC-Based Diagnostics/MODULE, Powertrain Control (PCM) - Standard Procedure).

No

- Go To 13

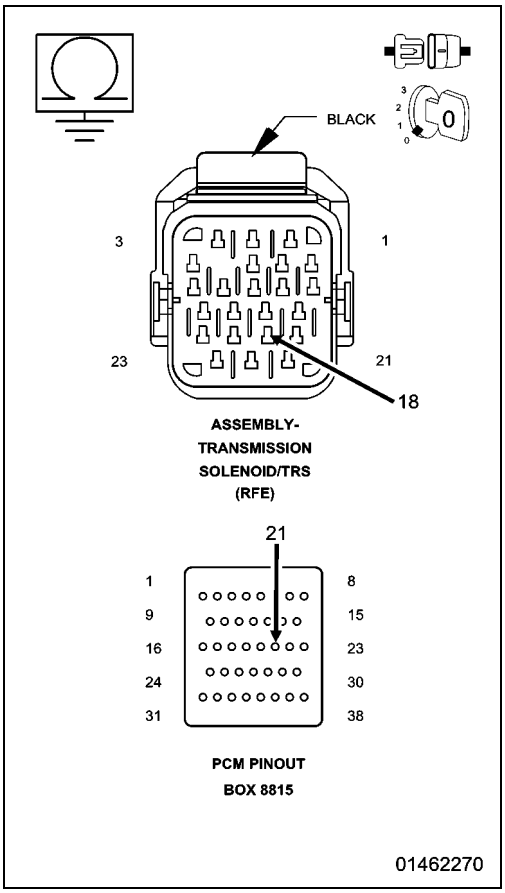

13. CHECK THE (T29) UD PRESSURE SWITCH SENSE CIRCUIT FOR A SHORT TO ANOTHER CIRCUIT

1. Disconnect all PCM harness connectors.

NOTE: Make sure the Transmission Solenoid/TRS Assembly harness connector is disconnected.

2. Measure the resistance between the (T29) UD Pressure Switch Sense circuit and all other circuits in the Transmission Solenoid/TRS Assembly harness connector.

Is the resistance below 5.0 Ohms between the (T29) UD Pressure Switch Sense circuit and any other circuit(s) in the Transmission Solenoid/TRS Assembly harness connector?

Yes

- Repair the (T29) UD Pressure Switch Sense circuit for a short to another circuit(s).
- Perform the 545RFE TRANSMISSION VERIFICATION TEST. (Refer to 28 - DTC-Based Diagnostics/MODULE, Powertrain Control (PCM) - Standard Procedure).

No

- Using the schematics as a guide, check the Powertrain Control Module (PCM) terminals for corrosion, damage, or terminal push out. Pay particular attention to all power and ground circuits. If no problems are found, replace and program the PCM in accordance with the Service Information. With the scan tool, perform Quick Learn.
- Perform the 545RFE TRANSMISSION VERIFICATION TEST. (Refer to 28 - DTC-Based Diagnostics/MODULE, Powertrain Control (PCM) - Standard Procedure).

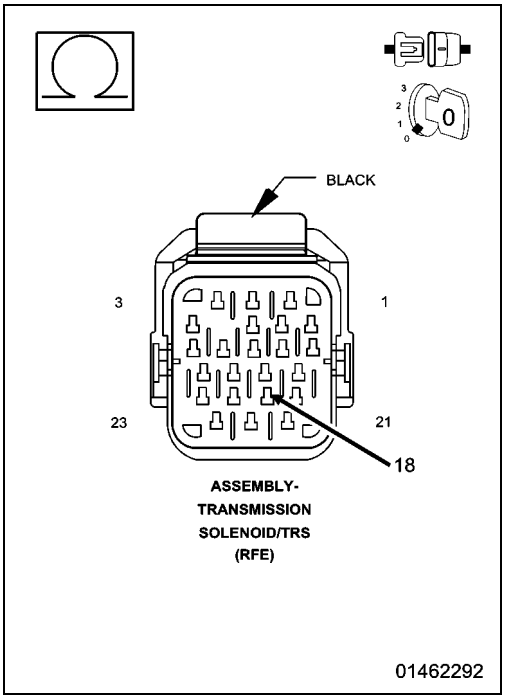

14. PERFORM A WIGGLE TEST USING THE TRANSMISSION SIMULATOR

1. Perform the steps in the previous test while wiggling the wiring harness and connectors pertaining to the UD Pressure Switch.

Did the state of the UD Pressure Switch change while pressing the Pressure Switch Test button?

Yes

- Repair the wiring harness and/or connectors as necessary.
- Perform the 545RFE TRANSMISSION VERIFICATION TEST. (Refer to 28 - DTC-Based Diagnostics/MODULE, Powertrain Control (PCM) - Standard Procedure).

No

- Go To 15

15. CHECK THE TRANSMISSION SOLENOID/TRS ASSEMBLY FOR A SHORT TO GROUND

1. Disconnect the Transmission Simulator and reconnect the Transmission Solenoid/TRS Assembly harness connector.
2. Disconnect the PCM C4 harness connector and connect the PCM Pinout Box 8815A.
3. Measure the resistance between ground and the (T29) UD Pressure Switch Sense circuit in the appropriate terminal of the PCM Pinout Box 8815A.

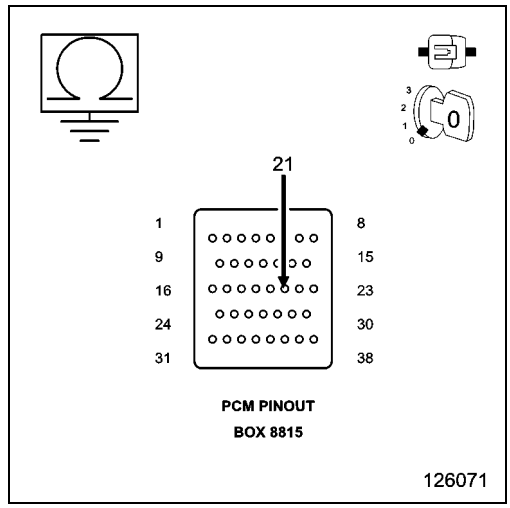

Is the resistance below 5.0 Ohms?

Yes

- Replace the Transmission Solenoid/TRS Assembly in accordance with the Service Information.
- Perform the 545RFE TRANSMISSION VERIFICATION TEST. (Refer to 28 - DTC-Based Diagnostics/MODULE, Powertrain Control (PCM) - Standard Procedure).

No

- Go To 16

16. CHECK IF THE DTC RESETS

1. Reconnect all previously disconnected connectors.
2. With the scan tool, erase all transmission DTCs.
3. Test drive the vehicle. Using the Event Data recorded earlier, try to duplicate the conditions in which the DTC originally set.

Does the DTC P0876 reset?

Yes

- Go To 17

No

- Go To 18

17. CHECK FOR A CUT NO. 2 CHECK BALL

1. Remove the Valve Body in accordance with the Service Information.
2. Check the No. 2 check ball for cuts or damage.

Is the No. 2 check ball cut or damaged?

Yes

- Replace the No. 2 check ball. Check for excessive clutch debris in the oil pan. If excessive debris is present, check the UD Clutch and repair as necessary.
- Perform the 545RFE TRANSMISSION VERIFICATION TEST. (Refer to 28 - DTC-Based Diagnostics/MODULE, Powertrain Control (PCM) - Standard Procedure).

No

- Replace the Transmission Solenoid/TRS Assembly in accordance with the Service Information. Check for excessive clutch debris in the oil pan. If excessive debris is present, check the UD Clutch and repair as necessary.(Refer to 21 - Transmission and Transfer Case/Automatic - 545RFE/ASSEMBLY, Transmission Solenoid and TRS - Removal).
- Perform the 545RFE TRANSMISSION VERIFICATION TEST. (Refer to 28 - DTC-Based Diagnostics/MODULE, Powertrain Control (PCM) - Standard Procedure).

18. CHECK FOR CHECK THE WIRING AND CONNECTORS

1. The conditions necessary to set this DTC are not present at this time.
2. Using the schematics as a guide, inspect the wiring and connectors specific to this circuit.
3. Wiggle the wires while checking for shorted and open circuits.
4. With the scan tool, check the Event Data to help identify the conditions in which the DTC was set.

Were there any problems found?

Yes

- Repair as necessary.
- Perform the 545RFE TRANSMISSION VERIFICATION TEST. (Refer to 28 - DTC-Based Diagnostics/MODULE, Powertrain Control (PCM) - Standard Procedure).

No

- Test Complete.

P0882-TCM POWER INPUT LOW

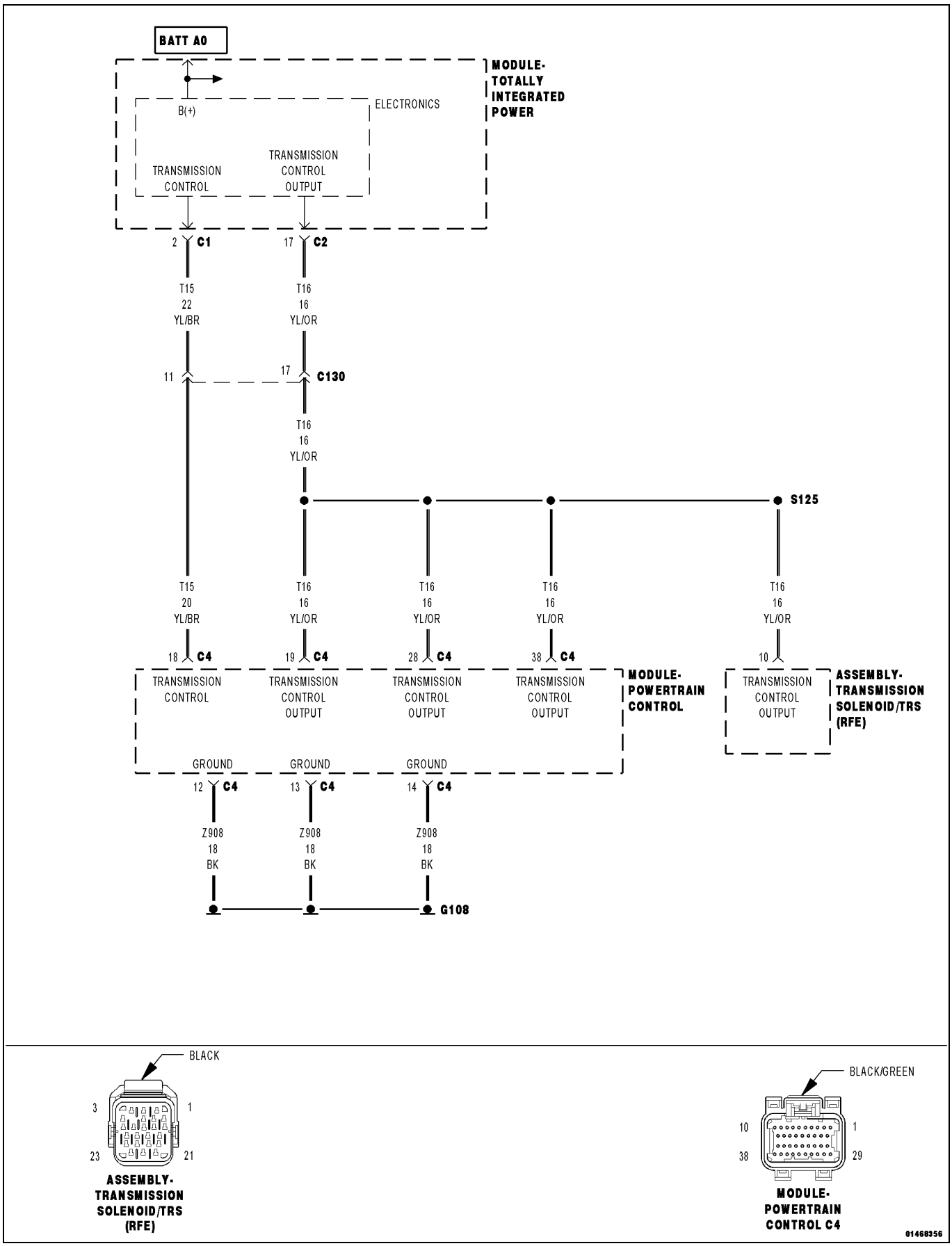

For a complete wiring diagram, **refer to the Wiring Information**.

Theory of Operation

The Transmission Control Output circuit is used to supply power to the Transmission Solenoid/TRS Assembly and to the Powertrain Control Module (PCM) when in normal operating mode. The purpose of the Transmission Output circuit is to allow the Transmission Control System to turn off the power to the Transmission Solenoid/TRS Assembly in event that the transmission should need to be placed into “limp-in” mode due to a DTC.

After a PCM reset, (ignition switch turned to the run position, or after cranking the engine) the Transmission Control System verifies that the Transmission Output circuit is open by checking for voltage on the Transmission Output circuits before the Transmission Control System request for the circuit to be powered up. The request is sent by a direct circuit control from the PCM to the TIPM. If the Transmission Control System detects less that 3.0 volts when the output is commanded on, the DTC will set. **Note: Inadequate Transmission Control Output voltage can also cause DTCs P0846, P0869, P0871, P0876 or P0988 to set. Repairing the P0882 fault should also eliminate the related DTCs.**

- **When Monitored:**

  When the ignition is turned from "OFF" position to "RUN" position and/or the ignition is turned from "START" position to "RUN" position.
- **Set Condition:**

  This DTC is set when there is less than 3.0 volts present at the transmission control output circuits located in the Powertrain Control Module (PCM) when the Transmission Control System request the power up of those circuits. **Note: Due to the integration of the Transmission Control Module and the Powertrain Control Module, both systems have their own power and ground circuits.**.

Possible Causes
RELATED TIPM DTCS
(T15) TRANSMISSION CONTROL CIRCUIT SHORTED TO GROUND
(T15) TRANSMISSION CONTROL CIRCUIT OPEN
POWERTRAIN CONTROL MODULE (PCM)

Always perform the Pre-Diagnostic Troubleshooting Procedure before proceeding. (Refer to 28 - DTC-Based Diagnostics/MODULE, Powertrain Control (PCM) - Standard Procedure).

1. CHECK IF THE DTC IS CURRENT

1. With the scan tool, read DTCs.

Is the status Active or is the Starts Since Set counter 2 or less for this DTC?

Yes

- Go To 2

No

- Go To 5

2. CHECK FOR TIPM RELATED DTCS

1. With the scan tool, read TIPM DTCs.

Are there any TCM TIPM DTCs present?

Yes

- Perform the appropriate diagnostic procedure.

No

- Go To 3

3. CHECK THE (T15) TRANSMISSION CONTROL CIRCUIT FOR A SHORT TO GROUND

1. Turn the ignition off to the lock position.
2. Disconnect the PCM C4 harness connector and connect the PCM Pinout Box 8815A.

CAUTION: Do not probe the PCM harness connectors. Probing the PCM harness connectors will damage the PCM terminals resulting in poor terminal to pin connection. Install the Kit, NGC, 38 Position 8815A to perform diagnosis.

3. Disconnect the TIPM C1 harness connector.
4. Measure the resistance between ground and the (T15) Transmission Control circuit.

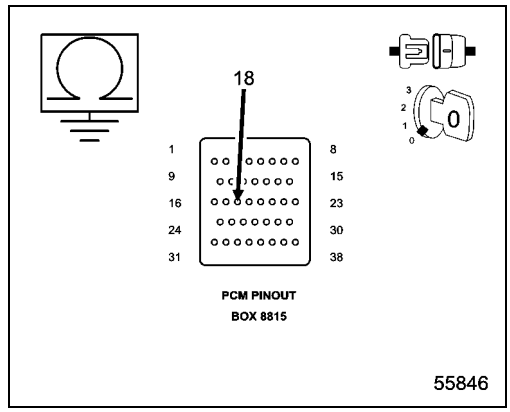

Is the resistance below 5.0 Ohms?

Yes

- Repair the (T15) Transmission Control circuit for a short to ground.
- Perform the 545RFE TRANSMISSION VERIFICATION TEST. (Refer to 28 - DTC-Based Diagnostics/MODULE, Powertrain Control (PCM) - Standard Procedure).

No

- Go To 4

4. CHECK THE (T15) TRANSMISSION CONTROL CIRCUIT FOR AN OPEN

1. Measure the resistance of the (T15) Transmission Control circuit between the TIPM C1 harness connector and the appropriate terminal of the PCM Pinout Box 8815A.

Is the resistance above 5.0 Ohms?

Yes

- Repair the (T15) Transmission Control circuit for an open.
- Perform the 545RFE TRANSMISSION VERIFICATION TEST. (Refer to 28 - DTC-Based Diagnostics/MODULE, Powertrain Control (PCM) - Standard Procedure).

No

- Using the schematics as a guide, check the Powertrain Control Module (PCM) terminals for corrosion, damage, or terminal push out. Pay particular attention to all power and ground circuits. If no problems are found, replace and program the PCM in accordance with the Service Information. With the scan tool, perform Quick Learn
- Perform the 545RFE TRANSMISSION VERIFICATION TEST. (Refer to 28 - DTC-Based Diagnostics/MODULE, Powertrain Control (PCM) - Standard Procedure).

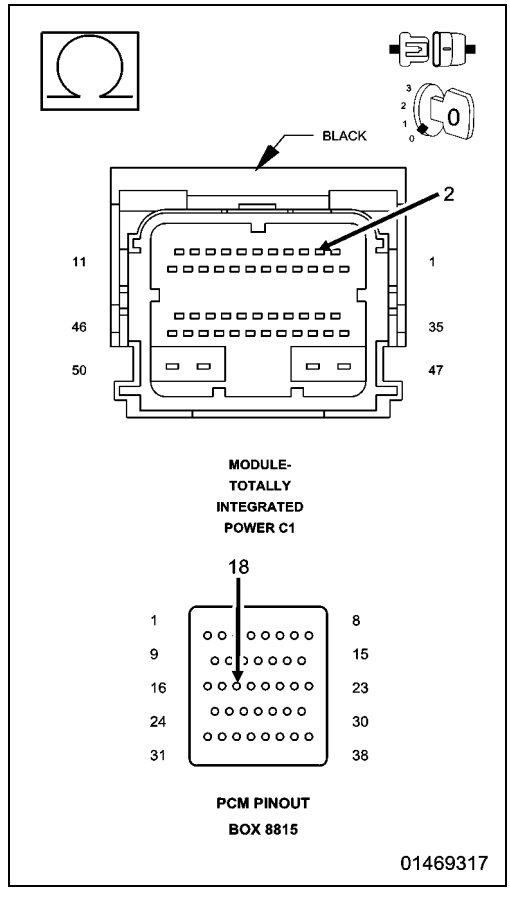

5. CHECK THE WIRING AND CONNECTORS

1. The conditions necessary to set this DTC are not present at this time.
2. Using the schematics as a guide, inspect the wiring and connectors specific to this circuit.
3. Wiggle the wires while checking for shorted and open circuits.
4. With the scan tool, check the Event Data to help identify the conditions in which the DTC was set.

Where there any problems found?

Yes

- Repair as necessary.
- Perform the 545RFE TRANSMISSION VERIFICATION TEST. (Refer to 28 - DTC-Based Diagnostics/MODULE, Powertrain Control (PCM) - Standard Procedure).

No

- Test Complete.

P0883-TCM POWER INPUT HIGH

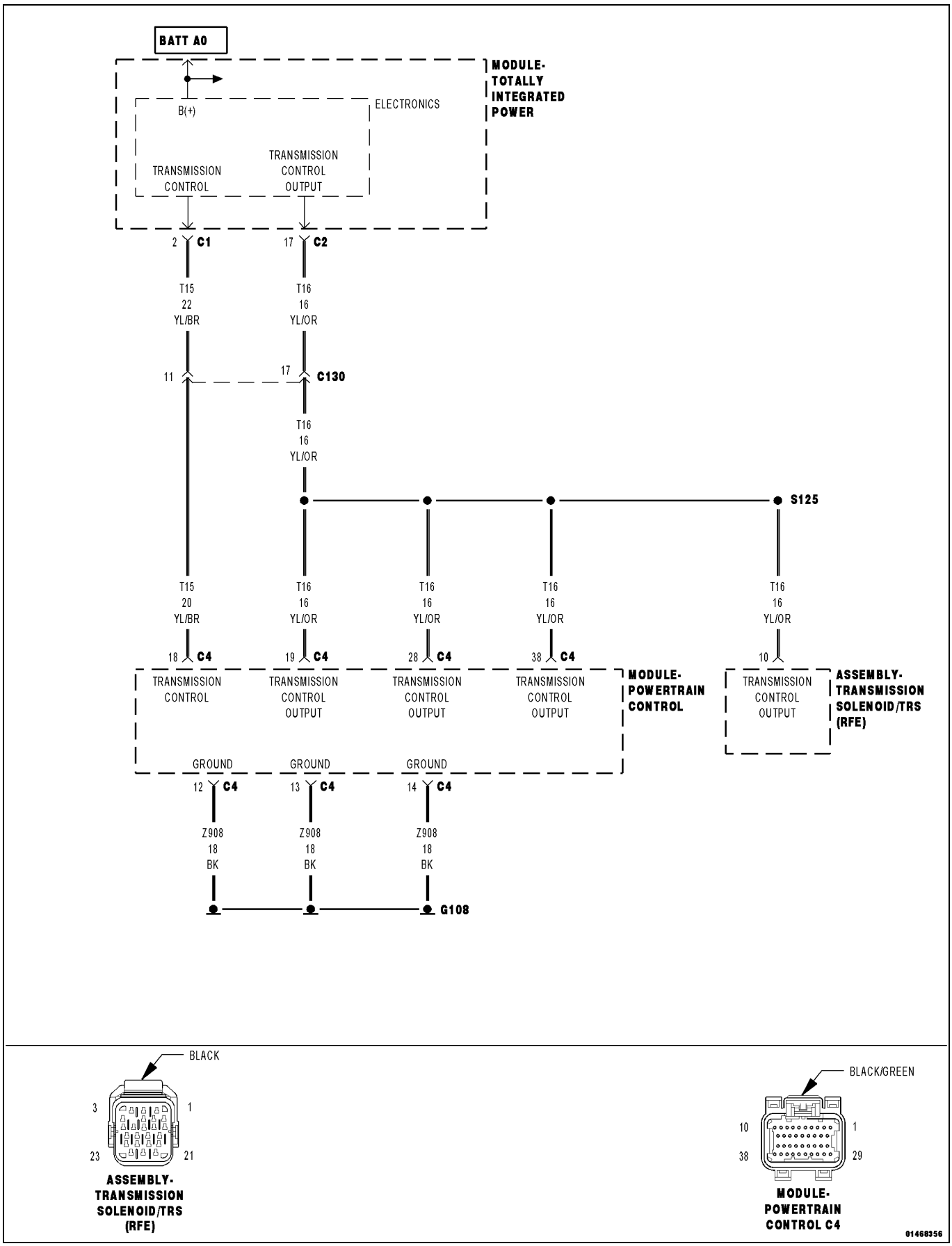

For a complete wiring diagram, **refer to the Wiring Information**.

Theory of Operation

The Transmission Control Output circuit is used to supply power to the Transmission Solenoid/TRS Assembly and to the Powertrain Control Module (PCM) when in normal operating mode. The purpose of the Transmission Output circuit is to allow the Transmission Control System to turn off the power to the Transmission Solenoid/TRS Assembly in event that the transmission should need to be placed into “limp-in” mode due to a DTC.

After a Powertrain Control Module (PCM) reset, (ignition switch turned to the run position, or after cranking the engine) the Transmission Control System verifies that the Transmission Output circuit is open by checking for voltage on the Transmission Output circuits before the Transmission Control System request for the circuit to be powered up. The request is sent by a direct circuit control from the PCM to the Totally Integrated Power Module (TIPM). If voltage is detected on the Transmission Output circuits before the request is sent, the DTC will set.

- **When Monitored:**

  When the ignition is turned from "OFF" position to "RUN" position and/or the ignition is turned from "START" position to "RUN" position.
- **Set Condition:**

  This DTC is set if the Powertrain Control Module (PCM) senses greater than 3.0 volts on the Transmission Control Relay Output circuits prior to a request from the PCM to Totally Integrated Power Module (TIPM) to energize the Transmission Output circuits.

Possible Causes
TIPM DTCS PRESENT
(T15) TRANSMISSION CONTROL CIRCUIT SHORTED TO VOLTAGE
(T16) TRANSMISSION CONTROL OUTPUT CIRCUIT SHORTED VOLTAGE
TRANSMISSION SOLENOID/TRS ASSEMBLY
POWERTRAIN CONTROL MODULE (PCM)

Always perform the Pre-Diagnostic Troubleshooting Procedure before proceeding. (Refer to 28 - DTC-Based Diagnostics/MODULE, Powertrain Control (PCM) - Standard Procedure).

1. CHECK FOR TCM TIPM DTCS

1. With the scan tool, read TIPM DTCs.

Are there any TIPM TCM Power Control Circuit DTCS present?

Yes

- (Refer to 28 - DTC-Based Diagnostics/MODULE, Totally Integrated Power (TIPM) - Diagnosis and Testing) and perform the appropriate diagnostic procedure.

No

- Go To 2

2. CHECK IF THE DTC IS CURRENT

1. With the scan tool, read DTCs.

Is the status Active or is the Starts Since Set counter 0 for this DTC?

Yes

- Go To 3

No

- Go To 6

3. (T16) TRANSMISSION OUTPUT CIRCUIT SHORTED TO VOLTAGE

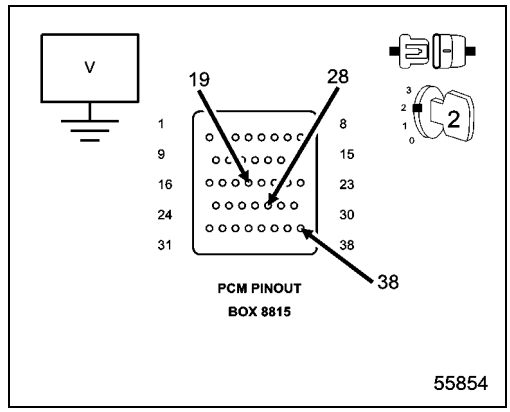

1. Turn the ignition off to the lock position.
2. Disconnect the PCM C4 harness connector.
3. Connect PCM Pinout Box 8815A to the PCM C4 harness connector.
4. Disconnect the TIPM C2 harness connector.

CAUTION: Do not probe the PCM harness connectors. Probing the PCM harness connectors will damage the PCM terminals resulting in poor terminal to pin connection. Install the Kit, NGC, 38 Position 8815A to perform diagnosis.

5. Ignition on, engine not running.
6. Measure the voltage of the (T16) Transmission Control Output circuits in the PCM Pinout Box 8815A.

Is the voltage above 0.5 of a volt on any (T16) Transmission Control Output circuit?

Yes

- Go To 4

No

- Go To 5

4. CHECK THE TRANSMISSION SOLENOID/TRS ASSEMBLY

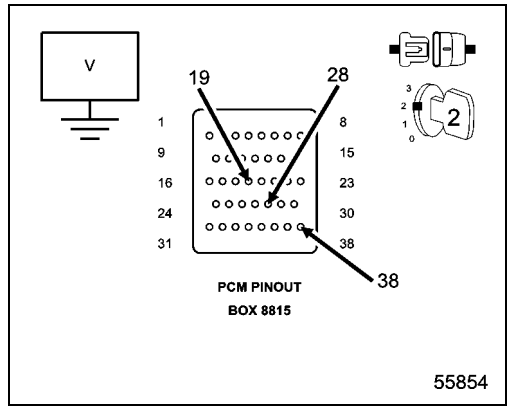

1. Turn the ignition off to the lock position.
2. Disconnect the Transmission Solenoid/TRS Assembly harness connector.
3. Ignition on, engine not running.
4. Measure the voltage of the (T16) Transmission Control Output circuits in the PCM Pinout Box 8815A.

Is the voltage above 0.5 of a volt?

Yes

- Repair the (T16) Transmission Control Output circuit for a short to voltage.
- Perform the 545RFE TRANSMISSION VERIFICATION TEST. (Refer to 28 - DTC-Based Diagnostics/MODULE, Powertrain Control (PCM) - Standard Procedure).

No

- Replace the Transmission Solenoid/TRS Assembly in accordance with the Service Information.
- Perform the 545RFE TRANSMISSION VERIFICATION TEST. (Refer to 28 - DTC-Based Diagnostics/MODULE, Powertrain Control (PCM) - Standard Procedure).

5. CHECK THE (T15) TRANSMISSION CONTROL CIRCUIT FOR A SHORT TO VOLTAGE

1. Measure the voltage of the (T15) Transmission Control circuit.

Is the voltage above 0.5 of a volt?

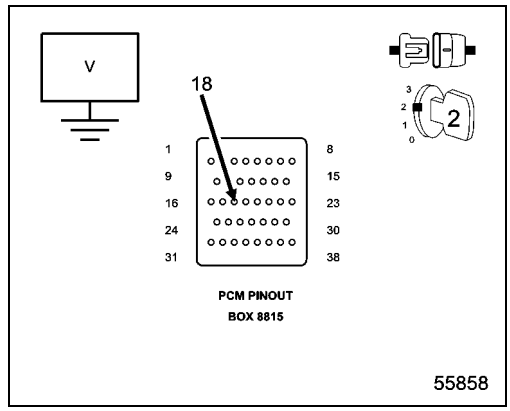

Yes

- Repair the (T15) Transmission Control circuit for a short to voltage.
- Perform the 545RFE TRANSMISSION VERIFICATION TEST. (Refer to 28 - DTC-Based Diagnostics/MODULE, Powertrain Control (PCM) - Standard Procedure).

No

- Using the schematics as a guide, check the Powertrain Control Module (PCM) terminals for corrosion, damage, or terminal push out. Pay particular attention to all power and ground circuits. If no problems are found, replace and program the PCM in accordance with the Service Information. With the scan tool, perform Quick Learn.
- Perform the 545RFE TRANSMISSION VERIFICATION TEST. (Refer to 28 - DTC-Based Diagnostics/MODULE, Powertrain Control (PCM) - Standard Procedure).

6. CHECK WIRING AND CONNECTORS

1. The conditions necessary to set this DTC are not present at this time.
2. Using the schematics as a guide, inspect the wiring and connectors specific to this circuit.
3. Wiggle the wires while checking for shorted and open circuits.
4. With the scan tool, check the Event Data to help identify the conditions in which the DTC was set.

Where there any problems found?

Yes

- Repair as necessary.
- Perform the 545RFE TRANSMISSION VERIFICATION TEST. (Refer to 28 - DTC-Based Diagnostics/MODULE, Powertrain Control (PCM) - Standard Procedure).

No

- Test Complete.

P0884-POWER UP AT SPEED

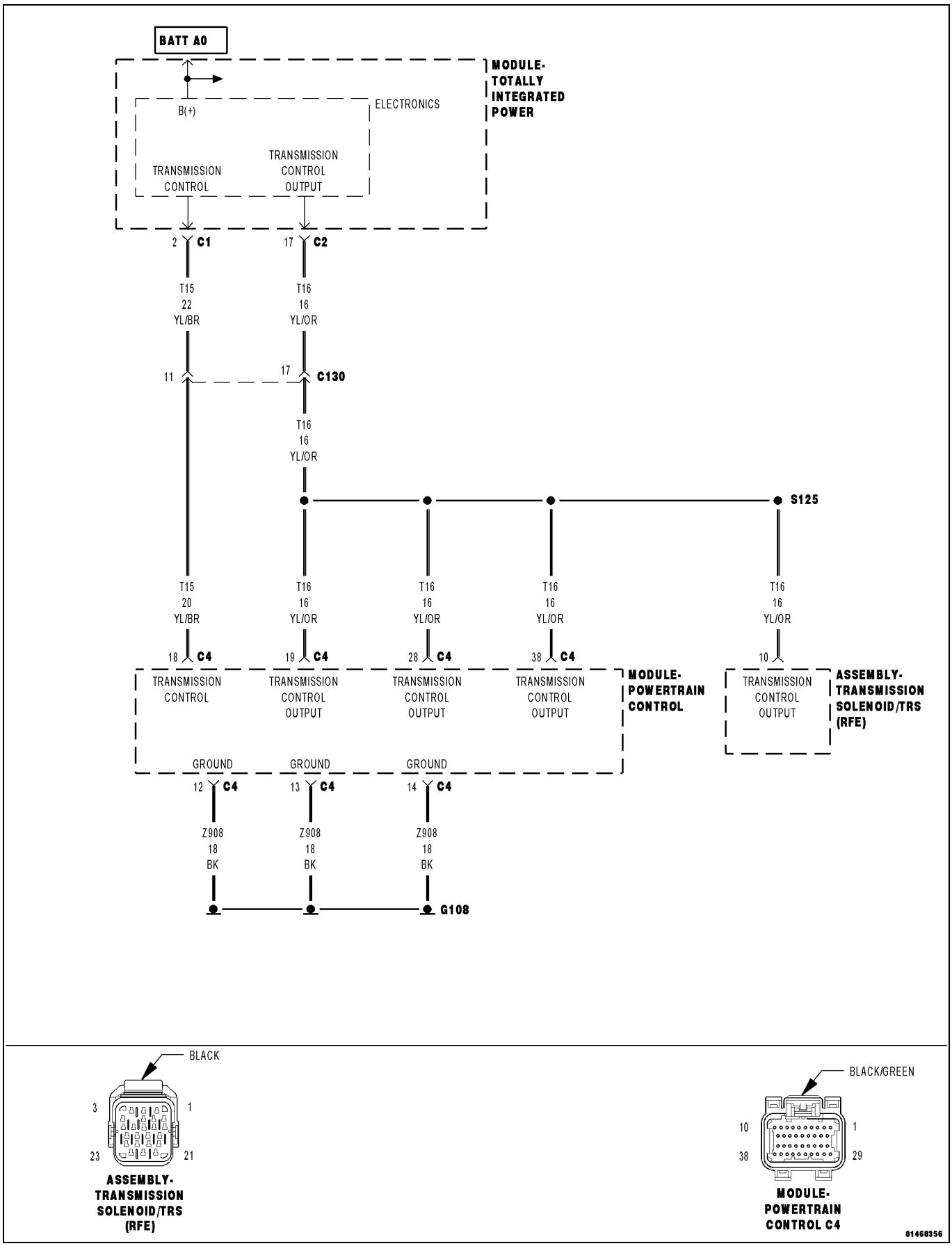

For a complete wiring diagram, **refer to the Wiring Information**.

Theory of Operation

If a vehicle loses power to the Transmission Control System, the solenoids (LR, 2C, OD, UD, 4C) will go to their respective power off state. Some solenoids are normally vented and some are normally applied in their power off state. The transmission is designed to be in 3rd gear with all of the solenoids in this state. However, if power is restored, the Transmission Control System will power-up and normal operation will be restored.

This code identifies that power to the Transmission Control System was restored when the gear selector was in a "Drive" position while the vehicle was moving at speeds above 32 km/h (20 mph). **This DTC does not indicate a problem with the transmission or Transmission Control System,** instead, it suggests intermittent problems in the fused ignition switch output, fused B(+), or ground circuits to the TCM. Alternately, if a person performs a rolling restart maneuver, the DTC can be set. Therefore it is critical that this DTC be investigated if the vehicle is experiencing intermittent 3rd gear operation and a subsequent return to normal operation.

- **When Monitored:**

  When the Powertrain Control Module (PCM) initially powers up. Due to the integration of the Powertrain and Transmission Control Modules, the transmission part of the PCM has its own specific power and ground circuits.
- **Set Condition:**

  This DTC will set if the Powertrain Control Module (PCM) powers up and senses the vehicle in a valid forward gear, with no PRNDL DTCs, and an output speed above 800 rpm, approximately 32 km/h or 20 mph.

Possible Causes
POWER UP AT SPEED

Always perform the Pre-Diagnostic Troubleshooting Procedure before proceeding. (Refer to 28 - DTC-Based Diagnostics/MODULE, Powertrain Control (PCM) - Standard Procedure).

1. CHECK THE POWER AND GROUND CIRCUITS

1. This DTC is set when the Transmission portion of the Powertrain Control Module is initialized while the vehicle is moving down the road in a valid forward gear.
2. Using the wiring diagram/schematic as a guide, inspect the wiring and connectors.

NOTE: Due to the integration of the Powertrain and Transmission Control Modules, the transmission part of the PCM has its own specific power and ground circuits.

3. Check all of the Fused B(+), Fused Ignition Switch Output, and ground circuits to the PCM for an intermittent open or short to ground.
4. With the scan tool, check the Event Data to help identify the conditions in which the DTC was set.

Repair

- Check all power and ground circuits to the PCM and repair as necessary.
- Perform the 545RFE TRANSMISSION VERIFICATION TEST. (Refer to 28 - DTC-Based Diagnostics/MODULE, Powertrain Control (PCM) - Standard Procedure).

P0890-SWITCHED BATTERY

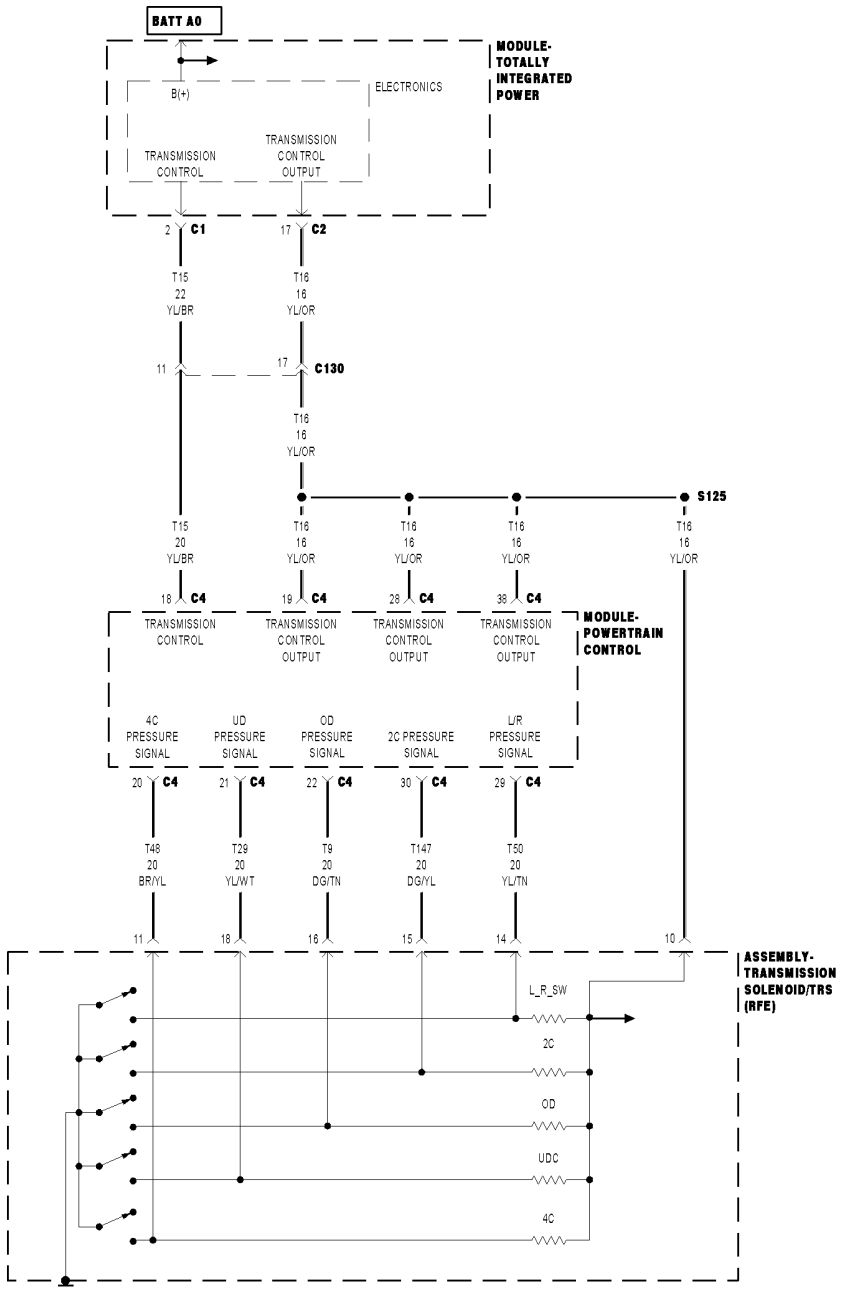

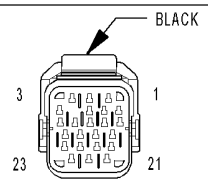

ASSEMBLY-
TRANSMISSION
SOLENOID/TRS
(RFE)

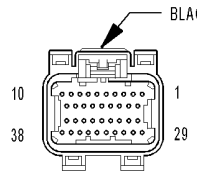

MODULE-
POWERTRAIN
CONTROL C4

01468388

For a complete wiring diagram, **refer to the Wiring Information**.

Theory of Operation

The Totally Integrated Control Module (TIPM) replaces the Transmission control relay. The Transmission Control Output circuit It is used to supply power to the solenoids and pressure switches (Transmission Solenoid/TRS Assembly) when the transmission is in normal operating mode. When the Transmission Control Output circuit is off, no power is supplied and the transmission.

Immediately after a controller reset (ignition key turned to the "run" position or after cranking engine), the TCM verifies that the Transmission Control Output circuits are open by checking for no voltage at the transmission control output terminals at the Powertrain Control Module (PCM). After this is verified, the voltage at the pressure switches are checked. There should be no voltage on the pressure switches at this time. The PCM will then activate the relay.

- **When Monitored:**

  When the ignition is turned from "OFF" position to "RUN" position and/or the ignition is turned from "START" position to "RUN" position.
- **Set Condition:**

  This DTC is set if the Powertrain Control Module (PCM) senses voltage on any of the pressure switch inputs prior to the Transmission Control Output circuit being energized.

Possible Causes
PRESSURE SWITCH SENSE CIRCUITS SHORTED TO VOLTAGE
TRANSMISSION SOLENOID/TRS ASSEMBLY
POWERTRAIN CONTROL MODULE (PCM)

Always perform the Pre-Diagnostic Troubleshooting Procedure before proceeding. (Refer to 28 - DTC-Based Diagnostics/MODULE, Powertrain Control (PCM) - Standard Procedure).

1. CHECK FOR TIPM TCM DTCS

1. With the scan tool, read TIPM DTCs.

Are there any TCM Power Control DTCs present?

Yes

- (Refer to 28 - DTC-Based Diagnostics/MODULE, Totally Integrated Power (TIPM) - Diagnosis and Testing) and perform the appropriate diagnostic procedure.

No

- Go To 2

2. CHECK IF THE DTC IS CURRENT

1. With the scan tool, read DTCs.

Is the status Active or is the Starts Since Set counter 0 for this DTC?

Yes

- Go To 3

No

- Go To 5

3. CHECK THE PRESSURE SWITCH SENSE CIRCUITS FOR A SHORT TO VOLTAGE

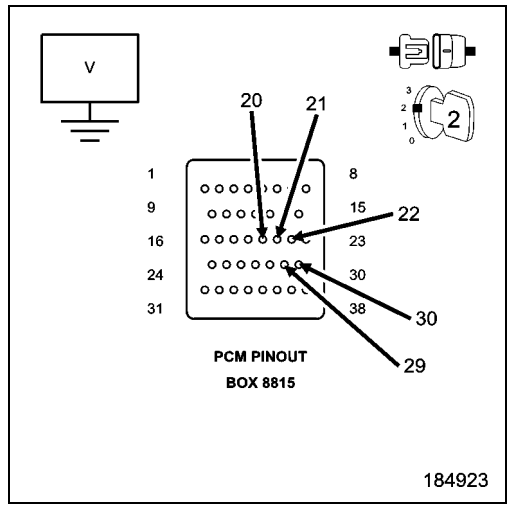

1. Turn the ignition off to the lock position.
2. Disconnect the PCM C4 harness connector and connect the PCM Pinout Box 8815A.
3. Disconnect the Transmission Solenoid/TRS Assembly harness connector.

CAUTION: Do not probe the PCM harness connectors. Probing the PCM harness connectors will damage the PCM terminals resulting in poor terminal to pin connection. Install the Kit, NGC, 38 Position 8815A to perform diagnosis.

4. Ignition on, engine not running.
5. With the scan tool under TIPM, actuate the Transmission.
6. Measure the voltage of the (T147) 2C, (T48) 4C, (T50) LR, (T9) OD, and (T29) UD Pressure Switch Sense circuits in the PCM Pinout Box 8815A.

Is the voltage above 0.5 of a volt on any of the measured circuits?

Yes

- Repair the (T147) 2C, (T48) 4C, (T50) LR, (T9) OD, and/or (T29) UD Pressure Switch Sense circuit(s) for a short to voltage.
- Perform the 545RFE TRANSMISSION VERIFICATION TEST. (Refer to 28 - DTC-Based Diagnostics/MODULE, Powertrain Control (PCM) - Standard Procedure).

No

- Go To 4

4. CHECK THE TRANSMISSION SOLENOID/TRS ASSEMBLY

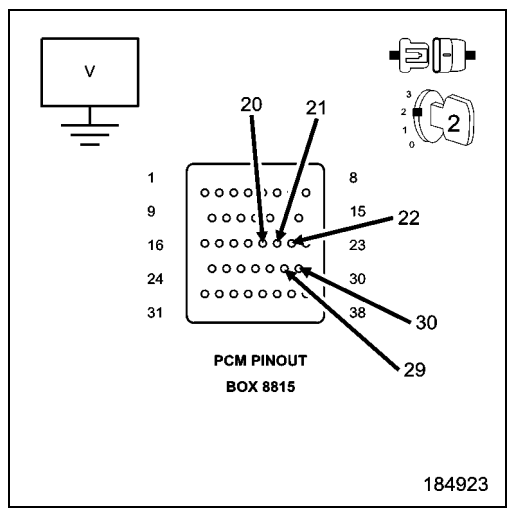

1. With the scan tool under TIPM, stop the Transmission actuation.
2. Turn the ignition off.
3. Reconnect the Transmission Solenoid/TRS Assembly harness connector.
4. Ignition on, engine not running.
5. Measure the voltage of the (T147) 2C, (T48) 4C, (T50) LR, (T9) OD, and (T29) UD Pressure Switch Sense circuits in the PCM Pinout Box 8815A.

Is the voltage above 0.5 of a volt on any of the sense circuits?

Yes

- Replace the Transmission Solenoid/TRS Assembly per the Service Information. (Refer to 21 - Transmission and Transfer Case/Automatic - 545RFE/ASSEMBLY, Transmission Solenoid and TRS - Removal).
- Perform the 545RFE TRANSMISSION VERIFICATION TEST. (Refer to 28 - DTC-Based Diagnostics/MODULE, Powertrain Control (PCM) - Standard Procedure).

No

- Using the schematics as a guide, check the Powertrain Control Module (PCM) terminals for corrosion, damage, or terminal push out. Pay particular attention to all power and ground circuits. If no problems are found, replace the PCM per the Service Information. With the scan tool, perform Quick Learn.
- Perform the 545RFE TRANSMISSION VERIFICATION TEST. (Refer to 28 - DTC-Based Diagnostics/MODULE, Powertrain Control (PCM) - Standard Procedure).

5. CHECK THE WIRING AND CONNECTORS

1. The conditions necessary to set this DTC are not present at this time.
2. Using the schematics as a guide, inspect the wiring and connectors specific to this circuit.
3. Wiggle the wires while checking for shorted and open circuits.
4. With the scan tool, check the Event Data to help identify the conditions in which the DTC was set.

Where there any problems found?

Yes

- Repair as necessary.
- Perform the 545RFE TRANSMISSION VERIFICATION TEST. (Refer to 28 - DTC-Based Diagnostics/MODULE, Powertrain Control (PCM) - Standard Procedure).

No

- Test Complete.

P0933-HYDRAULIC PRESSURE SENSOR RANGE/PERFORMANCE

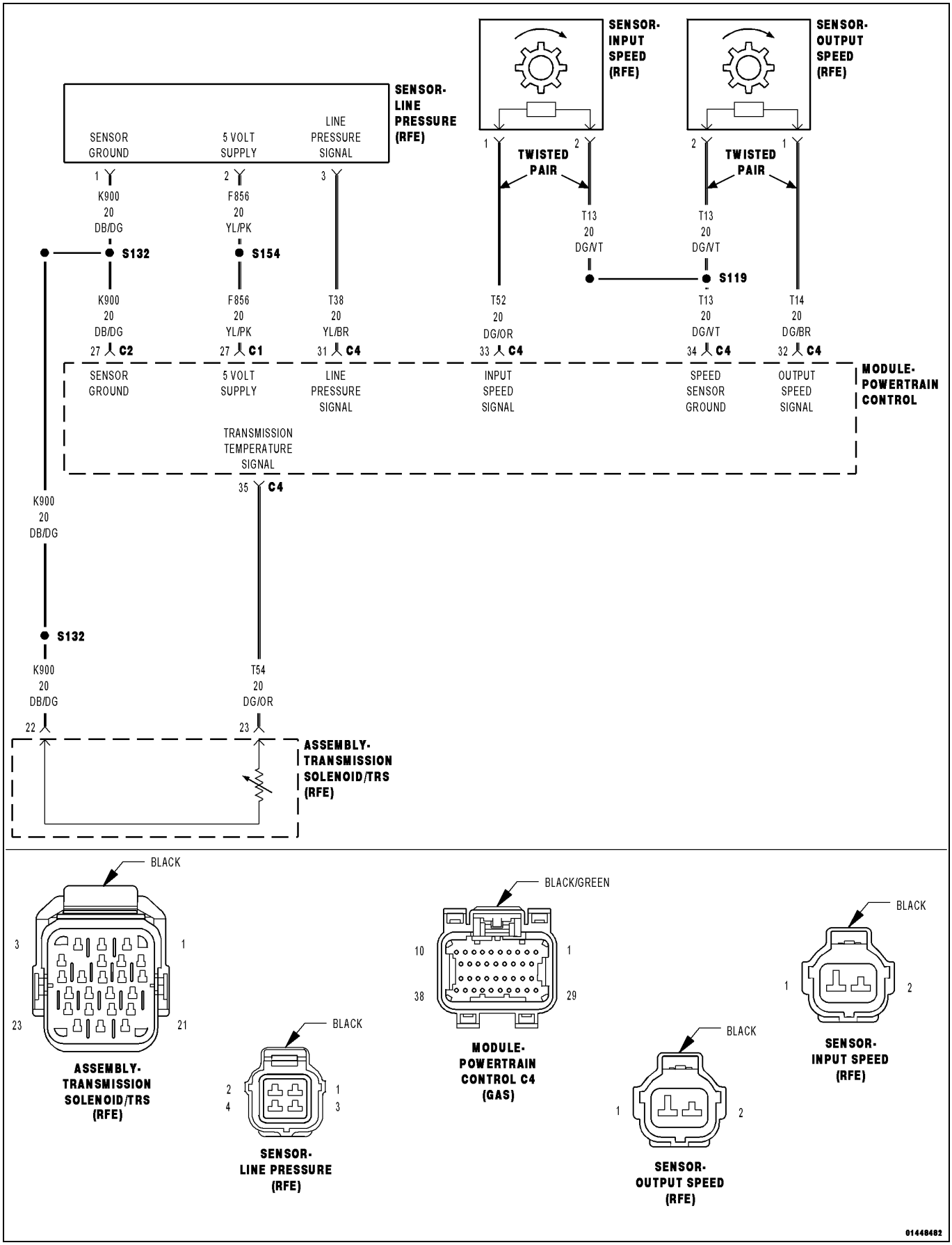

For a complete wiring diagram, **refer to the Wiring Information**.

Theory of Operation

Line pressure is electronically controlled by the Transmission Control System and is measured by the Line Pressure Sensor (LPS). The desired line pressure is continuously being compared to the actual line pressure and is regulated by electronically changing the duty cycle of the Pressure Control Solenoid (PCS). (5% duty cycle = solenoid off = max line pressure, 62% duty cycle = solenoid on = min line pressure).

The Transmission Control System calculates the desired line pressure based on inputs from the transmission and engine. A calculated torque input to the transmission is used as the primary input of the desired line pressure calculation and is called Torque Based Line Pressure. In addition, the line pressure is set to a preset level 827 to 931 kPa (120 to 135 psi) during shifts and in Park and Neutral to ensure consistent shift quality.

- **When Monitored:**

  Continuously with the ignition on, engine running, with the transmission in gear.
- **Set Condition:**

  The Powertrain Control Module (PCM) continuously monitors Actual Line Pressure and compares it to Desired Line Pressure. If the Actual Line Pressure reading is more than 172.4 kPa (25 psi) higher than the Desired Line Pressure, but is less than the highest Line Pressure ever used in the current gear, the DTC sets.

Possible Causes
RELATED DTCS PRESENT
LINE PRESSURE CONNECTOR AND WIRING
INTERNAL TRANSMISSION
POWERTRAIN CONTROL MODULE (PCM)

Always perform the Pre-Diagnostic Troubleshooting Procedure before proceeding. (Refer to 28 - DTC-Based Diagnostics/MODULE, Powertrain Control (PCM) - Standard Procedure).

1. DETERMINING IF RELATED DTCS ARE PRESENT

1. With the scan tool, check for other transmission DTCs.

Are there any other line pressure related DTCs present?

Yes

- (Refer to 28 - DTC-Based Diagnostics/MODULE, Powertrain Control (PCM) - Diagnosis and Testing) and perform the test for P0934 or P0935 first if present.

No

- Go To 2

2. COMPARE ACTUAL LINE PRESSURE TO DESIRED LINE PRESSURE

CAUTION: Apply Parking Brake

1. Start the engine.

CAUTION: Firmly apply the brakes.

2. With the scan tool, monitor the Line Pressure, Desired Line Pressure and the TPS degrees.
3. While firmly applying the brakes, place the shifter in reverse, then slowly press the accelerator pedal to a TPS degree of 15°.
4. Compare the Line Pressure reading to the Desired Line Pressure reading on the scan tool.

Does the Line Pressure stay within ± 34 kPa or 5 psi of the Desired Line Pressure?

No

- Go To 3

Yes

- Go To 6

3. CHECK LINE PRESSURE CONNECTOR AND WIRING

1. Ignition on, engine not running.
2. With the scan tool, monitor the Line Pressure Sensor voltage while wiggling the wiring harness and connectors pertaining to the Line Pressure Sensor and the Transmission Solenoid/TRS Assembly.

Did the voltage remain steady while wiggling the wiring harness and connectors?

Yes

- Go To 4

No

- Disconnect and properly reconnect the Line Pressure Sensor connector. Inspect terminals and repair as necessary.
- Perform the 545RFE TRANSMISSION VERIFICATION TEST. (Refer to 28 - DTC-Based Diagnostics/MODULE, Powertrain Control (PCM) - Standard Procedure).

4. CHECK PCM AND WIRING

1. Turn the ignition off to the lock position.
2. Remove the Ignition Switch Feed fuse from the TIPM.

CAUTION: Removal of the Ignition Switch Feed fuse from the TIPM will prevent the vehicle from being started in gear.

WARNING: The Ignition Switch Feed fuse must be removed from the TIPM. Failure to do so can result in possible serious or fatal injury.

3. Install the Transmission Simulator 8333A.
4. With the Transmission Simulator select the "OFF" position on the "Input/Output Speed" switch.
5. Ignition on, engine not running.
6. With the scan tool, monitor the Line Pressure during the following step.
7. With the Transmission Simulator, turn the selector switch to each of the three Line Pressure positions.

NOTE: All three scan tool Line Pressure readings should be steady and ±14 kPa or 2.0 psi of the reading specified on the Transmission Simulator.

Does the Line Pressure on the scan tool fluctuate up and down more than 69 kPa or 10 psi at any of the 3 line pressure positions on the Transmission Simulator?

Yes

- Using the schematics as a guide, check the Powertrain Control Module (PCM) terminals for corrosion, damage, or terminal push out. Pay particular attention to all power and ground circuits. If no problems are found, replace and program the PCM in accordance with the Service Information. With the scan tool, perform Quick Learn.
- Perform the 545RFE TRANSMISSION VERIFICATION TEST. (Refer to 28 - DTC-Based Diagnostics/MODULE, Powertrain Control (PCM) - Standard Procedure).

No

- Go To 5

5. CHECK THE LINE PRESSURE SENSOR

1. Turn the ignition off to the lock position.
2. Disconnect the Transmission Simulator 8333A and reconnect all previously disconnected connectors.
3. Install the Line Pressure Adaptor 8259, and the Pressure Gauge C-3293-SP, 0 to 2000 kPa (0 to 300 psi).
4. Start the engine in park.
5. Monitor the line pressure readings of both the scan tool and the pressure gauge and compare the two readings.

Is the line pressure gauge reading within 34 kPa (5 psi) of the scan tool reading?

Yes

- Repair internal transmission and inspect the oil pump per the Service information and replace if necessary. If no problems are found, replace the Transmission Solenoid/TRS Assembly - possible cause is the Pressure Control Solenoid is stuck.
- Perform the 545RFE TRANSMISSION VERIFICATION TEST. (Refer to 28 - DTC-Based Diagnostics/MODULE, Powertrain Control (PCM) - Standard Procedure).

No

- Replace the Line Pressure Sensor in accordance with the Service Information.
- Perform the 545RFE TRANSMISSION VERIFICATION TEST. (Refer to 28 - DTC-Based Diagnostics/MODULE, Powertrain Control (PCM) - Standard Procedure).

6. CHECK WIRING AND CONNECTORS

1. The conditions necessary to set this DTC are not present at this time.
2. Using the schematics as a guide, inspect the wiring and connectors specific to this circuit.
3. Wiggle the wires while checking for shorted and open circuits.
4. With the scan tool, check the Event Data to help identify the conditions in which the DTC was set.

Where there any problems found?

Yes

- Repair as necessary.
- Perform the 545RFE TRANSMISSION VERIFICATION TEST. (Refer to 28 - DTC-Based Diagnostics/MODULE, Powertrain Control (PCM) - Standard Procedure).

No

- Test Complete.

P0934-LINE PRESSURE SENSOR CIRCUIT LOW

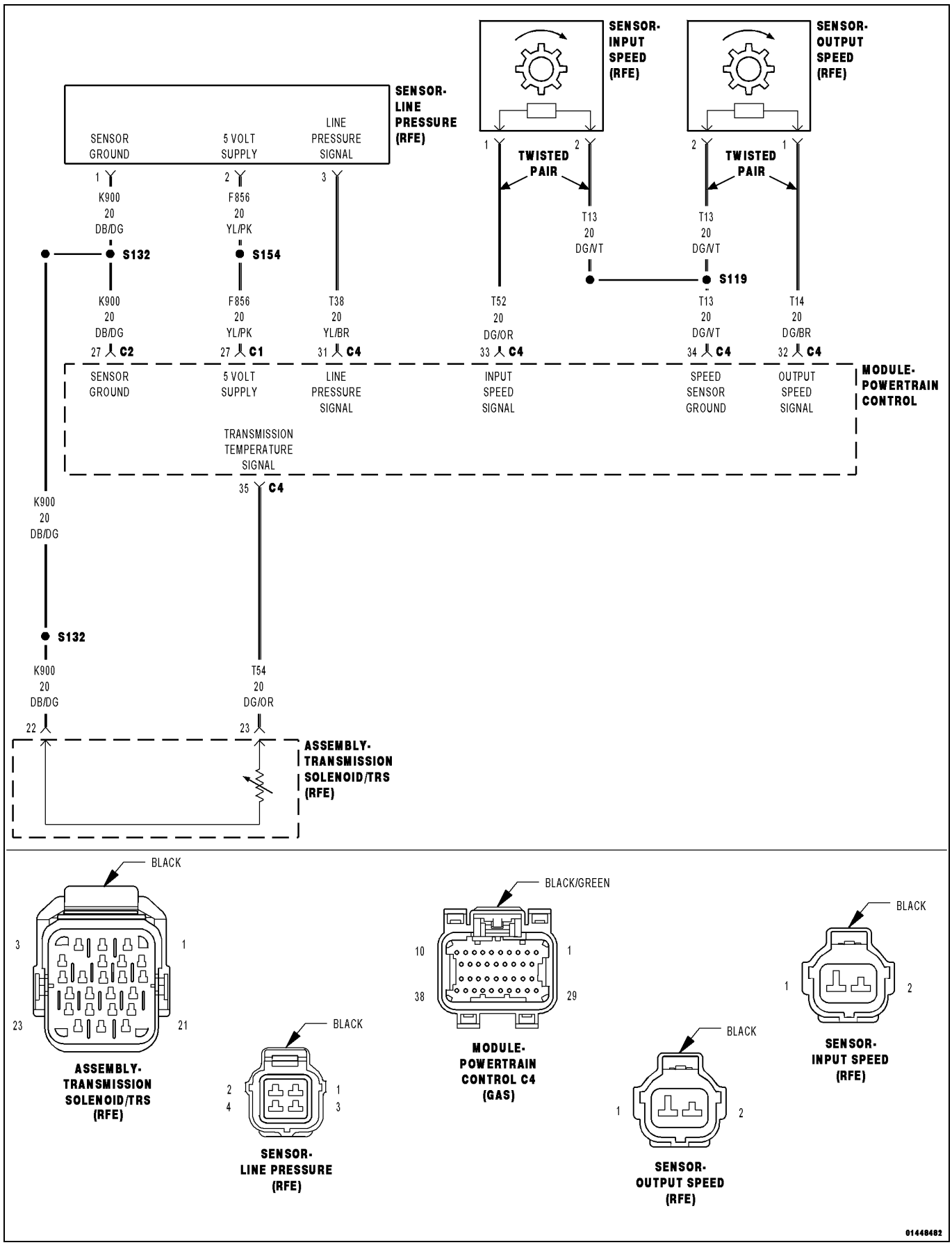

For a complete wiring diagram, **refer to the Wiring Information**.

Theory of Operation

Line pressure is electronically controlled by the Transmission Control System and is measured by the Line Pressure Sensor (LPS). The desired line pressure is continuously being compared to the actual line pressure and is regulated by electronically changing the duty cycle of the Pressure Control Solenoid (PCS). (5% duty cycle = solenoid off = max line pressure, 62% duty cycle = solenoid on = min line pressure).

The Transmission Control System calculates the desired line pressure based on inputs from the transmission and engine. A calculated torque input to the transmission is used as the primary input of the desired line pressure calculation and is called Torque Based Line Pressure. In addition, the line pressure is set to a preset level 827 to 931 kPa (120 to 135 psi) during shifts and in Park and Neutral to ensure consistent shift quality.

The monitored Line Pressure Sensor voltage should always be between 0.35 and 4.75 volts. Any monitored voltages outside these parameters indicate an Line Pressure Sensor or wiring problem and will cause either DTC P0934 or P0935 to set.

- **When Monitored:**
  Continuously with the ignition on and engine running.
- **Set Condition:**
  This DTC will set when the monitored Line Pressure Sensor voltage is less than or equal to 0.35 of a volt for 0.18 of a second.

Possible Causes
(F856) 5-VOLT SUPPLY CIRCUIT OPEN
(F856) 5-VOLT SUPPLY CIRCUIT SHORTED TO GROUND
(T38) LINE PRESSURE SENSOR SIGNAL CIRCUIT OPEN
(T38) LINE PRESSURE SENSOR SIGNAL CIRCUIT SHORTED TO GROUND
LINE PRESSURE SENSOR
POWERTRAIN CONTROL MODULE (PCM)

Always perform the Pre-Diagnostic Troubleshooting Procedure before proceeding. (Refer to 28 - DTC-Based Diagnostics/MODULE, Powertrain Control (PCM) - Standard Procedure).

1. CHECK IF THE DTC IS CURRENT

1. With the scan tool, read DTCs.

Is the status Active or is the Starts Since Set counter 2 or less for this DTC?

Yes

- Go To 2

No

- Go To 7

2. CHECK THE PCM AND WIRING

1. Turn the ignition off to the lock position.
2. Remove the Ignition Switch Feed fuse from the Totally Integrated Power Module (TIPM).

CAUTION: Removal of the Ignition Switch Feed fuse from the TIPM will prevent the vehicle from being started in gear.

WARNING: The Ignition Switch Feed fuse must be removed from the TIPM. Failure to do so can result in possible serious or fatal injury.

3. Install the Transmission Simulator 8333A.
4. Ignition on, engine not running.
5. With the scan tool, under Transmission Sensors, monitor the Line Pressure.
6. Using the Transmission Simulator, set the rotary switch to each of the three line pressure positions.

NOTE: The readings should be within ±14 kPa (2.0 psi) on the scan tool to the pressure readings specified on Transmission Simulator.

Does the Line Pressure on the scan tool match the line pressures on the Transmission Simulator?

Yes

- Replace the Line Pressure Sensor in accordance with the Service Information.
- Perform the 545RFE TRANSMISSION VERIFICATION TEST. (Refer to 28 - DTC-Based Diagnostics/MODULE, Powertrain Control (PCM) - Standard Procedure).

No

- Go To 3

3. CHECK THE (T38) LINE PRESSURE SENSOR SIGNAL CIRCUIT FOR A SHORT TO GROUND

1. Turn the ignition off to the lock position.
2. Disconnect the PCM C4 harness connector and connect the PCM Pinout Box 8815A.
3. Disconnect the Transmission Simulator 8333A.

CAUTION: Do not probe the PCM harness connectors. Probing the PCM harness connectors will damage the PCM terminals resulting in poor terminal to pin connection. Install the Kit, NGC, 38 Position 8815A to perform diagnosis.

4. Measure the resistance between ground and the (T38) Line Pressure Sensor Signal circuit.

Is the resistance below 5.0 Ohms?

Yes

- Repair the (T38) Line Pressure Sensor Signal circuit for a short to ground.
- Perform the 545RFE TRANSMISSION VERIFICATION TEST. (Refer to 28 - DTC-Based Diagnostics/MODULE, Powertrain Control (PCM) - Standard Procedure).

No

- Go To 4

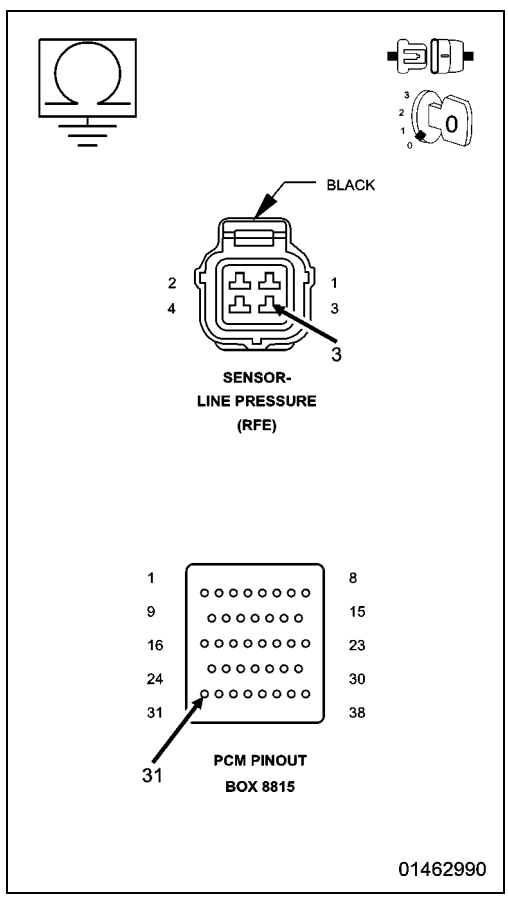

4. CHECK THE (T38) LINE PRESSURE SENSOR SIGNAL CIRCUIT FOR AN OPEN

1. Connect the PCM Pinout Box 8815A to the PCM C4 harness connector.
2. Measure the resistance of the (T38) Line Pressure Sensor Signal circuit between the Line Pressure Sensor harness connector and the appropriate terminal of the PCM Pinout Box 8815A.

Is the resistance above 5.0 Ohms?

Yes

- Repair the (T38) Line Pressure Sensor Signal circuit for an open.
- Perform the 545RFE TRANSMISSION VERIFICATION TEST. (Refer to 28 - DTC-Based Diagnostics/MODULE, Powertrain Control (PCM) - Standard Procedure).

No

- Go To 5

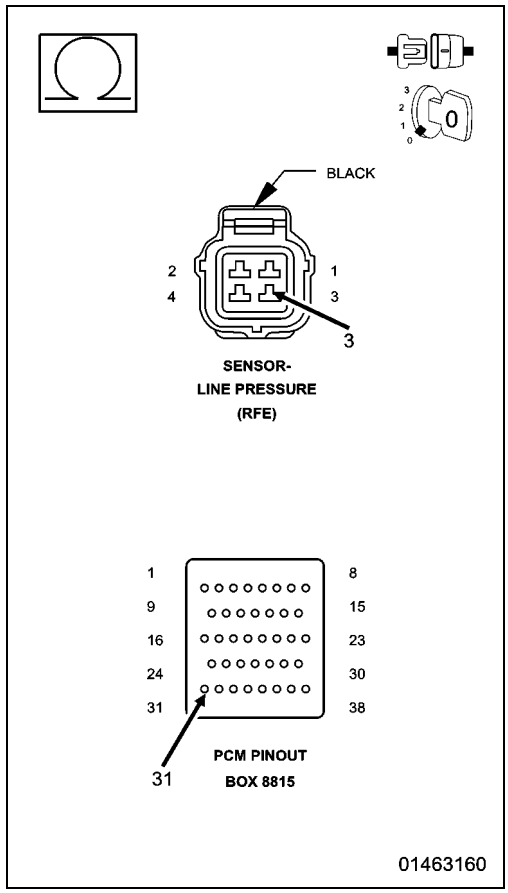

5. CHECK THE (F856) 5-VOLT SUPPLY CIRCUIT FOR AN OPEN

1. Connect the PCM Pinout Box 8815A to the PCM C1 harness connector.
2. Measure the resistance of the (F856) 5-volt Supply circuit between the Line Pressure sensor harness connector and the appropriate terminal of the PCM Pinout Box 8815A.

Is the resistance below 5.0 Ohms?

Yes

- Repair the (F856) 5-volt Supply circuit for an open.
- Perform the 545RFE TRANSMISSION VERIFICATION TEST. (Refer to 28 - DTC-Based Diagnostics/MODULE, Powertrain Control (PCM) - Standard Procedure).

No

- Go To 6

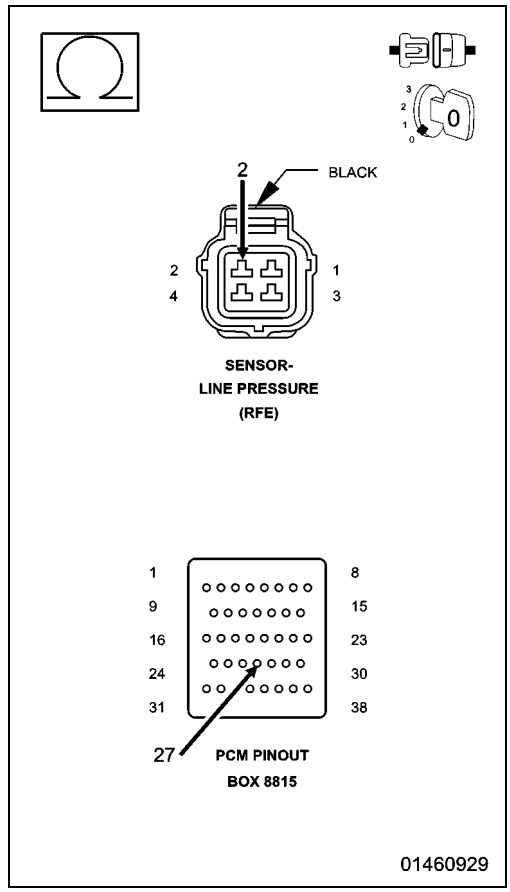

6. CHECK THE (F856) 5-VOLT SUPPLY CIRCUIT FOR A SHORT TO GROUND

1. Disconnect the PCM C1 harness connector and connect the PCM Pinout Box 8815A.
2. Measure the resistance between ground and the (F856) 5-volt Supply circuit.

Is the resistance below 5.0 Ohms?

Yes

- Repair the (F856) 5-volt Supply circuit for a short to ground.
- Perform the 545RFE TRANSMISSION VERIFICATION TEST. (Refer to 28 - DTC-Based Diagnostics/MODULE, Powertrain Control (PCM) - Standard Procedure).

No

- Using the schematics as a guide, check the Powertrain Control Module (PCM) terminals for corrosion, damage, or terminal push out. Pay particular attention to all power and ground circuits. If no problems are found, replace and program the PCM in accordance with the Service Information. With the scan tool, perform Quick Learn.
- Perform the 545RFE TRANSMISSION VERIFICATION TEST. (Refer to 28 - DTC-Based Diagnostics/MODULE, Powertrain Control (PCM) - Standard Procedure).

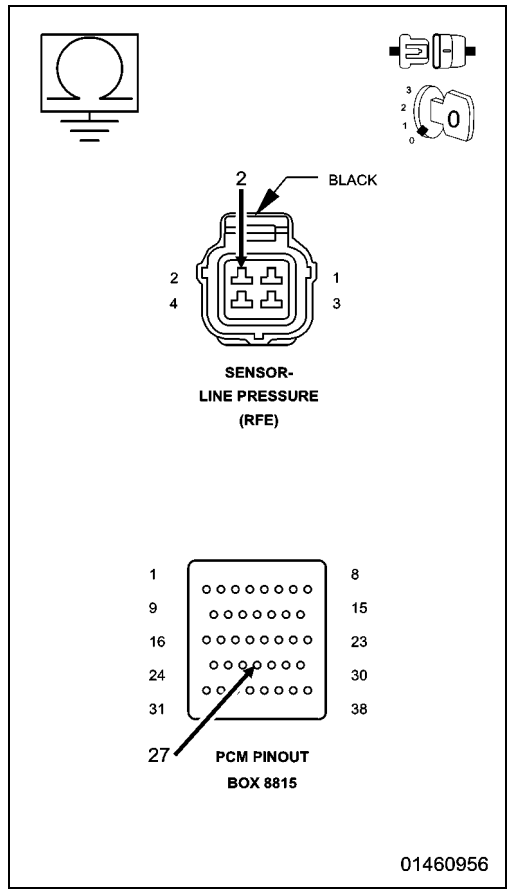

7. CHECK THE WIRING AND CONNECTORS

1. The conditions necessary to set this DTC are not present at this time.
2. Using the schematics as a guide, inspect the wiring and connectors specific to this circuit.
3. Wiggle the wires while checking for shorted and open circuits.
4. With the scan tool, check the Event Data to help identify the conditions in which the DTC was set.

Where there any problems found?

Yes

- Repair as necessary.
- Perform the 545RFE TRANSMISSION VERIFICATION TEST. (Refer to 28 - DTC-Based Diagnostics/MODULE, Powertrain Control (PCM) - Standard Procedure).

No

- Test Complete.

P0935-LINE PRESSURE SENSOR CIRCUIT HIGH

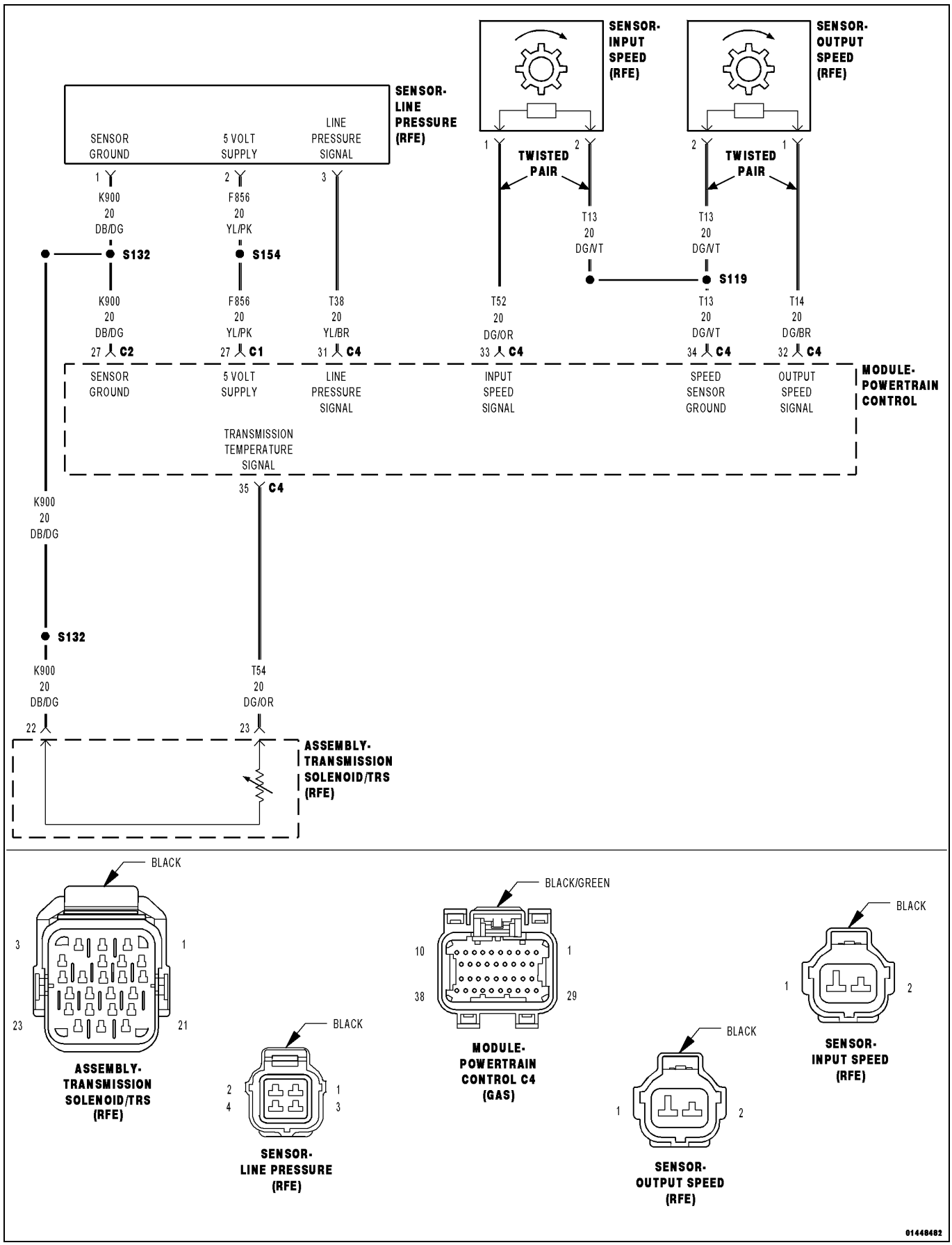

For a complete wiring diagram, **refer to the Wiring Information**.

Theory of Operation

Line pressure is electronically controlled by the Transmission Control System and is measured by the Line Pressure Sensor (LPS). The desired line pressure is continuously being compared to the actual line pressure and is regulated by electronically changing the duty cycle of the Pressure Control Solenoid (PCS). (5% duty cycle = solenoid off = max line pressure, 62% duty cycle = solenoid on = min line pressure).

The Transmission Control System calculates the desired line pressure based on inputs from the transmission and engine. A calculated torque input to the transmission is used as the primary input of the desired line pressure calculation and is called Torque Based Line Pressure. In addition, the line pressure is set to a preset level 827 to 931 kPa (120 to 135 psi) during shifts and in Park and Neutral to ensure consistent shift quality.

The monitored Line Pressure Sensor voltage should always be between 0.35 and 4.75 volts. Any monitored voltages outside these parameters indicate an Line Pressure Sensor or wiring problem and will cause either DTC P0934 or P0935 to set.

- **When Monitored:**
  Continuously with ignition on and engine running.
- **Set Condition:**
  This DTC will set if the monitored Line Pressure Sensor voltage is greater than or equal to 4.75 volts for the period of 0.18 of a second.

Possible Causes
(T38) LINE PRESSURE SENSOR SIGNAL CIRCUIT OPEN
(K900) SENSOR GROUND CIRCUIT OPEN
(T38) LINE PRESSURE SENSOR SIGNAL CIRCUIT SHORTED TO VOLTAGE
LINE PRESSURE SENSOR
POWERTRAIN CONTROL MODULE (PCM)

Always perform the Pre-Diagnostic Troubleshooting Procedure before proceeding. (Refer to 28 - DTC-Based Diagnostics/MODULE, Powertrain Control (PCM) - Standard Procedure).

1. CHECK IF THE DTC IS CURRENT

1. With the scan tool, read DTCs.

Is the status Active or is the Starts Since Set counter 2 or less for this DTC?

Yes

- Go To 2

No

- Go To 6

2. CHECK THE PCM AND WIRING

1. Turn the ignition off to the lock position.
2. Remove the Ignition Switch Feed fuse from the TIPM.

CAUTION: Removal of the Ignition Switch Feed fuse from the TIPM will prevent the vehicle from being started in gear.

WARNING: The Ignition Switch Feed fuse must be removed from the TIPM. Failure to do so can result in possible serious or fatal injury.

3. Install the Transmission Simulator 8333A.
4. Ignition on, engine not running.
5. With the scan tool, monitor the Line Pressure.
6. Using the Transmission Simulator, set the rotary switch to each of the three line pressure positions.

NOTE: The readings should be within ±14 kPa (2.0 psi) on the scan tool of the pressure reading specified on Transmission Simulator.

Does the 3 line pressures on the scan tool match the Line pressure readings on the Transmission Simulator?

Yes

- Replace the Line Pressure Sensor in accordance with the Service Information.
- Perform the 545RFE TRANSMISSION VERIFICATION TEST. (Refer to 28 - DTC-Based Diagnostics/MODULE, Powertrain Control (PCM) - Standard Procedure).

No

- Go To 3

3. CHECK THE (K900) SENSOR GROUND CIRCUIT FOR AN OPEN

1. Turn the ignition off to the lock position.
2. Disconnect the Transmission Simulator 8333A.
3. Disconnect the PCM C2 harness connector and connect the PCM Pinout Box 8815A.

CAUTION: Do not probe the PCM harness connectors. Probing the PCM harness connectors will damage the PCM terminals resulting in poor terminal to pin connection. Install the Kit, NGC, 38 Position 8815A to perform diagnosis.

4. Measure the resistance of the (K900) Sensor Ground circuit between the Line Pressure Sensor harness connector and the appropriate terminal of the PCM Pinout Box 8815A.

Is the resistance above 5.0 Ohms?

Yes

- Repair the (K900) Sensor Ground circuit for an open.
- Perform the 545RFE TRANSMISSION VERIFICATION TEST. (Refer to 28 - DTC-Based Diagnostics/MODULE, Powertrain Control (PCM) - Standard Procedure).

No

- Go To 4

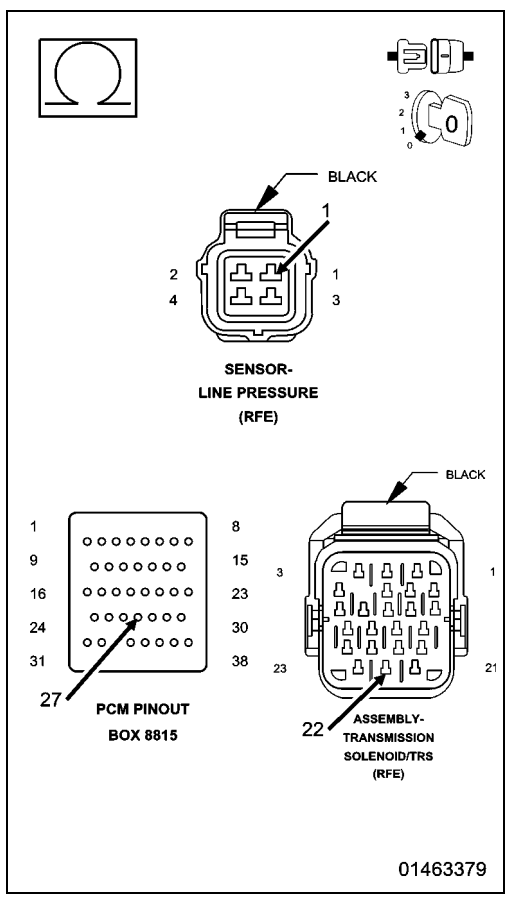

4. CHECK THE (T38) LINE PRESSURE SENSOR SIGNAL CIRCUIT FOR AN OPEN

1. Disconnect the PCM C4 harness connector and connect the PCM Pinout Box 8815A.
2. Measure the resistance of the (T38) Line Pressure Sensor Signal circuit between the Line Pressure Sensor harness connector and the appropriate terminal of the PCM Pinout Box 8815A.

Is the resistance above 5.0 Ohms?

Yes

- Repair the (T38) Line Pressure Sensor Signal circuit for an open.
- Perform the 545RFE TRANSMISSION VERIFICATION TEST. (Refer to 28 - DTC-Based Diagnostics/MODULE, Powertrain Control (PCM) - Standard Procedure)

No

- Go To 5

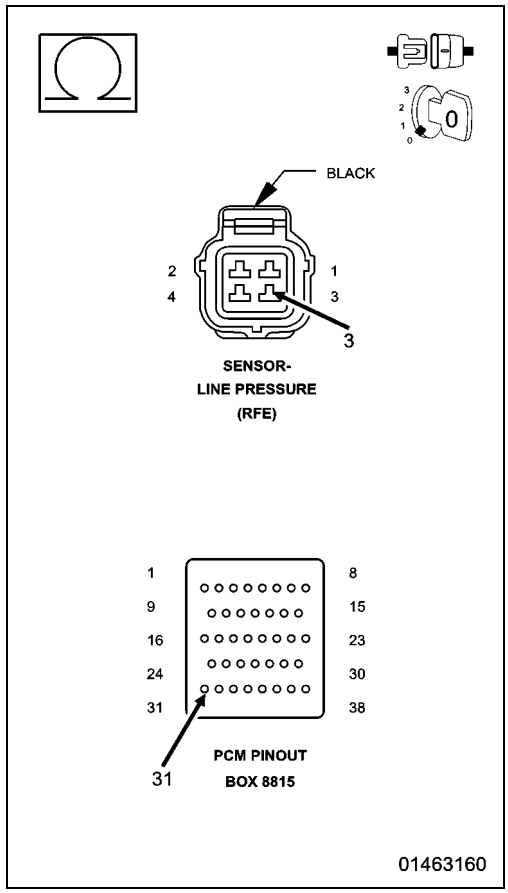

5. CHECK THE (T38) LINE PRESSURE SENSOR SIGNAL CIRCUIT FOR A SHORT TO VOLTAGE

1. Ignition on, engine not running.
2. With the scan tool under TIPM, actuate the Transmission.
3. Measure the voltage of the (T38) Line Pressure Sensor Signal circuit.

Is the voltage above 5.5 volts?

Yes

- Repair the (T38) Line Pressure Sensor Signal circuit for a short to voltage.
- Perform the 545RFE TRANSMISSION VERIFICATION TEST. (Refer to 28 - DTC-Based Diagnostics/MODULE, Powertrain Control (PCM) - Standard Procedure).

No

- Using the schematics as a guide, check the Powertrain Control Module (PCM) terminals for corrosion, damage, or terminal push out. Pay particular attention to all power and ground circuits. If no problems are found, replace and program the PCM in accordance with the Service Information. With the scan tool, perform Quick Learn.
- Perform the 545RFE TRANSMISSION VERIFICATION TEST. (Refer to 28 - DTC-Based Diagnostics/MODULE, Powertrain Control (PCM) - Standard Procedure).

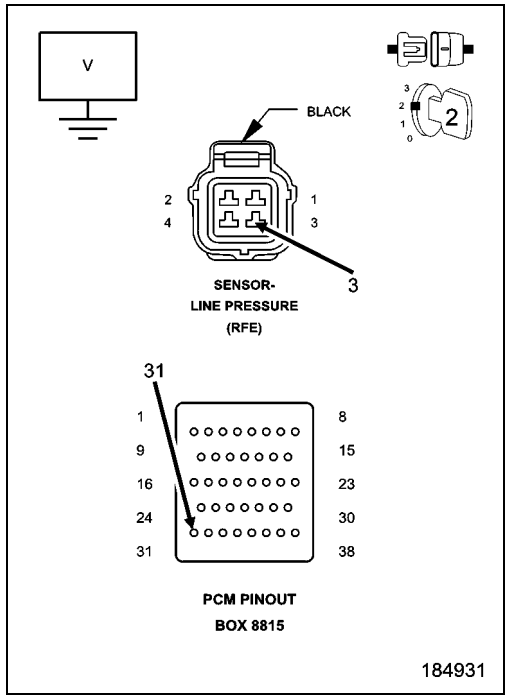

6. CHECK WIRING AND CONNECTORS

1. The conditions necessary to set this DTC are not present at this time.
2. Using the schematics as a guide, inspect the wiring and connectors specific to this circuit.
3. Wiggle the wires while checking for shorted and open circuits.
4. With the scan tool, check the Event Data to help identify the conditions in which the DTC was set.

Where there any problems found?

Yes

- Repair as necessary.
- Perform the 545RFE TRANSMISSION VERIFICATION TEST. (Refer to 28 - DTC-Based Diagnostics/MODULE, Powertrain Control (PCM) - Standard Procedure).

No

- Test Complete.

■ P0944-LOSS OF HYDRAULIC PUMP PRIME

For a complete wiring diagram, **refer to the Wiring Information**.

Theory of Operation

The Loss of prime test is used to prevent transmission defaults and erroneous fault codes during temporary loss of pump prime that may occur with low transmission fluid under severe braking conditions, start-up, etc. and to point towards more subtle problems such as a plugged or cracked oil filter.

The Loss of Prime DTC is set by a loss of hydraulic pressure in the transmission system. This condition, if sustained, will result in the vehicle being unable to move.

- **When Monitored:**

  If the transmission is slipping in any forward gear and all the pressure switches are not indicating pressure, a loss of prime test is run.
- **Set Condition:**

  If the transmission begins to slip in a forward gear and all the pressure switch(s) that should be closed are open a loss of prime test begins. Available elements are turned on by the Powertrain Control Module (PCM) to see if pump prime exists. The DTC sets if no pressure switch(s) respond.

Possible Causes
SHIFT LEVER OUT OF ADJUSTMENT
IMPROPER FLUID LEVEL
CRACKED OR IMPROPERLY INSTALLED PRIMARY OIL FILTER OR SEAL
LOOSE COOLER RETURN FILTER
STUCK OR STICKING MAIN REGULATOR VALVE
TRANSMISSION OIL PUMP

Always perform the Pre-Diagnostic Troubleshooting procedure before proceeding. (Refer to 28 - DTC-Based Diagnostics/MODULE, Powertrain Control (PCM) - Standard Procedure).

1. SHIFT LEVER POSITION TEST

1. Using the scan tool, perform a Shift Lever Position test. Follow the instructions on the scan tool.

Did the Shift Lever Position Test pass?

Yes

- Go To 2

No

- (Refer to 28 - DTC-Based Diagnostics/MODULE, Powertrain Control (PCM) - Diagnosis and Testing) and perform the appropriate diagnostic procedure.
- Perform the TRANSMISSION VERIFICATION TEST. (Refer to 28 - DTC-Based Diagnostics/MODULE, Powertrain Control (PCM) - Standard Procedure).

2. CHECK TO SEE IF DTC P0944 IS CURRENT

1. Place the gear selector in Park.
2. Start the engine.
3. The transmission must be at operating temperature prior to checking pressure. A cold transmission will give higher readings.
4. Run the engine at 1500 rpm.
5. With the scan tool, monitor the Transmission Line Pressure.

Does the Line Pressure match the Desired Line Pressure within ± 5 psi?

No

- Go To 6

Yes

- Go To 3

3. CHECK LINE PRESSURE IN DRIVE AND REVERSE

1. Firmly apply the brake and repeat the previous test in both Drive and the Reverse gear positions.
2. With the scan tool, monitor the Transmission Line Pressure.

Does the Line Pressure match the Desired Line Pressure within ± 5 psi in all gear ranges?

Yes

- Go To 4

No

- Go To 5

4. REVIEW CUSTOMER COMMENTS

1. The conditions necessary to set this DTC are not present at this time.
2. Verify with the customer if a delayed engagement and/or an intermittent "No Drive" condition has occurred.
3. If the customers answer is "No" erase the DTC and return the vehicle to the customer.
4. Make sure to check for any TSBs or controller flash updates that my apply.
5. With the scan tool, check the Event Data to help identify the conditions in which the DTC was set.

Has the customer experienced any delayed engagement and/or "No Drive" conditions?

Yes

- Go To 6

No

- Test Complete.

5. DTC VERIFICATION

1. Read and record the DTC and the Event Data information.
2. Test drive the vehicle and attempt to operate the vehicle within the parameters in which the DTC set.
3. With the scan tool, read DTCs.

Did any following DTCs set, P0868, P0944, P0841, P0846, P0871, P0876, or P0988?

Yes

- Go To 6

No

- Test Complete.

6. CHECK TRANSMISSION OIL FILTER

1. Remove and inspect the Transmission Oil Pan in accordance with the Service Information.
2. Remove and inspect the Primary Oil Filter in accordance with the Service Information.
3. Inspect the oil filter seal for damage and proper installation.

Does the Oil Pan contain excessive debris, or is the oil filter plugged, loose, or damaged?

Yes

- Repair the cause of the plugged transmission oil filter or excessive debris. Check the Transmission Oil Filter seal for improper installation onto filter neck instead of into the pump bore, not fully seated against pump housing, filter neck not engaged into pump. Check that the spin-on cooler return filter (if equipped) is not loose, and that its gasket is in good condition and properly seated. Repair as necessary.
- Perform the TRANSMISSION VERIFICATION TEST. (Refer to 28 - DTC-Based Diagnostics/MODULE, Powertrain Control (PCM) - Standard Procedure).

No

- Repair the Transmission Oil Pump as necessary. Check for a stuck main regulator valve and clean if necessary. Refer to the Service Information for the proper repair procedure.
- Perform the TRANSMISSION VERIFICATION TEST. (Refer to 28 - DTC-Based Diagnostics/MODULE, Powertrain Control (PCM) - Standard Procedure).

P0957-AUTOSTICK CIRCUIT LOW (ERS)

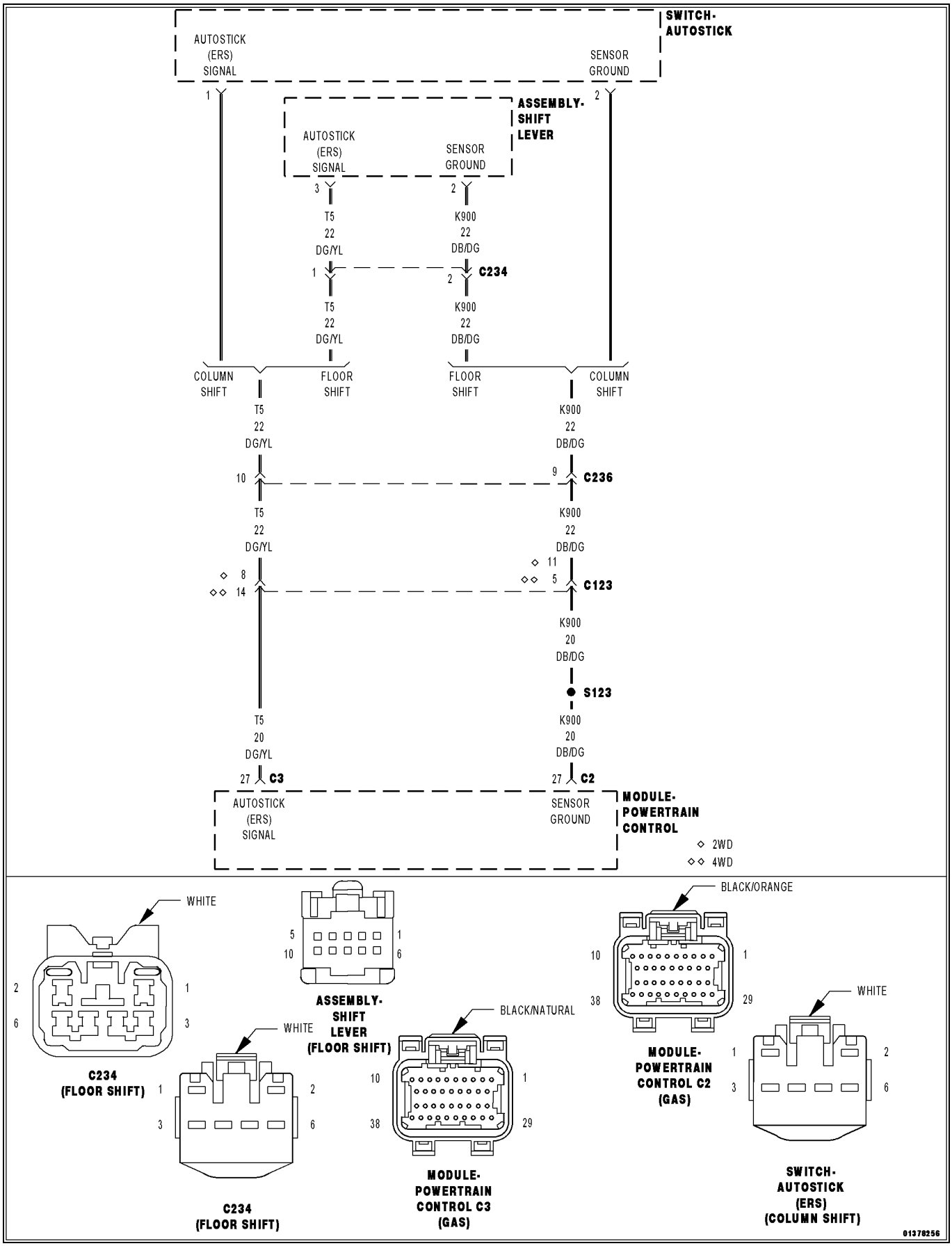

For a complete wiring diagram, **refer to the Wiring Information**.

Theory of Operation

Electronic Range Select (ERS) is an electronic gear selector. In ERS mode the transmission will upshift and downshift normally only up to the selected gear.

The AutoStick® (ERS) switch uses a MUX (multiplex) switch. The Powertrain Control Module (PCM) monitors the AutoStick® (ERS) Signal circuit for voltage changes in respect to the position of the switch. If the PCM detects an improper voltage during upshift, downshift, or in its neutral state, a DTC will set.

- **When Monitored:**
  Whenever the engine is running.
- **Set Condition:**
  The Powertrain Control Module (PCM) detects a voltage below 0.35 of a volt for the period of 5.0 seconds on the AutoStick® (ERS) Signal circuit.

Possible Causes
(T5) AUTOSTICK® (ERS) SIGNAL CIRCUIT SHORTED TO GROUND
AUTOSTICK® (ERS) SWITCH
POWERTRAIN CONTROL MODULE (PCM)

Always perform the Pre-Diagnostic Troubleshooting procedure before proceeding. (Refer to 28 - DTC-Based Diagnostics/MODULE, Powertrain Control (PCM) - Standard Procedure).

1. CHECK IF THE DTC IS CURRENT

NOTE: For vehicles with a floor mounted shift lever assembly, the AutoStick® switch is integral to the Shift Lever assembly.

1. With the scan tool, read DTCs.

Is the status Active or is the Starts Since Set counter 2 or less for this DTC?

Yes

- Go To 2

No

- Go To 5

2. CHECK THE AUTOSTICK® (ERS) SIGNAL CIRCUIT

SWITCH POSITION	SCAN TOOL VALUE	AUTOSTICK® (ERS) VOLTAGE
NEUTRAL	OPEN	4.45 TO 4.55 VOLTS
UPSHIFT	CLOSED	2.13 TO 2.23 VOLTS
DOWNSHIFT	CLOSED	0.84 TO 0.94 VOLTS

1. With the scan tool, monitor the AutoStick® voltage in the following steps:
2. With the ignition on, engine not running and the vehicle in drive, using the AutoStick® (ERS) switch, switch to all shift positions while noting the scan tool values and voltages.

Pick one of the following that best describes your findings.

Voltage is below 0.35 volts in ALL three switch positions and no values change.

- Go To 3

Voltage is below 0.35 of a volt in ONE of three switch positions.

- Go To 4

All shift values and voltages are within limits.

- Go To 5

3. CHECK THE (T5) AUTOSTICK® (ERS) SIGNAL CIRCUIT FOR A SHORT TO GROUND

1. Turn the ignition off to the lock position.
2. Disconnect the PCM C3 harness connector.
3. Disconnect the AutoStick® (ERS) switch harness connector (column shift).
4. Disconnect the Shift Lever assembly harness connector (floor shift).

CAUTION: Do not probe the PCM harness connectors. Probing the PCM harness connectors will damage the PCM terminals resulting in poor terminal to pin connection. Install the PCM Pinout Box Kit, NGC, 38 Position 8815A to perform diagnosis.

5. Measure the resistance between ground and the (T5) AutoStick® (ERS) Signal circuit.

Is the resistance below 5.0 Ohms?

Yes

- Repair the (T5) AutoStick® (ERS) Signal circuit for a short to ground.
- Perform the 545RFE TRANSMISSION VERIFICATION TEST. (Refer to 28 - DTC-Based Diagnostics/MODULE, Powertrain Control (PCM) - Standard Procedure).

No

- Go To 4

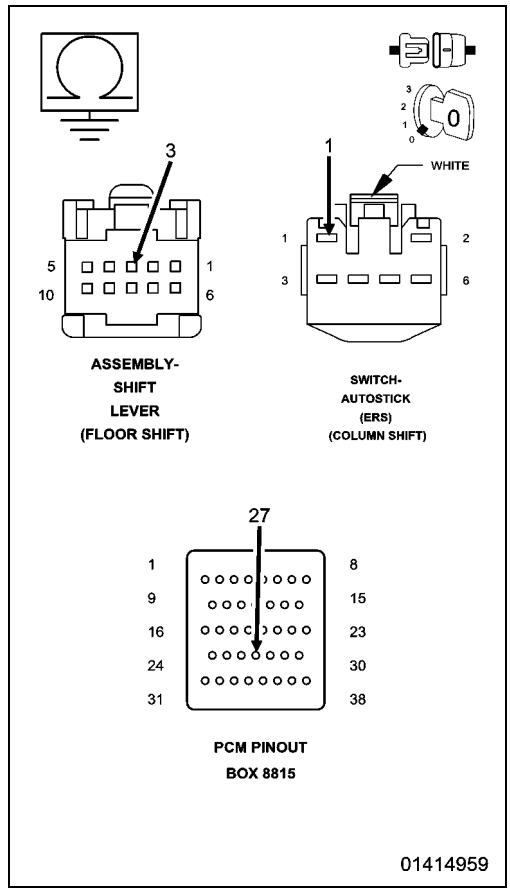

4. CHECK THE AUTOSTICK® (ERS) SWITCH

1. Turn the ignition off to the lock position.
2. Disconnect the AutoStick® (ERS) switch harness connector (column shift).
3. Disconnect the Shift Lever assembly harness connector (floor shift).

SWITCH POSITION	RESISTIVE VALUE (±1%)
NEUTRAL	18.68 k Ohms
UPSHIFT	1.65 k Ohms
DOWNSHIFT	0.46 k Ohms

4. Measure the resistance of the AutoStick® (ERS) switch between the (T5) AutoStick® (ERS) Signal circuit and the (K900) Sensor Ground circuit in all three shift positions. Use the above chart to verify your findings.

Are the resistances of the AutoStick® (ERS) switch within limits?

Yes

- Using the schematics as a guide, check the Powertrain Control Module (PCM) terminals for corrosion, damage, or terminal push out. Pay particular attention to all power and ground circuits. Check for Service Information Tune-ups or Service Bulletins for any possible causes that may apply. If no problems are found, replace and program the PCM in accordance with the Service Information. With the scan tool, perform Quick Learn.
- Perform the 545RFE TRANSMISSION VERIFICATION TEST. (Refer to 28 - DTC-Based Diagnostics/MODULE, Powertrain Control (PCM) - Standard Procedure).

No

- Replace the AutoStick® (ERS) switch in accordance with the Service Information.
- Perform the 545RFE TRANSMISSION VERIFICATION TEST. (Refer to 28 - DTC-Based Diagnostics/MODULE, Powertrain Control (PCM) - Standard Procedure).

5. CHECK THE WIRING AND CONNECTORS

1. The conditions necessary to set this DTC are not present at this time.
2. Using the schematics as a guide, inspect the wiring and connectors specific to this circuit.
3. Wiggle the wires while checking for shorted and open circuits.
4. With the scan tool, check the Event Data to help identify the conditions in which the DTC was set.

NOTE: It may be necessary to test drive the vehicle to enable or cause the DTC to set.

5. Check for any Service bulletins that may apply.

Were there any problems found?

Yes

- Repair as necessary.
- Perform the 545RFE TRANSMISSION VERIFICATION TEST. (Refer to 28 - DTC-Based Diagnostics/MODULE, Powertrain Control (PCM) - Standard Procedure).

No

- Test Complete.

P0958-AUTOSTICK CIRCUIT HIGH (ERS)

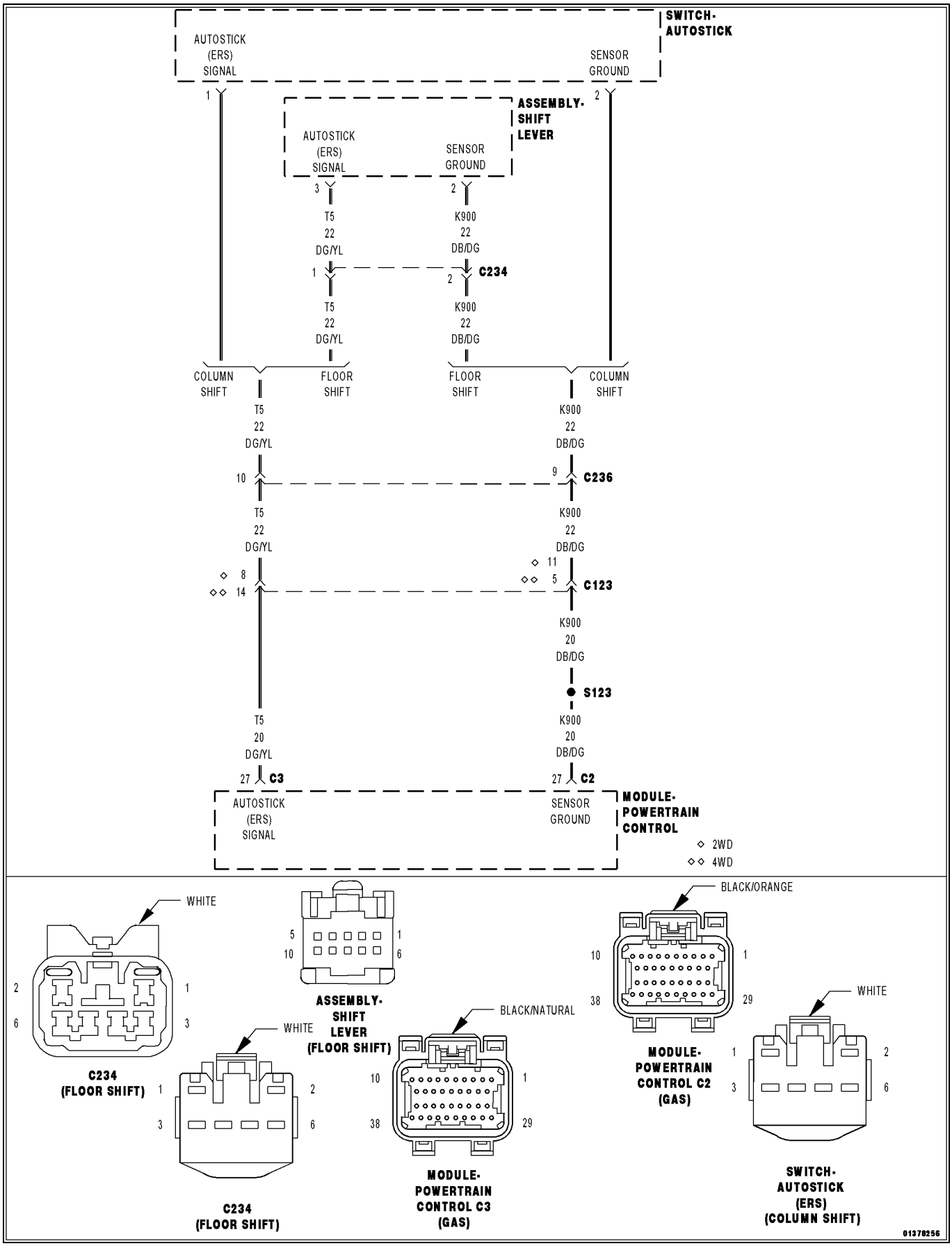

For a complete wiring diagram, **refer to the Wiring Information**.

Theory of Operation

Electronic Range Select (ERS) is an electronic gear selector. In ERS mode the transmission will upshift and downshift normally only up to the selected gear.

The AutoStick® (ERS) switch uses a MUX (multiplex) switch. The Powertrain Control Module (PCM) monitors the AutoStick® (ERS) Signal circuit for voltage changes in respect to the position of the switch. If the PCM detects an improper voltage during upshift, downshift, or in its neutral state, a DTC will set.

- **When Monitored:**
  Whenever the engine is running.
- **Set Condition:**
  The Powertrain Control Module (PCM) detects a voltage above 4.75 volts for the period of 5.0 seconds on the AutoStick® (ERS) Signal circuit.

Possible Causes
(T5) AUTOSTICK® (ERS) SIGNAL CIRCUIT OPEN
(K900) SENSOR GROUND CIRCUIT OPEN
(T5) AUTOSTICK® (ERS) SIGNAL CIRCUIT SHORTED TO VOLTAGE
AUTOSTICK® (ERS) SWITCH
POWERTRAIN CONTROL MODULE (PCM)

Always perform the Pre-Diagnostic Troubleshooting procedure before proceeding. (Refer to 28 - DTC-Based Diagnostics/MODULE, Powertrain Control (PCM) - Standard Procedure).

1. CHECK IF THE DTC IS CURRENT

NOTE: For vehicles with a floor mounted shift lever assembly, the AutoStick® switch is integral to the Shift Lever assembly.

1. With the scan tool, read DTCs.

Is the status Active or is the Starts Since Set counter 0 for this DTC?

Yes

- Go To 2

No

- Go To 7

2. CHECK THE (T5) AUTOSTICK® (ERS) SIGNAL CIRCUIT

1. Turn the ignition off to the lock position.
2. Ignition on, engine running.
3. With the scan tool, read the AutoStick (ERS) voltage.

Is the voltage above 4.75 volts?

Yes

- Go To 3

No

- Go To 6

3. (T5) AUTOSTICK® (ERS) SIGNAL CIRCUIT SHORTED TO VOLTAGE

1. Turn the ignition off to the lock position.
2. Disconnect the PCM C3 harness connector.

CAUTION: Do not probe the PCM harness connectors. Probing the PCM harness connectors will damage the PCM terminals resulting in poor terminal to pin connection. Install the PCM Pinout Box Kit, NGC, 38 Position 8815A to perform diagnosis.

3. Ignition on, engine not running.
4. Measure the voltage between the (T5) AutoStick® (ERS) Signal circuit and ground.

Is the voltage above 0.5 of a volt?

Yes

- Repair the (T5) AutoStick® (ERS) Signal circuit for a short to voltage.
- Perform the 545RFE TRANSMISSION VERIFICATION TEST. (Refer to 28 - DTC-Based Diagnostics/MODULE, Powertrain Control (PCM) - Standard Procedure).

No

- Go To 4

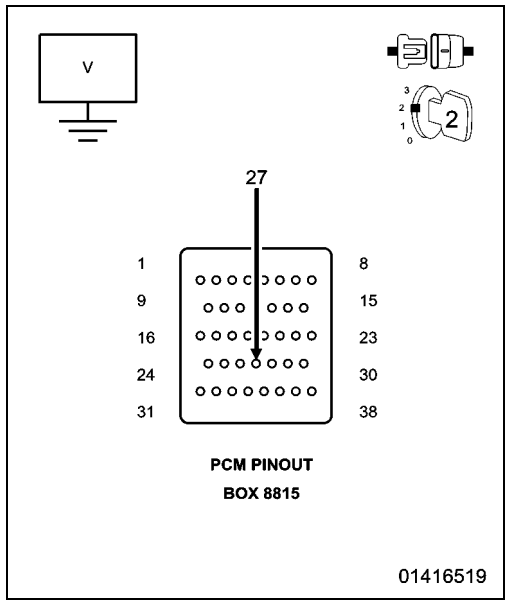

4. CHECK THE (T5) AUTOSTICK® (ERS) SIGNAL CIRCUIT FOR AN OPEN

1. Turn the ignition off to the lock position.
2. Disconnect the AutoStick® (ERS) switch harness connector (column shift).
3. Disconnect the Shift Lever assembly harness connector (floor shift).
4. Measure the resistance of the (T5) AutoStick® (ERS) Signal circuit from the AutoStick® (ERS) switch (column shift) or Shift Lever assembly (floor shift) harness connector to the appropriate terminal of PCM Pinout Box 8815A.

Is the resistance above 5.0 Ohms?

Yes

- Repair the (T5) AutoStick® (ERS) Signal circuit for an open.
- Perform the 545RFE TRANSMISSION VERIFICATION TEST. (Refer to 28 - DTC-Based Diagnostics/MODULE, Powertrain Control (PCM) - Standard Procedure).

No

- Go To 5

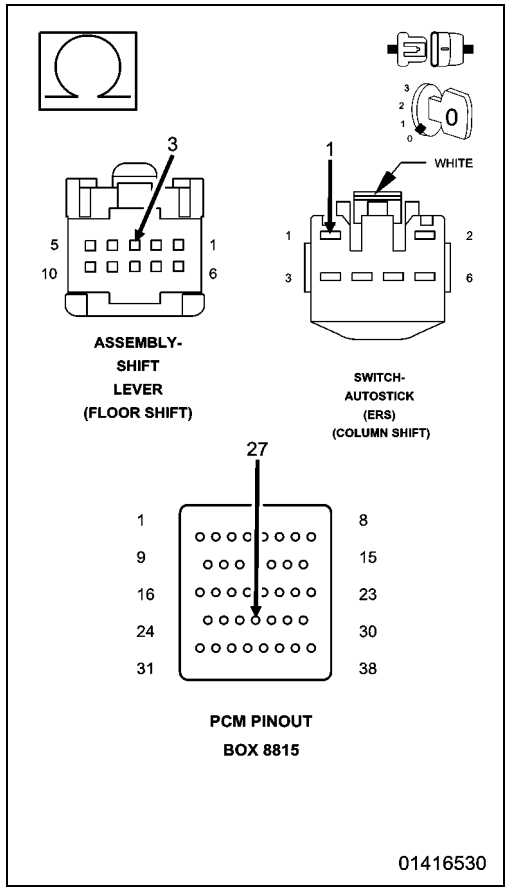

5. CHECK THE (K900) SENSOR GROUND CIRCUIT FOR AN OPEN

1. Disconnect the PCM C2 harness connector.
2. Measure the resistance of the (K900) Sensor Ground circuit from the AutoStick® (ERS) switch (column shift) or Shift Lever assembly (floor shift) harness connector to the appropriate terminal of PCM Pinout Box 8815A.

Is the resistance above 5.0 Ohms?

Yes

- Repair the (K900) Sensor Ground circuit for an open.
- Perform the 545RFE TRANSMISSION VERIFICATION TEST. (Refer to 28 - DTC-Based Diagnostics/MODULE, Powertrain Control (PCM) - Standard Procedure).

No

- Go To 6

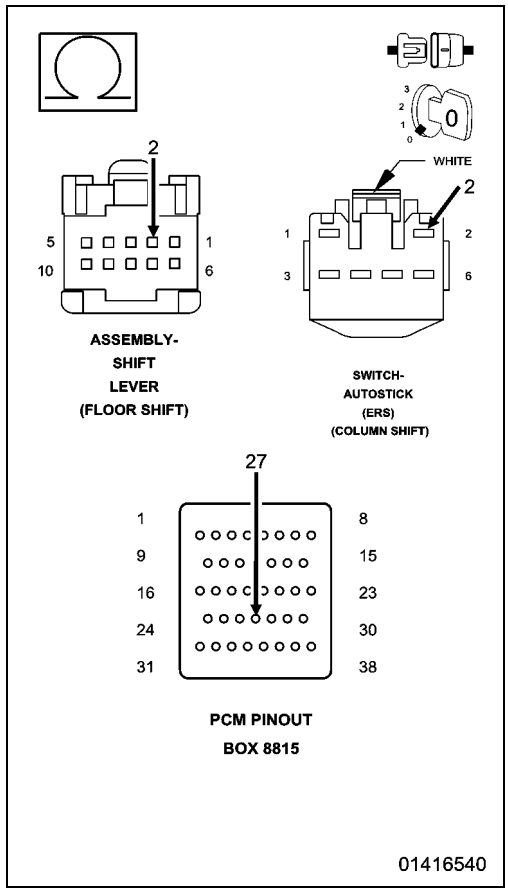

6. CHECK THE AUTOSTICK® (ERS) SWITCH

1. Turn the ignition off to the lock position.
2. Disconnect the AutoStick® (ERS) switch harness connector (column shift).
3. Disconnect the Shift Lever assembly harness connector (floor shift).

SWITCH POSITION	RESISTIVE VALUE (±1%)
NEUTRAL	18.68 k Ohms
UPSHIFT	1.65 k Ohms
DOWNSHIFT	0.46 k Ohms

4. Measure the resistance of the AutoStick® (ERS) switch between the (T5) AutoStick® (ERS) Signal circuit and the (K900) Sensor Ground circuit in all three shift positions. Use the above chart to verify your findings.

Are the resistances of the AutoStick® (ERS) switch within limits?

Yes

- Using the schematics as a guide, check the Powertrain Control Module (PCM) terminals for corrosion, damage, or terminal push out. Pay particular attention to all power and ground circuits. Check for Service Information Tune-ups or Service Bulletins for any possible causes that may apply. If no problems are found, replace and program the PCM in accordance with the Service Information. With the scan tool, perform Quick Learn.
- Perform the 545RFE TRANSMISSION VERIFICATION TEST. (Refer to 28 - DTC-Based Diagnostics/MODULE, Powertrain Control (PCM) - Standard Procedure).

No

- Replace the AutoStick® (ERS) switch in accordance with the Service Information.
- Perform the 545RFE TRANSMISSION VERIFICATION TEST. (Refer to 28 - DTC-Based Diagnostics/MODULE, Powertrain Control (PCM) - Standard Procedure).

7. CHECK THE WIRING AND CONNECTORS

1. The conditions necessary to set this DTC are not present at this time.
2. Using the schematics as a guide, inspect the wiring and connectors specific to this circuit.
3. Wiggle the wires while checking for shorted and open circuits.
4. With the scan tool, check the Event Data to help identify the conditions in which the DTC was set.

NOTE: It may be necessary to test drive the vehicle to enable or cause the DTC to set.

5. Check for any Service bulletins that may apply.

Were there any problems found?

Yes

- Repair as necessary.
- Perform the 545RFE TRANSMISSION VERIFICATION TEST. (Refer to 28 - DTC-Based Diagnostics/MODULE, Powertrain Control (PCM) - Standard Procedure).

No

- Test Complete.

P0987-4C HYDRAULIC PRESSURE TEST

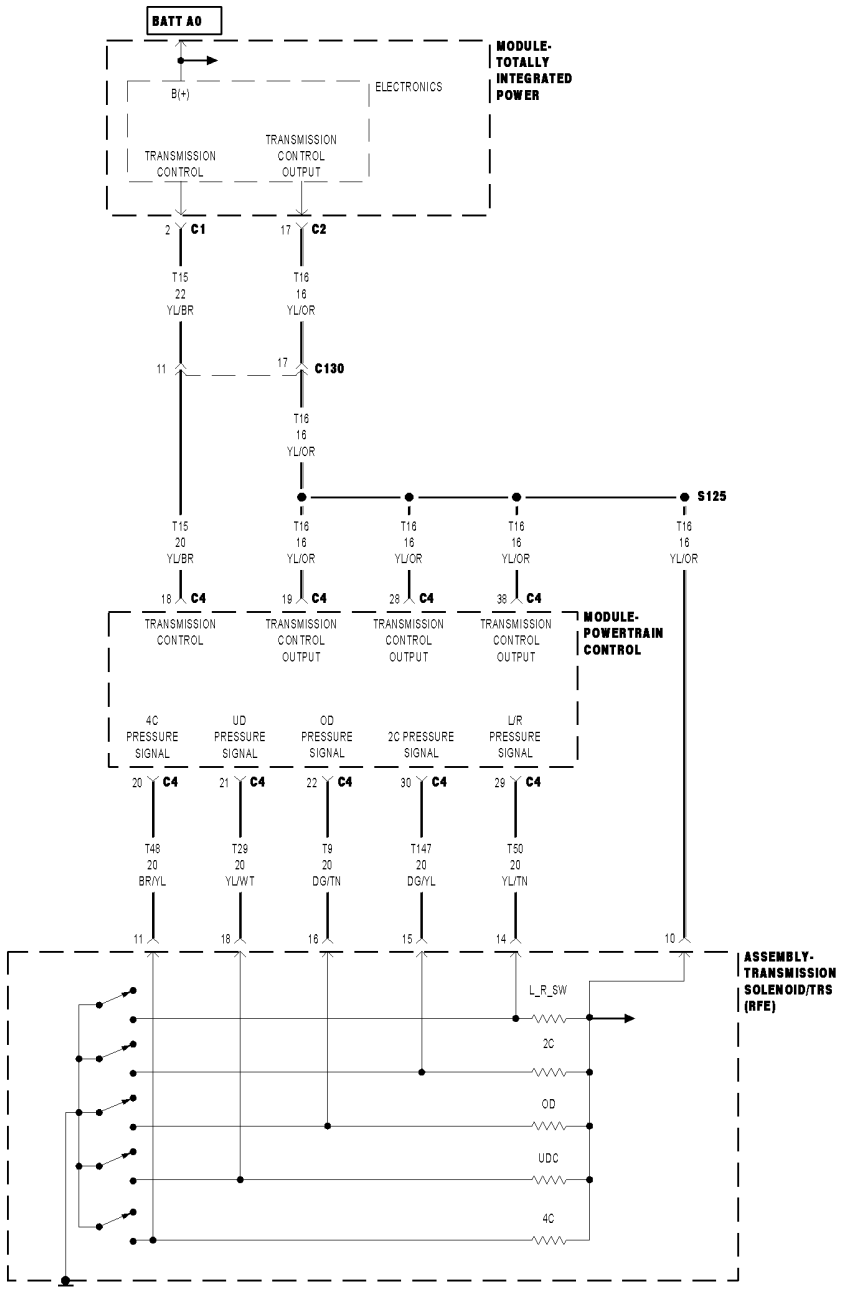

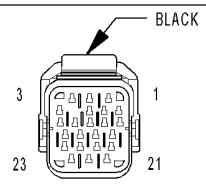

ASSEMBLY-
TRANSMISSION
SOLENOID/TRS
(RFE)

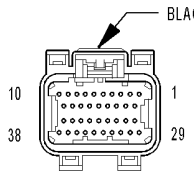

MODULE-
POWERTRAIN
CONTROL C4

01468388

For a complete wiring diagram, **refer to the Wiring Information**.

Theory of Operation

The Transmission Control System tests the pressure switches when they are off. The test verifies that the switches are operational (They will close with pressure applied). The Transmission Control System verifies that the switch closes when the corresponding element is applied. If a switch fails to close, it is re-tested. If it fails the second test, the DTC will set, the MIL will illuminate and the transmission system will default to the orderly Shutdown routine.

- **When Monitored:**
  In any forward gear with engine speed above 1000 rpm shortly after a shift and every minute thereafter.
- **Set Condition:**
  After a shift into a forward gear, with engine speed above 1000 rpm, the Powertrain Control Module (PCM) momentarily turns on element pressure to the Clutch circuits that don't have pressure to identify the correct Pressure Switch closes. If the Pressure Switch does not close two times, the DTC sets.

Possible Causes
LINE PRESSURE SENSOR
TRANSMISSION FLUID CONTAMINATION
RELATED DTCS PRESENT
EXCESSIVE DEBRIS IN OIL PAN
POOR LINE PRESSURE SENSOR CONNECTION
RELATED TCM POWER INPUT DTCS PRESENT
(T48) 4C PRESSURE SWITCH SENSE CIRCUIT OPEN
(F856) 5-VOLT SUPPLY CIRCUIT OPEN
(T48) 4C PRESSURE SWITCH SENSE CIRCUIT SHORTED TO GROUND
(F856) 5-VOLT SUPPLY CIRCUIT SHORTED TO GROUND
(T48) 4C PRESSURE SWITCH SENSE CIRCUIT SHORTED TO ANOTHER CIRCUIT
TRANSMISSION SOLENOID/TRS ASSEMBLY
INTERNAL TRANSMISSION
POWERTRAIN CONTROL MODULE (PCM)

Always perform the Pre-Diagnostic Troubleshooting Procedure before proceeding. (Refer to 28 - DTC-Based Diagnostics/MODULE, Powertrain Control (PCM) - Standard Procedure).

1. CHECK IF RELATED DTCS ARE PRESENT

1. With the scan tool, read DTCs.

Is there any Loss of Prime, TCM Power Input, and/or Line Pressure Sensor DTCs present?

Yes

- Perform the appropriate diagnostic procedure. If the DTC P0944 is present, perform its respective test first. (Refer to 28 - DTC-Based Diagnostics/MODULE, Powertrain Control (PCM) - Diagnosis and Testing).

No

- Go To 2

2. CHECK FOR DTCS

1. With the scan tool, read DTCs.

Is the DTC P0770 also present?

Yes

- (Refer to 28 - DTC-Based Diagnostics/MODULE, Powertrain Control (PCM) - Diagnosis and Testing) and perform the diagnostic procedure for DTC P0770.

No

- Go To 3

3. OTHER DTCS PRESENT

1. With the scan tool, read DTCs.

Are the DTCs P0988 and/or P1736 present also?

Yes

- Go To 12

No

- Go To 4

4. CHECK TO SEE IF DTC IS CURRENT

1. With the scan tool, check if the DTC P0987-4C HYDRAULIC PRESSURE TEST FAILURE is active or stored.

Is the DTC P0987-4C HYDRAULIC PRESSURE TEST FAILURE active?

Yes

- Go To 5

No

- Go To 17

5. CHECK IF THE LINE PRESSURE STAYS THE SAME

1. Start the engine.
2. Warm the transmission to 82° C or 180° F.
3. Firmly apply the brakes.
4. With the scan tool, monitor the Line Pressure during the following step.
5. Move the shift lever to each gear position, pausing momentarily in each position and record the line pressure reading. Allow the pressure to stabilize for at least 5 seconds in each range.

Did the line pressure remain at a steady value between 585 and 655 kPa or 85 and 95 psi in each position?

Yes

- Go To 6

No

- Go To 10

6. CHECK THE LINE PRESSURE SENSOR CONNECTION

1. Ignition on, **engine not running.**
2. With the scan tool, monitor the Line Pressure while firmly pushing the Transmission Line Pressure Sensor connector inwards towards the Transmission.

Did the Line Pressure reading on the scan tool change to about 207 kPa or 30 psi when the connector was pushed inward?

Yes

- Disconnect and properly reconnect the Line Pressure Sensor connector. Inspect terminals and repair as necessary.
- Perform the 545RFE TRANSMISSION VERIFICATION TEST. (Refer to 28 - DTC-Based Diagnostics/MODULE, Powertrain Control (PCM) - Standard Procedure).

No

- Go To 7

7. CHECK THE LINE PRESSURE SENSOR OPERATION

1. Turn the ignition off to the lock position.
2. Remove the Ignition Switch Feed fuse from the TIPM.

CAUTION: Removal of the Ignition Switch Feed fuse from the TIPM will prevent the vehicle from being started in gear.

WARNING: The Ignition Switch Feed fuse must be removed from the TIPM. Failure to do so can result in possible serious or fatal injury.

3. Install the Transmission Simulator 8333A.
4. With the Transmission Simulator select the "OFF" position on the "Input/Output Speed" switch.
5. Ignition on, engine not running.
6. With the scan tool, monitor the Line Pressure while turning the Pressure Switch selector to each of the 3 line pressure positions on the Transmission Simulator.

NOTE: All three scan tool Line Pressure readings should be steady and ±14 kPa or 2.0 psi of the reading specified on the Transmission Simulator.

Did the scan tool Line Pressure readings match the specified readings on the Transmission Simulator and remain steady in all three positions?

Yes

- Replace the Line Pressure Sensor in accordance with the Service Information.
- Perform the 545RFE TRANSMISSION VERIFICATION TEST. (Refer to 28 - DTC-Based Diagnostics/MODULE, Powertrain Control (PCM) - Standard Procedure).

No

- Go To 8

8. CHECK THE (F856) 5-VOLT SUPPLY CIRCUIT FOR AN OPEN

1. Turn the ignition off to the lock position.
2. Disconnect Transmission Simulator.
3. Disconnect the PCM C1 harness connector and connect the PCM Pinout Box 8815A.

CAUTION: Do not probe the PCM harness connectors. Probing the PCM harness connectors will damage the PCM terminals resulting in poor terminal to pin connection. Install the Kit, NGC, 38 Position 8815A to perform diagnosis.

4. Measure the resistance of the (F856) 5-volt Supply circuit between the Line Pressure Sensor harness connector and the appropriate terminal of the PCM Pinout Box 8815A.

Is the resistance above 5.0 Ohms?

Yes

- Repair the (F856) 5-volt Supply circuit for an open.
- Perform the 545RFE TRANSMISSION VERIFICATION TEST. (Refer to 28 - DTC-Based Diagnostics/MODULE, Powertrain Control (PCM) - Standard Procedure).

No

- Go To 9

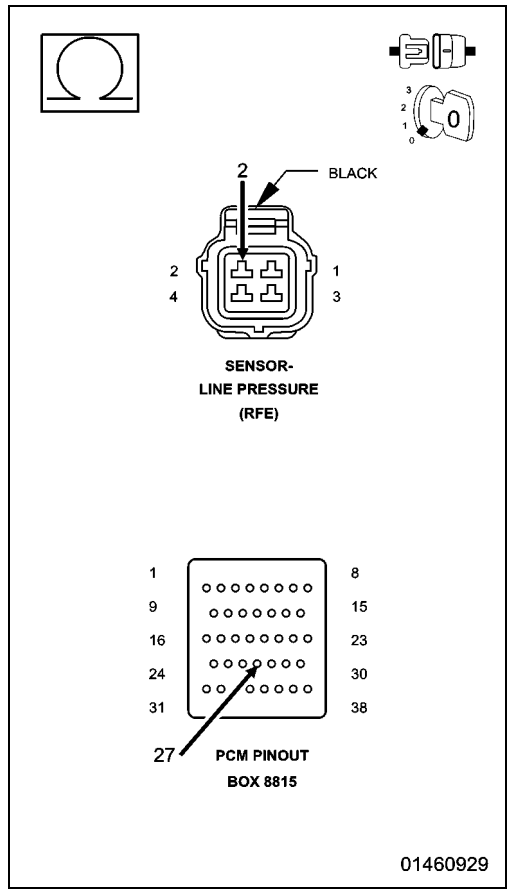

9. CHECK THE (F856) 5-VOLT SUPPLY CIRCUIT FOR A SHORT TO GROUND

1. Measure the resistance between ground and the (F856) 5-volt Supply circuit.

Is the resistance below 5.0 Ohms?

Yes

- Repair the (F856) 5-volt Supply circuit for a short to ground.
- Perform the 545RFE TRANSMISSION VERIFICATION TEST. (Refer to 28 - DTC-Based Diagnostics/MODULE, Powertrain Control (PCM) - Standard Procedure).

No

- Using the schematics as a guide, check the Powertrain Control Module (PCM) terminals for corrosion, damage, or terminal push out. Pay particular attention to all power and ground circuits. If no problems are found, replace and program the PCM in accordance with the Service Information. With the scan tool, perform Quick Learn.
- Perform the 545RFE TRANSMISSION VERIFICATION TEST. (Refer to 28 - DTC-Based Diagnostics/MODULE, Powertrain Control (PCM) - Standard Procedure).

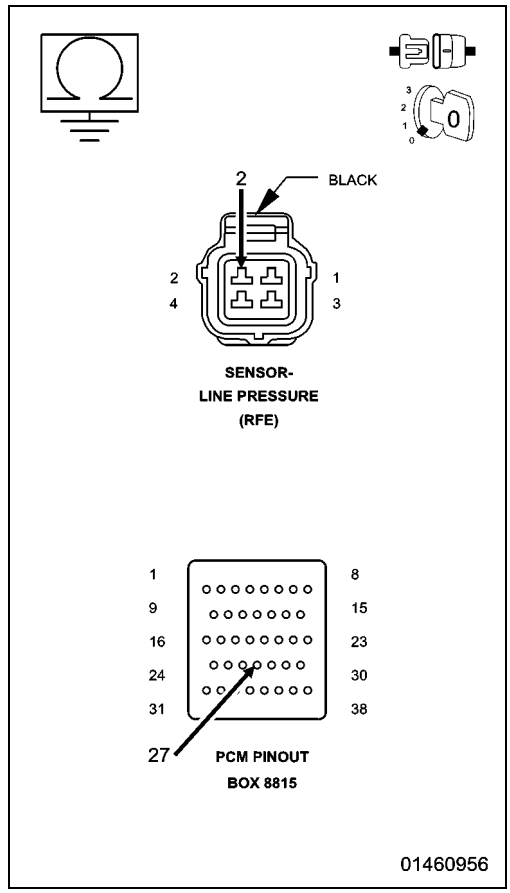

10. COMPARE SCAN TOOL TO PRESSURE GAUGE

1. Turn the ignition off to the lock position.
2. Connect the Line Pressure Adapter 8259 and 0-300 psi Test Gauge C-3293-SP. Refer to the Service Information for proper installation procedure.

CAUTION: Apply parking brake.

3. Start the engine.
4. In the following steps, compare the scan tool Line Pressure to the Pressure Gauge readings in each gear.

CAUTION: Do not overheat transmission.

5. With the gear selector in park, raise the RPM to 1500, and compare line pressure readings.
6. Firmly apply the brakes, move the gear selector into reverse, raise the RPM to 1500, and compare the line pressure readings.
7. Firmly apply the brakes, move the gear selector into drive, raise the RPM to 1500, and compare the line pressure readings.

Did the scan tool Line Pressure readings match the Pressure Gauge readings ± 10 psi?

Yes

- Go To 11

No

- Replace the Line Pressure Sensor in accordance with the Service Information.
- Perform the 545RFE TRANSMISSION VERIFICATION TEST. (Refer to 28 - DTC-Based Diagnostics/MODULE, Powertrain Control (PCM) - Standard Procedure).

11. CHECK PCM AND WIRING

1. Turn the ignition off to the lock position.
2. Remove the Line Pressure Adapter 8259 and 0-300 psi Test Gauge C-3293-SP.
3. Remove the Ignition Switch Feed fuse from the TIPM.

CAUTION: Removal of the Ignition Switch Feed fuse from the TIPM will prevent the vehicle from being started in gear.

WARNING: The Ignition Switch Feed fuse must be removed from the TIPM. Failure to do so can result in possible serious or fatal injury.

4. Install the Transmission Simulator 8333A.
5. On the Transmission Simulator, turn the Pressure Switch selector switch to 4C.
6. Ignition on, engine not running.
7. With the scan tool, monitor the 4C Pressure Switch state while pressing and holding the Pressure Switch test button and wiggling the wire harness and connectors that pertain to the 4C Pressure Switch.

Did the 4C Pressure Switch state change to closed and remain closed while wiggling the wires?

Yes

- Go To 12

No

- Go To 14

12. CHECK FOR EXCESSIVE DEBRIS

1. Turn the ignition off to the lock position.
2. Remove the Transmission Simulator 8333A.
3. Remove and inspect the Transmission Oil Pan in accordance with the Service Information.

Does the Transmission Oil Pan contain excessive debris or contamination?

Yes

- Repair the cause of the excessive debris in the Transmission Oil Pan. Refer to the Service Information for the proper procedures.
- Perform the 545RFE TRANSMISSION VERIFICATION TEST. (Refer to 28 - DTC-Based Diagnostics/MODULE, Powertrain Control (PCM) - Standard Procedure).

No

- Go To 13

13. CHECK 4C HYDRAULIC CLUTCH CIRCUIT

1. Remove the Valve Body and air check the 4C hydraulic clutch circuit (in the case) for leakage in accordance with the Service Information.

NOTE: The 4C hydraulic clutch circuit contains a small bleed orifice. A small amount of air leakage is normal.

Was there excessive air leakage noticed during the air check?

Yes

- Repair as necessary. Check the 4C clutch piston, piston seals and bleed orifice assembly.
- Perform the 545RFE TRANSMISSION VERIFICATION TEST. (Refer to 28 - DTC-Based Diagnostics/MODULE, Powertrain Control (PCM) - Standard Procedure).

No

- Disassemble and inspect the Valve Body and repair as necessary. Inspect the 4C Accumulator piston and seals. If no problems are found in the Valve Body, replace the Transmission Solenoid/TRS Assembly in accordance with the Service Information.
- Perform the 545RFE TRANSMISSION VERIFICATION TEST. (Refer to 28 - DTC-Based Diagnostics/MODULE, Powertrain Control (PCM) - Standard Procedure).

14. CHECK THE (T48) 4C PRESSURE SWITCH SENSE CIRCUIT FOR AN OPEN

1. Turn the ignition off to the lock position.
2. Remove the Transmission Simulator 8333A and connect the PCM Pinout Box 8815A.
3. Disconnect the PCM C4 harness connector.
4. Measure the resistance of the (T48) 4C Pressure Switch Sense circuit between the Transmission Solenoid/TRS Assembly harness connector and the appropriate terminal of the PCM Pinout Box 8815A.

Is the resistance above 5.0 Ohms?

Yes

- Repair the (T48) 4C Pressure Switch Sense circuit for an open.
- Perform the 545RFE TRANSMISSION VERIFICATION TEST. (Refer to 28 - DTC-Based Diagnostics/MODULE, Powertrain Control (PCM) - Standard Procedure).

No

- Go To 15

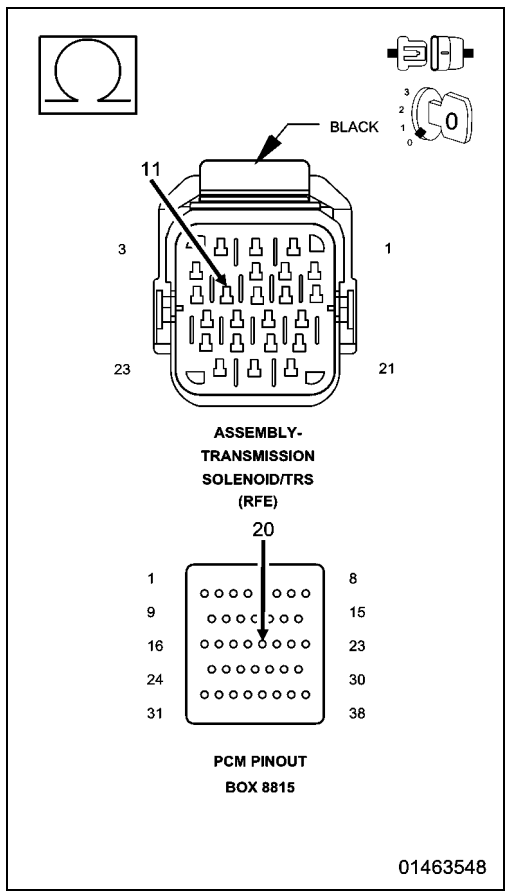

15. CHECK THE (T48) 4C PRESSURE SWITCH SENSE CIRCUIT FOR A SHORT TO GROUND

1. Measure the resistance between ground and the (T48) 4C Pressure Switch Sense circuit.

Is the resistance below 5.0 Ohms?

Yes

- Repair the (T48) 4C Pressure Switch Sense circuit for a short to ground.
- Perform the 545RFE TRANSMISSION VERIFICATION TEST. (Refer to 28 - DTC-Based Diagnostics/MODULE, Powertrain Control (PCM) - Standard Procedure).

No

- Go To 16

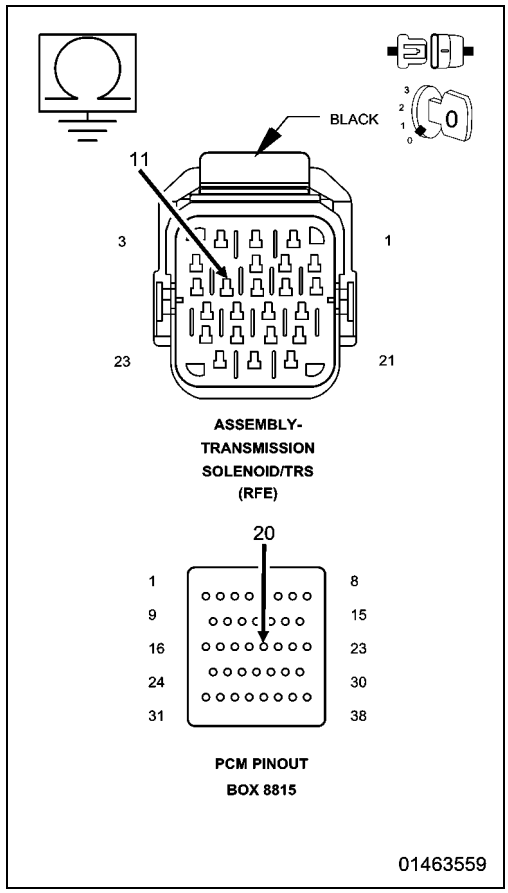

16. CHECK THE (T48) 4C PRESSURE SWITCH SENSE CIRCUIT FOR A SHORT TO ANOTHER CIRCUIT

1. Disconnect all PCM harness connectors.
2. Disconnect the Transmission Solenoid/TRS Assembly harness connector.

NOTE: Make sure the Transmission Solenoid/TRS Assembly harness connector is disconnected.

NOTE: Check connectors - Clean/repair as necessary.

3. Measure the resistance between the (T48) 4C Pressure Switch Sense circuit and all other circuits in the Transmission Solenoid/TRS Assembly harness connector.

Is the resistance below 5.0 Ohms between the (T48) 4C Pressure Switch Sense circuit and any other circuit(s) in the Transmission Solenoid/TRS Assembly harness connector?

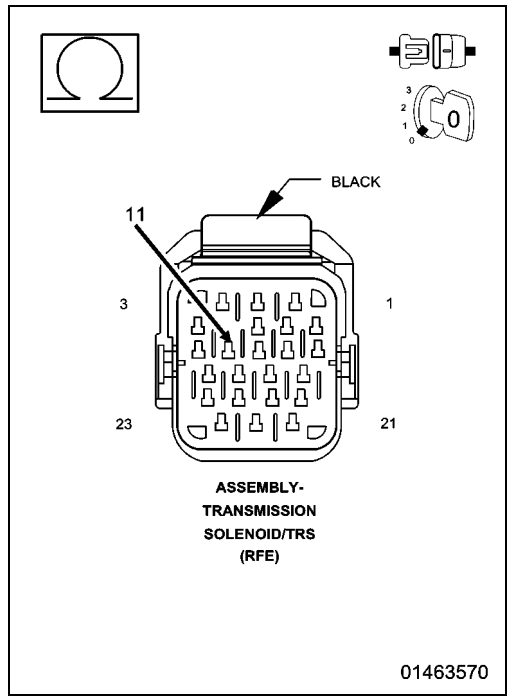

Yes

- Repair the (T48) 4C Pressure Switch Sense circuit for a short to another circuit(s).
- Perform the 545RFE TRANSMISSION VERIFICATION TEST. (Refer to 28 - DTC-Based Diagnostics/MODULE, Powertrain Control (PCM) - Standard Procedure).

No

- Using the schematics as a guide, check the Powertrain Control Module (PCM) terminals for corrosion, damage, or terminal push out. Pay particular attention to all power and ground circuits. If no problems are found, replace and program the PCM in accordance with the Service Information. With the scan tool, perform Quick Learn.
- Perform the 545RFE TRANSMISSION VERIFICATION TEST. (Refer to 28 - DTC-Based Diagnostics/MODULE, Powertrain Control (PCM) - Standard Procedure).

17. CHECK WIRING AND CONNECTORS

1. The conditions necessary to set this DTC are not present at this time.
2. Using the schematics as a guide, inspect the wiring and connectors specific to this circuit.
3. Wiggle the wires while checking for shorted and open circuits.
4. With the scan tool, check the Event Data to help identify the conditions in which the DTC was set.
5. If the Event Data shows the DTC Pie set while the Line Pressure was significantly below the Desired Line Pressure reading, check for causes of low line pressure (low fluid level, broken or improperly installed primary oil filter or filter seal, sticking Main Regulator Valve in the Pump Valve Body etc.). If the data shows the DTC set while the Line Pressure reading was significantly higher than the Desired Line Pressure, check the Line Pressure Sensor and related wiring.

Were there any problems found?

Yes

- Repair as necessary.
- Perform the 545RFE TRANSMISSION VERIFICATION TEST. (Refer to 28 - DTC-Based Diagnostics/MODULE, Powertrain Control (PCM) - Standard Procedure).

No

- Test Complete.

P0988-4C PRESSURE SWITCH RATIONALITY

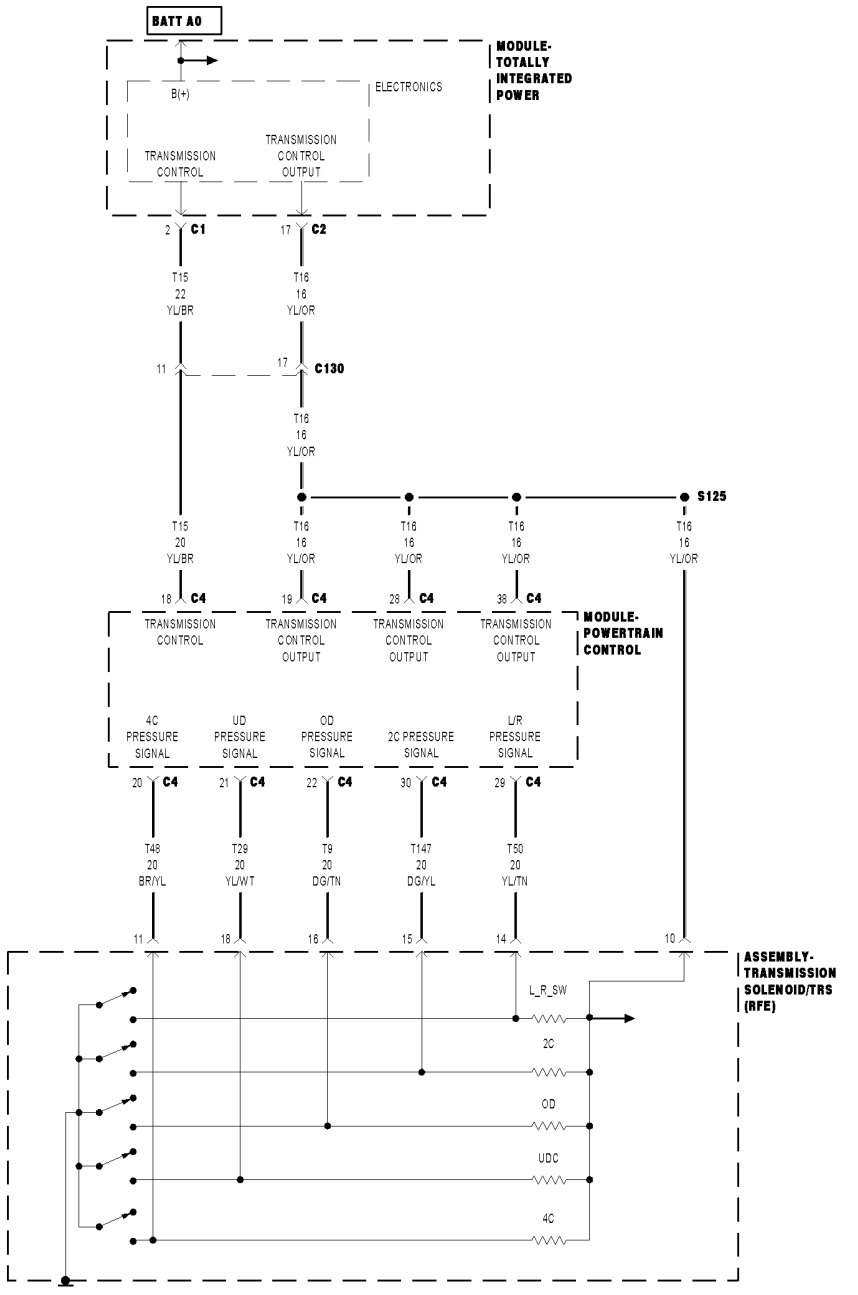

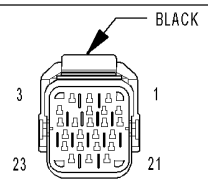

ASSEMBLY-
TRANSMISSION
SOLENOID/TRS
(RFE)

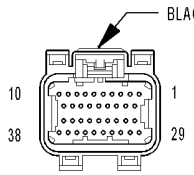

MODULE-
POWERTRAIN
CONTROL C4

01468388

For a complete wiring diagram, **refer to the Wiring Information**.

Theory of Operation

The Transmission system uses five pressure switches to monitor the fluid pressure in the LR, 2C, 4C, UD, and OD clutch circuits. The pressure switches are continuously monitored for the correct states in each gear as shown.

- **When Monitored:**
  Continuously with the ignition on, engine running, with the transmission in gear.
- **Set Condition:**
  The DTC is set if the 4C Pressure Switch reads open or closed at the wrong time in a given gear .

Possible Causes
RELATED TCM POWER INPUT DTCS PRESENT
DTC P0871 ALSO PRESENT
LOSS OF 12-VOLT FEED
(T48) 4C PRESSURE SWITCH SENSE CIRCUIT OPEN
(T48) 4C PRESSURE SWITCH SENSE CIRCUIT SHORTED TO GROUND
EXCESSIVE FLUID LEAKAGE WITH 4C CLUTCH CIRCUIT
NO. 5 AND/OR NO. 7 CHECK BALL CUT OR DAMAGED
LOW LINE PRESSURE
TRANSMISSION SOLENOID/TRS ASSEMBLY
POWERTRAIN CONTROL MODULE (PCM)
WIRING AND CONNECTORS

Always perform the Pre-Diagnostic Troubleshooting Procedure before proceeding. (Refer to 28 - DTC-Based Diagnostics/MODULE, Powertrain Control (PCM) - Standard Procedure).

GEAR	L/R	2C	4C	UD	OD
REVERSE	OPEN	OPEN	OPEN	OPEN	OPEN
P/N	CLOSED**	OPEN	OPEN	OPEN	OPEN
1ST	CLOSED*	OPEN	OPEN	CLOSED	OPEN
2ND	OPEN	CLOSED	OPEN	CLOSED	OPEN
2ND PRIME	OPEN	OPEN	CLOSED	CLOSED	OPEN
3RD	OPEN	OPEN	OPEN	CLOSED	CLOSED
4TH	OPEN	OPEN	CLOSED	OPEN	CLOSED
5TH	OPEN	CLOSED	OPEN	OPEN	CLOSED
*L/R is closed if output speed is below 100 rpm in Drive and Manual 2. L/R is closed in Manual 1.					
**May be open when rolling in Neutral or at low oil temperatures.					

1. CHECK FOR TCM POWER INPUT SIGNAL DTCS

1. With the scan tool, read DTCs.

Are there any TCM Power Input DTCs present?

Yes

- (Refer to 28 - DTC-Based Diagnostics/MODULE, Totally Integrated Power (TIPM) - Diagnosis and Testing) and perform the appropriate diagnostic procedure.

No

- Go To 2

2. DTC DATA SHOW CURRENT DTC

1. With the scan tool, read and record the Event Data.

NOTE: Make sure to record all Event Data stored in the scan tool for future reference in this test procedure.

Does the Event Data show data for DTC P0988?

Yes

- Go To 3

No

- (Refer to 28 - DTC-Based Diagnostics/MODULE, Powertrain Control (PCM) - Diagnosis and Testing) and perform the appropriate symptom identified in the Event Data.

3. CHECK IF MULTIPLE DTCS ARE PRESENT

1. With the scan tool, read DTCs.

Are there two or more related Pressure Switch Sense DTCs present in addition to P0988?

Yes

- Go To 4

No

- Go To 7

4. RELATED DTC PRESENT

In the Event Data recorded earlier, do all the pressure switches read CLOSED in the Event Data for P0988?

Yes

- (Refer to 28 - DTC-Based Diagnostics/MODULE, Powertrain Control (PCM) - Diagnosis and Testing) and perform the diagnostic procedure for DTC P0882. Diagnose the DTC as if it is current.

No

- Go To 5

5. CHECK IF THE PRESSURE SWITCHES READ OPEN

In the Event Data recorded earlier, do all the pressure switches read OPEN?

Yes

- Go To 6

No

- Go To 7

6. CHECK FOR LOW LINE PRESSURE

In the Event Data recorded earlier, is the Line Pressure less than 40 psi, and significantly below the Desired Line Pressure?

Yes

- Repair as necessary to correct low line pressure. Check fluid level and adjust as necessary. If fluid level is OK, check the Primary Oil Filter seal for a split, crack, or improperly installed. If the filter and seal are OK, check the Main Regulator Valve in the Oil Pump. Refer to the Service Information for the above procedures.
- Perform the 545RFE TRANSMISSION VERIFICATION TEST. (Refer to 28 - DTC-Based Diagnostics/MODULE, Powertrain Control (PCM) - Standard Procedure).

No

- Replace the Transmission Solenoid/TRS Assembly in accordance with the Service Information.
- Perform the 545RFE TRANSMISSION VERIFICATION TEST. (Refer to 28 - DTC-Based Diagnostics/MODULE, Powertrain Control (PCM) - Standard Procedure).

7. CHECK IF THE DTC P0871 ALSO SET

1. With the scan tool, read DTCs.

Is the DTC P0871 also present?

Yes

- (Refer to 28 - DTC-Based Diagnostics/MODULE, Powertrain Control (PCM) - Diagnosis and Testing) and perform the appropriate diagnostic procedure.

No

- Go To 8

8. CHECK IF THE DTC SET IN PARK, REVERSE OR NEUTRAL

In the Event Data recorded earlier, does the Event Data show the DTC set in Park, Neutral, or Reverse for P0988?

Yes

- Go To 13

No

- Go To 9

9. CHECK IF THE Event Data READS CLOSED

In the Event Data recorded earlier, does the Event Data show the 4C Pressure Switch reading CLOSED?

Yes

- Go To 11

No

- Go To 10

10. CHECK THE PRIMARY OIL FILTER SEAL

In the Event Data recorded earlier, is the Line Pressure less than 40 psi, and significantly below the Desired Line Pressure?

Yes

- Repair as necessary to correct low line pressure. Check fluid level and adjust as necessary. If fluid level is OK, check the Primary Oil Filter seal for a split, crack, or improperly installed. If the filter and seal are OK, check the Main Regulator Valve in the Oil Pump. Refer to the Service Information for the above procedures.
- Perform the 545RFE TRANSMISSION VERIFICATION TEST. (Refer to 28 - DTC-Based Diagnostics/MODULE, Powertrain Control (PCM) - Standard Procedure).

No

- Go To 15

11. CHECK THE PCM AND WIRING

1. Turn the ignition off to the lock position.
2. Remove the Ignition Switch Feed fuse from the TIPM.

CAUTION: Removal of the Ignition Switch Feed fuse from the TIPM will prevent the vehicle from being started in gear.

WARNING: The Ignition Switch Feed fuse must be removed from the TIPM. Failure to do so can result in possible serious or fatal injury.

3. Install the Transmission Simulator 8333A.
4. Ignition on, engine not running.
5. With the Transmission Simulator, turn the Pressure Switch selector switch to the 4C position.
6. With the scan tool, monitor the 4C Pressure Switch while pressing the Pressure Switch test button on the Transmission Simulator.

Did the state of the 4C Pressure Switch change while pressing the Pressure Switch Test button?

Yes

- Go To 12

No

- Go To 13

12. CHECK THE TRANSMISSION SOLENOID/TRS ASSEMBLY

1. Using the schematics as a guide, inspect the wiring and connectors specific to this circuit.
2. Wiggle the wires while checking for shorted and open circuits.

Where there any problems found?

Yes

- Repair as necessary.
- Perform the 545RFE TRANSMISSION VERIFICATION TEST. (Refer to 28 - DTC-Based Diagnostics/MODULE, Powertrain Control (PCM) - Standard Procedure).

No

- Replace the Transmission Solenoid/TRS Assembly in accordance with the Service Information.
- Perform the 545RFE TRANSMISSION VERIFICATION TEST. (Refer to 28 - DTC-Based Diagnostics/MODULE, Powertrain Control (PCM) - Standard Procedure).

13. CHECK THE (T48) 4C PRESSURE SWITCH SENSE CIRCUIT FOR AN OPEN

1. Turn the ignition off to the lock position.
2. Disconnect the Transmission Simulator 8333A.
3. Disconnect the PCM C4 harness connector.
4. Connect the PCM Pinout Box 8815A to the PCM C4 harness connector.

CAUTION: Do not probe the PCM harness connectors. Probing the PCM harness connectors will damage the PCM terminals resulting in poor terminal to pin connection. Install the Kit, NGC, 38 Position 8815A to perform diagnosis.

5. Measure the resistance of the (T48) 4C Pressure Switch Sense circuit between the Transmission Solenoid/TRS Assembly harness connector and the appropriate terminal of the PCM Pinout Box 8815A.

Is the resistance above 5.0 Ohms?

Yes

- Repair the (T48) 4C Pressure Switch Sense circuit for an open.
- Perform the 545RFE TRANSMISSION VERIFICATION TEST. (Refer to 28 - DTC-Based Diagnostics/MODULE, Powertrain Control (PCM) - Standard Procedure).

No

- Go To 14

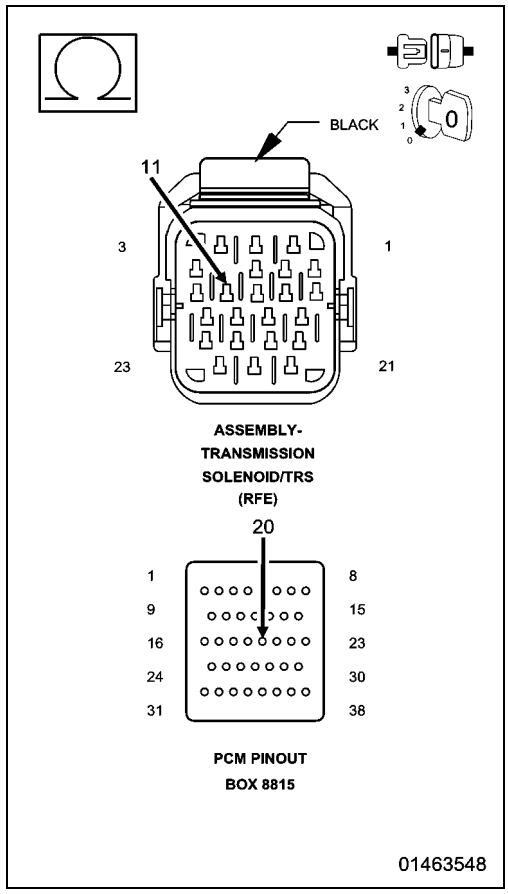

14. CHECK THE (T48) 4C PRESSURE SWITCH SENSE CIRCUIT FOR A SHORT TO GROUND

1. Measure the resistance between ground and the (T48) 4C Pressure Switch Sense circuit.

Is the resistance below 5.0 Ohms?

Yes

- Repair the (T48) 4C Pressure Switch Sense circuit for a short to ground.
- Perform the 545RFE TRANSMISSION VERIFICATION TEST. (Refer to 28 - DTC-Based Diagnostics/MODULE, Powertrain Control (PCM) - Standard Procedure).

No

- Replace the Powertrain Control Module in accordance with the Service Information. With the scan tool, perform the Quick Learn procedure.
- Perform the 545RFE TRANSMISSION VERIFICATION TEST. (Refer to 28 - DTC-Based Diagnostics/MODULE, Powertrain Control (PCM) - Standard Procedure).

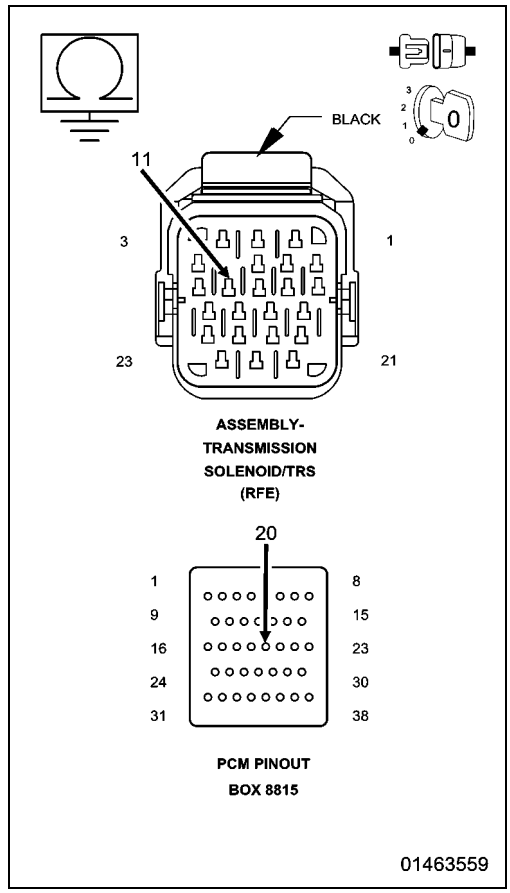

15. CHECK IF THE NO. 5 AND/OR NO. 7 CHECK BALL IS CUT OR DAMAGED

1. Turn the Ignition off to the lock position.
2. Remove the Valve Body Assembly in accordance with the Service Information.
3. Inspect the No. 5 and No. 7 check balls for any cuts or damage.
4. Inspect the 4C accumulator piston and seals and also the 4C tower seal on top of the valve body. Refer to the Service Information.

Were there any problems found?

Yes

- Repair as necessary. Check for excessive clutch debris in the transmission oil pan. If excessive clutch debris is present, repair 4C clutch as necessary. Refer to the Service Information for proper repair procedures.
- Perform the 545RFE TRANSMISSION VERIFICATION TEST. (Refer to 28 - DTC-Based Diagnostics/MODULE, Powertrain Control (PCM) - Standard Procedure).

No

- Go To 16

16. CHECK FOR EXCESSIVE LEAKAGE WITHIN THE 4C CLUTCH CIRCUIT

1. Air check the 4C Clutch hydraulic circuit. Refer to the Service Information.

NOTE: This hydraulic clutch circuit contains a small bleed orifice. Small leakage is considered normal.

Was there excessive air leakage in the 4C Clutch hydraulic circuit?

Yes

- Repair as necessary. Refer to the Service Information.
- Perform the 545RFE TRANSMISSION VERIFICATION TEST. (Refer to 28 - DTC-Based Diagnostics/MODULE, Powertrain Control (PCM) - Standard Procedure).

No

- Replace the Transmission Solenoid/TRS Assembly in accordance with the Service Information.
- Perform the 545RFE TRANSMISSION VERIFICATION TEST. (Refer to 28 - DTC-Based Diagnostics/MODULE, Powertrain Control (PCM) - Standard Procedure).

■ P1684-BATTERY WAS DISCONNECTED

For a complete wiring diagram, **refer to the Wiring Information**.

Theory of Operation

The PCM uses a battery backed RAM (Random Access Memory) is used to maintain some learned values. When the battery B(+) is disconnected, the memory is lost. When the B(+) is restored, this memory loss is detected by the Transmission Control System. The DTC is set and the learned values are initialized to known constants or previously learned values from EEPROM (Electronic Erasable Programmable Read Only Memory). This results in the reinitialization of some parameters.

- **When Monitored:**
  Whenever the ignition is in the Run/Start position.
- **Set Condition:**
  This DTC will set whenever Powertrain Control Module (PCM) is disconnected from Fused B(+) or ground. It will also be set using the scan tool to perform a Battery Disconnect and/or Quick Learn procedure.

Possible Causes
BATTERY WAS DISCONNECTED
SCAN TOOL BATTERY DISCONNECT PERFORMED
PCM WAS REPLACED OR DISCONNECTED
QUICK LEARN WAS PERFORMED

Always perform the Pre-Diagnostic Troubleshooting Procedure before proceeding. (Refer to 28 - DTC-Based Diagnostics/MODULE, Powertrain Control (PCM) - Standard Procedure).

1. POSSIBLE CAUSES

1. This DTC is an informational DTC only.
2. This DTC is set due to a momentary loss of power and/or the ground circuits to the PCM.
3. Below are a list of possible causes associated with this DTC.
4. Battery was disconnected.
5. The Battery Disconnect feature (if equipped) on the scan tool was performed.
6. The Quick Learn feature on the scan tool was performed.
7. PCM was replaced or disconnected.

Were any of the above possible causes performed?

Yes

- This is the cause of the DTC. Erase the DTC and return vehicle to customer.
- Perform the 545RFE TRANSMISSION VERIFICATION TEST. (Refer to 28 - DTC-Based Diagnostics/MODULE, Powertrain Control (PCM) - Standard Procedure).

No

- Go To 2

2. CHECK WIRING AND CONNECTORS

1. The conditions necessary to set this DTC are not present at this time.
2. Using the schematics as a guide, inspect the wiring and connectors specific to this circuit.

NOTE: Check all power and ground circuits to the PCM for a intermittent or high resistance condition.

3. Wiggle the wires while checking for shorted and open circuits.
4. With the scan tool, check the Event Data to help identify the conditions in which the DTC was set.

Where there any problems found?

Yes

- Repair as necessary.
- Perform the 545RFE TRANSMISSION VERIFICATION TEST. (Refer to 28 - DTC-Based Diagnostics/MODULE, Powertrain Control (PCM) - Standard Procedure).

No

- Test Complete.

P1715-RESTRICTED MANUAL VALVE IN T3 RANGE

For a complete wiring diagram, **refer to the Wiring Information**.

- **When Monitored:**

  Whenever the PRNDL code indicates Temp 3.
- **Set Condition:**

  This DTC sets when conditions for the DTC P1776 are satisfied or three unsuccessful attempts to engage 1st gear while the shifter is in the temp 3 zone. This indicates a restricted port at the manual valve because the shifter is not fully engaged in the drive position.

Possible Causes
RELATED TRANSMISSION DTCS PRESENT
CUSTOMER DRIVING HABITS
MISADJUSTED SHIFTER

Always perform the Pre-Diagnostic Troubleshooting Procedure before proceeding. (Refer to 28 - DTC-Based Diagnostics/MODULE, Powertrain Control (PCM) - Standard Procedure).

1. DETERMINING IF RELATED DTCS ARE PRESENT

1. With the scan tool, check DTCs.

Are any of the following DTCs P0731, P0732, P0733, P0734, P0736, or P0716 present?

Yes

- (Refer to 28 - DTC-Based Diagnostics/MODULE, Powertrain Control (PCM) - Diagnosis and Testing) and perform the appropriate diagnostic procedure.

No

- Go To 2

2. CHECK SHIFTER ADJUSTMENT

1. Check Shifter adjustment in accordance with the Service Information.

Is the shifter properly adjusted?

Yes

- Go To 3

No

- Adjust the Shifter Assembly in accordance with the Service Information.
- Perform the TRANSMISSION VERIFICATION TEST. (Refer to 28 - DTC-Based Diagnostics/MODULE, Powertrain Control (PCM) - Standard Procedure).

3. CHECK CUSTOMER DRIVING HABIT

1. This DTC can be set if the customer rests their hand on the shift lever while they are driving. The transmission can be put in the T3 position if just enough upward pressure towards neutral is exerted on the shift lever.
2. When this occurs, the feed port to the clutch is restricted, the transmission will declare neutral, and this DTC will be set. The customer should be informed not to rest their hand on the shifter while driving.
3. This DTC can also be set by simply bumping the shift lever toward neutral while accelerating.
4. With the scan tool, check the Event Data to help identify the conditions in which the DTC was set.

Repair

- This DTC can be set by putting too much forward pressure on the shift lever while it is in the OD position. Make sure the customer is informed.
- Perform the TRANSMISSION VERIFICATION TEST. (Refer to 28 - DTC-Based Diagnostics/MODULE, Powertrain Control (PCM) - Standard Procedure).

■ P1736-GEAR RATIO ERROR IN 2ND PRIME

For a complete wiring diagram, **refer to the Wiring Information**.

Theory of Operation

The transmission system uses two speed sensors, one to measure input rpm and one to measure output rpm. These inputs are essential for proper transmission operation. Therefore, the integrity of this data is verified through the following checks:

NOTE: Various Gear Ratio Error DTCs will set only if the transmission slips after first achieving the correct ratio. Therefore, a transmission with no drive (or reverse) may not set any Gear Ratio Error DTC because it never achieves a correct gear ratio.

1) Once in a particular gear, if the gear ratio varies from the correct gear ratio, the corresponding in-gear trouble code is set (DTCs P0731-36 and P1736).

2) An excessive change in input or output speeds indicating signal intermittent which will result in the DTCs P0716 and/or P0721 being set.

3) If the common speed sensor ground circuit is lost, both sensor inputs will read the pulses from the input speed sensor when at a stop in neutral. Since the input speed sensor reads 60 teeth from the input clutch hub and the output speed sensor reads 30 teeth from the park gear, the result is an apparent speed ratio of 1:2 and may cause the DTC P1794 to set.

- **When Monitored:**
  Continuously with the ignition on, engine running, and after the transmission has achieved the proper gear ratio.
- **Set Condition:**
  If the ratio of the Input rpm to the Output rpm does not match the current gear ratio. This DTC can take up to five minutes of problem identification before illuminating the MIL

Possible Causes
RELATED DTCS PRESENT
INPUT SPEED SENSOR OR WIRING
LOW FLUID LEVEL
CRACKED OR MIS-INSTALLED PRIMARY OIL FILTER OR SEAL
WORN SOLENOID SWITCH VALVE OR PLUGS
STUCK OR STICKING MAIN REGULATOR VALVE
BURNED UD OR 4C CLUTCH
CUT 4C OR UD PISTON SEAL
BROKEN 4C PISTON CASTING
BROKEN OR MISSING 4C BLEED ORIFICE
BROKEN OR MISSING UD BLEED ORIFICE
CUT 4C OR UD ACCUMULATOR PISTON SEAL
CRACKED 4C OR UD ACCUMULATOR PISTON
TRANSMISSION SOLENOID/TRS ASSEMBLY
BROKEN WELD - REACTION CARRIER TO REVERSE SUN GEAR
MISSING TEETH ON INPUT CLUTCH HUB TONE WHEEL

Always perform the the 545RFE Pre-Diagnostic Troubleshooting Procedure before proceeding. (Refer to 28 - DTC-Based Diagnostics/MODULE, Powertrain Control (PCM) - Standard Procedure).

1. CHECK IF RELATED DTCS ARE PRESENT

1. With the scan tool, read DTCs.

Are any Transmission solenoid, line pressure, speed sensor, or loss of prime DTCs present?

Yes

- (Refer to 28 - DTC-Based Diagnostics/MODULE, Powertrain Control (PCM) - Diagnosis and Testing) and perform the appropriate diagnostic procedure. Perform the test for P0944-LOSS OF PRIME first if it is present.

No

- Go To 2

2. CHECK THE EVENT DATA

1. With the scan tool, read and record the Event Data.

NOTE: Make sure to record all Event Data stored in the scan tool for future reference in this test procedure.

Does the Event Data display information for the DTC P1736?

Yes

- Go To 3

No

- Go To 6

3. CHECK INPUT RPM IN THE EVENT DATA

In the Event Data recorded earlier, does the Input rpm read zero?

Yes

- Check the input speed sensor and wiring. (Refer to 28 - DTC-Based Diagnostics/MODULE, Powertrain Control (PCM) - Diagnosis and Testing) and perform test P0716 and diagnose as if the DTC is current.

No

- Go To 4

4. CHECK LINE PRESSURE READING

In the Event Data recorded earlier, is the line pressure reading more than 10 psi below the desired line pressure?

Yes

- Go To 5

No

- Go To 6

5. PLUGGED TRANSMISSION OIL FILTER

1. Turn the ignition off to the lock position.
2. Remove and inspect the Transmission Oil Pan for excessive debris in accordance with the Service Information.
3. Remove and inspect the Primary Oil Filter in accordance with the Service Information.

NOTE: Make sure the Primary Transmission Oil Filter and/or seal is not cracked or split.

Does the Oil Pan contain excessive debris and/or is the Primary Oil Filter cracked or plugged?

Yes

- Repair the plugged, cracked, or split Primary Transmission Oil Filter and/or seal. If the Primary Transmission Oil Filter is plugged, refer to the Service Information for the proper hydraulic clutch repair procedure. (Refer to 21 - Transmission and Transfer Case/Automatic - 545RFE - Removal).
- Perform the 545RFE TRANSMISSION VERIFICATION TEST. (Refer to 28 - DTC-Based Diagnostics/MODULE, Powertrain Control (PCM) - Standard Procedure).

No

- Remove the Transmission Oil Pump in accordance with the Service Information. Check the main Regulator Valve for sticking in its bore, scoring, and/or damage and clean and repair as necessary. If no problem is found, replace the Transmission Solenoid/TRS Assembly. (Refer to 21 - Transmission and Transfer Case/Automatic - 545RFE/ ASSEMBLY, Transmission Solenoid and TRS - Removal).
- Perform the 545RFE TRANSMISSION VERIFICATION TEST. (Refer to 28 - DTC-Based Diagnostics/MODULE, Powertrain Control (PCM) - Standard Procedure).

6. CHECK IF THE DTC P1736 IS CURRENT

1. With the scan tool, perform the 2nd Prime Gear Clutch Test. Follow the instructions on the scan tool.
2. Increase the throttle angle, TPS Degree, to 30° for no more than a few seconds.

CAUTION: Do not overheat the transmission.

NOTE: If the 4C clutch is faulty, the overrunning clutch will hold and the slip test will pass. The 2nd Prime Gear Clutch Test will not detect a faulty 4C clutch. However, it will detect a faulty UD clutch.

Did the clutch test pass, did the Input Speed remain at zero?

Yes

- Go To 7

No

- Go To 9

7. CHECK FOR INTERMITTENT OPERATION

1. Check the Shifter adjustment in accordance with the Service Information.
2. Intermittent gear ratio DTCs can be set by problems in the Input and Output Speed Sensor circuits and/or Speed Sensor Ground circuit.
3. Check the Speed Sensor wiring and connectors for good connection, then perform a wiggle test using the Transmission Simulator 8333A.

Were there any problems found?

Yes

- Repair as necessary.
- Perform the 545RFE TRANSMISSION VERIFICATION TEST. (Refer to 28 - DTC-Based Diagnostics/MODULE, Powertrain Control (PCM) - Standard Procedure).

No

- Go To 8

8. CHECK FOR SLIPPAGE

1. With the scan tool, erase Transmission DTCs.
2. Road test the vehicle.
3. During the road test, operate in 4th gear, and perform kickdown shifts from 4th to 2nd (prime) gears.

Is there an obvious slippage noticed in 4th or 2nd prime gears, or runaway on the 4-2 shift?

Yes

- Go To 11

No

- Go To 14

9. UD CLUTCH HYDRAULIC CIRCUIT

1. Remove Transmission Oil Pan and check for excessive debris.
2. Remove the Valve Body and air check the UD clutch hydraulic circuit (in the case) in accordance with the Service Information.

NOTE: The UD clutch passage contains a small bleed orifice, a small amount of air leakage is normal.

Were there any problems found, excessive debris and/or excessive air leakage in the UD clutch hydraulic circuit?

Yes

- Repair as necessary. Check the UD clutch piston seals and the dribbler assembly, reaction shaft support seal rings, and the flatness of the pump valve body and pump housing faces. Check main regulator valve for sticking in the bore .

NOTE: If the UD clutch has failed but no obvious cause is found (such as a cut piston seal, broken seal ring, stuck regulator valve or any other items listed above) replace the Transmission Solenoid/TRS Assembly in addition to any necessary internal repairs. (Refer to 21 - Transmission and Transfer Case/Automatic - 545RFE/ASSEMBLY, Transmission Solenoid and TRS - Removal).

- Perform the 545RFE TRANSMISSION VERIFICATION TEST. (Refer to 28 - DTC-Based Diagnostics/MODULE, Powertrain Control (PCM) - Standard Procedure).

No

- Go To 10

10. UD ACCUMULATOR PISTON

1. Check the UD bleed orifice, accumulator piston, and accumulator piston seal in the main valve body.

Were there any problems found?

Yes

- Repair as necessary. Refer to the Service Information for proper repair procedures. (Refer to 21 - Transmission and Transfer Case/Automatic - 545RFE/VALVE BODY - Removal).

No

- Replace the Transmission Solenoid/TRS Assembly in accordance with the Service Information. (Refer to 21 - Transmission and Transfer Case/Automatic - 545RFE/ASSEMBLY, Transmission Solenoid and TRS - Removal).
- Perform the 545RFE TRANSMISSION VERIFICATION TEST. (Refer to 28 - DTC-Based Diagnostics/MODULE, Powertrain Control (PCM) - Standard Procedure).

11. EXCESSIVE DEBRIS

1. Remove the Transmission Oil Pan and check for excessive debris.
2. Remove the valve body and air check the 4C clutch hydraulic circuit in accordance with the Service Information.

NOTE: The 4C clutch passage contains a small bleed orifice, a small amount of air leakage is normal.

Were there any problems found, excessive debris, improperly assembled 4C clutch and/or excessive air leakage in the 4C clutch hydraulic circuit?

Yes

- Repair as necessary. Refer to the Service Information for proper repair procedures. Note: Check the 4C piston seals and bleed orifice.

NOTE: If the 4C clutch has failed but no obvious cause is found (such as a cut piston seal, broken seal ring, stuck regulator valve or any other items listed above) replace the Transmission Solenoid/TRS Assembly in addition to any necessary internal repairs.

- Perform the 545RFE TRANSMISSION VERIFICATION TEST. (Refer to 28 - DTC-Based Diagnostics/MODULE, Powertrain Control (PCM) - Standard Procedure).

No

- Go To 12

12. 4C ACCUMULATOR

1. Check the 4C Accumulator piston for cracks or a cut seal.
2. Check for a cut or missing No. 5 check ball.
3. Check the Solenoid Switch Valve and its plugs for sticking in its bore or excessive wear.

Were there any problems found?

Yes

- Repair as necessary. Refer to the Service Information for proper repair procedures. (Refer to 21 - Transmission and Transfer Case/Automatic - 545RFE/VALVE BODY - Removal).
- Perform the 545RFE TRANSMISSION VERIFICATION TEST. (Refer to 28 - DTC-Based Diagnostics/MODULE, Powertrain Control (PCM) - Standard Procedure).

No

- Go To 13

13. CHECK FOR BROKEN REVERSE SUN GEAR WELD

1. Working through the windows in the bottom of the case, check for a broken Reverse Sun gear weld to the reaction carrier as follows:
   - Hold the Transmission Output Shaft by holding the Transmission Manual Lever in the park position.
   - Rotate the Input Annulus gear and drive shell, (the drum that encloses the two rearmost carriers).
   - Check to see if the reaction carrier (the front most carrier, whose outer shell is splined to the 4C clutch) is rotating faster than the drive shell is being turned.

Is the reaction carrier turning faster than the drive shell?

Yes

- Replace the Transmission Solenoid/TRS Assembly in accordance with the Service Information. (Refer to 21 - Transmission and Transfer Case/Automatic - 545RFE/ASSEMBLY, Transmission Solenoid and TRS - Removal).
- Perform the 545RFE TRANSMISSION VERIFICATION TEST. (Refer to 28 - DTC-Based Diagnostics/MODULE, Powertrain Control (PCM) - Standard Procedure).

No

- Replace the reaction carrier in accordance with the Service Information. (Refer to 21 - Transmission and Transfer Case/Automatic - 545RFE - Removal).
- Perform the 545RFE TRANSMISSION VERIFICATION TEST. (Refer to 28 - DTC-Based Diagnostics/MODULE, Powertrain Control (PCM) - Standard Procedure).

14. CHECK IF THE DTC RESET

Did the DTC P1736 reset during the road test?

Yes

- Go To 15

No

- Go To 16

15. LIST OF POSSIBLE CAUSES

1. If any other DTCs set during the road test, refer to the appropriate symptom in the Transmission category.
2. If no other DTCs set during the road test, below is a list of possible causes, but not strictly limited to those:
   - Check for excessive debris in the Transmission Oil pan, plugged, cracked, or split Primary Transmission Oil Filter and/or seal.
   - Check for cuts or missing No. 5 check ball in the main valve body.
   - Check the 4C and UD accumulator pistons and seals, UD bleed orifice, and the Solenoid Switch Valve and Plugs in the main valve body.
   - Check the UD clutch piston seals, reaction shaft support seal rings, and the flatness of the pump valve body and pump housing faces.
   - Check the 4C clutch piston seals, and bleed orifice.
   - Check the UD clutch piston seals, reaction shaft support seal rings, and dribbler assemblies, and the flatness of the pump valve body and pump housing faces.

Repair

- Repair as necessary. Refer to the Service Information for proper repair procedures. (Refer to 21 - Transmission and Transfer Case/Automatic - 545RFE - Removal).

NOTE: If the UD or 4C clutch has failed but no obvious cause is found (such as a cut piston seal, broken seal ring, stuck regulator valve or any other items listed above) replace the Transmission Solenoid/TRS Assembly in addition to any necessary internal repairs.

- Perform the 545RFE TRANSMISSION VERIFICATION TEST. (Refer to 28 - DTC-Based Diagnostics/MODULE, Powertrain Control (PCM) - Standard Procedure).

16. INTERMITTENT DTC

1. The conditions necessary to set this DTC are not present at this time.
2. Use the Event Data to help identify the conditions and/or possible causes that may have caused the DTC to set.
3. Check for any Service Information Tune-ups or Technical Service Bulletins that may apply.

Where there any problems found?

Yes

- Repair as necessary.
- Perform the 545RFE TRANSMISSION VERIFICATION TEST. (Refer to 28 - DTC-Based Diagnostics/MODULE, Powertrain Control (PCM) - Standard Procedure).

No

- Test Complete.

P1775-SOLENOID SWITCH VALVE LATCHED IN TCC POSITION

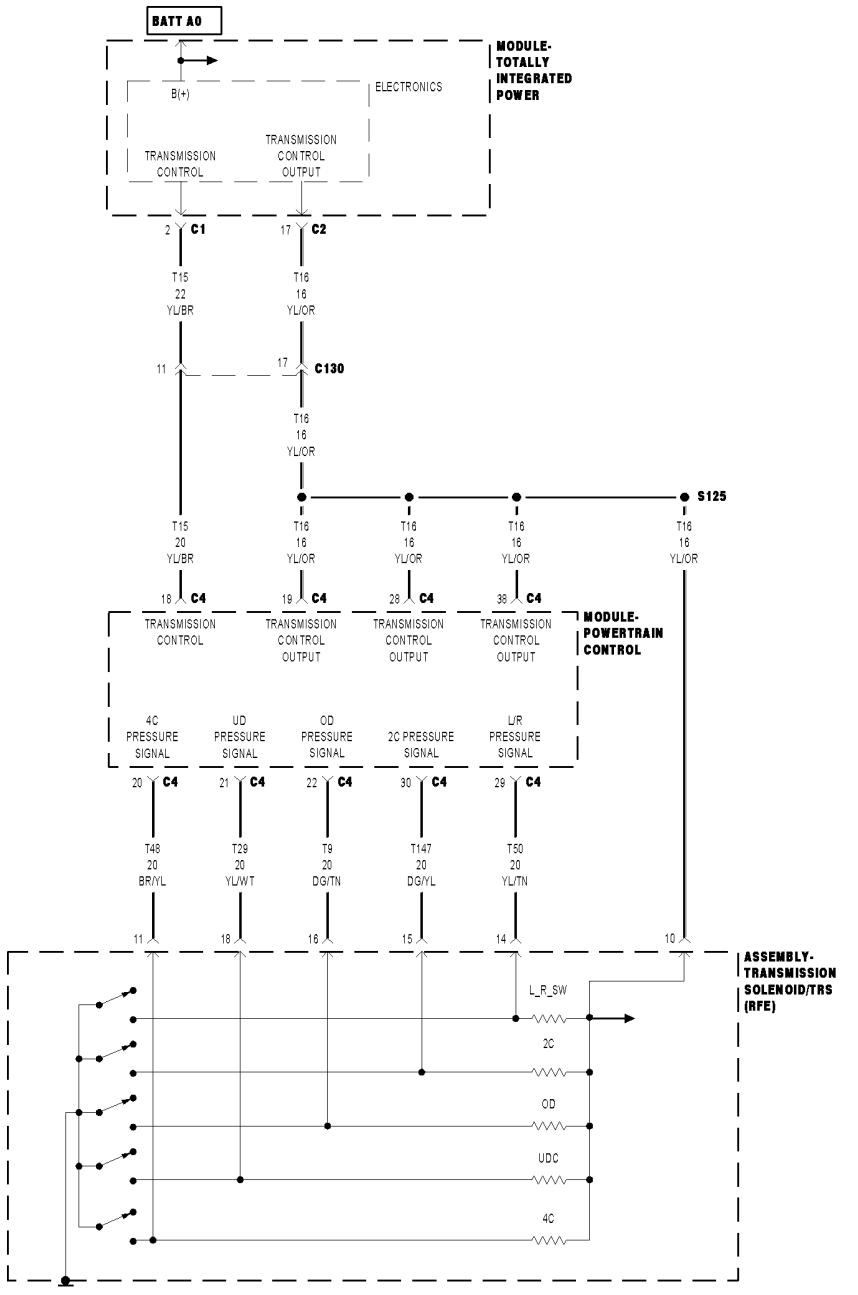

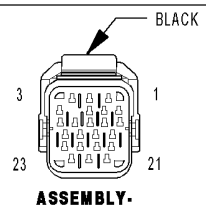

ASSEMBLY-
TRANSMISSION
SOLENOID/TRS
(RFE)

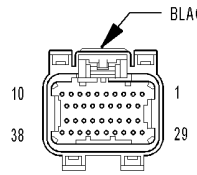

MODULE-
POWERTRAIN
CONTROL C4

01468388

For a complete wiring diagram, **refer to the Wiring Information**.

Theory of Operation

The Solenoid Switch Valve (SSV) controls the direction of the transmission fluid when the L/R Solenoid is energized. The SSV will be in the downshifted position in 1st gear, thus directing the fluid to the L/R clutch circuit. In 2nd through 5th gears, it will be in the upshifted position and directing the fluid into the torque converter clutch (TCC).

When shifting into 1st gear, a special hydraulic sequence is performed to ensure SSV movement into the downshifted position. The L/R Pressure Switch is monitored to confirm SSV movement. If movement is not confirmed (the L/R pressure switch does not close), EMCC is inhibited until SSV operation is confirmed.

- **When Monitored:**
  During an attempted shift into 1st gear.
- **Set Condition:**
  This DTC is set if three unsuccessful attempts are made to shift the Solenoid Switch Valve (SSV) into the downshifted position in one given ignition start. This DTC can take up to five minutes to mature before illuminating the MIL.

Possible Causes
RELATED DTC P0841 PRESENT
SOLENOID SWITCH VALVE STICKING
L/R PRESSURE SWITCH SENSE CIRCUIT SHORTED TO OTHER CIRCUITS
TRANSMISSION SOLENOID/TRS ASSEMBLY
POWERTRAIN CONTROL MODULE (PCM)

Always perform the Pre-Diagnostic Troubleshooting Procedure before proceeding. (Refer to 28 - DTC-Based Diagnostics/MODULE, Powertrain Control (PCM) - Standard Procedure).

1. CHECK IF RELATED DTCS ARE PRESENT

1. With the scan tool, read DTCs.

Is the DTC P0841 present also?

Yes

- (Refer to 28 - DTC-Based Diagnostics/MODULE, Powertrain Control (PCM) - Diagnosis and Testing) and perform the appropriate diagnostic procedure for DTC P0841.

No

- Go To 2

2. CHECK IF THE DTC IS CURRENT

1. Perform a visual inspection of all connectors, wiring, and cooler connections before proceeding. Repair as necessary.
2. With the scan tool, read DTCs.

Is the status Active or is the Starts Since Set counter 2 or less for this DTC?

Yes

- Go To 3

No

- Go To 6

3. CHECK THE PCM AND WIRING

1. Turn the ignition off to the lock position.
2. Remove the Ignition Switch Feed fuse from the TIPM.

CAUTION: Removal of the Ignition Switch Feed fuse from the TIPM will prevent the vehicle from being started in gear.

WARNING: The Ignition Switch Feed fuse must be removed from the TIPM. Failure to do so can result in possible serious or fatal injury.

3. Install the Transmission Simulator 8333A.
4. Ignition on, engine not running.
5. With the Transmission Simulator, turn the Pressure Switch selector switch to L/R.
6. With the scan tool, monitor the L/R Pressure Switch state while pressing the Pressure Switch Test button on the Transmission Simulator.

Did the state of the L/R Pressure Switch change while pressing the Pressure Switch Test button?

Yes

- Go To 4

No

- Go To 5

4. CHECK IF THE SOLENOID SWITCH VALVE STICKING

1. Turn the ignition off to the lock position.
2. Remove the Transmission Oil Pan in accordance with the Service Information.
3. Remove the Transmission Valve body in accordance with the Service Information.
4. Inspect the Solenoid Switch Valve and Plugs for sticking.

Is the Solenoid Switch Valve or Plugs sticking?

Yes

- Clean and inspect in accordance with the Service Information. Repair as necessary.
- Perform the 545RFE TRANSMISSION VERIFICATION TEST. (Refer to 28 - DTC-Based Diagnostics/MODULE, Powertrain Control (PCM) - Standard Procedure).

No

- Replace the Transmission Solenoid/TRS Assembly in accordance with the Service Information.
- Perform the 545RFE TRANSMISSION VERIFICATION TEST. (Refer to 28 - DTC-Based Diagnostics/MODULE, Powertrain Control (PCM) - Standard Procedure).

5. CHECK THE L/R PRESSURE SWITCH SENSE CIRCUIT FOR A SHORT TO ANOTHER CIRCUIT

1. Turn the ignition off to the lock position.
2. Disconnect the Transmission Solenoid/TRS Assembly harness connector.
3. Disconnect all PCM harness connectors.
4. Measure the resistance between the (T50) L/R Pressure Switch Sense circuit and all other circuits in the Transmission Solenoid/TRS Assembly harness connector.

Is the resistance below 5.0 Ohms between the (T50) L/R Pressure Switch Sense circuit and all other circuit(s) in the Transmission Solenoid/TRS Assembly harness connector?

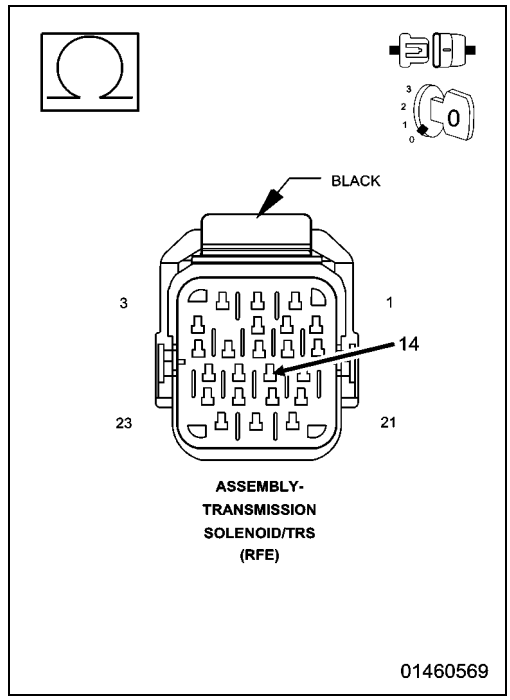

Yes

- Repair the (T50) L/R Pressure Switch Sense circuit for a short to another circuit(s).
- Perform the 545RFE TRANSMISSION VERIFICATION TEST. (Refer to 28 - DTC-Based Diagnostics/MODULE, Powertrain Control (PCM) - Standard Procedure).

No

- Using the schematics as a guide, check the Powertrain Control Module (PCM) terminals for corrosion, damage, or terminal push out. Pay particular attention to all power and ground circuits. If no problems are found, replace and program the PCM in accordance with the Service Information. With the scan tool, perform Quick Learn.
- Perform the 545RFE TRANSMISSION VERIFICATION TEST. (Refer to 28 - DTC-Based Diagnostics/MODULE, Powertrain Control (PCM) - Standard Procedure).

6. CHECK WIRING AND CONNECTORS

1. The conditions necessary to set this DTC are not present at this time.
2. Using the schematics as a guide, inspect the wiring and connectors specific to this circuit.
3. Wiggle the wires while checking for shorted and open circuits.
4. With the scan tool, check the Event Data to help identify the conditions in which the DTC was set.

Where there any problems found?

Yes

- Repair as necessary.
- Perform the 545RFE TRANSMISSION VERIFICATION TEST. (Refer to 28 - DTC-Based Diagnostics/MODULE, Powertrain Control (PCM) - Standard Procedure).

No

- Test Complete.

P1776-SOLENOID SWITCH VALVE LATCHED IN LR POSITION

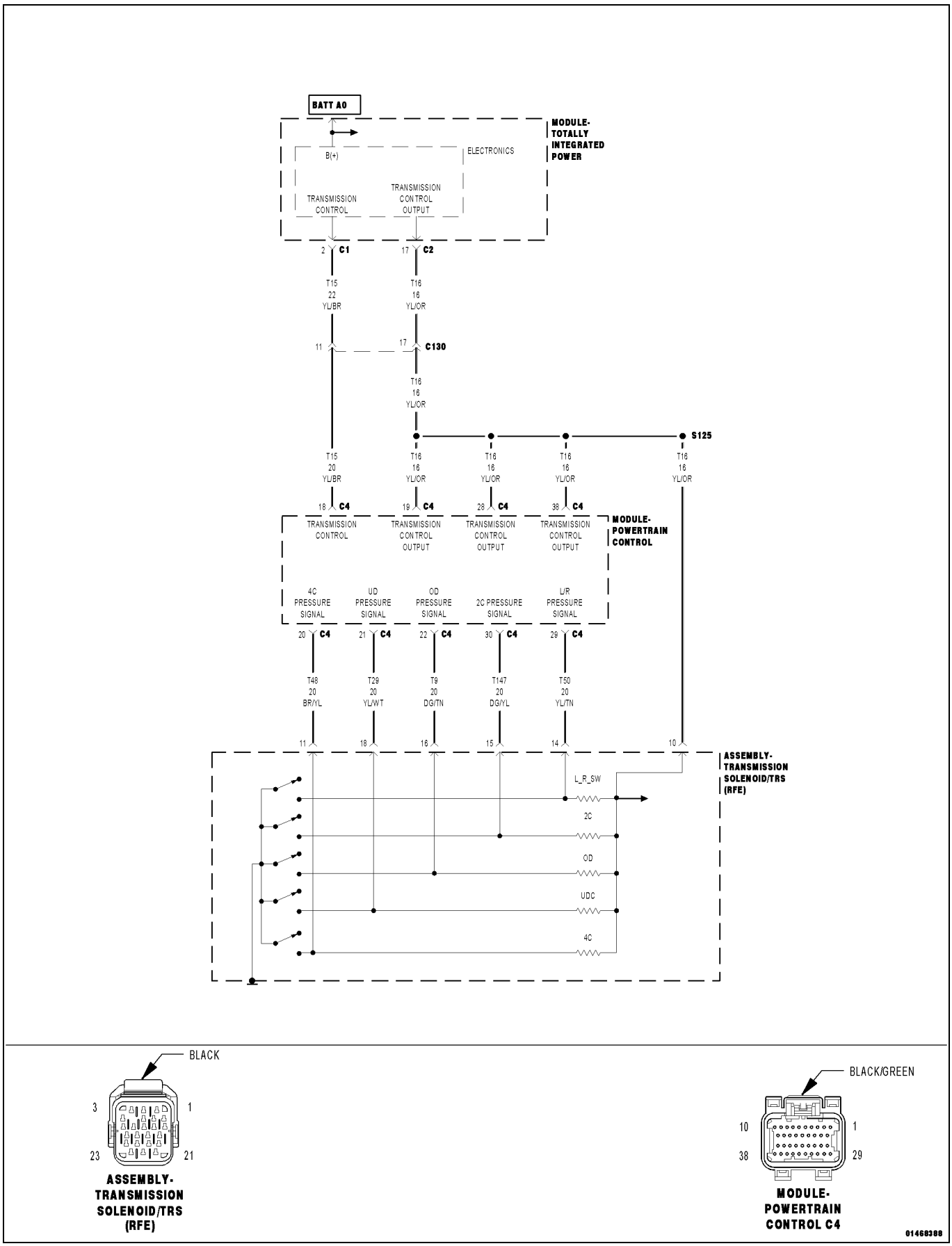

For a complete wiring diagram, **refer to the Wiring Information**.

Theory of Operation

The Solenoid Switch Valve (SSV) controls the direction of the transmission fluid when the L/R Solenoid is energized. The SSV will be in the downshifted position in 1st gear, thus directing the fluid to the L/R clutch circuit. In 2nd through 5th gears, it will be in the upshifted position and directing the fluid into the torque converter clutch (TCC).

When in 2nd, 2nd Prime, 3rd, 4th, or 5th gear, the Torque Converter Clutch (TCC) can be engaged when certain conditions are met. The TCC piston is electronically modulated by increasing the duty cycle of the L/R solenoid until the torque converter slip difference (difference between engine and transmission input speed) is within 60 rpm. Then the L/R solenoid is fully energized (FEMCC - 100% duty cycle). Torque converter slip is monitored in FEMCC to ensure adequate clutch capacity.

- **When Monitored:**

  Continuously when performing partial or full EMCC - PEMCC or FEMCC.
- **Set Condition:**

  If the transmission senses the L/R pressure switch closing while performing PEMCC or FEMCC. This DTC will set after two unsuccessful attempts to perform PEMCC or FEMCC. This DTC can take up to five minutes of problem identification before illuminating the MIL.

Possible Causes
RELATED DTC P0841 PRESENT
LR PRESSURE SWITCH SENSE CIRCUIT OPEN
LR PRESSURE SWITCH SENSE CIRCUIT SHORTED TO GROUND
SOLENOID SWITCH VALVE
POWERTRAIN CONTROL MODULE (PCM)
CHECK THE WIRING AND CONNECTORS

Always perform the Pre-Diagnostic Troubleshooting Procedure before proceeding. (Refer to 28 - DTC-Based Diagnostics/MODULE, Powertrain Control (PCM) - Standard Procedure).

1. CHECK FOR RELATED DTCS

1. With the scan tool, read DTCs.

   Is the DTC P0841 present also?

Yes

- (Refer to 28 - DTC-Based Diagnostics/MODULE, Powertrain Control (PCM) - Diagnosis and Testing) and perform the appropriate diagnostic procedure.

No

- Go To 2

2. CHECK IF THE DTC IS CURRENT

1. With the scan tool, read DTCs.

   Is the status Active or is the Starts Since Set counter 2 or less for this DTC?

Yes

- Go To 3

No

- Go To 7

3. CHECK THE PCM AND WIRING

1. Turn the ignition off to the lock position.
2. Remove the Ignition Switch Feed fuse from the TIPM.

CAUTION: Removal of the Ignition Switch Feed fuse from the TIPM will prevent the vehicle from being started in gear.

WARNING: The Ignition Switch Feed fuse must be removed from the TIPM. Failure to do so can result in possible serious or fatal injury.

3. Install the Transmission Simulator 8333A.
4. Ignition on, engine not running.
5. With the Transmission Simulator, turn the Pressure Switch selector switch to the LR position.
6. With the scan tool, monitor the LR Pressure Switch state while pressing the Pressure Switch Test button on the Transmission Simulator.

Did the state of the LR Pressure Switch change while pressing the Pressure Switch Test button?

Yes

- Go To 4

No

- Go To 5

4. CHECK THE SOLENOID SWITCH VALVE

1. Remove the Valve Body in accordance with the Service Information.
2. Inspect the Solenoid Switch Valve and plugs for sticking in the bore and/or wear.

Were there any problems found?

Yes

- Clean and repair as necessary in accordance with the Service Information.
- Perform the 545RFE TRANSMISSION VERIFICATION TEST. (Refer to 28 - DTC-Based Diagnostics/MODULE, Powertrain Control (PCM) - Standard Procedure).

No

- Go To 7

5. CHECK THE LR PRESSURE SWITCH SENSE CIRCUIT FOR AN OPEN

1. Turn the ignition off to the lock position.
2. Disconnect the Transmission Simulator 8333A.
3. Disconnect the PCM C4 harness connector and connect the PCM Pinout Box 8815A.

CAUTION: Do not probe the PCM harness connectors. Probing the PCM harness connectors will damage the PCM terminals resulting in poor terminal to pin connection. Install the Kit, NGC, 38 Position 8815A to perform diagnosis.

4. Measure the resistance of the (T50) LR Pressure Switch Sense circuit between the Solenoid/TRS Assembly harness connector and the appropriate terminal of the PCM Pinout Box 8815A.

Is the resistance above 5.0 Ohms?

Yes

- Repair the (T50) LR Pressure Switch Sense circuit for an open.
- Perform the 545RFE TRANSMISSION VERIFICATION TEST. (Refer to 28 - DTC-Based Diagnostics/MODULE, Powertrain Control (PCM) - Standard Procedure).

No

- Go To 6

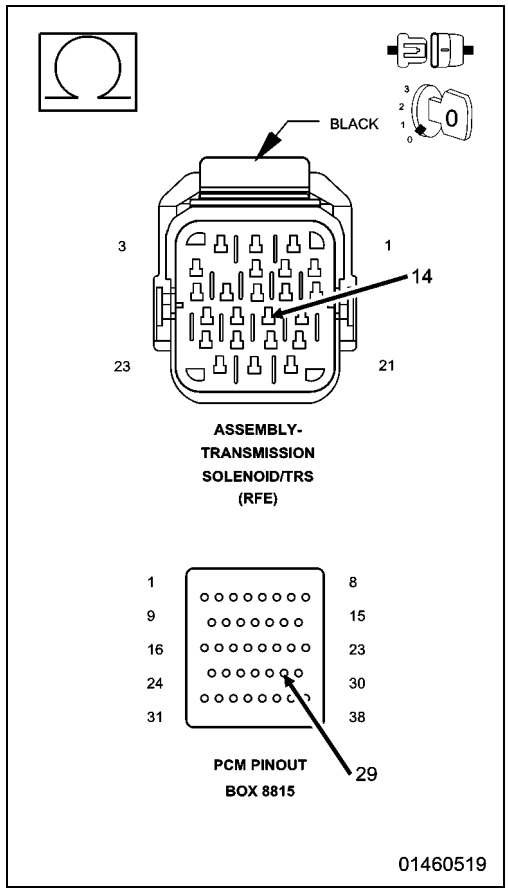

6. CHECK THE (T50) LR PRESSURE SWITCH SENSE CIRCUIT FOR A SHORT TO GROUND

1. Measure the resistance between ground and the (T50) LR Pressure Switch Sense circuit.

Is the resistance below 5.0 Ohms?

Yes

- Repair the (T50) LR Pressure Switch Sense circuit for a short to ground.
- Perform the 545RFE TRANSMISSION VERIFICATION TEST. (Refer to 28 - DTC-Based Diagnostics/MODULE, Powertrain Control (PCM) - Standard Procedure).

No

- Using the schematics as a guide, check the Powertrain Control Module (PCM) terminals for corrosion, damage, or terminal push out. Pay particular attention to all power and ground circuits. If no problems are found, replace and program the PCM in accordance with the Service Information. With the scan tool, perform Quick Learn.
- Perform the 545RFE TRANSMISSION VERIFICATION TEST. (Refer to 28 - DTC-Based Diagnostics/MODULE, Powertrain Control (PCM) - Standard Procedure).

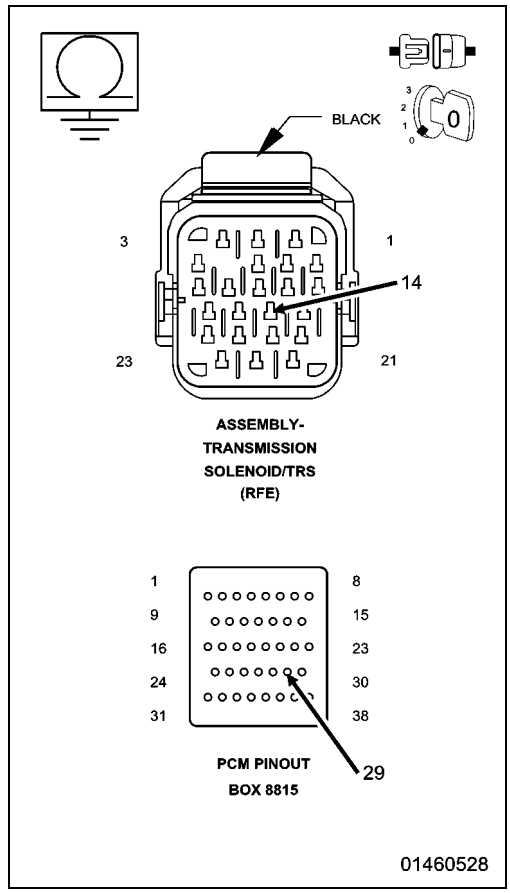

7. CHECK WIRING AND CONNECTORS

1. The conditions necessary to set this DTC are not present at this time.
2. Using the schematics as a guide, inspect the wiring and connectors specific to this circuit.
3. Wiggle the wires while checking for shorted and open circuits.
4. This DTC can also be set by the Solenoid Switch Valve intermittently sticking in it's bore under extreme temperature conditions, or by a worn Solenoid Switch Valve or plugs.
5. With the scan tool, check the Event Data to help identify the conditions in which the DTC was set.

Where there any problems found?

Yes

- Repair as necessary.
- Perform the 545RFE TRANSMISSION VERIFICATION TEST. (Refer to 28 - DTC-Based Diagnostics/MODULE, Powertrain Control (PCM) - Standard Procedure).

No

- Test Complete.

P1794-SPEED SENSOR GROUND ERROR

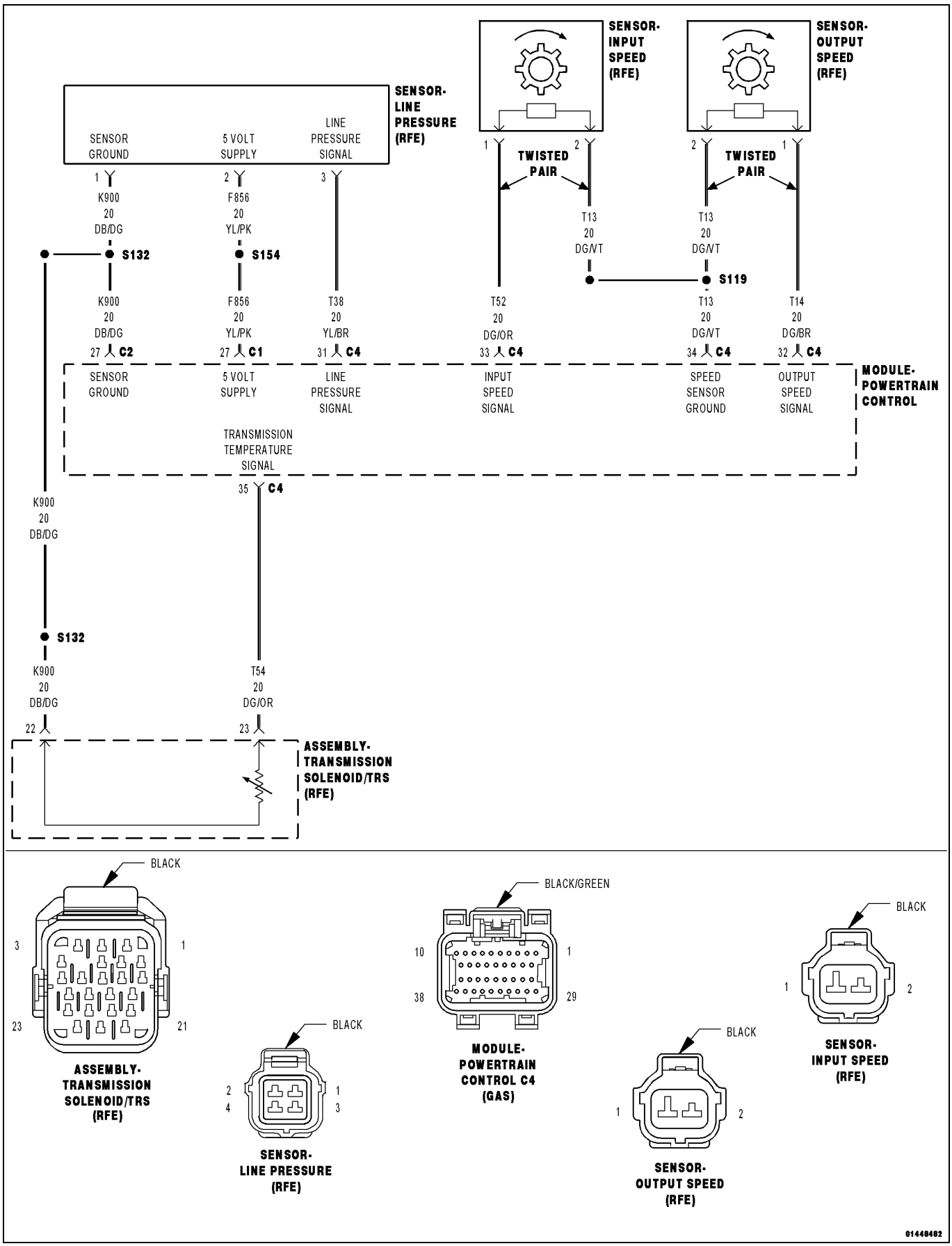

For a complete wiring diagram, **refer to the Wiring Information**.

Theory of Operation

The transmission system uses two speed sensors, one to measure input rpm and one to measure output rpm. These inputs are essential for proper transmission operation. Therefore, the integrity of this data is verified through the following checks:

1) When in gear, if the gear ratio does not compare to a known gear ratio, the corresponding in-gear trouble code is set (DTCs P0729 and P0731-36).

2) An excessive change in input or output speeds indicating signal intermittent which will result in the DTCs P0716 and/or P0721 being set.

3) If the common speed sensor ground circuit is lost, both sensor inputs will read the signal from the input speed sensor at idle in neutral. Since the input speed sensor reads 60 teeth from the input clutch hub and the output speed sensor reads 30 teeth from the park gear, the result is an apparent speed ratio of 1:2 and may cause the DTC P1794 to set when at a stop.

- **When Monitored:**
  The gear ratio is monitored continuously while the Transmission is in gear.
- **Set Condition:**
  After a controller reset in neutral and a ratio of input to output, of 1 to 2. This DTC can take up to five minutes of problem identification before illuminating the MIL.

Possible Causes
(T13) SPEED SENSOR GROUND CIRCUIT OPEN
(T13) SPEED SENSOR GROUND CIRCUIT SHORTED TO GROUND
(T13) SPEED SENSOR GROUND CIRCUIT SHORTED TO VOLTAGE
POWERTRAIN CONTROL MODULE (PCM)

Always perform the Pre-Diagnostic Troubleshooting Procedure before proceeding. (Refer to 28 - DTC-Based Diagnostics/MODULE, Powertrain Control (PCM) - Standard Procedure).

1. CHECK IF THE DTC IS CURRENT

1. Engine Running, Shift lever in park.
2. With the scan tool, read the Transmission Output and Input Speed Sensor states.

Is the Output Speed Sensor reading twice the Input Speed Sensor reading?

Yes

- Go To 2

No

- Go To 6

2. CHECK THE PCM AND WIRING

1. Turn the ignition off to the lock position.
2. Remove the Ignition Switch Feed fuse from the TIPM.

CAUTION: Removal of the Ignition Switch Feed fuse from the TIPM will prevent the vehicle from being started in gear.

WARNING: The Ignition Switch Feed fuse must be removed from the TIPM. Failure to do so can result in possible serious or fatal injury.

3. Install the Transmission Simulator 8333A.
4. With the Transmission Simulator, set the Input/Output Speed selector switch to the "3000/1000" position. Turn the Input/Output Speed switch to "ON".
5. Ignition on, engine not running.
6. With the scan tool, monitor the Input and Output Speed Sensor state.

Does the Input speed read 3000 rpm and the Output speed read 1000 rpm, within 50 rpm?

Yes

- Go To 6

No

- Go To 3

3. (T13) SPEED SENSOR GROUND CIRCUIT OPEN

1. Turn the ignition off to the lock position.
2. Disconnect the PCM C4 harness connector and connect the PCM Pinout Box 8815A.
3. Disconnect the Transmission Simulator 8333A.

CAUTION: Do not probe the PCM harness connectors. Probing the PCM harness connectors will damage the PCM terminals resulting in poor terminal to pin connection. Install the Kit, NGC, 38 Position 8815A to perform diagnosis.

4. Measure the resistance of the (T13) Speed Sensor Ground circuit between both Input and Output Speed Sensor harness connectors and the appropriate terminal of the PCM Pinout Box 8815A.

Is the resistance above 5.0 Ohms on any of the above measurements?

Yes

- Repair the (T13) Speed Sensor Ground circuit for an open.
- Perform the 545RFE TRANSMISSION VERIFICATION TEST. (Refer to 28 - DTC-Based Diagnostics/MODULE, Powertrain Control (PCM) - Standard Procedure).

No

- Go To 4

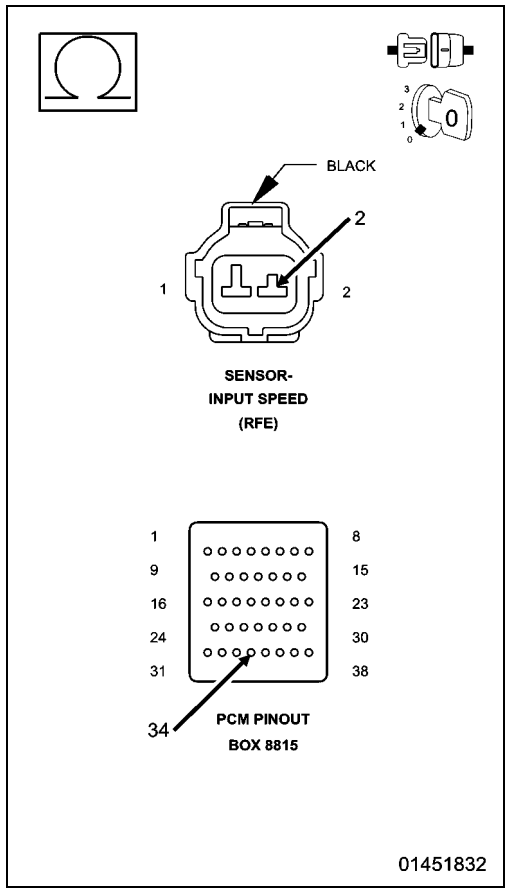

4. (T13) SPEED SENSOR GROUND CIRCUIT SHORTED TO GROUND

1. Measure the resistance between ground and the (T13) Speed Sensor Ground circuit.

Is the resistance below 5.0 Ohms?

Yes

- Repair the (T13) Speed Sensor Ground circuit for a short to ground.
- Perform the 545RFE TRANSMISSION VERIFICATION TEST. (Refer to 28 - DTC-Based Diagnostics/MODULE, Powertrain Control (PCM) - Standard Procedure).

No

- Go To 5

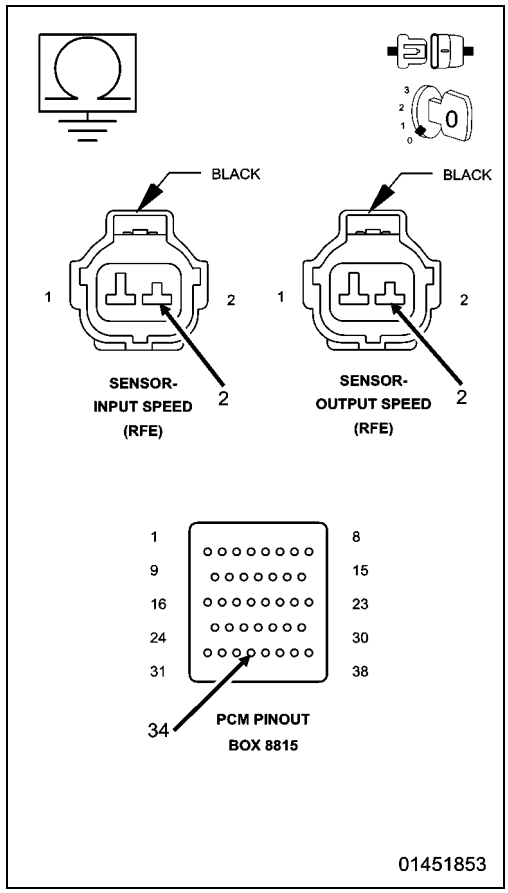

5. (T13) SPEED SENSOR GROUND CIRCUIT SHORTED TO VOLTAGE

1. Ignition on, engine not running.
2. With the scan tool under TIPM, actuate the Transmission.
3. Measure the voltage of the (T13) Speed Sensor Ground circuit.

Is the voltage above 0.5 of a volt?

Yes

- Repair the (T13) Speed Sensor Ground circuit for a short to voltage.
- Perform the 545RFE TRANSMISSION VERIFICATION TEST. (Refer to 28 - DTC-Based Diagnostics/MODULE, Powertrain Control (PCM) - Standard Procedure).

No

- Using the schematics as a guide, check the Powertrain Control Module (PCM) terminals for corrosion, damage, or terminal push out. Pay particular attention to all power and ground circuits. If no problems are found, replace and program the PCM in accordance with the Service Information. With the scan tool, perform Quick Learn.
- Perform the 545RFE TRANSMISSION VERIFICATION TEST. (Refer to 28 - DTC-Based Diagnostics/MODULE, Powertrain Control (PCM) - Standard Procedure).

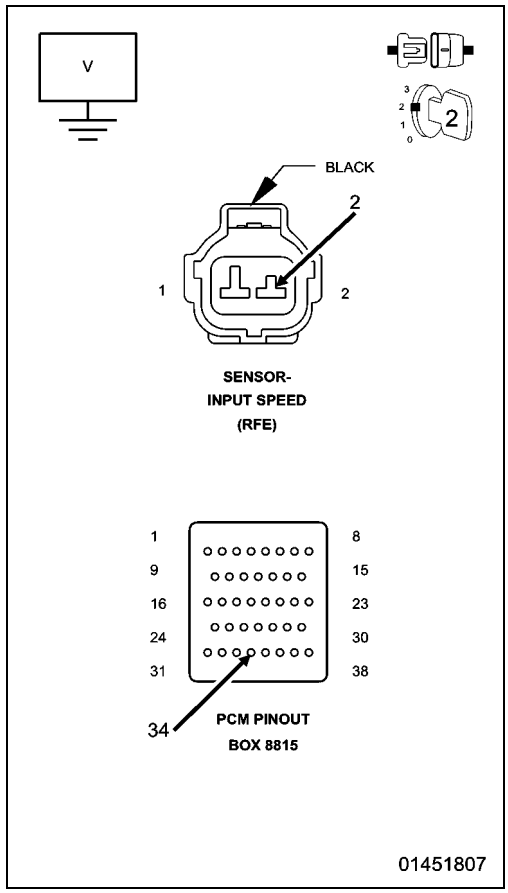

6. CHECK THE WIRING AND CONNECTORS

1. The conditions necessary to set this DTC are not present at this time.
2. Using the schematics as a guide, inspect the wiring and connectors specific to this circuit.
3. Wiggle the wires while checking for shorted and open circuits.
4. With the scan tool, check the Event Data to help identify the conditions in which the DTC was set.

Were there any problems found?

Yes

- Repair as necessary.
- Perform the 545RFE TRANSMISSION VERIFICATION TEST. (Refer to 28 - DTC-Based Diagnostics/MODULE, Powertrain Control (PCM) - Standard Procedure).

No

- Test Complete.

■ P2700-INADEQUATE ELEMENT VOLUME LR

For a complete wiring diagram, **refer to the Wiring Information**.

Theory of Operation

The volumes of the transmission fluid needed to apply the friction elements are continuously monitored and learned for adaptive controls. As the clutch friction material wears, the volume of fluid needed to apply the clutch increases. Certain transmission mechanical problems can cause near-zero learned volumes resulting in setting a DTC. The DTC will usually set with other DTCs, which indicates an internal transmission problem.

- **When Monitored:**

  Whenever the engine is running. The L/R clutch volume index (CVI) is updated during a 3-1 or 2-1 manual downshift with throttle angle below 5 degrees. Transmission temperature must be at least 43° C (110° F).
- **Set Condition:**

  When the L/R clutch volume index (CVI) falls below 16.

Possible Causes
HYDRAULIC LEAK IN THE VALVE BODY
BROKEN L/R CLUTCH PISTON RETURN SPRING OR SPRING RETAINERS
BROKEN L/R ACCUMULATOR SPRING(S)
TRANSMISSION SOLENOID/TRS ASSEMBLY
POWERTRAIN CONTROL MODULE (PCM)

Always perform the Pre-Diagnostic Troubleshooting procedure before proceeding. (Refer to 28 - DTC-Based Diagnostics/MODULE, Powertrain Control (PCM) - Standard Procedure).

1. OTHER DTCS PRESENT

1. With the scan tool, read DTCs.

Are there any Pressure Switch Sense circuit DTCs present also?

Yes

- (Refer to 28 - DTC-Based Diagnostics/MODULE, Powertrain Control (PCM) - Diagnosis and Testing) and perform the appropriate diagnostic procedure.

No

- Go To 2

2. CHECK L/R CLUTCH VOLUME INDEX

1. With the scan tool, erase DTCs.
2. Start the engine and warm the transmission.

NOTE: The TRANS TEMP DEG must be at least 43° C or 110° F before performing the following steps.

3. Drive the vehicle and perform at least ten 3-1 manual downshifts at closed throttle from speeds of about 32 Km/h or 20 mph.
4. With the scan tool, read the L/R CL VOL INDEX.

Is the L/R CL VOL INDEX below 20?

Yes

- Go To 3

No

- Go To 5

3. L/R CLUTCH CIRCUIT LEAKS IN THE VALVE BODY

1. Turn the ignition off to the lock position.
2. Remove the transmission oil pan in accordance with the Service Information.
3. Remove the valve body per the service information.
4. Check condition of the L/R accumulator springs.
5. Look for possible leak paths into the L/R clutch hydraulics circuit within the valve body.

Were any problems found?

Yes

- Repair as necessary. (Refer to 21 - Transmission and Transfer Case/Automatic - 545RFE/VALVE BODY - Removal).
- Perform the 545RFE TRANSMISSION VERIFICATION TEST. (Refer to 28 - DTC-Based Diagnostics/MODULE, Powertrain Control (PCM) - Standard Procedure).

No

- Go To 4

4. AIR CHECK L/R CLUTCH CIRCUITS

1. Perform an air check on the L/R Clutch circuit in accordance with the Service Information.
2. Watch and listen for L/R Clutch piston movement.

Does the L/R piston stroke and return properly?

Yes

- Replace the Transmission/TRS Solenoid Assembly per the service information. With the scan tool, perform Quick Learn. (Refer to 21 - Transmission and Transfer Case/Automatic - 545RFE/ASSEMBLY, Transmission Solenoid and TRS - Removal).
- Perform the 545RFE TRANSMISSION VERIFICATION TEST. (Refer to 28 - DTC-Based Diagnostics/MODULE, Powertrain Control (PCM) - Standard Procedure).

No

- Repair internal transmission as necessary. Pay attention to the components related to the L/R clutch. A broken or weak L/R clutch return spring, Accumulator Spring, and/or dislocated snap ring could cause this problem. (Refer to 21 - Transmission and Transfer Case/Automatic - 545RFE - Removal).
- Perform the 545RFE TRANSMISSION VERIFICATION TEST. (Refer to 28 - DTC-Based Diagnostics/MODULE, Powertrain Control (PCM) - Standard Procedure).

5. VERIFY PCM OPERATION

NOTE: The TRANS TEMP DEG must be at least 43° C (110° F) before performing the following steps.

1. Perform eight learnable starts. A learnable start is defined as follows: Start engine. From a standstill, accelerate lightly to 80 Km/h or 50 mph, then brake lightly to a stop. Turn off engine.
2. With the scan tool, record the CL VOL INDEX (CVI) for all clutches
3. With the scan tool, perform a BATTERY DISCONNECT.
4. With the scan tool, read the CVIs and compare them to the readings recorded before the BATTERY DISCONNECT.

Are any of the CVIs less than 5 or different than before the BATTERY DISCONNECT?

Yes

- Using the schematics as a guide, check the Powertrain Control Module (PCM) terminals for corrosion, damage, or terminal push out. Pay particular attention to all power and ground circuits. If no problems are found, replace and program the PCM in accordance with the Service Information. With the scan tool, perform Quick Learn. (Refer to 08 - Electrical/8E - Electronic Control Modules/MODULE, Powertrain Control - Removal).
- Perform the 545RFE TRANSMISSION VERIFICATION TEST. (Refer to 28 - DTC-Based Diagnostics/MODULE, Powertrain Control (PCM) - Standard Procedure).

No

- Test Complete.

■ P2701-INADEQUATE ELEMENT VOLUME 2C

For a complete wiring diagram, **refer to the Wiring Information**.

Theory of Operation

The volumes of the transmission fluid needed to apply the friction elements are continuously monitored and learned for adaptive controls. As the clutch friction material wears, the volume of fluid needed to apply the clutch increases. Certain transmission mechanical problems can cause near-zero learned volumes resulting in setting a DTC. The DTC will usually set with other DTCs, which indicates an internal transmission problem.

- **When Monitored:**

  Whenever the engine is running. The 2C clutch volume index (CVI) is updated during a 3-2 kickdown with throttle angle between 10 and 54 degrees. Transmission temperature must be at least 43° C (110° F).
- **Set Condition:**

  When the 2C CVI falls below 5.

Possible Causes
HYDRAULIC LEAK IN THE VALVE BODY
BROKEN 2C CLUTCH PISTON RETURN SPRING / DISLODGED SNAP RING
BROKEN ACCUMULATOR SPRING(S)
TRANSMISSION SOLENOID/TRS ASSEMBLY
POWERTRAIN CONTROL MODULE (PCM)

Always perform the Pre-Diagnostic Troubleshooting procedure before proceeding. (Refer to 28 - DTC-Based Diagnostics/MODULE, Powertrain Control (PCM) - Standard Procedure).

1. OTHER DTCS PRESENT

1. With the scan tool, read DTCs.

Are there any Pressure Switch Sense circuit DTCs present also?

Yes

- (Refer to 28 - DTC-Based Diagnostics/MODULE, Powertrain Control (PCM) - Diagnosis and Testing) and perform the appropriate diagnostic procedure.

No

- Go To 2

2. CHECK 2C CLUTCH VOLUME INDEX

1. With the scan tool, erase Transmission DTCs.
2. Drive the vehicle at about 80 Km/h (50 mph), then depress the OD off button. This will put the vehicle into third gear.

NOTE: The TRANS TEMP DEG must be at least 43° C (110° F) before performing the following steps.

3. Perform at least ten 3-2 kickdowns by depressing the throttle between 10 and 54 TPS Degrees at speeds of about 80 Km/h (50 mph).
4. With the scan tool, read the 2C CL VOL INDEX.

Is the 2C CL VOL INDEX below 10?

Yes

- Go To 3

No

- Go To 5

3. 2C CLUTCH CIRCUIT LEAKS IN THE VALVE BODY

1. Turn the ignition off to the lock position.
2. Remove the transmission oil pan in accordance with the Service Information.
3. Remove the valve body per the service information.
4. Check condition of the 2C accumulator springs .
5. Look for possible leak paths into the 2C clutch hydraulics circuit within the valve body.

Were any problems found?

Yes

- Repair as necessary. (Refer to 21 - Transmission and Transfer Case/Automatic - 545RFE/VALVE BODY - Removal).
- Perform the 545RFE TRANSMISSION VERIFICATION TEST. (Refer to 28 - DTC-Based Diagnostics/MODULE, Powertrain Control (PCM) - Standard Procedure).

No

- Go To 4

4. AIR CHECK 2C CLUTCH CIRCUIT

1. Turn the ignition off to the lock position.
2. Perform an air check on the 2C Clutch circuit in accordance with the Service Information.
3. Watch and listen for 2C Clutch piston movement.

Dose the piston stroke and return properly?

Yes

- Replace the Transmission/TRS Solenoid Assembly per the service information. With the scan tool, perform Quick Learn. (Refer to 21 - Transmission and Transfer Case/Automatic - 545RFE/ASSEMBLY, Transmission Solenoid and TRS - Removal).
- Perform the 545RFE TRANSMISSION VERIFICATION TEST. (Refer to 28 - DTC-Based Diagnostics/MODULE, Powertrain Control (PCM) - Standard Procedure).

No

- Repair internal transmission as necessary. Pay attention to the components related to the 2C clutch. A broken or dislodged 2C return spring, snap ring or broken 2C Accumulator Spring could cause this problem. (Refer to 21 - Transmission and Transfer Case/Automatic - 545RFE - Removal).
- Perform the 545RFE TRANSMISSION VERIFICATION TEST. (Refer to 28 - DTC-Based Diagnostics/MODULE, Powertrain Control (PCM) - Standard Procedure).

5. VERIFY PCM OPERATION

NOTE: The TRANS TEMP DEG must be at least 43° C or 110° F before performing the following steps.

1. Perform eight learnable starts. A learnable start is defined as follows: Start engine. From a standstill, accelerate lightly to 80 Km/h or 50 mph, then brake lightly to a stop. Turn off engine.
2. With the scan tool, record the CL VOL INDEX (CVI) for all clutches
3. With the scan tool, perform a BATTERY DISCONNECT.
4. With the scan tool, read the CVIs and compare them to the readings recorded before the BATTERY DISCONNECT.

Are any of the CVIs less than 5 or different than before the BATTERY DISCONNECT?

Yes

- Using the schematics as a guide, check the Powertrain Control Module (PCM) terminals for corrosion, damage, or terminal push out. Pay particular attention to all power and ground circuits. If no problems are found, replace and program the PCM in accordance with the Service Information. With the scan tool, perform Quick Learn. (Refer to 08 - Electrical/8E - Electronic Control Modules/MODULE, Powertrain Control - Removal).
- Perform the 545RFE TRANSMISSION VERIFICATION TEST. (Refer to 28 - DTC-Based Diagnostics/MODULE, Powertrain Control (PCM) - Standard Procedure).

No

- Test Complete.

■ P2702-INADEQUATE ELEMENT VOLUME OD

For a complete wiring diagram, **refer to the Wiring Information**.

Theory of Operation

The volumes of the transmission fluid needed to apply the friction elements are continuously monitored and learned for adaptive controls. As the clutch friction material wears, the volume of fluid needed to apply the clutch increases. Certain transmission mechanical problems can cause near-zero learned volumes resulting in setting a DTC. The DTC will usually set with other DTCs, which indicates an internal transmission problem.

- **When Monitored:**
  Whenever the engine is running. The OD clutch volume index (CVI) is updated during a 2-3 upshift with throttle angle between 10 and 54 degrees. Transmission temperature must be at least 43° C (110° F).
- **Set Condition:**
  When the OD CVI falls below 5.

Possible Causes
HYDRAULIC LEAK IN THE VALVE BODY
BROKEN OD ACCUMULATOR SPRING
BROKEN OD/REV PISTON BELLEVILLE SPRING OR DISLODGED SNAP RING
INTERNAL LEAKAGE IN PUMP ASSEMBLY
TRANSMISSION SOLENOID/TRS ASSEMBLY
POWERTRAIN CONTROL MODULE (PCM)

Always perform the Pre-Diagnostic Troubleshooting procedure before proceeding. (Refer to 28 - DTC-Based Diagnostics/MODULE, Powertrain Control (PCM) - Standard Procedure).

1. OTHER DTCS PRESENT

1. With the scan tool, check DTCs.

Are there any Pressure Switch Sense circuit DTCs present also?

Yes

- (Refer to 28 - DTC-Based Diagnostics/MODULE, Powertrain Control (PCM) - Diagnosis and Testing) and perform the appropriate diagnostic procedure.

No

- Go To 2

2. CHECK THE OD CLUTCH VOLUME INDEX

1. With the scan tool, erase DTCs.

NOTE: The TRANS TEMP DEG must be at least 43° C (110° F) before performing the following steps.

2. Drive the vehicle and perform at least ten 2-3 upshifts with the TPS degree between 10 and 54.
3. With the scan tool, read the OD CL VOL INDEX.

Is the OD CL VOL INDEX below 10?

Yes

- Go To 3

No

- Go To 5

3. OD CLUTCH CIRCUIT LEAKS IN THE VALVE BODY

1. Turn the ignition off to the lock position.
2. Remove the transmission oil pan in accordance with the Service Information.
3. Remove the valve body per the service information.
4. Check condition of the OD accumulator spring.
5. Look for possible leak paths into the OD clutch hydraulics circuit within the valve body.

Were any problems found?

Yes

- Repair as necessary. (Refer to 21 - Transmission and Transfer Case/Automatic - 545RFE/VALVE BODY - Removal)
- Perform the 545RFE TRANSMISSION VERIFICATION TEST. (Refer to 28 - DTC-Based Diagnostics/MODULE, Powertrain Control (PCM) - Standard Procedure).

No

- Go To 4

4. AIR CHECK OD CLUTCH CIRCUIT

1. Perform an air check on the OD Clutch circuit in accordance with the Service Information.
2. Watch and listen for OD Clutch piston movement.
3. Air check all other pump passages and watch for air leakage into the OD clutch passage.

NOTE: There is a bleed orifice between the OD and Reverse Clutch passages, so a small amount of air leakage from Reverse to OD is normal.

Were any problems found?

Yes

- Repair internal transmission. Pay attention to the OD Clutch. Broken or weak return spring or a dislocated snap ring could cause this problem. If no problems were found in the OD clutch, or if leakage into the OD passage was noted, replace Pump Assembly in accordance with the Service Information. (Refer to 21 - Transmission and Transfer Case/Automatic - 545RFE - Removal).
- Perform the 545RFE TRANSMISSION VERIFICATION TEST. (Refer to 28 - DTC-Based Diagnostics/MODULE, Powertrain Control (PCM) - Standard Procedure).

No

- Replace the Transmission/TRS Solenoid Assembly in accordance with the Service Information. With the scan tool, perform Quick Learn. (Refer to 21 - Transmission and Transfer Case/Automatic - 545RFE/ASSEMBLY, Transmission Solenoid and TRS - Removal).
- Perform the 545RFE TRANSMISSION VERIFICATION TEST. (Refer to 28 - DTC-Based Diagnostics/MODULE, Powertrain Control (PCM) - Standard Procedure).

5. VERIFY PCM OPERATION

NOTE: The TRANS TEMP DEG must be at least 43° C or 110° F before performing the following steps.

1. Perform eight learnable starts. A learnable start is defined as follows: Start engine. From a standstill, accelerate lightly to 80 Kmh or 50 MPH, then brake lightly to a stop. Turn off engine.
2. With the scan tool, record the CL VOL INDEX (CVI) for all clutches.
3. With the scan tool, perform a BATTERY DISCONNECT.
4. With the scan tool, read the CVIs and compare them to the readings recorded before the BATTERY DISCONNECT.

Are any of the CVIs less than 5 or different than before the BATTERY DISCONNECT?

Yes

- Using the schematics as a guide, check the Powertrain Control Module (PCM) terminals for corrosion, damage, or terminal push out. Pay particular attention to all power and ground circuits. If no problems are found, replace and program the PCM in accordance with the Service Information. With the scan tool, perform Quick Learn. (Refer to 08 - Electrical/8E - Electronic Control Modules/MODULE, Powertrain Control - Removal).
- Perform the 545RFE TRANSMISSION VERIFICATION TEST. (Refer to 28 - DTC-Based Diagnostics/MODULE, Powertrain Control (PCM) - Standard Procedure).

No

- Test Complete.

■ P2703-INADEQUATE ELEMENT VOLUME UD

For a complete wiring diagram, **refer to the Wiring Information**.

Theory of Operation

The volumes of the transmission fluid needed to apply the friction elements are continuously monitored and learned for adaptive controls. As the clutch friction material wears, the volume of fluid needed to apply the clutch increases. Certain transmission mechanical problems can cause near-zero learned volumes resulting in setting a DTC. The DTC will usually set with other DTCs, which indicates an internal transmission problem.

- **When Monitored:**

  Whenever the engine is running. The UD clutch volume index (CVI) is updated during a 4-3 kickdown with throttle angle between 10 and 54 degrees. Transmission temperature must be at least 43° C (110° F).
- **Set Condition:**

  When the UD CVI falls below 11.

Possible Causes
BROKEN UD ACCUMULATOR SPRING(S)
BROKEN UD CLUTCH PISTON SPRING OR DISLODGED SNAP RING
INTERNAL LEAKAGE IN PUMP OR VALVE BODY ASSEMBLIES
TRANSMISSION SOLENOID/TRS ASSEMBLY
POWERTRAIN CONTROL MODULE (PCM)

Always perform the Pre-Diagnostic Troubleshooting procedure before proceeding. (Refer to 28 - DTC-Based Diagnostics/MODULE, Powertrain Control (PCM) - Standard Procedure).

1. OTHER DTCS PRESENT

1. With the scan tool, check DTCs.

Are there any Pressure Switch Sense circuit DTCs present also?

Yes

- (Refer to 28 - DTC-Based Diagnostics/MODULE, Powertrain Control (PCM) - Diagnosis and Testing) and perform the appropriate diagnostic procedure.

No

- Go To 2

2. CHECK UD CLUTCH VOLUME INDEX

1. With the scan tool, erase Transmission DTCs.

NOTE: The TRANS TEMP DEG must be at least 43° C or 110° F before performing the following steps.

2. Drive the vehicle and perform at least ten 4-3 kickdowns by depressing the throttle between 30 and 54 TPS degrees at speeds about 80 Km/h or 50 mph.
3. With the scan tool, read the UD clutch volume index (CVI).

Is the UD CVI below 10?

Yes

- Go To 3

No

- Go To 5

3. UD CLUTCH CIRCUIT LEAKS IN THE VALVE BODY

1. Turn the ignition off to the lock position.
2. Remove the transmission oil pan and valve body in accordance with the Service Information.
3. Check the condition of the UD accumulator springs.
4. Look for possible leak paths into the UD clutch hydraulics circuit within the valve body.

Were there any problems found?

Yes

- Repair as necessary. (Refer to 21 - Transmission and Transfer Case/Automatic - 545RFE/VALVE BODY - Removal).
- Perform the 545RFE TRANSMISSION VERIFICATION TEST. (Refer to 28 - DTC-Based Diagnostics/MODULE, Powertrain Control (PCM) - Standard Procedure).

No

- Go To 4

4. AIR CHECK UD CLUTCH CIRCUIT

1. Perform an air check on the UD Clutch circuit in accordance with the Service Information.
2. Watch and listen for UD Clutch piston movement.
3. Air check all other pump passages for air leakage into the UD Clutch circuit.

Were any problems found?

Yes

- Repair internal transmission. Pay attention to components related to the UD clutch. Broken or weak return spring or a dislocated snap ring. If no trouble is found in UD clutch component or UD clutch leakage was noted in passage, replace the Pump Assembly. (Refer to 21 - Transmission and Transfer Case/Automatic - 545RFE - Removal).
- Perform the 545RFE TRANSMISSION VERIFICATION TEST. (Refer to 28 - DTC-Based Diagnostics/MODULE, Powertrain Control (PCM) - Standard Procedure).

No

- Replace the Transmission/TRS Solenoid Assembly per the service information. With the scan tool, perform Quick Learn. (Refer to 21 - Transmission and Transfer Case/Automatic - 545RFE/ASSEMBLY, Transmission Solenoid and TRS - Removal).
- Perform the 545RFE TRANSMISSION VERIFICATION TEST. (Refer to 28 - DTC-Based Diagnostics/MODULE, Powertrain Control (PCM) - Standard Procedure).

5. VERIFY PCM OPERATION

NOTE: The TRANS TEMP DEG must be at least 43° C or 110° F before performing the following steps.

1. Perform eight learnable starts. A learnable start is defined as follows: Start engine. From a standstill, accelerate lightly to 80 Km/h or 50 mph, then brake lightly to a stop. Turn off engine.
2. With the scan tool, record the clutch volume index (CVI) for all clutches.
3. With the scan tool, perform a BATTERY DISCONNECT.
4. With the scan tool, read the CVIs and compare them to the readings recorded before the BATTERY DISCONNECT.

Are any of the CVIs less than 5 or different than before the BATTERY DISCONNECT?

Yes

- Using the schematics as a guide, check the Powertrain Control Module (PCM) terminals for corrosion, damage, or terminal push out. Pay particular attention to all power and ground circuits. If no problems are found, replace and program the PCM in accordance with the Service Information. With the scan tool, perform Quick Learn. (Refer to 08 - Electrical/8E - Electronic Control Modules/MODULE, Powertrain Control - Removal).
- Perform the 545RFE TRANSMISSION VERIFICATION TEST. (Refer to 28 - DTC-Based Diagnostics/MODULE, Powertrain Control (PCM) - Standard Procedure).

No

- Test Complete.

■ P2704-INADEQUATE ELEMENT VOLUME 4C

For a complete wiring diagram, **refer to the Wiring Information**.

Theory of Operation

The volumes of the transmission fluid needed to apply the friction elements are continuously monitored and learned for adaptive controls. As the clutch friction material wears, the volume of fluid needed to apply the clutch increases. Certain transmission mechanical problems can cause near-zero learned volumes resulting in setting a DTC. The DTC will usually set with other DTCs, which indicates an internal transmission problem.

- **When Monitored:**
  Whenever the engine is running. The 4C clutch volume index (CVI) is updated during a 3-4 upshift with throttle angle between 10 and 54 degrees. Transmission temperature must be at least 43° C (110° F).
- **Set Condition:**
  When the 4C CVI falls below 5.

Possible Causes
BROKEN 4C RETURN SPRING OR DISLODGED SNAP RING
BROKEN 4C ACCUMULATOR SPRING(S)
HYDRAULIC LEAK IN THE VALVE BODY
TRANSMISSION SOLENOID/TRS ASSEMBLY
POWERTRAIN CONTROL MODULE (PCM)

Always perform the Pre-Diagnostic Troubleshooting procedure before proceeding. (Refer to 28 - DTC-Based Diagnostics/MODULE, Powertrain Control (PCM) - Standard Procedure).

1. CHECK THE 4C CLUTCH VOLUME

1. With the scan tool, record the 4C clutch volume index (CVI) and erase DTCs.
2. Perform at least 10, 3-4 upshifts with the throttle between 10 and 54 degrees. The Transmission temperature must be at least 43° C or 110° F.
3. With the scan tool, read the 4C CVI.

Is the current 4C CVI below 10?

Yes

- Go To 2

No

- Go To 5

2. DTC P0876 PRESENT

1. With the scan tool, check DTCs.

NOTE: The DTC P0876 must also be set with P2704 in order for this test to be valid.

Is the DTC P0876 also present?

Yes

- Replace the Transmission Solenoid/TRS Assembly in accordance with the Service Information. (Refer to 21 - Transmission and Transfer Case/Automatic - 545RFE/ASSEMBLY, Transmission Solenoid and TRS - Removal).
- Perform the 545RFE TRANSMISSION VERIFICATION TEST. (Refer to 28 - DTC-Based Diagnostics/MODULE, Powertrain Control (PCM) - Standard Procedure).

No

- Go To 3

3. 4C CLUTCH CIRCUIT LEAKS IN THE VALVE BODY

1. Turn the ignition off to the lock position.
2. Remove the transmission oil pan in accordance with the Service Information.
3. Remove the valve body in accordance with the Service Information.
4. Check condition of the 4C accumulator springs.
5. Look for possible leak paths into the 4C clutch hydraulics circuit within the valve body.

Were any problems found?

Yes

- Repair as necessary. (Refer to 21 - Transmission and Transfer Case/Automatic - 545RFE/VALVE BODY - Removal).
- Perform the 545RFE TRANSMISSION VERIFICATION TEST. (Refer to 28 - DTC-Based Diagnostics/MODULE, Powertrain Control (PCM) - Standard Procedure).

No

- Go To 4

4. AIR CHECK 4C CLUTCH CIRCUIT

1. Perform an air check on the 4C Clutch circuit in accordance with the Service Information.
2. Listen for proper 4C Clutch piston movement.

Were any problems found?

Yes

- Repair Internal transmission as necessary. Pay attention to the mechanical components related to the 4th clutch. A broken or weak return spring or a dislocated snap ring could cause this problem. (Refer to 21 - Transmission and Transfer Case/Automatic - 545RFE - Removal).
- Perform the 545RFE TRANSMISSION VERIFICATION TEST. (Refer to 28 - DTC-Based Diagnostics/MODULE, Powertrain Control (PCM) - Standard Procedure).

No

- Replace the Transmission Solenoid/TRS Assembly in accordance with the service information (Refer to 21 - Transmission and Transfer Case/Automatic - 545RFE/ASSEMBLY, Transmission Solenoid and TRS - Removal). With the scan tool, perform Quick Learn.
- Perform the 545RFE TRANSMISSION VERIFICATION TEST. (Refer to 28 - DTC-Based Diagnostics/MODULE, Powertrain Control (PCM) - Standard Procedure).

5. VERIFY PCM OPERATION

1. Perform eight learnable starts. A learnable start is defined as follows: Start engine. From a standstill, accelerate lightly to 50 MPH, then brake lightly to a stop. Turn off engine.
2. With the scan tool, record Transmission CL VOL INDEX (CVI) for all clutches.
3. With the scan tool, perform a BATTERY DISCONNECT.
4. With the scan tool, read the CVIs and compare them to the reading recorded before the BATTERY DISCONNECT.

Are any of the CVIs less than 5 or are they different than before the battery disconnect?

Yes

- Using the schematics as a guide, check the Powertrain Control Module (PCM) terminals for corrosion, damage, or terminal push out. Pay particular attention to all power and ground circuits. If no problems are found, replace and program the PCM in accordance with the Service Information. (Refer to 08 - Electrical/8E - Electronic Control Modules/MODULE, Powertrain Control - Removal). With the scan tool, perform Quick Learn.
- Perform the 545RFE TRANSMISSION VERIFICATION TEST. (Refer to 28 - DTC-Based Diagnostics/MODULE, Powertrain Control (PCM) - Standard Procedure).

No

- Test Complete.

P2706-MS SOLENOID CIRCUIT

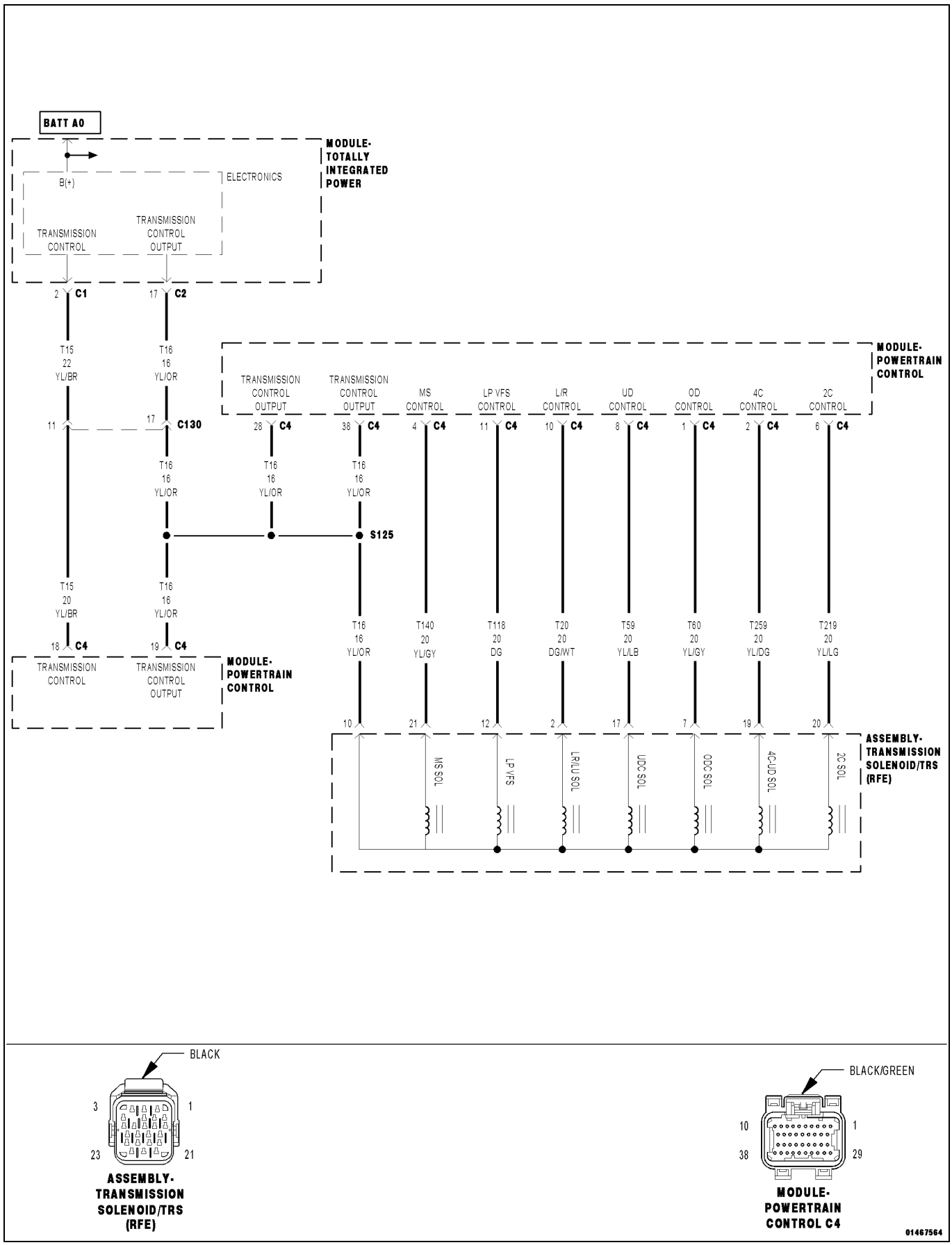

For a complete wiring diagram, **refer to the Wiring Information**.

Theory of Operation

The Transmission Control System uses six electronically controlled solenoids that allow hydraulic fluid to be applied to various friction elements (clutches), which enables the gear requested. The continuity of each solenoid circuit is periodically tested. Each inactive solenoid is turned on for a few milliseconds, then off. Each active solenoid is turned off for a few milliseconds, then on. This pulsing of voltage to the solenoid causes an inductive spike which can be sensed by the Transmission Control System. If an inductive spike is not sensed by the Transmission Control System during the continuity check, it is tested again. If the test fails three consecutive times, the appropriate Diagnostic Trouble Code (DTC) is set. If the solenoid test is run in response to a gear ratio or pressure switch error, one failure will result in setting the appropriate DTC.

- **When Monitored:**

  Initially at power-up, then every 10 seconds thereafter. The solenoid circuits will also be tested immediately after a gear ratio or pressure switch error is detected.
- **Set Condition:**

  After three consecutive solenoid continuity test failures, or one failure if test is run in response to a gear ratio or pressure switch error.

NOTE: This DTC is strictly an electrical fault and cannot be caused by any internal transmission failure other than an open in the Transmission Solenoid/TRS Assembly. If the Transmission Solenoid/TRS Assembly is in need of replacement - do not replace the Valve Body.

Possible Causes
RELATED DTCS PRESENT
(T140) MS SOLENOID CONTROL CIRCUIT SHORTED TO OTHER CIRCUITS
(T140) MS SOLENOID CONTROL CIRCUIT OPEN
(T140) MS SOLENOID CONTROL CIRCUIT SHORTED TO GROUND
TRANSMISSION SOLENOID/TRS ASSEMBLY
POWERTRAIN CONTROL MODULE (PCM)

Always perform the Pre-Diagnostic Troubleshooting Procedure before proceeding. (Refer to 28 - DTC-Based Diagnostics/MODULE, Powertrain Control (PCM) - Standard Procedure).

1. RELATED TCM POWER INPUT DTCS PRESENT

1. With the scan tool, check DTCs.

Are there any TIPM TCM Power Control Circuit or TCM Power Input DTCs present?

Yes

- (Refer to 28 - DTC-Based Diagnostics/MODULE, Totally Integrated Power (TIPM) - Diagnosis and Testing) and perform the appropriate diagnostic procedure.

No

- Go To 2

2. TRANSMISSION SOLENOID/TRS ASSEMBLY

1. Turn the ignition off to the lock position.
2. Remove the Ignition Switch Feed fuse from the TIPM.

CAUTION: Removal of the Ignition Switch Feed fuse from the TIPM will prevent the vehicle from being started in gear.

WARNING: The Ignition Switch Feed fuse must be removed from the TIPM. Failure to do so can result in possible serious or fatal injury.

3. Install Transmission Simulator 8333A.
4. Ignition on, engine not running.
5. With the scan tool, actuate the MS Solenoid.
6. Monitor the MS Solenoid LED on the Transmission Simulator.

Did the MS Solenoid LED on the Transmission Simulator blink on and off?

Yes

- Go To 3

No

- Go To 5

3. TRANSMISSION SOLENOID/TRS ASSEMBLY

1. With the scan tool, continue to actuate the MS Solenoid for the period of two minutes with the Transmission Simulator still connected.
2. After two minutes of actuation, with the scan tool, stop the actuation and check for transmission DTCs.

Did the DTC P2706 reset during the actuation test?

Yes

- Go To 5

No

- Go To 4

4. WIGGLE TEST WITH TRANSMISSION SIMULATOR

1. With the Transmission simulator still connected, continue to actuate the MS Solenoid for another two minutes while wiggling the related wiring harness and connectors.
2. With the scan tool, stop the actuation and check for transmission DTCs.

Did the DTC P2706 reset during the actuation test?

Yes

- Repair wiring harness or connectors as necessary.
- Perform the 545RFE TRANSMISSION VERIFICATION TEST. (Refer to 28 - DTC-Based Diagnostics/MODULE, Powertrain Control (PCM) - Standard Procedure).

No

- Replace the Transmission Solenoid/TRS Assembly in accordance with the Service Information. **Note: Do NOT replace the entire Valve Body.** (Refer to 21 - Transmission and Transfer Case/Automatic - 545RFE/ASSEMBLY, Transmission Solenoid and TRS - Removal).
- Perform the 545RFE TRANSMISSION VERIFICATION TEST. (Refer to 28 - DTC-Based Diagnostics/MODULE, Powertrain Control (PCM) - Standard Procedure).

5. (T140) MS SOLENOID CONTROL CIRCUIT SHORTED TO OTHER CIRCUITS

1. Turn the ignition off to the lock position.
2. Disconnect the Transmission Simulator 8333A.
3. Disconnect the PCM harness connectors.
4. Measure the resistance between the (T140) MS Solenoid Control circuit and all other circuits in the Transmission Solenoid/TRS Assembly harness connector.

Is the resistance below 5.0 Ohms between the (T140) MS Solenoid Control circuit and any other circuit(s) in the Transmission Solenoid/TRS Assembly harness connector?

Yes

- Repair the (T140) MS Solenoid Control circuit for a short to other circuit(s).
- Perform the 545RFE TRANSMISSION VERIFICATION TEST. (Refer to 28 - DTC-Based Diagnostics/MODULE, Powertrain Control (PCM) - Standard Procedure).

No

- Go To 6

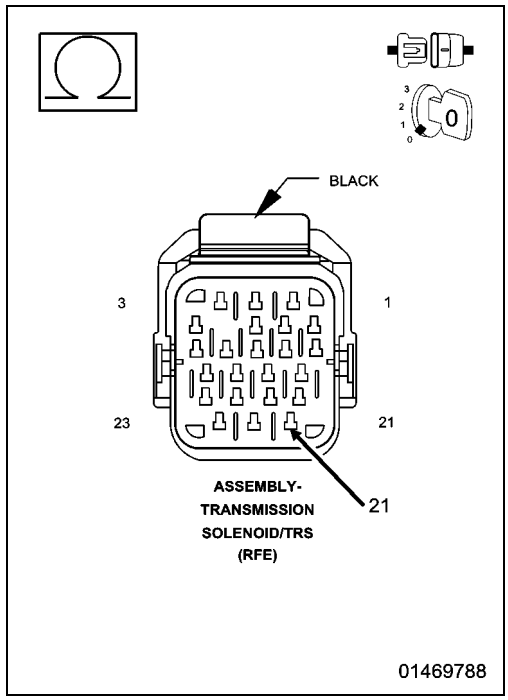

6. (T140) MS SOLENOID CONTROL CIRCUIT OPEN

1. Connect the PCM Pinout Box 8815A to the PCM C4 harness connector.

CAUTION: Do not probe the PCM harness connectors. Probing the PCM harness connectors will damage the PCM terminals resulting in poor terminal to pin connection. Install the Kit, NGC, 38 Position 8815A to perform diagnosis.

2. Measure the resistance of the (T140) MS Solenoid Control circuit from the Transmission Solenoid/TRS Assembly harness connector to the appropriate terminal of the PCM Pinout Box 8815A.

Is the resistance above 5.0 Ohms?

Yes

- Repair the (T140) MS Solenoid Control circuit for an open.
- Perform the 545RFE TRANSMISSION VERIFICATION TEST. (Refer to 28 - DTC-Based Diagnostics/MODULE, Powertrain Control (PCM) - Standard Procedure).

No

- Go To 7

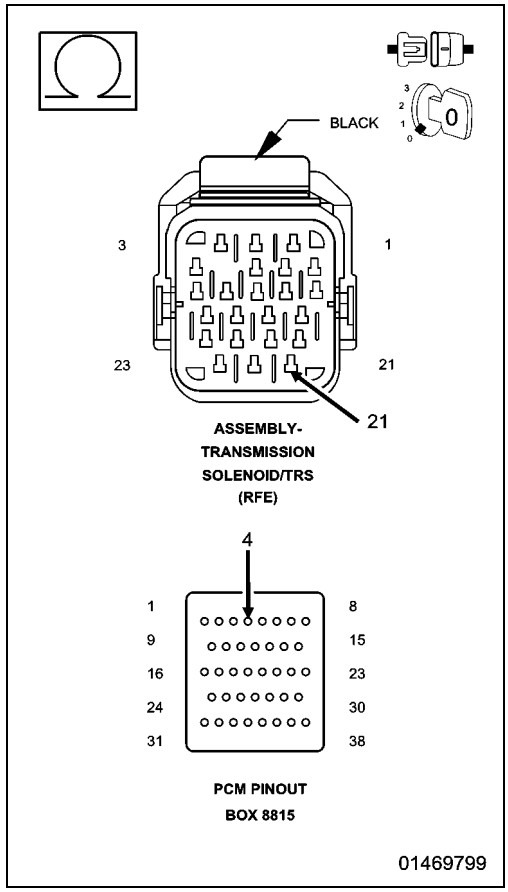

7. (T140) MS SOLENOID CONTROL CIRCUIT SHORTED TO GROUND

1. Measure the resistance between ground and the (T140) MS Solenoid Control circuit.

Is the resistance below 5.0 Ohms?

Yes

- Repair the (T140) MS Solenoid Control circuit for a short to ground.
- Perform the 545RFE TRANSMISSION VERIFICATION TEST. (Refer to 28 - DTC-Based Diagnostics/MODULE, Powertrain Control (PCM) - Standard Procedure).

No

- Using the schematics as a guide, check the Powertrain Control Module (PCM) terminals for corrosion, damage, or terminal push out. Pay particular attention to all power and ground circuits. If no problems are found, replace and program the PCM in accordance with the Service Information. With the scan tool, perform Quick Learn.
- Perform the 545RFE TRANSMISSION VERIFICATION TEST. (Refer to 28 - DTC-Based Diagnostics/MODULE, Powertrain Control (PCM) - Standard Procedure).

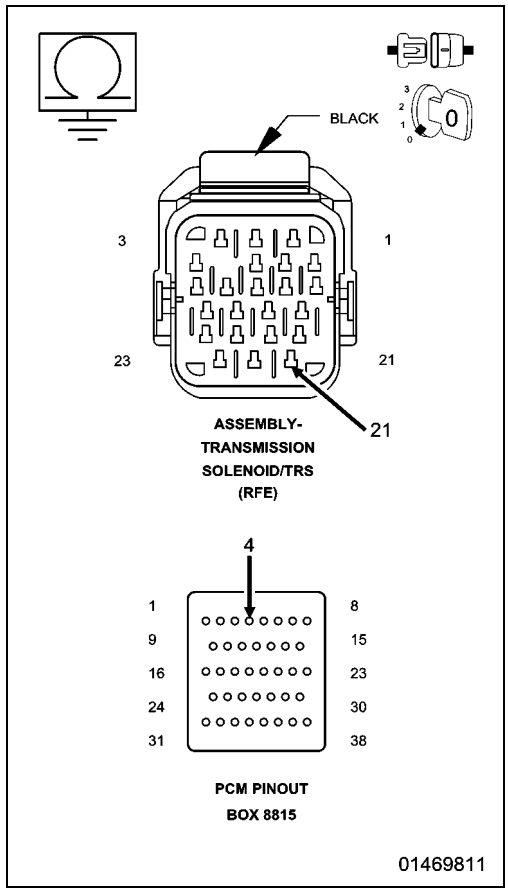

U0002-CAN C BUS OFF PERFORMANCE

For a complete wiring diagram, **refer to the Wiring Information**.

- **When Monitored:**
  Ignition run time is greater than one second.
  Battery voltage between 9 and 16 volts.
  Engine run time greater than three seconds.
- **Set Condition:**
  Bus messages not received from the Totally Integrated Power Module (TIPM) for approximately two to five seconds.

Possible Causes
CAN BUS CIRCUITS OPEN OR SHORTED
DTCS RELATED TO BATTERY VOLTAGE, IGNITION, OR VIN MESSAGES
TOTALLY INTEGRATED POWER MODULE POWER AND GROUND
TIPM NOT CONFIGURED CORRECTLY
TOTALLY INTEGRATED POWER MODULE (TIPM)
MODULE THAT SET THIS DTC

1. ACTIVE DTC

1. Ignition on, engine not running.
2. With the scan tool, select view DTCs.

Is the DTC Active at this time?

Yes

- **Diagnose the U0002-CAN C BUS OFF PERFORMANCE as the U0001-CAN C BUS CIRCUIT test. (Refer to 28 - DTC-Based Diagnostics/MODULE, Totally Integrated Power (TIPM) - Diagnosis and Testing)** and perform the U0001-CAN C Bus diagnostic procedure.

No

- **(Refer to 29 - Non-DTC Diagnostics/Communication - Diagnosis and Testing)** and perform the Stored Lost Communication DTCs diagnostic procedure.

■ U0100-LOST COMMUNICATION WITH THE ECM/PCM

For a complete wiring diagram, **refer to the Wiring Information**.

- **When Monitored:**
  Ignition run time is greater than one second.
  Battery voltage between 9 and 16 volts.
  Engine run time greater than three seconds.
- **Set Condition:**
  Bus messages not received from the Powertrain Control Module (ECM/PCM) for approximately two to five seconds.

Possible Causes
CAN BUS CIRCUITS OPEN OR SHORTED
DTCS RELATED TO BATTERY VOLTAGE, IGNITION, OR VIN MESSAGES
POWERTRAIN CONTROL MODULE POWER AND GROUND
TIPM NOT CONFIGURED CORRECTLY
POWERTRAIN CONTROL MODULE (ECM/PCM)
MODULE THAT SET THIS DTC

1. ACTIVE DTC

1. Ignition on, engine not running.
2. With the scan tool, select view DTCs.

Is the DTC Active at this time?

Yes

- **(Refer to 28 - DTC-Based Diagnostics/MODULE, Totally Integrated Power (TIPM) - Diagnosis and Testing)** and perform the U0100-Lost Communication with ECM/PCM diagnostic procedure.

No

- **(Refer to 29 - Non-DTC Diagnostics/Communication - Diagnosis and Testing)** and perform the Stored Lost Communication DTCs diagnostic procedure.

■ U0121-LOST COMMUNICATION WITH ABS

For a complete wiring diagram, **refer to the Wiring Information**.

- **When Monitored:**
  Ignition run time is greater than one second.
  Battery voltage between 9 and 16 volts.
  Engine run time greater than three seconds.
- **Set Condition:**
  Bus messages not received from the Totally Integrated Power Module (TIPM) for approximately two to five seconds.

Possible Causes
CAN BUS CIRCUITS OPEN OR SHORTED
ABS MODULE
DTCS RELATED TO BATTERY VOLTAGE, IGNITION, OR VIN MESSAGES
TOTALLY INTEGRATED POWER MODULE POWER AND GROUND
TIPM NOT CONFIGURED CORRECTLY
TOTALLY INTEGRATED POWER MODULE (TIPM)
MODULE THAT SET THIS DTC

1. ACTIVE DTC

1. Ignition on, engine not running.
2. With the scan tool, select view DTCs.

Is the DTC Active at this time?

Yes

- **(Refer to 28 - DTC-Based Diagnostics/MODULE, Totally Integrated Power (TIPM) - Diagnosis and Testing)** and perform the U0121-Lost Communication with Anti-Lock Brake Module diagnostic procedure.

No

- **(Refer to 29 - Non-DTC Diagnostics/Communication - Diagnosis and Testing)** and perform the Stored Lost Communication DTCs diagnostic procedure.

U0141-LOST COMMUNICATION WITH IPM (FCM/TIPM)

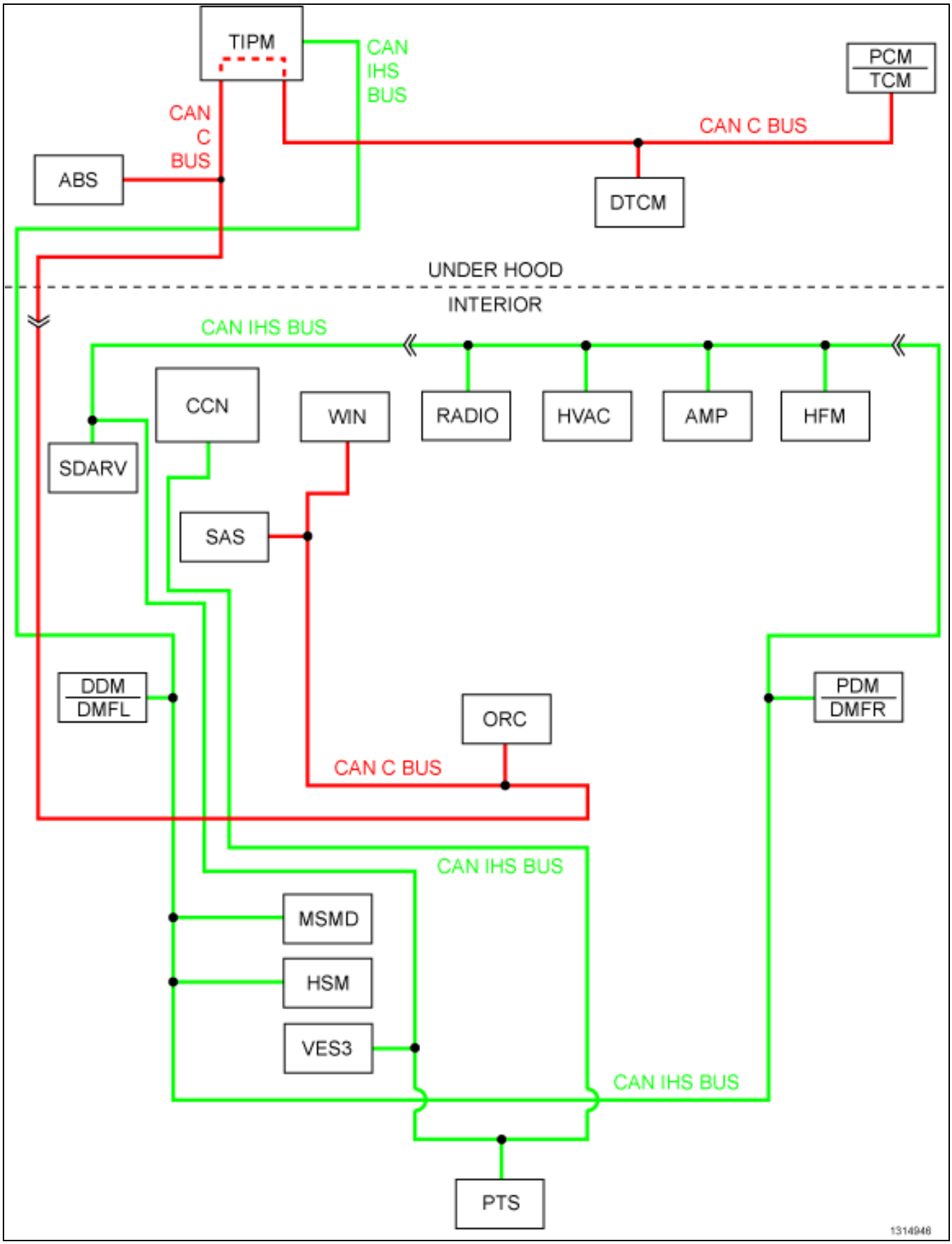

For a complete wiring diagram, **refer to the Wiring Information**.

- **When Monitored:**

  Ignition run time is greater than one second. Battery voltage between 9 and 16 volts. Engine run time greater than three seconds.
- **Set Condition:**

  The Transmission Control Module (TCM) loses communication over the CAN C Bus circuit. The circuit is continuously monitored. One Trip fault.

Possible Causes
CAN C BUS OPEN OR SHORTED CONDITION
TOTALLY INTEGRATED POWER MODULE (TIPM)
TRANSMISSION CONTROL MODULE (TCM)

1. ACTIVE DTC

1. Ignition on, engine not running.
2. With the scan tool, select view TCM DTCs.

Is the DTC Active at this time?

Yes

- (Refer to 28 - DTC-Based Diagnostics/MODULE, Totally Integrated Power (TIPM) - Diagnosis and Testing) and perform the U0141-Lost Communication with IPM (FCM/TIPM) diagnostic procedure.

No

- (Refer to 29 - Non-DTC Diagnostics/Communication - Diagnosis and Testing) and perform the Stored Lost Communication DTCs diagnostic procedure.

Standard Procedure

■ 545RFE TRANSMISSION VERIFICATION TEST

For a complete wiring diagram, **refer to the Wiring Information**.

1. Perform the following after completion of a diagnostic repair:
   - **After completion of the Transmission Verification Test, the Powertrain Verification Test must be performed.**
   - With the scan tool check pinion factor (if equipped) for proper tire identification and program or reprogram if necessary.
   - Connect the scan tool to the Data Link Connector (DLC).
   - Reconnect any disconnected components.
   - If the PCM has been replaced or updated (flashed), or the transmission has been repaired or replaced, using the scan tool, perform a Quick Learn Procedure.
   - With the scan tool, erase all Transmission and Engine DTCs.
   - With the scan tool, perform a BATTERY DISCONNECT, this will clear the Event Data
   - With the scan tool, display Transmission Temperature. Start and run the engine until the Transmission Temperature is HOT.
   - Check the Transmission fluid level and adjust if necessary. Refer to the Service Information for the Fluid Fill procedure.
   - Road test the vehicle.
   - Perform the following shifts from a standing start with a constant throttle opening of 20 to 25 degrees to the speeds of 97 Km/h (60 mph); make fifteen to twenty 1 to 2, 2 to 3, 3 to 4 4 to 5.upshifts.
   - Perform the following shifts with speeds below 40 Km/h (25 mph); make five to eight wide open throttle kickdowns to 1st gear. Allow at least 5 seconds each in 2nd and 3rd gear between each kickdown.
   - Check for DTCs during and after the road test.
   - If after performing the road test, if any shift concerns are noted, perform the drive learn procedure for those affected shifts.
   - **Use the EATX OBDII task manager to run Good Trip time in each gear, this will confirm the repair and to make sure that the DTC does not re-mature.**

Were there any Diagnostic Trouble Codes (DTCs) set during the road test?

Yes

- Perform the appropriate diagnostic procedure.

No

- Repair is complete.

545RFE PRE-DIAGNOSTIC TROUBLESHOOTING PROCEDURE

For a complete wiring diagram, **refer to the Wiring Information**.

1. Perform the following before attempting any diagnostic procedures:
   - With the scan tool check pinion factor (if equipped) for proper tire identification and program or reprogram if necessary.
   - Check the transmission fluid level. If the fluid level is low, locate and repair any leaks and fill the transmission to the proper level. Refer to the appropriate Service Information for procedures. Many transmission symptoms can be caused by a low fluid level.
   - Check the battery. To avoid false diagnosis, testing should only be performed with the battery fully charged.
   - With the scan tool, read Engine (PCM) DTCs. If DTCs are present, refer to section 28 - DTC Based Diagnostics and perform to the appropriate diagnostic procedure(s) before proceeding.
   - With the scan tool, read Transmission (TCM) DTCs. Record all Stored, Active, and Pending DTC information. Diagnose any Pending DTC as a matured DTC.
   - With the scan tool, read and record the Event Data. Use this data to identify the conditions in which the DTC was set.

NOTE: DTC Event Data may exist even if no DTCs are stored. DTC Event Data is only erased by a Battery Disconnect, reflash, Quick Learn procedure or an actual disconnection of the battery. Clearing DTCs does NOT erase the DTC Event Data. Some DTCs require two "bad trips" before they are stored (and the MIL illuminates). The transmission may enter "limp-in" mode during the first "bad trip," but if the fault condition is not present after the vehicle is restarted, the pending DTC may be cleared without lighting the MIL. Nevertheless, the DTC Event Data for the pending DTC will remain stored and can still be retrieved with the scan tool. If the customer reports a "limp-in" event but no DTCs are present, check the DTC Event Data.

   - Performing a Battery Disconnect will clear all Event Data and reset all learned Transmission values to the default values, which may temporarily result in erratic shift schedules.
   - With the scan tool, perform the Shift Lever Position Test. If the test does not pass, refer to the diagnostic procedure for P0706 Transmission Range Sensor Rationality.
   - For Gear Ratio Error DTCs, use the scan tool to view CVI Monitor data. Read and record the Clutch Volume Index information.
   - Use the wiring diagram as a guide. Inspect the wiring and connectors related to this circuit. Repair as necessary.
   - Refer to the When Monitored and Set Conditions for this DTC. DTCs can set at ignition on, at start up, after driving under specific conditions and after diagnostic monitors have been run.
   - Perform any applicable Technical Service Bulletins (TSBs) for controller software update information. Some conditions can be corrected by upgrading the Engine (PCM) or Transmission (TCM) controller software.
   - Refer to any Service Information Tune Ups or Technical Service Bulletins that apply.

Were there any repairs made that fixed the vehicle?

Yes

- Testing complete.
- Perform the 545RFE TRANSMISSION VERIFICATION TEST. (Refer to 28 - DTC-Based Diagnostics/MODULE, Powertrain Control (PCM) - Standard Procedure).

No

- Refer to DTC Based Diagnostics and perform the appropriate diagnostic procedure.

MODULE, Powertrain Control (PCM), NGC

Diagnosis and Testing

■ P000B-BANK 1 CAMSHAFT 2 POSITION SLOW RESPONSE

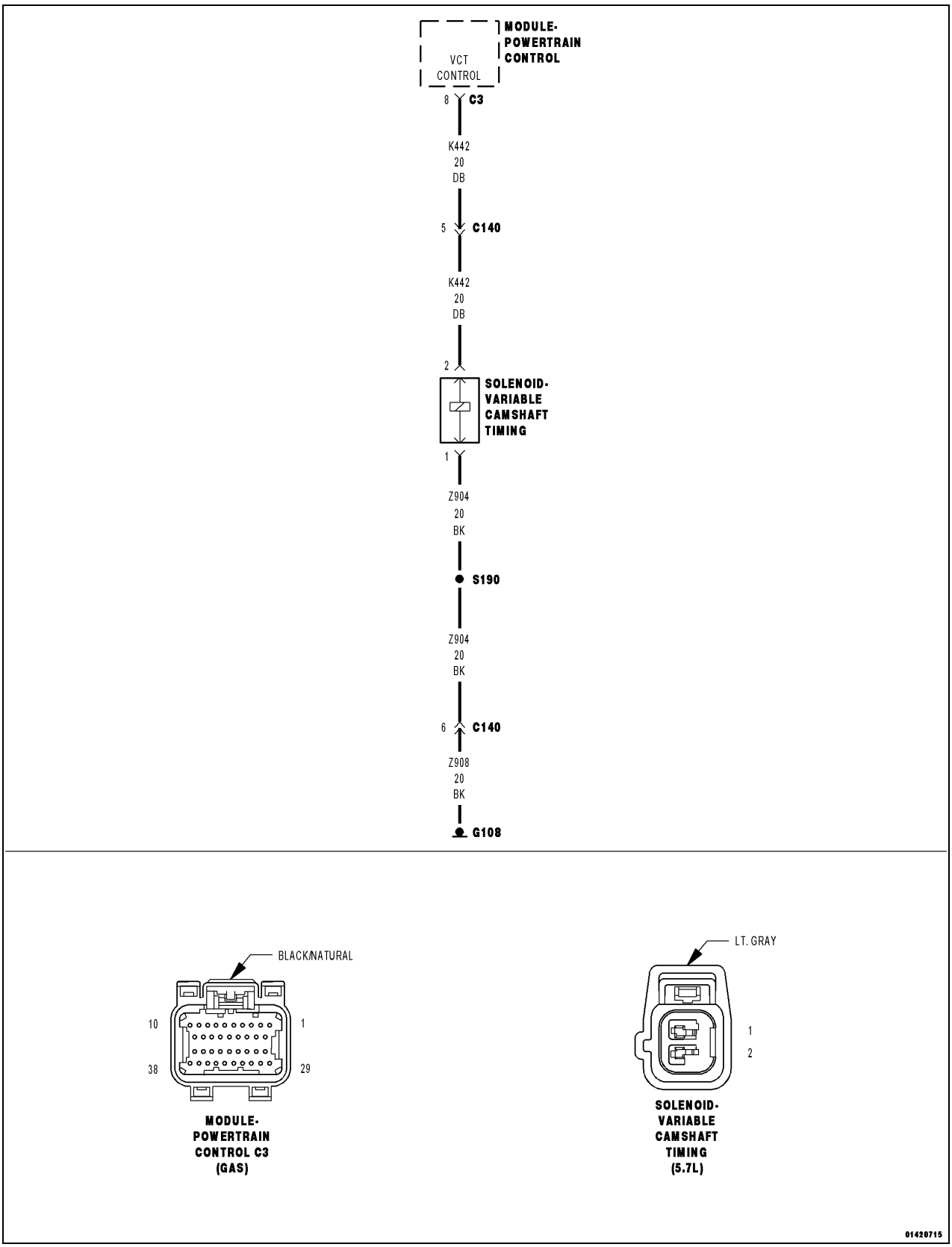

For a complete wiring diagram, **refer to the Wiring Information**.

Theory of Operation

Variable Cam Timing (VCT) allows the Powertrain Control Module (PCM) to monitor and adjust the position of the camshaft, based on desired torque levels and engine operating conditions. The camshaft design allows for the exhaust lobes to be adjusted while the intake lobes are not adjustable all on one camshaft. The PCM controls a solenoid operated control valve, that is used to direct oil pressure to hydraulic actuator mounted between the camshaft and its driving sprocket. The oil pressure alters the angular position or phasing of the camshaft relative to crankshaft rotation. A sensor is used to monitor the position of the camshaft.

- **When Monitored:**

  Variable Cam Timing (VCT) phasing accuracy is monitored under the following conditions: (1) Engine speed is at least 150 rpm; (2) No CMP sensor or CKP sensor plausibility errors. This is performed even when phasing control is not enabled, to verify the actuator is keeping the camshaft at the default (lockpin) phase.
- **Set Condition:**

  The actual measured camshaft phase does not match the desired camshaft phasing set point. Two Trip Fault. Three good trips to turn off the MIL.

Possible Causes
ENGINE OIL DIRTY OR CONTAMINATED
INCORRECT ENGINE OIL VISCOSITY
INSUFFICIENT ENGINE OIL PRESSURE
(K442) CMP CONTROL CIRCUIT OPEN OR SHORTED
(Z908) SOLENOID GROUND CIRCUIT EXCESSIVE RESISTANCE OR OPEN
CAMSHAFT POSITION SOLENOID (VARIABLE CAM TIMING SOLENOID)
CAMSHAFT PHASER
IMPROPER ASSEMBLY OF CAMSHAFT/CRANKSHAFT TIMING CHAIN AND SPROCKETS
ENGINE OIL PRESSURE SENSOR OR CIRCUIT
ENGINE OIL TEMPERATURE SENSOR OR CIRCUIT
HIGH FRICTION IN CAMSHAFT OR OTHER VALVETRAIN COMPONENTS

Always perform the Pre-Diagnostic Troubleshooting procedure before proceeding. (Refer to 28 - DTC-Based Diagnostics/MODULE, Powertrain Control (PCM) - Standard Procedure).

1. DTC IS ACTIVE

NOTE: Diagnose and repair P0013 Bank 1 Camshaft 2 Position Actuator Circuit Open DTC before continuing.

NOTE: Diagnose and repair any Crankshaft-Camshaft Timing Misalignment DTCs before continuing with this test.

NOTE: Diagnose and repair any Oil Temperature Sensor DTCs before continuing with this test.

NOTE: The most likely cause for this DTC to set is high friction in the valvetrain components such as the camshaft and valve springs.

NOTE: If this code has set with less than 1000 miles on the odometer the cause of the code may be that the engine assembly is tight and the engine needs time to loosen up.

NOTE: Diagnose and repair any system voltage DTCs before continuing with this test.

NOTE: Diagnose and repair any CMP Sensor or CKP Sensor DTCs before continuing with this test.

NOTE: Diagnose and repair any oil pressure or Oil Pressure Sensor DTCs before continuing with this test.

1. Start the engine and allow it to reach normal operating temperature.

WARNING: When the engine is operating, do not stand in direct line with the fan. Do not put your hands near the pulleys, belts, or fan. Do not wear loose clothing. Failure to follow these instructions can result possible serious or fatal injury.

2. With the scan tool, view DTCs and read and record the related Freeze Frame data.
3. With the scan tool, Clear DTCs in the Powertrain Control Module (PCM).
4. Test drive the vehicle under the conditions in which the DTC is monitored, as outlined above.
5. With the scan tool, select View DTCs.

Is the DTC Active or Pending at this time?

Yes

- Go To 2

No

- Perform the INTERMITTENT CONDITION Diagnostic Procedure. (Refer to 28 - DTC-Based Diagnostics/MODULE, Powertrain Control (PCM) - Standard Procedure).

2. CAMSHAFT POSITION SOLENOID CLEANING

1. With the scan tool preform the Exhaust Phaser 1 Cleaning function

Did the DTC reset?

Yes

- Go To 3

No

- Perform the INTERMITTENT CONDITION Diagnostic Procedure. (Refer to 28 - DTC-Based Diagnostics/MODULE, Powertrain Control (PCM) - Standard Procedure).

3. ENGINE OIL DIRTY OR CONTAMINATED

1. Turn the ignition off.
2. Inspect engine oil for signs of contamination, sludge or foreign material.

NOTE: If the engine oil is contaminated, inspect the Camshaft Position Solenoid for contamination, foreign material or any condition that would restrict movement of the valve. The solenoid must be replaced if it is damaged or if valve movement is restricted due to contamination.

Were any problems found?

Yes

- Clean the engine oil system, including oil passages.
- Perform the POWERTRAIN VERIFICATION TEST. (Refer to 28 - DTC-Based Diagnostics/MODULE, Powertrain Control (PCM) - Standard Procedure).

No

- Go To 4

4. ENGINE OIL PRESSURE

1. Turn the ignition off.
2. Check the engine oil pressure in accordance with the Service Information. (Refer to 09 - Engine/Lubrication - Diagnosis and Testing)
3. Using the scan tool, compare the engine oil pressure reading you get off of a gauge and compare that reading to what the scan tool displays with the engine running. If the pressure reading on the scan tool is not close to what the gauge displays, perform the diagnostic procedure for P0521-ENGINE OIL PRESSURE SENSOR PERFORMANCE.

Is the engine oil pressure within the specifications outlined in the Service Information?

Yes

- Go To 5

No

- Inspect and repair the cause of the low oil pressure condition.
- Perform the POWERTRAIN VERIFICATION TEST. (Refer to 28 - DTC-Based Diagnostics/MODULE, Powertrain Control (PCM) - Standard Procedure).

5. INCORRECT ENGINE OIL TEMPERATURE READING

1. Turn the ignition on.
2. Using a scan tool monitor the engine oil temperature and compare the engine oil temperature to the Engine Coolant Temperature value.

Does the Engine Oil Temperature seem excessively high or low as compared to the Engine Coolant Temperature?

Yes

- Perform the diagnostic procedure P0196-ENGINE OIL TEMPERATURE SENSOR PERFORMANCE for further assistance.
- Perform the POWERTRAIN VERIFICATION TEST. (Refer to 28 - DTC-Based Diagnostics/MODULE, Powertrain Control (PCM) - Standard Procedure).

No

- Go To 6

6. INCORRECT ENGINE OIL VISCOSITY

1. Review service history to determine if the correct viscosity engine oil was used.

Were any problems found?

Yes

- Change the engine oil in accordance with the Service Information and retest.
- Perform the POWERTRAIN VERIFICATION TEST. (Refer to 28 - DTC-Based Diagnostics/MODULE, Powertrain Control (PCM) - Standard Procedure).

No

- Go To 7

7. CAMSHAFT POSITION SOLENOID CONTROL ACTUATION

1. Turn the ignition on.

NOTE: The Camshaft Position Solenoid actuates whenever the ignition key is turned on for cleaning purposes. This actuation also take place when the engine stops. So if you are testing the solenoid with a test light it is possible that you will see the solenoid actuate at key on and engine stop.

2. With the scan tool, actuate the Camshaft Position Solenoid control to toggle on and off.
3. Listen for the Camshaft Position Solenoid to click open and closed during the actuation.

Does the Camshaft Position Solenoid click open and closed during the actuation?

Yes

- Go To 11

No

- Go To 8

8. EXCESSIVE RESISTANCE OR SHORT TO GROUND IN THE (K442) VCT CONTROL CIRCUIT

1. Turn the ignition off
2. Disconnect the Camshaft Position Solenoid (Variable Cam Timing Solenoid) harness connector.
3. Turn the ignition on.
4. With the scan tool actuate the VCT Solenoid.
5. Using a 12-volt test light connected to ground, probe the (K442) CMP Control circuit in the Camshaft Position Solenoid harness connector.

NOTE: The test light should be off unless you have a short to ground.

6. With the scan tool, actuate the Camshaft Position Solenoid (VCT Solenoid DC) control to the ON position.

NOTE: The test light should be illuminated and bright. Compare the brightness to that of a direct connection to the battery.

Is the test light illuminated and bright during the actuation and was it off when required?

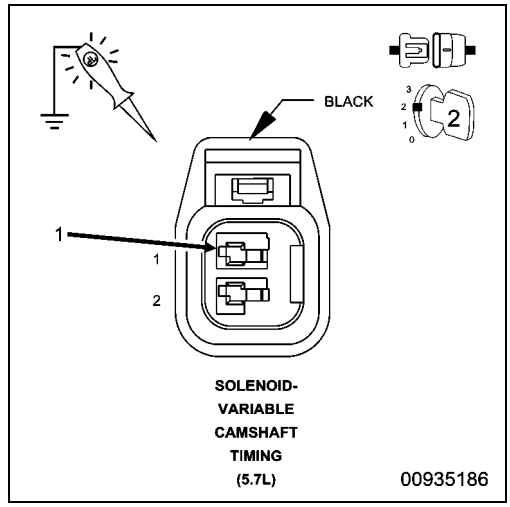

Yes

- Go To 10

No

- Repair the excessive resistance or short to ground in the (K442) CMP Control circuit.
- Perform the POWERTRAIN VERIFICATION TEST. (Refer to 28 - DTC-Based Diagnostics/MODULE, Powertrain Control (PCM) - Standard Procedure).

9. EXCESSIVE RESISTANCE OR OPEN (Z908) SOLENOID GROUND CIRCUIT

1. Turn the ignition off
2. Measure the resistance of the (Z908) VCT Solenoid ground circuit from the VCT Solenoid harness connector.

Is the resistance below 5.0 Ohms?

Yes

- Go To 8

No

- Repair the excessive resistance or open in the (Z908) VCT Solenoid ground circuit.
- Perform the POWERTRAIN VERIFICATION TEST. (Refer to 28 - DTC-Based Diagnostics/MODULE, Powertrain Control (PCM) - Standard Procedure).

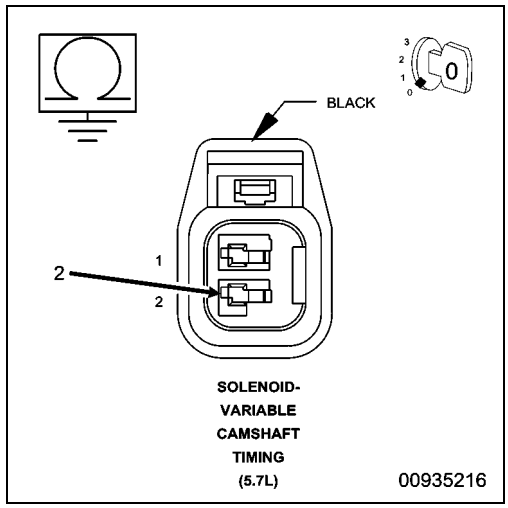

10. CAMSHAFT POSITION SOLENOID

1. Turn the ignition off.
2. Inspect the wiring and connectors between the Camshaft Position Solenoid (Variable Cam Timing Solenoid) and the Powertrain Control Module (PCM).
3. Look for any chafed, pierced, pinched or partially broken wires.
4. Look for broken, bent, pushed out or corroded terminals.
5. Verify that there is good pin to terminal contact in the Camshaft Position Solenoid and Powertrain Control Module connectors.
6. Remove the Camshaft Position Solenoid (VCT Solenoid) in accordance with the Service Information.
7. Inspect the Camshaft Position Solenoid (VCT Solenoid) for contamination, foreign material or any condition that would restrict movement of the valve.

NOTE: The solenoid must be replaced if it is damaged or if valve movement is restricted due to contamination.

Were any problems found?

Yes

- Repair as necessary.
- Perform the POWERTRAIN VERIFICATION TEST. (Refer to 28 - DTC-Based Diagnostics/MODULE, Powertrain Control (PCM) - Standard Procedure).

No

- Replace the Camshaft Position Solenoid (VCT Solenoid) in accordance with the Service Information.
- Perform the POWERTRAIN VERIFICATION TEST. (Refer to 28 - DTC-Based Diagnostics/MODULE, Powertrain Control (PCM) - Standard Procedure).

11. CAMSHAFT PHASER

1. Turn the ignition off.
2. Remove the Camshaft Phaser in accordance with the Service information. (Refer to 09 - Engine/Valve Timing/CHAIN and SPROCKETS, Timing - Removal)
3. Inspect the Phaser for contamination, foreign material or any condition that would restrict operation of the Phaser.
4. Inspect the Phaser oil passages for signs of sludge or foreign material.

NOTE: The Phaser should not be disassembled. If the Phaser is damaged, it must be replaced.

Were any problems found with the Camshaft Phaser?

Yes

- Replace the Camshaft Phaser in accordance with the Service Information.
- Perform the POWERTRAIN VERIFICATION TEST. (Refer to 28 - DTC-Based Diagnostics/MODULE, Powertrain Control (PCM) - Standard Procedure).

No

- Go To 12

12. HIGH FRICTION IN THE VALVETRAIN COMPONENTS

1. Turn the ignition off.
2. Remove the Camshaft in accordance with the Service information.
3. While removing the components to remove the Camshaft inspect the rocker arms, valve springs and pushrods that may cause an increase in the torque to rotate the camshaft.
4. Inspect the camshaft and camshaft bearings for any signs of excessive wear.

Were any problems found with the camshaft or any other valvetrain components?

Yes

- Repair as necessary.
- Perform the POWERTRAIN VERIFICATION TEST. (Refer to 28 - DTC-Based Diagnostics/MODULE, Powertrain Control (PCM) - Standard Procedure).

No

- Replace the Powertrain Control Module (PCM) in accordance with the Service Information.
- Perform the POWERTRAIN VERIFICATION TEST. (Refer to 28 - DTC-Based Diagnostics/MODULE, Powertrain Control (PCM) - Standard Procedure).

P0013-BANK 1 CAMSHAFT 2 POSITION ACTUATOR CIRCUIT OPEN

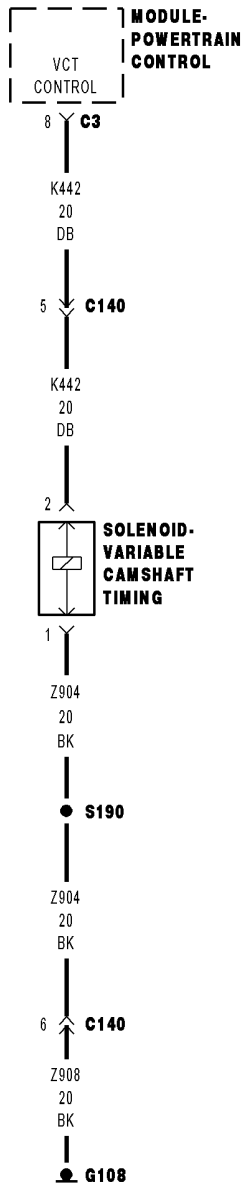

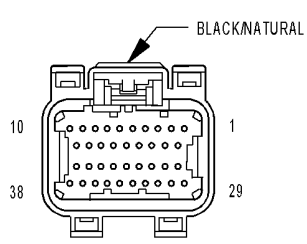

MODULE-
POWERTRAIN
CONTROL C3
(GAS)

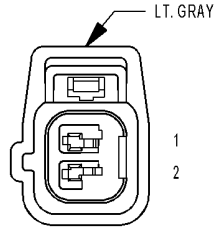

SOLENOID-
VARIABLE
CAMSHAFT
TIMING
(5.7L)

01420715

For a complete wiring diagram, **refer to the Wiring Information**.

Theory of Operation

Variable Cam Timing (VCT) allows the Powertrain Control Module (PCM) to monitor and adjust the position of the camshaft, based on desired torque levels and engine operating conditions. The camshaft design allows for the exhaust lobes to be adjusted while the intake lobes are not adjustable all on one camshaft. The PCM controls a solenoid operated control valve, that is used to direct oil pressure to hydraulic actuator mounted between the camshaft and its driving sprocket. The oil pressure alters the angular position or phasing of the camshaft relative to crankshaft rotation. A sensor is used to monitor the position of the camshaft.

- **When Monitored:**

  With the battery voltage is between 11 and 18 volts with the engine running.
- **Set Condition:**

  The Powertrain Control Module (PCM) detects that the actual voltage of the VCT solenoid control circuit does not match the intended state. One Trip Fault. Three good trips to turn off the MIL.

Possible Causes
EXCESSIVE RESISTANCE IN THE (K442) VCT (VARIABLE CAM TIMING) SOLENOID CONTROL CIRCUIT
(K442) VCT CONTROL CIRCUIT OPEN OR SHORTED TO GROUND
(K442) VCT CONTROL CIRCUIT SHORTED TO VOLTAGE
EXCESSIVE RESISTANCE IN THE (Z908) VCT SOLENOID GROUND CIRCUIT
VCT SOLENOID
POWERTRAIN CONTROL MODULE (PCM)

Always perform the Pre-Diagnostic Troubleshooting procedure before proceeding. (Refer to 28 - DTC-Based Diagnostics/MODULE, Powertrain Control (PCM) - Standard Procedure).

1. DTC IS ACTIVE

1. Ignition on, engine not running.
2. With the scan tool, record the related Freeze Fame Data and clear the DTCs in the Powertrain Control Module (PCM).
3. Start the engine and allow it to reach normal operating temperature. Hold engine speed greater than 1,000 rpm for at least one minute. The DTC will not be set unless cam phasing becomes active, which may not occur if speed never leaves idle.

WARNING: When the engine is operating, do not stand in direct line with the fan. Do not put your hands near the pulleys, belts, or fan. Do not wear loose clothing. Failure to follow these instructions can result possible serious or fatal injury.

4. With the scan tool, select View DTCs.

Is the DTC Active or Pending at this time?

Yes

- Go To 2

No

- Perform the INTERMITTENT CONDITION diagnostic procedure. (Refer to 28 - DTC-Based Diagnostics/MODULE, Powertrain Control (PCM) - Standard Procedure).

2. (K442) VCT CONTROL CIRCUIT SHORTED TO VOLTAGE

1. Turn the ignition off.
2. Disconnect the VCT Solenoid harness connector.
3. Disconnect the C3 Powertrain Control Module (PCM) harness connector.
4. Turn the ignition on.
5. Measure the voltage on the (K442) VCT Control circuit at the VCT Solenoid harness connector.

Is the voltage greater than 1.0 volt?

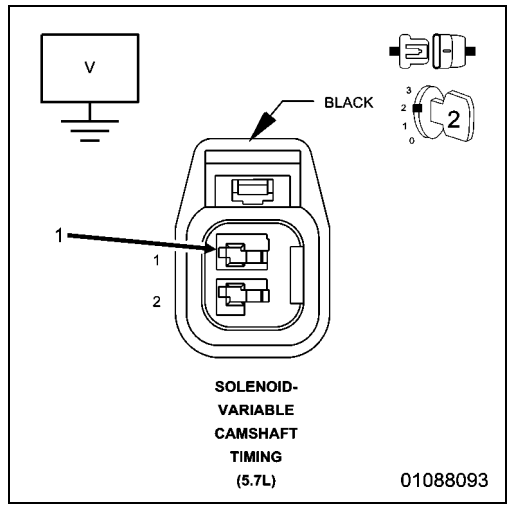

Yes

- Repair the short to voltage in the (K442) VCT Control circuit.
- Perform the POWERTRAIN VERIFICATION TEST. (Refer to 28 - DTC-Based Diagnostics/MODULE, Powertrain Control (PCM) - Standard Procedure).

No

- Go To 3

3. EXCESSIVE RESISTANCE IN THE (K442) VCT CONTROL CIRCUIT

1. Turn the ignition off.

CAUTION: Do not probe the PCM harness connectors. Probing the PCM harness connectors will damage the PCM terminals resulting in poor terminal to pin connection. Install the PCM Pinout Box Kit, NGC, 38 Position 8815A to perform diagnosis.

2. Measure the resistance of the (K442) VCT Control circuit between the VCT solenoid harness connector and the appropriate terminal of PCM Pinout Box 8815A.

Is the resistance below 5.0 Ohms?

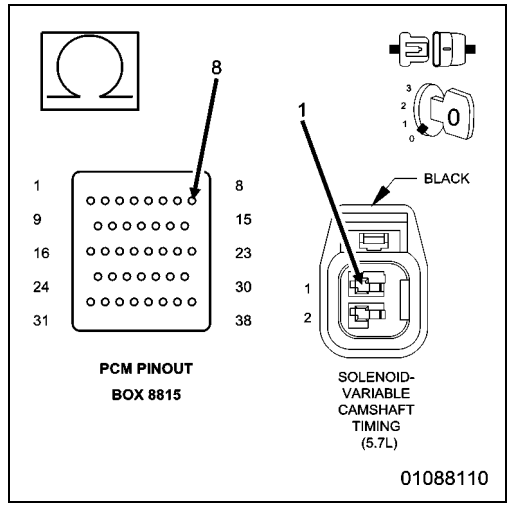

Yes

- Go To 4

No

- Repair the excessive resistance in the (K442) VCT Control circuit.
- Perform the POWERTRAIN VERIFICATION TEST. (Refer to 28 - DTC-Based Diagnostics/MODULE, Powertrain Control (PCM) - Standard Procedure).

4. (K442) VCT CONTROL CIRCUIT SHORTED TO GROUND

1. Measure the resistance between ground and the (K442) VCT Control circuit at the VCT solenoid harness connector.

Is the resistance greater than 20k Ohms?

Yes

- Go To 5

No

- Repair the short to ground in the (K442) VCT Control circuit.
- Perform the POWERTRAIN VERIFICATION TEST. (Refer to 28 - DTC-Based Diagnostics/MODULE, Powertrain Control (PCM) - Standard Procedure).

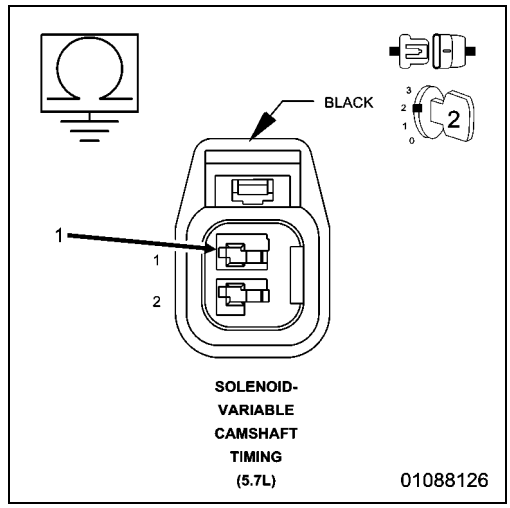

5. VCT SOLENOID

1. Connect the C3 Powertrain Control Module (PCM) harness connector.
2. Turn the ignition on.
3. Using a 12-volt test light connected to 12 Volts probe the (K442) VCT Control circuit in the VCT solenoid harness connector.

NOTE: The test light should be off unless you have a short to ground, except for a brief period immediately after turning ignition on.

4. With the scan tool, actuate the VCT solenoid control to the ON (100%) position.

NOTE: The test light should be illuminated and bright. Compare the brightness to that of a direct connection to the battery.

Is the test light illuminated and bright during the actuation and was it off when required?

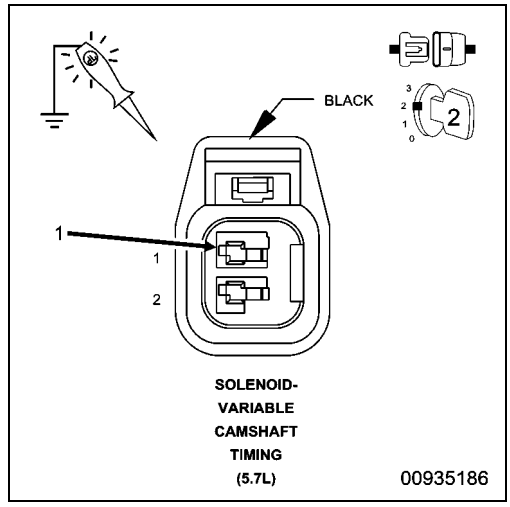

Yes

- Verify that there is good pin to terminal contact in the VCT solenoid and Powertrain Control Module connectors. If OK, replace the VCT solenoid in accordance with the Service Information.
- Perform the POWERTRAIN VERIFICATION TEST. (Refer to 28 - DTC-Based Diagnostics/MODULE, Powertrain Control (PCM) - Standard Procedure).

No

- Go To 6

6. EXCESSIVE RESISTANCE OR OPEN IN THE (Z908) VCT SOLENOID GROUND CIRCUIT

1. Turn the ignition off.
2. Measure the resistance between ground and the (Z908) VCT solenoid ground circuit at the VCT Solenoid harness connector.

Is the resistance below 5.0 Ohms?

Yes

- Go To 7

No

- Repair the excessive resistance in the (Z908) VCT solenoid ground control circuit.
- Perform the POWERTRAIN VERIFICATION TEST. (Refer to 28 - DTC-Based Diagnostics/MODULE, Powertrain Control (PCM) - Standard Procedure).

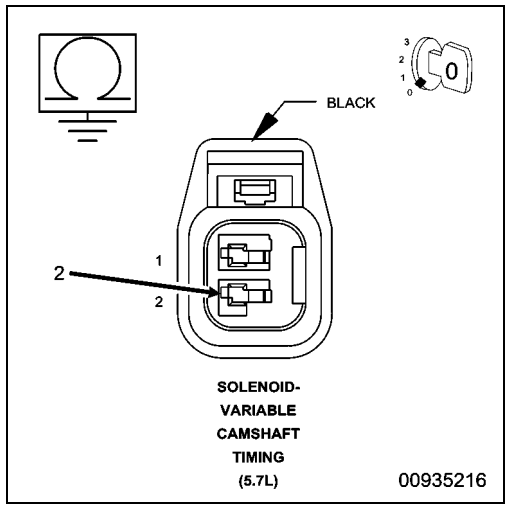

7. POWERTRAIN CONTROL MODULE (PCM)

1. Using the wiring diagram/schematic as a guide, inspect the wiring and connectors between the VCT solenoid and the Powertrain Control Module (PCM).
2. Look for any chafed, pierced, pinched or partially broken wires.
3. Look for broken, bent, pushed out or corroded terminals.
4. Verify that there is good pin to terminal contact in the VCT solenoid and Powertrain Control Module connectors.
5. Refer to any Technical Service Bulletins that may apply.

Were any problems found?

Yes

- Repair as necessary.
- Perform the POWERTRAIN VERIFICATION TEST. (Refer to 28 - DTC-Based Diagnostics/MODULE, Powertrain Control (PCM) - Standard Procedure).

No

- Replace and program the Powertrain Control Module (PCM) in accordance with the Service Information.
- Perform the POWERTRAIN VERIFICATION TEST. (Refer to 28 - DTC-Based Diagnostics/MODULE, Powertrain Control (PCM) - Standard Procedure).

P0014-EXHAUST TARGET ERROR BANK 1

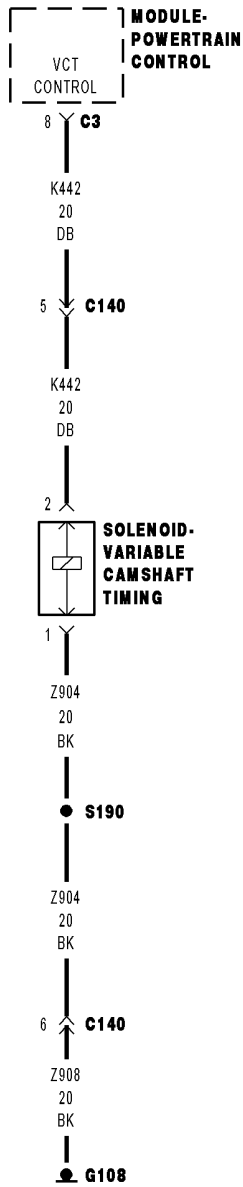

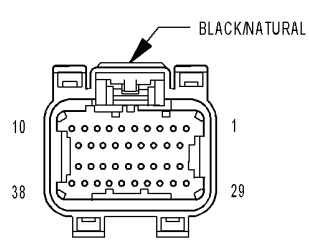

MODULE-
POWERTRAIN
CONTROL C3
(GAS)

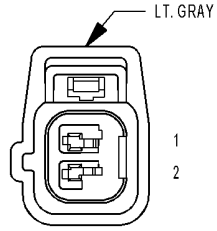

SOLENOID-
VARIABLE
CAMSHAFT
TIMING
(5.7L)

01420715

For a complete wiring diagram, **refer to the Wiring Information**.

Theory of Operation

Variable Cam Timing (VCT) allows the Powertrain Control Module (PCM) to monitor and adjust the position of the camshaft, based on desired torque levels and engine operating conditions. The camshaft design allows for the exhaust lobes to be adjusted while the intake lobes are not adjustable all on one camshaft. The PCM controls a solenoid operated control valve, that is used to direct oil pressure to hydraulic actuator mounted between the camshaft and its driving sprocket. The oil pressure alters the angular position or phasing of the camshaft relative to crankshaft rotation. A sensor is used to monitor the position of the camshaft.

- **When Monitored:**

  Variable Cam Timing (VCT) rationality is monitored under the following conditions: (1) Cam phasing is commanded off of the default (lockpin) position; (2) Oil temperature is between -12° C to 139° C (10° F to 282° F); (3) Battery voltage is greater than 10 Volts; (3) Engine speed is at least 650 to 1400 rpm, depending on oil temperature; (4) No CMP sensor, CKP sensor or OBDI plausibility errors. Before VCT can be enabled, reference adaptation must be completed.
- **Set Condition:**

  The actual camshaft phasing position is not moving towards the desired camshaft phasing position during steady state operation.

Possible Causes
ENGINE OIL DIRTY OR CONTAMINATED
INCORRECT ENGINE OIL VISCOSITY
(K442) VCT CONTROL CIRCUIT OPEN OR HIGH RESISTANCE
VCT SOLENOID
CAMSHAFT PHASER
POWERTRAIN CONTROL MODULE (PCM)

Always perform the Pre-Diagnostic Troubleshooting procedure before proceeding. (Refer to 28 - DTC-Based Diagnostics/MODULE, Powertrain Control (PCM) - Standard Procedure).

1. DTC IS ACTIVE

NOTE: Diagnose and repair any system voltage DTCs before continuing with this test.

NOTE: Diagnose and repair any Camshaft Position (CMP) Sensor or Crankshaft Position (CKP) Sensor DTCs before continuing with this test.

NOTE: Diagnose and repair any oil pressure or oil pressure sensor DTCs before continuing with this test.

1. Start the engine and allow it to reach normal operating temperature.

WARNING: When the engine is operating, do not stand in direct line with the fan. Do not put your hands near the pulleys, belts or fan. Do not wear loose clothing. Failure to follow these instructions may result in possible serious or fatal injury.

2. With the scan tool, record and clear DTCs.
3. Test drive the vehicle under the conditions in which the DTC is monitored, as outlined above.
4. With the scan tool, select View DTCs.

Is the status Active for this DTC?

Yes

- Go To 2

No

- Perform the INTERMITTENT CONDITION diagnostic procedure. (Refer to 28 - DTC-Based Diagnostics/MODULE, Powertrain Control (PCM) - Standard Procedure).

2. VCT POSITION SOLENOID CLEARING

1. With the scan tool preform the Exhaust Phaser 1 Cleaning function

Did the DTC reset?

Yes

- Go To 3

No

- Perform the INTERMITTENT CONDITION diagnostic procedure. (Refer to 28 - DTC-Based Diagnostics/MODULE, Powertrain Control (PCM) - Standard Procedure).

3. VCT SOLENOID INSPECTION

1. Turn the ignition off.
2. Remove the VCT Solenoid in accordance with the Service Information. Do not disconnect the harness connector.
3. Perform a visual inspection of the open part of the VCT Solenoid (spool valve) for the presence of any debris (metallic or non-metallic).

NOTE: If contamination is observed, the VCT Solenoid must be replaced. After replacing the valve, verify that the engine oil has been replaced with the appropriate oil in accordance with the Service Information.

Were any problems found?

Yes

- Replace the VCT Solenoid in accordance with the Service Information.
- Perform the POWERTRAIN VERIFICATION TEST. (Refer to 28 - DTC-Based Diagnostics/MODULE, Powertrain Control (PCM) - Standard Procedure).

No

- Go To 4

4. VCT SOLENOID ACTUATION

1. Turn the ignition on.
2. With the scan tool, actuate the VCT Solenoid.
3. Perform a visual inspection of the spool valve for erratic movement or sticking during the forward and reverse stroke.

NOTE: If sticking or erratic movement is observed, the VCT Solenoid must be replaced. After replacing the valve, verify that the engine oil has been replaced with the appropriate oil in accordance with the Service Information.

Select the appropriate response from the choices below:

Normal operation. No sticking or erratic movement is observed

- Go To 5

No movement is observed.

- Go To 7

Sticking or erratic movement is observed.

- Replace the VCT Solenoid in accordance with the Service Information.
- Perform the POWERTRAIN VERIFICATION TEST. (Refer to 28 - DTC-Based Diagnostics/MODULE, Powertrain Control (PCM) - Standard Procedure).

5. INCORRECT ENGINE OIL VISCOSITY

1. Review the vehicle service history to determine if the correct viscosity engine oil was used.

Were any problems found?

Yes

- Change the engine oil and filter in accordance with the Service Information and retest.
- Perform the POWERTRAIN VERIFICATION TEST. (Refer to 28 - DTC-Based Diagnostics/MODULE, Powertrain Control (PCM) - Standard Procedure).

No

- Go To 6

6. ENGINE OIL DIRTY OR CONTAMINATED

1. Turn the ignition off.
2. Inspect engine oil for signs of contamination, sludge or foreign material.

Were any problems found?

Yes

- Clean the engine of oil sludge. Once the engine is cleaned of excessive sludge, replace oil and oil filter in accordance with the Service Information.
- Perform the POWERTRAIN VERIFICATION TEST. (Refer to 28 - DTC-Based Diagnostics/MODULE, Powertrain Control (PCM) - Standard Procedure).

No

- Go To 11

7. VCT SOLENOID WIRING AND CONNECTORS

1. Turn the ignition off.
2. Inspect the wiring and connectors between the VCT Solenoid and the Powertrain Control Module (PCM).
3. Look for any chafed, pierced, pinched or partially broken wires.
4. Look for broken, bent, pushed out or corroded terminals.

Were any problems found?

Yes

- Repair as necessary.
- Perform the POWERTRAIN VERIFICATION TEST. (Refer to 28 - DTC-Based Diagnostics/MODULE, Powertrain Control (PCM) - Standard Procedure).

No

- Go To 8

8. (K442) VCT CONTROL CIRCUIT ACTUATION

1. With the scan tool, actuate the VCT Solenoid to the ON (maximum) position.
2. Using a 12-volt test light connected to ground, check the (K442) VCT control circuit in the VCT Solenoid harness connector.

NOTE: The test light should be illuminated and bright. Compare the brightness to that of a direct connection to the battery.

Is the test light illuminated and bright?

Yes

- Go To 10

No

- Go To 9

9. (K442) VCT CONTROL CIRCUIT OPEN OR HIGH RESISTANCE

1. Turn the ignition off.
2. Disconnect the Powertrain Control Module (PCM).

NOTE: When checking circuits at the Powertrain Control Module (PCM), be careful not to damage or distort the connector terminals. Improper measurement technique could result in poor pin to terminal contact.

3. Measure the resistance of the (K442) VCT Control circuit between the VCT Solenoid harness connector and the Powertrain Control Module (PCM) harness connector.

Is the resistance below 5.0 Ohms?

Yes

- Go To 12

No

- Repair the (K442) VCT Control circuit for an open circuit or high resistance.
- Perform the POWERTRAIN VERIFICATION TEST. (Refer to 28 - DTC-Based Diagnostics/MODULE, Powertrain Control (PCM) - Standard Procedure).

10. VCT SOLENOID

1. Turn the ignition off.
2. Inspect the wiring and connectors between the VCT Solenoid and the Powertrain Control Module (PCM).
3. Look for any chafed, pierced, pinched or partially broken wires.
4. Look for broken, bent, pushed out or corroded terminals.

Were any problems found?

Yes

- Repair as necessary.
- Perform the POWERTRAIN VERIFICATION TEST. (Refer to 28 - DTC-Based Diagnostics/MODULE, Powertrain Control (PCM) - Standard Procedure).

No

- Replace the VCT Solenoid in accordance with the Service Information.
- Perform the POWERTRAIN VERIFICATION TEST. (Refer to 28 - DTC-Based Diagnostics/MODULE, Powertrain Control (PCM) - Standard Procedure).

11. CAMSHAFT PHASER

1. Turn the ignition off.
2. Remove Camshaft Phaser in accordance with the Service information.
3. Inspect the Phaser for contamination, foreign material or any condition that would restrict operation of the Phaser.
4. Inspect the Phaser oil passages for signs of sludge or foreign material.

NOTE: The Phaser should not be disassembled. If the Phaser is damaged, it must be replaced.

Were any problems found?

Yes

- Repair as necessary.
- Perform the POWERTRAIN VERIFICATION TEST. (Refer to 28 - DTC-Based Diagnostics/MODULE, Powertrain Control (PCM) - Standard Procedure).

No

- Perform the INTERMITTENT CONDITION diagnostic procedure. (Refer to 28 - DTC-Based Diagnostics/MODULE, Powertrain Control (PCM) - Standard Procedure).

12. POWERTRAIN CONTROL MODULE (PCM)

1. Turn the ignition off.
2. Inspect the wiring and connectors between the VCT solenoid and the Powertrain Control Module (PCM).
3. Look for any chafed, pierced, pinched or partially broken wires.
4. Look for broken, bent, pushed out or corroded terminals.
5. Refer to any TSBs that apply.

Were any problems found?

Yes

- Repair as necessary.
- Perform the POWERTRAIN VERIFICATION TEST. (Refer to 28 - DTC-Based Diagnostics/MODULE, Powertrain Control (PCM) - Standard Procedure).

No

- Replace and program the Powertrain Control Module in accordance with the Service Information.
- Perform the POWERTRAIN VERIFICATION TEST. (Refer to 28 - DTC-Based Diagnostics/MODULE, Powertrain Control (PCM) - Standard Procedure).

P0016-CRANKSHAFT/CAMSHAFT TIMING MISALIGNMENT

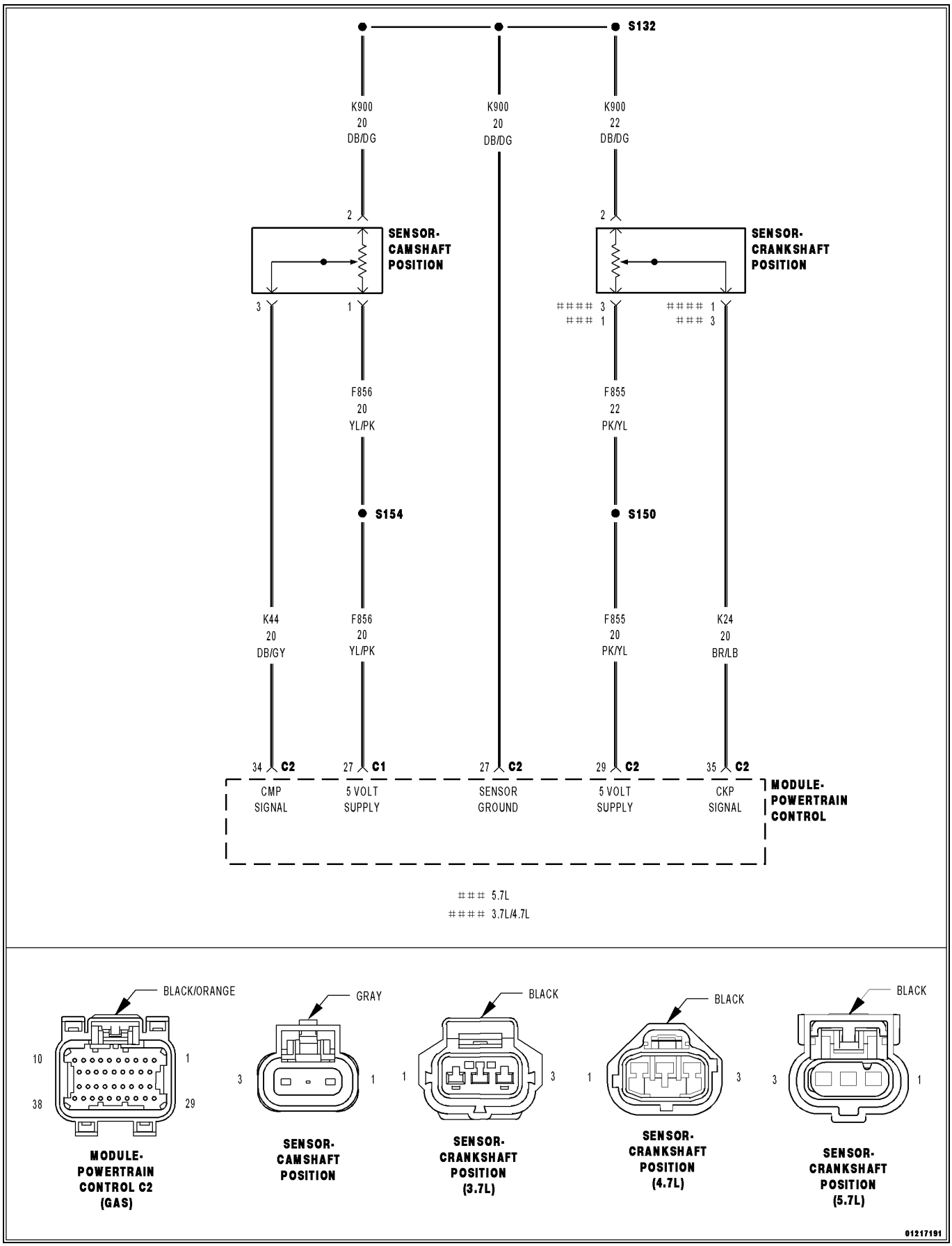

For a complete wiring diagram, **refer to the Wiring Information**.

- **When Monitored:**
  With the engine speed between 480 and 6816 RPM and no Camshaft Position (CMP) Sensor or Crankshaft Position (CKP) Sensor DTCs detected.
- **Set Condition:**
  Powertrain Control Module (PCM) detects an error when the camshaft position is out of phase with the crankshaft position. One Trip Fault. Three good trips to turn off the MIL.

Possible Causes
ERRATIC CAM POSITION SENSOR SIGNAL
CAMSHAFT POSITION SENSOR TONE WHEEL/PULSE RING
ERRATIC CRANKSHAFT POSITION SENSOR SIGNAL
CRANKSHAFT POSITION SENSOR TONE WHEEL/PULSE RING
TIMING SPROCKET ALIGNMENT
CAMSHAFT POSITION SENSOR
CRANKSHAFT POSITION SENSOR

Always perform the Pre-Diagnostic Troubleshooting procedure before proceeding. (Refer to 28 - DTC-Based Diagnostics/MODULE, Powertrain Control (PCM) - Standard Procedure).

1. ACTIVE DTC

1. Turn the ignition on.
2. With the scan tool select View DTCs.
3. Record the related Freeze Frame data.
4. With the scan tool clear DTCs.
5. Start the engine and allow it to reach operating temperature.

WARNING: When the engine is operating, do not stand in direct line with the fan. Do not put your hands near the pulleys, belts or fan. Do not wear loose clothing. Failure to follow these instructions may result in possible serious or fatal injury.

6. With the scan tool select View DTCs.

NOTE: If the DTC does not reset it may be necessary to test drive the vehicle.

Is the DTC Active at this time?

Yes, non Variable Camshaft Timing (VCT) vehicle

- Go To 3

Yes, vehicles with VCT

- Go To 2

No

- Perform the INTERMITTENT CONDITION diagnostic procedure. (Refer to 28 - DTC-Based Diagnostics/MODULE, Powertrain Control (PCM) - Standard Procedure).

2. CAMSHAFT POSITION SOLENOID CLEANING

1. With the scan tool perform the Exhaust Phaser 1 Cleaning function.

Did the DTC reset?

Yes

- Go To 3

No

- Perform the INTERMITTENT CONDITION diagnostic procedure. (Refer to 28 - DTC-Based Diagnostics/MODULE, Powertrain Control (PCM) - Standard Procedure).

3. CAMSHAFT POSITION SENSOR CIRCUIT WIRING OR CONNECTORS

1. Using the wiring diagram/schematic as a guide, inspect the wiring and connectors between the Camshaft Position (CMP) Sensor and the Powertrain Control Module (PCM).
2. Look for any chafed, pierced, pinched or partially broken wires.
3. Look for broken, bent, pushed out or corroded terminals.
4. Inspect the Camshaft Position Sensor for conditions such as loose mounting screws, damage or cracks.

Were any problems found?

Yes

- Repair as necessary.
- Perform the POWERTRAIN VERIFICATION TEST. (Refer to 28 - DTC-Based Diagnostics/MODULE, Powertrain Control (PCM) - Standard Procedure).

No

- Go To 4

4. CRANKSHAFT POSITION SENSOR CIRCUIT WIRING OR CONNECTORS

1. Using the wiring diagram/schematic as a guide, inspect the wiring and connectors between the Crankshaft Position (CKP) Sensor and the PCM.
2. Verify there is good pin to terminal contact in the CKP sensor and PCM connectors.
3. Look for any chafed, pierced, pinched or partially broken wires.
4. Look for broken, bent, pushed out or corroded terminals.
5. Inspect the CKP sensor for conditions such as loose mounting screws, damage or cracks.

Were any problems found?

Yes

- Repair as necessary.
- Perform the POWERTRAIN VERIFICATION TEST. (Refer to 28 - DTC-Based Diagnostics/MODULE, Powertrain Control (PCM) - Standard Procedure).

No

- Go To 5

5. CRANKSHAFT, TONE WHEEL OR FLEX PLATE

1. Turn the ignition off.
2. Remove the Crankshaft Position Sensor.
3. Inspect the Crankshaft Position Sensor and mounting area for any condition that would result in an incorrect signal, such as damage, evidence of foreign material or excessive movement.

Were any problems found?

Yes

- Repair as necessary in accordance with the Service Information.
- Perform the POWERTRAIN VERIFICATION TEST. (Refer to 28 - DTC-Based Diagnostics/MODULE, Powertrain Control (PCM) - Standard Procedure).

No

- Go To 6

6. CAMSHAFT, TONE WHEEL OR PULSE RING

1. Turn the ignition off.
2. Remove the Camshaft Position Sensor.
3. Inspect the Camshaft Position Sensor and mounting area for any condition that would result in an incorrect signal, such as damage, evidence of foreign material or excessive movement.

Were any problems found?

Yes

- Repair as necessary in accordance with the Service Information.
- Perform the POWERTRAIN VERIFICATION TEST. (Refer to 28 - DTC-Based Diagnostics/MODULE, Powertrain Control (PCM) - Standard Procedure).

No

- Go To 7

7. TIMING SPROCKET ALIGNMENT

1. Turn the ignition off.
2. Verify proper timing sprocket alignment in accordance with the Service Information.

Were any problems found?

Yes

- Repair as necessary in accordance with the Service Information.
- Perform the POWERTRAIN VERIFICATION TEST. (Refer to 28 - DTC-Based Diagnostics/MODULE, Powertrain Control (PCM) - Standard Procedure).

No

- Go To 8

8. CAMSHAFT POSITION SENSOR IRREGULAR SIGNAL

1. Turn the ignition off.
2. Install any previously removed components. Connect all connectors.
3. Using a lab scope and the Miller special tool Terminal Probe 6801, back probe the (K44) CMP Signal circuit in the Camshaft Position Sensor harness connector.
4. Turn the ignition on.
5. Wiggle the related wire harness and lightly tap on the Camshaft Position Sensor while monitoring the lab scope screen.
6. Start the engine.

WARNING: When the engine is operating, do not stand in direct line with the fan. Do not put your hands near the pulleys, belts or fan. Do not wear loose clothing. Failure to follow these instructions may result in possible serious or fatal injury.

7. Monitor the Camshaft Position Sensor signal on the lab scope screen.

Were any Camshaft Position Sensor signals irregular or missing?

Yes

- Go To 10

No

- Go To 9

9. CRANKSHAFT POSITION SENSOR IRREGULAR SIGNAL

1. Turn the ignition off.
2. Using a lab scope and the Miller special tool Terminal Probe 6801, back probe the (K24) CKP Signal circuit in the Crankshaft Position Sensor harness connector.
3. Turn the ignition on.
4. Wiggle the related wire harness and lightly tap on the Crankshaft Position Sensor while monitoring the lab scope screen.
5. Start the engine.

WARNING: When the engine is operating, do not stand in direct line with the fan. Do not put your hands near the pulleys, belts or fan. Do not wear loose clothing. Failure to follow these instructions may result in possible serious or fatal injury.

6. Monitor the Crankshaft Position Sensor signal on the lab scope screen.

Were any Crankshaft Position Sensor signals irregular or missing?

Yes

- Go To 11

No

- Go To 12

10. CAMSHAFT POSITION SENSOR

1. Using the wiring diagram/schematic as a guide, inspect the wiring and connectors between the Camshaft Position Sensor and the Powertrain Control Module (PCM).
2. Look for any chafed, pierced, pinched or partially broken wires.
3. Look for broken, bent, pushed out or corroded terminals.

Were any problems found?

Yes

- Repair as necessary.
- Perform the POWERTRAIN VERIFICATION TEST. (Refer to 28 - DTC-Based Diagnostics/MODULE, Powertrain Control (PCM) - Standard Procedure).

No

- Replace the Camshaft Position Sensor in accordance with the Service Information.
- Perform the POWERTRAIN VERIFICATION TEST. (Refer to 28 - DTC-Based Diagnostics/MODULE, Powertrain Control (PCM) - Standard Procedure).

11. CRANKSHAFT POSITION SENSOR

1. Using the wiring diagram/schematic as a guide, inspect the wiring and connectors between the Crankshaft Position Sensor and the Powertrain Control Module (PCM).
2. Look for any chafed, pierced, pinched or partially broken wires.
3. Look for broken, bent, pushed out or corroded terminals.

Were any problems found?

Yes

- Repair as necessary.
- Perform the POWERTRAIN VERIFICATION TEST. (Refer to 28 - DTC-Based Diagnostics/MODULE, Powertrain Control (PCM) - Standard Procedure).

No

- Replace the Crankshaft Position Sensor in accordance with the Service Information.
- Perform the POWERTRAIN VERIFICATION TEST. (Refer to 28 - DTC-Based Diagnostics/MODULE, Powertrain Control (PCM) - Standard Procedure).

12. POWERTRAIN CONTROL MODULE (PCM)

1. Ignition on, engine not running.
2. With the scan tool clear DTCs.
3. Start the engine.

WARNING: When the engine is operating, do not stand in direct line with the fan. Do not put your hands near the pulleys, belts or fan. Do not wear loose clothing. Failure to follow these instructions may result in possible serious or fatal injury.

4. Monitor the scan tool data relative to this circuit and wiggle test the wiring and connectors.
5. Turn the ignition off.
6. Using the wiring diagram/schematic as a guide, inspect the wiring and connectors between the Camshaft Position Sensor and the Powertrain Control Module (PCM) and between the Camshaft Position Sensor and the Powertrain Control Module (PCM).
7. Look for any chafed, pierced, pinched or partially broken wires.
8. Look for broken, bent, pushed out or corroded terminals. Verify that there is good pin to terminal contact in the sensor and control module connectors.
9. Look for the data to change or for the DTC to reset during the wiggle test.
10. Perform any Technical Service Bulletins that may apply.

Were any problems found?

Yes

- Repair as necessary.
- Perform the POWERTRAIN VERIFICATION TEST. (Refer to 28 - DTC-Based Diagnostics/MODULE, Powertrain Control (PCM) - Standard Procedure).

No

- Replace and program the Powertrain Control Module (PCM) in accordance with the Service Information.
- Perform the POWERTRAIN VERIFICATION TEST. (Refer to 28 - DTC-Based Diagnostics/MODULE, Powertrain Control (PCM) - Standard Procedure).

P0031-O2 SENSOR 1/1 HEATER CIRCUIT LOW

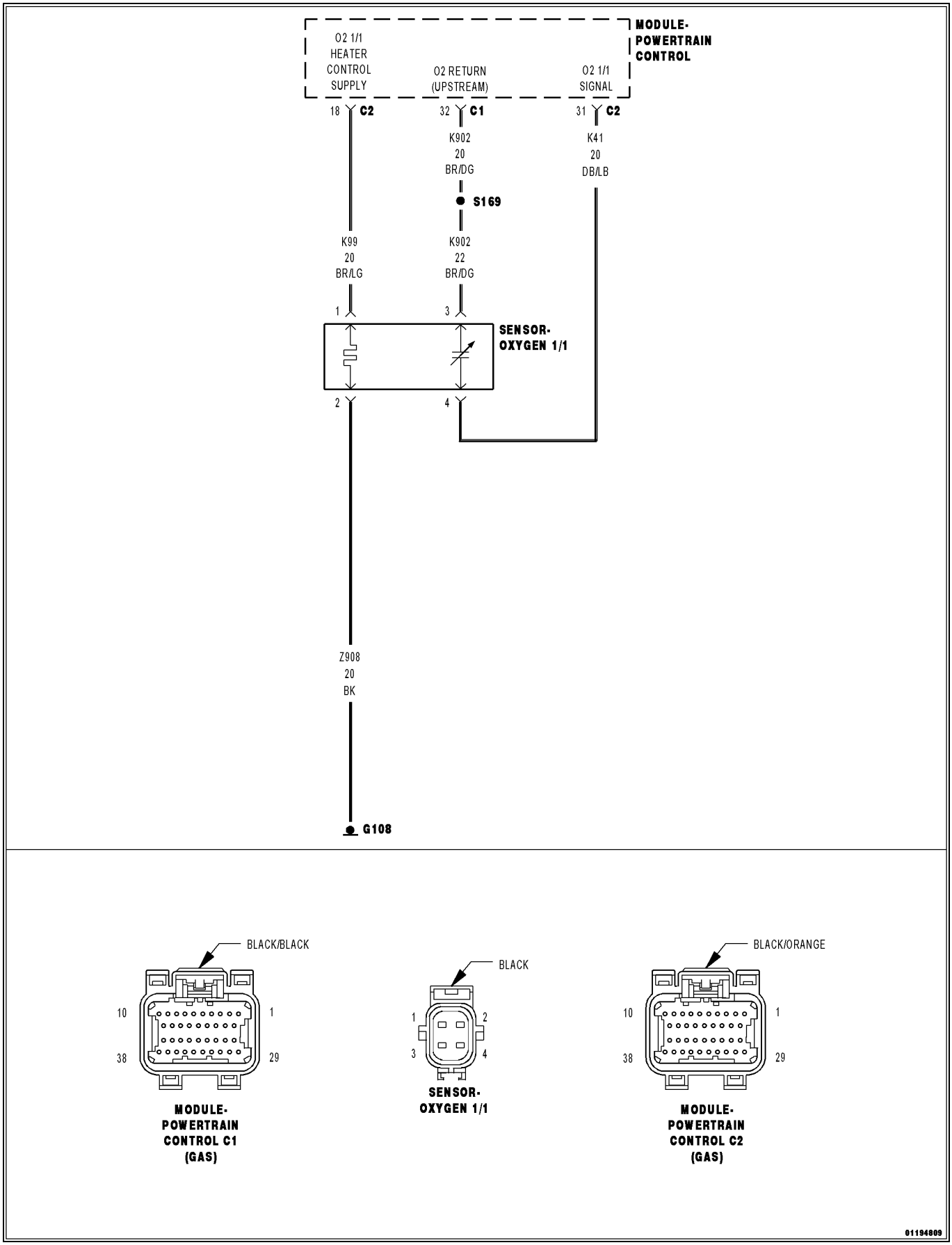

For a complete wiring diagram, **refer to the Wiring Information**.

- **When Monitored:**
  Continuously during O2 heater operation with battery voltage between 10.4 and 15.75 volts.
- **Set Condition:**
  The PCM detects that the O2 sensor heater element input is below the minimum acceptable voltage. One trip fault. Three good trips to turn off the MIL.

Possible Causes
(K99) O2 SENSOR 1/1 HEATER CONTROL CIRCUIT SHORTED TO GROUND
EXCESSIVE RESISTANCE IN THE (K99) O2 SENSOR 1/1 HEATER CONTROL CIRCUIT
O2 SENSOR
POWERTRAIN CONTROL MODULE (PCM)

Always perform the Pre-Diagnostic Troubleshooting procedure before proceeding. (Refer to 28 - DTC-Based Diagnostics/MODULE, Powertrain Control (PCM) - Standard Procedure).

1. DTC IS ACTIVE

1. Start the engine and allow it to idle for at least 60 seconds.

WARNING: When the engine is operating, do not stand in direct line with the fan. Do not put your hands near the pulleys, belts or fan. Do not wear loose clothing. Failure to follow these instructions may result in possible serious or fatal injury.

2. With a scan tool, select View DTCs.

Is the DTC Active at this time?

Yes

- Go To 2

No

- Perform the INTERMITTENT CONDITION diagnostic procedure. (Refer to 28 - DTC-Based Diagnostics/MODULE, Powertrain Control (PCM) - Standard Procedure).

2. O2 HEATER ELEMENT

1. Turn the ignition off.

NOTE: Allow the O2 Sensor to cool down to room temperature.

2. Disconnect the 1/1 O2 Sensor harness connector.
3. Measure the resistance across the O2 Sensor Heater element, between the Heater Control terminal and the Heater ground terminal at the component.

NOTE: O2 Heater Element resistance values should be measured at 21.1° C (70° F). The resistance value will vary with different temperature values.

Is the O2 Sensor Heater Element resistance between 2.0 and 30.0 Ohms?

Yes

- Go To 3

No

- Replace the O2 Sensor.
- Perform the POWERTRAIN VERIFICATION TEST. (Refer to 28 - DTC-Based Diagnostics/MODULE, Powertrain Control (PCM) - Standard Procedure).

3. (K99) O2 1/1 HEATER CONTROL CIRCUIT SHORTED TO GROUND

1. Disconnect the C2 PCM harness connector.
2. Measure the resistance between ground and the (K99) O2 1/1 Heater Control circuit in the O2 Sensor harness connector.

Is the resistance below 5.0 Ohms?

Yes

- Repair the short to ground in the (K99) O2 1/1 Heater Control circuit.
- Perform the POWERTRAIN VERIFICATION TEST. (Refer to 28 - DTC-Based Diagnostics/MODULE, Powertrain Control (PCM) - Standard Procedure).

No

- Go To 4

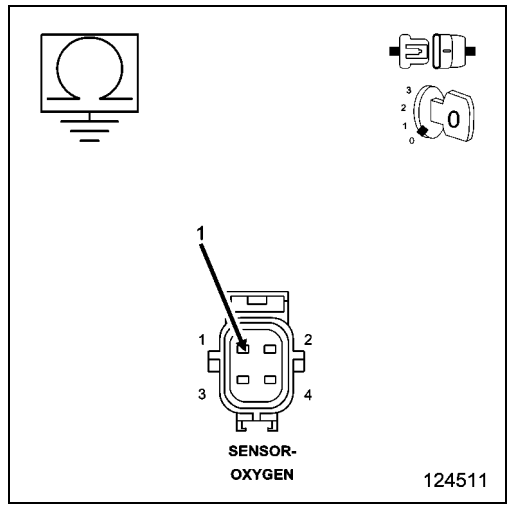

4. EXCESSIVE RESISTANCE IN THE (K99) O2 1/1 HEATER CONTROL CIRCUIT

CAUTION: Do not probe the PCM harness connectors. Probing the PCM harness connectors will damage the PCM terminals, resulting in poor terminal to pin connection. Install the PCM Pinout Box Kit, NGC, 38 Position 8815A to perform diagnosis.

1. Measure the resistance of the (K99) O2 1/1 Heater Control circuit between the 1/1 Oxygen Sensor harness connector and the appropriate terminal of PCM Pinout Box 8815A.

Is the resistance below 0.5 of an Ohm?

Yes

- Go To 5

No

- Repair the excessive resistance in the (K99) O2 1/1 Heater Control circuit.
- Perform the POWERTRAIN VERIFICATION TEST. (Refer to 28 - DTC-Based Diagnostics/MODULE, Powertrain Control (PCM) - Standard Procedure).

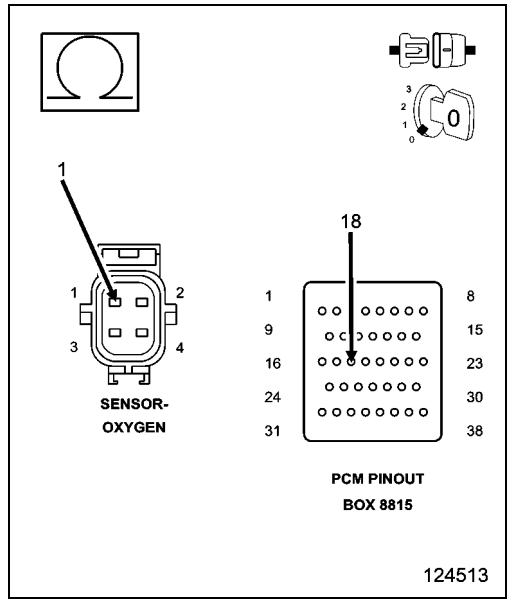

5. POWERTRAIN CONTROL MODULE (PCM)

1. Using the wiring diagram/schematic as a guide, inspect the wiring and connectors between the Oxygen Sensor 1/1 and the Powertrain Control Module (PCM).
2. Look for any chafed, pierced, pinched, or partially broken wires.
3. Look for broken, bent, pushed out or corroded terminals. Verify that there is good pin to terminal contact in the Sensor and Control Module connectors.
4. Refer to any Technical Service Bulletins that may apply.

Were there any problems found?

Yes

- Repair as necessary.
- Perform the POWERTRAIN VERIFICATION TEST. (Refer to 28 - DTC-Based Diagnostics/MODULE, Powertrain Control (PCM) - Standard Procedure).

No

- Replace and program the Powertrain Control Module in accordance with the Service Information.
- Perform the POWERTRAIN VERIFICATION TEST. (Refer to 28 - DTC-Based Diagnostics/MODULE, Powertrain Control (PCM) - Standard Procedure).

P0032-O2 SENSOR 1/1 HEATER CIRCUIT HIGH

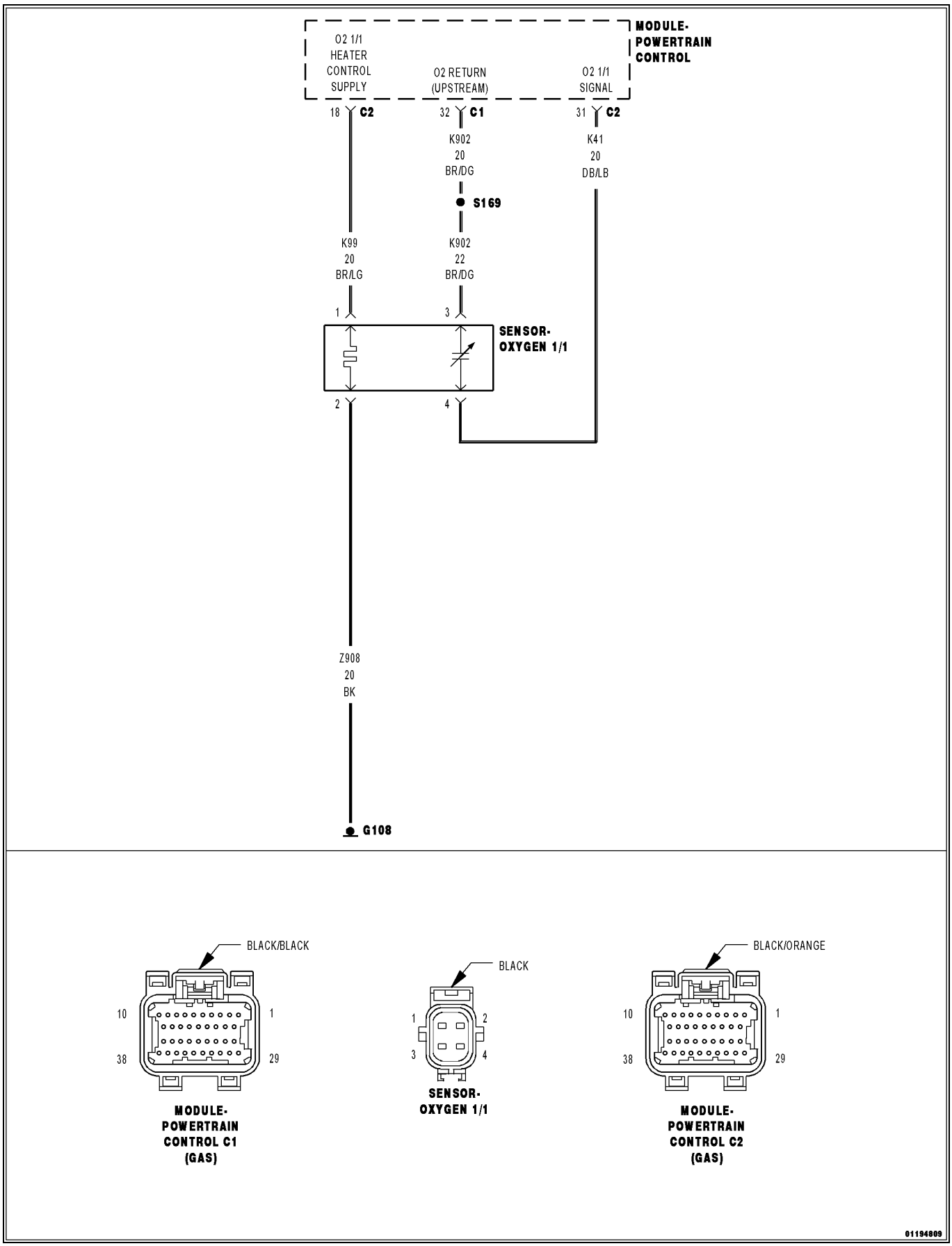

For a complete wiring diagram, **refer to the Wiring Information**.

- **When Monitored:**

  Continuously during O2 heater operation with battery voltage between 10.4 and 15.75 volts.
- **Set Condition:**

  The Powertrain Control Module (PCM) detects that the O2 sensor heater element input is above the maximum acceptable voltage. One trip fault. Three good trips to turn off the MIL.

Possible Causes
(K99) O2 1/1 HEATER CONTROL CIRCUIT OPEN
(Z908) O2 1/1 HEATER GROUND CIRCUIT OPEN
(K99) O2 1/1 HEATER CONTROL CIRCUIT SHORTED TO VOLTAGE
1/1 O2 SENSOR
POWERTRAIN CONTROL MODULE (PCM)

Always perform the Pre-Diagnostic Troubleshooting procedure before proceeding. (Refer to 28 - DTC-Based Diagnostics/MODULE, Powertrain Control (PCM) - Standard Procedure).

1. ACTIVE DTC

WARNING: When the engine is operating, do not stand in direct line with the fan. Do not put your hands near the pulleys, belts, or fan. Do not wear loose clothing. Failure to follow these instructions can result possible serious or fatal injury.

NOTE: If P0688-AUTO SHUTDOWN RELAY SENSE CIRCUIT LOW has set along with any of the O2 SENSOR HEATER CIRCUIT HIGH DTCs, all of the O2 Sensor Heater Control circuits need to be checked for a short to battery voltage.

1. Start the engine and allow it to idle for at least 60 seconds.
2. With a scan tool, select View DTCs.

Is the DTC Active at this time?

Yes

- Go To 2

No

- Perform the INTERMITTENT CONDITION diagnostic procedure. (Refer to 28 - DTC-Based Diagnostics/MODULE, Powertrain Control (PCM) - Standard Procedure).

2. O2 HEATER ELEMENT

1. Turn the ignition off.

NOTE: Allow the O2 1/1 Sensor to cool down to room temperature.

2. Disconnect the O2 Sensor 1/1 harness connector.
3. Measure the resistance across the O2 Sensor 1/1 Heater element between the O2 1/1 Heater Control terminal and the O2 1/1 Heater ground terminal at the component.

NOTE: O2 Heater Element resistance values should be measured at 21.1° C (70° F). The resistance value will vary with different temperature values.

Is the O2 Sensor Heater Element resistance between 2.0 and 30.0 Ohms?

Yes

- Go To 3

No

- Replace the O2 Sensor 1/1.
- Perform the POWERTRAIN VERIFICATION TEST. (Refer to 28 - DTC-Based Diagnostics/MODULE, Powertrain Control (PCM) - Standard Procedure).

3. (K99) O2 1/1 HEATER CONTROL CIRCUIT

1. Ignition on, engine not running.

NOTE: Make sure the test light is probing the circuit before actuating the Heater Test or a DTC may set and not allow the actuation.

2. Using a 12-volt test light connected to ground, probe the (K99) O2 1/1 Heater Control circuit in the O2 Sensor 1/1 harness connector.
3. With a scan tool, actuate the O2 1/1 Heater Test with the O2 Sensor harness connector still disconnected.

NOTE: The test light should be illuminated and bright proportional to the maximum duty cycle allowed by the scan tool. For example, if the scan tool allows 100% actuation, the brightness should be as bright as a direct connection to the battery. If the scan tool allows a maximum 25% actuation, the brightness should be 25% as bright as a direct connection to the battery.

Does the test light illuminate accordingly during the actuation?

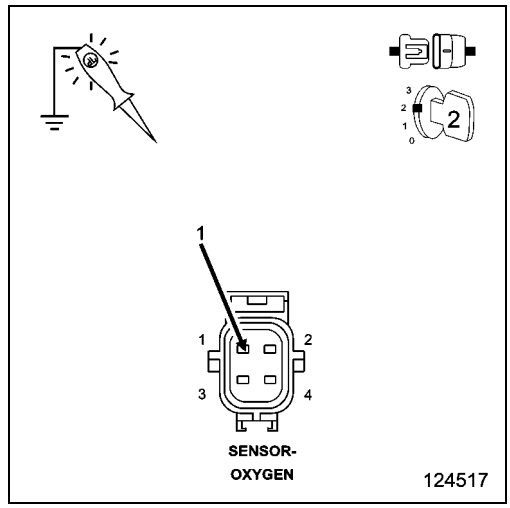

Yes

- Go To 4

No

- Go To 5

4. (Z908) O2 1/1 HEATER GROUND CIRCUIT OPEN

1. Turn the ignition off.
2. Measure the resistance between an engine ground and the (Z908) O2 1/1 Heater ground circuit in the O2 Sensor 1/1 harness connector.

Is the resistance below 5.0 Ohms?

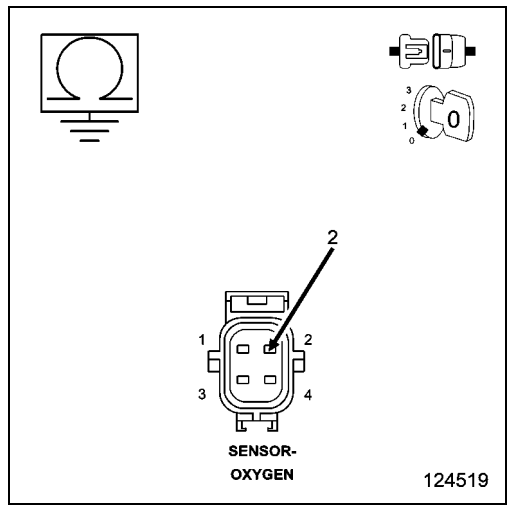

Yes

- Replace the O2 Sensor 1/1.
- Perform the POWERTRAIN VERIFICATION TEST. (Refer to 28 - DTC-Based Diagnostics/MODULE, Powertrain Control (PCM) - Standard Procedure).

No

- Repair the open in the (Z908) O2 1/1 Heater ground circuit.
- Perform the POWERTRAIN VERIFICATION TEST. (Refer to 28 - DTC-Based Diagnostics/MODULE, Powertrain Control (PCM) - Standard Procedure).

5. (K99) O2 1/1 HEATER CONTROL CIRCUIT SHORTED TO VOLTAGE

1. Turn the ignition off.
2. Disconnect the C2 PCM harness connector.
3. Ignition on, engine not running.
4. Measure the voltage of the (K99) O2 1/1 Heater Control circuit in the 1/1 Oxygen Sensor harness connector.

Is there any voltage present?

Yes

- Repair the short to voltage in the (K99) O2 1/1 Heater Control circuit.
- Perform the POWERTRAIN VERIFICATION TEST. (Refer to 28 - DTC-Based Diagnostics/MODULE, Powertrain Control (PCM) - Standard Procedure).

No

- Go To 6

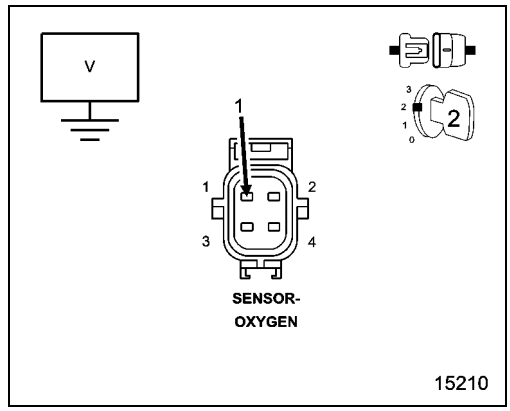

6. (K99) O2 1/1 HEATER CONTROL CIRCUIT OPEN

1. Turn the ignition off.
2. Disconnect the C2 PCM harness connector.

CAUTION: Do not probe the PCM harness connectors. Probing the PCM harness connectors will damage the PCM terminals resulting in poor terminal to pin connection. Install the PCM Pinout Box Kit, NGC, 38 Position 8815A to perform diagnosis.

3. Measure the resistance of the (K99) O2 1/1 Heater Control circuit from the O2 Sensor 1/1 harness connector to the appropriate terminal of PCM Pinout Box 8815A.

Is the resistance below 5.0 Ohms?

Yes

- Go To 7

No

- Repair the open in the (K99) O2 1/1 Heater Control circuit.
- Perform the POWERTRAIN VERIFICATION TEST. (Refer to 28 - DTC-Based Diagnostics/MODULE, Powertrain Control (PCM) - Standard Procedure).

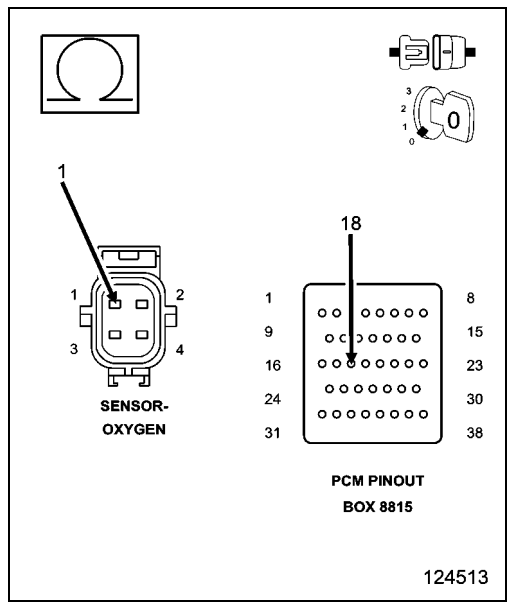

7. POWERTRAIN CONTROL MODULE (PCM)

1. Using the wiring diagram/schematic as a guide, inspect the wiring and connectors between the Oxygen Sensor 1/1 and the Powertrain Control Module (PCM).
2. Look for any chafed, pierced, pinched, or partially broken wires.
3. Look for broken, bent, pushed out or corroded terminals. Verify that there is good pin to terminal contact in the Sensor and Control Module connectors.
4. Refer to any Technical Service Bulletins that may apply.

Were there any problems found?

Yes

- Repair as necessary.
- Perform the POWERTRAIN VERIFICATION TEST. (Refer to 28 - DTC-Based Diagnostics/MODULE, Powertrain Control (PCM) - Standard Procedure).

No

- Replace and program the Powertrain Control Module in accordance with the Service Information.
- Perform the POWERTRAIN VERIFICATION TEST. (Refer to 28 - DTC-Based Diagnostics/MODULE, Powertrain Control (PCM) - Standard Procedure).

P0037-O2 SENSOR 1/2 HEATER CIRCUIT LOW

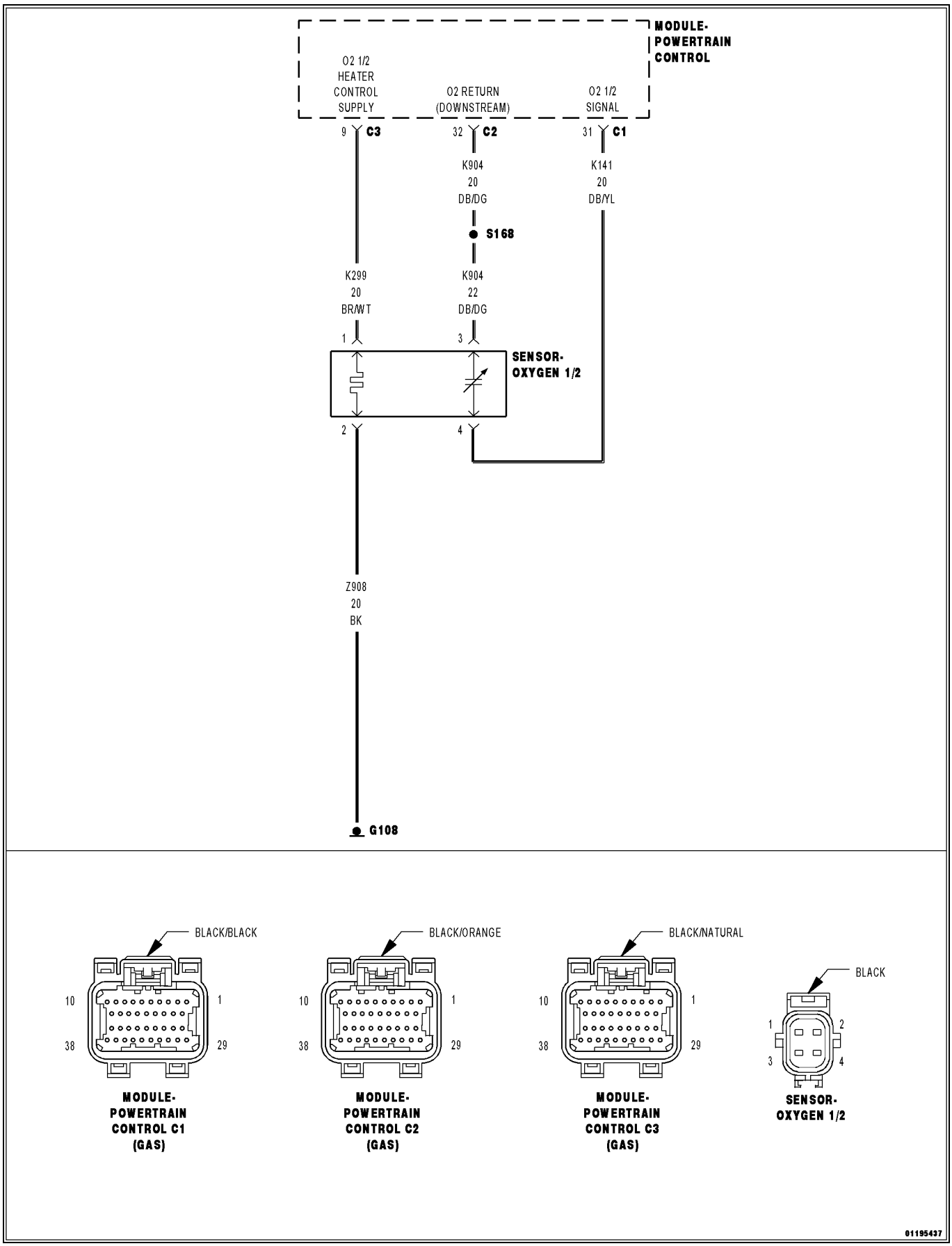

For a complete wiring diagram, **refer to the Wiring Information**.

- **When Monitored:**
  Continuously during O2 heater operation with battery voltage between 10.4 and 15.75 volts.
- **Set Condition:**
  The Powertrain Control Module (PCM) detects that the O2 sensor heater element input is below the minimum acceptable voltage. One trip fault. Three good trips to turn off the MIL.

Possible Causes
(K299) O2 1/2 HEATER CONTROL CIRCUIT SHORTED TO GROUND
EXCESSIVE RESISTANCE IN THE (K299) O2 SENSOR 1/2 HEATER CONTROL CIRCUIT
O2 SENSOR
POWERTRAIN CONTROL MODULE (PCM)

Always perform the Pre-Diagnostic Troubleshooting procedure before proceeding. (Refer to 28 - DTC-Based Diagnostics/MODULE, Powertrain Control (PCM) - Standard Procedure).

1. DTC IS ACTIVE

1. Start the engine and allow it to idle for at least 60 seconds.

WARNING: When the engine is operating, do not stand in direct line with the fan. Do not put your hands near the pulleys, belts or fan. Do not wear loose clothing. Failure to follow these instructions may result in possible serious or fatal injury.

2. With a scan tool, select View DTCs.

Is the DTC Active at this time?

Yes

- Go To 2

No

- Perform the INTERMITTENT CONDITION diagnostic procedure. (Refer to 28 - DTC-Based Diagnostics/MODULE, Powertrain Control (PCM) - Standard Procedure).

2. O2 HEATER ELEMENT

1. Turn the ignition off.

NOTE: Allow the O2 Sensor to cool down to room temperature.

2. Disconnect the 1/2 O2 Sensor harness connector.
3. Measure the resistance across the O2 Sensor Heater element, between the O2 Heater Control terminal and the O2 Heater ground terminal at the component.

NOTE: O2 Heater Element resistance values should be measured at 21.1° C (70° F). The resistance value will vary with different temperature values.

Is the O2 Sensor Heater Element resistance between 2.0 and 30.0 Ohms?

Yes

- Go To 3

No

- Replace the O2 Sensor.
- Perform the POWERTRAIN VERIFICATION TEST. (Refer to 28 - DTC-Based Diagnostics/MODULE, Powertrain Control (PCM) - Standard Procedure).

3. (K299) O2 1/2 HEATER CONTROL CIRCUIT SHORTED TO GROUND

1. Turn the ignition off.
2. Disconnect the C3 PCM harness connector.
3. Measure the resistance between ground and the (K299) O2 1/2 Heater Control circuit in the O2 Sensor harness connector.

Is the resistance below 5.0 Ohms?

Yes

- Repair the short to ground in the (K299) O2 1/2 Heater Control circuit.
- Perform the POWERTRAIN VERIFICATION TEST. (Refer to 28 - DTC-Based Diagnostics/MODULE, Powertrain Control (PCM) - Standard Procedure).

No

- Go To 4

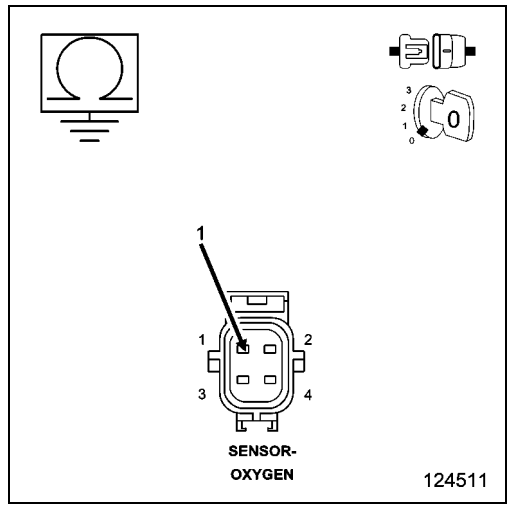

4. EXCESSIVE RESISTANCE IN THE (K299) O2 1/2 HEATER CONTROL CIRCUIT

CAUTION: Do not probe the PCM harness connectors. Probing the PCM harness connectors will damage the PCM terminals, resulting in poor terminal to pin connection. Install the PCM Pinout Box Kit, NGC, 38 Position 8815A to perform diagnosis.

1. Measure the resistance of the (K299) O2 1/2 Heater Control circuit between the 1/2 Oxygen Sensor harness connector and the appropriate terminal of PCM Pinout Box 8815A.

Is the resistance below 0.5 of an Ohm?

Yes

- Go To 5

No

- Repair the excessive resistance in the (K299) O2 1/2 Heater Control circuit.
- Perform the POWERTRAIN VERIFICATION TEST. (Refer to 28 - DTC-Based Diagnostics/MODULE, Powertrain Control (PCM) - Standard Procedure).

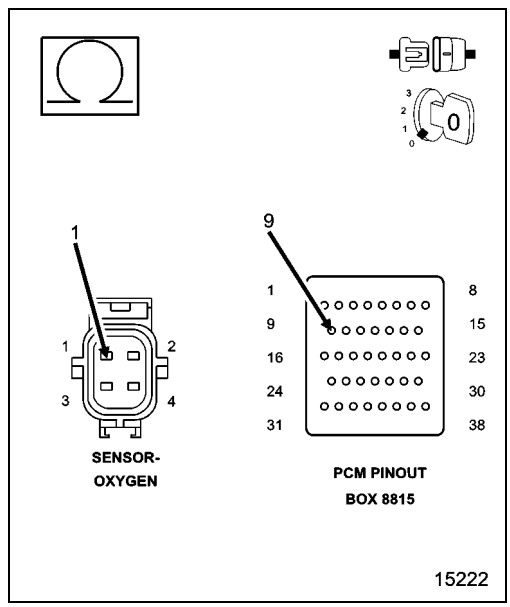

5. POWERTRAIN CONTROL MODULE (PCM)

1. Using the wiring diagram/schematic as a guide, inspect the wiring and connectors between the Oxygen Sensor 1/2 and the Powertrain Control Module (PCM).
2. Look for any chafed, pierced, pinched, or partially broken wires.
3. Look for broken, bent, pushed out or corroded terminals. Verify that there is good pin to terminal contact in the Sensor and Control Module connectors.
4. Refer to any Technical Service Bulletins that may apply.

Were there any problems found?

Yes

- Repair as necessary.
- Perform the POWERTRAIN VERIFICATION TEST. (Refer to 28 - DTC-Based Diagnostics/MODULE, Powertrain Control (PCM) - Standard Procedure).

No

- Replace and program the Powertrain Control Module in accordance with the Service Information.
- Perform the POWERTRAIN VERIFICATION TEST. (Refer to 28 - DTC-Based Diagnostics/MODULE, Powertrain Control (PCM) - Standard Procedure).

P0038-O2 SENSOR 1/2 HEATER CIRCUIT HIGH

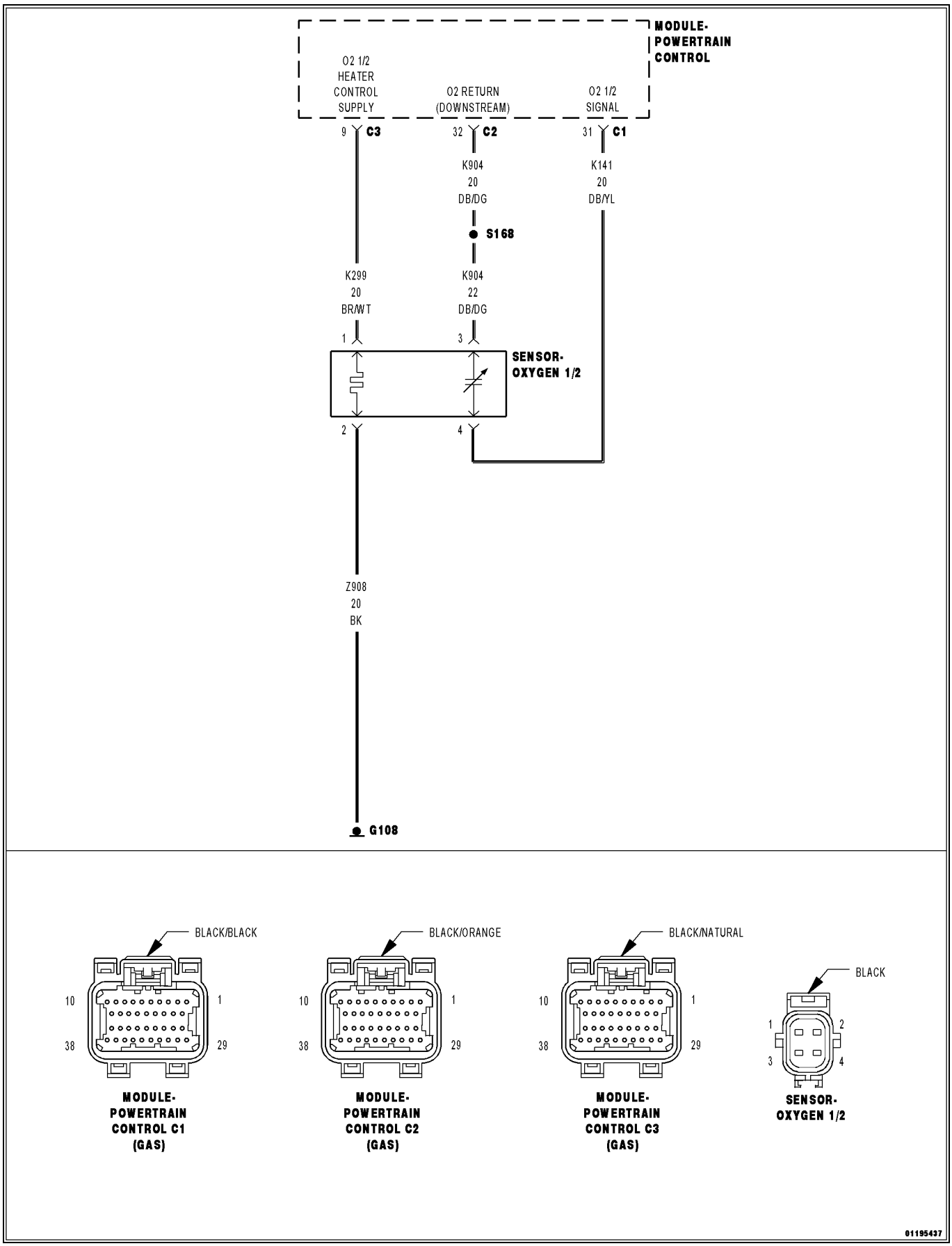

For a complete wiring diagram, **refer to the Wiring Information**.

- **When Monitored:**
  Continuously during O2 heater operation with battery voltage between 10.4 and 15.75 volts.
- **Set Condition:**
  The Powertrain Control Module (PCM) detects that the O2 sensor heater element input is above the maximum acceptable voltage. One trip fault. Three good trips to turn off the MIL.

Possible Causes
(K299) O2 1/2 HEATER CONTROL CIRCUIT OPEN
(Z908) O2 1/2 HEATER GROUND CIRCUIT OPEN
(K299) O2 SENSOR 1/2 HEATER CONTROL CIRCUIT SHORTED TO VOLTAGE
1/2 O2 SENSOR
POWERTRAIN CONTROL MODULE (PCM)

Always perform the Pre-Diagnostic Troubleshooting procedure before proceeding. (Refer to 28 - DTC-Based Diagnostics/MODULE, Powertrain Control (PCM) - Standard Procedure).

1. ACTIVE DTC

WARNING: When the engine is operating, do not stand in direct line with the fan. Do not put your hands near the pulleys, belts, or fan. Do not wear loose clothing. Failure to follow these instructions can result possible serious or fatal injury.

NOTE: If P0688-AUTO SHUTDOWN RELAY SENSE CIRCUIT LOW has set along with any of the O2 SENSOR HEATER CIRCUIT HIGH DTCs, all of the O2 Sensor Heater Control circuits need to be checked for a short to battery voltage.

1. Start the engine and allow it to idle for at least 60 seconds.
2. With a scan tool, select View DTCs.

Is the DTC Active at this time?

Yes

- Go To 2

No

- Perform the INTERMITTENT CONDITION diagnostic procedure. (Refer to 28 - DTC-Based Diagnostics/MODULE, Powertrain Control (PCM) - Standard Procedure).

2. O2 HEATER ELEMENT

1. Turn the ignition off.

NOTE: Allow the O2 Sensor to cool down to room temperature.

2. Disconnect the 1/2 O2 Sensor harness connector.
3. Measure the resistance across the O2 Sensor Heater element, between the Heater Control terminal and the Heater ground terminal at the component.

NOTE: O2 Heater Element resistance values should be measured at 21.1° C (70° F). The resistance value will vary with different temperature values.

Is the O2 Sensor Heater Element resistance between 2.0 and 30.0 Ohms?

Yes

- Go To 3

No

- Verify that there is good pin to terminal contact in the Sensor and Control Module connectors. If OK, replace the O2 Sensor.
- Perform the POWERTRAIN VERIFICATION TEST. (Refer to 28 - DTC-Based Diagnostics/MODULE, Powertrain Control (PCM) - Standard Procedure).

3. (K299) O2 1/2 HEATER CONTROL CIRCUIT

1. Ignition on, engine not running.
2. Using a 12-volt test light connected to ground, probe the (K299) O2 1/2 Heater Control circuit in the O2 Sensor harness connector.

NOTE: Make sure the test light is probing the circuit before actuating the Heater Test or a DTC may set and not allow the actuation.

3. With a scan tool, actuate the O2 1/2 Heater Test with the O2 Sensor harness connector still disconnected.

NOTE: The test light should be illuminated and bright proportional to the maximum duty cycle allowed by the scan tool. For example, if the scan tool allows 100% actuation, the brightness should be as bright as a direct connection to the battery. If the scan tool allows a maximum 25% actuation, the brightness should be 25% as bright as a direct connection to the battery.

Does the test light illuminate accordingly during the actuation?

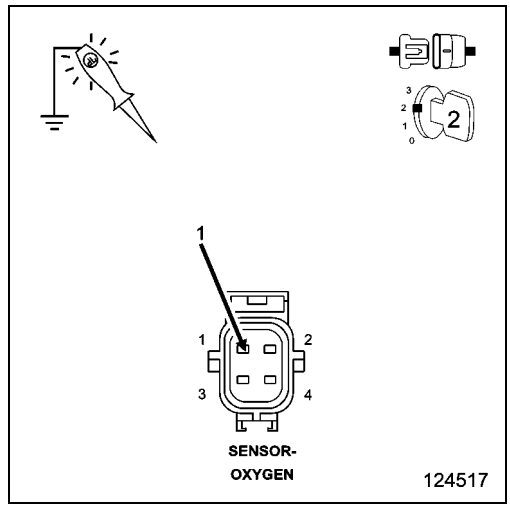

Yes

- Go To 4

No

- Go To 5

4. (Z908) O2 HEATER GROUND CIRCUIT OPEN

1. Turn the ignition off.
2. Measure the resistance between an engine ground and the (Z908) O2 1/2 Heater ground circuit in the O2 Sensor harness connector.

Is the resistance below 5.0 Ohms?

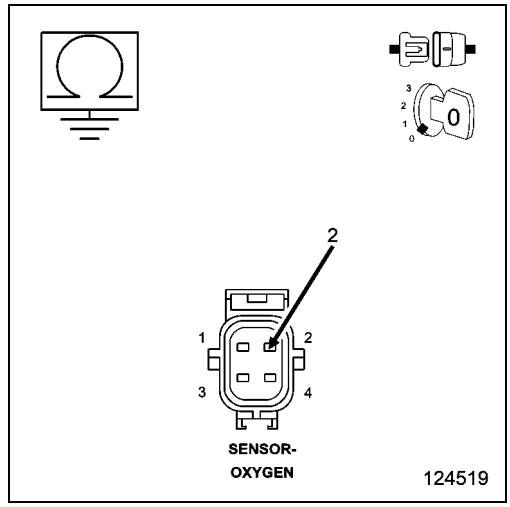

Yes

- Replace the O2 Sensor.
- Perform the POWERTRAIN VERIFICATION TEST. (Refer to 28 - DTC-Based Diagnostics/MODULE, Powertrain Control (PCM) - Standard Procedure).

No

- Repair the open in the (Z908) O2 1/2 Heater ground circuit.
- Perform the POWERTRAIN VERIFICATION TEST. (Refer to 28 - DTC-Based Diagnostics/MODULE, Powertrain Control (PCM) - Standard Procedure).

5. (K299) O2 1/2 HEATER CONTROL CIRCUIT SHORTED TO VOLTAGE

1. Turn the ignition off.
2. Disconnect the C3 PCM harness connector.
3. Ignition on, engine not running.
4. Measure the voltage of the (K299) O2 1/2 Heater Control circuit in the 1/2 Oxygen Sensor harness connector.

Is there any voltage present?

Yes

- Repair the short to voltage in the (K299) O2 1/2 Heater Control circuit.
- Perform the POWERTRAIN VERIFICATION TEST. (Refer to 28 - DTC-Based Diagnostics/MODULE, Powertrain Control (PCM) - Standard Procedure).

No

- Go To 6

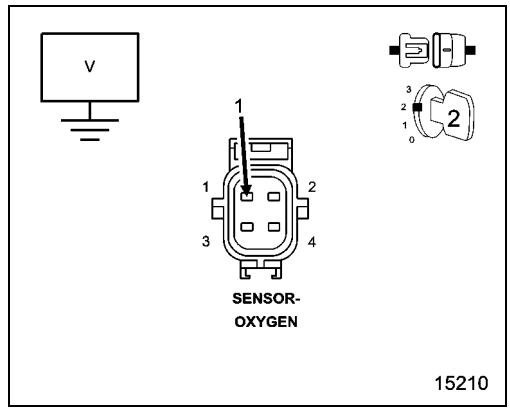

6. (K299) O2 1/2 HEATER CONTROL CIRCUIT OPEN

1. Turn the ignition off.

CAUTION: Do not probe the PCM harness connectors. Probing the PCM harness connectors will damage the PCM terminals resulting in poor terminal to pin connection. Install the PCM Pinout Box Kit, NGC, 38 Position 8815A to perform diagnosis.

2. Measure the resistance of the (K299) O2 1/2 Heater Control circuit from the O2 Sensor harness connector to the appropriate terminal of PCM Pinout Box 8815A.

Is the resistance below 5.0 Ohms?

Yes

- Go To 7

No

- Repair the open in the (K299) O2 1/2 Heater Control circuit.
- Perform the POWERTRAIN VERIFICATION TEST. (Refer to 28 - DTC-Based Diagnostics/MODULE, Powertrain Control (PCM) - Standard Procedure).

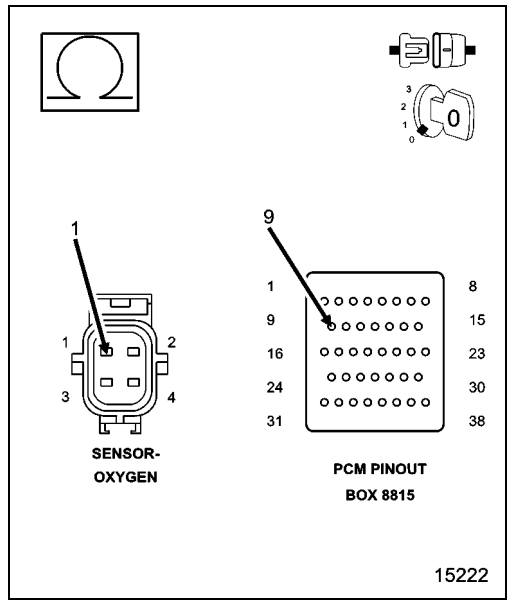

7. POWERTRAIN CONTROL MODULE (PCM)

1. Using the wiring diagram/schematic as a guide, inspect the wiring and connectors between the Oxygen Sensor 1/2 and the Powertrain Control Module (PCM).
2. Look for any chafed, pierced, pinched, or partially broken wires.
3. Look for broken, bent, pushed out or corroded terminals. Verify that there is good pin to terminal contact in the Sensor and Control Module connectors.
4. Refer to any Technical Service Bulletins that may apply.

Were there any problems found?

Yes

- Repair as necessary.
- Perform the POWERTRAIN VERIFICATION TEST. (Refer to 28 - DTC-Based Diagnostics/MODULE, Powertrain Control (PCM) - Standard Procedure).

No

- Replace and program the Powertrain Control Module in accordance with the Service Information.
- Perform the POWERTRAIN VERIFICATION TEST. (Refer to 28 - DTC-Based Diagnostics/MODULE, Powertrain Control (PCM) - Standard Procedure).

P0051-O2 SENSOR 2/1 HEATER CIRCUIT LOW

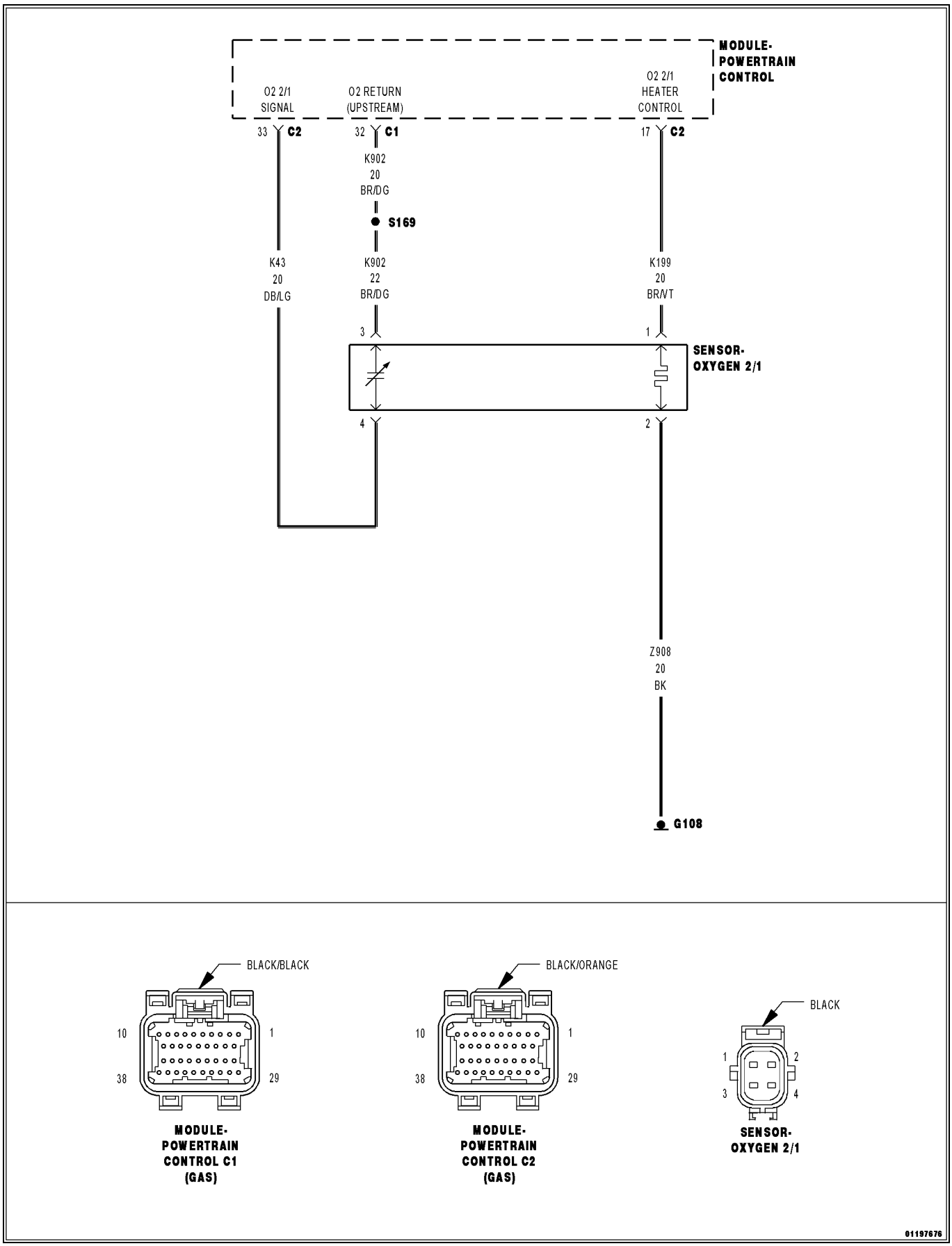

For a complete wiring diagram, **refer to the Wiring Information**.

- **When Monitored:**
  Continuously during O2 heater operation with battery voltage between 10.4 and 15.75 volts.
- **Set Condition:**
  The Powertrain Control Module (PCM) detects that the O2 sensor heater element input is below the minimum acceptable voltage. One trip fault. Three good trips to turn off the MIL.

Possible Causes
(K199) O2 2/1 HEATER CONTROL CIRCUIT SHORTED TO GROUND
EXCESSIVE RESISTANCE IN THE (K199) O2 2/1 HEATER CONTROL CIRCUIT
2/1 O2 SENSOR
POWERTRAIN CONTROL MODULE (PCM)

Always perform the Pre-Diagnostic Troubleshooting procedure before proceeding. (Refer to 28 - DTC-Based Diagnostics/MODULE, Powertrain Control (PCM) - Standard Procedure).

1. DTC IS ACTIVE

1. Start the engine and allow it to idle for at least 60 seconds.

WARNING: When the engine is operating, do not stand in direct line with the fan. Do not put your hands near the pulleys, belts or fan. Do not wear loose clothing. Failure to follow these instructions may result in possible serious or fatal injury.

2. With a scan tool, select View DTCs.

Is the DTC Active at this time?

Yes

- Go To 2

No

- Perform the INTERMITTENT CONDITION diagnostic procedure. (Refer to 28 - DTC-Based Diagnostics/MODULE, Powertrain Control (PCM) - Standard Procedure).

2. O2 HEATER ELEMENT

1. Turn the ignition off.

NOTE: Allow the O2 Sensor to cool down to room temperature.

2. Disconnect the 2/1 O2 Sensor harness connector.
3. Measure the resistance across the O2 Sensor Heater element, between the Heater Control terminal and the Heater ground terminal at the component.

NOTE: O2 Heater Element resistance values should be measured at 21.1° C (70° F). The resistance value will vary with different temperature values.

Is the O2 Sensor Heater Element resistance between 2.0 and 30.0 Ohms?

Yes

- Go To 3

No

- Verify that there is good pin to terminal contact in the Sensor and Control Module connectors. If OK, replace the O2 Sensor.
- Perform the POWERTRAIN VERIFICATION TEST. (Refer to 28 - DTC-Based Diagnostics/MODULE, Powertrain Control (PCM) - Standard Procedure).

3. (K199) O2 2/1 HEATER CONTROL CIRCUIT SHORTED TO GROUND

1. Turn the ignition off.
2. Disconnect the C2 PCM harness connector.
3. Measure the resistance between ground and the (K199) O2 2/1 Heater Control circuit in the O2 Sensor harness connector.

Is the resistance below 5.0 Ohms?

Yes

- Repair the short to ground in the (K199) O2 2/1 Sensor Heater Control circuit.
- Perform the POWERTRAIN VERIFICATION TEST. (Refer to 28 - DTC-Based Diagnostics/MODULE, Powertrain Control (PCM) - Standard Procedure).

No

- Go To 4

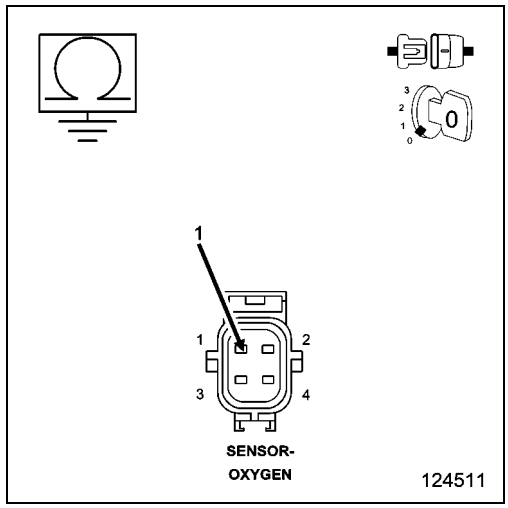

4. EXCESSIVE RESISTANCE IN THE (K199) O2 2/1 HEATER CONTROL CIRCUIT

CAUTION: Do not probe the PCM harness connectors. Probing the PCM harness connectors will damage the PCM terminals, resulting in poor terminal to pin connection. Install the PCM Pinout Box Kit, NGC, 38 Position 8815A to perform diagnosis.

1. Measure the resistance of the (K199) O2 2/1 Heater Control circuit between the 2/1 Oxygen Sensor harness connector and the appropriate terminal of PCM Pinout Box 8815A.

Is the resistance below 0.5 of an Ohm?

Yes

- Go To 5

No

- Repair the excessive resistance in the (K199) O2 2/1 Heater Control circuit.
- Perform the POWERTRAIN VERIFICATION TEST. (Refer to 28 - DTC-Based Diagnostics/MODULE, Powertrain Control (PCM) - Standard Procedure).

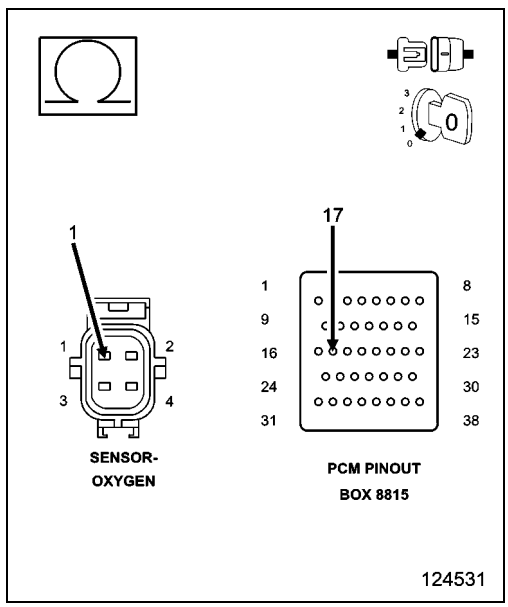

5. POWERTRAIN CONTROL MODULE (PCM)

1. Using the wiring diagram/schematic as a guide, inspect the wiring and connectors between the Oxygen Sensor 2/1 and the Powertrain Control Module (PCM).
2. Look for any chafed, pierced, pinched, or partially broken wires.
3. Look for broken, bent, pushed out or corroded terminals. Verify that there is good pin to terminal contact in the Sensor and Control Module connectors.
4. Refer to any Technical Service Bulletins that may apply.

Were there any problems found?

Yes

- Repair as necessary.
- Perform the POWERTRAIN VERIFICATION TEST. (Refer to 28 - DTC-Based Diagnostics/MODULE, Powertrain Control (PCM) - Standard Procedure).

No

- Replace and program the Powertrain Control Module in accordance with the Service Information.
- Perform the POWERTRAIN VERIFICATION TEST. (Refer to 28 - DTC-Based Diagnostics/MODULE, Powertrain Control (PCM) - Standard Procedure).

P0052-O2 SENSOR 2/1 HEATER CIRCUIT HIGH

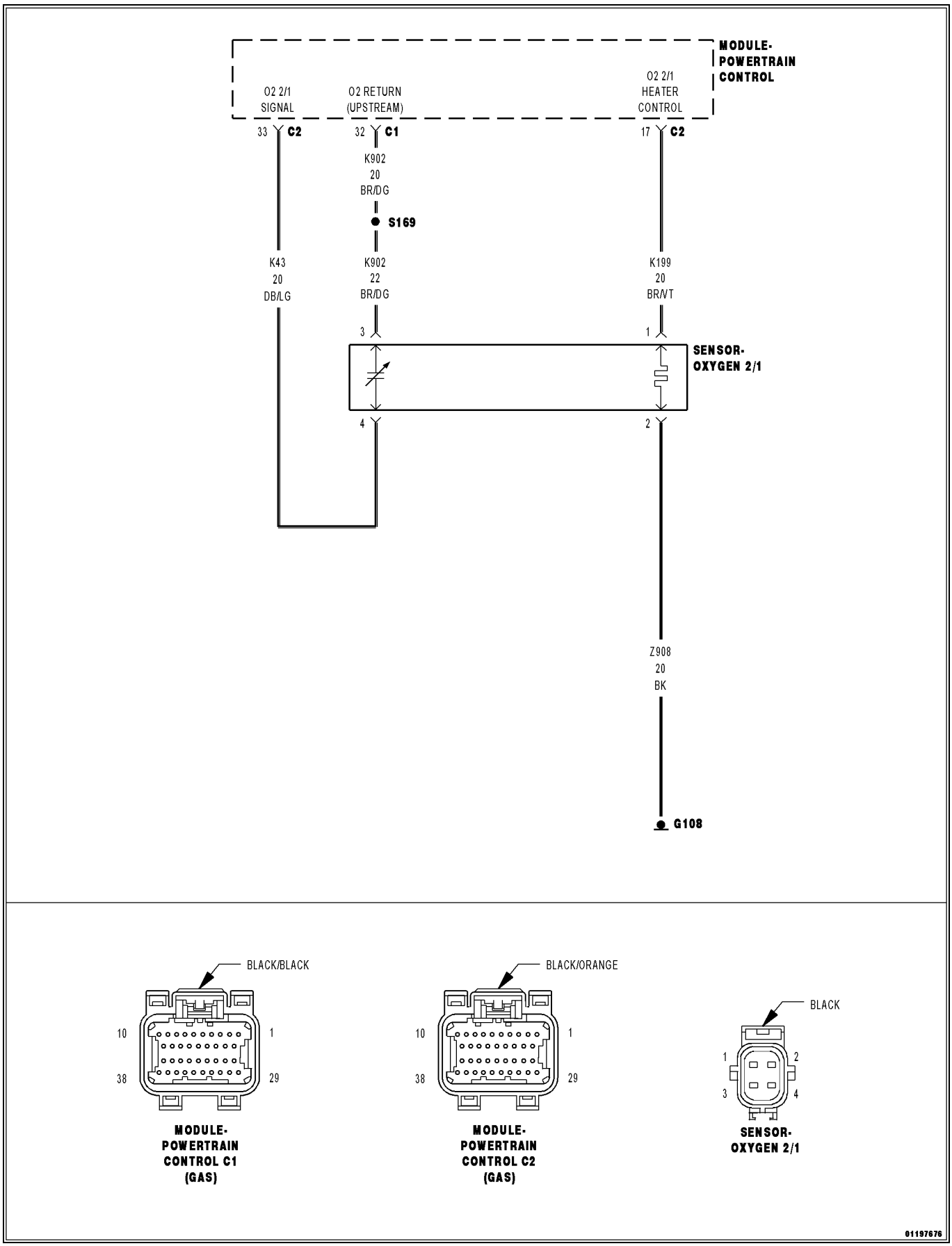

For a complete wiring diagram, **refer to the Wiring Information**.

- **When Monitored:**

  Continuously during O2 heater operation with battery voltage between 10.4 and 15.75 volts.
- **Set Condition:**

  The Powertrain Control Module (PCM) detects that the O2 sensor heater element input is above the maximum acceptable voltage. One trip fault. Three good trips to turn off the MIL.

Possible Causes
(K199) O2 2/1 HEATER CONTROL CIRCUIT OPEN
(Z908) O2 2/1 HEATER GROUND CIRCUIT OPEN
(K199) O2 2/1 HEATER CONTROL CIRCUIT SHORTED TO VOLTAGE
2/1 O2 SENSOR
POWERTRAIN CONTROL MODULE (PCM)

Always perform the Pre-Diagnostic Troubleshooting procedure before proceeding. (Refer to 28 - DTC-Based Diagnostics/MODULE, Powertrain Control (PCM) - Standard Procedure).

1. ACTIVE DTC

WARNING: When the engine is operating, do not stand in direct line with the fan. Do not put your hands near the pulleys, belts, or fan. Do not wear loose clothing. Failure to follow these instructions can result possible serious or fatal injury.

NOTE: If P0688-AUTO SHUTDOWN RELAY SENSE CIRCUIT LOW has set along with any of the O2 SENSOR HEATER CIRCUIT HIGH DTCs, all of the O2 Sensor Heater Control circuits need to be checked for a short to battery voltage.

1. Start the engine and allow it to idle for at least 60 seconds.
2. With a scan tool, select View DTCs.

Is the DTC Active at this time?

Yes

- Go To 2

No

- Perform the INTERMITTENT CONDITION diagnostic procedure. (Refer to 28 - DTC-Based Diagnostics/MODULE, Powertrain Control (PCM) - Standard Procedure).

2. O2 HEATER ELEMENT

1. Turn the ignition off.

NOTE: Allow the O2 Sensor to cool down to room temperature.

2. Disconnect the 2/1 O2 Sensor harness connector.
3. Measure the resistance across the O2 Sensor Heater element, between the O2 Heater Control terminal and the Heater ground terminal at the component connector.

NOTE: O2 Heater Element resistance values should be measured at 21.1° C (70° F). The resistance value will vary with different temperature values.

Is the O2 Sensor Heater Element resistance between 2.0 and 30.0 Ohms?

Yes

- Go To 3

No

- Verify that there is good pin to terminal contact in the Sensor and Control Module connectors. If OK, replace the O2 Sensor.
- Perform the POWERTRAIN VERIFICATION TEST. (Refer to 28 - DTC-Based Diagnostics/MODULE, Powertrain Control (PCM) - Standard Procedure).

3. (K199) O2 2/1 HEATER CONTROL CIRCUIT

1. Ignition on, engine not running.
2. Using a 12-volt test light connected to ground, probe the (K199) O2 2/1 Heater Control circuit in the O2 Sensor harness connector.

NOTE: Make sure the test light is probing the circuit before actuating the Heater Test or a DTC may set and not allow the actuation.

3. With a scan tool, actuate the O2 2/1 Heater Test with the O2 Sensor harness connector still disconnected.

NOTE: The test light should be illuminated and bright proportional to the maximum duty cycle allowed by the scan tool. For example, if the scan tool allows 100% actuation, the brightness should be as bright as a direct connection to the battery. If the scan tool allows a maximum 25% actuation, the brightness should be 25% as bright as a direct connection to the battery.

Does the test light illuminate accordingly during the actuation?

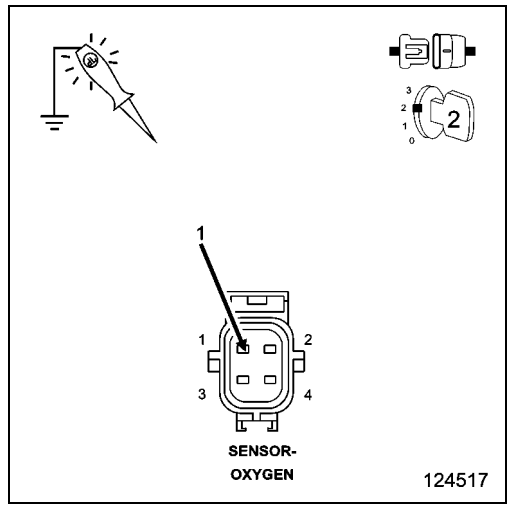

Yes

- Go To 4

No

- Go To 5

4. (Z908) O2 2/1 HEATER GROUND CIRCUIT OPEN

1. Turn the ignition off.
2. Measure the resistance between an engine ground and the (Z908) O2 2/1 Heater ground circuit in the O2 Sensor harness connector.

Is the resistance below 5.0 Ohms?

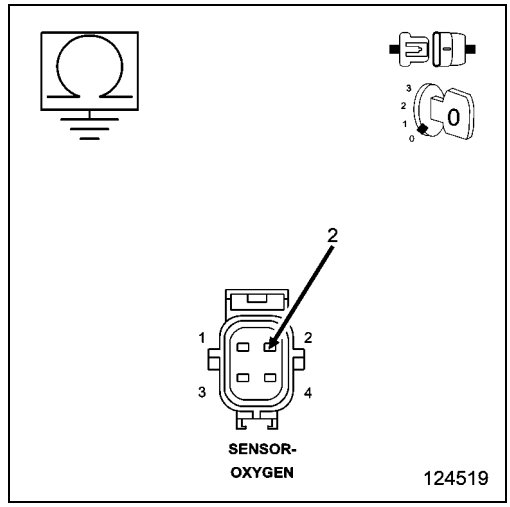

Yes

- Verify that there is good pin to terminal contact in the Sensor and Control Module connectors. If OK, replace the O2 Sensor.
- Perform the POWERTRAIN VERIFICATION TEST. (Refer to 28 - DTC-Based Diagnostics/MODULE, Powertrain Control (PCM) - Standard Procedure).

No

- Repair the open in the (Z908) O2 2/1 Heater ground circuit.
- Perform the POWERTRAIN VERIFICATION TEST. (Refer to 28 - DTC-Based Diagnostics/MODULE, Powertrain Control (PCM) - Standard Procedure).

5. (K199) O2 2/1 HEATER CONTROL CIRCUIT SHORTED TO VOLTAGE

1. Turn the ignition off.
2. Disconnect the C2 PCM harness connector.
3. Ignition on, engine not running.
4. Measure the voltage on the (K199) O2 2/1 Heater Control circuit at the 2/1 O2 Sensor harness connector.

Is there any voltage present?

Yes

- Repair the short to voltage in the (K199) O2 2/1 Heater Control circuit.
- Perform the POWERTRAIN VERIFICATION TEST. (Refer to 28 - DTC-Based Diagnostics/MODULE, Powertrain Control (PCM) - Standard Procedure).

No

- Go To 6

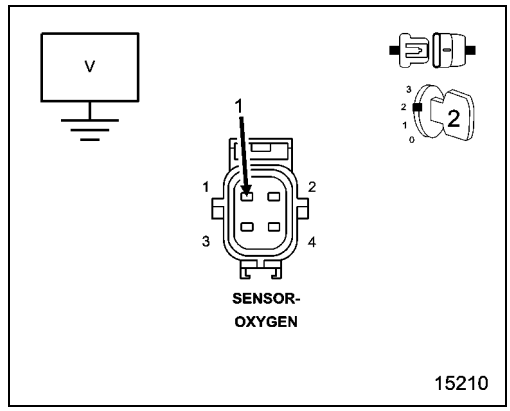

6. (K199) O2 2/1 HEATER CONTROL CIRCUIT OPEN

1. Turn the ignition off.

CAUTION: Do not probe the PCM harness connectors. Probing the PCM harness connectors will damage the PCM terminals resulting in poor terminal to pin connection. Install the PCM Pinout Box Kit, NGC, 38 Position 8815A to perform diagnosis.

2. Measure the resistance of the (K199) O2 2/1 Heater Control circuit from the O2 Sensor harness connector to the appropriate terminal of PCM Pinout Box 8815A.

Is the resistance below 5.0 Ohms?

Yes

- Go To 7

No

- Repair the open in the (K199) O2 2/1 Heater Control circuit.
- Perform the POWERTRAIN VERIFICATION TEST. (Refer to 28 - DTC-Based Diagnostics/MODULE, Powertrain Control (PCM) - Standard Procedure).

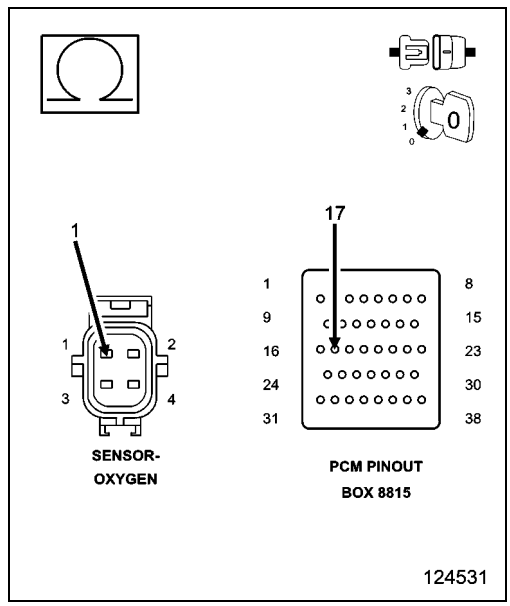

7. POWERTRAIN CONTROL MODULE (PCM)

1. Using the wiring diagram/schematic as a guide, inspect the wiring and connectors between the Oxygen Sensor 2/1 and the Powertrain Control Module (PCM).
2. Look for any chafed, pierced, pinched, or partially broken wires.
3. Look for broken, bent, pushed out or corroded terminals. Verify that there is good pin to terminal contact in the Sensor and Control Module connectors.
4. Refer to any Technical Service Bulletins that may apply.

Were there any problems found?

Yes

- Repair as necessary.
- Perform the POWERTRAIN VERIFICATION TEST. (Refer to 28 - DTC-Based Diagnostics/MODULE, Powertrain Control (PCM) - Standard Procedure).

No

- Replace and program the Powertrain Control Module in accordance with the Service Information.
- Perform the POWERTRAIN VERIFICATION TEST. (Refer to 28 - DTC-Based Diagnostics/MODULE, Powertrain Control (PCM) - Standard Procedure).

P0057-O2 SENSOR 2/2 HEATER CIRCUIT LOW

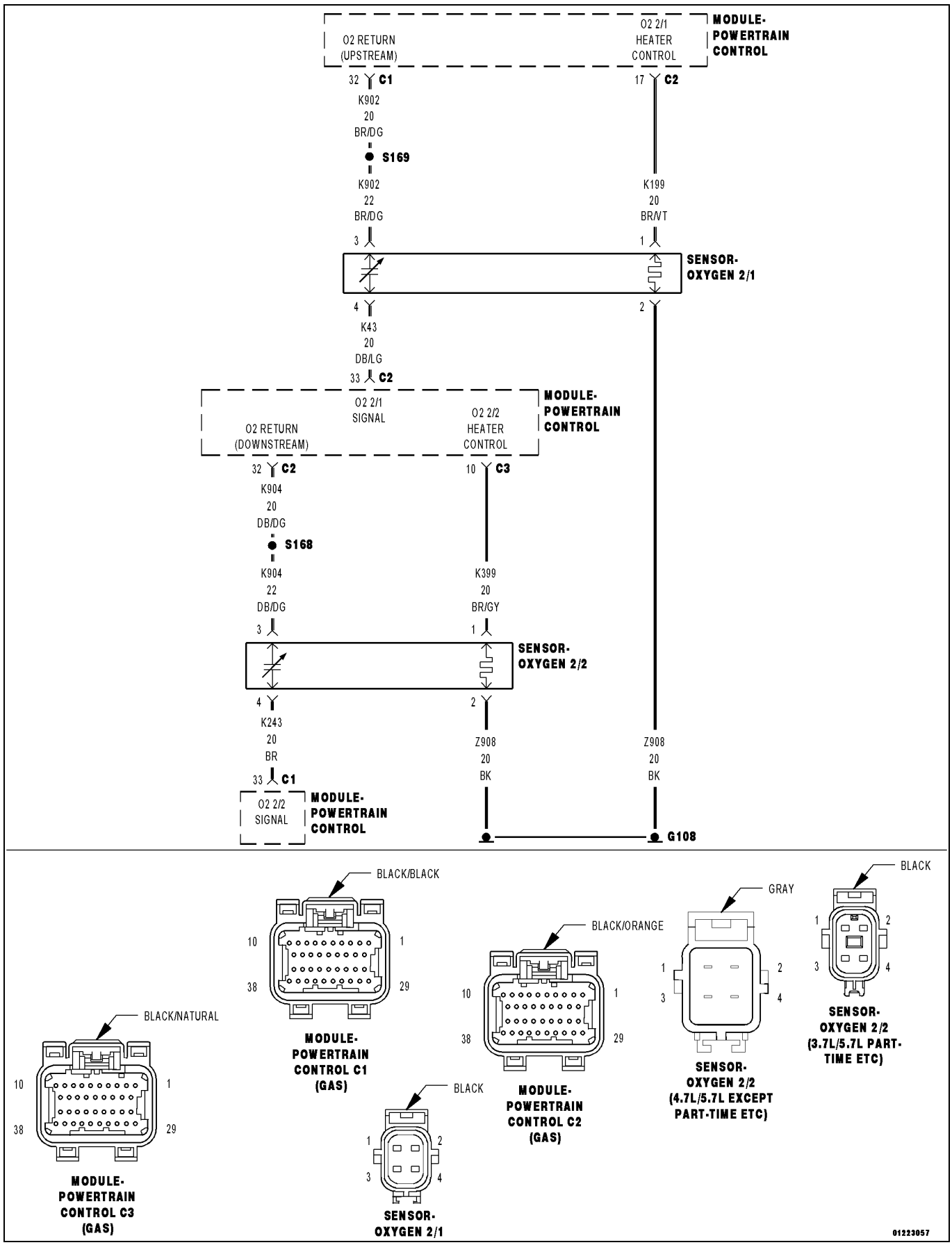

For a complete wiring diagram, **refer to the Wiring Information**.

- **When Monitored:**
  Continuously during O2 heater operation with battery voltage between 10.4 and 15.75 volts.
- **Set Condition:**
  The Powertrain Control Module (PCM) detects that the O2 sensor heater element input is below the minimum acceptable voltage. One trip fault. Three good trips to turn off the MIL.

Possible Causes
(K399) O2 SENSOR 2/2 HEATER CONTROL CIRCUIT SHORTED TO GROUND
EXCESSIVE RESISTANCE IN THE (K399) O2 SENSOR 2/2 HEATER CONTROL CIRCUIT
2/2 O2 SENSOR
POWERTRAIN CONTROL MODULE (PCM)

Always perform the Pre-Diagnostic Troubleshooting procedure before proceeding. (Refer to 28 - DTC-Based Diagnostics/MODULE, Powertrain Control (PCM) - Standard Procedure).

1. DTC IS ACTIVE

1. Start the engine and allow it to idle for at least 60 seconds.

WARNING: When the engine is operating, do not stand in direct line with the fan. Do not put your hands near the pulleys, belts or fan. Do not wear loose clothing. Failure to follow these instructions may result in possible serious or fatal injury.

2. With a scan tool, select View DTCs.

Is the DTC Active at this time?

Yes

- Go To 2

No

- Perform the INTERMITTENT CONDITION diagnostic procedure. (Refer to 28 - DTC-Based Diagnostics/MODULE, Powertrain Control (PCM) - Standard Procedure).

2. O2 HEATER ELEMENT

1. Turn the ignition off.

NOTE: Allow the O2 Sensor to cool down to room temperature.

2. Disconnect the 2/2 O2 Sensor harness connector.
3. Measure the resistance across the O2 Sensor Heater element, between the O2 Heater Control terminal and the O2 Heater ground terminal in the component connector.

NOTE: O2 Heater Element resistance values should be measured at 21.1° C (70° F). The resistance value will vary with different temperature values.

Is the O2 Sensor Heater Element resistance between 2.0 and 30.0 Ohms?

Yes

- Go To 3

No

- Verify that there is good pin to terminal contact in the Sensor and Control Module connectors. If OK, replace the O2 Sensor.
- Perform the POWERTRAIN VERIFICATION TEST. (Refer to 28 - DTC-Based Diagnostics/MODULE, Powertrain Control (PCM) - Standard Procedure).

3. (K399) O2 2/2 HEATER CONTROL CIRCUIT SHORTED TO GROUND

1. Turn the ignition off.
2. Disconnect the C3 PCM harness connector.
3. Measure the resistance between ground and the (K399) O2 2/2 Heater Control circuit in the O2 Sensor harness connector.

Is the resistance below 5.0 Ohms?

Yes

- Repair the short to ground in the (K399) O2 2/2 Sensor Heater Control circuit.
- Perform the POWERTRAIN VERIFICATION TEST. (Refer to 28 - DTC-Based Diagnostics/MODULE, Powertrain Control (PCM) - Standard Procedure).

No

- Go To 4

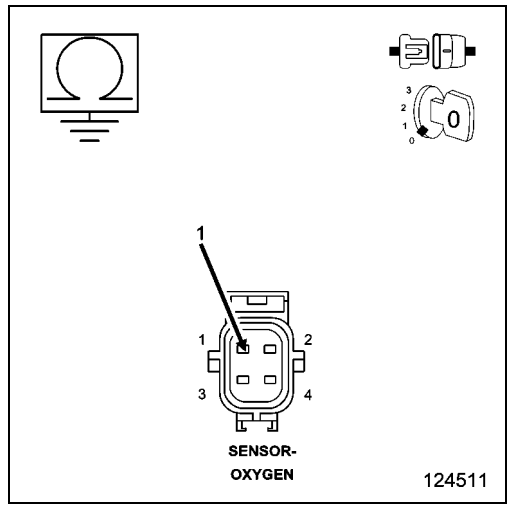

4. EXCESSIVE RESISTANCE IN THE (K399) O2 2/2 HEATER CONTROL CIRCUIT

CAUTION: Do not probe the PCM harness connectors. Probing the PCM harness connectors will damage the PCM terminals, resulting in poor terminal to pin connection. Install the PCM Pinout Box Kit, NGC, 38 Position 8815A to perform diagnosis.

1. Measure the resistance of the (K399) O2 2/2 Heater Control circuit between the 2/2 Oxygen Sensor harness connector and the appropriate terminal of PCM Pinout Box 8815A.

Is the resistance below 0.5 of an ohm?

Yes

- Go To 5

No

- Repair the excessive resistance in the (K399) O2 2/2 Heater Control circuit.
- Perform the POWERTRAIN VERIFICATION TEST. (Refer to 28 - DTC-Based Diagnostics/MODULE, Powertrain Control (PCM) - Standard Procedure).

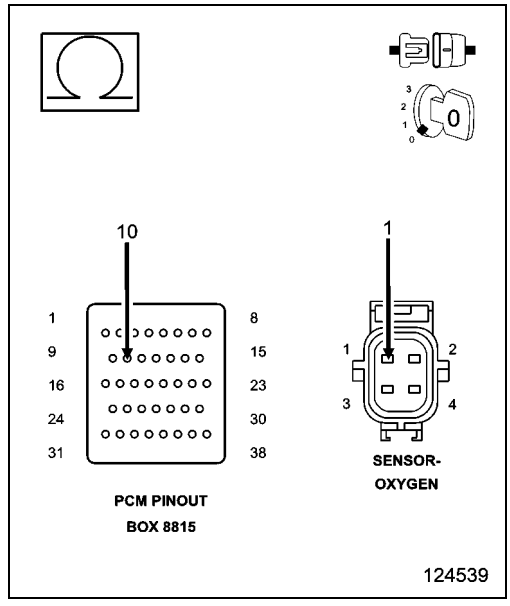

5. POWERTRAIN CONTROL MODULE (PCM)

1. Using the wiring diagram/schematic as a guide, inspect the wiring and connectors between the Oxygen Sensor 2/2 and the Powertrain Control Module (PCM).
2. Look for any chafed, pierced, pinched, or partially broken wires.
3. Look for broken, bent, pushed out or corroded terminals. Verify that there is good pin to terminal contact in the Sensor and Control Module connectors.
4. Refer to any Technical Service Bulletins that may apply.

Were there any problems found?

Yes

- Repair as necessary.
- Perform the POWERTRAIN VERIFICATION TEST. (Refer to 28 - DTC-Based Diagnostics/MODULE, Powertrain Control (PCM) - Standard Procedure).

No

- Replace and program the Powertrain Control Module in accordance with the Service Information.
- Perform the POWERTRAIN VERIFICATION TEST. (Refer to 28 - DTC-Based Diagnostics/MODULE, Powertrain Control (PCM) - Standard Procedure).

P0058-O2 SENSOR 2/2 HEATER CIRCUIT HIGH

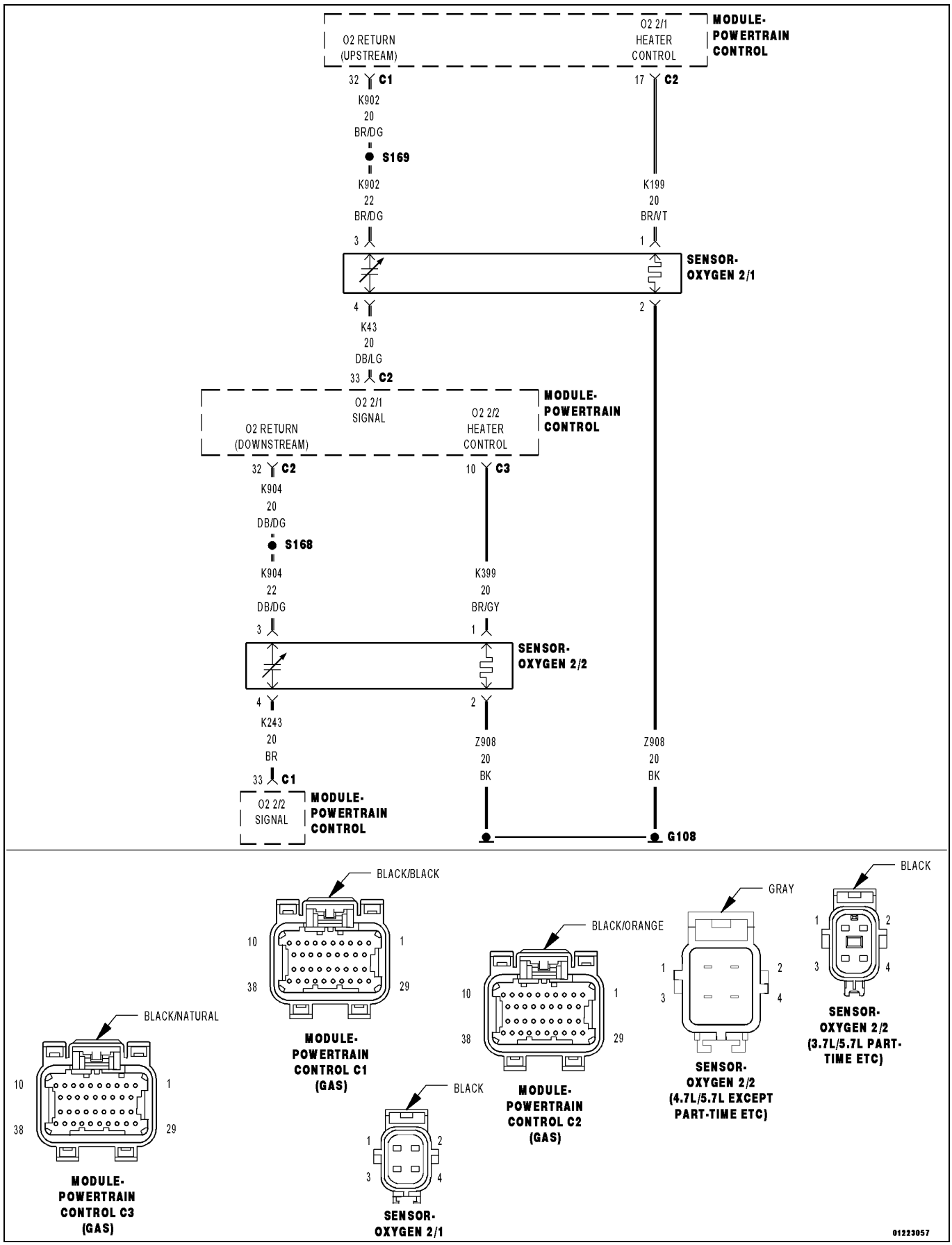

For a complete wiring diagram, **refer to the Wiring Information**.

- **When Monitored:**
  Continuously during O2 heater operation with battery voltage between 10.4 and 15.75 volts.
- **Set Condition:**
  The Powertrain Control Module (PCM) detects that the O2 sensor heater element input is above the maximum acceptable voltage. One trip fault. Three good trips to turn off the MIL.

Possible Causes
(K399) O2 2/2 HEATER CONTROL CIRCUIT OPEN
(Z908) O2 2/2 HEATER GROUND CIRCUIT OPEN
(K399) O2 2/2 HEATER CONTROL CIRCUIT SHORTED TO VOLTAGE
2/2 O2 SENSOR
POWERTRAIN CONTROL MODULE (PCM)

Always perform the Pre-Diagnostic Troubleshooting procedure before proceeding. (Refer to 28 - DTC-Based Diagnostics/MODULE, Powertrain Control (PCM) - Standard Procedure).

1. ACTIVE DTC

WARNING: When the engine is operating, do not stand in direct line with the fan. Do not put your hands near the pulleys, belts, or fan. Do not wear loose clothing. Failure to follow these instructions can result possible serious or fatal injury.

NOTE: If P0688-AUTO SHUTDOWN RELAY SENSE CIRCUIT LOW has set along with any of the O2 SENSOR HEATER CIRCUIT HIGH DTCs, all of the O2 Sensor Heater Control circuits need to be checked for a short to battery voltage.

1. Start the engine and allow it to idle for at least 60 seconds.
2. With a scan tool, select View DTCs.

Is the DTC Active at this time?

Yes

- Go To 2

No

- Perform the INTERMITTENT CONDITION diagnostic procedure. (Refer to 28 - DTC-Based Diagnostics/MODULE, Powertrain Control (PCM) - Standard Procedure).

2. O2 HEATER ELEMENT

1. Turn the ignition off.

NOTE: Allow the O2 Sensor to cool down to room temperature.

2. Disconnect the 2/2 O2 Sensor harness connector.
3. Measure the resistance across the O2 Sensor Heater element, between the O2 Heater Control terminal and the O2 Heater ground terminal in the component connector.

NOTE: O2 Heater Element resistance values should be measured at 21.1° C (70° F). The resistance value will vary with different temperature values.

Is the O2 Sensor Heater Element resistance between 2.0 and 30.0 Ohms?

Yes

- Go To 3

No

- Verify that there is good pin to terminal contact in the Sensor and Control Module connectors. If OK, replace the O2 Sensor.
- Perform the POWERTRAIN VERIFICATION TEST. (Refer to 28 - DTC-Based Diagnostics/MODULE, Powertrain Control (PCM) - Standard Procedure).

3. (K399) O2 2/2 HEATER CONTROL CIRCUIT

1. Ignition on, engine not running.
2. Using a 12-volt test light connected to ground, probe the (K399) O2 2/2 Heater Control circuit in the O2 Sensor harness connector.

NOTE: Make sure the test light is probing the circuit before actuating the Heater Test or a DTC may set and not allow the actuation.

3. With a scan tool, actuate the O2 2/2 Heater Test with the O2 Sensor harness connector still disconnected.

NOTE: The test light should be illuminated and bright proportional to the maximum duty cycle allowed by the scan tool. For example, if the scan tool allows 100% actuation, the brightness should be as bright as a direct connection to the battery. If the scan tool allows a maximum 25% actuation, the brightness should be 25% as bright as a direct connection to the battery.

Does the test light illuminate accordingly during the actuation?

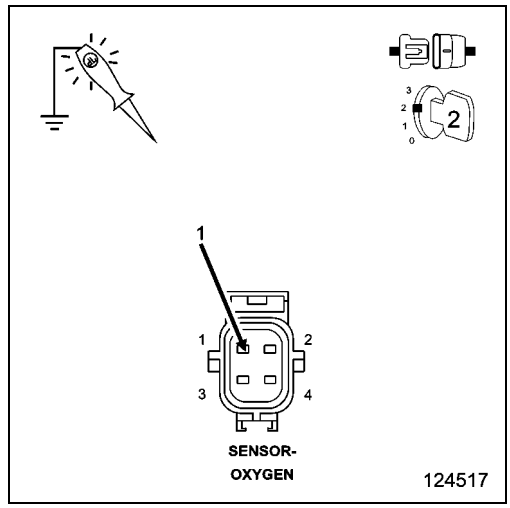

Yes

- Go To 4

No

- Go To 5

4. (Z908) O2 HEATER GROUND CIRCUIT OPEN

1. Turn the ignition off.
2. Measure the resistance between an engine ground and the (Z908) O2 2/2 Heater ground circuit in the O2 Sensor harness connector.

Is the resistance below 5.0 Ohms?

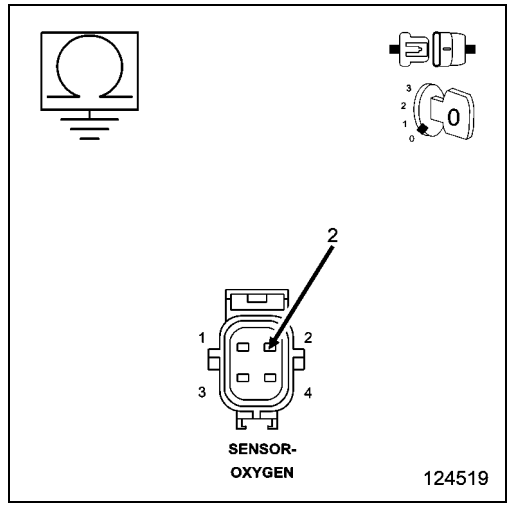

Yes

- Replace the O2 Sensor.
- Perform the POWERTRAIN VERIFICATION TEST. (Refer to 28 - DTC-Based Diagnostics/MODULE, Powertrain Control (PCM) - Standard Procedure).

No

- Repair the open in the (Z908) O2 2/2 Heater ground circuit.
- Perform the POWERTRAIN VERIFICATION TEST. (Refer to 28 - DTC-Based Diagnostics/MODULE, Powertrain Control (PCM) - Standard Procedure).

5. (K399) O2 2/2 HEATER CONTROL CIRCUIT SHORTED TO VOLTAGE

1. Turn the ignition off.
2. Disconnect the C3 PCM harness connector.
3. Ignition on, engine not running.
4. Measure the voltage of the (K199) O2 2/1 Heater Control circuit in the O2 Sensor harness connector.

Is there any voltage present?

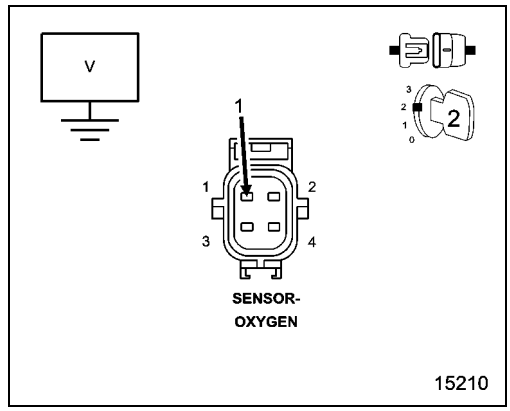

Yes

- Repair the short to voltage in the (K399) O2 2/2 Heater Control circuit.
- Perform the POWERTRAIN VERIFICATION TEST. (Refer to 28 - DTC-Based Diagnostics/MODULE, Powertrain Control (PCM) - Standard Procedure).

No

- Go To 6

6. (K399) O2 2/2 HEATER CONTROL CIRCUIT OPEN

1. Turn the ignition off.

CAUTION: Do not probe the PCM harness connectors. Probing the PCM harness connectors will damage the PCM terminals resulting in poor terminal to pin connection. Install the PCM Pinout Box Kit, NGC, 38 Position 8815A to perform diagnosis.

2. Measure the resistance of the (K399) O2 2/2 Heater Control circuit from the O2 Sensor harness connector to the appropriate terminal of special tool PCM Pinout Box 8815A.

Is the resistance below 5.0 Ohms?

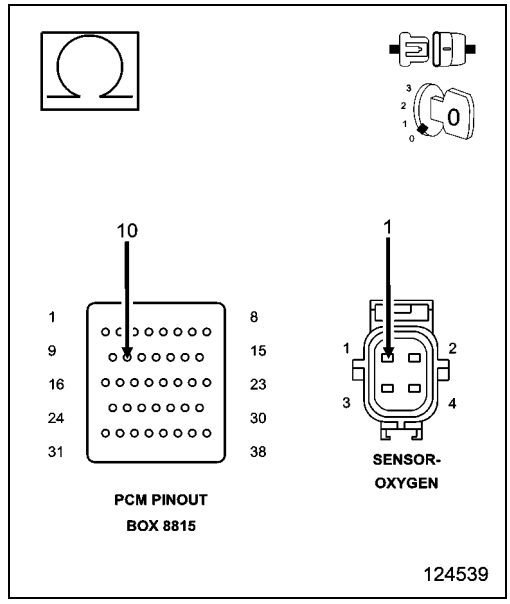

Yes

- Go To 7

No

- Repair the open in the (K399) O2 2/2 Heater Control circuit.
- Perform the POWERTRAIN VERIFICATION TEST. (Refer to 28 - DTC-Based Diagnostics/MODULE, Powertrain Control (PCM) - Standard Procedure).

7. POWERTRAIN CONTROL MODULE (PCM)

1. Using the wiring diagram/schematic as a guide, inspect the wiring and connectors between the Oxygen Sensor 2/2 and the Powertrain Control Module (PCM).
2. Look for any chafed, pierced, pinched, or partially broken wires.
3. Look for broken, bent, pushed out or corroded terminals. Verify that there is good pin to terminal contact in the Sensor and Control Module connectors.
4. Refer to any Technical Service Bulletins that may apply.

Were there any problems found?

Yes

- Repair as necessary.
- Perform the POWERTRAIN VERIFICATION TEST. (Refer to 28 - DTC-Based Diagnostics/MODULE, Powertrain Control (PCM) - Standard Procedure).

No

- Replace and program the Powertrain Control Module in accordance with the Service Information.
- Perform the POWERTRAIN VERIFICATION TEST. (Refer to 28 - DTC-Based Diagnostics/MODULE, Powertrain Control (PCM) - Standard Procedure).

P0071-AMBIENT AIR TEMPERATURE SENSOR PERFORMANCE

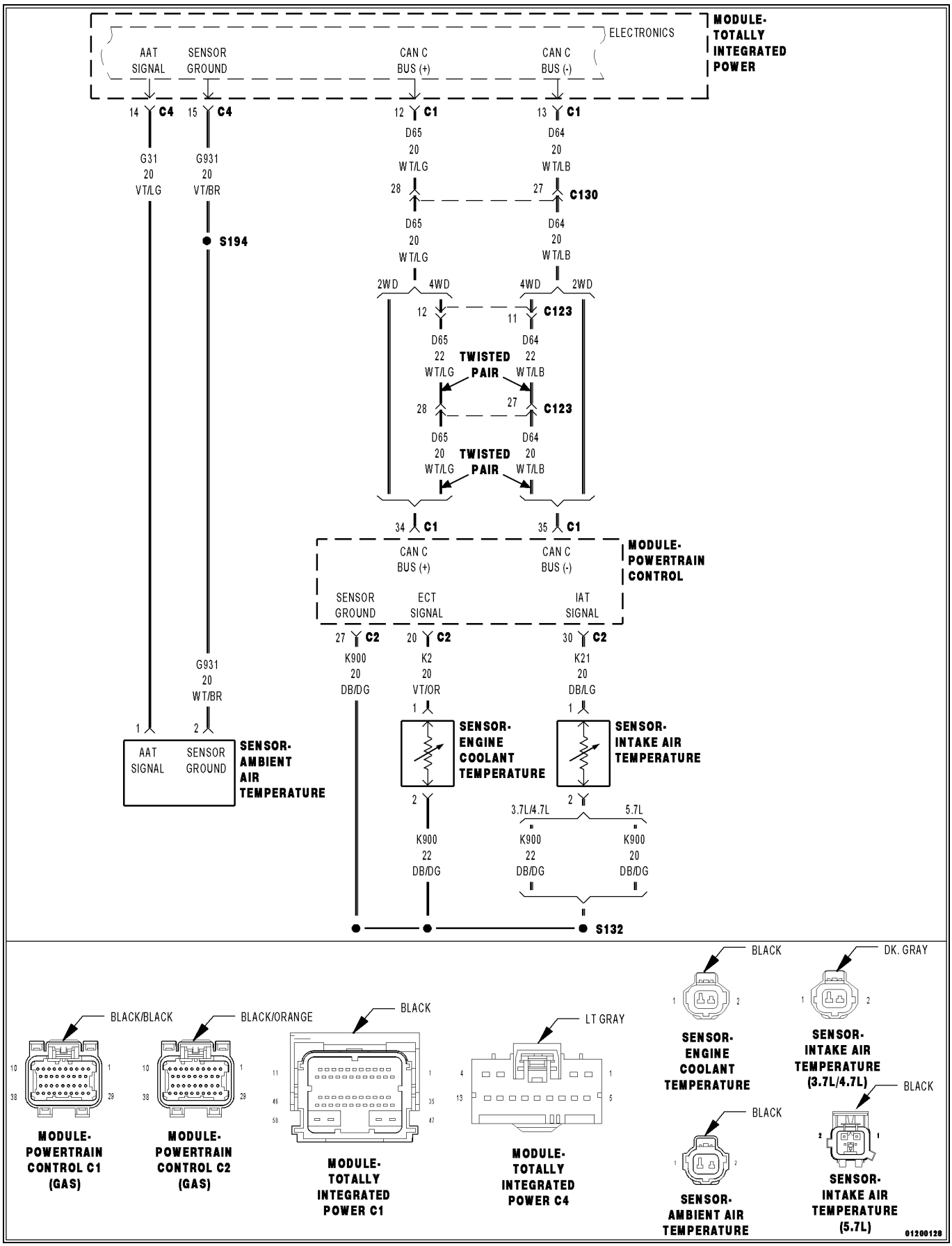

For a complete wiring diagram, **refer to the Wiring Information**.

Theory of Operation

Ambient Air Temperature (AAT) Sensor performance looks at the outputs of three temperature sensors and compares them under cold start conditions. Following a start to run delay time, the outputs of the ambient, engine coolant, and intake air temperature sensors will be compared. If the engine coolant and intake air temperature sensors agree and the ambient air temperature does not agree, the ambient air temperature sensor is declared as irrational. If declared irrational a second comparison will be done after a short drive cycle.

- **When Monitored:**

  Engine off time is greater than 480 minutes and the vehicle has been driven for one minute over 35 mph. Ambient temperature is greater than -64° C (-83° F).

- **Set Condition:**

  The Powertrain Control Module (PCM) compares the ambient, engine coolant, and intake air temperature sensor values. If engine coolant and intake air temperature sensors agree with each other but ambient air temperature does not agree with them, the ambient air temperature sensor is declared as irrational. Two Trip Fault. Three good trips to turn off the MIL.

Possible Causes
(G31) AAT SIGNAL CIRCUIT HIGH RESISTANCE
(G31) AAT SIGNAL CIRCUIT SHORTED TO GROUND
(G31) AAT SIGNAL CIRCUIT SHORTED TO THE (G931) SENSOR GROUND CIRCUIT
(G31) AAT SIGNAL CIRCUIT SHORTED TO VOLTAGE
(G931) SENSOR GROUND HIGH RESISTANCE
AMBIENT AIR TEMPERATURE SENSOR (AAT)
CAN C BUS CIRCUITS
TOTALLY INTEGRATED POWER MODULE (TIPM)
POWERTRAIN CONTROL MODULE (PCM)

Always perform the Pre-Diagnostic Troubleshooting procedure before proceeding. (Refer to 28 - DTC-Based Diagnostics/MODULE, Powertrain Control (PCM) - Standard Procedure).

1. ACTIVE DTC

NOTE: Diagnose any CAN - C Communication DTCs before continuing.

1. Turn the ignition off.
2. If possible, allow the vehicle to sit with the ignition off for more than 480 minutes in an environment where the temperature is consistent and above -7° C (19.4° F).
3. Test drive the vehicle. The vehicle must exceed 48 km/h (30 mph) during the test drive. Do not cycle the ignition off when the test drive is completed.
4. With a scan tool, select View DTCs.

Is the DTC Active or Pending at this time?

Yes

- Go To 3

No

- Go To 2

2. AMBIENT AIR TEMPERATURE

1. Turn the ignition off.
2. Allow the vehicle to sit with the ignition off in an environment where the temperature is consistent and above -7° C (19.4° F) until the engine coolant temperature is equal to ambient temperature.
3. Turn the ignition on.
4. With a scan tool, compare the AAT, ECT, and IAT sensor values.

Is the Ambient Air Temperature Sensor value within 10° C (18° F) of the other two sensor values?

Yes

- Perform the INTERMITTENT CONDITION diagnostic procedure. (Refer to 28 - DTC-Based Diagnostics/MODULE, Powertrain Control (PCM) - Standard Procedure).

No

- Go To 3

3. AAT SENSOR VOLTAGE

1. Turn the ignition off.
2. Disconnect the AAT Sensor harness connector.
3. Ignition on, engine not running.
4. With a scan tool, read the AAT voltage.

NOTE: The sensor voltage should be approximately 5.0 volts (plus or minus .1 of a volt) with the connector disconnected.

Does the scan tool display the voltage as described above?

Yes

- Go To 4

No

- Go To 5

4. AAT SENSOR

1. Turn the ignition off.
2. Connect a jumper wire between the (G31) AAT Signal circuit and the (G931) Sensor Ground circuit in Ambient Air Temperature Sensor harness connector.
3. Turn the ignition on.
4. With a scan tool, read the Ambient Air Temperature Sensor voltage.

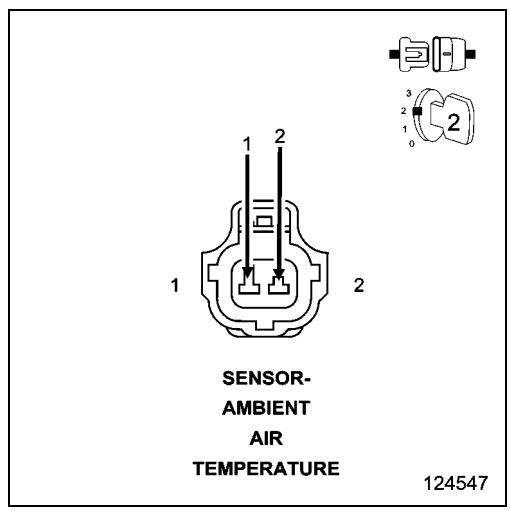

NOTE: The sensor voltage should be approximately 0.0 volts (plus or minus .1 volt) with the jumper wire in place.

Does the scan tool display the voltage as described above?

Yes

- Verify that there is good pin to terminal contact in the Sensor and Control Module connectors. Replace the AAT Sensor if no problems were found in the connectors.
- Perform the POWERTRAIN VERIFICATION TEST. (Refer to 28 - DTC-Based Diagnostics/MODULE, Powertrain Control (PCM) - Standard Procedure).

No

- Go To 5

NOTE: Remove the jumper wire before continuing.

5. (G31) AAT SIGNAL CIRCUIT HIGH RESISTANCE

1. Turn the ignition off.
2. Reconnect the AAT Sensor harness connector.
3. Using a voltmeter perform a voltage drop test. Backprobe the (G31) AAT Signal circuit at the AAT sensor harness connector and the C4 TIPM harness connector.
4. Start the engine and allow it to reach normal operating temperature.
5. Monitor the voltmeter.

Is the voltage less than 0.5 of a volt?

Yes

- Go To 6

No

- Repair the excessive resistance in the (G31) AAT Signal circuit.
- Perform the POWERTRAIN VERIFICATION TEST. (Refer to 28 - DTC-Based Diagnostics/MODULE, Powertrain Control (PCM) - Standard Procedure).

6. (G931) SENSOR GROUND CIRCUIT HIGH RESISTANCE

1. Turn the ignition off.
2. Using a voltmeter perform a voltage drop test. Backprobe the (G931) Sensor Ground circuit at the AAT sensor harness connector and the C4 TIPM harness connector.

WARNING: When the engine is operating, do not stand in direct line with the fan. Do not put your hands near the pulleys, belts or fan. Do not wear loose clothing. Failure to follow these instructions may result in possible serious or fatal injury.

3. Start the engine and allow it to reach normal operating temperature.
4. Monitor the voltmeter.

Is the voltage less than 0.5 of a volt?

Yes

- Go To 7

No

- Repair the excessive resistance in the (G930) AAT Return circuit.
- Perform the POWERTRAIN VERIFICATION TEST. (Refer to 28 - DTC-Based Diagnostics/MODULE, Powertrain Control (PCM) - Standard Procedure).

7. (G31) AAT SIGNAL CIRCUIT SHORTED TO VOLTAGE

1. Turn the ignition off.
2. Disconnect the C4 TIPM harness connector.
3. Ignition on, engine not running.
4. Measure the voltage on the (G31) AAT Signal circuit in the AAT Sensor harness connector.

Is there any voltage present?

Yes

- Repair the short to voltage in the (G31) AAT Signal circuit.
- Perform the POWERTRAIN VERIFICATION TEST.(Refer to 28 - DTC-Based Diagnostics/MODULE, Powertrain Control (PCM) - Standard Procedure).

No

- Go To 8

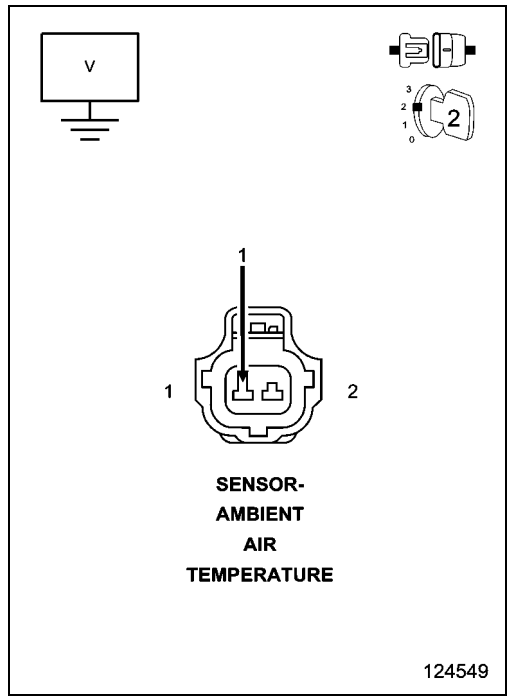

8. (G31) AAT SIGNAL CIRCUIT SHORTED TO GROUND

1. Turn the ignition off.
2. Measure the resistance between ground and the (G31) AAT Signal circuit in the AAT Sensor harness connector.

Is the resistance less than 100 Ohms?

Yes

- Repair the short to ground in the (G31) AAT Signal circuit.
- Perform the POWERTRAIN VERIFICATION TEST. (Refer to 28 - DTC-Based Diagnostics/MODULE, Powertrain Control (PCM) - Standard Procedure).

No

- Go To 9

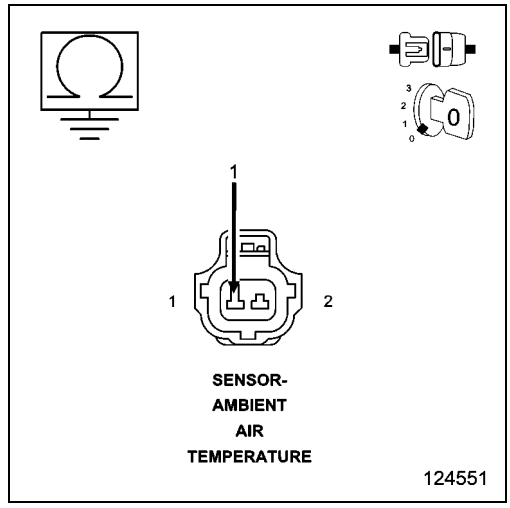

9. (G31) AAT SIGNAL CIRCUIT SHORTED TO THE (G931) SENSOR GROUND CIRCUIT

1. Measure the resistance between the (G930) AAT return circuit and the (G31) AAT Signal circuit in the AAT Sensor harness connector.

Is the resistance less than 5.0 Ohms?

Yes

- Repair the short between the (G930) AAT return circuit and the (G31) AAT Signal circuit.
- Perform the POWERTRAIN VERIFICATION TEST. (Refer to 28 - DTC-Based Diagnostics/MODULE, Powertrain Control (PCM) - Standard Procedure).

No

- Go To 10

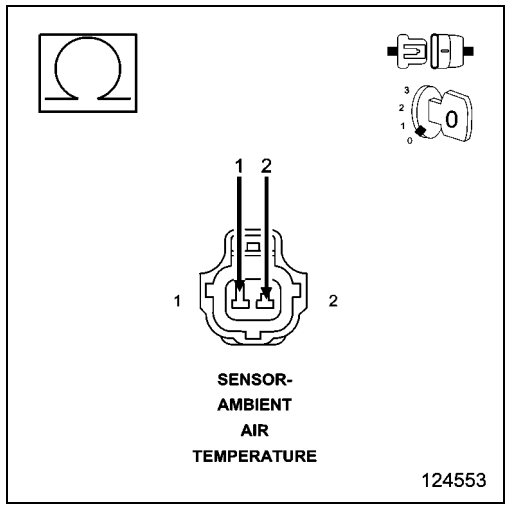

10. TOTALLY INTEGRATED POWER MODULE

1. Using the wiring diagram/schematic as a guide, inspect the wiring and connectors between the AAT Sensor and the Totally Integrated Power Module (TIPM).
2. Look for any chafed, pierced, pinched, or partially broken wires.
3. Look for broken, bent, pushed out or corroded terminals. Verify that there is good pin to terminal contact in the Sensor and Control Module connectors.
4. Refer to any Technical Service Bulletins that may apply.

Were there any problems found?

Yes

- Repair as necessary.
- Perform the BODY VERIFICATION TEST. (Refer to 28 - DTC-Based Diagnostics/MODULE, Totally Integrated Power (TIPM) - Standard Procedure).

No

- Replace the Totally Integrated Power Module in accordance with the Service Information.
- Perform the BODY VERIFICATION TEST. (Refer to 28 - DTC-Based Diagnostics/MODULE, Totally Integrated Power (TIPM) - Standard Procedure).

P0072-AMBIENT AIR TEMPERATURE SENSOR CIRCUIT LOW

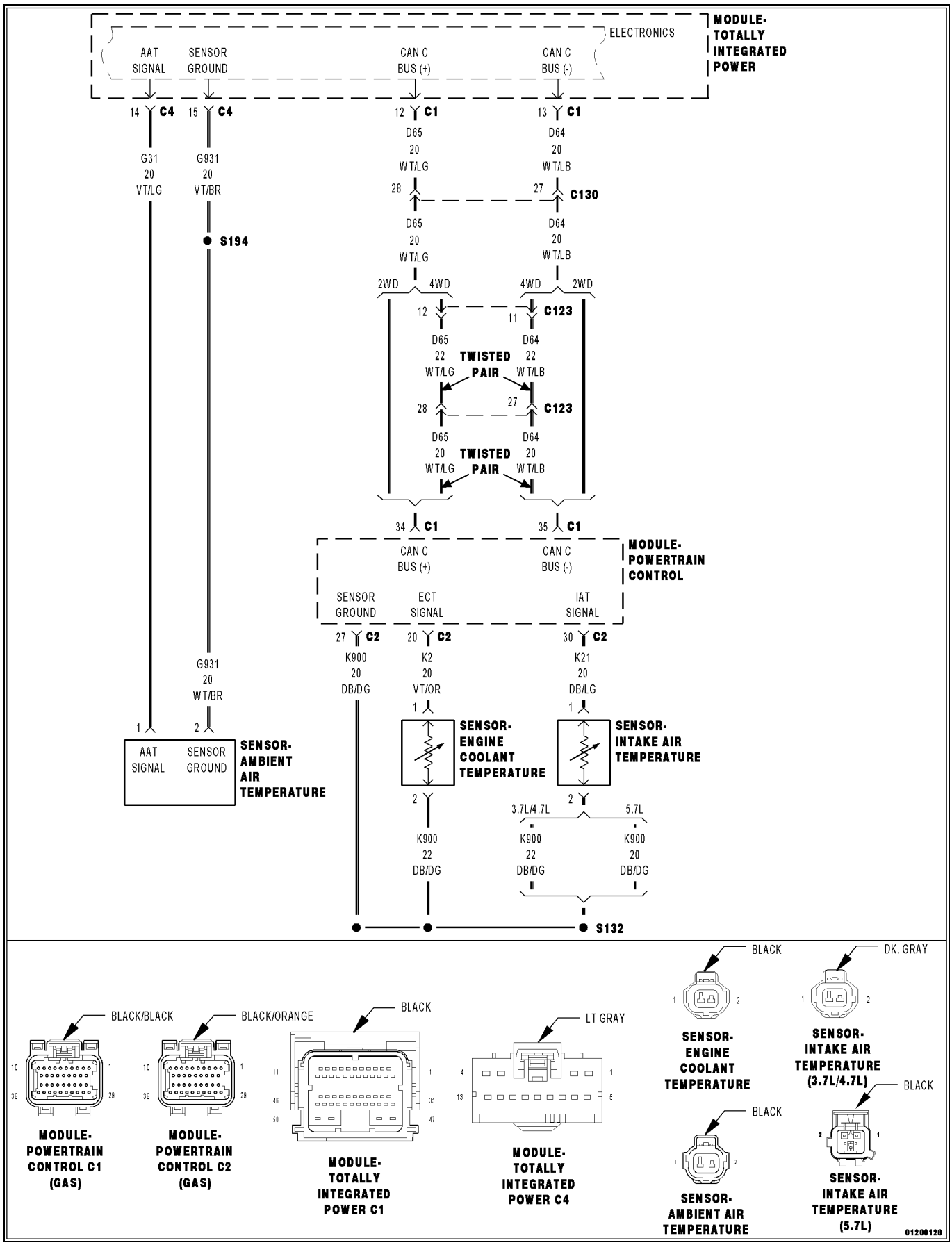

For a complete wiring diagram, **refer to the Wiring Information**.

- **When Monitored:**
  The ignition key on.
- **Set Condition:**
  The Powertrain Control Module (PCM) receives an Ambient Air Temperature (AAT) Sensor signal from the Totally Integrated Power Moduel (TIPM) which is less than the minimum acceptable value. One Trip Fault. Three good trips to turn off the MIL.

Possible Causes
(G31) AAT SIGNAL CIRCUIT SHORTED TO GROUND
(G31) AAT SIGNAL CIRCUIT SHORTED TO THE (G931) SENSOR GROUND CIRCUIT
EXCESSIVE RESISTANCE IN THE (G31) AAT SIGNAL CIRCUIT
AMBIENT AIR TEMPERATURE (AAT) SENSOR
TOTALLY INTEGRATED POWER MODULE (TIPM)

Always perform the Pre-Diagnostic Troubleshooting procedure before proceeding. (Refer to 28 - DTC-Based Diagnostics/MODULE, Powertrain Control (PCM) - Standard Procedure).

1. DTC IS ACTIVE

1. Start the engine and allow it to reach normal operating temperature.

WARNING: When the engine is operating, do not stand in direct line with the fan. Do not put your hands near the pulleys, belts or fan. Do not wear loose clothing. Failure to follow these instructions may result in possible serious or fatal injury.

2. With the scan tool, select View DTCs.

NOTE: If any communication or system voltage DTCs are present diagnose those DTCs before continuing with this test

Is the DTC Active at this time?

Yes

- Go To 2

No

- Perform the INTERMITTENT CONDITION diagnostic procedure. (Refer to 28 - DTC-Based Diagnostics/MODULE, Powertrain Control (PCM) - Standard Procedure).

2. CHECKING AAT SENSOR

1. Turn the ignition off.
2. Disconnect the Ambient Air Temperature Sensor harness connector.
3. Ignition on, engine not running.
4. With a scan tool, read the AAT Sensor voltage.

NOTE: The sensor voltage should be approximately 5.0 volts (plus or minus .1 of a volt) with the connector disconnected.

Does the scan tool display the voltage as described above?

Yes

- Verify that there is good pin to terminal contact in the Sensor and Control Module connectors. Replace the Ambient Air Temperature Sensor if no problems were found with the connectors.
- Perform the POWERTRAIN VERIFICATION TEST. (Refer to 28 - DTC-Based Diagnostics/MODULE, Powertrain Control (PCM) - Standard Procedure).

No

- Go To 3

3. (G31) AAT SIGNAL CIRCUIT SHORTED TO GROUND

1. Turn the ignition off.
2. Disconnect the C4 Totally Integrated Power Module (TIPM) harness connector.
3. Measure the resistance between ground and the (G31) AAT Signal circuit in the AAT Sensor harness connector.

Is the resistance below 100 Ohms?

Yes

- Repair the short to ground in the (G31) AAT Signal circuit.
- Perform the POWERTRAIN VERIFICATION TEST. (Refer to 28 - DTC-Based Diagnostics/MODULE, Powertrain Control (PCM) - Standard Procedure).

No

- Go To 4

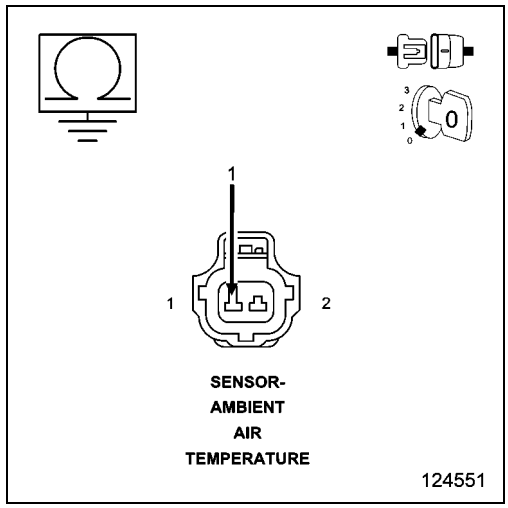

4. (G31) AAT SIGNAL CIRCUIT SHORTED TO THE (G931) SENSOR GROUND CIRCUIT

1. Measure the resistance between the (G931) Sensor Ground circuit and the (G31) AAT Signal circuit in the AAT Sensor harness connector.

Is the resistance below 5.0 Ohms?

Yes

- Repair the short between the (G931) Sensor Ground circuit and the (G31) AAT Signal circuit.
- Perform the POWERTRAIN VERIFICATION TEST. (Refer to 28 - DTC-Based Diagnostics/MODULE, Powertrain Control (PCM) - Standard Procedure).

No

- Go To 5

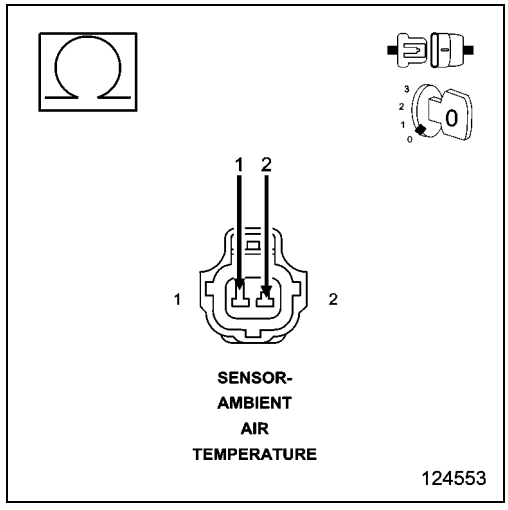

5. EXCESSIVE RESISTANCE IN THE (G31) AAT SIGNAL CIRCUIT

1. Measure the resistance of the (G31) AAT Signal circuit between the Ambient Air Temperature Sensor harness connector and the C4 TIPM harness connector.

Is the resistance below 5.0 Ohms?

Yes

- Go To 6

No

- Repair the excessive resistance in the (G31) AAT Signal circuit.
- Perform the POWERTRAIN VERIFICATION TEST. (Refer to 28 - DTC-Based Diagnostics/MODULE, Powertrain Control (PCM) - Standard Procedure).

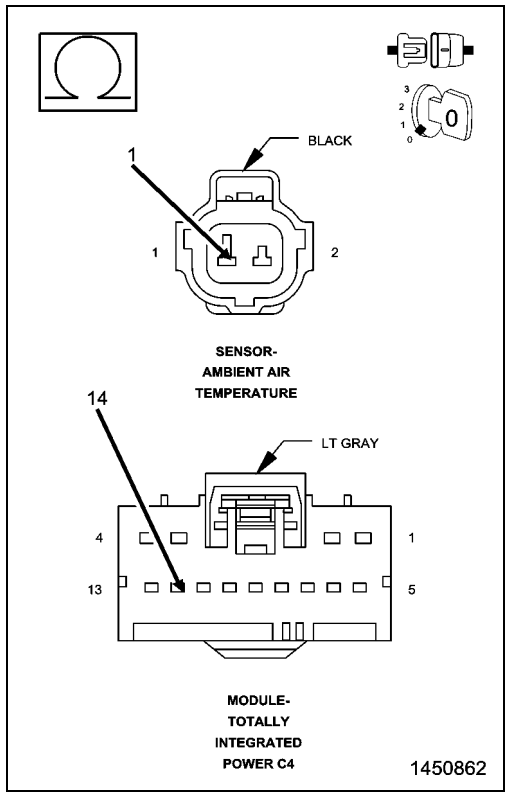

6. TOTALLY INTEGRATED POWER MODULE (TIPM)

1. Using the wiring diagram/schematic as a guide, inspect the wiring and connectors between the AAT Sensor and the Totally Integrated Power Module (TIPM).
2. Look for any chafed, pierced, pinched, or partially broken wires.
3. Look for broken, bent, pushed out or corroded terminals. Verify that there is good pin to terminal contact in the Sensor and Control Module connectors.
4. Refer to any Technical Service Bulletins that may apply.

Were there any problems found?

Yes

- Repair as necessary.
- Perform the BODY VERIFICATION TEST. (Refer to 28 - DTC-Based Diagnostics/MODULE, Totally Integrated Power (TIPM) - Standard Procedure).

No

- Replace and program the Totally Integrated Power Module (TIPM) in accordance with the Service Information.
- Perform the BODY VERIFICATION TEST. (Refer to 28 - DTC-Based Diagnostics/MODULE, Totally Integrated Power (TIPM) - Standard Procedure).

P0073-AMBIENT AIR TEMPERATURE SENSOR CIRCUIT HIGH

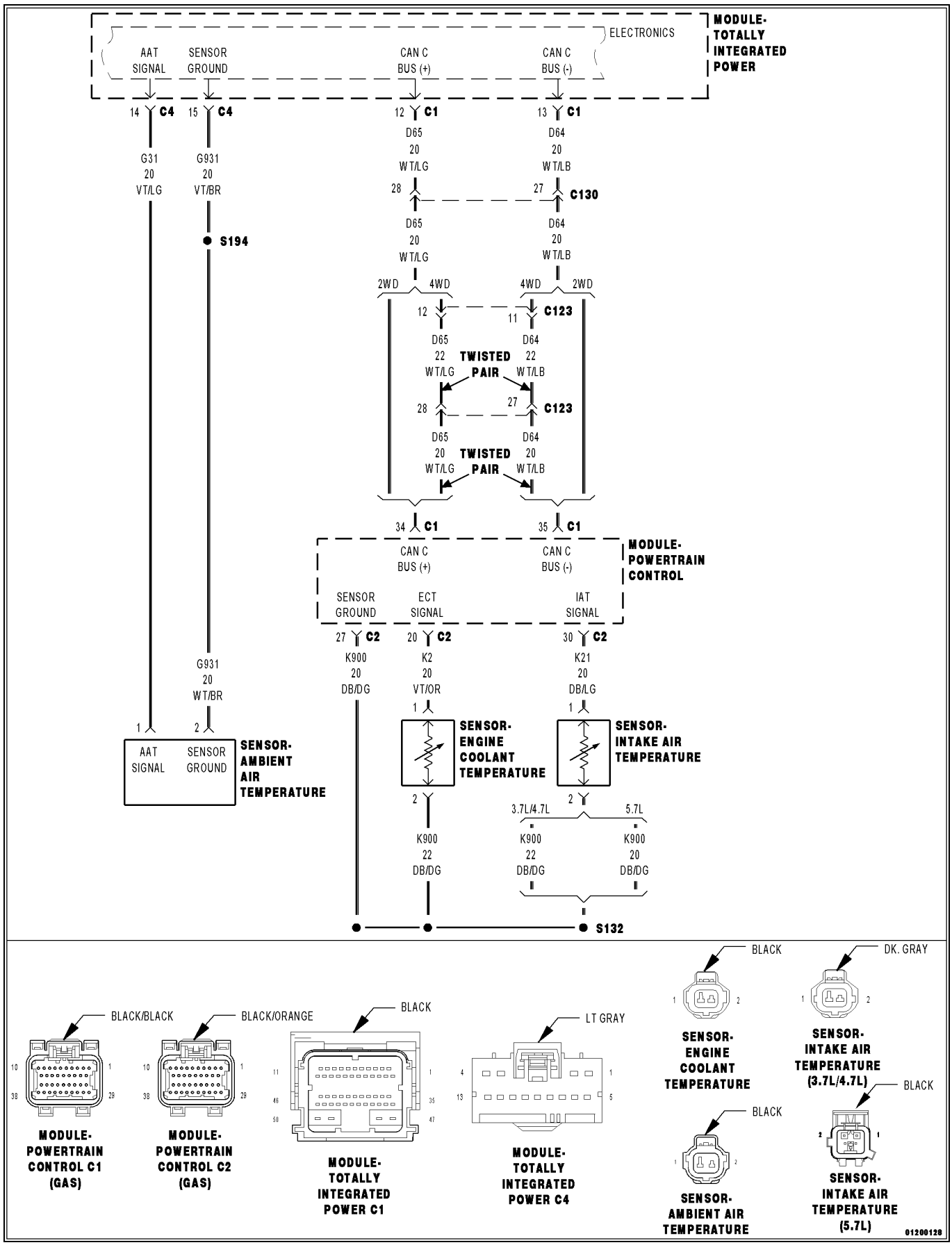

For a complete wiring diagram, **refer to the Wiring Information**.

- **When Monitored:**
  With the ignition on. Battery voltage greater than 10 volts.
- **Set Condition:**
  The Powertrain Control Module (PCM) receives an Ambient Air Temperature (AAT) Sensor signal from the Totally Integrated Power Module (TIPM) that is greater than the maximum acceptable value. One Trip Fault. Three good trips to turn off the MIL.

Possible Causes
(G31) AAT SIGNAL CIRCUIT SHORTED TO VOLTAGE
(G31) AAT SIGNAL CIRCUIT OPEN
(G931) SENSOR GROUND CIRCUIT OPEN
AMBIENT AIR TEMPERATURE SENSOR
TOTALLY INTEGRATED POWER MODULE (TIPM)

Always perform the Pre-Diagnostic Troubleshooting procedure before proceeding. (Refer to 28 - DTC-Based Diagnostics/MODULE, Powertrain Control (PCM) - Standard Procedure).

1. ACTIVE DTC

NOTE: Diagnose any CAN - C Communication DTCs before continuing.

1. Start the engine and allow it to reach normal operating temperature.

WARNING: When the engine is operating, do not stand in direct line with the fan. Do not put your hands near the pulleys, belts or fan. Do not wear loose clothing. Failure to follow these instructions may result in possible serious or fatal injury.

NOTE: Diagnose and repair any system voltage DTCs before continuing with this test.

2. With the scan tool, select View DTCs.

Is the DTC Active at this time?

Yes

- Go To 2

No

- Perform the INTERMITTENT CONDITION diagnostic procedure. (Refer to 28 - DTC-Based Diagnostics/MODULE, Powertrain Control (PCM) - Standard Procedure).

2. AAT SENSOR

1. Turn the ignition off.
2. Disconnect the Ambient Air Temperature Sensor harness connector.
3. Ignition on, engine not running.
4. With a scan tool, read AAT Sensor voltage.
5. Connect a jumper wire between the (G31) AAT Signal circuit and the (G931) Sensor Ground circuit in the AAT Sensor harness connector.

NOTE: The sensor voltage should be approximately 0.0 volts (plus or minus .1 of a volt) with the jumper wire in place.

Does the scan tool display the voltage as described above?

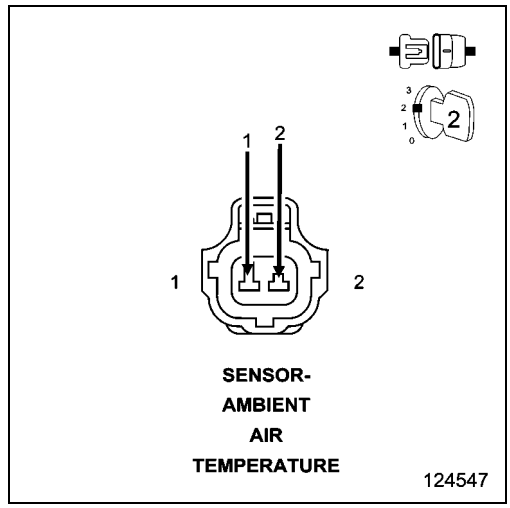

Yes

- Verify that there is good pin to terminal contact in the Sensor and Control Module connectors. Replace the Ambient Air Temperature Sensor if no problems were found with the connectors.
- Perform the POWERTRAIN VERIFICATION TEST. (Refer to 28 - DTC-Based Diagnostics/MODULE, Powertrain Control (PCM) - Standard Procedure).

No

- Go To 3

NOTE: Remove the jumper wire before continuing.

3. (G31) AAT SIGNAL CIRCUIT SHORTED TO VOLTAGE

1. Turn the ignition off.
2. Disconnect the TIPM C4 harness connector.
3. Ignition on, engine not running.
4. Measure the voltage on the (G31) AAT Signal circuit in the AAT Sensor harness connector.

Is there any voltage present?

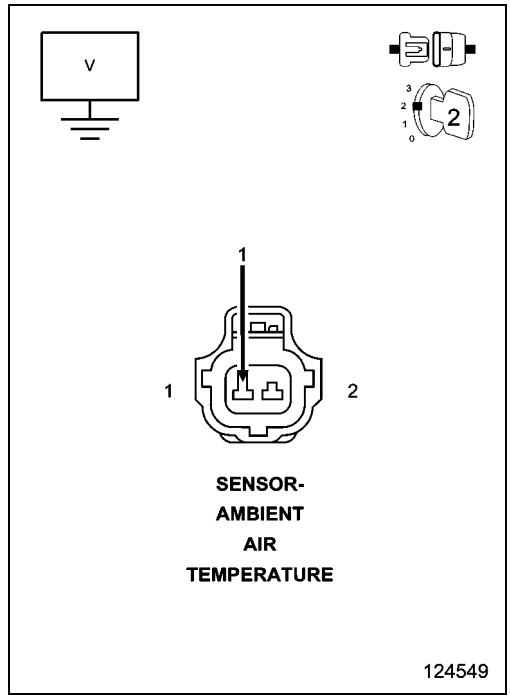

Yes

- Repair the short to voltage in the (G31) AAT Signal circuit.
- Perform the POWERTRAIN VERIFICATION TEST. (Refer to 28 - DTC-Based Diagnostics/MODULE, Powertrain Control (PCM) - Standard Procedure).

No

- Go To 4

4. (G31) AAT SIGNAL CIRCUIT OPEN

1. Turn the ignition off.
2. Measure the resistance of the (G31) AAT Signal circuit from the AAT Sensor harness connector to the TIPM C4 harness connector.

Is the resistance below 5.0 Ohms?

Yes

- Go To 5

No

- Repair the open in the (G31) AAT Signal circuit.
- Perform the POWERTRAIN VERIFICATION TEST. (Refer to 28 - DTC-Based Diagnostics/MODULE, Powertrain Control (PCM) - Standard Procedure).

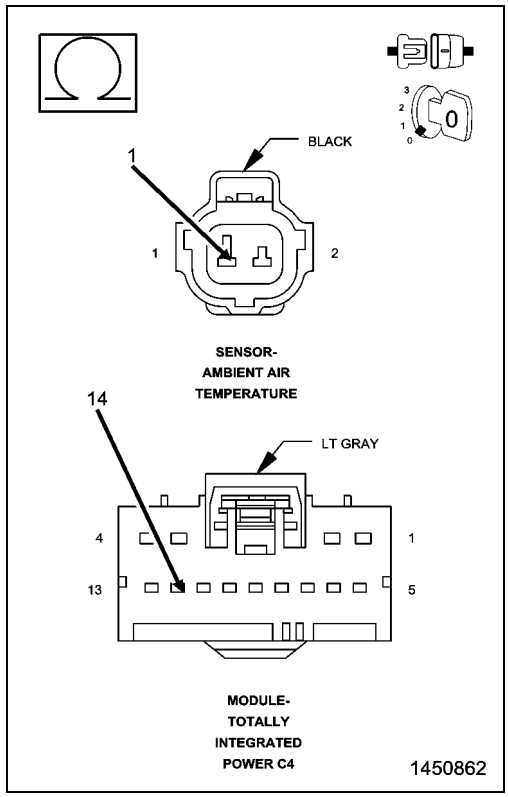

5. (G931) SENSOR GROUND CIRCUIT OPEN

1. Measure the resistance of the (G931) Sensor Ground circuit from the AAT Sensor harness connector to the TIPM C4 harness connector.

Is the resistance below 5.0 Ohms?

Yes

- Go To 6

No

- Repair the open in the (G931) Sensor Ground circuit.
- Perform the POWERTRAIN VERIFICATION TEST. (Refer to 28 - DTC-Based Diagnostics/MODULE, Powertrain Control (PCM) - Standard Procedure).

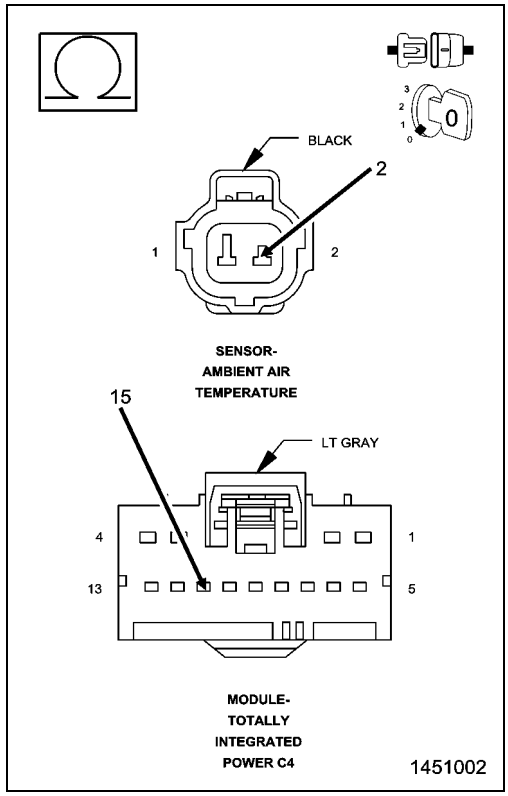

6. TOTALLY INTEGRATED POWER MODULE (TIPM)

1. Using the wiring diagram/schematic as a guide, inspect the wiring and connectors between the AAT Sensor and the Totally Integrated Power Module (TIPM).
2. Look for any chafed, pierced, pinched, or partially broken wires.
3. Look for broken, bent, pushed out or corroded terminals. Verify that there is good pin to terminal contact in the Sensor and Control Module connectors.
4. Refer to any Technical Service Bulletins that may apply.

Were there any problems found?

Yes

- Repair as necessary.
- Perform the BODY VERIFICATION TEST. (Refer to 28 - DTC-Based Diagnostics/MODULE, Totally Integrated Power (TIPM) - Standard Procedure).

No

- Replace the Totally Integrated Module (TIPM) in accordance with the Service Information.
- Perform the BODY VERIFICATION TEST. (Refer to 28 - DTC-Based Diagnostics/MODULE, Totally Integrated Power (TIPM) - Standard Procedure).

P0107-MANIFOLD ABSOLUTE PRESSURE SENSOR CIRCUIT LOW

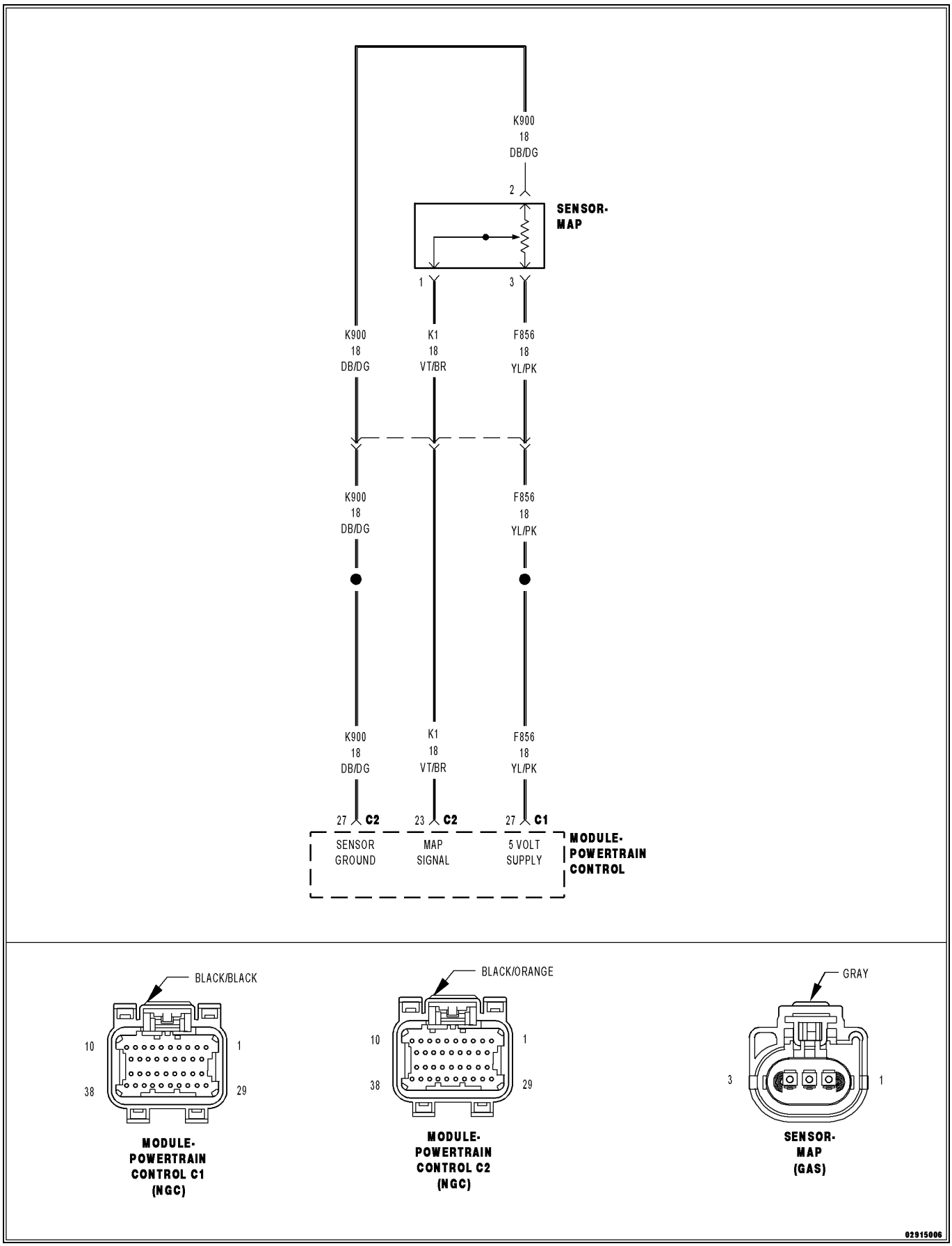

For a complete wiring diagram, **refer to the Wiring Information**.

Theory of operation

The Manifold Absolute Pressure (MAP) sensor is a transducer that varies resistance according to changes in altitude and atmospheric conditions. The MAP reading gives the Powertrain Control Module (PCM) an indication of the current air pressure within the intake manifold. The PCM uses this information to calculate fuel delivery. The MAP sensor has a 5 Volt reference circuit, a low reference circuit and a signal circuit. The PCM supplies 5 Volts to the MAP sensor on a 5 Volt reference circuit and provides a ground on a low reference circuit. The MAP sensor provides a voltage signal to the PCM on a signal circuit relative to the pressure changes.

- **When Monitored:**

  Engine speed between 600 to 3500 RPM. Battery voltage greater than 10 Volts.
- **Set Condition:**

  The MAP sensor signal voltage is below the minimum acceptable value. One Trip Fault. Three good trips to turn off the MIL, (MIL will illuminate and the ETC light will flash, if equipped.)

Possible Causes
(F856) 5 VOLT SUPPLY CIRCUIT OPEN
(F856) 5 VOLT SUPPLY CIRCUIT SHORTED TO GROUND
(K1) MAP SIGNAL CIRCUIT SHORTED TO GROUND
(K1) MAP SIGNAL CIRCUIT SHORTED TO THE (K900) SENSOR GROUND CIRCUIT
EXCESSIVE RESISTANCE IN THE (K1) MAP SIGNAL CIRCUIT
MAP SENSOR
POWERTRAIN CONTROL MODULE (PCM)

Always perform the Pre-Diagnostic Troubleshooting procedure before proceeding. (Refer to 28 - DTC-Based Diagnostics/MODULE, Powertrain Control (PCM) - Standard Procedure).

1. ACTIVE DTC

NOTE: Diagnose and repair any system voltage or sensor supply voltage DTCs before continuing with this test.

1. Start the engine and allow it to reach normal operating temperature.

WARNING: When the engine is operating, do not stand in direct line with the fan. Do not put your hands near the pulleys, belts or fan. Do not wear loose clothing. Failure to follow these instructions may result in possible serious or fatal injury.

2. With the scan tool, select View DTCs.

Is the DTC Active at this time?

Yes

- Go To 2

No

- Perform the INTERMITTENT CONDITION diagnostic procedure. (Refer to 28 - DTC-Based Diagnostics/MODULE, Powertrain Control (PCM) - Standard Procedure).

2. (F856) 5 VOLT SUPPLY CIRCUIT

1. Turn the ignition off.
2. Disconnect the MAP Sensor harness connector.
3. Ignition on, engine not running.
4. Measure the voltage on the (F856) 5 Volt Supply circuit in the MAP Sensor harness connector.

Is the voltage between 4.5 to 5.2 volts?

Yes

- Go To 3

No

- Go To 7

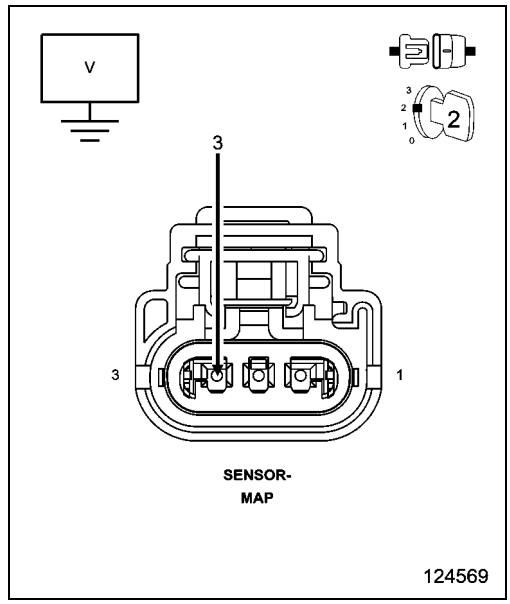

3. MAP SENSOR

1. With the scan tool, monitor the MAP Sensor voltage with the Sensor harness connector disconnected.

NOTE: The sensor voltage should be approximately 5.0 volts with the connector disconnected.

Does the scan tool display the voltage as described above?

Yes

- Verify that there is good pin to terminal contact in the Sensor and Powertrain Control Module connectors. Replace the MAP Sensor if no problems were found with the connectors. (Refer to 14 - Fuel System/Fuel Injection/SENSOR, Manifold Air Pressure (MAP) - Removal).
- Perform the POWERTRAIN VERIFICATION TEST. (Refer to 28 - DTC-Based Diagnostics/MODULE, Powertrain Control (PCM) - Standard Procedure).

No

- Go To 4

4. (K1) MAP SIGNAL CIRCUIT SHORTED TO GROUND

1. Turn the ignition off.
2. Disconnect the C2 PCM harness connector.
3. Measure the resistance between ground and the (K1) MAP Signal circuit in the MAP Sensor harness connector.

Is the resistance below 100 Ohms?

Yes

- Repair the short to ground in the (K1) MAP Signal circuit.
- Perform the POWERTRAIN VERIFICATION TEST. (Refer to 28 - DTC-Based Diagnostics/MODULE, Powertrain Control (PCM) - Standard Procedure).

No

- Go To 5

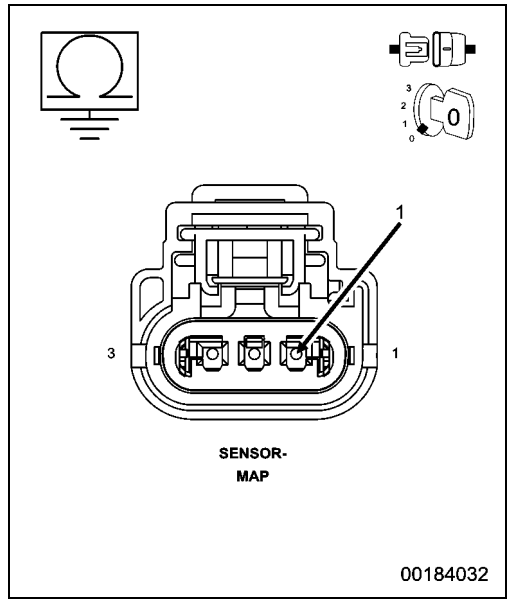

5. (K1) MAP SIGNAL CIRCUIT SHORTED TO THE (K900) SENSOR GROUND CIRCUIT

1. Measure the resistance between the (K1) MAP Signal circuit and the (K900) Sensor ground circuit in the MAP Sensor harness connector.

Is the resistance below 100 Ohms?

Yes

- Repair the short between the (K900) Sensor ground and the (K1) MAP Signal circuit.
- Perform the POWERTRAIN VERIFICATION TEST. (Refer to 28 - DTC-Based Diagnostics/MODULE, Powertrain Control (PCM) - Standard Procedure).

No

- Go To 6

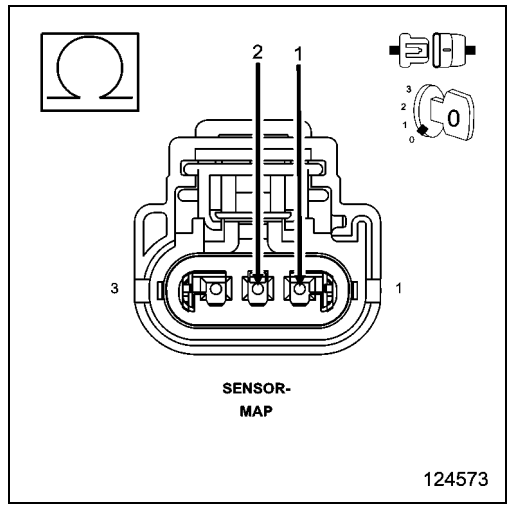

6. EXCESSIVE RESISTANCE IN THE (K1) MAP SIGNAL CIRCUIT

CAUTION: Do not probe the PCM harness connectors. Probing the PCM harness connectors will damage the PCM terminals, resulting in poor terminal to pin connection. Install the PCM Pinout Box Kit, NGC, 38 Position 8815A to perform diagnosis.

1. Measure the resistance of the (K1) MAP Signal circuit between the MAP Sensor harness connector and the appropriate terminal of PCM Pinout Box 8815A.

Is the resistance below 5.0 Ohms?

Yes

- Go To 9

No

- Repair the excessive resistance in the (K1) MAP Signal circuit.
- Perform the POWERTRAIN VERIFICATION TEST.(Refer to 28 - DTC-Based Diagnostics/MODULE, Powertrain Control (PCM) - Standard Procedure).

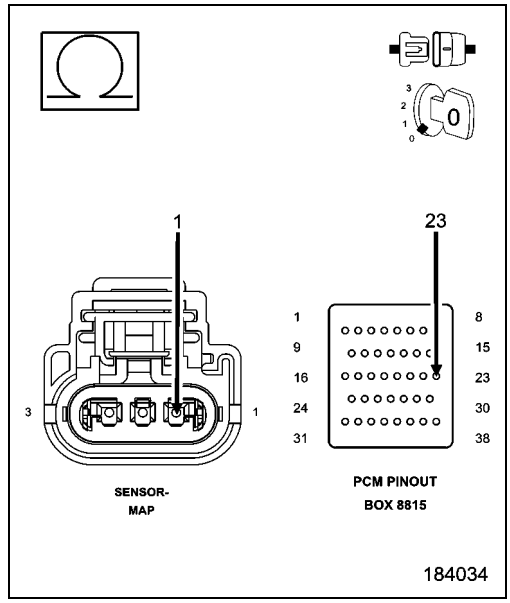

7. (F856) 5 VOLT SUPPLY CIRCUIT OPEN

1. Turn the ignition off.
2. Disconnect the C1 PCM harness connector.

CAUTION: Do not probe the PCM harness connectors. Probing the PCM harness connectors will damage the PCM terminals resulting in poor terminal to pin connection. Install the PCM Pinout Box Kit, NGC, 38 Position 8815A to perform diagnosis.

3. Measure the resistance of the (F856) 5 Volt Supply circuit from the MAP Sensor harness connector to the appropriate terminal of PCM Pinout Box 8815A.

Is the resistance below 5.0 Ohms?

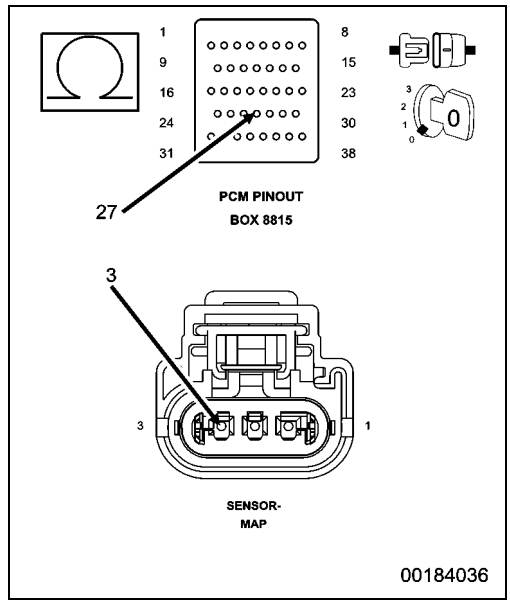

Yes

- Go To 8

No

- Repair the open or excessive resistance in the (F856) 5 Volt Supply circuit.
- Perform the POWERTRAIN VERIFICATION TEST. (Refer to 28 - DTC-Based Diagnostics/MODULE, Powertrain Control (PCM) - Standard Procedure).

8. (F856) 5 VOLT SUPPLY CIRCUIT SHORTED TO GROUND

1. Measure the resistance between ground and the (F856) 5 Volt Supply circuit in the MAP Sensor harness connector.

Is the resistance below 100 Ohms?

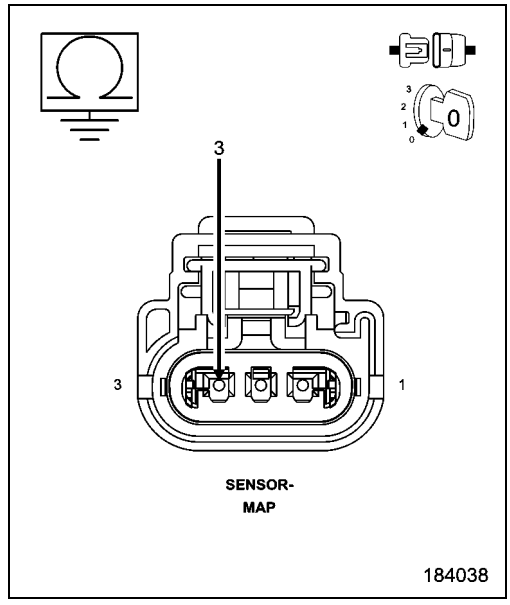

Yes

- Repair the short to ground in the (F856) 5 Volt Supply circuit.
- Perform the POWERTRAIN VERIFICATION TEST. (Refer to 28 - DTC-Based Diagnostics/MODULE, Powertrain Control (PCM) - Standard Procedure).

No

- Go To 9

9. POWERTRAIN CONTROL MODULE (PCM)

1. Using the wiring diagram/schematic as a guide, inspect the wiring and connectors between the MAP Sensor and the Powertrain Control Module (PCM).
2. Look for any chafed, pierced, pinched or partially broken wires.
3. Look for broken, bent, pushed out or corroded terminals. Verify that there is good pin to terminal contact in the Sensor and Control Module connectors.
4. Perform any Technical Service Bulletins that may apply.

Were there any problems found?

Yes

- Repair as necessary.
- Perform the POWERTRAIN VERIFICATION TEST. (Refer to 28 - DTC-Based Diagnostics/MODULE, Powertrain Control (PCM) - Standard Procedure).

No

- Replace and program the Powertrain Control Module in accordance with the Service Information. (Refer to 08 - Electrical/8E - Electronic Control Modules/MODULE, Powertrain Control - Removal).
- Perform the POWERTRAIN VERIFICATION TEST. (Refer to 28 - DTC-Based Diagnostics/MODULE, Powertrain Control (PCM) - Standard Procedure).

P0108-MANIFOLD ABSOLUTE PRESSURE SENSOR CIRCUIT HIGH

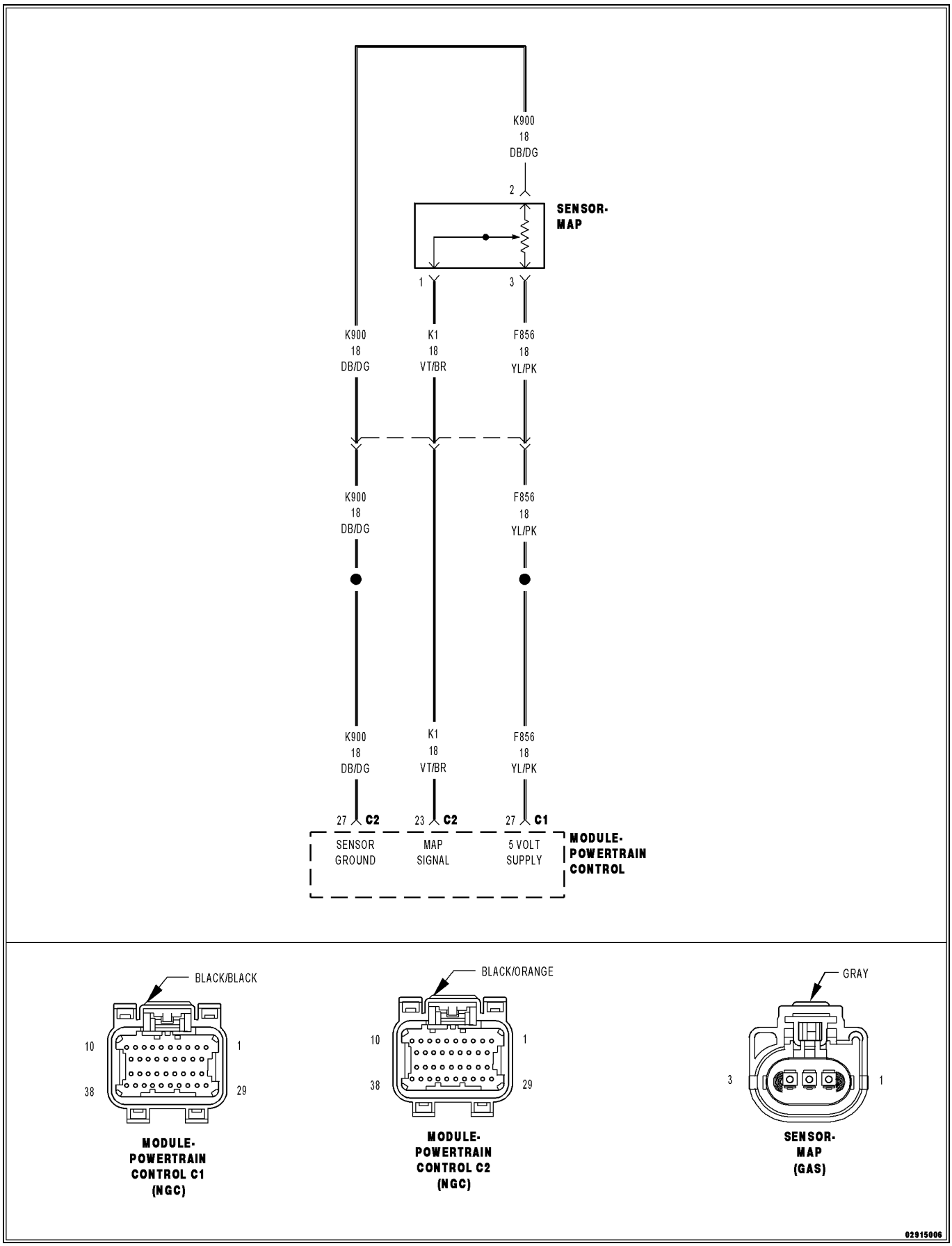

For a complete wiring diagram, **refer to the Wiring Information**.

Theory of operation

The Manifold Absolute Pressure (MAP) sensor is a transducer that varies resistance according to changes in altitude and atmospheric conditions. The MAP reading gives the Powertrain Control Module (PCM) an indication of the current air pressure within the intake manifold. The PCM uses this information to calculate fuel delivery. The MAP sensor has a 5 Volt reference circuit, a low reference circuit and a signal circuit. The PCM supplies 5 Volts to the MAP sensor on a 5 Volt reference circuit and provides a ground on a low reference circuit. The MAP sensor provides a voltage signal to the PCM on a signal circuit relative to the pressure changes.

- **When Monitored:**

  Engine speed between 600 to 3500 RPM. Battery voltage greater than 10.37 Volts.
- **Set Condition:**

  The MAP sensor signal voltage is greater than the maximum acceptable value. One trip fault. Three good trips to turn off the MIL. (MIL will illuminate and the ETC light will flash, if equipped).

Possible Causes
(K1) MAP SIGNAL CIRCUIT SHORTED TO VOLTAGE
(K1) MAP SIGNAL CIRCUIT OPEN
(K1) MAP SIGNAL CIRCUIT SHORTED TO THE (F856) 5 VOLT SUPPLY CIRCUIT
(K900) SENSOR GROUND CIRCUIT OPEN
MAP SENSOR
POWERTRAIN CONTROL MODULE (PCM)

Always perform the Pre-Diagnostic Troubleshooting procedure before proceeding. (Refer to 28 - DTC-Based Diagnostics/MODULE, Powertrain Control (PCM) - Standard Procedure).

1. ACTIVE DTC

1. Start the engine and allow it to reach normal operating temperature.

WARNING: When the engine is operating, do not stand in direct line with the fan. Do not put your hands near the pulleys, belts or fan. Do not wear loose clothing. Failure to follow these instructions may result in possible serious or fatal injury.

NOTE: Diagnose and repair any system voltage or sensor supply voltage DTCs before continuing with this test.

2. With the scan tool, select View DTCs.

Is the DTC Active at this time

Yes

- Go To 2

No

- Perform the INTERMITTENT CONDITION diagnostic procedure. (Refer to 28 - DTC-Based Diagnostics/MODULE, Powertrain Control (PCM) - Standard Procedure).

2. MAP SENSOR

1. Turn the ignition off.
2. Disconnect the MAP Sensor harness connector.
3. Connect a jumper wire between the (K1) MAP Signal circuit and the (K900) Sensor ground circuit in the Sensor harness connector.
4. Ignition on, engine not running.
5. With the scan tool, monitor the MAP Sensor voltage.

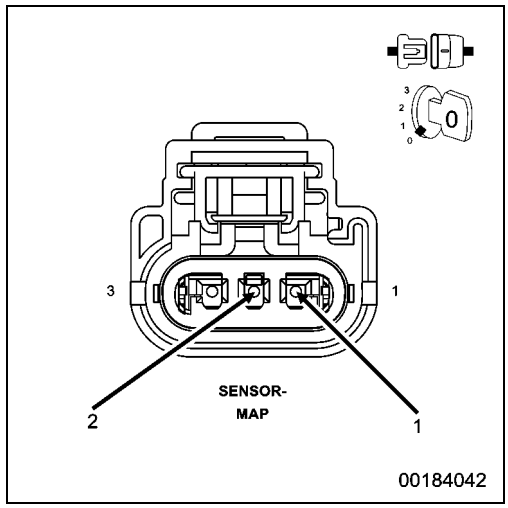

NOTE: The sensor voltage should be approximately 0 volts with the jumper wire in place.

Does the scan tool display the voltage as described above?

Yes

- Verify that there is good pin to terminal contact in the Sensor and Powertrain Control Module connectors. Replace the MAP Sensor if no issues were found with the connectors. (Refer to 14 - Fuel System/Fuel Injection/SENSOR, Manifold Air Pressure (MAP) - Removal).
- Perform the POWERTRAIN VERIFICATION TEST. (Refer to 28 - DTC-Based Diagnostics/MODULE, Powertrain Control (PCM) - Standard Procedure).

No

- Go To 3

NOTE: Remove the jumper wire before continuing.

3. (K1) MAP SIGNAL CIRCUIT SHORTED TO VOLTAGE

1. Turn the ignition off.
2. Disconnect the C1 and C2 PCM harness connectors.
3. Ignition on, engine not running.
4. Measure the voltage on the (K1) MAP Signal circuit in the MAP Sensor harness connector.

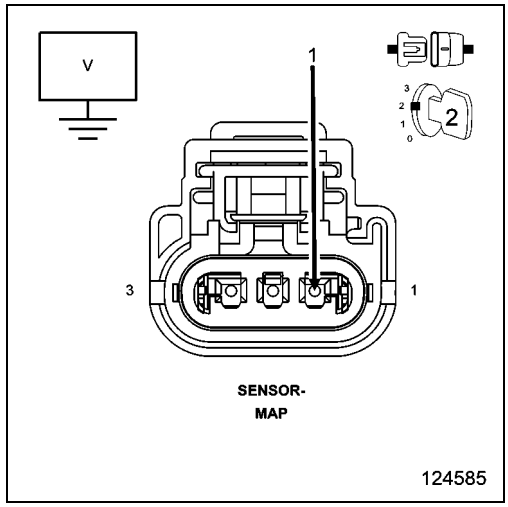

Is there any voltage present?

Yes

- Repair the short to voltage in the (K1) MAP Signal circuit.
- Perform the POWERTRAIN VERIFICATION TEST. (Refer to 28 - DTC-Based Diagnostics/MODULE, Powertrain Control (PCM) - Standard Procedure).

No

- Go To 4

4. (K1) MAP SIGNAL CIRCUIT OPEN

1. Turn the ignition off.

CAUTION: Do not probe the PCM harness connectors. Probing the PCM harness connectors will damage the PCM terminals resulting in poor terminal to pin connection. Install the PCM Pinout Box Kit, NGC, 38 Position 8815A to perform diagnosis.

2. Measure the resistance of the (K1) MAP Signal circuit from the MAP Sensor harness connector to the appropriate terminal of PCM Pinout Box 8815A.

Is the resistance below 5.0 Ohms?

Yes

- Go To 5

No

- Repair the open in the (K1) MAP Signal circuit.
- Perform the POWERTRAIN VERIFICATION TEST. (Refer to 28 - DTC-Based Diagnostics/MODULE, Powertrain Control (PCM) - Standard Procedure).

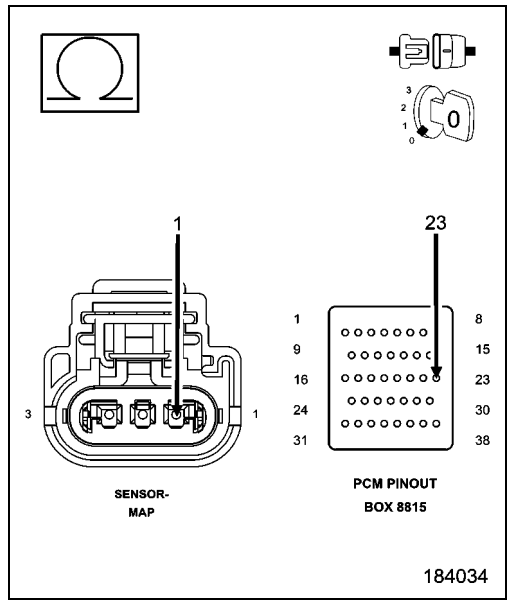

5. (K1) MAP SIGNAL CIRCUIT SHORTED TO THE (F856) 5 VOLT SUPPLY CIRCUIT

1. Measure the resistance between the (K1) MAP Signal circuit and the (F856) 5 Volt Supply circuit in the MAP Sensor harness connector.

Is the resistance below 100 Ohms?

Yes

- Repair the short between the (F856) 5 Volt Supply circuit and the (K1) MAP Signal circuit.
- Perform the POWERTRAIN VERIFICATION TEST. (Refer to 28 - DTC-Based Diagnostics/MODULE, Powertrain Control (PCM) - Standard Procedure).

No

- Go To 6

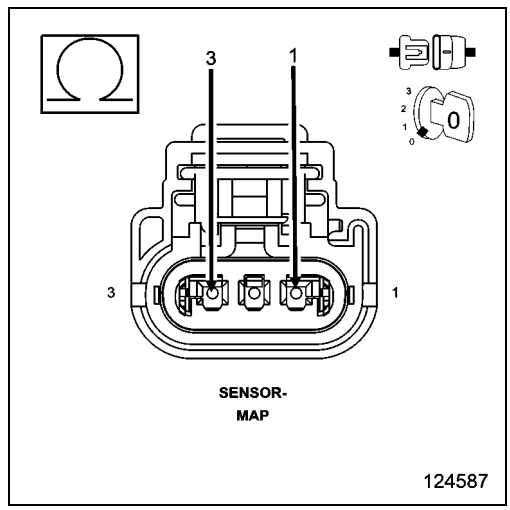

6. (K900) SENSOR GROUND CIRCUIT OPEN

1. Measure the resistance of the (K900) Sensor ground circuit from the MAP Sensor harness connector to the appropriate terminal of PCM Pinout Box 8815A.

Is the resistance below 5.0 Ohms?

Yes

- Go To 7

No

- Repair the open in the (K900) Sensor ground circuit.
- Perform the POWERTRAIN VERIFICATION TEST. (Refer to 28 - DTC-Based Diagnostics/MODULE, Powertrain Control (PCM) - Standard Procedure).

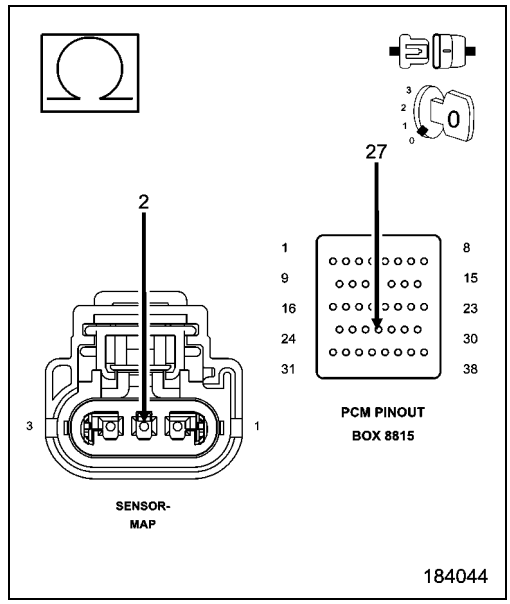

7. POWERTRAIN CONTROL MODULE (PCM)

1. Using the wiring diagram/schematic as a guide, inspect the wiring and connectors between the MAP Sensor and the Powertrain Control Module (PCM).
2. Look for any chafed, pierced, pinched or partially broken wires.
3. Look for broken, bent, pushed out or corroded terminals. Verify that there is good pin to terminal contact in the Sensor and Control Module connectors.
4. Perform any Technical Service Bulletins that may apply.

Were there any problems found?

Yes

- Repair as necessary.
- Perform the POWERTRAIN VERIFICATION TEST. (Refer to 28 - DTC-Based Diagnostics/MODULE, Powertrain Control (PCM) - Standard Procedure).

No

- Replace and program the Powertrain Control Module in accordance with the Service Information. (Refer to 08 - Electrical/8E - Electronic Control Modules/MODULE, Powertrain Control - Removal).
- Perform the POWERTRAIN VERIFICATION TEST. (Refer to 28 - DTC-Based Diagnostics/MODULE, Powertrain Control (PCM) - Standard Procedure).

P0111-INTAKE AIR TEMPERATURE SENSOR RATIONALITY

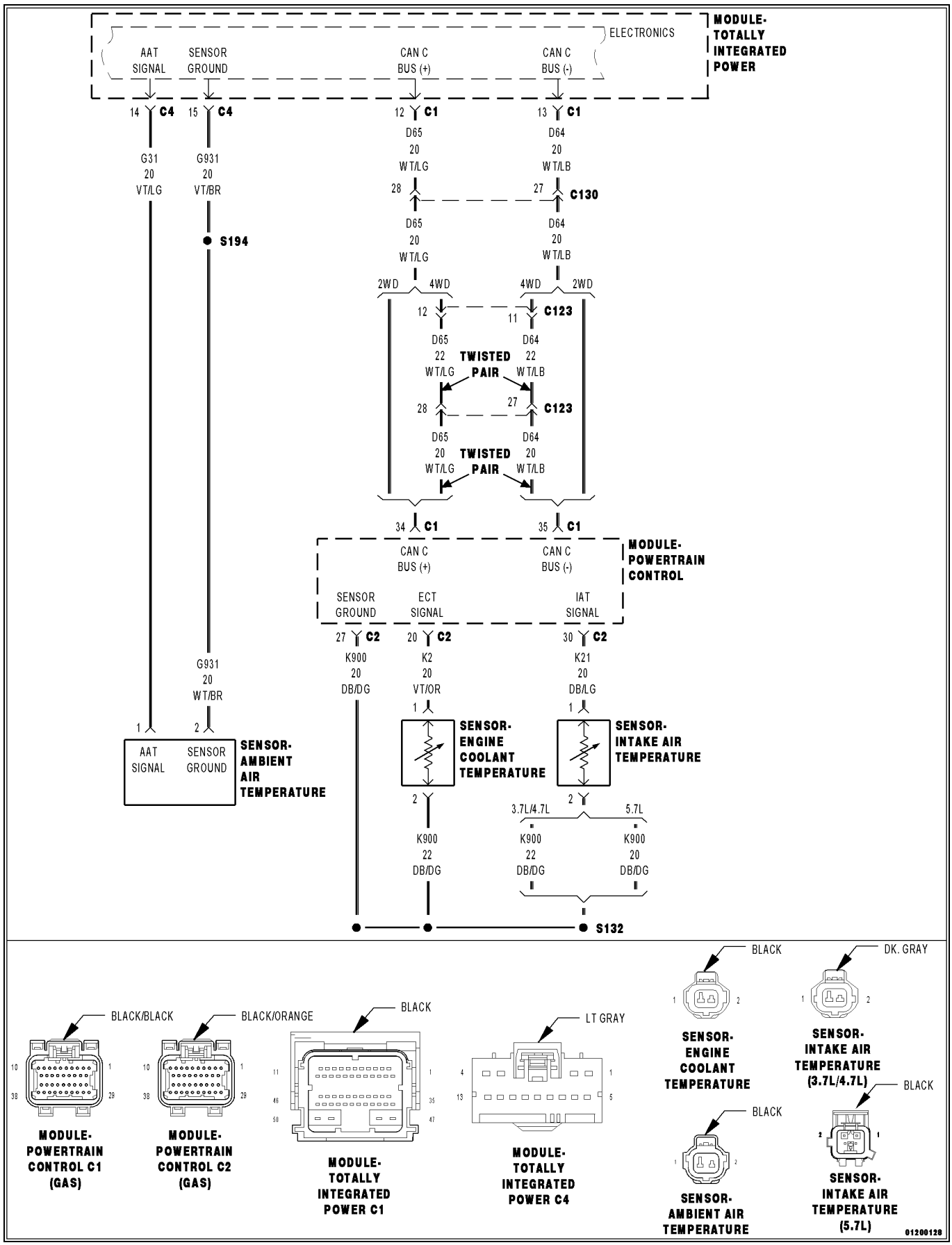

For a complete wiring diagram, **refer to the Wiring Information**.

Theory of Operation

Intake Air Temperature Sensor performance looks at the outputs of three temperature sensors and compares them under cold start conditions. Following a start to run delay time, the outputs of the ambient, engine coolant, and intake air temperature sensors will be compared. If the engine coolant and ambient air temperature sensors agree and the intake air temperature does not agree, the intake air temperature sensor is declared as irrational. If declared irrational a second comparison will be done after a short drive cycle.

- **When Monitored:**

  The engine off time is greater than 480 minutes. Ambient Temperature if greater than -64° C (-83° F).

- **Set Condition:**

  Once the vehicle is soaked for a calibrated engine off time and then driven over calibrated speed and load conditions for some calibrated time, the PCM compares the ambient, engine coolant, and intake air temperature sensor values. If engine coolant and ambient air temperature sensors agree with each other but intake air temperature does not agree with them, the intake air temperature sensor is declared as irrational. Two Trip Fault. Three good trips to turn off the MIL.

Possible Causes
EXCESSIVE RESISTANCE IN THE (K21) IAT SIGNAL CIRCUIT
(K21) IAT SIGNAL CIRCUIT SHORTED TO VOLTAGE
(K21) IAT SIGNAL CIRCUIT SHORTED TO GROUND
(K21) IAT SIGNAL CIRCUIT SHORTED TO THE (K900) SENSOR GROUND CIRCUIT
EXCESSIVE RESISTANCE IN THE (K900) SENSOR GROUND CIRCUIT
INTAKE AIR TEMPERATURE SENSOR
POWERTRAIN CONTROL MODULE (PCM)

Always perform the Pre-Diagnostic Troubleshooting procedure before proceeding. (Refer to 28 - DTC-Based Diagnostics/MODULE, Powertrain Control (PCM) - Standard Procedure).

1. ACTIVE DTC

1. Turn the ignition off.
2. If possible, allow the vehicle to sit with the ignition off for more than 480 minutes in an environment where the temperature is consistent and above -7° C (19.4° F).
3. Test drive the vehicle. The vehicle must exceed 48 km/h (30 mph) during the test drive. Do not cycle the ignition off when the test drive is completed.
4. With a scan tool, select View DTCs.

Is the DTC Active or Pending at this time?

Yes

- Go To 3

No

- Go To 2

2. INTAKE AIR TEMPERATURE

1. Turn the ignition off.
2. Allow the vehicle to sit with the ignition off in an environment where the temperature is consistent and above -7° C (19.4° F) until the engine coolant temperature is equal to ambient temperature.
3. Turn the ignition on.
4. With a scan tool, compare the AAT, ECT, and IAT sensor values.

Is the Intake Air Temperature Sensor value within 10° C (18° F) of the other two sensor values?

Yes

- Perform the INTERMITTENT CONDITION diagnostic procedure. (Refer to 28 - DTC-Based Diagnostics/MODULE, Powertrain Control (PCM) - Standard Procedure).

No

- Go To 3

3. IAT SENSOR VOLTAGE

1. Turn the ignition off.
2. Disconnect the Intake Air Temperature Sensor harness connector.
3. Turn the ignition on.
4. With a scan tool, read the Intake Air Temperature Sensor voltage.

NOTE: The sensor voltage should be approximately 5.0 volts (plus or minus .1 of a volt) with the connector disconnected.

Does the scan tool display the voltage as described above?

Yes

- Go To 4

No

- Go To 5

4. IAT SENSOR

1. With a scan tool, read the IAT voltage.
2. Connect a jumper wire between the (K21) IAT Signal circuit and the (K900) Sensor ground circuit in the IAT Sensor harness connector.

NOTE: The sensor voltage should be approximately 0.0 volts (plus or minus .1 volt) with the jumper wire in place.

Does the scan tool display the voltage as described above?

Yes

- Verify that there is good pin to terminal contact in the Sensor and Powertrain Control Module connectors. Replace the IAT Sensor if no problems were found with the connectors.
- Perform the POWERTRAIN VERIFICATION TEST.(Refer to 28 - DTC-Based Diagnostics/MODULE, Powertrain Control (PCM) - Standard Procedure).

No

- Go To 5

NOTE: Remove the jumper wire before continuing.

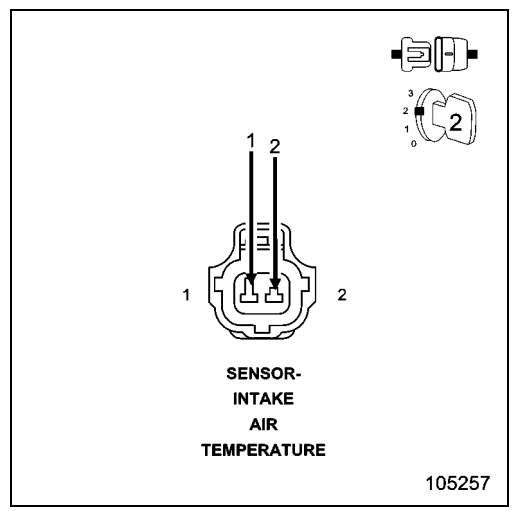

5. EXCESSIVE RESISTANCE IN THE (K21) IAT SIGNAL CIRCUIT

1. Turn the ignition off.
2. Disconnect the C2 PCM harness connector.

CAUTION: Do not probe the PCM harness connectors. Probing the PCM harness connectors will damage the PCM terminals resulting in poor terminal to pin connection. Install the PCM Pinout Box 8815A **and PCM Pinout Box Adapter** 8815-1 **to perform diagnosis.**

3. Using a voltmeter perform a voltage drop test. Backprobe the (K21) IAT Signal circuit at the IAT Sensor harness connector and probe the appropriate terminal of the PCM Pinout Box 8815A. Make sure the voltmeter leads are connected so a positive polarity is displayed on the voltmeter.

WARNING: When the engine is operating, do not stand in direct line with the fan. Do not put your hands near the pulleys, belts or fan. Do not wear loose clothing. Failure to follow these instructions may result in possible serious or fatal injury.

4. Start the engine and allow it to reach normal operating temperature.
5. Monitor the voltmeter.

Is the voltage below 0.5 of a volt?

Yes

- Go To 6

No

- Repair the open in the (K21) IAT Signal circuit.
- Perform the POWERTRAIN VERIFICATION TEST. (Refer to 28 - DTC-Based Diagnostics/MODULE, Powertrain Control (PCM) - Standard Procedure).

6. EXCESSIVE RESISTANCE IN THE (K900) SENSOR GROUND CIRCUIT

1. Turn the ignition off.
2. Move the voltmeter leads to backprobe the (K900) Sensor Ground circuit at the IAT Sensor harness connector and to probe the appropriate terminal of the PCM Pinout Box 8815A. Make sure the voltmeter leads are connected so a positive polarity is displayed on the voltmeter.

WARNING: When the engine is operating, do not stand in direct line with the fan. Do not put your hands near the pulleys, belts or fan. Do not wear loose clothing. Failure to follow these instructions may result in possible serious or fatal injury.

3. Start the engine and allow it to reach normal operating temperature.
4. Monitor the voltmeter.

Is the voltage below 0.5 of a volt?

Yes

- Go To 7

No

- Repair the open in the (K900) Sensor ground circuit.
- Perform the POWERTRAIN VERIFICATION TEST. (Refer to 28 - DTC-Based Diagnostics/MODULE, Powertrain Control (PCM) - Standard Procedure).

7. (K21) IAT SIGNAL CIRCUIT SHORTED TO VOLTAGE

1. Turn the ignition off.
2. Disconnect the PCM Pinout Box 8815A from the C2 PCM harness connector.
3. Ignition on, engine not running.
4. Measure the voltage on the (K21) IAT Signal circuit in the IAT Sensor harness connector.

Is there any voltage present?

Yes

- Repair the short to voltage in the (K21) IAT Signal circuit.
- Perform the POWERTRAIN VERIFICATION TEST.(Refer to 28 - DTC-Based Diagnostics/MODULE, Powertrain Control (PCM) - Standard Procedure).

No

- Go To 8

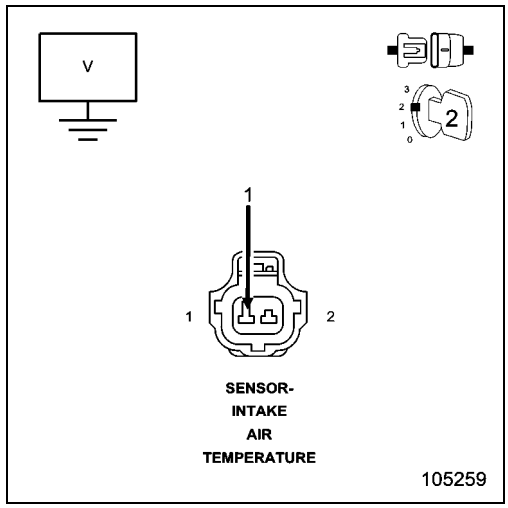

8. (K21) IAT SIGNAL CIRCUIT SHORTED TO GROUND

1. Turn the ignition off.
2. Measure the resistance between ground and the (K21) IAT Signal circuit in the IAT Sensor harness connector.

Is the resistance below 100 Ohms?

Yes

- Repair the short to ground in the (K21) IAT Signal circuit.
- Perform the POWERTRAIN VERIFICATION TEST.(Refer to 28 - DTC-Based Diagnostics/MODULE, Powertrain Control (PCM) - Standard Procedure).

No

- Go To 9

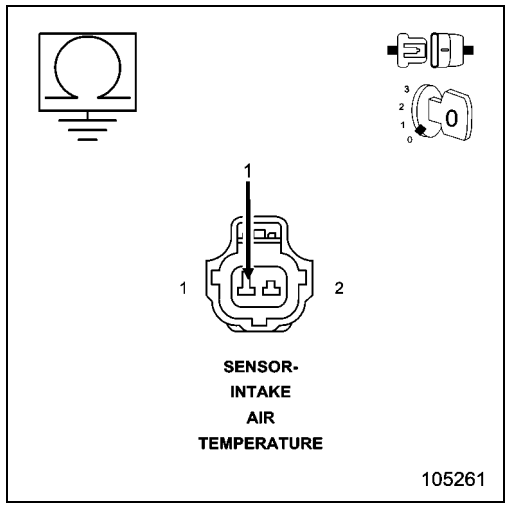

9. (K21) IAT SIGNAL CIRCUIT SHORTED TO THE (K900) SENSOR GROUND CIRCUIT

1. Measure the resistance between the (K21) IAT Signal circuit and the (K900) Sensor ground circuit in the IAT Sensor harness connector.

Is the resistance below 100 Ohms?

Yes

- Repair the short between the (K900) Sensor ground circuit and the (K21) IAT Sensor Signal circuit.
- Perform the POWERTRAIN VERIFICATION TEST. (Refer to 28 - DTC-Based Diagnostics/MODULE, Powertrain Control (PCM) - Standard Procedure).

No

- Go To 10

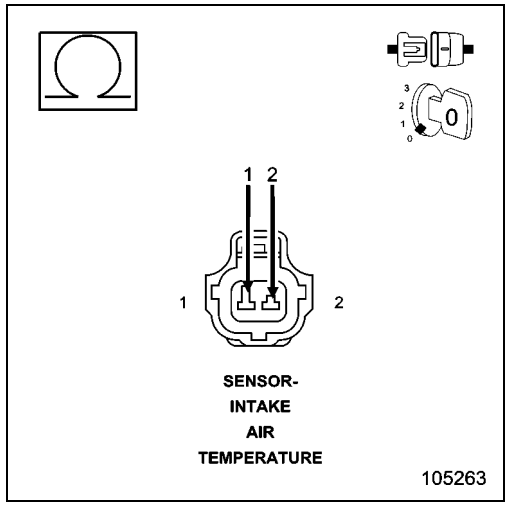

10. POWERTRAIN CONTROL MODULE (PCM)

1. Using the wiring diagram/schematic as a guide, inspect the wiring and connectors between the IAT Sensor and the Powertrain Control Module (PCM).
2. Look for any chafed, pierced, pinched, or partially broken wires.
3. Look for broken, bent, pushed out or corroded terminals. Verify that there is good pin to terminal contact in the Sensor and Control Module connectors.
4. Refer to any Technical Service Bulletins that may apply.

Were there any problems found?

Yes

- Repair as necessary.
- Perform the POWERTRAIN VERIFICATION TEST. (Refer to 28 - DTC-Based Diagnostics/MODULE, Powertrain Control (PCM) - Standard Procedure).

No

- Replace and program the Powertrain Control Module in accordance with the Service Information.
- Perform the POWERTRAIN VERIFICATION TEST. (Refer to 28 - DTC-Based Diagnostics/MODULE, Powertrain Control (PCM) - Standard Procedure).

P0112-INTAKE AIR TEMPERATURE SENSOR CIRCUIT LOW

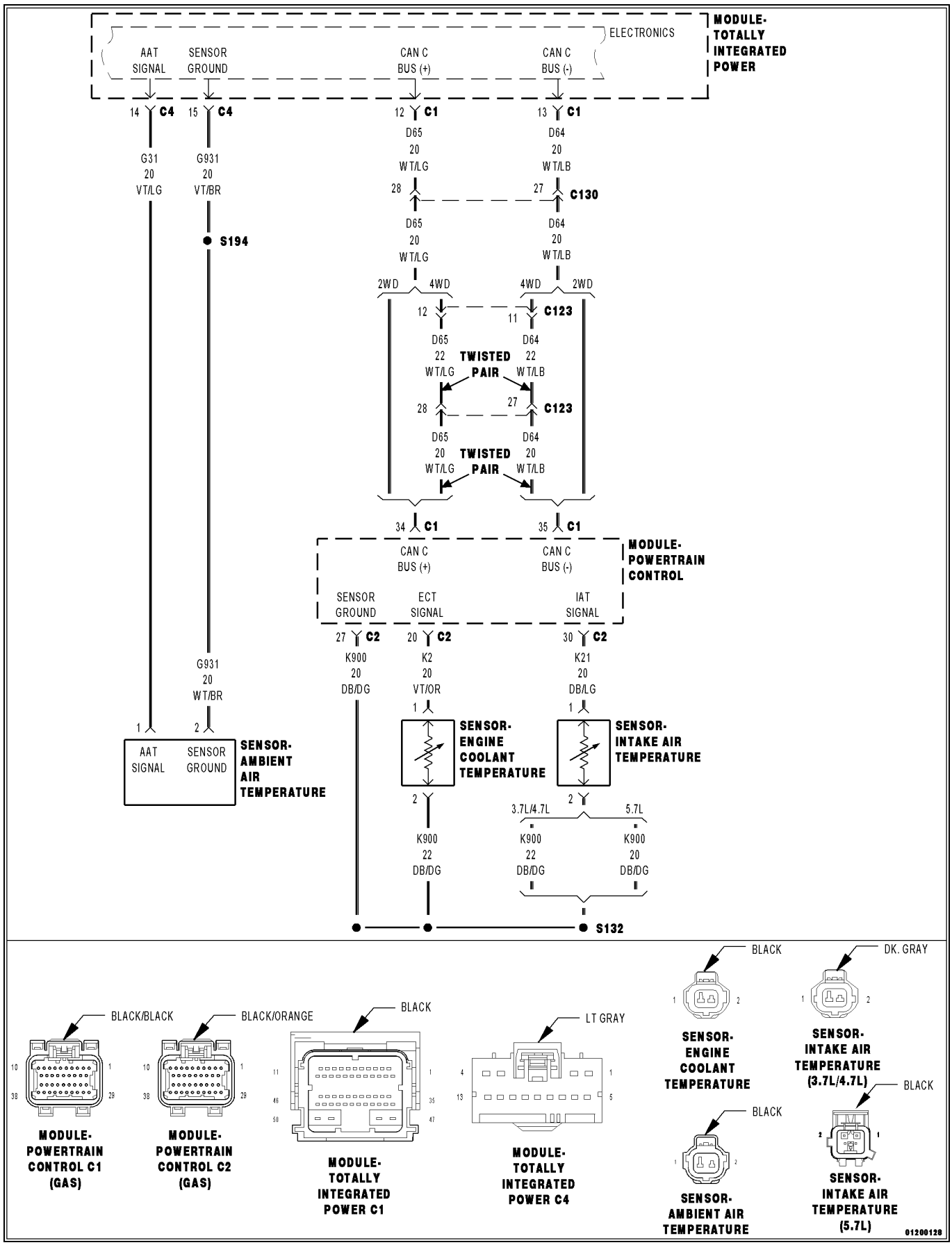

For a complete wiring diagram, **refer to the Wiring Information**.

- **When Monitored:**
  With the ignition on and battery voltage greater than 10.4 Volts.
- **Set Condition:**
  When the Inlet Air Temp Sensor Signal circuit voltage is less than the minimum acceptable value. One trip failure. Three good trips to clear the MIL.

Possible Causes
(K21) IAT SIGNAL CIRCUIT SHORTED TO GROUND
(K21) IAT SIGNAL CIRCUIT SHORTED TO THE (K900) SENSOR GROUND CIRCUIT
INTAKE AIR TEMPERATURE SENSOR
POWERTRAIN CONTROL MODULE (PCM)

Always perform the Pre-Diagnostic Troubleshooting procedure before proceeding. (Refer to 28 - DTC-Based Diagnostics/MODULE, Powertrain Control (PCM) - Standard Procedure).

1. ACTIVE DTC

1. Start the engine and allow it to reach normal operating temperature.

WARNING: When the engine is operating, do not stand in direct line with the fan. Do not put your hands near the pulleys, belts or fan. Do not wear loose clothing. Failure to follow these instructions may result in possible serious or fatal injury.

NOTE: Diagnose and repair any system voltage DTCs before continuing with this test.

2. With the scan tool, select View DTCs.

Is the DTC Active at this time?

Yes

- Go To 2

No

- Perform the INTERMITTENT CONDITION diagnostic procedure. (Refer to 28 - DTC-Based Diagnostics/MODULE, Powertrain Control (PCM) - Standard Procedure).

2. IAT SENSOR

1. Turn the ignition off.
2. Disconnect the IAT Sensor harness connector.
3. Ignition on, engine not running.
4. With a scan tool, read IAT voltage.

NOTE: The sensor voltage should be approximately 5.0 Volts (plus or minus .1 of a volt) with the connector disconnected.

Does the scan tool display the voltage as described above?

Yes

- Verify that there is good pin to terminal contact in the Sensor and Powertrain Control Module connectors. Replace the IAT Sensor if no problems were found with the connectors.
- Perform the POWERTRAIN VERIFICATION TEST. (Refer to 28 - DTC-Based Diagnostics/MODULE, Powertrain Control (PCM) - Standard Procedure).

No

- Go To 3

3. (K21) IAT SIGNAL CIRCUIT SHORTED TO GROUND

1. Turn the ignition off.
2. Disconnect the C2 PCM harness connector.
3. Measure the resistance between ground and the (K21) IAT Signal circuit in the IAT Sensor harness connector.

Is the resistance below 100 Ohms?

Yes

- Repair the short to ground in the (K21) IAT Signal circuit.
- Perform the POWERTRAIN VERIFICATION TEST. (Refer to 28 - DTC-Based Diagnostics/MODULE, Powertrain Control (PCM) - Standard Procedure)

No

- Go To 4

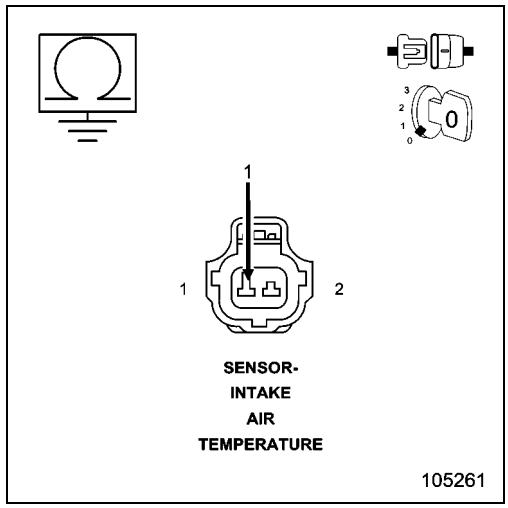

4. (K21) IAT SIGNAL CIRCUIT SHORTED TO THE (K900) SENSOR GROUND CIRCUIT

1. Measure the resistance between the (K21) IAT Signal circuit and the (K900) Sensor ground circuit in the IAT Sensor harness connector.

Is the resistance below 100 Ohms?

Yes

- Repair the short between the (K900) Sensor ground circuit and the (K21) IAT Sensor Signal circuit.
- Perform the POWERTRAIN VERIFICATION TEST. (Refer to 28 - DTC-Based Diagnostics/MODULE, Powertrain Control (PCM) - Standard Procedure).

No

- Go To 5

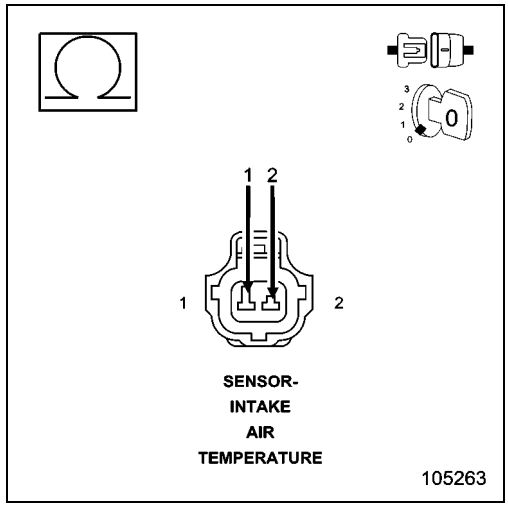

5. EXCESSIVE RESISTANCE IN THE (K21) IAT SIGNAL CIRCUIT

CAUTION: Do not probe the PCM harness connectors. Probing the PCM harness connectors will damage the PCM terminals, resulting in poor terminal to pin connection. Install the PCM Pinout Box Kit, NGC, 38 Position 8815A to perform diagnosis.

1. Measure the resistance of the (K21) IAT Signal circuit between the Intake Air Temperature Sensor harness connector and the appropriate terminal of PCM Pinout Box 8815A.

Is the resistance below 5.0 Ohms?

Yes

- Go To 6

No

- Repair the excessive resistance in the (K21) IAT Signal circuit.
- Perform the POWERTRAIN VERIFICATION TEST. (Refer to 28 - DTC-Based Diagnostics/MODULE, Powertrain Control (PCM) - Standard Procedure).

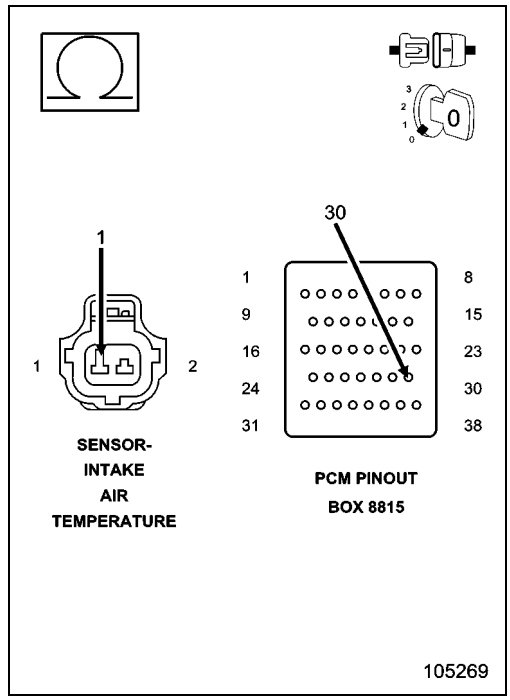

6. POWERTRAIN CONTROL MODULE (PCM)

1. Using the wiring diagram/schematic as a guide, inspect the wiring and connectors between the IAT Sensor and the Powertrain Control Module (PCM).
2. Look for any chafed, pierced, pinched or partially broken wires.
3. Look for broken, bent, pushed out or corroded terminals. Verify that there is good pin to terminal contact in the Sensor and Control Module connectors.
4. Refer to any Technical Service Bulletins that may apply.

Were there any problems found?

Yes

- Repair as necessary.
- Perform the POWERTRAIN VERIFICATION TEST. (Refer to 28 - DTC-Based Diagnostics/MODULE, Powertrain Control (PCM) - Standard Procedure).

No

- Replace and program the Powertrain Control Module in accordance with the Service Information.
- Perform the POWERTRAIN VERIFICATION TEST. (Refer to 28 - DTC-Based Diagnostics/MODULE, Powertrain Control (PCM) - Standard Procedure).

P0113-INTAKE AIR TEMPERATURE SENSOR CIRCUIT HIGH

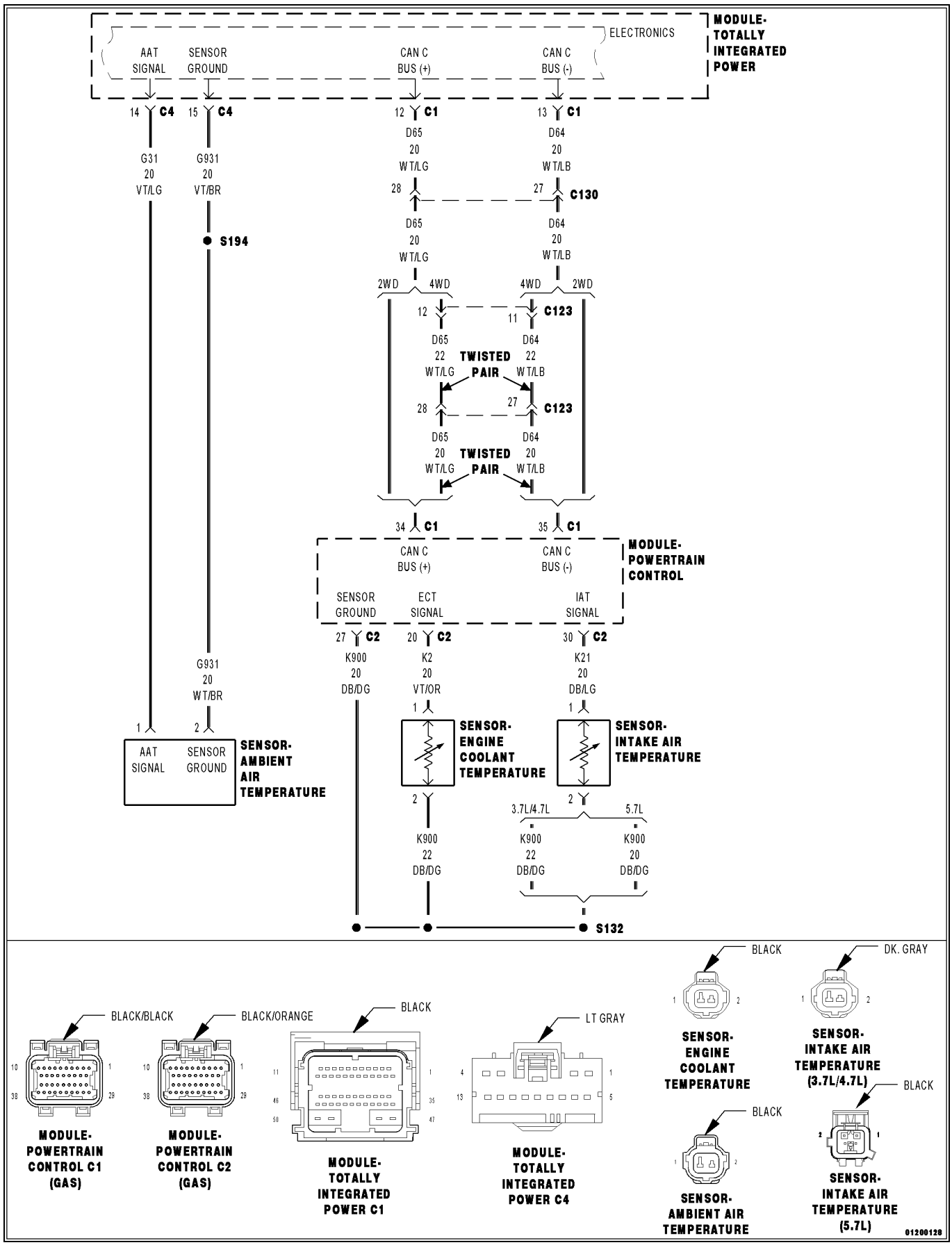

For a complete wiring diagram, **refer to the Wiring Information**.

- **When Monitored:**
  With the ignition on. Battery voltage greater than 10.4 Volts.
- **Set Condition:**
  The Powertrain Control Module (PCM) detects that the Intake Air Temperature Sensor input voltage is above the maximum acceptable value.

Possible Causes
(K21) IAT SIGNAL CIRCUIT SHORTED TO VOLTAGE
(K21) IAT SIGNAL CIRCUIT OPEN
(K900) SENSOR GROUND CIRCUIT OPEN
IAT SENSOR
POWERTRAIN CONTROL MODULE (PCM)

Always perform the Pre-Diagnostic Troubleshooting procedure before proceeding. (Refer to 28 - DTC-Based Diagnostics/MODULE, Powertrain Control (PCM) - Standard Procedure).

1. ACTIVE DTC

1. Start the engine and allow it to reach normal operating temperature.

WARNING: When the engine is operating, do not stand in direct line with the fan. Do not put your hands near the pulleys, belts or fan. Do not wear loose clothing. Failure to follow these instructions may result in possible serious or fatal injury.

NOTE: Diagnose and repair any system voltage DTCs before continuing with this test.

2. With the scan tool, select View DTCs.

Is the DTC Active at this time?

Yes

- Go To 2

No

- Perform the INTERMITTENT CONDITION diagnostic procedure. (Refer to 28 - DTC-Based Diagnostics/MODULE, Powertrain Control (PCM) - Standard Procedure).

2. IAT SENSOR

1. Turn the ignition off.
2. Disconnect the Intake Air Temperature Sensor harness connector.
3. Ignition on, engine not running.
4. With a scan tool, read the IAT Sensor voltage.
5. Connect a jumper wire between the (K21) IAT Signal circuit and the (K900) Sensor ground circuit in the IAT Sensor harness connector.

NOTE: The sensor voltage should be approximately 0.0 Volts (plus or minus .1 volt) with the jumper wire in place.

Does the scan tool display the voltage as described above?

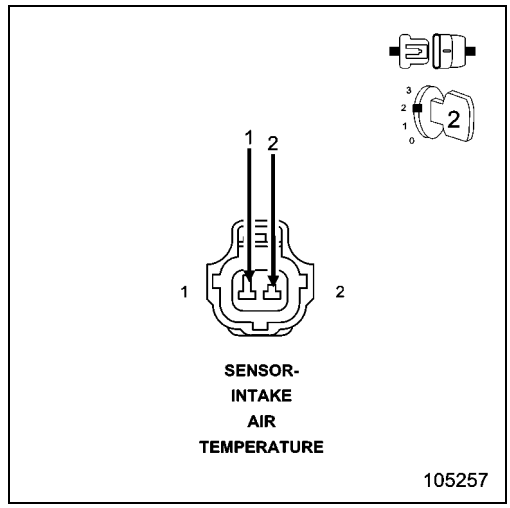

Yes

- Verify that there is good pin to terminal contact in the Sensor and Powertrain Control Module connectors. Replace the IAT Sensor if no problems were found with the connectors.
- Perform the POWERTRAIN VERIFICATION TEST. (Refer to 28 - DTC-Based Diagnostics/MODULE, Powertrain Control (PCM) - Standard Procedure).

No

- Go To 3

NOTE: Remove the jumper wire before continuing.

3. (K21) IAT SIGNAL CIRCUIT SHORTED TO VOLTAGE

1. Turn the ignition off.
2. Disconnect the C2 PCM harness connector.
3. Ignition on, engine not running.
4. Measure the voltage on the (K21) IAT Signal circuit in the IAT Sensor harness connector.

Is there any voltage present?

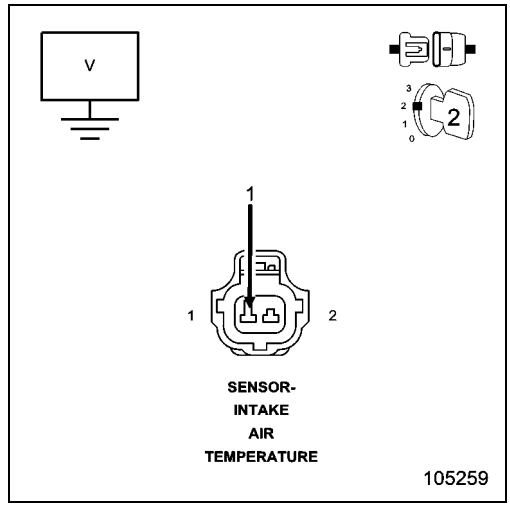

Yes

- Repair the short to voltage in the (K21) IAT Signal circuit.
- Perform the POWERTRAIN VERIFICATION TEST. (Refer to 28 - DTC-Based Diagnostics/MODULE, Powertrain Control (PCM) - Standard Procedure).

No

- Go To 4

4. (K21) IAT SIGNAL CIRCUIT OPEN

1. Turn the ignition off.

CAUTION: Do not probe the PCM harness connectors. Probing the PCM harness connectors will damage the PCM terminals resulting in poor terminal to pin connection. Install the PCM Pinout Box Kit, NGC, 38 Position 8815A to perform diagnosis.

2. Measure the resistance of the (K21) IAT Signal circuit from the IAT Sensor harness connector to the appropriate terminal of PCM Pinout Box 8815A.

Is the resistance below 5.0 Ohms?

Yes

- Go To 5

No

- Repair the open in the (K21) IAT Signal circuit.
- Perform the POWERTRAIN VERIFICATION TEST. (Refer to 28 - DTC-Based Diagnostics/MODULE, Powertrain Control (PCM) - Standard Procedure).

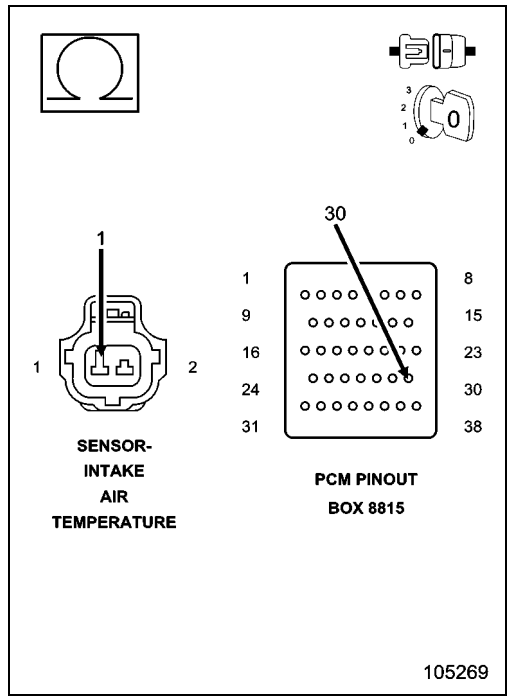

5. (K900) SENSOR GROUND CIRCUIT OPEN

1. Measure the resistance of the (K900) Sensor ground circuit from the IAT Sensor harness connector to the appropriate terminal of PCM Pinout Box 8815A.

Is the resistance below 5.0 Ohms?

Yes

- Go To 6

No

- Repair the open in the (K900) Sensor ground circuit.
- Perform the POWERTRAIN VERIFICATION TEST. (Refer to 28 - DTC-Based Diagnostics/MODULE, Powertrain Control (PCM) - Standard Procedure).

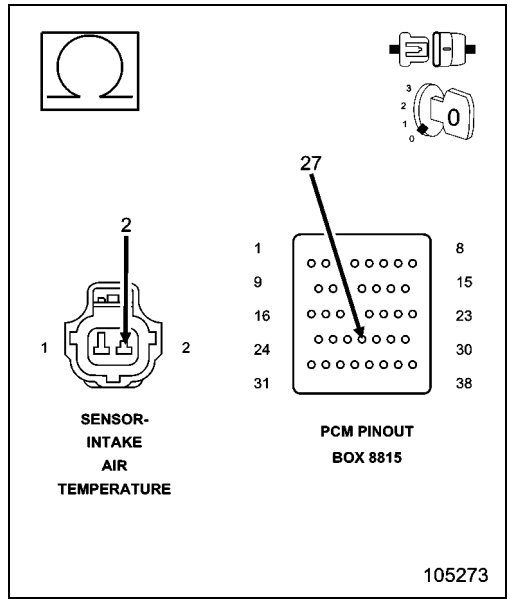

6. POWERTRAIN CONTROL MODULE (PCM)

1. Using the wiring diagram/schematic as a guide, inspect the wiring and connectors between the IAT Sensor and the Powertrain Control Module (PCM).
2. Look for any chafed, pierced, pinched or partially broken wires.
3. Look for broken, bent, pushed out or corroded terminals. Verify that there is good pin to terminal contact in the Sensor and Control Module connectors.
4. Refer to any Technical Service Bulletins that may apply.

Were there any problems found?

Yes

- Repair as necessary.
- Perform the POWERTRAIN VERIFICATION TEST. (Refer to 28 - DTC-Based Diagnostics/MODULE, Powertrain Control (PCM) - Standard Procedure).

No

- Replace and program the Powertrain Control Module in accordance with the Service Information.
- Perform the POWERTRAIN VERIFICATION TEST. (Refer to 28 - DTC-Based Diagnostics/MODULE, Powertrain Control (PCM) - Standard Procedure).

P0116-ENGINE COOLANT TEMPERATURE SENSOR CIRCUIT PERFORMANCE

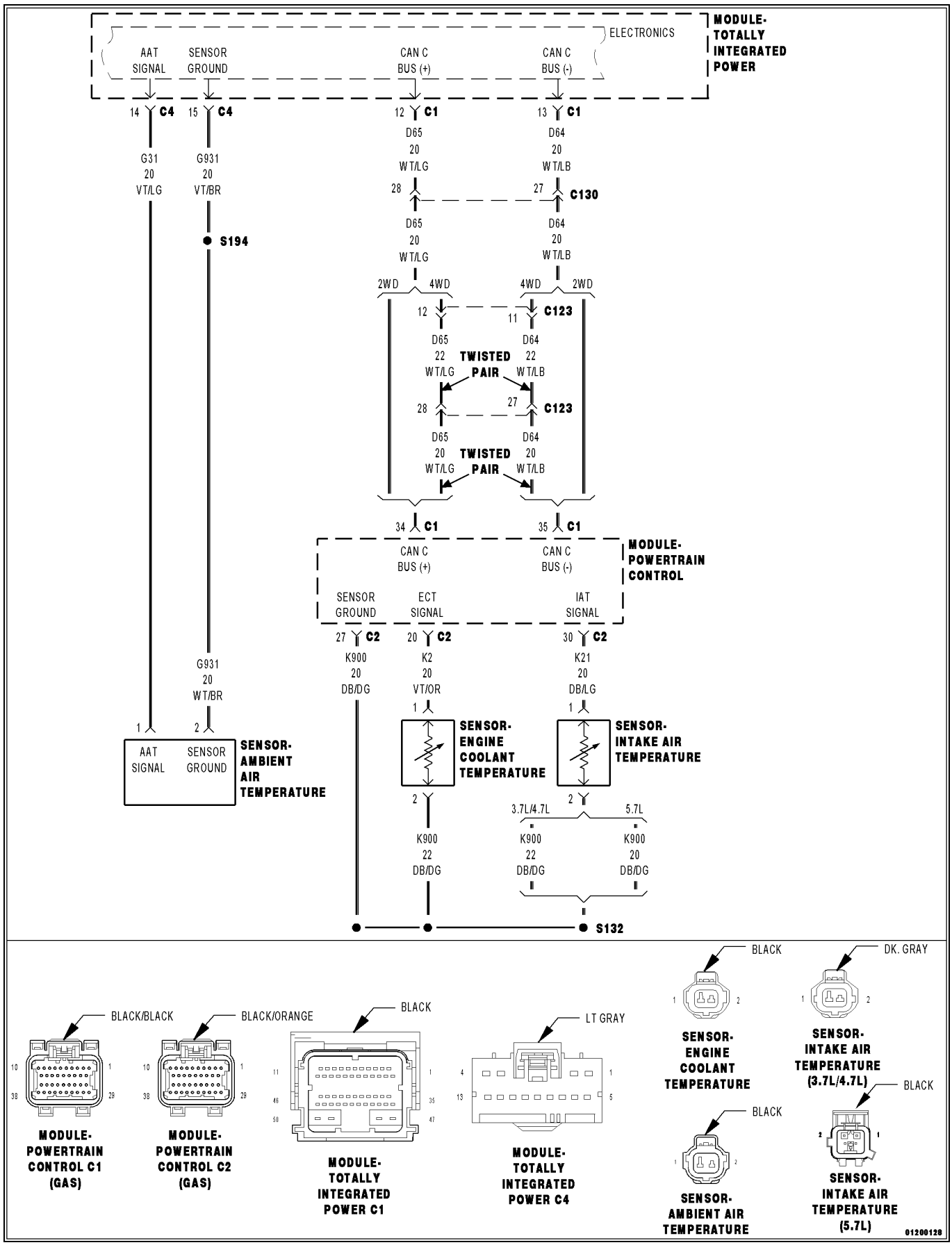

For a complete wiring diagram, **refer to the Wiring Information**.

Theory of Operation

Engine Coolant Temperature (ECT) Sensor performance looks at the outputs of three temperature sensors and compares them under cold start conditions. Following a start to run delay time, the outputs of the ambient, engine coolant and intake air temperature sensors will be compared. If the intake air and ambient air temperature sensors agree and the intake air temperature does not agree, the engine coolant temperature sensor is declared as irrational.

- **When Monitored:**

  Engine off time is greater than 480 minutes and the vehicle has been driven for one minute over 35 mph. Ambient temperature is greater than -64° C (-83° F).

- **Set Condition:**

  Once the vehicle is soaked for a calibrated engine off time and then driven over calibrated speed and load conditions for some calibrated time, the PCM compares the ambient, engine coolant and intake air temperature sensor values. If ambient air and intake air temperature sensors agree with each other but engine coolant temperature does not agree with them, the engine coolant temperature sensor is declared as irrational. Two Trip Fault. Three good trips to turn off the MIL.

Possible Causes
EXCESSIVE RESISTANCE IN THE (K2) ECT SIGNAL CIRCUIT
(K2) ECT SIGNAL CIRCUIT SHORTED TO GROUND
(K2) ECT SIGNAL CIRCUIT SHORTED TO THE (K900) SENSOR GROUND CIRCUIT
(K2) ECT SIGNAL CIRCUIT SHORTED TO VOLTAGE
EXCESSIVE RESISTANCE IN THE (K900) SENSOR GROUND CIRCUIT
ENGINE COOLANT TEMPERATURE (ECT) SENSOR
POWERTRAIN CONTROL MODULE (PCM)

Always perform the Pre-Diagnostic Troubleshooting procedure before proceeding. (Refer to 28 - DTC-Based Diagnostics/MODULE, Powertrain Control (PCM) - Standard Procedure).

1. ACTIVE DTC

NOTE: Diagnose any CAN - C Communication DTCs before continuing.

1. Turn the ignition off.
2. If possible, allow the vehicle to sit with the ignition off for more than 480 minutes in an environment where the temperature is consistent and above -7° C (19.4° F).
3. Test drive the vehicle. The vehicle must exceed 48 km/h (30 mph) during the test drive. Do not cycle the ignition off when the test drive is completed.
4. With the scan tool, select View DTCs.

Is the DTC Active or Pending at this time?

Yes

- Go To 3

No

- Go To 2

2. ENGINE COOLANT TEMPERATURE

1. Turn the ignition off.
2. Allow the vehicle to sit with the ignition off in an environment where the temperature is consistent and above -7° C (19.4° F) until the engine coolant temperature is equal to ambient temperature.
3. Turn the ignition on.
4. With the scan tool, compare the AAT, ECT and IAT sensor values.

Is the Engine Coolant Temperature Sensor value within 10° C (18° F) of the other two sensor values?

Yes

- Perform the INTERMITTENT CONDITION diagnostic procedure. (Refer to 28 - DTC-Based Diagnostics/MODULE, Powertrain Control (PCM) - Standard Procedure).

No

- Go To 3

3. ECT SENSOR VOLTAGE

1. Turn the ignition off.
2. Disconnect the Engine Coolant Temperature (ECT) Sensor harness connector.
3. Turn the ignition on.
4. With the scan tool, read the Engine Coolant Temperature Sensor voltage.

NOTE: The sensor voltage should be approximately 5.0 Volts (plus or minus .1 of a Volt) with the connector disconnected.

Does the scan tool display the voltage as described above?

Yes

- Go To 4

No

- Go To 5

4. ECT SENSOR

1. With the scan tool, read the Engine Coolant Temperature Sensor voltage.
2. Connect a jumper wire between the (K2) ECT Signal circuit and the (K900) Sensor Ground circuit in the Engine Coolant Temperature Sensor harness connector.

NOTE: The sensor voltage should be approximately 0.0 volts (plus or minus .1 of a volt) with the jumper wire in place.

Does the scan tool display the voltage as described above?

Yes

- Verify that there is good pin to terminal contact in the ECT Sensor and Powertrain Control Module connectors. If OK, replace the Engine Coolant Temperature Sensor.
- Perform the POWERTRAIN VERIFICATION TEST. (Refer to 28 - DTC-Based Diagnostics/MODULE, Powertrain Control (PCM) - Standard Procedure).

No

- Go To 5

NOTE: Remove the jumper wire before continuing.

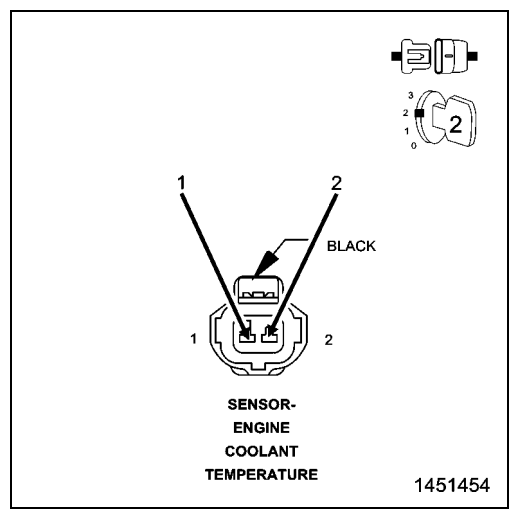

5. EXCESSIVE RESISTANCE IN THE (K2) ECT SIGNAL CIRCUIT

1. Turn the ignition off.
2. Disconnect the C2 PCM harness connector.

CAUTION: Do not probe the PCM harness connectors. Probing the PCM harness connectors will damage the PCM terminals resulting in poor terminal to pin connection. Install the PCM Pinout Box 8815A **and PCM Pinout Box Adapter** 8815-1 **to perform diagnosis.**

3. Using a Voltmeter perform a voltage drop test. Backprobe the (K2) ECT Signal circuit at the ECT Sensor harness connector and probe the appropriate terminal of the PCM Pinout Box 8815A. Make sure the Voltmeter leads are connected so a positive polarity is displayed on the Voltmeter.

WARNING: When the engine is operating, do not stand in direct line with the fan. Do not put your hands near the pulleys, belts or fan. Do not wear loose clothing. Failure to follow these instructions may result in possible serious or fatal injury.

4. Start the engine and allow it to reach normal operating temperature.
5. Monitor the Voltmeter.

Is the voltage below 0.5 of a volt?

Yes

- Go To 6

No

- Repair the open in the (K2) ECT Signal circuit.
- Perform the POWERTRAIN VERIFICATION TEST. (Refer to 28 - DTC-Based Diagnostics/MODULE, Powertrain Control (PCM) - Standard Procedure).

6. EXCESSIVE RESISTANCE IN THE (K900) SENSOR GROUND CIRCUIT

1. Turn the ignition off.
2. Move the Voltmeter leads to backprobe the (K900) Sensor Ground circuit at the ECT Sensor harness connector and to probe the appropriate terminal of the PCM Pinout Box 8815A. Make sure the Voltmeter leads are connected so a positive polarity is indicated on the Voltmeter.

WARNING: When the engine is operating, do not stand in direct line with the fan. Do not put your hands near the pulleys, belts or fan. Do not wear loose clothing. Failure to follow these instructions may result in possible serious or fatal injury.

3. Start the engine and allow it to reach normal operating temperature.
4. Monitor the Voltmeter.

Is the voltage below 0.5 of a volt?

Yes

- Go To 7

No

- Repair the open in the (K900) Sensor ground circuit.
- Perform the POWERTRAIN VERIFICATION TEST. (Refer to 28 - DTC-Based Diagnostics/MODULE, Powertrain Control (PCM) - Standard Procedure).

7. (K2) ECT SIGNAL CIRCUIT SHORTED TO VOLTAGE

1. Turn the ignition off.
2. Disconnect the PCM Pinout Box 8815A from the C2 PCM harness connector.
3. Ignition on, engine not running.
4. Measure the voltage on the (K2) ECT Signal circuit in the ECT Sensor harness connector.

Is the there any voltage present?

Yes

- Repair the short to voltage in the (K2) ECT Signal circuit.
- Perform the POWERTRAIN VERIFICATION TEST. (Refer to 28 - DTC-Based Diagnostics/MODULE, Powertrain Control (PCM) - Standard Procedure).

No

- Go To 8

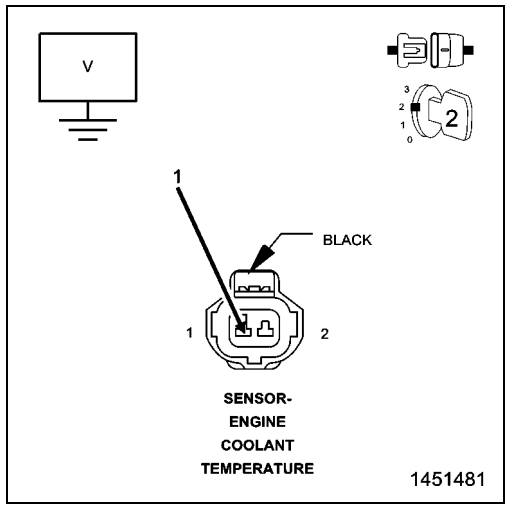

8. (K2) ECT SIGNAL CIRCUIT SHORTED GROUND

1. Turn the ignition off.
2. Measure the resistance between ground and the (K2) ECT Signal circuit in the ECT Sensor harness connector.

Is the resistance below 100 Ohms?

Yes

- Repair the short to ground in the (K2) ECT Signal circuit.
- Perform the POWERTRAIN VERIFICATION TEST. (Refer to 28 - DTC-Based Diagnostics/MODULE, Powertrain Control (PCM) - Standard Procedure).

No

- Go To 9

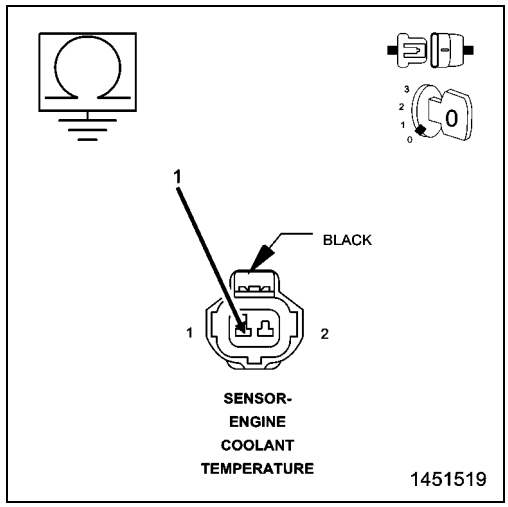

9. (K2) ECT SIGNAL CIRCUIT SHORTED TO THE (K900) SENSOR GROUND CIRCUIT

1. Turn the ignition off.
2. Disconnect the C2 PCM harness connector.
3. Measure the resistance between the (K900) Sensor ground circuit and the (K2) ECT Signal circuit in the ECT Sensor harness connector.

Is the resistance below 5.0 Ohms?

Yes

- Repair the short to between the (K900) Sensor ground circuit and the (K2) ECT Signal circuit.
- Perform the POWERTRAIN VERIFICATION TEST. (Refer to 28 - DTC-Based Diagnostics/MODULE, Powertrain Control (PCM) - Standard Procedure).

No

- Go To 10

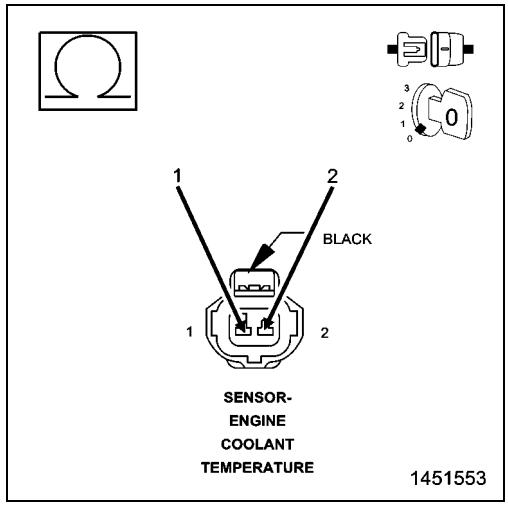

10. POWERTRAIN CONTROL MODULE (PCM)

1. Using the wiring diagram/schematic as a guide, inspect the wiring and connectors between the ECT Sensor and the Powertrain Control Module (PCM).
2. Look for any chafed, pierced, pinched or partially broken wires.
3. Look for broken, bent, pushed out or corroded terminals. Verify that there is good pin to terminal contact in the ECT Sensor and Powertrain Control Module connectors.
4. Refer to any Technical Service Bulletins that may apply.

Were there any problems found?

Yes

- Repair as necessary.
- Perform the POWERTRAIN VERIFICATION TEST. (Refer to 28 - DTC-Based Diagnostics/MODULE, Powertrain Control (PCM) - Standard Procedure).

No

- Replace and program the Powertrain Control Module in accordance with the Service Information.
- Perform the POWERTRAIN VERIFICATION TEST. (Refer to 28 - DTC-Based Diagnostics/MODULE, Powertrain Control (PCM) - Standard Procedure).

P0117-ENGINE COOLANT TEMPERATURE SENSOR CIRCUIT LOW

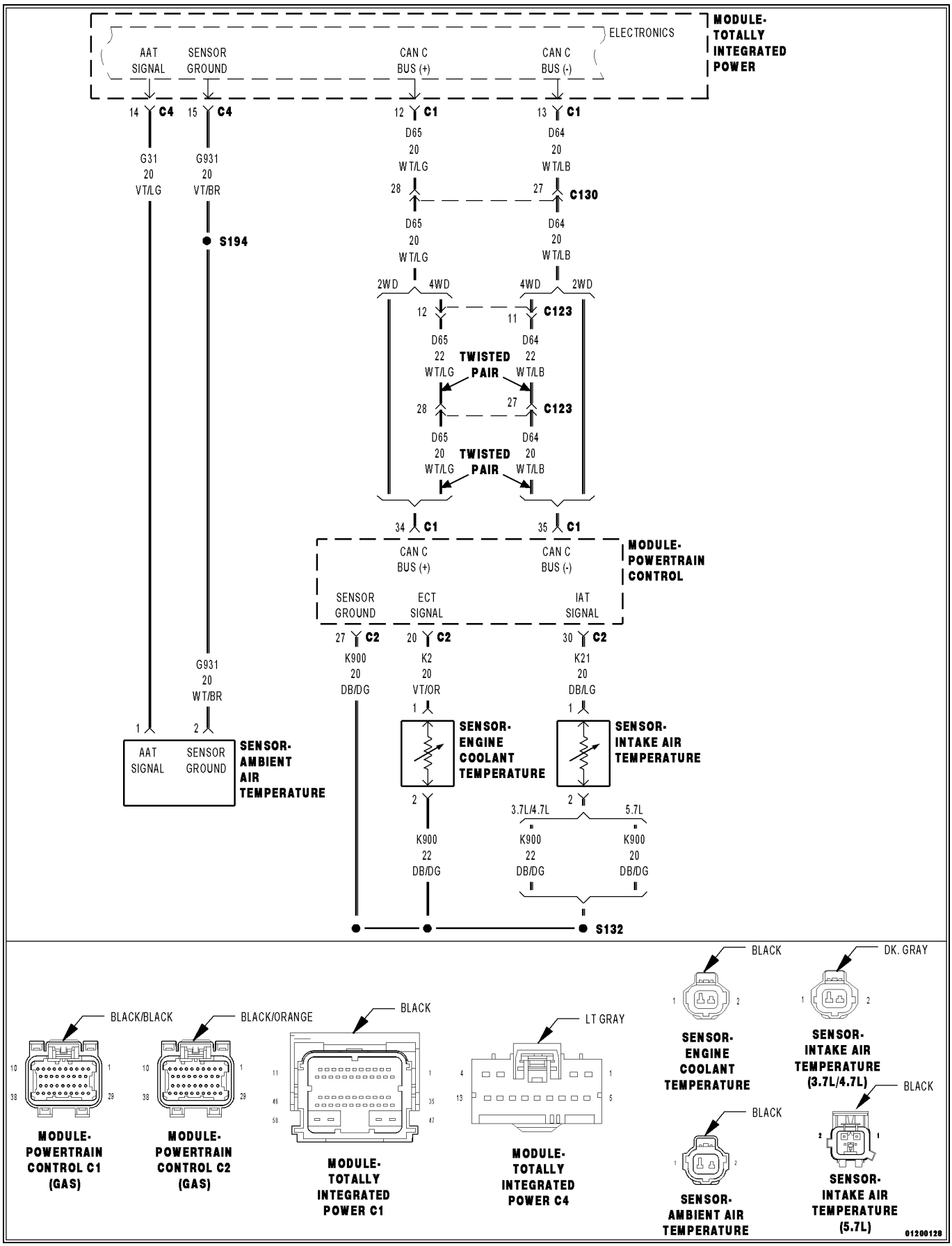

For a complete wiring diagram, **refer to the Wiring Information**.

Theory of Operation

The engine coolant temperature sensor is a negative temperature coefficient thermistor-type sensor whose resistance varies inversely with temperature. At cold temperatures the sensor resistance is high so the voltage is high. As the coolant temperature increases the resistance decreases and the voltage becomes low.

- **When Monitored:**
  With the ignition on. Battery voltage greater than 10.4 Volts.
- **Set Condition:**
  The Powertrain Control Module (PCM) detects that the Engine Coolant Temperature Sensor input voltage is below the minimum acceptable value. One Trip Fault. Three good trips to clear the MIL. The MIL and ETC light will illuminate if equipped.

Possible Causes
(K2) ECT SIGNAL CIRCUIT SHORTED TO GROUND
(K2) ECT SIGNAL CIRCUIT SHORTED TO THE (K900) SENSOR GROUND CIRCUIT
EXCESSIVE RESISTANCE IN THE (K2) ECT SIGNAL CIRCUIT
ENGINE COOLANT TEMPERATURE SENSOR
POWERTRAIN CONTROL MODULE (PCM)

Always perform the Pre-Diagnostic Troubleshooting procedure before proceeding. (Refer to 28 - DTC-Based Diagnostics/MODULE, Powertrain Control (PCM) - Standard Procedure).

1. ACTIVE DTC

1. Start the engine and allow it to reach normal operating temperature.

WARNING: When the engine is operating, do not stand in direct line with the fan. Do not put your hands near the pulleys, belts or fan. Do not wear loose clothing. Failure to follow these instructions may result in possible serious or fatal injury.

NOTE: Diagnose and repair any system voltage DTCs before continuing with this test.

2. With the scan tool, select View DTCs.

Is the DTC Active at this time?

Yes

- Go To 2

No

- Perform the INTERMITTENT CONDITION diagnostic procedure. (Refer to 28 - DTC-Based Diagnostics/MODULE, Powertrain Control (PCM) - Standard Procedure).

2. ECT SENSOR

1. Turn the ignition off.
2. Disconnect the ECT harness connector.
3. Ignition on, engine not running.
4. With the scan tool, read ECT voltage.

NOTE: The sensor voltage should be approximately 5.0 Volts (plus or minus .1 of a volt) with the connector disconnected.

Does the scan tool display the voltage as described above?

Yes

- Verify that there is good pin to terminal contact in the Sensor and Powertrain Control Module connectors. Replace the ECT Sensor if no problems were found with the connectors.
- Perform the POWERTRAIN VERIFICATION TEST. (Refer to 28 - DTC-Based Diagnostics/MODULE, Powertrain Control (PCM) - Standard Procedure).

No

- Go To 3

3. (K2) ECT SIGNAL CIRCUIT SHORTED TO THE (K900) SENSOR GROUND CIRCUIT

1. Turn the ignition off.
2. Disconnect the C2 PCM harness connector.
3. Measure the resistance between the (K900) Sensor ground circuit and the (K2) ECT Signal circuit in the ECT Sensor harness connector.

Is the resistance below 5.0 Ohms?

Yes

- Repair the short to between the (K900) Sensor ground circuit and the (K2) ECT Signal circuit.
- Perform the POWERTRAIN VERIFICATION TEST. (Refer to 28 - DTC-Based Diagnostics/MODULE, Powertrain Control (PCM) - Standard Procedure).

No

- Go To 4

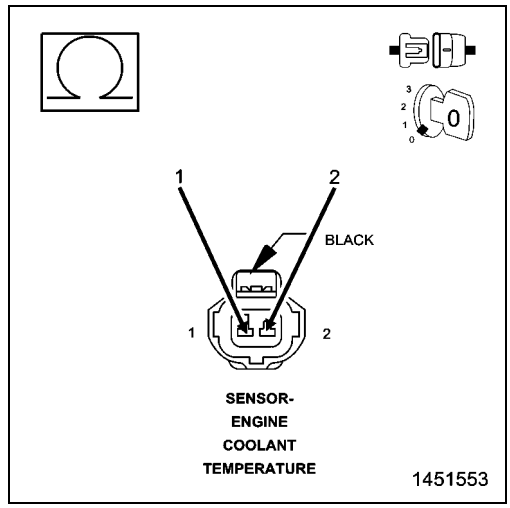

4. (K2) ECT SIGNAL CIRCUIT SHORTED GROUND

1. Measure the resistance between ground and the (K2) ECT Signal circuit in the ECT Sensor harness connector.

Is the resistance below 100 Ohms?

Yes

- Repair the short to ground in the (K2) ECT Signal circuit.
- Perform the POWERTRAIN VERIFICATION TEST. (Refer to 28 - DTC-Based Diagnostics/MODULE, Powertrain Control (PCM) - Standard Procedure).

No

- Go To 5

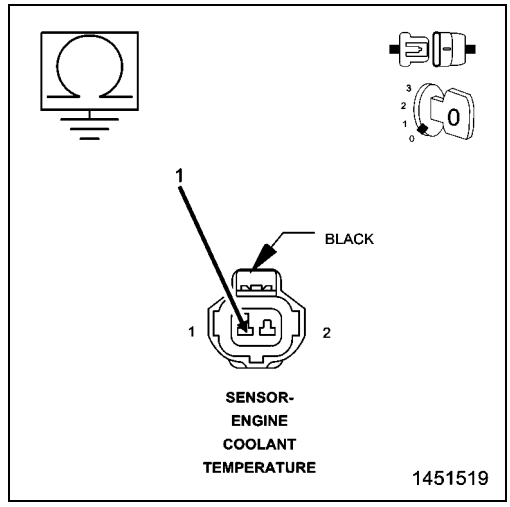

5. EXCESSIVE RESISTANCE IN THE (K2) ECT SIGNAL CIRCUIT

CAUTION: Do not probe the PCM harness connectors. Probing the PCM harness connectors will damage the PCM terminals, resulting in poor terminal to pin connection. Install the PCM Pinout Box Kit, NGC, 38 Position 8815A to perform diagnosis.

1. Measure the resistance of the (K2) ECT Signal circuit between the Engine Coolant Temperature Sensor harness connector and the appropriate terminal of PCM Pinout Box 8815A.

Is the resistance below 5.0 Ohms?

Yes

- Go To 6

No

- Repair the excessive resistance in the (K2) ECT Signal circuit.
- Perform the POWERTRAIN VERIFICATION TEST. (Refer to 28 - DTC-Based Diagnostics/MODULE, Powertrain Control (PCM) - Standard Procedure).

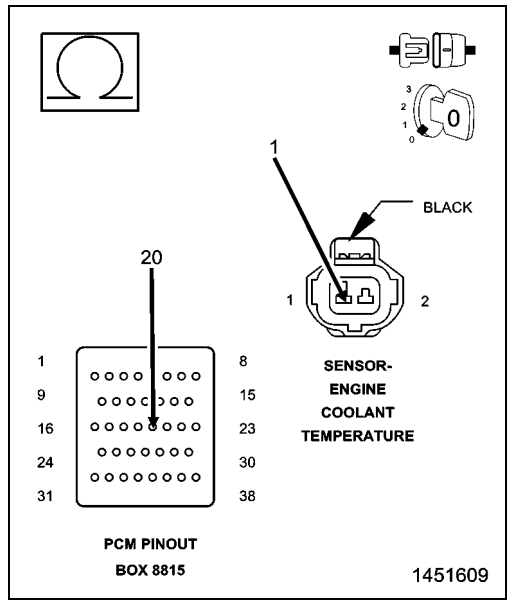

6. POWERTRAIN CONTROL MODULE (PCM)

1. Using the wiring diagram/schematic as a guide, inspect the wiring and connectors between the ECT Sensor and the Powertrain Control Module (PCM).
2. Look for any chafed, pierced, pinched or partially broken wires.
3. Look for broken, bent, pushed out or corroded terminals. Verify that there is good pin to terminal contact in the Sensor and Control Module connectors.
4. Refer to any Technical Service Bulletins that may apply.

Were there any problems found?

Yes

- Repair as necessary.
- Perform the POWERTRAIN VERIFICATION TEST. (Refer to 28 - DTC-Based Diagnostics/MODULE, Powertrain Control (PCM) - Standard Procedure).

No

- Replace and program the Powertrain Control Module in accordance with the Service Information.
- Perform the POWERTRAIN VERIFICATION TEST. (Refer to 28 - DTC-Based Diagnostics/MODULE, Powertrain Control (PCM) - Standard Procedure).

P0118-ENGINE COOLANT TEMPERATURE SENSOR CIRCUIT HIGH

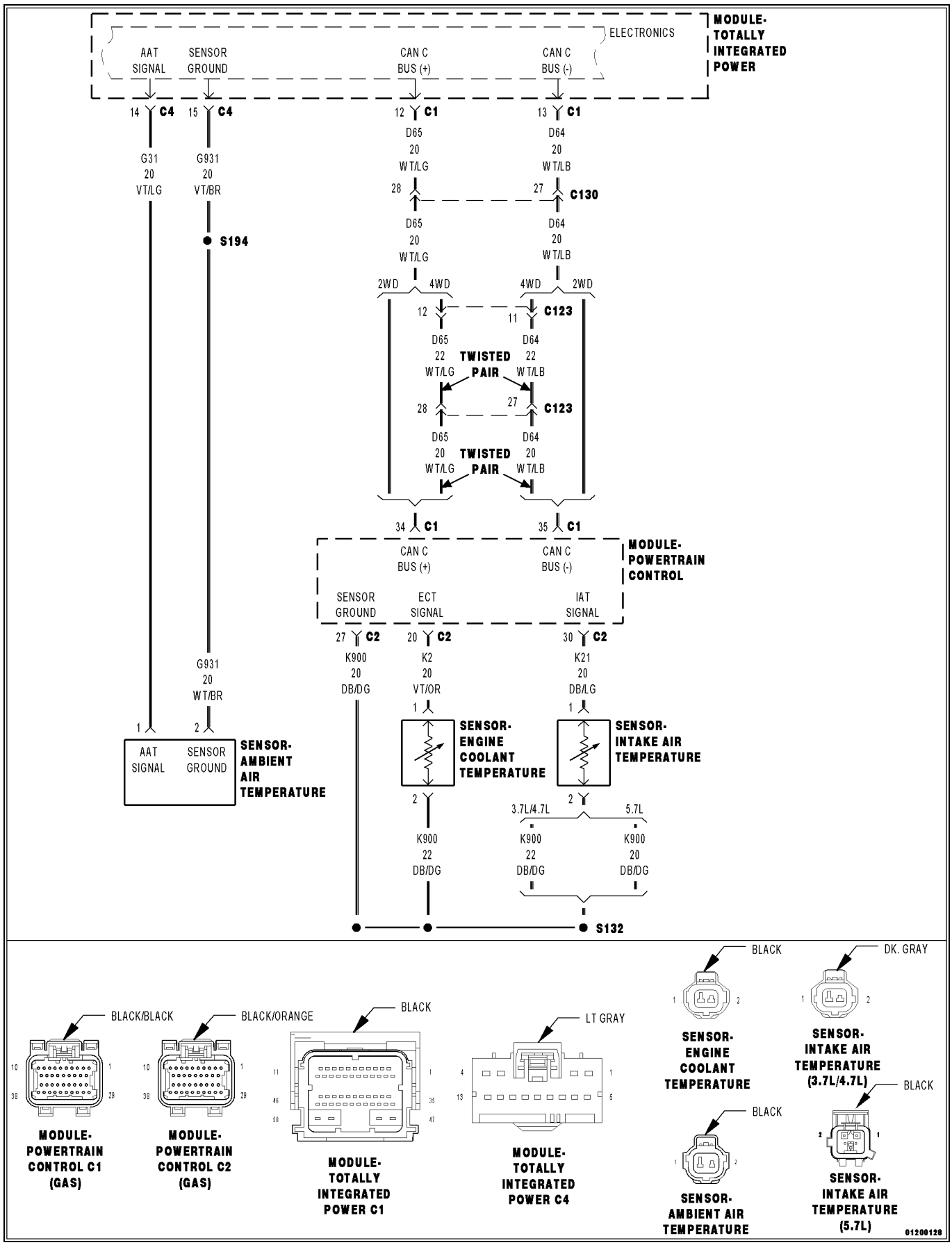

For a complete wiring diagram, **refer to the Wiring Information**.

- **When Monitored:**
  With the ignition on. Battery voltage greater than 10.4 Volts.
- **Set Condition:**
  The Powertrain Control Module (PCM) detects that the Engine Coolant Temperature Sensor input voltage is above the maximum acceptable value. One Trip Fault. Three good trips to turn off the MIL. The MIL and ETC light will illuminate if equipped.

Possible Causes
(K2) ECT SIGNAL CIRCUIT SHORTED TO VOLTAGE
(K2) ECT SIGNAL CIRCUIT OPEN
(K900) SENSOR GROUND CIRCUIT OPEN
ENGINE COOLANT TEMPERATURE SENSOR
POWERTRAIN CONTROL MODULE (PCM)

Always perform the Pre-Diagnostic Troubleshooting procedure before proceeding. (Refer to 28 - DTC-Based Diagnostics/MODULE, Powertrain Control (PCM) - Standard Procedure).

1. ACTIVE DTC

1. Start the engine and allow it to reach normal operating temperature.

WARNING: When the engine is operating, do not stand in direct line with the fan. Do not put your hands near the pulleys, belts or fan. Do not wear loose clothing. Failure to follow these instructions may result in possible serious or fatal injury.

NOTE: Diagnose and repair any system voltage DTCs before continuing with this test.

2. With the scan tool, select View DTCs.

Is the DTC Active at this time?

Yes

- Go To 2

No

- Perform the INTERMITTENT CONDITION diagnostic procedure. (Refer to 28 - DTC-Based Diagnostics/MODULE, Powertrain Control (PCM) - Standard Procedure).

2. ECT SENSOR

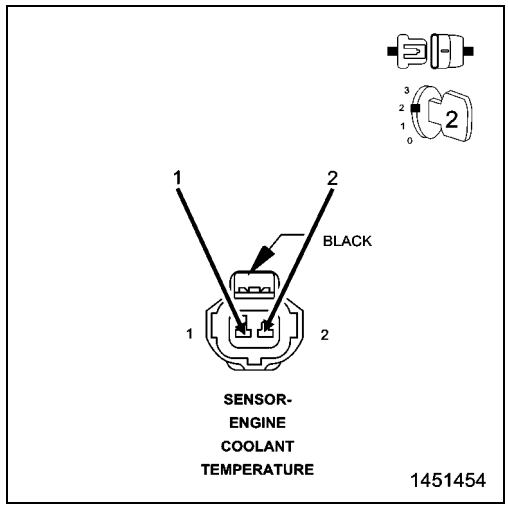

1. Turn the ignition off.
2. Disconnect the ECT harness connector.
3. Ignition on, engine not running.
4. With the scan tool, read ECT voltage.
5. Connect a jumper wire between the (K2) ECT Signal circuit and the (K900) Sensor ground circuit in the ECT harness connector.

NOTE: The sensor voltage should be approximately 0.0 volts (plus or minus .1 of a volt) with the jumper wire in place.

Does the scan tool display the voltage as described above?

Yes

- Verify that there is good pin to terminal contact in the Sensor and Powertrain Control Module connectors. Replace the ECT Sensor if no problems were found with the connectors.
- Perform the POWERTRAIN VERIFICATION TEST. (Refer to 28 - DTC-Based Diagnostics/MODULE, Powertrain Control (PCM) - Standard Procedure).

No

- Go To 3

NOTE: Remove the jumper wire before continuing.

3. (K2) ECT SIGNAL CIRCUIT SHORTED TO VOLTAGE

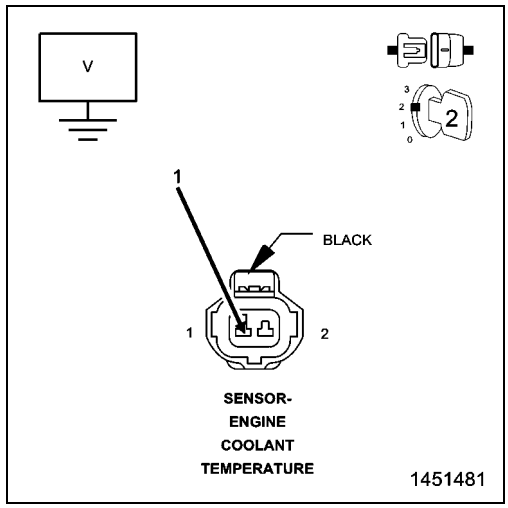

1. Turn the ignition off.
2. Disconnect the C2 PCM harness connector.
3. Ignition on, engine not running.
4. Measure the voltage on the (K2) ECT Signal circuit in the ECT Sensor harness connector.

Is the there any voltage present?

Yes

- Repair the short to voltage in the (K2) ECT Signal circuit.
- Perform the POWERTRAIN VERIFICATION TEST. (Refer to 28 - DTC-Based Diagnostics/MODULE, Powertrain Control (PCM) - Standard Procedure).

No

- Go To 4

4. (K2) ECT SIGNAL CIRCUIT OPEN

1. Turn the ignition off.

CAUTION: Do not probe the PCM harness connectors. Probing the PCM harness connectors will damage the PCM terminals resulting in poor terminal to pin connection. Install the PCM Pinout Box Kit, NGC, 38 Position 8815A to perform diagnosis.

2. Measure the resistance of the (K2) ECT Signal circuit from the ECT Sensor harness connector to the appropriate terminal of PCM Pinout Box 8815A.

Is the resistance below 5.0 Ohms?

Yes

- Go To 5

No

- Repair the open in the (K2) ECT Signal circuit.
- Perform the POWERTRAIN VERIFICATION TEST. (Refer to 28 - DTC-Based Diagnostics/MODULE, Powertrain Control (PCM) - Standard Procedure).

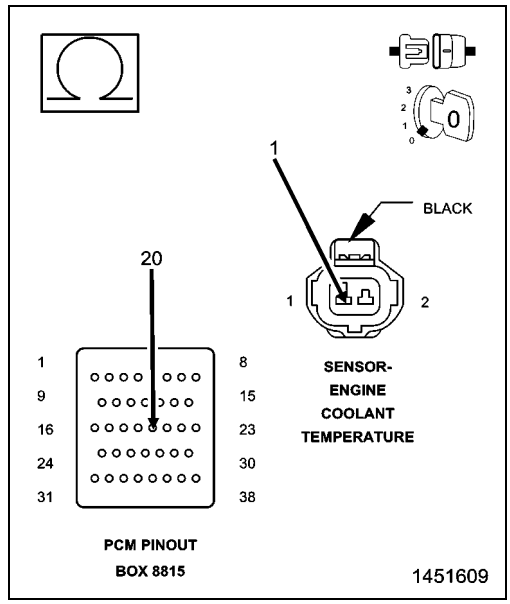

5. (K900) SENSOR GROUND CIRCUIT OPEN

1. Measure the resistance of the (K900) Sensor ground circuit from the ECT Sensor harness connector to the appropriate terminal of PCM Pinout Box 8815A.

Is the resistance below 5.0 Ohms?

Yes

- Go To 6

No

- Repair the open in the (K900) Sensor ground circuit.
- Perform the POWERTRAIN VERIFICATION TEST. (Refer to 28 - DTC-Based Diagnostics/MODULE, Powertrain Control (PCM) - Standard Procedure).

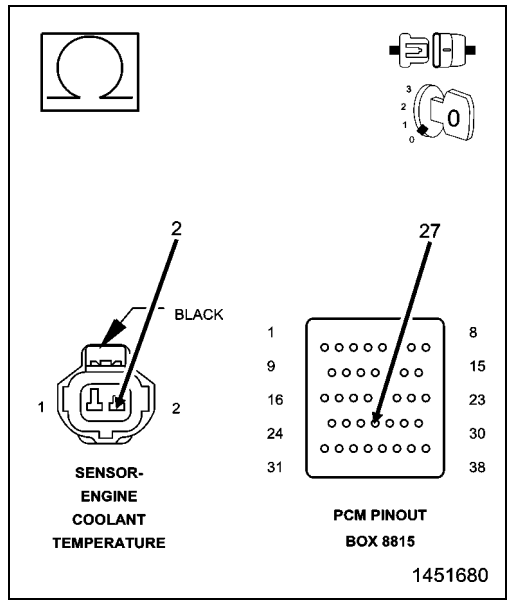

6. POWERTRAIN CONTROL MODULE (PCM)

1. Using the wiring diagram/schematic as a guide, inspect the wiring and connectors between the ECT Sensor and the Powertrain Control Module (PCM).
2. Look for any chafed, pierced, pinched or partially broken wires.
3. Look for broken, bent, pushed out or corroded terminals. Verify that there is good pin to terminal contact in the Sensor and Control Module connectors.
4. Refer to any Technical Service Bulletins that may apply.

Were there any problems found?

Yes

- Repair as necessary.
- Perform the POWERTRAIN VERIFICATION TEST. (Refer to 28 - DTC-Based Diagnostics/MODULE, Powertrain Control (PCM) - Standard Procedure).

No

- Replace and program the Powertrain Control Module in accordance with the Service Information.
- Perform the POWERTRAIN VERIFICATION TEST. (Refer to 28 - DTC-Based Diagnostics/MODULE, Powertrain Control (PCM) - Standard Procedure).

P0121-THROTTLE POSITION SENSOR 1 PERFORMANCE

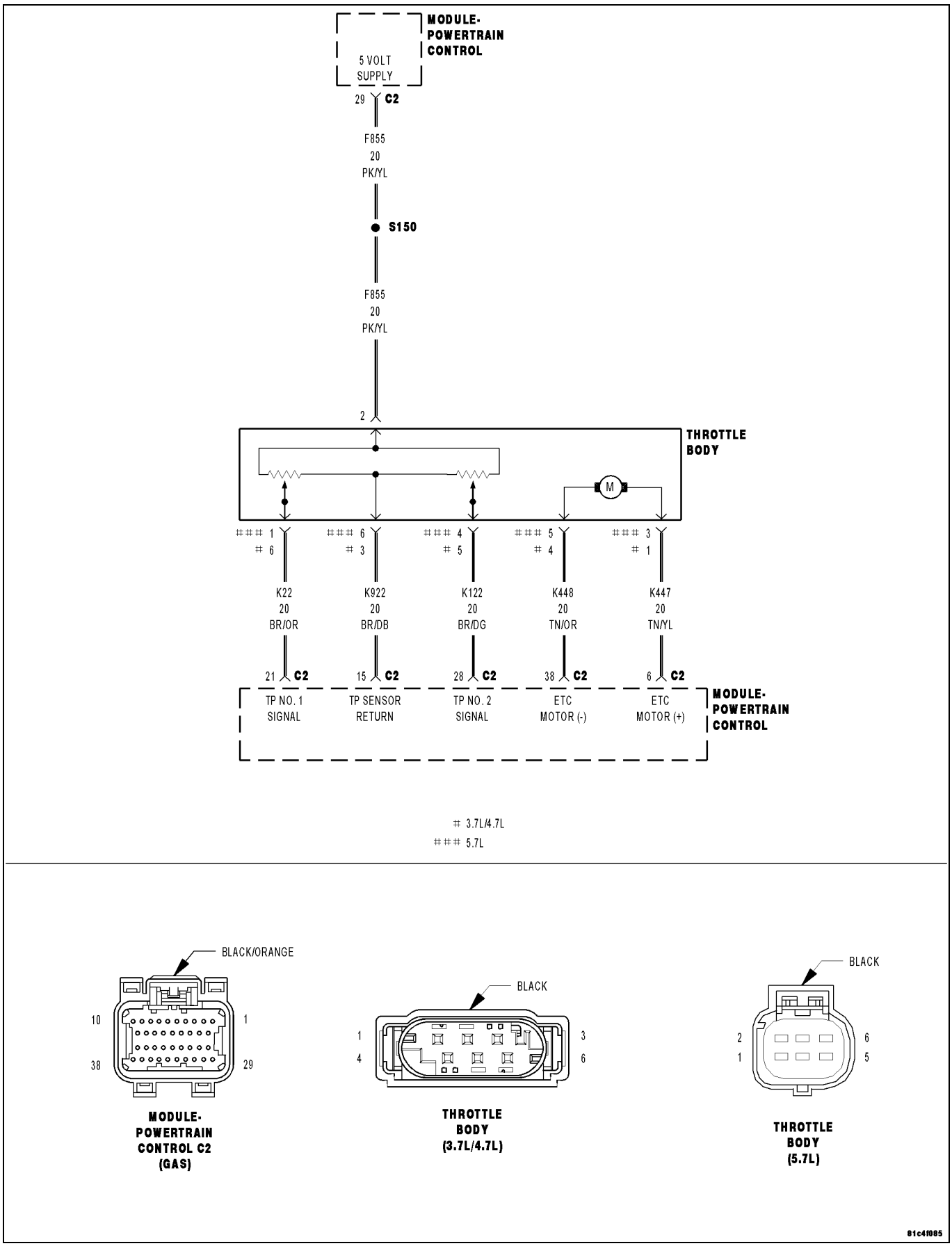

For a complete wiring diagram **Refer to the Wiring Information**.

- **When Monitored:**
  Ignition on and No MAP Sensor DTCs set.
- **Set Condition:**
  The PCM detects that the sensor input voltage does not fall within a valid range based on engine speed and load. Two Trip Fault. ETC light will illuminate. P2135 should set with this code also.

Possible Causes
EXCESSIVE RESISTANCE IN THE (K22) TP SENSOR NO.1 SIGNAL CIRCUIT
EXCESSIVE RESISTANCE IN THE (K122) TP SENSOR NO.2 SIGNAL CIRCUIT
EXCESSIVE RESISTANCE IN THE (F855) 5-VOLT SUPPLY CIRCUIT
EXCESSIVE RESISTANCE IN THE (K922) TP SENSOR RETURN CIRCUIT
(K22) TP SENSOR NO.1 SIGNAL CIRCUIT SHORTED TO THE (K122) TP SENSOR NO.2 SIGNAL CIRCUIT
THROTTLE POSITION SENSOR/THROTTLE BODY
POWERTRAIN CONTROL MODULE (PCM)

Always perform the Pre-Diagnostic Troubleshooting procedure before proceeding. (Refer to 28 - DTC-Based Diagnostics/MODULE, Powertrain Control (PCM) - Standard Procedure).

1. ACTIVE DTC

NOTE: Diagnose and repair any Throttle Body circuit, system voltage, or sensor supply voltage DTCs before continuing with this test.

1. Start the engine and allow it to reach operating temperature.

WARNING: When the engine is operating, do not stand in direct line with the fan. Do not put your hands near the pulleys, belts or fan. Do not wear loose clothing. Failure to follow these instructions may result in possible serious or fatal injury.

2. With the scan tool select View DTCs.

NOTE: If the DTC does not reset it may be necessary to test drive the vehicle.

Is the DTC Active at this time?

Yes

- Go To 2

No

- Go To 9

2. EXCESSIVE RESISTANCE IN THE (K22) TP SENSOR NO.1 SIGNAL CIRCUIT

1. Turn the ignition off.
2. Disconnect the C2 PCM harness connector.

CAUTION: Do not probe the PCM harness connectors. Probing the PCM harness connectors will damage the PCM terminals resulting in poor terminal to pin connection. Install the PCM Pinout Box Kit, NGC, 38 Position 8815A along with the Adapter PCM Pinout Box Adapter 8815-1to perform the diagnosis.

3. Using a voltmeter perform a voltage drop test. Backprobe the (K22) TP Sensor No.1 Signal circuit at the Throttle Body harness connector and to probe the appropriate terminal of the special tool #8815A. Make sure the voltmeter leads are connected so a positive polarity is displayed on the voltmeter.

WARNING: When the engine is operating, do not stand in direct line with the fan. Do not put your hands near the pulleys, belts or fan. Do not wear loose clothing. Failure to follow these instructions may result in possible serious or fatal injury.

4. Start the engine and allow it to reach normal operating temperature.
5. Monitor the voltmeter.

Is the voltage below 0.5 of a volt?

Yes

- Go To 3

No

- Repair the excessive resistance in the (K22) TP Sensor No.1 Signal circuit.
- Perform the POWERTRAIN VERIFICATION TEST. (Refer to 28 - DTC-Based Diagnostics/MODULE, Powertrain Control (PCM) - Standard Procedure)

3. EXCESSIVE RESISTANCE IN THE (K122) TP SENSOR NO.2 SIGNAL CIRCUIT

1. Turn the ignition off.
2. Move the voltmeter leads to backprobe the (K122) TP Sensor No.2 Signal circuit at the Throttle Body harness connector and to probe the appropriate terminal of the special tool #8815A. Make sure the voltmeter leads are connected so a positive polarity is displayed on the voltmeter.

WARNING: When the engine is operating, do not stand in direct line with the fan. Do not put your hands near the pulleys, belts or fan. Do not wear loose clothing. Failure to follow these instructions may result in possible serious or fatal injury.

3. Start the engine and allow it to reach normal operating temperature.
4. Monitor the voltmeter.

Is the voltage below 0.5 of a volt?

Yes

- Go To 4

No

- Repair the excessive resistance in the (K122) TP Sensor No.2 Signal circuit.
- Perform the POWERTRAIN VERIFICATION TEST. (Refer to 28 - DTC-Based Diagnostics/MODULE, Powertrain Control (PCM) - Standard Procedure)

4. EXCESSIVE RESISTANCE IN THE (F855) 5-VOLT SUPPLY CIRCUIT

1. Turn the ignition off.
2. Move the voltmeter leads to backprobe the (F855) 5-volt Supply circuit at the Throttle Body harness connector and to probe the appropriate terminal of the special tool #8815A. Make sure the voltmeter leads are connected so a positive polarity is displayed on the voltmeter.

WARNING: When the engine is operating, do not stand in direct line with the fan. Do not put your hands near the pulleys, belts or fan. Do not wear loose clothing. Failure to follow these instructions may result in possible serious or fatal injury.

3. Start the engine and allow it to reach normal operating temperature.
4. Monitor the voltmeter.

Is the voltage below 0.5 of a volt?

Yes

- Go To 5

No

- Repair the excessive resistance in the (F855) 5-volt Supply circuit.
- Perform the POWERTRAIN VERIFICATION TEST. (Refer to 28 - DTC-Based Diagnostics/MODULE, Powertrain Control (PCM) - Standard Procedure)

5. EXCESSIVE RESISTANCE IN THE (K922) TP SENSOR RETURN CIRCUIT

1. Turn the ignition off.
2. Move the voltmeter leads to backprobe the (K922) TP Sensor Return circuit at the Throttle Body harness connector and to probe the appropriate terminal of the special tool #8815A. Make sure the voltmeter leads are connected so a positive polarity is displayed on the voltmeter.

WARNING: When the engine is operating, do not stand in direct line with the fan. Do not put your hands near the pulleys, belts or fan. Do not wear loose clothing. Failure to follow these instructions may result in possible serious or fatal injury.

3. Start the engine and allow it to reach normal operating temperature.
4. Monitor the voltmeter.

Is the voltage below 0.5 of a volt?

Yes

- Go To 6

No

- Repair the excessive resistance in the (K922) TP Sensor Return circuit.
- Perform the POWERTRAIN VERIFICATION TEST. (Refer to 28 - DTC-Based Diagnostics/MODULE, Powertrain Control (PCM) - Standard Procedure)

6. (K22) TP SENSOR NO.1 SIGNAL CIRCUIT SHORTED TO THE (K122) TP SENSOR NO.2 SIGNAL CIRCUIT

1. Turn the ignition off.
2. Remove special tool #8815A and #8815-1 leaving the C2 PCM harness connector disconnected.
3. Disconnect the Throttle Body harness connector.
4. Measure the resistance between the (K22) TP Sensor No.1 Signal circuit and the (K122) TP Sensor No.2 Signal circuit in the Throttle Body harness connector.

Is the resistance below 5.0 ohms?

Yes

- Repair the short between the (K122) TP Sensor No.2 Signal circuit and the (K22) TP Sensor No.1 Signal circuit.
- Perform the POWERTRAIN VERIFICATION TEST. (Refer to 28 - DTC-Based Diagnostics/MODULE, Powertrain Control (PCM) - Standard Procedure)

No

- Go To 7

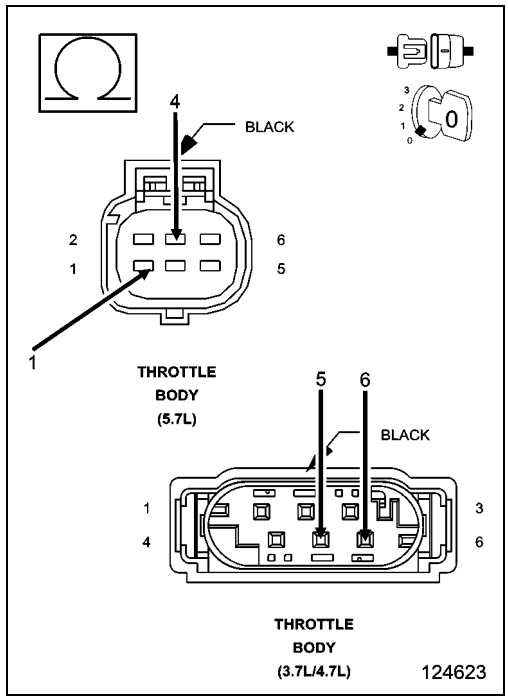

7. THROTTLE POSITION SENSOR

1. Connect the C2 PCM harness connector.
2. Ignition on, engine not running.
3. With a scan tool, monitor the TP Sensor No.1 and No.2 voltage.
4. Connect a jumper wire between the (K922) TP Sensor Return circuit and the (K22) TP Sensor No.1 Signal circuit.

NOTE: TP Sensor No.1 voltage should change from approximately 4.5 volts to less than 0.5 of a volt.

5. For TP Sensor No.2, connect a jumper wire between (F855) 5-volt supply circuit and the (K122) TP Sensor No.2 signal circuit.

NOTE: TP Sensor No.2 voltage should change from approximately 0 volts to 5.0 volts?

Is the voltage reading within the listed specification when the jumper wire is installed?

Yes

- Verify that there is good pin to terminal contact at the Throttle Body and the Powertrain Control Module connectors. Replace the Throttle Body Assembly if no problems were found in the connectors. Disconnect the Battery when replacing the Throttle Body Assembly. After installation is complete, use a scan tool and select the ETC RELEARN function.
- Perform the POWERTRAIN VERIFICATION TEST. (Refer to 28 - DTC-Based Diagnostics/MODULE, Powertrain Control (PCM) - Standard Procedure)

No

- Go To 8

NOTE: Remove the jumper wire before continuing.

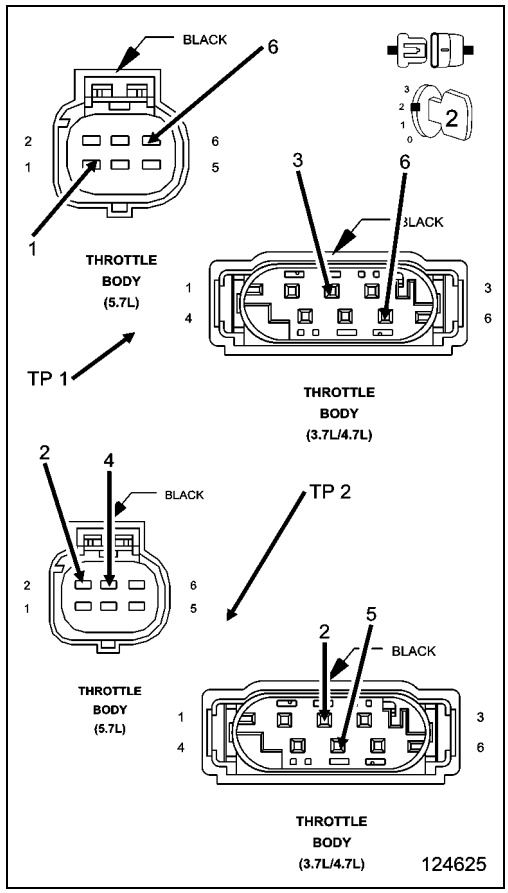

8. POWERTRAIN CONTROL MODULE (PCM)

1. Using the wiring diagram/schematic as a guide, inspect the wiring and connectors between the Throttle Body and the Powertrain Control Module (PCM).
2. Look for any chafed, pierced, pinched, or partially broken wires.
3. Look for broken, bent, pushed out or corroded terminals. Verify that there is good pin to terminal contact in the Throttle Body and Powertrain Control Module connectors.
4. Refer to any Technical Service Bulletins that may apply.

Were there any problems found?

Yes

- Repair as necessary.
- Perform the POWERTRAIN VERIFICATION TEST. (Refer to 28 - DTC-Based Diagnostics/MODULE, Powertrain Control (PCM) - Standard Procedure)

No

- Replace and program the Powertrain Control Module per Service Information.
- Perform the POWERTRAIN VERIFICATION TEST. (Refer to 28 - DTC-Based Diagnostics/MODULE, Powertrain Control (PCM) - Standard Procedure)

9. THROTTLE FOLLOWER TEST

1. Ignition on, engine not running.
2. With a scan tool, perform the ETC Throttle Follower Test and monitor the TP Sensor No.1 or No.2 voltage.
3. Slowly press the throttle pedal down.
4. The voltage for TP Sensor No.1 should start at approximately 0.7 of a volt and increase to approximately 4.3 volts.
5. The voltage for TP Sensor No.2 should start at approximately 4.3 volts and decrease to approximately 0.7 of a volt.

Is the voltage within the range of the listed specification for the appropriate Sensor?

Yes

- Refer to the INTERMITTENT CONDITION Diagnostic Procedure. (Refer to 28 - DTC-Based Diagnostics/MODULE, Powertrain Control (PCM) - Standard Procedure)

No

- Verify that there is good pin to terminal contact at the Throttle Body and the Powertrain Control Module connectors. Replace the Throttle Body Assembly if no problems were found in the connectors. Disconnect the Battery when replacing the Throttle Body Assembly. After installation is complete, use a scan tool and select the ETC RELEARN function.
- Perform the POWERTRAIN VERIFICATION TEST. (Refer to 28 - DTC-Based Diagnostics/MODULE, Powertrain Control (PCM) - Standard Procedure)

P0122-THROTTLE POSITION SENSOR 1 CIRCUIT LOW

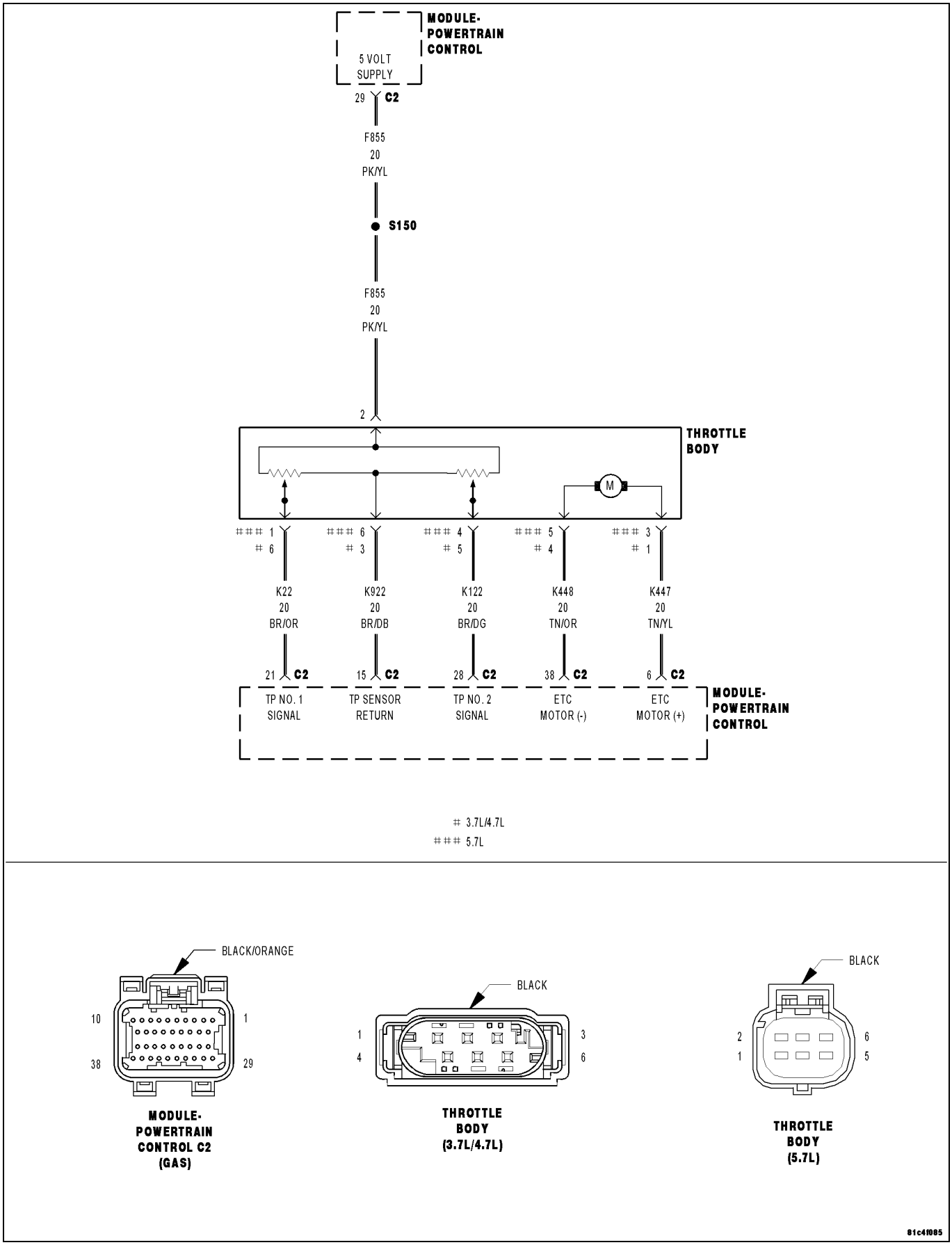

For a complete wiring diagram **Refer to the Wiring Information**.

- **When Monitored:**
  With the ignition on. Battery voltage greater than 10 volts.
- **Set Condition:**
  Throttle Position Sensor voltage at the PCM is less than the minimum acceptable voltage. One Trip Fault. Three good trips to turn off the MIL. ETC light will illuminate.

Possible Causes
(F855) 5-VOLT SUPPLY CIRCUIT OPEN
(F855) 5-VOLT SUPPLY CIRCUIT SHORTED TO GROUND
(K22) TP SENSOR NO.1 SIGNAL CIRCUIT SHORTED TO GROUND
(K22) TP SENSOR NO.1 SIGNAL CIRCUIT SHORTED TO THE (K922) TP SENSOR RETURN CIRCUIT
EXCESSIVE RESISTANCE IN THE (K22) TP SENSOR NO.1 SIGNAL CIRCUIT
THROTTLE POSITION SENSOR/THROTTLE BODY
POWERTRAIN CONTROL MODULE (PCM)

Always perform the Pre-Diagnostic Troubleshooting procedure before proceeding. (Refer to 28 - DTC-Based Diagnostics/MODULE, Powertrain Control (PCM) - Standard Procedure).

1. ACTIVE DTC

NOTE: If a 5-Volt Supply DTC has also set, diagnose the 5-Volt DTC before continuing.

1. Start the engine and allow it to reach operating temperature.

WARNING: When the engine is operating, do not stand in direct line with the fan. Do not put your hands near the pulleys, belts or fan. Do not wear loose clothing. Failure to follow these instructions may result in possible serious or fatal injury.

2. With the scan tool select View DTCs.

NOTE: If the DTC does not reset it may be necessary to test drive the vehicle.

NOTE: If the P2122-APP Sensor 1 Circuit Low DTC is also Active, diagnose the P2122 before continuing with the P0122 diagnostic procedure.

Is the DTC Active at this time?

Yes

- Go To 2

No

- Go To 11

2. P0222 ALSO SET

Was the P0222-TP SENSOR NO.2 VOLTAGE LOW DTC set along with the P0122?

Yes

- Go To 3

No

- Go To 4

3. (F855) 5-VOLT SUPPLY CIRCUIT

1. Turn the ignition off.
2. Disconnect the Throttle Body harness connector.
3. Ignition on, engine not running.
4. Measure the voltage on the (F855) 5-volt Supply circuit in the Throttle Body harness connector.

Is the voltage between 4.8 to 5.2 volts?

Yes

- Go To 4

No

- Go To 8

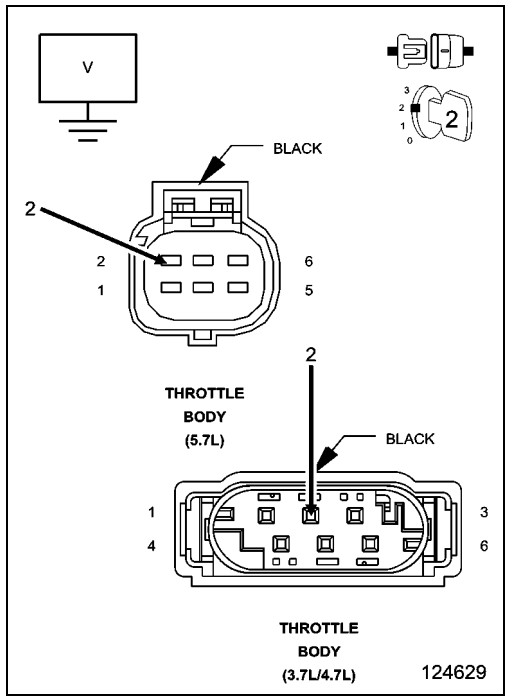

4. THROTTLE POSITION SENSOR

1. With a scan tool, monitor the TP Sensor No.1 voltage with the Throttle Body harness connector disconnected.

NOTE: The sensor voltage should be approximately 5.0 volts (plus or minus .1 volt) with the connector disconnected.

Does the scan tool display the voltage as described above?

Yes

- Verify that there is good pin to terminal contact at the Throttle Body and the Powertrain Control Module connectors. Replace the Throttle Body Assembly if no problems were found in the connectors. Disconnect the Battery when replacing the Throttle Body Assembly. After installation is complete, use a scan tool and select the ETC RELEARN function.
- Perform the POWERTRAIN VERIFICATION TEST. (Refer to 28 - DTC-Based Diagnostics/MODULE, Powertrain Control (PCM) - Standard Procedure)

No

- Go To 5

5. (K22) TP SENSOR NO.1 SIGNAL CIRCUIT SHORTED TO GROUND

1. Turn the ignition off.
2. Disconnect the C2 PCM harness connector.
3. Measure the resistance between ground and the (K22) TP Sensor No.1 Signal circuit in the Throttle Body harness connector.

Is the resistance below 100 ohms?

Yes

- Repair the short to ground in the (K22) TP Sensor No.1 Signal circuit.
- Perform the POWERTRAIN VERIFICATION TEST. (Refer to 28 - DTC-Based Diagnostics/MODULE, Powertrain Control (PCM) - Standard Procedure)

No

- Go To 6

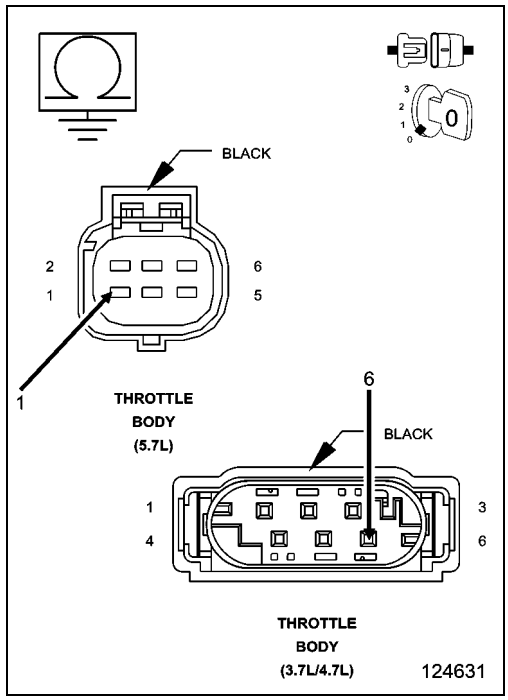

6. (K22) TP SENSOR NO.1 SIGNAL CIRCUIT SHORTED TO THE (K922) TP SENSOR RETURN CIRCUIT

1. Measure the resistance between the (K22) TP Sensor No.1 Signal circuit and the (K922) TP Sensor Return circuit in the Throttle Body harness connector.

Is the resistance below 100 ohms?

Yes

- Repair the short between the (K922) TP Sensor Return circuit and the (K22) TP Sensor No.1 Signal circuit.
- Perform the POWERTRAIN VERIFICATION TEST. (Refer to 28 - DTC-Based Diagnostics/MODULE, Powertrain Control (PCM) - Standard Procedure)

No

- Go To 7

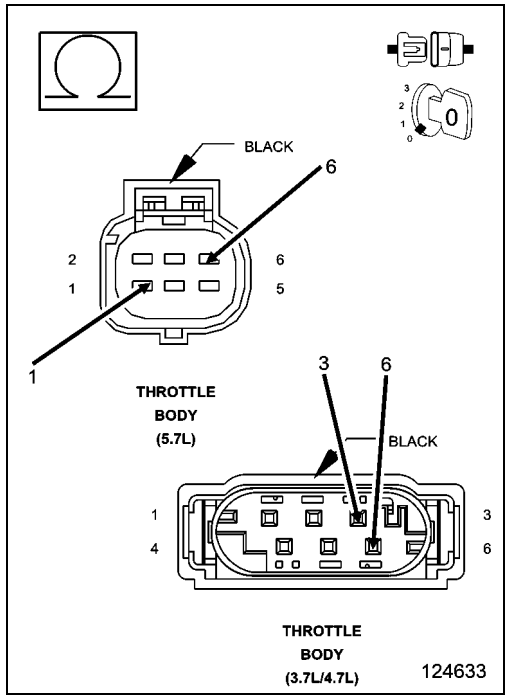

7. EXCESSIVE RESISTANCE IN THE (K22) TP SENSOR NO.1 SIGNAL CIRCUIT

CAUTION: Do not probe the PCM harness connectors. Probing the PCM harness connectors will damage the PCM terminals resulting in poor terminal to pin connection. Install the PCM Pinout Box Kit, NGC, 38 Position 8815A to perform diagnosis.

1. Measure the resistance of the (K22) TP Sensor No.1 Signal circuit between the Throttle Body harness connector and the appropriate terminal of special tool #8815A.

Is the resistance below 5.0 ohms?

Yes

- Go To 10

No

- Repair the excessive resistance in the (K22) TP Sensor No.1 Signal circuit.
- Perform the POWERTRAIN VERIFICATION TEST. (Refer to 28 - DTC-Based Diagnostics/MODULE, Powertrain Control (PCM) - Standard Procedure)

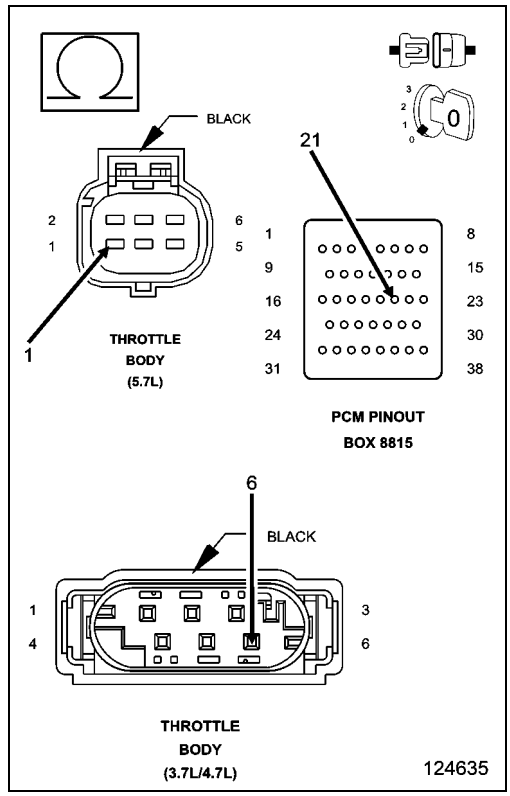

8. (F855) 5-VOLT SUPPLY CIRCUIT OPEN

1. Turn the ignition off.
2. Disconnect the C2 PCM harness connector.

CAUTION: Do not probe the PCM harness connectors. Probing the PCM harness connectors will damage the PCM terminals resulting in poor terminal to pin connection. Install the PCM Pinout BoxKit, NGC, 38 Position 8815A to perform diagnostics.

3. Measure the resistance of the (F855) 5-volt Supply circuit from the Throttle Body harness connector to the appropriate terminal of special tool #8815A.

Is the resistance below 5.0 ohms?

Yes

- Go To 9

No

- Repair the open in the (F855) 5-volt Supply circuit.
- Perform the POWERTRAIN VERIFICATION TEST. (Refer to 28 - DTC-Based Diagnostics/MODULE, Powertrain Control (PCM) - Standard Procedure)

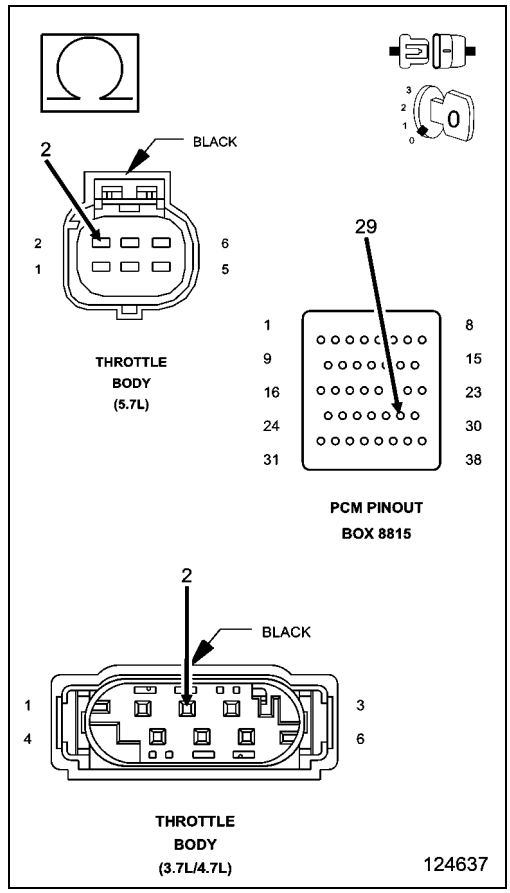

9. (F855) 5-VOLT SUPPLY CIRCUIT SHORTED TO GROUND

1. Measure the resistance between ground and the (F855) 5-volt Supply circuit in the Throttle Body harness connector.

Is the resistance below 100 ohms?

Yes

- Repair the short to ground in the (F855) 5-volt Supply circuit.
- Perform the POWERTRAIN VERIFICATION TEST. (Refer to 28 - DTC-Based Diagnostics/MODULE, Powertrain Control (PCM) - Standard Procedure)

No

- Go To 10

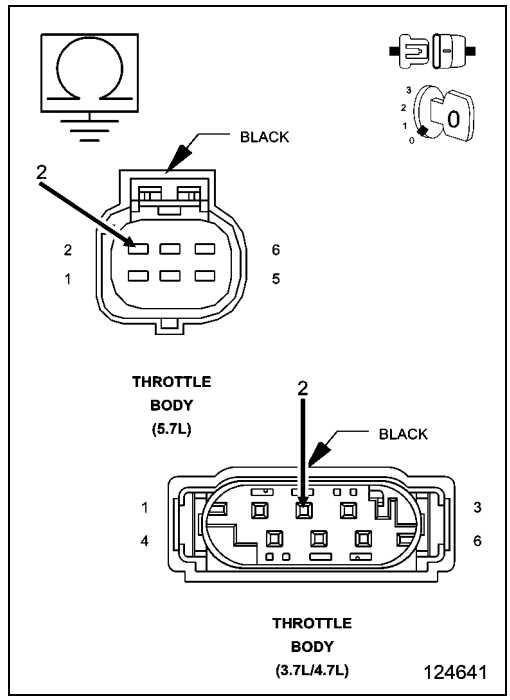

10. POWERTRAIN CONTROL MODULE (PCM)

1. Using the wiring diagram/schematic as a guide, inspect the wiring and connectors between the Throttle Body and the Powertrain Control Module (PCM).
2. Look for any chafed, pierced, pinched, or partially broken wires.
3. Look for broken, bent, pushed out or corroded terminals. Verify that there is good pin to terminal contact in the Throttle Body and Powertrain Control Module connectors.
4. Refer to any Technical Service Bulletins that may apply.

Were there any problems found?

Yes

- Repair as necessary.
- Perform the POWERTRAIN VERIFICATION TEST. (Refer to 28 - DTC-Based Diagnostics/MODULE, Powertrain Control (PCM) - Standard Procedure)

No

- Replace and program the Powertrain Control Module per Service Information.
- Perform the POWERTRAIN VERIFICATION TEST. (Refer to 28 - DTC-Based Diagnostics/MODULE, Powertrain Control (PCM) - Standard Procedure)

11. THROTTLE FOLLOWER TEST

1. With a scan tool, perform the ETC Throttle Follower Test.
2. Monitor the TP Sensor No.1 voltage.

Does voltage start at approximately 0.7 of a volt to approximately 4.3 volts with a smooth transition?

Yes

- Refer to the INTERMITTENT CONDITION Diagnostic Procedure. (Refer to 28 - DTC-Based Diagnostics/MODULE, Powertrain Control (PCM) - Standard Procedure)

No

- Verify that there is good pin to terminal contact at the Throttle Body and the Powertrain Control Module connectors. Replace the Throttle Body Assembly if no problems were found in the connectors. Disconnect the Battery when replacing the Throttle Body Assembly. After installation is complete, use a scan tool and select the ETC RELEARN function.
- Perform the POWERTRAIN VERIFICATION TEST. (Refer to 28 - DTC-Based Diagnostics/MODULE, Powertrain Control (PCM) - Standard Procedure)

P0123-THROTTLE POSITION SENSOR 1 CIRCUIT HIGH

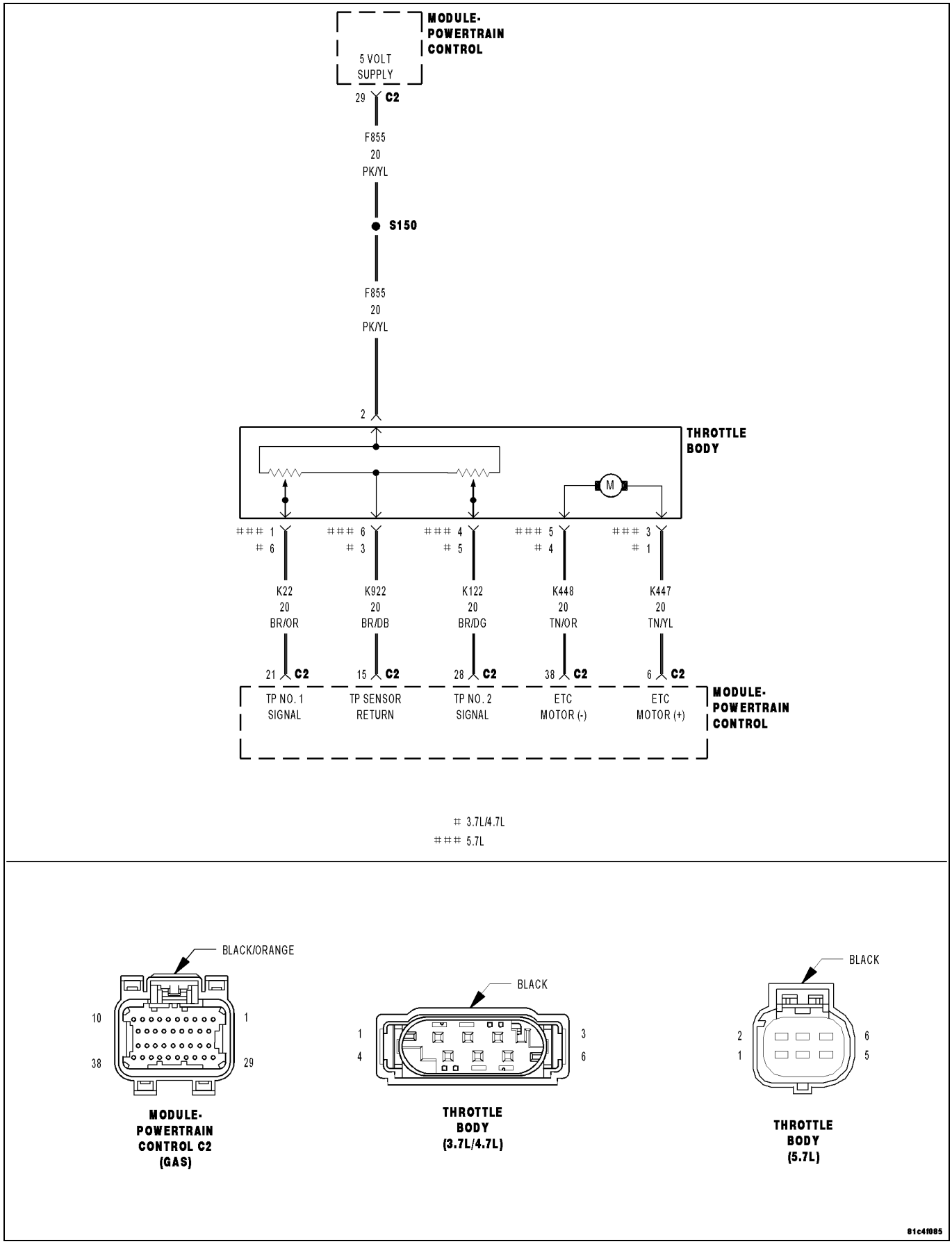

For a complete wiring diagram **Refer to the Wiring Information**.

- **When Monitored:**
  With the ignition on. Battery voltage greater than 10 volts.
- **Set Condition:**
  Throttle Position Sensor No.1 voltage is greater than the maximum acceptable voltage. One Trip Fault. ETC light will illuminate.

Possible Causes
(K22) TP SENSOR NO.1 SIGNAL CIRCUIT SHORTED TO VOLTAGE
(K22) TP SENSOR NO.1 SIGNAL CIRCUIT OPEN
(K22) TP SENSOR NO.1 SIGNAL CIRCUIT SHORTED TO THE (F855) 5-VOLT SUPPLY CIRCUIT
(K922) TP SENSOR RETURN CIRCUIT OPEN
THROTTLE POSITION SENSOR/THROTTLE BODY
THROTTLE PLATE JAMMED AGAINST THE MAXIMUM STOP
POWERTRAIN CONTROL MODULE (PCM)

Always perform the Pre-Diagnostic Troubleshooting procedure before proceeding. (Refer to 28 - DTC-Based Diagnostics/MODULE, Powertrain Control (PCM) - Standard Procedure).

1. ACTIVE DTC

NOTE: When this DTC is Active the engine speed, torque, and vehicle speed are limited to a Limp in mode.

NOTE: Make sure the throttle is fully closed and free from binding or carbon build up.

NOTE: If a 5-Volt Supply DTC has also set, diagnose the 5-Volt DTC before continuing.

NOTE: If P2101 is also set, then make sure that the blade moves freely and does not hang up near Wide Open Throttle before trying to repair P0123.

1. Start the engine and allow it to reach operating temperature.
2. With the scan tool select View DTCs.

NOTE: If the DTC does not reset it may be necessary to test drive the vehicle.

NOTE: If the P2123-APP Sensor 1 Circuit High DTC is also Active, diagnose the P2123 before continuing with the P0123 diagnostic procedure.

Is the DTC Active at this time?

Yes

- Go To 2

No

- Go To 8

2. THROTTLE POSITION SENSOR

1. Turn the ignition off.
2. Disconnect the Throttle Body harness connector.
3. Ignition on, engine not running.
4. With a scan tool, monitor the TP Sensor No.1 voltage.
5. Connect a jumper wire between the (K22) TP Sensor No.1 Signal circuit and the (K922) TP Sensor Return circuit in the Throttle Body harness connector.

NOTE: The sensor voltage should be approximately 0.0 volts (plus or minus .1 volt) with the jumper wire in place.

Does the scan tool display the voltage as described above?

Yes

- Verify that there is good pin to terminal contact at the Throttle Body and the Powertrain Control Module connectors. Replace the Throttle Body Assembly if no problems were found in the connectors. Disconnect the Battery when replacing the Throttle Body Assembly. After installation is complete, use a scan tool and select the ETC RELEARN function.
- Perform the POWERTRAIN VERIFICATION TEST. (Refer to 28 - DTC-Based Diagnostics/MODULE, Powertrain Control (PCM) - Standard Procedure)

No

- Go To 3

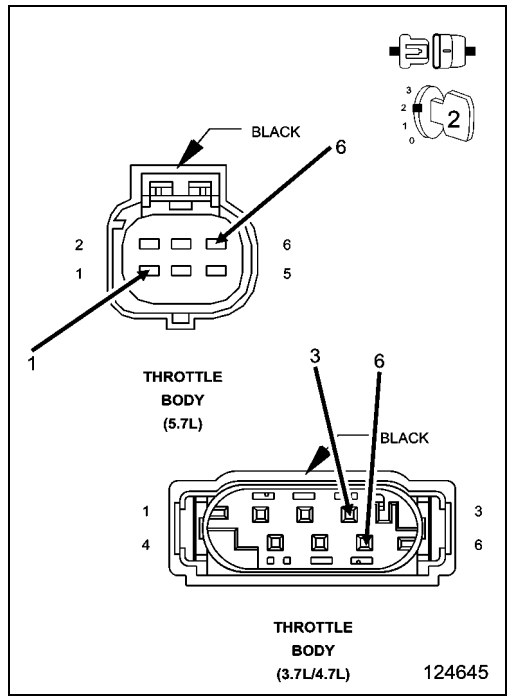

NOTE: Remove the jumper wire before continuing.

3. (K22) TP SENSOR NO.1 SIGNAL CIRCUIT SHORTED TO VOLTAGE

1. Turn the ignition off.
2. Disconnect the C2 PCM harness connector.
3. Ignition on, engine not running.
4. Measure the voltage on the (K22) TP Sensor No.1 Signal circuit in the Throttle Body harness connector.

Is there any voltage present?

Yes

- Repair the short to voltage in the (K22) TP Sensor No.1 Signal circuit.
- Perform the POWERTRAIN VERIFICATION TEST. (Refer to 28 - DTC-Based Diagnostics/MODULE, Powertrain Control (PCM) - Standard Procedure)

No

- Go To 4

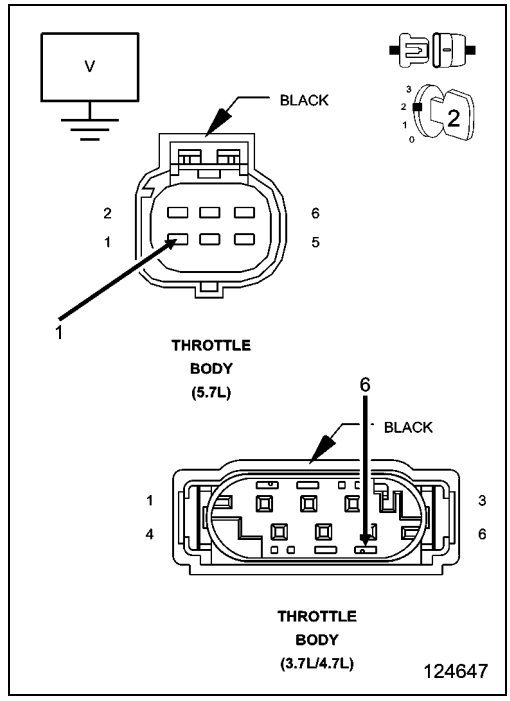

4. (K22) TP SENSOR NO.1 SIGNAL CIRCUIT OPEN

1. Turn the ignition off.

CAUTION: Do not probe the PCM harness connectors. Probing the PCM harness connectors will damage the PCM terminals resulting in poor terminal to pin connection. Install the PCM Pinout Box Kit, NGC, 38 Position 8815A to perform diagnosis.

2. Measure the resistance of the (K22) TP Sensor No.1 Signal circuit from the Throttle Body harness connector to the appropriate terminal of special tool #8815A.

Is the resistance below 5.0 ohms?

Yes

- Go To 5

No

- Repair the open in the (K22) TP Sensor No.1 Signal circuit.
- Perform the POWERTRAIN VERIFICATION TEST. (Refer to 28 - DTC-Based Diagnostics/MODULE, Powertrain Control (PCM) - Standard Procedure)

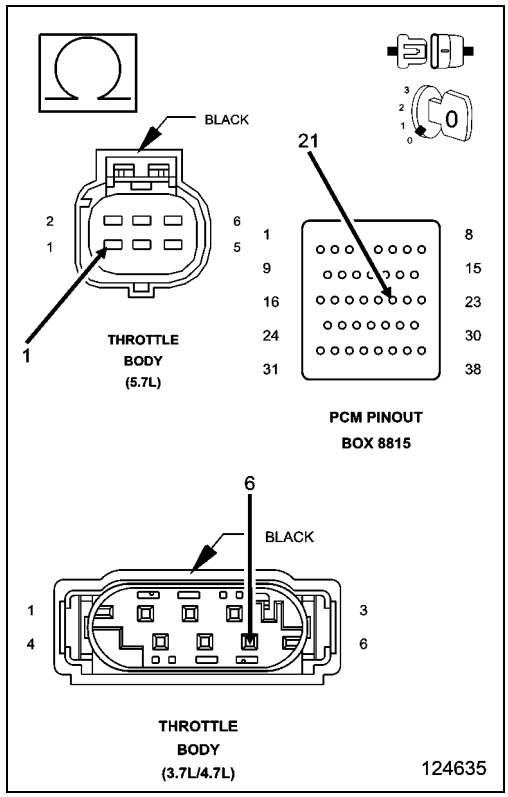

5. (K22) TP SENSOR NO.1 SIGNAL CIRCUIT SHORTED TO THE (F855) 5-VOLT SUPPLY CIRCUIT

1. Measure the resistance between the (K22) TP Sensor No.1 Signal circuit and the (F855) 5-volt Supply circuit in the Throttle Body harness connector.

Is the resistance below 100 ohms?

Yes

- Repair the short between the (F855) 5-volt Supply circuit and the (K22) TP Sensor No.1 Signal circuit.
- Perform the POWERTRAIN VERIFICATION TEST. (Refer to 28 - DTC-Based Diagnostics/MODULE, Powertrain Control (PCM) - Standard Procedure)

No

- Go To 6

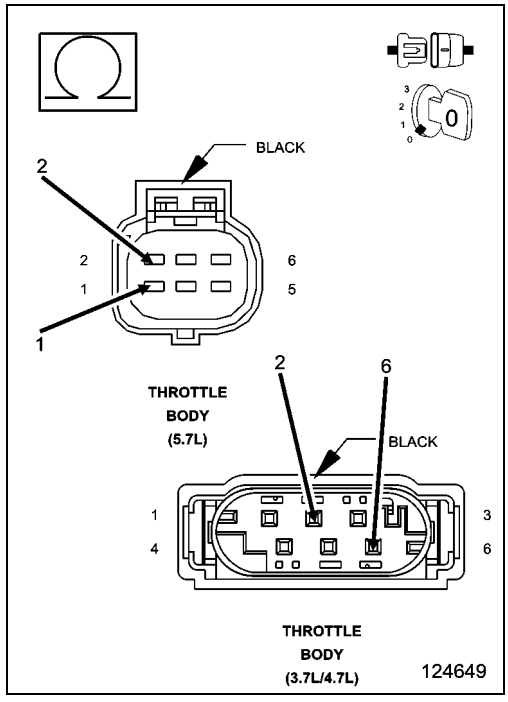

6. (K922) TP SENSOR RETURN CIRCUIT OPEN

1. Measure the resistance of the (K922) TP Sensor Return circuit from the Throttle Body harness connector to the appropriate terminal of special tool #8815A.

Is the resistance below 5.0 ohms?

Yes

- Go To 7

No

- Repair the open in the (K922) TP Sensor Return circuit.
- Perform the POWERTRAIN VERIFICATION TEST. (Refer to 28 - DTC-Based Diagnostics/MODULE, Powertrain Control (PCM) - Standard Procedure)

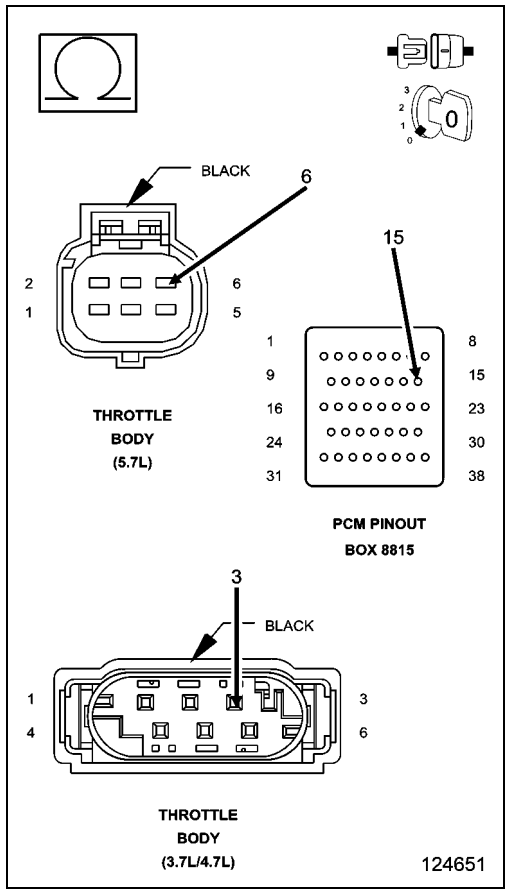

7. POWERTRAIN CONTROL MODULE (PCM)

1. Using the wiring diagram/schematic as a guide, inspect the wiring and connectors between the Throttle Body and the Powertrain Control Module (PCM).
2. Look for any chafed, pierced, pinched, or partially broken wires.
3. Look for broken, bent, pushed out or corroded terminals. Verify that there is good pin to terminal contact in the Throttle Body and Powertrain Control Module connectors.
4. Refer to any Technical Service Bulletins that may apply.

Were there any problems found?

Yes

- Repair as necessary.
- Perform the POWERTRAIN VERIFICATION TEST. (Refer to 28 - DTC-Based Diagnostics/MODULE, Powertrain Control (PCM) - Standard Procedure)

No

- Replace and program the Powertrain Control Module per Service Information.
- Perform the POWERTRAIN VERIFICATION TEST. (Refer to 28 - DTC-Based Diagnostics/MODULE, Powertrain Control (PCM) - Standard Procedure)

8. THROTTLE FOLLOWER TEST

1. With a scan tool, perform the ETC Throttle Follower Test.
2. Monitor the TP Sensor No.1 voltage.

Does voltage start at approximately 0.7 of a volt to approximately 4.3 volts with a smooth transition?

Yes

- Refer to the INTERMITTENT CONDITION Diagnostic Procedure. (Refer to 28 - DTC-Based Diagnostics/MODULE, Powertrain Control (PCM) - Standard Procedure)

No

- Verify that there is good pin to terminal contact at the Throttle Body and the Powertrain Control Module connectors. Replace the Throttle Body Assembly if no problems were found in the connectors. Disconnect the Battery when replacing the Throttle Body Assembly. After installation is complete, use a scan tool and select the ETC RELEARN function.
- Perform the POWERTRAIN VERIFICATION TEST. (Refer to 28 - DTC-Based Diagnostics/MODULE, Powertrain Control (PCM) - Standard Procedure)

P0125-INSUFFICIENT COOLANT TEMP FOR CLOSED-LOOP FUEL CONTROL

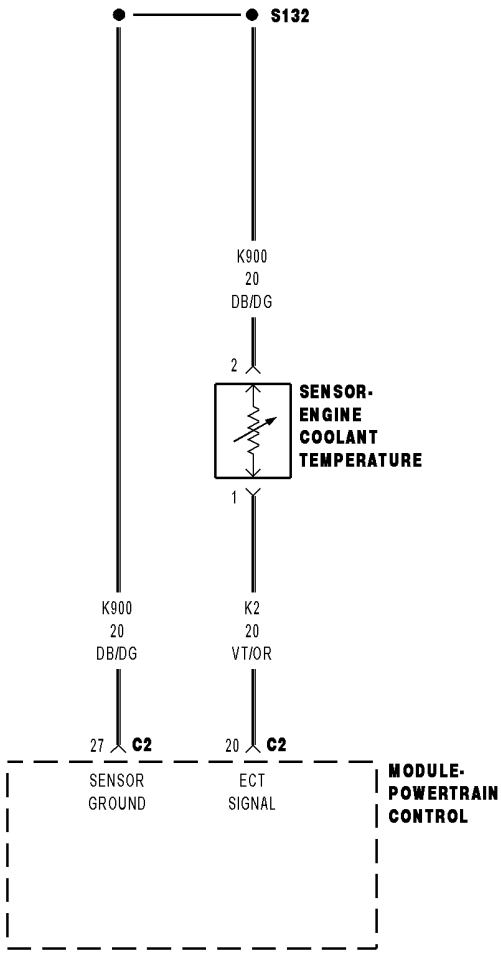

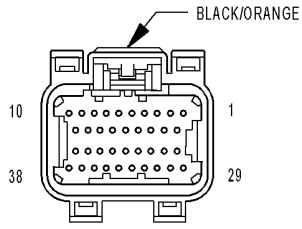

MODULE-
POWERTRAIN
CONTROL C2
(GAS)

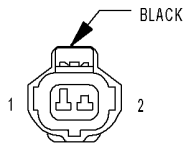

SENSOR-
ENGINE
COOLANT
TEMPERATURE
(GAS)

81417434

For a complete wiring diagram **Refer to the Wiring Information**.

Theory of Operation

The engine coolant temperature sensor is a negative temperature coefficient thermistor-type sensor whose resistance varies inversely with temperature. At cold temperatures the sensor resistance is high so the voltage is high. As the coolant temperature increases the resistance decreases and the voltage becomes low. The INSUFFICIENT COOLANT TEMP FOR CLOSED-LOOP FUEL CONTROL determines if the engine coolant temperature will reach the closed loop fueling control temperature limit in a regulated time after start.

- **When Monitored:**
  With battery voltage greater than 10.4 volts and after engine is started.
- **Set Condition:**
  The engine temperature does not go above -10° C (14° F). Failure time depends on start-up coolant temperature and ambient temperature. (i.e. 2 minutes for a start temp of -10° C (14° F) or up to 10 minutes for a vehicle with a start-up temp of -28° C (-18° F). Two Trip Fault. Three good trips to turn off the MIL.

Possible Causes
LOW COOLANT LEVEL
THERMOSTAT
ECT SENSOR

Always perform the Pre-Diagnostic Troubleshooting procedure before proceeding. (Refer to 28 - DTC-Based Diagnostics/MODULE, Powertrain Control (PCM) - Standard Procedure).

1. CHECKING COOLANT LEVEL AND CONDITION

1. Ignition on, engine not running.
2. With a scan tool, select View DTCs.

NOTE: If an Engine Coolant Temperature (ECT) DTC is set along with this code, diagnose the ECT DTC first.

NOTE: Inspect the ECT terminals and related PCM terminals. Make sure the terminals are free from corrosion and damage.

NOTE: The best way to diagnose this DTC is to allow the vehicle to sit overnight outside in order to have a totally cold soaked engine.

NOTE: Extremely cold outside ambient temperatures may have caused this DTC to set.

WARNING: Never open the cooling system when the engine is hot. The system is under pressure. Extreme burns or scalding may result. Failure to follow these instructions can result in possible serious or fatal injury. Allow the engine to cool before opening the cooling system.

3. Inspect the coolant system for proper level and condition.

Is the coolant level and condition OK?

Yes

- Go To 2

No

- Inspect the vehicle for a coolant leak, make the appropriate repairs, and add the correct amount of coolant.
- Perform the POWERTRAIN VERIFICATION TEST. (Refer to 28 - DTC-Based Diagnostics/MODULE, Powertrain Control (PCM) - Standard Procedure)

2. THERMOSTAT OPERATION

NOTE: This test works best if performed on a cold engine (cold soak)

1. Ignition on, engine not running.
2. With a scan tool, read the Eng Coolant Tmp Deg value. If the engine was allowed to sit overnight (cold soak), the temperature value should be a sensible value that is somewhere close to the ambient temperature.

NOTE: If engine coolant temperature is above 82° C (180° F), allow the engine to cool until 65° C (150° F) is reached.

3. Start the Engine.
4. During engine warm-up monitor the Eng Coolant Tmp Deg value. The temp deg value change should be a smooth transition from start up to normal operating temp 82° C (180° F). Also monitor the actual coolant temperature with a thermometer.

NOTE: As the engine warms up to operating temperature, the actual coolant temperature (thermometer reading) and the scan tool Eng Coolant Tmp Deg values should stay relatively close to each other.

5. Using the appropriate service information, determine the proper opening temperature of the thermostat.

Did the thermostat open at the proper temperature?

Yes

- Go To 3

No

- Replace the thermostat.
- Perform the POWERTRAIN VERIFICATION TEST. (Refer to 28 - DTC-Based Diagnostics/MODULE, Powertrain Control (PCM) - Standard Procedure)

3. ECT SENSOR OPERATION

1. Ignition on, engine not running.
2. With a scan tool, read the Eng Coolant Tmp Deg value. If the engine was allowed to sit overnight (cold soak), the temperature value should be a sensible value that is somewhere close to the ambient temperature.

NOTE: If engine coolant temperature is above 82° C (180° F), allow the engine to cool until 65° C (150° F) is reached.

3. Start the Engine.
4. During engine warm-up monitor the Eng Coolant Tmp Deg value. The temp deg value change should be a smooth transition from start up to normal operating temp 82° C (180° F). Also monitor the actual coolant temperature with a thermometer.

NOTE: As the engine warms up to operating temperature, the actual coolant temperature (thermometer reading) and the scan tools Eng Coolant Tmp Deg value should stay relatively close to each other.

Is the thermometer reading relatively close to the scan tool ECT reading?

Yes

- The conditions that originally set this DTC are no longer present. Refer to the INTERMITTENT CONDITION Diagnostic Procedure for further assistance. (Refer to 28 - DTC-Based Diagnostics/MODULE, Powertrain Control (PCM) - Standard Procedure)

No

- Replace the Engine Coolant Temperature Sensor.
- Perform the POWERTRAIN VERIFICATION TEST. (Refer to 28 - DTC-Based Diagnostics/MODULE, Powertrain Control (PCM) - Standard Procedure)

P0128-THERMOSTAT RATIONALITY

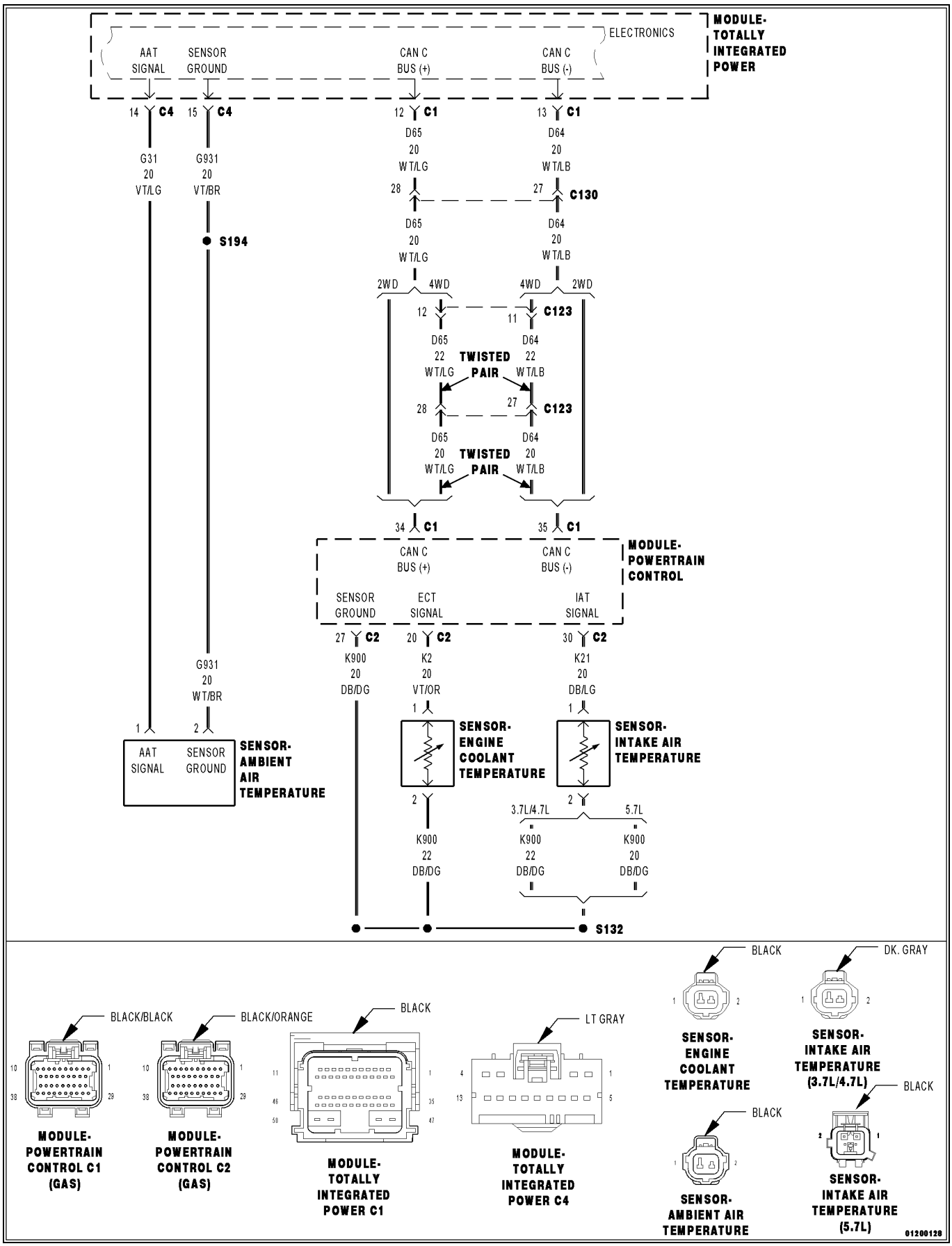

For a complete wiring diagram, **refer to the Wiring Information**.

Theory of Operation

The PCM predicts what the engine coolant temperature should be, based on the engine coolant temperature at start-up, ambient temperature and how the vehicle is subsequently driven. The predicted engine coolant temperature is compared to the Engine Coolant Temperature Sensor reading. The error between the two is calculated and integrated with respect to time. When the Thermostat diagnostic runs, the integrated error is compared to a calibrated threshold and pass/fail is determined. Separate pass and fail thresholds are used in order to improve accuracy of the diagnostic.

- **When Monitored:**

  With the engine running, ambient temperature between -8° C (17.6° F) and 50° C (122° F), start up coolant temperature less than 50° C (122° F), and average vehicle speed greater than 16 kph (10 mph) until coolant temperature reaches 85° C (185° F).
- **Set Condition:**

  The PCM detects that the actual engine coolant temperature falls too far below the predicted engine coolant temperature and the predicted coolant temperature reaches the predicted target value before the actual coolant temperature reaches the actual coolant temperature target value. Two trip fault. Three good trips to turn off the MIL.

Possible Causes
LOW COOLANT LEVEL
THERMOSTAT
SENSOR SIGNAL CIRCUIT SHORTED TO VOLTAGE
TEMPERATURE SENSOR
SIGNAL CIRCUIT OPEN
(K900) SENSOR GROUND CIRCUIT OPEN
(G931) SENSOR GROUND CIRCUIT OPEN
SIGNAL CIRCUIT SHORTED TO GROUND
(K2) ECT SIGNAL CIRCUIT SHORTED TO THE (K900) SENSOR GROUND CIRCUIT
(G31) AAT SIGNAL CIRCUIT SHORTED TO THE (G931) SENSOR GROUND CIRCUIT OPEN
OTHER POSSIBLE CAUSES
POWERTRAIN CONTROL MODULE (PCM)

Always perform the Pre-Diagnostic Troubleshooting procedure before proceeding. (Refer to 28 - DTC-Based Diagnostics/MODULE, Powertrain Control (PCM) - Standard Procedure).

1. ACTIVE DTC

NOTE: Diagnose any CAN - C Communication DTCs before continuing.

NOTE: If any ECT, AAT, CMP or CKP sensor DTCs have set along with P0128, diagnose them before continuing.

NOTE: Make sure that the Pinion Factor has been programmed correctly into the PCM.

1. Start the engine.
2. Allow the engine to reach normal operating temperature.
3. With a scan tool, select View DTCs.

NOTE: It may be necessary to drive the vehicle to meet the conditions to set this DTC, try to repeat the conditions in which the fault originally set by reviewing the Freeze Frame data.

Is the DTC Active or Pending at this time?

Yes

- Go To 2

No

- Perform the INTERMITTENT CONDITION diagnostic procedure. (Refer to 28 - DTC-Based Diagnostics/MODULE, Powertrain Control (PCM) - Standard Procedure).

2. LOW COOLANT LEVEL

NOTE: If an Engine Coolant Temperature (ECT) DTC is set along with this code, diagnose the ECT DTC first.

NOTE: Inspect the ECT terminals and related PCM terminals. Make sure the terminals are free from corrosion and damage.

NOTE: The best way to diagnose this DTC is to allow the vehicle to sit overnight outside in order to have a totally cold soaked engine.

NOTE: Extremely cold outside ambient temperatures may have caused this DTC to set.

WARNING: Never open the cooling system when the engine is hot. The system is under pressure. Failure to follow these instructions can result in personal injury including extreme burns, scalding, or fatal injury. Allow the engine to cool before opening the cooling system.

1. Check the coolant system to make sure that the coolant is in good condition and at the proper level.

   Is the coolant level and condition OK?

Yes

- Go To 3

No

- Inspect the vehicle for a coolant leak and add the necessary amount of coolant.
- Perform the POWERTRAIN VERIFICATION TEST. (Refer to 28 - DTC-Based Diagnostics/MODULE, Powertrain Control (PCM) - Standard Procedure).

3. THERMOSTAT OPERATION

NOTE: This test works best if performed on a cold engine (cold soak).

1. Ignition on, engine not running.
2. With a scan tool, read the ECT Deg value. If the engine was allowed to sit overnight (cold soak), the temperature value should be a sensible value that is somewhere close to the ambient temperature.

NOTE: If engine coolant temperature is above 82° C (180° F), allow the engine to cool until 65° C (150° F) is reached.

3. Start the Engine.
4. During engine warm-up, monitor the ECT Deg value. The temp deg value change should be a smooth transition from start up to normal operating temp 82° C (180° F). Also monitor the actual coolant temperature with a thermometer.

NOTE: As the engine warms up to operating temperature, the actual coolant temperature (thermometer reading) and the scan tool, ECT Temperature value should stay relatively close to each other.

5. Using the appropriate service information, determine the proper opening temperature of the thermostat.

   Did the thermostat open at the proper temperature?

Yes

- Go To 4

No

- Replace the thermostat.
- Perform the POWERTRAIN VERIFICATION TEST. (Refer to 28 - DTC-Based Diagnostics/MODULE, Powertrain Control (PCM) - Standard Procedure).

4. AMBIENT AIR TEMP SENSOR OPERATION

1. Ignition on, engine not running.
2. With a scan tool, read and record the AAT Sensor Temperature value.
3. Using the DRB Temperature Probe #CH7050, or an equivalent temperature measuring tool, measure the ambient air temperature near the AAT Sensor.

Is the AAT Sensor value with -15° C (5° F) of the temperature probe reading?

Yes

- Go To 5

No

- Go To 7

5. ECT SENSOR OPERATION

WARNING: Make sure the engine cooling system is cool before removing the pressure cap or any hose. The cooling system is pressurized when hot. Failure to follow these instructions can result in possible serious or fatal injury.

1. With a scan tool, read and record the ECT Sensor Temperature value.
2. Use the DRB Temperature Probe #CH7050, or an equivalent temperature measuring tool, measure the engine coolant temperature.

Is the ECT Sensor value with -15° C (5° F) of the temperature probe reading?

Yes

- Go To 6

No

- Go To 7

6. OTHER POSSIBLE CAUSES

1. Inspect the Temperature Sensors for any physical damage.
2. Inspect the engine coolant. Make sure the coolant is at the proper level. Refer to the Service Information COOLING.
3. Make sure the Temperature Sensors are properly installed.
4. Make sure the CMP and CKP sensors are installed properly. Check the connectors for any signs of damage.

WARNING: When the engine is operating, do not stand in direct line with the fan. Do not put your hands near the pulleys, belts or fan. Do not wear loose clothing. Failure to follow these instructions may result in possible serious or fatal injury.

5. Perform any Technical Service Bulletins (TSBs) that may apply.
6. With the engine running at normal operating temperature, monitor the Temperature sensor parameters while wiggling the wire harness. Look for parameter values to change.
7. Visually inspect the related wire harness. Look for any chafed, pierced, pinched, partially broken wires and broken, bent, pushed out, or corroded terminals.

CAUTION: Do not probe the PCM harness connectors. Probing the PCM harness connectors will damage the PCM terminals resulting in poor terminal to pin connection. Install the PCM Pinout Box Kit, NGC, 38 Position 8815A to perform diagnosis.

8. Inspect and clean all PCM, engine, and chassis grounds.

Were any problems found during the above inspections?

Yes

- Repair as necessary.
- Perform the POWERTRAIN VERIFICATION TEST. (Refer to 28 - DTC-Based Diagnostics/MODULE, Powertrain Control (PCM) - Standard Procedure).

No

- Test Complete.

7. (K2) ECT SIGNAL CIRCUIT SHORTED TO VOLTAGE

NOTE: Visually inspect both the component and the PCM connectors. Look for damage, partially broken wires and backed out or corroded terminals

1. Turn the ignition off.
2. Disconnect the ECT Temperature Sensor harness connector.
3. Disconnect the C2 PCM harness connector.
4. Ignition on, engine not running.
5. Measure the voltage on the (K2) ECT Signal circuit at the ECT Sensor harness connector.

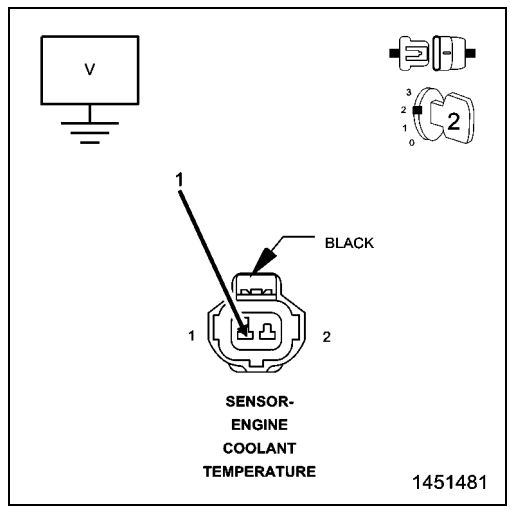

NOTE: The sensor voltage should be approximately 5.0 volts (plus or minus .1 volt) with the connector disconnected.

Does the scan tool display the voltage as described above?

Yes

- Repair the short to voltage in the (K2) ECT Signal circuit.
- Perform the POWERTRAIN VERIFICATION TEST. (Refer to 28 - DTC-Based Diagnostics/MODULE, Powertrain Control (PCM) - Standard Procedure).

No

- Go To 8

8. (G31) AAT SIGNAL CIRCUIT SHORTED TO VOLTAGE

1. Turn the ignition off.
2. Disconnect the C4 TIPM harness connector.
3. Disconnect the AAT Sensor harness connector.

NOTE: Visually inspect both the component and the TIPM connectors. Look for damaged, partially broken wires, and backed out or corroded terminals.

4. Ignition on, engine not running.
5. Measure the voltage on the (G31) AAT Signal circuit in the AAT Sensor harness connector.

NOTE: The sensor voltage should be approximately 5.0 volts (plus or minus .1 volt) with the connector disconnected.

Does the scan tool display the voltage as described above?

Yes

- Repair the short to voltage in the (G31) AAT Signal circuit.
- Perform the POWERTRAIN VERIFICATION TEST. (Refer to 28 - DTC-Based Diagnostics/MODULE, Powertrain Control (PCM) - Standard Procedure).

No

- Go To 9

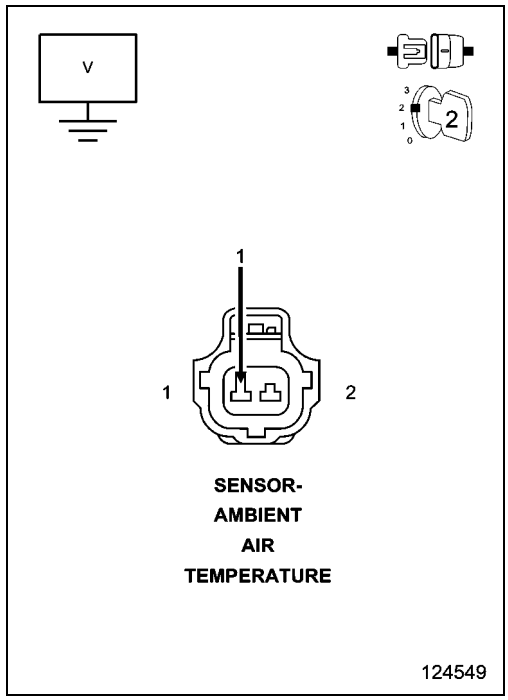

9. TEMPERATURE SENSOR

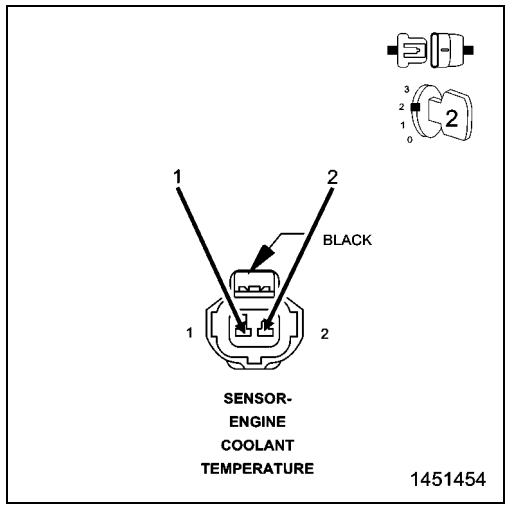

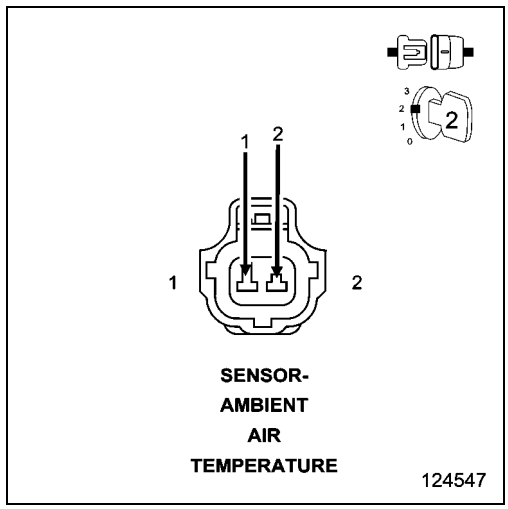

1. Turn the ignition off.
2. Connect the C2 PCM harness connector.
3. Connect the C4 TIPM harness connector.
4. Ignition on, engine not running.
5. With a scan tool, read the Temperature Sensor voltage.
6. Connect a jumper wire across the ECT and AAT Sensor harness connectors.

Does the voltage start at 5.0 volts when the jumper wire is not installed and drop below 1.0 volt when the jumper wire is installed?

Yes

- Verify that there is good pin to terminal contact in the Sensor and Powertrain Control Module connectors. Replace the Appropriate Sensor if no problems were found with the connectors.
- Perform the POWERTRAIN VERIFICATION TEST. (Refer to 28 - DTC-Based Diagnostics/MODULE, Powertrain Control (PCM) - Standard Procedure).

No

- Go To 10

NOTE: Disconnect the jumper wire before continuing.

10. (K2) ECT SIGNAL CIRCUIT OPEN

1. Turn the ignition off.
2. Disconnect the C2 PCM harness connector.

CAUTION: Do not probe the PCM harness connectors. Probing the PCM harness connectors will damage the PCM terminals resulting in poor terminal to pin connection. Install the PCM Pinout Box Kit, NGC, 38 Position 8815A to perform diagnosis.

3. Measure the resistance of the (K2) ECT Sensor Signal circuit from the ECT Sensor harness connector to the appropriate terminal of the PCM Pinout Box 8815A.

Is the resistance below 5.0 Ohms?

Yes

- Go To 11

No

- Repair the open in the (K2) ECT Sensor Signal circuit.
- Perform the POWERTRAIN VERIFICATION TEST. (Refer to 28 - DTC-Based Diagnostics/MODULE, Powertrain Control (PCM) - Standard Procedure).

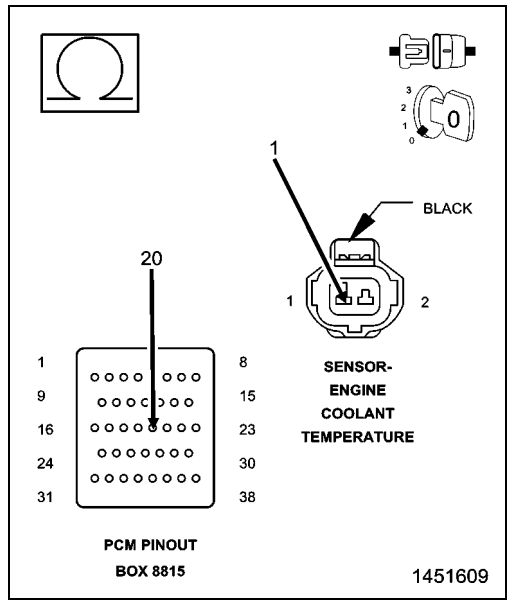

11. (G31) AAT SIGNAL CIRCUIT OPEN

1. Disconnect the C4 TIPM harness connector.
2. Measure the resistance of the (G31) AAT Signal circuit from the AAT Sensor harness connector to the C4 TIPM harness connector.

Is the resistance below 5.0 Ohms?

Yes

- Go To 12

No

- Repair the open in the (G31) AAT Signal circuit.
- Perform the POWERTRAIN VERIFICATION TEST. (Refer to 28 - DTC-Based Diagnostics/MODULE, Powertrain Control (PCM) - Standard Procedure).

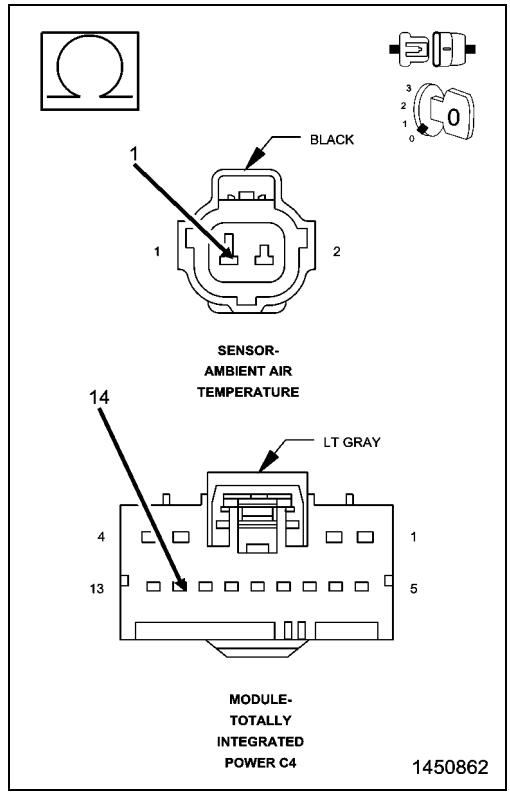

12. (K900) SENSOR GROUND CIRCUIT OPEN

1. For the ECT Sensor, measure the resistance of the (K900) Sensor ground circuit from the ECT Sensor harness connector to the appropriate terminal of the PCM Pinout Box 8815A.

Is the resistance below 5.0 Ohms?

Yes

- Go To 13

No

- Repair the open in the (K900) Sensor ground circuit.
- Perform the POWERTRAIN VERIFICATION TEST. (Refer to 28 - DTC-Based Diagnostics/MODULE, Powertrain Control (PCM) - Standard Procedure).

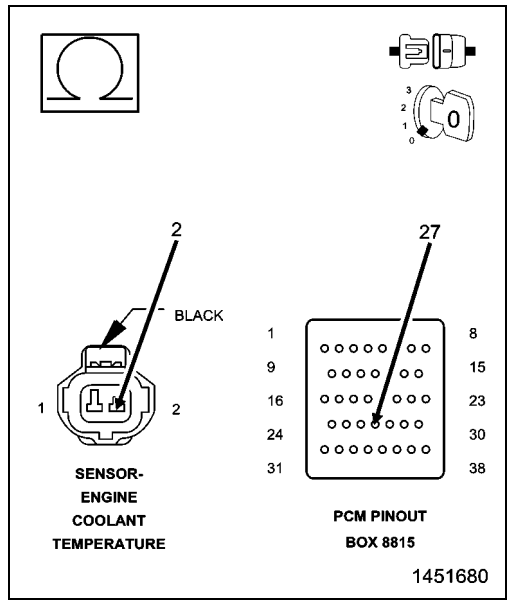

13. (G931) SENSOR GROUND CIRCUIT OPEN

1. Measure the resistance of the (G931) Sensor Ground circuit from the AAT Sensor harness connector to the C4 TIPM harness connector.

Is the resistance below 5.0 Ohms?

Yes

- Go To 14

No

- Repair the open in the (G931) Sensor Ground circuit.
- Perform the POWERTRAIN VERIFICATION TEST. (Refer to 28 - DTC-Based Diagnostics/MODULE, Powertrain Control (PCM) - Standard Procedure).

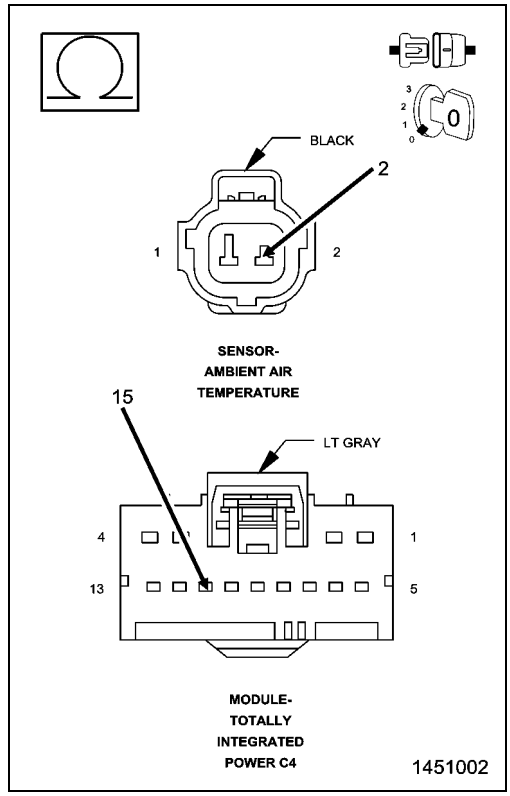

14. (K2) ECT SIGNAL CIRCUIT SHORTED TO GROUND

1. Measure the resistance between ground and the (K2) ECT Sensor Signal circuit in the Temperature Sensor harness connector.

Is the resistance below 100 Ohms?

Yes

- Repair the short to ground in the (K2) ECT Signal circuit.
- Perform the POWERTRAIN VERIFICATION TEST. (Refer to 28 - DTC-Based Diagnostics/MODULE, Powertrain Control (PCM) - Standard Procedure).

No

- Go To 15

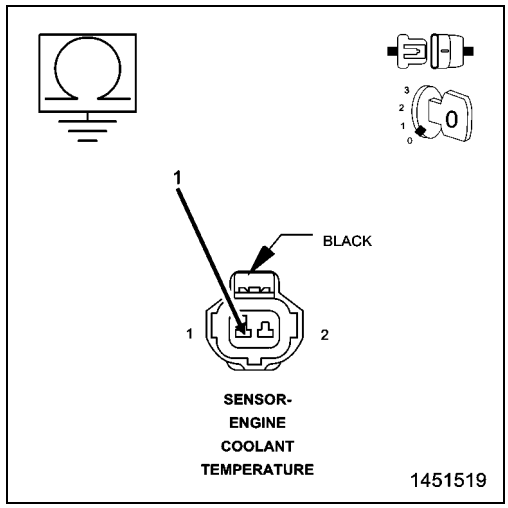

15. (G31) AAT SIGNAL CIRCUIT SHORTED TO GROUND

1. Measure the resistance between ground and the (G31) AAT Signal circuit in the AAT Sensor harness connector.

Is the resistance below 100 Ohms?

Yes

- Repair the short to ground in the (G31) AAT Signal circuit.
- Perform the POWERTRAIN VERIFICATION TEST. (Refer to 28 - DTC-Based Diagnostics/MODULE, Powertrain Control (PCM) - Standard Procedure).

No

- Go To 16

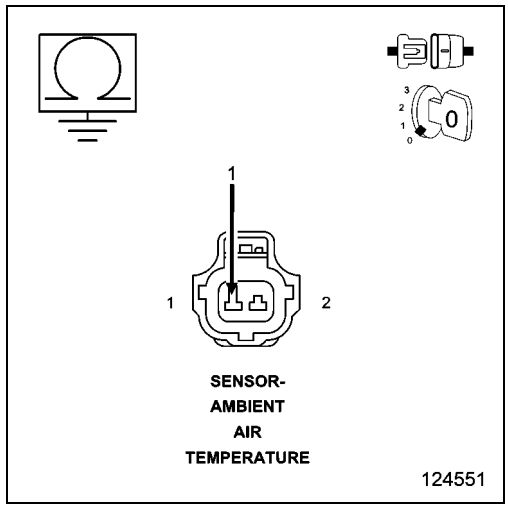

16. (K2) ECT SIGNAL CIRCUIT SHORTED TO THE (K900) SENSOR GROUND CIRCUIT

1. Measure the resistance between the (K2) ECT Signal circuit and the (K900) Sensor ground circuit in the ECT Sensor harness connector.

Is the resistance below 100 Ohms?

Yes

- Repair the short between the (K900) Sensor ground circuit and the (K2) ECT Sensor Signal circuit.
- Perform the POWERTRAIN VERIFICATION TEST. (Refer to 28 - DTC-Based Diagnostics/MODULE, Powertrain Control (PCM) - Standard Procedure).

No

- Go To 17

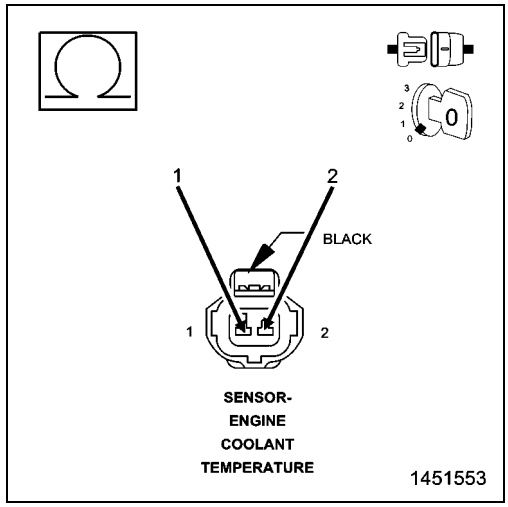

17. (G31) AAT SIGNAL CIRCUIT SHORTED TO THE (G931) SENSOR GROUND CIRCUIT

1. Measure the resistance between the (G31) AAT Signal circuit and the (G931) Sensor Ground circuit in the AAT Sensor harness connector.

Is the resistance below 5.0 Ohms?

Yes

- Repair the short between the (G931) Sensor Ground circuit and the (G31) AAT Signal circuit.
- Perform the POWERTRAIN VERIFICATION TEST. (Refer to 28 - DTC-Based Diagnostics/MODULE, Powertrain Control (PCM) - Standard Procedure).

No

- Go To 18

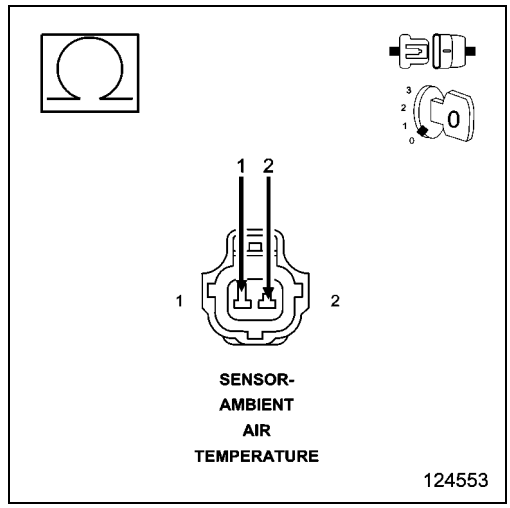

18. POWERTRAIN CONTROL MODULE (PCM)

1. Using the wiring diagram/schematic as a guide, inspect the wiring and connectors between the Temperature Sensors and the Powertrain Control Module (PCM).
2. Look for any chafed, pierced, pinched, or partially broken wires.
3. Look for broken, bent, pushed out or corroded terminals. Verify that there is good pin to terminal contact in the Sensor and Control Module connectors.
4. Refer to any Technical Service Bulletins that may apply.

Were there any problems found?

Yes

- Repair as necessary.
- Perform the POWERTRAIN VERIFICATION TEST. (Refer to 28 - DTC-Based Diagnostics/MODULE, Powertrain Control (PCM) - Standard Procedure).

No

- Replace and program the Powertrain Control Module per Service Information.
- Perform the POWERTRAIN VERIFICATION TEST. (Refer to 28 - DTC-Based Diagnostics/MODULE, Powertrain Control (PCM) - Standard Procedure).

P0129-BAROMETRIC PRESSURE OUT-OF-RANGE LOW

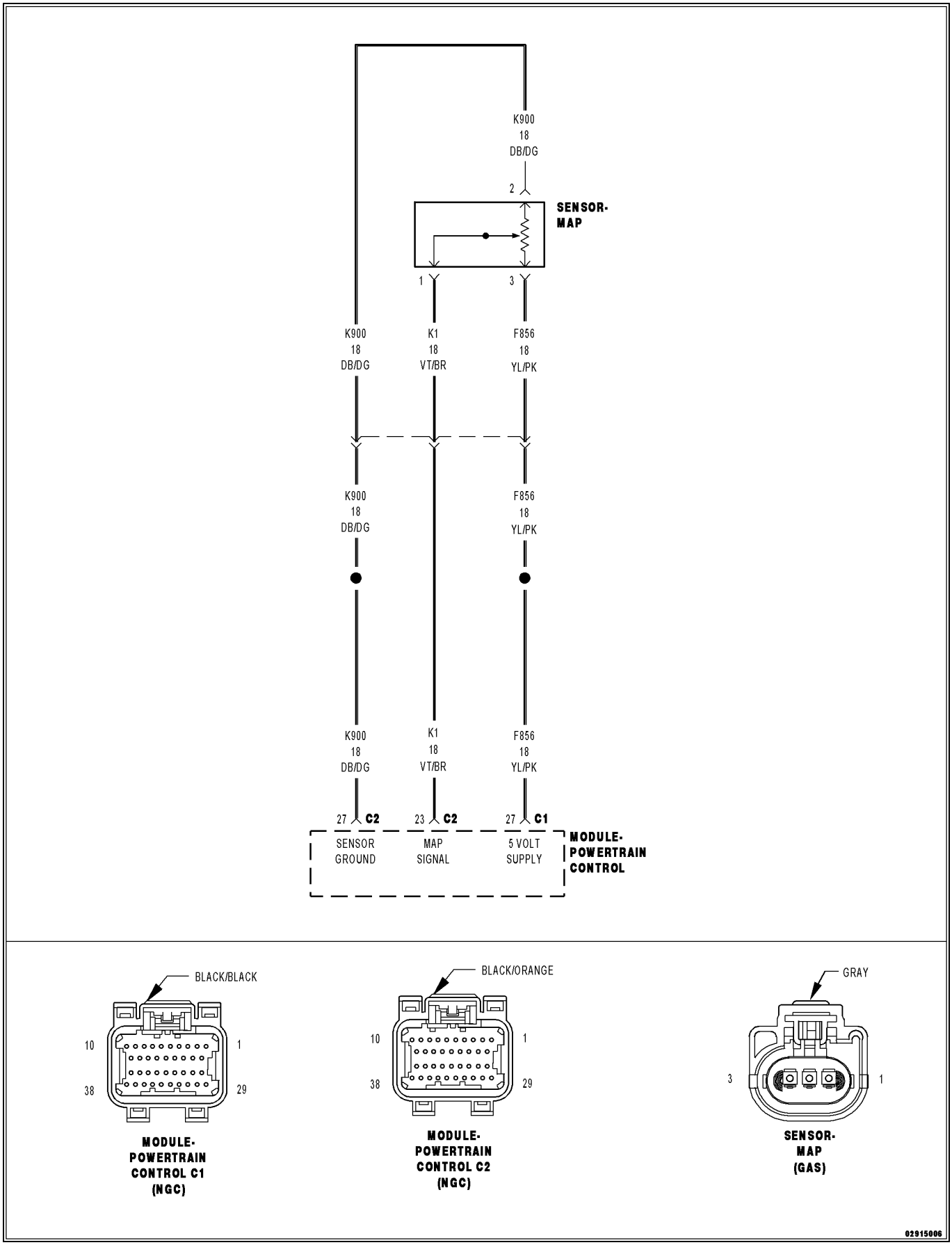

For a complete wiring diagram, **refer to the Wiring Information**.

Theory of operation

The barometric pressure (BARO) sensor is the Manifold Absolute Pressure (MAP) sensor which is a transducer that varies resistance according to changes in altitude and atmospheric conditions. The BARO reading, which is read the first few moments before engine cranking, gives the Powertrain Control Module (PCM) an indication of the current barometric pressure. The PCM uses this information to calculate fuel delivery. The MAP sensor has a 5 Volt reference circuit, a low reference circuit and a signal circuit. The PCM supplies 5 Volts to the MAP sensor on a 5 Volt reference circuit and provides a ground on a low reference circuit. The MAP sensor provides a voltage signal to the PCM on a signal circuit relative to the pressure changes. The PCM monitors the stability of the BARO reading output by comparing successive samples.

- **When Monitored:**

  With the ignition key on. No Cam or Crank signal within 75 ms. Engine speed less than 250 RPM.
- **Set Condition:**

  The Powertrain Control Module (PCM) senses the voltage from the MAP sensor to be less than 20.2 of a Volt but greater than 0.04 of a Volt for 300 milliseconds. One Trip Fault. Three good trips to turn off the MIL. (The MIL will illuminate and the ETC lamp will flash, if equipped.)

Possible Causes
(F856) 5 VOLT SUPPLY CIRCUIT SHORTED TO BATTERY VOLTAGE
(F856) 5 VOLT SUPPLY CIRCUIT OPEN
(F856) 5 VOLT SUPPLY CIRCUIT SHORTED TO GROUND
(K1) MAP SIGNAL CIRCUIT OPEN
(K1) MAP SIGNAL CIRCUIT SHORTED TO GROUND
(K1) MAP SIGNAL CIRCUIT SHORTED TO THE (K900) SENSOR GROUND CIRCUIT
MAP SENSOR
POWERTRAIN CONTROL MODULE (PCM)

Always perform the Pre-Diagnostic Troubleshooting procedure before proceeding. (Refer to 28 - DTC-Based Diagnostics/MODULE, Powertrain Control (PCM) - Standard Procedure).

1. ACTIVE DTC

1. Ignition on, engine not running.
2. With the scan tool, select View DTCs.

Is the DTC Active at this time?

Yes

- Go To 2

No

- Perform the INTERMITTENT CONDITION diagnostic procedure. (Refer to 28 - DTC-Based Diagnostics/MODULE, Powertrain Control (PCM) - Standard Procedure).

2. (F856) 5 VOLT SUPPLY CIRCUIT

1. Turn the ignition off.
2. Disconnect the MAP Sensor harness connector.
3. Ignition on, engine not running.
4. Measure the voltage on the (F856) 5 Volt Supply circuit in the MAP Sensor harness connector.

Is the voltage between 4.5 to 5.2 Volts?

Yes

- Go To 3

No

- Go To 7

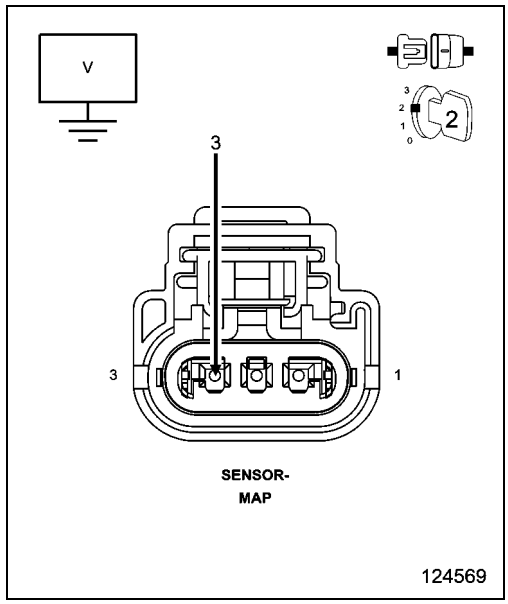

3. MAP SENSOR

1. With the scan tool, monitor the MAP Sensor voltage with the Sensor harness connector disconnected.

Is the voltage greater than 2.2 Volts?

Yes

- Verify that there is good pin to terminal contact in the Sensor and Powertrain Control Module connectors. If OK, replace the MAP Sensor in accordance with the service information. (Refer to 14 - Fuel System/Fuel Injection/ SENSOR, Manifold Air Pressure (MAP) - Removal).
- Perform the POWERTRAIN VERIFICATION TEST. (Refer to 28 - DTC-Based Diagnostics/MODULE, Powertrain Control (PCM) - Standard Procedure).

No

- Go To 4

4. (K1) MAP SIGNAL CIRCUIT OPEN

1. Turn the ignition off.
2. Disconnect the C2 PCM harness connector.

CAUTION: Do not probe the PCM harness connectors. Probing the PCM harness connectors will damage the PCM terminals resulting in poor terminal to pin connection. Install the PCM Pinout Box Kit, NGC, 38 Position 8815A to perform diagnosis.

3. Measure the resistance of the (K1) MAP Signal circuit from the MAP Sensor harness connector to the appropriate terminal of PCM Pinout Box 8815A.

Is the resistance less than 5.0 Ohms?

Yes

- Go To 5

No

- Repair the open in the (K1) MAP Signal circuit.
- Perform the POWERTRAIN VERIFICATION TEST. (Refer to 28 - DTC-Based Diagnostics/MODULE, Powertrain Control (PCM) - Standard Procedure).

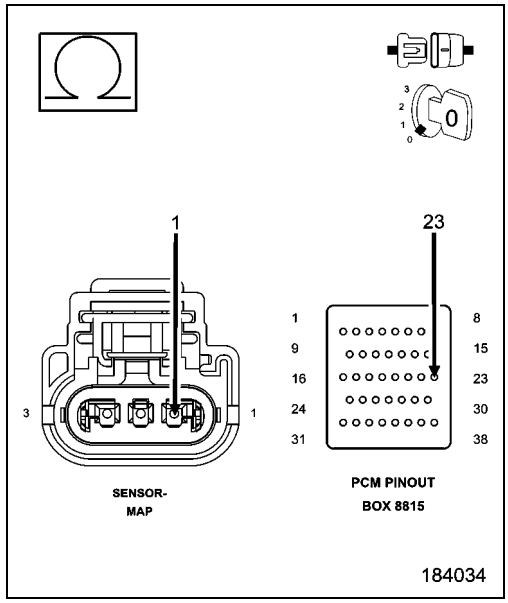

5. (K1) MAP SIGNAL CIRCUIT SHORTED TO THE (K900) SENSOR GROUND CIRCUIT

1. Measure the resistance between the (K900) Sensor ground circuit and the (K1) MAP Signal circuit in the MAP Sensor harness connector.

Is the resistance less than 5.0 Ohms?

Yes

- Repair the short between the (K900) Sensor ground circuit and the (K1) MAP Signal circuit.
- Perform the POWERTRAIN VERIFICATION TEST. (Refer to 28 - DTC-Based Diagnostics/MODULE, Powertrain Control (PCM) - Standard Procedure).

No

- Go To 6

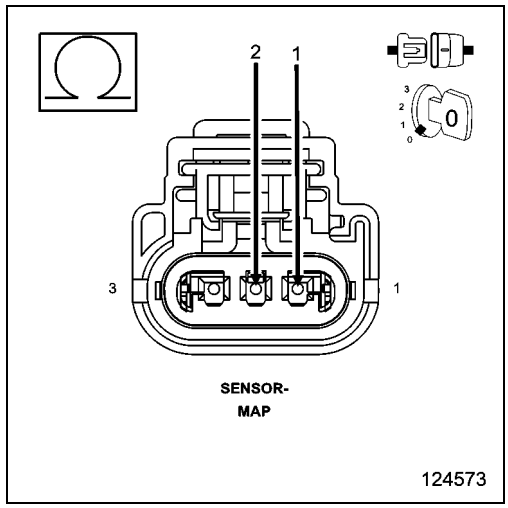

6. (K1) MAP SIGNAL CIRCUIT SHORTED TO GROUND

1. Measure the resistance between ground and the (K1) MAP Signal circuit in the MAP Sensor harness connector.

Is the resistance less than 100 Ohms?

Yes

- Repair the short to ground in the (K1) MAP Signal circuit.
- Perform the POWERTRAIN VERIFICATION TEST. (Refer to 28 - DTC-Based Diagnostics/MODULE, Powertrain Control (PCM) - Standard Procedure).

No

- Go To 10

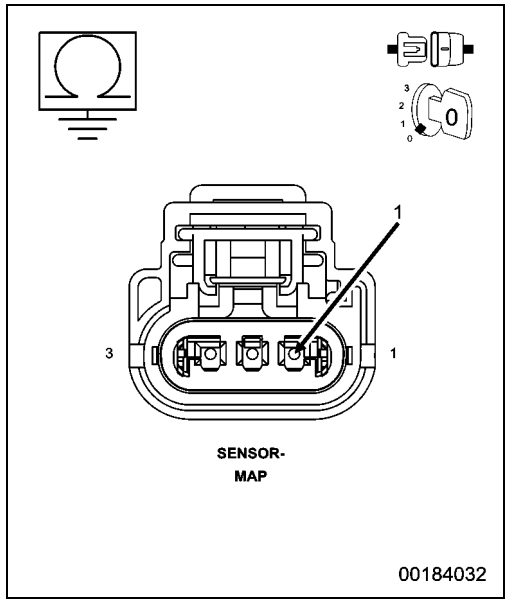

7. (F856) 5 VOLT SUPPLY CIRCUIT SHORTED TO VOLTAGE

1. Turn the ignition off.
2. Disconnect the C1 PCM harness connector.
3. Ignition on, engine not running.
4. Measure the voltage on the (F856) 5 Volt Supply circuit in the MAP Sensor harness connector.

Is there any voltage present?

Yes

- Repair the short to voltage in the (F856) 5 Volt Supply circuit.
- Perform the POWERTRAIN VERIFICATION TEST. (Refer to 28 - DTC-Based Diagnostics/MODULE, Powertrain Control (PCM) - Standard Procedure).

No

- Go To 8

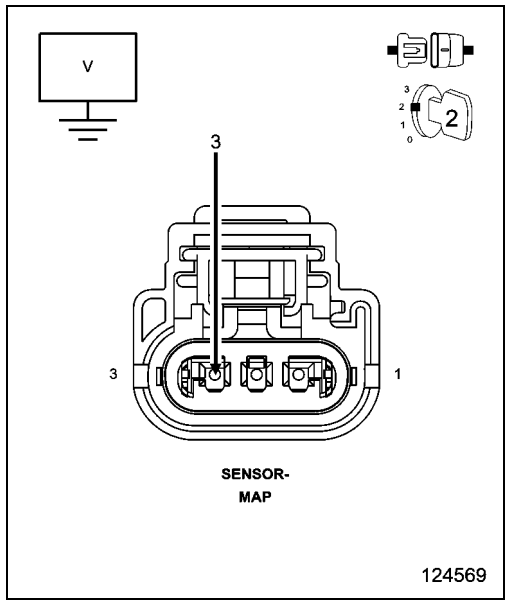

8. (F856) 5 VOLT SUPPLY CIRCUIT OPEN

1. Turn the ignition off.

CAUTION: Do not probe the PCM harness connectors. Probing the PCM harness connectors will damage the PCM terminals resulting in poor terminal to pin connection. Install the PCM Pinout Box Kit, NGC, 38 Position 8815A to perform diagnosis.

2. Measure the resistance of the (F856) 5 Volt Supply circuit from the MAP Sensor harness connector to the appropriate terminal of PCM Pinout Box 8815A.

Is the resistance less than 5.0 Ohms?

Yes

- Go To 9

No

- Repair the open in the (F856) 5 Volt Supply circuit.
- Perform the POWERTRAIN VERIFICATION TEST. (Refer to 28 - DTC-Based Diagnostics/MODULE, Powertrain Control (PCM) - Standard Procedure).

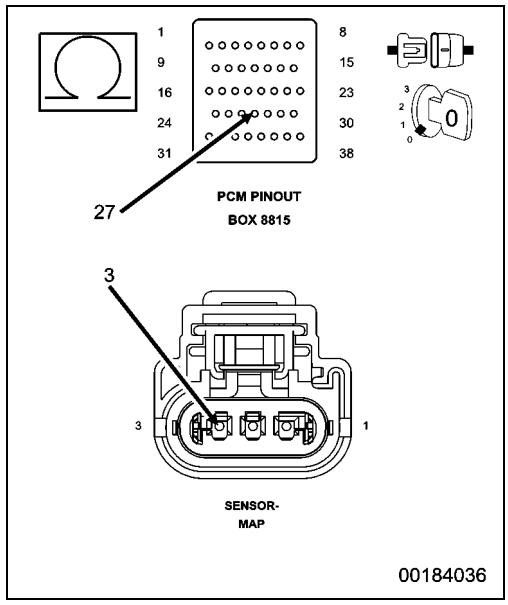

9. (F856) 5 VOLT SUPPLY CIRCUIT SHORTED TO GROUND

1. Measure the resistance between ground and the (F856) 5 Volt Supply circuit in the MAP Sensor harness connector.

Is the resistance less than 100 Ohms?

Yes

- Repair the short to ground in the (F856) 5 Volt Supply circuit.
- Perform the POWERTRAIN VERIFICATION TEST. (Refer to 28 - DTC-Based Diagnostics/MODULE, Powertrain Control (PCM) - Standard Procedure).

No

- Go To 10

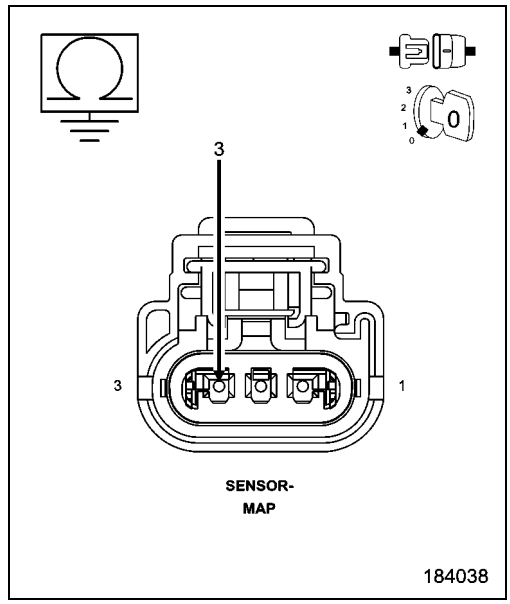

10. POWERTRAIN CONTROL MODULE (PCM)

1. Using the wiring diagram/schematic as a guide, inspect the wiring and connectors between the MAP Sensor and the Powertrain Control Module (PCM).
2. Look for any chafed, pierced, pinched or partially broken wires.
3. Look for broken, bent, pushed out or corroded terminals. Verify that there is good pin to terminal contact in the Sensor and Control Module connectors.
4. Perform any Technical Service Bulletins that may apply.

Were there any issues found?

Yes

- Repair as necessary.
- Perform the POWERTRAIN VERIFICATION TEST. (Refer to 28 - DTC-Based Diagnostics/MODULE, Powertrain Control (PCM) - Standard Procedure).

No

- Replace and program the Powertrain Control Module in accordance with the Service Information. (Refer to 08 - Electrical/8E - Electronic Control Modules/MODULE, Powertrain Control - Removal).
- Perform the POWERTRAIN VERIFICATION TEST. (Refer to 28 - DTC-Based Diagnostics/MODULE, Powertrain Control (PCM) - Standard Procedure).

P0131-O2 SENSOR 1/1 CIRCUIT LOW

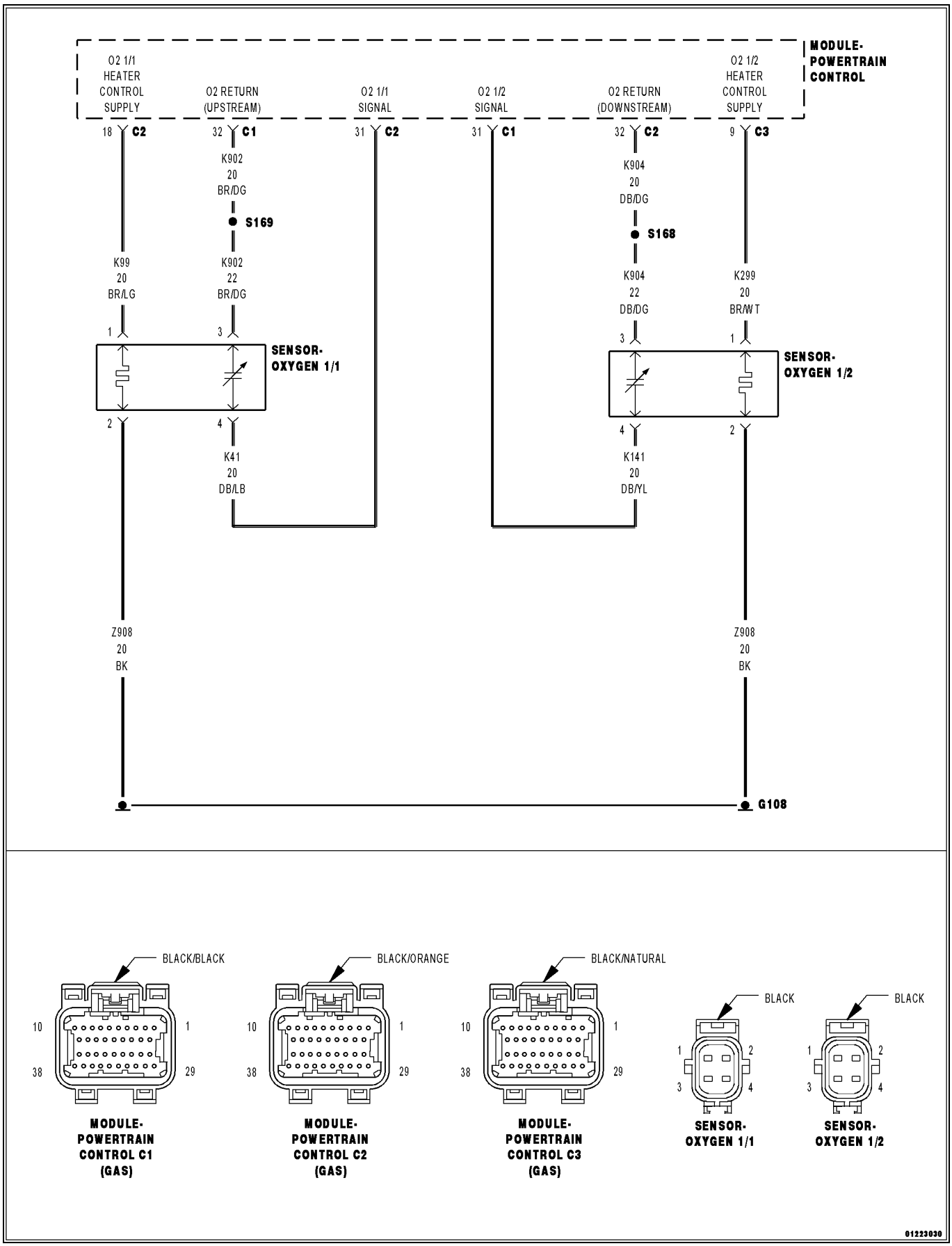

For a complete wiring diagram, **refer to the Wiring Information**.

- **When Monitored:**

  Engine running for less than 30 seconds and the O2 Sensor Heater Temperature is less than 251° C (484° F) with battery voltage greater 10.4 Volts.

- **Set Condition:**

  The Powertrain Control Module (PCM) detects that the 1/1 Oxygen Sensor signal voltage is below the minimum acceptable value. The DTC will set as Pending after one trip and Active after two trips. Three good trips to turn off the MIL.

Possible Causes
(K902) O2 RETURN UPSTREAM CIRCUIT SHORTED TO GROUND
(K41) O2 1/1 SIGNAL CIRCUIT SHORTED TO GROUND
(K41) O2 1/1 SIGNAL CIRCUIT SHORTED TO THE (K902) O2 RETURN UPSTREAM CIRCUIT
(K41) O2 1/1 SIGNAL CIRCUIT SHORTED TO THE (Z908) O2 1/1 HEATER GROUND CIRCUIT
1/1 O2 SENSOR
POWERTRAIN CONTROL MODULE (PCM)

Always perform the Pre-Diagnostic Troubleshooting procedure before proceeding. (Refer to 28 - DTC-Based Diagnostics/MODULE, Powertrain Control (PCM) - Standard Procedure).

1. ACTIVE DTC

1. Turn the ignition on.
2. With the scan tool, select View DTCs. Record DTC and Freeze Frame information.
3. Start the engine and allow it to idle for at least 60 seconds.

WARNING: When the engine is operating, do not stand in direct line with the fan. Do not put your hands near the pulleys, belts or fan. Do not wear loose clothing. Failure to follow these instructions may result in possible serious or fatal injury.

4. With the scan tool, select View DTCs.

Is the DTC Active or Pending at this time?

Yes

- Go To 2

No

- Perform the INTERMITTENT CONDITION diagnostic procedure. (Refer to 28 - DTC-Based Diagnostics/MODULE, Powertrain Control (PCM) - Standard Procedure).

2. (K41) O2 SENSOR 1/1 SIGNAL CIRCUIT

1. Turn the ignition off.
2. Disconnect the 1/1 O2 Sensor harness connector.
3. Ignition on, engine not running.
4. With the scan tool, monitor the O2 Sensor voltage.

Is the 1/1 O2 Sensor voltage between 4.1 and 5.0 Volts?

Yes

- Go To 3

No

- Go To 5

3. O2 SENSOR

1. Measure the voltage on the (K902) O2 Return Upstream circuit in the O2 Sensor harness connector.

Is the voltage at 2.5 Volts?

Yes

- Verify that there is good pin to terminal contact in the O2 Sensor and Powertrain Control Module connectors. Replace the 1/1 O2 Sensor if no problems were found with the connectors.
- Perform the POWERTRAIN VERIFICATION TEST. (Refer to 28 - DTC-Based Diagnostics/MODULE, Powertrain Control (PCM) - Standard Procedure).

No

- Go To 4

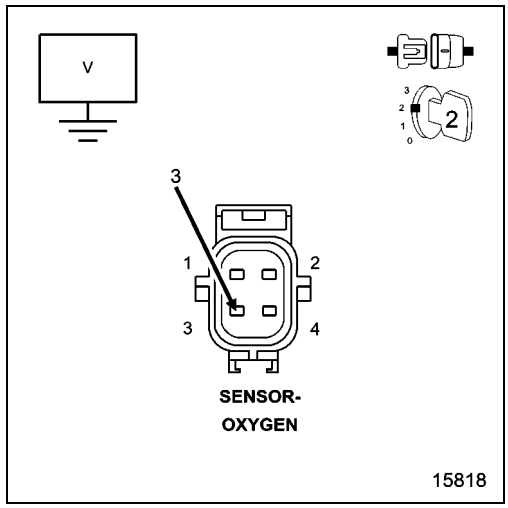

4. (K902) O2 RETURN UPSTREAM CIRCUIT SHORTED TO GROUND

1. Turn the ignition off.
2. Disconnect the C1 PCM harness connector.
3. Measure the resistance between ground and the (K902) O2 Return Upstream circuit in the O2 Sensor harness connector.

Is the resistance below 100 Ohms?

Yes

- Repair the short to ground in the (K902) O2 Return Upstream circuit.
- Perform the POWERTRAIN VERIFICATION TEST. (Refer to 28 - DTC-Based Diagnostics/MODULE, Powertrain Control (PCM) - Standard Procedure).

No

- Go To 8

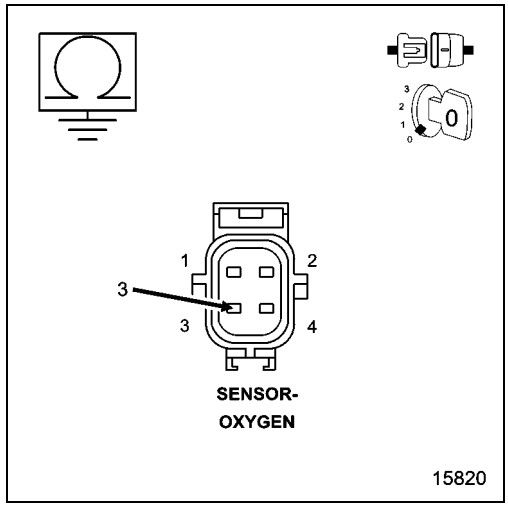

5. (K41) O2 SENSOR 1/1 SIGNAL CIRCUIT SHORTED TO GROUND

1. Turn the ignition off.
2. Disconnect the C1 and C2 PCM harness connectors.
3. Measure the resistance between ground and the (K41) O2 Sensor 1/1 Signal circuit in the O2 Sensor harness connector.

Is the resistance below 100 Ohms?

Yes

- Repair the short to ground in the (K41) O2 Sensor 1/1 Signal circuit.
- Perform the POWERTRAIN VERIFICATION TEST. (Refer to 28 - DTC-Based Diagnostics/MODULE, Powertrain Control (PCM) - Standard Procedure).

No

- Go To 6

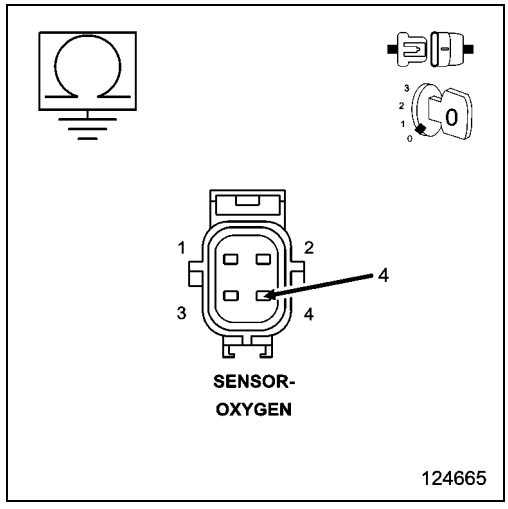

6. (K41) O2 SENSOR 1/1 SIGNAL CIRCUIT SHORTED TO THE (K902) O2 RETURN UPSTREAM CIRCUIT

1. Measure the resistance between the (K41) O2 Sensor 1/1 Signal circuit and the (K902) O2 Return Upstream circuit in the O2 Sensor harness connector.

Is the resistance below 100 Ohms?

Yes

- Repair the short between the (K902) O2 Return Upstream circuit and the (K41) O2 Sensor 1/1 Signal circuit.
- Perform the POWERTRAIN VERIFICATION TEST. (Refer to 28 - DTC-Based Diagnostics/MODULE, Powertrain Control (PCM) - Standard Procedure).

No

- Go To 7

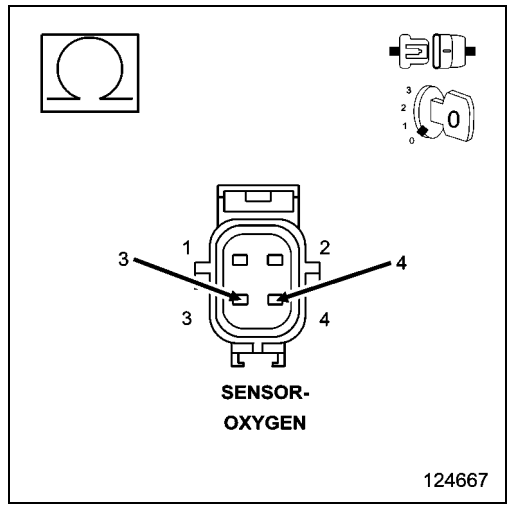

7. (K41) O2 SENSOR 1/1 SIGNAL CIRCUIT SHORTED TO THE (Z908) O2 1/1 HEATER GROUND CIRCUIT

1. Measure the resistance between the (K41) O2 Sensor 1/1 Signal circuit and the (Z908) O2 1/1 Heater ground circuit in the O2 Sensor harness connector.

Is the resistance below 100 Ohms?

Yes

- Repair the short between the (Z908) O2 1/1 Heater ground circuit and the (K41) O2 Sensor 1/1 Signal circuit.
- Perform the POWERTRAIN VERIFICATION TEST. (Refer to 28 - DTC-Based Diagnostics/MODULE, Powertrain Control (PCM) - Standard Procedure).

No

- Go To 8

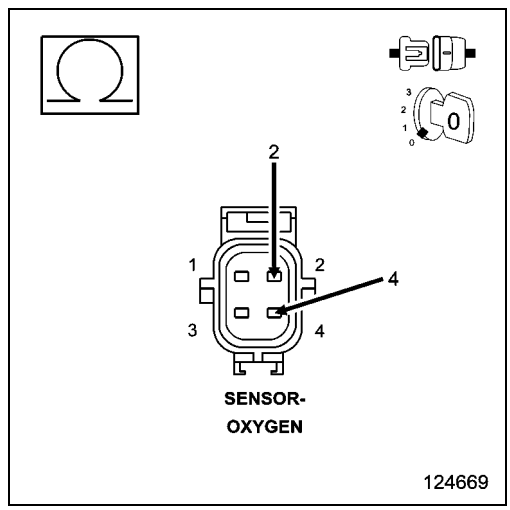

8. POWERTRAIN CONTROL MODULE (PCM)

1. Using the wiring diagram/schematic as a guide, inspect the wiring and connectors between the Oxygen Sensor 1/1 and the Powertrain Control Module (PCM).
2. Look for any chafed, pierced, pinched or partially broken wires.
3. Look for broken, bent, pushed out or corroded terminals. Verify that there is good pin to terminal contact in the Sensor and Control Module connectors.
4. Refer to any Technical Service Bulletins that may apply.

Were there any problems found?

Yes

- Repair as necessary.
- Perform the POWERTRAIN VERIFICATION TEST. (Refer to 28 - DTC-Based Diagnostics/MODULE, Powertrain Control (PCM) - Standard Procedure).

No

- Replace and program the Powertrain Control Module in accordance with the Service Information.
- Perform the POWERTRAIN VERIFICATION TEST. (Refer to 28 - DTC-Based Diagnostics/MODULE, Powertrain Control (PCM) - Standard Procedure).

P0132-O2 SENSOR 1/1 CIRCUIT HIGH

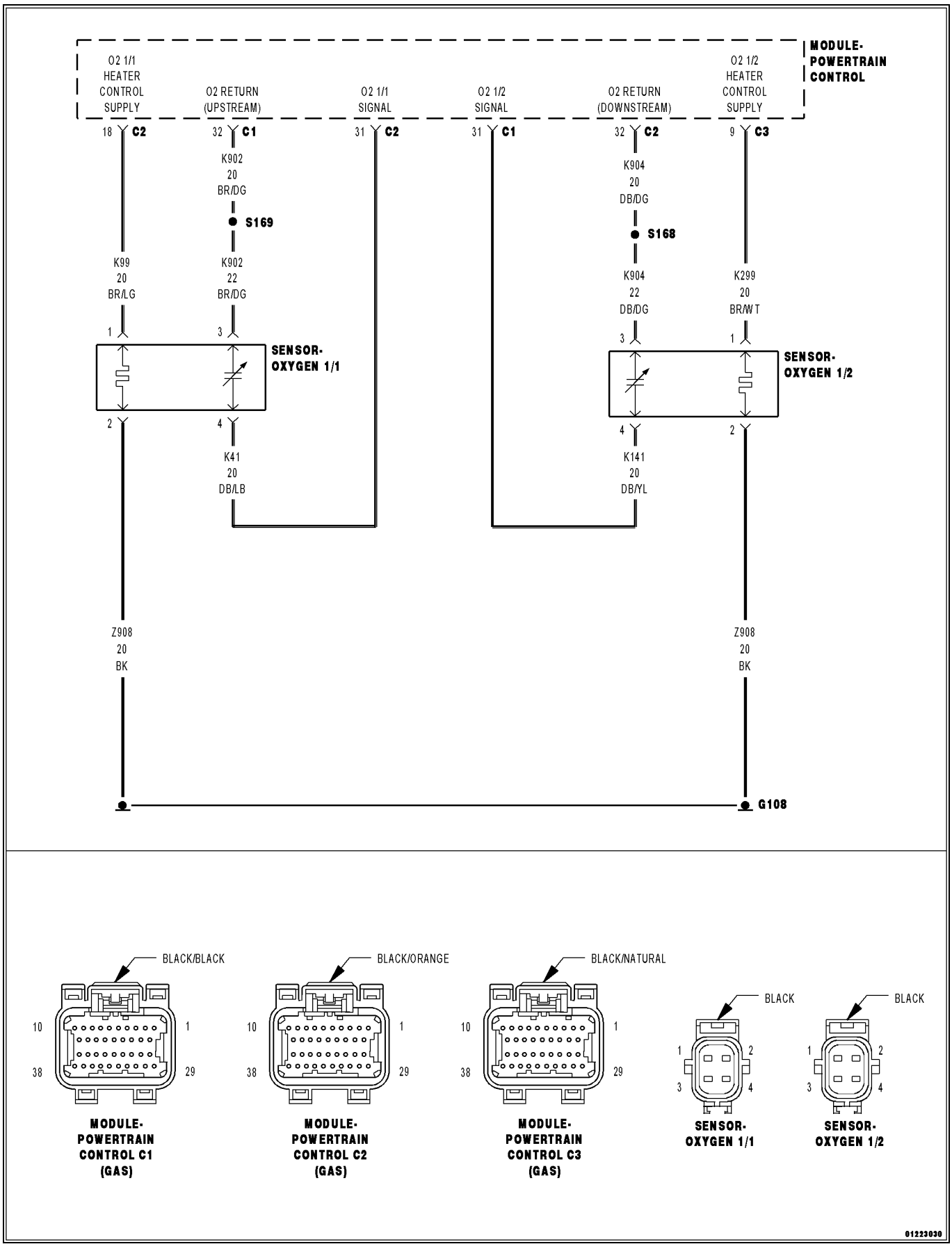

For a complete wiring diagram, **refer to the Wiring Information**.

- **When Monitored:**

  Continuously with the engine running, no O2 sensor heater DTCs present, 1/1 Oxygen Sensor heater temperature within a specific range and battery voltage greater than 10.4 Volts.
- **Set Condition:**

  The Oxygen Sensor voltage is above 3.99 Volts for 40 seconds. The DTC will set as Pending after one trip and Active after two trips. Three good trips to turn off the MIL.

Possible Causes
(K41) O2 1/1 SIGNAL CIRCUIT SHORTED TO VOLTAGE
(K902) O2 RETURN UPSTREAM CIRCUIT SHORTED TO VOLTAGE
(K41) O2 1/1 SIGNAL CIRCUIT OPEN
(K902) O2 RETURN UPSTREAM CIRCUIT OPEN
1/1 O2 SENSOR
POWERTRAIN CONTROL MODULE (PCM)

Always perform the Pre-Diagnostic Troubleshooting procedure before proceeding. (Refer to 28 - DTC-Based Diagnostics/MODULE, Powertrain Control (PCM) - Standard Procedure).

1. ACTIVE DTC

NOTE: If an O2 sensor signal circuit is shorted to voltage, all O2 sensor voltage readings displayed on the scan tool will be approximately 5.0 Volts. Diagnose the sensor that set the most current DTC.

1. Start the engine and allow it to idle for at least 60 seconds.

WARNING: When the engine is operating, do not stand in direct line with the fan. Do not put your hands near the pulleys, belts or fan. Do not wear loose clothing. Failure to follow these instructions may result in possible serious or fatal injury.

2. With the scan tool, select View DTCs.

   Is the status Active for this DTC?

Yes

- Go To 2

No

- Perform the INTERMITTENT CONDITION diagnostic procedure. (Refer to 28 - DTC-Based Diagnostics/MODULE, Powertrain Control (PCM) - Standard Procedure).

2. (K41) O2 1/1 SIGNAL CIRCUIT SHORTED TO VOLTAGE

1. Turn the ignition off.
2. Disconnect the C1 and C2 PCM harness connectors.
3. Disconnect the 1/1 O2 Sensor harness connector.
4. Turn the ignition on.
5. Measure the voltage on the (K41) O2 Sensor 1/1 Signal circuit in the 1/1 O2 Sensor harness connector.

NOTE: Measure the voltage in reference to ground, not the (K902) O2 Return Upstream circuit.

Is there any voltage present?

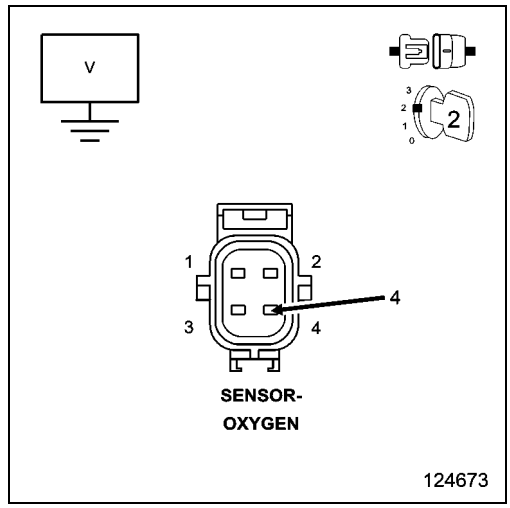

Yes

- Repair the short to voltage in the (K41) O2 Sensor 1/1 Signal circuit.
- Perform the POWERTRAIN VERIFICATION TEST. (Refer to 28 - DTC-Based Diagnostics/MODULE, Powertrain Control (PCM) - Standard Procedure).

No

- Go To 3

3. (K902) O2 RETURN UPSTREAM CIRCUIT SHORTED TO VOLTAGE

1. Measure the voltage on the (K902) O2 Return Upstream circuit in the 1/1 O2 Sensor harness connector.

Is there any voltage present?

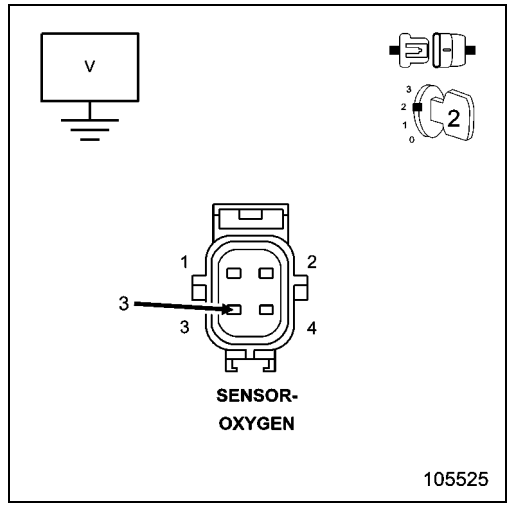

Yes

- Repair the short to voltage in the (K902) O2 Return Upstream circuit.
- Perform the POWERTRAIN VERIFICATION TEST. (Refer to 28 - DTC-Based Diagnostics/MODULE, Powertrain Control (PCM) - Standard Procedure).

No

- Go To 4

4. 1/1 O2 SENSOR

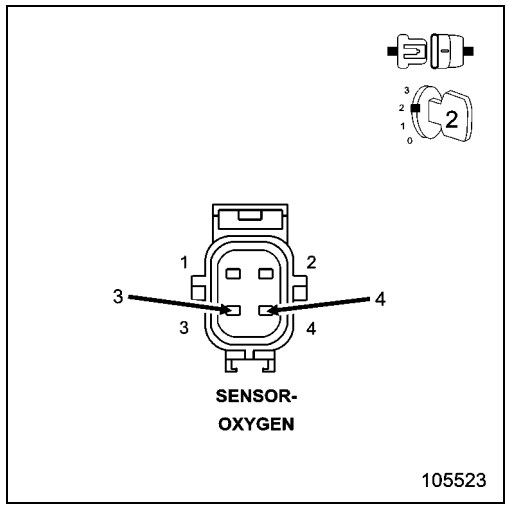

1. Turn the ignition off.
2. Connect the C1 and C2 PCM harness connectors.
3. Ignition on, engine not running.
4. With the scan tool, monitor the 1/1 O2 Sensor voltage.
5. Connect a jumper wire between the (K41) O2 1/1 Signal circuit and the (K902) O2 Return Upstream circuit in the O2 Sensor harness connector.

Is the voltage between 2.3 and 2.7 Volts with the jumper wire installed?

Yes

- Verify that there is good pin to terminal contact in the O2 Sensor and Powertrain Control Module connectors. Replace the 1/1 O2 Sensor if no problems were found with the connectors.
- Perform the POWERTRAIN VERIFICATION TEST. (Refer to 28 - DTC-Based Diagnostics/MODULE, Powertrain Control (PCM) - Standard Procedure).

No

- Go To 5

NOTE: Remove the jumper wire before continuing.

5. (K41) O2 1/1 SIGNAL CIRCUIT OPEN

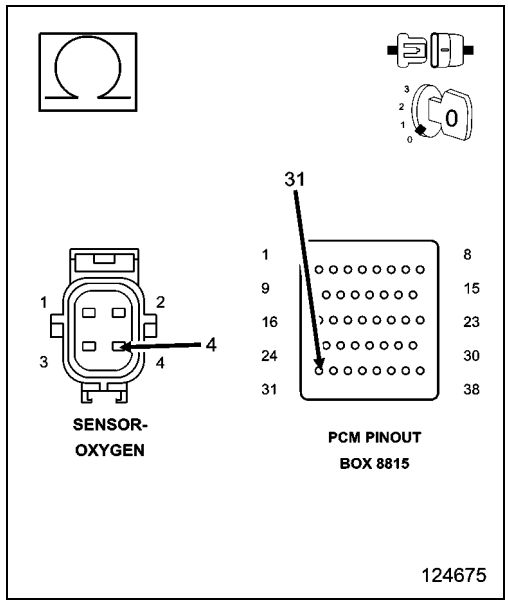

1. Turn the ignition off.
2. Disconnect the C1 and C2 PCM harness connectors.

CAUTION: Do not probe the PCM harness connectors. Probing the PCM harness connectors will damage the PCM terminals resulting in poor terminal to pin connection. Install the PCM Pinout Box Kit, NGC, 38 Position 8815A to perform diagnosis.

3. Measure the resistance of the (K41) O2 1/1 Signal circuit from the 1/1 O2 Sensor harness connector to the appropriate terminal of PCM Pinout Box 8815A.

Is the resistance below 5.0 Ohms?

Yes

- Go To 6

No

- Repair the open in the (K41) O2 1/1 Signal circuit.
- Perform the POWERTRAIN VERIFICATION TEST. (Refer to 28 - DTC-Based Diagnostics/MODULE, Powertrain Control (PCM) - Standard Procedure).

6. (K902) O2 RETURN UPSTREAM CIRCUIT OPEN

1. Measure the resistance of the (K902) O2 Return Upstream circuit from the O2 Sensor harness connector to the appropriate terminal of PCM Pinout Box 8815A.

Is the resistance below 5.0 Ohms?

Yes

- Go To 7

No

- Repair the open in the (K902) O2 Return Upstream circuit.
- Perform the POWERTRAIN VERIFICATION TEST. (Refer to 28 - DTC-Based Diagnostics/MODULE, Powertrain Control (PCM) - Standard Procedure).

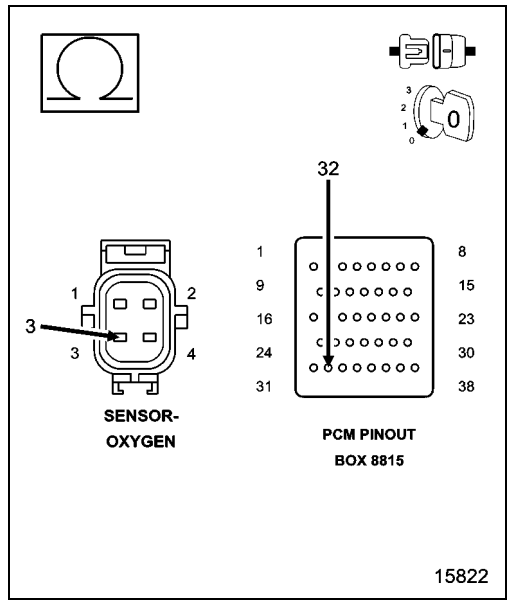

7. POWERTRAIN CONTROL MODULE (PCM)

1. Using the wiring diagram/schematic as a guide, inspect the wiring and connectors between the Oxygen Sensor 1/1 and the Powertrain Control Module (PCM).
2. Look for any chafed, pierced, pinched or partially broken wires.
3. Look for broken, bent, pushed out or corroded terminals. Verify that there is good pin to terminal contact in the Sensor and Control Module connectors.
4. Refer to any Technical Service Bulletins that may apply.

Were there any problems found?

Yes

- Repair as necessary.
- Perform the POWERTRAIN VERIFICATION TEST. (Refer to 28 - DTC-Based Diagnostics/MODULE, Powertrain Control (PCM) - Standard Procedure).

No

- Replace and program the Powertrain Control Module in accordance with the Service Information.
- Perform the POWERTRAIN VERIFICATION TEST. (Refer to 28 - DTC-Based Diagnostics/MODULE, Powertrain Control (PCM) - Standard Procedure).

P0133-O2 SENSOR 1/1 SLOW RESPONSE

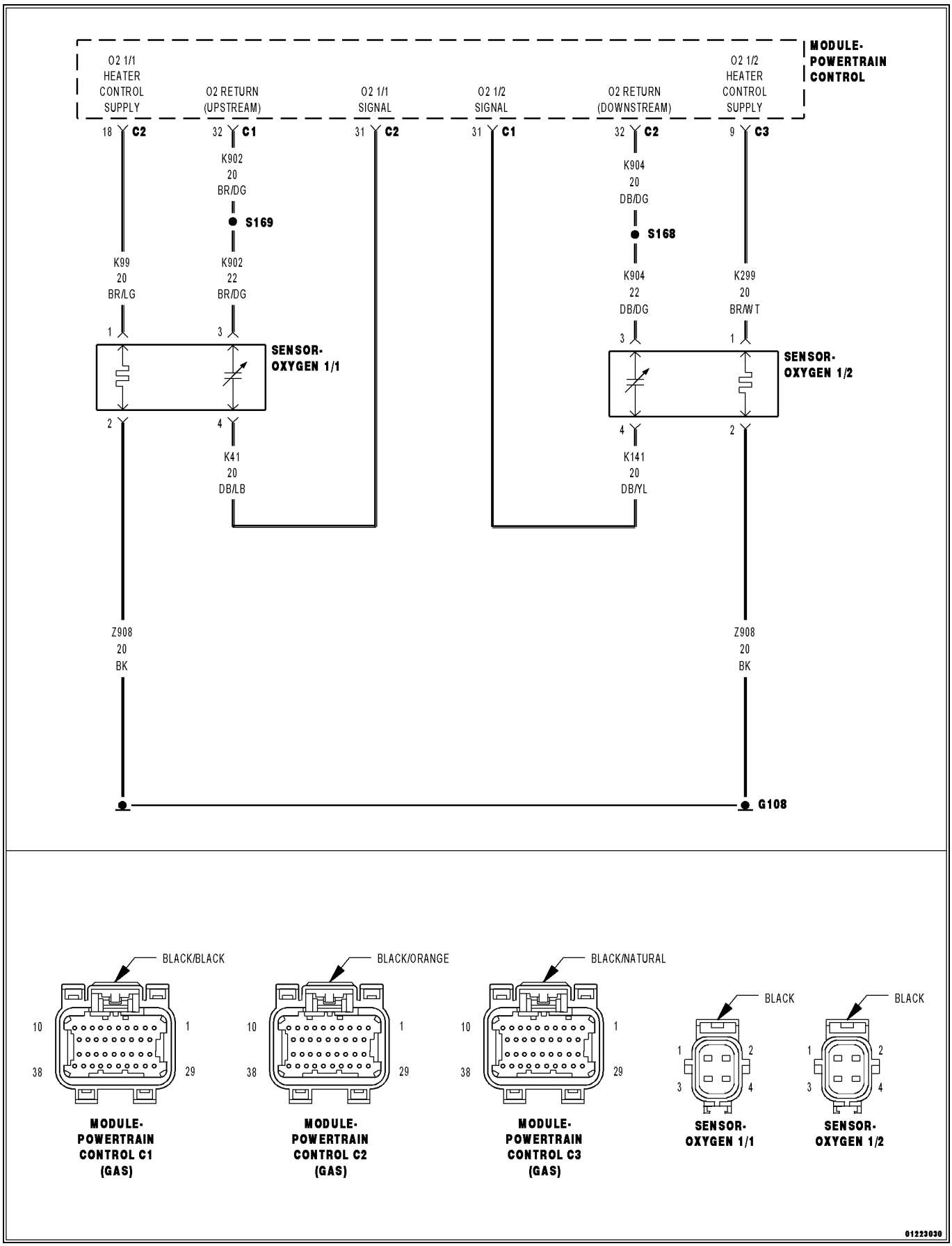

For a complete wiring diagram, **refer to the Wiring Information**.

Theory of Operation

For an aged O2 sensor, the response rate to the air/fuel change is slower than when it was new. The O2 sensor tends to move less with the same air/fuel changes in a given time frame. Therefore by observing the activity of voltage readings from the upstream O2 sensor, the quality of the O2 sensor can be detected.

- **When Monitored:**
  With the ECT above 70° C (158° F), engine RPM between 1400 and 2300, vehicle speed between 64 and 96 kph (40 and 60 mph), and engine run time greater than three minutes.
- **Set Condition:**
  The Powertrain Control Module (PCM) detects that the oxygen sensor signal does not switch adequately during monitoring. Two Trip Fault. Three good trips to turn off the MIL.

Possible Causes
EXHAUST LEAK
(K41) O2 1/1 SIGNAL CIRCUIT
(K902) O2 RETURN UPSTREAM CIRCUIT
1/1 O2 SENSOR

Always perform the Pre-Diagnostic Troubleshooting procedure before proceeding. (Refer to 28 - DTC-Based Diagnostics/MODULE, Powertrain Control (PCM) - Standard Procedure).

1. ACTIVE DTC

NOTE: After the repairs have been made, verify proper O2 Sensor operation. If all the O2 Sensor voltage readings have not returned to normal, follow the diagnostic procedure for the remaining O2 Sensors.

NOTE: Check for contaminants that may have damaged the O2 Sensor: contaminated fuel, unapproved silicone, oil and coolant.

1. Start the engine.
2. Allow the engine to reach normal operating temperature.

WARNING: When the engine is operating, do not stand in direct line with the fan. Do not put your hands near the pulleys, belts or fan. Do not wear loose clothing. Failure to follow these instructions may result in possible serious or fatal injury.

3. With a scan tool, select View DTCs.

NOTE: It may be necessary to drive the vehicle to meet the conditions to set this DTC, try to repeat the conditions in which the fault originally set by reviewing the Freeze Frame data.

Is the DTC Active or Pending at this time?

Yes

- Go To 2

No

- Perform the INTERMITTENT CONDITION diagnostic procedure. (Refer to 28 - DTC-Based Diagnostics/MODULE, Powertrain Control (PCM) - Standard Procedure).

2. CHECKING THE EXHAUST SYSTEM FOR LEAKS

1. Turn the ignition off.
2. Raise the vehicle in accordance with the Service Information.

WARNING: The normal operating temperature of the exhaust system is very high. Never work around or attempt to service any part of the exhaust system until it has cooled. Special care should be taken when working near the catalytic converter. The temperature of the converter rises to a high level after a short period of engine operating time.

3. Connect Exhaust Cone 8404-EC or 8404-EC to Air Pressure Regulator (with hose) W-18-MIL-1146AS.

CAUTION: The air pressure must not exceed 27.6 kPa (4 psi), otherwise engine damage can occur.

4. Attach shop air to the air pressure regulator.
5. Adjust the Air Pressure Regulator to 27.6 kPa (4 psi).
6. Insert the exhaust cone into the vehicle tail pipe.
7. If the vehicle is equipped with dual exhaust. Use the 8404-ECT with equipped attached plug, plug one side of the dual exhaust pipe. Pressurize the other as described above.
8. Apply Mopar® Air Leak Detector PN# 05191804AA (or an equivalent leak finder liquid) to the following areas:
   - All welded joints from the exhaust manifold to 152.4 mm (6 inches) behind the downstream O2 sensor
   - O2 sensor seal points
   - O2 sensor boss welds
   - Flange/joint connection(s)
   - Exhaust manifold to cylinder head connection(s)
   - EGR solenoid gasket base and tube seal points (if equipped)
9. Watch for the liquid/soapy water to bubble.
10. Use the following definitions to help determine if system or component repair/replacement is necessary:

Type 1 Leak is defined as a leak where very small foam like bubbles 1 mm (0.04 of an inch) or less appear. Any Type 1 or greater leaks found in welded joints, O2 sensor seal points or O2 sensor boss welds must be repaired or the component must be replaced.

Type 2 Leak is defined as a leak where larger bubbles pea size, 8 mm (0.3 of an inch) or greater appear. Any Type 2 or greater leaks found in flange or joint connections, exhaust manifold to cylinder head connections, or EGR gasket and tube seal points must be repaired or the components must be replaced.

Leak Location	Repair required if results at 27.6 kPa (4 psi) reveal bubble size:
Welded joints	Type 1, 1 mm (0.04 of an inch) or greater
O2 Sensor seal points	Type 1, 1 mm (0.04 of an inch) or greater
O2 Sensor boss welds	Type 1, 1 mm (0.04 of an inch) or greater
Flange / joint connections	Type 2, 8 mm (0.3 of an inch) or greater
Exhaust Manifold to cylinder head connections	Type 2, 8 mm (0.3 of an inch) or greater
EGR gasket and tube seal points	Type 2, 8 mm (0.3 of an inch) or greater

11. If a leak is found that matches the above definition, repair or replace the component as necessary.
12. Once the repair is complete, repeat the procedure to verify that all leaks have been repaired.

Were any exhaust leaks found?

Yes

- Repair or replace the leaking exhaust parts as necessary.
- Perform the POWERTRAIN VERIFICATION TEST. (Refer to 28 - DTC-Based Diagnostics/MODULE, Powertrain Control (PCM) - Standard Procedure).

No

- Go To 3

3. (K41) O2 1/1 SIGNAL CIRCUIT

1. Turn the ignition off.
2. Disconnect the 1/1 O2 Sensor harness connector.
3. Ignition on, engine not running.
4. Measure the voltage on the (K41) O2 1/1 Signal circuit in the O2 Sensor harness connector.

Is the voltage between 4.1 and 5.0 volts?

Yes

- Go To 4

No

- Check the (K41) O2 1/1 Signal circuit for a short to ground, open, or short to voltage. If OK, replace and program the Powertrain Control Module in accordance with the service information.
- Perform the POWERTRAIN VERIFICATION TEST. (Refer to 28 - DTC-Based Diagnostics/MODULE, Powertrain Control (PCM) - Standard Procedure).

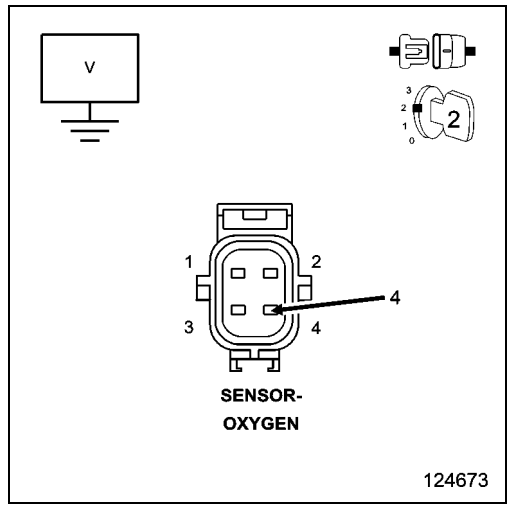

4. (K902) O2 RETURN UPSTREAM CIRCUIT

1. Measure the voltage on the (K902) O2 Return Upstream circuit in the O2 Sensor harness connector.

Is the voltage at 2.5 volts?

Yes

- Go To 5

No

- Check the (K902) O2 Return Upstream circuit for a short to ground, open, or short to voltage. If OK, replace and program the Powertrain Control Module in accordance with the Service Information.
- Perform the POWERTRAIN VERIFICATION TEST. (Refer to 28 - DTC-Based Diagnostics/MODULE, Powertrain Control (PCM) - Standard Procedure).

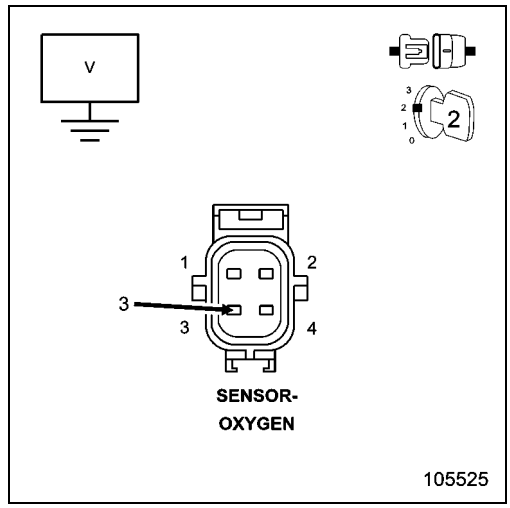

5. OXYGEN SENSOR

NOTE: Check for signs of contaminants that may have damaged the O2 Sensor, such as contaminated fuel, unapproved silicone, oil and coolant.

1. Using the wiring diagram/schematic as a guide, inspect the wiring and connectors between the 1/1 Oxygen Sensor and the Powertrain Control Module (PCM).
2. Look for any chafed, pierced, pinched, or partially broken wires.
3. Look for broken, bent, pushed out or corroded terminals.
4. Perform any Technical Service Bulletins that may apply.

Were any problems found?

Yes

- Repair as necessary.
- Perform the POWERTRAIN VERIFICATION TEST. (Refer to 28 - DTC-Based Diagnostics/MODULE, Powertrain Control (PCM) - Standard Procedure).

No

- Replace the 1/1 Oxygen Sensor in accordance with the Service Information.
- Perform the POWERTRAIN VERIFICATION TEST. (Refer to 28 - DTC-Based Diagnostics/MODULE, Powertrain Control (PCM) - Standard Procedure).

P0135-O2 SENSOR 1/1 HEATER PERFORMANCE

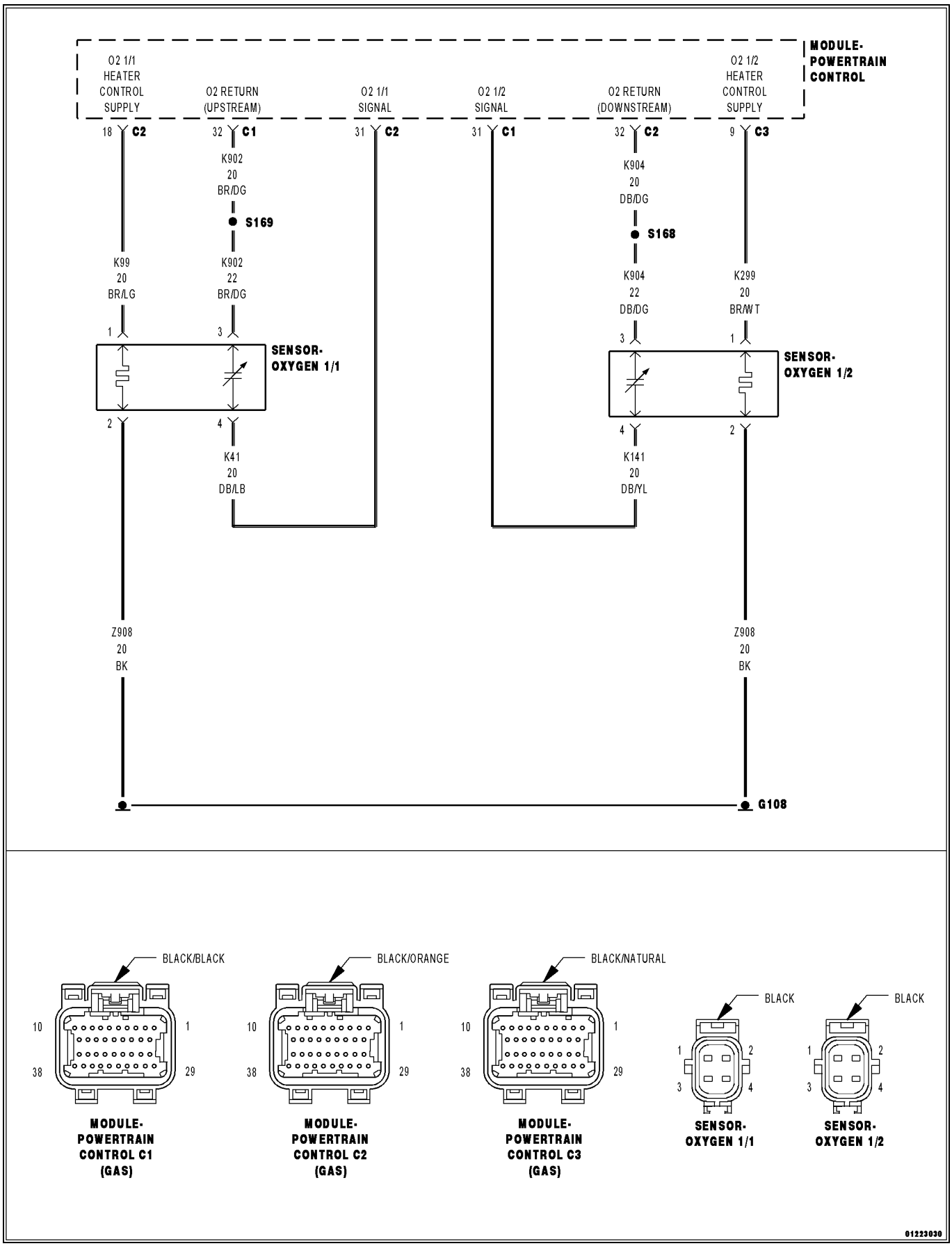

For a complete wiring diagram, **refer to the Wiring Information**.

Theory of Operation

This diagnostic provides a continuous check of the O2 heater circuit during operation. The heater circuit is momentarily disabled to allow a resistance measurement to be taken to infer heater temperature. The current delivery to the heater is duty cycled to maintain a specific target temperature. The error from the target temperature is continuously monitored to assess heater performance.

- **When Monitored:**

  Continuously during O2 sensor heater operation with battery voltage between 10.4 and 15.75 Volts and no O2 sensor circuit DTCs present.

- **Set Condition:**

  The Powertrain Control Module (PCM) detects no temperature change in the O2 sensor heater element when the heater circuit is active. The heater temperature is obtained by measuring the heater resistance and calculating the heater temperature. Two trip fault. Three good trips to turn off the MIL.

Possible Causes
(K99) O2 1/1 HEATER CONTROL CIRCUIT OPEN
(Z908) O2 1/1 HEATER GROUND CIRCUIT OPEN
1/1 O2 SENSOR
POWERTRAIN CONTROL MODULE (PCM)

Always perform the Pre-Diagnostic Troubleshooting procedure before proceeding. (Refer to 28 - DTC-Based Diagnostics/MODULE, Powertrain Control (PCM) - Standard Procedure).

1. O2 SENSOR HEATER OPERATION

1. Turn the ignition off.

NOTE: Wait a minimum of eight minutes to allow the O2 Sensor to cool down before continuing the test. Allow the O2 Sensor voltage to stabilize between 4.6 and 5.0 Volts.

2. Ignition on, engine not running.
3. With the scan tool, actuate the O2 Heater Test.
4. With the scan tool, monitor 1/1 O2 Sensor voltage for at least two minutes.

Does the voltage stay above 4.5 Volts?

Yes

- Go To 2

No

- Perform the INTERMITTENT CONDITION diagnostic procedure. (Refer to 28 - DTC-Based Diagnostics/MODULE, Powertrain Control (PCM) - Standard Procedure).

2. O2 SENSOR HEATER ELEMENT

1. Turn the ignition off.

NOTE: Allow the O2 sensor to cool down to room temperature.

2. Disconnect the O2 Sensor harness connector.
3. Measure the resistance of the O2 Heater Element across the 1/1 O2 Sensor connector between the O2 Heater Control terminal and the Heater ground terminal.

NOTE: O2 Heater Element resistance values should be measured at 21.1° C (70° F). The resistance value will vary with different temperature values.

Is the resistance of the O2 Sensor Heater Element between 2.0 and 30.0 Ohms?

Yes

- Go To 3

No

- Replace the O2 Sensor.
- Perform the POWERTRAIN VERIFICATION TEST. (Refer to 28 - DTC-Based Diagnostics/MODULE, Powertrain Control (PCM) - Standard Procedure).

3. (K99) O2 1/1 HEATER CONTROL CIRCUIT OPEN

1. Disconnect the C2 PCM harness connector.

CAUTION: Do not probe the PCM harness connectors. Probing the PCM harness connectors will damage the PCM terminals resulting in poor terminal to pin connection. Install the PCM Pinout Box Kit, NGC, 38 Position 8815A to perform diagnosis.

2. Measure the resistance of the (K99) O2 1/1 Heater Control circuit from the O2 harness connector to the appropriate terminal of PCM Pinout Box 8815A.

Is the resistance below 0.5 of an ohm?

Yes

- Go To 4

No

- Repair the excessive resistance in the (K99) O2 1/1 Heater Control circuit.
- Perform the POWERTRAIN VERIFICATION TEST. (Refer to 28 - DTC-Based Diagnostics/MODULE, Powertrain Control (PCM) - Standard Procedure).

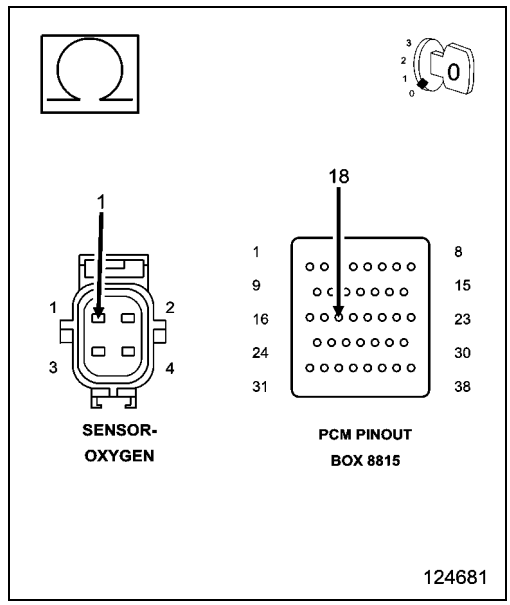

4. (Z908) O2 1/1 HEATER GROUND CIRCUIT OPEN

1. Using a 12-volt test light connected to 12 Volts, check the (Z908) Ground circuit in the 1/1 Oxygen Sensor harness connector.

NOTE: The test light should be illuminated and bright. Compare the brightness to that of a direct connection to the battery.

Is the test light illuminated and bright?

Yes

- Go To 5

No

- Repair the excessive resistance in the (Z908) O2 1/1 Heater ground circuit.
- Perform the POWERTRAIN VERIFICATION TEST. (Refer to 28 - DTC-Based Diagnostics/MODULE, Powertrain Control (PCM) - Standard Procedure).

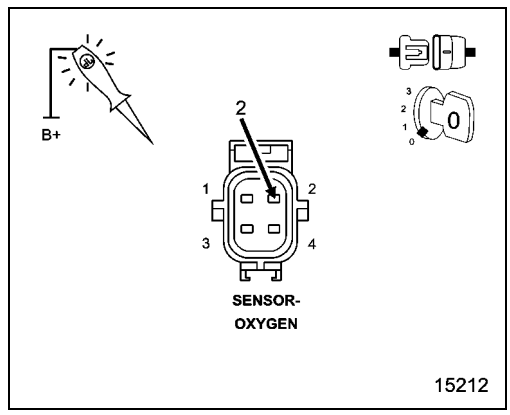

5. POWERTRAIN CONTROL MODULE (PCM)

1. Using the wiring diagram/schematic as a guide, inspect the wiring and connectors between the Oxygen Sensor 1/1 and the Powertrain Control Module (PCM).
2. Look for any chafed, pierced, pinched or partially broken wires.
3. Look for broken, bent, pushed out or corroded terminals. Verify that there is good pin to terminal contact in the Sensor and Control Module connectors.
4. Refer to any Technical Service Bulletins that may apply.

Were there any problems found?

Yes

- Repair as necessary.
- Perform the POWERTRAIN VERIFICATION TEST. (Refer to 28 - DTC-Based Diagnostics/MODULE, Powertrain Control (PCM) - Standard Procedure).

No

- Replace and program the Powertrain Control Module in accordance with the Service Information.
- Perform the POWERTRAIN VERIFICATION TEST. (Refer to 28 - DTC-Based Diagnostics/MODULE, Powertrain Control (PCM) - Standard Procedure).

P0137-O2 SENSOR 1/2 CIRCUIT LOW

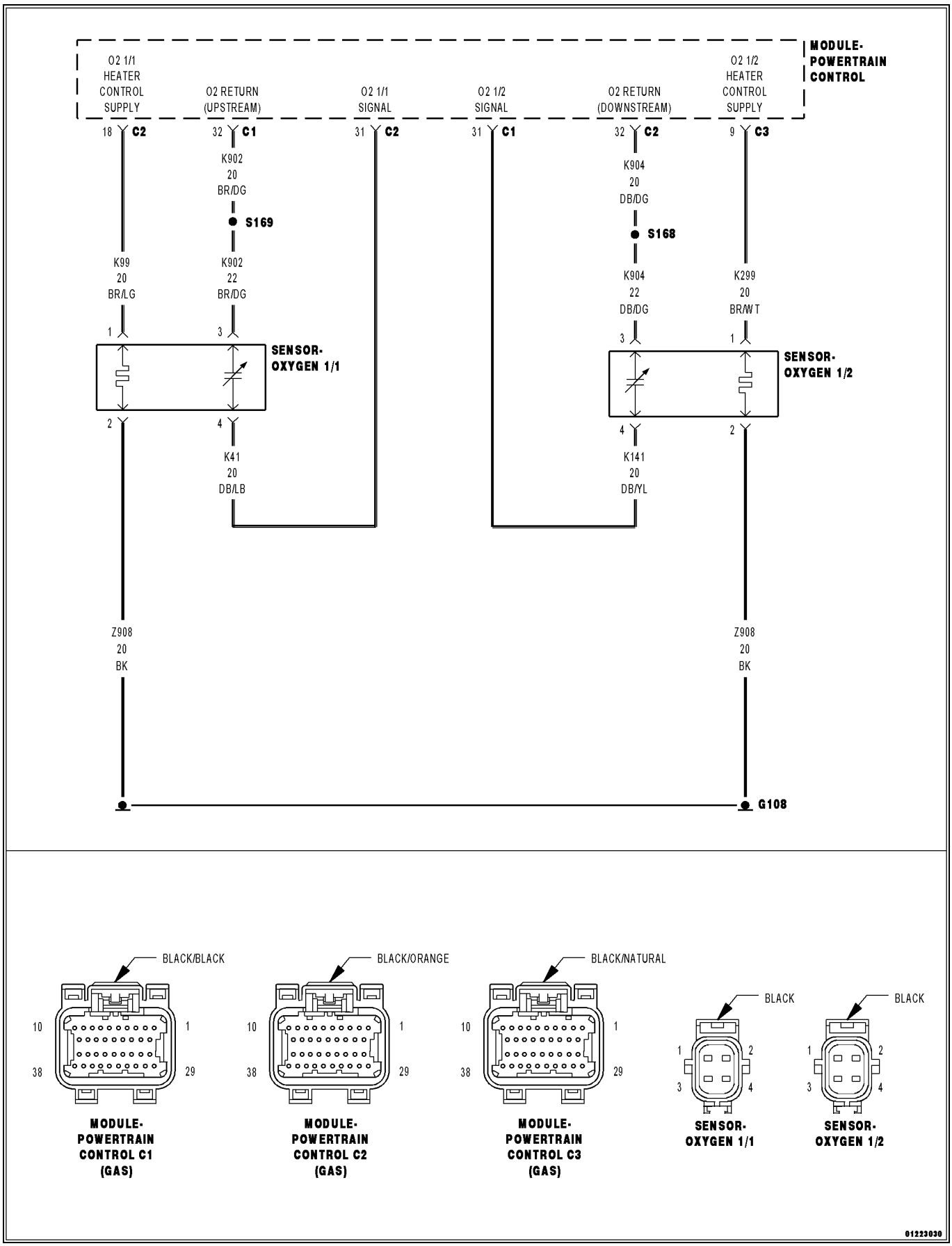

For a complete wiring diagram, **refer to the Wiring Information**.

- **When Monitored:**

  Engine running for less than 30 seconds and the O2 Sensor Heater Temperature is less than 251° C (484° F) with battery voltage greater 10.99 Volts.

- **Set Condition:**

  The Powertrain Control Module (PCM) detects that the 1/2 Oxygen Sensor signal voltage is below the minimum acceptable value. The DTC will set as Pending after one trip and Active after two trips. Three good trips to turn off the MIL.

Possible Causes
(K904) O2 RETURN DOWNSTREAM CIRCUIT SHORTED TO GROUND
(K141) O2 1/2 SIGNAL CIRCUIT SHORTED TO GROUND
(K141) O2 1/2 SIGNAL CIRCUIT SHORTED TO THE (K904) O2 RETURN DOWNSTREAM CIRCUIT
(K141) O2 1/2 SIGNAL CIRCUIT SHORTED TO THE (Z43) O2 1/2 HEATER GROUND CIRCUIT
1/2 O2 SENSOR
POWERTRAIN CONTROL MODULE (PCM)

Always perform the Pre-Diagnostic Troubleshooting procedure before proceeding. (Refer to 28 - DTC-Based Diagnostics/MODULE, Powertrain Control (PCM) - Standard Procedure).

1. ACTIVE DTC

1. Turn the ignition on.
2. With the scan tool, select View DTCs. Record DTC and Freeze Frame information.
3. Start the engine and allow it to idle for at least 60 seconds.

WARNING: When the engine is operating, do not stand in direct line with the fan. Do not put your hands near the pulleys, belts or fan. Do not wear loose clothing. Failure to follow these instructions may result in possible serious or fatal injury.

4. With the scan tool, select View DTCs.

Is the DTC Active at this time?

Yes

- Go To 2

No

- Perform the INTERMITTENT CONDITION diagnostic procedure. (Refer to 28 - DTC-Based Diagnostics/MODULE, Powertrain Control (PCM) - Standard Procedure).

2. (K141) O2 1/2 SIGNAL CIRCUIT

1. Turn the ignition off.
2. Disconnect the 1/2 O2 Sensor harness connector.
3. Ignition on, engine not running.
4. With the scan tool, monitor the 1/2 O2 Sensor voltage.

Is the O2 Sensor voltage between 4.1 and 5.0 Volts?

Yes

- Go To 3

No

- Go To 5

3. O2 SENSOR

1. Measure the voltage on the (K904) O2 Return Downstream circuit in the O2 Sensor harness connector.

Is the voltage at 2.5 Volts?

Yes

- Verify that there is good pin to terminal contact in the O2 Sensor and Powertrain Control Module connectors. Replace the 1/2 O2 Sensor if no problems were found with the connectors.
- Perform the POWERTRAIN VERIFICATION TEST. (Refer to 28 - DTC-Based Diagnostics/MODULE, Powertrain Control (PCM) - Standard Procedure).

No

- Go To 4

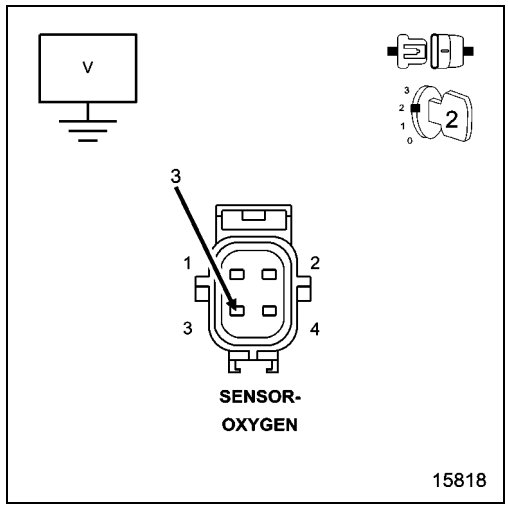

4. (K904) O2 RETURN DOWNSTREAM CIRCUIT SHORTED TO GROUND

1. Turn the ignition off.
2. Disconnect the C2 PCM harness connector.
3. Measure the resistance between ground and the (K904) O2 Return Downstream circuit in the O2 Sensor harness connector.

Is the resistance below 100 Ohms?

Yes

- Repair the short to ground in the (K904) O2 Return Downstream circuit.
- Perform the POWERTRAIN VERIFICATION TEST. (Refer to 28 - DTC-Based Diagnostics/MODULE, Powertrain Control (PCM) - Standard Procedure).

No

- Go To 8

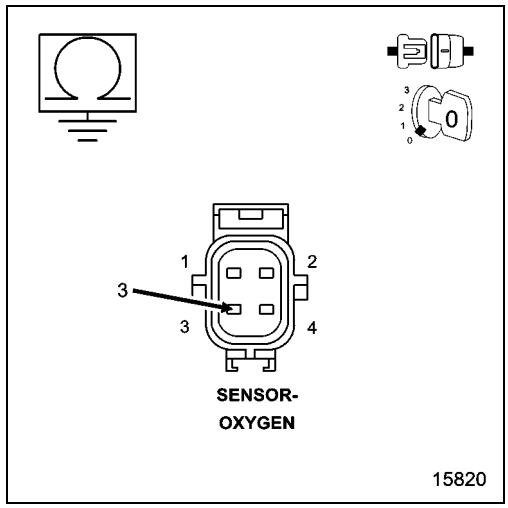

5. (K141) O2 1/2 SIGNAL CIRCUIT SHORTED TO GROUND

1. Turn the ignition off.
2. Disconnect the C1 and C2 PCM harness connectors.
3. Measure the resistance between ground and the (K141) O2 1/2 Signal circuit in the O2 Sensor harness connector.

Is the resistance below 100 Ohms?

Yes

- Repair the short to ground in the (K141) O2 1/2 Signal circuit.
- Perform the POWERTRAIN VERIFICATION TEST. (Refer to 28 - DTC-Based Diagnostics/MODULE, Powertrain Control (PCM) - Standard Procedure).

No

- Go To 6

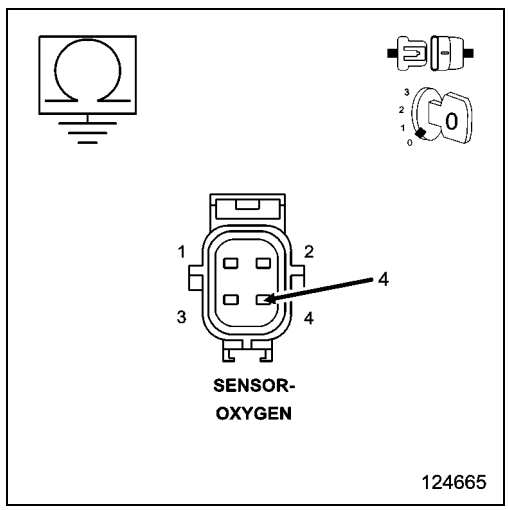

6. (K141) O2 1/2 SIGNAL CIRCUIT SHORTED TO THE (K904) O2 RETURN DOWNSTREAM CIRCUIT

1. Measure the resistance between the (K141) O2 1/2 Signal circuit and the (K904) O2 Return Downstream circuit in the O2 Sensor harness connector.

Is the resistance below 100 Ohms?

Yes

- Repair the short between the (K904) O2 Return Downstream circuit and the (K141) O2 1/2 Signal circuit.
- Perform the POWERTRAIN VERIFICATION TEST. (Refer to 28 - DTC-Based Diagnostics/MODULE, Powertrain Control (PCM) - Standard Procedure).

No

- Go To 7

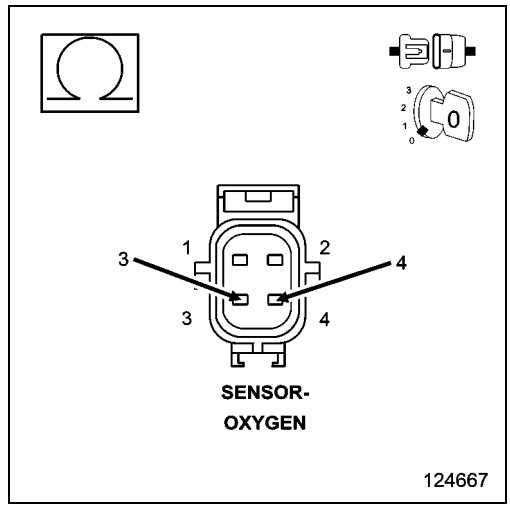

7. (K141) O2 1/2 SIGNAL CIRCUIT SHORTED TO THE (Z43) O2 1/2 HEATER GROUND CIRCUIT

1. Measure the resistance between the (K141) O2 1/2 Signal circuit and the (Z43) O2 1/2 Heater ground circuit in the O2 Sensor harness connector.

Is the resistance below 100 Ohms?

Yes

- Repair the short between the (Z43) O2 1/2 Heater ground circuit and the (K141) O2 1/2 Signal circuit.
- Perform the POWERTRAIN VERIFICATION TEST. (Refer to 28 - DTC-Based Diagnostics/MODULE, Powertrain Control (PCM) - Standard Procedure).

No

- Go To 8

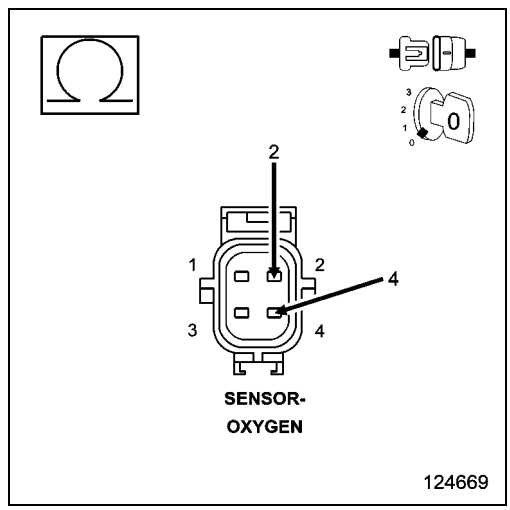

8. POWERTRAIN CONTROL MODULE (PCM)

1. Using the wiring diagram/schematic as a guide, inspect the wiring and connectors between the Oxygen Sensor 1/2 and the Powertrain Control Module (PCM).
2. Look for any chafed, pierced, pinched or partially broken wires.
3. Look for broken, bent, pushed out or corroded terminals. Verify that there is good pin to terminal contact in the Sensor and Control Module connectors.
4. Refer to any Technical Service Bulletins that may apply.

Were there any problems found?

Yes

- Repair as necessary.
- Perform the POWERTRAIN VERIFICATION TEST. (Refer to 28 - DTC-Based Diagnostics/MODULE, Powertrain Control (PCM) - Standard Procedure).

No

- Replace and program the Powertrain Control Module in accordance with the Service Information.
- Perform the POWERTRAIN VERIFICATION TEST. (Refer to 28 - DTC-Based Diagnostics/MODULE, Powertrain Control (PCM) - Standard Procedure).

P0138-O2 SENSOR 1/2 CIRCUIT HIGH

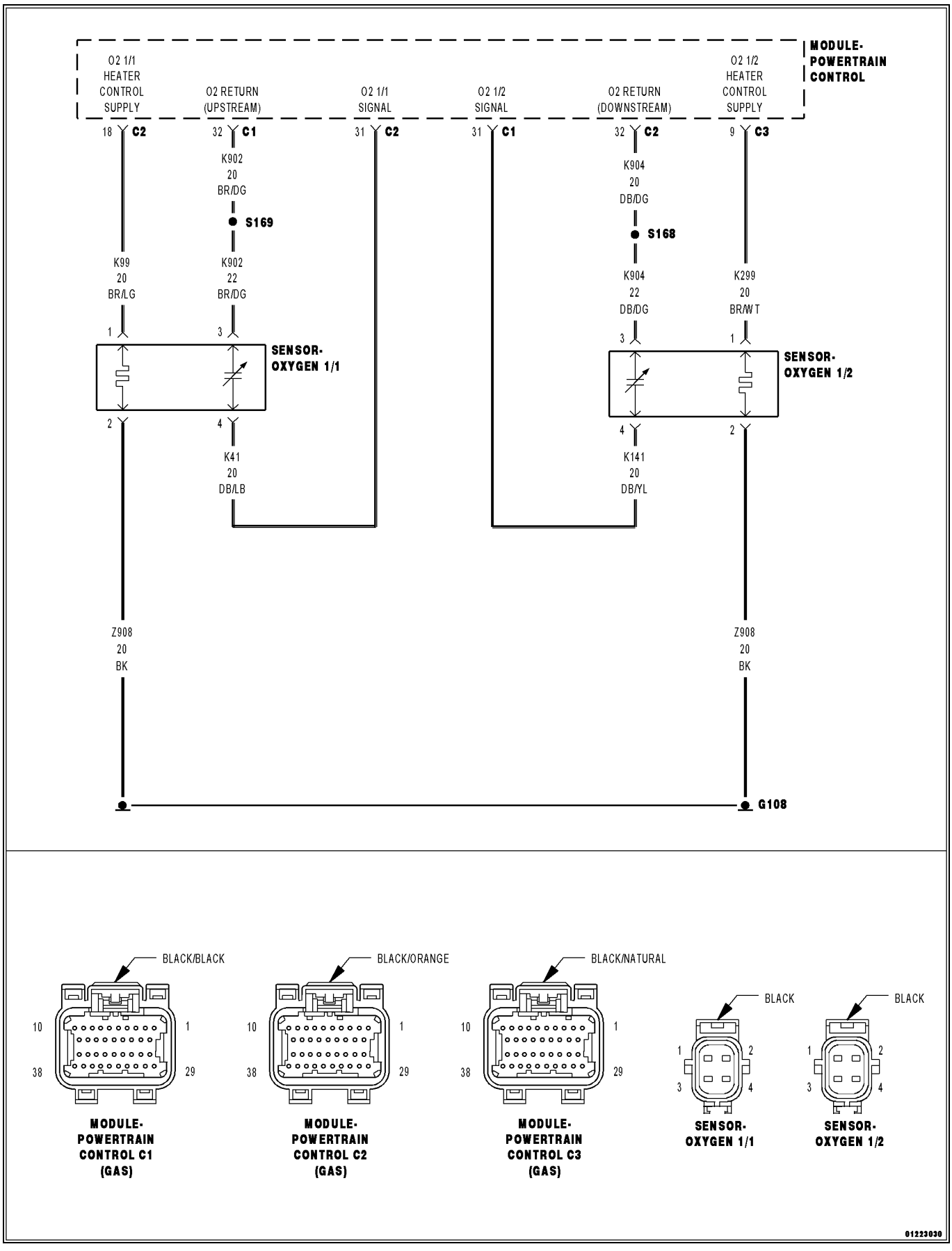

For a complete wiring diagram, **refer to the Wiring Information**.

- **When Monitored:**

  Continuously with the engine running, no O2 sensor heater DTCs present, 1/2 Oxygen Sensor heater temperature within a specific range, and battery voltage greater than 10.4 volts.

- **Set Condition:**

  The Powertrain Control Module (PCM) detects that the 1/2 Oxygen Sensor voltage is greater than the maximum acceptable value for a specific amount of time, based on O2 sensor heater temperature. The DTC will set as Pending after one trip and Active after two trips. Three good trips to turn off the MIL.

Possible Causes
(K141) O2 1/2 SIGNAL CIRCUIT SHORTED TO VOLTAGE
(K904) O2 RETURN DOWNSTREAM CIRCUIT SHORTED TO VOLTAGE
(K141) O2 1/2 SENSOR SIGNAL CIRCUIT OPEN
(K904) O2 RETURN DOWNSTREAM CIRCUIT OPEN
1/2 O2 SENSOR
POWERTRAIN CONTROL MODULE (PCM)

Always perform the Pre-Diagnostic Troubleshooting procedure before proceeding. (Refer to 28 - DTC-Based Diagnostics/MODULE, Powertrain Control (PCM) - Standard Procedure).

1. ACTIVE DTC

NOTE: If an O2 sensor signal circuit is shorted to voltage, all O2 sensor voltage readings displayed on the scan tool will be approximately 5.0 volts. Diagnose the sensor that set the most current DTC.

1. Start the engine and allow it to idle for at least 60 seconds.

WARNING: When the engine is operating, do not stand in direct line with the fan. Do not put your hands near the pulleys, belts or fan. Do not wear loose clothing. Failure to follow these instructions may result in possible serious or fatal injury.

2. With a scan tool, select View DTCs.

Is the status Active for this DTC?

Yes

- Go To 2

No

- Perform the INTERMITTENT CONDITION diagnostic procedure. (Refer to 28 - DTC-Based Diagnostics/MODULE, Powertrain Control (PCM) - Standard Procedure).

2. (K141) O2 1/2 SIGNAL CIRCUIT SHORTED TO VOLTAGE

1. Turn the ignition off.
2. Disconnect the C1 and C2 PCM harness connectors.
3. Disconnect the 1/2 O2 Sensor harness connector.
4. Turn the ignition on.
5. Measure the voltage on the (K141) O2 Sensor 1/2 Signal circuit in the O2 Sensor harness connector.

NOTE: Measure the voltage in reference to ground, not the (K904) O2 Return Downstream circuit.

Is there any voltage present?

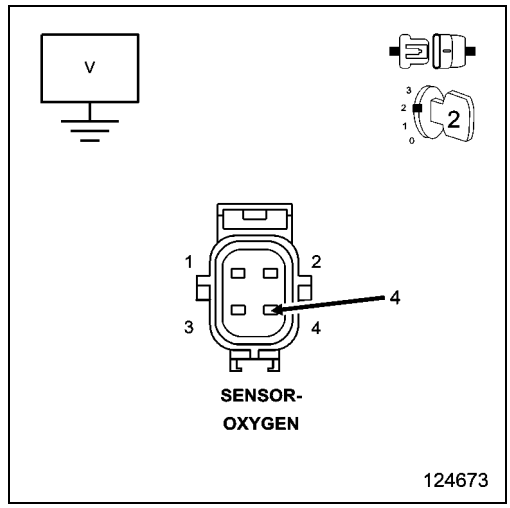

Yes

- Repair the short to voltage in the (K141) O2 Sensor 1/2 Signal circuit.
- Perform the POWERTRAIN VERIFICATION TEST. (Refer to 28 - DTC-Based Diagnostics/MODULE, Powertrain Control (PCM) - Standard Procedure).

No

- Go To 3

3. (K904) O2 RETURN DOWNSTREAM CIRCUIT SHORTED TO VOLTAGE

1. Measure the voltage on the (K904) O2 Return Downstream circuit in the O2 Sensor harness connector.

Is there any voltage present?

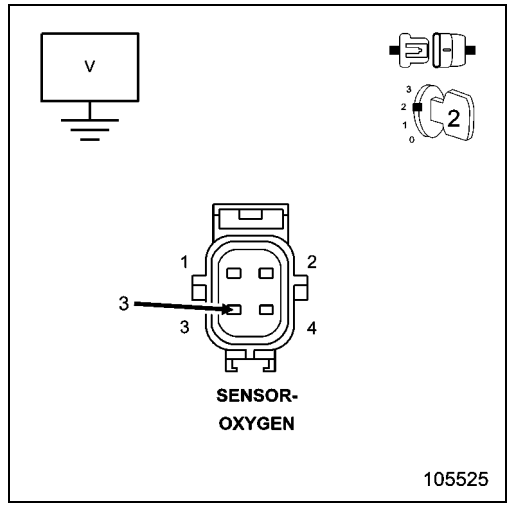

Yes

- Repair the short to voltage in the (K904) O2 Return Downstream circuit.
- Perform the POWERTRAIN VERIFICATION TEST. (Refer to 28 - DTC-Based Diagnostics/MODULE, Powertrain Control (PCM) - Standard Procedure).

No

- Go To 4

4. O2 SENSOR

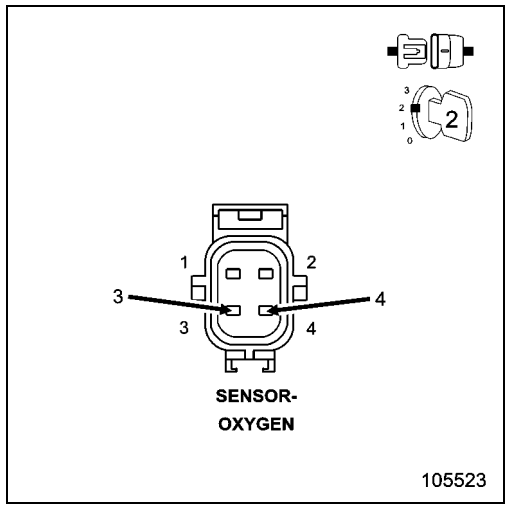

1. Turn the ignition off.
2. Connect the C1 and C2 PCM harness connectors.
3. Ignition on, engine not running.
4. With a scan tool, monitor the 1/2 O2 Sensor voltage.
5. Connect a jumper wire between the (K141) O2 1/2 Signal circuit and the (K904) O2 Return Downstream circuit in the 1/2 O2 Sensor harness connector.

Is the voltage between 2.3 and 2.7 volts with the jumper wire installed?

Yes

- Verify that there is good pin to terminal contact in the O2 Sensor and Powertrain Control Module connectors. Replace the 1/2 O2 Sensor if no problems were found with the connectors.
- Perform the POWERTRAIN VERIFICATION TEST. (Refer to 28 - DTC-Based Diagnostics/MODULE, Powertrain Control (PCM) - Standard Procedure).

No

- Go To 5

NOTE: Remove the jumper wire before continuing.

5. (K141) O2 1/2 SIGNAL CIRCUIT OPEN

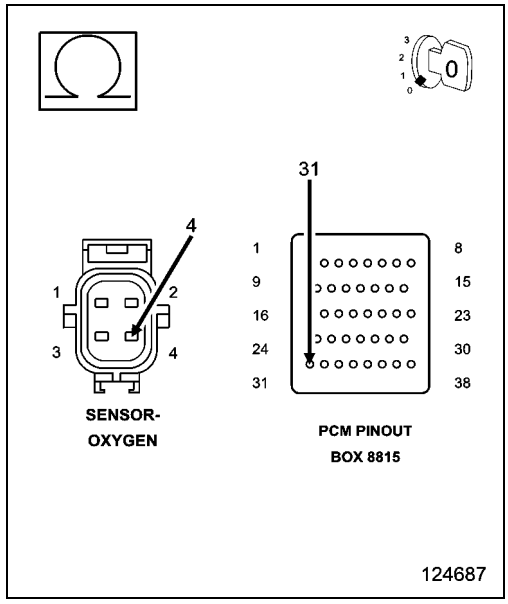

1. Turn the ignition off.
2. Disconnect the C1 and C2 PCM harness connectors.

CAUTION: Do not probe the PCM harness connectors. Probing the PCM harness connectors will damage the PCM terminals resulting in poor terminal to pin connection. Install the PCM Pinout Box Kit, NGC, 38 Position 8815A to perform diagnosis.

3. Measure the resistance of the (K141) O2 1/2 Signal circuit from the O2 Sensor harness connector to the appropriate terminal of PCM Pinout Box 8815A.

Is the resistance below 5.0 Ohms?

Yes

- Go To 6

No

- Repair the open in the (K141) O2 1/2 Signal circuit.
- Perform the POWERTRAIN VERIFICATION TEST. (Refer to 28 - DTC-Based Diagnostics/MODULE, Powertrain Control (PCM) - Standard Procedure).

6. (K904) O2 RETURN DOWNSTREAM CIRCUIT OPEN

1. Measure the resistance of the (K904) O2 Return Downstream circuit from the O2 Sensor harness connector to the appropriate terminal of PCM Pinout Box 8815A.

Is the resistance below 5.0 Ohms?

Yes

- Go To 7

No

- Repair the open in the (K904) O2 Return Downstream circuit.
- Perform the POWERTRAIN VERIFICATION TEST. (Refer to 28 - DTC-Based Diagnostics/MODULE, Powertrain Control (PCM) - Standard Procedure).

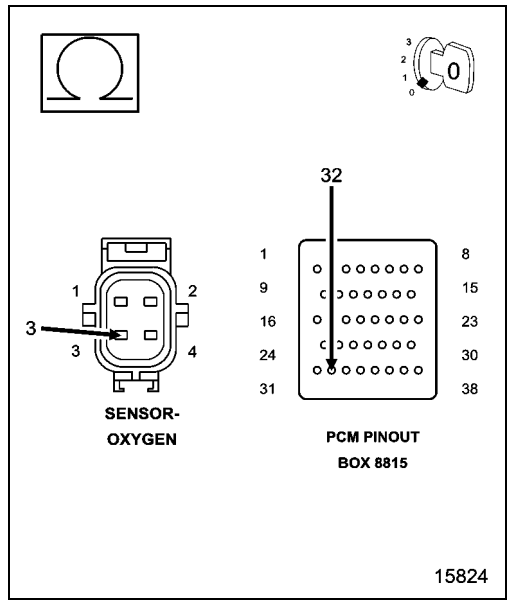

7. POWERTRAIN CONTROL MODULE (PCM)

1. Using the wiring diagram/schematic as a guide, inspect the wiring and connectors between the Oxygen Sensor 1/2 and the Powertrain Control Module (PCM).
2. Look for any chafed, pierced, pinched, or partially broken wires.
3. Look for broken, bent, pushed out or corroded terminals. Verify that there is good pin to terminal contact in the Sensor and Control Module connectors.
4. Refer to any Technical Service Bulletins that may apply.

Were there any problems found?

Yes

- Repair as necessary.
- Perform the POWERTRAIN VERIFICATION TEST. (Refer to 28 - DTC-Based Diagnostics/MODULE, Powertrain Control (PCM) - Standard Procedure).

No

- Replace and program the Powertrain Control Module per Service Information.
- Perform the POWERTRAIN VERIFICATION TEST. (Refer to 28 - DTC-Based Diagnostics/MODULE, Powertrain Control (PCM) - Standard Procedure).

P0139-O2 SENSOR 1/2 SLOW RESPONSE

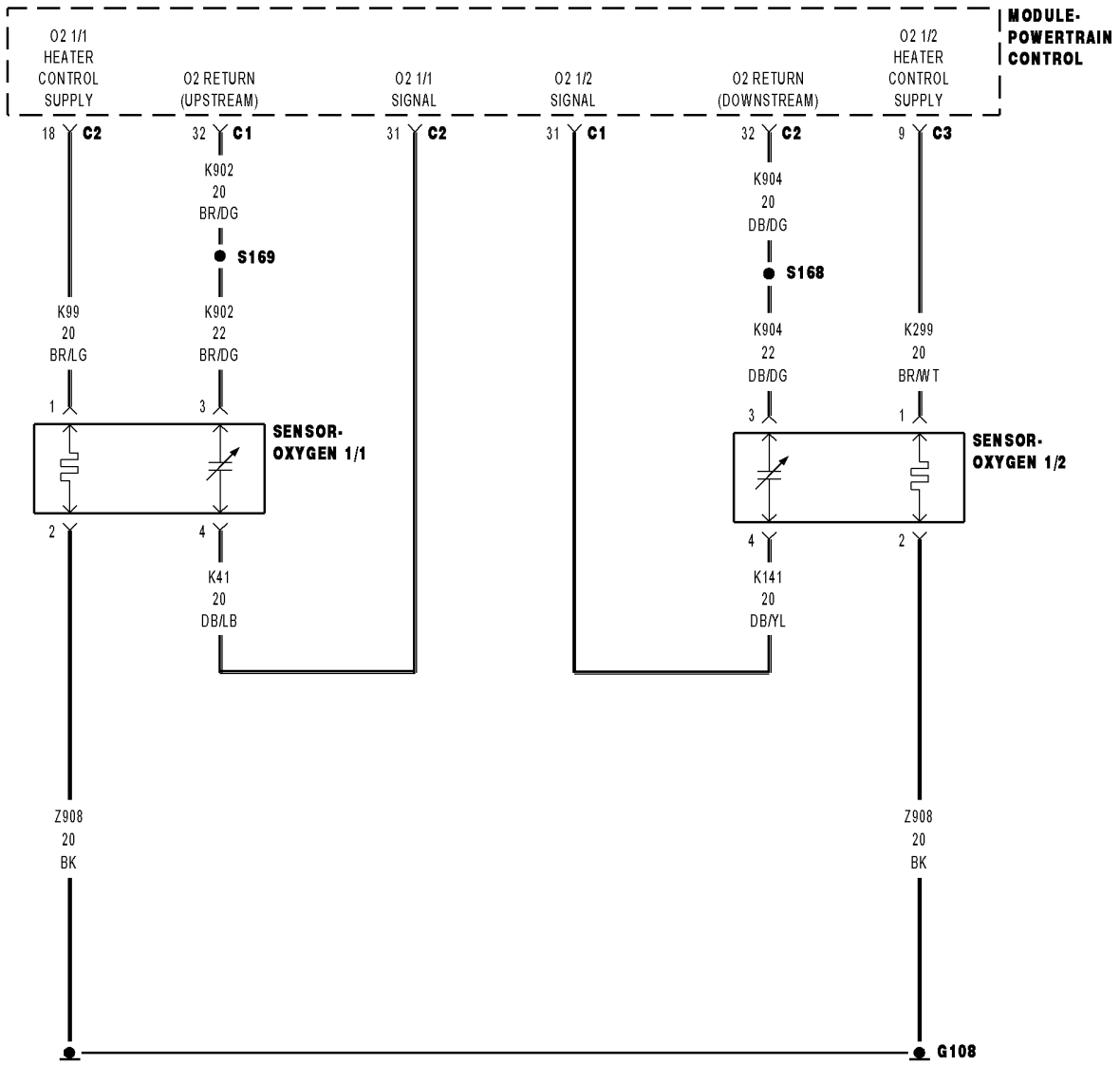

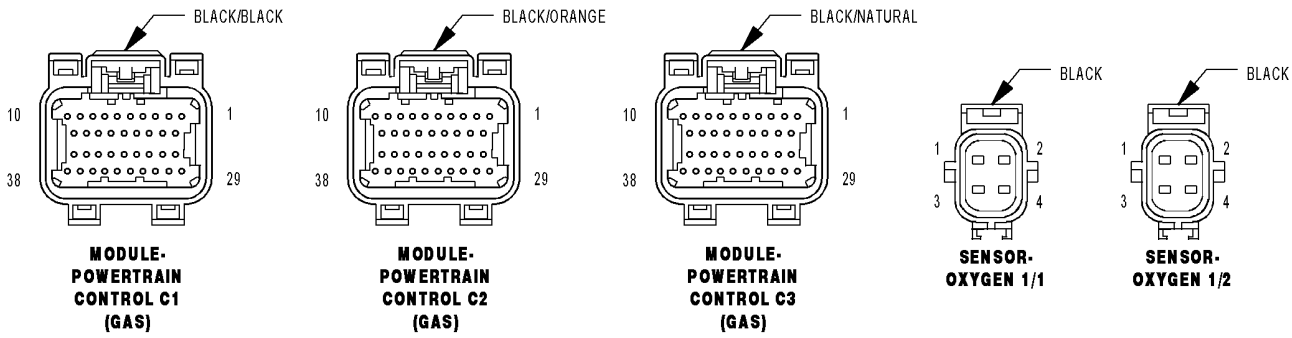

01223030

For a complete wiring diagram, **refer to the Wiring Information**.

Theory of Operation

The downstream O2 Sensor is located in the exhaust path behind the catalytic converter, is monitored for proper response to assure optimum catalytic converter efficiency. The downstream O2 response monitor is intended to diagnose a downstream O2 sensor that is not moving or stuck in a voltage window and to insure accurate information for catalyst monitor diagnosis.

- **When Monitored:**
  With the engine running, vehicle speed between 32 and 88 kph (20 and 55 mph), throttle open for a minimum of 120 seconds, ECT greater than 70° C (158° F), Catalytic Converter Temperature greater than 600° C (1112° F) and EVAP Purge active.
- **Set Condition:**
  The Powertrain Control Module (PCM) detects that the oxygen sensor signal switches from lean to rich less than 16 times within 20 seconds during monitoring. Two Trip Fault. Three good trips to turn off the MIL.

Possible Causes
EXHAUST LEAK
(K141) O2 1/2 SIGNAL CIRCUIT
(K904) O2 RETURN DOWNSTREAM CIRCUIT
1/2 O2 SENSOR

Always perform the Pre-Diagnostic Troubleshooting procedure before proceeding. (Refer to 28 - DTC-Based Diagnostics/MODULE, Powertrain Control (PCM) - Standard Procedure).

1. ACTIVE DTC

NOTE: After the repairs have been made, verify proper O2 Sensor operation. If all the O2 Sensor voltage readings have not returned to normal, follow the diagnostic procedure for the remaining O2 Sensors.

NOTE: Check for contaminants that may have damaged the O2 Sensor: contaminated fuel, unapproved silicone, oil and coolant.

1. Start the engine.
2. Allow the engine to reach normal operating temperature.
3. With the scan tool, select View DTCs.

NOTE: It may be necessary to drive the vehicle to meet the conditions to set this DTC, try to repeat the conditions in which the fault originally set by reviewing the Freeze Frame data.

Is the DTC Active or Pending at this time?

Yes

- Go To 2

No

- Perform the INTERMITTENT CONDITION diagnostic procedure. (Refer to 28 - DTC-Based Diagnostics/MODULE, Powertrain Control (PCM) - Standard Procedure).

2. CHECKING THE EXHAUST SYSTEM FOR LEAKS

1. Turn the ignition off.
2. Raise the vehicle in accordance with the Service Information.

WARNING: The normal operating temperature of the exhaust system is very high. Never work around or attempt to service any part of the exhaust system until it has cooled. Special care should be taken when working near the catalytic converter. The temperature of the converter rises to a high level after a short period of engine operating time.

3. Connect Exhaust Cone 8404-EC or 8404-EC to Air Pressure Regulator (with hose) W-18-MIL-1146AS.

CAUTION: The air pressure must not exceed 27.6 kPa (4 psi), otherwise engine damage can occur.

4. Attach shop air to the air pressure regulator.

5. Adjust the Air Pressure Regulator to 27.6 kPa (4 psi).
6. Insert the exhaust cone into the vehicle tail pipe.
7. If the vehicle is equipped with dual exhaust. Use the 8404-ECT with equipped attached plug, plug one side of the dual exhaust pipe. Pressurize the other as described above.
8. Apply Mopar® Air Leak Detector PN# 05191804AA (or an equivalent leak finder liquid) to the following areas:
   - All welded joints from the exhaust manifold to 152.4 mm (6 inches) behind the downstream O2 sensor
   - O2 sensor seal points
   - O2 sensor boss welds
   - Flange/joint connection(s)
   - Exhaust manifold to cylinder head connection(s)
   - EGR solenoid gasket base and tube seal points (if equipped)
9. Watch for the liquid/soapy water to bubble.
10. Use the following definitions to help determine if system or component repair/replacement is necessary:

- **Type 1 Leak** is defined as a leak where very small foam like bubbles 1 mm (0.04 of an inch) or less appear. Any Type 1 or greater leaks found in welded joints, O2 sensor seal points or O2 sensor boss welds must be repaired or the component must be replaced.
- **Type 2 Leak** is defined as a leak where larger bubbles pea size, 8 mm (0.3 of an inch) or greater appear. Any Type 2 or greater leaks found in flange or joint connections, exhaust manifold to cylinder head connections or EGR gasket and tube seal points must be repaired or the components must be replaced.

Leak Location	Repair required if results at 27.6 kPa (4 psi) reveal bubble size:
Welded joints	Type 1, 1 mm (0.04 of an inch) or greater
O2 Sensor seal points	Type 1, 1 mm (0.04 of an inch) or greater
O2 Sensor boss welds	Type 1, 1 mm (0.04 of an inch) or greater
Flange / joint connections	Type 2, 8 mm (0.3 of an inch) or greater
Exhaust Manifold to cylinder head connections	Type 2, 8 mm (0.3 of an inch) or greater
EGR gasket and tube seal points	Type 2, 8 mm (0.3 of an inch) or greater

11. If a leak is found that matches the above definition, repair or replace the component as necessary.
12. Once the repair is complete, repeat the procedure to verify that all leaks have been repaired.

Were any exhaust leaks found?

Yes

- Repair or replace the leaking exhaust parts as necessary.
- Perform the POWERTRAIN VERIFICATION TEST. (Refer to 28 - DTC-Based Diagnostics/MODULE, Powertrain Control (PCM) - Standard Procedure).

No

- Go To 3

3. (K141) O2 1/2 SIGNAL CIRCUIT

1. Turn the ignition off
2. Disconnect the 1/2 O2 Sensor harness connector.
3. Ignition on, engine not running.
4. Measure the voltage on the (K141) O2 1/2 Signal circuit in the O2 Sensor harness connector.

Is the voltage between 4.1 and 5.0 Volts?

Yes

- Go To 4

No

- Check the (K141) O2 1/2 Signal circuit for a short to ground, open or short to voltage. If OK, replace and program the Powertrain Control Module in accordance with the Service Information.
- Perform the POWERTRAIN VERIFICATION TEST. (Refer to 28 - DTC-Based Diagnostics/MODULE, Powertrain Control (PCM) - Standard Procedure).

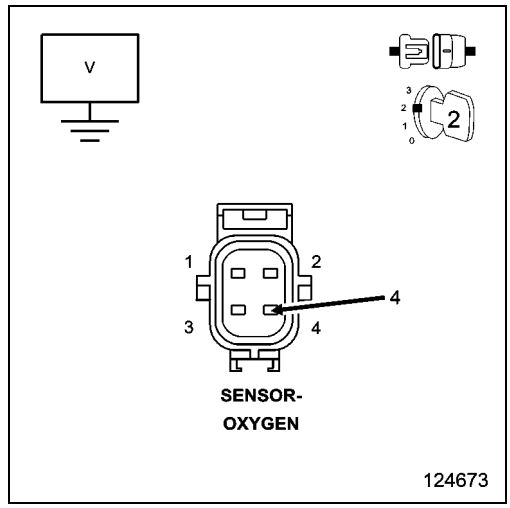

4. (K904) O2 RETURN DOWNSTREAM CIRCUIT

1. Measure the voltage on the (K904) O2 Return Downstream circuit in the 1/2 O2 Sensor harness connector.

Is the voltage at 2.5 Volts?

Yes

- Go To 5

No

- Check the (K904) O2 Return Downstream circuit for a short to ground, open or short to voltage. If OK, replace and program the Powertrain Control Module in accordance with the Service Information.
- Perform the POWERTRAIN VERIFICATION TEST. (Refer to 28 - DTC-Based Diagnostics/MODULE, Powertrain Control (PCM) - Standard Procedure).

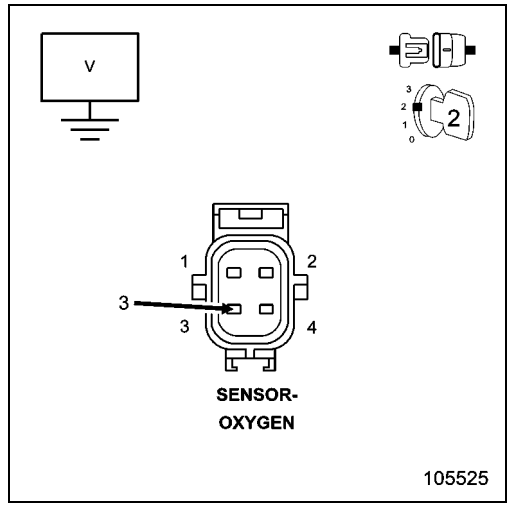

5. OXYGEN SENSOR

NOTE: Check for signs of contaminants that may have damaged the O2 Sensor, such as contaminated fuel, unapproved silicone, oil and coolant.

1. Using the wiring diagram/schematic as a guide, inspect the wiring and connectors between the 1/2 Oxygen Sensor and the Powertrain Control Module (PCM).
2. Look for any chafed, pierced, pinched or partially broken wires.
3. Look for broken, bent, pushed out or corroded terminals.
4. Perform any Technical Service Bulletins that may apply.

Were any problems found?

Yes

- Repair as necessary.
- Perform the POWERTRAIN VERIFICATION TEST. (Refer to 28 - DTC-Based Diagnostics/MODULE, Powertrain Control (PCM) - Standard Procedure).

No

- Replace the 1/2 Oxygen Sensor in accordance with the Service Information.
- Perform the POWERTRAIN VERIFICATION TEST. (Refer to 28 - DTC-Based Diagnostics/MODULE, Powertrain Control (PCM) - Standard Procedure).

P013A-O2 SENSOR 1/2 SLOW RESPONSE - RICH TO LEAN

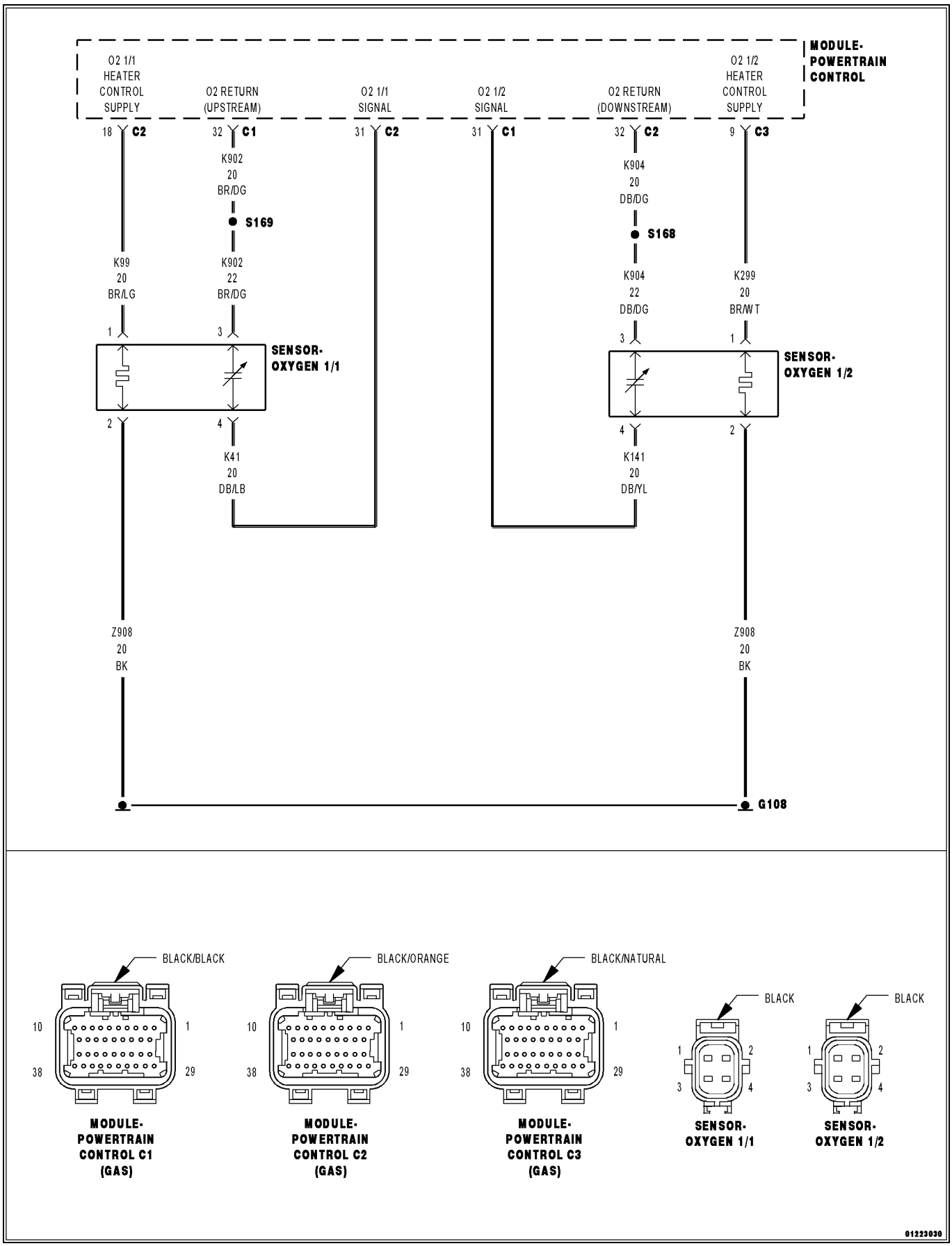

For a complete wiring diagram, **refer to the Wiring Information**.

Theory of Operation

The downstream O2 Sensor is located in the exhaust path behind the catalytic converter, is monitored for proper response to assure optimum catalytic converter efficiency. The downstream O2 response monitor is intended to diagnose a downstream O2 sensor that is not moving or stuck in a voltage window and to insure accurate information for catalyst monitor diagnosis.

- **When Monitored:**

  With the engine running, vehicle speed above 96 kph (60 mph), throttle open for a minimum of 120 seconds, ECT greater than 70° C (158° F), catalytic converter temperature greater than 600° C (1112° F) and downstream oxygen sensor in a rich state. During a decel fuel shutoff event, the downstream oxygen sensor should switch from rich to lean within a specific time.

- **Set Condition:**

  The Powertrain Control Module (PCM) monitors the downstream O2 sensor. If the PCM does not detect a rich to lean switch within a specific time during a decel fuel shutoff event, the monitor will fail. One trip fault. Three good trips to turn off the MIL.

Possible Causes
EXHAUST LEAK
(K141) O2 1/2 SIGNAL CIRCUIT
(K904) O2 RETURN DOWNSTREAM CIRCUIT
1/2 O2 SENSOR

Always perform the Pre-Diagnostic Troubleshooting procedure before proceeding. (Refer to 28 - DTC-Based Diagnostics/MODULE, Powertrain Control (PCM) - Standard Procedure).

1. ACTIVE DTC

NOTE: If an O2 sensor signal circuit is shorted to voltage, all O2 sensor voltage readings displayed on the scan tool will be approximately 5.0 Volts. Diagnose the sensor that set the most current DTC.

NOTE: After the repairs have been made, verify proper O2 Sensor operation. If all the O2 Sensor voltage readings have not returned to normal, follow the diagnostic procedure for the remaining O2 Sensors.

NOTE: Check for contaminants that may have damaged the O2 Sensor: contaminated fuel, unapproved silicone, oil and coolant.

1. Start the engine.
2. Allow the engine to reach normal operating temperature.

WARNING: When the engine is operating, do not stand in direct line with the fan. Do not put your hands near the pulleys, belts or fan. Do not wear loose clothing. Failure to follow these instructions may result in possible serious or fatal injury.

3. With the scan tool, select View DTCs.

NOTE: It may be necessary to drive the vehicle to meet the conditions to set this DTC, try to repeat the conditions in which the fault originally set by reviewing the Freeze Frame data.

Is the DTC Active or Pending at this time?

Yes

- Go To 2

No

- Perform the INTERMITTENT CONDITION diagnostic procedure. (Refer to 28 - DTC-Based Diagnostics/MODULE, Powertrain Control (PCM) - Standard Procedure).

2. CHECKING THE EXHAUST SYSTEM FOR LEAKS

1. Turn the ignition off.
2. Raise the vehicle in accordance with the Service Information.

WARNING: The normal operating temperature of the exhaust system is very high. Never work around or attempt to service any part of the exhaust system until it has cooled. Special care should be taken when working near the catalytic converter. The temperature of the converter rises to a high level after a short period of engine operating time.

3. Connect Exhaust Cone 8404-EC or 8404-ECT to Air Pressure Regulator (with hose) W-18-MIL-1146AS.

CAUTION: The air pressure must not exceed 27.6 kPa (4 psi), otherwise engine damage can occur.

4. Attach shop air to the air pressure regulator.
5. Adjust the Air Pressure Regulator to 27.6 kPa (4 psi).
6. Insert the exhaust cone into the vehicle tail pipe.
7. If the vehicle is equipped with dual exhaust. Use the 8404-ECT with equipped attached plug, plug one side of the dual exhaust pipe. Pressurize the other as described above.
8. Apply Mopar® Air Leak Detector PN# 05191804AA (or an equivalent leak finder liquid) to the following areas:
   - All welded joints from the exhaust manifold to 152.4 mm (6 inches) behind the downstream O2 sensor
   - O2 sensor seal points
   - O2 sensor boss welds
   - Flange/joint connection(s)
   - Exhaust manifold to cylinder head connection(s)
   - EGR solenoid gasket base and tube seal points (if equipped)
9. Watch for the liquid/soapy water to bubble.
10. Use the following definitions to help determine if system or component repair/replacement is necessary:

- **Type 1 Leak** is defined as a leak where very small foam like bubbles 1 mm (0.04 of an inch) or less appear. Any Type 1 or greater leaks found in welded joints, O2 sensor seal points or O2 sensor boss welds must be repaired or the component must be replaced.
- **Type 2 Leak** is defined as a leak where larger bubbles pea size, 8 mm (0.3 of an inch) or greater appear. Any Type 2 or greater leaks found in flange or joint connections, exhaust manifold to cylinder head connections or EGR gasket and tube seal points must be repaired or the components must be replaced.

Leak Location	Repair required if results at 27.6 kPa (4 psi) reveal bubble size:
Welded joints	Type 1, 1 mm (0.04 of an inch) or greater
O2 Sensor seal points	Type 1, 1 mm (0.04 of an inch) or greater
O2 Sensor boss welds	Type 1, 1 mm (0.04 of an inch) or greater
Flange / joint connections	Type 2, 8 mm (0.3 of an inch) or greater
Exhaust Manifold to cylinder head connections	Type 2, 8 mm (0.3 of an inch) or greater
EGR gasket and tube seal points	Type 2, 8 mm (0.3 of an inch) or greater

11. If a leak is found that matches the above definition, repair or replace the component as necessary.
12. Once the repair is complete, repeat the procedure to verify that all leaks have been repaired.

Were any exhaust leaks found?

Yes

- Repair or replace the leaking exhaust parts as necessary.
- Perform the POWERTRAIN VERIFICATION TEST. (Refer to 28 - DTC-Based Diagnostics/MODULE, Powertrain Control (PCM) - Standard Procedure).

No

- Go To 3

3. (K141) O2 1/2 SIGNAL CIRCUIT

1. Turn the ignition off
2. Disconnect the 1/2 O2 Sensor harness connector.
3. Ignition on, engine not running.
4. Measure the voltage on the (K141) O2 1/2 Signal circuit in the O2 Sensor harness connector.

Is the voltage between 4.1 and 5.0 Volts?

Yes

- Go To 4

No

- Check the (K141) O2 1/2 Signal circuit for a short to ground, open or short to voltage. If OK, replace and program the Powertrain Control Module in accordance with the Service Information.
- Perform the POWERTRAIN VERIFICATION TEST. (Refer to 28 - DTC-Based Diagnostics/MODULE, Powertrain Control (PCM) - Standard Procedure).

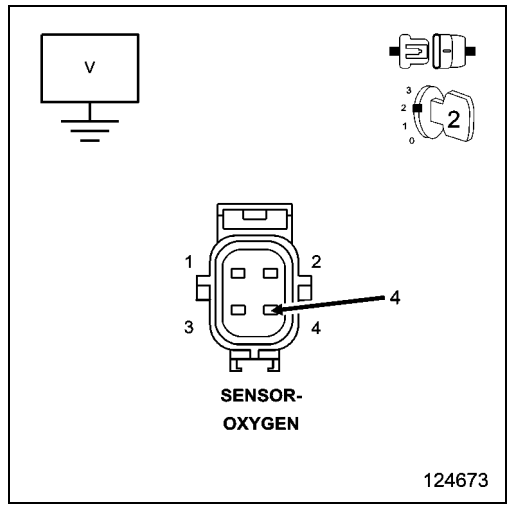

4. (K904) O2 RETURN DOWNSTREAM CIRCUIT

1. Measure the voltage on the (K904) O2 Return Downstream circuit in the 1/2 O2 Sensor harness connector.

Is the voltage at 2.5 Volts?

Yes

- Go To 5

No

- Check the (K904) O2 Return Downstream circuit for a short to ground, open or short to voltage. If OK, replace and program the Powertrain Control Module in accordance with the Service Information.
- Perform the POWERTRAIN VERIFICATION TEST. (Refer to 28 - DTC-Based Diagnostics/MODULE, Powertrain Control (PCM) - Standard Procedure).

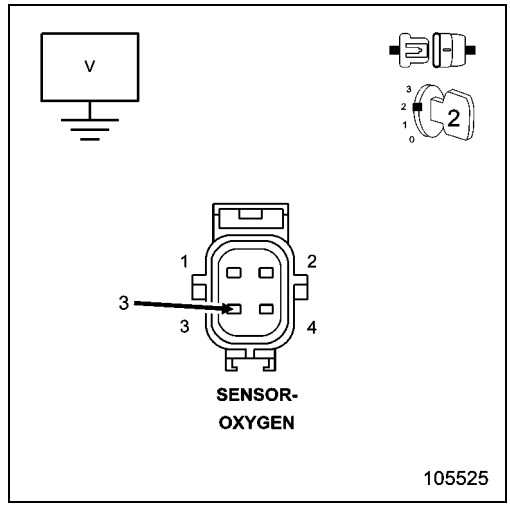

5. O2 SENSOR

NOTE: Check for signs of contaminants that may have damaged the O2 Sensor, such as contaminated fuel, unapproved silicone, oil and coolant.

1. Using the wiring diagram/schematic as a guide, inspect the wiring and connectors between the 1/2 Oxygen Sensor and the Powertrain Control Module (PCM).
2. Look for any chafed, pierced, pinched or partially broken wires.
3. Look for broken, bent, pushed out or corroded terminals.
4. Perform any Technical Service Bulletins that may apply.

Were any problems found?

Yes

- Repair as necessary.
- Perform the POWERTRAIN VERIFICATION TEST. (Refer to 28 - DTC-Based Diagnostics/MODULE, Powertrain Control (PCM) - Standard Procedure).

No

- Replace the 1/2 Oxygen Sensor in accordance with the Service Information.
- Perform the POWERTRAIN VERIFICATION TEST. (Refer to 28 - DTC-Based Diagnostics/MODULE, Powertrain Control (PCM) - Standard Procedure).

P013C-O2 SENSOR 2/2 SLOW RESPONSE - RICH TO LEAN

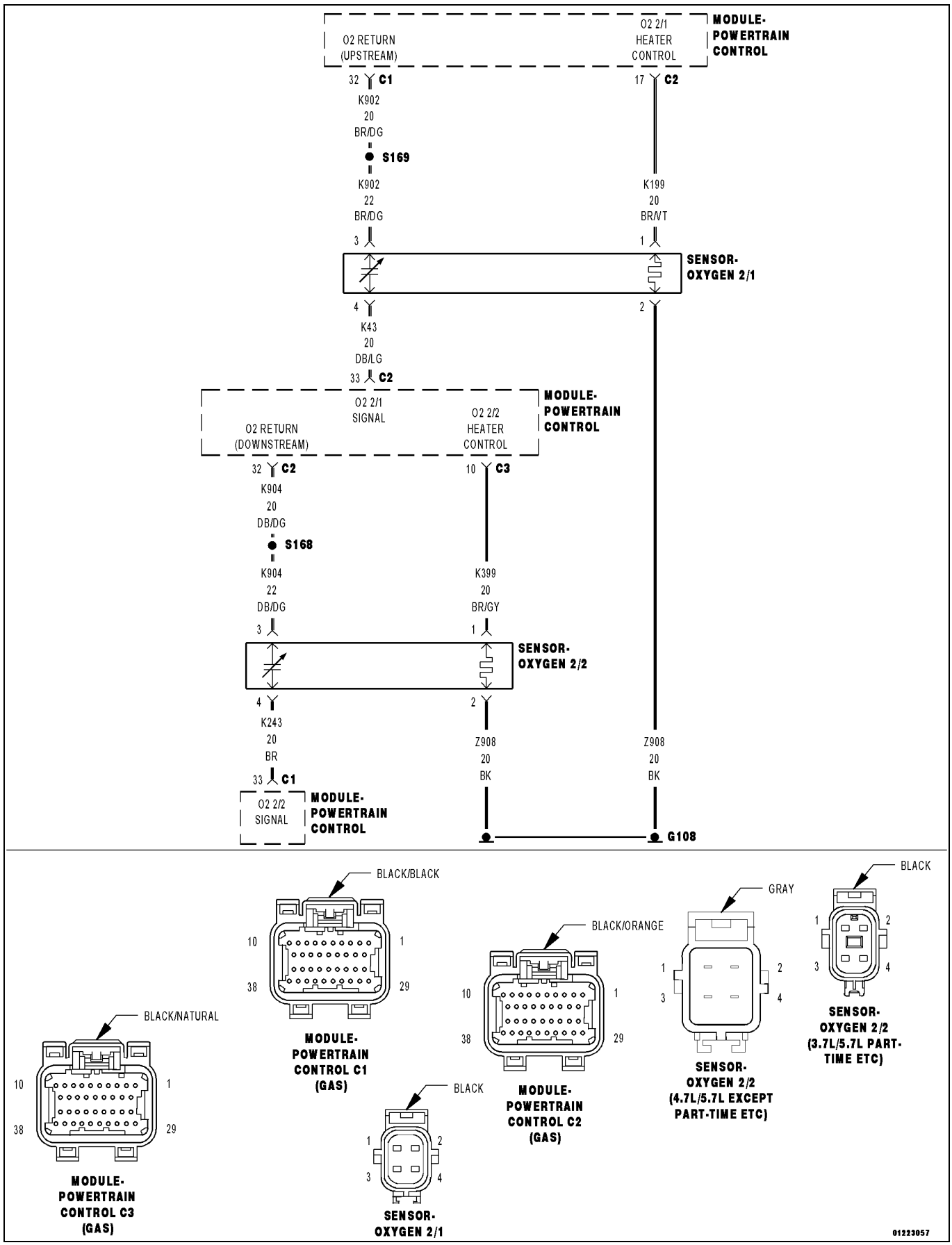

For a complete wiring diagram, **refer to the Wiring Information**.

Theory of Operation

The downstream O2 Sensor is located in the exhaust path behind the catalytic converter, is monitored for proper response to assure optimum catalytic converter efficiency. The downstream O2 response monitor is intended to diagnose a downstream O2 sensor that is not moving or stuck in a voltage window and to insure accurate information for catalyst monitor diagnosis.

- **When Monitored:**

  With the engine running, vehicle speed above 96 kph (60 mph), throttle open for a minimum of 120 seconds, ECT greater than 70° C (158° F), catalytic converter temperature greater than 600° C (1112° F) and downstream oxygen sensor in a rich state. During a decel fuel shutoff event, the downstream oxygen sensor should switch from rich to lean within a specific time.

- **Set Condition:**

  The Powertrain Control Module (PCM) monitors the downstream O2 sensor. If the PCM does not detect a rich to lean switch within a specific time during a decel fuel shutoff event, the monitor will fail. One trip fault. Three good trips to turn off the MIL.

Possible Causes
EXHAUST LEAK
(K243) O2 2/2 SIGNAL CIRCUIT
(K904) O2 RETURN DOWNSTREAM CIRCUIT
2/2 O2 SENSOR

Always perform the Pre-Diagnostic Troubleshooting procedure before proceeding. (Refer to 28 - DTC-Based Diagnostics/MODULE, Powertrain Control (PCM) - Standard Procedure).

1. ACTIVE DTC

NOTE: If an O2 sensor signal circuit is shorted to voltage, all O2 sensor voltage readings displayed on the scan tool will be approximately 5.0 Volts. Diagnose the sensor that set the most current DTC.

NOTE: After the repairs have been made, verify proper O2 Sensor operation. If all the O2 Sensor voltage readings have not returned to normal, follow the diagnostic procedure for the remaining O2 Sensors.

NOTE: Check for contaminants that may have damaged the O2 Sensor: contaminated fuel, unapproved silicone, oil and coolant.

1. Start the engine.
2. Allow the engine to reach normal operating temperature.

WARNING: When the engine is operating, do not stand in direct line with the fan. Do not put your hands near the pulleys, belts or fan. Do not wear loose clothing. Failure to follow these instructions may result in possible serious or fatal injury.

3. With the scan tool, select View DTCs.

NOTE: It may be necessary to drive the vehicle to meet the conditions to set this DTC, try to repeat the conditions in which the fault originally set by reviewing the Freeze Frame data.

Is the DTC Active or Pending at this time?

Yes

- Go To 2

No

- Perform the INTERMITTENT CONDITION diagnostic procedure. (Refer to 28 - DTC-Based Diagnostics/MODULE, Powertrain Control (PCM) - Standard Procedure).

2. CHECKING THE EXHAUST SYSTEM FOR LEAKS

1. Turn the ignition off.
2. Raise the vehicle in accordance with the Service Information.

WARNING: The normal operating temperature of the exhaust system is very high. Never work around or attempt to service any part of the exhaust system until it has cooled. Special care should be taken when working near the catalytic converter. The temperature of the converter rises to a high level after a short period of engine operating time.

3. Connect Exhaust Cone 8404-EC or 8404-EC to Air Pressure Regulator (with hose) W-18-MIL-1146AS.

CAUTION: The air pressure must not exceed 27.6 kPa (4 psi), otherwise engine damage can occur.

4. Attach shop air to the air pressure regulator.
5. Adjust the Air Pressure Regulator to 27.6 kPa (4 psi).
6. Insert the exhaust cone into the vehicle tail pipe.
7. If the vehicle is equipped with dual exhaust. Use the 8404-ECT with equipped attached plug, plug one side of the dual exhaust pipe. Pressurize the other as described above.
8. Apply Mopar® Air Leak Detector PN# 05191804AA (or an equivalent leak finder liquid) to the following areas:
   - All welded joints from the exhaust manifold to 152.4 mm (6 inches) behind the downstream O2 sensor
   - O2 sensor seal points
   - O2 sensor boss welds
   - Flange/joint connection(s)
   - Exhaust manifold to cylinder head connection(s)
   - EGR solenoid gasket base and tube seal points (if equipped)
9. Watch for the liquid/soapy water to bubble.
10. Use the following definitions to help determine if system or component repair/replacement is necessary:

- **Type 1 Leak** is defined as a leak where very small foam like bubbles 1 mm (0.04 of an inch) or less appear. Any Type 1 or greater leaks found in welded joints, O2 sensor seal points or O2 sensor boss welds must be repaired or the component must be replaced.
- **Type 2 Leak** is defined as a leak where larger bubbles pea size, 8 mm (0.3 of an inch) or greater appear. Any Type 2 or greater leaks found in flange or joint connections, exhaust manifold to cylinder head connections or EGR gasket and tube seal points must be repaired or the components must be replaced.

Leak Location	Repair required if results at 27.6 kPa (4 psi) reveal bubble size:
Welded joints	Type 1, 1 mm (0.04 of an inch) or greater
O2 Sensor seal points	Type 1, 1 mm (0.04 of an inch) or greater
O2 Sensor boss welds	Type 1, 1 mm (0.04 of an inch) or greater
Flange / joint connections	Type 2, 8 mm (0.3 of an inch) or greater
Exhaust Manifold to cylinder head connections	Type 2, 8 mm (0.3 of an inch) or greater
EGR gasket and tube seal points	Type 2, 8 mm (0.3 of an inch) or greater

11. If a leak is found that matches the above definition, repair or replace the component as necessary.
12. Once the repair is complete, repeat the procedure to verify that all leaks have been repaired.

Were any exhaust leaks found?

Yes

- Repair or replace the leaking exhaust parts as necessary.
- Perform the POWERTRAIN VERIFICATION TEST. (Refer to 28 - DTC-Based Diagnostics/MODULE, Powertrain Control (PCM) - Standard Procedure).

No

- Go To 3

3. (K243) O2 2/2 SIGNAL CIRCUIT

1. Turn the ignition off.
2. Disconnect the 2/2 O2 Sensor harness connector.
3. Ignition on, engine not running.
4. Measure the voltage on the (K243) O2 2/2 Signal circuit in the O2 Sensor harness connector.

Is the voltage between 4.1 and 5.0 Volts?

Yes

- Go To 4

No

- Check the (K243) O2 2/2 Signal circuit for a short to ground, open or short to voltage. If OK, replace and program the Powertrain Control Module in accordance with the Service Information.
- Perform the POWERTRAIN VERIFICATION TEST. (Refer to 28 - DTC-Based Diagnostics/MODULE, Powertrain Control (PCM) - Standard Procedure).

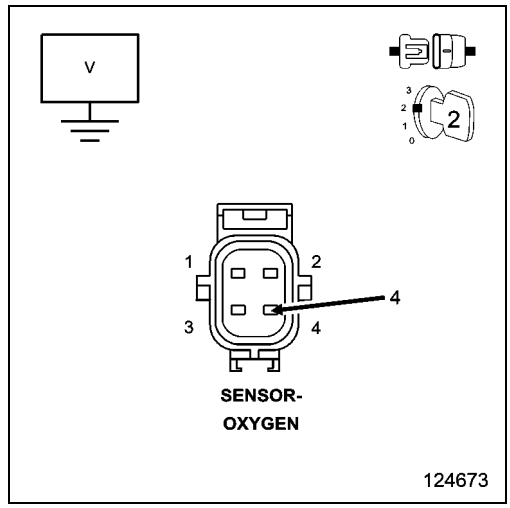

4. (K904) O2 RETURN DOWNSTREAM CIRCUIT

1. Measure the voltage on the (K904) O2 Return Downstream circuit in the 2/2 O2 Sensor harness connector.

Is the voltage at 2.5 Volts?

Yes

- Go To 5

No

- Check the (K904) O2 Return Downstream circuit for a short to ground, open or short to voltage. If OK, replace and program the Powertrain Control Module in accordance with the Service Information.
- Perform the POWERTRAIN VERIFICATION TEST. (Refer to 28 - DTC-Based Diagnostics/MODULE, Powertrain Control (PCM) - Standard Procedure).

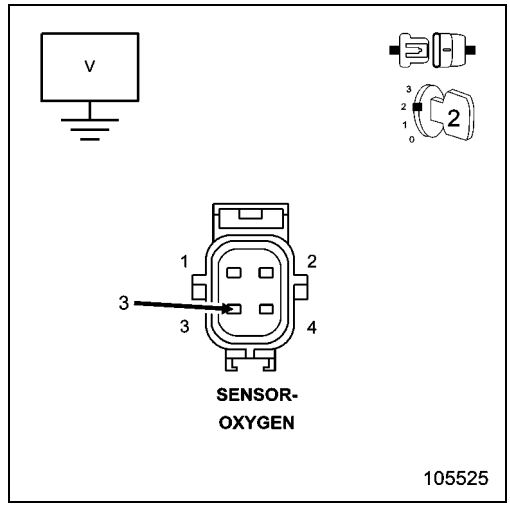

5. 2/2 OXYGEN SENSOR

NOTE: Check for signs of contaminants that may have damaged the O2 Sensor, such as contaminated fuel, unapproved silicone, oil and coolant.

1. Using the wiring diagram/schematic as a guide, inspect the wiring and connectors between the 2/2 Oxygen Sensor and the Powertrain Control Module (PCM).
2. Look for any chafed, pierced, pinched or partially broken wires.
3. Look for broken, bent, pushed out or corroded terminals.
4. Perform any Technical Service Bulletins that may apply.

Were any problems found?

Yes

- Repair as necessary.
- Perform the POWERTRAIN VERIFICATION TEST. (Refer to 28 - DTC-Based Diagnostics/MODULE, Powertrain Control (PCM) - Standard Procedure).

No

- Replace the 2/2 Oxygen Sensor in accordance with the Service Information.
- Perform the POWERTRAIN VERIFICATION TEST. (Refer to 28 - DTC-Based Diagnostics/MODULE, Powertrain Control (PCM) - Standard Procedure).

P0141-O2 SENSOR 1/2 HEATER PERFORMANCE

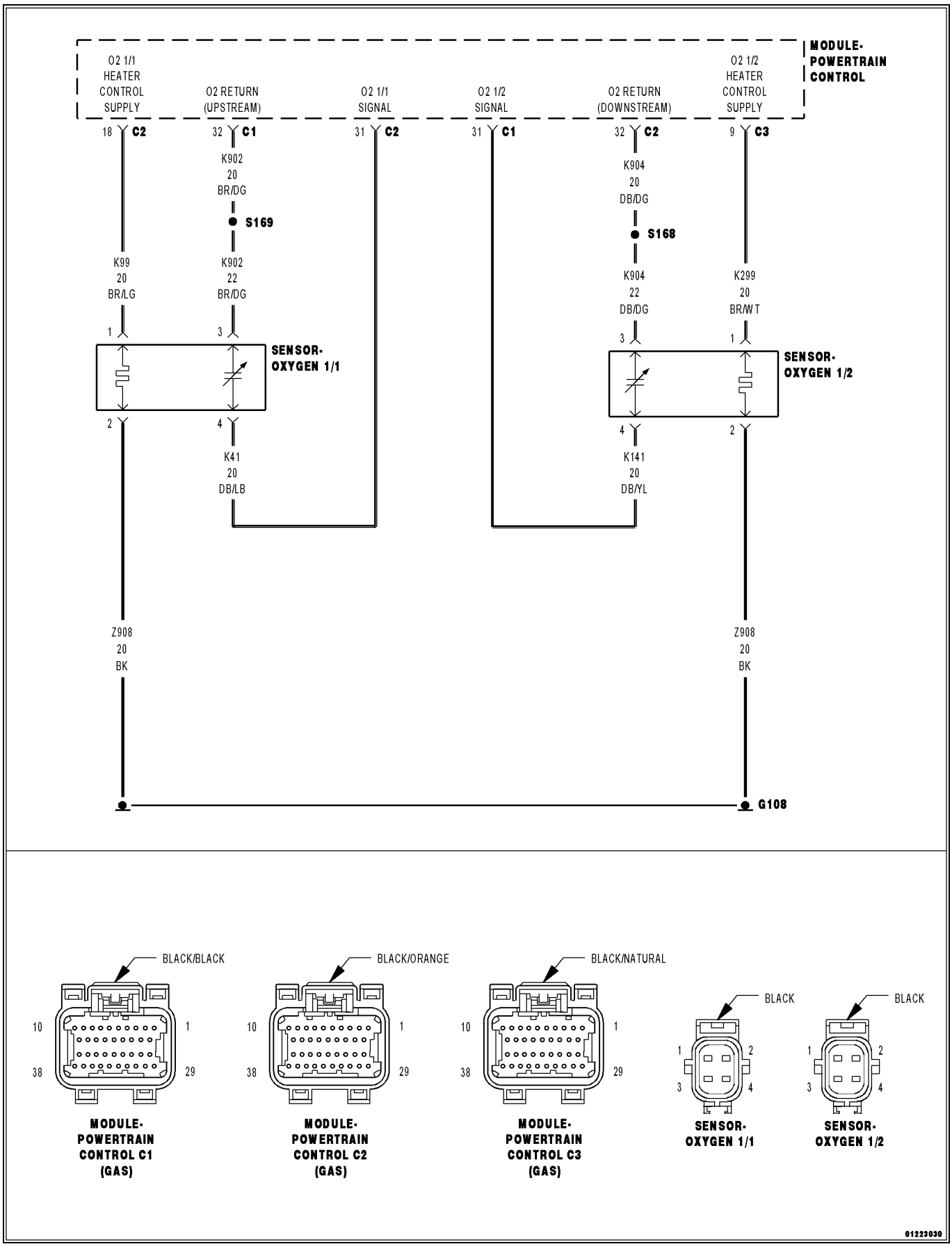

For a complete wiring diagram, **refer to the Wiring Information**.

Theory of Operation

This diagnostic provides a continuous check of the O2 heater circuit during operation. The heater circuit is momentarily disabled to allow a resistance measurement to be taken to infer heater temperature. The current delivery to the heater is duty cycled to maintain a specific target temperature. The error from the target temperature is continuously monitored to assess heater performance.

- **When Monitored:**

  Continuously during O2 sensor heater operation with battery voltage between 10.4 and 15.75 Volts and no O2 sensor circuit DTCs present.

- **Set Condition:**

  The Powertrain Control Module (PCM) detects no temperature change in the O2 sensor heater element when the heater circuit is active. The heater temperature is obtained by measuring the heater resistance and calculating the heater temperature. Two trip fault. Three good trips to turn off the MIL.

Possible Causes
(K299) O2 1/2 HEATER CONTROL CIRCUIT OPEN
(Z908) O2 HEATER GROUND CIRCUIT OPEN
1/2 O2 SENSOR
POWERTRAIN CONTROL MODULE (PCM)

Always perform the Pre-Diagnostic Troubleshooting procedure before proceeding. (Refer to 28 - DTC-Based Diagnostics/MODULE, Powertrain Control (PCM) - Standard Procedure).

1. O2 SENSOR HEATER OPERATION

1. Turn the ignition off.

NOTE: Wait a minimum of eight minutes to allow the O2 Sensor to cool down before continuing the test. Allow the O2 Sensor voltage to stabilize between 4.6 and 5.0 Volts.

2. Ignition on, engine not running.
3. With the scan tool, actuate the O2 Heater Test.
4. With the scan tool, monitor 1/2 O2 Sensor voltage for at least two minutes.

Does the voltage stay above 4.5 Volts?

Yes

- Go To 2

No

- Perform the INTERMITTENT CONDITION diagnostic procedure. (Refer to 28 - DTC-Based Diagnostics/MODULE, Powertrain Control (PCM) - Standard Procedure).

2. O2 SENSOR HEATER ELEMENT

1. Turn the ignition off.

NOTE: Allow the O2 sensor to cool down to room temperature.

2. Disconnect the O2 Sensor harness connector.
3. Measure the resistance of the O2 Heater Element across the O2 Sensor connector between the O2 Heater Control terminal and the Heater ground terminal.

NOTE: O2 Heater Element resistance values should be measured at 21.1° C (70° F). The resistance value will vary with different temperature values.

Is the resistance of the O2 Sensor Heater Element between 2.0 and 30.0 Ohms?

Yes

- Go To 3

No

- Replace the O2 Sensor.
- Perform the POWERTRAIN VERIFICATION TEST. (Refer to 28 - DTC-Based Diagnostics/MODULE, Powertrain Control (PCM) - Standard Procedure).

3. (K299) O2 1/2 HEATER CONTROL CIRCUIT OPEN

1. Disconnect the C3 PCM harness connector.

CAUTION: Do not probe the PCM harness connectors. Probing the PCM harness connectors will damage the PCM terminals resulting in poor terminal to pin connection. Install the PCM Pinout Box Kit, NGC, 38 Position 8815A to perform diagnosis.

2. Measure the resistance of the (K299) O2 1/2 Heater Control circuit from the O2 harness connector to the appropriate terminal of PCM Pinout Box 8815A.

Is the resistance below 0.5 of an Ohm?

Yes

- Go To 4

No

- Repair the excessive resistance in the (K299) O2 1/2 Heater Control circuit.
- Perform the POWERTRAIN VERIFICATION TEST. (Refer to 28 - DTC-Based Diagnostics/MODULE, Powertrain Control (PCM) - Standard Procedure).

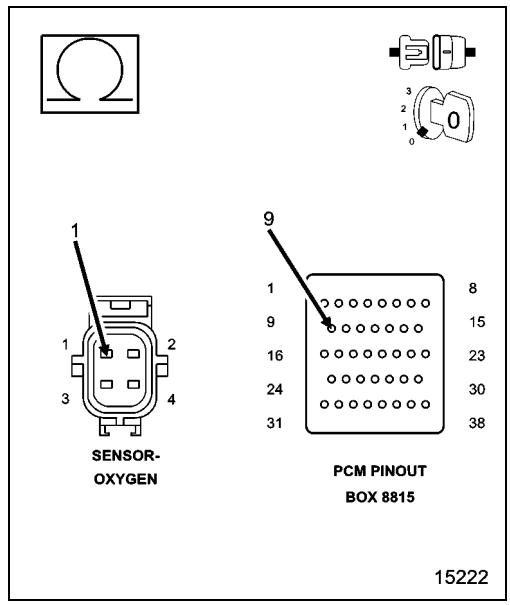

4. (Z908) O2 1/2 HEATER GROUND CIRCUIT OPEN

1. Using a 12-volt test light connected to 12 Volts, check the (Z908) Ground circuit in the 1/2 Oxygen Sensor harness connector.

NOTE: The test light should be illuminated and bright. Compare the brightness to that of a direct connection to the battery.

Is the test light illuminated and bright?

Yes

- Go To 5

No

- Repair the excessive resistance in the (Z908) O2 1/2 Heater ground circuit.
- Perform the POWERTRAIN VERIFICATION TEST. (Refer to 28 - DTC-Based Diagnostics/MODULE, Powertrain Control (PCM) - Standard Procedure).

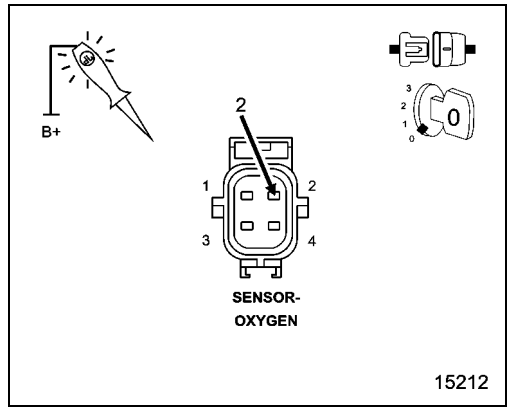

5. POWERTRAIN CONTROL MODULE (PCM)

1. Using the wiring diagram/schematic as a guide, inspect the wiring and connectors between the Oxygen Sensor 1/2 and the Powertrain Control Module (PCM).
2. Look for any chafed, pierced, pinched or partially broken wires.
3. Look for broken, bent, pushed out or corroded terminals. Verify that there is good pin to terminal contact in the Sensor and Control Module connectors.
4. Refer to any Technical Service Bulletins that may apply.

Were there any problems found?

Yes

- Repair as necessary.
- Perform the POWERTRAIN VERIFICATION TEST. (Refer to 28 - DTC-Based Diagnostics/MODULE, Powertrain Control (PCM) - Standard Procedure).

No

- Replace and program the Powertrain Control Module in accordance with the Service Information.
- Perform the POWERTRAIN VERIFICATION TEST. (Refer to 28 - DTC-Based Diagnostics/MODULE, Powertrain Control (PCM) - Standard Procedure).

P0151-O2 SENSOR 2/1 CIRCUIT LOW

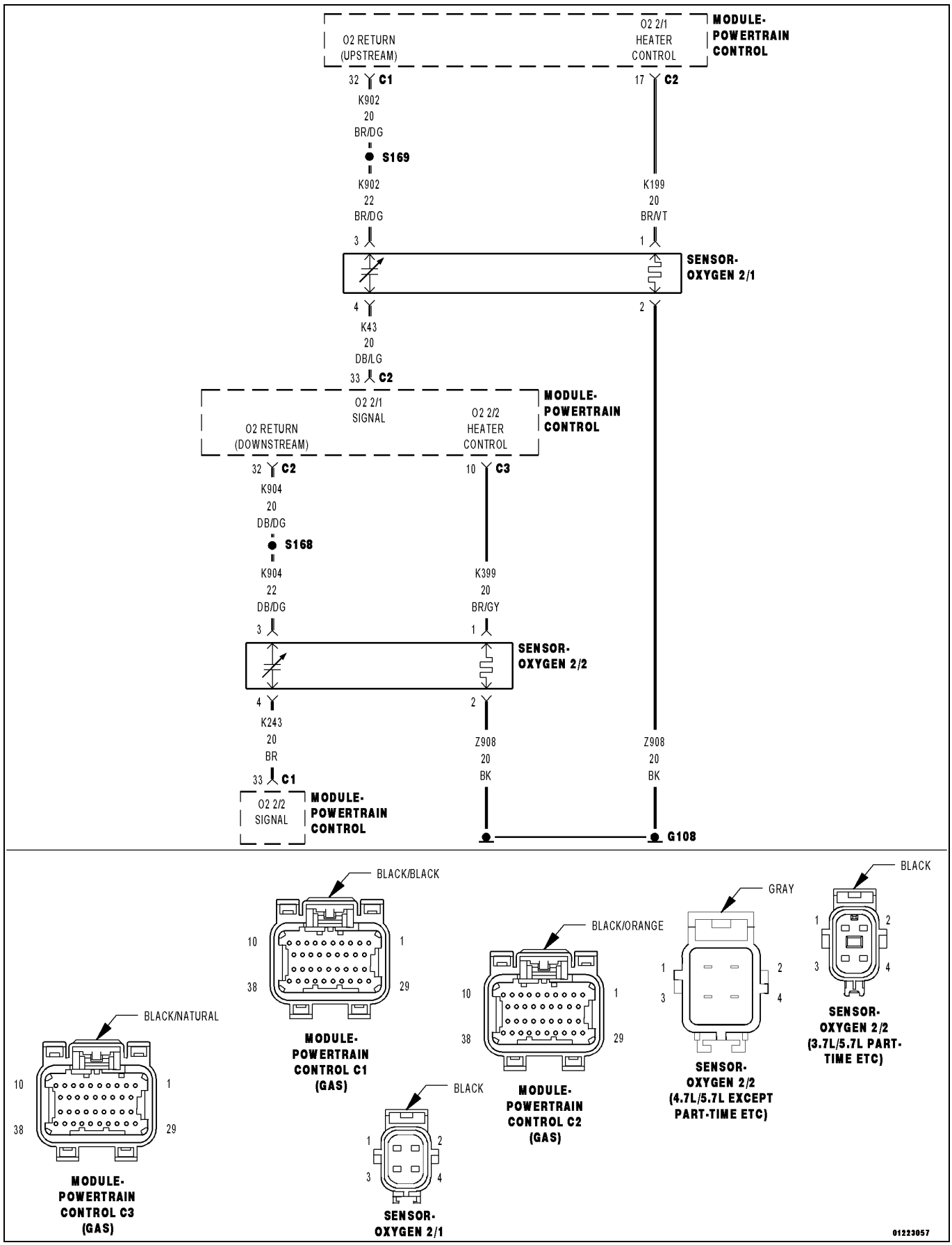

For a complete wiring diagram, **refer to the Wiring Information**.

- **When Monitored:**
  With the engine running, battery voltage greater than 10.4 Volts and no O2 sensor heater DTCs present.
- **Set Condition:**
  The Powertrain Control Module (PCM) detects that the 2/1 Oxygen Sensor signal voltage is below the minimum acceptable value. The DTC will set as Pending after one trip and Active after two trips. Three good trips to turn off the MIL.

Possible Causes
(K902) O2 RETURN UPSTREAM CIRCUIT SHORTED TO GROUND
(K43) O2 2/1 SIGNAL CIRCUIT SHORTED TO GROUND
(K43) O2 2/1 SIGNAL CIRCUIT SHORTED TO THE (K902) O2 RETURN UPSTREAM CIRCUIT
(K43) O2 2/1 SIGNAL CIRCUIT SHORTED TO THE (Z908) HEATER GROUND CIRCUIT
2/1 O2 SENSOR
POWERTRAIN CONTROL MODULE (PCM)

Always perform the Pre-Diagnostic Troubleshooting procedure before proceeding. (Refer to 28 - DTC-Based Diagnostics/MODULE, Powertrain Control (PCM) - Standard Procedure).

1. ACTIVE DTC

1. Turn the ignition on.
2. With the scan tool, select View DTCs. Record DTC and Freeze Frame information.
3. Start the engine and allow it to idle for at least 60 seconds.

WARNING: When the engine is operating, do not stand in direct line with the fan. Do not put your hands near the pulleys, belts or fan. Do not wear loose clothing. Failure to follow these instructions may result in possible serious or fatal injury.

4. With the scan tool, select View DTCs.

Is the DTC Active at this time?

Yes

- Go To 2

No

- Perform the INTERMITTENT CONDITION diagnostic procedure. (Refer to 28 - DTC-Based Diagnostics/MODULE, Powertrain Control (PCM) - Standard Procedure).

2. (K43) O2 2/1 SIGNAL CIRCUIT

1. Turn the ignition off.
2. Disconnect the 2/1 O2 Sensor harness connector.
3. Ignition on, engine not running.
4. With the scan tool, monitor the 2/1 O2 Sensor voltage.

Is the O2 Sensor voltage between 4.1 and 5.0 Volts?

Yes

- Go To 3

No

- Go To 5

3. O2 SENSOR

1. Measure the voltage on the (K902) O2 Return Upstream circuit in the O2 Sensor harness connector.

Is the voltage at 2.5 Volts?

Yes

- Verify that there is good pin to terminal contact in the O2 Sensor and Powertrain Control Module connectors. Replace the 2/1 O2 Sensor if no problems were found with the connectors.
- Perform the POWERTRAIN VERIFICATION TEST. (Refer to 28 - DTC-Based Diagnostics/MODULE, Powertrain Control (PCM) - Standard Procedure).

No

- Go To 4

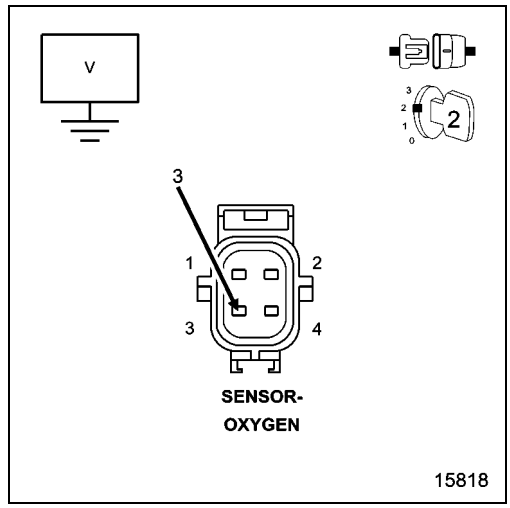

4. (K902) O2 RETURN UPSTREAM CIRCUIT SHORTED TO GROUND

1. Turn the ignition off.
2. Disconnect the C1 PCM harness connector.
3. Measure the resistance between ground and the (K902) O2 Return Upstream circuit in the O2 Sensor harness connector.

Is the resistance below 100 Ohms?

Yes

- Repair the short to ground in the (K902) O2 Return Upstream circuit.
- Perform the POWERTRAIN VERIFICATION TEST. (Refer to 28 - DTC-Based Diagnostics/MODULE, Powertrain Control (PCM) - Standard Procedure).

No

- Go To 8

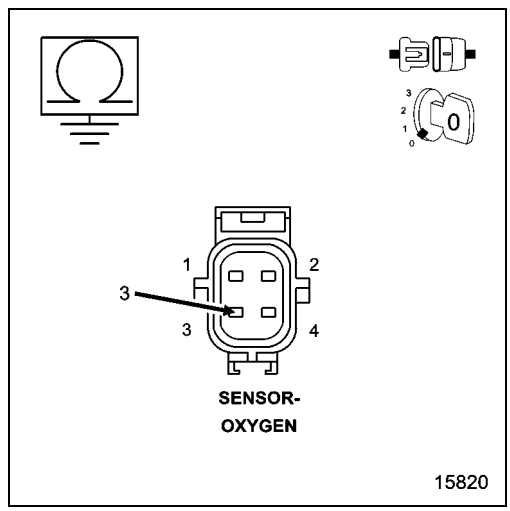

5. (K43) O2 2/1 SIGNAL CIRCUIT SHORTED TO GROUND

1. Turn the ignition off.
2. Disconnect the C1 and C2 PCM harness connectors.
3. Measure the resistance between ground and the (K43) O2 2/1 Signal circuit in the O2 Sensor harness connector.

Is the resistance below 100 Ohms?

Yes

- Repair the short to ground in the (K43) O2 2/1 Signal circuit.
- Perform the POWERTRAIN VERIFICATION TEST. (Refer to 28 - DTC-Based Diagnostics/MODULE, Powertrain Control (PCM) - Standard Procedure).

No

- Go To 6

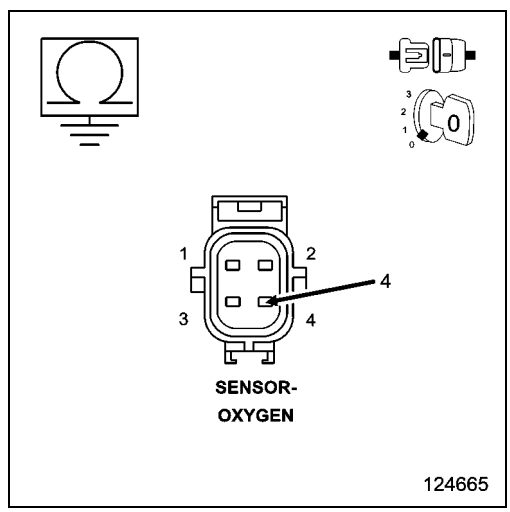

6. (K43) O2 2/1 SIGNAL CIRCUIT SHORTED TO THE (K902) O2 RETURN UPSTREAM CIRCUIT

1. Measure the resistance between the (K43) O2 2/1 Signal circuit and the (K902) O2 Return Upstream circuit in the O2 Sensor harness connector.

Is the resistance below 100 Ohms?

Yes

- Repair the short between the (K902) O2 Return Upstream circuit and the (K43) O2 2/1 Signal circuit.
- Perform the POWERTRAIN VERIFICATION TEST. (Refer to 28 - DTC-Based Diagnostics/MODULE, Powertrain Control (PCM) - Standard Procedure).

No

- Go To 7

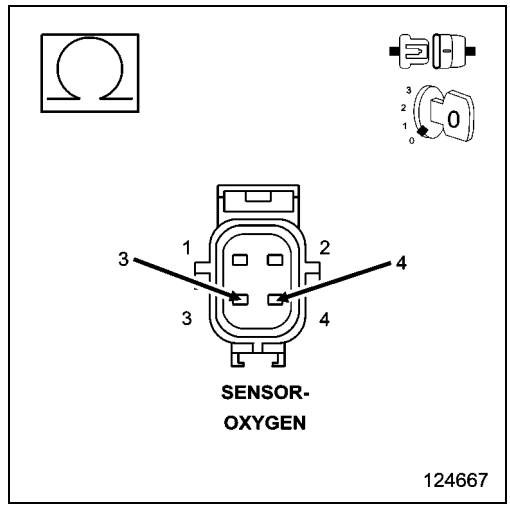

7. (K43) O2 2/1 SIGNAL CIRCUIT SHORTED TO THE (Z908) HEATER GROUND CIRCUIT

1. Measure the resistance between the (K43) O2 2/1 Signal circuit and the (Z908) O2 Heater ground circuit in the O2 Sensor harness connector.

Is the resistance below 100 Ohms?

Yes

- Repair the short between the (Z908) O2 Heater ground circuit and the (K43) O2 2/1 Signal circuit.
- Perform the POWERTRAIN VERIFICATION TEST. (Refer to 28 - DTC-Based Diagnostics/MODULE, Powertrain Control (PCM) - Standard Procedure).

No

- Go To 8

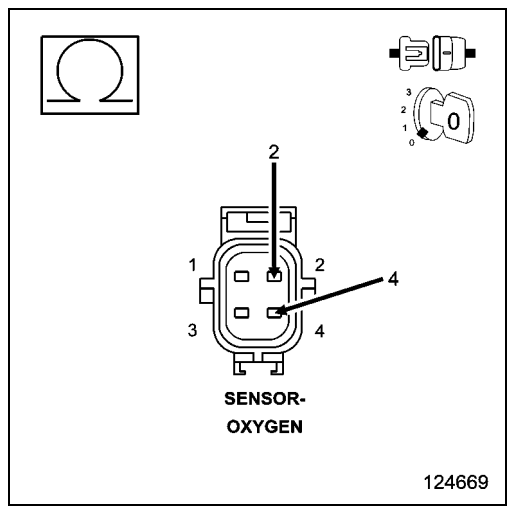

8. POWERTRAIN CONTROL MODULE (PCM)

1. Using the wiring diagram/schematic as a guide, inspect the wiring and connectors between the Oxygen Sensor 2/1 and the Powertrain Control Module (PCM).
2. Look for any chafed, pierced, pinched or partially broken wires.
3. Look for broken, bent, pushed out or corroded terminals. Verify that there is good pin to terminal contact in the Sensor and Control Module connectors.
4. Refer to any Technical Service Bulletins that may apply.

Were there any problems found?

Yes

- Repair as necessary.
- Perform the POWERTRAIN VERIFICATION TEST. (Refer to 28 - DTC-Based Diagnostics/MODULE, Powertrain Control (PCM) - Standard Procedure).

No

- Replace and program the Powertrain Control Module in accordance with the Service Information.
- Perform the POWERTRAIN VERIFICATION TEST. (Refer to 28 - DTC-Based Diagnostics/MODULE, Powertrain Control (PCM) - Standard Procedure).

P0152-O2 SENSOR 2/1 CIRCUIT HIGH

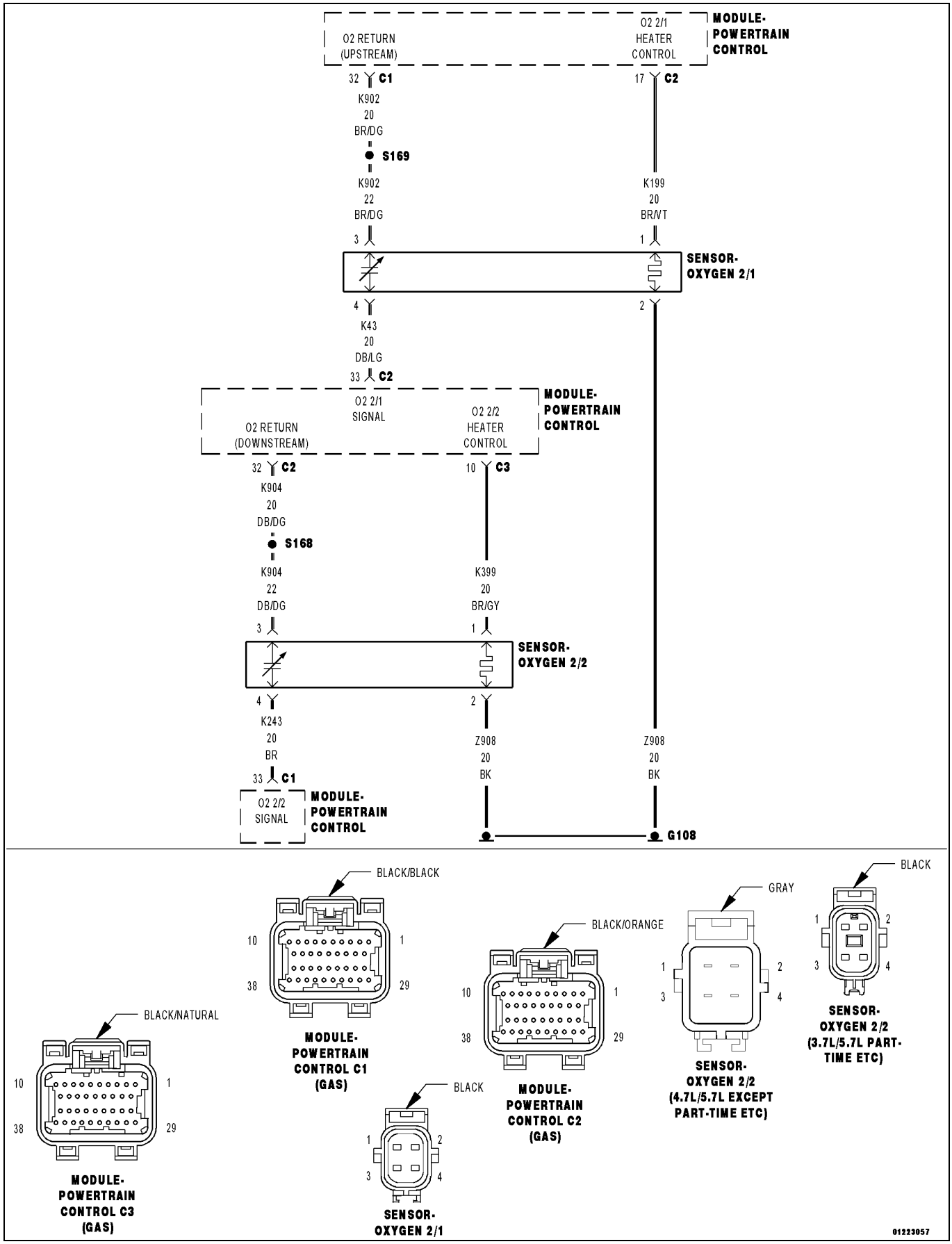

For a complete wiring diagram, **refer to the Wiring Information**.

- **When Monitored:**

  Continuously with the engine running, no O2 sensor heater DTCs present, 2/1 Oxygen Sensor heater temperature within a specific range, and battery voltage greater than 10.4 volts.

- **Set Condition:**

  The Powertrain Control Module (PCM) detects that the 2/1 Oxygen Sensor voltage is greater than the maximum acceptable value for a specific amount of time, based on O2 sensor heater temperature. The DTC will set as Pending after one trip and Active after two trips. Three good trips to turn off the MIL.

Possible Causes
(K43) O2 2/1 SIGNAL CIRCUIT SHORTED TO VOLTAGE
(K902) O2 RETURN UPSTREAM CIRCUIT SHORTED TO VOLTAGE
(K43) O2 2/1 SIGNAL CIRCUIT OPEN
(K902) O2 RETURN UPSTREAM CIRCUIT OPEN
2/1 O2 SENSOR
POWERTRAIN CONTROL MODULE (PCM)

Always perform the Pre-Diagnostic Troubleshooting procedure before proceeding. (Refer to 28 - DTC-Based Diagnostics/MODULE, Powertrain Control (PCM) - Standard Procedure).

1. ACTIVE DTC

NOTE: If an O2 sensor signal circuit is shorted to voltage, all O2 sensor voltage readings displayed on the scan tool will be approximately 5.0 volts. Diagnose the sensor that set the most current DTC.

1. Start the engine and allow it to idle for at least 60 seconds.

WARNING: When the engine is operating, do not stand in direct line with the fan. Do not put your hands near the pulleys, belts or fan. Do not wear loose clothing. Failure to follow these instructions may result in possible serious or fatal injury.

2. With a scan tool, select View DTCs.

Is the DTC Active at this time?

Yes

- Go To 2

No

- Perform the INTERMITTENT CONDITION diagnostic procedure. (Refer to 28 - DTC-Based Diagnostics/MODULE, Powertrain Control (PCM) - Standard Procedure).

2. (K43) O2 2/1 SIGNAL CIRCUIT SHORTED TO VOLTAGE

1. Turn the ignition off.
2. Disconnect the C1 and C2 PCM harness connectors.
3. Disconnect the 2/1 O2 Sensor harness connector.
4. Turn the ignition on.
5. Measure the voltage on the (K43) O2 Sensor 2/1 Signal circuit in the 2/1 O2 Sensor harness connector.

NOTE: Measure the voltage in reference to ground, not the (K902) O2 Return Upstream circuit.

Is there any voltage present?

Yes

- Repair the short to voltage in the (K43) O2 Sensor 2/1 Signal circuit.
- Perform the POWERTRAIN VERIFICATION TEST. (Refer to 28 - DTC-Based Diagnostics/MODULE, Powertrain Control (PCM) - Standard Procedure).

No

- Go To 3

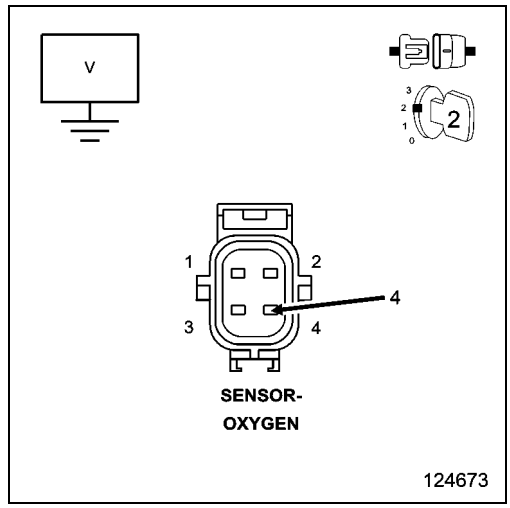

3. (K902) O2 RETURN UPSTREAM CIRCUIT SHORTED TO VOLTAGE

1. Measure the voltage on the (K902) O2 Return Upstream circuit in the 2/1 O2 Sensor harness connector.

Is there any voltage present?

Yes

- Repair the short to voltage in the (K902) O2 Return Upstream circuit.
- Perform the POWERTRAIN VERIFICATION TEST. (Refer to 28 - DTC-Based Diagnostics/MODULE, Powertrain Control (PCM) - Standard Procedure).

No

- Go To 4

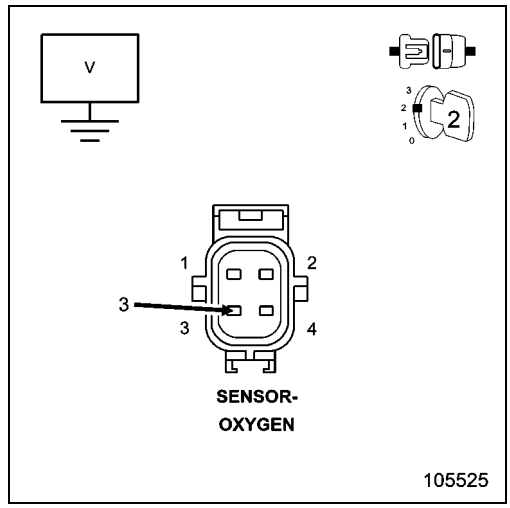

4. O2 SENSOR

1. Turn the ignition off.
2. Connect the C1 and C2 PCM harness connectors.
3. Ignition on, engine not running.
4. With a scan tool, monitor the 2/1 O2 Sensor voltage.
5. Connect a jumper wire between the (K43) O2 2/1 Signal circuit and the (K902) O2 Return Upstream circuit in the O2 Sensor harness connector.

Is the voltage between 2.3 and 2.7 volts with the jumper wire in place?

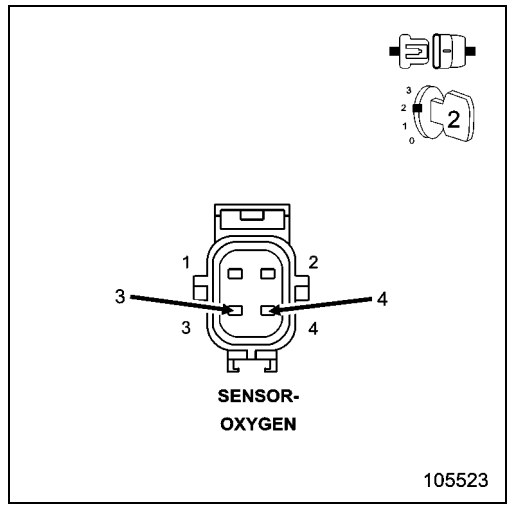

Yes

- Verify that there is good pin to terminal contact in the O2 Sensor and Powertrain Control Module connectors. Replace the 2/1 O2 Sensor if no problems were found with the connectors.
- Perform the POWERTRAIN VERIFICATION TEST. (Refer to 28 - DTC-Based Diagnostics/MODULE, Powertrain Control (PCM) - Standard Procedure).

No

- Go To 5

NOTE: Remove the jumper wire before continuing.

5. (K43) O2 2/1 SIGNAL CIRCUIT OPEN

1. Turn the ignition off.
2. Disconnect the C1 and C2 PCM harness connectors.

CAUTION: Do not probe the PCM harness connectors. Probing the PCM harness connectors will damage the PCM terminals resulting in poor terminal to pin connection. Install the PCM Pinout Box Kit, NGC, 38 Position 8815A to perform diagnosis.

3. Measure the resistance of the (K43) O2 2/1 Signal circuit from the 2/1 O2 Sensor harness connector to the appropriate terminal of PCM Pinout Box 8815A.

Is the resistance below 5.0 Ohms?

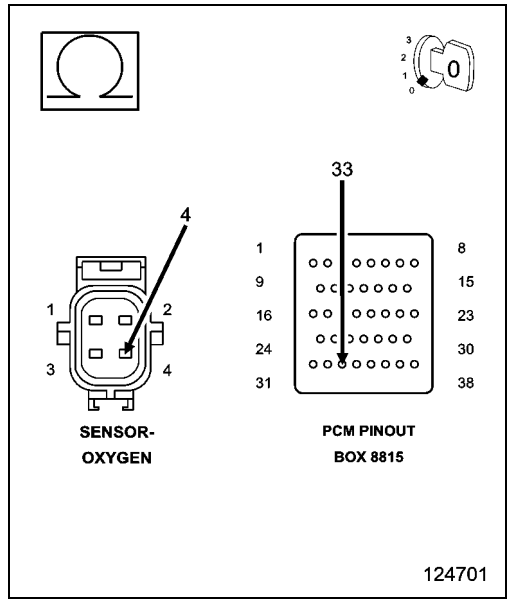

Yes

- Go To 6

No

- Repair the open in the (K43) O2 2/1 Signal circuit.
- Perform the POWERTRAIN VERIFICATION TEST. (Refer to 28 - DTC-Based Diagnostics/MODULE, Powertrain Control (PCM) - Standard Procedure).

6. (K902) O2 RETURN UPSTREAM CIRCUIT OPEN

1. Measure the resistance of the (K902) O2 Return Upstream circuit from the O2 Sensor harness connector to the appropriate terminal of PCM Pinout Box 8815A.

Is the resistance below 5.0 Ohms?

Yes

- Go To 7

No

- Repair the open in the (K902) O2 Return Upstream circuit.
- Perform the POWERTRAIN VERIFICATION TEST. (Refer to 28 - DTC-Based Diagnostics/MODULE, Powertrain Control (PCM) - Standard Procedure).

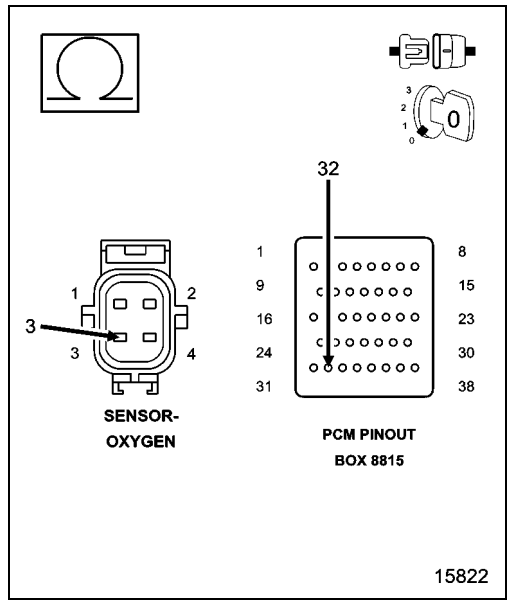

7. POWERTRAIN CONTROL MODULE (PCM)

1. Using the wiring diagram/schematic as a guide, inspect the wiring and connectors between the Oxygen Sensor 2/1 and the Powertrain Control Module (PCM).
2. Look for any chafed, pierced, pinched, or partially broken wires.
3. Look for broken, bent, pushed out or corroded terminals. Verify that there is good pin to terminal contact in the Sensor and Control Module connectors.
4. Refer to any Technical Service Bulletins that may apply.

Were there any problems found?

Yes

- Repair as necessary.
- Perform the POWERTRAIN VERIFICATION TEST. (Refer to 28 - DTC-Based Diagnostics/MODULE, Powertrain Control (PCM) - Standard Procedure).

No

- Replace and program the Powertrain Control Module in accordance with the Service Information.
- Perform the POWERTRAIN VERIFICATION TEST. (Refer to 28 - DTC-Based Diagnostics/MODULE, Powertrain Control (PCM) - Standard Procedure).

P0153-O2 SENSOR 2/1 SLOW RESPONSE

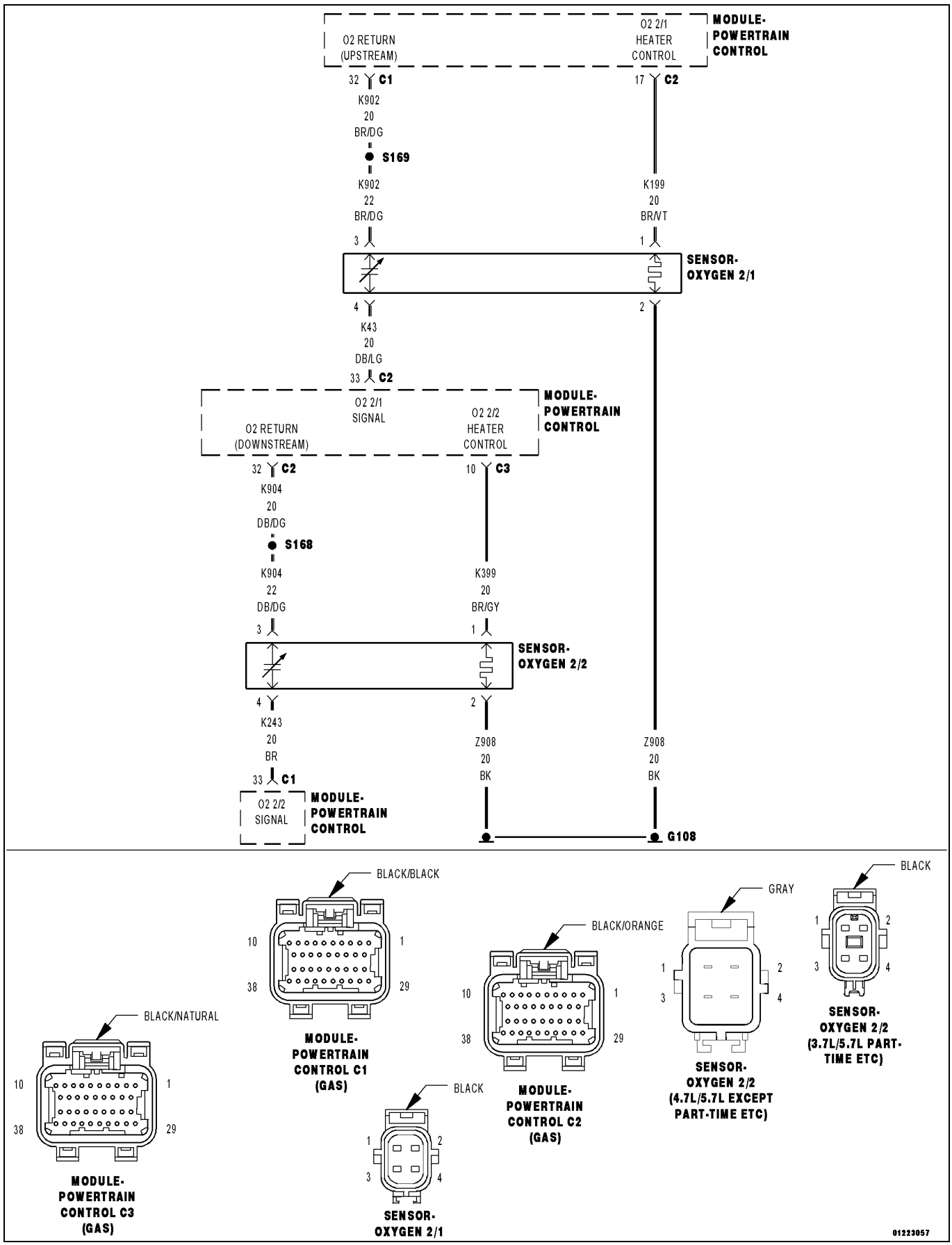

For a complete wiring diagram, **refer to the Wiring Information**.

Theory of Operation

For an aged O2 sensor, the response rate to the air/fuel change is slower than when it was new. The O2 sensor tends to move less with the same air/fuel changes in a given time frame. Therefore by observing the activity of voltage readings from the upstream O2 sensor, the quality of the O2 sensor can be detected.

- **When Monitored:**
  With the ECT above 70 °C (158 °F), engine RPM between 1400 and 2300, vehicle speed between 64 and 96 kph (40 and 60 mph) and engine run time greater than three minutes.
- **Set Condition:**
  The Powertrain Control Module (PCM) detects that the oxygen sensor signal does not switch adequately during monitoring. Two Trip Fault. Three good trips to turn off the MIL.

Possible Causes
EXHAUST LEAK
(K43) O2 2/1 SIGNAL CIRCUIT
(K902) O2 RETURN UPSTREAM CIRCUIT
2/1 O2 SENSOR

Always perform the Pre-Diagnostic Troubleshooting procedure before proceeding. (Refer to 28 - DTC-Based Diagnostics/MODULE, Powertrain Control (PCM) - Standard Procedure).

1. ACTIVE DTC

NOTE: After the repairs have been made, verify proper O2 Sensor operation. If all the O2 Sensor voltage readings have not returned to normal, follow the diagnostic procedure for the remaining O2 Sensors.

NOTE: Check for contaminants that may have damaged the O2 Sensor: contaminated fuel, unapproved silicone, oil and coolant.

1. Start the engine.
2. Allow the engine to reach normal operating temperature.

WARNING: When the engine is operating, do not stand in direct line with the fan. Do not put your hands near the pulleys, belts or fan. Do not wear loose clothing. Failure to follow these instructions may result in possible serious or fatal injury.

3. With the scan tool, select View DTCs.

NOTE: It may be necessary to drive the vehicle to meet the conditions to set this DTC, try to repeat the conditions in which the fault originally set by reviewing the Freeze Frame data.

Is the DTC Active or Pending at this time?

Yes

- Go To 2

No

- Perform the INTERMITTENT CONDITION diagnostic procedure. (Refer to 28 - DTC-Based Diagnostics/MODULE, Powertrain Control (PCM) - Standard Procedure).

2. CHECKING THE EXHAUST SYSTEM FOR LEAKS

1. Turn the ignition off.
2. Raise the vehicle in accordance with the Service Information.

WARNING: The normal operating temperature of the exhaust system is very high. Never work around or attempt to service any part of the exhaust system until it has cooled. Special care should be taken when working near the catalytic converter. The temperature of the converter rises to a high level after a short period of engine operating time.

3. Connect Exhaust Cone 8404-EC or 8404-EC to Air Pressure Regulator (with hose) W-18-MIL-1146AS.

CAUTION: The air pressure must not exceed 27.6 kPa (4 psi), otherwise engine damage can occur.

4. Attach shop air to the air pressure regulator.
5. Adjust the Air Pressure Regulator to 27.6 kPa (4 psi).
6. Insert the exhaust cone into the vehicle tail pipe.
7. If the vehicle is equipped with dual exhaust. Use the 8404-ECT with equipped attached plug, plug one side of the dual exhaust pipe. Pressurize the other as described above.
8. Apply Mopar® Air Leak Detector PN# 05191804AA (or an equivalent leak finder liquid) to the following areas:
   - All welded joints from the exhaust manifold to 152.4 mm (6 inches) behind the downstream O2 sensor
   - O2 sensor seal points
   - O2 sensor boss welds
   - Flange/joint connection(s)
   - Exhaust manifold to cylinder head connection(s)
   - EGR solenoid gasket base and tube seal points (if equipped)
9. Watch for the liquid/soapy water to bubble.
10. Use the following definitions to help determine if system or component repair/replacement is necessary:

- **Type 1 Leak** is defined as a leak where very small foam like bubbles 1 mm (0.04 of an inch) or less appear. Any Type 1 or greater leaks found in welded joints, O2 sensor seal points or O2 sensor boss welds must be repaired or the component must be replaced.
- **Type 2 Leak** is defined as a leak where larger bubbles pea size, 8 mm (0.3 of an inch) or greater appear. Any Type 2 or greater leaks found in flange or joint connections, exhaust manifold to cylinder head connections or EGR gasket and tube seal points must be repaired or the components must be replaced.

Leak Location	Repair required if results at 27.6 kPa (4 psi) reveal bubble size:
Welded joints	Type 1, 1 mm (0.04 of an inch) or greater
O2 Sensor seal points	Type 1, 1 mm (0.04 of an inch) or greater
O2 Sensor boss welds	Type 1, 1 mm (0.04 of an inch) or greater
Flange / joint connections	Type 2, 8 mm (0.3 of an inch) or greater
Exhaust Manifold to cylinder head connections	Type 2, 8 mm (0.3 of an inch) or greater
EGR gasket and tube seal points	Type 2, 8 mm (0.3 of an inch) or greater

11. If a leak is found that matches the above definition, repair or replace the component as necessary.
12. Once the repair is complete, repeat the procedure to verify that all leaks have been repaired.

Were any exhaust leaks found?

Yes

- Repair or replace the leaking exhaust parts as necessary.
- Perform the POWERTRAIN VERIFICATION TEST. (Refer to 28 - DTC-Based Diagnostics/MODULE, Powertrain Control (PCM) - Standard Procedure).

No

- Go To 3

3. (K43) O2 2/1 SIGNAL CIRCUIT

1. Turn the ignition off
2. Disconnect the 2/1 O2 Sensor harness connector.
3. Ignition on, engine not running.
4. Measure the voltage on the (K43) O2 2/1 Signal circuit in the O2 Sensor harness connector.

Is the voltage between 4.1 and 5.0 Volts?

Yes

- Go To 4

No

- Check the (K43) O2 2/1 Signal circuit for a short to ground, open or short to voltage. If OK, replace and program the Powertrain Control Module in accordance with the Service Information.
- Perform the POWERTRAIN VERIFICATION TEST. (Refer to 28 - DTC-Based Diagnostics/MODULE, Powertrain Control (PCM) - Standard Procedure).

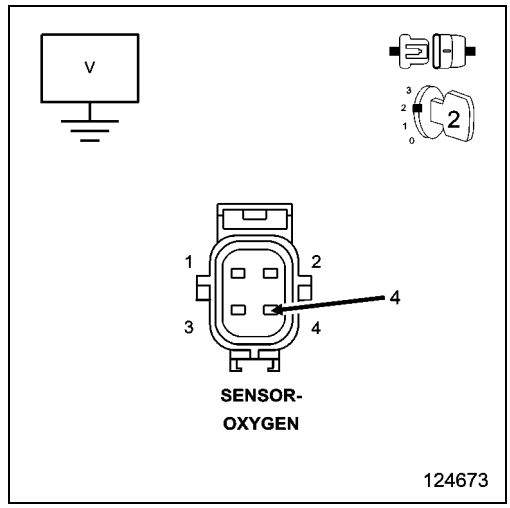

4. (K902) O2 RETURN UPSTREAM CIRCUIT

1. Measure the voltage on the (K902) O2 Return Upstream circuit in the O2 Sensor harness connector.

Is the voltage at 2.5 Volts?

Yes

- Go To 5

No

- Check the (K902) O2 Return Upstream circuit for a short to ground, open or short to voltage. If OK, replace and program the Powertrain Control Module in accordance with the Service Information.
- Perform the POWERTRAIN VERIFICATION TEST. (Refer to 28 - DTC-Based Diagnostics/MODULE, Powertrain Control (PCM) - Standard Procedure).

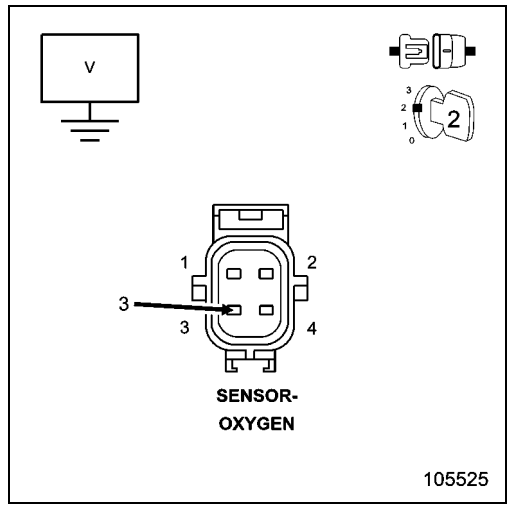

5. OXYGEN SENSOR

NOTE: Check for signs of contaminants that may have damaged the O2 Sensor, such as contaminated fuel, unapproved silicone, oil and coolant.

1. Using the wiring diagram/schematic as a guide, inspect the wiring and connectors between the 2/1 Oxygen Sensor and the Powertrain Control Module (PCM).
2. Look for any chafed, pierced, pinched or partially broken wires.
3. Look for broken, bent, pushed out or corroded terminals.
4. Perform any Technical Service Bulletins that may apply.

Were any problems found?

Yes

- Repair as necessary.
- Perform the POWERTRAIN VERIFICATION TEST. (Refer to 28 - DTC-Based Diagnostics/MODULE, Powertrain Control (PCM) - Standard Procedure).

No

- Replace the 2/1 Oxygen Sensor in accordance with the Service Information.
- Perform the POWERTRAIN VERIFICATION TEST. (Refer to 28 - DTC-Based Diagnostics/MODULE, Powertrain Control (PCM) - Standard Procedure).

P0155-O2 SENSOR 2/1 HEATER PERFORMANCE

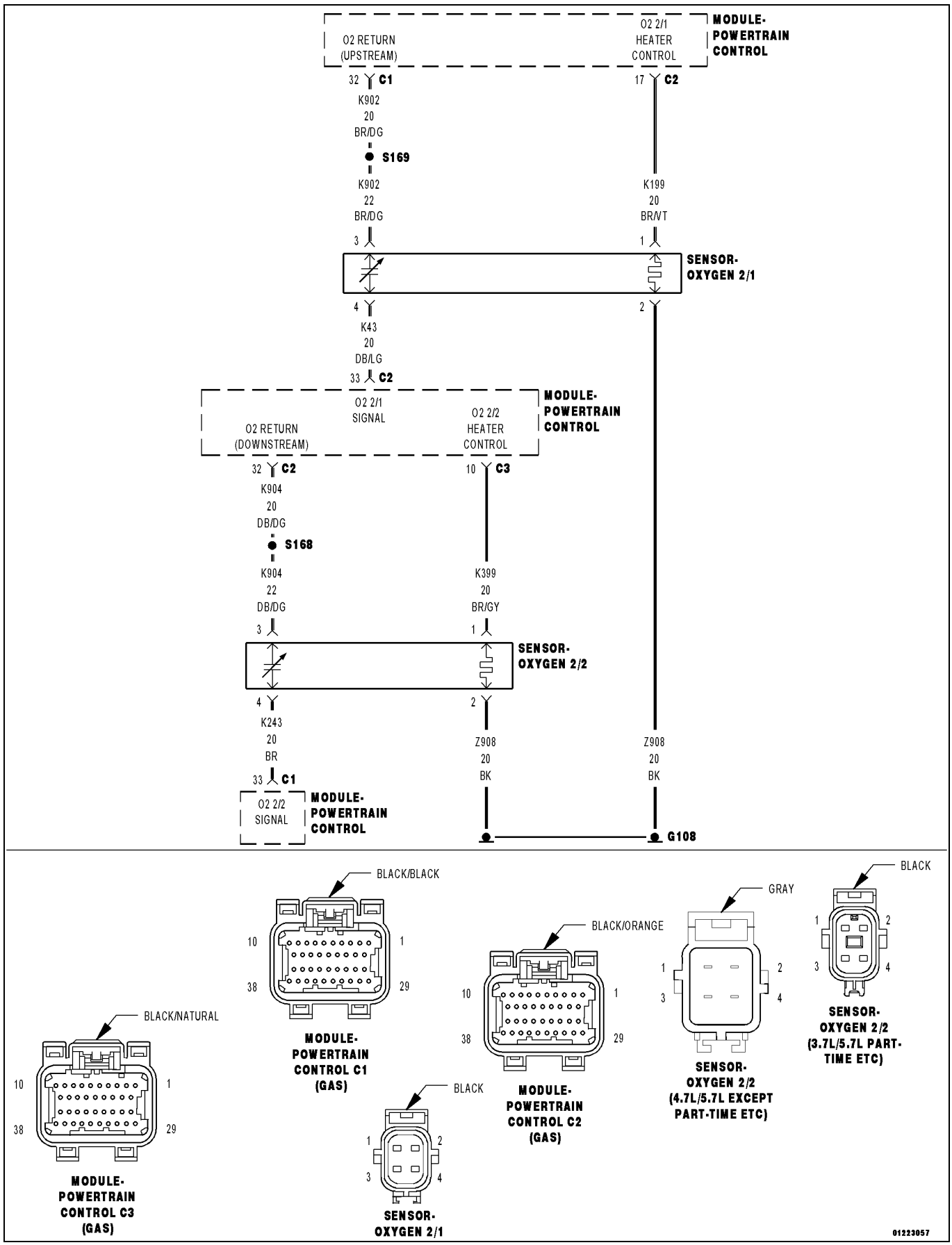

For a complete wiring diagram, **refer to the Wiring Information**.

Theory of Operation

This diagnostic provides a continuous check of the O2 heater circuit during operation. The heater circuit is momentarily disabled to allow a resistance measurement to be taken to infer heater temperature. The current delivery to the heater is duty cycled to maintain a specific target temperature. The error from the target temperature is continuously monitored to assess heater performance.

- **When Monitored:**

  Continuously during O2 sensor heater operation with battery voltage between 10.4 and 15.75 Volts and no O2 sensor circuit DTCs present.

- **Set Condition:**

  The Powertrain Control Module (PCM) detects no temperature change in the O2 sensor heater element when the heater circuit is active. The heater temperature is obtained by measuring the heater resistance and calculating the heater temperature. Two trip fault. Three good trips to turn off the MIL.

Possible Causes
(K199) O2 2/1 HEATER CONTROL CIRCUIT OPEN
(Z908) O2 HEATER GROUND CIRCUIT OPEN
2/1 O2 SENSOR
POWERTRAIN CONTROL MODULE (PCM)

Always perform the Pre-Diagnostic Troubleshooting procedure before proceeding. (Refer to 28 - DTC-Based Diagnostics/MODULE, Powertrain Control (PCM) - Standard Procedure).

1. O2 SENSOR HEATER OPERATION

1. Turn the ignition off.

NOTE: Wait a minimum of eight minutes to allow the O2 Sensor to cool down before continuing the test. Allow the O2 Sensor voltage to stabilize between 4.6 and 5.0 Volts.

2. Ignition on, engine not running.
3. With the scan tool, actuate the O2 Heater Test.
4. With the scan tool, monitor 2/1 O2 Sensor voltage for at least two minutes.

Does the voltage stay above 4.5 Volts?

Yes

- Go To 2

No

- Perform the INTERMITTENT CONDITION diagnostic procedure. (Refer to 28 - DTC-Based Diagnostics/MODULE, Powertrain Control (PCM) - Standard Procedure).

2. O2 SENSOR HEATER ELEMENT

1. Turn the ignition off.

NOTE: Allow the O2 sensor to cool down to room temperature.

2. Disconnect the 2/1 O2 Sensor harness connector.
3. Measure the resistance of the O2 Heater Element across the O2 Sensor connector between the O2 Heater Control terminal and the O2 Heater ground terminal.

NOTE: O2 Heater Element resistance values should be measured at 21.1° C (70° F). The resistance value will vary with different temperature values.

Is the resistance of the O2 Sensor Heater Element between 2.0 and 30.0 Ohms?

Yes

- Go To 3

No

- Replace the O2 Sensor.
- Perform the POWERTRAIN VERIFICATION TEST. (Refer to 28 - DTC-Based Diagnostics/MODULE, Powertrain Control (PCM) - Standard Procedure).

3. (K199) O2 2/1 HEATER CONTROL CIRCUIT OPEN

1. Disconnect the C2 PCM harness connector.

CAUTION: Do not probe the PCM harness connectors. Probing the PCM harness connectors will damage the PCM terminals resulting in poor terminal to pin connection. Install the PCM Pinout Box Kit, NGC, 38 Position 8815A to perform diagnosis.

2. Measure the resistance of the (K199) O2 2/1 Heater Control circuit from the O2 harness connector to the appropriate terminal of PCM Pinout Box 8815A.

Is the resistance below 0.5 of an Ohm?

Yes

- Go To 4

No

- Repair the excessive resistance in the (K199) O2 2/1 Heater Control circuit.
- Perform the POWERTRAIN VERIFICATION TEST. (Refer to 28 - DTC-Based Diagnostics/MODULE, Powertrain Control (PCM) - Standard Procedure).

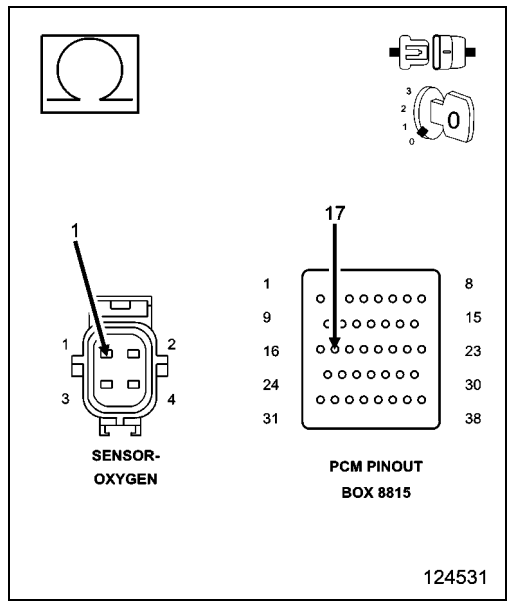

4. (Z908) O2 SENSOR HEATER GROUND CIRCUIT OPEN

1. Using a 12-volt test light connected to 12 Volts, check the (Z908) Ground circuit in the 2/1 Oxygen Sensor harness connector.

NOTE: The test light should be illuminated and bright. Compare the brightness to that of a direct connection to the battery.

Is the test light illuminated and bright?

Yes

- Go To 5

No

- Repair the excessive resistance in the (Z908) O2 Heater ground circuit.
- Perform the POWERTRAIN VERIFICATION TEST. (Refer to 28 - DTC-Based Diagnostics/MODULE, Powertrain Control (PCM) - Standard Procedure).

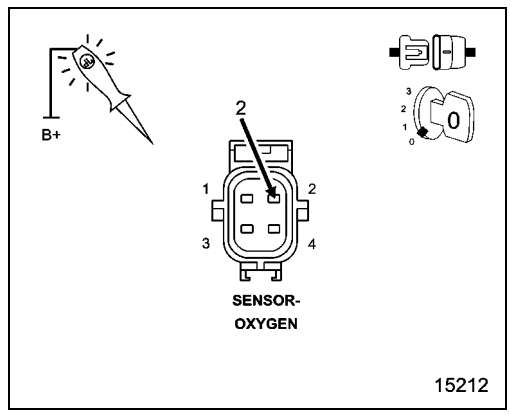

5. POWERTRAIN CONTROL MODULE (PCM)

1. Using the wiring diagram/schematic as a guide, inspect the wiring and connectors between the Oxygen Sensor 2/1 and the Powertrain Control Module (PCM).
2. Look for any chafed, pierced, pinched or partially broken wires.
3. Look for broken, bent, pushed out or corroded terminals. Verify that there is good pin to terminal contact in the Sensor and Control Module connectors.
4. Refer to any Technical Service Bulletins that may apply.

Were there any problems found?

Yes

- Repair as necessary.
- Perform the POWERTRAIN VERIFICATION TEST. (Refer to 28 - DTC-Based Diagnostics/MODULE, Powertrain Control (PCM) - Standard Procedure).

No

- Replace and program the Powertrain Control Module in accordance with the Service Information.
- Perform the POWERTRAIN VERIFICATION TEST. (Refer to 28 - DTC-Based Diagnostics/MODULE, Powertrain Control (PCM) - Standard Procedure).

P0157-O2 SENSOR 2/2 CIRCUIT LOW

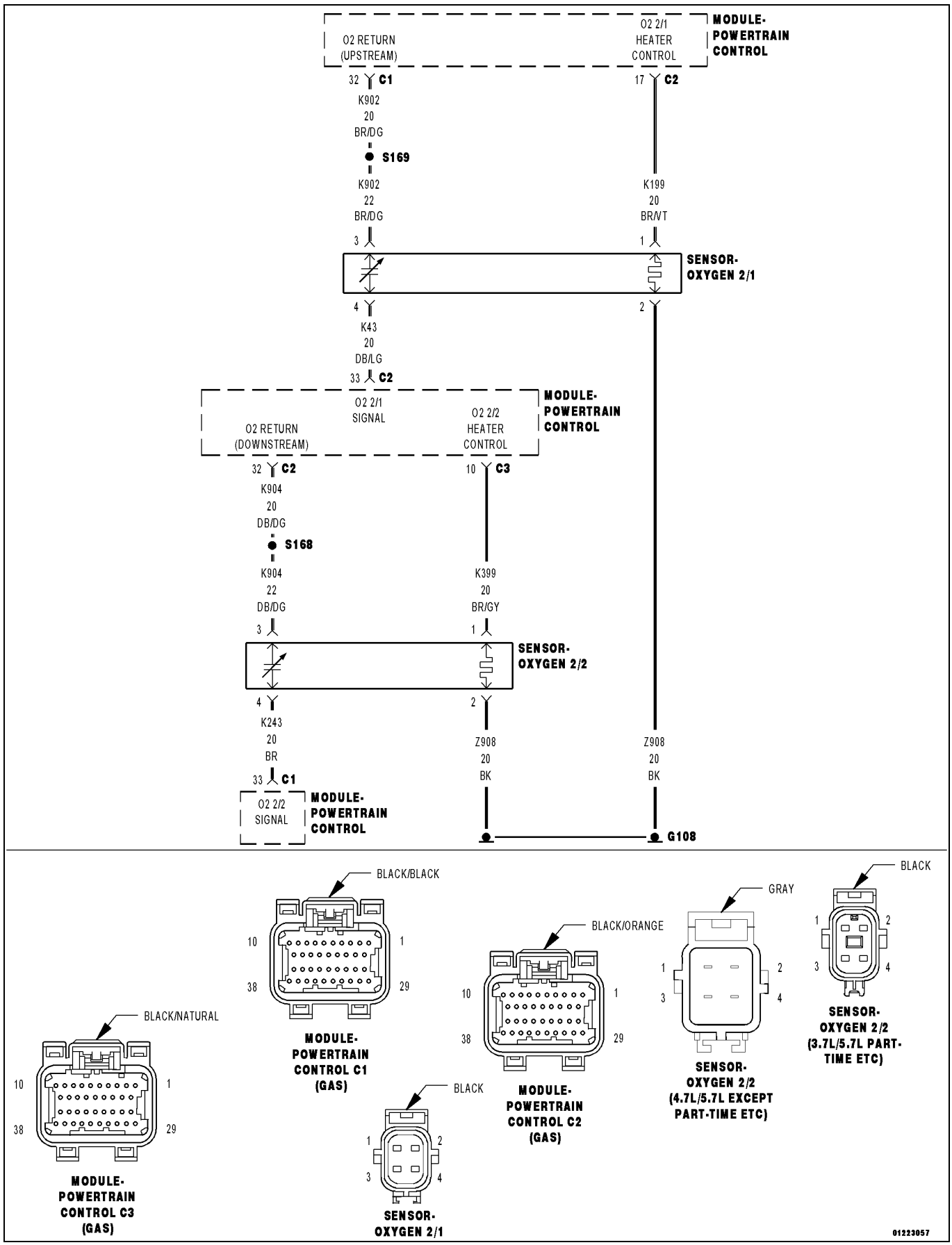

For a complete wiring diagram, **refer to the Wiring Information**.

- **When Monitored:**

  Engine running for less than 30 seconds and the O2 Sensor Heater Temperature is less than 251° C (484° F) with battery voltage greater 10.99 Volts.

- **Set Condition:**

  The Powertrain Control Module (PCM) detects that the 2/2 Oxygen Sensor signal voltage is below the acceptable value. The DTC will set as Pending after one trip and Active after two trips. Three good trips to turn off the MIL.

Possible Causes
(K904) O2 RETURN DOWNSTREAM CIRCUIT SHORTED TO GROUND
(K243) O2 2/2 SIGNAL CIRCUIT SHORTED TO GROUND
(K243) O2 SIGNAL CIRCUIT SHORTED TO THE (K904) O2 RETURN DOWNSTREAM CIRCUIT
(K243) O2 SIGNAL CIRCUIT SHORTED TO THE (Z908) O2 2/2 HEATER GROUND CIRCUIT
2/2 O2 SENSOR
POWERTRAIN CONTROL MODULE (PCM)

Always perform the Pre-Diagnostic Troubleshooting procedure before proceeding. (Refer to 28 - DTC-Based Diagnostics/MODULE, Powertrain Control (PCM) - Standard Procedure).

1. ACTIVE DTC

1. Turn the ignition on.
2. With the scan tool, select View DTCs. Record DTC and Freeze Frame information.
3. Start the engine and allow it to idle for at least 60 seconds.

WARNING: When the engine is operating, do not stand in direct line with the fan. Do not put your hands near the pulleys, belts or fan. Do not wear loose clothing. Failure to follow these instructions may result in possible serious or fatal injury.

4. With the scan tool, select View DTCs.

Is the DTC Active at this time?

Yes

- Go To 2

No

- Perform the INTERMITTENT CONDITION diagnostic procedure. (Refer to 28 - DTC-Based Diagnostics/MODULE, Powertrain Control (PCM) - Standard Procedure).

2. (K243) O2 2/2 SIGNAL CIRCUIT

1. Turn the ignition off.
2. Disconnect the 2/2 O2 Sensor harness connector.
3. Ignition on, engine not running.
4. With the scan tool, monitor the 2/2 O2 Sensor voltage.

Is the O2 Sensor voltage between 4.1 and 5.0 Volts?

Yes

- Go To 3

No

- Go To 5

3. O2 SENSOR

1. Measure the voltage on the (K904) O2 Return Downstream circuit in the O2 Sensor harness connector.

Is the voltage at 2.5 Volts?

Yes

- Verify that there is good pin to terminal contact in the O2 Sensor and Powertrain Control Module connectors. Replace the 2/2 O2 Sensor if no problems were found with the connectors.
- Perform the POWERTRAIN VERIFICATION TEST. (Refer to 28 - DTC-Based Diagnostics/MODULE, Powertrain Control (PCM) - Standard Procedure).

No

- Go To 4

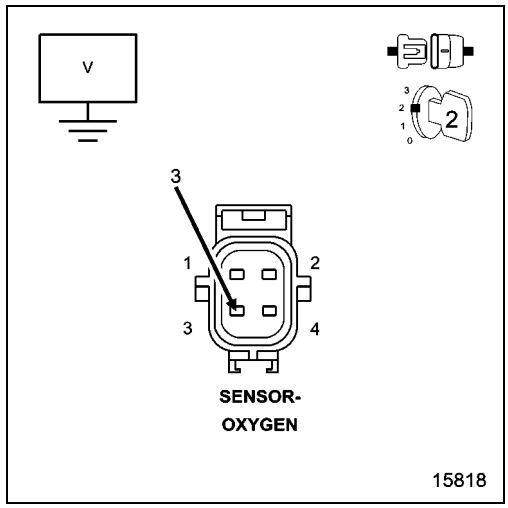

4. (K904) O2 RETURN DOWNSTREAM CIRCUIT SHORTED TO GROUND

1. Turn the ignition off.
2. Disconnect the C2 PCM harness connector.
3. Measure the resistance between ground and the (K904) O2 Return Downstream circuit in the O2 Sensor harness connector.

Is the resistance below 100 Ohms?

Yes

- Repair the short to ground in the (K904) O2 Return Downstream circuit.
- Perform the POWERTRAIN VERIFICATION TEST. (Refer to 28 - DTC-Based Diagnostics/MODULE, Powertrain Control (PCM) - Standard Procedure).

No

- Go To 8

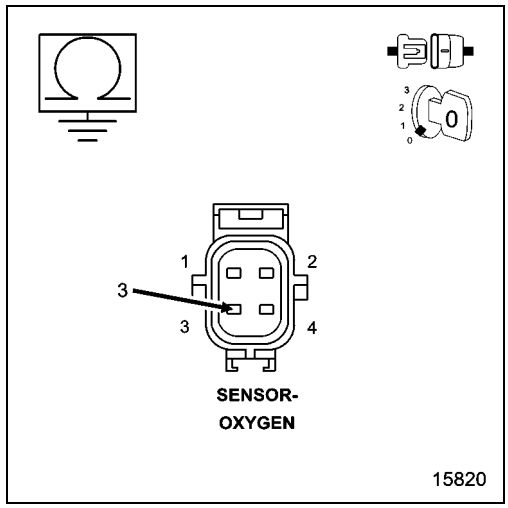

5. (K243) O2 2/2 SIGNAL CIRCUIT SHORTED TO GROUND

1. Turn the ignition off.
2. Disconnect the C1 and C2 PCM harness connectors.
3. Measure the resistance between ground and the (K243) O2 2/2 Signal circuit in the O2 Sensor harness connector.

Is the resistance below 100 Ohms?

Yes

- Repair the short to ground in the (K243) O2 2/2 Signal circuit.
- Perform the POWERTRAIN VERIFICATION TEST. (Refer to 28 - DTC-Based Diagnostics/MODULE, Powertrain Control (PCM) - Standard Procedure).

No

- Go To 6

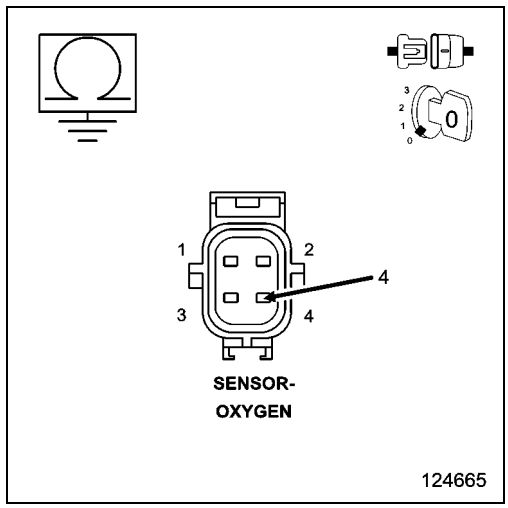

6. (K243) O2 2/2 SIGNAL CIRCUIT SHORTED TO THE (K904) O2 RETURN DOWNSTREAM CIRCUIT

1. Measure the resistance between the (K243) O2 2/2 Signal circuit and the (K904) O2 Return Downstream circuit in the O2 Sensor harness connector.

Is the resistance below 100 Ohms?

Yes

- Repair the short between the (K904) O2 Return Downstream circuit and the (K243) O2 2/2 Signal circuit.
- Perform the POWERTRAIN VERIFICATION TEST. (Refer to 28 - DTC-Based Diagnostics/MODULE, Powertrain Control (PCM) - Standard Procedure).

No

- Go To 7

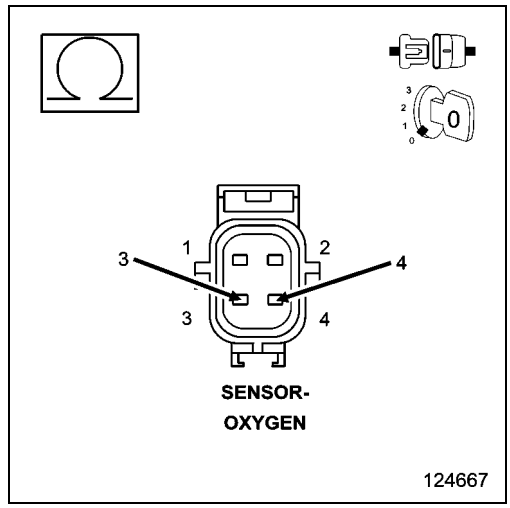

7. (K243) O2 2/2 SIGNAL CIRCUIT SHORTED TO THE (Z908) O2 2/2 HEATER GROUND CIRCUIT

1. Measure the resistance between the (K243) O2 2/2 Signal circuit and the (Z908) O2 2/2 Heater ground circuit in the O2 Sensor harness connector.

Is the resistance below 100 Ohms?

Yes

- Repair the short between the (Z908) O2 2/2 Heater ground circuit and the (K243) O2 2/2 Signal circuit.
- Perform the POWERTRAIN VERIFICATION TEST. (Refer to 28 - DTC-Based Diagnostics/MODULE, Powertrain Control (PCM) - Standard Procedure).

No

- Go To 8

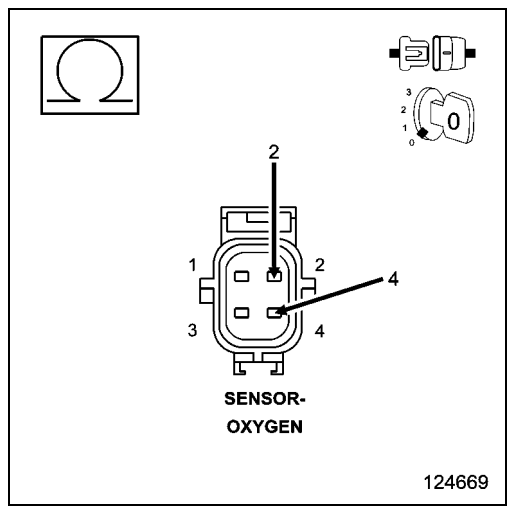

8. POWERTRAIN CONTROL MODULE (PCM)

1. Using the wiring diagram/schematic as a guide, inspect the wiring and connectors between the Oxygen Sensor 2/2 and the Powertrain Control Module (PCM).
2. Look for any chafed, pierced, pinched or partially broken wires.
3. Look for broken, bent, pushed out or corroded terminals. Verify that there is good pin to terminal contact in the Sensor and Control Module connectors.
4. Refer to any Technical Service Bulletins that may apply.

Were there any problems found?

Yes

- Repair as necessary.
- Perform the POWERTRAIN VERIFICATION TEST. (Refer to 28 - DTC-Based Diagnostics/MODULE, Powertrain Control (PCM) - Standard Procedure).

No

- Replace and program the Powertrain Control Module in accordance with the Service Information.
- Perform the POWERTRAIN VERIFICATION TEST. (Refer to 28 - DTC-Based Diagnostics/MODULE, Powertrain Control (PCM) - Standard Procedure).

P0158-O2 SENSOR 2/2 CIRCUIT HIGH

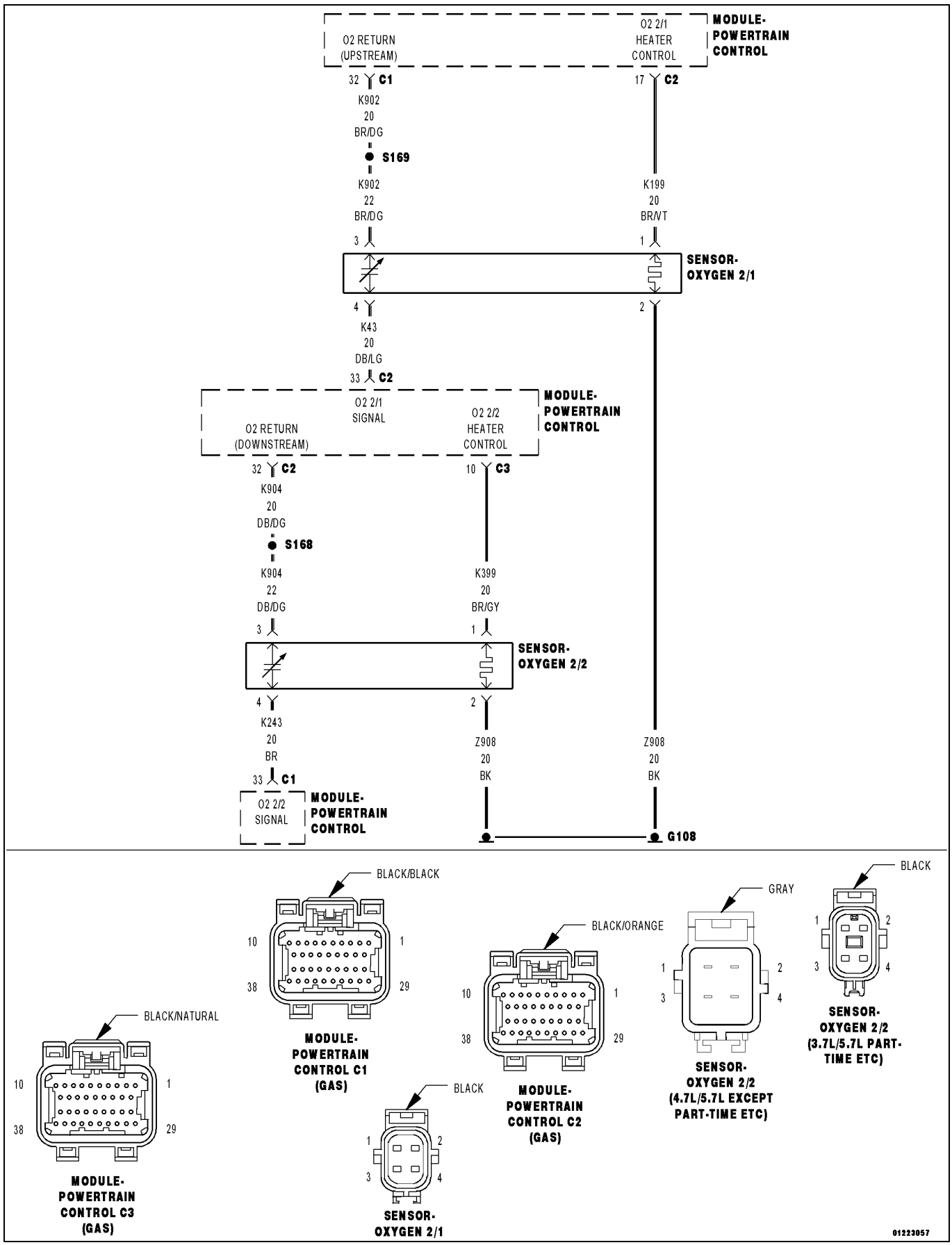

For a complete wiring diagram, **refer to the Wiring Information**.

- **When Monitored:**

  Continuously with the engine running, no O2 sensor heater DTCs present, 2/2 Oxygen Sensor heater temperature within a specific range and battery voltage greater than 10.4 Volts.

- **Set Condition:**

  The Powertrain Control Module (PCM) detects that the 2/2 Oxygen Sensor voltage is greater than the maximum acceptable value for a specific amount of time, based on O2 sensor heater temperature. The DTC will set as Pending after one trip and Active after two trips. Three good trips to turn off the MIL.

Possible Causes
(K243) O2 2/2 SIGNAL CIRCUIT SHORTED TO VOLTAGE
(K904) O2 RETURN DOWNSTREAM CIRCUIT SHORTED TO VOLTAGE
(K243) O2 2/2 SIGNAL CIRCUIT OPEN
(K904) O2 RETURN DOWNSTREAM CIRCUIT OPEN
2/2 O2 SENSOR
POWERTRAIN CONTROL MODULE (PCM)

Always perform the Pre-Diagnostic Troubleshooting procedure before proceeding. (Refer to 28 - DTC-Based Diagnostics/MODULE, Powertrain Control (PCM) - Standard Procedure).

1. ACTIVE DTC

NOTE: If an O2 sensor signal circuit is shorted to voltage, all O2 sensor voltage readings displayed on the scan tool will be approximately 5.0 Volts. Diagnose the sensor that set the most current DTC.

1. Start the engine and allow it to idle for at least 60 seconds.

WARNING: When the engine is operating, do not stand in direct line with the fan. Do not put your hands near the pulleys, belts or fan. Do not wear loose clothing. Failure to follow these instructions may result in possible serious or fatal injury.

2. With the scan tool, select View DTCs.

Is the DTC Active at this time?

Yes

- Go To 2

No

- Perform the INTERMITTENT CONDITION diagnostic procedure. (Refer to 28 - DTC-Based Diagnostics/MODULE, Powertrain Control (PCM) - Standard Procedure).

2. (K243) O2 2/2 SIGNAL CIRCUIT SHORTED TO VOLTAGE

1. Turn the ignition off.
2. Disconnect the C1 and C2 PCM harness connectors.
3. Disconnect the 2/2 O2 Sensor harness connector.
4. Turn the ignition on.
5. Measure the voltage on the (K243) O2 Sensor 2/2 Signal circuit in the O2 Sensor harness connector.

NOTE: Measure the voltage in reference to ground, not the (K904) O2 Return Downstream circuit.

Is there any voltage present?

Yes

- Repair the short to voltage in the (K243) O2 Sensor 2/2 Signal circuit.
- Perform the POWERTRAIN VERIFICATION TEST. (Refer to 28 - DTC-Based Diagnostics/MODULE, Powertrain Control (PCM) - Standard Procedure).

No

- Go To 3

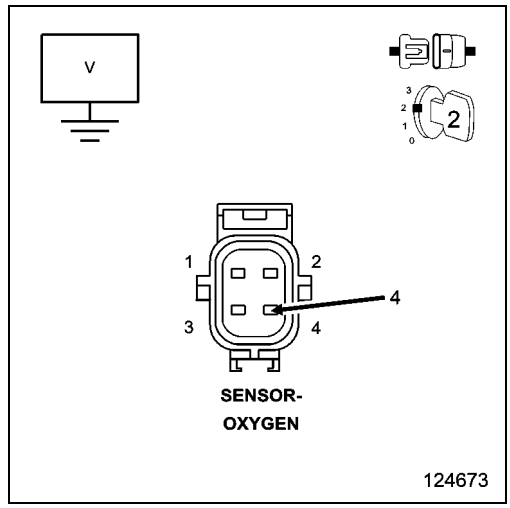

3. (K904) O2 RETURN DOWNSTREAM CIRCUIT SHORTED TO VOLTAGE

1. Measure the voltage on the (K904) O2 Return Downstream circuit in the 2/2 O2 Sensor harness connector.

Is there any voltage present?

Yes

- Repair the short to voltage in the (K904) O2 Return Downstream circuit.
- Perform the POWERTRAIN VERIFICATION TEST. (Refer to 28 - DTC-Based Diagnostics/MODULE, Powertrain Control (PCM) - Standard Procedure).

No

- Go To 4

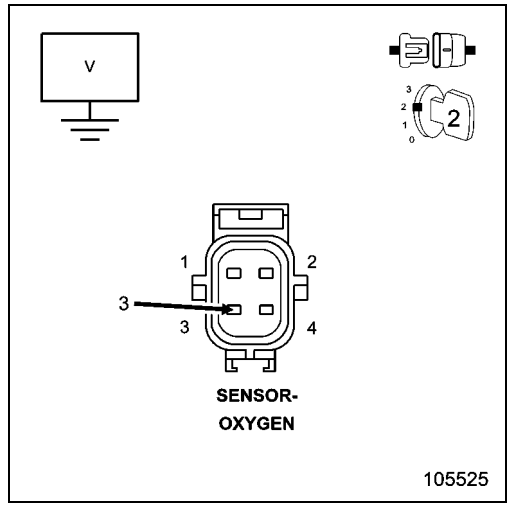

4. O2 SENSOR

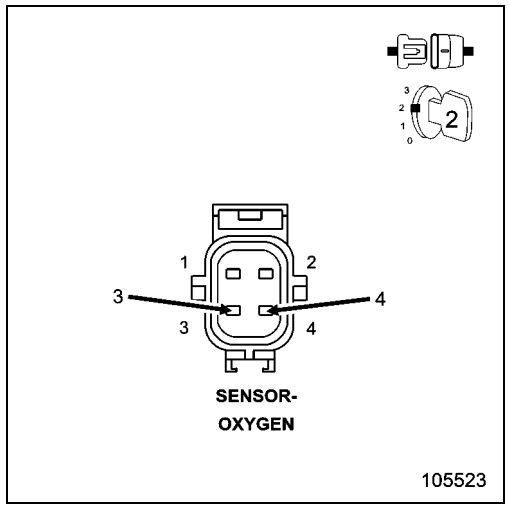

1. Turn the ignition off.
2. Connect the C1 and C2 PCM harness connectors.
3. Ignition on, engine not running.
4. With the scan tool, monitor the 2/2 O2 Sensor voltage.
5. Connect a jumper wire between the (K243) O2 2/2 Signal circuit and the (K904) O2 Return Downstream circuit in the 2/2 O2 Sensor harness connector.

Is the voltage between 2.3 and 2.7 Volts with the jumper wire installed?

Yes

- Verify that there is good pin to terminal contact in the O2 Sensor and Powertrain Control Module connectors. Replace the 2/2 O2 Sensor if no problems were found with the connectors.
- Perform the POWERTRAIN VERIFICATION TEST. (Refer to 28 - DTC-Based Diagnostics/MODULE, Powertrain Control (PCM) - Standard Procedure).

No

- Go To 5

NOTE: Remove the jumper wire before continuing.

5. (K243) O2 2/2 SIGNAL CIRCUIT OPEN

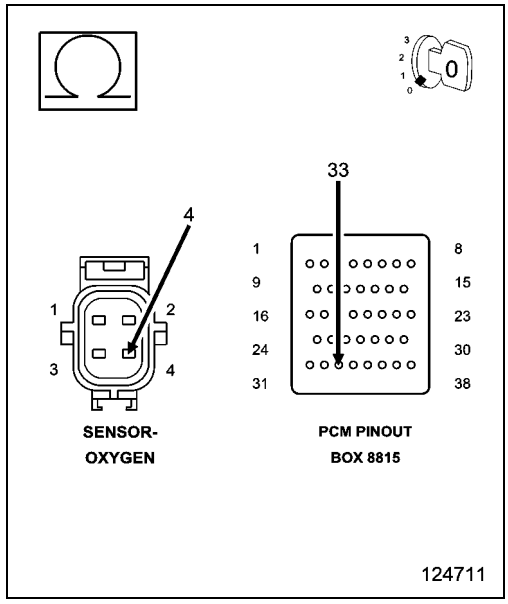

1. Turn the ignition off.
2. Disconnect the C1 and C2 PCM harness connectors.

CAUTION: Do not probe the PCM harness connectors. Probing the PCM harness connectors will damage the PCM terminals resulting in poor terminal to pin connection. Install the PCM Pinout Box Kit, NGC, 38 Position 8815A to perform diagnosis.

3. Measure the resistance of the (K243) O2 2/2 Signal circuit from the O2 Sensor harness connector to the appropriate terminal of PCM Pinout Box 8815A.

Is the resistance below 5.0 Ohms?

Yes

- Go To 6

No

- Repair the open in the (K243) O2 2/2 Signal circuit.
- Perform the POWERTRAIN VERIFICATION TEST. (Refer to 28 - DTC-Based Diagnostics/MODULE, Powertrain Control (PCM) - Standard Procedure).

6. (K904) O2 RETURN DOWNSTREAM CIRCUIT OPEN

1. Measure the resistance of the (K904) O2 Return Downstream circuit from the O2 Sensor harness connector to the appropriate terminal of PCM Pinout Box 8815A.

Is the resistance below 5.0 Ohms?

Yes

- Go To 7

No

- Repair the open in the (K904) O2 Return Downstream circuit.
- Perform the POWERTRAIN VERIFICATION TEST. (Refer to 28 - DTC-Based Diagnostics/MODULE, Powertrain Control (PCM) - Standard Procedure).

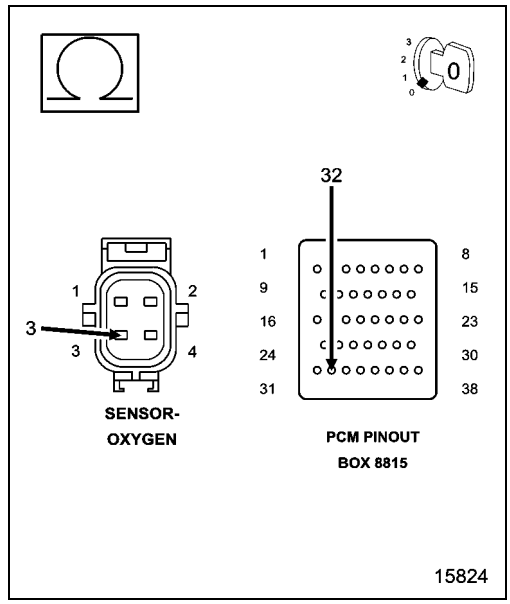

7. POWERTRAIN CONTROL MODULE (PCM)

1. Using the wiring diagram/schematic as a guide, inspect the wiring and connectors between the Oxygen Sensor 2/2 and the Powertrain Control Module (PCM).
2. Look for any chafed, pierced, pinched or partially broken wires.
3. Look for broken, bent, pushed out or corroded terminals. Verify that there is good pin to terminal contact in the Sensor and Control Module connectors.
4. Refer to any Technical Service Bulletins that may apply.

Were there any problems found?

Yes

- Repair as necessary.
- Perform the POWERTRAIN VERIFICATION TEST. (Refer to 28 - DTC-Based Diagnostics/MODULE, Powertrain Control (PCM) - Standard Procedure).

No

- Replace and program the Powertrain Control Module in accordance with the Service Information.
- Perform the POWERTRAIN VERIFICATION TEST. (Refer to 28 - DTC-Based Diagnostics/MODULE, Powertrain Control (PCM) - Standard Procedure).

P0159-O2 SENSOR 2/2 SLOW RESPONSE

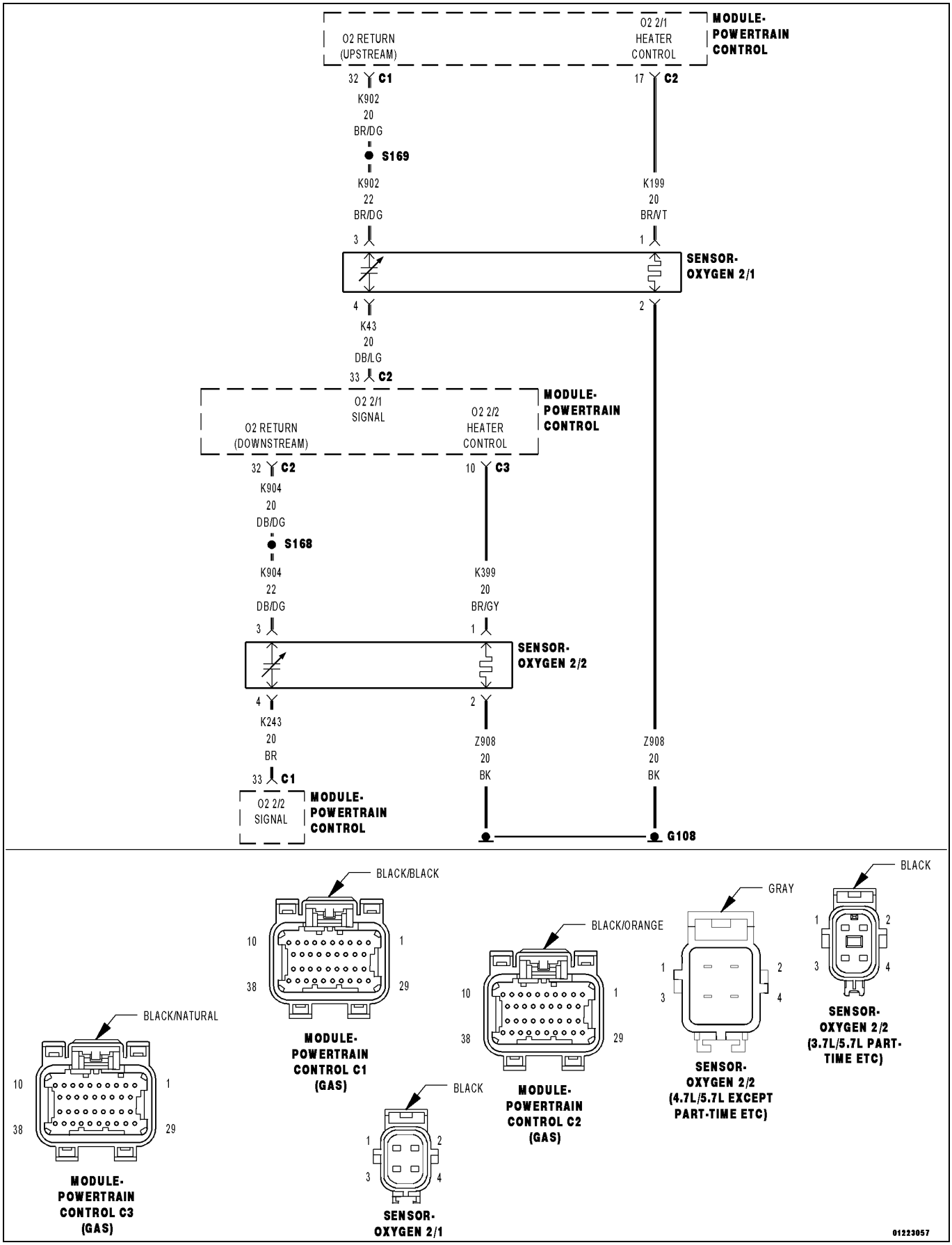

For a complete wiring diagram, **refer to the Wiring Information**.

Theory of Operation

The downstream O2 Sensor is located in the exhaust path behind the catalytic converter, is monitored for proper response to assure optimum catalytic converter efficiency. The downstream O2 response monitor is intended to diagnose a downstream O2 sensor that is not moving or stuck in a voltage window and to insure accurate information for catalyst monitor diagnosis.

- **When Monitored:**
  Vehicle is started and driven between 32 and 88.5 km/h (20 and 55 mph) with the Throttle open for a minimum of 120 seconds. Coolant greater than 70° C (158° F). Catalytic Converter Temp greater than 600° C (1112° F) and EVAP Purge is active.
- **Set Condition:**
  The oxygen sensor signal voltage switches less than 16 times from lean to rich within 20 seconds during monitoring. Two Trip Fault. Three good trips to turn off the MIL.

Possible Causes
EXHAUST LEAK
(K243) O2 2/2 SIGNAL CIRCUIT
(K904) O2 RETURN DOWNSTREAM CIRCUIT
2/2 O2 SENSOR

Always perform the Pre-Diagnostic Troubleshooting procedure before proceeding. (Refer to 28 - DTC-Based Diagnostics/MODULE, Powertrain Control (PCM) - Standard Procedure).

1. ACTIVE DTC

NOTE: After the repairs have been made, verify proper O2 Sensor operation. If all the O2 Sensor voltage readings have not returned to normal, follow the diagnostic procedure for the remaining O2 Sensors.

NOTE: Check for contaminants that may have damaged the O2 Sensor: contaminated fuel, unapproved silicone, oil and coolant.

1. Start the engine.
2. Allow the engine to reach normal operating temperature.
3. With the scan tool, select View DTCs.

NOTE: It may be necessary to drive the vehicle to meet the conditions to set this DTC, try to repeat the conditions in which the fault originally set by reviewing the Freeze Frame data.

Is the DTC Active or Pending at this time?

Yes

- Go To 2

No

- Perform the INTERMITTENT CONDITION diagnostic procedure. (Refer to 28 - DTC-Based Diagnostics/MODULE, Powertrain Control (PCM) - Standard Procedure).

2. CHECKING THE EXHAUST SYSTEM FOR LEAKS

1. Turn the ignition off.
2. Raise the vehicle in accordance with the Service Information.

WARNING: The normal operating temperature of the exhaust system is very high. Never work around or attempt to service any part of the exhaust system until it has cooled. Special care should be taken when working near the catalytic converter. The temperature of the converter rises to a high level after a short period of engine operating time.

3. Connect Exhaust Cone 8404-EC or 8404-EC to Air Pressure Regulator (with hose) W-18-MIL-1146AS.

CAUTION: The air pressure must not exceed 27.6 kPa (4 psi), otherwise engine damage can occur.

4. Attach shop air to the air pressure regulator.

5. Adjust the Air Pressure Regulator to 27.6 kPa (4 psi).
6. Insert the exhaust cone into the vehicle tail pipe.
7. If the vehicle is equipped with dual exhaust. Use the 8404-ECT with equipped attached plug, plug one side of the dual exhaust pipe. Pressurize the other as described above.
8. Apply Mopar® Air Leak Detector PN# 05191804AA (or an equivalent leak finder liquid) to the following areas:
   - All welded joints from the exhaust manifold to 152.4 mm (6 inches) behind the downstream O2 sensor
   - O2 sensor seal points
   - O2 sensor boss welds
   - Flange/joint connection(s)
   - Exhaust manifold to cylinder head connection(s)
   - EGR solenoid gasket base and tube seal points (if equipped)
9. Watch for the liquid/soapy water to bubble.
10. Use the following definitions to help determine if system or component repair/replacement is necessary:

- **Type 1 Leak** is defined as a leak where very small foam like bubbles 1 mm (0.04 of an inch) or less appear. Any Type 1 or greater leaks found in welded joints, O2 sensor seal points or O2 sensor boss welds must be repaired or the component must be replaced.
- **Type 2 Leak** is defined as a leak where larger bubbles pea size, 8 mm (0.3 of an inch) or greater appear. Any Type 2 or greater leaks found in flange or joint connections, exhaust manifold to cylinder head connections or EGR gasket and tube seal points must be repaired or the components must be replaced.

Leak Location	Repair required if results at 27.6 kPa (4 psi) reveal bubble size:
Welded joints	Type 1, 1 mm (0.04 of an inch) or greater
O2 Sensor seal points	Type 1, 1 mm (0.04 of an inch) or greater
O2 Sensor boss welds	Type 1, 1 mm (0.04 of an inch) or greater
Flange / joint connections	Type 2, 8 mm (0.3 of an inch) or greater
Exhaust Manifold to cylinder head connections	Type 2, 8 mm (0.3 of an inch) or greater
EGR gasket and tube seal points	Type 2, 8 mm (0.3 of an inch) or greater

11. If a leak is found that matches the above definition, repair or replace the component as necessary.
12. Once the repair is complete, repeat the procedure to verify that all leaks have been repaired.

Were any exhaust leaks found?

Yes

- Repair or replace the leaking exhaust parts as necessary.
- Perform the POWERTRAIN VERIFICATION TEST. (Refer to 28 - DTC-Based Diagnostics/MODULE, Powertrain Control (PCM) - Standard Procedure).

No

- Go To 3

3. (K243) O2 2/2 SIGNAL CIRCUIT

1. Turn the ignition off
2. Disconnect the 2/2 O2 Sensor harness connector.
3. Ignition on, engine not running.
4. Measure the voltage on the (K243) O2 2/2 Signal circuit in the O2 Sensor harness connector.

Is the voltage between 4.1 and 5.0 Volts?

Yes

- Go To 4

No

- Check the (K243) O2 2/2 Signal circuit for a short to ground, open or short to voltage. If OK, replace and program the Powertrain Control Module in accordance with the Service Information.
- Perform the POWERTRAIN VERIFICATION TEST. (Refer to 28 - DTC-Based Diagnostics/MODULE, Powertrain Control (PCM) - Standard Procedure).

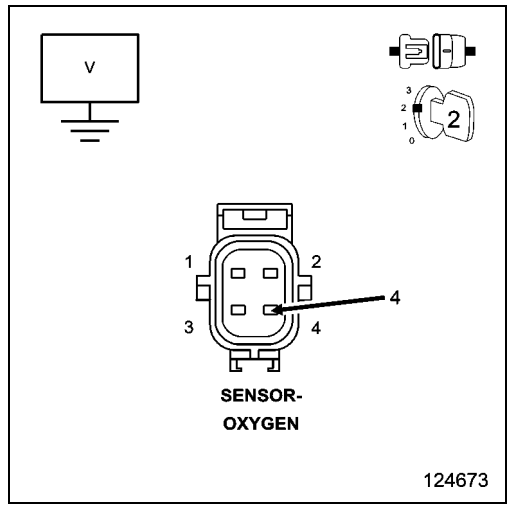

4. (K904) O2 RETURN DOWNSTREAM CIRCUIT

1. Measure the voltage on the (K904) O2 Return Downstream circuit in the O2 Sensor harness connector.

Is the voltage at 2.5 Volts?

Yes

- Go To 5

No

- Check the (K904) O2 Return Downstream circuit for a short to ground, open or short to voltage. If OK, replace and program the Powertrain Control Module in accordance with the Service Information.
- Perform the POWERTRAIN VERIFICATION TEST. (Refer to 28 - DTC-Based Diagnostics/MODULE, Powertrain Control (PCM) - Standard Procedure).

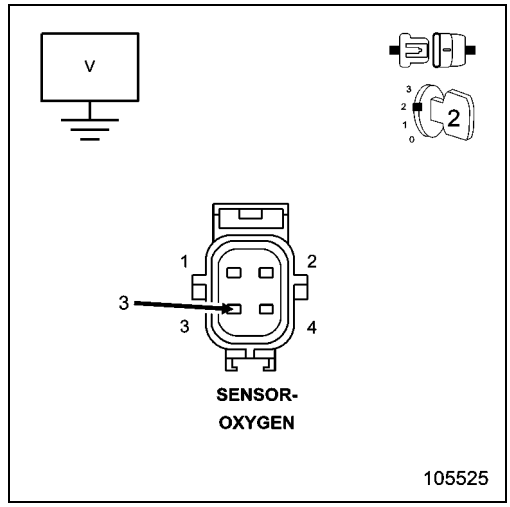

5. OXYGEN SENSOR

NOTE: Check for signs of contaminants that may have damaged the O2 Sensor, such as contaminated fuel, unapproved silicone, oil and coolant.

1. Using the wiring diagram/schematic as a guide, inspect the wiring and connectors between the 2/2 Oxygen Sensor and the Powertrain Control Module (PCM).
2. Look for any chafed, pierced, pinched or partially broken wires.
3. Look for broken, bent, pushed out or corroded terminals.
4. Perform any Technical Service Bulletins that may apply.

Were any problems found?

Yes

- Repair as necessary.
- Perform the POWERTRAIN VERIFICATION TEST. (Refer to 28 - DTC-Based Diagnostics/MODULE, Powertrain Control (PCM) - Standard Procedure).

No

- Replace the 2/2 Oxygen Sensor in accordance with the Service Information.
- Perform the POWERTRAIN VERIFICATION TEST. (Refer to 28 - DTC-Based Diagnostics/MODULE, Powertrain Control (PCM) - Standard Procedure).

P0161-O2 SENSOR 2/2 HEATER PERFORMANCE

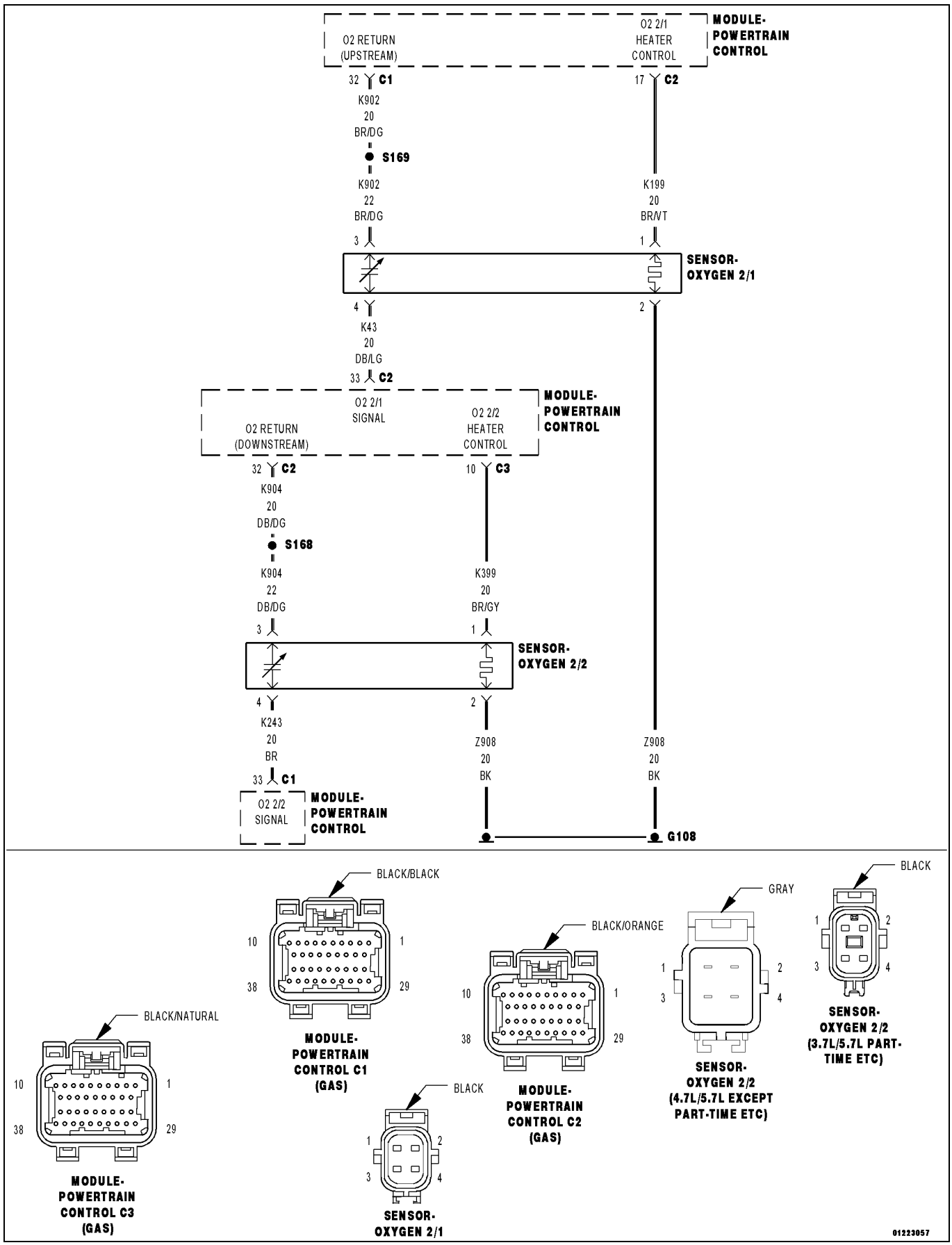

For a complete wiring diagram, **refer to the Wiring Information**.

Theory of Operation

This diagnostic provides a continuous check of the O2 heater circuit during operation. The heater circuit is momentarily disabled to allow a resistance measurement to be taken to infer heater temperature. The current delivery to the heater is duty cycled to maintain a specific target temperature. The error from the target temperature is continuously monitored to assess heater performance.

- **When Monitored:**

  Continuously during O2 sensor heater operation with battery voltage between 10.4 and 15.75 Volts and no O2 sensor circuit DTCs present.

- **Set Condition:**

  The Powertrain Control Module (PCM) detects no temperature change in the O2 sensor heater element when the heater circuit is active. The heater temperature is obtained by measuring the heater resistance and calculating the heater temperature. Two trip fault. Three good trips to turn off the MIL.

Possible Causes
(K399) O2 2/2 HEATER CONTROL CIRCUIT OPEN
(Z908) O2 2/2 HEATER GROUND CIRCUIT OPEN
2/2 O2 SENSOR
POWERTRAIN CONTROL MODULE (PCM)

Always perform the Pre-Diagnostic Troubleshooting procedure before proceeding. (Refer to 28 - DTC-Based Diagnostics/MODULE, Powertrain Control (PCM) - Standard Procedure).

1. O2 SENSOR HEATER OPERATION

1. Turn the ignition off.

NOTE: Wait a minimum of 8 minutes to allow the O2 Sensor to cool down before continuing the test. Allow the O2 Sensor voltage to stabilize between 4.6 and 5.0 Volts.

2. Ignition on, engine not running.
3. With the scan tool, actuate the O2 Heater Test.
4. With the scan tool, monitor 2/2 O2 Sensor voltage for at least 2 minutes.

Does the voltage stay above 4.5 Volts?

Yes

- Go To 2

No

- Perform the INTERMITTENT CONDITION diagnostic procedure. (Refer to 28 - DTC-Based Diagnostics/MODULE, Powertrain Control (PCM) - Standard Procedure)

2. O2 SENSOR HEATER ELEMENT

1. Turn the ignition off.

NOTE: Allow the O2 sensor to cool down to room temperature.

2. Disconnect the 2/2 O2 Sensor harness connector.
3. Measure the resistance of the 2/2 O2 Heater Element, between the O2 Heater Control terminal and the O2 Heater ground terminal in the O2 Sensor connector.

NOTE: O2 Heater Element resistance values should be measured at 21.1° C (70° F). The resistance value will vary with different temperature values.

Is the resistance of the O2 Sensor Heater Element between 2.0 and 30.0 Ohms?

Yes

- Go To 3

No

- Replace the 2/2 O2 Sensor.
- Perform the POWERTRAIN VERIFICATION TEST. (Refer to 28 - DTC-Based Diagnostics/MODULE, Powertrain Control (PCM) - Standard Procedure).

3. (K399) O2 2/2 HEATER CONTROL CIRCUIT OPEN

1. Disconnect the C3 PCM harness connector.

CAUTION: Do not probe the PCM harness connectors. Probing the PCM harness connectors will damage the PCM terminals resulting in poor terminal to pin connection. Install the PCM Pinout Box Kit, NGC, 38 Position 8815A to perform diagnosis.

2. Measure the resistance of the (K399) O2 2/2 Heater Control circuit from the O2 harness connector to the appropriate terminal of PCM Pinout Box 8815A.

Is the resistance below 0.5 of an Ohm?

Yes

- Go To 4

No

- Repair the excessive resistance in the (K399) O2 2/2 Heater Control circuit.
- Perform the POWERTRAIN VERIFICATION TEST. (Refer to 28 - DTC-Based Diagnostics/MODULE, Powertrain Control (PCM) - Standard Procedure).

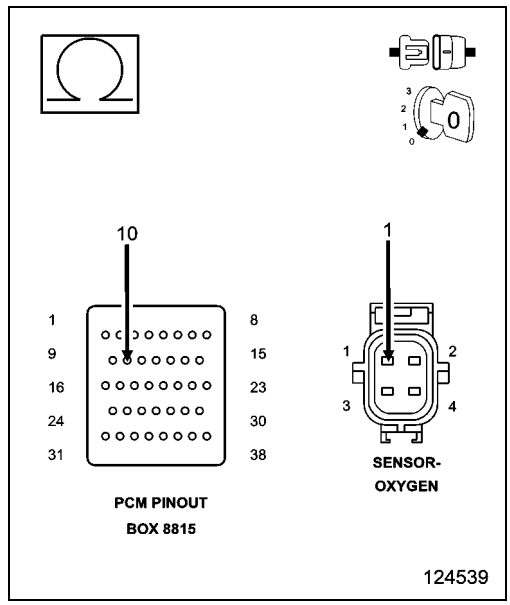

4. (Z908) O2 2/2 HEATER GROUND CIRCUIT OPEN

1. Using a 12-volt test light connected to 12 Volts, check the (Z908) Ground circuit in the 2/2 Oxygen Sensor harness connector.

NOTE: The test light should be illuminated and bright. Compare the brightness to that of a direct connection to the battery.

Is the test light illuminated and bright?

Yes

- Go To 5

No

- Repair the excessive resistance in the (Z908) O2 2/2 Heater ground circuit.
- Perform the POWERTRAIN VERIFICATION TEST. (Refer to 28 - DTC-Based Diagnostics/MODULE, Powertrain Control (PCM) - Standard Procedure).

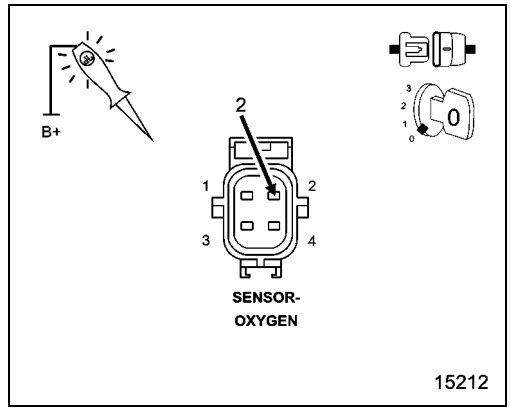

5. POWERTRAIN CONTROL MODULE (PCM)

1. Using the wiring diagram/schematic as a guide, inspect the wiring and connectors between the Oxygen Sensor 2/2 and the Powertrain Control Module (PCM).
2. Look for any chafed, pierced, pinched or partially broken wires.
3. Look for broken, bent, pushed out or corroded terminals. Verify that there is good pin to terminal contact in the Sensor and Control Module connectors.
4. Refer to any Technical Service Bulletins that may apply.

Were there any problems found?

Yes

- Repair as necessary.
- Perform the POWERTRAIN VERIFICATION TEST. (Refer to 28 - DTC-Based Diagnostics/MODULE, Powertrain Control (PCM) - Standard Procedure).

No

- Replace and program the Powertrain Control Module in accordance with the Service Information.
- Perform the POWERTRAIN VERIFICATION TEST. (Refer to 28 - DTC-Based Diagnostics/MODULE, Powertrain Control (PCM) - Standard Procedure).

P0171-FUEL SYSTEM 1/1 LEAN

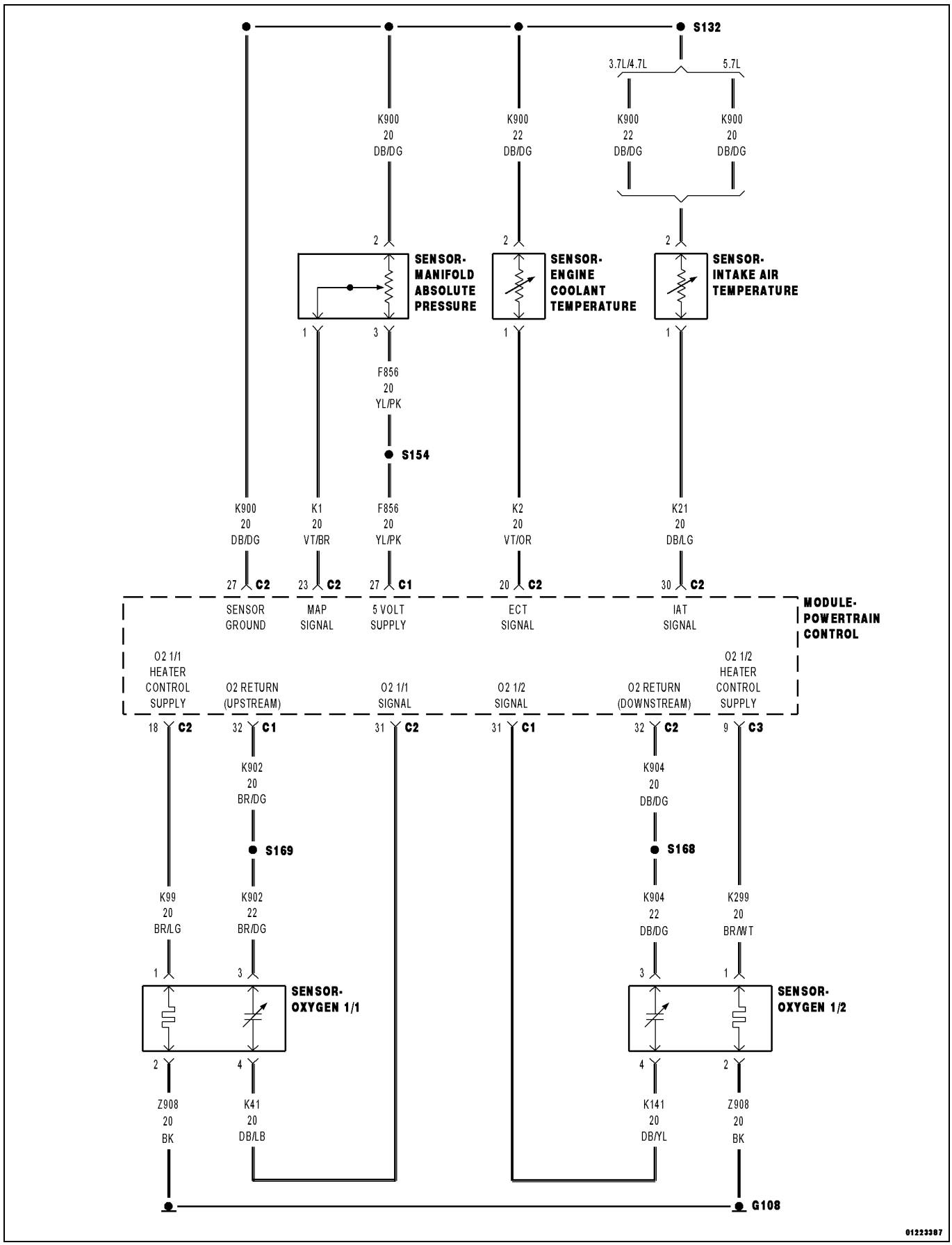

For a complete wiring diagram, **refer to the Wiring Information**.

Theory of Operation

The fuel feedback system will maintain a stoichiometric fuel/air mixture, 14.7:1, by modifying the injector pulse width according to the oxygen content of the exhaust gas. The Powertrain Control Module (PCM) makes short term and long term fuel corrections to maintain stoichiometric fuel/air ratio for best catalytic converter efficiency. Short term fuel correction is based on upstream O2 sensor output and is designed for quick engine response. The long term fuel correction compensated for variations in the engine specifications, sensor tolerances and component aging and is designed to correct rich and lean conditions over a longer period of time.

- **When Monitored:**

  With the engine running in closed loop mode, the ambient/battery temperature above -6.7° C (20° F) and altitude below 2590.8 m (8500 ft).
- **Set Condition:**

  If the Powertrain Control Module (PCM) multiplies short term compensation by long term adaptive and a certain percentage is exceeded for two trips, a freeze frame is stored, the MIL illuminates and a trouble code is stored. Two Trip Fault. Three good trips to turn off the MIL

Possible Causes
RESTRICTED FUEL SUPPLY LINE
FUEL PUMP INLET STRAINER PLUGGED
FUEL PUMP MODULE
O2 SIGNAL CIRCUIT
O2 RETURN CIRCUIT
O2 SENSOR HEATER OPERATION
O2 SENSOR
(F342) ASD CONTROL OUTPUT CIRCUIT(S) OPEN
(F342) ASD CONTROL OUTPUT CIRCUIT(S) SHORTED TO GROUND
MAP SENSOR OPERATION
ECT SENSOR OPERATION
ENGINE MECHANICAL
FUEL FILTER/PRESSURE REGULATOR (HIGH)
TOTALLY INTEGRATED POWER MODULE (TIPM)
POWERTRAIN CONTROL MODULE (PCM)

Always perform the Pre-Diagnostic Troubleshooting procedure before proceeding. (Refer to 28 - DTC-Based Diagnostics/MODULE, Powertrain Control (PCM) - Standard Procedure).

1. ACTIVE DIAGNOSTIC TROUBLE CODE (DTC)

1. Diagnose all other trouble codes before continuing.

NOTE: Check for contaminants that may have damaged an O2 Sensor: contaminated fuel, unapproved silicone, oil and coolant.

2. Start the engine.
3. Allow the engine to reach normal operating temperature.
4. Using the scan tool, select View DTCs.

NOTE: It may be necessary to drive the vehicle to meet the conditions to set this DTC, try to repeat the conditions in which the fault originally set by reviewing the Freeze Frame data.

Is the DTC Active or Pending at this time?

Yes

- Go To 2

No

- Perform the INTERMITTENT CONDITION diagnostic procedure. (Refer to 28 - DTC-Based Diagnostics/MODULE, Powertrain Control (PCM) - Standard Procedure).

2. CHECKING FUEL PRESSURE

WARNING: The fuel system is under a constant pressure (even with the engine off). Before testing or servicing any fuel system hose, fitting or line, the fuel system pressure must be released. Failure to follow these instructions can result in possible serious or fatal injury.

1. Install the Fuel Pressure Decay Tester 8978A to the fuel rail.
2. Ignition on, engine not running.
3. Using the scan tool, actuate the ASD Fuel System test and observe the fuel pressure gauge.

NOTE: Fuel pressure specification is 407 kPa +/- 34 kPa (59 psi +/- 5 psi).

4. Turn the ignition off.

Choose a conclusion that best matches your fuel pressure reading.

Within Specification

- Go To 3

Above Specification

- Replace the fuel filter/pressure regulator.
- Perform the POWERTRAIN VERIFICATION TEST. (Refer to 28 - DTC-Based Diagnostics/MODULE, Powertrain Control (PCM) - Standard Procedure).

Below Specification

- Go To 17

CAUTION: Before Proceeding Stop All Actuations.

3. CHECKING THE EXHAUST SYSTEM FOR LEAKS

1. Turn the ignition off.
2. Raise the vehicle in accordance with the Service Information.

WARNING: The normal operating temperature of the exhaust system is very high. Never work around or attempt to service any part of the exhaust system until it has cooled. Special care should be taken when working near the catalytic converter. The temperature of the converter rises to a high level after a short period of engine operating time.

3. Connect Exhaust Cone 8404-EC or 8404-EC to Air Pressure Regulator (with hose) W-18-MIL-1146AS.

CAUTION: Adjust the Air Pressure Regulator to 27.6 kPa (4 psi).

4. Attach shop air to the air pressure regulator.
5. Adjust the Air Pressure Regulator to 27.6 kPa (4 psi).
6. Insert the exhaust cone into the vehicle tail pipe.
7. If the vehicle is equipped with dual exhaust. Use the 8404-ECT with equipped attached plug , plug one side of the dual exhaust pipe. Pressurize the other as described above.
8. Apply Mopar® Air Leak Detector PN# 05191804AA (or an equivalent leak finder liquid) to the following areas:
   - All welded joints from the exhaust manifold to 152.4 mm (6 inches) behind the downstream O2 sensor
   - O2 sensor seal points
   - O2 sensor boss welds
   - Flange/joint connection(s)
   - Exhaust manifold to cylinder head connection(s)
   - EGR solenoid gasket base and tube seal points (if equipped)
9. Watch for the liquid/soapy water to bubble.
10. Use the following definitions to help determine if system or component repair/replacement is necessary:

Type 1 Leak is defined as a leak where very small foam like bubbles 1 mm (0.04 of an inch) or less appear.

Any Type 1 or greater leaks found in welded joints, O2 sensor seal points or O2 sensor boss welds must be repaired or the component must be replaced.

Type 2 Leak is defined as a leak where larger bubbles pea size, 8 mm (0.3 of an inch) or greater appear.

Any Type 2 or greater leaks found in flange or joint connections, exhaust manifold to cylinder head connections or EGR gasket and tube seal points must be repaired or the components must be replaced.

Leak Location	Repair required if results at 27.6 kPa (4 psi) reveal bubble size:
Welded joints	Type 1, 1 mm (0.04 of an inch) or greater
O2 Sensor seal points	Type 1, 1 mm (0.04 of an inch) or greater
O2 Sensor boss welds	Type 1, 1 mm (0.04 of an inch) or greater
Flange / joint connections	Type 2, 8 mm (0.3 of an inch) or greater
Exhaust Manifold to cylinder head connections	Type 2, 8 mm (0.3 of an inch) or greater
EGR gasket and tube seal points	Type 2, 8 mm (0.3 of an inch) or greater

11. If a leak is found that matches the above definition, repair or replace the component as necessary.
12. Once the repair is complete, repeat the procedure to verify that all leaks have been repaired.

Were any exhaust leaks found?

Yes

- Repair or replace the leaking exhaust parts as necessary.
- Perform the POWERTRAIN VERIFICATION TEST. (Refer to 28 - DTC-Based Diagnostics/MODULE, Powertrain Control (PCM) - Standard Procedure).

No

- Go To 4

4. O2 SENSOR OPERATION

1. Start the engine.
2. Allow the engine to reach normal operating temperature.

NOTE: If one of the O2 Sensor's Signal or Return circuit is shorted to ground the scan tool will display all O2 Sensor voltage readings low. The O2 Sensor that is shorted to ground will display a voltage reading near or at 0 Volts.

NOTE: If one of the O2 Sensor Signal or Return circuits are shorted to voltage, the scan tool will display all O2 Sensor voltage readings high.

NOTE: After the repairs have been made, verify proper O2 Sensor operation. If all the O2 Sensor voltage readings have not returned to normal, follow the diagnostic procedure for the remaining O2 Sensors.

3. Using the scan tool, monitor all of the O2 Sensor voltage readings.

Is the voltage switching between 2.5 and 3.4 Volts for all the O2 Sensors?

Yes

- Go To 5

No

- Go To 13

5. 1/1 O2 SENSOR HEATER OPERATION

1. Turn the ignition off.

NOTE: Wait a minimum of 10 minutes to allow the O2 Sensor to cool down before continuing the test. Allow the O2 Sensor voltage to stabilize at 5.0 Volts.

2. Ignition on, engine not running.
3. Using the scan tool, actuate the 1/1 O2 Heater Test.
4. Using the scan tool, monitor 1/1 O2 Sensor voltage for at least two minutes.

Does the voltage stay above 4.5 Volts?

Yes

- Verify that there is good pin to terminal contact in the O2 Sensor and Powertrain Control Module connectors. Replace the 1/1 O2 Sensor if no problems were found with the connectors.
- Perform the POWERTRAIN VERIFICATION TEST. (Refer to 28 - DTC-Based Diagnostics/MODULE, Powertrain Control (PCM) - Standard Procedure).

No

- Go To 6

6. ASD CONTROL OUTPUT OPERATION FROM THE TIPM

1. Turn the ignition off.

CAUTION: Do not probe the PCM harness connectors. Probing the PCM harness connectors will damage the PCM terminals resulting in poor terminal to pin connection. Install PCM Pinout Box 8815A **along with the adapter** 8815-1 **between the PCM harness connector C3 and the PCM to perform the diagnosis.**

WARNING: When the engine is operating, do not stand in direct line with the fan. Do not put your hands near the pulleys, belts or fan. Do not wear loose clothing. Failure to follow these instructions may result in possible serious or fatal injury.

2. Start and allow the engine to run.
3. With a Voltmeter, probe the (F342) ASD Control Output circuits in the appropriate terminals of PCM Pinout Box 8815A.

Is the voltage above 12.5 Volts?

Yes

- Go To 10

No

- Go To 7

7. (F342) ASD CONTROL OUTPUT CIRCUIT(S) OPEN

1. Turn the ignition off.
2. Disconnect the C5 TIPM harness connector.

CAUTION: Do not probe the PCM harness connectors. Probing the PCM harness connectors will damage the PCM terminals resulting in poor terminal to pin connection. Install the PCM Pinout Box Kit, NGC, 38 Position 8815A to perform diagnosis.

3. Measure the resistance of the (F342) ASD Control Output circuits from the C5 TIPM harness connector to the appropriate terminals of PCM Pinout Box 8815A.

Is the resistance below 5.0 Ohms?

Yes

- Go To 8

No

- Repair the open in the (F342) ASD Control Output circuit(s).
- Perform the POWERTRAIN VERIFICATION TEST. (Refer to 28 - DTC-Based Diagnostics/MODULE, Powertrain Control (PCM) - Standard Procedure).

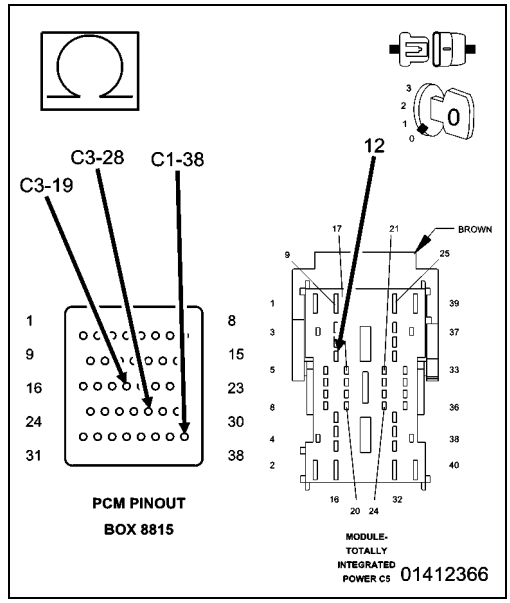

8. (F342) ASD CONTROL OUTPUT CIRCUIT(S) SHORTED TO GROUND

1. Measure the resistance between ground and both of the (F342) ASD Control Output circuits in the C5 TIPM harness connector.

Is the resistance below 100 Ohms?

Yes

- Repair the short to ground in the (F342) ASD Control Output circuit(s).
- Perform the POWERTRAIN VERIFICATION TEST. (Refer to 28 - DTC-Based Diagnostics/MODULE, Powertrain Control (PCM) - Standard Procedure).

No

- Go To 9

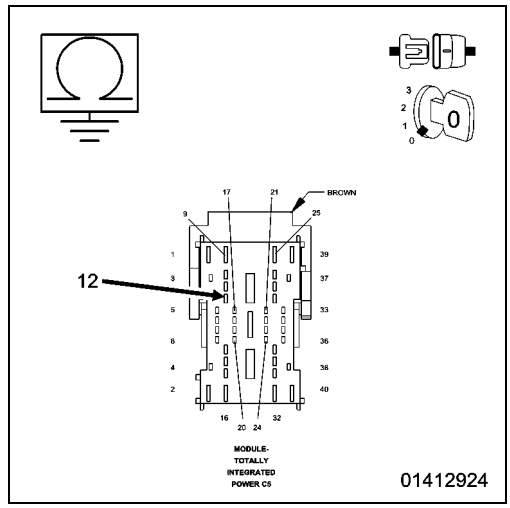

9. TOTALLY INTEGRATED POWER MODULE

1. Using the wiring diagram/schematic as a guide, inspect the wiring and connectors between the related TIPM and the Powertrain Control Module (PCM).
2. Look for any chafed, pierced, pinched or partially broken wires.
3. Look for broken, bent, pushed out or corroded terminals. Verify that there is good pin to terminal contact in the TIPM and Powertrain Control Module connectors.
4. Perform any Technical Service Bulletins that may apply.

Were there any problems found?

Yes

- Repair as necessary.
- Perform the BODY VERIFICATION TEST. (Refer to 28 - DTC-Based Diagnostics/MODULE, Totally Integrated Power (TIPM) - Standard Procedure).

No

- Replace and program the Totally Integrated Power Module in accordance with the Service Information.
- Perform the BODY VERIFICATION TEST. (Refer to 28 - DTC-Based Diagnostics/MODULE, Totally Integrated Power (TIPM) - Standard Procedure).

10. MAP SENSOR OPERATION

1. Ignition on, engine not running.
2. Using the scan tool, read the Barometric Pressure.

NOTE: The Barometric Pressure should be approximately equal to the actual barometric pressure. If necessary, compare the Barometric Pressure value of this vehicle to the value of a known good vehicle of a similar make and model.

3. Turn the ignition off.
4. Connect a Vacuum Gauge to a Manifold Vacuum source.
5. Start the engine.
6. Allow the engine to idle.

NOTE: If engine will not idle, maintain a constant RPM above idle.

7. Using the scan tool, read the MAP Sensor vacuum value.

Is the scan tool reading for MAP Vacuum within 1 inch of Hg on the Vacuum Gauge reading and is the Barometric Pressure reading of the vehicle the approximately the same as actual Barometric Pressure?

Yes

- Go To 11

No

- Verify that there is good pin to terminal contact in the MAP Sensor and Powertrain Control Module connectors. Replace the MAP Sensor if no problems were found with the connectors.
- Perform the POWERTRAIN VERIFICATION TEST. (Refer to 28 - DTC-Based Diagnostics/MODULE, Powertrain Control (PCM) - Standard Procedure).

11. ECT SENSOR OPERATION

NOTE: For this test to be valid, the thermostat must be operating correctly.

NOTE: This test works best if performed on a cold engine (cold soak)

1. Ignition on, engine not running.
2. Using the scan tool, read the Engine Coolant Temperature (ECT) Sensor value. If the engine was allowed to sit overnight (cold soak), the temperature value should be a sensible value that is somewhere close to the ambient temperature.

NOTE: If engine coolant temperature is above 82° C (180° F), allow the engine to cool until 65° C (150° F) is reached.

3. Start the Engine.
4. During engine warm-up, monitor the ECT Sensor value. The temperature value change should be a smooth transition from start up to normal operating temperature 82° C (180° F). The value should reach at least 82° C (180° F).

Did the ECT value increase smoothly and did it reach at least 82° C (180° F)?

Yes

- Go To 12

No

- Verify that there is good pin to terminal contact in the ECT Sensor and Powertrain Control Module connectors. Replace the ECT Sensor if no problems were found with the connectors.
- Perform the POWERTRAIN VERIFICATION TEST. (Refer to 28 - DTC-Based Diagnostics/MODULE, Powertrain Control (PCM) - Standard Procedure).

12. ENGINE MECHANICAL

1. Turn the ignition off.

Check for any of the following conditions/mechanical problems:

- AIR INDUCTION SYSTEM - must be free from leaks.
- ENGINE VACUUM - must be at least 13 inches in neutral
- ENGINE VALVE TIMING - must be within specifications
- ENGINE COMPRESSION - must be within specifications
- ENGINE EXHAUST SYSTEM - must be free of any restrictions or leaks.
- ENGINE PCV SYSTEM - must flow freely
- TORQUE CONVERTER STALL SPEED - must be within specifications
- POWER BRAKE BOOSTER - no internal vacuum leaks
- FUEL - must be free of contamination
- FUEL INJECTOR - plugged or restricted injector; control wire not connected to correct injector

Are there any engine mechanical problems?

Yes

- Repair as necessary.
- Perform the POWERTRAIN VERIFICATION TEST. (Refer to 28 - DTC-Based Diagnostics/MODULE, Powertrain Control (PCM) - Standard Procedure).

No

- Go To 16

13. 1/1 O2 SENSOR

1. Disconnect the 1/1 O2 Sensor harness connector.
2. Ignition on, engine not running.
3. Using the scan tool, monitor the 1/1 O2 Sensor voltage.
4. O2 Sensor voltage should read between 4.1 and 5.0 Volts on the scan tool with the connector disconnected.
5. Connect a jumper wire between the (K41) Signal circuit and the (K902) O2 Return Upstream circuit in the O2 Sensor harness connector.

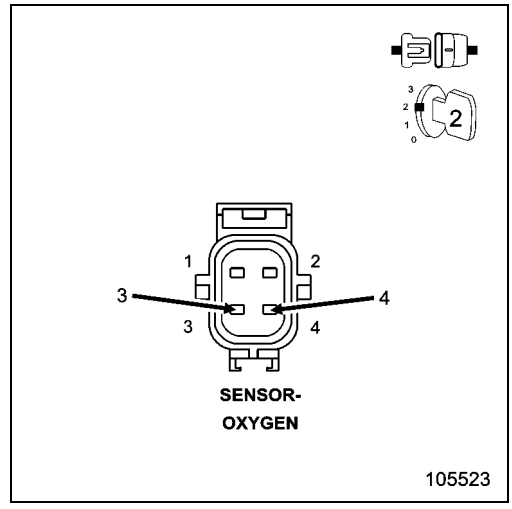

NOTE: The voltage should drop from between 4.1 and 5.0 Volts to 2.5 Volts with the jumper wire in place.

Did the O2 Sensor voltage change from between 4.1 and 5.0 Volts to 2.5 Volts with the jumper wire installed?

Yes

- Verify that there is good pin to terminal contact in the O2 Sensor and Powertrain Control Module connectors. Replace the 1/1 O2 Sensor if no problems were found with the connectors.
- Perform the POWERTRAIN VERIFICATION TEST. (Refer to 28 - DTC-Based Diagnostics/MODULE, Powertrain Control (PCM) - Standard Procedure).

No

- Go To 14

NOTE: Remove the jumper wire before continuing.

14. (K41) O2 SENSOR 1/1 SIGNAL CIRCUIT

1. Using the scan tool, monitor the 1/1 O2 Sensor voltage reading with the jumper wire removed.

NOTE: The scan tool will display all O2 Sensor voltage readings approximately 5.0 Volts when only one O2 Sensor's Signal circuit is shorted to voltage.

NOTE: The scan tool will display one O2 Sensor voltage close to zero and the others will read lower than normal when one O2 Sensor Signal circuit contains excessive resistance.

Is the voltage between 4.1 and 5.0 Volts?

Yes

- Go To 15

No

- Check the (K41) O2 Sensor 1/1 Signal circuit for a short to ground, open or short to voltage. Inspect the O2 Sensor connector and the PCM harness connector. If OK, replace and program the Powertrain Control Module in accordance with the Service Information.
- Perform the POWERTRAIN VERIFICATION TEST. (Refer to 28 - DTC-Based Diagnostics/MODULE, Powertrain Control (PCM) - Standard Procedure).

15. (K902) O2 RETURN UPSTREAM CIRCUIT

1. Measure the voltage on the (K902) O2 Return Upstream circuit in the O2 Sensor harness connector.

Is the voltage at 2.5 Volts?

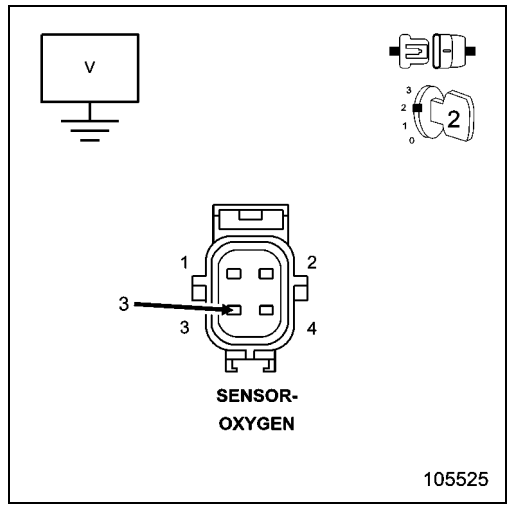

Yes

- Go To 16

No

- Check the O2 Return circuit for a short to ground, open or short to voltage. Inspect the O2 Sensor connector and the PCM harness connector. If OK, replace and program the Powertrain Control Module in accordance with the Service Information.
- Perform the POWERTRAIN VERIFICATION TEST. (Refer to 28 - DTC-Based Diagnostics/MODULE, Powertrain Control (PCM) - Standard Procedure).

16. POWERTRAIN CONTROL MODULE (PCM)

1. Using the wiring diagram/schematic as a guide, inspect the wiring and connectors between the Sensors and the Powertrain Control Module (PCM).
2. Look for any chafed, pierced, pinched or partially broken wires.
3. Look for broken, bent, pushed out or corroded terminals. Verify that there is good pin to terminal contact in the Sensor and Control Module connectors.
4. Perform any Technical Service Bulletins that may apply.

Were there any problems found?

Yes

- Repair as necessary.
- Perform the POWERTRAIN VERIFICATION TEST. (Refer to 28 - DTC-Based Diagnostics/MODULE, Powertrain Control (PCM) - Standard Procedure).

No

- Replace and program the Powertrain Control Module in accordance with the Service Information.
- Perform the POWERTRAIN VERIFICATION TEST. (Refer to 28 - DTC-Based Diagnostics/MODULE, Powertrain Control (PCM) - Standard Procedure).

17. RESTRICTED FUEL SUPPLY LINE

WARNING: The fuel system is under a constant pressure (even with the engine off). Before testing or servicing any fuel system hose, fitting or line, the fuel system pressure must be released. Failure to follow these instructions can result in possible serious or fatal injury.

1. Turn the ignition off.
2. Raise vehicle on hoist and disconnect the fuel pressure line at the fuel pump module.
3. Install Fuel Pressure Decay Tester 8978A between the fuel supply line and the fuel pump module.
4. Ignition on, engine not running.
5. Using the scan tool, actuate the ASD Fuel System test and observe the fuel pressure gauge.

NOTE: Fuel pressure specification is 407 kPa +/- 34 kPa (59 psi +/- 5 psi).

Is the fuel pressure within specification?

Yes

- Repair or replace fuel supply line as necessary.
- Perform the POWERTRAIN VERIFICATION TEST. (Refer to 28 - DTC-Based Diagnostics/MODULE, Powertrain Control (PCM) - Standard Procedure).

No

- Go To 18

CAUTION: Stop All Actuations.

18. FUEL PUMP INLET STRAINER

WARNING: The fuel system is under a constant pressure (even with the engine off). Before testing or servicing any fuel system hose, fitting or line, the fuel system pressure must be released.

1. Turn the ignition off.
2. Remove the Fuel Pump Module and inspect the Fuel Inlet Strainer.

Is the Fuel Inlet Strainer plugged?

Yes

- Replace the Fuel Pump Inlet Strainer.
- Perform the POWERTRAIN VERIFICATION TEST. (Refer to 28 - DTC-Based Diagnostics/MODULE, Powertrain Control (PCM) - Standard Procedure).

No

- Go To 19

19. FUEL PUMP MODULE

Repair

- Verify that there is good pin to terminal contact in the Fuel Pump Module, TIPM and Powertrain Control Module connectors. Replace the Fuel Pump Module if no problems were found with the connectors.
- Perform the POWERTRAIN VERIFICATION TEST. (Refer to 28 - DTC-Based Diagnostics/MODULE, Powertrain Control (PCM) - Standard Procedure).

P0172-FUEL SYSTEM 1/1 RICH

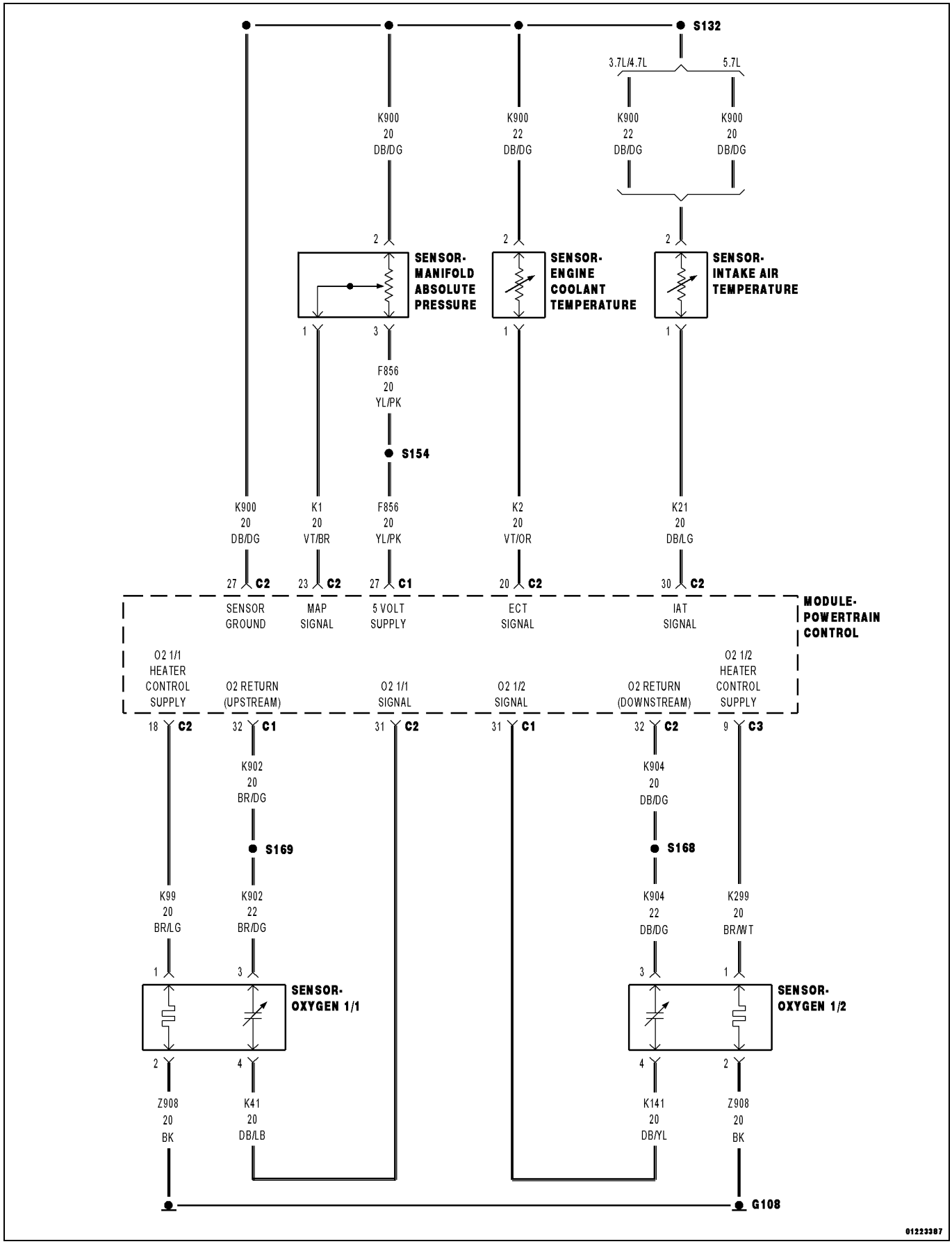

For a complete wiring diagram, **refer to the Wiring Information**.

Theory of Operation

The fuel feedback system will maintain a stoiciometric fuel/air mixture, 14.7:1, by modifying the injector pulse width according to the oxygen content of the exhaust gas. The Powertrain Control Module (PCM) makes short term and long term fuel corrections to maintain stoiciometric fuel/air ratio for best catalytic converter efficiency. Short term fuel correction is based on upstream O2 sensor output and is designed for quick engine response. The long term fuel correction compensated for variations in the engine specifications, sensor tolerances and component aging and is designed to correct rich and lean conditions over a longer period of time.

- **When Monitored:**

  With the engine running in closed loop mode, the ambient/battery temperature above -6.7° C (20° F) and altitude below 2590.8 m (8500 ft).
- **Set Condition:**

  If the Powertrain Control Module (PCM) multiplies short term compensation by long term adaptive and a purge fuel multiplier and the result is below a certain value for 30 seconds over two trips, a freeze frame is stored, the MIL illuminates and a trouble code is stored. Two Trip Fault. Three good trips to turn off the MIL.

Possible Causes
O2 SENSOR HEATER OPERATION
EVAP PURGE SOLENOID OPERATION
O2 SIGNAL CIRCUIT
O2 RETURN CIRCUIT
O2 SENSOR
MAP SENSOR
ECT SENSOR
ENGINE MECHANICAL PROBLEM
FUEL FILTER/PRESSURE REGULATOR (HIGH)
POWERTRAIN CONTROL MODULE (PCM)

Always perform the Pre-Diagnostic Troubleshooting procedure before proceeding. (Refer to 28 - DTC-Based Diagnostics/MODULE, Powertrain Control (PCM) - Standard Procedure).

1. ACTIVE DIAGNOSTIC TROUBLE CODE (DTC)

NOTE: Check for contaminates that may have damaged an O2 Sensor: contaminated fuel, unapproved silicone, oil and coolant.

1. Start the engine.
2. Allow the engine to reach normal operating temperature.
3. Using the scan tool, select View DTCs.

NOTE: It may be necessary to drive the vehicle to meet the conditions to set this DTC, try to repeat the conditions in which the fault originally set by reviewing the Freeze Frame data.

Is the DTC Active or Pending at this time?

Yes

- Go To 2

No

- Perform the INTERMITTENT CONDITION diagnostic procedure. (Refer to 28 - DTC-Based Diagnostics/MODULE, Powertrain Control (PCM) - Standard Procedure).

2. CHECKING FUEL PRESSURE

WARNING: The fuel system is under a constant pressure (even with the engine off). Before testing or servicing any fuel system hose, fitting or line, the fuel system pressure must be released. Failure to follow these instructions can result in possible serious or fatal injury.

1. Install the Fuel Pressure Decay Tester 8978A to the fuel rail.
2. Ignition on, engine not running.
3. Using the scan tool, actuate the ASD Fuel System test and observe the fuel pressure gauge.

NOTE: Fuel pressure specification is 407 kPa +/- 34 kPa (59 psi +/- 5 psi).

4. Turn the ignition off.

Choose a conclusion that best matches your fuel pressure reading.

Within Specification

- Go To 3

Above Specification

- Replace the fuel filter/pressure regulator.
- Perform the POWERTRAIN VERIFICATION TEST. (Refer to 28 - DTC-Based Diagnostics/MODULE, Powertrain Control (PCM) - Standard Procedure).

CAUTION: Stop All Actuations.

3. O2 SENSOR OPERATION

1. Start the engine.
2. Allow the engine to reach normal operating temperature.

NOTE: If one of the O2 Sensors Signal or Return circuit is shorted to ground or voltage, all the other O2 Sensor voltage readings will be affected.

NOTE: After the repairs have been made, verify proper O2 Sensor operation. If all the O2 Sensor voltage readings have not returned to normal, follow the diagnostic procedure for the remaining O2 Sensors.

3. Using the scan tool, monitor the 1/1 O2 Sensor voltage reading.

Is the voltage switching between 2.5 and 3.4 Volts?

Yes

- Go To 4

No

- Go To 9

4. 1/1 O2 SENSOR HEATER OPERATION

1. Turn the ignition off.

NOTE: Wait a minimum of 10 minutes to allow the O2 Sensor to cool down before continuing the test. Allow the O2 Sensor voltage to stabilize at 5.0 Volts.

2. Ignition on, engine not running.
3. Using the scan tool, perform the 1/1 O2 Heater Test.
4. Using the scan tool, monitor the O2 Sensor voltage while performing the Heater test for at least two minutes.

Does the voltage stay above 4.5 Volts during the Heater test?

Yes

- Verify that there is good pin to terminal contact in the O2 Sensor and Powertrain Control Module connectors. Replace the 1/1 O2 Sensor if no problems were found with the connectors.
- Perform the POWERTRAIN VERIFICATION TEST. (Refer to 28 - DTC-Based Diagnostics/MODULE, Powertrain Control (PCM) - Standard Procedure).

No

- Go To 5

5. MAP SENSOR OPERATION

1. Ignition on, engine not running.
2. Using the scan tool, read the Barometric Pressure.

NOTE: The Barometric Pressure should be approximately equal to the actual barometric pressure. If necessary, compare the Barometric Pressure value of this vehicle to the value of a known good vehicle of a similar make and model.

3. Turn the ignition off.
4. Connect a Vacuum Gauge to a Manifold Vacuum source.
5. Start the engine.
6. Allow the engine to idle.

NOTE: If engine will not idle, maintain a constant RPM above idle.

7. Using the scan tool, read the MAP Sensor vacuum value.

Is the scan tool reading for MAP Vacuum within 1 inch of Hg on the Vacuum Gauge reading and is the Barometric Pressure reading of the vehicle the approximately the same as actual Barometric Pressure?

Yes

- Go To 6

No

- Verify that there is good pin to terminal contact in the MAP Sensor and Powertrain Control Module connectors. Replace the MAP Sensor if no problems were found with the connectors.
- Perform the POWERTRAIN VERIFICATION TEST. (Refer to 28 - DTC-Based Diagnostics/MODULE, Powertrain Control (PCM) - Standard Procedure).

NOTE: Remove the vacuum gauge before continuing.

6. ECT SENSOR OPERATION

NOTE: For this test to be valid, the thermostat must be operating correctly.

NOTE: This test works best if performed on a cold engine (cold soak)

1. Ignition on, engine not running.
2. Using the scan tool, read the Engine Coolant Temperature Sensor value. If the engine was allowed to sit overnight (cold soak), the temperature value should be a sensible value that is somewhere close to the ambient temperature.

NOTE: If engine coolant temperature is above 82° C (180° F), allow the engine to cool until 65° C (150° F) is reached.

3. Start the Engine.
4. During engine warm-up, monitor the Engine Coolant Temperature value. The temp value change should be a smooth transition from start up to normal operating temp 82° C (180° F). The value should reach at least 82° C (180° F).

Did the ECT value increase smoothly and reach at least 82° C (180° F)?

Yes

- Go To 7

No

- Verify that there is good pin to terminal contact in the ECT Sensor and Powertrain Control Module connectors. Replace the Engine Coolant Temperature Sensor if no problems were found with the connectors.
- Perform the POWERTRAIN VERIFICATION TEST. (Refer to 28 - DTC-Based Diagnostics/MODULE, Powertrain Control (PCM) - Standard Procedure).

7. EVAP PURGE SOLENOID OPERATION

1. Turn the ignition off.
2. Disconnect the hoses at the Evap Purge Solenoid.
3. Using a hand vacuum pump, apply 10 inches of vacuum to the Evap Purge Solenoid vacuum source port on the component side.

Did the Evap Purge Solenoid hold vacuum?

Yes

- Go To 8

No

- Verify that there is good pin to terminal contact in the Solenoid and Powertrain Control Module connectors. Replace the Evap Purge Solenoid if no problems were found with the connectors.
- Perform the POWERTRAIN VERIFICATION TEST. (Refer to 28 - DTC-Based Diagnostics/MODULE, Powertrain Control (PCM) - Standard Procedure).

NOTE: Connect the vacuum hoses before continuing.

8. ENGINE MECHANICAL

Check for any of the following conditions/mechanical problems:

- AIR INDUCTION SYSTEM - must be free from leaks.
- ENGINE VACUUM - must be at least 13 inches in neutral
- ENGINE VALVE TIMING - must be within specifications
- ENGINE COMPRESSION - must be within specifications
- ENGINE EXHAUST SYSTEM - must be free of any restrictions or leaks.
- ENGINE PCV SYSTEM - must flow freely
- TORQUE CONVERTER STALL SPEED - must be within specifications
- POWER BRAKE BOOSTER - no internal vacuum leaks
- FUEL - must be free of contamination
- FUEL INJECTOR - plugged or restricted injector; control wire not connected to correct injector

Are there any engine mechanical problems?

Yes

- Repair as necessary.
- Perform the POWERTRAIN VERIFICATION TEST. (Refer to 28 - DTC-Based Diagnostics/MODULE, Powertrain Control (PCM) - Standard Procedure).

No

- Go To 12

9. 1/1 O2 SENSOR

NOTE: Perform the following test on the O2 Sensors whose voltage was not switching properly in the previous step.

1. Ignition on, engine not running.
2. Disconnect the 1/1 O2 Sensor harness connector.
3. Using the scan tool, monitor the 1/1 O2 Sensor voltage.
4. O2 Sensor voltage should read between 4.1 and 5.0 Volts on the scan tool with the connector disconnected.
5. Connect a jumper wire between the (K41) O2 Sensor 1/1 Signal circuit and the (K902) O2 Return Upstream circuit in the O2 Sensor harness connector.

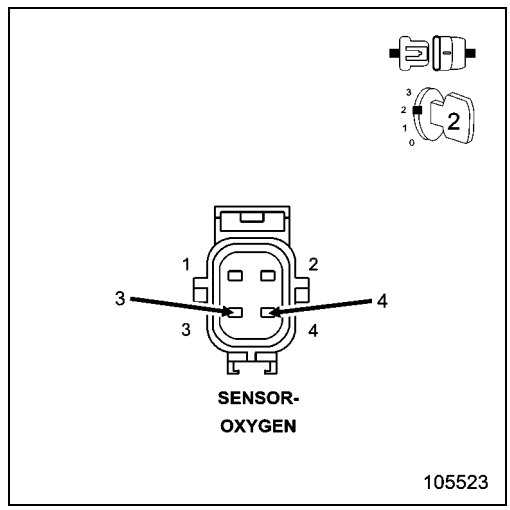

NOTE: The voltage should drop from between 4.1 and 5.0 Volts down to 2.5 Volts with the jumper wire connected.

Did the O2 Sensor voltage drop from between 4.1 and 5.0 Volts to 2.5 Volts when the jumper wire was installed?

Yes

- Verify that there is good pin to terminal contact in the O2 Sensor and Powertrain Control Module connectors. Replace the 1/1 O2 Sensor if no problems were found with the connectors.
- Perform the POWERTRAIN VERIFICATION TEST. (Refer to 28 - DTC-Based Diagnostics/MODULE, Powertrain Control (PCM) - Standard Procedure).

No

- Go To 10

NOTE: Remove the jumper wire before continuing.

10. (K41) O2 SENSOR 1/1 SIGNAL CIRCUIT

1. Using the scan tool, monitor the 1/1 O2 Sensor voltage reading with the jumper wire removed.

NOTE: The scan tool will display all O2 Sensor voltage readings approximately 5.0 Volts when only one O2 Sensor's Signal circuit is shorted to voltage.

NOTE: The scan tool will display one O2 Sensor voltage close to zero and the others will read lower than normal when one O2 Sensor Signal circuit contains excessive resistance.

Is the voltage between 4.1 and 5.0 Volts?

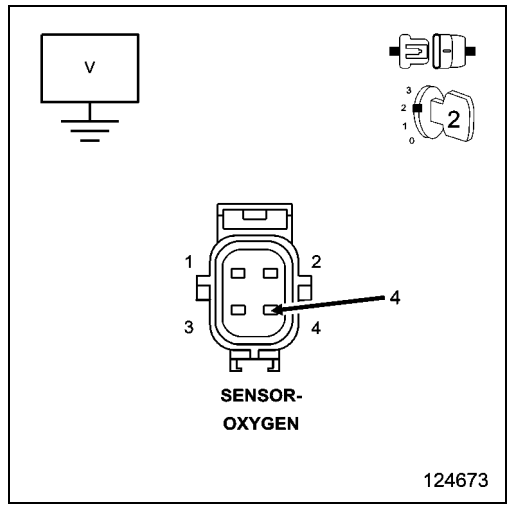

Yes

- Go To 11

No

- Check the (K41) O2 Sensor 1/1 Signal circuit for damage, short to ground, open or short to voltage. Inspect the O2 Sensor connector and the PCM harness connector. If OK, replace and program the Powertrain Control Module in accordance with the Service Information.
- Perform the POWERTRAIN VERIFICATION TEST. (Refer to 28 - DTC-Based Diagnostics/MODULE, Powertrain Control (PCM) - Standard Procedure).

11. (K902) O2 SENSOR RETURN UPSTREAM CIRCUIT

1. Measure the voltage on the (K902) O2 Return Upstream circuit in the 1/1 O2 Sensor harness connector.

Is the voltage at 2.5 Volts?

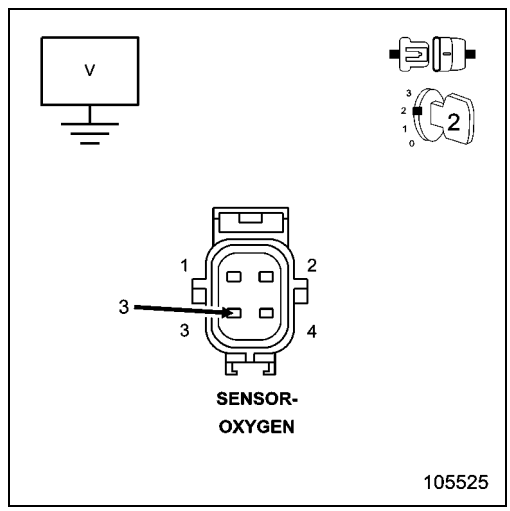

Yes

- Go To 12

No

- Check the (K902) O2 Return Upstream circuit for damage, short to ground, open or short to voltage. Inspect the O2 Sensor connector and the PCM harness connector. If OK, replace and program the Powertrain Control Module in accordance with the Service Information.
- Perform the POWERTRAIN VERIFICATION TEST. (Refer to 28 - DTC-Based Diagnostics/MODULE, Powertrain Control (PCM) - Standard Procedure).

NOTE: Turn the ignition off before continuing.

12. POWERTRAIN CONTROL MODULE (PCM)

1. Using the wiring diagram/schematic as a guide, inspect the wiring and connectors between the Sensors and the Powertrain Control Module (PCM).
2. Look for any chafed, pierced, pinched or partially broken wires.
3. Look for broken, bent, pushed out or corroded terminals. Verify that there is good pin to terminal contact in the Sensor and Control Module connectors.
4. Perform any Technical Service Bulletins that may apply.

Were there any problems found?

Yes

- Repair as necessary.
- Perform the POWERTRAIN VERIFICATION TEST. (Refer to 28 - DTC-Based Diagnostics/MODULE, Powertrain Control (PCM) - Standard Procedure).

No

- Replace and program the Powertrain Control Module in accordance with the Service Information.
- Perform the POWERTRAIN VERIFICATION TEST. (Refer to 28 - DTC-Based Diagnostics/MODULE, Powertrain Control (PCM) - Standard Procedure).

P0174-FUEL SYSTEM 2/1 LEAN

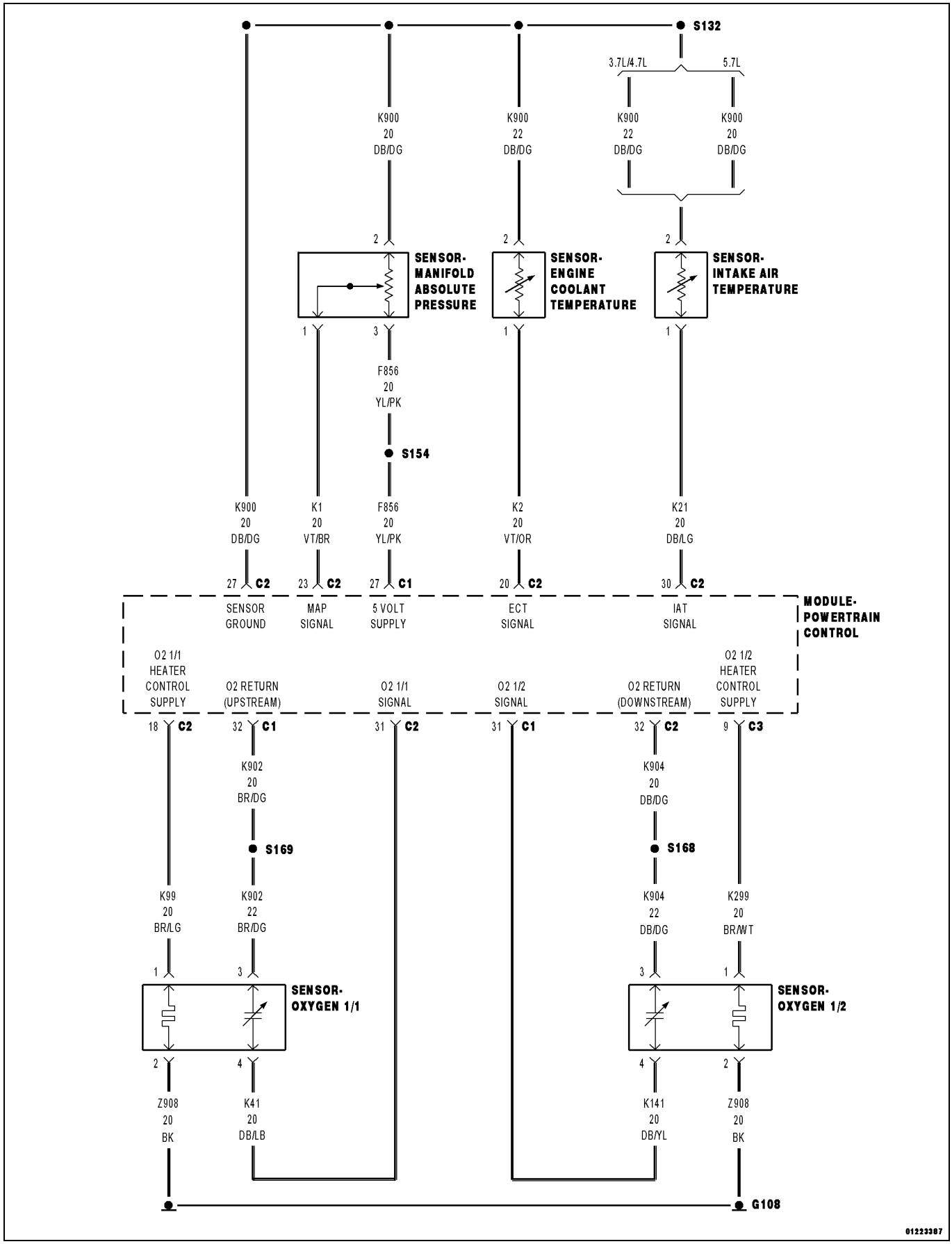

For a complete wiring diagram, **refer to the Wiring Information**.

Theory of Operation

The fuel feedback system will maintain a stoiciometric fuel/air mixture, 14.7:1, by modifying the injector pulse width according to the oxygen content of the exhaust gas. The Powertrain Control Module (PCM) makes short term and long term fuel corrections to maintain stoiciometric fuel/air ratio for best catalytic converter efficiency. Short term fuel correction is based on upstream O2 sensor output and is designed for quick engine response. The long term fuel correction compensated for variations in the engine specifications, sensor tolerances and component aging and is designed to correct rich and lean conditions over a longer period of time.

- **When Monitored:**

  With the engine running in closed loop mode, the ambient/battery temperature above -6.7° C (20° F) and altitude below 2590.8 m (8500 ft).
- **Set Condition:**

  If the Powertrain Control Module (PCM) multiplies short term compensation by long term adaptive and a certain percentage is exceeded for two trips, a freeze frame is stored, the MIL illuminates and a trouble code is stored. Two Trip Fault. Three good trips to turn off the MIL.

Possible Causes
RESTRICTED FUEL SUPPLY LINE
FUEL PUMP INLET STRAINER PLUGGED
FUEL PUMP MODULE
O2 SIGNAL CIRCUIT
O2 RETURN CIRCUIT
O2 SENSOR HEATER OPERATION
O2 SENSOR
MAP SENSOR OPERATION
ECT SENSOR OPERATION
ENGINE MECHANICAL
FUEL FILTER/PRESSURE REGULATOR (HIGH)
POWERTRAIN CONTROL MODULE (PCM)

Always perform the Pre-Diagnostic Troubleshooting procedure before proceeding. (Refer to 28 - DTC-Based Diagnostics/MODULE, Powertrain Control (PCM) - Standard Procedure).

1. ACTIVE DIAGNOSTIC TROUBLE CODE (DTC)

1. Diagnose all other trouble codes before continuing.

NOTE: Check for contaminants that may have damaged an O2 Sensor: contaminated fuel, unapproved silicone, oil and coolant.

2. Start the engine.
3. Allow the engine to reach normal operating temperature.
4. Using the scan tool, select View DTCs.

NOTE: It may be necessary to drive the vehicle to meet the conditions to set this DTC, try to repeat the conditions in which the fault originally set by reviewing the Freeze Frame data.

Is the DTC Active or Pending at this time?

Yes

- Go To 2

No

- Perform the INTERMITTENT CONDITION diagnostic procedure. (Refer to 28 - DTC-Based Diagnostics/MODULE, Powertrain Control (PCM) - Standard Procedure).

2. CHECKING FUEL PRESSURE

WARNING: The fuel system is under a constant pressure (even with the engine off). Before testing or servicing any fuel system hose, fitting or line, the fuel system pressure must be released. Failure to follow these instructions can result in possible serious or fatal injury.

1. Install the Fuel Pressure Decay Tester 8978A to the fuel rail.
2. Ignition on, engine not running.
3. Using the scan tool, actuate the ASD Fuel System test and observe the fuel pressure gauge.

NOTE: Fuel pressure specification is 407 kPa +/- 34 kPa (59 psi +/- 5 psi).

4. Turn the ignition off.

Choose a conclusion that best matches your fuel pressure reading.

Within Specification

- Go To 3

Above Specification

- Replace the fuel filter/pressure regulator.
- Perform the POWERTRAIN VERIFICATION TEST. (Refer to 28 - DTC-Based Diagnostics/MODULE, Powertrain Control (PCM) - Standard Procedure).

Below Specification

- Go To 17

CAUTION: Stop All Actuations.

3. CHECKING THE EXHAUST SYSTEM FOR LEAKS

1. Turn the ignition off.
2. Raise the vehicle in accordance with the Service Information.

WARNING: The normal operating temperature of the exhaust system is very high. Never work around or attempt to service any part of the exhaust system until it has cooled. Special care should be taken when working near the catalytic converter. The temperature of the converter rises to a high level after a short period of engine operating time.

3. Connect Exhaust Cone 8404-EC or 8404-EC to Air Pressure Regulator (with hose) W-18-MIL-1146AS.

CAUTION: The air pressure must not exceed 27.6 kPa (4 psi), otherwise engine damage can occur.

4. Attach shop air to the air pressure regulator.
5. Adjust the Air Pressure Regulator to 27.6 kPa (4 psi).
6. Insert the exhaust cone into the vehicle tail pipe.
7. If the vehicle is equipped with dual exhaust. Use the 8404-ECT with equipped attached plug, plug one side of the dual exhaust pipe. Pressurize the other as described above.
8. Apply Mopar® Air Leak Detector PN# 05191804AA (or an equivalent leak finder liquid) to the following areas:
   - All welded joints from the exhaust manifold to 152.4 mm (6 inches) behind the downstream O2 sensor
   - O2 sensor seal points
   - O2 sensor boss welds
   - Flange/joint connection(s)
   - Exhaust manifold to cylinder head connection(s)
   - EGR solenoid gasket base and tube seal points (if equipped)
9. Watch for the liquid/soapy water to bubble.
10. Use the following definitions to help determine if system or component repair/replacement is necessary:

Type 1 Leak is defined as a leak where very small foam like bubbles 1 mm (0.04 of an inch) or less appear.

Any Type 1 or greater leaks found in welded joints, O2 sensor seal points or O2 sensor boss welds must be repaired or the component must be replaced.

Type 2 Leak is defined as a leak where larger bubbles pea size, 8 mm (0.3 of an inch) or greater appear.

Any Type 2 or greater leaks found in flange or joint connections, exhaust manifold to cylinder head connections or EGR gasket and tube seal points must be repaired or the components must be replaced.

Leak Location	Repair required if results at 27.6 kPa (4 psi) reveal bubble size:
Welded joints	Type 1, 1 mm (0.04 of an inch) or greater
O2 Sensor seal points	Type 1, 1 mm (0.04 of an inch) or greater
O2 Sensor boss welds	Type 1, 1 mm (0.04 of an inch) or greater
Flange / joint connections	Type 2, 8 mm (0.3 of an inch) or greater
Exhaust Manifold to cylinder head connections	Type 2, 8 mm (0.3 of an inch) or greater
EGR gasket and tube seal points	Type 2, 8 mm (0.3 of an inch) or greater

11. If a leak is found that matches the above definition, repair or replace the component as necessary.
12. Once the repair is complete, repeat the procedure to verify that all leaks have been repaired.

Were any exhaust leaks found?

Yes

- Repair or replace the leaking exhaust parts as necessary.
- Perform the POWERTRAIN VERIFICATION TEST. (Refer to 28 - DTC-Based Diagnostics/MODULE, Powertrain Control (PCM) - Standard Procedure).

No

- Go To 4

4. O2 SENSOR OPERATION

1. Start the engine.
2. Allow the engine to reach normal operating temperature.

NOTE: If one of the O2 Sensor's Signal or Return circuit is shorted to ground the scan tool will display all O2 Sensor voltage readings low. The O2 Sensor that is shorted to ground will display a voltage reading near or at 0 Volts.

NOTE: If one of the O2 Sensor Signal or Return circuits are shorted to voltage, the scan tool will display all O2 Sensor voltage readings high.

NOTE: After the repairs have been made, verify proper O2 Sensor operation. If all the O2 Sensor voltage readings have not returned to normal, follow the diagnostic procedure for the remaining O2 Sensors.

3. Using the scan tool, monitor the 2/1 O2 Sensor voltage reading.

Is the voltage switching between 2.5 and 3.4 Volts?

Yes

- Go To 5

No

- Go To 13

5. 2/1 O2 SENSOR HEATER OPERATION

1. Turn the ignition off.

NOTE: Wait a minimum of 10 minutes to allow the O2 Sensor to cool down before continuing the test. Allow the O2 Sensor voltage to stabilize at 5.0 Volts.

NOTE: Perform the following test on all O2 Sensors.

2. Ignition on, engine not running.
3. Using the scan tool, actuate the 2/1 O2 Heater Test.
4. Using the scan tool, monitor 2/1 O2 Sensor voltage for at least two minutes.

Does the voltage stay above 4.5 Volts?

Yes

- Verify that there is good pin to terminal contact in the O2 Sensor and Powertrain Control Module connectors. Replace the 2/1 O2 Sensor if no problems were found with the connectors.
- Perform the POWERTRAIN VERIFICATION TEST. (Refer to 28 - DTC-Based Diagnostics/MODULE, Powertrain Control (PCM) - Standard Procedure).

No

- Go To 6

6. ASD CONTROL OUTPUT OPERATION FROM THE TIPM

1. Turn the ignition off.

CAUTION: Do not probe the PCM harness connectors. Probing the PCM harness connectors will damage the PCM terminals resulting in poor terminal to pin connection. Install PCM Pinout Box 8815A **along with the adapter** 8815-1 **between the PCM harness connector C3 and the PCM to perform the diagnosis.**

WARNING: When the engine is operating, do not stand in direct line with the fan. Do not put your hands near the pulleys, belts or fan. Do not wear loose clothing. Failure to follow these instructions may result in possible serious or fatal injury.

2. Start and allow the engine to run.
3. With a Voltmeter, probe the (F342) ASD Control Output circuits in the appropriate terminals of PCM Pinout Box 8815A.

Is the voltage above 12.5 Volts?

Yes

- Go To 10

No

- Go To 7

7. (F342) ASD CONTROL OUTPUT CIRCUIT(S) OPEN

1. Turn the ignition off.
2. Disconnect the C5 TIPM harness connector.

CAUTION: Do not probe the PCM harness connectors. Probing the PCM harness connectors will damage the PCM terminals resulting in poor terminal to pin connection. Install the PCM Pinout Box Kit, NGC, 38 Position 8815A to perform diagnosis.

3. Measure the resistance of the (F342) ASD Control Output circuits from the C5 TIPM harness connector to the appropriate terminals of PCM Pinout Box 8815A.

Is the resistance below 5.0 Ohms?

Yes

- Go To 8

No

- Repair the open in the (F342) ASD Control Output circuit(s).
- Perform the POWERTRAIN VERIFICATION TEST. (Refer to 28 - DTC-Based Diagnostics/MODULE, Powertrain Control (PCM) - Standard Procedure).

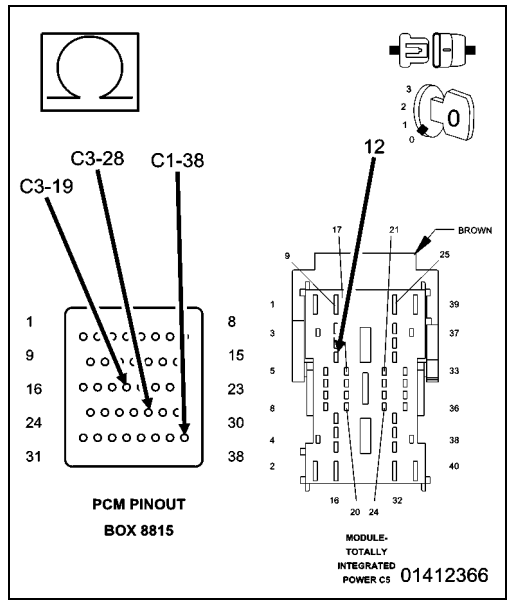

8. (F342) ASD CONTROL OUTPUT CIRCUIT(S) SHORTED TO GROUND

1. Measure the resistance between ground and both of the (F342) ASD Control Output circuits in the C5 TIPM harness connector.

Is the resistance below 100 Ohms?

Yes

- Repair the short to ground in the (F342) ASD Control Output circuit(s).
- Perform the POWERTRAIN VERIFICATION TEST. (Refer to 28 - DTC-Based Diagnostics/MODULE, Powertrain Control (PCM) - Standard Procedure).

No

- Go To 9

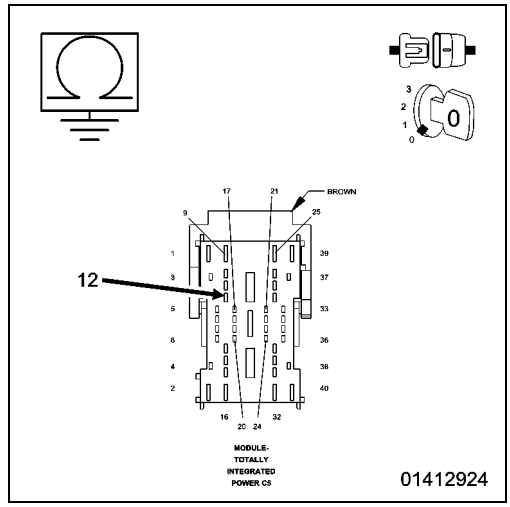

9. TOTALLY INTEGRATED POWER MODULE (TIPM)

1. Using the wiring diagram/schematic as a guide, inspect the wiring and connectors between the related TIPM and the Powertrain Control Module (PCM).
2. Look for any chafed, pierced, pinched or partially broken wires.
3. Look for broken, bent, pushed out or corroded terminals. Verify that there is good pin to terminal contact in the TIPM and Powertrain Control Module connectors.
4. Perform any Technical Service Bulletins that may apply.

Were there any problems found?

Yes

- Repair as necessary.
- Perform the BODY VERIFICATION TEST (Refer to 28 - DTC-Based Diagnostics/MODULE, Totally Integrated Power (TIPM) - Standard Procedure).

No

- Replace and program the Totally Integrated Power Module in accordance with the Service Information.
- Perform the BODY VERIFICATION TEST (Refer to 28 - DTC-Based Diagnostics/MODULE, Totally Integrated Power (TIPM) - Standard Procedure).

10. MAP SENSOR OPERATION

1. Ignition on, engine not running.
2. Using the scan tool, read the Barometric Pressure.

NOTE: The Barometric Pressure should be approximately equal to the actual barometric pressure. If necessary, compare the Barometric Pressure value of this vehicle to the value of a known good vehicle of a similar make and model.

3. Turn the ignition off.
4. Connect a Vacuum Gauge to a Manifold Vacuum source.
5. Start the engine.
6. Allow the engine to idle.

NOTE: If engine will not idle, maintain a constant RPM above idle.

7. Using the scan tool, read the MAP Sensor vacuum value.

Is the scan tool reading for MAP Vacuum within 1 inch of Hg on the Vacuum Gauge reading and is the Barometric Pressure reading of the vehicle the approximately the same as actual Barometric Pressure?

Yes

- Go To 11

No

- Verify that there is good pin to terminal contact in the MAP Sensor and Powertrain Control Module connectors. Replace the MAP Sensor if no problems were found with the connectors.
- Perform the POWERTRAIN VERIFICATION TEST. (Refer to 28 - DTC-Based Diagnostics/MODULE, Powertrain Control (PCM) - Standard Procedure).

11. ECT SENSOR OPERATION

NOTE: For this test to be valid, the thermostat must be operating correctly.

NOTE: This test works best if performed on a cold engine (cold soak).

1. Ignition on, engine not running.
2. Using the scan tool, read the Engine Coolant Temperature (ECT) Sensor value. If the engine was allowed to sit overnight (cold soak), the temperature value should be a sensible value that is somewhere close to the ambient temperature.

NOTE: If engine coolant temperature is above 82° C (180° F), allow the engine to cool until 65° C (150° F) is reached.

3. Start the Engine.
4. During engine warm-up, monitor the ECT Sensor value. The temperature value change should be a smooth transition from start up to normal operating temperature 82° C (180° F). The value should reach at least 82° C (180° F).

Did the ECT value increase smoothly and did it reach at least 82° C (180° F)?

Yes

- Go To 12

No

- Verify that there is good pin to terminal contact in the ECT Sensor and Powertrain Control Module connectors. Replace the Engine Coolant Temperature Sensor if no problems were found with the connectors.
- Perform the POWERTRAIN VERIFICATION TEST. (Refer to 28 - DTC-Based Diagnostics/MODULE, Powertrain Control (PCM) - Standard Procedure).

12. ENGINE MECHANICAL

1. Turn the ignition off.

Check for any of the following conditions/mechanical problems:

- AIR INDUCTION SYSTEM - must be free from leaks.
- ENGINE VACUUM - must be at least 13 inches in neutral
- ENGINE VALVE TIMING - must be within specifications
- ENGINE COMPRESSION - must be within specifications
- ENGINE EXHAUST SYSTEM - must be free of any restrictions or leaks.
- ENGINE PCV SYSTEM - must flow freely
- TORQUE CONVERTER STALL SPEED - must be within specifications
- POWER BRAKE BOOSTER - no internal vacuum leaks
- FUEL - must be free of contamination
- FUEL INJECTOR - plugged or restricted injector; control wire not connected to correct injector

Are there any engine mechanical problems?

Yes

- Repair as necessary.
- Perform the POWERTRAIN VERIFICATION TEST. (Refer to 28 - DTC-Based Diagnostics/MODULE, Powertrain Control (PCM) - Standard Procedure).

No

- Go To 16

13. O2 SENSOR

1. Disconnect the 2/1 O2 Sensor harness connector.
2. Ignition on, engine not running.
3. Using the scan tool, monitor the 2/1 O2 Sensor voltage.
4. O2 Sensor voltage should read between 4.1 and 5.0 Volts on the scan tool with the connector disconnected.
5. Connect a jumper wire between the (K43) O2 Sensor 2/1 Signal circuit and the (K902) O2 Return Upstream circuit in the O2 Sensor harness connector.

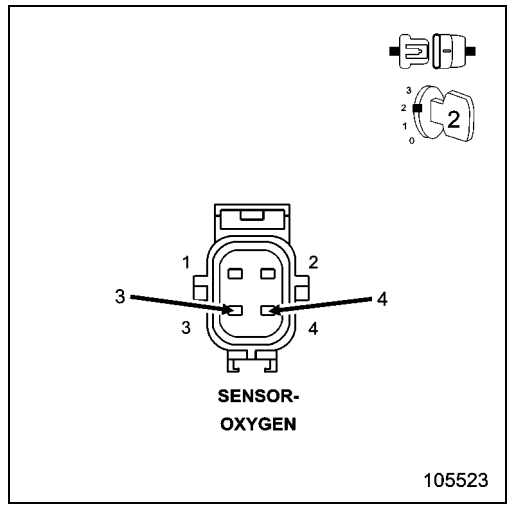

NOTE: The voltage should drop from between 4.1 and 5.0 Volts to 2.5 Volts with the jumper wire in place.

Did the O2 Sensor voltage change from between 4.1 and 5.0 Volts to 2.5 Volts when the jumper wire was installed?

Yes

- Verify that there is good pin to terminal contact in the O2 Sensor and Powertrain Control Module connectors. Replace the 2/1 O2 Sensor if no problems were found with the connectors.
- Perform the POWERTRAIN VERIFICATION TEST. (Refer to 28 - DTC-Based Diagnostics/MODULE, Powertrain Control (PCM) - Standard Procedure).

No

- Go To 14

NOTE: Remove the jumper wire before continuing.

14. O2 SENSOR SIGNAL CIRCUIT

1. Using the scan tool, monitor all the O2 Sensor voltage reading with the jumper wire removed.

NOTE: The scan tool will display all O2 Sensor voltage readings approximately 5.0 Volts when only one O2 Sensor's Signal circuit is shorted to voltage.

NOTE: The scan tool will display one O2 Sensor voltage close to zero and the others will read lower than normal when one O2 Sensor Signal circuit contains excessive resistance.

Is the voltage between 4.1 and 5.0 Volts?

Yes

- Go To 15

No

- Check all the O2 Signal circuits for a short to ground, open or short to voltage. Inspect the O2 Sensor connector and the PCM harness connector. If OK, replace and program the Powertrain Control Module in accordance with the Service Information.
- Perform the POWERTRAIN VERIFICATION TEST. (Refer to 28 - DTC-Based Diagnostics/MODULE, Powertrain Control (PCM) - Standard Procedure).

15. (K902) O2 RETURN UPSTREAM CIRCUIT

1. Measure the voltage on the (K902) O2 Return Upstream circuit in the O2 Sensor harness connector.

Is the voltage at 2.5 Volts?

Yes

- Go To 16

No

- Check the (K902) O2 Return Upstream circuit for a short to ground, open or short to voltage. Inspect the O2 Sensor connector and the PCM harness connector. If OK, replace and program the Powertrain Control Module in accordance with the Service Information.
- Perform the POWERTRAIN VERIFICATION TEST. (Refer to 28 - DTC-Based Diagnostics/MODULE, Powertrain Control (PCM) - Standard Procedure).

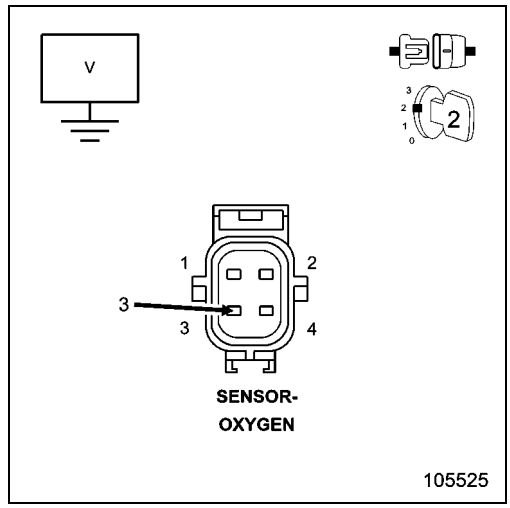

16. POWERTRAIN CONTROL MODULE (PCM)

1. Using the wiring diagram/schematic as a guide, inspect the wiring and connectors between the Sensors and the Powertrain Control Module (PCM).
2. Look for any chafed, pierced, pinched or partially broken wires.
3. Look for broken, bent, pushed out or corroded terminals. Verify that there is good pin to terminal contact in the Sensor and Control Module connectors.
4. Perform any Technical Service Bulletins that may apply.

Were there any problems found?

Yes

- Repair as necessary.
- Perform the POWERTRAIN VERIFICATION TEST. (Refer to 28 - DTC-Based Diagnostics/MODULE, Powertrain Control (PCM) - Standard Procedure).

No

- Replace and program the Powertrain Control Module in accordance with the Service Information.
- Perform the POWERTRAIN VERIFICATION TEST. (Refer to 28 - DTC-Based Diagnostics/MODULE, Powertrain Control (PCM) - Standard Procedure).

17. RESTRICTED FUEL SUPPLY LINE

WARNING: The fuel system is under a constant pressure (even with the engine off). Before testing or servicing any fuel system hose, fitting or line, the fuel system pressure must be released. Failure to follow these instructions can result in possible serious or fatal injury.

1. Turn the ignition off.
2. Raise vehicle on hoist and disconnect the fuel pressure line at the fuel pump module.
3. Install Fuel Pressure Decay Tester 8978A between the fuel supply line and the fuel pump module.
4. Ignition on, engine not running.
5. Using the scan tool, actuate the ASD Fuel System test and observe the fuel pressure gauge.

NOTE: Fuel pressure specification is 407 kPa +/- 34 kPa (59 psi +/- 5 psi).

Is the fuel pressure within specification?

Yes

- Repair or replace fuel supply line as necessary.
- Perform the POWERTRAIN VERIFICATION TEST. (Refer to 28 - DTC-Based Diagnostics/MODULE, Powertrain Control (PCM) - Standard Procedure).

No

- Go To 18

CAUTION: Stop All Actuations.

18. FUEL PUMP INLET STRAINER

WARNING: The fuel system is under a constant pressure (even with the engine off). Before testing or servicing any fuel system hose, fitting or line, the fuel system pressure must be released.

1. Turn the ignition off.
2. Remove the Fuel Pump Module and inspect the Fuel Inlet Strainer.

Is the Fuel Inlet Strainer plugged?

Yes

- Replace the Fuel Pump Inlet Strainer.
- Perform the POWERTRAIN VERIFICATION TEST. (Refer to 28 - DTC-Based Diagnostics/MODULE, Powertrain Control (PCM) - Standard Procedure).

No

- Go To 19

19. FUEL PUMP MODULE

Repair

- Verify that there is good pin to terminal contact in the Fuel Pump Module, TIPM and Powertrain Control Module connectors. Replace the Fuel Pump Module if no problems were found with the connectors.
- Perform the POWERTRAIN VERIFICATION TEST. (Refer to 28 - DTC-Based Diagnostics/MODULE, Powertrain Control (PCM) - Standard Procedure).

P0175-FUEL SYSTEM 2/1 RICH

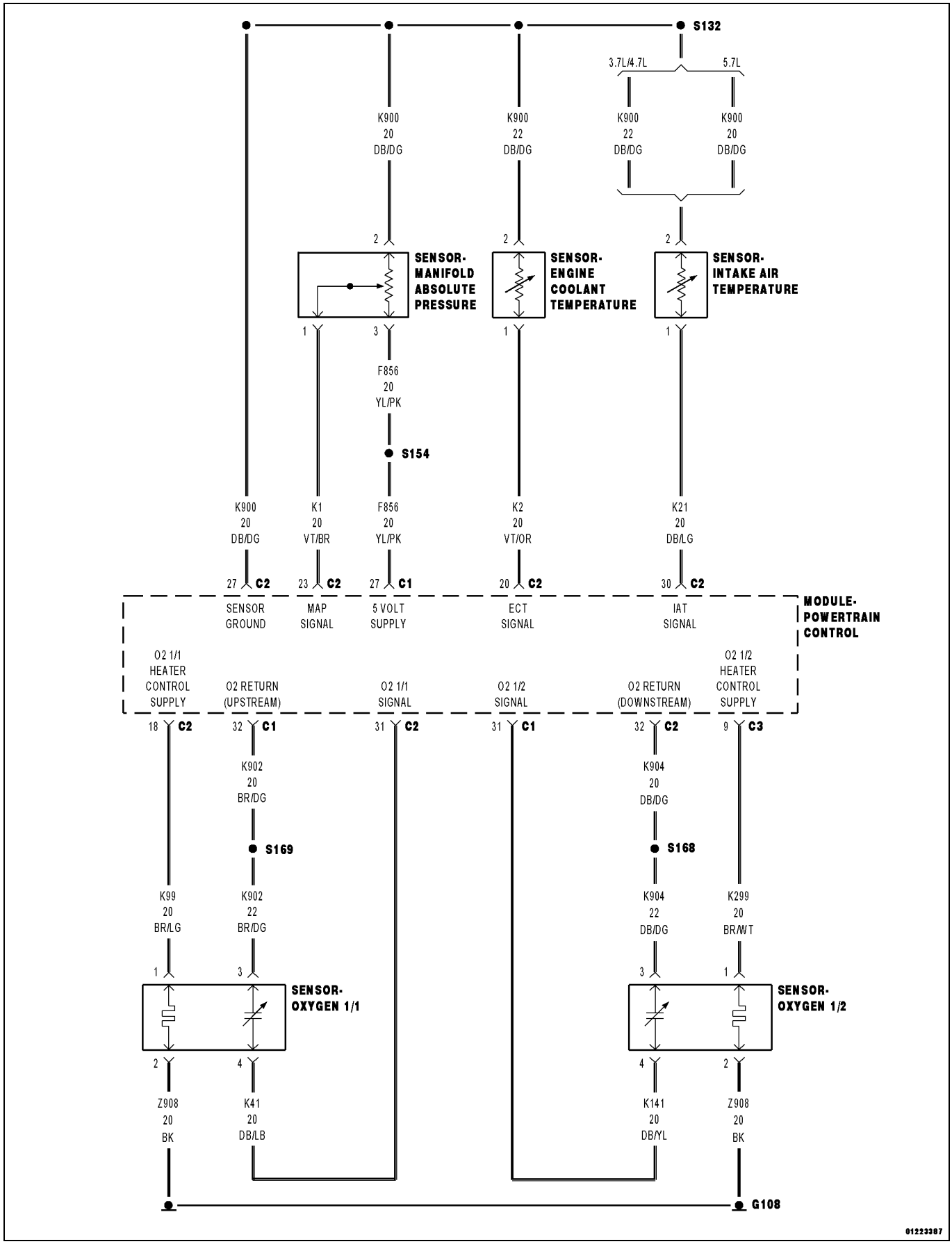

For a complete wiring diagram, **refer to the Wiring Information**.

Theory of Operation

The fuel feedback system will maintain a stoiciometric fuel/air mixture, 14.7:1, by modifying the injector pulse width according to the oxygen content of the exhaust gas. The Powertrain Control Module (PCM) makes short term and long term fuel corrections to maintain stoiciometric fuel/air ratio for best catalytic converter efficiency. Short term fuel correction is based on upstream O2 sensor output and is designed for quick engine response. The long term fuel correction compensated for variations in the engine specifications, sensor tolerances and component aging and is designed to correct rich and lean conditions over a longer period of time.

- **When Monitored:**

  With the engine running in closed loop mode, the ambient/battery temperature above -6.7° C (20° F) and altitude below 2590.8 m (8500 ft).
- **Set Condition:**

  If the Powertrain Control Module (PCM) multiplies short term compensation by long term adaptive and a purge fuel multiplier and the result is below a certain value for 30 seconds over two trips, a freeze frame is stored, the MIL illuminates and a trouble code is stored. Two Trip Fault. Three good trips to turn off the MIL.

Possible Causes
O2 SENSOR HEATER OPERATION
EVAP PURGE SOLENOID OPERATION
O2 SIGNAL CIRCUIT
O2 RETURN CIRCUIT
O2 SENSOR
MAP SENSOR
ECT SENSOR
ENGINE MECHANICAL
FUEL FILTER/PRESSURE REGULATOR (HIGH)
POWERTRAIN CONTROL MODULE (PCM)

Always perform the Pre-Diagnostic Troubleshooting procedure before proceeding. (Refer to 28 - DTC-Based Diagnostics/MODULE, Powertrain Control (PCM) - Standard Procedure).

1. ACTIVE DIAGNOSTIC TROUBLE CODE (DTC)

NOTE: Check for contaminates that may have damaged an O2 Sensor: contaminated fuel, unapproved silicone, oil and coolant.

1. Start the engine.
2. Allow the engine to reach normal operating temperature.
3. Using the scan tool, select View DTCs.

NOTE: It may be necessary to drive the vehicle to meet the conditions to set this DTC, try to repeat the conditions in which the fault originally set by reviewing the Freeze Frame data.

Is the DTC Active or Pending at this time?

Yes

- Go To 2

No

- Perform the INTERMITTENT CONDITION diagnostic procedure. (Refer to 28 - DTC-Based Diagnostics/MODULE, Powertrain Control (PCM) - Standard Procedure).

2. CHECKING FUEL PRESSURE

WARNING: The fuel system is under a constant pressure (even with the engine off). Before testing or servicing any fuel system hose, fitting or line, the fuel system pressure must be released. Failure to follow these instructions can result in possible serious or fatal injury.

1. Install the Fuel Pressure Decay Tester 8978A to the fuel rail.
2. Ignition on, engine not running.
3. Using the scan tool, actuate the ASD Fuel System test and observe the fuel pressure gauge.

NOTE: Fuel pressure specification is 407 kPa +/- 34 kPa (59 psi +/- 5 psi).

4. Turn the ignition off.

Choose a conclusion that best matches your fuel pressure reading.

Within Specification

- Go To 3

Above Specification

- Replace the fuel filter/pressure regulator.
- Perform the POWERTRAIN VERIFICATION TEST. (Refer to 28 - DTC-Based Diagnostics/MODULE, Powertrain Control (PCM) - Standard Procedure).

CAUTION: Stop All Actuations.

3. O2 SENSOR OPERATION

1. Start the engine.
2. Allow the engine to reach normal operating temperature.

NOTE: If one of the O2 Sensor's Signal or Return circuit is shorted to ground or voltage, all the other O2 Sensor voltage readings will be affected.

NOTE: After the repairs have been made, verify proper O2 Sensor operation. If all the O2 Sensor voltage readings have not returned to normal, follow the diagnostic procedure for the remaining O2 Sensors.

3. Using the scan tool, monitor the 2/1 O2 Sensor voltage reading.

Is the voltage switching between 2.5 and 3.4 Volts?

Yes

- Go To 4

No

- Go To 9

4. 2/1 O2 SENSOR HEATER OPERATION

1. Turn the ignition off.

NOTE: Wait a minimum of 10 minutes to allow the O2 Sensor to cool down before continuing the test. Allow the O2 Sensor voltage to stabilize at 5.0 Volts.

2. Ignition on, engine not running.
3. Using the scan tool, perform the 2/1 O2 Heater Test for each O2 Sensor.
4. Using the scan tool, monitor the 2/1 O2 Sensor voltage while performing the Heater test for at least two minutes.

Does the voltage stay above 4.5 Volts for each Sensor?

Yes

- Verify that there is good pin to terminal contact in the O2 Sensor and Powertrain Control Module connectors. Replace the 2/1 O2 Sensor if no problems were found with the connectors.
- Perform the POWERTRAIN VERIFICATION TEST. (Refer to 28 - DTC-Based Diagnostics/MODULE, Powertrain Control (PCM) - Standard Procedure).

No

- Go To 5

5. MAP SENSOR OPERATION

1. Ignition on, engine not running.
2. Using the scan tool, read the Barometric Pressure.

NOTE: The Barometric Pressure should be approximately equal to the actual barometric pressure. If necessary, compare the Barometric Pressure value of this vehicle to the value of a known good vehicle of a similar make and model.

3. Turn the ignition off.
4. Connect a Vacuum Gauge to a Manifold Vacuum source.
5. Start the engine.
6. Allow the engine to idle.

NOTE: If engine will not idle, maintain a constant RPM above idle.

7. Using the scan tool, read the MAP Sensor vacuum value.

Is the scan tool reading for MAP Vacuum within 1 inch of Hg on the Vacuum Gauge reading and is the Barometric Pressure reading of the vehicle the approximately the same as actual Barometric Pressure?

Yes

- Go To 6

No

- Verify that there is good pin to terminal contact in the MAP Sensor and Powertrain Control Module connectors. Replace the MAP Sensor if no problems were found with the connectors.
- Perform the POWERTRAIN VERIFICATION TEST. (Refer to 28 - DTC-Based Diagnostics/MODULE, Powertrain Control (PCM) - Standard Procedure).

NOTE: Remove the vacuum gauge before continuing.

6. ECT SENSOR OPERATION

NOTE: For this test to be valid, the thermostat must be operating correctly.

NOTE: This test works best if performed on a cold engine (cold soak).

1. Ignition on, engine not running.
2. Using the scan tool, read the Engine Coolant Temperature Sensor value. If the engine was allowed to sit overnight (cold soak), the temperature value should be a sensible value that is somewhere close to the ambient temperature.

NOTE: If engine coolant temperature is above 82° C (180° F), allow the engine to cool until 65° C (150° F) is reached.

3. Start the Engine.
4. During engine warm-up, monitor the Engine Coolant Temperature value. The temp value change should be a smooth transition from start up to normal operating temp 82° C (180° F). The value should reach at least 82° C (180° F).

Did the ECT value increase smoothly and reach at least 82° C (180° F)?

Yes

- Go To 7

No

- Verify that there is good pin to terminal contact in the ECT Sensor and Powertrain Control Module connectors. Replace the Engine Coolant Temperature Sensor if no problems were found with the connectors.
- Perform the POWERTRAIN VERIFICATION TEST. (Refer to 28 - DTC-Based Diagnostics/MODULE, Powertrain Control (PCM) - Standard Procedure).

7. EVAP PURGE SOLENOID OPERATION

1. Turn the ignition off.
2. Disconnect the hoses at the Evap Purge Solenoid.
3. Using a hand vacuum pump, apply 10 inches of vacuum to the Evap Purge Solenoid vacuum source port on the component side.

Did the Evap Purge Solenoid hold vacuum?

Yes

- Go To 8

No

- Verify that there is good pin to terminal contact in the Evap Purge Solenoid and Powertrain Control Module connectors. Replace the Evap Purge Solenoid if no problems were found with the connectors.
- Perform the POWERTRAIN VERIFICATION TEST. (Refer to 28 - DTC-Based Diagnostics/MODULE, Powertrain Control (PCM) - Standard Procedure).

NOTE: Connect the vacuum hoses before continuing.

8. ENGINE MECHANICAL

Check for any of the following conditions/mechanical problems:

- AIR INDUCTION SYSTEM - must be free from restrictions.
- ENGINE VACUUM - must be at least 13 inches in neutral
- ENGINE VALVE TIMING - must be within specifications
- ENGINE COMPRESSION - must be within specifications
- ENGINE EXHAUST SYSTEM - must be free of any restrictions or leaks.
- ENGINE PCV SYSTEM - must flow freely
- TORQUE CONVERTER STALL SPEED - must be within specifications
- POWER BRAKE BOOSTER - no internal vacuum leaks
- FUEL - must be free of contamination
- FUEL INJECTOR - plugged or restricted injector; control wire not connected to correct injector

Are there any engine mechanical problems?

Yes

- Repair as necessary.
- Perform the POWERTRAIN VERIFICATION TEST. (Refer to 28 - DTC-Based Diagnostics/MODULE, Powertrain Control (PCM) - Standard Procedure).

No

- Go To 12

9. 2/1 O2 SENSOR

1. Ignition on, engine not running.
2. Disconnect the 2/1 O2 Sensor harness connector.
3. Using the scan tool, monitor the 2/1 O2 Sensor voltage.
4. O2 Sensor voltage should read between 4.1 and 5.0 Volts on the scan tool with the connector disconnected.
5. Connect a jumper wire between the (K43) O2 Sensor 2/1 Signal circuit and the (K902) O2 Return Upstream circuit in the O2 Sensor harness connector.

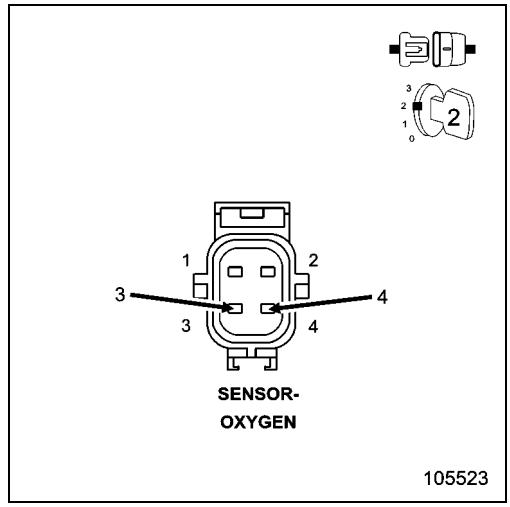

NOTE: The voltage should drop from between 4.1 and 5.0 Volts down to 2.5 Volts with the jumper wire connected.

Did the O2 Sensor voltage drop from between 4.1 and 5.0 Volts to 2.5 Volts when the jumper wire was installed?

Yes

- Verify that there is good pin to terminal contact in the O2 Sensor and Powertrain Control Module connectors. Replace the 2/1 O2 Sensor if no problems were found with the connectors.
- Perform the POWERTRAIN VERIFICATION TEST. (Refer to 28 - DTC-Based Diagnostics/MODULE, Powertrain Control (PCM) - Standard Procedure).

No

- Go To 10

NOTE: Remove the jumper wire before continuing.

10. O2 SENSOR SIGNAL CIRCUIT

1. Measure the voltage on the (K43) O2 Sensor 2/1 Signal circuit in the O2 Sensor harness connector.

Is the voltage between 4.1 and 5.0 Volts?

Yes

- Go To 11

No

- Check the (K43) O2 Sensor 2/1 Signal circuit for damage, short to ground, open or short to voltage. Inspect the O2 Sensor connector and the PCM harness connector. If OK, replace and program the Powertrain Control Module in accordance with the Service Information.
- Perform the POWERTRAIN VERIFICATION TEST. (Refer to 28 - DTC-Based Diagnostics/MODULE, Powertrain Control (PCM) - Standard Procedure).

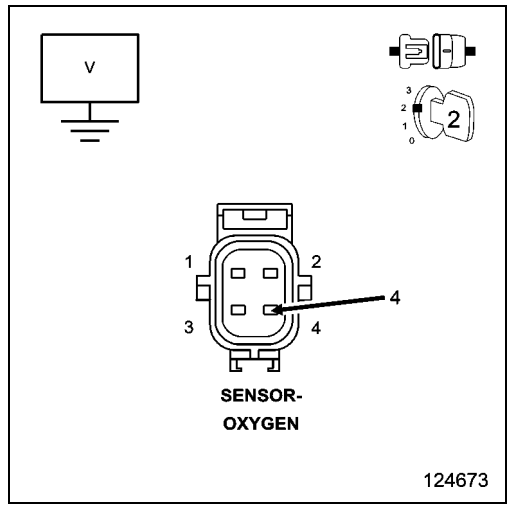

11. (K902) O2 SENSOR RETURN UPSTREAM CIRCUIT

1. Measure the voltage on the (K902) O2 Return Upstream circuit in the O2 Sensor harness connector.

Is the voltage at 2.5 Volts?

Yes

- Go To 12

No

- Check the (K902) O2 Return Upstream circuit for damage, short to ground, open or short to voltage. Inspect the O2 Sensor connector and the PCM harness connector. If OK, replace and program the Powertrain Control Module in accordance with the Service Information.
- Perform the POWERTRAIN VERIFICATION TEST. (Refer to 28 - DTC-Based Diagnostics/MODULE, Powertrain Control (PCM) - Standard Procedure).

NOTE: Turn the ignition off before continuing.

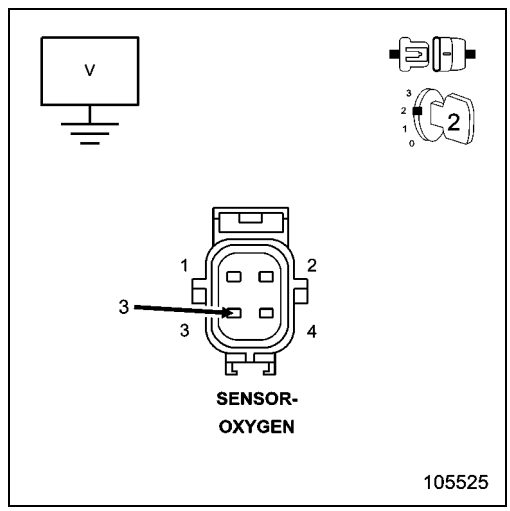

12. POWERTRAIN CONTROL MODULE (PCM)

1. Using the wiring diagram/schematic as a guide, inspect the wiring and connectors between the Sensors and the Powertrain Control Module (PCM).
2. Look for any chafed, pierced, pinched or partially broken wires.
3. Look for broken, bent, pushed out or corroded terminals. Verify that there is good pin to terminal contact in the Sensor and Control Module connectors.
4. Perform any Technical Service Bulletins that may apply.

Were there any problems found?

Yes

- Repair as necessary.
- Perform the POWERTRAIN VERIFICATION TEST. (Refer to 28 - DTC-Based Diagnostics/MODULE, Powertrain Control (PCM) - Standard Procedure).

No

- Replace and program the Powertrain Control Module in accordance with the Service Information.
- Perform the POWERTRAIN VERIFICATION TEST. (Refer to 28 - DTC-Based Diagnostics/MODULE, Powertrain Control (PCM) - Standard Procedure).

P0196-ENGINE OIL TEMPERATURE SENSOR PERFORMANCE

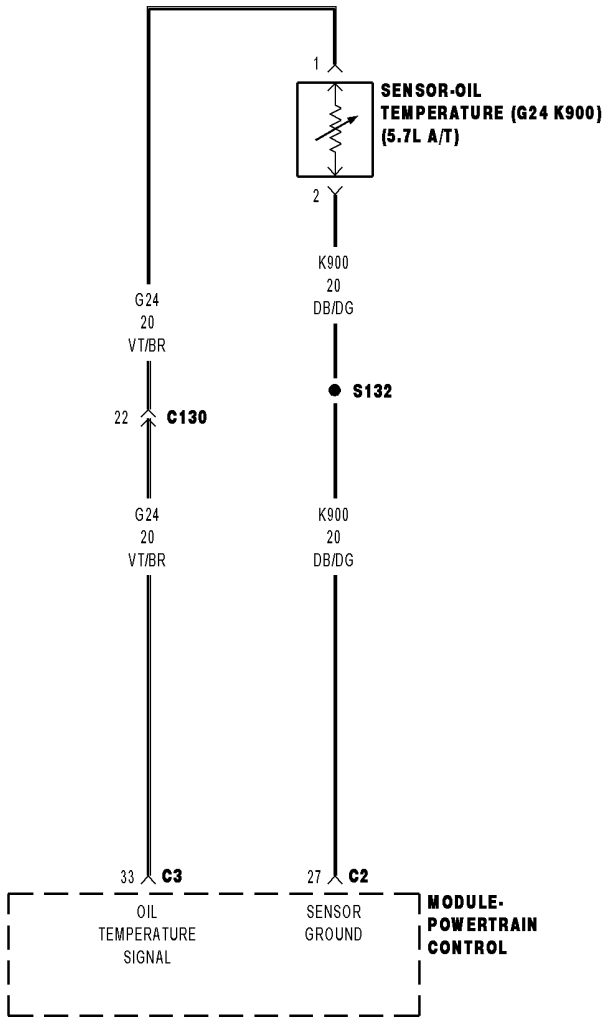

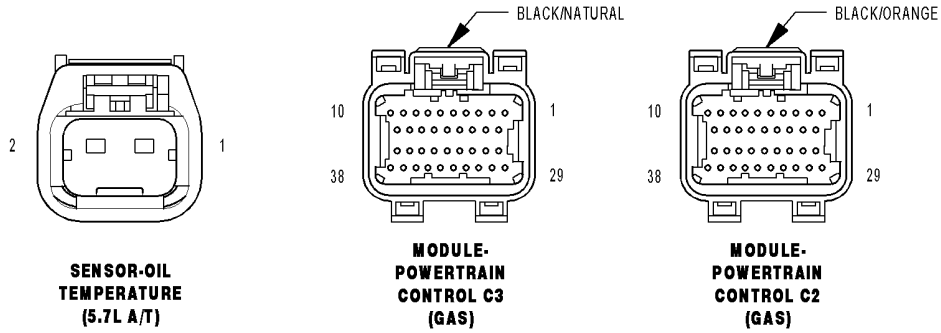

81cc494b

For a complete wiring diagram **Refer to the Wiring Information**.

Theory of Operation

The PCM compares engine coolant temperature (ECT), intake air temperature (IAT), and ambient air temperature (AAT) under cold start conditions. Following a start to run delay time, the sensor values are compared. If the one sensor value is not within a specified range of the other two sensors, the value is determined to be irrational. Once the general temperature rationality is passed, the PCM determines that the general temperature sensor values are correct. The PCM compares the Oil Temperature Sensor value to a threshold based on the other temp sensor values. If the difference is greater than a calibrated value, the diagnostic fails.

- **When Monitored:**

  Engine off time is greater than 480 minutes and the vehicle has been driven for one minute over 35 mph. Engine Oil temperature is greater than -64° C (-83° F).
- **Set Condition:**

  After a calibrated amount of cool down time, the PCM compares the AAT, ECT, and IAT Sensor values. If the general temperature rationality passes, the PCM compares the Oil Temperature Sensor value to a threshold based on the other temp sensor values. If the difference is greater than a calibrated value, the diagnostic fails.

Possible Causes
(G24) EOT SIGNAL CIRCUIT HIGH RESISTANCE
(G24) EOT SIGNAL CIRCUIT SHORTED TO THE (K900) SENSOR GROUND CIRCUIT
(G24) EOT SIGNAL CIRCUIT SHORTED TO GROUND
(G24) EOT SIGNAL CIRCUIT SHORTED TO VOLTAGE
(K900) SENSOR GROUND CIRCUIT HIGH RESISTANCE
ENGINE OIL TEMPERATURE SENSOR
POWERTRAIN CONTROL MODULE (PCM)

Always perform the Pre-Diagnostic Troubleshooting procedure before proceeding.(Refer to 28 - DTC-Based Diagnostics/MODULE, Powertrain Control (PCM) - Standard Procedure).

1. ACTIVE DTC

NOTE: Diagnose any CAN - C Communication DTCs before continuing.

1. Turn the ignition off.
2. If possible, allow the vehicle to sit with the ignition off for more than 480 minutes in an environment where the temperature is consistent and above -7° C (19.4° F).
3. Test drive the vehicle. The vehicle must exceed 48 km/h (30 mph) during the test drive. Do not cycle the ignition off when the test drive is completed.
4. With a scan tool, select View DTCs.

Is the status Active or Pending for this DTC?

Yes

- Go To 3

No

- Go To 2

2. ENGINE OIL TEMPERATURE

1. Turn the ignition off.
2. Allow the vehicle to sit with the ignition off in an environment where the temperature is consistent and above -7° C (19.4° F) until the engine coolant temperature is equal to ambient temperature.
3. Turn the ignition on.
4. With a scan tool, compare the Engine Oil Temperature Sensor value to the AAT, ECT, and IAT sensor values.

Is the Engine Oil Temperature Sensor value within 10° C (18° F) of the other sensor values?

Yes

- Refer to the INTERMITTENT CONDITION Diagnostic Procedure. (Refer to 28 - DTC-Based Diagnostics/MODULE, Powertrain Control (PCM) - Standard Procedure).

No

- Go To 3

3. ENGINE OIL TEMPERATURE SENSOR VOLTAGE

1. Turn the ignition off.
2. Disconnect the Engine Oil Temperature Sensor harness connector.
3. Turn the ignition on.
4. With a scan tool, read the Engine Oil Temperature Sensor voltage.

NOTE: The sensor voltage should be approximately 5.0 volts (plus or minus .1 volt) with the connector disconnected.

Does the scan tool display the voltage as described above?

Yes

- Go To 4

No

- Go To 5

4. ENGINE OIL TEMPERATURE SENSOR

1. Connect a jumper wire between the (G24) EOT Signal circuit and the (K900) Sensor Ground circuit in the Engine Oil Temperature Sensor harness connector.
2. With a scan tool, read the Engine Oil Temperature Sensor voltage.

NOTE: The sensor voltage should be approximately 0.0 volts (plus or minus .1 volt) with the jumper wire in place.

Does the scan tool display the voltage as described above?

Yes

- Verify that there is good pin to terminal contact in the Engine Oil Temperature Sensor and Powertrain Control Module connectors. Replace the Engine Oil Temperature Sensor if no problems were found with the connectors.
- Perform the POWERTRAIN VERIFICATION TEST. (Refer to 28 - DTC-Based Diagnostics/MODULE, Powertrain Control (PCM) - Standard Procedure)

No

- Go To 5

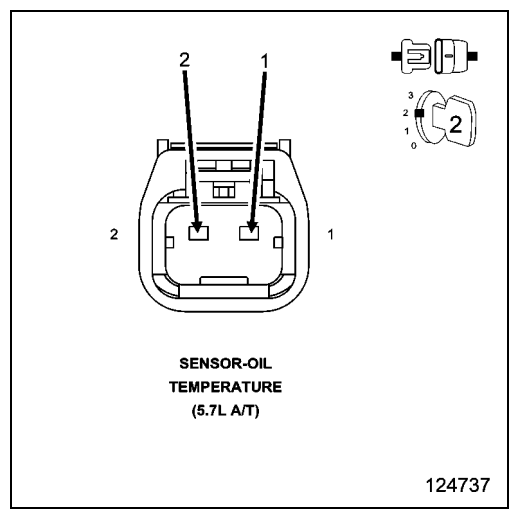

5. (G24) EOT SIGNAL CIRCUIT HIGH RESISTANCE

1. Turn the ignition off.
2. Connect the Engine Oil Temperature Sensor harness connector.

CAUTION: Do not probe the PCM harness connectors. Probing the PCM harness connectors will damage the PCM terminals resulting in poor terminal to pin connection. Install the PCM Pinout Box Kit, NGC, 38 Position 8815A along with the Adapter PCM Pinout Box Adapter 8815-1to perform the diagnosis.

3. Using a voltmeter, perform a voltage drop test by backprobing the (G24) EOT Signal circuit at the Engine Oil Temperature Sensor harness connector and probing the appropriate terminal of the special tool #8815A. Make sure the voltmeter leads are connected so that positive polarity is displayed on the voltmeter.

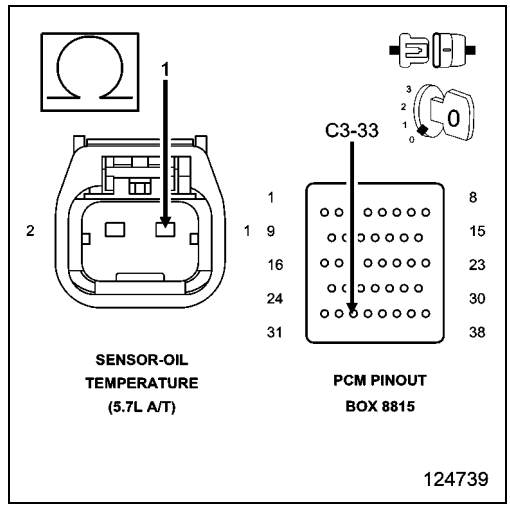

WARNING: When the engine is operating, do not stand in direct line with the fan. Do not put your hands near the pulleys, belts or fan. Do not wear loose clothing. Failure to follow these instructions may result in possible serious or fatal injury.

4. Start the engine.

Is the voltage below 0.5 volts?

Yes

- Go To 6

No

- Repair the (G24) EOT Signal circuit for high resistance.
- Perform the POWERTRAIN VERIFICATION TEST. (Refer to 28 - DTC-Based Diagnostics/MODULE, Powertrain Control (PCM) - Standard Procedure)

6. (K900) SENSOR GROUND CIRCUIT HIGH RESISTANCE

1. Turn the ignition off.

CAUTION: Do not probe the PCM harness connectors. Probing the PCM harness connectors will damage the PCM terminals resulting in poor terminal to pin connection. Install the PCM Pinout Box Kit, NGC, 38 Position 8815A along with the Adapter PCM Pinout Box Adapter 8815-1to perform the diagnosis.

2. Using a voltmeter, perform a voltage drop test by backprobing the (K900) Sensor Ground circuit at the Engine Oil Temperature Sensor harness connector and probing the appropriate terminal of the special tool #8815A. Make sure the voltmeter leads are connected so that positive polarity is displayed on the voltmeter.

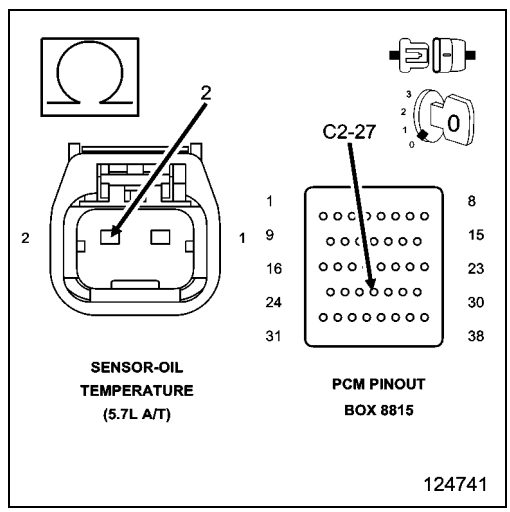

WARNING: When the engine is operating, do not stand in direct line with the fan. Do not put your hands near the pulleys, belts or fan. Do not wear loose clothing. Failure to follow these instructions may result in possible serious or fatal injury.

3. Start the engine.

Is the voltage below 0.5 volts?

Yes

- Go To 7

No

- Repair the (K900) Sensor Ground circuit for high resistance.
- Perform the POWERTRAIN VERIFICATION TEST. (Refer to 28 - DTC-Based Diagnostics/MODULE, Powertrain Control (PCM) - Standard Procedure)

7. (G24) ENGINE OIL TEMP SIGNAL CIRCUIT SHORTED TO VOLTAGE

1. Turn the ignition off.
2. Disconnect the C2 and C3 PCM harness connectors and remove Miller special tool #8815A.
3. Ignition on, engine not running.
4. Measure the voltage on the (G24) Engine Oil Temp Signal circuit in the Engine Oil Temp Sensor harness connector.

Is there any voltage present?

Yes

- Repair the short to voltage in the (G24) Engine Oil Temp Signal circuit.
- Perform the POWERTRAIN VERIFICATION TEST. (Refer to 28 - DTC-Based Diagnostics/MODULE, Powertrain Control (PCM) - Standard Procedure)

No

- Go To 8

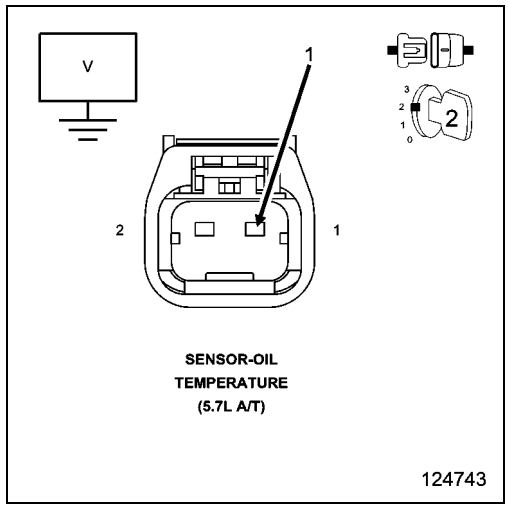

8. (G24) ENGINE OIL TEMP SIGNAL CIRCUIT SHORTED TO THE (K900) SENSOR GROUND CIRCUIT

1. Turn the ignition off.
2. Measure the resistance between the (K900) Sensor ground circuit and the (G24) Engine Oil Temp Signal circuit in the Engine Oil Temp Sensor harness connector.

Is the resistance below 5.0 ohms?

Yes

- Repair the short to between the (K900) Sensor ground circuit and the (G24) Engine Oil Temp Signal circuit.
- Perform the POWERTRAIN VERIFICATION TEST. (Refer to 28 - DTC-Based Diagnostics/MODULE, Powertrain Control (PCM) - Standard Procedure)

No

- Go To 9

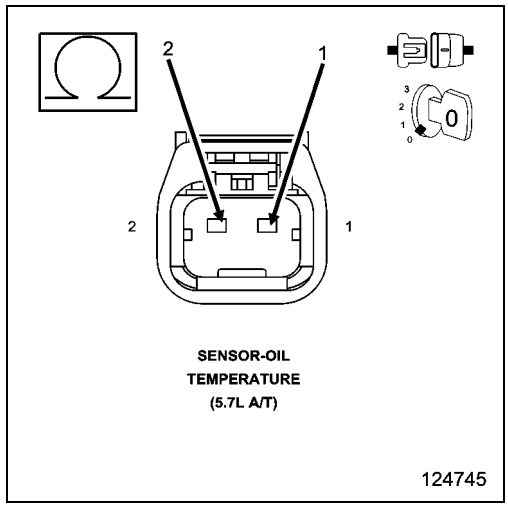

9. (G24) ENGINE OIL TEMP SIGNAL CIRCUIT SHORTED GROUND

1. Measure the resistance between ground and the (G24) Engine Oil Temp Signal circuit in the Engine Oil Temp Sensor harness connector.

Is the resistance below 100 ohms?

Yes

- Repair the short to ground in the (G24) Engine Oil Temp Signal circuit.
- Perform the POWERTRAIN VERIFICATION TEST. (Refer to 28 - DTC-Based Diagnostics/MODULE, Powertrain Control (PCM) - Standard Procedure)

No

- Go To 10

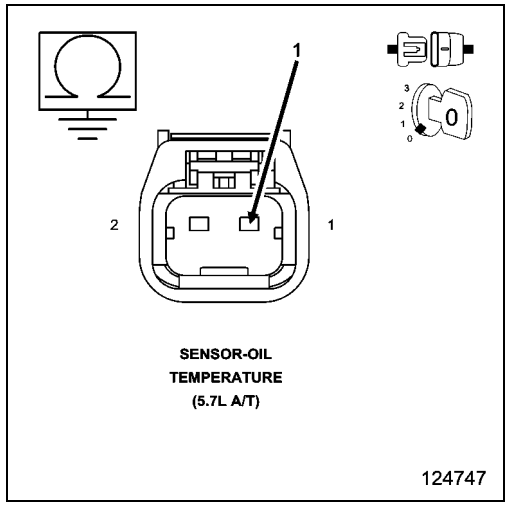

10. POWERTRAIN CONTROL MODULE (PCM)

1. Using the wiring diagram/schematic as a guide, inspect the wiring and connectors between the Engine Oil Temperature Sensor and the Powertrain Control Module (PCM).
2. Look for any chafed, pierced, pinched, or partially broken wires.
3. Look for broken, bent, pushed out or corroded terminals. Verify that there is good pin to terminal contact in the EOT Sensor and Control Module connectors.
4. Refer to any Technical Service Bulletins that may apply.

Were there any problems found?

Yes

- Repair as necessary.
- Perform the POWERTRAIN VERIFICATION TEST. (Refer to 28 - DTC-Based Diagnostics/MODULE, Powertrain Control (PCM) - Standard Procedure)

No

- Replace the Powertrain Control Module (PCM) in accordance with the Service Information.
- Perform the POWERTRAIN VERIFICATION TEST. (Refer to 28 - DTC-Based Diagnostics/MODULE, Powertrain Control (PCM) - Standard Procedure)

P0197-ENGINE OIL TEMPERATURE SENSOR CIRCUIT LOW

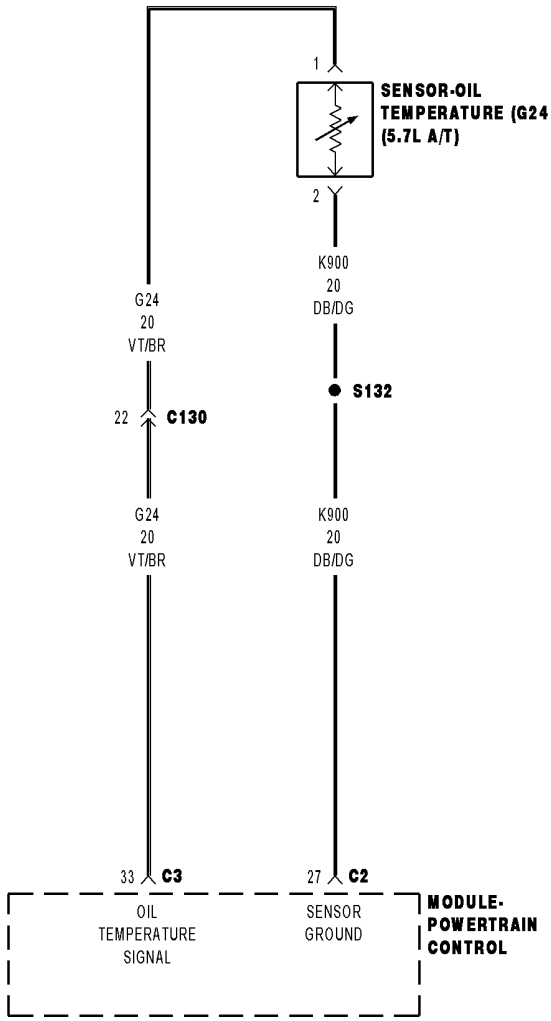

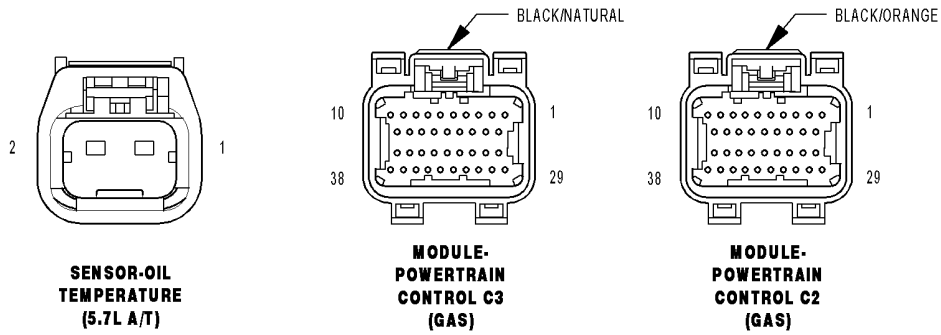

81cc494b

For a complete wiring diagram **Refer to the Wiring Information**.

- **When Monitored:**
  With the ignition on. Battery voltage greater than 10.4 volts.
- **Set Condition:**
  The Engine Oil Temperature sensor circuit voltage at the PCM is less than the calibrated amount. One Trip Fault. Three good trips to clear the MIL.

Possible Causes
(G24) ENGINE OIL TEMP SIGNAL CIRCUIT SHORTED TO GROUND
(G24) ENGINE OIL TEMP SIGNAL CIRCUIT SHORTED TO THE (K900) SENSOR GROUND CIRCUIT
EXCESSIVE RESISTANCE IN THE (G24) ENGINE OIL TEMP SIGNAL CIRCUIT
ENGINE OIL TEMPERATURE SENSOR
POWERTRAIN CONTROL MODULE (PCM)

Always perform the Pre-Diagnostic Troubleshooting procedure before proceeding.(Refer to 28 - DTC-Based Diagnostics/MODULE, Powertrain Control (PCM) - Standard Procedure).

1. ACTIVE DTC

1. Start the engine and allow it to reach normal operating temperature.

WARNING: When the engine is operating, do not stand in direct line with the fan. Do not put your hands near the pulleys, belts or fan. Do not wear loose clothing. Failure to follow these instructions may result in possible serious or fatal injury.

NOTE: Diagnose and repair any system voltage DTCs before continuing with this test.

2. With the scan tool, select View DTCs.

Is the DTC Active at this time?

Yes

- Go To 2

No

- Refer to the INTERMITTENT CONDITION Diagnostic Procedure. (Refer to 28 - DTC-Based Diagnostics/MODULE, Powertrain Control (PCM) - Standard Procedure)

2. ENGINE OIL TEMPERATURE SENSOR

1. Turn the ignition off.
2. Disconnect the Engine Oil Temp Sensor harness connector.
3. Ignition on, engine not running.
4. With a scan tool, read Engine Oil Temp voltage.

NOTE: The sensor voltage should be approximately 5.0 volts (plus or minus .1 volt) with the connector disconnected.

Does the scan tool display the voltage as described above?

Yes

- Verify that there is good pin to terminal contact in the Engine Oil Temperature Sensor and Powertrain Control Module connectors. Replace the Engine Oil Temperature Sensor if no problems were found with the connectors.
- Perform the POWERTRAIN VERIFICATION TEST. (Refer to 28 - DTC-Based Diagnostics/MODULE, Powertrain Control (PCM) - Standard Procedure)

No

- Go To 3

3. (G24) ENGINE OIL TEMP SIGNAL CIRCUIT SHORTED TO THE (K900) SENSOR GROUND CIRCUIT

1. Turn the ignition off.
2. Disconnect the C2 and C3 PCM harness connectors.
3. Measure the resistance between the (K900) Sensor ground circuit and the (G24) Engine Oil Temp Signal circuit in the Engine Oil Temp Sensor harness connector.

Is the resistance below 5.0 ohms?

Yes

- Repair the short to between the (K900) Sensor ground circuit and the (G24) Engine Oil Temp Signal circuit.
- Perform the POWERTRAIN VERIFICATION TEST. (Refer to 28 - DTC-Based Diagnostics/MODULE, Powertrain Control (PCM) - Standard Procedure)

No

- Go To 4

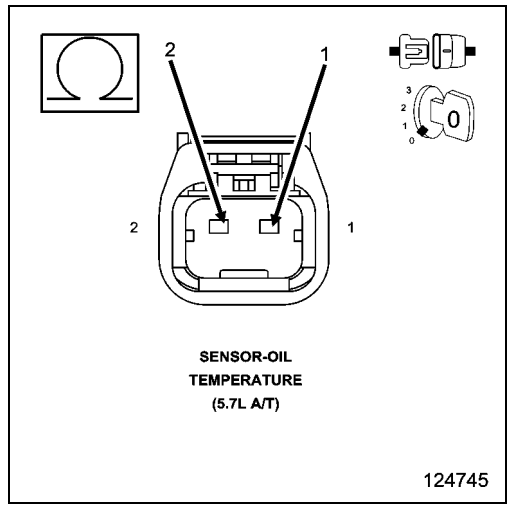

4. (G24) ENGINE OIL TEMP SIGNAL CIRCUIT SHORTED GROUND

1. Measure the resistance between ground and the (G24) Engine Oil Temp Signal circuit in the Engine Oil Temp Sensor harness connector.

Is the resistance below 100 ohms?

Yes

- Repair the short to ground in the (G24) Engine Oil Temp Signal circuit.
- Perform the POWERTRAIN VERIFICATION TEST. (Refer to 28 - DTC-Based Diagnostics/MODULE, Powertrain Control (PCM) - Standard Procedure)

No

- Go To 5

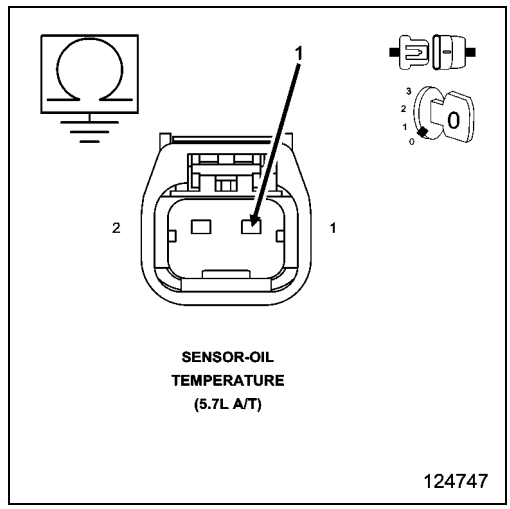

5. EXCESSIVE RESISTANCE IN THE (G24) ENGINE OIL TEMP SIGNAL CIRCUIT

CAUTION: Do not probe the PCM harness connectors. Probing the PCM harness connectors will damage the PCM terminals, resulting in poor terminal to pin connection. Install the PCM Pinout Box Kit, NGC, 38 Position 8815A to perform diagnosis.

1. Measure the resistance of the (G24) Engine Oil Temp Signal circuit between the Engine Oil Temperature Sensor harness connector and the appropriate terminal of special tool #8815A.

Is the resistance below 5.0 ohms?

Yes

- Go To 6

No

- Repair the excessive resistance in the (G24) Engine Oil Temp Signal circuit.
- Perform the POWERTRAIN VERIFICATION TEST. (Refer to 28 - DTC-Based Diagnostics/MODULE, Powertrain Control (PCM) - Standard Procedure)

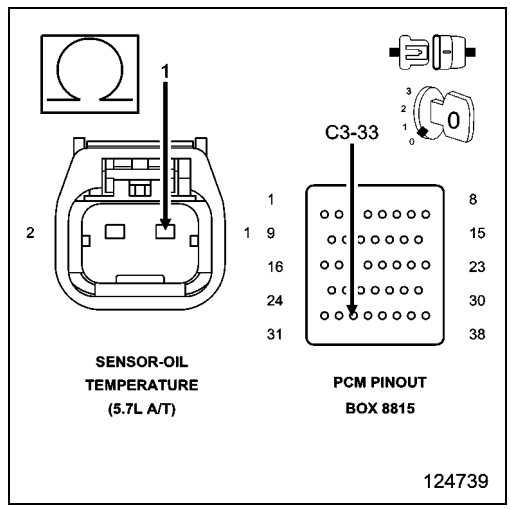

6. POWERTRAIN CONTROL MODULE (PCM)

1. Using the wiring diagram/schematic as a guide, inspect the wiring and connectors between the Engine Oil Temperature Sensor and the Powertrain Control Module (PCM).
2. Look for any chafed, pierced, pinched, or partially broken wires.
3. Look for broken, bent, pushed out or corroded terminals. Verify that there is good pin to terminal contact in the Sensor and Control Module connectors.
4. Refer to any Technical Service Bulletins that may apply.

Were there any problems found?

Yes

- Repair as necessary.
- Perform the POWERTRAIN VERIFICATION TEST. (Refer to 28 - DTC-Based Diagnostics/MODULE, Powertrain Control (PCM) - Standard Procedure)

No

- Replace and program the Powertrain Control Module per Service Information.
- Perform the POWERTRAIN VERIFICATION TEST. (Refer to 28 - DTC-Based Diagnostics/MODULE, Powertrain Control (PCM) - Standard Procedure)

P0198-ENGINE OIL TEMPERATURE SENSOR CIRCUIT HIGH

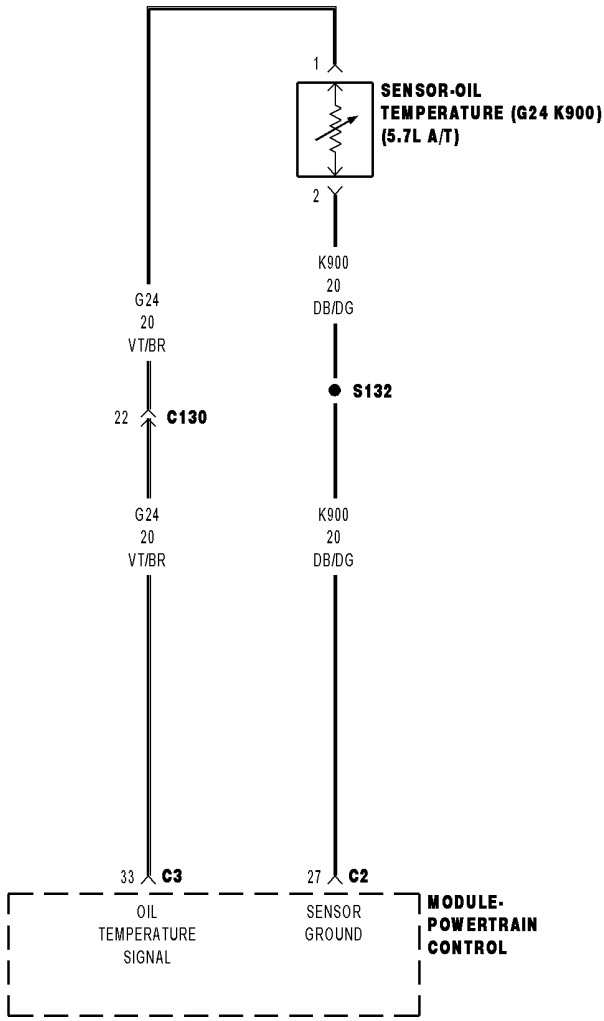

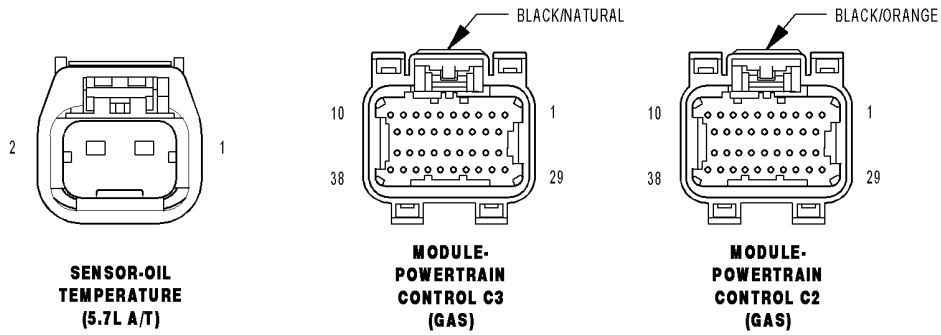

81cc494b

For a complete wiring diagram **Refer to the Wiring Information**.

- **When Monitored:**
  With the ignition on. Battery voltage greater than 10.4 volts.
- **Set Condition:**
  The Engine Oil Temperature sensor circuit voltage at the PCM is greater than the calibrated amount. One Trip Fault. Three good trips to turn off the MIL.

Possible Causes
(G24) ENGINE OIL TEMP SIGNAL CIRCUIT SHORTED TO VOLTAGE
(G24) ENGINE OIL TEMP SIGNAL CIRCUIT OPEN
(K900) SENSOR GROUND CIRCUIT OPEN
ENGINE OIL TEMPERATURE SENSOR
POWERTRAIN CONTROL MODULE (PCM)

Always perform the Pre-Diagnostic Troubleshooting procedure before proceeding.(Refer to 28 - DTC-Based Diagnostics/MODULE, Powertrain Control (PCM) - Standard Procedure).

1. ACTIVE DTC

1. Start the engine and allow it to reach normal operating temperature.

WARNING: When the engine is operating, do not stand in direct line with the fan. Do not put your hands near the pulleys, belts or fan. Do not wear loose clothing. Failure to follow these instructions may result in possible serious or fatal injury.

NOTE: Diagnose and repair any system voltage DTCs before continuing with this test.

2. With the scan tool, select View DTCs.

Is the DTC Active at this time?

Yes

- Go To 2

No

- Refer to the INTERMITTENT CONDITION Diagnostic Procedure. (Refer to 28 - DTC-Based Diagnostics/MODULE, Powertrain Control (PCM) - Standard Procedure)

2. ENGINE OIL TEMP SENSOR

1. Turn the ignition off.
2. Disconnect the Engine Oil Temp Sensor harness connector.
3. Ignition on, engine not running.
4. With a scan tool, read Engine Oil Temp voltage.
5. Connect a jumper wire between the (G24) Engine Oil Temp Signal circuit and the (K900) Sensor ground circuit in the Engine Oil Temp Sensor harness connector.

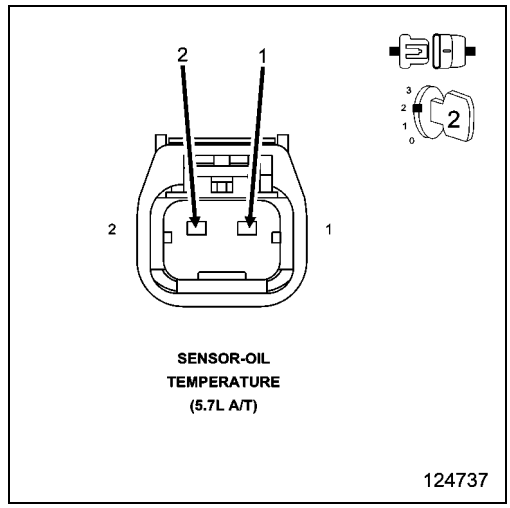

NOTE: The sensor voltage should be approximately 0.0 volts (plus or minus .1 volt) with the jumper wire in place.

Does the scan tool display the voltage as described above?

Yes

- Verify that there is good pin to terminal contact in the EOT Sensor and Control Module connectors. Replace the Engine Oil Temperature Sensor if no problems were found with the connectors.
- Perform the POWERTRAIN VERIFICATION TEST. (Refer to 28 - DTC-Based Diagnostics/MODULE, Powertrain Control (PCM) - Standard Procedure)

No

- Go To 3

NOTE: Remove the jumper wire before continuing.

3. (G24) ENGINE OIL TEMP SIGNAL CIRCUIT SHORTED TO VOLTAGE

1. Turn the ignition off.
2. Disconnect the C2 and C3 PCM harness connectors.
3. Ignition on, engine not running.
4. Measure the voltage on the (G24) Engine Oil Temp Signal circuit in the Engine Oil Temp Sensor harness connector.

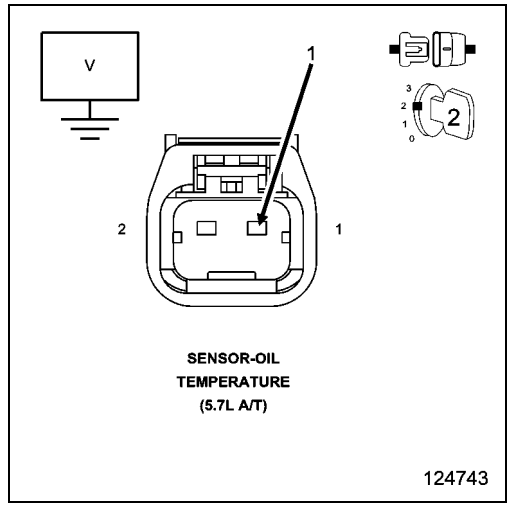

Is there any voltage present?

Yes

- Repair the short to voltage in the (G24) Engine Oil Temp Signal circuit.
- Perform the POWERTRAIN VERIFICATION TEST. (Refer to 28 - DTC-Based Diagnostics/MODULE, Powertrain Control (PCM) - Standard Procedure)

No

- Go To 4

4. (G24) ENGINE OIL TEMP SIGNAL CIRCUIT OPEN

1. Turn the ignition off.

CAUTION: Do not probe the PCM harness connectors. Probing the PCM harness connectors will damage the PCM terminals resulting in poor terminal to pin connection. Install the PCM Pinout Box Kit, NGC, 38 Position 8815A to perform diagnosis.

2. Measure the resistance of the (G24) Engine Oil Temp Signal circuit from the Engine Oil Temp Sensor harness connector to the appropriate terminal of special tool #8815A.

Is the resistance below 5.0 ohms?

Yes

- Go To 5

No

- Repair the open in the (G24) Engine Oil Temp Signal circuit.
- Perform the POWERTRAIN VERIFICATION TEST. (Refer to 28 - DTC-Based Diagnostics/MODULE, Powertrain Control (PCM) - Standard Procedure)

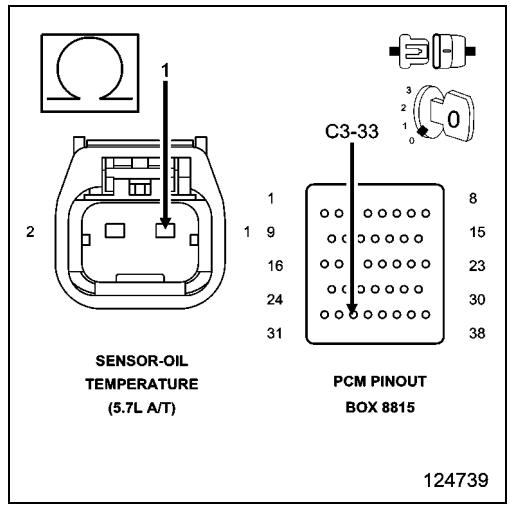

5. (K900) SENSOR GROUND CIRCUIT OPEN

1. Measure the resistance of the (K900) Sensor ground circuit from the Engine Oil Temp Sensor harness connector to the appropriate terminal of special tool #8815A.

Is the resistance below 5.0 ohms?

Yes

- Go To 6

No

- Repair the open in the (K900) Sensor ground circuit.
- Perform the POWERTRAIN VERIFICATION TEST. (Refer to 28 - DTC-Based Diagnostics/MODULE, Powertrain Control (PCM) - Standard Procedure)

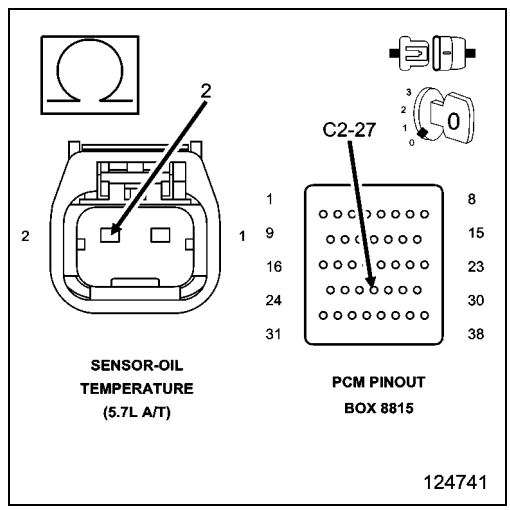

6. POWERTRAIN CONTROL MODULE (PCM)

1. Using the wiring diagram/schematic as a guide, inspect the wiring and connectors between the Engine Oil Temperature Sensor and the Powertrain Control Module (PCM).
2. Look for any chafed, pierced, pinched, or partially broken wires.
3. Look for broken, bent, pushed out or corroded terminals. Verify that there is good pin to terminal contact in the Sensor and Control Module connectors.
4. Refer to any Technical Service Bulletins that may apply.

Were there any problems found?

Yes

- Repair as necessary.
- Perform the POWERTRAIN VERIFICATION TEST. (Refer to 28 - DTC-Based Diagnostics/MODULE, Powertrain Control (PCM) - Standard Procedure)

No

- Replace and program the Powertrain Control Module per Service Information.
- Perform the POWERTRAIN VERIFICATION TEST. (Refer to 28 - DTC-Based Diagnostics/MODULE, Powertrain Control (PCM) - Standard Procedure)

P0201-FUEL INJECTOR 1 CIRCUIT

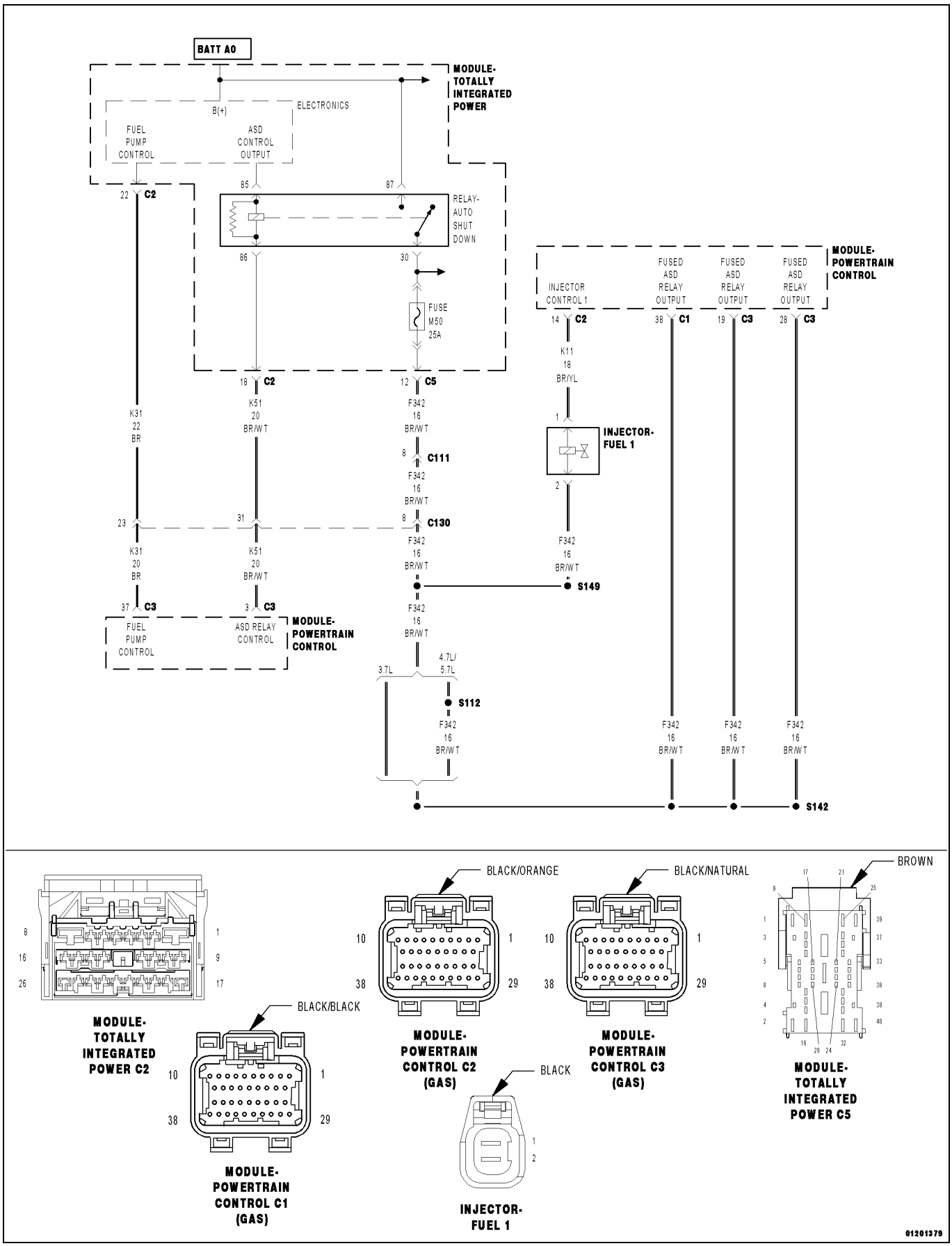

For a complete wiring diagram, **refer to the Wiring Information**.

- **When Monitored:**

  With the engine running and battery voltage greater than 10 volts. ASD is energized. Engine speed less than 3000 rpm.

- **Set Condition:**

  The Powertrain Control Module (PCM) monitors the continuity of the injector circuits as well as the voltage spike created by the collapse of the magnetic field in the injector coil. Any condition that reduces the maximum current flow or the magnitude of the voltage spike can cause this DTC to set.

Possible Causes
(F342) ASD CONTROL OUTPUT CIRCUIT
(K11) INJECTOR CONTROL NO.1 CIRCUIT OPEN
(K11) INJECTOR CONTROL NO.1 CIRCUIT SHORTED TO GROUND
FUEL INJECTOR
POWERTRAIN CONTROL MODULE (PCM)

Always perform the Pre-Diagnostic Troubleshooting procedure before proceeding. (Refer to 28 - DTC-Based Diagnostics/MODULE, Powertrain Control (PCM) - Standard Procedure).

1. DTC IS ACTIVE

1. Turn the ignition on.
2. With the scan tool, select View DTCs. Record DTC and Freeze Frame information.
3. Start the engine and allow it to reach operating temperature.

WARNING: When the engine is operating, do not stand in direct line with the fan. Do not put your hands near the pulleys, belts or fan. Do not wear loose clothing. Failure to follow these instructions may result in possible serious or fatal injury.

NOTE: Review Freeze Frame information. Operate the vehicle under conditions similar to which the DTC was set.

4. With a scan tool, select View DTCs.

Is the status Active for this DTC?

Yes

- Go To 2

No

- Perform the INTERMITTENT CONDITION diagnostic procedure. (Refer to 28 - DTC-Based Diagnostics/MODULE, Powertrain Control (PCM) - Standard Procedure).

2. FUEL INJECTOR 1 CIRCUIT RESISTANCE

1. Turn the ignition off.
2. Disconnect the C2 PCM harness connector.
3. Disconnect the C5 TIPM harness connector.

NOTE: The resistance of the circuit will vary according to the temperature of the injector coil. Use the table below to determine the resistance range of the injector.

CAUTION: Do not probe the PCM harness connectors. Probing the PCM harness connectors will damage the PCM terminals, resulting in poor terminal to pin connection. Install the PCM Pinout Box Kit, NGC, 38 Position 8815A to perform diagnosis.

4. Measure the resistance of the Fuel Injector 1 circuit from the appropriate terminal of the PCM Pinout Box 8815A and the C5 TIPM harness connector.

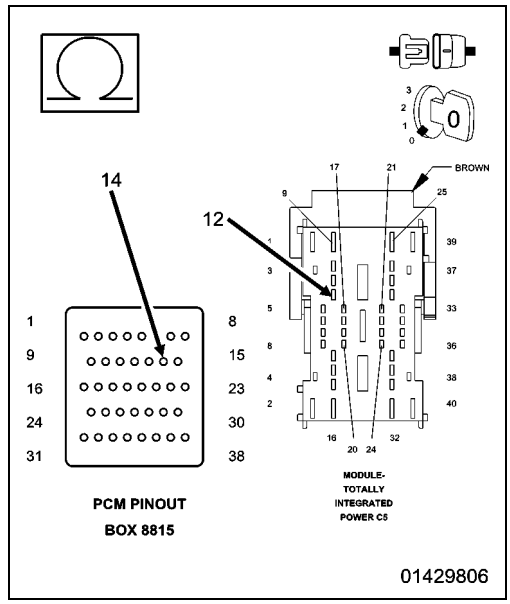

Fuel Injector Coil Resistance Based on Engine Temperature	
Temperature	**Resistance**
-20° C (-4° F)	10 Ohms (+/- .6 of an Ohm)
20° C (68° F)	12 Ohms (+/- .6 of an Ohm)
60° C (140° F)	14 Ohms (+/- .6 of an Ohm)
100° C (212° F)	16 Ohms (+/- .6 of an Ohm)

Is the resistance of the injector within the specified range?

Yes

- Go To 7

No

- Go To 3

3. FUEL INJECTOR 1 WIRING AND CONNECTOR INSPECTION

1. Turn the ignition off.
2. Verify that the Fuel Injector 1 is properly connected to the injector. Disconnect the Fuel Injector 1 connector and Inspect the terminals for any condition that would result in a poor connection.
3. Using the wiring diagram/schematic as a guide, inspect the Fuel Injector 1 wiring and connector.
4. Look for any chafed, pierced, pinched, or partially broken wires.
5. Look for broken, bent, pushed out or corroded terminals.
6. Verify that there is good pin to terminal contact in the Injector and Powertrain Control Module connectors.

Were any problems found?

Yes

- Repair as necessary.
- Perform the POWERTRAIN VERIFICATION TEST. (Refer to 28 - DTC-Based Diagnostics/MODULE, Powertrain Control (PCM) - Standard Procedure).

No

- Go To 4

4. (F342) ASD CONTROL OUTPUT CIRCUIT OPEN OR HIGH RESISTANCE

1. Turn the ignition on.
2. With the scan tool, actuate the Auto Shutdown (ASD) Control State.
3. Using a 12-volt test light connected to ground, check the (F342) ASD Control Output circuit in the Fuel Injector 1 harness connector.

NOTE: The test light should be illuminated and bright. Compare the brightness to that of a direct connection to the battery.

Is the test light illuminated and bright?

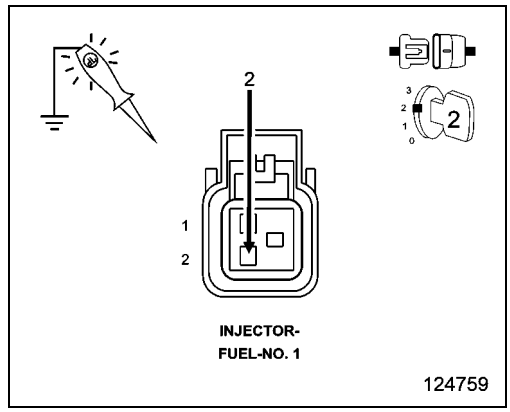

Yes

- Go To 5

No

- Repair the excessive resistance or short to ground in the (F342) ASD Control Output circuit.
- Perform the POWERTRAIN VERIFICATION TEST. (Refer to 28 - DTC-Based Diagnostics/MODULE, Powertrain Control (PCM) - Standard Procedure).

5. (K11) INJECTOR 1 CONTROL CIRCUIT OPEN OR HIGH RESISTANCE

CAUTION: Do not probe the PCM harness connectors. Probing the PCM harness connectors will damage the PCM terminals, resulting in poor terminal to pin connection. Install the PCM Pinout Box Kit, NGC, 38 Position 8815A to perform diagnosis.

1. Turn the ignition off.
2. Disconnect the C2 PCM harness connector.
3. Measure the resistance of the (K11) Injector 1 Control circuit between the Fuel Injector 1 harness connector and the appropriate terminal of the PCM Pinout Box 8815A.

Is the resistance below 5.0 Ohms?

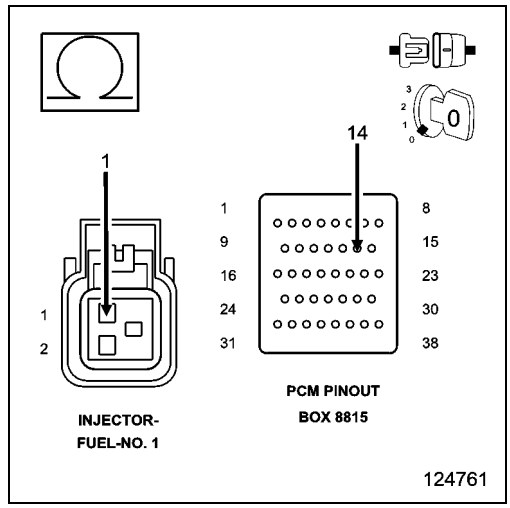

Yes

- Go To 6

No

- Repair the excessive resistance in the (K11) Injector 1 Control circuit.
- Perform the POWERTRAIN VERIFICATION TEST. (Refer to 28 - DTC-Based Diagnostics/MODULE, Powertrain Control (PCM) - Standard Procedure).

6. FUEL INJECTOR 1

1. Using the wiring diagram/schematic as a guide, inspect the wiring and connectors between the Fuel Injector 1 and the Powertrain Control Module (PCM).
2. Look for any chafed, pierced, pinched, or partially broken wires.
3. Look for broken, bent, pushed out or corroded terminals.
4. Refer to any Technical Service Bulletins that may apply.
5. Verify that there is good pin to terminal contact in the Injector and Powertrain Control Module connectors.

Were any problems found?

Yes

- Repair as necessary.
- Perform the POWERTRAIN VERIFICATION TEST. (Refer to 28 - DTC-Based Diagnostics/MODULE, Powertrain Control (PCM) - Standard Procedure).

No

- Replace the Fuel Injector 1 in accordance with the Service Information.
- Perform the POWERTRAIN VERIFICATION TEST. (Refer to 28 - DTC-Based Diagnostics/MODULE, Powertrain Control (PCM) - Standard Procedure).

7. (K11) INJECTOR 1 CONTROL CIRCUIT SHORTED TO GROUND

1. Turn the ignition off.
2. Measure the resistance between ground and the (K11) Injector 1 Control circuit in the Fuel Injector 1 harness connector.

Is the resistance above 100 Ohms?

Yes

- Go To 8

No

- Repair the (K11) Injector 1 Control circuit for a short to ground.
- Perform the POWERTRAIN VERIFICATION TEST. (Refer to 28 - DTC-Based Diagnostics/MODULE, Powertrain Control (PCM) - Standard Procedure).

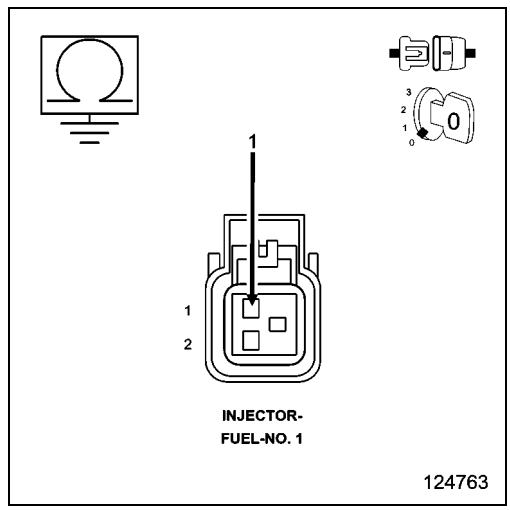

8. POWERTRAIN CONTROL MODULE (PCM)

1. Using the wiring diagram/schematic as a guide, inspect the wiring and connectors between the Fuel Injector 1 and the Powertrain Control Module (PCM).
2. Look for any chafed, pierced, pinched, or partially broken wires.
3. Look for broken, bent, pushed out or corroded terminals. Verify that there is good pin to terminal contact in the Injector and Control Module connectors.
4. Refer to any Technical Service Bulletins that may apply.

Were there any problems found?

Yes

- Repair as necessary.
- Perform the POWERTRAIN VERIFICATION TEST. (Refer to 28 - DTC-Based Diagnostics/MODULE, Powertrain Control (PCM) - Standard Procedure).

No

- Replace and program the Powertrain Control Module (PCM) in accordance with the Service Information.
- Perform the POWERTRAIN VERIFICATION TEST. (Refer to 28 - DTC-Based Diagnostics/MODULE, Powertrain Control (PCM) - Standard Procedure).

P0202-FUEL INJECTOR 2 CIRCUIT

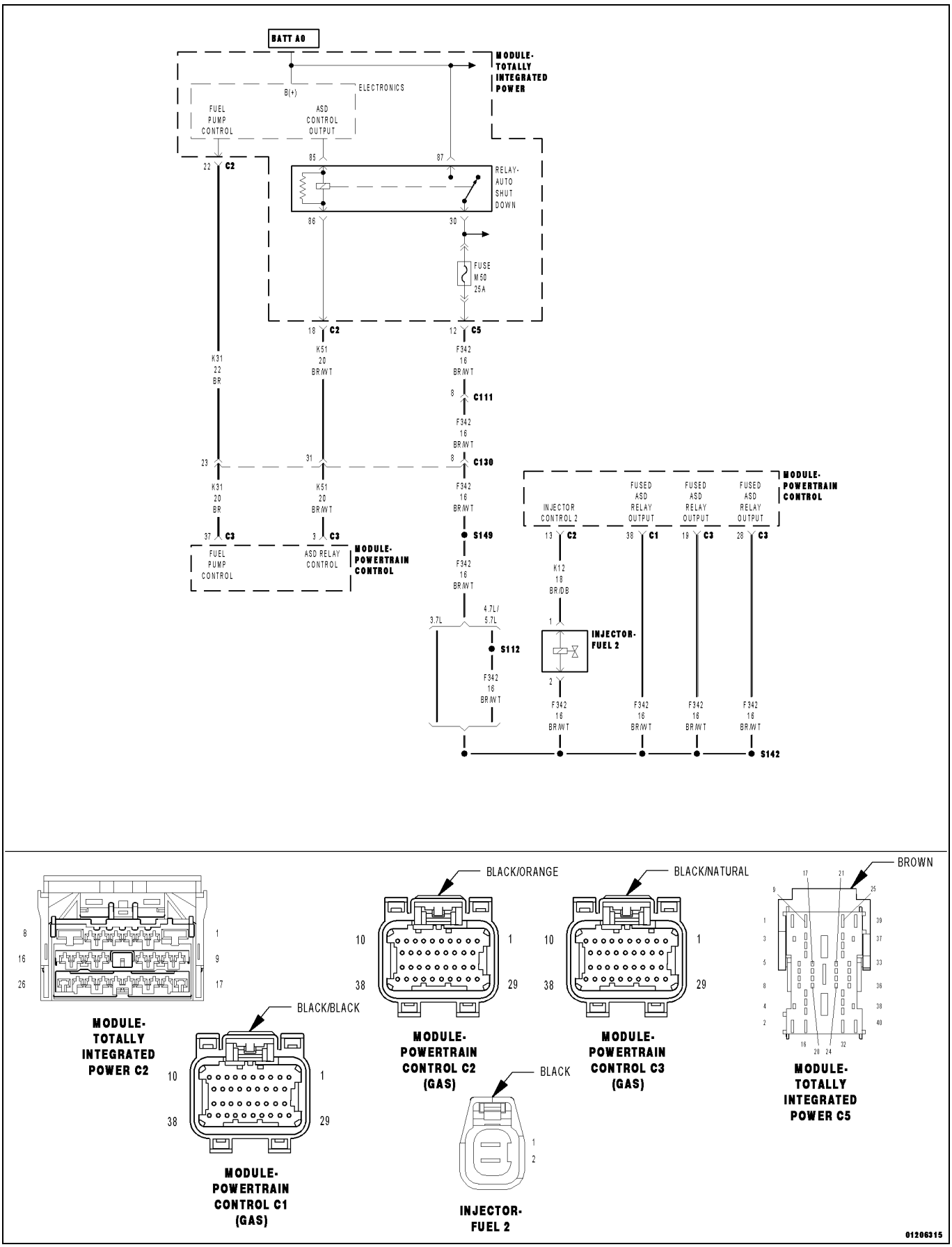

For a complete wiring diagram, **refer to the Wiring Information**.

- **When Monitored:**
  With battery voltage greater than 10 Volts. ASD is energized. Engine speed less than 3000 rpm.
- **Set Condition:**
  The Powertrain Control Module (PCM) monitors the continuity of the injector circuits as well as the voltage spike created by the collapse of the magnetic field in the injector coil. Any condition that reduces the maximum current flow or the magnitude of the voltage spike can cause this DTC to set.

Possible Causes
(F342) ASD CONTROL OUTPUT CIRCUIT
(K12) INJECTOR CONTROL NO.2 CIRCUIT OPEN
(K12) INJECTOR CONTROL NO.2 CIRCUIT SHORTED TO GROUND
FUEL INJECTOR
POWERTRAIN CONTROL MODULE (PCM)

Always perform the Pre-Diagnostic Troubleshooting procedure before proceeding. (Refer to 28 - DTC-Based Diagnostics/MODULE, Powertrain Control (PCM) - Standard Procedure).

1. ACTIVE DTC

1. Turn the ignition on.
2. With the scan tool, select View DTCs. Record DTC and Freeze Frame information.
3. Start the engine and allow it to reach operating temperature.

WARNING: When the engine is operating, do not stand in direct line with the fan. Do not put your hands near the pulleys, belts or fan. Do not wear loose clothing. Failure to follow these instructions may result in possible serious or fatal injury.

NOTE: Review Freeze Frame information. Operate the vehicle under conditions similar to which the DTC was set.

4. With the scan tool, select View DTCs.

Is the DTC Active at this time?

Yes

- Go To 2

No

- Perform the INTERMITTENT CONDITION diagnostic procedure. (Refer to 28 - DTC-Based Diagnostics/MODULE, Powertrain Control (PCM) - Standard Procedure).

2. FUEL INJECTOR 2 CIRCUIT RESISTANCE

1. Turn the ignition off.
2. Disconnect the C2 PCM harness connector.
3. Disconnect the C5 TIPM harness connector.

NOTE: The resistance of the circuit will vary according to the temperature of the injector coil. Use the table below to determine the resistance range of the injector.

CAUTION: Do not probe the PCM harness connectors. Probing the PCM harness connectors will damage the PCM terminals resulting in poor terminal to pin connection. Install the PCM Pinout Box Kit, NGC, 38 Position 8815A to perform diagnosis.

4. Measure the resistance of the Fuel Injector 2 circuit from the appropriate terminal of the PCM Pinout Box 8815A and the C5 TIPM harness connector.

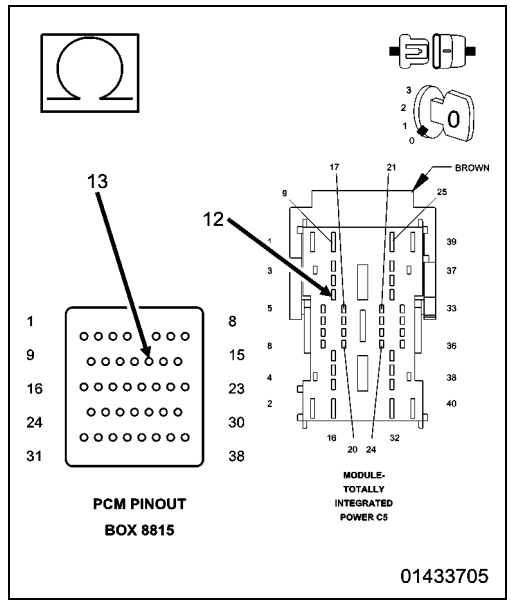

Fuel Injector Coil Resistance Based on Engine Temperature	
Temperature	**Resistance**
-20° C (-4° F)	10 Ohms (+/- .6 of an Ohm)
20° C (68° F)	12 Ohms (+/- .6 of an Ohm)
60° C (140° F)	14 Ohms (+/- .6 of an Ohm)
100° C (212° F)	16 Ohms (+/- .6 of an Ohm)

Is the resistance of the injector within the specified range?

Yes

- Go To 7

No

- Go To 3

3. FUEL INJECTOR 2 WIRING AND CONNECTOR INSPECTION

1. Turn the ignition off.
2. Verify that the Fuel Injector 2 is properly connected to the injector. Disconnect the Fuel Injector 2 connector and Inspect the terminals for any condition that would result in a poor connection.
3. Using the wiring diagram/schematic as a guide, inspect the Fuel Injector 2 wiring and connector.
4. Look for any chafed, pierced, pinched or partially broken wires.
5. Look for broken, bent, pushed out or corroded terminals.
6. Verify that there is good pin to terminal contact in the Injector and Powertrain Control Module connectors.

Were any problems found?

Yes

- Repair as necessary.
- Perform the POWERTRAIN VERIFICATION TEST. (Refer to 28 - DTC-Based Diagnostics/MODULE, Powertrain Control (PCM) - Standard Procedure).

No

- Go To 4

4. (F342) ASD CONTROL OUTPUT CIRCUIT OPEN OR HIGH RESISTANCE

1. Turn the ignition on.
2. With the scan tool, actuate the Auto Shutdown (ASD) Control State.
3. Using a 12-volt test light connected to ground, check the (F342) ASD Control Output circuit in the Fuel Injector 2 harness connector.

NOTE: The test light should be illuminated and bright. Compare the brightness to that of a direct connection to the battery.

Is the test light illuminated and bright?

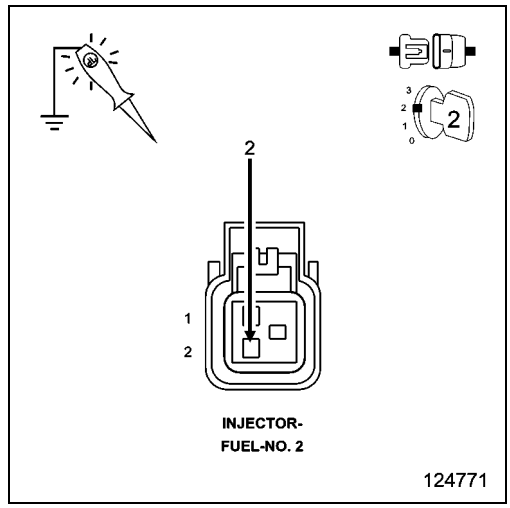

Yes.

- Go To 5

No.

- Repair the excessive resistance or short to ground in the (F342) ASD Control Output circuit.
- Perform the POWERTRAIN VERIFICATION TEST. (Refer to 28 - DTC-Based Diagnostics/MODULE, Powertrain Control (PCM) - Standard Procedure).

5. (K12) INJECTOR CONTROL NO.2 CIRCUIT OPEN

CAUTION: Do not probe the PCM harness connectors. Probing the PCM harness connectors will damage the PCM terminals resulting in poor terminal to pin connection. Install the PCM Pinout Box Kit, NGC, 38 Position 8815A to perform diagnosis.

1. Turn the ignition off.
2. Disconnect the C2 PCM harness connector.
3. Measure the resistance of the (K12) Injector Control No.2 circuit from the Fuel Injector harness connector to the appropriate terminal of the PCM Pinout Box 8815A.

Is the resistance below 5.0 Ohms?

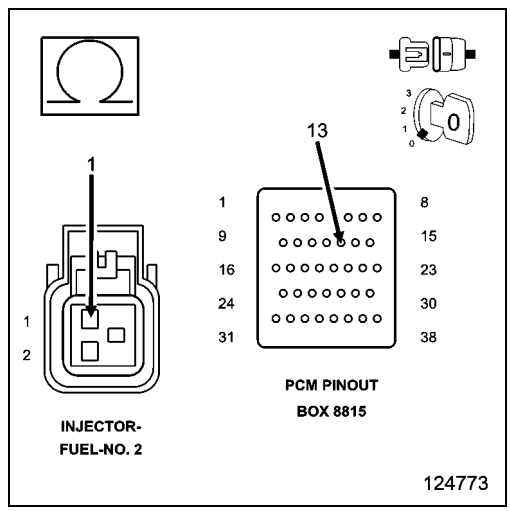

Yes

- Go To 6

No

- Repair the open in the (K12) Injector Control No.2 circuit.
- Perform the POWERTRAIN VERIFICATION TEST. (Refer to 28 - DTC-Based Diagnostics/MODULE, Powertrain Control (PCM) - Standard Procedure).

6. FUEL INJECTOR 2

1. Using the wiring diagram/schematic as a guide, inspect the wiring and connectors between the Fuel Injector 2 and the Powertrain Control Module (PCM).
2. Look for any chafed, pierced, pinched or partially broken wires.
3. Look for broken, bent, pushed out or corroded terminals.
4. Refer to any Technical Service Bulletins that may apply.
5. Verify that there is good pin to terminal contact in the Injector and Powertrain Control Module connectors.

Were any problems found?

Yes

- Repair as necessary.
- Perform the POWERTRAIN VERIFICATION TEST. (Refer to 28 - DTC-Based Diagnostics/MODULE, Powertrain Control (PCM) - Standard Procedure).

No

- Replace the Fuel Injector 2 in accordance with the Service Information.
- Perform the POWERTRAIN VERIFICATION TEST. (Refer to 28 - DTC-Based Diagnostics/MODULE, Powertrain Control (PCM) - Standard Procedure).

7. (K12) INJECTOR CONTROL NO.2 CIRCUIT SHORTED TO GROUND

1. Turn the ignition off.
2. Measure the resistance between ground and the (K12) Injector Control No.2 circuit in the Injector harness connector.

Is the resistance below 100 Ohms?

Yes

- Repair the short to ground in the (K12) Injector Control No.2 circuit.
- Perform the POWERTRAIN VERIFICATION TEST. (Refer to 28 - DTC-Based Diagnostics/MODULE, Powertrain Control (PCM) - Standard Procedure).

No

- Go To 8

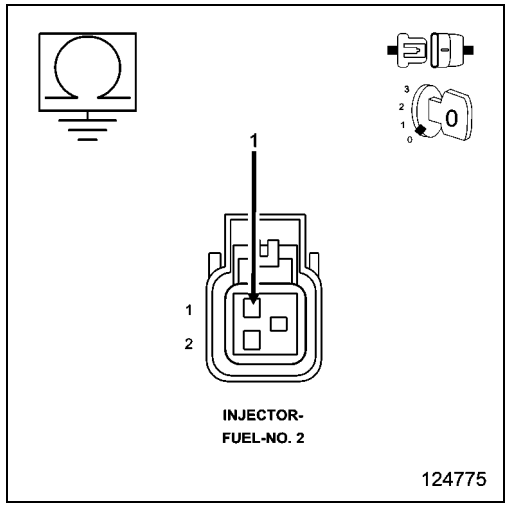

8. POWERTRAIN CONTROL MODULE (PCM)

1. Using the wiring diagram/schematic as a guide, inspect the wiring and connectors between the Fuel Injector 2 and the Powertrain Control Module (PCM).
2. Look for any chafed, pierced, pinched or partially broken wires.
3. Look for broken, bent, pushed out or corroded terminals. Verify that there is good pin to terminal contact in the Injector and Control Module connectors.
4. Refer to any Technical Service Bulletins that may apply.

Were there any problems found?

Yes

- Repair as necessary.
- Perform the POWERTRAIN VERIFICATION TEST. (Refer to 28 - DTC-Based Diagnostics/MODULE, Powertrain Control (PCM) - Standard Procedure).

No

- Replace and program the Powertrain Control Module in accordance with the Service Information.
- Perform the POWERTRAIN VERIFICATION TEST. (Refer to 28 - DTC-Based Diagnostics/MODULE, Powertrain Control (PCM) - Standard Procedure).

P0203-FUEL INJECTOR 3 CIRCUIT

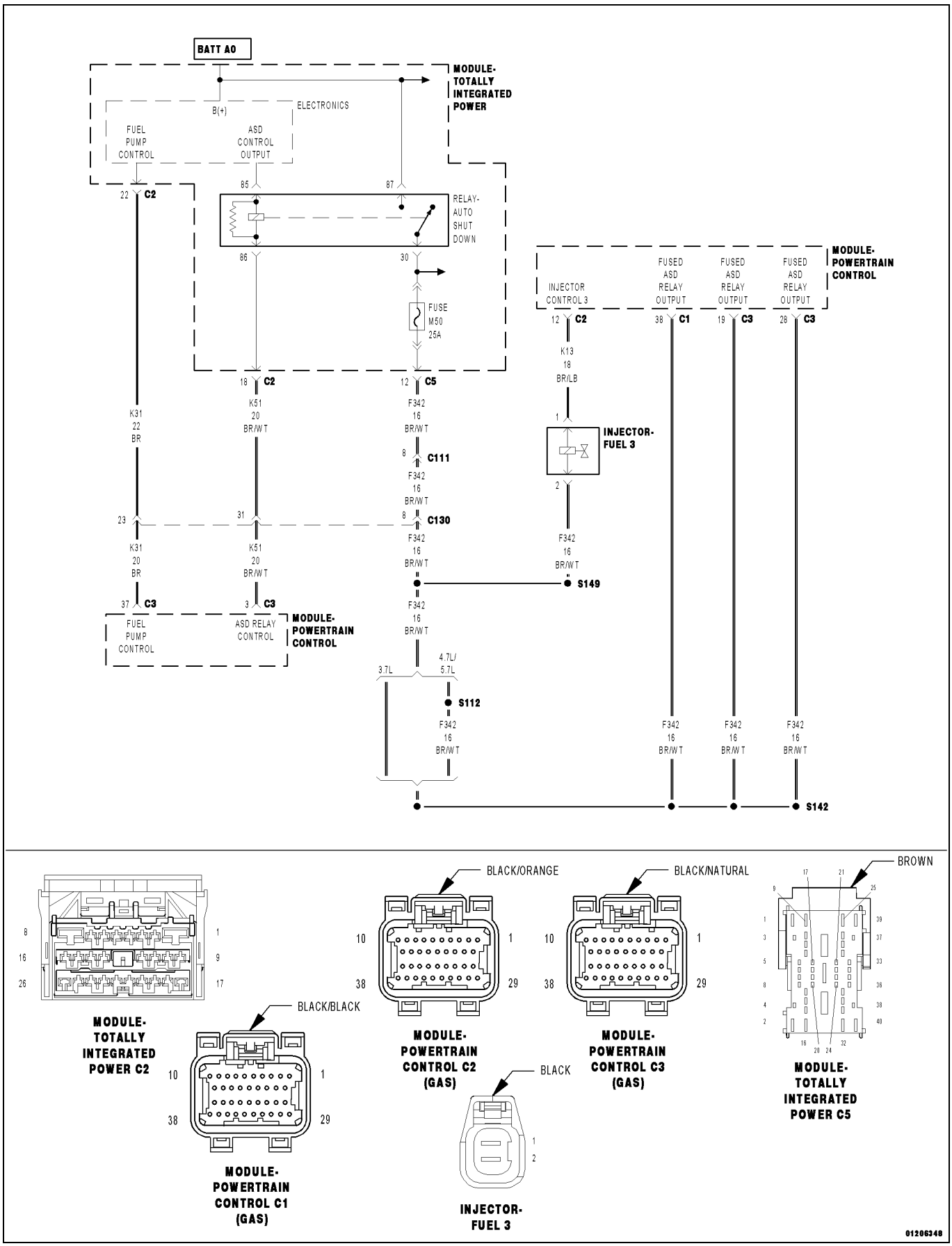

For a complete wiring diagram, **refer to the Wiring Information**.

- **When Monitored:**
  With battery voltage greater than 10 Volts. ASD is energized. Engine speed less than 3000 rpm.
- **Set Condition:**
  The Powertrain Control Module (PCM) monitors the continuity of the injector circuits as well as the voltage spike created by the collapse of the magnetic field in the injector coil. Any condition that reduces the maximum current flow or the magnitude of the voltage spike can cause this DTC to set.

Possible Causes
(F342) ASD CONTROL OUTPUT CIRCUIT
(K13) INJECTOR CONTROL NO.3 CIRCUIT OPEN
(K13) INJECTOR CONTROL NO.3 CIRCUIT SHORTED TO GROUND
FUEL INJECTOR
POWERTRAIN CONTROL MODULE (PCM)

Always perform the Pre-Diagnostic Troubleshooting procedure before proceeding. (Refer to 28 - DTC-Based Diagnostics/MODULE, Powertrain Control (PCM) - Standard Procedure).

1. ACTIVE DTC

1. Turn the ignition on.
2. With the scan tool, select View DTCs. Record DTC and Freeze Frame information.
3. Start the engine and allow it to reach operating temperature.

WARNING: When the engine is operating, do not stand in direct line with the fan. Do not put your hands near the pulleys, belts or fan. Do not wear loose clothing. Failure to follow these instructions may result in possible serious or fatal injury.

NOTE: Review Freeze Frame information. Operate the vehicle under conditions similar to which the DTC was set.

4. With the scan tool, select View DTCs.

Is the DTC Active at this time?

Yes

- Go To 2

No

- Perform the INTERMITTENT CONDITION diagnostic procedure. (Refer to 28 - DTC-Based Diagnostics/MODULE, Powertrain Control (PCM) - Standard Procedure).

2. FUEL INJECTOR 3 CIRCUIT RESISTANCE

1. Turn the ignition off.
2. Disconnect the C2 PCM harness connector.
3. Disconnect the C5 TIPM harness connector.

NOTE: The resistance of the circuit will vary according to the temperature of the injector coil. Use the table less than to determine the resistance range of the injector.

CAUTION: Do not probe the PCM harness connectors. Probing the PCM harness connectors will damage the PCM terminals resulting in poor terminal to pin connection. Install the PCM Pinout Box Kit, NGC, 38 Position 8815A to perform diagnosis.

4. Measure the resistance of the Fuel Injector 3 circuit from the appropriate terminal of the PCM Pinout Box 8815A and the C5 TIPM harness connector.

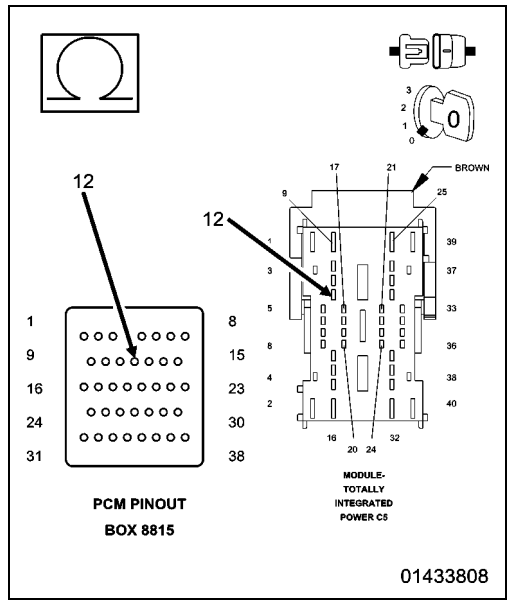

Fuel Injector Coil Resistance Based on Engine Temperature	
Temperature	**Resistance**
-20° C (-4° F)	10 Ohms (+/- .6 of an Ohm)
20° C (68° F)	12 Ohms (+/- .6 of an Ohm)
60° C (140° F)	14 Ohms (+/- .6 of an Ohm)
100° C (212° F)	16 Ohms (+/- .6 of an Ohm)

Is the resistance of the injector within the specified range?

Yes

- Go To 7

No

- Go To 3

3. FUEL INJECTOR 3 WIRING AND CONNECTOR INSPECTION

1. Turn the ignition off.
2. Verify that the Fuel Injector 3 is properly connected to the injector. Disconnect the Fuel Injector 3 connector and Inspect the terminals for any condition that would result in a poor connection.
3. Using the wiring diagram/schematic as a guide, inspect the Fuel Injector 3 wiring and connector.
4. Look for any chafed, pierced, pinched or partially broken wires.
5. Look for broken, bent, pushed out or corroded terminals.
6. Verify that there is good pin to terminal contact in the Injector and Powertrain Control Module connectors.

Were any problems found?

Yes

- Repair as necessary.
- Perform the POWERTRAIN VERIFICATION TEST. (Refer to 28 - DTC-Based Diagnostics/MODULE, Powertrain Control (PCM) - Standard Procedure).

No

- Go To 4

4. (F342) ASD CONTROL OUTPUT CIRCUIT OPEN OR HIGH RESISTANCE

1. Turn the ignition on.
2. With the scan tool, actuate the Auto Shutdown (ASD) Control State.
3. Using a 12-volt test light connected to ground, check the (F342) ASD Control Output circuit in the Fuel Injector 3 harness connector.

NOTE: The test light should be illuminated and bright. Compare the brightness to that of a direct connection to the battery.

Is the test light illuminated and bright?

Yes.

- Go To 5

No.

- Repair the excessive resistance or short to ground in the (F342) ASD Control Output circuit.
- Perform the POWERTRAIN VERIFICATION TEST. (Refer to 28 - DTC-Based Diagnostics/MODULE, Powertrain Control (PCM) - Standard Procedure).

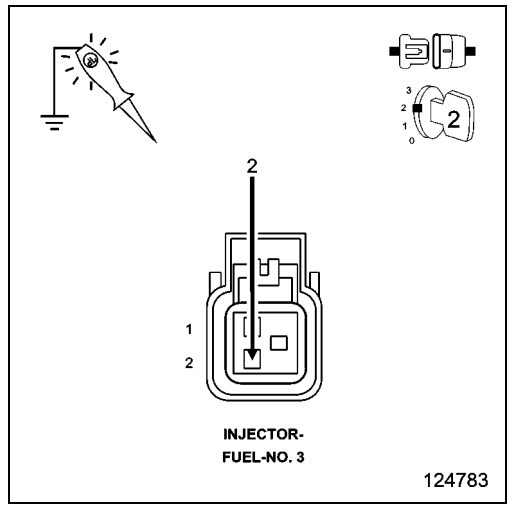

5. (K13) INJECTOR CONTROL NO.3 CIRCUIT OPEN

CAUTION: Do not probe the PCM harness connectors. Probing the PCM harness connectors will damage the PCM terminals resulting in poor terminal to pin connection. Install the PCM Pinout Box Kit, NGC, 38 Position 8815A to perform diagnosis.

1. Turn the ignition off.
2. Disconnect the C2 PCM harness connector.
3. Measure the resistance of the (K13) Injector Control No.3 circuit from the Fuel Injector harness connector to the appropriate terminal of the PCM Pinout Box 8815A.

Is the resistance less than 5.0 Ohms?

Yes

- Go To 6

No

- Repair the open in the (K13) Injector Control No.3 circuit.
- Perform the POWERTRAIN VERIFICATION TEST. (Refer to 28 - DTC-Based Diagnostics/MODULE, Powertrain Control (PCM) - Standard Procedure).

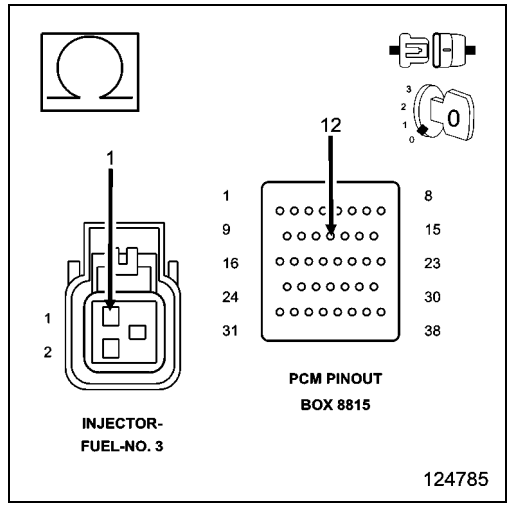

6. FUEL INJECTOR 3

1. Using the wiring diagram/schematic as a guide, inspect the wiring and connectors between the Fuel Injector 3 and the Powertrain Control Module (PCM).
2. Look for any chafed, pierced, pinched or partially broken wires.
3. Look for broken, bent, pushed out or corroded terminals.
4. Refer to any Technical Service Bulletins that may apply.
5. Verify that there is good pin to terminal contact in the Injector and Powertrain Control Module connectors.

Were any problems found?

Yes

- Repair as necessary.
- Perform the POWERTRAIN VERIFICATION TEST. (Refer to 28 - DTC-Based Diagnostics/MODULE, Powertrain Control (PCM) - Standard Procedure).

No

- Replace the Fuel Injector 3 in accordance with the Service Information.
- Perform the POWERTRAIN VERIFICATION TEST. (Refer to 28 - DTC-Based Diagnostics/MODULE, Powertrain Control (PCM) - Standard Procedure).

7. (K13) INJECTOR CONTROL NO.3 CIRCUIT SHORTED TO GROUND

1. Turn the ignition off.
2. Measure the resistance between ground and the (K13) Injector Control No.3 circuit in the Injector harness connector.

Is the resistance less than 100 Ohms?

Yes

- Repair the short to ground in the (K13) Injector Control No.3 circuit.
- Perform the POWERTRAIN VERIFICATION TEST. (Refer to 28 - DTC-Based Diagnostics/MODULE, Powertrain Control (PCM) - Standard Procedure).

No

- Go To 8

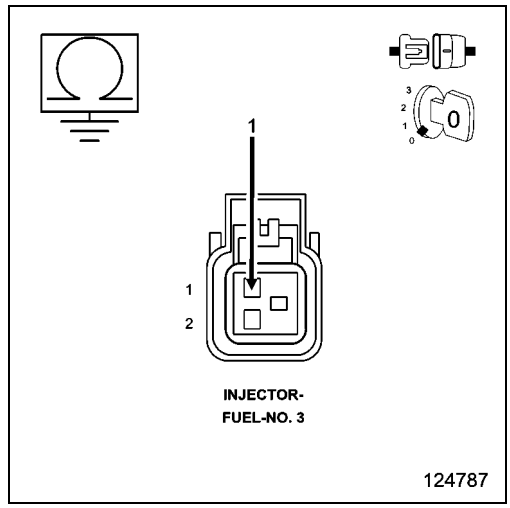

8. POWERTRAIN CONTROL MODULE (PCM)

1. Using the wiring diagram/schematic as a guide, inspect the wiring and connectors between the Fuel Injector 3 and the Powertrain Control Module (PCM).
2. Look for any chafed, pierced, pinched or partially broken wires.
3. Look for broken, bent, pushed out or corroded terminals. Verify that there is good pin to terminal contact in the Injector and Control Module connectors.
4. Refer to any Technical Service Bulletins that may apply.

Were there any problems found?

Yes

- Repair as necessary.
- Perform the POWERTRAIN VERIFICATION TEST. (Refer to 28 - DTC-Based Diagnostics/MODULE, Powertrain Control (PCM) - Standard Procedure).

No

- Replace and program the Powertrain Control Module in accordance with the Service Information.
- Perform the POWERTRAIN VERIFICATION TEST. (Refer to 28 - DTC-Based Diagnostics/MODULE, Powertrain Control (PCM) - Standard Procedure).

P0204-FUEL INJECTOR 4 CIRCUIT

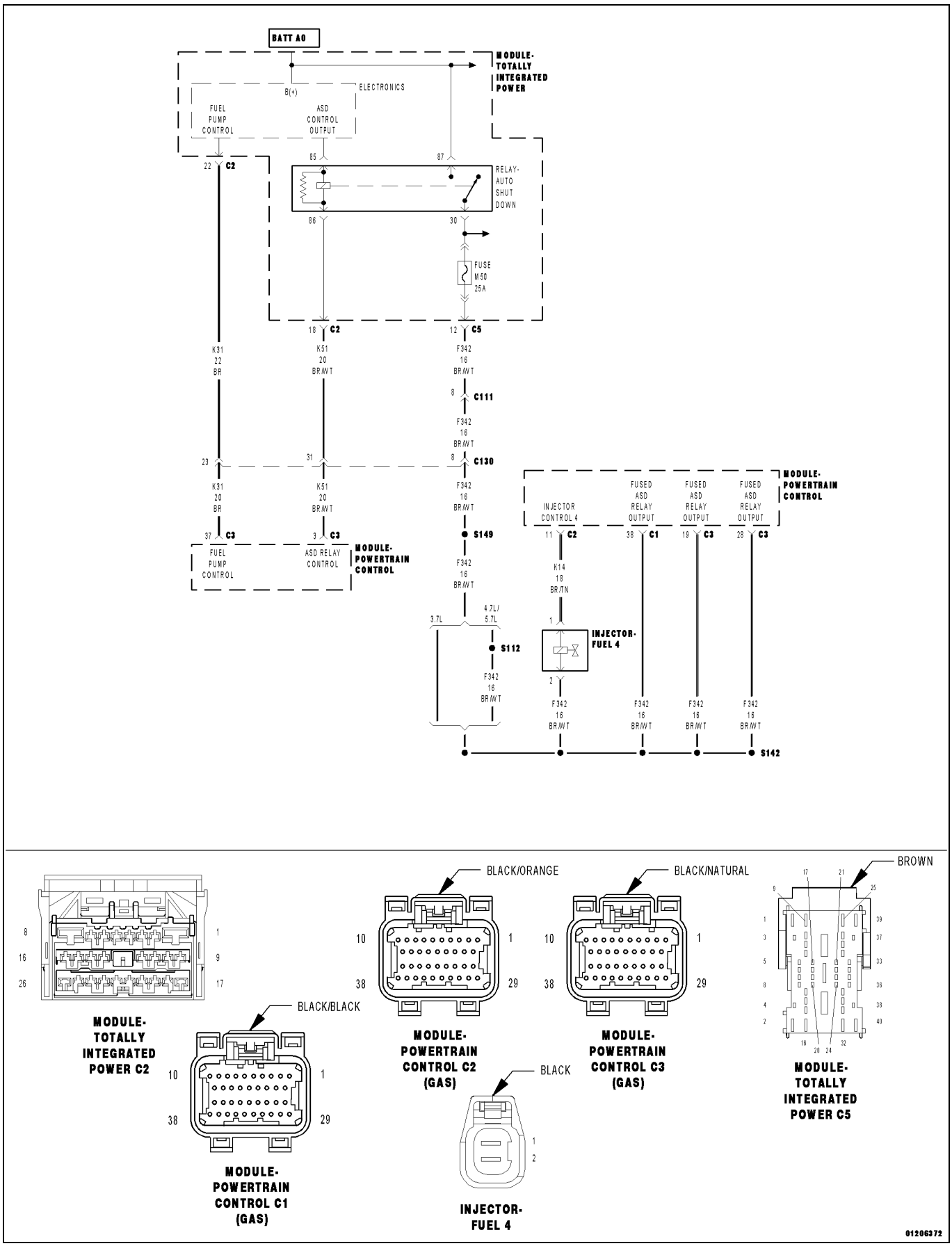

For a complete wiring diagram, **refer to the Wiring Information**.

- **When Monitored:**
  With battery voltage greater than 10 Volts. ASD is energized. Engine speed less than 4000 rpm.
- **Set Condition:**
  The Powertrain Control Module (PCM) monitors the continuity of the injector circuits as well as the voltage spike created by the collapse of the magnetic field in the injector coil. Any condition that reduces the maximum current flow or the magnitude of the voltage spike can cause this DTC to set.

Possible Causes
(F342) ASD CONTROL OUTPUT CIRCUIT
(K14) INJECTOR CONTROL NO.4 CIRCUIT OPEN
(K14) INJECTOR CONTROL NO.4 CIRCUIT SHORTED TO GROUND
FUEL INJECTOR
POWERTRAIN CONTROL MODULE (PCM)

Always perform the Pre-Diagnostic Troubleshooting procedure before proceeding. (Refer to 28 - DTC-Based Diagnostics/MODULE, Powertrain Control (PCM) - Standard Procedure).

1. ACTIVE DTC

1. Turn the ignition on.
2. With the scan tool, select View DTCs. Record DTC and Freeze Frame information.
3. Start the engine and allow it to reach operating temperature.

WARNING: When the engine is operating, do not stand in direct line with the fan. Do not put your hands near the pulleys, belts or fan. Do not wear loose clothing. Failure to follow these instructions may result in possible serious or fatal injury.

NOTE: Review Freeze Frame information. Operate the vehicle under conditions similar to which the DTC was set.

4. With the scan tool, select View DTCs.

Is the DTC Active at this time?

Yes

- Go To 2

No

- Perform the INTERMITTENT CONDITION diagnostic procedure. (Refer to 28 - DTC-Based Diagnostics/MODULE, Powertrain Control (PCM) - Standard Procedure).

2. FUEL INJECTOR 4 CIRCUIT RESISTANCE

1. Turn the ignition off.
2. Disconnect the C2 PCM harness connector.
3. Disconnect the C5 TIPM harness connector.

NOTE: The resistance of the circuit will vary according to the temperature of the injector coil. Use the table below to determine the resistance range of the injector.

CAUTION: Do not probe the PCM harness connectors. Probing the PCM harness connectors will damage the PCM terminals resulting in poor terminal to pin connection. Install the PCM Pinout Box Kit, NGC, 38 Position 8815A to perform diagnosis.

4. Measure the resistance of the Fuel Injector 4 circuit from the appropriate terminal of the PCM Pinout Box 8815A and the C5 TIPM harness connector.

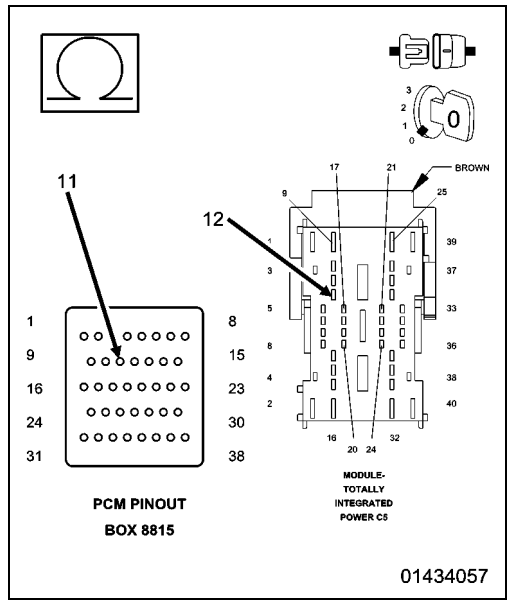

Fuel Injector Coil Resistance Based on Engine Temperature	
Temperature	**Resistance**
-20° C (-4° F)	10 Ohms (+/- .6 of an Ohm)
20° C (68° F)	12 Ohms (+/- .6 of an Ohm)
60° C (140° F)	14 Ohms (+/- .6 of an Ohm)
100° C (212° F)	16 Ohms (+/- .6 of an Ohm)

Is the resistance of the injector within the specified range?

Yes

- Go To 7

No

- Go To 3

3. FUEL INJECTOR 4 WIRING AND CONNECTOR INSPECTION

1. Turn the ignition off.
2. Verify that the Fuel Injector 4 is properly connected to the injector. Disconnect the Fuel Injector 4 connector and Inspect the terminals for any condition that would result in a poor connection.
3. Using the wiring diagram/schematic as a guide, inspect the Fuel Injector 4 wiring and connector.
4. Look for any chafed, pierced, pinched or partially broken wires.
5. Look for broken, bent, pushed out or corroded terminals.
6. Verify that there is good pin to terminal contact in the Injector and Powertrain Control Module connectors.

Were any problems found?

Yes

- Repair as necessary.
- Perform the POWERTRAIN VERIFICATION TEST. (Refer to 28 - DTC-Based Diagnostics/MODULE, Powertrain Control (PCM) - Standard Procedure).

No

- Go To 4

4. (F342) ASD CONTROL OUTPUT CIRCUIT OPEN OR HIGH RESISTANCE

1. Turn the ignition on.
2. With the scan tool, actuate the Auto Shutdown (ASD) Control State.
3. Using a 12-volt test light connected to ground, check the (F342) ASD Control Output circuit in the Fuel Injector 4 harness connector.

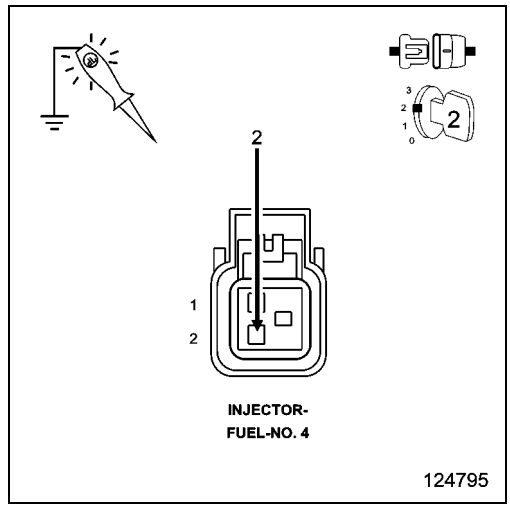

NOTE: The test light should be illuminated and bright. Compare the brightness to that of a direct connection to the battery.

Is the test light illuminated and bright?

Yes.

- Go To 5

No.

- Repair the excessive resistance or short to ground in the (F342) ASD Control Output circuit.
- Perform the POWERTRAIN VERIFICATION TEST. (Refer to 28 - DTC-Based Diagnostics/MODULE, Powertrain Control (PCM) - Standard Procedure).

5. (K14) INJECTOR CONTROL NO.4 CIRCUIT OPEN

CAUTION: Do not probe the PCM harness connectors. Probing the PCM harness connectors will damage the PCM terminals resulting in poor terminal to pin connection. Install the PCM Pinout Box Kit, NGC, 38 Position 8815A to perform diagnosis.

1. Turn the ignition off.
2. Disconnect the C2 PCM harness connector.
3. Measure the resistance of the (K14) Injector Control No.4 circuit from the Fuel Injector harness connector to the appropriate terminal of the PCM Pinout Box 8815A.

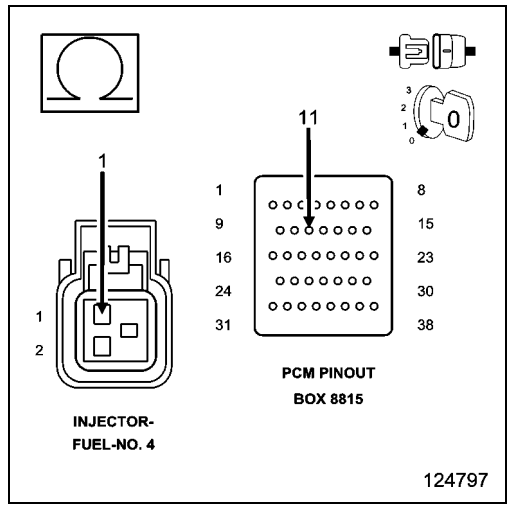

Is the resistance below 5.0 Ohms?

Yes

- Go To 6

No

- Repair the open in the (K14) Injector Control No.4 circuit.
- Perform the POWERTRAIN VERIFICATION TEST. (Refer to 28 - DTC-Based Diagnostics/MODULE, Powertrain Control (PCM) - Standard Procedure).

6. FUEL INJECTOR 4

1. Using the wiring diagram/schematic as a guide, inspect the wiring and connectors between the Fuel Injector 4 and the Powertrain Control Module (PCM).
2. Look for any chafed, pierced, pinched or partially broken wires.
3. Look for broken, bent, pushed out or corroded terminals.
4. Refer to any Technical Service Bulletins that may apply.
5. Verify that there is good pin to terminal contact in the Injector and Powertrain Control Module connectors.

Were any problems found?

Yes

- Repair as necessary.
- Perform the POWERTRAIN VERIFICATION TEST. (Refer to 28 - DTC-Based Diagnostics/MODULE, Powertrain Control (PCM) - Standard Procedure).

No

- Replace the Fuel Injector 4 in accordance with the Service Information.
- Perform the POWERTRAIN VERIFICATION TEST. (Refer to 28 - DTC-Based Diagnostics/MODULE, Powertrain Control (PCM) - Standard Procedure).

7. (K14) INJECTOR CONTROL NO.4 CIRCUIT SHORTED TO GROUND

1. Turn the ignition off.
2. Measure the resistance between ground and the (K14) Injector Control No.4 circuit in the Injector harness connector.

Is the resistance below 100 Ohms?

Yes

- Repair the short to ground in the (K14) Injector Control No.4 circuit.
- Perform the POWERTRAIN VERIFICATION TEST. (Refer to 28 - DTC-Based Diagnostics/MODULE, Powertrain Control (PCM) - Standard Procedure).

No

- Go To 8

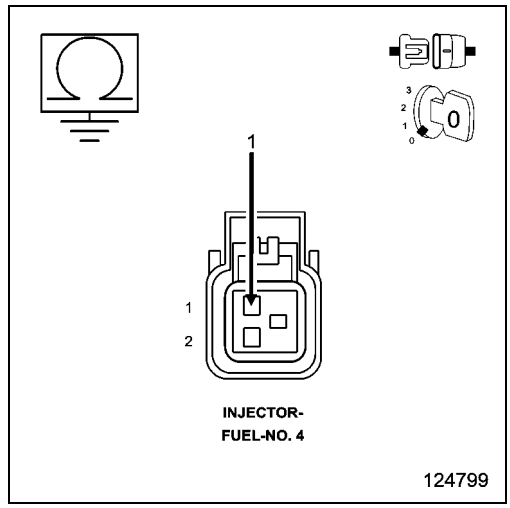

8. POWERTRAIN CONTROL MODULE (PCM)

1. Using the wiring diagram/schematic as a guide, inspect the wiring and connectors between the Fuel Injector 4 and the Powertrain Control Module (PCM).
2. Look for any chafed, pierced, pinched or partially broken wires.
3. Look for broken, bent, pushed out or corroded terminals. Verify that there is good pin to terminal contact in the Injector and Control Module connectors.
4. Refer to any Technical Service Bulletins that may apply.

Were there any problems found?

Yes

- Repair as necessary.
- Perform the POWERTRAIN VERIFICATION TEST. (Refer to 28 - DTC-Based Diagnostics/MODULE, Powertrain Control (PCM) - Standard Procedure).

No

- Replace and program the Powertrain Control Module in accordance with the Service Information.
- Perform the POWERTRAIN VERIFICATION TEST. (Refer to 28 - DTC-Based Diagnostics/MODULE, Powertrain Control (PCM) - Standard Procedure).

P0205-FUEL INJECTOR 5 CIRCUIT

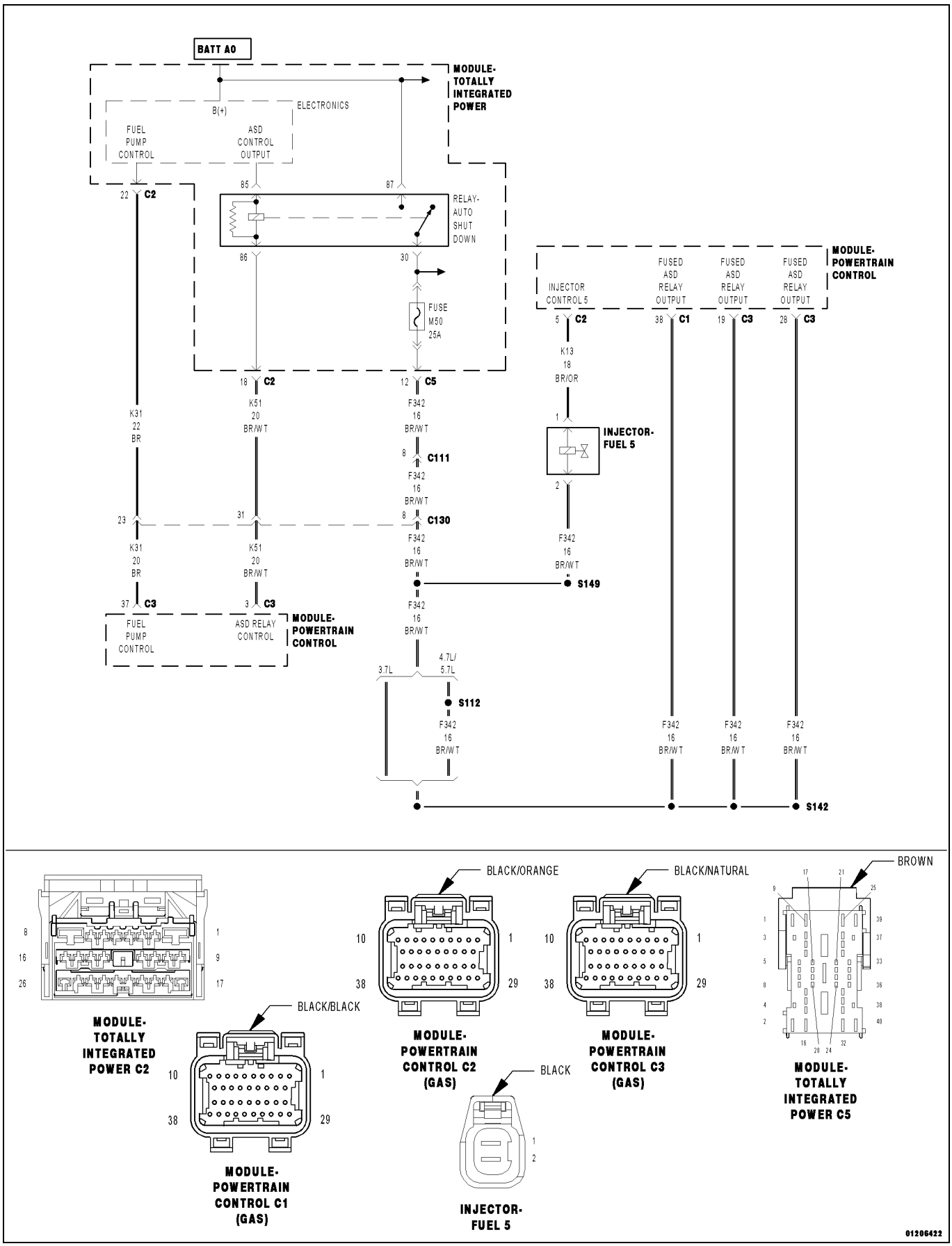

For a complete wiring diagram, **refer to the Wiring Information**.

- **When Monitored:**
  With battery voltage greater than 10 Volts. ASD is energized. Engine speed less than 3000 rpm.
- **Set Condition:**
  The Powertrain Control Module (PCM) monitors the continuity of the injector circuits as well as the voltage spike created by the collapse of the magnetic field in the injector coil. Any condition that reduces the maximum current flow or the magnitude of the voltage spike can cause this DTC to set.

Possible Causes
(F342) ASD CONTROL OUTPUT CIRCUIT
(K38) INJECTOR CONTROL NO.5 CIRCUIT OPEN
(K38) INJECTOR CONTROL NO.5 CIRCUIT SHORTED TO GROUND
FUEL INJECTOR
POWERTRAIN CONTROL MODULE (PCM)

Always perform the Pre-Diagnostic Troubleshooting procedure before proceeding. (Refer to 28 - DTC-Based Diagnostics/MODULE, Powertrain Control (PCM) - Standard Procedure).

1. ACTIVE DTC

1. Turn the ignition on.
2. With the scan tool, select View DTCs. Record DTC and Freeze Frame information.
3. Start the engine and allow it to reach operating temperature.

WARNING: When the engine is operating, do not stand in direct line with the fan. Do not put your hands near the pulleys, belts or fan. Do not wear loose clothing. Failure to follow these instructions may result in possible serious or fatal injury.

NOTE: Review Freeze Frame information. Operate the vehicle under conditions similar to which the DTC was set.

4. With the scan tool, select View DTCs.

Is the DTC Active at this time?

Yes

- Go To 2

No

- Perform the INTERMITTENT CONDITION diagnostic procedure. (Refer to 28 - DTC-Based Diagnostics/MODULE, Powertrain Control (PCM) - Standard Procedure).

2. FUEL INJECTOR 5 CIRCUIT RESISTANCE

1. Turn the ignition off.
2. Disconnect the C2 PCM harness connector.
3. Disconnect the C5 TIPM harness connector.

NOTE: The resistance of the circuit will vary according to the temperature of the injector coil. Use the table below to determine the resistance range of the injector.

CAUTION: Do not probe the PCM harness connectors. Probing the PCM harness connectors will damage the PCM terminals resulting in poor terminal to pin connection. Install the PCM Pinout Box Kit, NGC, 38 Position 8815A to perform diagnosis.

4. Measure the resistance of the Fuel Injector 5 circuit from the appropriate terminal of PCM Pinout Box 8815A and the C5 TIPM harness connector.

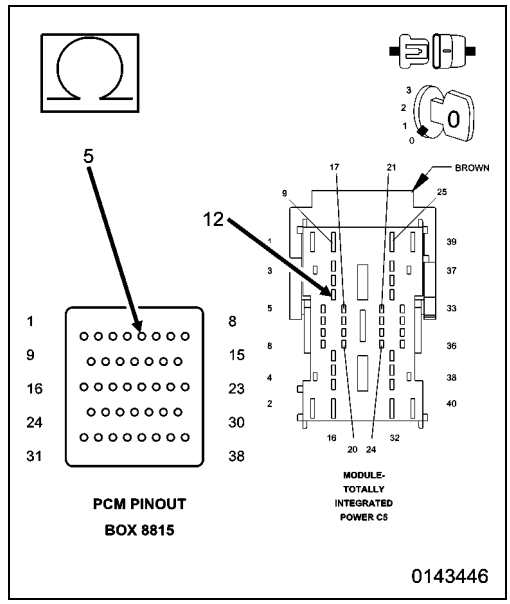

Fuel Injector Coil Resistance Based on Engine Temperature	
Temperature	**Resistance**
-20° C (-4° F)	10 Ohms (+/- .6 of an Ohm)
20° C (68° F)	12 Ohms (+/- .6 of an Ohm)
60° C (140° F)	14 Ohms (+/- .6 of an Ohm)
100° C (212° F)	16 Ohms (+/- .6 of an Ohm)

Is the resistance of the injector within the specified range?

Yes

- Go To 7

No

- Go To 3

3. FUEL INJECTOR 5 WIRING AND CONNECTOR INSPECTION

1. Turn the ignition off.
2. Verify that the Fuel Injector 5 is properly connected to the injector. Disconnect the Fuel Injector 5 connector and Inspect the terminals for any condition that would result in a poor connection.
3. Using the wiring diagram/schematic as a guide, inspect the Fuel Injector 5 wiring and connector.
4. Look for any chafed, pierced, pinched or partially broken wires.
5. Look for broken, bent, pushed out or corroded terminals.
6. Verify that there is good pin to terminal contact in the Injector and Powertrain Control Module connectors.

Were any problems found?

Yes

- Repair as necessary.
- Perform the POWERTRAIN VERIFICATION TEST. (Refer to 28 - DTC-Based Diagnostics/MODULE, Powertrain Control (PCM) - Standard Procedure).

No

- Go To 4

4. (F342) ASD CONTROL OUTPUT CIRCUIT OPEN OR HIGH RESISTANCE

1. Turn the ignition on.
2. With the scan tool, actuate the Auto Shutdown (ASD) Control State.
3. Using a 12-volt test light connected to ground, check the (F342) ASD Control Output circuit in the Fuel Injector 5 harness connector.

NOTE: The test light should be illuminated and bright. Compare the brightness to that of a direct connection to the battery.

Is the test light illuminated and bright?

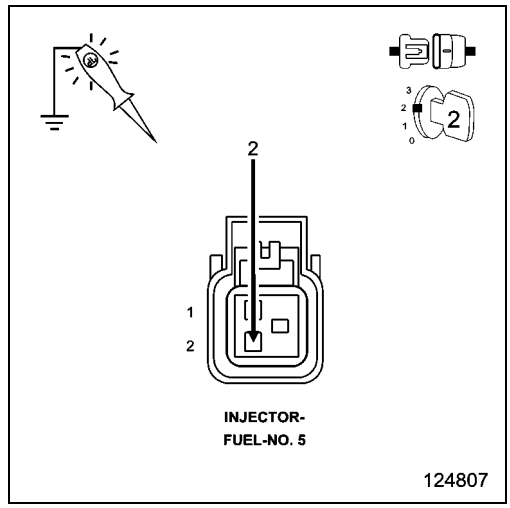

Yes.

- Go To 5

No.

- Repair the excessive resistance or short to ground in the (F342) ASD Control Output circuit.
- Perform the POWERTRAIN VERIFICATION TEST. (Refer to 28 - DTC-Based Diagnostics/MODULE, Powertrain Control (PCM) - Standard Procedure).

5. (K38) INJECTOR CONTROL NO.5 CIRCUIT OPEN

CAUTION: Do not probe the PCM harness connectors. Probing the PCM harness connectors will damage the PCM terminals resulting in poor terminal to pin connection. Install the PCM Pinout Box Kit, NGC, 38 Position 8815A to perform diagnosis.

1. Turn the ignition off.
2. Disconnect the C2 PCM harness connector.
3. Measure the resistance of the (K38) Injector Control No.5 circuit from the Fuel Injector harness connector to the appropriate terminal of the PCM Pinout Box 8815A.

Is the resistance below 5.0 Ohms?

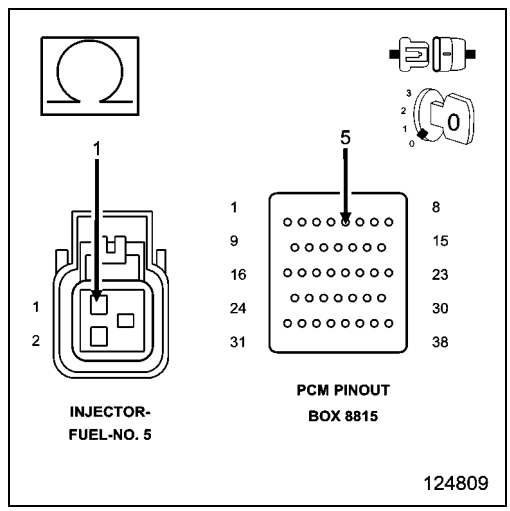

Yes

- Go To 6

No

- Repair the open in the (K38) Injector Control No.5 circuit.
- Perform the POWERTRAIN VERIFICATION TEST. (Refer to 28 - DTC-Based Diagnostics/MODULE, Powertrain Control (PCM) - Standard Procedure).

6. FUEL INJECTOR 5

1. Using the wiring diagram/schematic as a guide, inspect the wiring and connectors between the Fuel Injector 5 and the Powertrain Control Module (PCM).
2. Look for any chafed, pierced, pinched or partially broken wires.
3. Look for broken, bent, pushed out or corroded terminals.
4. Refer to any Technical Service Bulletins that may apply.
5. Verify that there is good pin to terminal contact in the Injector and Powertrain Control Module connectors.

Were any problems found?

Yes

- Repair as necessary.
- Perform the POWERTRAIN VERIFICATION TEST. (Refer to 28 - DTC-Based Diagnostics/MODULE, Powertrain Control (PCM) - Standard Procedure).

No

- Replace the Fuel Injector 5 in accordance with the Service Information.
- Perform the POWERTRAIN VERIFICATION TEST. (Refer to 28 - DTC-Based Diagnostics/MODULE, Powertrain Control (PCM) - Standard Procedure).

7. (K38) INJECTOR CONTROL NO.5 CIRCUIT SHORTED TO GROUND

1. Turn the ignition off.
2. Measure the resistance between ground and the (K38) Injector Control No.5 circuit in the Injector harness connector.

Is the resistance below 100 Ohms?

Yes

- Repair the short to ground in the (K38) Injector Control No.5 circuit.
- Perform the POWERTRAIN VERIFICATION TEST. (Refer to 28 - DTC-Based Diagnostics/MODULE, Powertrain Control (PCM) - Standard Procedure).

No

- Go To 8

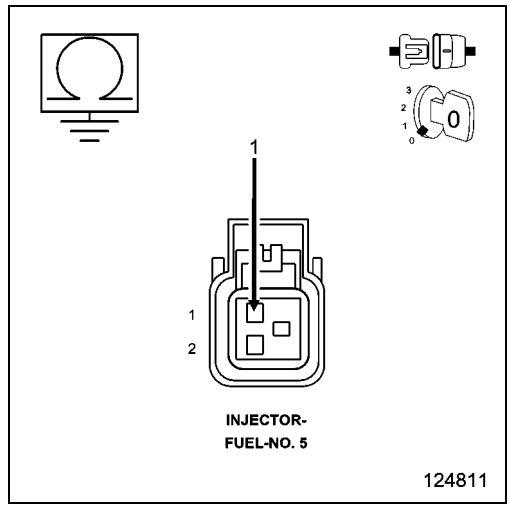

8. POWERTRAIN CONTROL MODULE (PCM)

1. Using the wiring diagram/schematic as a guide, inspect the wiring and connectors between the Fuel Injector 5 and the Powertrain Control Module (PCM).
2. Look for any chafed, pierced, pinched or partially broken wires.
3. Look for broken, bent, pushed out or corroded terminals. Verify that there is good pin to terminal contact in the Injector and Control Module connectors.
4. Refer to any Technical Service Bulletins that may apply.

Were there any problems found?

Yes

- Repair as necessary.
- Perform the POWERTRAIN VERIFICATION TEST. (Refer to 28 - DTC-Based Diagnostics/MODULE, Powertrain Control (PCM) - Standard Procedure).

No

- Replace and program the Powertrain Control Module in accordance with the Service Information.
- Perform the POWERTRAIN VERIFICATION TEST. (Refer to 28 - DTC-Based Diagnostics/MODULE, Powertrain Control (PCM) - Standard Procedure).

P0206-FUEL INJECTOR 6 CIRCUIT

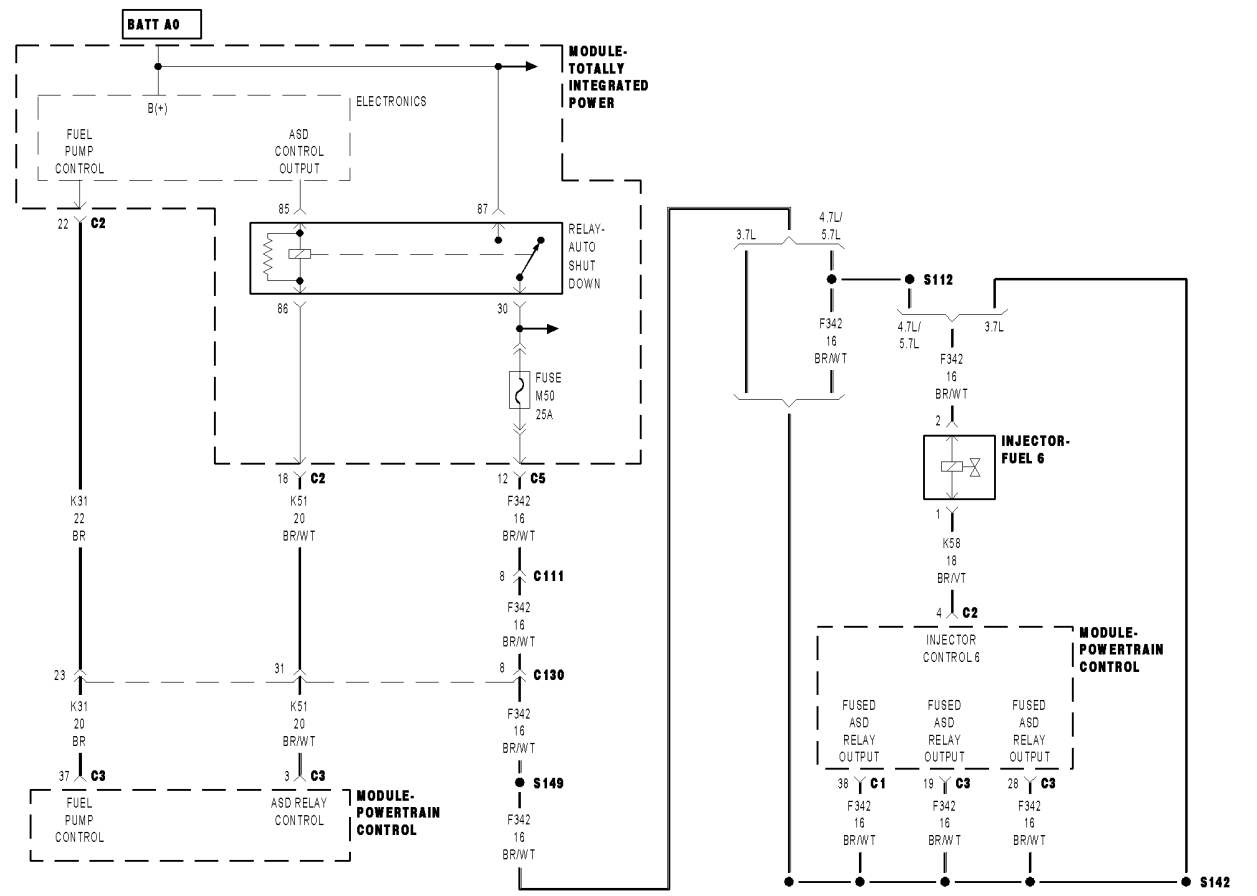

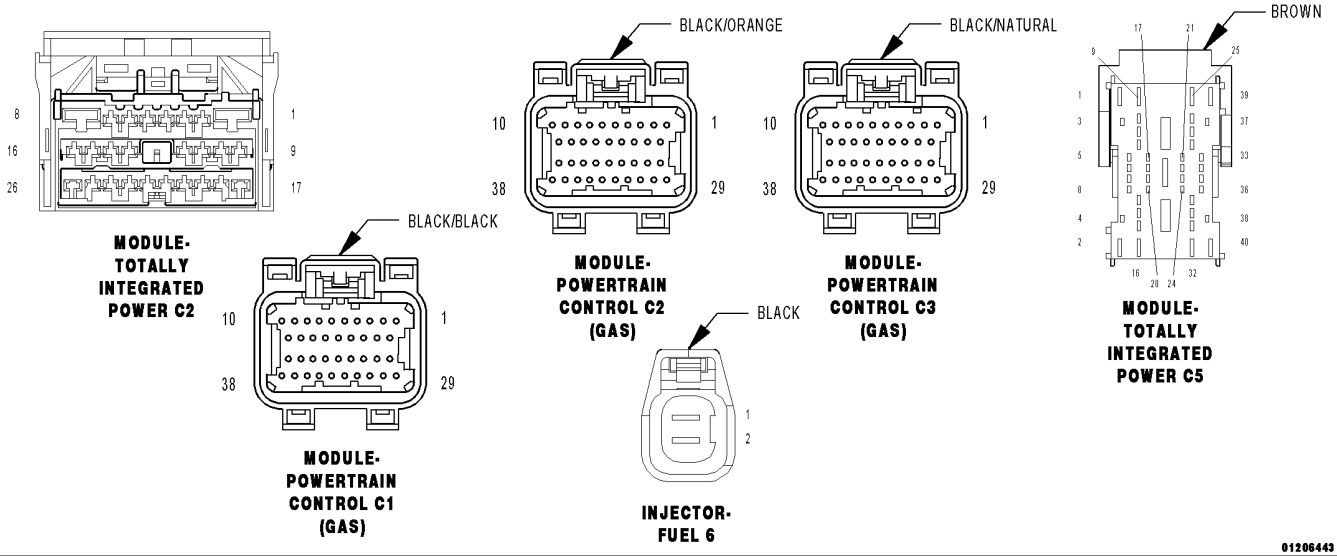

For a complete wiring diagram, **refer to the Wiring Information**.

- **When Monitored:**
  With battery voltage greater than 10 Volts. ASD is energized. Engine speed less than 3000 rpm.
- **Set Condition:**
  The Powertrain Control Module (PCM) monitors the continuity of the injector circuits as well as the voltage spike created by the collapse of the magnetic field in the injector coil. Any condition that reduces the maximum current flow or the magnitude of the voltage spike can cause this DTC to set.

Possible Causes
(F324) ASD CONTROL OUTPUT CIRCUIT
(K68) INJECTOR CONTROL NO.6 CIRCUIT OPEN
(K68) INJECTOR CONTROL NO.6 CIRCUIT SHORTED TO GROUND
FUEL INJECTOR
POWERTRAIN CONTROL MODULE (PCM)

Always perform the Pre-Diagnostic Troubleshooting procedure before proceeding. (Refer to 28 - DTC-Based Diagnostics/MODULE, Powertrain Control (PCM) - Standard Procedure).

1. ACTIVE DTC

1. Turn the ignition on.
2. With the scan tool, select View DTCs. Record DTC and Freeze Frame information.
3. Start the engine and allow it to reach operating temperature.

WARNING: When the engine is operating, do not stand in direct line with the fan. Do not put your hands near the pulleys, belts or fan. Do not wear loose clothing. Failure to follow these instructions may result in possible serious or fatal injury.

NOTE: Review Freeze Frame information. Operate the vehicle under conditions similar to which the DTC was set.

4. With a scan tool, select View DTCs.

Is the DTC Active at this time?

Yes

- Go To 2

No

- Perform the INTERMITTENT CONDITION diagnostic procedure. (Refer to 28 - DTC-Based Diagnostics/MODULE, Powertrain Control (PCM) - Standard Procedure).

2. FUEL INJECTOR 6 CIRCUIT RESISTANCE

1. Turn the ignition off.
2. Disconnect the C2 PCM harness connector.
3. Disconnect the C5 TIPM harness connector.

NOTE: The resistance of the circuit will vary according to the temperature of the injector coil. Use the table below to determine the resistance range of the injector.

CAUTION: Do not probe the PCM harness connectors. Probing the PCM harness connectors will damage the PCM terminals resulting in poor terminal to pin connection. Install the PCM Pinout Box Kit, NGC, 38 Position 8815A to perform diagnosis.

4. Measure the resistance of the Fuel Injector 6 circuit from the appropriate terminal of PCM Pinout Box 8815A and the C5 TIPM harness connector.

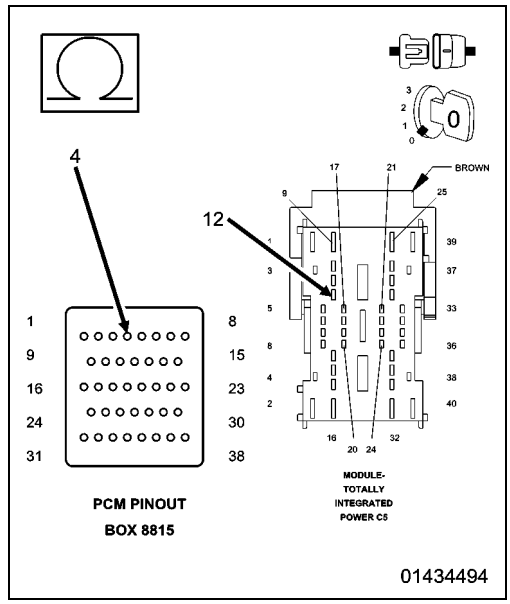

Fuel Injector Coil Resistance Based on Engine Temperature	
Temperature	**Resistance**
-20° C (-4° F)	10 Ohms (+/- .6 of an Ohm)
20° C (68° F)	12 Ohms (+/- .6 of an Ohm)
60° C (140° F)	14 Ohms (+/- .6 of an Ohm)
100° C (212° F)	16 Ohms (+/- .6 of an Ohm)

Is the resistance of the injector within the specified range?

Yes

- Go To 7

No

- Go To 3

3. FUEL INJECTOR 6 WIRING AND CONNECTOR INSPECTION

1. Turn the ignition off.
2. Verify that the Fuel Injector 6 is properly connected to the injector. Disconnect the Fuel Injector 6 connector and Inspect the terminals for any condition that would result in a poor connection.
3. Using the wiring diagram/schematic as a guide, inspect the Fuel Injector 6 wiring and connector.
4. Look for any chafed, pierced, pinched or partially broken wires.
5. Look for broken, bent, pushed out or corroded terminals.
6. Verify that there is good pin to terminal contact in the Injector and Powertrain Control Module connectors.

Were any problems found?

Yes

- Repair as necessary.
- Perform the POWERTRAIN VERIFICATION TEST. (Refer to 28 - DTC-Based Diagnostics/MODULE, Powertrain Control (PCM) - Standard Procedure).

No

- Go To 4

4. (F324) ASD CONTROL OUTPUT CIRCUIT OPEN OR HIGH RESISTANCE

1. Turn the ignition on.
2. With the scan tool, actuate the Auto Shutdown (ASD) Control State.
3. Using a 12-volt test light connected to ground, check the (F324) ASD Control Output circuit in the Fuel Injector 6 harness connector.

NOTE: The test light should be illuminated and bright. Compare the brightness to that of a direct connection to the battery.

Is the test light illuminated and bright?

Yes

- Go To 5

No

- Repair the excessive resistance or short to ground in the (F324) ASD Control Output circuit.
- Perform the POWERTRAIN VERIFICATION TEST. (Refer to 28 - DTC-Based Diagnostics/MODULE, Powertrain Control (PCM) - Standard Procedure).

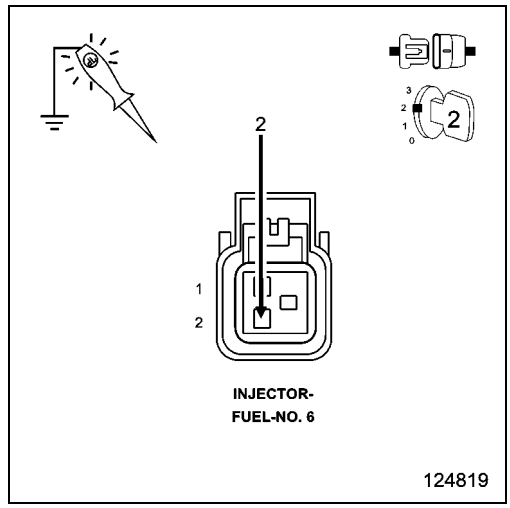

5. (K58) INJECTOR CONTROL NO.6 CIRCUIT OPEN

CAUTION: Do not probe the PCM harness connectors. Probing the PCM harness connectors will damage the PCM terminals resulting in poor terminal to pin connection. Install the PCM Pinout Box 8815A **to perform diagnosis.**

1. Turn the ignition off.
2. Disconnect the C2 PCM harness connector.
3. Measure the resistance of the (K58) Injector Control No.6 circuit from the Fuel Injector harness connector to the appropriate terminal of the PCM Pinout Box 8815A.

Is the resistance below 6.0 Ohms?

Yes

- Go To 6

No

- Repair the open in the (K58) Injector Control No.6 circuit.
- Perform the POWERTRAIN VERIFICATION TEST. (Refer to 28 - DTC-Based Diagnostics/MODULE, Powertrain Control (PCM) - Standard Procedure).

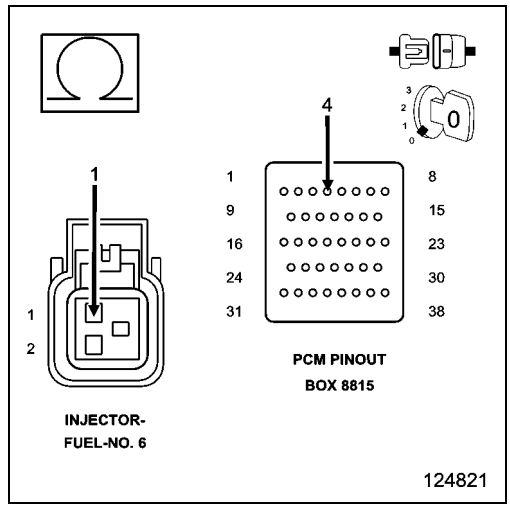

6. FUEL INJECTOR 6

1. Using the wiring diagram/schematic as a guide, inspect the wiring and connectors between the Fuel Injector 6 and the Powertrain Control Module (PCM).
2. Look for any chafed, pierced, pinched, or partially broken wires.
3. Look for broken, bent, pushed out or corroded terminals.
4. Refer to any Technical Service Bulletins that may apply.
5. Verify that there is good pin to terminal contact in the Injector and Powertrain Control Module connectors.

Were any problems found?

Yes

- Repair as necessary.
- Perform the POWERTRAIN VERIFICATION TEST. (Refer to 28 - DTC-Based Diagnostics/MODULE, Powertrain Control (PCM) - Standard Procedure).

No

- Replace the Fuel Injector 6 in accordance with the Service Information.
- Perform the POWERTRAIN VERIFICATION TEST. (Refer to 28 - DTC-Based Diagnostics/MODULE, Powertrain Control (PCM) - Standard Procedure).

7. (K58) INJECTOR CONTROL NO.6 CIRCUIT SHORTED TO GROUND

1. Turn the ignition off.
2. Measure the resistance between ground and the (K58) Injector Control No.6 circuit in the Injector harness connector.

Is the resistance below 100 Ohms?

Yes

- Repair the short to ground in the (K58) Injector Control No.6 circuit.
- Perform the POWERTRAIN VERIFICATION TEST. (Refer to 28 - DTC-Based Diagnostics/MODULE, Powertrain Control (PCM) - Standard Procedure)

No

- Go To 8

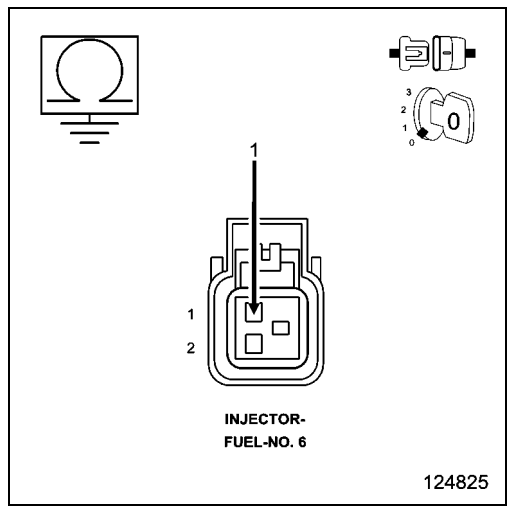

8. POWERTRAIN CONTROL MODULE (PCM)

1. Using the wiring diagram/schematic as a guide, inspect the wiring and connectors between the Fuel Injector 6 and the Powertrain Control Module (PCM).
2. Look for any chafed, pierced, pinched, or partially broken wires.
3. Look for broken, bent, pushed out or corroded terminals. Verify that there is good pin to terminal contact in the Injector and Control Module connectors.
4. Refer to any Technical Service Bulletins that may apply.

Were there any problems found?

Yes

- Repair as necessary.
- Perform the POWERTRAIN VERIFICATION TEST. (Refer to 28 - DTC-Based Diagnostics/MODULE, Powertrain Control (PCM) - Standard Procedure)

No

- Replace and program the Powertrain Control Module in accordance with the Service Information.
- Perform the POWERTRAIN VERIFICATION TEST. (Refer to 28 - DTC-Based Diagnostics/MODULE, Powertrain Control (PCM) - Standard Procedure)

P0207-FUEL INJECTOR 7 CIRCUIT

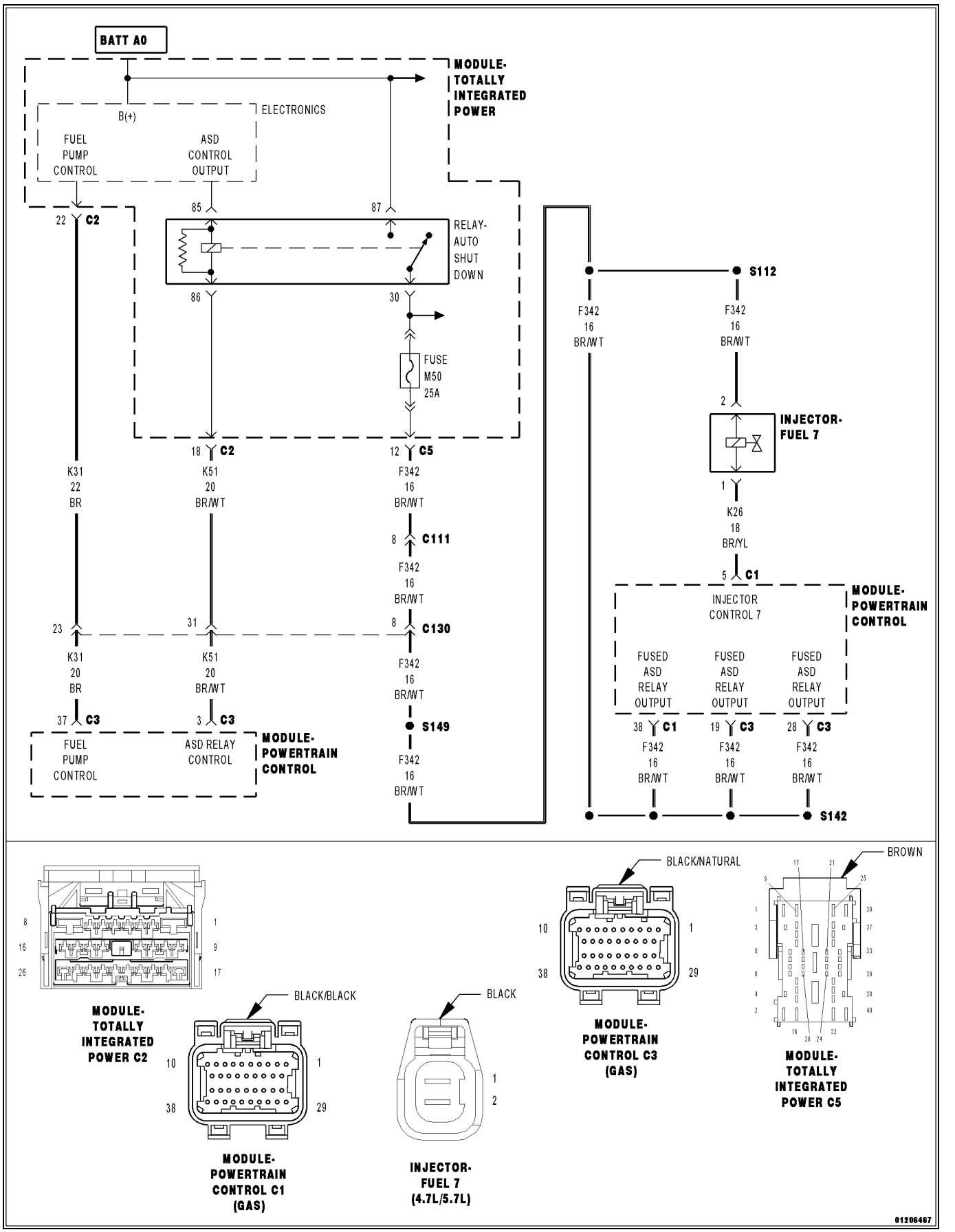

For a complete wiring diagram, **refer to the Wiring Information**.

- **When Monitored:**
  With battery voltage greater than 10 Volts. ASD is energized. Engine speed less than 3000 rpm.
- **Set Condition:**
  The Powertrain Control Module (PCM) monitors the continuity of the injector circuits as well as the voltage spike created by the collapse of the magnetic field in the injector coil. Any condition that reduces the maximum current flow or the magnitude of the voltage spike can cause this DTC to set.

Possible Causes
(K342) ASD OUTPUT CIRCUIT
(K27) INJECTOR CONTROL NO.7 CIRCUIT OPEN
(K27) INJECTOR CONTROL NO.7 CIRCUIT SHORTED TO GROUND
FUEL INJECTOR
POWERTRAIN CONTROL MODULE (PCM)

Always perform the Pre-Diagnostic Troubleshooting procedure before proceeding. (Refer to 28 - DTC-Based Diagnostics/MODULE, Powertrain Control (PCM) - Standard Procedure).

1. ACTIVE DTC

1. Turn the ignition on.
2. With the scan tool, select View DTCs. Record DTC and Freeze Frame information.
3. Start the engine and allow it to reach operating temperature.

WARNING: When the engine is operating, do not stand in direct line with the fan. Do not put your hands near the pulleys, belts or fan. Do not wear loose clothing. Failure to follow these instructions may result in possible serious or fatal injury.

NOTE: Review Freeze Frame information. Operate the vehicle under conditions similar to which the DTC was set.

4. With the scan tool, select View DTCs.

Is the DTC Active at this time?

Yes

- Go To 2

No

- Perform the INTERMITTENT CONDITION diagnostic procedure. (Refer to 28 - DTC-Based Diagnostics/MODULE, Powertrain Control (PCM) - Standard Procedure).

2. FUEL INJECTOR 7 CIRCUIT RESISTANCE

1. Turn the ignition off.
2. Disconnect the C1 PCM harness connector.
3. Disconnect the C10 TIPM harness connector.

NOTE: The resistance of the circuit will vary according to the temperature of the injector coil. Use the table below to determine the resistance range of the injector.

CAUTION: Do not probe the PCM harness connectors. Probing the PCM harness connectors will damage the PCM terminals resulting in poor terminal to pin connection. Install the PCM Pinout Box Kit, NGC, 38 Position 8815A to perform diagnosis.

4. Measure the resistance of the Fuel Injector 7 circuit from the appropriate terminal of the PCM Pinout Box 8815A and the C10 TIPM harness connector.

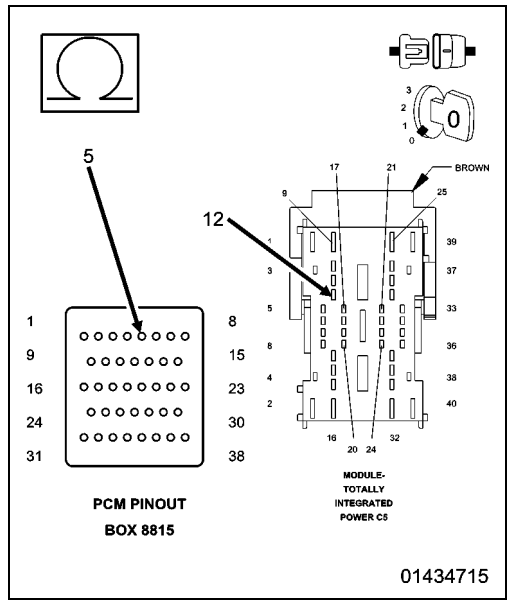

Fuel Injector Coil Resistance Based on Engine Temperature	
Temperature	**Resistance**
-20° C (-4° F)	10 Ohms (+/- .6 of an Ohm)
20° C (68° F)	12 Ohms (+/- .6 of an Ohm)
60° C (140° F)	14 Ohms (+/- .6 of an Ohm)
100° C (212° F)	16 Ohms (+/- .6 of an Ohm)

Is the resistance of the injector within the specified range?

Yes

- Go To 7

No

- Go To 3

3. FUEL INJECTOR 7 WIRING AND CONNECTOR INSPECTION

1. Turn the ignition off.
2. Verify that the Fuel Injector 7 is properly connected to the injector. Disconnect the Fuel Injector 7 connector and Inspect the terminals for any condition that would result in a poor connection.
3. Using the wiring diagram/schematic as a guide, inspect the Fuel Injector 7 wiring and connector.
4. Look for any chafed, pierced, pinched or partially broken wires.
5. Look for broken, bent, pushed out or corroded terminals.
6. Verify that there is good pin to terminal contact in the Injector and Powertrain Control Module connectors.

Were any problems found?

Yes

- Repair as necessary.
- Perform the POWERTRAIN VERIFICATION TEST. (Refer to 28 - DTC-Based Diagnostics/MODULE, Powertrain Control (PCM) - Standard Procedure).

No

- Go To 4

4. (K342) ASD CONTROL OUTPUT CIRCUIT OPEN OR HIGH RESISTANCE

1. Turn the ignition on.
2. With the scan tool, actuate the Auto Shutdown (ASD) Control State.
3. Using a 12-volt test light connected to ground, check the (K342) ASD Control Output circuit in the Fuel Injector 7 harness connector.

NOTE: The test light should be illuminated and bright. Compare the brightness to that of a direct connection to the battery.

Is the test light illuminated and bright?

Yes.

- Go To 5

No.

- Repair the excessive resistance or short to ground in the (K342) ASD Control Output circuit.
- Perform the POWERTRAIN VERIFICATION TEST. (Refer to 28 - DTC-Based Diagnostics/MODULE, Powertrain Control (PCM) - Standard Procedure).

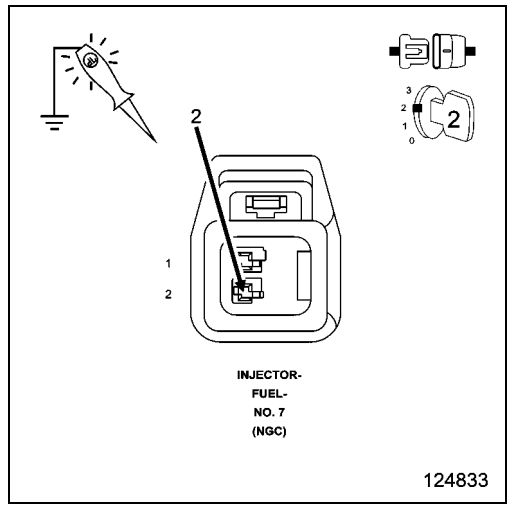

5. (K26) INJECTOR CONTROL NO.7 CIRCUIT OPEN

CAUTION: Do not probe the PCM harness connectors. Probing the PCM harness connectors will damage the PCM terminals resulting in poor terminal to pin connection. Install the PCM Pinout Box 8815A **to perform diagnosis.**

1. Turn the ignition off.
2. Disconnect the C1 PCM harness connector.
3. Measure the resistance of the (K26) Injector Control No.7 circuit from the Fuel Injector harness connector to the appropriate terminal of PCM Pinout Box 8815A.

Is the resistance below 7.0 Ohms?

Yes

- Go To 6

No

- Repair the open in the (K26) Injector Control No.7 circuit.
- Perform the POWERTRAIN VERIFICATION TEST. (Refer to 28 - DTC-Based Diagnostics/MODULE, Powertrain Control (PCM) - Standard Procedure).

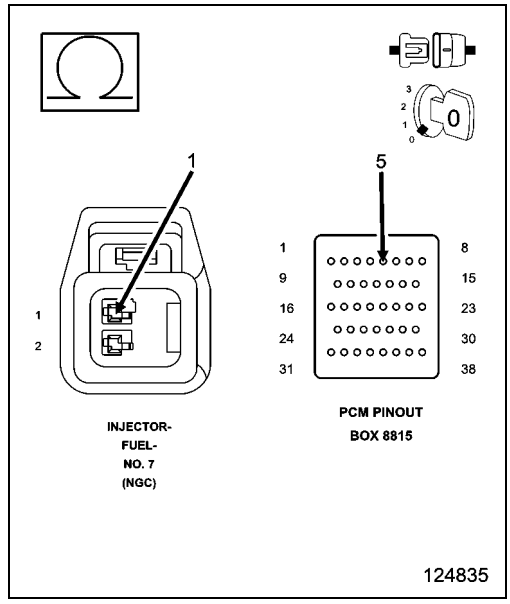

6. FUEL INJECTOR 7

1. Using the wiring diagram/schematic as a guide, inspect the wiring and connectors between the Fuel Injector 7 and the Powertrain Control Module (PCM).
2. Look for any chafed, pierced, pinched or partially broken wires.
3. Look for broken, bent, pushed out or corroded terminals.
4. Refer to any Technical Service Bulletins that may apply.
5. Verify that there is good pin to terminal contact in the Injector and Powertrain Control Module connectors.

Were any problems found?

Yes

- Repair as necessary.
- Perform the POWERTRAIN VERIFICATION TEST. (Refer to 28 - DTC-Based Diagnostics/MODULE, Powertrain Control (PCM) - Standard Procedure).

No

- Replace the Fuel Injector 7 in accordance with the Service Information.
- Perform the POWERTRAIN VERIFICATION TEST. (Refer to 28 - DTC-Based Diagnostics/MODULE, Powertrain Control (PCM) - Standard Procedure).

7. (K26) INJECTOR CONTROL NO.7 CIRCUIT SHORTED TO GROUND

1. Turn the ignition off.
2. Measure the resistance between ground and the (K26) Injector Control No.7 circuit in the Injector harness connector.

Is the resistance below 100 Ohms?

Yes

- Repair the short to ground in the (K26) Injector Control No.7 circuit.
- Perform the POWERTRAIN VERIFICATION TEST. (Refer to 28 - DTC-Based Diagnostics/MODULE, Powertrain Control (PCM) - Standard Procedure).

No

- Go To 8

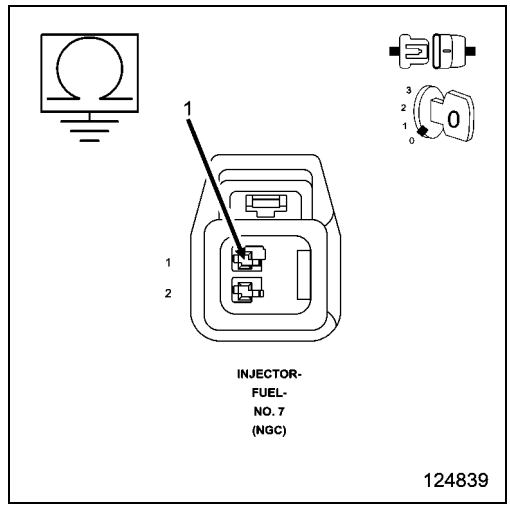

8. POWERTRAIN CONTROL MODULE (PCM)

1. Using the wiring diagram/schematic as a guide, inspect the wiring and connectors between the Fuel Injector 7 and the Powertrain Control Module (PCM).
2. Look for any chafed, pierced, pinched or partially broken wires.
3. Look for broken, bent, pushed out or corroded terminals. Verify that there is good pin to terminal contact in the Injector and Control Module connectors.
4. Refer to any Technical Service Bulletins that may apply.

Were there any problems found?

Yes

- Repair as necessary.
- Perform the POWERTRAIN VERIFICATION TEST. (Refer to 28 - DTC-Based Diagnostics/MODULE, Powertrain Control (PCM) - Standard Procedure).

No

- Replace and program the Powertrain Control Module in accordance with the Service Information.
- Perform the POWERTRAIN VERIFICATION TEST. (Refer to 28 - DTC-Based Diagnostics/MODULE, Powertrain Control (PCM) - Standard Procedure).

P0208-FUEL INJECTOR 8 CIRCUIT

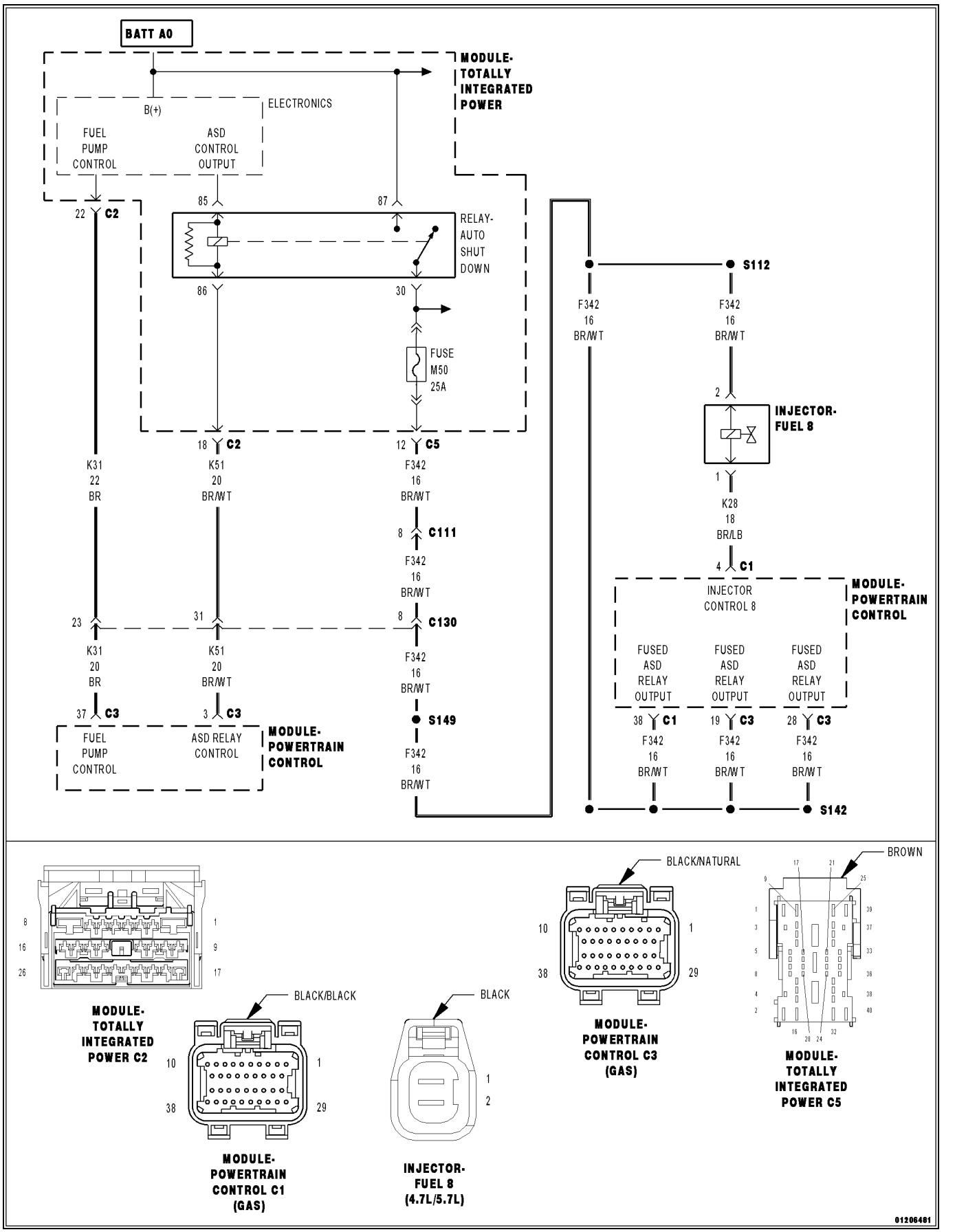

For a complete wiring diagram, **refer to the Wiring Information**.

- **When Monitored:**
  With battery voltage greater than 10 Volts. ASD is energized. Engine speed less than 3000 rpm.
- **Set Condition:**
  The Powertrain Control Module (PCM) monitors the continuity of the injector circuits as well as the voltage spike created by the collapse of the magnetic field in the injector coil. Any condition that reduces the maximum current flow or the magnitude of the voltage spike can cause this DTC to set.

Possible Causes
(F342) ASD CONTROL OUTPUT CIRCUIT
(K28) INJECTOR CONTROL NO.8 CIRCUIT OPEN
(K28) INJECTOR CONTROL NO.8 CIRCUIT SHORTED TO GROUND
FUEL INJECTOR
POWERTRAIN CONTROL MODULE (PCM)

Always perform the Pre-Diagnostic Troubleshooting procedure before proceeding. (Refer to 28 - DTC-Based Diagnostics/MODULE, Powertrain Control (PCM) - Standard Procedure).

1. ACTIVE DTC

1. Turn the ignition on.
2. With the scan tool, select View DTCs. Record DTC and Freeze Frame information.
3. Start the engine and allow it to reach operating temperature.

WARNING: When the engine is operating, do not stand in direct line with the fan. Do not put your hands near the pulleys, belts or fan. Do not wear loose clothing. Failure to follow these instructions may result in possible serious or fatal injury.

NOTE: Review Freeze Frame information. Operate the vehicle under conditions similar to which the DTC was set.

4. With the scan tool, select View DTCs.

Is the DTC Active at this time?

Yes

- Go To 2

No

- Perform the INTERMITTENT CONDITION diagnostic procedure. (Refer to 28 - DTC-Based Diagnostics/MODULE, Powertrain Control (PCM) - Standard Procedure).

2. FUEL INJECTOR 8 CIRCUIT RESISTANCE

1. Turn the ignition off.
2. Disconnect the C1 PCM harness connector.
3. Disconnect the C5 TIPM harness connector.

NOTE: The resistance of the circuit will vary according to the temperature of the injector coil. Use the table below to determine the resistance range of the injector.

CAUTION: Do not probe the PCM harness connectors. Probing the PCM harness connectors will damage the PCM terminals resulting in poor terminal to pin connection. Install the PCM Pinout Box Kit, NGC, 38 Position 8815A to perform diagnosis.

4. Measure the resistance of the Fuel Injector 8 circuit from the appropriate terminal of the PCM Pinout Box 8815A and the C5 TIPM harness connector.

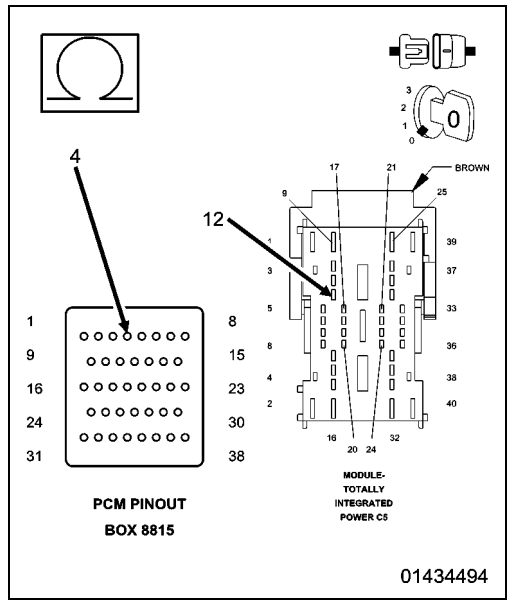

Fuel Injector Coil Resistance Based on Engine Temperature	
Temperature	**Resistance**
-20° C (-4° F)	10 Ohms (+/- .6 of an Ohm)
20° C (68° F)	12 Ohms (+/- .6 of an Ohm)
60° C (140° F)	14 Ohms (+/- .6 of an Ohm)
100° C (212° F)	16 Ohms (+/- .6 of an Ohm)

Is the resistance of the injector within the specified range?

Yes

- Go To 7

No

- Go To 3

3. FUEL INJECTOR 8 WIRING AND CONNECTOR INSPECTION

1. Turn the ignition off.
2. Verify that the Fuel Injector 8 is properly connected to the injector. Disconnect the Fuel Injector 8 connector and Inspect the terminals for any condition that would result in a poor connection.
3. Using the wiring diagram/schematic as a guide, inspect the Fuel Injector 8 wiring and connector.
4. Look for any chafed, pierced, pinched or partially broken wires.
5. Look for broken, bent, pushed out or corroded terminals.
6. Verify that there is good pin to terminal contact in the Injector and Powertrain Control Module connectors.

Were any problems found?

Yes

- Repair as necessary.
- Perform the POWERTRAIN VERIFICATION TEST. (Refer to 28 - DTC-Based Diagnostics/MODULE, Powertrain Control (PCM) - Standard Procedure).

No

- Go To 4

4. (F342) ASD CONTROL OUTPUT CIRCUIT OPEN OR HIGH RESISTANCE

1. Turn the ignition on.
2. With the scan tool, actuate the Auto Shutdown (ASD) Control State.
3. Using a 12-volt test light connected to ground, check the (F342) ASD Control Output circuit in the Fuel Injector 8 harness connector.

NOTE: The test light should be illuminated and bright. Compare the brightness to that of a direct connection to the battery.

Is the test light illuminated and bright?

Yes

- Go To 5

No

- Repair the excessive resistance or short to ground in the (F342) ASD Control Output circuit.
- Perform the POWERTRAIN VERIFICATION TEST. (Refer to 28 - DTC-Based Diagnostics/MODULE, Powertrain Control (PCM) - Standard Procedure).

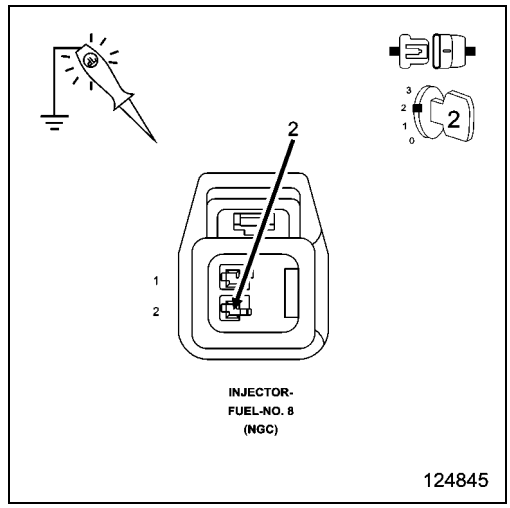

5. (K28) INJECTOR CONTROL NO.8 CIRCUIT OPEN

CAUTION: Do not probe the PCM harness connectors. Probing the PCM harness connectors will damage the PCM terminals resulting in poor terminal to pin connection. Install the PCM Pinout Box 8815A **to perform diagnosis.**

1. Turn the ignition off.
2. Disconnect the C1 PCM harness connector.
3. Measure the resistance of the (K28) Injector Control No.8 circuit from the Fuel Injector harness connector to the appropriate terminal of the PCM Pinout Box 8815A.

Is the resistance below 8.0 Ohms?

Yes

- Go To 6

No

- Repair the open in the (K28) Injector Control No.8 circuit.
- Perform the POWERTRAIN VERIFICATION TEST. (Refer to 28 - DTC-Based Diagnostics/MODULE, Powertrain Control (PCM) - Standard Procedure).

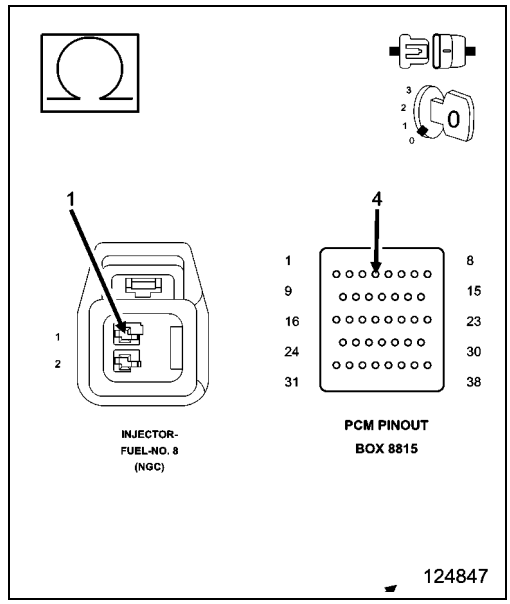

6. FUEL INJECTOR 8

1. Using the wiring diagram/schematic as a guide, inspect the wiring and connectors between the Fuel Injector 8 and the Powertrain Control Module (PCM).
2. Look for any chafed, pierced, pinched or partially broken wires.
3. Look for broken, bent, pushed out or corroded terminals.
4. Refer to any Technical Service Bulletins that may apply.
5. Verify that there is good pin to terminal contact in the Injector and Powertrain Control Module connectors.

Were any problems found?

Yes

- Repair as necessary.
- Perform the POWERTRAIN VERIFICATION TEST. (Refer to 28 - DTC-Based Diagnostics/MODULE, Powertrain Control (PCM) - Standard Procedure).

No

- Replace the Fuel Injector 8 in accordance with the Service Information.
- Perform the POWERTRAIN VERIFICATION TEST. (Refer to 28 - DTC-Based Diagnostics/MODULE, Powertrain Control (PCM) - Standard Procedure).

7. (K28) INJECTOR CONTROL NO.8 CIRCUIT SHORTED TO GROUND

1. Turn the ignition off.
2. Measure the resistance between ground and the (K28) Injector Control No.8 circuit in the Injector harness connector.

Is the resistance below 100 Ohms?

Yes

- Repair the short to ground in the (K28) Injector Control No.8 circuit.
- Perform the POWERTRAIN VERIFICATION TEST. (Refer to 28 - DTC-Based Diagnostics/MODULE, Powertrain Control (PCM) - Standard Procedure).

No

- Go To 8

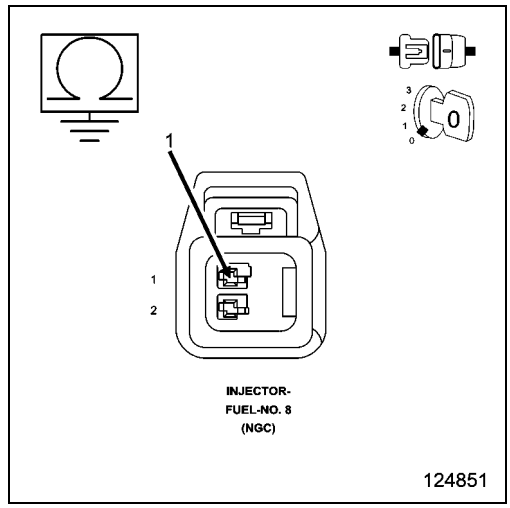

8. POWERTRAIN CONTROL MODULE (PCM)

1. Using the wiring diagram/schematic as a guide, inspect the wiring and connectors between the Fuel Injector 8 and the Powertrain Control Module (PCM).
2. Look for any chafed, pierced, pinched or partially broken wires.
3. Look for broken, bent, pushed out or corroded terminals. Verify that there is good pin to terminal contact in the Injector and Control Module connectors.
4. Refer to any Technical Service Bulletins that may apply.

Were there any problems found?

Yes

- Repair as necessary.
- Perform the POWERTRAIN VERIFICATION TEST. (Refer to 28 - DTC-Based Diagnostics/MODULE, Powertrain Control (PCM) - Standard Procedure).

No

- Replace and program the Powertrain Control Module in accordance with the Service Information.
- Perform the POWERTRAIN VERIFICATION TEST. (Refer to 28 - DTC-Based Diagnostics/MODULE, Powertrain Control (PCM) - Standard Procedure).

P0221-THROTTLE POSITION SENSOR 2 PERFORMANCE

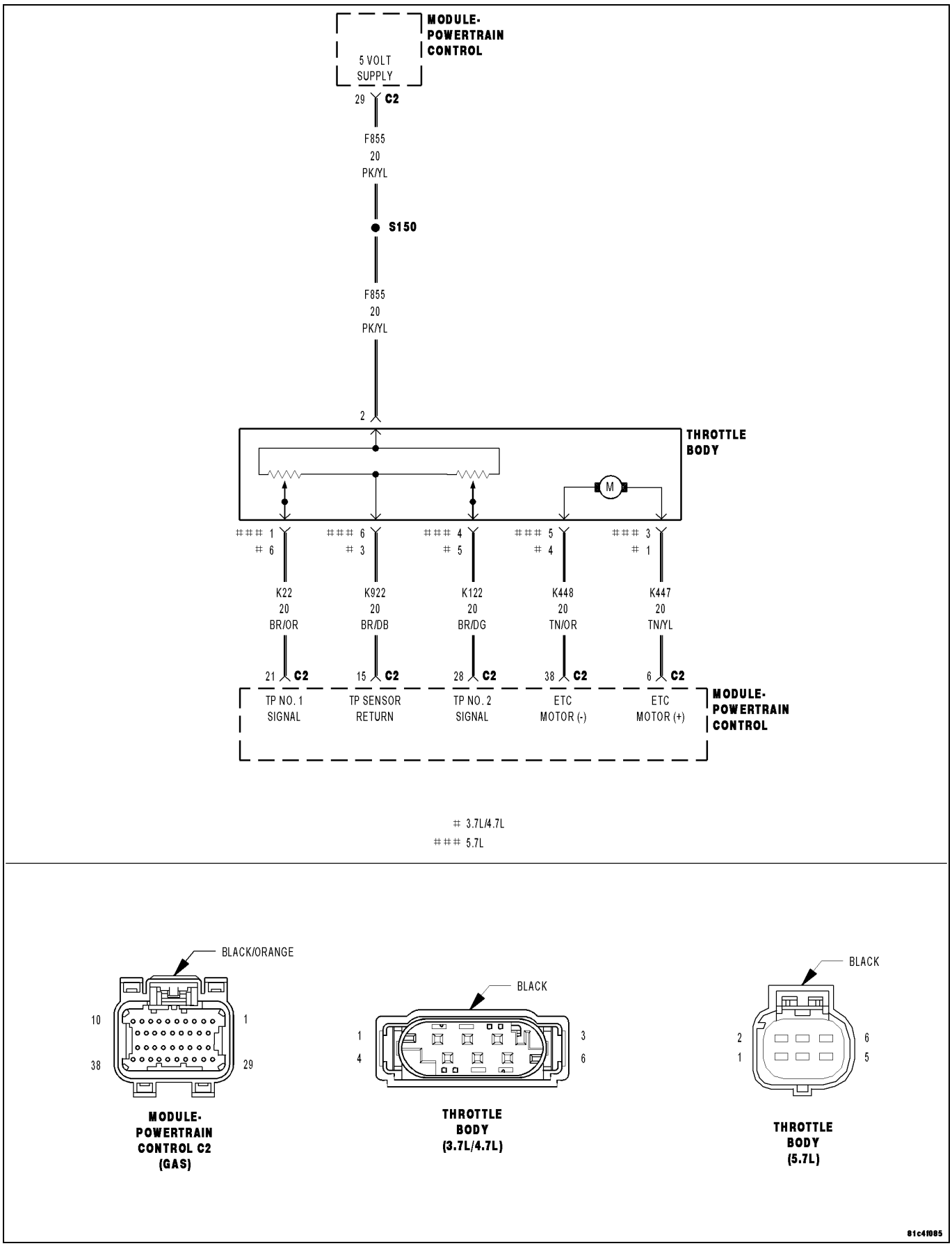

For a complete wiring diagram **Refer to the Wiring Information**.

- **When Monitored:**
  Ignition on and No MAP Sensor DTCs set.
- **Set Condition:**
  The PCM detects that the sensor input voltage does not fall within a valid range based on engine speed and load. Two Trip Fault. ETC light will illuminate. P2135 should set with this code also.

Possible Causes
EXCESSIVE RESISTANCE IN THE (K22) TP SENSOR CIRCUIT
EXCESSIVE RESISTANCE IN THE (K122) TP SENSOR NO.2 SIGNAL CIRCUIT
EXCESSIVE RESISTANCE IN THE (F855) 5-VOLT SUPPLY CIRCUIT
EXCESSIVE RESISTANCE IN THE (K922) TP SENSOR RETURN CIRCUIT
(K22) TP SENSOR NO.1 SIGNAL CIRCUIT SHORTED TO THE (K122) TP SENSOR NO.2 SIGNAL CIRCUIT
THROTTLE POSITION SENSOR/THROTTLE BODY
POWERTRAIN CONTROL MODULE (PCM)

Always perform the Pre-Diagnostic Troubleshooting procedure before proceeding. (Refer to 28 - DTC-Based Diagnostics/MODULE, Powertrain Control (PCM) - Standard Procedure).

1. ACTIVE DTC

NOTE: Diagnose and repair any Throttle Body circuit, system voltage, or sensor supply voltage DTCs before continuing with this test.

1. Start the engine and allow it to reach operating temperature.

WARNING: When the engine is operating, do not stand in direct line with the fan. Do not put your hands near the pulleys, belts or fan. Do not wear loose clothing. Failure to follow these instructions may result in possible serious or fatal injury.

2. With the scan tool select View DTCs.

NOTE: If the DTC does not reset it may be necessary to test drive the vehicle.

Is the DTC Active at this time?

Yes

- Go To 2

No

- Go To 9

2. EXCESSIVE RESISTANCE IN THE (K122) TP SENSOR NO.2 SIGNAL CIRCUIT

1. Turn the ignition off.
2. Disconnect the C2 PCM harness connector.

CAUTION: Do not probe the PCM harness connectors. Probing the PCM harness connectors will damage the PCM terminals resulting in poor terminal to pin connection. Install the PCM Pinout Box Kit, NGC, 38 Position 8815A along with the Adapter PCM Pinout Box Adapter 8815-1to perform the diagnosis.

3. Using a voltmeter perform a voltage drop test. Backprobe the (K122) TP Sensor No.2 Signal circuit at the Throttle Body harness connector and probe the appropriate terminal of the special tool #8815A. Make sure the voltmeter leads are connected so a positive polarity is displayed on the voltmeter.

WARNING: When the engine is operating, do not stand in direct line with the fan. Do not put your hands near the pulleys, belts or fan. Do not wear loose clothing. Failure to follow these instructions may result in possible serious or fatal injury.

4. Start the engine and allow it to reach normal operating temperature.
5. Monitor the voltmeter.

Is the voltage below 0.5 of a volt?

Yes

- Go To 3

No

- Repair the excessive resistance in the (K122) TP Sensor No.2 Signal circuit.
- Perform the POWERTRAIN VERIFICATION TEST. (Refer to 28 - DTC-Based Diagnostics/MODULE, Powertrain Control (PCM) - Standard Procedure)

3. EXCESSIVE RESISTANCE IN THE (K22) TP SENSOR NO.1 SIGNAL CIRCUIT

1. Turn the ignition off.
2. Move the voltmeter leads to backprobe the (K22) TP Sensor No.1 Signal circuit at the Throttle Body harness connector and to probe the appropriate terminal of the special tool #8815A. Make sure the voltmeter leads are connected so a positive polarity is displayed on the voltmeter.

WARNING: When the engine is operating, do not stand in direct line with the fan. Do not put your hands near the pulleys, belts or fan. Do not wear loose clothing. Failure to follow these instructions may result in possible serious or fatal injury.

3. Start the engine and allow it to reach normal operating temperature.
4. Monitor the voltmeter.

Is the voltage below 0.5 of a volt?

Yes

- Go To 4

No

- Repair the excessive resistance in the (K22) TP Sensor No.1 Signal circuit.
- Perform the POWERTRAIN VERIFICATION TEST. (Refer to 28 - DTC-Based Diagnostics/MODULE, Powertrain Control (PCM) - Standard Procedure)

4. EXCESSIVE RESISTANCE IN THE (F855) 5-VOLT SUPPLY CIRCUIT

1. Turn the ignition off.
2. Move the voltmeter leads to backprobe the (F855) 5-volt Supply circuit at the Throttle Body harness connector and to probe the appropriate terminal of the special tool #8815A. Make sure the voltmeter leads are connected so a positive polarity is displayed on the voltmeter.

WARNING: When the engine is operating, do not stand in direct line with the fan. Do not put your hands near the pulleys, belts or fan. Do not wear loose clothing. Failure to follow these instructions may result in possible serious or fatal injury.

3. Start the engine and allow it to reach normal operating temperature.
4. Monitor the voltmeter.

Is the voltage below 0.5 of a volt?

Yes

- Go To 5

No

- Repair the excessive resistance in the (F855) 5-volt Supply circuit.
- Perform the POWERTRAIN VERIFICATION TEST. (Refer to 28 - DTC-Based Diagnostics/MODULE, Powertrain Control (PCM) - Standard Procedure)

5. EXCESSIVE RESISTANCE IN THE (K922) TP SENSOR RETURN CIRCUIT

1. Turn the ignition off.
2. Move the voltmeter leads to backprobe the (K922) TP Sensor Return circuit at the Throttle Body harness connector and to probe the appropriate terminal of the special tool #8815A. Make sure the voltmeter leads are connected so a positive polarity is displayed on the voltmeter.

WARNING: When the engine is operating, do not stand in direct line with the fan. Do not put your hands near the pulleys, belts or fan. Do not wear loose clothing. Failure to follow these instructions may result in possible serious or fatal injury.

3. Start the engine and allow it to reach normal operating temperature.
4. Monitor the voltmeter.

Is the voltage below 0.5 of a volt?

Yes

- Go To 6

No

- Repair the excessive resistance in the (K922) TP Sensor Return circuit.
- Perform the POWERTRAIN VERIFICATION TEST. (Refer to 28 - DTC-Based Diagnostics/MODULE, Powertrain Control (PCM) - Standard Procedure)

6. (K22) TP SENSOR NO.1 SIGNAL SHORTED TO THE (K122) TP SENSOR NO.2 SIGNAL

1. Turn the ignition off.
2. Remove special tool #8815A and #8815-1, leaving the C2 PCM harness connector disconnected.
3. Disconnect the Throttle Body harness connector.
4. Measure the resistance between the (K22) TP Sensor No.1 Signal circuit and the (K122) TP Sensor No.2 Signal circuit at the Throttle Body harness connector.

Is the resistance below 5.0 ohms?

Yes

- Repair the short between the (K122) TP Sensor No.2 Signal circuit and the (K22) TP Sensor No.1 Signal circuit.
- Perform the POWERTRAIN VERIFICATION TEST. (Refer to 28 - DTC-Based Diagnostics/MODULE, Powertrain Control (PCM) - Standard Procedure)

No

- Go To 7

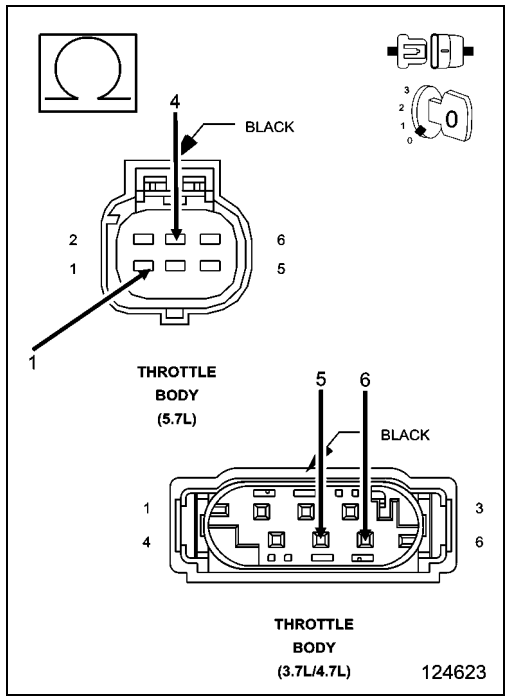

7. THROTTLE POSITION SENSOR

1. Connect the C2 PCM harness connector.
2. Ignition on, engine not running.
3. With the scan tool, monitor the TP Sensor No.1 and No.2 voltage.
4. Connect a jumper wire between the (K922) TP Sensor Return circuit and the (K22) TP Sensor No.1 Signal circuit.

NOTE: TP Sensor No.1 voltage should change from approximately 4.7 volts to 0.3 of a volt.

5. For TP Sensor No.2, connect a jumper wire between (F855) 5-volt supply circuit and the (K122) TP Sensor No.2 Signal circuit.

NOTE: TP Sensor No.2 voltage should change from approximately 0 volts to 5.0 volts.

Is the voltage reading within the listed specification with the jumper wire installed?

Yes

- Verify that there is good pin to terminal contact at the Throttle Body and the Powertrain Control Module connectors. Replace the Throttle Body Assembly if no problems were found in the connectors. Disconnect the Battery when replacing the Throttle Body Assembly. After installation is complete, use a scan tool and select the ETC RELEARN function.
- Perform the POWERTRAIN VERIFICATION TEST. (Refer to 28 - DTC-Based Diagnostics/MODULE, Powertrain Control (PCM) - Standard Procedure)

No

- Go To 8

NOTE: Remove the jumper wire before continuing.

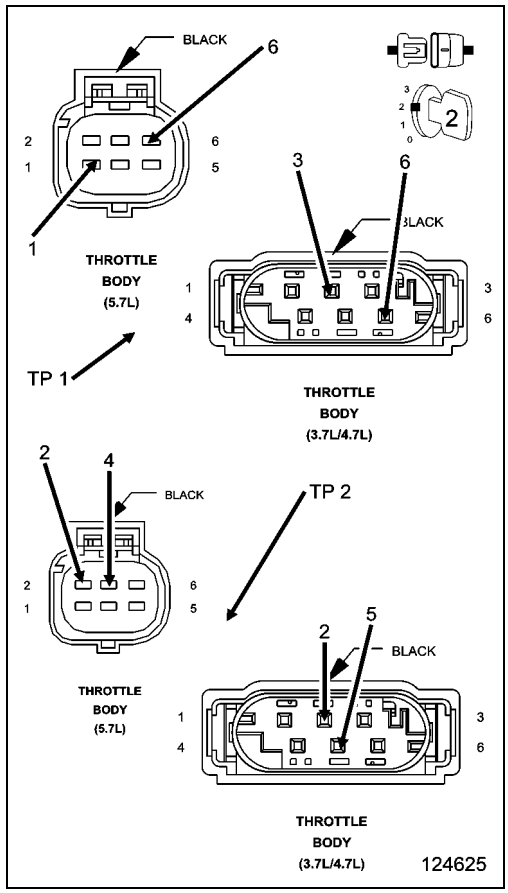

8. POWERTRAIN CONTROL MODULE (PCM)

1. Using the wiring diagram/schematic as a guide, inspect the wiring and connectors between the Throttle Body and the Powertrain Control Module (PCM).
2. Look for any chafed, pierced, pinched, or partially broken wires.
3. Look for broken, bent, pushed out or corroded terminals. Verify that there is good pin to terminal contact in the Throttle Body and Control Module connectors.
4. Refer to any Technical Service Bulletins that may apply.

Were there any problems found?

Yes

- Repair as necessary.
- Perform the POWERTRAIN VERIFICATION TEST. (Refer to 28 - DTC-Based Diagnostics/MODULE, Powertrain Control (PCM) - Standard Procedure)

No

- Replace and program the Powertrain Control Module per Service Information.
- Perform the POWERTRAIN VERIFICATION TEST. (Refer to 28 - DTC-Based Diagnostics/MODULE, Powertrain Control (PCM) - Standard Procedure)

9. THROTTLE FOLLOWER TEST

1. Ignition on, engine not running.
2. With the scan tool, perform the ETC Throttle Follower Test and monitor the TP Sensor No.1 or No.2 voltage.
3. Slowly press the throttle pedal down.
4. The voltage for TP Sensor No.1 should start at approximately 0.7 of a volt and increase to approximately 4.3 volts.
5. The voltage for TP Sensor No.2 should start at approximately 4.3 volts and decrease to approximately 0.7 of a volt.

Is the voltage within the range of the listed specification for the appropriate Sensor?

Yes

- Refer to the INTERMITTENT CONDITION Diagnostic Procedure. (Refer to 28 - DTC-Based Diagnostics/MODULE, Powertrain Control (PCM) - Standard Procedure).

No

- Verify that there is good pin to terminal contact at the Throttle Body and the Powertrain Control Module connectors. Replace the Throttle Body Assembly if no problems were found in the connectors. Disconnect the Battery when replacing the Throttle Body Assembly. After installation is complete, use a scan tool and select the ETC RELEARN function.
- Perform the POWERTRAIN VERIFICATION TEST. (Refer to 28 - DTC-Based Diagnostics/MODULE, Powertrain Control (PCM) - Standard Procedure)

P0222-THROTTLE POSITION SENSOR 2 CIRCUIT LOW

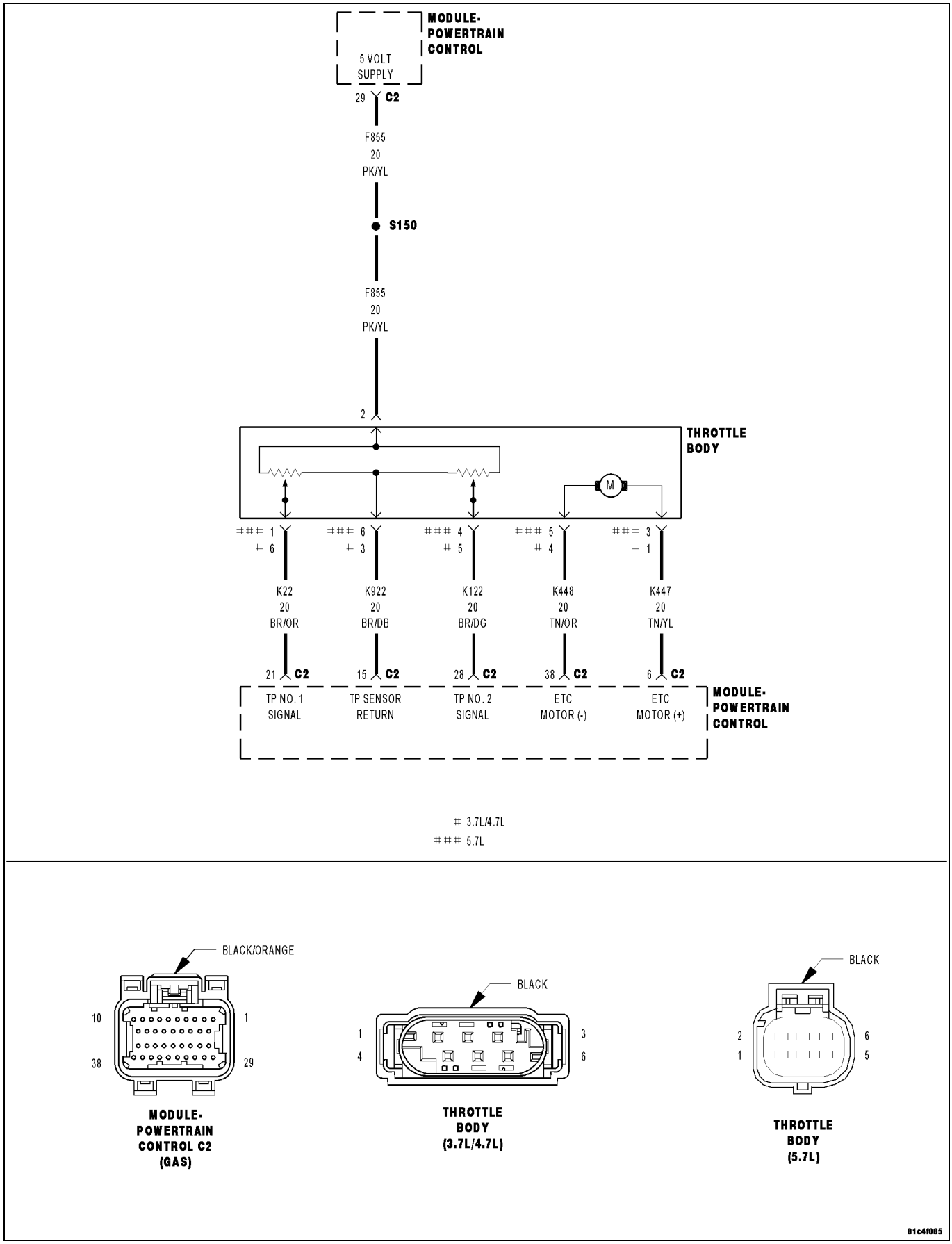

For a complete Engine wiring diagram **Refer to the Wiring Information**.

- **When Monitored:**
  With the ignition on. Battery voltage greater than 10 volts.
- **Set Condition:**
  The PCM detects that the Throttle Body input voltage is below the minimum acceptable value. One Trip Fault. Three good trips to turn off the MIL. The ETC light will illuminate.

Possible Causes
(F855) 5-VOLT SUPPLY CIRCUIT OPEN
(F855) 5-VOLT SUPPLY CIRCUIT SHORTED TO GROUND
(K122) TP SENSOR NO.2 SIGNAL CIRCUIT SHORTED TO GROUND
(K122) TP SENSOR NO.2 SIGNAL CIRCUIT SHORTED TO THE (K922) TP SENSOR RETURN CIRCUIT
EXCESSIVE RESISTANCE IN THE (K122) TP SENSOR NO.2 SIGNAL CIRCUIT
THROTTLE POSITION SENSOR/THROTTLE BODY
THROTTLE PLATE JAMMED AGAINST THE MAXIMUM STOP
POWERTRAIN CONTROL MODULE (PCM)

Always perform the Pre-Diagnostic Troubleshooting procedure before proceeding. (Refer to 28 - DTC-Based Diagnostics/MODULE, Powertrain Control (PCM) - Standard Procedure).

1. DTC IS ACTIVE

NOTE: Diagnose and repair any Throttle Body circuit, system voltage, or sensor supply voltage DTCs before continuing with this test.

1. Start the engine and allow it to reach operating temperature.

WARNING: When the engine is operating, do not stand in direct line with the fan. Do not put your hands near the pulleys, belts or fan. Do not wear loose clothing. Failure to follow these instructions may result in possible serious or fatal injury.

2. With the scan tool select View DTCs.

NOTE: If the DTC does not reset it may be necessary to test drive the vehicle.

Is the status Active for this DTC?

Yes
- Go To 2

No
- Go To 11

2. P0122 ALSO SET

Was the P0122-TP SENSOR NO.1 VOLTAGE LOW DTC set along with the P0222?

Yes
- Go To 3

No
- Go To 4

3. (F855) 5-VOLT SUPPLY CIRCUIT

1. Turn the ignition off.
2. Disconnect the Throttle Body harness connector.
3. Ignition on, engine not running.
4. Measure the voltage on the (F855) 5-volt Supply circuit in the Throttle Body harness connector.

Is the voltage between 4.5 to 5.2 volts?

Yes

- Go To 4

No

- Go To 8

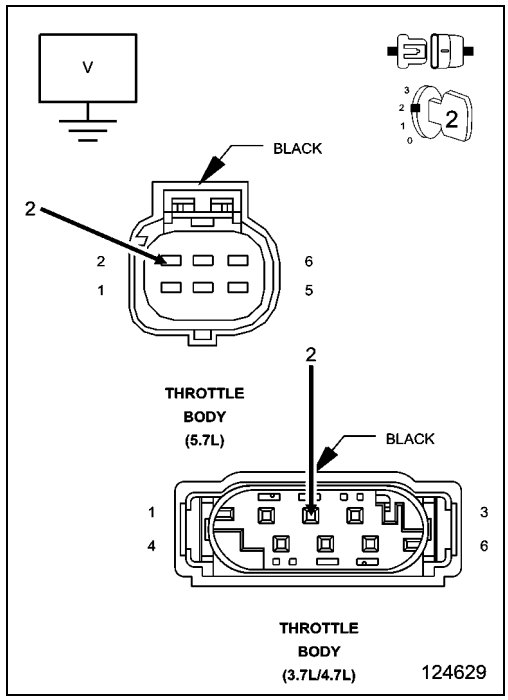

4. THROTTLE POSITION SENSOR

1. With the scan tool, monitor the TP Sensor No.2 voltage.
2. Connect a jumper wire between the (F855) 5-volt Supply circuit and the (K122) TP Sensor No.2 Signal circuit in the Throttle Body harness connector.

Is the voltage between 4.8 and 5.2 volts with the jumper wire installed?

Yes

- Verify that there is good pin to terminal contact at the Throttle Body and the Powertrain Control Module connectors. Replace the Throttle Body Assembly if no problems were found in the connectors. Disconnect the Battery when replacing the Throttle Body Assembly. After installation is complete, use a scan tool and select the ETC RELEARN function.
- Perform the POWERTRAIN VERIFICATION TEST. (Refer to 28 - DTC-Based Diagnostics/MODULE, Powertrain Control (PCM) - Standard Procedure)

No

- Go To 5

NOTE: Remove the jumper wire before continuing.

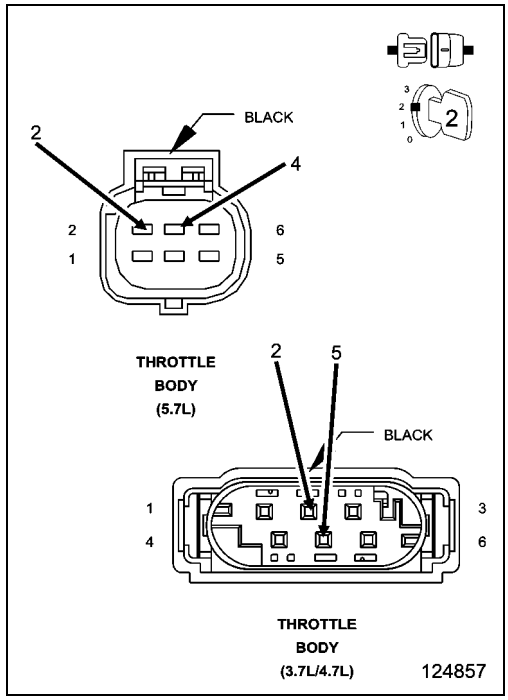

5. EXCESSIVE RESISTANCE IN THE (K122) TP SENSOR NO.2 SIGNAL CIRCUIT

1. Turn the ignition off.
2. Disconnect the C2 PCM harness connector.

CAUTION: Do not probe the PCM harness connectors. Probing the PCM harness connectors will damage the PCM terminals resulting in poor terminal to pin connection. Install the PCM Pinout Box Kit, NGC, 38 Position 8815A to perform diagnosis.

3. Measure the resistance of the (K122) TP Sensor No.2 Signal circuit from the Throttle Body harness connector to the appropriate terminal of special tool #8815A.

Is the resistance below 5.0 ohms?

Yes

- Go To 6

No

- Repair the excessive resistance in the (K122) TP Sensor No.2 Signal circuit.
- Perform the POWERTRAIN VERIFICATION TEST. (Refer to 28 - DTC-Based Diagnostics/MODULE, Powertrain Control (PCM) - Standard Procedure)

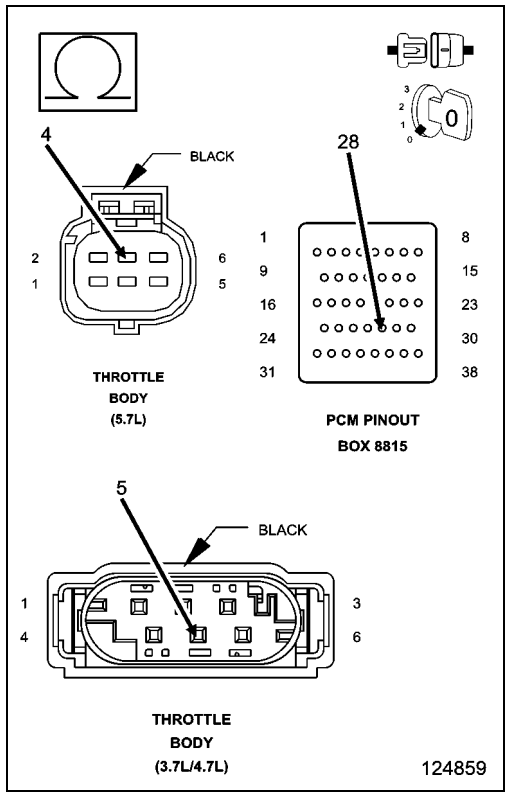

6. (K122) TP SENSOR NO.2 SIGNAL CIRCUIT SHORTED TO GROUND

1. Measure the resistance between ground and the (K122) TP Sensor No.2 Signal circuit at the Throttle Body harness connector.

Is the resistance below 100 ohms?

Yes

- Repair the short to ground in the (K122) TP Sensor No.2 Signal.
- Perform the POWERTRAIN VERIFICATION TEST. (Refer to 28 - DTC-Based Diagnostics/MODULE, Powertrain Control (PCM) - Standard Procedure)

No

- Go To 7

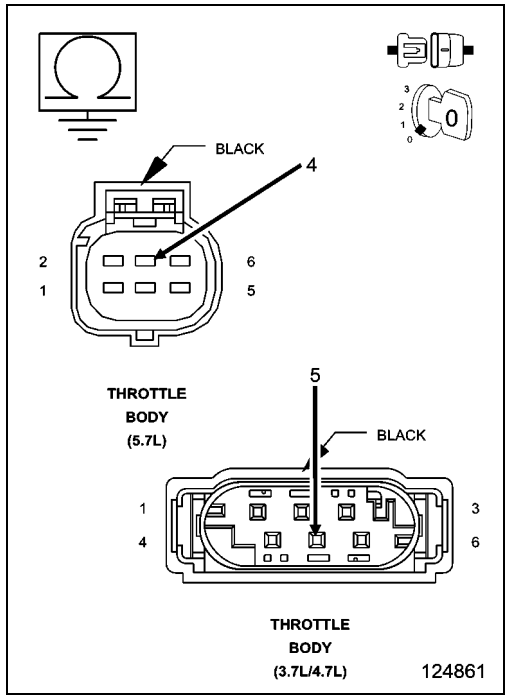

7. (K122) TP SENSOR NO.2 SIGNAL CIRCUIT SHORTED TO (K922) TP SENSOR RETURN CIRCUIT

1. Measure the resistance between the (K122) TP Sensor No.2 Signal circuit and the (K922) TP Sensor Return circuit at the Throttle Body harness connector.

Is the resistance below 100 ohms?

Yes

- Repair the short between the (K922) TP Sensor Return circuit and the (K122) TP Sensor No.2 Signal circuit.
- Perform the POWERTRAIN VERIFICATION TEST. (Refer to 28 - DTC-Based Diagnostics/MODULE, Powertrain Control (PCM) - Standard Procedure)

No

- Go To 10

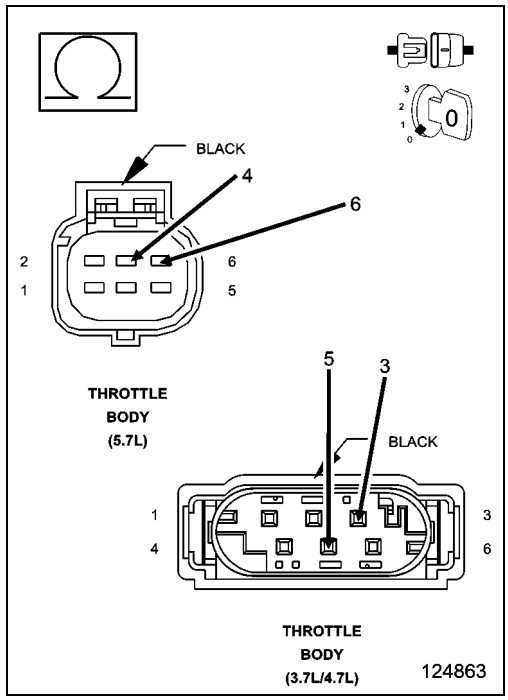

8. (F855) 5-VOLT SUPPLY CIRCUIT OPEN

1. Turn the ignition off.
2. Disconnect the C2 PCM harness connector.

CAUTION: Do not probe the PCM harness connectors. Probing the PCM harness connectors will damage the PCM terminals resulting in poor terminal to pin connection. Install the PCM Pinout Box Kit, NGC, 38 Position 8815A to perform diagnosis.

3. Measure the resistance of the (F855) 5-volt Supply circuit from the Throttle Body harness connector to the appropriate terminal of special tool #8815A.

Is the resistance below 5.0 ohms?

Yes

- Go To 9

No

- Repair the open in the (F855) 5-volt Supply circuit.
- Perform the POWERTRAIN VERIFICATION TEST. (Refer to 28 - DTC-Based Diagnostics/MODULE, Powertrain Control (PCM) - Standard Procedure)

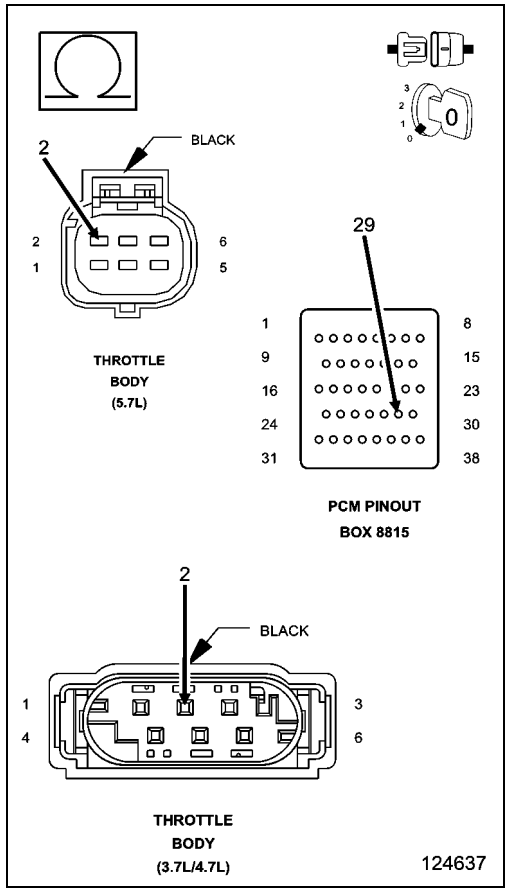

9. (F855) 5-VOLT SUPPLY CIRCUIT SHORTED TO GROUND

1. Measure the resistance between ground and the (F855) 5-volt Supply circuit at the Throttle Body harness connector.

Is the resistance below 100 ohms?

Yes

- Repair the short to ground in the (F855) 5-volt Supply circuit.
- Perform the POWERTRAIN VERIFICATION TEST. (Refer to 28 - DTC-Based Diagnostics/MODULE, Powertrain Control (PCM) - Standard Procedure)

No

- Go To 10

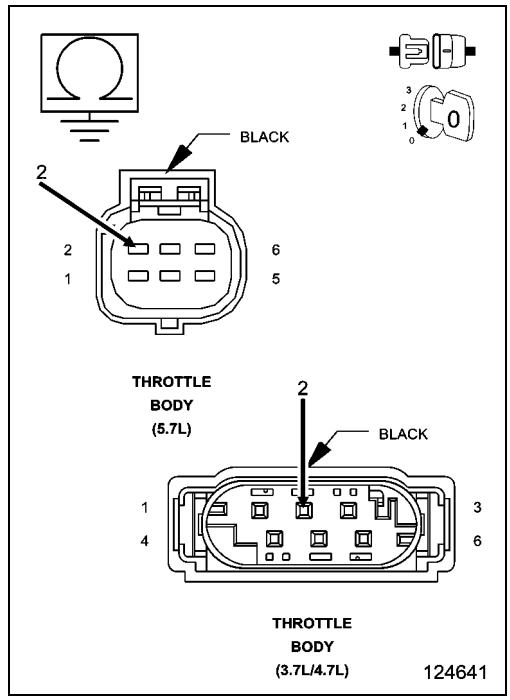

10. POWERTRAIN CONTROL MODULE (PCM)

1. Using the wiring diagram/schematic as a guide, inspect the wiring and connectors between the Throttle Body and the Powertrain Control Module (PCM).
2. Look for any chafed, pierced, pinched, or partially broken wires.
3. Look for broken, bent, pushed out or corroded terminals. Verify that there is good pin to terminal contact in the Throttle Body and Control Module connectors.
4. Refer to any Technical Service Bulletins that may apply.

Were there any problems found?

Yes

- Repair as necessary.
- Perform the POWERTRAIN VERIFICATION TEST. (Refer to 28 - DTC-Based Diagnostics/MODULE, Powertrain Control (PCM) - Standard Procedure)

No

- Replace and program the Powertrain Control Module per Service Information.
- Perform the POWERTRAIN VERIFICATION TEST. (Refer to 28 - DTC-Based Diagnostics/MODULE, Powertrain Control (PCM) - Standard Procedure)

11. THROTTLE FOLLOWER TEST

1. Ignition on, engine not running.
2. With the scan tool, perform the ETC Throttle Follower Test.
3. Monitor the TP Sensor No.2 voltage while slowly pressing the Throttle pedal down.

Is there a smooth voltage change from approximately 4.3 volts down to approximately 0.7 of a volt?

Yes

- Refer to the INTERMITTENT CONDITION Diagnostic Procedure. (Refer to 28 - DTC-Based Diagnostics/MODULE, Powertrain Control (PCM) - Standard Procedure)

No

- Verify that there is good pin to terminal contact at the Throttle Body and the Powertrain Control Module connectors. Replace the Throttle Body Assembly if no problems were found in the connectors. Disconnect the Battery when replacing the Throttle Body Assembly. After installation is complete, use a scan tool and select the ETC RELEARN function.
- Perform the POWERTRAIN VERIFICATION TEST. (Refer to 28 - DTC-Based Diagnostics/MODULE, Powertrain Control (PCM) - Standard Procedure)

P0223-THROTTLE POSITION SENSOR 2 CIRCUIT HIGH

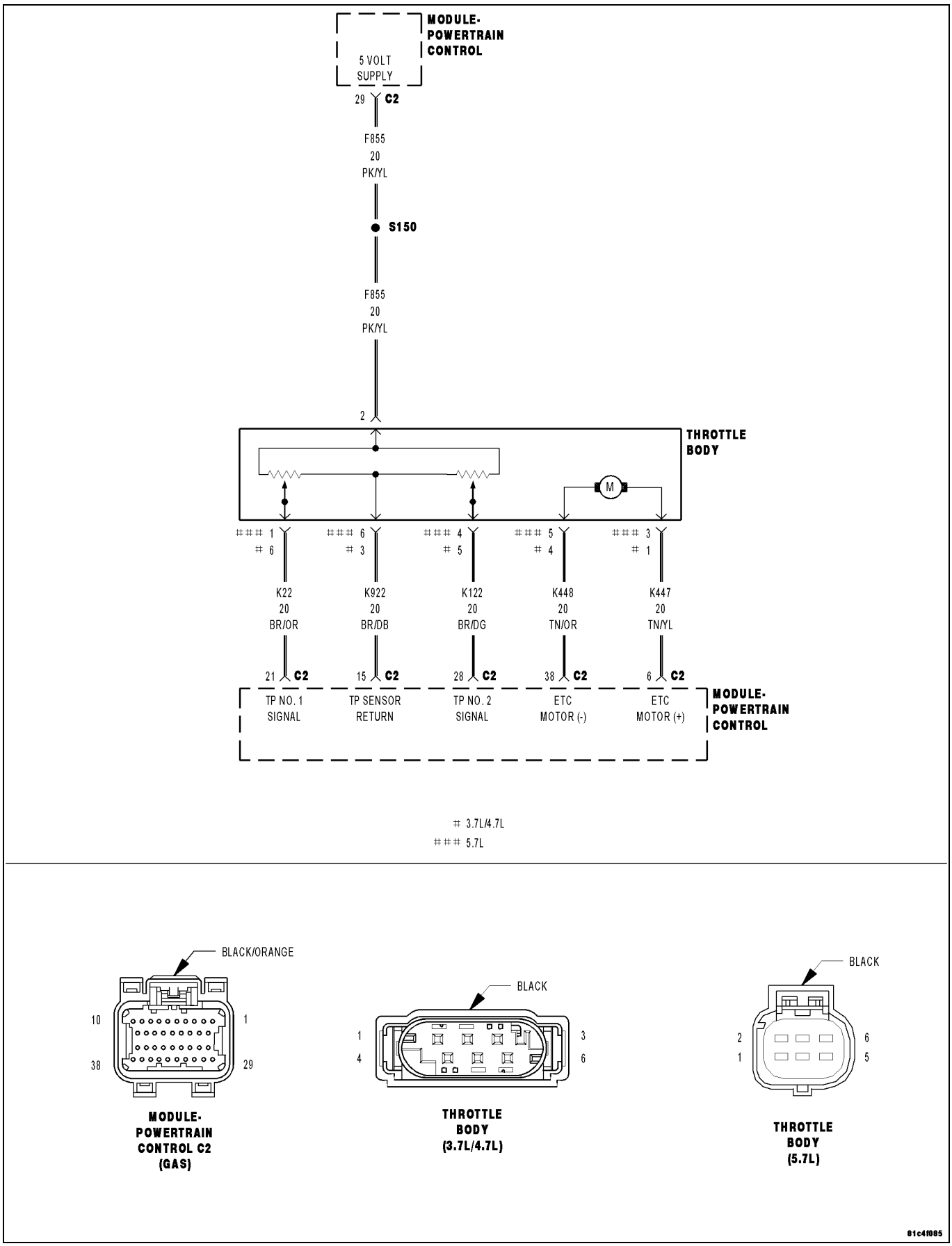

For a complete wiring diagram **Refer to the Wiring Information**.

- **When Monitored:**
  With the ignition on.
- **Set Condition:**
  The PCM detects that the Throttle Body input voltage is above the maximum acceptable value. One Trip Fault. ETC light will illuminate.

Possible Causes
(K122) TP SENSOR NO.2 SIGNAL CIRCUIT SHORTED TO VOLTAGE
(K122) TP SENSOR NO.2 SIGNAL CIRCUIT SHORTED TO THE (F855) 5-VOLT SUPPLY CIRCUIT
(K922) TP SENSOR RETURN CIRCUIT OPEN
THROTTLE POSITION SENSOR/THROTTLE BODY
POWERTRAIN CONTROL MODULE (PCM)

Always perform the Pre-Diagnostic Troubleshooting procedure before proceeding. (Refer to 28 - DTC-Based Diagnostics/MODULE, Powertrain Control (PCM) - Standard Procedure).

1. ACTIVE DTC

NOTE: Diagnose and repair any Throttle Body circuit, system voltage, or sensor supply voltage DTCs before continuing with this test.

1. Start the engine and allow it to reach operating temperature.

WARNING: When the engine is operating, do not stand in direct line with the fan. Do not put your hands near the pulleys, belts or fan. Do not wear loose clothing. Failure to follow these instructions may result in possible serious or fatal injury.

2. With the scan tool select View DTCs.

NOTE: If the DTC does not reset it may be necessary to test drive the vehicle.

Is the DTC Active at this time?

Yes

- Go To 2

No

- Go To 7

2. THROTTLE POSITION SENSOR

1. Turn the ignition off.
2. Disconnect the Throttle Body Assembly harness connector.
3. Ignition on, engine not running.
4. With the scan tool monitor the TP Sensor No.2 voltage.

NOTE: The sensor voltage should be approximately 0.0 volts (plus or minus .1 volt) with the connector disconnected.

Does the scan tool display the voltage as described above?

Yes

- Verify that there is good pin to terminal contact at the Throttle Body and the Powertrain Control Module connectors. Replace the Throttle Body Assembly if no problems were found in the connectors. Disconnect the Battery when replacing the Throttle Body Assembly. After installation is complete, use a scan tool and select the ETC RELEARN function.
- Perform the POWERTRAIN VERIFICATION TEST. (Refer to 28 - DTC-Based Diagnostics/MODULE, Powertrain Control (PCM) - Standard Procedure)

No

- Go To 3

3. (K122) TP SENSOR NO.2 SIGNAL CIRCUIT SHORTED TO VOLTAGE

1. Turn the ignition off.
2. Disconnect the C2 PCM harness connector.
3. Ignition on, engine not running.
4. Measure the voltage on the (K122) TP Sensor No.2 Signal circuit at the Throttle Body harness connector.

Is there any voltage present?

Yes

- Repair the short to voltage in the (K122) TP Sensor No.2 Signal circuit.
- Perform the POWERTRAIN VERIFICATION TEST. (Refer to 28 - DTC-Based Diagnostics/MODULE, Powertrain Control (PCM) - Standard Procedure)

No

- Go To 4

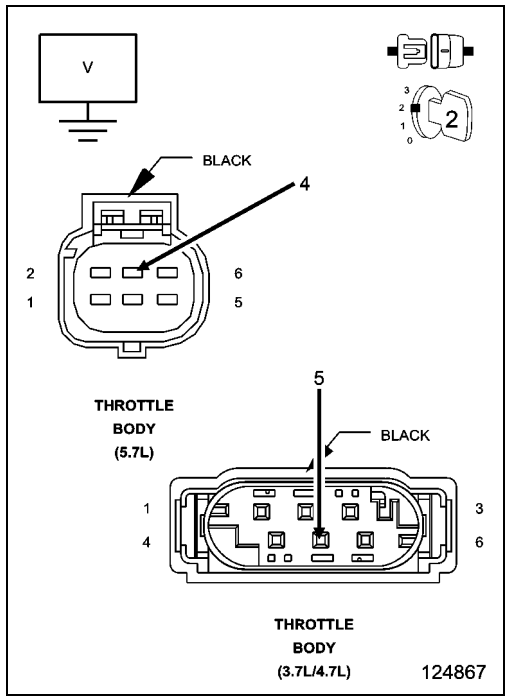

4. (K122) TP SENSOR NO.2 SIGNAL CIRCUIT SHORTED TO (F855) 5-VOLT SUPPLY CIRCUIT

1. Measure the resistance between the (K122) TP Sensor No.2 Signal circuit and the (F855) 5-volt Supply circuit at the Throttle Body harness connector.

Is the resistance below 100 ohms?

Yes

- Repair the short between the (K122) TP Sensor No.2 Signal circuit and the (F855) 5-volt Supply circuit.
- Perform the POWERTRAIN VERIFICATION TEST. (Refer to 28 - DTC-Based Diagnostics/MODULE, Powertrain Control (PCM) - Standard Procedure)

No

- Go To 5

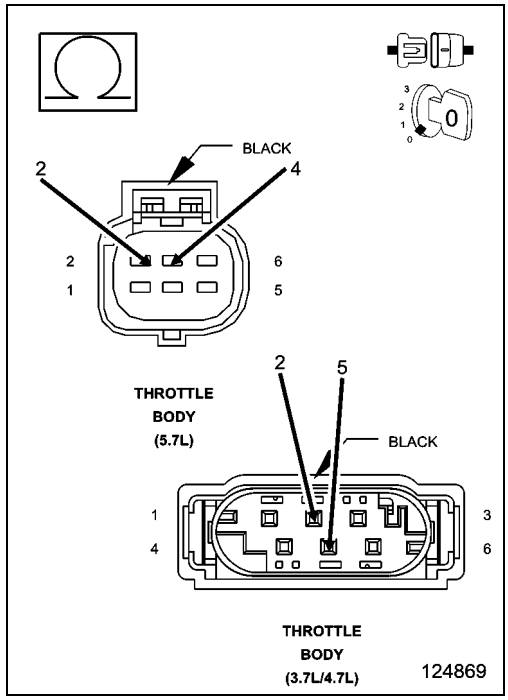

5. (K922) TP SENSOR RETURN CIRCUIT OPEN

CAUTION: Do not probe the PCM harness connectors. Probing the PCM harness connectors will damage the PCM terminals resulting in poor terminal to pin connection. Install the PCM Pinout Box Kit, NGC, 38 Position 8815A to perform diagnosis.

1. Measure the resistance of the (K922) TP Sensor Return circuit from the Throttle Body harness connector to the appropriate terminal of special tool #8815A.

Is the resistance below 5.0 ohms?

Yes

- Go To 6

No

- Repair the open in the (K922) TP Sensor Return circuit.
- Perform the POWERTRAIN VERIFICATION TEST. (Refer to 28 - DTC-Based Diagnostics/MODULE, Powertrain Control (PCM) - Standard Procedure)

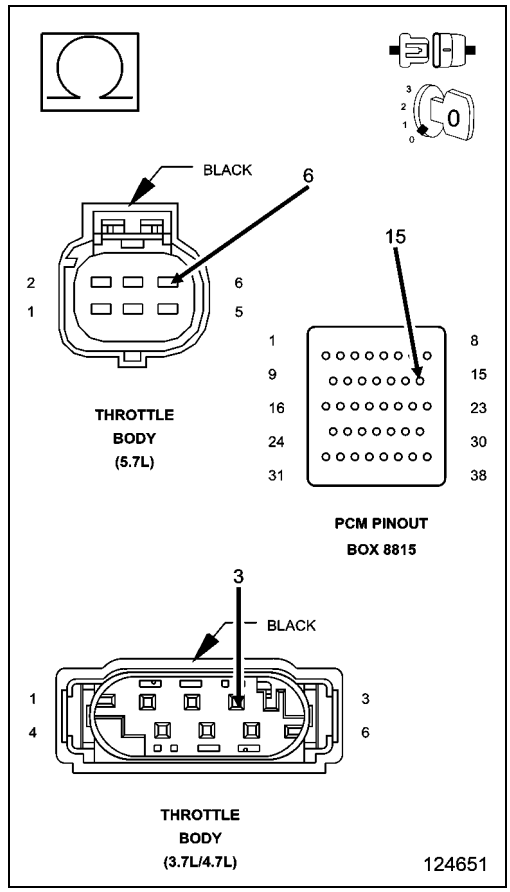

6. POWERTRAIN CONTROL MODULE (PCM)

1. Using the wiring diagram/schematic as a guide, inspect the wiring and connectors between the Throttle Body and the Powertrain Control Module (PCM).
2. Look for any chafed, pierced, pinched, or partially broken wires.
3. Look for broken, bent, pushed out or corroded terminals. Verify that there is good pin to terminal contact in the Throttle Body and Control Module connectors.
4. Refer to any Technical Service Bulletins that may apply.

Were there any problems found?

Yes

- Repair as necessary.
- Perform the POWERTRAIN VERIFICATION TEST. (Refer to 28 - DTC-Based Diagnostics/MODULE, Powertrain Control (PCM) - Standard Procedure)

No

- Replace and program the Powertrain Control Module per Service Information.
- Perform the POWERTRAIN VERIFICATION TEST. (Refer to 28 - DTC-Based Diagnostics/MODULE, Powertrain Control (PCM) - Standard Procedure)

7. THROTTLE FOLLOWER TEST

1. With the scan tool, perform the ETC Throttle Follower Test.
2. Monitor the TP Sensor No.2 voltage while slowly pressing the Throttle pedal down.

Is there a smooth voltage change from approximately 4.3 volts down to approximately 0.7 of a volt?

Yes

- Refer to the INTERMITTENT CONDITION Diagnostic Procedure. (Refer to 28 - DTC-Based Diagnostics/MODULE, Powertrain Control (PCM) - Standard Procedure)

No

- Verify that there is good pin to terminal contact at the Throttle Body and the Powertrain Control Module connectors. Replace the Throttle Body Assembly if no problems were found in the connectors. Disconnect the Battery when replacing the Throttle Body Assembly. After installation is complete, use a scan tool and select the ETC RELEARN function.
- Perform the POWERTRAIN VERIFICATION TEST. (Refer to 28 - DTC-Based Diagnostics/MODULE, Powertrain Control (PCM) - Standard Procedure)

P0298-ENGINE OIL TEMPERATURE TOO HIGH

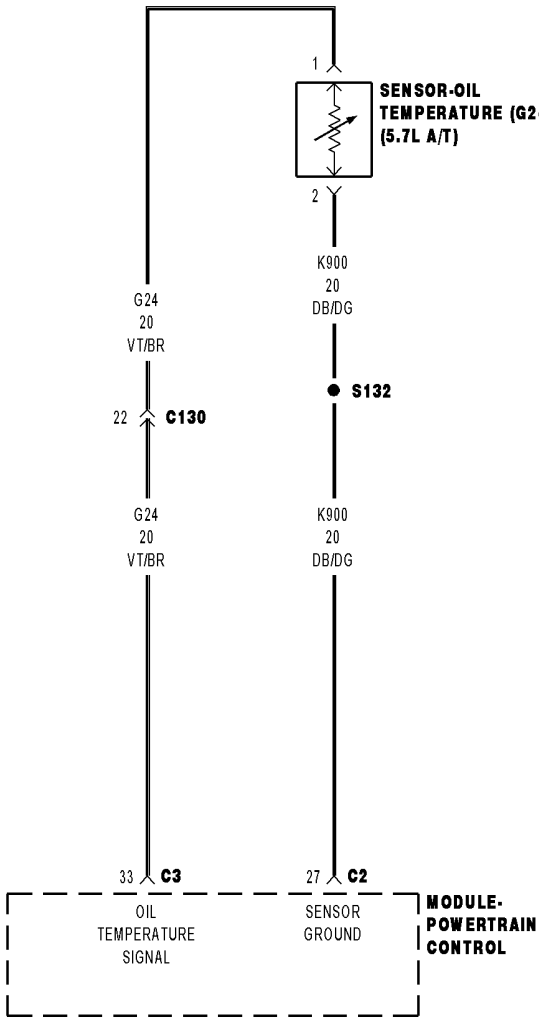

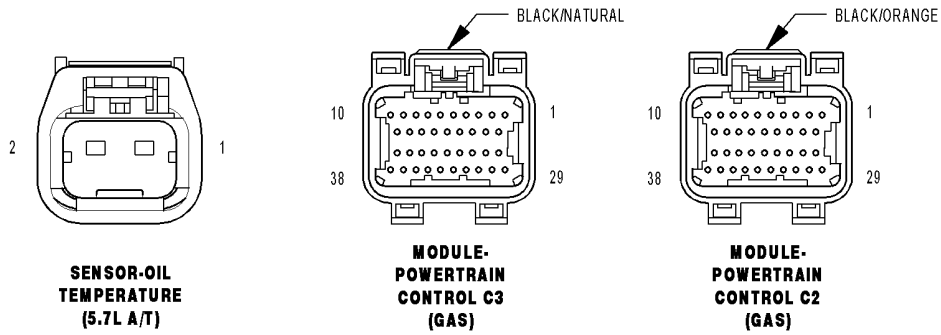

81cc494b

For a complete wiring diagram **Refer to the Wiring Information**.

- **When Monitored:**
  The engine oil temperature has dropped below a calibrated value. Engine start up.
- **Set Condition:**
  The Engine Oil temperature rises faster than a calibrated modeled temperature. When the actual oil temperature exceeds the calibrated modeled temperature for 3 minutes the fault is set.

Possible Causes
ENGINE OIL
(G24) ENGINE OIL TEMPERATURE SIGNAL CIRCUIT HIGH RESISTANCE
(K900) SENSOR GROUND CIRCUIT HIGH RESISTANCE
ENGINE OIL TEMPERATURE SENSOR
POWERTRAIN CONTROL MODULE (PCM)

Always perform the Pre-Diagnostic Troubleshooting procedure before proceeding. (Refer to 28 - DTC-Based Diagnostics/MODULE, Powertrain Control (PCM) - Standard Procedure).

1. ACTIVE DTC

NOTE: Diagnose any CAN - C Communication DTCs before continuing.

1. Turn the ignition off.
2. If possible, allow the vehicle to sit with the ignition off for more than 60 minutes in an environment where the temperature will allow the oil temperature to cool down.
3. Start the engine and allow it to reach normal operating conditions.
4. With a scan tool, select View DTCs.

Is the status Active or Pending for this DTC?

Yes

- Go To 2

No

- Refer to the INTERMITTENT CONDITION Diagnostic Procedure. (Refer to 28 - DTC-Based Diagnostics/MODULE, Powertrain Control (PCM) - Standard Procedure)

2. ENGINE OIL

1. The following conditions must be checked.
   - OEM recommended oil viscosity is being used.
   - Customer is following the oil change schedule.
   - Check the engine oil for contamination. (i.e., fuel and/or engine coolant)
   - Internal engine condition that may effect oil pressure.

Were any of the above conditions found?

Yes

- Repair as necessary.
- Perform the POWERTRAIN VERIFICATION TEST. (Refer to 28 - DTC-Based Diagnostics/MODULE, Powertrain Control (PCM) - Standard Procedure)

No

- Go To 3

3. ENGINE OIL TEMPERATURE SENSOR VOLTAGE

1. Turn the ignition off.
2. Disconnect the Engine Oil Temperature Sensor harness connector.
3. Turn the ignition on.
4. With a scan tool, read the Engine Oil Temperature Sensor voltage.

NOTE: The sensor voltage should be approximately 5.0 volts (plus or minus .1 volt) with the connector disconnected.

Does the scan tool display the voltage as described above?

Yes

- Go To 4

No

- Go To 5

4. ENGINE OIL TEMPERATURE SENSOR

1. With a scan tool, read the Engine Oil Temperature Sensor voltage.
2. Connect a jumper wire between the (G24) EOT Signal circuit and the (K900) Sensor Ground circuit in the Engine Oil Temperature Sensor harness connector.

NOTE: The sensor voltage should be approximately 0.0 volts (plus or minus .1 volt) with the jumper wire in place.

Does the scan tool display the voltage as described above?

Yes

- Verify that there is good pin to terminal contact in the Sensor and Powertrain Control Module connectors. Replace the Engine Oil Temperature Sensor if no problems were found with the connectors.
- Perform the POWERTRAIN VERIFICATION TEST. (Refer to 28 - DTC-Based Diagnostics/MODULE, Powertrain Control (PCM) - Standard Procedure)

No

- Go To 5

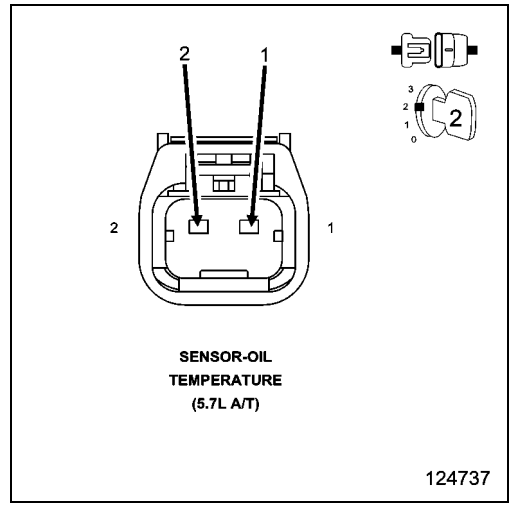

5. (G24) EOT SIGNAL CIRCUIT HIGH RESISTANCE

1. Turn the ignition off.
2. Connect the Engine Oil Temperature Sensor harness connector.

CAUTION: Do not probe the PCM harness connectors. Probing the PCM harness connectors will damage the PCM terminals resulting in poor terminal to pin connection. Install the PCM Pinout Box Kit, NGC, 38 Position 8815A along with the Adapter PCM Pinout Box Adapter 8815-1to perform the diagnosis.

3. Using a voltmeter, perform a voltage drop test by backprobing the (G24) EOT Signal circuit at the Engine Oil Temperature Sensor harness connector and probing the appropriate terminal of the special tool #8815A. Make sure the voltmeter leads are connected so that positive polarity is displayed on the voltmeter.

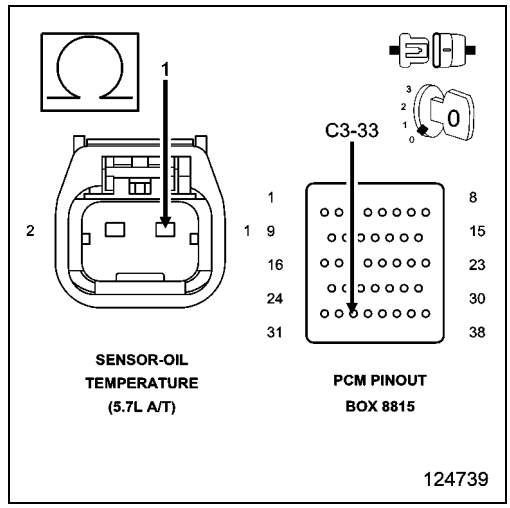

WARNING: When the engine is operating, do not stand in direct line with the fan. Do not put your hands near the pulleys, belts or fan. Do not wear loose clothing. Failure to follow these instructions may result in possible serious or fatal injury.

4. Start the engine.

Is the voltage below 0.5 volts?

Yes

- Go To 6

No

- Repair the (G24) EOT Signal circuit for high resistance.
- Perform the POWERTRAIN VERIFICATION TEST. (Refer to 28 - DTC-Based Diagnostics/MODULE, Powertrain Control (PCM) - Standard Procedure)

6. (K900) SENSOR GROUND CIRCUIT HIGH RESISTANCE

1. Turn the ignition off.

CAUTION: Do not probe the PCM harness connectors. Probing the PCM harness connectors will damage the PCM terminals resulting in poor terminal to pin connection. Install the PCM Pinout Box Kit, NGC, 38 Position 8815A along with the Adapter PCM Pinout Box Adapter 8815-1to perform the diagnosis.

2. Using a voltmeter, perform a voltage drop test by backprobing the (K900) Sensor Ground circuit at the Engine Oil Temperature Sensor harness connector and probing the appropriate terminal of the special tool #8815A. Make sure the voltmeter leads are connected so that positive polarity is displayed on the voltmeter.

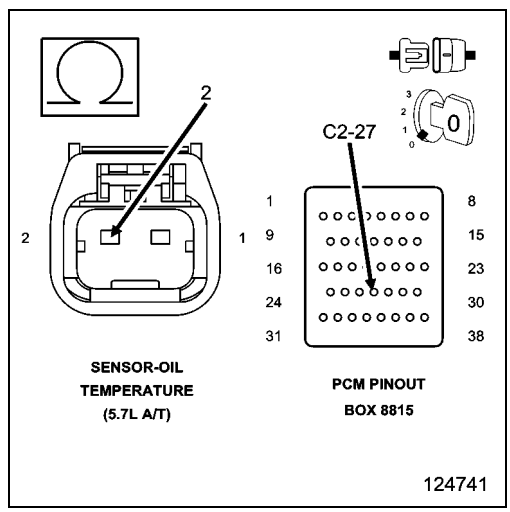

WARNING: When the engine is operating, do not stand in direct line with the fan. Do not put your hands near the pulleys, belts or fan. Do not wear loose clothing. Failure to follow these instructions may result in possible serious or fatal injury.

3. Start the engine.

Is the voltage below 0.5 volts?

Yes

- Go To 7

No

- Repair the (K900) Sensor Ground circuit for high resistance.
- Perform the POWERTRAIN VERIFICATION TEST. (Refer to 28 - DTC-Based Diagnostics/MODULE, Powertrain Control (PCM) - Standard Procedure)

7. POWERTRAIN CONTROL MODULE (PCM)

1. Using the wiring diagram/schematic as a guide, inspect the wiring and connectors between the Engine Oil Temp Sensor and the Powertrain Control Module (PCM).
2. Look for any chafed, pierced, pinched, or partially broken wires.
3. Look for broken, bent, pushed out or corroded terminals. Verify that there is good pin to terminal contact in the Sensor and Control Module connectors.
4. Refer to any Technical Service Bulletins that may apply.

Were there any problems found?

Yes

- Repair as necessary.
- Perform the POWERTRAIN VERIFICATION TEST. (Refer to 28 - DTC-Based Diagnostics/MODULE, Powertrain Control (PCM) - Standard Procedure)

No

- Replace the Powertrain Control Module (PCM) in accordance with the Service Information.
- Perform the POWERTRAIN VERIFICATION TEST. (Refer to 28 - DTC-Based Diagnostics/MODULE, Powertrain Control (PCM) - Standard Procedure)

P0300-MULTIPLE CYLINDER MISFIRE

For a complete wiring diagram, **refer to the Wiring Information**.

- **When Monitored:**

  Any time the engine is running, and the adaptive numerator has been successfully updated.
- **Set Condition:**

  The threshold to set the fault is application specific; it is tied to the level of misfire that will cause emissions to increase to 1.5 times the standard or in some cases 1%. It is always a two trip fault above the calibrated RPM. It takes one fail to set a Pending Fault and two trips to set the MIL. Three good trips to turn off the MIL.

Possible Causes
(F342) ASD OUTPUT CIRCUIT
INJECTOR CONTROL CIRCUIT
COIL CONTROL CIRCUIT
IGNITION WIRE
SPARK PLUG
IGNITION COIL
FUEL PUMP INLET STRAINER PLUGGED
RESTRICTED FUEL SUPPLY LINE
FUEL PUMP MODULE
FUEL PRESSURE LEAK DOWN
FUEL INJECTOR
ENGINE MECHANICAL
POWERTRAIN CONTROL MODULE (PCM)

Always perform the Pre-Diagnostic Troubleshooting procedure before proceeding. (Refer to 28 - DTC-Based Diagnostics/MODULE, Powertrain Control (PCM) - Standard Procedure).

1. ACTIVE DTC

1. Diagnose and repair any other active component or circuit DTCs before continuing with this procedure.
2. Turn the ignition on.
3. With the scan tool, select View DTCs. Copy DTC and Freeze Frame information.
4. Start the engine and allow it to reach operating temperature.

WARNING: When the engine is operating, do not stand in direct line with the fan. Do not put your hands near the pulleys, belts or fan. Do not wear loose clothing. Failure to follow these instructions may result in possible serious or fatal injury.

NOTE: Attempt to operate the vehicle under conditions similar to which the DTC was set.

NOTE: It may be necessary to test drive the vehicle within the DTC monitoring conditions in order for this DTC to set.

5. With a scan tool, select View DTCs.

Is the DTC Active at this time?

Yes

- Go To 2

No

- Perform the INTERMITTENT CONDITION diagnostic procedure. (Refer to 28 - DTC-Based Diagnostics/MODULE, Powertrain Control (PCM) - Standard Procedure).

2. VISUAL INSPECTION

NOTE: Anything that affects the speed of the crankshaft can cause a misfire DTC.

NOTE: When a Misfire is detected for a particular cylinder, the PCM will shut down that cylinder's Injector Control circuit.

Visually inspect the engine for any of the following conditions:

- Worn serpentine belt
- Binding Engine-Driven accessories: A/C Compressor, P/S Pump, Water pump.
- Misalignment of the Water pump, P/S Pump and A/C Compressor pulleys
- Corroded PCM power and ground circuits.
- Misalignment of the Water pump, P/S Pump and A/C Compressor pulleys
- Corroded PCM power and ground circuits.
- Improper CKP, CMP, MAP, and TP Sensor mounting
- Poor connector/terminal to component connection for CKP sensor, CMP sensor, MAP sensor, TP sensor, fuel injector, ignition coil, etc.
- Vacuum leaks
- Restricted Air Induction system or Exhaust system.
- Internal engine component failures.

Were any of the above conditions present?

Yes

- Repair as necessary.
- Perform the POWERTRAIN VERIFICATION TEST. (Refer to 28 - DTC-Based Diagnostics/MODULE, Powertrain Control (PCM) - Standard Procedure).

No

- Go To 3

3. (F342) ASD OUTPUT CIRCUIT

1. Turn the ignition off.
2. Disconnect the Ignition Coil harness connector of the misfiring cylinders.
3. Disconnect the Fuel Injector harness connector of the misfiring cylinders.
4. Ignition on, engine not running.
5. With a scan tool, actuate the ASD.
6. Using a 12-volt test light connected to ground, probe the (F342) ASD Output circuit in the Ignition Coil harness connector and Fuel Injector harness connector during the actuation.

NOTE: Make sure the test light is probing the circuit before actuating the Relay or a DTC may set and not allow the actuation.

Does the test light illuminate brightly?

Yes

- Go To 4

No

- Repair the excessive resistance or short to ground in the (F342) ASD Output circuit.
- Perform the POWERTRAIN VERIFICATION TEST. (Refer to 28 - DTC-Based Diagnostics/MODULE, Powertrain Control (PCM) - Standard Procedure).

4. IGNITION SYSTEM OPERATION

WARNING: When the engine is operating, do not stand in direct line with the fan. Do not put your hands near the pulleys, belts or fan. Do not wear loose clothing. Failure to follow these instructions may result in possible serious or fatal injury.

1. Turn the ignition off.
2. Connect the Ignition Coil harness connectors.
3. Remove the Ignition Coils.
4. Leave the Fuel Injector harness connector of the cylinder being tested disconnected.
5. Install a spark tester on the Ignition Coil.
6. While cranking the engine observe the spark coming from the spark tester.
7. Perform the same test on the ignition wire side of the Ignition coil.

NOTE: A crisp blue spark that is able to jump the gap of the spark tester should be generated at the coil on plug and at the end of the ignition wire.

Is good spark present?

Yes

- Go To 5

No

- Go To 14

NOTE: Connect the Fuel Injector harness connector before continuing.

5. SPARK PLUG

CAUTION: The 4.7L engine uses TWO DIFFERENT types of spark plugs. A total of 16 plugs are used. The plugs are mounted in two rows (banks). The upper row is used on the intake valve side of the cylinder head. The lower row is used on the exhaust valve side of the cylinder head. The upper row uses Nickel Yttrium plugs. The lower row uses Iridium plugs. DO NOT INTERCHANGE THESE PLUGS.

1. Turn the ignition off.
2. Remove the Spark Plug(s) in accordance with the Service Information.
3. Inspect the Spark Plug(s) for the following conditions:
   - Cracks
   - Carbon Tracking
   - Foreign Material
   - Gap size out of specifications
   - Loose or broken electrode

NOTE: Lightly tap the bottom of the spark plug on a solid surface. The electrode in the spark plug should not move.

Were any of the above conditions present?

Yes

- Replace the Spark Plug in accordance with the Service Information. (Refer to 08 - Electrical/8I - Ignition Control/ SPARK PLUG - Removal).
- Perform the POWERTRAIN VERIFICATION TEST. (Refer to 28 - DTC-Based Diagnostics/MODULE, Powertrain Control (PCM) - Standard Procedure).

No

- Go To 6

6. FUEL PRESSURE CHECK

WARNING: The fuel system is under a constant pressure (even with the engine off). Before testing or servicing any fuel system hose, fitting or line, the fuel system pressure must be released. Failure to follow these instructions can result in possible serious or fatal injury.

WARNING: When the engine is operating, do not stand in direct line with the fan. Do not put your hands near the pulleys, belts or fan. Do not wear loose clothing. Failure to follow these instructions may result in possible serious or fatal injury.

1. Install the Fuel Pressure Decay Tester 8978A to the fuel rail.
2. Start the engine and observe the fuel pressure reading.

NOTE: Fuel pressure specification is 407 kPa +/- 34 kPa (59 psi +/- 5 psi).

Choose a conclusion that best matches your fuel pressure reading.

Within Specification

- Go To 7

Below Specification

- Go To 12

Above Specification

- Replace the fuel filter/pressure regulator.
- Perform the POWERTRAIN VERIFICATION TEST. (Refer to 28 - DTC-Based Diagnostics/MODULE, Powertrain Control (PCM) - Standard Procedure).

7. FUEL PRESSURE LEAK DOWN

NOTE: Before continuing visually and physically inspect the fuel delivery system for external leaks or damage. Repair/replace as necessary.

WARNING: The fuel system is under a constant pressure (even with the engine off). Before testing or servicing any fuel system hose, fitting or line, the fuel system pressure must be released. Failure to follow these instructions can result in possible serious or fatal injury.

1. Turn the ignition off.
2. Install the Fuel Pressure Decay Tester 8978A.
3. Start the engine and allow the fuel system to reach maximum pressure.
4. Turn the ignition off.

NOTE: Fuel specification is 407 kPa +/- 34 kPa (59 psi +/- 5 psi).

5. Close the Fuel System Isolation Valve and then wait five minutes before proceeding.
6. Read the Fuel Inlet and Fuel Outlet Pressure Gauges. The pressure should not drop more than 10 psi on either gauge.
7. Monitor the fuel pressure gauge for a minimum of five minutes.

NOTE: The pressure should not decrease by greater than 69 kPa (10 psi).

Does the pressure fall below the listed specification?

Yes - On Fuel Inlet Gauge

- Replace the fuel pump module.
- Perform the POWERTRAIN VERIFICATION TEST. (Refer to 28 - DTC-Based Diagnostics/MODULE, Powertrain Control (PCM) - Standard Procedure).

Yes - On Fuel Outlet Gauge

- Replace the leaking fuel injector(s).
- Perform the POWERTRAIN VERIFICATION TEST. (Refer to 28 - DTC-Based Diagnostics/MODULE, Powertrain Control (PCM) - Standard Procedure).

No

- Go To 8

8. FUEL INJECTOR OPERATION

WARNING: The fuel system is under a constant pressure (even with the engine off). Before testing or servicing any fuel system hose, fitting or line, the fuel system pressure must be released. Failure to follow these instructions can result in possible serious or fatal injury.

CAUTION: After each Fuel Injector actuation, start the engine to clean the cylinder of fuel. Failure to do so could cause engine damage.

1. Open the Fuel System Isolation Valve.
2. Start the engine and allow the fuel pressure to reach maximum pressure.
3. Turn the ignition off.
4. Ignition on, engine not running.
5. Using the scan tool, actuate the Fuel Injector for the cylinder that indicated the misfire.
6. Monitor the fuel pressure gauge.

Does the fuel pressure gauge indicate a drop in fuel pressure?

Yes

- Go To 9

No

- Go To 10

NOTE: Turn the ignition off, remove the Fuel Pressure gauge, and connect the fuel lines before continuing.

9. ENGINE MECHANICAL

Check for any of the following conditions/mechanical problems:

- ENGINE VACUUM - must be at least 13 inches in neutral
- ENGINE VALVE TIMING - must be within specifications
- ENGINE COMPRESSION - must be within specifications
- ENGINE EXHAUST SYSTEM - must be free of any restrictions or leaks.
- ENGINE PCV SYSTEM - must flow freely
- TORQUE CONVERTER STALL SPEED - must be within specifications
- POWER BRAKE BOOSTER - no internal vacuum leaks
- FUEL - must be free of contamination
- CAM LOBES - must not be worn excessively
- CYLINDER LEAKAGE TEST - must be within specifications
- VALVE SPRINGS - cannot be weak or broken

Are there any engine mechanical problems?

Yes

- Repair as necessary.
- Perform the POWERTRAIN VERIFICATION TEST. (Refer to 28 - DTC-Based Diagnostics/MODULE, Powertrain Control (PCM) - Standard Procedure).

No

- Go To 17

10. FUEL INJECTOR

1. Turn the ignition off.
2. Disconnect the Fuel Injector harness connector of the misfiring cylinder.
3. Ignition on, engine not running.

NOTE: When a Misfire is detected for a particular cylinder, the PCM will shut down that cylinder's Injector Control circuit.

4. Install an Injector Noid light.
5. With the scan tool, actuate the Fuel Injector.

Does the Noid light blink/flicker during the actuation?

Yes

- Verify that there is good pin to terminal contact in the related Injector and the Powertrain Control Module connectors. Replace the Fuel Injector.
- Perform the POWERTRAIN VERIFICATION TEST. (Refer to 28 - DTC-Based Diagnostics/MODULE, Powertrain Control (PCM) - Standard Procedure).

No

- Go To 11

11. INJECTOR CONTROL CIRCUIT

1. Turn the ignition off.
2. Disconnect the Fuel Injector harness connector.
3. Disconnect the PCM harness connectors.

CAUTION: Do not probe the PCM harness connectors. Probing the PCM harness connectors will damage the PCM terminals resulting in poor terminal to pin connection. Install the PCM Pinout Box Kit, NGC, 38 Position 8815A to perform diagnosis.

4. Check the Injector Control circuit for an open, short to ground, and short to voltage.

Was a problem found with the Injector Control circuit?

Yes

- Repair the excessive resistance or short in the Injector Control circuit.
- Perform the POWERTRAIN VERIFICATION TEST. (Refer to 28 - DTC-Based Diagnostics/MODULE, Powertrain Control (PCM) - Standard Procedure).

No

- Go To 17

12. FUEL SUPPLY LINE RESTRICTED

WARNING: The fuel system is under a constant pressure (even with the engine off). Before testing or servicing any fuel system hose, fitting or line, the fuel system pressure must be released. Failure to follow these instructions can result in possible serious or fatal injury.

1. Turn the ignition off.
2. Raise the vehicle on a hoist, and disconnect the fuel pressure line at the fuel pump module.
3. Install the Fuel Pressure Decay Tester 8978A between the fuel supply line and the fuel pump module.
4. Ignition on, engine not running.
5. With the scan tool, actuate the ASD Fuel System test and observe the fuel pressure gauge.

NOTE: Fuel pressure specification is 407 kPa +/- 34 kPa (59 psi +/- 5 psi).

Is the fuel pressure within specification?

Yes

- Repair or replace fuel supply line as necessary.
- Perform the POWERTRAIN VERIFICATION TEST. (Refer to 28 - DTC-Based Diagnostics/MODULE, Powertrain Control (PCM) - Standard Procedure).

No

- Go To 13

13. FUEL PUMP INLET STRAINER

WARNING: The fuel system is under a constant pressure (even with the engine off). Before testing or servicing any fuel system hose, fitting or line, the fuel system pressure must be released. Failure to follow these instructions can result in possible serious or fatal injury.

1. Turn the ignition off.
2. Remove the Fuel Pump Module and inspect the Fuel Inlet Strainer.

Is the Fuel Inlet Strainer plugged?

Yes

- Replace the Fuel Pump Inlet Strainer.
- Perform the POWERTRAIN VERIFICATION TEST. (Refer to 28 - DTC-Based Diagnostics/MODULE, Powertrain Control (PCM) - Standard Procedure).

No

- Before continuing, check the Fuel Pump Module harness connector terminals for corrosion, damage, or terminal push out. Make sure the ground circuit is functional. Repair as necessary. Replace the Fuel Pump Module.
- Perform the POWERTRAIN VERIFICATION TEST. (Refer to 28 - DTC-Based Diagnostics/MODULE, Powertrain Control (PCM) - Standard Procedure).

14. IGNITION WIRE

NOTE: If the vehicle or cylinder being tested does not have an ignition wire answer YES to this test and continue.

1. Turn the ignition off.
2. Remove the ignition wire.
3. Measure the resistance of the ignition wire.

Is the resistance below 10K Ohms?

Yes

- Go To 15

No

- Replace the Ignition Wire.
- Perform the POWERTRAIN VERIFICATION TEST. (Refer to 28 - DTC-Based Diagnostics/MODULE, Powertrain Control (PCM) - Standard Procedure).

15. IGNITION COIL

WARNING: When the engine is operating, do not stand in direct line with the fan. Do not put your hands near the pulleys, belts or fan. Do not wear loose clothing. Failure to follow these instructions may result in possible serious or fatal injury.

1. Disconnect the Ignition Coil harness connector.
2. Using a 12-volt test light connected to 12-volts, probe the Ignition Coil Control circuit.
3. Crank the engine for five seconds while observing the test light.

NOTE: The primary resistance of the 3.7L and 4.7L Ignition coil is 0.6 to 0.9 of an ohm and the resistance of a 5.7L Ignition coil is 0.558 to 0.682 of an ohm at 25° C (77° F).

Does the test light brightly blink/flicker?

Yes

- Verify that there is good pin to terminal contact in the related Coil and the Powertrain Control Module connectors. If OK, replace the Ignition Coil in accordance with the Service Information.
- Perform the POWERTRAIN VERIFICATION TEST. (Refer to 28 - DTC-Based Diagnostics/MODULE, Powertrain Control (PCM) - Standard Procedure).

No

- Go To 16

16. COIL CONTROL CIRCUIT

1. Turn the ignition off.
2. Disconnect the Ignition Coil harness connector.
3. Disconnect the PCM harness connectors.

CAUTION: Do not probe the PCM harness connectors. Probing the PCM harness connectors will damage the PCM terminals resulting in poor terminal to pin connection. Install the PCM Pinout Box Kit, NGC, 38 Position 8815A to perform diagnosis.

4. Check the Coil Control circuit for an open, short to ground, and short to voltage.

Was a problem found with the Coil Control circuit?

Yes

- Repair the Coil Control circuit.
- Perform the POWERTRAIN VERIFICATION TEST. (Refer to 28 - DTC-Based Diagnostics/MODULE, Powertrain Control (PCM) - Standard Procedure).

No

- Go To 17

17. POWERTRAIN CONTROL MODULE (PCM)

1. Using the wiring diagram/schematic as a guide, inspect the wiring and connectors between the related Sensor, Coil, Injector, and the Powertrain Control Module (PCM).
2. Look for any chafed, pierced, pinched, or partially broken wires.
3. Look for broken, bent, pushed out or corroded terminals. Verify that there is good pin to terminal contact in the related Sensors, Coils, Injectors, and the Powertrain Control Module connectors.
4. Perform any Technical Service Bulletins that may apply.

Were there any problems found?

Yes

- Repair as necessary.
- Perform the POWERTRAIN VERIFICATION TEST. (Refer to 28 - DTC-Based Diagnostics/MODULE, Powertrain Control (PCM) - Standard Procedure).

No

- Replace and program the Powertrain Control Module per Service Information.
- Perform the POWERTRAIN VERIFICATION TEST. (Refer to 28 - DTC-Based Diagnostics/MODULE, Powertrain Control (PCM) - Standard Procedure).

■ P0301-CYLINDER 1 MISFIRE

For a complete wiring diagram, **refer to the Wiring Information**.

- **When Monitored:**

  Any time the engine is running, and the adaptive numerator has been successfully updated.
- **Set Condition:**

  The threshold to set the fault is application specific; it is tied to the level of misfire that will cause emissions to increase to 1.5 times the standard or in some cases 1%. It is always a two trip fault above the calibrated RPM. It takes one fail to set a Pending Fault and two trips to set the MIL. Three good trips to turn off the MIL.

Possible Causes
(F342) ASD OUTPUT CIRCUIT
(K11) INJECTOR CONTROL NO.1 CIRCUIT
(K19) COIL CONTROL NO.1 CIRCUIT
SPARK PLUG
IGNITION WIRE
IGNITION COIL
FUEL PUMP INLET STRAINER PLUGGED
RESTRICTED FUEL SUPPLY LINE
FUEL PUMP MODULE
FUEL PRESSURE LEAK DOWN
FUEL INJECTOR
ENGINE MECHANICAL
POWERTRAIN CONTROL MODULE (PCM)

Always perform the Pre-Diagnostic Troubleshooting procedure before proceeding. (Refer to 28 - DTC-Based Diagnostics/MODULE, Powertrain Control (PCM) - Standard Procedure).

1. ACTIVE DTC

1. Diagnose and repair any other active component or circuit DTCs before continuing with this procedure.
2. Turn the ignition on.
3. With the scan tool, select View DTCs. Copy DTC and Freeze Frame information.
4. Start the engine and allow it to reach operating temperature.

WARNING: When the engine is operating, do not stand in direct line with the fan. Do not put your hands near the pulleys, belts or fan. Do not wear loose clothing. Failure to follow these instructions may result in possible serious or fatal injury.

NOTE: Attempt to operate the vehicle under conditions similar to which the DTC was set.

NOTE: It may be necessary to test drive the vehicle within the DTC monitoring conditions in order for this DTC to set.

5. With a scan tool, select View DTCs.

Is the DTC Active at this time?

Yes

- Go To 2

No

- Perform the INTERMITTENT CONDITION diagnostic procedure. (Refer to 28 - DTC-Based Diagnostics/MODULE, Powertrain Control (PCM) - Standard Procedure).

2. VISUAL INSPECTION

NOTE: Anything that affects the speed of the crankshaft can cause a misfire DTC.

NOTE: When a Misfire is detected for a particular cylinder, the PCM will shut down that cylinder's Injector Control circuit.

Visually inspect the engine for any of the following conditions:

- Worn serpentine belt
- Binding Engine-Driven accessories: A/C Compressor, P/S Pump, Water pump.
- Misalignment of the Water pump, P/S Pump and A/C Compressor pulleys
- Corroded PCM power and ground circuits.
- Misalignment of the Water pump, P/S Pump and A/C Compressor pulleys
- Corroded PCM power and ground circuits.
- Improper CKP, CMP, MAP, and TP Sensor mounting
- Poor connector/terminal to component connection for CKP sensor, CMP sensor, MAP sensor, TP sensor, fuel injector, ignition coil, etc.
- Vacuum leaks
- Restricted Air Induction system or Exhaust system.
- Internal engine component failures.

Were any of the above conditions present?

Yes

- Repair as necessary.
- Perform the POWERTRAIN VERIFICATION TEST. (Refer to 28 - DTC-Based Diagnostics/MODULE, Powertrain Control (PCM) - Standard Procedure).

No

- Go To 3

3. (F342) ASD OUTPUT CIRCUIT

NOTE: Diagnose any ASD related DTCs before continuing.

1. Turn the ignition off.
2. Disconnect the Ignition Coil No.1 harness connector.

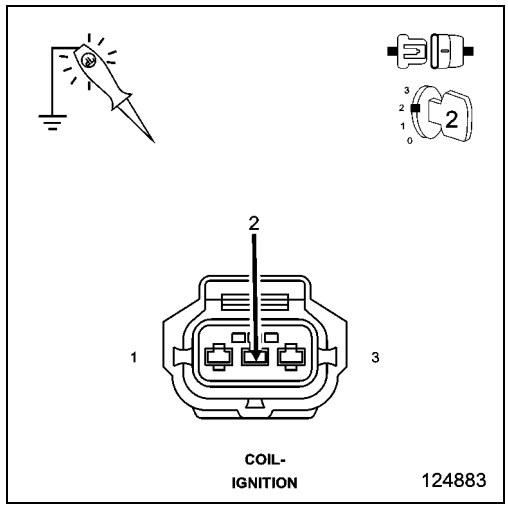

3. Disconnect the Fuel Injector No.1 harness connector.
4. Ignition on, engine not running.
5. Using a 12-volt test light connected to ground, probe the (F342) ASD Output circuit in the Ignition Coil harness connector and Fuel Injector harness connector before the actuation.

NOTE: Make sure the test light is probing the circuit before actuating the Relay or a DTC may set and not allow the actuation.

6. With the scan tool, actuate the ASD.

Does the test light illuminate brightly?

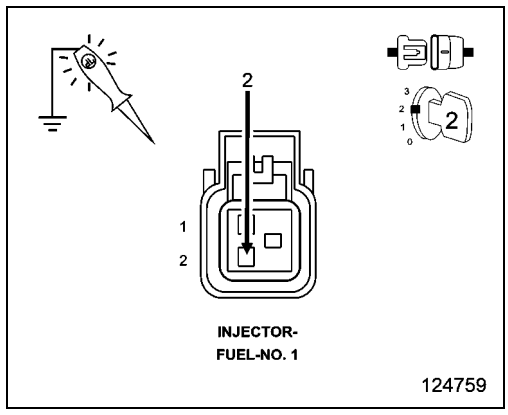

Yes

- Go To 4

No

- Repair the excessive resistance or short to ground in the (F342) ASD Output circuit.
- Perform the POWERTRAIN VERIFICATION TEST. (Refer to 28 - DTC-Based Diagnostics/MODULE, Powertrain Control (PCM) - Standard Procedure).

4. IGNITION SYSTEM OPERATION

WARNING: When the engine is operating, do not stand in direct line with the fan. Do not put your hands near the pulleys, belts or fan. Do not wear loose clothing. Failure to follow these instructions may result in possible serious or fatal injury.

1. Turn the ignition off.
2. Connect the Ignition Coil No.1 harness connector.
3. Remove the Ignition Coil.
4. Leave the Fuel Injector harness connector of the cylinder being tested disconnected.
5. Install a spark tester on the Ignition Coil.
6. While cranking the engine observe the spark coming from the spark tester.
7. Perform the same test on the ignition wire side of the Ignition coil.

NOTE: A crisp blue spark that is able to jump the gap of the spark tester should be generated at the coil on plug and at the end of the ignition wire.

Is good spark present?

Yes

- Go To 5

No

- Go To 14

NOTE: Connect the Fuel Injector harness connector before continuing.

5. SPARK PLUG

CAUTION: The 4.7L engine uses TWO DIFFERENT types of spark plugs. A total of 16 plugs are used. The plugs are mounted in two rows (banks). The upper row is used on the intake valve side of the cylinder head. The lower row is used on the exhaust valve side of the cylinder head. The upper row uses Nickel Yttrium plugs. The lower row uses Iridium plugs. DO NOT INTERCHANGE THESE PLUGS.

1. Turn the ignition off.
2. Remove the Spark Plug(s) in accordance with the Service Information.
3. Inspect the Spark Plug(s) for the following conditions:
   - Cracks
   - Carbon Tracking
   - Foreign Material
   - Gap size out of specifications
   - Loose or broken electrode

NOTE: Lightly tap the bottom of the spark plug on a solid surface. The electrode in the spark plug should not move.

Were any of the above conditions present?

Yes

- Replace the Spark Plug in accordance with the Service Information. (Refer to 08 - Electrical/8I - Ignition Control/ SPARK PLUG - Removal).
- Perform the POWERTRAIN VERIFICATION TEST. (Refer to 28 - DTC-Based Diagnostics/MODULE, Powertrain Control (PCM) - Standard Procedure).

No

- Go To 6

6. FUEL PRESSURE CHECK

WARNING: The fuel system is under a constant pressure (even with the engine off). Before testing or servicing any fuel system hose, fitting or line, the fuel system pressure must be released. Failure to follow these instructions can result in possible serious or fatal injury.

1. Install Fuel Pressure Decay Tester 8978A to the fuel rail.
2. Start the engine and observe the fuel pressure reading.

NOTE: Fuel pressure specification is 407 kPa +/- 34 kPa (59 psi +/- 5 psi).

Choose a conclusion that best matches your fuel pressure reading.

Within Specification

- Go To 7

Below Specification

- Go To 12

Above Specification

- Replace the fuel filter/pressure regulator.
- Perform the POWERTRAIN VERIFICATION TEST. (Refer to 28 - DTC-Based Diagnostics/MODULE, Powertrain Control (PCM) - Standard Procedure).

7. FUEL PRESSURE LEAK DOWN

NOTE: Before continuing visually and physically inspect the fuel delivery system for external leaks or damage. Repair/replace as necessary.

WARNING: The fuel system is under a constant pressure (even with the engine off). Before testing or servicing any fuel system hose, fitting or line, the fuel system pressure must be released. Failure to follow these instructions can result in possible serious or fatal injury.

1. Turn the ignition off.
2. Install the Fuel Pressure Decay Tester 8978A.
3. Start the engine and allow the fuel system to reach maximum pressure.
4. Turn the ignition off.

NOTE: Fuel specification is 407 kPa +/- 34 kPa (59 psi +/- 5 psi).

5. Close the Fuel System Isolation Valve and then wait five minutes before proceeding.
6. Read the Fuel Inlet and Fuel Outlet Pressure Gauges. The pressure should not drop more than 10 psi on either gauge.
7. Monitor the fuel pressure gauge for a minimum of five minutes.

NOTE: The pressure should not decrease by greater than 69 kPa (10 psi)

Does the pressure fall below the listed specification?

Yes - On Fuel Inlet Gauge

- Replace the fuel pump module.
- Perform the POWERTRAIN VERIFICATION TEST. (Refer to 28 - DTC-Based Diagnostics/MODULE, Powertrain Control (PCM) - Standard Procedure).

Yes - On Fuel Outlet Gauge

- Replace the leaking fuel injector(s).
- Perform the POWERTRAIN VERIFICATION TEST. (Refer to 28 - DTC-Based Diagnostics/MODULE, Powertrain Control (PCM) - Standard Procedure).

No

- Go To 8

8. FUEL INJECTOR OPERATION

WARNING: The fuel system is under a constant pressure (even with the engine off). Before testing or servicing any fuel system hose, fitting or line, the fuel system pressure must be released. Failure to follow these instructions can result in possible serious or fatal injury.

CAUTION: After each Fuel Injector actuation, start the engine to clean the cylinder of fuel. Failure to do so could cause engine damage.

1. Open the Fuel System Isolation Valve.
2. Start the engine and allow the fuel pressure to reach maximum pressure.
3. Turn the ignition off.
4. Ignition on, engine not running.
5. Using the scan tool, actuate the No.1 Fuel Injector.
6. Monitor the fuel pressure gauge.

Does the fuel pressure gauge indicate a drop in fuel pressure?

Yes

- Go To 9

No

- Go To 10

NOTE: Turn the ignition off, remove the Fuel Pressure gauge, and connect the fuel lines before continuing.

9. ENGINE MECHANICAL

Check for any of the following conditions/mechanical problems:

- ENGINE VACUUM - must be at least 13 inches in neutral
- ENGINE VALVE TIMING - must be within specifications
- ENGINE COMPRESSION - must be within specifications
- ENGINE EXHAUST SYSTEM - must be free of any restrictions or leaks.
- ENGINE PCV SYSTEM - must flow freely
- TORQUE CONVERTER STALL SPEED - must be within specifications
- POWER BRAKE BOOSTER - no internal vacuum leaks
- FUEL - must be free of contamination
- CAM LOBES - must not be worn excessively
- CYLINDER LEAKAGE TEST - must be within specifications
- VALVE SPRINGS - cannot be weak or broken

Are there any engine mechanical problems?

Yes

- Repair as necessary.
- Perform the POWERTRAIN VERIFICATION TEST. (Refer to 28 - DTC-Based Diagnostics/MODULE, Powertrain Control (PCM) - Standard Procedure).

No

- Go To 17

10. FUEL INJECTOR

1. Turn the ignition off.
2. Disconnect the No.1 Fuel Injector harness connector.
3. Ignition on, engine not running.

NOTE: When a Misfire is detected for a particular cylinder, the PCM will shut down that cylinders Injector Control circuit.

4. With the scan tool, erase DTCs.
5. Install an Injector Noid light.
6. With the scan tool, actuate the Fuel Injector.

Does the Noid light blink/flicker during the actuation?

Yes

- Verify that there is good pin to terminal contact in the Fuel Injector and the Powertrain Control Module connectors. If OK, replace the Fuel Injector.
- Perform the POWERTRAIN VERIFICATION TEST. (Refer to 28 - DTC-Based Diagnostics/MODULE, Powertrain Control (PCM) - Standard Procedure).

No

- Go To 11

11. (K11) INJECTOR CONTROL NO.1 CIRCUIT

1. Turn the ignition off.
2. Disconnect the C2 PCM harness connector.

CAUTION: Do not probe the PCM harness connectors. Probing the PCM harness connectors will damage the PCM terminals resulting in poor terminal to pin connection. Install the PCM Pinout Box Kit, NGC, 38 Position 8815A to perform diagnosis.

3. Check the (K11) Injector Control No.1 circuit for an open, short to ground, and short to voltage.

Was a problem found with the (K11) Injector Control No.1 circuit?

Yes

- Repair the excessive resistance or short in the (K11) Injector Control No.1 circuit.
- Perform the POWERTRAIN VERIFICATION TEST. (Refer to 28 - DTC-Based Diagnostics/MODULE, Powertrain Control (PCM) - Standard Procedure).

No

- Go To 17

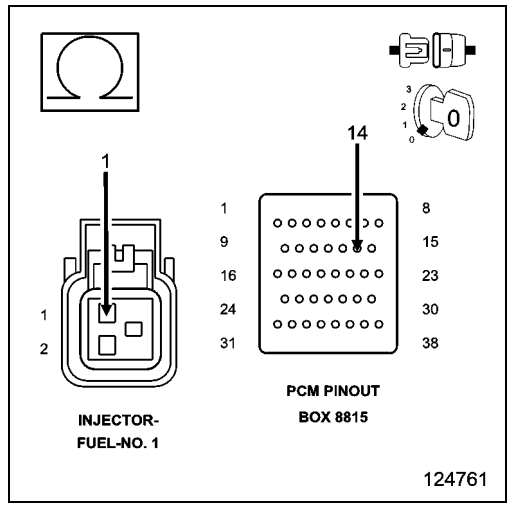

12. FUEL SUPPLY LINE RESTRICTED

WARNING: The fuel system is under a constant pressure (even with the engine off). Before testing or servicing any fuel system hose, fitting or line, the fuel system pressure must be released. Failure to follow these instructions can result in possible serious or fatal injury.

1. Turn the ignition off.
2. Raise the vehicle on a hoist, and disconnect the fuel pressure line at the fuel pump module.
3. Install the Fuel Pressure Decay Tester 8978A between the fuel supply line and the fuel pump module.
4. Ignition on, engine not running.
5. With the scan tool, actuate the ASD Fuel System test and observe the fuel pressure gauge.

NOTE: Fuel pressure specification is 407 kPa +/- 34 kPa (59 psi +/- 5 psi).

Is the fuel pressure within specification?

Yes

- Repair or replace fuel supply line as necessary.
- Perform the POWERTRAIN VERIFICATION TEST. (Refer to 28 - DTC-Based Diagnostics/MODULE, Powertrain Control (PCM) - Standard Procedure).

No

- Go To 13

13. FUEL PUMP INLET STRAINER

WARNING: The fuel system is under a constant pressure (even with the engine off). Before testing or servicing any fuel system hose, fitting or line, the fuel system pressure must be released. Failure to follow these instructions can result in possible serious or fatal injury.

1. Turn the ignition off.
2. Remove the Fuel Pump Module and inspect the Fuel Inlet Strainer.

Is the Fuel Inlet Strainer plugged?

Yes

- Replace the Fuel Pump Inlet Strainer.
- Perform the POWERTRAIN VERIFICATION TEST. (Refer to 28 - DTC-Based Diagnostics/MODULE, Powertrain Control (PCM) - Standard Procedure).

No

- Before continuing, check the Fuel Pump Module harness connector terminals for corrosion, damage, or terminal push out. Make sure the ground circuit is functional. Repair as necessary. Replace the Fuel Pump Module.
- Perform the POWERTRAIN VERIFICATION TEST. (Refer to 28 - DTC-Based Diagnostics/MODULE, Powertrain Control (PCM) - Standard Procedure).

14. IGNITION WIRE

NOTE: If the vehicle being tested does not have an ignition wire answer YES to this test and continue.

1. Turn the ignition off.
2. Remove the ignition wire.
3. Measure the resistance of the ignition wire.

Is the resistance below 10K Ohms?

Yes

- Go To 15

No

- Replace the Ignition Wire.
- Perform the POWERTRAIN VERIFICATION TEST. (Refer to 28 - DTC-Based Diagnostics/MODULE, Powertrain Control (PCM) - Standard Procedure).

15. IGNITION COIL

WARNING: When the engine is operating, do not stand in direct line with the fan. Do not put your hands near the pulleys, belts or fan. Do not wear loose clothing. Failure to follow these instructions may result in possible serious or fatal injury.

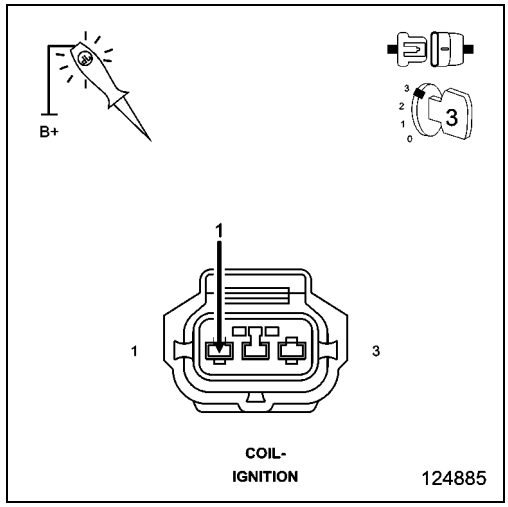

1. Disconnect the Ignition Coil harness connector.
2. Using a 12-volt test light connected to 12-volts, probe the (K19) Coil Control No.1 circuit.
3. Crank the engine for five seconds while observing the test light.

NOTE: The primary resistance of the 3.7L and 4.7L Ignition coil is 0.6 to 0.9 of an ohm and the resistance of a 5.7L Ignition coil is 0.558 to 0.682 of an ohm at 25° C (77° F).

Does the test light brightly blink/flicker?

Yes

- Verify that there is good pin to terminal contact in the Ignition Coil and the Powertrain Control Module connectors. If OK, replace the Ignition Coil in accordance with the Service Information.
- Perform the POWERTRAIN VERIFICATION TEST. (Refer to 28 - DTC-Based Diagnostics/MODULE, Powertrain Control (PCM) - Standard Procedure).

No

- Go To 16

16. (K19) COIL CONTROL NO.1 CIRCUIT

1. Turn the ignition off.
2. Disconnect the C2 PCM harness connector.

CAUTION: Do not probe the PCM harness connectors. Probing the PCM harness connectors will damage the PCM terminals resulting in poor terminal to pin connection. Install the PCM Pinout Box Kit, NGC, 38 Position 8815A to perform diagnosis.

3. Check the (K19) Coil Control No.1 circuit for an open, short to ground, and short to voltage.

Was a problem found with the (K19) Coil Control No.1 circuit?

Yes

- Repair the (K19) Coil Control No.1 circuit.
- Perform the POWERTRAIN VERIFICATION TEST. (Refer to 28 - DTC-Based Diagnostics/MODULE, Powertrain Control (PCM) - Standard Procedure).

No

- Go To 17

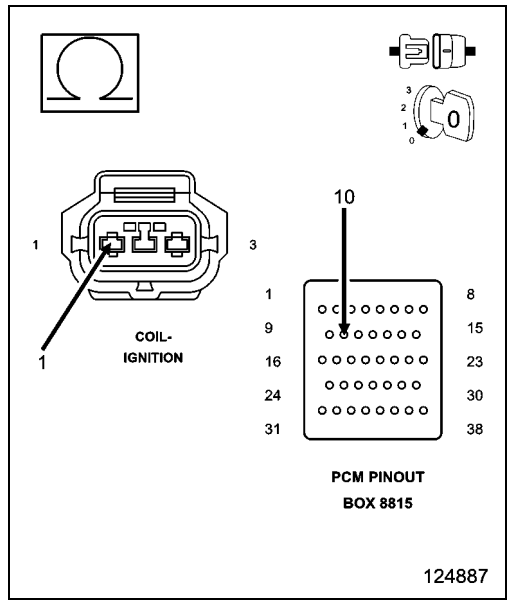

17. POWERTRAIN CONTROL MODULE (PCM)

1. Using the wiring diagram/schematic as a guide, inspect the wiring and connectors between the related Sensor, Coil, Injector, and the Powertrain Control Module (PCM).
2. Look for any chafed, pierced, pinched, or partially broken wires.
3. Look for broken, bent, pushed out or corroded terminals. Verify that there is good pin to terminal contact in the related Sensors, Coils, Injectors, and the Powertrain Control Module connectors.
4. Perform any Technical Service Bulletins that may apply.

Were there any problems found?

Yes

- Repair as necessary.
- Perform the POWERTRAIN VERIFICATION TEST. (Refer to 28 - DTC-Based Diagnostics/MODULE, Powertrain Control (PCM) - Standard Procedure).

No

- Replace and program the Powertrain Control Module per Service Information.
- Perform the POWERTRAIN VERIFICATION TEST. (Refer to 28 - DTC-Based Diagnostics/MODULE, Powertrain Control (PCM) - Standard Procedure).

■ P0302-CYLINDER 2 MISFIRE

For a complete wiring diagram, **refer to the Wiring Information**.

- **When Monitored:**
  Any time the engine is running, and the adaptive numerator has been successfully updated.
- **Set Condition:**
  The threshold to set the fault is application specific; it is tied to the level of misfire that will cause emissions to increase to 1.5 times the standard or in some cases 1%. It is always a two trip fault above the calibrated RPM. It takes one failure to set a Pending Fault and two trips to set the MIL. Three good trips to turn off the MIL.

Possible Causes
(F342) ASD CONTROL OUTPUT CIRCUIT
(K12) INJECTOR CONTROL NO.2 CIRCUIT
(K17) COIL CONTROL CIRCUIT
SPARK PLUG
IGNITION WIRE
IGNITION COIL
FUEL PUMP INLET STRAINER PLUGGED
RESTRICTED FUEL SUPPLY LINE
FUEL PUMP MODULE
FUEL PRESSURE LEAK DOWN
FUEL INJECTOR
ENGINE MECHANICAL
POWERTRAIN CONTROL MODULE (PCM)

Always perform the Pre-Diagnostic Troubleshooting procedure before proceeding. (Refer to 28 - DTC-Based Diagnostics/MODULE, Powertrain Control (PCM) - Standard Procedure).

1. ACTIVE DTC

1. Diagnose and repair any other active component or circuit DTCs before continuing with this procedure.
2. Turn the ignition on.
3. With the scan tool, select View DTCs. Copy DTC and Freeze Frame information.
4. Start the engine and allow it to reach operating temperature.

WARNING: When the engine is operating, do not stand in direct line with the fan. Do not put your hands near the pulleys, belts or fan. Do not wear loose clothing. Failure to follow these instructions may result in possible serious or fatal injury.

NOTE: Attempt to operate the vehicle under conditions similar to which the DTC was set.

NOTE: It may be necessary to test drive the vehicle within the DTC monitoring conditions in order for this DTC to set.

5. With a scan tool, select View DTCs.

Is the DTC Active at this time?

Yes

- Go To 2

No

- Perform the INTERMITTENT CONDITION diagnostic procedure. (Refer to 28 - DTC-Based Diagnostics/MODULE, Powertrain Control (PCM) - Standard Procedure).

2. VISUAL INSPECTION

NOTE: Anything that affects the speed of the crankshaft can cause a misfire DTC.

NOTE: When a Misfire is detected for a particular cylinder, the PCM will shut down that cylinder's Injector Control circuit.

Visually inspect the engine for any of the following conditions:

- Worn serpentine belt
- Binding Engine-Driven accessories: A/C Compressor, P/S Pump, Water pump.
- Misalignment of the Water pump, P/S Pump and A/C Compressor pulleys
- Corroded PCM power and ground circuits.
- Misalignment of the Water pump, P/S Pump and A/C Compressor pulleys
- Corroded PCM power and ground circuits.
- Improper CKP, CMP, MAP, and TP Sensor mounting
- Poor connector/terminal to component connection for CKP sensor, CMP sensor, MAP sensor, TP sensor, fuel injector, ignition coil, etc.
- Vacuum leaks
- Restricted Air Induction system or Exhaust system.
- Internal engine component failures.

Were any of the above conditions present?

Yes

- Repair as necessary.
- Perform the POWERTRAIN VERIFICATION TEST. (Refer to 28 - DTC-Based Diagnostics/MODULE, Powertrain Control (PCM) - Standard Procedure).

No

- Go To 3

3. (F342) ASD CONTROL OUTPUT CIRCUIT

NOTE: Diagnose any ASD related DTCs before continuing.

1. Turn the ignition off.

NOTE: The 3.7L V6 engine uses a modified Distributorless Ignition System (DIS) with coil consolidation on the left side engine bank.

2. Disconnect the Ignition Coil No.2 or No.5 harness connector.
3. Disconnect the Fuel Injector No.2 harness connector.
4. Ignition on, engine not running.
5. Using a 12-volt test light connected to ground, probe the (F342) ASD Control Output circuit in the Ignition Coil harness connector and Fuel Injector harness connector before the actuation.

NOTE: Make sure the test light is probing the circuit before actuating the Relay or a DTC may set and not allow the actuation.

6. With the scan tool, actuate the ASD.

Does the test light illuminate brightly?

Yes

- Go To 4

No

- Repair the excessive resistance or short to ground in the (F342) ASD Control Output circuit.
- Perform the POWERTRAIN VERIFICATION TEST. (Refer to 28 - DTC-Based Diagnostics/MODULE, Powertrain Control (PCM) - Standard Procedure).

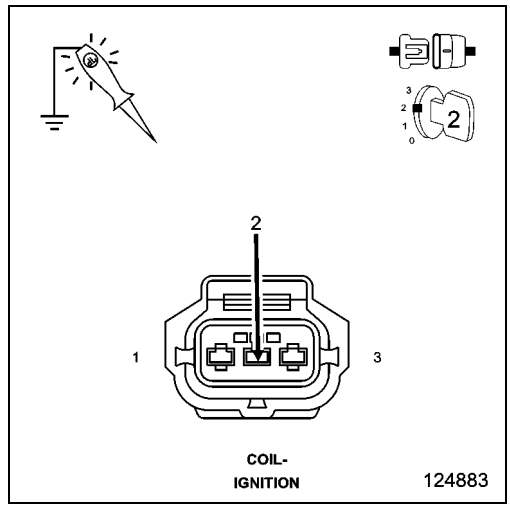

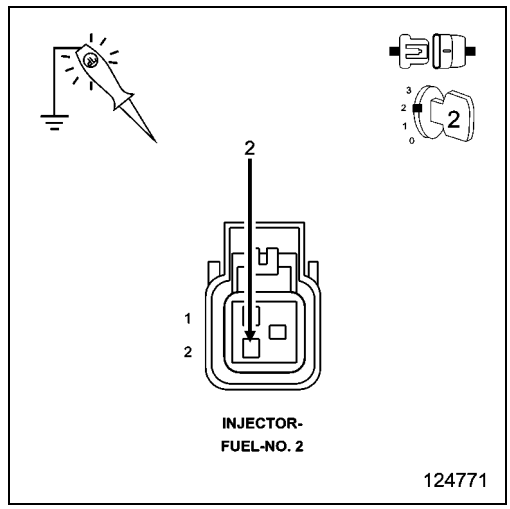

4. IGNITION SYSTEM OPERATION

WARNING: When the engine is operating, do not stand in direct line with the fan. Do not put your hands near the pulleys, belts or fan. Do not wear loose clothing. Failure to follow these instructions may result in possible serious or fatal injury.

1. Turn the ignition off.
2. Connect the Ignition Coil No.2 or No.5 harness connector.
3. Remove the Ignition Coil.
4. Leave the Fuel Injector harness connector of the cylinder being tested disconnected.
5. Install a spark tester on the Ignition Coil.
6. While cranking the engine observe the spark coming from the spark tester.
7. Perform the same test on the ignition wire side of the Ignition coil.

NOTE: A crisp blue spark that is able to jump the gap of the spark tester should be generated at the coil on plug and at the end of the ignition wire.

Is good spark present?

Yes

- Go To 5

No

- Go To 13

NOTE: Connect the Fuel Injector harness connector before continuing.

5. SPARK PLUG

CAUTION: The 4.7L engine uses TWO DIFFERENT types of spark plugs. A total of 16 plugs are used. The plugs are mounted in two rows (banks). The upper row is used on the intake valve side of the cylinder head. The lower row is used on the exhaust valve side of the cylinder head. The upper row uses Nickel Yttrium plugs. The lower row uses Iridium plugs. DO NOT INTERCHANGE THESE PLUGS.

1. Turn the ignition off.
2. Remove the Spark Plug(s) in accordance with the Service Information.
3. Inspect the Spark Plug(s) for the following conditions:
   - Cracks
   - Carbon Tracking
   - Foreign Material
   - Gap size out of specifications
   - Loose or broken electrode

NOTE: Lightly tap the bottom of the spark plug on a solid surface. The electrode in the spark plug should not move.

Were any of the above conditions present?

Yes

- Replace the Spark Plug in accordance with the Service Information. (Refer to 08 - Electrical/8I - Ignition Control/ SPARK PLUG - Removal).
- Perform the POWERTRAIN VERIFICATION TEST. (Refer to 28 - DTC-Based Diagnostics/MODULE, Powertrain Control (PCM) - Standard Procedure).

No

- Go To 6

6. FUEL PRESSURE CHECK

WARNING: The fuel system is under a constant pressure (even with the engine off). Before testing or servicing any fuel system hose, fitting or line, the fuel system pressure must be released. Failure to follow these instructions can result in possible serious or fatal injury.

1. Install Fuel Pressure Decay Tester 8978A to the fuel rail.
2. Start the engine and observe the fuel pressure reading.

NOTE: Fuel pressure specification is 407 kPa +/- 34 kPa (59 psi +/- 5 psi).

Choose a conclusion that best matches your fuel pressure reading.

Within Specification

- Go To 7

Below Specification

- Go To 11

Above Specification

- Replace the fuel filter/pressure regulator.
- Perform the POWERTRAIN VERIFICATION TEST. (Refer to 28 - DTC-Based Diagnostics/MODULE, Powertrain Control (PCM) - Standard Procedure).

7. FUEL PRESSURE LEAK DOWN

1. Perform the Fuel Pressure Leak Down Test. (Refer to 29 - Non-DTC Diagnostics/Drivability - Gas - Diagnosis and Testing).

Were any repairs made after performing the leak down test?

Yes

- Testing complete.
- Perform the POWERTRAIN VERIFICATION TEST. (Refer to 28 - DTC-Based Diagnostics/MODULE, Powertrain Control (PCM) - Standard Procedure).

No

- Go To 8

8. ENGINE MECHANICAL

Check for any of the following conditions/mechanical problems:

- ENGINE VACUUM - must be at least 13 inches in neutral
- ENGINE VALVE TIMING - must be within specifications
- ENGINE COMPRESSION - must be within specifications
- ENGINE EXHAUST SYSTEM - must be free of any restrictions or leaks.
- ENGINE PCV SYSTEM - must flow freely
- TORQUE CONVERTER STALL SPEED - must be within specifications
- POWER BRAKE BOOSTER - no internal vacuum leaks
- FUEL - must be free of contamination
- CAM LOBES - must not be worn excessively
- CYLINDER LEAKAGE TEST - must be within specifications
- VALVE SPRINGS - cannot be weak or broken

Are there any engine mechanical problems?

Yes

- Repair as necessary.
- Perform the POWERTRAIN VERIFICATION TEST. (Refer to 28 - DTC-Based Diagnostics/MODULE, Powertrain Control (PCM) - Standard Procedure).

No

- Go To 16

9. FUEL INJECTOR

1. Turn the ignition off.
2. Disconnect the No.2 Fuel Injector harness connector.
3. Ignition on, engine not running.

NOTE: When a Misfire is detected for a particular cylinder, the PCM will shut down that cylinder's Injector Control circuit.

4. With the scan tool, erase DTCs.
5. Install an Injector Noid light.
6. With the scan tool, actuate the Fuel Injector.

Does the Noid light blink/flicker during the actuation?

Yes

- Verify that there is good pin to terminal contact in the Fuel Injector and the Powertrain Control Module connectors. If OK, replace the Fuel Injector.
- Perform the POWERTRAIN VERIFICATION TEST. (Refer to 28 - DTC-Based Diagnostics/MODULE, Powertrain Control (PCM) - Standard Procedure).

No

- Go To 10

10. (K12) INJECTOR CONTROL NO.2 CIRCUIT

1. Turn the ignition off.
2. Disconnect the C2 PCM harness connector.

CAUTION: Do not probe the PCM harness connectors. Probing the PCM harness connectors will damage the PCM terminals resulting in poor terminal to pin connection. Install the PCM Pinout Box Kit, NGC, 38 Position 8815A to perform diagnosis.

3. Check the (K12) Injector Control No.2 circuit for an open, short to ground, and short to voltage.

Was a problem found with the (K12) Injector Control No.2 circuit?

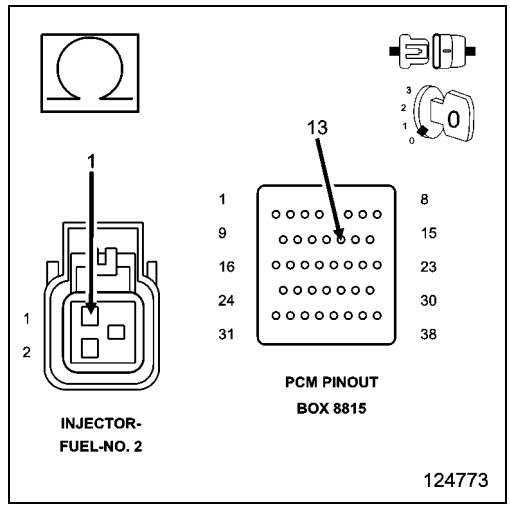

Yes

- Repair the excessive resistance or short in the (K12) Injector Control No.2 circuit.
- Perform the POWERTRAIN VERIFICATION TEST. (Refer to 28 - DTC-Based Diagnostics/MODULE, Powertrain Control (PCM) - Standard Procedure).

No

- Go To 16

11. FUEL SUPPLY LINE RESTRICTED

WARNING: The fuel system is under a constant pressure (even with the engine off). Before testing or servicing any fuel system hose, fitting or line, the fuel system pressure must be released. Failure to follow these instructions can result in possible serious or fatal injury.

1. Turn the ignition off.
2. Raise the vehicle on a hoist, and disconnect the fuel pressure line at the fuel pump module.
3. Install the Fuel Pressure Decay Tester 8978A between the fuel supply line and the fuel pump module.
4. Ignition on, engine not running.
5. With the scan tool, actuate the ASD Fuel System test and observe the fuel pressure gauge.

NOTE: Fuel pressure specification is 407 kPa +/- 34 kPa (59 psi +/- 5 psi).

Is the fuel pressure within specification?

Yes

- Repair or replace fuel supply line as necessary.
- Perform the POWERTRAIN VERIFICATION TEST. (Refer to 28 - DTC-Based Diagnostics/MODULE, Powertrain Control (PCM) - Standard Procedure).

No

- Go To 12

12. FUEL PUMP INLET STRAINER

WARNING: The fuel system is under a constant pressure (even with the engine off). Before testing or servicing any fuel system hose, fitting or line, the fuel system pressure must be released. Failure to follow these instructions can result in possible serious or fatal injury.

1. Turn the ignition off.
2. Remove the Fuel Pump Module and inspect the Fuel Inlet Strainer.

Is the Fuel Inlet Strainer plugged?

Yes

- Replace the Fuel Pump Inlet Strainer.
- Perform the POWERTRAIN VERIFICATION TEST. (Refer to 28 - DTC-Based Diagnostics/MODULE, Powertrain Control (PCM) - Standard Procedure).

No

- Before continuing, check the Fuel Pump Module harness connector terminals for corrosion, damage, or terminal push out. Make sure the ground circuit is functional. Repair as necessary. Replace the Fuel Pump Module.
- Perform the POWERTRAIN VERIFICATION TEST. (Refer to 28 - DTC-Based Diagnostics/MODULE, Powertrain Control (PCM) - Standard Procedure).

13. IGNITION WIRE

NOTE: If the vehicle or the cylinder being tested does not have an ignition wire answer YES to this test and continue.

1. Turn the ignition off.
2. Remove the ignition wire.
3. Measure the resistance of the ignition wire.

Is the resistance below 10K Ohms?

Yes

- Go To 14

No

- Replace the Ignition Wire.
- Perform the POWERTRAIN VERIFICATION TEST. (Refer to 28 - DTC-Based Diagnostics/MODULE, Powertrain Control (PCM) - Standard Procedure).

14. IGNITION COIL

WARNING: When the engine is operating, do not stand in direct line with the fan. Do not put your hands near the pulleys, belts or fan. Do not wear loose clothing. Failure to follow these instructions may result in possible serious or fatal injury.

NOTE: The 3.7L V6 engine uses a modified Distributorless Ignition System (DIS) with coil consolidation on the left side engine bank.

1. Disconnect the Ignition Coil harness connector.
2. Using a 12-volt test light connected to 12-volts, probe the (K17) Coil Control circuit.
3. Crank the engine for five seconds while observing the test light.

NOTE: The primary resistance of the 3.7L and 4.7L Ignition coil is 0.6 to 0.9 of an ohm and the resistance of a 5.7L Ignition coil is 0.558 to 0.682 of an ohm at 25° C (77° F).

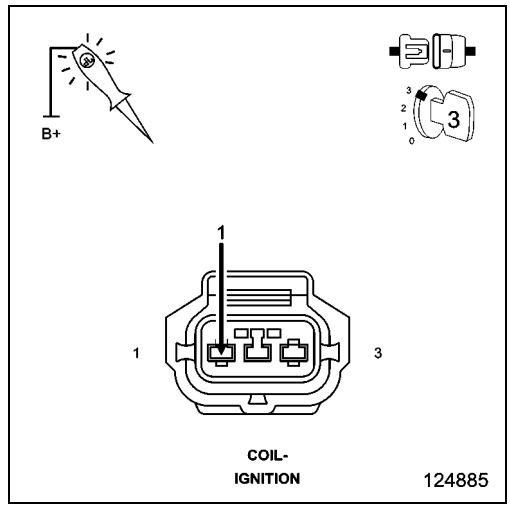

Does the test light brightly blink/flicker during the actuation?

Yes

- Verify that there is good pin to terminal contact in the Ignition Coil and the Powertrain Control Module connectors. If OK, replace the Ignition Coil in accordance with the Service Information.
- Perform the POWERTRAIN VERIFICATION TEST. (Refer to 28 - DTC-Based Diagnostics/MODULE, Powertrain Control (PCM) - Standard Procedure).

No

- Go To 15

15. (K17) COIL CONTROL CIRCUIT

1. Turn the ignition off.
2. Disconnect the C2 PCM harness connector.

CAUTION: Do not probe the PCM harness connectors. Probing the PCM harness connectors will damage the PCM terminals resulting in poor terminal to pin connection. Install the PCM Pinout Box Kit, NGC, 38 Position 8815A to perform diagnosis.

3. Check the (K17) Coil Control circuit for an open, short to ground, and short to voltage.

Was a problem found with the (K17) Coil Control circuit?

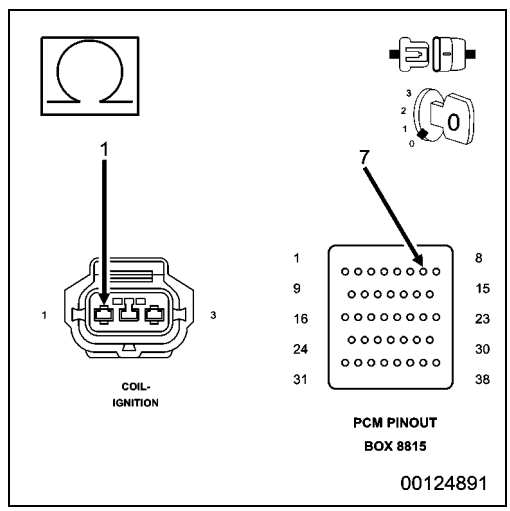

Yes

- Repair the (K17) Coil Control circuit.
- Perform the POWERTRAIN VERIFICATION TEST. (Refer to 28 - DTC-Based Diagnostics/MODULE, Powertrain Control (PCM) - Standard Procedure).

No

- Go To 16

16. POWERTRAIN CONTROL MODULE (PCM)

1. Using the wiring diagram/schematic as a guide, inspect the wiring and connectors between the related Sensor, Coil, Injector, and the Powertrain Control Module (PCM).
2. Look for any chafed, pierced, pinched, or partially broken wires.
3. Look for broken, bent, pushed out or corroded terminals. Verify that there is good pin to terminal contact in the related Sensors, Coils, Injectors, and the Powertrain Control Module connectors.
4. Refer to any Technical Service Bulletins that may apply.

Were there any problems found?

Yes

- Repair as necessary.
- Perform the POWERTRAIN VERIFICATION TEST. (Refer to 28 - DTC-Based Diagnostics/MODULE, Powertrain Control (PCM) - Standard Procedure).

No

- Replace and program the Powertrain Control Module per Service Information.
- Perform the POWERTRAIN VERIFICATION TEST. (Refer to 28 - DTC-Based Diagnostics/MODULE, Powertrain Control (PCM) - Standard Procedure).

■ P0303-CYLINDER 3 MISFIRE

For a complete wiring diagram, **refer to the Wiring Information**.

- **When Monitored:**

  Any time the engine is running, and the adaptive numerator has been successfully updated.
- **Set Condition:**

  The threshold to set the fault is application specific; it is tied to the level of misfire that will cause emissions to increase to 1.5 times the standard or in some cases 1%. It is always a two trip fault above the calibrated RPM. It takes one fail to set a Pending Fault and two trips to set the MIL. Three good trips to turn off the MIL.

Possible Causes
(F342) ASD CONTROL OUTPUT CIRCUIT
(K13) INJECTOR CONTROL NO.3 CIRCUIT
(K18) COIL CONTROL NO.3 CIRCUIT
SPARK PLUG
IGNITION WIRE
IGNITION COIL
FUEL PUMP INLET STRAINER PLUGGED
RESTRICTED FUEL SUPPLY LINE
FUEL PUMP MODULE
FUEL PRESSURE LEAK DOWN
FUEL INJECTOR
ENGINE MECHANICAL
POWERTRAIN CONTROL MODULE (PCM)

Always perform the Pre-Diagnostic Troubleshooting procedure before proceeding. (Refer to 28 - DTC-Based Diagnostics/MODULE, Powertrain Control (PCM) - Standard Procedure).

1. ACTIVE DTC

1. Diagnose and repair any other active component or circuit DTCs before continuing with this procedure.
2. Turn the ignition on.
3. With the scan tool, select View DTCs. Copy DTC and Freeze Frame information.
4. Start the engine and allow it to reach operating temperature.

WARNING: When the engine is operating, do not stand in direct line with the fan. Do not put your hands near the pulleys, belts or fan. Do not wear loose clothing. Failure to follow these instructions may result in possible serious or fatal injury.

NOTE: Attempt to operate the vehicle under conditions similar to which the DTC was set.

NOTE: It may be necessary to test drive the vehicle within the DTC monitoring conditions in order for this DTC to set.

5. With a scan tool, select View DTCs.

Is the DTC Active at this time?

Yes

- Go To 2

No

- Perform the INTERMITTENT CONDITION diagnostic procedure. (Refer to 28 - DTC-Based Diagnostics/MODULE, Powertrain Control (PCM) - Standard Procedure).

2. VISUAL INSPECTION

NOTE: Anything that affects the speed of the crankshaft can cause a misfire DTC.

NOTE: When a Misfire is detected for a particular cylinder, the PCM will shut down that cylinder's Injector Control circuit.

Visually inspect the engine for any of the following conditions:

- Worn serpentine belt
- Binding Engine-Driven accessories: A/C Compressor, P/S Pump, Water pump.
- Misalignment of the Water pump, P/S Pump and A/C Compressor pulleys
- Corroded PCM power and ground circuits.
- Misalignment of the Water pump, P/S Pump and A/C Compressor pulleys
- Corroded PCM power and ground circuits.
- Improper CKP, CMP, MAP, and TP Sensor mounting
- Poor connector/terminal to component connection for CKP sensor, CMP sensor, MAP sensor, TP sensor, fuel injector, ignition coil, etc.
- Vacuum leaks
- Restricted Air Induction system or Exhaust system.
- Internal engine component failures.

Were any of the above conditions present?

Yes

- Repair as necessary.
- Perform the POWERTRAIN VERIFICATION TEST. (Refer to 28 - DTC-Based Diagnostics/MODULE, Powertrain Control (PCM) - Standard Procedure).

No

- Go To 3

3. (F342) ASD CONTROL OUTPUT CIRCUIT

NOTE: Diagnose any ASD related DTCs before continuing.

1. Turn the ignition off.
2. Disconnect the No.3 Ignition Coil harness connector.

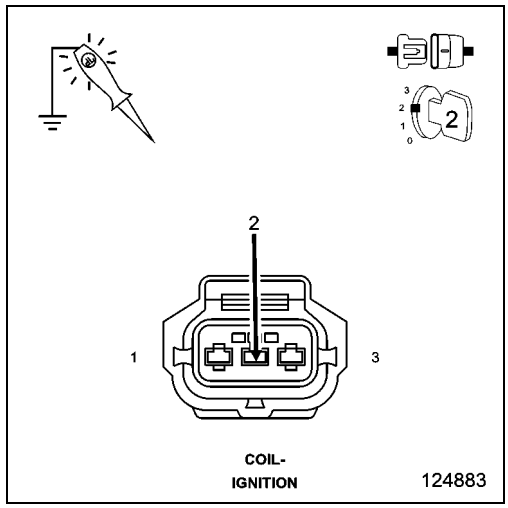

3. Disconnect the No.3 Fuel Injector harness connector.
4. Ignition on, engine not running.
5. Using a 12-volt test light connected to ground, probe the (F342) ASD Control Output circuit in the Ignition Coil harness connector and Fuel Injector harness connector before the actuation.

NOTE: Make sure the test light is probing the circuit before actuating the Relay or a DTC may set and not allow the actuation.

6. With a scan tool, actuate the ASD.

Does the test light illuminate brightly?

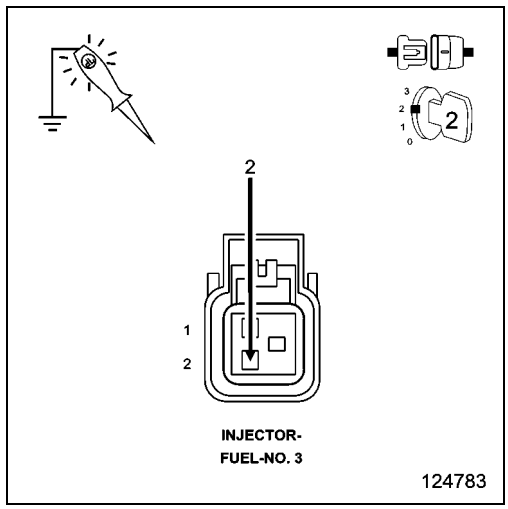

Yes

- Go To 4

No

- Repair the excessive resistance or short to ground in the (F342) ASD Control Output circuit.
- Perform the POWERTRAIN VERIFICATION TEST. (Refer to 28 - DTC-Based Diagnostics/MODULE, Powertrain Control (PCM) - Standard Procedure).

4. IGNITION SYSTEM OPERATION

WARNING: When the engine is operating, do not stand in direct line with the fan. Do not put your hands near the pulleys, belts or fan. Do not wear loose clothing. Failure to follow these instructions may result in possible serious or fatal injury.

1. Turn the ignition off.
2. Connect the Ignition Coil No.3 harness connector.
3. Remove the Ignition Coil.
4. Leave the Fuel Injector harness connector of the cylinder being tested disconnected.
5. Install a spark tester on the Ignition Coil.
6. While cranking the engine observe the spark coming from the spark tester.
7. Perform the same test on the ignition wire side of the Ignition coil.

NOTE: A crisp blue spark that is able to jump the gap of the spark tester should be generated at the coil on plug and at the end of the ignition wire.

Is good spark present?

Yes

- Go To 5

No

- Go To 14

NOTE: Connect the Fuel Injector harness connector before continuing.

5. SPARK PLUG

CAUTION: The 4.7L engine uses TWO DIFFERENT types of spark plugs. A total of 16 plugs are used. The plugs are mounted in two rows (banks). The upper row is used on the intake valve side of the cylinder head. The lower row is used on the exhaust valve side of the cylinder head. The upper row uses Nickel Yttrium plugs. The lower row uses Iridium plugs. DO NOT INTERCHANGE THESE PLUGS.

1. Turn the ignition off.
2. Remove the Spark Plug(s) in accordance with the Service Information.
3. Inspect the Spark Plug(s) for the following conditions:
   - Cracks
   - Carbon Tracking
   - Foreign Material
   - Gap size out of specifications
   - Loose or broken electrode

NOTE: Lightly tap the bottom of the spark plug on a solid surface. The electrode in the spark plug should not move.

Were any of the above conditions present?

Yes

- Replace the Spark Plug in accordance with the Service Information. (Refer to 08 - Electrical/8I - Ignition Control/ SPARK PLUG - Removal).
- Perform the POWERTRAIN VERIFICATION TEST. (Refer to 28 - DTC-Based Diagnostics/MODULE, Powertrain Control (PCM) - Standard Procedure).

No

- Go To 6

6. FUEL PRESSURE CHECK

WARNING: The fuel system is under a constant pressure (even with the engine off). Before testing or servicing any fuel system hose, fitting or line, the fuel system pressure must be released. Failure to follow these instructions can result in possible serious or fatal injury.

WARNING: When the engine is operating, do not stand in direct line with the fan. Do not put your hands near the pulleys, belts or fan. Do not wear loose clothing. Failure to follow these instructions may result in possible serious or fatal injury.

1. Install the Fuel Pressure Decay Tester 8978A to the fuel rail.
2. Start the engine and observe the fuel pressure reading.

NOTE: Fuel pressure specification is 407 kPa +/- 34 kPa (59 psi +/- 5 psi).

Choose a conclusion that best matches your fuel pressure reading.

Within Specification

- Go To 7

Below Specification

- Go To 12

Above Specification

- Replace the fuel filter/pressure regulator.
- Perform the POWERTRAIN VERIFICATION TEST. (Refer to 28 - DTC-Based Diagnostics/MODULE, Powertrain Control (PCM) - Standard Procedure).

7. FUEL PRESSURE LEAK DOWN

NOTE: Before continuing visually and physically inspect the fuel delivery system for external leaks or damage. Repair/replace as necessary.

WARNING: The fuel system is under a constant pressure (even with the engine off). Before testing or servicing any fuel system hose, fitting or line, the fuel system pressure must be released. Failure to follow these instructions can result in possible serious or fatal injury.

1. Turn the ignition off.
2. Install the Fuel Pressure Decay Tester 8978A.
3. Start the engine and allow the fuel system to reach maximum pressure.
4. Turn the ignition off.

NOTE: Fuel specification is 407 kPa +/- 34 kPa (59 psi +/- 5 psi).

5. Close the Fuel System Isolation Valve and then wait five minutes before proceeding.
6. Read the Fuel Inlet and Fuel Outlet Pressure Gauges. The pressure should not drop more than 10 psi on either gauge.
7. Monitor the fuel pressure gauge for a minimum of five minutes.

NOTE: The pressure should not decrease by greater than 69 kPa (10 psi)

Does the pressure fall below the listed specification?

Yes - On Fuel Inlet Gauge

- Replace the fuel pump module.
- Perform the POWERTRAIN VERIFICATION TEST. (Refer to 28 - DTC-Based Diagnostics/MODULE, Powertrain Control (PCM) - Standard Procedure).

Yes - On Fuel Outlet Gauge

- Replace the leaking fuel injector(s).
- Perform the POWERTRAIN VERIFICATION TEST. (Refer to 28 - DTC-Based Diagnostics/MODULE, Powertrain Control (PCM) - Standard Procedure).

No

- Go To 8

8. FUEL INJECTOR OPERATION

WARNING: The fuel system is under a constant pressure (even with the engine off). Before testing or servicing any fuel system hose, fitting or line, the fuel system pressure must be released. Failure to follow these instructions can result in possible serious or fatal injury.

CAUTION: After each Fuel Injector actuation, start the engine to clean the cylinder of fuel. Failure to do so could cause engine damage.

1. Open the Fuel System Isolation Valve.
2. Start the engine and allow the fuel pressure to reach maximum pressure.
3. Turn the ignition off.
4. Ignition on, engine not running.
5. Using a scan tool, actuate the No.3 Fuel Injector.
6. Monitor the fuel pressure gauge.

Does the fuel pressure gauge indicate a drop in fuel pressure?

Yes

- Go To 9

No

- Go To 10

NOTE: Turn the ignition off, remove the Fuel Pressure gauge, and connect the fuel lines before continuing.

9. ENGINE MECHANICAL

Check for any of the following conditions/mechanical problems:

- ENGINE VACUUM - must be at least 13 inches in neutral
- ENGINE VALVE TIMING - must be within specifications
- ENGINE COMPRESSION - must be within specifications
- ENGINE EXHAUST SYSTEM - must be free of any restrictions or leaks.
- ENGINE PCV SYSTEM - must flow freely
- TORQUE CONVERTER STALL SPEED - must be within specifications
- POWER BRAKE BOOSTER - no internal vacuum leaks
- FUEL - must be free of contamination
- CAM LOBES - must not be worn excessively
- CYLINDER LEAKAGE TEST - must be within specifications
- VALVE SPRINGS - cannot be weak or broken

Are there any engine mechanical problems?

Yes

- Repair as necessary.
- Perform the POWERTRAIN VERIFICATION TEST. (Refer to 28 - DTC-Based Diagnostics/MODULE, Powertrain Control (PCM) - Standard Procedure).

No

- Go To 17

10. FUEL INJECTOR

1. Turn the ignition off.
2. Disconnect the No.3 Fuel Injector harness connector.
3. Ignition on, engine not running.

NOTE: When a Misfire is detected for a particular cylinder, the PCM will shut down that cylinder's Injector Control circuit.

4. With the scan tool, erase DTCs.
5. Install an Injector Noid light.
6. With the scan tool, actuate the Fuel Injector.

Does the Noid light blink/flicker during the actuation?

Yes

- Verify that there is good pin to terminal contact in the Fuel Injector and the Powertrain Control Module connectors. If OK, replace the Fuel Injector.
- Perform the POWERTRAIN VERIFICATION TEST. (Refer to 28 - DTC-Based Diagnostics/MODULE, Powertrain Control (PCM) - Standard Procedure).

No

- Go To 11

11. (K13) INJECTOR CONTROL NO.3 CIRCUIT

1. Turn the ignition off.
2. Disconnect the C2 PCM harness connector.

CAUTION: Do not probe the PCM harness connectors. Probing the PCM harness connectors will damage the PCM terminals resulting in poor terminal to pin connection. Install the PCM Pinout Box Kit, NGC, 38 Position 8815A to perform diagnosis.

3. Check the (K13) Injector Control No.3 circuit for an open, short to ground, and short to voltage.

Was a problem found with the (K13) Injector Control No.3 circuit?

Yes

- Repair the excessive resistance or short in the (K13) Injector Control No.3 circuit.
- Perform the POWERTRAIN VERIFICATION TEST. (Refer to 28 - DTC-Based Diagnostics/MODULE, Powertrain Control (PCM) - Standard Procedure).

No

- Go To 17

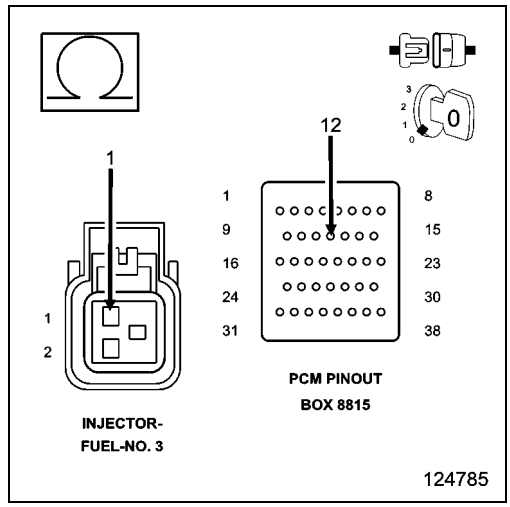

12. FUEL SUPPLY LINE RESTRICTED

WARNING: The fuel system is under a constant pressure (even with the engine off). Before testing or servicing any fuel system hose, fitting or line, the fuel system pressure must be released. Failure to follow these instructions can result in possible serious or fatal injury.

1. Turn the ignition off.
2. Raise the vehicle on a hoist, and disconnect the fuel pressure line at the fuel pump module.
3. Install the Fuel Pressure Decay Tester 8978A between the fuel supply line and the fuel pump module.
4. Ignition on, engine not running.
5. With a scan tool, actuate the ASD Fuel System test and observe the fuel pressure gauge.

NOTE: Fuel pressure specification is 407 kPa +/- 34 kPa (59 psi +/- 5 psi).

Is the fuel pressure within specification?

Yes

- Repair or replace fuel supply line as necessary.
- Perform the POWERTRAIN VERIFICATION TEST. (Refer to 28 - DTC-Based Diagnostics/MODULE, Powertrain Control (PCM) - Standard Procedure).

No

- Go To 13

13. FUEL PUMP INLET STRAINER

WARNING: The fuel system is under a constant pressure (even with the engine off). Before testing or servicing any fuel system hose, fitting or line, the fuel system pressure must be released. Failure to follow these instructions can result in possible serious or fatal injury.

1. Turn the ignition off.
2. Remove the Fuel Pump Module and inspect the Fuel Inlet Strainer.

Is the Fuel Inlet Strainer plugged?

Yes

- Replace the Fuel Pump Inlet Strainer.
- Perform the POWERTRAIN VERIFICATION TEST. (Refer to 28 - DTC-Based Diagnostics/MODULE, Powertrain Control (PCM) - Standard Procedure).

No

- Before continuing, check the Fuel Pump Module harness connector terminals for corrosion, damage, or terminal push out. Make sure the ground circuit is functional. Repair as necessary. Replace the Fuel Pump Module.
- Perform the POWERTRAIN VERIFICATION TEST. (Refer to 28 - DTC-Based Diagnostics/MODULE, Powertrain Control (PCM) - Standard Procedure).

14. IGNITION WIRE

NOTE: If the vehicle being tested does not have an ignition wire answer YES to this test and continue.

1. Turn the ignition off.
2. Remove the ignition wire.
3. Measure the resistance of the ignition wire.

Is the resistance below 10K Ohms?

Yes

- Go To 15

No

- Replace the Ignition Wire.
- Perform the POWERTRAIN VERIFICATION TEST. (Refer to 28 - DTC-Based Diagnostics/MODULE, Powertrain Control (PCM) - Standard Procedure).

15. IGNITION COIL

WARNING: When the engine is operating, do not stand in direct line with the fan. Do not put your hands near the pulleys, belts or fan. Do not wear loose clothing. Failure to follow these instructions may result in possible serious or fatal injury.

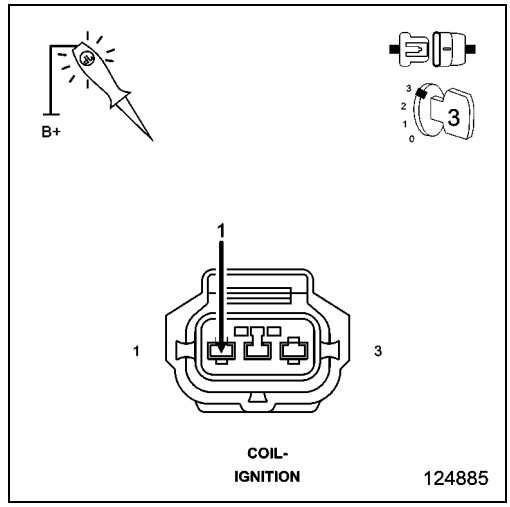

1. Disconnect the No.3 Ignition Coil harness connector.
2. Using a 12-volt test light connected to 12-volts, probe the (K18) Coil Control No.3 circuit.
3. Crank the engine for five seconds while observing the test light.

NOTE: The primary resistance of the 3.7L and 4.7L Ignition coil is 0.6 to 0.9 of an ohm and the resistance of a 5.7L Ignition coil is 0.558 to 0.682 of an ohm at 25° C (77° F).

Does the test light brightly blink/flicker?

Yes

- Verify that there is good pin to terminal contact in the Ignition Coil and the Powertrain Control Module connectors. If OK, replace the Ignition Coil in accordance with the Service Information.
- Perform the POWERTRAIN VERIFICATION TEST. (Refer to 28 - DTC-Based Diagnostics/MODULE, Powertrain Control (PCM) - Standard Procedure).

No

- Go To 16

16. (K18) COIL CONTROL NO.3 CIRCUIT

1. Turn the ignition off.
2. Disconnect the C2 PCM harness connector.

CAUTION: Do not probe the PCM harness connectors. Probing the PCM harness connectors will damage the PCM terminals resulting in poor terminal to pin connection. Install the PCM Pinout Box Kit, NGC, 38 Position 8815A to perform diagnosis.

3. Check the (K18) Coil Control No.3 circuit for an open, short to ground, and short to voltage.

Was a problem found with the (K18) Coil Control No.3 circuit?

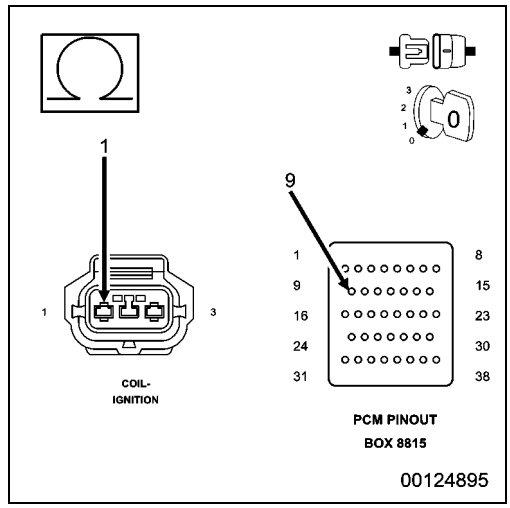

Yes

- Repair the (K18) Coil Control No.3 circuit.
- Perform the POWERTRAIN VERIFICATION TEST. (Refer to 28 - DTC-Based Diagnostics/MODULE, Powertrain Control (PCM) - Standard Procedure).

No

- Go To 17

17. POWERTRAIN CONTROL MODULE (PCM)

1. Using the wiring diagram/schematic as a guide, inspect the wiring and connectors between the related Sensor, Coil, Injector, and the Powertrain Control Module (PCM).
2. Look for any chafed, pierced, pinched, or partially broken wires.
3. Look for broken, bent, pushed out or corroded terminals. Verify that there is good pin to terminal contact in the related Sensors, Coils, Injectors, and the Powertrain Control Module connectors.
4. Perform any Technical Service Bulletins that may apply.

Were there any problems found?

Yes

- Repair as necessary.
- Perform the POWERTRAIN VERIFICATION TEST. (Refer to 28 - DTC-Based Diagnostics/MODULE, Powertrain Control (PCM) - Standard Procedure).

No

- Replace and program the Powertrain Control Module per Service Information.
- Perform the POWERTRAIN VERIFICATION TEST. (Refer to 28 - DTC-Based Diagnostics/MODULE, Powertrain Control (PCM) - Standard Procedure).

■ P0304-CYLINDER 4 MISFIRE

For a complete wiring diagram, **refer to the Wiring Information**.

- **When Monitored:**
  Any time the engine is running, and the adaptive numerator has been successfully updated.
- **Set Condition:**
  The threshold to set the fault is application specific; it is tied to the level of misfire that will cause emissions to increase to 1.5 times the standard or in some cases 1%. It is always a two trip fault above the calibrated RPM. It takes one failure to set a Pending Fault and two trips to set the MIL. Three good trips to turn off the MIL.

Possible Causes
(F342) ASD CONTROL OUTPUT CIRCUIT
(K14) INJECTOR CONTROL NO.4 CIRCUIT
(K15) COIL CONTROL NO.4 CIRCUIT
(K19) COIL CONTROL NO.1 CIRCUIT FOR 3.7
SPARK PLUG
IGNITION WIRE
IGNITION COIL
FUEL PUMP INLET STRAINER PLUGGED
RESTRICTED FUEL SUPPLY LINE
FUEL PUMP MODULE
FUEL PRESSURE LEAK DOWN
FUEL INJECTOR
ENGINE MECHANICAL
POWERTRAIN CONTROL MODULE (PCM)

Always perform the Pre-Diagnostic Troubleshooting procedure before proceeding. (Refer to 28 - DTC-Based Diagnostics/MODULE, Powertrain Control (PCM) - Standard Procedure).

1. ACTIVE DTC

1. Diagnose and repair any other active component or circuit DTCs before continuing with this procedure.
2. Turn the ignition on.
3. With the scan tool, select View DTCs. Copy DTC and Freeze Frame information.
4. Start the engine and allow it to reach operating temperature.

WARNING: When the engine is operating, do not stand in direct line with the fan. Do not put your hands near the pulleys, belts or fan. Do not wear loose clothing. Failure to follow these instructions may result in possible serious or fatal injury.

NOTE: Attempt to operate the vehicle under conditions similar to which the DTC was set.

NOTE: It may be necessary to test drive the vehicle within the DTC monitoring conditions in order for this DTC to set.

5. With a scan tool, select View DTCs.

Is the DTC Active at this time?

Yes

- Go To 2

No

- Perform the INTERMITTENT CONDITION diagnostic procedure. (Refer to 28 - DTC-Based Diagnostics/MODULE, Powertrain Control (PCM) - Standard Procedure).

2. VISUAL INSPECTION

NOTE: Anything that affects the speed of the crankshaft can cause a misfire DTC.

NOTE: When a Misfire is detected for a particular cylinder, the PCM will shut down that cylinder's Injector Control circuit.

Visually inspect the engine for any of the following conditions:

- Worn serpentine belt
- Binding Engine-Driven accessories: A/C Compressor, P/S Pump, Water pump.
- Misalignment of the Water pump, P/S Pump and A/C Compressor pulleys
- Corroded PCM power and ground circuits.
- Misalignment of the Water pump, P/S Pump and A/C Compressor pulleys
- Corroded PCM power and ground circuits.
- Improper CKP, CMP, MAP, and TP Sensor mounting
- Poor connector/terminal to component connection for CKP sensor, CMP sensor, MAP sensor, TP sensor, fuel injector, ignition coil, etc.
- Vacuum leaks
- Restricted Air Induction system or Exhaust system.
- Internal engine component failures.

Were any of the above conditions present?

Yes

- Repair as necessary.
- Perform the POWERTRAIN VERIFICATION TEST. (Refer to 28 - DTC-Based Diagnostics/MODULE, Powertrain Control (PCM) - Standard Procedure).

No

- Go To 3

3. (F342) ASD CONTROL OUTPUT CIRCUIT

1. Turn the ignition off.

NOTE: The 3.7L V6 engine uses a modified Distributorless Ignition System (DIS) with coil consolidation on the left side engine bank.

2. Disconnect the No.4 or No.1 Ignition Coil harness connector.
3. Disconnect the No.4 Fuel Injector harness connector.
4. Ignition on, engine not running.

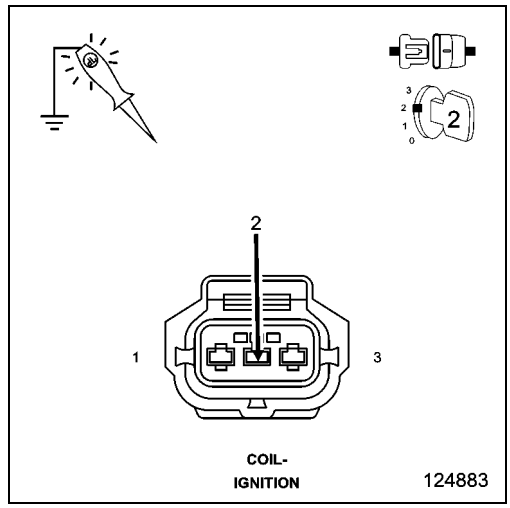

5. Using a 12-volt test light connected to ground, probe the (F342) ASD Control Output circuit in the Ignition Coil harness connector and Fuel Injector harness connector before the actuation.

NOTE: Make sure the test light is probing the circuit before actuating the Relay or a DTC may set and not allow the actuation.

6. With the scan tool, actuate the ASD.

Does the test light illuminate brightly?

Yes

- Go To 4

No

- Repair the excessive resistance or short to ground in the (F342) ASD Control Output circuit.
- Perform the POWERTRAIN VERIFICATION TEST. (Refer to 28 - DTC-Based Diagnostics/MODULE, Powertrain Control (PCM) - Standard Procedure) .

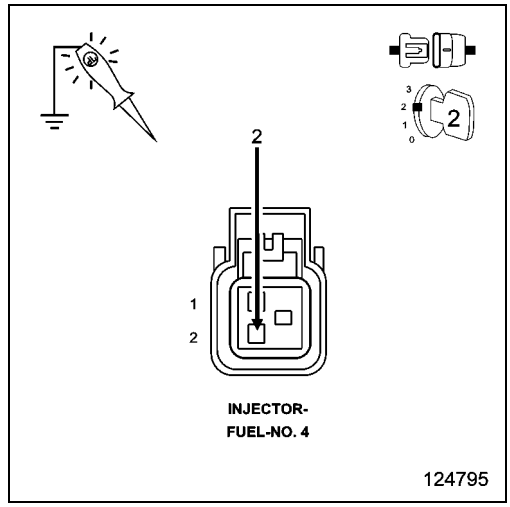

4. IGNITION SYSTEM OPERATION

WARNING: When the engine is operating, do not stand in direct line with the fan. Do not put your hands near the pulleys, belts or fan. Do not wear loose clothing. Failure to follow these instructions may result in possible serious or fatal injury.

1. Turn the ignition off.
2. Connect the No.4 or No.1 Ignition Coil harness connector.
3. Remove the Ignition Coil.
4. Leave the Fuel Injector harness connector of the cylinder being tested disconnected.
5. Install a spark tester on the Ignition Coil.
6. While cranking the engine observe the spark coming from the spark tester.
7. Perform the same test on the ignition wire side of the Ignition coil.

NOTE: A crisp blue spark that is able to jump the gap of the spark tester should be generated at the coil on plug and at the end of the ignition wire.

Is good spark present?

Yes

- Go To 5

No

- Go To 13

NOTE: Connect the Fuel Injector harness connector before continuing.

5. SPARK PLUG

CAUTION: The 4.7L engine uses TWO DIFFERENT types of spark plugs. A total of 16 plugs are used. The plugs are mounted in two rows (banks). The upper row is used on the intake valve side of the cylinder head. The lower row is used on the exhaust valve side of the cylinder head. The upper row uses Nickel Yttrium plugs. The lower row uses Iridium plugs. DO NOT INTERCHANGE THESE PLUGS.

1. Turn the ignition off.
2. Remove the Spark Plug(s) in accordance with the Service Information.
3. Inspect the Spark Plug(s) for the following conditions.
   - Cracks
   - Carbon Tracking
   - Foreign Material
   - Gap size out of specifications
   - Loose or broken electrode

NOTE: Lightly tap the bottom of the spark plug on a solid surface. The electrode in the spark plug should not move.

Were any of the above conditions present?

Yes

- Replace the Spark Plug in accordance with the Service Information. (Refer to 08 - Electrical/8I - Ignition Control/ SPARK PLUG - Removal).
- Perform the POWERTRAIN VERIFICATION TEST. (Refer to 28 - DTC-Based Diagnostics/MODULE, Powertrain Control (PCM) - Standard Procedure) .

No

- Go To 6

6. FUEL PRESSURE CHECK

WARNING: The fuel system is under a constant pressure (even with the engine off). Before testing or servicing any fuel system hose, fitting or line, the fuel system pressure must be released. Failure to follow these instructions can result in possible serious or fatal injury.

WARNING: When the engine is operating, do not stand in direct line with the fan. Do not put your hands near the pulleys, belts or fan. Do not wear loose clothing. Failure to follow these instructions may result in possible serious or fatal injury.

1. Install the Fuel Pressure Decay Tester 8978A to the fuel rail.
2. Start the engine and observe the fuel pressure reading.

NOTE: Fuel pressure specification is 407 kPa +/- 34 kPa (59 psi +/- 5 psi).

Choose a conclusion that best matches your fuel pressure reading.

Within Specification

- Go To 7

Below Specification

- Go To 11

Above Specification

- Replace the fuel filter/pressure regulator.
- Perform the POWERTRAIN VERIFICATION TEST. (Refer to 28 - DTC-Based Diagnostics/MODULE, Powertrain Control (PCM) - Standard Procedure).

7. FUEL PRESSURE LEAK DOWN

1. Perform the Fuel Pressure Leak Down Test. (Refer to 29 - Non-DTC Diagnostics/Drivability - Gas - Diagnosis and Testing).

Were any repairs made after performing the leak down test?

Yes

- Testing complete.
- Perform the POWERTRAIN VERIFICATION TEST. (Refer to 28 - DTC-Based Diagnostics/MODULE, Powertrain Control (PCM) - Standard Procedure).

No

- Go To 8

8. ENGINE MECHANICAL

Check for any of the following conditions/mechanical problems:

- ENGINE VACUUM - must be at least 13 inches in neutral
- ENGINE VALVE TIMING - must be within specifications
- ENGINE COMPRESSION - must be within specifications
- ENGINE EXHAUST SYSTEM - must be free of any restrictions or leaks.
- ENGINE PCV SYSTEM - must flow freely
- TORQUE CONVERTER STALL SPEED - must be within specifications
- POWER BRAKE BOOSTER - no internal vacuum leaks
- FUEL - must be free of contamination
- CAM LOBES - must not be worn excessively
- CYLINDER LEAKAGE TEST - must be within specifications
- VALVE SPRINGS - cannot be weak or broken

Are there any engine mechanical problems?

Yes

- Repair as necessary.
- Perform the POWERTRAIN VERIFICATION TEST. (Refer to 28 - DTC-Based Diagnostics/MODULE, Powertrain Control (PCM) - Standard Procedure).

No

- Go To 16

9. FUEL INJECTOR

1. Turn the ignition off.
2. Disconnect the No.4 Fuel Injector harness connector.
3. Ignition on, engine not running.

NOTE: When a Misfire is detected for a particular cylinder, the PCM will shut down that cylinder's Injector Control circuit.

4. With the scan tool, erase DTCs.
5. Install an Injector Noid light.
6. With the scan tool, actuate the Fuel Injector.

Does the Noid light blink/flicker during the actuation?

Yes

- Verify that there is good pin to terminal contact in the Fuel Injector and the Powertrain Control Module connectors. If OK, replace the Fuel Injector.
- Perform the POWERTRAIN VERIFICATION TEST. (Refer to 28 - DTC-Based Diagnostics/MODULE, Powertrain Control (PCM) - Standard Procedure).

No

- Go To 10

10. (K14) INJECTOR CONTROL NO.4 CIRCUIT

1. Turn the ignition off.
2. Disconnect the C2 PCM harness connector.

CAUTION: Do not probe the PCM harness connectors. Probing the PCM harness connectors will damage the PCM terminals resulting in poor terminal to pin connection. Install the PCM Pinout Box Kit, NGC, 38 Position 8815A to perform diagnosis.

3. Check the (K14) Injector Control No.4 circuit for an open, short to ground, and short to voltage.

Was a problem found with the (K14) Injector Control No.4 circuit?

Yes

- Repair the excessive resistance or short in the (K14) Injector Control No.4 circuit.
- Perform the POWERTRAIN VERIFICATION TEST. (Refer to 28 - DTC-Based Diagnostics/MODULE, Powertrain Control (PCM) - Standard Procedure).

No

- Go To 16

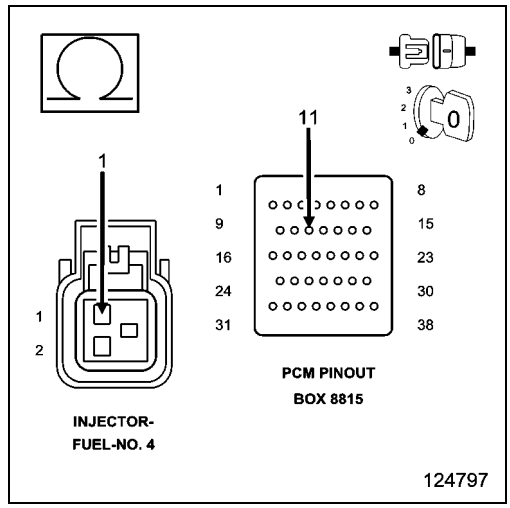

11. FUEL SUPPLY LINE RESTRICTED

WARNING: The fuel system is under a constant pressure (even with the engine off). Before testing or servicing any fuel system hose, fitting or line, the fuel system pressure must be released. Failure to follow these instructions can result in possible serious or fatal injury.

1. Turn the ignition off.
2. Raise vehicle on hoist, and disconnect the fuel pressure line at the fuel pump module.
3. Install the Fuel Pressure Decay Tester 8978A between the fuel supply line and the fuel pump module.
4. Ignition on, engine not running.
5. With the scan tool, actuate the ASD Fuel System test and observe the fuel pressure gauge.

NOTE: Fuel pressure specification is 407 kPa +/- 34 kPa (59 psi +/- 5 psi).

Is the fuel pressure within specification?

Yes

- Repair or replace fuel supply line as necessary.
- Perform the POWERTRAIN VERIFICATION TEST. (Refer to 28 - DTC-Based Diagnostics/MODULE, Powertrain Control (PCM) - Standard Procedure).

No

- Go To 12

12. FUEL PUMP INLET STRAINER

WARNING: The fuel system is under a constant pressure (even with the engine off). Before testing or servicing any fuel system hose, fitting or line, the fuel system pressure must be released. Failure to follow these instructions can result in possible serious or fatal injury.

1. Turn the ignition off.
2. Remove the Fuel Pump Module and inspect the Fuel Inlet Strainer.

Is the Fuel Inlet Strainer plugged?

Yes

- Replace the Fuel Pump Inlet Strainer.
- Perform the POWERTRAIN VERIFICATION TEST. (Refer to 28 - DTC-Based Diagnostics/MODULE, Powertrain Control (PCM) - Standard Procedure).

No

- Before continuing, check the Fuel Pump Module harness connector terminals for corrosion, damage, or terminal push out. Make sure the ground circuit is functional. Repair as necessary. Replace the Fuel Pump Module.
- Perform the POWERTRAIN VERIFICATION TEST. (Refer to 28 - DTC-Based Diagnostics/MODULE, Powertrain Control (PCM) - Standard Procedure).

13. IGNITION WIRE

NOTE: If the vehicle or cylinder being tested does not have an ignition wire answer YES to this test and continue.

1. Turn the ignition off.
2. Remove the ignition wire.
3. Measure the resistance of the ignition wire.

Is the resistance below 10K Ohms?

Yes

- Go To 14

No

- Replace the Ignition Wire.
- Perform the POWERTRAIN VERIFICATION TEST. (Refer to 28 - DTC-Based Diagnostics/MODULE, Powertrain Control (PCM) - Standard Procedure).

14. IGNITION COIL

WARNING: When the engine is operating, do not stand in direct line with the fan. Do not put your hands near the pulleys, belts or fan. Do not wear loose clothing. Failure to follow these instructions may result in possible serious or fatal injury.

NOTE: The 3.7L V6 engine uses a modified Distributorless Ignition System (DIS) with coil consolidation on the left side engine bank.

1. Disconnect the No.4 or No.1 Ignition Coil harness connector.
2. Using a 12-volt test light connected to 12-volts, probe the (K15) or the (K19) Coil Control circuit.
3. Crank the engine for five seconds while observing the test light.

NOTE: The primary resistance of the 3.7L and 4.7L Ignition coil is 0.6 to 0.9 of an ohm and the resistance of a 5.7L Ignition coil is 0.558 to 0.682 of an ohm at 25° C (77° F).

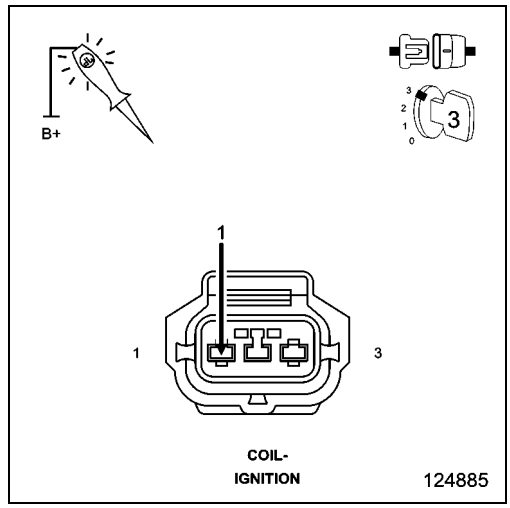

Does the test light brightly blink/flicker?

Yes

- Verify that there is good pin to terminal contact in the Ignition Coil and the Powertrain Control Module connectors. If OK, replace the Ignition Coil in accordance with the Service Information.
- Perform the POWERTRAIN VERIFICATION TEST. (Refer to 28 - DTC-Based Diagnostics/MODULE, Powertrain Control (PCM) - Standard Procedure).

No

- Go To 15

15. COIL CONTROL CIRCUIT

1. Turn the ignition off.
2. Disconnect the C2 PCM harness connector.

CAUTION: Do not probe the PCM harness connectors. Probing the PCM harness connectors will damage the PCM terminals resulting in poor terminal to pin connection. Install the PCM Pinout Box Kit, NGC, 38 Position 8815A to perform diagnosis.

3. Check the (K15) or the (K19) Coil Control circuit for an open, short to ground, and short to voltage.

Was a problem found with the Coil Control circuit?

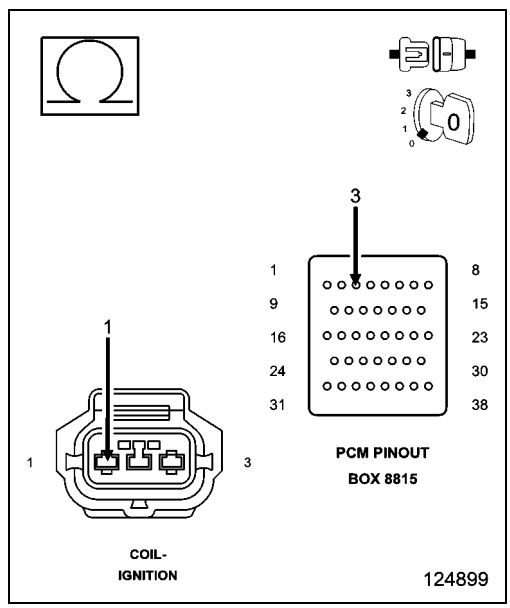

Yes

- Repair the (K15) or the (K19) Coil Control circuit.
- Perform the POWERTRAIN VERIFICATION TEST. (Refer to 28 - DTC-Based Diagnostics/MODULE, Powertrain Control (PCM) - Standard Procedure).

No

- Go To 16

16. POWERTRAIN CONTROL MODULE (PCM)

1. Using the wiring diagram/schematic as a guide, inspect the wiring and connectors between the related Sensor, Coil, Injector, and the Powertrain Control Module (PCM).
2. Look for any chafed, pierced, pinched, or partially broken wires.
3. Look for broken, bent, pushed out or corroded terminals. Verify that there is good pin to terminal contact in the related Sensors, Coils, Injectors, and the Powertrain Control Module connectors.
4. Refer to any Technical Service Bulletins that may apply.

Were there any problems found?

Yes

- Repair as necessary.
- Perform the POWERTRAIN VERIFICATION TEST. (Refer to 28 - DTC-Based Diagnostics/MODULE, Powertrain Control (PCM) - Standard Procedure).

No

- Replace and program the Powertrain Control Module per Service Information.
- Perform the POWERTRAIN VERIFICATION TEST. (Refer to 28 - DTC-Based Diagnostics/MODULE, Powertrain Control (PCM) - Standard Procedure).

■ P0305-CYLINDER 5 MISFIRE

For a complete wiring diagram, **refer to the Wiring Information**.

- **When Monitored:**

  Any time the engine is running, and the adaptive numerator has been successfully updated.
- **Set Condition:**

  The threshold to set the fault is application specific; it is tied to the level of misfire that will cause emissions to increase to 1.5 times the standard or in some cases 1%. It is always a two trip fault above the calibrated RPM. It takes one fail to set a Pending Fault and two trips to set the MIL. Three good trips to turn off the MIL.

Possible Causes
(F342) ASD CONTROL OUTPUT CIRCUIT
(K38) INJECTOR CONTROL NO.5 CIRCUIT
(K16) COIL CONTROL NO.5 CIRCUIT
SPARK PLUG
IGNITION WIRE
IGNITION COIL
FUEL PUMP INLET STRAINER PLUGGED
RESTRICTED FUEL SUPPLY LINE
FUEL PUMP MODULE
FUEL PRESSURE LEAK DOWN
FUEL INJECTOR
ENGINE MECHANICAL
POWERTRAIN CONTROL MODULE (PCM)

Always perform the Pre-Diagnostic Troubleshooting procedure before proceeding. (Refer to 28 - DTC-Based Diagnostics/MODULE, Powertrain Control (PCM) - Standard Procedure).

1. ACTIVE DIAGNOSTIC TROUBLE CODE (DTC)

1. Diagnose and repair any other active component or circuit DTCs before continuing with this procedure.
2. Turn the ignition on.
3. Using the scan tool, select View DTCs. Copy DTC and Freeze Frame information.
4. Start the engine and allow it to reach operating temperature.

WARNING: When the engine is operating, do not stand in direct line with the fan. Do not put your hands near the pulleys, belts or fan. Do not wear loose clothing. Failure to follow these instructions may result in possible serious or fatal injury.

NOTE: Attempt to operate the vehicle under conditions similar to which the DTC was set.

NOTE: It may be necessary to test drive the vehicle within the DTC monitoring conditions in order for this DTC to set.

5. With a scan tool, select View DTCs.

Is the DTC Active at this time?

Yes

- Go To 2

No

- Perform the INTERMITTENT CONDITION diagnostic procedure. (Refer to 28 - DTC-Based Diagnostics/MODULE, Powertrain Control (PCM) - Standard Procedure).

2. VISUAL INSPECTION

NOTE: Anything that affects the speed of the crankshaft can cause a misfire DTC.

NOTE: When a Misfire is detected for a particular cylinder, the PCM will shut down that cylinder's Injector Control circuit.

Visually inspect the engine for any of the following conditions:

- Worn serpentine belt
- Binding Engine-Driven accessories: A/C Compressor, P/S Pump, Water pump.
- Misalignment of the Water pump, P/S Pump and A/C Compressor pulleys
- Corroded PCM power and ground circuits.
- Misalignment of the Water pump, P/S Pump and A/C Compressor pulleys
- Corroded PCM power and ground circuits.
- Improper CKP, CMP, MAP, and TP Sensor mounting
- Poor connector/terminal to component connection for CKP sensor, CMP sensor, MAP sensor, TP sensor, fuel injector, ignition coil, etc.
- Vacuum leaks
- Restricted Air Induction system or Exhaust system.
- Internal engine component failures.

Were any of the above conditions present?

Yes

- Repair as necessary.
- Perform the POWERTRAIN VERIFICATION TEST. (Refer to 28 - DTC-Based Diagnostics/MODULE, Powertrain Control (PCM) - Standard Procedure).

No

- Go To 3

3. (F342) ASD CONTROL OUTPUT CIRCUIT

1. Turn the ignition off.
2. Disconnect the No.5 Ignition Coil harness connector.
3. Disconnect the No.5 Fuel Injector harness connector.
4. Ignition on, engine not running.

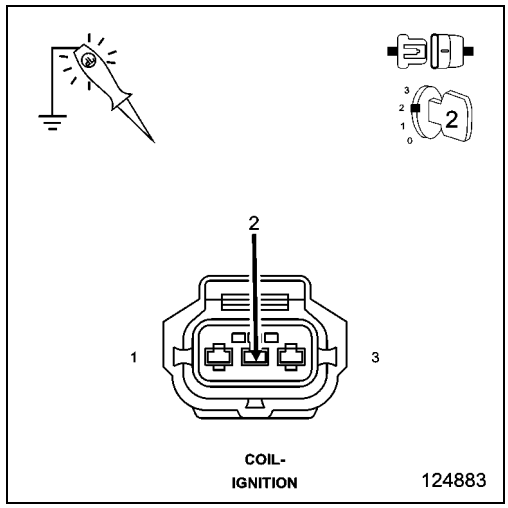

5. Using a 12-volt test light connected to ground, probe the (F342) ASD Control Output circuit in the Ignition Coil harness connector and Fuel Injector harness connector before the actuation.

NOTE: Make sure the test light is probing the circuit before actuating the Relay or a DTC may set and not allow the actuation.

6. Using the scan tool, actuate the ASD.

Does the test light illuminate brightly?

Yes

- Go To 4

No

- Repair the excessive resistance or short to ground in the (F342) ASD Control Output circuit.
- Perform the POWERTRAIN VERIFICATION TEST. (Refer to 28 - DTC-Based Diagnostics/MODULE, Powertrain Control (PCM) - Standard Procedure).

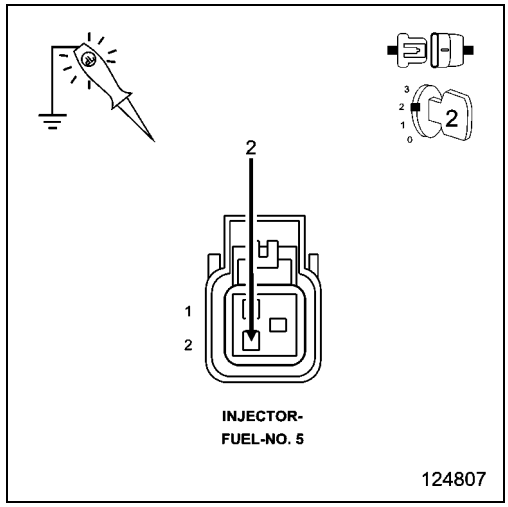

4. IGNITION SYSTEM OPERATION

WARNING: When the engine is operating, do not stand in direct line with the fan. Do not put your hands near the pulleys, belts or fan. Do not wear loose clothing. Failure to follow these instructions may result in possible serious or fatal injury.

1. Turn the ignition off.
2. Connect the Ignition Coil No.5 harness connector.
3. Remove the Ignition Coil.
4. Leave the Fuel Injector harness connector of the cylinder being tested disconnected.
5. Install a spark tester on the Ignition Coil.
6. While cranking the engine observe the spark coming from the spark tester.
7. Perform the same test on the ignition wire side of the Ignition coil.

NOTE: A crisp blue spark that is able to jump the gap of the spark tester should be generated at the coil on plug and at the end of the ignition wire.

Is good spark present?

Yes

- Go To 5

No

- Go To 14

NOTE: Connect the Fuel Injector harness connector before continuing.

5. SPARK PLUG

CAUTION: The 4.7L engine uses TWO DIFFERENT types of spark plugs. A total of 16 plugs are used. The plugs are mounted in two rows (banks). The upper row is used on the intake valve side of the cylinder head. The lower row is used on the exhaust valve side of the cylinder head. The upper row uses Nickel Yttrium plugs. The lower row uses Iridium plugs. DO NOT INTERCHANGE THESE PLUGS.

1. Turn the ignition off.
2. Remove the Spark Plug(s) in accordance with the Service Information.
3. Inspect the Spark Plug(s) for the following conditions.
   - Cracks
   - Carbon Tracking
   - Foreign Material
   - Gap size out of specifications
   - Loose or broken electrode

NOTE: Lightly tap the bottom of the spark plug on a solid surface. The electrode in the spark plug should not move.

Were any of the above conditions present?

Yes

- Replace the Spark Plug in accordance with the Service Information. (Refer to 08 - Electrical/8I - Ignition Control/ SPARK PLUG - Removal).
- Perform the POWERTRAIN VERIFICATION TEST. (Refer to 28 - DTC-Based Diagnostics/MODULE, Powertrain Control (PCM) - Standard Procedure).

No

- Go To 6

6. FUEL PRESSURE CHECK

WARNING: The fuel system is under a constant pressure (even with the engine off). Before testing or servicing any fuel system hose, fitting or line, the fuel system pressure must be released. Failure to follow these instructions can result in possible serious or fatal injury.

WARNING: When the engine is operating, do not stand in direct line with the fan. Do not put your hands near the pulleys, belts or fan. Do not wear loose clothing. Failure to follow these instructions may result in possible serious or fatal injury.

1. Install Fuel Pressure Decay Tester 8978A to the fuel rail.
2. Start the engine and observe the fuel pressure reading.

NOTE: Fuel pressure specification is 407 kPa +/- 34 kPa (59 psi +/- 5 psi).

Choose a conclusion that best matches your fuel pressure reading.

Within Specification

- Go To 7

Below Specification

- Go To 12

Above Specification

- Replace the fuel filter/pressure regulator.
- Perform the POWERTRAIN VERIFICATION TEST. (Refer to 28 - DTC-Based Diagnostics/MODULE, Powertrain Control (PCM) - Standard Procedure).

7. FUEL PRESSURE LEAK DOWN

NOTE: Before continuing visually and physically inspect the fuel delivery system for external leaks or damage. Repair/replace as necessary.

WARNING: The fuel system is under a constant pressure (even with the engine off). Before testing or servicing any fuel system hose, fitting or line, the fuel system pressure must be released. Failure to follow these instructions can result in possible serious or fatal injury.

1. Turn the ignition off.
2. Install the Fuel Pressure Decay Tester 8978A.
3. Start the engine and allow the fuel system to reach maximum pressure.
4. Turn the ignition off.

NOTE: Fuel specification is 407 kPa +/- 34 kPa (59 psi +/- 5 psi).

5. Close the Fuel System Isolation Valve and then wait five minutes before proceeding.
6. Read the Fuel Inlet and Fuel Outlet Pressure Gauges. The pressure should not drop more than 10 psi on either gauge.
7. Monitor the fuel pressure gauge for a minimum of five minutes.

NOTE: The pressure should not decrease by greater than 69 kPa (10 psi).

Does the pressure fall below the listed specification?

Yes - On Fuel Inlet Gauge

- Replace the fuel pump module.
- Perform the POWERTRAIN VERIFICATION TEST. (Refer to 28 - DTC-Based Diagnostics/MODULE, Powertrain Control (PCM) - Standard Procedure).

Yes - On Fuel Outlet Gauge

- Replace the leaking fuel injector(s).
- Perform the POWERTRAIN VERIFICATION TEST. (Refer to 28 - DTC-Based Diagnostics/MODULE, Powertrain Control (PCM) - Standard Procedure).

No

- Go To 8

8. FUEL INJECTOR OPERATION

WARNING: The fuel system is under a constant pressure (even with the engine off). Before testing or servicing any fuel system hose, fitting or line, the fuel system pressure must be released. Failure to follow these instructions can result in possible serious or fatal injury.

CAUTION: After each Fuel Injector actuation, start the engine to clean the cylinder of fuel. Failure to do so could cause engine damage.

1. Open the Fuel System Isolation Valve.
2. Start the engine and allow the fuel pressure to reach maximum pressure.
3. Turn the ignition off.
4. Ignition on, engine not running.
5. Using the scan tool, actuate the No.5 Fuel Injector.
6. Monitor the fuel pressure gauge.

Does the fuel pressure gauge indicate a drop in fuel pressure?

Yes

- Go To 9

No

- Go To 10

NOTE: Turn the ignition off, remove the Fuel Pressure gauge, and connect the fuel lines before continuing.

9. ENGINE MECHANICAL

Check for any of the following conditions/mechanical problems:

- ENGINE VACUUM - must be at least 13 inches in neutral
- ENGINE VALVE TIMING - must be within specifications
- ENGINE COMPRESSION - must be within specifications
- ENGINE EXHAUST SYSTEM - must be free of any restrictions or leaks.
- ENGINE PCV SYSTEM - must flow freely
- TORQUE CONVERTER STALL SPEED - must be within specifications
- POWER BRAKE BOOSTER - no internal vacuum leaks
- FUEL - must be free of contamination
- CAM LOBES - must not be worn excessively
- CYLINDER LEAKAGE TEST - must be within specifications
- VALVE SPRINGS - cannot be weak or broken

Are there any engine mechanical problems?

Yes

- Repair as necessary.
- Perform the POWERTRAIN VERIFICATION TEST. (Refer to 28 - DTC-Based Diagnostics/MODULE, Powertrain Control (PCM) - Standard Procedure).

No

- Go To 17

10. FUEL INJECTOR

1. Turn the ignition off.
2. Disconnect the No.5 Fuel Injector harness connector.
3. Ignition on, engine not running.

NOTE: When a Misfire is detected for a particular cylinder, the PCM will shut down that cylinder's Injector Control circuit.

4. Using the scan tool, erase DTCs.
5. Install an Injector Noid light.
6. Using the scan tool, actuate the Fuel Injector.

Does the Noid light blink/flicker during the actuation?

Yes

- Verify that there is good pin to terminal contact in the Fuel Injector and the Powertrain Control Module connectors. If OK, replace the Fuel Injector.
- Perform the POWERTRAIN VERIFICATION TEST. (Refer to 28 - DTC-Based Diagnostics/MODULE, Powertrain Control (PCM) - Standard Procedure).

No

- Go To 11

11. (K38) INJECTOR CONTROL NO.5 CIRCUIT

1. Turn the ignition off.
2. Disconnect the C2 PCM harness connector.

CAUTION: Do not probe the PCM harness connectors. Probing the PCM harness connectors will damage the PCM terminals resulting in poor terminal to pin connection. Install the PCM Pinout Box Kit, NGC, 38 Position 8815A to perform diagnosis.

3. Check the (K38) Injector Control No.5 circuit for an open, short to ground, and short to voltage.

Was a problem found with the (K38) Injector Control No.5 circuit?

Yes

- Repair the excessive resistance or short in the (K38) Injector Control No.5 circuit.
- Perform the POWERTRAIN VERIFICATION TEST. (Refer to 28 - DTC-Based Diagnostics/MODULE, Powertrain Control (PCM) - Standard Procedure).

No

- Go To 17

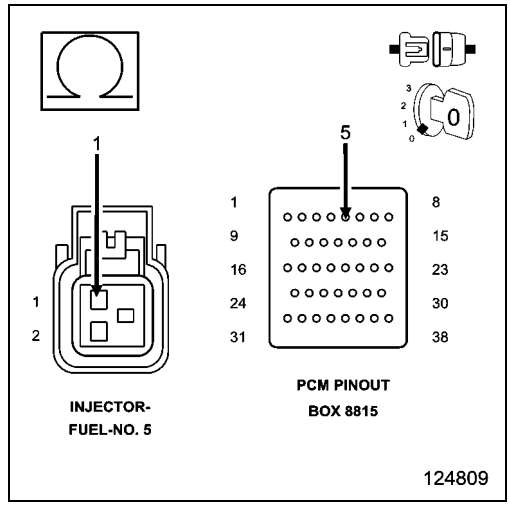

12. FUEL SUPPLY LINE RESTRICTED

WARNING: The fuel system is under a constant pressure (even with the engine off). Before testing or servicing any fuel system hose, fitting or line, the fuel system pressure must be released. Failure to follow these instructions can result in possible serious or fatal injury.

1. Turn the ignition off.
2. Raise the vehicle on a hoist, and disconnect the fuel pressure line at the fuel pump module.
3. Install the Fuel Pressure Decay Tester 8978A between the fuel supply line and the fuel pump module.
4. Ignition on, engine not running.
5. Using the scan tool, actuate the ASD Fuel System test and observe the fuel pressure gauge.

NOTE: Fuel pressure specification is 407 kPa +/- 34 kPa (59 psi +/- 5 psi).

Is the fuel pressure within specification?

Yes

- Repair or replace fuel supply line as necessary.
- Perform the POWERTRAIN VERIFICATION TEST. (Refer to 28 - DTC-Based Diagnostics/MODULE, Powertrain Control (PCM) - Standard Procedure).

No

- Go To 13

13. FUEL PUMP INLET STRAINER

WARNING: The fuel system is under a constant pressure (even with the engine off). Before testing or servicing any fuel system hose, fitting or line, the fuel system pressure must be released. Failure to follow these instructions can result in possible serious or fatal injury.

1. Turn the ignition off.
2. Remove the Fuel Pump Module and inspect the Fuel Inlet Strainer.

Is the Fuel Inlet Strainer plugged?

Yes

- Replace the Fuel Pump Inlet Strainer.
- Perform the POWERTRAIN VERIFICATION TEST. (Refer to 28 - DTC-Based Diagnostics/MODULE, Powertrain Control (PCM) - Standard Procedure).

No

- Before continuing, check the Fuel Pump Module harness connector terminals for corrosion, damage, or terminal push out. Make sure the ground circuit is functional. Repair as necessary. Replace the Fuel Pump Module.
- Perform the POWERTRAIN VERIFICATION TEST. (Refer to 28 - DTC-Based Diagnostics/MODULE, Powertrain Control (PCM) - Standard Procedure).

14. IGNITION WIRE

NOTE: If the vehicle being tested does not have an ignition wire answer YES to this test and continue.

1. Turn the ignition off.
2. Remove the ignition wire.
3. Measure the resistance of the ignition wire.

Is the resistance below 10K Ohms?

Yes

- Go To 15

No

- Replace the Ignition Wire.
- Perform the POWERTRAIN VERIFICATION TEST. (Refer to 28 - DTC-Based Diagnostics/MODULE, Powertrain Control (PCM) - Standard Procedure).

15. IGNITION COIL

WARNING: When the engine is operating, do not stand in direct line with the fan. Do not put your hands near the pulleys, belts or fan. Do not wear loose clothing. Failure to follow these instructions may result in possible serious or fatal injury.

1. Disconnect the No.5 Ignition Coil harness connector.
2. Using a 12-volt test light connected to 12-volts, probe the (K16) Coil Control No.5 circuit.
3. Using the scan tool, actuate the ASD.
4. Crank the engine for 5 seconds while observing the test light.

NOTE: The primary resistance of the 3.7L and 4.7L Ignition coil is 0.6 to 0.9 of an Ohm and the resistance of a 5.7L Ignition coil is 0.558 to 0.682 of an Ohm at 25° C (77° F).

Does the test light brightly blink/flicker?

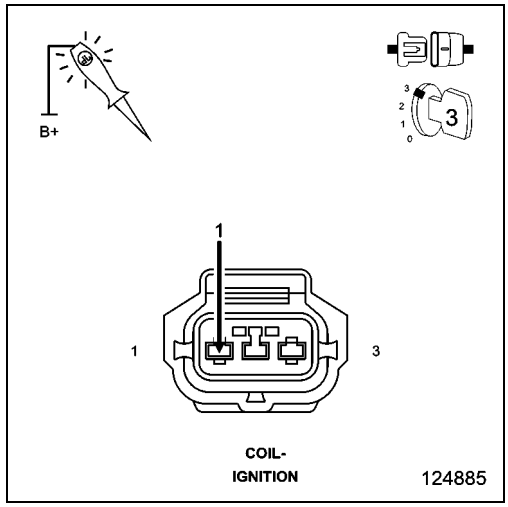

Yes

- Verify that there is good pin to terminal contact in the Ignition Coil and the Powertrain Control Module connectors. If OK, replace the Ignition Coil in accordance with the Service Information.
- Perform the POWERTRAIN VERIFICATION TEST. (Refer to 28 - DTC-Based Diagnostics/MODULE, Powertrain Control (PCM) - Standard Procedure).

No

- Go To 16

16. (K16) COIL CONTROL NO.5 CIRCUIT

1. Turn the ignition off.
2. Disconnect the C2 PCM harness connectors.

CAUTION: Do not probe the PCM harness connectors. Probing the PCM harness connectors will damage the PCM terminals resulting in poor terminal to pin connection. Install the PCM Pinout Box Kit, NGC, 38 Position 8815A to perform diagnosis.

3. Check the (K16) Coil Control No.5 circuit for an open, short to ground, and short to voltage.

Was a problem found with the (K16) Coil Control No.5 circuit?

Yes

- Repair the (K16) Coil Control No.5 circuit.
- Perform the POWERTRAIN VERIFICATION TEST. (Refer to 28 - DTC-Based Diagnostics/MODULE, Powertrain Control (PCM) - Standard Procedure).

No

- Go To 17

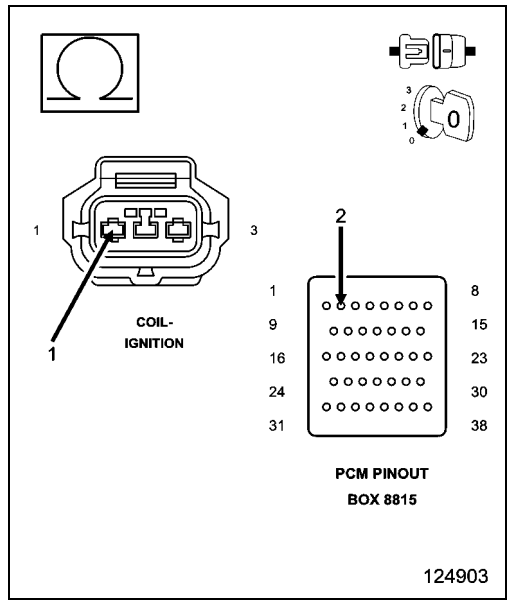

17. POWERTRAIN CONTROL MODULE (PCM)

1. Using the wiring diagram/schematic as a guide, inspect the wiring and connectors between the related Sensors, Coils, Injectors, and the Powertrain Control Module (PCM).
2. Look for any chafed, pierced, pinched, or partially broken wires.
3. Look for broken, bent, pushed out or corroded terminals. Verify that there is good pin to terminal contact in the related Sensor, Coil, Injector, and the Powertrain Control Module connectors.
4. Perform any Technical Service Bulletins that may apply.

Were there any problems found?

Yes

- Repair as necessary.
- Perform the POWERTRAIN VERIFICATION TEST. (Refer to 28 - DTC-Based Diagnostics/MODULE, Powertrain Control (PCM) - Standard Procedure).

No

- Replace and program the Powertrain Control Module in accordance with the service information.
- Perform the POWERTRAIN VERIFICATION TEST. (Refer to 28 - DTC-Based Diagnostics/MODULE, Powertrain Control (PCM) - Standard Procedure).

■ P0306-CYLINDER 6 MISFIRE

For a complete wiring diagram, **refer to the Wiring Information**.

- **When Monitored:**
  Any time the engine is running, and the adaptive numerator has been successfully updated.
- **Set Condition:**
  The threshold to set the fault is application specific; it is tied to the level of misfire that will cause emissions to increase to 1.5 times the standard or in some cases 1%. It is always a two trip fault above the calibrated RPM. It takes one fail to set a Pending Fault and two trips to set the MIL. Three good trips to turn off the MIL.

Possible Causes
(F342) ASD CONTROL OUTPUT CIRCUIT
(K58) INJECTOR CONTROL NO.6 CIRCUIT
(K10) COIL CONTROL NO.6 CIRCUIT
(K18) COIL CONTROL NO.3 CIRCUIT FOR 3.7L
SPARK PLUG
IGNITION WIRE
IGNITION COIL
FUEL PUMP INLET STRAINER PLUGGED
RESTRICTED FUEL SUPPLY LINE
FUEL PUMP MODULE
FUEL PRESSURE LEAK DOWN
FUEL INJECTOR
ENGINE MECHANICAL
POWERTRAIN CONTROL MODULE (PCM)

Always perform the Pre-Diagnostic Troubleshooting procedure before proceeding. (Refer to 28 - DTC-Based Diagnostics/MODULE, Powertrain Control (PCM) - Standard Procedure).

1. ACTIVE DTC

1. Diagnose and repair any other active component or circuit DTCs before continuing with this procedure.
2. Turn the ignition on.
3. With the scan tool, select View DTCs. Copy DTC and Freeze Frame information.
4. Start the engine and allow it to reach operating temperature.

WARNING: When the engine is operating, do not stand in direct line with the fan. Do not put your hands near the pulleys, belts or fan. Do not wear loose clothing. Failure to follow these instructions may result in possible serious or fatal injury.

NOTE: Attempt to operate the vehicle under conditions similar to which the DTC was set.

NOTE: It may be necessary to test drive the vehicle within the DTC monitoring conditions in order for this DTC to set.

5. With a scan tool, select View DTCs.

Is the DTC Active at this time?

Yes

- Go To 2

No

- Perform the INTERMITTENT CONDITION diagnostic procedure. (Refer to 28 - DTC-Based Diagnostics/MODULE, Powertrain Control (PCM) - Standard Procedure).

2. VISUAL INSPECTION

NOTE: Anything that affects the speed of the crankshaft can cause a misfire DTC.

NOTE: When a Misfire is detected for a particular cylinder, the PCM will shut down that cylinder's Injector Control circuit.

Visually inspect the engine for any of the following conditions:

- Worn serpentine belt
- Binding Engine-Driven accessories: A/C Compressor, P/S Pump, Water pump.
- Misalignment of the Water pump, P/S Pump and A/C Compressor pulleys
- Corroded PCM power and ground circuits.
- Misalignment of the Water pump, P/S Pump and A/C Compressor pulleys
- Corroded PCM power and ground circuits.
- Improper CKP, CMP, MAP, and TP Sensor mounting
- Poor connector/terminal to component connection for CKP sensor, CMP sensor, MAP sensor, TP sensor, fuel injector, ignition coil, etc.
- Vacuum leaks
- Restricted Air Induction system or Exhaust system.
- Internal engine component failures.

Were any of the above conditions present?

Yes

- Repair as necessary.
- Perform the POWERTRAIN VERIFICATION TEST. (Refer to 28 - DTC-Based Diagnostics/MODULE, Powertrain Control (PCM) - Standard Procedure).

No

- Go To 3

3. (F342) ASD CONTROL OUTPUT CIRCUIT

1. Turn the ignition off.

NOTE: The 3.7L V6 engine uses a modified Distributorless Ignition System (DIS) with coil consolidation on the left side engine bank.

2. Disconnect the No.6 or the No.3 Ignition Coil harness connector.
3. Disconnect the No.6 Fuel Injector harness connector.
4. Ignition on, engine not running.

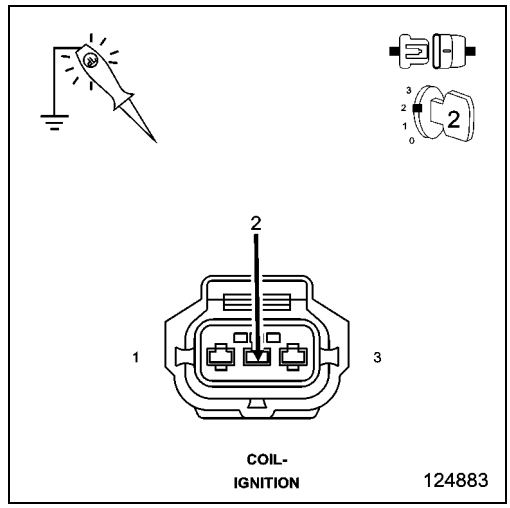

5. Using a 12-volt test light connected to ground, probe the (F342) ASD Control Output circuit in the Ignition Coil harness connector and Fuel Injector harness connector before the actuation.

NOTE: Make sure the test light is probing the circuit before actuating the Relay or a DTC may set and not allow the actuation.

6. With the scan tool, actuate the ASD.

Does the test light illuminate brightly?

Yes

- Go To 4

No

- Repair the excessive resistance or short to ground in the (F342) ASD Control Output circuit.
- Perform the POWERTRAIN VERIFICATION TEST. (Refer to 28 - DTC-Based Diagnostics/MODULE, Powertrain Control (PCM) - Standard Procedure).

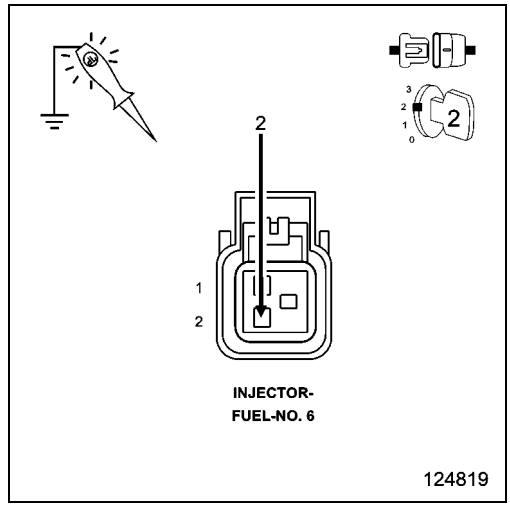

4. IGNITION SYSTEM OPERATION

WARNING: When the engine is operating, do not stand in direct line with the fan. Do not put your hands near the pulleys, belts or fan. Do not wear loose clothing. Failure to follow these instructions may result in possible serious or fatal injury.

1. Turn the ignition off.
2. Connect the Ignition Coil No.6 or the No.3 harness connector.
3. Remove the Ignition Coil.
4. Leave the Fuel Injector harness connector of the cylinder being tested disconnected.
5. Install a spark tester on the Ignition Coil.
6. While cranking the engine observe the spark coming from the spark tester.
7. Perform the same test on the ignition wire side of the Ignition coil.

NOTE: A crisp blue spark that is able to jump the gap of the spark tester should be generated at the coil on plug and at the end of the ignition wire.

Is good spark present?

Yes

- Go To 5

No

- Go To 13

NOTE: Connect the Fuel Injector harness connector before continuing.

5. SPARK PLUG

CAUTION: The 4.7L engine uses TWO DIFFERENT types of spark plugs. A total of 16 plugs are used. The plugs are mounted in two rows (banks). The upper row is used on the intake valve side of the cylinder head. The lower row is used on the exhaust valve side of the cylinder head. The upper row uses Nickel Yttrium plugs. The lower row uses Iridium plugs. DO NOT INTERCHANGE THESE PLUGS.

1. Turn the ignition off.
2. Remove the Spark Plug(s) in accordance with the Service Information.
3. Inspect the Spark Plug(s) for the following conditions:
   - Cracks
   - Carbon Tracking
   - Foreign Material
   - Gap size out of specifications
   - Loose or broken electrode

NOTE: Lightly tap the bottom of the spark plug on a solid surface. The electrode in the spark plug should not move.

Were any of the above conditions present?

Yes

- Replace the Spark Plug in accordance with the Service Information. (Refer to 08 - Electrical/8I - Ignition Control/ SPARK PLUG - Removal).
- Perform the POWERTRAIN VERIFICATION TEST. (Refer to 28 - DTC-Based Diagnostics/MODULE, Powertrain Control (PCM) - Standard Procedure).

No

- Go To 6

6. FUEL PRESSURE CHECK

WARNING: The fuel system is under a constant pressure (even with the engine off). Before testing or servicing any fuel system hose, fitting or line, the fuel system pressure must be released. Failure to follow these instructions can result in possible serious or fatal injury.

WARNING: When the engine is operating, do not stand in direct line with the fan. Do not put your hands near the pulleys, belts or fan. Do not wear loose clothing. Failure to follow these instructions may result in possible serious or fatal injury.

1. Install Fuel Pressure Decay Tester 8978A to the fuel rail.
2. Start the engine and observe the fuel pressure reading.

Choose a conclusion that best matches your fuel pressure reading.

Within Specification

- Go To 7

Below Specification

- Go To 11

Above Specification

- Replace the fuel filter/pressure regulator.
- Perform the POWERTRAIN VERIFICATION TEST. (Refer to 28 - DTC-Based Diagnostics/MODULE, Powertrain Control (PCM) - Standard Procedure).

NOTE: Fuel pressure specification is 407 kPa +/- 34 kPa (59 psi +/- 5 psi).

7. FUEL PRESSURE LEAK DOWN

1. Perform the Fuel Pressure Leak Down Test. (Refer to 29 - Non-DTC Diagnostics/Drivability - Gas - Diagnosis and Testing).

Were any repairs made after performing the leak down test?

Yes

- Testing complete.
- Perform the POWERTRAIN VERIFICATION TEST. (Refer to 28 - DTC-Based Diagnostics/MODULE, Powertrain Control (PCM) - Standard Procedure).

No

- Go To 8

8. ENGINE MECHANICAL

Check for any of the following conditions/mechanical problems:

- ENGINE VACUUM - must be at least 13 inches in neutral
- ENGINE VALVE TIMING - must be within specifications
- ENGINE COMPRESSION - must be within specifications
- ENGINE EXHAUST SYSTEM - must be free of any restrictions or leaks.
- ENGINE PCV SYSTEM - must flow freely
- TORQUE CONVERTER STALL SPEED - must be within specifications
- POWER BRAKE BOOSTER - no internal vacuum leaks
- FUEL - must be free of contamination
- CAM LOBES - must not be worn excessively
- CYLINDER LEAKAGE TEST - must be within specifications
- VALVE SPRINGS - cannot be weak or broken

Are there any engine mechanical problems?

Yes

- Repair as necessary.
- Perform the POWERTRAIN VERIFICATION TEST. (Refer to 28 - DTC-Based Diagnostics/MODULE, Powertrain Control (PCM) - Standard Procedure).

No

- Go To 16

9. FUEL INJECTOR

1. Turn the ignition off.
2. Disconnect the No.6 Fuel Injector harness connector.
3. Ignition on, engine not running.

NOTE: When a Misfire is detected for a particular cylinder, the PCM will shut down that cylinder's Injector Control circuit.

4. With the scan tool, erase DTCs.
5. Install an Injector Noid light.
6. With the scan tool, actuate the Fuel Injector.

Does the Noid light blink/flicker during the actuation?

Yes

- Verify that there is good pin to terminal contact in the Fuel Injector and the Powertrain Control Module connectors. If OK, replace the Fuel Injector.
- Perform the POWERTRAIN VERIFICATION TEST. (Refer to 28 - DTC-Based Diagnostics/MODULE, Powertrain Control (PCM) - Standard Procedure).

No

- Go To 10

10. (K58) INJECTOR CONTROL NO.6 CIRCUIT

1. Turn the ignition off.
2. Disconnect the C2 PCM harness connector.

CAUTION: Do not probe the PCM harness connectors. Probing the PCM harness connectors will damage the PCM terminals resulting in poor terminal to pin connection. Install the PCM Pinout Box Kit, NGC, 38 Position 8815A to perform diagnosis.

3. Check the (K58) Injector Control No.6 circuit for an open, short to ground, and short to voltage.

Was a problem found with the (K58) Injector Control No.6 circuit?

Yes

- Repair the excessive resistance or short in the (K58) Injector Control No.6 circuit.
- Perform the POWERTRAIN VERIFICATION TEST. (Refer to 28 - DTC-Based Diagnostics/MODULE, Powertrain Control (PCM) - Standard Procedure).

No

- Go To 16

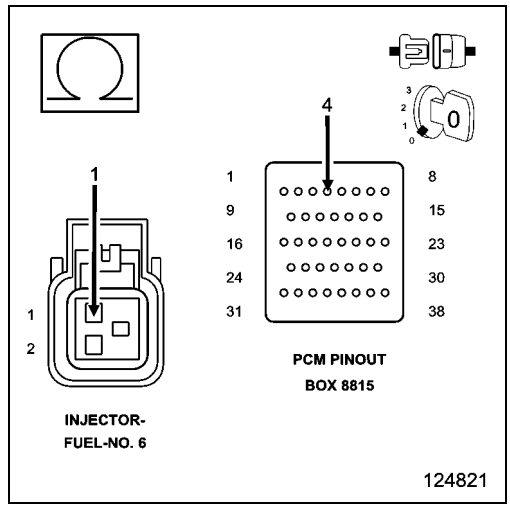

11. FUEL SUPPLY LINE RESTRICTED

WARNING: The fuel system is under a constant pressure (even with the engine off). Before testing or servicing any fuel system hose, fitting or line, the fuel system pressure must be released. Failure to follow these instructions can result in possible serious or fatal injury.

1. Turn the ignition off.
2. Raise vehicle on hoist, and disconnect the fuel pressure line at the fuel pump module.
3. Install Fuel Pressure Decay Tester 8978A between the fuel supply line and the fuel pump module.
4. Ignition on, engine not running.
5. With the scan tool, actuate the ASD Fuel System test and observe the fuel pressure gauge.

NOTE: Fuel pressure specification is 407 kPa +/- 34 kPa (59 psi +/- 5 psi).

Is the fuel pressure within specification?

Yes

- Repair or replace fuel supply line as necessary.
- Perform the POWERTRAIN VERIFICATION TEST. (Refer to 28 - DTC-Based Diagnostics/MODULE, Powertrain Control (PCM) - Standard Procedure).

No

- Go To 12

12. FUEL PUMP INLET STRAINER

WARNING: The fuel system is under a constant pressure (even with the engine off). Before testing or servicing any fuel system hose, fitting or line, the fuel system pressure must be released. Failure to follow these instructions can result in possible serious or fatal injury.

1. Turn the ignition off.
2. Remove the Fuel Pump Module and inspect the Fuel Inlet Strainer.

Is the Fuel Inlet Strainer plugged?

Yes

- Replace the Fuel Pump Inlet Strainer.
- Perform the POWERTRAIN VERIFICATION TEST. (Refer to 28 - DTC-Based Diagnostics/MODULE, Powertrain Control (PCM) - Standard Procedure).

No

- Before continuing, check the Fuel Pump Module harness connector terminals for corrosion, damage, or terminal push out. Make sure the ground circuit is functional. Repair as necessary. Replace the Fuel Pump Module.
- Perform the POWERTRAIN VERIFICATION TEST. (Refer to 28 - DTC-Based Diagnostics/MODULE, Powertrain Control (PCM) - Standard Procedure).

13. IGNITION WIRE

NOTE: If the vehicle or cylinder being tested does not have an ignition wire answer YES to this test and continue.

1. Turn the ignition off.
2. Remove the ignition wire.
3. Measure the resistance of the ignition wire.

Is the resistance below 10K Ohms?

Yes

- Go To 14

No

- Replace the Ignition Wire.
- Perform the POWERTRAIN VERIFICATION TEST. (Refer to 28 - DTC-Based Diagnostics/MODULE, Powertrain Control (PCM) - Standard Procedure).

14. IGNITION COIL

WARNING: When the engine is operating, do not stand in direct line with the fan. Do not put your hands near the pulleys, belts or fan. Do not wear loose clothing. Failure to follow these instructions may result in possible serious or fatal injury.

NOTE: The 3.7L V6 engine uses a modified Distributorless Ignition System (DIS) with coil consolidation on the left side engine bank.

1. Disconnect the No.6 or the No.3 Ignition Coil harness connector.
2. Using a 12-volt test light connected to 12-volts, probe the (K10) Coil Control No.6 circuit.
3. Crank the engine for five seconds while observing the test light.

NOTE: The primary resistance of the 3.7L and 4.7L Ignition coil is 0.6 to 0.9 of an ohm and the resistance of a 5.7L Ignition coil is 0.558 to 0.682 of an ohm at 25° C (77° F).

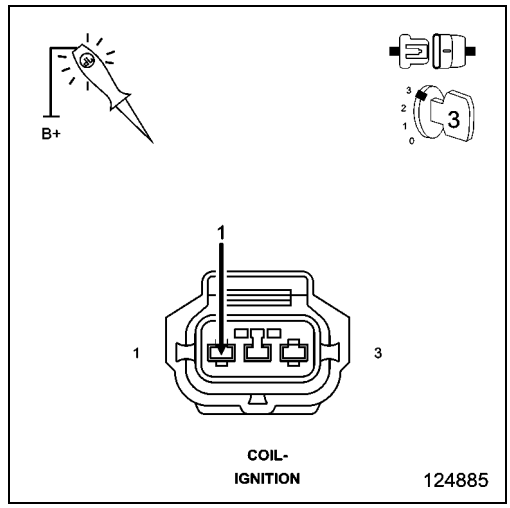

Does the test light brightly blink/flicker?

Yes

- Verify that there is good pin to terminal contact in the Ignition Coil and the Powertrain Control Module connectors. If OK, replace the Ignition Coil in accordance with the Service Information.
- Perform the POWERTRAIN VERIFICATION TEST. (Refer to 28 - DTC-Based Diagnostics/MODULE, Powertrain Control (PCM) - Standard Procedure).

No

- Go To 15

15. COIL CONTROL CIRCUIT

1. Turn the ignition off.
2. Disconnect the C2 PCM harness connector.
3. Check the (K10) or the (K18) Coil Control circuit for an open, short to ground, and short to voltage.

Was a problem found with the Coil Control circuit?

Yes

- Repair the (K10) or the (K18) Coil Control circuit.
- Perform the POWERTRAIN VERIFICATION TEST. (Refer to 28 - DTC-Based Diagnostics/MODULE, Powertrain Control (PCM) - Standard Procedure).

No

- Go To 16

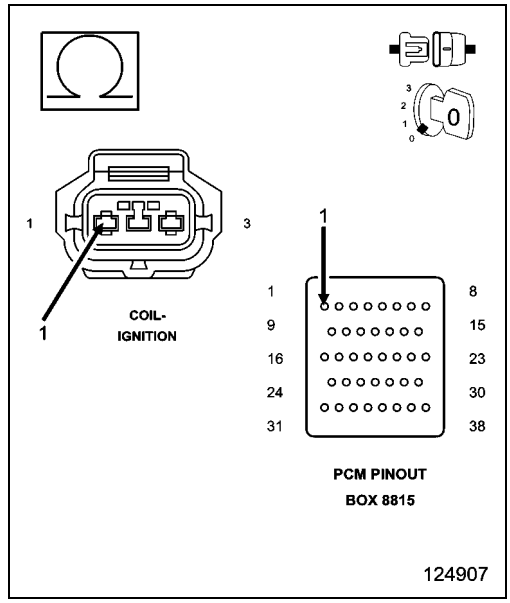

16. POWERTRAIN CONTROL MODULE (PCM)

1. Using the wiring diagram/schematic as a guide, inspect the wiring and connectors between the related Sensor, Coil, Injector, and the Powertrain Control Module (PCM).
2. Look for any chafed, pierced, pinched, or partially broken wires.
3. Look for broken, bent, pushed out or corroded terminals. Verify that there is good pin to terminal contact in the related Sensors, Coils, Injectors, and the Powertrain Control Module connectors.
4. Perform any Technical Service Bulletins that may apply.

Were there any problems found?

Yes

- Repair as necessary.
- Perform the POWERTRAIN VERIFICATION TEST. (Refer to 28 - DTC-Based Diagnostics/MODULE, Powertrain Control (PCM) - Standard Procedure).

No

- Replace and program the Powertrain Control Module per Service Information.
- Perform the POWERTRAIN VERIFICATION TEST. (Refer to 28 - DTC-Based Diagnostics/MODULE, Powertrain Control (PCM) - Standard Procedure).

■ P0307-CYLINDER 7 MISFIRE

For a complete wiring diagram, **refer to the Wiring Information**.

- **When Monitored:**

  Any time the engine is running, and the adaptive numerator has been successfully updated.
- **Set Condition:**

  The threshold to set the fault is application specific; it is tied to the level of misfire that will cause emissions to increase to 1.5 times the standard or in some cases 1%. It is always a two trip fault above the calibrated RPM. It takes 1 fail to set a Pending Fault and two trips to set the MIL. Three good trips to turn off the MIL.

Possible Causes
(F342) ASD CONTROL OUTPUT CIRCUIT
(K26) INJECTOR CONTROL NO.7 CIRCUIT
(K97) COIL CONTROL NO.7 CIRCUIT
SPARK PLUG
IGNITION WIRE
IGNITION COIL
FUEL PUMP INLET STRAINER PLUGGED
RESTRICTED FUEL SUPPLY LINE
FUEL PUMP MODULE
FUEL PRESSURE LEAK DOWN
FUEL INJECTOR
ENGINE MECHANICAL
POWERTRAIN CONTROL MODULE (PCM)

Always perform the Pre-Diagnostic Troubleshooting procedure before proceeding. (Refer to 28 - DTC-Based Diagnostics/MODULE, Powertrain Control (PCM) - Standard Procedure).

1. ACTIVE DIAGNOSTIC TROUBLE CODE (DTC)

1. Diagnose and repair any other active component or circuit DTCs before continuing with this procedure.
2. Turn the ignition on.
3. Using the scan tool, select View DTCs. Copy DTC and Freeze Frame information.
4. Start the engine and allow it to reach operating temperature.

WARNING: When the engine is operating, do not stand in direct line with the fan. Do not put your hands near the pulleys, belts or fan. Do not wear loose clothing. Failure to follow these instructions may result in possible serious or fatal injury.

NOTE: Attempt to operate the vehicle under conditions similar to which the DTC was set.

NOTE: It may be necessary to test drive the vehicle within the DTC monitoring conditions in order for this DTC to set.

5. With a scan tool, select View DTCs.

Is the DTC Active at this time?

Yes

- Go To 2

No

- Perform the INTERMITTENT CONDITION diagnostic procedure. (Refer to 28 - DTC-Based Diagnostics/MODULE, Powertrain Control (PCM) - Standard Procedure).

2. VISUAL INSPECTION

NOTE: Anything that affects the speed of the crankshaft can cause a misfire DTC.

NOTE: When a Misfire is detected for a particular cylinder, the PCM will shut down that cylinder's Injector Control circuit.

Visually inspect the engine for any of the following conditions:

- Worn serpentine belt
- Binding Engine-Driven accessories: A/C Compressor, P/S Pump, Water pump.
- Misalignment of the Water pump, P/S Pump and A/C Compressor pulleys
- Corroded PCM power and ground circuits.
- Misalignment of the Water pump, P/S Pump and A/C Compressor pulleys
- Corroded PCM power and ground circuits.
- Improper CKP, CMP, MAP, and TP Sensor mounting
- Poor connector/terminal to component connection for CKP sensor, CMP sensor, MAP sensor, TP sensor, fuel injector, ignition coil, etc.
- Vacuum leaks
- Restricted Air Induction system or Exhaust system.
- Internal engine component failures.

Were any of the above conditions present?

Yes

- Repair as necessary.
- Perform the POWERTRAIN VERIFICATION TEST. (Refer to 28 - DTC-Based Diagnostics/MODULE, Powertrain Control (PCM) - Standard Procedure).

No

- Go To 3

3. (F342) ASD CONTROL OUTPUT CIRCUIT

1. Turn the ignition off.
2. Disconnect the No.7 Ignition Coil harness connector.
3. Disconnect the No.7 Fuel Injector harness connector.

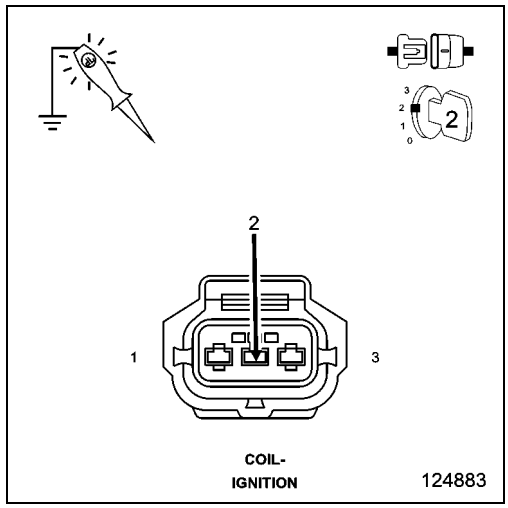

NOTE: 4.7L injector shown, 5.7L similar.

4. Ignition on, engine not running.
5. Using a 12-volt test light connected to ground, probe the (F342) ASD Control Output circuit in the Ignition Coil harness connector and Fuel Injector harness connector before the actuation.

NOTE: Make sure the test light is probing the circuit before actuating the Relay or a DTC may set and not allow the actuation.

6. Using the scan tool, actuate the ASD.

Does the test light illuminate brightly?

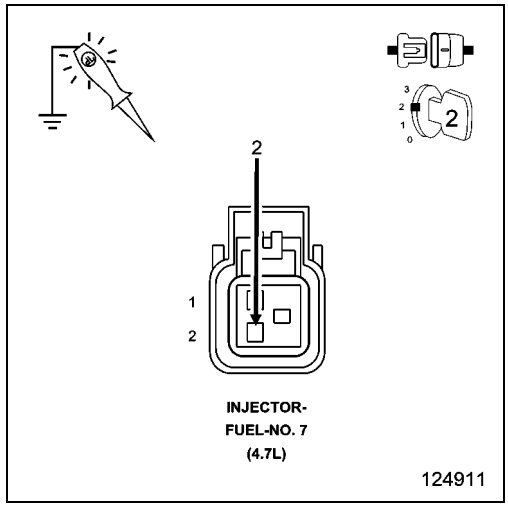

Yes

- Go To 4

No

- Repair the excessive resistance or short to ground in the (F342) ASD Control Output circuit.
- Perform the POWERTRAIN VERIFICATION TEST. (Refer to 28 - DTC-Based Diagnostics/MODULE, Powertrain Control (PCM) - Standard Procedure).

4. IGNITION SYSTEM OPERATION

WARNING: When the engine is operating, do not stand in direct line with the fan. Do not put your hands near the pulleys, belts or fan. Do not wear loose clothing. Failure to follow these instructions may result in possible serious or fatal injury.

1. Turn the ignition off.
2. Connect the Ignition Coil No.7 harness connector.
3. Remove the Ignition Coil.
4. Leave the Fuel Injector harness connector of the cylinder being tested disconnected.
5. Install a spark tester on the Ignition Coil.
6. While cranking the engine observe the spark coming from the spark tester.
7. Perform the same test on the ignition wire side of the Ignition coil.

NOTE: A crisp blue spark that is able to jump the gap of the spark tester should be generated at the coil on plug and at the end of the ignition wire.

Is good spark present?

Yes

- Go To 5

No

- Go To 14

NOTE: Connect the Fuel Injector harness connector before continuing.

5. SPARK PLUG

CAUTION: The 4.7L engine uses TWO DIFFERENT types of spark plugs. A total of 16 plugs are used. The plugs are mounted in two rows (banks). The upper row is used on the intake valve side of the cylinder head. The lower row is used on the exhaust valve side of the cylinder head. The upper row uses Nickel Yttrium plugs. The lower row uses Iridium plugs. DO NOT INTERCHANGE THESE PLUGS.

1. Turn the ignition off.
2. Remove the Spark Plug(s) in accordance with the Service Information.
3. Inspect the Spark Plug(s) for the following conditions:
   - Cracks
   - Carbon Tracking
   - Foreign Material
   - Gap size out of specifications
   - Loose or broken electrode

NOTE: Lightly tap the bottom of the spark plug on a solid surface. The electrode in the spark plug should not move.

Were any of the above conditions present?

Yes

- Replace the Spark Plug in accordance with the Service Information. (Refer to 08 - Electrical/8I - Ignition Control/ SPARK PLUG - Removal).
- Perform the POWERTRAIN VERIFICATION TEST. (Refer to 28 - DTC-Based Diagnostics/MODULE, Powertrain Control (PCM) - Standard Procedure).

No

- Go To 6

6. FUEL PRESSURE CHECK

WARNING: The fuel system is under a constant pressure (even with the engine off). Before testing or servicing any fuel system hose, fitting or line, the fuel system pressure must be released. Failure to follow these instructions can result in possible serious or fatal injury.

WARNING: When the engine is operating, do not stand in direct line with the fan. Do not put your hands near the pulleys, belts or fan. Do not wear loose clothing. Failure to follow these instructions may result in possible serious or fatal injury.

1. Install Fuel Pressure Decay Tester 8978A to the fuel rail.
2. Start the engine and observe the fuel pressure reading.

NOTE: Fuel pressure specification is 407 kPa +/- 34 kPa (59 psi +/- 5 psi).

Choose a conclusion that best matches your fuel pressure reading.

Within Specification

- Go To 7

Below Specification

- Go To 12

Above Specification

- Replace the fuel filter/pressure regulator.
- Perform the POWERTRAIN VERIFICATION TEST. (Refer to 28 - DTC-Based Diagnostics/MODULE, Powertrain Control (PCM) - Standard Procedure).

7. FUEL PRESSURE LEAK DOWN

NOTE: Before continuing visually and physically inspect the fuel delivery system for external leaks or damage. Repair/replace as necessary.

WARNING: The fuel system is under a constant pressure (even with the engine off). Before testing or servicing any fuel system hose, fitting or line, the fuel system pressure must be released. Failure to follow these instructions can result in possible serious or fatal injury.

1. Turn the ignition off.
2. Install the Fuel Pressure Decay Tester 8978A.
3. Start the engine and allow the fuel system to reach maximum pressure.
4. Turn the ignition off.

NOTE: Fuel specification is 407 kPa +/- 34 kPa (59 psi +/- 5 psi).

5. Close the Fuel System Isolation Valve and then wait five minutes before proceeding.
6. Read the Fuel Inlet and Fuel Outlet Pressure Gauges. The pressure should not drop more than 10 psi on either gauge.
7. Monitor the fuel pressure gauge for a minimum of five minutes.

NOTE: The pressure should not decrease by greater than 69 kPa (10 psi).

Does the pressure fall below the listed specification?

Yes - On Fuel Outlet Gauge

- Replace the leaking fuel injector(s).
- Perform the POWERTRAIN VERIFICATION TEST. (Refer to 28 - DTC-Based Diagnostics/MODULE, Powertrain Control (PCM) - Standard Procedure).

Yes - On Fuel Outlet Gauge

- Replace the leaking fuel injector(s).
- Perform the POWERTRAIN VERIFICATION TEST. (Refer to 28 - DTC-Based Diagnostics/MODULE, Powertrain Control (PCM) - Standard Procedure).

No

- Go To 8

8. FUEL INJECTOR OPERATION

WARNING: The fuel system is under a constant pressure (even with the engine off). Before testing or servicing any fuel system hose, fitting or line, the fuel system pressure must be released. Failure to follow these instructions can result in possible serious or fatal injury.

CAUTION: After each Fuel Injector actuation, start the engine to clean the cylinder of fuel. Failure to do so could cause engine damage.

1. Open the Fuel System Isolation Valve
2. Start the engine and allow the fuel pressure to reach maximum pressure.
3. Turn the ignition off.
4. Ignition on, engine not running.
5. Using the scan tool, actuate the No.7 Fuel Injector.
6. Monitor the fuel pressure gauge.

Does the fuel pressure gauge indicate a drop in fuel pressure?

Yes

- Go To 9

No

- Go To 10

NOTE: Turn the ignition off, remove the Fuel Pressure gauge, and connect the fuel lines before continuing.

9. ENGINE MECHANICAL

Check for any of the following conditions/mechanical problems:

- ENGINE VACUUM - must be at least 13 inches in neutral
- ENGINE VALVE TIMING - must be within specifications
- ENGINE COMPRESSION - must be within specifications
- ENGINE EXHAUST SYSTEM - must be free of any restrictions or leaks.
- ENGINE PCV SYSTEM - must flow freely
- TORQUE CONVERTER STALL SPEED - must be within specifications
- POWER BRAKE BOOSTER - no internal vacuum leaks
- FUEL - must be free of contamination
- CAM LOBES - must not be worn excessively
- CYLINDER LEAKAGE TEST - must be within specifications
- VALVE SPRINGS - cannot be weak or broken

Are there any engine mechanical problems?

Yes

- Repair as necessary.
- Perform the POWERTRAIN VERIFICATION TEST. (Refer to 28 - DTC-Based Diagnostics/MODULE, Powertrain Control (PCM) - Standard Procedure).

No

- Go To 17

10. FUEL INJECTOR

1. Turn the ignition off.
2. Disconnect the No.7 Fuel Injector harness connector.
3. Ignition on, engine not running.

NOTE: When a Misfire is detected for a particular cylinder, the PCM will shut down that cylinder's Injector Control circuit.

4. Using the scan tool, erase DTCs.
5. Install an Injector Noid light.
6. Using the scan tool, actuate the Fuel Injector.

Does the Noid light blink/flicker during the actuation?

Yes

- Verify that there is good pin to terminal contact in the Fuel Injector and the Powertrain Control Module connectors. If OK, replace the Fuel Injector.
- Perform the POWERTRAIN VERIFICATION TEST. (Refer to 28 - DTC-Based Diagnostics/MODULE, Powertrain Control (PCM) - Standard Procedure).

No

- Go To 11

11. (K26) INJECTOR CONTROL NO.7 CIRCUIT

1. Turn the ignition off.
2. Disconnect the C1 PCM harness connector.

CAUTION: Do not probe the PCM harness connectors. Probing the PCM harness connectors will damage the PCM terminals resulting in poor terminal to pin connection. Install the PCM Pinout Box Kit, NGC, 38 Position 8815A to perform diagnosis.

NOTE: 4.7L injector shown, 5.7L similar.

3. Check the (K26) Injector Control No.7 circuit for an open, short to ground, and short to voltage.

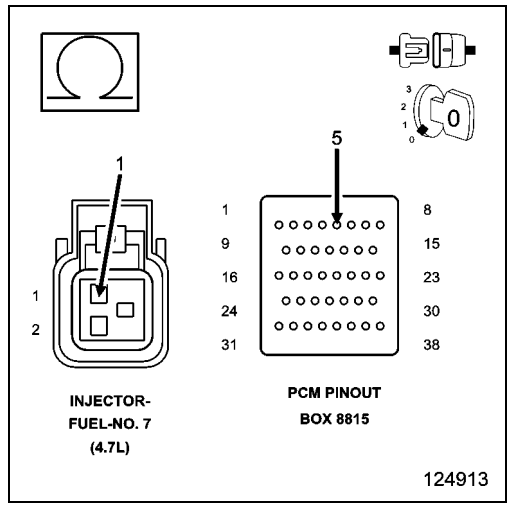

Was a problem found with the (K26) Injector Control No.7 circuit?

Yes

- Repair the excessive resistance or short in the (K26) Injector Control No.7 circuit.
- Perform the POWERTRAIN VERIFICATION TEST. (Refer to 28 - DTC-Based Diagnostics/MODULE, Powertrain Control (PCM) - Standard Procedure).

No

- Go To 17

12. FUEL SUPPLY LINE RESTRICTED

WARNING: The fuel system is under a constant pressure (even with the engine off). Before testing or servicing any fuel system hose, fitting or line, the fuel system pressure must be released. Failure to follow these instructions can result in possible serious or fatal injury.

1. Turn the ignition off.
2. Raise vehicle on hoist, and disconnect the fuel pressure line at the fuel pump module.
3. Install Fuel Pressure Decay Tester 8978A between the fuel supply line and the fuel pump module.
4. Ignition on, engine not running.
5. Using the scan tool, actuate the ASD Fuel System test and observe the fuel pressure gauge.

NOTE: Fuel pressure specification is 407 kPa +/- 34 kPa (59 psi +/- 5 psi).

Is the fuel pressure within specification?

Yes

- Repair or replace fuel supply line as necessary.
- Perform the POWERTRAIN VERIFICATION TEST. (Refer to 28 - DTC-Based Diagnostics/MODULE, Powertrain Control (PCM) - Standard Procedure).

No

- Go To 13

13. FUEL PUMP INLET STRAINER

WARNING: The fuel system is under a constant pressure (even with the engine off). Before testing or servicing any fuel system hose, fitting or line, the fuel system pressure must be released. Failure to follow these instructions can result in possible serious or fatal injury.

1. Turn the ignition off.
2. Remove the Fuel Pump Module and inspect the Fuel Inlet Strainer.

Is the Fuel Inlet Strainer plugged?

Yes

- Replace the Fuel Pump Inlet Strainer.
- Perform the POWERTRAIN VERIFICATION TEST. (Refer to 28 - DTC-Based Diagnostics/MODULE, Powertrain Control (PCM) - Standard Procedure).

No

- Before continuing, check the Fuel Pump Module harness connector terminals for corrosion, damage, or terminal push out. Make sure the ground circuit is functional. Repair as necessary. Replace the Fuel Pump Module.
- Perform the POWERTRAIN VERIFICATION TEST. (Refer to 28 - DTC-Based Diagnostics/MODULE, Powertrain Control (PCM) - Standard Procedure).

14. IGNITION WIRE

NOTE: If the vehicle being tested does not have an ignition wire answer YES to this test and continue.

1. Turn the ignition off.
2. Remove the ignition wire.
3. Measure the resistance of the ignition wire.

Is the resistance below 10K Ohms?

Yes

- Go To 15

No

- Replace the Ignition Wire.
- Perform the POWERTRAIN VERIFICATION TEST. (Refer to 28 - DTC-Based Diagnostics/MODULE, Powertrain Control (PCM) - Standard Procedure).

15. IGNITION COIL

WARNING: When the engine is operating, do not stand in direct line with the fan. Do not put your hands near the pulleys, belts or fan. Do not wear loose clothing. Failure to follow these instructions may result in possible serious or fatal injury.

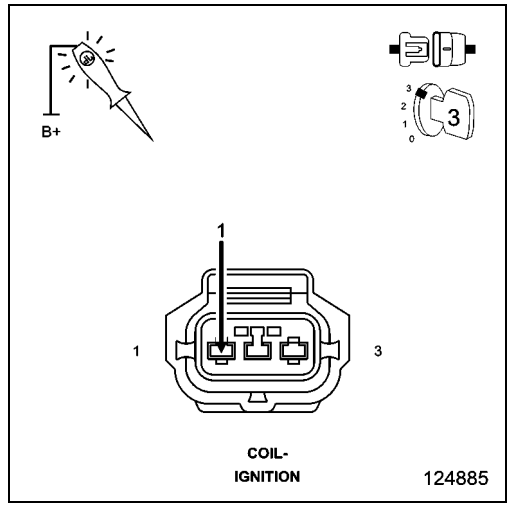

1. Disconnect the No.7 Ignition Coil harness connector.
2. Using a 12-volt test light connected to 12-volts, probe the (K97) Coil Control No.7 circuit.
3. Crank the engine for 5 seconds while observing the test light.

NOTE: The primary resistance of the 4.7L Ignition coil is 0.6 to 0.9 of an Ohm and the resistance of a 5.7L Ignition coil is 0.558 to 0.682 of an Ohm at 25° C (77° F).

Does the test light brightly blink/flicker?

Yes

- Verify that there is good pin to terminal contact in the Ignition Coil and the Powertrain Control Module connectors. If OK, replace the Ignition Coil in accordance with the Service Information.
- Perform the POWERTRAIN VERIFICATION TEST. (Refer to 28 - DTC-Based Diagnostics/MODULE, Powertrain Control (PCM) - Standard Procedure).

No

- Go To 16

16. (K97) COIL CONTROL NO.7 CIRCUIT

1. Turn the ignition off.
2. Disconnect the C1 PCM harness connector.

CAUTION: Do not probe the PCM harness connectors. Probing the PCM harness connectors will damage the PCM terminals resulting in poor terminal to pin connection. Install the PCM Pinout Box Kit, NGC, 38 Position 8815A to perform diagnosis.

3. Check the (K97) Coil Control No.7 circuit for an open, short to ground, and short to voltage.

Was a problem found with the (K97) Coil Control No.7 circuit?

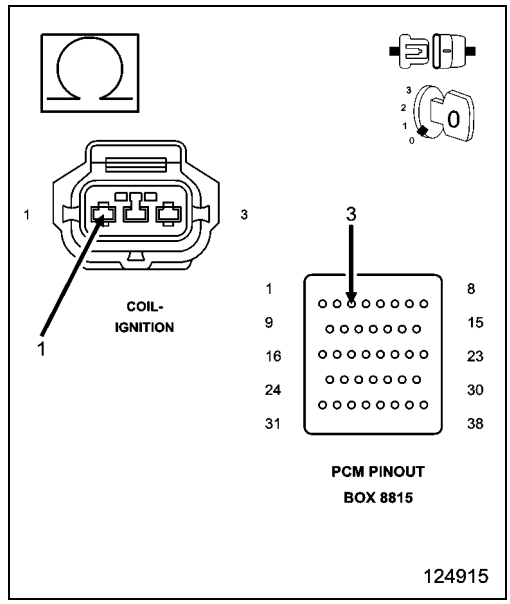

Yes

- Repair the (K97) Coil Control No.7 circuit.
- Perform the POWERTRAIN VERIFICATION TEST. (Refer to 28 - DTC-Based Diagnostics/MODULE, Powertrain Control (PCM) - Standard Procedure).

No

- Go To 17

17. POWERTRAIN CONTROL MODULE (PCM)

1. Using the wiring diagram/schematic as a guide, inspect the wiring and connectors between the related Sensor, Coil, Injector, and the Powertrain Control Module (PCM).
2. Look for any chafed, pierced, pinched, or partially broken wires.
3. Look for broken, bent, pushed out or corroded terminals. Verify that there is good pin to terminal contact in the related Sensors, Coils, Injectors, and the Powertrain Control Module connectors.
4. Perform any Technical Service Bulletins that may apply.

Were there any problems found?

Yes

- Repair as necessary.
- Perform the POWERTRAIN VERIFICATION TEST. (Refer to 28 - DTC-Based Diagnostics/MODULE, Powertrain Control (PCM) - Standard Procedure).

No

- Replace and program the Powertrain Control Module in accordance with the service information.
- Perform the POWERTRAIN VERIFICATION TEST. (Refer to 28 - DTC-Based Diagnostics/MODULE, Powertrain Control (PCM) - Standard Procedure).

■ P0308-CYLINDER 8 MISFIRE

For a complete wiring diagram, **refer to the Wiring Information**.

- **When Monitored:**

  Any time the engine is running, and the adaptive numerator has been successfully updated.
- **Set Condition:**

  The threshold to set the fault is application specific; it is tied to the level of misfire that will cause emissions to increase to 1.5 times the standard or in some cases 1%. It is always a two trip fault above the calibrated RPM. It takes one fail to set a Pending Fault and two trips to set the MIL. Three good trips to turn off the MIL.

Possible Causes
(F342) ASD CONTROL OUTPUT CIRCUIT
(K28) INJECTOR CONTROL NO.8 CIRCUIT
(K98) COIL CONTROL NO.8 CIRCUIT
SPARK PLUG
IGNITION WIRE
IGNITION COIL
FUEL PUMP INLET STRAINER PLUGGED
RESTRICTED FUEL SUPPLY LINE
FUEL PUMP MODULE
FUEL PRESSURE LEAK DOWN
FUEL INJECTOR
ENGINE MECHANICAL
POWERTRAIN CONTROL MODULE (PCM)

Always perform the Pre-Diagnostic Troubleshooting procedure before proceeding. (Refer to 28 - DTC-Based Diagnostics/MODULE, Powertrain Control (PCM) - Standard Procedure).

1. ACTIVE DIAGNOSTIC TROUBLE CODE (DTC)

1. Diagnose and repair any other active component or circuit DTCs before continuing with this procedure.
2. Turn the ignition on.
3. Using the scan tool, select View DTCs. Copy DTC and Freeze Frame information.
4. Start the engine and allow it to reach operating temperature.

WARNING: When the engine is operating, do not stand in direct line with the fan. Do not put your hands near the pulleys, belts or fan. Do not wear loose clothing. Failure to follow these instructions may result in possible serious or fatal injury.

NOTE: Attempt to operate the vehicle under conditions similar to which the DTC was set.

NOTE: It may be necessary to test drive the vehicle within the DTC monitoring conditions in order for this DTC to set.

5. With a scan tool, select View DTCs.

Is the DTC Active at this time?

Yes

- Go To 2

No

- Perform the INTERMITTENT CONDITION diagnostic procedure. (Refer to 28 - DTC-Based Diagnostics/MODULE, Powertrain Control (PCM) - Standard Procedure).

2. VISUAL INSPECTION

NOTE: Anything that affects the speed of the crankshaft can cause a misfire DTC.

NOTE: When a Misfire is detected for a particular cylinder, the PCM will shut down that cylinder's Injector Control circuit.

Visually inspect the engine for any of the following conditions:

- Worn serpentine belt
- Binding Engine-Driven accessories: A/C Compressor, P/S Pump, Water pump.
- Misalignment of the Water pump, P/S Pump and A/C Compressor pulleys
- Corroded PCM power and ground circuits.
- Misalignment of the Water pump, P/S Pump and A/C Compressor pulleys
- Corroded PCM power and ground circuits.
- Improper CKP, CMP, MAP, and TP Sensor mounting
- Poor connector/terminal to component connection for CKP sensor, CMP sensor, MAP sensor, TP sensor, fuel injector, ignition coil, etc.
- Vacuum leaks
- Restricted Air Induction system or Exhaust system.
- Internal engine component failures.

Were any of the above conditions present?

Yes

- Repair as necessary.
- Perform the POWERTRAIN VERIFICATION TEST. (Refer to 28 - DTC-Based Diagnostics/MODULE, Powertrain Control (PCM) - Standard Procedure).

No

- Go To 3

3. (F342) ASD CONTROL OUTPUT CIRCUIT

1. Turn the ignition off.
2. Disconnect the No.8 Ignition Coil harness connector.
3. Disconnect the No.8 Fuel Injector harness connector.

NOTE: 4.7L Injector shown, 5.7L similar.

4. Ignition on, engine not running.

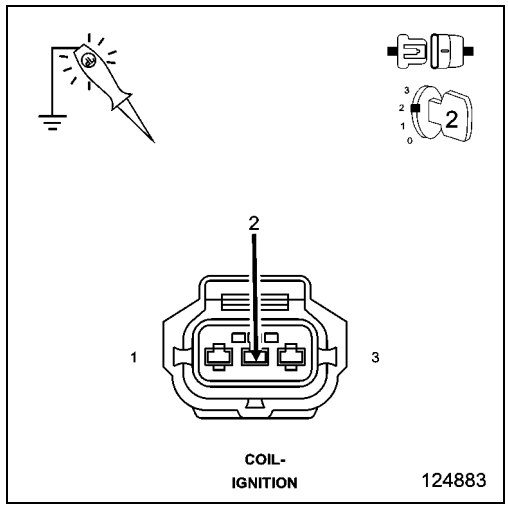

5. Using a 12-volt test light connected to ground, probe the (F342) ASD Control Output circuit in the Ignition Coil harness connector and Fuel Injector harness connector before the actuation.

NOTE: Make sure the test light is probing the circuit before actuating the Relay or a DTC may set and not allow the actuation.

6. Using the scan tool, actuate the ASD.

Does the test light illuminate brightly?

Yes

- Go To 4

No

- Repair the excessive resistance or short to ground in the (F342) ASD Control Output circuit.
- Perform the POWERTRAIN VERIFICATION TEST. (Refer to 28 - DTC-Based Diagnostics/MODULE, Powertrain Control (PCM) - Standard Procedure).

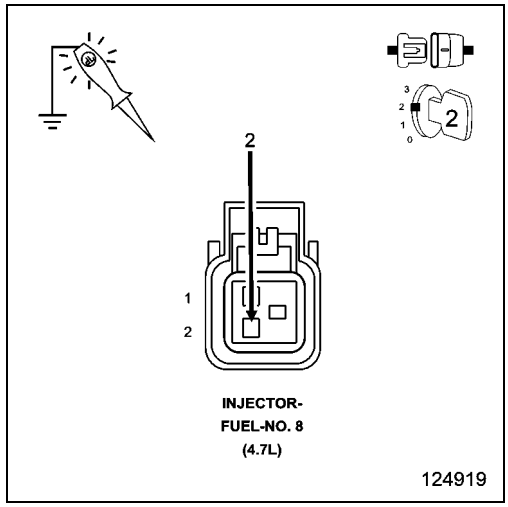

4. IGNITION SYSTEM OPERATION

WARNING: When the engine is operating, do not stand in direct line with the fan. Do not put your hands near the pulleys, belts or fan. Do not wear loose clothing. Failure to follow these instructions may result in possible serious or fatal injury.

1. Turn the ignition off.
2. Connect the Ignition Coil No.8 harness connector.
3. Remove the Ignition Coil.
4. Leave the Fuel Injector harness connector of the cylinder being tested disconnected.
5. Install a spark tester on the Ignition Coil.
6. While cranking the engine observe the spark coming from the spark tester.
7. Perform the same test on the ignition wire side of the Ignition coil.

NOTE: A crisp blue spark that is able to jump the gap of the spark tester should be generated at the coil on plug and at the end of the ignition wire.

Is good spark present?

Yes

- Go To 5

No

- Go To 14

NOTE: Connect the Fuel Injector harness connector before continuing.

5. SPARK PLUG

CAUTION: The 4.7L engine uses TWO DIFFERENT types of spark plugs. A total of 16 plugs are used. The plugs are mounted in two rows (banks). The upper row is used on the intake valve side of the cylinder head. The lower row is used on the exhaust valve side of the cylinder head. The upper row uses Nickel Yttrium plugs. The lower row uses Iridium plugs. DO NOT INTERCHANGE THESE PLUGS.

1. Turn the ignition off.
2. Remove the Spark Plug(s) in accordance with the Service Information.
3. Inspect the Spark Plug(s) for the following conditions:
   - Cracks
   - Carbon Tracking
   - Foreign Material
   - Gap size out of specifications
   - Loose or broken electrode

NOTE: Lightly tap the bottom of the spark plug on a solid surface. The electrode in the spark plug should not move.

Were any of the above conditions present?

Yes

- Replace the Spark Plug in accordance with the Service Information. (Refer to 08 - Electrical/8I - Ignition Control/ SPARK PLUG - Removal).
- Perform the POWERTRAIN VERIFICATION TEST. (Refer to 28 - DTC-Based Diagnostics/MODULE, Powertrain Control (PCM) - Standard Procedure).

No

- Go To 6

6. FUEL PRESSURE CHECK

WARNING: The fuel system is under a constant pressure (even with the engine off). Before testing or servicing any fuel system hose, fitting or line, the fuel system pressure must be released. Failure to follow these instructions can result in possible serious or fatal injury.

WARNING: When the engine is operating, do not stand in direct line with the fan. Do not put your hands near the pulleys, belts or fan. Do not wear loose clothing. Failure to follow these instructions may result in possible serious or fatal injury.

1. Install Fuel Pressure Decay Tester to the fuel rail.
2. Start the engine and observe the fuel pressure reading.

NOTE: Fuel pressure specification is 407 kPa +/- 34 kPa (59 psi +/- 5 psi).

Choose a conclusion that best matches your fuel pressure reading.

Within Specification

- Go To 7

Below Specification

- Go To 12

Above Specification

- Replace the fuel filter/pressure regulator.
- Perform the POWERTRAIN VERIFICATION TEST. (Refer to 28 - DTC-Based Diagnostics/MODULE, Powertrain Control (PCM) - Standard Procedure).

7. FUEL PRESSURE LEAK DOWN

NOTE: Before continuing visually and physically inspect the fuel delivery system for external leaks or damage. Repair/replace as necessary.

WARNING: The fuel system is under a constant pressure (even with the engine off). Before testing or servicing any fuel system hose, fitting or line, the fuel system pressure must be released. Failure to follow these instructions can result in possible serious or fatal injury.

1. Turn the ignition off.
2. Install the Fuel Pressure Decay Tester 8978A.
3. Start the engine and allow the fuel system to reach maximum pressure.
4. Turn the ignition off.

NOTE: Fuel specification is 407 kPa +/- 34 kPa (59 psi +/- 5 psi).

5. Close the Fuel System Isolation Valve and then wait five minutes before proceeding.
6. Read the Fuel Inlet and Fuel Outlet Pressure Gauges. The pressure should not drop more than 10 psi on either gauge.
7. Monitor the fuel pressure gauge for a minimum of five minutes.

NOTE: The pressure should not decrease by greater than 69 kPa (10 psi).

Does the pressure fall below the listed specification?

Yes - On Fuel Inlet Gauge

- Replace the fuel pump module.
- Perform the POWERTRAIN VERIFICATION TEST. (Refer to 28 - DTC-Based Diagnostics/MODULE, Powertrain Control (PCM) - Standard Procedure).

Yes - On Fuel Outlet Gauge

- Replace the leaking fuel injector(s).
- Perform the POWERTRAIN VERIFICATION TEST. (Refer to 28 - DTC-Based Diagnostics/MODULE, Powertrain Control (PCM) - Standard Procedure).

No

- Go To 8

8. FUEL INJECTOR OPERATION

WARNING: The fuel system is under a constant pressure (even with the engine off). Before testing or servicing any fuel system hose, fitting or line, the fuel system pressure must be released. Failure to follow these instructions can result in possible serious or fatal injury.

CAUTION: After each Fuel Injector actuation, start the engine to clean the cylinder of fuel. Failure to do so could cause engine damage.

1. Open the Fuel System Isolation Valve.
2. Start the engine and allow the fuel pressure to reach maximum pressure.
3. Turn the ignition off.
4. Ignition on, engine not running.
5. Using the scan tool, actuate the No.8 Fuel Injector.
6. Monitor the fuel pressure gauge.

Does the fuel pressure gauge indicate a drop in fuel pressure?

Yes

- Go To 9

No

- Go To 10

NOTE: Turn the ignition off, remove the Fuel Pressure gauge, and connect the fuel lines before continuing.

9. ENGINE MECHANICAL

Check for any of the following conditions/mechanical problems:

- ENGINE VACUUM - must be at least 13 inches in neutral
- ENGINE VALVE TIMING - must be within specifications
- ENGINE COMPRESSION - must be within specifications
- ENGINE EXHAUST SYSTEM - must be free of any restrictions or leaks.
- ENGINE PCV SYSTEM - must flow freely
- TORQUE CONVERTER STALL SPEED - must be within specifications
- POWER BRAKE BOOSTER - no internal vacuum leaks
- FUEL - must be free of contamination
- CAM LOBES - must not be worn excessively
- CYLINDER LEAKAGE TEST - must be within specifications
- VALVE SPRINGS - cannot be weak or broken

Are there any engine mechanical problems?

Yes

- Repair as necessary.
- Perform the POWERTRAIN VERIFICATION TEST. (Refer to 28 - DTC-Based Diagnostics/MODULE, Powertrain Control (PCM) - Standard Procedure).

No

- Go To 17

10. FUEL INJECTOR

1. Turn the ignition off.
2. Disconnect the No.8 Fuel Injector harness connector.
3. Ignition on, engine not running.

NOTE: When a Misfire is detected for a particular cylinder, the PCM will shut down that cylinder's Injector Control circuit.

4. Using the scan tool, erase DTCs.
5. Install an Injector Noid light.
6. Using the scan tool, actuate the Fuel Injector.

Does the Noid light blink/flicker during the actuation?

Yes

- Verify that there is good pin to terminal contact in the Fuel Injector and the Powertrain Control Module connectors. If OK, replace the Fuel Injector.
- Perform the POWERTRAIN VERIFICATION TEST. (Refer to 28 - DTC-Based Diagnostics/MODULE, Powertrain Control (PCM) - Standard Procedure).

No

- Go To 11

11. (K28) INJECTOR CONTROL NO.8 CIRCUIT

1. Turn the ignition off.
2. Disconnect the C1 PCM harness connector.

CAUTION: Do not probe the PCM harness connectors. Probing the PCM harness connectors will damage the PCM terminals resulting in poor terminal to pin connection. Install the PCM Pinout Box Kit, NGC, 38 Position 8815A to perform diagnosis.

NOTE: 4.7L injector shown, 5.7L similar.

3. Check the (K28) Injector Control No.8 circuit for an open, short to ground, and short to voltage.

Was a problem found with the (K28) Injector Control No.8 circuit?

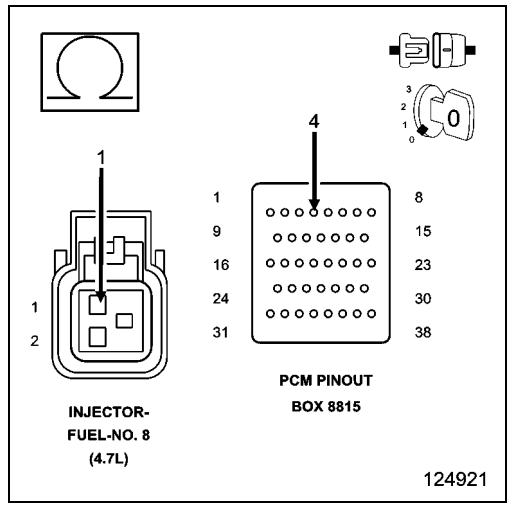

Yes

- Repair the excessive resistance or short in the (K28) Injector Control No.8 circuit.
- Perform the POWERTRAIN VERIFICATION TEST. (Refer to 28 - DTC-Based Diagnostics/MODULE, Powertrain Control (PCM) - Standard Procedure).

No

- Go To 17

12. FUEL SUPPLY LINE RESTRICTED

WARNING: The fuel system is under a constant pressure (even with the engine off). Before testing or servicing any fuel system hose, fitting or line, the fuel system pressure must be released. Failure to follow these instructions can result in possible serious or fatal injury.

1. Turn the ignition off.
2. Raise the vehicle on a hoist, and disconnect the fuel pressure line at the fuel pump module.
3. Install the Fuel Pressure Decay Tester 8978A between the fuel supply line and the fuel pump module.
4. Ignition on, engine not running.
5. Using the scan tool, actuate the ASD Fuel System test and observe the fuel pressure gauge.

NOTE: Fuel pressure specification is 407 kPa +/- 34 kPa (59 psi +/- 5 psi).

Is the fuel pressure within specification?

Yes

- Repair or replace fuel supply line as necessary.
- Perform the POWERTRAIN VERIFICATION TEST. (Refer to 28 - DTC-Based Diagnostics/MODULE, Powertrain Control (PCM) - Standard Procedure).

No

- Go To 13

13. FUEL PUMP INLET STRAINER

WARNING: The fuel system is under a constant pressure (even with the engine off). Before testing or servicing any fuel system hose, fitting or line, the fuel system pressure must be released. Failure to follow these instructions can result in possible serious or fatal injury.

1. Turn the ignition off.
2. Remove the Fuel Pump Module and inspect the Fuel Inlet Strainer.

Is the Fuel Inlet Strainer plugged?

Yes

- Replace the Fuel Pump Inlet Strainer.
- Perform the POWERTRAIN VERIFICATION TEST. (Refer to 28 - DTC-Based Diagnostics/MODULE, Powertrain Control (PCM) - Standard Procedure).

No

- Before continuing, check the Fuel Pump Module harness connector terminals for corrosion, damage, or terminal push out. Make sure the ground circuit is functional. Repair as necessary. Replace the Fuel Pump Module.
- Perform the POWERTRAIN VERIFICATION TEST. (Refer to 28 - DTC-Based Diagnostics/MODULE, Powertrain Control (PCM) - Standard Procedure).

14. IGNITION WIRE

NOTE: If the vehicle being tested does not have an ignition wire answer YES to this test and continue.

1. Turn the ignition off.
2. Remove the ignition wire.
3. Measure the resistance of the ignition wire.

Is the resistance below 10K Ohms?

Yes

- Go To 15

No

- Replace the Ignition Wire.
- Perform the POWERTRAIN VERIFICATION TEST. (Refer to 28 - DTC-Based Diagnostics/MODULE, Powertrain Control (PCM) - Standard Procedure).

15. IGNITION COIL

WARNING: When the engine is operating, do not stand in direct line with the fan. Do not put your hands near the pulleys, belts or fan. Do not wear loose clothing. Failure to follow these instructions may result in possible serious or fatal injury.

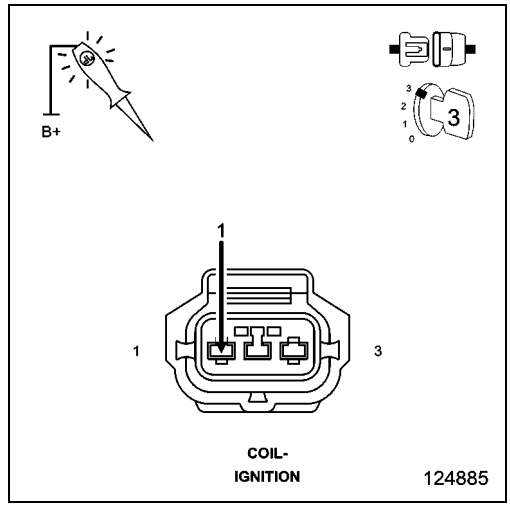

1. Disconnect the No.8 Ignition Coil harness connector.
2. Using a 12-volt test light connected to 12-volts, probe the (K98) Coil Control No.8 circuit.
3. Crank the engine for 5 seconds while observing the test light.

NOTE: The primary resistance of the 4.7L Ignition coil is 0.6 to 0.9 of an Ohm and the resistance of a 5.7L Ignition coil is 0.558 to 0.682 of an Ohm at 25° C (77° F).

Does the test light brightly blink/flicker?

Yes

- Verify that there is good pin to terminal contact in the Ignition Coil and the Powertrain Control Module connectors. If OK, replace the Ignition Coil in accordance with the Service Information.
- Perform the POWERTRAIN VERIFICATION TEST. (Refer to 28 - DTC-Based Diagnostics/MODULE, Powertrain Control (PCM) - Standard Procedure).

No

- Go To 16

16. (K98) COIL CONTROL NO.8 CIRCUIT

1. Turn the ignition off.
2. Disconnect the C1 PCM harness connector.

CAUTION: Do not probe the PCM harness connectors. Probing the PCM harness connectors will damage the PCM terminals resulting in poor terminal to pin connection. Install the PCM Pinout Box Kit, NGC, 38 Position 8815A to perform diagnosis.

3. Check the (K98) Coil Control No.8 circuit for an open, short to ground, and short to voltage.

Was a problem found with the (K98) Coil Control No.8 circuit?

Yes

- Repair the (K98) Coil Control No.8 circuit.
- Perform the POWERTRAIN VERIFICATION TEST. (Refer to 28 - DTC-Based Diagnostics/MODULE, Powertrain Control (PCM) - Standard Procedure)

No

- Go To 17

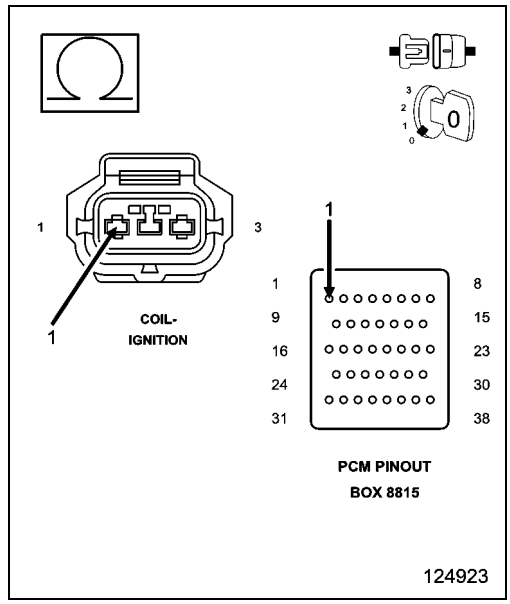

17. POWERTRAIN CONTROL MODULE (PCM)

1. Using the wiring diagram/schematic as a guide, inspect the wiring and connectors between the related Sensor, Coil, Injector, and the Powertrain Control Module (PCM).
2. Look for any chafed, pierced, pinched, or partially broken wires.
3. Look for broken, bent, pushed out or corroded terminals. Verify that there is good pin to terminal contact in the related Sensors, Coils, Injectors, and the Powertrain Control Module connectors.
4. Perform any Technical Service Bulletins that may apply.

Were there any problems found?

Yes

- Repair as necessary.
- Perform the POWERTRAIN VERIFICATION TEST. (Refer to 28 - DTC-Based Diagnostics/MODULE, Powertrain Control (PCM) - Standard Procedure).

No

- Replace and program the Powertrain Control Module in accordance with the service information.
- Perform the POWERTRAIN VERIFICATION TEST. (Refer to 28 - DTC-Based Diagnostics/MODULE, Powertrain Control (PCM) - Standard Procedure).

P0315-NO CRANK SENSOR LEARNED

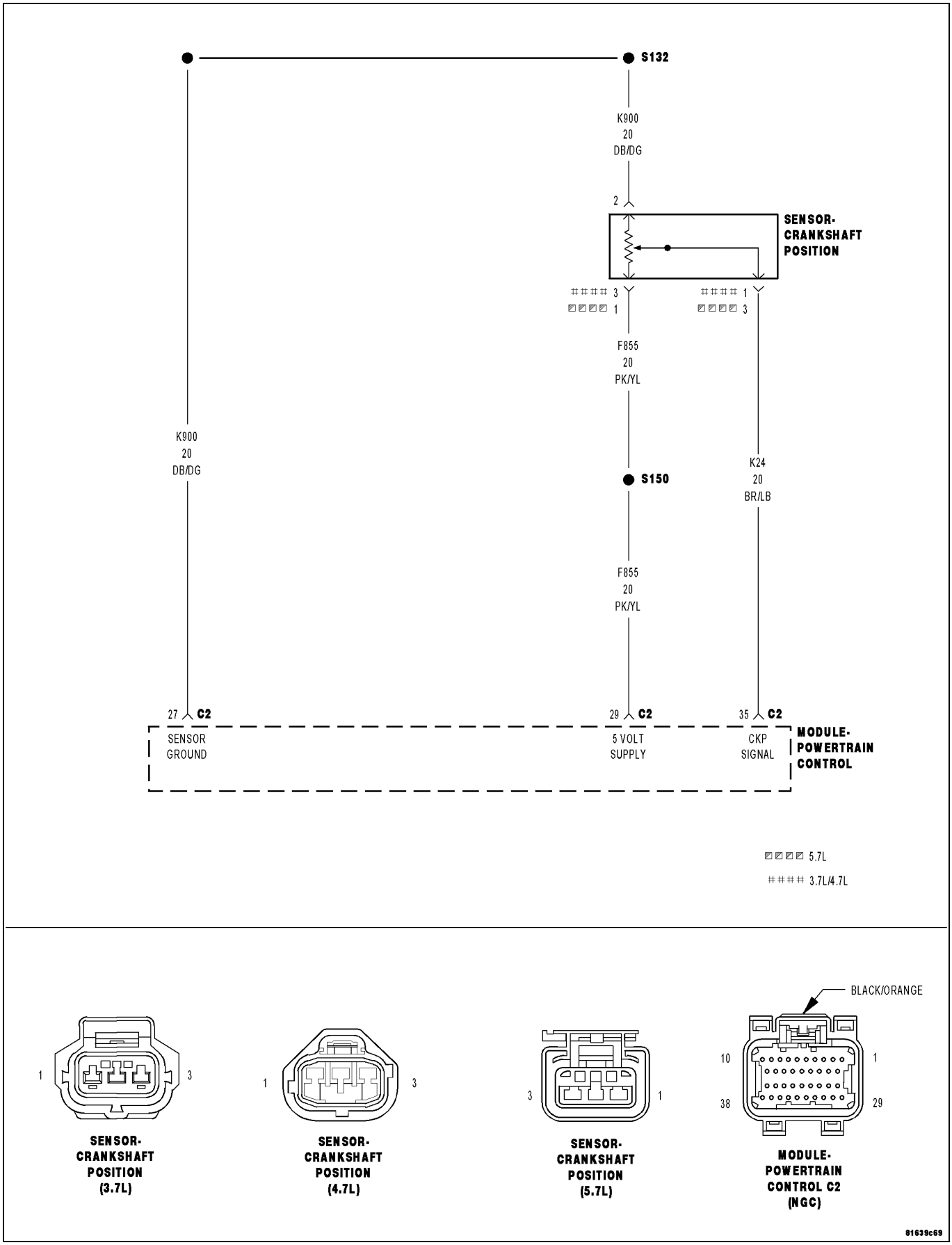

For a complete wiring diagram **Refer to the Wiring Information**.

- **When Monitored:**
  Under closed throttle decel and A/C off. ECT above 75° C (167° F). Engine start time is greater than 50 seconds.
- **Set Condition:**
  The PCM measures the variation between crankshaft position reference points. The measurements are compared to an ideal reference that is stored in the PCM. If the variation exceeds a calibrated percentage, a fault is stored. One Trip Fault. Three good trips to turn off the MIL.

Possible Causes
TONE WHEEL/PULSE RING
WIRE HARNESS
CRANKSHAFT POSITION SENSOR

Always perform the Pre-Diagnostic Troubleshooting procedure before proceeding. (Refer to 28 - DTC-Based Diagnostics/MODULE, Powertrain Control (PCM) - Standard Procedure).

1. ACTIVE DTC

1. Turn the ignition on.
2. With the scan tool select View DTCs.
3. Record the related DTC and Freeze Frame data.
4. With the scan tool clear DTCs.
5. Start the engine and allow it to reach operating temperature.

WARNING: When the engine is operating, do not stand in direct line with the fan. Do not put your hands near the pulleys, belts or fan. Do not wear loose clothing. Failure to follow these instructions may result in possible serious or fatal injury.

6. With the scan tool select View DTCs.

NOTE: If the DTC does not reset it may be necessary to test drive the vehicle.

Is the DTC Active at this time?

Yes

- Go To 2

No

- Refer to the INTERMITTENT CONDITION Diagnostic Procedure. (Refer to 28 - DTC-Based Diagnostics/MODULE, Powertrain Control (PCM) - Standard Procedure)

2. WIRE HARNESS INSPECTION

1. Turn the ignition off.
2. Visually inspect the CKP wire harness. Look for any chafed, pierced, pinched, or partially broken wires.
3. Verify that there is good pin to terminal contact in the Sensor and Powertrain Control Module connectors.
4. Visually inspect the CKP wire harness connectors. Look for broken, bent, pushed out, or corroded terminals.
5. Make sure the Crankshaft Position Sensor is properly installed and the mounting bolt(s) are torqued to the proper specification.

Were any of the above conditions present?

Yes

- Repair as necessary
- Perform the POWERTRAIN VERIFICATION TEST. (Refer to 28 - DTC-Based Diagnostics/MODULE, Powertrain Control (PCM) - Standard Procedure)

No

- Go To 3

3. TONE WHEEL/FLEX PLATE INSPECTION

1. Remove the Crankshaft Position Sensor.
2. Inspect the Tone Wheel/Flex Plate slots for damage, foreign material, or excessive movement.

Were any problems found?

Yes

- Repair or replace the Tone Wheel/Flex Plate as necessary.
- Perform the POWERTRAIN VERIFICATION TEST. (Refer to 28 - DTC-Based Diagnostics/MODULE, Powertrain Control (PCM) - Standard Procedure)

No

- Go To 4

4. CRANKSHAFT POSITION SENSOR

If there are no possible causes remaining, view repair.

Repair

- Verify that there is good pin to terminal contact in the Sensor and Powertrain Control Module connectors. Replace the Crank Position Sensor if no problems were found with the connectors.
- Perform the POWERTRAIN VERIFICATION TEST. (Refer to 28 - DTC-Based Diagnostics/MODULE, Powertrain Control (PCM) - Standard Procedure)

P0325-KNOCK SENSOR 1 CIRCUIT

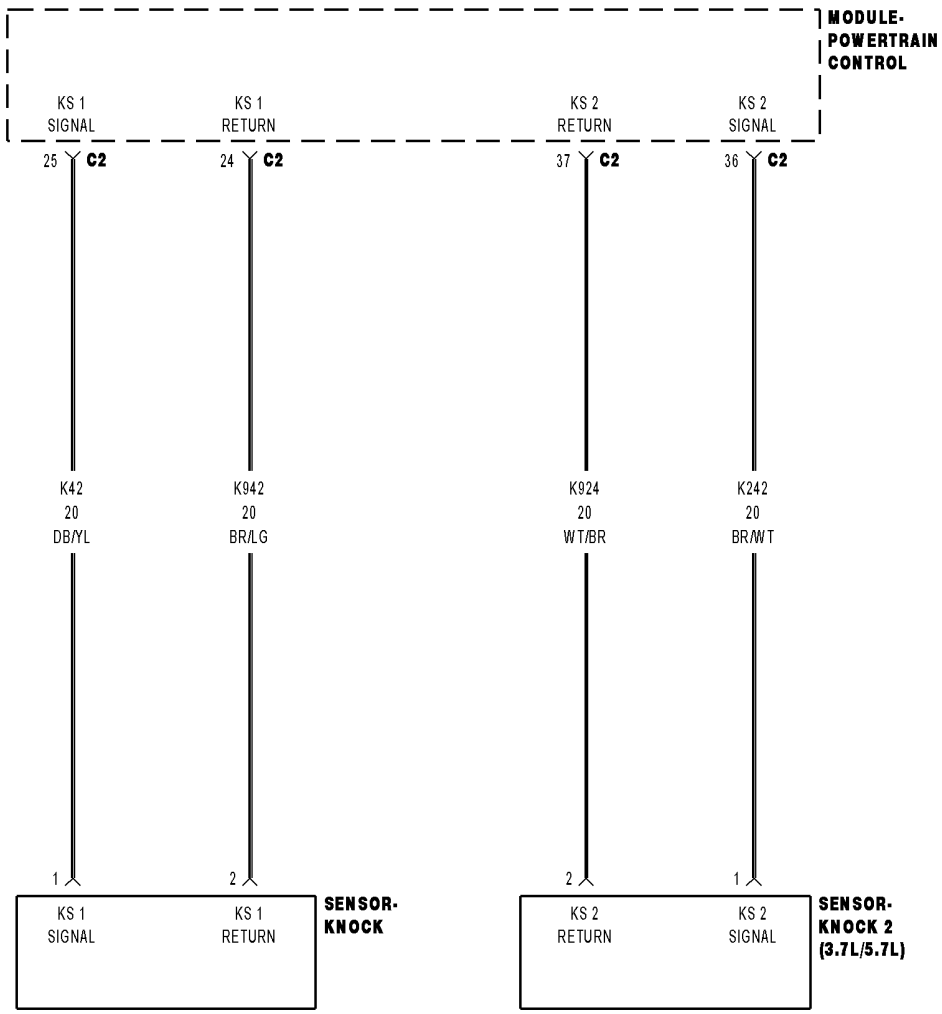

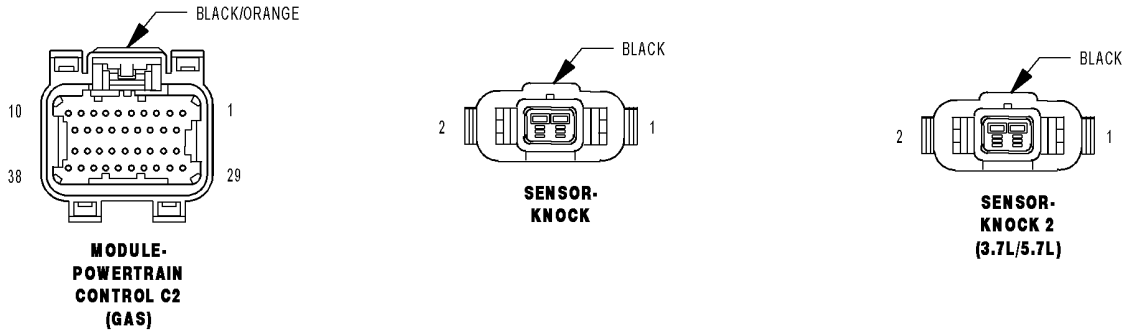

01216538

For a complete wiring diagram, **refer to the Wiring Information**.

Theory of Operation

Knock is the spontaneous auto-ignition of the remaining fuel/air mixture in the engine combustion chamber that occurs after normal combustion has started. It can occur under extreme vehicle operating conditions such as high engine temperature, high MAP, low humidity and heavy loads to the engine. Knock is caused by excessive spark advance for the given engine operating conditions. Severe, continuous knock may be caused by carbon deposits, bad gasoline and/or low octane fuel. Avoiding light audible knock is important for customer satisfaction while preventing excessive knock is important to protect engine components. The output voltage from the knock circuit represents the strength of the engine knock and is read by the engine controller. The knock system output voltage is not zero due to engine background noise, even when knock is not present. This background noise varies from engine to engine depending on the engine age, engine temperature, engine speed, engine load and other engine operating conditions. When the engine is operated under high load conditions where knock is possible, the knock voltage is tested to decide if it exceeds the knock voltage threshold. Knock has occurred when the knock voltage is at or above this knock threshold. When knock is detected a calibrated short term knock spark retard to be subtracted from the spark advance is calculated. The amount of retarded spark advance is based off a calibrated severity of the knock event. Severity is the amount of knock voltage that is greater than the knock threshold voltage level. This retarded spark advance is used in the next ignition event to prevent further knock events. If knock continues, an additional amount of short term spark advance retard is added. The additional amount of short term spark advance retard is based off a second calibrated severity amount. When short term knock spark retard compensation continues for a calibrated length of time and exceeds a retard threshold, long term knock spark retard compensation is initiated. If knock persists, additional short term knock spark retard is used besides the long term knock spark retard. When knock stops, short term knock spark retard is eliminated, the long term knock spark retard is reduced by a calibrated amount to recover some previously retarded spark advance. This decreases spark retard to improve engine performance.

- **When Monitored:**

  This monitor runs above 2000 rpm, under open throttle conditions. The Knock diagnostic does not run at idle or during decelerations. The high voltage test runs all the times the engine is running.

- **Set Condition:**

  The Powertrain Control Module (PCM) detects the Knock sensor signal is above the maximum acceptable voltage. Two Trip Fault. Three good trips to turn off the MIL.

Possible Causes
(K42) KNOCK SENSOR NO.1 SIGNAL CIRCUIT SHORTED TO VOLTAGE
(K42) KNOCK SENSOR NO.1 SIGNAL CIRCUIT OPEN
(K942) KNOCK SENSOR NO.1 RETURN CIRCUIT OPEN
(K42) KNOCK SENSOR NO.1 SIGNAL CIRCUIT SHORTED TO THE (K942) KNOCK SENSOR NO.1 RETURN CIRCUIT
(K42) KNOCK SENSOR NO.1 SIGNAL CIRCUIT SHORTED TO GROUND
KNOCK SENSOR
POWERTRAIN CONTROL MODULE (PCM)

Always perform the Pre-Diagnostic Troubleshooting procedure before proceeding. (Refer to 28 - DTC-Based Diagnostics/MODULE, Powertrain Control (PCM) - Standard Procedure).

1. ACTIVE DTC

1. Start the engine and allow it to reach normal operating temperature.

WARNING: When the engine is operating, do not stand in direct line with the fan. Do not put your hands near the pulleys, belts or fan. Do not wear loose clothing. Failure to follow these instructions may result in possible serious or fatal injury.

NOTE: It may be necessary to test drive the vehicle within the DTC monitoring conditions in order for this DTC to reset.

2. With the scan tool, select View DTCs.

Is the DTC Active or Pending at this time?

Yes

- Go To 2

No

- Perform the INTERMITTENT CONDITION diagnostic procedure. (Refer to 28 - DTC-Based Diagnostics/MODULE, Powertrain Control (PCM) - Standard Procedure).

2. (K42) KNOCK SENSOR NO.1 SIGNAL SHORTED TO VOLTAGE

1. Turn the ignition off.
2. Disconnect the Knock Sensor harness connector.
3. Disconnect the C2 PCM harness connector.
4. Ignition on, engine not running.
5. Measure the voltage on the (K42) Knock Sensor No.1 Signal circuit in the Knock Sensor harness connector.

Is there any voltage present?

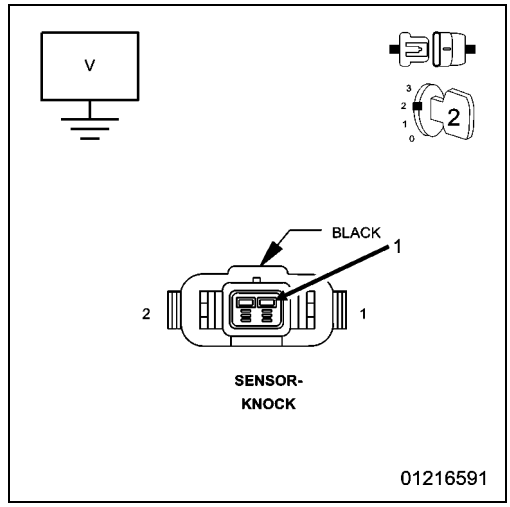

Yes

- Repair the short to voltage in the (K42) Knock Sensor No.1 Signal circuit.
- Perform the POWERTRAIN VERIFICATION TEST. (Refer to 28 - DTC-Based Diagnostics/MODULE, Powertrain Control (PCM) - Standard Procedure).

No

- Go To 3

3. (K42) KNOCK SENSOR NO.1 SIGNAL CIRCUIT OPEN

1. Turn the ignition off.

CAUTION: Do not probe the PCM harness connectors. Probing the PCM harness connectors will damage the PCM terminals resulting in poor terminal to pin connection. Install the PCM Pinout Box Kit, NGC, 38 Position 8815A to perform diagnosis.

2. Measure the resistance of the (K42) Knock Sensor No.1 Signal circuit from the Knock Sensor harness connector to the appropriate terminal of PCM Pinout Box 8815A.

Is the resistance below 5.0 Ohms?

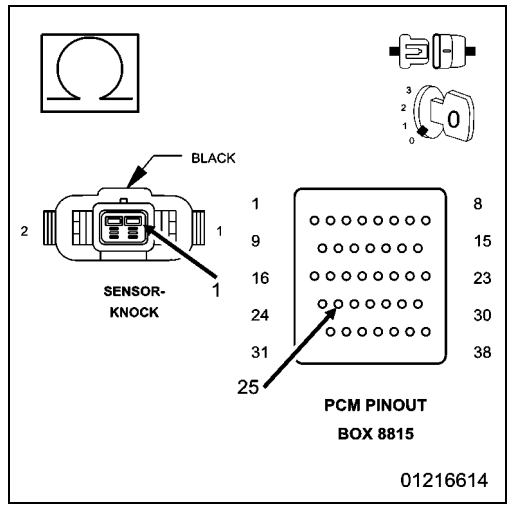

Yes

- Go To 4

No

- Repair the open in the (K42) Knock Sensor No.1 Signal circuit.
- Perform the POWERTRAIN VERIFICATION TEST. (Refer to 28 - DTC-Based Diagnostics/MODULE, Powertrain Control (PCM) - Standard Procedure).

4. (K942) KNOCK SENSOR NO.1 RETURN CIRCUIT OPEN

1. Measure the resistance of the (K942) Knock Sensor No.1 Return circuit from the Knock Sensor harness connector to the appropriate terminal of PCM Pinout Box 8815A.

Is the resistance below 5.0 Ohms?

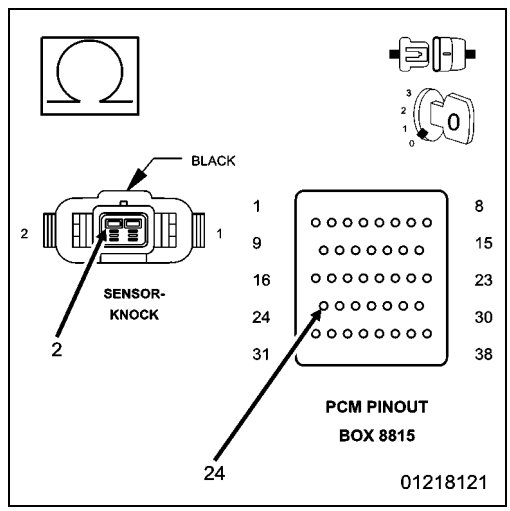

Yes

- Go To 5

No

- Repair the open in the (K942) Knock Sensor No.1 Return circuit.
- Perform the POWERTRAIN VERIFICATION TEST. (Refer to 28 - DTC-Based Diagnostics/MODULE, Powertrain Control (PCM) - Standard Procedure).

5. (K42) KNOCK SENSOR NO.1 SIGNAL SHORTED TO THE (K942) KNOCK SENSOR NO.1 RETURN CIRCUIT

1. Measure the resistance between the (K42) Knock Sensor No.1 Signal circuit and the (K942) Knock Sensor No.1 Return circuit in the Knock Sensor harness connector.

Is the resistance below 100 Ohms?

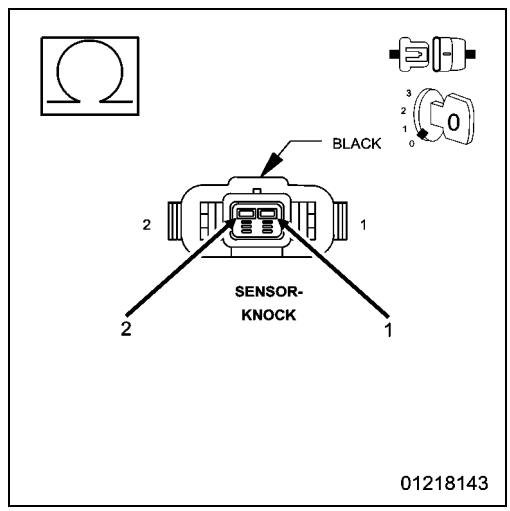

Yes

- Repair the short between the (K42) Knock Sensor No.1 Signal circuit and the (K942) Knock Sensor No.1 Return circuit.
- Perform the POWERTRAIN VERIFICATION TEST. (Refer to 28 - DTC-Based Diagnostics/MODULE, Powertrain Control (PCM) - Standard Procedure).

No

- Go To 6

6. (K42) KNOCK SENSOR NO.1 SIGNAL SHORTED TO GROUND

1. Measure the resistance between ground and the (K42) Knock Sensor No.1 Signal circuit in the Knock Sensor harness connector.

Is the resistance below 100 Ohms?

Yes

- Repair the short to ground in the (K42) Knock Sensor No.1 Signal circuit.
- Perform the POWERTRAIN VERIFICATION TEST. (Refer to 28 - DTC-Based Diagnostics/MODULE, Powertrain Control (PCM) - Standard Procedure).

No

- Go To 7

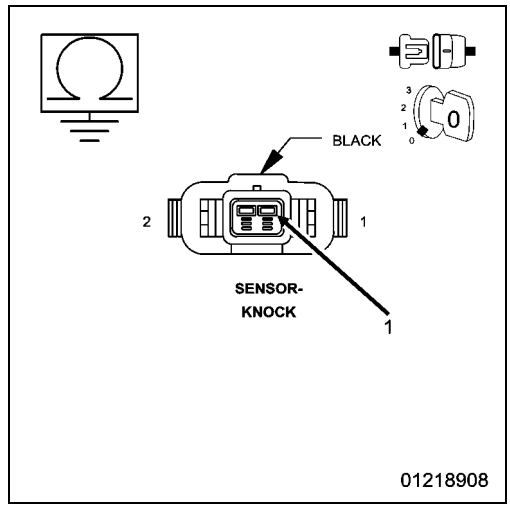

7. KNOCK SENSOR 1

1. Turn the ignition off.
2. Verify that there is good pin to terminal contact at the Knock Sensor and the Powertrain Control Module connectors.
3. If no problems were found in the connectors, replace the Knock Sensor 1.
4. Connect the Powertrain Control Module (PCM) harness connector.
5. Turn the ignition on.
6. With the scan tool, clear DTCs.
7. Start the engine and allow it to reach normal operating temperature.

WARNING: When the engine is operating, do not stand in direct line with the fan. Do not put your hands near the pulleys, belts or fan. Do not wear loose clothing. Failure to follow these instructions may result in possible serious or fatal injury.

NOTE: It may be necessary to test drive the vehicle within the DTC monitoring conditions in order for this DTC to reset.

8. With the scan tool, select View DTCs.

Did the status of this DTC change to Active?

Yes

- Go To 8

No

- Test complete.
- Perform the Powertrain Verification Test. (Refer to 28 - DTC-Based Diagnostics/MODULE, Powertrain Control (PCM) - Standard Procedure).

8. POWERTRAIN CONTROL MODULE (PCM)

1. Using the wiring diagram/schematic as a guide, inspect the wiring and connectors between the Knock Sensor 1 and the Powertrain Control Module (PCM).
2. Look for any chafed, pierced, pinched or partially broken wires.
3. Look for broken, bent, pushed out or corroded terminals.
4. Refer to any Technical Service Bulletins that may apply.

Were any problems found?

Yes

- Repair as necessary.
- Perform the Powertrain Verification Test. (Refer to 28 - DTC-Based Diagnostics/MODULE, Powertrain Control (PCM) - Standard Procedure).

No

- Replace and program the Powertrain Control Module (PCM) in accordance with the Service Information.
- Perform the Powertrain Verification Test. (Refer to 28 - DTC-Based Diagnostics/MODULE, Powertrain Control (PCM) - Standard Procedure).

P0330-KNOCK SENSOR 2 CIRCUIT

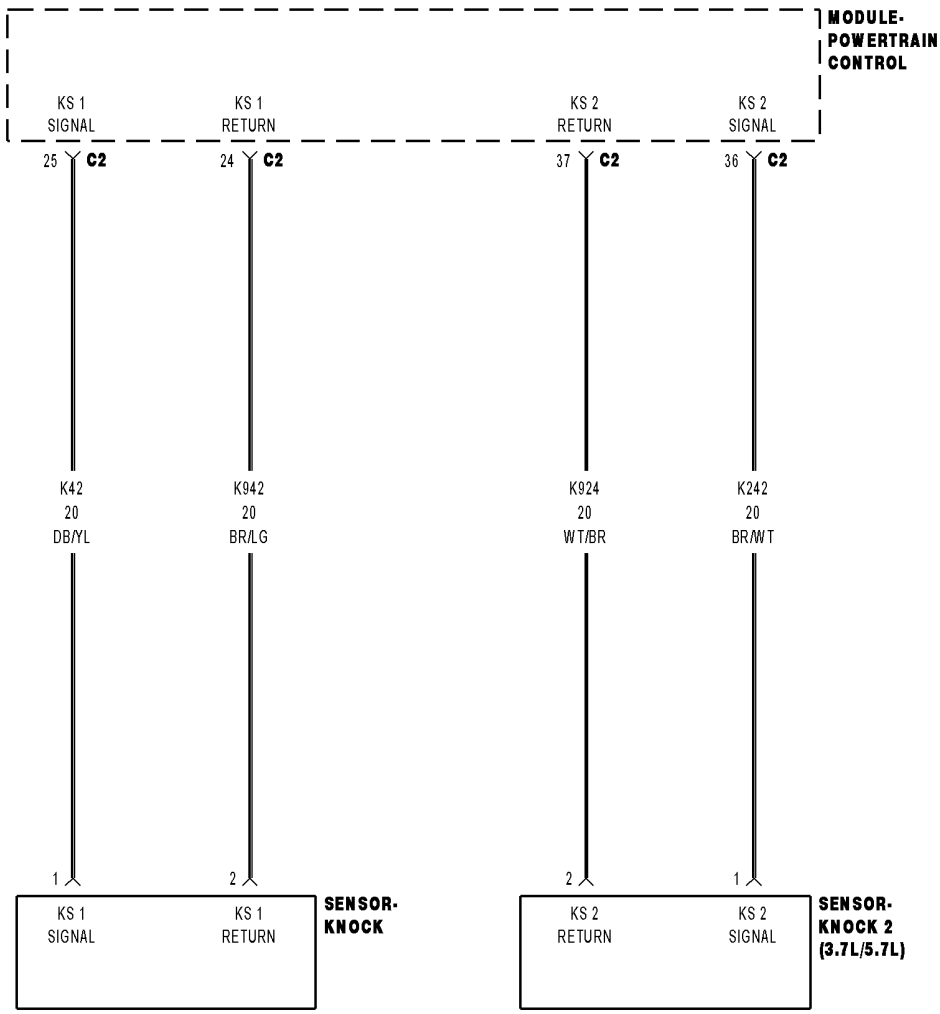

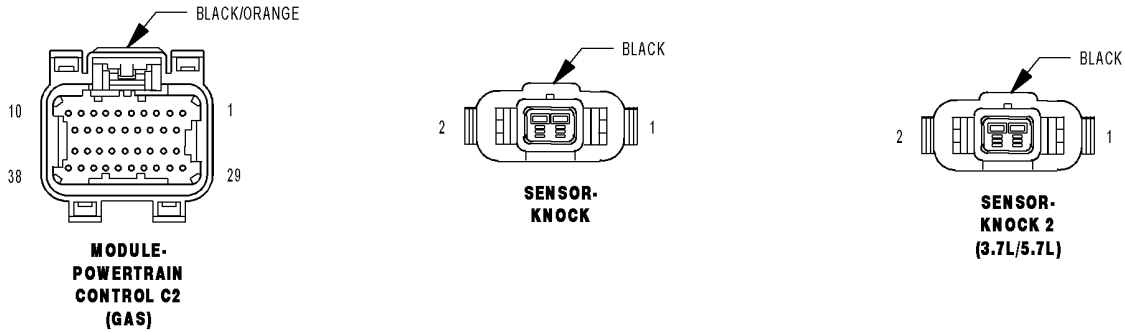

01216538

For a complete wiring diagram, **refer to the Wiring Information**.

Theory of Operation

Knock is the spontaneous auto-ignition of the remaining fuel/air mixture in the engine combustion chamber that occurs after normal combustion has started. It can occur under extreme vehicle operating conditions such as high engine temperature, high MAP, low humidity and heavy loads to the engine. Knock is caused by excessive spark advance for the given engine operating conditions. Severe, continuous knock may be caused by carbon deposits, bad gasoline and/or low octane fuel. Avoiding light audible knock is important for customer satisfaction while preventing excessive knock is important to protect engine components. The output voltage from the knock circuit represents the strength of the engine knock and is read by the engine controller. The knock system output voltage is not zero due to engine background noise, even when knock is not present. This background noise varies from engine to engine depending on the engine age, engine temperature, engine speed, engine load and other engine operating conditions. When the engine is operated under high load conditions where knock is possible, the knock voltage is tested to decide if it exceeds the knock voltage threshold. Knock has occurred when the knock voltage is at or above this knock threshold. When knock is detected a calibrated short term knock spark retard to be subtracted from the spark advance is calculated. The amount of retarded spark advance is based off a calibrated severity of the knock event. Severity is the amount of knock voltage that is greater than the knock threshold voltage level. This retarded spark advance is used in the next ignition event to prevent further knock events. If knock continues, an additional amount of short term spark advance retard is added. The additional amount of short term spark advance retard is based off a second calibrated severity amount. When short term knock spark retard compensation continues for a calibrated length of time and exceeds a retard threshold, long term knock spark retard compensation is initiated. If knock persists, additional short term knock spark retard is used besides the long term knock spark retard. When knock stops, short term knock spark retard is eliminated, the long term knock spark retard is reduced by a calibrated amount to recover some previously retarded spark advance. This decreases spark retard to improve engine performance.

- **When Monitored:**

  This monitor runs above 2000 rpm, under open throttle conditions. The Knock diagnostic does not run at idle or during decelerations. The high voltage test runs all the times the engine is running.

- **Set Condition:**

  The Powertrain Control Module (PCM) detects the Knock Sensor voltage is not within the calibrated value. Two Trip Fault. Three good trips to turn off the MIL.

Possible Causes
(K242) KNOCK SENSOR NO.2 SIGNAL CIRCUIT SHORTED TO VOLTAGE
(K242) KNOCK SENSOR NO.2 SIGNAL CIRCUIT OPEN
(K924) KNOCK SENSOR NO.2 RETURN CIRCUIT OPEN
(K242) KNOCK SENSOR NO.2 SIGNAL CIRCUIT SHORTED TO THE (K924) KNOCK SENSOR NO.2 RETURN CIRCUIT
(K242) KNOCK SENSOR NO.2 SIGNAL CIRCUIT SHORTED TO GROUND
KNOCK SENSOR
POWERTRAIN CONTROL MODULE (PCM)

Always perform the Pre-Diagnostic Troubleshooting procedure before proceeding. (Refer to 28 - DTC-Based Diagnostics/MODULE, Powertrain Control (PCM) - Standard Procedure).

1. ACTIVE DTC

1. Start the engine and allow it to reach normal operating temperature.

WARNING: When the engine is operating, do not stand in direct line with the fan. Do not put your hands near the pulleys, belts or fan. Do not wear loose clothing. Failure to follow these instructions may result in possible serious or fatal injury.

NOTE: It may be necessary to test drive the vehicle within the DTC monitoring conditions in order for this DTC to reset.

2. With the scan tool, select View DTCs.

Is the DTC Active or Pending at this time?

Yes

- Go To 2

No

- Perform the INTERMITTENT CONDITION diagnostic procedure. (Refer to 28 - DTC-Based Diagnostics/MODULE, Powertrain Control (PCM) - Standard Procedure).

2. (K242) KNOCK SENSOR NO.2 SIGNAL SHORTED TO VOLTAGE

1. Turn the ignition off.
2. Disconnect the No.2 Knock Sensor harness connector.
3. Disconnect the C2 PCM harness connector.
4. Ignition on, engine not running.
5. Measure the voltage on the (K242) Knock Sensor No.2 Signal circuit in the Knock Sensor harness connector.

Is there any voltage present?

Yes

- Repair the short to voltage in the (K242) Knock Sensor No.2 Signal circuit.
- Perform the POWERTRAIN VERIFICATION TEST. (Refer to 28 - DTC-Based Diagnostics/MODULE, Powertrain Control (PCM) - Standard Procedure).

No

- Go To 3

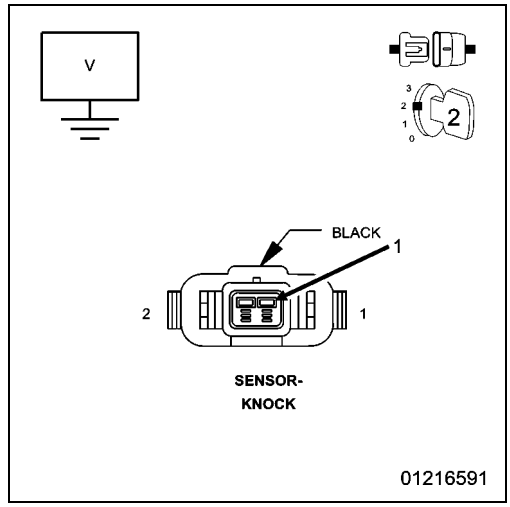

3. (K242) KNOCK SENSOR NO.2 SIGNAL CIRCUIT OPEN

1. Turn the ignition off.

CAUTION: Do not probe the PCM harness connectors. Probing the PCM harness connectors will damage the PCM terminals resulting in poor terminal to pin connection. Install the PCM Pinout Box Kit, NGC, 38 Position 8815A to perform diagnosis.

2. Measure the resistance of the (K242) Knock Sensor No.2 Signal circuit from the Knock Sensor harness connector to the appropriate terminal of PCM Pinout Box 8815A.

Is the resistance below 5.0 Ohms?

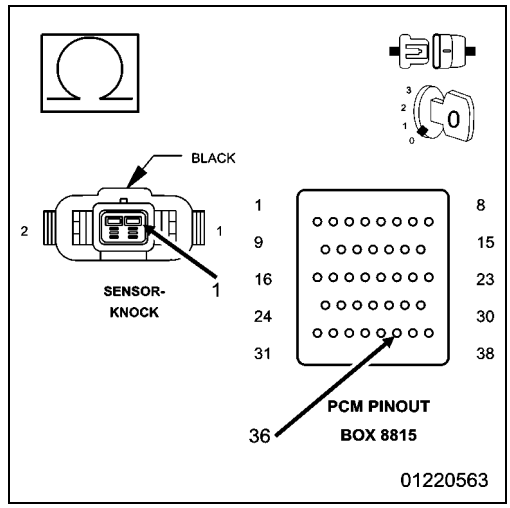

Yes

- Go To 4

No

- Repair the open in the (K242) Knock Sensor No.2 Signal circuit.
- Perform the POWERTRAIN VERIFICATION TEST. (Refer to 28 - DTC-Based Diagnostics/MODULE, Powertrain Control (PCM) - Standard Procedure).

4. (K924) KNOCK SENSOR NO.2 RETURN CIRCUIT OPEN

1. Measure the resistance of the (K924) Knock Sensor No.2 Return circuit from the Knock Sensor harness connector to the appropriate terminal of PCM Pinout Box 8815A.

Is the resistance below 5.0 Ohms?

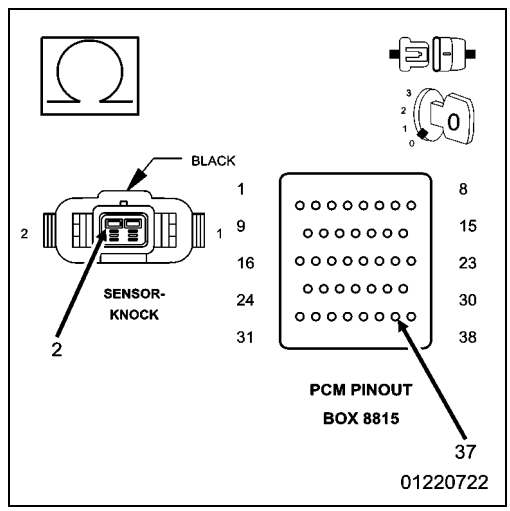

Yes

- Go To 5

No

- Repair the open in the (K924) Knock Sensor No.2 Return circuit.
- Perform the POWERTRAIN VERIFICATION TEST. (Refer to 28 - DTC-Based Diagnostics/MODULE, Powertrain Control (PCM) - Standard Procedure).

5. (K242) KNOCK SENSOR NO.2 SIGNAL SHORTED TO THE (K924) KNOCK SENSOR NO.2 RETURN CIRCUIT

1. Measure the resistance between the (K242) Knock Sensor No.2 Signal circuit and the (K924) Knock Sensor No.2 Return circuit in the Knock Sensor harness connector.

Is the resistance below 100 Ohms?

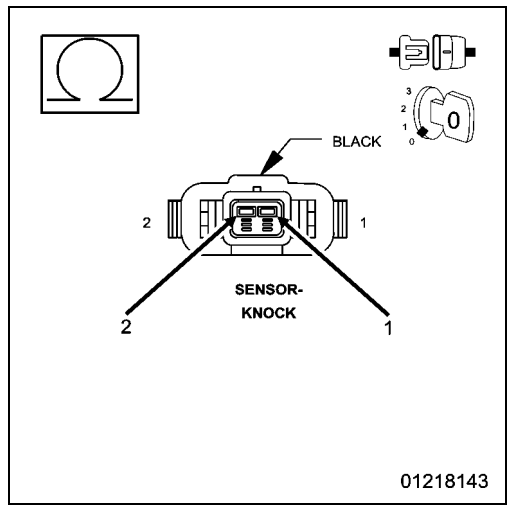

Yes

- Repair the short between the (K242) Knock Sensor No.2 Signal circuit and the (K924) Knock Sensor No.2 Return circuit.
- Perform the POWERTRAIN VERIFICATION TEST. (Refer to 28 - DTC-Based Diagnostics/MODULE, Powertrain Control (PCM) - Standard Procedure).

No

- Go To 6

6. (K242) KNOCK SENSOR NO.2 SIGNAL SHORTED TO GROUND

1. Measure the resistance between ground and the (K242) Knock Sensor No.2 Signal circuit in the Knock Sensor harness connector.

Is the resistance below 100 Ohms?

Yes

- Repair the short to ground in the (K242) Knock Sensor No.2 Signal circuit.
- Perform the POWERTRAIN VERIFICATION TEST. (Refer to 28 - DTC-Based Diagnostics/MODULE, Powertrain Control (PCM) - Standard Procedure).

No

- Go To 7

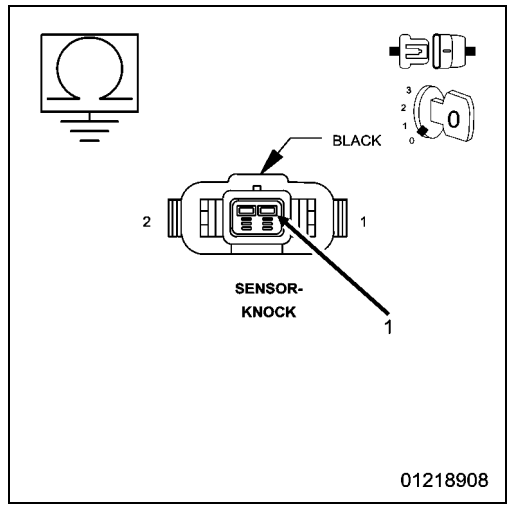

7. KNOCK SENSOR 2

1. Turn the ignition off.
2. Verify that there is good pin to terminal contact at the Knock Sensor and the Powertrain Control Module connectors.
3. If no problems were found in the connectors, replace the Knock Sensor 2.
4. Connect the Powertrain Control Module (PCM) harness connector.
5. Turn the ignition on.
6. With the scan tool, clear DTCs.
7. Start the engine and allow it to reach normal operating temperature.

WARNING: When the engine is operating, do not stand in direct line with the fan. Do not put your hands near the pulleys, belts or fan. Do not wear loose clothing. Failure to follow these instructions may result in possible serious or fatal injury.

NOTE: It may be necessary to test drive the vehicle within the DTC monitoring conditions in order for this DTC to reset.

8. With the scan tool, select View DTCs.

Is the status of this DTC Active?

Yes

- Go To 8

No

- Test complete.
- Perform the POWERTRAIN VERIFICATION TEST. (Refer to 28 - DTC-Based Diagnostics/MODULE, Powertrain Control (PCM) - Standard Procedure).

8. POWERTRAIN CONTROL MODULE (PCM)

1. Using the wiring diagram/schematic as a guide, inspect the wiring and connectors between the Knock Sensor 2 and the Powertrain Control Module (PCM).
2. Look for any chafed, pierced, pinched or partially broken wires.
3. Look for broken, bent, pushed out or corroded terminals.
4. Refer to any Technical Service Bulletins that may apply.

Were any problems found?

Yes

- Repair as necessary.
- Perform the POWERTRAIN VERIFICATION TEST. (Refer to 28 - DTC-Based Diagnostics/MODULE, Powertrain Control (PCM) - Standard Procedure).

No

- Replace and program the Powertrain Control Module (PCM) in accordance with the Service Information.
- Perform the POWERTRAIN VERIFICATION TEST. (Refer to 28 - DTC-Based Diagnostics/MODULE, Powertrain Control (PCM) - Standard Procedure).

P0335-CRANKSHAFT POSITION SENSOR CIRCUIT

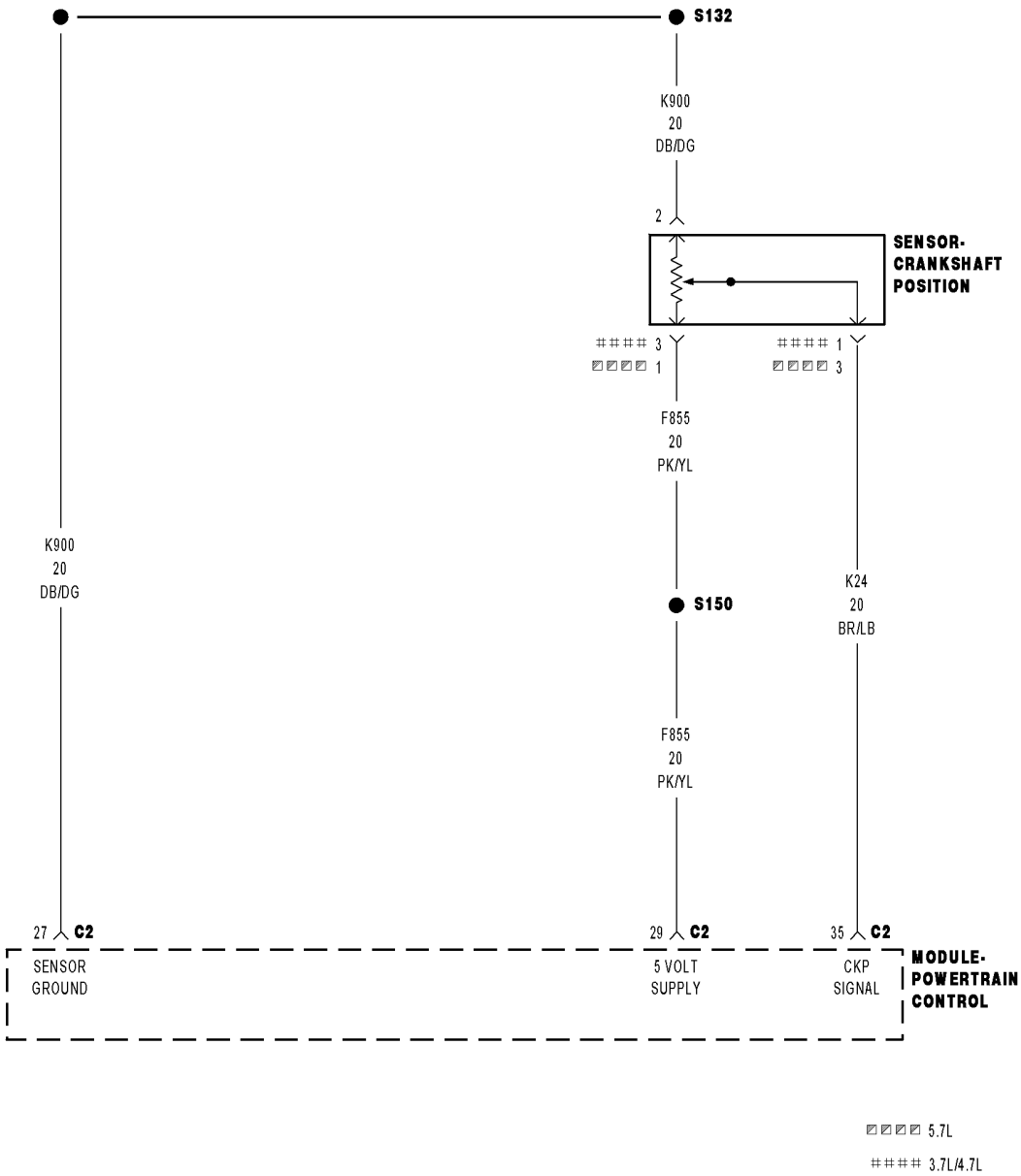

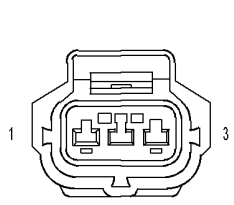

SENSOR-
CRANKSHAFT
POSITION
(3.7L)

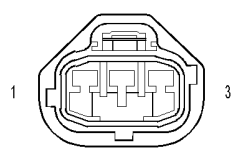

SENSOR-
CRANKSHAFT
POSITION
(4.7L)

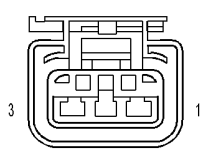

SENSOR-
CRANKSHAFT
POSITION
(5.7L)

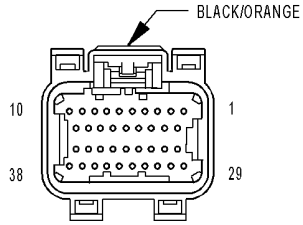

MODULE-
POWERTRAIN
CONTROL C2
(NGC)

81639c69

For a complete wiring diagram **Refer to the Wiring Information**.

- **When Monitored:**
  Engine cranking.
- **Set Condition:**
  No CKP signal is present during engine cranking, and at least 8 camshaft position sensor signals have occurred. One Trip Fault. Three good trips to turn off the MIL.

Possible Causes
(F855) 5-VOLT SUPPLY CIRCUIT SHORTED TO VOLTAGE
(F855) 5-VOLT SUPPLY CIRCUIT OPEN
(F855) 5-VOLT SUPPLY CIRCUIT SHORTED TO GROUND
(K24) CKP SIGNAL CIRCUIT OPEN
(K24) CKP SIGNAL CIRCUIT SHORTED TO VOLTAGE
(K24) CKP SIGNAL CIRCUIT SHORTED GROUND
(K24) CKP SIGNAL CIRCUIT SHORTED TO THE (F855) 5-VOLT SUPPLY CIRCUIT
(K900) SENSOR GROUND CIRCUIT OPEN
CRANKSHAFT POSITION SENSOR
CAMSHAFT POSITION SENSOR
POWERTRAIN CONTROL MODULE (PCM)

Always perform the Pre-Diagnostic Troubleshooting procedure before proceeding. (Refer to 28 - DTC-Based Diagnostics/MODULE, Powertrain Control (PCM) - Standard Procedure).

1. ACTIVE DTC

1. Turn the ignition on.
2. With the scan tool, select View DTCs. Copy DTC and Freeze Frame information.
3. Start the engine and allow it to reach operating temperature.

WARNING: When the engine is operating, do not stand in direct line with the fan. Do not put your hands near the pulleys, belts or fan. Do not wear loose clothing. Failure to follow these instructions may result in possible serious or fatal injury.

NOTE: Attempt to operate the vehicle under conditions similar to which the DTC was set.

NOTE: It may be necessary to test drive the vehicle within the DTC monitoring conditions in order for this DTC to set.

4. With a scan tool, select View DTCs.

Is the DTC Active at this time?

Yes

- Go To 2

No

- Go To 14

2. (F855) 5-VOLT SUPPLY CIRCUIT

1. Turn the ignition off.
2. Disconnect the CKP Sensor harness connector.
3. Ignition on, engine not running.
4. Measure the voltage on the (F855) 5-volt Supply circuit in the CKP Sensor harness connector.

Is the voltage between 4.5 and 5.2 volts?

Yes

- Go To 3

No

- Go To 10

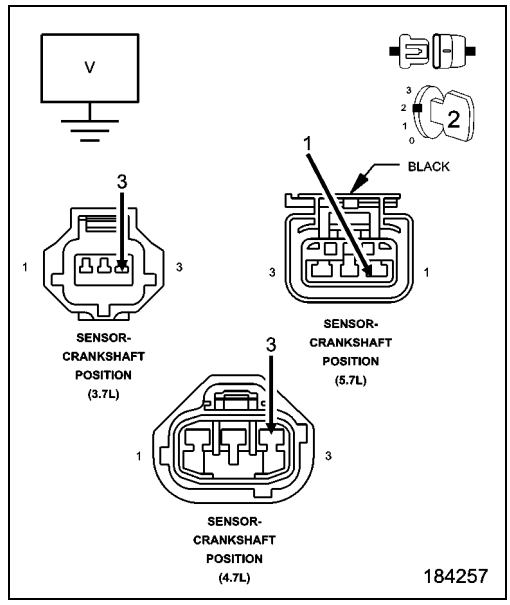

3. (K24) CKP SIGNAL CIRCUIT

1. Measure the voltage on the (K24) CKP Signal circuit in the CKP Sensor harness connector.

NOTE: The sensor voltage should be approximately 5.0 volts (plus or minus .1 volt) with the connector disconnected.

Does the scan tool display the voltage as described above?

Yes

- Go To 4

No

- Go To 7

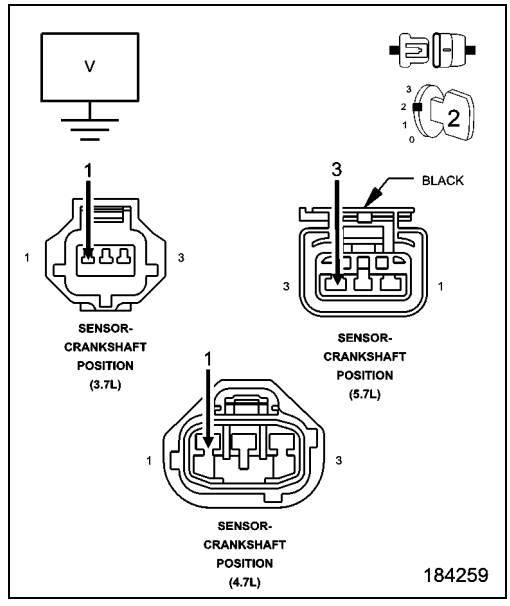

4. (K900) SENSOR GROUND CIRCUIT OPEN

1. Turn the ignition off.
2. Disconnect the C2 PCM harness connector.

CAUTION: Do not probe the PCM harness connectors. Probing the PCM harness connectors will damage the PCM terminals resulting in poor terminal to pin connection. Install the PCM Pinout Box Kit, NGC, 38 Position 8815A to perform diagnosis.

3. Measure the resistance of the (K900) Sensor ground circuit from the CKP Sensor harness connector to the appropriate terminal of special tool #8815A.

Is the resistance below 5.0 ohms?

Yes

- Go To 5

No

- Repair the open in the (K900) Sensor ground circuit.
- Perform the POWERTRAIN VERIFICATION TEST. (Refer to 28 - DTC-Based Diagnostics/MODULE, Powertrain Control (PCM) - Standard Procedure)

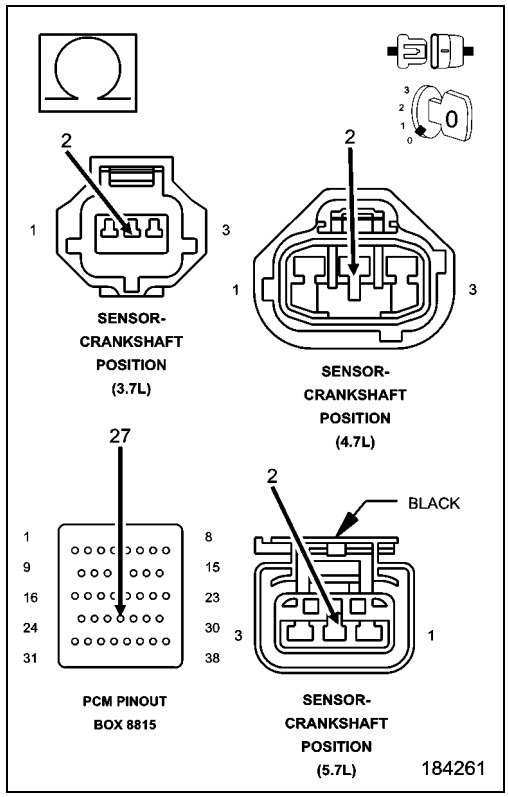

5. (K24) CKP SIGNAL CIRCUIT SHORTED TO THE (F855) 5-VOLT SUPPLY CIRCUIT

1. Measure the resistance between the (K24) CKP Signal circuit and the (F855) 5-volt Supply circuit in the CKP Sensor harness connector.

Is the resistance below 5.0 ohms?

Yes

- Repair the short between the (K24) CKP Signal circuit and the (F855) 5-volt Supply circuit.
- Perform the POWERTRAIN VERIFICATION TEST. (Refer to 28 - DTC-Based Diagnostics/MODULE, Powertrain Control (PCM) - Standard Procedure)

No

- Go To 6

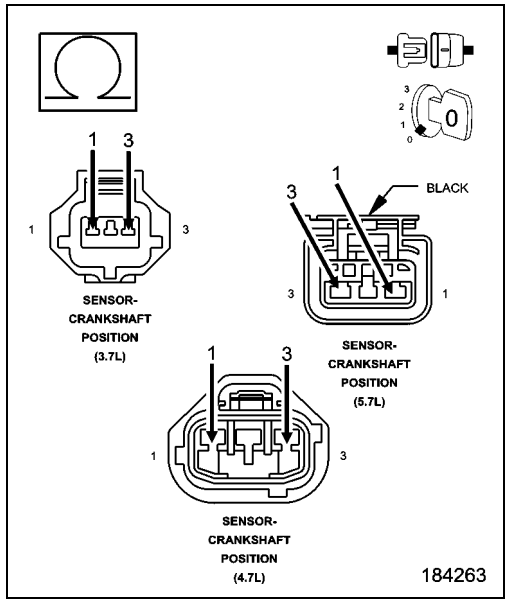

6. CRANKSHAFT POSITION SENSOR

NOTE: Inspect the slots on the flywheel for damage. If a problem is found repair as necessary.

If there are no possible causes remaining, view repair.

Repair

- Verify that there is good pin to terminal contact in the Crank Position Sensor and Powertrain Control Module connectors. Replace the Crank Position Sensor if no problems were found with the connectors.
- Perform the POWERTRAIN VERIFICATION TEST. (Refer to 28 - DTC-Based Diagnostics/MODULE, Powertrain Control (PCM) - Standard Procedure)

7. (K24) CKP SIGNAL CIRCUIT SHORTED TO VOLTAGE

1. Turn the ignition off.
2. Disconnect the C2 PCM harness connector.
3. Ignition on, engine not running.
4. Measure the voltage on the (K24) CKP Signal circuit in the CKP Sensor harness connector.

Is there any voltage present?

Yes

- Repair the short to voltage in the (K24) CKP Signal circuit.
- Perform the POWERTRAIN VERIFICATION TEST. (Refer to 28 - DTC-Based Diagnostics/MODULE, Powertrain Control (PCM) - Standard Procedure)

No

- Go To 8

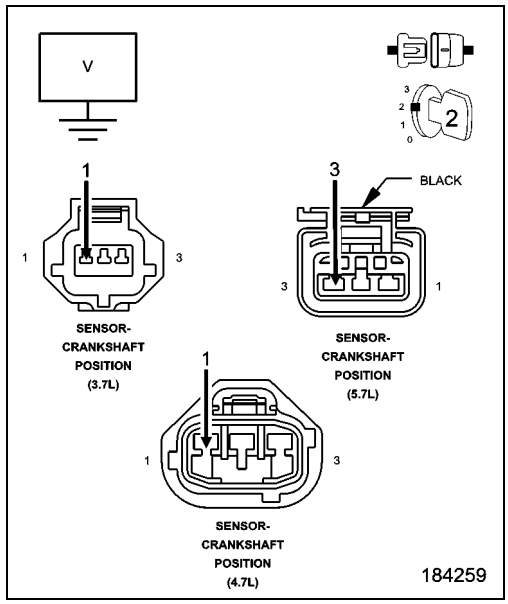

8. (K24) CKP SIGNAL CIRCUIT OPEN

1. Turn the ignition off.

CAUTION: Do not probe the PCM harness connectors. Probing the PCM harness connectors will damage the PCM terminals resulting in poor terminal to pin connection. Install the PCM Pinout Box Kit, NGC, 38 Position 8815A to perform diagnosis.

2. Measure the resistance of the (K24) CKP Signal circuit from the CKP Sensor harness connector to the appropriate terminal of special tool #8815A.

Is the resistance below 5.0 ohms?

Yes

- Go To 9

No

- Repair the open in the (K24) CKP Signal circuit.
- Perform the POWERTRAIN VERIFICATION TEST. (Refer to 28 - DTC-Based Diagnostics/MODULE, Powertrain Control (PCM) - Standard Procedure)

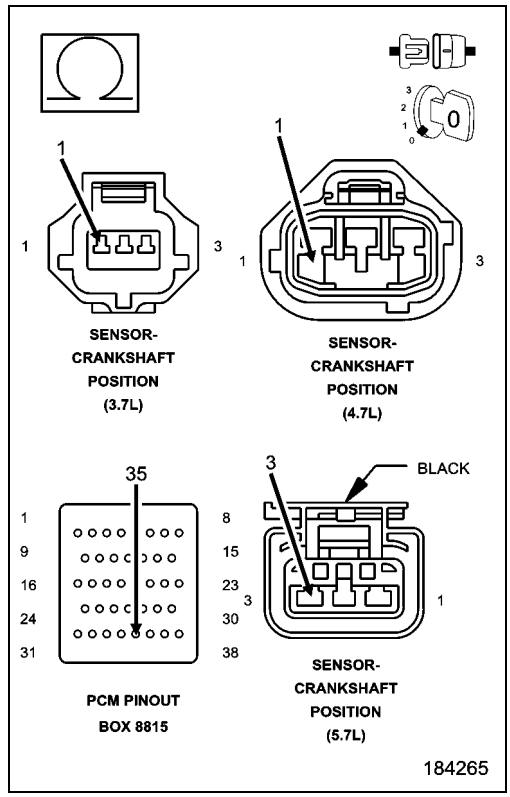

9. (K24) CKP SIGNAL CIRCUIT SHORTED TO GROUND

1. Measure the resistance between ground and the (K24) CKP Signal circuit in the CKP Sensor harness connector.

Is the resistance below 5.0 ohms?

Yes

- Repair the short to ground in the (K24) CKP Signal circuit.
- Perform the POWERTRAIN VERIFICATION TEST. (Refer to 28 - DTC-Based Diagnostics/MODULE, Powertrain Control (PCM) - Standard Procedure)

No

- Go To 13

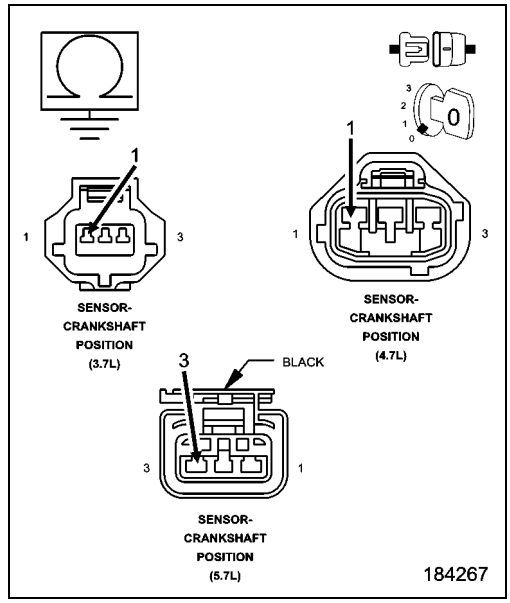

10. (F855) 5-VOLT SUPPLY CIRCUIT SHORTED TO VOLTAGE

1. Turn the ignition off.
2. Disconnect the C2 PCM harness connector.
3. Ignition on, engine not running.
4. Measure the voltage on the (F855) 5-volt Supply circuit in the CKP Sensor harness connector.

Is there any voltage present?

Yes

- Repair the short to voltage in the (F855) 5-volt Supply circuit.
- Perform the POWERTRAIN VERIFICATION TEST. (Refer to 28 - DTC-Based Diagnostics/MODULE, Powertrain Control (PCM) - Standard Procedure)

No

- Go To 11

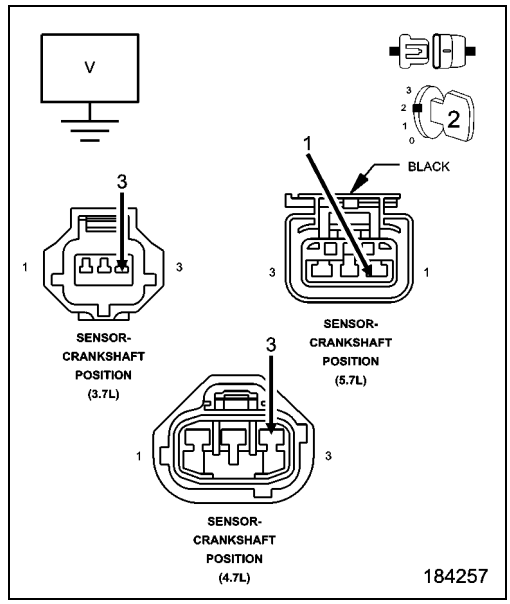

11. (F855) 5-VOLT SUPPLY CIRCUIT OPEN

1. Turn the ignition off.

CAUTION: Do not probe the PCM harness connectors. Probing the PCM harness connectors will damage the PCM terminals resulting in poor terminal to pin connection. Install the PCM Pinout Box Kit, NGC, 38 Position 8815A to perform diagnosis.

2. Measure the resistance of the (F855) 5-volt Supply circuit from the CKP Sensor harness connector to the appropriate terminal of special tool #8815A.

Is the resistance below 5.0 ohms?

Yes

- Go To 12

No

- Repair the open in the (F855) 5-volt Supply circuit.
- Perform the POWERTRAIN VERIFICATION TEST. (Refer to 28 - DTC-Based Diagnostics/MODULE, Powertrain Control (PCM) - Standard Procedure)

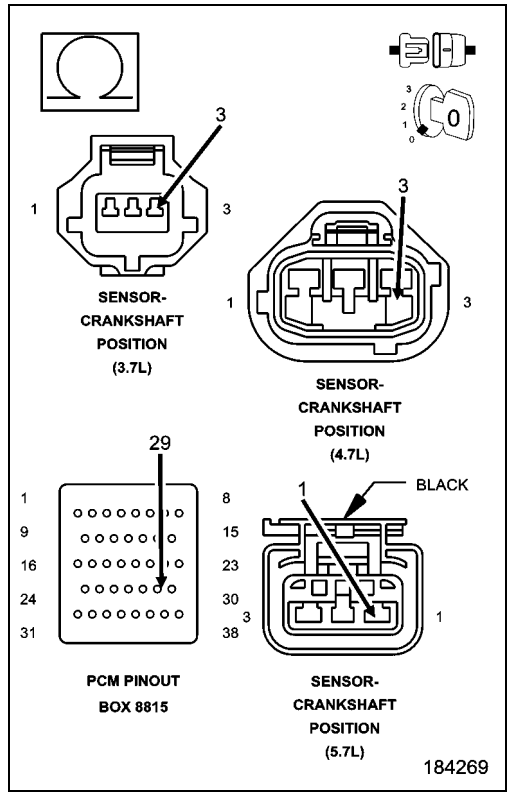

12. (F855) 5-VOLT SUPPLY CIRCUIT SHORTED TO GROUND

1. Measure the resistance between ground and the (F855) 5-volt Supply circuit in the CKP Sensor harness connector.

Is the resistance below 100 ohms?

Yes

- Repair the short to ground in the (F855) 5-volt Supply circuit.
- Perform the POWERTRAIN VERIFICATION TEST. (Refer to 28 - DTC-Based Diagnostics/MODULE, Powertrain Control (PCM) - Standard Procedure)

No

- Go To 13

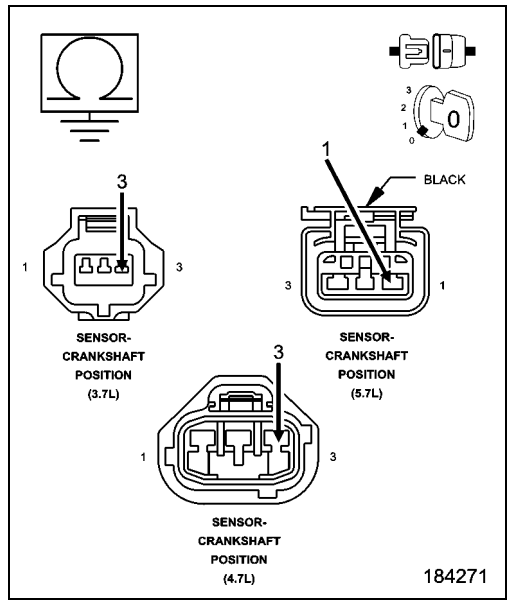

13. POWERTRAIN CONTROL MODULE (PCM)

1. Using the wiring diagram/schematic as a guide, inspect the wiring and connectors between the related Sensor and the Powertrain Control Module (PCM).
2. Look for any chafed, pierced, pinched, or partially broken wires.
3. Look for broken, bent, pushed out or corroded terminals. Verify that there is good pin to terminal contact in the related Sensor and the Powertrain Control Module connectors.
4. Refer to any Technical Service Bulletins that may apply.

Were there any problems found?

Yes

- Repair as necessary.
- Perform the POWERTRAIN VERIFICATION TEST. (Refer to 28 - DTC-Based Diagnostics/MODULE, Powertrain Control (PCM) - Standard Procedure)

No

- Replace and program the Powertrain Control Module per Service Information.
- Perform the POWERTRAIN VERIFICATION TEST. (Refer to 28 - DTC-Based Diagnostics/MODULE, Powertrain Control (PCM) - Standard Procedure)

14. ERRATIC CKP SENSOR SIGNAL

1. Turn the ignition off.
2. With a lab scope probe and the Miller special tool #6801, backprobe the (K24) CKP Signal circuit in the CKP harness connector.

WARNING: When the engine is operating, do not stand in direct line with the fan. Do not put your hands near the pulleys, belts or fan. Do not wear loose clothing. Failure to follow these instructions may result in possible serious or fatal injury.

3. Ignition on, engine not running.
4. Wiggle the related wire harness and lightly tap on the Crank Position Sensor.
5. Observe the lab scope screen.
6. Look for any pulses generated by the CKP Sensor.
7. Allow the engine to idle.
8. Observe the lab scope screen.

Did the CKP Sensor generate any erratic pulses?

Yes

- Verify that there is good pin to terminal contact in the Crank Position Sensor and Powertrain Control Module connectors. Replace the Crank Position Sensor if no problems were found with the connectors.
- Perform the POWERTRAIN VERIFICATION TEST. (Refer to 28 - DTC-Based Diagnostics/MODULE, Powertrain Control (PCM) - Standard Procedure)

No

- Go To 15

15. ERRATIC CMP SIGNAL

1. Turn the ignition off.
2. With a lab scope probe and the Miller special tool #6801, backprobe the (K44) CMP Signal circuit in the CMP harness connector.

WARNING: When the engine is operating, do not stand in direct line with the fan. Do not put your hands near the pulleys, belts or fan. Do not wear loose clothing. Failure to follow these instructions may result in possible serious or fatal injury.

3. Ignition on, engine not running.
4. Wiggle the related wire harness and lightly tap on the Cam Position Sensor.
5. Observe the lab scope screen.
6. Look for any pulses generated by the CMP Sensor.
7. Allow the engine to idle.
8. Observe the lab scope screen.

Did the CMP Sensor generate any pulses?

Yes

- Verify that there is good pin to terminal contact in the CMP Sensor and Powertrain Control Module connectors. Replace the Camshaft Position Sensor if no problems were found with the connectors.
- Perform the POWERTRAIN VERIFICATION TEST. (Refer to 28 - DTC-Based Diagnostics/MODULE, Powertrain Control (PCM) - Standard Procedure)

No

- Test complete, the conditions that set this DTC are not present at this time. Refer to the INTERMITTENT CONDITION Diagnostic Procedure for further assistance. (Refer to 28 - DTC-Based Diagnostics/MODULE, Powertrain Control (PCM) - Standard Procedure)

P0339-CRANKSHAFT POSITION SENSOR INTERMITTENT

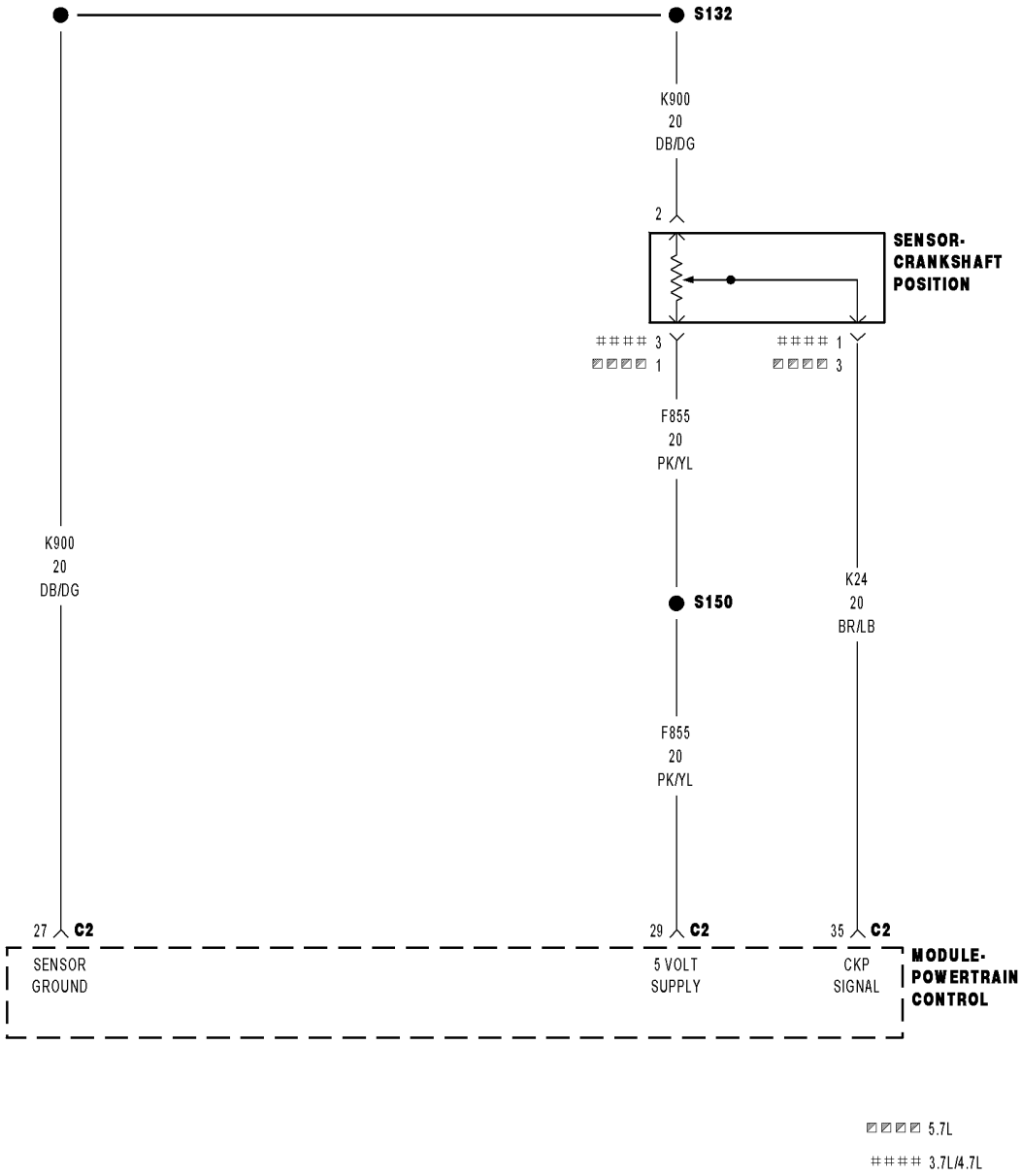

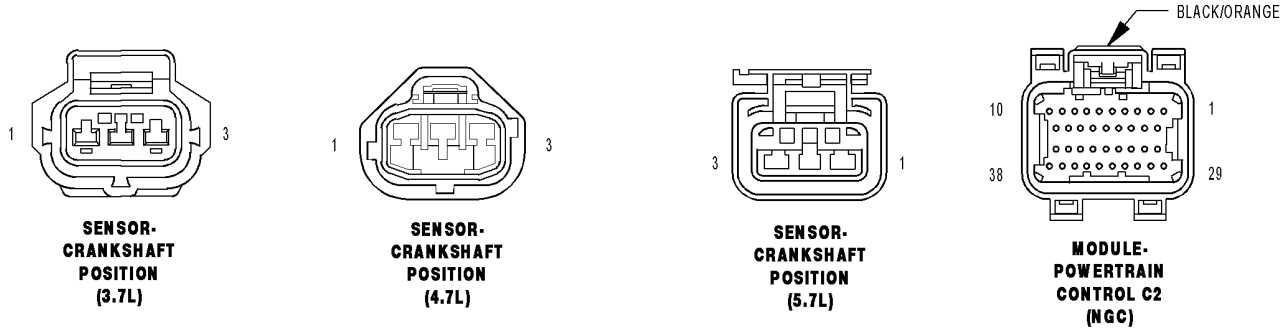

For a complete wiring diagram **Refer to the Wiring Information**.

- **When Monitored:**
  While cranking the engine and with the engine running.
- **Set Condition:**
  When the CKP Sensor failure counter reaches 20. One Trip Fault. Three good trips to turn off the MIL.

Possible Causes
(F855) 5-VOLT SUPPLY CIRCUIT OPEN
(F855) 5-VOLT SUPPLY CIRCUIT SHORTED TO GROUND
(K24) CKP SIGNAL CIRCUIT SHORTED TO VOLTAGE
(K24) CKP SIGNAL CIRCUIT OPEN
(K24) CKP SIGNAL CIRCUIT SHORTED TO GROUND
(K24) CKP SIGNAL CIRCUIT SHORTED TO THE (F855) 5-VOLT SUPPLY CIRCUIT
CRANKSHAFT POSITION SENSOR
TONE WHEEL/PULSE RING
POWERTRAIN CONTROL MODULE (PCM)

Always perform the Pre-Diagnostic Troubleshooting procedure before proceeding. (Refer to 28 - DTC-Based Diagnostics/MODULE, Powertrain Control (PCM) - Standard Procedure).

1. ACTIVE DTC

1. Turn the ignition on.
2. With the scan tool, select View DTCs. Copy DTC and Freeze Frame information.
3. Start the engine and allow it to reach operating temperature.

WARNING: When the engine is operating, do not stand in direct line with the fan. Do not put your hands near the pulleys, belts or fan. Do not wear loose clothing. Failure to follow these instructions may result in possible serious or fatal injury.

NOTE: Attempt to operate the vehicle under conditions similar to which the DTC was set.

NOTE: It may be necessary to test drive the vehicle within the DTC monitoring conditions in order for this DTC to set.

4. With a scan tool, select View DTCs.

Is the DTC Active at this time?

Yes

- Go To 2

No

- Refer to the INTERMITTENT CONDITION Diagnostic Procedure. (Refer to 28 - DTC-Based Diagnostics/MODULE, Powertrain Control (PCM) - Standard Procedure)

2. CHECKING CRANKSHAFT POSITION SENSOR SIGNAL WITH A LAB SCOPE

1. Turn the ignition off.
2. With a lab scope probe and the Miller special tool #6801, backprobe the (K24) CKP Signal circuit in the Sensor harness connector.

WARNING: When the engine is operating, do not stand in direct line with the fan. Do not put your hands near the pulleys, belts or fan. Do not wear loose clothing. Failure to follow these instructions may result in possible serious or fatal injury.

3. Ignition on, engine not running.
4. Observe the lab scope screen.
5. Start the engine.
6. Observe the lab scope screen.

Are there any irregular or missing signals?

Yes

- Go To 3

No

- Go To 8

3. WIRE HARNESS INSPECTION

1. Turn the ignition off.
2. Visually inspect the related wire harness including the ground circuit. Look for any chafed, pierced, pinched, or partially broken wires.
3. Visually inspect the related wire harness connectors. Look for broken, bent, pushed out, or corroded terminals.
4. Verify that there is good pin to terminal contact in the Crankshaft Position Sensor and the Powertrain Control Module connectors.
5. Make sure the Crankshaft Position Sensor and the Camshaft Position Sensor are properly installed and the mounting bolt(s) are torqued to the proper specification.
6. Refer to any TSBs that may apply.

Were any of the above conditions present?

Yes

- Repair as necessary.
- Perform the POWERTRAIN VERIFICATION TEST. (Refer to 28 - DTC-Based Diagnostics/MODULE, Powertrain Control (PCM) - Standard Procedure)

No

- Go To 4

4. (F855) 5-VOLT SUPPLY CIRCUIT OPEN OR SHORTED TO GROUND

1. Disconnect the CKP Sensor connector.
2. Ignition on, engine not running.
3. Measure the voltage on the (F855) 5-volt Supply circuit in the Sensor harness connector.

Is the voltage between 4.5 and 5.2 volts?

Yes

- Go To 5

No

- Repair the open or short to ground in the (F855) 5-volt Supply circuit. Use Miller special tool #8815A when checking for an open circuit to prevent PCM harness connector terminal damage.
- Perform the POWERTRAIN VERIFICATION TEST. (Refer to 28 - DTC-Based Diagnostics/MODULE, Powertrain Control (PCM) - Standard Procedure)

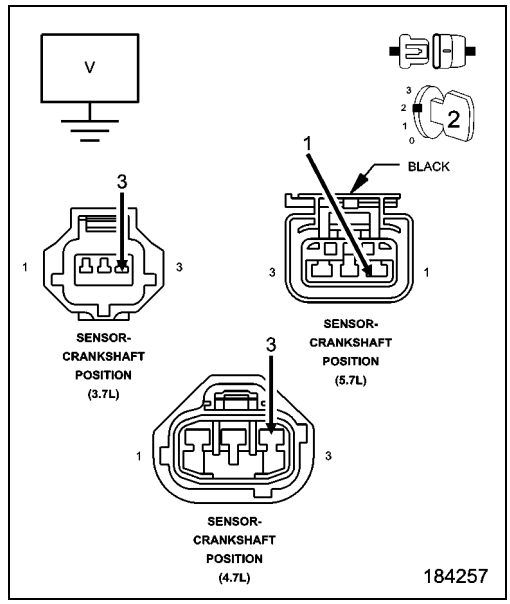

5. TONE WHEEL/FLEX PLATE INSPECTION

1. Turn the ignition off.
2. Carefully disconnect the Negative Battery (Ground) cable.
3. Remove the Crankshaft Position Sensor.
4. Inspect the Tone Wheel/Flex Plate slots for damage, foreign material, or excessive movement.

Were any problems found?

Yes

- Repair or replace the Tone Wheel/Flex Plate as necessary.
- Perform the POWERTRAIN VERIFICATION TEST. (Refer to 28 - DTC-Based Diagnostics/MODULE, Powertrain Control (PCM) - Standard Procedure)

No

- Go To 6

6. CHECKING CAMSHAFT POSITION SENSOR SIGNAL WITH A LAB SCOPE

1. Install the CKP Sensor and connect the battery cable.

NOTE: An intermittent condition in the Cam Position Sensor can cause the P0339 to set.

2. With the a lab scope probe and the Miller special tool #6801, backprobe the (K44) CMP Signal circuit in the Sensor harness connector.

WARNING: When the engine is operating, do not stand in direct line with the fan. Do not put your hands near the pulleys, belts or fan. Do not wear loose clothing. Failure to follow these instructions may result in possible serious or fatal injury.

3. Ignition on, engine not running.
4. Wiggle the related wire harness and lightly tap on the Cam Position Sensor.
5. Observe the lab scope screen.
6. Start the engine.
7. Observe the lab scope screen.

Are there any irregular or missing signals?

Yes

- Verify that there is good pin to terminal contact in the CMP Sensor and Powertrain Control Module connectors. Replace the Camshaft Position Sensor if no problems were found with the connectors.
- Perform the POWERTRAIN VERIFICATION TEST. (Refer to 28 - DTC-Based Diagnostics/MODULE, Powertrain Control (PCM) - Standard Procedure)

No

- Go To 7

7. CRANKSHAFT POSITION SENSOR

If there are no possible causes remaining, view repair.

Repair

- Verify that there is good pin to terminal contact in the CKP Sensor and Powertrain Control Module connectors. Replace the Crankshaft Position Sensor if no problems were found with the connectors.
- Perform the POWERTRAIN VERIFICATION TEST. (Refer to 28 - DTC-Based Diagnostics/MODULE, Powertrain Control (PCM) - Standard Procedure)

8. (K24) CKP SIGNAL CIRCUIT SHORTED TO VOLTAGE

1. Turn the ignition off.
2. Disconnect the C2 PCM harness connector.
3. Disconnect the CKP Sensor harness connector.
4. Ignition on, engine not running.
5. Measure the voltage on the (K24) CKP Signal circuit in the Sensor harness connector.
6. Wiggle the related wire harness while taking this measurement.

Is there any voltage present?

Yes

- Repair the short to voltage in the (K24) CKP Signal circuit.
- Perform the POWERTRAIN VERIFICATION TEST. (Refer to 28 - DTC-Based Diagnostics/MODULE, Powertrain Control (PCM) - Standard Procedure)

No

- Go To 9

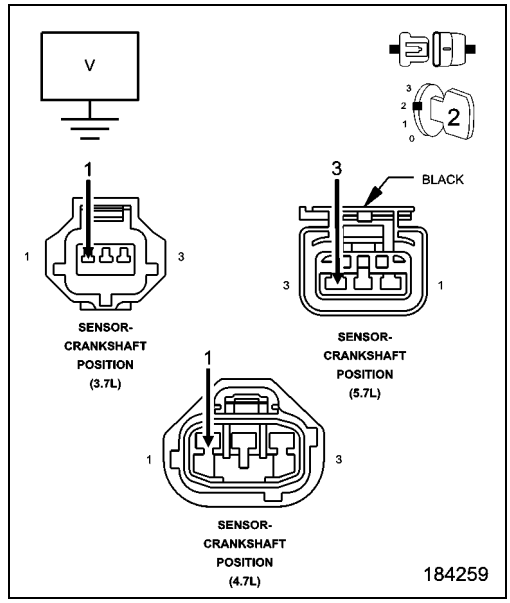

9. (K24) CKP SIGNAL CIRCUIT OPEN

1. Turn the ignition off.

CAUTION: Do not probe the PCM harness connectors. Probing the PCM harness connectors will damage the PCM terminals resulting in poor terminal to pin connection. Install the PCM Pinout Box Kit, NGC, 38 Position 8815A to perform diagnosis.

2. Measure the resistance in the (K24) CKP Signal circuit from the CKP harness connector to the appropriate terminal of special tool #8815A.
3. Wiggle the wire harness while taking this measurement.

Is the resistance below 1.0 ohm?

Yes

- Go To 10

No

- Repair the excessive resistance in the (K24) CKP Signal circuit.
- Perform the POWERTRAIN VERIFICATION TEST. (Refer to 28 - DTC-Based Diagnostics/MODULE, Powertrain Control (PCM) - Standard Procedure)

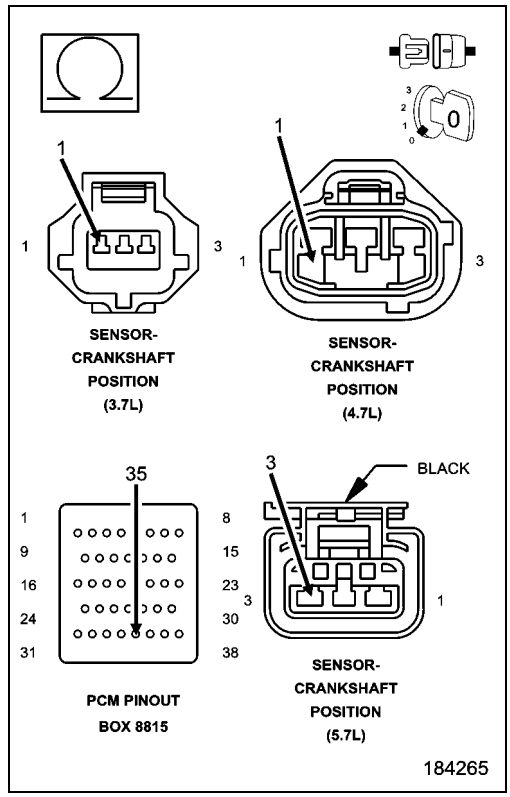

10. (K24) CKP SIGNAL CIRCUIT SHORTED TO GROUND

1. Measure the resistance between ground and the (K24) CKP Signal circuit in the CKP Sensor harness connector.
2. Wiggle the related wire harness while monitoring the resistance value.

Does the resistance ever go below 100 ohms?

Yes

- Repair the short to ground in the (K24) Signal circuit.
- Perform the POWERTRAIN VERIFICATION TEST. (Refer to 28 - DTC-Based Diagnostics/MODULE, Powertrain Control (PCM) - Standard Procedure)

No

- Go To 11

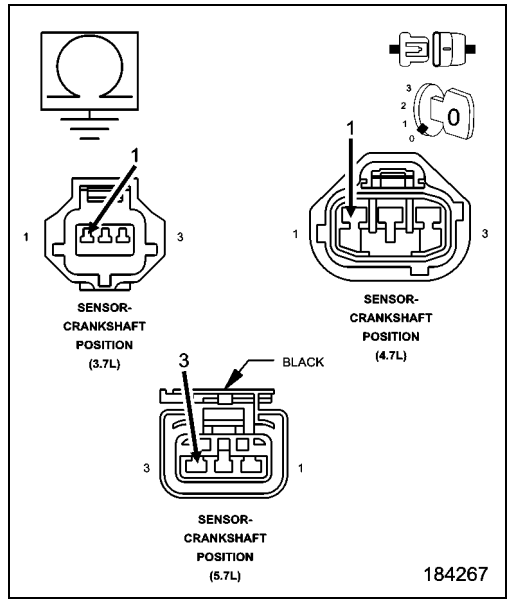

11. (K24) CKP SIGNAL CIRCUIT SHORTED TO THE (F855) 5-VOLT SUPPLY CIRCUIT

1. Measure the resistance between the (F855) 5-volt Supply circuit and the (K24) CKP Signal circuit in the CKP harness connector.
2. Wiggle the related wire harness while taking this measurement.

Is the resistance below 5.0 ohms?

Yes

- Repair the short between the (F855) 5-volt Supply circuit and the (K24) CKP Signal circuit.
- Perform the POWERTRAIN VERIFICATION TEST. (Refer to 28 - DTC-Based Diagnostics/MODULE, Powertrain Control (PCM) - Standard Procedure)

No

- Go To 12

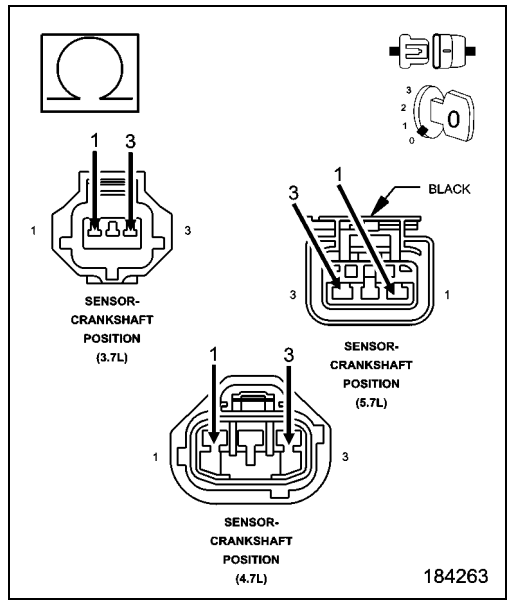

12. POWERTRAIN CONTROL MODULE (PCM)

1. Using the wiring diagram/schematic as a guide, inspect the wiring and connectors between the related Sensor and the Powertrain Control Module (PCM).
2. Look for any chafed, pierced, pinched, or partially broken wires.
3. Look for broken, bent, pushed out or corroded terminals. Verify that there is good pin to terminal contact in the Crankshaft Position Sensor and the Powertrain Control Module connectors.
4. Refer to any Technical Service Bulletins that may apply.

Were there any problems found?

Yes

- Repair as necessary.
- Perform the POWERTRAIN VERIFICATION TEST. (Refer to 28 - DTC-Based Diagnostics/MODULE, Powertrain Control (PCM) - Standard Procedure)

No

- Replace and program the Powertrain Control Module per Service Information.
- Perform the POWERTRAIN VERIFICATION TEST. (Refer to 28 - DTC-Based Diagnostics/MODULE, Powertrain Control (PCM) - Standard Procedure)

P0340-CAMSHAFT POSITION SENSOR CIRCUIT

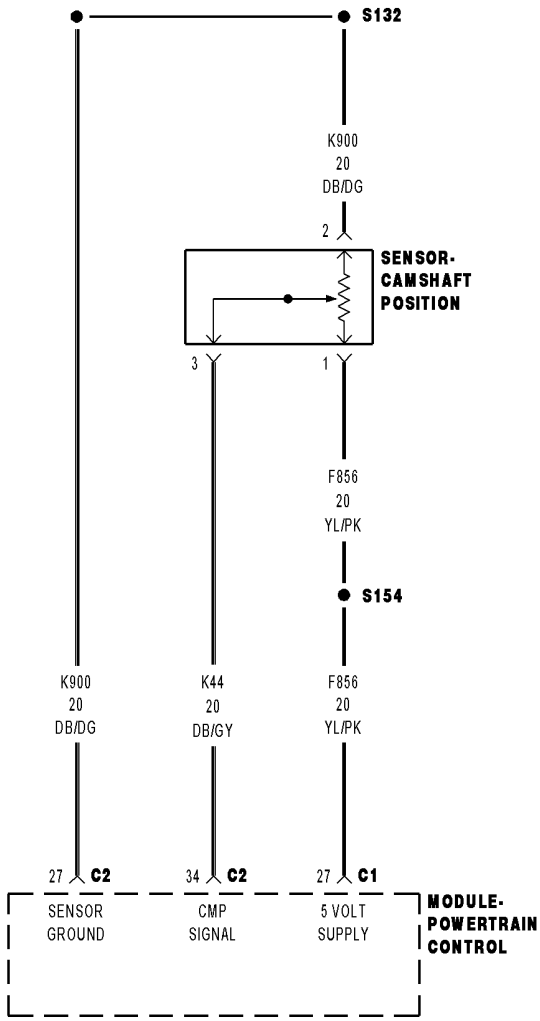

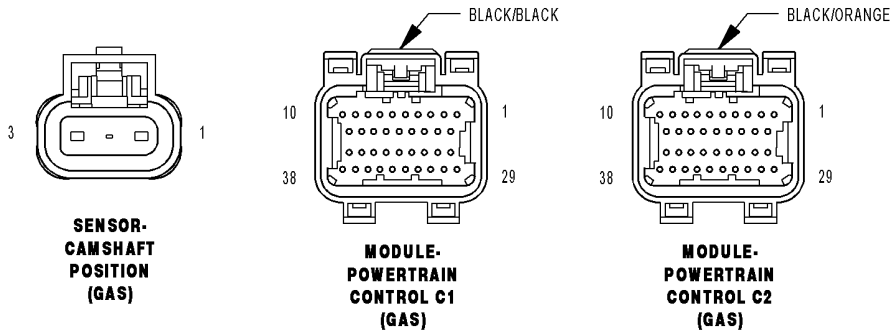

81cc45a0

For a complete wiring diagram **Refer to the Wiring Information**.

- **When Monitored:**
  During engine cranking and with the engine running. Battery voltage greater than 10 volts.
- **Set Condition:**
  At least 5 seconds or 2.5 engine revolutions have elapsed with crankshaft position sensor signals present but no camshaft position sensor signal. One Trip Fault. Three good trips to turn off the MIL.

Possible Causes
(F856) 5-VOLT SUPPLY CIRCUIT SHORTED TO VOLTAGE
(F856) 5-VOLT SUPPLY CIRCUIT OPEN
(F856) 5-VOLT SUPPLY CIRCUIT SHORTED TO GROUND
(K44) CMP SIGNAL CIRCUIT SHORTED TO VOLTAGE
(K44) CMP SIGNAL CIRCUIT OPEN
(K44) CMP SIGNAL CIRCUIT SHORTED GROUND
(K44) CMP SIGNAL SHORTED TO THE (F856) 5-VOLT SUPPLY CIRCUIT
(K900) SENSOR GROUND CIRCUIT OPEN
CAMSHAFT POSITION SENSOR
CRANKSHAFT POSITION SENSOR
POWERTRAIN CONTROL MODULE (PCM)

Always perform the Pre-Diagnostic Troubleshooting procedure before proceeding. (Refer to 28 - DTC-Based Diagnostics/MODULE, Powertrain Control (PCM) - Standard Procedure).

1. ACTIVE DTC

1. Turn the ignition on.
2. With the scan tool, select View DTCs. Copy DTC and Freeze Frame information.
3. Start the engine and allow it to reach operating temperature.

WARNING: When the engine is operating, do not stand in direct line with the fan. Do not put your hands near the pulleys, belts or fan. Do not wear loose clothing. Failure to follow these instructions may result in possible serious or fatal injury.

NOTE: Attempt to operate the vehicle under conditions similar to which the DTC was set.

NOTE: It may be necessary to test drive the vehicle within the DTC monitoring conditions in order for this DTC to set.

4. With a scan tool, select View DTCs.

Is the DTC Active at this time?

Yes

- Go To 2

No

- Go To 14

2. (F856) 5-VOLT SUPPLY CIRCUIT

1. Turn the ignition off.
2. Disconnect the CMP Sensor harness connector.
3. Ignition on, engine not running.
4. Measure the voltage on the (F856) 5-volt Supply circuit in the CMP Sensor harness connector.

Is the voltage between 4.5 and 5.2 volts?

Yes

- Go To 3

No

- Go To 10

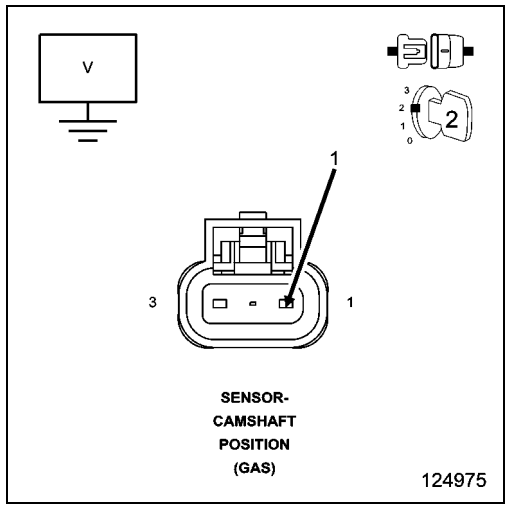

3. (K44) CMP SIGNAL CIRCUIT

1. Measure the voltage on the (K44) CMP Signal circuit in the CMP Sensor harness connector.

Is the voltage between 4.5 and 5.0 volts?

Yes

- Go To 4

No

- Go To 7

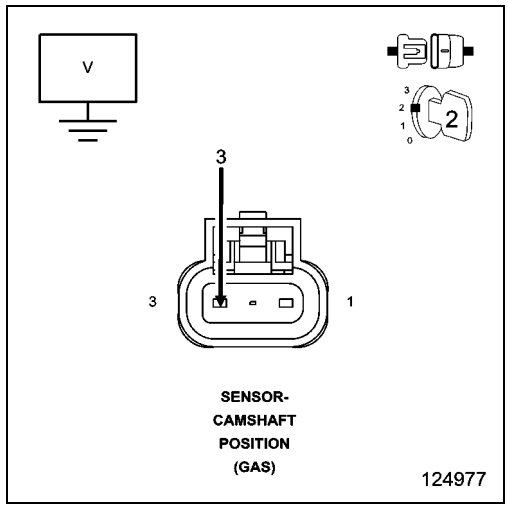

4. (K900) SENSOR GROUND CIRCUIT OPEN

1. Turn the ignition off.
2. Disconnect the C2 PCM harness connector.

CAUTION: Do not probe the PCM harness connectors. Probing the PCM harness connectors will damage the PCM terminals resulting in poor terminal to pin connection. Install the PCM Pinout Box Kit, NGC, 38 Position 8815A to perform diagnosis.

3. Measure the resistance of the (K900) Sensor ground circuit from the CMP Sensor harness connector to the appropriate terminal of special tool #8815A.

Is the resistance below 5.0 ohms?

Yes

- Go To 5

No

- Repair the open in the (K900) Sensor ground circuit.
- Perform the POWERTRAIN VERIFICATION TEST. (Refer to 28 - DTC-Based Diagnostics/MODULE, Powertrain Control (PCM) - Standard Procedure)

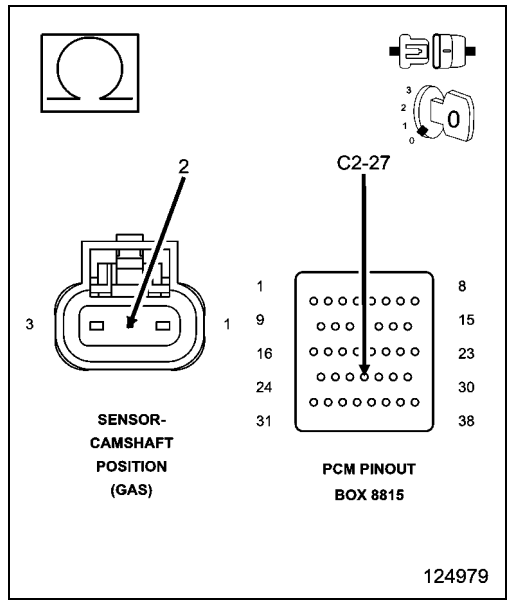

5. (K44) CMP SIGNAL SHORTED TO THE (F856) 5-VOLT SUPPLY CIRCUIT

1. Measure the resistance between the (K44) CMP Signal circuit and the (F856) 5-volt Supply circuit in the CMP Sensor harness connector.

Is the resistance below 5.0 ohms?

Yes

- Repair the short between the (K44) CMP Signal circuit and the (F856) 5-volt Supply circuit.
- Perform the POWERTRAIN VERIFICATION TEST. (Refer to 28 - DTC-Based Diagnostics/MODULE, Powertrain Control (PCM) - Standard Procedure)

No

- Go To 6

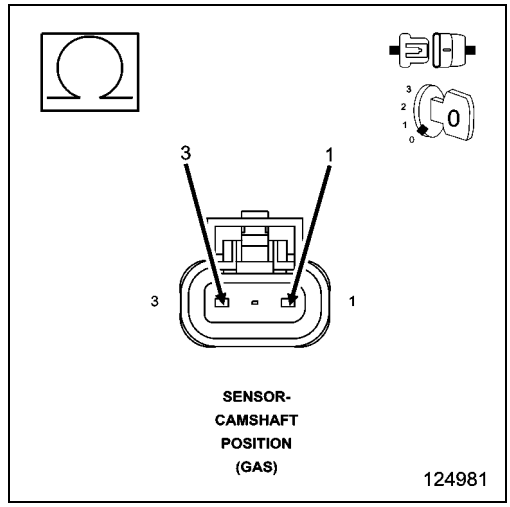

6. CAMSHAFT POSITION SENSOR

NOTE: Inspect the Camshaft sprocket for damage per the Service Information. If a problem is found repair as necessary.

If there are no possible causes remaining, view repair.

Repair

- Verify that there is good pin to terminal contact in the CMP Sensor and Powertrain Control Module connectors. Replace the Camshaft Position Sensor if no problems were found with the connectors.
- Perform the POWERTRAIN VERIFICATION TEST. (Refer to 28 - DTC-Based Diagnostics/MODULE, Powertrain Control (PCM) - Standard Procedure)

7. (K44) CMP SIGNAL CIRCUIT SHORTED TO VOLTAGE

1. Turn the ignition off.
2. Disconnect the C2 PCM harness connector.
3. Ignition on, engine not running.
4. Measure the voltage on the (K44) CMP Signal circuit in the CMP Sensor harness connector.

Is there any voltage present?

Yes

- Repair the short to voltage in the (K44) CMP Signal circuit.
- Perform the POWERTRAIN VERIFICATION TEST. (Refer to 28 - DTC-Based Diagnostics/MODULE, Powertrain Control (PCM) - Standard Procedure)

No

- Go To 8

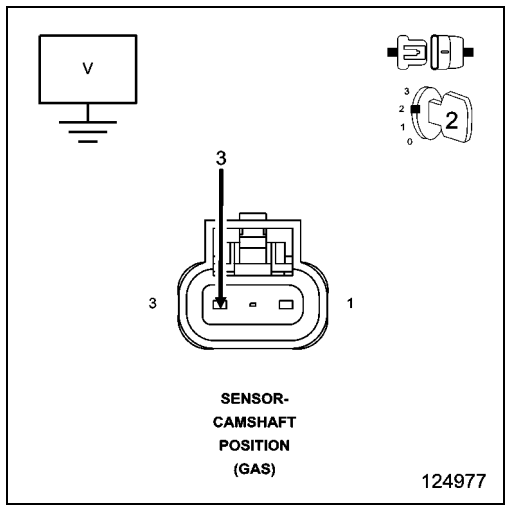

8. (K44) CMP SIGNAL CIRCUIT OPEN

1. Turn the ignition off.

CAUTION: Do not probe the PCM harness connectors. Probing the PCM harness connectors will damage the PCM terminals resulting in poor terminal to pin connection. Install the PCM Pinout Box Kit, NGC, 38 Position 8815A to perform diagnosis.

2. Measure the resistance of the (K44) CMP Signal circuit from the CMP Sensor harness connector to the appropriate terminal of special tool #8815A.

Is the resistance below 5.0 ohms?

Yes

- Go To 9

No

- Repair the open in the (K44) CMP Signal circuit.
- Perform the POWERTRAIN VERIFICATION TEST. (Refer to 28 - DTC-Based Diagnostics/MODULE, Powertrain Control (PCM) - Standard Procedure)

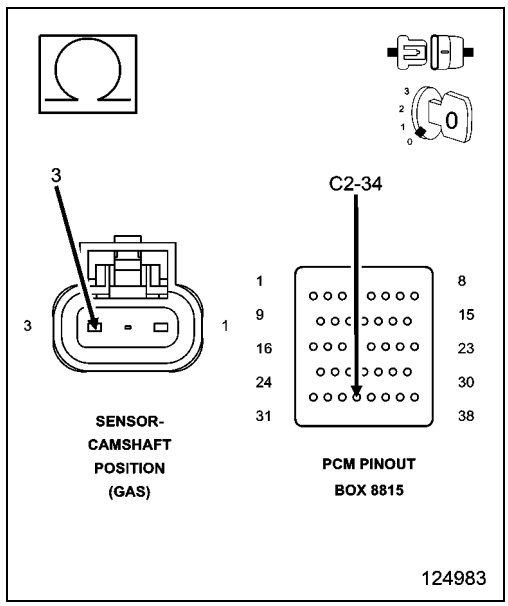

9. (K44) CMP SIGNAL CIRCUIT SHORTED TO GROUND

1. Measure the resistance between ground and the (K44) CMP Signal circuit in the CMP Sensor harness connector.

Is the resistance below 100 ohms?

Yes

- Repair the short to ground in the (K44) CMP Signal circuit
- Perform the POWERTRAIN VERIFICATION TEST. (Refer to 28 - DTC-Based Diagnostics/MODULE, Powertrain Control (PCM) - Standard Procedure)

No

- Go To 10

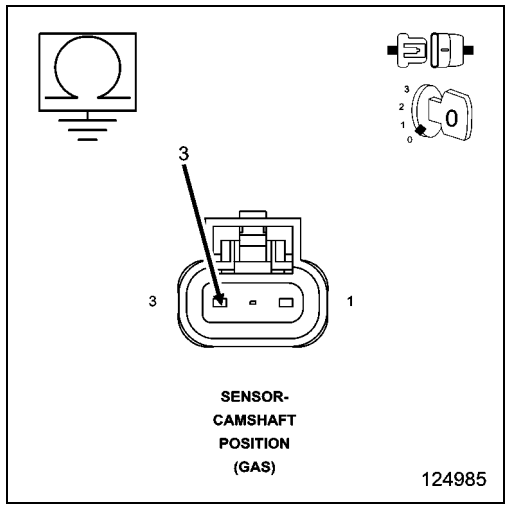

10. (F856) 5-VOLT SUPPLY CIRCUIT SHORTED TO VOLTAGE

1. Turn the ignition off.
2. Disconnect the C1 PCM harness connector.
3. Ignition on, engine not running.
4. Measure the voltage on the (F856) 5-volt Supply circuit in the CMP Sensor harness connector.

Is there any voltage present?

Yes

- Repair the short to voltage in the (F856) 5-volt Supply circuit.
- Perform the POWERTRAIN VERIFICATION TEST. (Refer to 28 - DTC-Based Diagnostics/MODULE, Powertrain Control (PCM) - Standard Procedure)

No

- Go To 11

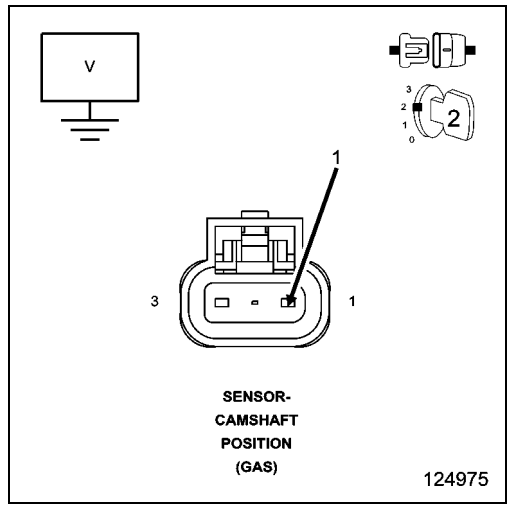

11. (F856) 5-VOLT SUPPLY CIRCUIT OPEN

1. Turn the ignition off.

CAUTION: Do not probe the PCM harness connectors. Probing the PCM harness connectors will damage the PCM terminals resulting in poor terminal to pin connection. Install the PCM Pinout Box Kit, NGC, 38 Position 8815A to perform diagnosis.

2. Measure the resistance of the (F856) 5-volt Supply circuit between the CMP Sensor harness connector to the appropriate terminal of special tool #8815A.

Is the resistance below 5.0 ohms?

Yes

- Go To 12

No

- Repair the open in the (F856) 5-volt Supply circuit.
- Perform the POWERTRAIN VERIFICATION TEST. (Refer to 28 - DTC-Based Diagnostics/MODULE, Powertrain Control (PCM) - Standard Procedure)

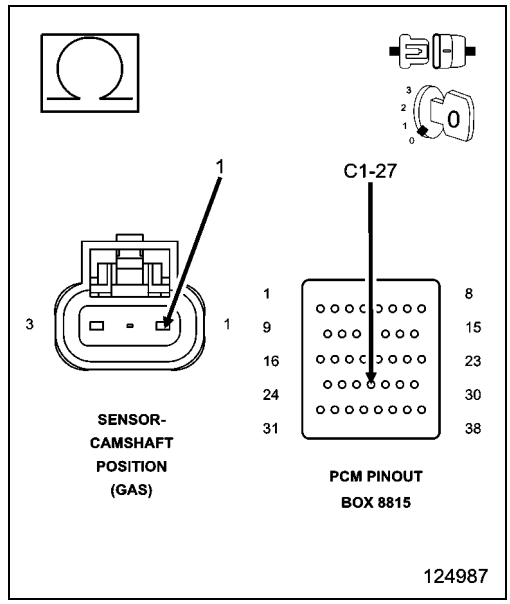

12. (F856) 5-VOLT SUPPLY CIRCUIT SHORTED TO GROUND

1. Measure the resistance between ground and the (F856) 5-volt Supply circuit in the CMP Sensor harness connector.

Is the resistance below 100 ohms?

Yes

- Repair the short to ground in the (F856) 5-volt Supply circuit.
- Perform the POWERTRAIN VERIFICATION TEST. (Refer to 28 - DTC-Based Diagnostics/MODULE, Powertrain Control (PCM) - Standard Procedure)

No

- Go To 13

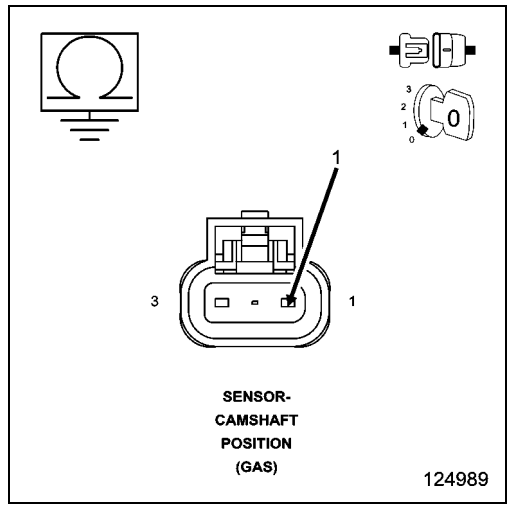

13. POWERTRAIN CONTROL MODULE (PCM)

1. Using the wiring diagram/schematic as a guide, inspect the wiring and connectors between the related Sensor and the Powertrain Control Module (PCM).
2. Look for any chafed, pierced, pinched, or partially broken wires.
3. Look for broken, bent, pushed out or corroded terminals. Verify that there is good pin to terminal contact in the related Sensor and the Powertrain Control Module connectors.
4. Refer to any Technical Service Bulletins that may apply.

Were there any problems found?

Yes

- Repair as necessary.
- Perform the POWERTRAIN VERIFICATION TEST. (Refer to 28 - DTC-Based Diagnostics/MODULE, Powertrain Control (PCM) - Standard Procedure)

No

- Replace and program the Powertrain Control Module per Service Information.
- Perform the POWERTRAIN VERIFICATION TEST. (Refer to 28 - DTC-Based Diagnostics/MODULE, Powertrain Control (PCM) - Standard Procedure)

14. ERRATIC CMP SIGNAL

1. With a lab scope probe and the Miller special tool #6801, back probe the (K44) CMP Signal circuit in the CMP harness connector.

WARNING: When the engine is operating, do not stand in direct line with the fan. Do not put your hands near the pulleys, belts or fan. Do not wear loose clothing. Failure to follow these instructions may result in possible serious or fatal injury.

2. Ignition on, engine not running.
3. Wiggle the related wire harness and lightly tap the Camshaft Position Sensor.
4. Observe the lab scope screen.
5. Allow the engine to idle.
6. Observe the lab scope screen.

Did the CMP Sensor generate any erratic pulses?

Yes

- Replace the Camshaft Position Sensor.
- Perform the POWERTRAIN VERIFICATION TEST. (Refer to 28 - DTC-Based Diagnostics/MODULE, Powertrain Control (PCM) - Standard Procedure)

No

- Go To 15

15. ERRATIC CKP SIGNAL

1. Turn the ignition off.
2. With a lab scope probe and the Miller special tool #6801, backprobe the (K24) CKP Signal circuit in the CKP harness connector.

WARNING: When the engine is operating, do not stand in direct line with the fan. Do not put your hands near the pulleys, belts or fan. Do not wear loose clothing. Failure to follow these instructions may result in possible serious or fatal injury.

3. Ignition on, engine not running.
4. Wiggle the related wire harness and lightly tap on the Crankshaft Position Sensor.
5. Observe the lab scope screen.
6. Allow the engine to idle.
7. Observe the lab scope screen.

Did the CKP Sensor generate any erratic pulses?

Yes

- Replace the Crankshaft Position Sensor.
- Perform the POWERTRAIN VERIFICATION TEST. (Refer to 28 - DTC-Based Diagnostics/MODULE, Powertrain Control (PCM) - Standard Procedure)

No

- Test complete, the conditions that set this DTC are not present at this time. Refer to the INTERMITTENT CONDITION Diagnostic Procedure for further assistance. (Refer to 28 - DTC-Based Diagnostics/MODULE, Powertrain Control (PCM) - Standard Procedure)

P0344-CAMSHAFT POSITION SENSOR INTERMITTENT

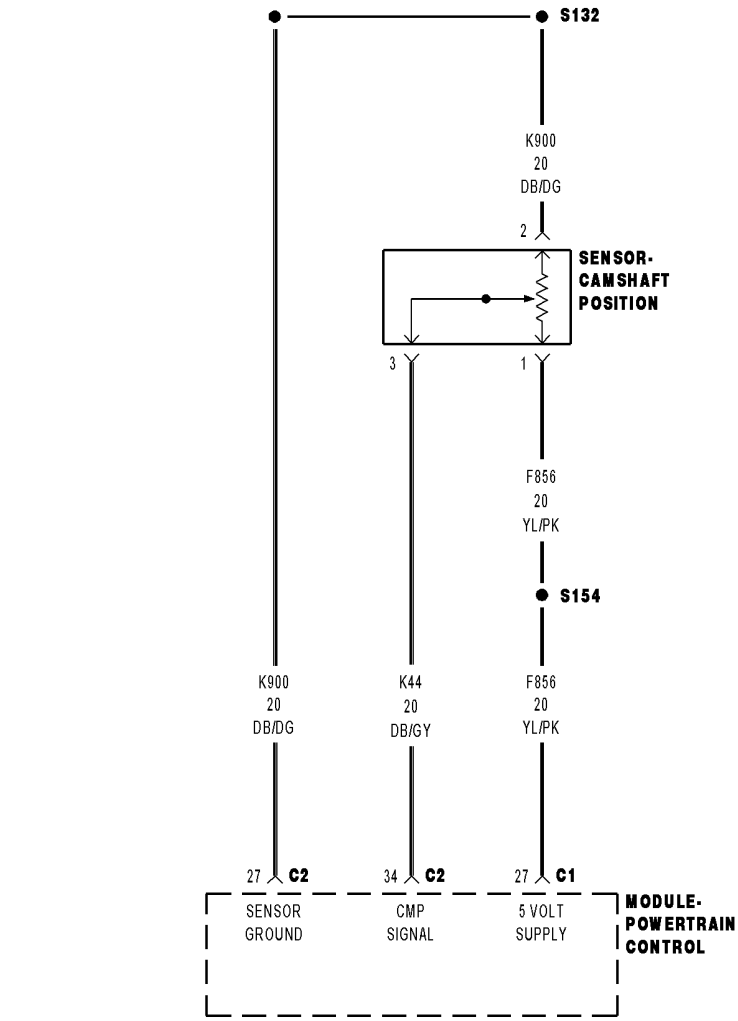

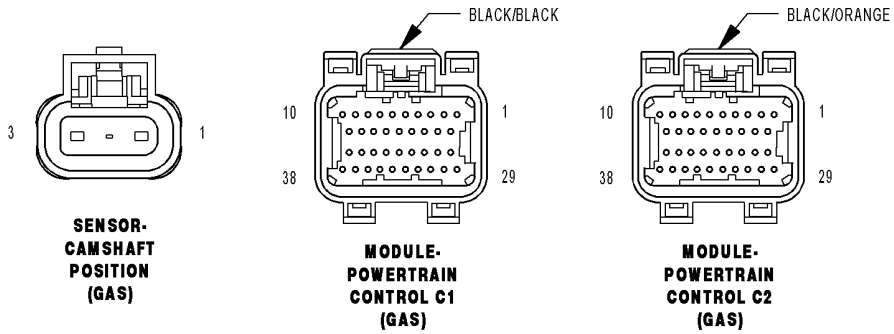

81cc45a0

For a complete wiring diagram **Refer to the Wiring Information**.

- **When Monitored:**
  While cranking the engine and engine running.
- **Set Condition:**
  When the failure counter reaches 20. One Trip Fault. Three good trips to turn off the MIL.

Possible Causes
(F856) 5-VOLT SUPPLY CIRCUIT OPEN
(F856) 5-VOLT SUPPLY CIRCUIT SHORTED TO GROUND
(K44) CMP SIGNAL CIRCUIT SHORTED TO VOLTAGE
(K44) CMP SIGNAL CIRCUIT OPEN
(K44) CMP SIGNAL CIRCUIT SHORTED TO GROUND
(K44) CMP SIGNAL CIRCUIT SHORTED TO THE (F856) 5-VOLT SUPPLY
TONE WHEEL/PULSE RING
CAMSHAFT POSITION SENSOR
POWERTRAIN CONTROL MODULE (PCM)

Always perform the Pre-Diagnostic Troubleshooting procedure before proceeding. (Refer to 28 - DTC-Based Diagnostics/MODULE, Powertrain Control (PCM) - Standard Procedure).

1. ACTIVE DTC

1. Turn the ignition on.
2. With the scan tool, select View DTCs. Copy DTC and Freeze Frame information.
3. Start the engine and allow it to reach operating temperature.

WARNING: When the engine is operating, do not stand in direct line with the fan. Do not put your hands near the pulleys, belts or fan. Do not wear loose clothing. Failure to follow these instructions may result in possible serious or fatal injury.

NOTE: Attempt to operate the vehicle under conditions similar to which the DTC was set.

NOTE: It may be necessary to test drive the vehicle within the DTC monitoring conditions in order for this DTC to set.

4. With a scan tool, select View DTCs.

Is the DTC Active at this time?

Yes

- Go To 2

No

- Refer to the INTERMITTENT CONDITION Diagnostic Procedure. (Refer to 28 - DTC-Based Diagnostics/MODULE, Powertrain Control (PCM) - Standard Procedure)

2. CHECKING CAMSHAFT POSITION SENSOR SIGNAL WITH A LAB SCOPE

1. Turn the ignition off.
2. With a lab scope probe and the Miller special tool #6801, backprobe the (K44) CMP Signal circuit in the CMP harness connector.

WARNING: When the engine is operating, do not stand in direct line with the fan. Do not put your hands near the pulleys, belts or fan. Do not wear loose clothing. Failure to follow these instructions may result in possible serious or fatal injury.

3. Ignition on, engine not running.
4. Observe the lab scope screen.
5. Start the engine.
6. Observe the lab scope screen.

Are there any irregular or missing signals?

Yes

- Go To 3

No

- Go To 8

3. WIRE HARNESS INSPECTION

1. Turn the ignition off.
2. Verify that there is good pin to terminal contact in the CMP Sensor and the Powertrain Control Module connectors.
3. Visually inspect the related wire harness including the ground circuit. Look for any chafed, pierced, pinched, or partially broken wires.
4. Visually inspect the related wire harness connectors. Look for broken, bent, pushed out, or corroded terminals.
5. Make sure the Crankshaft Position Sensor and the Camshaft Position Sensor are properly installed and the mounting bolt(s) are torqued to the proper specification.
6. Refer to any TSBs that may apply.

Were any of the above conditions present?

Yes

- Repair as necessary.
- Perform the POWERTRAIN VERIFICATION TEST. (Refer to 28 - DTC-Based Diagnostics/MODULE, Powertrain Control (PCM) - Standard Procedure)

No

- Go To 4

4. (F856) 5-VOLT SUPPLY CIRCUIT OPEN OR SHORTED TO GROUND

1. Disconnect the CMP Sensor connector.
2. Ignition on, engine not running.
3. Measure the voltage on the (F856) 5-volt Supply circuit in the CMP harness connector.

Is the voltage between 4.5 and 5.2 volts?

Yes

- Go To 5

No

- Repair the open or short to ground in the (F856) 5-volt Supply circuit. Use Miller special tool #8815A when checking for an open circuit to prevent PCM harness connector terminal damage.
- Perform the POWERTRAIN VERIFICATION TEST. (Refer to 28 - DTC-Based Diagnostics/MODULE, Powertrain Control (PCM) - Standard Procedure)

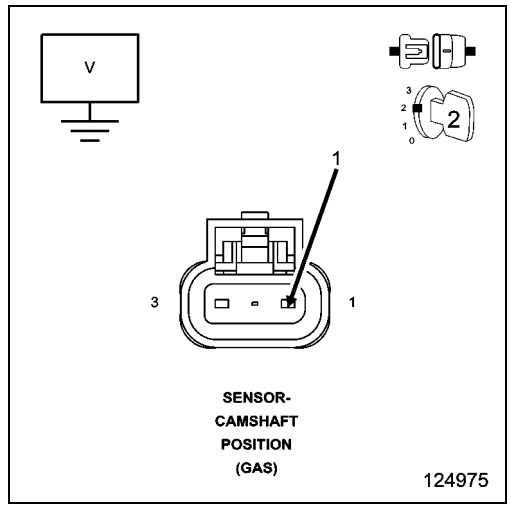

5. TONE WHEEL/PULSE RING INSPECTION

1. Turn the ignition off.
2. Carefully disconnect the Battery Ground cable.
3. Remove the Camshaft Position Sensor.
4. Inspect the Tone Wheel/Pulse Ring for damage, foreign material, or excessive movement.

Were any problems found?

Yes

- Repair or replace the Tone Wheel/Pulse Ring as necessary.
- Perform the POWERTRAIN VERIFICATION TEST. (Refer to 28 - DTC-Based Diagnostics/MODULE, Powertrain Control (PCM) - Standard Procedure)

No

- Go To 6

6. CHECKING CRANKSHAFT POSITION SENSOR SIGNAL WITH A LAB SCOPE

NOTE: An intermittent condition in the Crank Position Sensor can cause the P0344 to set.

1. Install the CMP Sensor and connect the Battery cable.
2. With a lab scope probe and the Miller special tool #6801, backprobe the (K24) CKP Signal circuit in the CKP harness connector.

WARNING: When the engine is operating, do not stand in direct line with the fan. Do not put your hands near the pulleys, belts or fan. Do not wear loose clothing. Failure to follow these instructions may result in possible serious or fatal injury.

3. Ignition on, engine not running.
4. Wiggle the related wire harness and lightly tap on the Crank Position Sensor.
5. Observe the lab scope screen.
6. Start the engine.
7. Observe the lab scope screen.

Are there any irregular or missing signals?

Yes

- Verify that there is good pin to terminal contact in the CKP Sensor and Powertrain Control Module connectors. Replace the Crankshaft Position Sensor if no problems were found with the connectors.
- Perform the POWERTRAIN VERIFICATION TEST. (Refer to 28 - DTC-Based Diagnostics/MODULE, Powertrain Control (PCM) - Standard Procedure)

No

- Go To 7

7. CAMSHAFT POSITION SENSOR

If there are no possible causes remaining, view repair.

Repair

- Verify that there is good pin to terminal contact in the CMP Sensor and Powertrain Control Module connectors. Replace the Camshaft Position Sensor if no problems were found with the connectors.
- Perform the POWERTRAIN VERIFICATION TEST. (Refer to 28 - DTC-Based Diagnostics/MODULE, Powertrain Control (PCM) - Standard Procedure)

8. (K44) CMP SIGNAL CIRCUIT SHORTED TO VOLTAGE

1. Turn the ignition off.
2. Disconnect the CMP Sensor connector.
3. Disconnect the C2 PCM harness connector.
4. Ignition on, engine not running.
5. Measure the voltage on the (K44) CMP Signal circuit.
6. Wiggle the related wire harness while taking this measurement.

Is there any voltage present?

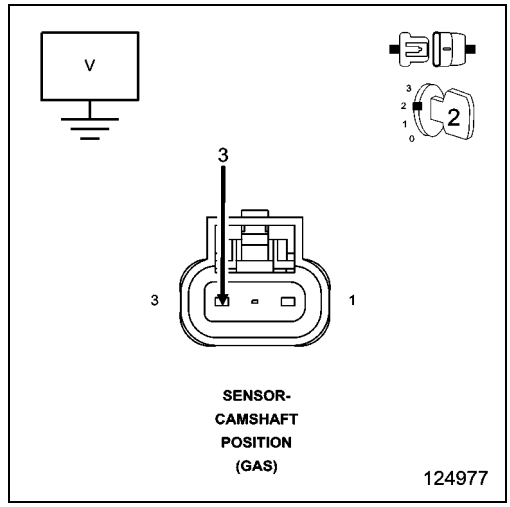

Yes

- Repair the short to voltage in the (K44) CMP Signal circuit.
- Perform the POWERTRAIN VERIFICATION TEST. (Refer to 28 - DTC-Based Diagnostics/MODULE, Powertrain Control (PCM) - Standard Procedure)

No

- Go To 9

9. (K44) CMP SIGNAL CIRCUIT OPEN

1. Turn the ignition off.

CAUTION: Do not probe the PCM harness connectors. Probing the PCM harness connectors will damage the PCM terminals resulting in poor terminal to pin connection. Install the PCM Pinout Box Kit, NGC, 38 Position 8815A to perform diagnosis.

2. Measure the resistance in the (K44) CMP Signal circuit from the CMP harness connector to the appropriate terminal of special tool #8815A.
3. Wiggle the related wire harness while taking this measurement.

Is the resistance below 5.0 ohms?

Yes

- Go To 10

No

- Repair the excessive resistance in the (K44) CMP Signal circuit.
- Perform the POWERTRAIN VERIFICATION TEST. (Refer to 28 - DTC-Based Diagnostics/MODULE, Powertrain Control (PCM) - Standard Procedure)

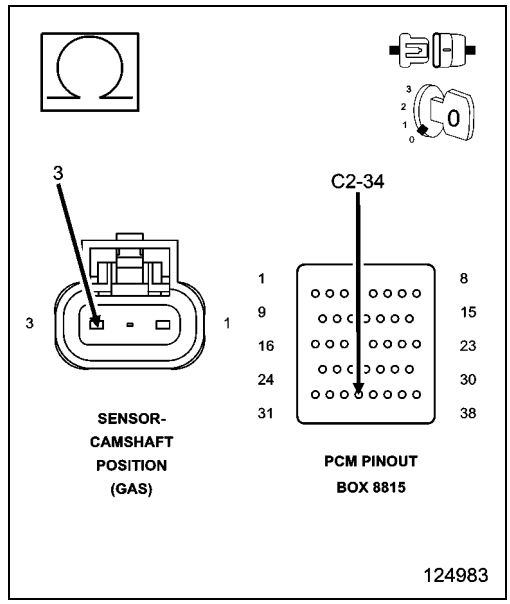

10. (K44) CMP SIGNAL CIRCUIT SHORTED TO GROUND

1. Measure the resistance between ground and the (K44) CMP Signal circuit in the CMP Sensor harness connector.
2. Wiggle the related wire harness while monitoring the resistance value.

Does the resistance ever go below 100 ohms?

Yes

- Repair the short to ground in the (K44) CMP Signal circuit.
- Perform the POWERTRAIN VERIFICATION TEST. (Refer to 28 - DTC-Based Diagnostics/MODULE, Powertrain Control (PCM) - Standard Procedure)

No

- Go To 11

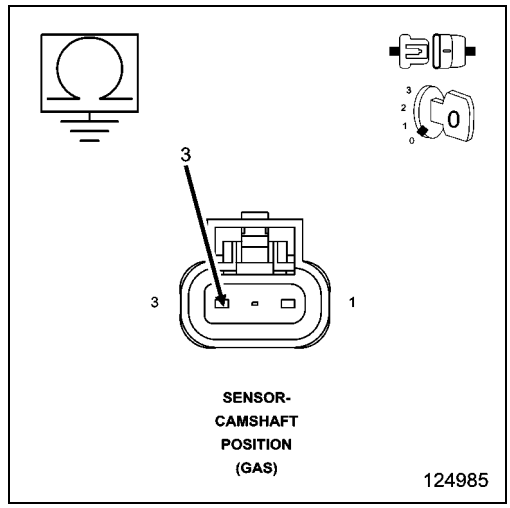

11. (K44) CMP SIGNAL CIRCUIT SHORTED TO THE (F856) 5-VOLT SUPPLY CIRCUIT

1. Measure the resistance between the (F856) 5-volt Supply circuit and the (K44) CMP Signal circuit in the CMP harness connector.
2. Wiggle the related wire harness while taking this measurement.

Is the resistance below 5.0 ohms?

Yes

- Repair the short between the (F856) 5-volt Supply circuit and the (K44) CMP Signal circuit.
- Perform the POWERTRAIN VERIFICATION TEST. (Refer to 28 - DTC-Based Diagnostics/MODULE, Powertrain Control (PCM) - Standard Procedure)

No

- Go To 12

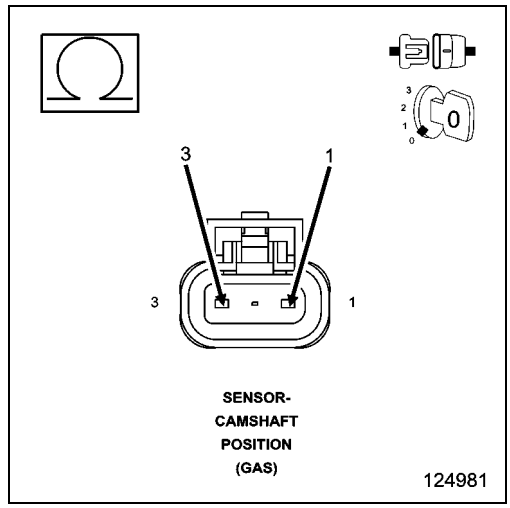

12. POWERTRAIN CONTROL MODULE (PCM)

1. Using the wiring diagram/schematic as a guide, inspect the wiring and connectors between the related Sensor and the Powertrain Control Module (PCM).
2. Look for any chafed, pierced, pinched, or partially broken wires.
3. Look for broken, bent, pushed out or corroded terminals. Verify that there is good pin to terminal contact in the CMP Sensor and the Powertrain Control Module connectors.
4. Refer to any Technical Service Bulletins that may apply.

Were there any problems found?

Yes

- Repair as necessary.
- Perform the POWERTRAIN VERIFICATION TEST. (Refer to 28 - DTC-Based Diagnostics/MODULE, Powertrain Control (PCM) - Standard Procedure)

No

- Replace and program the Powertrain Control Module per Service Information.
- Perform the POWERTRAIN VERIFICATION TEST. (Refer to 28 - DTC-Based Diagnostics/MODULE, Powertrain Control (PCM) - Standard Procedure)

P0401-EGR SYSTEM PERFORMANCE

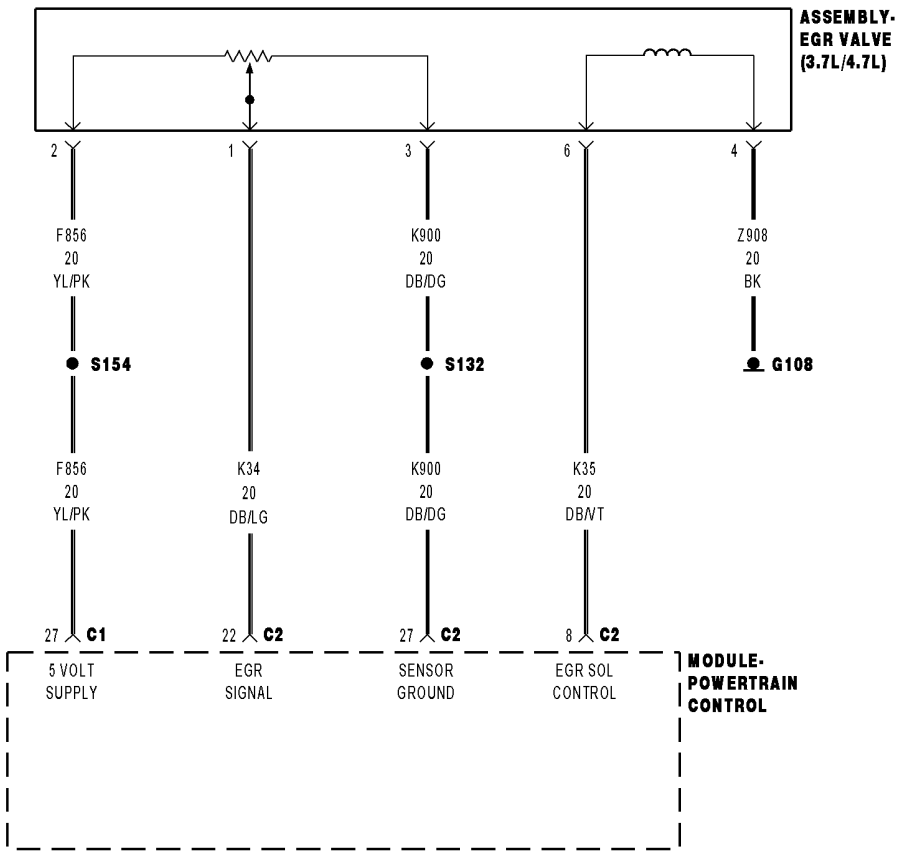

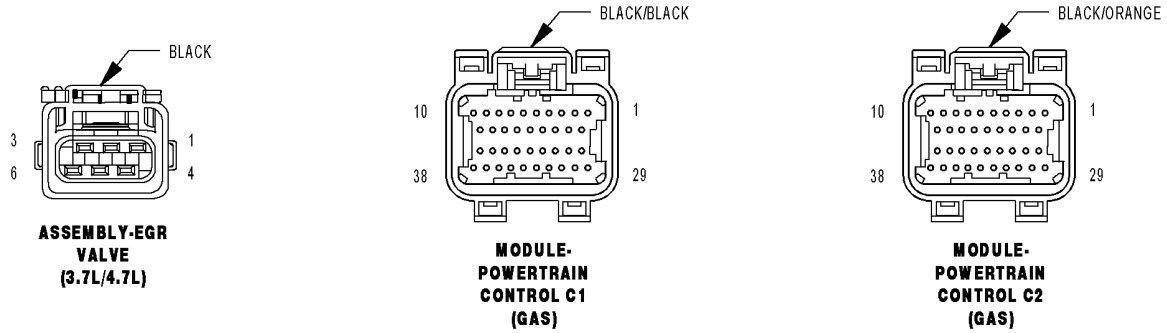

For a complete wiring diagram, **refer to the Wiring Information**.

Theory of Operation

Exhaust gas recirculation (EGR) is a method of reducing emissions of oxides of nitrogen. As the inert exhaust gas is recirculated, the mixture absorbs heat in the combustion chamber without interacting with the fuel/air mixture and reduces the formation of NOx emissions. After the EGR monitor conditions are met, the EGR valve is turned on and off momentarily. The EGR monitor calculated the difference in engine roughness from the EGR off condition to the EGR condition. This engine combustion stability difference as measured by engine roughness is the measure of a functional EGR system.

- **When Monitored:**

  Engine running for greater than two minutes with the Engine Coolant Temp greater than 70° C (158° F). EGR active. Less than 8500 feet. Ambient temperature greater than -6° C (20° F).

- **Set Condition:**

The Powertrain Control Module (PCM) closes the EGR valve while monitoring the O2 Sensor signal. Once a closed EGR fueling sample has been established the PCM then ramps in EGR and additional fueling while monitoring the O2 sensor signal in the open state. A fueling sample is again established. The PCM then compares the different O2 Sensor signal readings (fueling samples). If a larger than expected variation is detected, a soft failure is recorded. Three soft failures set a one trip failure. After two failed trips, a DTC is set and the MIL is illuminated.

Possible Causes
(Z908) EGR SOLENOID GROUND CIRCUIT OPEN
(K35) EGR SOLENOID CONTROL CIRCUIT SHORTED TO GROUND
(K35) EGR SOLENOID CONTROL CIRCUIT SHORTED TO VOLTAGE
(K35) EGR SOLENOID CONTROL CIRCUIT OPEN
EGR SOLENOID ASSEMBLY
POWERTRAIN CONTROL MODULE (PCM)

Always perform the Pre-Diagnostic Troubleshooting procedure before proceeding. (Refer to 28 - DTC-Based Diagnostics/MODULE, Powertrain Control (PCM) - Standard Procedure).

1. ACTIVE DIAGNOSTIC TROUBLE CODE (DTC)

NOTE: Diagnose and repair any EGR circuit DTCs before continuing with this procedure.

1. Turn the ignition on.
2. Using the scan tool, select View DTCs. Copy DTC and Freeze Frame information.
3. Start the engine and allow it to reach operating temperature.

WARNING: When the engine is operating, do not stand in direct line with the fan. Do not put your hands near the pulleys, belts or fan. Do not wear loose clothing. Failure to follow these instructions may result in possible serious or fatal injury.

NOTE: Attempt to operate the vehicle under conditions similar to which the DTC was set.

NOTE: It may be necessary to test drive the vehicle within the DTC monitoring conditions in order for this DTC to set.

4. Using the scan tool, select View DTCs.

Is the DTC Active or Pending at this time?

Yes

- Go To 2

No

- Perform the INTERMITTENT CONDITION diagnostic procedure. (Refer to 28 - DTC-Based Diagnostics/MODULE, Powertrain Control (PCM) - Standard Procedure).

2. ROUGH IDLE OR STALLING AT IDLE

1. Turn the ignition off.
2. Turn all accessories off.
3. Start the engine.

WARNING: When the engine is operating, do not stand in direct line with the fan. Do not put your hands near the pulleys, belts or fan. Do not wear loose clothing. Failure to follow these instructions may result in possible serious or fatal injury.

Does the engine run rough or stall at idle?

Yes

- Go To 3

No

- Go To 5

3. EGR VALVE ASSEMBLY CONTROL CIRCUIT

1. Turn the ignition off.
2. Disconnect the EGR Valve Assembly harness connector.
3. Start the engine.

WARNING: When the engine is operating, do not stand in direct line with the fan. Do not put your hands near the pulleys, belts or fan. Do not wear loose clothing. Failure to follow these instructions may result in possible serious or fatal injury.

Does the engine continue to run rough or stall with the EGR Valve Assembly connector disconnected?

Yes

- Go To 8

No

- Go To 4

4. (K35) EGR SOLENOID CONTROL CIRCUIT SHORTED TO VOLTAGE

1. Turn the ignition off.
2. Disconnect the C2 PCM harness connector.
3. Disconnect the EGR Solenoid harness connector.
4. Ignition on, engine not running.
5. Measure the voltage on the (K35) EGR Solenoid Control circuit in the EGR Solenoid connector.

Is there any voltage present?

Yes

- Repair the short to voltage in the (K35) EGR Solenoid Control circuit.
- Perform the POWERTRAIN VERIFICATION TEST. (Refer to 28 - DTC-Based Diagnostics/MODULE, Powertrain Control (PCM) - Standard Procedure).

No

- Go To 9

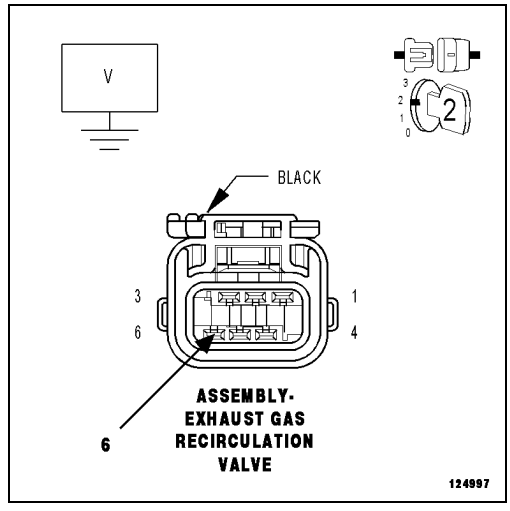

5. EGR SYSTEM TEST

1. Turn all accessories off.
2. Start the engine and allow it to reach operating temperature.

WARNING: When the engine is operating, do not stand in direct line with the fan. Do not put your hands near the pulleys, belts or fan. Do not wear loose clothing. Failure to follow these instructions may result in possible serious or fatal injury.

3. Using the scan tool, perform the EGR System Test.
4. Select OPEN to open the EGR valve.

Did the engine run rough or stall when the valve was opened during the system test?

Yes

- Go To 8

No

- Go To 6

6. (Z908) EGR SOLENOID GROUND CIRCUIT OPEN

1. Turn the ignition off.
2. Using a 12-volt test light connected to battery voltage, probe the (Z908) EGR Solenoid ground circuit in the EGR Solenoid harness connector.

Does the 12-volt test light illuminate brightly?

Yes

- Go To 7

No

- Repair the open in the (Z908) EGR Solenoid ground circuit.
- Perform the POWERTRAIN VERIFICATION TEST. (Refer to 28 - DTC-Based Diagnostics/MODULE, Powertrain Control (PCM) - Standard Procedure).

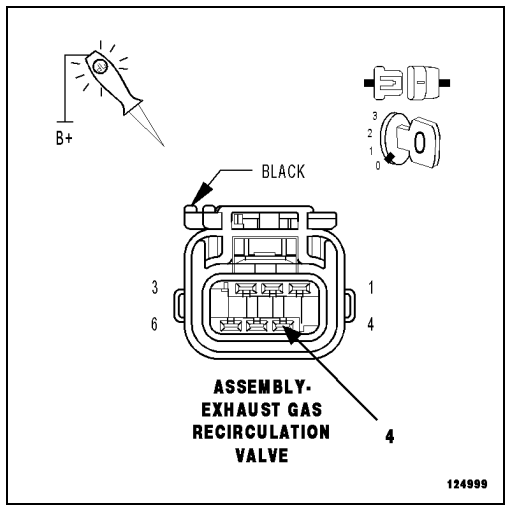

7. (K35) EGR CONTROL CIRCUIT HIGH RESISTANCE

1. Turn the ignition off.
2. Connect the EGR Valve Assembly connector.

CAUTION: Do not probe the PCM harness connectors. Probing the PCM harness connectors will damage the PCM terminals resulting in poor terminal to pin connection. Install the PCM Pinout Box Kit, NGC, 38 Position 8815A along with the Adapter PCM Pinout Box Adapter 8815-1to perform the diagnosis.

3. Using a Voltmeter, perform a voltage drop test by backprobing the (K35) EGR Control circuit at the EGR Valve Assembly harness connector and probing the appropriate terminal of the PCM Pinout Box 8815A. Make sure the Voltmeter leads are connected so that positive polarity is displayed on the Voltmeter.
4. Start the engine and allow it to reach operating temperature.

WARNING: When the engine is operating, do not stand in direct line with the fan. Do not put your hands near the pulleys, belts or fan. Do not wear loose clothing. Failure to follow these instructions may result in possible serious or fatal injury.

5. Using the scan tool, perform the EGR System Test.
6. Select OPEN to open the EGR valve.
7. Monitor the circuit voltage on the Voltmeter.

Is the voltage below 0.5 of a Volt when the valve was opened during the system test?

Yes

- Go To 8

No

- Repair the (K35) EGR Control circuit for excessive resistance.
- Perform the POWERTRAIN VERIFICATION TEST. (Refer to 28 - DTC-Based Diagnostics/MODULE, Powertrain Control (PCM) - Standard Procedure).

8. EGR VALVE ASSEMBLY

WARNING: The normal operating temperature of the EGR system is very high. Never work around or attempt to service any part of the EGR system until it has cooled. Failure to follow these instructions can result in possible serious or fatal injury.

1. Using the wiring diagram/schematic as a guide, inspect the wiring and connectors between the EGR Valve Assembly and the Powertrain Control Module (PCM).
2. Verify that there is good pin to terminal contact in the Solenoid and the Powertrain Control Module connectors.
3. Look for any chafed, pierced, pinched or partially broken wires.
4. Verify that there is good pin to terminal contact in the EGR Solenoid and the Powertrain Control Module connectors.
5. Look for broken, bent, pushed out or corroded terminals.
6. Perform any Technical Service Bulletins that may apply.
7. Inspect the EGR Valve Assembly for the following:
   - Proper mounting, leaking gasket(s)
   - Damaged, leaking or obstructed EGR tube(s)
   - Carbon build up on or near the EGR pintle or within passages

Were any problem found?

Yes

- Repair or replace the EGR system components as necessary.
- Perform the POWERTRAIN VERIFICATION TEST. (Refer to 28 - DTC-Based Diagnostics/MODULE, Powertrain Control (PCM) - Standard Procedure).

No

- Replace the EGR Valve Assembly.
- Perform the POWERTRAIN VERIFICATION TEST. (Refer to 28 - DTC-Based Diagnostics/MODULE, Powertrain Control (PCM) - Standard Procedure).

9. POWERTRAIN CONTROL MODULE (PCM)

1. Using the wiring diagram/schematic as a guide, inspect the wiring and connectors between the EGR Solenoid Assembly and the Powertrain Control Module (PCM).
2. Look for any chafed, pierced, pinched or partially broken wires.
3. Look for broken, bent, pushed out or corroded terminals. Verify that there is good pin to terminal contact in the Solenoid and the Powertrain Control Module connectors.
4. Perform any Technical Service Bulletins that may apply.

Were there any problems found?

Yes

- Repair as necessary.
- Perform the POWERTRAIN VERIFICATION TEST. (Refer to 28 - DTC-Based Diagnostics/MODULE, Powertrain Control (PCM) - Standard Procedure).

No

- Replace and program the Powertrain Control Module in accordance with the Service Information.
- Perform the POWERTRAIN VERIFICATION TEST. (Refer to 28 - DTC-Based Diagnostics/MODULE, Powertrain Control (PCM) - Standard Procedure).

P0403-EGR SOLENOID CIRCUIT

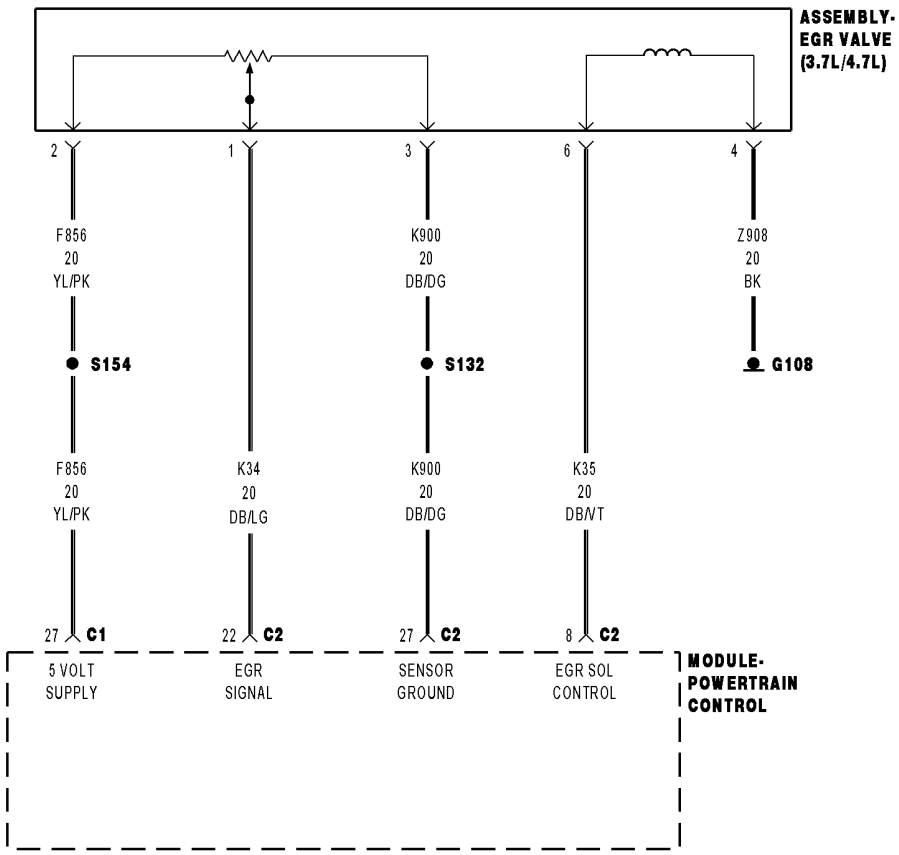

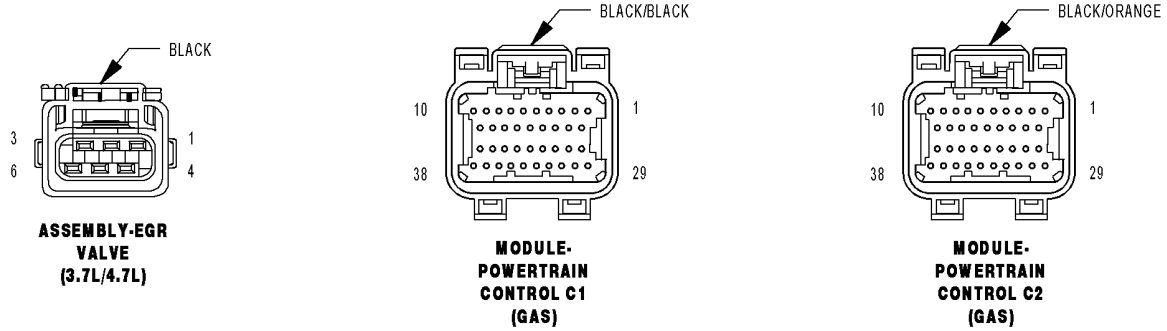

01221033

For a complete wiring diagram, **refer to the Wiring Information**.

- **When Monitored:**
  Engine running. Battery voltage greater than 10 Volts.
- **Set Condition:**
  The Exhaust Gas Recirculation (EGR) Solenoid control circuit is not in the expected state when requested to operate by the Powertrain Control Module (PCM). One Trip Fault.

Possible Causes
(Z908) EGR SOLENOID GROUND CIRCUIT OPEN
(K35) EGR SOLENOID CONTROL CIRCUIT SHORTED TO VOLTAGE
(K35) EGR SOLENOID CONTROL CIRCUIT SHORTED TO GROUND
(K35) EGR SOLENOID CONTROL CIRCUIT OPEN
EGR SOLENOID ASSEMBLY
POWERTRAIN CONTROL MODULE (PCM)

Always perform the Pre-Diagnostic Troubleshooting procedure before proceeding. (Refer to 28 - DTC-Based Diagnostics/MODULE, Powertrain Control (PCM) - Standard Procedure).

1. DTC IS ACTIVE

1. Turn the ignition on.
2. With the scan tool, Clear DTCs in the Powertrain Control Module (PCM).
3. With the scan tool, actuate the EGR Valve Solenoid Duty Cycle to 79.9%.
4. With the scan tool, select View DTCs.

Is the DTC Active at this time?

Yes

- Go To 2

No

- Perform the INTERMITTENT CONDITION diagnostic procedure. (Refer to 28 - DTC-Based Diagnostics/MODULE, Powertrain Control (PCM) - Standard Procedure).

2. (K35) EGR CONTROL CIRCUIT SHORTED TO VOLTAGE

1. Turn the ignition off.
2. Disconnect the EGR Valve Assembly connector.
3. Disconnect the C2 PCM harness connector.
4. Turn the ignition on.
5. Measure the voltage of the (K35) EGR Control circuit in the EGR Valve Assembly harness connector.

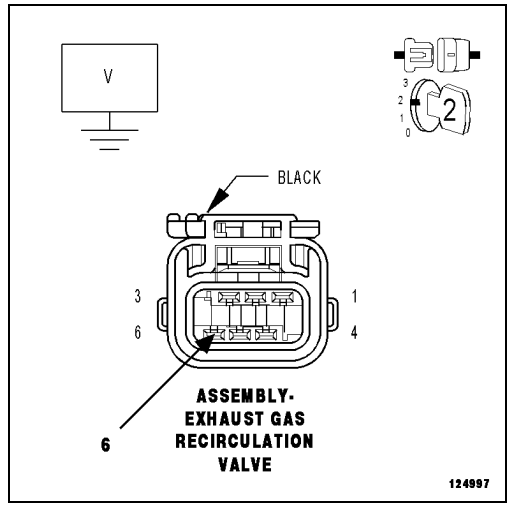

Is there any voltage present?

Yes

- Repair the short to voltage in the (K35) EGR Control circuit.
- Perform the POWERTRAIN VERIFICATION TEST. (Refer to 28 - DTC-Based Diagnostics/MODULE, Powertrain Control (PCM) - Standard Procedure).

No

- Go To 3

3. (K35) EGR CONTROL CIRCUIT SHORTED TO GROUND

1. Turn the ignition off.
2. Measure the resistance between ground and the (K35) EGR Control circuit in the EGR Valve Assembly harness connector.

Is the resistance above 100 Ohms?

Yes

- Go To 4

No

- Repair the short to ground in the (K35) EGR Control circuit.
- Perform the POWERTRAIN VERIFICATION TEST. (Refer to 28 - DTC-Based Diagnostics/MODULE, Powertrain Control (PCM) - Standard Procedure).

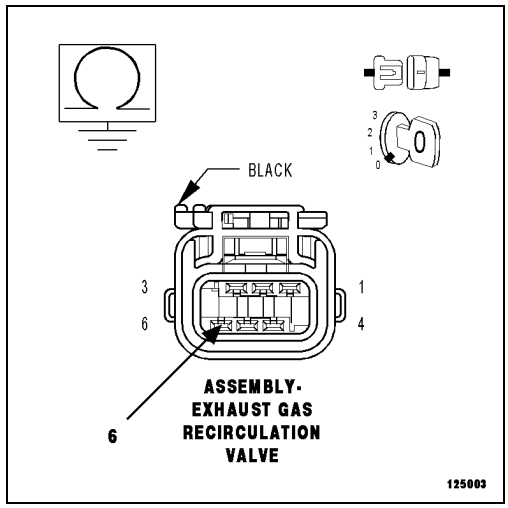

4. (K35) EGR CONTROL CIRCUIT OPEN OR HIGH RESISTANCE

CAUTION: Do not probe the PCM harness connectors. Probing the PCM harness connectors will damage the PCM terminals resulting in poor terminal to pin connection. Install the PCM Pinout Box Kit, NGC, 38 Position 8815A to perform diagnosis.

1. Measure the resistance of the (K35) EGR Control circuit between the EGR Valve Assembly harness connector and the appropriate terminal of PCM Pinout Box 8815A.

Is the resistance below 5.0 Ohms?

Yes

- Go To 5

No

- Repair the excessive resistance in the (K35) EGR Control circuit.
- Perform the POWERTRAIN VERIFICATION TEST. (Refer to 28 - DTC-Based Diagnostics/MODULE, Powertrain Control (PCM) - Standard Procedure).

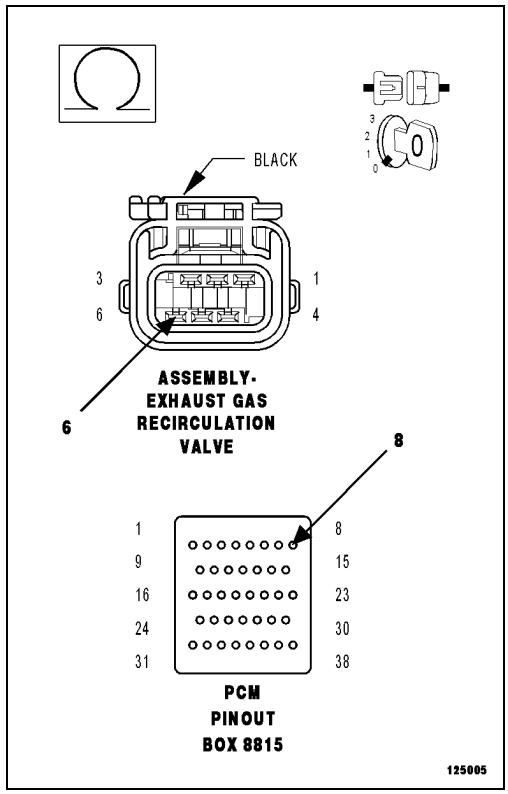

5. (Z908) GROUND CIRCUIT OPEN OR HIGH RESISTANCE

1. Using a 12-volt test light connected to 12 Volts, check the (Z908) Ground circuit in the EGR Valve Assembly harness connector.

NOTE: The test light should be illuminated and bright. Compare the brightness to that of a direct connection to the battery.

Is the test light illuminated and bright?

Yes

- Go To 6

No

- Repair the (Z908) Ground circuit for an open circuit or high resistance.
- Perform the POWERTRAIN VERIFICATION TEST. (Refer to 28 - DTC-Based Diagnostics/MODULE, Powertrain Control (PCM) - Standard Procedure).

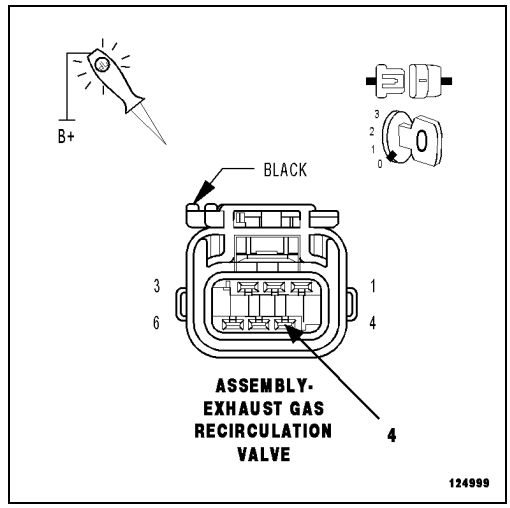

6. EGR VALVE ASSEMBLY

1. Connect the C2 Powertrain Control Module (PCM) connector.
2. Turn the ignition on.
3. With the scan tool, actuate the EGR Valve Solenoid Duty Cycle.
4. Select the Duty Cycle reading of 79.9%
5. Using a 12-volt test light connected to ground, check the (K35) EGR Control circuit in the EGR Valve Assembly harness connector.

NOTE: If the DTC is active, the actuation test may not be allowed by the PCM. If may be necessary to clear the DTCs before starting the actuation.

NOTE: The voltage supplied to the solenoid circuit during the actuation may be less than battery voltage. The test light should be illuminated, but may not be as bright as a direct connection to the battery.

NOTE: The test light should be illuminated and bright proportional to the maximum duty cycle allowed by the scan tool. For example, if the scan tool allows 100% actuation, the brightness should be as bright as a direct connection to the battery. If the scan tool allows a maximum 25% actuation, the brightness should be 25% as bright as a direct connection to the battery.

Does the test light illuminate accordingly during the actuation?

Yes

- Verify that there is good pin to terminal contact in the Solenoid and the Powertrain Control Module connectors. Replace the EGR Valve Assembly in accordance with the Service Information if no problems were found with the connectors.
- Perform the POWERTRAIN VERIFICATION TEST. (Refer to 28 - DTC-Based Diagnostics/MODULE, Powertrain Control (PCM) - Standard Procedure).

No

- Go To 7

7. POWERTRAIN CONTROL MODULE (PCM)

1. Using the wiring diagram/schematic as a guide, inspect the wiring and connectors between the EGR Solenoid Assembly and the Powertrain Control Module (PCM).
2. Look for any chafed, pierced, pinched or partially broken wires.
3. Look for broken, bent, pushed out or corroded terminals. Verify that there is good pin to terminal contact in the Solenoid and the Powertrain Control Module connectors.
4. Refer to any Technical Service Bulletins that may apply.

Were there any problems found?

Yes

- Repair as necessary.
- Perform the POWERTRAIN VERIFICATION TEST. (Refer to 28 - DTC-Based Diagnostics/MODULE, Powertrain Control (PCM) - Standard Procedure).

No

- Replace and program the Powertrain Control Module (PCM) in accordance with the Service Information.
- Perform the POWERTRAIN VERIFICATION TEST. (Refer to 28 - DTC-Based Diagnostics/MODULE, Powertrain Control (PCM) - Standard Procedure).

P0404-EGR POSITION SENSOR PERFORMANCE

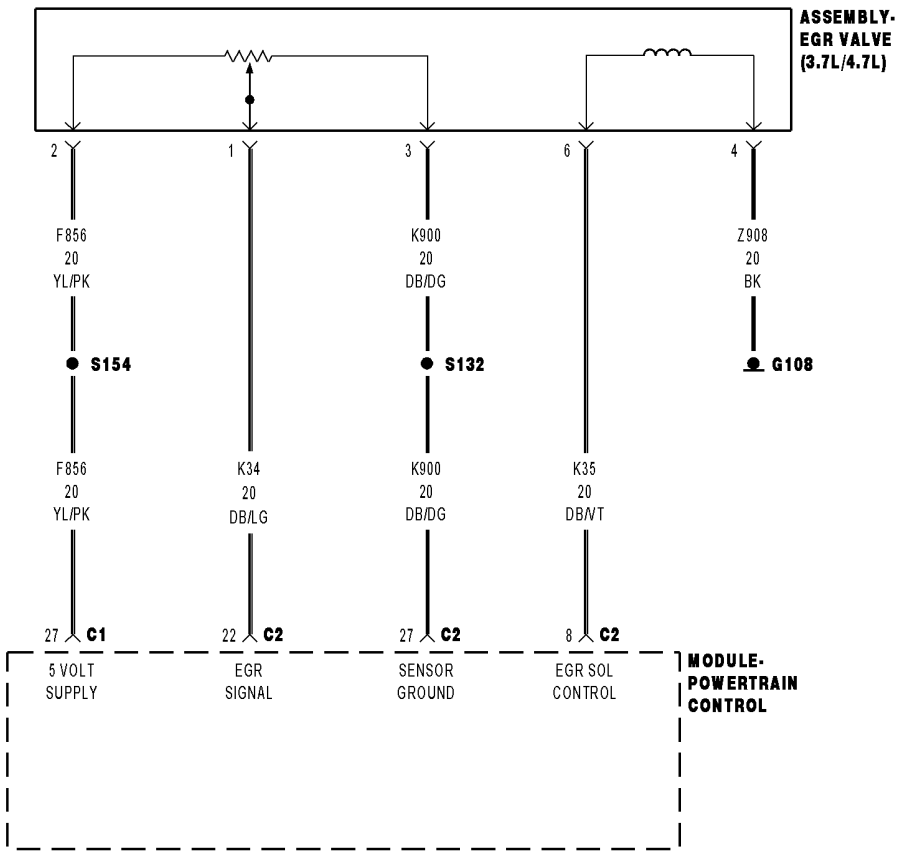

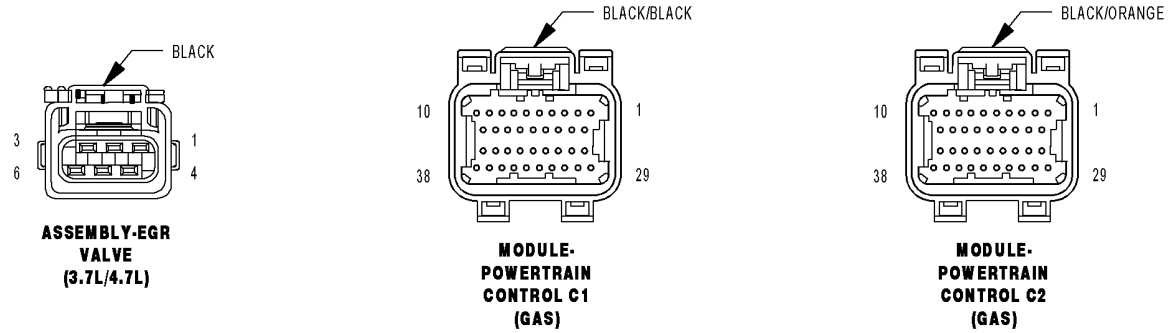

01221033

For a complete wiring diagram, **refer to the Wiring Information**.

Theory of Operation

The Exhaust Gas Recirculation (EGR) valve has a position sensor and the EGR position rationality is designed to make sure that the valve moves freely within its operating range. Closed valve position reference check verifies that the valve is within its allowable upper and lower limits. The EGR position rationality test looks for a sustained error relative to commanded valve position.

- **When Monitored:**
  Engine running.
- **Set Condition:**
  The EGR flow or valve movement is not what is expected.

Possible Causes
EXCESSIVE RESISTANCE IN THE (F856) 5-VOLT SUPPLY CIRCUIT
(K35) EGR SOLENOID CONTROL CIRCUIT EXCESSIVE RESISTANCE
(K34) EGR SENSOR SIGNAL CIRCUIT EXCESSIVE RESISTANCE
(K900) SENSOR GROUND CIRCUIT OPEN
(Z908) EGR SOLENOID GROUND CIRCUIT OPEN
EGR SOLENOID ASSEMBLY
POWERTRAIN CONTROL MODULE (PCM)

Always perform the Pre-Diagnostic Troubleshooting procedure before proceeding. (Refer to 28 - DTC-Based Diagnostics/MODULE, Powertrain Control (PCM) - Standard Procedure).

1. ACTIVE DTC

NOTE: Diagnose and repair any EGR signal circuit high or low DTCs before continuing with this procedure.

1. Turn the ignition on.
2. With the scan tool, select View DTCs. Record DTC and Freeze Frame information.
3. Start the engine and allow it to reach operating temperature.

WARNING: When the engine is operating, do not stand in direct line with the fan. Do not put your hands near the pulleys, belts or fan. Do not wear loose clothing. Failure to follow these instructions may result in possible serious or fatal injury.

WARNING: The normal operating temperature of the EGR system is very high. Never work around or attempt to service any part of the EGR system until it has cooled. Failure to follow these instructions can result in possible serious or fatal injury.

NOTE: Attempt to operate the vehicle under conditions similar to which the DTC was set.

NOTE: It may be necessary to test drive the vehicle within the DTC monitoring conditions in order for this DTC to set.

4. With the scan tool, select View DTCs.

Is the DTC Active or Pending at this time?

Yes

- Go To 2

No

- Refer to the INTERMITTENT CONDITION diagnostic procedure. (Refer to 28 - DTC-Based Diagnostics/MODULE, Powertrain Control (PCM) - Standard Procedure).

2. (F856) 5-VOLT SUPPLY CIRCUIT HIGH RESISTANCE

1. Turn the ignition off.

CAUTION: Do not probe the PCM harness connectors. Probing the PCM harness connectors will damage the PCM terminals resulting in poor terminal to pin connection. Install the PCM Pinout Box Kit, NGC, 38 Position 8815A to perform diagnosis.

2. Using a voltmeter, perform a voltage drop test by backprobing the (F856) 5-volt Supply circuit at the EGR Valve Assembly harness connector and probing the appropriate terminal of the PCM Pinout Box 8815A. Make sure the voltmeter leads are connected so that positive polarity is displayed on the voltmeter.

WARNING: When the engine is operating, do not stand in direct line with the fan. Do not put your hands near the pulleys, belts or fan. Do not wear loose clothing. Failure to follow these instructions may result in possible serious or fatal injury.

3. Start the engine.

Is the voltage below 0.5 of a volt?

Yes

- Go To 3

No

- Repair the (F856) 5-volt Supply circuit for high resistance.
- Perform the POWERTRAIN VERIFICATION TEST. (Refer to 28 - DTC-Based Diagnostics/MODULE, Powertrain Control (PCM) - Standard Procedure).

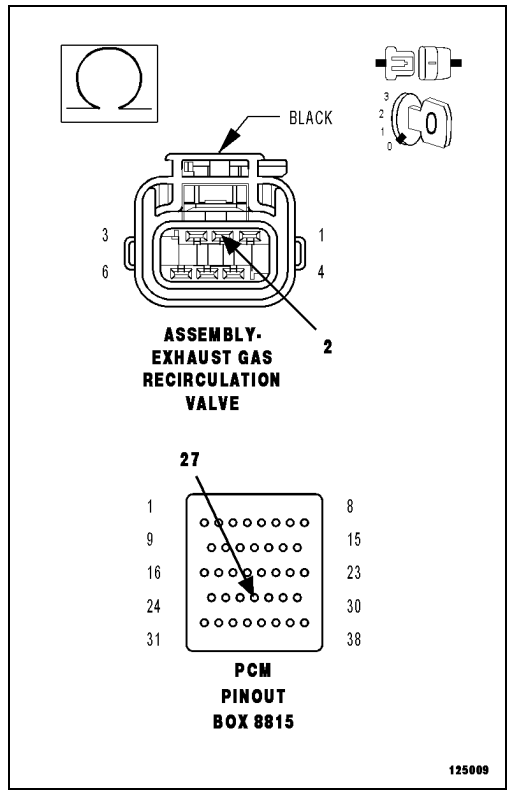

3. (K34) EGR SIGNAL CIRCUIT HIGH RESISTANCE

1. Turn the ignition off.

CAUTION: Do not probe the PCM harness connectors. Probing the PCM harness connectors will damage the PCM terminals resulting in poor terminal to pin connection. Install the PCM Pinout Box Kit, NGC, 38 Position 8815A to perform diagnosis.

2. Using a voltmeter, perform a voltage drop test by backprobing the (K34) EGR Signal circuit at the EGR Valve Assembly harness connector and probing the appropriate terminal of the PCM Pinout Box 8815A. Make sure the voltmeter leads are connected so that positive polarity is displayed on the voltmeter.

WARNING: When the engine is operating, do not stand in direct line with the fan. Do not put your hands near the pulleys, belts or fan. Do not wear loose clothing. Failure to follow these instructions may result in possible serious or fatal injury.

3. Start the engine.

Is the voltage below 0.5 of a volt?

Yes

- Go To 4

No

- Repair the (K34) EGR Signal circuit for high resistance.
- Perform the POWERTRAIN VERIFICATION TEST. (Refer to 28 - DTC-Based Diagnostics/MODULE, Powertrain Control (PCM) - Standard Procedure).

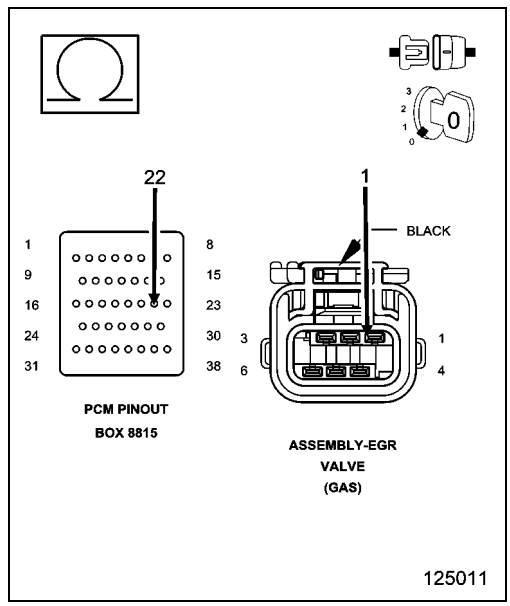

4. (K900) SENSOR GROUND CIRCUIT HIGH RESISTANCE

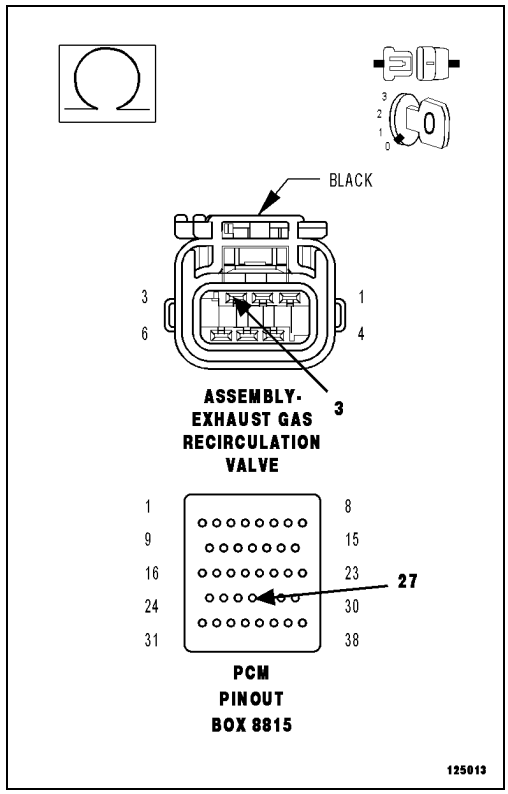

1. Turn the ignition off.

CAUTION: Do not probe the PCM harness connectors. Probing the PCM harness connectors will damage the PCM terminals resulting in poor terminal to pin connection. Install the PCM Pinout Box Kit, NGC, 38 Position 8815A to perform diagnosis.

2. Using a voltmeter, perform a voltage drop test by backprobing the (K900) Sensor Ground circuit at the EGR Valve Assembly harness connector and probing the appropriate terminal of the PCM Pinout Box 8815A. Make sure the voltmeter leads are connected so that positive polarity is displayed on the voltmeter.

WARNING: When the engine is operating, do not stand in direct line with the fan. Do not put your hands near the pulleys, belts or fan. Do not wear loose clothing. Failure to follow these instructions may result in possible serious or fatal injury.

3. Start the engine.

Is the voltage below 0.5 of a volt?

Yes

- Go To 5

No

- Repair the (K900) Sensor Ground circuit for high resistance.
- Perform the POWERTRAIN VERIFICATION TEST. (Refer to 28 - DTC-Based Diagnostics/MODULE, Powertrain Control (PCM) - Standard Procedure).

5. (Z908) GROUND CIRCUIT OPEN OR HIGH RESISTANCE

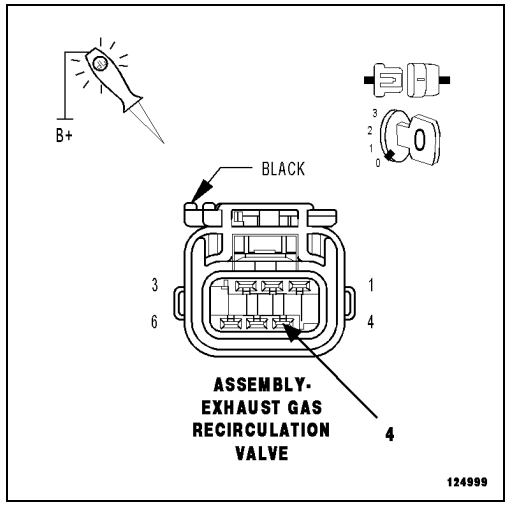

1. Turn the ignition off.
2. Disconnect the EGR Valve Assembly harness connector.
3. Using a 12-volt test light connected to the 12 Volts, check the (Z908) Ground circuit in the EGR Valve Assembly harness connector.

NOTE: The test light should be illuminated and bright. Compare the brightness to that of a direct connection to the battery.

Is the test light illuminated and bright?

Yes

- Go To 6

No

- Repair the (Z908) Ground circuit for an open circuit of high resistance.
- Perform the POWERTRAIN VERIFICATION TEST. (Refer to 28 - DTC-Based Diagnostics/MODULE, Powertrain Control (PCM) - Standard Procedure).

6. (K35) EGR CONTROL CIRCUIT HIGH RESISTANCE

1. Turn the ignition off.
2. Connect the EGR Valve Assembly connector.

CAUTION: Do not probe the PCM harness connectors. Probing the PCM harness connectors will damage the PCM terminals resulting in poor terminal to pin connection. Install the PCM Pinout Box Kit, NGC, 38 Position 8815A to perform diagnosis.

3. Using a voltmeter, perform a voltage drop test by backprobing the (K35) EGR Control circuit at the EGR Valve Assembly harness connector and probing the appropriate terminal of the PCM Pinout Box 8815A. Make sure the voltmeter leads are connected so that positive polarity is displayed on the voltmeter.
4. Start the engine and allow it to reach operating temperature.

WARNING: When the engine is operating, do not stand in direct line with the fan. Do not put your hands near the pulleys, belts or fan. Do not wear loose clothing. Failure to follow these instructions may result in possible serious or fatal injury.

5. With the scan tool, perform the EGR System Test.
6. Select OPEN to open the EGR valve.
7. Monitor the circuit voltage on the voltmeter.

Is the voltage below 0.5 of a volt when the valve was opened during the system test?

Yes

- Go To 7

No

- Repair the (K35) EGR Control circuit for excessive resistance.
- Perform the POWERTRAIN VERIFICATION TEST. (Refer to 28 - DTC-Based Diagnostics/MODULE, Powertrain Control (PCM) - Standard Procedure).

7. EGR VALVE ASSEMBLY

1. Using the wiring diagram/schematic as a guide, inspect the wiring and connectors between the EGR Valve Assembly and the Powertrain Control Module (PCM).
2. Verify that there is good pin to terminal contact in the Solenoid and the Powertrain Control Module connectors.
3. Look for any chafed, pierced, pinched or partially broken wires.
4. Look for broken, bent, pushed out or corroded terminals.
5. Refer to any Technical Service Bulletins that may apply.

Were any problems found?

Yes

- Repair as necessary.
- Perform the POWERTRAIN VERIFICATION TEST. (Refer to 28 - DTC-Based Diagnostics/MODULE, Powertrain Control (PCM) - Standard Procedure).

No

- Replace the EGR Valve Assembly in accordance with the Service Information if no problems were found with the connectors.
- Perform the POWERTRAIN VERIFICATION TEST. (Refer to 28 - DTC-Based Diagnostics/MODULE, Powertrain Control (PCM) - Standard Procedure).

P0405-EGR POSITION SENSOR CIRCUIT LOW

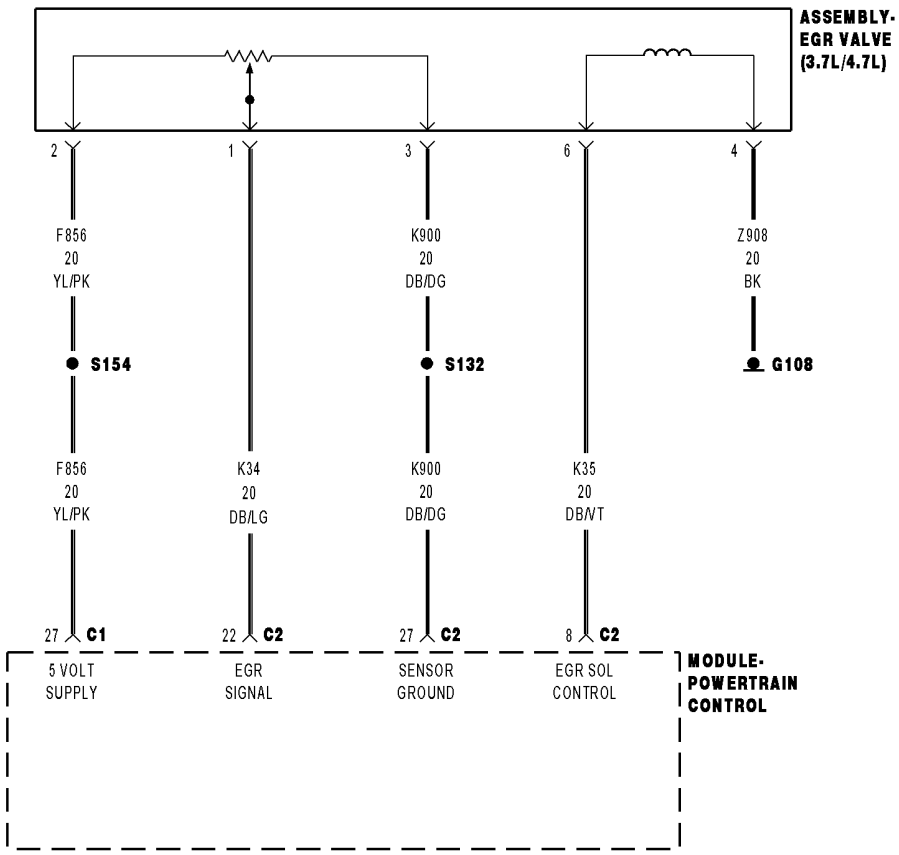

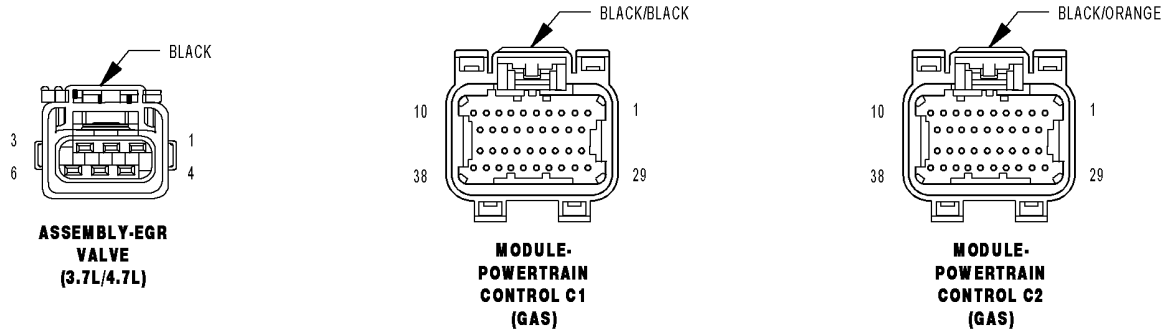

For a complete wiring diagram, **refer to the Wiring Information**.

- **When Monitored:**
  With the ignition on. Battery voltage above 10.0 Volts.
- **Set Condition:**
  Exhaust Gas Recirculation (EGR) Position Sensor Signal is less than the minimum acceptable voltage. One trip Fault.

Possible Causes
(F856) 5-VOLT SUPPLY CIRCUIT SHORTED TO GROUND
(F856) 5-VOLT SUPPLY CIRCUIT OPEN
(K34) EGR POSITION SENSOR SIGNAL CIRCUIT SHORTED TO GROUND
(K34) EGR POSITION SENSOR SIGNAL CIRCUIT SHORTED TO THE (K900) SENSOR GROUND CIRCUIT
EXCESSIVE RESISTANCE IN THE (K34) EGR SIGNAL CIRCUIT
EGR SOLENOID ASSEMBLY
POWERTRAIN CONTROL MODULE (PCM)

Always perform the Pre-Diagnostic Troubleshooting procedure before proceeding. (Refer to 28 - DTC-Based Diagnostics/MODULE, Powertrain Control (PCM) - Standard Procedure).

1. ACTIVE DTC

1. Turn the ignition on.
2. With the scan tool, select View DTCs. Record DTC and Freeze Frame information.
3. Start the engine and allow it to reach normal operating temperature.

WARNING: When the engine is operating, do not stand in direct line with the fan. Do not put your hands near the pulleys, belts or fan. Do not wear loose clothing. Failure to follow these instructions may result in possible serious or fatal injury.

WARNING: The normal operating temperature of the EGR system is very high. Never work around or attempt to service any part of the EGR system until it has cooled. Failure to follow these instructions can result in possible serious or fatal injury.

NOTE: Attempt to operate the vehicle under conditions similar to which the DTC was set.

NOTE: It may be necessary to test drive the vehicle within the DTC monitoring conditions in order for this DTC to set.

4. With the scan tool, select View DTCs.

Is the DTC Active at this time?

Yes

- Go To 2

No

- Refer to the INTERMITTENT CONDITION diagnostic procedure. (Refer to 28 - DTC-Based Diagnostics/MODULE, Powertrain Control (PCM) - Standard Procedure).

2. (F856) 5-VOLT SUPPLY CIRCUIT

1. Turn the ignition off.
2. Disconnect the EGR Solenoid harness connector.
3. Ignition on, engine not running.
4. Measure the voltage of the (F856) 5-volt Supply circuit in the EGR Solenoid harness connector.

Is the voltage between 4.5 to 5.2 Volts?

Yes

- Go To 3

No

- Go To 7

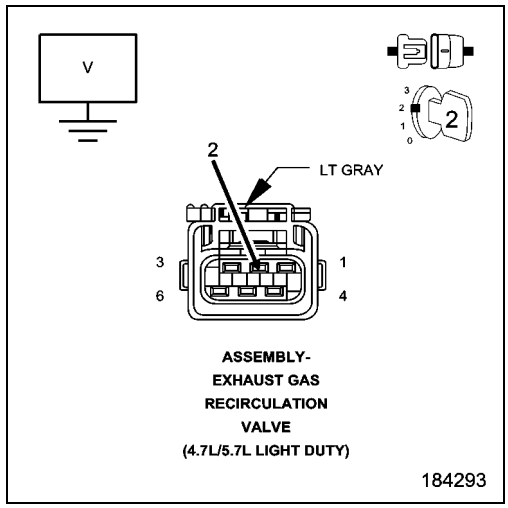

3. (K34) EGR POSITION SENSOR SIGNAL CIRCUIT SHORTED TO GROUND

1. Turn the ignition off.
2. Disconnect the C2 PCM harness connector.
3. Measure the resistance between ground and the (K34) EGR Position Sensor Signal circuit in the EGR Solenoid harness connector.

Is the resistance below 100 Ohms?

Yes

- Repair the short to ground circuit in the (K34) EGR Position Sensor Signal circuit.
- Perform the POWERTRAIN VERIFICATION TEST. (Refer to 28 - DTC-Based Diagnostics/MODULE, Powertrain Control (PCM) - Standard Procedure).

No

- Go To 4

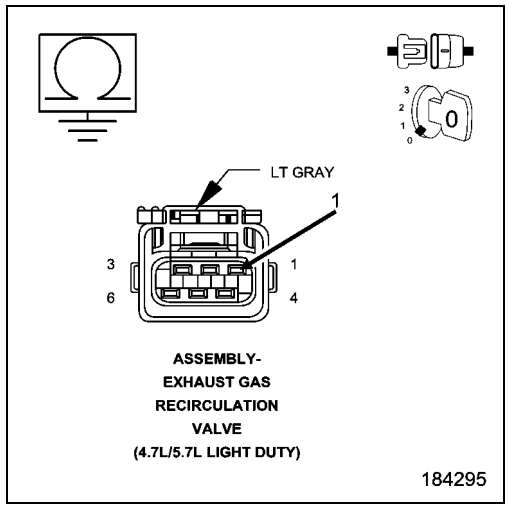

4. (K34) EGR SENSOR SIGNAL CIRCUIT SHORTED TO THE (K900) SENSOR GROUND CIRCUIT

1. Measure the resistance between the (K34) EGR Position Sensor Signal circuit and (K900) Sensor ground circuit in the EGR Solenoid harness connector.

Is the resistance below 100 Ohms?

Yes

- Repair the short between the (K900) Sensor ground and the (K34) EGR Position Sensor Signal circuit.
- Perform the POWERTRAIN VERIFICATION TEST. (Refer to 28 - DTC-Based Diagnostics/MODULE, Powertrain Control (PCM) - Standard Procedure).

No

- Go To 5

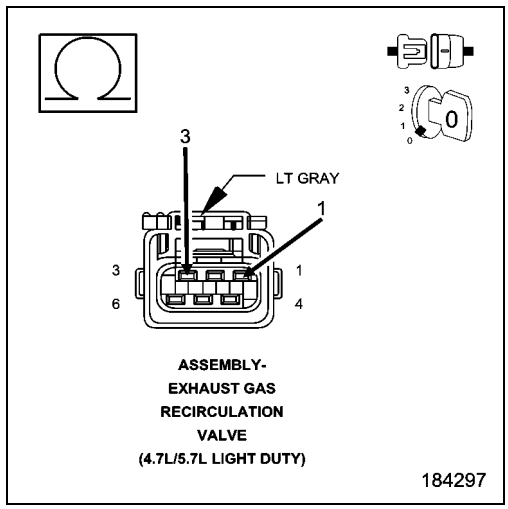

5. EXCESSIVE RESISTANCE IN THE (K34) EGR SIGNAL CIRCUIT

CAUTION: Do not probe the PCM harness connectors. Probing the PCM harness connectors will damage the PCM terminals, resulting in poor terminal to pin connection. Install the PCM Pinout Box Kit, NGC, 38 Position 8815A to perform diagnosis.

1. Measure the resistance of the (K34) EGR Signal circuit between the Exhaust Gas Recirculation Valve harness connector and the appropriate terminal of PCM Pinout Box 8815A.

Is the resistance below 5.0 Ohms?

Yes

- Go To 6

No

- Repair the excessive resistance in the (K34) EGR Signal circuit.
- Perform the POWERTRAIN VERIFICATION TEST. (Refer to 28 - DTC-Based Diagnostics/MODULE, Powertrain Control (PCM) - Standard Procedure).

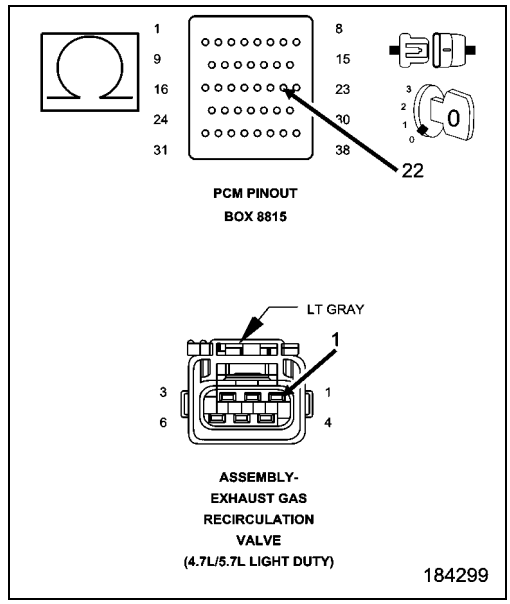

6. EXHAUST GAS RECIRCULATION VALVE

1. Turn the ignition off.
2. Connect the C2 PCM harness connector.
3. Turn the ignition on.
4. With the scan tool, read the Exhaust Gas Recirculation Valve signal voltage.

NOTE: The sensor voltage should be approximately 5.0 Volts (plus or minus .1 of a volt) with the connector disconnected.

Does the scan tool display the voltage as described above?

Yes

- Verify that there is good pin to terminal contact in the Solenoid and the Powertrain Control Module connectors. Replace the EGR Valve Assembly in accordance with the Service Information if no problems were found with the connectors.
- Perform the POWERTRAIN VERIFICATION TEST. (Refer to 28 - DTC-Based Diagnostics/MODULE, Powertrain Control (PCM) - Standard Procedure).

No

- Go To 9

7. (F856) 5-VOLT SUPPLY CIRCUIT SHORTED TO GROUND

1. Turn the ignition off.
2. Disconnect the C1 PCM harness connector.
3. Measure the resistance between ground and the (F856) 5-volt Supply circuit in the EGR Solenoid harness connector.

Is the resistance below 100 Ohms?

Yes

- Repair the short to ground in the (F856) 5-volt Supply circuit.
- Perform the POWERTRAIN VERIFICATION TEST. (Refer to 28 - DTC-Based Diagnostics/MODULE, Powertrain Control (PCM) - Standard Procedure).

No

- Go To 8

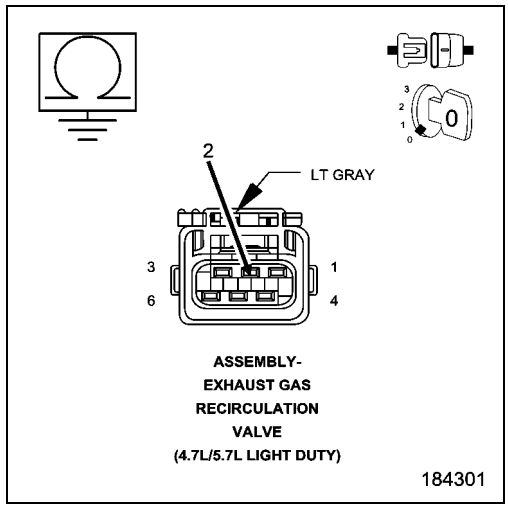

8. (F856) 5-VOLT SUPPLY CIRCUIT OPEN

CAUTION: Do not probe the PCM harness connectors. Probing the PCM harness connectors will damage the PCM terminals resulting in poor terminal to pin connection. Install the PCM Pinout Box Kit, NGC, 38 Position 8815A to perform diagnosis.

1. Measure the resistance of the (F856) 5-volt Supply circuit from the EGR Solenoid harness connector to the appropriate terminal of PCM Pinout Box 8815A.

Is the resistance below 5.0 Ohms?

Yes

- Go To 9

No

- Repair the open in the (F856) 5-volt Supply circuit.
- Perform the POWERTRAIN VERIFICATION TEST. (Refer to 28 - DTC-Based Diagnostics/MODULE, Powertrain Control (PCM) - Standard Procedure).

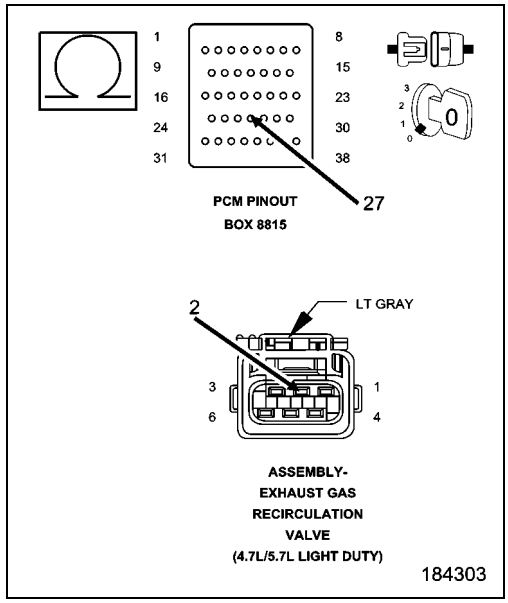

9. POWERTRAIN CONTROL MODULE (PCM)

1. Using the wiring diagram/schematic as a guide, inspect the wiring and connectors between the EGR Solenoid Assembly and the Powertrain Control Module (PCM).
2. Look for any chafed, pierced, pinched or partially broken wires.
3. Look for broken, bent, pushed out or corroded terminals. Verify that there is good pin to terminal contact in the Solenoid and the Powertrain Control Module connectors.
4. Refer to any Technical Service Bulletins that may apply.

Were there any problems found?

Yes

- Repair as necessary.
- Perform the POWERTRAIN VERIFICATION TEST. (Refer to 28 - DTC-Based Diagnostics/MODULE, Powertrain Control (PCM) - Standard Procedure).

No

- Replace and program the Powertrain Control Module in accordance with the Service Information.
- Perform the POWERTRAIN VERIFICATION TEST. (Refer to 28 - DTC-Based Diagnostics/MODULE, Powertrain Control (PCM) - Standard Procedure).

P0406-EGR POSITION SENSOR CIRCUIT HIGH

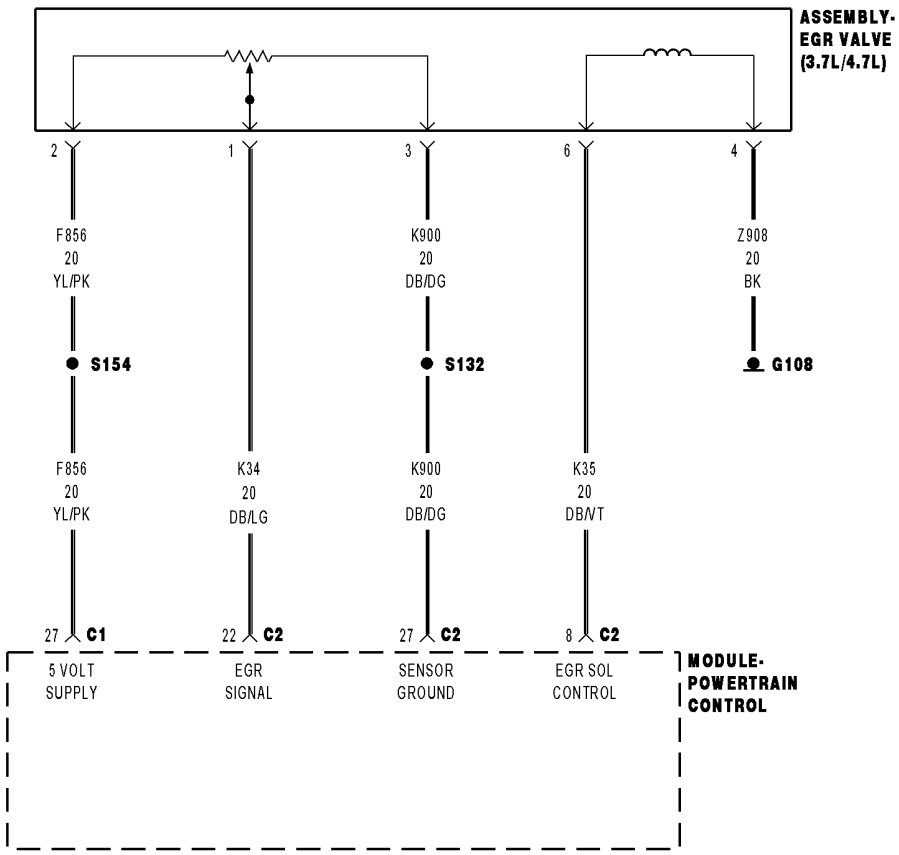

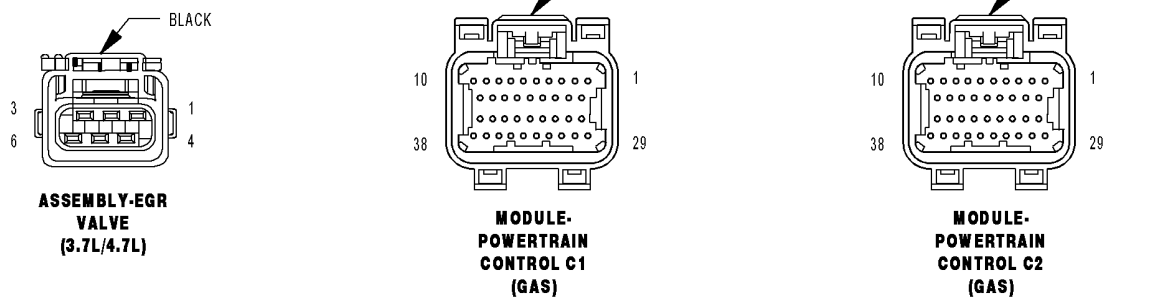

For a complete wiring diagram, **refer to the Wiring Information**.

- **When Monitored:**
  With the ignition on. Battery voltage greater than 10 Volts.
- **Set Condition:**
  Exhaust Gas Recirculatioin (EGR) Position Sensor Signal is greater than the maximum acceptable value. One trip Fault.

Possible Causes
(K34) EGR POSITION SENSOR SIGNAL CIRCUIT SHORTED TO THE (F856) 5-VOLT SUPPLY CIRCUIT
(K34) EGR POSITION SENSOR SIGNAL CIRCUIT SHORTED TO VOLTAGE
(K34) EGR POSITION SENSOR SIGNAL CIRCUIT OPEN
(K900) SENSOR GROUND CIRCUIT OPEN
EGR SOLENOID ASSEMBLY
POWERTRAIN CONTROL MODULE (PCM)

Always perform the Pre-Diagnostic Troubleshooting procedure before proceeding. (Refer to 28 - DTC-Based Diagnostics/MODULE, Powertrain Control (PCM) - Standard Procedure).

1. ACTIVE DTC

1. Turn the ignition on.
2. With the scan tool, select View DTCs. Record DTC and Freeze Frame information.
3. Start the engine and allow it to reach normal operating temperature.

WARNING: When the engine is operating, do not stand in direct line with the fan. Do not put your hands near the pulleys, belts or fan. Do not wear loose clothing. Failure to follow these instructions may result in possible serious or fatal injury.

WARNING: The normal operating temperature of the EGR system is very high. Never work around or attempt to service any part of the EGR system until it has cooled. Failure to follow these instructions can result in possible serious or fatal injury.

NOTE: Attempt to operate the vehicle under conditions similar to which the DTC was set.

NOTE: It may be necessary to test drive the vehicle within the DTC monitoring conditions in order for this DTC to set.

4. With the scan tool, select View DTCs.

Is the DTC Active at this time?

Yes

- Go To 2

No

- Perform the INTERMITTENT CONDITION diagnostic procedure. (Refer to 28 - DTC-Based Diagnostics/MODULE, Powertrain Control (PCM) - Standard Procedure).

2. (K34) EGR POSITION SENSOR SIGNAL CIRCUIT SHORTED TO THE (F856) 5-VOLT SUPPLY CIRCUIT

1. Turn the ignition off.
2. Disconnect the EGR Solenoid harness connector.
3. Disconnect the C1 and C2 PCM harness connectors.
4. Measure the resistance between the (K34) EGR Position Sensor Signal circuit and the (F856) 5-volt Supply circuit in the EGR Solenoid harness connector.

Is the resistance below 100 Ohms?

Yes

- Repair the short between the (K34) EGR Position Sensor Signal circuit and the (F856) 5-volt Supply circuit.
- Perform the POWERTRAIN VERIFICATION TEST. (Refer to 28 - DTC-Based Diagnostics/MODULE, Powertrain Control (PCM) - Standard Procedure).

No

- Go To 3

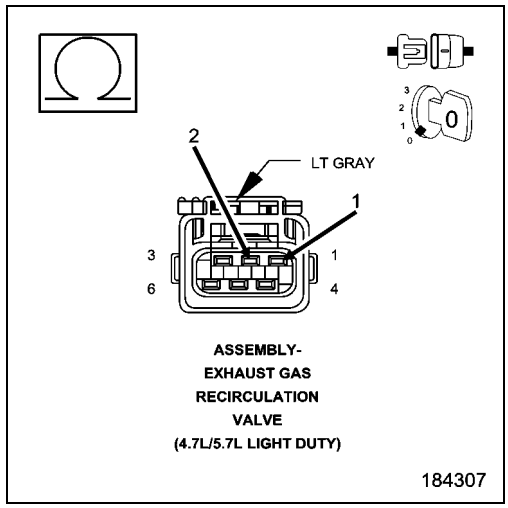

3. (K34) EGR POSITION SENSOR SIGNAL CIRCUIT SHORTED TO VOLTAGE

1. Ignition on, engine not running.
2. Measure the voltage on the (K34) EGR Sensor Signal circuit in the EGR Solenoid harness connector.

Is there any voltage present?

Yes

- Repair the short to voltage in the (K34) EGR Position Sensor Signal circuit.
- Perform the POWERTRAIN VERIFICATION TEST. (Refer to 28 - DTC-Based Diagnostics/MODULE, Powertrain Control (PCM) - Standard Procedure).

No

- Go To 4

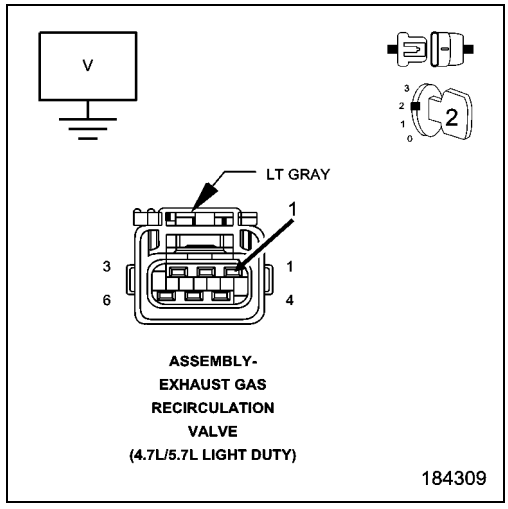

4. EGR SOLENOID ASSEMBLY

1. Turn the ignition off.
2. Connect the PCM harness connectors.
3. Connect a jumper wire between the (K34) EGR Position Sensor Signal circuit and the (K900) Sensor ground circuit.
4. With the scan tool, monitor the EGR Position Sensor voltage.
5. Ignition on, engine not running.

NOTE: The sensor voltage should be approximately 0.0 Volts (plus or minus .1 of a volt) with the jumper wire in place.

Does the scan tool display the voltage as described above?

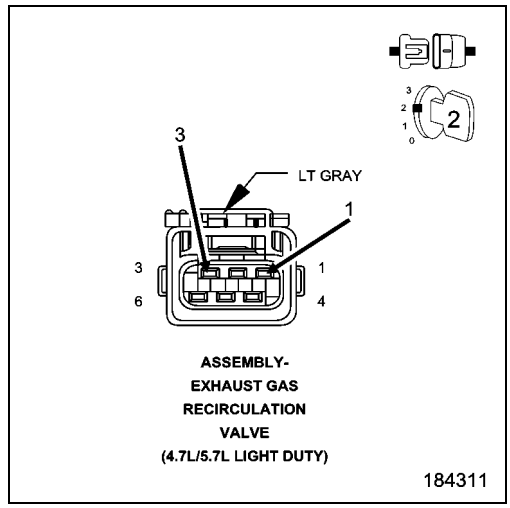

Yes

- Verify that there is good pin to terminal contact in the Solenoid and the Powertrain Control Module connectors. Replace the EGR Valve Assembly in accordance with the Service Information if no problems were found with the connectors.
- Perform the POWERTRAIN VERIFICATION TEST. (Refer to 28 - DTC-Based Diagnostics/MODULE, Powertrain Control (PCM) - Standard Procedure).

No

- Go To 5

NOTE: Remove the jumper wire before continuing.

5. (K34) EGR POSITION SENSOR SIGNAL CIRCUIT OPEN

1. Turn the ignition off.
2. Disconnect the C2 PCM harness connector.

CAUTION: Do not probe the PCM harness connectors. Probing the PCM harness connectors will damage the PCM terminals resulting in poor terminal to pin connection. Install the PCM Pinout Box Kit, NGC, 38 Position 8815A to perform diagnosis.

3. Measure the resistance of the (K34) EGR Position Sensor Signal circuit from the EGR Solenoid harness connector to the appropriate terminal of PCM Pinout Box 8815A.

Is the resistance below 5.0 Ohms?

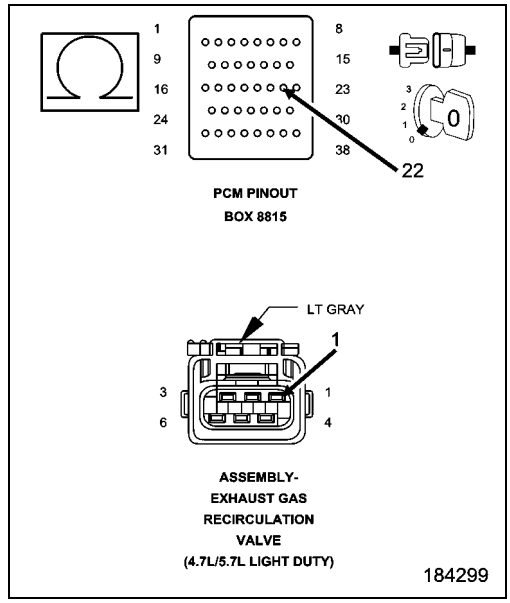

Yes

- Go To 6

No

- Repair the open in the (K34) EGR Position Sensor Signal circuit.
- Perform the POWERTRAIN VERIFICATION TEST. (Refer to 28 - DTC-Based Diagnostics/MODULE, Powertrain Control (PCM) - Standard Procedure).

6. (K900) SENSOR GROUND CIRCUIT OPEN

1. Measure the resistance of the (K900) Sensor ground circuit from the EGR Solenoid harness connector to the appropriate terminal of PCM Pinout Box 8815A.

Is the resistance below 30 Ohms?

Yes

- Go To 7

No

- Repair the open in the (K900) Sensor ground circuit.
- Perform the POWERTRAIN VERIFICATION TEST. (Refer to 28 - DTC-Based Diagnostics/MODULE, Powertrain Control (PCM) - Standard Procedure).

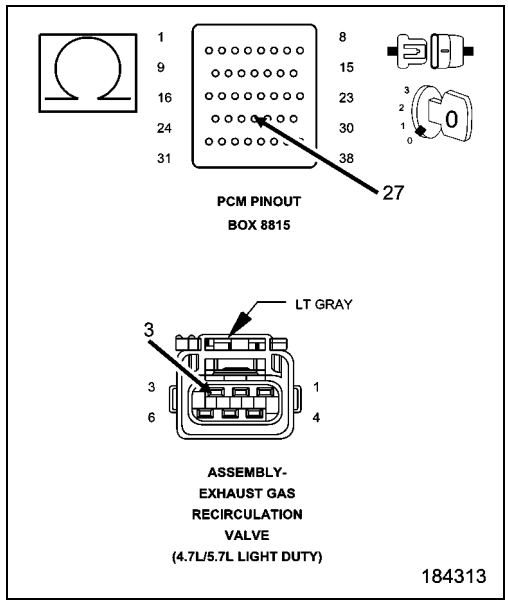

7. POWERTRAIN CONTROL MODULE (PCM)

1. Using the wiring diagram/schematic as a guide, inspect the wiring and connectors between the EGR Solenoid Assembly and the Powertrain Control Module (PCM).
2. Look for any chafed, pierced, pinched or partially broken wires.
3. Look for broken, bent, pushed out or corroded terminals. Verify that there is good pin to terminal contact in the Solenoid and the Powertrain Control Module connectors.
4. Refer to any Technical Service Bulletins that may apply.

Were there any problems found?

Yes

- Repair as necessary.
- Perform the POWERTRAIN VERIFICATION TEST. (Refer to 28 - DTC-Based Diagnostics/MODULE, Powertrain Control (PCM) - Standard Procedure).

No

- Replace and program the Powertrain Control Module in accordance with the Service Information.
- Perform the POWERTRAIN VERIFICATION TEST. (Refer to 28 - DTC-Based Diagnostics/MODULE, Powertrain Control (PCM) - Standard Procedure).

P0420-CATALYST EFFICIENCY (BANK 1)

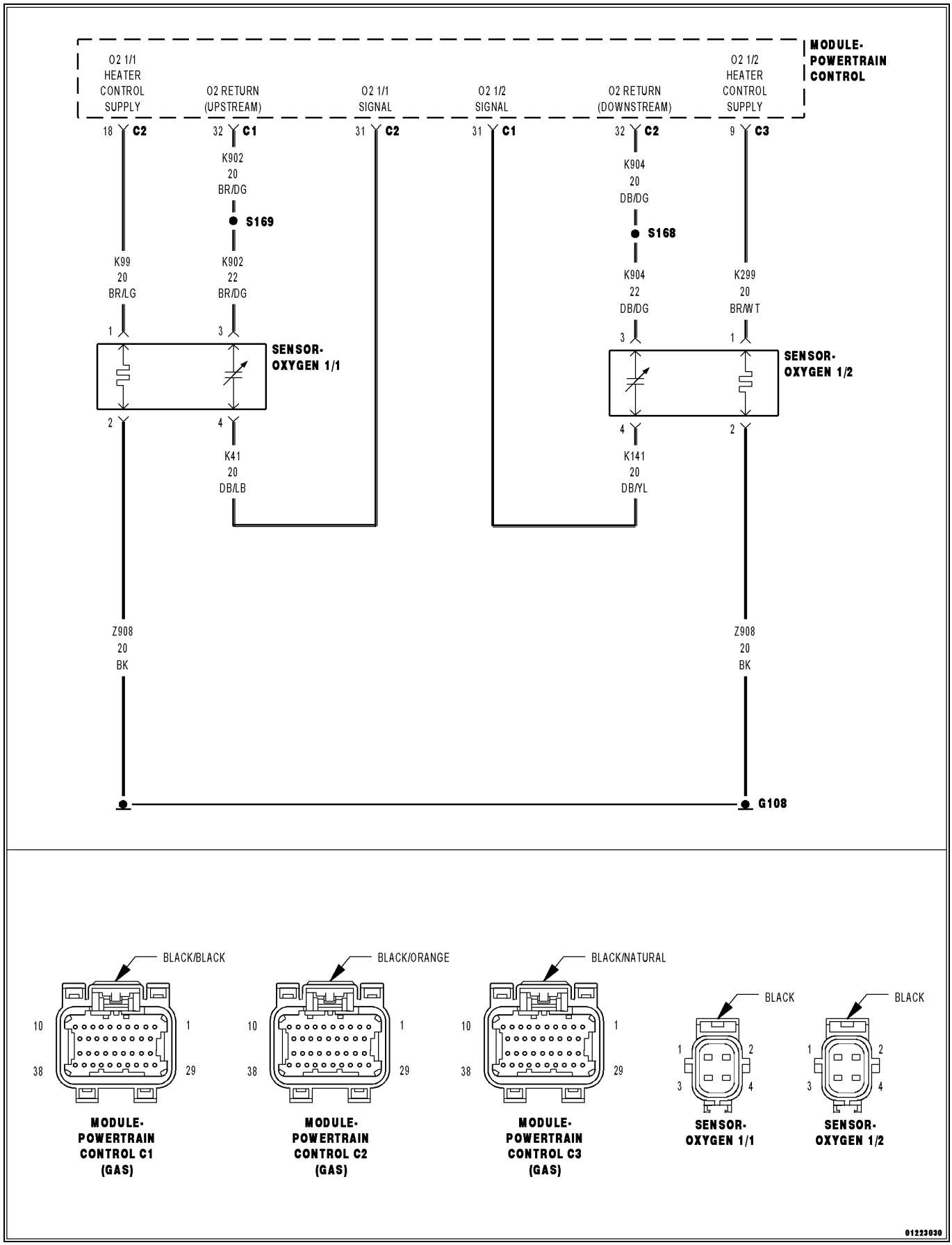

For a complete wiring diagram, **refer to the Wiring Information**.

Theory of Operation

The State of Change (SOC) catalyst monitor uses the signals from both the upstream and downstream O2 sensors to detect aging of the catalyst. Based on the fact that when a catalyst ages, it loses some of its Oxygen Storage Capacity (OSC). As a result, part of the untreated exhaust gases can breakthrough the catalyst and causes the downstream O2 sensor to deviate from its neutral (Stoichiometric) position. By observing the activities in the downstream O2 signal, the degradation level of catalyst can be detected. In general, the higher the downstream O2 sensor SOC value, the more exhaust gas breakthrough and the lower the OSC of the catalytic converter.

- **When Monitored:**

  Engine Coolant Temperature (ECT) above 70° C (158° F), engine RPM between 1400 and 2300, vehicle speed between 64 and 96 kph (40 and 60 mph) and engine run time greater than three minutes.
- **Set Condition:**

  If the final State of Change index is within the calibrated fail threshold. Two trip fault. Three good trips to turn off the MIL.

Possible Causes
(K902) O2 RETURN UPSTREAM CIRCUIT SHORTED TO GROUND
(K904) O2 RETURN DOWNSTREAM CIRCUIT SHORTED TO GROUND
(K902) O2 RETURN UPSTREAM CIRCUIT OPEN
(K904) O2 RETURN DOWNSTREAM CIRCUIT OPEN
EXHAUST LEAK
ENGINE MECHANICAL CONDITION
AGING O2 SENSOR
CATALYTIC CONVERTER

Always perform the Pre-Diagnostic Troubleshooting procedure before proceeding. (Refer to 28 - DTC-Based Diagnostics/MODULE, Powertrain Control (PCM) - Standard Procedure).

1. ACTIVE DTC

NOTE: A new rear O2 Sensor along with an aging front O2 Sensor may cause the DTC to set. Review the repair history of the vehicle before continuing.

NOTE: If an O2 Sensor DTC set along with the Catalytic Converter Efficiency DTC diagnose the O2 Sensor DTCs before continuing.

NOTE: Check for contaminants that may have damaged the O2 Sensor and Catalytic Converter: contaminated fuel, unapproved silicone, oil and coolant, repair necessary.

1. Start the engine.
2. Allow the engine to reach normal operating temperature.
3. With the scan tool, select View DTCs.

NOTE: It may be necessary to drive the vehicle to meet the conditions to set this DTC, try to repeat the conditions in which the fault originally set by reviewing the Freeze Frame data.

Is the DTC Active or Pending at this time?

Yes

- Go To 2

No

- Perform the INTERMITTENT CONDITION diagnostic procedure. (Refer to 28 - DTC-Based Diagnostics/MODULE, Powertrain Control (PCM) - Standard Procedure).

2. VISUALLY INSPECT CATALYTIC CONVERTER

Inspect the Catalytic Converter for the following damage:

- Damage Catalytic Converter, dents or holes.
- Severe discoloration caused by overheating the Catalytic Converter.
- Catalytic Converter broke internally.
- Inspect both ends of the converter, inlet and outlet.
- Leaking Catalytic Converter.

Were any problems found?

Yes

- Replace the Catalytic Converter. Repair the condition that may have caused the failure.
- Perform the POWERTRAIN VERIFICATION TEST. (Refer to 28 - DTC-Based Diagnostics/MODULE, Powertrain Control (PCM) - Standard Procedure).

No

- Go To 3

3. (K902) O2 RETURN UPSTREAM CIRCUIT VOLTAGE CHECK

1. Turn the ignition off.
2. Disconnect the 1/1 O2 Sensor harness connector.
3. Turn the ignition on.
4. Measure the voltage on the (K902) O2 Return Upstream circuit in the O2 Sensor harness connector.

Is the voltage at 2.5 Volts?

Yes

- Go To 4

No

- Go To 5

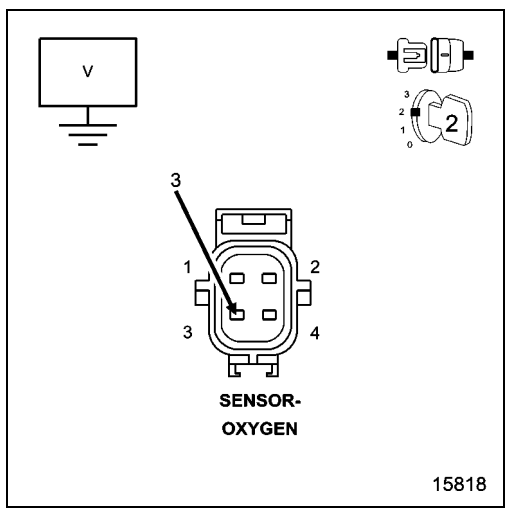

4. (K904) O2 RETURN DOWNSTREAM CIRCUIT VOLTAGE CHECK

1. Turn the ignition off.
2. Disconnect the 1/2 O2 Sensor harness connector.
3. Turn the ignition on.
4. Measure the voltage on the (K904) O2 Return Downstream circuit in the O2 Sensor harness connector.

Is the voltage at 2.5 Volts?

Yes

- Go To 10

No

- Go To 7

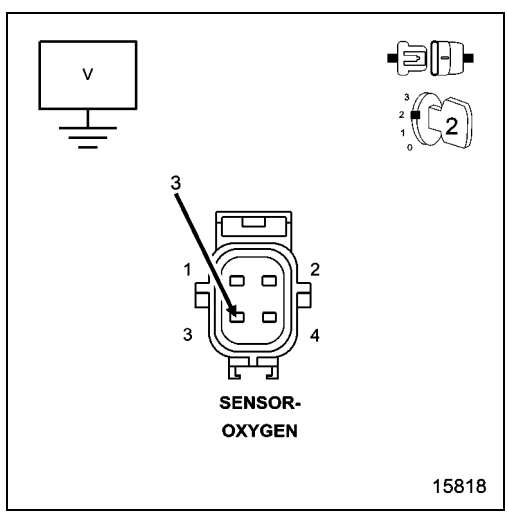

5. (K902) O2 RETURN UPSTREAM CIRCUIT SHORTED TO GROUND

1. Turn the ignition off.
2. Disconnect the C1 and C2 PCM harness connectors.
3. Measure the resistance between ground and the (K902) O2 Return Upstream circuit in the 1/1 O2 Sensor harness connector.

Is the resistance below 100 Ohms?

Yes

- Repair the short to ground in the (K902) O2 Return Upstream circuit.
- Perform the POWERTRAIN VERIFICATION TEST. (Refer to 28 - DTC-Based Diagnostics/MODULE, Powertrain Control (PCM) - Standard Procedure).

No

- Go To 6

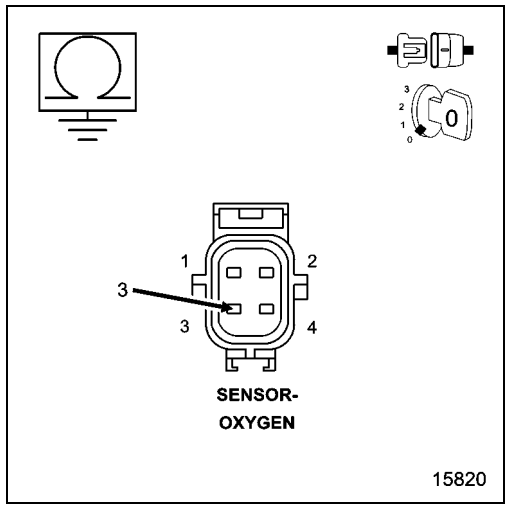

6. (K902) O2 RETURN UPSTREAM CIRCUIT OPEN

CAUTION: Do not probe the PCM harness connectors. Probing the PCM harness connectors will damage the PCM terminals resulting in poor terminal to pin connection. Install the PCM Pinout Box Kit, NGC, 38 Position 8815A to perform diagnosis.

1. Measure the resistance of the (K902) O2 Return Upstream circuit from the 1/1 O2 Sensor harness connector to the appropriate terminal of PCM Pinout Box 8815A.

Is the resistance below 5.0 Ohms?

Yes

- Go To 9

No

- Repair the open in the (K902) O2 Return Upstream circuit.
- Perform the POWERTRAIN VERIFICATION TEST. (Refer to 28 - DTC-Based Diagnostics/MODULE, Powertrain Control (PCM) - Standard Procedure).

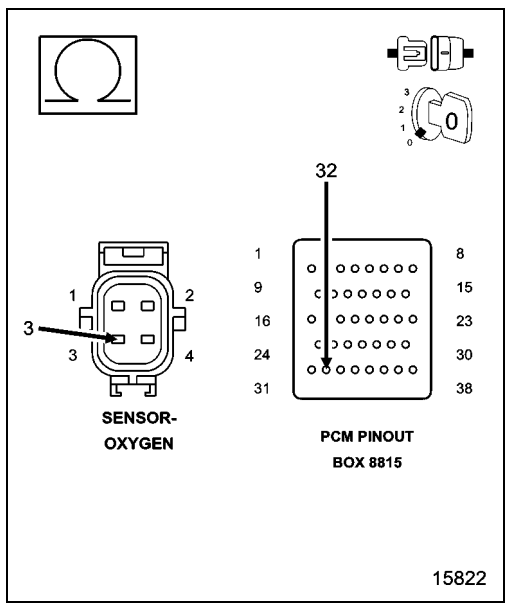

7. (K904) O2 RETURN DOWNSTREAM CIRCUIT SHORTED TO GROUND

1. Turn the ignition off.
2. Disconnect the 1/2 O2 harness connector.
3. Measure the resistance between ground and the (K904) O2 Return Downstream circuit in the 1/2 O2 Sensor harness connector.

Is the resistance below 100 Ohms?

Yes

- Repair the short to ground in the (K904) O2 Return Downstream circuit.
- Perform the POWERTRAIN VERIFICATION TEST. (Refer to 28 - DTC-Based Diagnostics/MODULE, Powertrain Control (PCM) - Standard Procedure).

No

- Go To 8

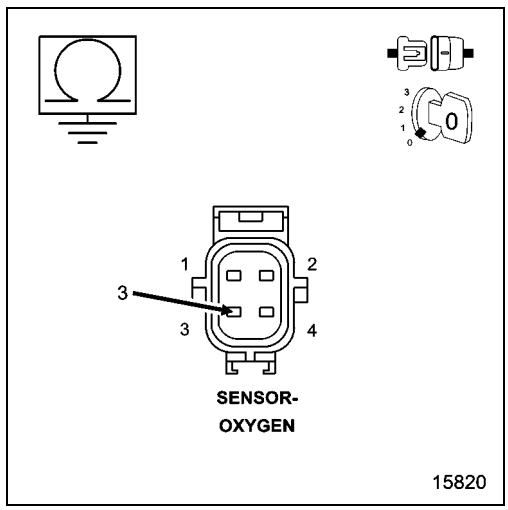

8. (K904) O2 RETURN DOWNSTREAM CIRCUIT OPEN

CAUTION: Do not probe the PCM harness connectors. Probing the PCM harness connectors will damage the PCM terminals resulting in poor terminal to pin connection. Install the PCM Pinout Box Kit, NGC, 38 Position 8815A to perform diagnosis.

1. Measure the resistance of the (K904) O2 Return Downstream circuit from the 1/2 O2 Sensor harness connector to the appropriate terminal of PCM Pinout Box 8815A.

Is the resistance below 5.0 Ohms?

Yes

- Go To 9

No

- Repair the open in the (K904) O2 Return Downstream circuit.
- Perform the POWERTRAIN VERIFICATION TEST. (Refer to 28 - DTC-Based Diagnostics/MODULE, Powertrain Control (PCM) - Standard Procedure).

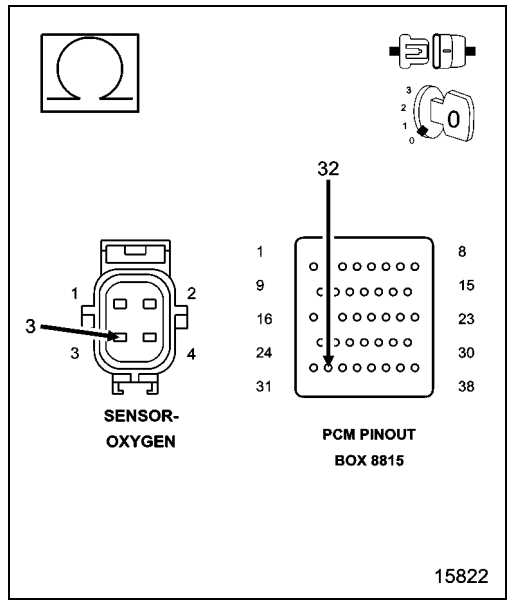

9. POWERTRAIN CONTROL MODULE (PCM)

1. Using the wiring diagram/schematic as a guide, inspect the wiring and connectors between the Sensor and the Powertrain Control Module (PCM).
2. Look for any chafed, pierced, pinched or partially broken wires.
3. Look for broken, bent, pushed out or corroded terminals. Verify that there is good pin to terminal contact in the Sensor and the Powertrain Control Module connectors.
4. Perform any Technical Service Bulletins that may apply.

Were there any problems found?

Yes

- Repair as necessary.
- Perform the POWERTRAIN VERIFICATION TEST. (Refer to 28 - DTC-Based Diagnostics/MODULE, Powertrain Control (PCM) - Standard Procedure).

No

- Replace and program the Powertrain Control Module in accordance with the Service Information.
- Perform the POWERTRAIN VERIFICATION TEST. (Refer to 28 - DTC-Based Diagnostics/MODULE, Powertrain Control (PCM) - Standard Procedure).

10. CHECKING THE EXHAUST SYSTEM FOR LEAKS

1. Turn the ignition off.
2. Raise the vehicle in accordance with the Service Information.

WARNING: The normal operating temperature of the exhaust system is very high. Never work around or attempt to service any part of the exhaust system until it has cooled. Special care should be taken when working near the catalytic converter. The temperature of the converter rises to a high level after a short period of engine operating time.

3. Connect Exhaust Cone 8404-EC or 8404-EC to Air Pressure Regulator (with hose) W-18-MIL-1146AS.

CAUTION: The air pressure must not exceed 27.6 kPa (4 psi), otherwise engine damage can occur.

4. Attach shop air to the air pressure regulator.
5. Adjust the Air Pressure Regulator to 27.6 kPa (4 psi).
6. Insert the exhaust cone into the vehicle tail pipe.

7. If the vehicle is equipped with dual exhaust. Use the 8404-ECT with equipped attached plug, plug one side of the dual exhaust pipe. Pressurize the other as described above.
8. Apply Mopar® Air Leak Detector PN# 05191804AA (or an equivalent leak finder liquid) to the following areas:
   - All welded joints from the exhaust manifold to 152.4 mm (6 inches) behind the downstream O2 sensor
   - O2 sensor seal points
   - O2 sensor boss welds
   - Flange/joint connection(s)
   - Exhaust manifold to cylinder head connection(s)
   - EGR solenoid gasket base and tube seal points (if equipped)
9. Watch for the liquid/soapy water to bubble.
10. Use the following definitions to help determine if system or component repair/replacement is necessary:

Type 1 Leak is defined as a leak where very small foam like bubbles 1 mm (0.04 of an inch) or less appear.

Any Type 1 or greater leaks found in welded joints, O2 sensor seal points or O2 sensor boss welds must be repaired or the component must be replaced.

Type 2 Leak is defined as a leak where larger bubbles pea size, 8 mm (0.3 of an inch) or greater appear.

Any Type 2 or greater leaks found in flange or joint connections, exhaust manifold to cylinder head connections or EGR gasket and tube seal points must be repaired or the components must be replaced.

Leak Location	Repair required if results at 4 psi reveal bubble size:
Welded joints	Type 1, 1 mm (0.04 of an inch) or greater
O2 Sensor seal points	Type 1, 1 mm (0.04 of an inch) or greater
O2 Sensor boss welds	Type 1, 1 mm (0.04 of an inch) or greater
Flange / joint connections	Type 2, 8 mm (0.3 of an inch) or greater
Exhaust Manifold to cylinder head connections	Type 2, 8 mm (0.3 of an inch) or greater
EGR gasket and tube seal points	Type 2, 8 mm (0.3 of an inch) or greater

11. If a leak is found that matches the above definition, repair or replace the component as necessary.
12. Once the repair is complete, repeat the procedure to verify that all leaks have been repaired.

Were any exhaust leaks found?

Yes

- Repair or replace the leaking exhaust parts as necessary.
- Perform the POWERTRAIN VERIFICATION TEST. (Refer to 28 - DTC-Based Diagnostics/MODULE, Powertrain Control (PCM) - Standard Procedure).

No

- Go To 11

11. ENGINE MECHANICAL CONDITION

1. Check the exhaust for excessive smoke caused by an internal problem in the engine.

Is an engine mechanical condition present?

Yes

- Repair the engine mechanical condition as necessary.
- Perform the POWERTRAIN VERIFICATION TEST. (Refer to 28 - DTC-Based Diagnostics/MODULE, Powertrain Control (PCM) - Standard Procedure).

No

- Go To 12

12. AGING O2 SENSOR

1. A new rear O2 Sensor along with an aging front O2 Sensor may cause the DTC to set.
2. Review the vehicles repair history.

Has the rear O2 Sensor been replaced without replacing the front O2 Sensor?

Yes

- Replace the Front O2 Sensor as necessary.
- Perform the POWERTRAIN VERIFICATION TEST. (Refer to 28 - DTC-Based Diagnostics/MODULE, Powertrain Control (PCM) - Standard Procedure).

No

- Go To 13

13. CATALYTIC CONVERTER

If there are no possible cause remaining, view repair.

Repair

- Replace the Catalytic Converter.
- Perform the POWERTRAIN VERIFICATION TEST. (Refer to 28 - DTC-Based Diagnostics/MODULE, Powertrain Control (PCM) - Standard Procedure).

P0430-CATALYST EFFICIENCY (BANK 2)

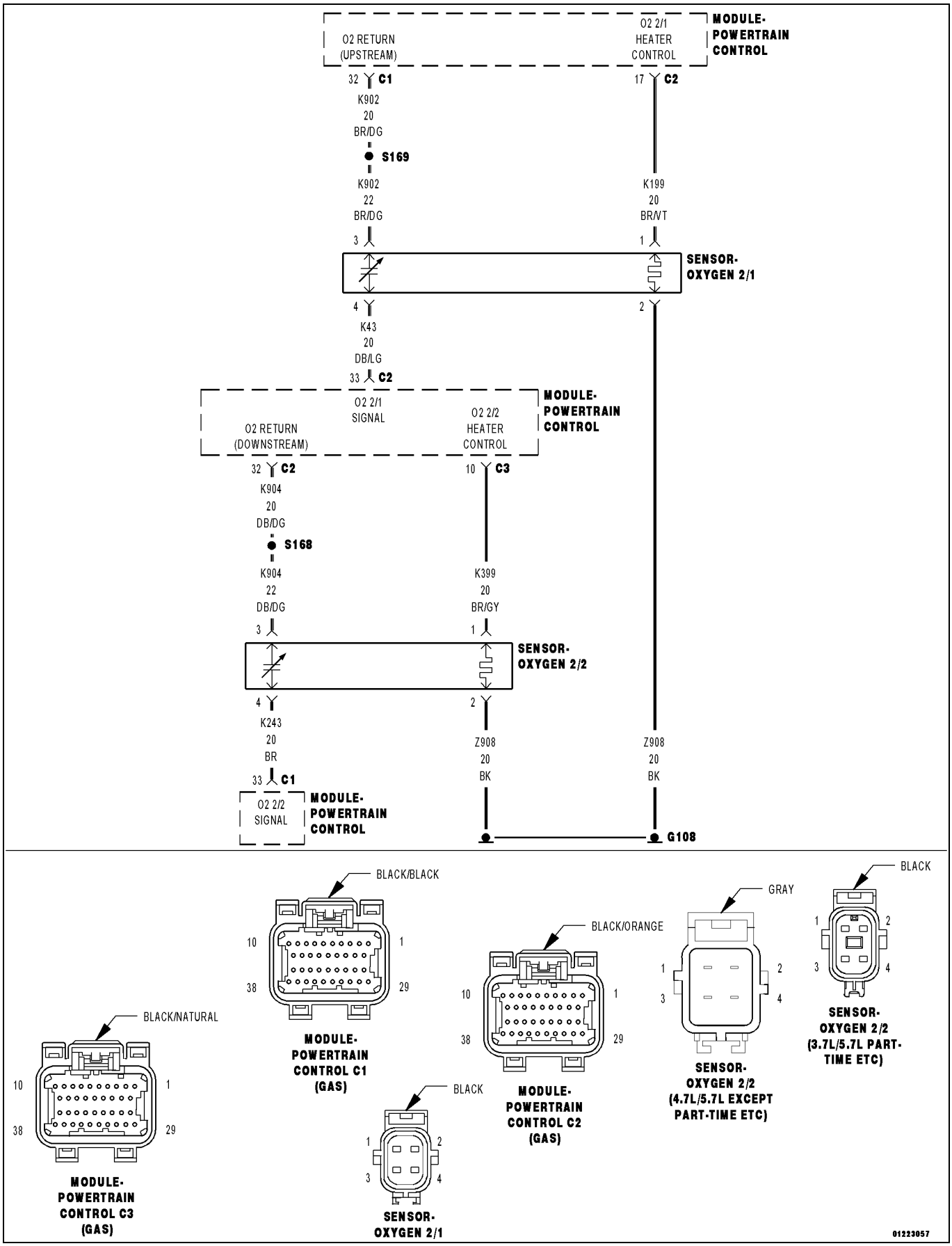

For a complete wiring diagram, **refer to the Wiring Information**.

Theory of Operation

The State of Change (SOC) catalyst monitor uses the signals from both the upstream and downstream O2 sensors to detect aging of the catalyst. Based on the fact that when a catalyst ages, it loses some of its Oxygen Storage Capacity (OSC). As a result, part of the untreated exhaust gases can breakthrough the catalyst and causes the downstream O2 sensor to deviate from its neutral (Stoichiometric) position. By observing the activities in the downstream O2 signal, the degradation level of catalyst can be detected. In general, the higher the downstream O2 sensor SOC value, the more exhaust gas breakthrough and the lower the OSC of the catalytic converter.

- **When Monitored:**

  Engine Coolant Temperaute (ECT) above 70° C (158° F), engine RPM between 1400 and 2300, vehicle speed between 64 and 96 kph (40 and 60 mph) and engine run time greater than 3 minutes.
- **Set Condition:**

  If the final State of Change index is within the calibrated fail threshold. Two trip fault. Three good trips to turn off the MIL.

Possible Causes
(K902) O2 RETURN UPSTREAM CIRCUIT SHORTED TO GROUND
(K904) O2 RETURN DOWNSTREAM CIRCUIT SHORTED TO GROUND
(K902) O2 RETURN UPSTREAM CIRCUIT OPEN
(K904) O2 RETURN DOWNSTREAM CIRCUIT OPEN
EXHAUST LEAK
ENGINE MECHANICAL CONDITION
AGING O2 SENSOR
CATALYTIC CONVERTER

Always perform the Pre-Diagnostic Troubleshooting procedure before proceeding. (Refer to 28 - DTC-Based Diagnostics/MODULE, Powertrain Control (PCM) - Standard Procedure).

1. ACTIVE DTC

NOTE: A new rear O2 Sensor along with an aging front O2 Sensor may cause the DTC to set. Review the repair history of the vehicle before continuing.

NOTE: If an O2 Sensor DTC set along with the Catalytic Converter Efficiency DTC diagnose the O2 Sensor DTCs before continuing.

NOTE: Check for contaminants that may have damaged the O2 Sensor and Catalytic Converter: contaminated fuel, unapproved silicone, oil and coolant, repair necessary.

1. Start the engine.
2. Allow the engine to reach normal operating temperature.
3. With the scan tool, select View DTCs.

NOTE: It may be necessary to drive the vehicle to meet the conditions to set this DTC, try to repeat the conditions in which the fault originally set by reviewing the Freeze Frame data.

Is the DTC Active or Pending at this time?

Yes

- Go To 2

No

- Perform the INTERMITTENT CONDITION diagnostic procedure. (Refer to 28 - DTC-Based Diagnostics/MODULE, Powertrain Control (PCM) - Standard Procedure).

2. VISUALLY INSPECT CATALYTIC CONVERTER

Inspect the Catalytic Converter for the following damage.

- Damage Catalytic Converter, dents or holes.
- Severe discoloration caused by overheating the Catalytic Converter.
- Catalytic Converter broke internally.
- Inspect both ends of the converter, inlet and outlet.
- Leaking Catalytic Converter.

Were any problems found?

Yes

- Replace the Catalytic Converter. Repair the condition that may have caused the failure.
- Perform the POWERTRAIN VERIFICATION TEST. (Refer to 28 - DTC-Based Diagnostics/MODULE, Powertrain Control (PCM) - Standard Procedure).

No

- Go To 3

3. (K902) O2 RETURN UPSTREAM CIRCUIT VOLTAGE CHECK

1. Turn the ignition off.
2. Disconnect the 2/1 O2 Sensor harness connector.
3. Turn the ignition on.
4. Measure the voltage on the (K902) O2 Return Upstream circuit in the O2 Sensor harness connector.

Is the voltage at 2.5 Volts?

Yes

- Go To 4

No

- Go To 5

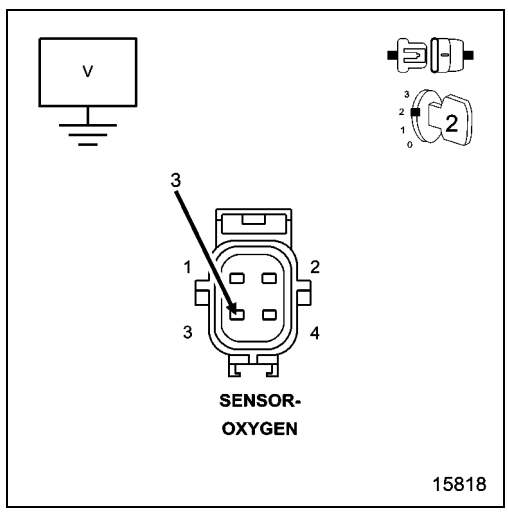

4. (K904) O2 RETURN DOWNSTREAM CIRCUIT VOLTAGE CHECK

1. Turn the ignition off.
2. Disconnect the 2/2 O2 Sensor harness connector.
3. Turn the ignition on.
4. Measure the voltage on the (K904) O2 Return Downstream circuit in the O2 Sensor harness connector.

Is the voltage at 2.5 Volts?

Yes

- Go To 10

No

- Go To 7

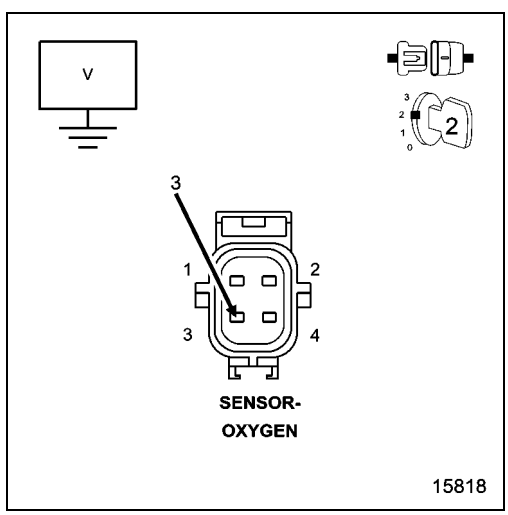

5. (K902) O2 RETURN UPSTREAM CIRCUIT SHORTED TO GROUND

1. Turn the ignition off.
2. Disconnect the C1 and C2 PCM harness connectors.
3. Measure the resistance between ground and the (K902) O2 Return Upstream circuit in the 2/1 O2 Sensor harness connector.

Is the resistance below 100 Ohms?

Yes

- Repair the short to ground in the (K902) O2 Return Upstream circuit.
- Perform the POWERTRAIN VERIFICATION TEST. (Refer to 28 - DTC-Based Diagnostics/MODULE, Powertrain Control (PCM) - Standard Procedure).

No

- Go To 6

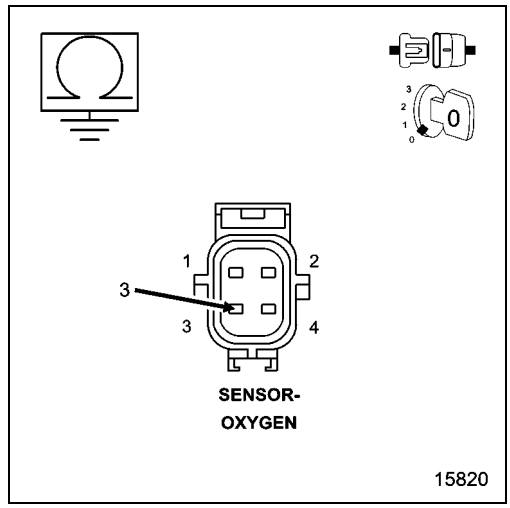

6. (K902) O2 RETURN UPSTREAM CIRCUIT OPEN

CAUTION: Do not probe the PCM harness connectors. Probing the PCM harness connectors will damage the PCM terminals resulting in poor terminal to pin connection. Install the PCM Pinout Box Kit, NGC, 38 Position 8815A to perform diagnosis.

1. Measure the resistance of the (K902) O2 Return Upstream circuit from the 2/1 O2 Sensor harness connector to the appropriate terminal of PCM Pinout Box 8815A.

Is the resistance below 5.0 Ohms?

Yes

- Go To 9

No

- Repair the open in the (K902) O2 Return Upstream circuit.
- Perform the POWERTRAIN VERIFICATION TEST. (Refer to 28 - DTC-Based Diagnostics/MODULE, Powertrain Control (PCM) - Standard Procedure).

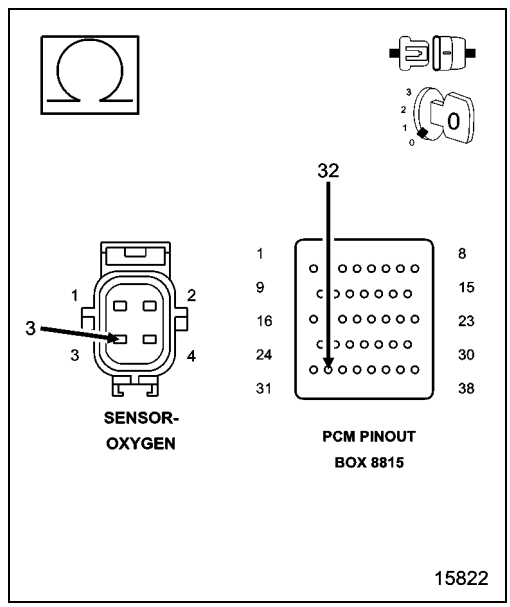

7. (K904) O2 RETURN DOWNSTREAM CIRCUIT SHORTED TO GROUND

1. Turn the ignition off.
2. Disconnect the 2/2 O2 harness connector.
3. Measure the resistance between ground and the (K904) O2 Return Downstream circuit in the 2/2 O2 Sensor harness connector.

Is the resistance below 100 Ohms?

Yes

- Repair the short to ground in the (K904) O2 Return Downstream circuit.
- Perform the POWERTRAIN VERIFICATION TEST. (Refer to 28 - DTC-Based Diagnostics/MODULE, Powertrain Control (PCM) - Standard Procedure).

No

- Go To 8

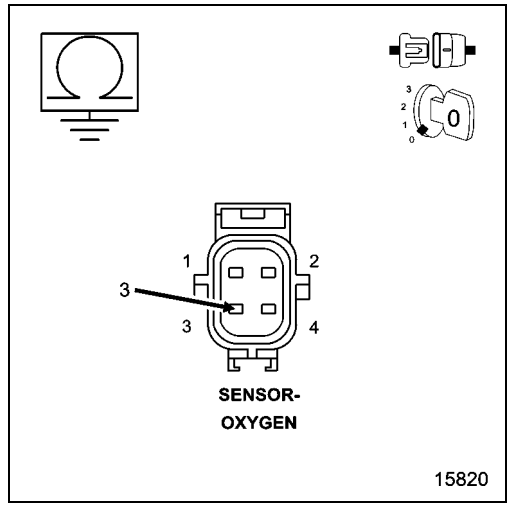

8. (K904) O2 RETURN DOWNSTREAM CIRCUIT OPEN

1. Measure the resistance of the (K904) O2 Return Downstream circuit from the 2/2 O2 Sensor harness connector to the appropriate terminal of PCM Pinout Box 8815A.

Is the resistance below 5.0 Ohms?

Yes

- Go To 9

No

- Repair the open in the (K904) O2 Return Downstream circuit.
- Perform the POWERTRAIN VERIFICATION TEST. (Refer to 28 - DTC-Based Diagnostics/MODULE, Powertrain Control (PCM) - Standard Procedure).

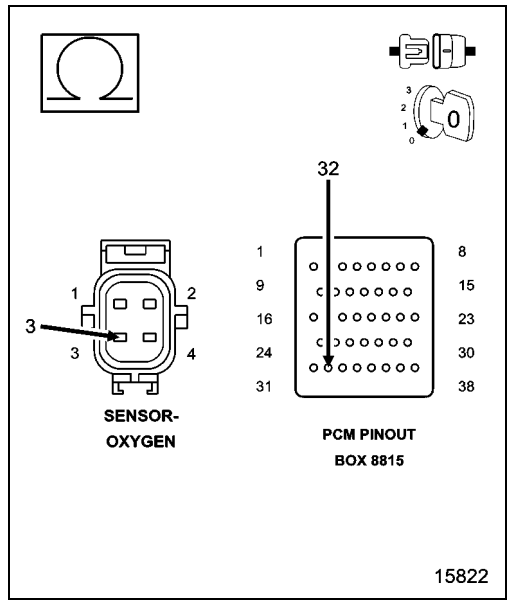

9. POWERTRAIN CONTROL MODULE (PCM)

1. Using the wiring diagram/schematic as a guide, inspect the wiring and connectors between the Sensor and the Powertrain Control Module (PCM).
2. Look for any chafed, pierced, pinched or partially broken wires.
3. Look for broken, bent, pushed out or corroded terminals. Verify that there is good pin to terminal contact in the Sensor and the Powertrain Control Module connectors.
4. Perform any Technical Service Bulletins that may apply.

Were there any problems found?

Yes

- Repair as necessary.
- Perform the POWERTRAIN VERIFICATION TEST. (Refer to 28 - DTC-Based Diagnostics/MODULE, Powertrain Control (PCM) - Standard Procedure).

No

- Replace and program the Powertrain Control Module in accordance with the Service Information.
- Perform the POWERTRAIN VERIFICATION TEST. (Refer to 28 - DTC-Based Diagnostics/MODULE, Powertrain Control (PCM) - Standard Procedure).

10. CHECKING THE EXHAUST SYSTEM FOR LEAKS

1. Turn the ignition off.
2. Raise the vehicle in accordance with the Service Information.

WARNING: The normal operating temperature of the exhaust system is very high. Never work around or attempt to service any part of the exhaust system until it has cooled. Special care should be taken when working near the catalytic converter. The temperature of the converter rises to a high level after a short period of engine operating time.

3. Connect Exhaust Cone 8404-EC or 8404-EC to Air Pressure Regulator (with hose) W-18-MIL-1146AS.

CAUTION: The air pressure must not exceed 27.6 kPa (4 psi), otherwise engine damage can occur.

4. Attach shop air to the air pressure regulator.
5. Adjust the Air Pressure Regulator to 27.6 kPa (4 psi).
6. Insert the exhaust cone into the vehicle tail pipe.

7. If the vehicle is equipped with dual exhaust. Use the 8404-ECT with equipped attached plug, plug one side of the dual exhaust pipe. Pressurize the other as described above.
8. Apply Mopar® Air Leak Detector PN# 05191804AA (or an equivalent leak finder liquid) to the following areas:
   - All welded joints from the exhaust manifold to 152.4 mm (6 inches) behind the downstream O2 sensor
   - O2 sensor seal points
   - O2 sensor boss welds
   - Flange/joint connection(s)
   - Exhaust manifold to cylinder head connection(s)
   - EGR solenoid gasket base and tube seal points (if equipped)
9. Watch for the liquid/soapy water to bubble.
10. Use the following definitions to help determine if system or component repair/replacement is necessary:

Type 1 Leak is defined as a leak where very small foam like bubbles 1 mm (0.04 of an inch) or less appear.

Any Type 1 or greater leaks found in welded joints, O2 sensor seal points or O2 sensor boss welds must be repaired or the component must be replaced.

Type 2 Leak is defined as a leak where larger bubbles pea size, 8 mm (0.3 of an inch) or greater appear.

Any Type 2 or greater leaks found in flange or joint connections, exhaust manifold to cylinder head connections or EGR gasket and tube seal points must be repaired or the components must be replaced

Leak Location	Repair required if results at 4 psi reveal bubble size:
Welded joints	Type 1, 1 mm (0.04 of an inch) or greater
O2 Sensor seal points	Type 1, 1 mm (0.04 of an inch) or greater
O2 Sensor boss welds	Type 1, 1 mm (0.04 of an inch) or greater
Flange / joint connections	Type 2, 8 mm (0.3 of an inch) or greater
Exhaust Manifold to cylinder head connections	Type 2, 8 mm (0.3 of an inch) or greater
EGR gasket and tube seal points	Type 2, 8 mm (0.3 of an inch) or greater

11. If a leak is found that matches the above definition, repair or replace the component as necessary.
12. Once the repair is complete, repeat the procedure to verify that all leaks have been repaired.

Were any exhaust leaks found?

Yes

- Repair or replace the leaking exhaust parts as necessary.
- Perform the POWERTRAIN VERIFICATION TEST. (Refer to 28 - DTC-Based Diagnostics/MODULE, Powertrain Control (PCM) - Standard Procedure).

No

- Go To 11

11. ENGINE MECHANICAL CONDITION

1. Check the exhaust for excessive smoke caused by an internal problem in the engine.

Is an engine mechanical condition present?

Yes

- Repair the engine mechanical condition as necessary.
- Perform the POWERTRAIN VERIFICATION TEST. (Refer to 28 - DTC-Based Diagnostics/MODULE, Powertrain Control (PCM) - Standard Procedure).

No

- Go To 12

12. AGING O2 SENSOR

1. A new rear O2 Sensor along with an aging front O2 Sensor may cause the DTC to set.
2. Review the vehicles repair history.

Has the rear O2 Sensor been replaced without replacing the front O2 Sensor?

Yes

- Replace the Front O2 Sensor as necessary.
- Perform the POWERTRAIN VERIFICATION TEST. (Refer to 28 - DTC-Based Diagnostics/MODULE, Powertrain Control (PCM) - Standard Procedure).

No

- Go To 13

13. CATALYTIC CONVERTER

If there are no possible cause remaining, view repair.

Repair

- Replace the Catalytic Converter.
- Perform the POWERTRAIN VERIFICATION TEST. (Refer to 28 - DTC-Based Diagnostics/MODULE, Powertrain Control (PCM) - Standard Procedure).

P0440-GENERAL EVAP SYSTEM FAILURE

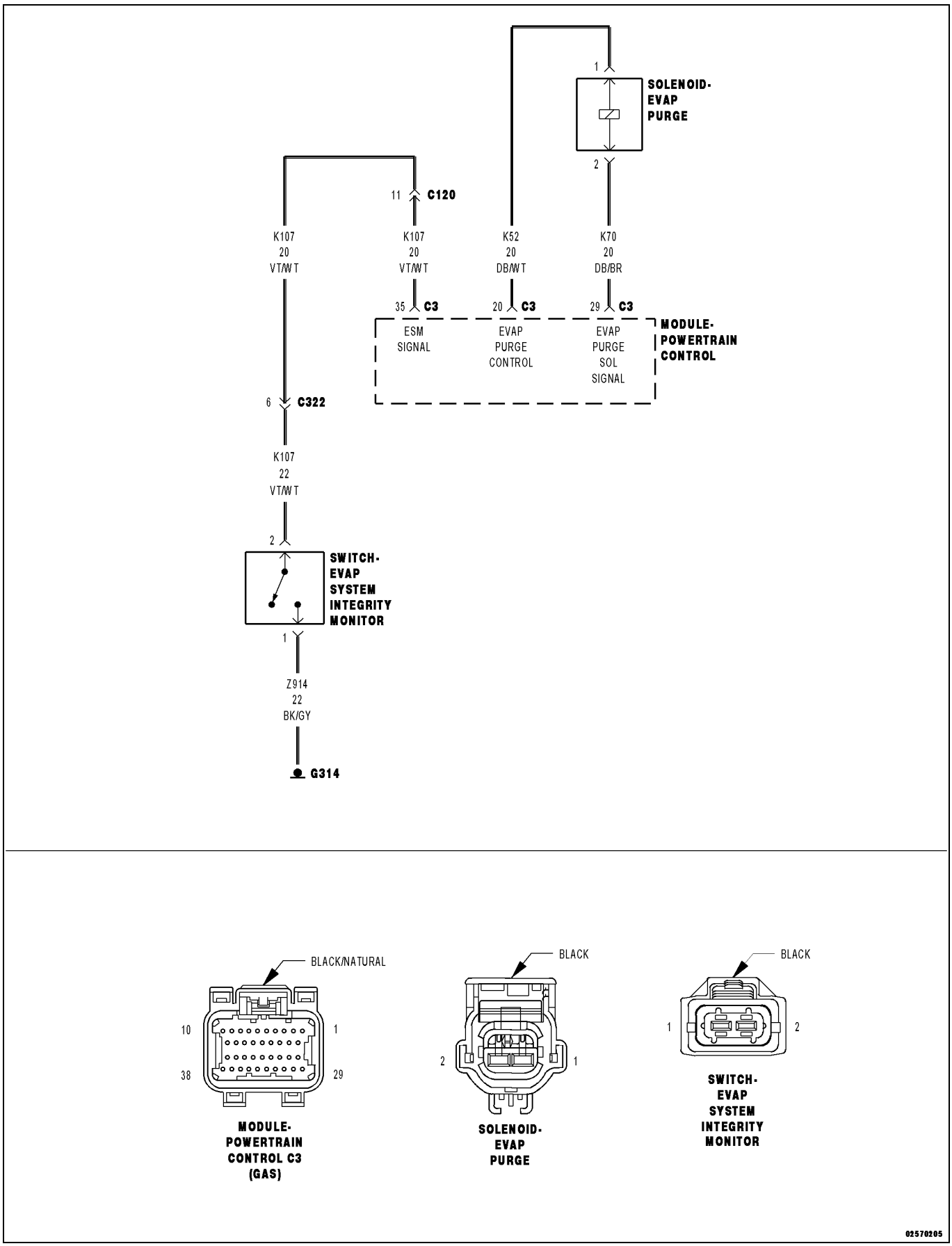

For a complete wiring diagram, **refer to the Wiring Information**.

Theory of Operation

The Evap Purge Monitor tests the integrity of the hoses/tube between the throttle body/intake and the fuel tank. The monitor is a two stage test and runs only after the Evap system passes the small leak test. Stage one is non-intrusive. The Powertrain Control Module (PCM) monitors the purge vapor ratio and the Evap System Integrity Monitor (ESIM) switch closed ratio. If the purge vapor ratio is above a calculated value, the monitor passes. If the ESIM switch closed ratio is greater than calculated value when purge flow is greater than a minimum value, the monitor passes. Stage two is an intrusive test and runs only if stage one does not pass. The PCM commands the purge solenoid to flow at a specified rate to force the purge vapor ratio to update. The ratio is compared to a calibrated specification. If it is less than specified, a one trip failure is recorded. This test can detect if the purge hose is off, obstructed or the purge valve is not operational.

- **When Monitored:**

  Engine running after a cold start with the difference between ECT and AAT is less than 10° C (19° F). Fuel Level between 12% and 88% full. Manifold vacuum greater than a calculated minimum value. Ambient Temperature between 4° C and 32° C (39° F and 89° F).

- **Set Condition:**

  When the monitor conditions are met, the PCM will ramp in purge flow. If the PCM does not sense an ESIM switch closure after a calculated amount of purge flow accumulation, an error is detected. Two Trip Fault. Three good trips to turn off the MIL.

Possible Causes
EVAP PURGE SOLENOID VACUUM SUPPLY
EVAP PURGE HOSE/TUBE AND FRESH AIR FILTER OBSTRUCTION
(Z914) GROUND CIRCUIT OPEN
(K107) ESIM SIGNAL CIRCUIT OPEN
EVAPORATIVE EMISSION LEAK
EVAPORATIVE SYSTEM INTEGRITY MONITOR SWITCH
EVAP PURGE SOLENOID
POWERTRAIN CONTROL MODULE (PCM)

Always perform the Pre-Diagnostic Troubleshooting procedure before proceeding. (Refer to 28 - DTC-Based Diagnostics/MODULE, Powertrain Control (PCM) - Standard Procedure).

1. VEHICLE HISTORY AND SERVICE BULLETIN INVESTIGATION

1. Ignition on, engine not running.
2. With the scan tool, select View DTCs. Record the related Freeze Frame data if any DTCs are present.
3. Whether or not any DTCs are active you will want to check the following items which may assist in repairing the customer's complaint successfully.
4. Check the vehicle's repair history.
5. If the vehicle has a repair history that pertains to the customer's current complaint, review the repair.
6. Inspect the vehicle for any aftermarket accessories that may have been installed incorrectly.
7. Check for any service bulletin(s) related to the customer's complaint or DTCs.
8. If a service bulletin applies, follow the instructions per the service bulletin.

Choose the following scenario that best applies.

The service bulletin repaired the customer's complaint.

- Testing complete.

A DTC is present, no service bulletins apply or the service bulletin didn't repair the customer's complaint.

- Go To 2

2. ACTIVE DTC

NOTE: It maybe necessary to drive the vehicle to meet the conditions to set this DTC, try to repeat the conditions in which the fault originally set by reviewing the Freeze Frame data.

NOTE: Allow the vehicle to reach ambient temperature before continuing with this procedure.

NOTE: A loose gas cap could have caused this DTC to set. Make sure the gas cap is tight and in good condition.

NOTE: If the customer is experiencing an early fuel shut off during the fuel filling process along with P0440, P0441 and P0452 setting, you need to check for restrictions in the Evap Purge tubes/hoses as well as the Fresh Air Filter before continuing.

1. Start the engine.
2. Allow the engine to reach normal operating temperature.
3. Using the scan tool, perform the ESIM Forced Monitor test. Allow the test to complete.
4. With the scan tool, select View DTCs.

Is the DTC Active or Pending at this time?

Yes

- Go To 3

No

- Perform the INTERMITTENT CONDITION diagnostic procedure. (Refer to 28 - DTC-Based Diagnostics/MODULE, Powertrain Control (PCM) - Standard Procedure).

3. VISUAL AND PHYSICAL INSPECTION

Inspect the Evap System for any of the following conditions:

- Holes or cracks
- Loose seal points
- Damaged or missing components
- Incorrect routing of hoses and tubes
- Loose or missing Fuel Cap
- Damaged or missing Fuel Cap seal
- Improper installation of the Fuel Cap
- Damaged Locking tabs on the Fuel Cap and/or filler tube
- Damaged seal points on the Fuel Cap and/or filler tube

Were any of the above conditions found?

Yes

- Repair as necessary.
- Perform the POWERTRAIN VERIFICATION TEST. (Refer to 28 - DTC-Based Diagnostics/MODULE, Powertrain Control (PCM) - Standard Procedure).

No

- Go To 4

4. EVAP VACUUM SUPPLY HOSE INSPECTION

1. Carefully inspect the Evap Purge Solenoid vacuum supply hose for proper routing.
2. Check for a pinched or plugged hose from the throttle body or intake manifold to the Purge Solenoid.
3. Make sure the vacuum port at the throttle body or intake manifold is free from any blockage.

Were any problems found?

Yes

- Repair the vacuum supply, hose/tube as necessary.
- Perform the POWERTRAIN VERIFICATION TEST. (Refer to 28 - DTC-Based Diagnostics/MODULE, Powertrain Control (PCM) - Standard Procedure).

No

- Go To 5

5. EVAP PURGE SOLENOID

NOTE: After disconnecting the Evap Purge Solenoid vacuum connections, inspect the lines and solenoid for signs of contamination.

1. Using a hand vacuum pump, apply 10 in Hg to the "CAN" side of the Evap Purge Solenoid.

NOTE: The solenoid should hold vacuum for a minimum of 15 seconds.

2. Ignition on, engine not running.
3. With the scan tool, actuate the Evap Purge Solenoid to the ON position.

NOTE: The vacuum should drop when the solenoid is actuated.

Does the solenoid function as described above?

Yes

- Go To 6

No

- Verify that there is good pin to terminal contact in the Solenoid and the Powertrain Control Module connectors. Replace the Evap Purge Solenoid if no problems were found in the connectors.
- Perform the POWERTRAIN VERIFICATION TEST. (Refer to 28 - DTC-Based Diagnostics/MODULE, Powertrain Control (PCM) - Standard Procedure).

6. ESIM SWITCH STATE

1. Turn the ignition off.
2. Connect the previously disconnected vacuum hose.
3. Disconnect the ESIM switch harness connector.
4. Ignition on, engine not running.
5. Monitor the ESIM switch state on the scan tool.
6. Carefully connect a jumper wire between the (K107) ESIM Signal circuit and the (Z914) Ground circuit in the ESIM switch harness connector.
7. Monitor the ESIM switch state on the scan tool.

Did the switch change from OPEN to CLOSED when the jumper wire was installed?

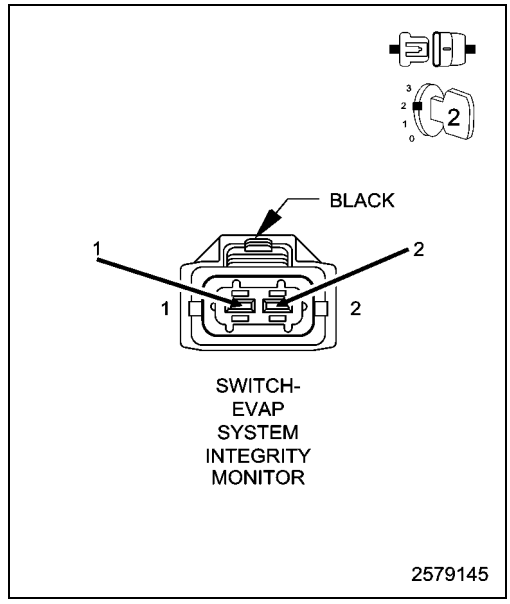

Yes

- Go To 9

No

- Go To 7

NOTE: Remove the jumper wire before continuing.

7. EXCESSIVE RESISTANCE IN THE (K107) ESIM SIGNAL CIRCUIT

1. Turn the ignition off.
2. Disconnect the C3 PCM harness connector.

CAUTION: Do not probe the PCM harness connectors. Probing the PCM harness connectors will damage the PCM terminals resulting in poor terminal to pin connection. Install the PCM Pinout Box Kit, NGC, 38 Position 8815A to perform diagnosis.

3. Measure the resistance of the (K107) ESIM Signal circuit from the ESIM switch harness connector to the appropriate terminal of PCM Pinout Box 8815A.

Is the resistance below 5.0 Ohms?

Yes

- Go To 8

No

- Repair the excessive resistance in the (K107) ESIM Signal circuit.
- Perform the POWERTRAIN VERIFICATION TEST. (Refer to 28 - DTC-Based Diagnostics/MODULE, Powertrain Control (PCM) - Standard Procedure).

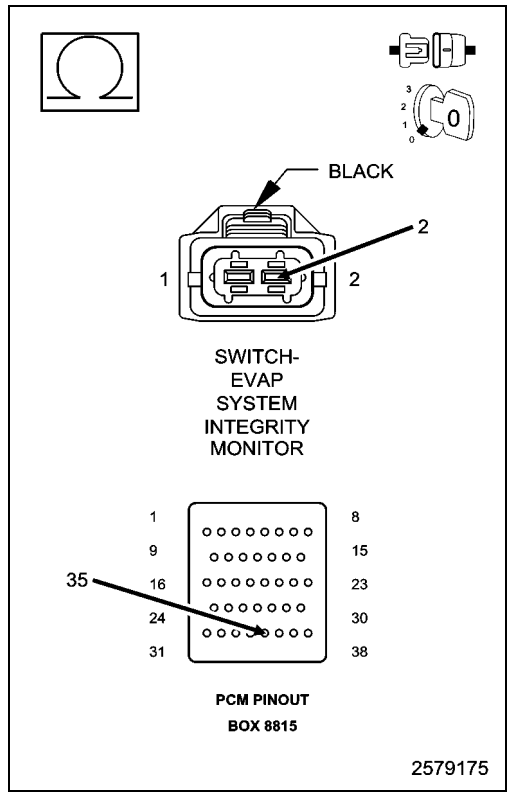

8. EXCESSIVE RESISTANCE IN THE (Z914) GROUND CIRCUIT

1. Using a 12-volt test light connected to B+, probe the (Z914) Ground circuit in the ESIM switch harness connector.

NOTE: The test light should illuminate brightly. Compare the brightness to that of a direct connection to B- (ground).

Does the test light illuminate brightly?

Yes

- Go To 13

No

- Repair the excessive resistance in the (Z914) Ground circuit.
- Perform the POWERTRAIN VERIFICATION TEST. (Refer to 28 - DTC-Based Diagnostics/MODULE, Powertrain Control (PCM) - Standard Procedure).

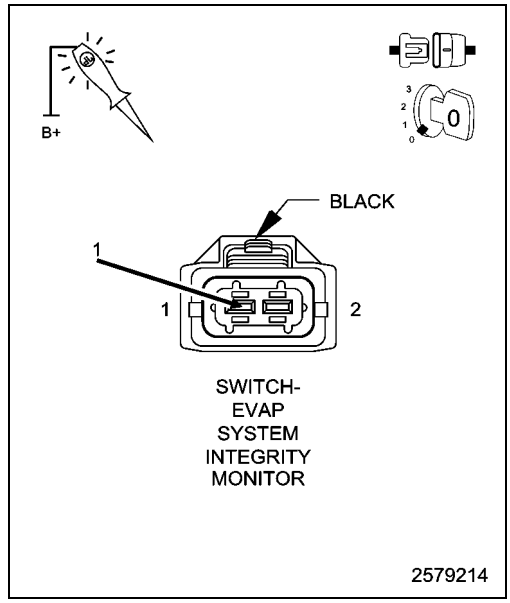

9. VERIFY EVAPORATIVE EMISSION LEAK

WARNING: Keep lit cigarettes, sparks, flames, and other ignition sources away from the test area to prevent the ignition of explosive gases. Keep the test area well ventilated. Failure to do so may result in possible serious or fatal injury.

1. Turn the ignition off.
2. To continue testing you will need Evap Emission Leak Detector (EELD) 8404B.

NOTE: The fuel tank should have between 20% and 80% of fuel tank capacity to properly test the Evap system.

3. Connect the red power lead of EELD to the battery positive terminal and the black ground lead to battery negative terminal.
4. Block the vent hose of the Evap Canister.
5. Connect shop air to the EELD.
6. Set the smoke/air control switch to AIR.
7. Insert the tester's AIR supply tip (clear hose) into the .040 orifice on the tester's control panel.
8. Press the remote smoke/air start button.
9. Position the red flag on the air flow meter so it is aligned with the indicator ball.
10. When the calibration is complete, release the remote button. The EELD flow meter is now calibrated in liters per minute.
11. Install the service port adapter 8404-14 on the vehicle's service port (if equipped) or install the adapter 8404-ADP into the filter line.
12. Connect the Air supply hose from the EELD to the service port (if equipped) or to the adapter 8404-ADP.
13. Press the remote button to activate AIR flow.
14. Compare the flow meter indicator ball reading to the red flag.
15. ABOVE the red flag indicates a leak present.
16. BELOW the red flag indicates a sealed system.

Is the indicator ball above the red flag?

Yes

- Go To 10

No

- Go To 11

10. EVAPORATIVE EMISSION LEAK DETECTION

NOTE: A thorough visual inspection of the Evap system hoses, tubes and connections may save time in your diagnosis. Look for any physical damage or signs of wetness at connections. The strong smell of fuel vapors may aid diagnosis also.

1. Remove the Air supply hose from the service port or the adapter 8404-ADP.
2. Connect the SMOKE supply tip (black hose) to the service port (if equipped) or to the adapter 8404-ADP.
3. Set the smoke/air control switch to SMOKE.

NOTE: The flow meter indicator ball will not move at this point.

4. Press the remote smoke/air start button.

NOTE: Make sure that smoke has filled the Evap system by continuing to press the remote smoke/air start button, remove the vehicle fuel cap and wait for the smoke to exit. Once smoke is indicated reinstall the fuel cap.

NOTE: For optimal performance, introduce smoke into the system for an additional 60 seconds; continue introducing smoke at 15 second intervals, as necessary.

5. While still holding the remote smoke/air start button, use the white light 8404-CLL to follow the Evap System path and look for the source of the leak indicated by exiting smoke.
6. If a leak is concealed from view (i.e., top of fuel tank), release the remote smoke/air start button and use the ultraviolet (UV) black light 8404-UVL and the yellow goggles 8404-20 to look for residual traces of dye that are left behind by the smoke.
7. The exiting smoke deposits a residual fluid that is either bright green or bright yellow in color when viewed with a UV light.

NOTE: The Evap System is divided into three zones. A leak from any of these zones can cause this DTC to set. The lists below specify the possible leak points in that specific zone. For further assistance see the Zone Identification Charts below.

ZONE 1

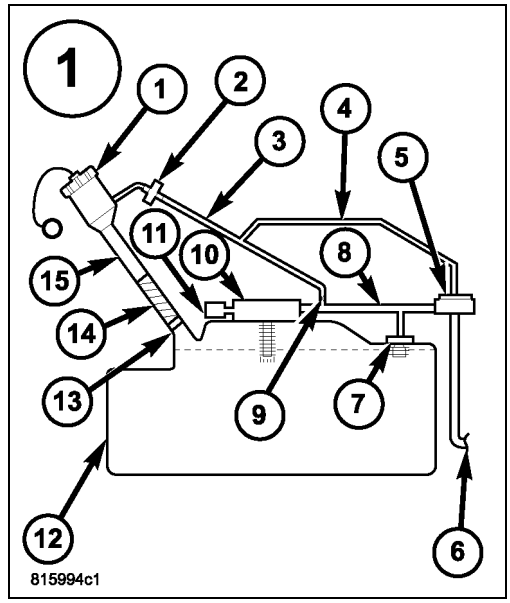

1. Fuel Cap
2. Recirculation Check Valve
3. Vapor Recirculation Line
4. Signal Vapor Line for FVM
5. Flow Management Valve
6. Fuel Tank to Canister Vapor Line
7. Fuel Tank Vent (Check Valve)
8. Vapor Line to Canister
9. Flow Control Orifice
10. Control Valve
11. Liquid Trap
12. Fuel Tank
13. Check valve
14. Fuel Fill Tube to Tank connector
15. Fuel Fill Tube

ZONE 2

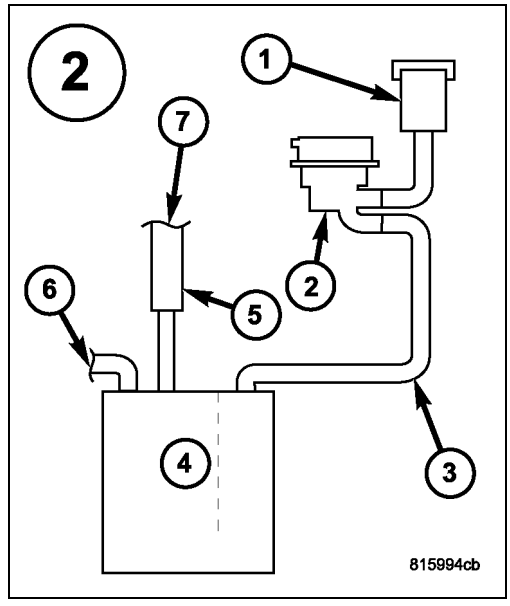

1. Filter
2. Evap System Integrity Monitor (ESIM) switch
3. Canister Vent Line
4. Evap Canister
5. Chassis Purge Valve
6. Fuel Tank to Canister Vapor Line connection
7. Evap Purge connection

ZONE 3

1. Evap Purge Vacuum Line
2. Connection to Chassis Line
3. Connection to Canister
4. Chassis Purge Line
5. Evap Purge Vacuum Line
6. Connection to Evap Purge Harness
7. Chassis Evap Purge Line connection to Engine Vacuum
8. Evap Purge Valve
9. Service Port

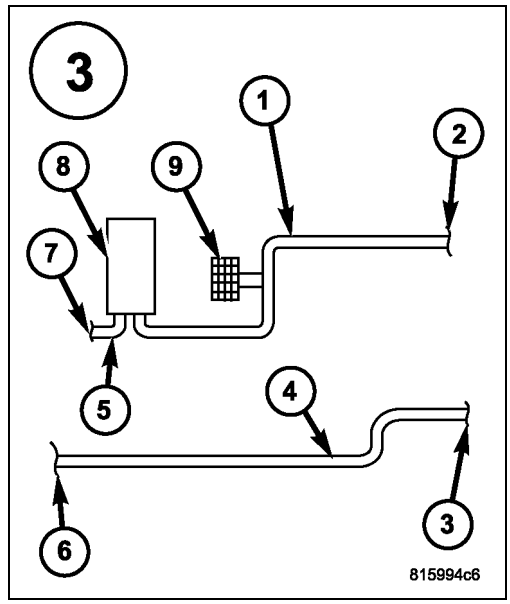

NOTE: Carefully inspect the vent side of the Evap Canister. Due to the filtering system in the canister the smoke or dye may or may not be visible. Introducing smoke into the filtered side of the canister may assist in locating the leak.

Was a leak found?

Yes

- Repair or replace the leaking component as necessary.
- Perform the POWERTRAIN VERIFICATION TEST. (Refer to 28 - DTC-Based Diagnostics/MODULE, Powertrain Control (PCM) - Standard Procedure).

No

- Go To 11

11. EVAPORATIVE PURGE HOSE/TUBE OBSTRUCTION

1. Inspect the Evap Purge hose/tube for proper routing and installation between the Evap Purge Solenoid and the Fuel Tank and between the Fuel Tank and the Evap Purge Canister.
2. Make sure the hose/tube is not damaged or kinked and is free from any obstructions or blockage.

Were any problems found?

Yes

- Repair or replace as necessary.
- Perform the POWERTRAIN VERIFICATION TEST. (Refer to 28 - DTC-Based Diagnostics/MODULE, Powertrain Control (PCM) - Standard Procedure).

No

- Go To 12

12. ESIM SWITCH

1. Using the wiring diagram/schematic as a guide, inspect the wiring and connectors between the ESIM switch and the Powertrain Control Module (PCM).
2. Look for any chafed, pierced, pinched or partially broken wires.
3. Look for broken, bent, pushed out or corroded terminals.
4. Perform any Technical Service Bulletins that may apply.

Were any problems found?

Yes

- Repair as necessary.
- Perform the POWERTRAIN VERIFICATION TEST. (Refer to 28 - DTC-Based Diagnostics/MODULE, Powertrain Control (PCM) - Standard Procedure).

No

- Replace the ESIM switch in accordance with the Service Information.
- Perform the POWERTRAIN VERIFICATION TEST. (Refer to 28 - DTC-Based Diagnostics/MODULE, Powertrain Control (PCM) - Standard Procedure).

13. POWERTRAIN CONTROL MODULE (PCM)

1. Using the wiring diagram/schematic as a guide, inspect the wiring and connectors between the ESIM switch and the Powertrain Control Module (PCM).
2. Look for any chafed, pierced, pinched or partially broken wires.
3. Look for broken, bent, pushed out or corroded terminals.
4. Perform any Technical Service Bulletins that may apply.

Were any problems found?

Yes

- Repair as necessary.
- Perform the POWERTRAIN VERIFICATION TEST. (Refer to 28 - DTC-Based Diagnostics/MODULE, Powertrain Control (PCM) - Standard Procedure).

No

- Replace and program the Powertrain Control Module (PCM) in accordance with the Service Information.
- Perform the POWERTRAIN VERIFICATION TEST. (Refer to 28 - DTC-Based Diagnostics/MODULE, Powertrain Control (PCM) - Standard Procedure).

P0441-EVAP PURGE SYSTEM PERFORMANCE

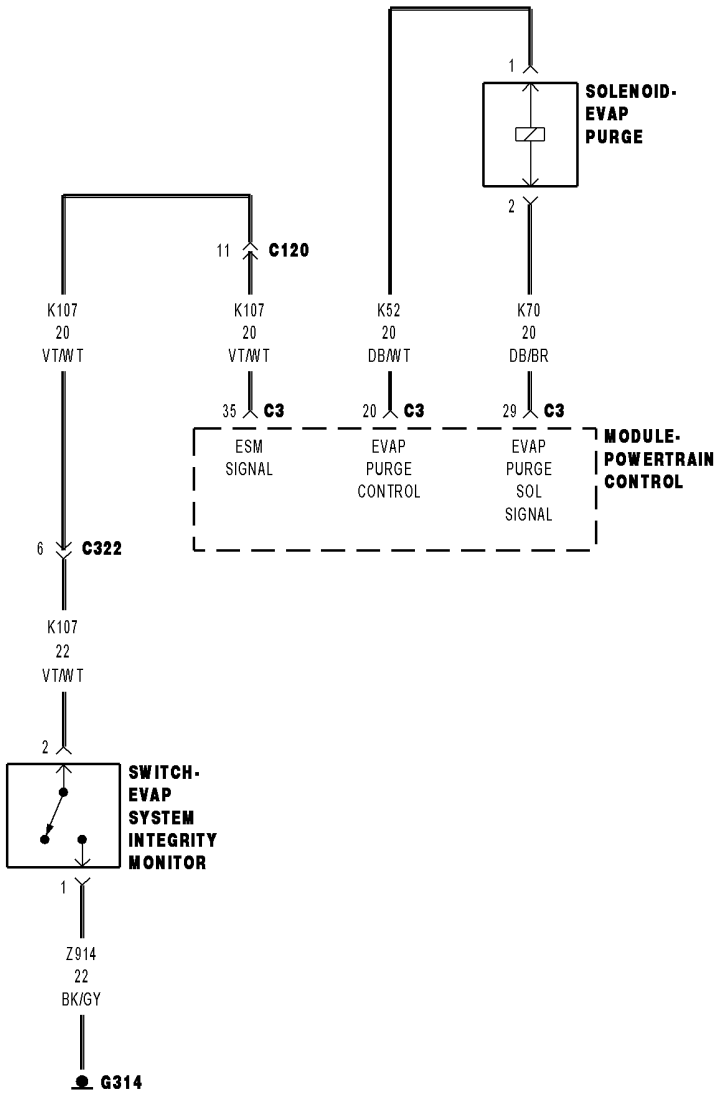

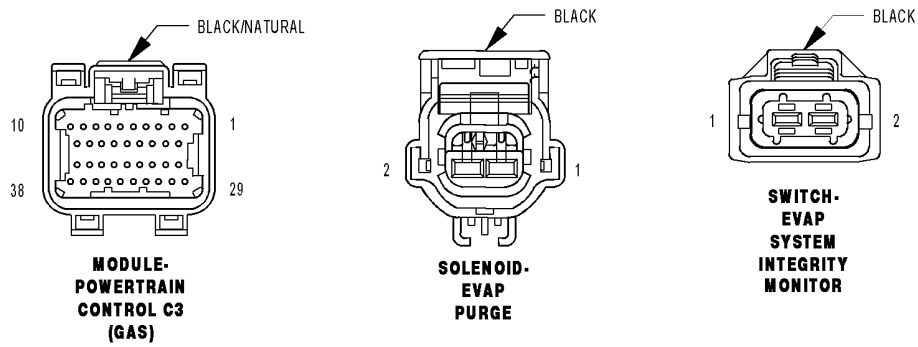

02570205

For a complete wiring diagram, **refer to the Wiring Information**.

Theory of Operation

The Evaporative Purge Monitor tests the integrity of the hoses/tube between the throttle body/intake and the fuel tank. The monitor is a two stage test and runs only after the Evaporative system passes the small leak test. Stage one is non-intrusive. The Powertrain Control Module (PCM) monitors the purge vapor ratio and the Evaporative System Integrity Monitor (ESIM) switch closed ratio. If the purge vapor ratio is above a calculated value, the monitor passes. If the ESIM switch closed ratio is greater than calculated value when purge flow is greater than a minimum value, the monitor passes. Stage two is an intrusive test and runs only if stage one does not pass. The PCM commands the purge solenoid to flow at a specified rate to force the purge vapor ratio to update. The ratio is compared to a calibrated specification. If it is less than specified, a one trip failure is recorded. This test can detect if the purge hose is off, obstructed or the purge valve is not operational.

- **When Monitored:**

  After the Evaporative System small leak test has passed, with the engine running, ambient temperature between 4° C (39° F) and 35° (95° F), with the engine at idle after a calibrated amount of drive time has accumulated.
- **Set Condition:**

  If the Powertrain Control Module (PCM) detects that the purge vapor ratio and the ESIM switch closed ratio are below a calculated value, the PCM commands the purge solenoid to flow at a specified rate to update the purge vapor ratio. If the ratio remains below a specified value, a one trip failure is recorded. Two Trip Fault. Three good trips to turn off the MIL.

Possible Causes
EVAP PURGE SOLENOID VACUUM SUPPLY
EVAPORATIVE PURGE HOSE/TUBE AND FRESH AIR FILTER OBSTRUCTION
EVAP PURGE SOLENOID
POWERTRAIN CONTROL MODULE (PCM)

Always perform the Pre-Diagnostic Troubleshooting procedure before proceeding. (Refer to 28 - DTC-Based Diagnostics/MODULE, Powertrain Control (PCM) - Standard Procedure).

1. VEHICLE HISTORY AND SERVICE BULLETIN INVESTIGATION

1. Ignition on, engine not running.
2. With the scan tool, select View DTCs. Record the Freeze Frame data if any DTCs are present.
3. Whether or not any DTCs are Active you will want to check the following items which may assist in repairing the customer's complaint successfully.
4. Check the vehicle's repair history.
5. If the vehicle has a repair history that pertains to the customer's current complaint, review the repair.
6. Inspect the vehicle for any aftermarket accessories that may have been installed incorrectly.
7. Check for any service bulletin(s) related to the customer's complaint or DTCs.
8. If a service bulletin applies, follow the instructions per the service bulletin.

Choose the following scenario that best applies.

The service bulletin repaired the customer's complaint.

- Testing complete.

A DTC is present, no service bulletins apply or the service bulletin didn't repair the customer's complaint.

- Go To 2

2. ACTIVE DTC

NOTE: If P0443 is set along with this DTC, perform the diagnostic procedure for P0443 before continuing with this test.

NOTE: If the customer is experiencing an early fuel shut off during the fuel filling process along with P0440, P0441 and P0452 setting, you need to check for restrictions in the Evaporative Purge tubes/hoses as well as the Fresh Air Filter before continuing.

1. Start the engine.
2. Allow the engine to idle.
3. Using the scan tool, perform the ESIM FORCED MONITOR TEST. Allow the test to complete.
4. With the scan tool, select View DTCs.

NOTE: If any other DTC sets, active or pending, perform the diagnostic procedure for that DTC before proceeding with this test.

Is the DTC Active or Pending at this time?

Yes

- Go To 3

No

- Perform the INTERMITTENT CONDITION diagnostic procedure. (Refer to 28 - DTC-Based Diagnostics/MODULE, Powertrain Control (PCM) - Standard Procedure).

3. VISUAL INSPECTION

Inspect the Evaporative System for any of the following conditions:

- Holes or cracks
- Loose seal points
- Damaged or missing components
- Incorrect routing of hoses and tubes
- Loose or missing Fuel Cap
- Damaged or missing Fuel Cap seal
- Improper installation of the Fuel Cap
- Damaged Locking tabs on the Fuel Cap and/or filler tube
- Damaged seal points on the Fuel Cap and/or filler tube

Were any problems found?

Yes

- Repair as necessary.
- Perform the POWERTRAIN VERIFICATION TEST. (Refer to 28 - DTC-Based Diagnostics/MODULE, Powertrain Control (PCM) - Standard Procedure).

No

- Go To 4

4. INSUFFICIENT VACUUM SUPPLY TO THE EVAP PURGE SOLENOID

1. Turn the ignition off.
2. Carefully inspect the Evap Purge Solenoid vacuum supply hose for proper routing.
3. Check for a pinched or plugged hose from the throttle body or intake manifold to the Purge Solenoid.
4. Inspect the vacuum port at the throttle body or intake manifold for any damage or obstructions.

Were any problems found?

Yes

- Repair the vacuum supply hose/tube as necessary.
- Perform the POWERTRAIN VERIFICATION TEST. (Refer to 28 - DTC-Based Diagnostics/MODULE, Powertrain Control (PCM) - Standard Procedure).

No

- Go To 5

5. EVAP PURGE HOSE/TUBE AND FRESH AIR FILTER OBSTRUCTION

1. Inspect the Evaporative Purge hose/tube for proper routing and installation between the Evap Purge Solenoid and the Fuel Tank and between the Fuel Tank and the Evap Purge Canister.
2. Make sure the hose/tube and fresh air filter are not damaged, kinked and free from any obstructions.

Were any problems found?

Yes

- Repair or replace as necessary.
- Perform the POWERTRAIN VERIFICATION TEST. (Refer to 28 - DTC-Based Diagnostics/MODULE, Powertrain Control (PCM) - Standard Procedure).

No

- Go To 6

6. EVAP PURGE SOLENOID

NOTE: After disconnecting the Evap Purge Solenoid vacuum connections, inspect the lines and solenoid for signs of contamination.

1. Using a hand vacuum pump, apply 10 in Hg to the "CAN" side of the Evap Purge Solenoid.

NOTE: The solenoid should hold vacuum for a minimum of 15 seconds.

2. Ignition on, engine not running.
3. With the scan tool, actuate the Evap Purge Solenoid to the ON position.

NOTE: The vacuum should drop when the solenoid is actuated.

Does the solenoid function as described above?

Yes

- Go To 7

No

- Verify that there is good pin to terminal contact in the Solenoid and the Powertrain Control Module connectors. Replace the Evap Purge Solenoid if no problems were found in the connectors.
- Perform the POWERTRAIN VERIFICATION TEST. (Refer to 28 - DTC-Based Diagnostics/MODULE, Powertrain Control (PCM) - Standard Procedure).

7. POWERTRAIN CONTROL MODULE (PCM)

1. Using the wiring diagram/schematic as a guide, inspect the wiring and connectors between the Evap Purge Solenoid Assembly, ESIM switch and the Powertrain Control Module (PCM).
2. Look for any chafed, pierced, pinched or partially broken wires.
3. Look for broken, bent, pushed out or corroded terminals. Verify that there is good pin to terminal contact in the switch, Solenoid and the Powertrain Control Module connectors.
4. Perform any Technical Service Bulletins that may apply.

Were there any problems found?

Yes

- Repair as necessary.
- Perform the POWERTRAIN VERIFICATION TEST. (Refer to 28 - DTC-Based Diagnostics/MODULE, Powertrain Control (PCM) - Standard Procedure).

No

- Replace and program the Powertrain Control Module in accordance with the Service Information.
- Perform the POWERTRAIN VERIFICATION TEST. (Refer to 28 - DTC-Based Diagnostics/MODULE, Powertrain Control (PCM) - Standard Procedure).

P0443-EVAP PURGE SOLENOID CIRCUIT

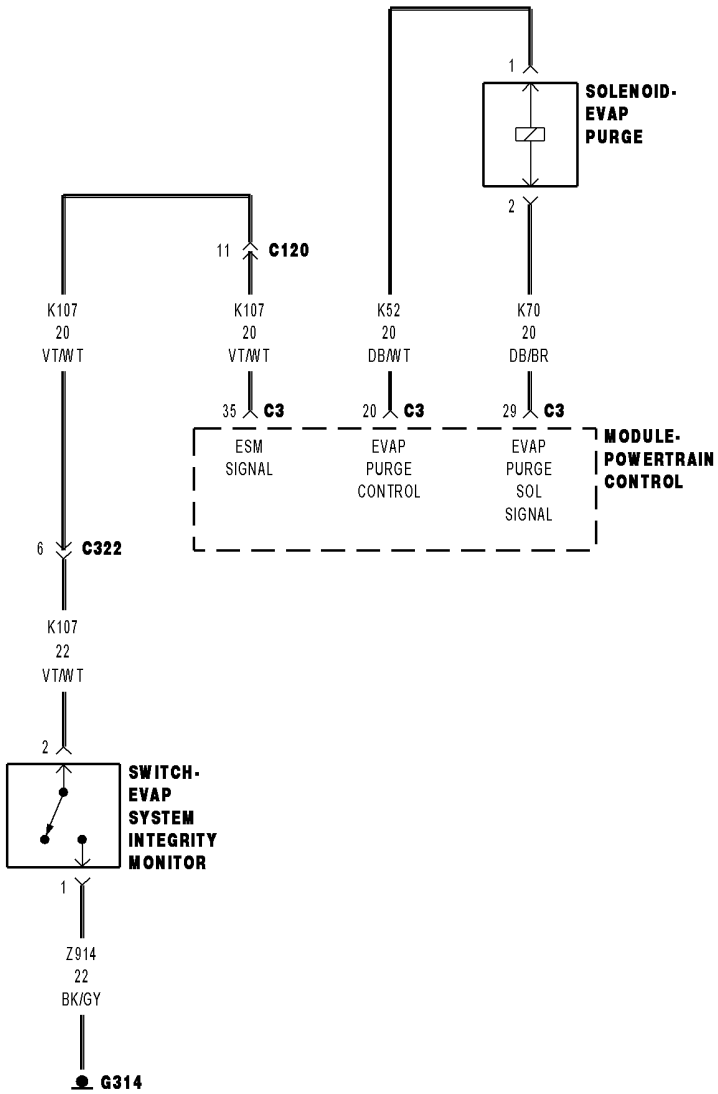

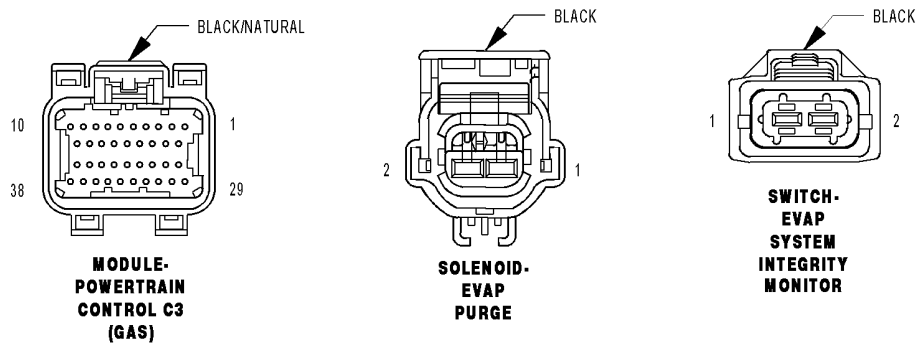

02570205

For a complete wiring diagram, **refer to the Wiring Information**.

- **When Monitored:**
  The ignition on or engine running. Battery voltage greater than 10 Volts.
- **Set Condition:**
  The Powertrain Control Module (PCM) will set a trouble code if the actual state of the solenoid does not match the intended state. One Trip Fault. Three good trips to turn off the MIL.

Possible Causes
(K52) EVAP PURGE CONTROL CIRCUIT SHORTED TO VOLTAGE
(K70) EVAP PURGE SOLENOID SIGNAL CIRCUIT SHORTED TO VOLTAGE
(K52) EVAP PURGE SOLENOID CONTROL CIRCUIT SHORTED TO GROUND
EXCESSIVE RESISTANCE IN THE (K52) EVAP PURGE CONTROL CIRCUIT
EXCESSIVE RESISTANCE IN THE (K70) EVAP PURGE SOLENOID SIGNAL CIRCUIT
EVAP PURGE SOLENOID
POWERTRAIN CONTROL MODULE (PCM)

Always perform the Pre-Diagnostic Troubleshooting procedure before proceeding. (Refer to 28 - DTC-Based Diagnostics/MODULE, Powertrain Control (PCM) - Standard Procedure).

1. VEHICLE HISTORY AND SERVICE BULLETIN INVESTIGATION

1. Ignition on, engine not running.
2. With the scan tool, select View DTCs and record the related Freeze Frame data if any DTCs are present.
3. Whether or not any DTCs are Active you will want to check the following items which may assist in repairing the customer's complaint successfully.
4. Check the vehicle's repair history.
5. If the vehicle has a repair history that pertains to the customer's current complaint, review the repair.
6. Inspect the vehicle for any aftermarket accessories that may have been installed incorrectly.
7. Check for any service bulletin(s) related to the customer's complaint or DTCs.
8. If a service bulletin applies, follow the instructions per the service bulletin.

Choose the following scenario that best applies.

The service bulletin repaired the customer's complaint.

- Testing complete.

A DTC is present, no service bulletins apply or the service bulletin didn't repair the customer's complaint.

- Go To 2

2. ACTIVE DTC

1. Ignition on, engine not running.
2. With the scan tool, Select View DTCs.

Is the DTC Active at this time?

Yes

- Go To 3

No

- Perform the INTERMITTENT CONDITION diagnostic procedure. (Refer to 28 - DTC-Based Diagnostics/MODULE, Powertrain Control (PCM) - Standard Procedure).

3. (K52) EVAP PURGE CONTROL CIRCUIT SHORTED TO VOLTAGE

1. Turn the ignition off.
2. Disconnect the Evap Purge Solenoid harness connector.
3. Disconnect the C3 PCM harness connector.
4. Ignition on, engine not running.
5. Measure the voltage of the (K52) Evap Purge Control circuit in the Evap Purge Solenoid harness connector.

Is there any voltage present?

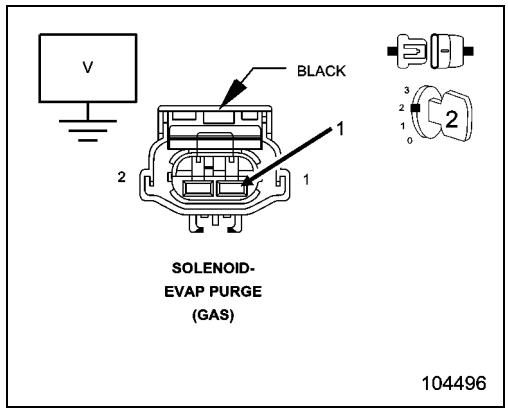

Yes

- Repair the short to voltage in the (K52) Evap Purge Control circuit.
- Perform the POWERTRAIN VERIFICATION TEST. (Refer to 28 - DTC-Based Diagnostics/MODULE, Powertrain Control (PCM) - Standard Procedure).

No

- Go To 4

4. (K70) EVAP PURGE RETURN CIRCUIT SHORTED TO VOLTAGE

1. Measure the voltage of the (K70) Evap Purge Return circuit in the Evap Purge Solenoid harness connector.

Is there any voltage present?

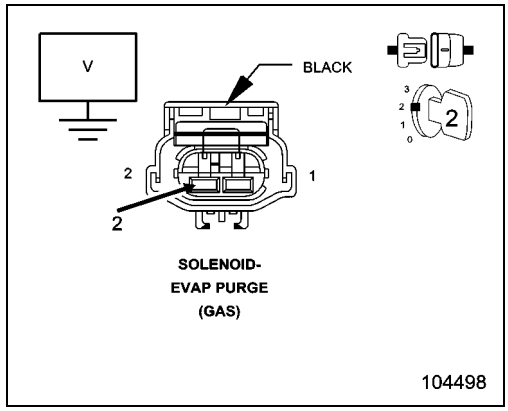

Yes

- Repair the short to voltage in the (K70) Evap Purge Return circuit.
- Perform the POWERTRAIN VERIFICATION TEST. (Refer to 28 - DTC-Based Diagnostics/MODULE, Powertrain Control (PCM) - Standard Procedure).

No

- Go To 5

5. (K52) EVAP PURGE CONTROL CIRCUIT SHORTED TO GROUND

1. Turn the ignition off.
2. Measure the resistance between ground and the (K52) Evap Purge Control circuit in the Evap Purge Solenoid harness connector.

Is the resistance below 100 Ohms?

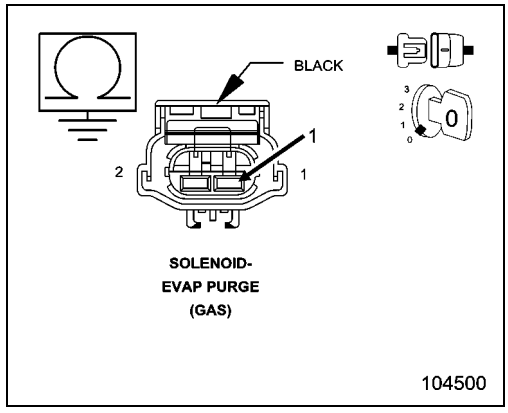

Yes

- Repair the (K52) Evap Purge Control circuit for a short to ground.
- Perform the POWERTRAIN VERIFICATION TEST. (Refer to 28 - DTC-Based Diagnostics/MODULE, Powertrain Control (PCM) - Standard Procedure).

No

- Go To 6

6. (K52) EVAP PURGE SOLENOID CONTROL CIRCUIT OPEN

CAUTION: Do not probe the PCM harness connectors. Probing the PCM harness connectors will damage the PCM terminals resulting in poor terminal to pin connection. Install the PCM Pinout Box Kit, NGC, 38 Position 8815A to perform diagnosis.

1. Measure the resistance of the (K52) Evap Purge Solenoid Control circuit from the Evap Purge Solenoid harness connector to the appropriate terminal of PCM Pinout Box 8815A.

Is the resistance below 5.0 Ohms?

Yes

- Go To 7

No

- Repair the open in the (K52) Evap Purge Solenoid Control circuit.
- Perform the POWERTRAIN VERIFICATION TEST. (Refer to 28 - DTC-Based Diagnostics/MODULE, Powertrain Control (PCM) - Standard Procedure).

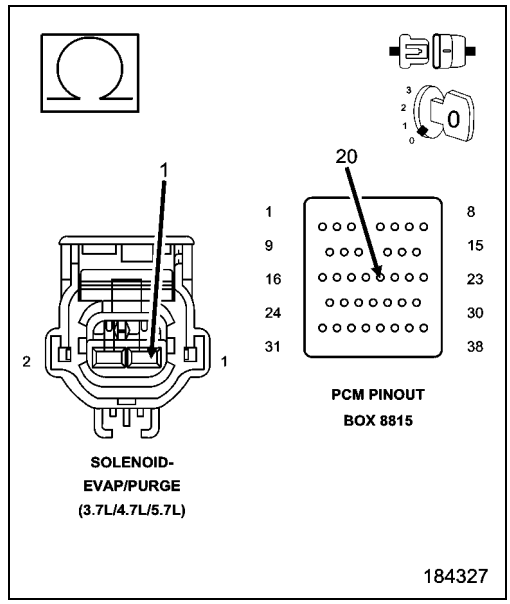

7. (K70) EVAP PURGE SOLENOID SIGNAL CIRCUIT OPEN

CAUTION: Do not probe the PCM harness connectors. Probing the PCM harness connectors will damage the PCM terminals resulting in poor terminal to pin connection. Install the PCM Pinout Box Kit, NGC, 38 Position 8815A to perform diagnosis.

1. Measure the resistance of the (K70) Evap Purge Solenoid Signal circuit from the Evap Purge Solenoid harness connector to the appropriate terminal of PCM Pinout Box 8815A.

Is the resistance below 5.0 Ohms?

Yes

- Go To 8

No

- Repair the open in the (K70) Evap Purge Solenoid Signal circuit.
- Perform the POWERTRAIN VERIFICATION TEST. (Refer to 28 - DTC-Based Diagnostics/MODULE, Powertrain Control (PCM) - Standard Procedure).

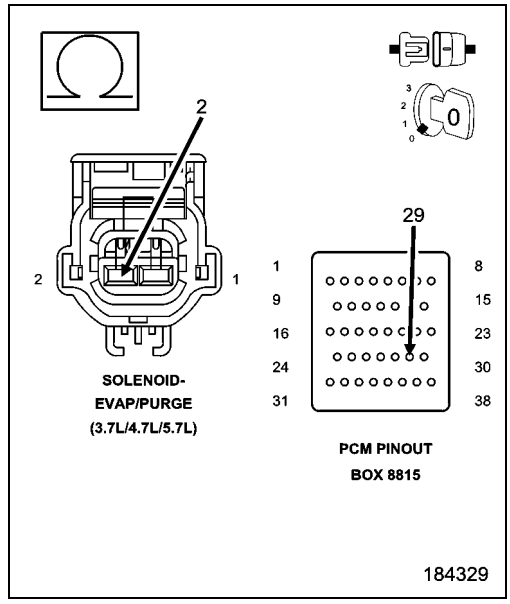

8. EVAP PURGE SOLENOID

1. Connect the C3 PCM harness connector.
2. Ignition on, engine not running.
3. Using a 12-volt test light connected to ground, check the (K52) Evap Purge Control circuit in the Evap Purge Solenoid harness connector.
4. With the scan tool, actuate the Evap Purge Solenoid control to the ON (100%) position.

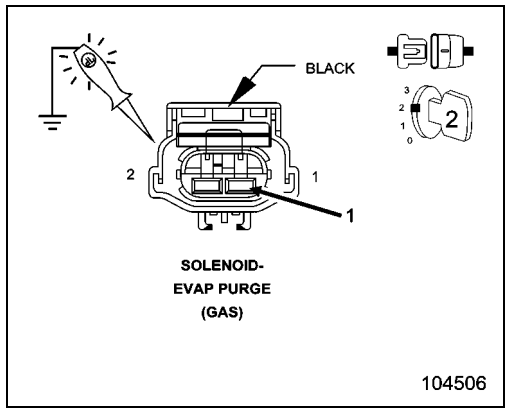

NOTE: The DTC needs to be cleared before actuating the Purge Solenoid, if the DTC is not cleared, the Solenoid may not be allowed to actuate.

NOTE: The test light should be illuminated and bright proportional to the maximum duty cycle allowed by the scan tool. For example, if the scan tool allows 100% actuation, the brightness should be as bright as a direct connection to the battery. If the scan tool allows a maximum 25% actuation, the brightness should be 25% as bright as a direct connection to the battery.

Does the test light illuminate accordingly during the actuation?

Yes

- Verify that there is good pin to terminal contact in the Solenoid and the Powertrain Control Module connectors. Replace the Evap Purge Solenoid if no problems were found in the connectors.
- Perform the POWERTRAIN VERIFICATION TEST. (Refer to 28 - DTC-Based Diagnostics/MODULE, Powertrain Control (PCM) - Standard Procedure).

No

- Go To 9

9. POWERTRAIN CONTROL MODULE (PCM)

1. Using the wiring diagram/schematic as a guide, inspect the wiring and connectors between the Evap Purge Solenoid Assembly, ESIM switch and the Powertrain Control Module (PCM).
2. Look for any chafed, pierced, pinched or partially broken wires.
3. Look for broken, bent, pushed out or corroded terminals. Verify that there is good pin to terminal contact in the Switch, Solenoid and the Powertrain Control Module connectors.
4. Perform any Technical Service Bulletins that may apply.

Were there any problems found?

Yes

- Repair as necessary.
- Perform the POWERTRAIN VERIFICATION TEST. (Refer to 28 - DTC-Based Diagnostics/MODULE, Powertrain Control (PCM) - Standard Procedure).

No

- Replace and program the Powertrain Control Module in accordance with the Service Information.
- Perform the POWERTRAIN VERIFICATION TEST. (Refer to 28 - DTC-Based Diagnostics/MODULE, Powertrain Control (PCM) - Standard Procedure).

P0452-EVAP PRESSURE SWITCH STUCK CLOSED

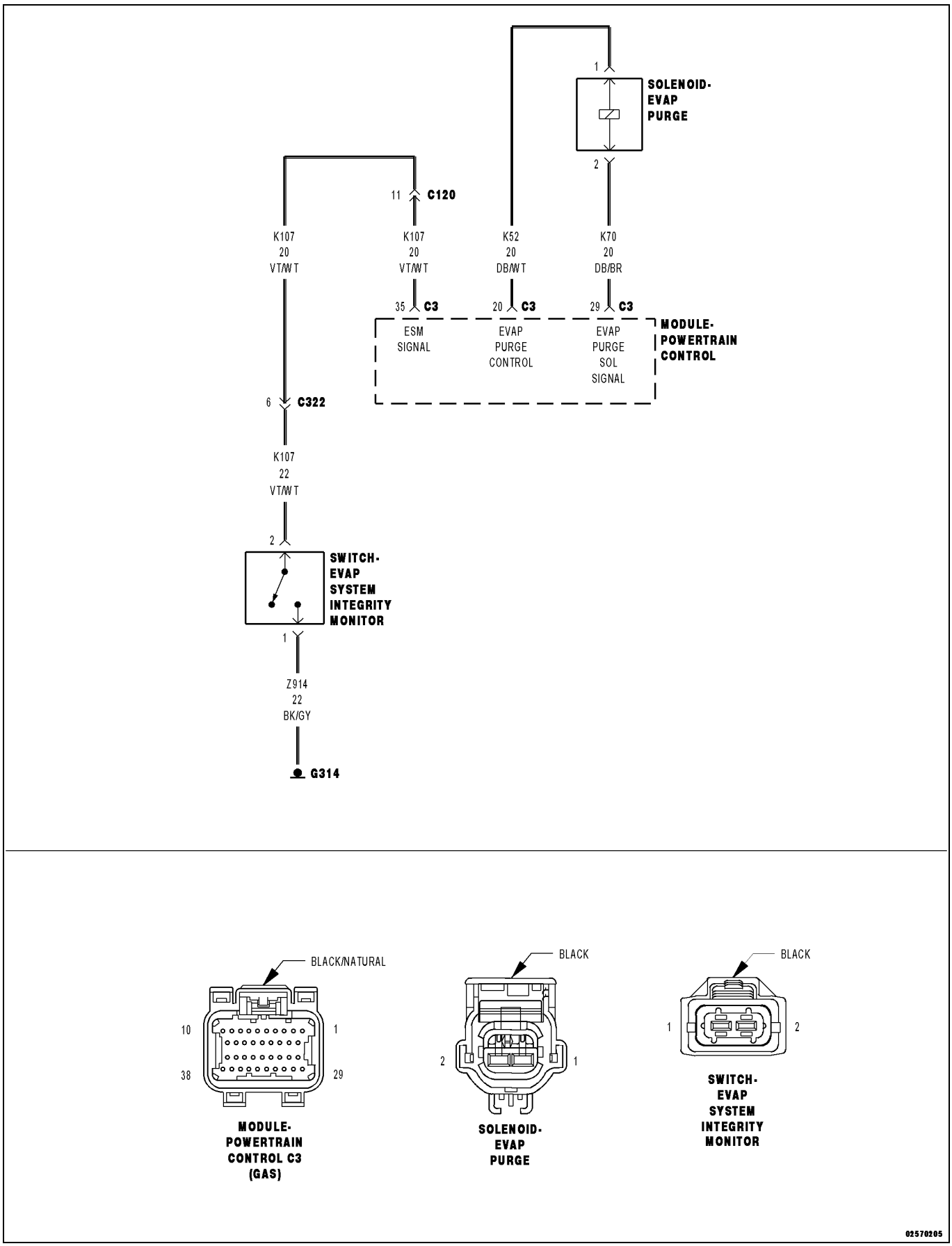

For a complete wiring diagram, **refer to the Wiring Information**.

- **When Monitored:**
  Immediately after the ignition has been turned off.
- **Set Condition:**
  At key off, the Powertrain Control Module (PCM) energizes the Purge Solenoid for a calibrated amount of time (30 seconds maximum) and stores the state of the ESIM Switch. The state is evaluated again at the next key on. If the PCM does not detect that the ESIM Switch is open, an error is detected. Two Trip Fault. Three good trips to turn off the MIL.

Possible Causes
EVAPORATIVE PURGE HOSE/TUBE AND FRESH AIR FILTER OBSTRUCTION
(K52) EVAP PURGE SOLENOID CONTROL CIRCUIT SHORTED TO GROUND
(K107) ESIM SWITCH SIGNAL CIRCUIT SHORTED TO GROUND
ESIM SWITCH
EVAP PURGE SOLENOID
POWERTRAIN CONTROL MODULE (PCM)

Always perform the Pre-Diagnostic Troubleshooting procedure before proceeding. (Refer to 28 - DTC-Based Diagnostics/MODULE, Powertrain Control (PCM) - Standard Procedure).

1. VEHICLE HISTORY AND SERVICE BULLETIN INVESTIGATION

1. Ignition on, engine not running.
2. Using the scan tool, select View DTCs and record the related Freeze Frame data if any DTCs are present.
3. Whether or not any DTCs are Active you will want to check the following items which may assist in repairing the customer's complaint successfully.
4. Check the vehicle's repair history.
5. If the vehicle has a repair history that pertains to the customer's current complaint, review the repair.
6. Inspect the vehicle for any aftermarket accessories that may have been installed incorrectly.
7. Check for any service bulletin(s) related to the customer's complaint or DTCs.
8. If a service bulletin applies, follow the instructions of the service bulletin.

Choose the following scenario that best applies.

The service bulletin repaired the customer's complaint.

- Testing complete.

A DTC is present, no service bulletins apply or the service bulletin didn't repair the customer's complaint.

- Go To 2

2. ACTIVE DIAGNOSTIC TROUBLE CODE (DTC)

NOTE: If the customer is experiencing an early fuel shut off during the fuel filling process along with P0440, P0441 and P0452 setting, you need to check for restrictions in the Evaporative Purge tubes/hoses as well as the Fresh Air Filter before continuing.

1. Ignition on, engine not running.
2. Using the scan tool, select View DTCs.

Is the DTC Active or Pending at this time?

Yes

- Go To 3

No

- Perform the INTERMITTENT CONDITION diagnostic procedure. (Refer to 28 - DTC-Based Diagnostics/MODULE, Powertrain Control (PCM) - Standard Procedure).

3. ESIM SWITCH STATE

1. Using the scan tool, select Data Display and view the ESIM Switch state.
2. Disconnect the purge hose from the Evap Canister.

Is the ESIM Switch state change from 'Closed' to 'Open' when the purge hose was disconnected?

Yes

- Go To 4

No

- Go To 7

4. EVAP PURGE HOSE/TUBE AND FRESH AIR FILTER OBSTRUCTION

1. Turn the ignition off.
2. Inspect the Evaporative Purge hose/tube for proper routing and installation between the Evap Purge Solenoid and the Fuel Tank and between the Fuel Tank and the Evaporative Purge Canister.
3. Make sure the hose/tube and fresh air filter are not damaged, kinked and free from any obstructions.
4. Check for any kink in the purge line connecting the LPV (Linear Purge Valve) to intake manifold.

Were any problems found?

Yes

- Repair as necessary.
- Perform the POWERTRAIN VERIFICATION TEST. (Refer to 28 - DTC-Based Diagnostics/MODULE, Powertrain Control (PCM) - Standard Procedure).

No

- Go To 5

5. (K52) EVAP PURGE CONTROL CIRCUIT SHORTED TO GROUND

1. Disconnect the C3 PCM harness connector.
2. Measure the resistance between ground and the (K52) Evap Purge Control circuit in the Evap Purge Solenoid harness connector.

Is the resistance below 100 Ohms?

Yes

- Repair the short to ground in the (K52) Evap Purge Control circuit.
- Perform the POWERTRAIN VERIFICATION TEST. (Refer to 28 - DTC-Based Diagnostics/MODULE, Powertrain Control (PCM) - Standard Procedure).

No

- Go To 6

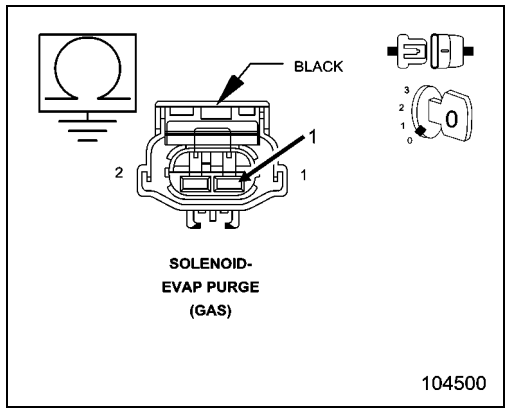

6. EVAP PURGE SOLENOID

1. Using the wiring diagram/schematic as a guide, inspect the wiring and connectors between the Evap Purge Solenoid and the Powertrain Control Module (PCM).
2. Look for any chafed, pierced, pinched or partially broken wires.
3. Look for broken, bent, pushed out or corroded terminals. Verify that there is good pin to terminal contact in the Evap Solenoid and the Powertrain Control Module connectors.
4. Perform any Technical Service Bulletins that may apply.

Were any problems found?

Yes

- Repair as necessary.
- Perform the POWERTRAIN VERIFICATION TEST. (Refer to 28 - DTC-Based Diagnostics/MODULE, Powertrain Control (PCM) - Standard Procedure).

No

- Replace the Evap Purge Solenoid if no problems were found with the connectors.
- Perform the POWERTRAIN VERIFICATION TEST. (Refer to 28 - DTC-Based Diagnostics/MODULE, Powertrain Control (PCM) - Standard Procedure).

7. ESIM SWITCH

1. Using the scan tool, select Data Display and view the ESIM Switch state.
2. Disconnect the ESIM Switch electrical connector.

Does the ESIM Switch state change from CLOSED to OPEN when the switch is disconnected?

Yes

- Verify that there is good pin to terminal contact in the switch and the Powertrain Control Module connectors. Replace the ESIM Switch if no problems were found with the connectors.
- Perform the POWERTRAIN VERIFICATION TEST. (Refer to 28 - DTC-Based Diagnostics/MODULE, Powertrain Control (PCM) - Standard Procedure).

No

- Go To 8

8. (K107) ESIM SWITCH SIGNAL CIRCUIT SHORTED TO GROUND

1. Turn the ignition off.
2. Disconnect the C3 PCM harness connector.
3. Measure the resistance between ground and the (K107) ESIM Switch Signal circuit in the ESIM Switch harness connector.

Is the resistance below 100 Ohms?

Yes

- Repair the short to ground in the (K107) ESIM Switch Signal circuit.
- Perform the POWERTRAIN VERIFICATION TEST. (Refer to 28 - DTC-Based Diagnostics/MODULE, Powertrain Control (PCM) - Standard Procedure).

No

- Go To 9

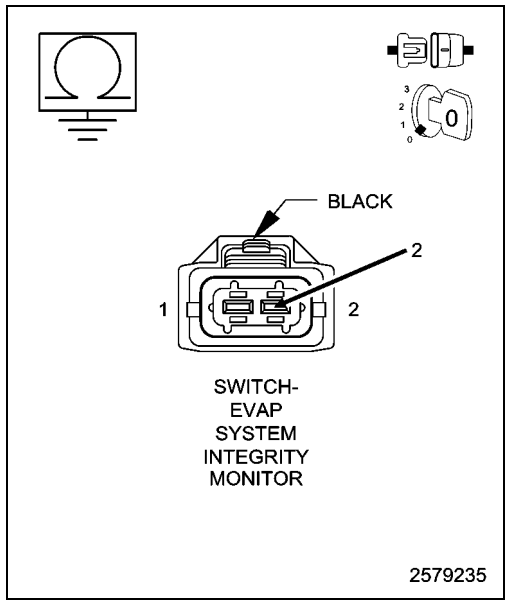

9. POWERTRAIN CONTROL MODULE (PCM)

1. Using the wiring diagram/schematic as a guide, inspect the wiring and connectors between the Evap Purge Solenoid Assembly, ESIM Switch and the Powertrain Control Module (PCM).
2. Look for any chafed, pierced, pinched or partially broken wires.
3. Look for broken, bent, pushed out or corroded terminals. Verify that there is good pin to terminal contact in the ESIM, Evap Purge Solenoid and the Powertrain Control Module connectors.
4. Perform any Technical Service Bulletins that may apply.

Were there any problems found?

Yes

- Repair as necessary.
- Perform the POWERTRAIN VERIFICATION TEST. (Refer to 28 - DTC-Based Diagnostics/MODULE, Powertrain Control (PCM) - Standard Procedure).

No

- Replace and program the Powertrain Control Module in accordance with the Service Information.
- Perform the POWERTRAIN VERIFICATION TEST. (Refer to 28 - DTC-Based Diagnostics/MODULE, Powertrain Control (PCM) - Standard Procedure).

P0455-EVAP PURGE SYSTEM LARGE LEAK

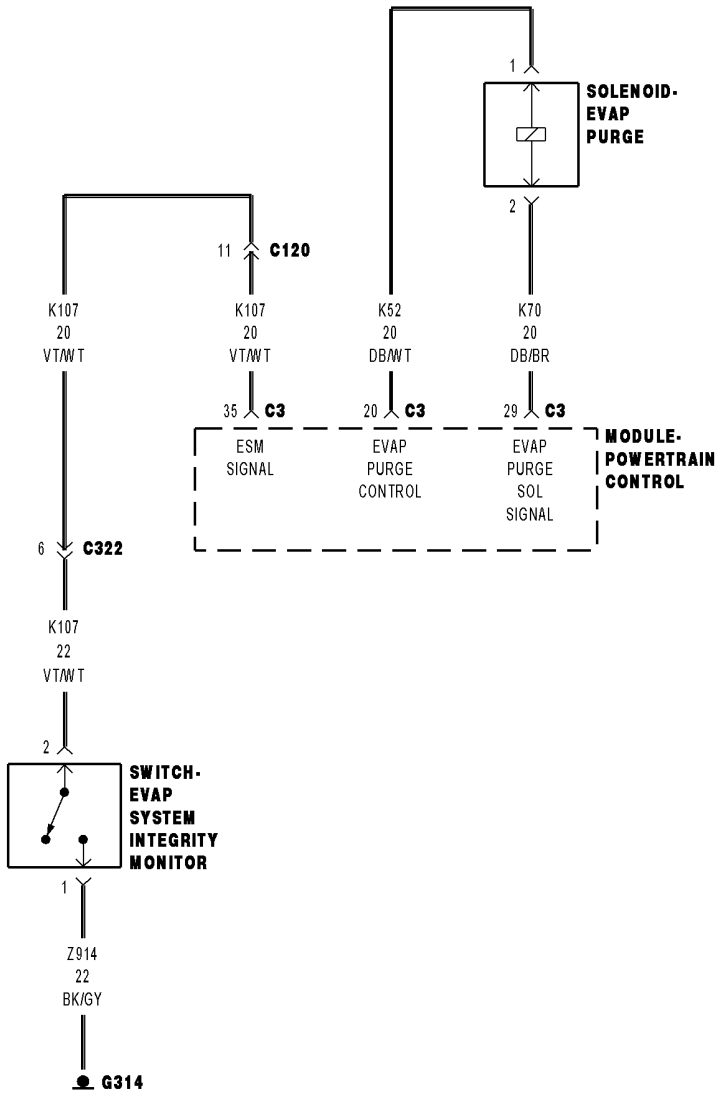

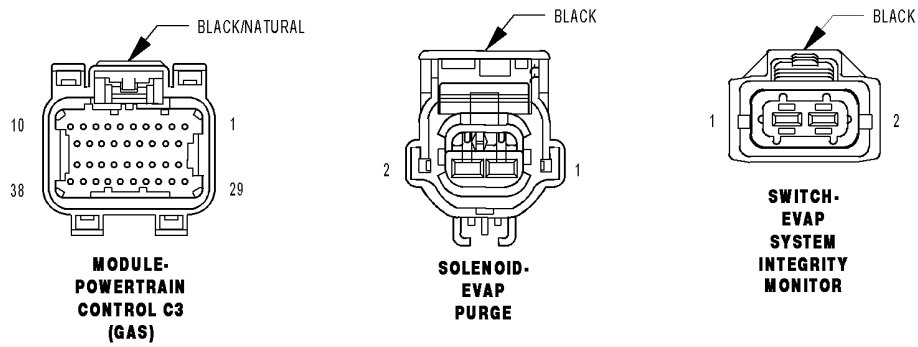

02570205

For a complete wiring diagram, **refer to the Wiring Information**.

Theory of Operation

The Evaporative Purge Monitor tests the integrity of the hoses/tube between the throttle body/intake and the fuel tank. The monitor is a two stage test and runs only after the Evaporative system passes the small leak test. Stage one is non-intrusive. The Powertrain Control Module (PCM) monitors the purge vapor ratio and the Evaporative System Integrity Monitor (ESIM) switch closed ratio. If the purge vapor ratio is above a calculated value, the monitor passes. If the ESIM switch closed ratio is greater than calculated value when purge flow is greater than a minimum value, the monitor passes. Stage two is an intrusive test and runs only if stage one does not pass. The PCM commands the purge solenoid to flow at a specified rate to force the purge vapor ratio to update. The ratio is compared to a calibrated specification. If it is less than specified, a one trip failure is recorded. This test can detect if the purge hose is off, obstructed or the purge valve is not operational.

- **When Monitored:**

  With the engine running, during a cold start test with the fuel level above 12%, ambient temperature between 4° C and 32° C (39° F and 89° F) and the fuel system in closed loop. The test runs when the small leak test is maturing.

- **Set Condition:**

  The Powertrain Control Module (PCM) activates the Evap Purge Solenoid to pull the Evaporative system into a vacuum to close the Evaporative System Integrity Monitor (ESIM) switch. Once the ESIM switch is closed, the PCM turns the Evap Purge solenoid off to seal the Evaporative System. If the ESIM switch reopens before the calibrated amount of time, a large leak error is detected. Two Trip Fault. Three good trips to turn off the MIL.

Possible Causes
EVAPORATIVE PURGE SYSTEM LEAK
EVAP PURGE SOLENOID
EVAPORATIVE SYSTEM INTEGRITY MONITOR SWITCH

Always perform the Pre-Diagnostic Troubleshooting procedure before proceeding. (Refer to 28 - DTC-Based Diagnostics/MODULE, Powertrain Control (PCM) - Standard Procedure).

1. VEHICLE HISTORY AND SERVICE BULLETIN INVESTIGATION

1. Ignition on, engine not running.
2. With the scan tool, select View DTCs and record the related Freeze Frame data if any DTCs are present.
3. Whether or not any DTCs are Active you will want to check the following items which may assist in repairing the customer's complaint successfully.
4. Check the vehicle's repair history.
5. If the vehicle has a repair history that pertains to the customer's current complaint, review the repair.
6. Inspect the vehicle for any aftermarket accessories that may have been installed incorrectly.
7. Check for any service bulletin(s) related to the customer's complaint or DTCs.
8. If a service bulletin applies, follow the instructions of the service bulletin.

Choose the following scenario that best applies.

The service bulletin repaired the customer's complaint.

- Testing complete.

A DTC is present, no service bulletins apply or the service bulletin didn't repair the customer's complaint.

- Go To 2

2. ACTIVE DTC

NOTE: Since a hot vehicle can conceal a leak, it is best to perform this test at room temperature.

NOTE: A loose gas cap could have caused this DTC to set. Make sure gas cap is tight and in good condition. Make sure the gas cap meets OEM specifications.

1. Start the engine.
2. Allow the engine to idle.
3. Using the scan tool, perform the ESIM FORCED MONITOR TEST. Allow the test to complete.
4. With the scan tool, select View DTCs.

Is the DTC Active or Pending at this time?

Yes

- Go To 3

No

- Perform the INTERMITTENT CONDITION diagnostic procedure. (Refer to 28 - DTC-Based Diagnostics/MODULE, Powertrain Control (PCM) - Standard Procedure).

3. EVAPORATIVE SYSTEM INSPECTION

1. Perform a visual and physical inspection of the entire Evaporative Emission system.
2. Check for the following conditions:
   - Holes or cracks
   - Loose seal points
   - Evidence of damaged components
   - Incorrect routing of hoses and tubes
   - Loose or missing Fuel Filler Cap
   - Improper installation of the Fuel Fill Cap
   - Damaged Locking tabs on Cap and/or fill tube
   - Damaged seal points on Cap and/or fill tube
   - Fuel cap gasket seal

Were any of the above conditions found?

Yes

- Repair as necessary.
- Perform the POWERTRAIN VERIFICATION TEST. (Refer to 28 - DTC-Based Diagnostics/MODULE, Powertrain Control (PCM) - Standard Procedure).

No

- Go To 4

4. VERIFY EVAPORATIVE EMISSION LEAK

WARNING: Keep lit cigarettes, sparks, flames, and other ignition sources away from the test area to prevent the ignition of explosive gases. Keep the test area well ventilated. Failure to do so may result in possible serious or fatal injury.

1. To continue testing you will need Evaporative Emission Leak Detector (EELD) 8404B.

NOTE: The fuel tank should have between 20% and 80% of fuel tank capacity to properly test the Evaporative system.

2. Connect the red power lead of the EELD to the battery positive terminal and the black ground lead to battery negative terminal.
3. Block the vent hose of the canister if using the service port.
4. Connect shop air to the EELD.
5. Set the smoke/air control switch to AIR.
6. Insert the tester's AIR supply tip (clear hose) into the appropriate calibration orifice on the tester's control panel (based on DTC leak size).
7. Press the remote smoke/air start button.
8. Position the red flag on the air flow meter so it is aligned with the indicator ball.
9. When the calibration is complete, release the remote button. The EELD flow meter is now calibrated in liters per minute to the size leak indicated by the DTC set in the PCM.
10. Install the Service Port Adapter 8404-14 on the vehicle's service port and block the vent hose of the Evaporative Canister (if equipped) or install the service adapter 8404-ADP into the filter line.
11. Connect the Air supply hose from the EELD to the service port (if equipped) or to the adapter 8404-ADP.
12. Press the remote button to activate AIR flow.

NOTE: Larger volume fuel tanks, lower fuel levels or if the vehicle is equipped with a Flow Management Valve may indicate high flow and will require four to five minutes to fill.

13. Compare the flow meter indicator ball reading to the red flag.
14. ABOVE the red flag indicates a leak present.
15. BELOW the red flag indicates a sealed system.

Is the indicator ball above the red flag?

Yes

- Go To 5

No

- Refer to the Freeze Frame data recorded in step 1. If the data indicates that the vehicle was in motion when the DTC was set, verify that all hoses are properly connected.
- Perform the POWERTRAIN VERIFICATION TEST. (Refer to 28 - DTC-Based Diagnostics/MODULE, Powertrain Control (PCM) - Standard Procedure).

5. EVAPORATIVE EMISSION LEAK DETECTION

NOTE: A thorough visual inspection of the Evaporative system hoses, tubes and connections may save time in your diagnosis. Look for any physical damage or signs of wetness at connections. The strong smell of fuel vapors may aid diagnosis also.

1. To continue testing, you will need Evaporative Emissions Leak Detector (EELD) 8404B.
2. Remove the Air supply hose from the service port (if equipped) or from the adapter 8404-ADP.
3. Connect the SMOKE supply tip (black hose) to the service port (if equipped) or to the adapter 8404-ADP.
4. Set the smoke/air control switch to SMOKE.

NOTE: The flow meter indicator ball will not move in the smoke mode.

5. Press the remote smoke/air start button.

NOTE: Make sure that smoke has filled the Evaporative System by continuing to press the remote smoke/air start button, remove the vehicle fuel cap and wait for the smoke to exit. Once smoke is indicated reinstall the fuel cap.

NOTE: For optimal performance, introduce smoke into the system for an additional 60 seconds; continue introducing smoke at 15 second intervals, as necessary.

6. While still holding the remote smoke/air start button, use the white light 8404-CLL to follow the Evaporative System path and look for the source of the leak indicated by exiting smoke.
7. If a leak is concealed from view (i.e., top of fuel tank), release the remote smoke/air start button and use the ultraviolet (UV) black light 8404-UVL and the yellow goggles 8404-20 to look for residual traces of dye that is left behind by the smoke.
8. The exiting smoke deposits a residual fluid that is either bright green or bright yellow in color when viewed with a UV light.

NOTE: The Evaporative System is divided into three zones. A leak from any of these zones can cause this DTC to set. The lists below specify the possible leak points in that specific zone. For further assistance see the Zone Identification Charts below.

ZONE 1

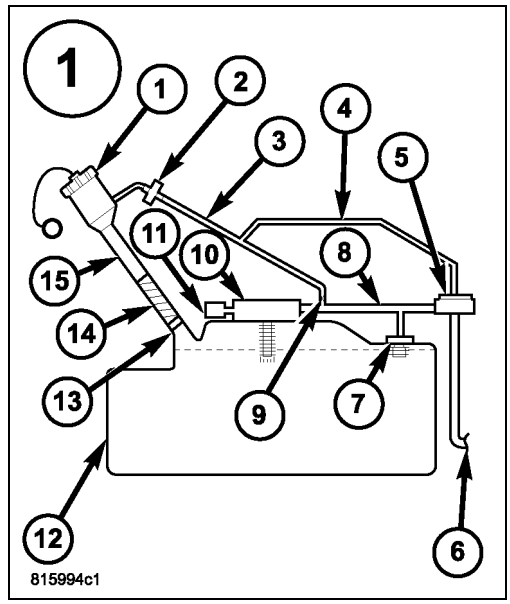

1. Fuel Cap
2. Recirculation Check Valve
3. Vapor Recirculation Line
4. Signal Vapor Line for FVM
5. Flow Management Valve
6. Fuel Tank to Canister Vapor Line
7. Fuel Tank Vent (Check Valve)
8. Vapor Line to Canister
9. Flow Control Orifice
10. Control Valve
11. Liquid Trap
12. Fuel Tank
13. Check valve
14. Fuel Fill Tube to Tank connector
15. Fuel Fill Tube

ZONE 2

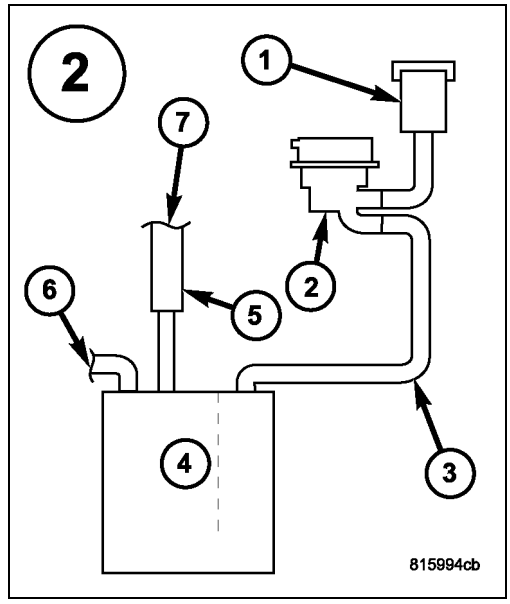

1. Filter
2. ESIM switch
3. Canister Vent Line
4. Evaporative Canister
5. Chassis Purge Valve
6. Fuel Tank to Canister Vapor Line connection
7. Evaporative Purge connection

ZONE 3

1. Evaporative Purge Vacuum Line
2. Connection to Chassis Line
3. Connection to Canister
4. Chassis Purge Line
5. Evaporative Purge Vacuum Line
6. Connection to Evaporative Purge Harness
7. Chassis Evaporative Purge Line connection to Engine Vacuum
8. Evap Purge Valve
9. Service Port

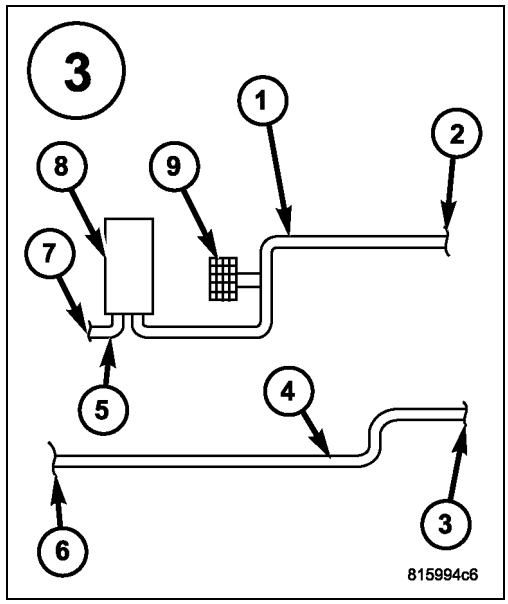

NOTE: Carefully inspect the vent side of the Evap Canister. Due to the filtering system in the canister the smoke may not be as thick. Introducing smoke into the filtered side of the canister may assist in locating the leak.

Select the appropriate response from the list below:

A leak was found at the gas cap or fuel filler tube

- Go To 6

A leak was found in one or more of the Evaporative System zones

- If the leak is at a hose connection, remove the hose then reconnect the hose and check for a leak again. All other leaks repair as necessary.
- Perform the POWERTRAIN VERIFICATION TEST. (Refer to 28 - DTC-Based Diagnostics/MODULE, Powertrain Control (PCM) - Standard Procedure).

No leaks were detected

- Go To 7

6. LEAK AT GAS CAP

1. Remove the SMOKE supply tip (black hose) from the service port (if equipped) or to the adapter 8404-ADP.
2. Install Leak Check Adapter 8382 (1/4 turn cap) or Fuel Tank Adapter 6922 (screw on cap) and Leak Check Adapter 8399 (secondary seal depressor) and repeat step 5.

NOTE: The gas cap adapter is being used as a known good cap.

Was a leak found at the gas cap adapter?

Yes

- Replace the Fuel Filler tube assembly.
- Perform the POWERTRAIN VERIFICATION TEST. (Refer to 28 - DTC-Based Diagnostics/MODULE, Powertrain Control (PCM) - Standard Procedure).

No

- Replace the gas cap.
- Perform the POWERTRAIN VERIFICATION TEST. (Refer to 28 - DTC-Based Diagnostics/MODULE, Powertrain Control (PCM) - Standard Procedure).

7. EVAP PURGE SOLENOID

NOTE: After disconnecting the Evap Purge Solenoid vacuum connections, inspect the lines and solenoid for signs of contamination.

1. Disconnect the vacuum hoses at the Evap Purge Solenoid.
2. Using a hand vacuum pump, apply 10 in. Hg. to the "CAN" side of the Evap Purge Solenoid.

NOTE: The solenoid should hold vacuum for a minimum of 15 seconds.

3. Turn the ignition on.
4. Using the scan tool, actuate the Evap Purge Solenoid to the ON position.

NOTE: The vacuum should drop when the solenoid is actuated.

Does the solenoid function as described above?

Yes

- Go To 8

No

- Verify that there is good pin to terminal contact in the Solenoid and PCM harness connectors. Replace the Evap Purge Solenoid in accordance with the Service Information if no problems were found in the connectors.
- Perform the PCM VERIFICATION TEST. (Refer to 28 - DTC-Based Diagnostics/MODULE, Powertrain Control (PCM) - Standard Procedure).

8. EVAPORATIVE SYSTEM INTEGRITY MONITOR SWITCH

1. Using the wiring diagram/schematic as a guide, inspect the wiring and connectors between the ESIM switch and the Powertrain Control Module (PCM).
2. Look for any chafed, pierced, pinched or partially broken wires.
3. Look for broken, bent, pushed out or corroded terminals. Verify that there is good pin to terminal contact in the Switch, Solenoid and the Powertrain Control Module connectors.
4. Perform any Technical Service Bulletins that may apply.

Were any problems found?

Yes

- Repair as necessary.
- Perform the POWERTRAIN VERIFICATION TEST. (Refer to 28 - DTC-Based Diagnostics/MODULE, Powertrain Control (PCM) - Standard Procedure).

No

- Verify that there is good pin to terminal contact in the Switch and the Powertrain Control Module connectors. Replace the ESIM switch Assembly if no problems were found with the connectors.
- Perform the POWERTRAIN VERIFICATION TEST. (Refer to 28 - DTC-Based Diagnostics/MODULE, Powertrain Control (PCM) - Standard Procedure).

P0456-EVAP PURGE SYSTEM SMALL LEAK

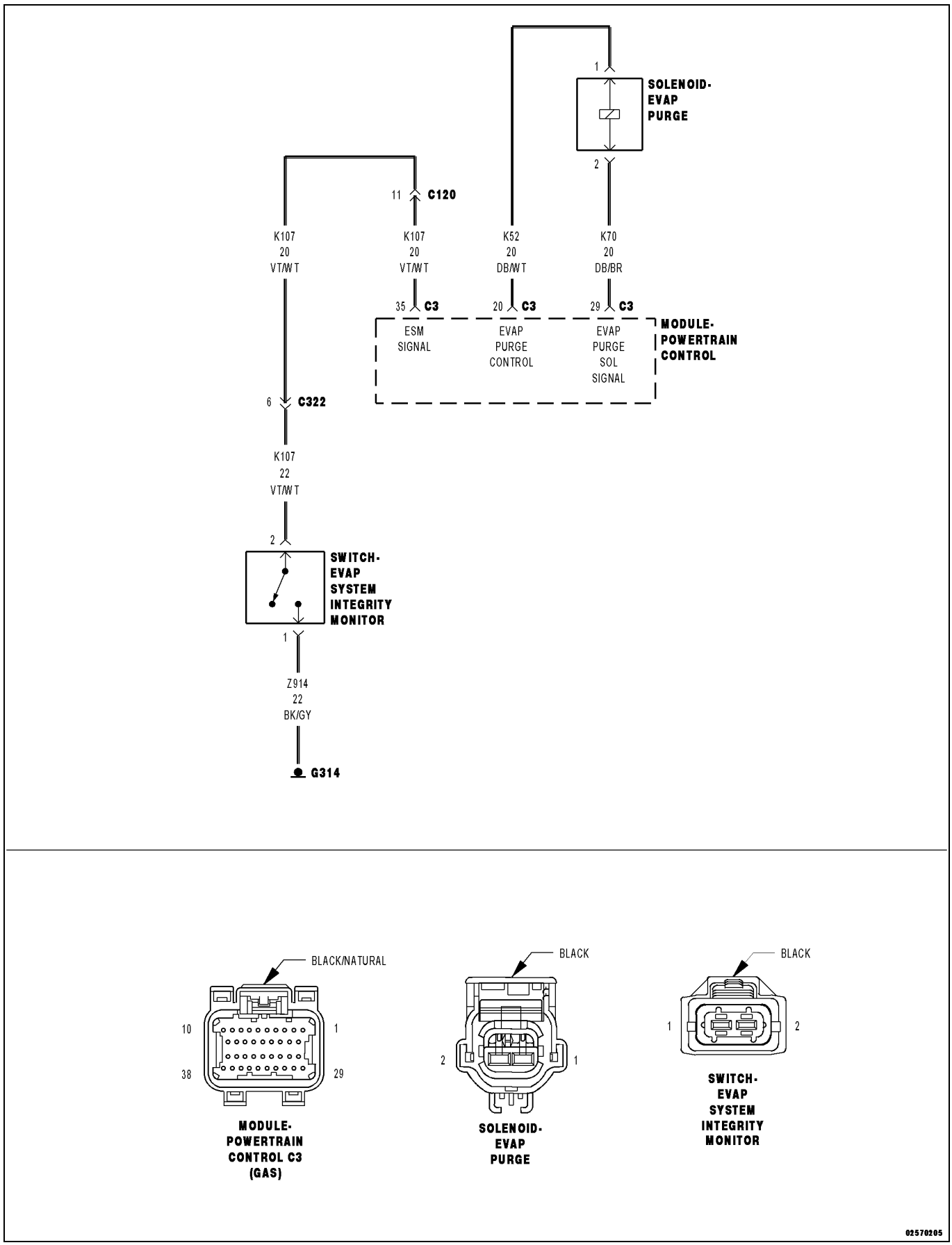

For a complete wiring diagram, **refer to the Wiring Information**.

Theory of Operation

The Evaporative Purge Monitor tests the integrity of the hoses/tube between the throttle body/intake and the fuel tank. The monitor is a two stage test and runs only after the Evaporative system passes the small leak test. Stage one is non-intrusive. The Powertrain Control Module (PCM) monitors the purge vapor ratio and the Evaporative System Integrity Monitor (ESIM) switch closed ratio. If the purge vapor ratio is above a calculated value, the monitor passes. If the ESIM switch closed ratio is greater than calculated value when purge flow is greater than a minimum value, the monitor passes. Stage two is an intrusive test and runs only if stage one does not pass. The PCM commands the purge solenoid to flow at a specified rate to force the purge vapor ratio to update. The ratio is compared to a calibrated specification. If it is less than specified, a one trip failure is recorded. This test can detect if the purge hose is off, obstructed or the purge valve is not operational.

- **When Monitored:**

  With the ignition off, fuel level less than 88%, ambient temperature between 4° C and 43° C (39° F and 109° F) and the fuel system in closed loop.
- **Set Condition:**

  As temperatures change, a vacuum is created in the fuel tank and Evaporative System. With the Evaporative System sealed, the Powertrain Control Module (PCM) monitors the Evaporative System Integrity Monitor (ESIM) Switch. If the ESIM switch does not close within a calibrated time, an error is detected by the PCM. One Trip Fault. Three good trips to turn off the MIL.

Possible Causes
EVAPORATIVE PURGE SYSTEM LEAK
EVAP PURGE SOLENOID
ESIM SWITCH

Always perform the Pre-Diagnostic Troubleshooting procedure before proceeding. (Refer to 28 - DTC-Based Diagnostics/MODULE, Powertrain Control (PCM) - Standard Procedure).

1. VEHICLE HISTORY AND SERVICE BULLETIN INVESTIGATION

1. Ignition on, engine not running.
2. With the scan tool, select View DTCs and record the related Freeze Frame data if any DTCs are present.
3. Whether or not any DTCs are Active you will want to check the following items which may assist in repairing the customer's complaint successfully.
4. Check the vehicle's repair history.
5. If the vehicle has a repair history that pertains to the customer's current complaint, review the repair.
6. Inspect the vehicle for any aftermarket accessories that may have been installed incorrectly.
7. Check for any service bulletin(s) related to the customer's complaint or DTCs.
8. If a service bulletin applies, follow the instructions of the service bulletin.

Choose the following scenario that best applies.

The service bulletin repaired the customer's complaint.

- Testing complete.

A DTC is present, no service bulletins apply or the service bulletin didn't repair the customer's complaint.

- Go To 2

2. ACTIVE DTC

NOTE: Since a hot vehicle can conceal a leak, it is best to perform this test at room temperature.

NOTE: A loose gas cap could have caused this DTC to set. Make sure gas cap is tight and in good condition. Make sure the gas cap meets OEM specifications.

1. Ignition on, engine not running.
2. With the scan tool, select View DTCs.

Is the DTC Active at this time?

Yes

- Go To 3

No

- Perform the INTERMITTENT CONDITION diagnostic procedure. (Refer to 28 - DTC-Based Diagnostics/MODULE, Powertrain Control (PCM) - Standard Procedure)

3. VISUAL AND PHYSICAL INSPECTION

1. Perform a visual and physical inspection of the entire Evaporative Emission system.
2. Check for the following conditions:

- Holes or cracks
- Loose seal points
- Evidence of damaged components
- Incorrect routing of hoses and tubes
- Loose or missing Fuel Filler Cap
- Improper installation of the Fuel Fill Cap
- Damaged Locking tabs on Cap and/or fill tube
- Damaged seal points on Cap and/or fill tube
- Fuel cap gasket seal

Were any of the above conditions found?

Yes

- Repair as necessary.
- Perform the POWERTRAIN VERIFICATION TEST. (Refer to 28 - DTC-Based Diagnostics/MODULE, Powertrain Control (PCM) - Standard Procedure).

No

- Go To 4

4. VERIFY EVAPORATIVE EMISSION LEAK

WARNING: Keep lit cigarettes, sparks, flames, and other ignition sources away from the test area to prevent the ignition of explosive gases. Keep the test area well ventilated. Failure to do so may result in possible serious or fatal injury.

1. To continue testing you will need Evaporative Emission Leak Detector (EELD) 8404B.

NOTE: The fuel tank should have between 20% and 80% of fuel tank capacity to properly test the Evaporative system.

2. Connect the red power lead of the EELD to the battery positive terminal and the black ground lead to battery negative terminal.
3. Block the vent hose of the canister if using the service port.
4. Connect shop air to the EELD.
5. Set the smoke/air control switch to AIR.
6. Insert the tester's AIR supply tip (clear hose) into the appropriate calibration orifice on the tester's control panel (based on DTC leak size).
7. Press the remote smoke/air start button.
8. Position the red flag on the air flow meter so it is aligned with the indicator ball.
9. When the calibration is complete, release the remote button. The EELD flow meter is now calibrated in liters per minute to the size leak indicated by the DTC set in the PCM.
10. Install the Service Port Adapter 8404-14 on the vehicle's service port and block the vent hose of the Evaporative Canister (if equipped) or install the adapter 8404-ADP into the filter line.
11. Connect the Air supply hose from the EELD to the service port (if equipped) or to the adapter 8404-ADP.
12. Press the remote button to activate AIR flow.

NOTE: Larger volume fuel tanks, lower fuel levels or if the vehicle is equipped with a Flow Management Valve may indicate high flow and will require four to five minutes to fill.

13. Compare the flow meter indicator ball reading to the red flag.
14. ABOVE the red flag indicates a leak present.
15. BELOW the red flag indicates a sealed system.

Is the indicator ball above the red flag?

Yes

- Go To 5

No

- Perform the INTERMITTENT CONDITION diagnostic procedure. (Refer to 28 - DTC-Based Diagnostics/MODULE, Powertrain Control (PCM) - Standard Procedure).

5. EVAPORATIVE EMISSION LEAK DETECTION

NOTE: A thorough visual inspection of the Evaporative System hoses, tubes and connections may save time in your diagnosis. Look for any physical damage or signs of wetness at connections. The strong smell of fuel vapors may also aid diagnosis.

1. To continue testing, you will need Evaporative Emissions Leak Detector (EELD) 8404B.
2. Remove the Air supply hose from the service port (if equipped) or from the adapter 8404-ADP.
3. Connect the SMOKE supply tip (black hose) to the service port (if equipped) or to the adapter 8404-ADP.
4. Set the smoke/air control switch to SMOKE.

NOTE: The flow meter indicator ball will not move in the smoke mode.

5. Press the remote smoke/air start button.

NOTE: Make sure that smoke has filled the Evaporative System by continuing to press the remote smoke/air start button, remove the vehicle fuel cap and wait for the smoke to exit. Once smoke is indicated reinstall the fuel cap.

NOTE: For optimal performance, introduce smoke into the system for an additional 60 seconds; continue introducing smoke at 15 second intervals, as necessary.

6. While still holding the remote smoke/air start button, use the white light 8404-CLL to follow the Evaporative System path and look for the source of the leak indicated by exiting smoke.
7. If a leak is concealed from view (i.e., top of fuel tank), release the remote smoke/air start button and use the ultraviolet (UV) black light 8404-UVL and the yellow goggles 8404-20 to look for residual traces of dye that is left behind by the smoke.
8. The exiting smoke deposits a residual fluid that is either bright green or bright yellow in color when viewed with a UV light.

NOTE: The Evaporative System is divided into three zones. A leak from any of these zones can cause this DTC to set. The lists below specify the possible leak points in that specific zone. For further assistance see the Zone Identification Charts below.

ZONE 1

1. Fuel Cap
2. Recirculation Check Valve
3. Vapor Recirculation Line
4. Signal Vapor Line for FVM
5. Flow Management Valve
6. Fuel Tank to Canister Vapor Line
7. Fuel Tank Vent (Check Valve)
8. Vapor Line to Canister
9. Flow Control Orifice
10. Control Valve
11. Liquid Trap
12. Fuel Tank
13. Check valve
14. Fuel Fill Tube to Tank connector
15. Fuel Fill Tube

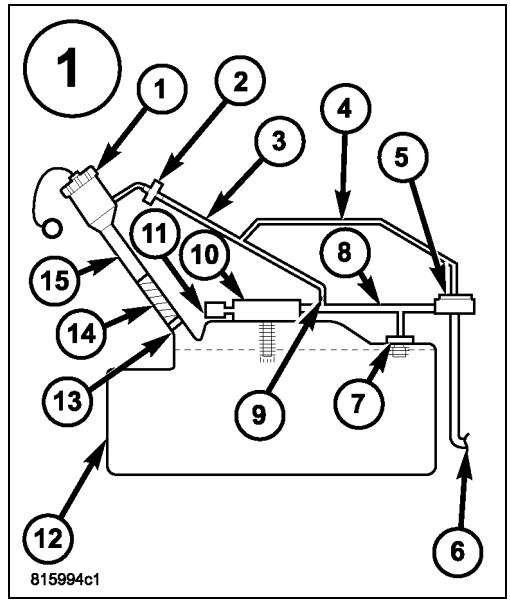

ZONE 2

1. Filter
2. ESIM switch
3. Canister Vent Line
4. Evaporative Canister
5. Chassis Purge Valve
6. Fuel Tank to Canister Vapor Line connection
7. Evaporative Purge connection

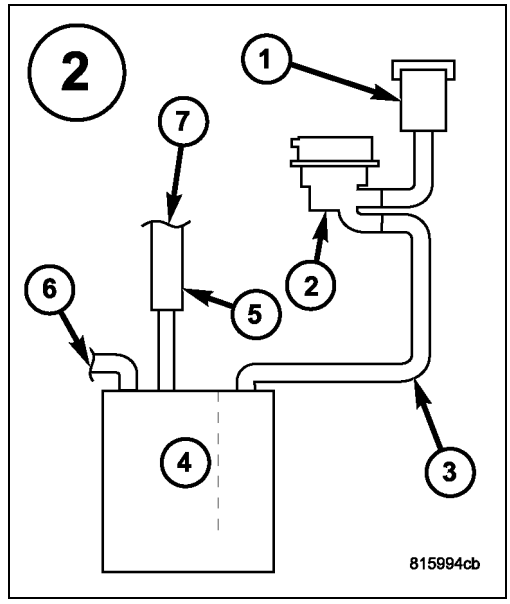

ZONE 3

1. Evaporative Purge Vacuum Line
2. Connection to Chassis Line
3. Connection to Canister
4. Chassis Purge Line
5. Evaporative Purge Vacuum Line
6. Connection to Evaporative Purge Harness
7. Chassis Evaporative Purge Line connection to Engine Vacuum
8. Evap Purge Valve
9. Service Port

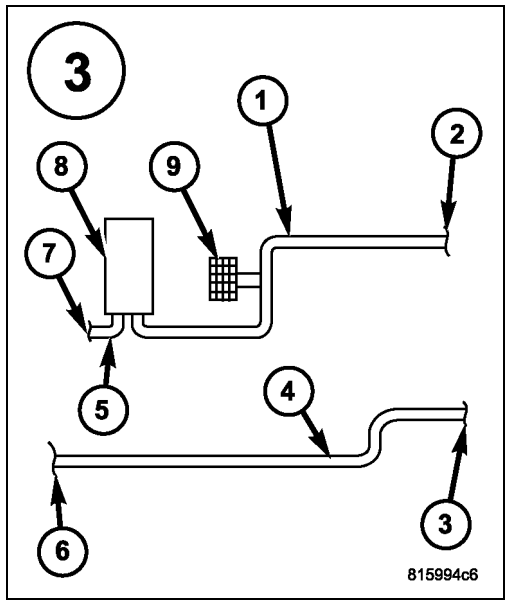

NOTE: Carefully inspect the vent side of the Evap Canister. Due to the filtering system in the canister the smoke may not be as thick. Introducing smoke into the filtered side of the canister may assist in locating the leak.

Select the appropriate response from the list below:

A leak was found at the gas cap or fuel filler tube

- Go To 6

A leak was found in one or more of the Evaporative System zones

- If the leak is at a hose connection, remove the hose then reconnect the hose and check for a leak again. All other leaks repair as necessary.
- Perform the POWERTRAIN VERIFICATION TEST. (Refer to 28 - DTC-Based Diagnostics/MODULE, Powertrain Control (PCM) - Standard Procedure).

No leaks were detected

- Go To 7

6. LEAK AT GAS CAP

1. Remove the SMOKE supply tip (black hose) from the service port (if equipped) or to the adapter 8404-ADP.
2. Install Leak Check Adapter 8382 (1/4 turn cap) or Fuel Tank Adapter 6922 (screw on cap) and Leak Check Adapter 8399 (secondary seal depressor) and repeat step 5.

NOTE: The gas cap adapter is being used as a known good cap.

Was a leak found at the gas cap adapter?

Yes

- Replace the Fuel Filler tube assembly.
- Perform the POWERTRAIN VERIFICATION TEST. (Refer to 28 - DTC-Based Diagnostics/MODULE, Powertrain Control (PCM) - Standard Procedure).

No

- Replace the gas cap.
- Perform the POWERTRAIN VERIFICATION TEST. (Refer to 28 - DTC-Based Diagnostics/MODULE, Powertrain Control (PCM) - Standard Procedure).

7. EVAP PURGE SOLENOID

NOTE: After disconnecting the Evap Purge Solenoid vacuum connections, inspect the lines and solenoid for signs of contamination.

1. Disconnect the vacuum hoses at the Evap Purge Solenoid.
2. Using a hand vacuum pump, apply 10 in. Hg. to the "CAN" side of the Evap Purge Solenoid.

NOTE: The solenoid should hold vacuum for a minimum of 15 seconds.

3. Turn the ignition on.
4. Using the scan tool, actuate the Evap Purge Solenoid to the ON position.

NOTE: The vacuum should drop when the solenoid is actuated.

Does the solenoid function as described above?

Yes

- Go To 8

No

- Verify that there is good pin to terminal contact in the Solenoid and PCM harness connectors. Replace the Evap Purge Solenoid in accordance with the Service Information if no problems were found in the connectors.
- Perform the PCM VERIFICATION TEST. (Refer to 28 - DTC-Based Diagnostics/MODULE, Powertrain Control (PCM) - Standard Procedure).

8. EVAPORATIVE SYSTEM INTEGRITY MONITOR SWITCH

1. Using the wiring diagram/schematic as a guide, inspect the wiring and connectors between the ESIM switch and the Powertrain Control Module (PCM).
2. Look for any chafed, pierced, pinched or partially broken wires.
3. Look for broken, bent, pushed out or corroded terminals. Verify that there is good pin to terminal contact in the Switch, Solenoid and the Powertrain Control Module connectors.
4. Perform any Technical Service Bulletins that may apply.

Were any problems found?

Yes

- Repair as necessary.
- Perform the POWERTRAIN VERIFICATION TEST. (Refer to 28 - DTC-Based Diagnostics/MODULE, Powertrain Control (PCM) - Standard Procedure).

No

- Replace the ESIM switch in accordance with the Service Information.
- Perform the POWERTRAIN VERIFICATION TEST. (Refer to 28 - DTC-Based Diagnostics/MODULE, Powertrain Control (PCM) - Standard Procedure).

P0457-LOOSE FUEL CAP

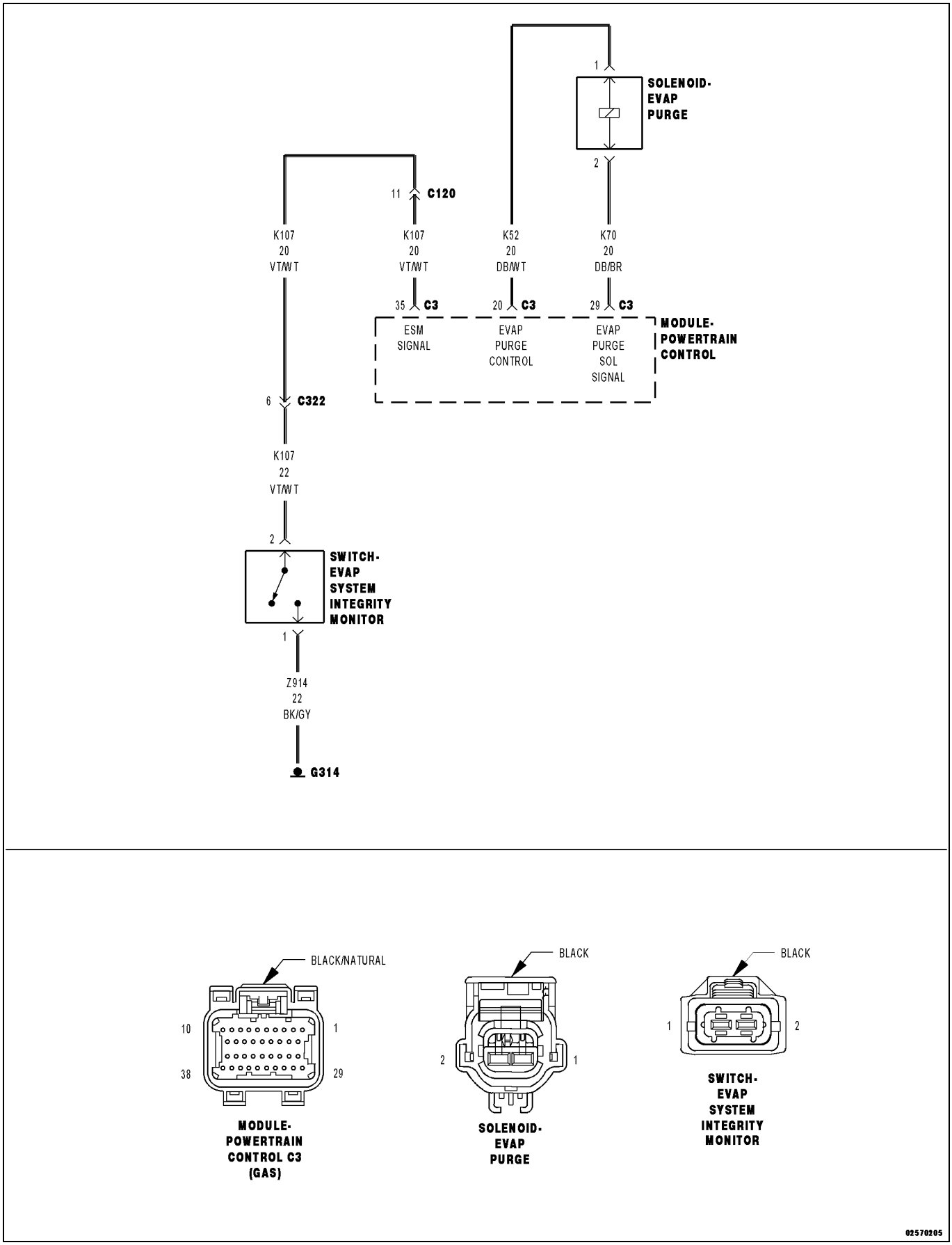

For a complete wiring diagram, **refer to the Wiring Information**.

Theory of Operation

Fuel level is recorded when the ignition key is turned off and is compared to the fuel level when the ignition key is turned back on. The Powertrain Control Module (PCM) recognizes an increase in fuel level and will fail the Medium leak test because the fuel cap is broken or not installed properly. GAS CAP will be displayed in odometer to inform the owner that the cap is off of loose.

- **When Monitored:**

  Engine running. Ambient Temperature between 4° C and 32° C (39° F and 89° F) Close Loop fuel system. Test runs after the medium leak test is inconclusive and the PCM has senses a fuel increase.
- **Set Condition:**

  If a leak greater than .090" is detected by the Powertrain Control Module (PCM) for two consecutive cold start trips after a significant fuel level change, this DTC will set. One good trip turns off the MIL.

Possible Causes
LOOSE OR MISSING FUEL CAP

Always perform the Pre-Diagnostic Troubleshooting procedure before proceeding. (Refer to 28 - DTC-Based Diagnostics/MODULE, Powertrain Control (PCM) - Standard Procedure).

1. ACTIVE DTC

NOTE: If DTC P0455-EVAP SYSTEM LARGE LEAK is set along with this DTC, perform the DTC P0455 diagnostic procedure before continuing with this test.

1. Start the engine.
2. Allow the engine to idle.
3. Using the scan tool, perform the ESIM FORCED MONITOR TEST. Allow the test to complete.
4. Using the scan tool, read DTCs.

Is the DTC Active or Pending at this time?

Yes

- Go To 2

No

- Test complete, the condition or conditions that originally set this DTC are not present at this time. Using the wiring diagrams as a guide, check all related splices and connectors for signs of water intrusion, corrosion, pushed out or bent terminals and correct pin tension.
- Perform the CHECKING FOR AN INTERMITTENT DTC diagnostic procedure. (Refer to 28 - DTC-Based Diagnostics/MODULE, Powertrain Control (PCM) - Standard Procedure).

2. FUEL FILLER CAP VISUAL INSPECTION

Remove the Fuel Filler Cap and visually inspect for the following:

- Loose or missing Fuel Filler Cap or seal
- Damaged locking tabs on the Fuel Filler Cap and/or filler tube
- Damaged seal points on the Fuel Filler Cap and/or filler tube

Were any problems found?

Yes

- Repair as necessary.
- Perform the PCM VERIFICATION TEST. (Refer to 28 - DTC-Based Diagnostics/MODULE, Powertrain Control (PCM) - Standard Procedure).

No

- Go To 3

3. FUEL FILLER CAP

1. Reinstall the Fuel Filler Cap.
2. Start the engine.
3. Allow the engine to idle.
4. Using the scan tool, perform the ESIM FORCED MONITOR TEST. Allow the test to complete.
5. Using the scan tool, read DTCs.

Is the DTC Active or Pending at this time?

Yes

- Replace the Fuel Filler Cap in accordance with the Service Information.
- Perform the PCM VERIFICATION TEST. (Refer to 28 - DTC-Based Diagnostics/MODULE, Powertrain Control (PCM) - Standard Procedure).

No

- Test complete, the condition or conditions that originally set this DTC are not present at this time. Using the wiring diagrams as a guide, check all related splices and connectors for signs of water intrusion, corrosion, pushed out or bent terminals and correct pin tension.
- Perform the CHECKING FOR AN INTERMITTENT DTC diagnostic procedure. (Refer to 28 - DTC-Based Diagnostics/MODULE, Powertrain Control (PCM) - Standard Procedure).

P0461-FUEL LEVEL SENSOR 1 PERFORMANCE

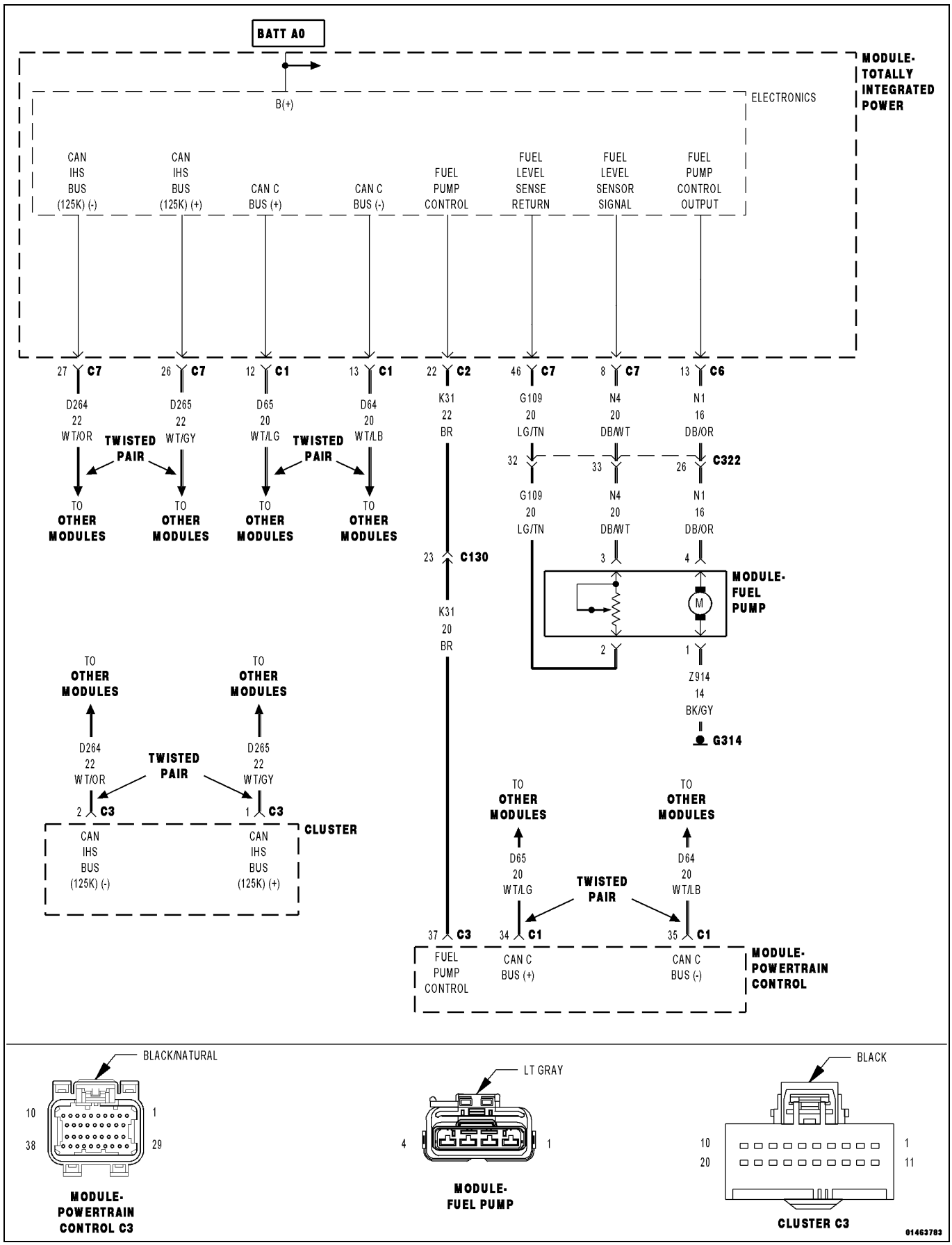

For a complete wiring diagram, **refer to the Wiring Information**.

Theory of Operation

The fuel level rationality will set a fault for a fuel level reading that does not change over an accumulated mileage threshold to keep stuck high or stuck low fuel levels from disabling OBD monitors. If the vehicle is fitted with a saddle tank fuel system this feature includes diagnostics for both of the sending units and diagnostics for a siphon tube that has become disconnected or plugged. The power up test looks to see a large enough fuel level voltage change from the last key-off to the following engine run. The engine run test looks to see a fuel level voltage change over an accumulated mileage.

- **When Monitored:**

  TEST No.1: With the ignition on, the fuel level is compared to the previous key down after a 20 second delay. TEST No.2: The PCM monitors the fuel level at ignition on.

- **Set Condition:**

  TEST No.1: If the PCM does not see a difference in fuel level of greater than 0.1 volt the test will fail. TEST No.2: If the PCM does not see a change in the fuel level of .1765 over a set amount of miles the test will fail. Two trip failure. Three good trips to turn off the MIL.

Possible Causes
(N4) FUEL LEVEL SIGNAL CIRCUIT OPEN
(N4) FUEL LEVEL SIGNAL CIRCUIT SHORTED TO GROUND
(G109) GROUND CIRCUIT OPEN
FUEL TANK
FUEL LEVEL SENSOR

Always perform the Pre-Diagnostic Troubleshooting procedure before proceeding. (Refer to 28 - DTC-Based Diagnostics/MODULE, Powertrain Control (PCM) - Standard Procedure).

1. ACTIVE DTC

NOTE: Diagnose and repair any communication DTCs before continuing with this test.

NOTE: Diagnose P0462 or P0463 first, if set along with P0461.

1. Start the engine.
2. Allow the engine to reach normal operating temperature.
3. With the scan tool, select View DTCs.

NOTE: It may be necessary to drive the vehicle to meet the conditions to set this DTC, try to repeat the conditions in which the fault originally set by reviewing the Freeze Frame data.

Is the DTC Active or Pending at this time?

Yes

- Go To 2

No

- Perform the INTERMITTENT CONDITION Diagnostic Procedure. (Refer to 28 - DTC-Based Diagnostics/MODULE, Powertrain Control (PCM) - Standard Procedure)

2. VISUALLY INSPECT FUEL TANK

1. Visually inspect the Fuel Tank for damage that may restrict the Fuel Sending Unit float from moving.

Is the Fuel Tank OK?

Yes

- Go To 3

No

- Replace the Fuel Tank as necessary.
- Perform the POWERTRAIN VERIFICATION TEST. (Refer to 28 - DTC-Based Diagnostics/MODULE, Powertrain Control (PCM) - Standard Procedure)

3. (N4) FUEL LEVEL SIGNAL CIRCUIT OPEN

1. Turn the ignition off.
2. Disconnect the Fuel Pump Module harness connector.
3. Disconnect the C7 Totally Integrated Power Module (TIPM) harness connector.
4. Measure the resistance of the (N4) Fuel Level Signal circuit from the Fuel Pump Module harness connector to the C7 TIPM harness connector.

Is the resistance below 5.0 Ohms?

Yes

- Go To 4

No

- Repair the open in the (N4) Fuel Level Signal circuit.
- Perform the POWERTRAIN VERIFICATION TEST. (Refer to 28 - DTC-Based Diagnostics/MODULE, Powertrain Control (PCM) - Standard Procedure).

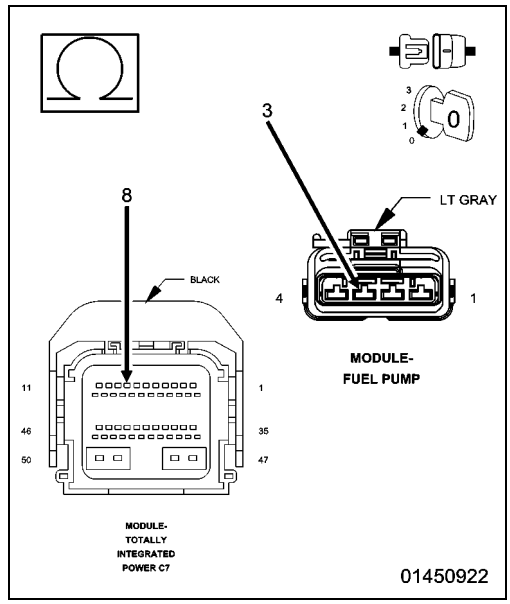

4. (N4) FUEL LEVEL SIGNAL CIRCUIT SHORTED TO GROUND

1. Measure the resistance between ground and the (N4) Fuel Level Signal circuit in the Fuel Pump Module harness connector.

Is the resistance below 100 Ohms?

Yes

- Repair the short to ground in the (N4) Fuel Level Signal circuit.
- Perform the POWERTRAIN VERIFICATION TEST. (Refer to 28 - DTC-Based Diagnostics/MODULE, Powertrain Control (PCM) - Standard Procedure)

No

- Go To 5

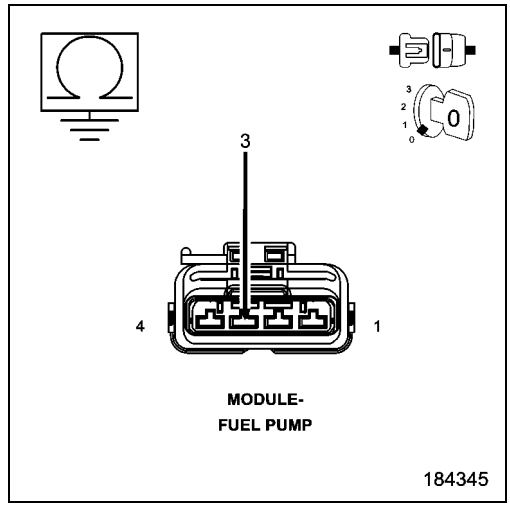

5. (G109) GROUND CIRCUIT OPEN

1. Measure the resistance of the (G109) Ground circuit from the Fuel Pump Module harness connector to the C7 TIPM harness connector.

Is the resistance below 5.0 Ohms?

Yes

- Go To 6

No

- Repair the open in the (G109) Ground circuit.
- Perform the POWERTRAIN VERIFICATION TEST. (Refer to 28 - DTC-Based Diagnostics/MODULE, Powertrain Control (PCM) - Standard Procedure)

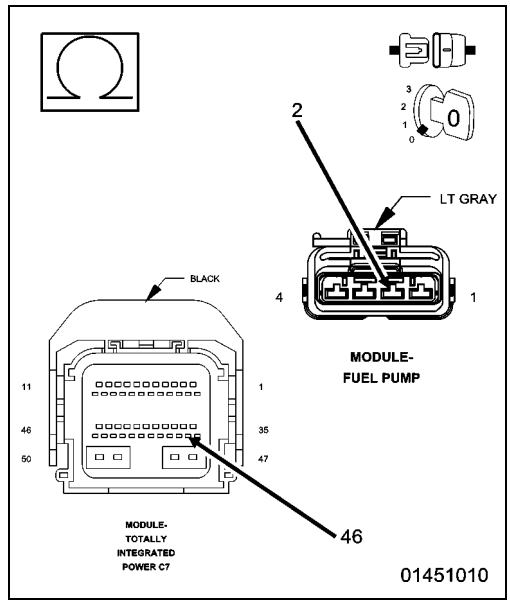

6. INTERNAL INSPECTION OF THE FUEL TANK

WARNING: The fuel system is under a constant pressure (even with the engine off). Before testing or servicing any fuel system hose, fitting or line, the fuel system pressure must be released. Failure to follow these instructions can result in possible serious or fatal injury.

1. Remove the Fuel Tank in accordance with the Service Information.
2. Remove the Fuel Pump Module.
3. Visually inspect the inside of the Fuel Tank for any obstructions or deformities.
4. Inspect the Fuel Pump Module Float arm for damage.

Were any problems found?

Yes

- Repair or replace as necessary.
- Perform the POWERTRAIN VERIFICATION TEST. (Refer to 28 - DTC-Based Diagnostics/MODULE, Powertrain Control (PCM) - Standard Procedure)

No

- Go To 7

7. FUEL LEVEL SENSOR

If there are no possible causes remaining, view repair.

Repair

- Verify that there is good pin to terminal contact at the Fuel Pump Module and the Powertrain Control Module connectors. Replace the Fuel Level Sensor if no problems were found at the connectors.
- Perform the POWERTRAIN VERIFICATION TEST. (Refer to 28 - DTC-Based Diagnostics/MODULE, Powertrain Control (PCM) - Standard Procedure)

P0462-FUEL LEVEL SENSOR 1 CIRCUIT LOW

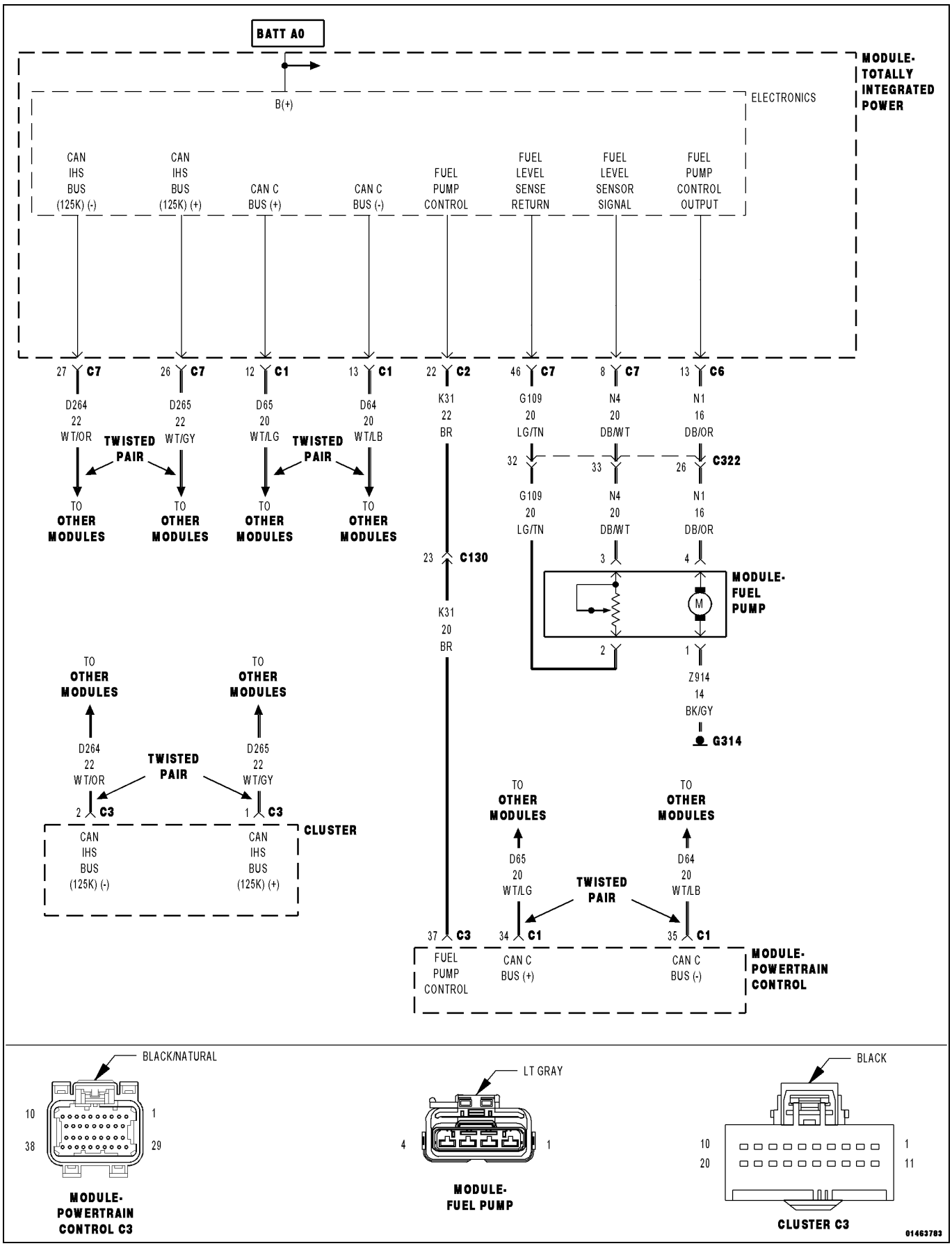

For a complete wiring diagram, **refer to the Wiring Information**.

Theory of Operation

The fuel level rationality will set a fault for a fuel level reading that does not change over an accumulated mileage threshold to keep stuck high or stuck low fuel levels from disabling OBD monitors. If the vehicle is fitted with a saddle tank fuel system this feature includes diagnostics for both of the sending units and diagnostics for a siphon tube that has become disconnected or plugged. The power up test looks to see a large enough fuel level voltage change from the last key-off to the following engine run. The engine run test looks to see a fuel level voltage change over an accumulated mileage.

- **When Monitored:**

  Ignition on and battery voltage above 10.4 Volts.
- **Set Condition:**

  The Fuel Level Sensor 1 input voltage is below the minimum acceptable value. One Trip Fault. Three good trips to turn off the MIL.

Possible Causes
(N4) FUEL LEVEL SIGNAL CIRCUIT SHORTED TO GROUND
EXCESSIVE RESISTANCE IN THE (N4) FUEL LEVEL SIGNAL CIRCUIT
FUEL LEVEL SENSOR
TOTALLY INTEGRATED POWER MODULE (TIMP)

Always perform the Pre-Diagnostic Troubleshooting procedure before proceeding. (Refer to 28 - DTC-Based Diagnostics/MODULE, Powertrain Control (PCM) - Standard Procedure).

1. ACTIVE DTC

NOTE: Diagnose and repair any system voltage DTCs before continuing with this test.

NOTE: Diagnose and repair any communication DTCs before continuing with this test.

1. Start the engine and allow it to reach operating temperature.

WARNING: When the engine is operating, do not stand in direct line with the fan. Do not put your hands near the pulleys, belts or fan. Do not wear loose clothing. Failure to follow these instructions may result in possible serious or fatal injury.

2. With the scan tool, select View DTCs.

Is the DTC Active at this time?

Yes

- Go To 2

No

- Perform the INTERMITTENT CONDITION Diagnostic Procedure. (Refer to 28 - DTC-Based Diagnostics/MODULE, Powertrain Control (PCM) - Standard Procedure).

2. FUEL LEVEL SENSOR

1. Turn the ignition off.
2. Disconnect the Fuel Pump Module harness connector.
3. Ignition on, engine not running.
4. With the scan tool, read the Fuel Level Sensor voltage.

Did the Fuel Level Sensor voltage change from below 0.4 of a volt to above 4.0 Volts?

Yes

- Verify that there is good pin to terminal contact at the Fuel Pump Module and the Powertrain Control Module connectors. Replace the Fuel Level Sensor if no problems were found at the connectors.
- Perform the POWERTRAIN VERIFICATION TEST. (Refer to 28 - DTC-Based Diagnostics/MODULE, Powertrain Control (PCM) - Standard Procedure).

No

- Go To 3

3. (N4) FUEL LEVEL SIGNAL CIRCUIT SHORTED TO GROUND

1. Turn the ignition off.
2. Disconnect the C7 TIPM harness connector.
3. Measure the resistance between ground and the (N4) Fuel Level Signal circuit in the Fuel Pump Module harness connector.

Is the resistance below 100 Ohms?

Yes

- Repair the short to ground in the (N4) Fuel Level Signal circuit.
- Perform the POWERTRAIN VERIFICATION TEST. (Refer to 28 - DTC-Based Diagnostics/MODULE, Powertrain Control (PCM) - Standard Procedure).

No

- Go To 4

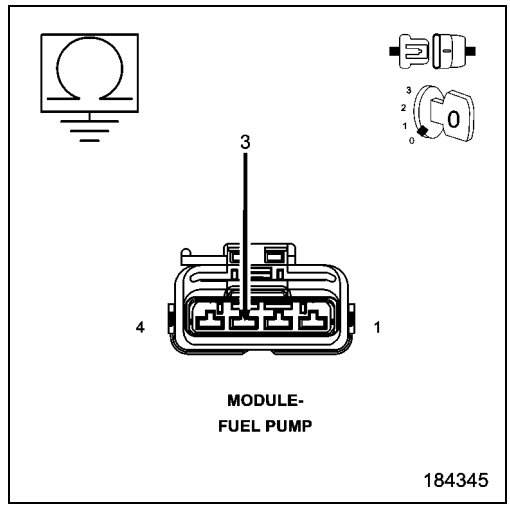

4. EXCESSIVE RESISTANCE IN THE (N4) FUEL LEVEL SIGNAL CIRCUIT

1. Measure the resistance of the (N4) Fuel Level Signal circuit from the Fuel Pump Module harness connector to the C7 TIPM harness connector.

Is the resistance below 5.0 Ohms?

Yes

- Go To 5

No

- Repair the excessive resistance in the (N4) Fuel Level Signal circuit.
- Perform the POWERTRAIN VERIFICATION TEST. (Refer to 28 - DTC-Based Diagnostics/MODULE, Powertrain Control (PCM) - Standard Procedure).

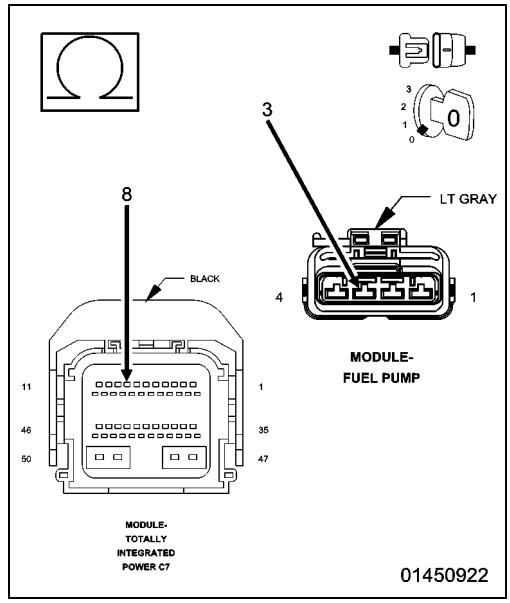

5. TOTALLY INTEGRATED POWER MODULE

1. Using the wiring diagram/schematic as a guide, inspect the wiring and connectors between the Fuel Pump Module and the TIPM.
2. Look for any chafed, pierced, pinched or partially broken wires.
3. Look for broken, bent, pushed out or corroded terminals. Verify that there is good pin to terminal contact in the Fuel Pump Module and the TIPM connectors.
4. Refer to any Technical Service Bulletins that may apply.

Were there any problems found?

Yes

- Repair as necessary.
- Perform the BODY VERIFICATION TEST. (Refer to 28 - DTC-Based Diagnostics/MODULE, Totally Integrated Power (TIPM) - Standard Procedure).

No

- Replace and program the TIPM in accordance with the Service Information.
- Perform the BODY VERIFICATION TEST. (Refer to 28 - DTC-Based Diagnostics/MODULE, Totally Integrated Power (TIPM) - Standard Procedure).

P0463-FUEL LEVEL SENSOR 1 CIRCUIT HIGH

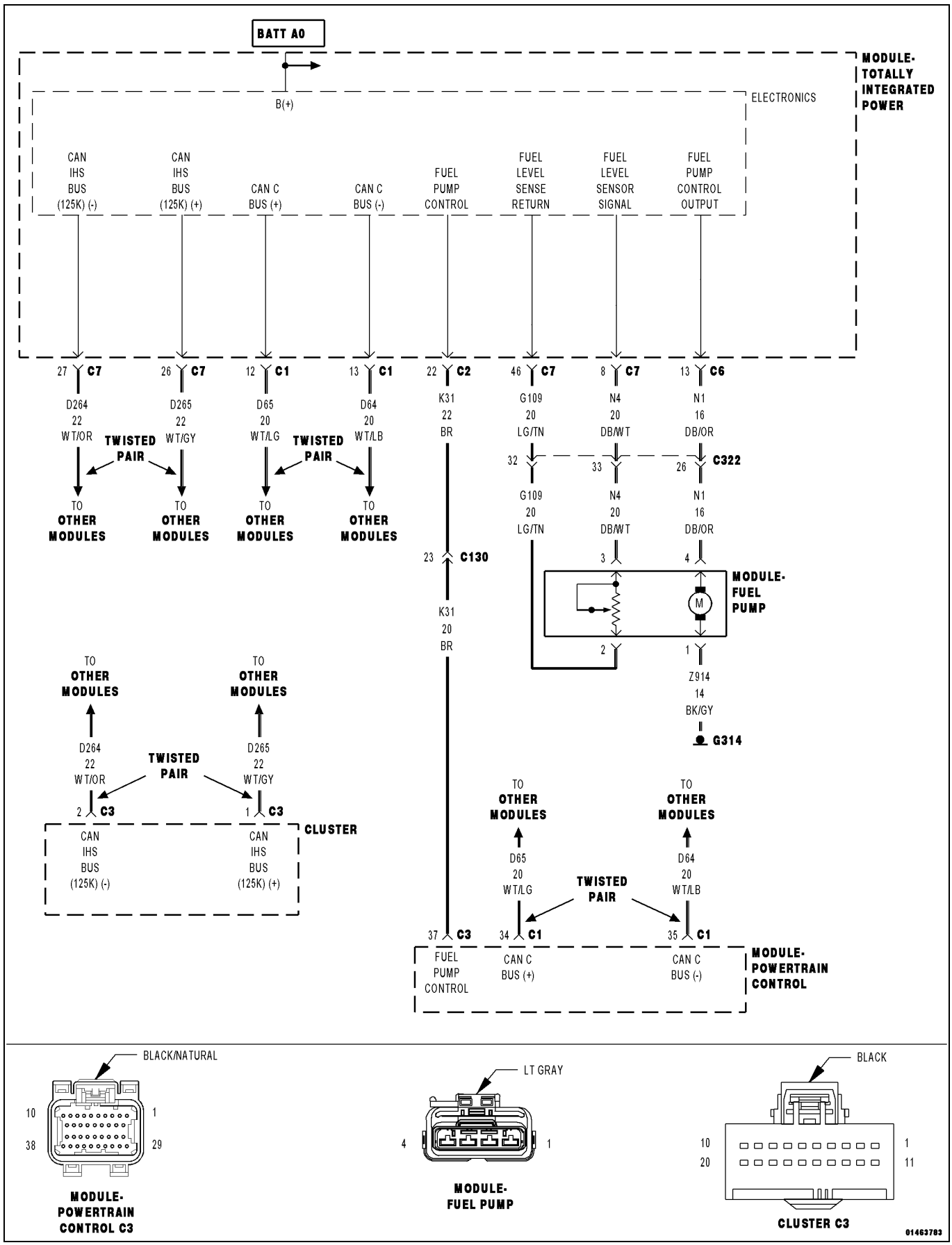

For a complete wiring diagram, **refer to the Wiring Information**.

- **When Monitored:**
  Ignition on and battery voltage above 10.4 Volts.
- **Set Condition:**
  The fuel level sensor signal voltage is greater than the maximum acceptable value. One Trip Fault. Three good trips to turn off the MIL.

Possible Causes
(N4) FUEL LEVEL SIGNAL CIRCUIT SHORTED TO VOLTAGE
(N4) FUEL LEVEL SIGNAL CIRCUIT OPEN
(G109) GROUND CIRCUIT OPEN
FUEL LEVEL SENSOR
TOTALLY INTEGRATED POWER MODULE (TIPM)
POWERTRAIN CONTROL MODULE (PCM)

Always perform the Pre-Diagnostic Troubleshooting procedure before proceeding. (Refer to 28 - DTC-Based Diagnostics/MODULE, Powertrain Control (PCM) - Standard Procedure).

1. ACTIVE DTC

NOTE: Diagnose and repair any system voltage DTCs before continuing with this test.

NOTE: Diagnose and repair any communication DTCs before continuing with this test.

1. Start the engine and allow it to reach operating temperature.

WARNING: When the engine is operating, do not stand in direct line with the fan. Do not put your hands near the pulleys, belts or fan. Do not wear loose clothing. Failure to follow these instructions may result in possible serious or fatal injury.

2. With the scan tool, select View DTCs.

Is the DTC Active at this time?

Yes

- Go To 2

No

- Perform the INTERMITTENT CONDITION Diagnostic Procedure. (Refer to 28 - DTC-Based Diagnostics/MODULE, Powertrain Control (PCM) - Standard Procedure)

2. FUEL LEVEL SENSOR

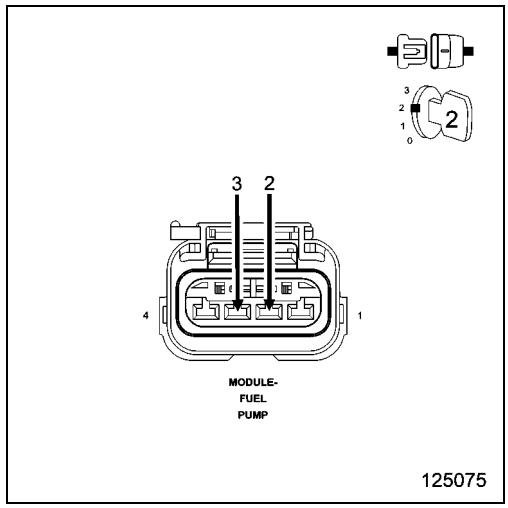

1. Turn the ignition off.
2. Disconnect the Fuel Pump Module electrical harness connector.
3. Ignition on, engine not running.
4. Connect a jumper wire between the (N4) Fuel Level Signal circuit and the (G109) Ground circuit in the Fuel Pump Module harness connector.
5. With the scan tool, read the Fuel Level Sensor voltage.

Did the Fuel Level Sensor voltage change from above 4.8 Volts to below 0.4 of a volt with the jumper wire installed?

Yes

- Verify that there is good pin to terminal contact at the Fuel Pump Module and the Totally Integrated Power Module (TIPM) connectors. Replace the Fuel Level Sensor if no problems were found at the connectors.
- Perform the POWERTRAIN VERIFICATION TEST. (Refer to 28 - DTC-Based Diagnostics/MODULE, Powertrain Control (PCM) - Standard Procedure)

No

- Go To 3

NOTE: Remove the jumper wire before continuing.

3. (N4) FUEL LEVEL SIGNAL CIRCUIT SHORTED TO VOLTAGE

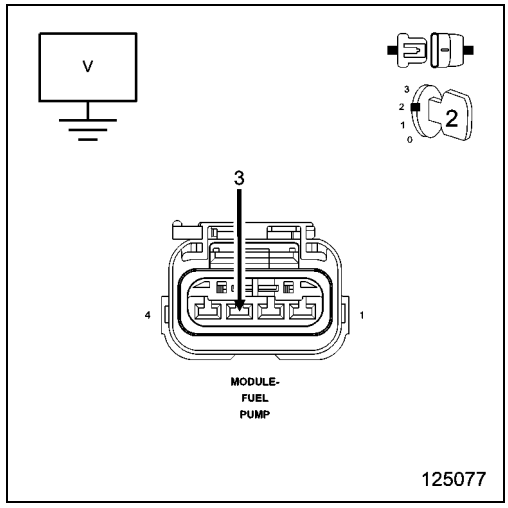

1. Turn the ignition off.
2. Disconnect the C7 TIPM harness connector.
3. Ignition on, engine not running.
4. Measure the voltage on the (N4) Fuel Level Signal circuit in the Fuel Pump Module harness connector.

Is there any voltage present?

Yes

- Repair the short to voltage in the (N4) Fuel Level Signal circuit.
- Perform the POWERTRAIN VERIFICATION TEST. (Refer to 28 - DTC-Based Diagnostics/MODULE, Powertrain Control (PCM) - Standard Procedure)

No

- Go To 4

4. (N4) FUEL LEVEL SIGNAL CIRCUIT OPEN

1. Turn the ignition off.
2. Disconnect the C7 TIPM harness connector.
3. Measure the resistance of the (N4) Fuel Level Signal circuit from the Fuel Pump Module harness connector to the C7 TIPM harness connector.

Is the resistance below 5.0 Ohms?

Yes

- Go To 5

No

- Repair the open in the (N4) Fuel Level Signal circuit.
- Perform the POWERTRAIN VERIFICATION TEST. (Refer to 28 - DTC-Based Diagnostics/MODULE, Powertrain Control (PCM) - Standard Procedure)

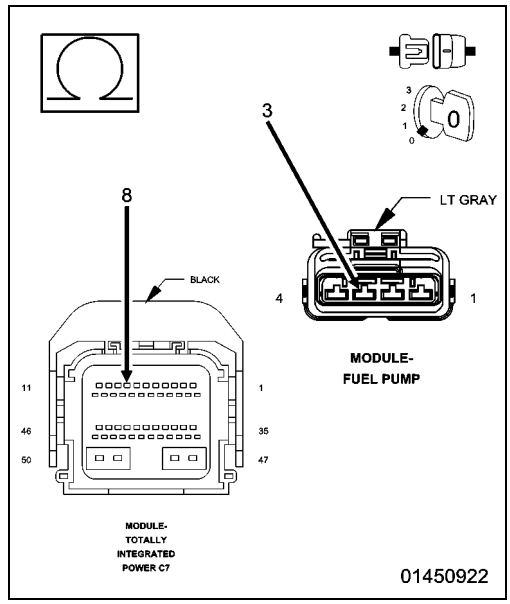

5. (G109) GROUND CIRCUIT OPEN

1. Disconnect the C7 TIPM harness connector.
2. Measure the resistance of the (G109) Ground circuit from the Fuel Pump Module harness connector to the C7 TIPM harness connector.

Is the resistance below 5.0 Ohms?

Yes

- Go To 6

No

- Repair the open in the (G109) Ground circuit.
- Perform the POWERTRAIN VERIFICATION TEST. (Refer to 28 - DTC-Based Diagnostics/MODULE, Powertrain Control (PCM) - Standard Procedure)

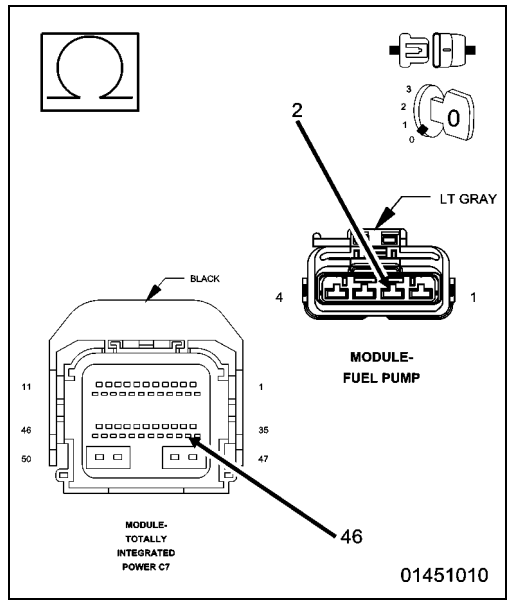

6. TOTALLY INTEGRATED POWER MODULE

1. Using the wiring diagram/schematic as a guide, inspect the wiring and connectors between the Fuel Pump Module and the Totally Integrated Power Module.
2. Look for any chafed, pierced, pinched or partially broken wires.
3. Look for broken, bent, pushed out or corroded terminals. Verify that there is good pin to terminal contact in the Fuel Pump Module and the Totally Integrated Power Module connectors.
4. Refer to any Technical Service Bulletins that may apply.

Were there any problems found?

Yes

- Repair as necessary.
- Perform the BODY VERIFICATION TEST, (Refer to 28 - DTC-Based Diagnostics/MODULE, Totally Integrated Power (TIPM) - Standard Procedure).

No

- Replace and program the Totally Integrated Power Module in accordance with the Service Information.
- Perform the BODY VERIFICATION TEST (Refer to 28 - DTC-Based Diagnostics/MODULE, Totally Integrated Power (TIPM) - Standard Procedure)

P0480-COOLING FAN 1 CONTROL CIRCUIT

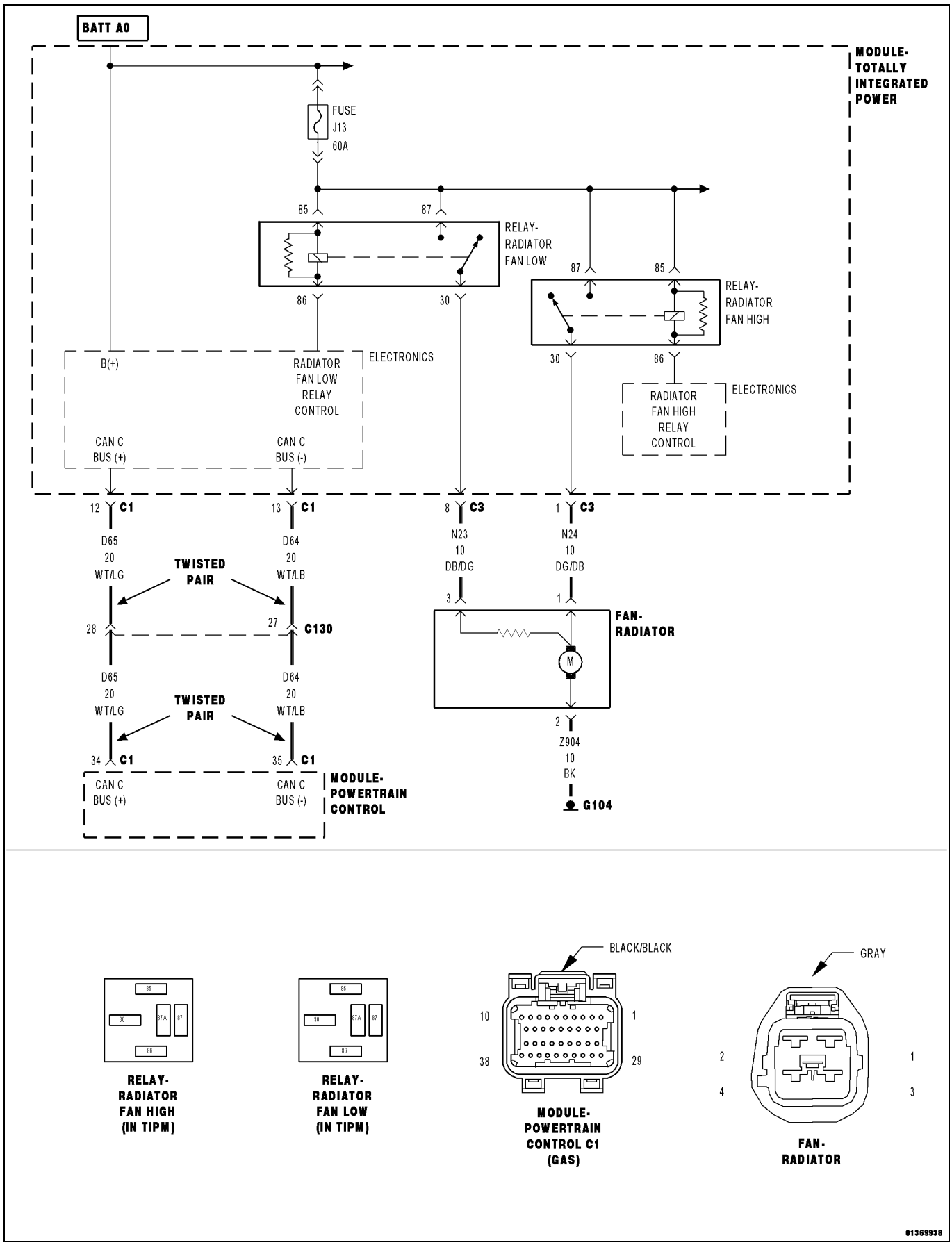

For a complete wiring diagram, **refer to the Wiring Information**.

- **When Monitored:**
  With the ignition on. Battery voltage greater than 10 Volts.
- **Set Condition:**
  The Powertrain Control Module (PCM) is requesting the Totally Integrated Power Module (TIPM) to turn on the Condenser Fan On and it is not operating. One Trip Fault. Three good trips to turn off the MIL.

Possible Causes
CAN C BUS FAILURE
ENGINE COOLANT TEMP SENSOR DTCS SET
CONDENSER FAN CONTROL CIRCUIT DTCS SET IN THE HVAC MODULE
POWERTRAIN CONTROL MODULE (PCM)

Always perform the Pre-Diagnostic Troubleshooting procedure before proceeding. (Refer to 28 - DTC-Based Diagnostics/MODULE, Powertrain Control (PCM) - Standard Procedure).

1. COOLING FAN RELAY OPERATION

1. Ignition on, engine not running.
2. With the scan tool, actuate the Cooling Fan Relay.

Is the Cooling Fan Relay operating?

Yes

- Perform the INTERMITTENT CONDITION diagnostic procedure. (Refer to 28 - DTC-Based Diagnostics/MODULE, Powertrain Control (PCM) - Standard Procedure).

No

- Go To 2

2. ECT SENSOR DTCS CURRENTLY ACTIVE

Are any CAN C or ECT Sensor DTCs active at this time?

Yes

- Perform the appropriate diagnostics for the ECT Sensor or CAN C Bus DTCs. (Refer to 28 - DTC-Based Diagnostics/MODULE, Powertrain Control (PCM) - Diagnosis and Testing).

No

- Go To 3

3. CONDENSER FAN CONTROL CIRCUIT DTCS SET IN THE TIPM

Are any Condenser Fan Control Circuit DTCs set in the TIPM?

Yes

- Diagnose the appropriate Condenser Fan Control Circuits in the TIPM. (Refer to 28 - DTC-Based Diagnostics/MODULE, Totally Integrated Power (TIPM) - Diagnosis and Testing).

No

- Go To 4

4. POWERTRAIN CONTROL MODULE (PCM)

1. Using the wiring diagram/schematic as a guide, inspect the wiring and connectors between the Cooling Fan and the Totally Integrated Power Module (TIPM).
2. Look for any chafed, pierced, pinched or partially broken wires.
3. Look for broken, bent, pushed out or corroded terminals. Verify that there is good pin to terminal contact in the Cooling Fan Module and the Totally Integrated Power Module connectors.
4. Refer to any Technical Service Bulletins that may apply.

Were there any problems found?

Yes

- Repair as necessary.
- Perform the POWERTRAIN VERIFICATION TEST. (Refer to 28 - DTC-Based Diagnostics/MODULE, Powertrain Control (PCM) - Standard Procedure).

No

- Replace and program the Powertrain Control Module in accordance with the Service Information.
- Perform the POWERTRAIN VERIFICATION TEST. (Refer to 28 - DTC-Based Diagnostics/MODULE, Powertrain Control (PCM) - Standard Procedure).

P0501-VEHICLE SPEED SENSOR 1 PERFORMANCE

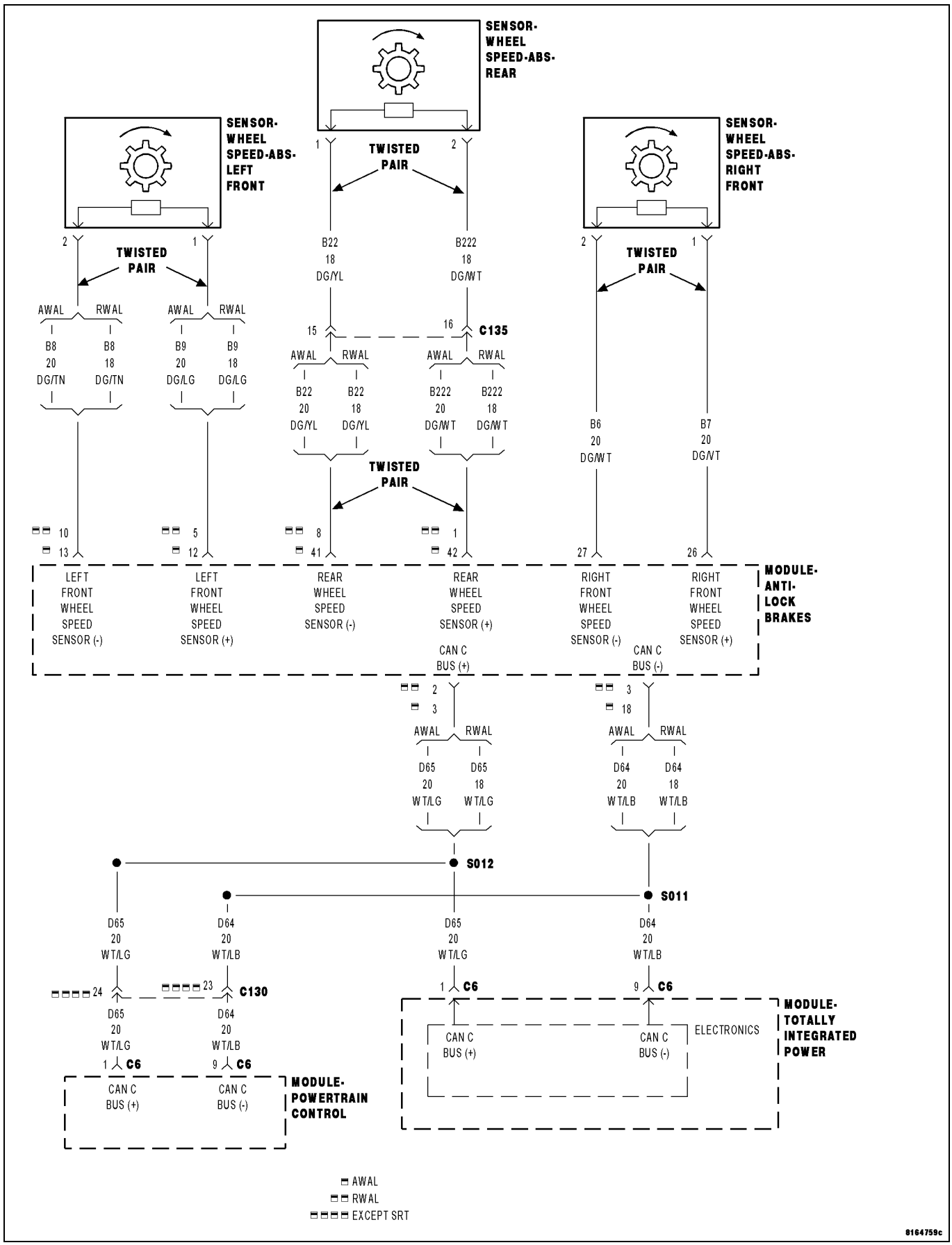

For a complete wiring diagram **Refer to the Wiring Information**.

Theory of Operation

The vehicle speed sensor rationality is a continuous test that monitors the vehicle speed sensor for lack of activity. The rationality will not run if a limp-in exists for MAP, Throttle Position, and Engine Coolant Temperature. If vehicle speed sensor is below a minimum threshold for a period of time after the vehicle is operated at a sufficient load, a failure will be indicated.

- **When Monitored:**

  With ECT above -8° C (17.6° F), transmission not in park or neutral, brakes not applied, engine speed greater than 1500 rpm, MAP around 45 kPa (moderate engine load), and no ECT, MAP, TPS, ETC, or brake switch stuck DTCs present.
- **Set Condition:**

  The PCM receives no vehicle speed signal for 1 minute. Two Trip Fault. Three good trips to turn off the MIL.

Possible Causes
ACTIVE BUS OR COMMUNICATION DTCS
TIRE CIRCUMFERENCE
POWERTRAIN CONTROL MODULE (PCM)

Always perform the Pre-Diagnostic Troubleshooting procedure before proceeding. (Refer to 28 - DTC-Based Diagnostics/MODULE, Powertrain Control (PCM) - Standard Procedure).

1. ACTIVE DTC

1. Ignition on, engine not running.
2. With a scan tool, select View DTCs.

NOTE: Check for any Bus Communication DTCs. If no Bus or Communication DTCs are set, check for active DTCs stored in the Anti-Lock Brake Module. Any bus or communication DTCs or VSS DTCs in the Anti-Lock Brake Module must be properly diagnosed before continuing.

3. Start the engine.
4. Allow the engine to reach normal operating temperature.
5. With a scan tool, select View DTCs.

NOTE: It may be necessary to drive the vehicle to meet the conditions to set this DTC, try to repeat the conditions in which the fault originally set by reviewing the Freeze Frame data.

Is the DTC Active or Pending at this time?

Yes

- Go To 2

No

- Refer to the INTERMITTENT CONDITION Diagnostic Procedure. (Refer to 28 - DTC-Based Diagnostics/MODULE, Powertrain Control (PCM) - Standard Procedure)

2. VISUAL INSPECTION

NOTE: This code can set due to tire circumference differences and from the front or rear wheels being on a slippery surface while the opposite tires are not.

1. This code may also set on a hard acceleration on loose gravel or during other off road driving conditions.
2. Check tire pressure of all the tires.
3. Check tire wear on all the tires.
4. Ask the customer what the road and driving conditions were like when the fault set.

Were any problems found?

Yes

- Repair as necessary. If the code set during a front OR rear wheel spin condition, no repair is necessary.
- Perform the POWERTRAIN VERIFICATION TEST. (Refer to 28 - DTC-Based Diagnostics/MODULE, Powertrain Control (PCM) - Standard Procedure)

No

- Go To 3

3. POWERTRAIN CONTROL MODULE (PCM)

1. Using the wiring diagram/schematic as a guide, inspect the wiring and connectors between the Wheel Speed Sensors and the Powertrain Control Module (PCM).
2. Look for any chafed, pierced, pinched, or partially broken wires.
3. Look for broken, bent, pushed out or corroded terminals. Verify that there is good pin to terminal contact in the Wheel Speed Sensor and the Powertrain Control Module connectors.
4. Refer to any Technical Service Bulletins that may apply.

Were there any problems found?

Yes

- Repair as necessary.
- Perform the POWERTRAIN VERIFICATION TEST. (Refer to 28 - DTC-Based Diagnostics/MODULE, Powertrain Control (PCM) - Standard Procedure)

No

- Replace and program the Powertrain Control Module per Service Information.
- Perform the POWERTRAIN VERIFICATION TEST. (Refer to 28 - DTC-Based Diagnostics/MODULE, Powertrain Control (PCM) - Standard Procedure)

P0503-VEHICLE SPEED SENSOR 1 ERRATIC

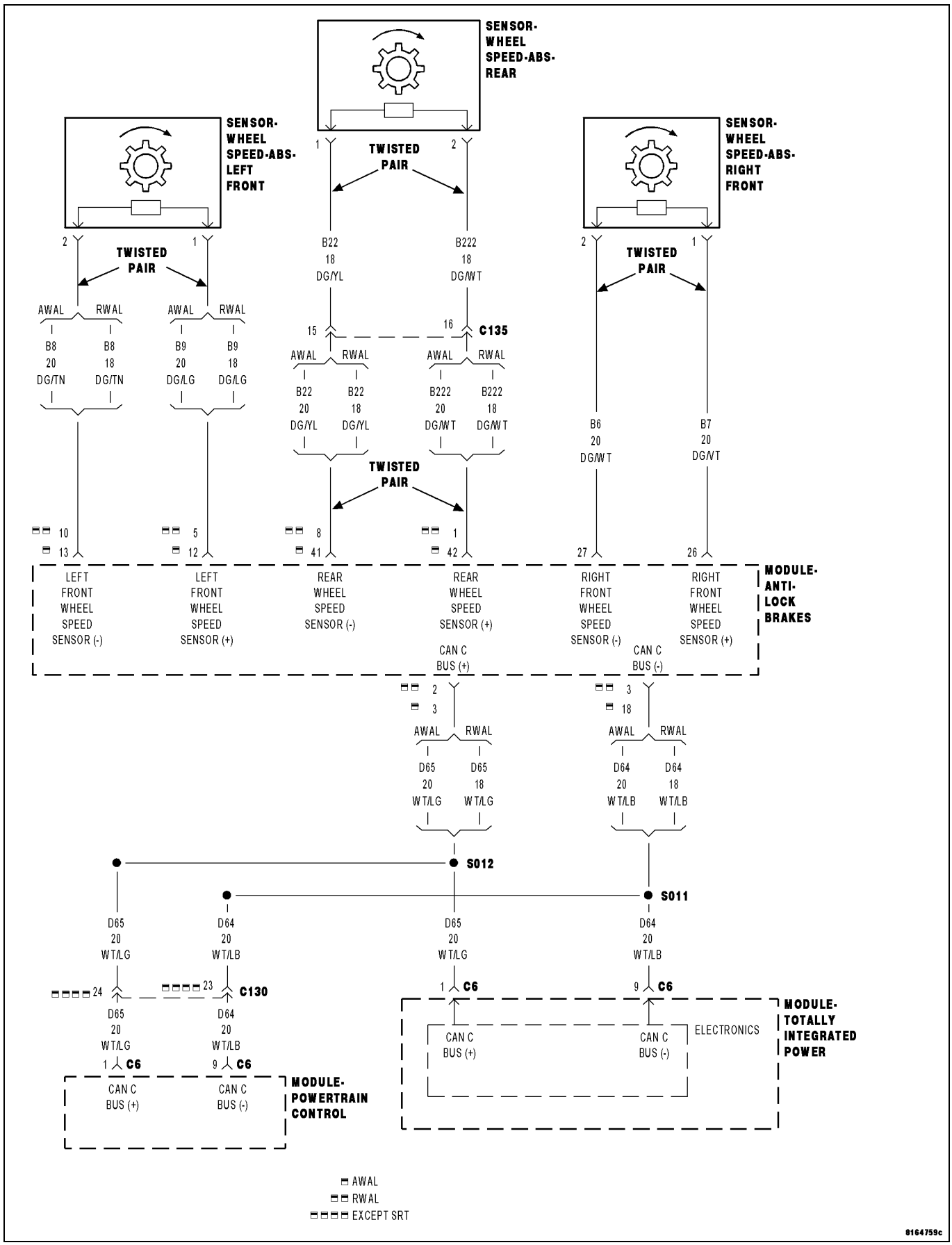

For a complete wiring diagram **Refer to the Wiring Information**.

Theory of Operation

The vehicle speed sensor rationality is a continuous test that monitors the vehicle speed sensor for lack of activity. The rationality will not run if a limp-in exists for MAP, Throttle Position, and Engine Coolant Temperature. If vehicle speed sensor is below a minimum threshold for a period of time after the vehicle is operated at a sufficient load, a failure will be indicated.

- **When Monitored:**
  Ignition on and battery voltage greater than 10 volts. Transmission in Drive or Reverse.
- **Set Condition:**
  This code will set if no vehicle speed signal is received from the ABS Module up to 120 seconds for 2 consecutive trips. One Trip Fault. Three good trips to turn off the MIL.

Possible Causes
ACTIVE BUS OR COMMUNICATION DTCS
TIRE CIRCUMFERENCE
POWERTRAIN CONTROL MODULE (PCM)

Always perform the Pre-Diagnostic Troubleshooting procedure before proceeding. (Refer to 28 - DTC-Based Diagnostics/MODULE, Powertrain Control (PCM) - Standard Procedure).

1. ACTIVE DTC

1. Ignition on, engine not running.
2. With a scan tool, select View DTCs and record the related Freeze Frame data.

NOTE: Check for any Bus Communication DTCs. If no Bus or Communication DTCs are set, check for active DTCs stored in the Anti-Lock Brake Module. Any bus or communication DTCs or VSS DTCs in the Anti-Lock Brake Module must be properly diagnosed before continuing.

3. Start the engine.
4. Allow the engine to idle.
5. With a scan tool, select View DTCs.

Is the status Active or Pending for this DTC?

Yes

- Go To 2

No

- Refer to the INTERMITTENT CONDITION Diagnostic Procedure. (Refer to 28 - DTC-Based Diagnostics/MODULE, Powertrain Control (PCM) - Standard Procedure)

2. VISUAL INSPECTION

NOTE: This code can set due to tire circumference differences and from the front or rear wheels being on a slippery surface while the opposite tires are not.

1. This code may also set on a hard acceleration on loose gravel or during other off road driving conditions.
2. Check tire pressure of all the tires.
3. Check tire wear on all the tires.
4. Ask the customer what the road and driving conditions were like when the fault set.

Were any problems found?

Yes

- Repair as necessary. If the code set during a front OR rear wheel spin condition, no repair is necessary.
- Perform the POWERTRAIN VERIFICATION TEST. (Refer to 28 - DTC-Based Diagnostics/MODULE, Powertrain Control (PCM) - Standard Procedure)

No

- Go To 3

3. POWERTRAIN CONTROL MODULE (PCM)

1. Using the wiring diagram/schematic as a guide, inspect the wiring and connectors between the Wheel Speed Sensors and the Powertrain Control Module (PCM).
2. Look for any chafed, pierced, pinched, or partially broken wires.
3. Look for broken, bent, pushed out or corroded terminals. Verify that there is good pin to terminal contact in the Wheel Speed Sensor and the Powertrain Control Module connectors.
4. Refer to any Technical Service Bulletins that may apply.

Were there any problems found?

Yes

- Repair as necessary.
- Perform the POWERTRAIN VERIFICATION TEST. (Refer to 28 - DTC-Based Diagnostics/MODULE, Powertrain Control (PCM) - Standard Procedure)

No

- Replace and program the Powertrain Control Module per Service Information.
- Perform the POWERTRAIN VERIFICATION TEST. (Refer to 28 - DTC-Based Diagnostics/MODULE, Powertrain Control (PCM) - Standard Procedure)

■ P0506-IDLE SPEED PERFORMANCE LOWER THAN EXCEPTED

For a complete wiring diagram, **refer to the Wiring Information**.

Theory of Operation

The objective of the Idle Speed Rationality is to monitor the ability to achieve and maintain a steady idle condition. The monitor will judge the functionality of the idle speed control system by monitoring RPM during idle. If RPM does not come within a calibrated deadband of target idle speed, a timer is started. If the timer reaches its maximum threshold without any sign of the RPM trending towards control, a soft failure is generated.

- **When Monitored:**
  With the engine idling in drive, the brake applied, engine run time above a minimum calibrated value, and no VSS, MAF/MAP, ECT, TPS, ETC, CKP Sensor, fuel system, or injector DTCs present.
- **Set Condition:**
  Engine speed is 100 RPM or more below target idle speed for 30 seconds. Two Trip Fault. Three good trips to turn off the MIL.

Possible Causes
AIR INDUCTION SYSTEM RESTRICTIONS
PCV SYSTEM RESTRICTIONS
THROTTLE BODY
POWERTRAIN CONTROL MODULE (PCM)

Always perform the Pre-Diagnostic Troubleshooting procedure before proceeding. (Refer to 28 - DTC-Based Diagnostics/MODULE, Powertrain Control (PCM) - Standard Procedure).

1. ACTIVE DTC

NOTE: If any other Throttle Body DTCs are present, they must be diagnosed and repaired before continuing this test.

1. Start the engine.
2. Allow the engine to reach normal operating temperature.

WARNING: When the engine is operating, do not stand in direct line with the fan. Do not put your hands near the pulleys, belts or fan. Do not wear loose clothing. Failure to follow these instructions may result in possible serious or fatal injury.

3. With a scan tool, select View DTCs.

NOTE: It may be necessary to drive the vehicle to meet the conditions to set this DTC, try to repeat the conditions in which the fault originally set by reviewing the Freeze Frame data.

Is the DTC Active or Pending at this time?

Yes

- Go To 2

No

- Refer to the INTERMITTENT CONDITION Diagnostic Procedure.(Refer to 28 - DTC-Based Diagnostics/MODULE, Powertrain Control (PCM) - Standard Procedure)

2. AIR INDUCTION SYSTEM

1. Inspect the Air Induction System for the following problems:
2. Restrictions: Dirty Air Cleaner, Foreign material trapped in the air intake tube, etc.

Were any problems found?

Yes

- Repair or replace as necessary.
- Perform the POWERTRAIN VERIFICATION TEST.(Refer to 28 - DTC-Based Diagnostics/MODULE, Powertrain Control (PCM) - Standard Procedure)

No

- Go To 3

3. PCV SYSTEM

1. Inspect the PCV system for the following problems:
2. Restrictions - sticking valve, collapsed hoses or tubes, obstructed passages or ports, etc.

Were any problems found?

Yes

- Repair as necessary.
- Perform the POWERTRAIN VERIFICATION TEST.(Refer to 28 - DTC-Based Diagnostics/MODULE, Powertrain Control (PCM) - Standard Procedure)

No

- Go To 4

4. THROTTLE BODY OPERATION

1. Inspect the throttle body for carbon build up, other restrictions, and a bent throttle plate using a straight edge.

WARNING: When the engine is operating, do not stand in direct line with the fan. Do not put your hands near the pulleys, belts or fan. Do not wear loose clothing. Failure to follow these instructions may result in possible serious or fatal injury.

2. While the vehicle is running, lightly tap on ETC Motor with your hand and listen for idle to raise.

Were any problems found or did the idle fluctuate while tapping on the ETC Motor?

Yes

- Verify that there is good pin to terminal contact at the Throttle Body and the Powertrain Control Module connectors. Replace the Throttle Body Assembly if no problems were found in the connectors. Disconnect the Battery when replacing the Throttle Body Assembly. After installation is complete, use a scan tool and select the ETC RELEARN function.
- Perform the POWERTRAIN VERIFICATION TEST.(Refer to 28 - DTC-Based Diagnostics/MODULE, Powertrain Control (PCM) - Standard Procedure)

No

- Go To 5

5. POWERTRAIN CONTROL MODULE (PCM)

1. Using the wiring diagram/schematic as a guide, inspect the wiring and connectors between the Throttle Body and the Powertrain Control Module (PCM).
2. Look for any chafed, pierced, pinched, or partially broken wires.
3. Look for broken, bent, pushed out or corroded terminals. Verify that there is good pin to terminal contact in the Throttle Body and Powertrain Control Module connectors.
4. Refer to any Technical Service Bulletins that may apply.

Were there any problems found?

Yes

- Repair as necessary.
- Perform the POWERTRAIN VERIFICATION TEST.(Refer to 28 - DTC-Based Diagnostics/MODULE, Powertrain Control (PCM) - Standard Procedure)

No

- Replace and program the Powertrain Control Module per Service Information.
- Perform the POWERTRAIN VERIFICATION TEST.(Refer to 28 - DTC-Based Diagnostics/MODULE, Powertrain Control (PCM) - Standard Procedure)

■ P0507-IDLE SPEED PERFORMANCE HIGHER THAN EXCEPTED

For a complete wiring diagram **Refer to the Wiring Information**.

Theory of Operation

The objective of the Idle Speed Rationality is to monitor the ability to achieve and maintain a steady idle condition. The monitor will judge the functionality of the idle speed control system by monitoring RPM during idle. If RPM does not come within a calibrated deadband of target idle speed, a timer is started. If the timer reaches its maximum threshold without any sign of the RPM trending towards control, a soft failure is generated.

- **When Monitored:**

  With the engine idling in drive, the brake applied, engine run time above a minimum calibrated value, and no VSS, MAF/MAP, ECT, TPS, ETC, CKP Sensor, fuel system, or injector DTCs present.
- **Set Condition:**

  Engine speed is 200 RPM or more above target idle speed for 30 seconds. Two Trip Fault. Three good trips to turn off the MIL.

Possible Causes
AIR INDUCTION SYSTEM LEAKS
PCV SYSTEM LEAKS
ENGINE VACUUM LEAKS
THROTTLE BODY
POWERTRAIN CONTROL MODULE (PCM)

Always perform the Pre-Diagnostic Troubleshooting procedure before proceeding. (Refer to 28 - DTC-Based Diagnostics/MODULE, Powertrain Control (PCM) - Standard Procedure).

1. ACTIVE DTC

NOTE: If any other Throttle Body DTCs are present, they must be diagnosed and repaired before continuing this test.

1. Start the engine.

WARNING: When the engine is operating, do not stand in direct line with the fan. Do not put your hands near the pulleys, belts or fan. Do not wear loose clothing. Failure to follow these instructions may result in possible serious or fatal injury.

2. Allow the engine to reach normal operating temperature.
3. With a scan tool, select View DTCs.

NOTE: It may be necessary to drive the vehicle to meet the conditions to set this DTC, try to repeat the conditions in which the fault originally set by reviewing the Freeze Frame data.

Is the DTC Active or Pending at this time?

Yes

- Go To 2

No

- Refer to the INTERMITTENT CONDITION Diagnostic Procedure.(Refer to 28 - DTC-Based Diagnostics/MODULE, Powertrain Control (PCM) - Standard Procedure)

2. AIR INDUCTION SYSTEM

1. Inspect the Air Induction System for the following problems:
2. Leaks: Air Intake tube connection, Air Cleaner housing, etc.

Were any problems found?

Yes

- Repair or replace as necessary.
- Perform the POWERTRAIN VERIFICATION TEST.(Refer to 28 - DTC-Based Diagnostics/MODULE, Powertrain Control (PCM) - Standard Procedure)

No

- Go To 3

3. PCV SYSTEM

1. Inspect the PCV system for the following problems:
2. Leaks - cracked or damaged hoses or tubes, poor hose or tube connections, PCV valve stuck open, etc.

Were any problems found?

Yes

- Repair as necessary.
- Perform the POWERTRAIN VERIFICATION TEST.(Refer to 28 - DTC-Based Diagnostics/MODULE, Powertrain Control (PCM) - Standard Procedure)

No

- Go To 4

4. ENGINE VACUUM LEAKS

WARNING: When the engine is operating, do not stand in direct line with the fan. Do not put your hands near the pulleys, belts or fan. Do not wear loose clothing. Failure to follow these instructions may result in possible serious or fatal injury.

1. Start the engine.
2. Inspect the vehicle for external vacuum leaks.
3. Inspect the engine for internal leaks.

Were any vacuum leaks found?

Yes

- Repair the vacuum leak as necessary.
- Perform the POWERTRAIN VERIFICATION TEST.(Refer to 28 - DTC-Based Diagnostics/MODULE, Powertrain Control (PCM) - Standard Procedure)

No

- Go To 5

5. THROTTLE BODY OPERATION

1. Inspect the throttle body for carbon build up, other restrictions, and a bent throttle plate using a straight edge.

WARNING: When the engine is operating, do not stand in direct line with the fan. Do not put your hands near the pulleys, belts or fan. Do not wear loose clothing. Failure to follow these instructions may result in possible serious or fatal injury.

2. While the vehicle is running, lightly tap on ETC Motor with your hand and listen for idle to raise.

Were any problems found or did the idle fluctuate while tapping on the ETC Motor?

Yes

- Verify that there is good pin to terminal contact at the Throttle Body and the Powertrain Control Module connectors. Replace the Throttle Body Assembly if no problems were found in the connectors. Disconnect the Battery when replacing the Throttle Body Assembly. After installation is complete, use a scan tool and select the ETC RELEARN function.
- Perform the POWERTRAIN VERIFICATION TEST.(Refer to 28 - DTC-Based Diagnostics/MODULE, Powertrain Control (PCM) - Standard Procedure)

No

- Go To 6

6. POWERTRAIN CONTROL MODULE (PCM)

1. Using the wiring diagram/schematic as a guide, inspect the wiring and connectors between the Throttle Body and the Powertrain Control Module (PCM).
2. Look for any chafed, pierced, pinched, or partially broken wires.
3. Look for broken, bent, pushed out or corroded terminals. Verify that there is good pin to terminal contact in the Throttle Body and Powertrain Control Module connectors.
4. Refer to any Technical Service Bulletins that may apply.

Were there any problems found?

Yes

- Repair as necessary.
- Perform the POWERTRAIN VERIFICATION TEST.(Refer to 28 - DTC-Based Diagnostics/MODULE, Powertrain Control (PCM) - Standard Procedure)

No

- Replace and program the Powertrain Control Module per Service Information.
- Perform the POWERTRAIN VERIFICATION TEST.(Refer to 28 - DTC-Based Diagnostics/MODULE, Powertrain Control (PCM) - Standard Procedure)

P050B-COLD START IGNITION TIMING PERFORMANCE

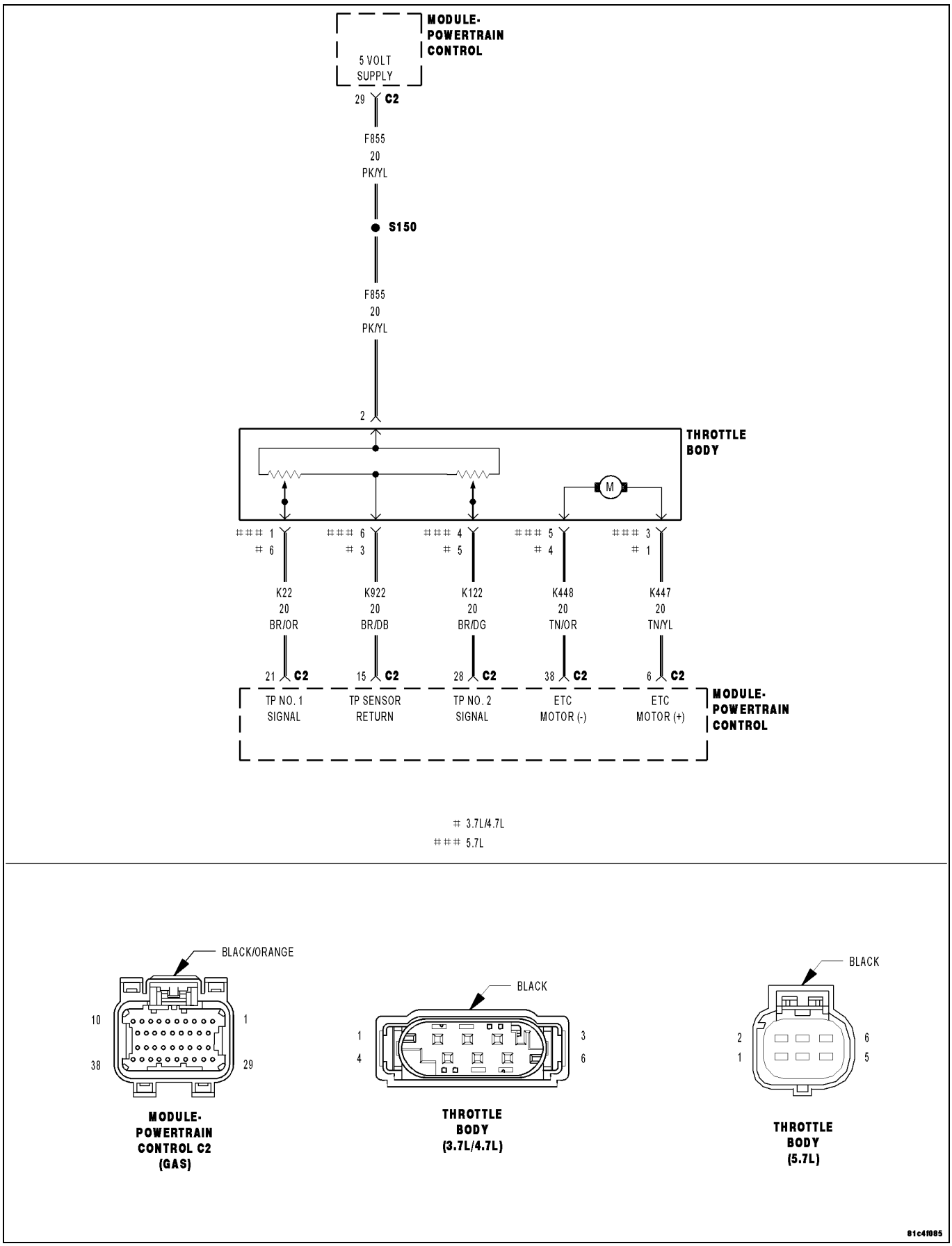

For a complete wiring diagram **Refer to the Wiring Information**.

Theory of Operation

Spark adjustment during a cold start is intended to provide quick response to idle speed variations. The spark adjust diagnostics monitors spark advance on a cold start over a period of time, then compares the average spark advance to a threshold.

- **When Monitored:**

  Cold start condition. Ambient Air temperature between -7° C and 50° C (19.4° F and 122° F). Engine Coolant temperature between -7° C and 50° C (19.4° F and 122° F). The difference between the Ambient Air temp and ECT temp at Start is equal to or less than 10° C (50° F). Engine running at idle only.

- **Set Condition:**

  Engine RPM is 50 RPM or more (depending on vehicle specifications), below idle speed for at least 3 seconds and the average spark advance is above the threshold, too much spark advance, for a specified time limit. Two trip fault. Three good trips to turn off the MIL.

Possible Causes
RESTRICTED INTAKE AIR SYSTEM
LOW BATTERY VOLTAGE
FUEL CONTAMINATION
EXCESSIVE RESISTANCE IN THE (K447) ETC POSITIVE CIRCUIT
EXCESSIVE RESISTANCE IN THE (K448) ETC NEGATIVE CIRCUIT
ETC MOTOR/THROTTLE BODY
POWERTRAIN CONTROL MODULE (PCM)

Always perform the Pre-Diagnostic Troubleshooting procedure before proceeding. (Refer to 28 - DTC-Based Diagnostics/MODULE, Powertrain Control (PCM) - Standard Procedure).

1. ACTIVE DTC

1. Ignition on, engine not running.

NOTE: Low battery voltage can also cause excessive current draw, in very hot and very cold ambient temperatures. Make sure the battery can pass a load test before continuing.

2. Start the engine.
3. Allow the engine to reach normal operating temperature.
4. With a scan tool, select View DTCs.

NOTE: It may be necessary to drive the vehicle to meet the conditions to set this DTC, try to repeat the conditions in which the fault originally set by reviewing the Freeze Frame data.

Is the DTC Active or Pending at this time?

Yes

- Go To 2

No

- Refer to the INTERMITTENT CONDITION Diagnostic Procedure. (Refer to 28 - DTC-Based Diagnostics/MODULE, Powertrain Control (PCM) - Standard Procedure)

2. THROTTLE PLATE INSPECTION

1. Turn the ignition off.
2. Remove the Air Cleaner Assembly from the Throttle Body.
3. Check for any signs of a foreign material (ice, dirt, or excessive carbon build up) on the Throttle Plate or in the bore causing the Throttle Plate to stick.

Were any signs of foreign material or scoring of the throttle plate or bore found?

Yes

- Remove the debris if possible or replace the Throttle Body Assembly. Disconnect the Battery when replacing the Throttle Body Assembly. After installation is complete, use a scan tool and select the ETC RELEARN function.
- Perform the POWERTRAIN VERIFICATION TEST. (Refer to 28 - DTC-Based Diagnostics/MODULE, Powertrain Control (PCM) - Standard Procedure)

No

- Go To 3

3. DIRTY AIR FILTER

1. Remove and inspect the Air Filter.

Is the Air Filter dirty?

Yes

- Replace the Air Filter.
- Perform the POWERTRAIN VERIFICATION TEST. (Refer to 28 - DTC-Based Diagnostics/MODULE, Powertrain Control (PCM) - Standard Procedure)

No

- Go To 4

4. CONTAMINATED FUEL

1. Inspect the Fuel for contamination. (Dirt, water, or other foreign material)

Is the fuel contaminated?

Yes

- Drain the Fuel from the fuel tank into an approved gas holding tank and add clean fuel. (Refer to 14 - Fuel System/ Fuel Delivery - Standard Procedure)

No

- Go To 5

5. EXCESSIVE RESISTANCE IN THE (K447) ETC POSITIVE CIRCUIT

1. Turn the ignition off.
2. Disconnect the C2 harness connector.

CAUTION: Do not probe the PCM harness connectors. Probing the PCM harness connectors will damage the PCM terminals resulting in poor terminal to pin connection. Install the PCM Pinout Box Kit, NGC, 38 Position 8815A along with the Adapter PCM Pinout Box Adapter 8815-1to perform the diagnosis.

3. Using a voltmeter perform a voltage drop test. Backprobe the (K447) ETC Positive circuit at the Throttle Body harness connector and probe the appropriate terminal of the special tool #8815A. Make sure the voltmeter leads are connected so a positive polarity is displayed on the voltmeter.

WARNING: When the engine is operating, do not stand in direct line with the fan. Do not put your hands near the pulleys, belts or fan. Do not wear loose clothing. Failure to follow these instructions may result in possible serious or fatal injury.

4. Start the engine and allow it to reach normal operating temperature.
5. Monitor the voltmeter.

Is the voltage below 0.5 of a volt?

Yes

- Go To 6

No

- Repair the excessive resistance in the (K447) ETC Positive circuit.
- Perform the POWERTRAIN VERIFICATION TEST. (Refer to 28 - DTC-Based Diagnostics/MODULE, Powertrain Control (PCM) - Standard Procedure)

6. EXCESSIVE RESISTANCE IN THE (K448) ETC NEGATIVE CIRCUIT

1. Turn the ignition off.
2. Move the voltmeter leads to backprobe the (K448) ETC Negative circuit at the Throttle Body harness connector and to probe the appropriate terminal of the special tool #8815A. Make sure the voltmeter leads are connected so a positive polarity is displayed on the voltmeter.

WARNING: When the engine is operating, do not stand in direct line with the fan. Do not put your hands near the pulleys, belts or fan. Do not wear loose clothing. Failure to follow these instructions may result in possible serious or fatal injury.

3. Start the engine and allow it to reach normal operating temperature.
4. Monitor the voltmeter.

Is the voltage below 0.5 of a volt?

Yes

- Go To 7

No

- Repair the excessive resistance in the (K448) ETC Negative circuit.
- Perform the POWERTRAIN VERIFICATION TEST. (Refer to 28 - DTC-Based Diagnostics/MODULE, Powertrain Control (PCM) - Standard Procedure)

7. ETC MOTOR

1. Turn the ignition off.

NOTE: Take the following measurement using special tool #8815A **to avoid possible damage to the Throttle Body harness connector.**

2. Connect the Throttle Body harness connector.
3. Disconnect special tool #8815-1 from the C2 PCM harness connector.
4. Measure the resistance of the ETC Motor by probing the appropriate terminals of special tool #8815A for the (K447) ETC Positive circuit and the (K448) ETC Negative circuit.

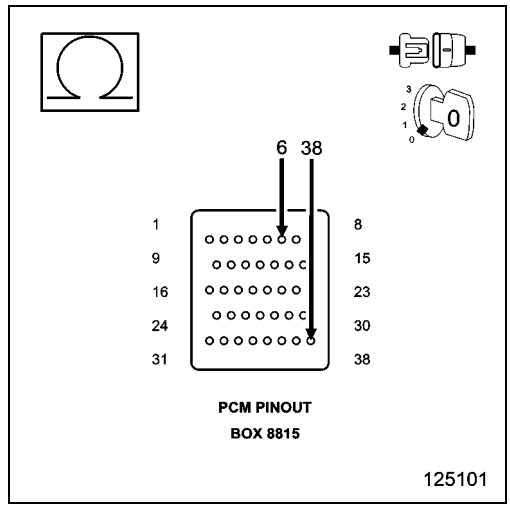

Is the resistance between 2.5 and 25 ohms at closed throttle?

Yes

- Go To 8

No

- Verify that there is good pin to terminal contact at the Throttle Body and the Powertrain Control Module connectors. Replace the Throttle Body Assembly if no problems were found in the connectors. Disconnect the Battery when replacing the Throttle Body Assembly. After installation is complete, use a scan tool and select the ETC RELEARN function.
- Perform the POWERTRAIN VERIFICATION TEST. (Refer to 28 - DTC-Based Diagnostics/MODULE, Powertrain Control (PCM) - Standard Procedure)

8. POWERTRAIN CONTROL MODULE (PCM)

1. Using the wiring diagram/schematic as a guide, inspect the wiring and connectors between the Throttle Body and the Powertrain Control Module (PCM).
2. Look for any chafed, pierced, pinched, or partially broken wires.
3. Look for broken, bent, pushed out or corroded terminals. Verify that there is good pin to terminal contact in the Throttle Body and the Powertrain Control Module connectors.
4. Refer to any Technical Service Bulletins that may apply.

Were there any problems found?

Yes

- Repair as necessary.
- Perform the POWERTRAIN VERIFICATION TEST. (Refer to 28 - DTC-Based Diagnostics/MODULE, Powertrain Control (PCM) - Standard Procedure)

No

- Replace and program the Powertrain Control Module per Service Information.
- Perform the POWERTRAIN VERIFICATION TEST. (Refer to 28 - DTC-Based Diagnostics/MODULE, Powertrain Control (PCM) - Standard Procedure)

■ P050D-COLD START ROUGH IDLE

For a complete wiring diagram, **refer to the Wiring Information**.

Theory of Operation

The objective of the Dynamic Crankshaft Fuel Control (DCFC) is to reduce the fuel as much as possible during a cold start. The Dynamic Crankshaft Fuel Control (DCFC) begins subtracting fuel from a high limit upon a cold start and keeps removing fuel in an attempt to get to a calibrated lean limit. DCFC stops removing fuel when rough idle is detected or the lean limit is reached.

- **When Monitored:**

  Cold start condition. Ambient Air temperature between -7° C and 50° C (19.4° F and 122° F). Engine Coolant temperature between -7° C and 50° C (19.4° F and 122° F). The difference between the Ambient Air temp and ECT temp at Start is equal to or less than 10° C (50° F). Engine running at idle only.

- **Set Condition:**

  If a rough idle is detected and the Dynamic Crankshaft Fuel Control remains or returns to the high limit window for a calibrated time. Two trip fault.

Possible Causes
ENGINE MECHANICAL PROBLEM
1/1 O2 SENSOR
MAP SENSOR
ECT SENSOR
IGNITION COIL
SPARK PLUG
FUEL INJECTOR
INTERNAL FUEL LEAK
FUEL DELIVERY SYSTEM
POWERTRAIN CONTROL MODULE (PCM)

1. CHECKING FOR CYLINDER MISFIRE CONDITION PRESENT

NOTE: Check for any TSBs that apply to a Misfire condition. Review the vehicle repair history for any misfire condition repairs that have been performed.

NOTE: Reviewing the vehicle repair history may aid in the repair of the misfire condition.

1. Start the engine.
2. Allow the engine to reach normal operating temperature.

WARNING: When the engine is operating, do not stand in direct line with the fan. Do not put your hands near the pulleys, belts or fan. Do not wear loose clothing. Failure to follow these instructions may result in possible serious or fatal injury.

3. With the scan tool, select View DTCs.

Is P0300 or any other Misfire DTCs set along with the P050D?

Yes

- Perform the appropriate Cylinder Misfire diagnostic procedure.

No

- Go To 2

2. ACTIVE DTC

NOTE: Check for contaminants that may have damaged an O2 Sensor: contaminated fuel, unapproved silicone, oil and coolant.

NOTE: Diagnose and repair any other DTCs before continuing with this test.

1. Start the engine.
2. Allow the engine to reach normal operating temperature.
3. With the scan tool, select View DTCs.

NOTE: It may be necessary to drive the vehicle to meet the conditions to set this DTC, try to repeat the conditions in which the fault originally set by reviewing the Freeze Frame data.

Is the DTC Active or Pending at this time?

Yes

- Go To 3

No

- Perform the INTERMITTENT CONDITION diagnostic procedure. (Refer to 28 - DTC-Based Diagnostics/MODULE, Powertrain Control (PCM) - Standard Procedure).

3. CHECKING THE FUEL DELIVERY SYSTEM

1. (Refer to 29 - Non-DTC Diagnostics/Drivability - Gas - Diagnosis and Testing) and perform the diagnostic procedure for Checking the Fuel Delivery System.

Were any problems found?

Yes

- Repair as necessary in accordance with the Service Information.
- Perform the POWERTRAIN VERIFICATION TEST. (Refer to 28 - DTC-Based Diagnostics/MODULE, Powertrain Control (PCM) - Standard Procedure).

No

- Go To 4

4. O2 SENSOR OPERATION

1. Start the engine.
2. Allow the engine to reach normal operating temperature.

NOTE: If one of the O2 Sensor's Signal or Return circuit is shorted to ground the scan tool will display all O2 Sensor voltage readings low. The O2 Sensor that is shorted to ground will display a voltage reading near or at 0 Volts.

NOTE: If one of the O2 Sensor Signal or Return circuits are shorted to voltage, the scan tool will display all O2 Sensor voltage readings high.

NOTE: After the repairs have been made, verify proper O2 Sensor operation. If all the O2 Sensor voltage readings have not returned to normal, follow the diagnostic procedure for the remaining O2 Sensors.

3. With the scan tool, monitor all of the O2 Sensor voltage readings.

Is the voltage switching between 2.5 and 3.4 Volts for all the O2 Sensors?

Yes

- Go To 5

No

- Go To 9

5. 1/1 O2 SENSOR HEATER OPERATION

1. Turn the ignition off.

NOTE: Wait a minimum of 10 minutes to allow the O2 Sensor to cool down before continuing the test. Allow the O2 Sensor voltage to stabilize at 5.0 Volts.

2. Ignition on, engine not running.
3. With the scan tool, actuate the 1/1 O2 Heater Test.

NOTE: The DTC needs to be cleared before actuating the Heater Test, if the DTC is not cleared, the Heater Test may not be allowed to actuate.

4. With the scan tool, monitor 1/1 O2 Sensor voltage for at least 2 minutes.

Does the voltage stay above 4.5 Volts?

Yes

- Verify that there is good pin to terminal contact in the 1/1 O2 Sensor and the Powertrain Control Module connectors. Replace the 1/1 O2 Sensor if no problems were found in the connectors.
- Perform the POWERTRAIN VERIFICATION TEST. (Refer to 28 - DTC-Based Diagnostics/MODULE, Powertrain Control (PCM) - Standard Procedure).

No

- Go To 6

6. MAP SENSOR OPERATION

1. Turn the ignition off.
2. Connect a Vacuum Gauge to a Manifold Vacuum source.
3. Start the engine.
4. Allow the engine to idle.

NOTE: If engine will not idle, maintain a constant RPM above idle.

5. With the scan tool, read the MAP Sensor vacuum value.

Is the scan tool reading within 1" of Hg on the Vacuum Gauge reading?

Yes

- Go To 7

No

- Verify that there is good pin to terminal contact in the MAP Sensor and the Powertrain Control Module connectors. Replace the MAP Sensor if no problems were found in the connectors.
- Perform the POWERTRAIN VERIFICATION TEST. (Refer to 28 - DTC-Based Diagnostics/MODULE, Powertrain Control (PCM) - Standard Procedure).

7. ECT SENSOR OPERATION

NOTE: For this test to be valid, the thermostat must be operating correctly.

NOTE: This test works best if performed on a cold engine (cold soak)

1. Ignition on, engine not running.
2. With the scan tool, read the Engine Coolant Temperature (ECT) Sensor value. If the engine was allowed to sit overnight (cold soak), the temperature value should be a sensible value that is somewhere close to the ambient temperature.

NOTE: If engine coolant temperature is above 82° C (180° F), allow the engine to cool until 65° C (150° F) is reached.

3. Start the Engine.
4. During engine warm-up, monitor the ECT Sensor value. The temperature value change should be a smooth transition from start up to normal operating temperature 82° C (180° F). The value should reach at least 82° C (180° F).

Did the ECT value increase smoothly and did it reach at least 82° C (180° F)?

Yes

- Go To 8

No

- Verify that there is good pin to terminal contact in the ETC Sensor and the Powertrain Control Module connectors. Replace the Engine Coolant Temperature Sensor if no problems were found in the connectors.
- Perform the POWERTRAIN VERIFICATION TEST. (Refer to 28 - DTC-Based Diagnostics/MODULE, Powertrain Control (PCM) - Standard Procedure).

8. ENGINE MECHANICAL PROBLEM

1. Turn the ignition off.
2. Check for any of the following conditions/mechanical problems:
   - AIR INDUCTION SYSTEM - must be free from leaks.
   - ENGINE VACUUM - must be at least 13 inches in neutral
   - ENGINE VALVE TIMING - must be within specifications
   - ENGINE COMPRESSION - must be within specifications
   - ENGINE EXHAUST SYSTEM - must be free of any restrictions or leaks.
   - ENGINE PCV SYSTEM - must flow freely
   - TORQUE CONVERTER STALL SPEED - must be within specifications
   - POWER BRAKE BOOSTER - no internal vacuum leaks
   - FUEL - must be free of contamination
   - FUEL INJECTOR - plugged or restricted injector; control wire not connected to correct injector

Are there any engine mechanical problems?

Yes

- Repair as necessary.
- Perform the POWERTRAIN VERIFICATION TEST. (Refer to 28 - DTC-Based Diagnostics/MODULE, Powertrain Control (PCM) - Standard Procedure).

No

- Go To 12

9. 1/1 O2 SENSOR

1. Turn the ignition off.
2. Disconnect the 1/1 O2 Sensor harness connector.
3. Ignition on, engine not running.
4. With the scan tool, monitor the 1/1 O2 Sensor voltage.
5. O2 Sensor voltage should read between 4.1 and 5.0 Volts on the scan tool with the connector disconnected.
6. Connect a jumper wire between the (K41) O2 1/1 Signal circuit and the (K902) O2 Return Upstream circuit in the O2 Sensor harness connector.

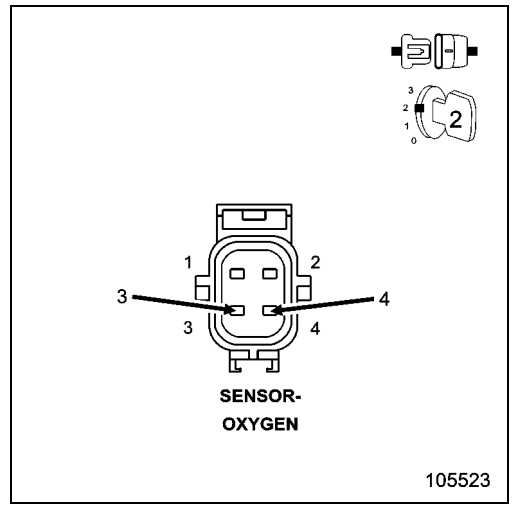

NOTE: The voltage should drop from between 4.1 and 5.0 Volts to 2.5 Volts with the jumper wire in place.

Did the O2 Sensor voltage change from between 4.1 and 5.0 Volts to 2.5 Volts with the jumper wire installed?

Yes

- Verify that there is good pin to terminal contact in the related Sensors and the Powertrain Control Module connectors. Replace the 1/1 O2 Sensor.
- Perform the POWERTRAIN VERIFICATION TEST. (Refer to 28 - DTC-Based Diagnostics/MODULE, Powertrain Control (PCM) - Standard Procedure).

No

- Go To 10

NOTE: Remove the jumper wire before continuing.

10. (K41) O2 SENSOR 1/1 SIGNAL CIRCUIT

1. With the scan tool, monitor the 1/1 O2 Sensor voltage reading with the jumper wire removed.

NOTE: The scan tool will display all O2 Sensor voltage readings approximately 5.0 Volts when only one O2 Sensor's Signal circuit is shorted to voltage.

NOTE: The scan tool will display one O2 Sensor voltage close to zero and the others will read lower than normal when one O2 Sensor Signal circuit contains excessive resistance.

Is the voltage between 4.1 and 5.0 Volts?

Yes

- Go To 11

No

- Check the (K41) O2 Sensor 1/1 Signal circuit for a short to ground, open or short to voltage. Inspect the O2 Sensor connector and the PCM harness connector. If OK, replace and program the Powertrain Control Module in accordance with the Service Information.
- Perform the POWERTRAIN VERIFICATION TEST. (Refer to 28 - DTC-Based Diagnostics/MODULE, Powertrain Control (PCM) - Standard Procedure).

11. (K902) O2 RETURN UPSTREAM CIRCUIT

1. Measure the voltage on the (K902) O2 Return Upstream circuit in the O2 Sensor harness connector.

Is the voltage at 2.5 Volts?

Yes

- Go To 12

No

- Check the O2 Return circuit for a short to ground, open or short to voltage. Inspect the O2 Sensor connector and the PCM harness connector. If OK, replace and program the Powertrain Control Module in accordance with the Service Information.
- Perform the POWERTRAIN VERIFICATION TEST. (Refer to 28 - DTC-Based Diagnostics/MODULE, Powertrain Control (PCM) - Standard Procedure).

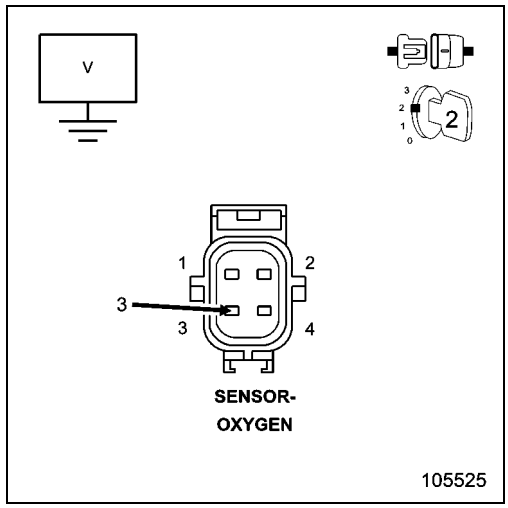

12. POWERTRAIN CONTROL MODULE (PCM)

1. Using the wiring diagram/schematic as a guide, inspect the wiring and connectors between the related Sensors and the Powertrain Control Module (PCM).
2. Look for any chafed, pierced, pinched or partially broken wires.
3. Look for broken, bent, pushed out or corroded terminals. Verify that there is good pin to terminal contact in the related Sensors and the Powertrain Control Module connectors.
4. Perform any Technical Service Bulletins that may apply.

Were there any problems found?

Yes

- Repair as necessary.
- Perform the POWERTRAIN VERIFICATION TEST. (Refer to 28 - DTC-Based Diagnostics/MODULE, Powertrain Control (PCM) - Standard Procedure).

No

- Replace and program the Powertrain Control Module in accordance with the Service Information.
- Perform the POWERTRAIN VERIFICATION TEST. (Refer to 28 - DTC-Based Diagnostics/MODULE, Powertrain Control (PCM) - Standard Procedure).

P0513-INVALID SKIM KEY

For a complete wiring diagram, **refer to the Wiring Information**.

- **When Monitored:**
  Ignition on.
- **Set Condition:**
  The Powertrain Control Module (PCM) detects an invalid ignition key. One Trip Fault.

Possible Causes
INCORRECT VIN PROGRAMMED IN THE PCM
NO COMMUNICATION WITH WIRELESS IGNITION NODE (WIN)
INCORRECT VIN PROGRAMMED IN THE PCM
IGNITION KEY
WIRELESS IGNITION NODE (WIN)
POWERTRAIN CONTROL MODULE (PCM)

Always perform the Pre-Diagnostic Troubleshooting procedure before proceeding. (Refer to 28 - DTC-Based Diagnostics/MODULE, Powertrain Control (PCM) - Standard Procedure).

1. ACTIVE DTC

1. Attempt to start the vehicle.

WARNING: When the engine is operating, do not stand in direct line with the fan. Do not put your hand near the pulleys, belts, or fan. Do not wear loose clothing. Failure to follow these instructions can result in possible serious or fatal injury.

2. Using the scan tool, select View DTCs.

Is the status Active for this DTC?

Yes

- Go To 2

No

- Go To 7

2. NO COMMUNICATION WITH WIN

NOTE: For vehicle communication problems, use the scan tool to refer to the Network Review Screen. The screen depicts a high level view of the vehicle network. Fault and problem areas appear in red. Selecting any of the network components allows access to the source of the problem.

1. Using the scan tool, attempt to communicate with the WIN.

Can the scan tool communicate with the WIN?

Yes

- Go To 3

No

- (Refer to 29 - Non-DTC Diagnostics/Communication - Diagnosis and Testing) and perform the No Response from WIN diagnostic procedure.

3. TROUBLE CODES SET IN THE WIN

1. Using the scan tool, check for WIN DTCs.

Are any DTCs present in the WIN ?

Yes

- (Refer to 28 - DTC-Based Diagnostics/NODE, Wireless Ignition (WIN) - Diagnosis and Testing) and perform the appropriate diagnostic procedure.
- Perform the PCM VERIFICATION TEST. (Refer to 28 - DTC-Based Diagnostics/MODULE, Powertrain Control (PCM) - Standard Procedure).

No

- Go To 4

4. VIN PROGRAMMED INTO PCM

1. Using the scan tool, display the VIN that is programmed in the PCM.

Has the correct VIN been programmed into the PCM?

Yes

- Go To 5

No

- Program the correct VIN into the PCM and retest.
- Perform the POWERTRAIN VERIFICATION TEST. (Refer to 28 - DTC-Based Diagnostics/MODULE, Powertrain Control (PCM) - Standard Procedure).

5. WIRELESS IGNITION NODE (WIN)

1. Turn the ignition off.
2. Replace and program the WIN in accordance with the Service Information.
3. Turn the ignition on.
4. Using the scan tool, erase all WIN and PCM DTCs.
5. Attempt to start the engine.
6. Using the scan tool, select View DTCs.

Is the status Active for this DTC?

Yes

- Go To 6

No

- Test complete.

6. POWERTRAIN CONTROL MODULE (PCM)

1. Using the wiring diagram/schematic as a guide, inspect the wiring and connectors between the WIN and the PCM.
2. Look for any chafed, pierced, pinched or partially broken wires.
3. Look for broken, bent, pushed out or corroded terminals.
4. Refer to any Technical Service Bulletins that may apply.

Were any problems found?

Yes

- Repair as necessary.
- Perform the POWERTRAIN VERIFICATION TEST. (Refer to 28 - DTC-Based Diagnostics/MODULE, Powertrain Control (PCM) - Standard Procedure).

No

- Replace and program the Powertrain Control Module (PCM) in accordance with the Service Information.
- Perform the POWERTRAIN VERIFICATION TEST. (Refer to 28 - DTC-Based Diagnostics/MODULE, Powertrain Control (PCM) - Standard Procedure).

7. IGNITION KEY

NOTE: This DTC could have been set if the WIN harness connector was disconnected or if the WIN was replaced recently.

NOTE: All of the ignition keys for this vehicle must be tested to verify proper operation.

NOTE: If this DTC does not reset, it may have been an actual theft attempt.

1. Turn the ignition on.
2. Verify that the correct VIN is programmed into the PCM and WIN.
3. Turn the ignition off.
4. Using each vehicle key, turn the ignition on and start the engine.
5. Using the scan tool, View DTCs for each key.

Is the status Active for this DTC?

Yes

- Replace the ignition key.
- Perform the POWERTRAIN VERIFICATION TEST. (Refer to 28 - DTC-Based Diagnostics/MODULE, Powertrain Control (PCM) - Standard Procedure).

No

- Test Complete.

P0520-ENGINE OIL PRESSURE SENSOR CIRCUIT

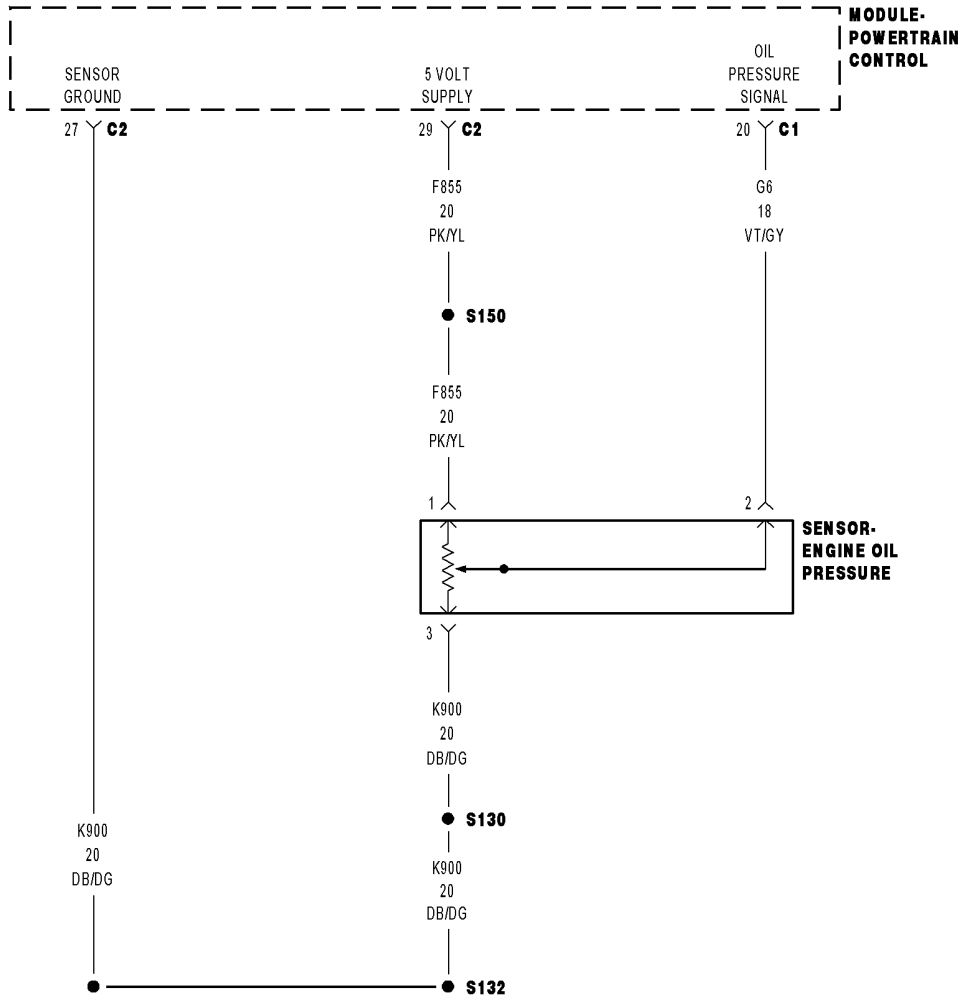

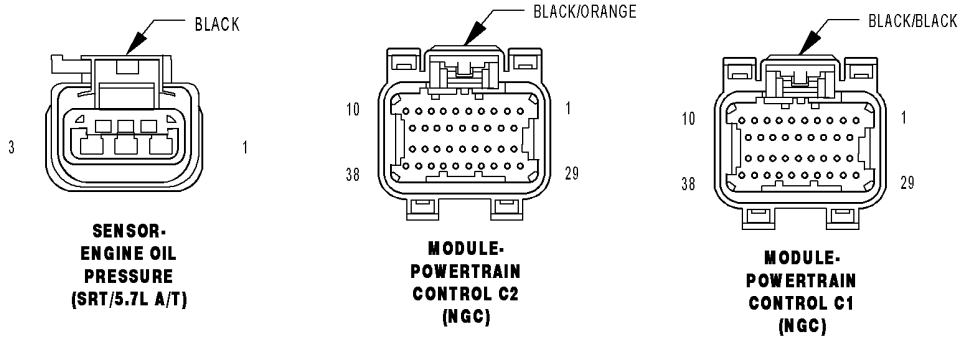

81639f46

For a complete wiring diagram, **refer to the Wiring Information**.

- **When Monitored:**
  Ignition on, engine not running.
- **Set Condition:**
  The Powertrain Control Module (PCM) senses the oil pressure is out of the calibrated range. One Trip fault.

Possible Causes
(G6) ENGINE OIL PRESSURE SENSOR SIGNAL CIRCUIT SHORTED TO VOLTAGE
RESISTANCE IN THE (G6) ENGINE OIL PRESSURE SENSOR SIGNAL CIRCUIT
(G6) ENGINE OIL PRESSURE SENSOR SIGNAL CIRCUIT SHORTED TO GROUND
RESISTANCE IN THE (F855) 5-VOLT SUPPLY CIRCUIT
(F855) 5-VOLT SUPPLY CIRCUIT SHORTED TO GROUND
RESISTANCE IN THE (K900) SENSOR GROUND CIRCUIT
ENGINE OIL PRESSURE SENSOR
POWERTRAIN CONTROL MODULE (PCM)

Always perform the Pre-Diagnostic Troubleshooting procedure before proceeding. (Refer to 28 - DTC-Based Diagnostics/MODULE, Powertrain Control (PCM) - Standard Procedure).

1. ACTIVE DTC

NOTE: Verify that the engine oil is at the proper level. Review oil change history to verify that the oil is changed at the correct intervals and that the proper oil viscosity is used.

NOTE: Diagnose and repair any Engine Oil Pressure Sensor circuit, system voltage or sensor supply voltage DTCs before continuing with this test.

1. Start the engine and allow it to reach operating temperature.

WARNING: When the engine is operating, do not stand in direct line with the fan. Do not put your hands near the pulleys, belts or fan. Do not wear loose clothing. Failure to follow these instructions may result in possible serious or fatal injury.

2. With the scan tool select View DTCs.

Is the DTC Active at this time?

Yes

- Go To 2

No

- Perform the INTERMITTENT CONDITION diagnostic procedure. (Refer to 28 - DTC-Based Diagnostics/MODULE, Powertrain Control (PCM) - Standard Procedure).

2. (G6) ENGINE OIL PRESSURE SENSOR SIGNAL CIRCUIT SHORTED TO VOLTAGE

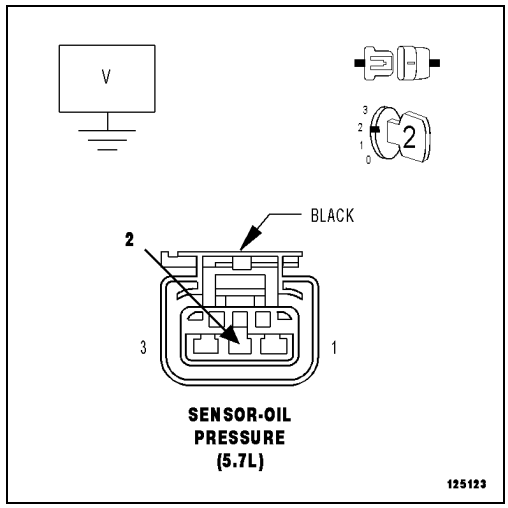

1. Turn the ignition off.
2. Disconnect the C1 and C2 PCM harness connectors.
3. Disconnect the Engine Oil Pressure Sensor harness connector.
4. Ignition on, engine not running.
5. Measure the voltage on the (G6) Engine Oil Pressure Signal circuit in the Engine Oil Pressure Sensor harness connector.

Is there any voltage present?

Yes

- Repair the short to voltage in the (G6) Engine Oil Pressure Signal circuit.
- Perform the POWERTRAIN VERIFICATION TEST. (Refer to 28 - DTC-Based Diagnostics/MODULE, Powertrain Control (PCM) - Standard Procedure).

No

- Go To 3

3. ENGINE OIL PRESSURE SENSOR

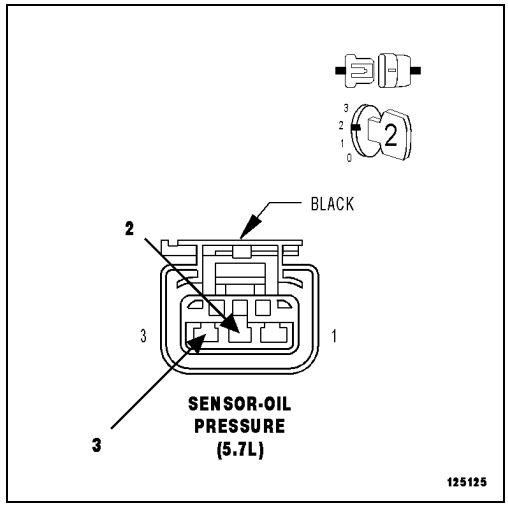

1. Turn the ignition off.
2. Connect the PCM harness connectors.
3. Connect a jumper wire between the (K900) Sensor Ground circuit and the (G6) Engine Oil Pressure Signal circuit.
4. Ignition on, engine not running.
5. With the scan tool, monitor the Engine Oil Pressure Sensor voltage.

NOTE: The circuit voltage should change from approximately 5.0 Volts (plus or minus .1 of a volt) with the connector disconnected to 0.0 Volts (plus or minus .1 of a volt) with the jumper wire in place.

Does the scan tool display the voltage as described above?

Yes

- Verify that there is good pin to terminal contact in the Oil Pressure Sensor and the Powertrain Control Module connectors. Replace the Engine Oil Pressure Sensor if no problems were found with the connectors.
- Perform the POWERTRAIN VERIFICATION TEST. (Refer to 28 - DTC-Based Diagnostics/MODULE, Powertrain Control (PCM) - Standard Procedure).

No

- Go To 4

NOTE: Remove the jumper wire before continuing.

4. EXCESSIVE RESISTANCE IN THE (G6) ENGINE OIL PRESSURE SIGNAL CIRCUIT

1. Turn the ignition off.
2. Disconnect the C1 and C2 PCM harness connectors.

CAUTION: Do not probe the PCM harness connectors. Probing the PCM harness connectors will damage the PCM terminals resulting in poor terminal to pin connection. Install the PCM Pinout Box Kit, NGC, 38 Position 8815A to perform diagnosis.

3. Measure the resistance of the (G6) Engine Oil Pressure Signal circuit from the Engine Oil Pressure Sensor harness connector to the appropriate terminal of PCM Pinout Box 8815A.

Is the resistance below 5.0 Ohms for each circuit?

Yes

- Go To 5

No

- Repair the excessive resistance in the (G6) Engine Oil Pressure Signal circuit.
- Perform the POWERTRAIN VERIFICATION TEST. (Refer to 28 - DTC-Based Diagnostics/MODULE, Powertrain Control (PCM) - Standard Procedure).

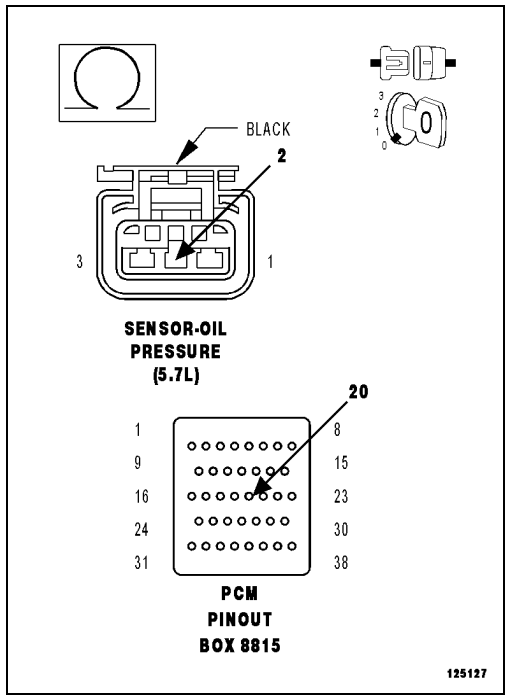

5. (G6) ENGINE OIL PRESSURE SIGNAL CIRCUIT SHORTED TO GROUND

1. Measure the resistance between ground and the (G6) Engine Oil Pressure Signal circuit Engine Oil Pressure Sensor harness connector.

Is the resistance below 100 Ohms?

Yes

- Repair the short to ground in the (G6) Engine Oil Pressure Signal circuit.
- Perform the POWERTRAIN VERIFICATION TEST. (Refer to 28 - DTC-Based Diagnostics/MODULE, Powertrain Control (PCM) - Standard Procedure).

No

- Go To 6

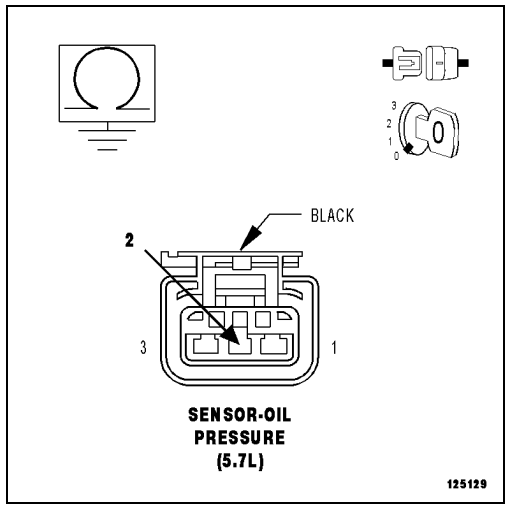

6. EXCESSIVE RESISTANCE IN THE (F855) 5-VOLT SUPPLY CIRCUIT

1. Measure the resistance of the (F855) 5-volt Supply circuit from the Engine Oil Pressure Sensor harness connector to the appropriate terminal of PCM Pinout Box 8815A.

Is the resistance below 5.0 Ohms?

Yes

- Go To 7

No

- Repair the excessive resistance in the (F855) 5-volt Supply circuit.
- Perform the POWERTRAIN VERIFICATION TEST. (Refer to 28 - DTC-Based Diagnostics/MODULE, Powertrain Control (PCM) - Standard Procedure).

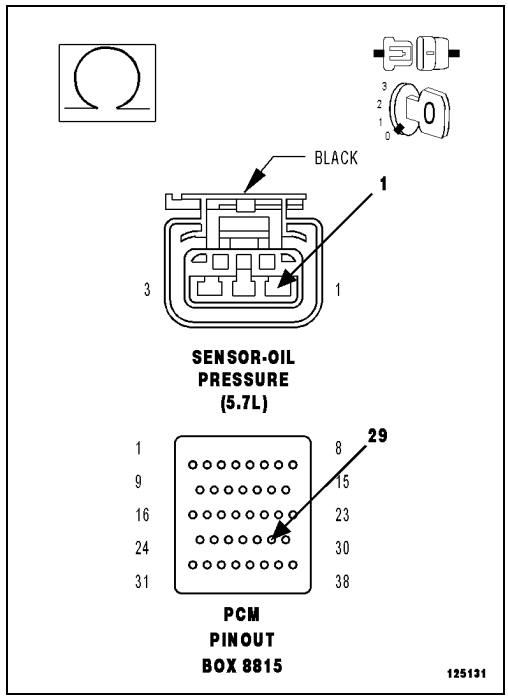

7. (F855) 5-VOLT SUPPLY SHORTED TO GROUND

1. Measure the resistance between ground and the (F855) 5-volt Supply circuit in the Engine Oil Pressure Sensor harness connector.

Is the resistance below 100 Ohms?

Yes

- Repair the short to ground in the (F855) 5-volt Supply circuit.
- Perform the POWERTRAIN VERIFICATION TEST. (Refer to 28 - DTC-Based Diagnostics/MODULE, Powertrain Control (PCM) - Standard Procedure).

No

- Go To 8

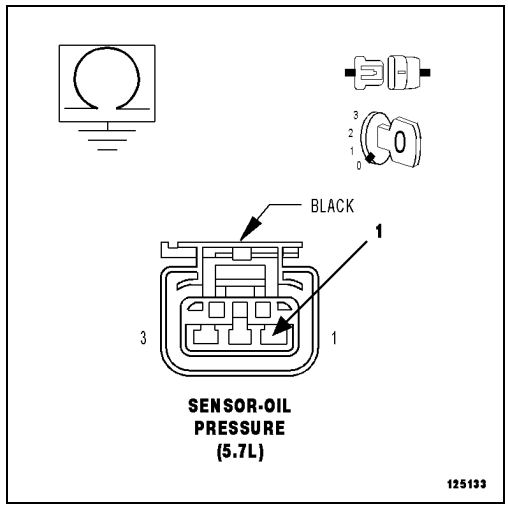

8. EXCESSIVE RESISTANCE IN THE (K900) SENSOR GROUND CIRCUIT

1. Measure the resistance of the (K900) Sensor Ground circuit from the Engine Oil Pressure Sensor harness connector to the appropriate terminal of PCM Pinout Box 8815A.

Is the resistance below 5.0 Ohms?

Yes

- Go To 9

No

- Repair the excessive resistance in the (K900) Sensor Ground circuit.
- Perform the POWERTRAIN VERIFICATION TEST. (Refer to 28 - DTC-Based Diagnostics/MODULE, Powertrain Control (PCM) - Standard Procedure).

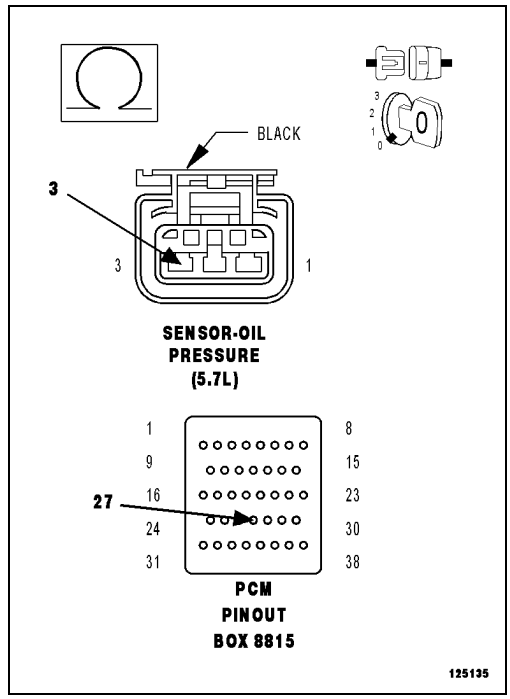

9. POWERTRAIN CONTROL MODULE (PCM)

1. Using the wiring diagram/schematic as a guide, inspect the wiring and connectors between the related Oil Pressure Sensor and the Powertrain Control Module (PCM).
2. Look for any chafed, pierced, pinched or partially broken wires.
3. Look for broken, bent, pushed out or corroded terminals. Verify that there is good pin to terminal contact in the Oil Pressure Sensor and the Powertrain Control Module connectors.
4. Refer to any Technical Service Bulletins that may apply.

Were there any problems found?

Yes

- Repair as necessary.
- Perform the POWERTRAIN VERIFICATION TEST. (Refer to 28 - DTC-Based Diagnostics/MODULE, Powertrain Control (PCM) - Standard Procedure).

No

- Replace and program the Powertrain Control Module in accordance with the Service Information.
- Perform the POWERTRAIN VERIFICATION TEST. (Refer to 28 - DTC-Based Diagnostics/MODULE, Powertrain Control (PCM) - Standard Procedure).

P0521-ENGINE OIL PRESSURE SENSOR PERFORMANCE

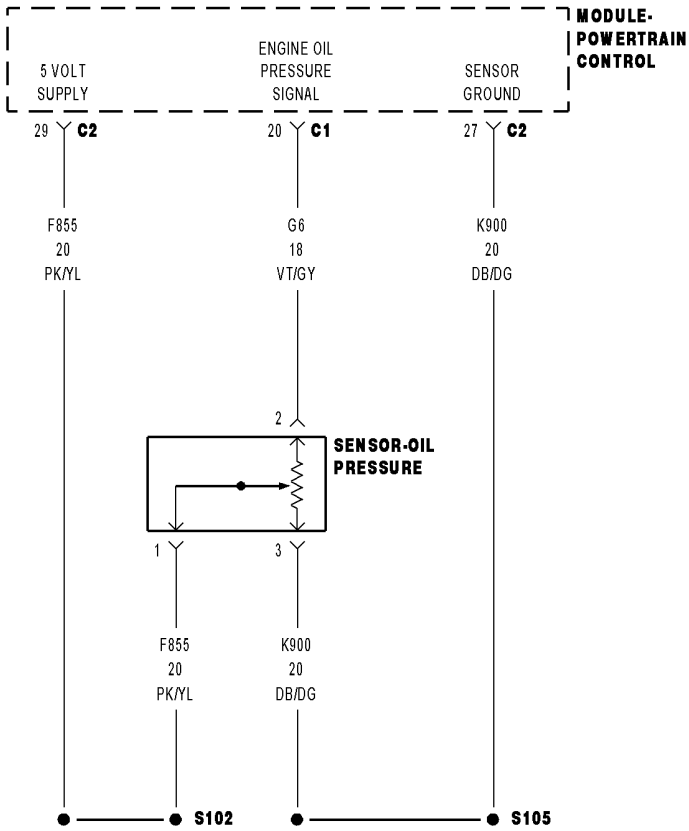

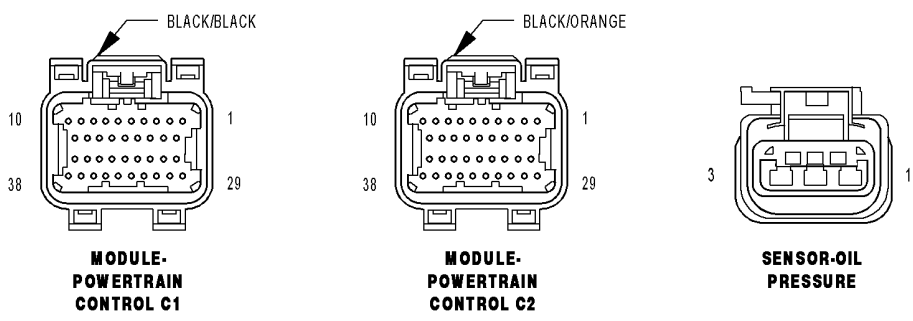

For a complete wiring diagram, **refer to the Wiring Information**.

- **When Monitored:**
  Engine running.
- **Set Condition:**
  The engine oil pressure never reaches the calibrated specification with the engine RPM at 1250. One trip fault.

Possible Causes
ENGINE OIL/ENGINE MECHANICAL
EXCESSIVE RESISTANCE IN THE (G6) ENGINE OIL PRESSURE SENSOR SIGNAL CIRCUIT
EXCESSIVE RESISTANCE IN THE (F855) 5-VOLT SUPPLY CIRCUIT
EXCESSIVE RESISTANCE IN THE (K900) SENSOR GROUND CIRCUIT
ENGINE OIL PRESSURE SENSOR
POWERTRAIN CONTROL MODULE (PCM)

Always perform the Pre-Diagnostic Troubleshooting procedure before proceeding. (Refer to 28 - DTC-Based Diagnostics/MODULE, Powertrain Control (PCM) - Standard Procedure).

1. ACTIVE DTC

NOTE: Make sure that the engine oil is at the proper level. Also, check the customers oil change history to ensure that the oil is being changed at the correct intervals and that the proper oil viscosity is being used.

1. Ignition on, engine not running.
2. With the scan tool, select View DTCs.

Is the DTC Active at this time?

Yes

- Go To 2

No

- Perform the INTERMITTENT CONDITION diagnostic procedure. (Refer to 28 - DTC-Based Diagnostics/MODULE, Powertrain Control (PCM) - Standard Procedure).

2. ENGINE OIL/ENGINE MECHANICAL

NOTE: The following items must be considered before determining the cause of this DTC. Failure to do so may lead to misdiagnosis.

- **ENGINE MECHANICAL TOLERANCES OUT OF SPECIFICATION**
- **ENGINE OIL PRESSURE OUT OF SPECIFICATION**
- **LOW ENGINE OIL**
- **OIL DIRTY OR DETERIORATED (Lack of scheduled oil changes)**
- **ENGINE OIL CONTAMINATED (i.e., coolant and/or fuel)**

1. If any of the above conditions are found, repair as necessary.

Were any of the above conditions present?

Yes

- Repair as necessary.
- Perform the POWERTRAIN VERIFICATION TEST. (Refer to 28 - DTC-Based Diagnostics/MODULE, Powertrain Control (PCM) - Standard Procedure).

No

- Go To 3

3. ENGINE OIL PRESSURE SENSOR

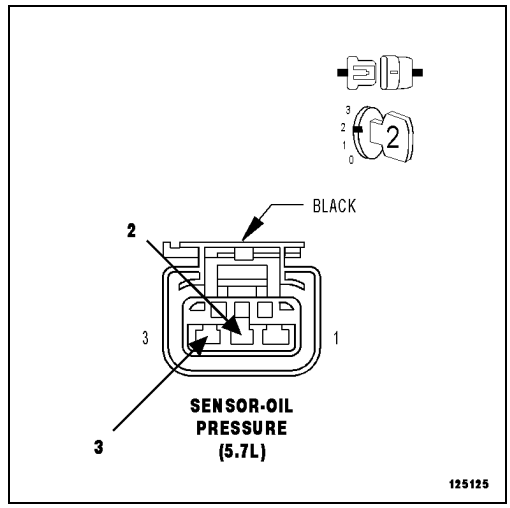

1. Turn the ignition off.
2. Disconnect the Engine Oil Pressure Sensor harness connector.
3. Ignition on, engine not running.
4. With the scan tool, monitor the Engine Oil Pressure Sensor voltage.
5. Connect a jumper wire between the (K900) Sensor Ground circuit and the (G6) Engine Oil Pressure Signal circuit.

NOTE: Engine Oil Pressure voltage should change from approximately 4.5 to less than 0.5 of a volt.

Is the voltage reading within the listed specification when the jumper wire is installed?

Yes

- Verify that there is good pin to terminal contact in the Sensor and Powertrain Control Module connectors. Remove the Engine Oil Pressure sensor and ensure the oil passage/port is free from any blockage. If OK, replace the Engine Oil Pressure Sensor.
- Perform the POWERTRAIN VERIFICATION TEST. (Refer to 28 - DTC-Based Diagnostics/MODULE, Powertrain Control (PCM) - Standard Procedure).

No

- Go To 4

NOTE: Remove the jumper wire before continuing.

4. EXCESSIVE RESISTANCE IN THE (G6) ENGINE OIL PRESSURE SIGNAL CIRCUIT

1. Turn the ignition off.
2. Connect the Engine Oil Pressure Sensor connector.
3. Disconnect the C1 PCM harness connector.

CAUTION: Do not probe the PCM harness connectors. Probing the PCM harness connectors will damage the PCM terminals resulting in poor terminal to pin connection. Install the PCM Pinout Box Kit, NGC, 38 Position 8815A along with the Adapter PCM Pinout Box Adapter 8815-1to perform the diagnosis.

4. Using a voltmeter perform a voltage drop test. Backprobe the (G6) Engine Oil Pressure Signal circuit at the Throttle Body harness connector and probe the appropriate terminal of the PCM Pinout Box 8815A. Make sure the voltmeter leads are connected so a positive polarity is displayed on the voltmeter.

WARNING: When the engine is operating, do not stand in direct line with the fan. Do not put your hands near the pulleys, belts or fan. Do not wear loose clothing. Failure to follow these instructions may result in possible serious or fatal injury.

5. Start the engine and allow it to reach normal operating temperature.
6. Monitor the voltmeter.

Is the voltage less than 0.5 of a volt?

Yes

- Go To 5

No

- Repair the excessive resistance in the (G6) Engine Oil Pressure Signal circuit.
- Perform the POWERTRAIN VERIFICATION TEST. (Refer to 28 - DTC-Based Diagnostics/MODULE, Powertrain Control (PCM) - Standard Procedure).

5. EXCESSIVE RESISTANCE IN THE (F855) 5-VOLT SUPPLY CIRCUIT

1. Turn the Ignition off.
2. Remove PCM Pinout Box 8815A from the C1 PCM harness connector and Re-Connect the C1 PCM harness connector to the PCM.
3. Disconnect the C2 PCM harness connector to install PCM Pinout Box 8815A and Adapter 8815-1.
4. Using a voltmeter perform a voltage drop test. Backprobe the (F855) 5-volt Supply circuit at the Throttle Body harness connector and probe the appropriate terminal of the PCM Pinout Box 8815A. Make sure the voltmeter leads are connected so a positive polarity is displayed on the voltmeter.

WARNING: When the engine is operating, do not stand in direct line with the fan. Do not put your hands near the pulleys, belts or fan. Do not wear loose clothing. Failure to follow these instructions may result in possible serious or fatal injury.

5. Start the engine and allow it to reach normal operating temperature.
6. Monitor the voltmeter.

Is the voltage less than 0.5 of a volt?

Yes

- Go To 6

No

- Repair the excessive resistance in the (F855) 5-volt Supply circuit.
- Perform the POWERTRAIN VERIFICATION TEST. (Refer to 28 - DTC-Based Diagnostics/MODULE, Powertrain Control (PCM) - Standard Procedure).

6. EXCESSIVE RESISTANCE IN THE (K900) SENSOR GROUND CIRCUIT

1. Turn the Ignition off.
2. Move your volt meter leads to backprobe the (K900) Sensor Ground circuit at the Throttle Body harness connector and to probe the appropriate terminal of the PCM Pinout Box 8815A. Make sure the voltmeter leads are connected so a positive polarity is displayed on the voltmeter.

WARNING: When the engine is operating, do not stand in direct line with the fan. Do not put your hands near the pulleys, belts or fan. Do not wear loose clothing. Failure to follow these instructions may result in possible serious or fatal injury.

3. Start the engine and allow it to reach normal operating temperature.
4. Monitor the voltmeter.

Is the voltage less than 0.5 of a volt?

Yes

- Go To 7

No

- Repair the excessive resistance in the (K900) Sensor Ground circuit.
- Perform the POWERTRAIN VERIFICATION TEST. (Refer to 28 - DTC-Based Diagnostics/MODULE, Powertrain Control (PCM) - Standard Procedure).

7. POWERTRAIN CONTROL MODULE (PCM)

1. Using the wiring diagram/schematic as a guide, inspect the wiring and connectors between the Engine Oil Pressure Sensor and the Powertrain Control Module (PCM).
2. Look for any chafed, pierced, pinched or partially broken wires.
3. Look for broken, bent, pushed out or corroded terminals. Verify that there is good pin to terminal contact in the Sensor and Powertrain Control Module connectors.
4. Refer to any Technical Service Bulletins that may apply.

Were there any problems found?

Yes

- Repair as necessary.
- Perform the POWERTRAIN VERIFICATION TEST. (Refer to 28 - DTC-Based Diagnostics/MODULE, Powertrain Control (PCM) - Standard Procedure).

No

- Replace and program the Powertrain Control Module in accordance with the Service Information.
- Perform the POWERTRAIN VERIFICATION TEST. (Refer to 28 - DTC-Based Diagnostics/MODULE, Powertrain Control (PCM) - Standard Procedure).

P0522-ENGINE OIL PRESSURE SENSOR CIRCUIT LOW 5.7L

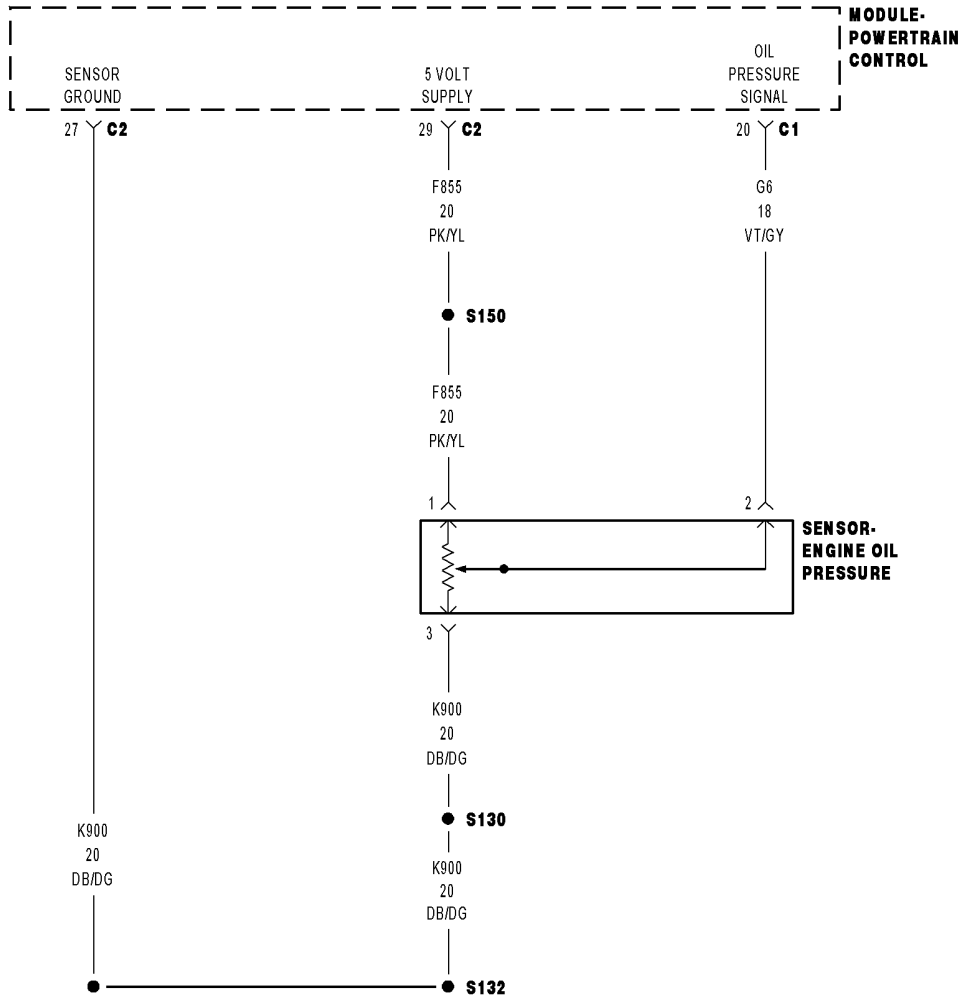

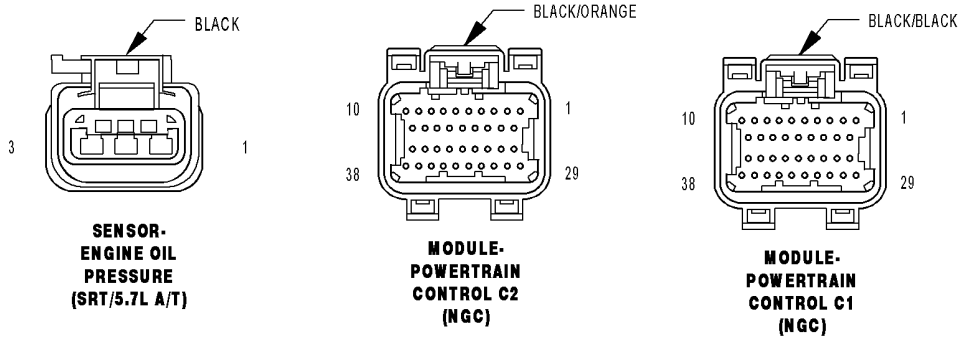

81639f46

For a complete wiring diagram, **refer to the Wiring Information**.

- **When Monitored:**
  With the ignition on. Battery voltage greater than 10 Volts.
- **Set Condition:**
  The Oil pressure signal is below the calibrated amount. One Trip Fault. Three good trips to turn off the MIL. ETC light will illuminate.

Possible Causes
(F855) 5-VOLT SUPPLY CIRCUIT OPEN
(F855) 5-VOLT SUPPLY CIRCUIT SHORTED TO GROUND
(G6) ENGINE OIL PRESSURE SIGNAL CIRCUIT SHORTED TO GROUND
(G6) ENGINE OIL PRESSURE SIGNAL CIRCUIT SHORTED TO THE (K900) SENSOR GROUND CIRCUIT
EXCESSIVE RESISTANCE IN THE (G6) ENGINE OIL PRESSURE SIGNAL CIRCUIT
ENGINE OIL PRESSURE SENSOR
POWERTRAIN CONTROL MODULE (PCM)

Always perform the Pre-Diagnostic Troubleshooting procedure before proceeding. (Refer to 28 - DTC-Based Diagnostics/MODULE, Powertrain Control (PCM) - Standard Procedure).

1. ACTIVE DTC

NOTE: Make sure that the engine oil is at the proper level. Also, check the customers oil change history to ensure that the oil is being changed at the correct intervals and that the proper oil viscosity is being used.

1. Start the engine and allow it to reach normal operating temperature.

WARNING: When the engine is operating, do not stand in direct line with the fan. Do not put your hands near the pulleys, belts or fan. Do not wear loose clothing. Failure to follow these instructions may result in possible serious or fatal injury.

NOTE: Diagnose and repair any system voltage or sensor supply voltage DTCs before continuing with this test.

Is the DTC Active at this time?

Yes

- Go To 2

No

- Perform the INTERMITTENT CONDITION diagnostic procedure. (Refer to 28 - DTC-Based Diagnostics/MODULE, Powertrain Control (PCM) - Standard Procedure).

2. (F855) 5-VOLT SUPPLY CIRCUIT

1. Turn the ignition off.
2. Disconnect the Engine Oil Pressure Sensor harness connector.
3. Ignition on, engine not running.
4. Measure the voltage on the (F855) 5-volt Supply circuit in the Engine Oil Pressure Sensor harness connector.

Is the voltage between 4.8 to 5.2 Volts?

Yes

- Go To 3

No

- Go To 7

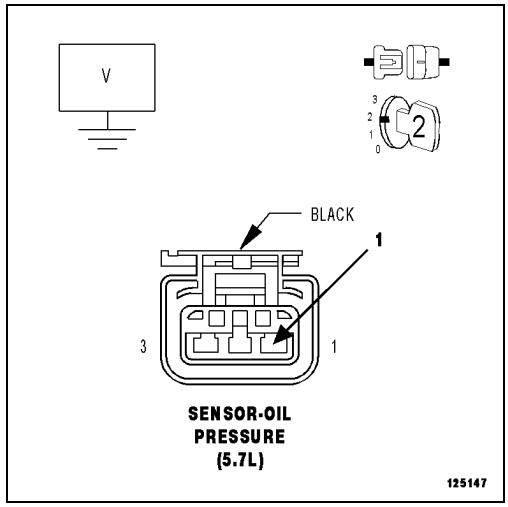

3. ENGINE OIL PRESSURE SENSOR

1. With the scan tool, read the Engine Oil Pressure Sensor signal voltage.

NOTE: The sensor voltage should be approximately 5.0 Volts (plus or minus .1 of a volt) with the connector disconnected.

Does the scan tool display the voltage as described above?

Yes

- Verify that there is good pin to terminal contact in the Oil Pressure Sensor and the Powertrain Control Module connectors. Replace the Engine Oil Pressure Sensor if no problems were found with the connectors.
- Perform the POWERTRAIN VERIFICATION TEST. (Refer to 28 - DTC-Based Diagnostics/MODULE, Powertrain Control (PCM) - Standard Procedure).

No

- Go To 4

4. (G6) ENGINE OIL PRESSURE SIGNAL CIRCUIT SHORTED TO GROUND

1. Turn the ignition off.
2. Disconnect the C1 and C2 PCM harness connectors.
3. Measure the resistance between ground and the (G6) Engine Oil Pressure Signal circuit in the Engine Oil Pressure Sensor harness connector.

Is the resistance below 100 Ohms?

Yes

- Repair the short to ground in the (G6) Engine Oil Pressure Signal circuit.
- Perform the POWERTRAIN VERIFICATION TEST. (Refer to 28 - DTC-Based Diagnostics/MODULE, Powertrain Control (PCM) - Standard Procedure).

No

- Go To 5

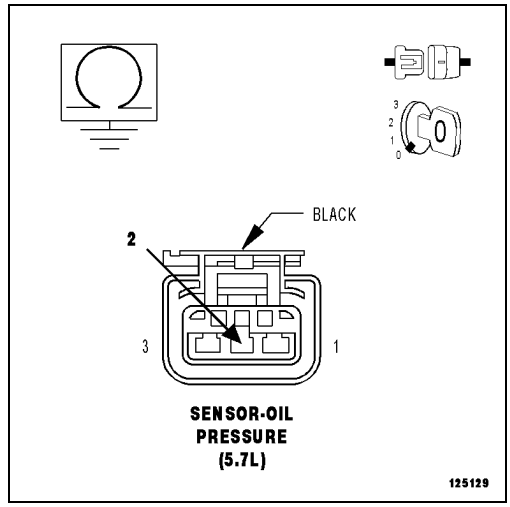

5. (G6) ENGINE OIL PRESSURE SIGNAL CIRCUIT SHORTED TO THE (K900) SENSOR GROUND CIRCUIT

1. Measure the resistance between the (G6) Engine Oil Pressure Sensor Signal circuit and the (K900) Sensor Ground circuit in the Engine Oil Pressure Sensor harness connector.

Is the resistance below 100 Ohms?

Yes

- Repair the short between the (K900) Sensor Ground circuit and the (G6) Engine Oil Pressure Signal circuit.
- Perform the POWERTRAIN VERIFICATION TEST. (Refer to 28 - DTC-Based Diagnostics/MODULE, Powertrain Control (PCM) - Standard Procedure).

No

- Go To 6

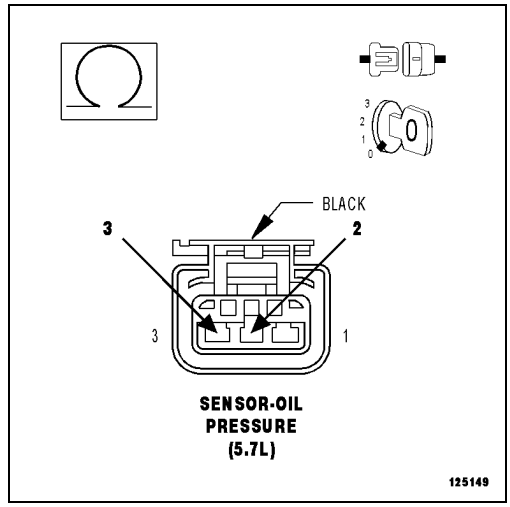

6. EXCESSIVE RESISTANCE IN THE (G6) ENGINE OIL PRESSURE SIGNAL CIRCUIT

CAUTION: Do not probe the PCM harness connectors. Probing the PCM harness connectors will damage the PCM terminals resulting in poor terminal to pin connection. Install the PCM Pinout Box Kit, NGC, 38 Position 8815A to perform diagnosis.

1. Measure the resistance of the (G6) Engine Oil Pressure Signal circuit from the Engine Oil Pressure Sensor harness connector to the appropriate terminal of PCM Pinout Box 8815A.

Is the resistance below 5.0 Ohms?

Yes

- Go To 9

No

- Repair the excessive resistance in the (G6) Engine Oil Pressure Signal circuit.
- Perform the POWERTRAIN VERIFICATION TEST. (Refer to 28 - DTC-Based Diagnostics/MODULE, Powertrain Control (PCM) - Standard Procedure).

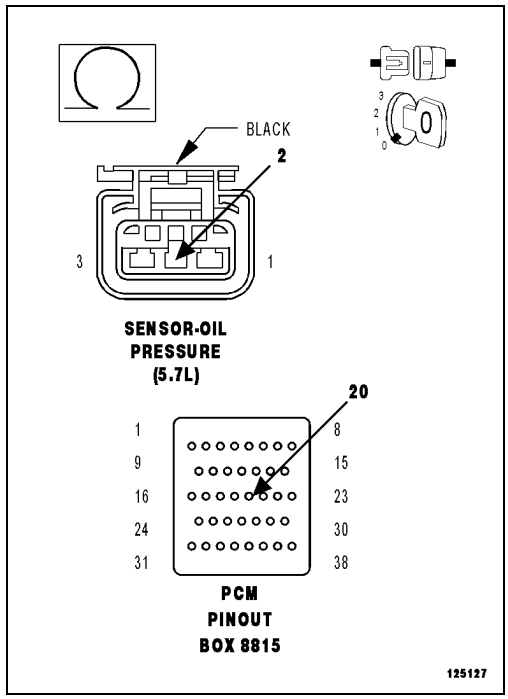

7. (F855) 5-VOLT SUPPLY CIRCUIT OPEN

1. Turn the ignition off.
2. Disconnect the C2 PCM harness connector.

CAUTION: Do not probe the PCM harness connectors. Probing the PCM harness connectors will damage the PCM terminals resulting in poor terminal to pin connection. Install the PCM Pinout BoxKit, NGC, 38 Position 8815A to perform diagnostics.

3. Measure the resistance of the (F855) 5-volt Supply circuit from the Engine Oil Pressure Sensor harness connector to the appropriate terminal of PCM Pinout Box 8815A.

Is the resistance below 5.0 Ohms?

Yes

- Go To 8

No

- Repair the open in the (F855) 5-volt Supply circuit.
- Perform the POWERTRAIN VERIFICATION TEST. (Refer to 28 - DTC-Based Diagnostics/MODULE, Powertrain Control (PCM) - Standard Procedure).

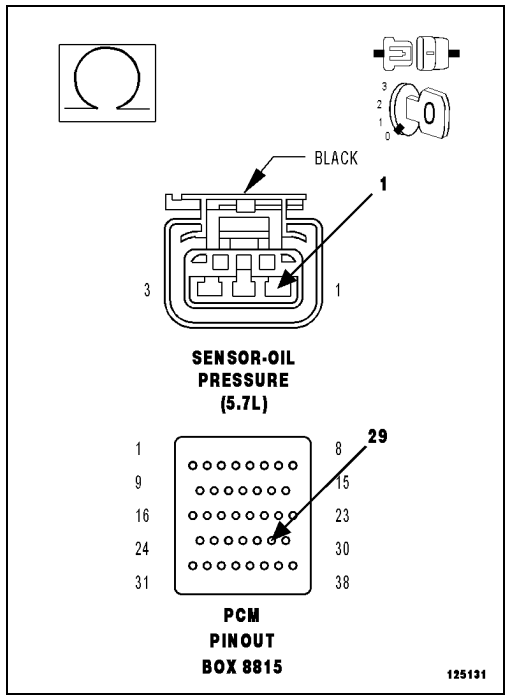

8. (F855) 5-VOLT SUPPLY CIRCUIT SHORTED TO GROUND

1. Measure the resistance between ground and the (F855) 5-volt Supply circuit in the Engine Oil Pressure Sensor harness connector.

Is the resistance below 100 Ohms?

Yes

- Repair the short to ground in the (F855) 5-volt Supply circuit.
- Perform the POWERTRAIN VERIFICATION TEST. (Refer to 28 - DTC-Based Diagnostics/MODULE, Powertrain Control (PCM) - Standard Procedure).

No

- Go To 9

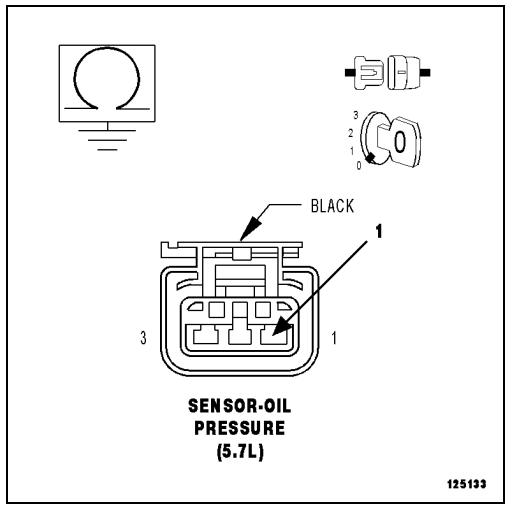

9. POWERTRAIN CONTROL MODULE (PCM)

1. Using the wiring diagram/schematic as a guide, inspect the wiring and connectors between the related Oil Pressure Sensor and the Powertrain Control Module (PCM).
2. Look for any chafed, pierced, pinched or partially broken wires.
3. Look for broken, bent, pushed out or corroded terminals. Verify that there is good pin to terminal contact in the Oil Pressure Sensor and the Powertrain Control Module connectors.
4. Refer to any Technical Service Bulletins that may apply.

Were there any problems found?

Yes

- Repair as necessary.
- Perform the POWERTRAIN VERIFICATION TEST. (Refer to 28 - DTC-Based Diagnostics/MODULE, Powertrain Control (PCM) - Standard Procedure).

No

- Replace and program the Powertrain Control Module in accordance with the Service Information.
- Perform the POWERTRAIN VERIFICATION TEST. (Refer to 28 - DTC-Based Diagnostics/MODULE, Powertrain Control (PCM) - Standard Procedure).

P0522-OIL PRESSURE TOO LOW 3.7L, 4.7L

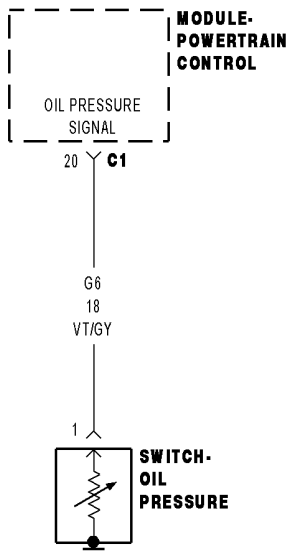

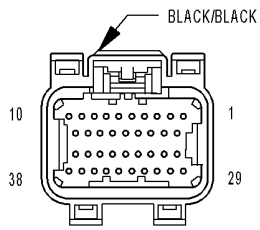

MODULE-
POWERTRAIN
CONTROL C1
(NGC)

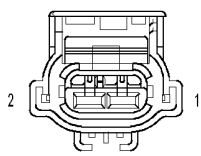

SWITCH-OIL
PRESSURE

814544e9

For a complete wiring diagram, **refer to the Wiring Information**.

- **When Monitored:**
  With the ignition key on and battery voltage above 10.4 Volts.
- **Set Condition:**
  The oil pressure sensor voltage at Powertrain Control Module (PCM) is not within the calibrated specification. One Trip Fault. Three good trips to turn off the MIL.

Possible Causes
(G6) OIL PRESSURE SIGNAL CIRCUIT OPEN
(G6) OIL PRESSURE SIGNAL CIRCUIT SHORTED TO VOLTAGE
(G6) OIL PRESSURE SIGNAL CIRCUIT SHORTED TO GROUND
OIL PRESSURE SWITCH
POWERTRAIN CONTROL MODULE (PCM)

Always perform the Pre-Diagnostic Troubleshooting procedure before proceeding. (Refer to 28 - DTC-Based Diagnostics/MODULE, Powertrain Control (PCM) - Standard Procedure).

1. ACTIVE DTC

NOTE: Make sure that the engine oil is at the proper level. Also, check the customers oil change history to ensure that the oil is being changed at the correct intervals and that the proper oil viscosity is being used.

1. Start the engine and allow it to reach normal operating temperature.

WARNING: When the engine is operating, do not stand in direct line with the fan. Do not put your hands near the pulleys, belts or fan. Do not wear loose clothing. Failure to follow these instructions may result in possible serious or fatal injury.

NOTE: Diagnose and repair any system voltage or sensor supply voltage DTCs before continuing with this test.

Is the DTC Active at this time?

Yes

- Go To 2

No

- Perform the INTERMITTENT CONDITION diagnostic procedure. (Refer to 28 - DTC-Based Diagnostics/MODULE, Powertrain Control (PCM) - Standard Procedure).

2. OIL PRESSURE SWITCH

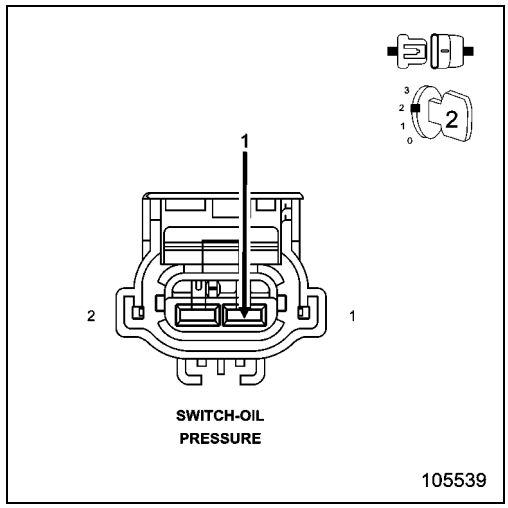

1. Turn the ignition off.
2. Disconnect the Oil Pressure Switch harness connector.
3. Ignition on, engine not running.
4. Connect a jumper wire to the (G6) Oil Pressure Signal circuit in the Sensor harness connector.
5. With the scan tool monitor the Oil Pressure Switch state.
6. Touch the other end of the jumper wire to a known good Ground several times.

Did the Oil Pressure Switch state change from High to Low when connecting and disconnecting the jumper wire to ground?

Yes

- Verify that there is good pin to terminal contact in the Oil Pressure Switch and the Powertrain Control Module connectors. Replace the Engine Oil Pressure Switch if no problems were found with the connectors.
- Perform the POWERTRAIN VERIFICATION TEST. (Refer to 28 - DTC-Based Diagnostics/MODULE, Powertrain Control (PCM) - Standard Procedure).

No

- Go To 3

NOTE: Remove the jumper wire before continuing.

3. (G6) OIL PRESSURE SIGNAL CIRCUIT SHORTED TO VOLTAGE

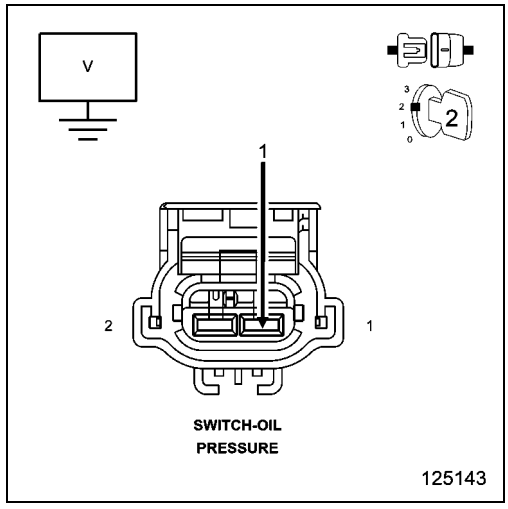

1. Turn the ignition off.
2. Disconnect the C1 PCM harness connector.
3. Ignition on, engine not running.
4. Measure the voltage on the (G6) Oil Pressure Signal circuit in the Switch harness connector.

NOTE: The sensor voltage should be approximately 5.0 Volts (plus or minus .1 of a volt) with the connector disconnected.

Does the scan tool display the voltage as described above?

Yes

- Repair the short to voltage on the (G6) Oil Pressure Signal circuit.
- Perform the POWERTRAIN VERIFICATION TEST. (Refer to 28 - DTC-Based Diagnostics/MODULE, Powertrain Control (PCM) - Standard Procedure).

No

- Go To 4

4. (G6) OIL PRESSURE SWITCH SIGNAL CIRCUIT OPEN

CAUTION: Do not probe the PCM harness connectors. Probing the PCM harness connectors will damage the PCM terminals resulting in poor terminal to pin connection. Install the PCM Pinout Box Kit, NGC, 38 Position 8815A to perform diagnosis.

1. Measure the resistance of the (G6) Oil Pressure Signal circuit from the Oil Pressure Switch harness connector to the appropriate terminal of PCM Pinout Box 8815A.

Is the resistance below 5.0 Ohms?

Yes

- Go To 5

No

- Repair the open in the (G6) Oil Pressure Signal circuit.
- Perform the POWERTRAIN VERIFICATION TEST. (Refer to 28 - DTC-Based Diagnostics/MODULE, Powertrain Control (PCM) - Standard Procedure).

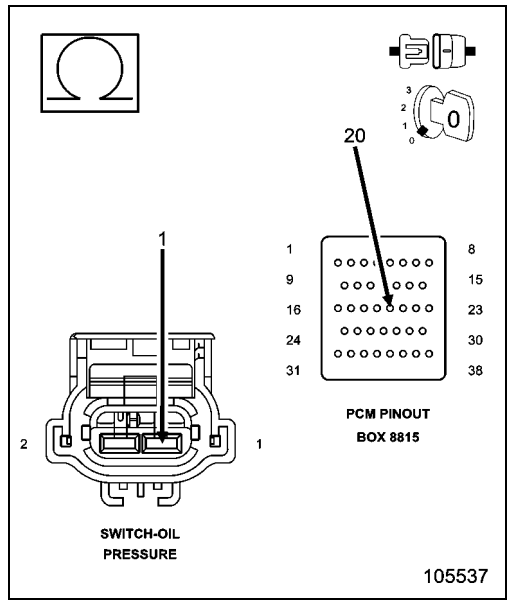

5. (G6) SIGNAL CIRCUIT SHORTED TO GROUND

1. Measure the resistance between a known good ground and the (G6) Oil Pressure Signal circuit in the Switch connector.

Is the resistance below 100 Ohms?

Yes

- Repair the short to ground in the (G6) Oil Pressure Signal circuit.
- Perform the POWERTRAIN VERIFICATION TEST. (Refer to 28 - DTC-Based Diagnostics/MODULE, Powertrain Control (PCM) - Standard Procedure).

No

- Go To 6

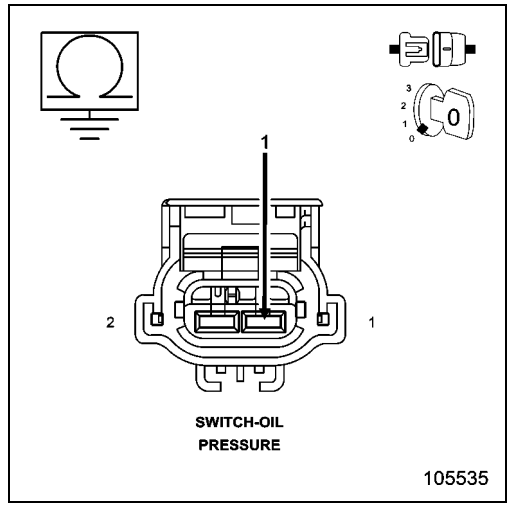

6. POWERTRAIN CONTROL MODULE (PCM)

1. Using the wiring diagram/schematic as a guide, inspect the wiring and connectors between the related Oil Pressure Switch and the Powertrain Control Module (PCM).
2. Look for any chafed, pierced, pinched or partially broken wires.
3. Look for broken, bent, pushed out or corroded terminals. Verify that there is good pin to terminal contact in the Oil Pressure Switch and the Powertrain Control Module connectors.
4. Refer to any Technical Service Bulletins that may apply.

Were there any problems found?

Yes

- Repair as necessary.
- Perform the POWERTRAIN VERIFICATION TEST. (Refer to 28 - DTC-Based Diagnostics/MODULE, Powertrain Control (PCM) - Standard Procedure).

No

- Replace and program the Powertrain Control Module in accordance with the Service Information.
- Perform the POWERTRAIN VERIFICATION TEST. (Refer to 28 - DTC-Based Diagnostics/MODULE, Powertrain Control (PCM) - Standard Procedure).

P0523-ENGINE OIL PRESSURE SENSOR CIRCUIT HIGH

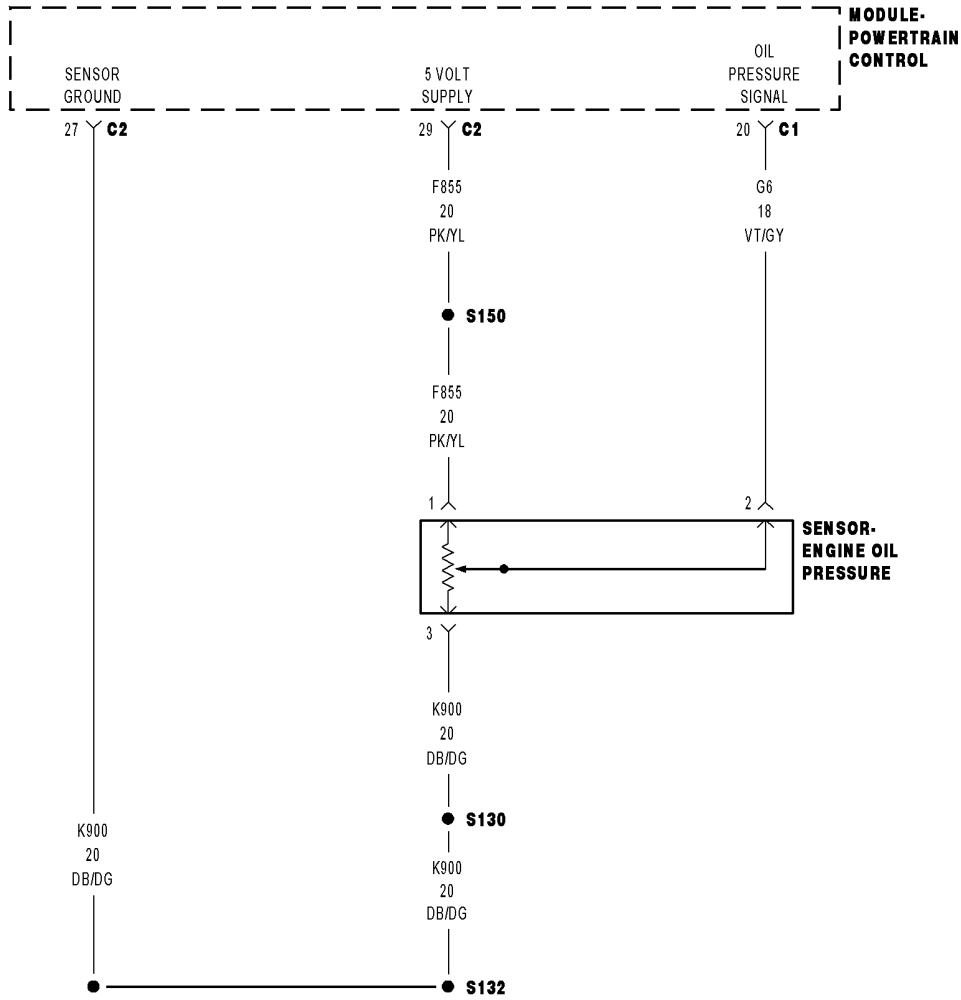

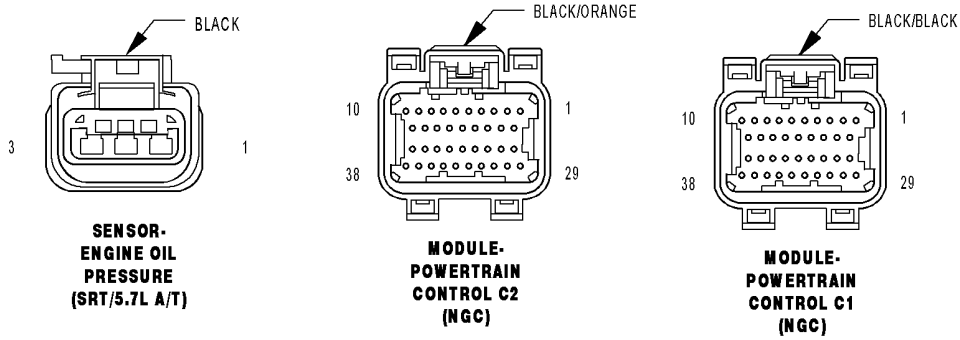

81639f46

For a complete wiring diagram, **refer to the Wiring Information**.

- **When Monitored:**
  With the ignition on. Battery voltage greater than 10 Volts.
- **Set Condition:**
  The Engine Oil pressure signal is greater than the calibrated amount. One Trip Fault. Three good trips to clear the MIL.

Possible Causes
(G6) ENGINE OIL PRESSURE SIGNAL CIRCUIT SHORTED TO VOLTAGE
(G6) ENGINE OIL PRESSURE SIGNAL CIRCUIT OPEN
(G6) ENGINE OIL PRESSURE SIGNAL CIRCUIT SHORTED TO THE (F855) 5-VOLT SUPPLY CIRCUIT
(K900) SENSOR GROUND CIRCUIT OPEN
ENGINE OIL PRESSURE SENSOR
POWERTRAIN CONTROL MODULE (PCM)

Always perform the Pre-Diagnostic Troubleshooting procedure before proceeding. (Refer to 28 - DTC-Based Diagnostics/MODULE, Powertrain Control (PCM) - Standard Procedure).

1. ACTIVE DTC

NOTE: Make sure that the engine oil is at the proper level. Also, check the customers oil change history to make sure that the oil is being changed at the correct intervals and that the proper oil viscosity is being used.

1. Start the engine and allow it to reach normal operating temperature.

WARNING: When the engine is operating, do not stand in direct line with the fan. Do not put your hands near the pulleys, belts or fan. Do not wear loose clothing. Failure to follow these instructions may result in possible serious or fatal injury.

NOTE: Diagnose and repair any system voltage or sensor supply voltage DTCs before continuing with this test.

2. With the scan tool, select View DTCs.

Is the DTC Active at this time?

Yes

- Go To 2

No

- Perform the INTERMITTENT CONDITION diagnostic procedure. (Refer to 28 - DTC-Based Diagnostics/MODULE, Powertrain Control (PCM) - Standard Procedure).

2. ENGINE OIL PRESSURE SENSOR

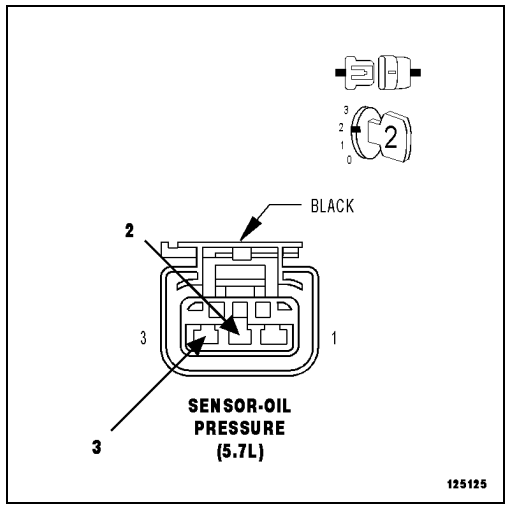

1. Turn the ignition off.
2. Disconnect the Engine Oil Pressure Sensor harness connector.
3. Ignition on, engine not running.
4. With the scan tool, monitor the Engine Oil Pressure Sensor voltage.
5. Connect a jumper wire between the (G6) Engine Oil Pressure Signal circuit and the (K900) Sensor Ground circuit in the Engine Oil Pressure Sensor harness connector.

NOTE: The sensor voltage should be approximately 0.0 Volts (plus or minus .1 of a volt) with the jumper wire in place.

Does the scan tool display the voltage as described above?

Yes

- Verify that there is good pin to terminal contact in the Oil Pressure Sensor and the Powertrain Control Module connectors. Replace the Engine Oil Pressure Sensor if no problems were found with the connectors.
- Perform the POWERTRAIN VERIFICATION TEST. (Refer to 28 - DTC-Based Diagnostics/MODULE, Powertrain Control (PCM) - Standard Procedure).

No

- Go To 3

NOTE: Remove the jumper wire before continuing.

3. (G6) ENGINE OIL PRESSURE SIGNAL CIRCUIT SHORTED TO VOLTAGE

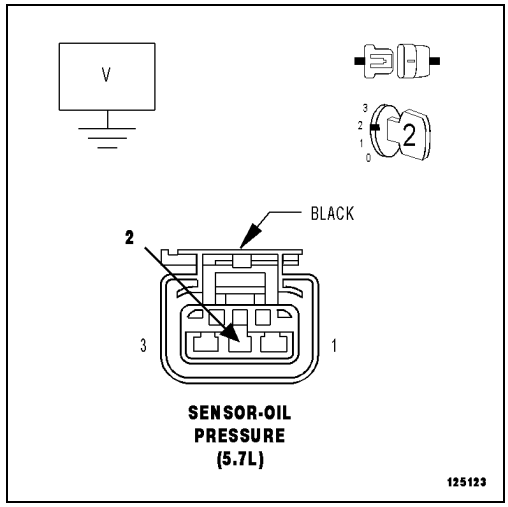

1. Turn the ignition off.
2. Disconnect the C1 and C2 PCM harness connectors.
3. Ignition on, engine not running.
4. Measure the voltage on the (G6) Engine Oil Pressure Signal circuit in the Engine Oil Pressure Sensor harness connector.

Is there any voltage present?

Yes

- Repair the short to voltage in the (G6) Engine Oil Pressure Signal circuit.
- Perform the POWERTRAIN VERIFICATION TEST. (Refer to 28 - DTC-Based Diagnostics/MODULE, Powertrain Control (PCM) - Standard Procedure).

No

- Go To 4

4. (G6) ENGINE OIL PRESSURE SIGNAL CIRCUIT OPEN

1. Turn the ignition off.

CAUTION: Do not probe the PCM harness connectors. Probing the PCM harness connectors will damage the PCM terminals resulting in poor terminal to pin connection. Install the PCM Pinout Box Kit, NGC, 38 Position 8815A to perform diagnosis.

2. Measure the resistance of the (G6) Engine Oil Pressure Signal circuit from the Engine Oil Pressure Sensor harness connector to the appropriate terminal of PCM Pinout Box 8815A.

Is the resistance below 5.0 Ohms?

Yes

- Go To 5

No

- Repair the open in the (G6) Engine Oil Pressure Signal circuit.
- Perform the POWERTRAIN VERIFICATION TEST. (Refer to 28 - DTC-Based Diagnostics/MODULE, Powertrain Control (PCM) - Standard Procedure).

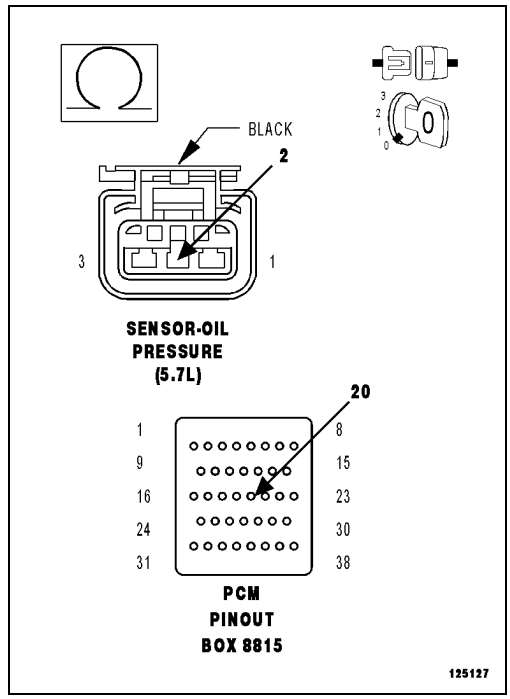

5. (G6) ENGINE OIL PRESSURE SIGNAL CIRCUIT SHORTED TO THE (F855) 5-VOLT SUPPLY CIRCUIT

1. Measure the resistance between the (G6) Engine Oil Pressure Signal circuit and the (F855) 5-volt Supply circuit in the Engine Oil Pressure Sensor harness connector.

Is the resistance below 100 Ohms?

Yes

- Repair the short between the (F855) 5-volt Supply circuit and the (G6) Engine Oil Pressure Signal circuit.
- Perform the POWERTRAIN VERIFICATION TEST. (Refer to 28 - DTC-Based Diagnostics/MODULE, Powertrain Control (PCM) - Standard Procedure).

No

- Go To 6

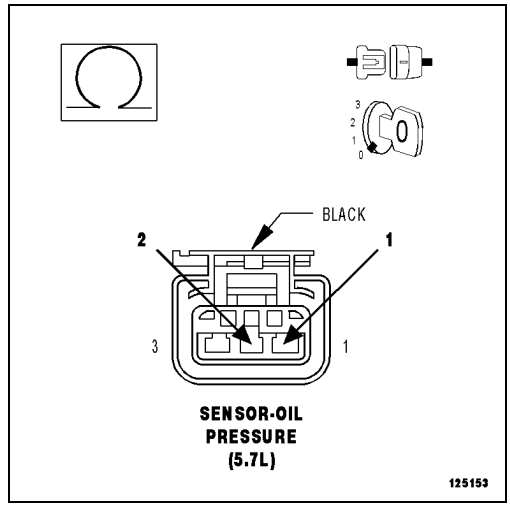

6. (K900) SENSOR GROUND CIRCUIT OPEN

1. Measure the resistance of the (K900) Sensor Ground circuit from the Engine Oil Pressure Sensor harness connector to the appropriate terminal of PCM Pinout Box 8815A.

Is the resistance below 5.0 Ohms?

Yes

- Go To 7

No

- Repair the open in the (K900) Sensor Ground circuit.
- Perform the POWERTRAIN VERIFICATION TEST. (Refer to 28 - DTC-Based Diagnostics/MODULE, Powertrain Control (PCM) - Standard Procedure).

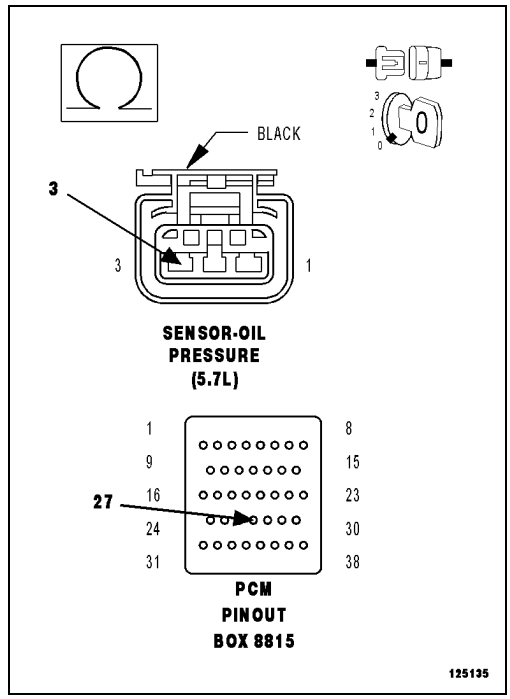

7. POWERTRAIN CONTROL MODULE (PCM)

1. Using the wiring diagram/schematic as a guide, inspect the wiring and connectors between the related Oil Pressure Sensor and the Powertrain Control Module (PCM).
2. Look for any chafed, pierced, pinched or partially broken wires.
3. Look for broken, bent, pushed out or corroded terminals. Verify that there is good pin to terminal contact in the Oil Pressure Sensor and the Powertrain Control Module connectors.
4. Refer to any Technical Service Bulletins that may apply.

Were there any problems found?

Yes

- Repair as necessary.
- Perform the POWERTRAIN VERIFICATION TEST. (Refer to 28 - DTC-Based Diagnostics/MODULE, Powertrain Control (PCM) - Standard Procedure).

No

- Replace and program the Powertrain Control Module in accordance with the Service Information.
- Perform the POWERTRAIN VERIFICATION TEST. (Refer to 28 - DTC-Based Diagnostics/MODULE, Powertrain Control (PCM) - Standard Procedure).

P0524-ENGINE OIL PRESSURE TOO LOW

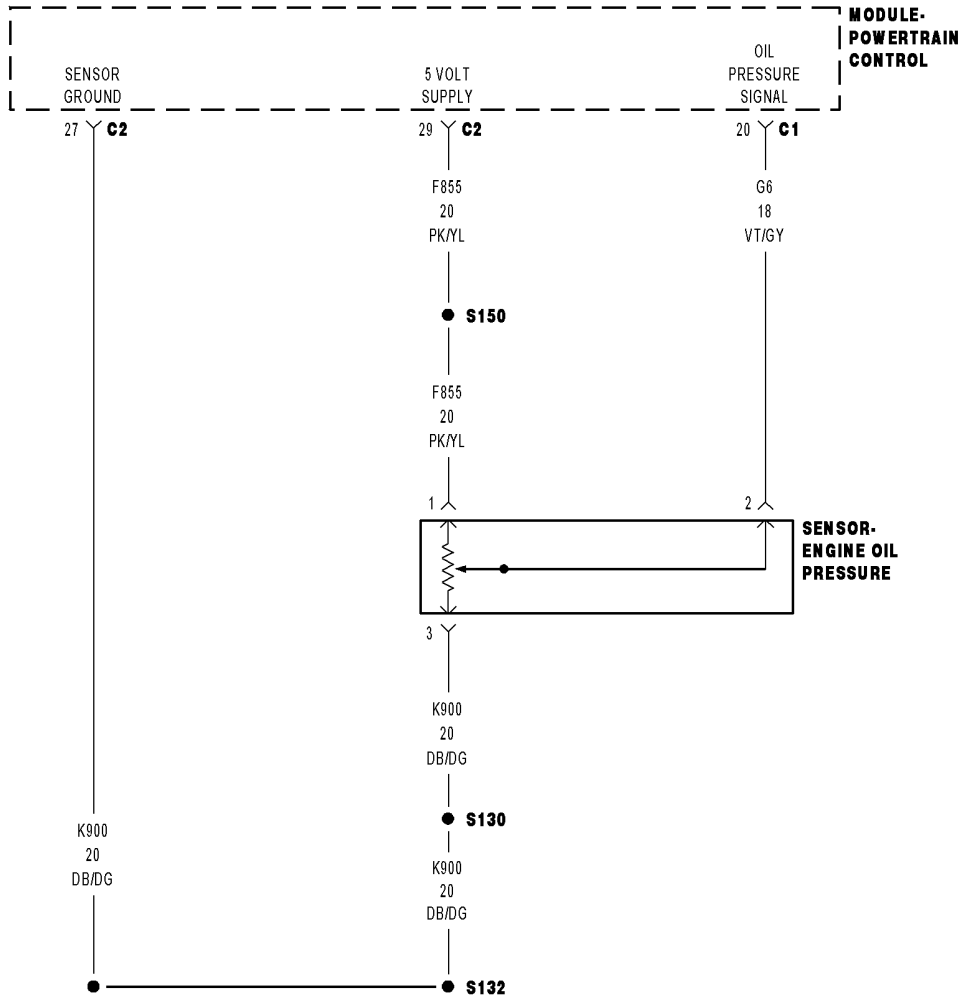

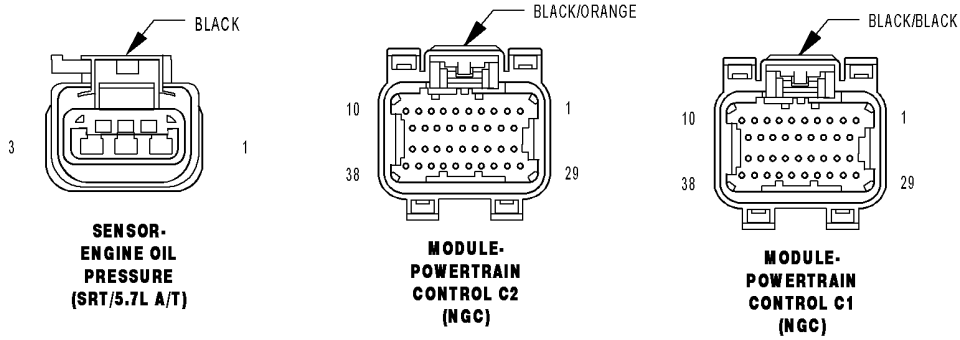

81639f46

For a complete wiring diagram, **refer to the Wiring Information**.

Theory of Operation

For the MDS to enable the 4 cylinder mode, the oil pressure has to be approximately 25 psi. For the MDS to remain enabled in the 4 cylinder mode the engine oil pressure can not drop less than 23.2 psi. If the oil pressure drops less than 23.2 psi while the, the MDS will be disabled.

- **When Monitored:**
  Engine running.
- **Set Condition:**
  The engine oil pressure never reaches the calibrated specification to allow the MDS activation. One trip fault.

Possible Causes
ENGINE OIL/ENGINE MECHANICAL
(G6) ENGINE OIL PRESSURE SENSOR SIGNAL CIRCUIT SHORTED TO VOLTAGE
RESISTANCE (G6) ENGINE OIL PRESSURE SENSOR SIGNAL CIRCUIT
(G6) ENGINE OIL PRESSURE SENSOR SIGNAL CIRCUIT SHORTED TO GROUND
RESISTANCE IN (F855) 5-VOLT SUPPLY CIRCUIT
(F855) 5-VOLT SUPPLY CIRCUIT SHORTED TO GROUND
RESISTANCE IN THE (K900) SENSOR GROUND CIRCUIT
ENGINE OIL PRESSURE SENSOR
POWERTRAIN CONTROL MODULE (PCM)

Always perform the Pre-Diagnostic Troubleshooting procedure before proceeding. (Refer to 28 - DTC-Based Diagnostics/MODULE, Powertrain Control (PCM) - Standard Procedure).

1. ACTIVE DTC

NOTE: Make sure that the engine oil is at the proper level. Also, check the customers oil change history to make sure that the oil is being changed at the correct intervals and that the proper oil viscosity is being used.

1. Ignition on, engine not running.
2. With the scan tool, select View DTCs.

Is the DTC Active at this time?

Yes

- Go To 2

No

- Perform the INTERMITTENT CONDITION diagnostic procedure. (Refer to 28 - DTC-Based Diagnostics/MODULE, Powertrain Control (PCM) - Standard Procedure).

2. ENGINE OIL/ENGINE MECHANICAL

NOTE: The following items must be considered before determining the cause of this DTC. Failure to do so may lead to misdiagnosis.
For the MDS to enable the 4 cylinder mode, the oil pressure has to be approximately 25 psi. For the MDS to remain enabled in the 4 cylinder mode the engine oil pressure can not drop less than 23.2 psi. When checking the engine oil pressure use a mechanical gauge.

- **ENGINE MECHANICAL TOLERANCES OUT OF SPECIFICATION**
- **ENGINE OIL PRESSURE OUT OF SPECIFICATION**
- **LOW ENGINE OIL**
- **OIL DIRTY OR DETERIORATED (Lack of scheduled oil changes)**
- **CORRECT VISCOSITY**
- **ENGINE OIL CONTAMINATED (i.e., coolant and/or fuel)**

1. If any of the above conditions are found, repair as necessary.

Were any of the above conditions present?

Yes

- Repair as necessary.
- Perform the POWERTRAIN VERIFICATION TEST. (Refer to 28 - DTC-Based Diagnostics/MODULE, Powertrain Control (PCM) - Standard Procedure).

No

- Go To 3

3. ENGINE OIL PRESSURE SENSOR

1. Turn the ignition off.
2. Connect the C2 PCM harness connector.
3. Ignition on, engine not running.
4. With the scan tool, monitor the Engine Oil Pressure Sensor voltage.
5. Connect a jumper wire between the (K900) Sensor Ground circuit and the (G6) Engine Oil Pressure Signal circuit.

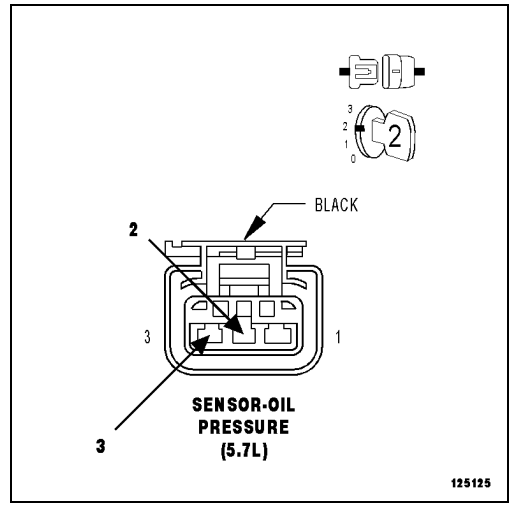

NOTE: Engine Oil Pressure voltage should change from approximately 4.5 Volts to less than 0.5 of a volt.

Is the voltage reading within the listed specification when the jumper wire is installed?

Yes

- Remove the Engine Oil Pressure sensor and ensure the oil passage/port is free from any blockage. If OK, replace the Engine Oil Pressure Sensor.
- Perform the POWERTRAIN VERIFICATION TEST. (Refer to 28 - DTC-Based Diagnostics/MODULE, Powertrain Control (PCM) - Standard Procedure).

No

- Go To 4

NOTE: Remove the jumper wire before continuing.

4. EXCESSIVE RESISTANCE IN THE (G6) ENGINE OIL PRESSURE SIGNAL CIRCUIT

1. Turn the ignition off.
2. Disconnect the C1 PCM harness connector.

CAUTION: Do not probe the PCM harness connectors. Probing the PCM harness connectors will damage the PCM terminals resulting in poor terminal to pin connection. Install the PCM Pinout Box Kit, NGC, 38 Position 8815A to perform diagnosis.

3. Measure the resistance of the (G6) Engine Oil Pressure Signal circuit from the Engine Oil Pressure Sensor harness connector to the appropriate terminal of PCM Pinout Box 8815A.

Is the resistance less than 5.0 Ohms?

Yes

- Go To 5

No

- Repair the excessive resistance in the (G6) Engine Oil Pressure Signal circuit.
- Perform the POWERTRAIN VERIFICATION TEST. (Refer to 28 - DTC-Based Diagnostics/MODULE, Powertrain Control (PCM) - Standard Procedure).

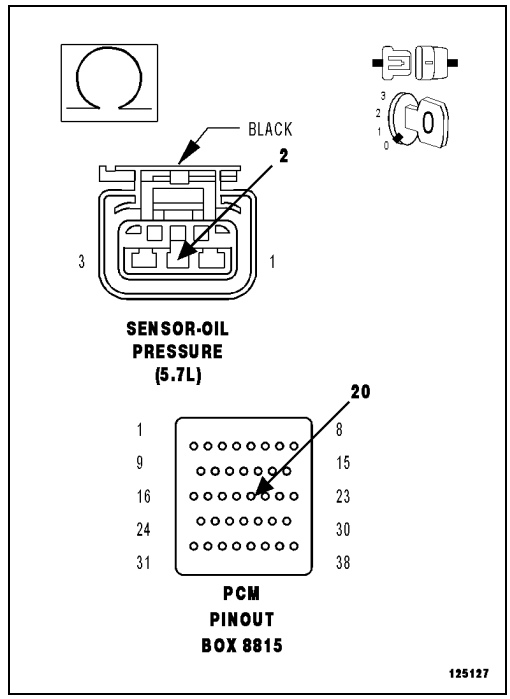

5. (G6) ENGINE OIL PRESSURE SIGNAL CIRCUIT SHORTED TO GROUND

1. Measure the resistance between ground and the (G6) Engine Oil Pressure Signal circuit in the Engine Oil Pressure Sensor harness connector.

Is the resistance less than 100 Ohms?

Yes

- Repair the short to ground in the (G6) Engine Oil Pressure Signal circuit.
- Perform the POWERTRAIN VERIFICATION TEST. (Refer to 28 - DTC-Based Diagnostics/MODULE, Powertrain Control (PCM) - Standard Procedure).

No

- Go To 6

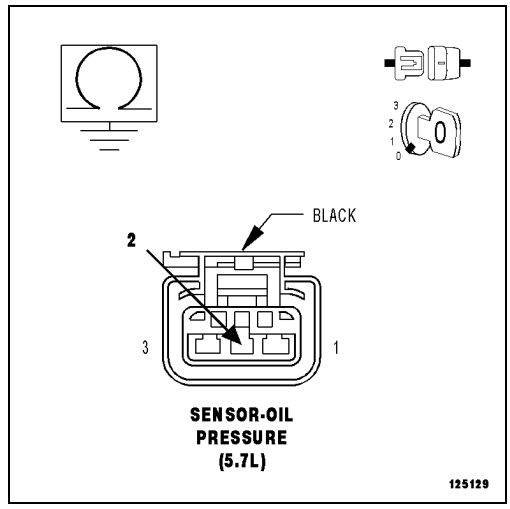

6. EXCESSIVE RESISTANCE IN THE (F855) 5-VOLT SUPPLY CIRCUIT

1. Measure the resistance of the (F855) 5-volt Supply circuit from the Engine Oil Pressure Sensor harness connector to the appropriate terminal of PCM Pinout Box 8815A.

Is the resistance less than 5.0 Ohms?

Yes

- Go To 7

No

- Repair the excessive resistance in the (F855) 5-volt Supply circuit.
- Perform the POWERTRAIN VERIFICATION TEST. (Refer to 28 - DTC-Based Diagnostics/MODULE, Powertrain Control (PCM) - Standard Procedure).

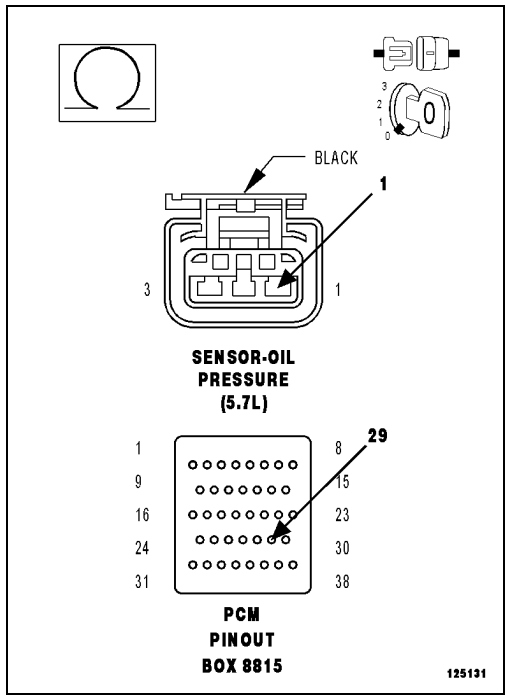

7. (F855) 5-VOLT SUPPLY SHORTED TO GROUND

1. Measure the resistance between ground and the (F855) 5-volt Supply circuit in the Engine Oil Pressure Sensor harness connector.

Is the resistance less than 100 Ohms?

Yes

- Repair the short to ground in the (F855) 5-volt Supply circuit.
- Perform the POWERTRAIN VERIFICATION TEST. (Refer to 28 - DTC-Based Diagnostics/MODULE, Powertrain Control (PCM) - Standard Procedure).

No

- Go To 8

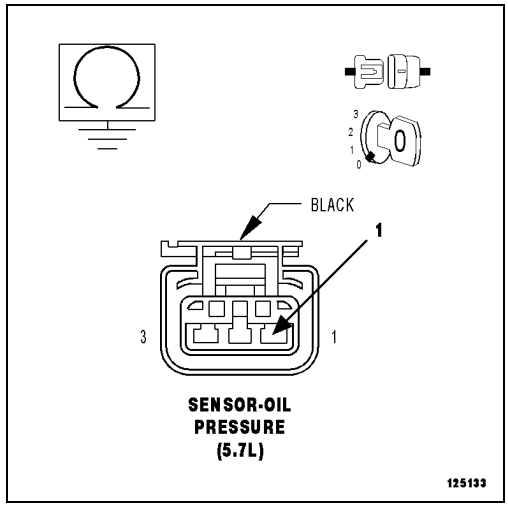

8. EXCESSIVE RESISTANCE IN THE (K900) SENSOR GROUND CIRCUIT

1. Measure the resistance of the (K900) Sensor Ground circuit from the Engine Oil Pressure Sensor harness connector to the appropriate terminal of PCM Pinout Box 8815A.

Is the resistance less than 5.0 Ohms?

Yes

- Go To 9

No

- Repair the excessive resistance in the (K900) Sensor Ground circuit.
- Perform the POWERTRAIN VERIFICATION TEST. (Refer to 28 - DTC-Based Diagnostics/MODULE, Powertrain Control (PCM) - Standard Procedure).

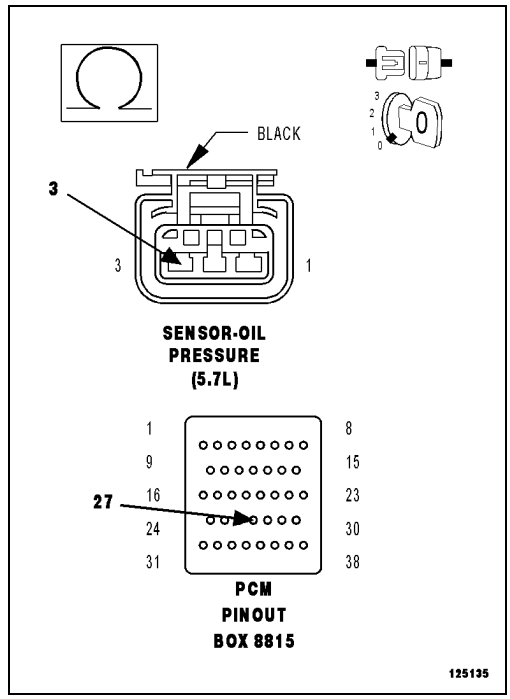

9. POWERTRAIN CONTROL MODULE (PCM)

1. Using the wiring diagram/schematic as a guide, inspect the wiring and connectors between the related Oil Pressure Sensor and the Powertrain Control Module (PCM).
2. Look for any chafed, pierced, pinched or partially broken wires.
3. Look for broken, bent, pushed out or corroded terminals. Verify that there is good pin to terminal contact in the Oil Pressure Sensor and the Powertrain Control Module connectors.
4. Refer to any Technical Service Bulletins that may apply.

Were there any problems found?

Yes

- Repair as necessary.
- Perform the POWERTRAIN VERIFICATION TEST. (Refer to 28 - DTC-Based Diagnostics/MODULE, Powertrain Control (PCM) - Standard Procedure).

No

- Replace and program the Powertrain Control Module in accordance with the Service Information.
- Perform the POWERTRAIN VERIFICATION TEST. (Refer to 28 - DTC-Based Diagnostics/MODULE, Powertrain Control (PCM) - Standard Procedure).

P0532-A/C PRESSURE SENSOR CIRCUIT LOW

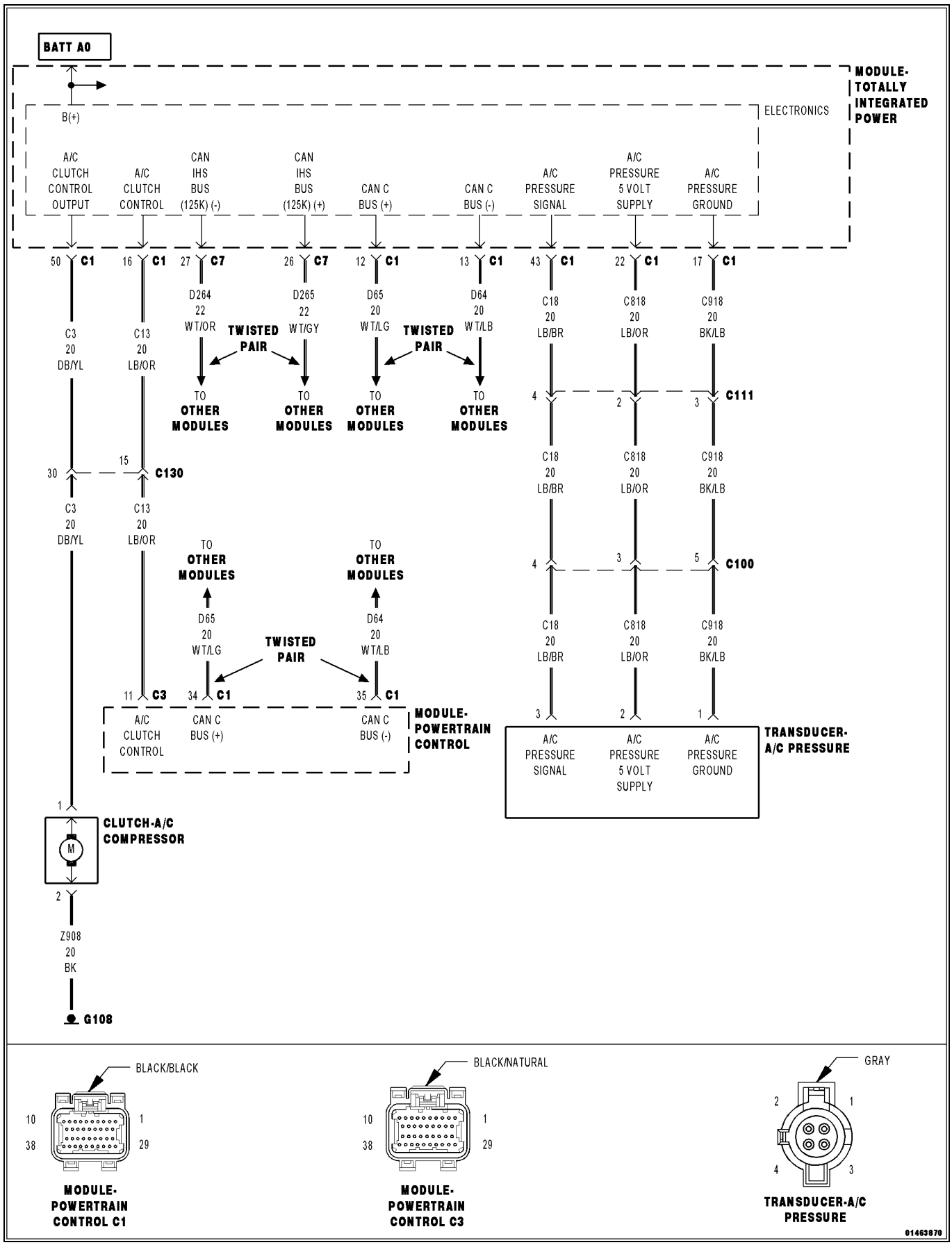

For a complete wiring diagram, **refer to the Wiring Information**.

- **When Monitored:**
  Engine running, AC is learned and AC Clutch Relay energized.
- **Set Condition:**
  The A/C pressure transducer signal voltage at the PCM goes below the minimum acceptable voltage. One Trip Fault. Three good trips to turn off the MIL.

Possible Causes
(C818) 5-VOLT SUPPLY CIRCUIT OPEN
(C818) 5-VOLT SUPPLY CIRCUIT SHORTED TO GROUND
A/C PRESSURE TRANSDUCER
(C18) A/C PRESSURE SIGNAL CIRCUIT SHORTED TO GROUND
(C18) A/C PRESSURE SIGNAL CIRCUIT SHORTED TO THE (C918) A/C PRESSURE TRANSDUCER GROUND CIRCUIT
EXCESSIVE RESISTANCE IN THE (C18) A/C PRESSURE SIGNAL CIRCUIT
TOTALLY INTEGRATED POWER MODULE (TIPM)
POWERTRAIN CONTROL MODULE (PCM)

Always perform the Pre-Diagnostic Troubleshooting procedure before proceeding. (Refer to 28 - DTC-Based Diagnostics/MODULE, Powertrain Control (PCM) - Standard Procedure).

1. ACTIVE DTC

NOTE: Diagnose and repair any communication DTCs before continuing.

NOTE: Make sure the A/C refrigerant System is properly charged in accordance with the Service Information.

1. Start the engine and allow it to reach normal operating temperature.

WARNING: When the engine is operating, do not stand in direct line with the fan. Do not put your hands near the pulleys, belts or fan. Do not wear loose clothing. Failure to follow these instructions may result in possible serious or fatal injury.

NOTE: Diagnose and repair any system voltage or sensor supply voltage DTCs before continuing with this test.

2. With the scan tool, select View DTCs.

Is the DTC Active at this time?

Yes

- Go To 2

No

- Perform the INTERMITTENT CONDITION Diagnostic Procedure. (Refer to 28 - DTC-Based Diagnostics/MODULE, Powertrain Control (PCM) - Standard Procedure)

2. (C818) 5-VOLT SUPPLY CIRCUIT

1. Turn the ignition off.
2. Disconnect the A/C Pressure Transducer harness connector.
3. Ignition on, engine not running.
4. Measure the voltage on the (C818) 5-volt Supply circuit in the A/C Pressure Transducer harness connector.

Is the voltage between 4.5 to 5.2 Volts?

Yes

- Go To 3

No

- Go To 7

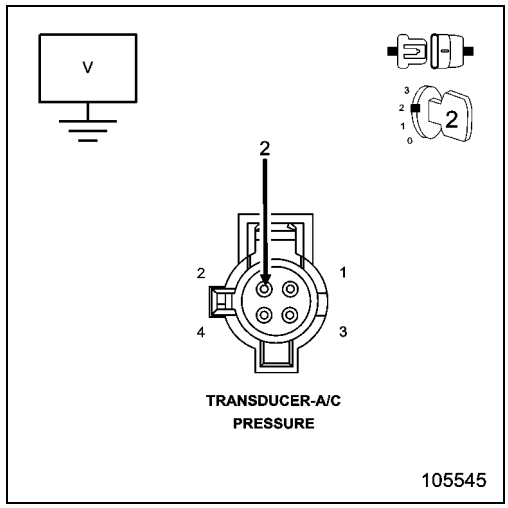

3. A/C PRESSURE TRANSDUCER

1. With the scan tool, monitor the A/C Pressure Transducer voltage.

NOTE: The sensor voltage should be approximately 5.0 Volts (plus or minus .1 volt) with the connector disconnected.

Does the scan tool display the voltage as described above?

Yes

- Verify that there is good pin to terminal contact in the A/C Pressure Transducer and the Powertrain Control Module connectors. Replace the A/C Pressure Transducer if no problems were found with the connectors.
- Perform the POWERTRAIN VERIFICATION TEST. (Refer to 28 - DTC-Based Diagnostics/MODULE, Powertrain Control (PCM) - Standard Procedure)

No

- Go To 4

4. (C18) A/C PRESSURE SIGNAL CIRCUIT SHORTED TO GROUND

1. Turn the ignition off.
2. Disconnect the C1 TIPM harness connector.
3. Measure the resistance between ground and the (C18) A/C Pressure Signal circuit in the A/C Pressure Transducer harness connector.

Is the resistance below 100 Ohms?

Yes

- Repair the short to ground in the (C18) A/C Pressure Signal circuit.
- Perform the POWERTRAIN VERIFICATION TEST. (Refer to 28 - DTC-Based Diagnostics/MODULE, Powertrain Control (PCM) - Standard Procedure)

No

- Go To 5

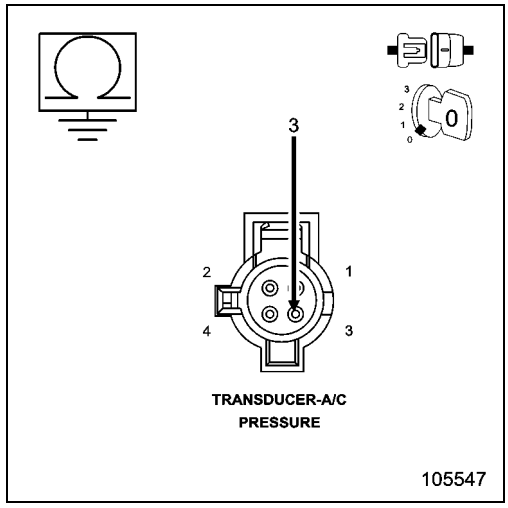

5. (C18) A/C PRESSURE SIGNAL CIRCUIT SHORTED TO THE (C918) SENSOR GROUND CIRCUIT

1. Disconnect the C1 TIPM harness connector.
2. Measure the resistance between the (C18) A/C Pressure Signal circuit and the (C918) Sensor Ground circuit in the A/C Pressure Transducer harness connector.

Is the resistance below 100 Ohms?

Yes

- Repair the short between the (C918) Sensor Ground circuit and the (C18) A/C Pressure Signal circuit.
- Perform the POWERTRAIN VERIFICATION TEST. (Refer to 28 - DTC-Based Diagnostics/MODULE, Powertrain Control (PCM) - Standard Procedure)

No

- Go To 6

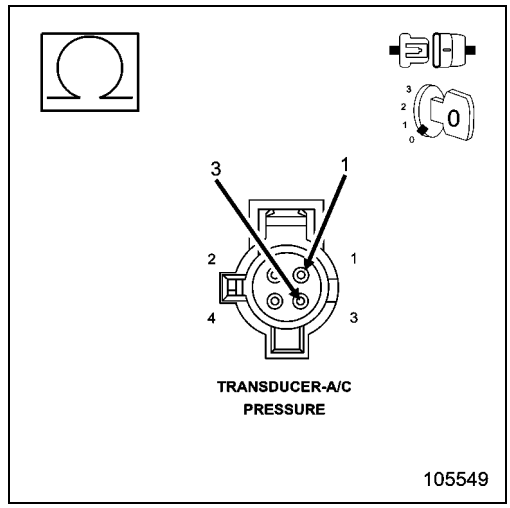

6. EXCESSIVE RESISTANCE IN THE (C18) A/C PRESSURE SIGNAL CIRCUIT

1. Measure the resistance of the (C18) A/C Pressure Signal circuit from the A/C Pressure Transducer harness connector to C1 TIPM harness connector.

Is the resistance below 5.0 Ohms?

Yes

- Go To 9

No

- Repair the excessive resistance in the (C18) A/C Pressure Signal circuit.
- Perform the POWERTRAIN VERIFICATION TEST. (Refer to 28 - DTC-Based Diagnostics/MODULE, Powertrain Control (PCM) - Standard Procedure)

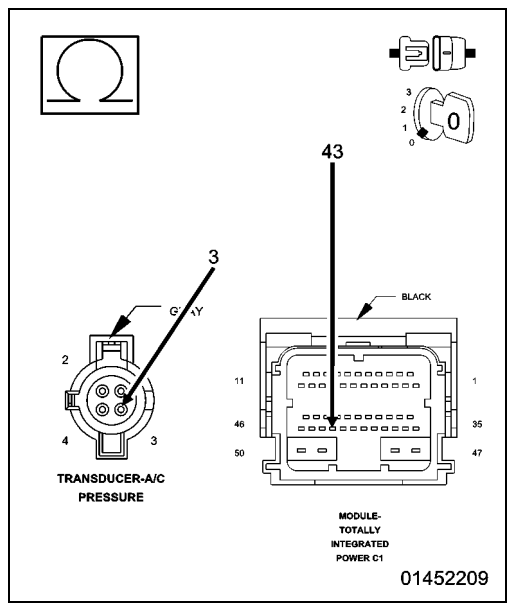

7. (C818) 5-VOLT SUPPLY CIRCUIT OPEN

1. Turn the ignition off.
2. Disconnect the C1 TIPM harness connector.
3. Measure the resistance of the (C818) 5-volt Supply circuit from the A/C Pressure Transducer harness connector to the C1 TIPM harness connector.

Is the resistance below 5.0 Ohms?

Yes

- Go To 8

No

- Repair the open in the (C818) 5-volt Supply circuit.
- Perform the POWERTRAIN VERIFICATION TEST. (Refer to 28 - DTC-Based Diagnostics/MODULE, Powertrain Control (PCM) - Standard Procedure)

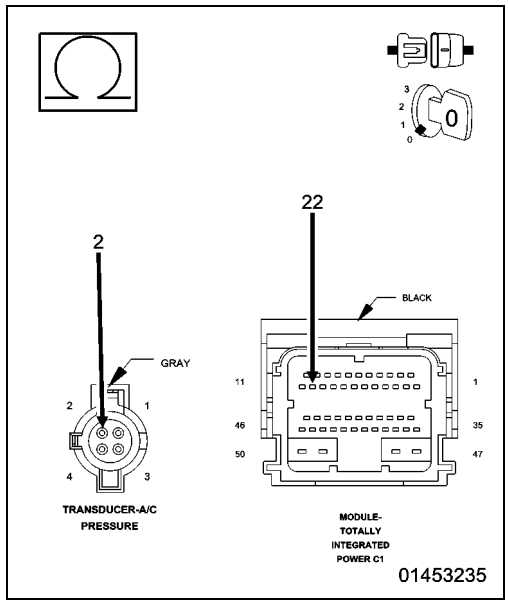

8. (C818) 5-VOLT SUPPLY CIRCUIT SHORTED TO GROUND

1. Measure the resistance between ground and the (C818) 5-volt Supply circuit in the A/C Pressure Transducer harness connector.

Is the resistance below 100 Ohms?

Yes

- Repair the short to ground in the (C818) 5-volt Supply circuit.
- Perform the POWERTRAIN VERIFICATION TEST. (Refer to 28 - DTC-Based Diagnostics/MODULE, Powertrain Control (PCM) - Standard Procedure)

No

- Go To 9

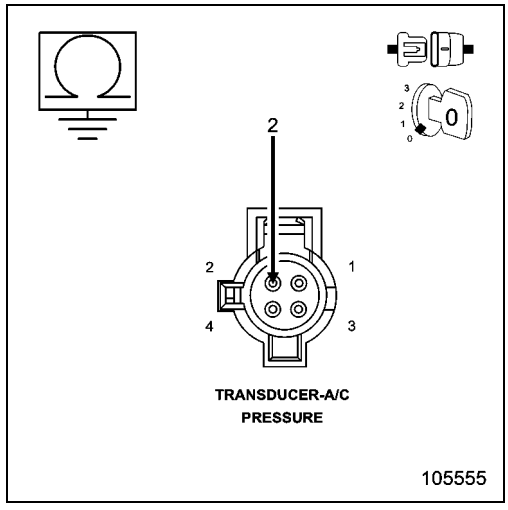

9. TOTALLY INTEGRATED POWER MODULE (TIPM)

1. Using the wiring diagram/schematic as a guide, inspect the wiring and connectors between the related A/C Pressure Transducer and the Totally Integrated Power Module (TIPM).
2. Look for any chafed, pierced, pinched or partially broken wires.
3. Look for broken, bent, pushed out or corroded terminals. Verify that there is good pin to terminal contact in the A/C Pressure Transducer and the Totally Integrated Power Module connectors.
4. Refer to any Technical Service Bulletins that may apply.

Were there any problems found?

Yes

- Repair as necessary.
- Perform the POWERTRAIN VERIFICATION TEST. (Refer to 28 - DTC-Based Diagnostics/MODULE, Powertrain Control (PCM) - Standard Procedure)

No

- Replace and program the Powertrain Control Module in accordance with the Service Information.
- Perform the POWERTRAIN VERIFICATION TEST. (Refer to 28 - DTC-Based Diagnostics/MODULE, Powertrain Control (PCM) - Standard Procedure)

P0533-A/C PRESSURE SENSOR CIRCUIT HIGH

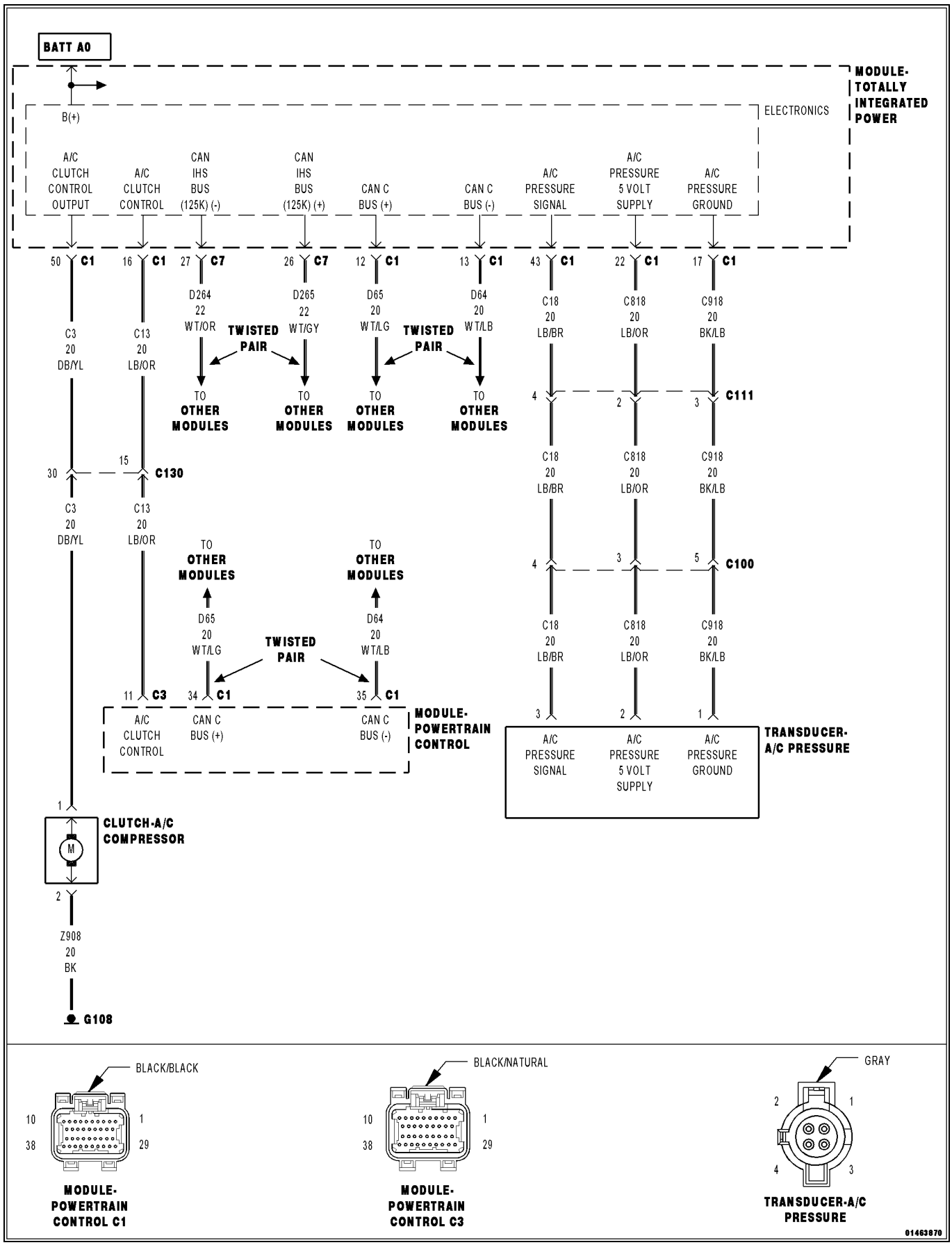

For a complete wiring diagram, **refer to the Wiring Information**.

- **When Monitored:**
  Engine running and the A/C Clutch Relay energized.
- **Set Condition:**
  The A/C pressure transducer signal at the PCM goes above the maximum acceptable voltage. One trip Fault. Three good trips to turn off the MIL.

Possible Causes
(C18) A/C PRESSURE SIGNAL CIRCUIT SHORTED TO VOLTAGE
(C18) A/C PRESSURE SIGNAL CIRCUIT OPEN
(C18) A/C PRESSURE SIGNAL CIRCUIT SHORTED TO THE (C818) 5-VOLT SUPPLY CIRCUIT
(C918) A/C PRESSURE GROUND CIRCUIT OPEN
A/C PRESSURE TRANSDUCER
TOTALLY INTEGRATED POWER MODULE (TIPM)
POWERTRAIN CONTROL MODULE (PCM)

Always perform the Pre-Diagnostic Troubleshooting procedure before proceeding. (Refer to 28 - DTC-Based Diagnostics/MODULE, Powertrain Control (PCM) - Standard Procedure).

1. ACTIVE DTC

NOTE: Diagnose and repair any communication DTCs before continuing.

NOTE: Make sure the A/C refrigerant System is properly charged in accordance with the Service Information.

1. Start the engine and allow it to reach normal operating temperature.

WARNING: When the engine is operating, do not stand in direct line with the fan. Do not put your hands near the pulleys, belts or fan. Do not wear loose clothing. Failure to follow these instructions may result in possible serious or fatal injury.

NOTE: Diagnose and repair any system voltage or sensor supply voltage DTCs before continuing with this test.

2. With the scan tool, select View DTCs.

Is the DTC Active at this time?

Yes

- Go To 2

No

- Perform the INTERMITTENT CONDITION Diagnostic Procedure. (Refer to 28 - DTC-Based Diagnostics/MODULE, Powertrain Control (PCM) - Standard Procedure)

2. A/C PRESSURE TRANSDUCER

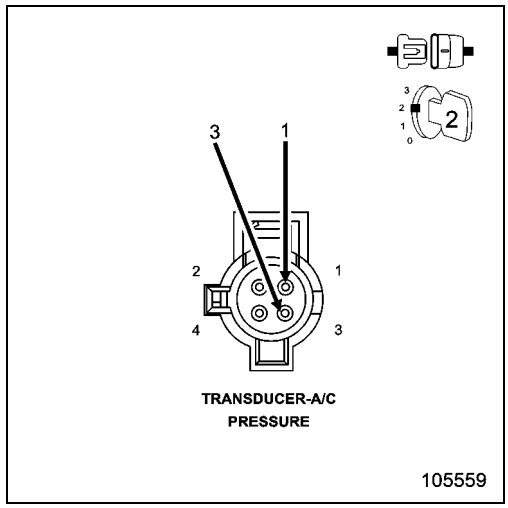

1. Turn the ignition off.
2. Disconnect the A/C Pressure Transducer harness connector.
3. Ignition on, engine not running.
4. With the scan tool, monitor the A/C Pressure Transducer voltage.
5. Connect a jumper wire between the (C18) A/C Pressure Signal circuit and the (C918) Sensor Ground circuit in the Transducer harness connector.

NOTE: The sensor voltage should be approximately 0.0 Volts (plus or minus .1 volt) with the jumper wire in place.

Does the scan tool display the voltage as described above?

Yes

- Verify that there is good pin to terminal contact in the A/C Pressure Transducer and the Powertrain Control Module connectors. Replace the A/C Pressure Transducer if no problems were found with the connectors.
- Perform the POWERTRAIN VERIFICATION TEST. (Refer to 28 - DTC-Based Diagnostics/MODULE, Powertrain Control (PCM) - Standard Procedure)

No

- Go To 3

NOTE: Remove the jumper wire before continuing.

3. (C18) A/C PRESSURE SIGNAL CIRCUIT SHORTED TO VOLTAGE

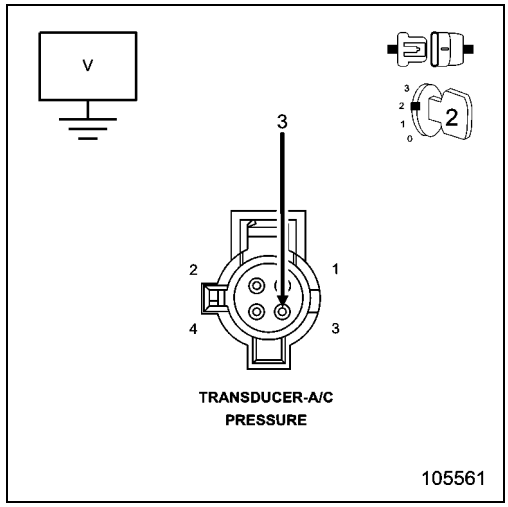

1. Turn the ignition off.
2. Disconnect the C1 TIPM harness connector.
3. Ignition on, engine not running.
4. Measure the voltage on the (C18) A/C Pressure Signal circuit in the A/C Pressure Transducer harness connector.

Is there any voltage present?

Yes

- Repair the short to voltage in the (C18) A/C Pressure Signal circuit.
- Perform the POWERTRAIN VERIFICATION TEST. (Refer to 28 - DTC-Based Diagnostics/MODULE, Powertrain Control (PCM) - Standard Procedure)

No

- Go To 4

4. (C18) A/C PRESSURE SIGNAL CIRCUIT OPEN

1. Turn the ignition off.
2. Measure the resistance of the (C18) A/C Pressure Signal circuit from the A/C Pressure Transducer harness connector to C1 TIPM harness connector.

Is the resistance below 5.0 Ohms?

Yes

- Go To 5

No

- Repair the open in the (C18) A/C Pressure Signal circuit.
- Perform the POWERTRAIN VERIFICATION TEST. (Refer to 28 - DTC-Based Diagnostics/MODULE, Powertrain Control (PCM) - Standard Procedure)

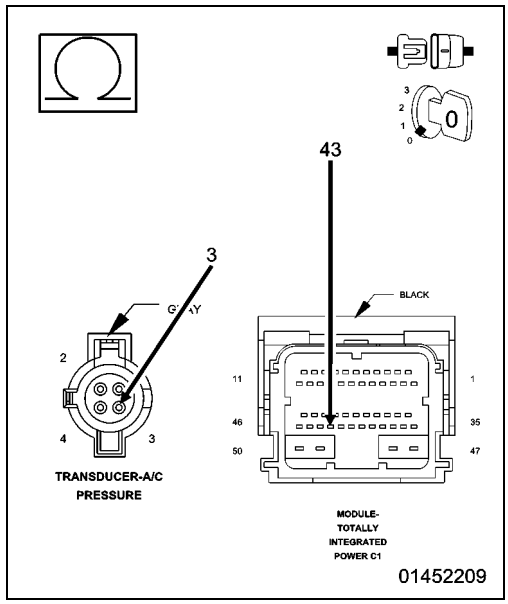

5. (C18) A/C PRESSURE SIGNAL CIRCUIT SHORTED TO THE (C818) 5-VOLT SUPPLY CIRCUIT

1. Measure the resistance between the (C18) A/C Pressure Signal circuit and the (C818) 5-volt Supply circuit in the A/C Pressure Transducer harness connector.

Is the resistance below 5.0 Ohms?

Yes

- Repair the short between the (C818) 5-volt Supply circuit and the (C18) A/C Pressure Signal circuit.
- Perform the POWERTRAIN VERIFICATION TEST. (Refer to 28 - DTC-Based Diagnostics/MODULE, Powertrain Control (PCM) - Standard Procedure)

No

- Go To 6

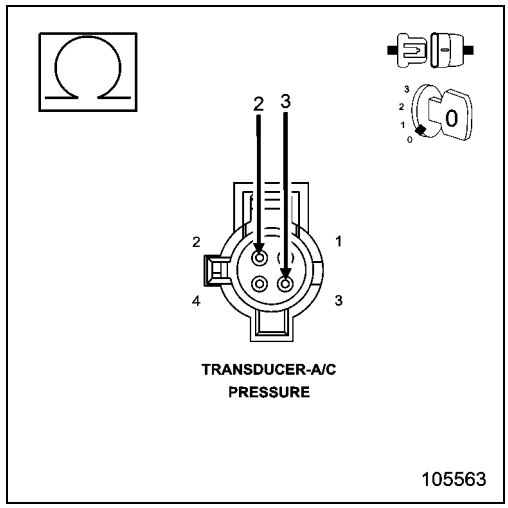

6. (C918) SENSOR GROUND CIRCUIT OPEN

1. Disconnect the C1 TIPM harness connector.
2. Measure the resistance of the (C918) Sensor Ground circuit from the A/C Pressure Sensor harness connector to the C1 TIPM harness connector.

Is the resistance below 5.0 Ohms?

Yes

- Go To 7

No

- Repair the open in the (C918) Sensor Ground circuit.
- Perform the POWERTRAIN VERIFICATION TEST. (Refer to 28 - DTC-Based Diagnostics/MODULE, Powertrain Control (PCM) - Standard Procedure)

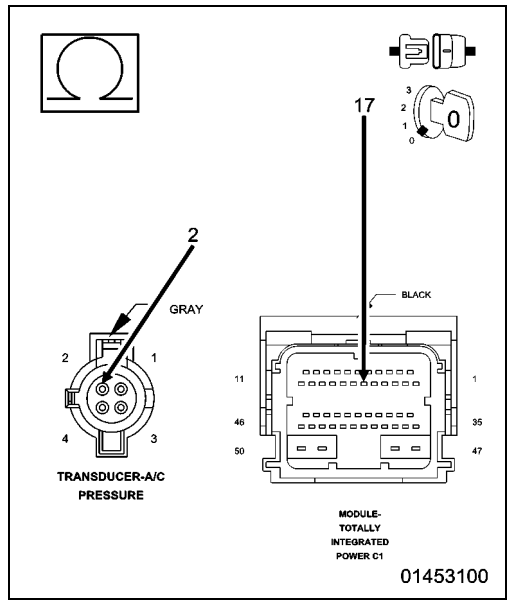

7. TOTALLY INTEGRATED POWER MODULE (TIPM)

1. Using the wiring diagram/schematic as a guide, inspect the wiring and connectors between the related A/C Pressure Transducer and the Totally Integrated Power Module (TIPM).
2. Look for any chafed, pierced, pinched or partially broken wires.
3. Look for broken, bent, pushed out or corroded terminals. Verify that there is good pin to terminal contact in the A/C Pressure Transducer and the Totally Integrated Power Module connectors.
4. Refer to any Technical Service Bulletins that may apply.

Were there any problems found?

Yes

- Repair as necessary.
- Perform the POWERTRAIN VERIFICATION TEST. (Refer to 28 - DTC-Based Diagnostics/MODULE, Powertrain Control (PCM) - Standard Procedure)

No

- Replace and program the Powertrain Control Module in accordance with the Service Information.
- Perform the POWERTRAIN VERIFICATION TEST. (Refer to 28 - DTC-Based Diagnostics/MODULE, Powertrain Control (PCM) - Standard Procedure)

P0562-BATTERY VOLTAGE LOW

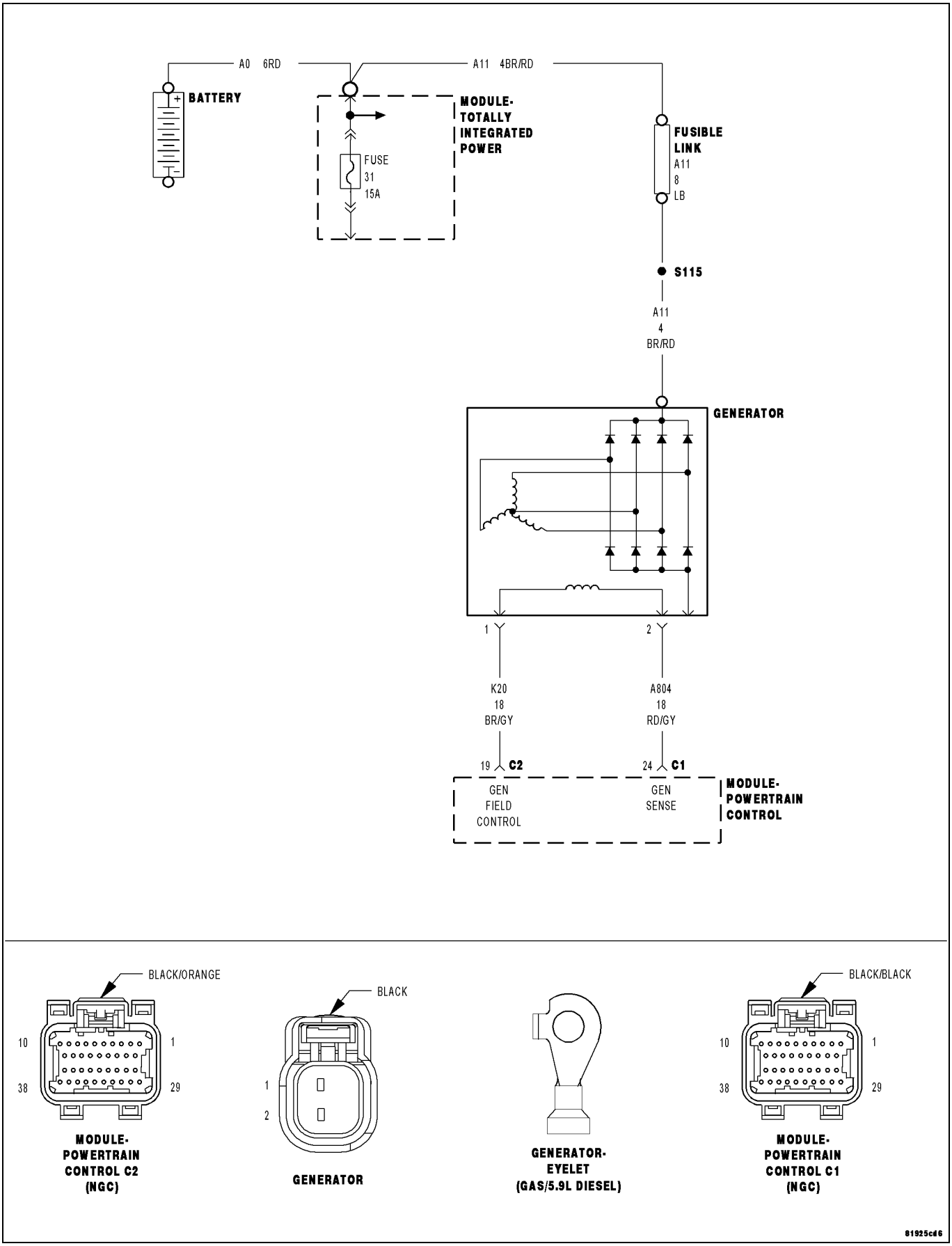

For a complete wiring diagram **Refer to the Wiring Information**.

- **When Monitored:**
  The engine running. The engine speed greater than 1000 RPM.
- **Set Condition:**
  Battery voltage is below 6 volts. Two Trip Fault.

Possible Causes
RESISTANCE IN THE (A11) BATTERY POSITIVE CIRCUIT
GENERATOR OPERATION
(K20) GENERATOR FIELD CONTROL CIRCUIT OPEN
(K20) GENERATOR FIELD CONTROL CIRCUIT SHORTED TO GROUND
POWERTRAIN CONTROL MODULE (PCM)

Always perform the Pre-Diagnostic Troubleshooting procedure before proceeding. (Refer to 28 - DTC-Based Diagnostics/MODULE, Powertrain Control (PCM) - Standard Procedure).

1. ACTIVE DTC

NOTE: Make sure the Battery is in good condition. Using the Midtronics Battery Tester, test the Battery before continuing.

NOTE: Inspect the vehicle for after market accessories that may exceed the Generator System output.

NOTE: Make sure the generator drive belt is in good operating condition.

NOTE: Inspect the fuses in the TIPM. If an open fuse is found, use the wire diagram/schematic as a guide, inspect the wiring and connectors for damage.

1. Start the engine.
2. Allow the engine to reach normal operating temperature.
3. With a scan tool, select View DTCs.

NOTE: It may be necessary to drive the vehicle to meet the conditions to set this DTC, try to repeat the conditions in which the fault originally set by reviewing the Freeze Frame data.

Is the DTC Active or Pending at this time?

Yes

- Go To 2

No

- Refer to the INTERMITTENT CONDITION Diagnostic Procedure. (Refer to 28 - DTC-Based Diagnostics/MODULE, Powertrain Control (PCM) - Standard Procedure)

2. (A11) B+ CIRCUIT HIGH RESISTANCE

WARNING: When the engine is operating, do not stand in direct line with the fan. Do not put your hands near the pulleys, belts or fan. Do not wear loose clothing. Failure to follow these instructions may result in possible serious or fatal injury.

NOTE: Make sure all wires are clear of the engine's moving parts.

1. Measure the voltage between the (A11) B+ Terminal at the Generator and the Battery + Post.
2. Start the engine.

Is the voltage above 0.4 of a volt?

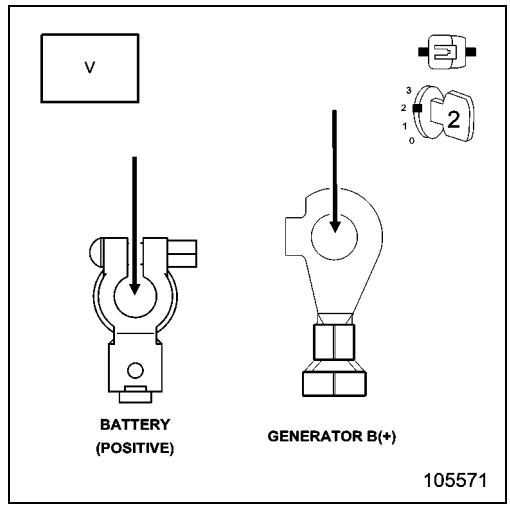

Yes

- Repair the excessive resistance in the (A11) B+ circuit between the Generator and Battery.
- Perform the POWERTRAIN VERIFICATION TEST. (Refer to 28 - DTC-Based Diagnostics/MODULE, Powertrain Control (PCM) - Standard Procedure)

No

- Go To 3

3. GENERATOR CASE GROUND HIGH RESISTANCE

WARNING: When the engine is operating, do not stand in direct line with the fan. Do not put your hands near the pulleys, belts or fan. Do not wear loose clothing. Failure to follow these instructions may result in possible serious or fatal injury.

1. Ignition on, engine not running.
2. Start the engine.
3. Allow the engine to reach normal operating temperature.
4. Measure the voltage between the Generator case and Battery ground post.

Is the voltage above 0.1 of a volt?

Yes

- Repair excessive resistance in the Generator Ground between the Generator Case and Battery ground side.
- Perform the POWERTRAIN VERIFICATION TEST. (Refer to 28 - DTC-Based Diagnostics/MODULE, Powertrain Control (PCM) - Standard Procedure)

No

- Go To 4

4. GENERATOR OPERATION

1. Turn the ignition off.
2. Disconnect the Generator Field harness connector.
3. Using a 12-volt test light connected to ground, probe the (K20) Generator Field Control circuit in the Generator Field harness connector.

NOTE: Make sure the test light is probing the circuit before actuating the Test or a DTC may set and not allow the actuation.

4. With a scan tool, actuate the Generator Field Driver.

NOTE: The test light should be illuminated and bright proportional to the maximum duty cycle allowed by the scan tool. For example, if the scan tool allows 100% actuation, the brightness should be as bright as a direct connection to the battery. If the scan tool allows a maximum 25% actuation, the brightness should be 25% as bright as a direct connection to the battery.

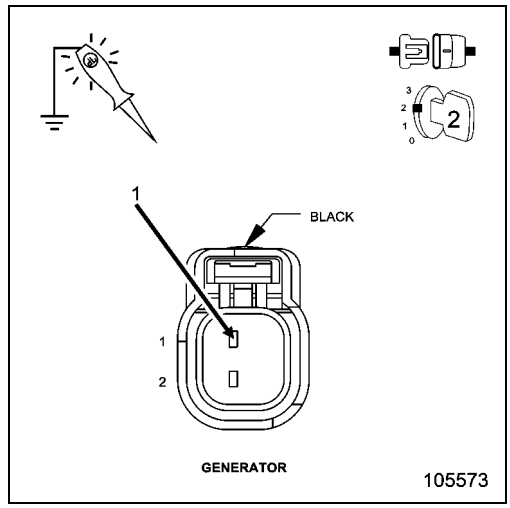

Does the test light illuminate accordingly during the actuation?

Yes

- Verify that there is good pin to terminal contact in the Generator and Powertrain Control Module connectors. Replace the Generator if no problems were found with the connectors.
- Perform the POWERTRAIN VERIFICATION TEST. (Refer to 28 - DTC-Based Diagnostics/MODULE, Powertrain Control (PCM) - Standard Procedure)

No

- Go To 5

5. (K20) GENERATOR FIELD CONTROL CIRCUIT OPEN

1. Turn the ignition off.
2. Disconnect the C2 PCM harness connector.

CAUTION: Do not probe the PCM harness connectors. Probing the PCM harness connectors will damage the PCM terminals resulting in poor terminal to pin connection. Install the PCM Pinout Box Kit, NGC, 38 Position 8815A to perform diagnosis.

3. Measure the resistance of the (K20) Gen Field Control circuit from the Generator harness connector to the appropriate terminal of the special tool #8815A.

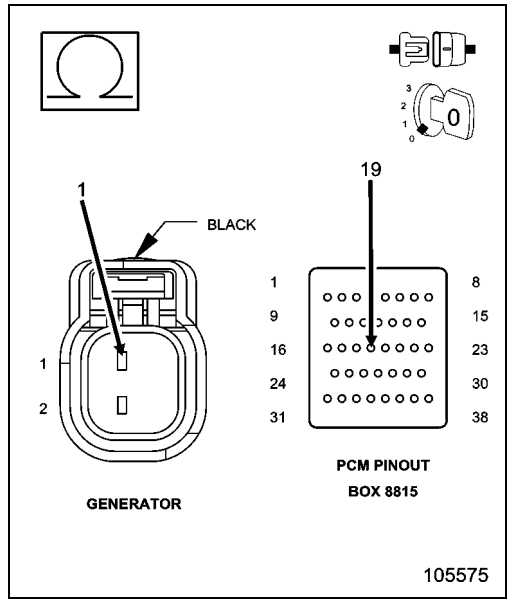

Is the resistance below 5.0 ohms?

Yes

- Go To 6

No

- Repair the open in the (K20) Gen Field Control circuit.
- Perform the POWERTRAIN VERIFICATION TEST. (Refer to 28 - DTC-Based Diagnostics/MODULE, Powertrain Control (PCM) - Standard Procedure)

6. (K20) GENERATOR FIELD CONTROL CIRCUIT SHORTED TO GROUND

1. Measure the resistance between ground and the (K20) Gen Field Control circuit in the Generator Field harness connector.

Is the resistance below 100 ohms?

Yes

- Repair the short to ground in the (K20) Gen Field Control circuit.
- Perform the POWERTRAIN VERIFICATION TEST. (Refer to 28 - DTC-Based Diagnostics/MODULE, Powertrain Control (PCM) - Standard Procedure)

No

- Go To 7

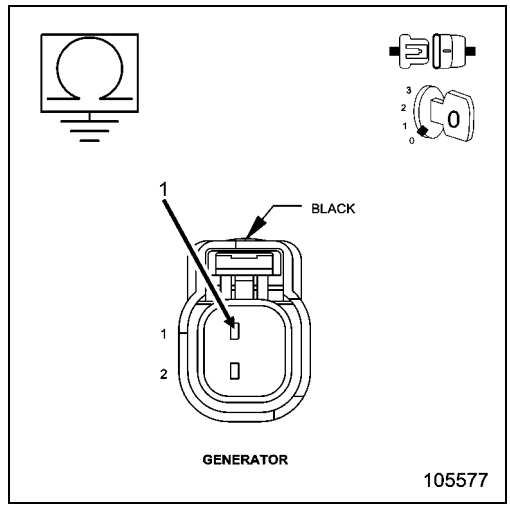

7. POWERTRAIN CONTROL MODULE (PCM)

1. Using the wiring diagram/schematic as a guide, inspect the wiring and connectors between the Generator and the Powertrain Control Module (PCM).
2. Look for any chafed, pierced, pinched, or partially broken wires.
3. Look for broken, bent, pushed out or corroded terminals. Verify that there is good pin to terminal contact in the Generator and Control Module connectors.
4. Refer to any Technical Service Bulletins that may apply.

Were there any problems found?

Yes

- Repair as necessary.
- Perform the POWERTRAIN VERIFICATION TEST. (Refer to 28 - DTC-Based Diagnostics/MODULE, Powertrain Control (PCM) - Standard Procedure)

No

- Replace and program the Powertrain Control Module per Service Information.
- Perform the POWERTRAIN VERIFICATION TEST. (Refer to 28 - DTC-Based Diagnostics/MODULE, Powertrain Control (PCM) - Standard Procedure)

P0563-BATTERY VOLTAGE HIGH

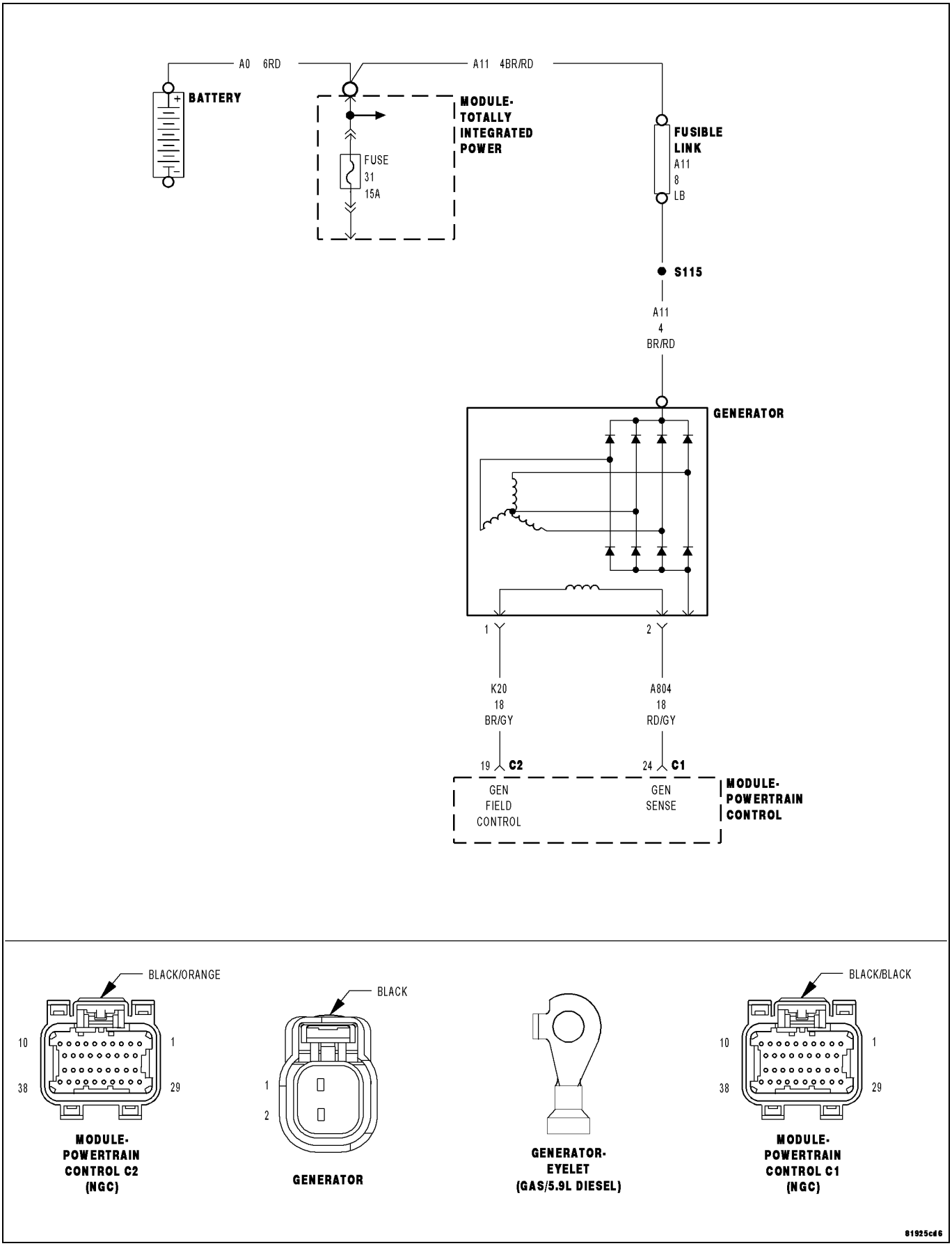

For a complete wiring diagram **Refer to the Wiring Information**.

- **When Monitored:**
  With the ignition on. Engine RPM greater than 1000 RPM. With no other charging system codes set.
- **Set Condition:**
  Battery voltage is 1 volt greater than desired voltage for more than 10 seconds. Battery voltage greater than 15.75 volts. One Trip Fault. Three good trips to turn off the MIL.

Possible Causes
(K20) GENERATOR FIELD CONTROL CIRCUIT SHORTED TO VOLTAGE
GENERATOR
POWERTRAIN CONTROL MODULE (PCM)

Always perform the Pre-Diagnostic Troubleshooting procedure before proceeding. (Refer to 28 - DTC-Based Diagnostics/MODULE, Powertrain Control (PCM) - Standard Procedure).

1. ACTIVE DTC

NOTE: Make sure the Battery is in good condition. Using the Midtronics Battery Tester, test the Battery before continuing.

NOTE: Inspect the vehicle for after market accessories that may exceed the Generator System output.

NOTE: Make sure the generator drive belt is in good operating condition.

NOTE: Inspect the fuses in the IPM. If an open fuse is found, use the wire diagram/schematic as a guide, inspect the wiring and connectors for damage.

1. Start the engine.
2. Allow the engine to reach normal operating temperature.
3. With a scan tool, select View DTCs.

NOTE: It may be necessary to drive the vehicle to meet the conditions to set this DTC, try to repeat the conditions in which the fault originally set by reviewing the Freeze Frame data.

Is the DTC Active at this time?

Yes

- Go To 2

No

- Refer to the INTERMITTENT CONDITION Diagnostic Procedure. (Refer to 28 - DTC-Based Diagnostics/MODULE, Powertrain Control (PCM) - Standard Procedure)

2. GENERATOR OPERATION

1. Turn the ignition off.
2. Disconnect the Generator Field harness connector.
3. Using a 12-volt test light connected to ground, probe the (K20) Generator Field Control circuit in the Generator Field harness connector.

NOTE: Make sure the test light is probing the circuit before actuating the Relay or a DTC may set and not allow the actuation.

4. Ignition on, engine not running.
5. With the scan tool, actuate the Gen Field Control circuit.

Does the test light illuminate brightly and flash on and off?

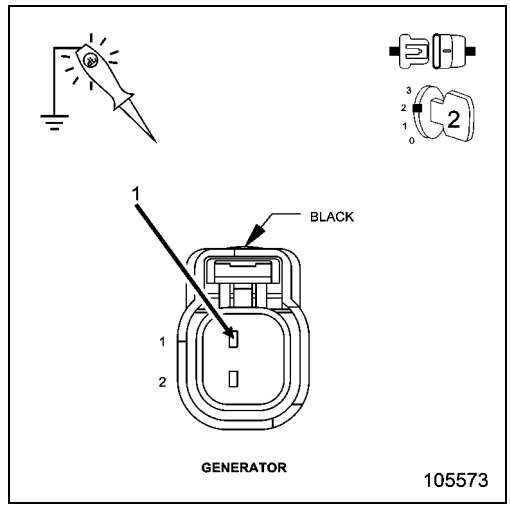

Yes

- Replace the Generator.
- Perform the POWERTRAIN VERIFICATION TEST. (Refer to 28 - DTC-Based Diagnostics/MODULE, Powertrain Control (PCM) - Standard Procedure)

No

- Go To 3

3. (K20) FIELD CIRCUIT SHORTED VOLTAGE

1. Turn the ignition off.
2. Disconnect the C2 PCM harness connector.
3. Ignition on, engine not running.
4. Measure the voltage on the (K20) Gen Field Control circuit at the Generator Field harness connector.

Is there any voltage present?

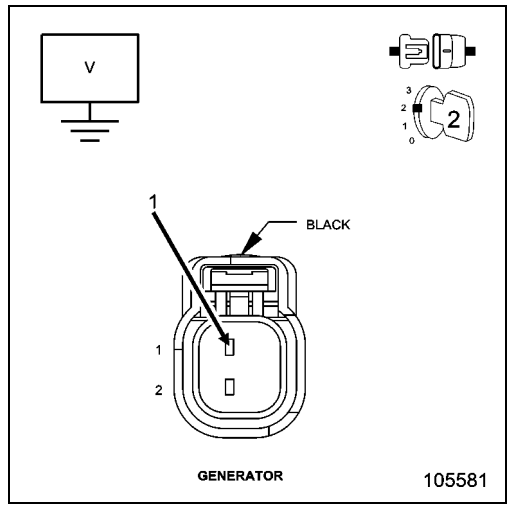

Yes

- Repair the short to voltage in the (K20) Gen Field Control circuit.
- Perform the POWERTRAIN VERIFICATION TEST. (Refer to 28 - DTC-Based Diagnostics/MODULE, Powertrain Control (PCM) - Standard Procedure)

No

- Go To 4

4. POWERTRAIN CONTROL MODULE (PCM)

1. Using the wiring diagram/schematic as a guide, inspect the wiring and connectors between the Generator and the Powertrain Control Module (PCM).
2. Look for any chafed, pierced, pinched, or partially broken wires.
3. Look for broken, bent, pushed out or corroded terminals. Verify that there is good pin to terminal contact in the Generator and Control Module connectors.
4. Refer to any Technical Service Bulletins that may apply.

Were there any problems found?

Yes

- Repair as necessary.
- Perform the POWERTRAIN VERIFICATION TEST. (Refer to 28 - DTC-Based Diagnostics/MODULE, Powertrain Control (PCM) - Standard Procedure)

No

- Replace and program the Powertrain Control Module per Service Information.
- Perform the POWERTRAIN VERIFICATION TEST. (Refer to 28 - DTC-Based Diagnostics/MODULE, Powertrain Control (PCM) - Standard Procedure)

P0571-BRAKE SWITCH 1 PERFORMANCE

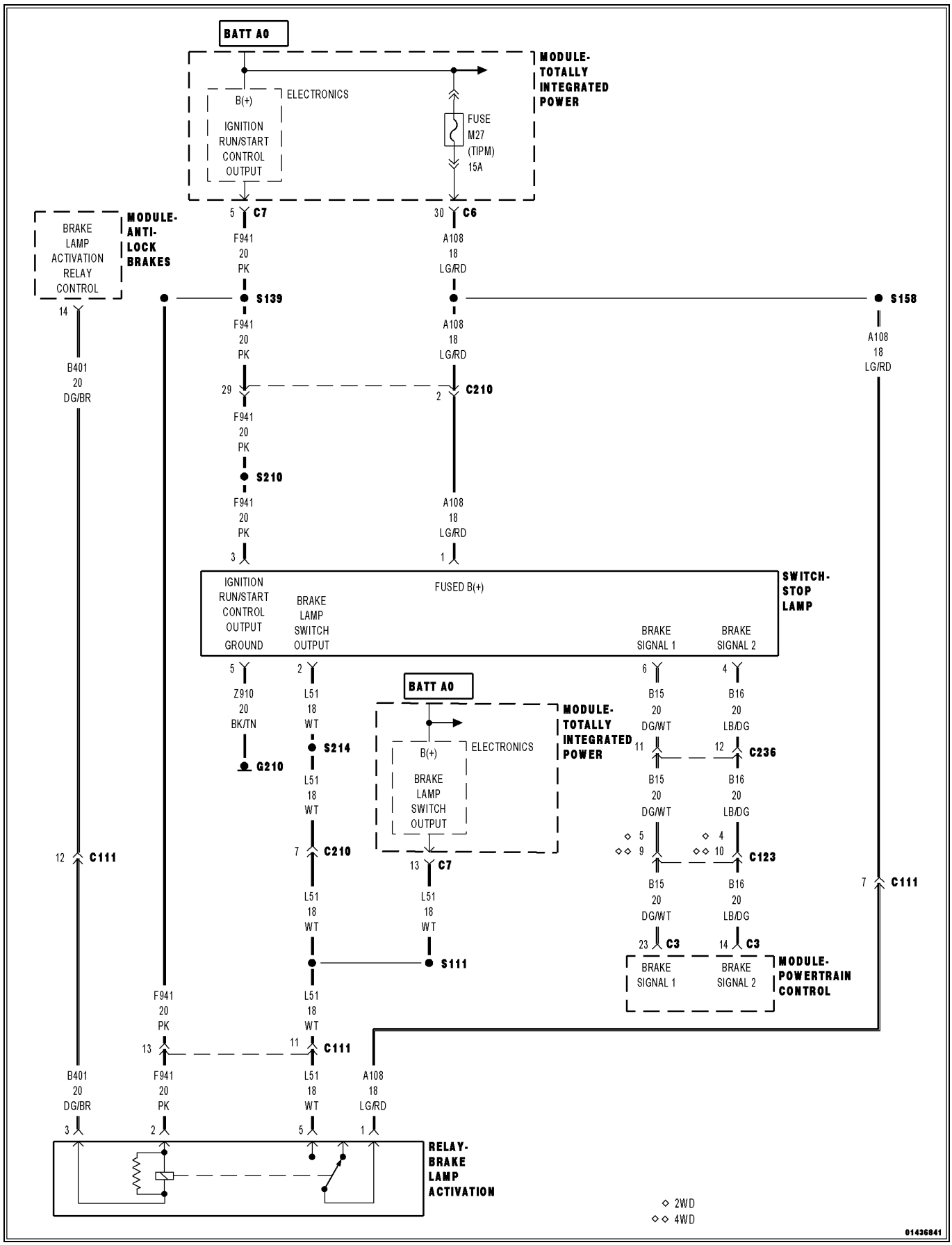

For a complete wiring diagram, **refer to the Wiring Information**.

Theory of Operation

The brake switch rationality checks both failure modes of the brake switch. The brake switch stuck on test checks for a high vehicle speed condition where the brake switch is unexpectedly depressed. The brake switch stuck off test checks for repeated vehicle stop maneuvers without the brake switch depressed.

- **When Monitored:**
  Ignition on.
- **Set Condition:**
  If the output of Brake Switch No.1 to the Powertrain Control Module (PCM) looks like it is not applied, while Brake Lamp Switch Output circuit is applied the fault will mature in 60ms. One Trip Fault.

Possible Causes
(B15) BRAKE SWITCH NO.1 SIGNAL SHORTED TO GROUND
(B16) BRAKE SWITCH NO.2 SIGNAL CIRCUIT OPEN
(B16) BRAKE SWITCH NO.2 SIGNAL CIRCUIT SHORTED TO GROUND
(G210) GROUND CIRCUIT OPEN
STOP LAMP SWITCH
POWERTRAIN CONTROL MODULE (PCM)

Always perform the Pre-Diagnostic Troubleshooting procedure before proceeding. (Refer to 28 - DTC-Based Diagnostics/MODULE, Powertrain Control (PCM) - Standard Procedure).

1. ACTIVE DTC

NOTE: Make sure the Stop Lamp Switch is properly adjusted before continuing.

NOTE: Make sure the Stop Lamp Switch is properly wired, such as (B15) Brake Switch No.1 and (B16) Brake Switch No.2 circuit are not switched at the harness connector.

1. Ignition on, engine not running.
2. With the scan tool, select View DTCs.

Is the DTC Active at this time?

Yes

- Go To 2

No

- Perform the INTERMITTENT CONDITION diagnostic procedure. (Refer to 28 - DTC-Based Diagnostics/MODULE, Powertrain Control (PCM) - Standard Procedure).

2. (B15) BRAKE SWITCH NO.1 SIGNAL SHORTED TO GROUND

1. Turn the ignition off.
2. Disconnect the Stop Lamp Switch harness connector.
3. Disconnect the C3 PCM harness connector.
4. Measure the resistance between ground and the (B15) Brake Switch No.1 Signal circuit in the Stop Lamp Switch harness connector.

Is the resistance below 100 Ohms?

Yes

- Repair the short to ground in the (B15) Brake Switch No.1 Signal circuit.
- Perform the POWERTRAIN VERIFICATION TEST. (Refer to 28 - DTC-Based Diagnostics/MODULE, Powertrain Control (PCM) - Standard Procedure).

No

- Go To 3

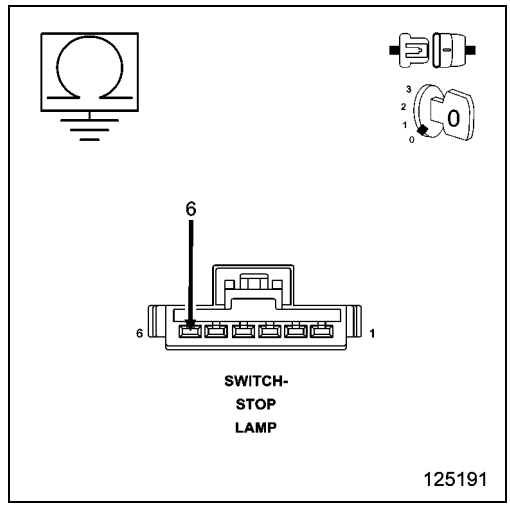

3. (B16) BRAKE SWITCH NO.2 SIGNAL CIRCUIT OPEN

CAUTION: Do not probe the PCM harness connectors. Probing the PCM harness connectors will damage the PCM terminals resulting in poor terminal to pin connection. Install the PCM Pinout Box Kit, NGC, 38 Position 8815A to perform diagnosis.

1. Measure the resistance of the (B16) Brake Switch No.2 Signal circuit from the Stop Lamp Switch harness connector to the appropriate terminal of PCM Pinout Box 8815A.

Is the resistance below 5.0 Ohms?

Yes

- Go To 4

No

- Repair the open in the (B16) Brake Switch No.2 Signal circuit.
- Perform the POWERTRAIN VERIFICATION TEST. (Refer to 28 - DTC-Based Diagnostics/MODULE, Powertrain Control (PCM) - Standard Procedure).

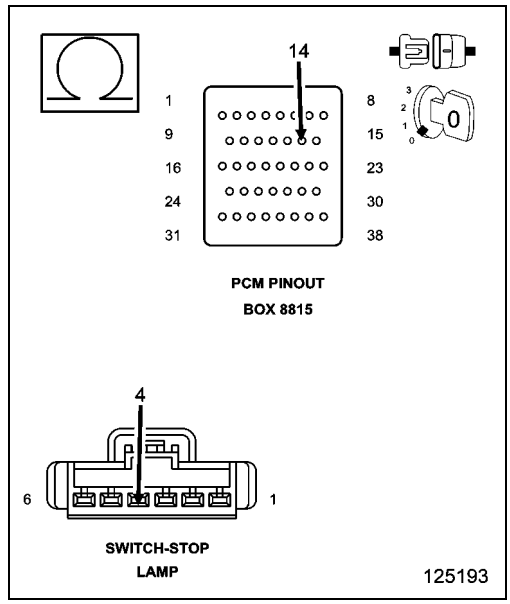

4. (B16) BRAKE SWITCH NO.2 SIGNAL CIRCUIT SHORTED TO GROUND

1. Measure the resistance between ground and the (B16) Brake Switch No.2 Signal circuit in the Stop Lamp Switch harness connector.

Is the resistance below 100 Ohms?

Yes

- Repair the short to ground in the (B16) Brake Switch No.2 Signal circuit.
- Perform the POWERTRAIN VERIFICATION TEST. (Refer to 28 - DTC-Based Diagnostics/MODULE, Powertrain Control (PCM) - Standard Procedure).

No

- Go To 5

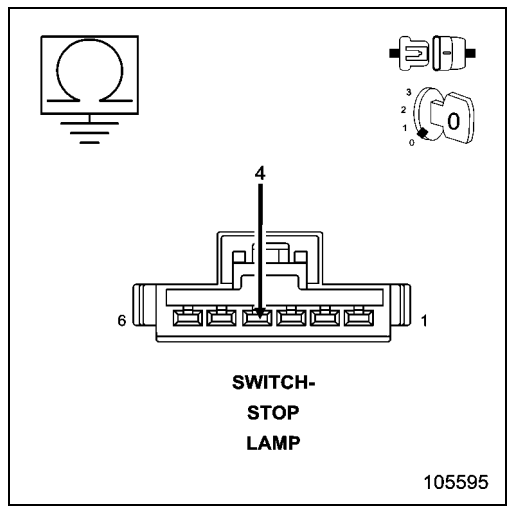

5. (G210) GROUND CIRCUIT OPEN

1. Measure the resistance between ground and the (G210) Ground circuit in the Stop Lamp Switch harness connector.

Is the resistance below 5.0 Ohms?

Yes

- Go To 6

No

- Repair the open in the (G210) Ground circuit.
- Perform the POWERTRAIN VERIFICATION TEST. (Refer to 28 - DTC-Based Diagnostics/MODULE, Powertrain Control (PCM) - Standard Procedure).

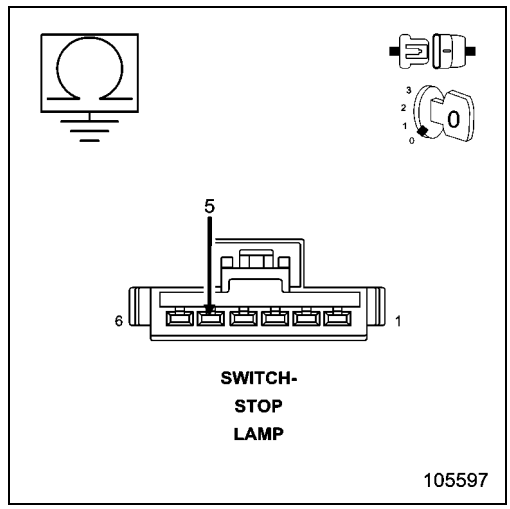

6. STOP LAMP SWITCH

1. Measure the resistance between the (G210) Ground circuit terminal and the (B15) Brake Switch No.1 Signal terminal in the Stop Lamp Switch.
2. Apply and release the brake pedal while monitoring the ohmmeter.
3. Next, measure the resistance between the (A108) Fused Ignition Switch circuit terminal and the (B16) Brake Switch No.2 Signal circuit terminal in the Stop Lamp Switch.
4. Apply and release the brake pedal while monitoring the ohmmeter.

Does the resistance change from below 5.0 Ohms to an open circuit for one or both of the measurements taken?

Yes

- Go To 7

No

- Verify that there is good pin to terminal contact in the Switch and Control Module connectors. Replace the Stop Lamp Switch if no problems were found in the connectors.
- Perform the POWERTRAIN VERIFICATION TEST. (Refer to 28 - DTC-Based Diagnostics/MODULE, Powertrain Control (PCM) - Standard Procedure).

7. POWERTRAIN CONTROL MODULE (PCM)

1. Using the wiring diagram/schematic as a guide, inspect the wiring and connectors between the Stop Lamp Switch and the Powertrain Control Module (PCM).
2. Look for any chafed, pierced, pinched or partially broken wires.
3. Look for broken, bent, pushed out or corroded terminals. Verify that there is good pin to terminal contact in the Switch and Control Module connectors.
4. Perform any Technical Service Bulletins that may apply.

Were there any problems found?

Yes

- Repair as necessary.
- Perform the POWERTRAIN VERIFICATION TEST. (Refer to 28 - DTC-Based Diagnostics/MODULE, Powertrain Control (PCM) - Standard Procedure).

No

- Replace and program the Powertrain Control Module in accordance with the Service Information.
- Perform the POWERTRAIN VERIFICATION TEST. (Refer to 28 - DTC-Based Diagnostics/MODULE, Powertrain Control (PCM) - Standard Procedure).

P0572-BRAKE SWITCH 1 STUCK ON

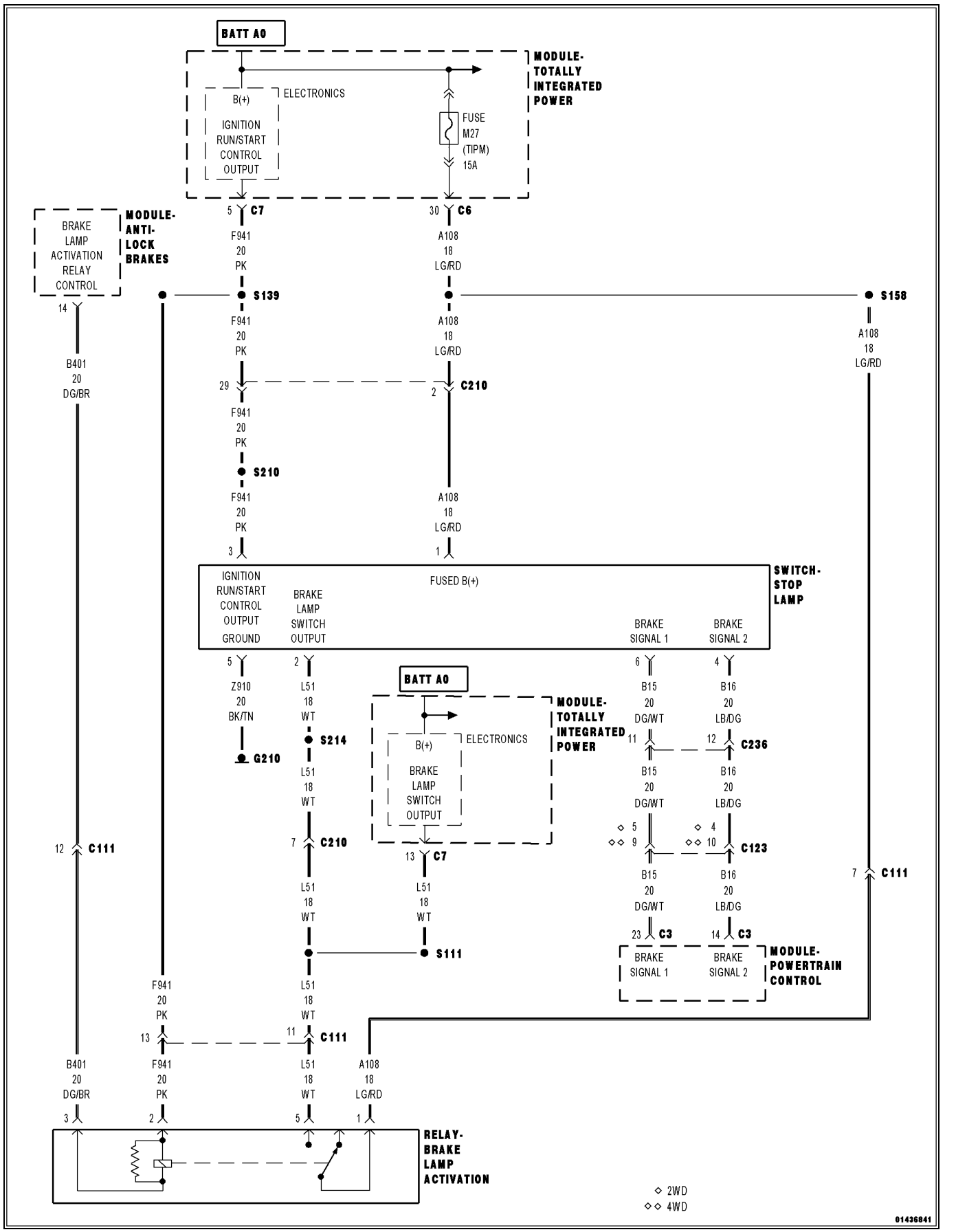

For a complete wiring diagram, **refer to the Wiring Information**.

- **When Monitored:**
  When vehicle speed cycles from 0 kph to 48 kph (30 mph) at least 10 times.
- **Set Condition:**
  When the Powertrain Control Module (PCM) recognizes Brake Switch No.1 is mechanically stuck in the low/on position. Two Trip Fault. Three Global Good Trips to Clear.

Possible Causes
(B15) BRAKE SWITCH NO.1 SIGNAL CIRCUIT SHORTED TO GROUND
(B16) BRAKE SWITCH NO.2 SIGNAL CIRCUIT OPEN
STOP LAMP SWITCH
POWERTRAIN CONTROL MODULE (PCM)

Always perform the Pre-Diagnostic Troubleshooting procedure before proceeding. (Refer to 28 - DTC-Based Diagnostics/MODULE, Powertrain Control (PCM) - Standard Procedure).

1. ACTIVE DTC

NOTE: Verify battery voltage is greater than 10 Volts.

NOTE: Make sure the Stop Lamp Switch is properly adjusted before continuing.

1. Start the engine.
2. Allow the engine to reach normal operating temperature.
3. With the scan tool, select View DTCs.

NOTE: It may be necessary to drive the vehicle to meet the conditions to set this DTC, try to repeat the conditions in which the fault originally set by reviewing the Freeze Frame data.

Is the DTC Active or Pending at this time?

Yes

- Go To 2

No

- Perform the INTERMITTENT CONDITION diagnostic procedure. (Refer to 28 - DTC-Based Diagnostics/MODULE, Powertrain Control (PCM) - Standard Procedure).

2. STOP LAMP SWITCH

1. Turn the ignition off.
2. Disconnect the Stop Lamp Switch harness connector.
3. Measure the resistance between the (G210) Ground circuit terminal and the (B15) Brake Switch No.1 Signal terminal in the Stop Lamp Switch.
4. Measure the resistance between the (A108) Fused Ignition Switch circuit terminal and the (B16) Brake Switch No.2 Signal terminal in the Stop Lamp Switch.
5. Apply and release the stop lamp switch plunger while monitoring the Ohmmeter.

Does the resistance change from below 5.0 Ohms to an open circuit?

Yes

- Go To 3

No

- Verify that there is good pin to terminal contact in the Switch and Control Module connectors. Replace the Stop Lamp Switch if no problems were found in the connectors.
- Perform the POWERTRAIN VERIFICATION TEST. (Refer to 28 - DTC-Based Diagnostics/MODULE, Powertrain Control (PCM) - Standard Procedure).

3. (B15) BRAKE SWITCH NO.1 SIGNAL CIRCUIT SHORTED TO GROUND

1. Turn the ignition off.
2. Disconnect the C3 PCM harness connector.
3. Measure the resistance between ground and the (B15) Brake Switch No.1 Signal circuit in the Stop Lamp Switch harness connector.

Is the resistance below 100 Ohms?

Yes

- Repair the short to ground in the (B15) Brake Switch No.1 Signal circuit.
- Perform the POWERTRAIN VERIFICATION TEST. (Refer to 28 - DTC-Based Diagnostics/MODULE, Powertrain Control (PCM) - Standard Procedure).

No

- Go To 4

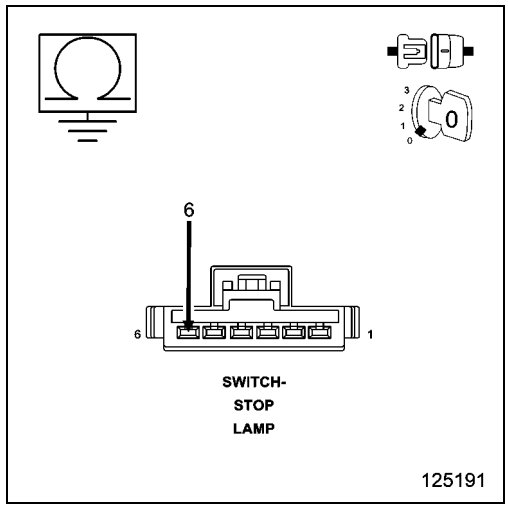

4. (B16) BRAKE SWITCH NO.2 SIGNAL CIRCUIT OPEN

CAUTION: Do not probe the PCM harness connectors. Probing the PCM harness connectors will damage the PCM terminals resulting in poor terminal to pin connection. Install the PCM Pinout Box Kit, NGC, 38 Position 8815A to perform diagnosis.

1. Measure the resistance of the (B16) Brake Switch No.2 Signal Output circuit from the Stop Lamp Switch harness connector to the appropriate terminal of PCM Pinout Box 8815A.

Is the resistance below 5.0 Ohms?

Yes

- Go To 5

No

- Repair the open in the (B16) Brake Switch No.2 Signal circuit.
- Perform the POWERTRAIN VERIFICATION TEST. (Refer to 28 - DTC-Based Diagnostics/MODULE, Powertrain Control (PCM) - Standard Procedure).

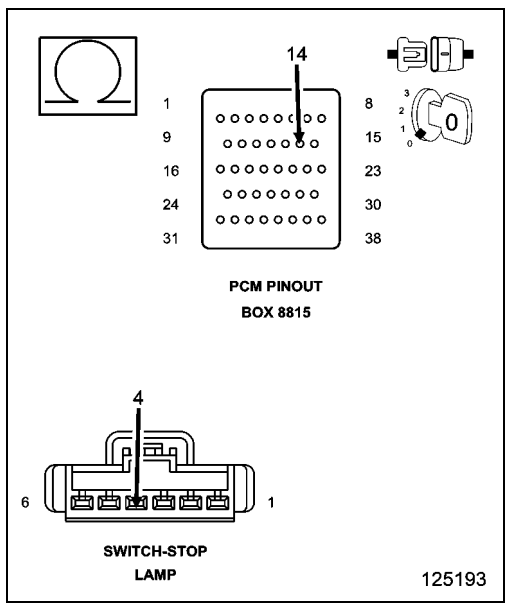

5. POWERTRAIN CONTROL MODULE (PCM)

1. Using the wiring diagram/schematic as a guide, inspect the wiring and connectors between the Stop Lamp Switch and the Powertrain Control Module (PCM).
2. Look for any chafed, pierced, pinched or partially broken wires.
3. Look for broken, bent, pushed out or corroded terminals. Verify that there is good pin to terminal contact in the Switch and Control Module connectors.
4. Perform any Technical Service Bulletins that may apply.

Were there any problems found?

Yes

- Repair as necessary.
- Perform the POWERTRAIN VERIFICATION TEST. (Refer to 28 - DTC-Based Diagnostics/MODULE, Powertrain Control (PCM) - Standard Procedure).

No

- Replace and program the Powertrain Control Module in accordance with the Service Information.
- Perform the POWERTRAIN VERIFICATION TEST. (Refer to 28 - DTC-Based Diagnostics/MODULE, Powertrain Control (PCM) - Standard Procedure).

P0573-BRAKE SWITCH 1 STUCK OFF

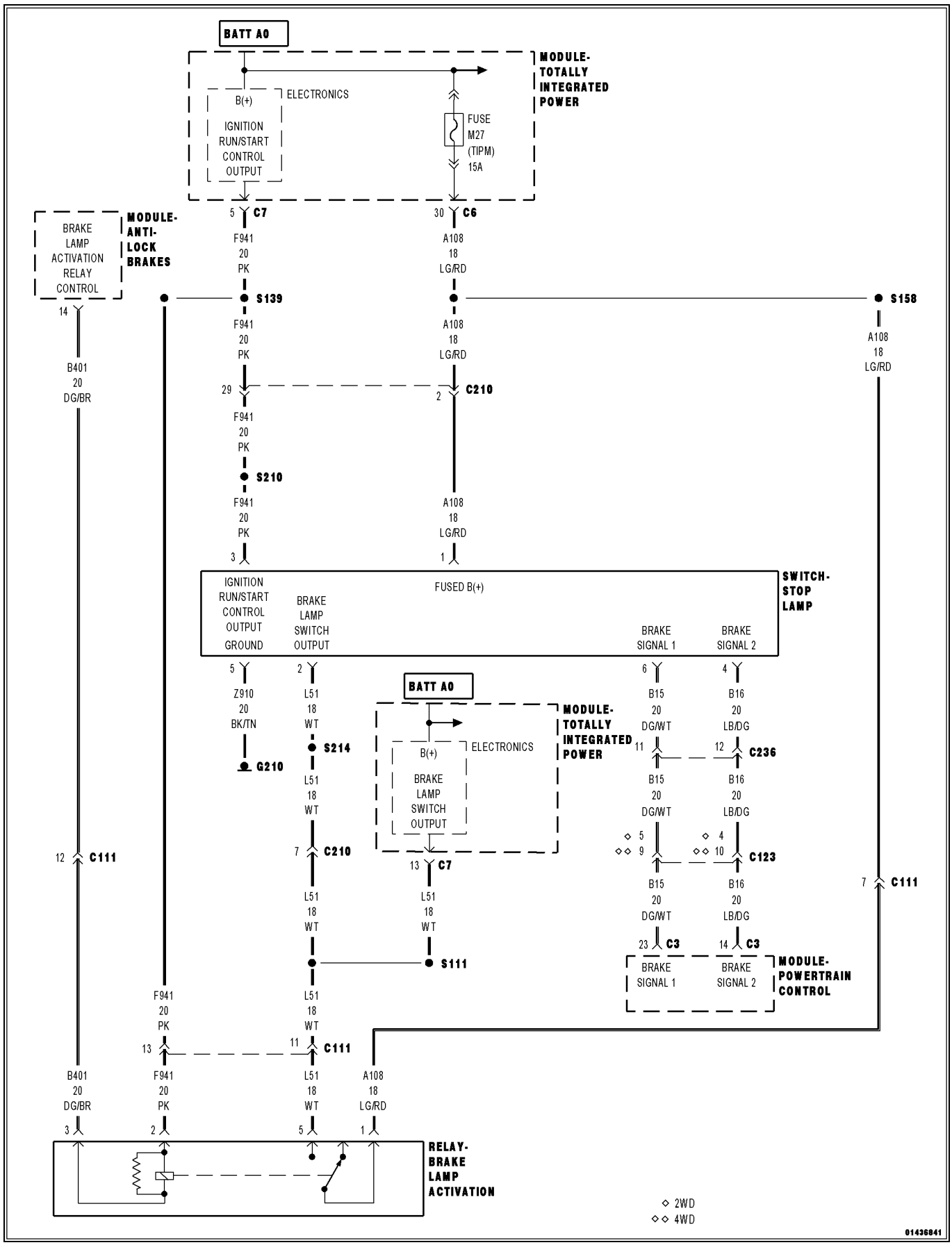

For a complete wiring diagram, **refer to the Wiring Information**.

- **When Monitored:**
  When vehicle speed cycles from 0 kph to 48 kph (30 mph) at least 10 times.
- **Set Condition:**
  When the Powertrain Control Module (PCM) recognizes Brake Switch No.1 is stuck in the high/off position. Two Trip Fault. Three good trips to turn off the MIL.

Possible Causes
(B15) BRAKE SWITCH NO.1 SIGNAL CIRCUIT OPEN
(B16) BRAKE SWITCH NO.2 SIGNAL CIRCUIT SHORTED TO GROUND
(G210) GROUND CIRCUIT OPEN
STOP LAMP SWITCH
POWERTRAIN CONTROL MODULE (PCM)

Always perform the Pre-Diagnostic Troubleshooting procedure before proceeding. (Refer to 28 - DTC-Based Diagnostics/MODULE, Powertrain Control (PCM) - Standard Procedure).

1. ACTIVE DTC

1. Start the engine.
2. Allow the engine to reach normal operating temperature.
3. With the scan tool, select View DTCs.

NOTE: It may be necessary to drive the vehicle to meet the conditions to set this DTC, try to repeat the conditions in which the fault originally set by reviewing the Freeze Frame data.

Is the DTC Active or Pending at this time?

Yes

- Go To 2

No

- Perform the INTERMITTENT CONDITION diagnostic procedure. (Refer to 28 - DTC-Based Diagnostics/MODULE, Powertrain Control (PCM) - Standard Procedure).

2. STOP LAMP SWITCH

1. Turn the ignition off.
2. Disconnect the Stop Lamp Switch harness connector.
3. Measure the resistance between the (G210) Ground circuit terminal and the (B15) Brake Switch No.1 Signal circuit terminal in the Stop Lamp Switch.
4. Apply and release the Stop Lamp Switch while monitoring the Ohmmeter.

Does the resistance change from below 5.0 Ohms to an open circuit?

Yes

- Go To 3

No

- Verify that there is good pin to terminal contact in the Switch and Control Module connectors. Replace the Stop Lamp Switch if no problems were found in the connectors.
- Perform the POWERTRAIN VERIFICATION TEST. (Refer to 28 - DTC-Based Diagnostics/MODULE, Powertrain Control (PCM) - Standard Procedure).

3. (B15) BRAKE SWITCH NO.1 SIGNAL CIRCUIT OPEN

1. Turn the ignition off.
2. Disconnect the C3 PCM harness connector.

CAUTION: Do not probe the PCM harness connectors. Probing the PCM harness connectors will damage the PCM terminals resulting in poor terminal to pin connection. Install the PCM Pinout Box Kit, NGC, 38 Position 8815A to perform diagnosis.

3. Measure the resistance of the (B15) Brake Switch No.1 Signal circuit from the Stop Lamp Switch harness connector to the appropriate terminal of PCM Pinout Box 8815A.

Is the resistance below 5.0 Ohms?

Yes

- Go To 4

No

- Repair the open in the (B15) Brake Switch No.1 Signal circuit.
- Perform the POWERTRAIN VERIFICATION TEST. (Refer to 28 - DTC-Based Diagnostics/MODULE, Powertrain Control (PCM) - Standard Procedure).

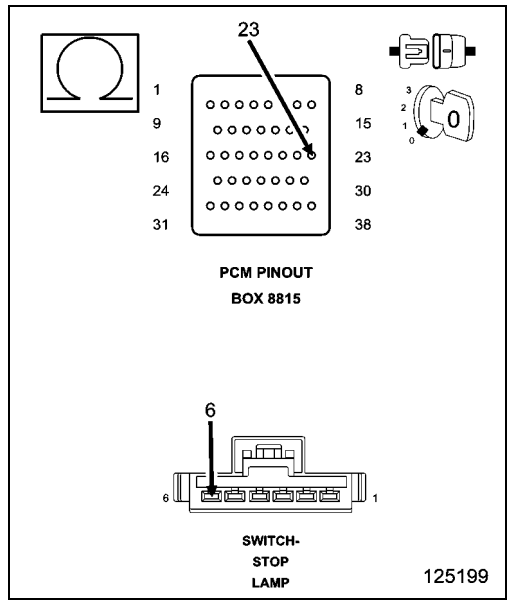

4. (B16) BRAKE SWITCH NO.2 SIGNAL CIRCUIT SHORTED TO GROUND

1. Measure the resistance between ground and the (B16) Brake Switch No.2 Signal circuit in the Stop Lamp Switch harness connector.

Is the resistance below 100 Ohms?

Yes

- Repair the short to ground in the (B16) Brake Switch No.2 Signal circuit.
- Perform the POWERTRAIN VERIFICATION TEST. (Refer to 28 - DTC-Based Diagnostics/MODULE, Powertrain Control (PCM) - Standard Procedure).

No

- Go To 5

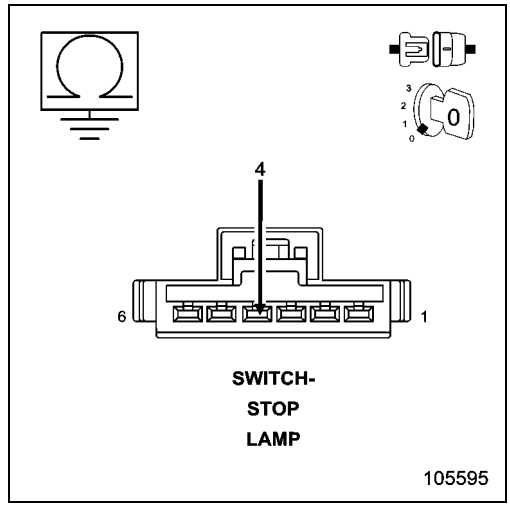

5. (G210) GROUND CIRCUIT OPEN

1. Measure the resistance between the (G210) Ground circuit and ground in the Stop Lamp Switch harness connector.

Is the resistance below 5.0 Ohms?

Yes

- Go To 6

No

- Repair the open in the (G210) Ground circuit.
- Perform the POWERTRAIN VERIFICATION TEST. (Refer to 28 - DTC-Based Diagnostics/MODULE, Powertrain Control (PCM) - Standard Procedure).

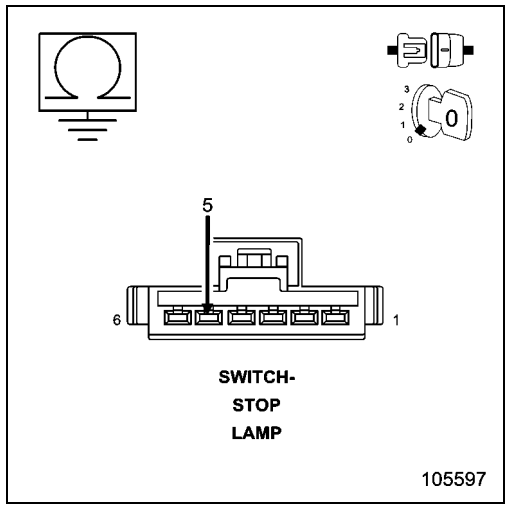

6. POWERTRAIN CONTROL MODULE (PCM)

1. Using the wiring diagram/schematic as a guide, inspect the wiring and connectors between the Stop Lamp Switch and the Powertrain Control Module (PCM).
2. Look for any chafed, pierced, pinched or partially broken wires.
3. Look for broken, bent, pushed out or corroded terminals. Verify that there is good pin to terminal contact in the Switch and Control Module connectors.
4. Perform any Technical Service Bulletins that may apply.

Were there any problems found?

Yes

- Repair as necessary.
- Perform the POWERTRAIN VERIFICATION TEST. (Refer to 28 - DTC-Based Diagnostics/MODULE, Powertrain Control (PCM) - Standard Procedure).

No

- Replace and program the Powertrain Control Module in accordance with the Service Information.
- Perform the POWERTRAIN VERIFICATION TEST. (Refer to 28 - DTC-Based Diagnostics/MODULE, Powertrain Control (PCM) - Standard Procedure).

P0579-SPEED CONTROL SWITCH 1 PERFORMANCE

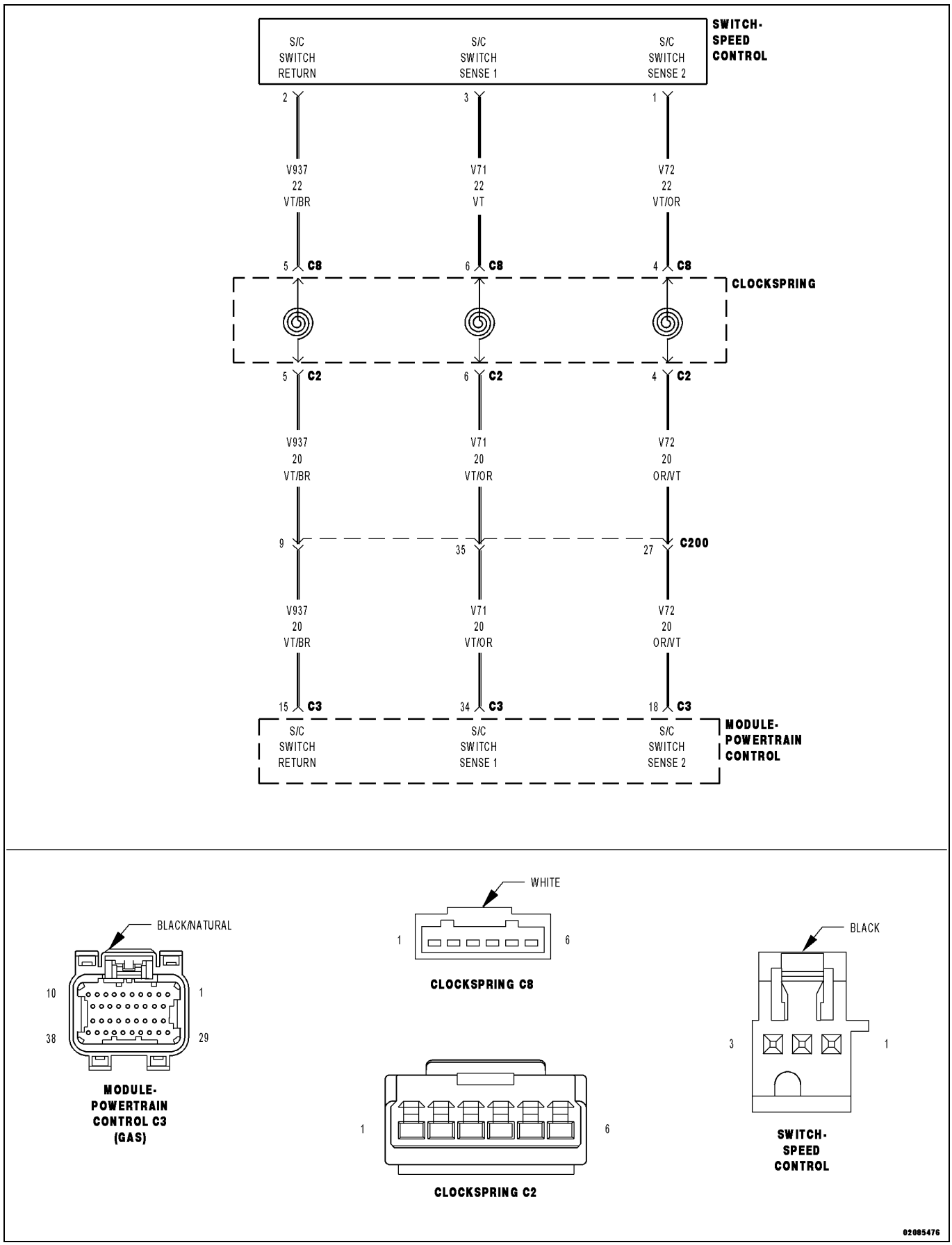

For a complete wiring diagram, **refer to the Wiring Information**.

- **When Monitored:**
  With the ignition key on.
- **Set Condition:**
  Speed Control (S/C) switch voltage output is not out of range but it does not equal any of the values for any of the button positions. One trip fault.

Possible Causes
(V71) S/C SWITCH SENSE 1 CIRCUIT SHORTED TO VOLTAGE
(V71) S/C SWITCH SENSE 1 CIRCUIT OPEN
(V937) SWITCH RETURN CIRCUIT OPEN
(V71) S/C SWITCH SENSE 1 CIRCUIT SHORTED TO GROUND
(V71) S/C SWITCH SENSE 1 CIRCUIT SHORTED TO THE (V937) SWITCH RETURN CIRCUIT
CLOCKSPRING
STEERING WHEEL JUMPER HARNESS
SPEED CONTROL SWITCH
POWERTRAIN CONTROL MODULE (PCM)

Always perform the Pre-Diagnostic Troubleshooting procedure before proceeding. (Refer to 28 - DTC-Based Diagnostics/MODULE, Powertrain Control (PCM) - Standard Procedure).

1. ACTIVE DIAGNOSTIC TROUBLE CODE (DTC)

1. Start the engine and allow it to idle for at least 60 seconds.

WARNING: When the engine is operating, do not stand in direct line with the fan. Do not put your hands near the pulleys, belts, or fan. Do not wear loose clothing. Failure to follow these instructions can result in possible serious or fatal injury.

NOTE: It may be necessary to test drive the vehicle and operate the speed control in order for this DTC to set.

2. Using the scan tool, select View DTCs.

Is the DTC Active at this time?

Yes

- Go To 2

No

- Perform the INTERMITTENT CONDITION diagnostic procedure. (Refer to 28 - DTC-Based Diagnostics/MODULE, Powertrain Control (PCM) - Standard Procedure).

2. SPEED CONTROL SWITCH

1. Turn the ignition off.
2. Disconnect the Speed Control Switch harness connector in accordance with the Service Information.
3. Measure the resistance between (V71) S/C Switch Sense 1 circuit and the (V937) Switch Return circuit.
4. Monitor the Ohmmeter while pressing each function button on each switch.
5. The following resistance specs are taken between terminals (V71) S/C Switch Sense 1 circuit and the (V937) Switch Return circuit of the switch when holding the switch button in the following position:
   - Not pressing any switch - 20.5 kOhms
   - On/Off - 0.47 kOhms
   - Set/Decel - 4.34 kOhms
   - Cancel - 1.24 kOhms
   - Resume/Accel - 8.80 kOhms

Does the function on the Speed Control Switch have the correct resistance value +/- 0.2 of an Ohm?

Yes

- Go To 3

No

- Replace the Speed Control Switch.
- Perform the POWERTRAIN VERIFICATION TEST. (Refer to 28 - DTC-Based Diagnostics/MODULE, Powertrain Control (PCM) - Standard Procedure).

3. (V71) S/C SWITCH SENSE 1 CIRCUIT SHORTED TO VOLTAGE

1. Disconnect the C3 PCM harness connector.
2. Disconnect the C2 Clockspring harness connector in accordance with the Service Information.
3. Ignition on, engine not running.
4. Measure the voltage on the (V71) S/C Switch Sense 1 circuit in the C2 Clockspring harness connector.

Is there any voltage present?

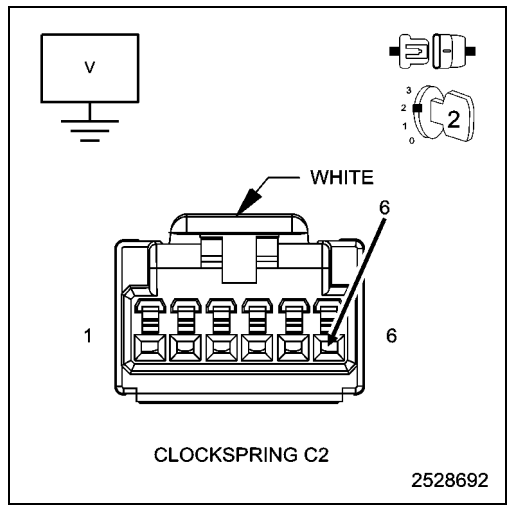

Yes

- Repair the short to voltage in the (V71) S/C Switch Sense 1 circuit.
- Perform the POWERTRAIN VERIFICATION TEST. (Refer to 28 - DTC-Based Diagnostics/MODULE, Powertrain Control (PCM) - Standard Procedure).

No

- Go To 4

4. (V71) S/C NO.1 SWITCH SIGNAL CIRCUIT SHORTED TO GROUND

1. Turn the ignition off.
2. Measure the resistance between ground and the (V71) S/C Switch Sense 1 circuit in the C2 SCM harness connector.

Is the resistance below 100 Ohms?

Yes

- Repair the short to ground in the (V71) S/C Switch Sense 1 circuit.
- Perform the POWERTRAIN VERIFICATION TEST. (Refer to 28 - DTC-Based Diagnostics/MODULE, Powertrain Control (PCM) - Standard Procedure).

No

- Go To 5

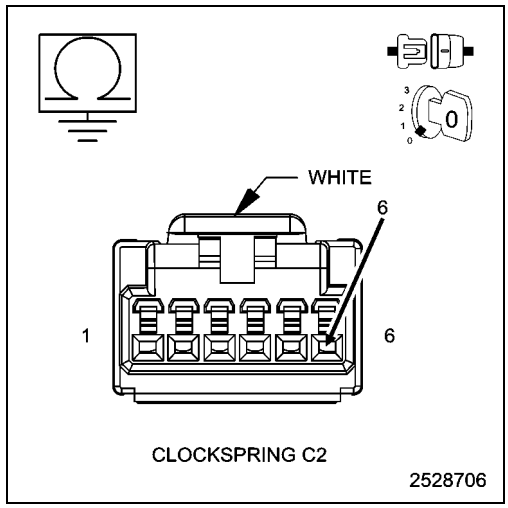

5. (V71) S/C SWITCH SENSE 1 CIRCUIT SHORTED TO THE (V937) S/C SWITCH RETURN CIRCUIT

1. Measure the resistance between the (V71) S/C Switch Sense 1 circuit and the (V937) S/C Switch Return circuit in the C2 SCM harness connector.

Is the resistance below 5.0 Ohms?

Yes

- Repair the short between the (V71) S/C Switch Sense 1 circuit and the (V937) Switch Return circuit.
- Perform the POWERTRAIN VERIFICATION TEST. (Refer to 28 - DTC-Based Diagnostics/MODULE, Powertrain Control (PCM) - Standard Procedure).

No

- Go To 6

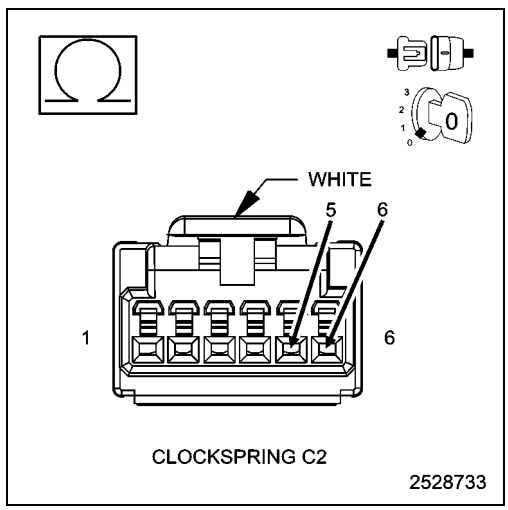

6. CLOCKSPRING

1. Measure the resistance of the (V71) S/C Switch Sense 1 circuit between the C2 and C8 SCM connections.
2. Measure the resistance of the (V937) Switch Return circuit between the C2 and C8 SCM connections.

Is the resistance above 5.0 Ohms for either reading?

Yes

- Replace the Clockspring in accordance with the Service Information.
- Perform the POWERTRAIN VERIFICATION TEST. (Refer to 28 - DTC-Based Diagnostics/MODULE, Powertrain Control (PCM) - Standard Procedure).

No

- Go To 7

7. STEERING WHEEL JUMPER HARNESS

1. Turn the ignition off.
2. Measure the resistance of the (V71) S/C Switch Sense 1 circuit between the C8 Clockspring harness connector and S/C Switch harness connector.
3. Measure the resistance of the (V937) Switch Return circuit between the C8 Clockspring harness connector and S/C Switch harness connector.

Is the resistance above 5.0 Ohms for either reading?

Yes

- Replace the Steering Wheel Jumper narness in accordance with the Service Information.
- Perform the POWERTRAIN VERIFICATION TEST. (Refer to 28 - DTC-Based Diagnostics/MODULE, Powertrain Control (PCM) - Standard Procedure).

No

- Go To 8

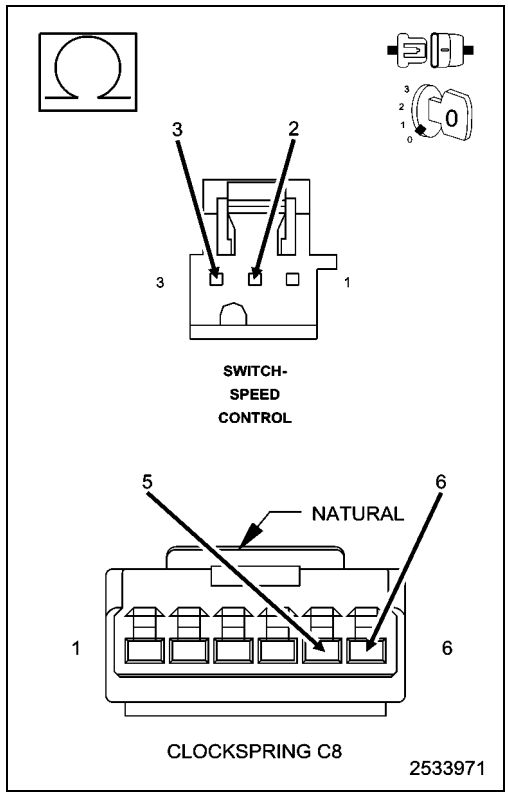

8. (V71) S/C SWITCH SENSE 1 CIRCUIT OPEN

CAUTION: Do not probe the PCM harness connectors. Probing the PCM harness connectors will damage the PCM terminals resulting in poor terminal to pin connection. Install the PCM Pinout Box Kit, NGC, 38 Position 8815A to perform diagnosis.

1. Measure the resistance of the (V71) S/C Switch Sense 1 circuit from the C2 Clockspring harness connector to the appropriate terminal of PCM Pinout Box 8815A.

Is the resistance below 5.0 Ohms for both measurements?

Yes

- Go To 9

No

- Repair the open in the (V71) S/C Switch Sense 1 circuit.
- Perform the POWERTRAIN VERIFICATION TEST. (Refer to 28 - DTC-Based Diagnostics/MODULE, Powertrain Control (PCM) - Standard Procedure).

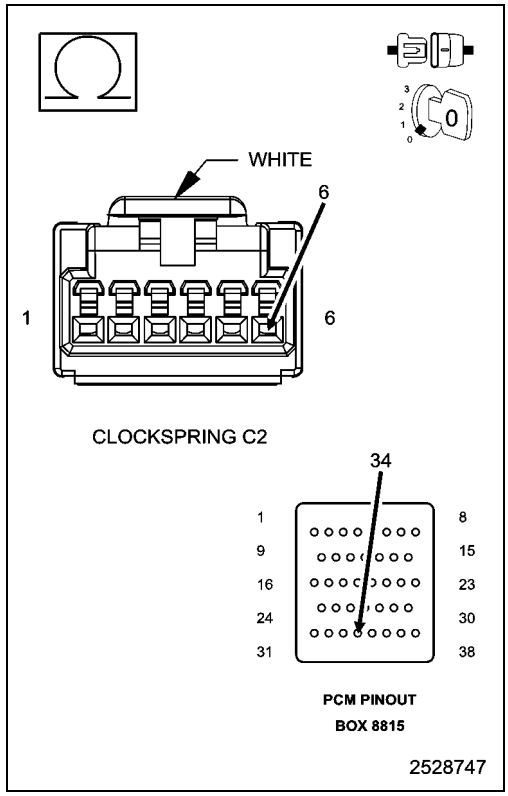

9. (V937) SWITCH RETURN CIRCUIT OPEN

1. Measure the resistance of the (V937) Switch Return circuit from the C2 Clockspring harness connector to the appropriate terminal of PCM Pinout Box 8815A.

Is the resistance below 5.0 Ohms for both measurements?

Yes

- Go To 10

No

- Repair the open in the (V937) Switch Return circuit.
- Perform the POWERTRAIN VERIFICATION TEST. (Refer to 28 - DTC-Based Diagnostics/MODULE, Powertrain Control (PCM) - Standard Procedure).

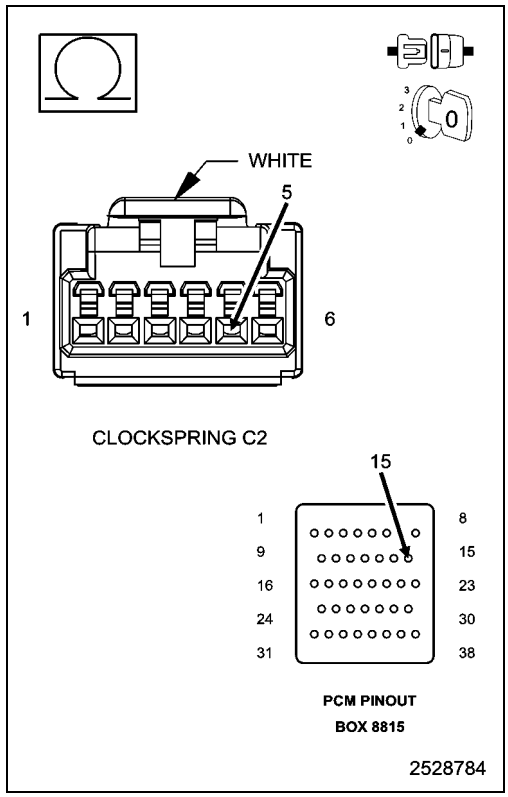

10. SPEED CONTROL SWITCH VOLTAGE VALUES

CAUTION: Do not probe the PCM harness connectors. Probing the PCM harness connectors will damage the PCM terminals resulting in poor terminal to pin connection. Install the PCM Pinout Box 8815A **and PCM Pinout Box Adapter** 8815-1 **to perform diagnosis.**

1. Install the PCM Pinout Box 8815-1 on the C3 PCM harness connector.
2. Connect the S/C Switch harness connectors.
3. Connect the Clockspring harness connectors.
4. Turn the ignition on.
5. Using the scan tool, monitor the S/C Switch voltage readings.
6. Using a Voltmeter check the voltage on the (V71) S/C Switch Sense 1 circuit and the (V72) S/C Switch Sense 2 circuit at the appropriate terminals of the PCM Pinout Box 8815A.
7. Monitor the Voltmeter.
8. Using the scan tool, monitor the S/C Switch voltage readings.

SWITCH POSITION	SWITCH No.1 VOLTAGE VALUE	SWITCH No.2 VOLTAGE VALUE
NO SWITCHES PRESSED	4.31 to 4.78 Volts	4.31 to 4.78 Volts
ON/OFF PRESSED	0.59 to 1.13 Volts	3.53 to 3.92 Volts
RES/ACCEL PRESSED	3.88 to 4.17 Volts	2.04 to 2.47 Volts
SET/DECEL PRESSED	3.16 to 3.56 Volts	1.17 to 1.56 Volts
CANCEL PRESSED	1.59 to 1.99 Volts	2.84 to 3.25 Volts

9. Compare the voltage readings on the Voltmeter to what the scan tool displayed.

   Are the voltage readings out of the listed specification and is there less than a 0.2 of a Volt difference between the Voltmeter switch values and the scan tool switch value?

Yes

- Replace the Speed Control Switch.
- Perform the POWERTRAIN VERIFICATION TEST. (Refer to 28 - DTC-Based Diagnostics/MODULE, Powertrain Control (PCM) - Standard Procedure).

No

- Go To 11

11. POWERTRAIN CONTROL MODULE (PCM)

1. Using the wiring diagram/schematic as a guide, inspect the wiring and connectors between the Speed Control Switch and the Powertrain Control Module (PCM).
2. Look for any chafed, pierced, pinched or partially broken wires.
3. Look for broken, bent, pushed out or corroded terminals. Verify that there is good pin to terminal contact in the Switch and Powertrain Control Module connectors.
4. Perform any Technical Service Bulletins that may apply.

Were there any problems found?

Yes

- Repair as necessary.
- Perform the POWERTRAIN VERIFICATION TEST. (Refer to 28 - DTC-Based Diagnostics/MODULE, Powertrain Control (PCM) - Standard Procedure).

No

- Replace and program the Powertrain Control Module in accordance with the Service Information.
- Perform the POWERTRAIN VERIFICATION TEST. (Refer to 28 - DTC-Based Diagnostics/MODULE, Powertrain Control (PCM) - Standard Procedure).

P0580-SPEED CONTROL SWITCH 1 CIRCUIT LOW

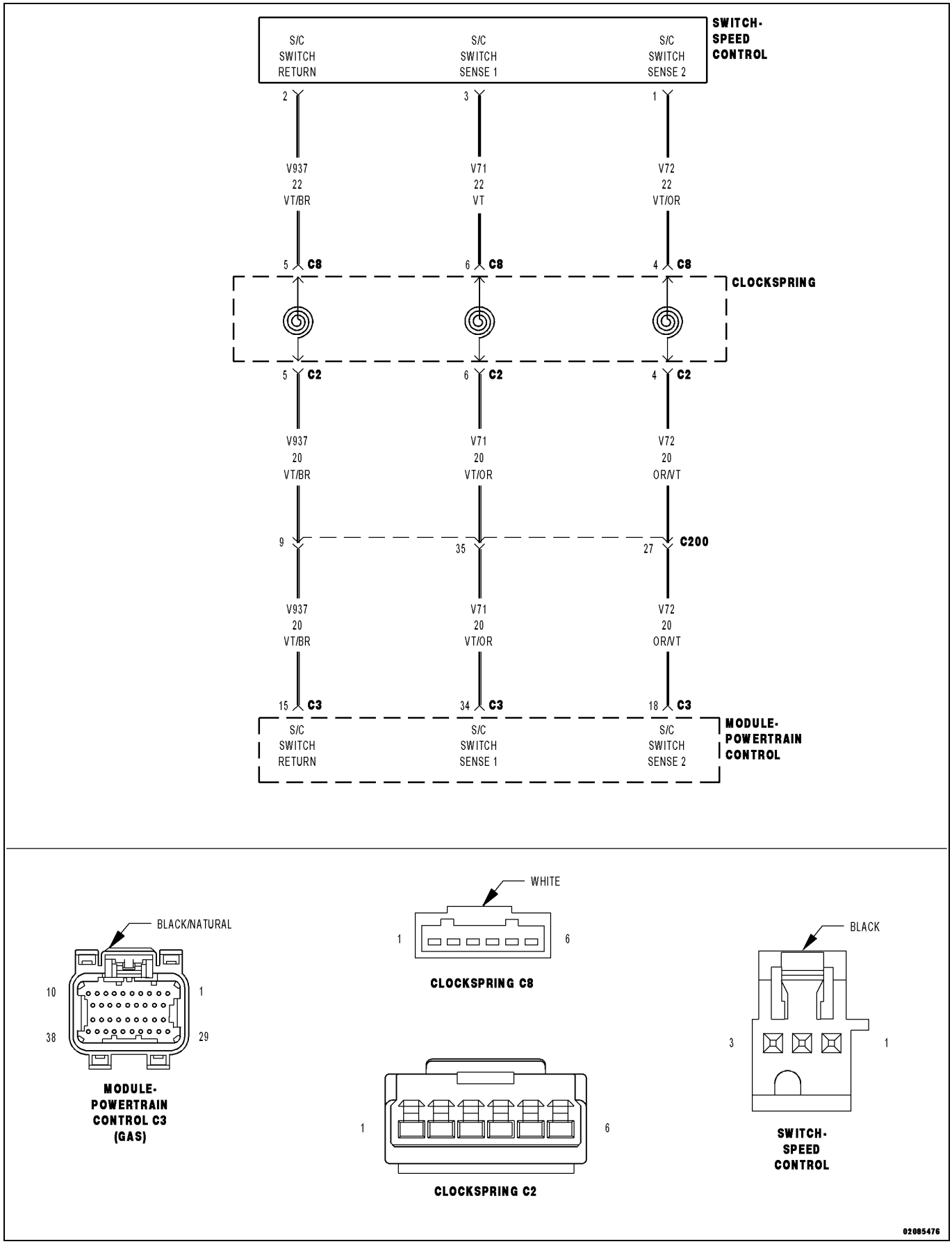

For a complete wiring diagram, **refer to the Wiring Information**.

- **When Monitored:**
  With the ignition key on.
- **Set Condition:**
  Speed Control (S/C) switch input No.1 is below the minimum acceptable voltage at the Powertrain Control Module (PCM). One trip fault.

Possible Causes
(V71) S/C SWITCH SENSE 1 CIRCUIT SHORTED TO THE (V937) S/C SWITCH RETURN CIRCUIT
(V71) S/C SWITCH SENSE 1 CIRCUIT SHORTED TO GROUND
CLOCKSPRING
SPEED CONTROL SWITCH
POWERTRAIN CONTROL MODULE (PCM)

Always perform the Pre-Diagnostic Troubleshooting procedure before proceeding. (Refer to 28 - DTC-Based Diagnostics/MODULE, Powertrain Control (PCM) - Standard Procedure).

1. ACTIVE DIAGNOSTIC TROUBLE CODE (DTC)

1. Start the engine and allow it to idle for at least 60 seconds.

WARNING: When the engine is operating, do not stand in direct line with the fan. Do not put your hands near the pulleys, belts, or fan. Do not wear loose clothing. Failure to follow these instructions can result in possible serious or fatal injury.

NOTE: It may be necessary to test drive the vehicle and operate the speed control in order for this DTC to set.

2. Using the scan tool, select View DTCs.

Is the DTC Active at this time?

Yes

- Go To 2

No

- Perform the INTERMITTENT CONDITION diagnostic procedure. (Refer to 28 - DTC-Based Diagnostics/MODULE, Powertrain Control (PCM) - Standard Procedure).

2. SPEED CONTROL SWITCHES

1. Turn the ignition off.
2. Disconnect the Speed Control Switch harness connector in accordance with the Service Information.
3. Measure the resistance between (V71) S/C Switch Sense 1 circuit and the (V937) Switch Return circuit.
4. Monitor the Ohmmeter while pressing each function button on each switch.
5. The following resistance specs are taken between terminals (V71) S/C Switch Sense 1 circuit and the (V937) Switch Return circuit of the switch when holding the switch button in the following position:
   - Not pressing any switch - 20.5 kOhms
   - On/Off - 0.47 kOhms
   - Set/Decel - 4.34 kOhms
   - Cancel - 1.24 kOhms
   - Resume/Accel - 8.80 kOhms

Does the function on the Speed Control Switch have the correct resistance value +/- 0.2 of an Ohm?

Yes

- Go To 3

No

- Replace the Speed Control Switch.
- Perform the POWERTRAIN VERIFICATION TEST. (Refer to 28 - DTC-Based Diagnostics/MODULE, Powertrain Control (PCM) - Standard Procedure).

3. CLOCKSPRING

1. Disconnect the C3 PCM harness connector.
2. Disconnect the C2 Clockspring harness connector in accordance with the Service Information.
3. Disconnect the C8 Clockspring harness connector.
4. Measure the resistance of the (V71) S/C Switch Sense 1 circuit between the C2 and C8 SCM connections.
5. Measure the resistance of the (V937) Switch Return circuit between the C2 and C8 SCM connections.

Is the resistance above 5.0 Ohms for either reading?

Yes

- Replace the Clockspring in accordance with the Service Information.
- Perform the POWERTRAIN VERIFICATION TEST. (Refer to 28 - DTC-Based Diagnostics/MODULE, Powertrain Control (PCM) - Standard Procedure).

No

- Go To 4

4. STEERING WHEEL JUMPER HARNESS

1. Turn the ignition off.
2. Measure the resistance of the (V71) S/C Switch Sense 1 circuit between the Clockspring C8 harness connector and S/C Switch harness connector.
3. Measure the resistance of the (V937) Switch Return circuit between the Clockspring C8 harness connector and S/C Switch harness connector.

Is the resistance above 5.0 Ohms for either reading?

Yes

- Replace the Steering Wheel Jumper harness in accordance with the Service Information.
- Perform the POWERTRAIN VERIFICATION TEST. (Refer to 28 - DTC-Based Diagnostics/MODULE, Powertrain Control (PCM) - Standard Procedure).

No

- Go To 5

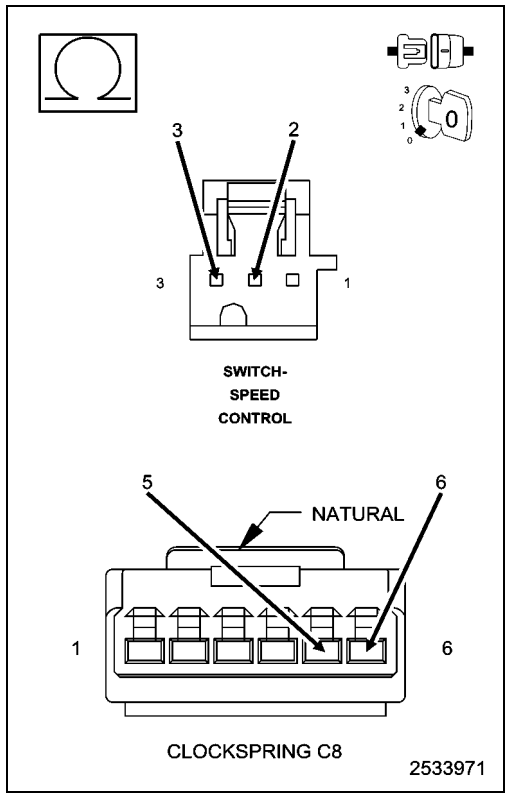

5. (V71) S/C SWITCH SENSE 1 CIRCUIT SHORTED TO THE (V937) S/C SWITCH RETURN CIRCUIT

1. Measure the resistance between the (V71) S/C Switch Sense 1 circuit and the (V937) S/C Switch Return circuit in the Clockspring C2 harness connector.

Is the resistance below 5.0 Ohms?

Yes

- Repair the short between the (V71) S/C Switch Sense 1 circuit and the (V937) Switch Return circuit.
- Perform the POWERTRAIN VERIFICATION TEST. (Refer to 28 - DTC-Based Diagnostics/MODULE, Powertrain Control (PCM) - Standard Procedure).

No

- Go To 6

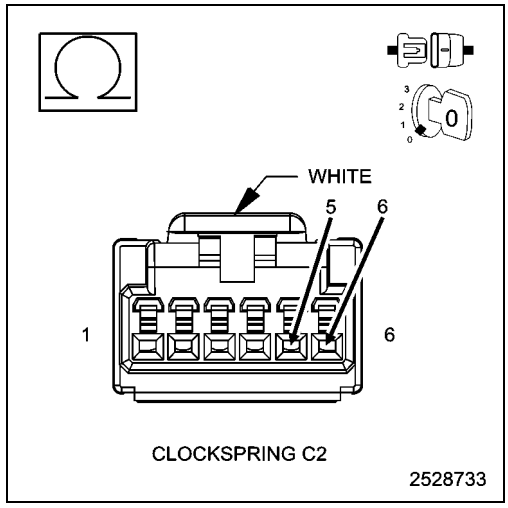

6. (V71) S/C NO.1 SWITCH SIGNAL CIRCUIT SHORTED TO GROUND

1. Measure the resistance between ground and the (V71) S/C Switch Sense 1 circuit in the Clockspring C2 harness connector.

Is the resistance below 100 Ohms?

Yes

- Repair the short to ground in the (V71) S/C Switch Sense 1 circuit.
- Perform the POWERTRAIN VERIFICATION TEST. (Refer to 28 - DTC-Based Diagnostics/MODULE, Powertrain Control (PCM) - Standard Procedure).

No

- Go To 7

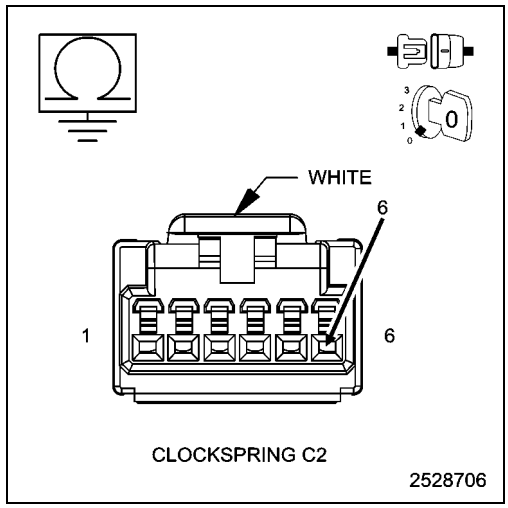

7. SPEED CONTROL SWITCH VOLTAGE VALUES

CAUTION: Do not probe the PCM harness connectors. Probing the PCM harness connectors will damage the PCM terminals resulting in poor terminal to pin connection. Install the PCM Pinout Box 8815A **and PCM Pinout Box Adapter** 8815-1 **to perform diagnosis.**

1. Install the PCM Pinout Box 8815-1 on the C3 PCM harness connector.
2. Connect the S/C Switch harness connectors.
3. Connect the Clockspring harness connectors.
4. Turn the ignition on.
5. Using the scan tool, monitor the S/C Switch voltage readings.
6. Using a Voltmeter check the voltage on the (V71) S/C Switch Sense 1 circuit and the (V72) S/C Switch Sense 2 circuit at the appropriate terminals of the PCM Pinout Box 8815A.
7. Monitor the Voltmeter.
8. Using the scan tool, monitor the S/C Switch voltage readings.

SWITCH POSITION	SWITCH No.1 VOLTAGE VALUE	SWITCH No.2 VOLTAGE VALUE
NO SWITCHES PRESSED	4.31 to 4.78 Volts	4.31 to 4.78 Volts
ON/OFF PRESSED	0.59 to 1.13 Volts	3.53 to 3.92 Volts
RES/ACCEL PRESSED	3.88 to 4.17 Volts	2.04 to 2.47 Volts
SET/DECEL PRESSED	3.16 to 3.56 Volts	1.17 to 1.56 Volts
CANCEL PRESSED	1.59 to 1.99 Volts	2.84 to 3.25 Volts

9. Compare the voltage readings on the Voltmeter to what the scan tool displayed.

Are the voltage readings out of the listed specification and is there less than a 0.2 of a Volt difference between the Voltmeter switch values and the scan tool switch value?

Yes

- Replace the Speed Control Switch.
- Perform the POWERTRAIN VERIFICATION TEST. (Refer to 28 - DTC-Based Diagnostics/MODULE, Powertrain Control (PCM) - Standard Procedure).

No

- Go To 8

8. POWERTRAIN CONTROL MODULE (PCM)

1. Using the wiring diagram/schematic as a guide, inspect the wiring and connectors between the Speed Control Switch and the Powertrain Control Module (PCM).
2. Look for any chafed, pierced, pinched or partially broken wires.
3. Look for broken, bent, pushed out or corroded terminals. Verify that there is good pin to terminal contact in the Switch and Powertrain Control Module connectors.
4. Perform any Technical Service Bulletins that may apply.

Were there any problems found?

Yes

- Repair as necessary.
- Perform the POWERTRAIN VERIFICATION TEST. (Refer to 28 - DTC-Based Diagnostics/MODULE, Powertrain Control (PCM) - Standard Procedure).

No

- Replace and program the Powertrain Control Module in accordance with the Service Information.
- Perform the POWERTRAIN VERIFICATION TEST. (Refer to 28 - DTC-Based Diagnostics/MODULE, Powertrain Control (PCM) - Standard Procedure).

P0581-SPEED CONTROL SWITCH 1 CIRCUIT HIGH

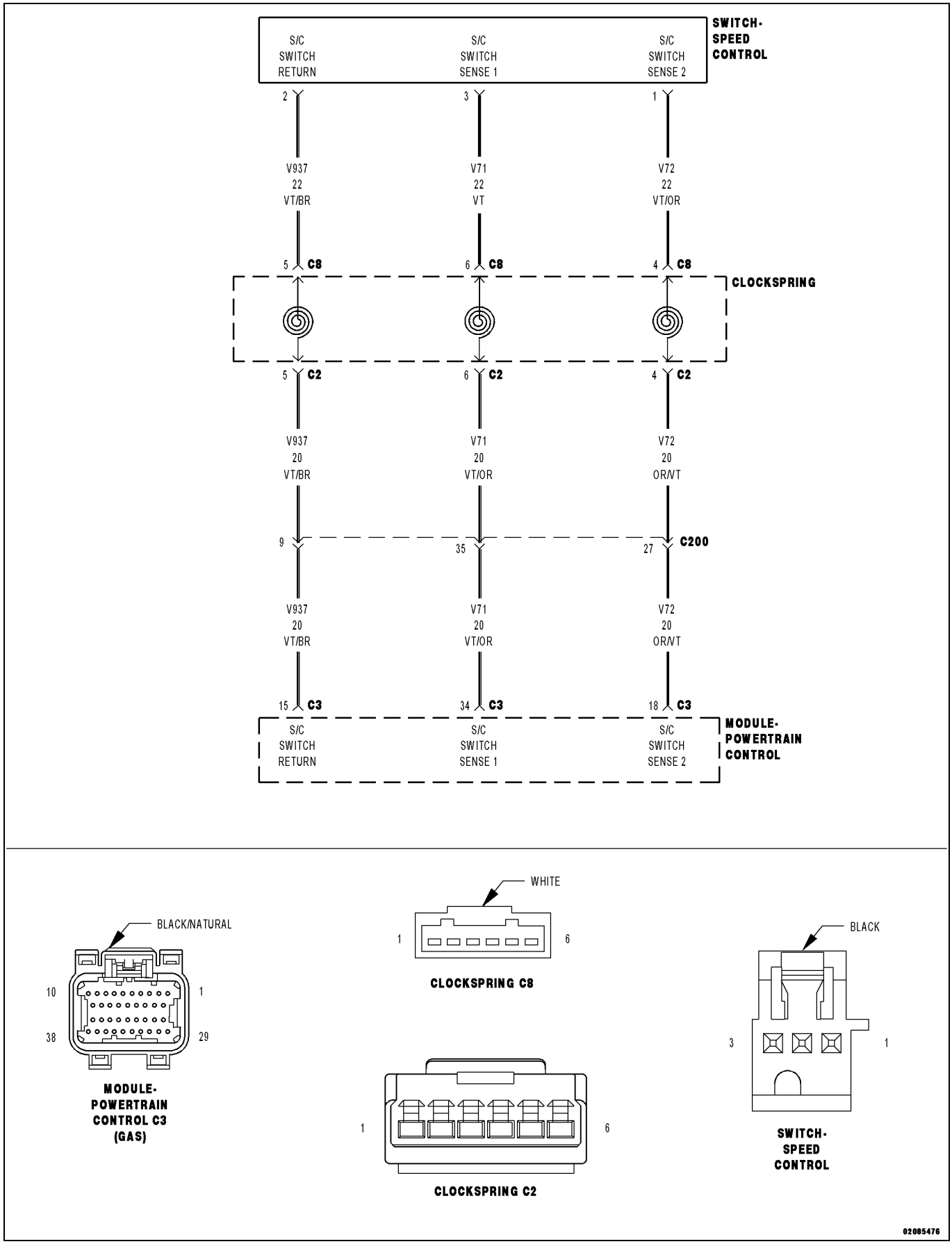

For a complete wiring diagram, **refer to the Wiring Information**.

- **When Monitored:**
  With the ignition key on.
- **Set Condition:**
  Speed Control (S/C) switch input above the maximum acceptable voltage at the Powertrain Control Module (PCM). One trip fault.

Possible Causes
(V71) S/C SWITCH SENSE 1 CIRCUIT SHORTED TO VOLTAGE
(V71) S/C SWITCH SENSE 1 CIRCUIT OPEN
(V937) S/C SWITCH RETURN CIRCUIT OPEN
CLOCKSPRING
SPEED CONTROL SWITCH
POWERTRAIN CONTROL MODULE (PCM)

Always perform the Pre-Diagnostic Troubleshooting procedure before proceeding. (Refer to 28 - DTC-Based Diagnostics/MODULE, Powertrain Control (PCM) - Standard Procedure).

1. ACTIVE DIAGNOSTIC TROUBLE CODE (DTC)

1. Start the engine and allow it to idle for at least 60 seconds.

WARNING: When the engine is operating, do not stand in direct line with the fan. Do not put your hands near the pulleys, belts, or fan. Do not wear loose clothing. Failure to follow these instructions can result in possible serious or fatal injury.

NOTE: It may be necessary to test drive the vehicle and operate the speed control in order for this DTC to set.

2. Using the scan tool, select View DTCs.

Is the DTC Active at this time?

Yes

- Go To 2

No

- Perform the INTERMITTENT CONDITION diagnostic procedure. (Refer to 28 - DTC-Based Diagnostics/MODULE, Powertrain Control (PCM) - Standard Procedure).

2. SPEED CONTROL SWITCHES

1. Turn the ignition off.
2. Disconnect the Speed Control Switch harness connector in accordance with the Service Information.
3. Measure the resistance between (V71) S/C Switch Sense 1 circuit and the (V937) Switch Return circuit.
4. Monitor the Ohmmeter while pressing each function button on each switch.
5. The following resistance specs are taken between terminals (V71) S/C Switch Sense 1 circuit and the (V937) Switch Return circuit of the switch when holding the switch button in the following position:
   - Not pressing any switch - 20.5 kOhms
   - On/Off - 0.47 kOhms
   - Set/Decel - 4.34 kOhms
   - Cancel - 1.24 kOhms
   - Resume/Accel - 8.80 kOhms

Does the function on the Speed Control Switches have the correct resistance value?

Yes

- Go To 3

No

- Replace the Speed Control Switch that had the incorrect resistance value.
- Perform the POWERTRAIN VERIFICATION TEST. (Refer to 28 - DTC-Based Diagnostics/MODULE, Powertrain Control (PCM) - Standard Procedure).

3. Clockspring

1. Disconnect the PCM C3 harness connector.
2. Disconnect the Clockspring C2 harness connector in accordance with the Service Information.
3. Disconnect the Clockspring C8 harness connector.
4. Measure the resistance of the (V71) S/C Switch Sense 1 circuit between the C2 and C8 SCM connections.
5. Measure the resistance of the (V937) Switch Return circuit between the C2 and C8 SCM connections.

Is the resistance above 5.0 Ohms for either reading?

Yes

- Replace the Clockspring in accordance with the Service Information.
- Perform the POWERTRAIN VERIFICATION TEST. (Refer to 28 - DTC-Based Diagnostics/MODULE, Powertrain Control (PCM) - Standard Procedure).

No

- Go To 4

4. STEERING WHEEL JUMPER HARNESS

1. Turn the ignition off.
2. Measure the resistance of the (V71) S/C Switch Sense 1 circuit between the v Clockspring C8 harness connector and S/C Switch harness connector.
3. Measure the resistance of the (V937) Switch Return circuit between the Clockspring C8 harness connector and S/C Switch harness connector.

Is the resistance above 5.0 Ohms for either reading?

Yes

- Replace the Steering Wheel Jumper harness in accordance with the Service Information.
- Perform the POWERTRAIN VERIFICATION TEST. (Refer to 28 - DTC-Based Diagnostics/MODULE, Powertrain Control (PCM) - Standard Procedure).

No

- Go To 5

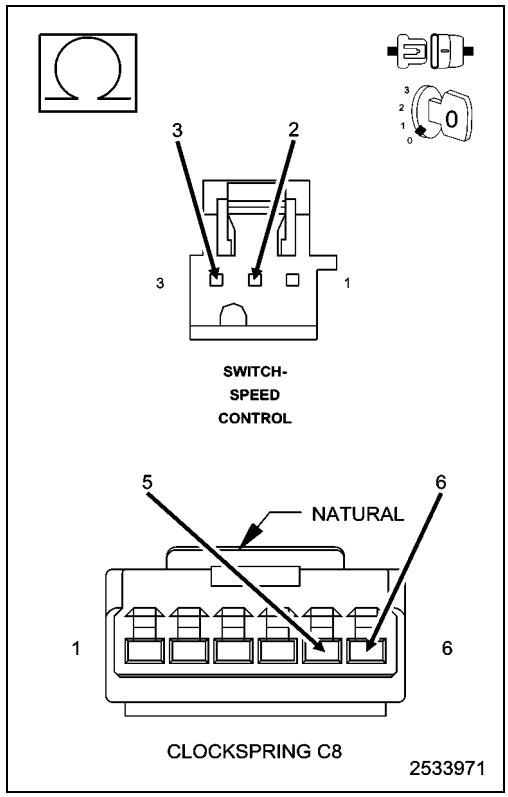

5. (V71) S/C SWITCH NO.1 SIGNAL CIRCUIT SHORTED TO VOLTAGE

1. Ignition on, engine not running.
2. Measure the voltage of the (V71) S/C Switch Sense 1 circuit in the Clockspring C2 harness connector.

Is there any voltage present?

Yes

- Repair the short to voltage in the (V71) S/C Switch Sense 1 circuit.
- Perform the POWERTRAIN VERIFICATION TEST. (Refer to 28 - DTC-Based Diagnostics/MODULE, Powertrain Control (PCM) - Standard Procedure).

No

- Go To 6

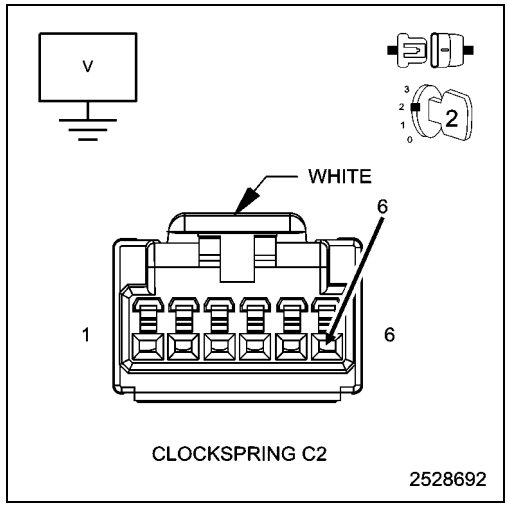

6. (V71) S/C SWITCH SENSE 1 CIRCUIT OPEN

CAUTION: Do not probe the PCM harness connectors. Probing the PCM harness connectors will damage the PCM terminals resulting in poor terminal to pin connection. Install the PCM Pinout Box Kit, NGC, 38 Position 8815A to perform diagnosis.

1. Measure the resistance of the (V71) S/C Switch Sense 1 circuit from the Clockspring C2 harness connector to the appropriate terminal of PCM Pinout Box 8815A.

Is the resistance below 5.0 Ohms?

Yes

- Go To 7

No

- Repair the open in the (V71) S/C Switch Sense 1 circuit.
- Perform the POWERTRAIN VERIFICATION TEST. (Refer to 28 - DTC-Based Diagnostics/MODULE, Powertrain Control (PCM) - Standard Procedure).

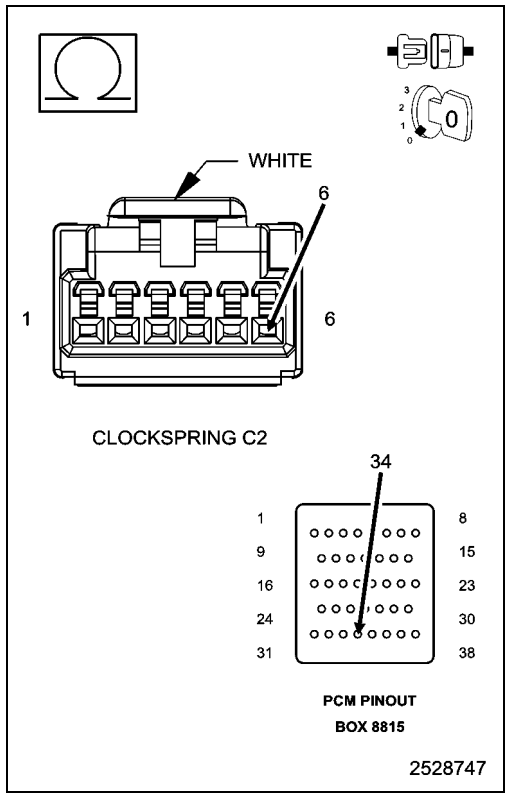

7. (V937) S/C SWITCH RETURN CIRCUIT OPEN

1. Measure the resistance of the (V937) Switch Return circuit from the Clockspring C2 harness connector to the appropriate terminal of PCM Pinout Box 8815A.

Is the resistance below 5.0 Ohms for both measurements?

Yes

- Go To 8

No

- Repair the open in the (V937) S/C Switch Return circuit.
- Perform the POWERTRAIN VERIFICATION TEST. (Refer to 28 - DTC-Based Diagnostics/MODULE, Powertrain Control (PCM) - Standard Procedure).

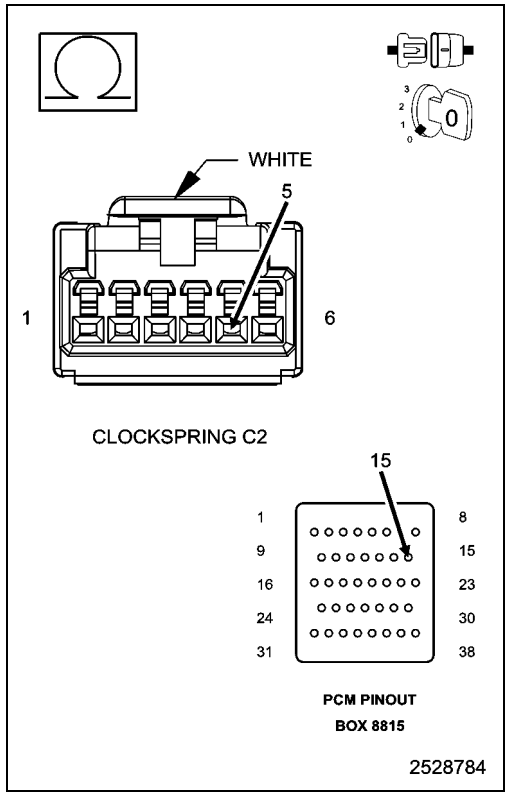

8. SPEED CONTROL SWITCH VOLTAGE VALUES

CAUTION: Do not probe the PCM harness connectors. Probing the PCM harness connectors will damage the PCM terminals resulting in poor terminal to pin connection. Install the PCM Pinout Box 8815A **and PCM Pinout Box Adapter** 8815-1 **to perform diagnosis.**

1. Install the PCM Pinout Box 8815-1 on the PCM C3 harness connector.
2. Connect the S/C Switch harness connectors.
3. Connect the Clockspring harness connectors.
4. Turn the ignition on.
5. Using the scan tool, monitor the S/C Switch voltage readings.
6. Using a Voltmeter check the voltage on the (V71) S/C Switch Sense 1 circuit and the (V72) S/C Switch Sense 2 circuit at the appropriate terminals of the PCM Pinout Box 8815A.
7. Monitor the Voltmeter.
8. Using the scan tool, monitor the S/C Switch voltage readings.

SWITCH POSITION	SWITCH No.1 VOLTAGE VALUE	SWITCH No.2 VOLTAGE VALUE
NO SWITCHES PRESSED	4.31 to 4.78 Volts	4.31 to 4.78 Volts
ON/OFF PRESSED	0.59 to 1.13 Volts	3.53 to 3.92 Volts
RES/ACCEL PRESSED	3.88 to 4.17 Volts	2.04 to 2.47 Volts
SET/DECEL PRESSED	3.16 to 3.56 Volts	1.17 to 1.56 Volts
CANCEL PRESSED	1.59 to 1.99 Volts	2.84 to 3.25 Volts

9. Compare the voltage readings on the Voltmeter to what the scan tool displayed.

   Are the voltage readings out of the listed specification and is there less than a 0.2 of a Volt difference between the Voltmeter switch values and the scan tool switch value?

Yes

- Replace the Speed Control Switch.
- Perform the POWERTRAIN VERIFICATION TEST. (Refer to 28 - DTC-Based Diagnostics/MODULE, Powertrain Control (PCM) - Standard Procedure).

No

- Go To 9

9. POWERTRAIN CONTROL MODULE (PCM)

1. Using the wiring diagram/schematic as a guide, inspect the wiring and connectors between the Speed Control Switch and the Powertrain Control Module (PCM).
2. Look for any chafed, pierced, pinched or partially broken wires.
3. Look for broken, bent, pushed out or corroded terminals. Verify that there is good pin to terminal contact in the Switch and Powertrain Control Module connectors.
4. Perform any Technical Service Bulletins that may apply.

Were there any problems found?

Yes

- Repair as necessary.
- Perform the POWERTRAIN VERIFICATION TEST. (Refer to 28 - DTC-Based Diagnostics/MODULE, Powertrain Control (PCM) - Standard Procedure).

No

- Replace and program the Powertrain Control Module in accordance with the Service Information.
- Perform the POWERTRAIN VERIFICATION TEST. (Refer to 28 - DTC-Based Diagnostics/MODULE, Powertrain Control (PCM) - Standard Procedure).

■ P0585-SPEED CONTROL SWITCH 1/2 CORRELATION

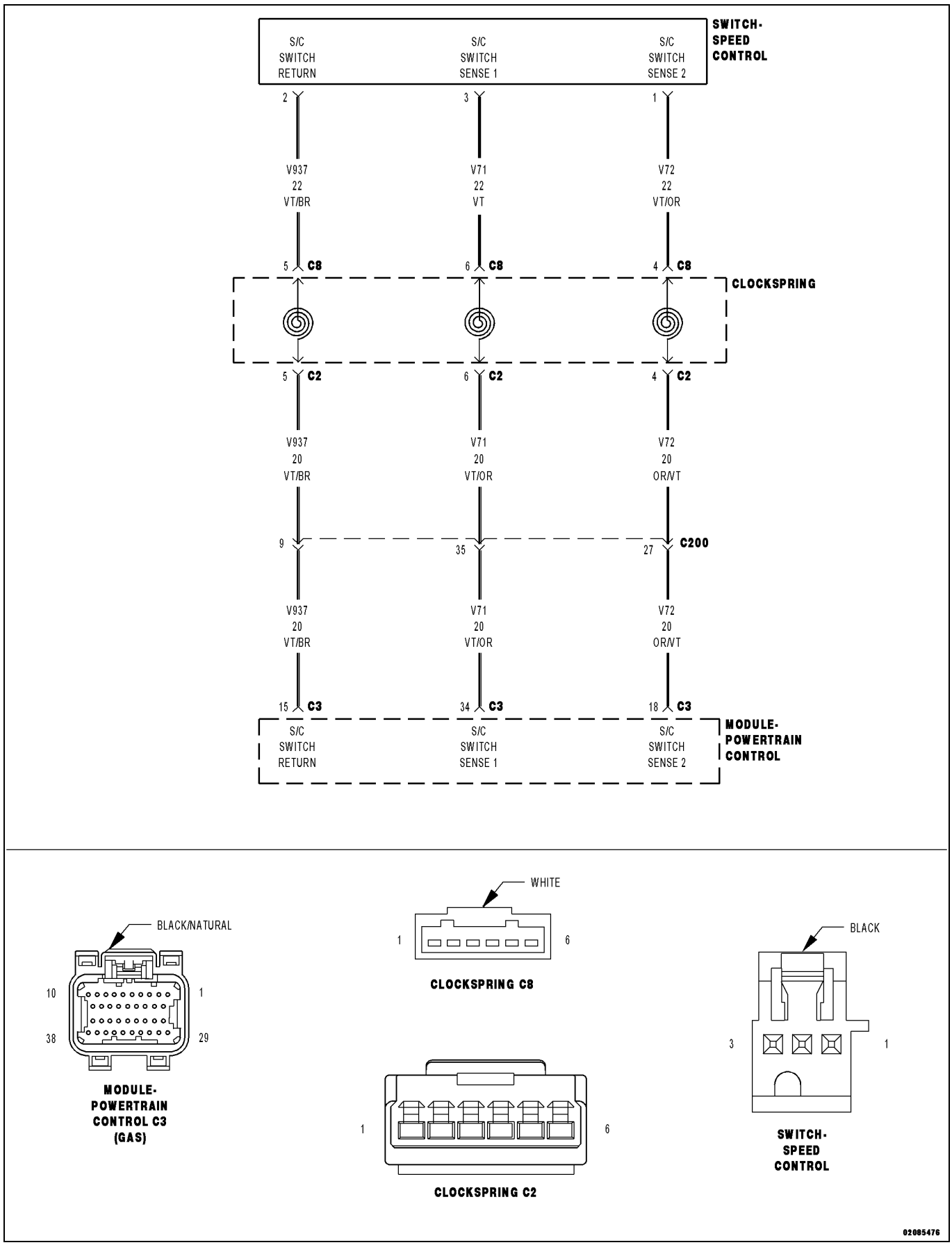

For a complete wiring diagram, **refer to the Wiring Information**.

- **When Monitored:**
  Ignition on.
- **Set Condition:**
  Speed Control (S/C) switch inputs are not coherent with each other. Example: Powertrain Control Module (PCM) is reading Switch No.1 as Accel and Switch No.2 as Coast at the same time. One trip fault.

Possible Causes
S/C SWITCH SENSE CIRCUIT SHORTED TO VOLTAGE
RESISTANCE IN THE S/C SWITCH SENSE CIRCUITS
RESISTANCE IN THE (V937) S/C SWITCH RETURN CIRCUIT
S/C SWITCH SENSE CIRCUITS SHORTED TO THE (V937) S/C SWITCH RETURN CIRCUIT
S/C SWITCH SENSE CIRCUITS SHORTED TO GROUND
CLOCKSPRING
SPEED CONTROL SWITCH
POWERTRAIN CONTROL MODULE (PCM)

Always perform the Pre-Diagnostic Troubleshooting procedure before proceeding. (Refer to 28 - DTC-Based Diagnostics/MODULE, Powertrain Control (PCM) - Standard Procedure).

1. ACTIVE DIAGNOSTIC TROUBLE CODE (DTC)

1. Start the engine.
2. Allow the engine to reach normal operating temperature.
3. Using the scan tool, select View DTCs.

NOTE: It may be necessary to drive the vehicle to meet the conditions to set this DTC, try to repeat the conditions in which the fault originally set by reviewing the Freeze Frame data.

Is the DTC Active or Pending at this time?

Yes

- Go To 2

No

- Perform the INTERMITTENT CONDITION diagnostic procedure. (Refer to 28 - DTC-Based Diagnostics/MODULE, Powertrain Control (PCM) - Standard Procedure).

2. SPEED CONTROL SWITCHES

1. Turn the ignition off.
2. Disconnect the Speed Control Switch harness connector in accordance with the Service Information.
3. Measure the resistance across each Speed Control Switch sense circuit.
4. Monitor the Ohmmeter while pressing each function button.
5. The following resistance specs are taken between terminals (V71) S/C Switch Sense 1 circuit and the (V937) Switch Return circuit of the switch when holding the switch button in the following position:
   - Not pressing any switch - 20.5 kOhms
   - On/Off - 0.47 kOhms
   - Set/Decel - 4.34 kOhms
   - Cancel - 1.24 kOhms
   - Resume/Accel - 8.80 kOhms
6. The following resistance specs are taken between terminals (V72) S/C Switch Sense 2 circuit and the (V937) Switch Return circuit of the switch when holding the switch button in the following position:
   - Not pressing any switch - 20.5 kOhms
   - On/Off - 6.2 kOhms
   - Set/Decel - 0.79 kOhms
   - Cancel - 3.2 kOhms
   - Resume/Accel - 1.7 kOhms

Does the function on the Speed Control Switch have the correct resistance value +/- 0.2 of an Ohm?

Yes

- Go To 3

No

- Replace the Speed Control Switch.
- Perform the POWERTRAIN VERIFICATION TEST. (Refer to 28 - DTC-Based Diagnostics/MODULE, Powertrain Control (PCM) - Standard Procedure).

3. SPEED CONTROL SWITCH VOLTAGE VALUES

CAUTION: Do not probe the PCM harness connectors. Probing the PCM harness connectors will damage the PCM terminals resulting in poor terminal to pin connection. Install the PCM Pinout Box 8815A **and PCM Pinout Box Adapter** 8815-1 **to perform diagnosis.**

1. Install the PCM Pinout Box 8815-1 on the C3 PCM harness connector.
2. Connect the S/C Switch harness connectors.
3. Turn the ignition on.
4. Using the scan tool, monitor the S/C Switch voltage readings.
5. Using a Voltmeter check the voltage on the (V71) S/C Switch Sense 1 circuit and the (V72) S/C Switch Sense 2 circuit at the appropriate terminals of the PCM Pinout Box 8815A.
6. Monitor the Voltmeter.
7. Using the scan tool, monitor the S/C Switch voltage readings.

SWITCH POSITION	SWITCH No.1 VOLTAGE VALUE	SWITCH No.2 VOLTAGE VALUE
NO SWITCHES PRESSED	4.31 to 4.78 Volts	4.31 to 4.78 Volts
ON/OFF PRESSED	0.59 to 1.13 Volts	3.53 to 3.92 Volts
RES/ACCEL PRESSED	3.88 to 4.17 Volts	2.04 to 2.47 Volts
SET/DECEL PRESSED	3.16 to 3.56 Volts	1.17 to 1.56 Volts
CANCEL PRESSED	1.59 to 1.99 Volts	2.84 to 3.25 Volts

8. Compare the voltage readings on the Voltmeter to what the scan tool displayed.

Are the voltage readings out of the listed specification and is there less than a 0.2 of a Volt difference between the Voltmeter switch values and the scan tool switch value?

Yes

- Replace the Speed Control Switch.
- Perform the POWERTRAIN VERIFICATION TEST. (Refer to 28 - DTC-Based Diagnostics/MODULE, Powertrain Control (PCM) - Standard Procedure).

No

- Go To 4

4. CLOCKSPRING

1. Disconnect the PCM C3 harness connector.
2. Disconnect the Clockspring C2 harness connector in accordance with the Service Information.
3. Disconnect the Clockspring C8 harness connector.
4. Measure the resistance of the (V71) S/C Switch Sense 1circuit between the C2 and C8 Clockspring connections.
5. Measure the resistance of the (V72) S/C Switch Sense 2 circuit between the C2 and C8 Clockspring connections.
6. Measure the resistance of the (V937) Switch Return circuit between the C2 and C8 Clockspring connections.

Is the resistance above 5.0 Ohms for either reading?

Yes

- Replace the Steering Column Module in accordance with the Service Information.
- Perform the POWERTRAIN VERIFICATION TEST. (Refer to 28 - DTC-Based Diagnostics/MODULE, Powertrain Control (PCM) - Standard Procedure).

No

- Go To 5

5. STEERING WHEEL JUMPER HARNESS

1. Measure the resistance of the (V71) S/C Switch Sense 1 circuit between the Clockspring C8 harness connector and S/C Switch harness connector.
2. Measure the resistance of the (V72) S/C Switch Sense 2 circuit between the Clockspring C8 harness connector and S/C Switch harness connector.

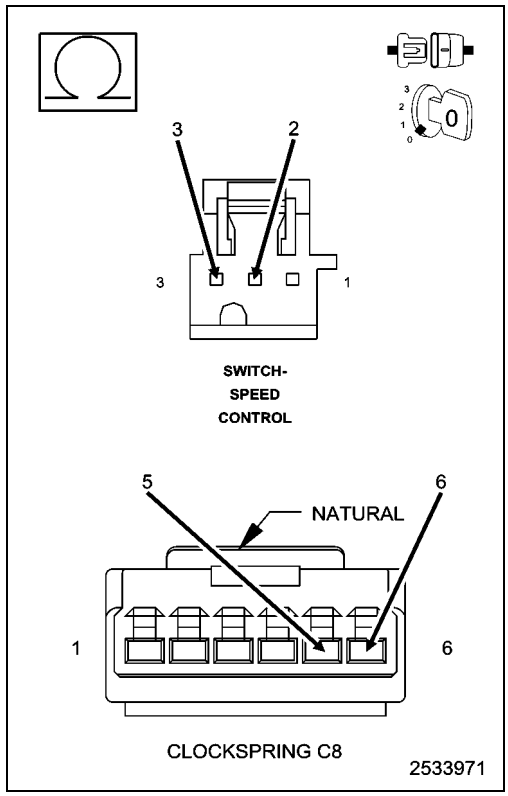

3. Measure the resistance of the (V937) Switch Return circuit between the Clockspring C8 harness connector and S/C Switch harness connector.

Is the resistance above 5.0 Ohms for either reading?

Yes

- Replace the Steering Wheel Jumper narness in accordance with the Service Information.
- Perform the POWERTRAIN VERIFICATION TEST. (Refer to 28 - DTC-Based Diagnostics/MODULE, Powertrain Control (PCM) - Standard Procedure).

No

- Go To 6

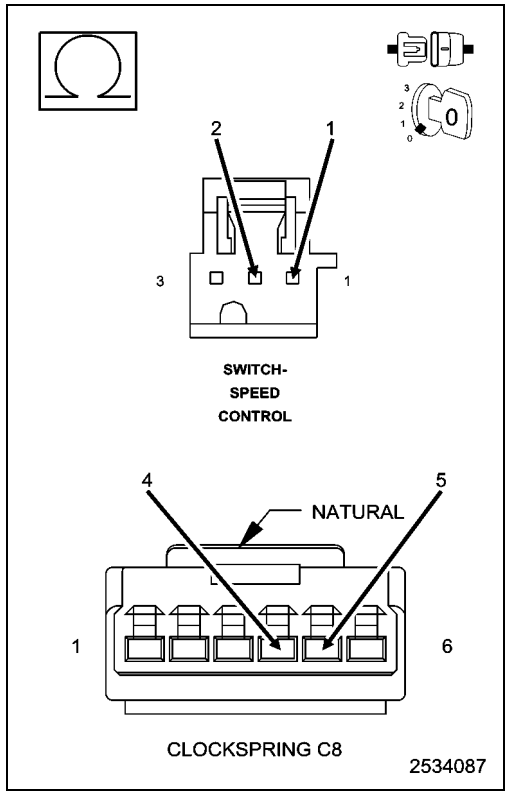

6. S/C SWITCH SIGNAL CIRCUIT SHORTED TO VOLTAGE

1. Turn the ignition on.
2. Measure the voltage on the (V71) and (V72) S/C switch sense circuits in the Clockspring C2 harness connector.

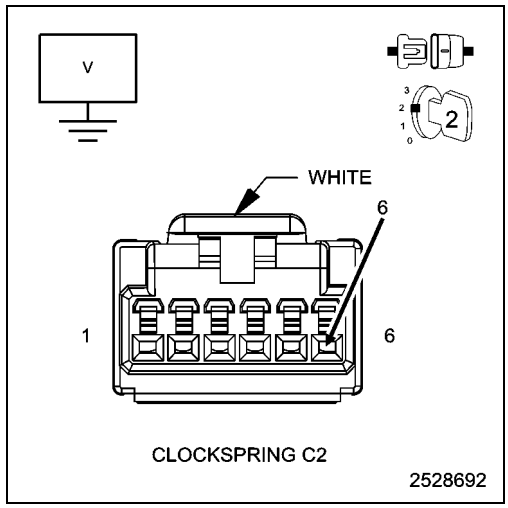

Is there any voltage present?

Yes

- Repair the short to voltage in the (V71) or (V72) S/C switch sense circuit.
- Perform the POWERTRAIN VERIFICATION TEST. (Refer to 28 - DTC-Based Diagnostics/MODULE, Powertrain Control (PCM) - Standard Procedure).

No

- Go To 7

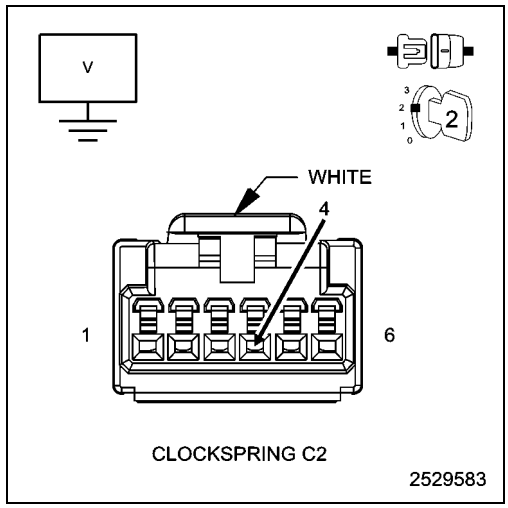

7. S/C SWITCH SENSE CIRCUIT SHORTED TO GROUND

1. Turn the ignition off.
2. Measure the resistance between ground and the (V71) S/C Switch Sense 1 circuit in the Clockspring C2 harness connector.

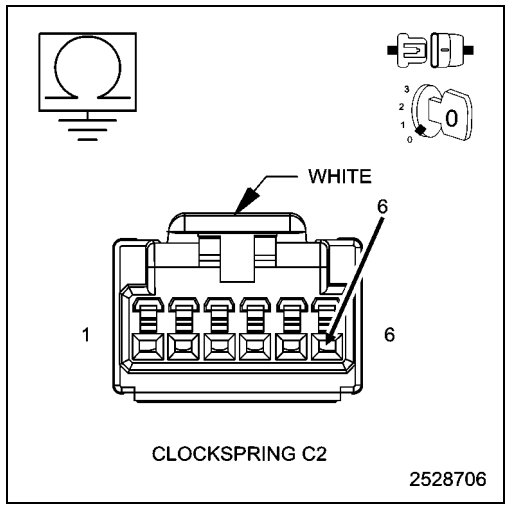

3. Measure the resistance between ground and the (V72) S/C Switch Sense 2 circuit in the Clockspring C2 harness connector.

Is the resistance below 100 Ohms?

Yes

- Repair the short to ground in the (V71) or (V72) S/C switch sense circuit.
- Perform the POWERTRAIN VERIFICATION TEST. (Refer to 28 - DTC-Based Diagnostics/MODULE, Powertrain Control (PCM) - Standard Procedure).

No

- Go To 8

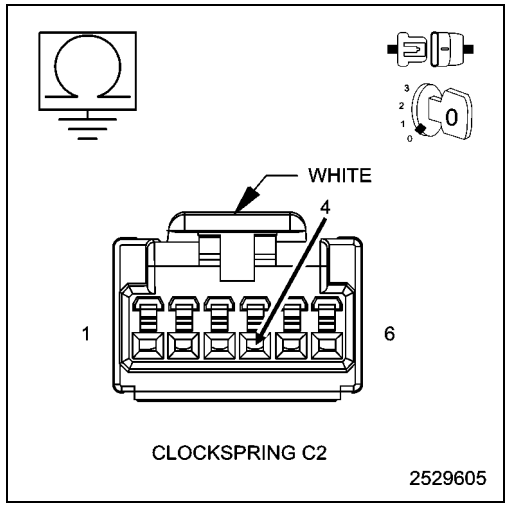

8. S/C SWITCH SENSE CIRCUIT SHORTED TO THE (V937) S/C SWITCH RETURN CIRCUIT

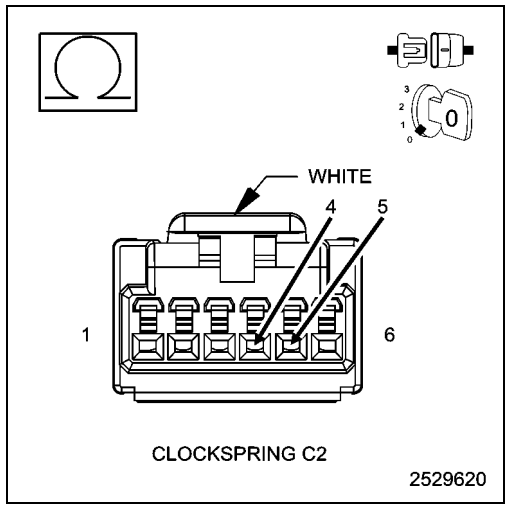

1. Measure the resistance between the (V71) and (V72) S/C Switch Sense circuit and the (V937) S/C Switch Return circuit in the Clockspring C2 harness connector.

Is the resistance below 5.0 Ohms?

Yes

- Repair the short between the (V71) or (V72) S/C Switch Sense circuit and the (V937) Switch Return circuit.
- Perform the POWERTRAIN VERIFICATION TEST. (Refer to 28 - DTC-Based Diagnostics/MODULE, Powertrain Control (PCM) - Standard Procedure).

No

- Go To 9

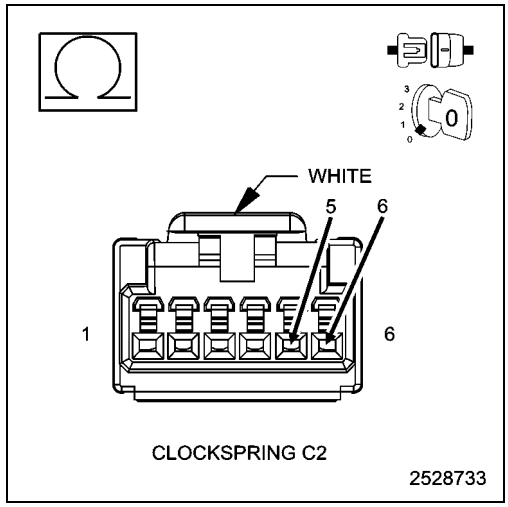

9. S/C SWITCH SENSE CIRCUIT OPEN

1. Connect the C3 PCM harness connector.
2. Measure the resistance of the (V71) and (V72) S/C Switch Sense circuit in the C2 Clockspring harness connector to the appropriate terminals of PCM Pinout Box 8815A.

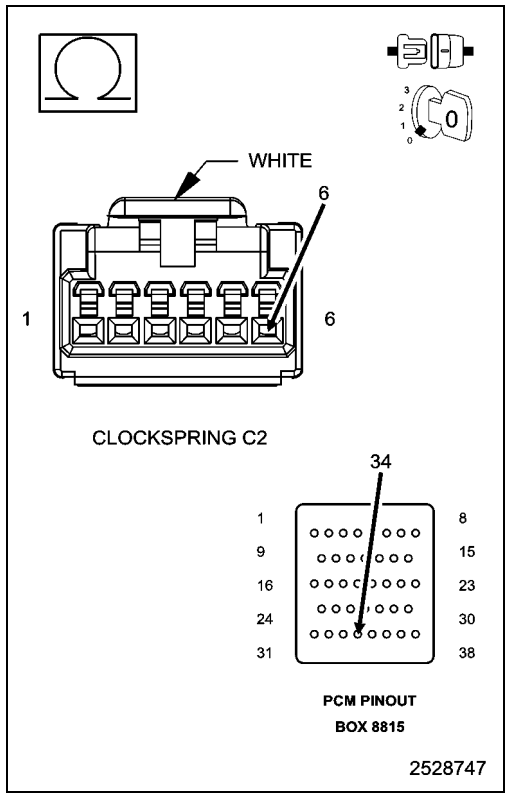

Is the resistance below 5.0 Ohms for each measurement?

Yes

- Go To 10

No

- Repair the excessive resistance in the (V71) or (V72) S/C Switch Sense circuit.
- Perform the POWERTRAIN VERIFICATION TEST. (Refer to 28 - DTC-Based Diagnostics/MODULE, Powertrain Control (PCM) - Standard Procedure).

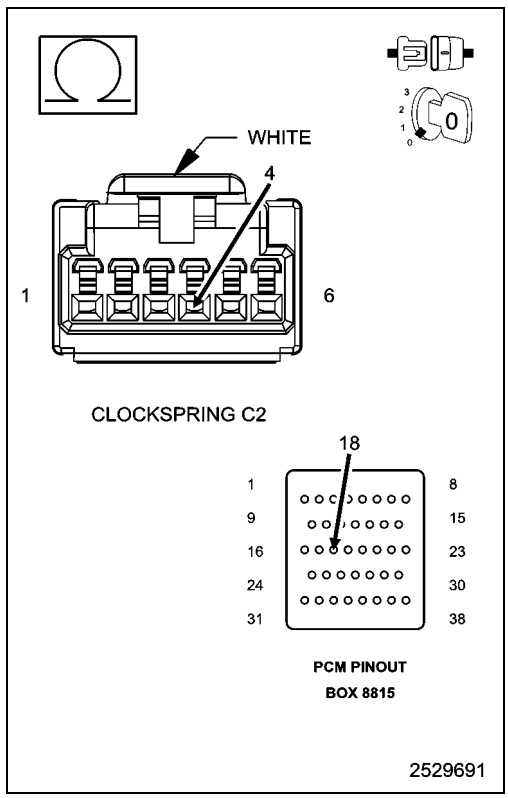

10. (V937) S/C SWITCH RETURN CIRCUIT OPEN

1. Measure the resistance of the (V937) S/C Switch Return circuit from the Clockspring C2 harness connector to the appropriate terminal of PCM Pinout Box 8815A.

Is the resistance below 5.0 Ohms for both measurements?

Yes

- Go To 11

No

- Repair the excessive resistance in the (V937) S/C Switch Return circuit.
- Perform the POWERTRAIN VERIFICATION TEST. (Refer to 28 - DTC-Based Diagnostics/MODULE, Powertrain Control (PCM) - Standard Procedure).

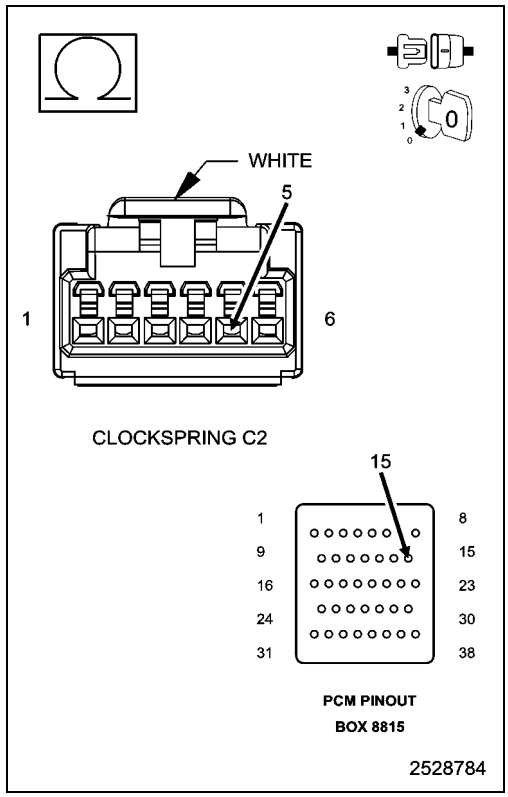

11. POWERTRAIN CONTROL MODULE (PCM)

1. Using the wiring diagram/schematic as a guide, inspect the wiring and connectors between the Speed Control Switch and the Powertrain Control Module (PCM).
2. Look for any chafed, pierced, pinched or partially broken wires.
3. Look for broken, bent, pushed out or corroded terminals. Verify that there is good pin to terminal contact in the Switch and Powertrain Control Module connectors.
4. Perform any Technical Service Bulletins that may apply.

Were there any problems found?

Yes

- Repair as necessary.
- Perform the POWERTRAIN VERIFICATION TEST. (Refer to 28 - DTC-Based Diagnostics/MODULE, Powertrain Control (PCM) - Standard Procedure).

No

- Replace and program the Powertrain Control Module in accordance with the Service Information.
- Perform the POWERTRAIN VERIFICATION TEST. (Refer to 28 - DTC-Based Diagnostics/MODULE, Powertrain Control (PCM) - Standard Procedure).

P0591-SPEED CONTROL SWITCH 2 PERFORMANCE

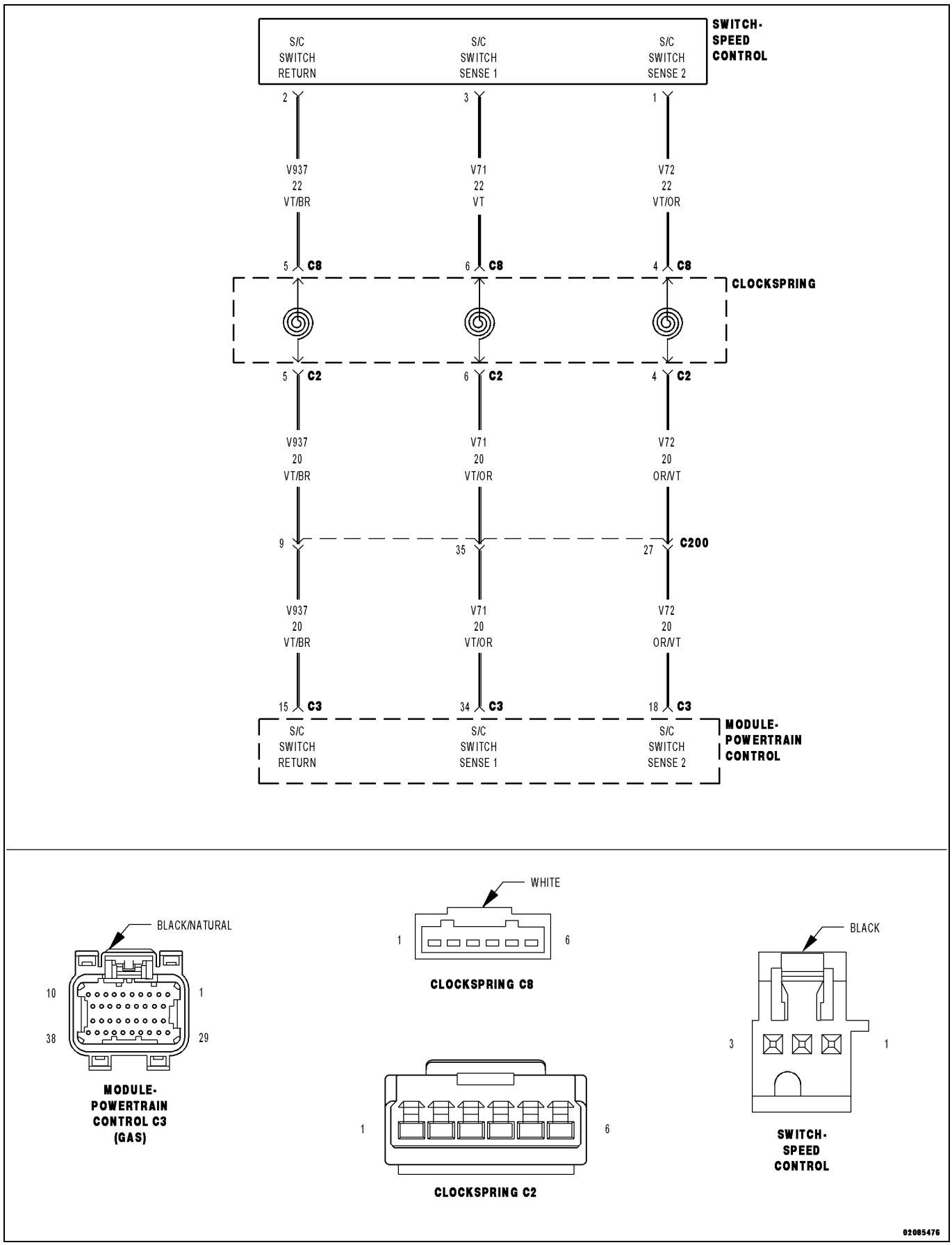

For a complete wiring diagram, **refer to the Wiring Information**.

- **When Monitored:**
  With the ignition key on.
- **Set Condition:**
  Speed Control (S/C) switch voltage output is not out of range but it does not equal any of the values for any of the button positions. One trip fault.

Possible Causes
(V72) S/C SWITCH SENSE 2 CIRCUIT OPEN
(V72) S/C SWITCH SENSE 2 CIRCUIT SHORTED TO VOLTAGE
(V937) S/C SWITCH RETURN CIRCUIT OPEN
(V72) S/C SWITCH SENSE 2 CIRCUIT SHORTED TO GROUND
(V72) S/C SWITCH SENSE 2 CIRCUIT SHORTED TO THE (V937) S/C SWITCH RETURN CIRCUIT
SPEED CONTROL SWITCH
CLOCKSPRING
POWERTRAIN CONTROL MODULE (PCM)

Always perform the Pre-Diagnostic Troubleshooting procedure before proceeding. (Refer to 28 - DTC-Based Diagnostics/MODULE, Powertrain Control (PCM) - Standard Procedure).

1. ACTIVE DIAGNOSTIC TROUBLE CODE (DTC)

1. Start the engine and allow it to idle for at least 60 seconds.

WARNING: When the engine is operating, do not stand in direct line with the fan. Do not put your hands near the pulleys, belts, or fan. Do not wear loose clothing. Failure to follow these instructions can result in possible serious or fatal injury.

NOTE: It may be necessary to test drive the vehicle and operate the speed control in order for this DTC to set.

2. Using the scan tool, select View DTCs.

Is the DTC Active at this time?

Yes

- Go To 2

No

- Perform the INTERMITTENT CONDITION diagnostic procedure. (Refer to 28 - DTC-Based Diagnostics/MODULE, Powertrain Control (PCM) - Standard Procedure).

2. SPEED CONTROL SWITCH

1. Turn the ignition off.
2. Disconnect the Speed Control Switch harness connector in accordance with the Service Information.
3. Measure the resistance between (V72) S/C Switch Sense 2 circuit and the (V937) Switch Return circuit.
4. Monitor the Ohmmeter while pressing each function button on each switch.
5. The following resistance specs are taken between terminals (V72) S/C Switch Sense 2 circuit and the (V937) Switch Return circuit of the switch when holding the switch button in the following position:
   - Not pressing any switch - 20.5 kOhms
   - On/Off - 6.2 kOhms
   - Set/Decel - 0.79 kOhms
   - Cancel - 3.2 kOhms
   - Resume/Accel - 1.7 kOhms

Does the function on the Speed Control Switch have the correct resistance value +/- 0.2 of an Ohm?

Yes

- Go To 3

No

- Replace the Speed Control Switch.
- Perform the POWERTRAIN VERIFICATION TEST. (Refer to 28 - DTC-Based Diagnostics/MODULE, Powertrain Control (PCM) - Standard Procedure).

3. CLOCKSPRING

1. Disconnect the PCM C3 harness connector.
2. Disconnect the Clockspring C2 harness connector in accordance with the Service Information.
3. Disconnect the Clockspring C8 harness connector.
4. Measure the resistance of the (V72) S/C Switch Sense 2 circuit between the C2 and C8 Clockspring connections.
5. Measure the resistance of the (V937) Switch Return circuit between the C2 and C8 Clockspring connections.

Is the resistance above 5.0 Ohms for either reading?

Yes

- Replace the Steering Column Module in accordance with the Service Information.
- Perform the POWERTRAIN VERIFICATION TEST. (Refer to 28 - DTC-Based Diagnostics/MODULE, Powertrain Control (PCM) - Standard Procedure).

No

- Go To 4

4. STEERING WHEEL JUMPER HARNESS

1. Measure the resistance of the (V72) S/C Switch Sense 2 circuit between the Clockspring C8 harness connector and S/C Switch harness connector.
2. Measure the resistance of the (V937) Switch Return circuit between the Clockspring C8 harness connector and S/C Switch harness connector.

Is the resistance above 5.0 Ohms for either reading?

Yes

- Replace the Steering Wheel Jumper narness in accordance with the Service Information.
- Perform the POWERTRAIN VERIFICATION TEST. (Refer to 28 - DTC-Based Diagnostics/MODULE, Powertrain Control (PCM) - Standard Procedure).

No

- Go To 5

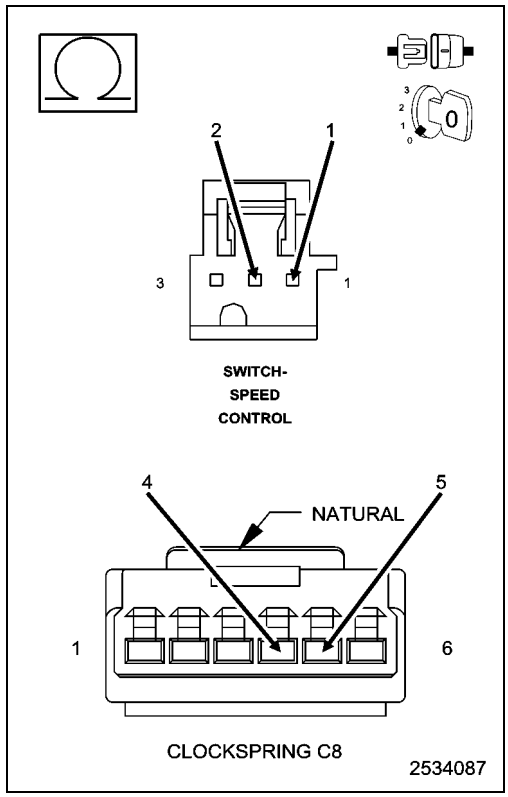

5. (V72) S/C SWITCH SENSE 2 CIRCUIT SHORTED TO VOLTAGE

1. Ignition on, engine not running.
2. Measure the voltage on the (V72) S/C Switch Sense 2 circuit in the Clockspring C2 harness connector.

Is there any voltage present?

Yes

- Repair the short to voltage in the (V72) S/C Switch Sense 2 circuit.
- Perform the POWERTRAIN VERIFICATION TEST. (Refer to 28 - DTC-Based Diagnostics/MODULE, Powertrain Control (PCM) - Standard Procedure).

No

- Go To 6

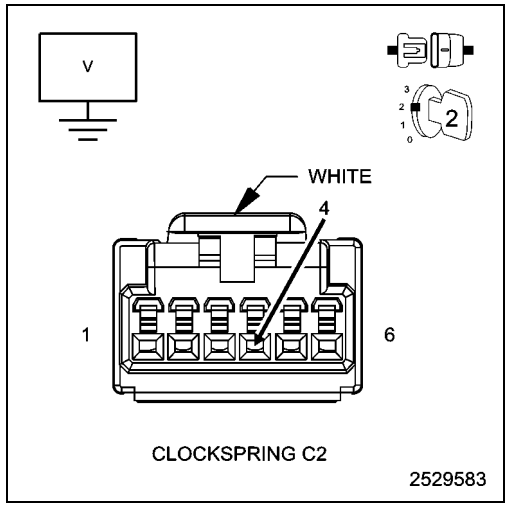

6. (V72) S/C SWITCH SENSE 2 CIRCUIT SHORTED TO GROUND

1. Turn the ignition off.
2. Measure the resistance between ground and the (V72) S/C Switch Sense 2 circuit in the Clockspring C2 harness connector.

Is the resistance below 100 Ohms?

Yes

- Repair the short to ground in the (V72) S/C Switch Sense 2 circuit.
- Perform the POWERTRAIN VERIFICATION TEST. (Refer to 28 - DTC-Based Diagnostics/MODULE, Powertrain Control (PCM) - Standard Procedure).

No

- Go To 7

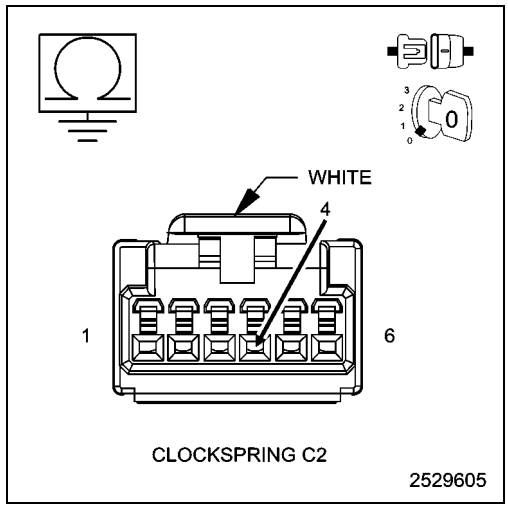

7. (V72) S/C SWITCH SENSE 2 CIRCUIT SHORTED TO THE (V937) S/C SWITCH RETURN CIRCUIT

1. Measure the resistance between the (V72) S/C Switch Sense 2 circuit and the (V937) S/C Switch Return circuit in the Clockspring C2 harness connector.

Is the resistance below 5.0 Ohms?

Yes

- Repair the short between the (V72) S/C Switch Sense 2 circuit and the (V937) Switch Return circuit.
- Perform the POWERTRAIN VERIFICATION TEST. (Refer to 28 - DTC-Based Diagnostics/MODULE, Powertrain Control (PCM) - Standard Procedure).

No

- Go To 8

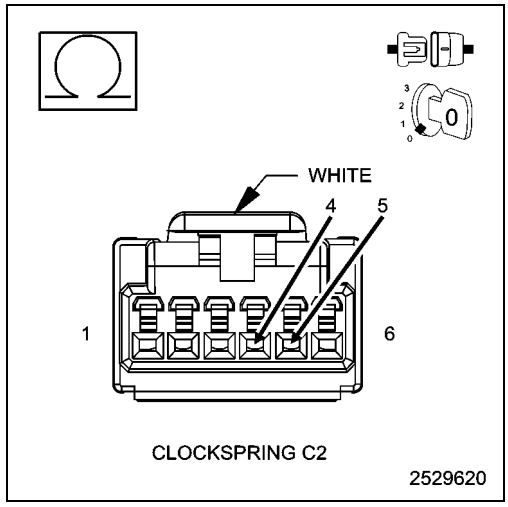

8. (V937) S/C SWITCH RETURN OPEN

CAUTION: Do not probe the PCM harness connectors. Probing the PCM harness connectors will damage the PCM terminals resulting in poor terminal to pin connection. Install the PCM Pinout Box Kit, NGC, 38 Position 8815A to perform diagnosis.

1. Measure the resistance of the (V937) S/C Switch Return circuit from the Clockspring C2 harness connector to the appropriate terminal of PCM Pinout Box 8815A.

   Is the resistance below 5.0 Ohms for both measurement?

Yes

- Go To 9

No

- Repair the open in the (V937) S/C Switch Return circuit.
- Perform the POWERTRAIN VERIFICATION TEST. (Refer to 28 - DTC-Based Diagnostics/MODULE, Powertrain Control (PCM) - Standard Procedure).

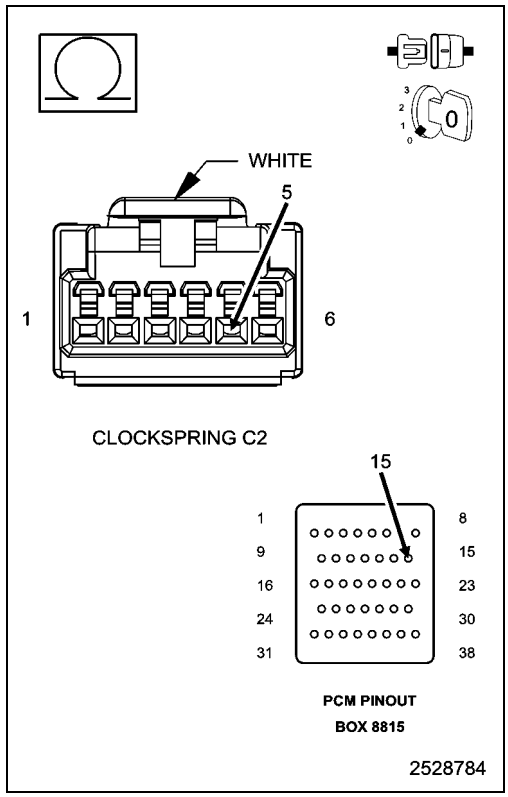

9. (V72) S/C SWITCH SENSE 2 CIRCUIT OPEN

CAUTION: Do not probe the PCM harness connectors. Probing the PCM harness connectors will damage the PCM terminals resulting in poor terminal to pin connection. Install the PCM Pinout Box Kit, NGC, 38 Position 8815A to perform diagnosis.

1. Measure the resistance of the (V72) S/C Switch Sense 2 circuit from the Clockspring C1 harness connector to the appropriate terminal of PCM Pinout Box 8815A.

   Is the resistance below 5.0 Ohms for both measurements?

Yes

- Go To 10

No

- Repair the open in the (V72) S/C Switch Sense 2 circuit.
- Perform the POWERTRAIN VERIFICATION TEST. (Refer to 28 - DTC-Based Diagnostics/MODULE, Powertrain Control (PCM) - Standard Procedure).

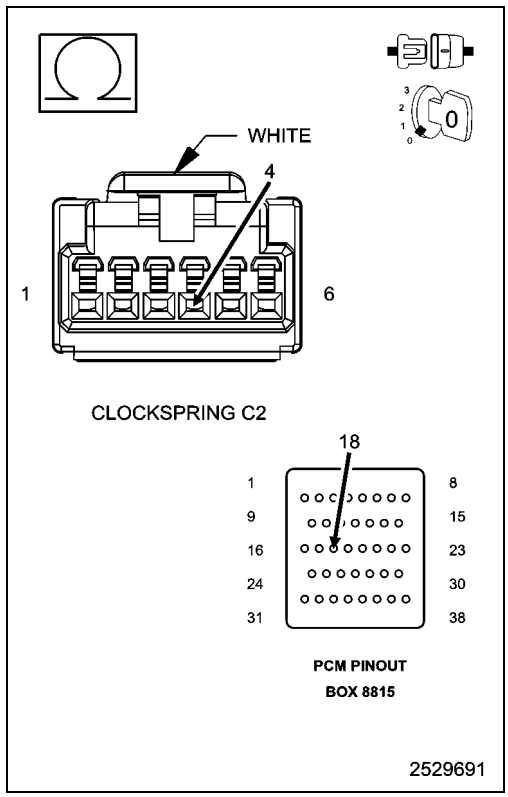

10. SPEED CONTROL SWITCH VOLTAGE VALUES

CAUTION: Do not probe the PCM harness connectors. Probing the PCM harness connectors will damage the PCM terminals resulting in poor terminal to pin connection. Install the PCM Pinout Box 8815A **and PCM Pinout Box Adapter** 8815-1 **to perform diagnosis.**

1. Install the PCM Pinout Box 8815-1 on the PCM C3 harness connector.
2. Connect the S/C Switch harness connectors.
3. Connect the Clockspring harness connectors.
4. Turn the ignition on.
5. Using the scan tool, monitor the S/C Switch voltage readings.
6. Using a Voltmeter check the voltage on the (V71) S/C Switch Sense 1 circuit and the (V72) S/C Switch Sense 2 circuit at the appropriate terminals of the PCM Pinout Box 8815A.
7. Monitor the Voltmeter.
8. Using the scan tool, monitor the S/C Switch voltage readings.

SWITCH POSITION	SWITCH No.1 VOLTAGE VALUE	SWITCH No.2 VOLTAGE VALUE
NO SWITCHES PRESSED	4.31 to 4.78 Volts	4.31 to 4.78 Volts
ON/OFF PRESSED	0.59 to 1.13 Volts	3.53 to 3.92 Volts
RES/ACCEL PRESSED	3.88 to 4.17 Volts	2.04 to 2.47 Volts
SET/DECEL PRESSED	3.16 to 3.56 Volts	1.17 to 1.56 Volts
CANCEL PRESSED	1.59 to 1.99 Volts	2.84 to 3.25 Volts

9. Compare the voltage readings on the Voltmeter to what the scan tool displayed.

   Are the voltage readings out of the listed specification and is there less than a 0.2 of a Volt difference between the Voltmeter switch values and the scan tool switch values?

Yes

- Replace the Speed Control Switch.
- Perform the POWERTRAIN VERIFICATION TEST. (Refer to 28 - DTC-Based Diagnostics/MODULE, Powertrain Control (PCM) - Standard Procedure).

No

- Go To 11

11. POWERTRAIN CONTROL MODULE (PCM)

1. Using the wiring diagram/schematic as a guide, inspect the wiring and connectors between the Speed Control Switch and the Powertrain Control Module (PCM).
2. Look for any chafed, pierced, pinched or partially broken wires.
3. Look for broken, bent, pushed out or corroded terminals. Verify that there is good pin to terminal contact in the Switch and Powertrain Control Module connectors.
4. Perform any Technical Service Bulletins that may apply.

Were there any problems found?

Yes

- Repair as necessary.
- Perform the POWERTRAIN VERIFICATION TEST. (Refer to 28 - DTC-Based Diagnostics/MODULE, Powertrain Control (PCM) - Standard Procedure).

No

- Replace and program the Powertrain Control Module in accordance with the Service Information.
- Perform the POWERTRAIN VERIFICATION TEST. (Refer to 28 - DTC-Based Diagnostics/MODULE, Powertrain Control (PCM) - Standard Procedure).

P0592-SPEED CONTROL SWITCH 2 CIRCUIT LOW

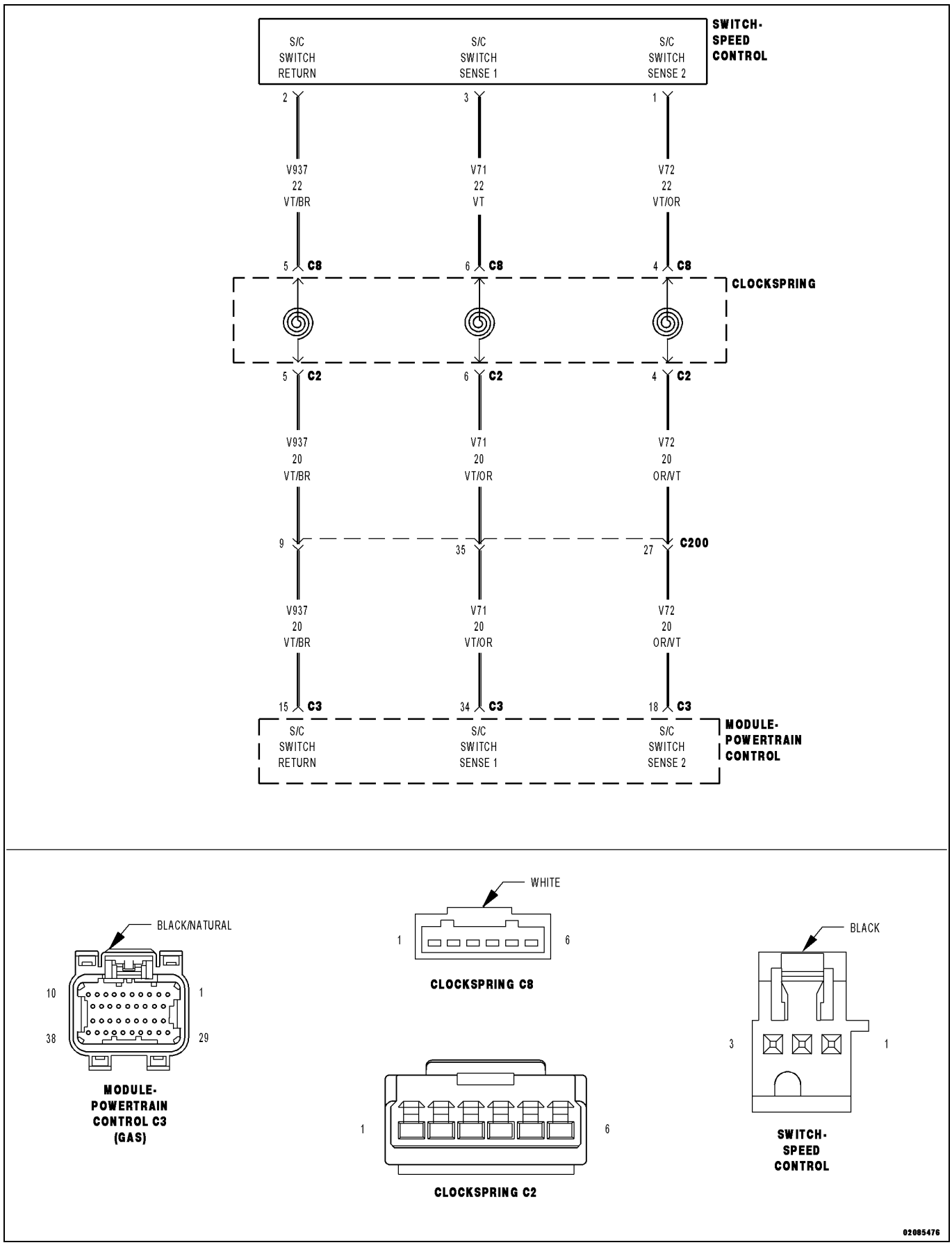

For a complete wiring diagram, **refer to the Wiring Information**.

- **When Monitored:**
  With the ignition key on.
- **Set Condition:**
  Speed Control (S/C) switch input No.2 is below the minimum acceptable voltage at the Powertrain Control Module (PCM). One trip fault.

Possible Causes
(V72) S/C SWITCH SENSE 2 CIRCUIT SHORTED TO GROUND
(V72) S/C SWITCH SENSE 2 CIRCUIT SHORTED TO THE (V937) S/C SWITCH RETURN CIRCUIT
CLOCKSPRING
SPEED CONTROL SWITCH
POWERTRAIN CONTROL MODULE (PCM)

Always perform the Pre-Diagnostic Troubleshooting procedure before proceeding. (Refer to 28 - DTC-Based Diagnostics/MODULE, Powertrain Control (PCM) - Standard Procedure).

1. ACTIVE DIAGNOSTIC TROUBLE CODE (DTC)

1. Start the engine and allow it to idle for at least 60 seconds.

WARNING: When the engine is operating, do not stand in direct line with the fan. Do not put your hands near the pulleys, belts, or fan. Do not wear loose clothing. Failure to follow these instructions can result in possible serious or fatal injury.

NOTE: It may be necessary to test drive the vehicle and operate the speed control in order for this DTC to set.

2. Using the scan tool, select View DTCs.

Is the DTC Active at this time?

Yes

- Go To 2

No

- Perform the INTERMITTENT CONDITION diagnostic procedure. (Refer to 28 - DTC-Based Diagnostics/MODULE, Powertrain Control (PCM) - Standard Procedure).

2. SPEED CONTROL SWITCH

1. Turn the ignition off.
2. Disconnect the Speed Control Switch harness connector in accordance with the Service Information.
3. Measure the resistance between (V72) S/C Switch Sense 2 circuit and the (V937) Switch Return circuit.
4. Monitor the Ohmmeter while pressing each function button on each switch.
5. The following resistance specs are taken between terminals (V72) S/C Switch Sense 2 circuit and the (V937) Switch Return circuit of the switch when holding the switch button in the following position:
   - Not pressing any switch - 20.5 kOhms
   - On/Off - 6.2 kOhms
   - Set/Decel - 0.79 kOhms
   - Cancel - 3.2 kOhms
   - Resume/Accel - 1.7 kOhms

Does the function on the Speed Control Switch have the correct resistance value +/- 0.2 of an Ohm?

Yes

- Go To 3

No

- Replace the Speed Control Switch.
- Perform the POWERTRAIN VERIFICATION TEST. (Refer to 28 - DTC-Based Diagnostics/MODULE, Powertrain Control (PCM) - Standard Procedure).

3. STEERING COLUMN MODULE

1. Disconnect the PCM C3 harness connector.
2. Disconnect the Clockspring C2 harness connector in accordance with the Service Information.
3. Disconnect the Clockspring C8 harness connector.
4. Measure the resistance of the (V72) S/C Switch Sense 2 circuit between the C2 and C8 Clockspring connections.
5. Measure the resistance of the (V937) Switch Return circuit between the C2 and C8 Clockspring connections.

Is the resistance above 5.0 Ohms for either reading?

Yes

- Replace the Steering Column Module in accordance with the Service Information.
- Perform the POWERTRAIN VERIFICATION TEST. (Refer to 28 - DTC-Based Diagnostics/MODULE, Powertrain Control (PCM) - Standard Procedure).

No

- Go To 4

4. STEERING WHEEL JUMPER HARNESS

1. Turn the ignition off.
2. Measure the resistance of the (V72) S/C Switch Sense 2 circuit between the Clockspring C8 harness connector and S/C Switch harness connector.
3. Measure the resistance of the (V937) Switch Return circuit between the Clockspring C8 harness connector and S/C Switch harness connector.

Is the resistance above 5.0 Ohms for either reading?

Yes

- Replace the Steering Wheel Jumper narness in accordance with the Service Information.
- Perform the POWERTRAIN VERIFICATION TEST. (Refer to 28 - DTC-Based Diagnostics/MODULE, Powertrain Control (PCM) - Standard Procedure).

No

- Go To 5

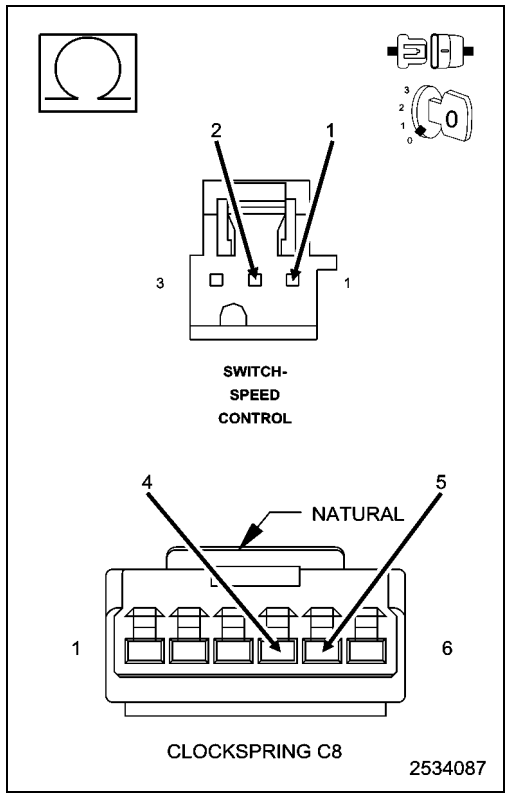

5. (V72) S/C SWITCH SENSE 2 CIRCUIT SHORTED TO THE (V937) S/C SWITCH RETURN CIRCUIT

1. Measure the resistance between the (V72) S/C Switch Sense 2 circuit and the (V937) S/C Switch Return circuit in the Clockspring C2 harness connector.

Is the resistance below 5.0 Ohms?

Yes

- Repair the short between the (V72) S/C Switch Sense 2 circuit and the (V937) Switch Return circuit.
- Perform the POWERTRAIN VERIFICATION TEST. (Refer to 28 - DTC-Based Diagnostics/MODULE, Powertrain Control (PCM) - Standard Procedure).

No

- Go To 6

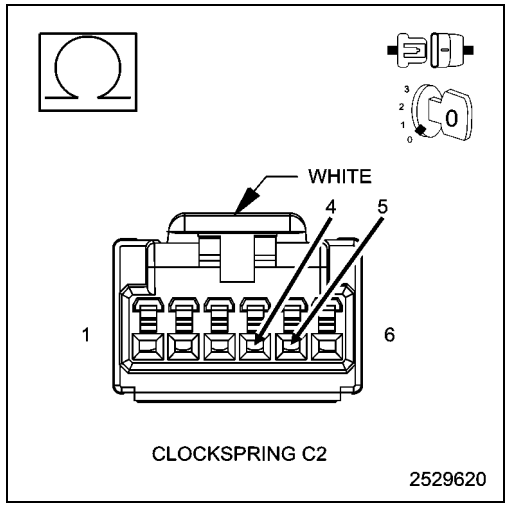

6. (V72) S/C NO.2 SWITCH SIGNAL CIRCUIT SHORTED TO GROUND

1. Measure the resistance between ground and the (V72) S/C Switch Sense 2 circuit in the Clockspring C2 harness connector.

Is the resistance below 100 Ohms?

Yes

- Repair the short to ground in the (V72) S/C Switch Sense 1 circuit.
- Perform the POWERTRAIN VERIFICATION TEST. (Refer to 28 - DTC-Based Diagnostics/MODULE, Powertrain Control (PCM) - Standard Procedure).

No

- Go To 7

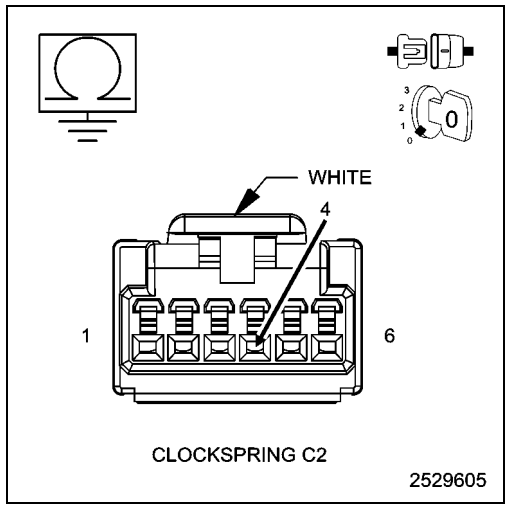

7. SPEED CONTROL SWITCH VOLTAGE VALUES

CAUTION: Do not probe the PCM harness connectors. Probing the PCM harness connectors will damage the PCM terminals resulting in poor terminal to pin connection. Install the PCM Pinout Box 8815A **and PCM Pinout Box Adapter** 8815-1 **to perform diagnosis.**

1. Install the PCM Pinout Box 8815-1 on the PCM C3 harness connector.
2. Connect the S/C Switch harness connectors.
3. Connect the Clockspring harness connectors.
4. Turn the ignition on.
5. Using the scan tool, monitor the S/C Switch voltage readings.
6. Using a Voltmeter check the voltage on the (V72) S/C Switch Sense 1 circuit and the (V72) S/C Switch Sense 2 circuit at the appropriate terminals of the PCM Pinout Box 8815A.
7. Monitor the Voltmeter.
8. Using the scan tool, monitor the S/C Switch voltage readings.

SWITCH POSITION	SWITCH No.1 VOLTAGE VALUE	SWITCH No.2 VOLTAGE VALUE
NO SWITCHES PRESSED	4.31 to 4.78 Volts	4.31 to 4.78 Volts
ON/OFF PRESSED	0.59 to 1.13 Volts	3.53 to 3.92 Volts
RES/ACCEL PRESSED	3.88 to 4.17 Volts	2.04 to 2.47 Volts
SET/DECEL PRESSED	3.16 to 3.56 Volts	1.17 to 1.56 Volts
CANCEL PRESSED	1.59 to 1.99 Volts	2.84 to 3.25 Volts

9. Compare the voltage readings on the Voltmeter to what the scan tool displayed.

Are the voltage readings out of the listed specification and is there less than a 0.2 of a Volt difference between the Voltmeter switch values and the scan tool switch value?

Yes

- Replace the Speed Control Switch.
- Perform the POWERTRAIN VERIFICATION TEST. (Refer to 28 - DTC-Based Diagnostics/MODULE, Powertrain Control (PCM) - Standard Procedure).

No

- Go To 8

8. POWERTRAIN CONTROL MODULE (PCM)

1. Using the wiring diagram/schematic as a guide, inspect the wiring and connectors between the Speed Control Switch and the Powertrain Control Module (PCM).
2. Look for any chafed, pierced, pinched or partially broken wires.
3. Look for broken, bent, pushed out or corroded terminals. Verify that there is good pin to terminal contact in the Switch and Powertrain Control Module connectors.
4. Perform any Technical Service Bulletins that may apply.

Were there any problems found?

Yes

- Repair as necessary.
- Perform the POWERTRAIN VERIFICATION TEST. (Refer to 28 - DTC-Based Diagnostics/MODULE, Powertrain Control (PCM) - Standard Procedure).

No

- Replace and program the Powertrain Control Module in accordance with the Service Information.
- Perform the POWERTRAIN VERIFICATION TEST. (Refer to 28 - DTC-Based Diagnostics/MODULE, Powertrain Control (PCM) - Standard Procedure).

P0593-SPEED CONTROL SWITCH 2 CIRCUIT HIGH

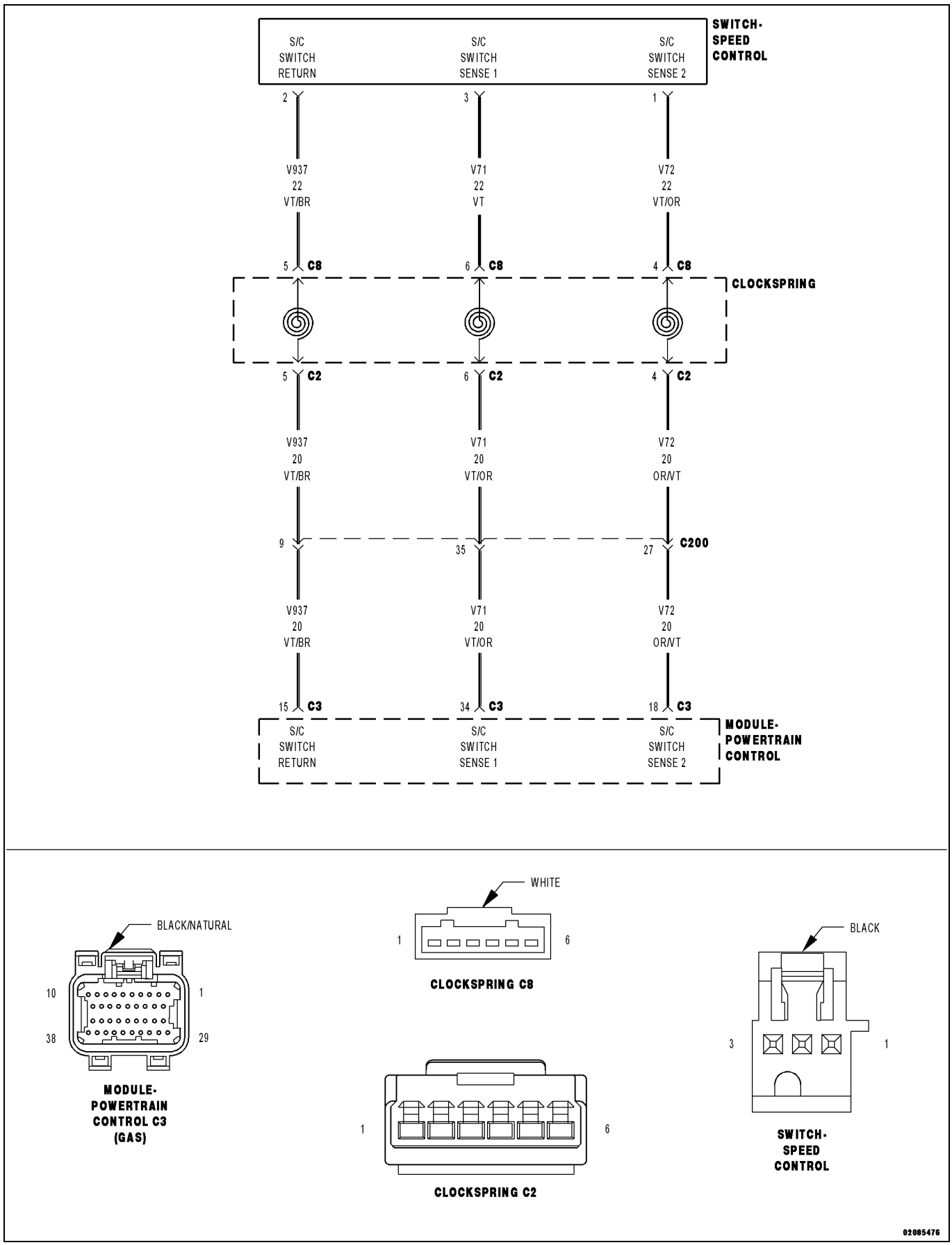

For a complete wiring diagram, **refer to the Wiring Information**.

- **When Monitored:**
  With the ignition key on.
- **Set Condition:**
  Speed Control (S/C) Switch No.2 input above the maximum acceptable voltage at the Powertrain Control Module (PCM). One trip fault.

Possible Causes
(V72) S/C SWITCH SENSE 2 CIRCUIT SHORTED TO VOLTAGE
(V72) S/C SWITCH SENSE 2 CIRCUIT OPEN
(V937) S/C SWITCH RETURN CIRCUIT OPEN
CLOCKSPRING
SPEED CONTROL SWITCH
POWERTRAIN CONTROL MODULE (PCM)

Always perform the Pre-Diagnostic Troubleshooting procedure before proceeding. (Refer to 28 - DTC-Based Diagnostics/MODULE, Powertrain Control (PCM) - Standard Procedure).

1. ACTIVE DIAGNOSTIC TROUBLE CODE (DTC)

1. Start the engine and allow it to idle for at least 60 seconds.

WARNING: When the engine is operating, do not stand in direct line with the fan. Do not put your hands near the pulleys, belts, or fan. Do not wear loose clothing. Failure to follow these instructions can result in possible serious or fatal injury.

NOTE: It may be necessary to test drive the vehicle and operate the speed control in order for this DTC to set.

2. Using the scan tool, select View DTCs.

Is the DTC Active at this time?

Yes

- Go To 2

No

- Perform the INTERMITTENT CONDITION diagnostic procedure. (Refer to 28 - DTC-Based Diagnostics/MODULE, Powertrain Control (PCM) - Standard Procedure).

2. SPEED CONTROL SWITCH

1. Turn the ignition off.
2. Disconnect the Speed Control Switch harness connector in accordance with the Service Information.
3. Measure the resistance between (V72) S/C Switch Sense 2 circuit and the (V937) Switch Return circuit.
4. Monitor the Ohmmeter while pressing each function button on each switch.
5. The following resistance specs are taken between terminals (V72) S/C Switch Sense 2 circuit and the (V937) Switch Return circuit of the switch when holding the switch button in the following position:
   - Not pressing any switch - 20.5 kOhms
   - On/Off - 6.2 kOhms
   - Set/Decel - 0.79 kOhms
   - Cancel - 3.2 kOhms
   - Resume/Accel - 1.7 kOhms

Does the function on the Speed Control Switch have the correct resistance value +/- 0.2 of an Ohm?

Yes

- Go To 3

No

- Replace the Speed Control Switch.
- Perform the POWERTRAIN VERIFICATION TEST. (Refer to 28 - DTC-Based Diagnostics/MODULE, Powertrain Control (PCM) - Standard Procedure).

3. CLOCKSPRING

1. Disconnect the PCM C3 harness connector.
2. Disconnect the Clockspring C2 harness connector in accordance with the Service Information.
3. Disconnect the Clockspring C8 harness connector.
4. Measure the resistance of the (V72) S/C Switch Sense 2 circuit between the C2 and C8 Clockspring connections.
5. Measure the resistance of the (V937) Switch Return circuit between the C2 and C8 Clockspring connections.

Is the resistance above 5.0 Ohms for either reading?

Yes

- Replace the Clockspring in accordance with the Service Information.
- Perform the POWERTRAIN VERIFICATION TEST. (Refer to 28 - DTC-Based Diagnostics/MODULE, Powertrain Control (PCM) - Standard Procedure).

No

- Go To 4

4. STEERING WHEEL JUMPER HARNESS

1. Measure the resistance of the (V72) S/C Switch Sense 2 circuit between the Clockspring C8 harness connector and S/C Switch harness connector.
2. Measure the resistance of the (V937) Switch Return circuit between the Clockspring C8 harness connector and S/C Switch harness connector.

Is the resistance above 5.0 Ohms for either reading?

Yes

- Replace the Steering Wheel Jumper harness in accordance with the Service Information.
- Perform the POWERTRAIN VERIFICATION TEST. (Refer to 28 - DTC-Based Diagnostics/MODULE, Powertrain Control (PCM) - Standard Procedure).

No

- Go To 5

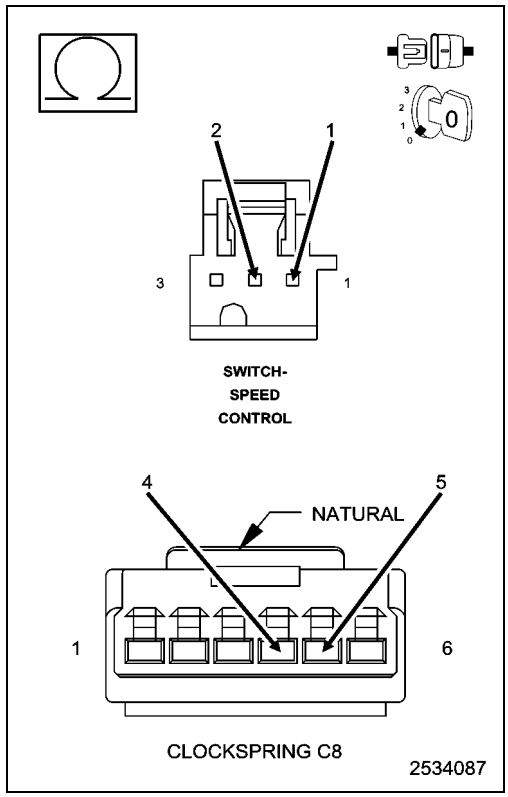

5. (V72) S/C SWITCH SENSE 2 CIRCUIT SHORTED TO VOLTAGE

1. Ignition on, engine not running.
2. Measure the voltage on the (V72) S/C Switch Sense 2 circuit in the Clockspring C2 harness connector.

Is there any voltage present?

Yes

- Repair the short to voltage in the (V72) S/C Switch Sense 2 circuit.
- Perform the POWERTRAIN VERIFICATION TEST. (Refer to 28 - DTC-Based Diagnostics/MODULE, Powertrain Control (PCM) - Standard Procedure).

No

- Go To 6

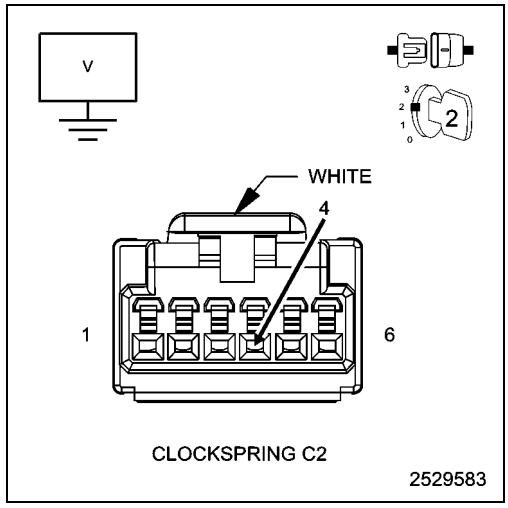

6. (V72) S/C SWITCH SENSE 2 CIRCUIT OPEN

1. Turn the ignition off.

CAUTION: Do not probe the PCM harness connectors. Probing the PCM harness connectors will damage the PCM terminals resulting in poor terminal to pin connection. Install the PCM Pinout Box Kit, NGC, 38 Position 8815A to perform diagnosis.

2. Measure the resistance of the (V72) S/C Switch Sense 2 circuit from the Clockspring C2 harness connector to the appropriate terminal of PCM Pinout Box 8815A.

Is the resistance below 5.0 Ohms for both measurements?

Yes

- Go To 7

No

- Repair the open in the (V72) S/C Switch Sense 2 circuit.
- Perform the POWERTRAIN VERIFICATION TEST. (Refer to 28 - DTC-Based Diagnostics/MODULE, Powertrain Control (PCM) - Standard Procedure).

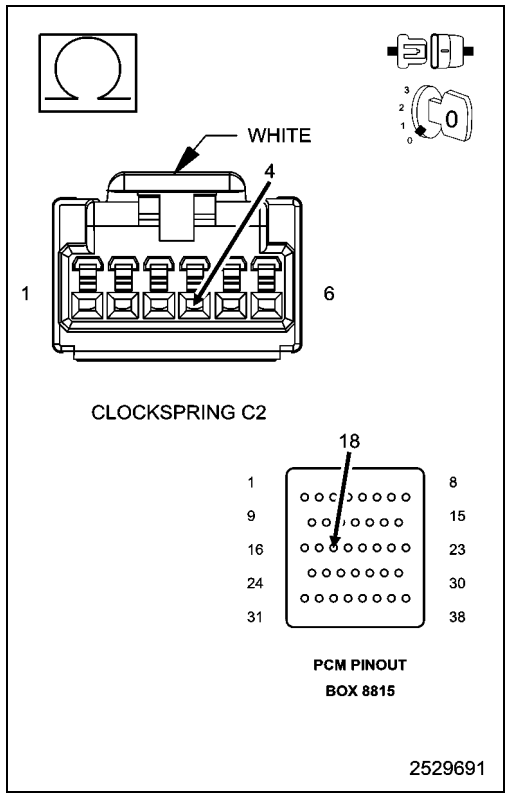

7. (V937) S/C SWITCH RETURN CIRCUIT OPEN

1. Measure the resistance of the (V937) S/C Switch Return circuit from the Clockspring C2 harness connector to the appropriate terminal of PCM Pinout Box 8815A.

Is the resistance below 5.0 Ohms for both measurements?

Yes

- Go To 8

No

- Repair the open in the (V937) S/C Switch Return circuit.
- Perform the POWERTRAIN VERIFICATION TEST. (Refer to 28 - DTC-Based Diagnostics/MODULE, Powertrain Control (PCM) - Standard Procedure).

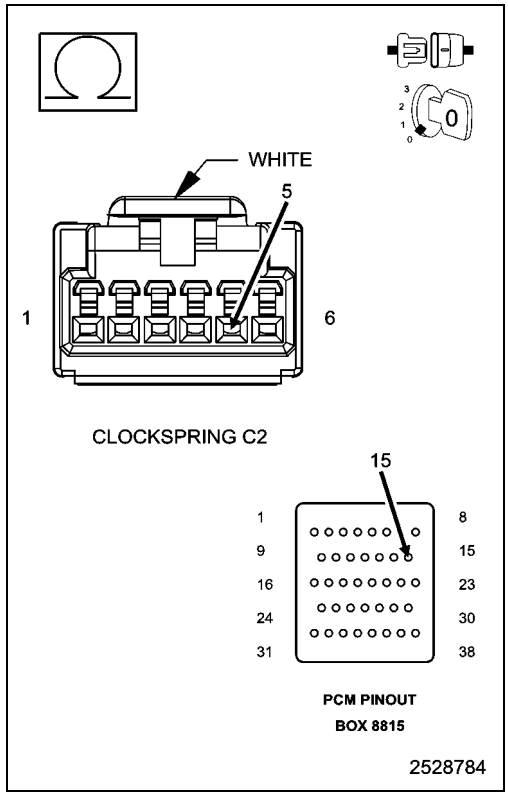

8. SPEED CONTROL SWITCH VOLTAGE VALUES

CAUTION: Do not probe the PCM harness connectors. Probing the PCM harness connectors will damage the PCM terminals resulting in poor terminal to pin connection. Install the PCM Pinout Box 8815A **and PCM Pinout Box Adapter** 8815-1 **to perform diagnosis.**

1. Install the PCM Pinout Box 8815-1 on the PCM C3 harness connector.
2. Connect the S/C Switch harness connectors.
3. Connect the Clockspring harness connectors.
4. Turn the ignition on.
5. Using the scan tool, monitor the S/C Switch voltage readings.
6. Using a Voltmeter check the voltage on the (V71) S/C Switch Sense 1 circuit and the (V72) S/C Switch Sense 2 circuit at the appropriate terminals of the PCM Pinout Box 8815A.
7. Monitor the Voltmeter.
8. Using the scan tool, monitor the S/C Switch voltage readings.

SWITCH POSITION	SWITCH No.1 VOLTAGE VALUE	SWITCH No.2 VOLTAGE VALUE
NO SWITCHES PRESSED	4.31 to 4.78 Volts	4.31 to 4.78 Volts
ON/OFF PRESSED	0.59 to 1.13 Volts	3.53 to 3.92 Volts
RES/ACCEL PRESSED	3.88 to 4.17 Volts	2.04 to 2.47 Volts
SET/DECEL PRESSED	3.16 to 3.56 Volts	1.17 to 1.56 Volts
CANCEL PRESSED	1.59 to 1.99 Volts	2.84 to 3.25 Volts

9. Compare the voltage readings on the Voltmeter to what the scan tool displayed.

Are the voltage readings out of the listed specification and is there less than a 0.2 of a Volt difference between the Voltmeter switch values and the scan tool switch value?

Yes

- Replace the Speed Control Switch.
- Perform the POWERTRAIN VERIFICATION TEST. (Refer to 28 - DTC-Based Diagnostics/MODULE, Powertrain Control (PCM) - Standard Procedure).

No

- Go To 9

9. POWERTRAIN CONTROL MODULE (PCM)

1. Using the wiring diagram/schematic as a guide, inspect the wiring and connectors between the Speed Control Switch and the Powertrain Control Module (PCM).

- Look for any chafed, pierced, pinched or partially broken wires.
- Look for broken, bent, pushed out or corroded terminals. Verify that there is good pin to terminal contact in the Switch and Powertrain Control Module connectors.
- Perform any Technical Service Bulletins that may apply.

Were there any problems found?

Yes

- Repair as necessary.
- Perform the POWERTRAIN VERIFICATION TEST. (Refer to 28 - DTC-Based Diagnostics/MODULE, Powertrain Control (PCM) - Standard Procedure).

No

- Replace and program the Powertrain Control Module in accordance with the Service Information.
- Perform the POWERTRAIN VERIFICATION TEST. (Refer to 28 - DTC-Based Diagnostics/MODULE, Powertrain Control (PCM) - Standard Procedure).

P0600-SERIAL COMMUNICATION LINK

For a complete wiring diagram **Refer to the Wiring Information**.

- **When Monitored:**
  With the ignition on.
- **Set Condition:**
  Internal Bus communication failure between processors. One Trip Fault. Three Global Good Trips to Clear.

Possible Causes
POWERTRAIN CONTROL MODULE (PCM)

Always perform the Pre-Diagnostic Troubleshooting procedure before proceeding. (Refer to 28 - DTC-Based Diagnostics/MODULE, Powertrain Control (PCM) - Standard Procedure).

1. POWERTRAIN CONTROL MODULE (PCM)

NOTE: Diagnose any CMP or CKP Sensor faults before continuing. Check for intermittent loose CMP or CKP connections.

The Powertrain Control Module is reporting internal errors, view repair to continue.

Repair

- Replace and program the Powertrain Control Module per Service Information.
- Perform the POWERTRAIN VERIFICATION TEST. (Refer to 28 - DTC-Based Diagnostics/MODULE, Powertrain Control (PCM) - Standard Procedure)

P0601-INTERNAL MEMORY CHECKSUM INVALID

For a complete wiring diagram **Refer to the Wiring Information**.

- **When Monitored:**
  With the ignition on.
- **Set Condition:**
  Internal checksum for software failed, does not match calculated value. One Trip Fault, Three Good Trips to clear. The ETC light will flash if equipped.

Possible Causes
POWERTRAIN CONTROL MODULE (PCM)

Always perform the Pre-Diagnostic Troubleshooting procedure before proceeding. (Refer to 28 - DTC-Based Diagnostics/MODULE, Powertrain Control (PCM) - Standard Procedure).

1. POWERTRAIN CONTROL MODULE (PCM)

NOTE: Diagnose any CMP or CKP Sensor faults before continuing. Check for intermittent loose CMP or CKP connections.

The Powertrain Control Module is reporting internal errors, view repair to continue.

Repair

- Replace and program the Powertrain Control Module per Service Information.
- Perform the POWERTRAIN VERIFICATION TEST. (Refer to 28 - DTC-Based Diagnostics/MODULE, Powertrain Control (PCM) - Standard Procedure)

P0606-INTERNAL ECM PROCESSOR

For a complete wiring diagram, **refer to the Wiring Information**.

- **When Monitored:**

  Engine running.
- **Set Condition:**

  When the Powertrain Control Module (PCM) recognizes an internal failure to communicate with the the Camshaft Position Sensor (CMP) and Crankshaft Position Sensor (CKP) Sensor count periods are too short. One trip fault. ETC light is flashing.

Possible Causes
POWERTRAIN CONTROL MODULE (PCM)

Always perform the Pre-Diagnostic Troubleshooting procedure before proceeding. (Refer to 28 - DTC-Based Diagnostics/MODULE, Powertrain Control (PCM) - Standard Procedure).

1. POWERTRAIN CONTROL MODULE (PCM)

NOTE: Diagnose any CMP or CKP Sensor faults before continuing. Check for intermittent loose CMP or CKP connections.

The Powertrain Control Module is reporting internal errors, view repair to continue.

Repair

- Replace and program the Powertrain Control Module in accordance with the Service Information.
- Perform the POWERTRAIN VERIFICATION TEST. (Refer to 28 - DTC-Based Diagnostics/MODULE, Powertrain Control (PCM) - Standard Procedure).

P060B-ETC A/D GROUND PERFORMANCE

For a complete wiring diagram, **refer to the Wiring Information**.

- **When Monitored:**

  When the Throttle Motor is powered.
- **Set Condition:**

  When A2D reading does not return to ground within a set period of time of test activation, this fault sets. The test typically runs a couple of times per second, and is the reason why APP2 signal spikes to ground a couple of times per second in normal running. Reprogramming the module may not always fix this fault. One trip failure. ETC lamp will flash.

Possible Causes
PCM NEEDS TO BE PROGRAMMED
POWERTRAIN CONTROL MODULE (PCM)

Always perform the Pre-Diagnostic Troubleshooting procedure before proceeding. (Refer to 28 - DTC-Based Diagnostics/MODULE, Powertrain Control (PCM) - Standard Procedure).

1. PROGRAM THE POWERTRAIN CONTROL MODULE

1. Verify the PCM is at the latest calibration (flash level).

NOTE: An intermittent loss of power to the PCM without performing an ETC Relearn procedure may cause this DTC to set.

NOTE: Diagnose any other DTCs that may have set with the P060B.

2. Flash the Powertrain Control Module in accordance with the Service Information if any updates are available.
3. Start the engine.
4. Allow the engine to reach normal operating temperature.
5. Operate the accelerator pedal. (do not exceed 3500 rpm)
6. With a scan tool, select View DTCs.

Does this DTC reset by itself?

Yes

- Replace and reprogram the Powertrain Control Module in accordance with the Service Information.
- Perform the POWERTRAIN VERIFICATION TEST. (Refer to 28 - DTC-Based Diagnostics/MODULE, Powertrain Control (PCM) - Standard Procedure).

No

- Test Complete.

P060D-ETC LEVEL 2 APP PERFORMANCE

For a complete wiring diagram, **refer to the Wiring Information**.

- **When Monitored:**

  Throttle motor is powered and no matured faults related to APP Sensors.
- **Set Condition:**

  When secondary software determines that APPS 1 and APPS 2 signals do not match for a period of time. One trip failure. ETC lamp will flash

Possible Causes
PCM NEEDS TO BE PROGRAMMED
POWERTRAIN CONTROL MODULE (PCM)

Always perform the Pre-Diagnostic Troubleshooting procedure before proceeding. (Refer to 28 - DTC-Based Diagnostics/MODULE, Powertrain Control (PCM) - Standard Procedure).

1. PROGRAM THE POWERTRAIN CONTROL MODULE

1. Verify the PCM is at the latest calibration (flash level).

NOTE: An intermittent loss of power to the PCM without performing an ETC Relearn procedure may cause this DTC to set.

2. Flash the Powertrain Control Module in accordance with the Service Information if any updates are available.
3. Start the engine.
4. Allow the engine to reach normal operating temperature.
5. Operate the accelerator pedal. (do not exceed 3500 rpm)
6. With a scan tool, select View DTCs.

NOTE: Diagnose any other DTCs that may have set with the P060D.

Does this DTC reset by itself?

Yes

- Replace and reprogram the Powertrain Control Module in accordance with the Service Information.
- Perform the POWERTRAIN VERIFICATION TEST. (Refer to 28 - DTC-Based Diagnostics/MODULE, Powertrain Control (PCM) - Standard Procedure).

No

- Test Complete.

P060E-ETC LEVEL 2 TPS PERFORMANCE

For a complete wiring diagram, **refer to the Wiring Information**.

- **When Monitored:**

  Throttle motor is powered and no matured faults related to TP Sensors.
- **Set Condition:**

  When secondary software determines that TPS 1 and TPS 2 signals do not match for a period of time. One trip failure. ETC lamp will flash.

Possible Causes
PCM NEEDS TO BE PROGRAMMED
POWERTRAIN CONTROL MODULE (PCM)

Always perform the Pre-Diagnostic Troubleshooting procedure before proceeding. (Refer to 28 - DTC-Based Diagnostics/MODULE, Powertrain Control (PCM) - Standard Procedure).

1. PROGRAM THE POWERTRAIN CONTROL MODULE

1. Verify the PCM is at the latest calibration (flash level).

NOTE: An intermittent loss of power to the PCM without performing an ETC Relearn procedure may cause this DTC to set.

2. Flash the Powertrain Control Module in accordance with the Service Information if any updates are available.
3. Start the engine.
4. Allow the engine to reach normal operating temperature.
5. Operate the accelerator pedal. (do not exceed 3500 rpm)
6. With a scan tool, select View DTCs.

NOTE: Diagnose any other DTCs that may have set with the P060E.

Does this DTC reset by itself?

Yes

- Replace and reprogram the Powertrain Control Module in accordance with the Service Information.
- Perform the POWERTRAIN VERIFICATION TEST. (Refer to 28 - DTC-Based Diagnostics/MODULE, Powertrain Control (PCM) - Standard Procedure)

No

- Test Complete.

P060F-ETC LEVEL 2 ECT PERFORMANCE

For a complete wiring diagram, **refer to the Wiring Information**.

- **When Monitored:**

  Throttle motor is powered and no matured faults related to the Engine Coolant Temp Sensor.
- **Set Condition:**

  When secondary software determines that the Coolant Temperature is implausible for a period of time. One trip failure. ETC lamp will flash.

Possible Causes
PCM NEEDS TO BE PROGRAMMED
POWERTRAIN CONTROL MODULE (PCM)

Always perform the Pre-Diagnostic Troubleshooting procedure before proceeding. (Refer to 28 - DTC-Based Diagnostics/MODULE, Powertrain Control (PCM) - Standard Procedure).

1. PROGRAM THE POWERTRAIN CONTROL MODULE

NOTE: Diagnose any Engine Coolant Temperature Sensor DTCs before continuing.

1. Verify the PCM is at the latest calibration (flash level).

NOTE: An intermittent loss of power to the PCM without performing an ETC Relearn procedure may cause this DTC to set.

2. Flash the Powertrain Control Module in accordance with the Service Information if any updates are available.
3. Start the engine.
4. Allow the engine to reach normal operating temperature.
5. Operate the accelerator pedal. (do not exceed 3500 rpm)
6. With a scan tool, select View DTCs.

NOTE: Diagnose any other DTCs that may have set with the P060F.

Does this DTC reset by itself?

Yes

- Replace and reprogram the Powertrain Control Module in accordance with the Service Information.
- Perform the POWERTRAIN VERIFICATION TEST. (Refer to 28 - DTC-Based Diagnostics/MODULE, Powertrain Control (PCM) - Standard Procedure).

No

- Test Complete.

P061A-ETC LEVEL 2 TORQUE PERFORMANCE

For a complete wiring diagram, **refer to the Wiring Information**.

- **When Monitored:**
  Throttle motor is powered.
- **Set Condition:**
  When secondary software determines that the customer requested output is not being achieved by the engine for a period of time. One trip failure. ETC lamp will flash.

Possible Causes
PCM NEEDS TO BE PROGRAMMED
POWERTRAIN CONTROL MODULE (PCM)

Always perform the Pre-Diagnostic Troubleshooting procedure before proceeding. (Refer to 28 - DTC-Based Diagnostics/MODULE, Powertrain Control (PCM) - Standard Procedure).

1. PROGRAM THE POWERTRAIN CONTROL MODULE

NOTE: Check the engine for air/vacuum leaks and diagnose any Fuel System Lean/Rich as well as MAP Sensor DTCs before continuing.

1. Verify the PCM is at the latest calibration (flash level).

NOTE: An intermittent loss of power to the PCM without performing an ETC Relearn procedure may cause this DTC to set.

2. Flash the Powertrain Control Module in accordance with the Service Information if any updates are available.
3. Start the engine.
4. Allow the engine to reach normal operating temperature.
5. Operate the accelerator pedal. (do not exceed 3500 rpm)
6. With a scan tool, select View DTCS.

NOTE: Diagnose any other DTCs that may have set with the P061A.

Does this DTC reset by itself?

Yes

- Replace and reprogram the Powertrain Control Module in accordance with the Service Information.
- Perform the POWERTRAIN VERIFICATION TEST. (Refer to 28 - DTC-Based Diagnostics/MODULE, Powertrain Control (PCM) - Standard Procedure).

No

- Test Complete.

P061C-ETC LEVEL 2 RPM PERFORMANCE

For a complete wiring diagram, **refer to the Wiring Information**.

- **When Monitored:**

  Throttle motor is powered and no camshaft or crankshaft electrical signal related DTCs are set.
- **Set Condition:**

  When secondary software determines that the engine speed is implausible for a period of time. One trip failure. ETC lamp will flash.

Possible Causes
PCM NEEDS TO BE PROGRAMMED
POWERTRAIN CONTROL MODULE (PCM)

Always perform the Pre-Diagnostic Troubleshooting procedure before proceeding. (Refer to 28 - DTC-Based Diagnostics/MODULE, Powertrain Control (PCM) - Standard Procedure).

1. PROGRAM THE POWERTRAIN CONTROL MODULE

NOTE: Diagnose any Camshaft Position and Crankshaft Position Sensor DTCs before continuing.

1. Verify the PCM is at the latest calibration (flash level).

NOTE: An intermittent loss of power to the PCM without performing an ETC Relearn procedure may cause this DTC to set.

2. Flash the Powertrain Control Module in accordance with the Service Information if any updates are available.
3. Start the engine.
4. Allow the engine to reach normal operating temperature.
5. Operate the accelerator pedal. (do not exceed 3500 rpm)
6. With a scan tool, select View DTCs.

NOTE: Diagnose any other DTCs that may have set with the P061C.

Does this DTC reset by itself?

Yes

- Replace and reprogram the Powertrain Control Module in accordance with the Service Information.
- Perform the POWERTRAIN VERIFICATION TEST. (Refer to 28 - DTC-Based Diagnostics/MODULE, Powertrain Control (PCM) - Standard Procedure).

No

- Test Complete.

P062C-ETC LEVEL 2 MPH PERFORMANCE

For a complete wiring diagram, **refer to the Wiring Information**.

- **When Monitored:**

  Throttle motor is powered and no vehicle speed related DTCs have matured.
- **Set Condition:**

  When secondary software determines that the vehicle speed is implausible for a period of time. ETC lamp will flash.

Possible Causes
PCM NEEDS TO BE PROGRAMMED
POWERTRAIN CONTROL MODULE (PCM)

Always perform the Pre-Diagnostic Troubleshooting procedure before proceeding. (Refer to 28 - DTC-Based Diagnostics/MODULE, Powertrain Control (PCM) - Standard Procedure).

1. PROGRAM THE POWERTRAIN CONTROL MODULE

1. Verify the PCM is at the latest calibration (flash level).

NOTE: An intermittent loss of power to the PCM without performing an ETC Relearn procedure may cause this DTC to set.

2. Flash the Powertrain Control Module in accordance with the Service Information if any updates are available.
3. Start the engine.
4. Allow the engine to reach normal operating temperature.
5. Operate the accelerator pedal. (do not exceed 3500 rpm)
6. With a scan tool, select View DTCs.

NOTE: Diagnose any other DTCs that may have set with the P062C.

Does this DTC reset by itself?

Yes

- Replace and reprogram the Powertrain Control Module in accordance with the Service Information.
- Perform the POWERTRAIN VERIFICATION TEST. (Refer to 28 - DTC-Based Diagnostics/MODULE, Powertrain Control (PCM) - Standard Procedure).

No

- Test Complete.

P0622-GENERATOR FIELD CONTROL CIRCUIT

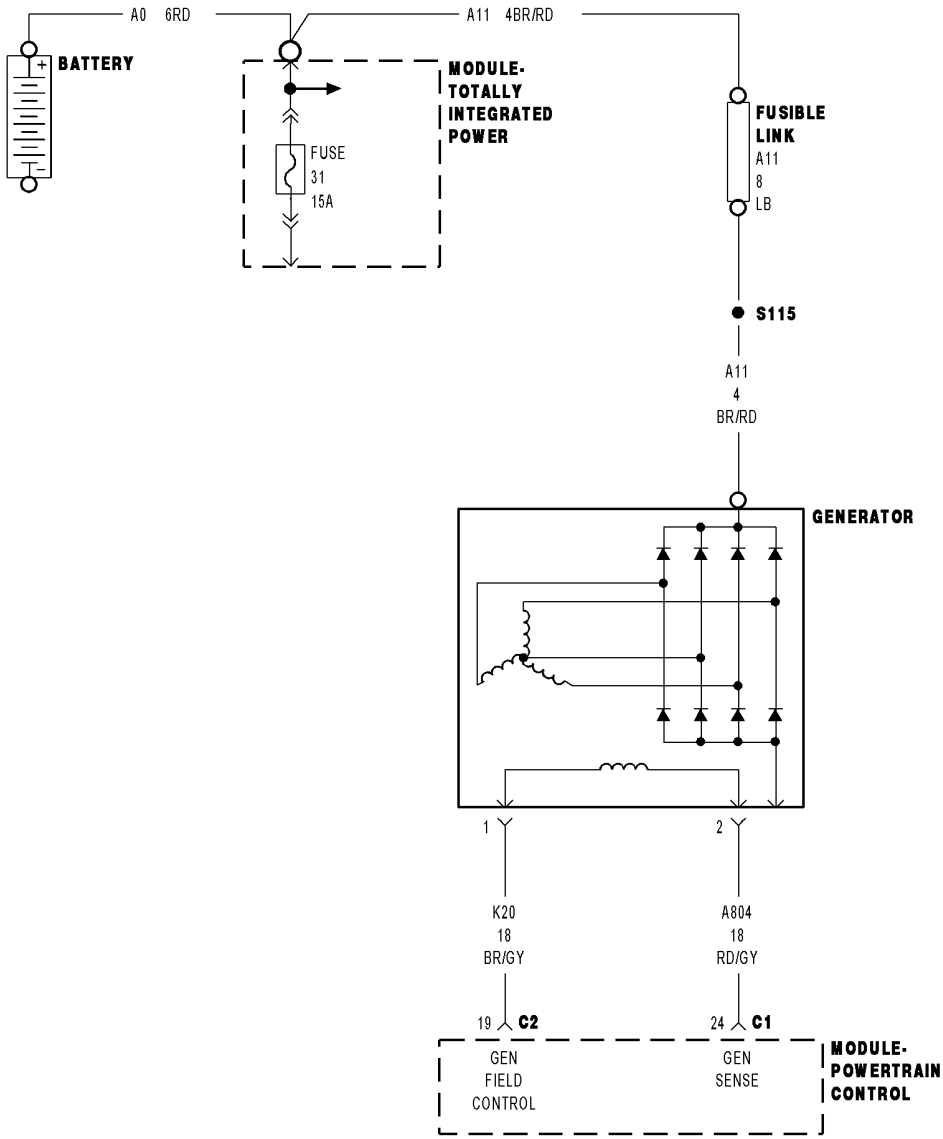

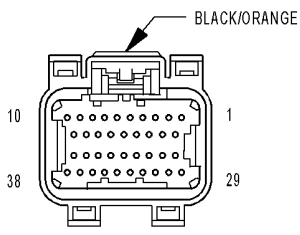

MODULE-
POWERTRAIN
CONTROL C2
(NGC)

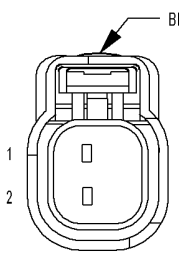

GENERATOR

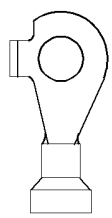

GENERATOR-
EYELET
(GAS/5.9L DIESEL)

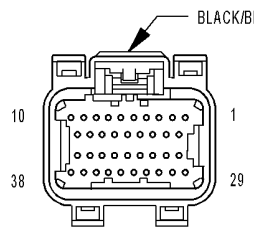

MODULE-
POWERTRAIN
CONTROL C1
(NGC)

81925cd6

For a complete wiring diagram **Refer to the Wiring Information**.

- **When Monitored:**
  With the ignition on. Engine running.
- **Set Condition:**
  When the PCM tries to regulate the generator field with no result during monitoring. One Trip Fault. Three good trips to turn off the MIL.

Possible Causes
(K20) GEN FIELD CONTROL CIRCUIT SHORTED TO VOLTAGE
(K20) GEN FIELD CONTROL CIRCUIT OPEN
(K20) GEN FIELD CONTROL CIRCUIT SHORTED TO GROUND
GENERATOR
POWERTRAIN CONTROL MODULE (PCM)

Always perform the Pre-Diagnostic Troubleshooting procedure before proceeding. (Refer to 28 - DTC-Based Diagnostics/MODULE, Powertrain Control (PCM) - Standard Procedure).

1. ACTIVE DTC

1. Start the engine and allow it to reach operating temperature.

WARNING: When the engine is operating, do not stand in direct line with the fan. Do not put your hands near the pulleys, belts or fan. Do not wear loose clothing. Failure to follow these instructions may result in possible serious or fatal injury.

2. Increase engine speed by pressing the accelerator pedal. Do not exceed 3500 rpm.
3. With the scan tool, select View DTCs.

Is the DTC Active at this time?

Yes

- Go To 2

No

- Refer to the INTERMITTENT CONDITION Diagnostic Procedure. (Refer to 28 - DTC-Based Diagnostics/MODULE, Powertrain Control (PCM) - Standard Procedure)

2. GENERATOR OPERATION

1. Ignition on, engine not running.

NOTE: The DTC needs to be cleared before actuating the Generator Field, if the DTC is not cleared, the Generator Field may not be allowed to actuate.

2. Using a 12-volt test light connected to ground, probe the (K20) Generator Field Control circuit in the Generator Field harness connector.
3. With a scan tool, actuate the Generator Field Driver.

NOTE: The test light should be illuminated and bright proportional to the maximum duty cycle allowed by the scan tool. For example, if the scan tool allows 100% actuation, the brightness should be as bright as a direct connection to the battery. If the scan tool allows a maximum 25% actuation, the brightness should be 25% as bright as a direct connection to the battery.

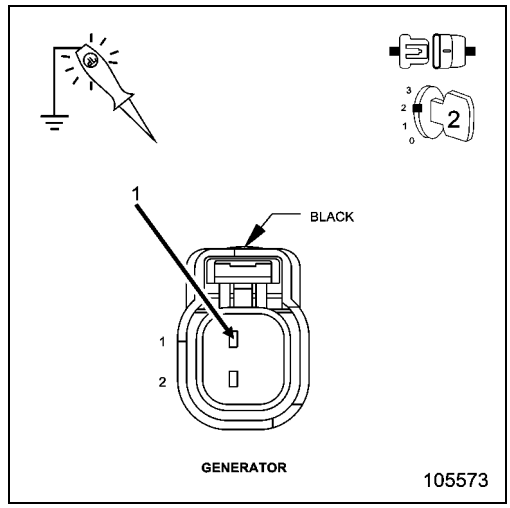

Does the test light illuminate accordingly during the actuation?

Yes

- Verify that there is good pin to terminal contact in the Generator and Powertrain Control Module connectors. Replace the Generator if no problems were found with the connectors.
- Perform the POWERTRAIN VERIFICATION TEST. (Refer to 28 - DTC-Based Diagnostics/MODULE, Powertrain Control (PCM) - Standard Procedure)

No

- Go To 3

3. (K20) GEN FIELD CIRCUIT SHORTED VOLTAGE

1. Turn the ignition off.
2. Disconnect the C2 PCM harness connector.
3. Ignition on, engine not running.
4. Measure the voltage on the (K20) Gen Field Control circuit in the Generator Field harness connector.

Is there any voltage present?

Yes

- Repair the short to voltage in the (K20) Gen Field Control circuit.
- Perform the POWERTRAIN VERIFICATION TEST. (Refer to 28 - DTC-Based Diagnostics/MODULE, Powertrain Control (PCM) - Standard Procedure)

No

- Go To 4

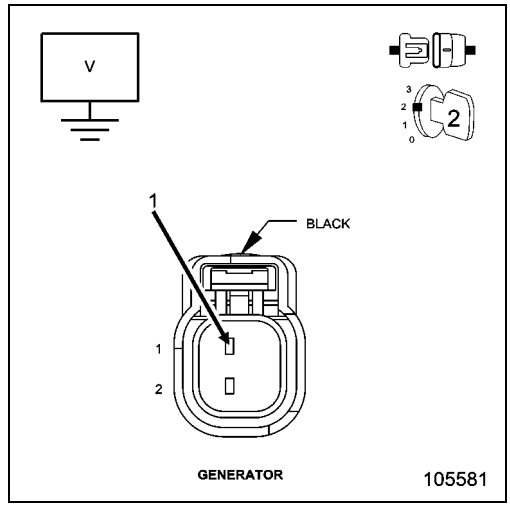

4. (K20) GEN FIELD CIRCUIT OPEN

1. Turn the ignition off.

CAUTION: Do not probe the PCM harness connectors. Probing the PCM harness connectors will damage the PCM terminals resulting in poor terminal to pin connection. Install the PCM Pinout Box Kit, NGC, 38 Position 8815A to perform diagnosis.

2. Measure the resistance of the (K20) Gen Field Control circuit from the Generator Field harness connector to appropriate terminal of the special tool #8815A.

Is the resistance below 5.0 ohms?

Yes

- Go To 5

No

- Repair the open in the (K20) Gen Field Control circuit.
- Perform the POWERTRAIN VERIFICATION TEST. (Refer to 28 - DTC-Based Diagnostics/MODULE, Powertrain Control (PCM) - Standard Procedure)

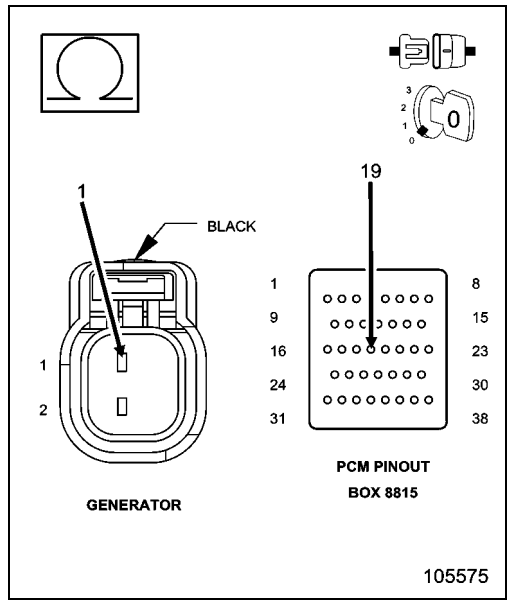

5. (K20) GEN FIELD CIRCUIT SHORTED TO GROUND

1. Measure the resistance between ground and the (K20) Gen Field Control circuit in the Generator Field harness connector.

Is the resistance below 100 ohms?

Yes

- Repair the short to ground in the (K20) Gen Field Control circuit.
- Perform the POWERTRAIN VERIFICATION TEST. (Refer to 28 - DTC-Based Diagnostics/MODULE, Powertrain Control (PCM) - Standard Procedure)

No

- Go To 6

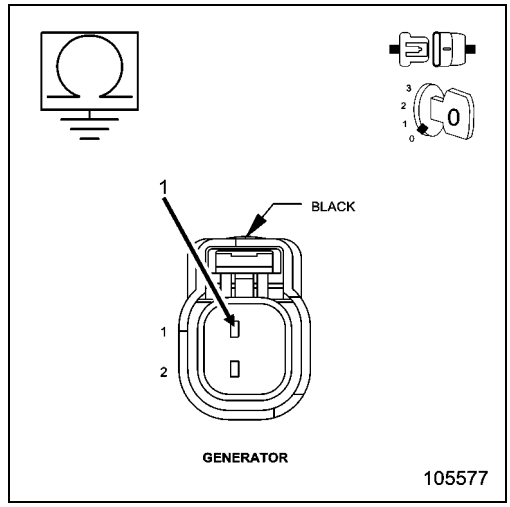

6. POWERTRAIN CONTROL MODULE (PCM)

1. Using the wiring diagram/schematic as a guide, inspect the wiring and connectors between the Generator and the Powertrain Control Module (PCM).
2. Look for any chafed, pierced, pinched, or partially broken wires.
3. Look for broken, bent, pushed out or corroded terminals. Verify that there is good pin to terminal contact in the Generator and Powertrain Control Module connectors.
4. Refer to any Technical Service Bulletins that may apply.

Were there any problems found?

Yes

- Repair as necessary.
- Perform the POWERTRAIN VERIFICATION TEST. (Refer to 28 - DTC-Based Diagnostics/MODULE, Powertrain Control (PCM) - Standard Procedure)

No

- Replace and program the Powertrain Control Module per Service Information.
- Perform the POWERTRAIN VERIFICATION TEST. (Refer to 28 - DTC-Based Diagnostics/MODULE, Powertrain Control (PCM) - Standard Procedure)

P0627-FUEL PUMP CONTROL CIRCUIT

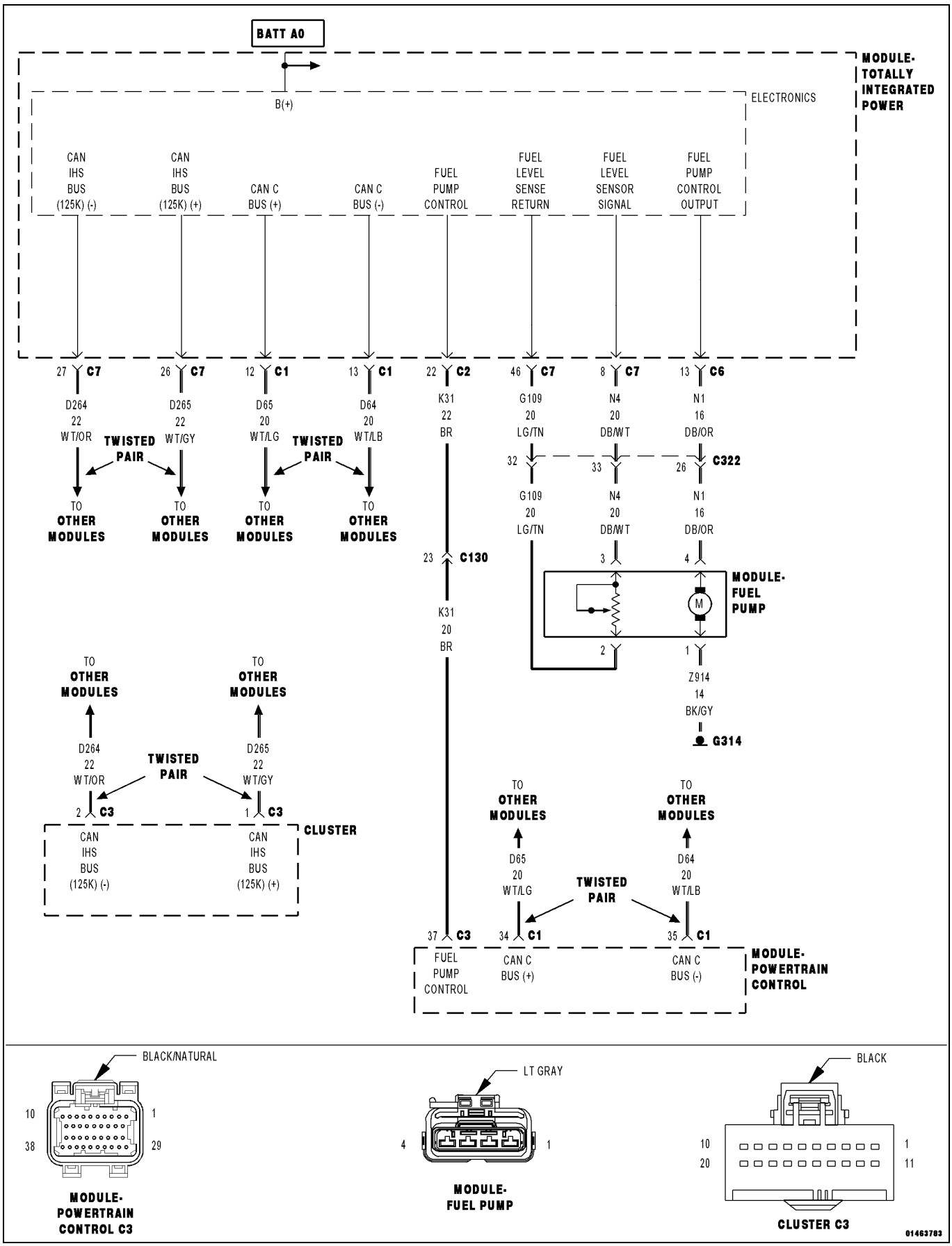

For a complete wiring diagram, **refer to the Wiring Information**.

- **When Monitored:**
  With the ignition on. Battery voltage greater than 10.4 Volts and the ASD sense switch is on.
- **Set Condition:**
  Actual Fuel Pump state is not equal to desired state. One Trip Fault. Three good trips to turn off the MIL.

Possible Causes
(K31) FUEL PUMP CONTROL CIRCUIT SHORTED TO VOLTAGE
(K31) FUEL PUMP CONTROL CIRCUIT SHORTED TO GROUND
(K31) FUEL PUMP CONTROL CIRCUIT OPEN
TOTALLY INTEGRATED POWER MODULE (TIPM)
POWERTRAIN CONTROL MODULE (PCM)

Always perform the Pre-Diagnostic Troubleshooting procedure before proceeding. (Refer to 28 - DTC-Based Diagnostics/MODULE, Powertrain Control (PCM) - Standard Procedure).

1. ACTIVE DTC

1. Ignition on, engine not running.
2. With the scan tool, select View DTCs.

Is the DTC Active at this time?

Yes

- Go To 2

No

- Perform the INTERMITTENT CONDITION Diagnostic Procedure. (Refer to 28 - DTC-Based Diagnostics/MODULE, Powertrain Control (PCM) - Standard Procedure).

2. (K31) FUEL PUMP CONTROL CIRCUIT SHORTED TO VOLTAGE

1. Turn the ignition off.
2. Disconnect the C3 PCM harness connector.
3. Disconnect the C2 TIPM harness connector.
4. Ignition on, engine not running.
5. Measure the voltage on the (K31) Fuel Pump Control circuit at the C2 TIPM harness connector.

Does the voltmeter indicate voltage present?

Yes

- Repair the short to voltage in the (K31) Fuel Pump Control circuit.
- Perform the POWERTRAIN VERIFICATION TEST. (Refer to 28 - DTC-Based Diagnostics/MODULE, Powertrain Control (PCM) - Standard Procedure)

No

- Go To 3

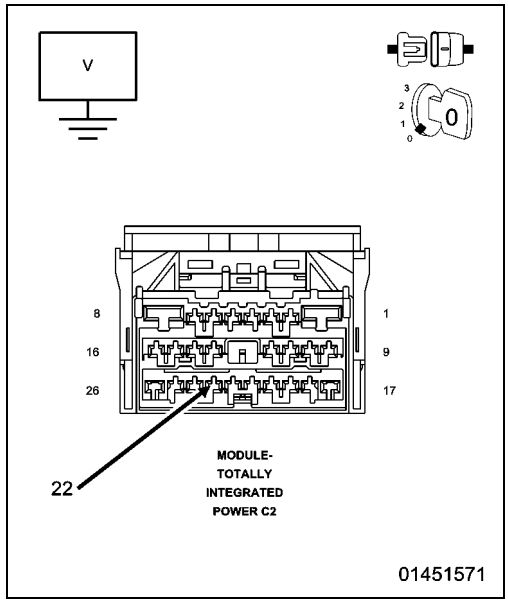

3. (K31) FUEL PUMP CONTROL CIRCUIT OPEN

1. Turn the ignition off.

CAUTION: Do not probe the PCM harness connectors. Probing the PCM harness connectors will damage the PCM terminals resulting in poor terminal to pin connection. Install the PCM Pinout Box Kit, NGC, 38 Position 8815A to perform diagnosis.

2. Measure the resistance of the (K31) Fuel Pump Control circuit from the C2 TIPM harness connector to the appropriate terminal of PCM Pinout Box 8815A.

Is the resistance below 5.0 Ohms?

Yes

- Go To 4

No

- Repair the open in the (K31) Fuel Pump Control circuit.
- Perform the POWERTRAIN VERIFICATION TEST. (Refer to 28 - DTC-Based Diagnostics/MODULE, Powertrain Control (PCM) - Standard Procedure)

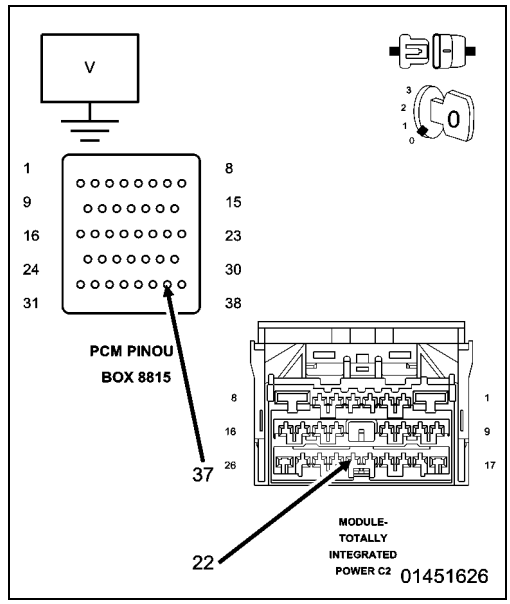

4. (K31) FUEL PUMP CONTROL CIRCUIT SHORTED TO GROUND

1. Measure the resistance between ground and the (K31) Fuel Pump Control circuit in the TIPM C2 harness connector.

Is the resistance below 100 Ohms?

Yes

- Repair the short to ground in the (K31) Fuel Pump Control circuit.
- Perform the POWERTRAIN VERIFICATION TEST. (Refer to 28 - DTC-Based Diagnostics/MODULE, Powertrain Control (PCM) - Standard Procedure)

No

- Go To 5

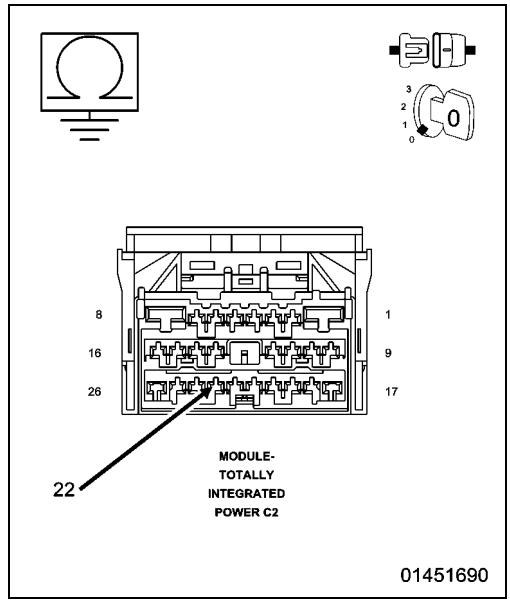

5. FUEL PUMP CONTROL OPERATION FROM THE PCM

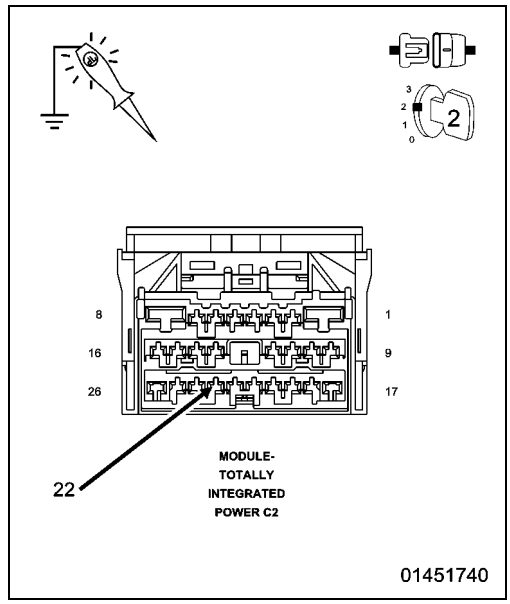

1. Turn the ignition off.
2. Connect the C3 PCM harness connector.
3. Ignition on, engine not running.
4. With a 12-volt test light connected to ground, probe the (K31) Fuel Pump Control circuit in the TIPM C2 harness connector.
5. Using the scan tool in the PCM, actuate the Fuel Pump.

NOTE: The test light should be illuminated and bright proportional to the maximum duty cycle allowed by the scan tool. For example, if the scan tool allows 100% actuation, the brightness should be as bright as a direct connection to the battery. If the scan tool allows a maximum 25% actuation, the brightness should be 25% as bright as a direct connection to the battery.

Does the test light illuminate accordingly during the actuation?

Yes

•

NOTE: Before continuing, check the TIPM harness connector terminals for corrosion, damage or terminal push out. Repair as necessary.

If OK, replace the TIPM in accordance with the Service Information.

- Perform the POWERTRAIN VERIFICATION TEST. (Refer to 28 - DTC-Based Diagnostics/MODULE, Powertrain Control (PCM) - Standard Procedure)

No

- Go To 6

6. POWERTRAIN CONTROL MODULE (PCM)

1. Using the wiring diagram/schematic as a guide, inspect the wiring and connectors between the Fuel Pump Module and the Powertrain Control Module (PCM).
2. Look for any chafed, pierced, pinched or partially broken wires.
3. Look for broken, bent, pushed out or corroded terminals. Verify that there is good pin to terminal contact in the Fuel Pump and Control Module connectors.
4. Refer to any Technical Service Bulletins that may apply.

Were there any problems found?

Yes

- Repair as necessary.
- Perform the POWERTRAIN VERIFICATION TEST. (Refer to 28 - DTC-Based Diagnostics/MODULE, Powertrain Control (PCM) - Standard Procedure)

No

- Replace and program the Powertrain Control Module in accordance with the Service Information.
- Perform the POWERTRAIN VERIFICATION TEST. (Refer to 28 - DTC-Based Diagnostics/MODULE, Powertrain Control (PCM) - Standard Procedure)

■ P0630-VIN NOT PROGRAMMED IN PCM

For a complete wiring diagram **Refer to the Wiring Information**.

- **When Monitored:**
  At initialization.
- **Set Condition:**
  The VIN has not been programmed into the PCM. One Trip Fault. Three good trips to turn off the MIL.

Possible Causes
PROGRAMMING VIN INTO PCM
POWERTRAIN CONTROL MODULE (PCM)

Always perform the Pre-Diagnostic Troubleshooting procedure before proceeding. (Refer to 28 - DTC-Based Diagnostics/MODULE, Powertrain Control (PCM) - Standard Procedure).

1. PROGRAMMING VIN INTO THE PCM

1. Ignition on, engine not running.
2. Using the scan tool, program VIN into the PCM.
3. Start the engine.

NOTE: If the engine will not start, crank the engine over for 15 seconds. Crank at least 2 times with the ignition switch returning to the off position each time.

4. Allow the engine to reach normal operating temperature.
5. With the scan tool, select View DTCs.

Does the DTC reset?

Yes

- Replace and program the Powertrain Control Module per Service Information.
- Perform the POWERTRAIN VERIFICATION TEST. (Refer to 28 - DTC-Based Diagnostics/MODULE, Powertrain Control (PCM) - Standard Procedure)

No

- The VIN has been successfully programmed into the PCM. Test is complete.
- Perform the POWERTRAIN VERIFICATION TEST. (Refer to 28 - DTC-Based Diagnostics/MODULE, Powertrain Control (PCM) - Standard Procedure)

P0632-ODOMETER NOT PROGRAMMED IN PCM

For a complete wiring diagram **Refer to the Wiring Information**.

- **When Monitored:**
  Ignition on.
- **Set Condition:**
  Odometer is not programed into the PCM. One Trip Fault. Three good trips to turn off the MIL.

Possible Causes
PROGRAMMING MILEAGE INTO THE PCM
POWERTRAIN CONTROL MODULE (PCM)

Always perform the Pre-Diagnostic Troubleshooting procedure before proceeding. (Refer to 28 - DTC-Based Diagnostics/MODULE, Powertrain Control (PCM) - Standard Procedure).

1. PROGRAMMING MILEAGE INTO THE PCM

1. Ignition on, engine not running.
2. With the scan tool, erase DTCs.
3. Using a scan tool, program the mileage into the PCM.
4. Start the engine.
5. Allow the engine to reach normal operating temperature.
6. With a scan tool, select View DTCs.

Does the DTC reset?

Yes

- Replace and program the Powertrain Control Module per Service Information.
- Perform the POWERTRAIN VERIFICATION TEST. (Refer to 28 - DTC-Based Diagnostics/MODULE, Powertrain Control (PCM) - Standard Procedure)

No

- The mileage has been successfully programmed into the PCM. Test is complete.
- Perform the POWERTRAIN VERIFICATION TEST. (Refer to 28 - DTC-Based Diagnostics/MODULE, Powertrain Control (PCM) - Standard Procedure)

■ P0633-SKIM KEY NOT PROGRAMMED IN PCM

For a complete wiring diagram **Refer to the Wiring Information**.

- **When Monitored:**
  Ignition on.
- **Set Condition:**
  The SKIM Key information has not been programmed into the PCM. One Trip Fault. Three good trips to turn off the MIL.

Possible Causes
PROGRAMMING SKIM KEY INTO THE PCM
POWERTRAIN CONTROL MODULE (PCM)

Always perform the Pre-Diagnostic Troubleshooting procedure before proceeding. (Refer to 28 - DTC-Based Diagnostics/MODULE, Powertrain Control (PCM) - Standard Procedure).

1. PROGRAMMING SKIM KEY INTO THE PCM

1. Ignition on, engine not running.
2. With a scan tool, erase DTCs.
3. Using the scan tool, program the SKIM Key information into the PCM.
4. Start the engine.

NOTE: If the engine will not start, crank the engine over for 15 seconds. Crank at least 2 times with the ignition switch returning to the off position each time.

5. Allow the engine to reach normal operating temperature.
6. With the scan tool, select View DTCs.

Does the DTC reset?

Yes

- Replace and program the Powertrain Control Module per Service Information.
- Perform the POWERTRAIN VERIFICATION TEST. (Refer to 28 - DTC-Based Diagnostics/MODULE, Powertrain Control (PCM) - Standard Procedure)

No

- The SKIM KEY information has been successfully programmed into the PCM. Test is complete.
- Perform the POWERTRAIN VERIFICATION TEST. (Refer to 28 - DTC-Based Diagnostics/MODULE, Powertrain Control (PCM) - Standard Procedure)

P063A-GENERATOR VOLTAGE SENSE CIRCUIT

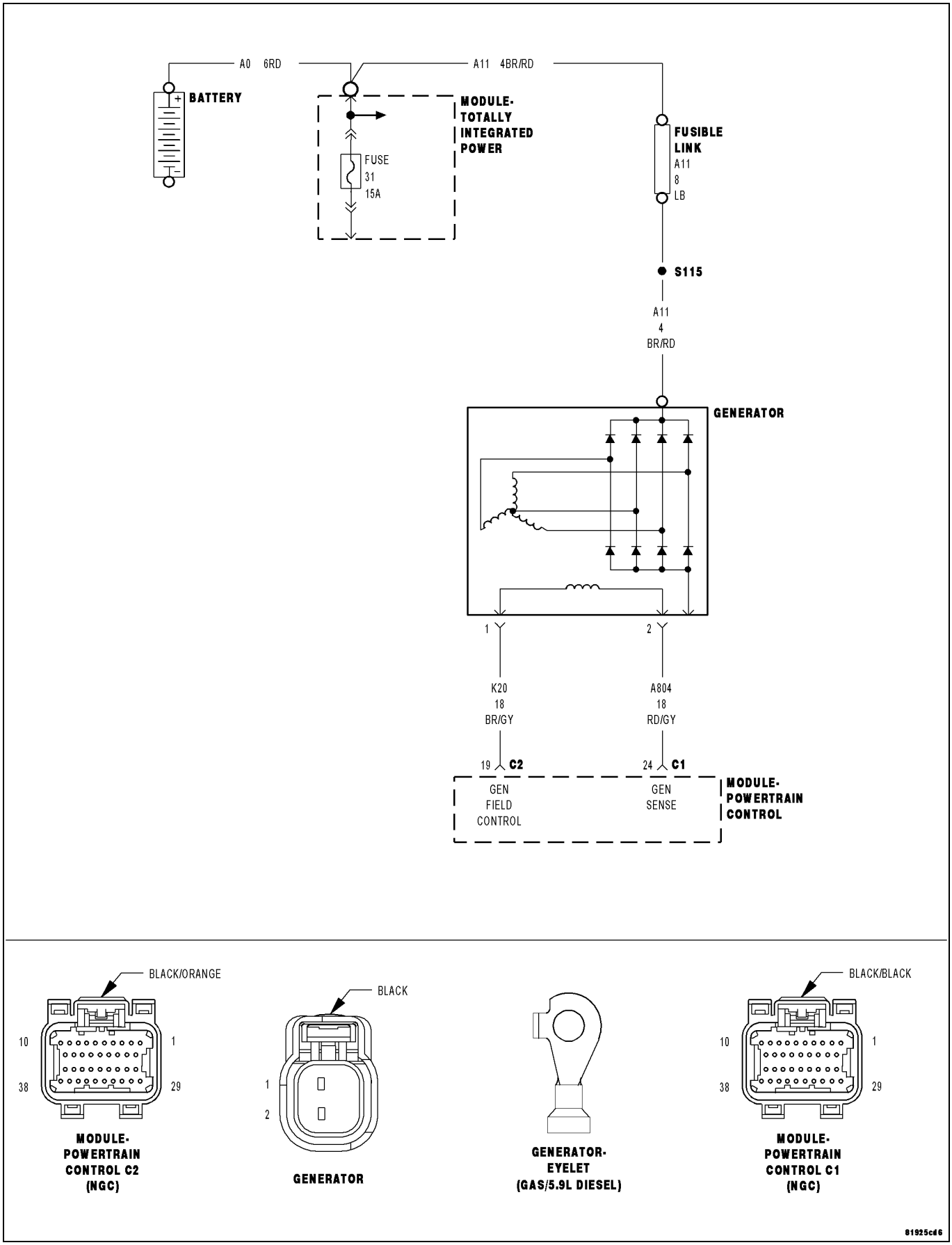

For a complete wiring diagram **Refer to the Wiring Information**.

- **When Monitored:**
  The engine running. The engine speed greater than 1157 RPM.
- **Set Condition:**
  The PCM recognizes the alternator output voltage is less than the Battery feed circuit voltage. One trip failure. The Generator light will illuminate. The fault will be checked again on the next key cycle.

Possible Causes
EXCESSIVE RESISTANCE IN THE (A803) GENERATOR SENSE CIRCUIT
(A803) GENERATOR SENSE CIRCUIT SHORTED TO GROUND
GENERATOR
POWERTRAIN CONTROL MODULE (PCM)

Always perform the Pre-Diagnostic Troubleshooting procedure before proceeding. (Refer to 28 - DTC-Based Diagnostics/MODULE, Powertrain Control (PCM) - Standard Procedure).

1. ACTIVE DTC

NOTE: Inspect the vehicle for aftermarket accessories that may exceed the Generator System output.

NOTE: The battery must be fully charged.

NOTE: The Generator belt tension and condition must be checked before continuing.

1. Ignition on, engine not running.
2. With a scan tool, select View DTCs.
3. Start the engine.
4. Allow the idle to stabilize.
5. With the scan tool, View DTCs.

Is the DTC Active at this time?

Yes

- Go To 2

No

- Refer to the INTERMITTENT CONDITION Diagnostic Procedure. (Refer to 28 - DTC-Based Diagnostics/MODULE, Powertrain Control (PCM) - Standard Procedure).

2. EXCESSIVE RESISTANCE IN THE (A803) GENERATOR SENSE CIRCUIT

1. Turn the ignition off.
2. Disconnect the Generator harness connector.
3. Disconnect the C1 PCM harness connector.

CAUTION: Do not probe the PCM harness connectors. Probing the PCM harness connectors will damage the PCM terminals resulting in poor terminal to pin connection. Install the PCM Pinout Box Kit, NGC, 38 Position 8815A to perform diagnosis.

4. Measure the resistance of the (A803) Generator Sense circuit from the Generator harness connector to the appropriate terminal of special tool #8815A.

Is the resistance below 5.0 ohms?

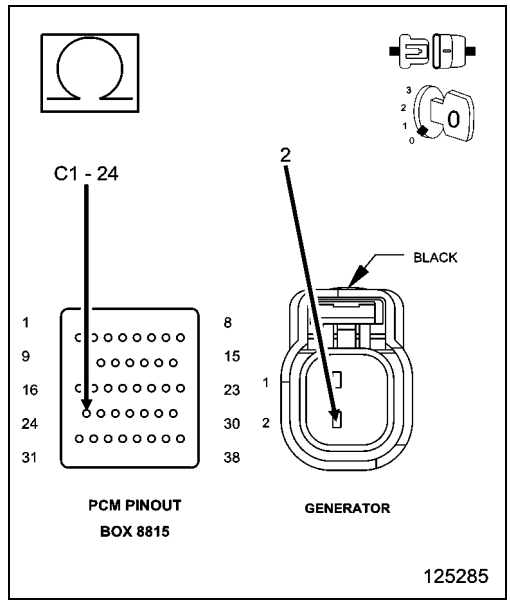

Yes

- Go To 3

No

- Repair the excessive resistance in the (A803) Generator Sense circuit.
- Perform the POWERTRAIN VERIFICATION TEST. (Refer to 28 - DTC-Based Diagnostics/MODULE, Powertrain Control (PCM) - Standard Procedure).

3. (A803) GENERATOR SENSE CIRCUIT SHORTED TO GROUND

1. Measure the resistance between ground and the (A803) Generator Sense circuit at the Generator harness connector.

Is the resistance below 100 ohms?

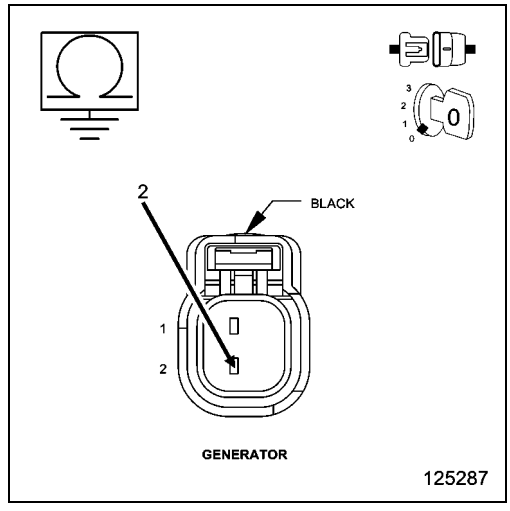

Yes

- Repair the short to ground in the (A803) Generator Sense circuit.
- Perform the POWERTRAIN VERIFICATION TEST. (Refer to 28 - DTC-Based Diagnostics/MODULE, Powertrain Control (PCM) - Standard Procedure).

No

- Go To 4

4. GENERATOR OPERATION

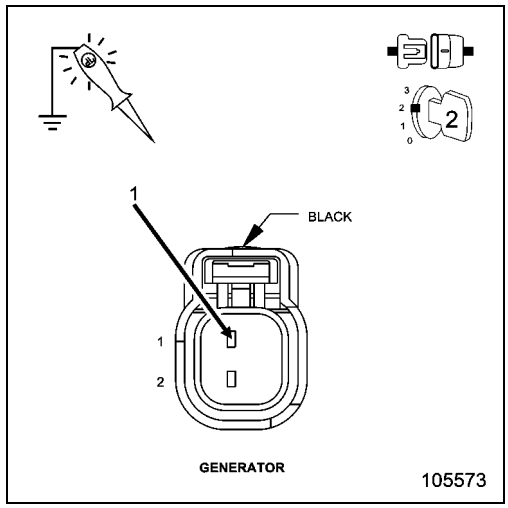

1. Connect the C1 PCM harness connector.
2. Using a 12-volt test light connected to ground, probe the (K20) Generator Field Control circuit in the Generator Field harness connector.
3. Ignition on, engine not running.
4. With a scan tool, actuate the Generator Field Driver.

NOTE: The DTC needs to be cleared before actuating the Solenoid, if the DTC is not cleared, the Solenoid may not be allowed to actuate.

NOTE: The test light should be illuminated and bright proportional to the maximum duty cycle allowed by the scan tool. For example, if the scan tool allows 100% actuation, the brightness should be as bright as a direct connection to the battery. If the scan tool allows a maximum 25% actuation, the brightness should be 25% as bright as a direct connection to the battery.

Does the test light illuminate accordingly during the actuation?

Yes

- Verify that there is good pin to terminal contact in the Generator and Powertrain Control Module connectors. Replace the Generator if no problems were found with the connectors.
- Perform the POWERTRAIN VERIFICATION TEST. (Refer to 28 - DTC-Based Diagnostics/MODULE, Powertrain Control (PCM) - Standard Procedure).

No

- Go To 5

5. POWERTRAIN CONTROL MODULE (PCM)

1. Using the wiring diagram/schematic as a guide, inspect the wiring and connectors between the Generator and the Powertrain Control Module (PCM).
2. Look for any chafed, pierced, pinched, or partially broken wires.
3. Look for broken, bent, pushed out or corroded terminals. Verify that there is good pin to terminal contact in the Generator and Powertrain Control Module connectors.
4. Refer to any Technical Service Bulletins that may apply.

Were there any problems found?

Yes

- Repair as necessary.
- Perform the POWERTRAIN VERIFICATION TEST. (Refer to 28 - DTC-Based Diagnostics/MODULE, Powertrain Control (PCM) - Standard Procedure).

No

- Replace and program the Powertrain Control Module per Service Information.
- Perform the POWERTRAIN VERIFICATION TEST. (Refer to 28 - DTC-Based Diagnostics/MODULE, Powertrain Control (PCM) - Standard Procedure).

P0642-SENSOR REFERENCE VOLTAGE 1 CIRCUIT LOW

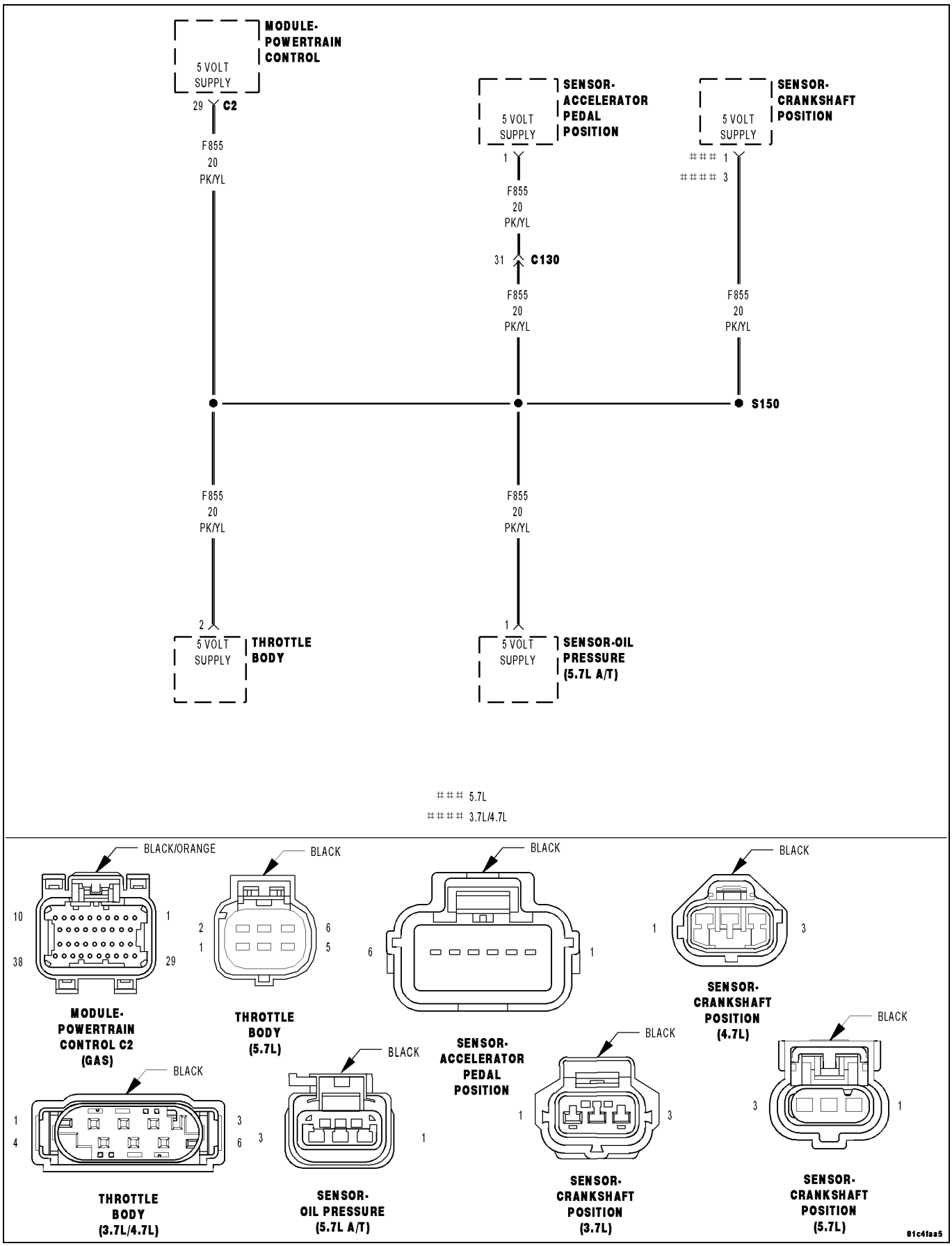

For a complete wiring diagram **Refer to the Wiring Information**.

- **When Monitored:**
  Ignition on.
- **Set Condition:**
  When the PCM recognizes the Primary 5-volt Supply circuit voltage is too low. One Trip Fault. ETC light is flashing.

Possible Causes
(F855) PRIMARY 5-VOLT SUPPLY SHORTED TO GROUND
SENSOR SHORTED TO GROUND
5-VOLT SENSOR
POWERTRAIN CONTROL MODULE (PCM)

Always perform the Pre-Diagnostic Troubleshooting procedure before proceeding. (Refer to 28 - DTC-Based Diagnostics/MODULE, Powertrain Control (PCM) - Standard Procedure).

1. ACTIVE DTC

NOTE: Improperly installed aftermarket accessories can cause this DTC to set. Check for any improperly installed aftermarket accessories before continuing with this test.

1. Start the engine and allow it to idle for at least 60 seconds.

WARNING: When the engine is operating, do not stand in direct line with the fan. Do not put your hands near the pulleys, belts or fan. Do not wear loose clothing. Failure to follow these instructions may result in possible serious or fatal injury.

2. With a scan tool, select View DTCs.

Is the DTC Active at this time?

Yes

- Go To 2

No

- Refer to the INTERMITTENT CONDITION Diagnostic Procedure. (Refer to 28 - DTC-Based Diagnostics/MODULE, Powertrain Control (PCM) - Standard Procedure)

2. (F855) PRIMARY 5-VOLT SUPPLY CIRCUIT SHORTED TO GROUND

1. Turn the ignition off.
2. Disconnect the C2 PCM harness connector.
3. Disconnect all the Sensors that share the (F855) Primary 5-volt Supply circuit.
4. Measure the resistance between ground and the (F855) Primary 5-volt Supply circuit in the CKP Sensor harness connector.

Is the resistance below 100 ohms?

Yes

- Repair the short to ground in the (F855) Primary 5-volt Supply circuit.
- Perform the POWERTRAIN VERIFICATION TEST. (Refer to 28 - DTC-Based Diagnostics/MODULE, Powertrain Control (PCM) - Standard Procedure)

No

- Go To 3

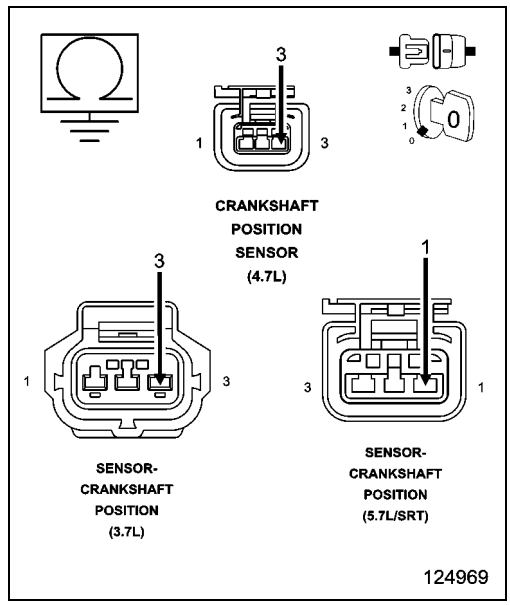

3. 5-VOLT SENSOR

1. Turn the ignition off.
2. Reconnect all the previously disconnected Sensors except for the CKP Sensor harness connector.
3. Ignition on, engine not running.
4. Measure the voltage on the (F855) Primary 5-volt Supply circuit in the CKP Sensor harness connector.

Is the voltage below 4.5 volts?

Yes

- Go To 4

No

- Replace the CKP Sensor.
- Perform the POWERTRAIN VERIFICATION TEST. (Refer to 28 - DTC-Based Diagnostics/MODULE, Powertrain Control (PCM) - Standard Procedure)

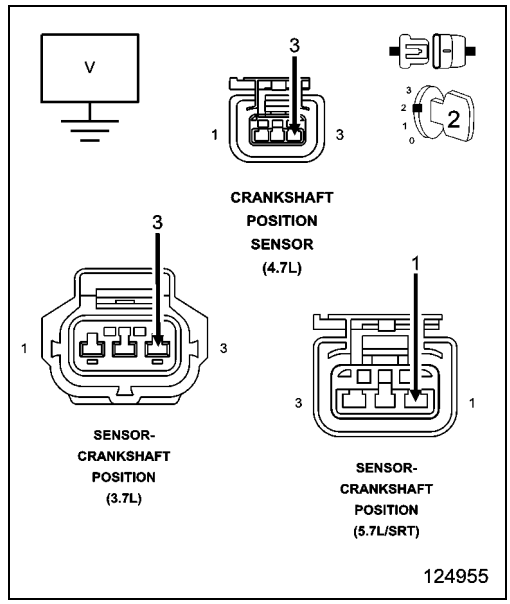

4. 5-VOLT SENSOR SHORTED TO GROUND

1. Measure the voltage on the (F855) Primary 5-volt Supply circuit at the CKP Sensor harness connector.

CAUTION: You must Turn the Ignition OFF when disconnecting any of the Sensor harness connectors and Turn the Ignition On to check the voltage readings.

2. While monitoring the voltage, disconnect each Sensor harness connector that shares the (F855) Primary 5-volt Supply circuit, one at a time.

Does the voltage increase above 4.5 volts when disconnecting any of the remaining Sensors?

Yes

- Replace the Sensor that causes the (F855) Primary 5-volt Supply circuit voltage to increase when disconnected.
- Perform the POWERTRAIN VERIFICATION TEST. (Refer to 28 - DTC-Based Diagnostics/MODULE, Powertrain Control (PCM) - Standard Procedure)

No

- Go To 5

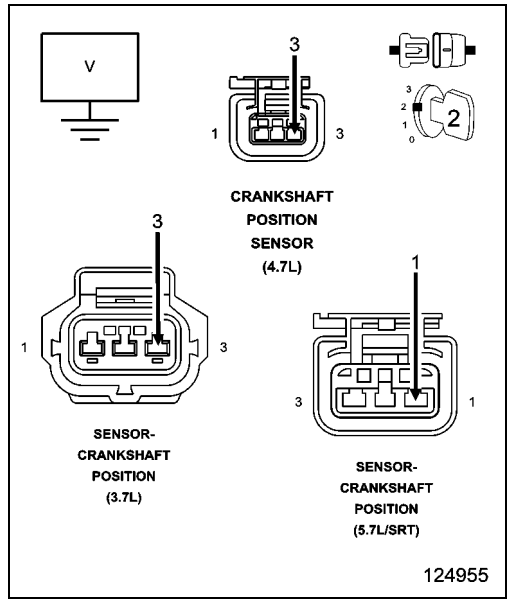

NOTE: Reconnect all the Sensors and clear all trouble codes before continuing.

5. POWERTRAIN CONTROL MODULE (PCM)

1. Using the wiring diagram/schematic as a guide, inspect the wiring and connectors between the related Sensors and the Powertrain Control Module (PCM).
2. Look for any chafed, pierced, pinched, or partially broken wires.
3. Look for broken, bent, pushed out or corroded terminals. Verify that there is good pin to terminal contact in the related Sensor and Control Module connectors.
4. Refer to any Technical Service Bulletins that may apply.

Were there any problems found?

Yes

- Repair as necessary.
- Perform the POWERTRAIN VERIFICATION TEST. (Refer to 28 - DTC-Based Diagnostics/MODULE, Powertrain Control (PCM) - Standard Procedure)

No

- Replace and program the Powertrain Control Module per Service Information.
- Perform the POWERTRAIN VERIFICATION TEST. (Refer to 28 - DTC-Based Diagnostics/MODULE, Powertrain Control (PCM) - Standard Procedure)

P0643-PRIMARY 5-VOLT SUPPLY CIRCUIT HIGH

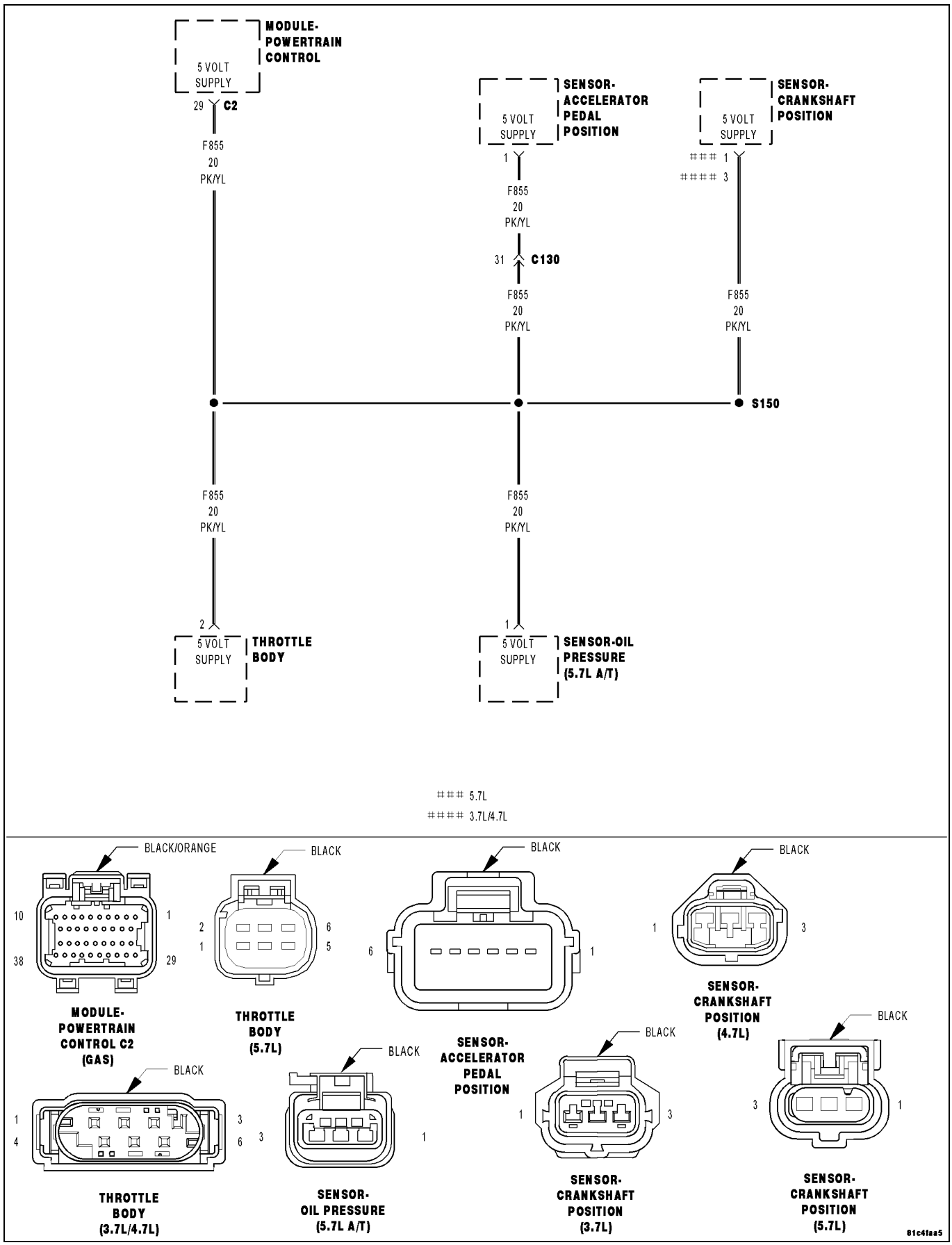

For a complete wiring diagram **Refer to the Wiring Information**.

- **When Monitored:**
  Ignition on.
- **Set Condition:**
  When the PCM recognizes the Primary 5-volt Supply circuit voltage is too high. One Trip Fault. ETC light is flashing.

Possible Causes
(F855) PRIMARY 5-VOLT SUPPLY SHORTED TO VOLTAGE
POWERTRAIN CONTROL MODULE (PCM)

Always perform the Pre-Diagnostic Troubleshooting procedure before proceeding. (Refer to 28 - DTC-Based Diagnostics/MODULE, Powertrain Control (PCM) - Standard Procedure).

1. ACTIVE DTC

NOTE: Improperly installed aftermarket accessories can cause this DTC to set. Check for any improperly installed aftermarket accessories before continuing with this test.

1. Start the engine and allow it to idle for at least 60 seconds.

WARNING: When the engine is operating, do not stand in direct line with the fan. Do not put your hands near the pulleys, belts or fan. Do not wear loose clothing. Failure to follow these instructions may result in possible serious or fatal injury.

2. With a scan tool, select View DTCs.

Is the DTC Active at this time?

Yes

- Go To 2

No

- Refer to the INTERMITTENT CONDITION Diagnostic Procedure. (Refer to 28 - DTC-Based Diagnostics/MODULE, Powertrain Control (PCM) - Standard Procedure)

2. (F855) PRIMARY 5-VOLT SUPPLY SHORTED TO VOLTAGE

NOTE: Improperly installed aftermarket accessories can cause this DTC to set. Check for wiring added by customer.

1. Turn the ignition off.
2. Disconnect the C2 PCM harness connector.
3. Disconnect all the Sensors that share the (F855) Primary 5-volt Supply circuit.
4. Ignition on, engine not running.
5. Measure the voltage on the (F855) Primary 5-volt Supply circuit at the CKP Sensor harness connector.

Is there any voltage present?

Yes

- Repair the short to voltage in the (F855) Primary 5-volt Supply circuit.
- Perform the POWERTRAIN VERIFICATION TEST. (Refer to 28 - DTC-Based Diagnostics/MODULE, Powertrain Control (PCM) - Standard Procedure)

No

- Go To 3

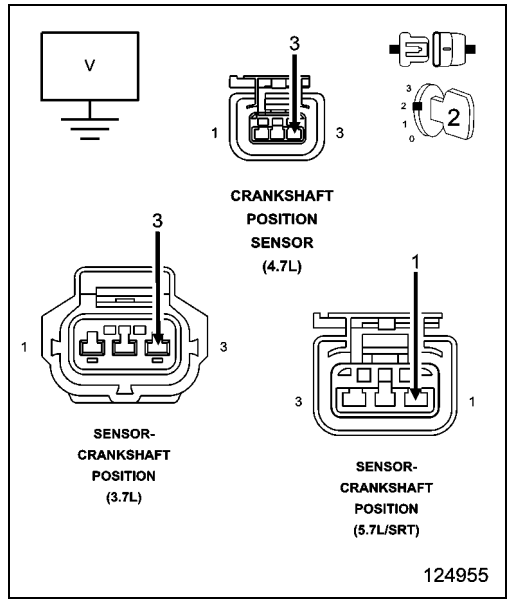

3. POWERTRAIN CONTROL MODULE (PCM)

1. Using the wiring diagram/schematic as a guide, inspect the wiring and connectors between the related Sensors and the Powertrain Control Module (PCM).
2. Look for any chafed, pierced, pinched, or partially broken wires.
3. Look for broken, bent, pushed out or corroded terminals. Verify that there is good pin to terminal contact in the related Sensor and Control Module connectors.
4. Refer to any Technical Service Bulletins that may apply.

Were there any problems found?

Yes

- Repair as necessary.
- Perform the POWERTRAIN VERIFICATION TEST. (Refer to 28 - DTC-Based Diagnostics/MODULE, Powertrain Control (PCM) - Standard Procedure)

No

- Replace and program the Powertrain Control Module per Service Information.
- Perform the POWERTRAIN VERIFICATION TEST. (Refer to 28 - DTC-Based Diagnostics/MODULE, Powertrain Control (PCM) - Standard Procedure)

P0645-A/C CLUTCH CONTROL CIRCUIT

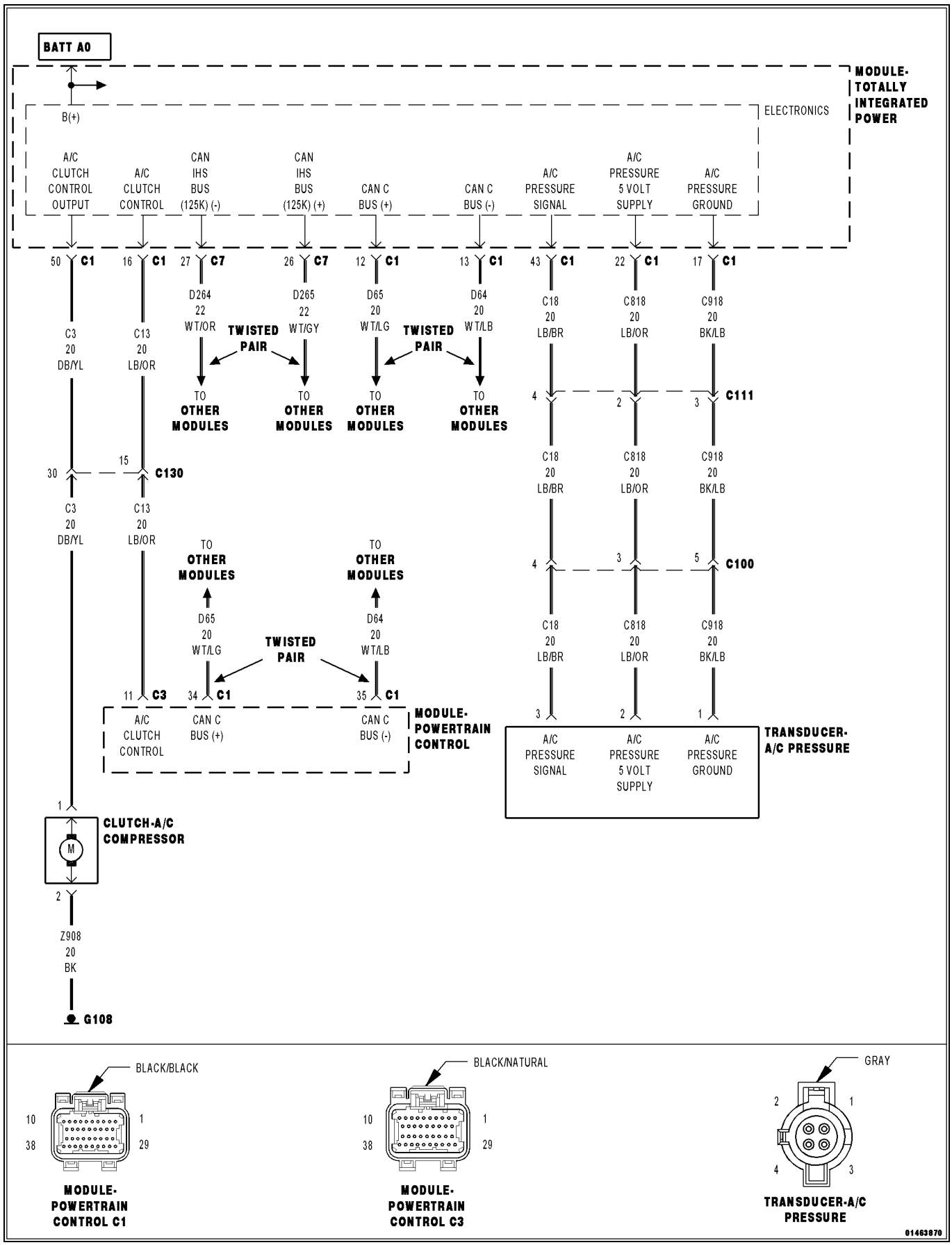

For a complete wiring diagram, **refer to the Wiring Information**.

- **When Monitored:**
  With the ignition on. Battery voltage greater than 10 Volts. A/C Switch on.
- **Set Condition:**
  An open or shorted condition is detected in the A/C clutch control circuit. One Trip Fault. Three good trips to turn off the MIL.

Possible Causes
(C13) A/C CLUTCH CONTROL CIRCUIT SHORTED TO VOLTAGE
(C13) A/C CLUTCH CONTROL CIRCUIT OPEN
(C13) A/C CLUTCH CONTROL CIRCUIT SHORTED TO GROUND
TOTALLY INTEGRATED POWER MODULE (TIPM)
POWERTRAIN CONTROL MODULE (PCM)

Always perform the Pre-Diagnostic Troubleshooting procedure before proceeding. (Refer to 28 - DTC-Based Diagnostics/MODULE, Powertrain Control (PCM) - Standard Procedure).

1. ACTIVE DTC

1. Start the engine.
2. Allow the engine to reach normal operating temperature.
3. Turn the A/C on.
4. With the scan tool, select View DTCs.

Is the DTC Active at this time?

Yes

- Go To 2

No

- Perform the INTERMITTENT CONDITION Diagnostic Procedure. (Refer to 28 - DTC-Based Diagnostics/MODULE, Powertrain Control (PCM) - Standard Procedure)

2. (C13) A/C CLUTCH CONTROL CIRCUIT SHORTED TO VOLTAGE

1. Turn the ignition off.
2. Disconnect the C3 PCM harness connector.
3. Disconnect the C1 TIPM harness connector.
4. Ignition on, engine not running.
5. Measure the voltage on the (C13) A/C Clutch Control circuit at the C1 TIPM harness connector.

Is there any voltage present?

Yes

- Repair the short to voltage in the (C13) A/C Clutch Control circuit.
- Perform the POWERTRAIN VERIFICATION TEST. (Refer to 28 - DTC-Based Diagnostics/MODULE, Powertrain Control (PCM) - Standard Procedure)

No

- Go To 3

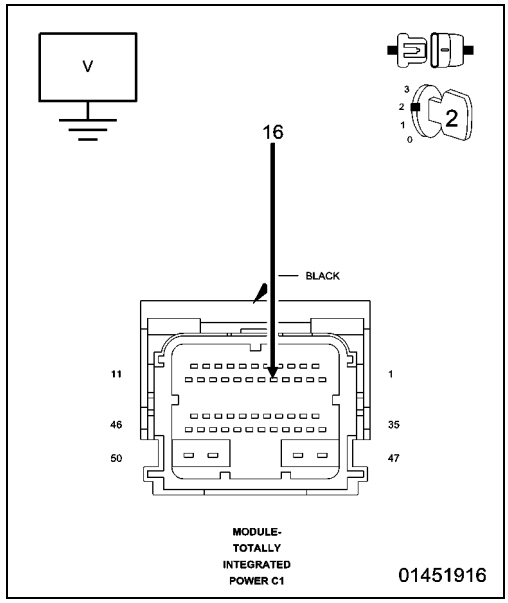

3. (C13) A/C CLUTCH CONTROL CIRCUIT OPEN

1. Turn the ignition off.

CAUTION: Do not probe the PCM harness connectors. Probing the PCM harness connectors will damage the PCM terminals resulting in poor terminal to pin connection. Install the PCM Pinout Box Kit, NGC, 38 Position 8815A to perform diagnosis.

2. Measure the resistance of the (C13) A/C Clutch Control circuit from the C1 TIPM harness connector to the appropriate terminal of PCM Pinout Box 8815A.

Is the resistance below 5.0 Ohms?

Yes

- Go To 4

No

- Repair the open in the (C13) A/C Clutch Control circuit.
- Perform the POWERTRAIN VERIFICATION TEST. (Refer to 28 - DTC-Based Diagnostics/MODULE, Powertrain Control (PCM) - Standard Procedure)

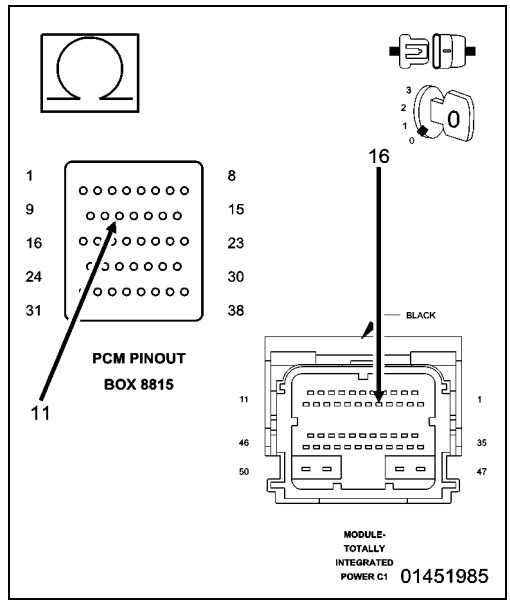

4. (C13) A/C CLUTCH CONTROL CIRCUIT SHORTED TO GROUND

1. Measure the resistance between ground and the (C13) A/C Clutch Control circuit at the C1 TIPM harness connector.

Is the resistance below 5.0 Ohms?

Yes

- Repair the short to ground in the (C13) A/C Clutch Control circuit.
- Perform the POWERTRAIN VERIFICATION TEST. (Refer to 28 - DTC-Based Diagnostics/MODULE, Powertrain Control (PCM) - Standard Procedure)

No

- Go To 5

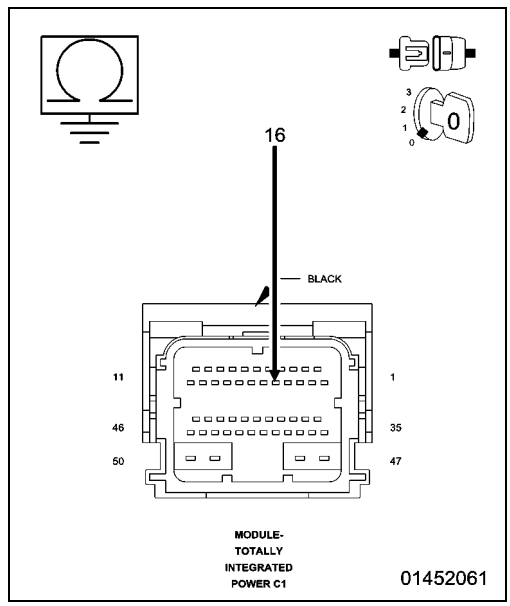

5. A/C CLUTCH CONTROL OPERATION FROM THE PCM

1. Turn the ignition off.
2. Connect the C3 PCM harness connector.
3. Ignition on, engine not running.
4. Using the scan tool in the PCM, actuate the A/C Clutch.
5. With a 12-volt test light connected to ground, probe the (C13) A/C Clutch Control circuit in the TIPM C1 harness connector.

Does the test light illuminate brightly and flash on an off?

Yes

•

NOTE: Before continuing, check the TIPM harness connector terminals for corrosion, damage or terminal push out. Repair as necessary.
If OK, replace the TIPM in accordance with the Service Information.

No

• Go To 6

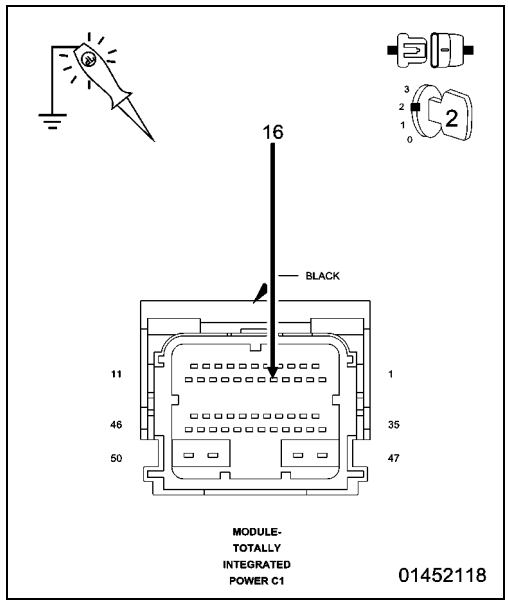

6. POWERTRAIN CONTROL MODULE (PCM)

1. Using the wiring diagram/schematic as a guide, inspect the wiring and connectors between the related A/C Clutch and the Powertrain Control Module (PCM).
2. Look for any chafed, pierced, pinched or partially broken wires.
3. Look for broken, bent, pushed out or corroded terminals. Verify that there is good pin to terminal contact in the A/C Clutch and Control Module connectors.
4. Refer to any Technical Service Bulletins that may apply.

Were there any problems found?

Yes

- Repair as necessary.
- Perform the POWERTRAIN VERIFICATION TEST. (Refer to 28 - DTC-Based Diagnostics/MODULE, Powertrain Control (PCM) - Standard Procedure)

No

- Replace and program the Powertrain Control Module in accordance with the Service Information.
- Perform the POWERTRAIN VERIFICATION TEST. (Refer to 28 - DTC-Based Diagnostics/MODULE, Powertrain Control (PCM) - Standard Procedure)

P0652-SENSOR REFERENCE VOLTAGE 2 CIRCUIT LOW

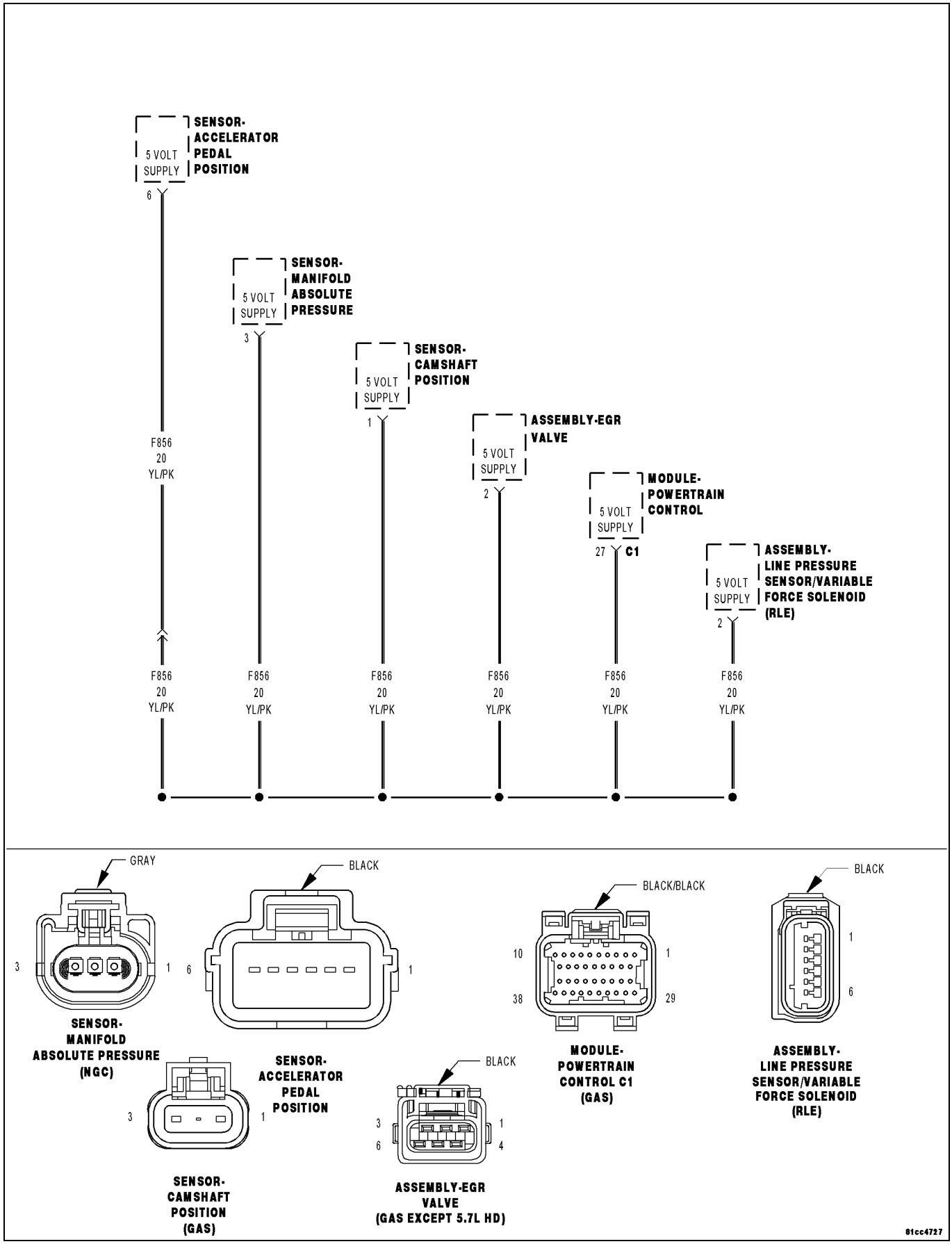

For a complete wiring diagram **Refer to the Wiring Information**.

- **When Monitored:**
  Ignition on.
- **Set Condition:**
  When the PCM recognizes the Auxiliary 5-volt Supply circuit voltage is too low. One Trip Fault. ETC light is flashing.

Possible Causes
(F856) AUXILIARY 5-VOLT SUPPLY SHORTED TO GROUND
SENSOR SHORTED TO GROUND
CAM POSITION SENSOR
POWERTRAIN CONTROL MODULE (PCM)

Always perform the Pre-Diagnostic Troubleshooting procedure before proceeding. (Refer to 28 - DTC-Based Diagnostics/MODULE, Powertrain Control (PCM) - Standard Procedure).

1. ACTIVE DTC

NOTE: Improperly installed aftermarket accessories can cause this DTC to set. Check for any improperly installed aftermarket accessories before continuing with this test.

1. Start the engine and allow it to idle for at least 60 seconds.

WARNING: When the engine is operating, do not stand in direct line with the fan. Do not put your hands near the pulleys, belts or fan. Do not wear loose clothing. Failure to follow these instructions may result in possible serious or fatal injury.

2. With a scan tool, select View DTCs.

Is the DTC Active at this time?

Yes

- Go To 2

No

- Refer to the INTERMITTENT CONDITION Diagnostic Procedure. (Refer to 28 - DTC-Based Diagnostics/MODULE, Powertrain Control (PCM) - Standard Procedure)

2. (F856) AUXILIARY 5-VOLT SUPPLY SHORTED TO GROUND

1. Turn the ignition off.
2. Disconnect the C1 PCM harness connector.
3. Disconnect all the Sensors that share the (F856) Auxiliary 5-volt Supply circuit.
4. Measure the resistance between ground and the (F856) Auxiliary 5-volt Supply circuit in the CMP Sensor harness connector.

Is the resistance below 100 ohms?

Yes

- Repair the short to ground in the (F856) Auxiliary 5-volt Supply circuit.
- Perform the POWERTRAIN VERIFICATION TEST. (Refer to 28 - DTC-Based Diagnostics/MODULE, Powertrain Control (PCM) - Standard Procedure)

No

- Go To 3

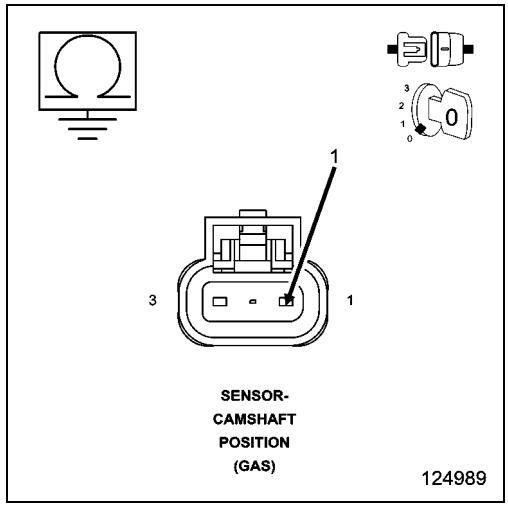

3. CMP SENSOR

1. Turn the ignition off.
2. Reconnect all the previously disconnected Sensors except for the CMP Sensor harness connector.
3. Ignition on, engine not running.
4. Measure the voltage on the (F856) Auxiliary 5-volt Supply circuit in the CMP Sensor harness connector.

Is the voltage below 4.5 volts?

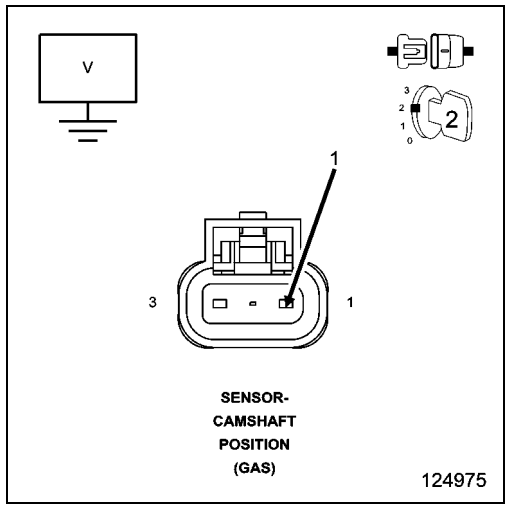

Yes

- Go To 4

No

- Replace the Cam Position Sensor.
- Perform the POWERTRAIN VERIFICATION TEST. (Refer to 28 - DTC-Based Diagnostics/MODULE, Powertrain Control (PCM) - Standard Procedure)

4. 5-VOLT SENSOR SHORTED TO GROUND

1. Measure the voltage on the (F856) Auxiliary 5-volt Supply circuit at the CMP Sensor harness connector.

CAUTION: You must Turn the Ignition OFF when disconnecting any of the Sensor harness connectors and Turn the Ignition On to check the voltage readings.

2. While monitoring the voltage, disconnect each Sensor harness connector that shares the (F856) Auxiliary 5-volt Supply circuit, one at a time.

Does the voltage increase above 4.5 volts when disconnecting any of the Sensor harness connectors?

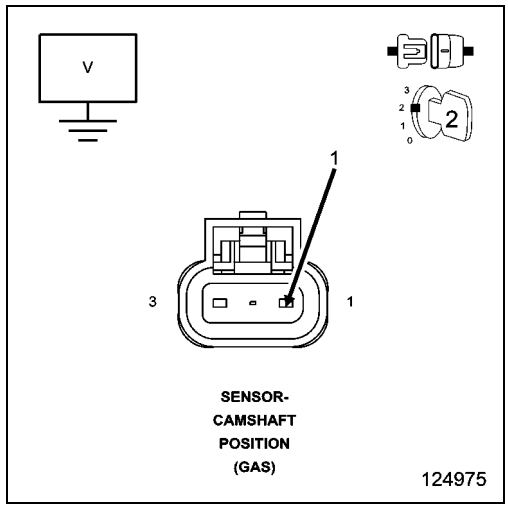

Yes

- Replace the Sensor that causes the (F856) Auxiliary 5-volt Supply circuit voltage to increase when disconnected.
- Perform the POWERTRAIN VERIFICATION TEST. (Refer to 28 - DTC-Based Diagnostics/MODULE, Powertrain Control (PCM) - Standard Procedure)

No

- Go To 5

5. POWERTRAIN CONTROL MODULE (PCM)

1. Using the wiring diagram/schematic as a guide, inspect the wiring and connectors between the related Sensors and the Powertrain Control Module (PCM).
2. Look for any chafed, pierced, pinched, or partially broken wires.
3. Look for broken, bent, pushed out or corroded terminals. Verify that there is good pin to terminal contact in the related Sensor and Control Module connectors.
4. Refer to any Technical Service Bulletins that may apply.

Were there any problems found?

Yes

- Repair as necessary.
- Perform the POWERTRAIN VERIFICATION TEST. (Refer to 28 - DTC-Based Diagnostics/MODULE, Powertrain Control (PCM) - Standard Procedure)

No

- Replace and program the Powertrain Control Module per Service Information.
- Perform the POWERTRAIN VERIFICATION TEST. (Refer to 28 - DTC-Based Diagnostics/MODULE, Powertrain Control (PCM) - Standard Procedure)

P0653-SENSOR REFERENCE VOLTAGE 2 CIRCUIT HIGH

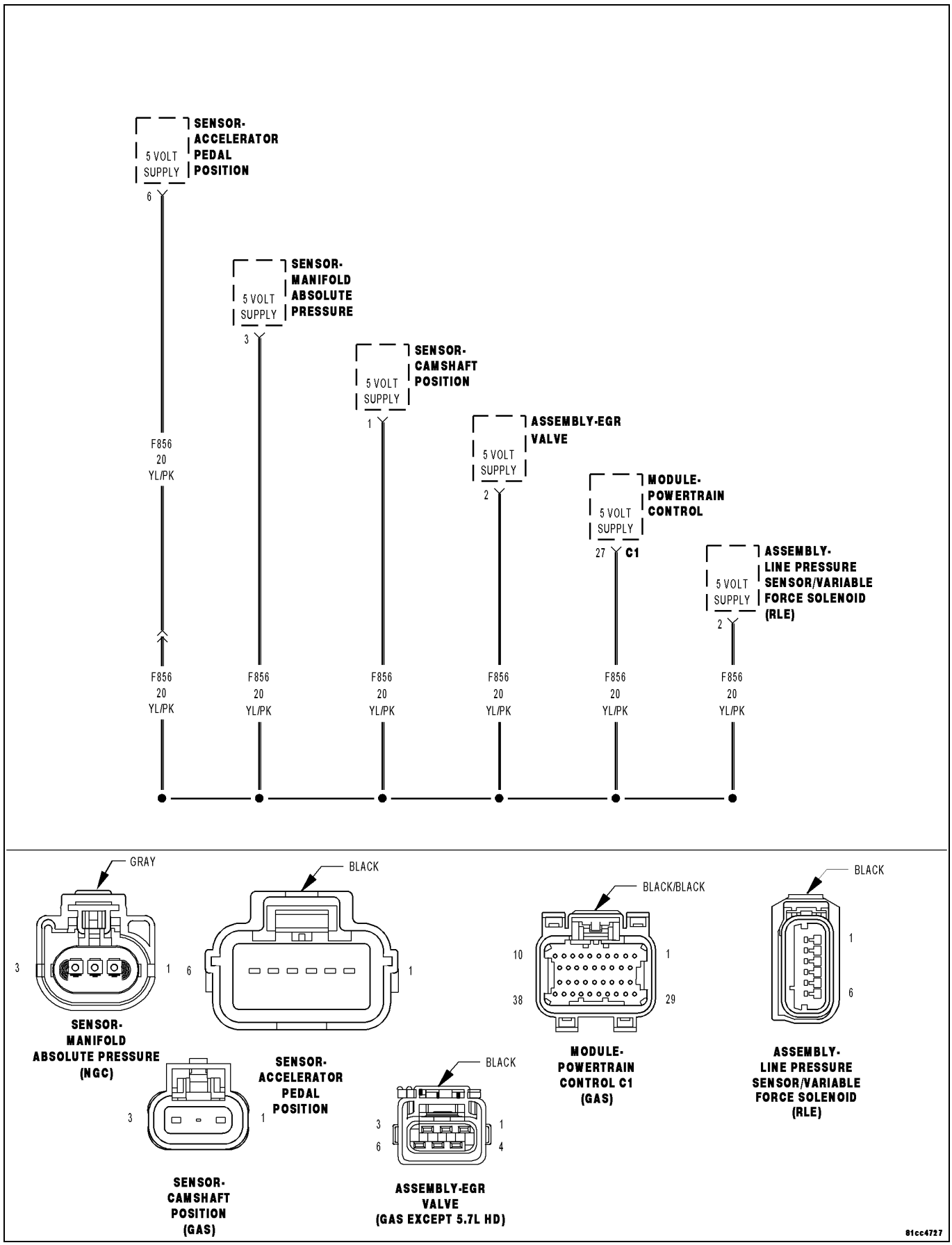

For a complete wiring diagram, **refer to the Wiring Information**.

- **When Monitored:**
  Ignition on.
- **Set Condition:**
  When the Powertrain Control Module (PCM) recognizes the Auxiliary 5-volt Supply circuit voltage is too high. One Trip Fault. ETC light is flashing.

Possible Causes
(F856) AUXILIARY 5-VOLT SUPPLY SHORTED TO VOLTAGE
POWERTRAIN CONTROL MODULE (PCM)

Always perform the Pre-Diagnostic Troubleshooting procedure before proceeding. (Refer to 28 - DTC-Based Diagnostics/MODULE, Powertrain Control (PCM) - Standard Procedure).

1. ACTIVE DTC

NOTE: Improperly installed aftermarket accessories can cause this DTC to set. Check for any improperly installed aftermarket accessories before continuing with this test.

1. Start the engine and allow it to idle for at least 60 seconds.

WARNING: When the engine is operating, do not stand in direct line with the fan. Do not put your hands near the pulleys, belts or fan. Do not wear loose clothing. Failure to follow these instructions may result in possible serious or fatal injury.

2. With a scan tool, select View DTCs.

Is the DTC Active at this time?

Yes

- Go To 2

No

- Perform the INTERMITTENT CONDITION diagnostic procedure. (Refer to 28 - DTC-Based Diagnostics/MODULE, Powertrain Control (PCM) - Standard Procedure).

2. (F856) AUXILIARY 5-VOLT SUPPLY SHORTED TO VOLTAGE

1. Turn the ignition off.
2. Disconnect the PCM C1 harness connector.
3. Disconnect all the Sensors that share the (F856) Auxiliary 5-volt Supply circuit.

NOTE: Improperly installed aftermarket accessories can cause this DTC to set. Check for wiring added by customer.

4. Ignition on, engine not running.
5. Measure the voltage on the (F856) Auxiliary 5-volt Supply circuit at the CMP Sensor harness connector.

Is there any voltage present?

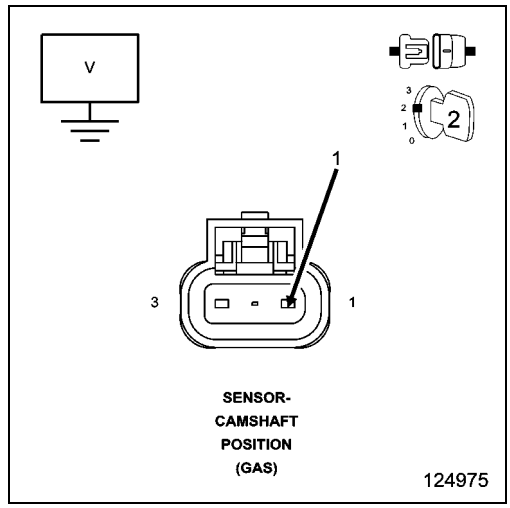

Yes

- Repair the short to voltage in the (F856) Auxiliary 5-volt Supply circuit.
- Perform the POWERTRAIN VERIFICATION TEST. (Refer to 28 - DTC-Based Diagnostics/MODULE, Powertrain Control (PCM) - Standard Procedure).

No

- Go To 3

3. POWERTRAIN CONTROL MODULE (PCM)

1. Using the wiring diagram/schematic as a guide, inspect the wiring and connectors between the related Sensors and the Powertrain Control Module (PCM).
2. Look for any chafed, pierced, pinched, or partially broken wires.
3. Look for broken, bent, pushed out or corroded terminals. Verify that there is good pin to terminal contact in the related Sensor and Control Module connectors.
4. Perform any Technical Service Bulletins that may apply.

Were there any problems found?

Yes

- Repair as necessary.
- Perform the POWERTRAIN VERIFICATION TEST. (Refer to 28 - DTC-Based Diagnostics/MODULE, Powertrain Control (PCM) - Standard Procedure).

No

- Replace and program the Powertrain Control Module in accordance with the service information.
- Perform the POWERTRAIN VERIFICATION TEST. (Refer to 28 - DTC-Based Diagnostics/MODULE, Powertrain Control (PCM) - Standard Procedure).

P0685-AUTO SHUTDOWN CONTROL CIRCUIT

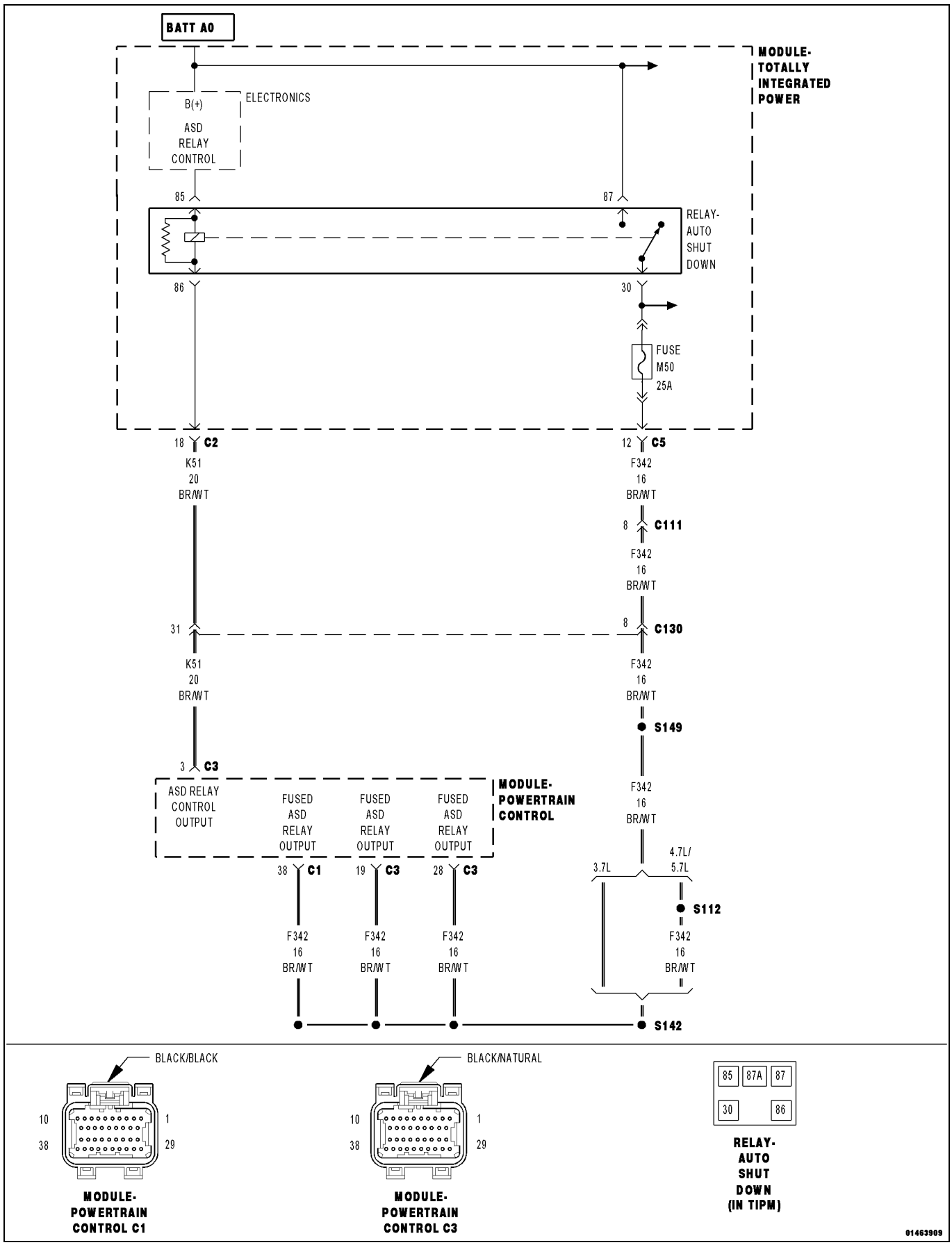

For a complete wiring diagram, **refer to the Wiring Information**.

- **When Monitored:**
  With the ignition on. Battery voltage greater than 10.4 Volts.
- **Set Condition:**
  The actual ASD state is not equal to the desired ASD state. One Trip Fault. Three good trips to turn off the MIL.

Possible Causes
(K51) ASD CONTROL CIRCUIT SHORTED TO VOLTAGE
(K51) ASD CONTROL CIRCUIT SHORTED TO GROUND
(K51) ASD CONTROL CIRCUIT OPEN
TOTALLY INTEGRATED POWER MODULE (TIPM)
POWERTRAIN CONTROL MODULE (PCM)

Always perform the Pre-Diagnostic Troubleshooting procedure before proceeding. (Refer to 28 - DTC-Based Diagnostics/MODULE, Powertrain Control (PCM) - Standard Procedure).

1. ACTIVE DTC

1. Ignition on, engine not running.
2. With the scan tool, select View DTCs.

Is the DTC Active at this time?

Yes

- Go To 2

No

- Perform the INTERMITTENT CONDITION Diagnostic Procedure. (Refer to 28 - DTC-Based Diagnostics/MODULE, Powertrain Control (PCM) - Standard Procedure)

2. ASD CONTROL OPERATION FROM THE PCM

1. Turn the ignition off.
2. Disconnect the C2 TIPM harness connector.
3. With a 12-volt test light connected to battery voltage, probe the (K51) ASD Control circuit in the C2 TIPM harness connector.
4. Ignition on, engine not running.
5. Using the scan tool in the PCM, actuate the ASD.

Does the test light illuminate brightly and flash on an off?

Yes

•

NOTE: Before continuing, check the TIPM harness connector terminals for corrosion, damage or terminal push out. Repair as necessary.
If OK, replace the TIPM in accordance with the Service Information.

- Perform the POWERTRAIN VERIFICATION TEST. (Refer to 28 - DTC-Based Diagnostics/MODULE, Powertrain Control (PCM) - Standard Procedure)

No

- Go To 3

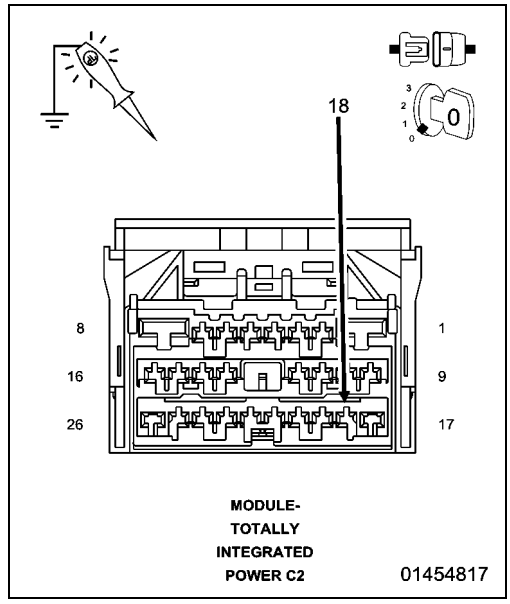

3. (K51) ASD CONTROL CIRCUIT SHORTED TO VOLTAGE

1. Stop the ASD actuation.
2. Turn the ignition off.
3. Disconnect the C3 PCM harness connector.
4. Ignition on, engine not running.
5. Measure the voltage on the (K51) ASD Control circuit at the C2 TIPM harness connector.

Is there any voltage present?

Yes

- Repair the short to voltage in the (K51) ASD Control circuit.
- Perform the POWERTRAIN VERIFICATION TEST. (Refer to 28 - DTC-Based Diagnostics/MODULE, Powertrain Control (PCM) - Standard Procedure)

No

- Go To 4

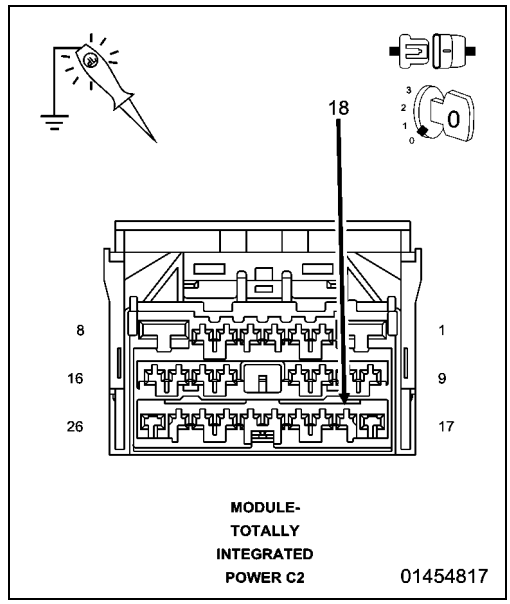

4. (K51) ASD CONTROL CIRCUIT OPEN

1. Turn the ignition off.

CAUTION: Do not probe the PCM harness connectors. Probing the PCM harness connectors will damage the PCM terminals resulting in poor terminal to pin connection. Install the PCM Pinout Box Kit, NGC, 38 Position 8815A to perform diagnosis.

2. Measure the resistance of the (K51) ASD Control circuit from the C2 TIPM harness connector to the appropriate terminal of PCM Pinout Box 8815A.

Is the resistance below 5.0 Ohms?

Yes

- Go To 5

No

- Repair the open in the (K51) ASD Control circuit.
- Perform the POWERTRAIN VERIFICATION TEST. (Refer to 28 - DTC-Based Diagnostics/MODULE, Powertrain Control (PCM) - Standard Procedure)

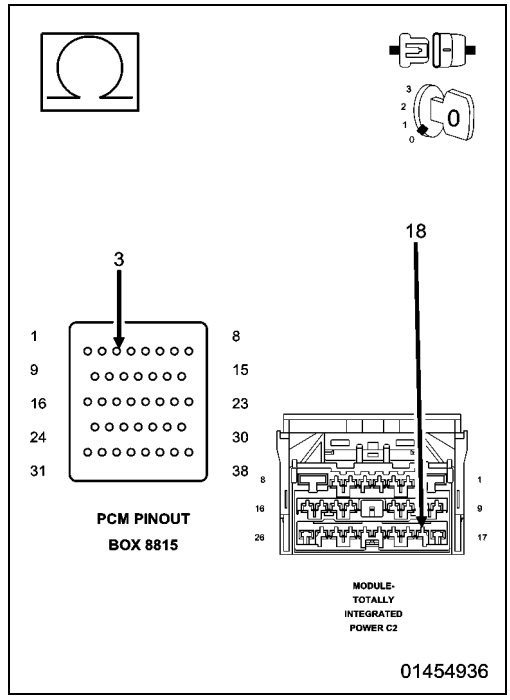

5. (K51) ASD CONTROL CIRCUIT SHORTED TO GROUND

1. Measure the resistance between ground and the (K51) ASD Control circuit in the C2 TIPM harness connector.

Is the resistance below 100 Ohms?

Yes

- Repair the short to ground in the (K51) ASD Control circuit.
- Perform the POWERTRAIN VERIFICATION TEST. (Refer to 28 - DTC-Based Diagnostics/MODULE, Powertrain Control (PCM) - Standard Procedure)

No

- Go To 6

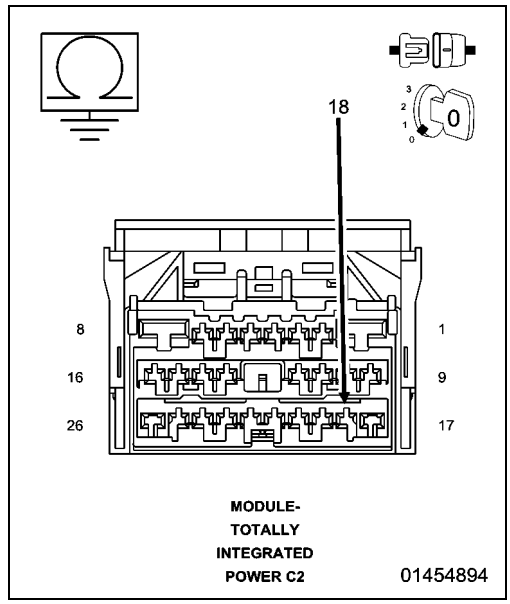

6. POWERTRAIN CONTROL MODULE (PCM)

1. Using the wiring diagram/schematic as a guide, inspect the wiring and connectors between the related TIPM and the Powertrain Control Module (PCM).
2. Look for any chafed, pierced, pinched or partially broken wires.
3. Look for broken, bent, pushed out or corroded terminals. Verify that there is good pin to terminal contact in the TIPM and Powertrain Control Module connectors.
4. Refer to any Technical Service Bulletins that may apply.

Were there any problems found?

Yes

- Repair as necessary.
- Perform the POWERTRAIN VERIFICATION TEST. (Refer to 28 - DTC-Based Diagnostics/MODULE, Powertrain Control (PCM) - Standard Procedure)

No

- Replace and program the Powertrain Control Module in accordance with the Service Information.
- Perform the POWERTRAIN VERIFICATION TEST. (Refer to 28 - DTC-Based Diagnostics/MODULE, Powertrain Control (PCM) - Standard Procedure)

P0688-AUTO SHUTDOWN SENSE CIRCUIT LOW

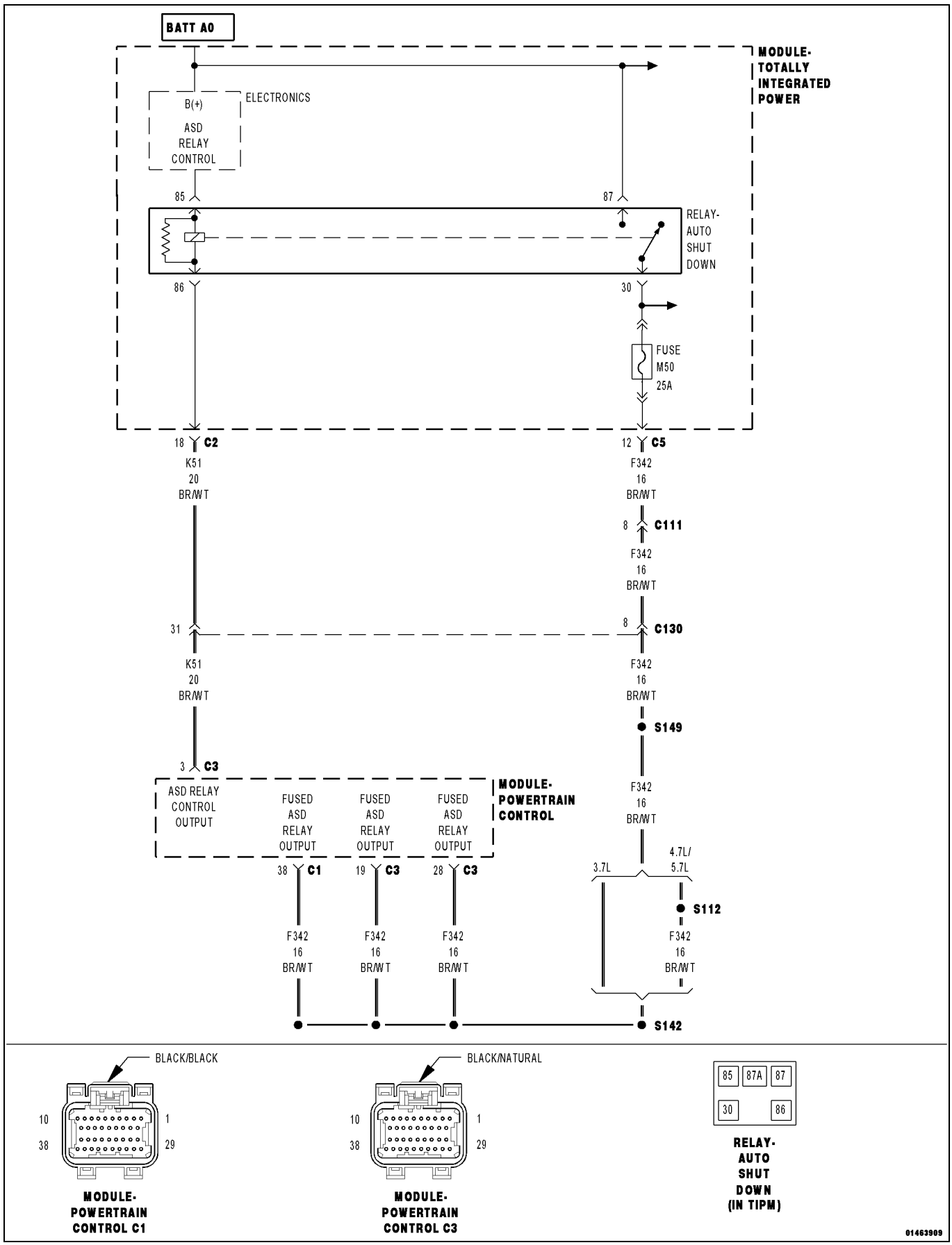

For a complete wiring diagram, **refer to the Wiring Information**.

- **When Monitored:**
  With ignition key on. Battery voltage greater than 10 Volts.
- **Set Condition:**
  No voltage sensed at the PCM when the ASD relay is energized. One Trip Fault. Three good trips to turn off the MIL.

Possible Causes
(F342) ASD RELAY OUTPUT CIRCUIT OPEN
(F342) ASD RELAY OUTPUT CIRCUIT SHORTED TO GROUND
TOTALLY INTEGRATED POWER MODULE (TIPM)
POWERTRAIN CONTROL MODULE (PCM)

Always perform the Pre-Diagnostic Troubleshooting procedure before proceeding. (Refer to 28 - DTC-Based Diagnostics/MODULE, Powertrain Control (PCM) - Standard Procedure).

1. ACTIVE DTC

NOTE: If any O2 SENSOR HEATER CIRCUIT HIGH DTCs set along with P0688-AUTO SHUTDOWN RELAY SENSE CIRCUIT LOW, all of the O2 Sensor Heater Control circuits need to be checked for a short to battery voltage.

NOTE: If any of the following component DTCs have set along with P0688, diagnose them first before continuing. Ignition Coil(s)Fuel Injector(s)ASD ControlASD Control Output (TIPM DTC)

1. Ignition on, engine not running.
2. With the scan tool, select View DTCs.

Is the DTC Active at this time?

Yes

- Go To 2

No

- Perform the INTERMITTENT CONDITION diagnostic procedure. (Refer to 28 - DTC-Based Diagnostics/MODULE, Powertrain Control (PCM) - Standard Procedure).

2. ASD RELAY

1. Turn the ignition off.
2. Install a known good relay in place of the existing ASD Relay.
3. Attempt to start the engine.

Does the engine start with no codes?

Yes

- Replace the ASD Relay.
- Perform the POWERTRAIN VERIFICATION TEST. (Refer to 28 - DTC-Based Diagnostics/MODULE, Powertrain Control (PCM) - Standard Procedure).

No

- Go To 3

3. (F342) ASD RELAY CONTROL CIRCUIT(S) OPEN

1. Turn the ignition off.
2. Disconnect the C1 TIPM harness connector.

CAUTION: Do not probe the PCM harness connectors. Probing the PCM harness connectors will damage the PCM terminals resulting in poor terminal to pin connection. Install the PCM Pinout Box Kit, NGC, 38 Position 8815A to perform diagnosis.

3. Measure the resistance of both the (F342) ASD Relay Output circuits from the C1 TIPM harness connector to the appropriate terminals of PCM Pinout Box 8815A.

Is the resistance below 5.0 Ohms?

Yes

- Go To 4

No

- Repair the open in the (F342) ASD Relay Output circuit(s).
- Perform the POWERTRAIN VERIFICATION TEST. (Refer to 28 - DTC-Based Diagnostics/MODULE, Powertrain Control (PCM) - Standard Procedure).

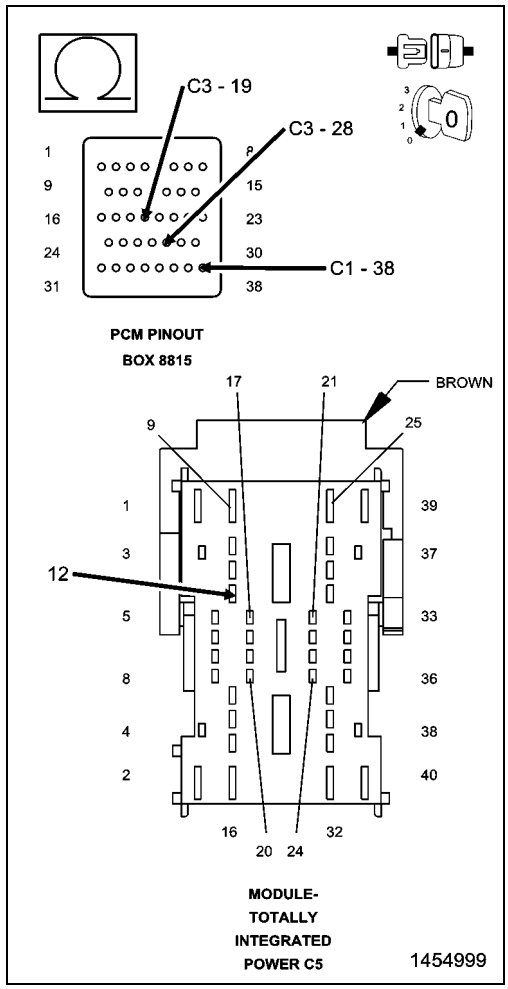

4. (F342) ASD RELAY OUTPUT CIRCUIT(S) SHORTED TO GROUND

1. Measure the resistance between ground and any of the (F342) ASD Relay Output circuits at the appropriate terminal of the PCM Pinout Box 8815A.

Is the resistance below 10k Ohms?

Yes

- Repair the short to ground in the (F342) ASD Relay Output circuit(s).
- Perform the POWERTRAIN VERIFICATION TEST. (Refer to 28 - DTC-Based Diagnostics/MODULE, Powertrain Control (PCM) - Standard Procedure).

No

- Go To 5

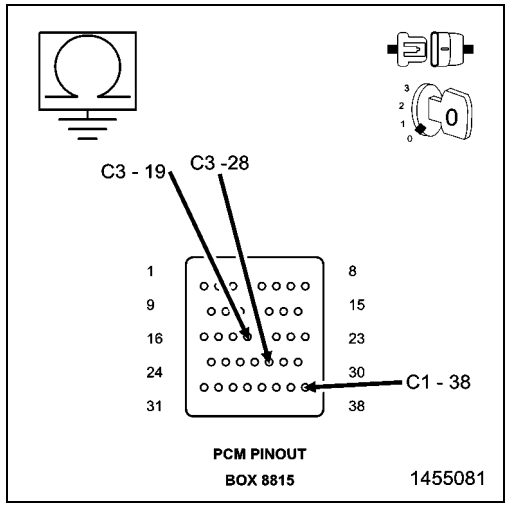

5. POWERTRAIN CONTROL MODULE (PCM)

1. Using the wiring diagram/schematic as a guide, inspect the wiring and connectors between the related TIPM and the Powertrain Control Module (PCM).
2. Look for any chafed, pierced, pinched or partially broken wires.
3. Look for broken, bent, pushed out or corroded terminals. Verify that there is good pin to terminal contact in the TIPM and Powertrain Control Module connectors.
4. Refer to any Technical Service Bulletins that may apply.

Were there any problems found?

Yes

- Repair as necessary.
- Perform the POWERTRAIN VERIFICATION TEST. (Refer to 28 - DTC-Based Diagnostics/MODULE, Powertrain Control (PCM) - Standard Procedure).

No

- Replace and program the Powertrain Control Module (PCM) in accordance with the Service Information.
- Perform the POWERTRAIN VERIFICATION TEST. (Refer to 28 - DTC-Based Diagnostics/MODULE, Powertrain Control (PCM) - Standard Procedure).

P0700-TRANSMISSION CONTROL SYSTEM (MIL REQUEST)

For a complete wiring diagram **Refer to the Wiring Information**.

- **When Monitored:**
  Ignition on and battery voltage greater than 10 volts.
- **Set Condition:**
  An active DTC is stored in the TCM. One Trip Fault. Three good trips to turn off the MIL.

Possible Causes
DTC PRESENT IN THE TRANSMISSION CONTROL MODULE

Always perform the Pre-Diagnostic Troubleshooting procedure before proceeding. (Refer to 28 - DTC-Based Diagnostics/MODULE, Powertrain Control (PCM) - Standard Procedure).

1. DTC PRESENT IN EATX CONTROLLER

1. This is an informational DTC letting you know that a DTC(s) is stored in the Transmission Control Module.
2. Erase this DTC from the PCM after all Transmission DTC(s) have been repaired.
3. Using a scan tool, read the Transmission Controller DTC and refer to the Transmission Category and perform the appropriate symptom.

PCM Diagnostic Information complete.

Continue

- Test Complete.

P0703-BRAKE SWITCH 2 PERFORMANCE

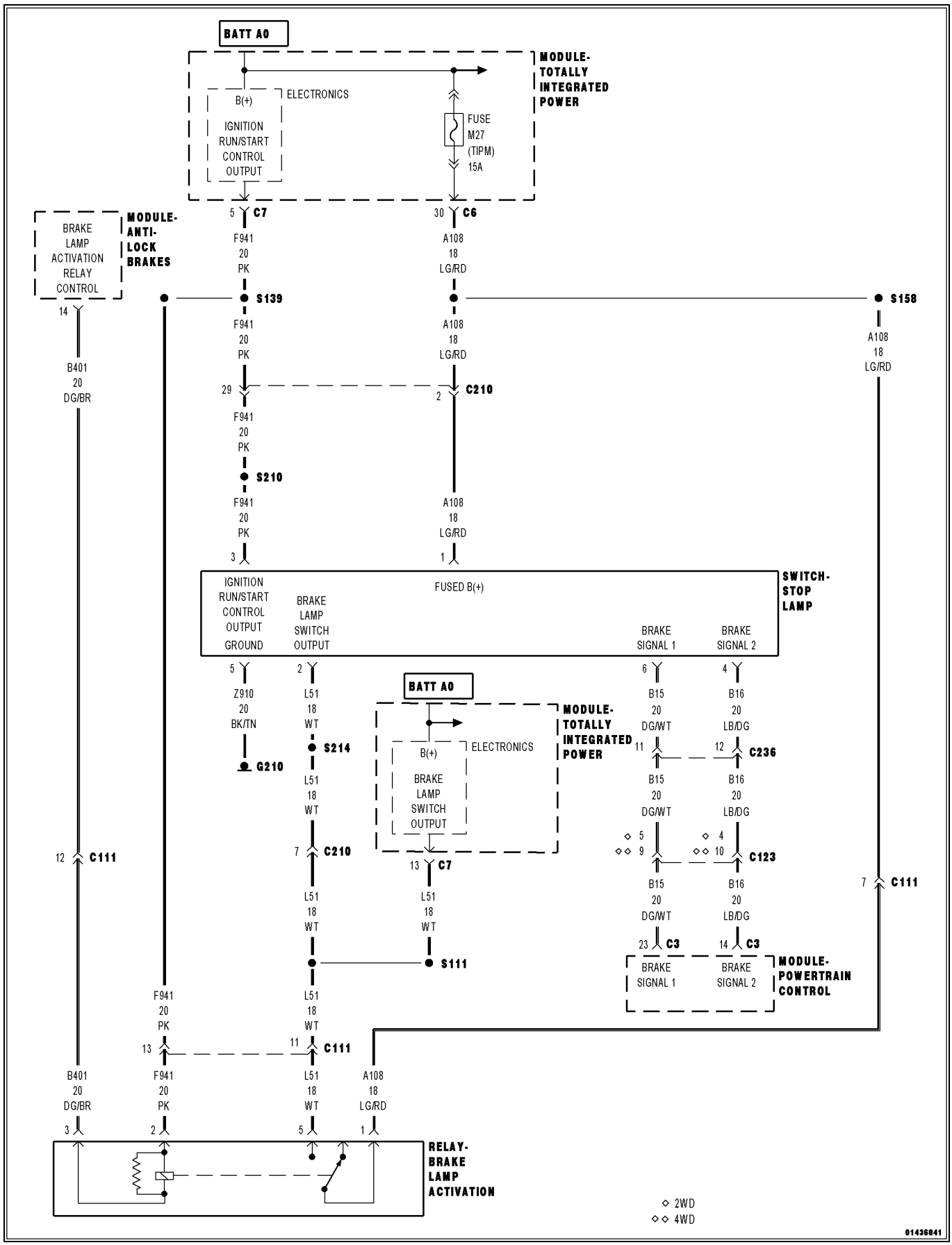

For a complete wiring diagram, **refer to the Wiring Information**.

- **When Monitored:**
  Ignition on.
- **Set Condition:**
  When the PCM recognizes Brake Switch No.2 voltagex is not equal to the applied value at the PCM when Brake Switch No.1 is applied. This could be a normal condition. If this condition is seen repeatedly by the PCM the fault is set. Cruise will not work for the rest of the key cycle.

Possible Causes
(A108) FUSED IGNITION SWITCH OUTPUT CIRCUIT
(B16) BRAKE SWITCH NO.2 SIGNAL CIRCUIT OPEN
(B16) BRAKE SWITCH NO.2 SIGNAL CIRCUIT SHORTED TO VOLTAGE
(B16) BRAKE SWITCH NO.2 SIGNAL CIRCUIT SHORTED TO GROUND
(B15) BRAKE SWITCH NO.1 SIGNAL CIRCUIT OPEN
STOP LAMP SWITCH
POWERTRAIN CONTROL MODULE (PCM)

Always perform the Pre-Diagnostic Troubleshooting procedure before proceeding. (Refer to 28 - DTC-Based Diagnostics/MODULE, Powertrain Control (PCM) - Standard Procedure).

1. ACTIVE DTC

NOTE: Make sure the Stop Lamp Switch is adjusted properly before continuing.

NOTE: Make sure the Stop Lamp Switch is properly wired, such as (B15) Brake Switch No.1 and (L51) Brake Lamp Switch Output are not switched at the harness connector.

1. Ignition on, engine not running.
2. With the scan tool, select View DTCs.

Is the DTC Active at this time?

Yes

- Go To 2

No

- Perform the INTERMITTENT CONDITION diagnostic procedure. (Refer to 28 - DTC-Based Diagnostics/MODULE, Powertrain Control (PCM) - Standard Procedure).

2. (A108) FUSED IGNITION SWITCH OUTPUT CIRCUIT

1. Turn the ignition off.
2. Disconnect the Stop Lamp Switch harness connector.
3. Using a 12-volt test light connected to ground, probe the (A108) Fused Ignition Switch Output circuit in the Stop Lamp Switch harness connector.
4. Turn the ignition on.

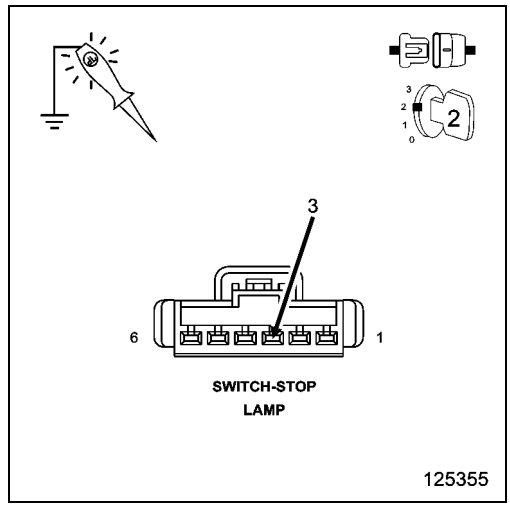

Does the test light illuminate brightly?

Yes

- Go To 3

No

- Repair the open or short to ground in the (A108) Fused Ignition Switch Output circuit. Inspect the related fuse and repair as necessary.
- Perform the POWERTRAIN VERIFICATION TEST. (Refer to 28 - DTC-Based Diagnostics/MODULE, Powertrain Control (PCM) - Standard Procedure).

3. STOP LAMP SWITCH

1. Turn the ignition off.
2. Measure the resistance between the (A108) Fused Ignition Switch circuit terminal and the (B16) Brake Switch No.2 Signal terminal in the Stop Lamp Switch.
3. Measure the resistance between the (G210) Ground circuit terminal and the (B15) Brake Switch No.1 Signal terminal in the Stop Lamp Switch.
4. Apply and release the Stop Lamp Switch while monitoring the Ohmmeter.

Does the resistance change from below 5.0 Ohms to open circuit for each circuit check?

Yes

- Go To 4

No

- Replace the Stop Lamp Switch.
- Perform the POWERTRAIN VERIFICATION TEST. (Refer to 28 - DTC-Based Diagnostics/MODULE, Powertrain Control (PCM) - Standard Procedure).

4. (B16) BRAKE SWITCH NO.2 SIGNAL CIRCUIT SHORTED TO VOLTAGE

1. Disconnect the C3 PCM harness connector.
2. Ignition on, engine not running.
3. Measure the voltage on the (B16) Brake Switch No.2 Signal circuit in the Stop Lamp Switch harness connector.

Is there any voltage present?

Yes

- Repair the short to voltage in the (B16) Brake Switch No.2 Signal circuit.
- Perform the POWERTRAIN VERIFICATION TEST. (Refer to 28 - DTC-Based Diagnostics/MODULE, Powertrain Control (PCM) - Standard Procedure).

No

- Go To 5

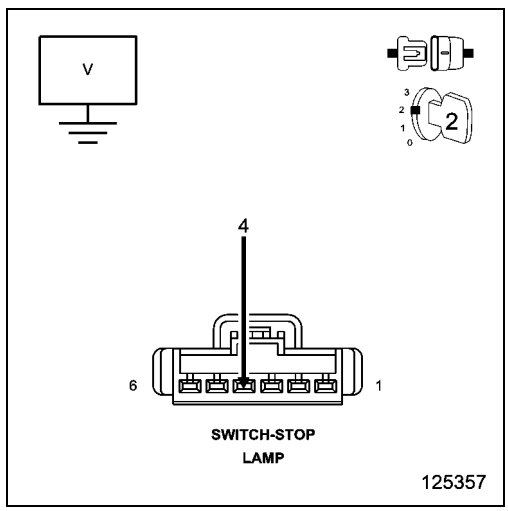

5. (B16) BRAKE SWITCH NO.2 SIGNAL CIRCUIT OPEN

1. Turn the ignition off.

CAUTION: Do not probe the PCM harness connectors. Probing the PCM harness connectors will damage the PCM terminals resulting in poor terminal to pin connection. Install the PCM Pinout Box Kit, NGC, 38 Position 8815A to perform diagnosis.

2. Measure the resistance of the (B16) Brake Switch No.2 Signal circuit from the Stop Lamp Switch harness connector to the appropriate terminal of PCM Pinout Box 8815A.

Is the resistance below 5.0 Ohms?

Yes

- Go To 6

No

- Repair the open in the (B16) Brake Switch No.2 Signal circuit.
- Perform the POWERTRAIN VERIFICATION TEST. (Refer to 28 - DTC-Based Diagnostics/MODULE, Powertrain Control (PCM) - Standard Procedure).

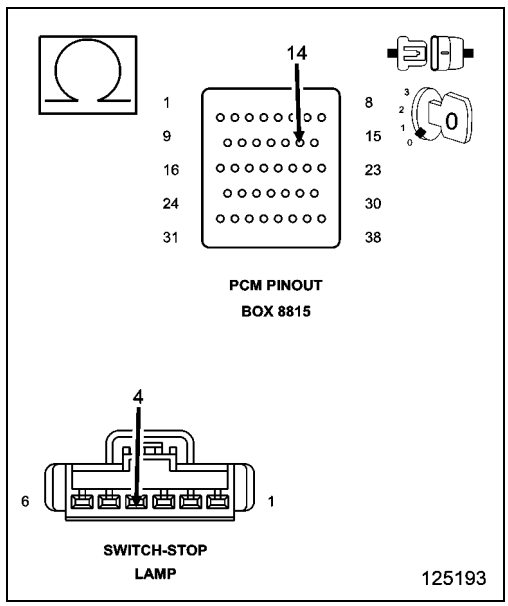

6. (B16) BRAKE SWITCH NO.2 SIGNAL CIRCUIT SHORTED TO GROUND

1. Measure the resistance between ground and the (B16) Brake Switch No.2 Signal circuit in the Stop Lamp Switch harness connector.

Is the resistance below 5.0 Ohms?

Yes

- Repair the short to ground in the (B16) Brake Switch No.2 Signal circuit.
- Perform the POWERTRAIN VERIFICATION TEST. (Refer to 28 - DTC-Based Diagnostics/MODULE, Powertrain Control (PCM) - Standard Procedure).

No

- Go To 7

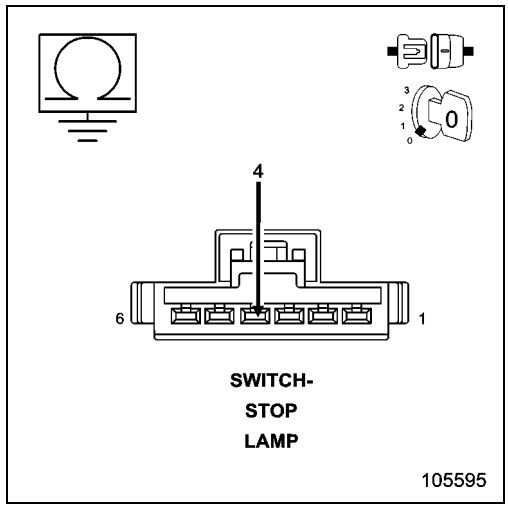

7. (B15) BRAKE SWITCH NO.1 SIGNAL CIRCUIT OPEN

1. Measure the resistance of the (B15) Brake Switch No.1 Signal circuit from the Stop Lamp Switch harness connector to the appropriate terminal of PCM Pinout Box 8815A.

Is the resistance below 5.0 Ohms?

Yes

- Go To 8

No

- Repair the open in the (B15) Brake Switch No.1 Signal circuit.
- Perform the POWERTRAIN VERIFICATION TEST. (Refer to 28 - DTC-Based Diagnostics/MODULE, Powertrain Control (PCM) - Standard Procedure).

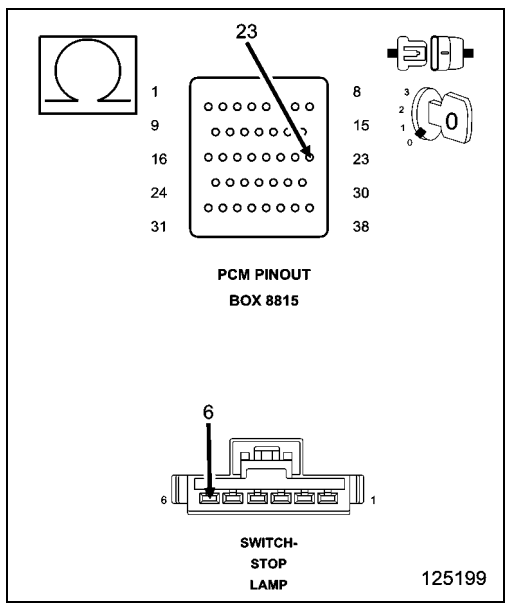

8. POWERTRAIN CONTROL MODULE (PCM)

1. Using the wiring diagram/schematic as a guide, inspect the wiring and connectors between the Stop Lamp Switch and the Powertrain Control Module (PCM).
2. Look for any chafed, pierced, pinched or partially broken wires.
3. Look for broken, bent, pushed out or corroded terminals. Verify that there is good pin to terminal contact in the Switch and Powertrain Control Module connectors.
4. Perform any Technical Service Bulletins that may apply.

Were there any problems found?

Yes

- Repair as necessary.
- Perform the POWERTRAIN VERIFICATION TEST. (Refer to 28 - DTC-Based Diagnostics/MODULE, Powertrain Control (PCM) - Standard Procedure).

No

- Replace and program the Powertrain Control Module in accordance with the Service Information.
- Perform the POWERTRAIN VERIFICATION TEST. (Refer to 28 - DTC-Based Diagnostics/MODULE, Powertrain Control (PCM) - Standard Procedure).

P0850-PARK/NEUTRAL SWITCH PERFORMANCE

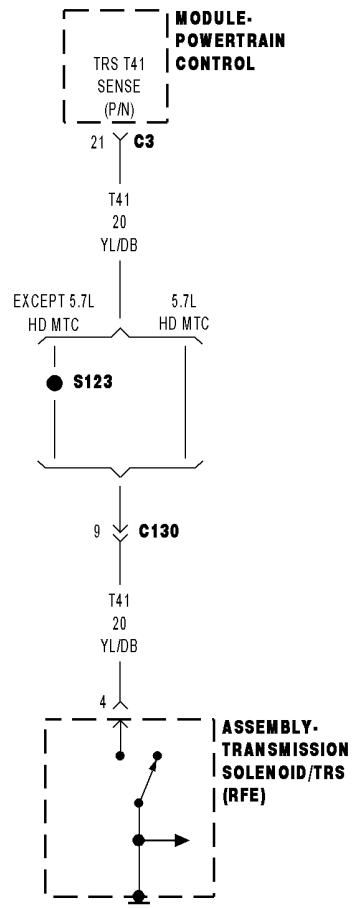

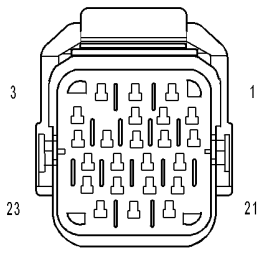

ASSEMBLY-
TRANSMISSION
SOLENOID/TRS
(RFE)

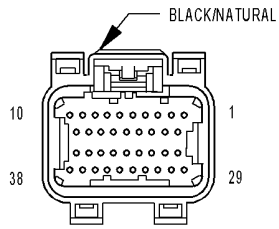

MODULE-
POWERTRAIN
CONTROL C3
(NGC)

814549a5

For a complete wiring diagram **Refer to the Wiring Information**.

Theory of Operation

The Park Neutral switch rationality test is enabled only for vehicles equipped with a 4/5 speed automatic transmission. This diagnostic checks if the park/neutral switch is incorrectly stuck in the neutral position during driving conditions by comparing Vehicle Speed, Engine Speed, Throttle Position, and Pressure Ratio to the fail thresholds and by looking at the state of the Park/Neutral Switch. The stuck in drive condition is not explicitly checked as the starter relay does not energize and therefore render the vehicle inoperable.

- **When Monitored:**

  Continuously with the transmission in Park, Neutral, or Drive and NOT in Limp-in mode.
- **Set Condition:**

  This code will set if the PCM detects an irrational Park/Neutral switch state for at least one minute. Two trip fault. Three good trips to turn off the MIL.

Possible Causes
TRS (T41) SENSE (P/N SENSE) CIRCUIT OPEN
TRS (T41) SENSE (P/N SENSE) CIRCUIT SHORTED TO GROUND
TRANSMISSION RANGE SENSOR
POWERTRAIN CONTROL MODULE (PCM)

Always perform the Pre-Diagnostic Troubleshooting procedure before proceeding. (Refer to 28 - DTC-Based Diagnostics/MODULE, Powertrain Control (PCM) - Standard Procedure).

1. P/N AND D/R NOT IN CORRECT POSITION

NOTE: Check the TCM for DTCs, if P0706 is set in the TCM diagnose the TCM code before continuing.

1. Ignition on, engine not running.
2. With the scan tool, read the Park/Neutral Position Switch input state.
3. While moving the gear selector through all gear positions (Park to 1 and back to Park), monitor the scan tool display.

Did the scan tool display show P/N and D/R in the correct gear positions?

Yes

- Refer to the INTERMITTENT CONDITION Diagnostic Procedure. (Refer to 28 - DTC-Based Diagnostics/MODULE, Powertrain Control (PCM) - Standard Procedure)

No

- Go To 2

2. TRS (T41) SENSE (P/N SENSE) CIRCUIT OPEN

1. Turn the ignition off.
2. Disconnect the C3 PCM harness connector.
3. Disconnect the Transmission Range Sensor harness connector.

CAUTION: Do not probe the PCM harness connectors. Probing the PCM harness connectors will damage the PCM terminals resulting in poor terminal to pin connection. Install the PCM Pinout Box Kit, NGC, 38 Position 8815A to perform diagnosis.

4. Measure the resistance of the TRS (T41) Sense (P/N Sense) circuit from the TRS harness connector to the appropriate terminal of special tool #8815A.

Is the resistance below 5.0 ohms?

Yes

- Go To 3

No

- Repair the open in the TRS (T41) Sense (P/N Sense) circuit.
- Perform the POWERTRAIN VERIFICATION TEST. (Refer to 28 - DTC-Based Diagnostics/MODULE, Powertrain Control (PCM) - Standard Procedure)

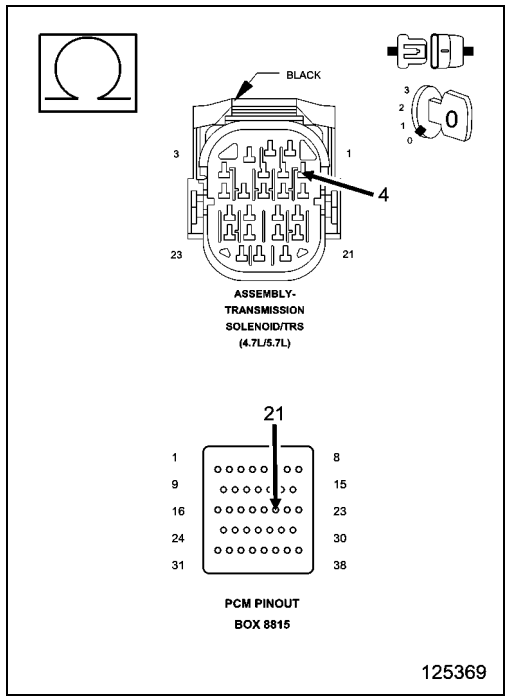

3. TRS (T41) SIGNAL CIRCUIT SHORTED TO GROUND

1. Measure the resistance between ground and the TRS (T41) Sense (P/N Sense) circuit at the TRS harness connector.

Is the resistance above 100k ohms?

Yes

- Go To 4

No

- Repair the short to ground in the TRS (T41) Sense (P/N Sense) circuit.
- Perform the POWERTRAIN VERIFICATION TEST. (Refer to 28 - DTC-Based Diagnostics/MODULE, Powertrain Control (PCM) - Standard Procedure)

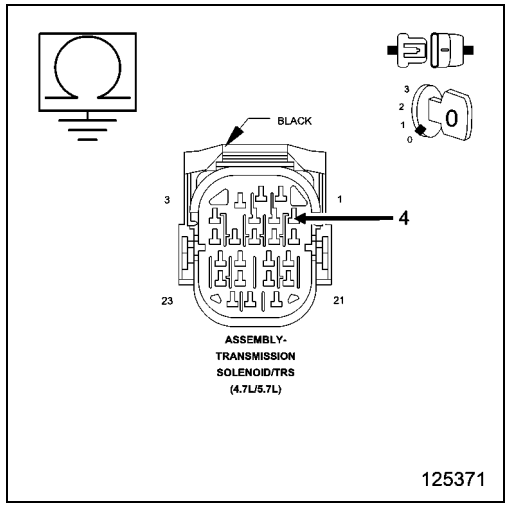

4. TRANSMISSION RANGE SENSOR

1. Measure the resistance between ground and the (T41) TRS Sense (P/N Sense) circuit while moving the gear selector through each gear in the TRS connector.

NOTE: The circuit is grounded in Park and Neutral and open in the other positions.

Did the resistance change from above 100 kohms (open) to below 10.0 ohms (grounded)?

Yes

- Go To 5

No

- Replace the Transmission Range Sensor.
- Perform the POWERTRAIN VERIFICATION TEST. (Refer to 28 - DTC-Based Diagnostics/MODULE, Powertrain Control (PCM) - Standard Procedure)

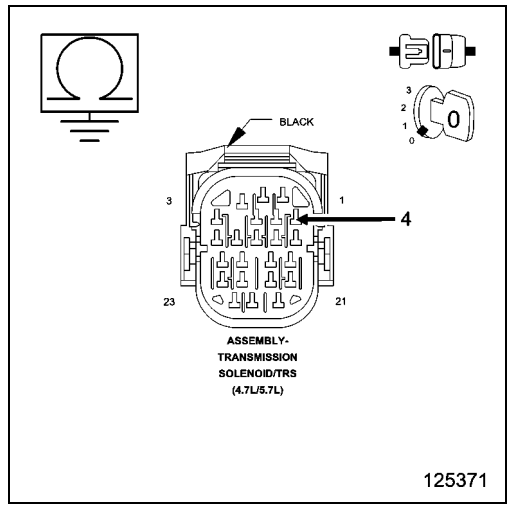

5. POWERTRAIN CONTROL MODULE (PCM)

1. Using the wiring diagram/schematic as a guide, inspect the wiring and connectors between the Transmission Solenoid and the Powertrain Control Module (PCM).
2. Look for any chafed, pierced, pinched, or partially broken wires.
3. Look for broken, bent, pushed out or corroded terminals. Verify that there is good pin to terminal contact in the Solenoid and Powertrain Control Module connectors.
4. Refer to any Technical Service Bulletins that may apply.

Were there any problems found?

Yes

- Repair as necessary.
- Perform the POWERTRAIN VERIFICATION TEST. (Refer to 28 - DTC-Based Diagnostics/MODULE, Powertrain Control (PCM) - Standard Procedure)

No

- Replace and program the Powertrain Control Module per Service Information.
- Perform the POWERTRAIN VERIFICATION TEST. (Refer to 28 - DTC-Based Diagnostics/MODULE, Powertrain Control (PCM) - Standard Procedure)

P1004-SHORT RUNNER VALVE CONTROL PERFORMANCE

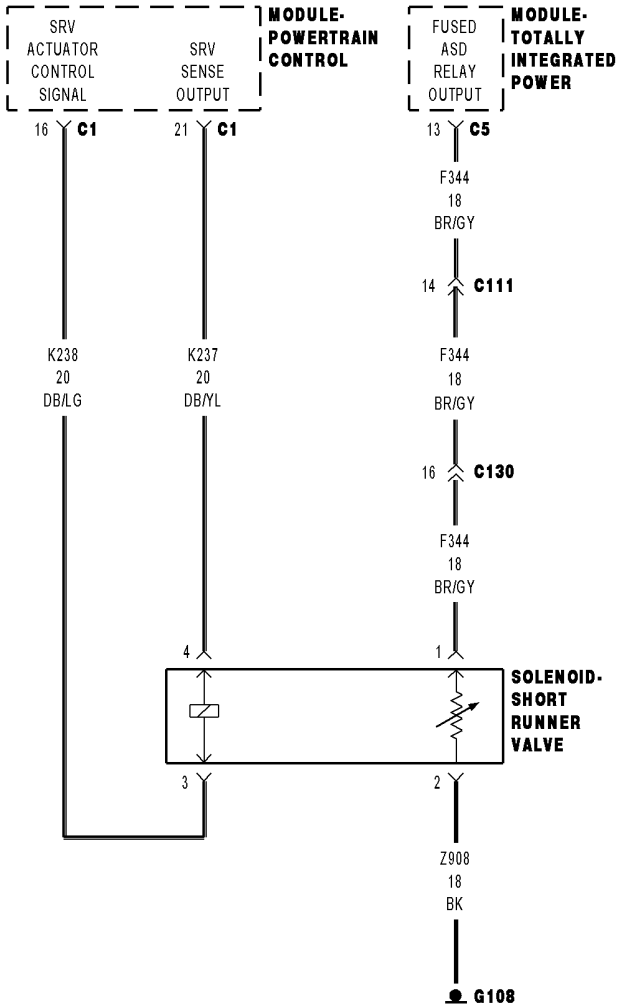

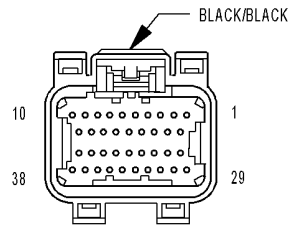

MODULE- POWERTRAIN CONTROL C1 (GAS)

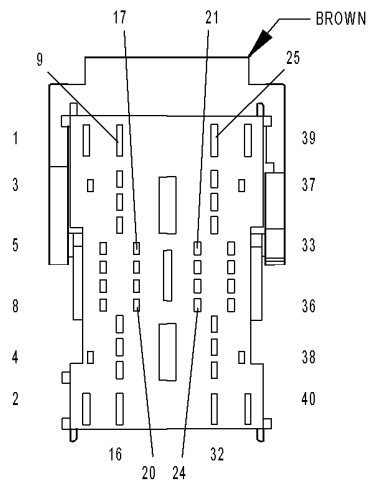

MODULE- TOTALLY INTEGRATED POWER C5

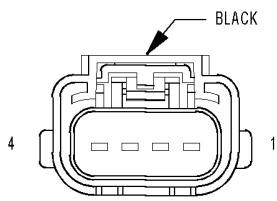

SOLENOID- SHORT RUNNER VALVE

01247696

For a complete wiring diagram, **refer to the Wiring Information**.

Theory of Operation

The engine performance and power output is enhanced through the use of the “short runner valve” (SRV) system. The SRV system allows the intake charge air to bypass the long intake manifold runners between the intake manifold plenum and the intake manifold interface to the cylinder heads by providing a shorter runner directly between the plenum and the cylinder head interface The SRV position is controlled by a pneumatic/spring actuator and electronic solenoid valve. When the solenoid is not energized (the “rest” position), the SRV is held in the closed position. When the solenoid is energized the SRV is moved and held in its opened position. There is a set of enable conditions including a minimum engine coolant and ambient temperature, SRV enable and Powertrain Coordinator load enable condition. If any of these conditions are not met, then the SRV valve is de-energized (closed).

- **When Monitored:**

  With the engine run time above a calibrated value, battery voltage greater than 10.4 Volts, ECT within a specific range and the Short Runner Valve Assembly (SRV) control active.
- **Set Condition:**

  The Powertrain Control Module (PCM) compares the circuit feedback to a calibrated closed range, between 75% & 85% Pulse Width Modulated (PWM) duty cycle, when the circuit is de-energized or to a calibrated open range, between 35% & 55% PWM duty cycle, when the circuit is energized. If the value is determined to be out of the calibrated range in either the de-energized, greater than 85% duty cycle or less than 75% duty cycle or energized, greater than 55% duty cycle or less than 35% duty cycle, state for more than a calibrated amount of time, this DTC will set.

Possible Causes
(F344) ASD RELAY OUTPUT CIRCUIT OPEN OR HIGH RESISTANCE
(K237) SHORT RUNNER VALVE (SRV) SIGNAL CIRCUIT SHORTED TO GROUND
(K237) SHORT RUNNER VALVE (SRV) SIGNAL CIRCUIT OPEN OR HIGH RESISTANCE
(K238) SHORT RUNNER VALVE (SRV) CONTROL CIRCUIT SHORTED TO GROUND
(K238) SHORT RUNNER VALVE (SRV) CONTROL CIRCUIT OPEN OR HIGH RESISTANCE
SHORT RUNNER VALVE (SRV) ASSEMBLY
(Z903) SHORT RUNNER VALVE (SRV) GROUND CIRCUIT OPEN CIRCUIT OR HIGH RESISTANCE
POWERTRAIN CONTROL MODULE (PCM)

Always perform the Pre-Diagnostic Troubleshooting procedure before proceeding. (Refer to 28 - DTC-Based Diagnostics/MODULE, Powertrain Control (PCM) - Standard Procedure).

1. DTC IS ACTIVE

1. Turn the ignition on.
2. With the scan tool, Clear DTCs in the Powertrain Control Module (PCM).
3. With the scan tool, actuate the SRV Solenoid Control State.
4. With the scan tool, select View DTCs.

Is the status Active for this DTC?

Yes

- Go To 2

No

- Perform the INTERMITTENT CONDITION diagnostic procedure. (Refer to 28 - DTC-Based Diagnostics/MODULE, Powertrain Control (PCM) - Standard Procedure).

2. (F344) ASD RELAY OUTPUT CIRCUIT OPEN OR HIGH RESISTANCE

1. Turn the ignition off.
2. Disconnect the Short Runner Valve Assembly harness connector.
3. Turn the ignition on.
4. With the scan tool, actuate the Auto Shutdown (ASD) Relay Control State.
5. Using a 12-volt test light connected to ground, check the (F344) ASD Relay Output circuit in the Short Runner Valve Assembly harness connector.

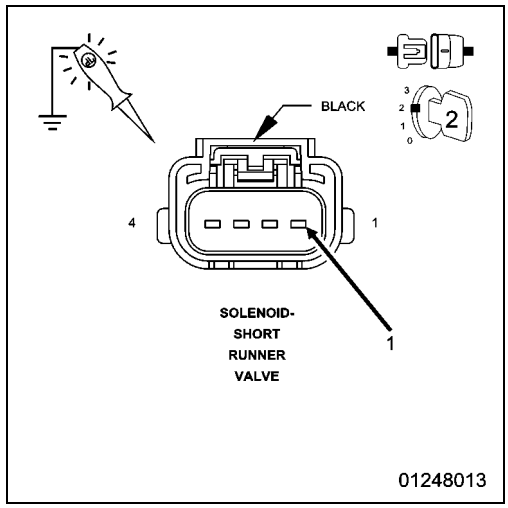

NOTE: The test light should be illuminated and bright. Compare the brightness to that of a direct connection to the battery.

Is the test light illuminated and bright?

Yes

- Go To 3

No

- Repair the open or high resistance in the (F344) ASD Relay Output circuit.
- Perform the POWERTRAIN VERIFICATION TEST. (Refer to 28 - DTC-Based Diagnostics/MODULE, Powertrain Control (PCM) - Standard Procedure).

3. (K238) SRV CONTROL CIRCUIT SHORTED TO GROUND

1. Turn the ignition off.
2. Disconnect the Powertrain Control Module (PCM) C1 harness connector.
3. Measure the resistance between ground and the (K238) SRV control circuit in the Short Runner Valve Assembly harness connector.

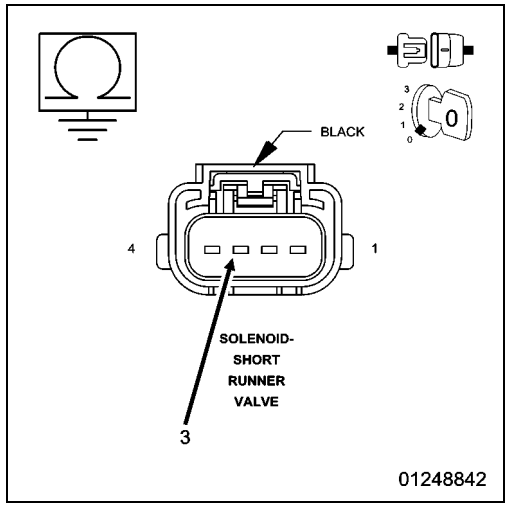

Is the resistance above 100 Ohms?

Yes

- Go To 4

No

- Repair the short to ground in the (K238) SRV control circuit.
- Perform the POWERTRAIN VERIFICATION TEST. (Refer to 28 - DTC-Based Diagnostics/MODULE, Powertrain Control (PCM) - Standard Procedure).

4. (K238) SRV CONTROL CIRCUIT OPEN OR HIGH RESISTANCE

CAUTION: Do not probe the PCM harness connectors. Probing the PCM harness connectors will damage the PCM terminals, resulting in poor terminal to pin connection. Install the PCM Pinout Box 8815A **to perform diagnosis.**

1. Measure the resistance of the (K238) SRV control circuit between the Short Runner Valve Assembly harness connector and the appropriate terminal of PCM Pinout Box 8815A.

Is the resistance below 5.0 Ohms?

Yes

- Go To 5

No

- Repair the open or high resistance in the (K238) SRV Control circuit.
- Perform the POWERTRAIN VERIFICATION TEST. (Refer to 28 - DTC-Based Diagnostics/MODULE, Powertrain Control (PCM) - Standard Procedure).

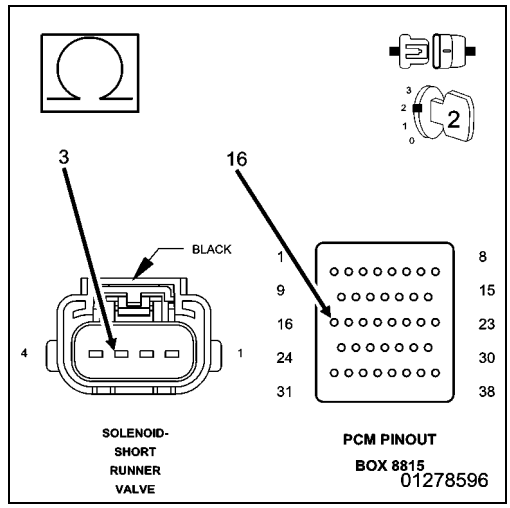

5. (K237) SRV SIGNALCIRCUIT SHORTED TO GROUND

1. Measure the resistance between ground and the (K237) SRV Signal circuit in the Short Runner Valve Assembly harness connector.

Is the resistance above 100 Ohms?

Yes

- Go To 6

No

- Repair the short to ground in the (K237) SRV Signal circuit.
- Perform the POWERTRAIN VERIFICATION TEST. (Refer to 28 - DTC-Based Diagnostics/MODULE, Powertrain Control (PCM) - Standard Procedure).

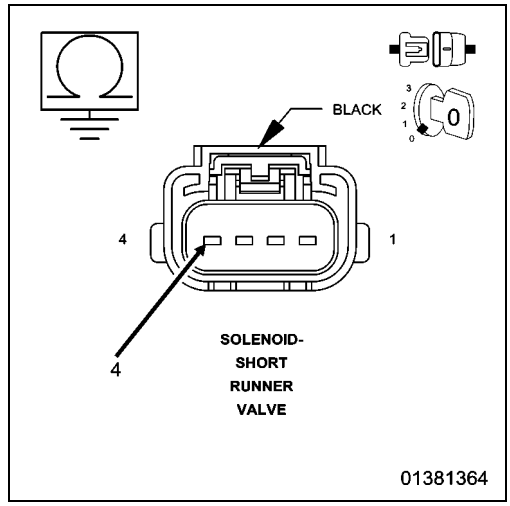

6. (K237) SRV SIGNAL CIRCUIT OPEN OR HIGH RESISTANCE

CAUTION: Do not probe the PCM harness connectors. Probing the PCM harness connectors will damage the PCM terminals, resulting in poor terminal to pin connection. Install the PCM Pinout Box 8815A **to perform diagnosis.**

1. Measure the resistance of the (K237) SRV signal circuit between the Short Runner Valve Assembly harness connector and the appropriate terminal of PCM Pinout Box 8815A.

Is the resistance below 5.0 Ohms?

Yes

- Go To 7

No

- Repair the open or high resistance in the (K237) SRV signal circuit for .
- Perform the POWERTRAIN VERIFICATION TEST. (Refer to 28 - DTC-Based Diagnostics/MODULE, Powertrain Control (PCM) - Standard Procedure).

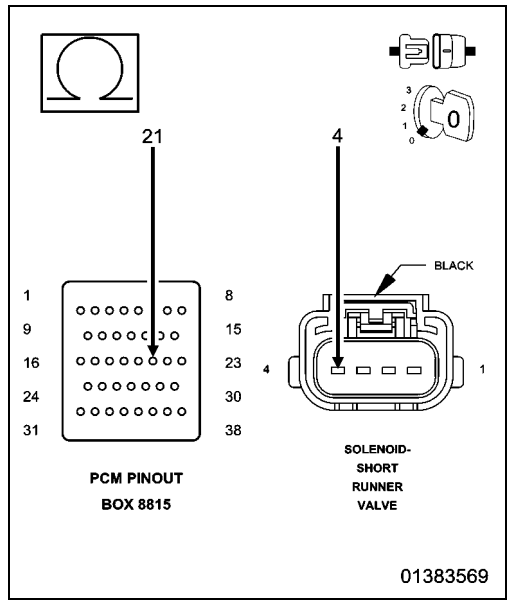

7. SHORT RUNNER VALVE ASSEMBLY

1. Connect the Powertrain Control Module (PCM) C1 harness connector.
2. Turn the ignition on.
3. With the scan tool, actuate the SRV Solenoid Control State to toggle.
4. Using a 12-volt test light connected to 12 Volts, check the (K238) SRV control circuit in the Short Runner Valve Assembly harness connector.

NOTE: If the DTC is active, the actuation test may not be allowed by the PCM. It may be necessary to clear the DTCs before starting the actuation.

NOTE: The test light should illuminate on and off with the actuation.

Does the test light illuminate on and off with the actuation?

Yes

- Replace the Short Runner Valve Assembly in accordance with the Service Information.
- Perform the POWERTRAIN VERIFICATION TEST. (Refer to 28 - DTC-Based Diagnostics/MODULE, Powertrain Control (PCM) - Standard Procedure).

No

- Go To 8

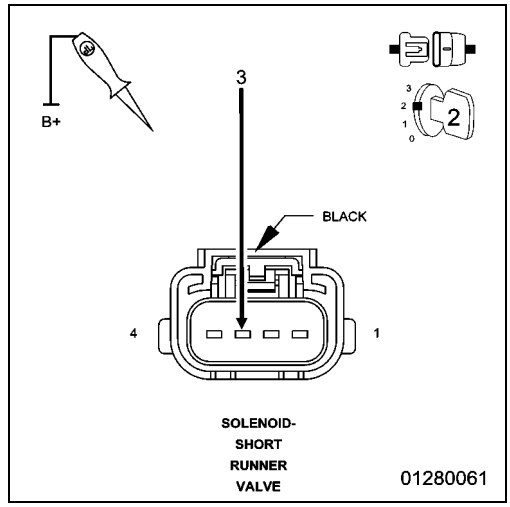

8. (Z903) SRV GROUND CIRCUIT OPEN CIRCUIT OR HIGH RESISTANCE

1. Turn the ignition off.
2. Disconnect the Powertrain Control Module (PCM) C1 harness connector.
3. Measure the resistance of the (Z903) SRV ground circuit in the Short Runner Valve Assembly harness connector to ground.

Is the resistance less than 5.0 Ohms?

Yes

- Go To 9

No

- Repair the open or high resistance in the (Z903) SRV ground circuit.
- Perform the POWERTRAIN VERIFICATION TEST. (Refer to 28 - DTC-Based Diagnostics/MODULE, Powertrain Control (PCM) - Standard Procedure).

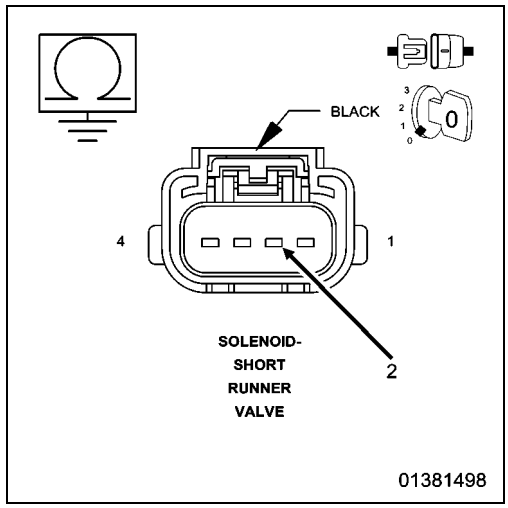

9. POWERTRAIN CONTROL MODULE (PCM)

1. Using the wiring diagram/schematic as a guide, inspect the wiring and connectors between the Short Runner Valve Assembly and the Powertrain Control Module (PCM).
2. Look for any chafed, pierced, pinched or partially broken wires.
3. Look for broken, bent, pushed out or corroded terminals.
4. Perform any Technical Service Bulletins that may apply.

Were any problems found?

Yes

- Repair as necessary.
- Perform the POWERTRAIN VERIFICATION TEST. (Refer to 28 - DTC-Based Diagnostics/MODULE, Powertrain Control (PCM) - Standard Procedure).

No

- Replace and program the Powertrain Control Module (PCM) in accordance with the Service Information.
- Perform the POWERTRAIN VERIFICATION TEST. (Refer to 28 - DTC-Based Diagnostics/MODULE, Powertrain Control (PCM) - Standard Procedure).

P1115-GENERAL TEMPERATURE RATIONALITY

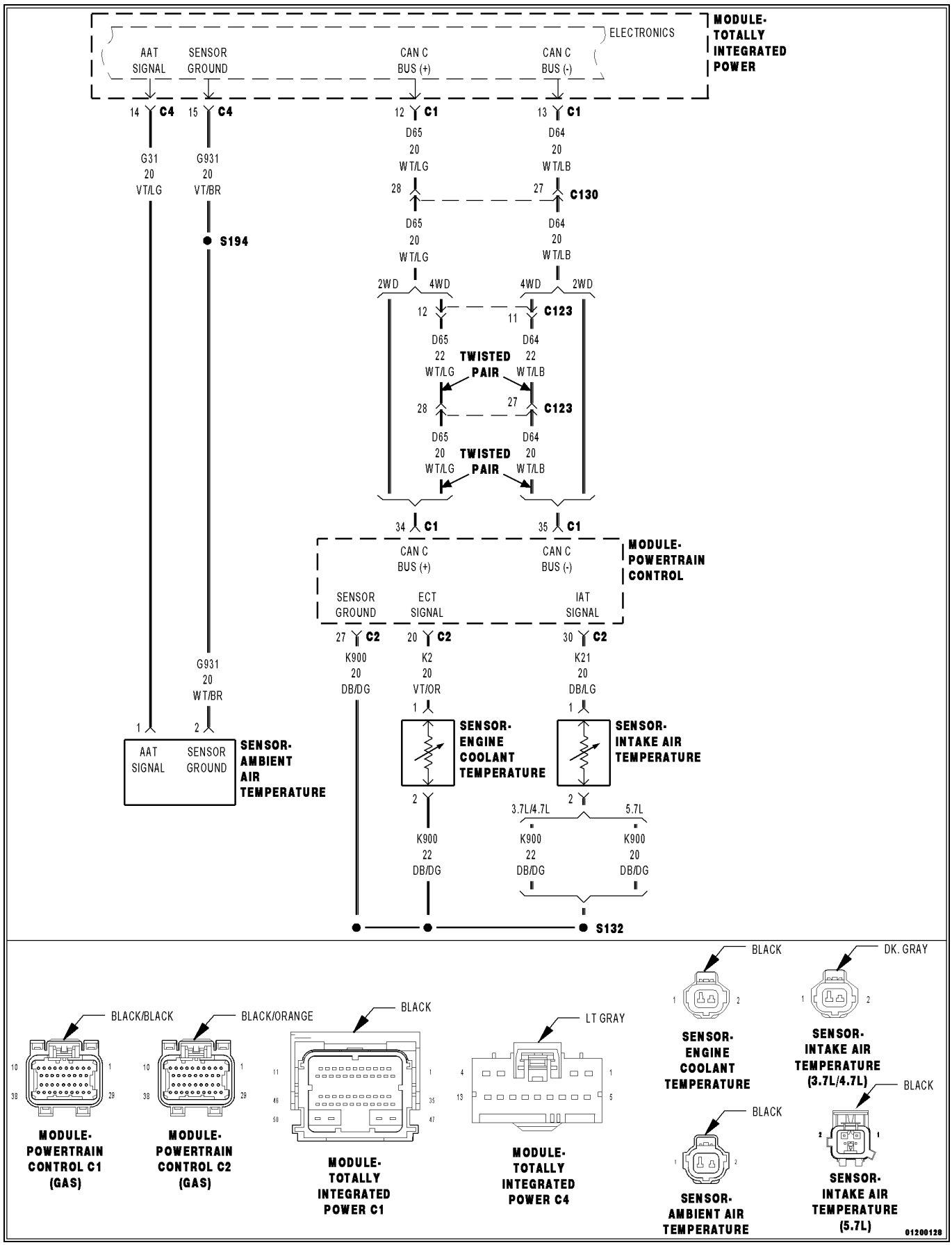

For a complete wiring diagram, **refer to the Wiring Information**.

Theory of Operation

The General Temperature Rationality looks at the outputs of the three temperature sensors and compare them under cold start conditions. Following a start to run delay time, the outputs of the ambient, engine coolant, and intake air temperature sensors will be compared. If two sensors agree but not the third, the third sensor is declared as irrational. If all three sensors are irrational the General Temperature Sensor Rationality is failed.

- **When Monitored:**

  Engine off time is greater than 480 minutes and the vehicle has been driven for one minute over 35 mph. Ambient temperature is greater than -64° C (-83° F).

- **Set Condition:**

  Once the vehicle is soaked for a calibrated engine off time and then driven over calibrated speed and load conditions for some calibrated time, thePowertrain Control Module (PCM) compares the ambient air, engine coolant, and intake air temperature sensor values. If the values of all the three sensors disagree with one another, a general temperature sensor irrationality is declared. Two Trip Fault. Three good trips to turn off the MIL.

Possible Causes
EXCESSIVE RESISTANCE IN THE SENSOR SIGNAL CIRCUIT
EXCESSIVE RESISTANCE IN THE SENSOR GROUND CIRCUIT
SENSOR SIGNAL CIRCUIT SHORTED TO GROUND
SENSOR SIGNAL CIRCUIT SHORTED TO VOLTAGE
SENSOR SIGNAL CIRCUIT SHORTED TO THE SENSOR GROUND CIRCUIT
TEMPERATURE SENSOR
POWERTRAIN CONTROL MODULE (PCM)

Always perform the Pre-Diagnostic Troubleshooting procedure before proceeding. (Refer to 28 - DTC-Based Diagnostics/MODULE, Powertrain Control (PCM) - Standard Procedure).

1. ACTIVE DTC

1. Turn the ignition off.
2. If possible, allow the vehicle to sit with the ignition off for more than 480 minutes in an environment where the temperature is consistent and above -7° C (19.4° F).
3. Test drive the vehicle. The vehicle must exceed 48 km/h (30 mph) during the test drive. Do not cycle the ignition off when the test drive is completed.
4. With a scan tool, select View the DTCs.

NOTE: All ECT, Intake Air, and Ambient Air Temperature Sensor codes must be diagnosed and repaired before continuing.

NOTE: In cold weather, this DTC could be set by a high powered block heater and no repair would be required.

Is the DTC Active or Pending at this time?

Yes

- Go To 2

No

- Perform the INTERMITTENT CONDITION diagnostic procedure. (Refer to 28 - DTC-Based Diagnostics/MODULE, Powertrain Control (PCM) - Standard Procedure).

2. TEMPERATURE SENSOR READINGS

1. Turn the ignition off.
2. Allow the vehicle to sit with the ignition off in an environment where the temperature is consistent and above -7° C (19.4° F) until the engine coolant temperature is equal to ambient temperature.
3. Turn the ignition on.
4. With a scan tool, compare the AAT, ECT, and IAT sensor values.

Are all of the temperature sensor values within a range of 10° C (18° F)?

Yes

- Perform the INTERMITTENT CONDITION diagnostic procedure. (Refer to 28 - DTC-Based Diagnostics/MODULE, Powertrain Control (PCM) - Standard Procedure).

No

- Go To 3

3. TEMPERATURE SENSOR

1. Ignition on, engine not running.
2. Disconnect the suspected faulty sensor.
3. Connect a jumper wire between the Sensor Signal circuit and the Sensor ground circuit.
4. With the scan tool, read the voltage of the suspected Sensor.

Did the voltage reading start at 4.8 to 5.0 volts and decrease to 0 volts when the jumper wire was installed?

Yes

- Verify that there is good pin to terminal contact in the related Sensor and Powertrain Control Module connectors. Replace the Sensor if no problems were found in the connectors.
- Perform the POWERTRAIN VERIFICATION TEST. (Refer to 28 - DTC-Based Diagnostics/MODULE, Powertrain Control (PCM) - Standard Procedure).

No

- Go To 4

NOTE: Remove the jumper wire before continuing.

4. EXCESSIVE RESISTANCE IN THE TEMPERATURE SENSOR SIGNAL CIRCUIT

1. Turn the ignition off.
2. Disconnect the C1 and C2 PCM harness connectors.

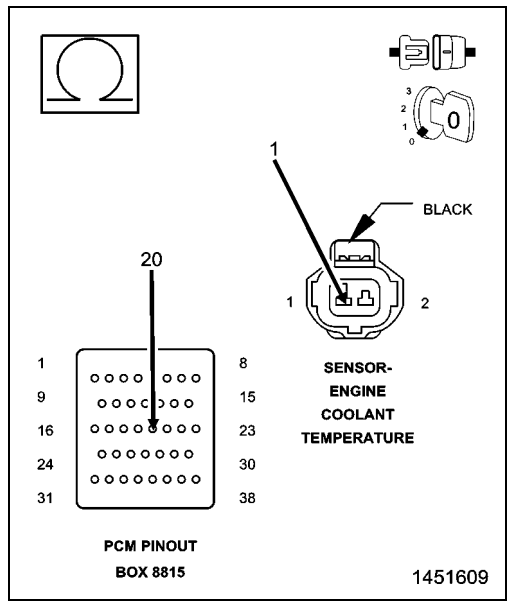

3. Disconnect the C4 TIPM harness connector.

CAUTION: Do not probe the PCM harness connectors. Probing the PCM harness connectors will damage the PCM terminals resulting in poor terminal to pin connection. Install the PCM Pinout Box Kit, NGC, 38 Position 8815A to perform diagnosis.

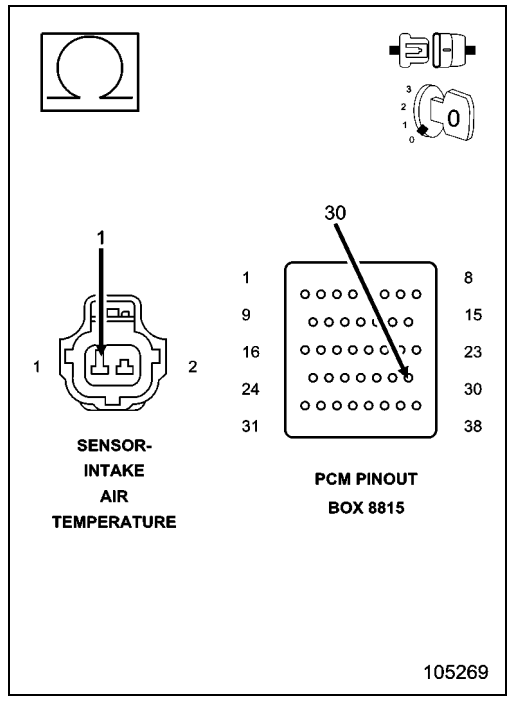

4. Measure the resistance of the Sensor Signal circuit from the Sensor harness connector to the appropriate terminal of the PCM Pinout Box 8815A or the C4 TIPM harness connector.

Is the resistance above 5.0 Ohms?

Yes

- Repair the excessive resistance in the Temperature Sensor Signal circuit.
- Perform the POWERTRAIN VERIFICATION TEST. (Refer to 28 - DTC-Based Diagnostics/MODULE, Powertrain Control (PCM) - Standard Procedure).

No

- Go To 5

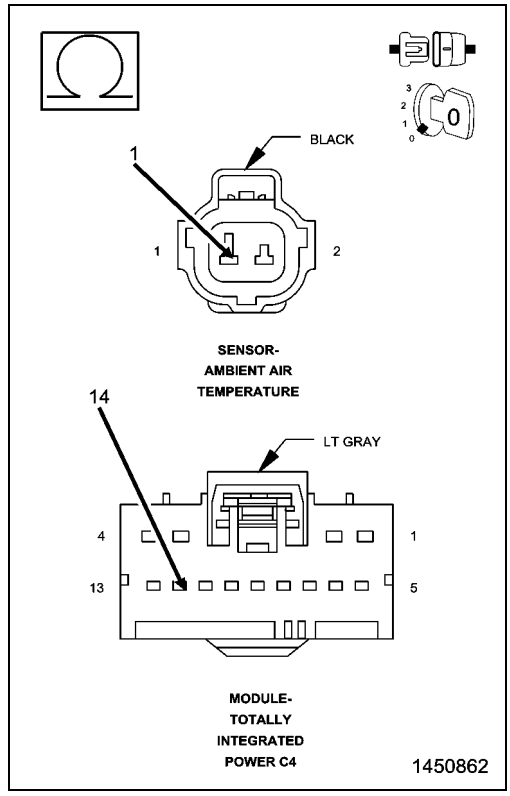

5. EXCESSIVE RESISTANCE IN THE SENSOR GROUND CIRCUIT

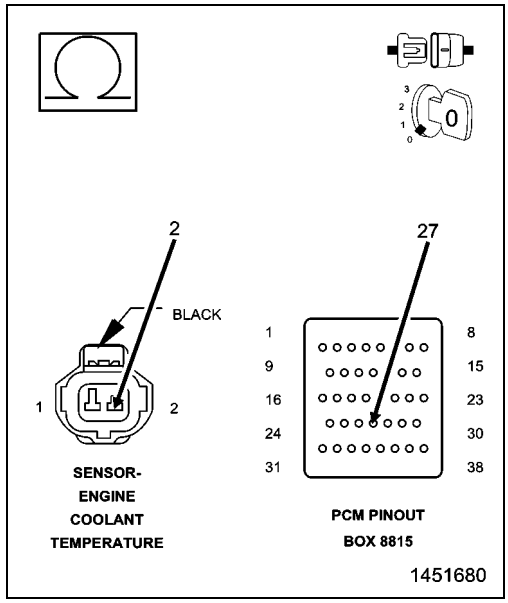

1. Measure the resistance of the Sensor ground circuit from the Sensor harness connector to the PCM Pinout Box 8815A or the C4 TIPM harness connector.

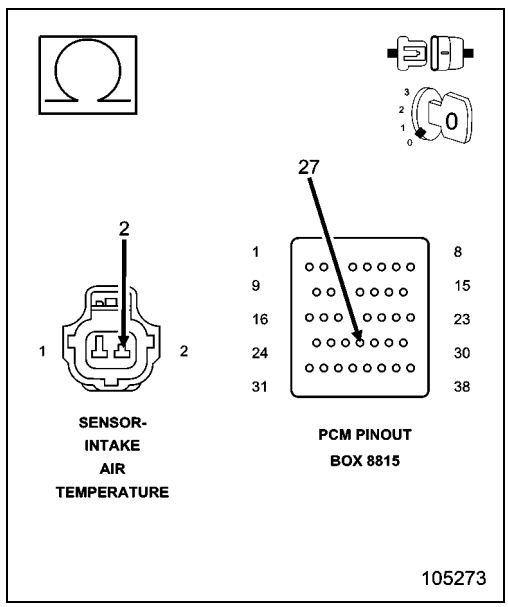

Is the resistance above 5.0 Ohms?

Yes

- Repair the excessive resistance in the Sensor ground circuit.
- Perform the POWERTRAIN VERIFICATION TEST. (Refer to 28 - DTC-Based Diagnostics/MODULE, Powertrain Control (PCM) - Standard Procedure).

No

- Go To 6

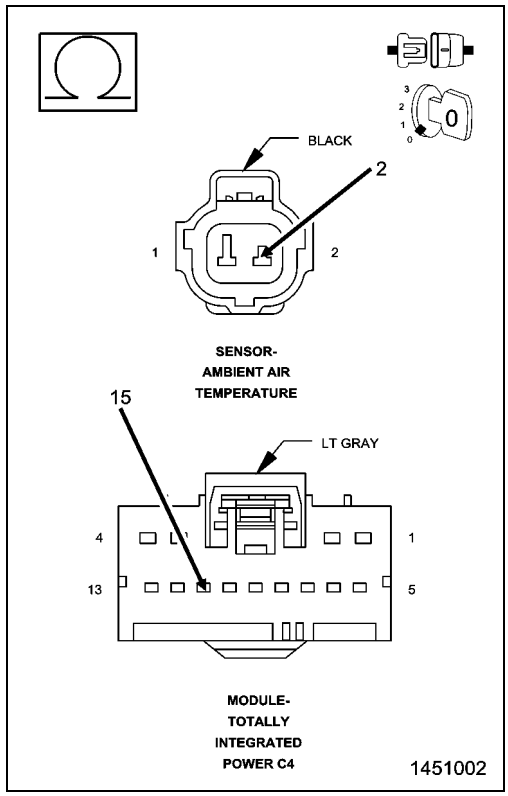

6. SENSOR SIGNAL CIRCUIT SHORTED TO GROUND

1. Measure the resistance between ground and the Sensor Signal circuit at the Sensor harness connector.

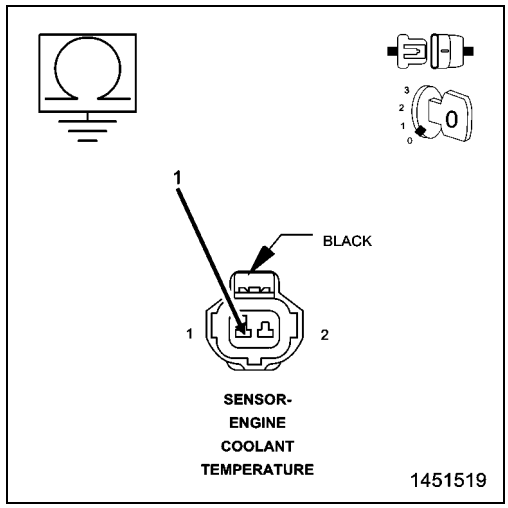

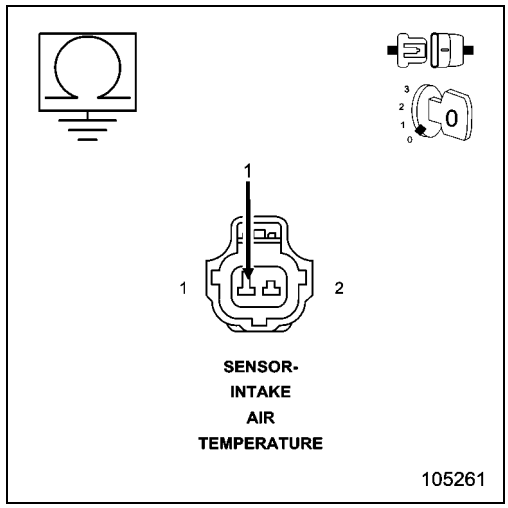

Is the resistance below 100 Ohms?

Yes

- Repair the short to ground in the Sensor Signal circuit.
- Perform the POWERTRAIN VERIFICATION TEST. (Refer to 28 - DTC-Based Diagnostics/MODULE, Powertrain Control (PCM) - Standard Procedure).

No

- Go To 7

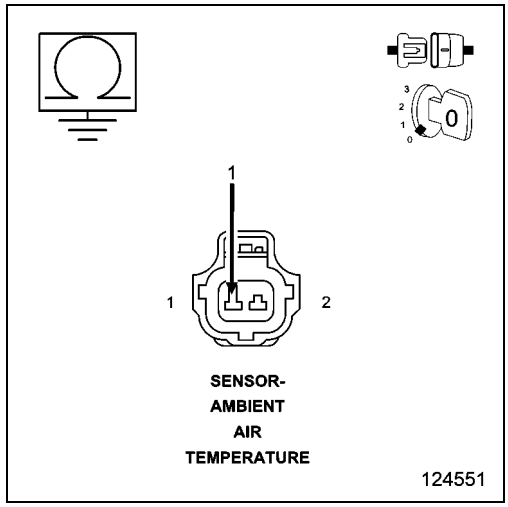

7. SENSOR SIGNAL CIRCUIT SHORTED TO THE SENSOR GROUND CIRCUIT

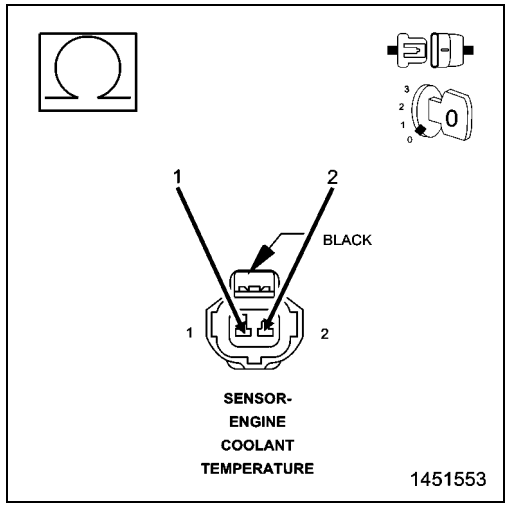

1. Measure the resistance between ground and the Sensor Signal circuit at the Sensor harness connector.

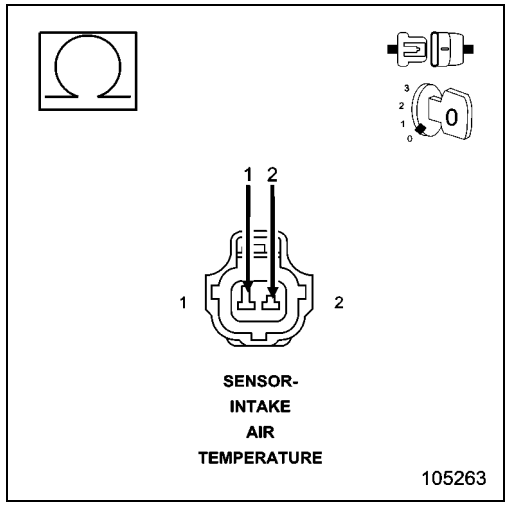

Is the resistance below 100 Ohms?

Yes

- Repair the short between the Sensor ground circuit and the Sensor Signal circuit.
- Perform the POWERTRAIN VERIFICATION TEST. (Refer to 28 - DTC-Based Diagnostics/MODULE, Powertrain Control (PCM) - Standard Procedure).

No

- Go To 8

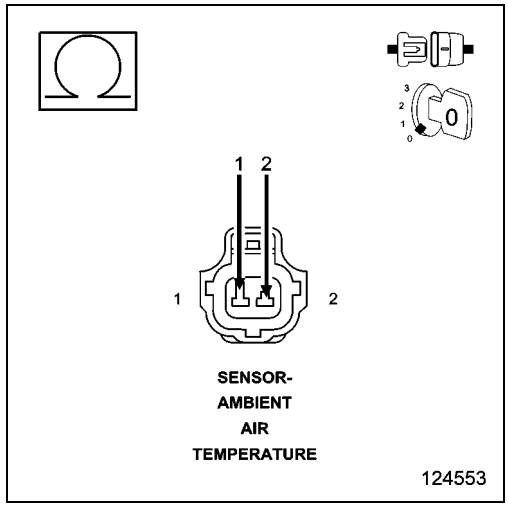

8. SENSOR SIGNAL CIRCUIT SHORTED TO VOLTAGE

1. Turn the ignition on.
2. Measure the voltage on the Sensor Signal circuit at the Sensor harness connector.

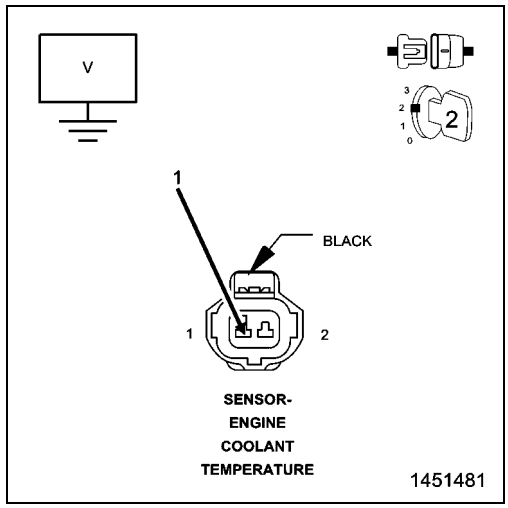

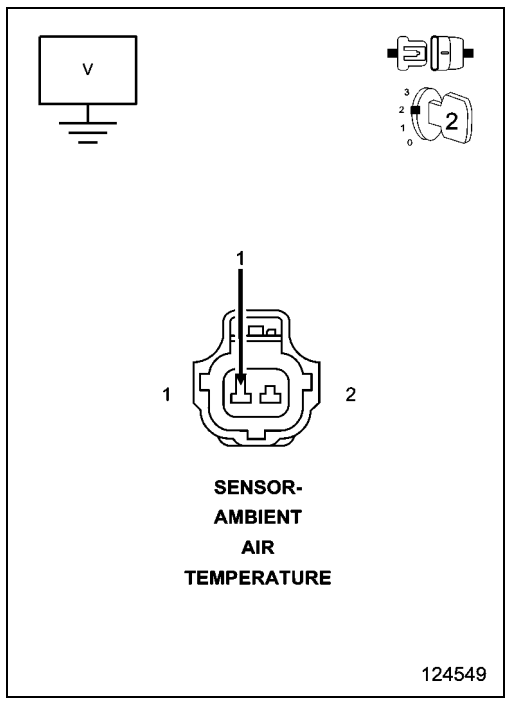

Is there any voltage present?

Yes

- Repair the short to voltage in the Sensor Signal circuit.
- Perform the POWERTRAIN VERIFICATION TEST. (Refer to 28 - DTC-Based Diagnostics/MODULE, Powertrain Control (PCM) - Standard Procedure).

No

- Go To 9

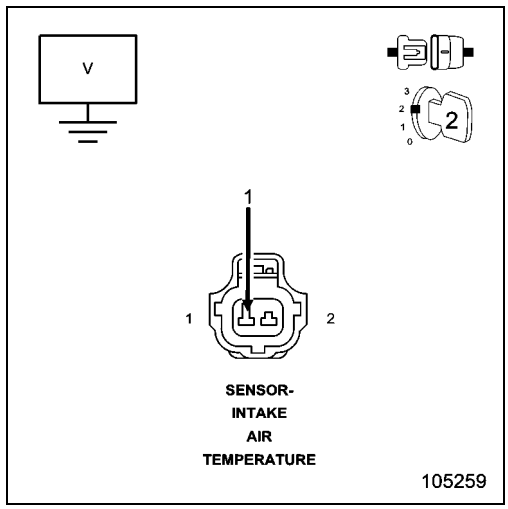

9. POWERTRAIN CONTROL MODULE (PCM)

1. Using the wiring diagram/schematic as a guide, inspect the wiring and connectors between the related Sensor and the Powertrain Control Module (PCM).
2. Look for any chafed, pierced, pinched, or partially broken wires.
3. Look for broken, bent, pushed out or corroded terminals. Verify that there is good pin to terminal contact in the related Sensor and Powertrain Control Module connectors.
4. Perform any Technical Service Bulletins that may apply.

Were there any problems found?

Yes

- Repair as necessary.
- Perform the POWERTRAIN VERIFICATION TEST. (Refer to 28 - DTC-Based Diagnostics/MODULE, Powertrain Control (PCM) - Standard Procedure).

No

- Replace and program the Powertrain Control Module in accordance with the Service Information.
- Perform the POWERTRAIN VERIFICATION TEST. (Refer to 28 - DTC-Based Diagnostics/MODULE, Powertrain Control (PCM) - Standard Procedure).

■ P1128-CLOSED LOOP FUELING NOT ACHIEVED - BANK 1

For a complete wiring diagram, **refer to the Wiring Information**.

- **When Monitored:**

  Engine running in closed loop mode.
- **Set Condition:**

  Enable conditions are met and the 02 sensor has not been in closed loop control at least once on each of the two consecutive trips, the MIL illuminates and the DTC is set. Two Trip Fault. Three good trips to turn off the MIL

Possible Causes
RESTRICTED FUEL SUPPLY LINE
FUEL PUMP INLET STRAINER PLUGGED
FUEL PUMP MODULE
O2 SIGNAL CIRCUIT
O2 RETURN CIRCUIT
1/1 O2 SENSOR
MAP SENSOR
ECT SENSOR
ENGINE MECHANICAL PROBLEM
FUEL FILTER/PRESSURE REGULATOR
POWERTRAIN CONTROL MODULE (PCM)

Always perform the Pre-Diagnostic Troubleshooting procedure before proceeding. (Refer to 28 - DTC-Based Diagnostics/MODULE, Powertrain Control (PCM) - Standard Procedure).

1. ACTIVE DTC

1. Diagnose all other trouble codes before continuing.
2. Start the engine.
3. Allow the engine to reach normal operating temperature.
4. With a scan tool, select View DTCs.

NOTE: It may be necessary to drive the vehicle to meet the conditions to set this DTC, try to repeat the conditions in which the fault originally set by reviewing the Freeze Frame data.

Is the DTC Active or Pending at this time?

Yes

- Go To 2

No

- Perform the INTERMITTENT CONDITION diagnostic procedure. (Refer to 28 - DTC-Based Diagnostics/MODULE, Powertrain Control (PCM) - Standard Procedure).

2. CHECKING FUEL PRESSURE

WARNING: The fuel system is under a constant pressure (even with the engine off). Before testing or servicing any fuel system hose, fitting or line, the fuel system pressure must be released. Failure to follow these instructions can result in possible serious or fatal injury.

1. Turn the ignition off.
2. Install Fuel Pressure Decay Tester 8978A to the fuel rail.
3. Ignition on, engine not running.
4. With a scan tool, actuate the ASD Fuel System test and observe the fuel pressure gauge.

NOTE: Fuel pressure specification is 407 kPa +/- 34 kPa (59 psi +/- 5 psi).

5. Turn the ignition off.

Choose a conclusion that best matches your fuel pressure reading.

Within Specification

- Go To 3

Above Specification

- Replace the fuel filter/pressure regulator.
- Perform the POWERTRAIN VERIFICATION TEST. (Refer to 28 - DTC-Based Diagnostics/MODULE, Powertrain Control (PCM) - Standard Procedure).

Below Specification

- Go To 12

CAUTION: Stop All Actuations.

3. O2 SENSOR OPERATION

1. Start the engine.
2. Allow the engine to reach normal operating temperature.

NOTE: If one of the O2 Sensor's Signal or Return circuit is shorted to ground the scan tool will display all O2 Sensor voltage readings low. The O2 Sensor that is shorted to ground will display a voltage reading near or at 0 volts.

NOTE: If one of the O2 Sensor Signal or Return circuits are shorted to voltage, the scan tool will display all O2 Sensor voltage readings high.

NOTE: After the repairs have been made, verify proper O2 Sensor operation. If all the O2 Sensor voltage readings have not returned to normal, follow the diagnostic procedure for the remaining O2 Sensors.

3. With a scan tool, monitor all of the O2 Sensor voltage readings.

Is the voltage switching between 2.5 and 3.4 volts for all the O2 Sensors?

Yes

- Go To 4

No

- Go To 8

4. 1/1 O2 SENSOR HEATER OPERATION

1. Turn the ignition off.

NOTE: Wait a minimum of 10 minutes to allow the O2 Sensor to cool down before continuing the test. Allow the O2 Sensor voltage to stabilize at 5.0 volts.

2. Ignition on, engine not running.
3. With a scan tool, actuate the 1/1 O2 Heater Test.
4. With the scan tool, monitor 1/1 O2 Sensor voltage for at least 2 minutes.

Does the voltage stay above 4.5 volts?

Yes

- Verify that there is good pin to terminal contact in the 1/1 O2 Sensor and Powertrain Control Module connectors. If OK, replace the 1/1 O2 Sensor.
- Perform the POWERTRAIN VERIFICATION TEST. (Refer to 28 - DTC-Based Diagnostics/MODULE, Powertrain Control (PCM) - Standard Procedure).

No

- Go To 5

5. MAP SENSOR OPERATION

1. Turn the ignition off.
2. Connect a Vacuum Gauge to a Manifold Vacuum source.
3. Start the engine.
4. Allow the engine to idle.

NOTE: If engine will not idle, maintain a constant RPM above idle.

5. With the scan tool, read the MAP Sensor vacuum value.

Is the scan tool reading within 1 inch of Hg on the Vacuum Gauge reading?

Yes

- Go To 6

No

- Verify that there is good pin to terminal contact in the MAP Sensor and Powertrain Control Module connectors. If OK, replace the MAP Sensor.
- Perform the POWERTRAIN VERIFICATION TEST. (Refer to 28 - DTC-Based Diagnostics/MODULE, Powertrain Control (PCM) - Standard Procedure).

6. ECT SENSOR OPERATION

NOTE: For this test to be valid, the thermostat must be operating correctly.

NOTE: This test works best if performed on a cold engine (cold soak)

1. Ignition on, engine not running.
2. With a scan tool, read the Engine Coolant Temperature (ECT) Sensor value. If the engine was allowed to sit overnight (cold soak), the temperature value should be a sensible value that is somewhere close to the ambient temperature.

NOTE: If engine coolant temperature is above 82° C (180° F), allow the engine to cool until 65° C (150° F) is reached.

3. Start the Engine.
4. During engine warm-up, monitor the ECT Sensor value. The temperature value change should be a smooth transition from start up to normal operating temperature 82° C (180° F). The value should reach at least 82° C (180° F).

Did the ECT value increase smoothly and did it reach at least 82° C (180° F)?

Yes

- Go To 7

No

- Verify that there is good pin to terminal contact in the ECT Sensor and Powertrain Control Module connectors. If OK, replace the Engine Coolant Temperature Sensor.
- Perform the POWERTRAIN VERIFICATION TEST. (Refer to 28 - DTC-Based Diagnostics/MODULE, Powertrain Control (PCM) - Standard Procedure).

7. ENGINE MECHANICAL PROBLEM

1. Turn the ignition off.
2. Check for any of the following conditions/mechanical problems:
   - AIR INDUCTION SYSTEM - must be free from leaks.
   - ENGINE VACUUM - must be at least 13 inches in neutral
   - ENGINE VALVE TIMING - must be within specifications
   - ENGINE COMPRESSION - must be within specifications
   - ENGINE EXHAUST SYSTEM - must be free of any restrictions or leaks
   - ENGINE PCV SYSTEM - must flow freely
   - TORQUE CONVERTER STALL SPEED - must be within specifications
   - POWER BRAKE BOOSTER - no internal vacuum leaks
   - FUEL - must be free of contamination
   - FUEL INJECTOR - plugged or restricted injector; control wire not connected to correct injector

Are there any engine mechanical problems?

Yes

- Repair as necessary.
- Perform the POWERTRAIN VERIFICATION TEST. (Refer to 28 - DTC-Based Diagnostics/MODULE, Powertrain Control (PCM) - Standard Procedure).

No

- Go To 11

8. 1/1 O2 SENSOR

1. Ignition on, engine not running.
2. Disconnect the 1/1 O2 Sensor harness connector.
3. With a scan tool, monitor the 1/1 O2 Sensor voltage.
4. O2 Sensor voltage should read between 4.1 and 5.0 volts on the scan tool with the connector disconnected.
5. Connect a jumper wire between the (K41) Signal circuit and the (K902) O2 Return Upstream circuit in the O2 Sensor harness connector.

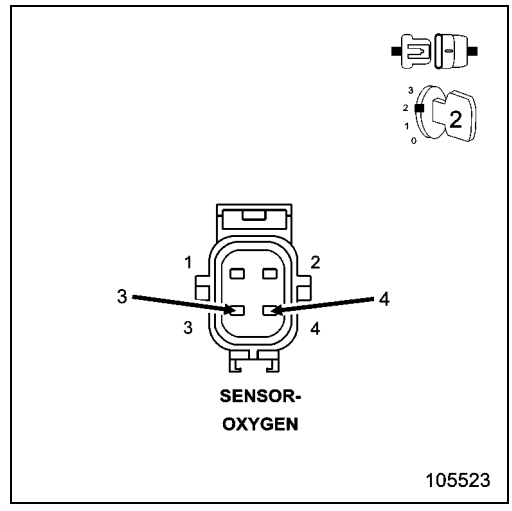

NOTE: The voltage should drop from between 4.1 and 5.0 volts to 2.5 volts with the jumper wire in place.

Did the O2 Sensor voltage change from between 4.1 and 5.0 volts to 2.5 volts with the jumper wire installed?

Yes

- Verify that there is good pin to terminal contact in the 1/1 O2 Sensor and Powertrain Control Module connectors. If OK, replace the 1/1 O2 Sensor.
- Perform the POWERTRAIN VERIFICATION TEST. (Refer to 28 - DTC-Based Diagnostics/MODULE, Powertrain Control (PCM) - Standard Procedure).

No

- Go To 9

NOTE: Remove the jumper wire before continuing.

9. (K41) O2 SENSOR 1/1 SIGNAL CIRCUIT

1. With a scan tool, monitor the 1/1 O2 Sensor voltage reading with the jumper wire removed.

NOTE: The scan tool will display all O2 Sensor voltage readings approximately 5.0 volts when only one O2 Sensor's Signal circuit is shorted to voltage.

NOTE: The scan tool will display one O2 Sensor voltage close to zero and the others will read lower than normal when one O2 Sensor Signal circuit contains excessive resistance.

Is the voltage between 4.1 and 5.0 volts?

Yes

- Go To 10

No

- Check the (K41) O2 Sensor 1/1 Signal circuit for a short to ground, open, or short to voltage. Inspect the O2 Sensor connector and the PCM harness connector. If OK, replace and program the Powertrain Control Module per Service Information.
- Perform the POWERTRAIN VERIFICATION TEST. (Refer to 28 - DTC-Based Diagnostics/MODULE, Powertrain Control (PCM) - Standard Procedure).

10. (K902) O2 RETURN UPSTREAM CIRCUIT

1. Disconnect the 1/1 O2 Sensor harness connector.
2. Measure the voltage on the (K902) O2 Return Upstream circuit in the O2 Sensor harness connector.

Is the voltage at 2.5 volts?

Yes

- Go To 11

No

- Check the O2 Return circuit for a short to ground, open, or short to voltage. Inspect the O2 Sensor connector and the PCM harness connector. If OK, replace and program the Powertrain Control Module per Service Information.
- Perform the POWERTRAIN VERIFICATION TEST. (Refer to 28 - DTC-Based Diagnostics/MODULE, Powertrain Control (PCM) - Standard Procedure).

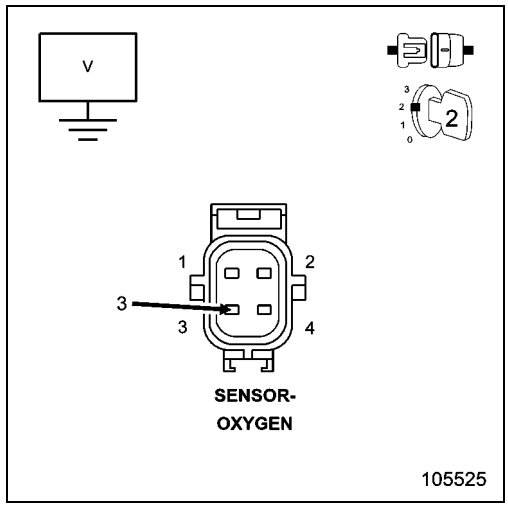

11. POWERTRAIN CONTROL MODULE (PCM)

1. Using the wiring diagram/schematic as a guide, inspect the wiring and connectors between the related Sensor and the Powertrain Control Module (PCM).
2. Look for any chafed, pierced, pinched, or partially broken wires.
3. Look for broken, bent, pushed out or corroded terminals. Verify that there is good pin to terminal contact in the related Sensor and Powertrain Control Module connectors.
4. Perform any Technical Service Bulletins that may apply.

Were there any problems found?

Yes

- Repair as necessary.
- Perform the POWERTRAIN VERIFICATION TEST. (Refer to 28 - DTC-Based Diagnostics/MODULE, Powertrain Control (PCM) - Standard Procedure).

No

- Replace and program the Powertrain Control Module per Service Information.
- Perform the POWERTRAIN VERIFICATION TEST. (Refer to 28 - DTC-Based Diagnostics/MODULE, Powertrain Control (PCM) - Standard Procedure).

12. RESTRICTED FUEL SUPPLY LINE

WARNING: The fuel system is under a constant pressure (even with the engine off). Before testing or servicing any fuel system hose, fitting or line, the fuel system pressure must be released. Failure to follow these instructions can result in possible serious or fatal injury.

1. Turn the ignition off.
2. Raise vehicle on hoist, and disconnect the fuel pressure line at the fuel pump module.
3. Install Fuel Pressure Decay Tester 8978A between the fuel supply line and the fuel pump module.
4. Ignition on, engine not running.
5. With a scan tool, actuate the ASD Fuel System test and observe the fuel pressure gauge.

NOTE: Fuel pressure specification is 407 kPa +/- 34 kPa (59 psi +/- 5 psi).

Is the fuel pressure within specification?

Yes

- Repair or replace fuel supply line as necessary.
- Perform the POWERTRAIN VERIFICATION TEST. (Refer to 28 - DTC-Based Diagnostics/MODULE, Powertrain Control (PCM) - Standard Procedure).

No

- Go To 13

CAUTION: Stop All Actuations.

13. FUEL PUMP INLET STRAINER

WARNING: The fuel system is under a constant pressure (even with the engine off). Before testing or servicing any fuel system hose, fitting or line, the fuel system pressure must be released. Failure to follow these instructions can result in possible serious or fatal injury.

1. Turn the ignition off.
2. Remove the Fuel Pump Module and inspect the Fuel Inlet Strainer.

Is the Fuel Inlet Strainer plugged?

Yes

- Replace the Fuel Pump Inlet Strainer.
- Perform the POWERTRAIN VERIFICATION TEST. (Refer to 28 - DTC-Based Diagnostics/MODULE, Powertrain Control (PCM) - Standard Procedure).

No

- Go To 14

14. FUEL PUMP MODULE

If there are no possible causes remaining, view repair.

Repair

- Verify that there is good pin to terminal contact in the Fuel Pump Module, Relay, and Powertrain Control Module connectors. If OK, replace the Fuel Pump Module.
- Perform the POWERTRAIN VERIFICATION TEST. (Refer to 28 - DTC-Based Diagnostics/MODULE, Powertrain Control (PCM) - Standard Procedure).

■ P1129-CLOSED LOOP FUELING NOT ACHIEVED - BANK 2

For a complete wiring diagram, **refer to the Wiring Information**.

- **When Monitored:**
  Engine running in closed loop mode.
- **Set Condition:**
  Enable conditions are met and the 02 sensor has not been in closed loop control at least once on each of the two consecutive trips, the MIL illuminates and the DTC is set. Two Trip Fault. Three good trips to turn off the MIL

Possible Causes
RESTRICTED FUEL SUPPLY LINE
FUEL PUMP INLET STRAINER PLUGGED
FUEL PUMP MODULE
O2 SIGNAL CIRCUIT
O2 RETURN CIRCUIT
O2 SENSOR
MAP SENSOR
ECT SENSOR
ENGINE MECHANICAL PROBLEM
FUEL FILTER/PRESSURE REGULATOR
POWERTRAIN CONTROL MODULE (PCM)

Always perform the Pre-Diagnostic Troubleshooting procedure before proceeding. (Refer to 28 - DTC-Based Diagnostics/MODULE, Powertrain Control (PCM) - Standard Procedure).

1. ACTIVE DTC

1. Diagnose all other trouble codes before continuing.

NOTE: Check for contaminants that may have damaged an O2 Sensor: contaminated fuel, unapproved silicone, oil and coolant.

2. Start the engine.
3. Allow the engine to reach normal operating temperature.
4. With a scan tool, select View DTCs.

NOTE: It may be necessary to drive the vehicle to meet the conditions to set this DTC, try to repeat the conditions in which the fault originally set by reviewing the Freeze Frame data.

Is the DTC Active or Pending at this time?

Yes

- Go To 2

No

- Perform the INTERMITTENT CONDITION diagnostic procedure. (Refer to 28 - DTC-Based Diagnostics/MODULE, Powertrain Control (PCM) - Standard Procedure).

2. CHECKING FUEL PRESSURE

WARNING: The fuel system is under a constant pressure (even with the engine off). Before testing or servicing any fuel system hose, fitting or line, the fuel system pressure must be released. Failure to follow these instructions can result in possible serious or fatal injury.

1. Turn the ignition off.
2. Install Fuel Pressure Decay Tester 8978A to the fuel rail.
3. Ignition on, engine not running.
4. With the scan tool, actuate the ASD Fuel System test and observe the fuel pressure gauge.

NOTE: Fuel pressure specification is 407 kPa +/- 34 kPa (59 psi +/- 5 psi).

5. Turn the ignition off.

Choose a conclusion that best matches your fuel pressure reading.

Within Specification

- Go To 3

Above Specification

- Replace the fuel filter/pressure regulator.
- Perform the POWERTRAIN VERIFICATION TEST. (Refer to 28 - DTC-Based Diagnostics/MODULE, Powertrain Control (PCM) - Standard Procedure).

Below Specification

- Go To 12

CAUTION: Stop All Actuations.

3. O2 SENSOR OPERATION

1. Start the engine.
2. Allow the engine to reach normal operating temperature.

NOTE: If one of the O2 Sensor's Signal or Return circuit is shorted to ground the scan tool will display all O2 Sensor voltage readings low. The O2 Sensor that is shorted to ground will display a voltage reading near or at 0 volts.

NOTE: If one of the O2 Sensor Signal or Return circuits are shorted to voltage, the scan tool will display all O2 Sensor voltage readings high.

NOTE: After the repairs have been made, verify proper O2 Sensor operation. If all the O2 Sensor voltage readings have not returned to normal, follow the diagnostic procedure for the remaining O2 Sensors.

3. With the scan tool, monitor the 2/1 O2 Sensor voltage reading.

Is the voltage switching between 2.5 and 3.4 volts?

Yes

- Go To 4

No

- Go To 8

4. 2/1 O2 SENSOR HEATER OPERATION

1. Turn the ignition off.

NOTE: Wait a minimum of 10 minutes to allow the O2 Sensor to cool down before continuing the test. Allow the O2 Sensor voltage to stabilize at 5.0 volts.

NOTE: Perform the following test on all O2 Sensors.

2. Ignition on, engine not running.
3. With a scan tool, actuate the 2/1 O2 Heater Test.
4. With the scan tool, monitor 2/1 O2 Sensor voltage for at least 2 minutes.

Does the voltage stay above 4.5 volts?

Yes

- Verify that there is good pin to terminal contact in the 2/1 O2 Sensor and Powertrain Control Module connectors. If OK, replace the 2/1 O2 Sensor.
- Perform the POWERTRAIN VERIFICATION TEST. (Refer to 28 - DTC-Based Diagnostics/MODULE, Powertrain Control (PCM) - Standard Procedure).

No

- Go To 5

5. MAP SENSOR OPERATION

1. Turn the ignition off.
2. Connect a Vacuum Gauge to a Manifold Vacuum source.
3. Start the engine.
4. Allow the engine to idle.

NOTE: If engine will not idle, maintain a constant RPM above idle.

5. With the scan tool, read the MAP Sensor vacuum value.

Is the scan tool reading within 1 inch of Hg on the Vacuum Gauge reading?

Yes

- Go To 6

No

- Verify that there is good pin to terminal contact in the MAP Sensor and Powertrain Control Module connectors. If OK, replace the MAP Sensor.
- Perform the POWERTRAIN VERIFICATION TEST. (Refer to 28 - DTC-Based Diagnostics/MODULE, Powertrain Control (PCM) - Standard Procedure).

6. ECT SENSOR OPERATION

NOTE: For this test to be valid, the thermostat must be operating correctly.

NOTE: This test works best if performed on a cold engine (cold soak).

1. Ignition on, engine not running.
2. With the scan tool, read the Engine Coolant Temperature (ECT) Sensor value. If the engine was allowed to sit overnight (cold soak), the temperature value should be a sensible value that is somewhere close to the ambient temperature.

NOTE: If engine coolant temperature is above 82° C (180° F), allow the engine to cool until 65° C (150° F) is reached.

3. Start the Engine.
4. During engine warm-up, monitor the ECT Sensor value. The temperature value change should be a smooth transition from start up to normal operating temperature 82° C (180° F). The value should reach at least 82° C (180° F).

Did the ECT value increase smoothly and did it reach at least 82° C (180° F)?

Yes

- Go To 7

No

- Verify that there is good pin to terminal contact in the ECT Sensor and Powertrain Control Module connectors. If OK, replace the Engine Coolant Temperature Sensor.
- Perform the POWERTRAIN VERIFICATION TEST. (Refer to 28 - DTC-Based Diagnostics/MODULE, Powertrain Control (PCM) - Standard Procedure).

7. ENGINE MECHANICAL PROBLEM

1. Turn the ignition off.
2. Check for any of the following conditions/mechanical problems:
   - AIR INDUCTION SYSTEM - must be free from leaks.
   - ENGINE VACUUM - must be at least 13 inches in neutral
   - ENGINE VALVE TIMING - must be within specifications
   - ENGINE COMPRESSION - must be within specifications
   - ENGINE EXHAUST SYSTEM - must be free of any restrictions or leaks
   - ENGINE PCV SYSTEM - must flow freely
   - TORQUE CONVERTER STALL SPEED - must be within specifications
   - POWER BRAKE BOOSTER - no internal vacuum leaks
   - FUEL - must be free of contamination
   - FUEL INJECTOR - plugged or restricted injector; control wire not connected to correct injector

Are there any engine mechanical problems?

Yes

- Repair as necessary.
- Perform the POWERTRAIN VERIFICATION TEST. (Refer to 28 - DTC-Based Diagnostics/MODULE, Powertrain Control (PCM) - Standard Procedure).

No

- Go To 11

8. O2 SENSOR

1. Ignition on, engine not running.
2. Disconnect the 2/1 O2 Sensor harness connector.
3. With the scan tool, monitor the 2/1 O2 Sensor voltage.
4. O2 Sensor voltage should read between 4.1 and 5.0 volts on the scan tool with the connector disconnected.
5. Connect a jumper wire between the (K43) O2 Sensor 2/1 Signal circuit and the (K902) O2 Return Upstream circuit in the O2 Sensor harness connector.

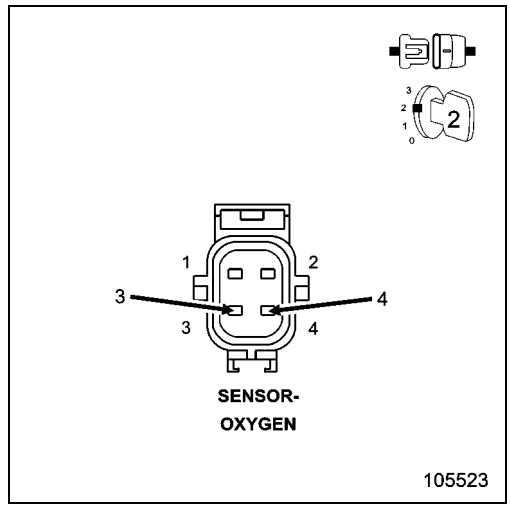

NOTE: The voltage should drop from between 4.1 and 5.0 volts to 2.5 volts with the jumper wire in place.

Did the O2 Sensor voltage change from between 4.1 and 5.0 volts to 2.5 volts when the jumper wire was installed?

Yes

- Verify that there is good pin to terminal contact in the 2/1 O2 Sensor and Powertrain Control Module connectors. If OK, replace the 2/1 O2 Sensor.
- Perform the POWERTRAIN VERIFICATION TEST. (Refer to 28 - DTC-Based Diagnostics/MODULE, Powertrain Control (PCM) - Standard Procedure).

No

- Go To 9

NOTE: Remove the jumper wire before continuing.

9. O2 SENSOR SIGNAL CIRCUIT

1. With the scan tool, monitor all the O2 Sensor voltage reading with the jumper wire removed.

NOTE: The scan tool will display all O2 Sensor voltage readings approximately 5.0 volts when only one O2 Sensor's Signal circuit is shorted to voltage.

NOTE: The scan tool will display one O2 Sensor voltage close to zero and the others will read lower than normal when one O2 Sensor Signal circuit contains excessive resistance.

Is the voltage between 4.1 and 5.0 volts?

Yes

- Go To 10

No

- Check all the O2 Signal circuits for a short to ground, open, or short to voltage. Inspect the O2 Sensor connector and the PCM harness connector. If OK, replace and program the Powertrain Control Module per Service Information.
- Perform the POWERTRAIN VERIFICATION TEST. (Refer to 28 - DTC-Based Diagnostics/MODULE, Powertrain Control (PCM) - Standard Procedure).

10. (K902) O2 RETURN UPSTREAM CIRCUIT

1. Measure the voltage on the (K902) O2 Return Upstream circuit in the O2 Sensor harness connector.

Is the voltage at 2.5 volts?

Yes

- Go To 11

No

- Check the (K902) O2 Return Upstream circuit for a short to ground, open, or short to voltage. Inspect the O2 Sensor connector and the PCM harness connector. If OK, replace and program the Powertrain Control Module per Service Information.
- Perform the POWERTRAIN VERIFICATION TEST. (Refer to 28 - DTC-Based Diagnostics/MODULE, Powertrain Control (PCM) - Standard Procedure).

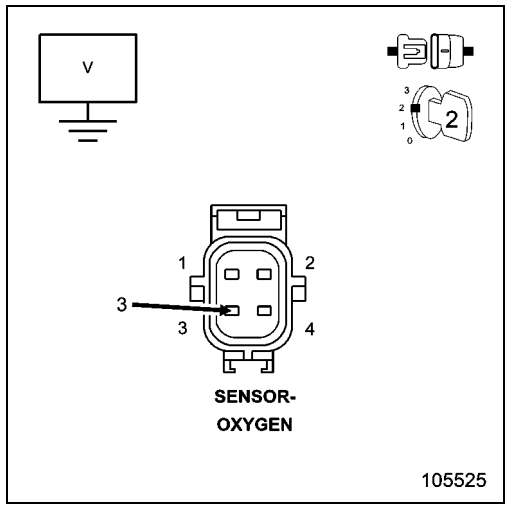

11. POWERTRAIN CONTROL MODULE (PCM)

1. Using the wiring diagram/schematic as a guide, inspect the wiring and connectors between the related Sensor and the Powertrain Control Module (PCM).
2. Look for any chafed, pierced, pinched, or partially broken wires.
3. Look for broken, bent, pushed out or corroded terminals. Verify that there is good pin to terminal contact in the related Sensor and Powertrain Control Module connectors.
4. Refer to any Technical Service Bulletins that may apply.

Were there any problems found?

Yes

- Repair as necessary.
- Perform the POWERTRAIN VERIFICATION TEST. (Refer to 28 - DTC-Based Diagnostics/MODULE, Powertrain Control (PCM) - Standard Procedure).

No

- Replace and program the Powertrain Control Module per Service Information.
- Perform the POWERTRAIN VERIFICATION TEST. (Refer to 28 - DTC-Based Diagnostics/MODULE, Powertrain Control (PCM) - Standard Procedure).

12. RESTRICTED FUEL SUPPLY LINE

WARNING: The fuel system is under a constant pressure (even with the engine off). Before testing or servicing any fuel system hose, fitting or line, the fuel system pressure must be released. Failure to follow these instructions can result in possible serious or fatal injury.

1. Turn the ignition off.
2. Raise vehicle on hoist, and disconnect the fuel pressure line at the fuel pump module.
3. Install Fuel Pressure Decay Tester 8978A between the fuel supply line and the fuel pump module.
4. Ignition on, engine not running.
5. With the scan tool, actuate the ASD Fuel System test and observe the fuel pressure gauge.

NOTE: Fuel pressure specification is 407 kPa +/- 34 kPa (59 psi +/- 5 psi).

Is the fuel pressure within specification?

Yes

- Repair or replace fuel supply line as necessary.
- Perform the POWERTRAIN VERIFICATION TEST. (Refer to 28 - DTC-Based Diagnostics/MODULE, Powertrain Control (PCM) - Standard Procedure).

No

- Go To 13

CAUTION: Stop All Actuations.

13. FUEL PUMP INLET STRAINER

WARNING: The fuel system is under a constant pressure (even with the engine off). Before testing or servicing any fuel system hose, fitting or line, the fuel system pressure must be released.

1. Turn the ignition off.
2. Remove the Fuel Pump Module and inspect the Fuel Inlet Strainer.

Is the Fuel Inlet Strainer plugged?

Yes

- Replace the Fuel Pump Inlet Strainer.
- Perform the POWERTRAIN VERIFICATION TEST. (Refer to 28 - DTC-Based Diagnostics/MODULE, Powertrain Control (PCM) - Standard Procedure).

No

- Go To 14

14. FUEL PUMP MODULE

If there are no possible causes remaining, view repair.

Repair

- Verify that there is good pin to terminal contact in the Fuel Pump Module, Relay, and Powertrain Control Module connectors. If OK, replace the Fuel Pump Module.
- Perform the POWERTRAIN VERIFICATION TEST. (Refer to 28 - DTC-Based Diagnostics/MODULE, Powertrain Control (PCM) - Standard Procedure).

P1239-ENGINE OIL TEMPERATURE TOO LOW

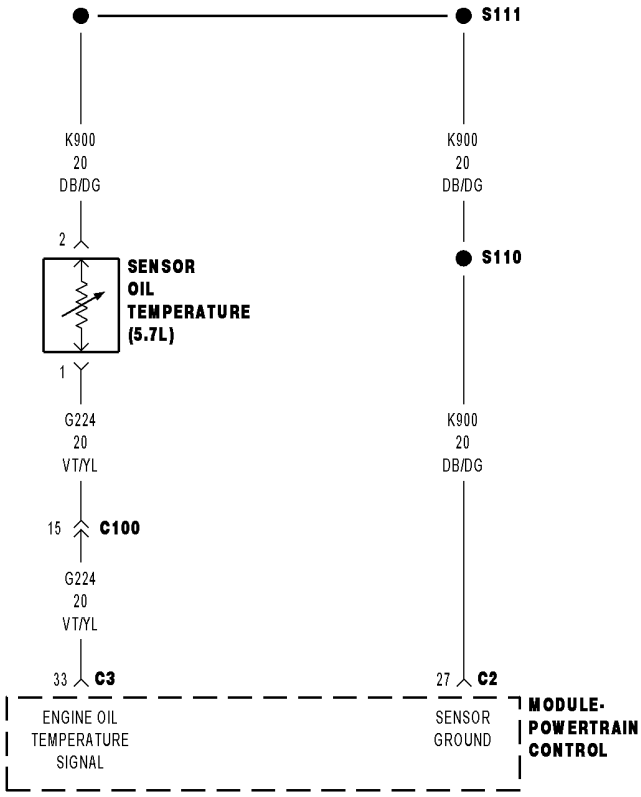

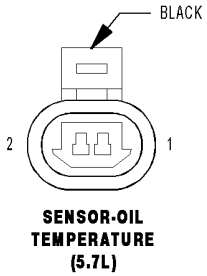

SENSOR-OIL
TEMPERATURE
(5.7L)

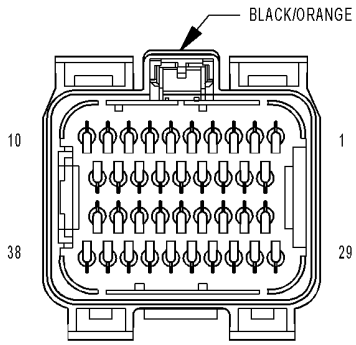

MODULE-
POWERTRAIN
CONTROL C2

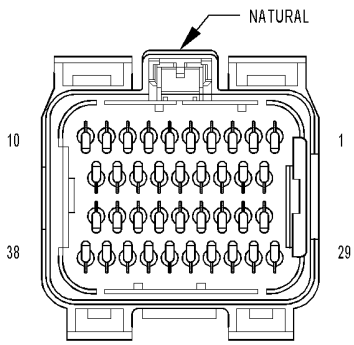

MODULE-
POWERTRAIN
CONTROL C3

81382304

For a complete wiring diagram **Refer to the Wiring Information**.

- **When Monitored:**

  The engine oil temperature has dropped below a calibrated temperature value. Engine start up.
- **Set Condition:**

  The Engine Oil temperature rises slower than a calibrated modeled temperature. When the actual oil temperature falls below the low boundary of the calibrated modeled temperature for 3 minutes the fault is set. Two trip fault. Three good trips to turn off the MIL.

Possible Causes
INTERMITTENT DTC
ENGINE OIL
(G224) EOT SIGNAL CIRCUIT HIGH RESISTANCE
(K900) SENSOR GROUND CIRCUIT HIGH RESISTANCE
ENGINE OIL TEMPERATURE SENSOR
POWERTRAIN CONTROL MODULE (PCM)

Always perform the Pre-Diagnostic Troubleshooting procedure before proceeding. (Refer to 28 - DTC-Based Diagnostics/MODULE, Powertrain Control (PCM) - Standard Procedure).

1. DTC IS ACTIVE

NOTE: Diagnose any CAN - C Communication DTCs before continuing.

1. Turn the ignition off.
2. If possible, allow the vehicle to sit with the ignition off for more than 60 minutes in an environment where the temperature will allow the oil temperature to cool down.
3. Start the engine and allow it to reach normal operating conditions.
4. With a scan tool, select View DTCs.

Is the status Active or Pending for this DTC?

Yes

- Go to 2

No

- Refer to the *CHECKING FOR AN INTERMITTENT DTC Diagnostic Procedure.(Refer to 28 - DTC-Based Diagnostics/MODULE, Powertrain Control (PCM) - Standard Procedure)

2. ENGINE OIL

The following conditions must be checked:

- OEM recommended oil viscosity is being used.
- Customer is following the oil change schedule.
- Check the engine oil for contamination. (i.e., fuel and/or engine coolant)
- Internal engine condition that may effect oil pressure.

Were any of the above conditions found?

Yes

- Repair as necessary.
- Perform the POWERTRAIN VERIFICATION TEST. (Refer to 28 - DTC-Based Diagnostics/MODULE, Powertrain Control (PCM) - Standard Procedure)

No

- Go to 3

3. ENGINE OIL TEMPERATURE SENSOR VOLTAGE

1. Turn the ignition off.
2. Disconnect the Engine Oil Temperature Sensor harness connector.
3. Turn the ignition on.
4. With a scan tool, read the Engine Oil Temperature Sensor voltage.

NOTE: The sensor voltage should be approximately 5.0 volts (plus or minus .1 volt) with the connector disconnected.

Does the scan tool display the voltage as described above?

Yes

- Go to 4

No

- Go to 5

4. ENGINE OIL TEMPERATURE SENSOR

1. Turn the ignition off.
2. Connect a jumper wire between the (G224) EOT Signal circuit and the (K900) Sensor Ground circuit in the Engine Oil Temperature Sensor harness connector.
3. Turn the ignition on.
4. With a scan tool, read the Engine Oil Temperature Sensor voltage.

NOTE: The sensor voltage should be approximately 0.0 volts (plus or minus .1 volt) with the jumper wire in place.

Does the scan tool display the voltage as described above?

Yes

- Replace the Engine Oil Temperature Sensor.
- Perform the PCM Verification Test.(Refer to 28 - DTC-Based Diagnostics/MODULE, Powertrain Control (PCM) - Standard Procedure)

No

- Go to 5

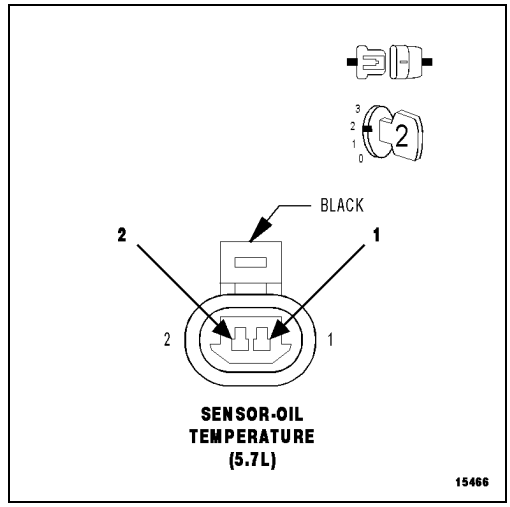

5. (G224) EOT SIGNAL CIRCUIT HIGH RESISTANCE

1. Turn the ignition off.
2. Connect the Engine Oil Temperature Sensor harness connector.

CAUTION: Do not probe the PCM harness connectors. Probing the PCM harness connectors will damage the PCM terminals resulting in poor terminal to pin connection. Install the PCM Pinout Box 8815A **along with the** 8815-1 **to perform the diagnosis.**

3. Using a voltmeter, perform a voltage drop test by backprobing the (G224) EOT Signal circuit at the Engine Oil Temperature Sensor harness connector and probing the appropriate terminal of the special tool #8815A. Make sure the voltmeter leads are connected so that positive polarity is displayed on the voltmeter.

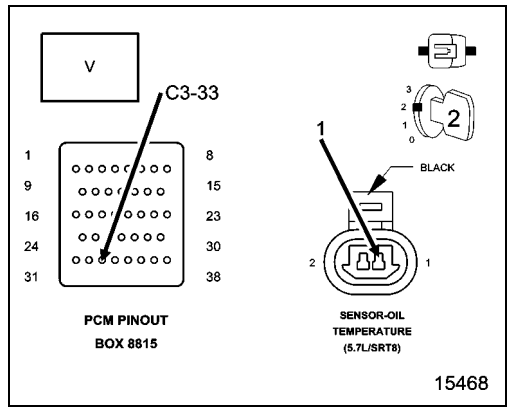

WARNING: When the engine is operating, do not stand in direct line with the fan. Do not put your hands near the pulleys, belts, or fan. Do not wear loose clothing. Failure to follow these instructions can result in possible serious or fatal injury.

4. Start the engine.

Is the voltage below 0.5 volts?

Yes

- Go to 6

No

- Repair the (G224) EOT Signal circuit for high resistance.
- Perform the PCM Verification Test.(Refer to 28 - DTC-Based Diagnostics/MODULE, Powertrain Control (PCM) - Standard Procedure)

6. (K900) SENSOR GROUND CIRCUIT HIGH RESISTANCE

1. Turn the ignition off.

CAUTION: Do not probe the PCM harness connectors. Probing the PCM harness connectors will damage the PCM terminals resulting in poor terminal to pin connection. Install the PCM Pinout Box 8815A **along with the** 8815-1 **to perform the diagnosis.**

2. Using a voltmeter, perform a voltage drop test by backprobing the (K900) Sensor Ground circuit at the Engine Oil Temperature Sensor harness connector and probing the appropriate terminal of the special tool #8815A. Make sure the voltmeter leads are connected so that positive polarity is displayed on the voltmeter.

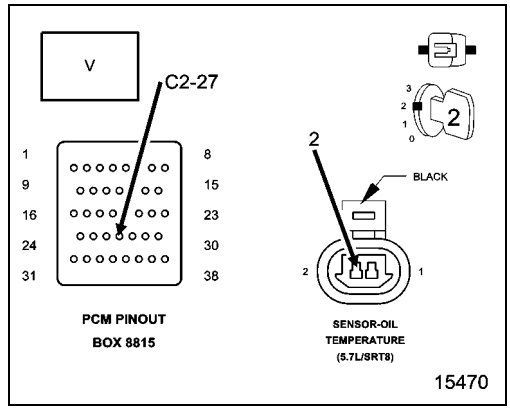

WARNING: When the engine is operating, do not stand in direct line with the fan. Do not put your hands near the pulleys, belts, or fan. Do not wear loose clothing. Failure to follow these instructions can result in personal injury or death.

3. Start the engine.

Is the voltage below 0.5 volts?

Yes

- Go to 7

No

- Repair the (K900) Sensor Ground circuit for high resistance.
- Perform the PCM Verification Test.(Refer to 28 - DTC-Based Diagnostics/MODULE, Powertrain Control (PCM) - Standard Procedure)

7. POWERTRAIN CONTROL MODULE (PCM)

1. Using the wiring diagram/schematic as a guide, inspect the wiring and connectors between the Engine Oil Temperature Sensor and the Powertrain Control Module (PCM).
2. Look for any chafed, pierced, pinched, or partially broken wires.
3. Look for broken, bent, pushed out or corroded terminals.
4. Monitor the scan tool data relative to this circuit and wiggle test the wiring and connectors.
5. Look for the data to change or for the DTC to reset during the wiggle test.
6. Refer to any Technical Service Bulletins that may apply.

Were any problems found?

Yes

- Repair as necessary.
- Perform the PCM Verification Test.(Refer to 28 - DTC-Based Diagnostics/MODULE, Powertrain Control (PCM) - Standard Procedure)

No

- Replace the Powertrain Control Module (PCM) in accordance with the Service Information.
- Perform the PCM Verification Test.(Refer to 28 - DTC-Based Diagnostics/MODULE, Powertrain Control (PCM) - Standard Procedure)

P1404-EGR POSITION SENSOR RATIONALITY CLOSED

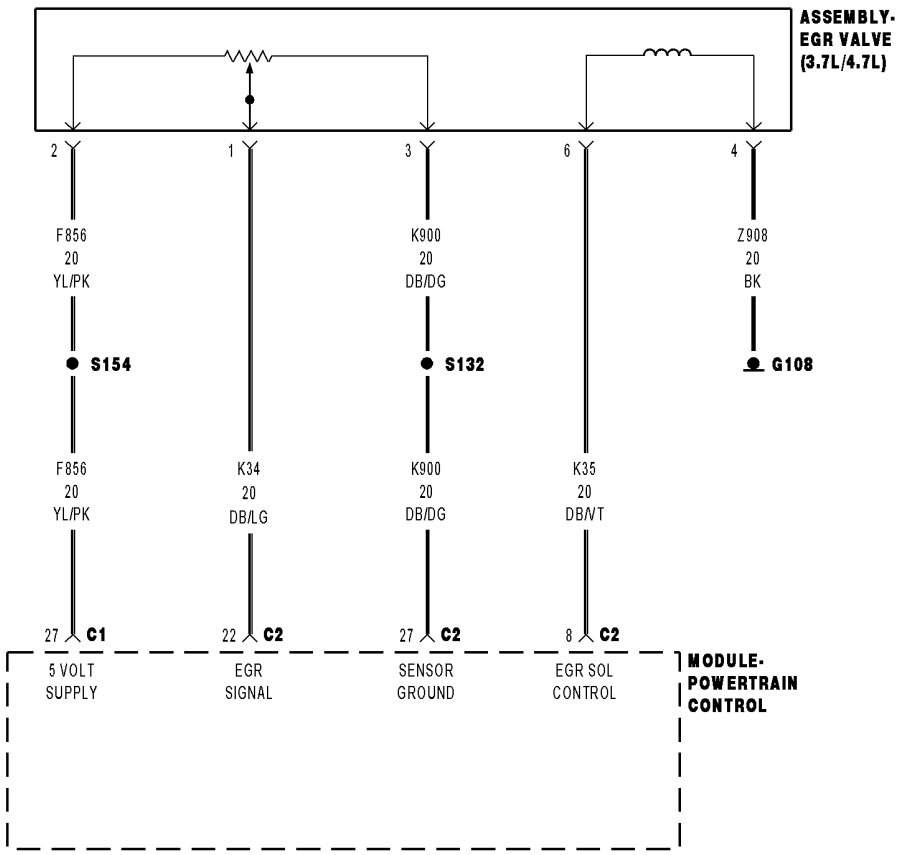

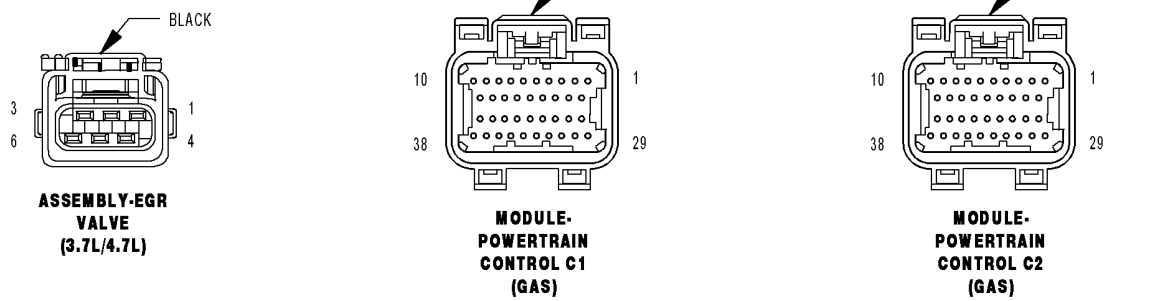

01221033

For a complete wiring diagram, **refer to the Wiring Information**.

Theory of Operation

The Exhaust Gas Recirculation (EGR) valve has a position sensor and the EGR position rationality is designed to make sure that the valve moves freely within its operating range. Closed valve position reference check verifies that the valve is within its allowable upper and lower limits. The EGR position rationality test looks for a sustained error relative to commanded valve position.

- **When Monitored:**
  Engine running.
- **Set Condition:**
  The EGR flow or valve movement is not what is expected. A rationality error has been detected for the EGR Open Position Performance. Two trip fault.

Possible Causes
EXCESSIVE RESISTANCE IN THE (F856) 5-VOLT SUPPLY CIRCUIT
(K35) EGR SOLENOID CONTROL CIRCUIT OPEN
(K34) EGR SENSOR SIGNAL CIRCUIT SHORTED TO GROUND
(Z335) GROUND CIRCUIT OPEN
EGR SOLENOID ASSEMBLY
POWERTRAIN CONTROL MODULE (PCM)

Always perform the Pre-Diagnostic Troubleshooting procedure before proceeding. (Refer to 28 - DTC-Based Diagnostics/MODULE, Powertrain Control (PCM) - Standard Procedure).

1. ACTIVE DTC

NOTE: Diagnose and repair any EGR signal circuit high or low DTCs before continuing with this procedure.

1. Turn the ignition on.
2. With the scan tool, select View DTCs. Record DTC and Freeze Frame information.
3. Start the engine and allow it to reach operating temperature.

WARNING: When the engine is operating, do not stand in direct line with the fan. Do not put your hands near the pulleys, belts, or fan. Do not wear loose fitting clothing. Failure to follow these instructions can result in personal or fatal injury.

WARNING: The normal operating temperature of the EGR system is very high. Never work around or attempt to service any part of the EGR system until it has cooled. Failure to follow these instructions can result in possible serious or fatal injury.

NOTE: Attempt to operate the vehicle under conditions similar to which the DTC was set.

NOTE: It may be necessary to test drive the vehicle within the DTC monitoring conditions in order for this DTC to set.

4. With the scan tool, select View DTCs.

Is the DTC Active or Pending at this time?

Yes

- Go To 2

No

- Perform the INTERMITTENT CONDITION diagnostic procedure. (Refer to 28 - DTC-Based Diagnostics/MODULE, Powertrain Control (PCM) - Standard Procedure).

2. EXCESSIVE RESISTANCE IN THE (F856) 5-VOLT SUPPLY CIRCUIT

1. Turn the ignition off.
2. Disconnect the EGR Solenoid harness connector.
3. Disconnect the C1 and C2 PCM harness connectors.

CAUTION: Do not probe the PCM harness connectors. Probing the PCM harness connectors will damage the PCM terminals resulting in poor terminal to pin connection. Install the PCM Pinout Box Kit, NGC, 38 Position 8815A to perform diagnosis.

4. Measure the resistance of the (F856) 5-volt Supply circuit from the EGR Solenoid harness connector to the appropriate terminal of PCM Pinout Box 8815A.

Is the resistance below 5.0 Ohms?

Yes

- Go To 3

No

- Repair the excessive resistance in the (F856) 5-volt Supply circuit.
- Perform the POWERTRAIN VERIFICATION TEST. (Refer to 28 - DTC-Based Diagnostics/MODULE, Powertrain Control (PCM) - Standard Procedure).

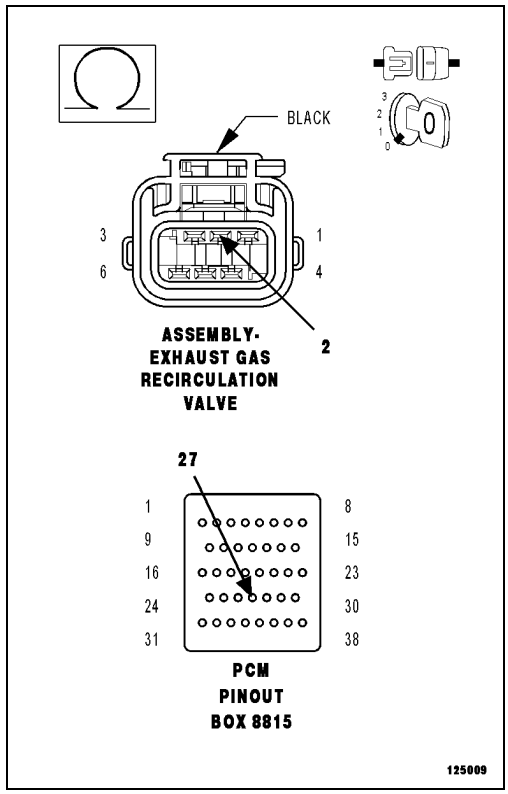

3. (K35) EGR SOLENOID CONTROL CIRCUIT OPEN

1. Measure the resistance of the (K35) EGR Solenoid Control circuit from the EGR Solenoid harness connector to the appropriate terminal of PCM Pinout Box 8815A.

Is the resistance below 5.0 Ohms?

Yes

- Go To 4

No

- Repair the open in the (K35) EGR Solenoid Control circuit.
- Perform the POWERTRAIN VERIFICATION TEST. (Refer to 28 - DTC-Based Diagnostics/MODULE, Powertrain Control (PCM) - Standard Procedure).

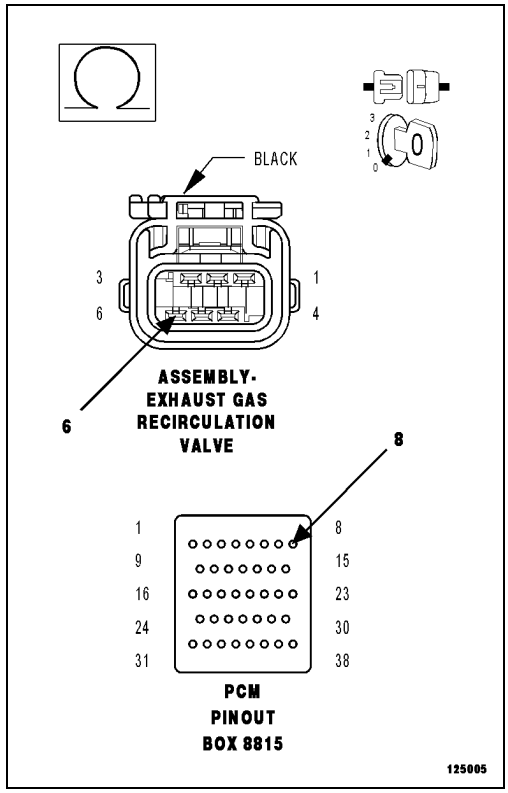

4. (K34) EGR SENSOR SIGNAL CIRCUIT SHORTED TO GROUND

1. Measure the resistance between ground and the (K34) EGR Sensor Signal circuit in the EGR Solenoid harness connector.

Is the resistance below 5.0 Ohms?

Yes

- Repair the short to ground in the (K34) EGR Sensor Signal circuit.
- Perform the POWERTRAIN VERIFICATION TEST. (Refer to 28 - DTC-Based Diagnostics/MODULE, Powertrain Control (PCM) - Standard Procedure).

No

- Go To 5

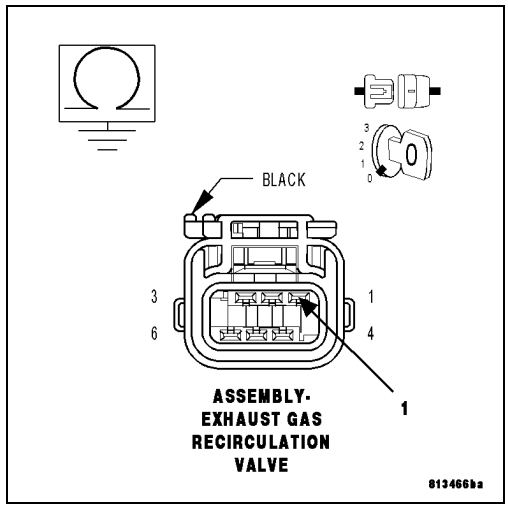

5. (Z335) GROUND CIRCUIT OPEN OR HIGH RESISTANCE

1. Turn the ignition off.
2. Disconnect the EGR Valve Assembly harness connector.
3. Using a 12 volt test light connected to the 12 Volts, check the (Z335) Ground circuit in the EGR Valve Assembly harness connector.

NOTE: The test light should be illuminated and bright. Compare the brightness to that of a direct connection to the battery.

Is the test light illuminated and bright?

Yes

- Go To 6

No

- Repair the (Z335) Ground circuit for an open circuit of high resistance.
- Perform the POWERTRAIN VERIFICATION TEST. (Refer to 28 - DTC-Based Diagnostics/MODULE, Powertrain Control (PCM) - Standard Procedure).

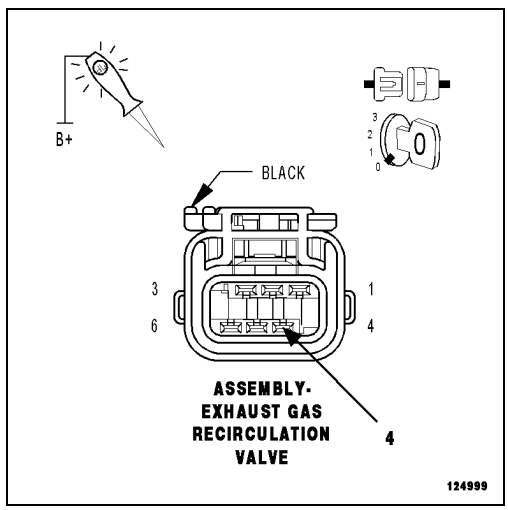

6. (K35) EGR CONTROL CIRCUIT HIGH RESISTANCE

1. Turn the ignition off.
2. Connect the EGR Valve Assembly connector.

CAUTION: Do not probe the PCM harness connectors. Probing the PCM harness connectors will damage the PCM terminals resulting in poor terminal to pin connection. Install the PCM Pinout Box Kit, NGC, 38 Position 8815A along with the Adapter PCM Pinout Box Adapter 8815-1to perform the diagnosis.

3. Using a voltmeter, perform a voltage drop test by backprobing the (K35) EGR Control circuit at the EGR Valve Assembly harness connector and probing the appropriate terminal of the PCM Pinout Box 8815A. Make sure the voltmeter leads are connected so that positive polarity is displayed on the voltmeter.
4. Start the engine and allow it to reach operating temperature.

WARNING: When the engine is operating, do not stand in direct line with the fan. Do not put your hands near the pulleys, belts or fan. Do not wear loose clothing. Failure to follow these instructions may result in possible serious or fatal injury.

5. With the scan tool, perform the EGR System Test.
6. Select OPEN to open the EGR valve.
7. Monitor the circuit voltage on the voltmeter.

Is the voltage below 0.5 Volts when the valve was opened during the system test?

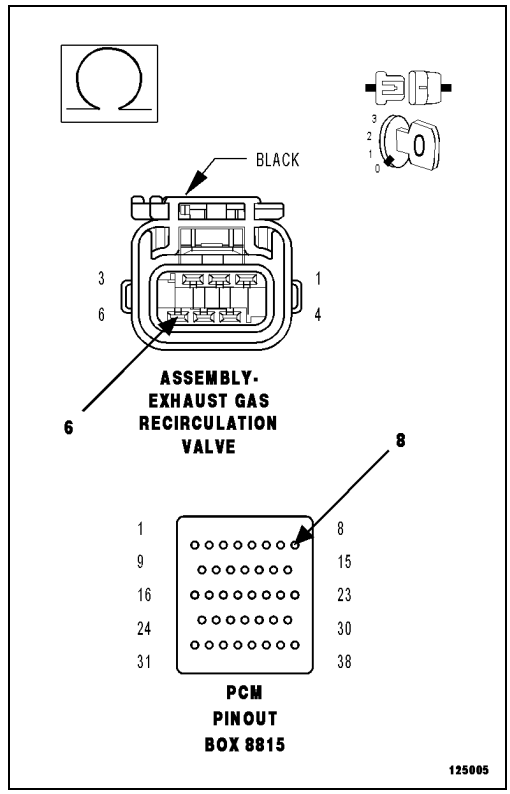

Yes

- Go To 7

No

- Repair the (K35) EGR Control circuit for excessive resistance.
- Perform the POWERTRAIN VERIFICATION TEST. (Refer to 28 - DTC-Based Diagnostics/MODULE, Powertrain Control (PCM) - Standard Procedure).

7. EGR SOLENOID ASSEMBLY

1. Connect the Powertrain Control Module (PCM) connector.
2. Turn the ignition on.
3. With the scan tool, actuate the EGR Valve Solenoid Duty Cycle.
4. Select the Duty Cycle reading of 79.9%
5. Using a 12 volt test light connected to ground, check the (K35) EGR Control circuit in the EGR Valve Assembly harness connector.

NOTE: If the DTC is active, the actuation test may not be allowed by the PCM. If may be necessary to clear the DTCs before starting the actuation.

NOTE: The voltage supplied to the solenoid circuit during the actuation may be less than battery voltage. The test light should be illuminated, but may not be as bright as a direct connection to the battery.

NOTE: The test light should be illuminated and bright proportional to the maximum duty cycle allowed by the scan tool. For example, if the scan tool allows 100% actuation, the brightness should be as bright as a direct connection to the battery. If the scan tool allows a maximum 25% actuation, the brightness should be 25% as bright as a direct connection to the battery.

Does the test light illuminate accordingly during the actuation?

Yes

- Go To 8

No

- Verify that there is good pin to terminal contact in the Solenoid and the Powertrain Control Module connectors. If OK, replace the EGR Solenoid Assembly in accordance with the Service Information.
- Perform the POWERTRAIN VERIFICATION TEST. (Refer to 28 - DTC-Based Diagnostics/MODULE, Powertrain Control (PCM) - Standard Procedure).

8. POWERTRAIN CONTROL MODULE (PCM)

1. Using the wiring diagram/schematic as a guide, inspect the wiring and connectors between the EGR Solenoid Assembly and the Powertrain Control Module (PCM).
2. Look for any chafed, pierced, pinched or partially broken wires.
3. Look for broken, bent, pushed out or corroded terminals. Verify that there is good pin to terminal contact in the Solenoid and the Powertrain Control Module connectors.
4. Refer to any Technical Service Bulletins that may apply.

Were there any problems found?

Yes

- Repair as necessary.
- Perform the POWERTRAIN VERIFICATION TEST. (Refer to 28 - DTC-Based Diagnostics/MODULE, Powertrain Control (PCM) - Standard Procedure).

No

- Replace and program the Powertrain Control Module in accordance with the Service Information.
- Perform the POWERTRAIN VERIFICATION TEST. (Refer to 28 - DTC-Based Diagnostics/MODULE, Powertrain Control (PCM) - Standard Procedure).

P1411-CYLINDER 1 REACTIVATION CONTROL PERFORMANCE

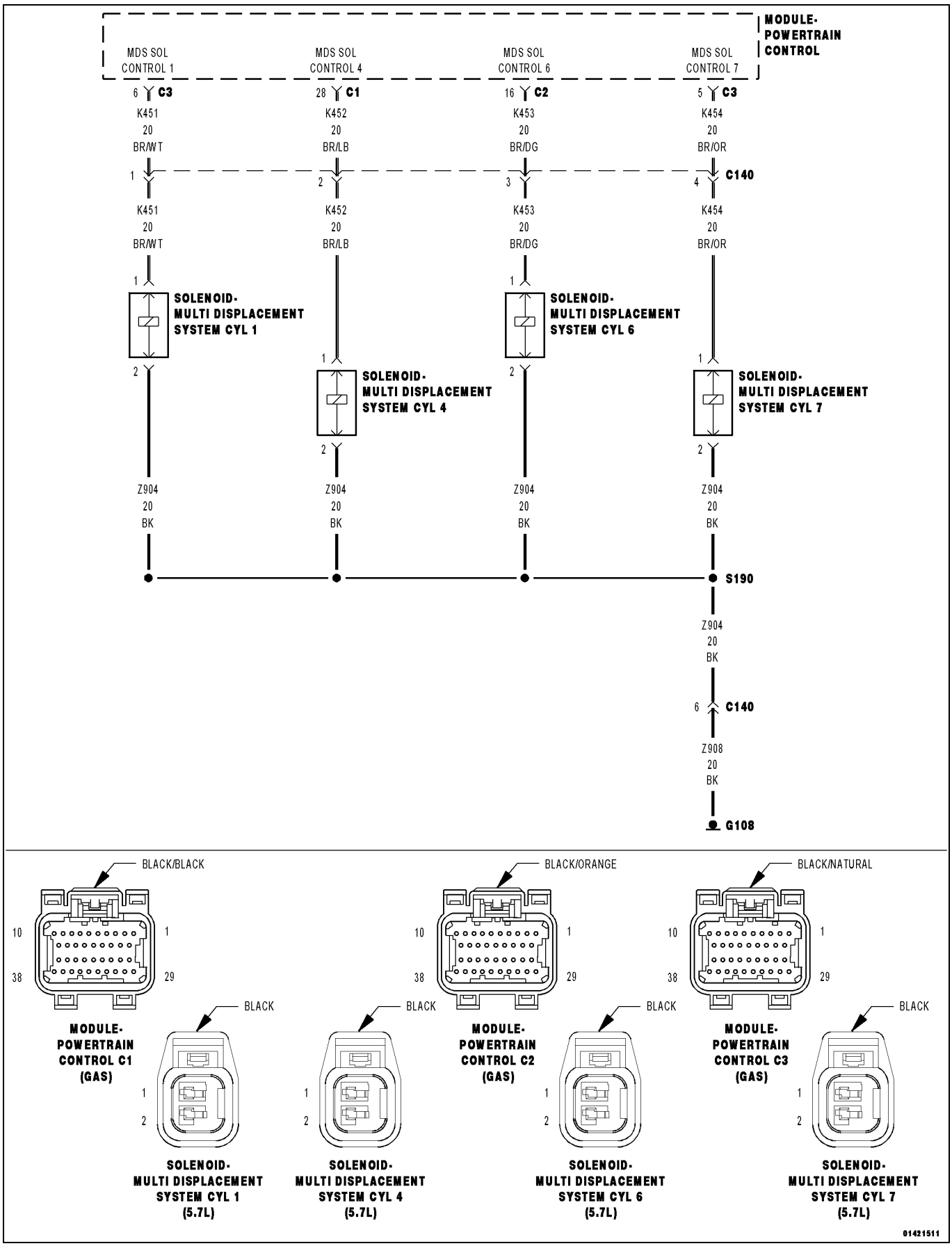

For a complete wiring diagram, **refer to the Wiring Information**.

Theory of Operation

When all criteria has been met, power is supplied to each MDS Solenoid when the engine is making a transition from 8 cylinder mode to 4 cylinder mode. By actuating the solenoid, oil pressure is raised to the pair of lifters that coincide with each particular solenoid. The oil pressure pushes in the locking pins that allows the lifter to collapse, decoupling the valves and camshaft.

- **When Monitored:**
  Transition from 8 to 4 cylinder mode.
- **Set Condition:**
  The MDS fails to active and take place for cylinder 1. One trip fault.

Possible Causes
(K451) MDS SOLENOID NO.1 CONTROL SHORT TO VOLTAGE
OIL PASSAGES RESTRICTED
LIFTER
MDS SOLENOID NO.1
POWERTRAIN CONTROL MODULE (PCM)

Always perform the Pre-Diagnostic Troubleshooting procedure before proceeding. (Refer to 28 - DTC-Based Diagnostics/MODULE, Powertrain Control (PCM) - Standard Procedure).

1. ACTIVE DTC

NOTE: Diagnose any Misfire DTCs before continuing.

1. Start the engine and allow it to reach normal operating temperature.

WARNING: When the engine is operating, do not stand in direct line with the fan. Do not put your hands near the pulleys, belts or fan. Do not wear loose clothing. Failure to follow these instructions may result in possible serious or fatal injury.

NOTE: It may be necessary to test drive the vehicle in order for this DTC to set.

2. With the scan tool, select View DTCs.

Is the DTC Active at this time?

Yes

- Go To 2

No

- Perform the INTERMITTENT CONDITION diagnostic procedure. (Refer to 28 - DTC-Based Diagnostics/MODULE, Powertrain Control (PCM) - Standard Procedure).

2. (K451) MDS SOLENOID NO.1 CONTROL CIRCUIT SHORTED TO VOLTAGE

1. Turn the ignition off.
2. Disconnect the C3 PCM harness connector.
3. Disconnect the C140 In-line harness connector.

CAUTION: Do not probe the PCM harness connectors. Probing the PCM harness connectors will damage the PCM terminals resulting in poor terminal to pin connection. Install the PCM Pinout Box Kit, NGC, 38 Position 8815A to perform diagnosis.

4. Turn the ignition on.
5. Measure the voltage on (K451) MDS Solenoid No.1 Control circuit in the appropriate terminal of the PCM Pinout Box 8815A.

Is voltage present?

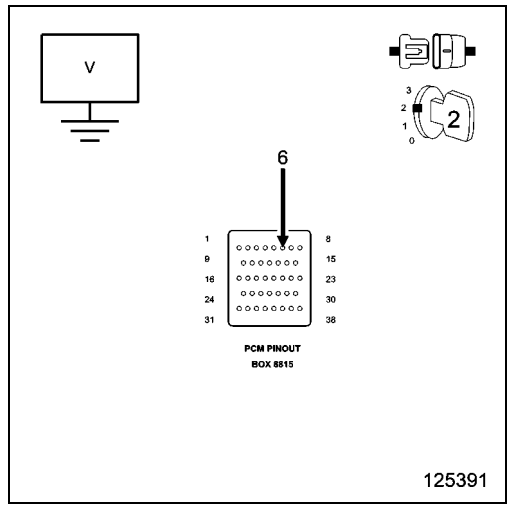

Yes

- Repair the short to voltage in the (K451) MDS Solenoid No.1 Control circuit.
- Perform the POWERTRAIN VERIFICATION TEST. (Refer to 28 - DTC-Based Diagnostics/MODULE, Powertrain Control (PCM) - Standard Procedure).

No

- Go To 3

3. MDS SOLENOID RESISTANCE

1. Turn the ignition off.
2. Reconnect the C140 In-line harness connector.
3. Measure the resistance between Ground and the (K451) MDS Solenoid No.1 Control Circuit in the appropriate terminal of PCM Pinout Box 8815A.

NOTE: It is important to follow the below temp/resistance values to ensure an accurate reading.

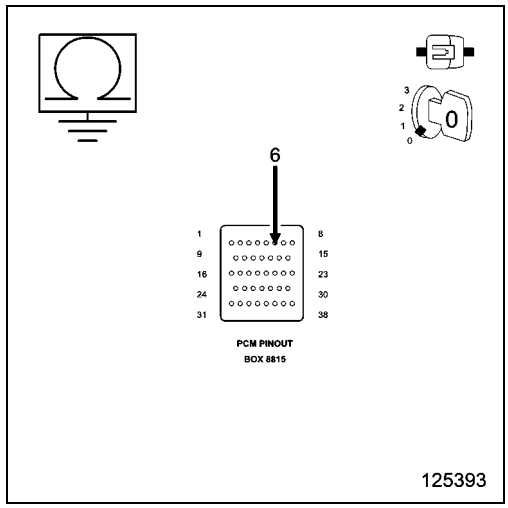

MDS SOLENOID RESISTANCE	
TEMPERATURE VALUE ± -7° C (20° F)	**RESISTANCE (OHMS) ± .25 Ohms**
-18° C (0° F)	8.8 Ohms
0° C (32° F)	9.5 Ohms
20° C (68° F)	10.3 Ohms
38° C (100° F)	11 Ohms
66° C (150° F)	12.2 Ohms
93° C (200° F)	13.4 Ohms
121° C (250° F)	14.4 Ohms
149° C (300° F)	15.6 Ohms

Is the resistance within an acceptable range?

Yes

- Go To 4

No

- Visually and Physically inspect the wiring harness between the C140 In-line connector and the MDS Solenoid connector. Repair as necessary. If OK, replace the MDS Solenoid in accordance with the Service Information.
- Perform the POWERTRAIN VERIFICATION TEST. (Refer to 28 - DTC-Based Diagnostics/MODULE, Powertrain Control (PCM) - Standard Procedure).

4. PCM CONTROL

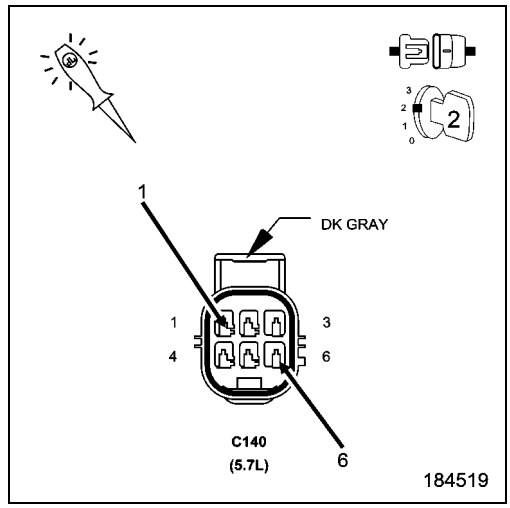

1. Turn the ignition off.
2. Reconnect the C3 PCM harness connector.
3. Disconnect the C140 In-line harness connector.
4. Ignition on, engine not running.
5. Using a 12-volt test light connected to the (Z903) Ground circuit, probe the (K451) MDS Solenoid No.1 Control circuit in the C140 In-line harness connector (PCM side).
6. With the scan tool, actuate the MDS Solenoid.

NOTE: The test light should be illuminated and bright proportional to the maximum duty cycle allowed by the scan tool. For example, if the scan tool allows 100% actuation, the brightness should be as bright as a direct connection to the battery. If the scan tool allows a maximum 25% actuation, the brightness should be 25% as bright as a direct connection to the battery.

Does the test light illuminate accordingly during the actuation?

Yes

- Go To 5

No

- Replace and program the Powertrain Control Module in accordance with the Service Information.
- Perform the POWERTRAIN VERIFICATION TEST. (Refer to 28 - DTC-Based Diagnostics/MODULE, Powertrain Control (PCM) - Standard Procedure).

5. MDS SOLENOID 1

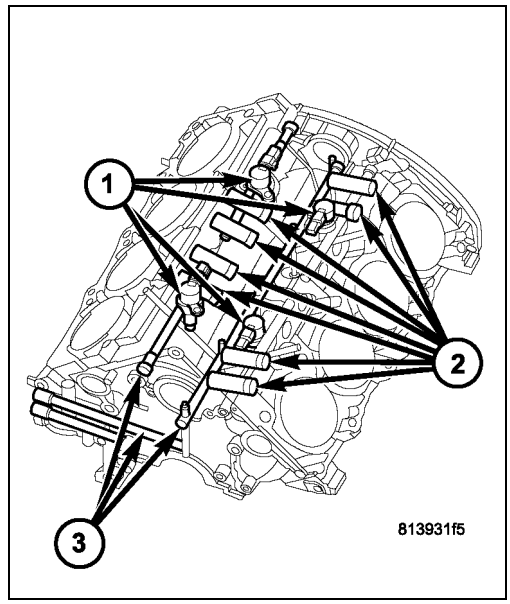

1. Turn the ignition off.
2. Remove the Intake Manifold in accordance with the Service Information.
3. Turn the ignition on.
4. With the scan tool actuate the MDS Solenoid 1.

Can you feel and hear the Solenoid Actuating?

Yes

- Go To 6

No

- Remove the Solenoid (1) and check for any debris that may be blocking the oil passages (3) to the Solenoid. If the passages are clogged, clean the passages and replace the MDS Solenoid 1. If the passages are not clogged with debris, replace the MDS Solenoid 1.
- Perform the POWERTRAIN VERIFICATION TEST. (Refer to 28 - DTC-Based Diagnostics/MODULE, Powertrain Control (PCM) - Standard Procedure).

6. OIL PASSAGES RESTRICTED

1. Turn the ignition off.
2. Remove both Solenoids on Bank 1 of the engine block.
3. Remove the Bank 1 Cylinder Head in accordance with the Service Information.
4. Remove the Lifters from the left engine bank.
5. Inspect the oil passages to the Solenoids and from the Solenoids to the lifters.

Are the passages blocked?

Yes

- Clean the oil passages as necessary. If the entire engine is restricted disassembly of the entire engine block may be necessary.
- Perform the POWERTRAIN VERIFICATION TEST. (Refer to 28 - DTC-Based Diagnostics/MODULE, Powertrain Control (PCM) - Standard Procedure).

No

- Replace both sets of lifters if no other possible causes remain.
- Perform the POWERTRAIN VERIFICATION TEST. (Refer to 28 - DTC-Based Diagnostics/MODULE, Powertrain Control (PCM) - Standard Procedure).

P1414-CYLINDER 4 REACTIVATION CONTROL PERFORMANCE

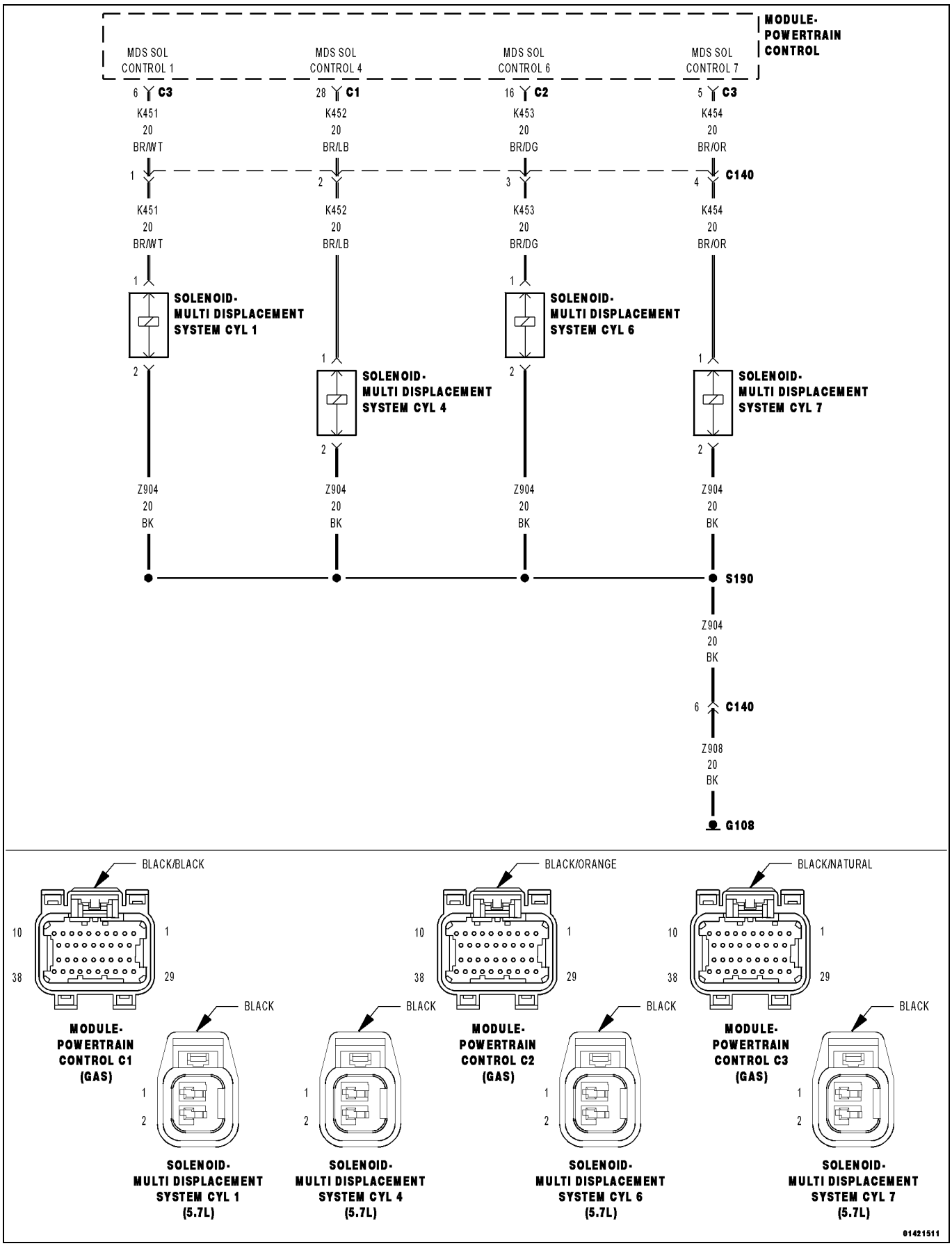

For a complete wiring diagram, **refer to the Wiring Information**.

Theory of Operation

When all criteria has been met, power is supplied to each MDS Solenoid when the engine is making a transition from 8 cylinder mode to 4 cylinder mode. By actuating the solenoid, oil pressure is raised to the pair of lifters that coincide with each particular solenoid. The oil pressure pushes in the locking pins that allows the lifter to collapse, decoupling the valves and camshaft.

- **When Monitored:**
  Transition from 8 to 4 cylinder mode.
- **Set Condition:**
  The MDS fails to active and take place for cylinder 4. One trip fault.

Possible Causes
(K452) MDS SOLENOID NO.4 CONTROL SHORTED TO VOLTAGE
OIL PASSAGES RESTRICTED
LIFTER
MDS SOLENOID NO.4
POWERTRAIN CONTROL MODULE (PCM)

Always perform the Pre-Diagnostic Troubleshooting procedure before proceeding. (Refer to 28 - DTC-Based Diagnostics/MODULE, Powertrain Control (PCM) - Standard Procedure).

1. ACTIVE DTC

NOTE: Diagnose any Misfire DTCs before continuing.

1. Start the engine and allow it to reach normal operating temperature.

WARNING: When the engine is operating, do not stand in direct line with the fan. Do not put your hands near the pulleys, belts or fan. Do not wear loose clothing. Failure to follow these instructions may result in possible serious or fatal injury.

NOTE: It may be necessary to test drive the vehicle in order for this DTC to set.

2. With the scan tool, select View DTCs.

Is the DTC Active at this time?

Yes

- Go To 2

No

- Perform the INTERMITTENT CONDITION diagnostic procedure. (Refer to 28 - DTC-Based Diagnostics/MODULE, Powertrain Control (PCM) - Standard Procedure).

2. (K452) MDS SOLENOID NO.4 CONTROL CIRCUIT SHORTED TO VOLTAGE

1. Turn the ignition off.
2. Disconnect the C3 PCM harness connector.
3. Disconnect the C140 In-line harness connector.

CAUTION: Do not probe the PCM harness connectors. Probing the PCM harness connectors will damage the PCM terminals resulting in poor terminal to pin connection. Install the PCM Pinout Box Kit, NGC, 38 Position 8815A to perform diagnosis.

4. Turn the ignition on.
5. Measure the voltage on (K452) MDS Solenoid No.4 Control circuit in the appropriate terminal of PCM Pinout Box 8815A.

Is there any voltage present?

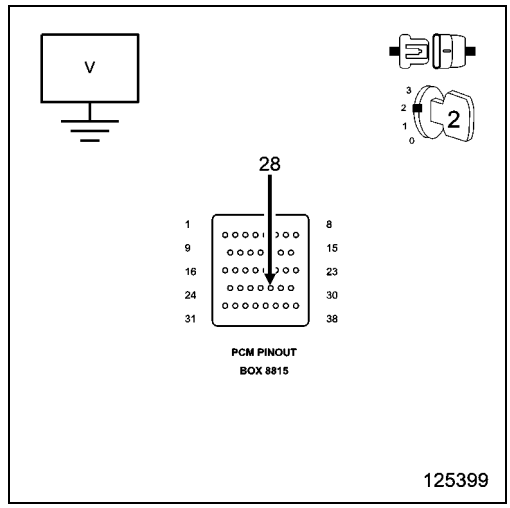

Yes

- Repair the short to voltage in the (K452) MDS Solenoid No.4 Control circuit.
- Perform the POWERTRAIN VERIFICATION TEST. (Refer to 28 - DTC-Based Diagnostics/MODULE, Powertrain Control (PCM) - Standard Procedure).

No

- Go To 3

3. MDS SOLENOID RESISTANCE

1. Turn the ignition off.
2. Reconnect the C140 In-line harness connector.
3. Measure the resistance between Ground and the (K452) MDS Solenoid No.4 Control Circuit in the appropriate terminal of PCM Pinout Box 8815A.

NOTE: It is important to follow the below temp/resistance values to ensure an accurate reading.

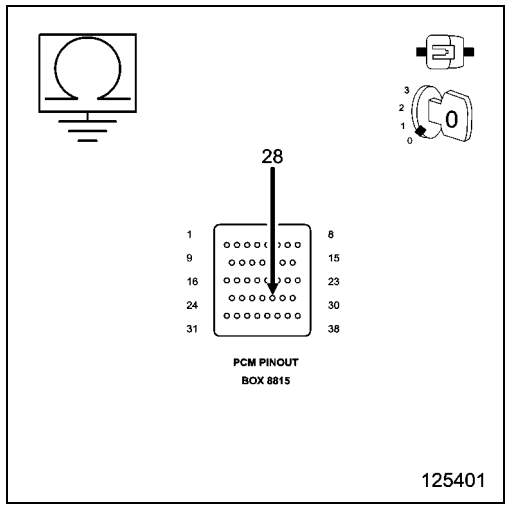

MDS SOLENOID RESISTANCE	
TEMPERATURE VALUE ± -7° C (20° F)	**RESISTANCE (OHMS) ± .25 Ohms**
-18° C (0° F)	8.8 Ohms
0° C (32° F)	9.5 Ohms
20° C (68° F)	10.3 Ohms
38° C (100° F)	11 Ohms
66° C (150° F)	12.2 Ohms
93° C (200° F)	13.4 Ohms
121° C (250° F)	14.4 Ohms
149° C (300° F)	15.6 Ohms

Is the resistance within an acceptable range?

Yes

- Go To 4

No

- Visually and Physically inspect the wiring harness between the C140 In-line connector and the MDS Solenoid connector. Repair as necessary. If OK, replace the MDS Solenoid in accordance with the Service Information.

4. PCM CONTROL

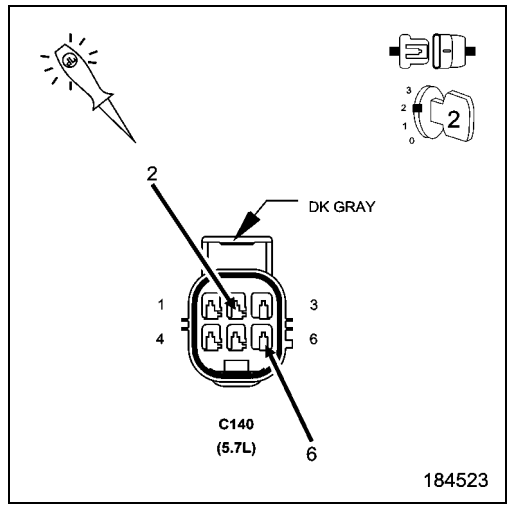

1. Turn the ignition off.
2. Reconnect the C3 PCM harness connector.
3. Disconnect the C140 In-line harness connector.
4. Ignition on, engine not running.
5. Using a 12-volt test light connected to the (Z903) Ground circuit, probe the (K452) MDS Solenoid No.4 Control circuit in the C140 In-line harness connector (PCM side).
6. With the scan tool, actuate the MDS Solenoid.

NOTE: The test light should be illuminated and bright proportional to the maximum duty cycle allowed by the scan tool. For example, if the scan tool allows 100% actuation, the brightness should be as bright as a direct connection to the battery. If the scan tool allows a maximum 25% actuation, the brightness should be 25% as bright as a direct connection to the battery.

Does the test light illuminate accordingly during the actuation?

Yes

- Go To 5

No

- Replace and program the Powertrain Control Module in accordance with the Service Information.
- Perform the POWERTRAIN VERIFICATION TEST. (Refer to 28 - DTC-Based Diagnostics/MODULE, Powertrain Control (PCM) - Standard Procedure).

5. MDS SOLENOID 4

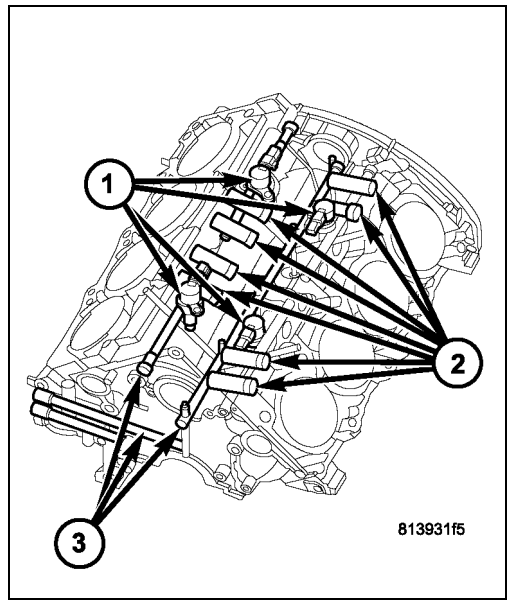

1. Turn the ignition off.
2. Remove the Intake Manifold in accordance with the Service Information.
3. Reconnect the Solenoid harness connector.
4. Turn the ignition on.
5. With the scan tool actuate the MDS Solenoid 4.

Can you feel and hear the Solenoid Actuating?

Yes

- Go To 6

No

- Remove the Solenoid and check for any debris that may be blocking the oil passages to the Solenoid. If the passages are clogged, clean the passages and replace the MDS Solenoid 4. If the passages are not clogged with debris, replace the MDS Solenoid 4.
- Perform the POWERTRAIN VERIFICATION TEST. (Refer to 28 - DTC-Based Diagnostics/MODULE, Powertrain Control (PCM) - Standard Procedure).

6. OIL PASSAGES RESTRICTED

1. Turn the ignition off.
2. Remove both Solenoids on Bank 2 of the engine block.
3. Remove the Bank 2 Cylinder Head in accordance with the Service Information.
4. Remove the Lifters from the right engine bank.
5. Inspect the oil passages to the Solenoids and from the Solenoids to the lifters.

Are the passages blocked?

Yes

- Clean the oil passages as necessary. If the entire engine is restricted disassembly of the entire engine block may be necessary.
- Perform the POWERTRAIN VERIFICATION TEST. (Refer to 28 - DTC-Based Diagnostics/MODULE, Powertrain Control (PCM) - Standard Procedure).

No

- Replace both sets of lifters if no other possible causes remain.
- Perform the POWERTRAIN VERIFICATION TEST. (Refer to 28 - DTC-Based Diagnostics/MODULE, Powertrain Control (PCM) - Standard Procedure).

P1416-CYLINDER 6 REACTIVATION CONTROL PERFORMANCE

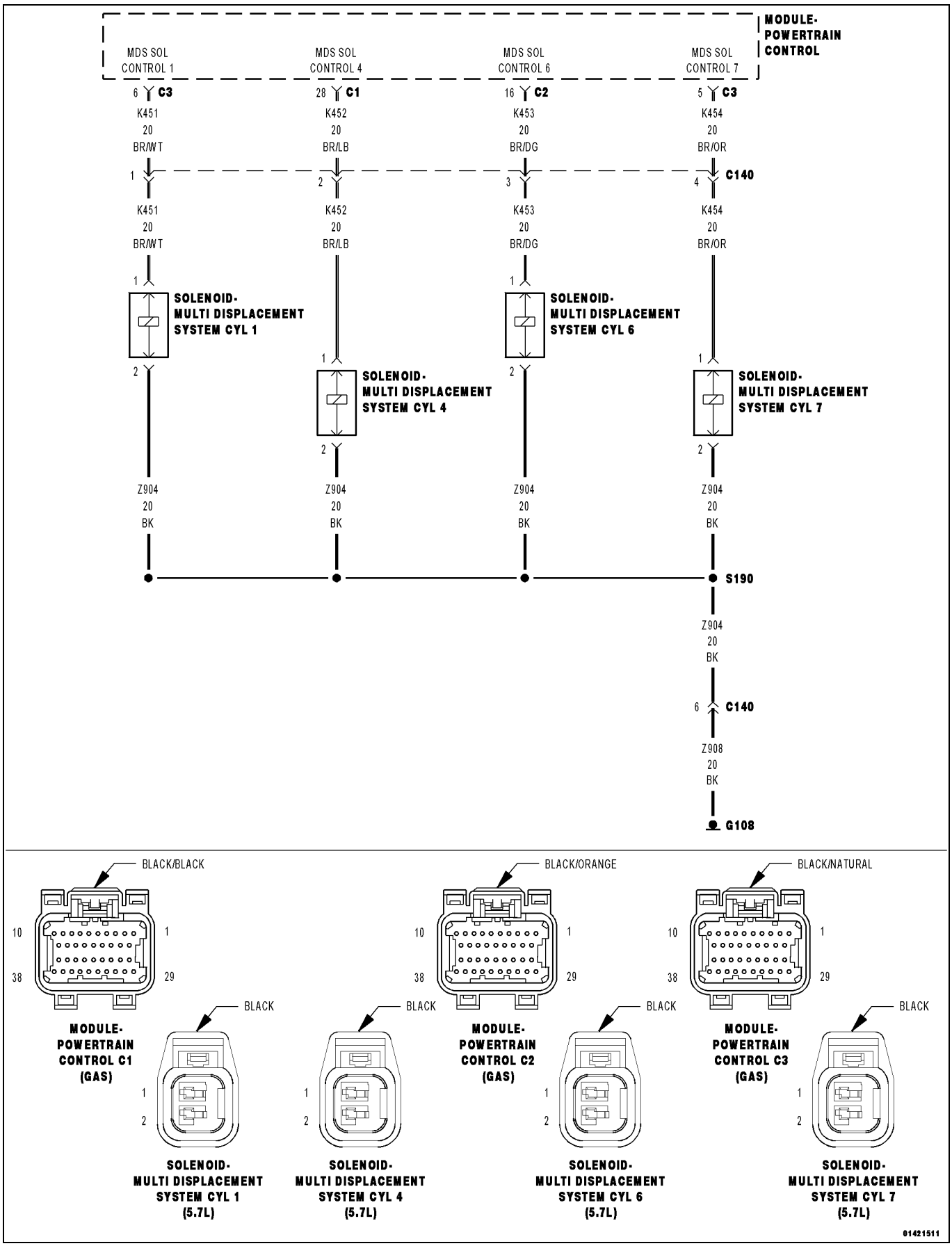

For a complete wiring diagram, **refer to the Wiring Information**.

Theory of Operation

When all criteria has been met, power is supplied to each MDS Solenoid when the engine is making a transition from 8 cylinder mode to 4 cylinder mode. By actuating the solenoid, oil pressure is raised to the pair of lifters that coincide with each particular solenoid. The oil pressure pushes in the locking pins that allows the lifter to collapse, decoupling the valves and camshaft.

- **When Monitored:**
  Transition from 8 to 4 cylinder mode.
- **Set Condition:**
  The MDS fails to active and take place for cylinder 6. One trip fault.

Possible Causes
(K453) MDS SOLENOID NO.6 CONTROL SHORT TO VOLTAGE
OIL PASSAGES RESTRICTED
LIFTER
MDS SOLENOID NO.6
POWERTRAIN CONTROL MODULE (PCM)

Always perform the Pre-Diagnostic Troubleshooting procedure before proceeding. (Refer to 28 - DTC-Based Diagnostics/MODULE, Powertrain Control (PCM) - Standard Procedure).

1. ACTIVE DTC

NOTE: Diagnose any Misfire DTCs before continuing.

1. Start the engine and allow it to reach normal operating temperature.

WARNING: When the engine is operating, do not stand in direct line with the fan. Do not put your hands near the pulleys, belts or fan. Do not wear loose clothing. Failure to follow these instructions may result in possible serious or fatal injury.

NOTE: It may be necessary to test drive the vehicle in order for this DTC to set.

2. With the scan tool, select View DTCs.

Is the DTC Active at this time?

Yes

- Go To 2

No

- Perform the INTERMITTENT CONDITION diagnostic procedure. (Refer to 28 - DTC-Based Diagnostics/MODULE, Powertrain Control (PCM) - Standard Procedure).

2. (K453) MDS SOLENOID NO.6 CONTROL CIRCUIT SHORTED TO VOLTAGE

1. Turn the ignition off.
2. Disconnect the C2 PCM harness connector.
3. Disconnect the C140 In-line harness connector.

CAUTION: Do not probe the PCM harness connectors. Probing the PCM harness connectors will damage the PCM terminals resulting in poor terminal to pin connection. Install the PCM Pinout Box Kit, NGC, 38 Position 8815A to perform diagnosis.

4. Turn the ignition on.
5. Measure the voltage on (K453) MDS Solenoid No.6 Control circuit in the appropriate terminal of PCM Pinout Box 8815A.

Is voltage present?

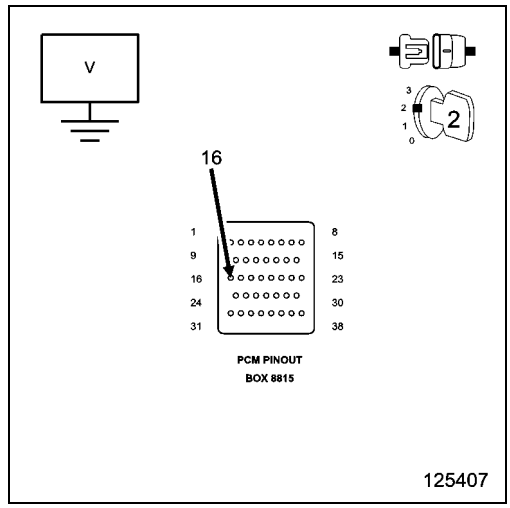

Yes

- Repair the short to voltage in the (K453) MDS Solenoid No.6 Control circuit.
- Perform the POWERTRAIN VERIFICATION TEST. (Refer to 28 - DTC-Based Diagnostics/MODULE, Powertrain Control (PCM) - Standard Procedure).

No

- Go To 3

3. MDS SOLENOID RESISTANCE

1. Turn the ignition off.
2. Reconnect the C140 In-line harness connector.
3. Measure the resistance between Ground and the (K453) MDS Solenoid No.6 Control Circuit in the appropriate terminal of PCM Pinout Box 8815A.

NOTE: It is important to follow the below temp/resistance values to ensure an accurate reading.

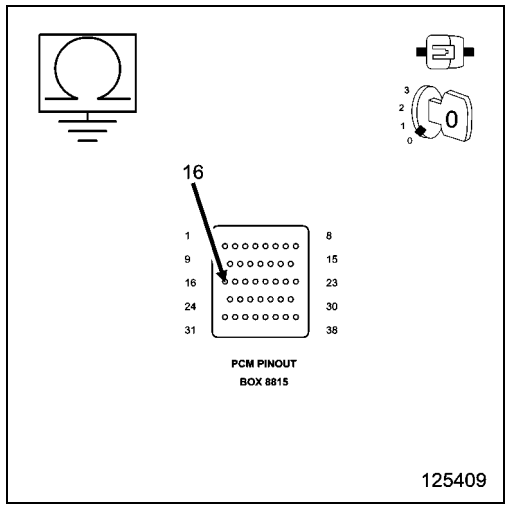

MDS SOLENOID RESISTANCE	
TEMPERATURE VALUE ± -7° C (20° F)	**RESISTANCE (OHMS) ± .25 Ohms**
-18° C (0° F)	8.8 Ohms
0° C (32° F)	9.5 Ohms
20° C (68° F)	10.3 Ohms
38° C (100° F)	11 Ohms
66° C (150° F)	12.2 Ohms
93° C (200° F)	13.4 Ohms
121° C (250° F)	14.4 Ohms
149° C (300° F)	15.6 Ohms

Is the resistance within an acceptable range?

Yes

- Go To 4

No

- Visually and Physically inspect the wiring harness between the C140 In-line connector and the MDS Solenoid connector. Repair as necessary. If OK, replace the MDS Solenoid in accordance with the Service Information.

4. PCM CONTROL

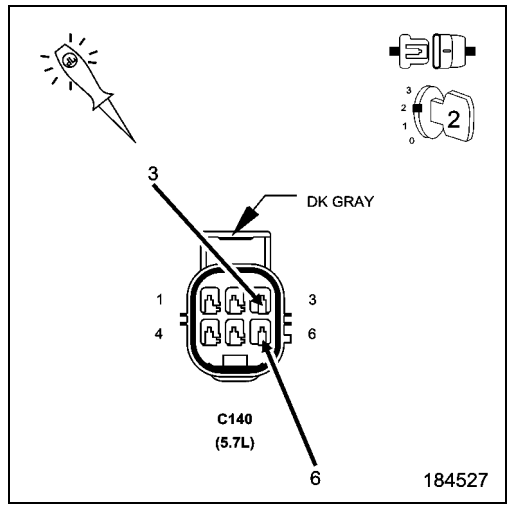

1. Turn the ignition off.
2. Reconnect the C2 PCM harness connector.
3. Disconnect the C140 In-line harness connector.
4. Ignition on, engine not running.
5. Using a 12-volt test light connected to the (Z903) Ground circuit, probe the (K453) MDS Solenoid No.6 Control circuit in the C140 In-line harness connector (PCM side).
6. With the scan tool, actuate the MDS Solenoid.

NOTE: The test light should be illuminated and bright proportional to the maximum duty cycle allowed by the scan tool. For example, if the scan tool allows 100% actuation, the brightness should be as bright as a direct connection to the battery. If the scan tool allows a maximum 25% actuation, the brightness should be 25% as bright as a direct connection to the battery.

Does the test light illuminate accordingly during the actuation?

Yes

- Go To 5

No

- Replace and program the Powertrain Control Module in accordance with the Service Information.
- Perform the POWERTRAIN VERIFICATION TEST. (Refer to 28 - DTC-Based Diagnostics/MODULE, Powertrain Control (PCM) - Standard Procedure).

5. MDS SOLENOID 6

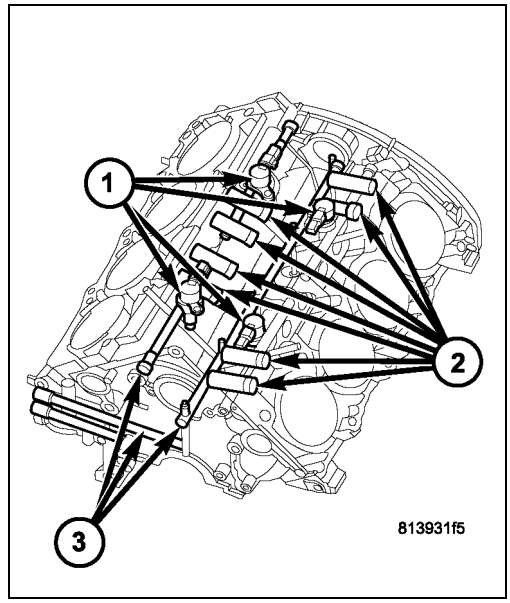

1. Turn the ignition off.
2. Remove the Intake Manifold in accordance with the Service Information.
3. Reconnect the Solenoid connector.
4. Turn the ignition on.
5. With the scan tool actuate the MDS Solenoid 6.

Can you feel and hear the Solenoid Actuating?

Yes

- Go To 6

No

- Remove the Solenoid and check for any debris that may be blocking the oil passages to the Solenoid. If the passages are clogged, clean the passages and replace the MDS Solenoid 6. If the passages are not clogged with debris, replace the MDS Solenoid 6.
- Perform the POWERTRAIN VERIFICATION TEST. (Refer to 28 - DTC-Based Diagnostics/MODULE, Powertrain Control (PCM) - Standard Procedure).

6. OIL PASSAGES RESTRICTED

1. Turn the ignition off.
2. Remove both Solenoids on Bank 2 of the engine block.
3. Remove the Bank 2 Cylinder Head in accordance with the Service Information.
4. Remove the Lifters from the right engine bank.
5. Inspect the oil passages to the Solenoids and from the Solenoids to the lifters.

Are the passages blocked?

Yes

- Clean the oil passages as necessary. If the entire engine is restricted disassembly of the entire engine block may be necessary.
- Perform the POWERTRAIN VERIFICATION TEST. (Refer to 28 - DTC-Based Diagnostics/MODULE, Powertrain Control (PCM) - Standard Procedure).

No

- Replace both sets of lifters if no other possible causes remain.
- Perform the POWERTRAIN VERIFICATION TEST. (Refer to 28 - DTC-Based Diagnostics/MODULE, Powertrain Control (PCM) - Standard Procedure).

P1417-CYLINDER 7 REACTIVATION CONTROL PERFORMANCE

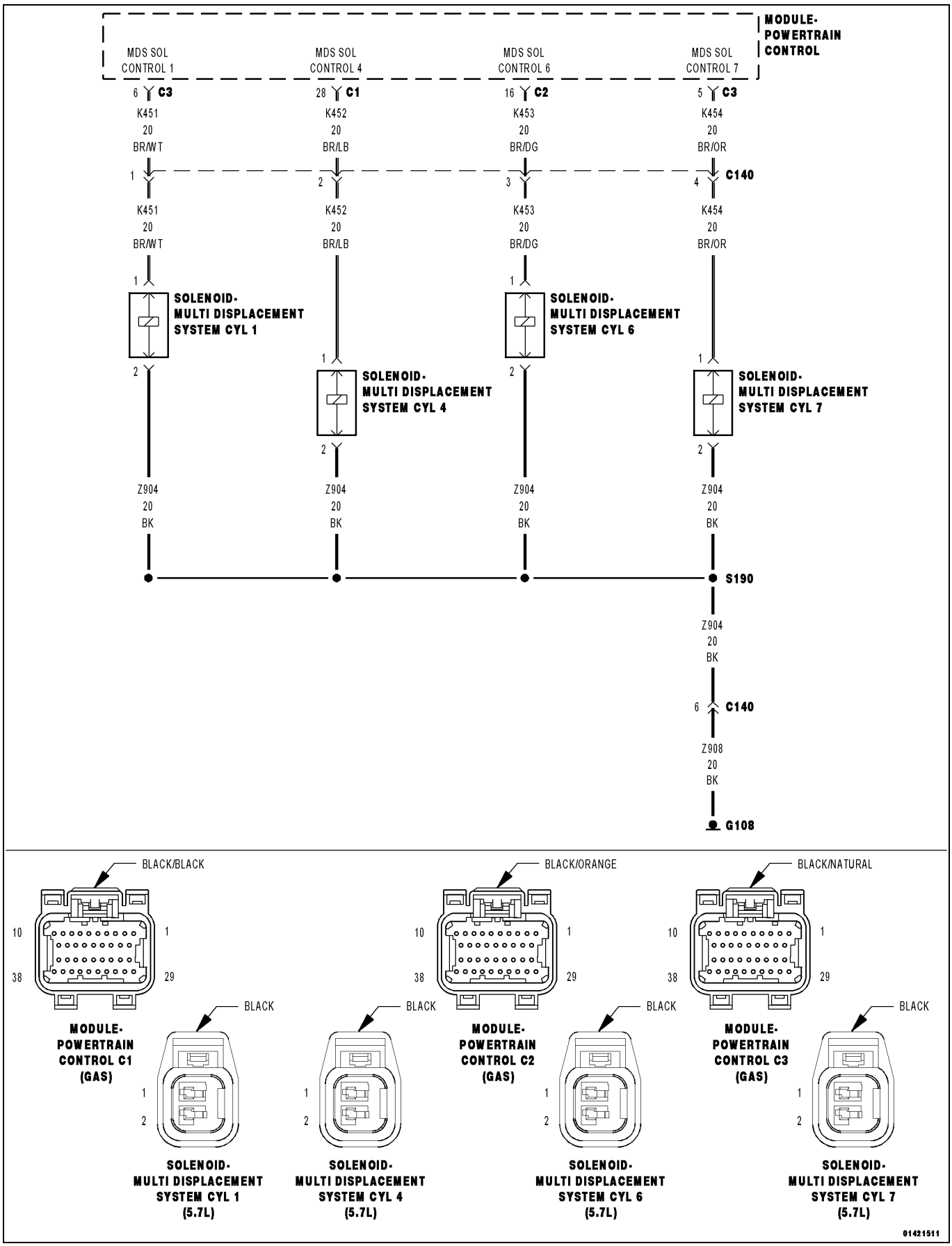

For a complete wiring diagram, **refer to the Wiring Information**.

Theory of Operation

When all criteria has been met, power is supplied to each MDS Solenoid when the engine is making a transition from 8 cylinder mode to 4 cylinder mode. By actuating the solenoid, oil pressure is raised to the pair of lifters that coincide with each particular solenoid. The oil pressure pushes in the locking pins that allows the lifter to collapse, decoupling the valves and camshaft.

- **When Monitored:**
  Transition from 8 to 4 cylinder mode.
- **Set Condition:**
  The MDS fails to active and take place for cylinder 7. One trip fault.

Possible Causes
(K454) MDS SOLENOID NO.7 CONTROL SHORT TO VOLTAGE
OIL PASSAGES RESTRICTED
LIFTER
MDS SOLENOID NO.7
POWERTRAIN CONTROL MODULE (PCM)

Always perform the Pre-Diagnostic Troubleshooting procedure before proceeding. (Refer to 28 - DTC-Based Diagnostics/MODULE, Powertrain Control (PCM) - Standard Procedure).

1. ACTIVE DTC

NOTE: Diagnose any Misfire DTCs before continuing.

1. Start the engine and allow it to reach normal operating temperature.

WARNING: When the engine is operating, do not stand in direct line with the fan. Do not put your hands near the pulleys, belts or fan. Do not wear loose clothing. Failure to follow these instructions may result in possible serious or fatal injury.

NOTE: It may be necessary to test drive the vehicle in order for this DTC to set.

2. With the scan tool, select View DTCs.

Is the DTC Active at this time?

Yes

- Go To 2

No

- Perform the INTERMITTENT CONDITION diagnostic procedure. (Refer to 28 - DTC-Based Diagnostics/MODULE, Powertrain Control (PCM) - Standard Procedure).

2. (K454) MDS SOLENOID NO.7 CONTROL CIRCUIT SHORTED TO VOLTAGE

1. Turn the ignition off.
2. Disconnect the C3 PCM harness connector.
3. Disconnect the C140 In-line harness connector.

CAUTION: Do not probe the PCM harness connectors. Probing the PCM harness connectors will damage the PCM terminals resulting in poor terminal to pin connection. Install the PCM Pinout Box Kit, NGC, 38 Position 8815A to perform diagnosis.

4. Turn the ignition on.
5. Measure the voltage on (K454) MDS Solenoid No.7 Control circuit in the appropriate terminal of PCM Pinout Box 8815A.

Is there any voltage present?

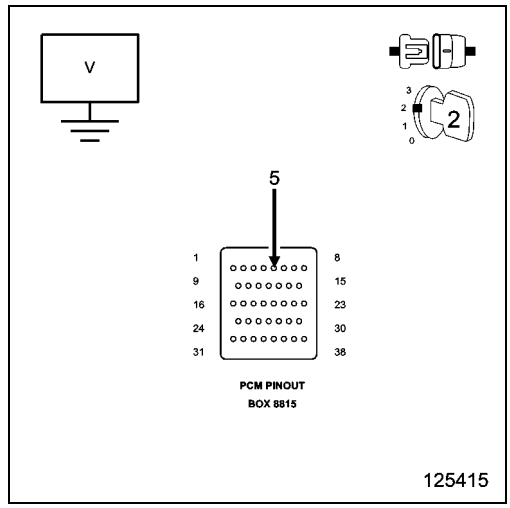

Yes

- Repair the short to voltage in the (K454) MDS Solenoid No.7 Control circuit.
- Perform the POWERTRAIN VERIFICATION TEST. (Refer to 28 - DTC-Based Diagnostics/MODULE, Powertrain Control (PCM) - Standard Procedure).

No

- Go To 3

3. MDS SOLENOID RESISTANCE

1. Turn the ignition off.
2. Reconnect the C140 In-line harness connector.
3. Measure the resistance between Ground and the (K454) MDS Solenoid No.7 Control Circuit in the appropriate terminal of PCM Pinout Box 8815A.

NOTE: It is important to follow the below temp/resistance values to ensure an accurate reading.

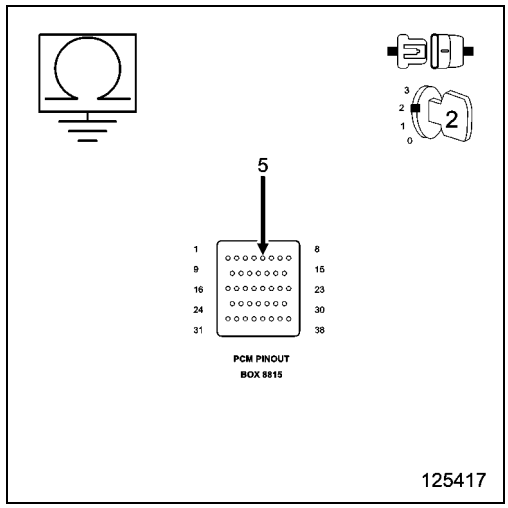

MDS SOLENOID RESISTANCE	
TEMPERATURE VALUE ± -7° C (20° F)	**RESISTANCE (OHMS) ± .25 Ohms**
-18° C (0° F)	8.8 Ohms
0° C (32° F)	9.5 Ohms
20° C (68° F)	10.3 Ohms
38° C (100° F)	11 Ohms
66° C (150° F)	12.2 Ohms
93° C (200° F)	13.4 Ohms
121° C (250° F)	14.4 Ohms
149° C (300° F)	15.6 Ohms

Is the resistance within an acceptable range?

Yes

- Go To 4

No

- Visually and Physically inspect the wiring harness between the C140 In-line connector and the MDS Solenoid connector. Repair as necessary. If OK, replace the MDS Solenoid in accordance with the Service Information.
- Perform the POWERTRAIN VERIFICATION TEST. (Refer to 28 - DTC-Based Diagnostics/MODULE, Powertrain Control (PCM) - Standard Procedure).

4. PCM CONTROL

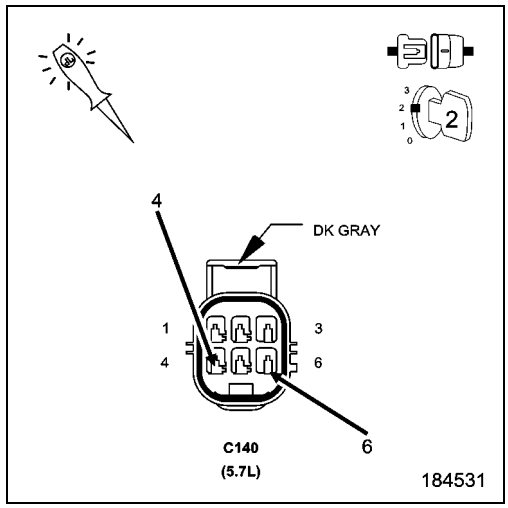

1. Turn the ignition off.
2. Reconnect the C3 PCM harness connector.
3. Disconnect the C140 In-line harness connector.
4. Ignition on, engine not running.
5. Using a 12-volt test light connected to the (Z903) Ground circuit, probe the (K454) MDS Solenoid No.7 Control circuit in the C140 harness connector.
6. With the scan tool, actuate the MDS Solenoid.

NOTE: The test light should be illuminated and bright proportional to the maximum duty cycle allowed by the scan tool. For example, if the scan tool allows 100% actuation, the brightness should be as bright as a direct connection to the battery. If the scan tool allows a maximum 25% actuation, the brightness should be 25% as bright as a direct connection to the battery.

Does the test light illuminate accordingly during the actuation?

Yes

- Go To 5

No

- Replace and program the Powertrain Control Module in accordance with the Service Information.
- Perform the POWERTRAIN VERIFICATION TEST. (Refer to 28 - DTC-Based Diagnostics/MODULE, Powertrain Control (PCM) - Standard Procedure).

5. MDS SOLENOID 7

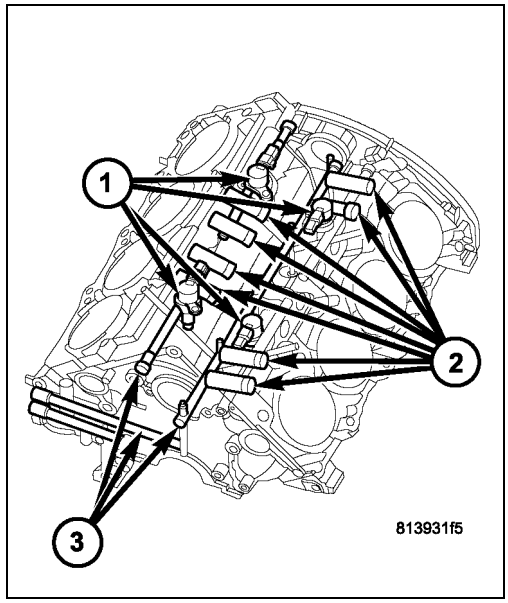

1. Turn the ignition off.
2. Remove the Intake Manifold in accordance with the Service Information.
3. Reconnect the Solenoid harness connector.
4. Turn the ignition on.
5. With the scan tool actuate the MDS Solenoid 7.

Can you feel and hear the Solenoid Actuating?

Yes

- Go To 6

No

- Remove the Solenoid and check for any debris that may be blocking the oil passages to the Solenoid. If the passages are clogged, clean the passages and replace the MDS Solenoid 7. If the passages are not clogged with debris, replace the MDS Solenoid 7.
- Perform the POWERTRAIN VERIFICATION TEST. (Refer to 28 - DTC-Based Diagnostics/MODULE, Powertrain Control (PCM) - Standard Procedure).

6. OIL PASSAGES RESTRICTED

1. Turn the ignition off.
2. Remove both Solenoids on Bank 1 of the engine block.
3. Remove the Bank 1 Cylinder Head in accordance with the Service Information.
4. Remove the Lifters from the left engine bank.
5. Inspect the oil passages to the Solenoids and from the Solenoids to the lifters.

Are the passages blocked?

Yes

- Clean the oil passages as necessary. If the entire engine is restricted disassembly of the entire engine block may be necessary.
- Perform the POWERTRAIN VERIFICATION TEST. (Refer to 28 - DTC-Based Diagnostics/MODULE, Powertrain Control (PCM) - Standard Procedure).

No

- Replace both sets of lifters if no other possible causes remain.
- Perform the POWERTRAIN VERIFICATION TEST. (Refer to 28 - DTC-Based Diagnostics/MODULE, Powertrain Control (PCM) - Standard Procedure).

P1521-INCORRECT ENGINE OIL TYPE

- **When Monitored:**

  Engine Running.
- **Set Condition:**

  Using oil pressure, oil temperature and other engine inputs the Powertrain Control Module (PCM) can determine the engine oil viscosity. Incorrect viscosity will effect the operation of the Multi Displacement System (MDS) and/or the Vairable Cam Timing (VCT) system.

Possible Causes
INCORRECT ENGINE OIL TYPE
ENGINE OIL CONTAMINATION
ENGINE OIL

Always perform the Pre-Diagnostic Troubleshooting procedure before proceeding. (Refer to 28 - DTC-Based Diagnostics/MODULE, Powertrain Control (PCM) - Standard Procedure).

1. ACTIVE DTC

NOTE: Review the customers oil change history. Make sure the customers is using the correct engine oil viscosity. If the incorrect oil is being used, change the oil, using the correct engine oil viscosity.

1. Ignition on, engine off.
2. With the scan tool, select View DTCs.

Is the DTC Active at this time?

Yes

- Go To 2

No

- Test Complete.

2. ENGINE OIL

NOTE: If any engine oil pressure or oil temperature DTCs set along with P1521, repair them before continuing with the P1521 diagnostics.

The following conditions must be checked:

- OEM recommended oil viscosity is being used.
- Customer is following the oil change schedule.
- Check the engine oil for contamination. (i.e., fuel and/or engine coolant)
- Internal engine condition that may effect oil pressure.

Were any of the above conditions found?

Yes

- Repair as necessary.
- Perform the POWERTRAIN VERIFICATION TEST. (Refer to 28 - DTC-Based Diagnostics/MODULE, Powertrain Control (PCM) - Standard Procedure).

No

- Change the engine oil using the correct oil viscosity.
- Perform the POWERTRAIN VERIFICATION TEST. (Refer to 28 - DTC-Based Diagnostics/MODULE, Powertrain Control (PCM) - Standard Procedure).

■ P1524-OIL PRESSURE OUT OF RANGE - CAMSHAFT ADVANCE/RETARD DISABLED

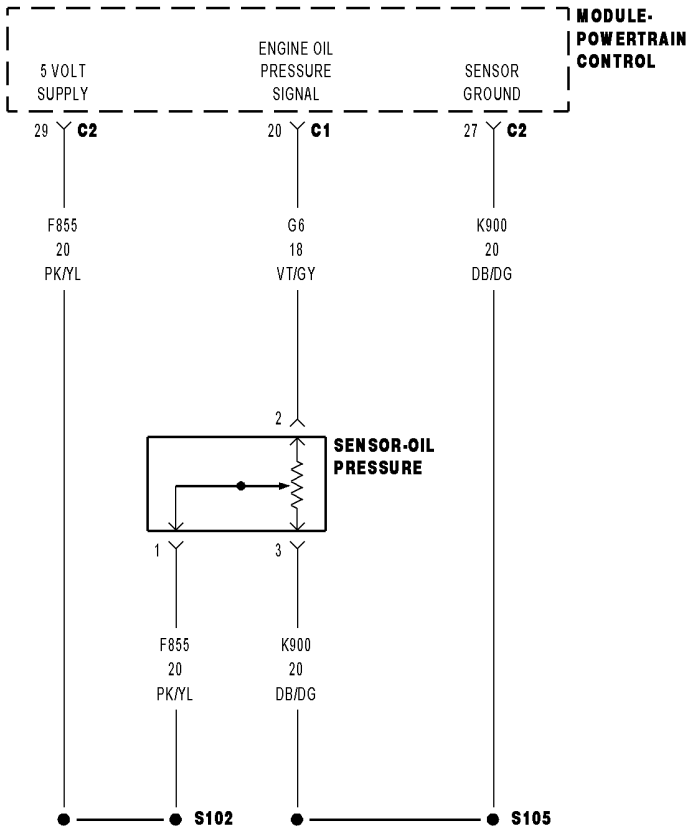

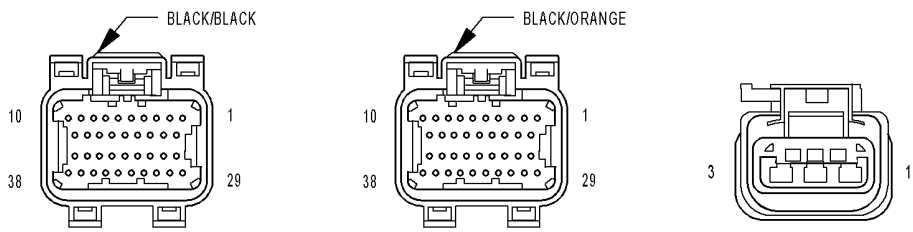

MODULE-
POWERTRAIN
CONTROL C1

MODULE-
POWERTRAIN
CONTROL C2

SENSOR-OIL
PRESSURE

81669b00

For a complete wiring diagram, **refer to the Wiring Information**.

Theory of Operation

For the VCT to enable, the oil pressure has to be approximately 42 psi. For the VCT to remain enabled the engine oil pressure can not drop below 31 psi.

- **When Monitored:**
  Engine running. RPM greater than or equal to 1100. Oil temperature less than or equal to 100° C (212° F)
- **Set Condition:**
  The engine oil pressure never reaches the calibrated specification to allow the VCT activation. One trip fault.

Possible Causes
ENGINE OIL/ENGINE MECHANICAL
(G6) ENGINE OIL PRESSURE SENSOR SIGNAL CIRCUIT SHORTED TO VOLTAGE
RESISTANCE (G6) ENGINE OIL PRESSURE SENSOR SIGNAL CIRCUIT
(G6) ENGINE OIL PRESSURE SENSOR SIGNAL CIRCUIT SHORTED TO GROUND
RESISTANCE IN (F855) 5-VOLT SUPPLY CIRCUIT
(F855) 5-VOLT SUPPLY CIRCUIT SHORTED TO GROUND
RESISTANCE IN THE (K900) SENSOR GROUND CIRCUIT
ENGINE OIL PRESSURE SENSOR
POWERTRAIN CONTROL MODULE (PCM)

Always perform the Pre-Diagnostic Troubleshooting procedure before proceeding. (Refer to 28 - DTC-Based Diagnostics/MODULE, Powertrain Control (PCM) - Standard Procedure).

1. ACTIVE DTC

NOTE: Make sure that the engine oil is at the proper level. Also, check the customers oil change history to ensure that the oil is being changed at the correct intervals and that the proper oil viscosity is being used.

1. Start the engine and allow it to reach normal operating temperature.

WARNING: When the engine is operating, do not stand in direct line with the fan. Do not put your hands near the pulleys, belts or fan. Do not wear loose clothing. Failure to follow these instructions may result in possible serious or fatal injury.

NOTE: Diagnose and repair any system voltage or sensor supply voltage DTCs before continuing with this test.

Is the DTC Active at this time?

Yes

- Go To 2

No

- Perform the INTERMITTENT CONDITION diagnostic procedure. (Refer to 28 - DTC-Based Diagnostics/MODULE, Powertrain Control (PCM) - Standard Procedure).

2. ENGINE OIL/ENGINE MECHANICAL

NOTE: The following items must be considered before determining the cause of this DTC. Failure to do so may lead to misdiagnosis.
For the VCT to enable the oil pressure has to be approximately 42 psi. For the VCT to remain enabled the engine oil pressure can not drop below 31 psi. When checking the engine oil pressure use a mechanical gauge.

- **ENGINE MECHANICAL TOLERANCES OUT OF SPECIFICATION**
- **ENGINE OIL PRESSURE OUT OF SPECIFICATION**
- **LOW ENGINE OIL**
- **OIL DIRTY OR DETERIORATED (Lack of scheduled oil changes)**
- **CORRECT VISCOSITY**
- **ENGINE OIL CONTAMINATED (i.e., coolant and/or fuel)**

1. If any of the above conditions are found, repair as necessary.

Were any of the above conditions present?

Yes

- Repair as necessary.
- Perform the POWERTRAIN VERIFICATION TEST. (Refer to 28 - DTC-Based Diagnostics/MODULE, Powertrain Control (PCM) - Standard Procedure).

No

- Go To 3

3. ENGINE OIL PRESSURE SENSOR

1. Turn the ignition off.
2. Connect the C2 PCM harness connector.
3. Ignition on, engine not running.
4. With a scan tool, monitor the Engine Oil Pressure Sensor voltage.
5. Connect a jumper wire between the (K900) Sensor Ground circuit and the (G6) Engine Oil Pressure Signal circuit.

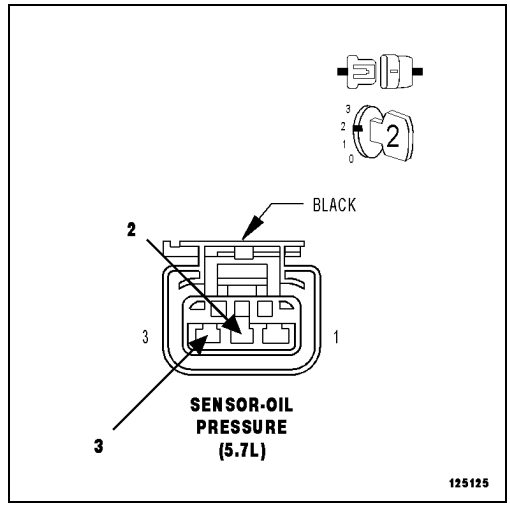

NOTE: Engine Oil Pressure voltage should change from approximately 4.5 volts to less than 0.5 of a volt.

Is the voltage reading within the listed specification when the jumper wire is installed?

Yes

- Verify that there is good pin to terminal contact in the Sensor and Powertrain Control Module connectors. Remove the Engine Oil Pressure sensor and ensure the oil passage/port is free from any blockage. If OK, replace the Engine Oil Pressure Sensor.
- Perform the POWERTRAIN VERIFICATION TEST. (Refer to 28 - DTC-Based Diagnostics/MODULE, Powertrain Control (PCM) - Standard Procedure).

No

- Go To 4

NOTE: Remove the jumper wire before continuing.

4. EXCESSIVE RESISTANCE IN THE (G6) ENGINE OIL PRESSURE SIGNAL CIRCUIT

1. Turn the ignition off.
2. Disconnect the C1 PCM harness connector.

CAUTION: Do not probe the PCM harness connectors. Probing the PCM harness connectors will damage the PCM terminals resulting in poor terminal to pin connection. Install the PCM Pinout Box Kit, NGC, 38 Position 8815A to perform diagnosis.

3. Measure the resistance of the (G6) Engine Oil Pressure Signal circuit from the Engine Oil Pressure Sensor harness connector to the appropriate terminal of PCM Pinout Box 8815A.

Is the resistance below 5.0 Ohms?

Yes

- Go To 5

No

- Repair the excessive resistance in the (G6) Engine Oil Pressure Signal circuit.
- Perform the POWERTRAIN VERIFICATION TEST. (Refer to 28 - DTC-Based Diagnostics/MODULE, Powertrain Control (PCM) - Standard Procedure).

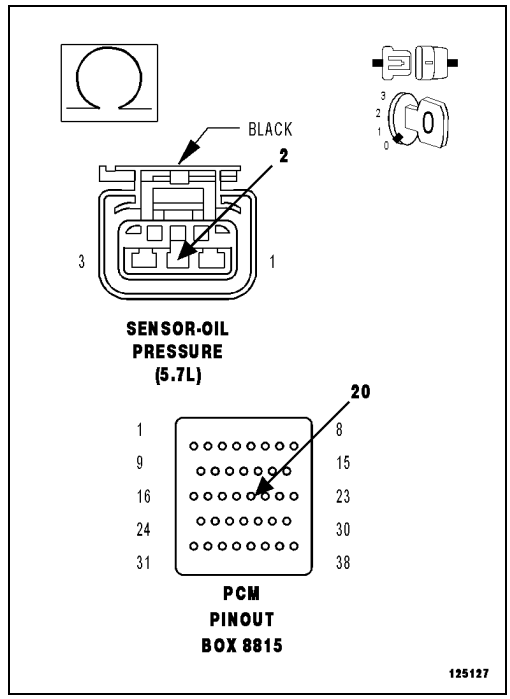

5. (G6) ENGINE OIL PRESSURE SIGNAL CIRCUIT SHORTED TO GROUND

1. Measure the resistance between ground and the (G6) Engine Oil Pressure Signal circuit in the Engine Oil Pressure Sensor harness connector.

Is the resistance below 100 Ohms?

Yes

- Repair the short to ground in the (G6) Engine Oil Pressure Signal circuit.
- Perform the POWERTRAIN VERIFICATION TEST. (Refer to 28 - DTC-Based Diagnostics/MODULE, Powertrain Control (PCM) - Standard Procedure).

No

- Go To 6

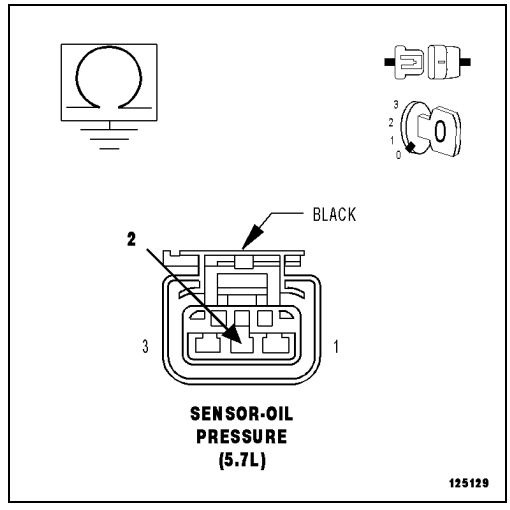

6. EXCESSIVE RESISTANCE IN THE (F855) 5-VOLT SUPPLY CIRCUIT

1. Measure the resistance of the (F855) 5-volt Supply circuit from the Engine Oil Pressure Sensor harness connector to the appropriate terminal of PCM Pinout Box 8815A.

Is the resistance below 5.0 Ohms?

Yes

- Go To 7

No

- Repair the excessive resistance in the (F855) 5-volt Supply circuit.
- Perform the POWERTRAIN VERIFICATION TEST. (Refer to 28 - DTC-Based Diagnostics/MODULE, Powertrain Control (PCM) - Standard Procedure).

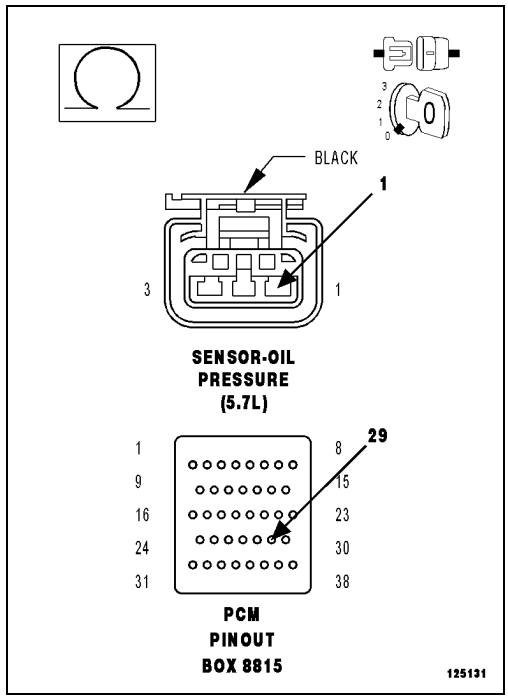

7. (F855) 5-VOLT SUPPLY SHORTED TO GROUND

1. Measure the resistance between ground and the (F855) 5-volt Supply circuit in the Engine Oil Pressure Sensor harness connector.

Is the resistance below 100 Ohms?

Yes

- Repair the short to ground in the (F855) 5-volt Supply circuit.
- Perform the POWERTRAIN VERIFICATION TEST. (Refer to 28 - DTC-Based Diagnostics/MODULE, Powertrain Control (PCM) - Standard Procedure).

No

- Go To 8

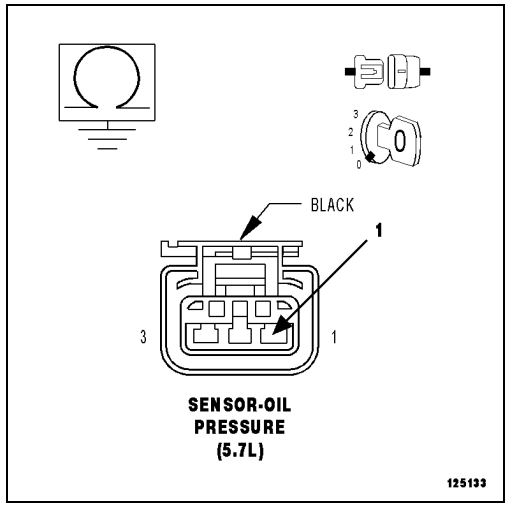

8. EXCESSIVE RESISTANCE IN THE (K900) SENSOR GROUND CIRCUIT

1. Measure the resistance of the (K900) Sensor Ground circuit from the Engine Oil Pressure Sensor harness connector to the appropriate terminal of PCM Pinout Box 8815A.

Is the resistance below 5.0 Ohms?

Yes

- Go To 9

No

- Repair the excessive resistance in the (K900) Sensor Ground circuit.
- Perform the POWERTRAIN VERIFICATION TEST. (Refer to 28 - DTC-Based Diagnostics/MODULE, Powertrain Control (PCM) - Standard Procedure).

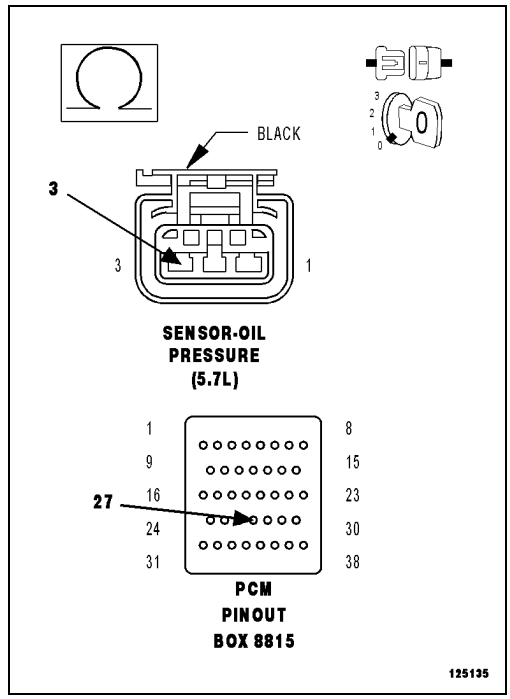

9. POWERTRAIN CONTROL MODULE (PCM)

1. Using the wiring diagram/schematic as a guide, inspect the wiring and connectors between the Engine Oil Pressure Sensor and the Powertrain Control Module (PCM).
2. Look for any chafed, pierced, pinched, or partially broken wires.
3. Look for broken, bent, pushed out or corroded terminals. Verify that there is good pin to terminal contact in the Sensor and Powertrain Control Module connectors.
4. Refer to any Technical Service Bulletins that may apply.

Were there any problems found?

Yes

- Repair as necessary.
- Perform the POWERTRAIN VERIFICATION TEST. (Refer to 28 - DTC-Based Diagnostics/MODULE, Powertrain Control (PCM) - Standard Procedure).

No

- Replace and program the Powertrain Control Module in accordance with the Service Information.
- Perform the POWERTRAIN VERIFICATION TEST. (Refer to 28 - DTC-Based Diagnostics/MODULE, Powertrain Control (PCM) - Standard Procedure).

P1572-BRAKE PEDAL STUCK ON

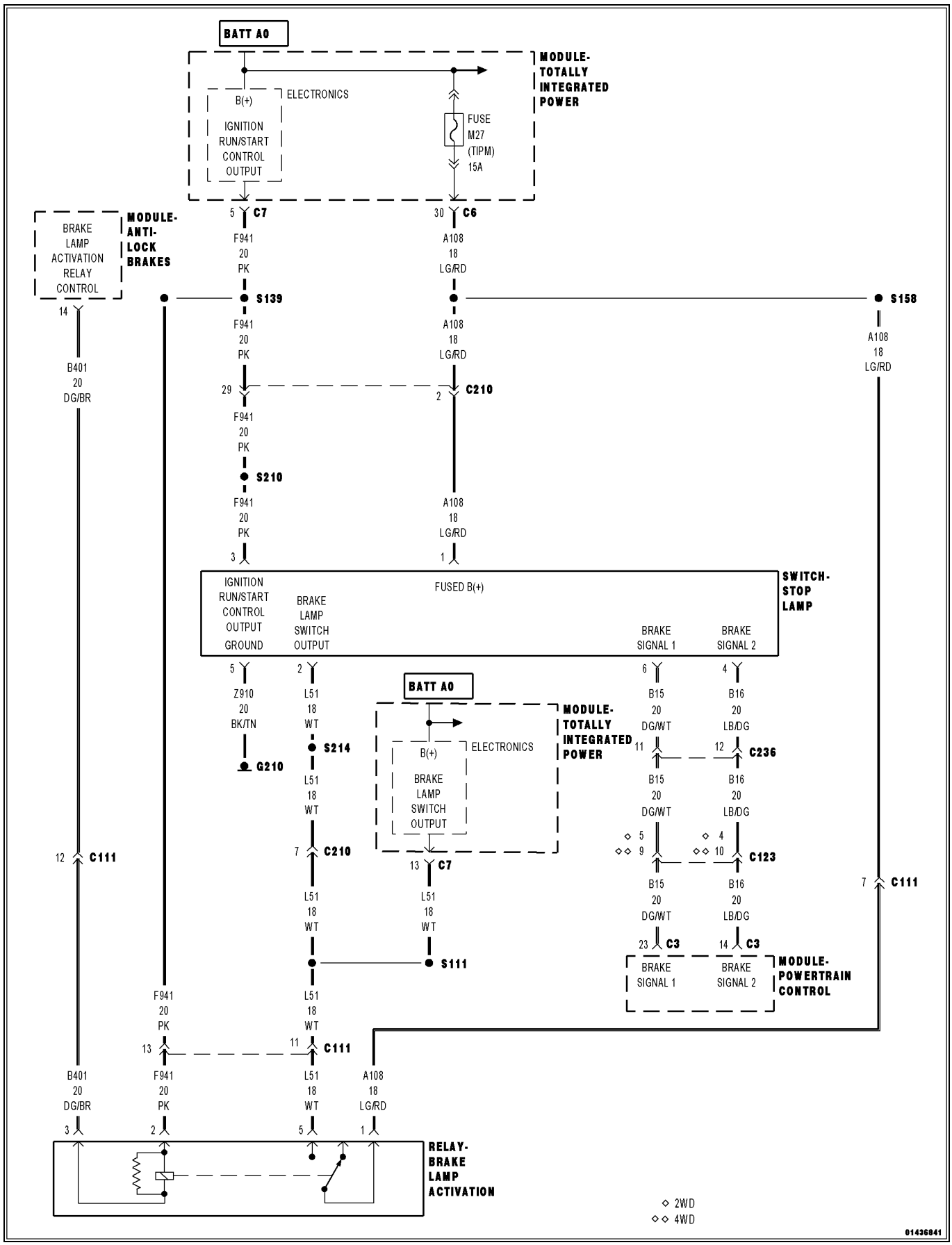

For a complete wiring diagram, **refer to the Wiring Information**.

- **When Monitored:**
  Ignition on. In plant mode only.
- **Set Condition:**
  The Powertrain Control Module (PCM) recognizes the Brake Pedal could not electrically indicate the applied (On) position with both switch inputs. One trip fault.

Possible Causes
(B15) BRAKE SWITCH NO.1 SIGNAL CIRCUIT OPEN
(B16) BRAKE SWITCH NO.2 SIGNAL CIRCUIT OPEN
STOP LAMP SWITCH
POWERTRAIN CONTROL MODULE (PCM)

Always perform the Pre-Diagnostic Troubleshooting procedure before proceeding. (Refer to 28 - DTC-Based Diagnostics/MODULE, Powertrain Control (PCM) - Standard Procedure).

1. ACTIVE DTC

NOTE: Make sure the Stop Lamp Switch is adjusted properly before continuing.

1. Ignition on, engine not running.
2. With the scan tool, select View DTCs.

Is the DTC Active at this time?

Yes

- Go To 2

No

- Perform the INTERMITTENT CONDITION diagnostic procedure. (Refer to 28 - DTC-Based Diagnostics/MODULE, Powertrain Control (PCM) - Standard Procedure).

2. STOP LAMP SWITCH OPERATION

1. Turn the ignition off.
2. Disconnect the Stop Lamp Switch harness connector.
3. Measure the resistance between the (G210) Ground circuit terminal and the (B15) Brake Switch No.1 Signal terminal in the Stop Lamp Switch.
4. Apply and release the brake pedal while monitoring the Ohmmeter.

Does the resistance change from below 5.0 Ohms to open circuit when pressing and releasing the brake pedal switch?

Yes

- Go To 3

No

- Replace the Stop Lamp Switch.
- Perform the POWERTRAIN VERIFICATION TEST. (Refer to 28 - DTC-Based Diagnostics/MODULE, Powertrain Control (PCM) - Standard Procedure).

3. STOP LAMP SWITCH OPERATION

1. Measure the resistance between the (A108) Fused Ignition Switch Output terminal and the (B16) Brake Switch No.2 Signal circuit terminal in the Stop Lamp Switch.
2. Apply and release the brake pedal while monitoring the Ohmmeter.

Does the resistance change from below 5.0 Ohms to open circuit when pressing and releasing the Stop Lamp switch?

Yes

- Go To 4

No

- Verify that there is good pin to terminal contact in the Switch and Powertrain Control Module connectors. Replace the Stop Lamp Switch if no problems were found in the connectors.
- Perform the POWERTRAIN VERIFICATION TEST. (Refer to 28 - DTC-Based Diagnostics/MODULE, Powertrain Control (PCM) - Standard Procedure).

4. (B15) BRAKE SWITCH NO.1 SIGNAL CIRCUIT OPEN

1. Disconnect the C3 PCM harness connector.

CAUTION: Do not probe the PCM harness connectors. Probing the PCM harness connectors will damage the PCM terminals resulting in poor terminal to pin connection. Install the PCM Pinout Box Kit, NGC, 38 Position 8815A to perform diagnosis.

2. Measure the resistance of the (B15) Brake Switch No.1 Signal circuit from the Stop Lamp Switch harness connector to the appropriate terminal of PCM Pinout Box 8815A.

Is the resistance below 5.0 Ohms?

Yes

- Go To 5

No

- Repair the open in the (B15) Brake Switch No.1 Signal circuit.
- Perform the POWERTRAIN VERIFICATION TEST. (Refer to 28 - DTC-Based Diagnostics/MODULE, Powertrain Control (PCM) - Standard Procedure).

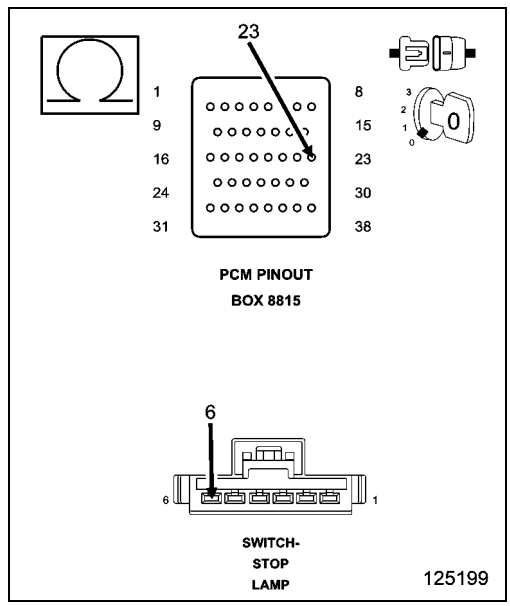

5. (B16) BRAKE SWITCH NO.2 SIGNAL CIRCUIT OPEN

1. Measure the resistance of the (B16) Brake Switch No.2 Signal circuit from the Stop Lamp Switch harness connector to the appropriate terminal of PCM Pinout Box 8815A.

Is the resistance below 5.0 Ohms?

Yes

- Go To 6

No

- Repair the open in the (B16) Brake Switch No.2 Signal circuit.
- Perform the POWERTRAIN VERIFICATION TEST. (Refer to 28 - DTC-Based Diagnostics/MODULE, Powertrain Control (PCM) - Standard Procedure).

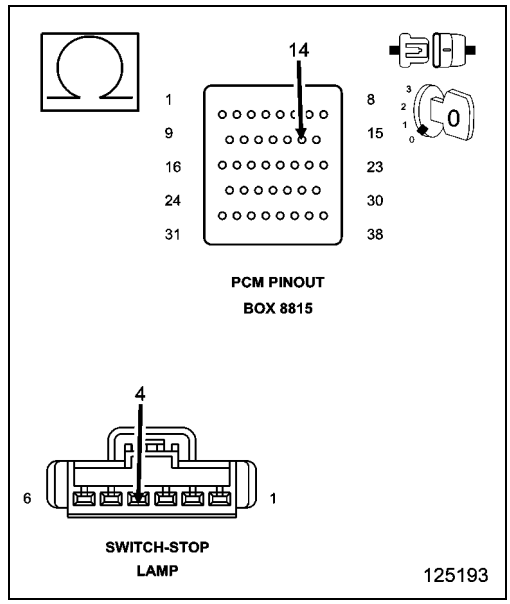

6. POWERTRAIN CONTROL MODULE (PCM)

1. Using the wiring diagram/schematic as a guide, inspect the wiring and connectors between the Stop Lamp Switch and the Powertrain Control Module (PCM).
2. Look for any chafed, pierced, pinched or partially broken wires.
3. Look for broken, bent, pushed out or corroded terminals. Verify that there is good pin to terminal contact in the Switch and Powertrain Control Module connectors.
4. Perform any Technical Service Bulletins that may apply.

Were there any problems found?

Yes

- Repair as necessary.
- Perform the POWERTRAIN VERIFICATION TEST. (Refer to 28 - DTC-Based Diagnostics/MODULE, Powertrain Control (PCM) - Standard Procedure).

No

- Replace and program the Powertrain Control Module in accordance with the Service Information.
- Perform the POWERTRAIN VERIFICATION TEST. (Refer to 28 - DTC-Based Diagnostics/MODULE, Powertrain Control (PCM) - Standard Procedure).

P1573-BRAKE PEDAL STUCK OFF

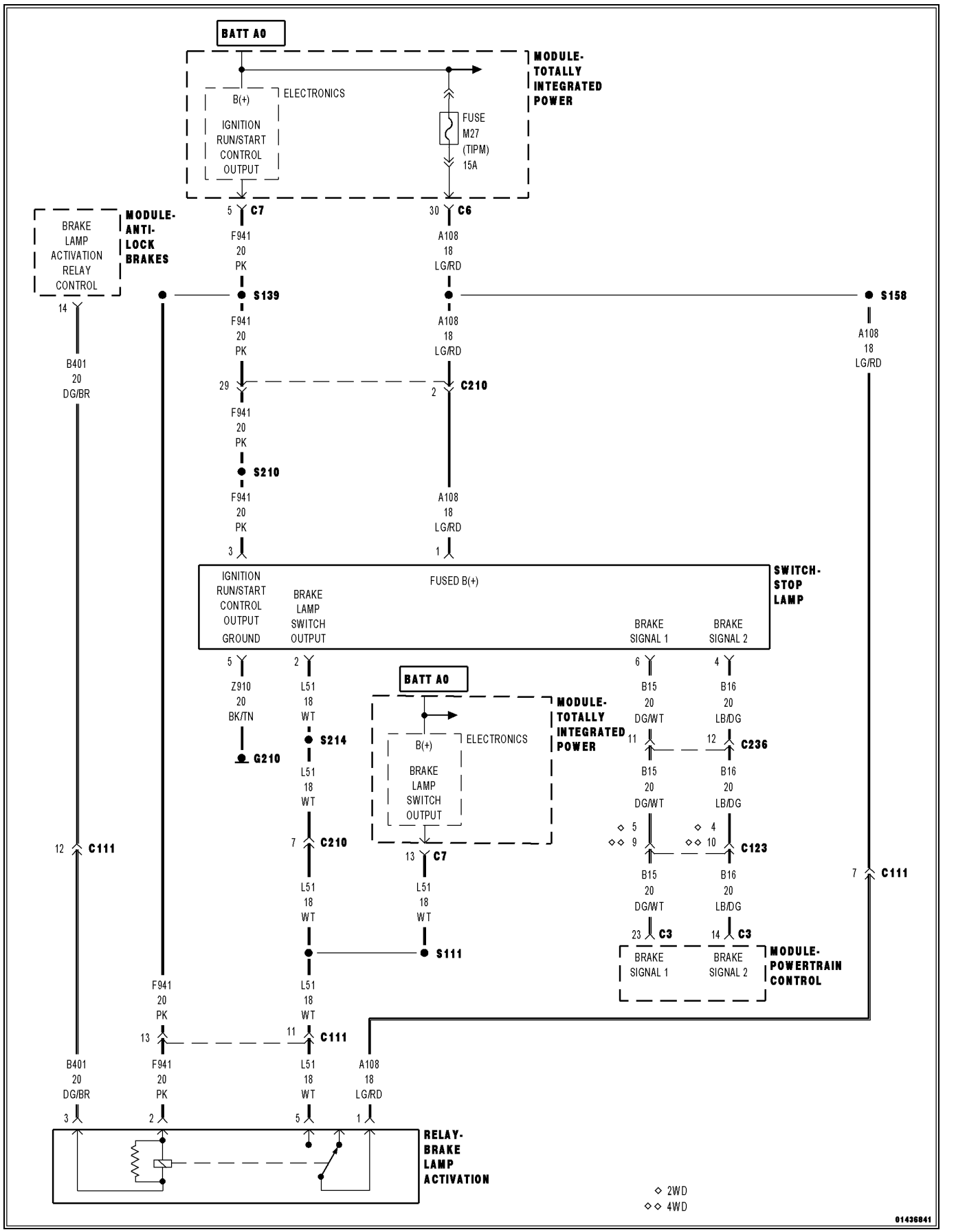

For a complete wiring diagram, **refer to the Wiring Information**.

- **When Monitored:**
  Ignition on, In plant mode passed the Applied test.
- **Set Condition:**
  The Powertrain Control Module (PCM) recognizes the Brake Pedal could not electronically indicate the released (Off) position with both switches. If P1572 sets, P1573 will also set. One trip fault.

Possible Causes
(B16) BRAKE SWITCH NO.2 SIGNAL CIRCUIT SHORTED TO VOLTAGE
(B15) BRAKE SWITCH NO.1 SIGNAL CIRCUIT SHORTED TO GROUND
STOP LAMP SWITCH
POWERTRAIN CONTROL MODULE (PCM)

Always perform the Pre-Diagnostic Troubleshooting procedure before proceeding. (Refer to 28 - DTC-Based Diagnostics/MODULE, Powertrain Control (PCM) - Standard Procedure).

1. ACTIVE DTC

NOTE: Make sure the Stop Lamp Switch is adjusted properly before continuing.

1. Ignition on, engine not running.
2. With the scan tool, select View DTCs.

Is the DTC Active at this time?

Yes

- Go To 2

No

- Perform the INTERMITTENT CONDITION diagnostic procedure. (Refer to 28 - DTC-Based Diagnostics/MODULE, Powertrain Control (PCM) - Standard Procedure).

2. STOP LAMP SWITCH OPERATION

1. Turn the ignition off.
2. Disconnect the Stop Lamp Switch harness connectors.
3. Measure the resistance between the (Z429) Ground circuit terminal and the (B15) Brake Switch No.1 Signal terminal in the Stop Lamp Switch.
4. Apply and release the brake pedal while monitoring the Ohmmeter.

Does the resistance change from below 5.0 Ohms to an open circuit when pressing and releasing the brake switch?

Yes

- Go To 3

No

- Replace the Stop Lamp Switch.
- Perform the POWERTRAIN VERIFICATION TEST. (Refer to 28 - DTC-Based Diagnostics/MODULE, Powertrain Control (PCM) - Standard Procedure).

3. STOP LAMP SWITCH OPERATION

1. Measure the resistance between the (A108) Fused Ignition Switch Output circuit terminal and the (B16) Brake Switch No.2 Signal terminal in the Stop Lamp Switch.
2. Apply and release the brake pedal while monitoring the Ohmmeter.

Does the resistance change from below 5.0 Ohms to an open circuit when pressing and releasing the Stop Lamp switch?

Yes

- Go To 4

No

- Verify that there is good pin to terminal contact in the Switch and Powertrain Control Module connectors. Replace the Stop Lamp Switch if no problems were found in the connectors.
- Perform the POWERTRAIN VERIFICATION TEST. (Refer to 28 - DTC-Based Diagnostics/MODULE, Powertrain Control (PCM) - Standard Procedure).

4. (B16) BRAKE SWITCH NO.2 SIGNAL CIRCUIT SHORTED TO VOLTAGE

1. Disconnect the C2 PCM harness connector.
2. Ignition on, engine not running.
3. Measure the voltage on the (B16) Brake Switch No.2 Signal circuit in the Stop Lamp Switch harness connector.

Is there any voltage present?

Yes

- Repair the short to voltage in the (B16) Brake Switch No.2 Signal circuit.
- Perform the POWERTRAIN VERIFICATION TEST. (Refer to 28 - DTC-Based Diagnostics/MODULE, Powertrain Control (PCM) - Standard Procedure).

No

- Go To 5

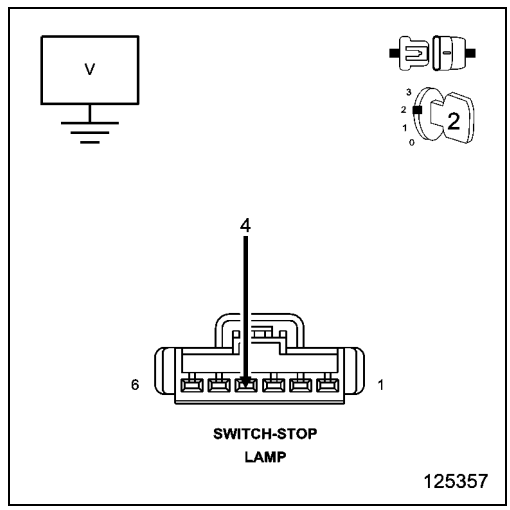

5. (B15) BRAKE SWITCH NO.1 SIGNAL CIRCUIT SHORTED TO GROUND

1. Turn the ignition off.
2. Measure the resistance between ground and the (B15) Brake Switch No.1 Signal circuit in the Stop Lamp Switch harness connector.

Is the resistance below 100 Ohms?

Yes

- Repair the short to ground in the (B15) Brake Switch No.1 Signal circuit.
- Perform the POWERTRAIN VERIFICATION TEST. (Refer to 28 - DTC-Based Diagnostics/MODULE, Powertrain Control (PCM) - Standard Procedure).

No

- Go To 6

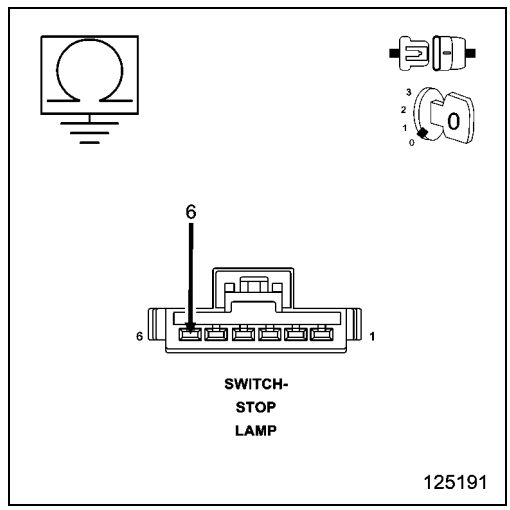

6. POWERTRAIN CONTROL MODULE (PCM)

1. Using the wiring diagram/schematic as a guide, inspect the wiring and connectors between the Stop Lamp Switch and the Powertrain Control Module (PCM).
2. Look for any chafed, pierced, pinched or partially broken wires.
3. Look for broken, bent, pushed out or corroded terminals. Verify that there is good pin to terminal contact in the Switch and Powertrain Control Module connectors.
4. Perform any Technical Service Bulletins that may apply.

Were there any problems found?

Yes

- Repair as necessary.
- Perform the POWERTRAIN VERIFICATION TEST. (Refer to 28 - DTC-Based Diagnostics/MODULE, Powertrain Control (PCM) - Standard Procedure).

No

- Replace and program the Powertrain Control Module in accordance with the Service Information.
- Perform the POWERTRAIN VERIFICATION TEST. (Refer to 28 - DTC-Based Diagnostics/MODULE, Powertrain Control (PCM) - Standard Procedure).

P1593-SPEED CONTROL SWITCH 1 STUCK

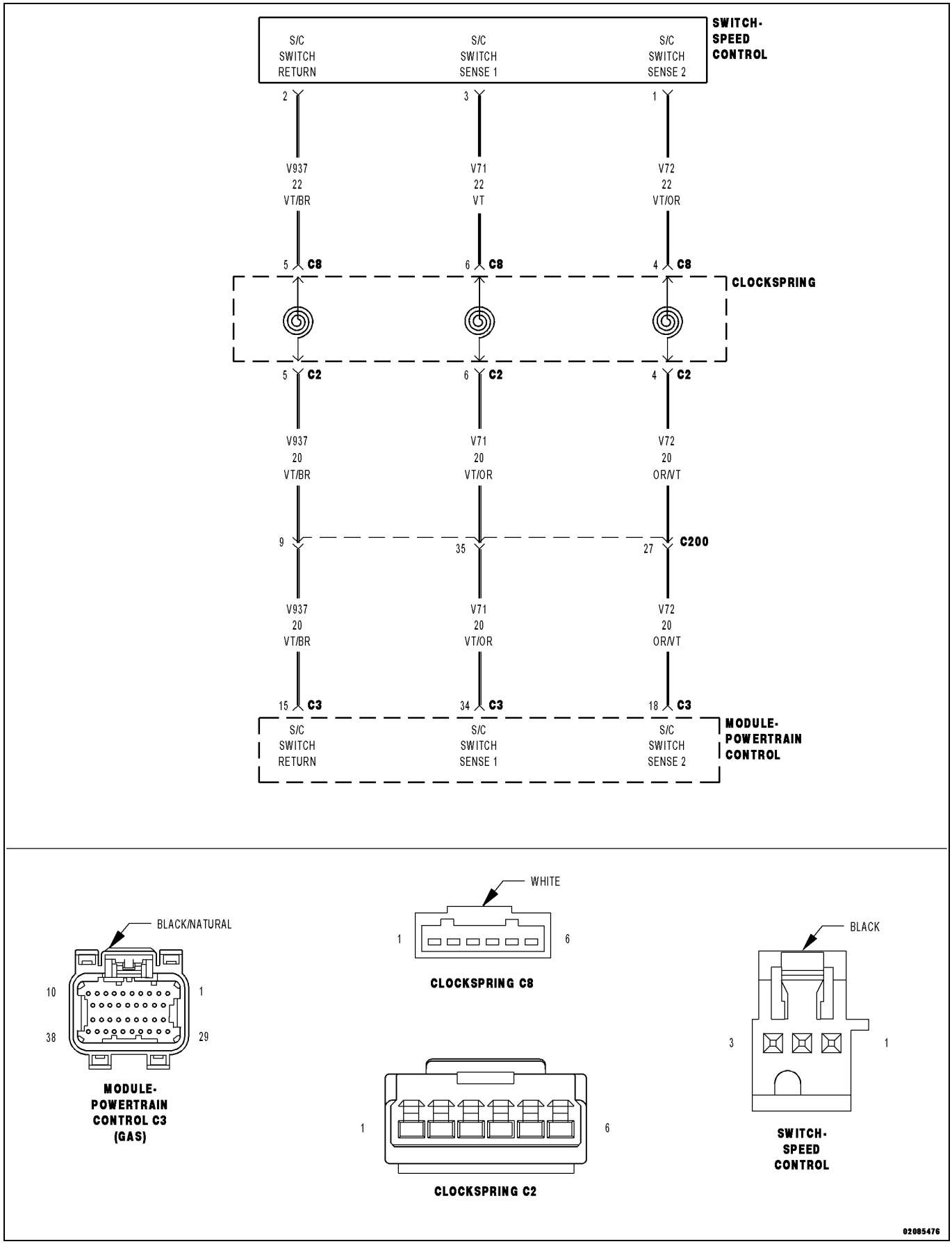

For a complete wiring diagram, **refer to the Wiring Information**.

- **When Monitored:**
  Ignition on.
- **Set Condition:**
  Cruise Switch inputs are not coherent with each other. Example: The Powertrain Control Module (PCM) is reading Switch No.1 as Accel and Switch No.2 as Coast at the same time. One trip fault.

Possible Causes
S/C SWITCH SIGNAL CIRCUITS SHORTED TO VOLTAGE
RESISTANCE IN THE S/C SWITCH SIGNAL CIRCUITS
RESISTANCE IN THE (V937) S/C SWITCH RETURN CIRCUIT
S/C SWITCH SIGNAL CIRCUITS SHORTED TO THE (V937) S/C SWITCH RETURN CIRCUIT
(V71) S/C SWITCH NO.1 SIGNAL CIRCUIT SHORTED TO THE (V72) S/C SWITCH NO.2 SIGNAL CIRCUIT
S/C SWITCH SIGNAL CIRCUITS SHORTED TO GROUND
CLOCKSPRING
SPEED CONTROL SWITCH
POWERTRAIN CONTROL MODULE (PCM)

Always perform the Pre-Diagnostic Troubleshooting procedure before proceeding. (Refer to 28 - DTC-Based Diagnostics/MODULE, Powertrain Control (PCM) - Standard Procedure).

1. ACTIVE DIAGNOSTIC TROUBLE CODE (DTC)

1. Ignition on, engine not running.

NOTE: This DTC may be the result of pressing two Speed Control Switch buttons simultaneously for more than 450 msec.

2. Ask the customer if it is possible that two buttons were pressed at the same time before this DTC set. If this is the case, no repair is necessary.

Is the DTC Active at this time?

Yes

- Go To 2

No

- Perform the INTERMITTENT CONDITION diagnostic procedure. (Refer to 28 - DTC-Based Diagnostics/MODULE, Powertrain Control (PCM) - Standard Procedure).

2. SPEED CONTROL SWITCHES

1. Turn the ignition off.
2. Disconnect the Speed Control Switch harness connector in accordance with the Service Information.
3. Measure the resistance across each Speed Control Switch sense circuit.
4. Monitor the Ohmmeter while pressing each function button.
5. The following resistance specs are taken between terminals (V71) S/C Switch Sense 1 circuit and the (V937) Switch Return circuit of the switch when holding the switch button in the following position:
   - Not pressing any switch - 20.5 kOhms
   - On/Off - 0.47 kOhms
   - Set/Decel - 4.34 kOhms
   - Cancel - 1.24 kOhms
   - Resume/Accel - 8.80 kOhms
6. The following resistance specs are taken between terminals (V72) S/C Switch Sense 2 circuit and the (V937) Switch Return circuit of the switch when holding the switch button in the following position:
   - Not pressing any switch - 20.5 kOhms
   - On/Off - 6.2 kOhms
   - Set/Decel - 0.79 kOhms
   - Cancel - 3.2 kOhms
   - Resume/Accel - 1.7 kOhms

Does the function on the Speed Control Switch have the correct resistance value +/- 0.2 of an Ohm?

Yes

- Go To 3

No

- Replace the Speed Control Switch.
- Perform the POWERTRAIN VERIFICATION TEST. (Refer to 28 - DTC-Based Diagnostics/MODULE, Powertrain Control (PCM) - Standard Procedure).

3. SPEED CONTROL SWITCH VOLTAGE VALUES

CAUTION: Do not probe the PCM harness connectors. Probing the PCM harness connectors will damage the PCM terminals resulting in poor terminal to pin connection. Install the PCM Pinout Box 8815A **and PCM Pinout Box Adapter** 8815-1 **to perform diagnosis.**

1. Install the PCM Pinout Box 8815-1 on the C3 PCM harness connector.
2. Connect the S/C Switch harness connectors.
3. Turn the ignition on.
4. Using the scan tool, monitor the S/C Switch voltage readings.
5. Using a Voltmeter check the voltage on the (V71) S/C Switch Sense 1 circuit and the (V72) S/C Switch Sense 2 circuit at the appropriate terminals of the PCM Pinout Box 8815A.
6. Monitor the Voltmeter.
7. Using the scan tool, monitor the S/C Switch voltage readings.

SWITCH POSITION	SWITCH No.1 VOLTAGE VALUE	SWITCH No.2 VOLTAGE VALUE
NO SWITCHES PRESSED	4.31 to 4.78 Volts	4.31 to 4.78 Volts
ON/OFF PRESSED	0.59 to 1.13 Volts	3.53 to 3.92 Volts
RES/ACCEL PRESSED	3.88 to 4.17 Volts	2.04 to 2.47 Volts
SET/DECEL PRESSED	3.16 to 3.56 Volts	1.17 to 1.56 Volts
CANCEL PRESSED	1.59 to 1.99 Volts	2.84 to 3.25 Volts

8. Compare the voltage readings on the Voltmeter to what the scan tool displayed.

Are the voltage readings out of the listed specification and is there less than a 0.2 of a Volt difference between the Voltmeter switch values and the scan tool switch value?

Yes

- Replace the Speed Control Switch.
- Perform the POWERTRAIN VERIFICATION TEST. (Refer to 28 - DTC-Based Diagnostics/MODULE, Powertrain Control (PCM) - Standard Procedure).

No

- Go To 4

4. CLOCKSPRING

1. Disconnect the PCM C3 harness connector.
2. Disconnect the Clockspring C2 harness connector in accordance with the Service Information.
3. Disconnect the Clockspring C8 harness connector.
4. Measure the resistance of the (V71) S/C Switch Sense 1circuit between the C2 and C8 Clockspring connections.
5. Measure the resistance of the (V72) S/C Switch Sense 2 circuit between the C2 and C8 Clockspring connections.
6. Measure the resistance of the (V937) Switch Return circuit between the C2 and C8 Clockspring connections.

Is the resistance above 5.0 Ohms for either reading?

Yes

- Replace the Clockspring in accordance with the Service Information.
- Perform the POWERTRAIN VERIFICATION TEST. (Refer to 28 - DTC-Based Diagnostics/MODULE, Powertrain Control (PCM) - Standard Procedure).

No

- Go To 5

5. STEERING WHEEL JUMPER HARNESS

1. Measure the resistance of the (V71) S/C Switch Sense 1 circuit between the Clockspring C8 harness connector and S/C Switch harness connector.
2. Measure the resistance of the (V72) S/C Switch Sense 2 circuit between the Clockspring C8 harness connector and S/C Switch harness connector.

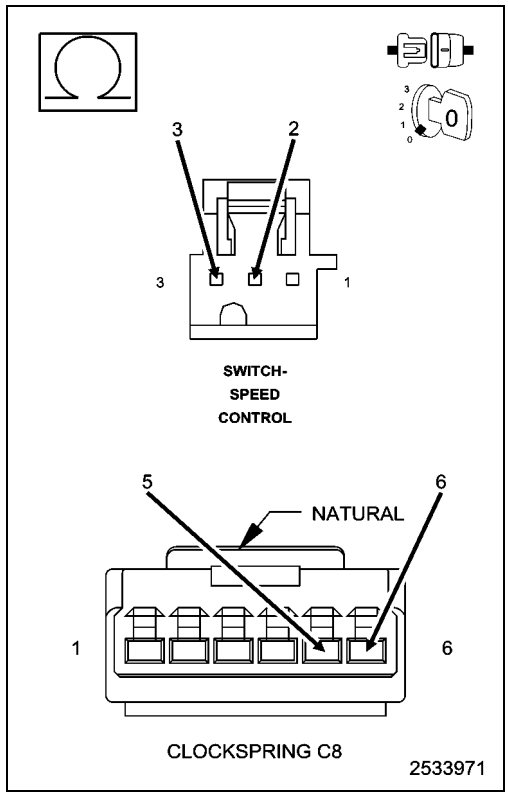

3. Measure the resistance of the (V937) Switch Return circuit between the Clockspring C8 harness connector and S/C Switch harness connector.

Is the resistance above 5.0 Ohms for either reading?

Yes

- Replace the Steering Wheel Jumper narness in accordance with the Service Information.
- Perform the POWERTRAIN VERIFICATION TEST. (Refer to 28 - DTC-Based Diagnostics/MODULE, Powertrain Control (PCM) - Standard Procedure).

No

- Go To 6

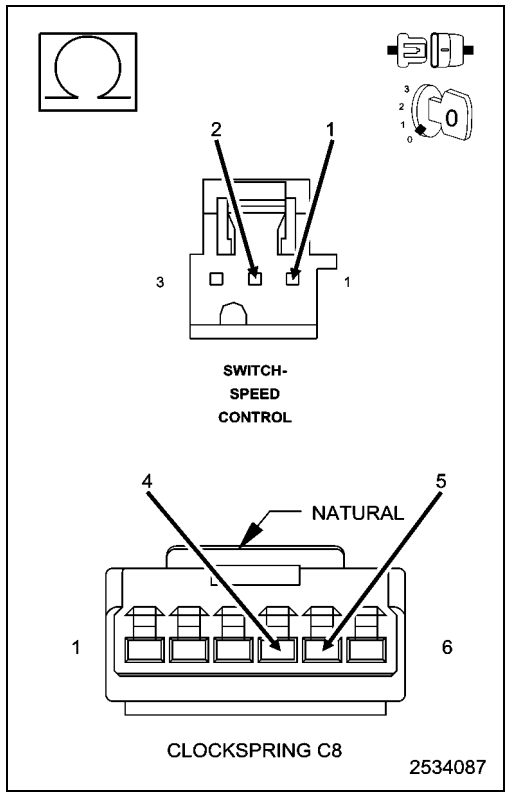

6. S/C SWITCH SIGNAL CIRCUIT SHORTED TO VOLTAGE

1. Turn the ignition on.
2. Measure the voltage on the (V71) and (V72) S/C Switch Sense circuits in the C2 Clockspring harness connector.

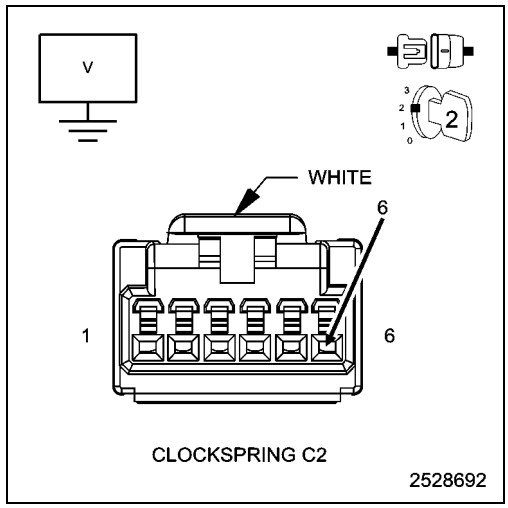

Is there any voltage present?

Yes

- Repair the short to voltage in the (V71) or (V72) S/C Switch Sense circuit.
- Perform the POWERTRAIN VERIFICATION TEST. (Refer to 28 - DTC-Based Diagnostics/MODULE, Powertrain Control (PCM) - Standard Procedure).

No

- Go To 7

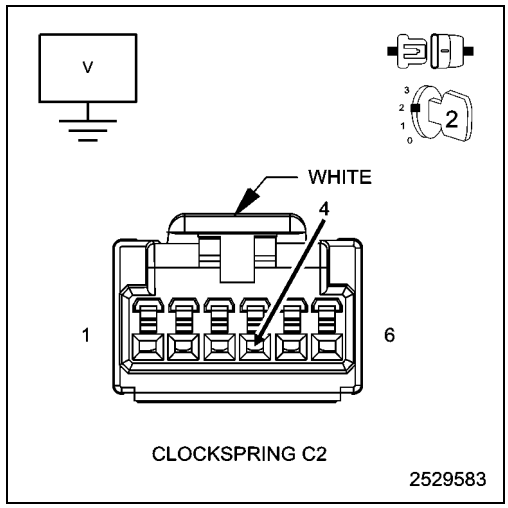

7. S/C SWITCH SENSE CIRCUIT SHORTED TO GROUND

1. Turn the ignition off.
2. Measure the resistance between ground and the (V71) S/C Switch Sense 1 circuit in the Clockspring C2 harness connector.

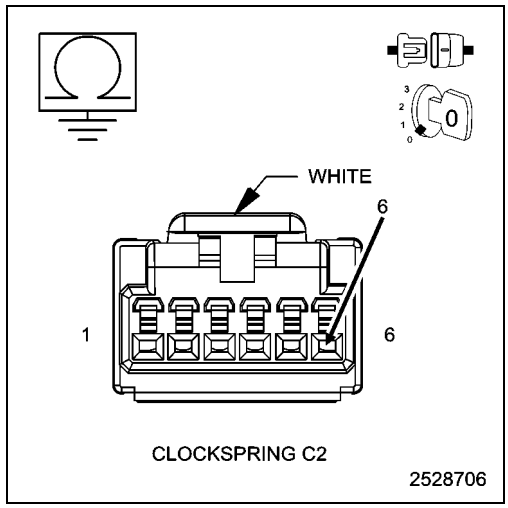

3. Measure the resistance between ground and the (V72) S/C Switch Sense 2 circuit in the Clockspring C2 harness connector.

Is the resistance below 100 Ohms?

Yes

- Repair the short to ground in the (V71) or (V72) S/C Switch Sense circuit.
- Perform the POWERTRAIN VERIFICATION TEST. (Refer to 28 - DTC-Based Diagnostics/MODULE, Powertrain Control (PCM) - Standard Procedure).

No

- Go To 8

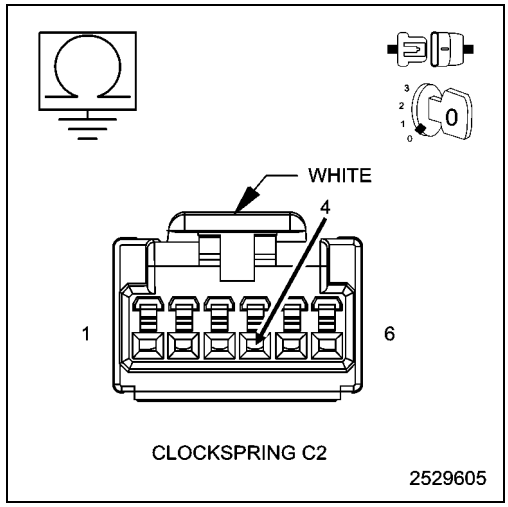

8. S/C SWITCH SENSE CIRCUIT SHORTED TO THE (V937) S/C SWITCH RETURN CIRCUIT

1. Measure the resistance between the (V71) S/C Switch Sense circuit and the (V937) S/C Switch Return circuit in the Clockspring C2 harness connector.

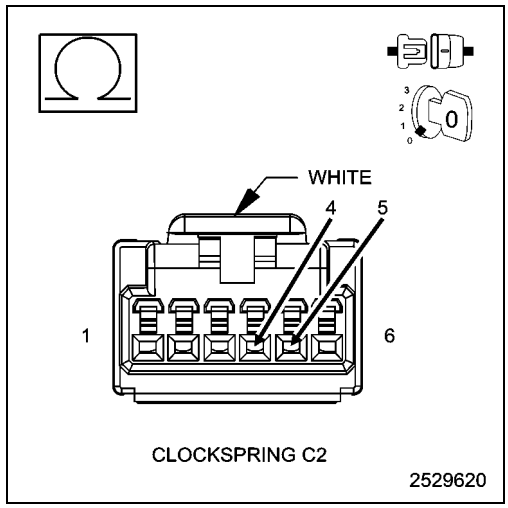

2. Measure the resistance between the (V72) S/C Switch Sense circuit and the (V937) S/C Switch Return circuit in the Clockspring C2 harness connector.

Is the resistance below 5.0 Ohms?

Yes

- Repair the short between the (V71) or (V72) S/C Switch Sense circuit and the (V937) Switch Return circuit.
- Perform the POWERTRAIN VERIFICATION TEST. (Refer to 28 - DTC-Based Diagnostics/MODULE, Powertrain Control (PCM) - Standard Procedure).

No

- Go To 9

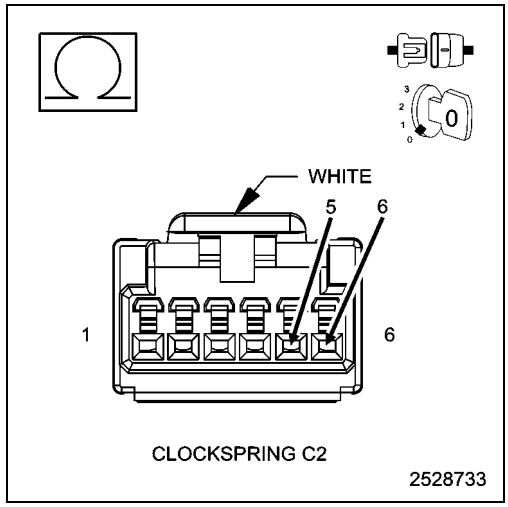

9. S/C SWITCH SENSE CIRCUIT OPEN

1. Connect the PCM C3 harness connector.
2. Measure the resistance of the (V71) and (V72) S/C Switch Sense circuit in the C2 Clockspring harness connector to the appropriate terminals of PCM Pinout Box 8815A.

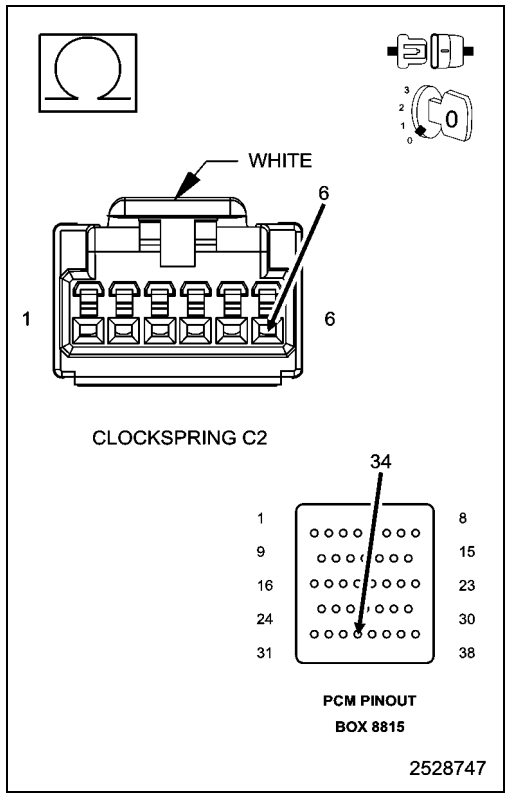

Is the resistance below 5.0 Ohms for each measurement?

Yes

- Go To 10

No

- Repair the excessive resistance in the (V71) or (V72) S/C Switch Sense circuit.
- Perform the POWERTRAIN VERIFICATION TEST. (Refer to 28 - DTC-Based Diagnostics/MODULE, Powertrain Control (PCM) - Standard Procedure).

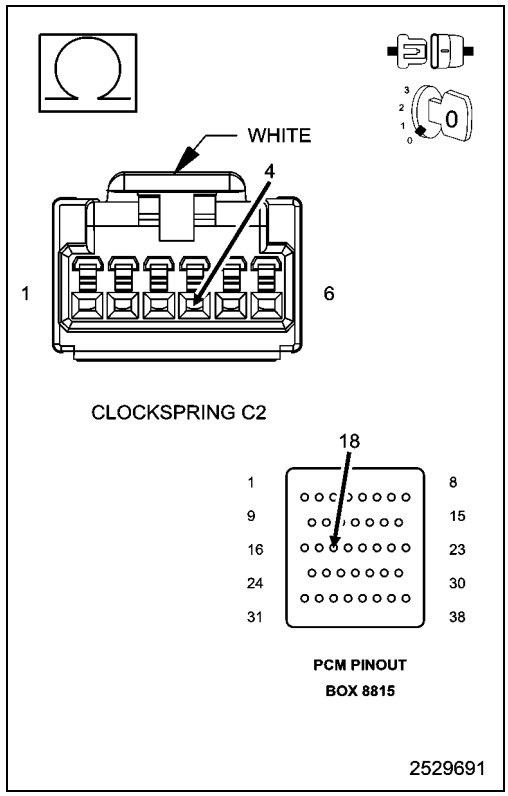

10. (V937) S/C SWITCH RETURN CIRCUIT OPEN

1. Measure the resistance of the (V937) S/C Switch Return circuit from the Clockspring C2 harness connector to the appropriate terminal of PCM Pinout Box 8815A.

Is the resistance below 5.0 Ohms for both measurements?

Yes

- Go To 11

No

- Repair the excessive resistance in the (V937) S/C Switch Return circuit.
- Perform the POWERTRAIN VERIFICATION TEST. (Refer to 28 - DTC-Based Diagnostics/MODULE, Powertrain Control (PCM) - Standard Procedure).

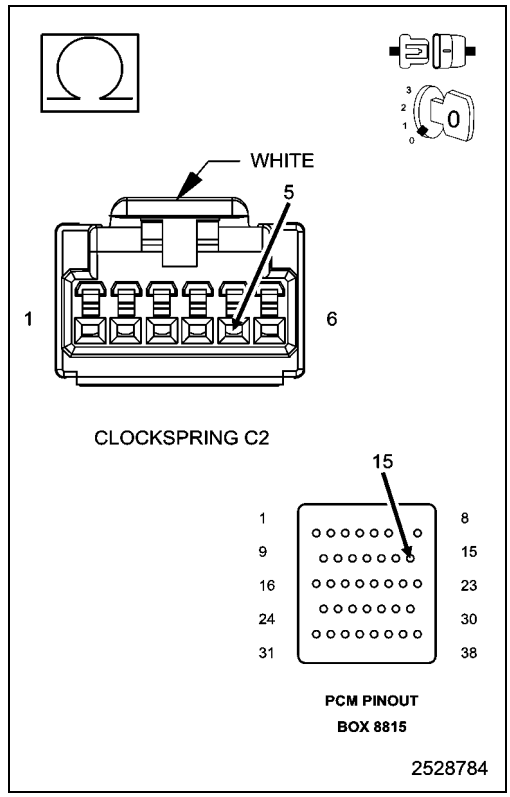

11. POWERTRAIN CONTROL MODULE (PCM)

1. Using the wiring diagram/schematic as a guide, inspect the wiring and connectors between the Speed Control Switch and the Powertrain Control Module (PCM).
2. Look for any chafed, pierced, pinched or partially broken wires.
3. Look for broken, bent, pushed out or corroded terminals. Verify that there is good pin to terminal contact in the Switch and Powertrain Control Module connectors.
4. Perform any Technical Service Bulletins that may apply.

Were there any problems found?

Yes

- Repair as necessary.
- Perform the POWERTRAIN VERIFICATION TEST. (Refer to 28 - DTC-Based Diagnostics/MODULE, Powertrain Control (PCM) - Standard Procedure).

No

- Replace and program the Powertrain Control Module in accordance with the Service Information.
- Perform the POWERTRAIN VERIFICATION TEST. (Refer to 28 - DTC-Based Diagnostics/MODULE, Powertrain Control (PCM) - Standard Procedure).

■ P1607-PCM INTERNAL SHUTDOWN TIMER SLOW RATIONALITY

For a complete wiring diagram **Refer to the Wiring Information**.

Theory of Operation

The PCM compares actual shutdown time to a calculated shutdown time value. The calculated shut down time value is based on the amount the ECT should drop after a completely warmed up engine is shut down for a minimum of 8 hours. If the difference between actual shutdown time and the calculated shut down time is greater than a maximum value, a one trip failure will set. The shutdown time is measured again after 1 hour of ignition off time following the next engine warm up cycle. The PCM compares the shutdown time to a calculated value. If the difference is greater than a maximum value, the MIL is illuminated and a DTC will set.

- **When Monitored:**

  With the engine running after a cycle when a complete engine warm up was achieved, the difference between engine coolant temperature and ambient air temperature less than or equal to 10° C (50° F), and battery voltage greater than 10 volts.
- **Set Condition:**

  This DTC sets if the engine coolant temp does not drop enough or drops too much during engine off time. This DTC may also set if the controller timer is inaccurate. Two Trip Fault. Three good trips to turn off the MIL.

Possible Causes
ENGINE COOLING CONDITIONS THAT MAY SET THIS DTC
ENGINE COOLANT LEVEL
PCM INTERNAL TIMER

Always perform the Pre-Diagnostic Troubleshooting procedure before proceeding. (Refer to 28 - DTC-Based Diagnostics/MODULE, Powertrain Control (PCM) - Standard Procedure).

1. ENGINE COOLANT INSPECTION

NOTE: This DTC will set if the engine cools quicker than is should compared to engine off times. If the customer washed a hot engine with the engine off, a One Trip Failure will set. If the vehicle is parked in a highly ventilated area or has a large fan blowing on it which might cause the engine to cool quicker than expected this DTC may set.

WARNING: Do not remove or loosen the radiator cap with the system hot and under pressure. Serious burns from coolant can occur.

1. Turn the ignition off.
2. Allow the engine to cool enough to allow the pressure in the coolant system to drop enough to safely remove the radiator cap.
3. Check the coolant level and condition.

Is the engine coolant level filled to the proper level?

Yes

- Go To 2

No

- Add the appropriate type and amount of engine coolant. (Refer to 07 - Cooling - Standard Procedure)
- Perform the POWERTRAIN VERIFICATION TEST. (Refer to 28 - DTC-Based Diagnostics/MODULE, Powertrain Control (PCM) - Standard Procedure)

2. POWERTRAIN CONTROL MODULE (PCM)

1. Turn the ignition on.
2. With the scan tool under PCM/NGC Data Display, locate the Ignition Off Time value.
3. While monitoring a stop watch, turn the Ignition off for 10 minutes, watch the stop watch for those 10 minutes, and then turn the Ignition on.
4. With the scan tool under Data Functions, check the Ignition Off Time value again.

Does the Ignition Time Off value on the scan tool match the actual time you had the Ignition off on the stop watch?

Yes

- The conditions that set the DTC are not active at this time. For further assistance refer to the INTERMITTENT CONDITION Diagnostic Procedure. (Refer to 28 - DTC-Based Diagnostics/MODULE, Powertrain Control (PCM) - Standard Procedure)

No

- Replace and program the Powertrain Control Module per Service Information.
- Perform the POWERTRAIN VERIFICATION TEST. (Refer to 28 - DTC-Based Diagnostics/MODULE, Powertrain Control (PCM) - Standard Procedure)

P1618-SENSOR REFERENCE VOLTAGE 1 CIRCUIT ERRATIC

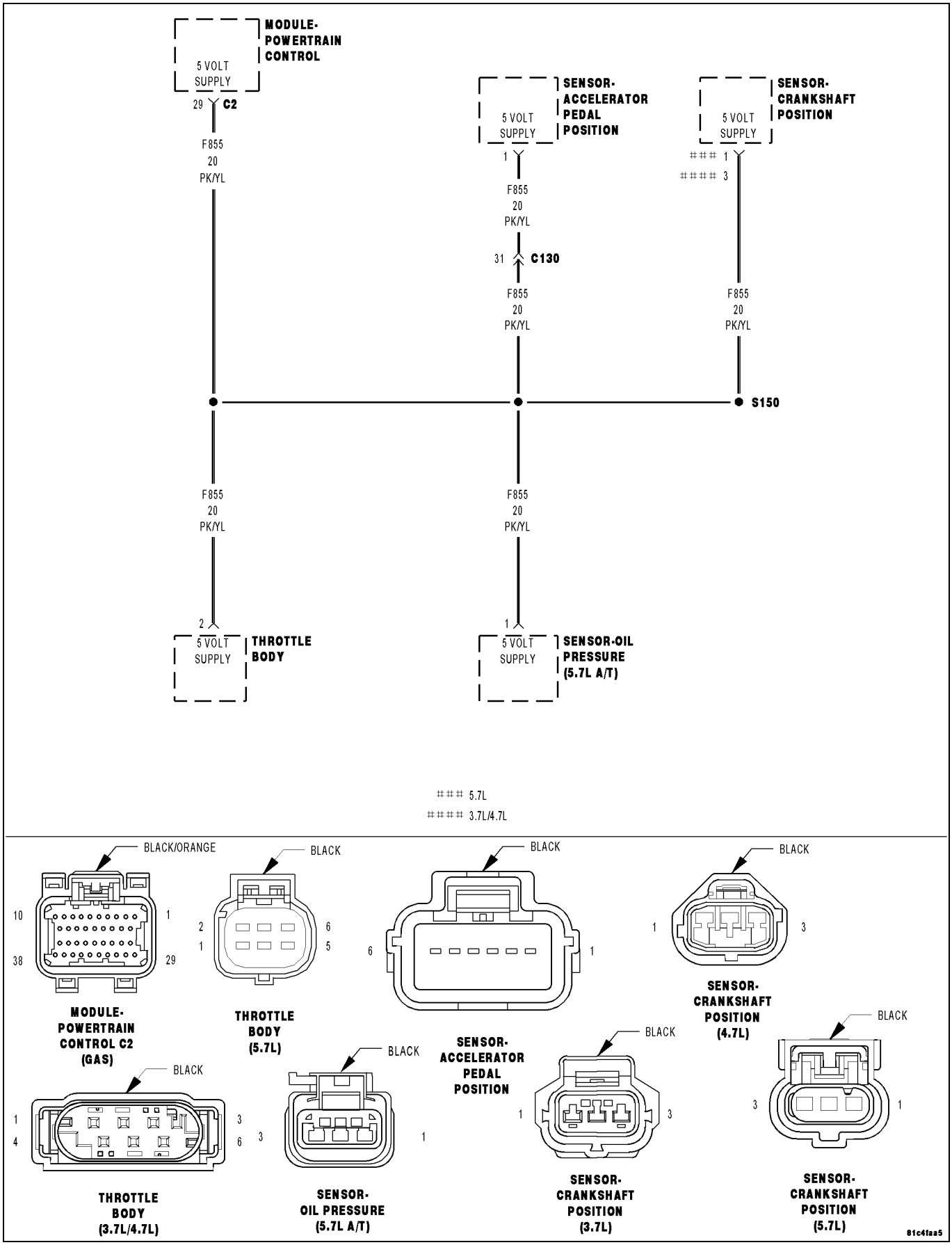

For a complete wiring diagram **Refer to the Wiring Information**.

- **When Monitored:**
  Ignition on.
- **Set Condition:**
  When the PCM recognizes the Primary 5-volt Supply circuit voltage is varying too much too quickly. One Trip Fault. ETC light is flashing.

Possible Causes
(F855) PRIMARY 5-VOLT SUPPLY SHORTED TO GROUND
(F855) PRIMARY 5-VOLT SUPPLY SHORTED TO VOLTAGE
(F855) PRIMARY 5-VOLT SUPPLY CIRCUIT OPEN
5-VOLT SENSOR
POWERTRAIN CONTROL MODULE (PCM)

Always perform the Pre-Diagnostic Troubleshooting procedure before proceeding. (Refer to 28 - DTC-Based Diagnostics/MODULE, Powertrain Control (PCM) - Standard Procedure).

1. ACTIVE DTC

NOTE: Improperly installed aftermarket accessories can cause this DTC to set. Check for any improperly installed aftermarket accessories before continuing with this test.

1. Start the engine and allow it to idle for at least 60 seconds.

WARNING: When the engine is operating, do not stand in direct line with the fan. Do not put your hands near the pulleys, belts or fan. Do not wear loose clothing. Failure to follow these instructions may result in possible serious or fatal injury.

2. With a scan tool, select View DTCs.

Is the status Active for this DTC?

Yes

- Go To 2

No

- Refer to the INTERMITTENT CONDITION Diagnostic Procedure. (Refer to 28 - DTC-Based Diagnostics/MODULE, Powertrain Control (PCM) - Standard Procedure)

2. (F855) PRIMARY 5-VOLT SUPPLY CIRCUIT SHORTED TO GROUND

1. Turn the ignition off.
2. Disconnect the C2 PCM harness connector.
3. Disconnect all the Sensors that share the (F855) Primary 5-volt Supply circuit.
4. Measure the resistance between ground and the (F855) Primary 5-volt Supply circuit in the CKP Sensor harness connector.

Is the resistance below 100 ohms?

Yes

- Repair the short to ground in the (F855) Primary 5-volt Supply circuit.
- Perform the POWERTRAIN VERIFICATION TEST. (Refer to 28 - DTC-Based Diagnostics/MODULE, Powertrain Control (PCM) - Standard Procedure)

No

- Go To 3

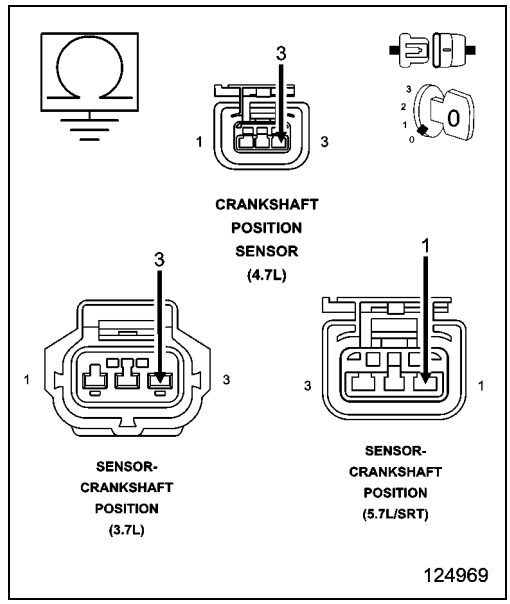

3. SENSOR SHORTED TO GROUND

1. Connect the C2 PCM harness connector and all the previously disconnected Sensors except for the CKP Sensor harness connector.
2. Ignition on, engine not running.
3. Measure the voltage on the (F855) Primary 5-volt Supply circuit at the Throttle Body harness connector.

CAUTION: You must Turn the Ignition Off when disconnecting any of the Sensor harness connectors and Turn the Ignition On to check the voltage readings.

4. While monitoring the voltage, disconnect each Sensor harness connector that shares the (F855) Primary 5-volt Supply circuit, one at a time.

Does the voltage increase above 4.5 volts when disconnecting any of the Sensor harness connectors?

Yes

- Replace the Sensor that causes the (F855) Primary 5-volt Supply circuit voltage to increase when disconnected.
- Perform the POWERTRAIN VERIFICATION TEST. (Refer to 28 - DTC-Based Diagnostics/MODULE, Powertrain Control (PCM) - Standard Procedure)

No

- Go To 4

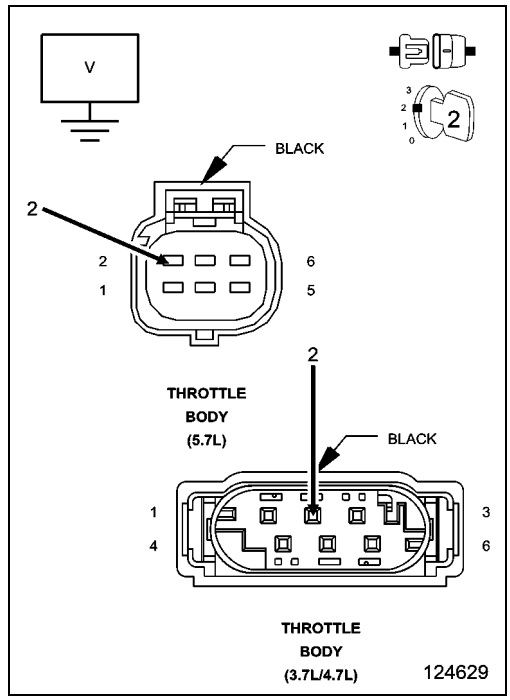

4. 5-VOLT SENSOR

1. Turn the ignition off.
2. Connect all the previously disconnected Sensors except for the CKP Sensor harness connector.
3. Ignition on, engine not running.
4. Measure the voltage on the (F855) Primary 5-volt Supply circuit at the CKP Sensor harness connector.

Is the voltage between 4.8 and 5.2 volts?

Yes

- Replace the Crank Position Sensor.
- Perform the POWERTRAIN VERIFICATION TEST. (Refer to 28 - DTC-Based Diagnostics/MODULE, Powertrain Control (PCM) - Standard Procedure)

No

- Go To 5

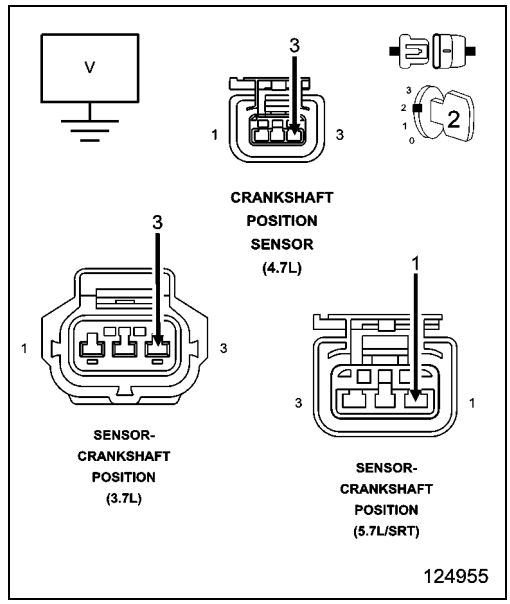

5. (F855) PRIMARY 5-VOLT SUPPLY SHORTED TO VOLTAGE

1. Turn the ignition off.
2. Disconnect the C2 PCM harness connector.
3. Disconnect all the Sensors that share the (F855) Primary 5-volt Supply circuit.
4. Ignition on, engine not running.
5. Measure the voltage on the (F855) Primary 5-volt Supply circuit in the CKP Sensor harness connector.

Is there any voltage present?

Yes

- Repair the short to voltage in the (F855) Primary 5-volt Supply circuit.
- Perform the POWERTRAIN VERIFICATION TEST. (Refer to 28 - DTC-Based Diagnostics/MODULE, Powertrain Control (PCM) - Standard Procedure)

No

- Go To 6

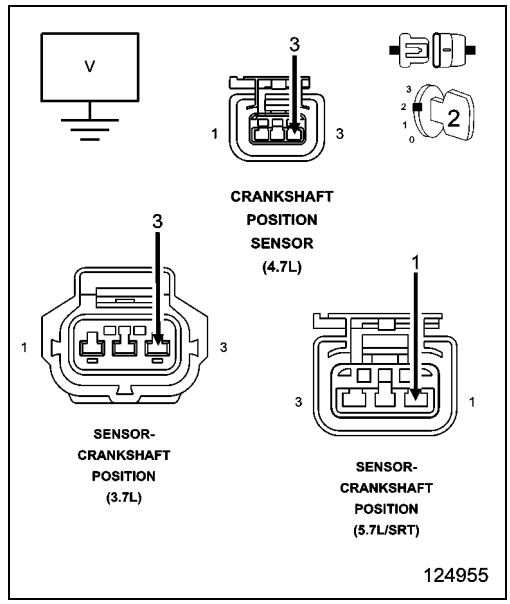

6. (F855) PRIMARY 5-VOLT SUPPLY CIRCUIT OPEN

1. Turn the ignition off.
2. Reconnect all the sensors that were disconnected in the previous step except for the CKP Sensor harness connector.

CAUTION: Do not probe the PCM harness connectors. Probing the PCM harness connectors will damage the PCM terminals resulting in poor terminal to pin connection. Install the PCM Pinout Box Kit, NGC, 38 Position 8815A to perform diagnosis.

3. Measure the resistance in the (F855) Primary 5-volt Supply circuit from the Sensor harness connector to the appropriate terminal of special tool #8815A.
4. It may be necessary to perform this test from every sensor that uses the (F855) Primary 5-volt Supply circuit.

Is the resistance below 5.0 ohms?

Yes

- Go To 7

No

- Repair the open in the (F855) Primary 5-volt Supply circuit.
- Perform the POWERTRAIN VERIFICATION TEST. (Refer to 28 - DTC-Based Diagnostics/MODULE, Powertrain Control (PCM) - Standard Procedure)

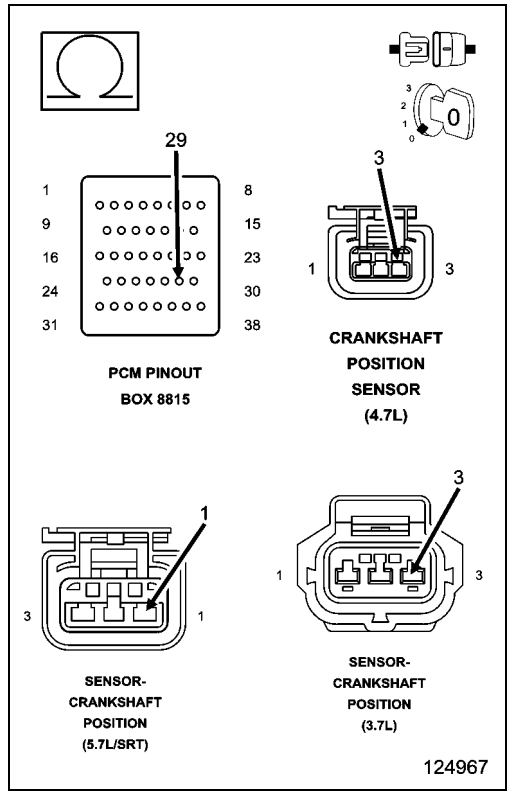

7. POWERTRAIN CONTROL MODULE (PCM)

1. Using the wiring diagram/schematic as a guide, inspect the wiring and connectors between the Related Sensors and the Powertrain Control Module (PCM).
2. Look for any chafed, pierced, pinched, or partially broken wires.
3. Look for broken, bent, pushed out or corroded terminals. Verify that there is good pin to terminal contact in the Related Sensor and the Powertrain Control Module connectors.
4. Refer to any Technical Service Bulletins that may apply.

Were there any problems found?

Yes

- Repair as necessary.
- Perform the POWERTRAIN VERIFICATION TEST. (Refer to 28 - DTC-Based Diagnostics/MODULE, Powertrain Control (PCM) - Standard Procedure)

No

- Replace and program the Powertrain Control Module per Service Information.
- Perform the POWERTRAIN VERIFICATION TEST. (Refer to 28 - DTC-Based Diagnostics/MODULE, Powertrain Control (PCM) - Standard Procedure)

P1628-SENSOR REFERENCE VOLTAGE 2 CIRCUIT ERRATIC

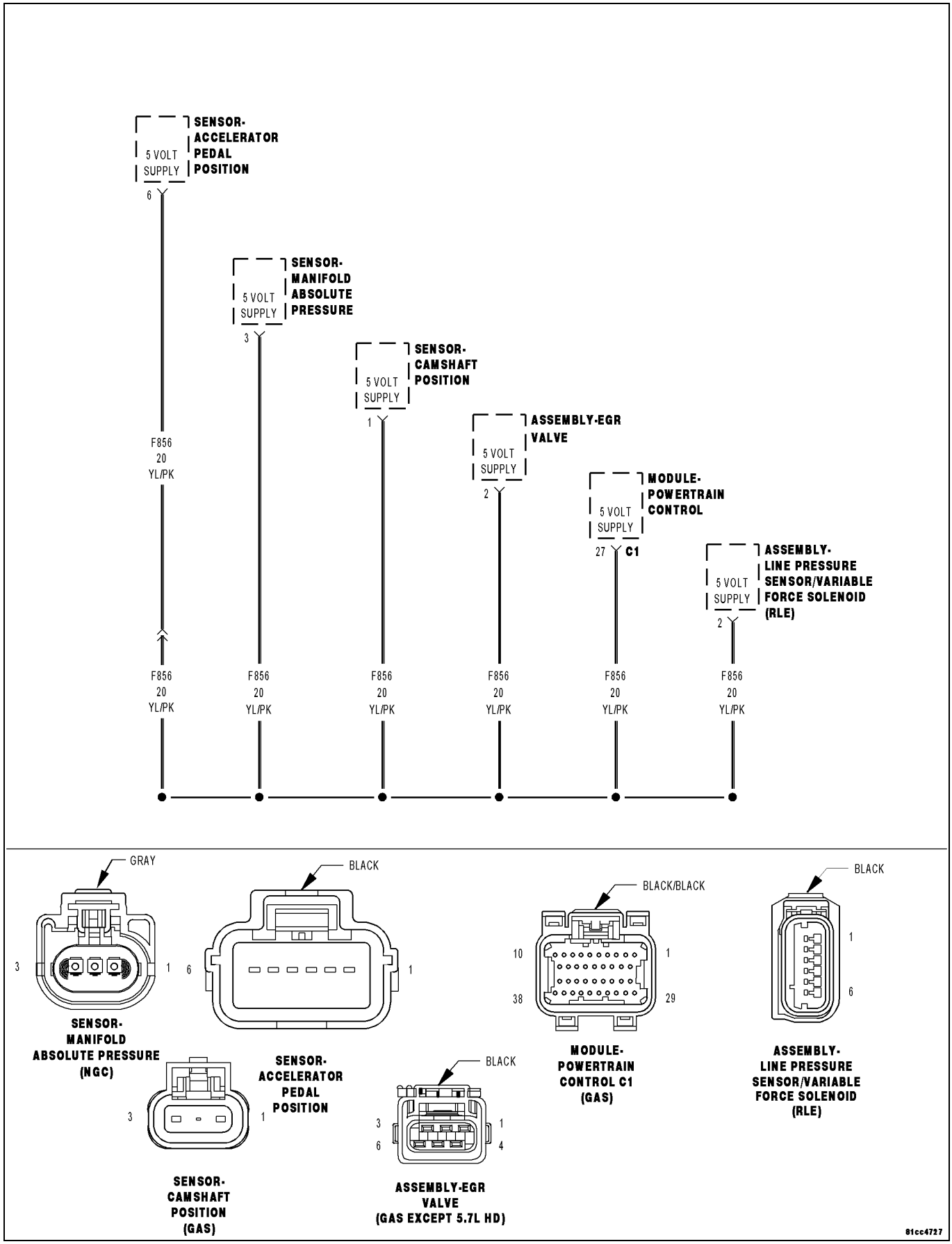

For a complete wiring diagram **Refer to the Wiring Information**.

- **When Monitored:**
  Ignition on.
- **Set Condition:**
  When the PCM recognizes the Auxiliary 5-volt Supply circuit voltage is varying too much too quickly. One Trip Fault. ETC light is flashing.

Possible Causes
(F856) AUXILIARY 5-VOLT SUPPLY CIRCUIT SHORTED TO GROUND
(F856) AUXILIARY 5-VOLT SUPPLY CIRCUIT SHORTED TO VOLTAGE
(F856) AUXILIARY 5-VOLT SUPPLY CIRCUIT OPEN
5-VOLT SENSOR
POWERTRAIN CONTROL MODULE (PCM)

Always perform the Pre-Diagnostic Troubleshooting procedure before proceeding. (Refer to 28 - DTC-Based Diagnostics/MODULE, Powertrain Control (PCM) - Standard Procedure).

1. ACTIVE DTC

NOTE: Improperly installed aftermarket accessories can cause this DTC to set. Check for any improperly installed aftermarket accessories before continuing with this test.

1. Start the engine and allow it to idle for at least 60 seconds.

WARNING: When the engine is operating, do not stand in direct line with the fan. Do not put your hands near the pulleys, belts or fan. Do not wear loose clothing. Failure to follow these instructions may result in possible serious or fatal injury.

2. With a scan tool, select View DTCs.

Is the DTC Active at this time?

Yes

- Go To 2

No

- Refer to the INTERMITTENT CONDITION Diagnostic Procedure. (Refer to 28 - DTC-Based Diagnostics/MODULE, Powertrain Control (PCM) - Standard Procedure)

2. (F856) AUXILIARY 5-VOLT SUPPLY CIRCUIT SHORTED TO GROUND

1. Turn the ignition off.
2. Disconnect the C1 PCM harness connector.
3. Disconnect all the Sensors that share the (F856) Auxiliary 5-volt Supply circuit.
4. Measure the resistance between ground and the (F856) Auxiliary 5-volt Supply circuit at the CMP Sensor harness connector.

Is the resistance below 100 ohms?

Yes

- Repair the short to ground in the (F856) Auxiliary 5-volt Supply circuit.
- Perform the POWERTRAIN VERIFICATION TEST. (Refer to 28 - DTC-Based Diagnostics/MODULE, Powertrain Control (PCM) - Standard Procedure)

No

- Go To 3

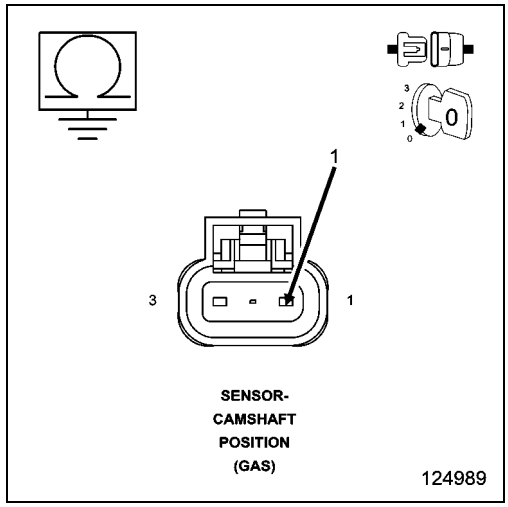

3. SENSOR SHORTED TO GROUND

1. Connect the C1 PCM harness connector and all the previously disconnected Sensors except for the CMP Sensor harness connector.
2. Ignition on, engine not running.
3. Measure the voltage on the (F856) Auxiliary 5-volt Supply circuit in the CMP Sensor harness connector.

CAUTION: You must Turn the Ignition OFF when disconnecting any of the Sensor harness connectors and Turn the Ignition On to check the voltage readings.

4. While monitoring the voltage, disconnect each Sensor harness connector that shares the (F856) Auxiliary 5-volt Supply circuit, one at a time.

Does the voltage increase above 4.5 volts when disconnecting any of the Sensor harness connectors?

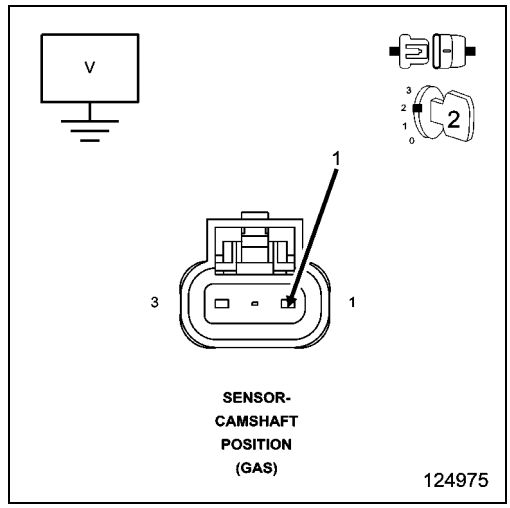

Yes

- Replace the Sensor that causes the (F856) Auxiliary 5-volt Supply circuit voltage to increase when disconnected.
- Perform the POWERTRAIN VERIFICATION TEST. (Refer to 28 - DTC-Based Diagnostics/MODULE, Powertrain Control (PCM) - Standard Procedure)

No

- Go To 4

4. 5-VOLT SENSOR

1. Turn the ignition off.
2. Connect all the previously disconnected Sensors except for the CMP Sensor harness connector.
3. Ignition on, engine not running.
4. Measure the voltage on the (F856) Auxiliary 5-volt Supply circuit in the CMP Sensor harness connector.

Is the voltage below 4.5 volts?

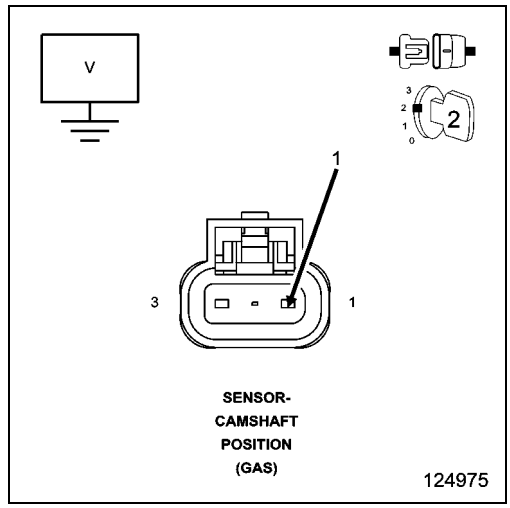

Yes

- Go To 5

No

- Replace the Cam Position Sensor.
- Perform the POWERTRAIN VERIFICATION TEST. (Refer to 28 - DTC-Based Diagnostics/MODULE, Powertrain Control (PCM) - Standard Procedure)

5. (F856) AUXILIARY 5-VOLT SUPPLY CIRCUIT SHORTED TO VOLTAGE

1. Turn the ignition off.
2. Disconnect the C1 PCM harness connector.
3. Disconnect all the Sensors that share the (F856) Auxiliary 5-volt Supply circuit.
4. Ignition on, engine not running.
5. Measure the voltage on the (F856) Auxiliary 5-volt Supply circuit at the CMP Sensor harness connector.

Is there any voltage present?

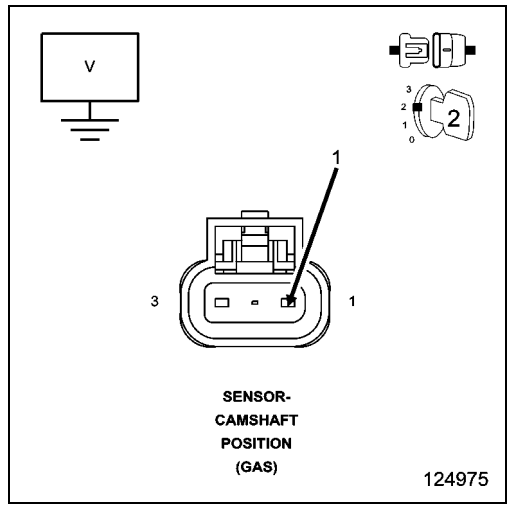

Yes

- Repair the short to voltage in the (F856) Auxiliary 5-volt Supply circuit.
- Perform the POWERTRAIN VERIFICATION TEST. (Refer to 28 - DTC-Based Diagnostics/MODULE, Powertrain Control (PCM) - Standard Procedure)

No

- Go To 6

6. (F856) AUXILIARY 5-VOLT SUPPLY CIRCUIT OPEN

1. Turn the ignition off.
2. Reconnect all the sensors that were disconnected in the previous step except the CMP Sensor harness connector.

CAUTION: Do not probe the PCM harness connectors. Probing the PCM harness connectors will damage the PCM terminals resulting in poor terminal to pin connection. Install the PCM Pinout Box Kit, NGC, 38 Position 8815A to perform diagnosis.

3. Measure the resistance in the (F856) Auxiliary 5-volt Supply circuit from the Sensor harness connector to the appropriate terminal of special tool #8815A.
4. It may be necessary to perform this test from every sensor that uses the (F856) Auxiliary 5-volt Supply circuit.

Is the resistance below 5.0 ohms?

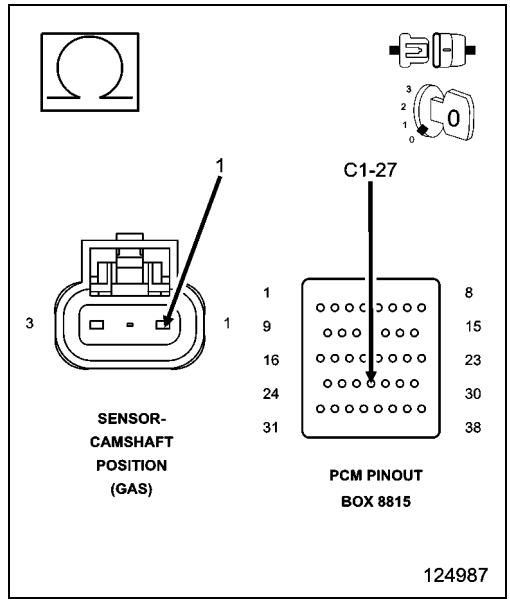

Yes

- Go To 7

No

- Repair the open in the (F856) Auxiliary 5-volt Supply circuit.
- Perform the POWERTRAIN VERIFICATION TEST. (Refer to 28 - DTC-Based Diagnostics/MODULE, Powertrain Control (PCM) - Standard Procedure)

7. POWERTRAIN CONTROL MODULE (PCM)

1. Using the wiring diagram/schematic as a guide, inspect the wiring and connectors between the Related Sensors and the Powertrain Control Module (PCM).
2. Look for any chafed, pierced, pinched, or partially broken wires.
3. Look for broken, bent, pushed out or corroded terminals. Verify that there is good pin to terminal contact in the Related Sensor and the Powertrain Control Module connectors.
4. Refer to any Technical Service Bulletins that may apply.

Were there any problems found?

Yes

- Repair as necessary.
- Perform the POWERTRAIN VERIFICATION TEST. (Refer to 28 - DTC-Based Diagnostics/MODULE, Powertrain Control (PCM) - Standard Procedure)

No

- Replace and program the Powertrain Control Module per Service Information.
- Perform the POWERTRAIN VERIFICATION TEST. (Refer to 28 - DTC-Based Diagnostics/MODULE, Powertrain Control (PCM) - Standard Procedure)

P1696-EEPROM MEMORY WRITE DENIED/INVALID

For a complete wiring diagram **Refer to the Wiring Information**.

- **When Monitored:**

  Continuously with the ignition on.
- **Set Condition:**

  An attempt to program/write to the internal EEPROM failed, Also checks at power down. One Trip Fault. Three good trips to turn off the MIL.

Possible Causes
POWERTRAIN CONTROL MODULE (PCM) SOFTWARE UPDATE
EXCESSIVE RESISTANCE IN THE PCM POWER OR GROUND CIRCUITS
POWERTRAIN CONTROL MODULE (PCM)

Always perform the Pre-Diagnostic Troubleshooting procedure before proceeding. (Refer to 28 - DTC-Based Diagnostics/MODULE, Powertrain Control (PCM) - Standard Procedure).

1. DTC IS ACTIVE

NOTE: Diagnose and repair any other DTCs set in the PCM before proceeding with this test.

1. Turn the ignition on.
2. With the scan tool, Clear DTCs.
3. Start the engine and allow it to reach operating temperature.

WARNING: When the engine is operating, do not stand in direct line with the fan. Do not put your hands near the pulleys, belts or fan. Do not wear loose clothing. Failure to follow these instructions may result in possible serious or fatal injury.

NOTE: It may be necessary to test drive the vehicle in order for this DTC to set.

4. With the scan tool, select View DTCs.

Is the DTC Active at this time?

Yes

- Go to 2

No

- Refer to the INTERMITTENT CONDITION Diagnostic Procedure. (Refer to 28 - DTC-Based Diagnostics/MODULE, Powertrain Control (PCM) - Standard Procedure)

2. PCM ODOMETER MILEAGE NOT PROGRAMMED

1. Turn the ignition on.
2. With the scan tool, attempt to perform the Program PCM Odometer function.
3. With the scan tool, Clear DTCs.
4. Start the engine.
5. Allow the engine to reach normal operating temperature.
6. With a scan tool, select View DTCs.

Is the status Active for this DTC?

Yes

- Go to 3

No

- The SRI mileage has been successfully programmed into the PCM. Test is complete.
- Perform the POWERTRAIN VERIFICATION TEST. (Refer to 28 - DTC-Based Diagnostics/MODULE, Powertrain Control (PCM) - Standard Procedure).

3. CHECKING THE PCM POWER AND GROUND CIRCUITS

1. Perform the diagnostic procedure for *CHECKING THE PCM POWER AND GROUND CIRCUITS.
2. Using the wiring diagram/schematic as a guide, inspect the Powertrain Control Module (PCM) wiring and connectors.
3. Look for any chafed, pierced, pinched, or partially broken wires.
4. Look for broken, bent, pushed out or corroded terminals.
5. Refer to any Technical Service Bulletins that may apply.

Were any problems found?

Yes

- Repair as necessary.
- Perform the POWERTRAIN VERIFICATION TEST. (Refer to 28 - DTC-Based Diagnostics/MODULE, Powertrain Control (PCM) - Standard Procedure).

No

- Go to 4

4. POWERTRAIN CONTROL MODULE (PCM)

1. Turn the ignition on.
2. With the scan tool, attempt to perform the Program PCM Odometer function.
3. With the scan tool, Clear DTCs.
4. Start the engine.
5. Allow the engine to reach normal operating temperature.
6. With a scan tool, select View DTCs.

Is the DTC Active at this time?

Yes

- Replace and program the Powertrain Control Module (PCM) in accordance with the Service Information.
- Perform the POWERTRAIN VERIFICATION TEST. (Refer to 28 - DTC-Based Diagnostics/MODULE, Powertrain Control (PCM) - Standard Procedure).

No

- The SRI mileage has been successfully programmed into the PCM. Test is complete.
- Perform the POWERTRAIN VERIFICATION TEST. (Refer to 28 - DTC-Based Diagnostics/MODULE, Powertrain Control (PCM) - Standard Procedure).

P1697-EMR (SRI) MILEAGE NOT STORED

For a complete wiring diagram, **refer to the Wiring Information**.

- **When Monitored:**
  Continuously with the ignition on.
- **Set Condition:**
  The Powertrain Control Module (PCM) Odometer mileage has not been programmed into the PCM.

Possible Causes
PCM ODOMETER MILEAGE NOT PROGRAMMED
POWERTRAIN CONTROL MODULE (PCM)

Always perform the Pre-Diagnostic Troubleshooting procedure before proceeding. (Refer to 28 - DTC-Based Diagnostics/MODULE, Powertrain Control (PCM) - Standard Procedure).

1. PCM ODOMETER MILEAGE NOT PROGRAMMED

1. Turn the ignition on.
2. Using the scan tool, attempt to perform the Program PCM Odometer function.
3. Using the scan tool, clear DTCs.
4. Start the engine.
5. Allow the engine to reach normal operating temperature.
6. With a scan tool, select View DTCs.

Is the DTC Active at this time?

Yes

- Replace and program the Powertrain Control Module in accordance with the Service Information.
- Perform the POWERTRAIN VERIFICATION TEST. (Refer to 28 - DTC-Based Diagnostics/MODULE, Powertrain Control (PCM) - Standard Procedure).

No

- The SRI mileage has been successfully programmed into the PCM. Test is complete.
- Perform the POWERTRAIN VERIFICATION TEST. (Refer to 28 - DTC-Based Diagnostics/MODULE, Powertrain Control (PCM) - Standard Procedure).

P2008-SHORT RUNNER VALVE (SRV) CONTROL CIRCUIT

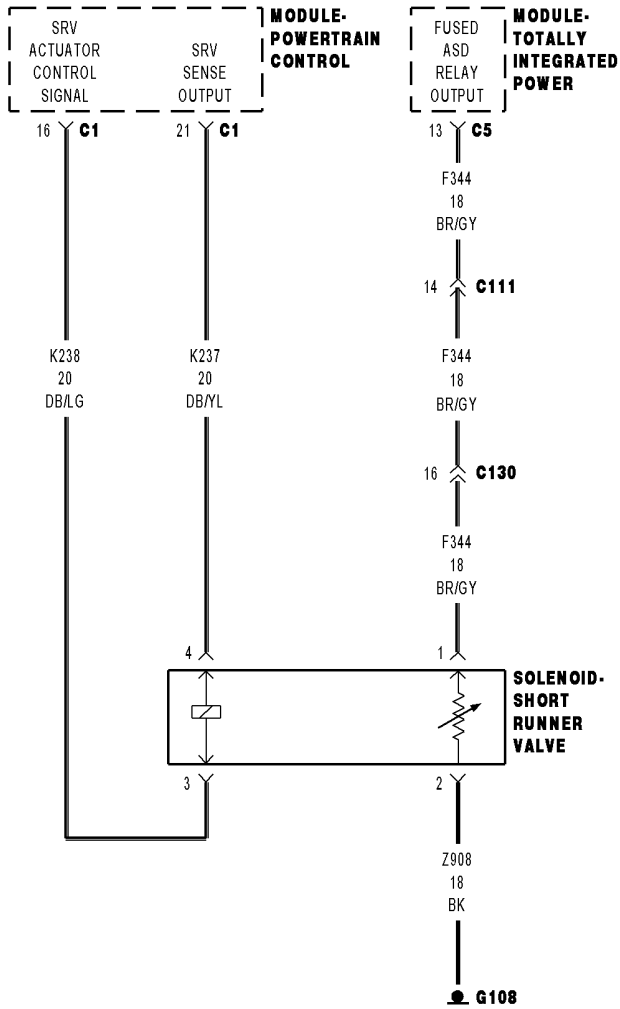

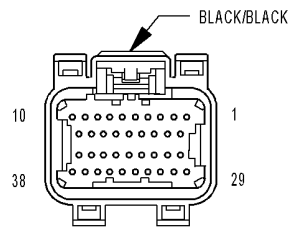

MODULE- POWERTRAIN CONTROL C1 (GAS)

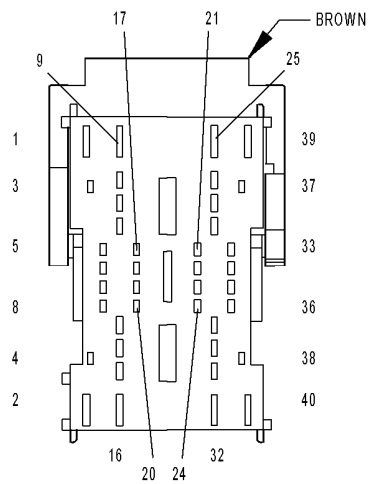

MODULE- TOTALLY INTEGRATED POWER C5

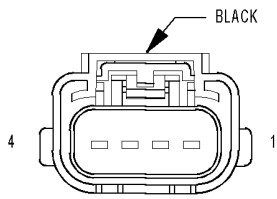

SOLENOID- SHORT RUNNER VALVE

01247696

For a complete wiring diagram, **refer to the Wiring Information**.

Theory of Operation

The engine performance and power output is enhanced through the use of the “Short Runner Valve” (SRV) system. The SRV system allows the intake charge air to bypass the long intake manifold runners between the intake manifold plenum and the intake manifold interface to the cylinder heads by providing a shorter runner directly between the plenum and the cylinder head interface The SRV position is controlled by a pneumatic/spring actuator and electronic solenoid valve. When the solenoid is not energized (the “rest” position), the SRV is held in the closed position. When the solenoid is energized the SRV is moved and held in its opened position. There is a set of enable conditions including a minimum Engine Coolant Temperature (ECT) and Ambient Air Temperature (AAT), SRV enable and Powertrain Coordinator load enable condition. If any of these conditions are not met, then the SRV valve is de-energized (closed).

- **When Monitored:**

  With the engine run time above a calibrated value, battery voltage greater than 10.4 Volts, ECT within a specific range and the Short Runner Valve Assembly control active.
- **Set Condition:**

  This Powertrain Control Module (PCM) compares the circuit feedback to a calibrated closed range when the circuit is de-energized or to a calibrated open range when the circuit is energized. If the value is determined to be out of the calibrated range in either the de-energized or energized state for more than a calibrated amount of time, this DTC will set.

Possible Causes
(F344) ASD RELAY OUTPUT CIRCUIT OPEN OR HIGH RESISTANCE
(Z908) SRV GROUND CIRCUIT OPEN OR HIGH RESISTANCE
(K238) SRV CONTROL CIRCUIT SHORTED TO GROUND
(K238) SRV CONTROL CIRCUIT SHORTED TO VOLTAGE
(K238) SRV CONTROL CIRCUIT OPEN OR HIGH RESISTANCE
SHORT RUNNER VALVE ASSEMBLY
POWERTRAIN CONTROL MODULE (PCM)

Always perform the Pre-Diagnostic Troubleshooting procedure before proceeding. (Refer to 28 - DTC-Based Diagnostics/MODULE, Powertrain Control (PCM) - Standard Procedure).

1. DTC IS ACTIVE

1. Turn the ignition on.
2. With the scan tool, Clear DTCs in the Powertrain Control Module (PCM).
3. With the scan tool, actuate the SRV Solenoid Control State.
4. With the scan tool, select View DTCs.

Is the status Active for this DTC?

Yes

- Go To 2

No

- Perform the INTERMITTENT CONDITION diagnostic procedure. (Refer to 28 - DTC-Based Diagnostics/MODULE, Powertrain Control (PCM) - Standard Procedure).

2. (F344) ASD RELAY OUTPUT CIRCUIT OPEN OR HIGH RESISTANCE

1. Turn the ignition off.
2. Disconnect the Short Runner Valve Assembly harness connector.
3. Turn the ignition on.
4. With the scan tool, actuate the Auto Shutdown (ASD) Relay Control State.
5. Using a 12-volt test light connected to ground, check the (F344) ASD Relay Output circuit in the Short Runner Valve Assembly harness connector.

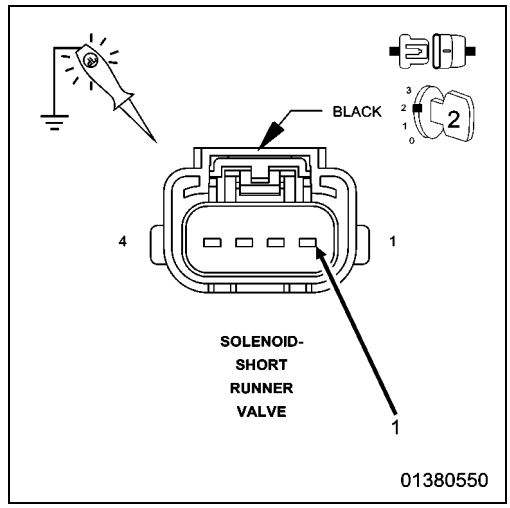

NOTE: The test light should be illuminated and bright. Compare the brightness to that of a direct connection to the battery.

Is the test light illuminated and bright?

Yes

- Go To 3

No

- Repair the (F344) ASD Relay Output circuit for an open circuit or high resistance.
- Perform the POWERTRAIN VERIFICATION TEST. (Refer to 28 - DTC-Based Diagnostics/MODULE, Powertrain Control (PCM) - Standard Procedure).

3. (Z908) SRV GROUND CIRCUIT OPEN CIRCUIT OR HIGH RESISTANCE

1. Turn the ignition off.
2. Measure the resistance of the (Z908) SRV ground circuit in the Short Runner Valve Assembly harness connector to ground.

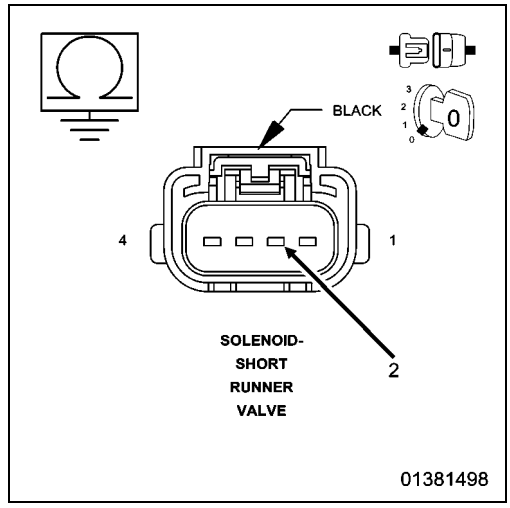

Is the resistance less than 5.0 Ohms?

Yes

- Go To 4

No

- Repair the (Z908) SRV ground circuit for an open circuit or high resistance.
- Perform the POWERTRAIN VERIFICATION TEST. (Refer to 28 - DTC-Based Diagnostics/MODULE, Powertrain Control (PCM) - Standard Procedure).

4. SHORT RUNNER VALVE ASSEMBLY

1. Turn the ignition on.
2. With the scan tool, actuate the SRV Solenoid Control State to toggle.
3. Using a 12-volt test light connected to ground, check the (K238) SRV Control circuit in the Short Runner Valve Assembly harness connector.

NOTE: If the DTC is active, the actuation test may not be allowed by the PCM. If may be necessary to clear the DTCs before starting the actuation.

NOTE: The test light should illuminate on and off with the actuation.

Does the test light illuminate on and off with the actuation?

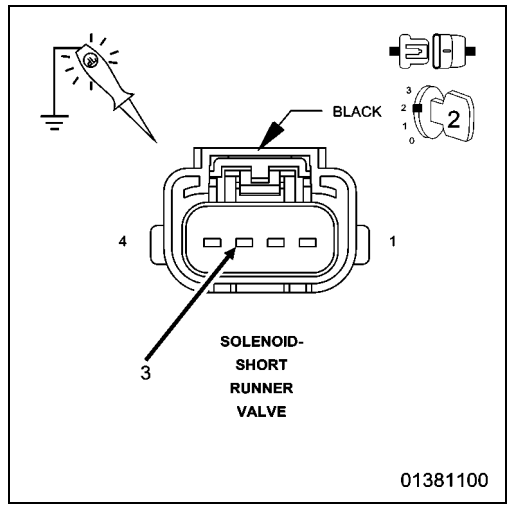

Yes

- Replace the Short Runner Valve Assembly in accordance with the Service Information.
- Perform the POWERTRAIN VERIFICATION TEST. (Refer to 28 - DTC-Based Diagnostics/MODULE, Powertrain Control (PCM) - Standard Procedure).

No

- Go To 5

5. (K238) SRV CONTROL CIRCUIT SHORTED TO GROUND

1. Turn the ignition off.
2. Disconnect the Powertrain Control Module (PCM) C1 harness connector.
3. Measure the resistance between ground and the (K238) SRV Control circuit in the Short Runner Valve Assembly harness connector.

Is the resistance less than 100 Ohms?

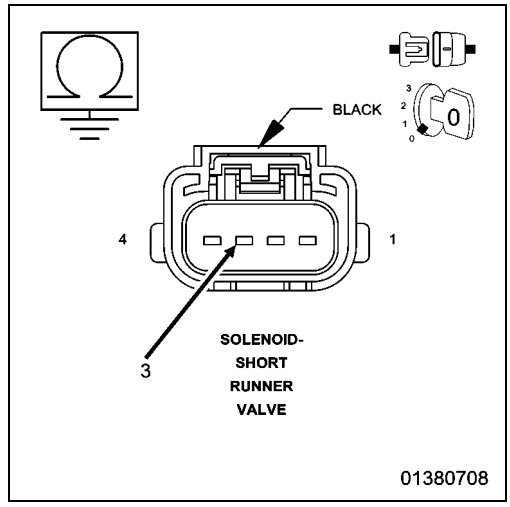

Yes

- Repair the (K238) SRV Control circuit for a short to ground.
- Perform the POWERTRAIN VERIFICATION TEST. (Refer to 28 - DTC-Based Diagnostics/MODULE, Powertrain Control (PCM) - Standard Procedure).

No

- Go To 6

6. (K238) SRV CONTROL CIRCUIT OPEN OR HIGH RESISTANCE

CAUTION: Do not probe the PCM harness connectors. Probing the PCM harness connectors will damage the PCM terminals, resulting in poor terminal to pin connection. Install the PCM Pinout Box 8815A **to perform diagnosis.**

1. Measure the resistance of the (K238) SRV Control circuit between the Short Runner Valve Assembly harness connector and the appropriate terminal of PCM Pinout Box 8815A.

Is the resistance less than 5.0 Ohms?

Yes

- Go To 7

No

- Repair the (K238) SRV Control circuit for an open circuit or high resistance.
- Perform the POWERTRAIN VERIFICATION TEST. (Refer to 28 - DTC-Based Diagnostics/MODULE, Powertrain Control (PCM) - Standard Procedure).

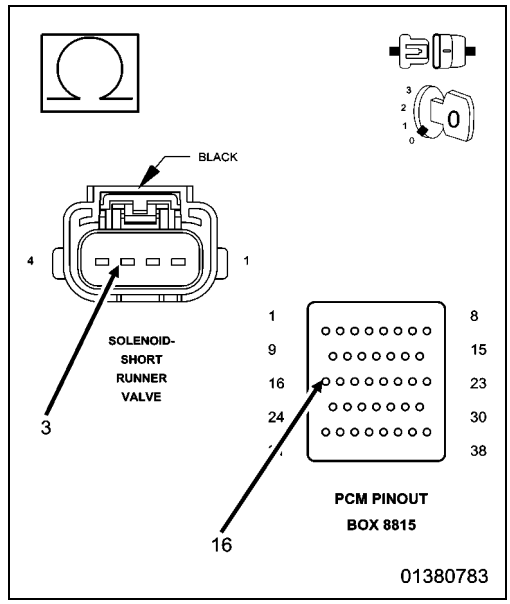

7. (K238) SRV SIGNAL CIRCUIT SHORTED TO VOLTAGE

1. Turn the ignition on
2. Measure the voltage of the (K238) SRV Signal circuit in the Short Runner Valve Assembly harness connector.

Is there any voltage present?

Yes

- Repair the (K238) SRV Signal circuit for a short to voltage.
- Perform the POWERTRAIN VERIFICATION TEST. (Refer to 28 - DTC-Based Diagnostics/MODULE, Powertrain Control (PCM) - Standard Procedure).

No

- Go To 8

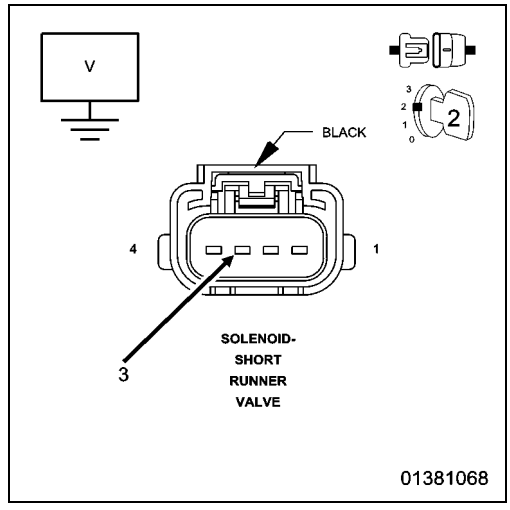

8. POWERTRAIN CONTROL MODULE (PCM)

1. Using the wiring diagram/schematic as a guide, inspect the wiring and connectors between the Short Runner Valve Assembly and the Powertrain Control Module (PCM).
2. Look for any chafed, pierced, pinched or partially broken wires.
3. Look for broken, bent, pushed out or corroded terminals.
4. Perform any Technical Service Bulletins that may apply.

Were any problems found?

Yes

- Repair as necessary.
- Perform the POWERTRAIN VERIFICATION TEST. (Refer to 28 - DTC-Based Diagnostics/MODULE, Powertrain Control (PCM) - Standard Procedure).

No

- Replace and program the Powertrain Control Module (PCM) in accordance with the Service Information.
- Perform the POWERTRAIN VERIFICATION TEST. (Refer to 28 - DTC-Based Diagnostics/MODULE, Powertrain Control (PCM) - Standard Procedure).

P2016-SHORT RUNNER VALVE (SRV) POSITION SENSOR CIRCUIT LOW

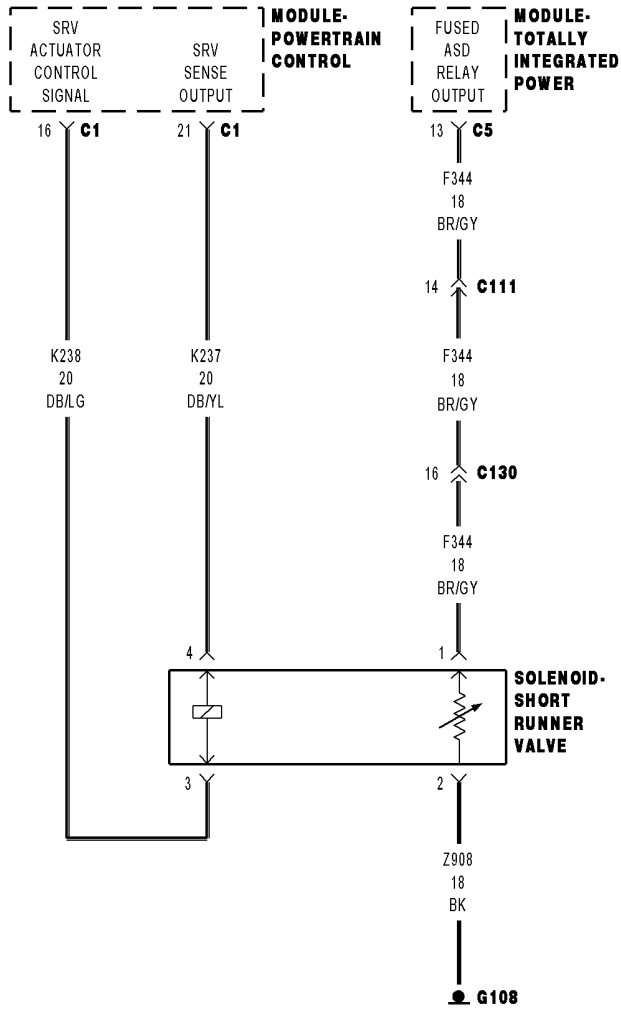

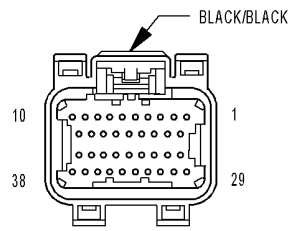

MODULE-POWERTRAIN CONTROL C1 (GAS)

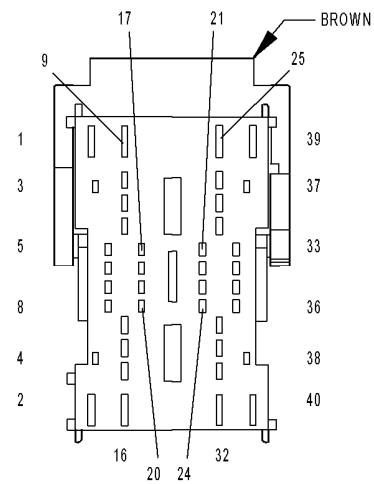

MODULE-TOTALLY INTEGRATED POWER C5

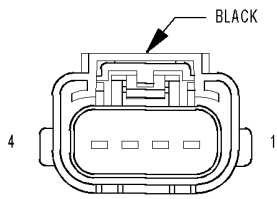

SOLENOID-SHORT RUNNER VALVE

01247696

For a complete wiring diagram, **refer to the Wiring Information**.

Theory of Operation

The engine performance and power output is enhanced through the use of the “Short Runner Valve” (SRV) system. The SRV system allows the intake charge air to bypass the long intake manifold runners between the intake manifold plenum and the intake manifold interface to the cylinder heads by providing a shorter runner directly between the plenum and the cylinder head interface The SRV position is controlled by a pneumatic/spring actuator and electronic solenoid valve. When the solenoid is not energized (the “rest” position), the SRV is held in the closed position. When the solenoid is energized the SRV is moved and held in its opened position. There is a set of enable conditions including a minimum Engine Coolant Temperature (ECT) and Ambient Air Temperature (AAT), SRV enable and Powertrain Coordinator load enable condition. If any of these conditions are not met, then the SRV valve is de-energized (closed).

- **When Monitored:**
  With the ignition on and battery voltage greater than 10.4 Volts.
- **Set Condition:**
  The Powertrain Control Module (PCM) detects that the PWM signal from the Short Runner Valve position sensor circuit is below the minimum acceptable value.

Possible Causes
(F344) ASD RELAY OUTPUT CIRCUIT OPEN OR HIGH RESISTANCE
(K237) SRV SIGNAL CIRCUIT SHORTED TO GROUND
SHORT RUNNER VALVE ASSEMBLY
POWERTRAIN CONTROL MODULE (PCM)

Always perform the Pre-Diagnostic Troubleshooting procedure before proceeding. (Refer to 28 - DTC-Based Diagnostics/MODULE, Powertrain Control (PCM) - Standard Procedure).

1. DTC IS ACTIVE

1. Turn the ignition on.
2. With the scan tool, clear DTCs in the Powertrain Control Module (PCM).
3. With the scan tool, actuate the SRV Solenoid Control State.
4. With the scan tool, select View DTCs.

Is the status Active for this DTC?

Yes

- Go To 2

No

- Perform the INTERMITTENT CONDITION diagnostic procedure. (Refer to 28 - DTC-Based Diagnostics/MODULE, Powertrain Control (PCM) - Standard Procedure).

2. (F344) ASD RELAY OUTPUT CIRCUIT OPEN OR HIGH RESISTANCE

1. Turn the ignition off.
2. Disconnect the Short Runner Valve Assembly harness connector.
3. Turn the ignition on.
4. With the scan tool, actuate the Auto Shutdown (ASD) Relay Control State.
5. Using a 12-volt test light connected to ground, check the (F344) ASD Relay Output circuit in the Short Runner Valve Assembly harness connector.

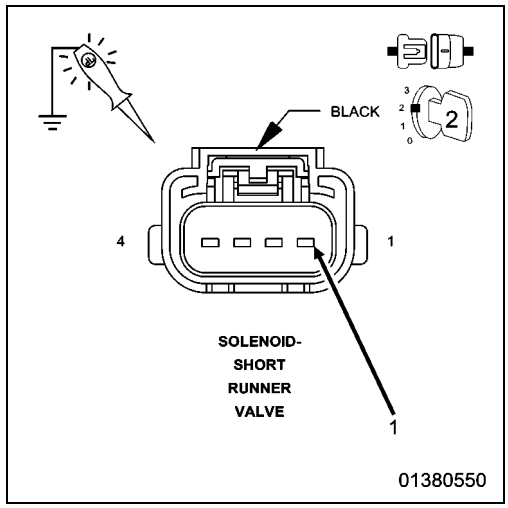

NOTE: If the DTC is active, the actuation test may not be allowed by the PCM. If may be necessary to clear the DTCs before starting the actuation.

NOTE: The test light should be illuminated and bright. Compare the brightness to that of a direct connection to the battery.

Is the test light illuminated and bright?

Yes

- Go To 3

No

- Repair the (F344) ASD Relay Output circuit for an open circuit or high resistance.
- Perform the POWERTRAIN VERIFICATION TEST. (Refer to 28 - DTC-Based Diagnostics/MODULE, Powertrain Control (PCM) - Standard Procedure).

3. SHORT RUNNER VALVE ASSEMBLY

1. Turn the ignition off.
2. Disconnect the Short Runner Valve Assembly connector.
3. Turn the ignition on.
4. With the scan tool, read the SRV PWM Feedback.

NOTE: The SRV PWM Feedback should be greater than 97% with the connector disconnected.

Is the SRV PWM Feedback greater than 97%?

Yes

- Replace the Short Runner Valve Assembly in accordance with the Service Information.
- Perform the POWERTRAIN VERIFICATION TEST. (Refer to 28 - DTC-Based Diagnostics/MODULE, Powertrain Control (PCM) - Standard Procedure).

No

- Go To 4

4. (K237) SRV SIGNAL CIRCUIT SHORTED TO GROUND

1. Turn the ignition off.
2. Disconnect the Powertrain Control Module (PCM) C1 harness connector.
3. Measure the resistance between ground and the (K237) SRV Signal circuit in the Short Runner Valve Assembly harness connector.

Is the resistance less than 100 Ohms?

Yes

- Repair the (K237) SRV signal circuit for a short to ground.
- Perform the POWERTRAIN VERIFICATION TEST. (Refer to 28 - DTC-Based Diagnostics/MODULE, Powertrain Control (PCM) - Standard Procedure).

No

- Go To 5

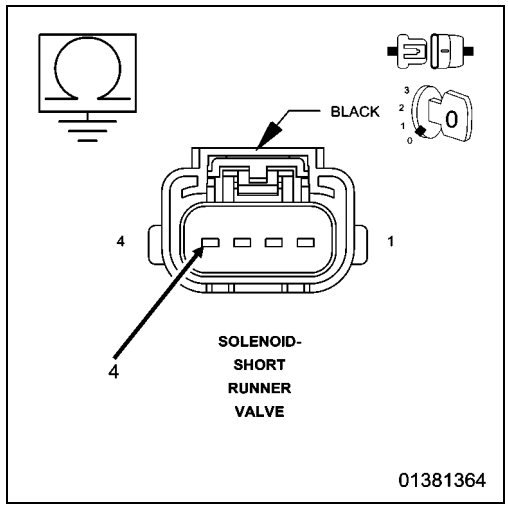

5. POWERTRAIN CONTROL MODULE (PCM)

1. Using the wiring diagram/schematic as a guide, inspect the wiring and connectors between the Short Runner Valve Assembly and the Powertrain Control Module (PCM).
2. Look for any chafed, pierced, pinched or partially broken wires.
3. Look for broken, bent, pushed out or corroded terminals.
4. Monitor the scan tool data relative to this circuit and wiggle test the wiring and connectors.
5. Look for the data to change or for the DTC to reset during the wiggle test.
6. Perform any Technical Service Bulletins that may apply.

Were any problems found?

Yes

- Repair as necessary.
- Perform the POWERTRAIN VERIFICATION TEST. (Refer to 28 - DTC-Based Diagnostics/MODULE, Powertrain Control (PCM) - Standard Procedure).

No

- Replace and program the Powertrain Control Module (PCM) in accordance with the Service Information.
- Perform the POWERTRAIN VERIFICATION TEST. (Refer to 28 - DTC-Based Diagnostics/MODULE, Powertrain Control (PCM) - Standard Procedure).

P2017-SHORT RUNNER VALVE (SRV) POSITION SENSOR CIRCUIT HIGH

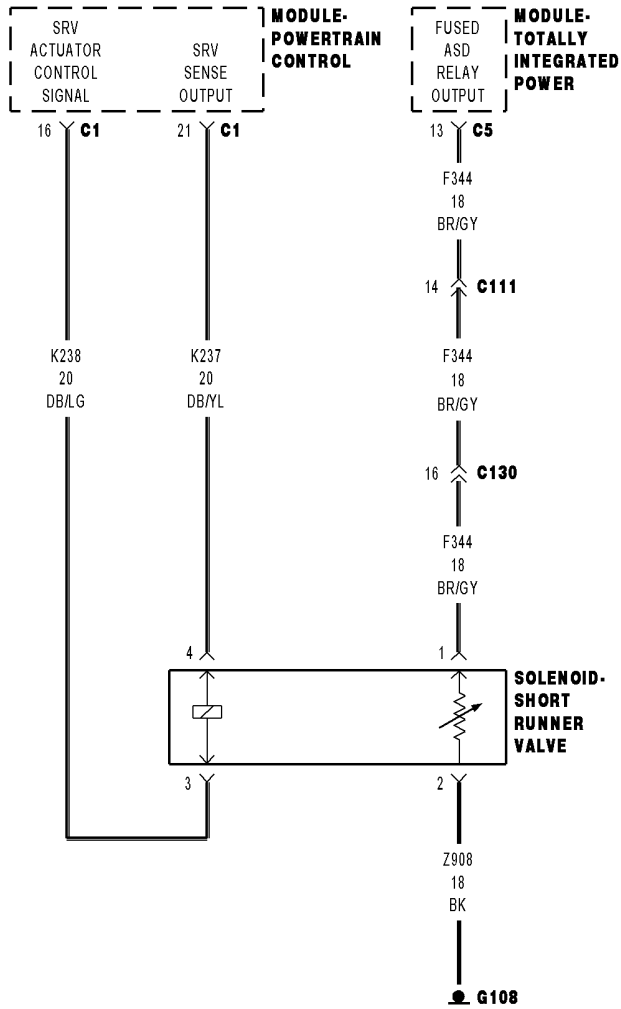

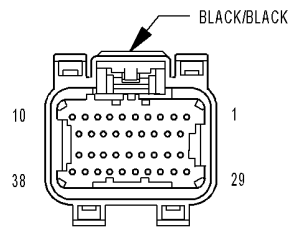

MODULE- POWERTRAIN CONTROL C1 (GAS)

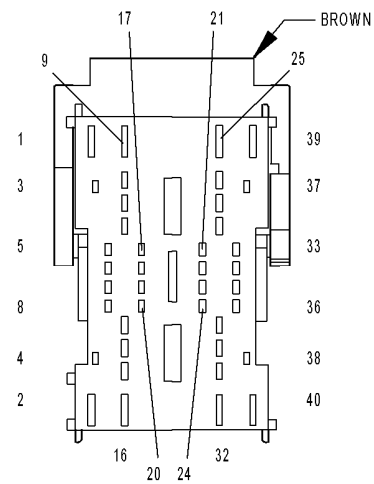

MODULE- TOTALLY INTEGRATED POWER C5

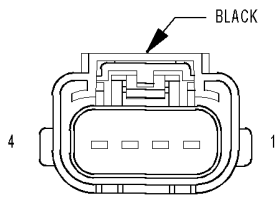

SOLENOID- SHORT RUNNER VALVE

01247696

For a complete wiring diagram, **refer to the Wiring Information**.

Theory of Operation

The engine performance and power output is enhanced through the use of the Short Runner Valve (SRV) system. The SRV system allows the intake charge air to bypass the long intake manifold runners between the intake manifold plenum and the intake manifold interface to the cylinder heads by providing a shorter runner directly between the plenum and the cylinder head interface The SRV position is controlled by a pneumatic/spring actuator and electronic solenoid valve. When the solenoid is not energized (the “rest” position), the SRV is held in the closed position. When the solenoid is energized the SRV is moved and held in its opened position. There is a set of enable conditions including a minimum Engine Coolant Temperature (ECT) and Ambient Air Temperature (AAT), SRV enable and Powertrain Coordinator load enable condition. If any of these conditions are not met, then the SRV valve is de-energized (closed).

- **When Monitored:**

  With the ignition on and battery voltage greater than 10.4 Volts.
- **Set Condition:**

  The Powertrain Control Module (PCM) detects that the PWM signal from the Short Runner Valve Position sensor is greater than the maximum acceptable value.

Possible Causes
(F344) ASD RELAY OUTPUT CIRCUIT OPEN OR HIGH RESISTANCE
(K237) SRV SIGNAL CIRCUIT SHORTED TO VOLTAGE
(K237) SRV SIGNAL CIRCUIT OPEN OR HIGH RESISTANCE
(Z908) SENSOR GROUND CIRCUIT OPEN OR HIGH RESISTANCE
SHORT RUNNER VALVE ASSEMBLY
POWERTRAIN CONTROL MODULE (PCM)

Always perform the Pre-Diagnostic Troubleshooting procedure before proceeding. (Refer to 28 - DTC-Based Diagnostics/MODULE, Powertrain Control (PCM) - Standard Procedure).

1. DTC IS ACTIVE

NOTE: Diagnose and repair any system voltage or sensor supply voltage DTCs before continuing with this test.

1. Turn the ignition on.
2. With the scan tool, clear DTCs in the Powertrain Control Module (PCM).
3. With the scan tool, actuate the SRV Solenoid Control State.
4. With the scan tool, select View DTCs.

Is the status Active for this DTC?

Yes

- Go To

No

- Perform the INTERMITTENT CONDITION diagnostic procedure. (Refer to 28 - DTC-Based Diagnostics/MODULE, Powertrain Control (PCM) - Standard Procedure).

2. SHORT RUNNER VALVE ASSEMBLY

1. Turn the ignition off.
2. Disconnect the Short Runner Valve Assembly connector.
3. Connect a jumper wire between the (Z908) Sensor Ground circuit and the (K237) SRV signal circuit in the Short Runner Valve Assembly harness connector.
4. Turn the ignition on.
5. With the scan tool, read the SRV PWM Feedback.

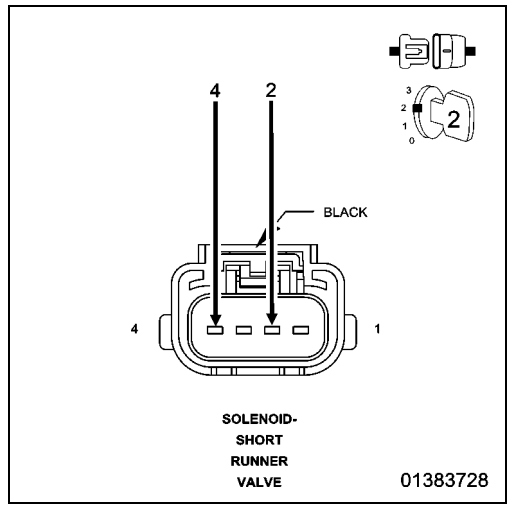

NOTE: The SRV PWM Feedback should be less than 3% with the jumper wire in place.

Is the SRV PWM Feedback less than 3%?

Yes

- Replace the Short Runner Valve Assembly in accordance with the Service Information.
- Perform the POWERTRAIN VERIFICATION TEST. (Refer to 28 - DTC-Based Diagnostics/MODULE, Powertrain Control (PCM) - Standard Procedure).

No

- Go To 3

NOTE: Remove the jumper wire before continuing.

3. (F344) ASD RELAY OUTPUT CIRCUIT OPEN OR HIGH RESISTANCE

1. With the scan tool, actuate the Auto Shutdown (ASD) Relay Control State.
2. Using a 12-volt test light connected to ground, check the (F344) ASD Relay Output circuit in the Short Runner Valve Assembly harness connector.

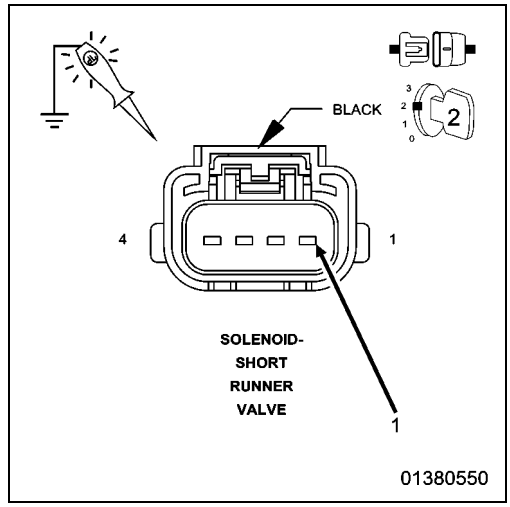

NOTE: The test light should be illuminated and bright. Compare the brightness to that of a direct connection to the battery.

Is the test light illuminated and bright?

Yes

- Go To 4

No

- Repair the (F344) ASD Relay Output circuit for an open circuit or high resistance.
- Perform the POWERTRAIN VERIFICATION TEST. (Refer to 28 - DTC-Based Diagnostics/MODULE, Powertrain Control (PCM) - Standard Procedure).

4. (Z908) SRV GROUND CIRCUIT OPEN CIRCUIT OR HIGH RESISTANCE

1. Turn the ignition off.
2. Disconnect the Powertrain Control Module (PCM) C1 harness connector.
3. Measure the resistance of the (Z908) SRV ground circuit in the Short Runner Valve Assembly harness connector to ground.

Is the resistance less than 5.0 Ohms?

Yes

- Go To 5

No

- Repair the (Z908) SRV ground circuit for an open circuit or high resistance.
- Perform the POWERTRAIN VERIFICATION TEST. (Refer to 28 - DTC-Based Diagnostics/MODULE, Powertrain Control (PCM) - Standard Procedure).

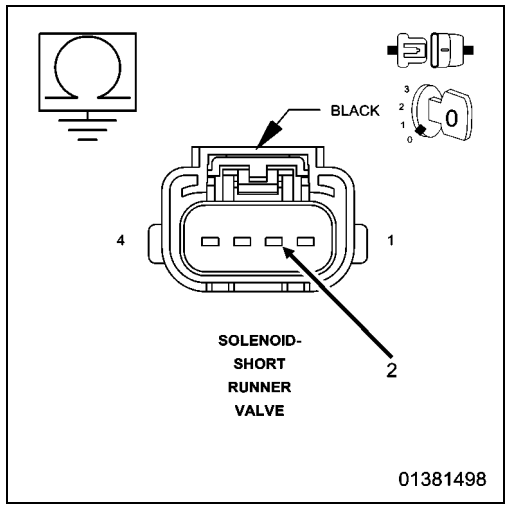

5. (K237) SRV SIGNAL CIRCUIT SHORTED TO VOLTAGE

1. Turn the ignition on.
2. Measure the voltage of the (K237) SRV signal circuit in the Short Runner Valve Assembly harness connector.

Is there any voltage present?

Yes

- Repair the (K237) SRV signal circuit for a short to voltage.
- Perform the POWERTRAIN VERIFICATION TEST. (Refer to 28 - DTC-Based Diagnostics/MODULE, Powertrain Control (PCM) - Standard Procedure).

No

- Go To 6

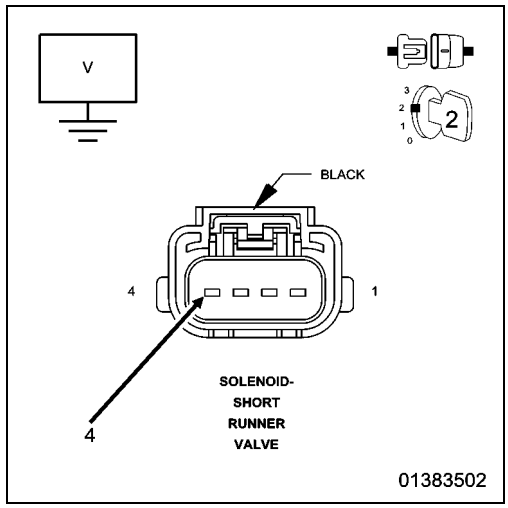

6. (K237) SRV SIGNAL CIRCUIT OPEN OR HIGH RESISTANCE

1. Turn the ignition off.

CAUTION: Do not probe the PCM harness connectors. Probing the PCM harness connectors will damage the PCM terminals, resulting in poor terminal to pin connection. Install the PCM Pinout Box 8815A **to perform diagnosis.**

2. Measure the resistance of the (K237) SRV signal between the Short Runner Valve Assembly harness connector and the appropriate terminal of PCM Pinout Box 8815A.

Is the resistance less than 5.0 Ohms?

Yes

- Go To 7

No

- Repair the (K237) SRV signal for an open circuit or high resistance.
- Perform the POWERTRAIN VERIFICATION TEST. (Refer to 28 - DTC-Based Diagnostics/MODULE, Powertrain Control (PCM) - Standard Procedure).

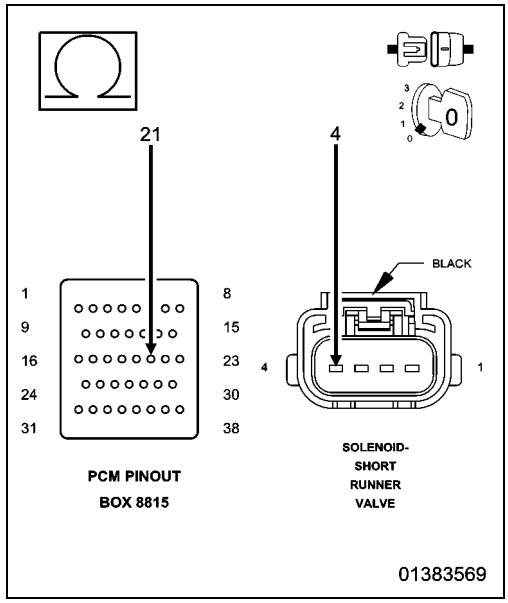

7. POWERTRAIN CONTROL MODULE (PCM)

1. Using the wiring diagram/schematic as a guide, inspect the wiring and connectors between the Short Runner Valve Assembly and the Powertrain Control Module (PCM).
2. Look for any chafed, pierced, pinched or partially broken wires.
3. Look for broken, bent, pushed out or corroded terminals.
4. Monitor the scan tool data relative to this circuit and wiggle test the wiring and connectors.
5. Look for the data to change or for the DTC to reset during the wiggle test.
6. Refer to any Technical Service Bulletins that may apply.

Were any problems found?

Yes

- Repair as necessary.
- Perform the POWERTRAIN VERIFICATION TEST. (Refer to 28 - DTC-Based Diagnostics/MODULE, Powertrain Control (PCM) - Standard Procedure).

No

- Replace and program the Powertrain Control Module (PCM) in accordance with the Service Information.
- Perform the POWERTRAIN VERIFICATION TEST. (Refer to 28 - DTC-Based Diagnostics/MODULE, Powertrain Control (PCM) - Standard Procedure).

■ P2072-ELECTRONIC THROTTLE CONTROL SYSTEM - ICE BLOCKAGE

For a complete wiring diagram, **refer to the Wiring Information**.

- **When Monitored:**

  Ignition on.
- **Set Condition:**

  The Powertrain Control Module (PCM) recognizes the Throttle plate is stuck during extremely cold Ambient Temperature operation. The throttle plate goes through a de-icing procedure. If the throttle blade still doesn't move this fault sets. The MIL will not illuminate. ETC light will illuminate. The vehicle will be in Limp home condition, limiting rpm and vehicle speed.

Possible Causes
THROTTLE PLATE FROZEN

1. THROTTLE BODY INSPECTION

1. Ignition on, engine not running.
2. With a scan tool, read DTCs and record the related Freeze Frame data.

NOTE: This DTC sets in extreme cold Ambient Temperatures with the throttle plate stuck by the time the vehicle gets to the dealership the condition may be corrected.

NOTE: P2110 will set with P2072. P2118 may also set and the customer will experience a Limp-in condition. If either of these two faults are set, it indicates that the ice blockage software has run and no repair is necessary.

NOTE: Diagnose any other DTCs that may also be set before continuing.

3. Turn the ignition off.
4. Remove the Air Cleaner Assembly from the Throttle Body.
5. Check for any signs of a foreign material (ice or dirt) on the Throttle Plate or in the bore causing the Throttle Plate to stick.

Is the throttle blade still stuck because it is frozen?

Yes

- Allow the Throttle Body to thaw naturally in a room temperature climate.
- Perform the POWERTRAIN VERIFICATION TEST. (Refer to 28 - DTC-Based Diagnostics/MODULE, Powertrain Control (PCM) - Standard Procedure).

No

- Test Complete.

P2096-DOWNSTREAM FUEL TRIM SYSTEM 1 LEAN

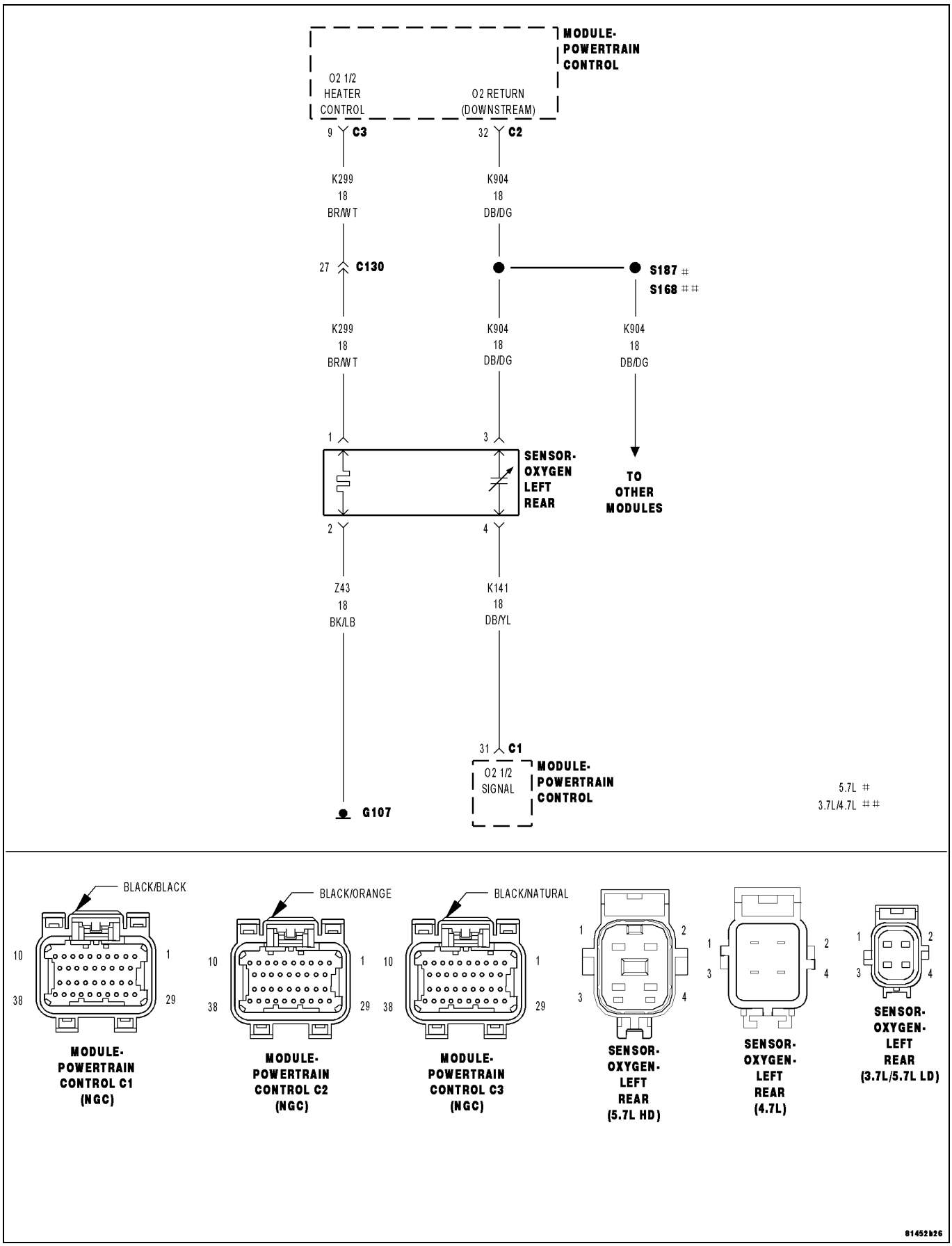

For a complete wiring diagram, **refer to the Wiring Information**.

- **When Monitored:**

  With the engine running in closed loop mode, the ambient/battery temperature above -6.7° C (20° F) and altitude below 2590.8 m (8500 ft).

- **Set Condition:**

  The conditions that cause this diagnostic to fail is when the upstream O2 sensor becomes biased from an exhaust leak, O2 sensor contamination, or some other extreme operating condition. The downstream O2 sensor is considered to be protected from extreme environments by the catalyst. The PCM monitors the downstream O2 sensor feedback control, called downstream fuel trim, to detect any shift in the upstream O2 sensor target voltage from nominal target voltage. The value of the downstream fuel trim is compared with the lean thresholds. Every time the value exceeds the calibrated threshold, a fail timer is incremented and mass flow through the exhaust is accumulated. If the fail timer and accumulated mass flow exceed the fail thresholds, the test fails and the diagnostic stops running for that trip. If the test fails on consecutive trips, a DTC is set.

Possible Causes
EXHAUST LEAK
FUEL DELIVERY SYSTEM
O2 SENSOR, WIRING, OR CONNECTORS
ENGINE MECHANICAL SYSTEM
POWERTRAIN CONTROL MODULE (PCM)

Always perform the Pre-Diagnostic Troubleshooting procedure before proceeding. (Refer to 28 - DTC-Based Diagnostics/MODULE, Powertrain Control (PCM) - Standard Procedure).

1. ACTIVE DIAGNOSTIC TROUBLE CODE (DTC)

NOTE: Check the vehicle repair history. If the 1/2 O2 has been replaced make sure that the O2 sensor was properly installed and meets OEM specification.

NOTE: Check for contaminants that may have damaged the O2 Sensor: contaminated fuel, unapproved silicone, oil and coolant.

1. Start the engine.
2. Allow the engine to reach normal operating temperature.
3. With a scan tool, select View DTCs.

NOTE: It may be necessary to drive the vehicle to meet the conditions to set this DTC, try to repeat the conditions in which the fault originally set by reviewing the Freeze Frame data.

Is the DTC Active or Pending at this time?

Yes

- Go To 2

No

- Perform the INTERMITTENT CONDITION diagnostic procedure. (Refer to 28 - DTC-Based Diagnostics/MODULE, Powertrain Control (PCM) - Standard Procedure).

2. CHECKING THE EXHAUST SYSTEM FOR LEAKS

NOTE: A thorough exhaust leak test must be completed before removing an O2 Sensor or any other part from the exhaust system. Do not remove any parts before an exhaust leak check has been completed.

NOTE: An exhaust leak may cause downstream fuel adaptives to rail out, resulting in a false O2 Sensor failure

1. Turn the ignition off.
2. Raise the vehicle in accordance with the Service Information.

WARNING: The normal operating temperature of the exhaust system is very high. Never work around or attempt to service any part of the exhaust system until it has cooled. Special care should be taken when working near

the catalytic converter. The temperature of the converter rises to a high level after a short period of engine operating time.

3. Connect Exhaust Cone 8404-EC or 8404-EC to Air Pressure Regulator (with hose) W-18-MIL-1146AS.

CAUTION: The air pressure must not exceed 27.6 kPa (4 psi), otherwise engine damage can occur.

4. Attach shop air to the air pressure regulator.
5. Adjust the Air Pressure Regulator to 27.6 kPa (4 psi).
6. Insert the exhaust cone into the vehicle tail pipe.
7. If the vehicle is equipped with dual exhaust. Use the 8404-ECT with equipped attached plug, plug one side of the dual exhaust pipe. Pressurize the other as described above.
8. Apply Mopar® Air Leak Detector PN# 05191804AA (or an equivalent leak finder liquid) to the following areas:
   - All welded joints from the exhaust manifold to 152.4 mm (6 inches) behind the downstream O2 sensor
   - O2 sensor seal points
   - O2 sensor boss welds
   - Flange/joint connection(s)
   - Exhaust manifold to cylinder head connection(s)
   - EGR solenoid gasket base and tube seal points (if equipped)
9. Watch for the liquid/soapy water to bubble.
10. Use the following definitions to help determine if system or component repair/replacement is necessary:

Type 1 Leak is defined as a leak where very small foam like bubbles 1 mm (0.04 of an inch) or less appear.

Any Type 1 or greater leaks found in welded joints, O2 sensor seal points or O2 sensor boss welds must be repaired or the component must be replaced.

Type 2 Leak is defined as a leak where larger bubbles pea size, 8 mm (0.3 of an inch) or greater appear.

Any Type 2 or greater leaks found in flange or joint connections, exhaust manifold to cylinder head connections, or EGR gasket and tube seal points must be repaired or the components must be replaced.

Leak Location	Repair required if results at 27.6 kPa (4 psi) reveal bubble size:
Welded joints	Type 1, 1 mm (0.04 of an inch) or greater
O2 Sensor seal points	Type 1, 1 mm (0.04 of an inch) or greater
O2 Sensor boss welds	Type 1, 1 mm (0.04 of an inch) or greater
Flange / joint connections	Type 2, 8 mm (0.3 of an inch) or greater
Exhaust Manifold to cylinder head connections	Type 2, 8 mm (0.3 of an inch) or greater
EGR gasket and tube seal points	Type 2, 8 mm (0.3 of an inch) or greater

11. If a leak is found that matches the above definition, repair or replace the component as necessary.
12. Once the repair is complete, repeat the procedure to verify that all leaks have been repaired.

Were any exhaust leaks found?

Yes

- Repair or replace the leaking exhaust parts as necessary.
- Perform the POWERTRAIN VERIFICATION TEST. (Refer to 28 - DTC-Based Diagnostics/MODULE, Powertrain Control (PCM) - Standard Procedure).

No

- Go To 3

3. CHECKING THE FUEL DELIVERY SYSTEM

1. Perform the diagnostic procedure for CHECKING THE FUEL DELIVERY SYSTEM, (Refer to 29 - Non-DTC Diagnostics/Drivability - Gas - Diagnosis and Testing).

Were any problems found?

Yes

- Repair as necessary in accordance with the Service Information.
- Perform the POWERTRAIN VERIFICATION TEST. (Refer to 28 - DTC-Based Diagnostics/MODULE, Powertrain Control (PCM) - Standard Procedure).

No

- Go To 4

4. CHECKING THE OXYGEN SENSOR OPERATION

1. Perform the diagnostic procedure for CHECKING THE OXYGEN SENSOR OPERATION, (Refer to 29 - Non-DTC Diagnostics/Drivability - Gas - Diagnosis and Testing).

Were any problems found?

Yes

- Repair as necessary in accordance with the Service Information.
- Perform the POWERTRAIN VERIFICATION TEST. (Refer to 28 - DTC-Based Diagnostics/MODULE, Powertrain Control (PCM) - Standard Procedure).

No

- Go To 5

5. ENGINE MECHANICAL

1. Check for any of the following conditions/mechanical problems:
   - AIR INDUCTION SYSTEM - must be free from leaks
   - ENGINE VACUUM - must be at least 13 inches in neutral
   - ENGINE VALVE TIMING - must be within specifications
   - ENGINE COMPRESSION - must be within specifications
   - ENGINE EXHAUST SYSTEM - must be free of any restrictions or leaks
   - ENGINE PCV SYSTEM - must flow freely
   - TORQUE CONVERTER STALL SPEED - must be within specifications
   - POWER BRAKE BOOSTER - no internal vacuum leaks
   - FUEL - must be free of contamination
   - FUEL INJECTOR - plugged or restricted injector; control wire not connected to correct injector

Are there any engine mechanical problems?

Yes

- Repair as necessary.
- Perform the POWERTRAIN VERIFICATION TEST. (Refer to 28 - DTC-Based Diagnostics/MODULE, Powertrain Control (PCM) - Standard Procedure).

No

- Go To 6

6. POWERTRAIN CONTROL MODULE (PCM)

1. Using the wiring diagram/schematic as a guide, inspect the wiring and connectors relative to the components tested in this procedure.
2. Look for any chafed, pierced, pinched, or partially broken wires.
3. Look for broken, bent, pushed out or corroded terminals.
4. Monitor the scan tool data relative to the components tested in this procedure and wiggle test the wiring and connectors.
5. Look for the data to change or for a DTC to set during the wiggle test.
6. Perform any Technical Service Bulletins that may apply.

Were any problems found?

Yes

- Repair as necessary.
- Perform the POWERTRAIN VERIFICATION TEST. (Refer to 28 - DTC-Based Diagnostics/MODULE, Powertrain Control (PCM) - Standard Procedure).

No

- Replace and program the PCM in accordance with the Service Information.
- Perform the POWERTRAIN VERIFICATION TEST. (Refer to 28 - DTC-Based Diagnostics/MODULE, Powertrain Control (PCM) - Standard Procedure).

P2097-DOWNSTREAM FUEL TRIM SYSTEM 1 RICH

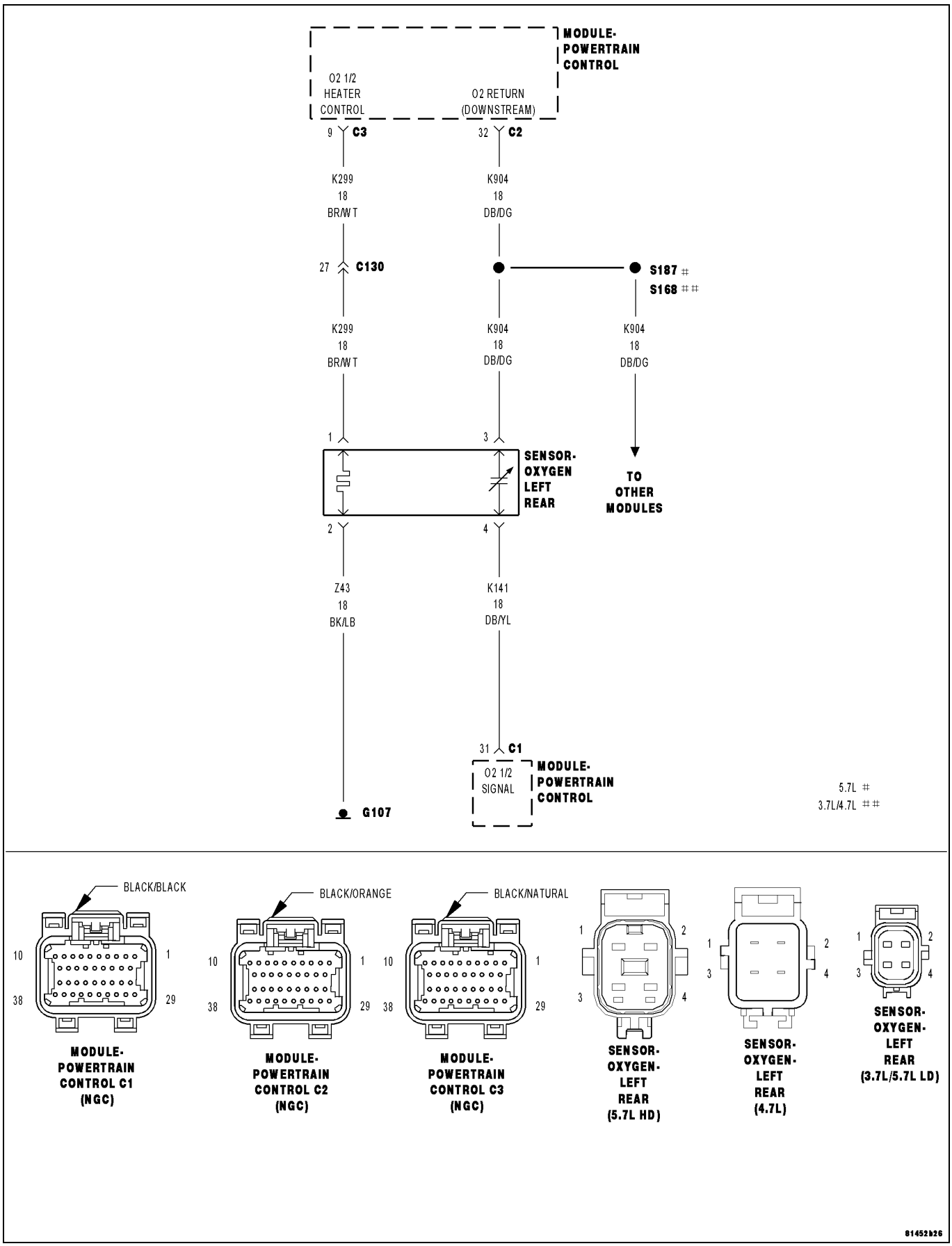

For a complete wiring diagram, **refer to the Wiring Information**.

- **When Monitored:**

  With the engine running in closed loop mode, the ambient/battery temperature above -6.7° C (20° F) and altitude below 2590.8 m (8500 ft).

- **Set Condition:**

  The conditions that cause this diagnostic to fail is when the upstream O2 sensor becomes biased from an exhaust leak, O2 sensor contamination, or some other extreme operating condition. The downstream O2 sensor is considered to be protected from extreme environments by the catalyst. The PCM monitors the downstream O2 sensor feedback control, called downstream fuel trim, to detect any shift in the upstream O2 sensor target voltage from nominal target voltage. The value of the downstream fuel trim is compared with the rich thresholds. Every time the value exceeds the calibrated threshold, a fail timer is incremented and mass flow through the exhaust is accumulated. If the fail timer and accumulated mass flow exceed the fail thresholds, the test fails and the diagnostic stops running for that trip. If the test fails on consecutive trips, a DTC is set.

Possible Causes
EXHAUST LEAK
FUEL DELIVERY SYSTEM
O2 SENSOR, WIRING, OR CONNECTORS
ENGINE MECHANICAL SYSTEM
POWERTRAIN CONTROL MODULE (PCM)

Always perform the Pre-Diagnostic Troubleshooting procedure before proceeding. (Refer to 28 - DTC-Based Diagnostics/MODULE, Powertrain Control (PCM) - Standard Procedure).

1. ACTIVE DIAGNOSTIC TROUBLE CODE (DTC)

NOTE: Check the vehicle repair history. If the 1/2 O2 has been replaced make sure that the O2 sensor was properly installed and meets OEM specification.

NOTE: Check for contaminants that may have damaged the O2 Sensor: contaminated fuel, unapproved silicone, oil and coolant.

1. Start the engine.
2. Allow the engine to reach normal operating temperature.
3. With a scan tool, select View DTCs.

NOTE: It may be necessary to drive the vehicle to meet the conditions to set this DTC, try to repeat the conditions in which the fault originally set by reviewing the Freeze Frame data.

Is the DTC Active or Pending at this time?

Yes

- Go To 2

No

- Perform the INTERMITTENT CONDITION diagnostic procedure. (Refer to 28 - DTC-Based Diagnostics/MODULE, Powertrain Control (PCM) - Standard Procedure).

2. CHECKING THE EXHAUST SYSTEM FOR LEAKS

NOTE: A thorough exhaust leak test must be completed before removing an O2 Sensor or any other part from the exhaust system. Do not remove any parts before an exhaust leak check has been completed.

NOTE: An exhaust leak may cause downstream fuel adaptives to rail out, resulting in a false O2 Sensor failure

1. Turn the ignition off.
2. Raise the vehicle in accordance with the Service Information.

WARNING: The normal operating temperature of the exhaust system is very high. Never work around or attempt to service any part of the exhaust system until it has cooled. Special care should be taken when working near

the catalytic converter. The temperature of the converter rises to a high level after a short period of engine operating time.

3. Connect Exhaust Cone 8404-EC or 8404-EC to Air Pressure Regulator (with hose) W-18-MIL-1146AS.

CAUTION: The air pressure must not exceed 27.6 kPa (4 psi), otherwise engine damage can occur.

4. Attach shop air to the air pressure regulator.
5. Adjust the Air Pressure Regulator to 27.6 kPa (4 psi).
6. Insert the exhaust cone into the vehicle tail pipe.
7. If the vehicle is equipped with dual exhaust. Use the 8404-ECT with equipped attached plug, plug one side of the dual exhaust pipe. Pressurize the other as described above.
8. Apply Mopar® Air Leak Detector PN# 05191804AA (or an equivalent leak finder liquid) to the following areas:
   - All welded joints from the exhaust manifold to 152.4 mm (6 inches) behind the downstream O2 sensor
   - O2 sensor seal points
   - O2 sensor boss welds
   - Flange/joint connection(s)
   - Exhaust manifold to cylinder head connection(s)
   - EGR solenoid gasket base and tube seal points (if equipped)
9. Watch for the liquid/soapy water to bubble.
10. Use the following definitions to help determine if system or component repair/replacement is necessary:

Type 1 Leak is defined as a leak where very small foam like bubbles 1 mm (0.04 of an inch) or less appear.

Any Type 1 or greater leaks found in welded joints, O2 sensor seal points or O2 sensor boss welds must be repaired or the component must be replaced.

Type 2 Leak is defined as a leak where larger bubbles pea size, 8 mm (0.3 of an inch) or greater appear.

Any Type 2 or greater leaks found in flange or joint connections, exhaust manifold to cylinder head connections, or EGR gasket and tube seal points must be repaired or the components must be replaced.

Leak Location	Repair required if results at 27.6 kPa (4 psi) reveal bubble size:
Welded joints	Type 1, 1 mm (0.04 of an inch) or greater
O2 Sensor seal points	Type 1, 1 mm (0.04 of an inch) or greater
O2 Sensor boss welds	Type 1, 1 mm (0.04 of an inch) or greater
Flange / joint connections	Type 2, 8 mm (0.3 of an inch) or greater
Exhaust Manifold to cylinder head connections	Type 2, 8 mm (0.3 of an inch) or greater
EGR gasket and tube seal points	Type 2, 8 mm (0.3 of an inch) or greater

11. If a leak is found that matches the above definition, repair or replace the component as necessary.
12. Once the repair is complete, repeat the procedure to verify that all leaks have been repaired.

Were any exhaust leaks found?

Yes

- Repair or replace the leaking exhaust parts as necessary.
- Perform the POWERTRAIN VERIFICATION TEST. (Refer to 28 - DTC-Based Diagnostics/MODULE, Powertrain Control (PCM) - Standard Procedure).

No

- Go To 3

3. CHECKING THE FUEL DELIVERY SYSTEM

1. Perform the diagnostic procedure for CHECKING THE FUEL DELIVERY SYSTEM. (Refer to 29 - Non-DTC Diagnostics/Drivability - Gas - Diagnosis and Testing).

Were any problems found?

Yes

- Repair as necessary in accordance with the Service Information.
- Perform the POWERTRAIN VERIFICATION TEST. (Refer to 28 - DTC-Based Diagnostics/MODULE, Powertrain Control (PCM) - Standard Procedure).

No

- Go To 4

4. CHECKING THE OXYGEN SENSOR OPERATION

1. Perform the diagnostic procedure for CHECKING THE OXYGEN SENSOR OPERATION. (Refer to 29 - Non-DTC Diagnostics/Drivability - Gas - Diagnosis and Testing).

Were any problems found?

Yes

- Repair as necessary in accordance with the Service Information.
- Perform the POWERTRAIN VERIFICATION TEST. (Refer to 28 - DTC-Based Diagnostics/MODULE, Powertrain Control (PCM) - Standard Procedure).

No

- Go To 5

5. ENGINE MECHANICAL

1. Check for any of the following conditions/mechanical problems:
   - AIR INDUCTION SYSTEM - must be free from leaks
   - ENGINE VACUUM - must be at least 13 inches in neutral
   - ENGINE VALVE TIMING - must be within specifications
   - ENGINE COMPRESSION - must be within specifications
   - ENGINE EXHAUST SYSTEM - must be free of any restrictions or leaks
   - ENGINE PCV SYSTEM - must flow freely
   - TORQUE CONVERTER STALL SPEED - must be within specifications
   - POWER BRAKE BOOSTER - no internal vacuum leaks
   - FUEL - must be free of contamination
   - FUEL INJECTOR - plugged or restricted injector; control wire not connected to correct injector

Are there any engine mechanical problems?

Yes

- Repair as necessary.
- Perform the POWERTRAIN VERIFICATION TEST. (Refer to 28 - DTC-Based Diagnostics/MODULE, Powertrain Control (PCM) - Standard Procedure).

No

- Go To 6

6. POWERTRAIN CONTROL MODULE (PCM)

1. Using the wiring diagram/schematic as a guide, inspect the wiring and connectors relative to the components tested in this procedure.
2. Look for any chafed, pierced, pinched, or partially broken wires.
3. Look for broken, bent, pushed out or corroded terminals.
4. Monitor the scan tool data relative to the components tested in this procedure and wiggle test the wiring and connectors.
5. Look for the data to change or for a DTC to set during the wiggle test.
6. Perform any Technical Service Bulletins that may apply.

Were any problems found?

Yes

- Repair as necessary.
- Perform the POWERTRAIN VERIFICATION TEST. (Refer to 28 - DTC-Based Diagnostics/MODULE, Powertrain Control (PCM) - Standard Procedure).

No

- Replace and program the PCM in accordance with the Service Information.
- Perform the POWERTRAIN VERIFICATION TEST. (Refer to 28 - DTC-Based Diagnostics/MODULE, Powertrain Control (PCM) - Standard Procedure).

P2098-DOWNSTREAM FUEL TRIM SYSTEM 2 LEAN

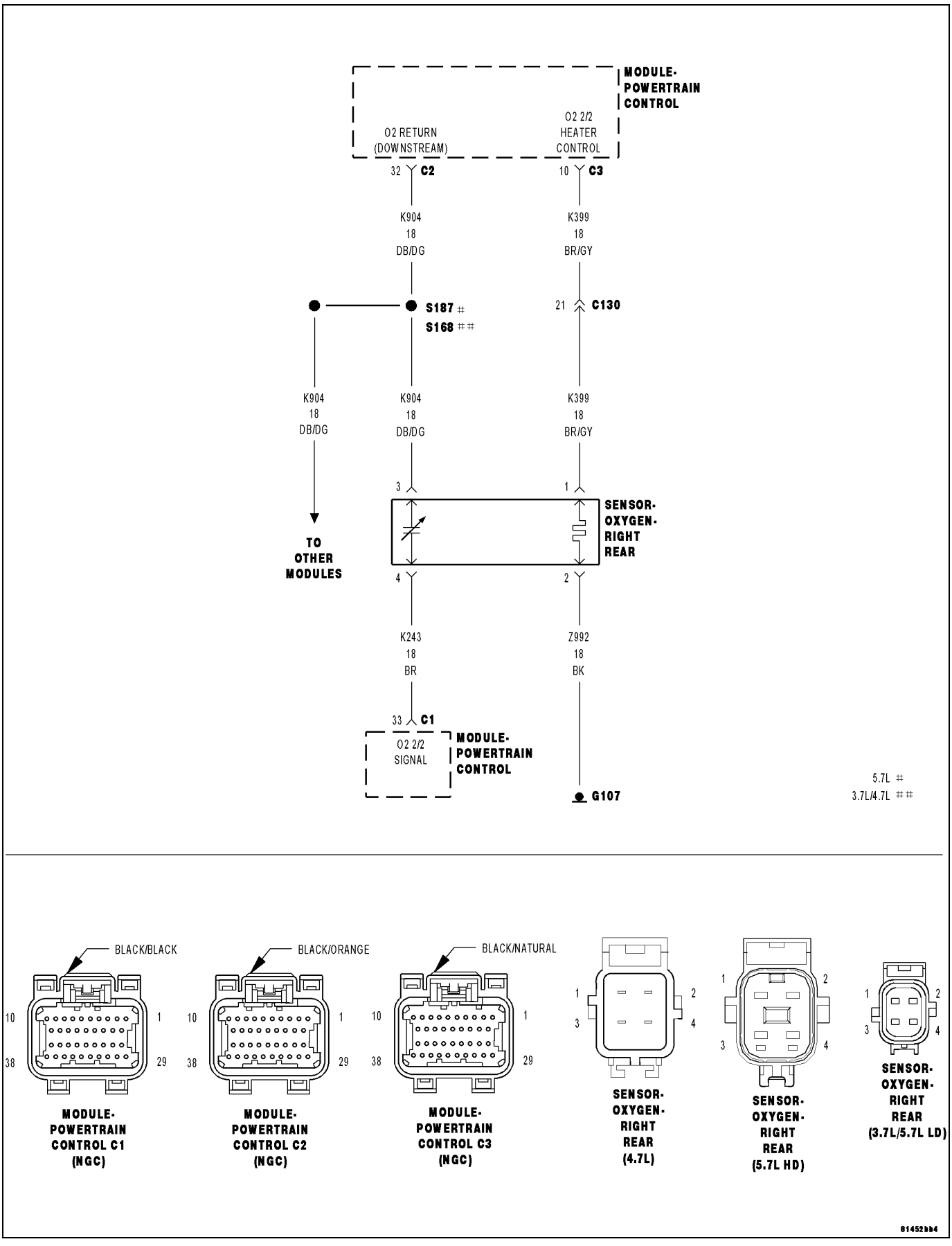

For a complete wiring diagram, **refer to the Wiring Information**.

- **When Monitored:**

  With the engine running in closed loop mode, the ambient/battery temperature above -6.7° C (20° F) and altitude below 2590.8 m (8500 ft). Fuel level greater than 15%.

- **Set Condition:**

  The conditions that cause this diagnostic to fail is when the upstream O2 sensor becomes biased from an exhaust leak, O2 sensor contamination, or some other extreme operating condition. The downstream O2 sensor is considered to be protected from extreme environments by the catalyst. The PCM monitors the downstream O2 sensor feedback control, called downstream fuel trim, to detect any shift in the upstream O2 sensor target voltage from nominal target voltage. The value of the downstream fuel trim is compared with the lean thresholds. Every time the value exceeds the calibrated threshold, a fail timer is incremented and mass flow through the exhaust is accumulated. If the fail timer and accumulated mass flow exceed the fail thresholds, the test fails and the diagnostic stops running for that trip. If the test fails on consecutive trips, a DTC is set.

Possible Causes
EXHAUST LEAK
FUEL DELIVERY SYSTEM
O2 SENSOR, WIRING, OR CONNECTORS
ENGINE MECHANICAL SYSTEM
POWERTRAIN CONTROL MODULE (PCM)

Always perform the Pre-Diagnostic Troubleshooting procedure before proceeding. (Refer to 28 - DTC-Based Diagnostics/MODULE, Powertrain Control (PCM) - Standard Procedure).

1. ACTIVE DIAGNOSTIC TROUBLE CODE (DTC)

NOTE: Check the vehicle repair history. If the 2/2 O2 has been replaced make sure that the O2 sensor was properly installed and meets OEM specification.

NOTE: Check for contaminants that may have damaged the O2 Sensor: contaminated fuel, unapproved silicone, oil and coolant.

1. Start the engine.
2. Allow the engine to reach normal operating temperature.
3. With a scan tool, select View DTCs.

NOTE: It may be necessary to drive the vehicle to meet the conditions to set this DTC, try to repeat the conditions in which the fault originally set by reviewing the Freeze Frame data.

Is the DTC Active or Pending at this time?

Yes

- Go To 2

No

- Perform the INTERMITTENT CONDITION diagnostic procedure. (Refer to 28 - DTC-Based Diagnostics/MODULE, Powertrain Control (PCM) - Standard Procedure).

2. CHECKING THE EXHAUST SYSTEM FOR LEAKS

NOTE: A thorough exhaust leak test must be completed before removing an O2 Sensor or any other part from the exhaust system. Do not remove any parts before an exhaust leak check has been completed.

NOTE: An exhaust leak may cause downstream fuel adaptives to rail out, resulting in a false O2 Sensor failure

1. Turn the ignition off.
2. Raise the vehicle in accordance with the Service Information.

WARNING: The normal operating temperature of the exhaust system is very high. Never work around or attempt to service any part of the exhaust system until it has cooled. Special care should be taken when working near

the catalytic converter. The temperature of the converter rises to a high level after a short period of engine operating time.

3. Connect Exhaust Cone 8404-EC or 8404-EC to Air Pressure Regulator (with hose) W-18-MIL-1146AS.

CAUTION: The air pressure must not exceed 27.6 kPa (4 psi), otherwise engine damage can occur.

4. Attach shop air to the air pressure regulator.
5. Adjust the Air Pressure Regulator to 27.6 kPa (4 psi).
6. Insert the exhaust cone into the vehicle tail pipe.
7. If the vehicle is equipped with dual exhaust. Use the 8404-ECT with equipped attached plug, plug one side of the dual exhaust pipe. Pressurize the other as described above.
8. Apply Mopar® Air Leak Detector PN# 05191804AA (or an equivalent leak finder liquid) to the following areas:
   - All welded joints from the exhaust manifold to 152.4 mm (6 inches) behind the downstream O2 sensor
   - O2 sensor seal points
   - O2 sensor boss welds
   - Flange/joint connection(s)
   - Exhaust manifold to cylinder head connection(s)
   - EGR solenoid gasket base and tube seal points (if equipped)
9. Watch for the liquid/soapy water to bubble.
10. Use the following definitions to help determine if system or component repair/replacement is necessary:

Type 1 Leak is defined as a leak where very small foam like bubbles 1 mm (0.04 of an inch) or less appear.

Any Type 1 or greater leaks found in welded joints, O2 sensor seal points or O2 sensor boss welds must be repaired or the component must be replaced.

Type 2 Leak is defined as a leak where larger bubbles pea size, 8 mm (0.3 of an inch) or greater appear.

Any Type 2 or greater leaks found in flange or joint connections, exhaust manifold to cylinder head connections, or EGR gasket and tube seal points must be repaired or the components must be replaced.

Leak Location	Repair required if results at 27.6 kPa (4 psi) reveal bubble size:
Welded joints	Type 1, 1 mm (0.04 of an inch) or greater
O2 Sensor seal points	Type 1, 1 mm (0.04 of an inch) or greater
O2 Sensor boss welds	Type 1, 1 mm (0.04 of an inch) or greater
Flange / joint connections	Type 2, 8 mm (0.3 of an inch) or greater
Exhaust Manifold to cylinder head connections	Type 2, 8 mm (0.3 of an inch) or greater
EGR gasket and tube seal points	Type 2, 8 mm (0.3 of an inch) or greater

11. If a leak is found that matches the above definition, repair or replace the component as necessary.
12. Once the repair is complete, repeat the procedure to verify that all leaks have been repaired.

Were any exhaust leaks found?

Yes

- Repair or replace the leaking exhaust parts as necessary.
- Perform the POWERTRAIN VERIFICATION TEST. (Refer to 28 - DTC-Based Diagnostics/MODULE, Powertrain Control (PCM) - Standard Procedure).

No

- Go To 3

3. CHECKING THE FUEL DELIVERY SYSTEM

1. Perform the diagnostic procedure for CHECKING THE FUEL DELIVERY SYSTEM. (Refer to 29 - Non-DTC Diagnostics/Drivability - Gas - Diagnosis and Testing)

Were any problems found?

Yes

- Repair as necessary in accordance with the Service Information.
- Perform the POWERTRAIN VERIFICATION TEST. (Refer to 28 - DTC-Based Diagnostics/MODULE, Powertrain Control (PCM) - Standard Procedure).

No

- Go To 4

4. CHECKING THE OXYGEN SENSOR OPERATION

1. Perform the diagnostic procedure for CHECKING THE OXYGEN SENSOR OPERATION. (Refer to 28 - DTC-Based Diagnostics/MODULE, Powertrain Control (PCM) - Standard Procedure)

Were any problems found?

Yes

- Repair as necessary in accordance with the Service Information.
- Perform the POWERTRAIN VERIFICATION TEST. (Refer to 28 - DTC-Based Diagnostics/MODULE, Powertrain Control (PCM) - Standard Procedure).

No

- Go To 5

5. ENGINE MECHANICAL

1. Check for any of the following conditions/mechanical problems:
   - AIR INDUCTION SYSTEM - must be free from leaks
   - ENGINE VACUUM - must be at least 13 inches in neutral
   - ENGINE VALVE TIMING - must be within specifications
   - ENGINE COMPRESSION - must be within specifications
   - ENGINE EXHAUST SYSTEM - must be free of any restrictions or leaks
   - ENGINE PCV SYSTEM - must flow freely
   - TORQUE CONVERTER STALL SPEED - must be within specifications
   - POWER BRAKE BOOSTER - no internal vacuum leaks
   - FUEL - must be free of contamination
   - FUEL INJECTOR - plugged or restricted injector; control wire not connected to correct injector

Are there any engine mechanical problems?

Yes

- Repair as necessary.
- Perform the POWERTRAIN VERIFICATION TEST. (Refer to 28 - DTC-Based Diagnostics/MODULE, Powertrain Control (PCM) - Standard Procedure)

No

- Go To 6

6. POWERTRAIN CONTROL MODULE (PCM)

1. Using the wiring diagram/schematic as a guide, inspect the wiring and connectors relative to the components tested in this procedure.
2. Look for any chafed, pierced, pinched, or partially broken wires.
3. Look for broken, bent, pushed out or corroded terminals.
4. Monitor the scan tool data relative to the components tested in this procedure and wiggle test the wiring and connectors.
5. Look for the data to change or for a DTC to set during the wiggle test.
6. Perform any Technical Service Bulletins that may apply.

Were any problems found?

Yes

- Repair as necessary.
- Perform the POWERTRAIN VERIFICATION TEST. (Refer to 28 - DTC-Based Diagnostics/MODULE, Powertrain Control (PCM) - Standard Procedure).

No

- Replace and program the PCM in accordance with the Service Information.
- Perform the POWERTRAIN VERIFICATION TEST. (Refer to 28 - DTC-Based Diagnostics/MODULE, Powertrain Control (PCM) - Standard Procedure).

P2099-DOWNSTREAM FUEL TRIM SYSTEM 2 RICH

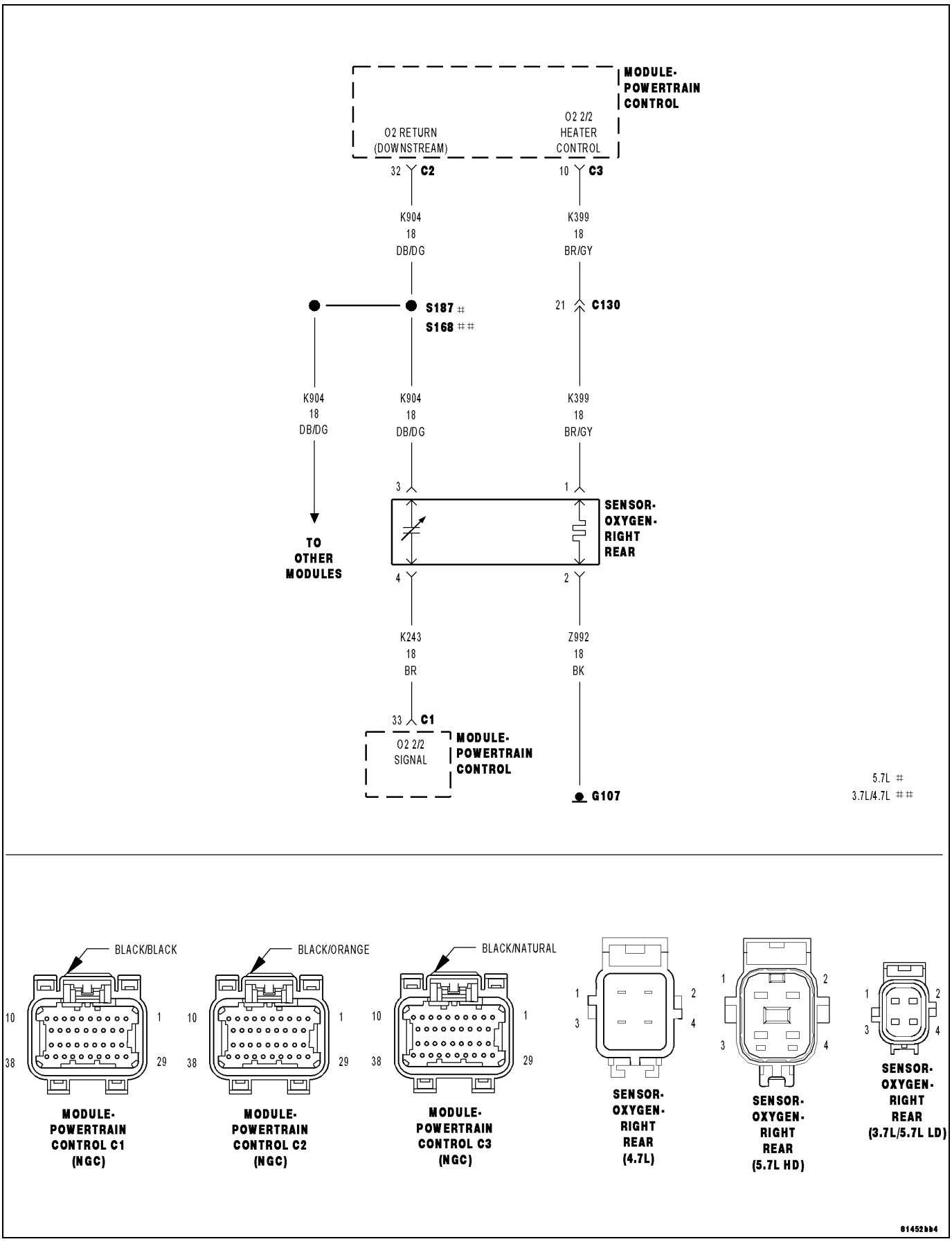

For a complete wiring diagram, **refer to the Wiring Information**.

- **When Monitored:**

  With the engine running in closed loop mode, the ambient/battery temperature above -6.7° C (20° F) and altitude below 2590.8 m (8500 ft).

- **Set Condition:**

  The conditions that cause this diagnostic to fail is when the upstream O2 sensor becomes biased from an exhaust leak, O2 sensor contamination, or some other extreme operating condition. The downstream O2 sensor is considered to be protected from extreme environments by the catalyst. The PCM monitors the downstream O2 sensor feedback control, called downstream fuel trim, to detect any shift in the upstream O2 sensor target voltage from nominal target voltage. The value of the downstream fuel trim is compared with the lean thresholds. Every time the value exceeds the calibrated threshold, a fail timer is incremented and mass flow through the exhaust is accumulated. If the fail timer and accumulated mass flow exceed the fail thresholds, the test fails and the diagnostic stops running for that trip. If the test fails on consecutive trips, a DTC is set.

Possible Causes
EXHAUST LEAK
FUEL DELIVERY SYSTEM
O2 SENSOR, WIRING, OR CONNECTORS
ENGINE MECHANICAL SYSTEM
POWERTRAIN CONTROL MODULE (PCM)

Always perform the Pre-Diagnostic Troubleshooting procedure before proceeding. (Refer to 28 - DTC-Based Diagnostics/MODULE, Powertrain Control (PCM) - Standard Procedure).

1. ACTIVE DIAGNOSTIC TROUBLE CODE (DTC)

NOTE: Check the vehicle repair history. If the 2/2 O2 has been replaced make sure that the O2 sensor was properly installed and meets OEM specification.

NOTE: Check for contaminants that may have damaged the O2 Sensor: contaminated fuel, unapproved silicone, oil and coolant.

1. Start the engine.
2. Allow the engine to reach normal operating temperature.
3. With a scan tool, select View DTCs.

NOTE: It may be necessary to drive the vehicle to meet the conditions to set this DTC, try to repeat the conditions in which the fault originally set by reviewing the Freeze Frame data.

Is the DTC Active or Pending at this time?

Yes

- Go To 2

No

- Perform the INTERMITTENT CONDITION diagnostic procedure. (Refer to 28 - DTC-Based Diagnostics/MODULE, Powertrain Control (PCM) - Standard Procedure).

2. CHECKING THE EXHAUST SYSTEM FOR LEAKS

NOTE: A thorough exhaust leak test must be completed before removing an O2 Sensor or any other part from the exhaust system. Do not remove any parts before an exhaust leak check has been completed.

NOTE: An exhaust leak may cause downstream fuel adaptives to rail out, resulting in a false O2 Sensor failure

1. Turn the ignition off.
2. Raise the vehicle in accordance with the Service Information.

WARNING: The normal operating temperature of the exhaust system is very high. Never work around or attempt to service any part of the exhaust system until it has cooled. Special care should be taken when working near

the catalytic converter. The temperature of the converter rises to a high level after a short period of engine operating time.

3. Connect Exhaust Cone 8404-EC or 8404-EC to Air Pressure Regulator (with hose) W-18-MIL-1146AS.

CAUTION: The air pressure must not exceed 27.6 kPa (4 psi), otherwise engine damage can occur.

4. Attach shop air to the air pressure regulator.
5. Adjust the Air Pressure Regulator to 27.6 kPa (4 psi).
6. Insert the exhaust cone into the vehicle tail pipe.
7. If the vehicle is equipped with dual exhaust. Use the 8404-ECT with equipped attached plug, plug one side of the dual exhaust pipe. Pressurize the other as described above.
8. Apply Mopar® Air Leak Detector PN# 05191804AA (or an equivalent leak finder liquid) to the following areas:
   - All welded joints from the exhaust manifold to 152.4 mm (6 inches) behind the downstream O2 sensor
   - O2 sensor seal points
   - O2 sensor boss welds
   - Flange/joint connection(s)
   - Exhaust manifold to cylinder head connection(s)
   - EGR solenoid gasket base and tube seal points (if equipped)
9. Watch for the liquid/soapy water to bubble.
10. Use the following definitions to help determine if system or component repair/replacement is necessary:

Type 1 Leak is defined as a leak where very small foam like bubbles 1 mm (0.04 of an inch) or less appear.

Any Type 1 or greater leaks found in welded joints, O2 sensor seal points or O2 sensor boss welds must be repaired or the component must be replaced.

Type 2 Leak is defined as a leak where larger bubbles pea size, 8 mm (0.3 of an inch) or greater appear.

Any Type 2 or greater leaks found in flange or joint connections, exhaust manifold to cylinder head connections, or EGR gasket and tube seal points must be repaired or the components must be replaced.

Leak Location	Repair required if results at 27.6 kPa (4 psi) reveal bubble size:
Welded joints	Type 1, 1 mm (0.04 of an inch) or greater
O2 Sensor seal points	Type 1, 1 mm (0.04 of an inch) or greater
O2 Sensor boss welds	Type 1, 1 mm (0.04 of an inch) or greater
Flange / joint connections	Type 2, 8 mm (0.3 of an inch) or greater
Exhaust Manifold to cylinder head connections	Type 2, 8 mm (0.3 of an inch) or greater
EGR gasket and tube seal points	Type 2, 8 mm (0.3 of an inch) or greater

11. If a leak is found that matches the above definition, repair or replace the component as necessary.
12. Once the repair is complete, repeat the procedure to verify that all leaks have been repaired.

Were any exhaust leaks found?

Yes

- Repair or replace the leaking exhaust parts as necessary.
- Perform the POWERTRAIN VERIFICATION TEST. (Refer to 28 - DTC-Based Diagnostics/MODULE, Powertrain Control (PCM) - Standard Procedure).

No

- Go To 3

3. CHECKING THE FUEL DELIVERY SYSTEM

1. Perform the diagnostic procedure for CHECKING THE FUEL DELIVERY SYSTEM. (Refer to 29 - Non-DTC Diagnostics/Drivability - Gas - Diagnosis and Testing).

Were any problems found?

Yes

- Repair as necessary in accordance with the Service Information.
- Perform the POWERTRAIN VERIFICATION TEST. (Refer to 28 - DTC-Based Diagnostics/MODULE, Powertrain Control (PCM) - Standard Procedure).

No

- Go To 4

4. CHECKING THE OXYGEN SENSOR OPERATION

1. Perform the diagnostic procedure for CHECKING THE OXYGEN SENSOR OPERATION. (Refer to 29 - Non-DTC Diagnostics/Drivability - Gas - Diagnosis and Testing).

Were any problems found?

Yes

- Repair as necessary in accordance with the Service Information.
- Perform the POWERTRAIN VERIFICATION TEST. (Refer to 28 - DTC-Based Diagnostics/MODULE, Powertrain Control (PCM) - Standard Procedure).

No

- Go To 5

5. ENGINE MECHANICAL

1. Check for any of the following conditions/mechanical problems:
   - AIR INDUCTION SYSTEM - must be free from leaks
   - ENGINE VACUUM - must be at least 13 inches in neutral
   - ENGINE VALVE TIMING - must be within specifications
   - ENGINE COMPRESSION - must be within specifications
   - ENGINE EXHAUST SYSTEM - must be free of any restrictions or leaks
   - ENGINE PCV SYSTEM - must flow freely
   - TORQUE CONVERTER STALL SPEED - must be within specifications
   - POWER BRAKE BOOSTER - no internal vacuum leaks
   - FUEL - must be free of contamination
   - FUEL INJECTOR - plugged or restricted injector; control wire not connected to correct injector

Are there any engine mechanical problems?

Yes

- Repair as necessary.
- Perform the POWERTRAIN VERIFICATION TEST. (Refer to 28 - DTC-Based Diagnostics/MODULE, Powertrain Control (PCM) - Standard Procedure).

No

- Go To 6

6. POWERTRAIN CONTROL MODULE (PCM)

1. Using the wiring diagram/schematic as a guide, inspect the wiring and connectors relative to the components tested in this procedure.
2. Look for any chafed, pierced, pinched, or partially broken wires.
3. Look for broken, bent, pushed out or corroded terminals.
4. Monitor the scan tool data relative to the components tested in this procedure and wiggle test the wiring and connectors.
5. Look for the data to change or for a DTC to set during the wiggle test.
6. Perform any Technical Service Bulletins that may apply.

Were any problems found?

Yes

- Repair as necessary.
- Perform the POWERTRAIN VERIFICATION TEST. (Refer to 28 - DTC-Based Diagnostics/MODULE, Powertrain Control (PCM) - Standard Procedure).

No

- Replace and program the PCM in accordance with the Service Information.
- Perform the POWERTRAIN VERIFICATION TEST. (Refer to 28 - DTC-Based Diagnostics/MODULE, Powertrain Control (PCM) - Standard Procedure).

P2100-ELECTRONIC THROTTLE CONTROL MOTOR CIRCUIT

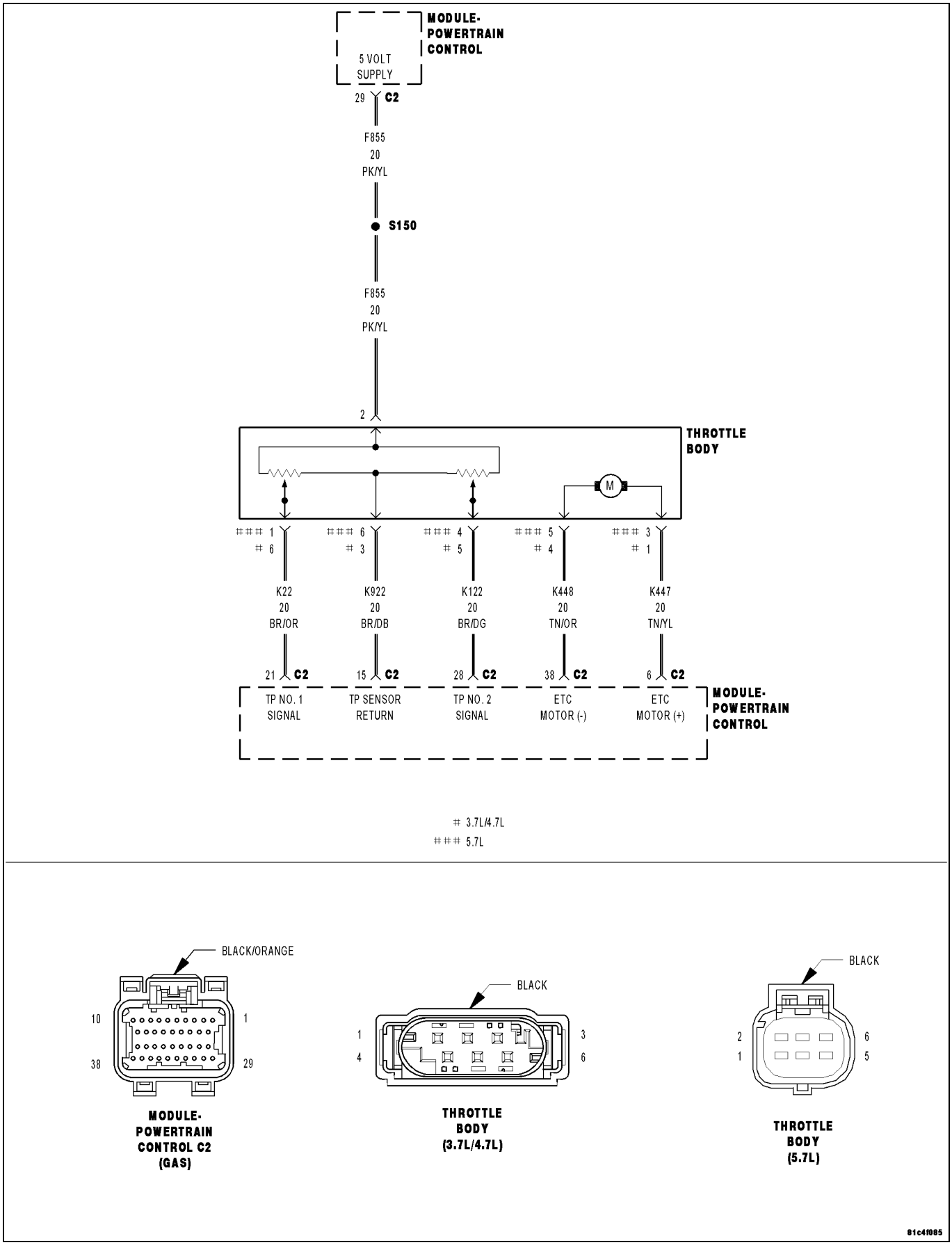

For a complete wiring diagram **Refer to the Wiring Information**.

- **When Monitored:**
  With the ignition on and the ETC Motor is not in Limp Home mode.
- **Set Condition:**
  When the PCM detects an internal error or a short between the ETC Motor - and ETC Motor + circuits in the ETC Motor Driver. One trip fault. ETC light is flashing.

Possible Causes
THROTTLE PLATE / BORE INSPECTION
(K447) ETC POSITIVE CIRCUIT SHORTED TO VOLTAGE
(K448) ETC NEGATIVE CIRCUIT SHORTED TO VOLTAGE
(K447) ETC POSITIVE CIRCUIT SHORTED TO THE (K448) ETC NEGATIVE CIRCUIT
(K447) ETC POSITIVE CIRCUIT OPEN
(K447) ETC POSITIVE CIRCUIT SHORTED TO GROUND
(K448) ETC NEGATIVE CIRCUIT OPEN
(K448) ETC NEGATIVE CIRCUIT SHORTED TO GROUND
LOW BATTERY VOLTAGE
ETC MOTOR/THROTTLE BODY
POWERTRAIN CONTROL MODULE (PCM)

Always perform the Pre-Diagnostic Troubleshooting procedure before proceeding. (Refer to 28 - DTC-Based Diagnostics/MODULE, Powertrain Control (PCM) - Standard Procedure).

1. ACTIVE DTC

1. Ignition on, engine not running.

NOTE: If the P2100 is intermittent, it is possible that the controller is overheating in extreme hot temperatures, and this is considered a normal protection operation. No repair is necessary.

NOTE: Low battery voltage can also cause excessive current draw, in very hot and very cold ambient temperatures. Make sure the battery can pass a load test before continuing.

2. With a scan tool, select View DTCs.
3. Record the Freeze Frame data and look closely at the temperatures at which this DTC set.

Is the DTC Active at this time?

Yes

- Go To 2

No

- Refer to the INTERMITTENT CONDITION Diagnostic Procedure. (Refer to 28 - DTC-Based Diagnostics/MODULE, Powertrain Control (PCM) - Standard Procedure)

2. THROTTLE PLATE INSPECTION

1. Turn the ignition off.
2. Remove the Air Cleaner Assembly from the Throttle Body.
3. Check for any signs of a foreign material (ice or dirt) on the Throttle Plate or in the bore causing the Throttle Plate to stick.

Were any signs of foreign material or scoring of the throttle plate or bore found?

Yes

- Remove the debris if possible or replace the Throttle Body Assembly. Disconnect the Battery when replacing the Throttle Body Assembly. After installation is complete, use a scan tool and select the ETC RELEARN function.
- Perform the POWERTRAIN VERIFICATION TEST. (Refer to 28 - DTC-Based Diagnostics/MODULE, Powertrain Control (PCM) - Standard Procedure)

No

- Go To 3

3. (K447) ETC POSITIVE CIRCUIT SHORTED TO VOLTAGE

1. Disconnect the Throttle Body harness connector.
2. Disconnect the C2 PCM harness connector.
3. Ignition on, engine not running.

CAUTION: Do not probe the PCM harness connectors. Probing the PCM harness connectors will damage the PCM terminals resulting in poor terminal to pin connection. Install the PCM Pinout Box 8815A **to perform the diagnostics.**

4. Measure the voltage on the (K447) ETC Positive circuit at the appropriate terminal of special tool #8815A.

Is there any voltage present?

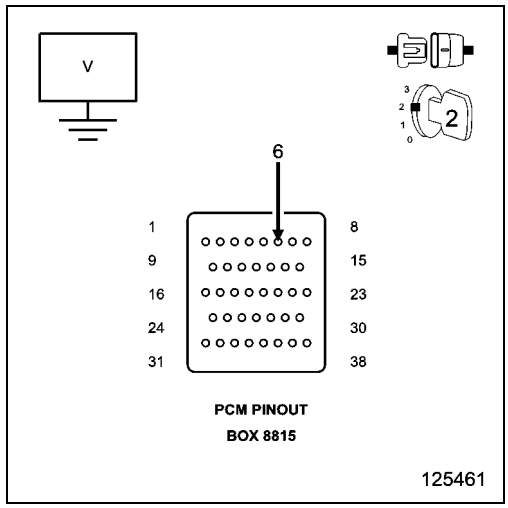

Yes

- Repair the short to voltage on the (K447) ETC Positive circuit.
- Perform the POWERTRAIN VERIFICATION TEST. (Refer to 28 - DTC-Based Diagnostics/MODULE, Powertrain Control (PCM) - Standard Procedure)

No

- Go To 4

4. (K448) ETC NEGATIVE CIRCUIT SHORTED TO VOLTAGE

1. Measure the voltage on the (K448) ETC Negative circuit at the appropriate terminal of special tool #8815A.

Is there any voltage present?

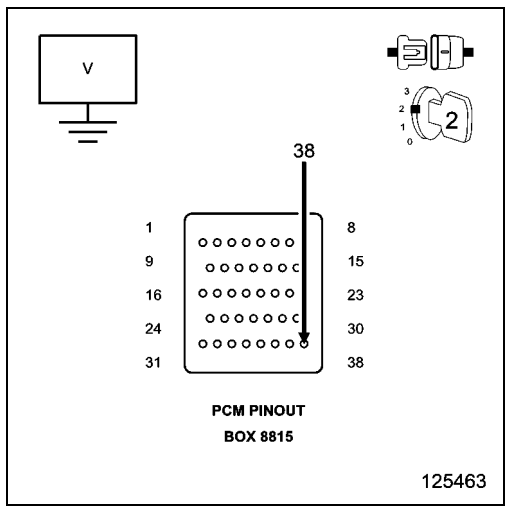

Yes

- Repair the short to voltage in the (K448) ETC Negative circuit.
- Perform the POWERTRAIN VERIFICATION TEST. (Refer to 28 - DTC-Based Diagnostics/MODULE, Powertrain Control (PCM) - Standard Procedure)

No

- Go To 5

5. (K447) ETC POSITIVE CIRCUIT SHORTED TO THE (K448) ETC NEGATIVE CIRCUIT

1. Turn the ignition off.
2. Measure the resistance between the (K447) ETC Positive circuit and the (K448) ETC Negative circuit at the appropriate terminals of special tool #8815A.

Is the resistance below 100 ohms?

Yes

- Repair the short to between the (K447) ETC Positive circuit and the (K448) ETC Negative circuit.
- Perform the POWERTRAIN VERIFICATION TEST. (Refer to 28 - DTC-Based Diagnostics/MODULE, Powertrain Control (PCM) - Standard Procedure)

No

- Go To 6

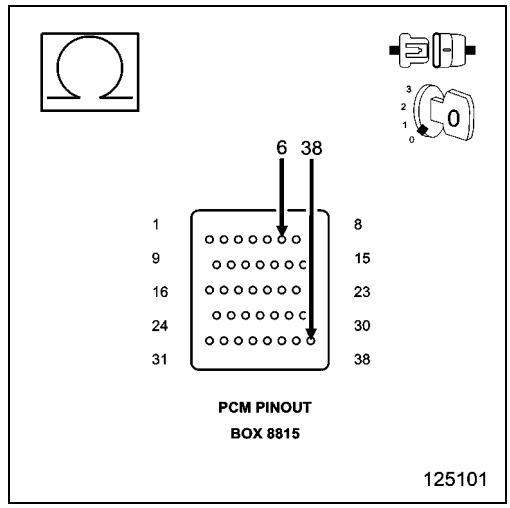

6. (K447) ETC POSITIVE CIRCUIT OPEN

1. Measure the resistance of the (K447) ETC Positive circuit from the Throttle Body harness connector to the appropriate terminal of special tool #8815A.

Is the resistance below 5.0 ohms?

Yes

- Go To 7

No

- Repair the open in the (K447) ETC Positive circuit.
- Perform the POWERTRAIN VERIFICATION TEST. (Refer to 28 - DTC-Based Diagnostics/MODULE, Powertrain Control (PCM) - Standard Procedure)

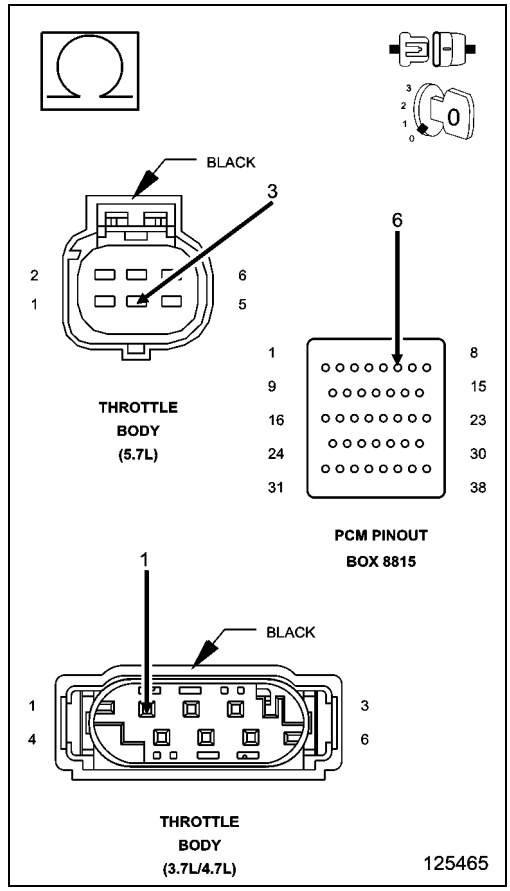

7. (K447) ETC POSITIVE CIRCUIT SHORTED TO GROUND

1. Measure the resistance between ground and the (K447) ETC Positive circuit between the appropriate terminals of special tool #8815A.

Is the resistance below 100 ohms?

Yes

- Repair the short to ground in the (K447) ETC Positive circuit.
- Perform the POWERTRAIN VERIFICATION TEST. (Refer to 28 - DTC-Based Diagnostics/MODULE, Powertrain Control (PCM) - Standard Procedure)

No

- Go To 8

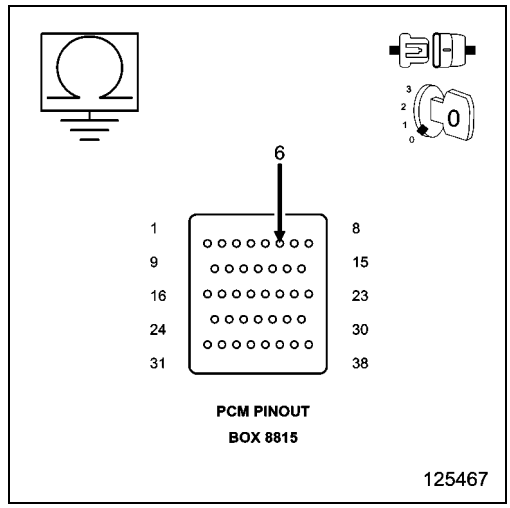

8. (K448) ETC NEGATIVE CIRCUIT OPEN

1. Measure the resistance of the (K448) ETC Negative circuit from the Throttle Body harness connector to the appropriate terminal of special tool #8815A.

Is the resistance below 5.0 ohms?

Yes

- Go To 9

No

- Repair the open in the (K448) ETC Negative circuit.
- Perform the POWERTRAIN VERIFICATION TEST. (Refer to 28 - DTC-Based Diagnostics/MODULE, Powertrain Control (PCM) - Standard Procedure)

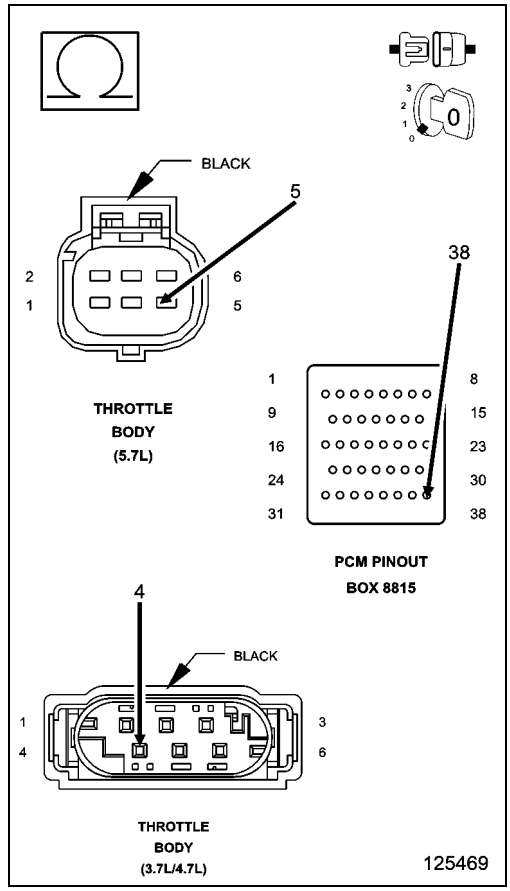

9. (K448) ETC NEGATIVE CIRCUIT SHORTED TO GROUND

1. Measure the resistance between ground and the (K448) ETC Negative circuit using the appropriate terminal of special tool #8815A.

Is the resistance below 100 ohms?

Yes

- Repair the short to ground in the (K448) ETC Negative circuit.
- Perform the POWERTRAIN VERIFICATION TEST. (Refer to 28 - DTC-Based Diagnostics/MODULE, Powertrain Control (PCM) - Standard Procedure)

No

- Go To 10

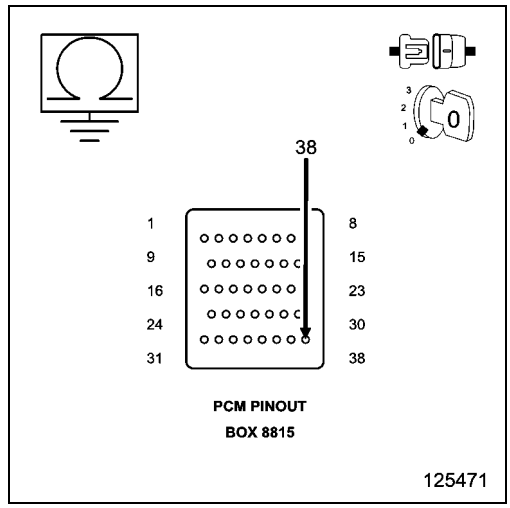

10. ETC MOTOR

NOTE: Take the following measurement using special tool #8815A **to avoid possible damage to the Throttle Body harness connector.**

1. Connect the Throttle Body harness connector.
2. Measure the resistance of the ETC Motor between the (K447) ETC Positive circuit and the (K448) ETC Negative circuit at the appropriate terminals of special tool #8815A.

Is the resistance between 2.5 and 25 ohms at closed throttle?

Yes

- Go To 11

No

- Verify that there is good pin to terminal contact at the Throttle Body and the Powertrain Control Module connectors. Replace the Throttle Body Assembly if no problems were found in the connectors. Disconnect the Battery when replacing the Throttle Body Assembly. After installation is complete, use a scan tool and select the ETC RELEARN function.
- Perform the POWERTRAIN VERIFICATION TEST. (Refer to 28 - DTC-Based Diagnostics/MODULE, Powertrain Control (PCM) - Standard Procedure)

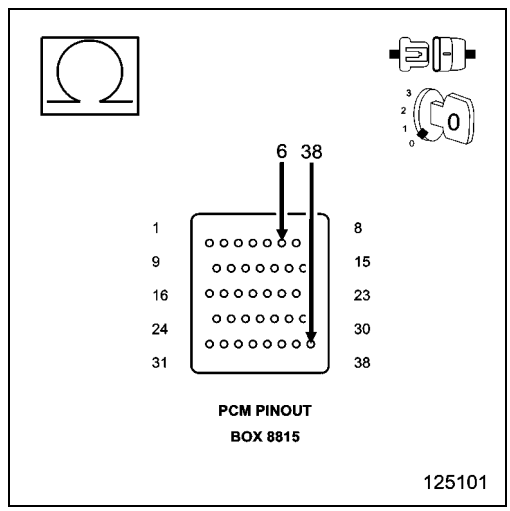

11. POWERTRAIN CONTROL MODULE (PCM)

1. Using the wiring diagram/schematic as a guide, inspect the wiring and connectors between the Throttle Body and the Powertrain Control Module (PCM).
2. Look for any chafed, pierced, pinched, or partially broken wires.
3. Look for broken, bent, pushed out or corroded terminals. Verify that there is good pin to terminal contact in the Throttle Body and the Powertrain Control Module connectors.
4. Refer to any Technical Service Bulletins that may apply.

Were there any problems found?

Yes

- Repair as necessary.
- Perform the POWERTRAIN VERIFICATION TEST. (Refer to 28 - DTC-Based Diagnostics/MODULE, Powertrain Control (PCM) - Standard Procedure)

No

- Replace and program the Powertrain Control Module per Service Information.
- Perform the POWERTRAIN VERIFICATION TEST. (Refer to 28 - DTC-Based Diagnostics/MODULE, Powertrain Control (PCM) - Standard Procedure)

P2101-ELECTRONIC THROTTLE CONTROL MOTOR PERFORMANCE

For a complete wiring diagram **Refer to the Wiring Information**.

- **When Monitored:**
  With the vehicle running, ETC Motor not in Limp Home mode, and the TPS adaptation is complete.
- **Set Condition:**
  The PCM recognizes too large of an error between the actual position of the Throttle Plate and the Set Point position. One trip fault and the code will set within 5 seconds. Three good trips to turn off the MIL ETC light is flashing.

Possible Causes
THROTTLE BODY ASSEMBLY
LOW BATTERY VOLTAGE
POWERTRAIN CONTROL MODULE (PCM)

Always perform the Pre-Diagnostic Troubleshooting procedure before proceeding. (Refer to 28 - DTC-Based Diagnostics/MODULE, Powertrain Control (PCM) - Standard Procedure).

1. ACTIVE DTC

NOTE: Before continuing visually inspect the throttle blade and bore for any obstructions. Icing of the throttle body may have caused this code to set.

NOTE: Low battery voltage can also cause excessive current draw, in very hot and very cold ambient temperature. Make sure the battery can pass a Load test before continuing.

NOTE: Diagnose any 5-Volt Supply, Battery, and TP Sensor DTCs before continuing.

1. Ignition on, engine not running.
2. With a scan tool, select View DTCs.

Is the DTC Active at this time?

Yes

- Go To 2

No

- Refer to the INTERMITTENT CONDITION Diagnostic Procedure. (Refer to 28 - DTC-Based Diagnostics/MODULE, Powertrain Control (PCM) - Standard Procedure)

2. THROTTLE POSITION WITHIN 2° DEGREES OF DESIRED THROTTLE POSITION

1. Start the engine.
2. Allow the engine to reach normal operating temperature.
3. With a scan tool, monitor the Actual Throttle Position and Desired Throttle Position.
4. Compare the Actual Throttle Position and the Set Point Throttle Position.

Is the Actual Throttle Position within 2° degrees of the Desired Throttle Position?

Yes

- Go To 3

No

- Verify that there is good pin to terminal contact in the Throttle Body and the Powertrain Control Module connectors. If OK, replace the Throttle Body Assembly. Disconnect the Battery when replacing the Throttle Body Assembly. After installation is complete, use a scan tool and select the ETC RELEARN function.
- Perform the POWERTRAIN VERIFICATION TEST. (Refer to 28 - DTC-Based Diagnostics/MODULE, Powertrain Control (PCM) - Standard Procedure)

3. ETC OPERATION

1. Ignition on, engine not running.
2. With a scan tool, perform the ETC Throttle Follower Test.

NOTE: It may be necessary to use a mirror to see the throttle blade.

3. Observe the throttle blade.

NOTE: Make sure the motion of the throttle blade is smooth and that it opens and closes.

Did the ETC motor operate properly?

Yes

- Refer to the INTERMITTENT CONDITION Diagnostic Procedure. (Refer to 28 - DTC-Based Diagnostics/MODULE, Powertrain Control (PCM) - Standard Procedure)

No

- Verify that there is good pin to terminal contact at the Throttle Body and the Powertrain Control Module connectors. Replace the Throttle Body Assembly if no problems were found in the connectors. Disconnect the Battery when replacing the Throttle Body Assembly. After installation is complete, use a scan tool and select the ETC RELEARN function.
- Perform the POWERTRAIN VERIFICATION TEST. (Refer to 28 - DTC-Based Diagnostics/MODULE, Powertrain Control (PCM) - Standard Procedure)

■ P2107-ELECTRONIC THROTTLE CONTROL MODULE PROCESSOR

For a complete wiring diagram **Refer to the Wiring Information**.

- **When Monitored:**

  Ignition on.
- **Set Condition:**

  Internal PCM failure. Module will attempt to reset, so you will be able to hear the throttle relearning. If the condition is continuous, the vehicle may not be driveable. One trip fault. ETC light is flashing.

Possible Causes
POWERTRAIN CONTROL MODULE NEEDS TO BE REPROGRAMMED

Always perform the Pre-Diagnostic Troubleshooting procedure before proceeding. (Refer to 28 - DTC-Based Diagnostics/MODULE, Powertrain Control (PCM) - Standard Procedure) .

1. REPROGRAM THE POWERTRAIN CONTROL MODULE

1. Check for any related TSBs.
2. Verify the PCM is at the latest calibration (flash level).

NOTE: An intermittent loss of power to the PCM without performing an ETC Relearn procedure may cause this DTC to set.

3. Flash the Powertrain Control Module per Service Information if any updates are available.
4. Start the engine.
5. Allow the engine to reach normal operating temperature.
6. Operate the accelerator pedal. (do not exceed 3500 rpm)
7. Test drive the vehicle for 10 miles on a flat road surface.

Does this DTC reset?

Yes

- Replace and reprogram the Powertrain Control Module per Service Information.
- Perform the POWERTRAIN VERIFICATION TEST. (Refer to 28 - DTC-Based Diagnostics/MODULE, Powertrain Control (PCM) - Standard Procedure)

No

- Test Complete.

P2110-ELECTRONIC THROTTLE CONTROL - FORCED LIMITED RPM

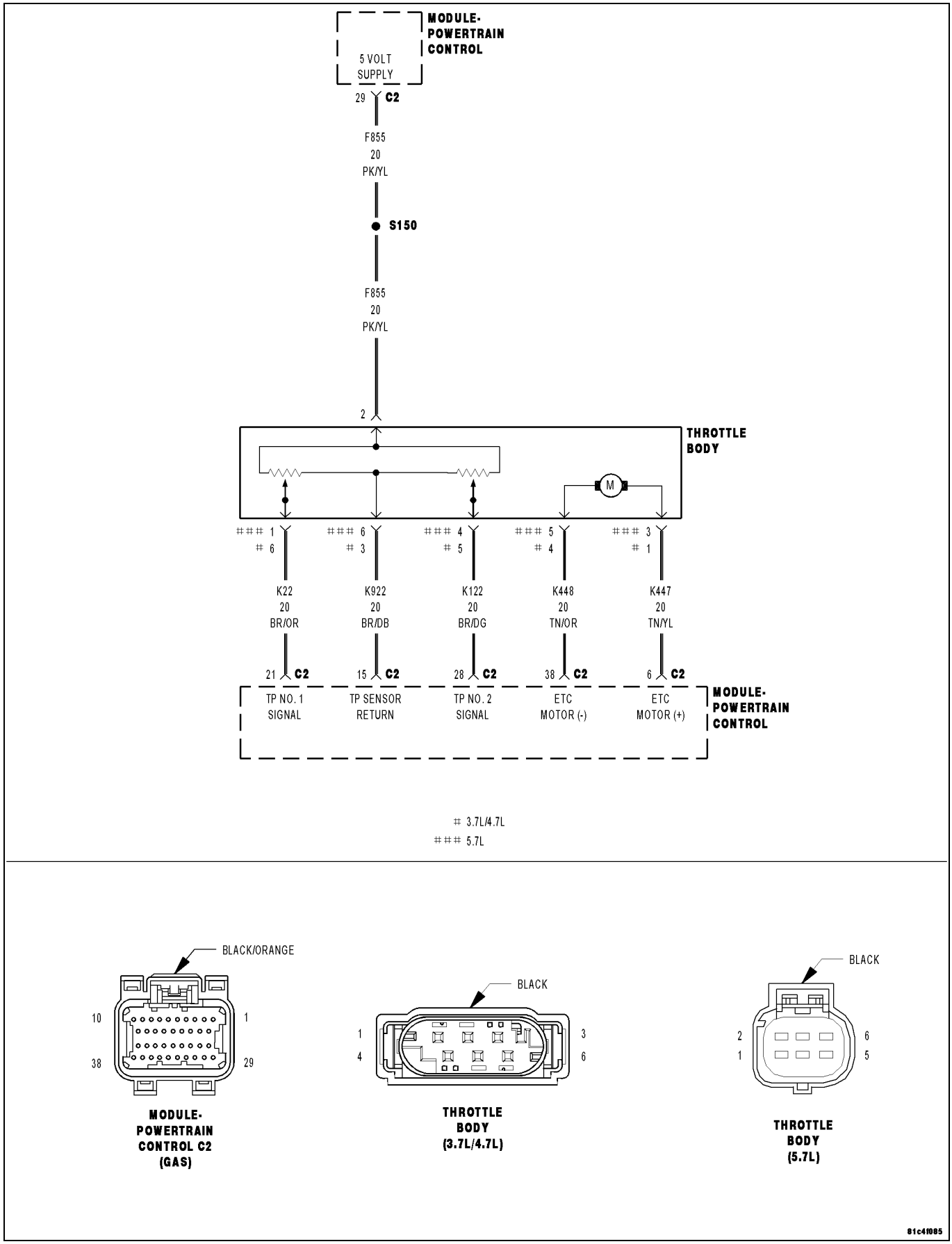

For a complete wiring diagram **Refer to the Wiring Information**.

- **When Monitored:**
  Ignition on and ETC motor is working.
- **Set Condition:**
  When the PCM requests to limit engine speed if PWM is too high for 20.5 seconds and before P2118 sets. One trip fault and the code will set within 5 seconds. ETC light is illuminated.

Possible Causes
THROTTLE PLATE STUCK
(K447) ETC POSITIVE CIRCUIT OPEN
(K448) ETC NEGATIVE CIRCUIT OPEN
(K447) ETC POSITIVE CIRCUIT SHORTED TO GROUND
(K448) ETC NEGATIVE CIRCUIT SHORTED TO GROUND
ETC MOTOR
POWERTRAIN CONTROL MODULE (PCM)

Always perform the Pre-Diagnostic Troubleshooting procedure before proceeding. (Refer to 28 - DTC-Based Diagnostics/MODULE, Powertrain Control (PCM) - Standard Procedure).

1. ACTIVE DTC

1. Ignition on, engine not running.
2. With a scan tool select View DTCs.
3. In the Freeze Frame data, look at the temperature at which the fault occurred. If it occurred in extreme cold temperatures, Icing of the throttle body may have caused this code to set.

NOTE: Diagnose any TP Sensor faults, 5-Volt Supply faults, and Battery Voltage High or Low DTCs before continuing.

NOTE: If P2072 is also set, this indicates that the cold weather ice blockage routine has run. No repair action is required.

Is the DTC Active at this time?

Yes

- Go To 2

No

- Refer to the INTERMITTENT CONDITION Diagnostic Procedure. (Refer to 28 - DTC-Based Diagnostics/MODULE, Powertrain Control (PCM) - Standard Procedure)

2. (K447) ETC POSITIVE CIRCUIT OPEN

1. Turn the ignition off.
2. Disconnect the Throttle Body harness connector.
3. Disconnect the C2 PCM harness connector.

CAUTION: Do not probe the PCM harness connectors. Probing the PCM harness connectors will damage the PCM terminals resulting in poor terminal to pin connection. Install the PCM Pinout Box Kit, NGC, 38 Position 8815A to perform diagnosis.

4. Measure the resistance of the (K447) ETC Positive circuit from the Throttle Body harness connector to the appropriate terminal of special tool #8815A.

Is the resistance below 5.0 ohms?

Yes

- Go To 3

No

- Repair the open in the (K447) ETC Positive circuit.
- Perform the POWERTRAIN VERIFICATION TEST. (Refer to 28 - DTC-Based Diagnostics/MODULE, Powertrain Control (PCM) - Standard Procedure)

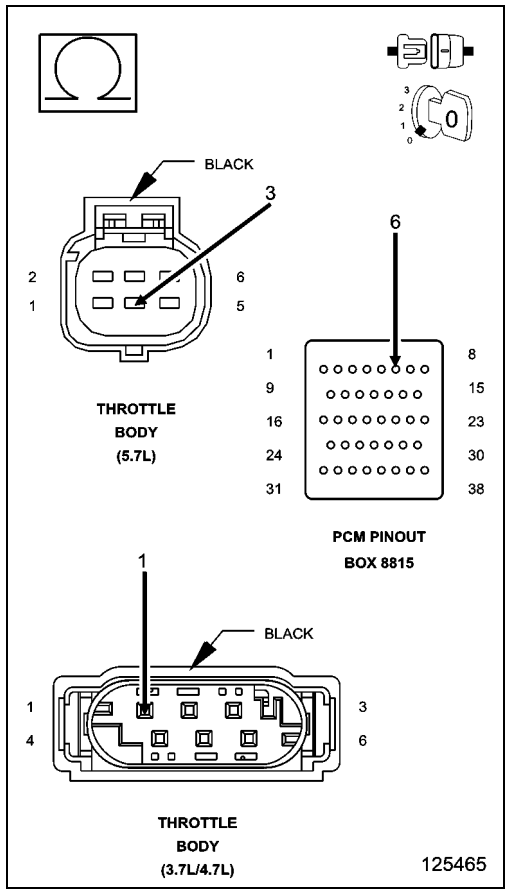

3. (K448) ETC NEGATIVE CIRCUIT OPEN

1. Measure the resistance of the (K448) ETC Negative circuit from the Throttle Body harness connector to the appropriate terminal of special tool #8815A.

Is the resistance below 5.0 ohms?

Yes

- Go To 4

No

- Repair the open in the (K448) ETC Negative circuit.
- Perform the POWERTRAIN VERIFICATION TEST. (Refer to 28 - DTC-Based Diagnostics/MODULE, Powertrain Control (PCM) - Standard Procedure)

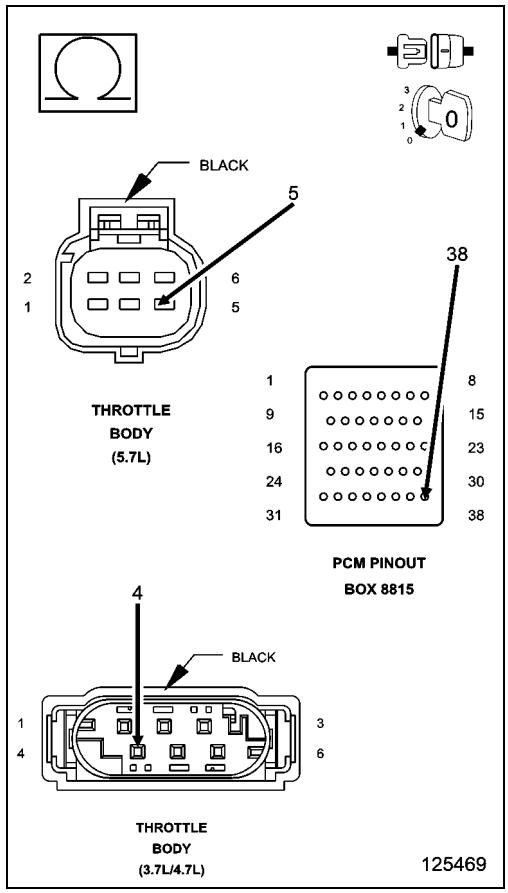

4. (K447) ETC POSITIVE CIRCUIT SHORTED TO GROUND

1. Measure the resistance between a known good ground and the (K447) ETC Positive circuit at the appropriate terminal of special tool #8815A.

Is the resistance below 100 ohms?

Yes

- Repair the short to ground in the (K447) ETC Positive circuit.
- Perform the POWERTRAIN VERIFICATION TEST. (Refer to 28 - DTC-Based Diagnostics/MODULE, Powertrain Control (PCM) - Standard Procedure)

No

- Go To 5

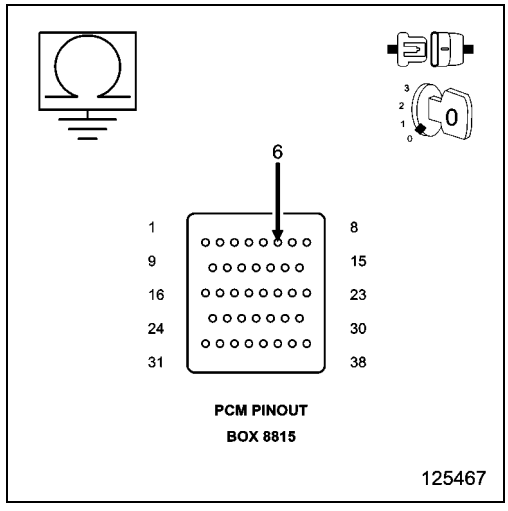

5. (K448) ETC NEGATIVE CIRCUIT SHORTED TO GROUND

1. Measure the resistance between a known good ground and the (K448) ETC Negative circuit at the appropriate terminal of special tool #8815A.

Is the resistance below 100 ohms?

Yes

- Repair the short to ground in the (K448) ETC Negative circuit.
- Perform the POWERTRAIN VERIFICATION TEST. (Refer to 28 - DTC-Based Diagnostics/MODULE, Powertrain Control (PCM) - Standard Procedure)

No

- Go To 6

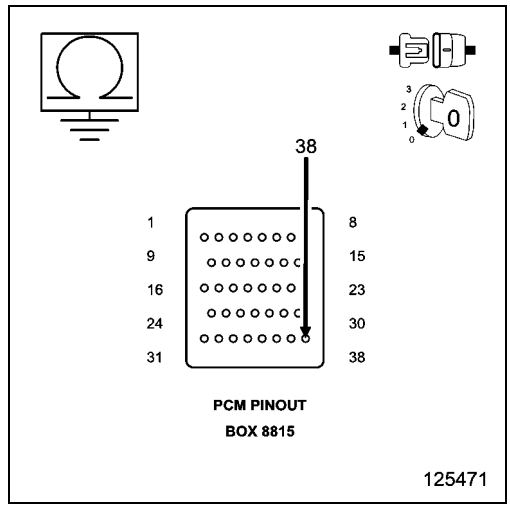

6. ETC MOTOR

NOTE: Take the following measurement using special tool #8815A **to avoid possible damage to the Throttle Body harness connector.**

1. Measure the resistance of the ETC Motor between the (K447) ETC Positive circuit and the (K448) ETC Negative circuit at the appropriate terminals of special tool #8815A.

Is the resistance between 2.5 and 25 ohms at closed throttle?

Yes

- Go To 7

No

- Verify that there is good pin to terminal contact at the Throttle Body and the Powertrain Control Module connectors. Replace the Throttle Body Assembly if no problems were found in the connectors. Disconnect the Battery when replacing the Throttle Body Assembly. After installation is complete, use a scan tool and select the ETC RELEARN function.
- Perform the POWERTRAIN VERIFICATION TEST. (Refer to 28 - DTC-Based Diagnostics/MODULE, Powertrain Control (PCM) - Standard Procedure)

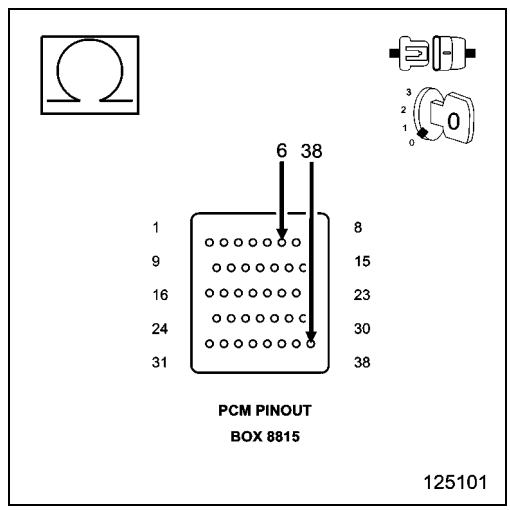

7. THROTTLE PLATE STUCK

1. Turn the ignition off.
2. Remove the Air Cleaner Assembly from the Throttle Body.
3. Check for any signs of a foreign material (ice or dirt) causing the Throttle to stick.
4. Using a scan tool, perform the ETC Throttle Follower Test.
5. You may need an assistant to watch the Throttle Plate move.

Does the Throttle Plate move during the test?

Yes

- Go To 8

No

- Remove the debris if possible or replace the Throttle Body Assembly if signs of physical damage are present. Disconnect the Battery when replacing the Throttle Body Assembly. After installation is complete, use a scan tool and select the ETC RELEARN function.
- Perform the POWERTRAIN VERIFICATION TEST. (Refer to 28 - DTC-Based Diagnostics/MODULE, Powertrain Control (PCM) - Standard Procedure)

8. POWERTRAIN CONTROL MODULE (PCM)

1. Using the wiring diagram/schematic as a guide, inspect the wiring and connectors between the Throttle Body and the Powertrain Control Module (PCM).
2. Look for any chafed, pierced, pinched, or partially broken wires.
3. Look for broken, bent, pushed out or corroded terminals. Verify that there is good pin to terminal contact in the Throttle Body and the Powertrain Control Module connectors.
4. Refer to any Technical Service Bulletins that may apply.

Were there any problems found?

Yes

- Repair as necessary.
- Perform the POWERTRAIN VERIFICATION TEST. (Refer to 28 - DTC-Based Diagnostics/MODULE, Powertrain Control (PCM) - Standard Procedure)

No

- Replace and program the Powertrain Control Module per Service Information.
- Perform the POWERTRAIN VERIFICATION TEST. (Refer to 28 - DTC-Based Diagnostics/MODULE, Powertrain Control (PCM) - Standard Procedure)

P2111-ELECTRONIC THROTTLE CONTROL - UNABLE TO CLOSE

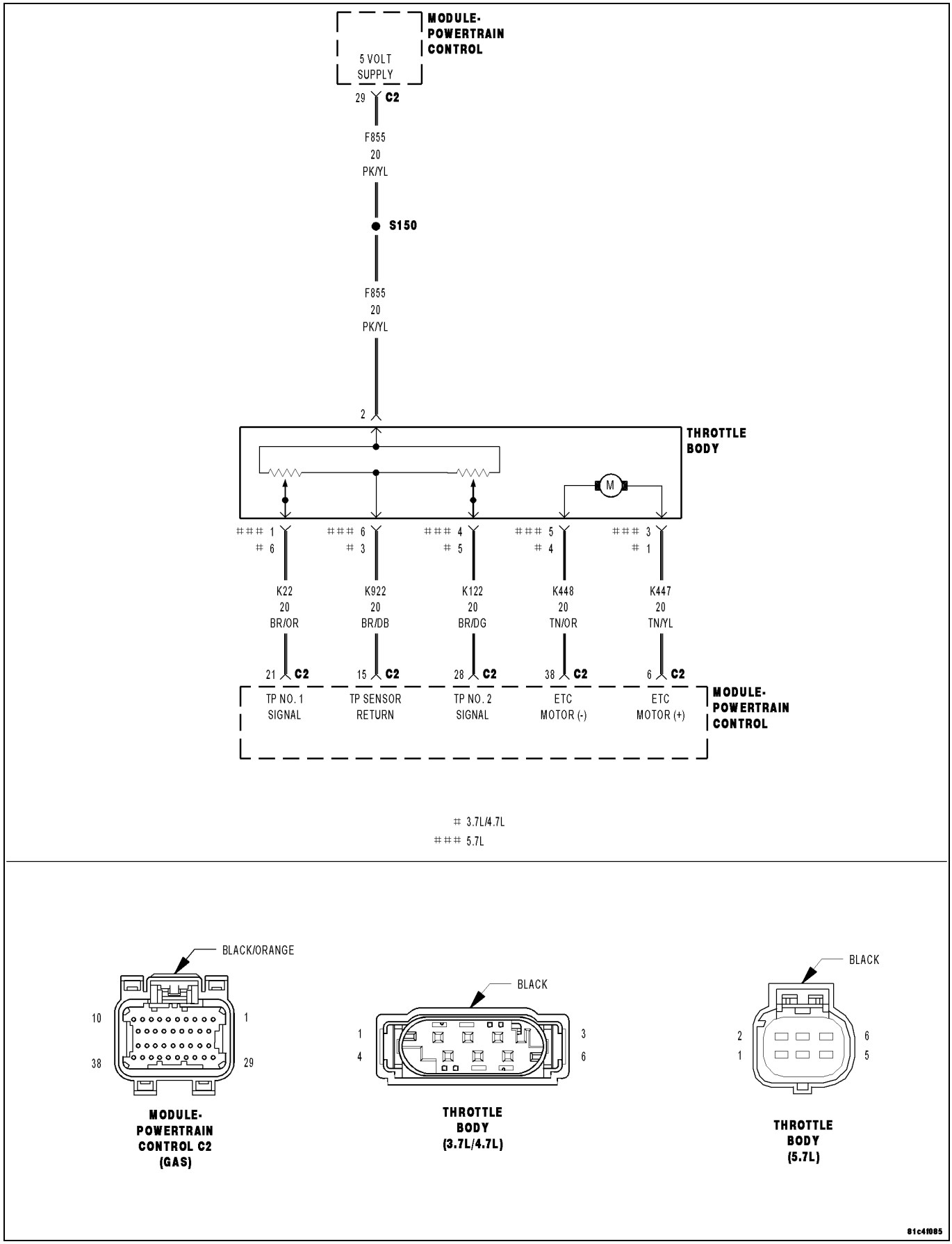

For a complete wiring diagram **Refer to the Wiring Information**.

- **When Monitored:**
  Ignition on and battery voltage greater than 10 volts.
- **Set Condition:**
  Just after key on, the throttle is opened and closed to test the system. If the TP Sensor does not return to Limp Home Position at the end of this test, this DTC will set. One trip fault and the code will set within 5 seconds. ETC light is flashing.

Possible Causes
THROTTLE PLATE STUCK ABOVE LIMP HOME POSITION
TP SENSOR NO.1 AND TP SENSOR NO.2 BOTH READ 2.5 VOLTS
(K447) ETC POSITIVE CIRCUIT SHORTED TO VOLTAGE
(K447) ETC POSITIVE CIRCUIT OPEN
(K448) ETC NEGATIVE CIRCUIT OPEN
(K447) ETC POSITIVE CIRCUIT SHORTED TO GROUND
(K448) ETC NEGATIVE CIRCUIT SHORTED TO GROUND
POWERTRAIN CONTROL MODULE (PCM)

Always perform the Pre-Diagnostic Troubleshooting procedure before proceeding. (Refer to 28 - DTC-Based Diagnostics/MODULE, Powertrain Control (PCM) - Standard Procedure).

1. ACTIVE DTC

NOTE: Maximum engine speed could be reduced while this fault is active, it just depends where the throttle gets stuck.

1. Ignition on, engine not running.

NOTE: The PCM tests the ETC Motor by opening and closing the Throttle Plate before starting the engine. If during this test the Throttle plate does not return to the closed position this DTC sets.

2. With a scan tool select View DTCs.

NOTE: Diagnose any TP Sensor or 5-Volt Supply DTCs before continuing.

Is the DTC Active at this time?

Yes

- Go To 2

No

- Refer to the INTERMITTENT CONDITION Diagnostic Procedure. (Refer to 28 - DTC-Based Diagnostics/MODULE, Powertrain Control (PCM) - Standard Procedure)

2. THROTTLE PLATE STUCK OPEN

1. Turn the ignition off.

NOTE: The PCM tests the ETC Motor by opening and closing the Throttle Plate before starting the engine. If during this test the Throttle plate does not return to the closed position this DTC sets.

2. Remove the Air Cleaner Assembly from the Throttle Body.
3. Check for any signs of a foreign material causing the Throttle to remain open.
4. Using a scan tool under System Tests, perform the ETC Throttle Follower Test.
5. Have an assistant watch the throttle plate to verify it moves during the test.

Does the Throttle Plate move?

Yes

- Go To 3

No

- Remove the debris if possible or replace the Throttle Body Assembly if signs of physical damage are present. Disconnect the Battery when replacing the Throttle Body Assembly. After installation is complete, use a scan tool and perform the ETC RELEARN function.
- Perform the POWERTRAIN VERIFICATION TEST. (Refer to 28 - DTC-Based Diagnostics/MODULE, Powertrain Control (PCM) - Standard Procedure)

3. TP SENSOR NO.1 AND TP SENSOR NO.2 BOTH EQUAL 2.5 VOLTS

1. With a scan tool, perform the ETC Throttle Follower test while reading both TP Sensor voltage readings.

Are both TP Sensor readings stuck at 2.5 volts?

Yes

- Check the TP Sensor Signal circuits for excessive resistance, being shorted to each other, or shorted to the Sensor Return circuit.
- Perform the POWERTRAIN VERIFICATION TEST. (Refer to 28 - DTC-Based Diagnostics/MODULE, Powertrain Control (PCM) - Standard Procedure)

No

- Go To 4

4. (K447) ETC POSITIVE CIRCUIT SHORTED TO VOLTAGE

1. Turn the ignition off.
2. Disconnect the Throttle Body harness connector.
3. Disconnect the C2 PCM harness connector.

CAUTION: Do not probe the PCM harness connectors. Probing the PCM harness connectors will damage the PCM terminals resulting in poor terminal to pin connection. Install the PCM Pinout Box 8815A **to perform the diagnostics.**

4. Ignition on, engine not running.
5. Measure the voltage on the (K447) ETC Positive circuit at the appropriate terminal of special tool #8815A.

Is there any voltage present?

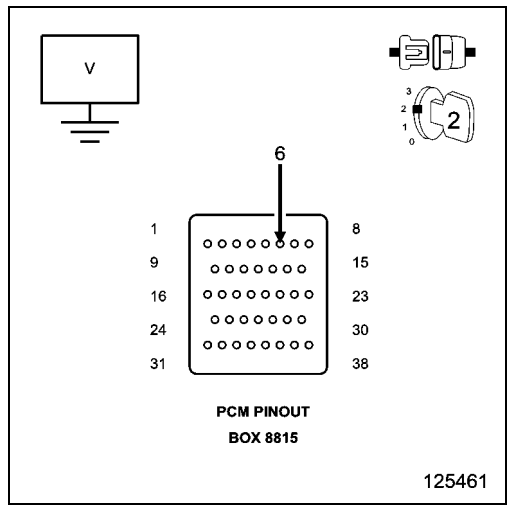

Yes

- Repair the short to voltage on the (K447) ETC Positive circuit.
- Perform the POWERTRAIN VERIFICATION TEST. (Refer to 28 - DTC-Based Diagnostics/MODULE, Powertrain Control (PCM) - Standard Procedure)

No

- Go To 5

5. (K447) ETC POSITIVE CIRCUIT OPEN

1. Turn the ignition off.
2. Measure the resistance of the (K447) ETC Positive circuit from the Throttle Body harness connector to the appropriate terminal of special tool #8815A.

Is the resistance below 5.0 ohms?

Yes

- Go To 6

No

- Repair the open in the (K447) ETC Positive circuit.
- Perform the POWERTRAIN VERIFICATION TEST. (Refer to 28 - DTC-Based Diagnostics/MODULE, Powertrain Control (PCM) - Standard Procedure)

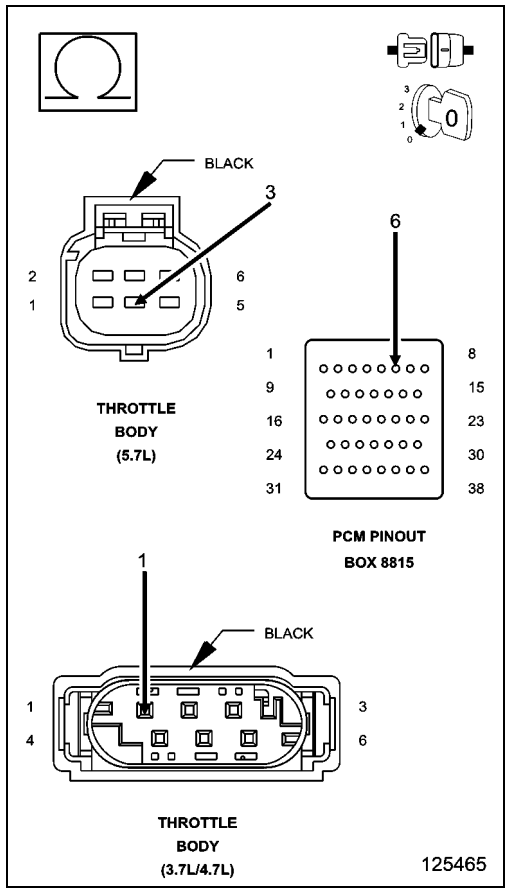

6. (K448) ETC NEGATIVE CIRCUIT OPEN

1. Measure the resistance of the (K448) ETC Negative circuit from the Throttle Body harness connector to the appropriate terminal of special tool #8815A.

Is the resistance below 5.0 ohms?

Yes

- Go To 7

No

- Repair the open in the (K448) ETC Negative circuit.
- Perform the POWERTRAIN VERIFICATION TEST. (Refer to 28 - DTC-Based Diagnostics/MODULE, Powertrain Control (PCM) - Standard Procedure)

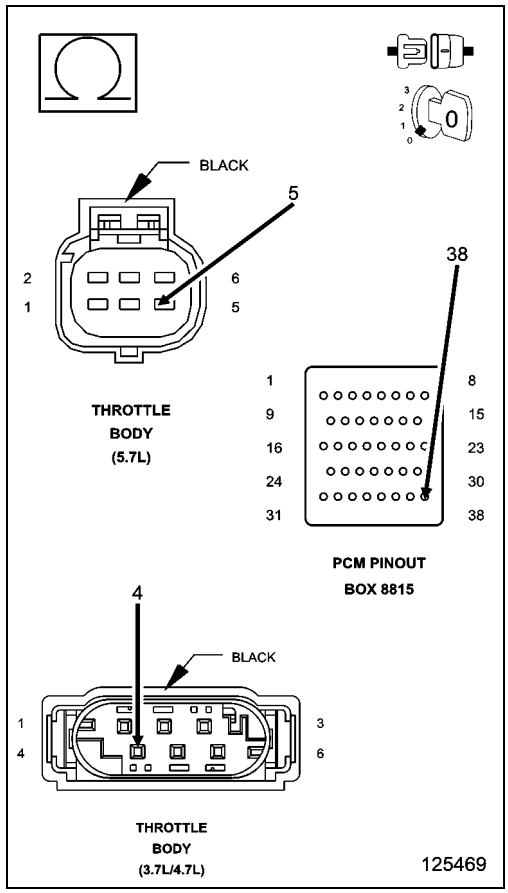

7. (K447) ETC POSITIVE CIRCUIT SHORTED TO GROUND

1. Measure the resistance between a known good ground and the (K447) ETC Positive circuit at the appropriate terminal of special tool #8815A.

Is the resistance below 100 ohms?

Yes

- Repair the short to ground in the (K447) ETC Positive circuit.
- Perform the POWERTRAIN VERIFICATION TEST. (Refer to 28 - DTC-Based Diagnostics/MODULE, Powertrain Control (PCM) - Standard Procedure)

No

- Go To 8

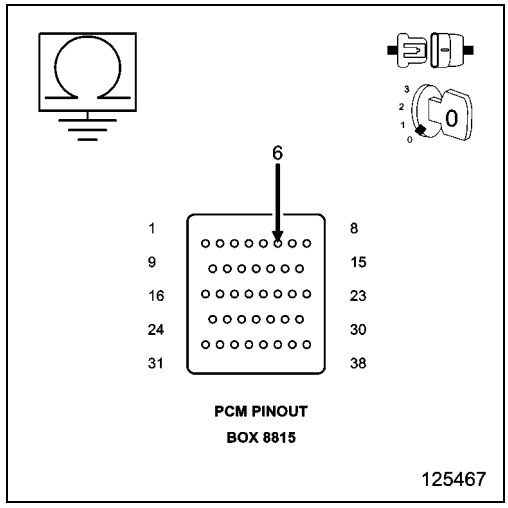

8. (K448) ETC NEGATIVE CIRCUIT SHORTED TO GROUND

1. Measure the resistance between a known good ground and the (K448) ETC Negative circuit at the appropriate terminal of special tool #8815A.

Is the resistance below 100 ohms?

Yes

- Repair the short to ground in the (K448) ETC Negative circuit.
- Perform the POWERTRAIN VERIFICATION TEST. (Refer to 28 - DTC-Based Diagnostics/MODULE, Powertrain Control (PCM) - Standard Procedure)

No

- Go To 9

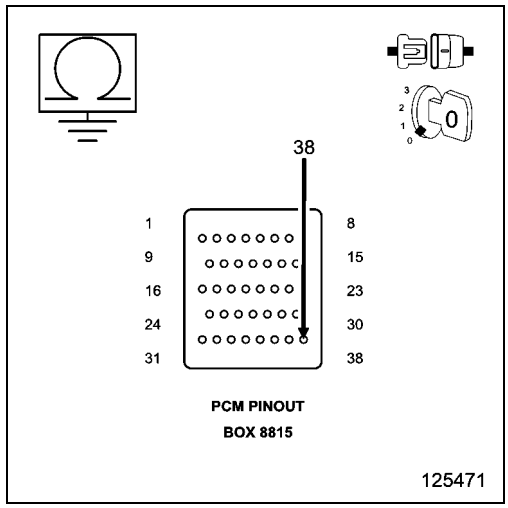

9. POWERTRAIN CONTROL MODULE (PCM)

1. Using the wiring diagram/schematic as a guide, inspect the wiring and connectors between the Throttle Body and the Powertrain Control Module (PCM).
2. Look for any chafed, pierced, pinched, or partially broken wires.
3. Look for broken, bent, pushed out or corroded terminals. Verify that there is good pin to terminal contact in the Throttle Body and the Powertrain Control Module connectors.
4. Refer to any Technical Service Bulletins that may apply.

Were there any problems found?

Yes

- Repair as necessary.
- Perform the POWERTRAIN VERIFICATION TEST. (Refer to 28 - DTC-Based Diagnostics/MODULE, Powertrain Control (PCM) - Standard Procedure)

No

- Replace and program the Powertrain Control Module per Service Information.
- Perform the POWERTRAIN VERIFICATION TEST. (Refer to 28 - DTC-Based Diagnostics/MODULE, Powertrain Control (PCM) - Standard Procedure)

P2112-ELECTRONIC THROTTLE CONTROL - UNABLE TO OPEN

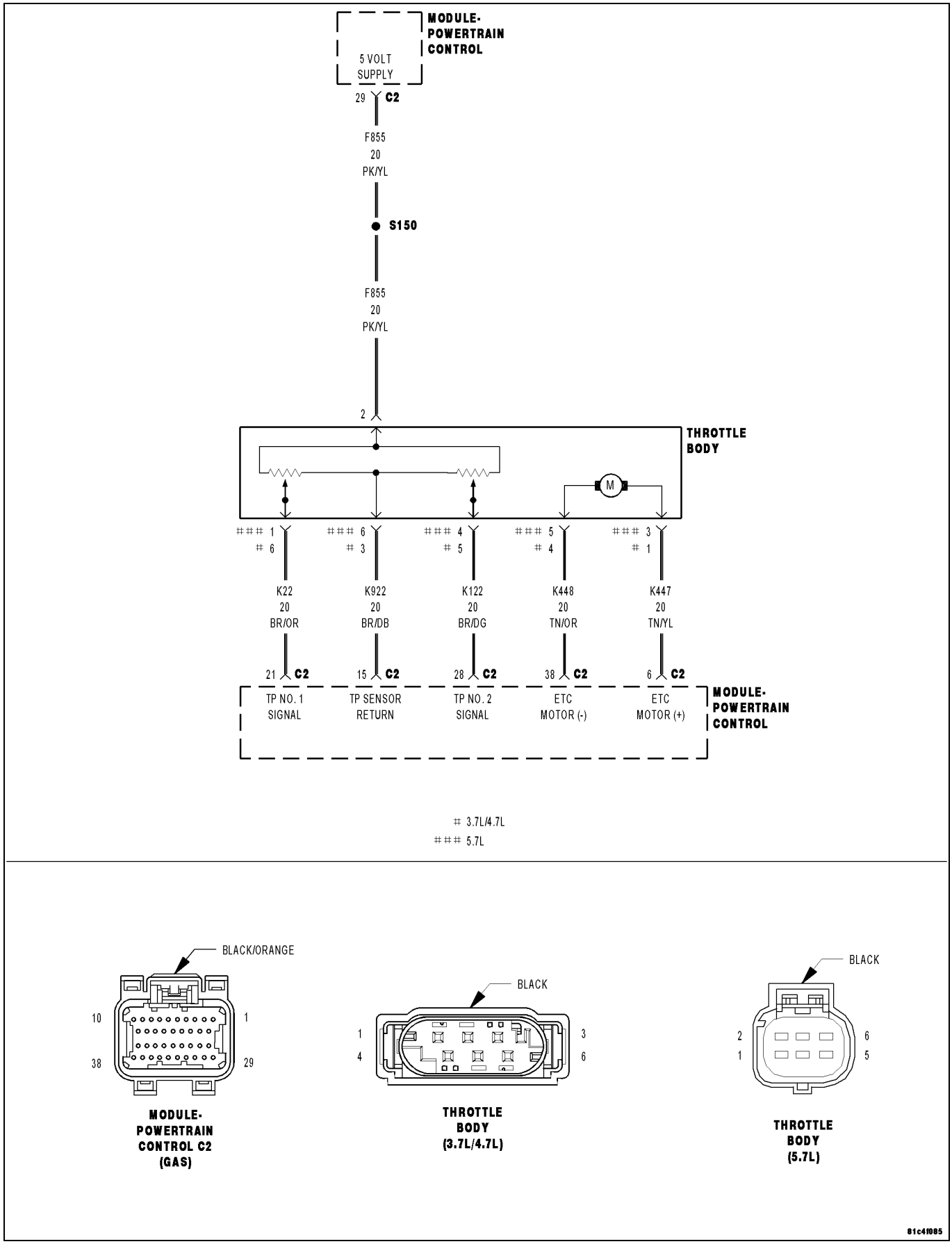

For a complete wiring diagram **Refer to the Wiring Information**.

- **When Monitored:**
  Ignition on and battery voltage greater than 10 volts.
- **Set Condition:**
  Just after key on, the throttle is opened and closed to test the system. If the TP Sensor does not return to Limp Home Position at the end of this test, this DTC will set. One trip fault and the code will set within 5 seconds. ETC light is flashing.

Possible Causes
THROTTLE PLATE STUCK AT OR BELOW LIMP HOME POSITION
(K448) ETC NEGATIVE CIRCUIT SHORTED TO VOLTAGE
(K447) ETC POSITIVE CIRCUIT OPEN
(K448) ETC NEGATIVE CIRCUIT OPEN
(K447) ETC POSITIVE CIRCUIT SHORTED TO GROUND
(K448) ETC NEGATIVE CIRCUIT SHORTED TO GROUND
POWERTRAIN CONTROL MODULE (PCM)

Always perform the Pre-Diagnostic Troubleshooting procedure before proceeding. (Refer to 28 - DTC-Based Diagnostics/MODULE, Powertrain Control (PCM) - Standard Procedure).

1. ACTIVE DTC

1. Ignition on, engine not running.

NOTE: The PCM tests the ETC Motor by opening and closing the Throttle Plate before starting the engine. If during this test the Throttle plate does not return to the closed position this DTC sets.

2. With a scan tool select View DTCs.

NOTE: Diagnose any TP Sensor, Battery Voltage, and 5-Volt Supply DTCs before continuing.

Is the DTC Active at this time?

Yes

- Go To 2

No

- Refer to the INTERMITTENT CONDITION Diagnostic Procedure. (Refer to 28 - DTC-Based Diagnostics/MODULE, Powertrain Control (PCM) - Standard Procedure)

2. THROTTLE PLATE STUCK OPEN

1. Turn the ignition off.

NOTE: The PCM tests the ETC Motor by opening and closing the Throttle Plate before starting the engine. If during this test the Throttle plate does not open this DTC sets.

2. Remove the Air Cleaner Assembly from the Throttle Body.
3. Check for any signs of a foreign material causing the Throttle to remain open.
4. Ignition on, engine not running.
5. Using a scan tool under System Tests, perform the ETC Throttle Follower Test.
6. Have an assistant watch the throttle plate to verify it moves during the test.

Does the Throttle Plate move?

Yes

- Go To 3

No

- Remove the debris if possible or replace the Throttle Body Assembly. Disconnect the Battery when replacing the Throttle Body Assembly. After installation is complete, use a scan tool and select the ETC RELEARN function.
- Perform the POWERTRAIN VERIFICATION TEST. (Refer to 28 - DTC-Based Diagnostics/MODULE, Powertrain Control (PCM) - Standard Procedure)

3. (K448) ETC NEGATIVE CIRCUIT SHORTED TO VOLTAGE

1. Turn the ignition off.
2. Disconnect the Throttle Body harness connector.
3. Disconnect the C2 PCM harness connector.

CAUTION: Do not probe the PCM harness connectors. Probing the PCM harness connectors will damage the PCM terminals resulting in poor terminal to pin connection. Install the PCM Pinout Box Kit, NGC, 38 Position 8815A to perform diagnosis.

4. Ignition on, engine not running.
5. Measure the voltage on the (K448) ETC Negative circuit at the appropriate terminal of special tool #8815A.

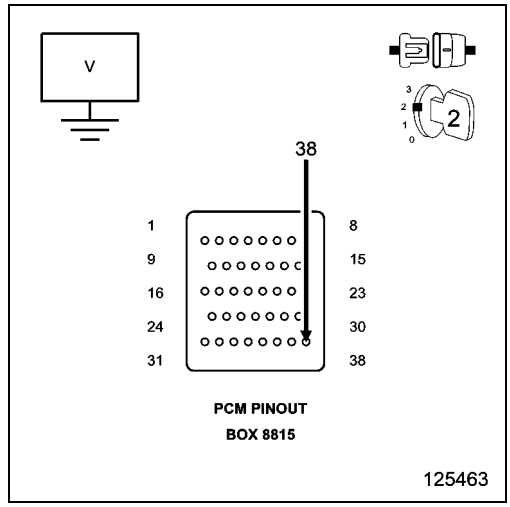

Is there any voltage present?

Yes

- Repair the short to voltage on the (K448) ETC Negative circuit.
- Perform the POWERTRAIN VERIFICATION TEST. (Refer to 28 - DTC-Based Diagnostics/MODULE, Powertrain Control (PCM) - Standard Procedure)

No

- Go To 4

4. (K447) ETC POSITIVE CIRCUIT OPEN

1. Turn the ignition off.
2. Measure the resistance of the (K447) ETC Positive circuit from the Throttle Body harness connector to the appropriate terminal of special tool #8815A.

Is the resistance below 5.0 ohms?

Yes

- Go To 5

No

- Repair the open in the (K447) ETC Positive circuit.
- Perform the POWERTRAIN VERIFICATION TEST. (Refer to 28 - DTC-Based Diagnostics/MODULE, Powertrain Control (PCM) - Standard Procedure)

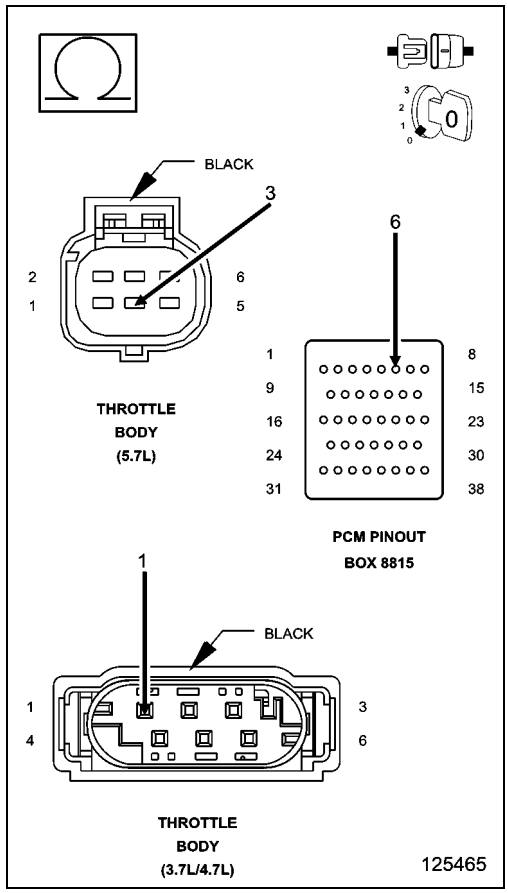

5. (K448) ETC NEGATIVE CIRCUIT OPEN

1. Measure the resistance of the (K448) ETC Negative circuit from the Throttle Body harness connector to the appropriate terminal of special tool #8815A.

Is the resistance below 5.0 ohms?

Yes

- Go To 6

No

- Repair the open in the (K448) ETC Negative circuit.
- Perform the POWERTRAIN VERIFICATION TEST. (Refer to 28 - DTC-Based Diagnostics/MODULE, Powertrain Control (PCM) - Standard Procedure)

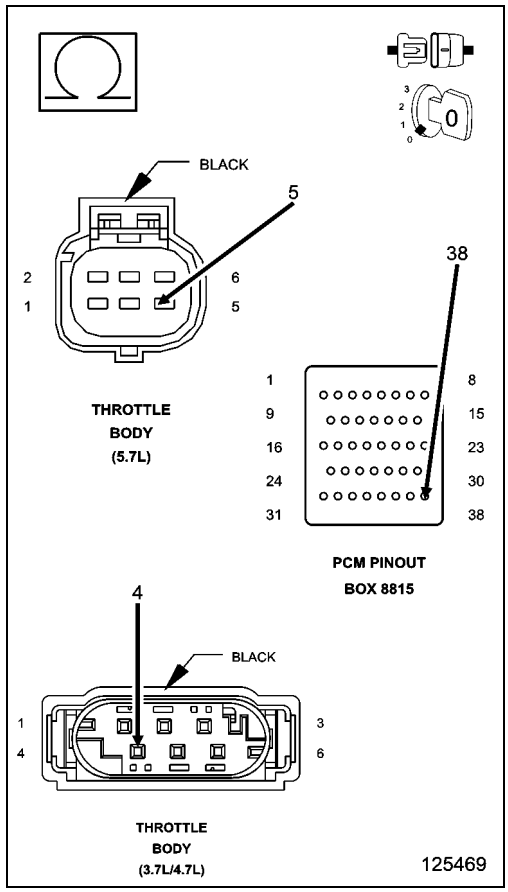

6. (K447) ETC POSITIVE CIRCUIT SHORTED TO GROUND

1. Measure the resistance between a known good ground and the (K447) ETC Positive circuit at the appropriate terminal of special tool #8815A.

Is the resistance below 100 ohms?

Yes

- Repair the short to ground in the (K447) ETC Positive circuit.
- Perform the POWERTRAIN VERIFICATION TEST. (Refer to 28 - DTC-Based Diagnostics/MODULE, Powertrain Control (PCM) - Standard Procedure)

No

- Go To 7

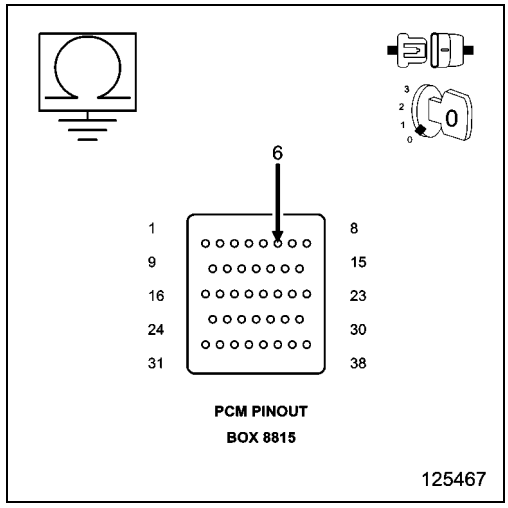

7. (K448) ETC NEGATIVE CIRCUIT SHORTED TO GROUND

1. Measure the resistance between a known good ground and the (K448) ETC Negative circuit at the appropriate terminal of special tool #8815A.

Is the resistance below 100 ohms?

Yes

- Repair the short to ground in the (K448) ETC Negative circuit.
- Perform the POWERTRAIN VERIFICATION TEST. (Refer to 28 - DTC-Based Diagnostics/MODULE, Powertrain Control (PCM) - Standard Procedure)

No

- Go To 8

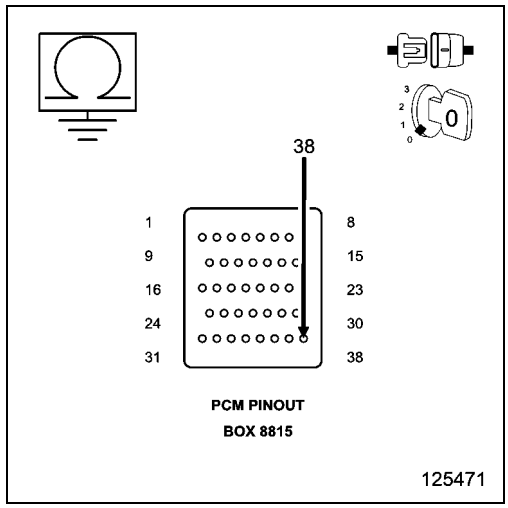

8. POWERTRAIN CONTROL MODULE (PCM)

1. Using the wiring diagram/schematic as a guide, inspect the wiring and connectors between the Throttle Body and the Powertrain Control Module (PCM).
2. Look for any chafed, pierced, pinched, or partially broken wires.
3. Look for broken, bent, pushed out or corroded terminals. Verify that there is good pin to terminal contact in the Throttle Body and the Powertrain Control Module connectors.
4. Refer to any Technical Service Bulletins that may apply.

Were there any problems found?

Yes

- Repair as necessary.
- Perform the POWERTRAIN VERIFICATION TEST. (Refer to 28 - DTC-Based Diagnostics/MODULE, Powertrain Control (PCM) - Standard Procedure)

No

- Replace and program the Powertrain Control Module per Service Information.
- Perform the POWERTRAIN VERIFICATION TEST. (Refer to 28 - DTC-Based Diagnostics/MODULE, Powertrain Control (PCM) - Standard Procedure)

■ P2115-ACCELERATOR PEDAL POSITION SENSOR 1 MINIMUM STOP PERFORMANCE

For a complete wiring diagram **Refer to the Wiring Information**.

- **When Monitored:**

  Ignition on. During in plant mode the APP Sensors need to be checked to make sure that idle and full pedal travel can be reached on both sensors. The test for P2115 is only enabled once test for P2166 has passed.

- **Set Condition:**

  APPS No.1 has failed to achieve the required minimum value during In Plant testing. One trip fault and the code will set within 5 seconds. Engine will only idle. ETC light is illuminated.

Possible Causes
IN PLANT TEST FAILURE
APPS RELEARN

Always perform the Pre-Diagnostic Troubleshooting procedure before proceeding. (Refer to 28 - DTC-Based Diagnostics/MODULE, Powertrain Control (PCM) - Standard Procedure).

1. IN PLANT TEST FAILURE

1. Ignition on, engine not running.

NOTE: This DTC is set when the APP Sensors are learned in plant but do not reach the Minimum or Maximum voltage range.

2. With a scan tool view DTCs and record the related Freeze Frame data.
3. With a scan tool, erase DTCs.
4. Start the engine.
5. With a scan tool, select View DTCs.

Is the DTC Active at this time?

Yes

- Go To 2

No

- Refer to the INTERMITTENT CONDITION Diagnostic Procedure. (Refer to 28 - DTC-Based Diagnostics/MODULE, Powertrain Control (PCM) - Standard Procedure)

2. APPS RELEARN

1. With a scan tool select the ETC RELEARN function.
2. Next, erase DTCs.
3. Start the engine.

Does the DTC return?

Yes

- Replace the APPS Assembly per Service Information. After installation is complete, use a scan tool and select the ETC RELEARN function.
- Perform the POWERTRAIN VERIFICATION TEST. (Refer to 28 - DTC-Based Diagnostics/MODULE, Powertrain Control (PCM) - Standard Procedure)

No

- Test Complete.

■ P2116-ACCELERATOR PEDAL POSITION SENSOR 2 MINIMUM STOP PERFORMANCE

For a complete wiring diagram **Refer to the Wiring Information**.

- **When Monitored:**

  Ignition on. During in plant mode the APP Sensors need to be checked to make sure that idle and full pedal travel can be reached on both sensors. The test for P2116 is only enabled once test for P2167 has passed.

- **Set Condition:**

  APPS No.2 has failed to achieve the required minimum value during In Plant testing. One trip fault and the code will be stored within 5 seconds. Engine will only idle. ETC light is illuminated.

Possible Causes
IN PLANT TEST FAILURE
APPS RELEARN

Always perform the Pre-Diagnostic Troubleshooting procedure before proceeding. (Refer to 28 - DTC-Based Diagnostics/MODULE, Powertrain Control (PCM) - Standard Procedure).

1. IN PLANT TEST FAILURE

1. Ignition on, engine not running.

NOTE: This DTC is set when the APP Sensors are learned in plant but do not reach the Minimum or Maximum voltage range.

2. With a scan tool view DTCs and record the related Freeze Frame data.
3. With a scan tool, erase DTCs.
4. Start the engine.
5. With a scan tool, select View DTCs.

Is the DTC Active at this time?

Yes

- Go To 2

No

- Refer to the INTERMITTENT CONDITION Diagnostic Procedure. (Refer to 28 - DTC-Based Diagnostics/MODULE, Powertrain Control (PCM) - Standard Procedure)

2. APPS RELEARN

1. With a scan tool select the ETC RELEARN function.
2. Next, erase DTCs.
3. Start the engine.

Does the DTC return?

Yes

- Replace the APPS Assembly per Service Information. After installation is complete, use a scan tool and select the ETC RELEARN function.
- Perform the POWERTRAIN VERIFICATION TEST. (Refer to 28 - DTC-Based Diagnostics/MODULE, Powertrain Control (PCM) - Standard Procedure)

No

- Test Complete.

P2118-ELECTRONIC THROTTLE CONTROL MOTOR CIRCUIT

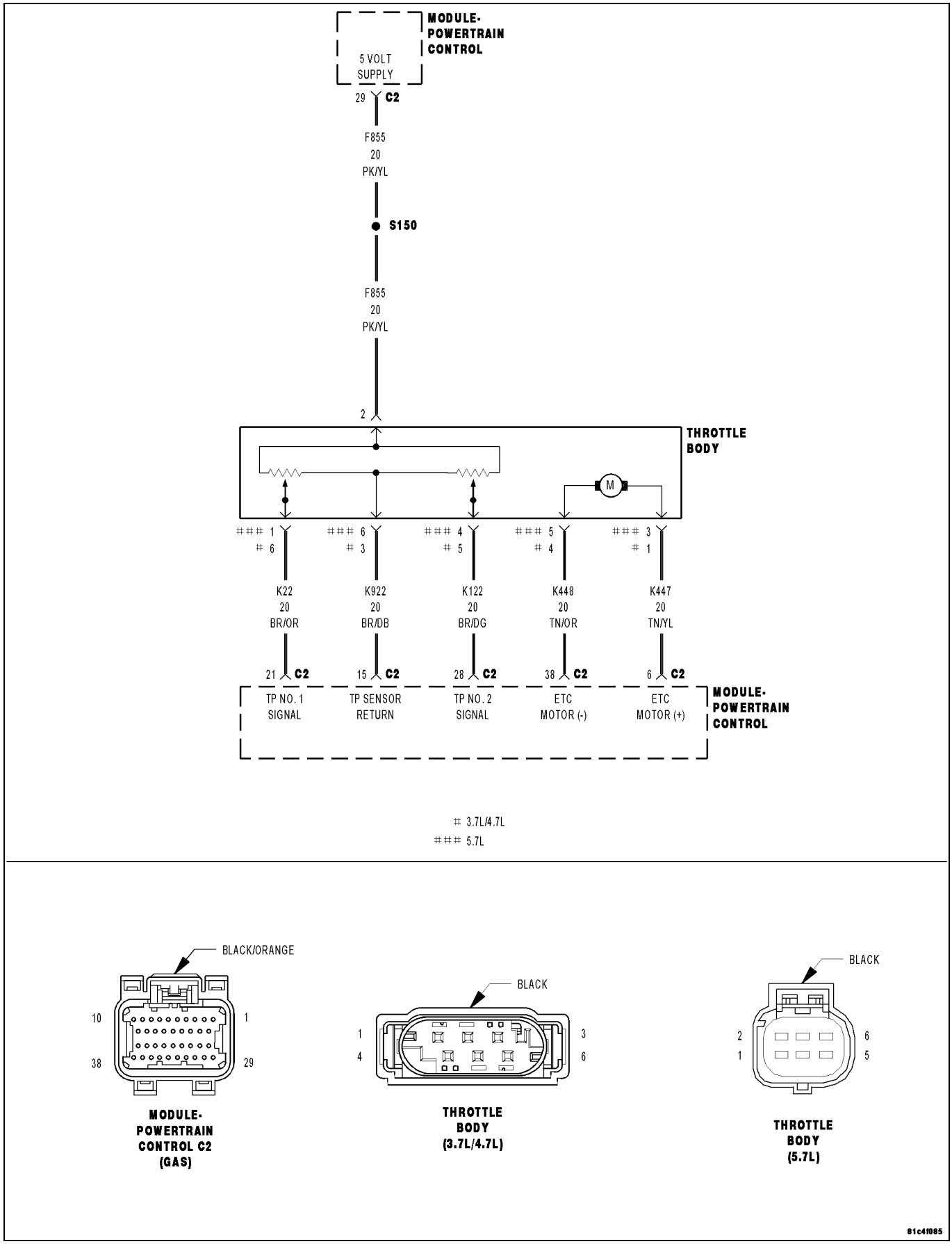

For a complete wiring diagram **Refer to the Wiring Information**.

- **When Monitored:**
  With the ignition on and the ETC Motor is not in Limp Home mode.
- **Set Condition:**
  When the PCM detects an internal error or a short between the ETC Motor - and ETC Motor + circuits in the ETC Motor Driver. One trip fault. ETC light is flashing.

Possible Causes
THROTTLE PLATE / BORE INSPECTION
(K447) ETC POSITIVE CIRCUIT SHORTED TO VOLTAGE
(K448) ETC NEGATIVE CIRCUIT SHORTED TO VOLTAGE
(K447) ETC POSITIVE CIRCUIT SHORTED TO THE (K448) ETC NEGATIVE CIRCUIT
(K447) ETC POSITIVE CIRCUIT OPEN
(K447) ETC POSITIVE CIRCUIT SHORTED TO GROUND
(K448) ETC NEGATIVE CIRCUIT OPEN
(K448) ETC NEGATIVE CIRCUIT SHORTED TO GROUND
ETC MOTOR
POWERTRAIN CONTROL MODULE (PCM)

Always perform the Pre-Diagnostic Troubleshooting procedure before proceeding. (Refer to 28 - DTC-Based Diagnostics/MODULE, Powertrain Control (PCM) - Standard Procedure).

1. ACTIVE DTC

1. Ignition on, engine not running.

NOTE: If the P2118 is intermittent, it is possible that the controller is overheating in extreme hot temperatures, and this is considered a normal protection operation. No repair is necessary.

NOTE: If P2072 is also set, this indicates that the cold weather ice blockage routine has run. No repair action is necessary.

2. With a scan tool, select View DTCs.
3. Look closely at the temperatures at which this DTC set.

Is the DTC Active at this time?

Yes

- Go To 2

No

- Refer to the INTERMITTENT CONDITION Diagnostic Procedure. (Refer to 28 - DTC-Based Diagnostics/MODULE, Powertrain Control (PCM) - Standard Procedure)

2. THROTTLE PLATE INSPECTION

1. Turn the ignition off.
2. Remove the Air Cleaner Assembly from the Throttle Body.
3. Check for any signs of a foreign material (ice or dirt) on the Throttle Plate or in the bore causing the Throttle Plate to stick.

Were any signs of foreign material or scoring of the throttle plate or bore found?

Yes

- Remove the debris if possible or replace the Throttle Body Assembly. Disconnect the Battery when replacing the Throttle Body Assembly. After installation is complete, use a scan tool and select the ETC RELEARN function.
- Perform the POWERTRAIN VERIFICATION TEST. (Refer to 28 - DTC-Based Diagnostics/MODULE, Powertrain Control (PCM) - Standard Procedure)

No

- Go To 3

3. (K447) ETC POSITIVE CIRCUIT SHORTED TO VOLTAGE

1. Turn the ignition off.
2. Disconnect the Throttle Body harness connector.
3. Disconnect the C2 PCM harness connector.
4. Ignition on, engine not running.

CAUTION: Do not probe the PCM harness connectors. Probing the PCM harness connectors will damage the PCM terminals resulting in poor terminal to pin connection. Install the PCM Pinout Box Kit, NGC, 38 Position 8815A to perform diagnosis.

5. Measure the voltage on the (K447) ETC Positive circuit at the appropriate terminal of special tool #8815A.

Is there any voltage present?

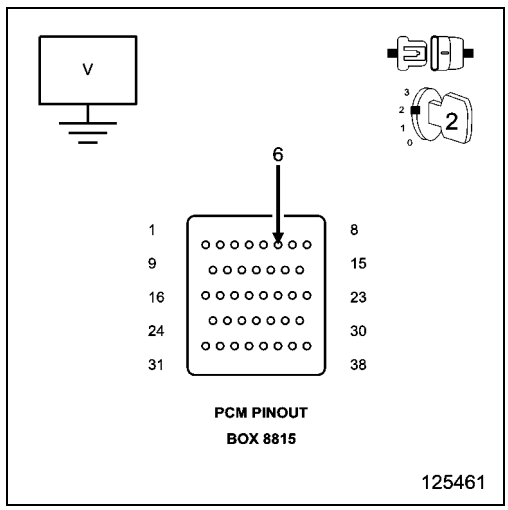

Yes

- Repair the short to voltage on the (K447) ETC Positive circuit.
- Perform the POWERTRAIN VERIFICATION TEST. (Refer to 28 - DTC-Based Diagnostics/MODULE, Powertrain Control (PCM) - Standard Procedure)

No

- Go To 4

4. (K448) ETC NEGATIVE CIRCUIT SHORTED TO VOLTAGE

1. Measure the voltage on the (K448) ETC Negative circuit at the appropriate terminal of special tool #8815A.

Is there any voltage present?

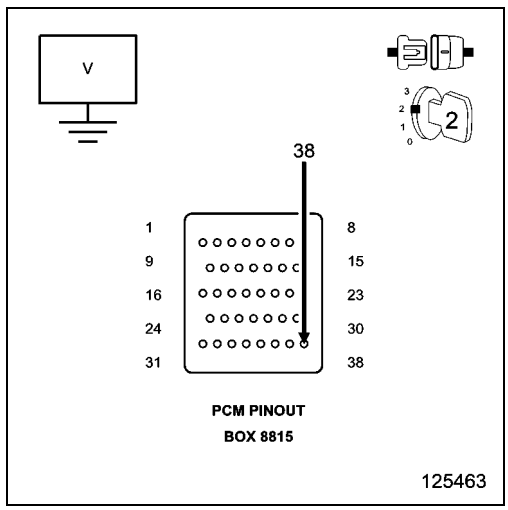

Yes

- Repair the short to voltage in the (K448) ETC Negative circuit.
- Perform the POWERTRAIN VERIFICATION TEST. (Refer to 28 - DTC-Based Diagnostics/MODULE, Powertrain Control (PCM) - Standard Procedure)

No

- Go To 5

5. (K447) ETC POSITIVE CIRCUIT SHORTED TO THE (K448) ETC NEGATIVE CIRCUIT

1. Turn the ignition off.
2. Measure the resistance between the (K447) ETC Positive circuit and the (K448) ETC Negative circuit at the appropriate terminals of special tool #8815A.

Is the resistance below 100 ohms?

Yes

- Repair the short to between the (K447) ETC Positive circuit and the (K448) ETC Negative circuit.
- Perform the POWERTRAIN VERIFICATION TEST. (Refer to 28 - DTC-Based Diagnostics/MODULE, Powertrain Control (PCM) - Standard Procedure)

No

- Go To 6

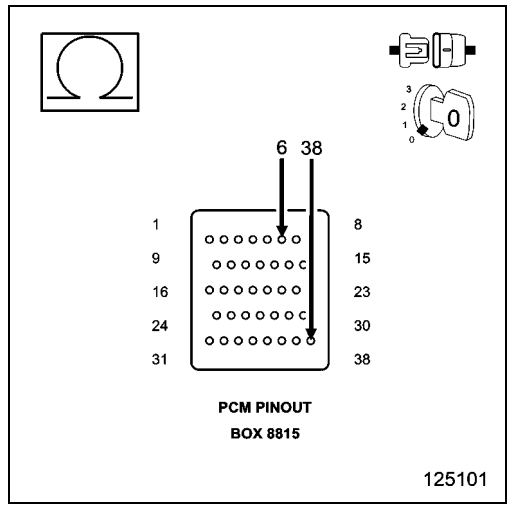

6. (K447) ETC POSITIVE CIRCUIT OPEN

1. Measure the resistance of the (K447) ETC Positive circuit from the Throttle Body harness connector to the appropriate terminal of special tool #8815A.

Is the resistance below 5.0 ohms?

Yes

- Go To 7

No

- Repair the open in the (K447) ETC Positive circuit.
- Perform the POWERTRAIN VERIFICATION TEST. (Refer to 28 - DTC-Based Diagnostics/MODULE, Powertrain Control (PCM) - Standard Procedure)

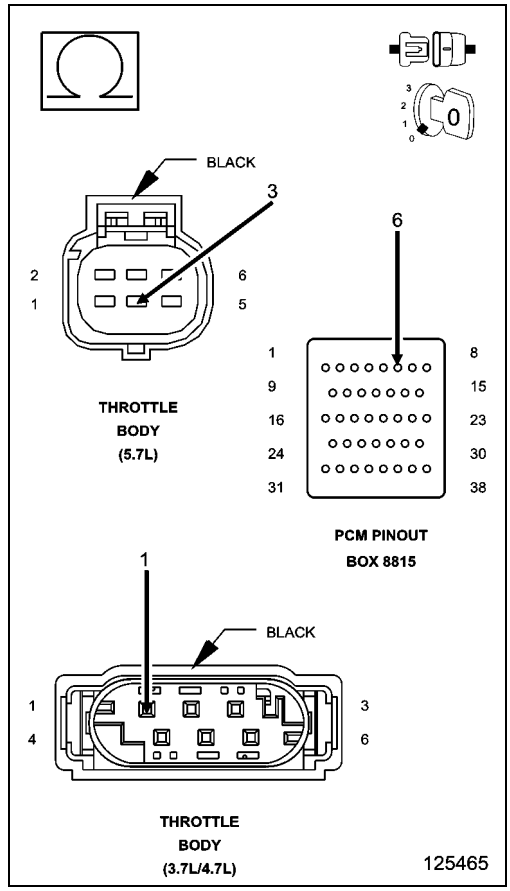

7. (K447) ETC POSITIVE CIRCUIT SHORTED TO GROUND

1. Measure the resistance between ground and the (K447) ETC Positive circuit between the appropriate terminals of special tool #8815A.

Is the resistance below 100 ohms?

Yes

- Repair the short to ground in the (K447) ETC Positive circuit.
- Perform the POWERTRAIN VERIFICATION TEST. (Refer to 28 - DTC-Based Diagnostics/MODULE, Powertrain Control (PCM) - Standard Procedure)

No

- Go To 8

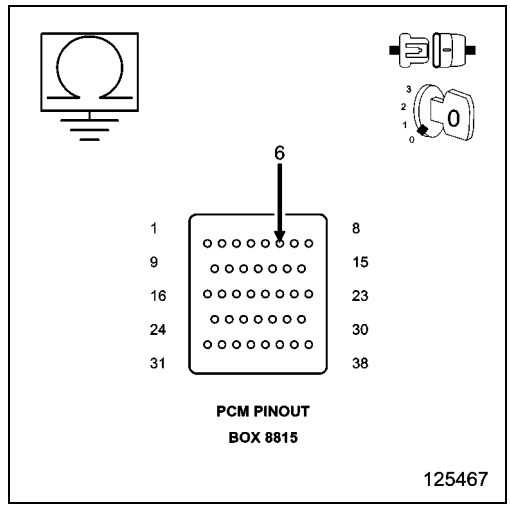

8. (K448) ETC NEGATIVE CIRCUIT OPEN

1. Measure the resistance of the (K448) ETC Negative circuit from the Throttle Body harness connector to the appropriate terminal of special tool #8815A.

Is the resistance below 5.0 ohms?

Yes

- Go To 9

No

- Repair the open in the (K448) ETC Negative circuit.
- Perform the POWERTRAIN VERIFICATION TEST. (Refer to 28 - DTC-Based Diagnostics/MODULE, Powertrain Control (PCM) - Standard Procedure)

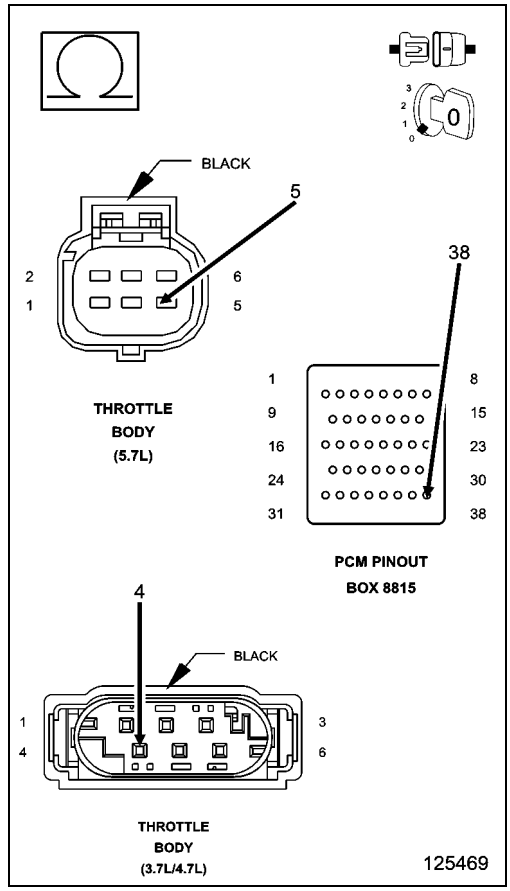

9. (K448) ETC NEGATIVE CIRCUIT SHORTED TO GROUND

1. Measure the resistance between ground and the (K448) ETC Negative circuit between the appropriate terminals of special tool #8815A.

Is the resistance below 100 ohms?

Yes

- Repair the short to ground in the (K448) ETC Negative circuit.
- Perform the POWERTRAIN VERIFICATION TEST. (Refer to 28 - DTC-Based Diagnostics/MODULE, Powertrain Control (PCM) - Standard Procedure)

No

- Go To 10

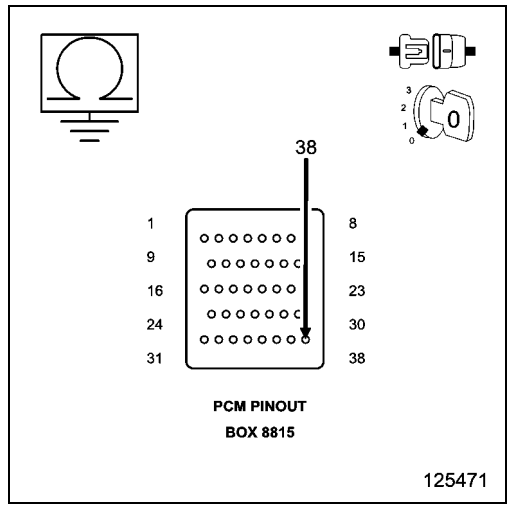

10. ETC MOTOR

NOTE: Take the following measurement using special tool #8815A **to avoid possible damage to the Throttle Body harness connector.**

1. Connect the Throttle Body harness connector.
2. Measure the resistance of the ETC Motor between the (K447) ETC Positive circuit and the (K448) ETC Negative circuit at the appropriate terminals of special tool #8815A.

Is the resistance between 2.5 and 25 ohms at closed throttle?

Yes

- Go To 11

No

- Verify that there is good pin to terminal contact at the Throttle Body and the Powertrain Control Module connectors. Replace the Throttle Body Assembly if no problems were found in the connectors. Disconnect the Battery when replacing the Throttle Body Assembly. After installation is complete, use a scan tool and select the ETC RELEARN function.
- Perform the POWERTRAIN VERIFICATION TEST. (Refer to 28 - DTC-Based Diagnostics/MODULE, Powertrain Control (PCM) - Standard Procedure)

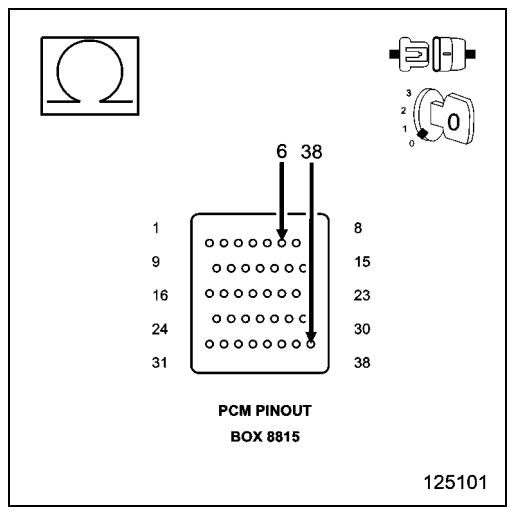

11. POWERTRAIN CONTROL MODULE (PCM)

1. Using the wiring diagram/schematic as a guide, inspect the wiring and connectors between the Throttle Body and the Powertrain Control Module (PCM).
2. Look for any chafed, pierced, pinched, or partially broken wires.
3. Look for broken, bent, pushed out or corroded terminals. Verify that there is good pin to terminal contact in the Throttle Body and the Powertrain Control Module connectors.
4. Refer to any Technical Service Bulletins that may apply.

Were there any problems found?

Yes

- Repair as necessary.
- Perform the POWERTRAIN VERIFICATION TEST. (Refer to 28 - DTC-Based Diagnostics/MODULE, Powertrain Control (PCM) - Standard Procedure)

No

- Replace and program the Powertrain Control Module per Service Information.
- Perform the POWERTRAIN VERIFICATION TEST. (Refer to 28 - DTC-Based Diagnostics/MODULE, Powertrain Control (PCM) - Standard Procedure)

P2122-ACCELERATOR PEDAL POSITION SENSOR 1 CIRCUIT LOW

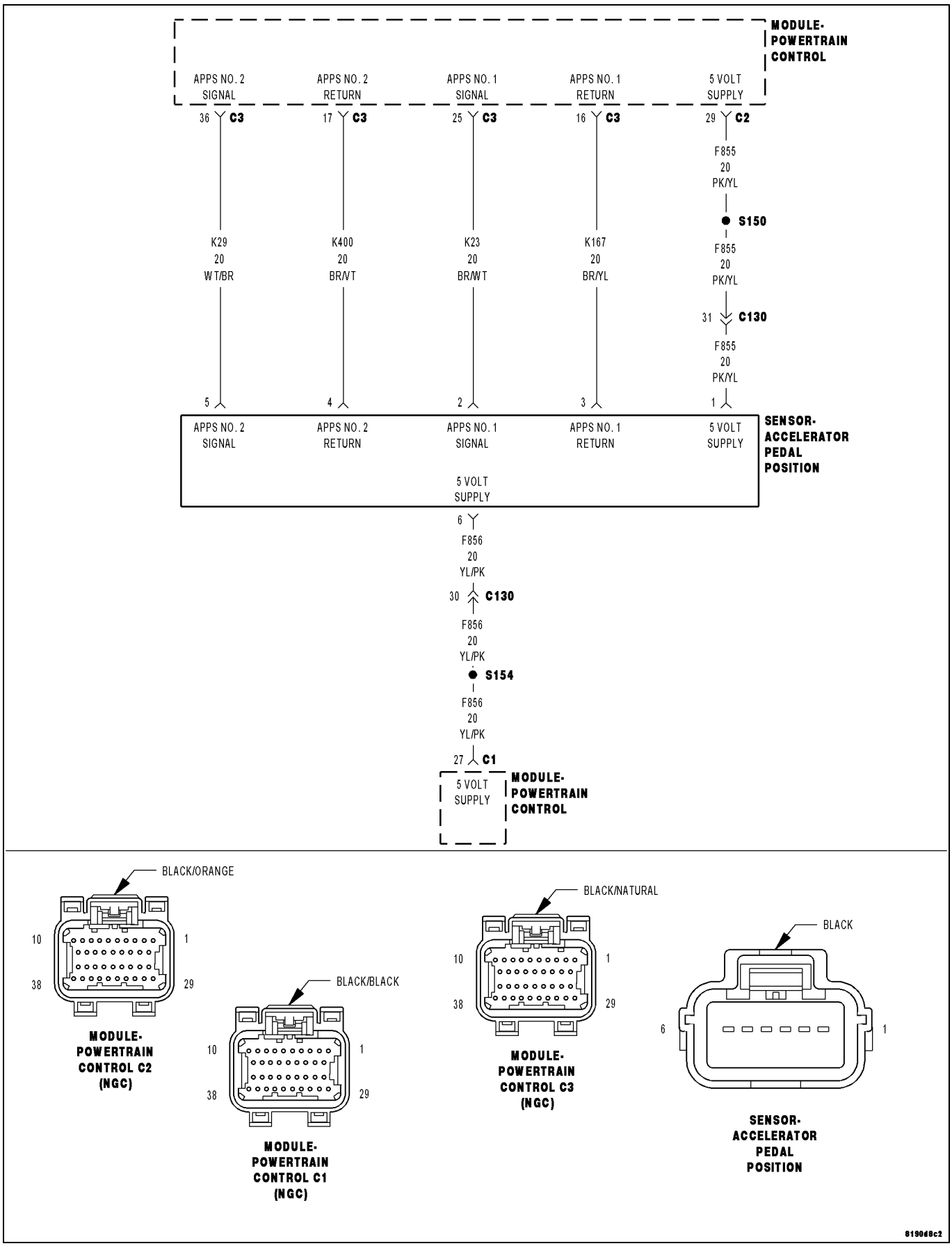

For a complete wiring diagram **Refer to the Wiring Information**.

- **When Monitored:**
  With the ignition on and no other APPS No.1 DTCs present.
- **Set Condition:**
  When the APP Sensor No.1 voltage is too low. Engine will additionally idle if the brake pedal is pressed or has failed. Acceleration rate and Engine output are limited. One trip fault and the code will set within 5 seconds. ETC light is flashing.

Possible Causes
(F855) 5-VOLT SUPPLY CIRCUIT OPEN
(F855) 5-VOLT SUPPLY CIRCUIT SHORTED TO GROUND
(K23) APP SENSOR NO.1 SIGNAL CIRCUIT OPEN
(K23) APP SENSOR NO.1 SIGNAL CIRCUIT SHORTED TO GROUND
(K23) APP SENSOR NO.1 SIGNAL CIRCUIT SHORTED TO THE (K167) APP SENSOR NO.1 RETURN CIRCUIT
(K23) APP SENSOR NO.1 SIGNAL CIRCUIT SHORTED TO THE (K400) APP SENSOR NO.2 RETURN CIRCUIT
APP SENSOR
POWERTRAIN CONTROL MODULE (PCM)

Always perform the Pre-Diagnostic Troubleshooting procedure before proceeding. (Refer to 28 - DTC-Based Diagnostics/MODULE, Powertrain Control (PCM) - Standard Procedure).

1. ACTIVE DTC

1. Start the engine and allow it to reach normal operating temperature.

WARNING: When the engine is operating, do not stand in direct line with the fan. Do not put your hands near the pulleys, belts or fan. Do not wear loose clothing. Failure to follow these instructions may result in possible serious or fatal injury.

NOTE: Diagnose and repair any system voltage or sensor supply voltage DTCs before continuing with this test.

NOTE: If you are viewing data recorder information or Freeze Frame data the APP Sensor No. 2 is pulled low by the PCM as part of its system testing. This test happens every 320 milliseconds and may not show up on the scan tool but may show up on a data recorder or lab scope. It is acceptable to see the voltage close to zero with a normal sensor when using a data recorder/lab scope.

2. With the scan tool, select View DTCs.

Is the status Active for this DTC?

Yes

- Go To 2

No

- Go To 11

2. (F855) 5-VOLT SUPPLY CIRCUIT

1. Turn the ignition off.
2. Disconnect the APP Sensor harness connector.
3. Ignition on, engine not running.
4. Measure the voltage on the (F855) 5-volt Supply circuit in the APP Sensor harness connector.

Is the voltage between 4.5 and 5.2 volts?

Yes

- Go To 3

No

- Go To 8

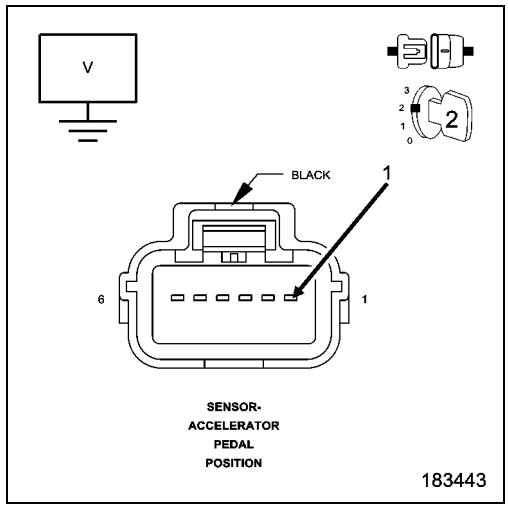

3. (K23) APP SENSOR NO.1 SIGNAL CIRCUIT OPEN

1. Turn the ignition off.
2. Disconnect the C3 PCM harness connector.

CAUTION: Do not probe the PCM harness connectors. Probing the PCM harness connectors will damage the PCM terminals resulting in poor terminal to pin connection. Install the PCM Pinout Box Kit, NGC, 38 Position 8815A to perform diagnosis.

3. Measure the resistance of the (K23) APP Sensor No.1 Signal circuit from the APP Sensor harness connector to the appropriate terminal of special tool #8815A.

Is the resistance below 5.0 ohms?

Yes

- Go To 4

No

- Repair the open in the (K23) APP Sensor No.1 Signal circuit.
- Perform the POWERTRAIN VERIFICATION TEST. (Refer to 28 - DTC-Based Diagnostics/MODULE, Powertrain Control (PCM) - Standard Procedure)

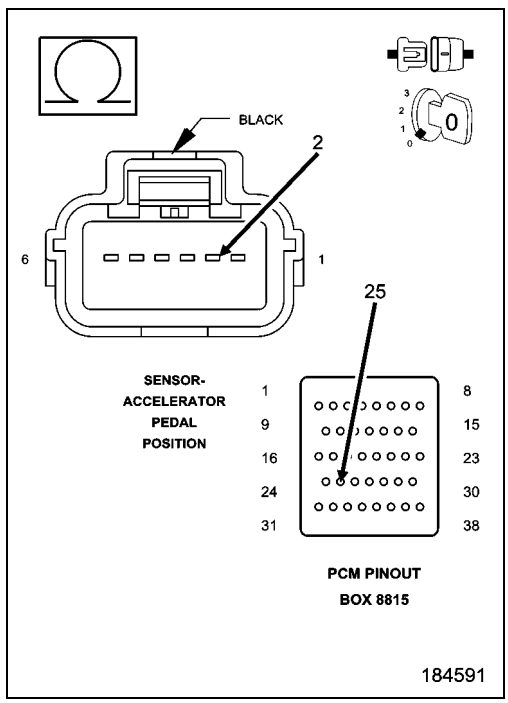

4. (K23) APP SENSOR NO.1 SIGNAL CIRCUIT SHORTED TO GROUND

1. Measure the resistance between ground and the (K23) APP Sensor No.1 Signal circuit in the APP Sensor harness connector.

Is the resistance below 100 ohms?

Yes

- Repair the short to ground in the (K23) APP Sensor No.1 Signal circuit.
- Perform the POWERTRAIN VERIFICATION TEST. (Refer to 28 - DTC-Based Diagnostics/MODULE, Powertrain Control (PCM) - Standard Procedure)

No

- Go To 5

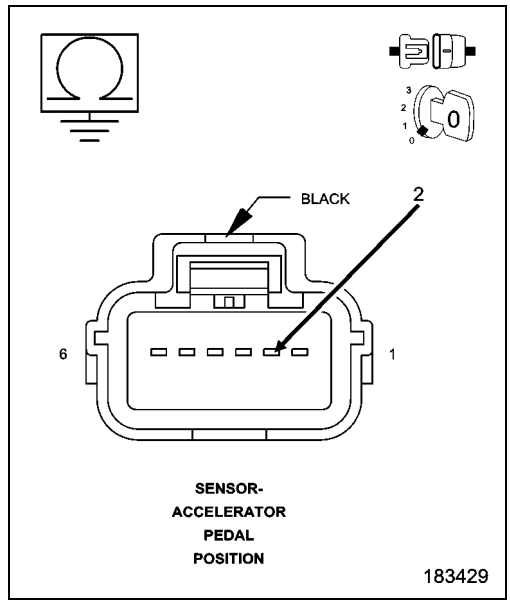

5. (K23) APP SENSOR NO.1 SIGNAL CIRCUIT SHORTED TO THE (K167) APP SENSOR NO.1 RETURN CIRCUIT

1. Measure the resistance between the (K23) APP Sensor No.1 Signal circuit and the (K167) Sensor No.1 Return circuit at the APP Sensor harness connector.

Is the resistance below 100 ohms?

Yes

- Repair the short between the (K167) APP Sensor No.1 Return circuit and the (K23) APP Sensor No.1 Signal circuit.
- Perform the POWERTRAIN VERIFICATION TEST. (Refer to 28 - DTC-Based Diagnostics/MODULE, Powertrain Control (PCM) - Standard Procedure)

No

- Go To 6

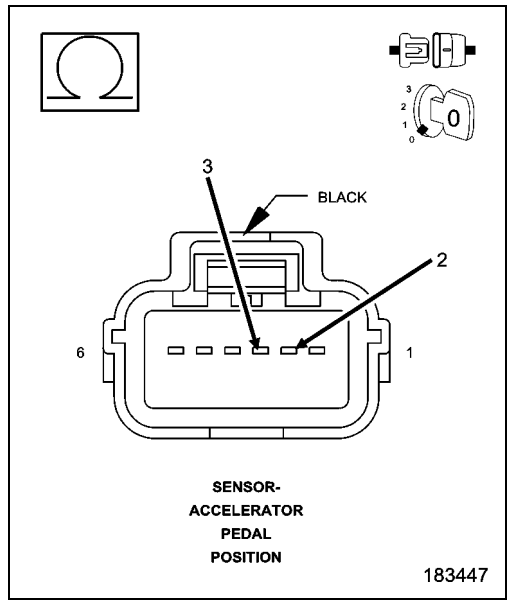

6. (K23) APP SENSOR NO.1 SIGNAL CIRCUIT SHORTED TO THE (K400) APP SENSOR NO.2 RETURN CIRCUIT

1. Measure the resistance between the (K23) APP Sensor No.1 Signal circuit and the (K400) APP Sensor No.2 Return circuit in the APP Sensor harness connector.

Is the resistance below 100 ohms?

Yes

- Repair the short between the (K400) APP Sensor No.2 Return circuit and the (K23) APP Sensor No.1 Signal circuit.
- Perform the POWERTRAIN VERIFICATION TEST. (Refer to 28 - DTC-Based Diagnostics/MODULE, Powertrain Control (PCM) - Standard Procedure)

No

- Go To 7

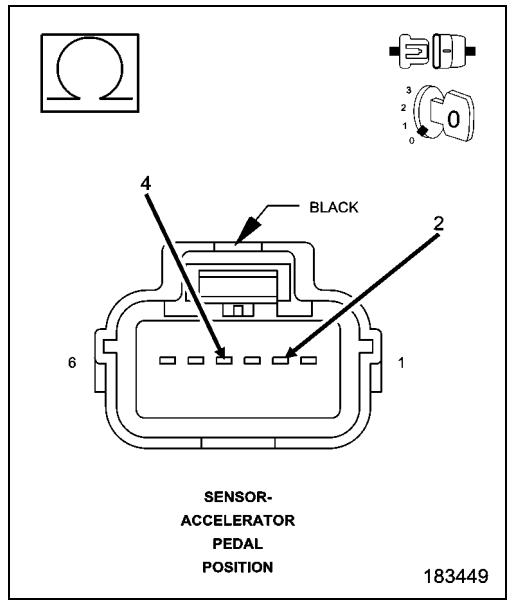

7. ACCELERATOR PEDAL POSITION SENSOR

1. Connect the PCM harness connectors.
2. Ignition on, engine not running.
3. With a scan tool, monitor the APP Sensor No.1 voltage.
4. Connect a jumper wire between the (F855) 5-volt Supply circuit and the (K23) APP Sensor No.1 Signal circuit in the Sensor harness connector.

NOTE: The sensor voltage should be approximately 5.0 volts (plus or minus .1 volt) with the jumper wire installed.

Does the scan tool display the voltage as described above?

Yes

- Verify that there is good pin to terminal contact in the APPS and the Powertrain Control Module connectors. Replace the APP Sensor Assembly per Service Information if no problems were found with the connectors. After installation is complete, use a scan tool and select the ETC RELEARN function to relearn the APPS values.
- Perform the POWERTRAIN VERIFICATION TEST. (Refer to 28 - DTC-Based Diagnostics/MODULE, Powertrain Control (PCM) - Standard Procedure)

No

- Go To 10

NOTE: Remove the jumper wire before continuing.

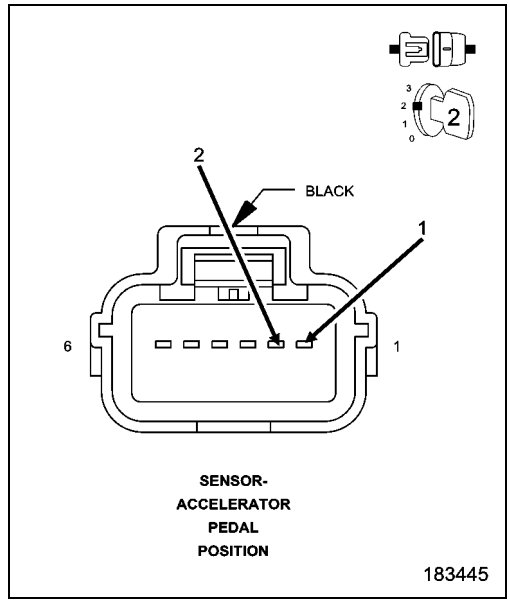

8. (F855) 5-VOLT SUPPLY CIRCUIT OPEN

1. Turn the ignition off.
2. Disconnect the C2 PCM harness connector.

CAUTION: Do not probe the PCM harness connectors. Probing the PCM harness connectors will damage the PCM terminals resulting in poor terminal to pin connection. Install the PCM Pinout Box Kit, NGC, 38 Position 8815A to perform diagnosis.

3. Measure the resistance of the (F855) 5-volt Supply circuit from the Sensor harness connector to the appropriate terminal of special tool #8815A.

Is the resistance below 5.0 ohms?

Yes

- Go To 9

No

- Repair the open in the (F855) 5-volt Supply circuit.
- Perform the POWERTRAIN VERIFICATION TEST. (Refer to 28 - DTC-Based Diagnostics/MODULE, Powertrain Control (PCM) - Standard Procedure)

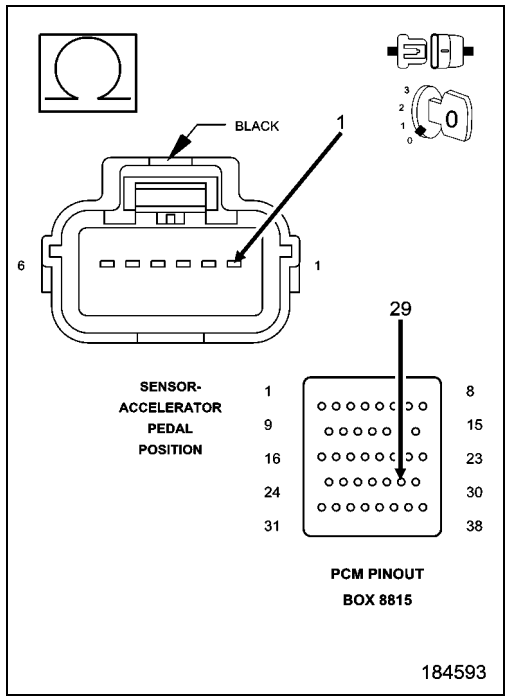

9. (F855) 5-VOLT SUPPLY CIRCUIT SHORTED TO GROUND

1. Measure the resistance between ground and the (F855) 5-volt Supply circuit in the APP Sensor harness connector.

Is the resistance below 100 ohms?

Yes

- Repair the short to ground in the (F855) 5-volt Supply circuit.
- Perform the POWERTRAIN VERIFICATION TEST. (Refer to 28 - DTC-Based Diagnostics/MODULE, Powertrain Control (PCM) - Standard Procedure)

No

- Go To 10

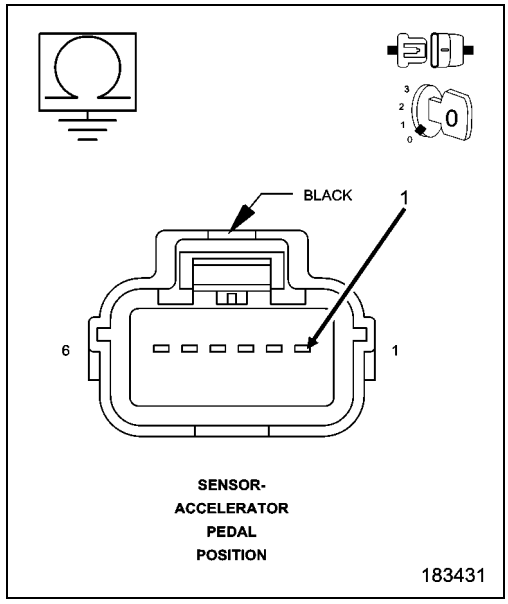

10. POWERTRAIN CONTROL MODULE (PCM)

1. Using the wiring diagram/schematic as a guide, inspect the wiring and connectors between the Accelerator Pedal Position Sensor and the Powertrain Control Module (PCM).
2. Look for any chafed, pierced, pinched, or partially broken wires.
3. Look for broken, bent, pushed out or corroded terminals. Verify that there is good pin to terminal contact in the APPS and the Powertrain Control Module connectors.
4. Refer to any Technical Service Bulletins that may apply.

Were there any problems found?

Yes

- Repair as necessary.
- Perform the POWERTRAIN VERIFICATION TEST. (Refer to 28 - DTC-Based Diagnostics/MODULE, Powertrain Control (PCM) - Standard Procedure)

No

- Replace and program the Powertrain Control Module per Service Information.
- Perform the POWERTRAIN VERIFICATION TEST. (Refer to 28 - DTC-Based Diagnostics/MODULE, Powertrain Control (PCM) - Standard Procedure)

11. APP SENSOR SWEEP

1. Ignition on, engine not running.
2. With a scan tool, monitor the APP Sensor No.1 voltage.
3. Slowly press the Accelerator pedal down.

Does voltage start at approximately 0.45 of a volt and go above 4.6 volts with a smooth transition?

Yes

- Refer to the INTERMITTENT CONDITION Diagnostic Procedure. (Refer to 28 - DTC-Based Diagnostics/MODULE, Powertrain Control (PCM) - Standard Procedure).

No

- Replace the APP Sensor Assembly per Service Information. After installation is complete, use a scan tool and select the ETC RELEARN function to relearn the APPS values.
- Perform the POWERTRAIN VERIFICATION TEST. (Refer to 28 - DTC-Based Diagnostics/MODULE, Powertrain Control (PCM) - Standard Procedure)

P2123-ACCELERATOR PEDAL POSITION SENSOR 1 CIRCUIT HIGH

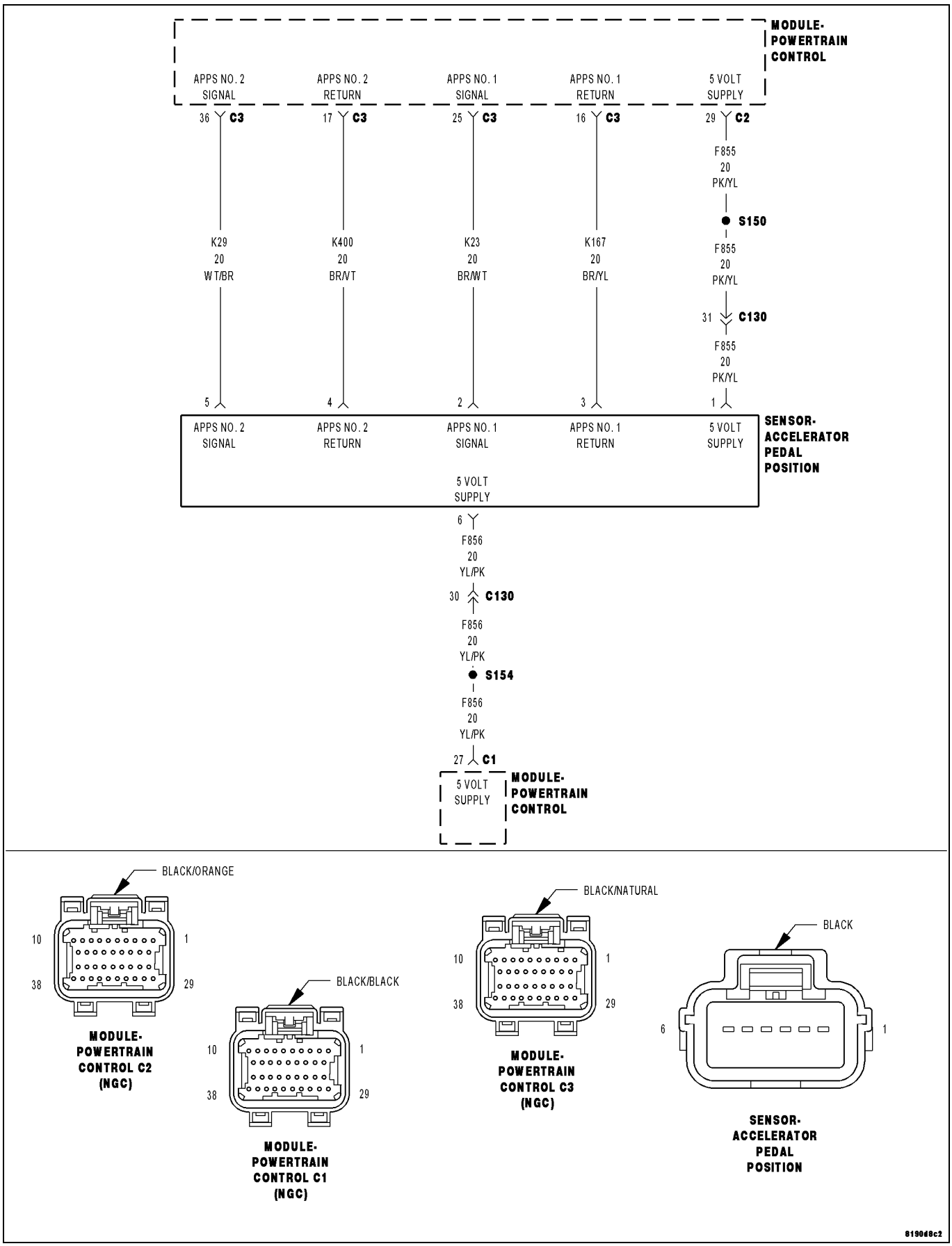

For a complete wiring diagram **Refer to the Wiring Information**.

- **When Monitored:**
  With the ignition on and no other APPS No.1 DTCs present.
- **Set Condition:**
  When APP Sensor No.1 voltage is too high. Engine will additionally idle if the brake pedal is pressed or has failed. Acceleration rate and Engine output are limited. One trip fault and the code will set within 5 seconds. ETC light is flashing.

Possible Causes
(K23) APP SENSOR NO.1 SIGNAL CIRCUIT SHORTED TO VOLTAGE
(K23) APP SENSOR NO.1 SIGNAL SHORTED TO THE (F855) 5-VOLT SUPPLY CIRCUIT
(K23) APP SENSOR NO.1 SIGNAL SHORTED TO THE (F856) 5-VOLT SUPPLY CIRCUIT
(K167) APP SENSOR NO.1 RETURN CIRCUIT OPEN
APP SENSOR
POWERTRAIN CONTROL MODULE (PCM)

Always perform the Pre-Diagnostic Troubleshooting procedure before proceeding. (Refer to 28 - DTC-Based Diagnostics/MODULE, Powertrain Control (PCM) - Standard Procedure).

1. ACTIVE DTC

1. Start the engine and allow it to reach normal operating temperature.

WARNING: When the engine is operating, do not stand in direct line with the fan. Do not put your hands near the pulleys, belts or fan. Do not wear loose clothing. Failure to follow these instructions may result in possible serious or fatal injury.

NOTE: Diagnose and repair any system voltage or sensor supply voltage DTCs before continuing with this test.

NOTE: If you are viewing data recorder information or Freeze Frame data the APP Sensor No. 2 is pulled low by the PCM as part of its system testing. This test happens every 320 milliseconds and may not show up on the scan tool but may show up on a data recorder or lab scope. It is acceptable to see the voltage close to zero with a normal sensor when using a data recorder/lab scope.

2. With the scan tool, select View DTCs.

Is the DTC Active at this time?

Yes

- Go To 2

No

- Go To 8

2. (K23) APP SENSOR NO.1 SIGNAL CIRCUIT SHORTED TO VOLTAGE

1. Turn the ignition off.
2. Disconnect the APP Sensor harness connector.
3. Disconnect the PCM harness connectors.
4. Ignition on, engine not running.
5. Measure the voltage on the (K23) APP Sensor No.1 Signal circuit in the APP Sensor harness connector.

Is there any voltage present?

Yes

- Repair the short to voltage in the (K23) APP Sensor No.1 Signal circuit.
- Perform the POWERTRAIN VERIFICATION TEST. (Refer to 28 - DTC-Based Diagnostics/MODULE, Powertrain Control (PCM) - Standard Procedure)

No

- Go To 3

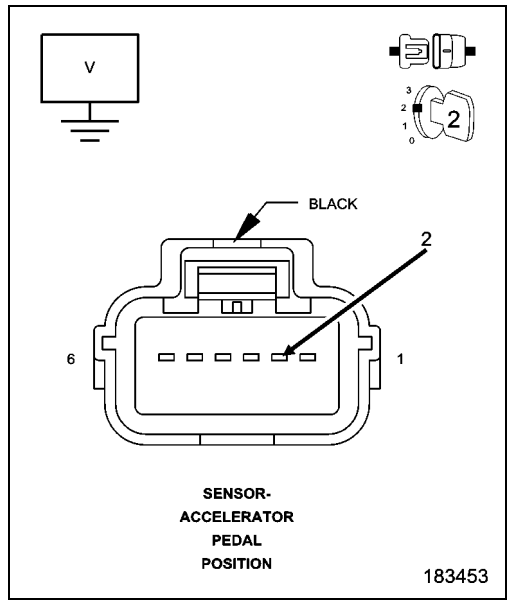

3. (K23) APPS NO.1 SIGNAL CIRCUIT SHORTED TO THE (F855) 5-VOLT SUPPLY CIRCUIT

1. Turn the ignition off.
2. Measure the resistance between the (K23) APP Sensor No.1 Signal circuit and the (F855) 5-volt Supply circuit in the APP Sensor harness connector.

Is the resistance below 100 ohms?

Yes

- Repair the short between the (K23) APP Sensor No.1 Signal circuit and the (F855) 5-volt Supply circuit.
- Perform the POWERTRAIN VERIFICATION TEST. (Refer to 28 - DTC-Based Diagnostics/MODULE, Powertrain Control (PCM) - Standard Procedure)

No

- Go To 4

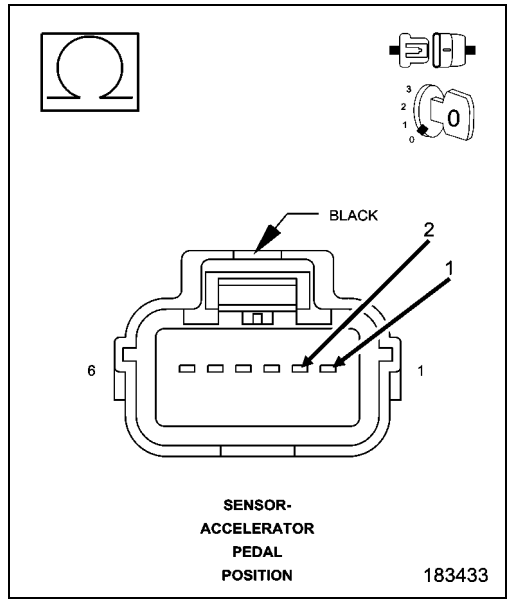

4. (K23) APPS NO.1 SIGNAL CIRCUIT SHORTED TO THE (F856) 5-VOLT SUPPLY CIRCUIT

1. Measure the resistance between the (K23) APP Sensor No.1 Signal circuit and the (F856) 5-volt Supply circuit in the APP Sensor harness connector.

Is the resistance below 100 ohms?

Yes

- Repair the short between the (K23) APP Sensor No.1 Signal circuit and the (F856) 5-volt Supply circuit.
- Perform the POWERTRAIN VERIFICATION TEST. (Refer to 28 - DTC-Based Diagnostics/MODULE, Powertrain Control (PCM) - Standard Procedure)

No

- Go To 5

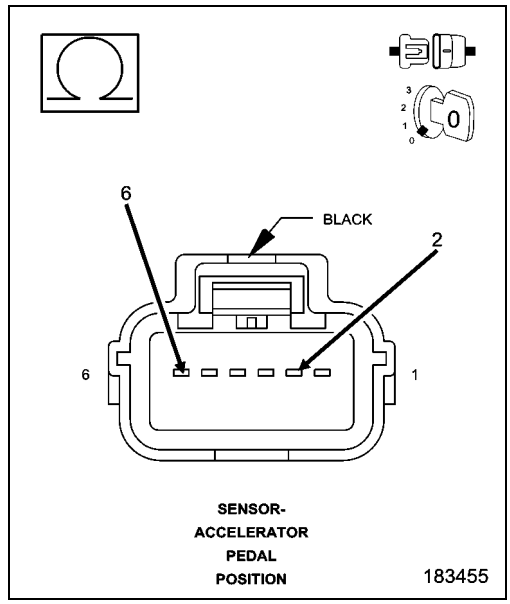

5. (K167) APP SENSOR NO.1 RETURN CIRCUIT OPEN

CAUTION: Do not probe the PCM harness connectors. Probing the PCM harness connectors will damage the PCM terminals resulting in poor terminal to pin connection. Install the PCM Pinout Box Kit, NGC, 38 Position 8815A to perform diagnosis.

1. Measure the resistance of the (K167) APP Sensor No.1 Return circuit from the APP Sensor harness connector to the appropriate terminal of special tool #8815A.

Is the resistance below 5.0 ohms?

Yes

- Go To 6

No

- Repair the open in the (K167) APP Sensor No.1 Return circuit.
- Perform the POWERTRAIN VERIFICATION TEST. (Refer to 28 - DTC-Based Diagnostics/MODULE, Powertrain Control (PCM) - Standard Procedure)

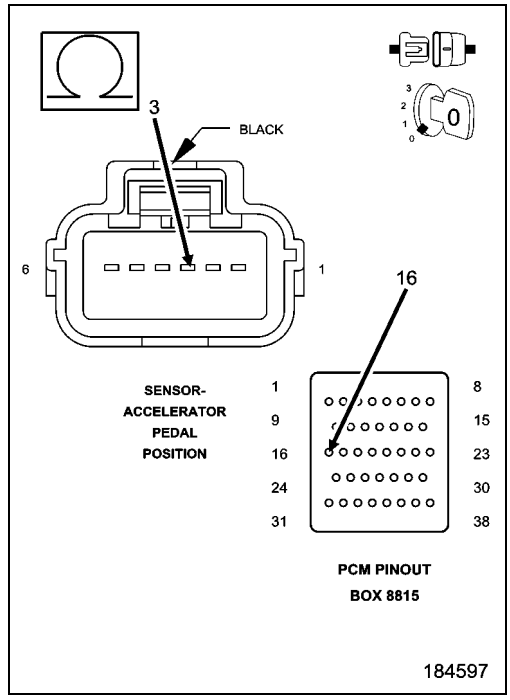

6. ACCELERATOR PEDAL POSITION SENSOR

1. Connect the PCM harness connectors.
2. Ignition on, engine not running.
3. With a scan tool, monitor the APP Sensor 1 voltage.

Is the voltage above 0 volts?

Yes

- Go To 7

No

- Verify that there is good pin to terminal contact in the APPS and the Powertrain Control Module connectors. Replace the APP Sensor Assembly per Service Information if no problems were found with the connectors. After installation is complete, use a scan tool and select the ETC RELEARN function to relearn the APPS values.
- Perform the POWERTRAIN VERIFICATION TEST. (Refer to 28 - DTC-Based Diagnostics/MODULE, Powertrain Control (PCM) - Standard Procedure)

7. POWERTRAIN CONTROL MODULE (PCM)

1. Using the wiring diagram/schematic as a guide, inspect the wiring and connectors between the Accelerator Pedal Position Sensor and the Powertrain Control Module (PCM).
2. Look for any chafed, pierced, pinched, or partially broken wires.
3. Look for broken, bent, pushed out or corroded terminals. Verify that there is good pin to terminal contact in the APPS and the Powertrain Control Module connectors.
4. Refer to any Technical Service Bulletins that may apply.

Were there any problems found?

Yes

- Repair as necessary.
- Perform the POWERTRAIN VERIFICATION TEST. (Refer to 28 - DTC-Based Diagnostics/MODULE, Powertrain Control (PCM) - Standard Procedure)

No

- Replace and program the Powertrain Control Module per Service Information.
- Perform the POWERTRAIN VERIFICATION TEST. (Refer to 28 - DTC-Based Diagnostics/MODULE, Powertrain Control (PCM) - Standard Procedure)

8. APP SENSOR NO.1 SWEEP

1. Ignition on, engine not running.
2. With a scan tool, monitor the Accelerator Pedal Position Sensor voltage.
3. Slowly press the Accelerator Pedal down.

Does voltage start at approximately 0.45 of a volt and go above 4.6 volts with a smooth transition?

Yes

- Refer to the INTERMITTENT CONDITION Diagnostic Procedure. (Refer to 28 - DTC-Based Diagnostics/MODULE, Powertrain Control (PCM) - Standard Procedure)

No

- Replace the APP Sensor Assembly per Service Information. After installation is complete, use a scan tool and select the ETC RELEARN function to relearn the APPS values.
- Perform the POWERTRAIN VERIFICATION TEST. (Refer to 28 - DTC-Based Diagnostics/MODULE, Powertrain Control (PCM) - Standard Procedure)

P2127-ACCELERATOR PEDAL POSITION SENSOR 2 CIRCUIT LOW

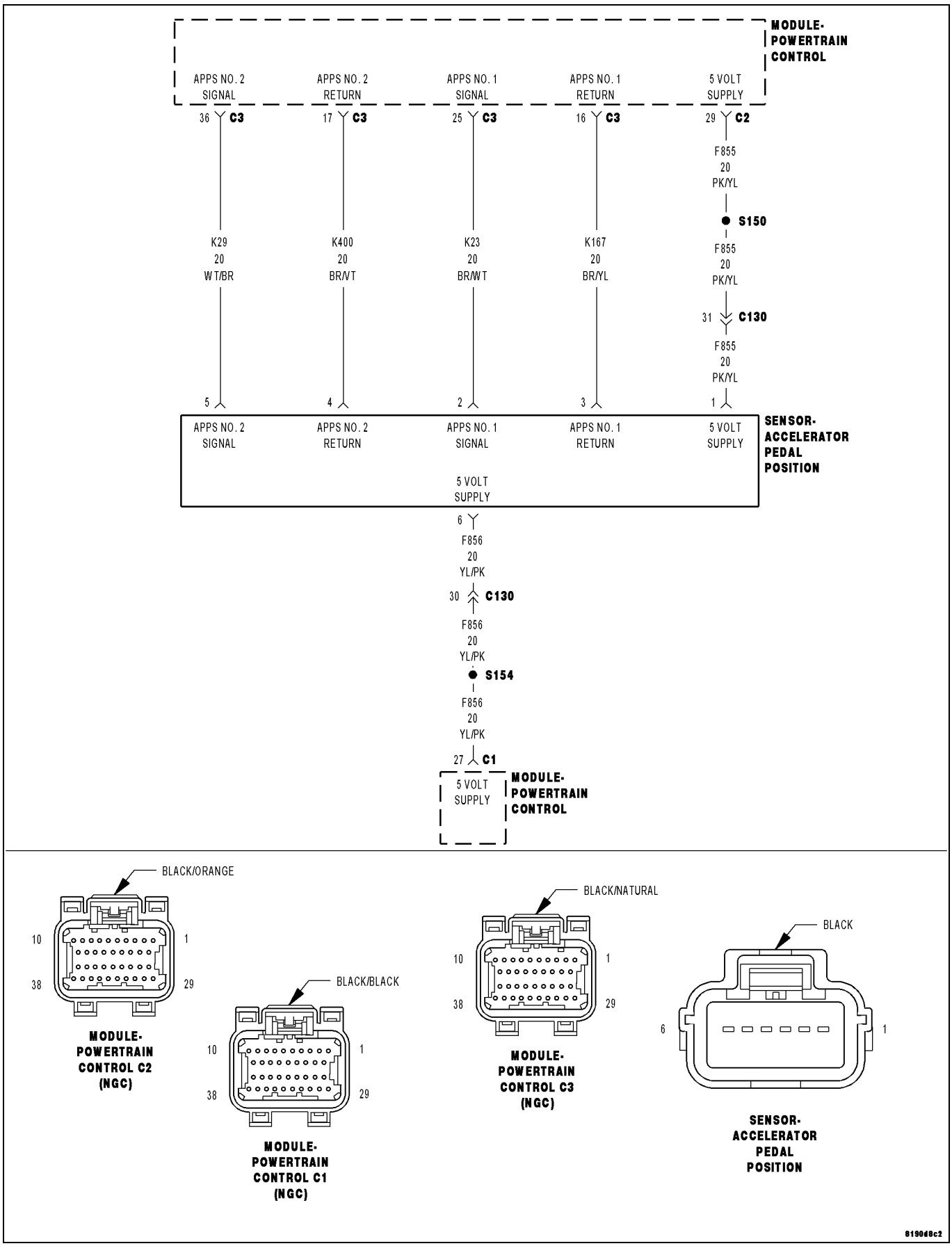

For a complete wiring diagram **Refer to the Wiring Information**.

- **When Monitored:**
  With the ignition on and no other APPS No.2 DTCs present.
- **Set Condition:**
  When the APP Sensor No.2 voltage is too low. Engine will only idle if the Brake pedal is Pressed or has failed. Acceleration rate and Engine output are limited. One trip fault and the code will set within 5 seconds. ETC light is flashing.

Possible Causes
(F856) 5-VOLT SUPPLY CIRCUIT OPEN
(F856) 5-VOLT SUPPLY CIRCUIT SHORTED TO GROUND
(K29) APP SENSOR NO.2 SIGNAL CIRCUIT OPEN
(K29) APP SENSOR NO.2 SIGNAL CIRCUIT SHORTED TO GROUND
(K29) APP SENSOR NO.2 SIGNAL CIRCUIT SHORTED TO THE (K167) APP SENSOR NO.1 RETURN CIRCUIT
(K29) APP SENSOR NO.2 SIGNAL CIRCUIT SHORTED TO THE (K400) APP SENSOR NO.2 RETURN CIRCUIT
APP SENSOR
POWERTRAIN CONTROL MODULE (PCM)

Always perform the Pre-Diagnostic Troubleshooting procedure before proceeding. (Refer to 28 - DTC-Based Diagnostics/MODULE, Powertrain Control (PCM) - Standard Procedure).

1. ACTIVE DTC

1. Start the engine and allow it to reach normal operating temperature.

WARNING: When the engine is operating, do not stand in direct line with the fan. Do not put your hands near the pulleys, belts or fan. Do not wear loose clothing. Failure to follow these instructions may result in possible serious or fatal injury.

NOTE: Diagnose and repair any system voltage or sensor supply voltage DTCs before continuing with this test.

NOTE: If you are viewing data recorder information or Freeze Frame data the APP Sensor No. 2 is pulled low by the PCM as part of its system testing. This test happens every 320 milliseconds and may not show up on the scan tool but may show up on a data recorder or lab scope. It is acceptable to see the voltage close to zero with a normal sensor when using a data recorder/lab scope.

2. With the scan tool, select View DTCs.

Is the status Active for this DTC?

Yes

- Go To 2

No

- Go To 11

2. (F856) 5-VOLT SUPPLY CIRCUIT

1. Turn the ignition off.
2. Disconnect the APP Sensor harness connector.
3. Ignition on, engine not running.
4. Measure the voltage on the (F856) 5-volt Supply circuit in the APP Sensor harness connector.

Is the voltage between 4.5 and 5.2 volts?

Yes

- Go To 3

No

- Go To 8

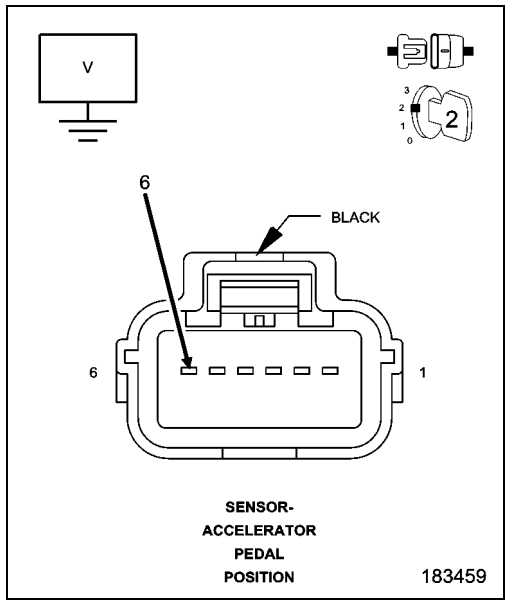

3. (K29) APP SENSOR NO.2 SIGNAL CIRCUIT OPEN

1. Turn the ignition off.
2. Disconnect the PCM harness connectors.

CAUTION: Do not probe the PCM harness connectors. Probing the PCM harness connectors will damage the PCM terminals resulting in poor terminal to pin connection. Install the PCM Pinout Box Kit, NGC, 38 Position 8815A to perform diagnosis.

3. Measure the resistance of the (K29) APP Sensor No.2 Signal circuit from the APP Sensor harness connector to the appropriate terminal of special tool #8815A.

Is the resistance below 5.0 ohms?

Yes

- Go To 4

No

- Repair the open in the (K29) APP Sensor No.2 Signal circuit.
- Perform the POWERTRAIN VERIFICATION TEST. (Refer to 28 - DTC-Based Diagnostics/MODULE, Powertrain Control (PCM) - Standard Procedure)

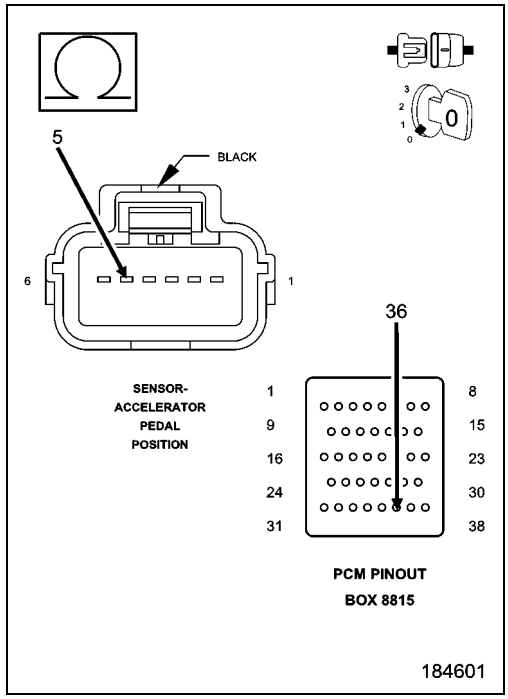

4. (K29) APP SENSOR NO.2 SIGNAL CIRCUIT SHORTED TO GROUND

1. Measure the resistance between ground and the (K29) APP Sensor No.2 Signal circuit in the APP Sensor harness connector.

Is the resistance below 100 ohms?

Yes

- Repair the short to ground in the (K29) APP Sensor No.2 Signal circuit.
- Perform the POWERTRAIN VERIFICATION TEST. (Refer to 28 - DTC-Based Diagnostics/MODULE, Powertrain Control (PCM) - Standard Procedure)

No

- Go To 5

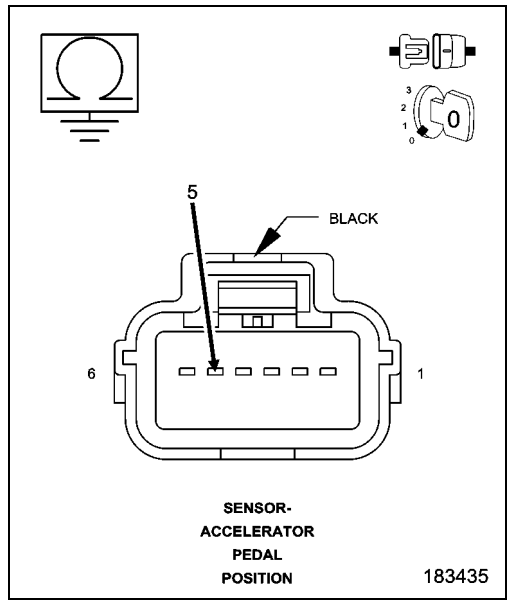

5. (K29) APP SENSOR NO.2 SIGNAL CIRCUIT SHORTED TO THE (K400) APP SENSOR NO.2 RETURN CIRCUIT

1. Measure the resistance between the (K29) APP Sensor No.2 Signal circuit and the (K400) APP Sensor No.2 Return circuit in the APP Sensor harness connector.

Is the resistance below 100 ohms?

Yes

- Repair the short between the (K400) APP Sensor No.2 Return circuit and the (K29) APP Sensor No.2 Signal circuit.
- Perform the POWERTRAIN VERIFICATION TEST. (Refer to 28 - DTC-Based Diagnostics/MODULE, Powertrain Control (PCM) - Standard Procedure)

No

- Go To 6

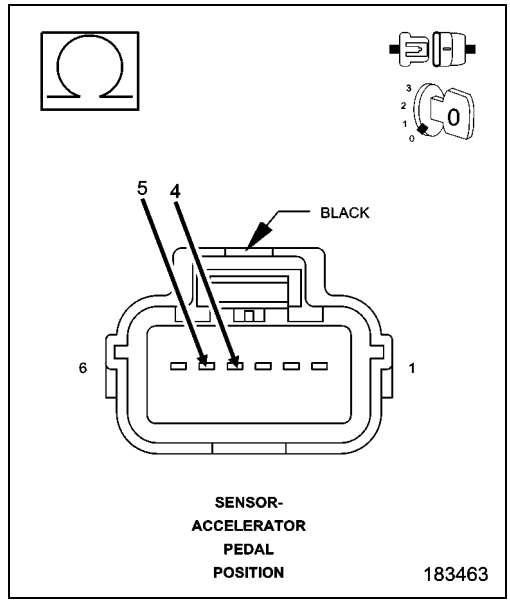

6. (K29) APP SENSOR NO.2 SIGNAL CIRCUIT SHORTED TO THE (K167) APP SENSOR NO.1 RETURN CIRCUIT

1. Measure the resistance between the (K29) APP Sensor No.2 Signal circuit and the (K167) APP Sensor No.1 Return circuit in the APP Sensor harness connector.

Is the resistance below 100 ohms?

Yes

- Repair the short between the (K167) APP Sensor No.1 Return circuit and the (K29) APP Sensor No.2 Signal circuit.
- Perform the POWERTRAIN VERIFICATION TEST. (Refer to 28 - DTC-Based Diagnostics/MODULE, Powertrain Control (PCM) - Standard Procedure)

No

- Go To 7

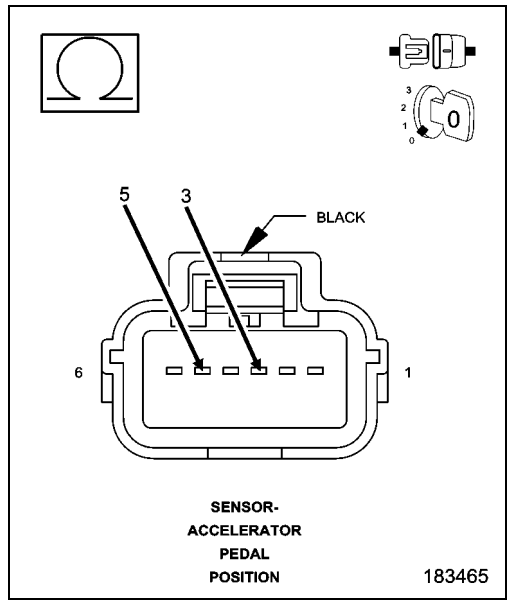

7. ACCELERATOR PEDAL POSITION SENSOR

1. Connect the PCM harness connectors.
2. Ignition on, engine not running.
3. Connect a jumper wire between the (F856) 5-volt Supply circuit and the (K29) APP Sensor No.2 Signal circuit in the Sensor harness connector.
4. With a scan tool, monitor the APP Sensor No.2 voltage.

NOTE: The sensor voltage should be approximately 5.0 volts (plus or minus .1 volt) with the jumper wire installed.

Does the scan tool display the voltage as described above?

Yes

- Verify that there is good pin to terminal contact in the APPS and the Powertrain Control Module connectors. Replace the APP Sensor Assembly per Service Information if no problems were found with the connectors. After installation is complete, use a scan tool and select the ETC RELEARN function to relearn the APPS values.
- Perform the POWERTRAIN VERIFICATION TEST. (Refer to 28 - DTC-Based Diagnostics/MODULE, Powertrain Control (PCM) - Standard Procedure)

No

- Go To 10

NOTE: Remove the jumper wire before continuing.

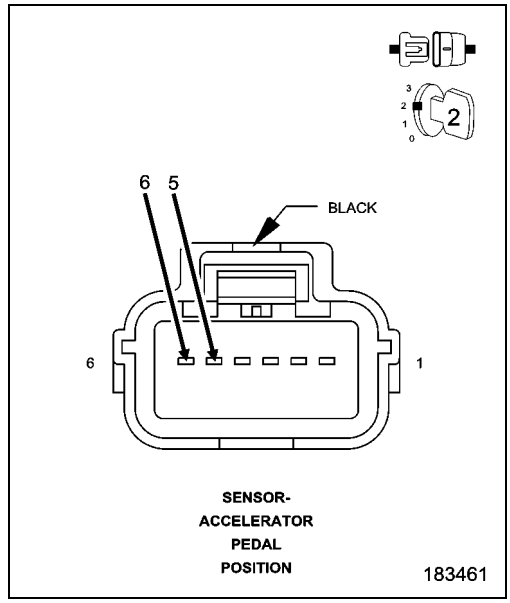

8. (F856) 5-VOLT SUPPLY CIRCUIT OPEN

1. Turn the ignition off.
2. Disconnect the C1 PCM harness connector.

CAUTION: Do not probe the PCM harness connectors. Probing the PCM harness connectors will damage the PCM terminals resulting in poor terminal to pin connection. Install the PCM Pinout Box Kit, NGC, 38 Position 8815A to perform diagnosis.

3. Measure the resistance of the (F856) 5-volt Supply circuit from the Sensor harness connector to the appropriate terminal of special tool #8815A.

Is the resistance below 5.0 ohms?

Yes

- Go To 9

No

- Repair the open in the (F856) 5-volt Supply circuit.
- Perform the POWERTRAIN VERIFICATION TEST. (Refer to 28 - DTC-Based Diagnostics/MODULE, Powertrain Control (PCM) - Standard Procedure)

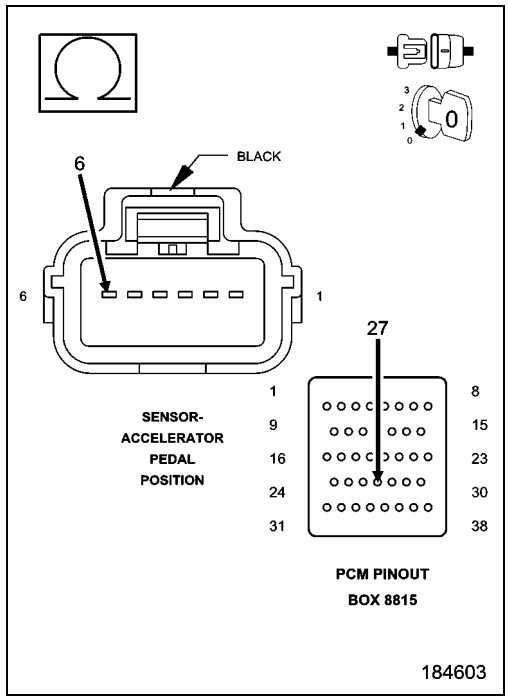

9. (F856) 5-VOLT SUPPLY CIRCUIT SHORTED TO GROUND

1. Measure the resistance between ground and the (F856) 5-volt Supply circuit in the APP Sensor harness connector.

Is the resistance below 100 ohms?

Yes

- Repair the short to ground in the (F856) 5-volt Supply circuit.
- Perform the POWERTRAIN VERIFICATION TEST. (Refer to 28 - DTC-Based Diagnostics/MODULE, Powertrain Control (PCM) - Standard Procedure)

No

- Go To 10

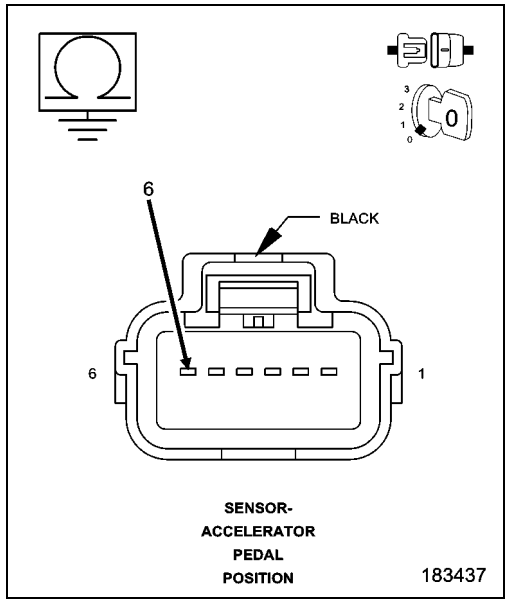

10. POWERTRAIN CONTROL MODULE (PCM)

1. Using the wiring diagram/schematic as a guide, inspect the wiring and connectors between the Accelerator Pedal Position Sensor and the Powertrain Control Module (PCM).
2. Look for any chafed, pierced, pinched, or partially broken wires.
3. Look for broken, bent, pushed out or corroded terminals. Verify that there is good pin to terminal contact in the APPS and the Powertrain Control Module connectors.
4. Refer to any Technical Service Bulletins that may apply.

Were there any problems found?

Yes

- Repair as necessary.
- Perform the POWERTRAIN VERIFICATION TEST. (Refer to 28 - DTC-Based Diagnostics/MODULE, Powertrain Control (PCM) - Standard Procedure)

No

- Replace and program the Powertrain Control Module per Service Information.
- Perform the POWERTRAIN VERIFICATION TEST. (Refer to 28 - DTC-Based Diagnostics/MODULE, Powertrain Control (PCM) - Standard Procedure)

11. APP SENSOR SWEEP

1. Ignition on, engine not running.
2. With a scan tool, monitor the APP Sensor 2 voltage.
3. Slowly press the Accelerator pedal down.

Does voltage start at approximately 0.22 of a volt and go above 2.31 volts with a smooth transition?

Yes

- Refer to the INTERMITTENT CONDITION Diagnostic Procedure. (Refer to 28 - DTC-Based Diagnostics/MODULE, Powertrain Control (PCM) - Standard Procedure).

No

- Replace the APP Sensor Assembly per Service Information. After installation is complete, use a scan tool and select the ETC RELEARN function to relearn the APPS values.
- Perform the POWERTRAIN VERIFICATION TEST. (Refer to 28 - DTC-Based Diagnostics/MODULE, Powertrain Control (PCM) - Standard Procedure)

P2128-ACCELERATOR PEDAL POSITION SENSOR 2 CIRCUIT HIGH

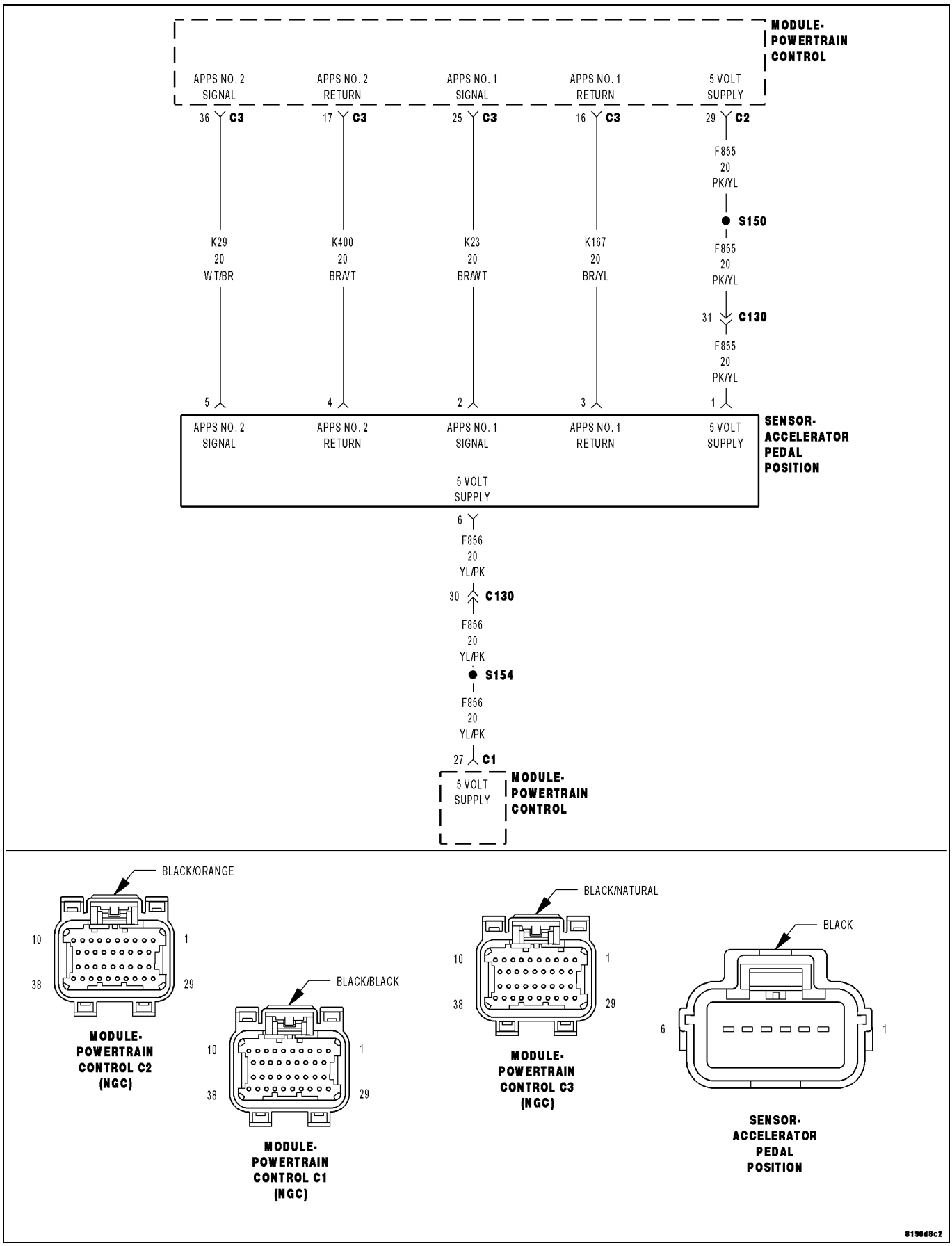

For a complete wiring diagram **Refer to the Wiring Information**.

- **When Monitored:**
  With the ignition on and no other APPS No.2 DTCs present.
- **Set Condition:**
  When APP Sensor No.2 voltage is too high. Idle is additionally forced any time the brake is applied or failed. Acceleration rate and Engine output are limited. One trip fault and the code will set within 5 seconds. ETC light is flashing.

Possible Causes
(K29) APP SENSOR NO.2 SIGNAL CIRCUIT SHORTED TO VOLTAGE
(K29) APP SENSOR NO.2 SIGNAL SHORTED TO THE (F856) 5-VOLT SUPPLY CIRCUIT
(K29) APP SENSOR NO.2 SIGNAL SHORTED TO THE (F855) 5-VOLT SUPPLY CIRCUIT
(K400) APP SENSOR NO.2 RETURN CIRCUIT OPEN
APP SENSOR
POWERTRAIN CONTROL MODULE (PCM)

Always perform the Pre-Diagnostic Troubleshooting procedure before proceeding. (Refer to 28 - DTC-Based Diagnostics/MODULE, Powertrain Control (PCM) - Standard Procedure).

1. ACTIVE DTC

1. Start the engine and allow it to reach normal operating temperature.

WARNING: When the engine is operating, do not stand in direct line with the fan. Do not put your hands near the pulleys, belts or fan. Do not wear loose clothing. Failure to follow these instructions may result in possible serious or fatal injury.

NOTE: Diagnose and repair any system voltage or sensor supply voltage DTCs before continuing with this test.

NOTE: If you are viewing data recorder information or Freeze Frame data the APP Sensor No. 2 is pulled low by the PCM as part of its system testing. This test happens every 320 milliseconds and may not show up on the scan tool but may show up on a data recorder or lab scope. It is acceptable to see the voltage close to zero with a normal sensor when using a data recorder/lab scope.

2. With the scan tool, select View DTCs.

Is the status Active for this DTC?

Yes

- Go To 2

No

- Go To 8

2. (K29) APP SENSOR NO.2 SIGNAL CIRCUIT SHORTED TO VOLTAGE

1. Turn the ignition off.
2. Disconnect the PCM harness connectors.
3. Disconnect the APP Sensor harness connector.
4. Ignition on, engine not running.
5. Measure the voltage on the (K29) APP Sensor No.2 Signal circuit in the APP Sensor harness connector.

Is there any voltage present?

Yes

- Repair the short to voltage in the (K29) APP Sensor No.2 Signal circuit.
- Perform the POWERTRAIN VERIFICATION TEST. (Refer to 28 - DTC-Based Diagnostics/MODULE, Powertrain Control (PCM) - Standard Procedure)

No

- Go To 3

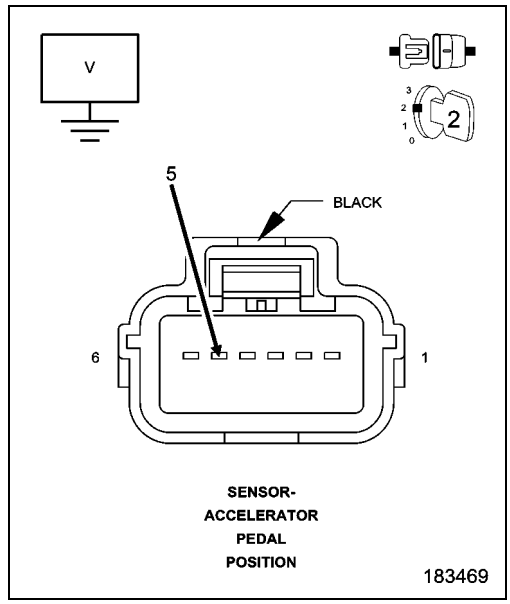

3. (K29) APPS NO.2 SIGNAL CIRCUIT SHORTED TO THE (F856) 5-VOLT SUPPLY CIRCUIT

1. Turn the ignition off.
2. Measure the resistance between the (K29) APP Sensor No.2 Signal circuit and the (F856) 5-volt Supply circuit in the APP Sensor harness connector.

Is the resistance below 10 ohms?

Yes

- Repair the short between the (K29) APP Sensor No.2 Signal circuit and the (F856) 5-volt Supply circuit.
- Perform the POWERTRAIN VERIFICATION TEST. (Refer to 28 - DTC-Based Diagnostics/MODULE, Powertrain Control (PCM) - Standard Procedure)

No

- Go To 4

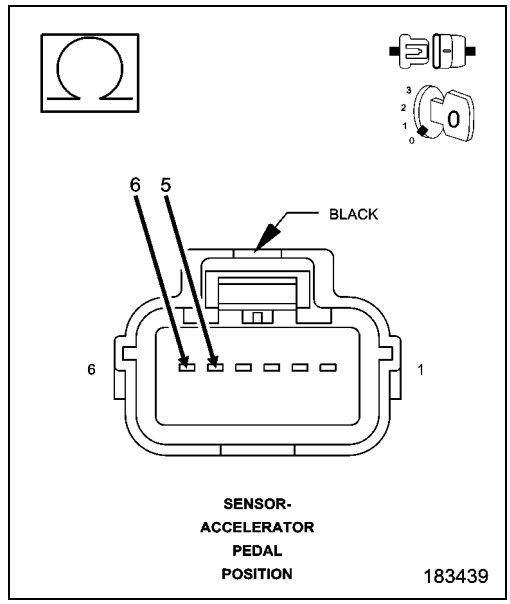

4. (K29) APPS NO.2 SIGNAL CIRCUIT SHORTED TO THE (F855) 5-VOLT SUPPLY CIRCUIT

1. Measure the resistance between the (K29) APP Sensor No.2 Signal circuit and the (F855) 5-volt Supply circuit in the APP Sensor harness connector.

Is the resistance below 10 ohms?

Yes

- Repair the short between the (K29) APP Sensor No.2 Signal circuit and the (F855) 5-volt Supply circuit.
- Perform the POWERTRAIN VERIFICATION TEST. (Refer to 28 - DTC-Based Diagnostics/MODULE, Powertrain Control (PCM) - Standard Procedure)

No

- Go To 5

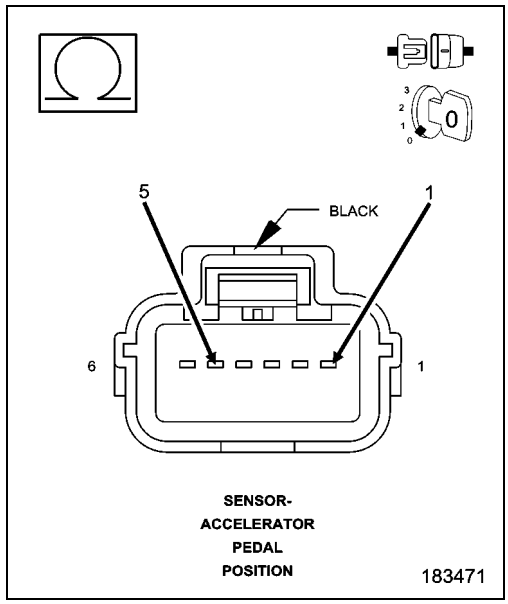

5. (K400) APP SENSOR NO.2 RETURN CIRCUIT OPEN

CAUTION: Do not probe the PCM harness connectors. Probing the PCM harness connectors will damage the PCM terminals resulting in poor terminal to pin connection. Install the PCM Pinout Box Kit, NGC, 38 Position 8815A to perform diagnosis.

1. Measure the resistance of the (K400) APP Sensor No.2 Return circuit from the APP Sensor harness connector to the appropriate terminal of special tool #8815A.

Is the resistance below 5.0 ohms?

Yes

- Go To 6

No

- Repair the open in the (K400) APP Sensor No.2 Return circuit.
- Perform the POWERTRAIN VERIFICATION TEST. (Refer to 28 - DTC-Based Diagnostics/MODULE, Powertrain Control (PCM) - Standard Procedure)

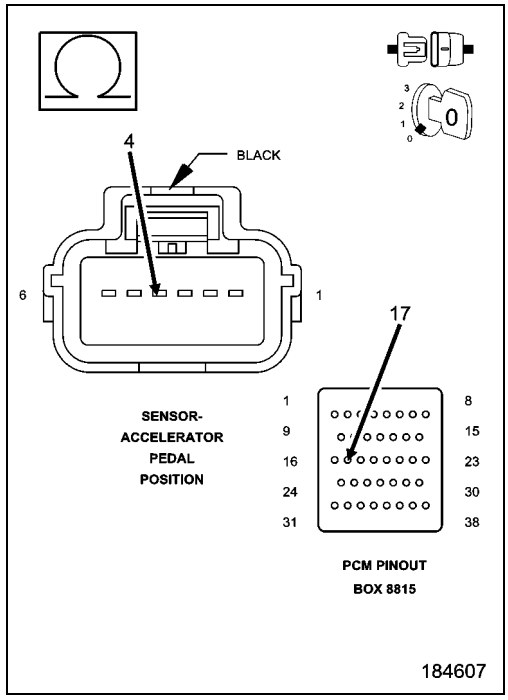

6. ACCELERATOR PEDAL POSITION SENSOR

1. Connect the PCM harness connectors.
2. Ignition on, engine not running.
3. With a scan tool, monitor the APP Sensor 2 voltage.

Is the voltage above 0 volts?

Yes

- Go To 7

No

- Verify that there is good pin to terminal contact in the APPS and the Powertrain Control Module connectors. Replace the APP Sensor Assembly per Service Information if no problems were found with the connectors. After installation is complete, use a scan tool and select the ETC RELEARN function to relearn the APPS values.
- Perform the POWERTRAIN VERIFICATION TEST. (Refer to 28 - DTC-Based Diagnostics/MODULE, Powertrain Control (PCM) - Standard Procedure)

7. POWERTRAIN CONTROL MODULE (PCM)

1. Using the wiring diagram/schematic as a guide, inspect the wiring and connectors between the Accelerator Pedal Position Sensor and the Powertrain Control Module (PCM).
2. Look for any chafed, pierced, pinched, or partially broken wires.
3. Look for broken, bent, pushed out or corroded terminals. Verify that there is good pin to terminal contact in the APPS and the Powertrain Control Module connectors.
4. Refer to any Technical Service Bulletins that may apply.

Were there any problems found?

Yes

- Repair as necessary.
- Perform the POWERTRAIN VERIFICATION TEST. (Refer to 28 - DTC-Based Diagnostics/MODULE, Powertrain Control (PCM) - Standard Procedure)

No

- Replace and program the Powertrain Control Module per Service Information.
- Perform the POWERTRAIN VERIFICATION TEST. (Refer to 28 - DTC-Based Diagnostics/MODULE, Powertrain Control (PCM) - Standard Procedure)

8. APP SENSOR NO.2 SWEEP

1. Ignition on, engine not running.
2. With a scan tool, monitor the APP Sensor 2 voltage.
3. Slowly press the Accelerator Pedal down.

Does voltage start at approximately 0.22 of a volt and go above 2.31 volts with a smooth transition?

Yes

- Refer to the INTERMITTENT CONDITION Diagnostic Procedure. (Refer to 28 - DTC-Based Diagnostics/MODULE, Powertrain Control (PCM) - Standard Procedure)

No

- Replace the APP Sensor Assembly per Service Information. After installation is complete, use a scan tool and select the ETC RELEARN function to relearn the APPS values.
- Perform the POWERTRAIN VERIFICATION TEST. (Refer to 28 - DTC-Based Diagnostics/MODULE, Powertrain Control (PCM) - Standard Procedure)

P2135-THROTTLE POSITION SENSOR 1/2 CORRELATION

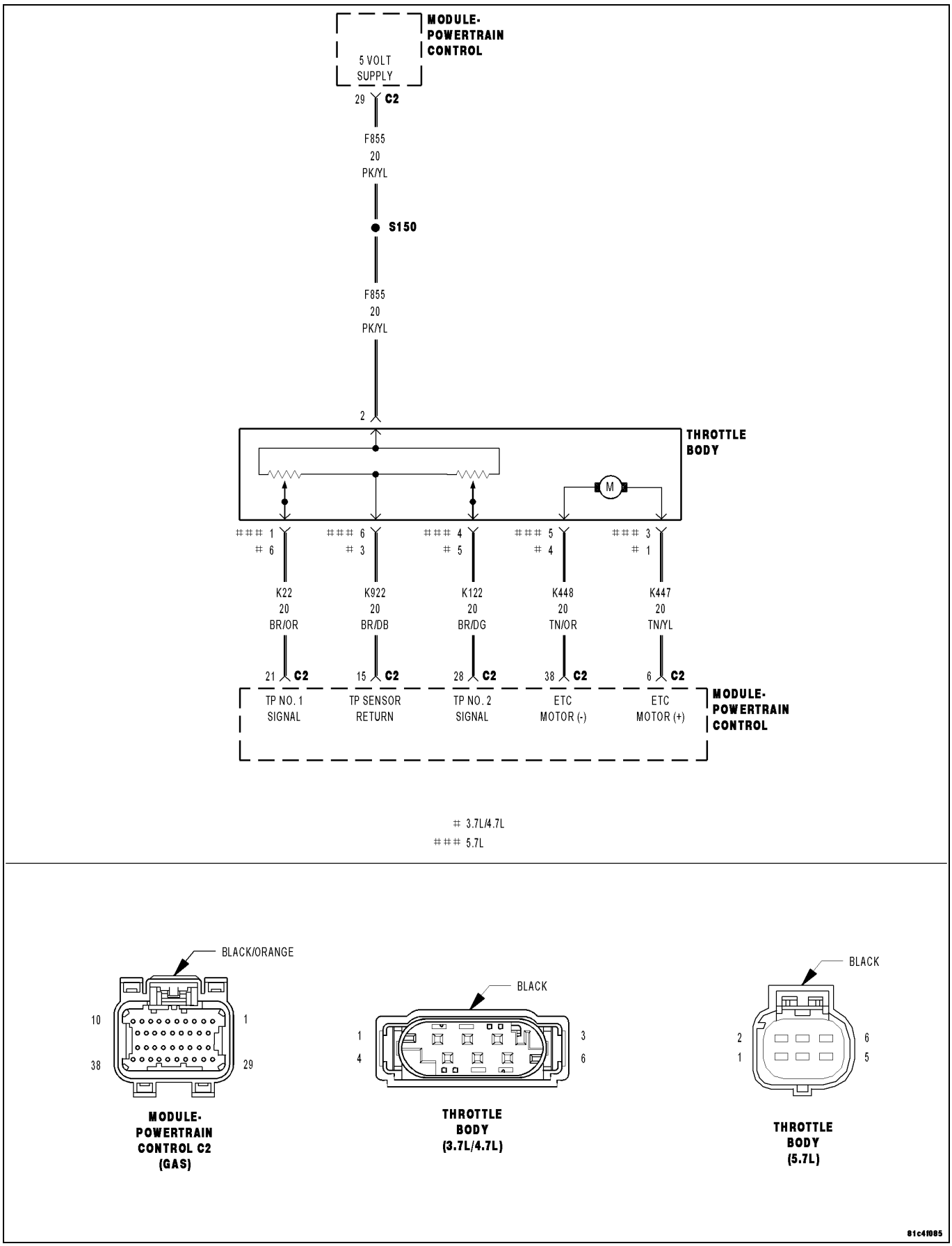

For a complete wiring diagram **Refer to the Wiring Information**.

- **When Monitored:**
  With the ignition on and no other DTCs present for TP Sensor No.1 or No.2.
- **Set Condition:**
  PCM recognizes TP Sensors No.1 and No.2 are not coherent. One trip fault and the code will set within 5 seconds. ETC light is illuminated.

Possible Causes
EXCESSIVE RESISTANCE IN THE (K22) TP SENSOR NO.1 SIGNAL CIRCUIT
EXCESSIVE RESISTANCE IN THE (K122) TP SENSOR NO.2 SIGNAL CIRCUIT
EXCESSIVE RESISTANCE IN THE (K922) TP SENSOR RETURN CIRCUIT
EXCESSIVE RESISTANCE IN THE (F855) 5-VOLT SUPPLY CIRCUIT
THROTTLE POSITION SENSOR
POWERTRAIN CONTROL MODULE (PCM)

Always perform the Pre-Diagnostic Troubleshooting procedure before proceeding. (Refer to 28 - DTC-Based Diagnostics/MODULE, Powertrain Control (PCM) - Standard Procedure).

1. ACTIVE DTC

NOTE: The throttle plate and linkage should be free from binding and carbon build up.

NOTE: Make sure the throttle plate is at the idle position.

NOTE: Inspect the engine for vacuum leaks.

NOTE: Repair any other 5-Volt Supply or TPS High and Low DTCs before diagnosing P2135.

1. Ignition on, engine not running.
2. With a scan tool, select View DTCs.

Is the DTC Active at this time?

Yes

- Go To 2

No

- Go To 7

2. EXCESSIVE RESISTANCE IN THE (K22) TP NO.1 SIGNAL CIRCUIT

1. Turn the ignition off.
2. Disconnect the C2 harness connector.

CAUTION: Do not probe the PCM harness connectors. Probing the PCM harness connectors will damage the PCM terminals resulting in poor terminal to pin connection. Install the PCM Pinout Box Kit, NGC, 38 Position 8815A along with the Adapter PCM Pinout Box Adapter 8815-1to perform the diagnosis.

3. Using a voltmeter perform a voltage drop test. Backprobe the (K22) TP Sensor No.1 Signal circuit at the Throttle Body harness connector and probe the appropriate terminal of the special tool #8815A. Make sure the voltmeter leads are connected so a positive polarity is displayed on the voltmeter.

WARNING: When the engine is operating, do not stand in direct line with the fan. Do not put your hands near the pulleys, belts or fan. Do not wear loose clothing. Failure to follow these instructions may result in possible serious or fatal injury.

4. Start the engine and allow it to reach normal operating temperature.
5. Monitor the voltmeter.

Is the voltage below 0.5 of a volt?

Yes

- Go To 3

No

- Repair the excessive resistance in the (K22) TP Sensor No.1 Signal circuit.
- Perform the POWERTRAIN VERIFICATION TEST. (Refer to 28 - DTC-Based Diagnostics/MODULE, Powertrain Control (PCM) - Standard Procedure)

3. EXCESSIVE RESISTANCE IN THE (K922) TP SENSOR RETURN CIRCUIT

1. Turn the ignition off.
2. Move the voltmeter leads to backprobe the (K922) TP Sensor Return circuit at the Throttle Body harness connector and probe the appropriate terminal of the special tool #8815A. Make sure the voltmeter leads are connected so a positive polarity is displayed on the voltmeter.

WARNING: When the engine is operating, do not stand in direct line with the fan. Do not put your hands near the pulleys, belts or fan. Do not wear loose clothing. Failure to follow these instructions may result in possible serious or fatal injury.

3. Start the engine and allow it to reach normal operating temperature.
4. Monitor the voltmeter.

Is the voltage below 0.5 of a volt?

Yes

- Go To 4

No

- Repair the excessive resistance in the (K922) TP Sensor Return circuit.
- Perform the POWERTRAIN VERIFICATION TEST. (Refer to 28 - DTC-Based Diagnostics/MODULE, Powertrain Control (PCM) - Standard Procedure)

4. EXCESSIVE RESISTANCE IN THE (K122) TP SENSOR NO.2 SIGNAL CIRCUIT

1. Turn the ignition off.
2. Move the voltmeter leads to backprobe the (K122) TP Sensor No.2 Signal circuit at the Throttle Body harness connector and probe the appropriate terminal of the special tool #8815A. Make sure the voltmeter leads are connected so a positive polarity is displayed on the voltmeter.

WARNING: When the engine is operating, do not stand in direct line with the fan. Do not put your hands near the pulleys, belts or fan. Do not wear loose clothing. Failure to follow these instructions may result in possible serious or fatal injury.

3. Start the engine and allow it to reach normal operating temperature.
4. Monitor the voltmeter.

Is the voltage below 0.5 of a volt?

Yes

- Go To 5

No

- Repair the excessive resistance in the (K122) TP Sensor No.2 Signal circuit.
- Perform the POWERTRAIN VERIFICATION TEST. (Refer to 28 - DTC-Based Diagnostics/MODULE, Powertrain Control (PCM) - Standard Procedure)

5. EXCESSIVE RESISTANCE IN THE (F855) 5-VOLT SUPPLY CIRCUIT

1. Turn the ignition off.
2. Using a voltmeter perform a voltage drop test. Backprobe the (F855) 5-volt Supply circuit at the Throttle Body harness connector and probe the appropriate terminal of the special tool #8815A. Make sure the voltmeter leads are connected so a positive polarity is displayed on the voltmeter.

WARNING: When the engine is operating, do not stand in direct line with the fan. Do not put your hands near the pulleys, belts or fan. Do not wear loose clothing. Failure to follow these instructions may result in possible serious or fatal injury.

3. Start the engine and allow it to reach normal operating temperature.
4. Monitor the voltmeter.

Is the voltage below 0.5 of a volt?

Yes

- Go To 6

No

- Repair the excessive resistance in the (F855) 5-Volt Supply circuit
- Perform the POWERTRAIN VERIFICATION TEST. (Refer to 28 - DTC-Based Diagnostics/MODULE, Powertrain Control (PCM) - Standard Procedure)

6. POWERTRAIN CONTROL MODULE (PCM)

1. Using the wiring diagram/schematic as a guide, inspect the wiring and connectors between the Throttle Body and the Powertrain Control Module (PCM).
2. Look for any chafed, pierced, pinched, or partially broken wires.
3. Look for broken, bent, pushed out or corroded terminals. Verify that there is good pin to terminal contact in the Throttle Body and the Powertrain Control Module connectors.
4. Refer to any Technical Service Bulletins that may apply.

Were there any problems found?

Yes

- Repair as necessary.
- Perform the POWERTRAIN VERIFICATION TEST. (Refer to 28 - DTC-Based Diagnostics/MODULE, Powertrain Control (PCM) - Standard Procedure)

No

- Replace and program the Powertrain Control Module per Service Information.
- Perform the POWERTRAIN VERIFICATION TEST. (Refer to 28 - DTC-Based Diagnostics/MODULE, Powertrain Control (PCM) - Standard Procedure)

7. THROTTLE FOLLOWER TEST

1. Ignition on, engine not running.
2. With a scan tool, perform the ETC Throttle Follower Test and monitor the TP Sensor No.1 or No.2 voltage.
3. Slowly press the throttle pedal down.
4. The voltage for TP Sensor No.1 should start at approximately 0.7 of a volt and increase to approximately 4.3 volts.
5. The voltage for TP Sensor No.2 should start at approximately 4.3 volts and decrease to approximately 0.7 of a volt.

Is the voltage within the range of the listed specification for the appropriate Sensor?

Yes

- Refer to the INTERMITTENT CONDITION Diagnostic Procedure. (Refer to 28 - DTC-Based Diagnostics/MODULE, Powertrain Control (PCM) - Standard Procedure)

No

- Disconnect the Battery when replacing the Throttle Body Assembly. Replace the Throttle Body Assembly. After installation is complete, use a scan tool and select the ETC RELEARN function.
- Perform the POWERTRAIN VERIFICATION TEST. (Refer to 28 - DTC-Based Diagnostics/MODULE, Powertrain Control (PCM) - Standard Procedure)

P2138-ACCELERATOR PEDAL POSITION SENSOR 1/2 CORRELATION

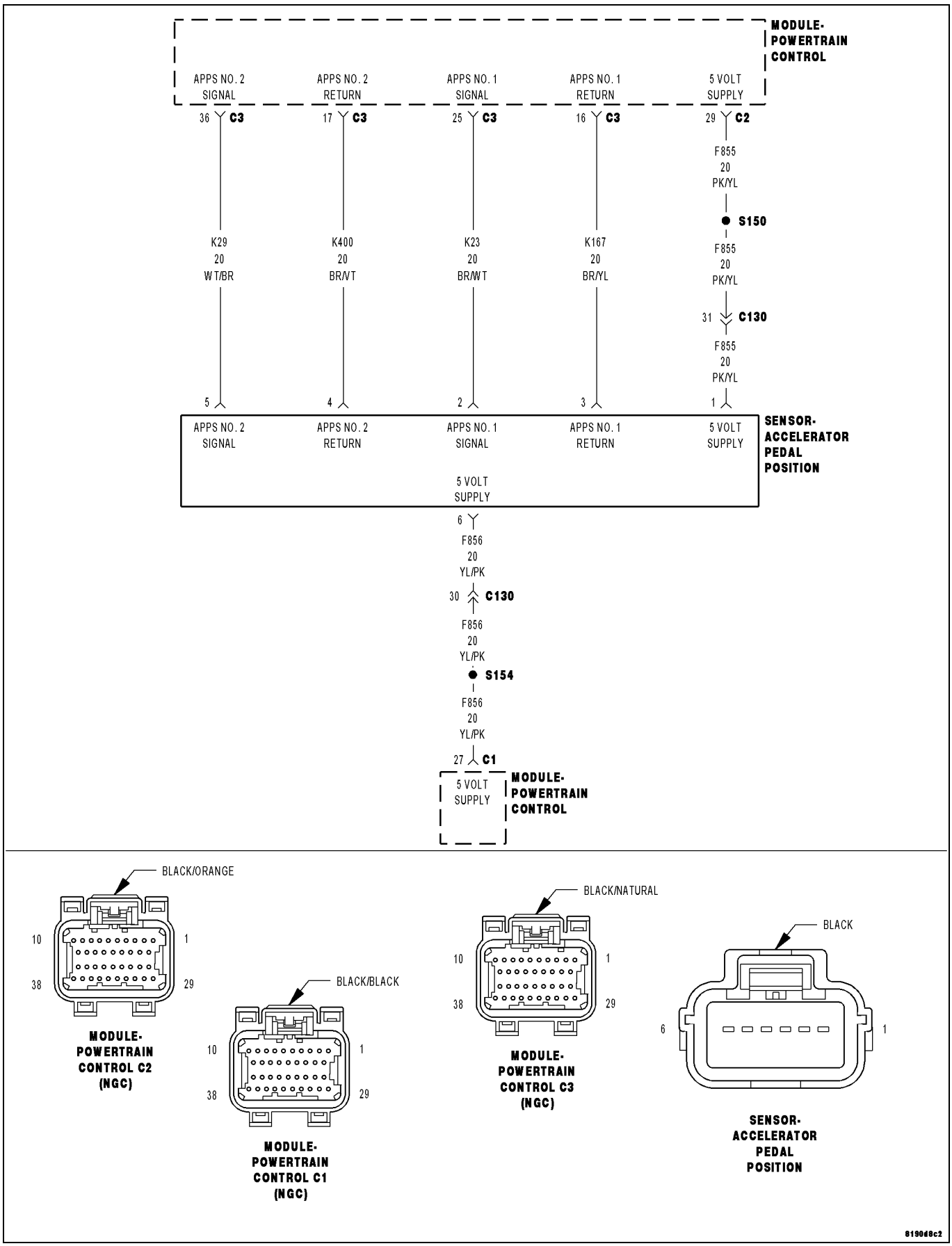

For a complete wiring diagram **Refer to the Wiring Information**.

- **When Monitored:**
  With the ignition on and no APPS No.1 and APPS No.2 DTC present.
- **Set Condition:**
  APPS values No.1 and No.2 are not coherent. Idle is additionally forced when the brake pedal is pressed or failed. Acceleration rate and Engine output are limited. One trip fault and the code will set within 5 seconds. ETC light is flashing.

Possible Causes
EXCESSIVE RESISTANCE IN THE (F855) 5-VOLT SUPPLY CIRCUIT
EXCESSIVE RESISTANCE IN THE (F856) 5-VOLT SUPPLY CIRCUIT
EXCESSIVE RESISTANCE IN THE (K167) SENSOR NO.1 RETURN CIRCUIT
EXCESSIVE RESISTANCE IN THE (K400) SENSOR NO.2 RETURN CIRCUIT
EXCESSIVE RESISTANCE IN THE (K23) APP SENSOR NO.1 SIGNAL CIRCUIT
EXCESSIVE RESISTANCE IN THE (K29) APP SENSOR NO.2 SIGNAL CIRCUIT
APP SENSOR
POWERTRAIN CONTROL MODULE (PCM)

Always perform the Pre-Diagnostic Troubleshooting procedure before proceeding. (Refer to 28 - DTC-Based Diagnostics/MODULE, Powertrain Control (PCM) - Standard Procedure).

1. ACTIVE DTC

1. Start the engine and allow it to reach normal operating temperature.

WARNING: When the engine is operating, do not stand in direct line with the fan. Do not put your hands near the pulleys, belts or fan. Do not wear loose clothing. Failure to follow these instructions may result in possible serious or fatal injury.

NOTE: Diagnose and repair any system voltage or sensor supply voltage DTCs before continuing with this test.

NOTE: If you are viewing data recorder information or Freeze Frame data the APP Sensor No. 2 is pulled low by the PCM as part of its system testing. This test happens every 320 milliseconds and may not show up on the scan tool but may show up on a data recorder or lab scope. It is acceptable to see the voltage close to zero with a normal sensor when using a data recorder/lab scope.

2. With the scan tool, select View DTCs.

Is the status Active for this DTC?

Yes

- Go To 2

No

- Refer to the INTERMITTENT CONDITION Diagnostic Procedure. (Refer to 28 - DTC-Based Diagnostics/MODULE, Powertrain Control (PCM) - Standard Procedure).

2. EXCESSIVE RESISTANCE IN THE (K23) APPS NO.1 SIGNAL CIRCUIT

1. Turn the ignition off.
2. Disconnect the C3 harness connector.

CAUTION: Do not probe the PCM harness connectors. Probing the PCM harness connectors will damage the PCM terminals resulting in poor terminal to pin connection. Install the PCM Pinout Box Kit, NGC, 38 Position 8815A along with the Adapter PCM Pinout Box Adapter 8815-1to perform the diagnosis.

3. Using a voltmeter perform a voltage drop test. Backprobe the (K23) APPS No.1 Signal circuit at the APPS harness connector and probe the appropriate terminal of the special tool #8815A. Make sure the voltmeter leads are connected so a positive polarity is displayed on the voltmeter.

WARNING: When the engine is operating, do not stand in direct line with the fan. Do not put your hands near the pulleys, belts or fan. Do not wear loose clothing. Failure to follow these instructions may result in possible serious or fatal injury.

4. Start the engine and allow it to reach normal operating temperature.
5. Monitor the voltmeter.

Is the voltage below 0.5 of a volt?

Yes

- Go To 3

No

- Repair the excessive resistance in the (K23) APP Sensor No.1 Signal circuit.
- Perform the POWERTRAIN VERIFICATION TEST. (Refer to 28 - DTC-Based Diagnostics/MODULE, Powertrain Control (PCM) - Standard Procedure).

3. EXCESSIVE RESISTANCE IN THE (K167) SENSOR NO.1 RETURN CIRCUIT

1. Turn the ignition off.
2. Move the voltmeter leads to backprobe the (K167) APPS No.1 Return circuit at the APPS harness connector and probe the appropriate terminal of the special tool #8815A. Make sure the voltmeter leads are connected so a positive polarity is displayed on the voltmeter.

WARNING: When the engine is operating, do not stand in direct line with the fan. Do not put your hands near the pulleys, belts or fan. Do not wear loose clothing. Failure to follow these instructions may result in possible serious or fatal injury.

3. Start the engine and allow it to reach normal operating temperature.
4. Monitor the voltmeter.

Is the voltage below 0.5 of a volt?

Yes

- Go To 4

No

- Repair the excessive resistance in the (K167) Sensor No.1 Return circuit.
- Perform the POWERTRAIN VERIFICATION TEST. (Refer to 28 - DTC-Based Diagnostics/MODULE, Powertrain Control (PCM) - Standard Procedure).

4. EXCESSIVE RESISTANCE IN THE (K29) APPS NO.2 SIGNAL CIRCUIT

1. Turn the ignition off.
2. Move the voltmeter leads to backprobe the (K29) APPS No.2 Signal circuit at the APPS harness connector and probe the appropriate terminal of the special tool #8815A. Make sure the voltmeter leads are connected so a positive polarity is displayed on the voltmeter.

WARNING: When the engine is operating, do not stand in direct line with the fan. Do not put your hands near the pulleys, belts or fan. Do not wear loose clothing. Failure to follow these instructions may result in possible serious or fatal injury.

3. Start the engine and allow it to reach normal operating temperature.
4. Monitor the voltmeter.

Is the voltage below 0.5 of a volt?

Yes

- Go To 5

No

- Repair the excessive resistance in the (K29) APP Sensor No.2 Signal circuit.
- Perform the POWERTRAIN VERIFICATION TEST. (Refer to 28 - DTC-Based Diagnostics/MODULE, Powertrain Control (PCM) - Standard Procedure).

5. EXCESSIVE RESISTANCE IN THE (K400) SENSOR NO.2 RETURN CIRCUIT

1. Turn the ignition off.
2. Move the voltmeter leads to backprobe the (K400) APPS No.2 Return circuit at the APPS harness connector and probe the appropriate terminal of the special tool #8815A. Make sure the voltmeter leads are connected so a positive polarity is displayed on the voltmeter.

WARNING: When the engine is operating, do not stand in direct line with the fan. Do not put your hands near the pulleys, belts or fan. Do not wear loose clothing. Failure to follow these instructions may result in possible serious or fatal injury.

3. Start the engine and allow it to reach normal operating temperature.
4. Monitor the voltmeter.

Is the voltage below 0.5 of a volt?

Yes

- Go To 6

No

- Repair the excessive resistance in the (K400) Sensor No.2 Return circuit.
- Perform the POWERTRAIN VERIFICATION TEST. (Refer to 28 - DTC-Based Diagnostics/MODULE, Powertrain Control (PCM) - Standard Procedure).

6. EXCESSIVE RESISTANCE IN THE (F855) 5-VOLT SUPPLY CIRCUIT

1. Turn the Ignition off.
2. Remove special tool #8815A from the C3 PCM harness connector and Re-Connect the C3 PCM harness connector to the PCM.
3. Disconnect the C2 PCM harness connector to install special tool #8815A and #8815-1.
4. Using a voltmeter perform a voltage drop test. Backprobe the (F855) 5-volt Supply circuit at the APPS harness connector and probe the appropriate terminal of the special tool #8815A. Make sure the voltmeter leads are connected so a positive polarity is displayed on the voltmeter.

WARNING: When the engine is operating, do not stand in direct line with the fan. Do not put your hands near the pulleys, belts or fan. Do not wear loose clothing. Failure to follow these instructions may result in possible serious or fatal injury.

5. Start the engine and allow it to reach normal operating temperature.
6. Monitor the voltmeter.

Is the voltage below 0.5 of a volt?

Yes

- Go To 7

No

- Repair the excessive resistance in the (F855) 5-volt Supply circuit.
- Perform the POWERTRAIN VERIFICATION TEST. (Refer to 28 - DTC-Based Diagnostics/MODULE, Powertrain Control (PCM) - Standard Procedure).

7. EXCESSIVE RESISTANCE IN THE (F856) 5-VOLT SUPPLY CIRCUIT

1. Turn the Ignition off.
2. Remove special tool #8815A from the C2 PCM harness connector and Re-Connect the C2 PCM harness connector to the PCM.
3. Disconnect the C1 PCM harness connector to install special tool #8815A and #8815-1.
4. Using a voltmeter perform a voltage drop test. Backprobe the (F856) 5-volt Supply circuit at the APPS harness connector and probe the appropriate terminal of the special tool #8815A. Make sure the voltmeter leads are connected so a positive polarity is displayed on the voltmeter.

WARNING: When the engine is operating, do not stand in direct line with the fan. Do not put your hands near the pulleys, belts or fan. Do not wear loose clothing. Failure to follow these instructions may result in possible serious or fatal injury.

5. Start the engine and allow it to reach normal operating temperature.
6. Monitor the voltmeter.

Is the voltage below 0.5 of a volt?

Yes

- Go To 8

No

- Repair the excessive resistance in the (F856) 5-volt Supply circuit.
- Perform the POWERTRAIN VERIFICATION TEST. (Refer to 28 - DTC-Based Diagnostics/MODULE, Powertrain Control (PCM) - Standard Procedure).

8. CHECKING APPS NO.1 AND NO.2 WITH A LAB SCOPE

1. Turn the ignition off.
2. Remove special tool #8815A and #8815-1.
3. Connect the PCM harness connectors
4. Ignition on, engine not running.
5. Set up a lab scope in a way that you can view two graphs simultaneously.
6. Backprobe (K23) APP Sensor No.1 Signal circuit using Channel 1 at the APP Sensor harness connector.
7. Backprobe (K29) APP Sensor No.2 Signal circuit using Channel 2 at the APP Sensor harness connector.

NOTE: The APP Sensor No. 2 is pulled low by the PCM as part of its system testing. This test happens every 320 milliseconds and may not show up on the scan tool but may show up on a data recorder. It is acceptable to see the voltage close to zero with a normal sensor when using a data recorder/lab scope.

8. Slowly press and release the Accelerator Pedal while monitoring the lab scope screen.

Does the scope pattern show any missing or erratic signals?

Yes

- Replace the APP Sensor Assembly per Service Information. After installation is complete, use a scan tool and select the ETC RELEARN function to relearn the APPS values.
- Perform the POWERTRAIN VERIFICATION TEST. (Refer to 28 - DTC-Based Diagnostics/MODULE, Powertrain Control (PCM) - Standard Procedure).

No

- Go To 9

9. POWERTRAIN CONTROL MODULE (PCM)

1. Using the wiring diagram/schematic as a guide, inspect the wiring and connectors between the Accelerator Pedal Position Sensor and the Powertrain Control Module (PCM).
2. Look for any chafed, pierced, pinched, or partially broken wires.
3. Look for broken, bent, pushed out or corroded terminals. Verify that there is good pin to terminal contact in the APPS and the Powertrain Control Module connectors.
4. Refer to any Technical Service Bulletins that may apply.

Were there any problems found?

Yes

- Repair as necessary.
- Perform the POWERTRAIN VERIFICATION TEST. (Refer to 28 - DTC-Based Diagnostics/MODULE, Powertrain Control (PCM) - Standard Procedure).

No

- Replace and program the Powertrain Control Module per Service Information.
- Perform the POWERTRAIN VERIFICATION TEST. (Refer to 28 - DTC-Based Diagnostics/MODULE, Powertrain Control (PCM) - Standard Procedure).

P2161-VEHICLE SPEED SENSOR 2 ERRATIC

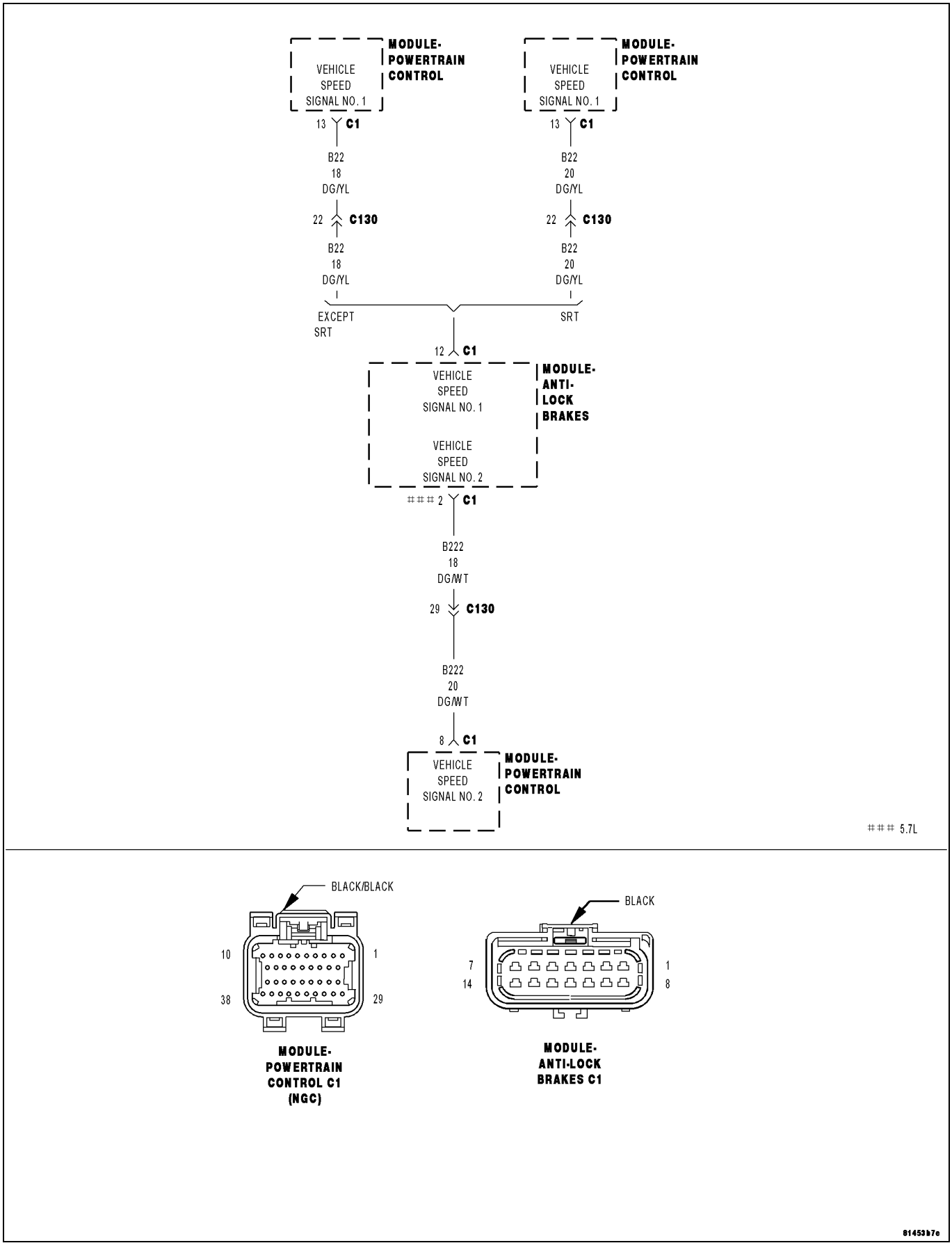

For a complete wiring diagram **Refer to the Wiring Information**.

- **When Monitored:**
  Ignition on.
- **Set Condition:**
  PCM recognizes Vehicle speed input No.2 erratic or high. VSS No.2 is based on the average of the Front Wheel Speeds. One trip fault and the code will set within 5 seconds. No MIL and No ETC light. Cruise is disabled.

Possible Causes
(B222) VEHICLE SPEED NO.2 SIGNAL CIRCUIT SHORTED TO VOLTAGE
(B222) VEHICLE SPEED NO.2 SIGNAL CIRCUIT OPEN
(B222) VEHICLE SPEED NO.2 SIGNAL CIRCUIT SHORTED TO GROUND
TIRE CIRCUMFERENCE
POWERTRAIN CONTROL MODULE (PCM)

Always perform the Pre-Diagnostic Troubleshooting procedure before proceeding. (Refer to 28 - DTC-Based Diagnostics/MODULE, Powertrain Control (PCM) - Standard Procedure).

1. ACTIVE DTC

1. Ignition on, engine not running.

NOTE: Check for any Bus Communication DTCs. If no Bus or Communication DTCs are set, check for active DTCs stored in the Anti-Lock Brake Module. Any bus or communication DTCs or VSS DTCs in the Anti-Lock Brake Module must be properly diagnosed before continuing.

2. With a scan tool, select View DTCs.

Is the DTC Active at this time?

Yes

- Go To 2

No

- Refer to the INTERMITTENT CONDITION Diagnostic Procedure. (Refer to 28 - DTC-Based Diagnostics/MODULE, Powertrain Control (PCM) - Standard Procedure)

2. VISUAL INSPECTION

NOTE: This code can set due to tire circumference differences and from the front or rear wheels being on a slippery surface while the opposite tires are not.

1. This code may also set on a hard acceleration on loose gravel or during other off road driving conditions.
2. Check tire pressure of all the tires.
3. Check tire wear on all the tires.
4. Ask the customer what the road and driving conditions were like when the fault set.

Were any problems found?

Yes

- Repair as necessary. If the code set during a front OR rear wheel spin condition, no repair is necessary.
- Perform the POWERTRAIN VERIFICATION TEST. (Refer to 28 - DTC-Based Diagnostics/MODULE, Powertrain Control (PCM) - Standard Procedure)

No

- Go To 3

3. (B222) VEHICLE SPEED NO.2 SIGNAL CIRCUIT SHORTED TO VOLTAGE

1. Turn the ignition off.
2. Disconnect the ABS Module harness connector.
3. Disconnect the C1 PCM harness connector.

CAUTION: Do not probe the PCM harness connectors. Probing the PCM harness connectors will damage the PCM terminals resulting in poor terminal to pin connection. Install the PCM Pinout Box Kit, NGC, 38 Position 8815A to perform diagnosis.

4. Ignition on, engine not running.
5. Measure the voltage of the (B222) Vehicle Speed No.2 Signal circuit at the appropriate terminals of special tool #8815A.

Is there any voltage present?

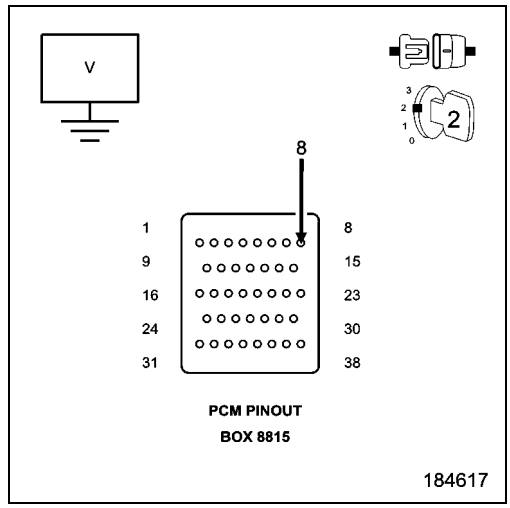

Yes

- Repair the short to voltage in the (B222) Vehicle Speed No.2 Signal circuit.
- Perform the POWERTRAIN VERIFICATION TEST. (Refer to 28 - DTC-Based Diagnostics/MODULE, Powertrain Control (PCM) - Standard Procedure)

No

- Go To 4

4. (B222) VEHICLE SPEED NO.2 SIGNAL CIRCUIT OPEN

1. Turn the ignition off.
2. Measure the resistance of the (B222) Vehicle Speed No.2 Signal circuit from the ABS Module harness connector to the appropriate terminal special tool #8815A.

Is the resistance below 5.0 ohms?

Yes

- Go To 5

No

- Repair the open in the (B222) Vehicle Speed No.2 Signal circuit.
- Perform the POWERTRAIN VERIFICATION TEST. (Refer to 28 - DTC-Based Diagnostics/MODULE, Powertrain Control (PCM) - Standard Procedure)

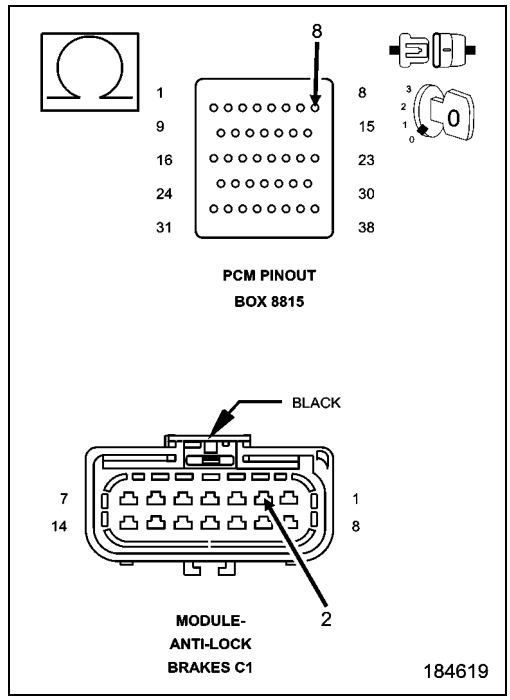

5. (B222) VEHICLE SPEED NO.2 SIGNAL CIRCUIT SHORTED TO GROUND

1. Measure the resistance between ground and the (B222) Vehicle Speed No.2 Signal circuit at the appropriate terminals of special tool #8815A.

Is the resistance below 100 ohms?

Yes

- Repair the short to ground in the (B222) Vehicle Speed No.2 Signal circuit.
- Perform the POWERTRAIN VERIFICATION TEST. (Refer to 28 - DTC-Based Diagnostics/MODULE, Powertrain Control (PCM) - Standard Procedure)

No

- Go To 6

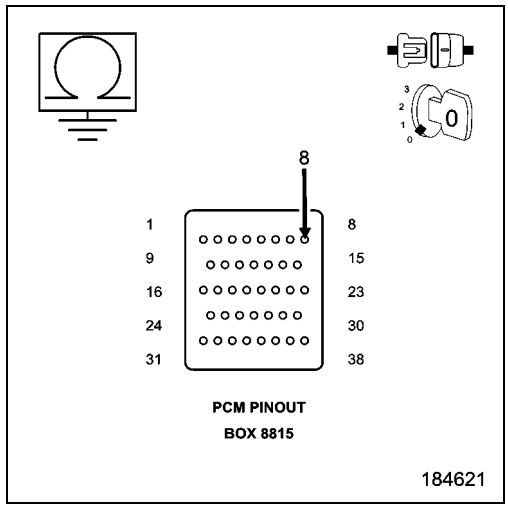

6. POWERTRAIN CONTROL MODULE (PCM)

1. Using the wiring diagram/schematic as a guide, inspect the wiring and connectors between the ABS Module, VSS, and the Powertrain Control Module (PCM).
2. Look for any chafed, pierced, pinched, or partially broken wires.
3. Look for broken, bent, pushed out or corroded terminals. Verify that there is good pin to terminal contact in the ABS Module, VSS, and the Powertrain Control Module connectors.
4. Refer to any Technical Service Bulletins that may apply.

Were there any problems found?

Yes

- Repair as necessary.
- Perform the POWERTRAIN VERIFICATION TEST. (Refer to 28 - DTC-Based Diagnostics/MODULE, Powertrain Control (PCM) - Standard Procedure)

No

- Replace and program the Powertrain Control Module per Service Information.
- Perform the POWERTRAIN VERIFICATION TEST. (Refer to 28 - DTC-Based Diagnostics/MODULE, Powertrain Control (PCM) - Standard Procedure)

■ P2166-ACCELERATOR PEDAL POSITION SENSOR 1 MAXIMUM STOP PERFORMANCE

For a complete wiring diagram **Refer to the Wiring Information**.

- **When Monitored:**

  Ignition on. During in plant mode the APP Sensors need to be checked to make sure that idle and full pedal travel can be reached on both sensors.
- **Set Condition:**

  APPS No.1 has failed to achieve the required maximum value during In Plant testing. One trip fault and the code will set within 5 seconds. Engine will only idle. ETC light is illuminated.

Possible Causes
IN PLANT TEST FAILURE
APPS RELEARN

Always perform the Pre-Diagnostic Troubleshooting procedure before proceeding. (Refer to 28 - DTC-Based Diagnostics/MODULE, Powertrain Control (PCM) - Standard Procedure).

1. IN PLANT TEST FAILURE

1. Ignition on, engine not running.

NOTE: This DTC is set when the APP Sensors are learned in plant but do not reach the Minimum or Maximum voltage range.

2. With a scan tool, select View DTCs.
3. With the scan tool, erase DTCs.
4. Start the engine.
5. With the scan tool, View DTCs.

Is the DTC Active at this time?

Yes

- Go To 2

No

- Refer to the INTERMITTENT CONDITION Diagnostic Procedure. (Refer to 28 - DTC-Based Diagnostics/MODULE, Powertrain Control (PCM) - Standard Procedure)

2. APPS RELEARN

1. With a scan tool select the ETC RELEARN function.
2. Next, erase DTCs.
3. Start the engine.

Does the DTC return?

Yes

- Replace the APPS Assembly per Service Information. After installation is complete, use a scan tool and select the ETC RELEARN function.
- Perform the POWERTRAIN VERIFICATION TEST. (Refer to 28 - DTC-Based Diagnostics/MODULE, Powertrain Control (PCM) - Standard Procedure)

No

- Test Complete.

■ P2167-ACCELERATOR PEDAL POSITION SENSOR 2 MAXIMUM STOP PERFORMANCE

For a complete wiring diagram **Refer to the Wiring Information**.

- **When Monitored:**

  Ignition on. During in plant mode the APP Sensors need to be checked to make sure that idle and full pedal travel can be reached on both sensors.

- **Set Condition:**

  APPS No.2 has failed to achieve the required maximum value during In Plant testing. One trip fault and the code will set within 5 seconds. Engine will only idle. ETC light will illuminate.

Possible Causes
IN PLANT TEST FAILURE
APPS RELEARN

1. IN PLANT TEST FAILURE

1. Ignition on, engine not running.

NOTE: This DTC is set when the APP Sensors are learned in plant but do not reach the Minimum or Maximum voltage range.

2. With a scan tool, select View DTCs.
3. With the scan tool, erase DTCs.
4. Start the engine.
5. With the scan tool, View DTCs.

Is the DTC Active at this time?

Yes

- Go To 2

No

- Refer to the INTERMITTENT CONDITION Diagnostic Procedure. (Refer to 28 - DTC-Based Diagnostics/MODULE, Powertrain Control (PCM) - Standard Procedure)

2. APPS RELEARN

1. With a scan tool select the ETC RELEARN function.
2. Next, erase DTCs.
3. Start the engine.

Does the DTC return?

Yes

- Replace the APPS Assembly per Service Information. After installation is complete, use a scan tool and select the ETC RELEARN function.
- Perform the POWERTRAIN VERIFICATION TEST. (Refer to 28 - DTC-Based Diagnostics/MODULE, Powertrain Control (PCM) - Standard Procedure)

No

- Test Complete.

■ P2172-HIGH AIRFLOW/VACUUM LEAK DETECTED (INSTANTANEOUS ACCUMULATION)

For a complete wiring diagram **Refer to the Wiring Information**.

- **When Monitored:**
  Ignition on and engine running with no MAP Sensor DTCs.
- **Set Condition:**
  A large vacuum leak has been detected or both of the TP Sensors have failed based on their position being 2.5 volts and the calculated MAP value is less than the actual MAP minus an Offset value. One trip fault and the code will set within 5 seconds. ETC light will flash.

Possible Causes
VACUUM LEAK
RESISTANCE IN THE (F856) 5-VOLT SUPPLY CIRCUIT
(F856) 5-VOLT SUPPLY CIRCUIT SHORTED TO GROUND
RESISTANCE IN THE (K1) MAP SIGNAL CIRCUIT
(K1) MAP SIGNAL CIRCUIT SHORTED TO GROUND
RESISTANCE IN (K900) SENSOR GROUND CIRCUIT
RESISTANCE IN THE (F855) 5-VOLT SUPPLY CIRCUIT
(F855) 5-VOLT SUPPLY CIRCUIT SHORTED TO GROUND
RESISTANCE IN THE TP SENSOR SIGNAL CIRCUIT
TP SENSOR SIGNAL CIRCUIT SHORTED TO GROUND
RESISTANCE IN THE (K922) TP SENSOR RETURN CIRCUIT
MAP SENSOR
THROTTLE BODY
POWERTRAIN CONTROL MODULE (PCM)

Always perform the Pre-Diagnostic Troubleshooting procedure before proceeding. (Refer to 28 - DTC-Based Diagnostics/MODULE, Powertrain Control (PCM) - Standard Procedure).

1. ACTIVE DTC

NOTE: The most likely cause of this DTC is a vacuum leak.

NOTE: This fault code could be present if any Cam/Crank DTCs are set. No repair is necessary for P2172 if any Cam or Crank DTCs are set.

NOTE: Diagnose any 5-Volt Supply, TP Sensor, Fuel System Lean or Rich, or MAP Sensor DTCs before continuing.

NOTE: The throttle plate should be free from binding and carbon build up.

1. Ignition on, engine not running.
2. With a scan tool, select View DTCs.

Is the DTC Active at this time?

Yes

- Go To 2

No

- Refer to the INTERMITTENT CONDITION Diagnostic Procedure. (Refer to 28 - DTC-Based Diagnostics/MODULE, Powertrain Control (PCM) - Standard Procedure)

2. VACUUM LEAK

NOTE: This code is enabled on engines with a plastic intake manifold and is intended to limit the maximum engine speed if a large crack occurs.

NOTE: A large vacuum leak is most likely the cause of this DTC.

1. Inspect the Intake Manifold and Throttle body for leaks and cracks.
2. Inspect the Power Brake Booster for any vacuum leaks.
3. Inspect the PCV system for proper operation or any vacuum leaks.
4. Inspect the MAP Sensor for proper installation.

Were any vacuum leaks found?

Yes

- Repair the vacuum leak as necessary.
- Perform the POWERTRAIN VERIFICATION TEST. (Refer to 28 - DTC-Based Diagnostics/MODULE, Powertrain Control (PCM) - Standard Procedure)

No

- Go To 3

3. MAP SENSOR OPERATION

1. Start the engine.
2. With a scan tool, monitor the MAP Sensor voltage.
3. Snap the Accelerator pedal.

Does the MAP Sensor voltage vary from below 2.0 volts at idle to above 3.5 volts at Wide Open Throttle?

Yes

- Go To 4

No

- Go To 13

4. TP SENSOR OPERATION

1. Ignition on, engine not running.
2. With a scan tool, perform the ETC Throttle Follower Test.
3. TP Sensor No.1 should start at approximately 0.7 of a volt and increase to 4.3 volts.
4. TP Sensor No.2 should start at approximately 4.3 volts and decrease to 0.7 of a volt.

Is the voltage transition smooth between the appropriate values?

Yes

- Refer to the INTERMITTENT CONDITION Diagnostic Procedure. (Refer to 28 - DTC-Based Diagnostics/MODULE, Powertrain Control (PCM) - Standard Procedure)

No

- Go To 5

5. RESISTANCE IN THE (F855) 5-VOLT SUPPLY CIRCUIT

1. Turn the ignition off.
2. Disconnect the Throttle Body harness connector.
3. Disconnect the C2 PCM harness connector.

CAUTION: Do not probe the PCM harness connectors. Probing the PCM harness connectors will damage the PCM terminals resulting in poor terminal to pin connection. Install the PCM Pinout Box Kit, NGC, 38 Position 8815A to perform diagnosis.

4. Measure the resistance of the (F855) 5-volt Supply circuit from the Throttle Body harness connector to the appropriate terminal of special tool #8815A.

Is the resistance above 100 ohms?

Yes

- Go To 6

No

- Repair the excessive resistance in the (F855) 5-volt Supply circuit.
- Perform the POWERTRAIN VERIFICATION TEST. (Refer to 28 - DTC-Based Diagnostics/MODULE, Powertrain Control (PCM) - Standard Procedure)

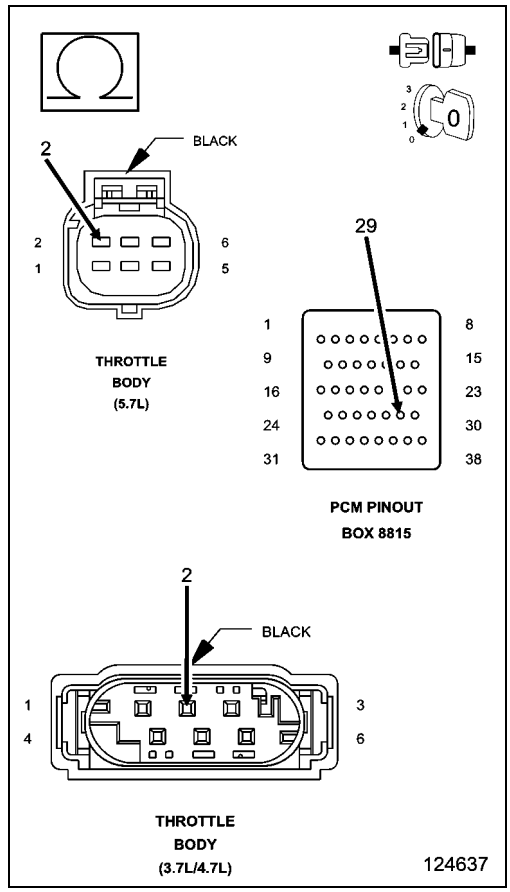

6. (F855) 5-VOLT SUPPLY CIRCUIT SHORTED TO GROUND

1. Measure the resistance between ground and (F855) 5-volt Supply circuit at the Throttle Body harness connector.

Is the resistance above 100 ohms?

Yes

- Go To 7

No

- Repair the short to ground in the (F855) 5-volt Supply circuit.
- Perform the POWERTRAIN VERIFICATION TEST. (Refer to 28 - DTC-Based Diagnostics/MODULE, Powertrain Control (PCM) - Standard Procedure)

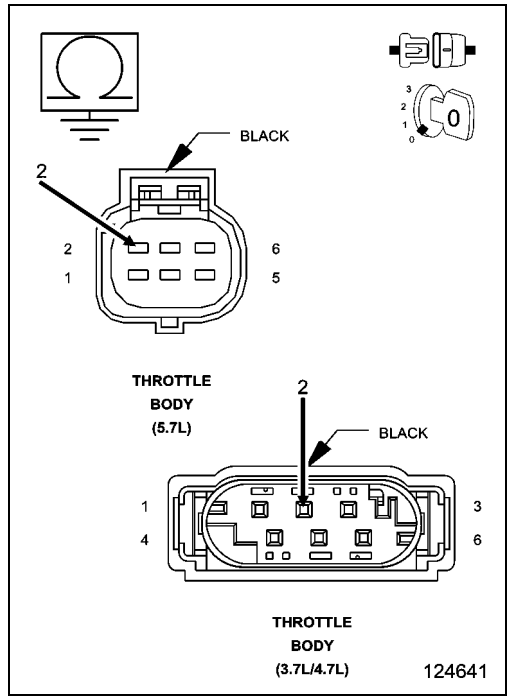

7. TP SENSOR

1. Connect the C2 PCM harness connector.
2. Ignition on, engine not running.
3. With a scan tool, monitor the TP Sensor voltage.
4. Connect a jumper wire between the (K22) TP Sensor No.1 Signal circuit and the (K922) TP Sensor Return circuit in the Throttle Body harness connector.
5. TP Sensor No.1 voltage should start at approximately 4.8 volts and decrease to 0.2 of a volt.
6. Connect a jumper wire between the (K122) TP Sensor No.2 Signal circuit and the (F855) 5-volt Supply circuit in the Throttle Body harness connector.
7. TP Sensor No.2 voltage should start at approximately 0 volts and increase to 4.8 to 5.2 volts.

Does the TP Sensor voltage change to the appropriate voltage with the jumper wire installed?

Yes

- Disconnect the Battery before replacing the Throttle Body Assembly. Replace the Throttle Body Assembly. After installation is complete, use a scan tool and select the ETC RELEARN function
- Perform the POWERTRAIN VERIFICATION TEST. (Refer to 28 - DTC-Based Diagnostics/MODULE, Powertrain Control (PCM) - Standard Procedure)

No

- Go To 8

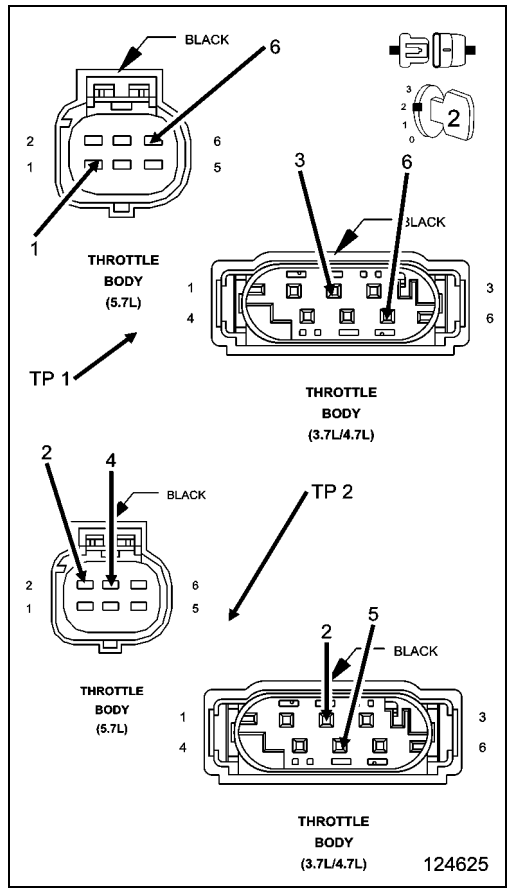

8. RESISTANCE IN THE (K22) TP SENSOR NO.1 SIGNAL CIRCUIT

1. Turn the ignition off.
2. Disconnect the C2 PCM harness connector.
3. Measure the resistance of the (K22) TP Sensor No.1 Signal circuit from the Throttle Body harness connector to the appropriate terminal of special tool #8815A.

Is the resistance below 5.0 ohms?

Yes

- Go To 9

No

- Repair the excessive resistance in the (K22) TP Sensor No.1 Signal circuit.
- Perform the POWERTRAIN VERIFICATION TEST. (Refer to 28 - DTC-Based Diagnostics/MODULE, Powertrain Control (PCM) - Standard Procedure)

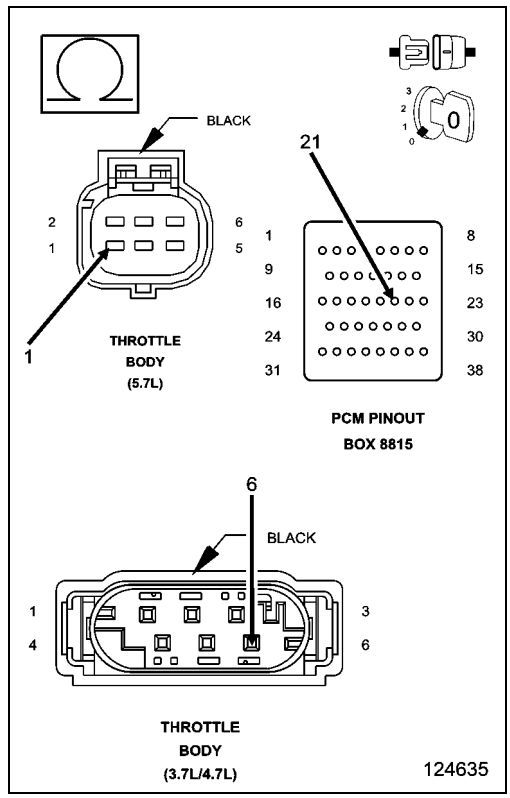

9. RESISTANCE IN THE (K122) TP SENSOR NO.2 SIGNAL CIRCUIT

1. Measure the resistance of the (K122) TP Sensor No.2 Signal circuit from the Throttle Body harness connector to the appropriate terminal of special tool #8815A.

Is the resistance below 5.0 ohms?

Yes

- Go To 10

No

- Repair the excessive resistance in the (K122) TP Sensor No.2 Signal circuit.
- Perform the POWERTRAIN VERIFICATION TEST. (Refer to 28 - DTC-Based Diagnostics/MODULE, Powertrain Control (PCM) - Standard Procedure)

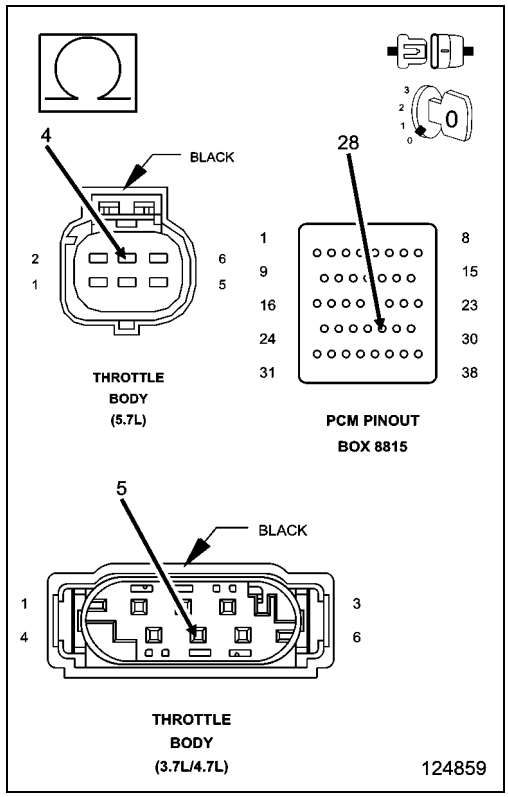

10. (K22) TP SENSOR NO.1 SIGNAL CIRCUIT SHORTED TO GROUND

1. Measure the resistance between ground and the (K22) TP Sensor No.1 Signal circuit at the Throttle Body harness connector.

Is the resistance above 100 ohms?

Yes

- Go To 11

No

- Repair the short to ground in the (K22) TP Sensor No.1 Signal circuit.
- Perform the POWERTRAIN VERIFICATION TEST. (Refer to 28 - DTC-Based Diagnostics/MODULE, Powertrain Control (PCM) - Standard Procedure)

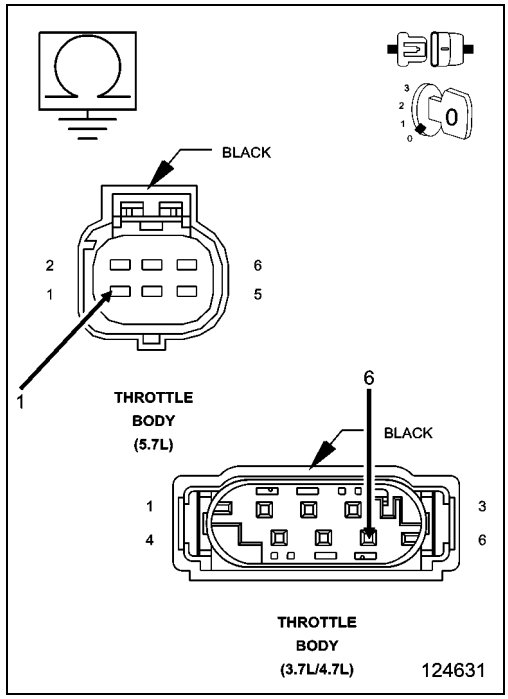

11. (K122) TP SENSOR NO.2 SIGNAL CIRCUIT SHORTED TO GROUND

1. Measure the resistance between ground and the (K122) TP Sensor No.2 Signal circuit at the Throttle Body harness connector.

Is the resistance above 100 ohms?

Yes

- Go To 12

No

- Repair the short to ground in the (K122) TP Sensor No.2 Signal circuit.
- Perform the POWERTRAIN VERIFICATION TEST. (Refer to 28 - DTC-Based Diagnostics/MODULE, Powertrain Control (PCM) - Standard Procedure)

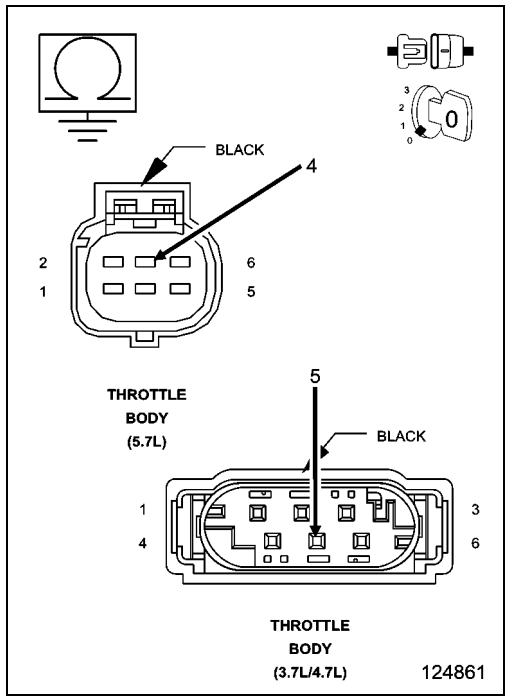

12. RESISTANCE IN THE (K922) TP SENSOR RETURN CIRCUIT

1. Measure the resistance of the (K922) TP Sensor Return circuit from the Throttle Body harness connector to the appropriate terminal of special tool #8815A.

Is the resistance below 5.0 ohms?

Yes

- Go To 19

No

- Repair the excessive resistance in the (K922) TP Sensor Return circuit.
- Perform the POWERTRAIN VERIFICATION TEST. (Refer to 28 - DTC-Based Diagnostics/MODULE, Powertrain Control (PCM) - Standard Procedure)

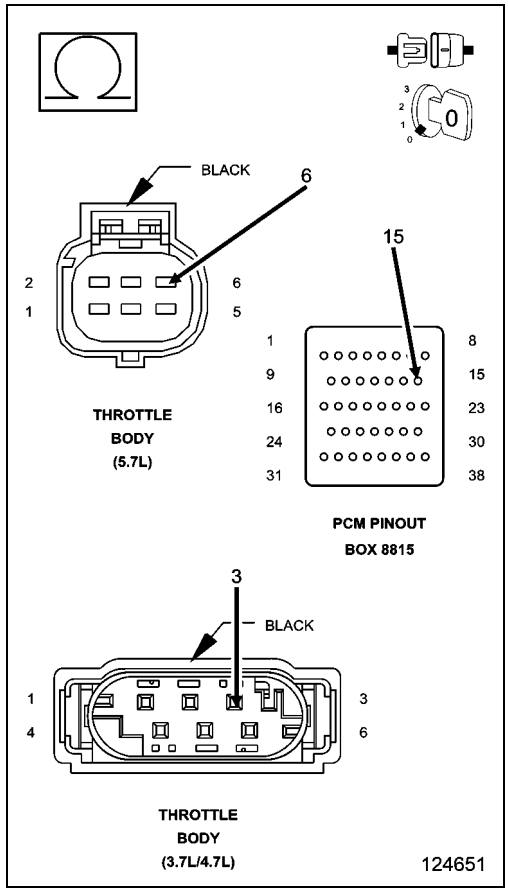

13. RESISTANCE IN THE (F856) 5-VOLT SUPPLY CIRCUIT

1. Turn the ignition off.
2. Disconnect the MAP Sensor harness connector.
3. Disconnect the C1 PCM harness connector.

CAUTION: Do not probe the PCM harness connectors. Probing the PCM harness connectors will damage the PCM terminals resulting in poor terminal to pin connection. Install the PCM Pinout Box Kit, NGC, 38 Position 8815A to perform diagnosis.

4. Measure the resistance of the (F856) 5-volt Supply circuit from the MAP Sensor harness connector to the appropriate terminal of special tool #8815A.

Is the resistance below 5.0 ohms?

Yes

- Go To 14

No

- Repair the excessive resistance in the (F856) 5-volt Supply circuit.
- Perform the POWERTRAIN VERIFICATION TEST. (Refer to 28 - DTC-Based Diagnostics/MODULE, Powertrain Control (PCM) - Standard Procedure)

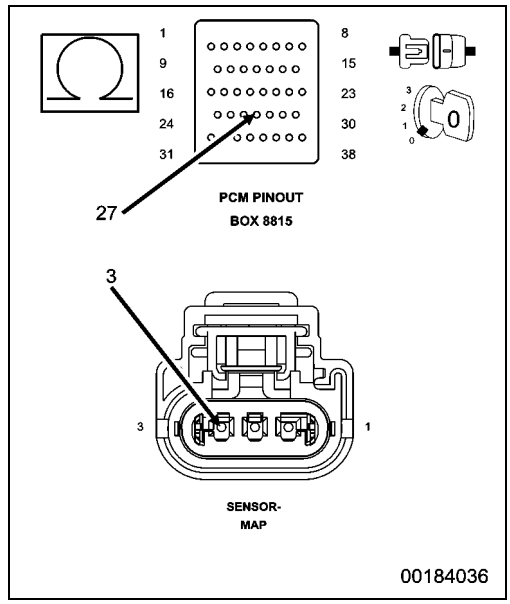

14. (F856) 5-VOLT SUPPLY CIRCUIT SHORTED TO GROUND

1. Measure the resistance between ground and the (F856) 5-volt Supply circuit in the MAP Sensor harness connector.

Is the resistance above 100k ohms?

Yes

- Go To 15

No

- Repair the short to ground in the (F856) 5-volt Supply circuit.
- Perform the POWERTRAIN VERIFICATION TEST. (Refer to 28 - DTC-Based Diagnostics/MODULE, Powertrain Control (PCM) - Standard Procedure)

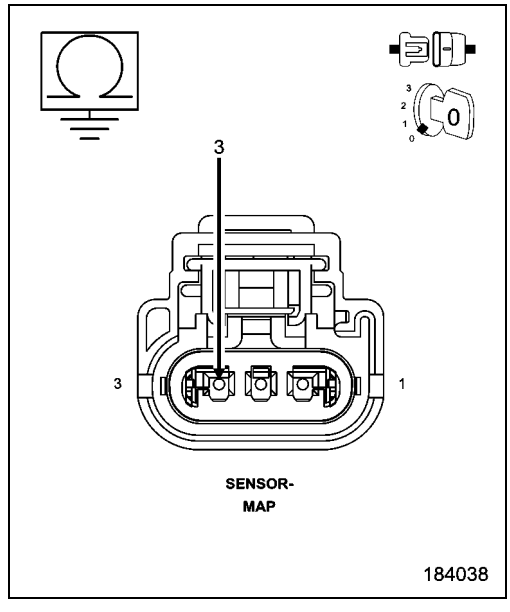

15. MAP SENSOR

1. Connect the C1 PCM harness connector.
2. Ignition on, engine not running.
3. With a scan tool, monitor the MAP Sensor voltage.
4. Connect a jumper wire between the (K1) MAP Signal circuit and the (K900) Sensor ground circuit in the MAP Sensor harness connector.
5. Cycle the ignition switch from off to on.
6. With a scan tool, monitor the MAP Sensor voltage.

Does the scan tool display MAP voltage from approximately 4.9 volts to below 0.5 volt with the jumper wire installed?

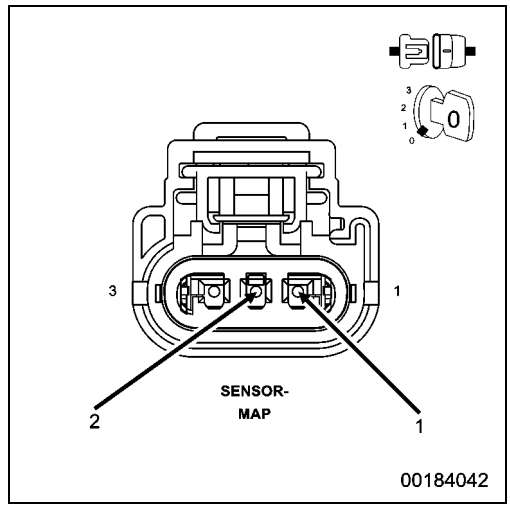

Yes

- Replace the MAP Sensor.
- Perform the POWERTRAIN VERIFICATION TEST. (Refer to 28 - DTC-Based Diagnostics/MODULE, Powertrain Control (PCM) - Standard Procedure)

No

- Go To 16

NOTE: Remove the jumper wire before continuing.

16. RESISTANCE IN THE (K1) MAP SIGNAL CIRCUIT

1. Turn the ignition off.
2. Disconnect the C2 PCM harness connector.
3. Measure the resistance of the (K1) MAP Signal circuit from the MAP Sensor harness connector to the appropriate terminal of special tool #8815A.

Is the resistance below 5.0 ohms?

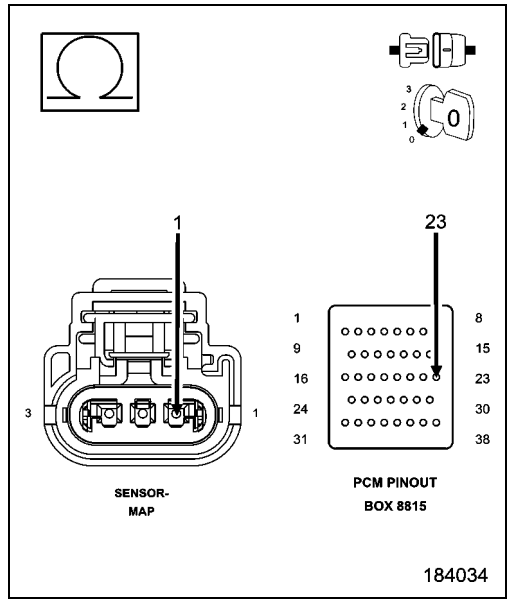

Yes

- Go To 17

No

- Repair the excessive resistance in the (K1) MAP Signal circuit
- Perform the POWERTRAIN VERIFICATION TEST. (Refer to 28 - DTC-Based Diagnostics/MODULE, Powertrain Control (PCM) - Standard Procedure)

17. (K1) MAP SIGNAL CIRCUIT SHORTED TO GROUND

1. Measure the resistance between ground and the (K1) MAP Signal circuit in the MAP Sensor harness connector.

Is the resistance above 100k ohms?

Yes

- Go To 18

No

- Repair the short to ground in the (K1) MAP Signal circuit.
- Perform the POWERTRAIN VERIFICATION TEST. (Refer to 28 - DTC-Based Diagnostics/MODULE, Powertrain Control (PCM) - Standard Procedure)

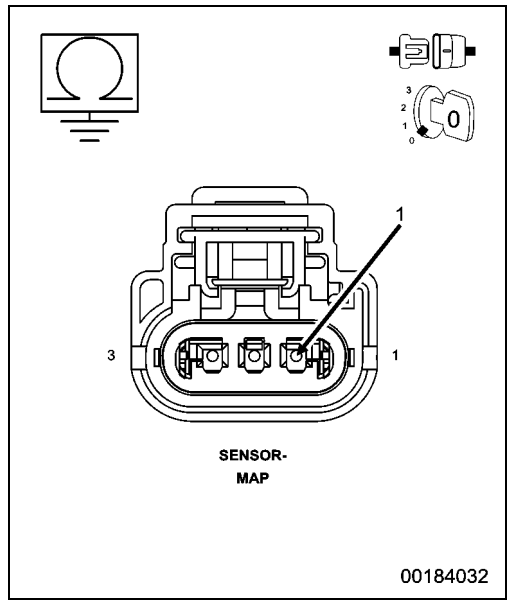

18. RESISTANCE IN THE (K900) SENSOR GROUND CIRCUIT

1. Measure the resistance of the (K900) Sensor ground circuit from the MAP Sensor harness connector to the appropriate terminal of special tool #8815A.

Is the resistance below 5.0 ohms?

Yes

- Go To 19

No

- Repair the excessive resistance in the (K900) Sensor ground circuit.
- Perform the POWERTRAIN VERIFICATION TEST. (Refer to 28 - DTC-Based Diagnostics/MODULE, Powertrain Control (PCM) - Standard Procedure)

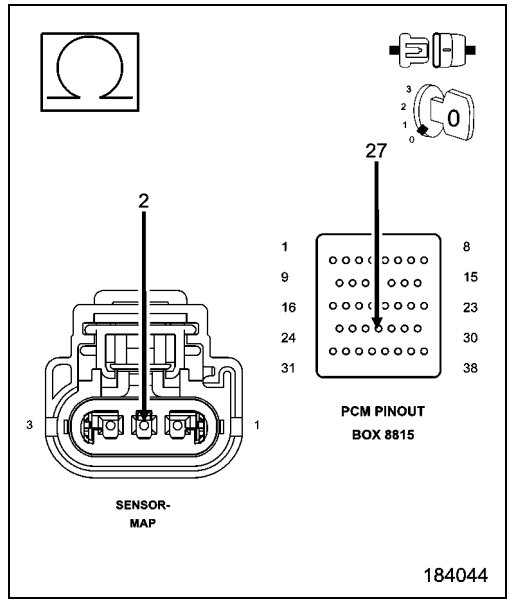

19. POWERTRAIN CONTROL MODULE (PCM)

1. Using the wiring diagram/schematic as a guide, inspect the wiring and connectors between the MAP Sensor, Throttle Body, and the Powertrain Control Module (PCM).
2. Look for any chafed, pierced, pinched, or partially broken wires.
3. Look for broken, bent, pushed out or corroded terminals. Verify that there is good pin to terminal contact in the MAP Sensor, Throttle Body, and the Powertrain Control Module connectors.
4. Refer to any Technical Service Bulletins that may apply.

Were there any problems found?

Yes

- Repair as necessary.
- Perform the POWERTRAIN VERIFICATION TEST. (Refer to 28 - DTC-Based Diagnostics/MODULE, Powertrain Control (PCM) - Standard Procedure)

No

- Replace and program the Powertrain Control Module per Service Information.
- Perform the POWERTRAIN VERIFICATION TEST. (Refer to 28 - DTC-Based Diagnostics/MODULE, Powertrain Control (PCM) - Standard Procedure)

■ P2173-HIGH AIRFLOW/VACUUM LEAK DETECTED (SLOW ACCUMULATION)

For a complete wiring diagram **Refer to the Wiring Information**.

- **When Monitored:**

  Ignition on and engine running with no MAP Sensor DTCs.
- **Set Condition:**

  A large vacuum leak has been detected or both of the TP Sensors have failed based on their position being 2.5 volts and the calculated MAP value is less than the Gas Flow Adaptation value is too high. One trip fault the code will set within 5 seconds. ETC light will flash.

Possible Causes
VACUUM LEAK
RESISTANCE IN THE (F856) 5-VOLT SUPPLY CIRCUIT
(F856) 5-VOLT SUPPLY CIRCUIT SHORTED TO GROUND
RESISTANCE IN THE (K1) MAP SIGNAL CIRCUIT
(K1) MAP SIGNAL CIRCUIT SHORTED TO GROUND
RESISTANCE IN (K900) SENSOR GROUND CIRCUIT
RESISTANCE IN THE (F855) 5-VOLT SUPPLY CIRCUIT
(F855) 5-VOLT SUPPLY CIRCUIT SHORTED TO GROUND
RESISTANCE IN THE TP SENSOR SIGNAL CIRCUIT
TP SENSOR SIGNAL CIRCUIT SHORTED TO GROUND
RESISTANCE IN THE (K922) TP SENSOR RETURN CIRCUIT
MAP SENSOR
THROTTLE BODY
POWERTRAIN CONTROL MODULE (PCM)

Always perform the Pre-Diagnostic Troubleshooting procedure before proceeding. (Refer to 28 - DTC-Based Diagnostics/MODULE, Powertrain Control (PCM) - Standard Procedure).

1. ACTIVE DTC

NOTE: The most likely cause of this DTC is a vacuum leak.

NOTE: Diagnose any 5-Volt Supply, TP Sensor, Oxygen Sensor, Fuel related, or MAP Sensor DTCs before continuing.

NOTE: The throttle plate should be free from binding and carbon build up.

1. Ignition on, engine not running.
2. With a scan tool, select View DTCs.

Is the DTC Active at this time?

Yes

- Go To 2

No

- Refer to the INTERMITTENT CONDITION Diagnostic Procedure. (Refer to 28 - DTC-Based Diagnostics/MODULE, Powertrain Control (PCM) - Standard Procedure)

2. VACUUM LEAK

NOTE: This code is enabled on engines with a plastic intake manifold and is intended to limit the maximum engine speed if a large crack occurs.

NOTE: A large vacuum leak is most likely the cause of this DTC.

1. Inspect the Intake Manifold and Throttle body for leaks and cracks.
2. Inspect the Power Brake Booster for any vacuum leaks.
3. Inspect the PCV system for proper operation or any vacuum leaks.
4. Inspect the MAP Sensor for proper installation.

Were any vacuum leaks found?

Yes

- Repair the vacuum leak as necessary.
- Perform the POWERTRAIN VERIFICATION TEST. (Refer to 28 - DTC-Based Diagnostics/MODULE, Powertrain Control (PCM) - Standard Procedure)

No

- Go To 3

3. MAP SENSOR OPERATION

1. Start the engine.
2. With a scan tool, monitor the MAP Sensor voltage.
3. Snap the Accelerator pedal.

Does the MAP Sensor voltage vary from below 2.0 volts at idle to above 3.5 volts at Wide Open Throttle?

Yes

- Go To 4

No

- Go To 13

4. TP SENSOR OPERATION

1. Ignition on, engine not running.
2. With a scan tool, perform the ETC Throttle Follower Test.
3. TP Sensor No.1 should start at approximately 0.7 of a volt and increase to 4.3 volts.
4. TP Sensor No.2 should start at approximately 4.3 volts and decrease to 0.7 of a volt.

Is the voltage transition smooth between the appropriate values?

Yes

- Refer to the INTERMITTENT CONDITION Diagnostic Procedure. (Refer to 28 - DTC-Based Diagnostics/MODULE, Powertrain Control (PCM) - Standard Procedure)

No

- Go To 5

5. RESISTANCE IN THE (F855) 5-VOLT SUPPLY CIRCUIT

1. Turn the ignition off.
2. Disconnect the Throttle Body harness connector.
3. Disconnect the C2 PCM harness connector.

CAUTION: Do not probe the PCM harness connectors. Probing the PCM harness connectors will damage the PCM terminals resulting in poor terminal to pin connection. Install the PCM Pinout Box Kit, NGC, 38 Position 8815A to perform diagnosis.

4. Measure the resistance of the (F855) 5-volt Supply circuit from the Throttle Body harness connector to the appropriate terminal of special tool #8815A.

Is the resistance below 100 ohms?

Yes

- Go To 6

No

- Repair the excessive resistance in the (F855) 5-volt Supply circuit.
- Perform the POWERTRAIN VERIFICATION TEST. (Refer to 28 - DTC-Based Diagnostics/MODULE, Powertrain Control (PCM) - Standard Procedure)

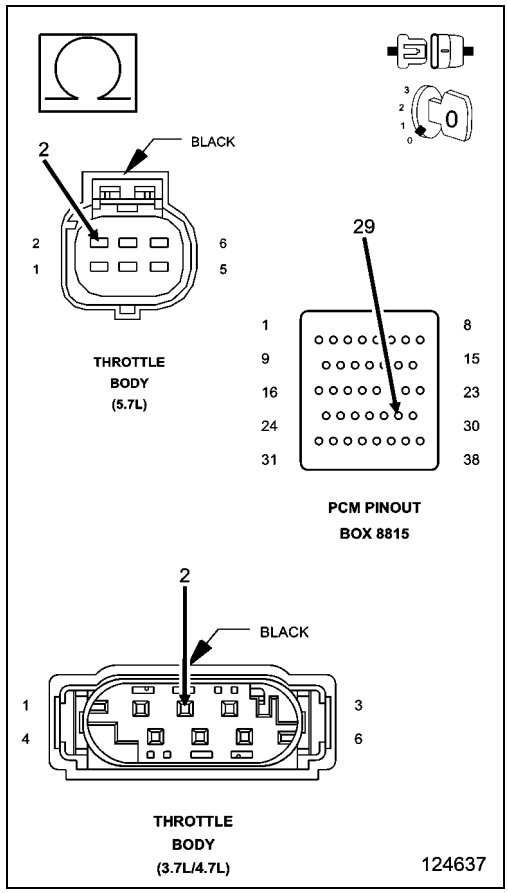

6. (F855) 5-VOLT SUPPLY CIRCUIT SHORTED TO GROUND

1. Measure the resistance between ground and (F855) 5-volt Supply circuit at the Throttle Body harness connector.

Is the resistance above 100 ohms?

Yes

- Go To 7

No

- Repair the short to ground in the (F855) 5-volt Supply circuit.
- Perform the POWERTRAIN VERIFICATION TEST. (Refer to 28 - DTC-Based Diagnostics/MODULE, Powertrain Control (PCM) - Standard Procedure)

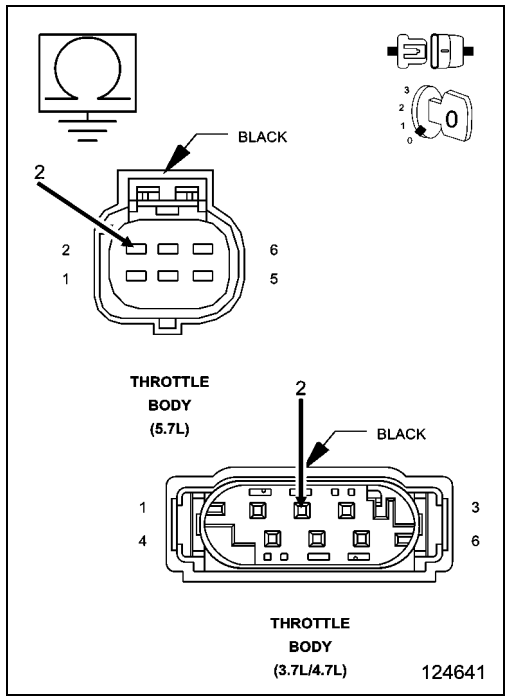

7. TP SENSOR

1. Connect the C2 PCM harness connector.
2. Ignition on, engine not running.
3. With a scan tool, monitor the TP Sensor voltage.
4. Connect a jumper wire between the (K22) TP Sensor No.1 Signal circuit and the (K922) TP Sensor Return circuit in the Throttle Body harness connector.
5. TP Sensor No.1 voltage should start at approximately 4.8 volts and decrease to 0.2 of a volt.
6. Connect a jumper wire between the (K122) TP Sensor No.2 Signal circuit and the (F855) 5-volt Supply circuit in the Throttle Body harness connector.
7. TP Sensor No.2 voltage should start at approximately 0 volts and increase to 4.8 to 5.2 volts.

Does the TP Sensor voltage change to the appropriate voltage with the jumper wire installed?

Yes

- Disconnect the Battery before replacing the Throttle Body Assembly. Replace the Throttle Body Assembly. After installation is complete, use a scan tool and select the ETC RELEARN function
- Perform the POWERTRAIN VERIFICATION TEST. (Refer to 28 - DTC-Based Diagnostics/MODULE, Powertrain Control (PCM) - Standard Procedure)

No

- Go To 8

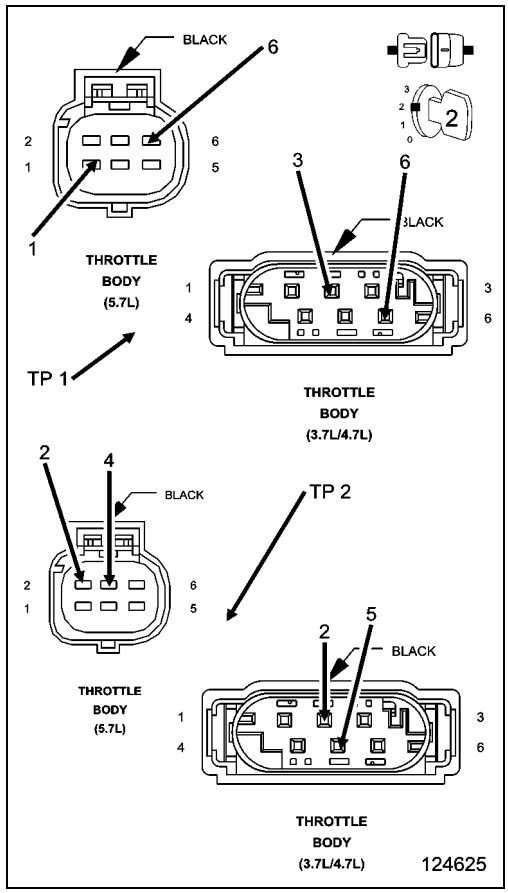

8. RESISTANCE IN THE (K22) TP SENSOR NO.1 SIGNAL CIRCUIT

1. Turn the ignition off.
2. Disconnect the C2 PCM harness connector.
3. Measure the resistance of the (K22) TP Sensor No.1 Signal circuit from the Throttle Body harness connector to the appropriate terminal of special tool #8815A.

Is the resistance below 5.0 ohms?

Yes

- Go To 9

No

- Repair the excessive resistance in the (K22) TP Sensor No.1 Signal circuit.
- Perform the POWERTRAIN VERIFICATION TEST. (Refer to 28 - DTC-Based Diagnostics/MODULE, Powertrain Control (PCM) - Standard Procedure)

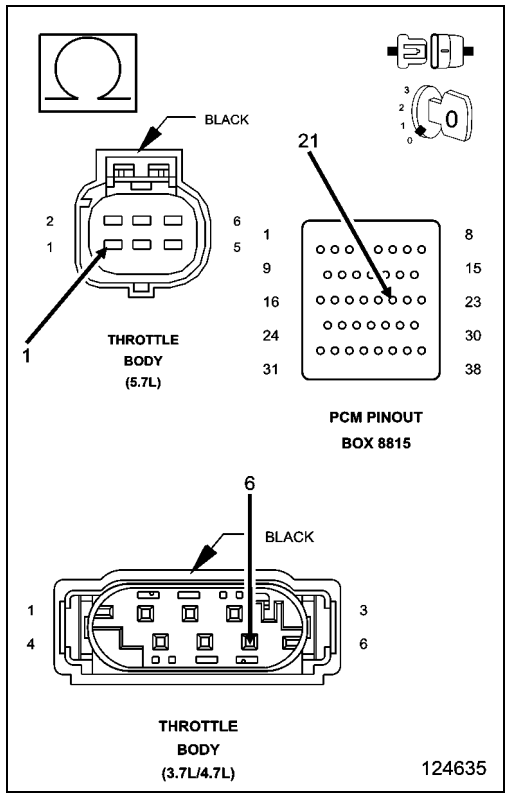

9. RESISTANCE IN THE (K122) TP SENSOR NO.2 SIGNAL CIRCUIT

1. Measure the resistance of the (K122) TP Sensor No.2 Signal circuit from the Throttle Body harness connector to the appropriate terminal of special tool #8815A.

Is the resistance below 5.0 ohms?

Yes

- Go To 10

No

- Repair the excessive resistance in the (K122) TP Sensor No.2 Signal circuit.
- Perform the POWERTRAIN VERIFICATION TEST. (Refer to 28 - DTC-Based Diagnostics/MODULE, Powertrain Control (PCM) - Standard Procedure)

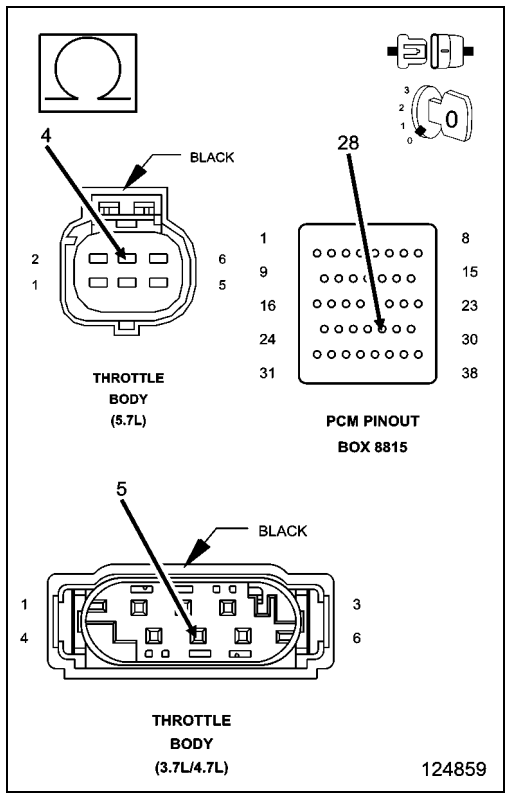

10. (K22) TP SENSOR NO.1 SIGNAL CIRCUIT SHORTED TO GROUND

1. Measure the resistance between ground and the (K22) TP Sensor No.1 Signal circuit at the Throttle Body harness connector.

Is the resistance above 100k ohms?

Yes

- Go To 11

No

- Repair the short to ground in the (K22) TP Sensor No.1 Signal circuit.
- Perform the POWERTRAIN VERIFICATION TEST. (Refer to 28 - DTC-Based Diagnostics/MODULE, Powertrain Control (PCM) - Standard Procedure)

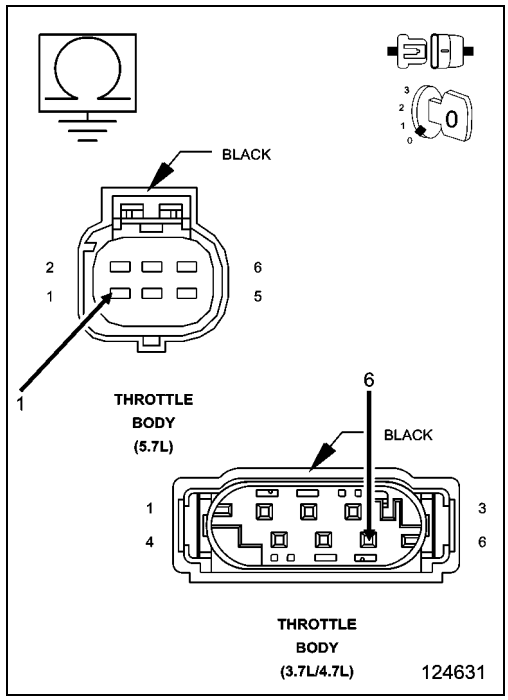

11. (K122) TP SENSOR NO.2 SIGNAL CIRCUIT SHORTED TO GROUND

1. Measure the resistance between ground and the (K122) TP Sensor No.2 Signal circuit at the Throttle Body harness connector.

Is the resistance above 100k ohms?

Yes

- Go To 12

No

- Repair the short to ground in the (K122) TP Sensor No.2 Signal circuit.
- Perform the POWERTRAIN VERIFICATION TEST. (Refer to 28 - DTC-Based Diagnostics/MODULE, Powertrain Control (PCM) - Standard Procedure)

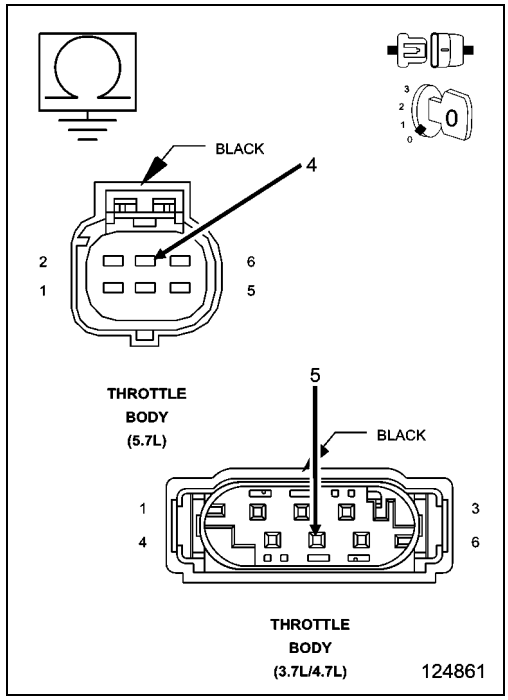

12. RESISTANCE IN THE (K922) TP SENSOR RETURN CIRCUIT

1. Measure the resistance of the (K922) TP Sensor Return circuit from the Throttle Body harness connector to the appropriate terminal of special tool #8815A.

Is the resistance below 5.0 ohms?

Yes

- Go To 19

No

- Repair the excessive resistance in the (K922) TP Sensor Return circuit.
- Perform the POWERTRAIN VERIFICATION TEST. (Refer to 28 - DTC-Based Diagnostics/MODULE, Powertrain Control (PCM) - Standard Procedure)

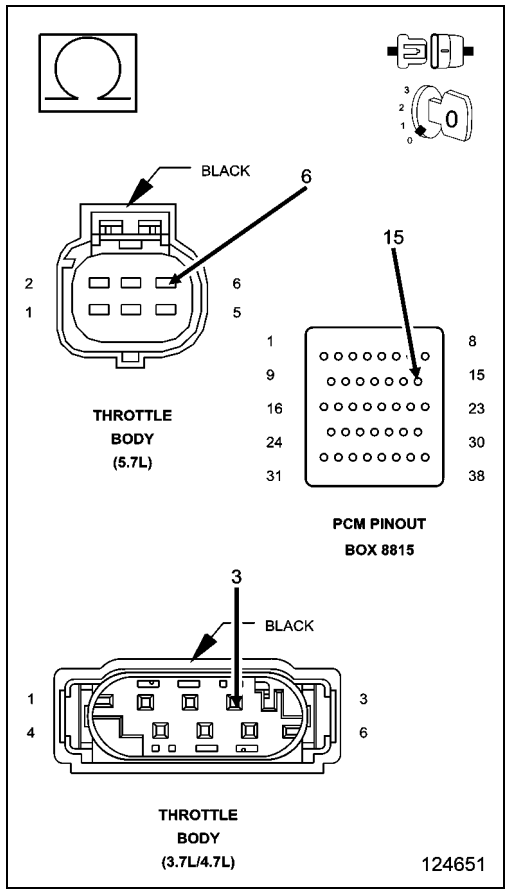

13. RESISTANCE IN THE (F856) 5-VOLT SUPPLY CIRCUIT

1. Turn the ignition off.
2. Disconnect the MAP Sensor harness connector.
3. Disconnect the C1 PCM harness connector.

CAUTION: Do not probe the PCM harness connectors. Probing the PCM harness connectors will damage the PCM terminals resulting in poor terminal to pin connection. Install the PCM Pinout Box Kit, NGC, 38 Position 8815A to perform diagnosis.

4. Measure the resistance of the (F856) 5-volt Supply circuit from the MAP Sensor harness connector to the appropriate terminal of special tool #8815A.

Is the resistance below 5.0 ohms?

Yes

- Go To 14

No

- Repair the excessive resistance in the (F856) 5-volt Supply circuit.
- Perform the POWERTRAIN VERIFICATION TEST. (Refer to 28 - DTC-Based Diagnostics/MODULE, Powertrain Control (PCM) - Standard Procedure)

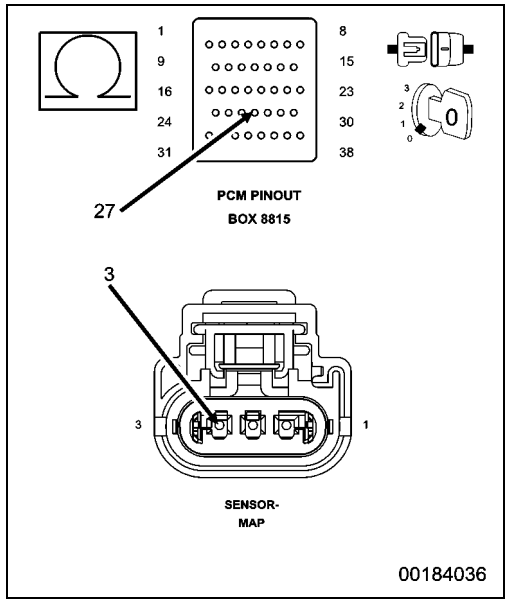

14. (F856) 5-VOLT SUPPLY CIRCUIT SHORTED TO GROUND

1. Measure the resistance between ground and the (F856) 5-volt Supply circuit in the MAP Sensor harness connector.

Is the resistance above 100k ohms?

Yes

- Go To 15

No

- Repair the short to ground in the (F856) 5-volt Supply circuit.
- Perform the POWERTRAIN VERIFICATION TEST. (Refer to 28 - DTC-Based Diagnostics/MODULE, Powertrain Control (PCM) - Standard Procedure)

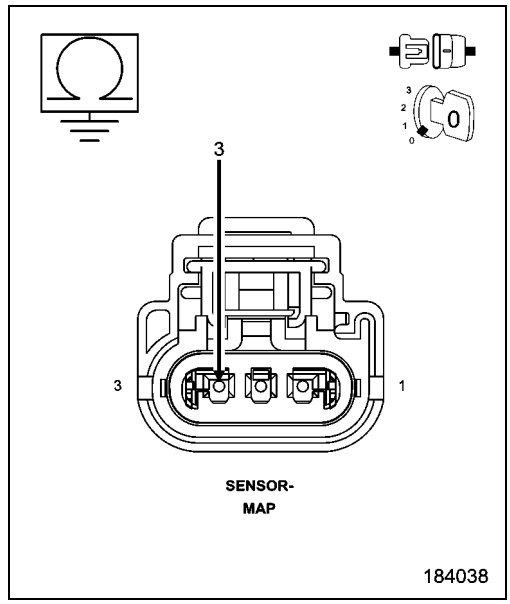

15. MAP SENSOR

1. Connect the C1 PCM harness connector.
2. Ignition on, engine not running.
3. With a scan tool, monitor the MAP Sensor voltage.
4. Connect a jumper wire between the (K1) MAP Signal circuit and the (K900) Sensor ground circuit in the MAP Sensor harness connector.
5. Cycle the ignition switch from off to on.
6. With a scan tool, monitor the MAP Sensor voltage.

Does the scan tool display MAP voltage from approximately 4.9 volts to below 0.5 volt with the jumper wire installed?

Yes

- Replace the MAP Sensor.
- Perform the POWERTRAIN VERIFICATION TEST. (Refer to 28 - DTC-Based Diagnostics/MODULE, Powertrain Control (PCM) - Standard Procedure)

No

- Go To 16

NOTE: Remove the jumper wire before continuing.

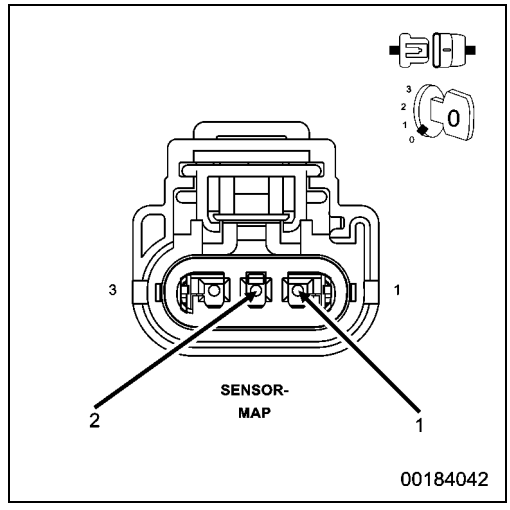

16. RESISTANCE IN THE (K1) MAP SIGNAL CIRCUIT

1. Turn the ignition off.
2. Disconnect the C2 PCM harness connector.
3. Measure the resistance of the (K1) MAP Signal circuit from the MAP Sensor harness connector to the appropriate terminal of special tool #8815A.

Is the resistance below 5.0 ohms?

Yes

- Go To 17

No

- Repair the excessive resistance in the (K1) MAP Signal circuit.
- Perform the POWERTRAIN VERIFICATION TEST. (Refer to 28 - DTC-Based Diagnostics/MODULE, Powertrain Control (PCM) - Standard Procedure)

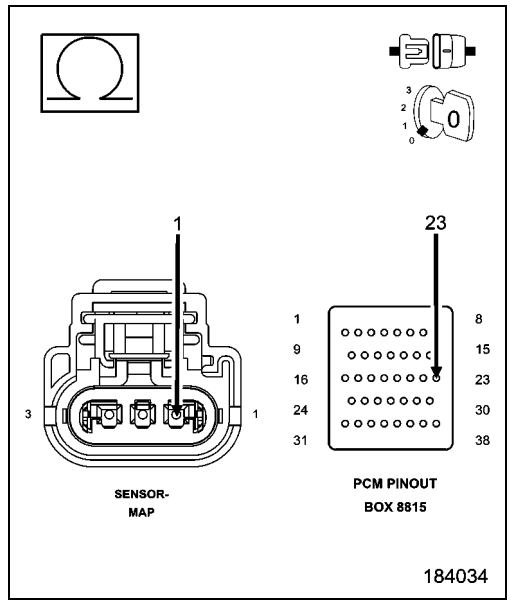

17. (K1) MAP SIGNAL CIRCUIT SHORTED TO GROUND

1. Measure the resistance between ground and the (K1) MAP Signal circuit at the MAP Sensor harness connector.

Is the resistance above 100k ohms?

Yes

- Go To 18

No

- Repair the short to ground in the (K1) MAP Signal circuit.
- Perform the POWERTRAIN VERIFICATION TEST. (Refer to 28 - DTC-Based Diagnostics/MODULE, Powertrain Control (PCM) - Standard Procedure)

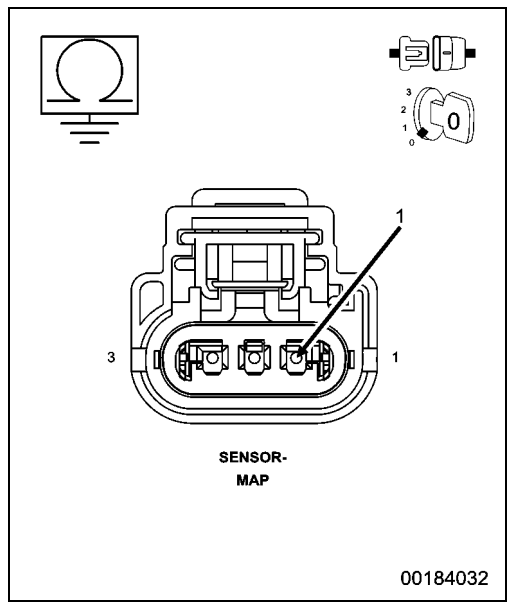

18. RESISTANCE IN THE (K900) SENSOR GROUND CIRCUIT

1. Measure the resistance of the (K900) Sensor ground circuit from the MAP Sensor harness connector to the appropriate terminal of special tool #8815A.

Is the resistance below 5.0 ohms?

Yes

- Go To 19

No

- Repair the excessive resistance in the (K900) Sensor ground circuit.
- Perform the POWERTRAIN VERIFICATION TEST. (Refer to 28 - DTC-Based Diagnostics/MODULE, Powertrain Control (PCM) - Standard Procedure)

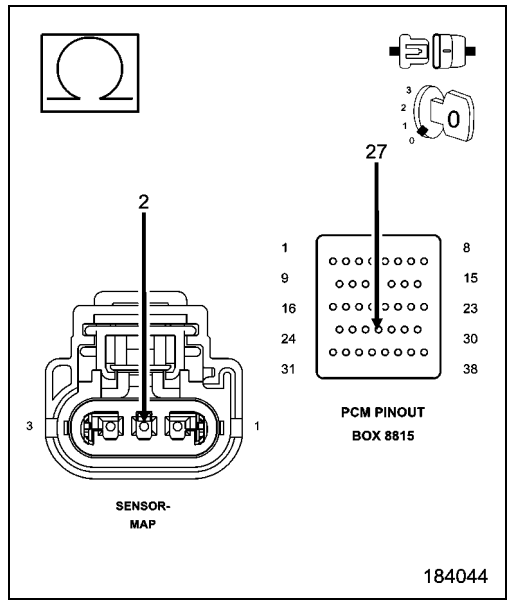

19. POWERTRAIN CONTROL MODULE (PCM)

1. Using the wiring diagram/schematic as a guide, inspect the wiring and connectors between the MAP Sensor, Throttle Body, and the Powertrain Control Module (PCM).
2. Look for any chafed, pierced, pinched, or partially broken wires.
3. Look for broken, bent, pushed out or corroded terminals. Verify that there is good pin to terminal contact in the MAP Sensor, Throttle Body, and the Powertrain Control Module connectors.
4. Refer to any Technical Service Bulletins that may apply.

Were there any problems found?

Yes

- Repair as necessary.
- Perform the POWERTRAIN VERIFICATION TEST. (Refer to 28 - DTC-Based Diagnostics/MODULE, Powertrain Control (PCM) - Standard Procedure)

No

- Replace and program the Powertrain Control Module per Service Information.
- Perform the POWERTRAIN VERIFICATION TEST. (Refer to 28 - DTC-Based Diagnostics/MODULE, Powertrain Control (PCM) - Standard Procedure)

■ P2174-LOW AIRFLOW/RESTRICTION DETECTED (INSTANTANEOUS ACCUMULATION)

For a complete wiring diagram **Refer to the Wiring Information**.

- **When Monitored:**
  Ignition on and engine running with no MAP Sensor DTCs.
- **Set Condition:**
  PCM calculated MAP value is greater than actual MAP value plus an offset value. One trip fault. Three good trips to turn of the mil. ETC light will flash.

Possible Causes
RESTRICTED AIR INLET SYSTEM
RESISTANCE IN THE (F856) 5-VOLT SUPPLY CIRCUIT
(F856) 5-VOLT SUPPLY CIRCUIT SHORTED TO GROUND
RESISTANCE IN THE (K1) MAP SIGNAL CIRCUIT
(K1) MAP SIGNAL CIRCUIT SHORTED TO GROUND
RESISTANCE IN (K900) SENSOR GROUND CIRCUIT
RESISTANCE IN THE (F855) 5-VOLT SUPPLY CIRCUIT
(F855) 5-VOLT SUPPLY CIRCUIT SHORTED TO GROUND
RESISTANCE IN THE TP SENSOR SIGNAL CIRCUIT
TP SENSOR SIGNAL CIRCUIT SHORTED TO GROUND
RESISTANCE IN THE (K922) TP SENSOR RETURN CIRCUIT
MAP SENSOR
THROTTLE BODY
POWERTRAIN CONTROL MODULE (PCM)

Always perform the Pre-Diagnostic Troubleshooting procedure before proceeding. (Refer to 28 - DTC-Based Diagnostics/MODULE, Powertrain Control (PCM) - Standard Procedure).

1. ACTIVE DTC

NOTE: The most likely cause of this DTC is a plugged intake air system or Dirty Throttle Body. Check for TSBs before continuing.

NOTE: Diagnose any 5-Volt Supply, TP Sensor, Fuel System Lean or Rich, or MAP Sensor DTCs before continuing.

NOTE: The throttle plate should be free from binding and carbon build up.

NOTE: Question the customer about weather conditions, as ICE build up on the blade can cause this fault when ambient is around -10° C (14° F) to 4° C (39° F) range.

1. Ignition on, engine not running.
2. With a scan tool, select View DTCs.

Is the DTC Active at this time?

Yes

- Go To 2

No

- Refer to the INTERMITTENT CONDITION Diagnostic Procedure. (Refer to 28 - DTC-Based Diagnostics/MODULE, Powertrain Control (PCM) - Standard Procedure)

2. RESTRICTED AIR INLET SYSTEM

1. Turn the ignition off.
2. Remove the Air Cleaner Assembly.
3. Remove the Air Filter.
4. Inspect the Throttle Body opening for signs of any foreign materials.
5. Check the intake tube/air cleaner for obstructions - include snow packing questions to customer.

Were any restrictions found?

Yes

- Repair the restriction as necessary.
- Perform the POWERTRAIN VERIFICATION TEST. (Refer to 28 - DTC-Based Diagnostics/MODULE, Powertrain Control (PCM) - Standard Procedure)

No

- Go To 3

3. MAP SENSOR OPERATION

1. Start the engine.
2. With a scan tool, monitor the MAP Sensor voltage.
3. Snap the Accelerator pedal.

Does the MAP Sensor voltage vary from below 2.0 volts at idle to above 3.5 volts at Wide Open Throttle?

Yes

- Go To 4

No

- Go To 13

4. TP SENSOR OPERATION

1. Ignition on, engine not running.
2. With a scan tool, perform the ETC Throttle Follower Test.
3. TP Sensor No.1 should start at approximately 0.7 of a volt and increase to 4.3 volts.
4. TP Sensor No.2 should start at approximately 4.3 volts and decrease to 0.7 of a volt.

Is the voltage transition smooth between the appropriate values?

Yes

- Refer to the INTERMITTENT CONDITION Diagnostic Procedure. (Refer to 28 - DTC-Based Diagnostics/MODULE, Powertrain Control (PCM) - Standard Procedure)

No

- Go To 5

5. RESISTANCE IN THE (F855) 5-VOLT SUPPLY CIRCUIT

1. Turn the ignition off.
2. Disconnect the Throttle Body harness connector.
3. Disconnect the C2 PCM harness connector.

CAUTION: Do not probe the PCM harness connectors. Probing the PCM harness connectors will damage the PCM terminals resulting in poor terminal to pin connection. Install the PCM Pinout Box Kit, NGC, 38 Position 8815A to perform diagnosis.

4. Measure the resistance of the (F855) 5-volt Supply circuit from the Throttle Body harness connector to the appropriate terminal of special tool #8815A.

Is the resistance below 100 ohms?

Yes

- Go To 6

No

- Repair the excessive resistance in the (F855) 5-volt Supply circuit.
- Perform the POWERTRAIN VERIFICATION TEST. (Refer to 28 - DTC-Based Diagnostics/MODULE, Powertrain Control (PCM) - Standard Procedure)

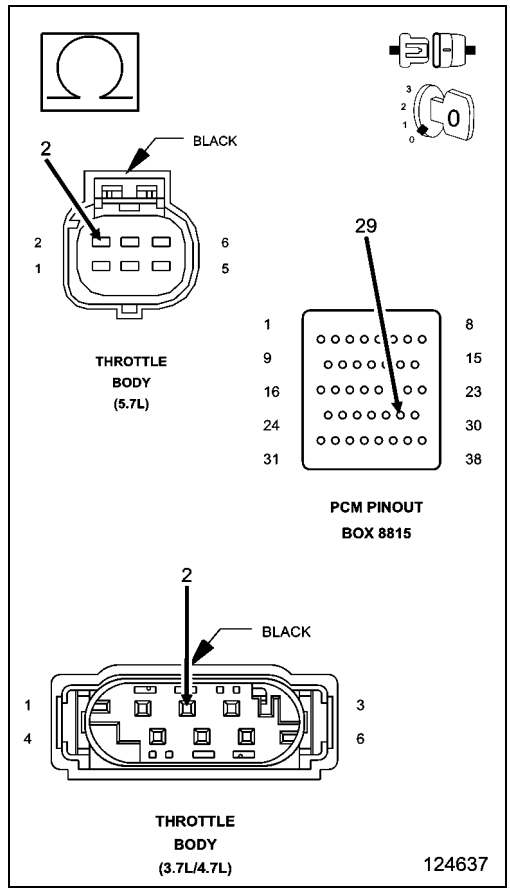

6. (F855) 5-VOLT SUPPLY CIRCUIT SHORTED TO GROUND

1. Measure the resistance between ground and (F855) 5-volt Supply circuit at the Throttle Body harness connector.

Is the resistance above 100k ohms?

Yes

- Go To 7

No

- Repair the short to ground in the (F855) 5-volt Supply circuit.
- Perform the POWERTRAIN VERIFICATION TEST. (Refer to 28 - DTC-Based Diagnostics/MODULE, Powertrain Control (PCM) - Standard Procedure)

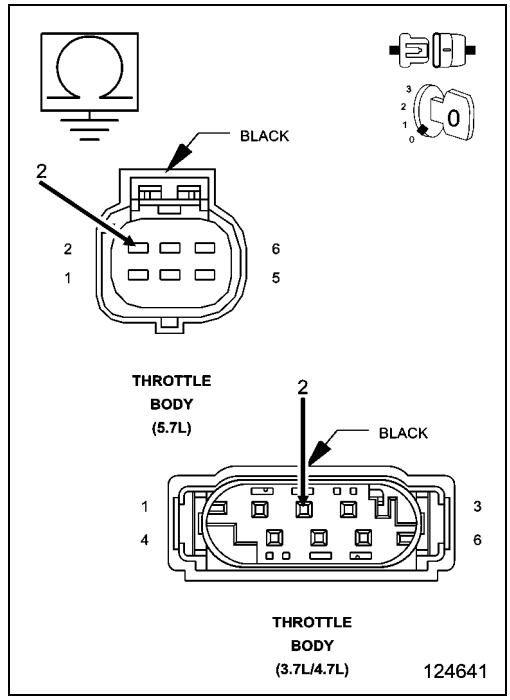

7. TP SENSOR

1. Connect the PCM harness connectors.
2. Ignition on, engine not running.
3. With a scan tool, monitor the TP Sensor voltage.
4. Connect a jumper wire between the (K22) TP Sensor No.1 Signal circuit and the (K922) TP Sensor Return circuit in the Throttle Body harness connector.
5. TP Sensor No.1 voltage should start at approximately 4.8 volts and decrease to 0.2 of a volt.
6. Connect a jumper wire between the (K122) TP Sensor No.2 Signal circuit and the (F855) 5-volt Supply circuit in the Throttle Body harness connector.
7. TP Sensor No.2 voltage should start at approximately 0 volts and increase to 4.8 to 5.2 volts.

Does the TP Sensor voltage change to the appropriate voltage with the jumper wire installed?

Yes

- Disconnect the Battery before replacing the Throttle Body Assembly. Replace the Throttle Body Assembly. After installation is complete, use a scan tool and select the ETC RELEARN function
- Perform the POWERTRAIN VERIFICATION TEST. (Refer to 28 - DTC-Based Diagnostics/MODULE, Powertrain Control (PCM) - Standard Procedure)

No

- Go To 8

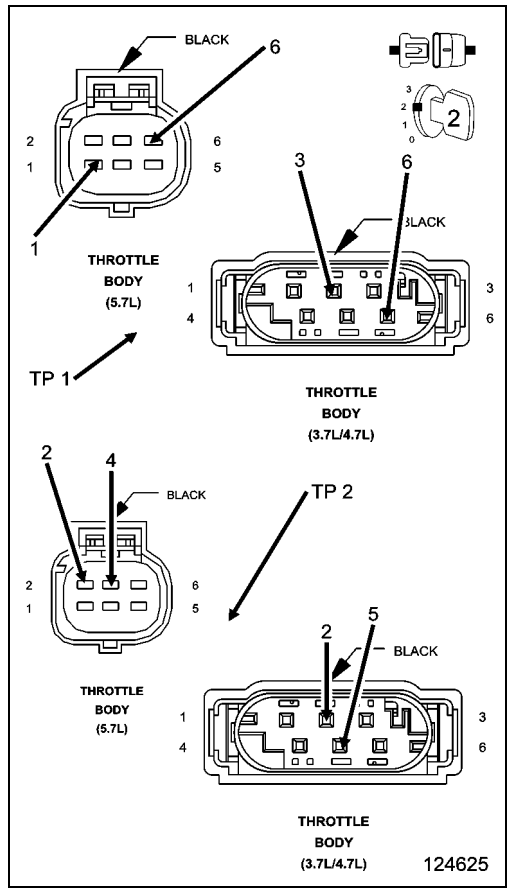

8. RESISTANCE IN THE (K22) TP SENSOR NO.1 SIGNAL CIRCUIT

1. Turn the ignition off.
2. Disconnect the C2 PCM harness connector.
3. Measure the resistance of the (K22) TP Sensor No.1 Signal circuit from the Throttle Body harness connector to the appropriate terminal of special tool #8815A.

Is the resistance below 5.0 ohms?

Yes

- Go To 9

No

- Repair the excessive resistance in the (K22) TP Sensor No.1 Signal circuit.
- Perform the POWERTRAIN VERIFICATION TEST. (Refer to 28 - DTC-Based Diagnostics/MODULE, Powertrain Control (PCM) - Standard Procedure)

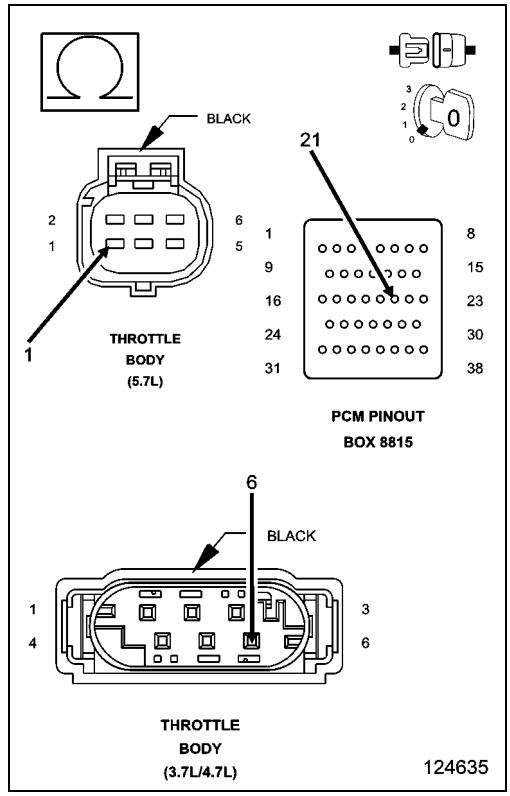

9. RESISTANCE IN THE (K122) TP SENSOR NO.2 SIGNAL CIRCUIT

1. Measure the resistance of the (K122) TP Sensor No.2 Signal circuit from the Throttle Body harness connector to the appropriate terminal of special tool #8815A.

Is the resistance below 5.0 ohms?

Yes

- Go To 10

No

- Repair the excessive resistance in the (K122) TP Sensor No.2 Signal circuit.
- Perform the POWERTRAIN VERIFICATION TEST. (Refer to 28 - DTC-Based Diagnostics/MODULE, Powertrain Control (PCM) - Standard Procedure)

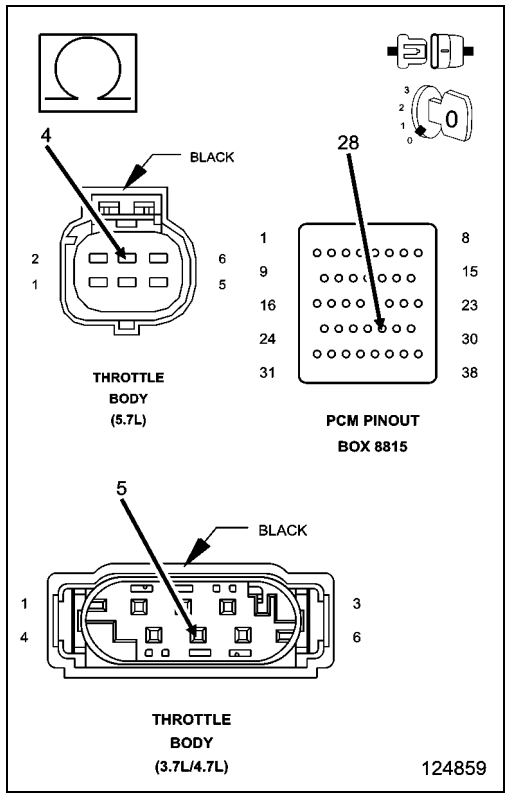

10. (K22) TP SENSOR NO.1 SIGNAL CIRCUIT SHORTED TO GROUND

1. Measure the resistance between ground and the (K22) TP Sensor No.1 Signal circuit at the Throttle Body harness connector.

Is the resistance above 100k ohms?

Yes

- Go To 11

No

- Repair the short to ground in the (K22) TP Sensor No.1 Signal circuit.
- Perform the POWERTRAIN VERIFICATION TEST. (Refer to 28 - DTC-Based Diagnostics/MODULE, Powertrain Control (PCM) - Standard Procedure)

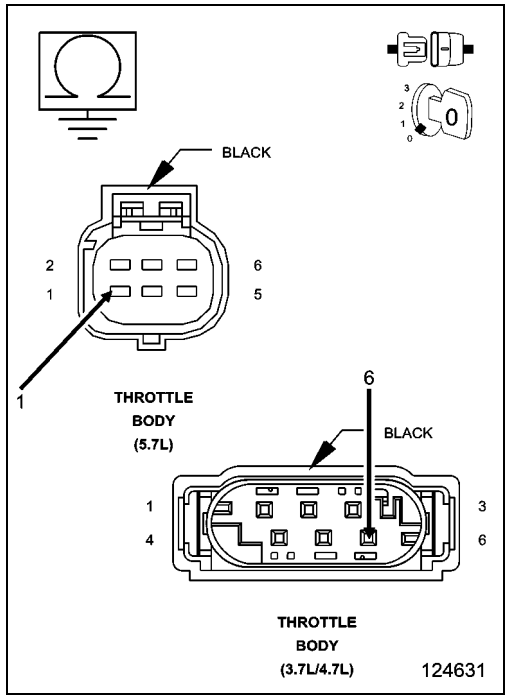

11. (K122) TP SENSOR NO.2 SIGNAL CIRCUIT SHORTED TO GROUND

1. Measure the resistance between ground and the (K122) TP Sensor No.2 Signal circuit at the Throttle Body harness connector.

Is the resistance above 100k ohms?

Yes

- Go To 12

No

- Repair the short to ground in the (K122) TP Sensor No.2 Signal circuit.
- Perform the POWERTRAIN VERIFICATION TEST. (Refer to 28 - DTC-Based Diagnostics/MODULE, Powertrain Control (PCM) - Standard Procedure)

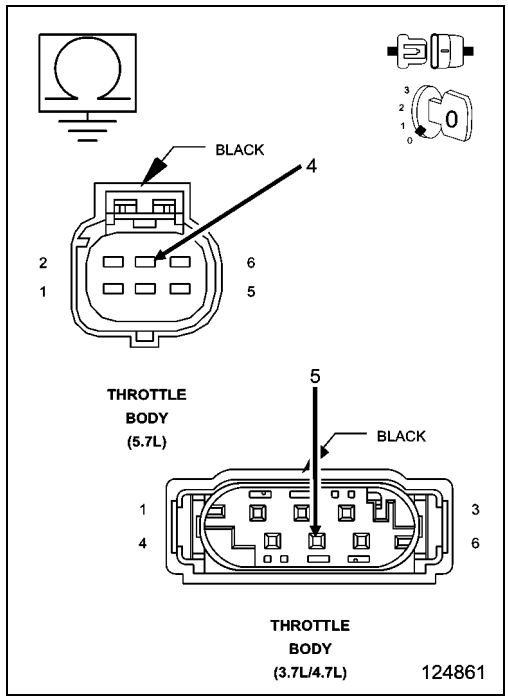

12. RESISTANCE IN (K922) TP SENSOR RETURN CIRCUIT

1. Measure the resistance of the (K922) TP Sensor Return circuit from the Throttle Body harness connector to the appropriate terminal of special tool #8815A.

Is the resistance below 5.0 ohms?

Yes

- Go To 19

No

- Repair the excessive resistance in the (K922) TP Sensor Return circuit.
- Perform the POWERTRAIN VERIFICATION TEST. (Refer to 28 - DTC-Based Diagnostics/MODULE, Powertrain Control (PCM) - Standard Procedure)

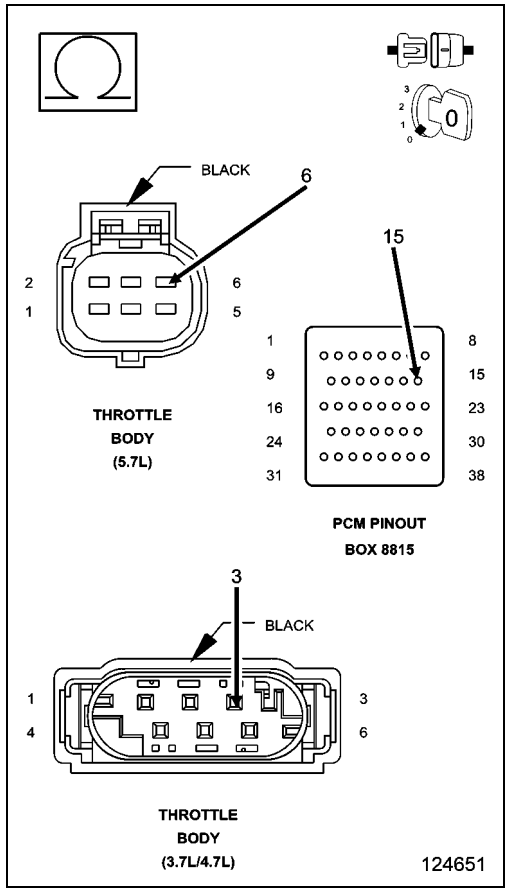

13. RESISTANCE IN THE (F856) 5-VOLT SUPPLY CIRCUIT

1. Turn the ignition off.
2. Disconnect the MAP Sensor harness connector.
3. Disconnect the C1 PCM harness connector.

CAUTION: Do not probe the PCM harness connectors. Probing the PCM harness connectors will damage the PCM terminals resulting in poor terminal to pin connection. Install the PCM Pinout Box Kit, NGC, 38 Position 8815A to perform diagnosis.

4. Measure the resistance of the (F856) 5-volt Supply circuit from the MAP Sensor harness connector to the appropriate terminal of special tool #8815A.

Is the resistance below 5.0 ohms?

Yes

- Go To 14

No

- Repair the excessive resistance in the (F856) 5-volt Supply circuit.
- Perform the POWERTRAIN VERIFICATION TEST. (Refer to 28 - DTC-Based Diagnostics/MODULE, Powertrain Control (PCM) - Standard Procedure)

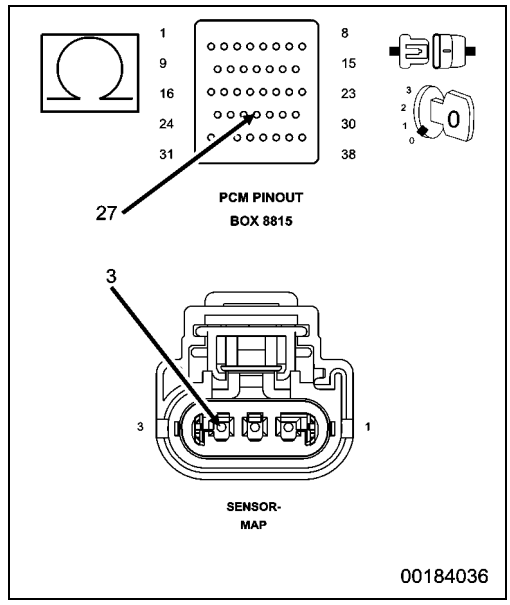

14. (F856) 5-VOLT SUPPLY CIRCUIT SHORTED TO GROUND

1. Measure the resistance between ground and the (F856) 5-volt Supply circuit in the MAP Sensor harness connector.

Is the resistance above 100k ohms?

Yes

- Go To 15

No

- Repair the short to ground in the (F856) 5-volt Supply circuit.
- Perform the POWERTRAIN VERIFICATION TEST. (Refer to 28 - DTC-Based Diagnostics/MODULE, Powertrain Control (PCM) - Standard Procedure)

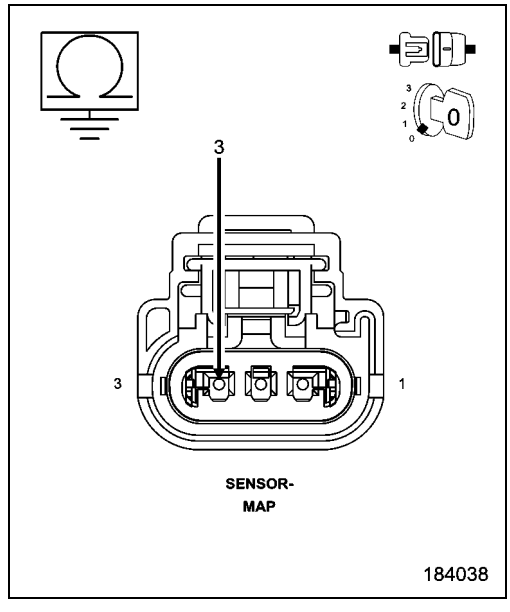

15. MAP SENSOR

1. Connect the PCM harness connectors.
2. Ignition on, engine not running.
3. With a scan tool, monitor the MAP Sensor voltage.
4. Connect a jumper wire between the (K1) MAP Signal circuit and the (K900) Sensor ground circuit.
5. Cycle the ignition switch from off to on.
6. With a scan tool, monitor the MAP Sensor voltage.

Does the scan tool display MAP voltage from approximately 4.9 volts to below 0.5 volt with the jumper wire installed?

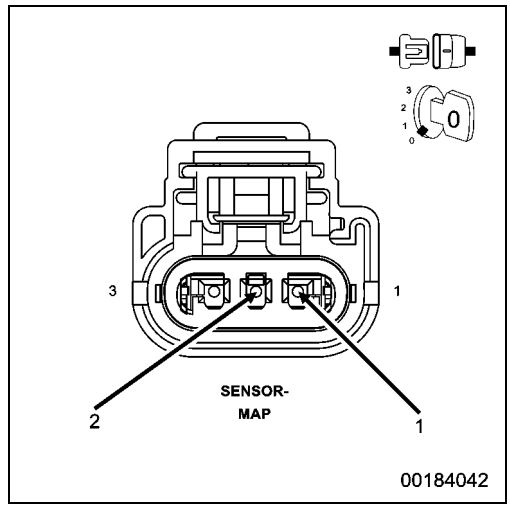

Yes

- Replace the MAP Sensor.
- Perform the POWERTRAIN VERIFICATION TEST. (Refer to 28 - DTC-Based Diagnostics/MODULE, Powertrain Control (PCM) - Standard Procedure)

No

- Go To 16

NOTE: Remove the jumper wire before continuing.

16. RESISTANCE IN THE (K1) MAP SIGNAL CIRCUIT

1. Turn the ignition off.
2. Disconnect the C2 PCM harness connector.
3. Measure the resistance of the (K1) MAP Signal circuit from the MAP Sensor harness connector to the appropriate terminal of special tool #8815A.

Is the resistance below 5.0 ohms?

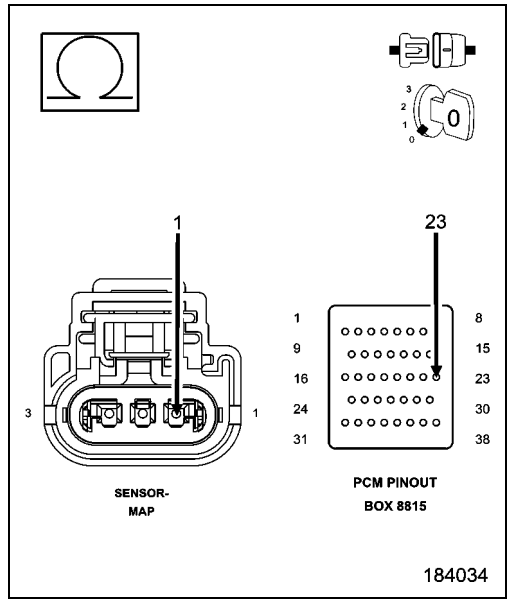

Yes

- Go To 17

No

- Repair the excessive resistance in the (K1) MAP Signal circuit
- Perform the POWERTRAIN VERIFICATION TEST. (Refer to 28 - DTC-Based Diagnostics/MODULE, Powertrain Control (PCM) - Standard Procedure)

17. (K1) MAP SIGNAL CIRCUIT SHORTED TO GROUND

1. Measure the resistance between ground and the (K1) MAP Signal circuit in the MAP Sensor harness connector.

Is the resistance above 100k ohms?

Yes

- Go To 18

No

- Repair the short to ground in the (K1) MAP Signal circuit.
- Perform the POWERTRAIN VERIFICATION TEST. (Refer to 28 - DTC-Based Diagnostics/MODULE, Powertrain Control (PCM) - Standard Procedure)

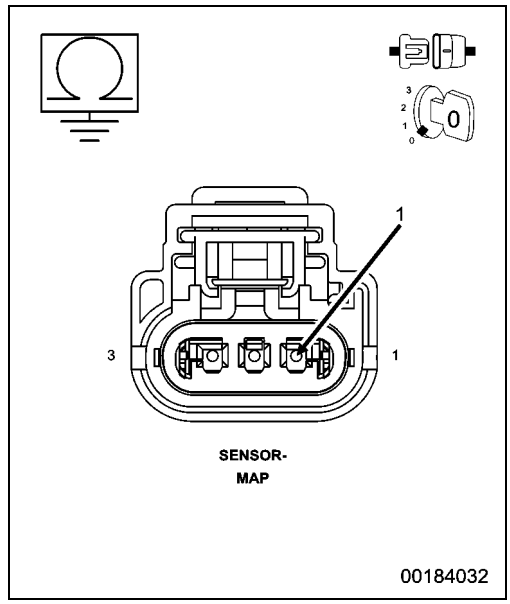

18. RESISTANCE IN (K900) SENSOR GROUND CIRCUIT

1. Measure the resistance of the (K900) Sensor ground circuit from the MAP Sensor harness connector to the appropriate terminal of special tool #8815A.

Is the resistance below 5.0 ohms?

Yes

- Go To 19

No

- Repair the excessive resistance in the (K900) Sensor ground circuit.
- Perform the POWERTRAIN VERIFICATION TEST. (Refer to 28 - DTC-Based Diagnostics/MODULE, Powertrain Control (PCM) - Standard Procedure)

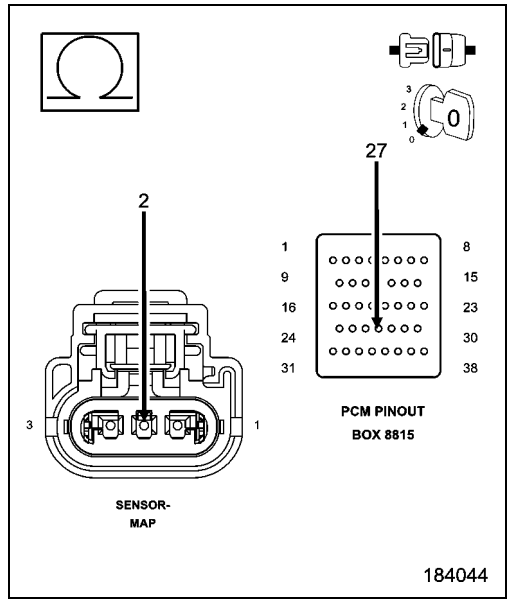

19. POWERTRAIN CONTROL MODULE (PCM)

1. Using the wiring diagram/schematic as a guide, inspect the wiring and connectors between the MAP Sensor, Throttle Body, and the Powertrain Control Module (PCM).
2. Look for any chafed, pierced, pinched, or partially broken wires.
3. Look for broken, bent, pushed out or corroded terminals. Verify that there is good pin to terminal contact in the MAP Sensor, Throttle Body, and the Powertrain Control Module connectors.
4. Refer to any Technical Service Bulletins that may apply.

Were there any problems found?

Yes

- Repair as necessary.
- Perform the POWERTRAIN VERIFICATION TEST. (Refer to 28 - DTC-Based Diagnostics/MODULE, Powertrain Control (PCM) - Standard Procedure)

No

- Replace and program the Powertrain Control Module per Service Information.
- Perform the POWERTRAIN VERIFICATION TEST. (Refer to 28 - DTC-Based Diagnostics/MODULE, Powertrain Control (PCM) - Standard Procedure)

■ P2175-LOW AIRFLOW/RESTRICTION DETECTED (SLOW ACCUMULATION)

For a complete wiring diagram **Refer to the Wiring Information**.

- **When Monitored:**
  Ignition on and engine running with no MAP Sensor DTCs.
- **Set Condition:**
  PCM calculated MAP value is greater than actual MAP value plus an offset value. One trip fault and the code will set within 5 seconds. Three good trips to turn of the mil. ETC light will flash.

Possible Causes
RESTRICTED AIR INLET SYSTEM
RESISTANCE IN THE (F856) 5-VOLT SUPPLY CIRCUIT
(F856) 5-VOLT SUPPLY CIRCUIT SHORTED TO GROUND
RESISTANCE IN THE (K1) MAP SIGNAL CIRCUIT
(K1) MAP SIGNAL CIRCUIT SHORTED TO GROUND
RESISTANCE IN (K900) SENSOR GROUND CIRCUIT
RESISTANCE IN THE (F855) 5-VOLT SUPPLY CIRCUIT
(F855) 5-VOLT SUPPLY CIRCUIT SHORTED TO GROUND
RESISTANCE IN THE TP SENSOR SIGNAL CIRCUIT
TP SENSOR SIGNAL CIRCUIT SHORTED TO GROUND
RESISTANCE IN THE (K922) TP SENSOR RETURN CIRCUIT
MAP SENSOR
THROTTLE BODY
POWERTRAIN CONTROL MODULE (PCM)

Always perform the Pre-Diagnostic Troubleshooting procedure before proceeding. (Refer to 28 - DTC-Based Diagnostics/MODULE, Powertrain Control (PCM) - Standard Procedure).

1. ACTIVE DTC

NOTE: The most likely cause of this DTC is a plugged intake air system or dirty Throttle Body. Check for any TSBs before continuing.

NOTE: Diagnose any 5-Volt Supply, TP Sensor, Oxygen Sensor, Fuel related or MAP Sensor DTCs before continuing.

NOTE: The throttle plate should be free from binding and carbon build up.

NOTE: Question the customer about weather conditions, as ICE build up on the blade can cause this fault when ambient is around -10° C (14° F) to 4° C (39° F) range.

1. Ignition on, engine not running.
2. With a scan tool, select View DTCs.

Is the DTC Active at this time?

Yes

- Go To 2

No

- Refer to the INTERMITTENT CONDITION Diagnostic Procedure. (Refer to 28 - DTC-Based Diagnostics/MODULE, Powertrain Control (PCM) - Standard Procedure)

2. RESTRICTED AIR INLET SYSTEM

1. Turn the ignition off.
2. Remove the Air Cleaner Assembly.
3. Remove the Air Filter.
4. Inspect the Throttle Body opening for signs of any foreign materials.
5. Check the intake tube/air cleaner for obstructions - include snow packing questions to customer.

Were any restrictions found?

Yes

- Repair the restriction as necessary.
- Perform the POWERTRAIN VERIFICATION TEST. (Refer to 28 - DTC-Based Diagnostics/MODULE, Powertrain Control (PCM) - Standard Procedure)

No

- Go To 3

3. MAP SENSOR OPERATION

1. Start the engine.
2. With a scan tool, monitor the MAP Sensor voltage.
3. Snap the Accelerator pedal.

Does the MAP Sensor voltage vary from below 2.0 volts at idle to above 3.5 volts at Wide Open Throttle?

Yes

- Go To 4

No

- Go To 13

4. TP SENSOR OPERATION

1. Ignition on, engine not running.
2. With a scan tool, perform the ETC Throttle Follower Test.
3. TP Sensor No.1 should start at approximately 0.7 of a volt and increase to 4.3 volts.
4. TP Sensor No.2 should start at approximately 4.3 volts and decrease to 0.7 of a volt.

Is the voltage transition smooth between the appropriate values?

Yes

- Refer to the INTERMITTENT CONDITION Diagnostic Procedure. (Refer to 28 - DTC-Based Diagnostics/MODULE, Powertrain Control (PCM) - Standard Procedure)

No

- Go To 5

5. RESISTANCE IN THE (F855) 5-VOLT SUPPLY CIRCUIT

1. Turn the ignition off.
2. Disconnect the Throttle Body harness connector.
3. Disconnect the C2 PCM harness connector.

CAUTION: Do not probe the PCM harness connectors. Probing the PCM harness connectors will damage the PCM terminals resulting in poor terminal to pin connection. Install the PCM Pinout Box Kit, NGC, 38 Position 8815A to perform diagnosis.

4. Measure the resistance of the (F855) 5-volt Supply circuit from the Throttle Body harness connector to the appropriate terminal of special tool #8815A.

Is the resistance below 100 ohms?

Yes

- Go To 6

No

- Repair the excessive resistance in the (F855) 5-volt Supply circuit.
- Perform the POWERTRAIN VERIFICATION TEST. (Refer to 28 - DTC-Based Diagnostics/MODULE, Powertrain Control (PCM) - Standard Procedure)

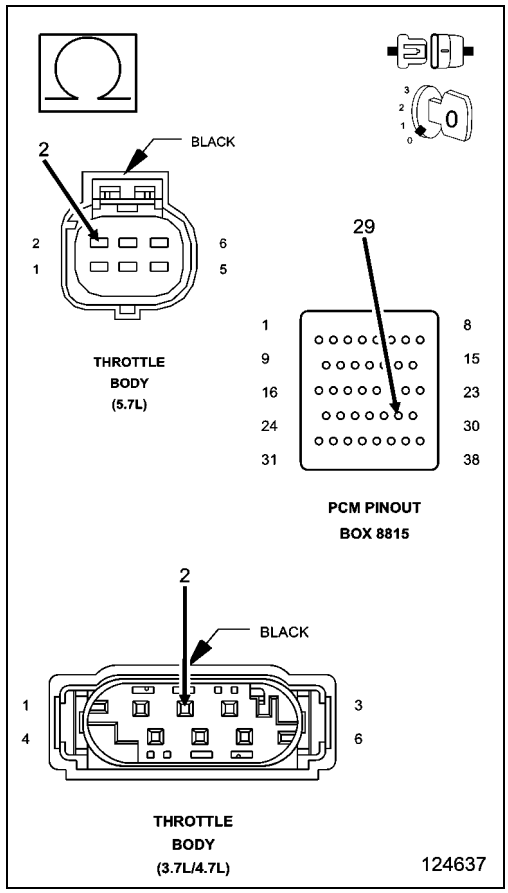

6. (F855) 5-VOLT SUPPLY CIRCUIT SHORTED TO GROUND

1. Measure the resistance between ground and (F855) 5-volt Supply circuit at the Throttle Body harness connector.

Is the resistance above 100k ohms?

Yes

- Go To 7

No

- Repair the short to ground in the (F855) 5-volt Supply circuit.
- Perform the POWERTRAIN VERIFICATION TEST. (Refer to 28 - DTC-Based Diagnostics/MODULE, Powertrain Control (PCM) - Standard Procedure)

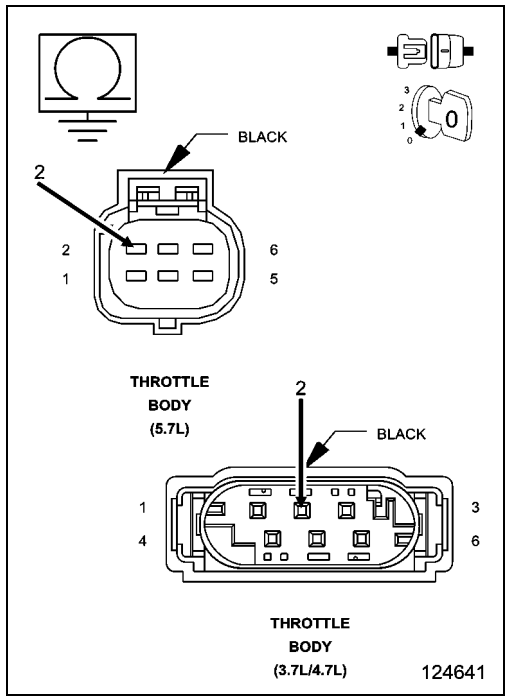

7. TP SENSOR

1. Connect the PCM harness connector.
2. Ignition on, engine not running.
3. With a scan tool, monitor the TP Sensor voltage.
4. Connect a jumper wire between the (K22) TP Sensor No.1 Signal circuit and the (K922) TP Sensor Return circuit in the Throttle Body harness connector.
5. TP Sensor No.1 voltage should start at approximately 4.8 volts and decrease to 0.2 of a volt.
6. Connect a jumper wire between the (K122) TP Sensor No.2 Signal circuit and the (F855) 5-volt Supply circuit in the Throttle Body harness connector.
7. TP Sensor No.2 voltage should start at approximately 0 volts and increase to 4.8 to 5.2 volts.

Does the TP Sensor voltage change to the appropriate voltage with the jumper wire installed?

Yes

- Disconnect the Battery before replacing the Throttle Body Assembly. Replace the Throttle Body Assembly. After installation is complete, use a scan tool and select the ETC RELEARN function
- Perform the POWERTRAIN VERIFICATION TEST. (Refer to 28 - DTC-Based Diagnostics/MODULE, Powertrain Control (PCM) - Standard Procedure)

No

- Go To 8

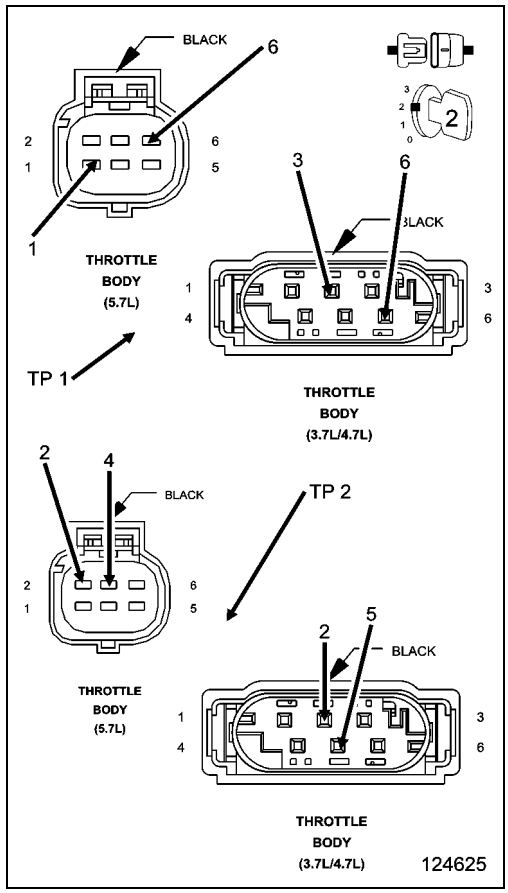

8. RESISTANCE IN THE (K22) TP SENSOR NO.1 SIGNAL CIRCUIT

1. Turn the ignition off.
2. Disconnect the C2 PCM harness connector.
3. Measure the resistance of the (K22) TP Sensor No.1 Signal circuit from the Throttle Body harness connector to the appropriate terminal of special tool #8815A.

Is the resistance below 5.0 ohms?

Yes

- Go To 9

No

- Repair the excessive resistance in the (K22) TP Sensor No.1 Signal circuit.
- Perform the POWERTRAIN VERIFICATION TEST. (Refer to 28 - DTC-Based Diagnostics/MODULE, Powertrain Control (PCM) - Standard Procedure)

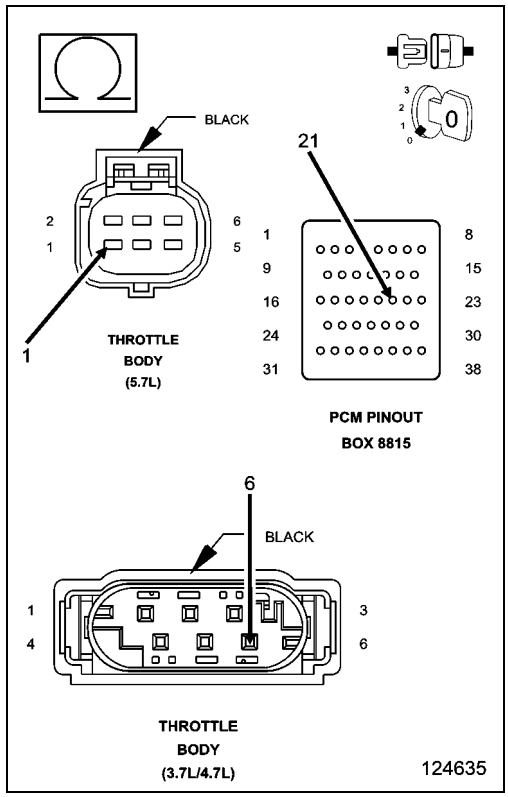

9. RESISTANCE IN THE (K122) TP SENSOR NO.2 SIGNAL CIRCUIT

1. Measure the resistance of the (K122) TP Sensor No.2 Signal circuit from the Throttle Body harness connector to the appropriate terminal of special tool #8815A.

Is the resistance below 5.0 ohms?

Yes

- Go To 10

No

- Repair the excessive resistance in the (K122) TP Sensor No.2 Signal circuit.
- Perform the POWERTRAIN VERIFICATION TEST. (Refer to 28 - DTC-Based Diagnostics/MODULE, Powertrain Control (PCM) - Standard Procedure)

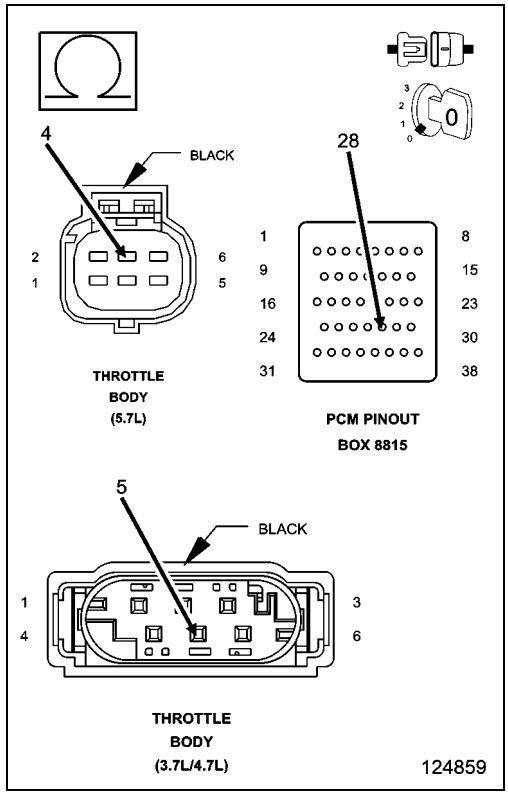

10. (K22) TP SENSOR NO.1 SIGNAL CIRCUIT SHORTED TO GROUND

1. Measure the resistance between ground and the (K22) TP Sensor No.1 Signal circuit at the Throttle Body harness connector.

Is the resistance above 100k ohms?

Yes

- Go To 11

No

- Repair the short to ground in the (K22) TP Sensor No.1 Signal circuit.
- Perform the POWERTRAIN VERIFICATION TEST. (Refer to 28 - DTC-Based Diagnostics/MODULE, Powertrain Control (PCM) - Standard Procedure)

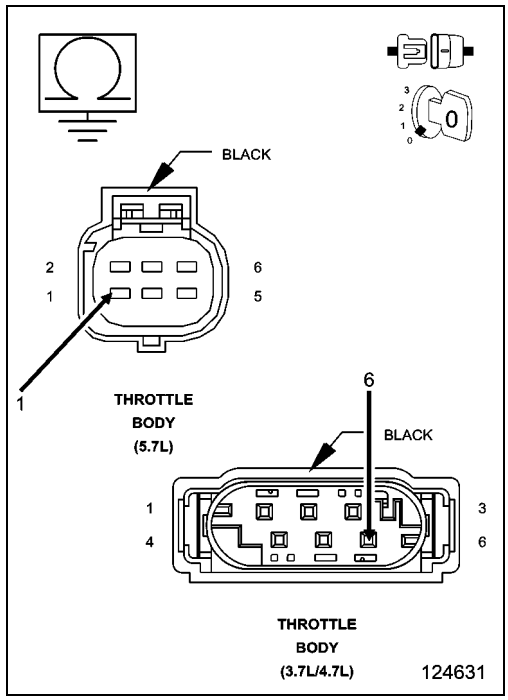

11. (K122) TP SENSOR NO.2 SIGNAL CIRCUIT SHORTED TO GROUND

1. Measure the resistance between ground and the (K122) TP Sensor No.2 Signal circuit at the Throttle Body harness connector.

Is the resistance above 100k ohms?

Yes

- Go To 12

No

- Repair the short to ground in the (K122) TP Sensor No.2 Signal circuit.
- Perform the POWERTRAIN VERIFICATION TEST. (Refer to 28 - DTC-Based Diagnostics/MODULE, Powertrain Control (PCM) - Standard Procedure)

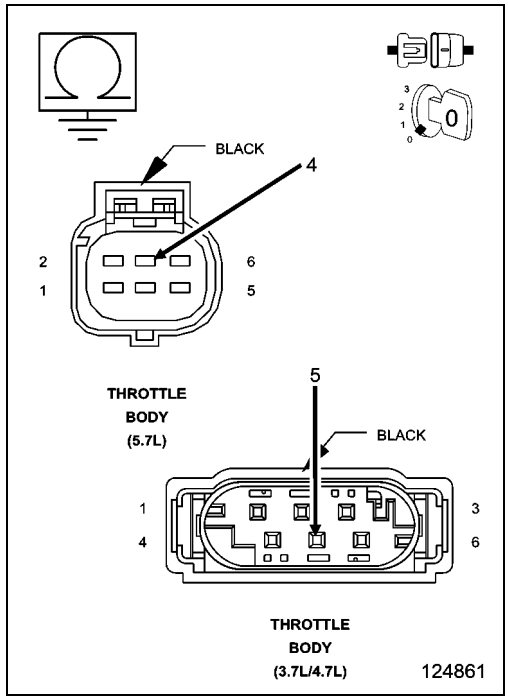

12. RESISTANCE IN THE (K922) TP SENSOR RETURN CIRCUIT

1. Measure the resistance of the (K922) TP Sensor Return circuit from the Throttle Body harness connector to the appropriate terminal of special tool #8815A.

Is the resistance below 5.0 ohms?

Yes

- Go To 19

No

- Repair the excessive resistance in the (K922) TP Sensor Return circuit.
- Perform the POWERTRAIN VERIFICATION TEST. (Refer to 28 - DTC-Based Diagnostics/MODULE, Powertrain Control (PCM) - Standard Procedure)

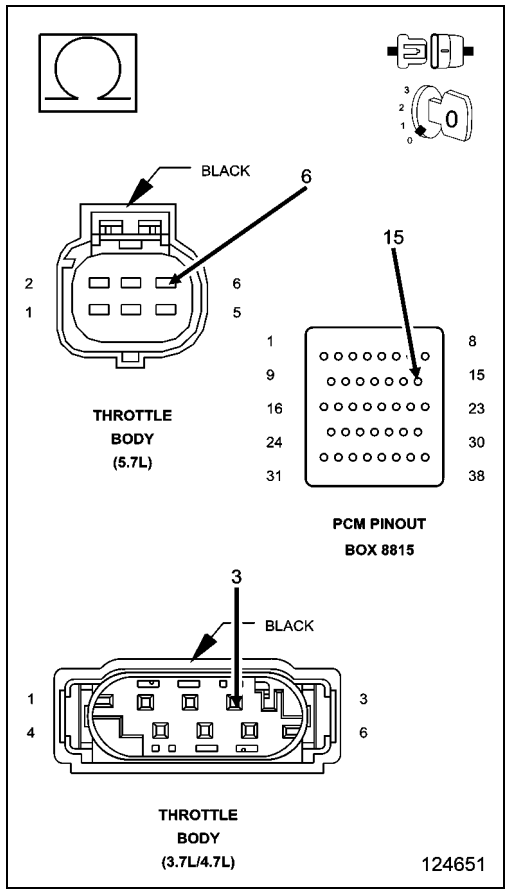

13. RESISTANCE IN THE (F856) 5-VOLT SUPPLY CIRCUIT

1. Turn the ignition off.
2. Disconnect the MAP Sensor harness connector.
3. Disconnect the C1 PCM harness connector.

CAUTION: Do not probe the PCM harness connectors. Probing the PCM harness connectors will damage the PCM terminals resulting in poor terminal to pin connection. Install the PCM Pinout Box Kit, NGC, 38 Position 8815A to perform diagnosis.

4. Measure the resistance of the (F856) 5-volt Supply circuit from the MAP Sensor harness connector to the appropriate terminal of special tool #8815A.

Is the resistance below 5.0 ohms?

Yes

- Go To 14

No

- Repair the excessive resistance in the (F856) 5-volt Supply circuit.
- Perform the POWERTRAIN VERIFICATION TEST. (Refer to 28 - DTC-Based Diagnostics/MODULE, Powertrain Control (PCM) - Standard Procedure)

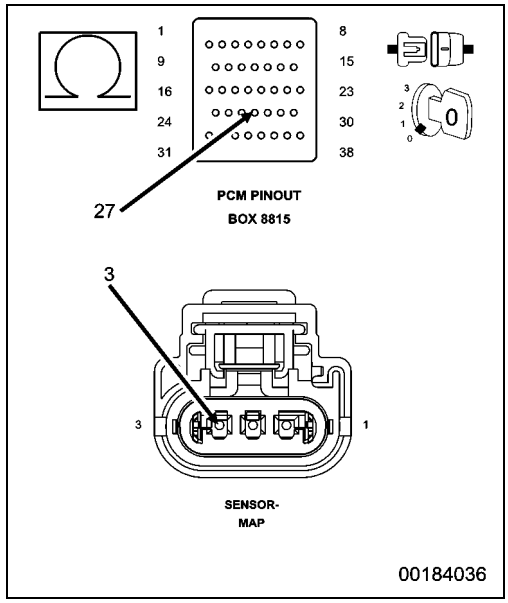

14. (F856) 5-VOLT SUPPLY CIRCUIT SHORTED TO GROUND

1. Measure the resistance between ground and the (F856) 5-volt Supply circuit in the MAP Sensor harness connector.

Is the resistance above 100k ohms?

Yes

- Go To 15

No

- Repair the short to ground in the (F856) 5-volt Supply circuit.
- Perform the POWERTRAIN VERIFICATION TEST. (Refer to 28 - DTC-Based Diagnostics/MODULE, Powertrain Control (PCM) - Standard Procedure)

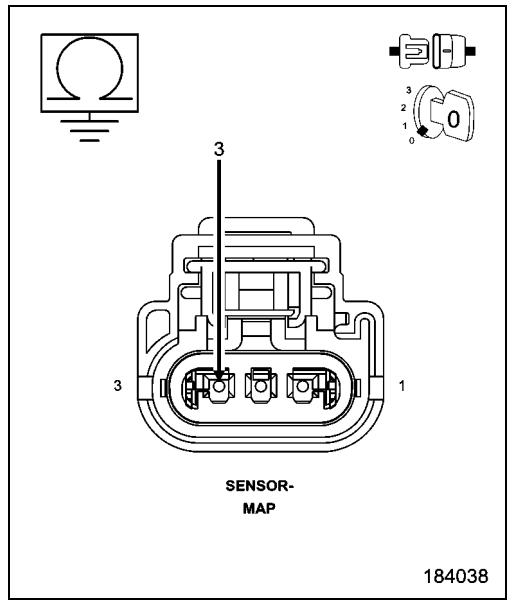

15. MAP SENSOR

1. Connect the C1 PCM harness connector.
2. Ignition on, engine not running.
3. With a scan tool, monitor the MAP Sensor voltage.
4. Connect a jumper wire between the (K1) MAP Signal circuit and the (K900) Sensor ground circuit.
5. Cycle the ignition switch from off to on.
6. With a scan tool, monitor the MAP Sensor voltage.

Does the scan tool display MAP voltage from approximately 4.9 volts to below 0.5 volt with the jumper wire installed?

Yes

- Replace the MAP Sensor.
- Perform the POWERTRAIN VERIFICATION TEST. (Refer to 28 - DTC-Based Diagnostics/MODULE, Powertrain Control (PCM) - Standard Procedure)

No

- Go To 16

NOTE: Remove the jumper wire before continuing.

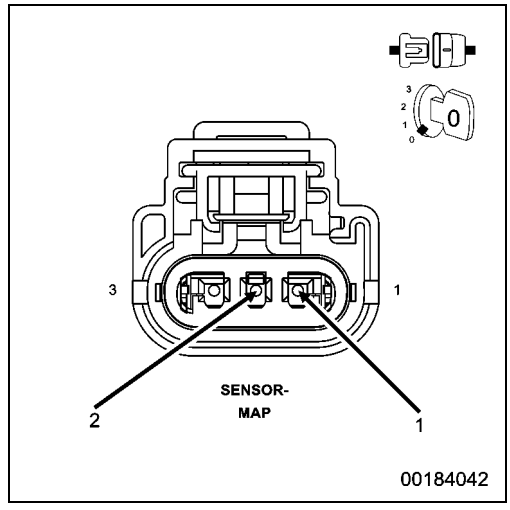

16. RESISTANCE IN THE (K1) MAP SIGNAL CIRCUIT

1. Turn the ignition off.
2. Disconnect the C2 PCM harness connector.
3. Measure the resistance of the (K1) MAP Signal circuit from the MAP Sensor harness connector to the appropriate terminal of special tool #8815A.

Is the resistance below 5.0 ohms?

Yes

- Go To 17

No

- Repair the excessive resistance in the (K1) MAP Signal circuit
- Perform the POWERTRAIN VERIFICATION TEST. (Refer to 28 - DTC-Based Diagnostics/MODULE, Powertrain Control (PCM) - Standard Procedure)

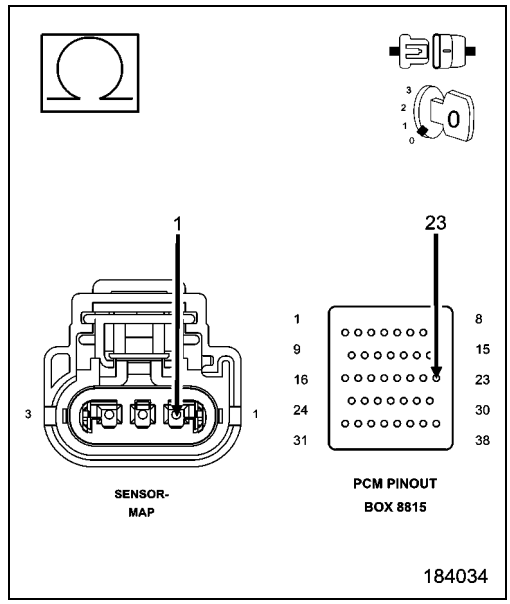

17. (K1) MAP SIGNAL CIRCUIT SHORTED TO GROUND

1. Measure the resistance between ground and the (K1) MAP Signal circuit in the MAP Sensor harness connector.

Is the resistance above 100k ohms?

Yes

- Go To 18

No

- Repair the short to ground in the (K1) MAP Signal circuit.
- Perform the POWERTRAIN VERIFICATION TEST. (Refer to 28 - DTC-Based Diagnostics/MODULE, Powertrain Control (PCM) - Standard Procedure)

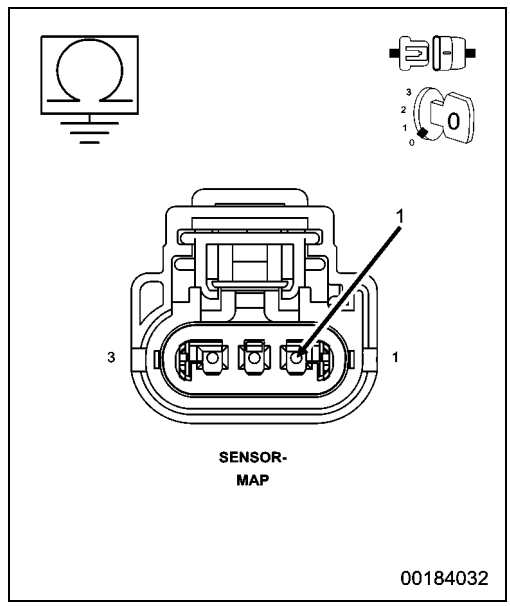

18. RESISTANCE IN THE (K900) SENSOR GROUND CIRCUIT

1. Measure the resistance of the (K900) Sensor ground circuit from the MAP Sensor harness connector to the appropriate terminal of special tool #8815A.

Is the resistance below 5.0 ohms?

Yes

- Go To 19

No

- Repair the excessive resistance in the (K900) Sensor ground circuit.
- Perform the POWERTRAIN VERIFICATION TEST. (Refer to 28 - DTC-Based Diagnostics/MODULE, Powertrain Control (PCM) - Standard Procedure)

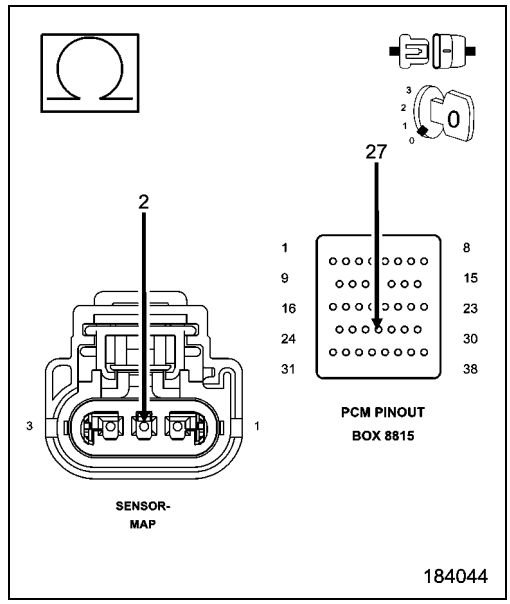

19. POWERTRAIN CONTROL MODULE (PCM)

1. Using the wiring diagram/schematic as a guide, inspect the wiring and connectors between the MAP Sensor, Throttle Body, and the Powertrain Control Module (PCM).
2. Look for any chafed, pierced, pinched, or partially broken wires.
3. Look for broken, bent, pushed out or corroded terminals. Verify that there is good pin to terminal contact in the MAP Sensor, Throttle Body, and the Powertrain Control Module connectors.
4. Refer to any Technical Service Bulletins that may apply.

Were there any problems found?

Yes

- Repair as necessary.
- Perform the POWERTRAIN VERIFICATION TEST. (Refer to 28 - DTC-Based Diagnostics/MODULE, Powertrain Control (PCM) - Standard Procedure)

No

- Replace and program the Powertrain Control Module per Service Information.
- Perform the POWERTRAIN VERIFICATION TEST. (Refer to 28 - DTC-Based Diagnostics/MODULE, Powertrain Control (PCM) - Standard Procedure)

P2181-COOLING SYSTEM PERFORMANCE

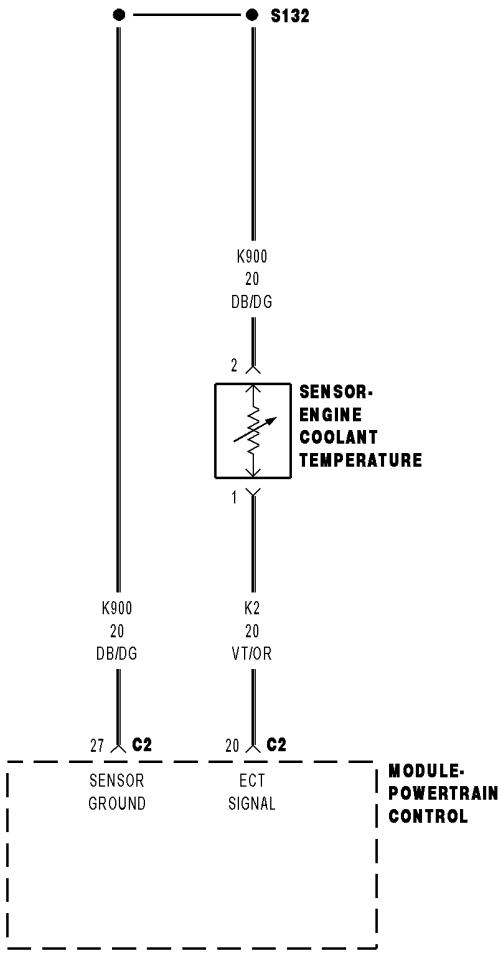

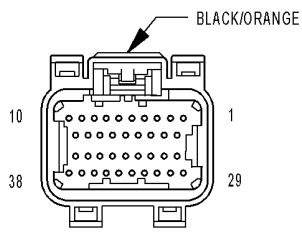

MODULE-
POWERTRAIN
CONTROL C2
(GAS)

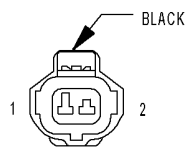

SENSOR-
ENGINE
COOLANT
TEMPERATURE
(GAS)

81417434

For a complete wiring diagram, **refer to the Wiring Information**.

- **When Monitored:**

  Ignition on, Engine running and no ECT DTCs present.
- **Set Condition:**

  The Powertrain Control Module (PCM) recognizes that the Engine Coolant Temperature (ECT) Sensor has failed its self coherence test. The coolant temp should only change at a certain rate, if this rate is too slow or too fast this fault will set. Two trip fault. Three good trips to clear MIL. Electronic Throttle Control (ETC) light will illuminate on first trip failure.

Possible Causes
LOW COOLANT LEVEL
(K2) ECT SIGNAL CIRCUIT SHORTED TO VOLTAGE
(K2) ECT SIGNAL CIRCUIT OPEN
(K900) SENSOR GROUND CIRCUIT OPEN
(K2) ECT SIGNAL CIRCUIT SHORTED TO GROUND
(K2) ECT SIGNAL CIRCUIT SHORTED TO THE (K900) SENSOR GROUND
THERMOSTAT
ENGINE COOLANT TEMPERATURE (ECT) SENSOR
POWERTRAIN CONTROL MODULE (PCM)

Always perform the Pre-Diagnostic Troubleshooting procedure before proceeding. (Refer to 28 - DTC-Based Diagnostics/MODULE, Powertrain Control (PCM) - Standard Procedure).

1. ACTIVE DTC

1. Ignition on, engine not running.

NOTE: If this code sets during extreme ambient temperatures, improper installation of a block heater could be the cause of this DTC.

2. With the scan tool, select View DTCs.
3. Diagnose all other ECT and Cooling System codes before continuing.

Is the DTC Active at this time?

Yes

- Go To 2

No

- Perform the INTERMITTENT CONDITION diagnostic procedure. (Refer to 28 - DTC-Based Diagnostics/MODULE, Powertrain Control (PCM) - Standard Procedure).

2. LOW COOLANT LEVEL

NOTE: If a Engine Coolant Temperature (ECT) DTC is set along with this code, diagnose the ECT DTC first.

NOTE: Inspect the ECT terminals and related PCM terminals. Make sure the terminals are free from corrosion and damage.

NOTE: The best way to diagnose this DTC is to allow the vehicle to sit overnight outside in order to have a totally cold soaked engine.

NOTE: Extremely cold outside ambient temperatures may have caused this DTC to set.

NOTE: Need to make sure that no Cooling System DTCs are set or changes that would make the warm up much slower or much faster: broken water pump can set this, addition of aftermarket auxiliary cooler can set this DTC.

WARNING: Never open the cooling system when the engine is hot. The system is under pressure. Failure to follow these instructions can result in personal injury or death. Allow the engine to cool before opening the cooling system.

1. Inspect the coolant system for proper level and condition.

Is the coolant level and condition OK?

Yes

- Go To 3

No

- Inspect the vehicle for a coolant leak and add the necessary amount of coolant.
- Perform the POWERTRAIN VERIFICATION TEST. (Refer to 28 - DTC-Based Diagnostics/MODULE, Powertrain Control (PCM) - Standard Procedure).

3. THERMOSTAT

NOTE: This test works best if performed on a cold engine (cold soak).

1. Ignition on, engine not running.
2. With the scan tool, read the Engine Coolant Temperature Degree value. If the engine was allowed to sit overnight (cold soak), the temperature value should be a value that is close to the ambient temperature.

NOTE: If engine coolant temperature is above 82° C (180° F), allow the engine to cool until 65° C (150° F) is reached.

3. Start the engine.
4. During engine warm-up monitor the Engine Coolant Temperature Degree value. The temp degree value change should be a smooth transition from start up to normal operating temp 82° C (180° F). Also monitor the actual coolant temperature with a thermometer.

NOTE: As the engine warms up to operating temperature, the actual coolant temperature (thermometer reading) and the Engine Coolant Temperature Degree on the scan tool should stay relatively close to each other.

5. Using the appropriate Service Information, determine the proper opening temperature of the thermostat.

Did the thermostat open at the proper temperature?

Yes

- Go To 4

No

- Replace the thermostat.
- Perform the POWERTRAIN VERIFICATION TEST. (Refer to 28 - DTC-Based Diagnostics/MODULE, Powertrain Control (PCM) - Standard Procedure).

4. ECT SENSOR

1. Turn the ignition off.
2. Disconnect the ECT Sensor harness connector.
3. Ignition on, engine not running.
4. With the scan tool, read the ECT voltage.
5. Connect a jumper between the (K2) ECT Signal circuit and the (K900) Sensor ground circuit in the ECT Sensor harness connector.

NOTE: The sensor voltage should be approximately 0.0 Volts (plus or minus .1 Volt) with the jumper wire in place.

Does the scan tool display the voltage as described above?

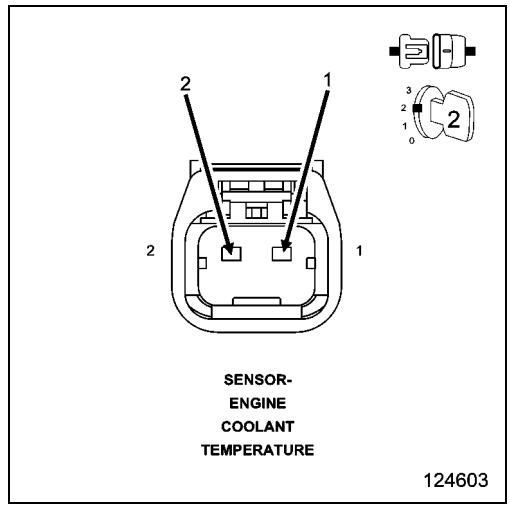

Yes

- Replace the ECT Sensor.
- Perform the POWERTRAIN VERIFICATION TEST. (Refer to 28 - DTC-Based Diagnostics/MODULE, Powertrain Control (PCM) - Standard Procedure).

No

- Go To 5

5. (K2) ECT SIGNAL CIRCUIT SHORTED TO VOLTAGE

1. Turn the ignition off.
2. Disconnect the C2 PCM harness connector.
3. Ignition on, engine not running.
4. Measure the voltage on the (K2) ECT Signal circuit in the ECT Sensor harness connector.

Is there any voltage present?

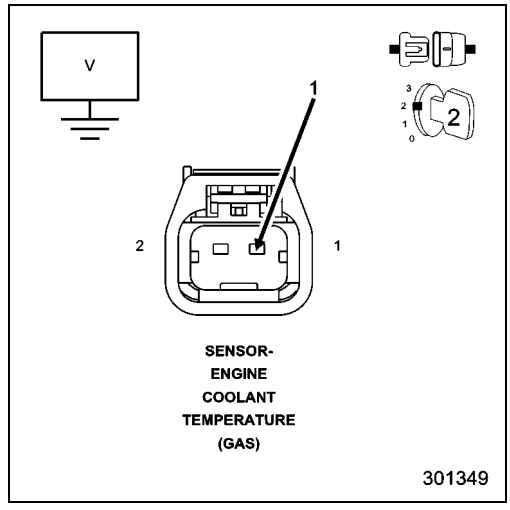

Yes

- Repair the short to voltage in the (K2) ECT Signal circuit.
- Perform the POWERTRAIN VERIFICATION TEST. (Refer to 28 - DTC-Based Diagnostics/MODULE, Powertrain Control (PCM) - Standard Procedure).

No

- Go To 6

6. (K2) ECT SIGNAL CIRCUIT OPEN

1. Turn the ignition off.

CAUTION: Do not probe the PCM harness connectors. Probing the PCM harness connectors will damage the PCM terminals resulting in poor terminal to pin connection. Install the PCM Pinout Box Kit, NGC, 38 Position 8815A to perform diagnosis.

2. Measure the resistance of the (K2) ECT Signal circuit from the ECT Sensor harness connector to the appropriate terminal of the PCM Pinout Box Kit, NGC, 38 Position 8815A.

Is the resistance below 5.0 Ohms?

Yes

- Go To 7

No

- Repair the open in the (K2) ECT Signal circuit.
- Perform the POWERTRAIN VERIFICATION TEST. (Refer to 28 - DTC-Based Diagnostics/MODULE, Powertrain Control (PCM) - Standard Procedure).

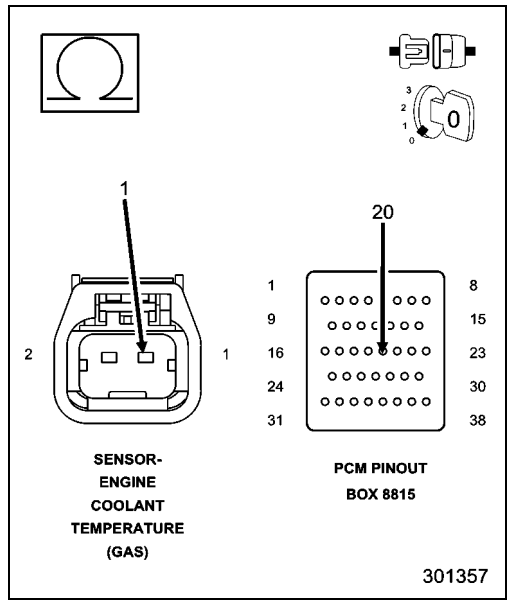

7. (K900) SENSOR GROUND CIRCUIT OPEN

1. Measure the resistance of the (K900) Sensor ground circuit from the ECT Sensor harness connector to the appropriate terminal the PCM Pinout Box Kit, NGC, 38 Position 8815A.

Is the resistance below 5.0 Ohms?

Yes

- Go To 8

No

- Repair the open in the (K900) Sensor ground circuit.
- Perform the POWERTRAIN VERIFICATION TEST. (Refer to 28 - DTC-Based Diagnostics/MODULE, Powertrain Control (PCM) - Standard Procedure).

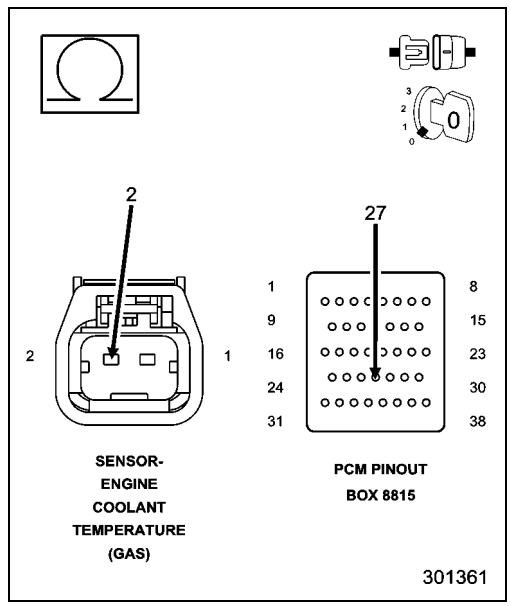

8. (K2) ECT SIGNAL CIRCUIT SHORTED TO GROUND

1. Measure the resistance between ground and the (K2) ECT Signal circuit in the ECT Sensor harness connector.

Is the resistance below 100 Ohms?

Yes

- Repair the short to ground in the (K2) ECT Signal circuit.
- Perform the POWERTRAIN VERIFICATION TEST. (Refer to 28 - DTC-Based Diagnostics/MODULE, Powertrain Control (PCM) - Standard Procedure).

No

- Go To 9

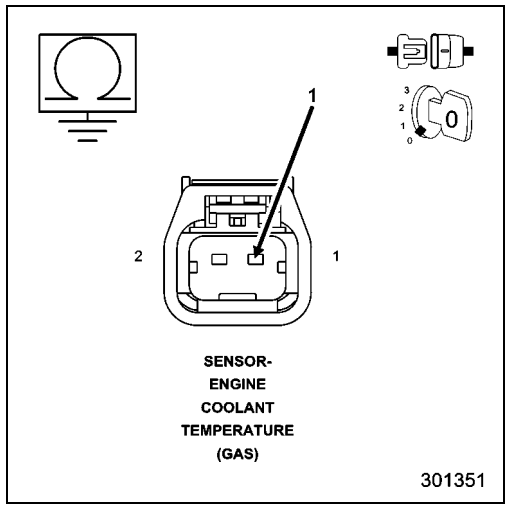

9. (K2) ECT SIGNAL CIRCUIT SHORTED TO THE (K900) SENSOR GROUND CIRCUIT

1. Measure the resistance between the (K2) ECT Signal circuit and the (K900) Sensor ground circuit in the ECT Sensor harness connector.

Is the resistance below 5.0 Ohms?

Yes

- Repair the short between the (K900) Sensor ground and the (K2) ECT Signal circuit.
- Perform the POWERTRAIN VERIFICATION TEST. (Refer to 28 - DTC-Based Diagnostics/MODULE, Powertrain Control (PCM) - Standard Procedure).

No

- Go To 10

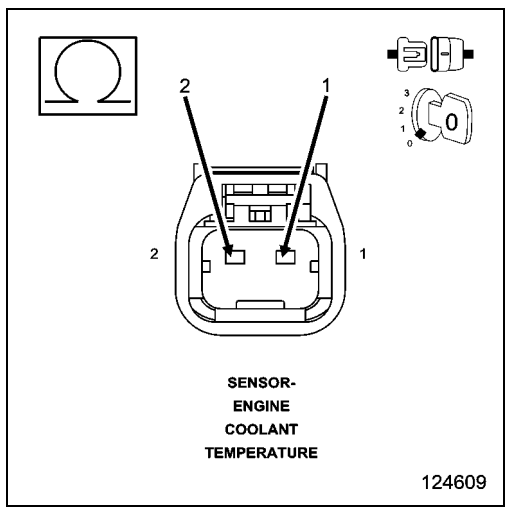

10. POWERTRAIN CONTROL MODULE (PCM)

1. Using the wiring diagram/schematic as a guide, inspect the wiring and connectors between the related Sensor and the Powertrain Control Module (PCM).
2. Look for any chafed, pierced, pinched or partially broken wires.
3. Look for broken, bent, pushed out or corroded terminals. Verify that there is good pin to terminal contact in the related Sensor and the Powertrain Control Module connectors.
4. Perform any Technical Service Bulletins that may apply.

Were there any problems found?

Yes

- Repair as necessary.
- Perform the POWERTRAIN VERIFICATION TEST. (Refer to 28 - DTC-Based Diagnostics/MODULE, Powertrain Control (PCM) - Standard Procedure).

No

- Replace and program the Powertrain Control Module in accordance with the Service Information.
- Perform the POWERTRAIN VERIFICATION TEST. (Refer to 28 - DTC-Based Diagnostics/MODULE, Powertrain Control (PCM) - Standard Procedure).

P2271-O2 SENSOR 1/2 SIGNAL STUCK RICH

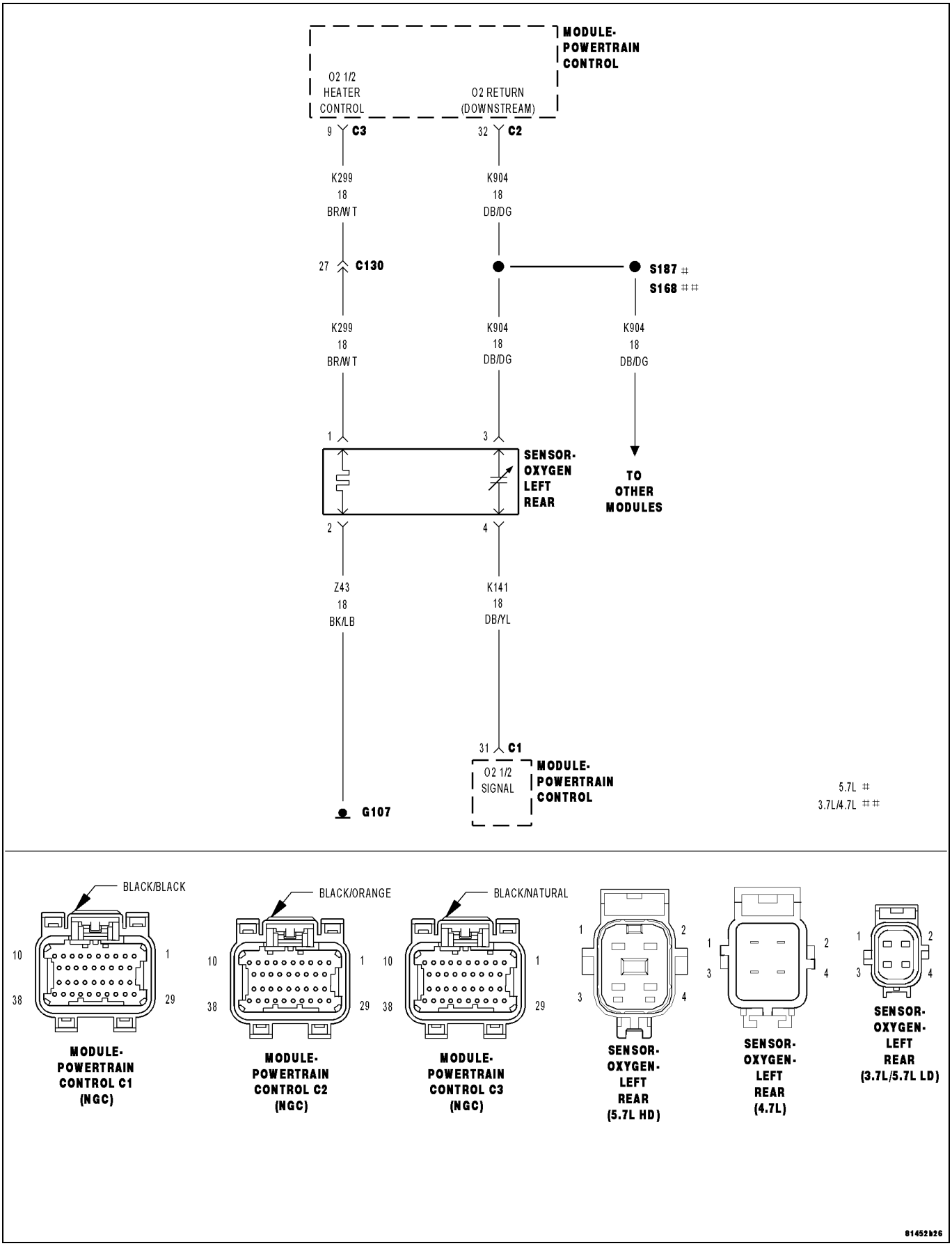

For a complete wiring diagram, **refer to the Wiring Information**.

- **When Monitored:**

  With the engine running, vehicle speed above 96 kph (60 mph), throttle open for a minimum of 120 seconds, ECT greater than 70° C (158° F), catalytic converter temperature greater than 600° C (1112° F), and downstream oxygen sensor in a rich state. During a decel fuel shutoff event, the downstream oxygen sensor should switch from rich to lean within a specific time.
- **Set Condition:**

  The PCM monitors the downstream O2 sensor. If the PCM does not detect a rich to lean switch within a specific time during a decel fuel shutoff event, the monitor will fail. Two trip fault. Three good trips to turn off the MIL.

Possible Causes
OXYGEN SENSOR WIRING OR CONNECTORS
O2 SENSOR SIGNAL CIRCUIT
O2 SENSOR RETURN CIRCUIT
1/2 O2 SENSOR
POWERTRAIN CONTROL MODULE (PCM)

Always perform the Pre-Diagnostic Troubleshooting procedure before proceeding. (Refer to 28 - DTC-Based Diagnostics/MODULE, Powertrain Control (PCM) - Standard Procedure).

1. DTC IS ACTIVE

1. Start the engine and allow it to reach operating temperature.

WARNING: When the engine is operating, do not stand in direct line with the fan. Do not put your hands near the pulleys, belts or fan. Do not wear loose clothing. Failure to follow these instructions may result in possible serious or fatal injury.

NOTE: It may be necessary to test drive the vehicle within the DTC monitoring conditions in order for this DTC to set.

2. With a scan tool, select View DTCs.

Is the DTC Active at this time?

Yes

- Go To 2

No

- Perform the INTERMITTENT CONDITION Diagnostic Procedure. (Refer to 28 - DTC-Based Diagnostics/MODULE, Powertrain Control (PCM) - Standard Procedure).

2. CHECKING THE OXYGEN SENSOR OPERATION

NOTE: Check for signs of contaminants that may have damaged the O2 Sensor, such as contaminated fuel, unapproved silicone, oil and coolant.

1. Perform the diagnostic procedure for CHECKING THE OXYGEN SENSOR OPERATION. (Refer to 29 - Non-DTC Diagnostics/Drivability - Gas - Diagnosis and Testing)

Were any problems found?

Yes

- Repair as necessary.
- Perform the POWERTRAIN VERIFICATION TEST. (Refer to 28 - DTC-Based Diagnostics/MODULE, Powertrain Control (PCM) - Standard Procedure)

No

- Go To 3

3. POWERTRAIN CONTROL MODULE (PCM)

1. Using the wiring diagram/schematic as a guide, inspect the wiring and connectors between the 1/2 O2 Sensor and the Powertrain Control Module (PCM).
2. Look for any chafed, pierced, pinched, or partially broken wires.
3. Look for broken, bent, pushed out or corroded terminals.
4. Refer to any Technical Service Bulletins that may apply.

Were any problems found?

Yes

- Repair as necessary.
- Perform the POWERTRAIN VERIFICATION TEST. (Refer to 28 - DTC-Based Diagnostics/MODULE, Powertrain Control (PCM) - Standard Procedure)

No

- Replace and program the Powertrain Control Module (PCM) in accordance with the Service Information.
- Perform the POWERTRAIN VERIFICATION TEST. (Refer to 28 - DTC-Based Diagnostics/MODULE, Powertrain Control (PCM) - Standard Procedure)

P2273-O2 SENSOR 2/2 SIGNAL STUCK RICH

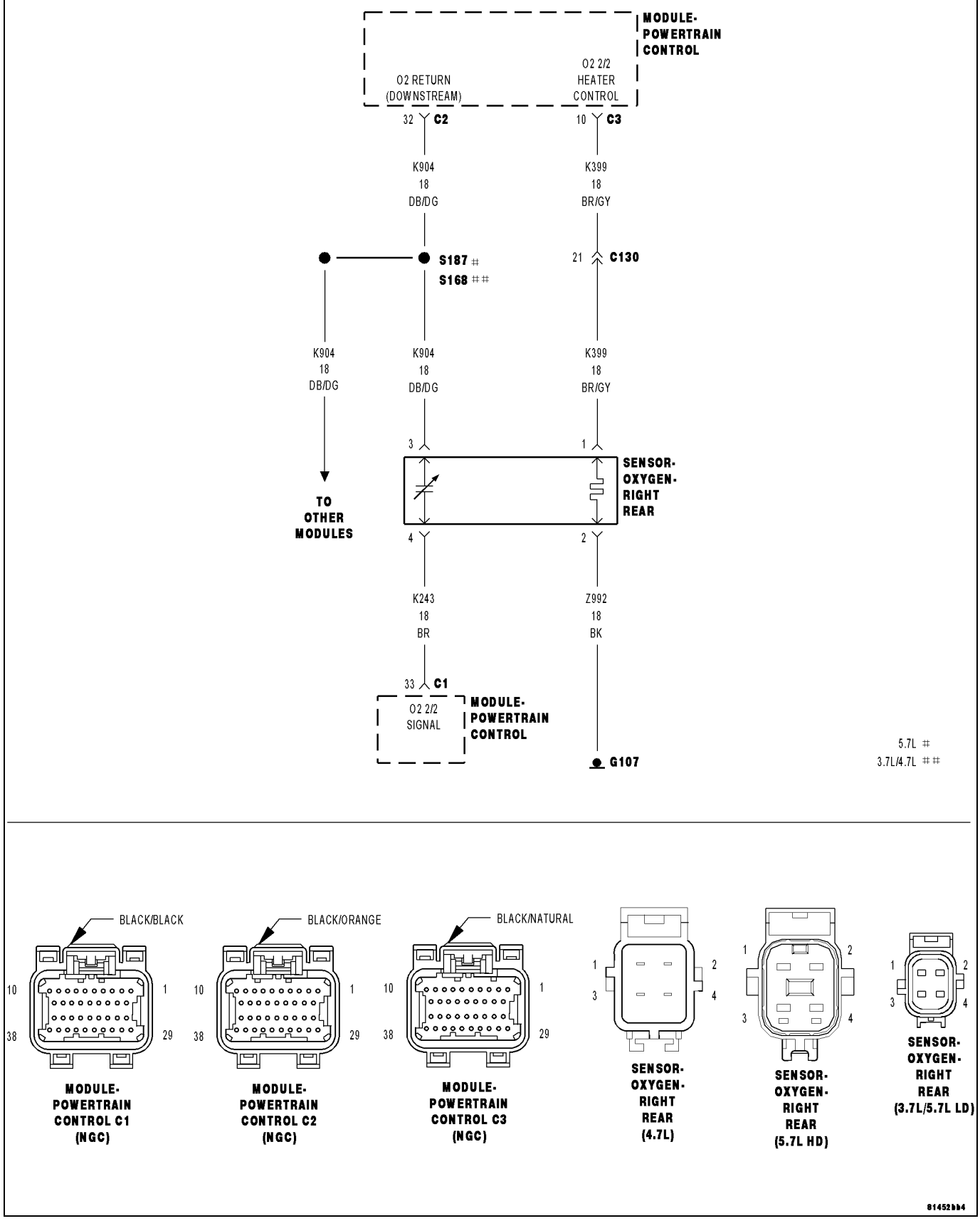

For a complete wiring diagram, **refer to the Wiring Information**.

- **When Monitored:**

  With the engine running, vehicle speed above 96 kph (60 mph), throttle open for a minimum of 120 seconds, ECT greater than 70 C (158 F), catalytic converter temperature greater than 600 C (1112 F), and downstream oxygen sensor in a rich state. During a decel fuel shutoff event, the downstream oxygen sensor should switch from rich to lean within a specific time.

- **Set Condition:**

  The PCM monitors the downstream O2 sensor. If the PCM does not detect a rich to lean switch within a specific time during a decel fuel shutoff event, the monitor will fail. Two trip fault. Three good trips to turn off the MIL.

Possible Causes
OXYGEN SENSOR WIRING OR CONNECTORS
O2 SENSOR SIGNAL CIRCUIT
O2 SENSOR RETURN CIRCUIT
2/2 O2 SENSOR
POWERTRAIN CONTROL MODULE (PCM)

Always perform the Pre-Diagnostic Troubleshooting procedure before proceeding. (Refer to 28 - DTC-Based Diagnostics/MODULE, Powertrain Control (PCM) - Standard Procedure).

1. DTC IS ACTIVE

1. Start the engine and allow it to reach operating temperature.

WARNING: When the engine is operating, do not stand in direct line with the fan. Do not put your hands near the pulleys, belts or fan. Do not wear loose clothing. Failure to follow these instructions may result in possible serious or fatal injury.

NOTE: It may be necessary to test drive the vehicle within the DTC monitoring conditions in order for this DTC to set.

2. With a scan tool, select View DTCs.

Is the DTC Active at this time?

Yes

- Go To 2

No

- Perform the INTERMITTENT CONDITION Diagnostic Procedure. (Refer to 28 - DTC-Based Diagnostics/MODULE, Powertrain Control (PCM) - Standard Procedure).

2. CHECKING THE OXYGEN SENSOR OPERATION

NOTE: Check for signs of contaminants that may have damaged the O2 Sensor, such as contaminated fuel, unapproved silicone, oil and coolant.

1. Perform the diagnostic procedure for CHECKING THE OXYGEN SENSOR OPERATION. (Refer to 29 - Non-DTC Diagnostics/Drivability - Gas - Diagnosis and Testing)

Were any problems found?

Yes

- Repair as necessary.
- Perform the POWERTRAIN VERIFICATION TEST. (Refer to 28 - DTC-Based Diagnostics/MODULE, Powertrain Control (PCM) - Standard Procedure)

No

- Go To 3

3. POWERTRAIN CONTROL MODULE (PCM)

1. Using the wiring diagram/schematic as a guide, inspect the wiring and connectors between the 2/2 O2 Sensor and the Powertrain Control Module (PCM).
2. Look for any chafed, pierced, pinched, or partially broken wires.
3. Look for broken, bent, pushed out or corroded terminals.
4. Refer to any Technical Service Bulletins that may apply.

Were any problems found?

Yes

- Repair as necessary.
- Perform the POWERTRAIN VERIFICATION TEST. (Refer to 28 - DTC-Based Diagnostics/MODULE, Powertrain Control (PCM) - Standard Procedure)

No

- Replace and program the Powertrain Control Module (PCM) in accordance with the Service Information.
- Perform the POWERTRAIN VERIFICATION TEST. (Refer to 28 - DTC-Based Diagnostics/MODULE, Powertrain Control (PCM) - Standard Procedure)

■ P2299-BRAKE PEDAL POSITION/ACCELERATOR PEDAL POSITION INCOMPATIBLE

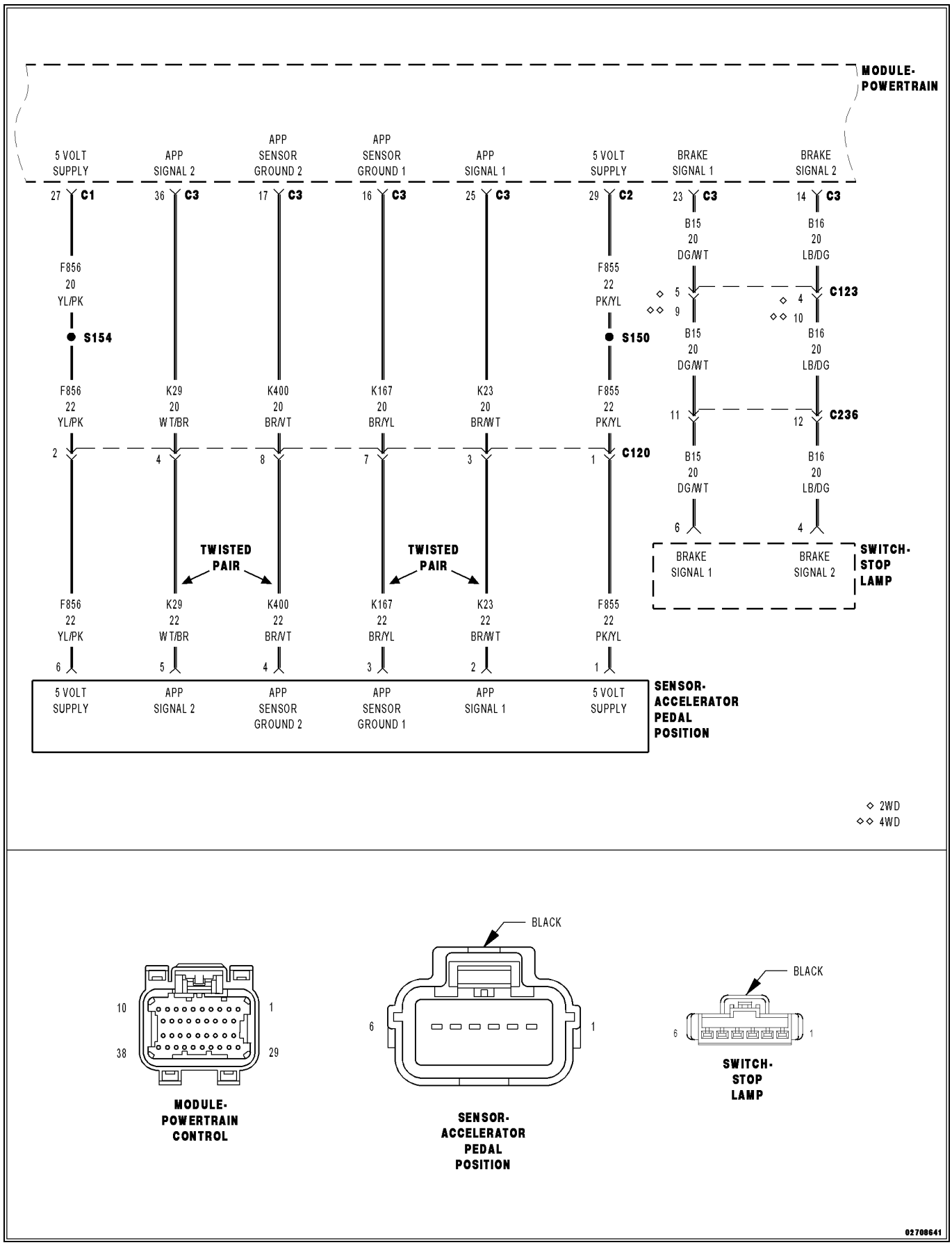

For a complete wiring diagram, **refer to the Wiring Information**.

- **When Monitored:**

  Ignition on. No Brake or APPS faults present.
- **Set Condition:**

  The Powertrain Control Module (PCM) recognizes a brake application following the APPS showing a fixed pedal opening. Temporary or permanent. Internally the PCM will reduce throttle opening below driver demand. One trip fault and the code will be set within five seconds. ETC light will illuminate, the light will only stay illuminated while DTC is active.

Possible Causes
CUSTOMER PRESSING ACCELERATOR PEDAL, THEN PRESSING BRAKE PEDAL, AND CONTINUES HOLDING THEM DOWN SIMULTANEOUSLY
STOP LAMP SWITCH
APP SENSOR

Always perform the Pre-Diagnostic Troubleshooting procedure before proceeding. (Refer to 28 - DTC-Based Diagnostics/MODULE, Powertrain Control (PCM) - Standard Procedure).

1. DTC INFORMATION

NOTE: If a pedal assembly becomes mechanically stuck the voltage output will stay fixed, if this is also followed by a long application of the brakes this code will set.

NOTE: When this code sets the pedal position in the PCM software will ramp to idle. If the pedal voltage changes OR the brake pedal is released, the pedal position in the PCM software will ramp up to the pedal position and the ETC light will go out.

1. With the scan tool, read DTCs and record the related Freeze Frame data.
2. Diagnose all other Stop Lamp Switch and APP Sensor codes before continuing.
3. This code can be set by a driver who uses both feet while driving, one for the Accelerator Pedal and the other for the Brake Pedal.

NOTE: The most likely cause of this DTC is caused by the customer Brake Torquing the engine by pressing the Accelerator pedal and the pressing the Brake Pedal.

4. Ask the driver of the vehicle if these conditions apply to their driving habits.

Are the listed conditions part of the customers driving habits?

Yes

- Advise the customer of what caused the DTC. This is normal operation of a ETC equipped vehicle because of safety issues.
- Perform the POWERTRAIN VERIFICATION TEST. (Refer to 28 - DTC-Based Diagnostics/MODULE, Powertrain Control (PCM) - Standard Procedure).

No

- Go To 2

2. STOP LAMP SWITCH OPERATION

1. With the scan tool, read both Stop Lamp Switch statuses while pressing and releasing the Brake Pedal.

Does the scan tool display the Pressed and Released while pressing and releasing the Pedal?

Yes

- Go To 3

No

- Check the Stop Lamp Switch for proper installation and check the related circuits for opens and shorts using the appropriate wiring diagram. If OK, replace the Stop Lamp Switch assembly.
- Perform the POWERTRAIN VERIFICATION TEST. (Refer to 28 - DTC-Based Diagnostics/MODULE, Powertrain Control (PCM) - Standard Procedure).

3. APP SENSOR SWEEP

1. Ignition on, engine not running.
2. With the scan tool, monitor both APP Sensor voltage readings.
3. Slowly press the accelerator pedal from idle until it reaches the end stop near the floor.
4. APPS No.1 voltage should start at approximately 0.45 of a Volt and increase to approximately 4.6 Volts with a smooth transition.
5. APPS No.2 voltage should start at approximately 0.22 of a Volt and increase to approximately 2.31 Volts with a smooth transition.

Does the voltage for the appropriate sensor follow the list specification?

Yes

- Perform the INTERMITTENT CONDITION diagnostic procedure. (Refer to 28 - DTC-Based Diagnostics/MODULE, Powertrain Control (PCM) - Standard Procedure).

No

- Check the Signal and Return circuits for opens and shorts. If OK, Replace the APP Sensor Assembly in accordance with the Service Information. After installation is complete, with a scan tool select the ETC RELEARN function to relearn the APPS values.
- Perform the POWERTRAIN VERIFICATION TEST. (Refer to 28 - DTC-Based Diagnostics/MODULE, Powertrain Control (PCM) - Standard Procedure).

P2302-IGNITION COIL 1 SECONDARY CIRCUIT- INSUFFICIENT IONIZATION

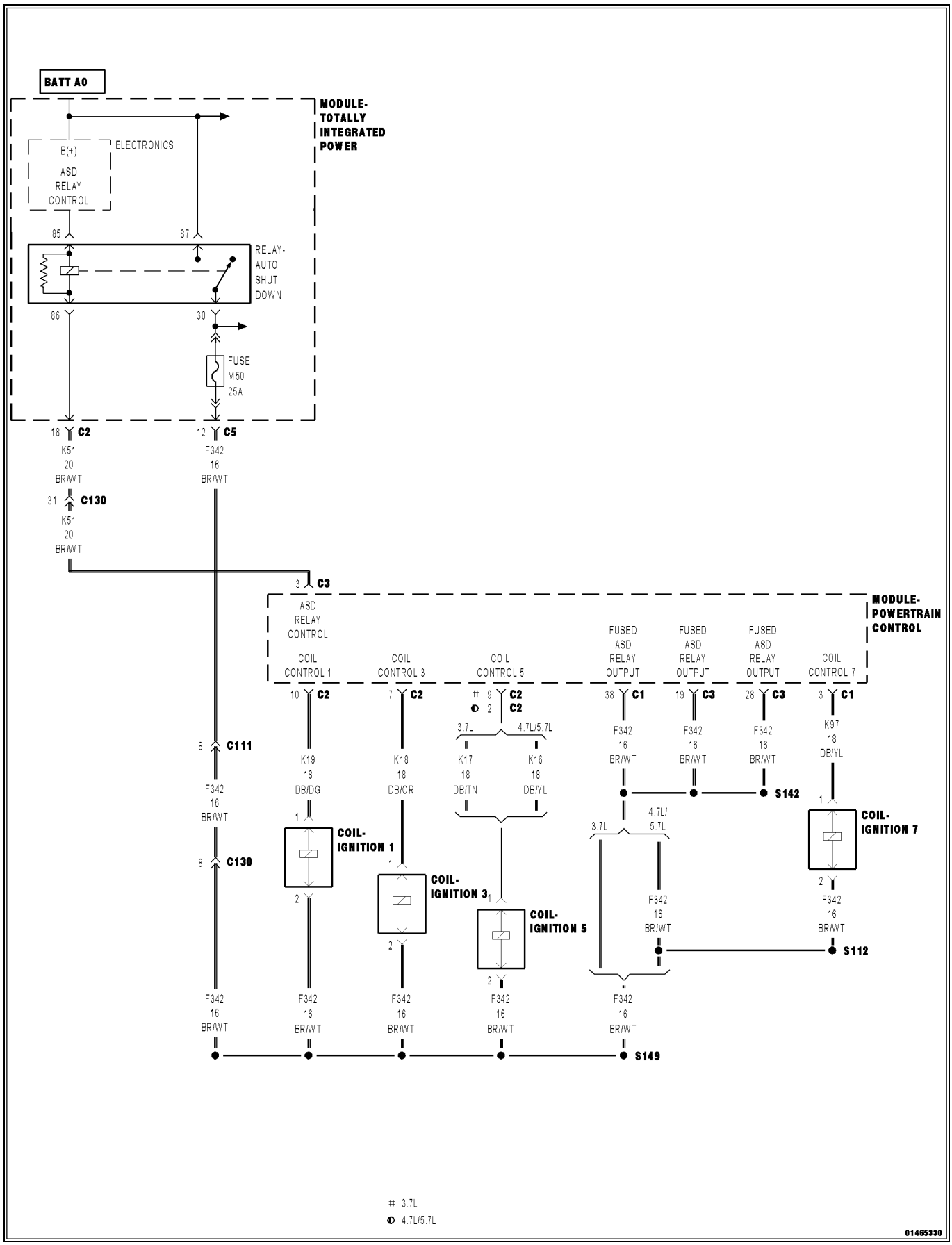

For a complete wiring diagram, **refer to the Wiring Information**.

- **When Monitored:**
  Engine running and battery voltage greater than 10 Volts.
- **Set Condition:**
  If PCM detects that the secondary ignition burn time is incorrect, too short or not present, an error is detected. One Trip Fault. Three good trips to turn off the MIL.

Possible Causes
(K342) ASD CONTROL OUTPUT CIRCUIT
(K19) COIL CONTROL NO.1 CIRCUIT OPEN
(K19) COIL CONTROL NO.1 CIRCUIT SHORTED TO GROUND
COIL ON PLUG
POWERTRAIN CONTROL MODULE (PCM)

Always perform the Pre-Diagnostic Troubleshooting procedure before proceeding. (Refer to 28 - DTC-Based Diagnostics/MODULE, Powertrain Control (PCM) - Standard Procedure).

1. ACTIVE DTC

NOTE: Diagnose any ASD related DTCs before continuing.

1. Start the engine.
2. With the scan tool, select View DTCs.

NOTE: It may be necessary to drive the vehicle to meet the conditions to set this DTC, try to repeat the conditions in which the fault originally set by reviewing the Freeze Frame data.

Does the DTC become Active?

Yes

- Go To 2

No

- Perform the INTERMITTENT CONDITION Diagnostic Procedure. (Refer to 28 - DTC-Based Diagnostics/MODULE, Powertrain Control (PCM) - Standard Procedure)

2. (K342) ASD CONTROL OUTPUT CIRCUIT

1. Turn the ignition off.
2. Disconnect the Coil on Plug harness connector.
3. Ignition on, engine not running.

NOTE: Make sure the test light is probing the circuit before actuating the Coil or a DTC may set and not allow the actuation.

4. Using a 12-volt test light connected to ground, probe the (K342) ASD Control Output circuit in the Coil on Plug harness connector.
5. With the scan tool, actuate the ASD.

Does the test light illuminate brightly?

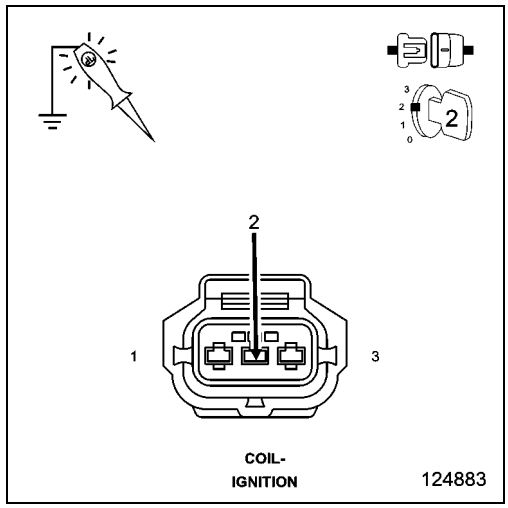

Yes

- Go To 3

No

- Repair the open or short to ground in the (K342) ASD Control Output circuit between the TIPM and Coil harness connector.
- Perform the POWERTRAIN VERIFICATION TEST. (Refer to 28 - DTC-Based Diagnostics/MODULE, Powertrain Control (PCM) - Standard Procedure)

NOTE: Stop All Actuations.

3. COIL ON PLUG RESISTANCE

1. Turn the ignition off.

NOTE: The following resistance measurement should be taken between 70° and 80° F.

2. Measure the resistance of the Coil on Plug.
3. 4.7L and 3.7L Primary Ignition Coil resistance is 0.6 to 0.9 of an ohm at 25° C (77° F).
4. 5.7L Primary Ignition Coil resistance is 0.558 to 0.682 of an ohm at 25° C (77° F).

Is the resistance within the given specification for the Ignition Coil being tested?

Yes

- Go To 4

No

- Replace the Coil on plug.
- Perform the POWERTRAIN VERIFICATION TEST. (Refer to 28 - DTC-Based Diagnostics/MODULE, Powertrain Control (PCM) - Standard Procedure)

4. IGNITION COIL

WARNING: When the engine is operating, do not stand in direct line with the fan. Do not put your hands near the pulleys, belts or fan. Do not wear loose clothing. Failure to follow these instructions may result in possible serious or fatal injury.

1. Using a 12-volt test light connected to a 12-volt source, probe the (K19) Coil Control No.1 circuit.
2. Crank the engine for 5 seconds while observing the test light.

What is the condition of the test light while cranking the engine?

Brightly blinking.

- Verify that there is good pin to terminal contact in the Ignition Coil and the Powertrain Control Module connectors. Replace the Ignition Coil if no problems were found in the connectors.
- Perform the POWERTRAIN VERIFICATION TEST. (Refer to 28 - DTC-Based Diagnostics/MODULE, Powertrain Control (PCM) - Standard Procedure)

ON constantly.

- Go To 5

OFF constantly.

- Go To 6

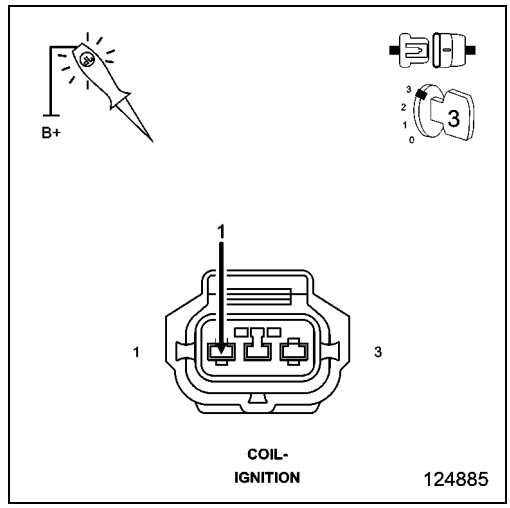

5. (K19) COIL CONTROL NO.1 CIRCUIT SHORTED TO GROUND

1. Turn the ignition off.
2. Disconnect the C2 PCM harness connector.
3. Measure the resistance between ground and the (K19) Coil Control No.1 circuit in the Coil on Plug harness connector.

Is the resistance below 100 Ohms?

Yes

- Repair the short to ground in the (K19) Coil Control No.1 circuit.
- Perform the POWERTRAIN VERIFICATION TEST. (Refer to 28 - DTC-Based Diagnostics/MODULE, Powertrain Control (PCM) - Standard Procedure)

No

- Go To 7

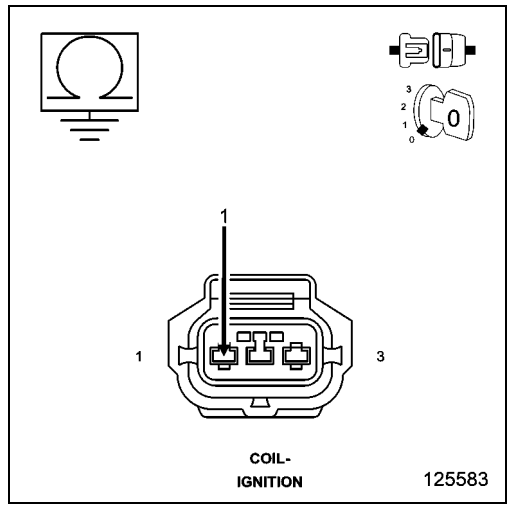

6. (K19) COIL CONTROL NO.1 CIRCUIT OPEN

1. Turn the ignition off.
2. Disconnect the C2 PCM harness connector.

CAUTION: Do not probe the PCM harness connectors. Probing the PCM harness connectors will damage the PCM terminals resulting in poor terminal to pin connection. Install the PCM Pinout Box Kit, NGC, 38 Position 8815A to perform diagnosis.

3. Measure the resistance of the (K19) Coil Control No.1 circuit from the Coil on Plug harness connector to the appropriate terminal of PCM Pinout Box 8815A.

Is the resistance below 5.0 Ohms?

Yes

- Go To 7

No

- Repair the open in the (K19) Coil Control No.1 circuit.
- Perform the POWERTRAIN VERIFICATION TEST. (Refer to 28 - DTC-Based Diagnostics/MODULE, Powertrain Control (PCM) - Standard Procedure)

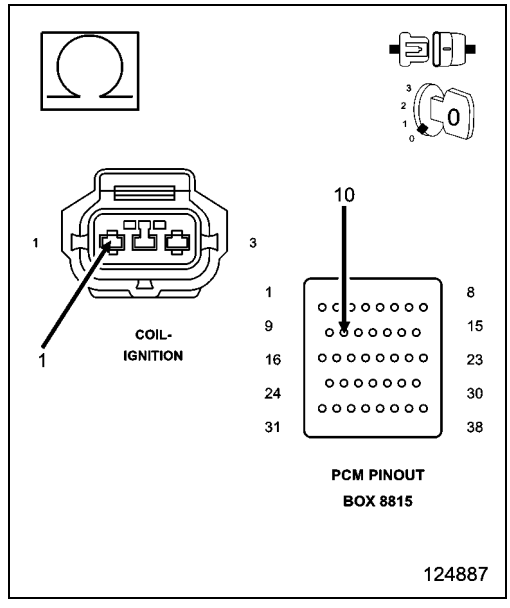

7. POWERTRAIN CONTROL MODULE (PCM)

1. Using the wiring diagram/schematic as a guide, inspect the wiring and connectors between the Ignition Coil and the Powertrain Control Module (PCM).
2. Look for any chafed, pierced, pinched or partially broken wires.
3. Look for broken, bent, pushed out or corroded terminals. Verify that there is good pin to terminal contact in the Ignition Coil and the Powertrain Control Module connectors.
4. Refer to any Technical Service Bulletins that may apply.

Were there any problems found?

Yes

- Repair as necessary.
- Perform the POWERTRAIN VERIFICATION TEST. (Refer to 28 - DTC-Based Diagnostics/MODULE, Powertrain Control (PCM) - Standard Procedure)

No

- Replace and program the Powertrain Control Module in accordance with the Service Information.
- Perform the POWERTRAIN VERIFICATION TEST. (Refer to 28 - DTC-Based Diagnostics/MODULE, Powertrain Control (PCM) - Standard Procedure)

P2305-IGNITION COIL 2 SECONDARY CIRCUIT- INSUFFICIENT IONIZATION

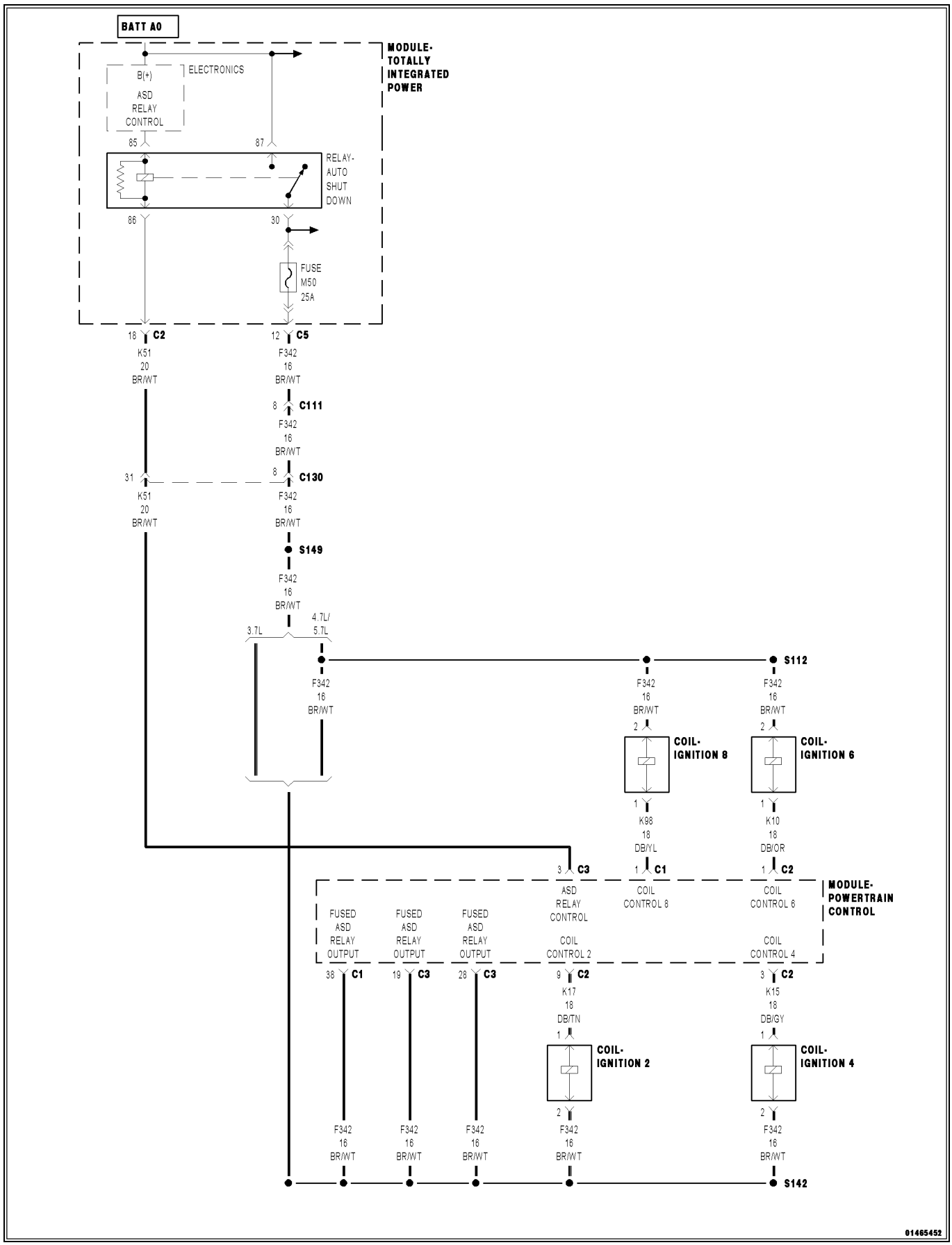

For a complete wiring diagram, **refer to the Wiring Information**.

- **When Monitored:**
  Engine running and battery voltage greater than 10 Volts.
- **Set Condition:**
  If PCM detects that the secondary ignition burn time is incorrect, too short or not present, an error is detected. One Trip Fault. Three good trips to turn off the MIL.

Possible Causes
(K342) ASD CONTROL OUTPUT CIRCUIT
(K17) COIL CONTROL NO.2 CIRCUIT OPEN
(K17) COIL CONTROL NO.2 CIRCUIT SHORTED TO GROUND
COIL ON PLUG
POWERTRAIN CONTROL MODULE (PCM)

Always perform the Pre-Diagnostic Troubleshooting procedure before proceeding. (Refer to 28 - DTC-Based Diagnostics/MODULE, Powertrain Control (PCM) - Standard Procedure).

1. ACTIVE DTC

NOTE: Diagnose any ASD related DTCs before continuing.

1. Start the engine.
2. With the scan tool, select View DTCs.

NOTE: It may be necessary to drive the vehicle to meet the conditions to set this DTC, try to repeat the conditions in which the fault originally set by reviewing the Freeze Frame data.

Does the DTC become Active?

Yes

- Go To 2

No

- Perform the INTERMITTENT CONDITION Diagnostic Procedure. (Refer to 28 - DTC-Based Diagnostics/MODULE, Powertrain Control (PCM) - Standard Procedure)

2. (K342) ASD CONTROL OUTPUT CIRCUIT

1. Turn the ignition off.
2. Disconnect the Coil on Plug harness connector.
3. Ignition on, engine not running.

NOTE: Make sure the test light is probing the circuit before actuating the Coil or a DTC may set and not allow the actuation.

4. Using a 12-volt test light connected to ground, probe the (K342) ASD Control Output circuit in the Coil on Plug harness connector.
5. With the scan tool, actuate the ASD.

Does the test light illuminate brightly?

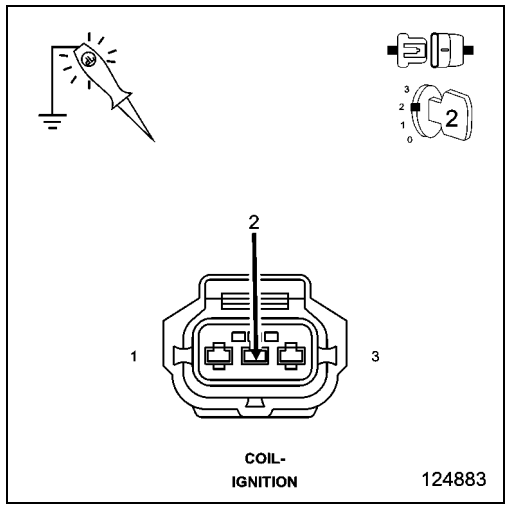

Yes

- Go To 3

No

- Repair the open or short to ground in the (K342) ASD Control Output circuit between the TIPM and Coil harness connector.
- Perform the POWERTRAIN VERIFICATION TEST. (Refer to 28 - DTC-Based Diagnostics/MODULE, Powertrain Control (PCM) - Standard Procedure)

NOTE: Stop All Actuations.

3. COIL ON PLUG RESISTANCE

1. Turn the ignition off.

NOTE: The following resistance measurement should be taken between 70° and 80° F.

2. Measure the resistance of the Coil on Plug.
3. 4.7L and 3.7L Primary Ignition Coil resistance is 0.6 to 0.9 of an ohm at 25° C (77° F).
4. 5.7L Primary Ignition Coil resistance is 0.558 to 0.682 of an ohm at 25° C (77° F).

Is the resistance within the given specification for the Ignition Coil being tested?

Yes

- Go To 4

No

- Replace the Coil on plug.
- Perform the POWERTRAIN VERIFICATION TEST. (Refer to 28 - DTC-Based Diagnostics/MODULE, Powertrain Control (PCM) - Standard Procedure)

4. IGNITION COIL

WARNING: When the engine is operating, do not stand in direct line with the fan. Do not put your hands near the pulleys, belts or fan. Do not wear loose clothing. Failure to follow these instructions may result in possible serious or fatal injury.

1. Using a 12-volt test light connected to a 12-volt source, probe the (K17) Coil Control No.2 circuit.
2. Crank the engine for 5 seconds while observing the test light.

What is the state of the test light while cranking the engine?

Brightly blinking.

- Verify that there is good pin to terminal contact in the Ignition Coil and the Powertrain Control Module connectors. Replace the Ignition Coil if no problems were found in the connectors.
- Perform the POWERTRAIN VERIFICATION TEST. (Refer to 28 - DTC-Based Diagnostics/MODULE, Powertrain Control (PCM) - Standard Procedure)

ON constantly.

- Go To 5

OFF constantly.

- Go To 6

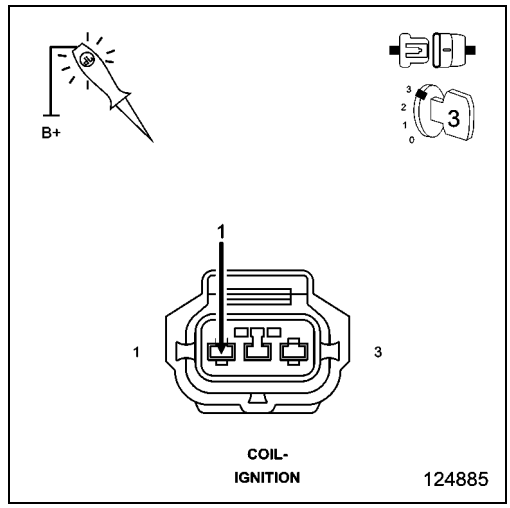

5. (K17) COIL CONTROL NO.2 CIRCUIT SHORTED TO GROUND

1. Turn the ignition off.
2. Disconnect the C2 PCM harness connector.
3. Measure the resistance between ground and the (K17) Coil Control No.2 circuit in the Coil on Plug harness connector.

Is the resistance below 100 Ohms?

Yes

- Repair the short to ground in the (K17) Coil Control No.2 circuit.
- Perform the POWERTRAIN VERIFICATION TEST. (Refer to 28 - DTC-Based Diagnostics/MODULE, Powertrain Control (PCM) - Standard Procedure)

No

- Go To 7

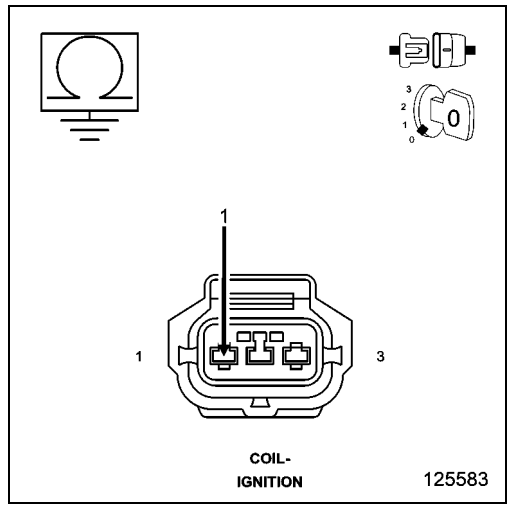

6. (K17) COIL CONTROL NO.2 CIRCUIT OPEN

1. Turn the ignition off.
2. Disconnect the C2 PCM harness connector.

CAUTION: Do not probe the PCM harness connectors. Probing the PCM harness connectors will damage the PCM terminals resulting in poor terminal to pin connection. Install the PCM Pinout Box Kit, NGC, 38 Position 8815A to perform diagnosis.

3. Measure the resistance of the (K17) Coil Control No.2 circuit from the Coil on Plug harness connector to the appropriate terminal of PCM Pinout Box 8815A.

Is the resistance below 5.0 Ohms?

Yes

- Go To 7

No

- Repair the open in the (K17) Coil Control No.2 circuit.
- Perform the POWERTRAIN VERIFICATION TEST. (Refer to 28 - DTC-Based Diagnostics/MODULE, Powertrain Control (PCM) - Standard Procedure)

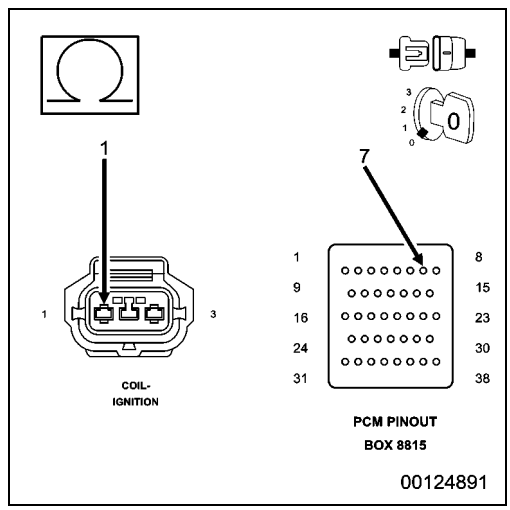

7. POWERTRAIN CONTROL MODULE (PCM)

1. Using the wiring diagram/schematic as a guide, inspect the wiring and connectors between the Ignition Coil and the Powertrain Control Module (PCM).
2. Look for any chafed, pierced, pinched or partially broken wires.
3. Look for broken, bent, pushed out or corroded terminals. Verify that there is good pin to terminal contact in the Ignition Coil and the Powertrain Control Module connectors.
4. Refer to any Technical Service Bulletins that may apply.

Were there any problems found?

Yes

- Repair as necessary.
- Perform the POWERTRAIN VERIFICATION TEST. (Refer to 28 - DTC-Based Diagnostics/MODULE, Powertrain Control (PCM) - Standard Procedure)

No

- Replace and program the Powertrain Control Module in accordance with the Service Information.
- Perform the POWERTRAIN VERIFICATION TEST. (Refer to 28 - DTC-Based Diagnostics/MODULE, Powertrain Control (PCM) - Standard Procedure)

P2308-IGNITION COIL 3 SECONDARY CIRCUIT- INSUFFICIENT IONIZATION

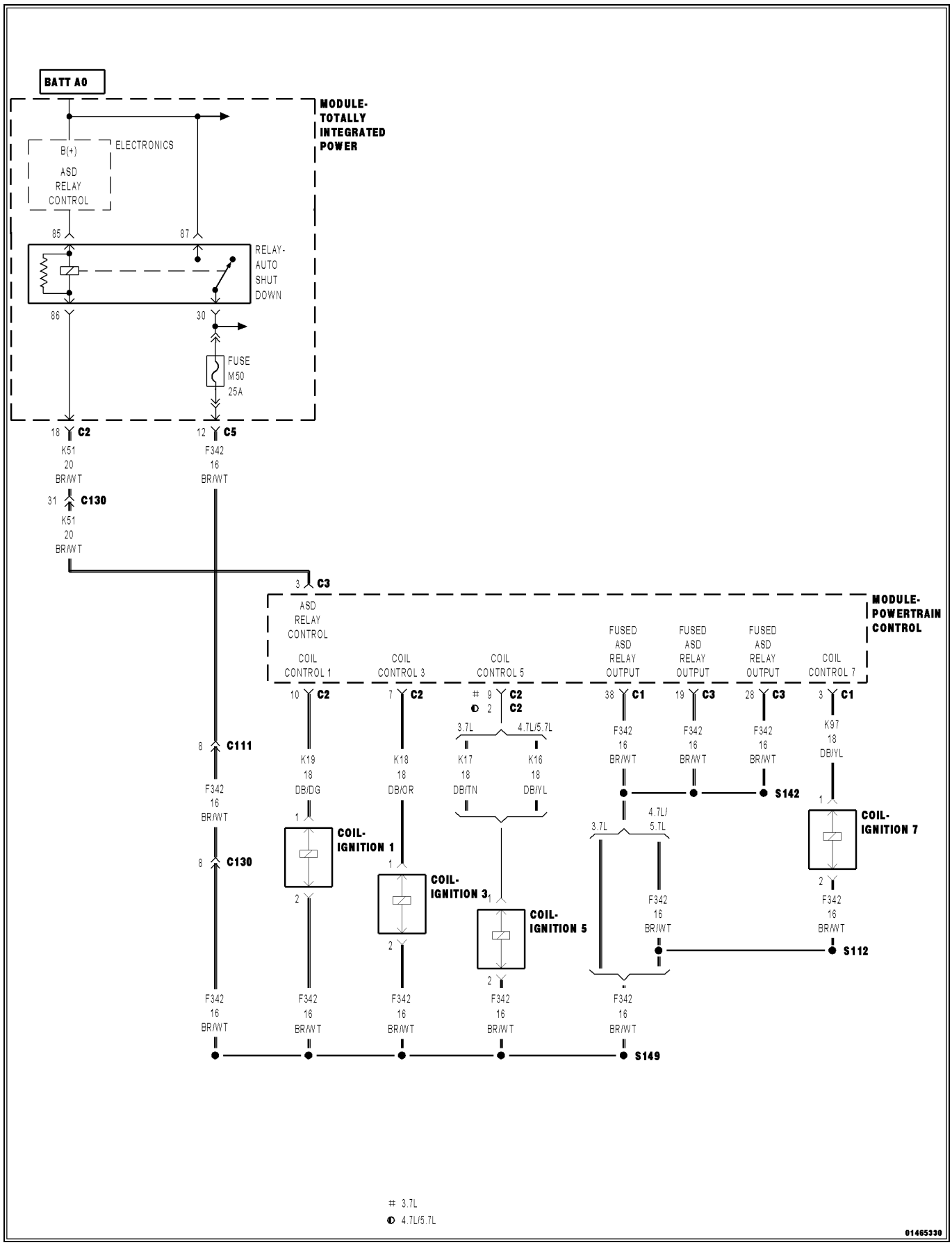

For a complete wiring diagram, **refer to the Wiring Information**.

- **When Monitored:**
  Engine running and battery voltage greater than 10 Volts.
- **Set Condition:**
  If PCM detects that the secondary ignition burn time is incorrect, too short or not present, an error is detected. One Trip Fault. Three good trips to turn off the MIL.

Possible Causes
(K342) ASD CONTROL OUTPUT CIRCUIT
(K18) COIL CONTROL NO.3 CIRCUIT OPEN
(K18) COIL CONTROL NO.3 CIRCUIT SHORTED TO GROUND
COIL ON PLUG
POWERTRAIN CONTROL MODULE (PCM)

Always perform the Pre-Diagnostic Troubleshooting procedure before proceeding. (Refer to 28 - DTC-Based Diagnostics/MODULE, Powertrain Control (PCM) - Standard Procedure).

1. ACTIVE DTC

NOTE: Diagnose any ASD related DTCs before continuing.

1. Start the engine.
2. With the scan tool, select View DTCs.

NOTE: It may be necessary to drive the vehicle to meet the conditions to set this DTC, try to repeat the conditions in which the fault originally set by reviewing the Freeze Frame data.

Does the DTC become Active?

Yes

- Go To 2

No

- Perform the INTERMITTENT CONDITION Diagnostic Procedure. (Refer to 28 - DTC-Based Diagnostics/MODULE, Powertrain Control (PCM) - Standard Procedure)

2. (K342) ASD CONTROL OUTPUT CIRCUIT

1. Turn the ignition off.
2. Disconnect the Coil on Plug harness connector.
3. Ignition on, engine not running.

NOTE: Make sure the test light is probing the circuit before actuating the Coil or a DTC may set and not allow the actuation.

4. Using a 12-volt test light connected to ground, probe the (K342) ASD Control Output circuit in the Coil on Plug harness connector.
5. With the scan tool, actuate the ASD.

Does the test light illuminate brightly?

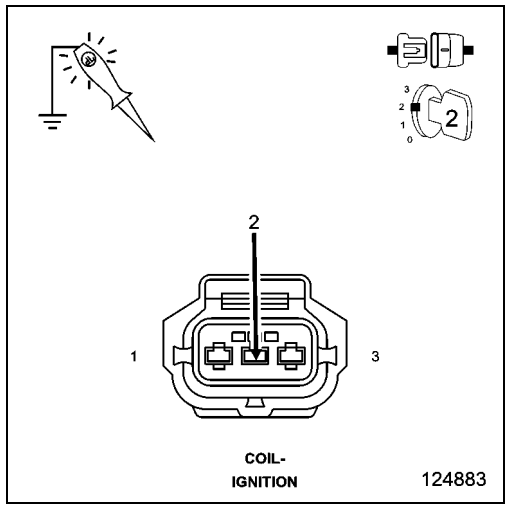

Yes

- Go To 3

No

- Repair the open or short to ground in the (K342) ASD Control Output circuit between the TIPM and Coil harness connector.
- Perform the POWERTRAIN VERIFICATION TEST. (Refer to 28 - DTC-Based Diagnostics/MODULE, Powertrain Control (PCM) - Standard Procedure)

NOTE: Stop All Actuations.

3. COIL ON PLUG RESISTANCE

1. Turn the ignition off.

NOTE: The following resistance measurement should be taken between 70° and 80° F.

2. Measure the resistance of the Coil on Plug.
3. 4.7L and 3.7L Primary Ignition Coil resistance is 0.6 to 0.9 of an ohm at 25° C (77° F).
4. 5.7L Primary Ignition Coil resistance is 0.558 to 0.682 of an ohm at 25° C (77° F).

Is the resistance within the given specification for the Ignition Coil being tested?

Yes

- Go To 4

No

- Replace the Coil on plug.
- Perform the POWERTRAIN VERIFICATION TEST. (Refer to 28 - DTC-Based Diagnostics/MODULE, Powertrain Control (PCM) - Standard Procedure)

4. IGNITION COIL

WARNING: When the engine is operating, do not stand in direct line with the fan. Do not put your hands near the pulleys, belts or fan. Do not wear loose clothing. Failure to follow these instructions may result in possible serious or fatal injury.

1. Using a 12-volt test light connected to a 12-volt source, probe the (K18) Coil Control No.3 circuit.
2. Crank the engine for 5 seconds while observing the test light.

What is the state of the test light while cranking the engine?

Brightly blinking.

- Verify that there is good pin to terminal contact in the Ignition Coil and the Powertrain Control Module connectors. Replace the Ignition Coil if no problems were found in the connectors.
- Perform the POWERTRAIN VERIFICATION TEST. (Refer to 28 - DTC-Based Diagnostics/MODULE, Powertrain Control (PCM) - Standard Procedure)

ON constantly.

- Go To 5

OFF constantly.

- Go To 6

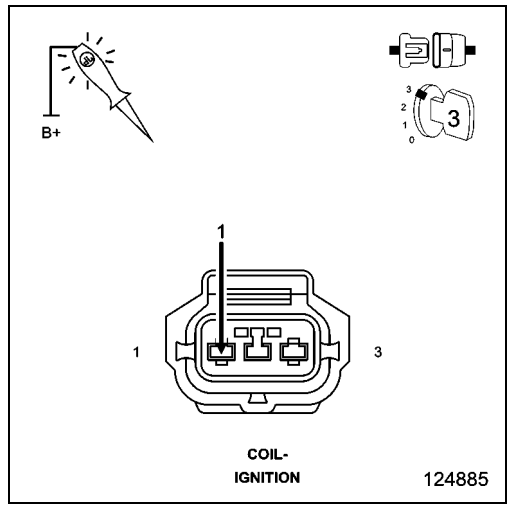

5. (K18) COIL CONTROL NO.3 CIRCUIT SHORTED TO GROUND

1. Turn the ignition off.
2. Disconnect the C2 PCM harness connector.
3. Measure the resistance between ground and the (K18) Coil Control No.3 circuit in the Coil on Plug harness connector.

Is the resistance below 100 Ohms?

Yes

- Repair the short to ground in the (K18) Coil Control No.3 circuit.
- Perform the POWERTRAIN VERIFICATION TEST. (Refer to 28 - DTC-Based Diagnostics/MODULE, Powertrain Control (PCM) - Standard Procedure)

No

- Go To 7

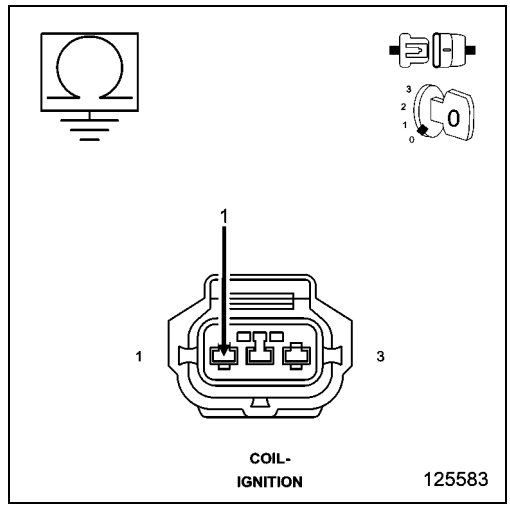

6. (K18) COIL CONTROL NO.3 CIRCUIT OPEN

1. Turn the ignition off.
2. Disconnect the C2 PCM harness connector.

CAUTION: Do not probe the PCM harness connectors. Probing the PCM harness connectors will damage the PCM terminals resulting in poor terminal to pin connection. Install the PCM Pinout Box Kit, NGC, 38 Position 8815A to perform diagnosis.

3. Measure the resistance of the (K18) Coil Control No.3 circuit from the Coil on Plug harness connector to the appropriate terminal of PCM Pinout Box 8815A.

Is the resistance below 5.0 Ohms?

Yes

- Go To 7

No

- Repair the open in the (K18) Coil Control No.3 circuit.
- Perform the POWERTRAIN VERIFICATION TEST. (Refer to 28 - DTC-Based Diagnostics/MODULE, Powertrain Control (PCM) - Standard Procedure)

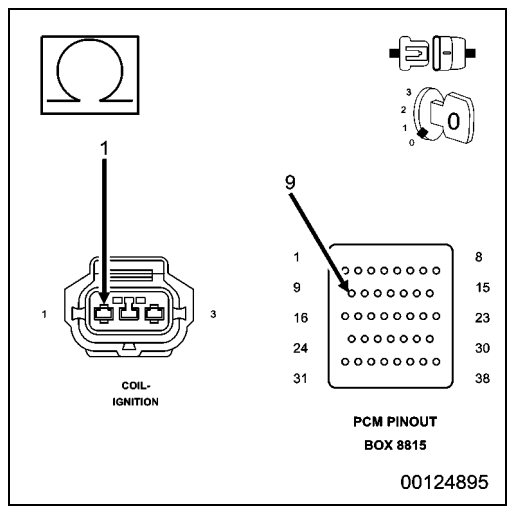

7. POWERTRAIN CONTROL MODULE (PCM)

1. Using the wiring diagram/schematic as a guide, inspect the wiring and connectors between the Ignition Coil and the Powertrain Control Module (PCM).
2. Look for any chafed, pierced, pinched or partially broken wires.
3. Look for broken, bent, pushed out or corroded terminals. Verify that there is good pin to terminal contact in the Ignition Coil and the Powertrain Control Module connectors.
4. Refer to any Technical Service Bulletins that may apply.

Were there any problems found?

Yes

- Repair as necessary.
- Perform the POWERTRAIN VERIFICATION TEST. (Refer to 28 - DTC-Based Diagnostics/MODULE, Powertrain Control (PCM) - Standard Procedure)

No

- Replace and program the Powertrain Control Module in accordance with the Service Information.
- Perform the POWERTRAIN VERIFICATION TEST. (Refer to 28 - DTC-Based Diagnostics/MODULE, Powertrain Control (PCM) - Standard Procedure)

P2311-IGNITION COIL 4 SECONDARY CIRCUIT- INSUFFICIENT IONIZATION

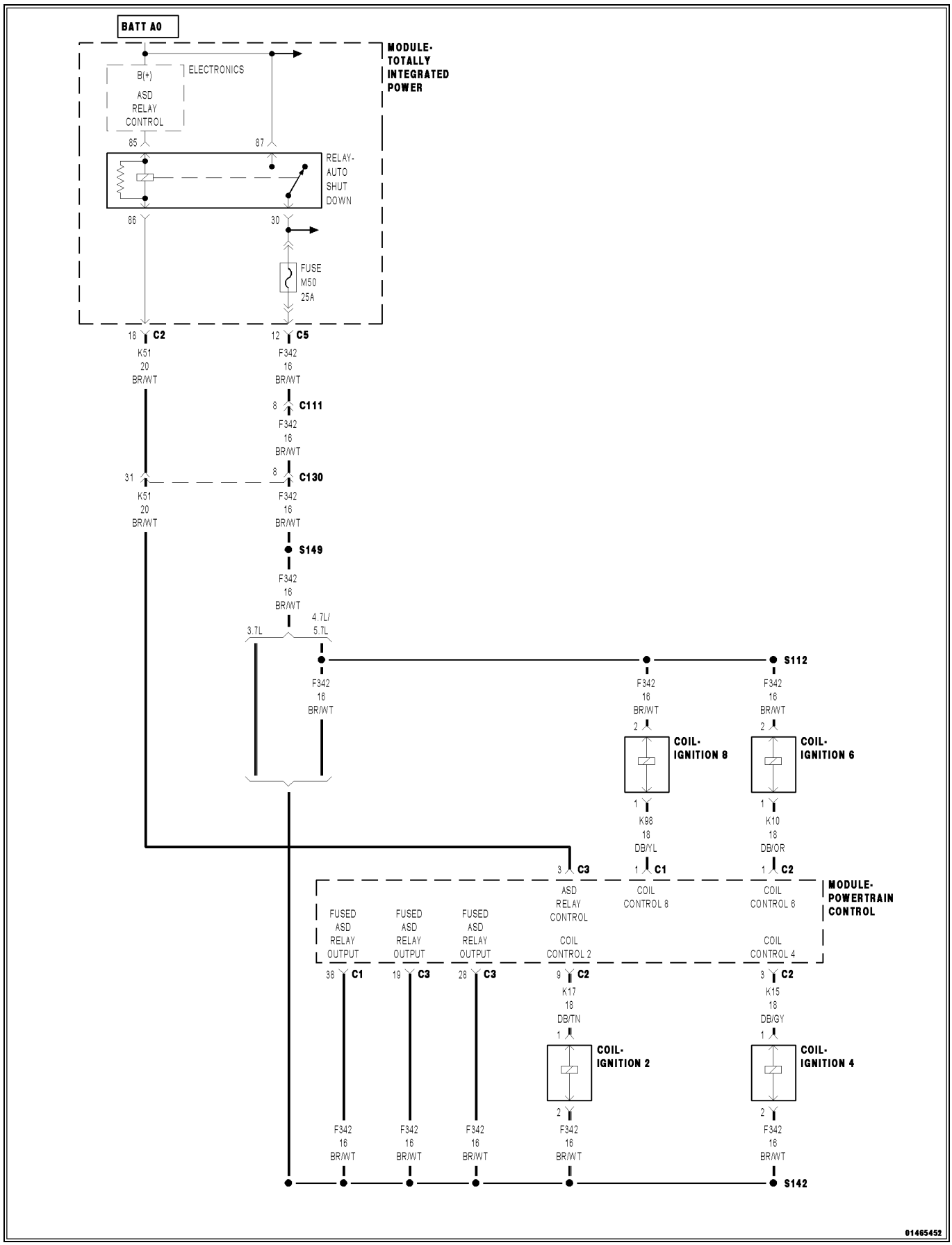

For a complete wiring diagram, **refer to the Wiring Information**.

- **When Monitored:**
  Engine running and battery voltage greater than 10 Volts.
- **Set Condition:**
  If PCM detects that the secondary ignition burn time is incorrect, too short or not present, an error is detected. One Trip Fault. Three good trips to turn off the MIL.

Possible Causes
(K342) ASD CONTROL OUTPUT CIRCUIT
(K15) COIL CONTROL NO.4 CIRCUIT OPEN
(K15) COIL CONTROL NO.4 CIRCUIT SHORTED TO GROUND
COIL ON PLUG
POWERTRAIN CONTROL MODULE (PCM)

Always perform the Pre-Diagnostic Troubleshooting procedure before proceeding. (Refer to 28 - DTC-Based Diagnostics/MODULE, Powertrain Control (PCM) - Standard Procedure).

1. ACTIVE DTC

NOTE: Diagnose any ASD related DTCs before continuing.

1. Start the engine.
2. With the scan tool, select View DTCs.

NOTE: It may be necessary to drive the vehicle to meet the conditions to set this DTC, try to repeat the conditions in which the fault originally set by reviewing the Freeze Frame data.

Does the DTC become Active?

Yes

- Go To 2

No

- Perform the INTERMITTENT CONDITION Diagnostic Procedure. (Refer to 28 - DTC-Based Diagnostics/MODULE, Powertrain Control (PCM) - Standard Procedure)

2. (K342) ASD CONTROL OUTPUT CIRCUIT

1. Turn the ignition off.
2. Disconnect the Coil on Plug harness connector.
3. Ignition on, engine not running.

NOTE: Make sure the test light is probing the circuit before actuating the Coil or a DTC may set and not allow the actuation.

4. Using a 12-volt test light connected to ground, probe the (K342) ASD Control Output circuit in the Coil on Plug harness connector.
5. With the scan tool, actuate the ASD.

Does the test light illuminate brightly?

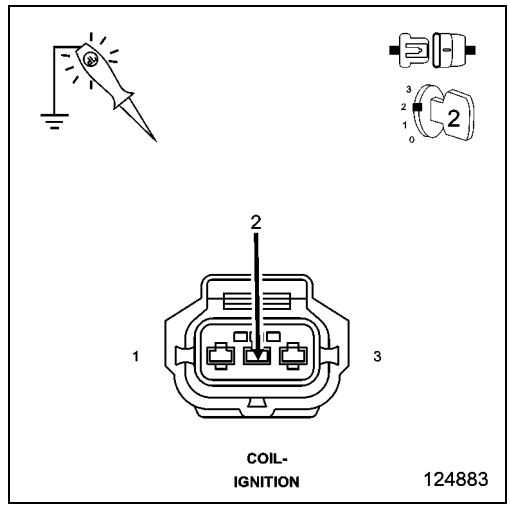

Yes

- Go To 3

No

- Repair the open or short to ground in the (K342) ASD Control Output circuit between the TIPM and Coil harness connector.
- Perform the POWERTRAIN VERIFICATION TEST. (Refer to 28 - DTC-Based Diagnostics/MODULE, Powertrain Control (PCM) - Standard Procedure)

NOTE: Stop All Actuations.

3. COIL ON PLUG RESISTANCE

1. Turn the ignition off.

NOTE: The following resistance measurement should be taken between 70° and 80° F.

2. Measure the resistance of the Coil on Plug.
3. 4.7L and 3.7L Primary Ignition Coil resistance is 0.6 to 0.9 of an ohm at 25° C (77° F).
4. 5.7L Primary Ignition Coil resistance is 0.558 to 0.682 of an ohm at 25° C (77° F).

Is the resistance within the given specification for the Ignition Coil being tested?

Yes

- Go To 4

No

- Replace the Coil on plug.
- Perform the POWERTRAIN VERIFICATION TEST. (Refer to 28 - DTC-Based Diagnostics/MODULE, Powertrain Control (PCM) - Standard Procedure)

4. IGNITION COIL

WARNING: When the engine is operating, do not stand in direct line with the fan. Do not put your hands near the pulleys, belts or fan. Do not wear loose clothing. Failure to follow these instructions may result in possible serious or fatal injury.

1. Using a 12-volt test light connected to a 12-volt source, probe the (K15) Coil Control No.4 circuit.
2. Crank the engine for 5 seconds while observing the test light.

What is the state of the test light while cranking the engine?

Brightly blinking.

- Verify that there is good pin to terminal contact in the Ignition Coil and the Powertrain Control Module connectors. Replace the Ignition Coil if no problems were found in the connectors.
- Perform the POWERTRAIN VERIFICATION TEST. (Refer to 28 - DTC-Based Diagnostics/MODULE, Powertrain Control (PCM) - Standard Procedure)

ON constantly.

- Go To 5

OFF constantly.

- Go To 6

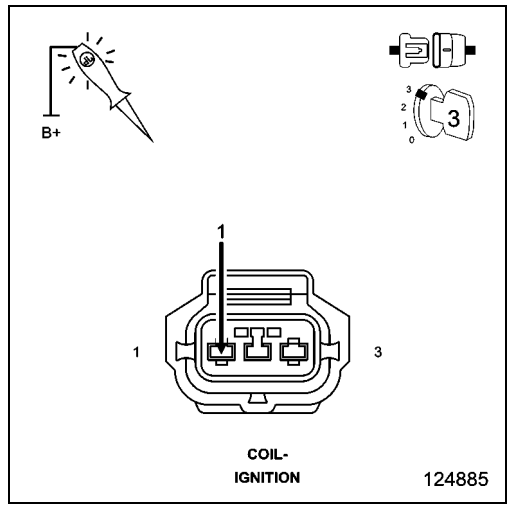

5. (K15) COIL CONTROL NO.4 CIRCUIT SHORTED TO GROUND

1. Turn the ignition off.
2. Disconnect the C2 PCM harness connector.
3. Measure the resistance between ground and the (K15) Coil Control No.4 circuit in the Coil on Plug harness connector.

Is the resistance below 100 Ohms?

Yes

- Repair the short to ground in the (K15) Coil Control No.4 circuit.
- Perform the POWERTRAIN VERIFICATION TEST. (Refer to 28 - DTC-Based Diagnostics/MODULE, Powertrain Control (PCM) - Standard Procedure)

No

- Go To 7

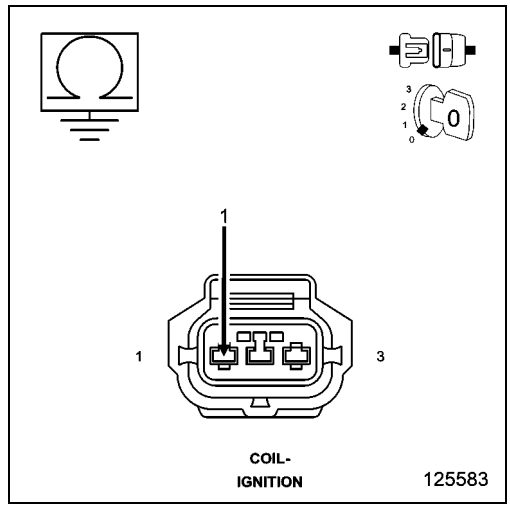

6. (K15) COIL CONTROL NO.4 CIRCUIT OPEN

1. Turn the ignition off.
2. Disconnect the C2 PCM harness connector.

CAUTION: Do not probe the PCM harness connectors. Probing the PCM harness connectors will damage the PCM terminals resulting in poor terminal to pin connection. Install the PCM Pinout Box Kit, NGC, 38 Position 8815A to perform diagnosis.

3. Measure the resistance of the (K15) Coil Control No.4 circuit from the Coil on Plug harness connector to the appropriate terminal of PCM Pinout Box 8815A.

Is the resistance below 5.0 Ohms?

Yes

- Go To 7

No

- Repair the open in the (K15) Coil Control No.4 circuit.
- Perform the POWERTRAIN VERIFICATION TEST. (Refer to 28 - DTC-Based Diagnostics/MODULE, Powertrain Control (PCM) - Standard Procedure)

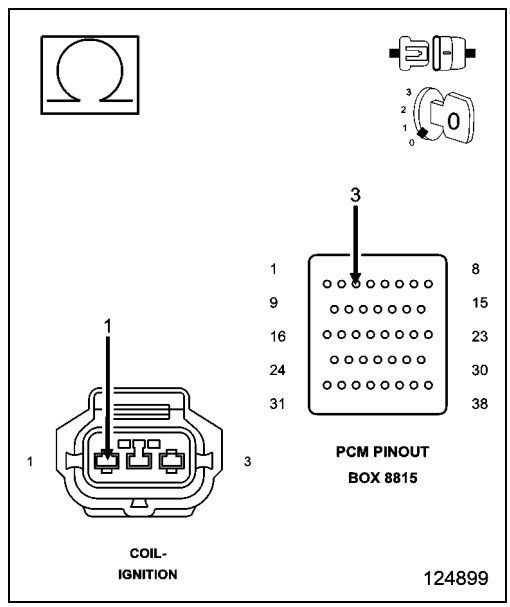

7. POWERTRAIN CONTROL MODULE (PCM)

1. Using the wiring diagram/schematic as a guide, inspect the wiring and connectors between the Ignition Coil and the Powertrain Control Module (PCM).
2. Look for any chafed, pierced, pinched or partially broken wires.
3. Look for broken, bent, pushed out or corroded terminals. Verify that there is good pin to terminal contact in the Ignition Coil and the Powertrain Control Module connectors.
4. Refer to any Technical Service Bulletins that may apply.

Were there any problems found?

Yes

- Repair as necessary.
- Perform the POWERTRAIN VERIFICATION TEST. (Refer to 28 - DTC-Based Diagnostics/MODULE, Powertrain Control (PCM) - Standard Procedure)

No

- Replace and program the Powertrain Control Module in accordance with the Service Information.
- Perform the POWERTRAIN VERIFICATION TEST. (Refer to 28 - DTC-Based Diagnostics/MODULE, Powertrain Control (PCM) - Standard Procedure)

P2314-IGNITION COIL 5 SECONDARY CIRCUIT- INSUFFICIENT IONIZATION

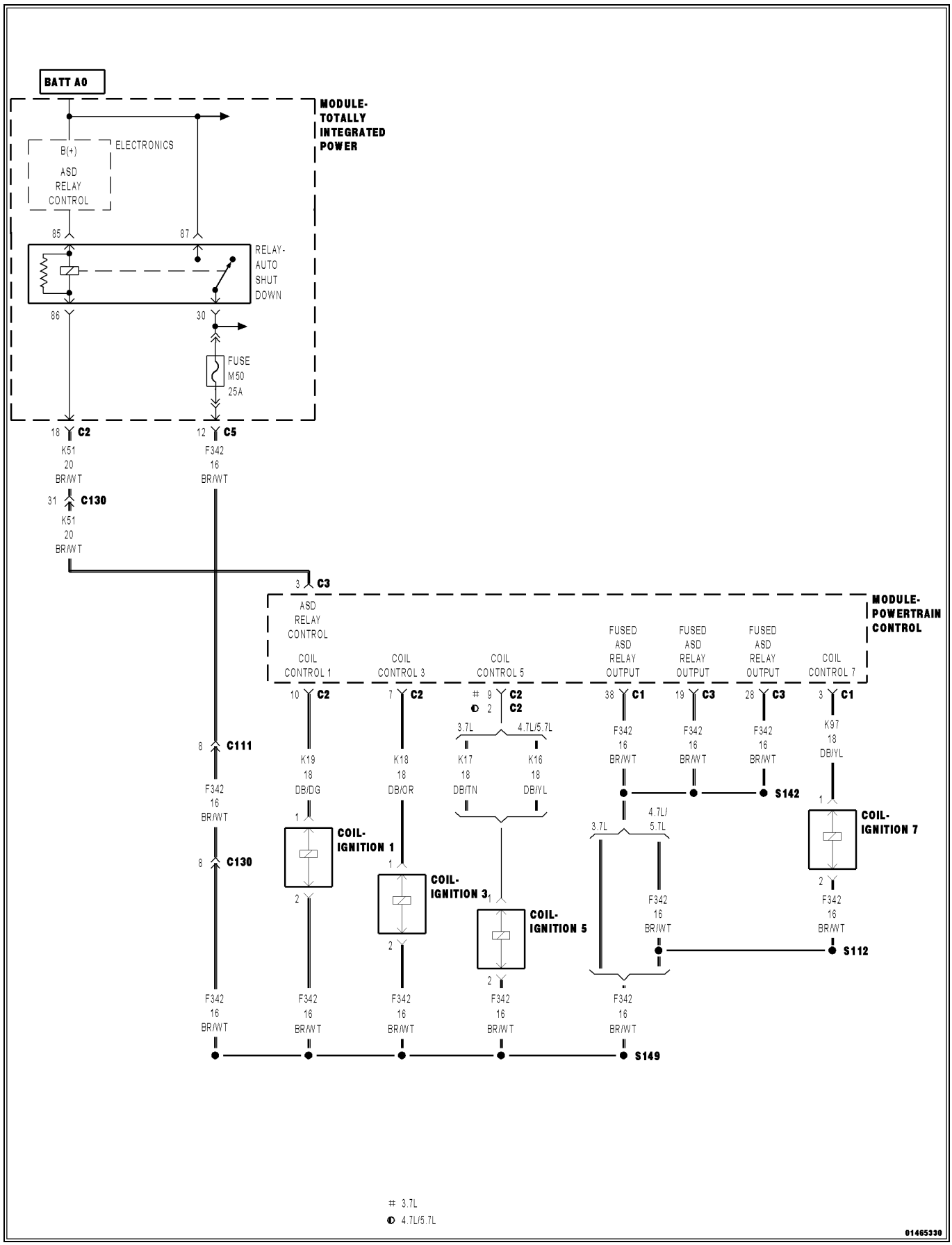

For a complete wiring diagram, **refer to the Wiring Information**.

- **When Monitored:**
  Engine running and battery voltage greater than 10 Volts.
- **Set Condition:**
  If PCM detects that the secondary ignition burn time is incorrect, too short or not present, an error is detected. One Trip Fault. Three good trips to turn off the MIL.

Possible Causes
(K342) ASD CONTROL OUTPUT CIRCUIT
(K16) COIL CONTROL NO.5 CIRCUIT OPEN
(K16) COIL CONTROL NO.5 CIRCUIT SHORTED TO GROUND
COIL ON PLUG
POWERTRAIN CONTROL MODULE (PCM)

Always perform the Pre-Diagnostic Troubleshooting procedure before proceeding. (Refer to 28 - DTC-Based Diagnostics/MODULE, Powertrain Control (PCM) - Standard Procedure).

1. ACTIVE DTC

NOTE: Diagnose any ASD related DTCs before continuing.

1. Start the engine.
2. With the scan tool, select View DTCs.

NOTE: It may be necessary to drive the vehicle to meet the conditions to set this DTC, try to repeat the conditions in which the fault originally set by reviewing the Freeze Frame data.

Does the DTC become Active?

Yes

- Go To 2

No

- Perform the INTERMITTENT CONDITION Diagnostic Procedure. (Refer to 28 - DTC-Based Diagnostics/MODULE, Powertrain Control (PCM) - Standard Procedure)

2. (K342) ASD CONTROL OUTPUT CIRCUIT

1. Turn the ignition off.
2. Disconnect the Coil on Plug harness connector.
3. Ignition on, engine not running.

NOTE: Make sure the test light is probing the circuit before actuating the Coil or a DTC may set and not allow the actuation.

4. Using a 12-volt test light connected to ground, probe the (K342) ASD Control Output circuit in the Coil on Plug harness connector.
5. With the scan tool, actuate the ASD.

Does the test light illuminate brightly?

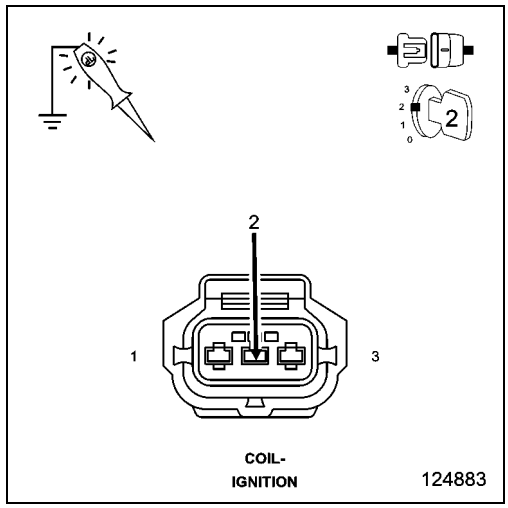

Yes

- Go To 3

No

- Repair the open or short to ground in the (K342) ASD Control Output circuit between the TIPM and Coil harness connector.
- Perform the POWERTRAIN VERIFICATION TEST. (Refer to 28 - DTC-Based Diagnostics/MODULE, Powertrain Control (PCM) - Standard Procedure)

NOTE: Stop All Actuations.

3. COIL ON PLUG RESISTANCE

1. Turn the ignition off.

NOTE: The following resistance measurement should be taken at 70°-80° F.

2. Measure the resistance of the Coil on Plug.
3. 4.7L and 3.7L Primary Ignition Coil resistance is 0.6 to 0.9 of an ohm at 25° C (77° F).
4. 5.7L Primary Ignition Coil resistance is 0.558 to 0.682 of an ohm at 25° C (77° F).

Is the resistance within the given specification for the Ignition Coil being tested?

Yes

- Go To 4

No

- Replace the Coil on plug.
- Perform the POWERTRAIN VERIFICATION TEST. (Refer to 28 - DTC-Based Diagnostics/MODULE, Powertrain Control (PCM) - Standard Procedure)

4. IGNITION COIL

WARNING: When the engine is operating, do not stand in direct line with the fan. Do not put your hands near the pulleys, belts or fan. Do not wear loose clothing. Failure to follow these instructions may result in possible serious or fatal injury.

1. Using a 12-volt test light connected to a 12-volt source, probe the (K16) Coil Control No.5 circuit.
2. Crank the engine for 5 seconds while observing the test light.

What is the state of the test light while cranking the engine?

Brightly blinking.

- Verify that there is good pin to terminal contact in the Ignition Coil and the Powertrain Control Module connectors. Replace the Ignition Coil if no problems were found in the connectors.
- Perform the POWERTRAIN VERIFICATION TEST. (Refer to 28 - DTC-Based Diagnostics/MODULE, Powertrain Control (PCM) - Standard Procedure)

ON constantly.

- Go To 5

OFF constantly.

- Go To 6

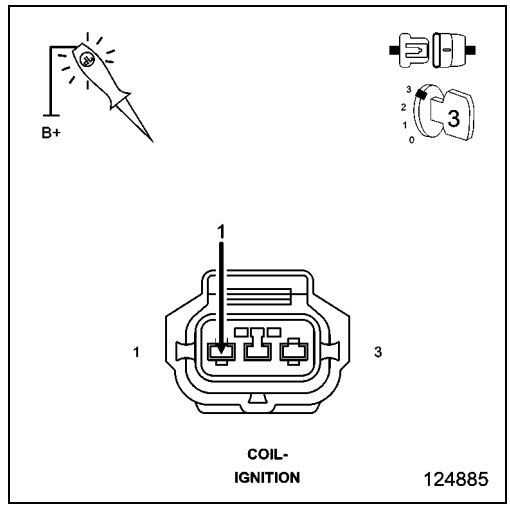

5. (K16) COIL CONTROL NO.5 CIRCUIT SHORTED TO GROUND

1. Turn the ignition off.
2. Disconnect the C2 PCM harness connector.
3. Measure the resistance between ground and the (K16) Coil Control No.5 circuit in the Coil on Plug harness connector.

Is the resistance below 100 Ohms?

Yes

- Repair the short to ground in the (K16) Coil Control No.5 circuit.
- Perform the POWERTRAIN VERIFICATION TEST. (Refer to 28 - DTC-Based Diagnostics/MODULE, Powertrain Control (PCM) - Standard Procedure)

No

- Go To 7

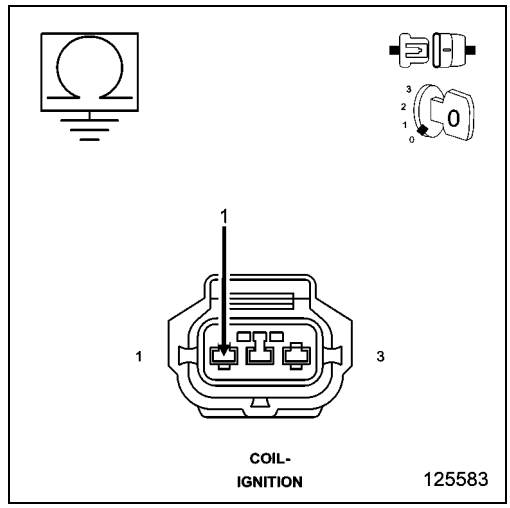

6. (K16) COIL CONTROL NO.5 CIRCUIT OPEN

1. Turn the ignition off.
2. Disconnect the C2 PCM harness connector.

CAUTION: Do not probe the PCM harness connectors. Probing the PCM harness connectors will damage the PCM terminals resulting in poor terminal to pin connection. Install the PCM Pinout Box Kit, NGC, 38 Position 8815A to perform diagnosis.

3. Measure the resistance of the (K16) Coil Control No.5 circuit from the Coil on Plug harness connector to the appropriate terminal of PCM Pinout Box 8815A.

Is the resistance below 5.0 Ohms?

Yes

- Go To 7

No

- Repair the open in the (K16) Coil Control No.5 circuit.
- Perform the POWERTRAIN VERIFICATION TEST. (Refer to 28 - DTC-Based Diagnostics/MODULE, Powertrain Control (PCM) - Standard Procedure)

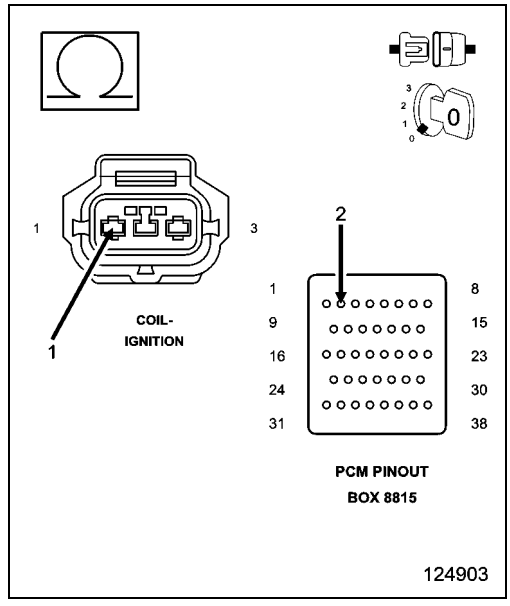

7. POWERTRAIN CONTROL MODULE (PCM)

1. Using the wiring diagram/schematic as a guide, inspect the wiring and connectors between the Ignition Coil and the Powertrain Control Module (PCM).
2. Look for any chafed, pierced, pinched or partially broken wires.
3. Look for broken, bent, pushed out or corroded terminals. Verify that there is good pin to terminal contact in the Ignition Coil and the Powertrain Control Module connectors.
4. Refer to any Technical Service Bulletins that may apply.

Were there any problems found?

Yes

- Repair as necessary.
- Perform the POWERTRAIN VERIFICATION TEST. (Refer to 28 - DTC-Based Diagnostics/MODULE, Powertrain Control (PCM) - Standard Procedure)

No

- Replace and program the Powertrain Control Module in accordance with the Service Information.
- Perform the POWERTRAIN VERIFICATION TEST. (Refer to 28 - DTC-Based Diagnostics/MODULE, Powertrain Control (PCM) - Standard Procedure)

P2317-IGNITION COIL 6 SECONDARY CIRCUIT- INSUFFICIENT IONIZATION

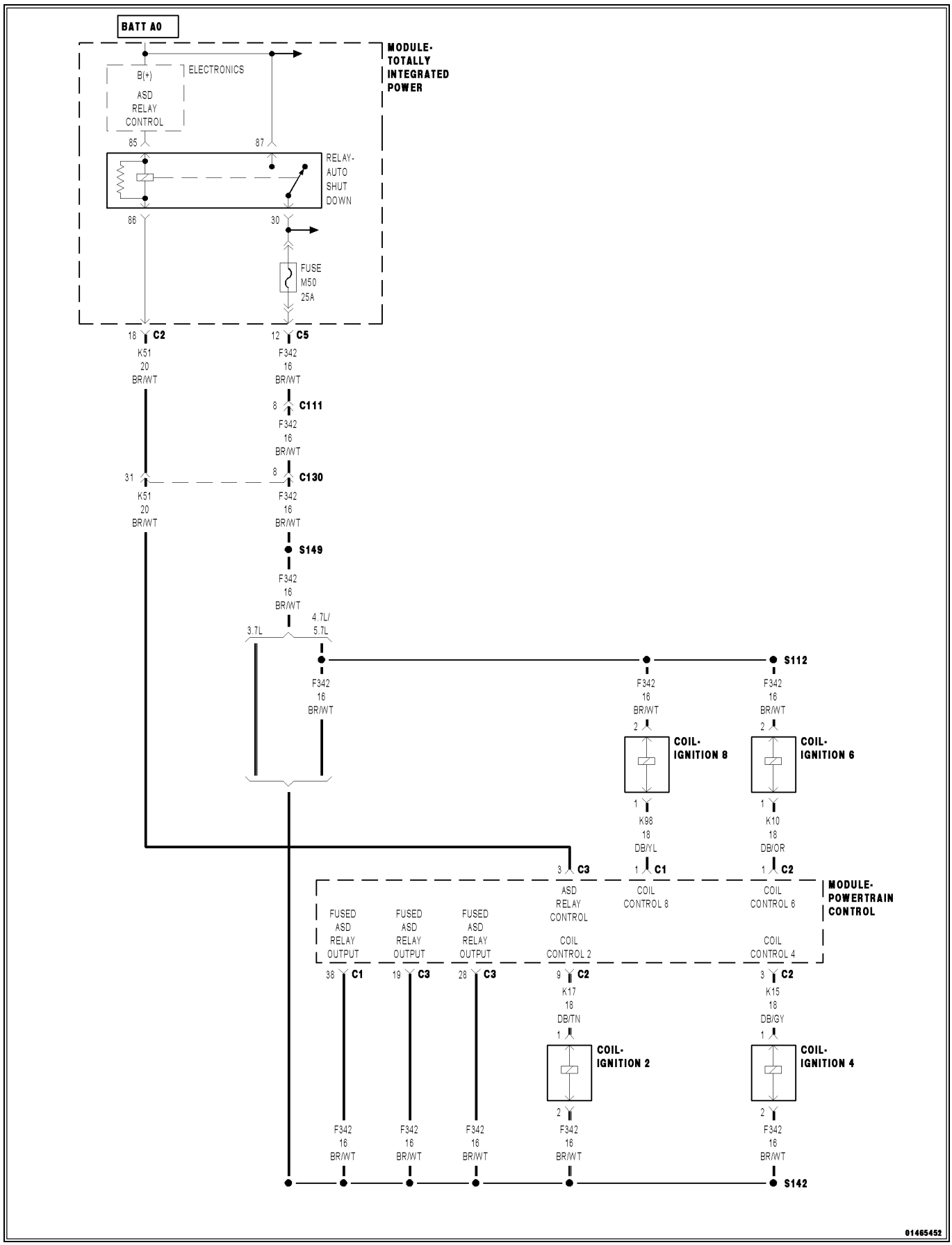

For a complete wiring diagram, **refer to the Wiring Information**.

- **When Monitored:**
  Engine running and battery voltage greater than 10 Volts.
- **Set Condition:**
  If PCM detects that the secondary ignition burn time is incorrect, too short or not present, an error is detected. One Trip Fault. Three good trips to turn off the MIL.

Possible Causes
(K342) ASD CONTROL OUTPUT CIRCUIT
(K10) COIL CONTROL NO.6 CIRCUIT OPEN
(K10) COIL CONTROL NO.6 CIRCUIT SHORTED TO GROUND
COIL ON PLUG
POWERTRAIN CONTROL MODULE (PCM)

Always perform the Pre-Diagnostic Troubleshooting procedure before proceeding. (Refer to 28 - DTC-Based Diagnostics/MODULE, Powertrain Control (PCM) - Standard Procedure).

1. ACTIVE DTC

NOTE: Diagnose any ASD related DTCs before continuing.

1. Start the engine.
2. With the scan tool, select View DTCs.

NOTE: It may be necessary to drive the vehicle to meet the conditions to set this DTC, try to repeat the conditions in which the fault originally set by reviewing the Freeze Frame data.

Does the DTC become Active?

Yes

- Go To 2

No

- Perform the INTERMITTENT CONDITION Diagnostic Procedure. (Refer to 28 - DTC-Based Diagnostics/MODULE, Powertrain Control (PCM) - Standard Procedure)

2. (K342) ASD CONTROL OUTPUT CIRCUIT

1. Turn the ignition off.
2. Disconnect the Coil on Plug harness connector.
3. Ignition on, engine not running.

NOTE: Make sure the test light is probing the circuit before actuating the Coil or a DTC may set and not allow the actuation.

4. Using a 12-volt test light connected to ground, probe the (K342) ASD Control Output circuit in the Coil on Plug harness connector.
5. With the scan tool, actuate the ASD.

Does the test light illuminate brightly?

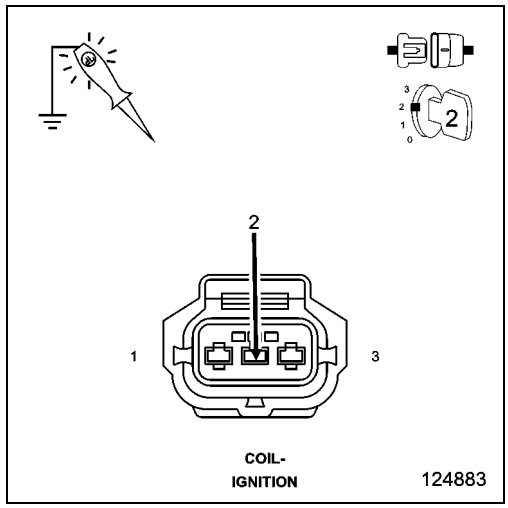

Yes

- Go To 3

No

- Repair the open or short to ground in the (K342) ASD Control Output circuit between the TIPM and Coil harness connector.
- Perform the POWERTRAIN VERIFICATION TEST. (Refer to 28 - DTC-Based Diagnostics/MODULE, Powertrain Control (PCM) - Standard Procedure)

NOTE: Stop All Actuations.

3. COIL ON PLUG RESISTANCE

1. Turn the ignition off.

NOTE: The following resistance measurement should be taken between 70° and 80° F.

2. Measure the resistance of the Coil on Plug.
3. 4.7L and 3.7L Primary Ignition Coil resistance is 0.6 to 0.9 of an ohm at 25° C (77° F).
4. 5.7L Primary Ignition Coil resistance is 0.558 to 0.682 of an ohm at 25° C (77° F).

Is the resistance within the given specification for the Ignition Coil being tested?

Yes

- Go To 4

No

- Replace the Coil on plug.
- Perform the POWERTRAIN VERIFICATION TEST. (Refer to 28 - DTC-Based Diagnostics/MODULE, Powertrain Control (PCM) - Standard Procedure)

4. IGNITION COIL

WARNING: When the engine is operating, do not stand in direct line with the fan. Do not put your hands near the pulleys, belts or fan. Do not wear loose clothing. Failure to follow these instructions may result in possible serious or fatal injury.

1. Using a 12-volt test light connected to a 12-volt source, probe the (K10) Coil Control No.6 circuit.
2. Crank the engine for 5 seconds while observing the test light.

What is the state of the test light while cranking the engine?

Brightly blinking.

- Verify that there is good pin to terminal contact in the Ignition Coil and the Powertrain Control Module connectors. Replace the Ignition Coil if no problems were found in the connectors.
- Perform the POWERTRAIN VERIFICATION TEST. (Refer to 28 - DTC-Based Diagnostics/MODULE, Powertrain Control (PCM) - Standard Procedure)

ON constantly.

- Go To 5

OFF constantly.

- Go To 6

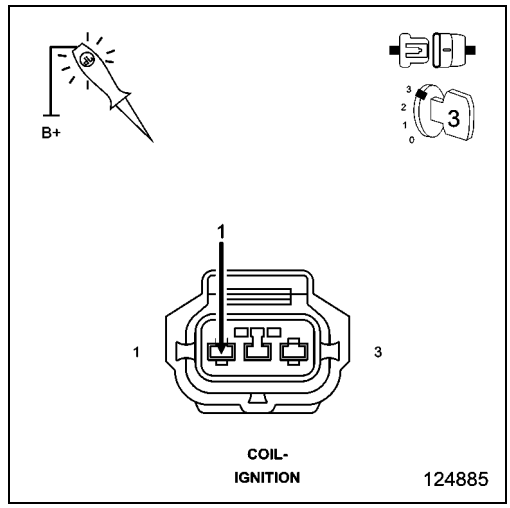

5. (K10) COIL CONTROL NO.6 CIRCUIT SHORTED TO GROUND

1. Turn the ignition off.
2. Disconnect the C2 PCM harness connector.
3. Measure the resistance between ground and the (K10) Coil Control No.6 circuit in the Coil on Plug harness connector.

Is the resistance below 100 Ohms?

Yes

- Repair the short to ground in the (K10) Coil Control No.6 circuit.
- Perform the POWERTRAIN VERIFICATION TEST. (Refer to 28 - DTC-Based Diagnostics/MODULE, Powertrain Control (PCM) - Standard Procedure)

No

- Go To 7

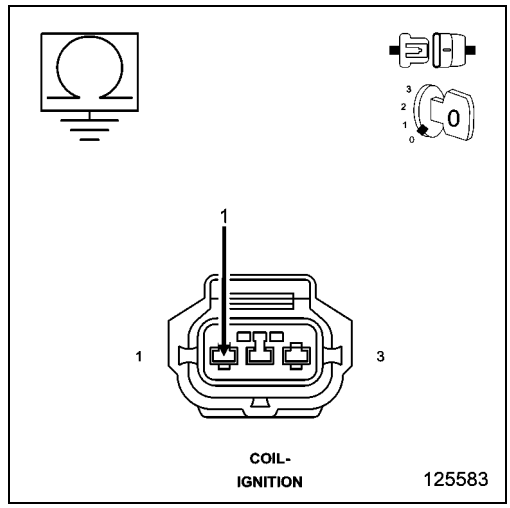

6. (K10) COIL CONTROL NO.6 CIRCUIT OPEN

1. Turn the ignition off.
2. Disconnect the C2 PCM harness connectors.

CAUTION: Do not probe the PCM harness connectors. Probing the PCM harness connectors will damage the PCM terminals resulting in poor terminal to pin connection. Install the PCM Pinout Box Kit, NGC, 38 Position 8815A to perform diagnosis.

3. Measure the resistance of the (K10) Coil Control No.6 circuit from the Coil on Plug harness connector to the appropriate terminal of PCM Pinout Box 8815A.

Is the resistance below 5.0 Ohms?

Yes

- Go To 7

No

- Repair the open in the (K10) Coil Control No.6 circuit.
- Perform the POWERTRAIN VERIFICATION TEST. (Refer to 28 - DTC-Based Diagnostics/MODULE, Powertrain Control (PCM) - Standard Procedure)

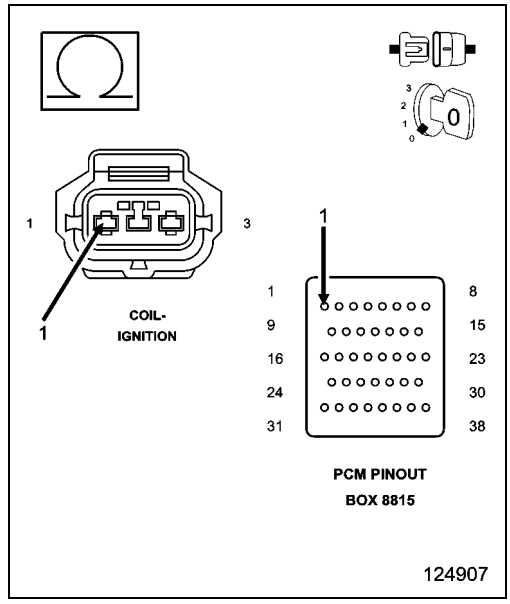

7. POWERTRAIN CONTROL MODULE (PCM)

1. Using the wiring diagram/schematic as a guide, inspect the wiring and connectors between the Ignition Coil and the Powertrain Control Module (PCM).
2. Look for any chafed, pierced, pinched or partially broken wires.
3. Look for broken, bent, pushed out or corroded terminals. Verify that there is good pin to terminal contact in the Ignition Coil and the Powertrain Control Module connectors.
4. Refer to any Technical Service Bulletins that may apply.

Were there any problems found?

Yes

- Repair as necessary.
- Perform the POWERTRAIN VERIFICATION TEST. (Refer to 28 - DTC-Based Diagnostics/MODULE, Powertrain Control (PCM) - Standard Procedure)

No

- Replace and program the Powertrain Control Module in accordance with the Service Information.
- Perform the POWERTRAIN VERIFICATION TEST. (Refer to 28 - DTC-Based Diagnostics/MODULE, Powertrain Control (PCM) - Standard Procedure)

P2320-IGNITION COIL 7 SECONDARY CIRCUIT- INSUFFICIENT IONIZATION

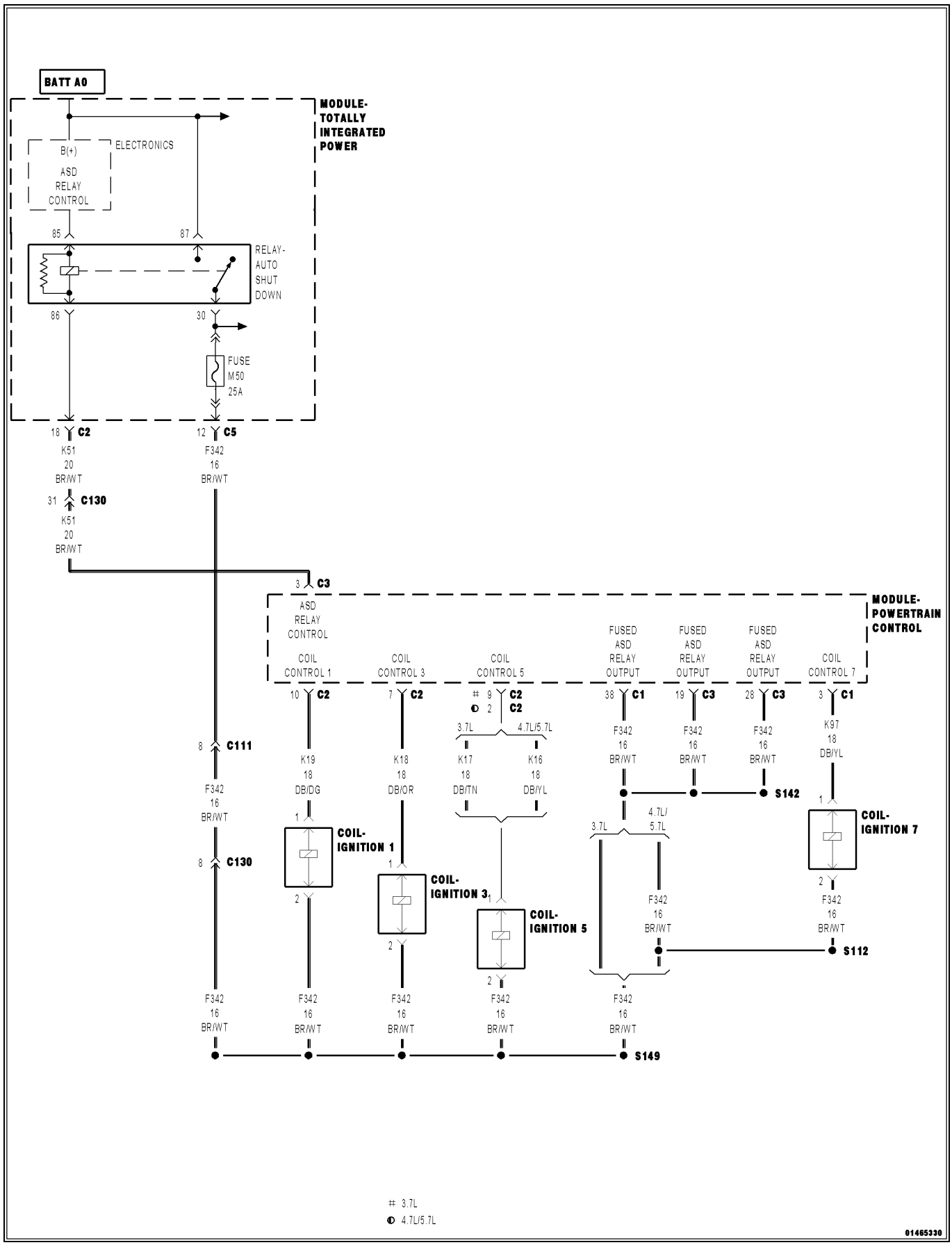

For a complete wiring diagram, **refer to the Wiring Information**.

- **When Monitored:**
  Engine running and battery voltage greater than 10 Volts.
- **Set Condition:**
  If PCM detects that the secondary ignition burn time is incorrect, too short or not present, an error is detected. One Trip Fault. Three good trips to turn off the MIL.

Possible Causes
(K342) ASD CONTROL OUTPUT CIRCUIT
(K97) COIL CONTROL NO.7 CIRCUIT OPEN
(K97) COIL CONTROL NO.7 CIRCUIT SHORTED TO GROUND
COIL ON PLUG
POWERTRAIN CONTROL MODULE (PCM)

Always perform the Pre-Diagnostic Troubleshooting procedure before proceeding. (Refer to 28 - DTC-Based Diagnostics/MODULE, Powertrain Control (PCM) - Standard Procedure).

1. ACTIVE DTC

NOTE: Diagnose any ASD related DTCs before continuing.

1. Start the engine.
2. With the scan tool, select View DTCs.

NOTE: It may be necessary to drive the vehicle to meet the conditions to set this DTC, try to repeat the conditions in which the fault originally set by reviewing the Freeze Frame data.

Does the DTC become Active?

Yes

- Go To 2

No

- Perform the INTERMITTENT CONDITION Diagnostic Procedure. (Refer to 28 - DTC-Based Diagnostics/MODULE, Powertrain Control (PCM) - Standard Procedure)

2. (K342) ASD CONTROL OUTPUT CIRCUIT

1. Turn the ignition off.
2. Disconnect the Coil on Plug harness connector.
3. Ignition on, engine not running.

NOTE: Make sure the test light is probing the circuit before actuating the Coil or a DTC may set and not allow the actuation.

4. Using a 12-volt test light connected to ground, probe the (K342) ASD Control Output circuit in the Coil on Plug harness connector.
5. With the scan tool, actuate the ASD.

Does the test light illuminate brightly?

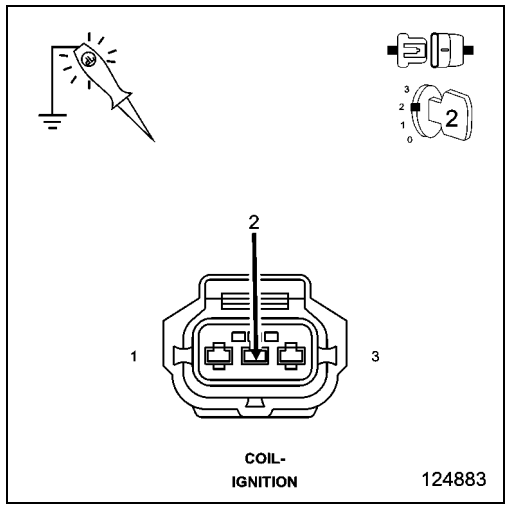

Yes

- Go To 3

No

- Repair the open or short to ground in the (K342) ASD Control Output circuit between the TIPM and Coil harness connector.
- Perform the POWERTRAIN VERIFICATION TEST. (Refer to 28 - DTC-Based Diagnostics/MODULE, Powertrain Control (PCM) - Standard Procedure)

NOTE: Stop All Actuations.

3. COIL ON PLUG RESISTANCE

1. Turn the ignition off.

NOTE: The following resistance measurement should be taken between 70° and 80° F.

2. Measure the resistance of the Coil on Plug.
3. 4.7L Primary Ignition Coil resistance is 0.6 to 0.9 of an ohm at 25° C (77° F).
4. 5.7L Primary Ignition Coil resistance is 0.558 to 0.682 of an ohm at 25° C (77° F).

Is the resistance within the given specification for the Ignition Coil being tested?

Yes

- Go To 4

No

- Replace the Coil on plug.
- Perform the POWERTRAIN VERIFICATION TEST. (Refer to 28 - DTC-Based Diagnostics/MODULE, Powertrain Control (PCM) - Standard Procedure)

4. IGNITION COIL

WARNING: When the engine is operating, do not stand in direct line with the fan. Do not put your hands near the pulleys, belts or fan. Do not wear loose clothing. Failure to follow these instructions may result in possible serious or fatal injury.

1. Using a 12-volt test light connected to a 12-volt source, probe the (K97) Coil Control No.7 circuit.
2. Crank the engine for 5 seconds while observing the test light.

What is the state of the test light while cranking the engine?

Brightly blinking.

- Verify that there is good pin to terminal contact in the Ignition Coil and the Powertrain Control Module connectors. Replace the Ignition Coil if no problems were found in the connectors.
- Perform the POWERTRAIN VERIFICATION TEST. (Refer to 28 - DTC-Based Diagnostics/MODULE, Powertrain Control (PCM) - Standard Procedure)

ON constantly.

- Go To 5

OFF constantly.

- Go To 6

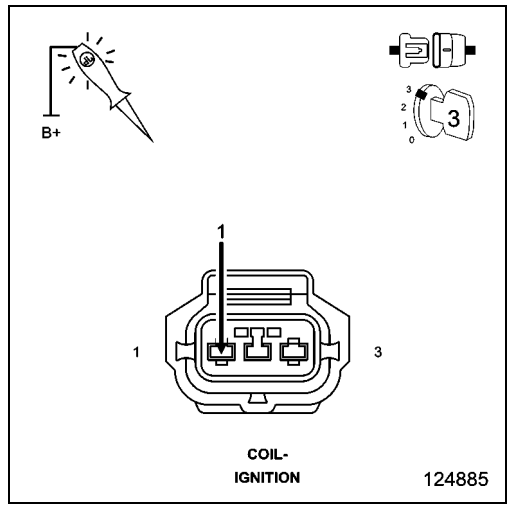

5. (K97) COIL CONTROL NO.7 CIRCUIT SHORTED TO GROUND

1. Turn the ignition off.
2. Disconnect the C1 PCM harness connector.
3. Measure the resistance between ground and the (K97) Coil Control No.7 circuit in the Coil on Plug harness connector.

Is the resistance below 100 Ohms?

Yes

- Repair the short to ground in the (K97) Coil Control No.7 circuit.
- Perform the POWERTRAIN VERIFICATION TEST. (Refer to 28 - DTC-Based Diagnostics/MODULE, Powertrain Control (PCM) - Standard Procedure)

No

- Go To 7

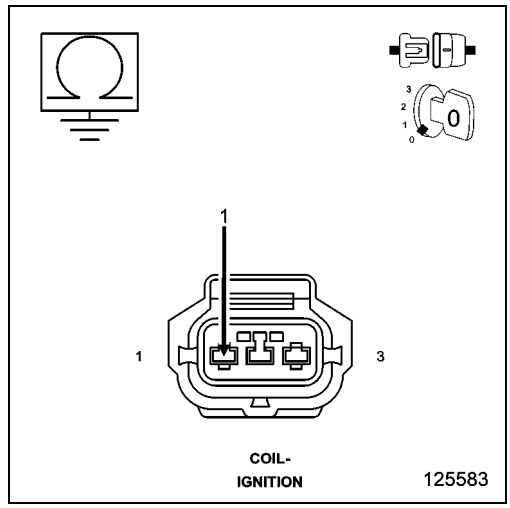

6. (K97) COIL CONTROL NO.7 CIRCUIT OPEN

1. Turn the ignition off.
2. Disconnect the C1 PCM harness connector.

CAUTION: Do not probe the PCM harness connectors. Probing the PCM harness connectors will damage the PCM terminals resulting in poor terminal to pin connection. Install the PCM Pinout Box Kit, NGC, 38 Position 8815A to perform diagnosis.

3. Measure the resistance of the (K97) Coil Control No.7 circuit from the Coil on Plug connector to the appropriate terminal of PCM Pinout Box 8815A.

Is the resistance below 5.0 Ohms?

Yes

- Go To 7

No

- Repair the open in the (K97) Coil Control No.7 circuit.
- Perform the POWERTRAIN VERIFICATION TEST. (Refer to 28 - DTC-Based Diagnostics/MODULE, Powertrain Control (PCM) - Standard Procedure)

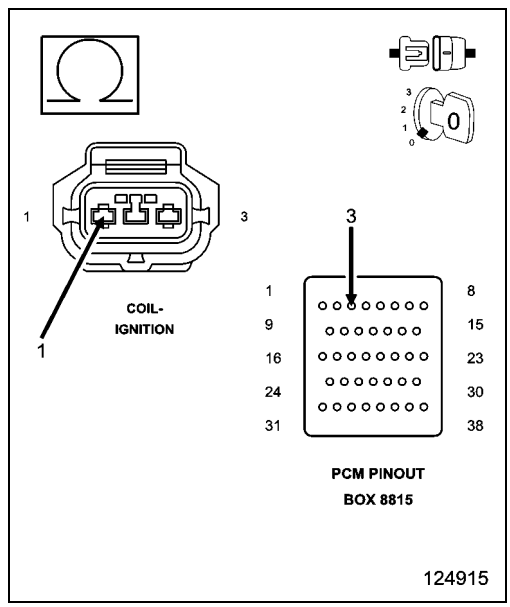

7. POWERTRAIN CONTROL MODULE (PCM)

1. Using the wiring diagram/schematic as a guide, inspect the wiring and connectors between the Ignition Coil and the Powertrain Control Module (PCM).
2. Look for any chafed, pierced, pinched or partially broken wires.
3. Look for broken, bent, pushed out or corroded terminals. Verify that there is good pin to terminal contact in the Ignition Coil and the Powertrain Control Module connectors.
4. Refer to any Technical Service Bulletins that may apply.

Were there any problems found?

Yes

- Repair as necessary.
- Perform the POWERTRAIN VERIFICATION TEST. (Refer to 28 - DTC-Based Diagnostics/MODULE, Powertrain Control (PCM) - Standard Procedure)

No

- Replace and program the Powertrain Control Module in accordance with the Service Information.
- Perform the POWERTRAIN VERIFICATION TEST. (Refer to 28 - DTC-Based Diagnostics/MODULE, Powertrain Control (PCM) - Standard Procedure)

P2323-IGNITION COIL 8 SECONDARY CIRCUIT- INSUFFICIENT IONIZATION

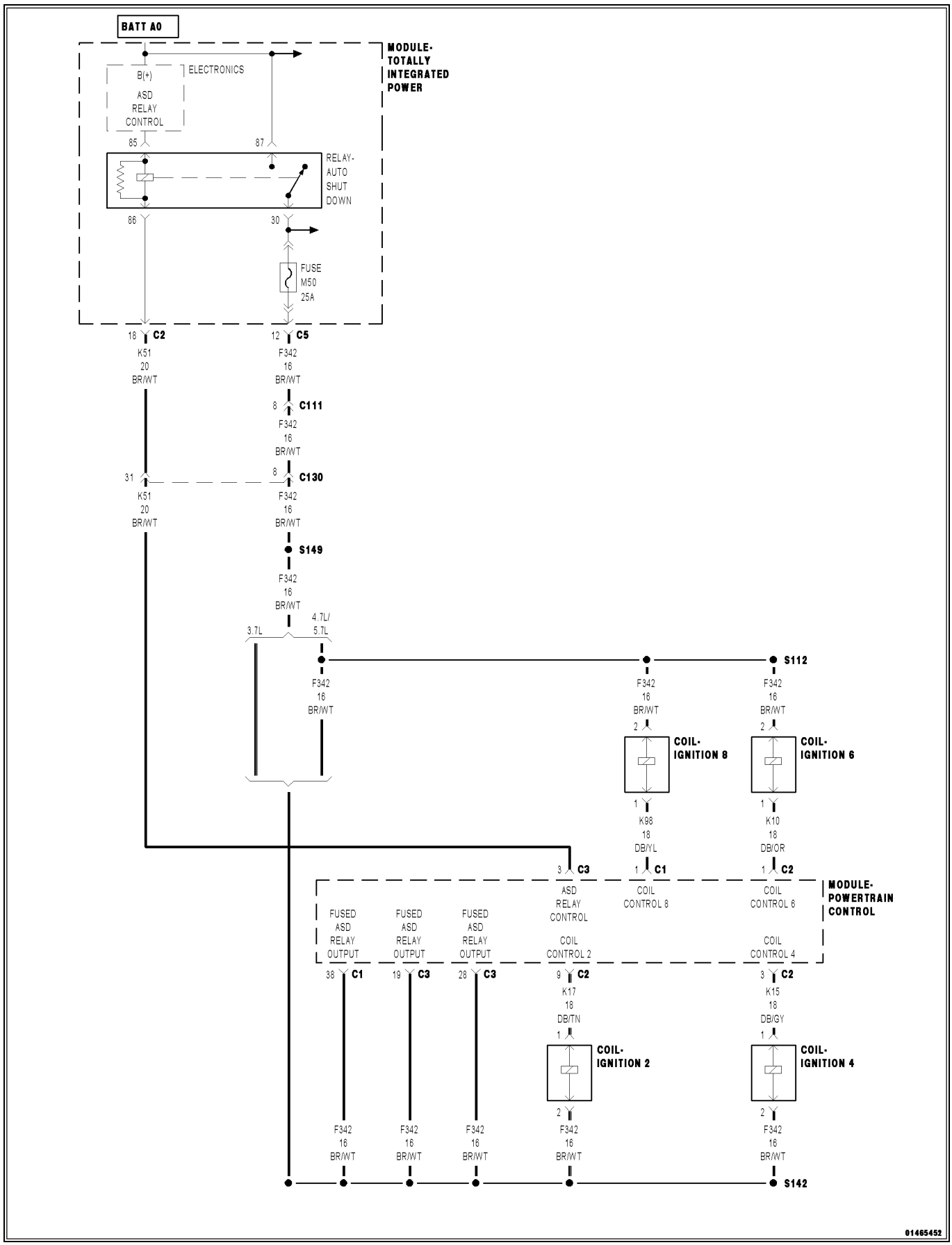

For a complete wiring diagram, **refer to the Wiring Information**.

- **When Monitored:**
  Engine running and battery voltage greater than 10 Volts.
- **Set Condition:**
  If PCM detects that the secondary ignition burn time is incorrect, to short or not present, an error is detected. One Trip Fault. Three good trips to turn off the MIL.

Possible Causes
(K342) ASD CONTROL OUTPUT CIRCUIT
(K98) COIL CONTROL NO.8 CIRCUIT OPEN
(K98) COIL CONTROL NO.8 CIRCUIT SHORTED TO GROUND
COIL ON PLUG
POWERTRAIN CONTROL MODULE (PCM)

Always perform the Pre-Diagnostic Troubleshooting procedure before proceeding. (Refer to 28 - DTC-Based Diagnostics/MODULE, Powertrain Control (PCM) - Standard Procedure).

1. ACTIVE DTC

NOTE: Diagnose any ASD related DTCs before continuing.

1. Start the engine.
2. With the scan tool, select View DTCs.

NOTE: It may be necessary to drive the vehicle to meet the conditions to set this DTC, try to repeat the conditions in which the fault originally set by reviewing the Freeze Frame data.

Does the DTC become Active?

Yes

- Go To 2

No

- Perform the INTERMITTENT CONDITION Diagnostic Procedure. (Refer to 28 - DTC-Based Diagnostics/MODULE, Powertrain Control (PCM) - Standard Procedure)

2. (K342) ASD CONTROL OUTPUT CIRCUIT

1. Turn the ignition off.
2. Disconnect the Coil on Plug harness connector.
3. Ignition on, engine not running.

NOTE: Make sure the test light is probing the circuit before actuating the Coil or a DTC may set and not allow the actuation.

4. Using a 12-volt test light connected to ground, probe the (K342) ASD Control Output circuit in the Coil on Plug harness connector.
5. With the scan tool, actuate the ASD.

Does the test light illuminate brightly?

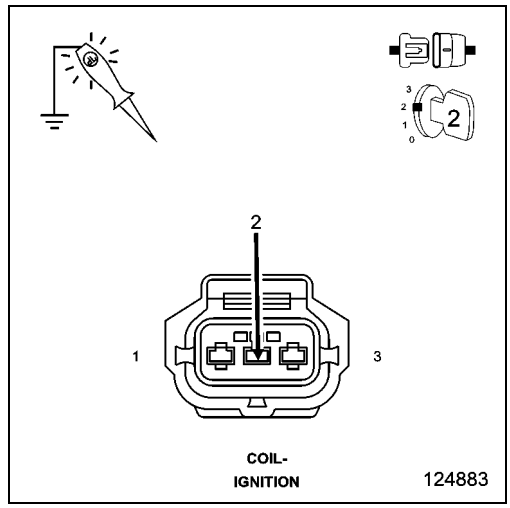

Yes

- Go To 3

No

- Repair the open or short to ground in the (K342) ASD Control Output circuit between the TIPM and Coil harness connector.
- Perform the POWERTRAIN VERIFICATION TEST. (Refer to 28 - DTC-Based Diagnostics/MODULE, Powertrain Control (PCM) - Standard Procedure)

NOTE: Stop All Actuations.

3. COIL ON PLUG RESISTANCE

1. Turn the ignition off.

NOTE: The following resistance measurement should be taken between 70° and 80° F.

2. Measure the resistance of the Coil on Plug.
3. 4.7L Primary Ignition Coil resistance is 0.6 to 0.9 of an ohm at 25° C (77° F).
4. 5.7L Primary Ignition Coil resistance is 0.558 to 0.682 of an ohm at 25° C (77° F).

Is the resistance within the given specification for the Ignition Coil being tested?

Yes

- Go To 4

No

- Replace the Coil on plug.
- Perform the POWERTRAIN VERIFICATION TEST. (Refer to 28 - DTC-Based Diagnostics/MODULE, Powertrain Control (PCM) - Standard Procedure)

4. IGNITION COIL

WARNING: When the engine is operating, do not stand in direct line with the fan. Do not put your hands near the pulleys, belts or fan. Do not wear loose clothing. Failure to follow these instructions may result in possible serious or fatal injury.

1. Using a 12-volt test light connected to a 12-volt source, probe the (K98) Coil Control No.8 circuit.
2. Crank the engine for 5 seconds while observing the test light.

What is the state of the test light while cranking the engine?

Brightly blinking.

- Verify that there is good pin to terminal contact in the Ignition Coil and the Powertrain Control Module connectors. Replace the Ignition Coil if no problems were found in the connectors.
- Perform the POWERTRAIN VERIFICATION TEST. (Refer to 28 - DTC-Based Diagnostics/MODULE, Powertrain Control (PCM) - Standard Procedure)

ON constantly.

- Go To 5

OFF constantly.

- Go To 6

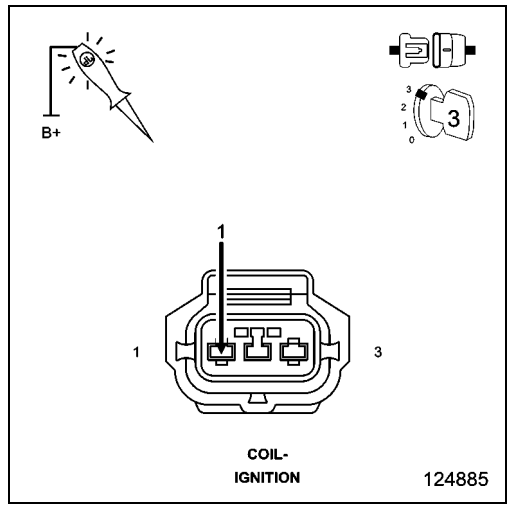

5. (K98) COIL CONTROL NO.8 CIRCUIT SHORTED TO GROUND

1. Turn the ignition off.
2. Disconnect the C1 PCM harness connector.
3. Measure the resistance between ground and the (K98) Coil Control No.8 circuit in the Coil on Plug harness connector.

Is the resistance below 100 Ohms?

Yes

- Repair the short to ground in the (K98) Coil Control No.8 circuit.
- Perform the POWERTRAIN VERIFICATION TEST. (Refer to 28 - DTC-Based Diagnostics/MODULE, Powertrain Control (PCM) - Standard Procedure)

No

- Go To 7

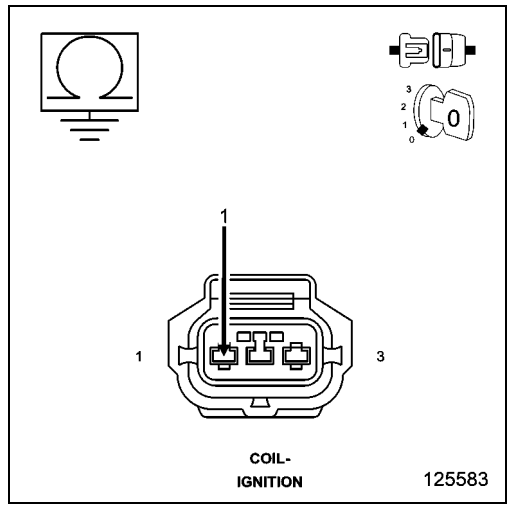

6. (K98) COIL CONTROL NO.8 CIRCUIT OPEN

1. Turn the ignition off.
2. Disconnect the C1 PCM harness connector.

CAUTION: Do not probe the PCM harness connectors. Probing the PCM harness connectors will damage the PCM terminals resulting in poor terminal to pin connection. Install the PCM Pinout Box Kit, NGC, 38 Position 8815A to perform diagnosis.

3. Measure the resistance of the (K98) Coil Control No.8 circuit from the Coil on Plug harness connector to the appropriate terminal of PCM Pinout Box 8815A.

Is the resistance below 5.0 Ohms?

Yes

- Go To 7

No

- Repair the open in the (K98) Coil Control No.8 circuit.
- Perform the POWERTRAIN VERIFICATION TEST. (Refer to 28 - DTC-Based Diagnostics/MODULE, Powertrain Control (PCM) - Standard Procedure)

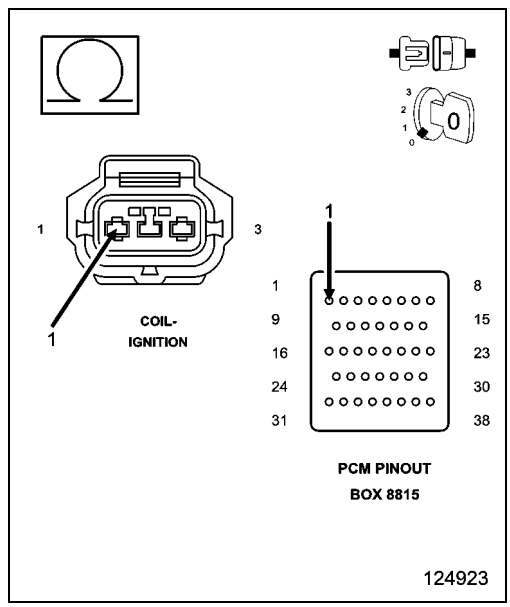

7. POWERTRAIN CONTROL MODULE (PCM)

1. Using the wiring diagram/schematic as a guide, inspect the wiring and connectors between the Ignition Coil and the Powertrain Control Module (PCM).
2. Look for any chafed, pierced, pinched or partially broken wires.
3. Look for broken, bent, pushed out or corroded terminals. Verify that there is good pin to terminal contact in the Ignition Coil and the Powertrain Control Module connectors.
4. Refer to any Technical Service Bulletins that may apply.

Were there any problems found?

Yes

- Repair as necessary.
- Perform the POWERTRAIN VERIFICATION TEST. (Refer to 28 - DTC-Based Diagnostics/MODULE, Powertrain Control (PCM) - Standard Procedure)

No

- Replace and program the Powertrain Control Module in accordance with the Service Information.
- Perform the POWERTRAIN VERIFICATION TEST. (Refer to 28 - DTC-Based Diagnostics/MODULE, Powertrain Control (PCM) - Standard Procedure)

P2503-CHARGING SYSTEM OUTPUT LOW

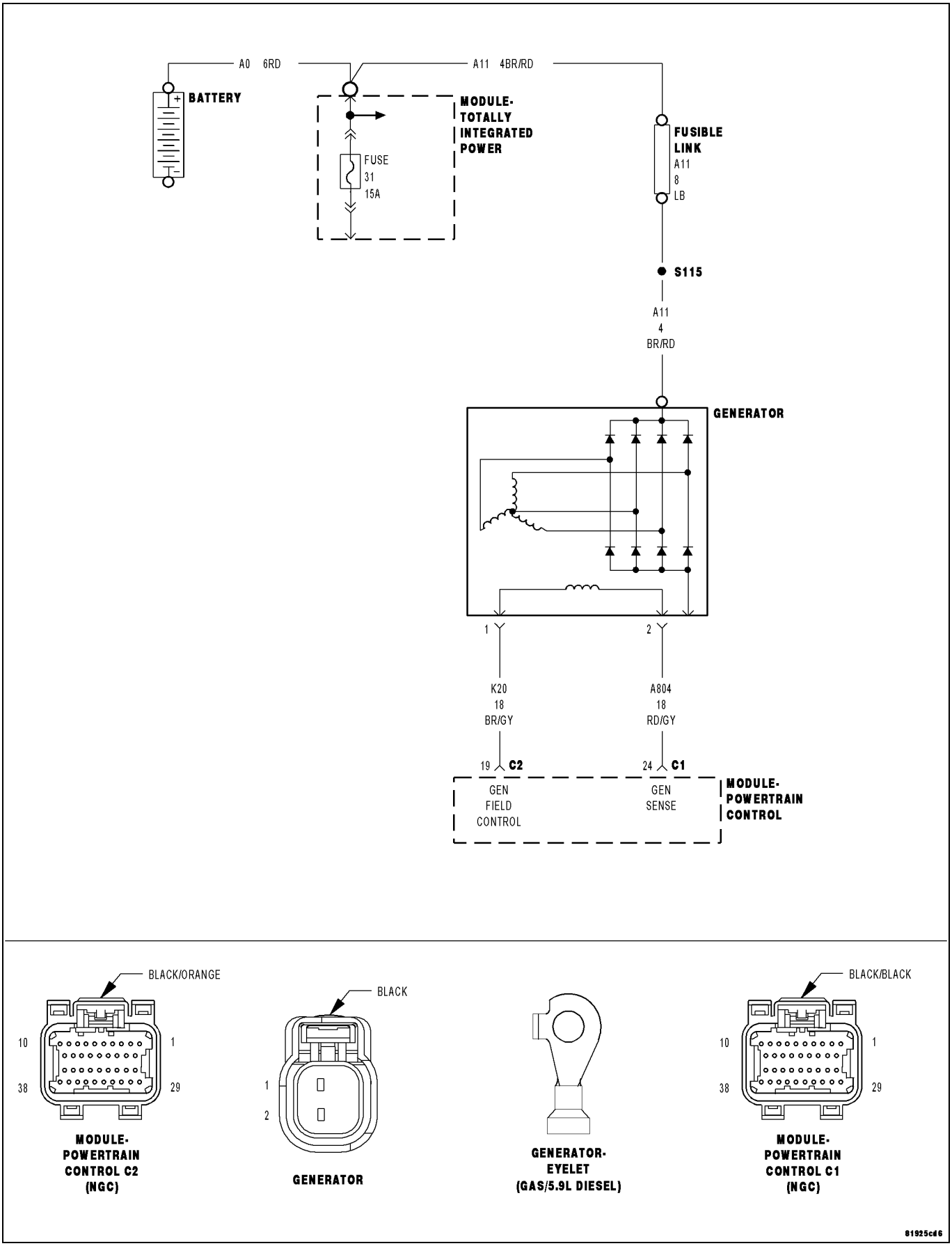

For a complete wiring diagram **Refer to the Wiring Information**.

- **When Monitored:**

  The engine running. The engine RPM is high enough to assure sufficient generator current output to satisfy the electrical loads.
- **Set Condition:**

  The battery sensed voltage is less than the target charging voltage, during engine operation, for a calibrateable amount of time. One Trip Fault. Generator light will illuminate.

Possible Causes
LOOSE ACCESSORY DRIVE BELT
EXCESSIVE RESISTANCE IN THE (A1) BATTERY POSITIVE CIRCUIT
GENERATOR
POWERTRAIN CONTROL MODULE (PCM)

Always perform the Pre-Diagnostic Troubleshooting procedure before proceeding. (Refer to 28 - DTC-Based Diagnostics/MODULE, Powertrain Control (PCM) - Standard Procedure).

1. ACTIVE DTC

NOTE: Inspect the vehicle for aftermarket accessories that may exceed the Generator System output.

NOTE: The battery must be fully charged.

NOTE: The Generator belt tension and condition must be checked before continuing.

1. Ignition on, engine not running.
2. With a scan tool, select View DTCs.
3. Read and record the related Freeze Frame data for P2503.
4. With a scan tool, erase DTCs.
5. Start the engine.
6. Allow the idle to stabilize.
7. Ignition on, engine not running.
8. With the scan tool, select View DTCs.

Is the DTC Active at this time?

Yes

- Go To 2

No

- Refer to the INTERMITTENT CONDITION Diagnostic Procedure. (Refer to 28 - DTC-Based Diagnostics/MODULE, Powertrain Control (PCM) - Standard Procedure)

2. FUSED B+ CIRCUIT HIGH RESISTANCE

WARNING: When the engine is operating, do not stand in direct line with the fan. Do not put your hands near the pulleys, belts or fan. Do not wear loose clothing. Failure to follow these instructions may result in possible serious or fatal injury.

1. Ignition on, engine not running.
2. Measure the voltage between the Generator B+ Output Terminal and the Battery + Post.
3. Start the engine.

Is the voltage above 0.4 of a volt?

Yes

- Repair the excessive resistance in the battery positive circuit between the Generator and Battery.
- Perform the POWERTRAIN VERIFICATION TEST. (Refer to 28 - DTC-Based Diagnostics/MODULE, Powertrain Control (PCM) - Standard Procedure)

No

- Go To 3

3. GENERATOR OPERATION

1. Turn the ignition off.
2. Disconnect the Generator Field harness connector.
3. Using a 12-volt test light connected to ground, probe (K20) Generator Field Control circuit in the Generator Field harness connector.

NOTE: The DTC needs to be cleared before actuating the Solenoid, if the DTC is not cleared, the Solenoid may not be allowed to actuate.

4. Ignition on, engine not running.
5. With a scan tool, actuate the Generator Field Driver.

NOTE: The test light should be illuminated and bright proportional to the maximum duty cycle allowed by the scan tool. For example, if the scan tool allows 100% actuation, the brightness should be as bright as a direct connection to the battery. If the scan tool allows a maximum 25% actuation, the brightness should be 25% as bright as a direct connection to the battery.

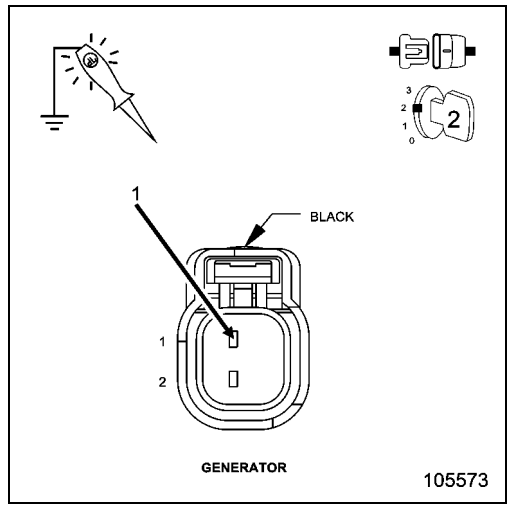

Does the test light illuminate accordingly during the actuation?

Yes

- Verify that there is good pin to terminal contact in the Generator and Powertrain Control Module connectors. Replace the Generator if no problems were found with the connectors.
- Perform the POWERTRAIN VERIFICATION TEST. (Refer to 28 - DTC-Based Diagnostics/MODULE, Powertrain Control (PCM) - Standard Procedure)

No

- Go To 4

4. POWERTRAIN CONTROL MODULE (PCM)

1. Using the wiring diagram/schematic as a guide, inspect the wiring and connectors between the Generator and the Powertrain Control Module (PCM).
2. Look for any chafed, pierced, pinched, or partially broken wires.
3. Look for broken, bent, pushed out or corroded terminals. Verify that there is good pin to terminal contact in the Generator and Powertrain Control Module connectors.
4. Refer to any Technical Service Bulletins that may apply.

Were there any problems found?

Yes

- Repair as necessary.
- Perform the POWERTRAIN VERIFICATION TEST. (Refer to 28 - DTC-Based Diagnostics/MODULE, Powertrain Control (PCM) - Standard Procedure)

No

- Replace and program the Powertrain Control Module per Service Information.
- Perform the POWERTRAIN VERIFICATION TEST. (Refer to 28 - DTC-Based Diagnostics/MODULE, Powertrain Control (PCM) - Standard Procedure)

P2504-CHARGING SYSTEM OUTPUT HIGH

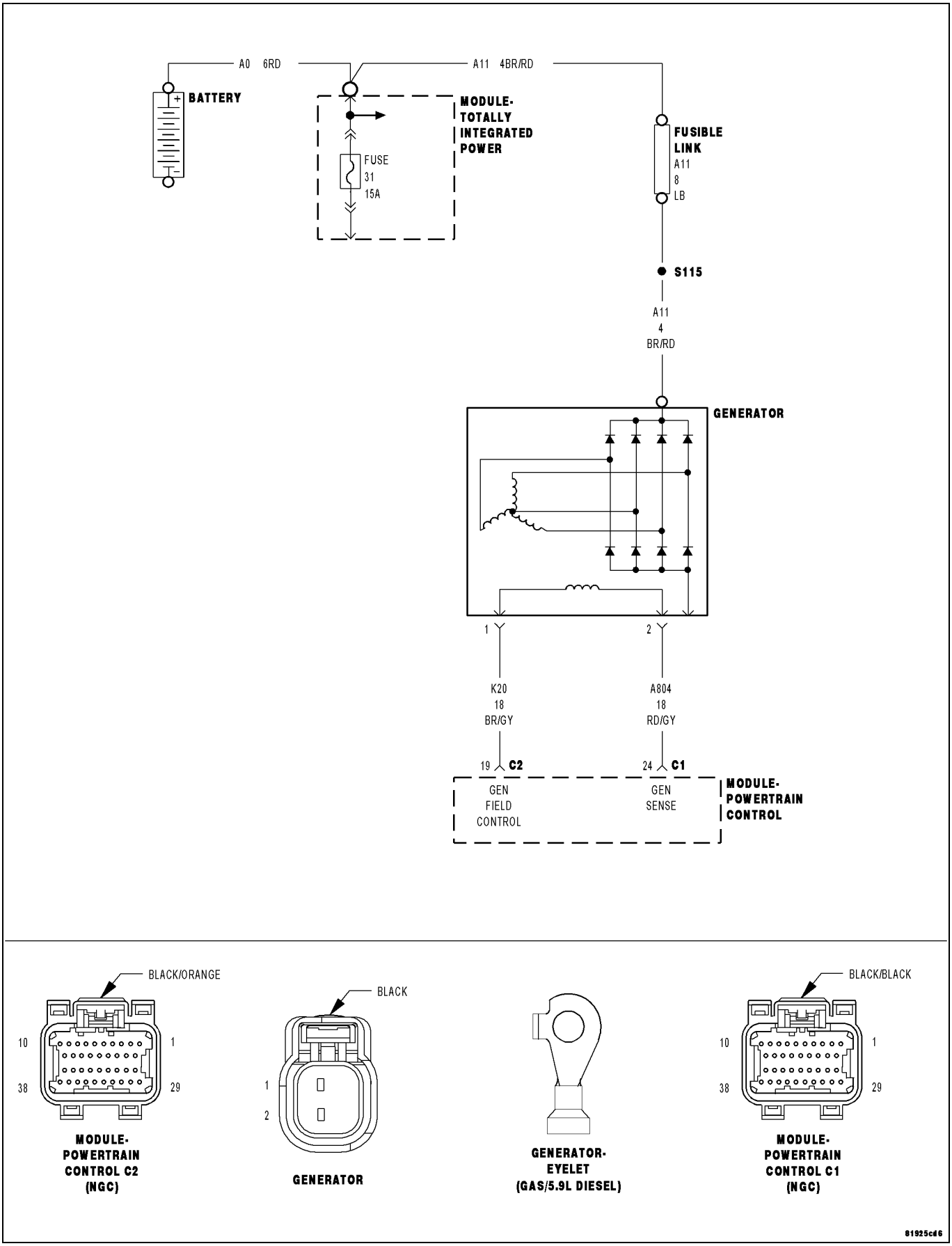

For a complete wiring diagram **Refer to the Wiring Information**.

- **When Monitored:**
  The engine running. The engine speed greater than 1157 RPM.
- **Set Condition:**
  The alternator B+ voltage sense circuit voltage reading exceeds the direct Battery B+ sense circuit. The Generator output terminal is not connected to the Battery B+ post. One trip fault.

Possible Causes
EXCESSIVE RESISTANCE IN THE (A918) BATTERY FEED CIRCUIT
POWERTRAIN CONTROL MODULE (PCM)

Always perform the Pre-Diagnostic Troubleshooting procedure before proceeding. (Refer to 28 - DTC-Based Diagnostics/MODULE, Powertrain Control (PCM) - Standard Procedure).

1. ACTIVE DTC

NOTE: Inspect the vehicle for aftermarket accessories that may exceed the Generator System output.

NOTE: The battery must be fully charged.

NOTE: The Generator belt tension and condition must be checked before continuing.

1. Ignition on, engine not running.
2. With a scan tool, select View DTCs.
3. Read and record the related Freeze Frame data for P2504.
4. With a scan tool, erase DTCs.
5. Start the engine.
6. Allow the idle to stabilize.
7. With the scan tool, View DTCs.

Is the DTC Active at this time?

Yes

- Go To 2

No

- Refer to the INTERMITTENT CONDITION Diagnostic Procedure. (Refer to 28 - DTC-Based Diagnostics/MODULE, Powertrain Control (PCM) - Standard Procedure)

2. (A11) BATTERY POSITIVE CIRCUIT VISUAL INSPECTION

1. Turn the ignition off.
2. Inspect the (A11) Battery Positive circuit at Generator Output post for corrosion and looseness.
3. Inspect the Battery + and - cables for corrosion and looseness.
4. Inspect the (A11) Battery Positive circuit at the TIPM Power Eyelet for corrosion and looseness.

Were any problems found?

Yes

- Repair and replace as necessary.
- Perform the POWERTRAIN VERIFICATION TEST. (Refer to 28 - DTC-Based Diagnostics/MODULE, Powertrain Control (PCM) - Standard Procedure)

No

- Go To 3

3. EXCESSIVE RESISTANCE IN THE (A918) BATTERY FEED CIRCUIT

CAUTION: Do not probe the PCM harness connectors. Probing the PCM harness connectors will damage the PCM terminals resulting in poor terminal to pin connection. Install the PCM Pinout Box 8815A **and PCM Pinout Box Adapter** 8815-1 **to perform diagnosis.**

1. Disconnect the C1 PCM harness connector.
2. Perform a voltage drop test on the (A918) Battery Feed circuit from the appropriate terminal of special tool #8815-1 to the C3 TIPM connector.
3. Using a voltmeter probe the appropriate terminal of special tool #8815-1 with the Negative lead of the voltmeter and back probe the (A918) Battery Feed circuit at the C3 TIPM with the Positive lead of the voltmeter.

WARNING: When the engine is operating, do not stand in direct line with the fan. Do not put your hands near the pulleys, belts or fan. Do not wear loose clothing. Failure to follow these instructions may result in possible serious or fatal injury.

4. Start the engine
5. Monitor the voltmeter.

Is the voltage above 0.4 of a volt?

Yes

- Repair the excessive resistance in the (A918) Battery Feed circuit between the PCM and IPM.
- Perform the POWERTRAIN VERIFICATION TEST. (Refer to 28 - DTC-Based Diagnostics/MODULE, Powertrain Control (PCM) - Standard Procedure)

No

- Go To 4

4. PCM

NOTE: Before continuing, check the PCM harness connector terminals for corrosion, damage, or terminal push out. Repair as necessary.

1. Turn the ignition off.
2. Using the schematics as a guide, inspect the wire harness and connectors. Pay particular attention to all Power and Ground circuits.

Were there any problems found?

Yes

- Repair as necessary.
- Perform the POWERTRAIN VERIFICATION TEST. (Refer to 28 - DTC-Based Diagnostics/MODULE, Powertrain Control (PCM) - Standard Procedure)

No

- Replace and program the Powertrain Control Module per Service Information.
- Perform the POWERTRAIN VERIFICATION TEST. (Refer to 28 - DTC-Based Diagnostics/MODULE, Powertrain Control (PCM) - Standard Procedure)

■ P2610-PCM INTERNAL SHUTDOWN TIMER FAST RATIONALITY

For a complete wiring diagram **Refer to the Wiring Information**.

Theory of Operation

The PCM compares actual shutdown time to a calculated shutdown time value. The calculated shut down time value is based on the amount of shutdown time necessary for the ECT to drop a specific amount after a completely warmed up engine is shut down. If the difference between actual shutdown time and the calculated shut down time is greater than a maximum value, a one trip failure will set. The shutdown time is measured again after 1 hour of ignition off time following the next engine warm up cycle. The PCM compares the shutdown time to a calculated value. If the difference is greater than a maximum value, the MIL is illuminated and a DTC will set.

- **When Monitored:**

  With the engine running after a cycle when a complete engine warm up was achieved, the difference between engine coolant temperature and ambient air temperature greater than 10° C (50° F), after a minimum temperature drop of 10° C (50° F) during ignition off, and battery voltage greater than 10 volts.
- **Set Condition:**

  The PCM detects that the engine coolant temperature drops a specified amount during the measured engine off time. Two trip fault. Three good trips to turn off the MIL.

Possible Causes
POWERTRAIN CONTROL MODULE (PCM) SOFTWARE UPDATE
EXCESSIVE RESISTANCE IN THE PCM POWER OR GROUND CIRCUITS
POWERTRAIN CONTROL MODULE (PCM)

Always perform the Pre-Diagnostic Troubleshooting procedure before proceeding. (Refer to 28 - DTC-Based Diagnostics/MODULE, Powertrain Control (PCM) - Standard Procedure).

1. ACTIVE DTC

NOTE: Diagnose and repair any other DTCs set in the PCM before proceeding with this test.

1. Turn the ignition on.
2. With the scan tool, Clear DTCs in the Powertrain Control Module (PCM).
3. Start the engine and allow it to reach operating temperature.

WARNING: When the engine is operating, do not stand in direct line with the fan. Do not put your hands near the pulleys, belts or fan. Do not wear loose clothing. Failure to follow these instructions may result in possible serious or fatal injury.

4. With the scan tool, select View DTCs.

Is the DTC Active at this time?

Yes

- Go To 2

No

- Refer to the INTERMITTENT CONDITION Diagnostic Procedure. (Refer to 28 - DTC-Based Diagnostics/MODULE, Powertrain Control (PCM) - Standard Procedure)

2. PCM IGNITION CIRCUITS

1. Turn the ignition off.
2. Disconnect the C1 PCM harness connector.

CAUTION: Do not probe the PCM harness connectors. Probing the PCM harness connectors will damage the PCM terminals resulting in poor terminal to pin connection. Install the PCM Pinout Box Kit, NGC, 38 Position 8815A to perform diagnosis.

3. With a 12-volt test light connected to ground and with special tool #8815A installed, probe the (F202), (F1), and (T751) Fused Ignition Switch circuits.
4. Perform the above check with the Ignition key in the off lock position, Ignition on, engine not running position, and during cranking.
5. Wiggle the related wire harness while probing the special tool with the test light to try to interrupt the circuit.

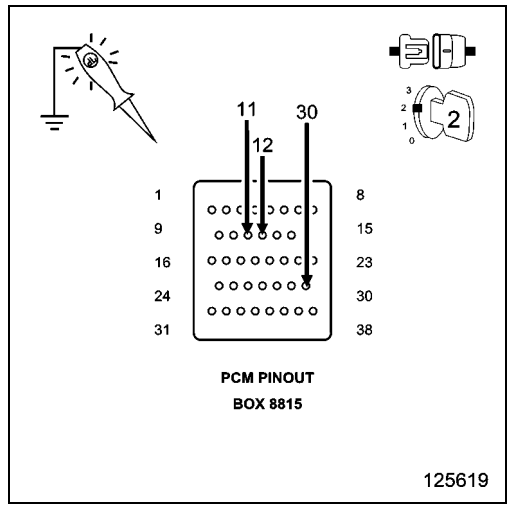

Does the test light illuminate brightly?

Yes

- Go To 3

No

- Repair the open or excessive resistance in the (F202), (F1), and (T751) Fused Ignition Switch (Off, Run, Start) circuits. Inspect the related fuse, if the fuse is open check the circuits for a short to ground.
- Perform the POWERTRAIN VERIFICATION TEST. (Refer to 28 - DTC-Based Diagnostics/MODULE, Powertrain Control (PCM) - Standard Procedure)

3. POWERTRAIN CONTROL MODULE (PCM)

1. Verify that the PCM is operating at the latest software version available.
2. Refer to any Technical Service Bulletins that may apply.

Were any problems found?

Yes

- Repair as necessary.
- Perform the POWERTRAIN VERIFICATION TEST. (Refer to 28 - DTC-Based Diagnostics/MODULE, Powertrain Control (PCM) - Standard Procedure)

No

- Replace and program the Powertrain Control Module (PCM) in accordance with the Service Information.
- Perform the POWERTRAIN VERIFICATION TEST. (Refer to 28 - DTC-Based Diagnostics/MODULE, Powertrain Control (PCM) - Standard Procedure)

P3400-MDS RATIONALITY BANK 1

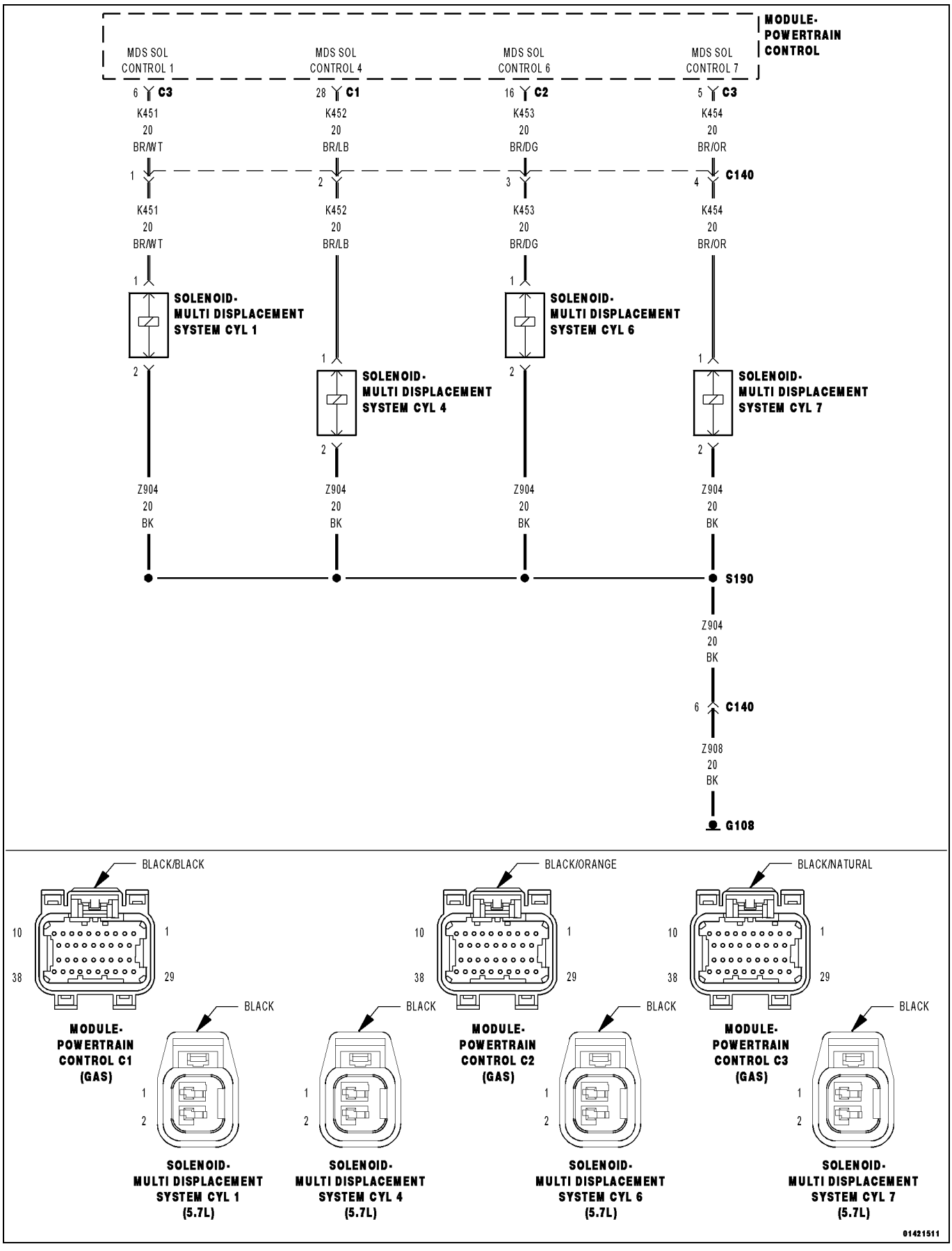

For a complete wiring diagram, **refer to the Wiring Information**.

Theory of Operation

When all criteria has been met, power is supplied to each MDS Solenoid when the engine is making a transition from 8 cylinder mode to 4 cylinder mode. By actuating the solenoid, oil pressure is raised to the pair of lifters that coincide with each particular solenoid. The oil pressure pushes in the locking pins that allows the lifter to collapse, decoupling the valves and camshaft.

- **When Monitored:**
  Transition from 8 to 4 cylinder mode.
- **Set Condition:**
  O2 Sensor readings on Bank 1 side indicate a lean condition while in 4 cylinder mode. One trip fault.

Possible Causes
INSUFFICIENT OIL PRESSURE ACTING ON THE LIFTER LOCKING PINS
OIL PASSAGES RESTRICTED
LIFTER
MDS SOLENOID

Always perform the Pre-Diagnostic Troubleshooting procedure before proceeding. (Refer to 28 - DTC-Based Diagnostics/MODULE, Powertrain Control (PCM) - Standard Procedure).

1. ACTIVE DTC

NOTE: Diagnose any Misfire DTCs before continuing.

1. Start the engine and allow it to reach normal operating temperature.

WARNING: When the engine is operating, do not stand in direct line with the fan. Do not put your hands near the pulleys, belts or fan. Do not wear loose clothing. Failure to follow these instructions may result in possible serious or fatal injury.

NOTE: It may be necessary to test drive the vehicle in order for this DTC to set.

2. With the scan tool, select View DTCs.

NOTE: Diagnose any Deactivation or Oil Pressure DTCs before continuing with this test.

Is the DTC Active at this time?

Yes

- Go To 2

No

- Perform the INTERMITTENT CONDITION diagnostic procedure. (Refer to 28 - DTC-Based Diagnostics/MODULE, Powertrain Control (PCM) - Standard Procedure).

2. MDS SOLENOID 1

1. Turn the ignition off.
2. Remove the Intake Manifold in accordance with the Service Information.
3. Turn the ignition on.
4. With the scan tool actuate the MDS Solenoid 1.

NOTE: The DTC needs to be cleared before actuating the Solenoid, if the DTC is not cleared, the Solenoid may not be allowed to actuate.

Can you feel and hear the Solenoid Actuating?

Yes

- Go To 3

No

- Remove the Solenoid and check for any debris that may be blocking the oil passages to the Solenoid. If the passages are clogged, clean the passages and replace the MDS Solenoid 1. If the passages are not clogged with debris, replace the MDS Solenoid 1.
- Perform the POWERTRAIN VERIFICATION TEST. (Refer to 28 - DTC-Based Diagnostics/MODULE, Powertrain Control (PCM) - Standard Procedure).

3. MDS SOLENOID 7

1. With the scan tool actuate the MDS Solenoid 7.

NOTE: The DTC needs to be cleared before actuating the Solenoid, if the DTC is not cleared, the Solenoid may not be allowed to actuate.

Can you feel and hear the Solenoid Actuating?

Yes

- Go To 4

No

- Remove the Solenoid and check for any debris that may be blocking the oil passages to the Solenoid. If the passages are restricted, clean the passages and replace the MDS Solenoid 7. If the passages are not clogged with debris, replace the MDS Solenoid 7.
- Perform the POWERTRAIN VERIFICATION TEST. (Refer to 28 - DTC-Based Diagnostics/MODULE, Powertrain Control (PCM) - Standard Procedure).

4. OIL PASSAGES RESTRICTED

1. Turn the ignition off.
2. Remove both Solenoids on Bank 1 of the engine block.
3. Remove the Bank 1 Cylinder Head in accordance with the Service Information.
4. Remove the Lifters from the left engine bank.
5. Inspect the oil passages to the Solenoids and from the Solenoids to the lifters.

Are the passages blocked?

Yes

- Clean the oil passages as necessary. If the entire engine is restricted disassembly of the entire engine block may be necessary.
- Perform the POWERTRAIN VERIFICATION TEST. (Refer to 28 - DTC-Based Diagnostics/MODULE, Powertrain Control (PCM) - Standard Procedure).

No

- Replace both sets of lifters if no other possible causes remain.
- Perform the POWERTRAIN VERIFICATION TEST. (Refer to 28 - DTC-Based Diagnostics/MODULE, Powertrain Control (PCM) - Standard Procedure).

P3401-MDS SOLENOID 1 CIRCUIT

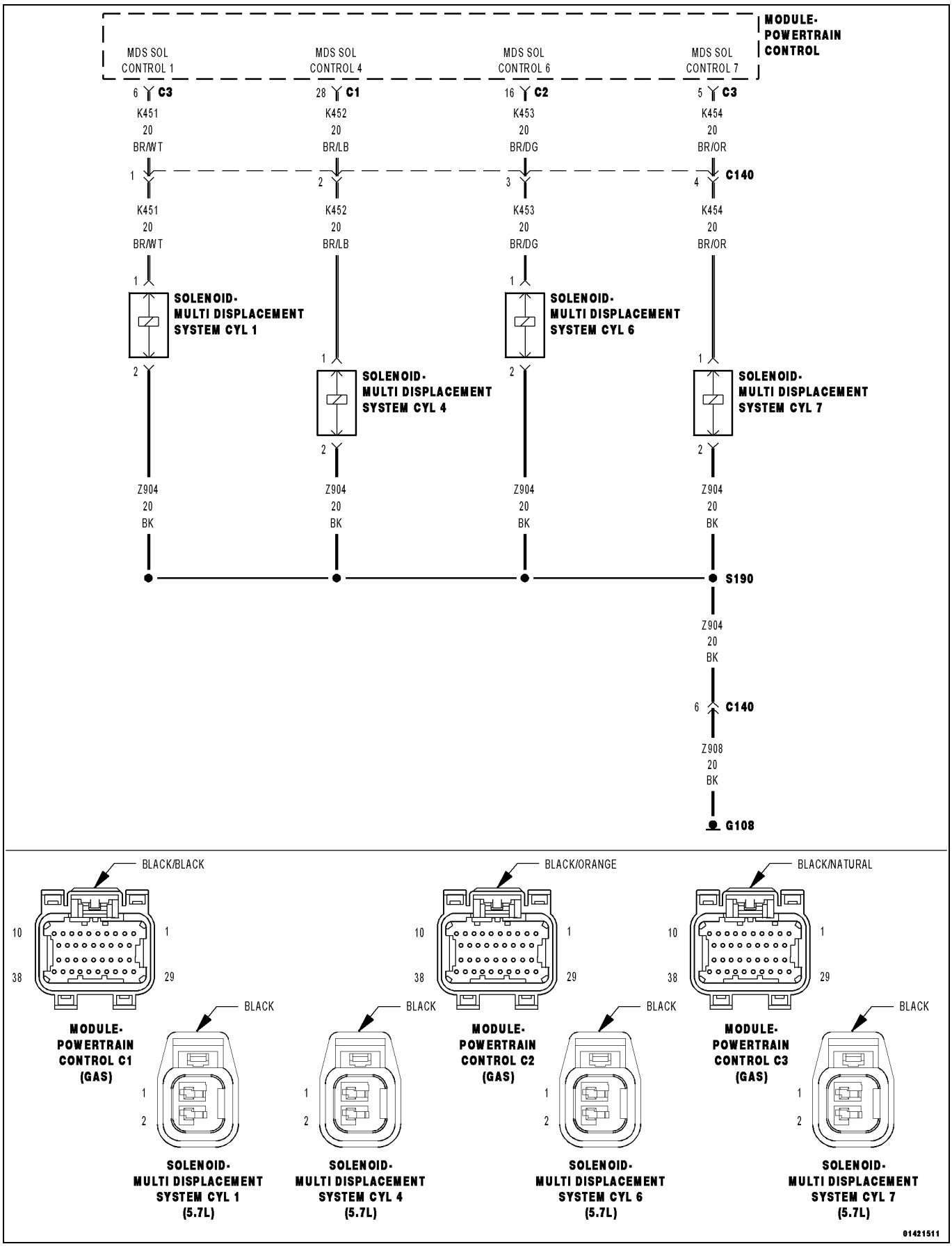

For a complete wiring diagram, **refer to the Wiring Information**.

Theory of Operation

When all criteria has been met, power is supplied to each MDS Solenoid when the engine is making a transition from 8 cylinder mode to 4 cylinder mode. By actuating the solenoid, oil pressure is raised to the pair of lifters that coincide with each particular solenoid. The oil pressure pushes in the locking pins that allows the lifter to collapse, decoupling the valves and camshaft.

- **When Monitored:**
  Transition from 8 to 4 cylinder mode.
- **Set Condition:**
  When the Powertrain Control Module (PCM) recognizes a problem with the Solenoid Control circuit. One trip fault.

Possible Causes
(K451) MDS SOLENOID NO.1 CONTROL SHORT TO VOLTAGE
(K451) MDS SOLENOID NO.1 CONTROL SHORT TO GROUND
(K451) MDS SOLENOID NO.1 CONTROL OPEN
(Z908) GROUND CIRCUIT OPEN
MDS SOLENOID NO.1
POWERTRAIN CONTROL MODULE (PCM)

Always perform the Pre-Diagnostic Troubleshooting procedure before proceeding. (Refer to 28 - DTC-Based Diagnostics/MODULE, Powertrain Control (PCM) - Standard Procedure).

1. ACTIVE DTC

NOTE: Diagnose any Misfire DTCs before continuing.

1. Start the engine and allow it to reach normal operating temperature.

WARNING: When the engine is operating, do not stand in direct line with the fan. Do not put your hands near the pulleys, belts or fan. Do not wear loose clothing. Failure to follow these instructions may result in possible serious or fatal injury.

NOTE: It may be necessary to test drive the vehicle in order for this DTC to set.

2. With a scan tool, select View DTCs.

NOTE: Diagnose any Deactivation or Oil Pressure DTCs before continuing with this test.

Is the DTC Active at this time?

Yes

- Go To 2

No

- Perform the INTERMITTENT CONDITION diagnostic procedure. (Refer to 28 - DTC-Based Diagnostics/MODULE, Powertrain Control (PCM) - Standard Procedure).

2. MDS SOLENOID NO.1

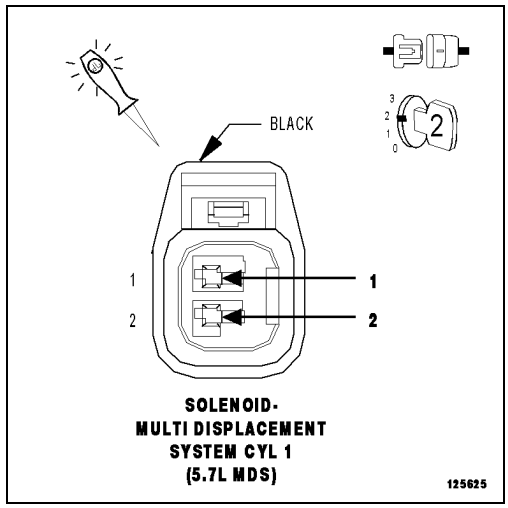

1. Turn the ignition off.
2. Gain access to the MDS Solenoid No.1.
3. Disconnect the MDS Solenoid No.1 harness connector.
4. Ignition on, engine not running.
5. Turn off all accessories.
6. Using a 12-volt test light connected to the (Z908) Ground circuit, probe the (K451) MDS Solenoid No.1 Control circuit.

NOTE: The DTC needs to be cleared before actuating the Solenoid, if the DTC is not cleared, the Solenoid may not be allowed to actuate.

7. With a scan tool, actuate the MDS Solenoid 1.

NOTE: The test light should be illuminated and bright proportional to the maximum duty cycle allowed by the scan tool. For example, if the scan tool allows 100% actuation, the brightness should be as bright as a direct connection to the battery. If the scan tool allows a maximum 25% actuation, the brightness should be 25% as bright as a direct connection to the battery.

Does the test light illuminate accordingly during the actuation?

Yes

- Verify that there is good pin to terminal contact in the Solenoid and the Powertrain Control Module connectors. Replace the MDS Solenoid No.1 if no problems were found in the connectors.
- Perform the POWERTRAIN VERIFICATION TEST. (Refer to 28 - DTC-Based Diagnostics/MODULE, Powertrain Control (PCM) - Standard Procedure).

No

- Go To 3

3. (Z908) GROUND CIRCUIT OPEN

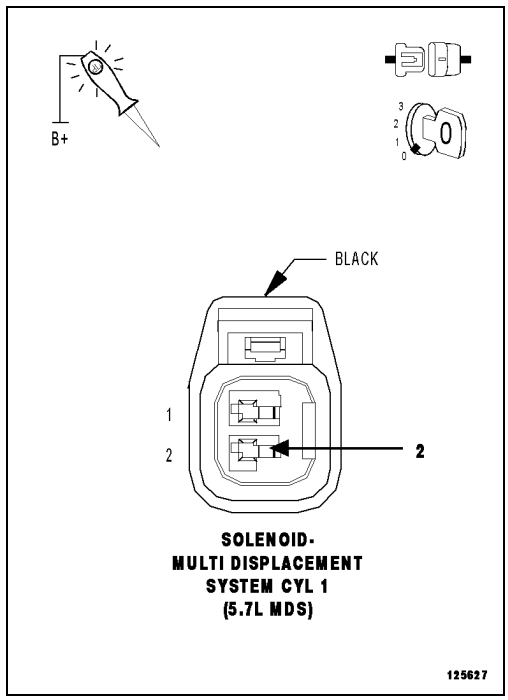

1. Turn the ignition off.
2. Using a 12-volt test light connected to the 12-volts, probe the (Z908) Ground circuit in the MDS Solenoid No.1 harness connector.

Does the test light illuminate brightly?

Yes

- Go To 4

No

- Repair the open in the (Z908) Ground circuit.
- Perform the POWERTRAIN VERIFICATION TEST. (Refer to 28 - DTC-Based Diagnostics/MODULE, Powertrain Control (PCM) - Standard Procedure).

4. (K451) MDS SOLENOID NO.1 CONTROL CIRCUIT SHORTED TO VOLTAGE

1. Disconnect the C3 PCM harness connector.
2. Ignition on, engine not running.
3. Measure the voltage on the (K451) MDS Solenoid No.1 Control circuit in the MDS Solenoid No.1 connector.

Is there any voltage present

Yes

- Repair the short to voltage in the (K451) MDS Solenoid No.1 Control circuit.
- Perform the POWERTRAIN VERIFICATION TEST. (Refer to 28 - DTC-Based Diagnostics/MODULE, Powertrain Control (PCM) - Standard Procedure).

No

- Go To 5

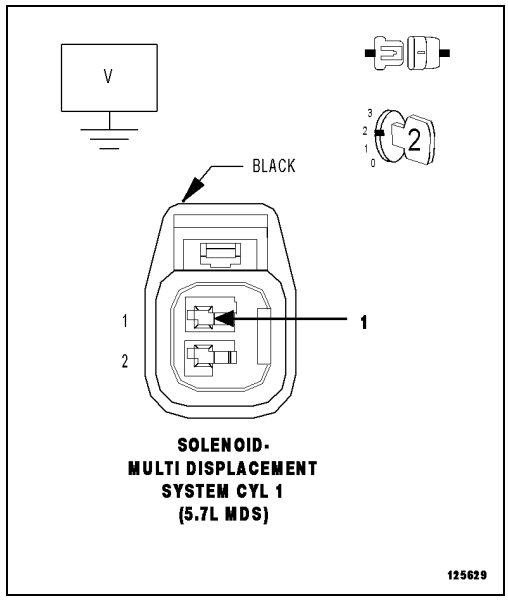

5. (K451) MDS SOLENOID NO.1 CONTROL CIRCUIT SHORTED TO GROUND

1. Turn the ignition off.
2. Measure the resistance between ground and the (K451) MDS Solenoid No.1 Control circuit in the MDS Solenoid No.1 harness connector.

Is the resistance below 100 Ohms?

Yes

- Repair the short to ground in the (K451) MDS Solenoid No.1 Control circuit.
- Perform the POWERTRAIN VERIFICATION TEST. (Refer to 28 - DTC-Based Diagnostics/MODULE, Powertrain Control (PCM) - Standard Procedure).

No

- Go To 6

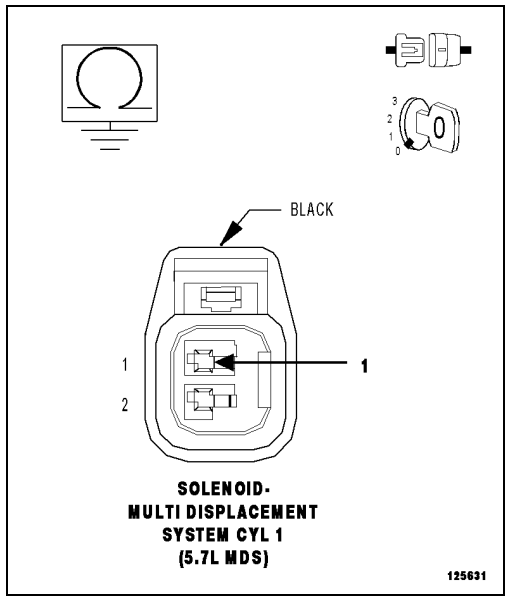

6. (K451) MDS SOLENOID NO.1 CONTROL CIRCUIT OPEN

CAUTION: Do not probe the PCM harness connectors. Probing the PCM harness connectors will damage the PCM terminals resulting in poor terminal to pin connection. Install the PCM Pinout Box Kit, NGC, 38 Position 8815A to perform diagnosis.

1. Measure the resistance of the (K451) MDS Solenoid No.1 Control circuit from the MDS Solenoid No.1 harness connector to the appropriate terminal of PCM Pinout Box 8815A.

Is the resistance below 5.0 Ohms?

Yes

- Go To 7

No

- Repair the open in the (K451) MDS Solenoid No.1 Control circuit.
- Perform the POWERTRAIN VERIFICATION TEST. (Refer to 28 - DTC-Based Diagnostics/MODULE, Powertrain Control (PCM) - Standard Procedure).

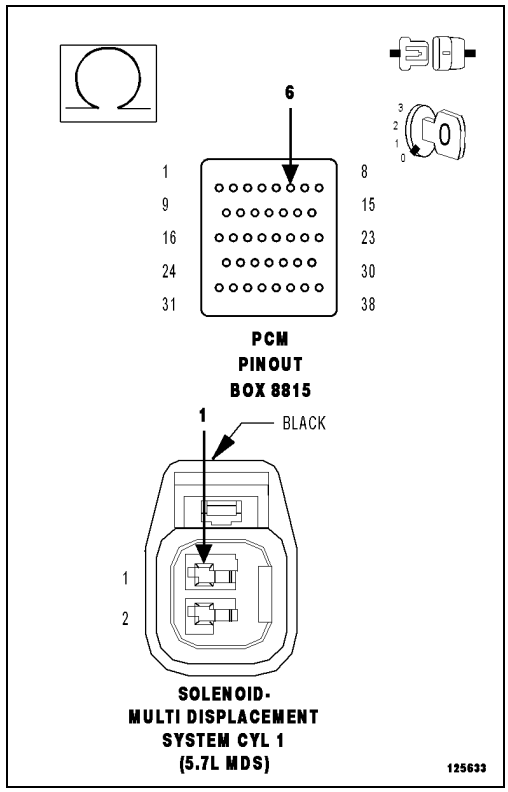

7. POWERTRAIN CONTROL MODULE (PCM)

1. Using the wiring diagram/schematic as a guide, inspect the wiring and connectors between the Solenoid and the Powertrain Control Module (PCM).
2. Look for any chafed, pierced, pinched, or partially broken wires.
3. Look for broken, bent, pushed out or corroded terminals. Verify that there is good pin to terminal contact in the Solenoid and the Powertrain Control Module connectors.
4. Refer to any Technical Service Bulletins that may apply.

Were there any problems found?

Yes

- Repair as necessary.
- Perform the POWERTRAIN VERIFICATION TEST. (Refer to 28 - DTC-Based Diagnostics/MODULE, Powertrain Control (PCM) - Standard Procedure).

No

- Replace and program the Powertrain Control Module in accordance with the Service Information.
- Perform the POWERTRAIN VERIFICATION TEST. (Refer to 28 - DTC-Based Diagnostics/MODULE, Powertrain Control (PCM) - Standard Procedure).

P3402-CYLINDER 1 DEACTIVATION CONTROL PERFORMANCE

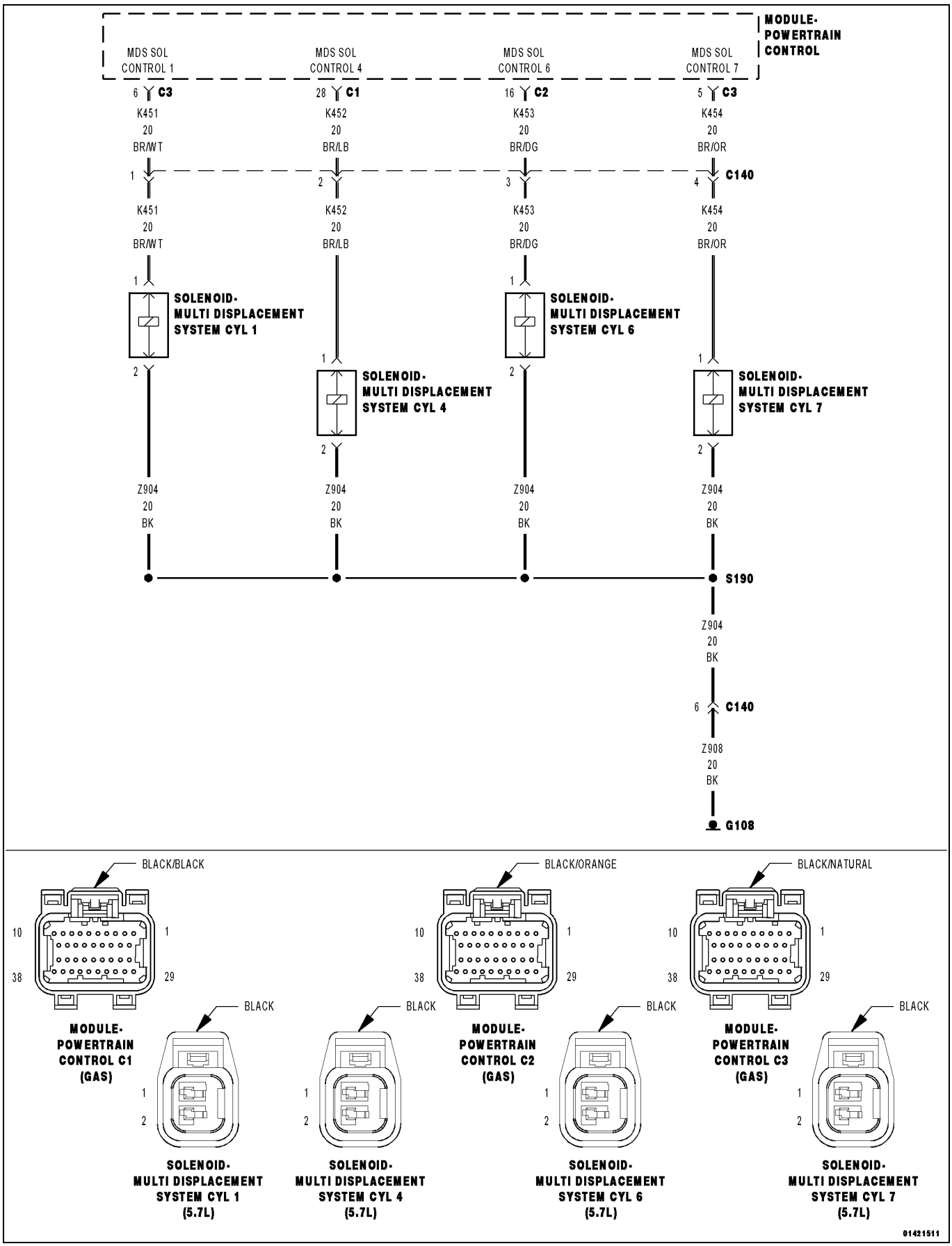

For a complete wiring diagram, **refer to the Wiring Information**.

Theory of Operation

When all criteria has been met, power is supplied to each MDS Solenoid when the engine is making a transition from 8 cylinder mode to 4 cylinder mode. By actuating the solenoid, oil pressure is raised to the pair of lifters that coincide with each particular solenoid. The oil pressure pushes in the locking pins that allows the lifter to collapse, decoupling the valves and camshaft.

- **When Monitored:**
  Transition from 8 to 4 cylinder mode.
- **Set Condition:**
  The MDS fails to disengage for cylinder 1. One trip fault.

Possible Causes
(K451) MDS SOLENOID NO.1 CONTROL SHORT TO GROUND
(K451) MDS SOLENOID NO.1 CONTROL OPEN
(Z903) GROUND CIRCUIT OPEN
INSUFFICIENT OIL PRESSURE ACTING ON THE LIFTER LOCKING PINS
OIL PASSAGES RESTRICTED
LIFTER
MDS SOLENOID
POWERTRAIN CONTROL MODULE (PCM)

Always perform the Pre-Diagnostic Troubleshooting procedure before proceeding. (Refer to 28 - DTC-Based Diagnostics/MODULE, Powertrain Control (PCM) - Standard Procedure).

1. ACTIVE DTC

NOTE: Diagnose any Misfire DTCs before continuing.

1. Start the engine and allow it to reach normal operating temperature.

WARNING: When the engine is operating, do not stand in direct line with the fan. Do not put your hands near the pulleys, belts or fan. Do not wear loose clothing. Failure to follow these instructions may result in possible serious or fatal injury.

NOTE: It may be necessary to test drive the vehicle in order for this DTC to set.

2. With the scan tool, select View DTCs.

Is the DTC Active at this time?

Yes

- Go To 2

No

- Perform the INTERMITTENT CONDITION diagnostic procedure. (Refer to 28 - DTC-Based Diagnostics/MODULE, Powertrain Control (PCM) - Standard Procedure).

2. CHECKING PCM CONTROL SIDE FOR THE MDS SOLENOID (C140)

1. Turn the ignition off.
2. Disconnect the C140 harness connector.
3. Using a 12-volt test light, jumper from the (Z903) Ground Circuit and the (K451) MDS Solenoid No.1 Control Circuit in the C140 harness connector (PCM side).
4. Turn the ignition on.
5. With the scan tool, actuate the MDS Solenoid No.1.

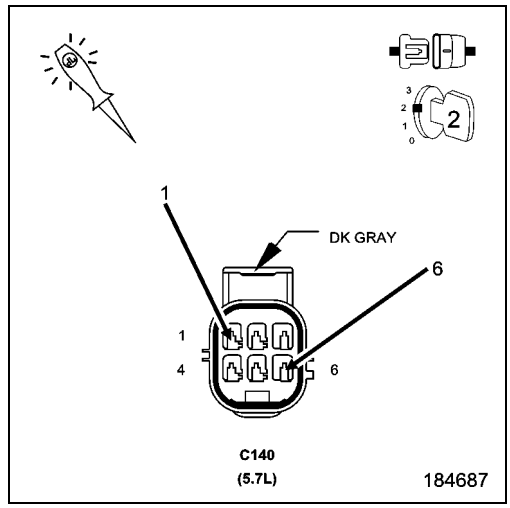

NOTE: The test light should be illuminated and bright proportional to the maximum duty cycle allowed by the scan tool. For example, if the scan tool allows 100% actuation, the brightness should be as bright as a direct connection to the battery. If the scan tool allows a maximum 25% actuation, the brightness should be 25% as bright as a direct connection to the battery.

Does the test light illuminate accordingly during the actuation?

Yes

- Go To 3

No

- Go To 4

3. MDS SOLENOID RESISTANCE

1. Turn the ignition off.
2. Measure the resistance between the (Z903) Ground Circuit and the (K451) MDS Solenoid No.1 Control Circuit in the C140 harness connector (MDS side).

NOTE: It is important to follow the below temp/resistance values to ensure an accurate reading.

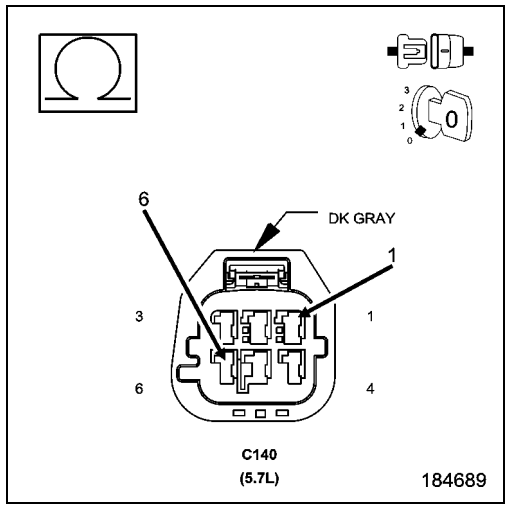

MDS SOLENOID RESISTANCE	
TEMPERATURE VALUE ± -7° C (20° F)	**RESISTANCE (OHMS) ± .25 Ohms**
-18° C (0° F)	8.8 Ohms
0° C (32° F)	9.5 Ohms
20° C (68° F)	10.3 Ohms
38° C (100° F)	11 Ohms
66° C (150° F)	12.2 Ohms
93° C (200° F)	13.4 Ohms
121° C (250° F)	14.4 Ohms
149° C (300° F)	15.6 Ohms

Is the resistance within an acceptable range?

Yes

- Go To 7

No

- Visually and Physically inspect the wiring harness between the C140 connector and the MDS Solenoid connector. Repair as necessary. If OK, replace the MDS Solenoid in accordance with the Service Information.
- Perform the POWERTRAIN VERIFICATION TEST. (Refer to 28 - DTC-Based Diagnostics/MODULE, Powertrain Control (PCM) - Standard Procedure).

4. (Z903) GROUND CIRCUIT OPEN (PCM SIDE)

1. Turn the ignition off.
2. Using a 12-volt test light connected to 12-volts, probe the (Z903) Ground circuit in the C140 harness connector (PCM side).

Does the test light illuminate brightly?

Yes

- Go To 5

No

- Repair the open in the (Z903) Ground circuit.
- Perform the POWERTRAIN VERIFICATION TEST. (Refer to 28 - DTC-Based Diagnostics/MODULE, Powertrain Control (PCM) - Standard Procedure).

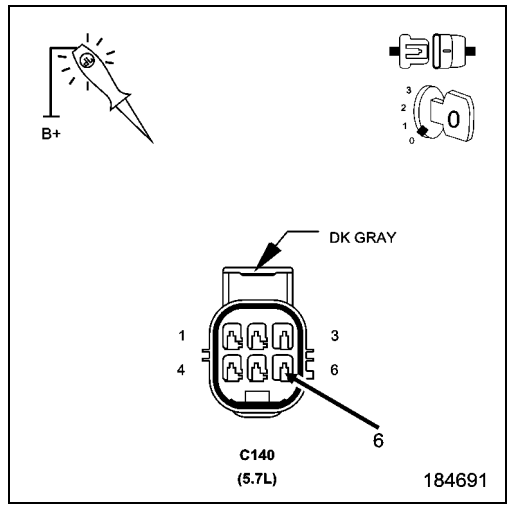

5. (K451) MDS SOLENOID NO.1 CONTROL CIRCUIT SHORTED TO GROUND (PCM SIDE)

1. Turn the ignition off.
2. Disconnect the C3 PCM harness connector.
3. Measure the resistance between ground and the (K451) MDS Solenoid No.1 Control circuit in the C140 harness connector.

Is the resistance below 100 Ohms?

Yes

- Repair the short to ground in the (K451) MDS Solenoid No.1 Control circuit between the PCM harness connector and the C140 harness connector.
- Perform the POWERTRAIN VERIFICATION TEST. (Refer to 28 - DTC-Based Diagnostics/MODULE, Powertrain Control (PCM) - Standard Procedure).

No

- Go To 6

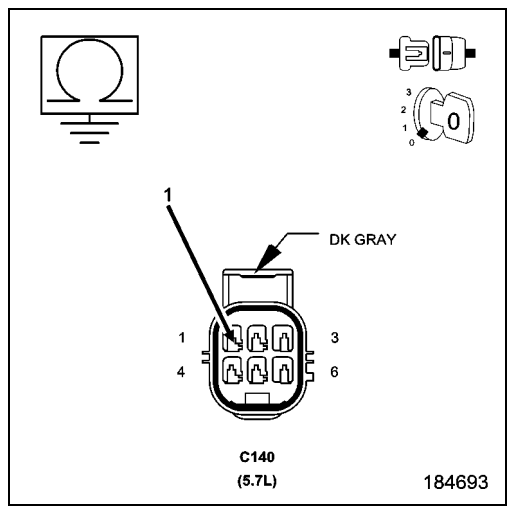

6. (K451) MDS SOLENOID NO.1 CONTROL CIRCUIT OPEN (PCM SIDE)

CAUTION: Do not probe the PCM harness connectors. Probing the PCM harness connectors will damage the PCM terminals resulting in poor terminal to pin connection. Install the PCM Pinout Box Kit, NGC, 38 Position 8815A to perform diagnosis.

1. Measure the resistance of the (K451) MDS Solenoid No.1 Control circuit from the C140 harness connector to the appropriate terminal of PCM Pinout Box 8815A.

Is the resistance below 5.0 Ohms?

Yes

- Replace and program the Powertrain Control Module in accordance with the Service Information.
- Perform the POWERTRAIN VERIFICATION TEST. (Refer to 28 - DTC-Based Diagnostics/MODULE, Powertrain Control (PCM) - Standard Procedure).

No

- Repair the open in the (K451) MDS Solenoid No.1 Control circuit between the C140 harness connector and the PCM harness connector.
- Perform the POWERTRAIN VERIFICATION TEST. (Refer to 28 - DTC-Based Diagnostics/MODULE, Powertrain Control (PCM) - Standard Procedure).

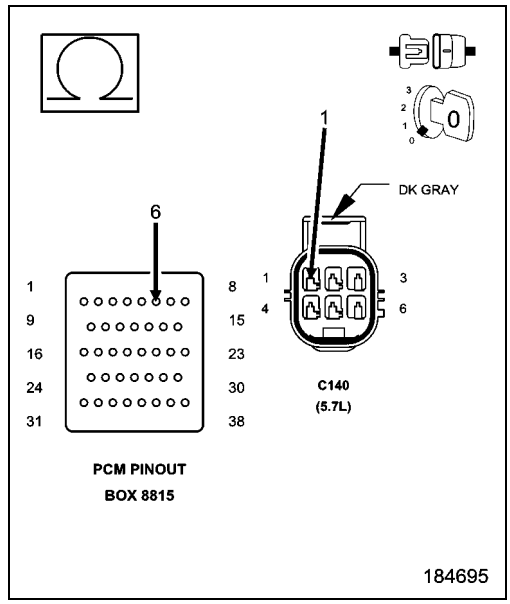

7. MDS SOLENOID 1

1. Turn the ignition off.
2. Remove the Intake Manifold in accordance with the Service Information.
3. Turn the ignition on.

NOTE: The DTC needs to be cleared before actuating the Solenoid, if the DTC is not cleared, the Solenoid may not be allowed to actuate.

4. With the scan tool actuate the MDS Solenoid 1.

Can you feel and hear the Solenoid Actuating?

Yes

- Go To 8

No

- Remove the Solenoid and check for any debris that may be blocking the oil passages to the Solenoid. If the passages are clogged, clean the passages and replace the MDS Solenoid 1. If the passages are not clogged with debris, replace the MDS Solenoid 1.
- Perform the POWERTRAIN VERIFICATION TEST. (Refer to 28 - DTC-Based Diagnostics/MODULE, Powertrain Control (PCM) - Standard Procedure).

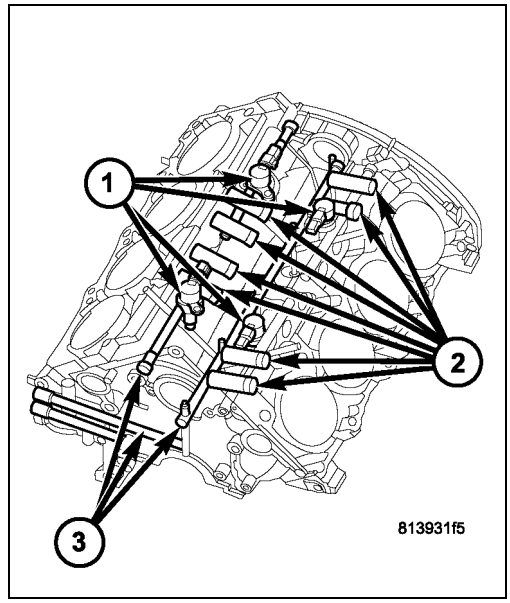

8. OIL PASSAGES RESTRICTED

1. Turn the ignition off.
2. Remove both Solenoids on Bank 1 of the engine block.
3. Remove the Bank 1 Cylinder Head in accordance with the Service Information.
4. Remove the Lifters from the left engine bank.
5. Inspect the oil passages to the Solenoids and from the Solenoids to the lifters.

Are the passages blocked?

Yes

- Clean the oil passages as necessary. If the entire engine is restricted, disassembly of the entire engine block may be necessary.
- Perform the POWERTRAIN VERIFICATION TEST. (Refer to 28 - DTC-Based Diagnostics/MODULE, Powertrain Control (PCM) - Standard Procedure).

No

- Replace both sets of lifters if no other possible causes remain.
- Perform the POWERTRAIN VERIFICATION TEST. (Refer to 28 - DTC-Based Diagnostics/MODULE, Powertrain Control (PCM) - Standard Procedure).

P3425-MDS SOLENOID 4 CIRCUIT

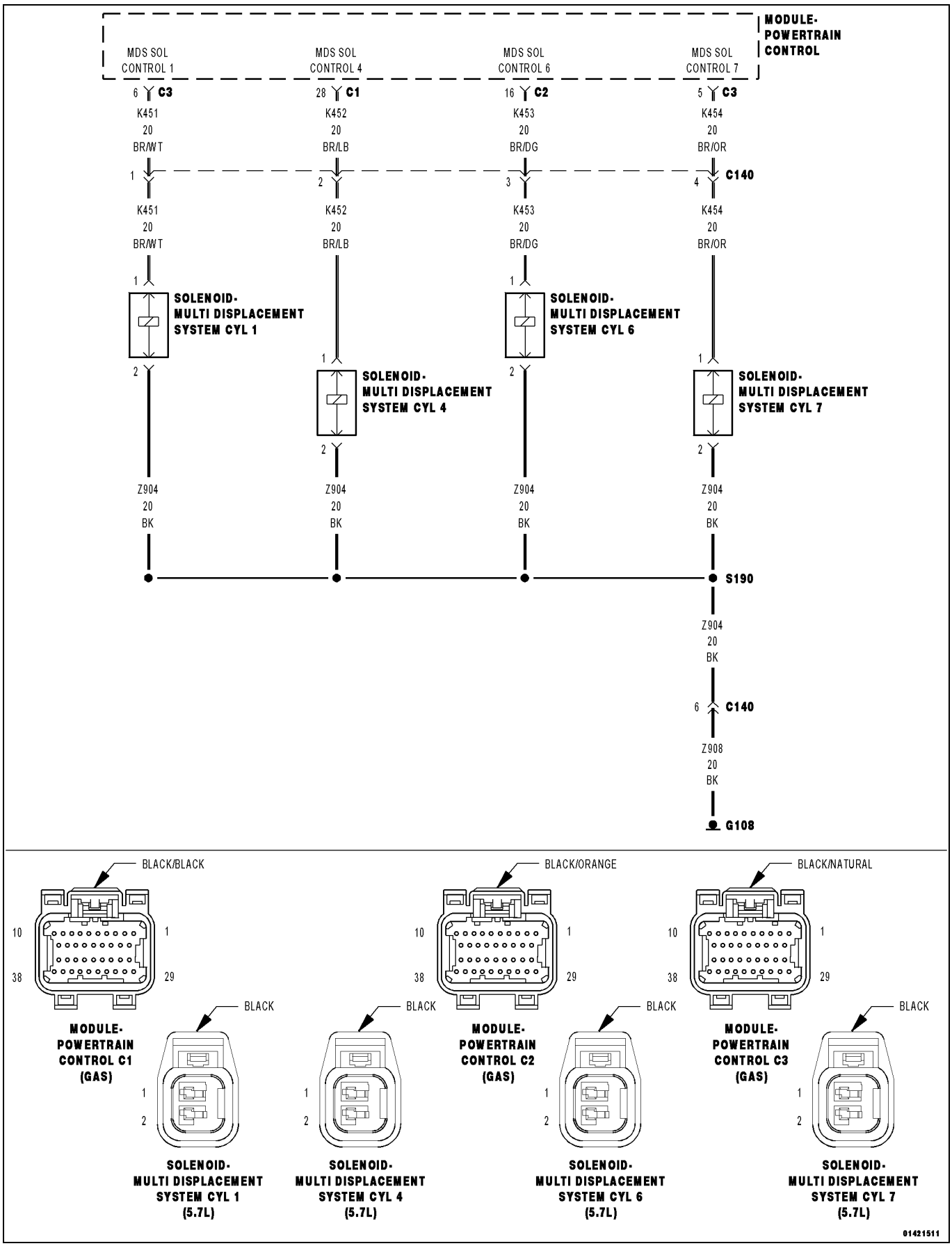

For a complete wiring diagram, **refer to the Wiring Information**.

Theory of Operation

When all criteria has been met, power is supplied to each MDS Solenoid when the engine is making a transition from 8 cylinder mode to 4 cylinder mode. By actuating the solenoid, oil pressure is raised to the pair of lifters that coincide with each particular solenoid. The oil pressure pushes in the locking pins that allows the lifter to collapse, decoupling the valves and camshaft.

- **When Monitored:**
  Transition from 8 to 4 cylinder mode.
- **Set Condition:**
  When the Powertrain Control Module (PCM) recognizes a problem with the Solenoid Control circuit. One trip fault.

Possible Causes
(K452) MDS SOLENOID NO.4 CONTROL SHORT TO VOLTAGE
(K452) MDS SOLENOID NO.4 CONTROL SHORT TO GROUND
(K452) MDS SOLENOID NO.4 CONTROL OPEN
(Z908) GROUND CIRCUIT OPEN
MDS SOLENOID NO.4
POWERTRAIN CONTROL MODULE (PCM)

Always perform the Pre-Diagnostic Troubleshooting procedure before proceeding. (Refer to 28 - DTC-Based Diagnostics/MODULE, Powertrain Control (PCM) - Standard Procedure).

1. ACTIVE DTC

NOTE: Diagnose any Misfire DTCs before continuing.

1. Start the engine and allow it to reach normal operating temperature.

WARNING: When the engine is operating, do not stand in direct line with the fan. Do not put your hands near the pulleys, belts or fan. Do not wear loose clothing. Failure to follow these instructions may result in possible serious or fatal injury.

NOTE: It may be necessary to test drive the vehicle in order for this DTC to set.

2. With the scan tool, select View DTCs.

NOTE: Diagnose any Deactivation or Oil Pressure DTCs before continuing with this test.

Is the DTC Active at this time?

Yes

- Go To 2

No

- Perform the INTERMITTENT CONDITION diagnostic procedure. (Refer to 28 - DTC-Based Diagnostics/MODULE, Powertrain Control (PCM) - Standard Procedure).

2. MDS SOLENOID NO.4

1. Turn the ignition off.
2. Gain access to the MDS Solenoid No. 4.
3. Disconnect the MDS Solenoid No.4 harness connector.
4. Ignition on, engine not running.
5. Turn off all accessories.
6. Using a 12-volt test light connected to the (Z908) Ground circuit, probe the (K452) MDS Solenoid No.4 Control circuit.

NOTE: The DTC needs to be cleared before actuating the Solenoid, if the DTC is not cleared, the Solenoid may not be allowed to actuate.

7. With the scan tool, actuate the MDS Solenoid 4.

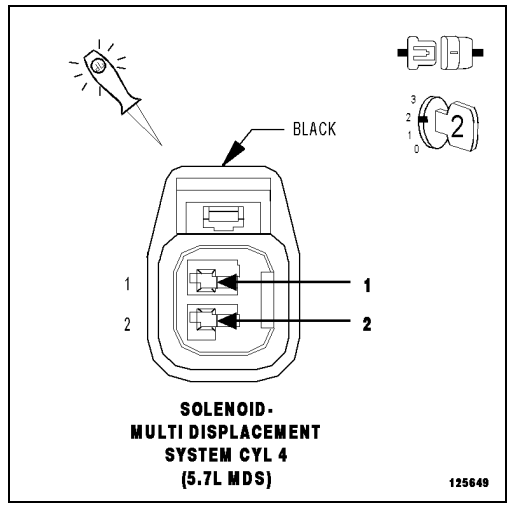

NOTE: The test light should be illuminated and bright proportional to the maximum duty cycle allowed by the scan tool. For example, if the scan tool allows 100% actuation, the brightness should be as bright as a direct connection to the battery. If the scan tool allows a maximum 25% actuation, the brightness should be 25% as bright as a direct connection to the battery.

Does the test light illuminate accordingly during the actuation?

Yes

- Verify that there is good pin to terminal contact in the Solenoid and the Powertrain Control Module connectors. Replace the MDS Solenoid No.4 if no problems were found in the connectors.
- Perform the POWERTRAIN VERIFICATION TEST. (Refer to 28 - DTC-Based Diagnostics/MODULE, Powertrain Control (PCM) - Standard Procedure).

No

- Go To 3

3. (Z908) GROUND CIRCUIT OPEN

1. Turn the ignition off.
2. Using a 12-volt test light connected to the 12-volts, probe the (Z908) Ground circuit in the MDS Solenoid No.4 harness connector.

Does the test light illuminate brightly?

Yes

- Go To 4

No

- Repair the open in the (Z908) Ground circuit.
- Perform the POWERTRAIN VERIFICATION TEST. (Refer to 28 - DTC-Based Diagnostics/MODULE, Powertrain Control (PCM) - Standard Procedure).

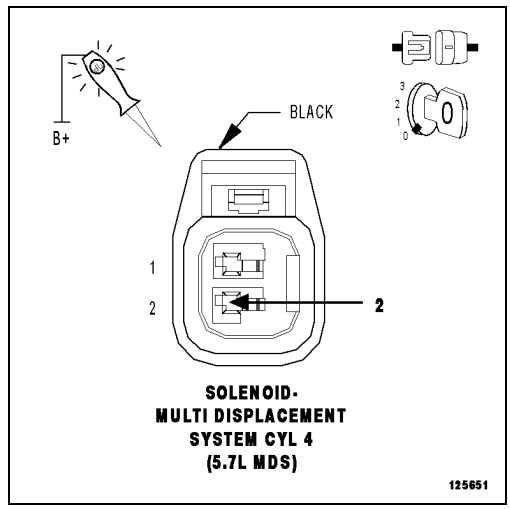

4. (K452) MDS SOLENOID NO.4 CONTROL CIRCUIT SHORTED TO VOLTAGE

1. Disconnect the C1 PCM harness connector.
2. Ignition on, engine not running.
3. Measure the voltage on the (K452) MDS Solenoid No.4 Control circuit in the MDS Solenoid No.4 harness connector.

Is there any voltage present

Yes

- Repair the short to voltage in the (K452) MDS Solenoid No.4 Control circuit.
- Perform the POWERTRAIN VERIFICATION TEST. (Refer to 28 - DTC-Based Diagnostics/MODULE, Powertrain Control (PCM) - Standard Procedure).

No

- Go To 5

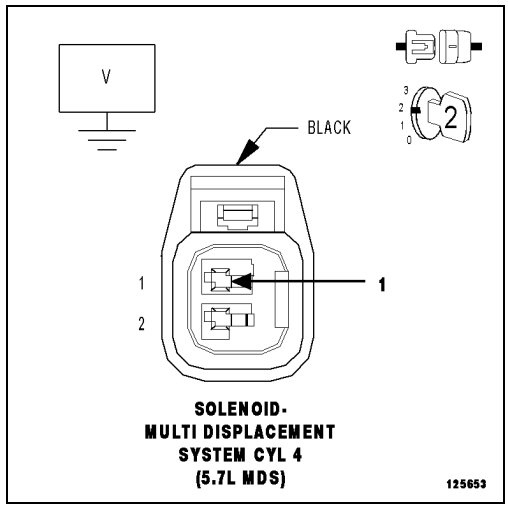

5. (K452) MDS SOLENOID NO.4 CONTROL CIRCUIT SHORTED TO GROUND

1. Measure the resistance between ground and the (K452) MDS Solenoid No.4 Control circuit in the MDS Solenoid No.4 harness connector.

Is the resistance below 100 Ohms?

Yes

- Repair the short to ground in the (K452) MDS Solenoid No.4 Control circuit.
- Perform the POWERTRAIN VERIFICATION TEST. (Refer to 28 - DTC-Based Diagnostics/MODULE, Powertrain Control (PCM) - Standard Procedure).

No

- Go To 6

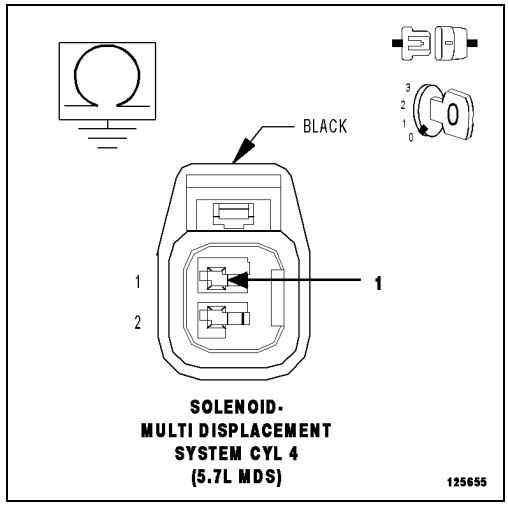

6. (K452) MDS SOLENOID NO.4 CONTROL CIRCUIT OPEN

CAUTION: Do not probe the PCM harness connectors. Probing the PCM harness connectors will damage the PCM terminals resulting in poor terminal to pin connection. Install the PCM Pinout Box Kit, NGC, 38 Position 8815A to perform diagnosis.

1. Measure the resistance of the (K452) MDS Solenoid No.4 Control circuit from the MDS Solenoid No.4 harness connector to the appropriate terminal of PCM Pinout Box 8815A.

Is the resistance below 5.0 Ohms?

Yes

- Go To 7

No

- Repair the open in the (K452) MDS Solenoid No.4 Control circuit.
- Perform the POWERTRAIN VERIFICATION TEST. (Refer to 28 - DTC-Based Diagnostics/MODULE, Powertrain Control (PCM) - Standard Procedure).

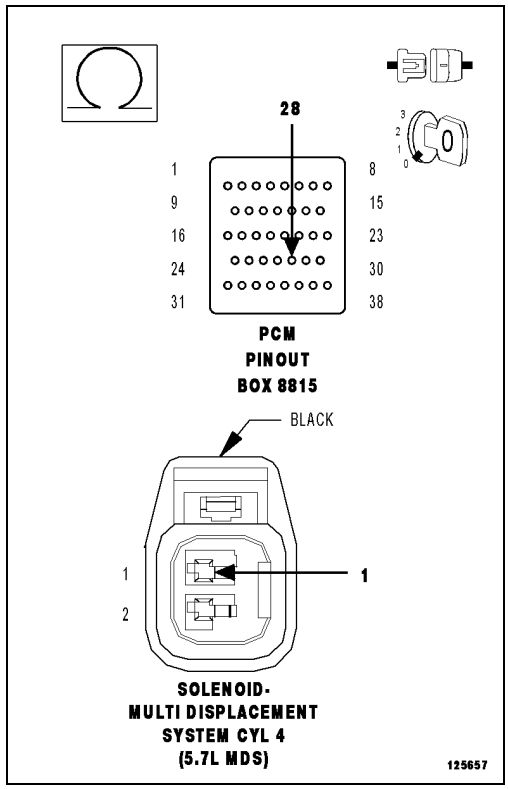

7. POWERTRAIN CONTROL MODULE (PCM)

1. Using the wiring diagram/schematic as a guide, inspect the wiring and connectors between the Solenoid and the Powertrain Control Module (PCM).
2. Look for any chafed, pierced, pinched or partially broken wires.
3. Look for broken, bent, pushed out or corroded terminals. Verify that there is good pin to terminal contact in the Solenoid and the Powertrain Control Module connectors.
4. Refer to any Technical Service Bulletins that may apply.

Were there any problems found?

Yes

- Repair as necessary.
- Perform the POWERTRAIN VERIFICATION TEST. (Refer to 28 - DTC-Based Diagnostics/MODULE, Powertrain Control (PCM) - Standard Procedure).

No

- Replace and program the Powertrain Control Module in accordance with the Service Information.
- Perform the POWERTRAIN VERIFICATION TEST. (Refer to 28 - DTC-Based Diagnostics/MODULE, Powertrain Control (PCM) - Standard Procedure).

P3426-CYLINDER 4 DEACTIVATION CONTROL PERFORMANCE

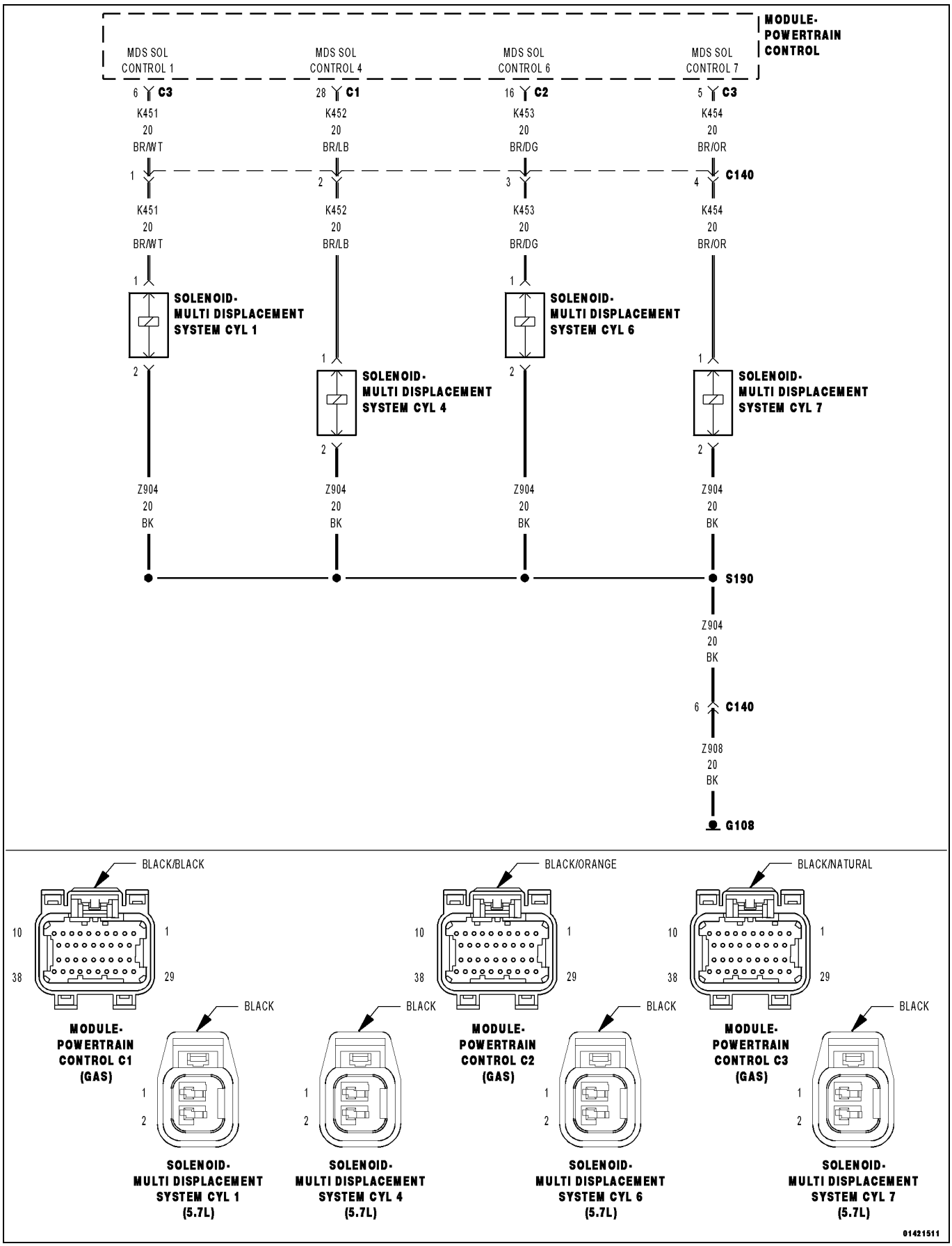

For a complete wiring diagram, **refer to the Wiring Information**.

Theory of Operation

When all criteria has been met, power is supplied to each MDS Solenoid when the engine is making a transition from 8 cylinder mode to 4 cylinder mode. By actuating the solenoid, oil pressure is raised to the pair of lifters that coincide with each particular solenoid. The oil pressure pushes in the locking pins that allows the lifter to collapse, decoupling the valves and camshaft.

- **When Monitored:**
  Transition from 8 to 4 cylinder mode.
- **Set Condition:**
  The MDS fails to disengage for cylinder 4. One trip fault.

Possible Causes
(K452) MDS SOLENOID NO.4 CONTROL CIRCUIT OPEN
(K452) MDS SOLENOID NO.4 CONTROL CIRCUIT SHORTED TO GROUND
GROUND CIRCUIT OPEN
INSUFFICIENT OIL PRESSURE ACTING ON THE LIFTER LOCKING PINS
OIL PASSAGES RESTRICTED
LIFTER
MDS SOLENOID NO.4
POWERTRAIN CONTROL MODULE (PCM)

Always perform the Pre-Diagnostic Troubleshooting procedure before proceeding. (Refer to 28 - DTC-Based Diagnostics/MODULE, Powertrain Control (PCM) - Standard Procedure).

1. ACTIVE DTC

NOTE: Diagnose any Misfire DTCs before continuing.

1. Start the engine and allow it to reach normal operating temperature.

WARNING: When the engine is operating, do not stand in direct line with the fan. Do not put your hands near the pulleys, belts or fan. Do not wear loose clothing. Failure to follow these instructions may result in possible serious or fatal injury.

NOTE: It may be necessary to test drive the vehicle in order for this DTC to set.

2. With the scan tool, select View DTCs.

Is the DTC Active at this time?

Yes

- Go To 2

No

- Perform the INTERMITTENT CONDITION diagnostic procedure. (Refer to 28 - DTC-Based Diagnostics/MODULE, Powertrain Control (PCM) - Standard Procedure).

2. CHECKING PCM CONTROL SIDE FOR THE MDS SOLENOID (C140)

1. Turn the ignition off.
2. Disconnect the C140 harness connector.
3. Using a 12-volt test light, jumper from the (Z903) Ground Circuit and the (K452) MDS Solenoid No.4 Control Circuit in the C140 harness connector (PCM side).
4. Turn the ignition on.
5. With the scan tool, actuate the MDS Solenoid No.4.

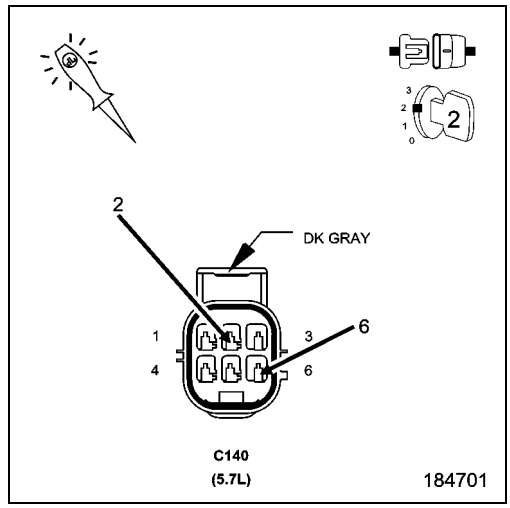

NOTE: The test light should be illuminated and bright proportional to the maximum duty cycle allowed by the scan tool. For example, if the scan tool allows 100% actuation, the brightness should be as bright as a direct connection to the battery. If the scan tool allows a maximum 25% actuation, the brightness should be 25% as bright as a direct connection to the battery.

Does the test light illuminate accordingly during the actuation?

Yes

- Go To 3

No

- Go To 4

3. MDS SOLENOID RESISTANCE

1. Turn the ignition off.
2. Measure the resistance between the (Z903) Ground Circuit and the (K452) MDS Solenoid No.4 Control Circuit in the C140 harness connector (MDS side).

NOTE: It is important to follow the below temp/resistance values to ensure an accurate reading.

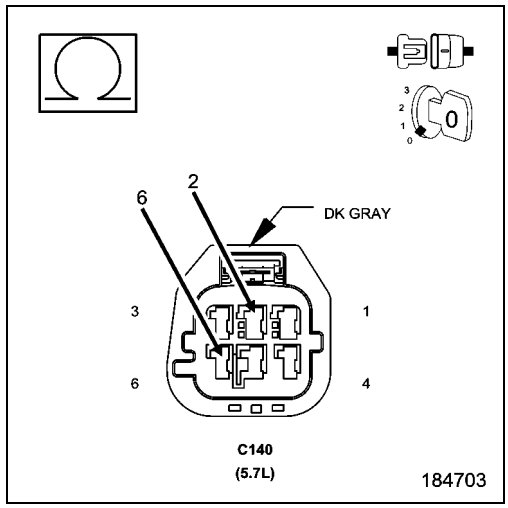

MDS SOLENOID RESISTANCE	
TEMPERATURE VALUE ± -7° C (20° F)	**RESISTANCE (OHMS) ± .25 Ohms**
-18° C (0° F)	8.8 Ohms
0° C (32° F)	9.5 Ohms
20° C (68° F)	10.3 Ohms
38° C (100° F)	11 Ohms
66° C (150° F)	12.2 Ohms
93° C (200° F)	13.4 Ohms
121° C (250° F)	14.4 Ohms
149° C (300° F)	15.6 Ohms

Is the resistance within an acceptable range?

Yes

- Go To 7

No

- Visually and Physically inspect the wiring harness between the C140 connector and the MDS Solenoid connector. Repair as necessary. If OK, replace the MDS Solenoid in accordance with the Service Information.

4. (Z903) GROUND CIRCUIT OPEN (PCM SIDE)

1. Turn the ignition off.
2. Using a 12-volt test light connected to 12-volts, probe the (Z903) Ground circuit in the C140 harness connector (PCM side).

Does the test light illuminate brightly?

Yes

- Go To 5

No

- Repair the open in the (Z903) Ground circuit.
- Perform the POWERTRAIN VERIFICATION TEST. (Refer to 28 - DTC-Based Diagnostics/MODULE, Powertrain Control (PCM) - Standard Procedure).

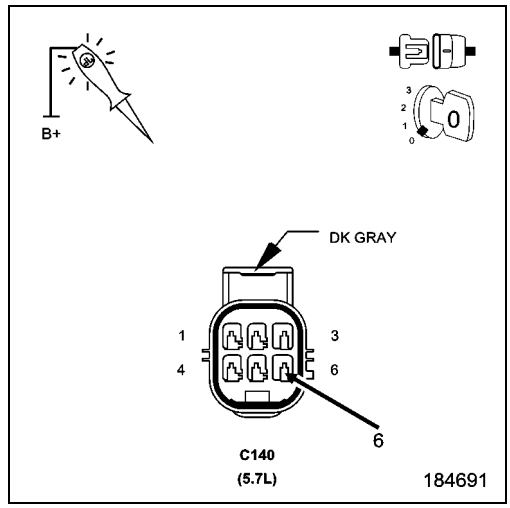

5. (K452) MDS SOLENOID NO.4 CONTROL CIRCUIT SHORTED TO GROUND (PCM SIDE)

1. Turn the ignition off.
2. Disconnect the C1 PCM harness connector.
3. Measure the resistance between ground and the (K452) MDS Solenoid No.4 Control circuit in the C140 harness connector.

Is the resistance below 100 Ohms?

Yes

- Repair the short to ground in the (K452) MDS Solenoid No.4 Control circuit between the PCM harness connector and the C140 harness connector.
- Perform the POWERTRAIN VERIFICATION TEST. (Refer to 28 - DTC-Based Diagnostics/MODULE, Powertrain Control (PCM) - Standard Procedure).

No

- Go To 6

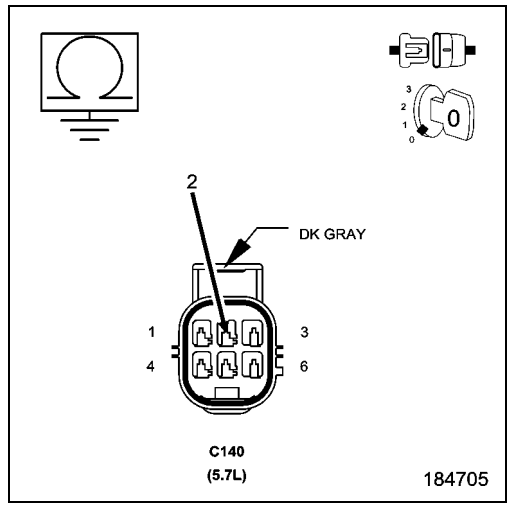

6. (K452) MDS SOLENOID NO.4 CONTROL CIRCUIT OPEN (PCM SIDE)

CAUTION: Do not probe the PCM harness connectors. Probing the PCM harness connectors will damage the PCM terminals resulting in poor terminal to pin connection. Install the PCM Pinout Box Kit, NGC, 38 Position 8815A to perform diagnosis.

1. Measure the resistance of the (K452) MDS Solenoid No.4 Control circuit from the C140 harness connector to the appropriate terminal of PCM Pinout Box 8815A.

Is the resistance below 5.0 Ohms?

Yes

- Replace and program the Powertrain Control Module in accordance with the Service Information.
- Perform the POWERTRAIN VERIFICATION TEST. (Refer to 28 - DTC-Based Diagnostics/MODULE, Powertrain Control (PCM) - Standard Procedure).

No

- Repair the open in the (K452) MDS Solenoid No.4 Control circuit between the C140 harness connector and the PCM harness connector.
- Perform the POWERTRAIN VERIFICATION TEST. (Refer to 28 - DTC-Based Diagnostics/MODULE, Powertrain Control (PCM) - Standard Procedure).

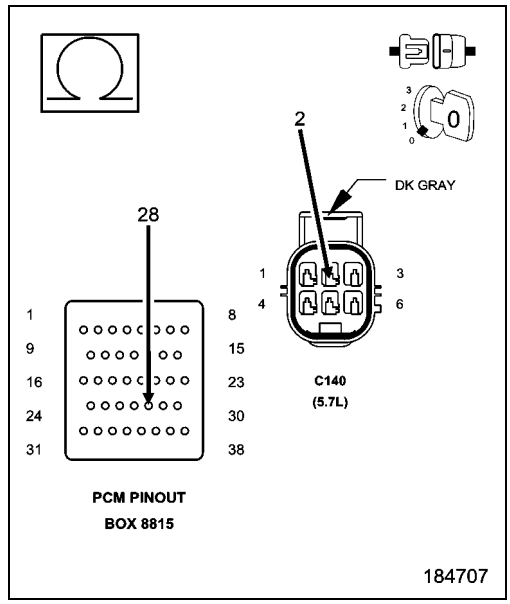

7. MDS SOLENOID 4

1. Turn the ignition off.
2. Remove the Intake Manifold in accordance with the Service Information.
3. Reconnect the C1 PCM harness connector.
4. Turn the ignition on.
5. With the scan tool actuate the MDS Solenoid 4.

Can you feel and hear the Solenoid Actuating?

Yes

- Go To 8

No

- Remove the Solenoid (1) and check for any debris that may be blocking the oil passages (3) to the Solenoid. If the passages are clogged, clean the passages and replace the MDS Solenoid 4. If the passages are not clogged with debris, replace the MDS Solenoid 4.

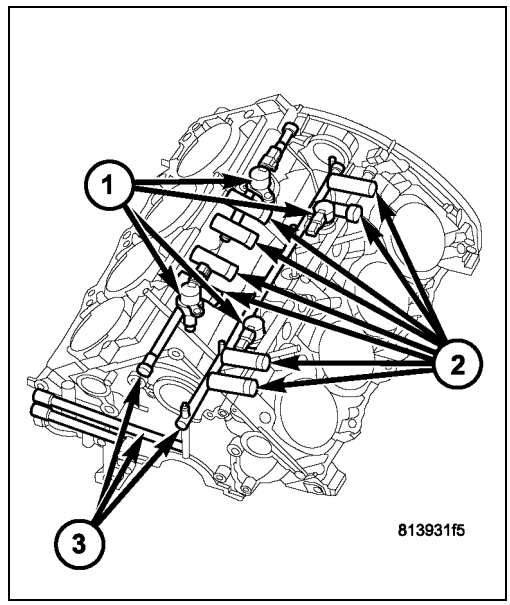

8. OIL PASSAGES RESTRICTED

1. Turn the ignition off.
2. Remove both Solenoids on Bank 2 of the engine block.
3. Remove the Bank 2 Cylinder Head in accordance with the Service Information.
4. Remove the Lifters from the right engine bank.
5. Inspect the oil passages to the Solenoids and from the Solenoids to the lifters.

Are the passages blocked?

Yes

- Clean the oil passages as necessary. If the entire engine is restricted disassembly of the entire engine block may be necessary.
- Perform the POWERTRAIN VERIFICATION TEST. (Refer to 28 - DTC-Based Diagnostics/MODULE, Powertrain Control (PCM) - Standard Procedure).

No

- Replace both sets of lifters if no other possible causes remain.
- Perform the POWERTRAIN VERIFICATION TEST. (Refer to 28 - DTC-Based Diagnostics/MODULE, Powertrain Control (PCM) - Standard Procedure).

P3441-MDS SOLENOID 6 CIRCUIT

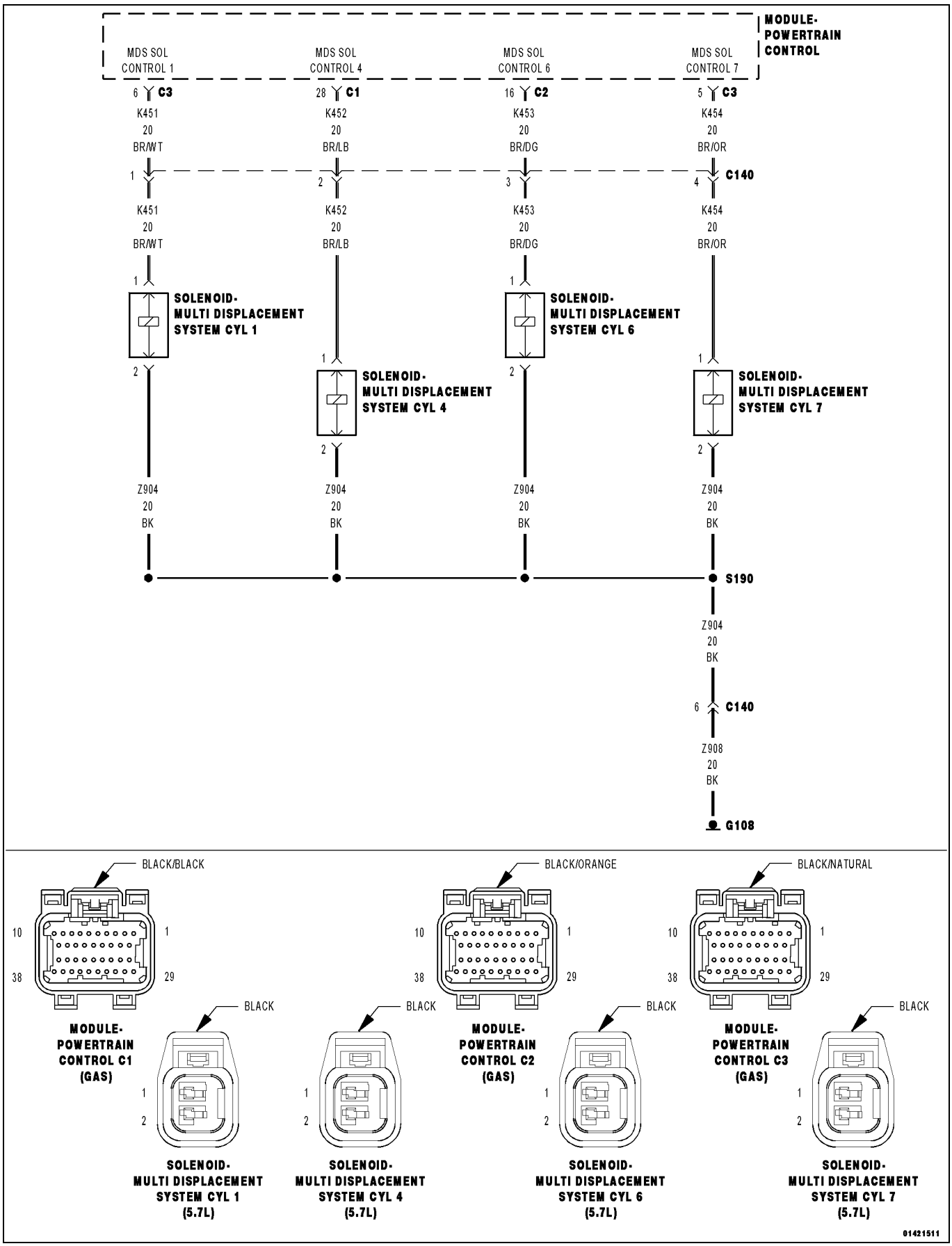

For a complete wiring diagram, **refer to the Wiring Information**.

Theory of Operation

When all criteria has been met, power is supplied to each MDS Solenoid when the engine is making a transition from 8 cylinder mode to 4 cylinder mode. By actuating the solenoid, oil pressure is raised to the pair of lifters that coincide with each particular solenoid. The oil pressure pushes in the locking pins that allows the lifter to collapse, decoupling the valves and camshaft.

- **When Monitored:**
  Transition from 8 to 4 cylinder mode.
- **Set Condition:**
  When the Powertrain Control Module (PCM) recognizes a problem with the Solenoid Control circuit. One trip fault.

Possible Causes
(K453) MDS SOLENOID NO.6 CONTROL SHORT TO VOLTAGE
(K453) MDS SOLENOID NO.6 CONTROL SHORT TO GROUND
(K453) MDS SOLENOID NO.6 CONTROL OPEN
(Z908) GROUND CIRCUIT OPEN
MDS SOLENOID NO.6
POWERTRAIN CONTROL MODULE (PCM)

Always perform the Pre-Diagnostic Troubleshooting procedure before proceeding. (Refer to 28 - DTC-Based Diagnostics/MODULE, Powertrain Control (PCM) - Standard Procedure).

1. ACTIVE DTC

NOTE: Diagnose any Misfire DTCs before continuing.

1. Start the engine and allow it to reach normal operating temperature.

WARNING: When the engine is operating, do not stand in direct line with the fan. Do not put your hands near the pulleys, belts or fan. Do not wear loose clothing. Failure to follow these instructions may result in possible serious or fatal injury.

NOTE: It may be necessary to test drive the vehicle in order for this DTC to set.

2. With the scan tool, select View DTCs.

NOTE: Diagnose any Deactivation or Oil Pressure DTCs before continuing with this test.

Is the DTC Active at this time?

Yes

- Go To 2

No

- Perform the INTERMITTENT CONDITION diagnostic procedure. (Refer to 28 - DTC-Based Diagnostics/MODULE, Powertrain Control (PCM) - Standard Procedure).

2. MDS SOLENOID NO.6

1. Turn the ignition off.
2. Gain access to the MDS Solenoid No.6.
3. Disconnect the MDS Solenoid No.6 harness connector.
4. Ignition on, engine not running.
5. Turn off all accessories.
6. Using a 12-volt test light connected to the (Z908) Ground circuit, probe the (K453) MDS Solenoid No.6 Control circuit.

NOTE: The DTC needs to be cleared before actuating the Solenoid, if the DTC is not cleared, the Solenoid may not be allowed to actuate.

7. With the scan tool, actuate the MDS Solenoid No.6.

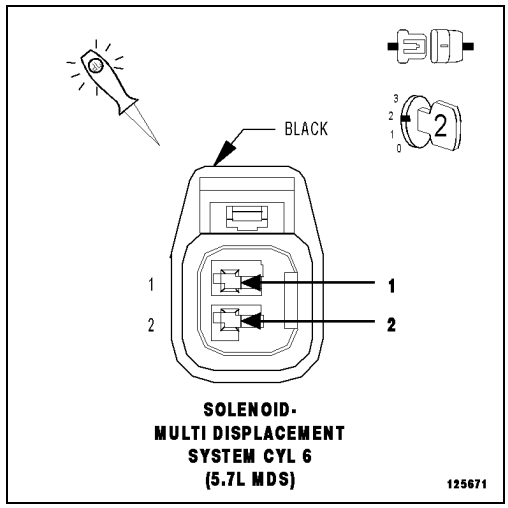

NOTE: The test light should be illuminated and bright proportional to the maximum duty cycle allowed by the scan tool. For example, if the scan tool allows 100% actuation, the brightness should be as bright as a direct connection to the battery. If the scan tool allows a maximum 25% actuation, the brightness should be 25% as bright as a direct connection to the battery.

Does the test light illuminate accordingly during the actuation?

Yes

- Verify that there is good pin to terminal contact in the Solenoid and the Powertrain Control Module connectors. Replace the MDS Solenoid No.6 if no problems were found in the connectors.
- Perform the POWERTRAIN VERIFICATION TEST. (Refer to 28 - DTC-Based Diagnostics/MODULE, Powertrain Control (PCM) - Standard Procedure).

No

- Go To 3

3. (Z908) GROUND CIRCUIT OPEN

1. Turn the ignition off.
2. Using a 12-volt test light connected to the 12-volts, probe the (Z908) Ground circuit in the MDS Solenoid No.6 harness connector.

Does the test light illuminate brightly?

Yes

- Go To 4

No

- Repair the open in the (Z908) Ground circuit.
- Perform the POWERTRAIN VERIFICATION TEST. (Refer to 28 - DTC-Based Diagnostics/MODULE, Powertrain Control (PCM) - Standard Procedure).

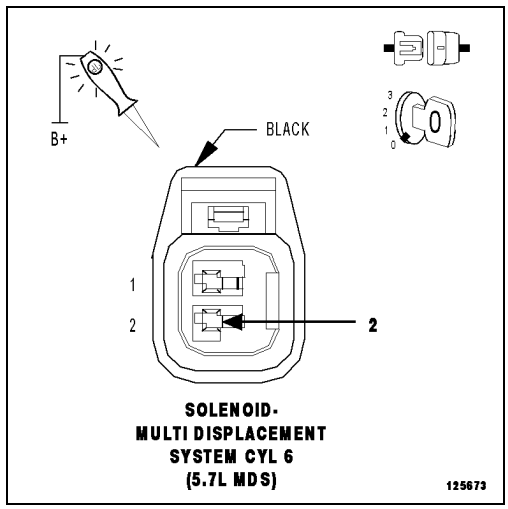

4. (K453) MDS SOLENOID CONTROL NO.6 CIRCUIT SHORTED TO VOLTAGE

1. Disconnect the C2 PCM harness connector.
2. Ignition on, engine not running.
3. Measure the voltage on the (K453) MDS Solenoid No.6 Control circuit in the MDS Solenoid No.6 connector.

Is there any voltage present?

Yes

- Repair the short to voltage in the (K453) MDS Solenoid No.6 Control circuit.
- Perform the POWERTRAIN VERIFICATION TEST. (Refer to 28 - DTC-Based Diagnostics/MODULE, Powertrain Control (PCM) - Standard Procedure).

No

- Go To 5

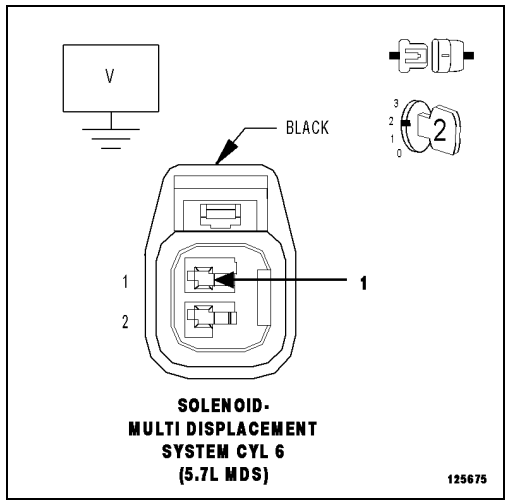

5. (K453) MDS SOLENOID NO.6 CONTROL CIRCUIT SHORTED TO GROUND

1. Turn the ignition off.
2. Measure the resistance between ground and the (K453) MDS Solenoid No.6 Control circuit in the MDS Solenoid No.6 harness connector.

Is the resistance below 100 Ohms?

Yes

- Repair the short to ground in the (K453) MDS Solenoid No.6 Control circuit.
- Perform the POWERTRAIN VERIFICATION TEST. (Refer to 28 - DTC-Based Diagnostics/MODULE, Powertrain Control (PCM) - Standard Procedure).

No

- Go To 6

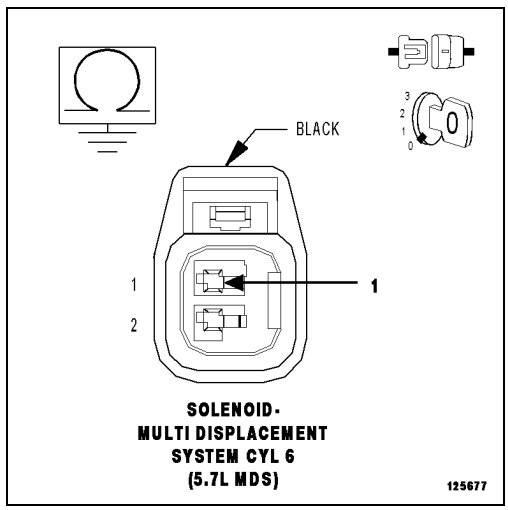

6. (K453) MDS SOLENOID NO.6 CONTROL CIRCUIT OPEN

CAUTION: Do not probe the PCM harness connectors. Probing the PCM harness connectors will damage the PCM terminals resulting in poor terminal to pin connection. Install the PCM Pinout Box Kit, NGC, 38 Position 8815A to perform diagnosis.

1. Measure the resistance of the (K453) MDS Solenoid No.6 Control circuit from the MDS Solenoid No.6 harness connector to the appropriate terminal of PCM Pinout Box 8815A.

Is the resistance below 5.0 Ohms?

Yes

- Go To 7

No

- Repair the open in the (K453) MDS Solenoid No.6 Control circuit.
- Perform the POWERTRAIN VERIFICATION TEST. (Refer to 28 - DTC-Based Diagnostics/MODULE, Powertrain Control (PCM) - Standard Procedure).

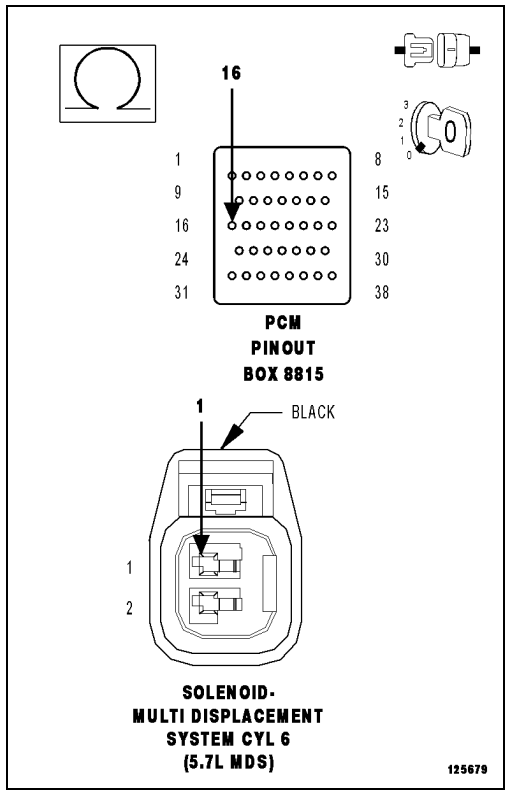

7. POWERTRAIN CONTROL MODULE (PCM)

1. Using the wiring diagram/schematic as a guide, inspect the wiring and connectors between the Solenoid and the Powertrain Control Module (PCM).
2. Look for any chafed, pierced, pinched or partially broken wires.
3. Look for broken, bent, pushed out or corroded terminals. Verify that there is good pin to terminal contact in the Solenoid and the Powertrain Control Module connectors.
4. Refer to any Technical Service Bulletins that may apply.

Were there any problems found?

Yes

- Repair as necessary.
- Perform the POWERTRAIN VERIFICATION TEST. (Refer to 28 - DTC-Based Diagnostics/MODULE, Powertrain Control (PCM) - Standard Procedure).

No

- Replace and program the Powertrain Control Module in accordance with the Service Information.
- Perform the POWERTRAIN VERIFICATION TEST. (Refer to 28 - DTC-Based Diagnostics/MODULE, Powertrain Control (PCM) - Standard Procedure).

P3442-CYLINDER 6 DEACTIVATION CONTROL PERFORMANCE

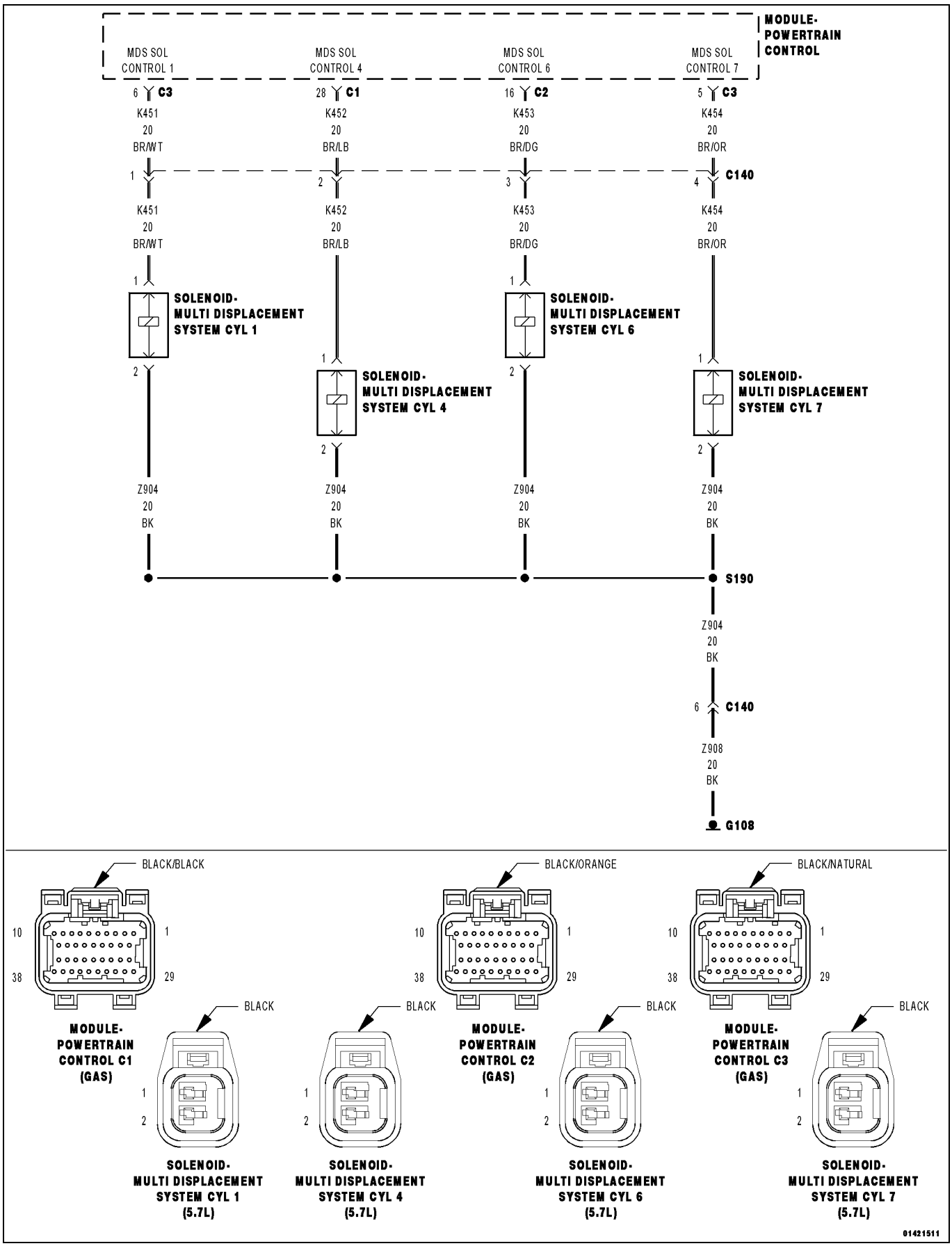

For a complete wiring diagram, **refer to the Wiring Information**.

Theory of Operation

When all criteria has been met, power is supplied to each MDS Solenoid when the engine is making a transition from 8 cylinder mode to 4 cylinder mode. By actuating the solenoid, oil pressure is raised to the pair of lifters that coincide with each particular solenoid. The oil pressure pushes in the locking pins that allows the lifter to collapse, decoupling the valves and camshaft.

- **When Monitored:**
  Transition from 8 to 4 cylinder mode.
- **Set Condition:**
  The MDS fails to disengage for cylinder 6. One trip fault.

Possible Causes
(K453) MDS SOLENOID NO.6 CONTROL SHORT TO GROUND
(K453) MDS SOLENOID NO.6 CONTROL OPEN
(Z903) GROUND CIRCUIT OPEN
INSUFFICIENT OIL PRESSURE ACTING ON THE LIFTER LOCKING PINS
OIL PASSAGES RESTRICTED
LIFTER
MDS SOLENOID
POWERTRAIN CONTROL MODULE (PCM)

Always perform the Pre-Diagnostic Troubleshooting procedure before proceeding. (Refer to 28 - DTC-Based Diagnostics/MODULE, Powertrain Control (PCM) - Standard Procedure).

1. ACTIVE DTC

NOTE: Diagnose any Misfire DTCs before continuing.

1. Start the engine and allow it to reach normal operating temperature.

WARNING: When the engine is operating, do not stand in direct line with the fan. Do not put your hands near the pulleys, belts or fan. Do not wear loose clothing. Failure to follow these instructions may result in possible serious or fatal injury.

NOTE: It may be necessary to test drive the vehicle in order for this DTC to set.

2. With the scan tool, select View DTCs.

Is the DTC Active at this time?

Yes

- Go To 2

No

- Perform the INTERMITTENT CONDITION diagnostic procedure. (Refer to 28 - DTC-Based Diagnostics/MODULE, Powertrain Control (PCM) - Standard Procedure).

2. CHECKING PCM CONTROL SIDE FOR THE MDS SOLENOID (C140)

1. Turn the ignition off.
2. Disconnect the C140 harness connector.
3. Using a 12-volt test light, jumper from the (Z903) Ground Circuit and the (K453) MDS Solenoid No.6 Control Circuit in the C140 harness connector (PCM side).
4. Turn the ignition on.
5. With the scan tool, actuate the MDS Solenoid No.6.

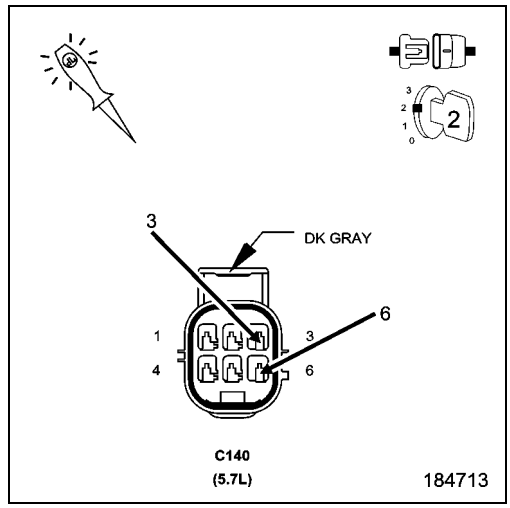

NOTE: The test light should be illuminated and bright proportional to the maximum duty cycle allowed by the scan tool. For example, if the scan tool allows 100% actuation, the brightness should be as bright as a direct connection to the battery. If the scan tool allows a maximum 25% actuation, the brightness should be 25% as bright as a direct connection to the battery.

Does the test light illuminate accordingly during the actuation?

Yes

- Go To 3

No

- Go To 4

3. MDS SOLENOID RESISTANCE

1. Turn the ignition off.
2. Measure the resistance between the (Z903) Ground Circuit and the (K453) MDS Solenoid No.6 Control Circuit in the C140 harness connector (MDS side).

NOTE: It is important to follow the below temp/resistance values to ensure an accurate reading.

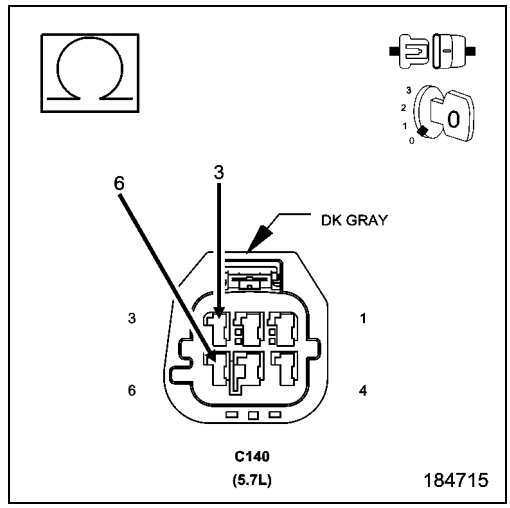

MDS SOLENOID RESISTANCE	
TEMPERATURE VALUE ± -7° C (20° F)	**RESISTANCE (OHMS) ± .25 Ohms**
-18° C (0° F)	8.8 Ohms
0° C (32° F)	9.5 Ohms
20° C (68° F)	10.3 Ohms
38° C (100° F)	11 Ohms
66° C (150° F)	12.2 Ohms
93° C (200° F)	13.4 Ohms
121° C (250° F)	14.4 Ohms
149° C (300° F)	15.6 Ohms

Is the resistance within an acceptable range?

Yes

- Go To 7

No

- Visually and Physically inspect the wiring harness between the C140 connector and the MDS Solenoid connector. Repair as necessary. If OK, replace the MDS Solenoid in accordance with the Service Information.
- Perform the POWERTRAIN VERIFICATION TEST. (Refer to 28 - DTC-Based Diagnostics/MODULE, Powertrain Control (PCM) - Standard Procedure).

4. (Z903) GROUND CIRCUIT OPEN (PCM SIDE)

1. Turn the ignition off.
2. Using a 12-volt test light connected to 12-volts, probe the (Z903) Ground circuit in the C140 harness connector (PCM side).

Does the test light illuminate brightly?

Yes

- Go To 5

No

- Repair the open in the (Z903) Ground circuit.
- Perform the POWERTRAIN VERIFICATION TEST. (Refer to 28 - DTC-Based Diagnostics/MODULE, Powertrain Control (PCM) - Standard Procedure).

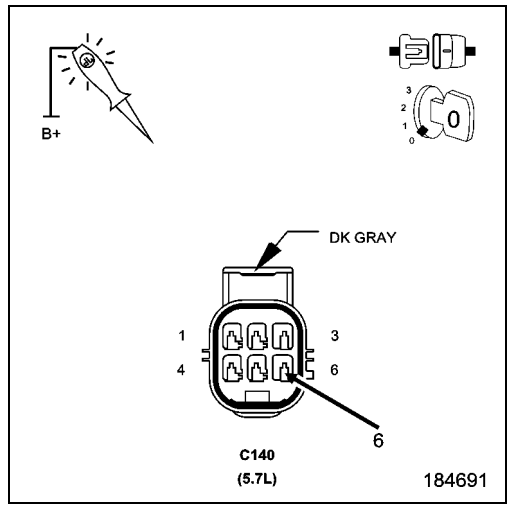

5. (K453) MDS SOLENOID NO.6 CONTROL CIRCUIT SHORTED TO GROUND (PCM SIDE)

1. Turn the ignition off.
2. Disconnect the C2 PCM harness connector.
3. Measure the resistance between ground and the (K453) MDS Solenoid No.6 Control circuit in the C140 harness connector.

Is the resistance below 100 Ohms?

Yes

- Repair the short to ground in the (K453) MDS Solenoid No.6 Control circuit between the PCM harness connector and the C140 harness connector.
- Perform the POWERTRAIN VERIFICATION TEST. (Refer to 28 - DTC-Based Diagnostics/MODULE, Powertrain Control (PCM) - Standard Procedure).

No

- Go To 6

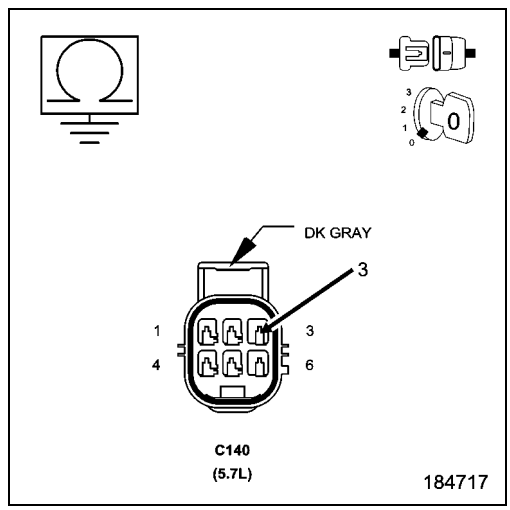

6. (K453) MDS SOLENOID NO.6 CONTROL CIRCUIT OPEN (PCM SIDE)

CAUTION: Do not probe the PCM harness connectors. Probing the PCM harness connectors will damage the PCM terminals resulting in poor terminal to pin connection. Install the PCM Pinout Box Kit, NGC, 38 Position 8815A to perform diagnosis.

1. Measure the resistance of the (K453) MDS Solenoid No.6 Control circuit from the C140 harness connector to the appropriate terminal of PCM Pinout Box 8815A.

Is the resistance below 5.0 Ohms?

Yes

- Replace and program the Powertrain Control Module in accordance with the Service Information.
- Perform the POWERTRAIN VERIFICATION TEST. (Refer to 28 - DTC-Based Diagnostics/MODULE, Powertrain Control (PCM) - Standard Procedure).

No

- Repair the open in the (K453) MDS Solenoid No.6 Control circuit between the C140 harness connector and the PCM harness connector.
- Perform the POWERTRAIN VERIFICATION TEST. (Refer to 28 - DTC-Based Diagnostics/MODULE, Powertrain Control (PCM) - Standard Procedure).

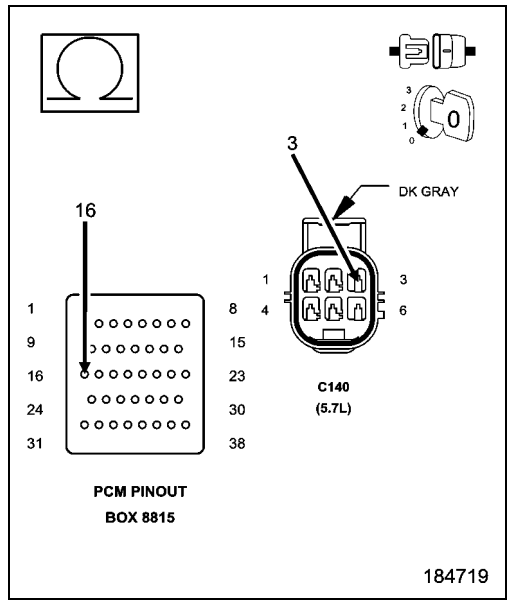

7. MDS SOLENOID 6

1. Turn the ignition off.
2. Remove the Intake Manifold in accordance with the Service Information.
3. Reconnect the C2 PCM harness connector.
4. Turn the ignition on.
5. With the scan tool actuate the MDS Solenoid 6.

Can you feel and hear the Solenoid Actuating?

Yes

- Go To 8

No

- Remove the Solenoid (1) and check for any debris that may be blocking the oil passages (3) to the Solenoid. If the passages are clogged, clean the passages and replace the MDS Solenoid 6. If the passages are not clogged with debris, replace the MDS Solenoid 6.
- Perform the POWERTRAIN VERIFICATION TEST. (Refer to 28 - DTC-Based Diagnostics/MODULE, Powertrain Control (PCM) - Standard Procedure).

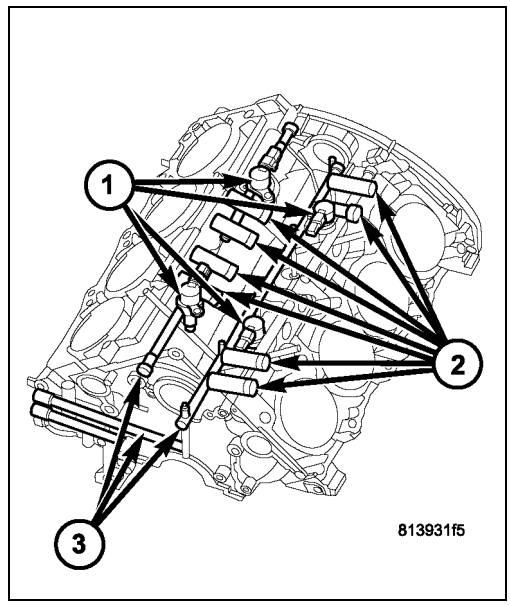

8. OIL PASSAGES RESTRICTED

1. Turn the ignition off.
2. Remove both Solenoids on Bank 2 of the engine block.
3. Remove the Bank 2 Cylinder Head in accordance with the Service Information.
4. Remove the Lifters from the right engine bank.
5. Inspect the oil passages to the Solenoids and from the Solenoids to the lifters.

Are the passages blocked?

Yes

- Clean the oil passages as necessary. If the entire engine is restricted disassembly of the entire engine block may be necessary.
- Perform the POWERTRAIN VERIFICATION TEST. (Refer to 28 - DTC-Based Diagnostics/MODULE, Powertrain Control (PCM) - Standard Procedure).

No

- Replace both sets of lifters if no other possible causes remain.
- Perform the POWERTRAIN VERIFICATION TEST. (Refer to 28 - DTC-Based Diagnostics/MODULE, Powertrain Control (PCM) - Standard Procedure).

P3449-MDS SOLENOID 7 CIRCUIT

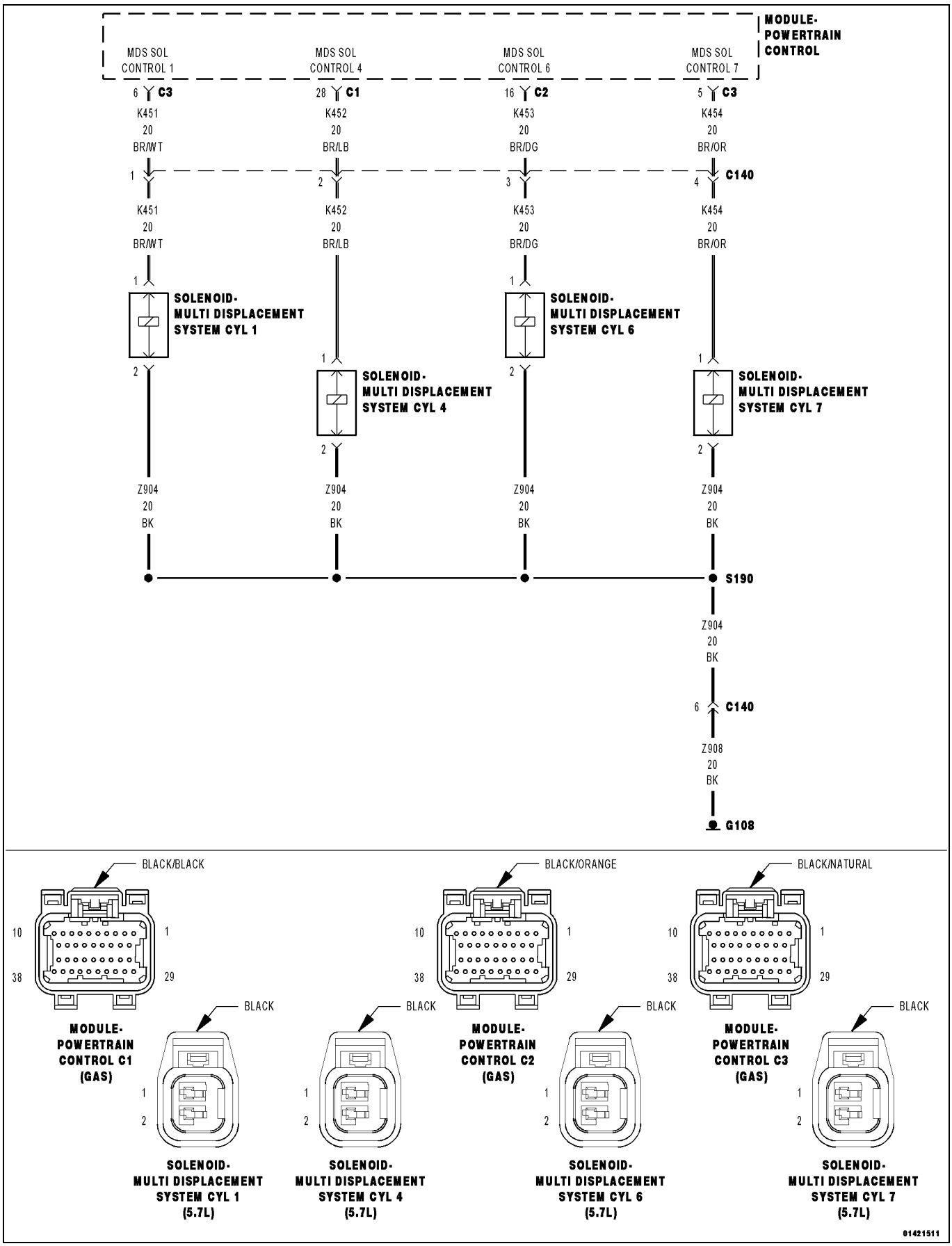

For a complete wiring diagram, **refer to the Wiring Information**.

Theory of Operation

When all criteria has been met, power is supplied to each MDS Solenoid when the engine is making a transition from 8 cylinder mode to 4 cylinder mode. By actuating the solenoid, oil pressure is raised to the pair of lifters that coincide with each particular solenoid. The oil pressure pushes in the locking pins that allows the lifter to collapse, decoupling the valves and camshaft.

- **When Monitored:**
  Transition from 8 to 4 cylinder mode.
- **Set Condition:**
  When the Powertrain Control Module (PCM) recognizes a problem with the Solenoid Control circuit. One trip fault.

Possible Causes
(K454) MDS SOLENOID NO.7 CONTROL SHORT TO VOLTAGE
(K454) MDS SOLENOID NO.7 CONTROL SHORT TO GROUND
(K454) MDS SOLENOID NO.7 CONTROL OPEN
(Z908) GROUND CIRCUIT OPEN
MDS SOLENOID NO.7
POWERTRAIN CONTROL MODULE (PCM)

Always perform the Pre-Diagnostic Troubleshooting procedure before proceeding. (Refer to 28 - DTC-Based Diagnostics/MODULE, Powertrain Control (PCM) - Standard Procedure).

1. ACTIVE DTC

NOTE: Diagnose any Misfire DTCs before continuing.

1. Start the engine and allow it to reach normal operating temperature.

WARNING: When the engine is operating, do not stand in direct line with the fan. Do not put your hands near the pulleys, belts or fan. Do not wear loose clothing. Failure to follow these instructions may result in possible serious or fatal injury.

NOTE: It may be necessary to test drive the vehicle in order for this DTC to set.

2. With the scan tool, select View DTCs.

NOTE: Diagnose any Deactivation or Oil Pressure DTCs before continuing with this test.

Is the DTC Active at this time?

Yes

- Go To 2

No

- Perform the INTERMITTENT CONDITION diagnostic procedure. (Refer to 28 - DTC-Based Diagnostics/MODULE, Powertrain Control (PCM) - Standard Procedure).

2. MDS SOLENOID NO.7

1. Turn the ignition off.
2. Gain access to the MDS Solenoid No.7.
3. Disconnect the MDS Solenoid No.7 harness connector.
4. Ignition on, engine not running.
5. Turn off all accessories.
6. Using a 12-volt test light connected to the (Z908) Ground circuit, probe the (K454) MDS Solenoid No.7 Control circuit.

NOTE: The DTC needs to be cleared before actuating the Solenoid, if the DTC is not cleared, the Solenoid may not be allowed to actuate.

7. With the scan tool, actuate the MDS Solenoid No.7.

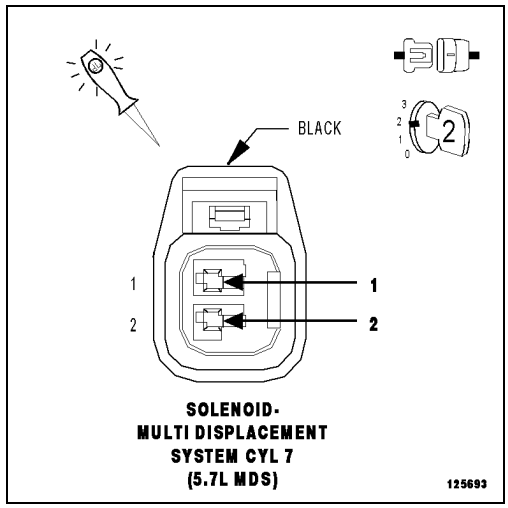

NOTE: The test light should be illuminated and bright proportional to the maximum duty cycle allowed by the scan tool. For example, if the scan tool allows 100% actuation, the brightness should be as bright as a direct connection to the battery. If the scan tool allows a maximum 25% actuation, the brightness should be 25% as bright as a direct connection to the battery.

Does the test light illuminate accordingly during the actuation?

Yes

- Verify that there is good pin to terminal contact in the Solenoid and the Powertrain Control Module connectors. Replace the MDS Solenoid No.7 if no problems were found in the connectors.
- Perform the POWERTRAIN VERIFICATION TEST. (Refer to 28 - DTC-Based Diagnostics/MODULE, Powertrain Control (PCM) - Standard Procedure).

No

- Go To 3

3. (Z908) GROUND CIRCUIT OPEN

1. Turn the ignition off.
2. Using a 12-volt test light connected to the 12-volts, probe the (Z908) Ground circuit in the MDS Solenoid No.7 harness connector.

Does the test light illuminate brightly?

Yes

- Go To 4

No

- Repair the open in the (Z908) Ground circuit.
- Perform the POWERTRAIN VERIFICATION TEST. (Refer to 28 - DTC-Based Diagnostics/MODULE, Powertrain Control (PCM) - Standard Procedure).

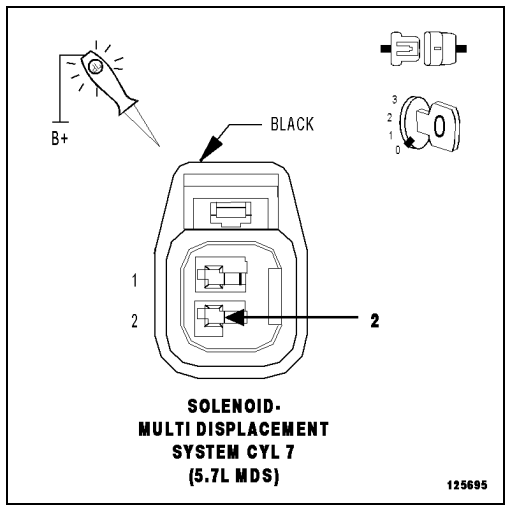

4. (K454) MDS SOLENOID NO.7 CONTROL CIRCUIT SHORTED TO VOLTAGE

1. Disconnect the C3 PCM harness connector.
2. Ignition on, engine not running.
3. Measure the voltage on the (K454) MDS Solenoid No.7 Control circuit in the MDS Solenoid No.7 harness connector.

Is there any voltage present

Yes

- Repair the short to voltage in the (K454) MDS Solenoid No.7 Control circuit.
- Perform the POWERTRAIN VERIFICATION TEST. (Refer to 28 - DTC-Based Diagnostics/MODULE, Powertrain Control (PCM) - Standard Procedure).

No

- Go To 5

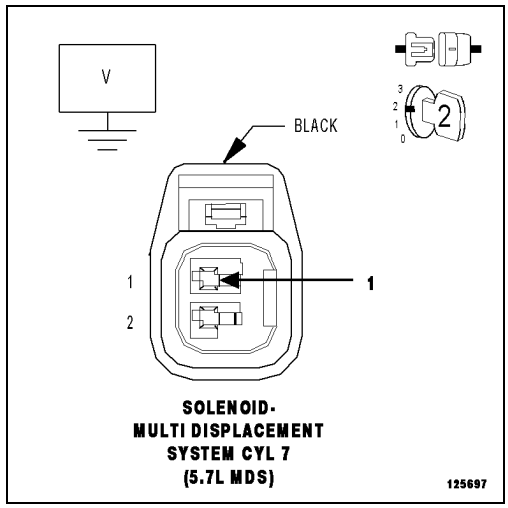

5. (K454) MDS SOLENOID NO.7 CONTROL CIRCUIT SHORTED TO GROUND

1. Turn the ignition off.
2. Measure the resistance between ground and the (K454) MDS Solenoid No.7 Control circuit in the MDS Solenoid No.7 harness connector.

Is the resistance below 100 Ohms?

Yes

- Repair the short to ground in the (K454) MDS Solenoid No.7 Control circuit.
- Perform the POWERTRAIN VERIFICATION TEST. (Refer to 28 - DTC-Based Diagnostics/MODULE, Powertrain Control (PCM) - Standard Procedure).

No

- Go To 6

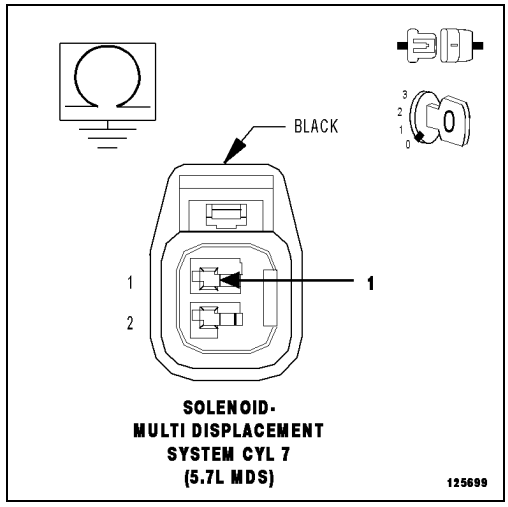

6. (K454) MDS SOLENOID NO.7 CONTROL CIRCUIT OPEN

CAUTION: Do not probe the PCM harness connectors. Probing the PCM harness connectors will damage the PCM terminals resulting in poor terminal to pin connection. Install the PCM Pinout Box Kit, NGC, 38 Position 8815A to perform diagnosis.

1. Measure the resistance of the (K454) MDS Solenoid No.7 Control circuit from the MDS Solenoid No.7 harness connector to the appropriate terminal of PCM Pinout Box 8815A.

Is the resistance below 5.0 Ohms?

Yes

- Go To 7

No

- Repair the open in the (K454) MDS Solenoid No.7 Control circuit.
- Perform the POWERTRAIN VERIFICATION TEST. (Refer to 28 - DTC-Based Diagnostics/MODULE, Powertrain Control (PCM) - Standard Procedure).

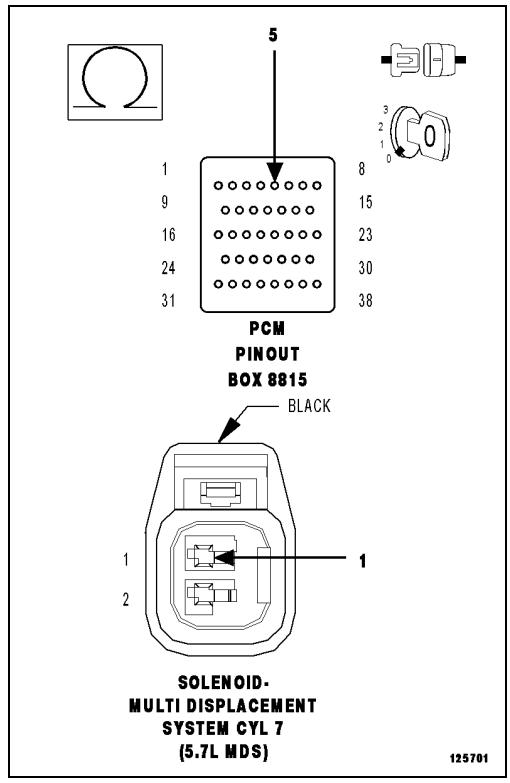

7. POWERTRAIN CONTROL MODULE (PCM)

1. Using the wiring diagram/schematic as a guide, inspect the wiring and connectors between the Solenoid and the Powertrain Control Module (PCM).
2. Look for any chafed, pierced, pinched or partially broken wires.
3. Look for broken, bent, pushed out or corroded terminals. Verify that there is good pin to terminal contact in the Solenoid and the Powertrain Control Module connectors.
4. Refer to any Technical Service Bulletins that may apply.

Were there any problems found?

Yes

- Repair as necessary.
- Perform the POWERTRAIN VERIFICATION TEST. (Refer to 28 - DTC-Based Diagnostics/MODULE, Powertrain Control (PCM) - Standard Procedure).

No

- Replace and program the Powertrain Control Module in accordance with the Service Information.
- Perform the POWERTRAIN VERIFICATION TEST. (Refer to 28 - DTC-Based Diagnostics/MODULE, Powertrain Control (PCM) - Standard Procedure).

P3450-CYLINDER 7 DEACTIVATION CONTROL PERFORMANCE

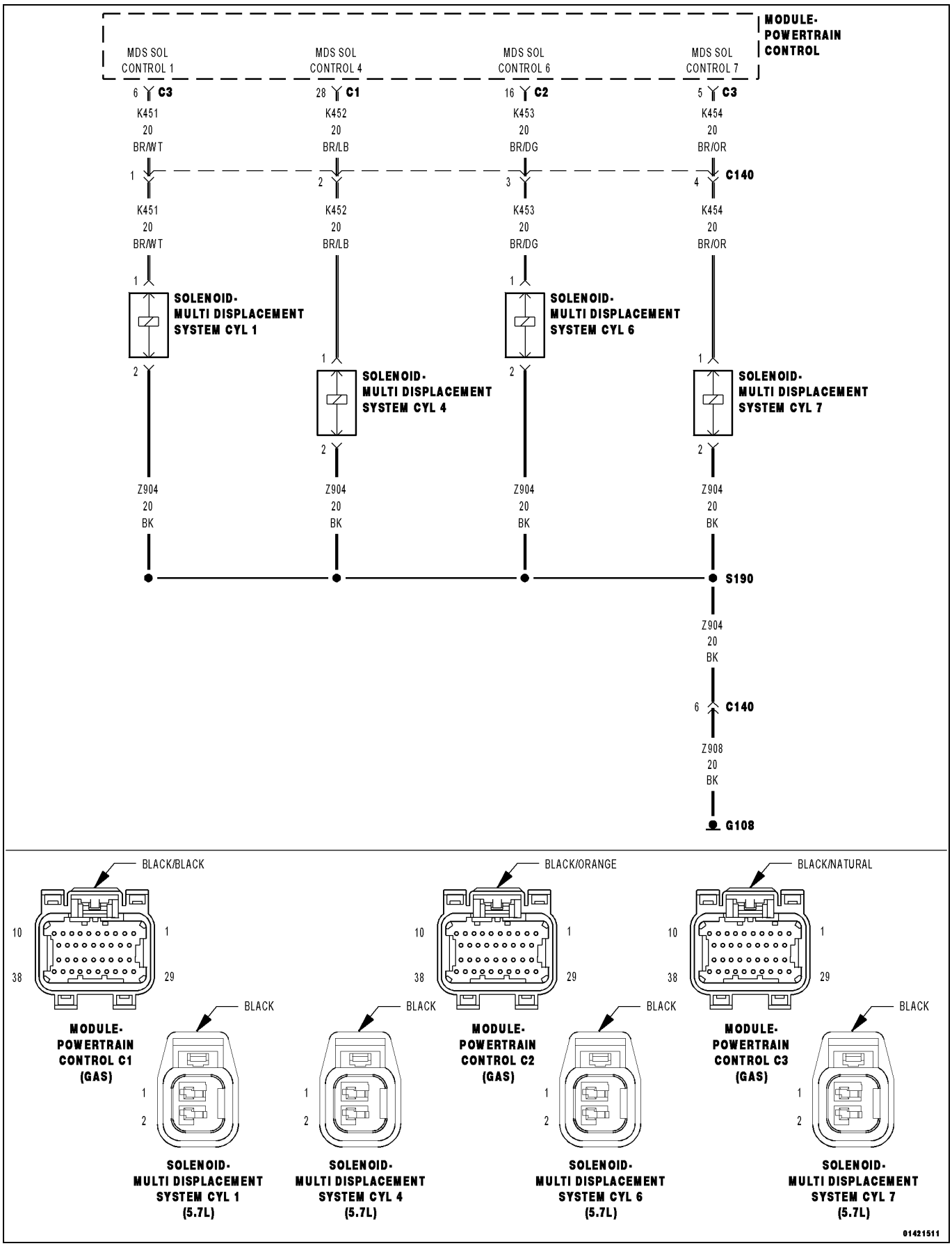

For a complete wiring diagram, **refer to the Wiring Information**.

Theory of Operation

When all criteria has been met, power is supplied to each MDS Solenoid when the engine is making a transition from 8 cylinder mode to 4 cylinder mode. By actuating the solenoid, oil pressure is raised to the pair of lifters that coincide with each particular solenoid. The oil pressure pushes in the locking pins that allows the lifter to collapse, decoupling the valves and camshaft.

- **When Monitored:**
  Transition from 8 to 4 cylinder mode.
- **Set Condition:**
  The MDS fails to disengage for cylinder 7. Two trip fault.

Possible Causes
(K454) MDS SOLENOID NO.7 CONTROL SHORT TO GROUND
(K454) MDS SOLENOID NO.7 CONTROL OPEN
(Z908) GROUND CIRCUIT OPEN
INSUFFICIENT OIL PRESSURE ACTING ON THE LIFTER LOCKING PINS
OIL PASSAGES RESTRICTED
LIFTER
MDS SOLENOID
POWERTRAIN CONTROL MODULE (PCM)

Always perform the Pre-Diagnostic Troubleshooting procedure before proceeding. (Refer to 28 - DTC-Based Diagnostics/MODULE, Powertrain Control (PCM) - Standard Procedure).

1. ACTIVE DTC

NOTE: Diagnose any Misfire DTCs before continuing.

1. Start the engine and allow it to reach normal operating temperature.

WARNING: When the engine is operating, do not stand in direct line with the fan. Do not put your hands near the pulleys, belts or fan. Do not wear loose clothing. Failure to follow these instructions may result in possible serious or fatal injury.

NOTE: It may be necessary to test drive the vehicle in order for this DTC to set.

2. With the scan tool, select View DTCs.

Is the DTC Active at this time?

Yes

- Go To 2

No

- Perform the INTERMITTENT CONDITION diagnostic procedure. (Refer to 28 - DTC-Based Diagnostics/MODULE, Powertrain Control (PCM) - Standard Procedure).

2. CHECKING PCM CONTROL SIDE FOR THE MDS SOLENOID (C140)

1. Turn the ignition off.
2. Disconnect the C140 harness connector.
3. Using a 12-volt test light, jumper from the (Z908) Ground circuit and the (K454) MDS Solenoid No.7 Control circuit in the C140 harness connector (PCM side).
4. Turn the ignition on.
5. With the scan tool, actuate the MDS Solenoid No.7.

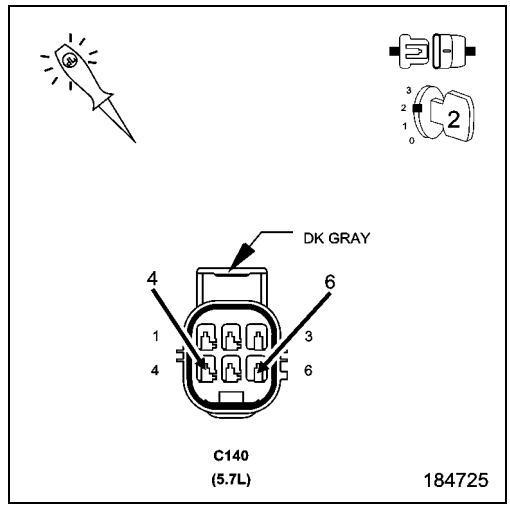

NOTE: The test light should be illuminated and bright proportional to the maximum duty cycle allowed by the scan tool. For example, if the scan tool allows 100% actuation, the brightness should be as bright as a direct connection to the battery. If the scan tool allows a maximum 25% actuation, the brightness should be 25% as bright as a direct connection to the battery.

Does the test light illuminate accordingly during the actuation?

Yes

- Go To 3

No

- Go To 4

3. MDS SOLENOID RESISTANCE

1. Turn the ignition off.
2. Measure the resistance between the (Z908) Ground Circuit and the (K454) MDS Solenoid No.7 Control Circuit in the C140 harness connector (MDS side).

NOTE: It is important to follow the below temp/resistance values to ensure an accurate reading.

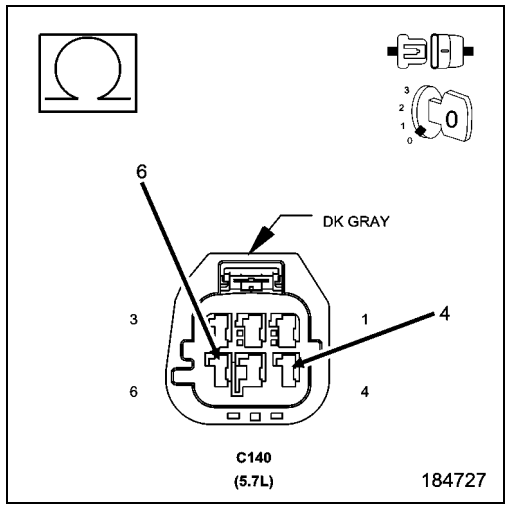

MDS SOLENOID RESISTANCE	
TEMPERATURE VALUE ± -7° C (20° F)	**RESISTANCE (OHMS) ± .25 Ohms**
-18° C (0° F)	8.8 Ohms
0° C (32° F)	9.5 Ohms
20° C (68° F)	10.3 Ohms
38° C (100° F)	11 Ohms
66° C (150° F)	12.2 Ohms
93° C (200° F)	13.4 Ohms
121° C (250° F)	14.4 Ohms
149° C (300° F)	15.6 Ohms

Is the resistance within an acceptable range?

Yes

- Go To 7

No

- Visually and Physically inspect the wiring harness between the C140 connector and the MDS Solenoid connector. Repair as necessary. If OK, replace the MDS Solenoid in accordance with the Service Information.

4. (Z908) GROUND CIRCUIT OPEN (PCM SIDE)

1. Turn the ignition off.
2. Using a 12-volt test light connected to 12-volts, probe the (Z908) Ground circuit in the C140 harness connector (PCM side).

Does the test light illuminate brightly?

Yes

- Go To 5

No

- Repair the open in the (Z908) Ground circuit.
- Perform the POWERTRAIN VERIFICATION TEST. (Refer to 28 - DTC-Based Diagnostics/MODULE, Powertrain Control (PCM) - Standard Procedure).

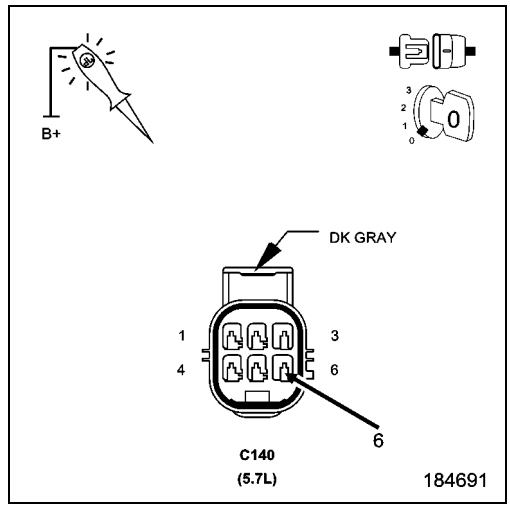

5. (K454) MDS SOLENOID NO.7 CONTROL CIRCUIT SHORTED TO GROUND (PCM SIDE)

1. Turn the ignition off.
2. Disconnect the C3 PCM harness connector.
3. Measure the resistance between ground and the (K454) MDS Solenoid No.7 Control circuit in the C140 harness connector.

Is the resistance below 100 Ohms?

Yes

- Repair the short to ground in the (K454) MDS Solenoid No.7 Control circuit between the PCM harness connector and the C140 harness connector.
- Perform the POWERTRAIN VERIFICATION TEST. (Refer to 28 - DTC-Based Diagnostics/MODULE, Powertrain Control (PCM) - Standard Procedure).

No

- Go To 6

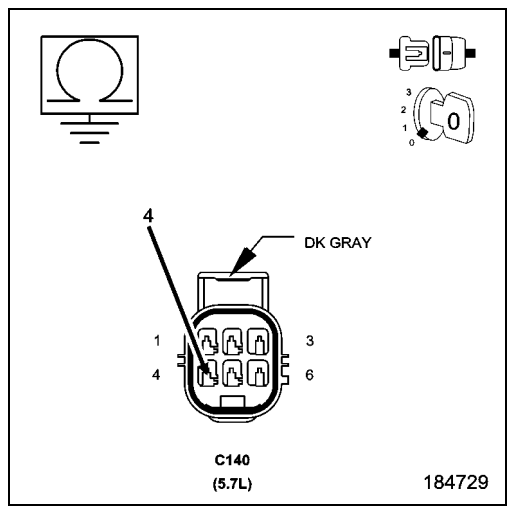

6. (K454) MDS SOLENOID NO.7 CONTROL CIRCUIT OPEN (PCM SIDE)

CAUTION: Do not probe the PCM harness connectors. Probing the PCM harness connectors will damage the PCM terminals resulting in poor terminal to pin connection. Install the PCM Pinout Box Kit, NGC, 38 Position 8815A to perform diagnosis.

1. Measure the resistance of the (K454) MDS Solenoid No.7 Control circuit from the C140 harness connector to the appropriate terminal of PCM Pinout Box 8815A.

Is the resistance below 5.0 Ohms?

Yes

- Replace and program the Powertrain Control Module in accordance with the Service Information.
- Perform the POWERTRAIN VERIFICATION TEST. (Refer to 28 - DTC-Based Diagnostics/MODULE, Powertrain Control (PCM) - Standard Procedure).

No

- Repair the open in the (K454) MDS Solenoid No.7 Control circuit between the C140 harness connector and the PCM harness connector.
- Perform the POWERTRAIN VERIFICATION TEST. (Refer to 28 - DTC-Based Diagnostics/MODULE, Powertrain Control (PCM) - Standard Procedure).

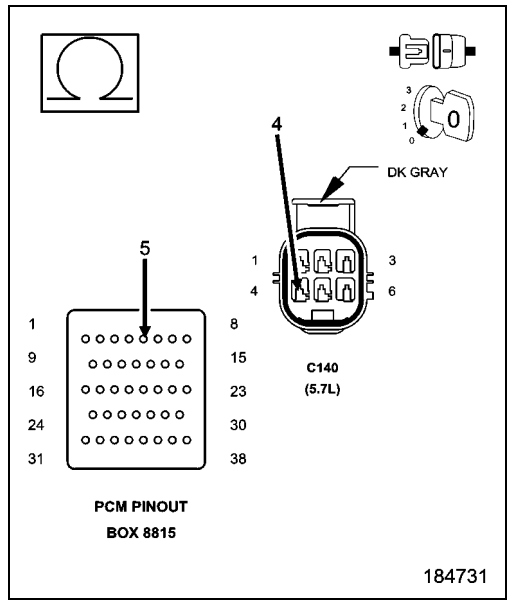

7. MDS SOLENOID 7

1. Turn the ignition off.
2. Remove the Intake Manifold in accordance with the Service Information.
3. Reconnect the C3 PCM harness connector.
4. Turn the ignition on.
5. With the scan tool actuate the MDS Solenoid 7.

Can you feel and hear the Solenoid Actuating?

Yes

- Go To 8

No

- Remove the Solenoid (1) and check for any debris that may be blocking the oil passages (3) to the Solenoid. If the passages are clogged, clean the passages and replace the MDS Solenoid 7. If the passages are not clogged with debris, replace the MDS Solenoid 7.

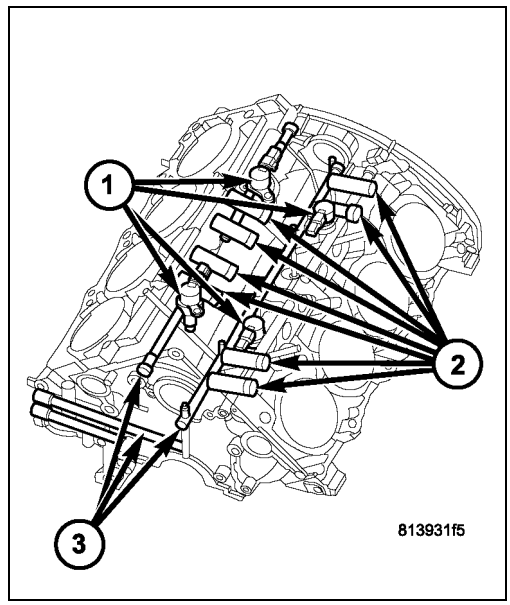

8. OIL PASSAGES RESTRICTED

1. Turn the ignition off.
2. Remove both Solenoids on Bank 1 of the engine block.
3. Remove the Bank 1 Cylinder Head in accordance with the Service Information.
4. Remove the Lifters from the right engine bank.
5. Inspect the oil passages to the Solenoids and from the Solenoids to the lifters.

Are the passages blocked?

Yes

- Clean the oil passages as necessary. If the entire engine is restricted disassembly of the entire engine block may be necessary.
- Perform the POWERTRAIN VERIFICATION TEST. (Refer to 28 - DTC-Based Diagnostics/MODULE, Powertrain Control (PCM) - Standard Procedure).

No

- Replace both sets of lifters if no other possible causes remain.
- Perform the POWERTRAIN VERIFICATION TEST. (Refer to 28 - DTC-Based Diagnostics/MODULE, Powertrain Control (PCM) - Standard Procedure).

P3497-MDS RATIONALITY BANK 2

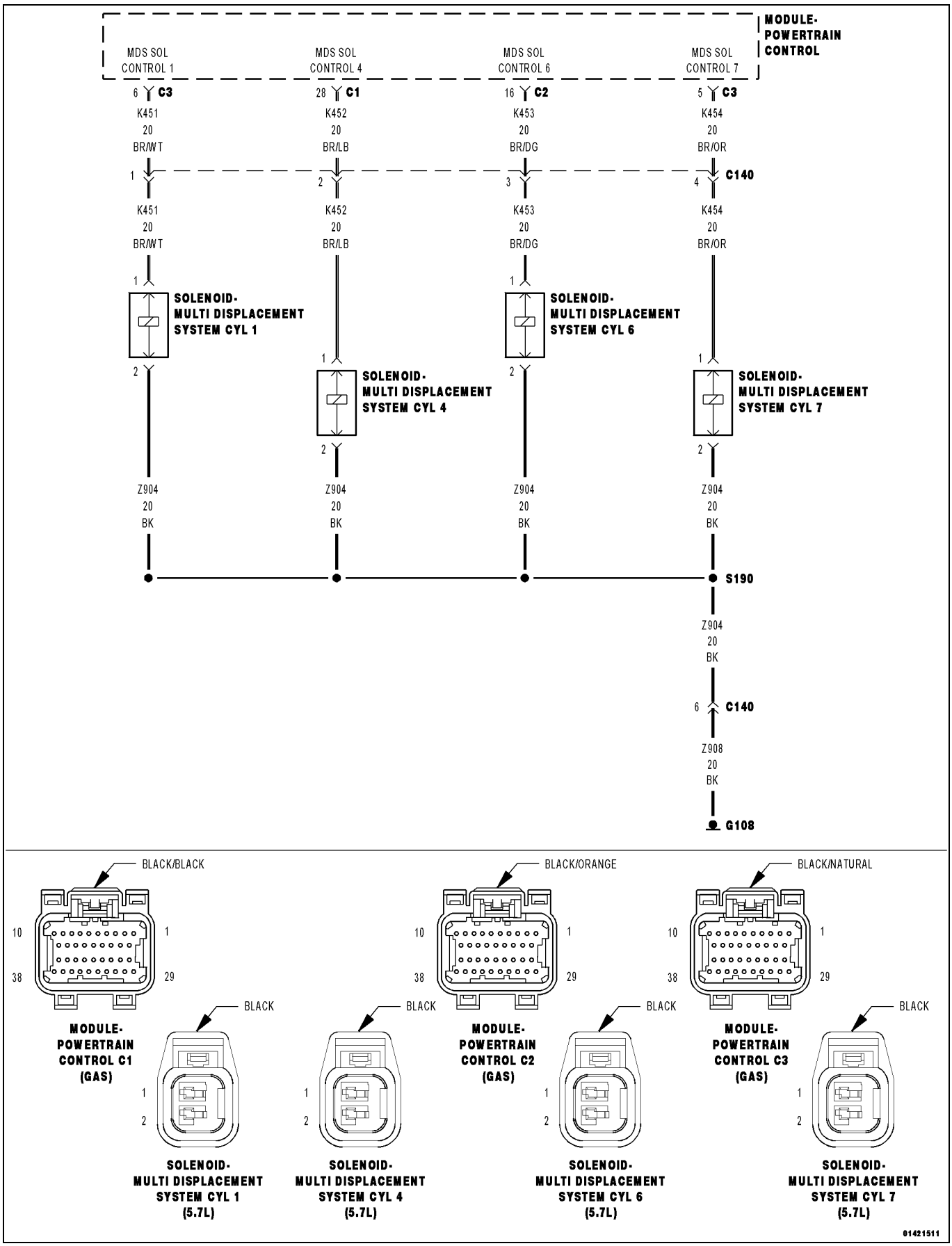

For a complete wiring diagram, **refer to the Wiring Information**.

Theory of Operation

When all criteria has been met, power is supplied to each MDS Solenoid when the engine is making a transition from 8 cylinder mode to 4 cylinder mode. By actuating the solenoid, oil pressure is raised to the pair of lifters that coincide with each particular solenoid. The oil pressure pushes in the locking pins that allows the lifter to collapse, decoupling the valves and camshaft.

- **When Monitored:**
  Transition from 8 to 4 cylinder mode.
- **Set Condition:**
  O2 sensor readings on Bank 2 side indicate a lean condition while in 4 cylinder mode. One trip fault.

Possible Causes
INSUFFICIENT OIL PRESSURE ACTING ON THE LIFTER LOCKING PINS
OIL PASSAGES RESTRICTED
LIFTER
MDS SOLENOID

Always perform the Pre-Diagnostic Troubleshooting procedure before proceeding. (Refer to 28 - DTC-Based Diagnostics/MODULE, Powertrain Control (PCM) - Standard Procedure).

1. ACTIVE DTC

NOTE: Diagnose any Misfire DTCs before continuing.

1. Start the engine and allow it to reach normal operating temperature.

WARNING: When the engine is operating, do not stand in direct line with the fan. Do not put your hands near the pulleys, belts or fan. Do not wear loose clothing. Failure to follow these instructions may result in possible serious or fatal injury.

NOTE: It may be necessary to test drive the vehicle in order for this DTC to set.

2. With the scan tool, select View DTCs.

NOTE: Diagnose any Deactivation or Oil Pressure DTCs before continuing with this test.

Is the DTC Active at this time?

Yes

- Go To 2

No

- Perform the INTERMITTENT CONDITION diagnostic procedure. (Refer to 28 - DTC-Based Diagnostics/MODULE, Powertrain Control (PCM) - Standard Procedure).

2. MDS SOLENOID 4

1. Turn the ignition off.
2. Remove the Intake Manifold in accordance with the Service Information.
3. Turn the ignition on.

NOTE: The DTC needs to be cleared before actuating the Solenoid, if the DTC is not cleared, the Solenoid may not be allowed to actuate.

4. With the scan tool actuate the MDS Solenoid 4.

Can you feel and hear the Solenoid Actuating?

Yes

- Go To 3

No

- Remove the Solenoid and check for any debris that may be blocking the oil passages to the Solenoid. If the passages are clogged, clean the passages and replace the MDS Solenoid 4. If the passages are not clogged with debris, replace the MDS Solenoid 4.
- Perform the POWERTRAIN VERIFICATION TEST. (Refer to 28 - DTC-Based Diagnostics/MODULE, Powertrain Control (PCM) - Standard Procedure).

3. MDS SOLENOID 6

1. With the scan tool actuate the MDS Solenoid 6.

NOTE: The DTC needs to be cleared before actuating the Solenoid, if the DTC is not cleared, the Solenoid may not be allowed to actuate.

Can you feel and hear the Solenoid Actuating?

Yes

- Go To 4

No

- Remove the Solenoid and check for any debris that may be blocking the oil passages to the Solenoid. If the passages are restricted, clean the passages and replace the MDS Solenoid 6. If the passages are unable to be cleaned out, replacing the engine block may be necessary. If the passages are not clogged with debris, replace the MDS Solenoid 6.
- Perform the POWERTRAIN VERIFICATION TEST. (Refer to 28 - DTC-Based Diagnostics/MODULE, Powertrain Control (PCM) - Standard Procedure).

4. OIL PASSAGES RESTRICTED

1. Turn the ignition off.
2. Remove both Solenoids on Bank 2 of the engine block.
3. Remove the Bank 2 Cylinder Head in accordance with the Service Information.
4. Remove the each pair of lifters for Cylinders 4 and 6.
5. Inspect the oil passages to the Solenoids and from the Solenoids to the lifters.

Are the passages blocked?

Yes

- Clean the oil passages as necessary. If the entire engine is restricted, disassembly of the entire engine block may be necessary.
- Perform the POWERTRAIN VERIFICATION TEST. (Refer to 28 - DTC-Based Diagnostics/MODULE, Powertrain Control (PCM) - Standard Procedure).

No

- Replace both sets of lifters if no other possible causes remain.
- Perform the POWERTRAIN VERIFICATION TEST. (Refer to 28 - DTC-Based Diagnostics/MODULE, Powertrain Control (PCM) - Standard Procedure).

U0001-CAN C BUS

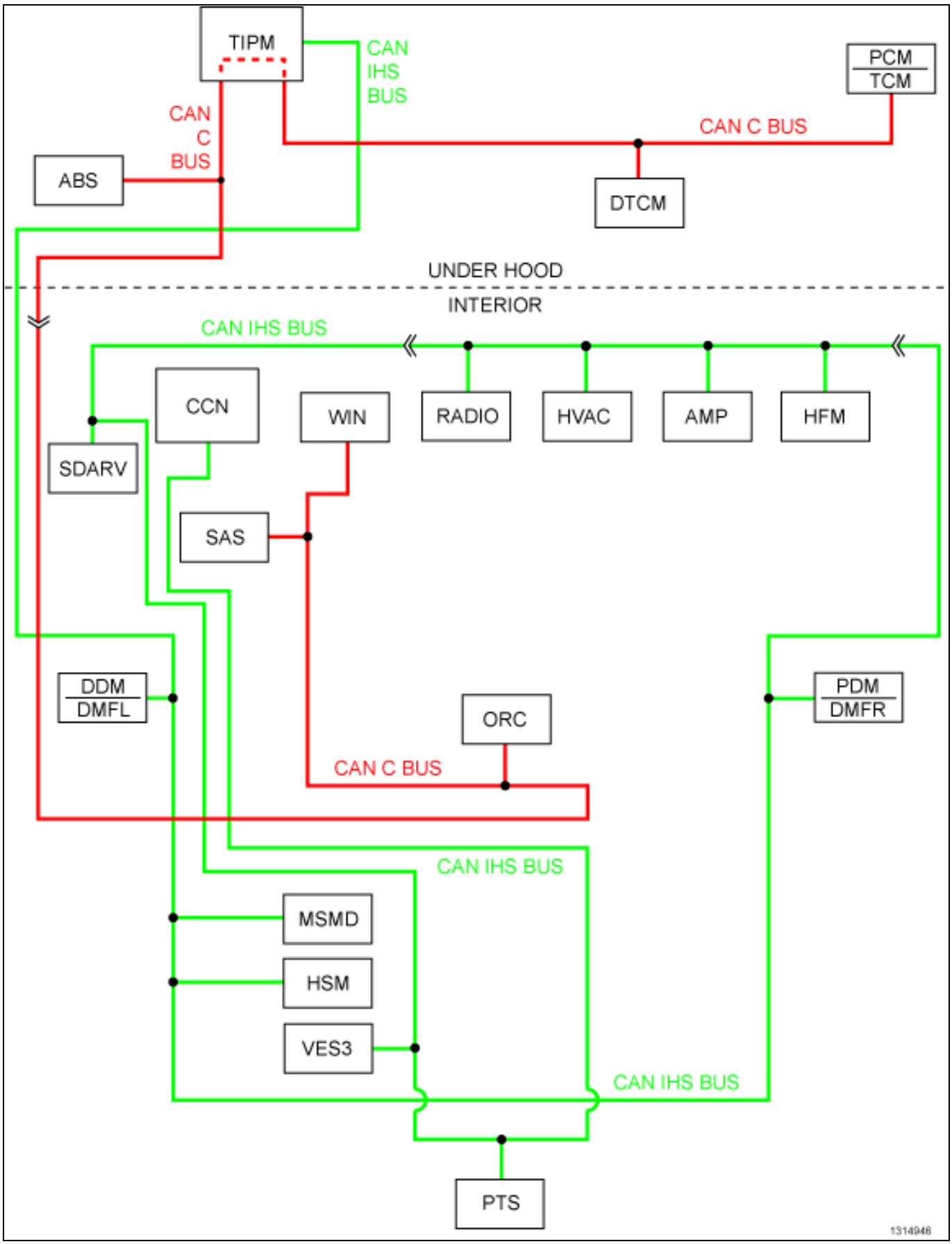

For a complete wiring diagram, **refer to the Wiring Information**.

- **When Monitored:**

  Ignition run time is greater than one second. Battery voltage between 9 and 16 volts. Engine run time greater than three seconds.
- **Set Condition:**

  The Powertrain Control Module (PCM) loses communication over the CAN C Bus circuit. The circuit is continuously monitored. One Trip fault.

Possible Causes
CAN C BUS OPEN OR SHORTED CONDITION
POWERTRAIN CONTROL MODULE (PCM)

Always perform the Pre-Diagnostic Troubleshooting procedure before proceeding. (Refer to 28 - DTC-Based Diagnostics/MODULE, Powertrain Control (PCM) - Standard Procedure).

1. ACTIVE DTC

1. Ignition on, engine not running.
2. With the scan tool, select view PCM DTCs.

Is the DTC Active at this time?

Yes

- (Refer to 28 - DTC-Based Diagnostics/MODULE, Totally Integrated Power (TIPM) - Diagnosis and Testing) and perform the U0001-Can C Bus diagnostic procedure.

No

- (Refer to 29 - Non-DTC Diagnostics/Communication - Diagnosis and Testing) and perform the Stored Lost Communication DTCs diagnostic procedure.

U0101-LOST COMMUNICATION WITH TCM

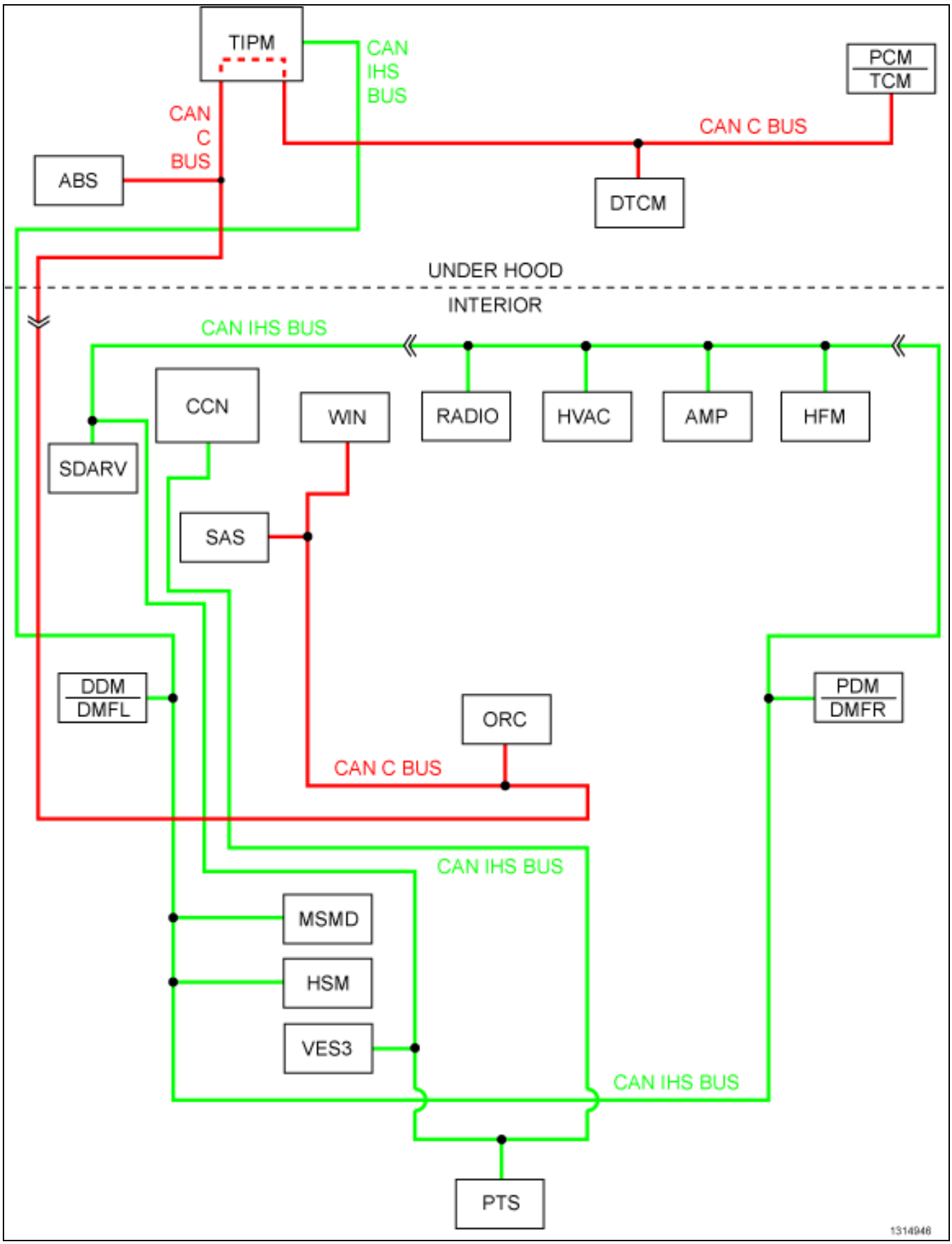

For a complete wiring diagram, **refer to the Wiring Information**.

- **When Monitored:**

  Ignition run time is greater than one second. Battery voltage between 9 and 16 volts. Engine run time greater than three seconds.

- **Set Condition:**

  The Powertrain Control Module (PCM) doesn't receive a Bus Message from the Transmission Control Module for seven consecutive seconds. One trip failure. The circuit is continuously monitored. Two Trip fault.

Possible Causes
PCM FUSED IGNITION SWITCH OUTPUT CIRCUIT CHECK
BUS FAILURE OPEN OR SHORTED CONDITION
POWERTRAIN CONTROL MODULE (PCM)

1. ACTIVE DTC

1. Start the engine.
2. With a scan tool, select View DTCs.

NOTE: It may be necessary to drive the vehicle to meet the conditions to set this DTC, because this fault is set after two failed trips.

Is the DTC Active or Pending at this time?

Yes

- (Refer to 28 - DTC-Based Diagnostics/MODULE, Totally Integrated Power (TIPM) - Diagnosis and Testing) and perform the U0101-Lost Communication with TCM diagnostic procedure.

No

- (Refer to 29 - Non-DTC Diagnostics/Communication - Diagnosis and Testing) and perform the Stored Lost Communication DTCs diagnostic procedure.

U0121-LOST COMMUNICATION WITH ANTI-LOCK BRAKE MODULE

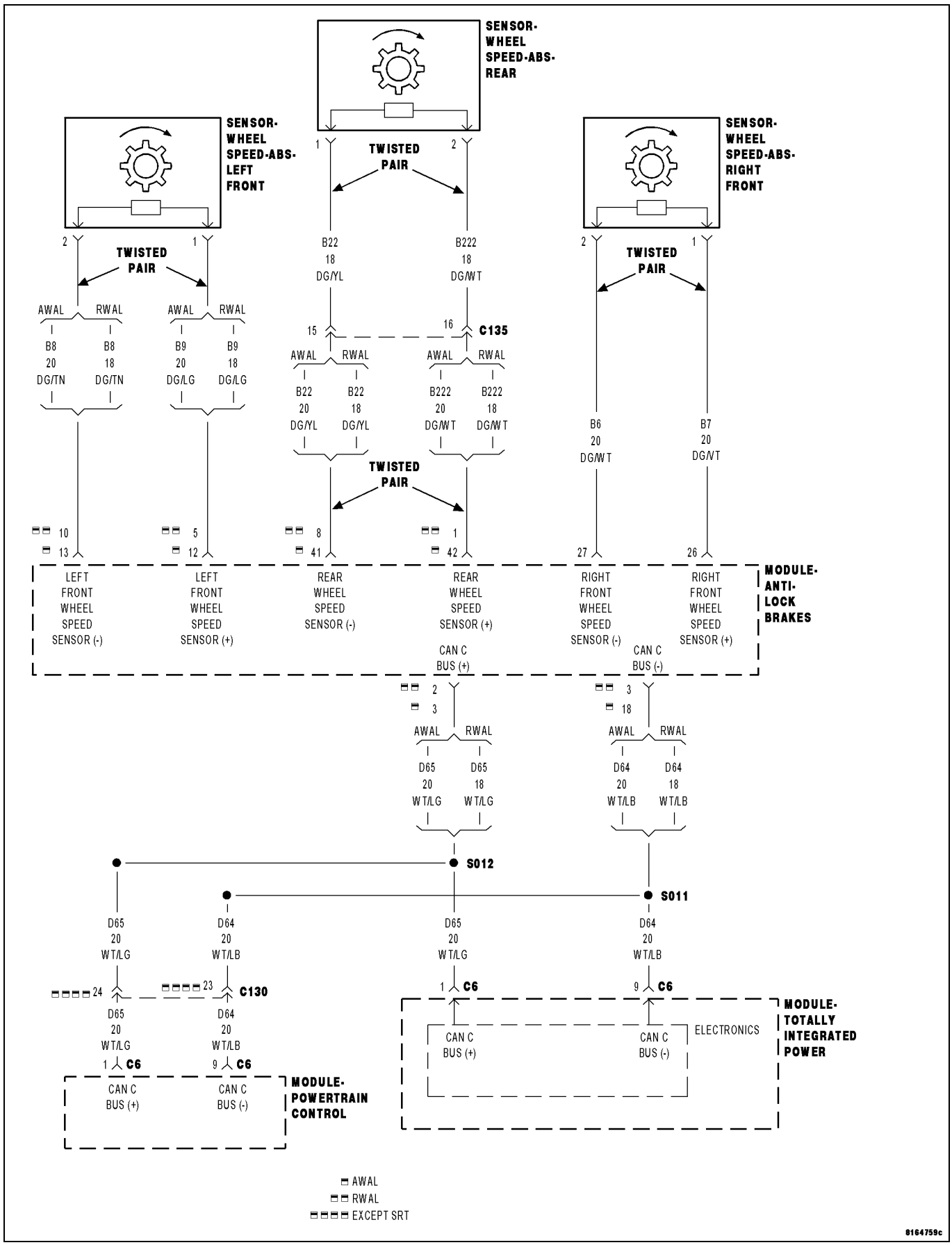

For a complete wiring diagram, **refer to the Wiring Information**.

- **When Monitored:**

  Ignition run time is greater than one second. Battery voltage between 9 and 16 volts. Engine run time greater than three seconds.
- **Set Condition:**

  The Powertrain Control Module (PCM) doesn't receive an ABS message over the CAN C circuit for seven consecutive seconds. The circuit is continuously monitored. One Trip fault.

Possible Causes
CAN C BUS OPEN OR SHORTED CONDITION
ABS MODULE
TOTALLY INTEGRATED POWER MODULE (TIPM)
POWERTRAIN CONTROL MODULE (PCM)

1. ACTIVE DTC

1. Ignition on, engine not running.
2. With a scan tool, select View PCM DTCs.

Is the DTC Active at this time?

Yes

- (Refer to 28 - DTC-Based Diagnostics/MODULE, Totally Integrated Power (TIPM) - Diagnosis and Testing) and perform the U0121-Lost Communication with Antilock Brake Module diagnostic procedure.

No

- (Refer to 29 - Non-DTC Diagnostics/Communication - Diagnosis and Testing) and perform the Stored Lost Communication DTCs diagnostic procedure.

U0141-LOST COMMUNICATION WITH IPM (FCM/TIPM)

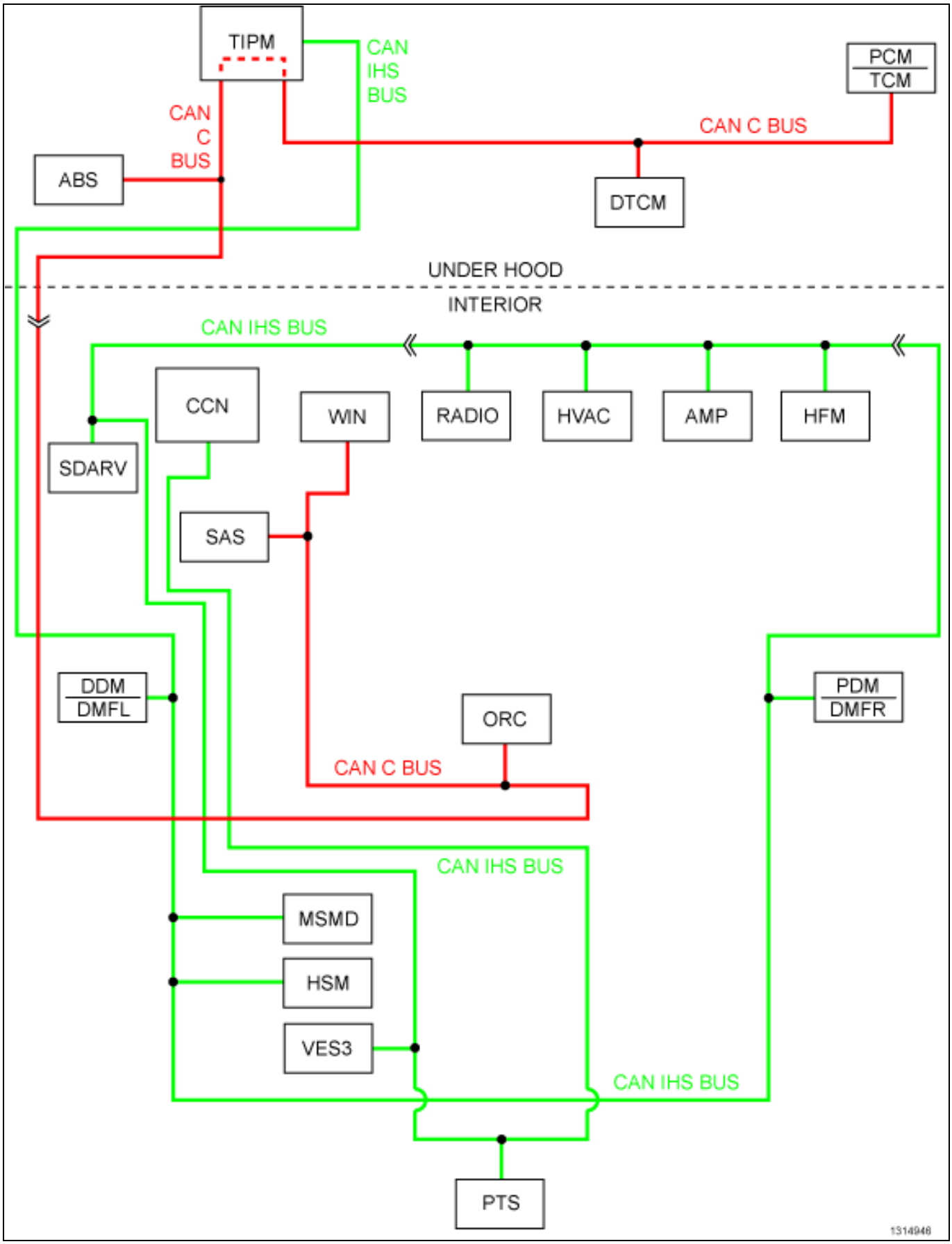

For a complete wiring diagram, **refer to the Wiring Information**.

- **When Monitored:**

  Ignition run time is greater than one second. Battery voltage between 9 and 16 Volts.
- **Set Condition:**

  The Powertrain Control Module (PCM) doesn't receive a Totally Integrated Power Module (TIPM) message over the CAN C circuit for 7 consecutive seconds. The circuit is continuously monitored. One Trip fault.

Possible Causes
CAN C BUS OPEN OR SHORTED CONDITION
TOTALLY INTEGRATED POWER MODULE (TIPM)
POWERTRAIN CONTROL MODULE (PCM)

1. ACTIVE DTC

1. Ignition on, engine not running.
2. With the scan tool, select View PCM DTCs.

Is the DTC Active at this time?

Yes

- (Refer to 28 - DTC-Based Diagnostics/MODULE, Totally Integrated Power (TIPM) - Diagnosis and Testing) and perform the U0141-Lost Communication with IPM (FCM/TIPM) diagnostic procedure.

No

- (Refer to 29 - Non-DTC Diagnostics/Communication - Diagnosis and Testing) and perform the Stored Lost Communication DTCs diagnostic procedure.

■ U0168-LOST COMMUNICATION WITH VEHICLE SECURITY CONTROL MODULE (WIN)

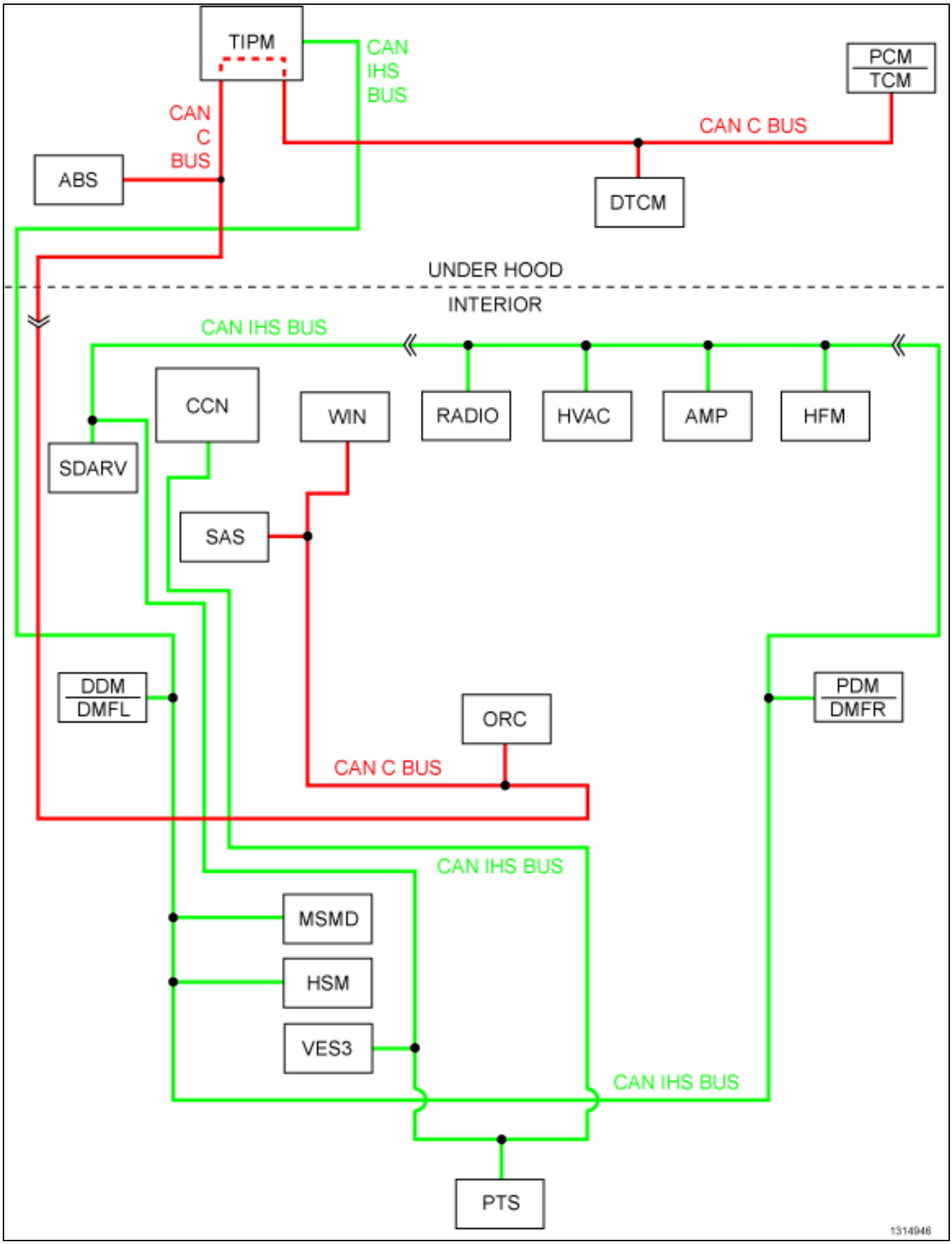

For a complete wiring diagram, **refer to the Wiring Information**.

- **When Monitored:**

  Ignition run time is greater than one second. Battery voltage between 9 and 16 volts. Engine run time greater than three seconds.
- **Set Condition:**

  The Powertrain Control Module (PCM) doesn't receive a Wireless Ignition Node (WIN) message over the CAN C circuit for seven consecutive seconds. The circuit is continuously monitored.

Possible Causes
CAN C BUS OPEN OR SHORTED CONDITION
NO POWER TO WIRELESS IGNITION NODE - MODULE UNPLUGGED OR OPEN FUSE
POWERTRAIN CONTROL MODULE (PCM)

1. ACTIVE DTC

NOTE: For vehicle communication problems, use the scan tool to refer to the Network Review Screen. The screen depicts a high level view of the vehicle network. Fault and problem areas appear in red. Selecting any of the network components allows access to the source of the problem.

NOTE: Check the Ignition Off Draw (IOD) fuse before continuing. If the fuse is open, check the circuit for a short to ground.

1. Turn the ignition on.
2. With a scan tool, select View DTCs.

Is the DTC Active at this time?

Yes

- (Refer to 28 - DTC-Based Diagnostics/MODULE, Totally Integrated Power (TIPM) - Diagnosis and Testing) and perform the U0168-Lost Communication with Vehicle Security Control Module diagnostic procedure.

No

- (Refer to 29 - Non-DTC Diagnostics/Communication - Diagnosis and Testing) and perform the Stored Lost Communication DTCs diagnostic procedure.

U110C-NO FUEL LEVEL BUS MESSAGE RECEIVED

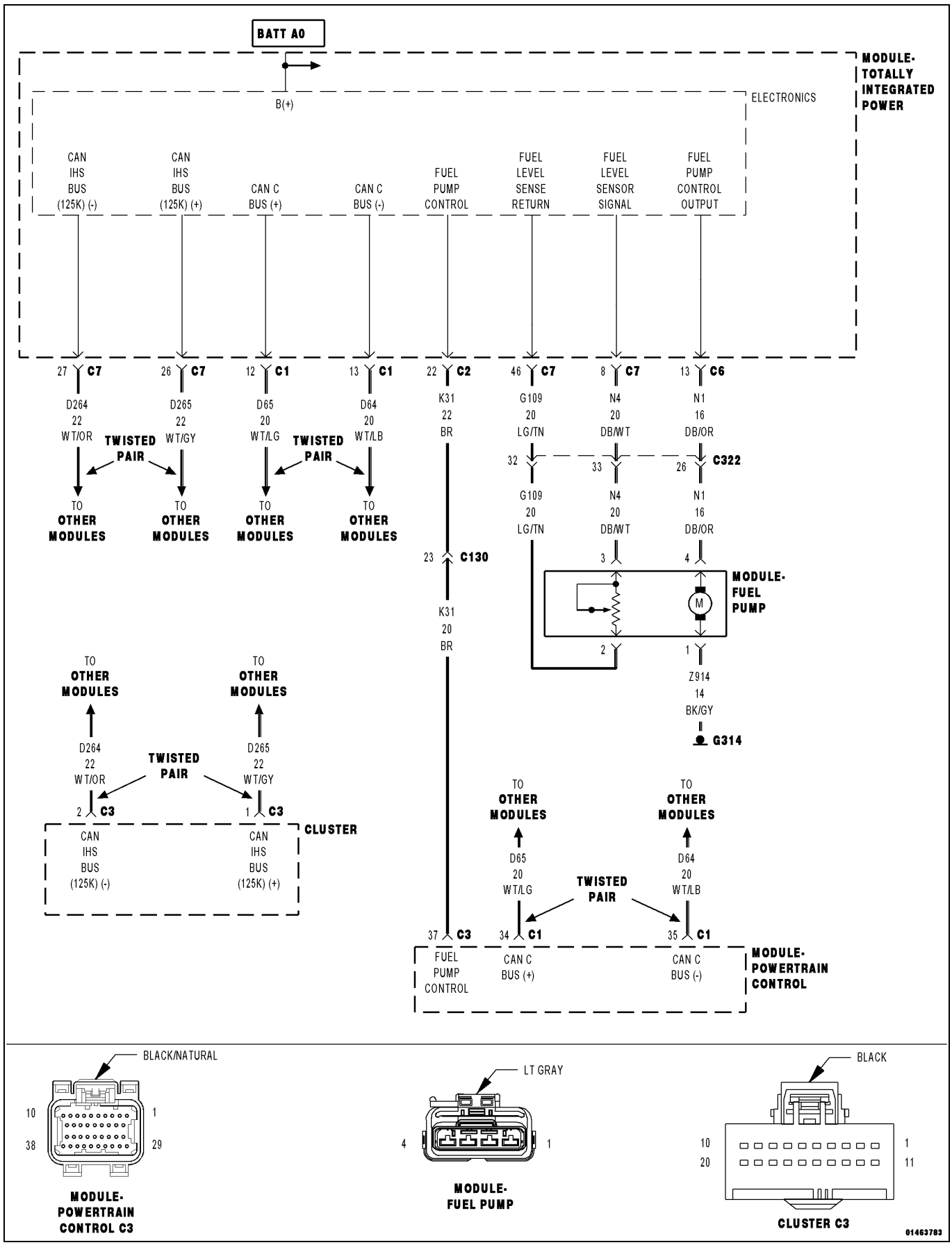

For a complete wiring diagram, **refer to the Wiring Information**.

Theory of Operation

The fuel level signal is a direct input to the Cluster. The fuel level signal is sent to the TIPM over the CAN B bus circuit. The NGC receives the fuel level signal from the TIPM over the CAN C bus circuit.

- **When Monitored:**
  Ignition on.
- **Set Condition:**
  When the PCM does not receive a fuel level signal from the TIPM over the CAN C circuit. The circuit is constantly monitored. One Trip fault.

Possible Causes
CAN C BUS CIRCUIT OPEN OR SHORTED
TOTALLY INTEGRATED POWER MODULE (TIPM)
POWERTRAIN CONTROL MODULE (PCM)

Always perform the Pre-Diagnostic Troubleshooting procedure before proceeding. (Refer to 28 - DTC-Based Diagnostics/MODULE, Powertrain Control (PCM) - Standard Procedure) .

1. ACTIVE DTC

1. Ignition on, engine not running.
2. With the scan tool, select View PCM DTCs.

Is the DTC Active at this time?

Yes

- Go To 2

No

- Refer to the INTERMITTENT CONDITION Diagnostic Procedure. (Refer to 28 - DTC-Based Diagnostics/MODULE, Powertrain Control (PCM) - Standard Procedure)

2. U0141-LOST COMMUNICATION WITH FRONT CONTROL MODULE ALSO ACTIVE

1. With the scan tool, select View DTCs.

Is the U0141-LOST COMMUNICATION WITH FRONT CONTROL MODULE also set?

Yes

- Perform the appropriate diagnostic procedure for U0141, (Refer to 28 - DTC-Based Diagnostics/MODULE, Totally Integrated Power (TIPM) - Diagnosis and Testing).
- Perform the POWERTRAIN VERIFICATION TEST. (Refer to 28 - DTC-Based Diagnostics/MODULE, Powertrain Control (PCM) - Standard Procedure)

No

- Replace and program the Powertrain Control Module per Service Information.
- Perform the POWERTRAIN VERIFICATION TEST. (Refer to 28 - DTC-Based Diagnostics/MODULE, Powertrain Control (PCM) - Standard Procedure)

U110E-LOST AMBIENT TEMPERATURE MESSAGE

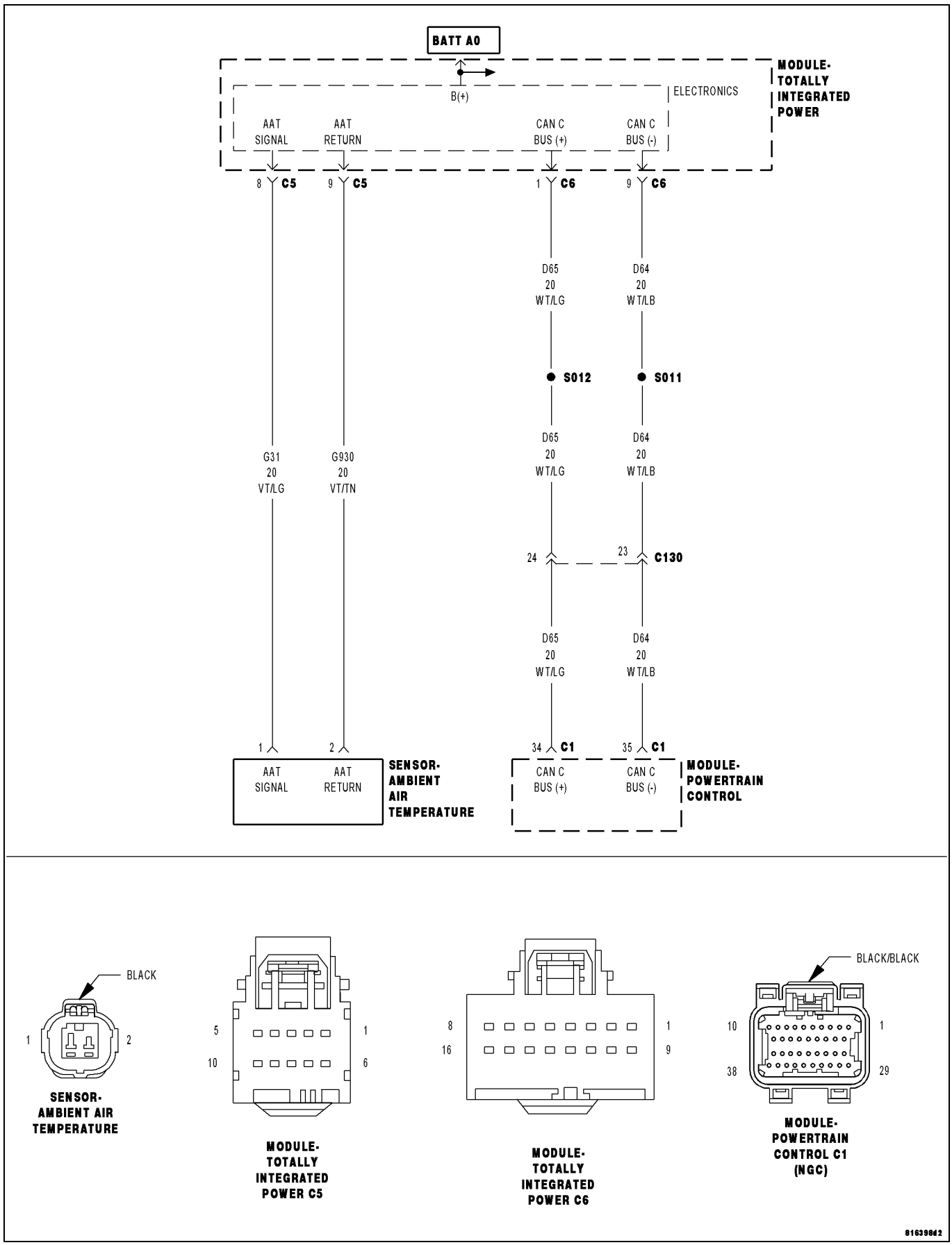

For a complete wiring diagram, **refer to the Wiring Information**.

Theory of Operation

The ambient temperature sensor signal is a direct input to the TIPM. The TIPM sends the PCM the ambient temperature signal over the CAN C bus.

- **When Monitored:**
  Ignition on.
- **Set Condition:**
  The PCM doesn't receive the ambient temperature signal over the CAN C bus from the TIPM. The circuit is continuously monitored. One Trip fault.

Possible Causes
CAN C BUS CIRCUIT OPEN OR SHORTED
TOTALLY INTEGRATED POWER MODULE (TIPM)
POWERTRAIN CONTROL MODULE (PCM)

Always perform the Pre-Diagnostic Troubleshooting procedure before proceeding. (Refer to 28 - DTC-Based Diagnostics/MODULE, Powertrain Control (PCM) - Standard Procedure).

1. ACTIVE DTC

1. Ignition on, engine not running.
2. With the scan too, select View PCM DTCs.

Is the DTC Active at this time?

Yes

- Go To 2

No

- Refer to the INTERMITTENT CONDITION Diagnostic Procedure. (Refer to 28 - DTC-Based Diagnostics/MODULE, Powertrain Control (PCM) - Standard Procedure)

2. U0141-LOST COMMUNICATION WITH FRONT CONTROL MODULE (TIPM) ALSO ACTIVE

1. With the scan too, select View DTCs.

Is the U0141-NO BUS MESSAGE RECEIVED FROM THE TIPM also set?

Yes

- Follow the diagnostics for U0141-LOST COMMUNICATION WITH FRONT CONTROL MODULE (TIPM). (Refer to 28 - DTC-Based Diagnostics/MODULE, Totally Integrated Power (TIPM) - Diagnosis and Testing)
- Perform the POWERTRAIN VERIFICATION TEST. (Refer to 28 - DTC-Based Diagnostics/MODULE, Powertrain Control (PCM) - Standard Procedure)

No

- Replace and program the Powertrain Control Module per Service Information.
- Perform the POWERTRAIN VERIFICATION TEST. (Refer to 28 - DTC-Based Diagnostics/MODULE, Powertrain Control (PCM) - Standard Procedure)

U1110-LOST VEHICLE SPEED MESSAGE

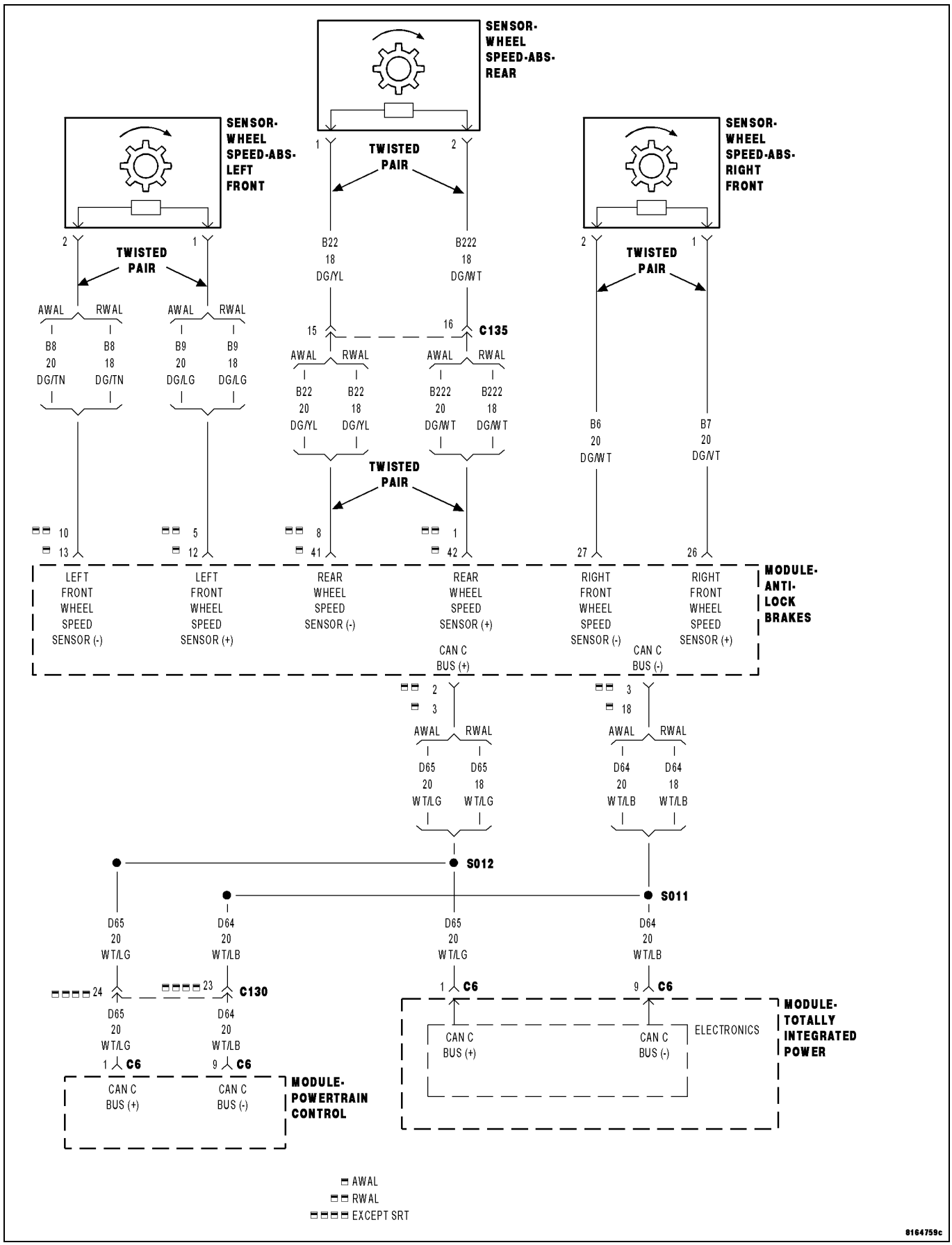

For a complete wiring diagram, **refer to the Wiring Information**.

Theory of Operation

The PCM receives the vehicle speed signal over the CAN C bus from the Anti-lock Brake Module.

- **When Monitored:**
  Ignition on.
- **Set Condition:**
  The PCM doesn't receive a vehicle speed signal from the Anti-lock brake Module over the CAN C bus. One Trip fault.

Possible Causes
CAN C BUS CIRCUIT OPEN OR SHORTED
ANTI-LOCK BRAKE MODULE
POWERTRAIN CONTROL MODULE (PCM)

Always perform the Pre-Diagnostic Troubleshooting procedure before proceeding. (Refer to 28 - DTC-Based Diagnostics/MODULE, Powertrain Control (PCM) - Standard Procedure) .

1. ACTIVE DTC

1. Ignition on, engine not running.
2. With the scan tool, select View PCM DTCs.

Is the DTC Active at this time?

Yes

- Go To 2

No

- Refer to the INTERMITTENT CONDITION Diagnostic Procedure. (Refer to 28 - DTC-Based Diagnostics/MODULE, Powertrain Control (PCM) - Standard Procedure)

2. U0121-LOST COMMUNICATION WITH ABS MODULE ALSO SET

1. With the scan tool continue reading DTCs.

Is the U0121-LOST COMMUNICATION WITH ABS MODULE also set?

Yes

- Follow the diagnostics for U0121-LOST COMMUNICATION WITH ABS MODULE. (Refer to 28 - DTC-Based Diagnostics/MODULE, Totally Integrated Power (TIPM) - Diagnosis and Testing)
- Perform the POWERTRAIN VERIFICATION TEST. (Refer to 28 - DTC-Based Diagnostics/MODULE, Powertrain Control (PCM) - Standard Procedure)

No

- Replace and program the Powertrain Control Module per Service Information.
- Perform the POWERTRAIN VERIFICATION TEST. (Refer to 28 - DTC-Based Diagnostics/MODULE, Powertrain Control (PCM) - Standard Procedure)

U1113-LOST A/C PRESSURE MESSAGE

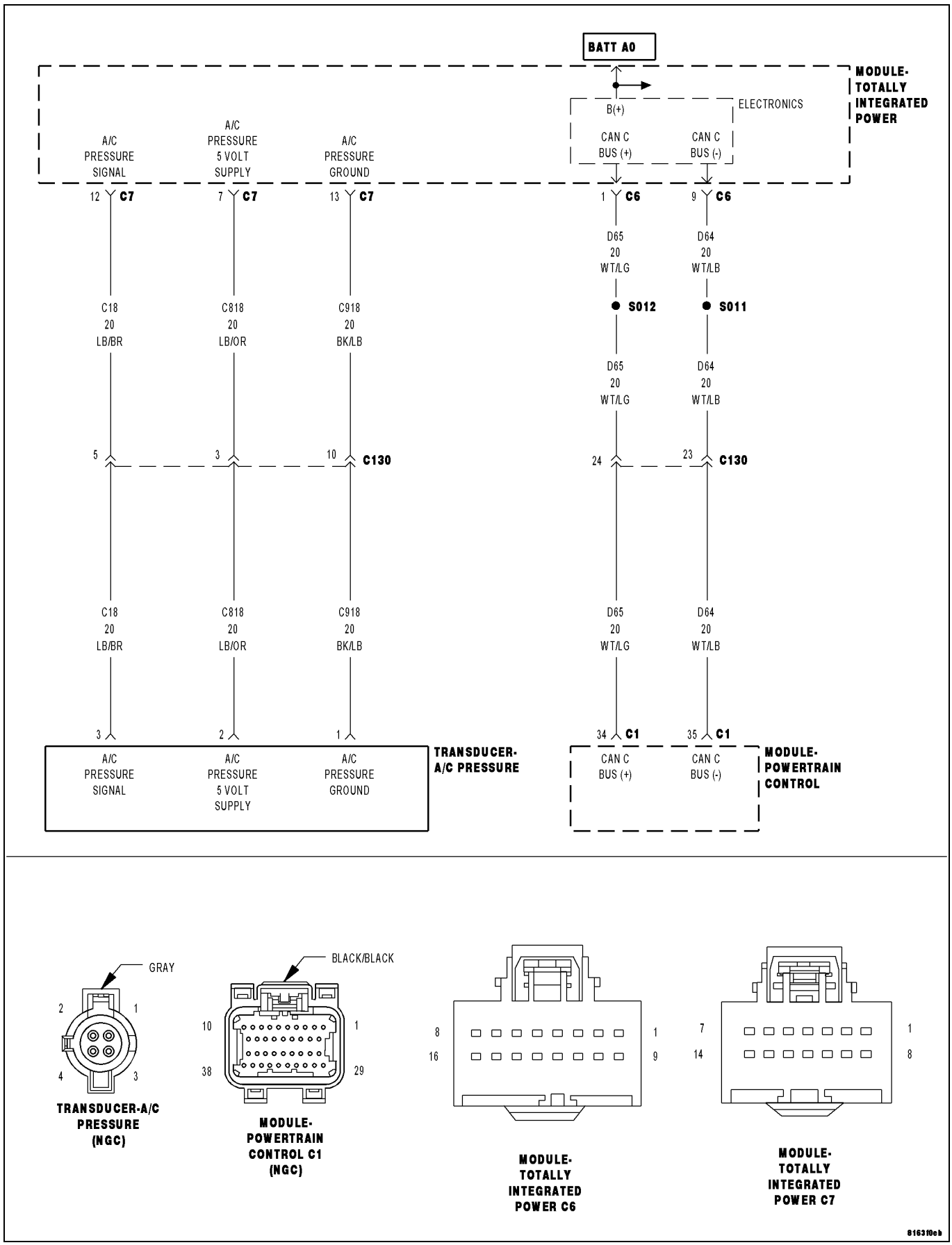

For a complete wiring diagram, **refer to the Wiring Information**.

Theory of Operation

The A/C Pressure Transducer signal is a direct input to the TIPM. The TIPM sends the PCM the A/C pressure signal over the CAN C bus.

- **When Monitored:**
  Ignition on.
- **Set Condition:**
  The PCM doesn't receive the A/C Pressure signal over the CAN C bus from the TIPM. The circuit is continuously monitored. One Trip fault.

Possible Causes
CAN C BUS CIRCUIT OPEN OR SHORTED
TOTALLY INTEGRATED POWER MODULE (TIPM)
POWERTRAIN CONTROL MODULE (PCM)

Always perform the Pre-Diagnostic Troubleshooting procedure before proceeding. (Refer to 28 - DTC-Based Diagnostics/MODULE, Powertrain Control (PCM) - Standard Procedure).

1. ACTIVE DTC

1. Ignition on, engine not running.
2. With the scan tool, select View PCM DTCs.

Is the DTC Active at this time?

Yes

- Go To 2

No

- Refer to the INTERMITTENT CONDITION Diagnostic Procedure. (Refer to 28 - DTC-Based Diagnostics/MODULE, Powertrain Control (PCM) - Standard Procedure)

2. U0141-LOST COMMUNICATION WITH TOTALLY INTEGRATED POWER MODULE ALSO ACTIVE

1. With the scan tool, select View DTCs.

Is the U0141-NO BUS MESSAGE RECEIVED FROM THE FRONT CONTROL MODULE (TIPM) also set?

Yes

- Follow the diagnostics for U0141-LOST COMMUNICATION WITH FRONT CONTROL MODULE (TIPM). (Refer to 28 - DTC-Based Diagnostics/MODULE, Totally Integrated Power (TIPM) - Diagnosis and Testing)
- Perform the POWERTRAIN VERIFICATION TEST. (Refer to 28 - DTC-Based Diagnostics/MODULE, Powertrain Control (PCM) - Standard Procedure)

No

- Replace and program the Powertrain Control Module per Service Information.
- Perform the POWERTRAIN VERIFICATION TEST. (Refer to 28 - DTC-Based Diagnostics/MODULE, Powertrain Control (PCM) - Standard Procedure)

U1120-LOST WHEEL DISTANCE MESSAGE

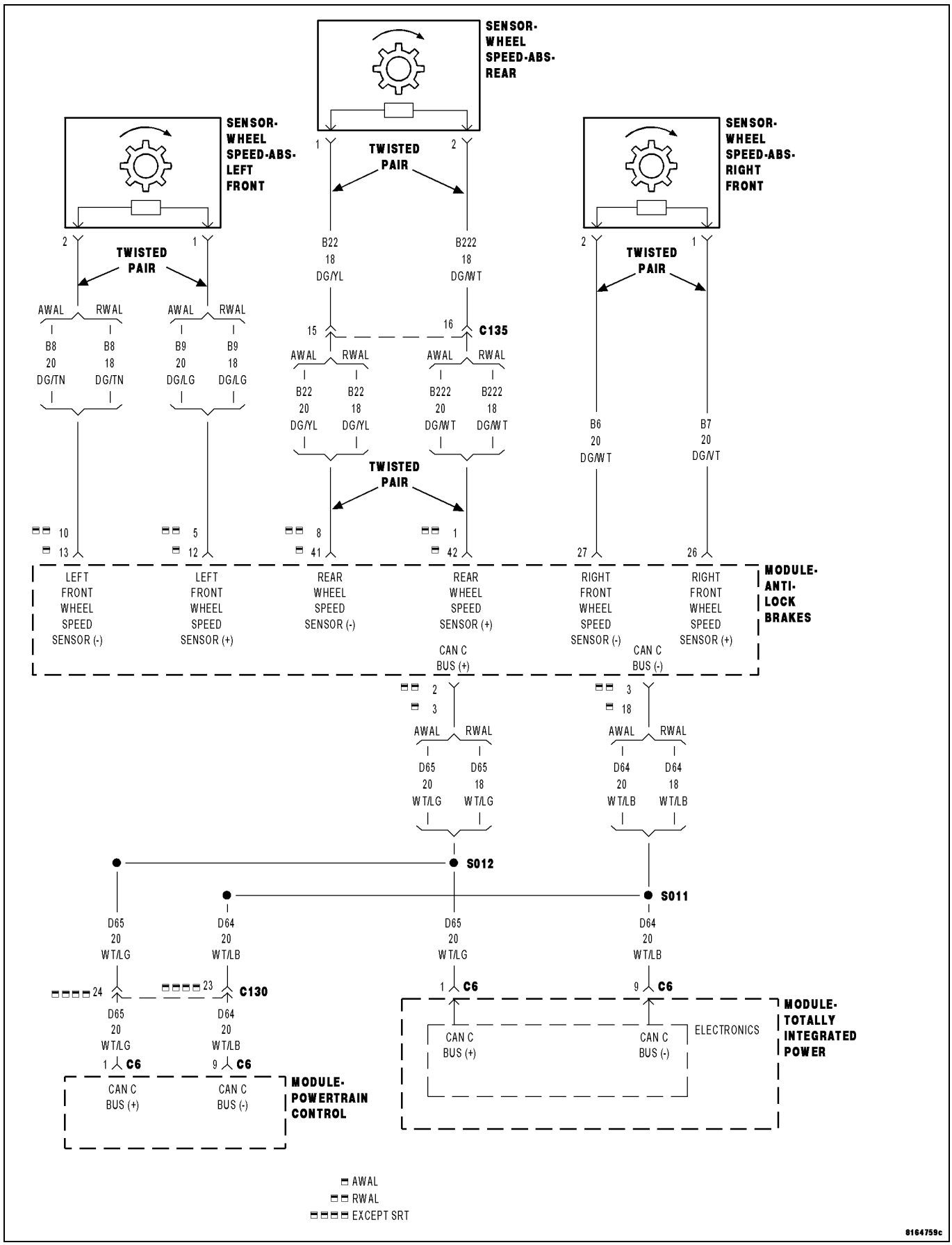

For a complete wiring diagram, **refer to the Wiring Information**.

Theory of Operation

The PCM receives the vehicle speed signal over the CAN C bus from the Anti-lock Brake Module.

- **When Monitored:**
  Ignition on.
- **Set Condition:**
  The PCM doesn't receive a vehicle speed signal from the Anti-lock brake Module over the CAN C bus. One Trip fault.

Possible Causes
CAN C BUS CIRCUIT OPEN OR SHORTED
ANTI-LOCK BRAKE MODULE
POWERTRAIN CONTROL MODULE (PCM)

Always perform the Pre-Diagnostic Troubleshooting procedure before proceeding. (Refer to 28 - DTC-Based Diagnostics/MODULE, Powertrain Control (PCM) - Standard Procedure) .

1. ACTIVE DTC

1. Ignition on, engine not running.
2. With the scan tool, select View PCM DTCs.

Is the DTC Active at this time?

Yes

- Go To 2

No

- Refer to the INTERMITTENT CONDITION Diagnostic Procedure. (Refer to 28 - DTC-Based Diagnostics/MODULE, Powertrain Control (PCM) - Standard Procedure)

2. U0121-LOST COMMUNICATION WITH ABS MODULE ALSO SET

1. With the scan tool continue reading DTCs.

Is the U0121-LOST COMMUNICATION WITH ABS MODULE also set?

Yes

- Follow the diagnostics for U0121-LOST COMMUNICATION WITH ABS MODULE. (Refer to 28 - DTC-Based Diagnostics/MODULE, Totally Integrated Power (TIPM) - Diagnosis and Testing)
- Perform the POWERTRAIN VERIFICATION TEST. (Refer to 28 - DTC-Based Diagnostics/MODULE, Powertrain Control (PCM) - Standard Procedure)

No

- Replace and program the Powertrain Control Module per Service Information.
- Perform the POWERTRAIN VERIFICATION TEST. (Refer to 28 - DTC-Based Diagnostics/MODULE, Powertrain Control (PCM) - Standard Procedure)

U1403-IMPLAUSIBLE FUEL LEVEL SIGNAL RECEIVED

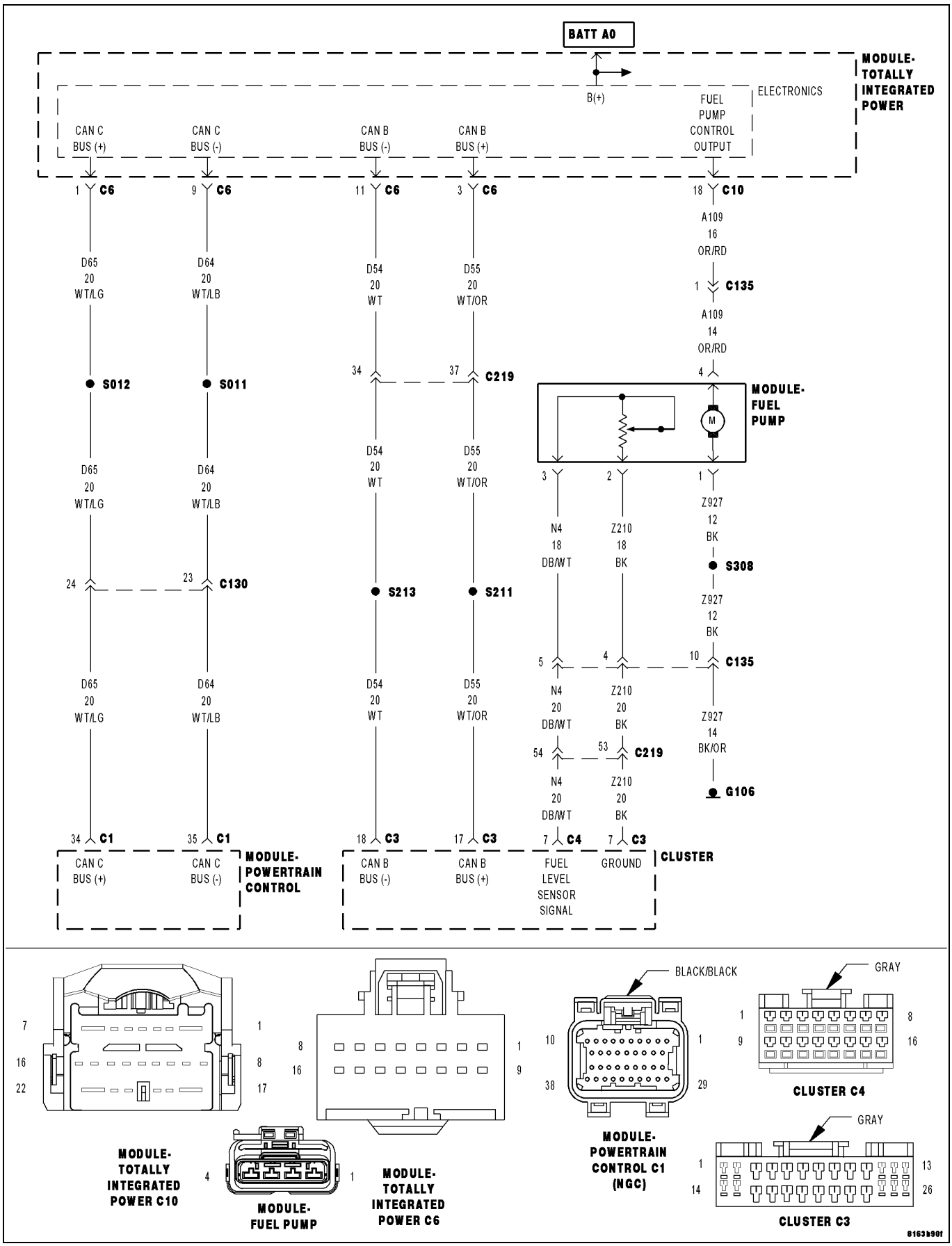

For a complete wiring diagram, **refer to the Wiring Information**.

Theory of Operation

The Totally Integrated Power Module isn't receiving a fuel volume signal over CAN B from the Cluster Module. The TIPM has to send the PCM a fuel volume signal over CAN C. The signal the TIPM sends over CAN C is implausible.

- **When Monitored:**
  Ignition on.
- **Set Condition:**
  The fuel volume message the Powertrain Control Module (PCM) is receiving is implausible. The circuit is continuously monitored. One Trip fault.

Possible Causes
FUEL LEVEL SENSOR
(N4) FUEL LEVEL SIGNAL CIRCUIT OPEN OR SHORTED
(Z210) GROUND CIRCUIT OPEN
CAN B OPEN OR SHORTED
CLUSTER MODULE
TOTALLY INTEGRATED POWER MODULE (TIPM)
POWERTRAIN CONTROL MODULE (PCM)

Always perform the Pre-Diagnostic Troubleshooting procedure before proceeding. (Refer to 28 - DTC-Based Diagnostics/MODULE, Powertrain Control (PCM) - Standard Procedure).

1. ACTIVE DIAGNOSTIC TROUBLE CODE (DTC)

1. Ignition on, engine not running.
2. With a scan tool, select View DTCs.

Is the DTC Active at this time?

Yes

- Go To 2

No

- Perform the INTERMITTENT CONDITION diagnostic procedure. (Refer to 28 - DTC-Based Diagnostics/MODULE, Powertrain Control (PCM) - Standard Procedure).

2. CAN B BUS HARDWARE DTCS ALSO ACTIVE

1. With a scan tool check for DTCs in the TIPM.

Are any CAN B Hardware related DTCs active at this time?

Yes

- Peroform the appropriate diagnostic procedure, (Refer to 28 - DTC-Based Diagnostics/MODULE, Totally Integrated Power (TIPM) - Diagnosis and Testing).
- Perform the BODY VERIFICATION TEST. (Refer to 28 - DTC-Based Diagnostics/MODULE, Totally Integrated Power (TIPM) - Standard Procedure).

No

- Go To 3

3. FUEL LEVEL SENSOR

1. Turn the ignition off.
2. Disconnect the Fuel Pump Module electrical harness connector.
3. Ignition on, engine not running.
4. Connect a jumper wire between the (N4) Fuel Level Signal circuit and the (Z210) Ground circuit in the Fuel Pump Module harness connector.
5. Using the scan tool, read the Fuel Level Sensor voltage.

Did the Fuel Level Sensor voltage change from above 4.8 Volts to below 0.4 of a Volt with the jumper wire installed?

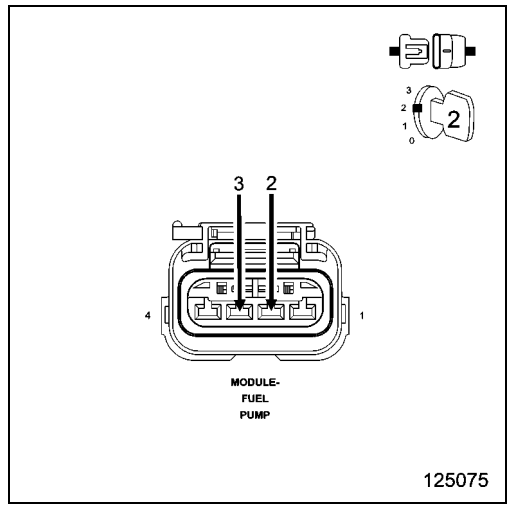

Yes

- Replace the Fuel Level Sensor.
- Perform the POWERTRAIN VERIFICATION TEST. (Refer to 28 - DTC-Based Diagnostics/MODULE, Powertrain Control (PCM) - Standard Procedure).

No

- Go To 4

NOTE: Remove the jumper wire before continuing.

4. (N4) FUEL LEVEL SIGNAL CIRCUIT OPEN

1. Turn the ignition off.
2. Disconnect the C4 Cluster harness connector.
3. Measure the resistance of the (N4) Fuel Level Signal circuit from the Fuel Pump Module harness connector to the C4 Cluster harness connector.

Is the resistance below 5.0 Ohms?

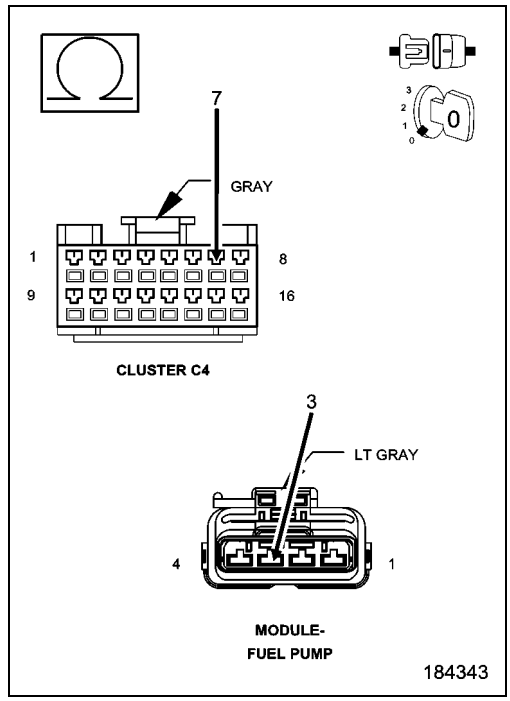

Yes

- Go To 5

No

- Repair the open in the (N4) Fuel Level Signal circuit.
- Perform the POWERTRAIN VERIFICATION TEST. (Refer to 28 - DTC-Based Diagnostics/MODULE, Powertrain Control (PCM) - Standard Procedure).

5. (Z210) GROUND CIRCUIT OPEN

1. Disconnect the C3 Cluster harness connector.
2. Measure the resistance of the (Z210) Ground circuit from the Fuel Pump Module harness connector to the C3 Cluster harness connector.

Is the resistance below 5.0 Ohms?

Yes

- Go To 6

No

- Repair the open in the (Z210) Ground circuit.
- Perform the POWERTRAIN VERIFICATION TEST. (Refer to 28 - DTC-Based Diagnostics/MODULE, Powertrain Control (PCM) - Standard Procedure).

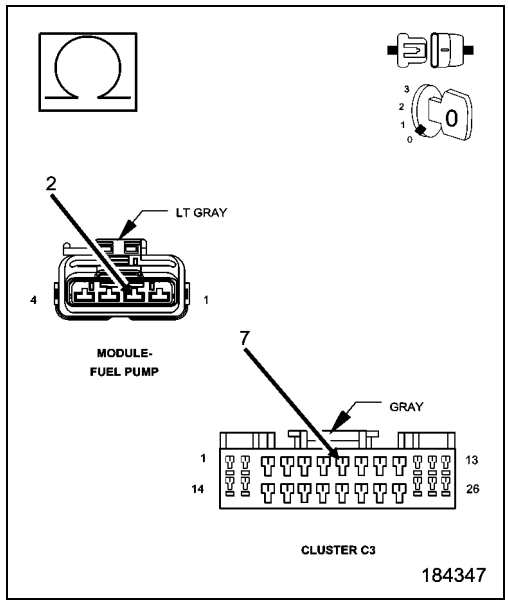

6. POWERTRAIN CONTROL MODULE (PCM)

1. Using the wiring diagram/schematic as a guide, inspect the wiring and connector at the Powertrain Control Module (PCM).
2. Look for any chafed, pierced, pinched, or partially broken wires.
3. Look for broken, bent, pushed out or corroded terminals. Verify that there is good pin to terminal contact in the Powertrain Control Module connectors.
4. Perform any Technical Service Bulletins that may apply.

Were there any problems found?

Yes

- Repair as necessary.
- Perform the POWERTRAIN VERIFICATION TEST. (Refer to 28 - DTC-Based Diagnostics/MODULE, Powertrain Control (PCM) - Standard Procedure).

No

- Replace and program the Powertrain Control Module in accordance with the service information.
- Perform the POWERTRAIN VERIFICATION TEST. (Refer to 28 - DTC-Based Diagnostics/MODULE, Powertrain Control (PCM) - Standard Procedure).

U1412-IMPLAUSIBLE VEHICLE SPEED SIGNAL RECEIVED

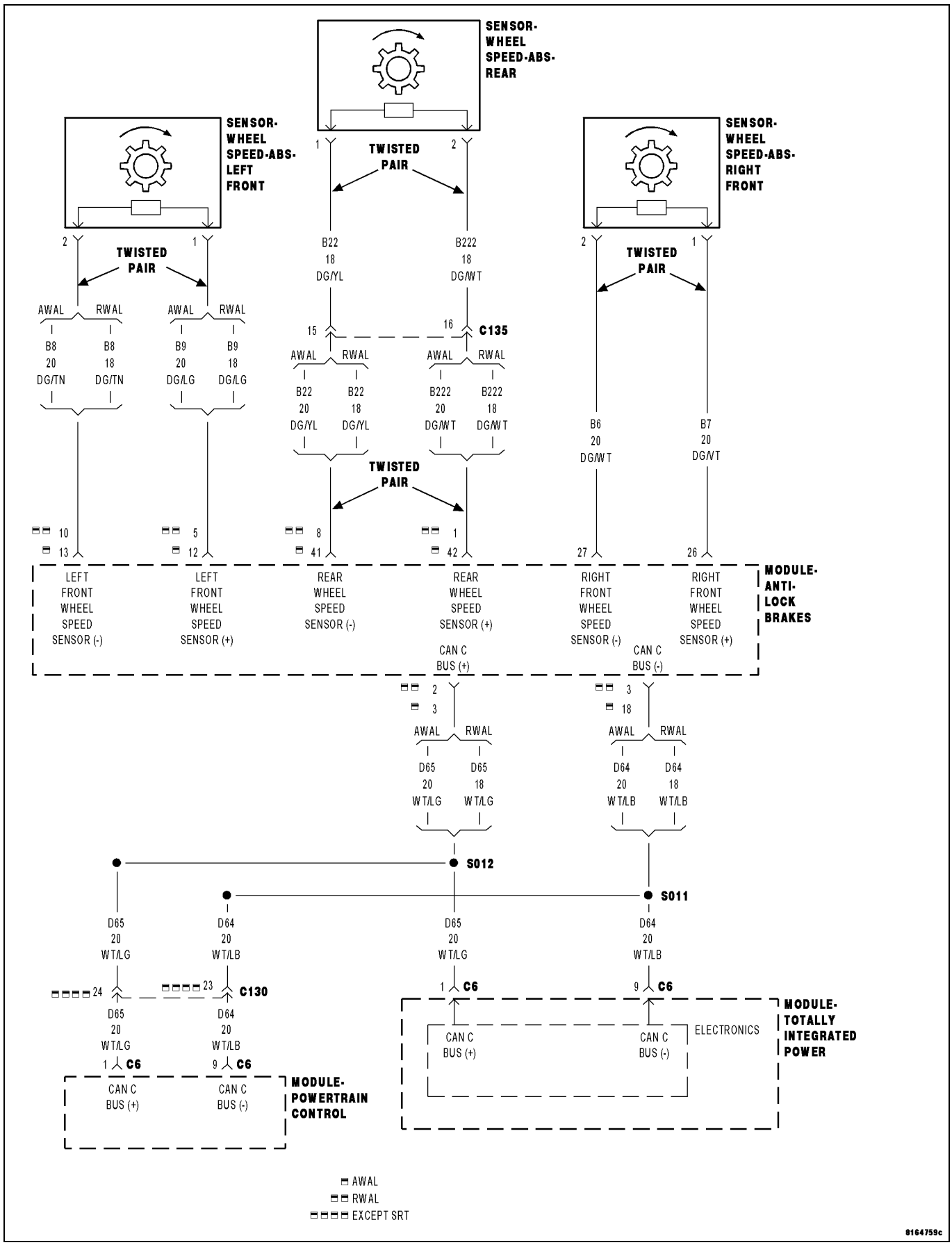

For a complete wiring diagram, **refer to the Wiring Information**.

Theory of Operation

The ABS Module sends vehicle speed information over the CAN C Bus circuit to the PCM.

- **When Monitored:**
  Ignition on.
- **Set Condition:**
  The PCM gets an implausible signal over the CAN C circuit from the ABS Module. The circuit is continuously monitored. One Trip fault.

Possible Causes
CAN C BUS CIRCUIT SHORTED
CAN C BUS CIRCUIT OPEN
ABS MODULE
POWERTRAIN CONTROL MODULE (PCM)

Always perform the Pre-Diagnostic Troubleshooting procedure before proceeding. (Refer to 28 - DTC-Based Diagnostics/MODULE, Powertrain Control (PCM) - Standard Procedure).

1. ACTIVE DTC

1. Ignition on, engine not running.
2. With a scan tool, select View DTCs.

Is the U1412-IMPLAUSIBLE VEHICLE SPEED SIGNAL RECEIVED Active at this time?

Yes

- Go To 2

No

- Refer to the INTERMITTENT CONDITION Diagnostic Procedure. (Refer to 28 - DTC-Based Diagnostics/MODULE, Powertrain Control (PCM) - Standard Procedure)

2. U0001-NO COMMUNICATION ON THE CAN C BUS CIRCUIT IS ACTIVE

1. Continue reading DTCs.

Is the U0001-NO COMMUNICATION ON THE CAN C BUS CIRCUIT ACTIVE at this time?

Yes

- Refer to the Diagnostic Procedure for the U0001-NO COMMUNICATION ON THE CAN C BUS CIRCUIT. (Refer to 28 - DTC-Based Diagnostics/MODULE, Totally Integrated Power (TIPM) - Diagnosis and Testing)

No

- Go To 3

3. ABS MODULE IS ACTIVE ON THE CAN C BUS

1. With the scan tool, select ECU View.
2. Verify that the ABS Module active on the bus.

Is the ABS Module active on the bus?

Yes

- Go To 4

No

- (Refer to 28 - DTC-Based Diagnostics/MODULE, Totally Integrated Power (TIPM) - Diagnosis and Testing) for No Response diagnostic procedures.
- Perform the BODY VERIFICATION TEST (Refer to 28 - DTC-Based Diagnostics/MODULE, Totally Integrated Power (TIPM) - Standard Procedure).

4. ACTIVE DTCS IN THE TIPM

1. With the scan tool, select ECU View and select TIPM.
2. With the scan tool, read Active DTCs.

Is the U0001-NO COMMUNICATION ON THE CAN C BUS CIRCUIT ACTIVE in the TIPM at this time?

Yes

- Replace the ABS Module per Service Information.
- Perform the POWERTRAIN VERIFICATION TEST. (Refer to 28 - DTC-Based Diagnostics/MODULE, Powertrain Control (PCM) - Standard Procedure)

No

- Replace and program the Powertrain Control Module per Service Information.
- Perform the POWERTRAIN VERIFICATION TEST. (Refer to 28 - DTC-Based Diagnostics/MODULE, Powertrain Control (PCM) - Standard Procedure)

U1417-IMPLAUSIBLE LEFT WHEEL DISTANCE SIGNAL RECEIVED

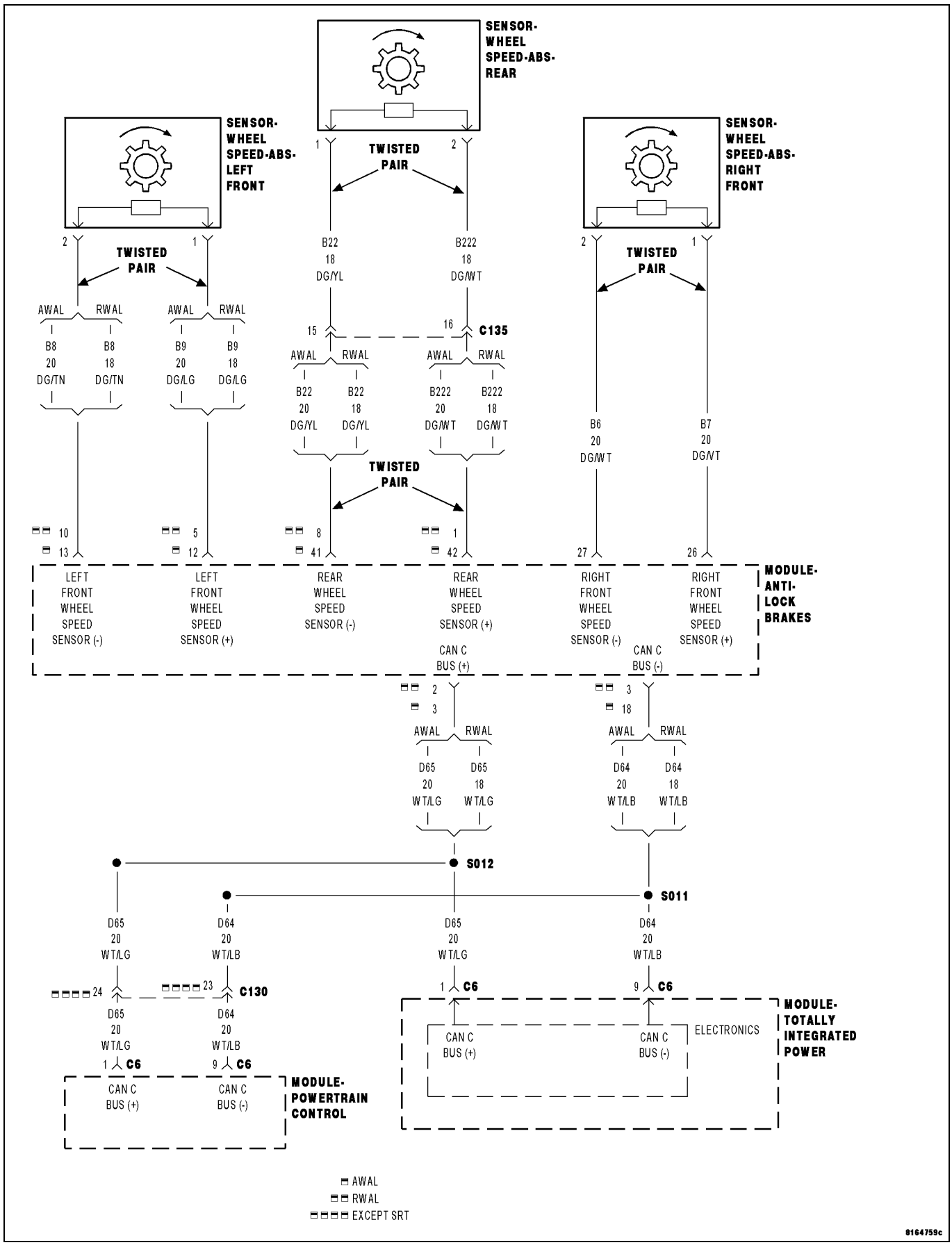

For a complete wiring diagram, **refer to the Wiring Information**.

Theory of Operation

The ABS Module sends an implausible distance signal over the CAN C Bus circuit to the PCM.

- **When Monitored:**
  Ignition on.
- **Set Condition:**
  The Powertrain Control Module (PCM) gets an implausible signal over the CAN C circuit from the ABS Module. The circuit is continuously monitored. One Trip fault.

Possible Causes
VEHICLE SPEED SENSOR FAULT ACTIVE IN ANTI-LOCK BRAKE MODULE
CAN C BUS CIRCUIT SHORTED
CAN C BUS CIRCUIT OPEN
ABS MODULE
POWERTRAIN CONTROL MODULE (PCM)

Always perform the Pre-Diagnostic Troubleshooting procedure before proceeding. (Refer to 28 - DTC-Based Diagnostics/MODULE, Powertrain Control (PCM) - Standard Procedure).

1. ACTIVE DIAGNOSTIC TROUBLE CODE (DTC)

1. Ignition on, engine not running.
2. With a scan tool, select View DTCs.

Is the U1417-IMPLAUSIBLE LEFT WHEEL DISTANCE SIGNAL RECEIVED Active at this time?

Yes

- Go To 2

No

- Perform the INTERMITTENT CONDITION diagnostic procedure. (Refer to 28 - DTC-Based Diagnostics/MODULE, Powertrain Control (PCM) - Standard Procedure).

2. ABS MODULE IS ACTIVE ON THE CAN C BUS

1. Using the scan tool, select ECU View.
2. Verify that the ABS Module active on the bus.

Is the ABS Module active on the bus?

Yes

- Go To 3

No

- Perform the No Response from the ABS Module diagnostic procedure. (Refer to 28 - DTC-Based Diagnostics/MODULE, Totally Integrated Power (TIPM) - Diagnosis and Testing).

3. DTCS STORED OR ACTIVE IN THE ABS MODULE

1. Check for DTCs in the ABS Module.

Are any DTCs active or stored in the ABS Module?

Yes

- Go to and perform the appropriate diagnostic procedure.

No

- Go To 4

4. ACTIVE DIAGNOSTIC TROUBLE CODE (DTC)S IN THE TIPM

1. Using the scan tool, select ECU View and select TIPM.
2. Using the scan tool, read Active DTCs.

Are any Communication DTCs active in the TIPM relating to the ABS System?

Yes

- Replace the ABS Module in accordance with the Service Information.
- Perform the ABS VERIFICATION TEST. (Refer to 28 - DTC-Based Diagnostics/MODULE, Antilock Brake (ABS) - Standard Procedure).

No

- Replace and program the Powertrain Control Module in accordance with the service information.
- Perform the POWERTRAIN VERIFICATION TEST. (Refer to 28 - DTC-Based Diagnostics/MODULE, Powertrain Control (PCM) - Standard Procedure).

U1418-IMPLAUSIBLE RIGHT WHEEL DISTANCE SIGNAL RECEIVED

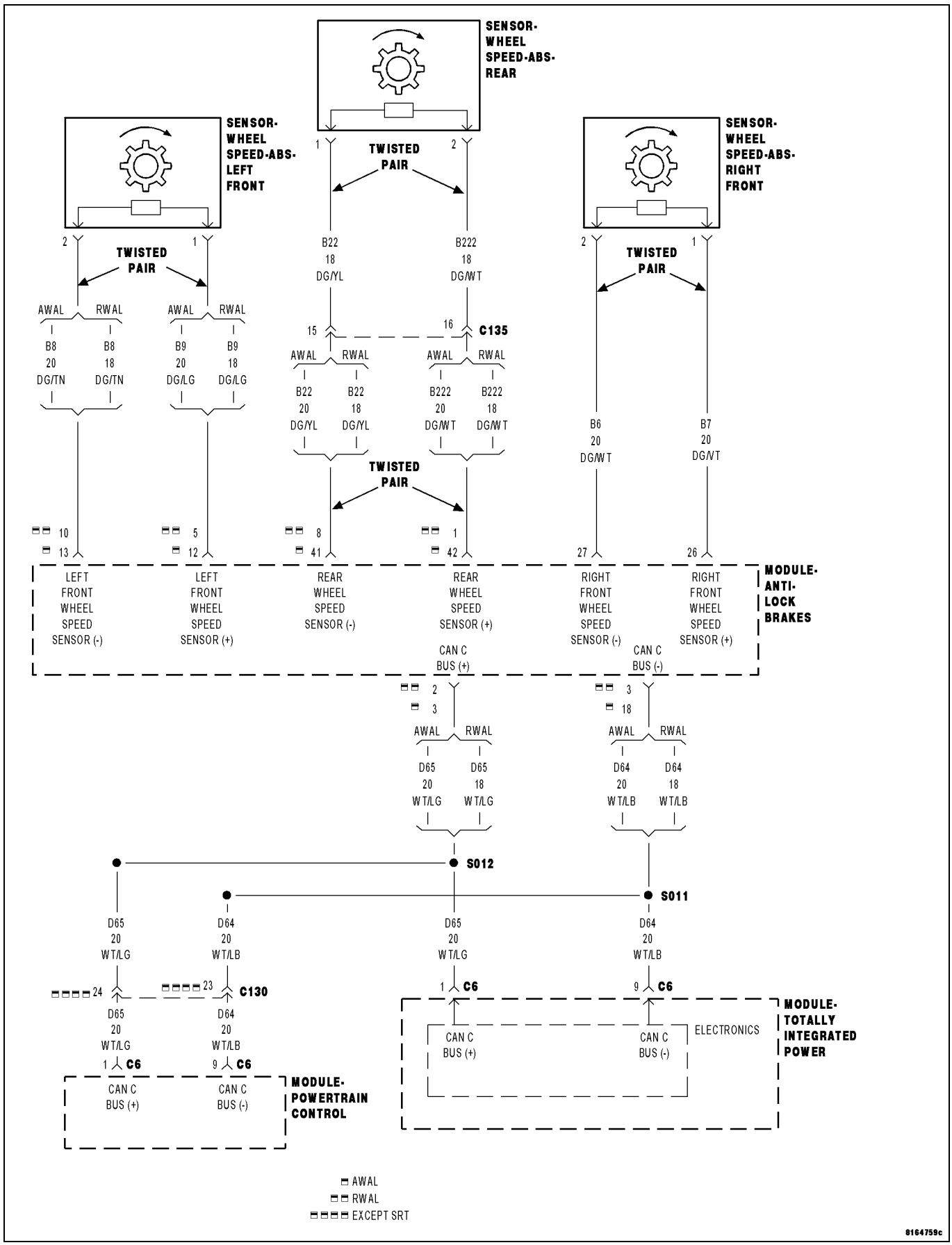

For a complete wiring diagram, **refer to the Wiring Information**.

Theory of Operation

The ABS Module sends an implausible distance signal over the CAN C Bus circuit to the PCM.

- **When Monitored:**
  Ignition on.
- **Set Condition:**
  The PCM gets an implausible signal over the CAN C circuit from the ABS Module. The circuit is continuously monitored. One Trip fault.

Possible Causes
VEHICLE SPEED SENSOR FAULT ACTIVE IN ANTI-LOCK BRAKE MODULE
CAN C BUS CIRCUIT SHORTED
CAN C BUS CIRCUIT OPEN
ABS MODULE
POWERTRAIN CONTROL MODULE (PCM)

Always perform the Pre-Diagnostic Troubleshooting procedure before proceeding. (Refer to 28 - DTC-Based Diagnostics/MODULE, Powertrain Control (PCM) - Standard Procedure).

1. ACTIVE DTC

1. Ignition on, engine not running.
2. With a scan tool, select View DTCs.

Is the U1418-IMPLAUSIBLE RIGHT WHEEL DISTANCE SIGNAL RECEIVED Active at this time?

Yes

- Go To 2

No

- Refer to the INTERMITTENT CONDITION Diagnostic Procedure. (Refer to 28 - DTC-Based Diagnostics/MODULE, Powertrain Control (PCM) - Standard Procedure)

2. ABS MODULE IS ACTIVE ON THE CAN C BUS

1. With the scan tool, select ECU View.
2. Verify that the ABS Module active on the bus.

Is the ABS Module Active on the bus?

Yes

- Go To 3

No

- (Refer to 28 - DTC-Based Diagnostics/MODULE, Totally Integrated Power (TIPM) - Diagnosis and Testing) for No Response diagnostic procedures.
- Perform the BODY VERIFICATION TEST, (Refer to 28 - DTC-Based Diagnostics/MODULE, Totally Integrated Power (TIPM) - Standard Procedure).

3. DTCS STORED OR ACTIVE IN THE ABS MODULE

1. Check for DTCs in the ABS Module.

Are any DTCs active or stored in the ABS Module?

Yes

- Refer to section 28 DTC Based Diagnostics and perform the diagnostic procedure for the DTCs in the ABS Module.
- Perform the ABS VERIFICATION TEST, (Refer to 28 - DTC-Based Diagnostics/MODULE, Antilock Brake (ABS) - Standard Procedure).

No

- Go To 4

4. ACTIVE DTCS IN THE TIPM

1. With the scan tool, select ECU View and select TIPM.
2. With the scan tool, read Active DTCs.

Are any Communication DTCs active in the TIPM relating to the ABS System?

Yes

- Replace the ABS Module per Service Information.
- Perform the POWERTRAIN VERIFICATION TEST. (Refer to 28 - DTC-Based Diagnostics/MODULE, Powertrain Control (PCM) - Standard Procedure)

No

- Replace and program the Powertrain Control Module per Service Information.
- Perform the POWERTRAIN VERIFICATION TEST. (Refer to 28 - DTC-Based Diagnostics/MODULE, Powertrain Control (PCM) - Standard Procedure)

Standard Procedure

■ INTERMITTENT CONDITION

POSSIBLE CAUSES
INTERMITTENT CONDITION

1. INTERMITTENT CONDITION

NOTE: The conditions that set the DTC are not present at this time. The following list may help in identifying the intermittent condition.

WARNING: When the engine is operating, do not stand in direct line with the fan. Do not put your hands near the pulleys, belts or fan. Do not wear loose clothing. Failure to follow these instructions may result in possible serious or fatal injury.

1. Refer to any Technical Service Bulletins (TSBs) that may apply.
2. Review the scan tool Freeze Frame information. If possible, try to duplicate the conditions under which the DTC set.
3. With the engine running at normal operating temperature, monitor the scan tool parameters related to the DTC while wiggling the wire harness. Look for parameter values to change and/or a DTC to set.
4. Turn the ignition off.
5. Visually inspect the related wire harness. Disconnect all the related harness connectors. Look for any chafed, pierced, pinched, partially broken wires and broken, bent, pushed out, or corroded terminals.
6. Perform a voltage drop test on the related circuits between the suspected inoperative component and the PCM.

CAUTION: Do not probe the PCM harness connectors. Probing the PCM harness connectors will damage the PCM terminals resulting in poor terminal to pin connection. Install the PCM Pinout Box Kit, NGC, 38 Position 8815A to perform diagnosis.

7. Inspect and clean all PCM, engine, and chassis grounds that are related to the most current DTC.
8. If numerous trouble codes were set, use a wire schematic and look for any common ground or supply circuits.
9. For any Relay DTCs, actuate the Relay with the scan tool and wiggle the related wire harness to try to interrupt the actuation.
10. For intermittent Evaporative Emission trouble codes perform a visual and physical inspection of the related parts including hoses and the Fuel Filler cap.
11. For intermittent Misfire DTCs check for restrictions in the Intake and Exhaust system, proper installation of Sensors, vacuum leaks, and binding components that are run by the accessory drive belt.
12. Use the scan tool to perform a System Test if one applies to failing component.
13. A co-pilot, data recorder, and/or lab scope should be used to help diagnose intermittent conditions.

Were any problems found during the above inspections?

Yes

- Perform the necessary repairs.
- Perform the POWERTRAIN VERIFICATION TEST. (Refer to 28 - DTC-Based Diagnostics/MODULE, Powertrain Control (PCM) - Standard Procedure)

No

- Test Complete.

■ PRE-DIAGNOSTIC TROUBLESHOOTING PROCEDURE

1. NO RESPONSE

1. Make sure the scan tool will communicate with the appropriate modules.

Are you currently experiencing a NO RESPONSE condition?

Yes

- The NO RESPONSE condition must be properly diagnosed before continuing (Refer to 29 - Non-DTC Diagnostics/Communication - Diagnosis and Testing).

No

- Go To 2

2. NO START

Is the customer complaint a NO START condition?

Yes

- Check the vehicle for any NO START related PCM DTCs or Vehicle Theft Security related DTCs (Refer to 28 - DTC-Based Diagnostics/MODULE, Powertrain Control (PCM) - Diagnosis and Testing).
- If no Theft related DTCs are present, refer to the Non DTC Diagnostic Procedures that relate to Fuel and Starting. (Refer to 29 - Non-DTC Diagnostics/Drivability - Gas - Diagnosis and Testing).

No

- Go To 3

3. VEHICLE HISTORY AND TSB(s)

1. Continue by reading PCM DTCs and record the related Freeze Frame data if any DTCs are present.
2. Whether or not any DTCs are present you will want to check the following items which may assist in repairing the customers complaint successfully.
3. Check the vehicle's repair history.
4. If the vehicle has a repair history that pertains to the customer's current complaint, review the repair.
5. Inspect the vehicle for any aftermarket accessories that may have been installed incorrectly.
6. Check for any TSBs related to the customer's complaint or DTCs.
7. If a TSB applies, follow the instructions per the TSB.

Choose the following scenario that best applies.

The TSB repaired the customer's complaint.

- Testing complete.

A DTC is present, no TSB applies, or the TSB didn't repair the customer's complaint.

- Go To 4

No DTCs are present.

- Perform the INTERMITTENT CONDITION diagnostic procedure (Refer to 28 - DTC-Based Diagnostics/MODULE, Powertrain Control (PCM) - Standard Procedure).

4. WIRE HARNESS INSPECTION

1. Clear the DTCs.
2. Attempt to duplicate the customer complaint.
3. Whether the customer complaint can be duplicated or not, make a quick wire harness inspection related to the DTCs that were previously cleared.
4. Check the Powertrain Control Module connectors, the suspected component connection, in-line connectors, wire harness splices, PCM power and ground circuits, and any related fuses.
5. If the DTCs are fuel or air related, check the fuel level and quality.

Were any repairs made that fixed the customer's complaint?

Yes

- Testing complete.

No

- Perform the diagnostic test procedure related to the DTC. (Refer to 28 - DTC-Based Diagnostics/MODULE, Powertrain Control (PCM) - Diagnosis and Testing).

■ PCM / TCM PROGRAMMING

PCM / TCM FLASH PROGRAMING

This procedure will need to be done when one or more of the following situations are true:

1. A vehicle's Powertrain Control Module (PCM) has been replaced.
2. A diagnostic trouble code (DTC) is set P1602 - PCM Not Programmed.
3. An updated calibration or software release is available for either the PCM or TCM ECUs.

This procedure assumes that the wiTECH™ Vehicle Connection Interface (VCI) pod, StarSCAN® and StarMOBILE® devices are configured to your dealership's network with either a wired or wireless connection. The wiTECH™ VCI pod, StarSCAN® and StarMOBILE® must also be running at the latest operating system and software release level. For more help on how to network your StarSCAN® or StarMOBILE® reference the StarSCAN® / StarMOBILE® Quick Start Networking Guide available on 'DealerCONNECT > Service > StarSCAN® and StarMOBILE® Tools > Online Documentation' or at www.dcctools.com, under the Download Center. For the wiTECH™ VCI pod use the "HELP" tab in the wiTECH™ Diagnostic Application.

Table of contents

1. SECTION 1 - PCM / TCM FLASH PROCEDURE **SECTION 1 - PCM / TCM FLASH PROCEDURE**
2. REQUIRED TOOLS/EQUIPMENT **REQUIRED TOOLS/EQUIPMENT:**
3. TECH TIPS and INFORMATION **TECH TIPS and INFORMATION:**
4. PARTS REQUIRED **PARTS REQUIRED**

SECTION 1 - PCM / TCM FLASH PROCEDURE

If using StarSCAN® or StarMOBILE® Desktop Client. Go To **REPAIR PROCEDURE - Using StarSCAN® or StarMOBILE® Desktop Client**

If using wiTECH™ Diagnostic Application. Go To **REPAIR PROCEDURE – wiTECH™ Diagnostic Application**

REPAIR PROCEDURE - Using StarSCAN® or StarMOBILE® Desktop Client

NOTE: If this flash process is interrupted or aborted, the flash should be restarted.

1. Open the hood of the vehicle and install a battery charger. Verify that the charging rate provides a continuous charge of 13.2 - 13.5 volts.
2. Connect the StarSCAN® or StarMOBILE® to the vehicle data link connector located under the steering column and turn the ignition key to the "RUN" position.
3. Power on the StarSCAN® or StarMOBILE®. If the StarMOBILE® is being used, launch the StarMOBILE® Desktop Client and connect to the appropriate StarMOBILE® device.
4. Retrieve the old ECU part number. From the tool's Home screen,
   a. Select "ECU View"
   b. Select "PCM/ECM"
   c. Select "More Options"
   d. Select "ECU Flash"
   e. Record the part number at the top of the Flash PCM/ECM screen for later reference.
5. Program the ECU as follows:
   a. Using the StarSCAN® / StarMOBILE® at the Home screen, select "ECU View"
   b. Select "PCM/ECM"
   c. Select "More Options"
   d. Select "ECU Flash"
   e. Select "Browse for New File" and follow the on screen instructions.
   f. Highlight the appropriate calibration based on the part number recorded in Step 4e, or by using Year/Model/Engine and appropriate emissions selection for the vehicle being worked on.

NOTE: If you are not connected to the vehicle, you may also search for flash files by selecting the "Flash Download" button from the Home screen.

   g. Select "Download to Scantool"
   h. Once the download is complete, select "Close" and then "Back"
   i. Highlight the listed calibration, select "Update Controller" and follow the on screen instructions.
   j. When the PCM/ECM update is complete, select "OK"
   k. Verify that the part number at the top of the Flash PCM/ECM screen has updated to the new part number.

NOTE: If this flash process is interrupted or aborted, the flash should be restarted.

6. Continue to **SECTION 2 - ADDITIONAL PCM / TCM REPLACEMENT PROCEDURES** to complete the process if the ECU has been replaced.
7. Type the necessary information on the “Authorized Modification Label” (p/n 04275086AB) and attach near the VECI label (See Section 3 **SECTION 3 - AUTHORIZED MODIFCATION LABEL**for details).

REPAIR PROCEDURE – wiTECH™ Diagnostic Application

NOTE: If this flash process is interrupted or aborted, the flash should be restarted.

1. Open the hood of the vehicle and install a battery charger. Verify that the charging rate provides a continuous charge of 13.2 – 13.5 volts.
2. Connect the wiTECH™ Vehicle Connection Interface (VCI) pod to the vehicle data link connector located under the steering column and turn the ignition key to the “RUN” position.
3. Launch the wiTECH™ Diagnostic Application and connect to the appropriate wiTECH™ device.
4. From the wiTECH™ Diagnostic Application Home screen,
   a. Select “HELP”
   b. Select “HELP CONTENTS”
   c. Follow the correct "HELP TOPIC" for the ECU being programmed

SECTION 2 - ADDITIONAL PCM / TCM REPLACEMENT PROCEDURES

NOTE: Find the PCM/TCM Type for the vehicle, read and write down the steps, and then go to the step by step instructions for additional information on how to perform these procedures. STEP-BY-STEP INSTRUCTIONS

If an EDC16-U31 PCM/ECM (2.0L) was replaced, perform the following additional steps and/or routines:

1. PCM/ECM Replaced - if WIN equipped
2. Check PCM/ECM VIN - if NOT WIN equipped
3. Program Variant Code

If an EDC16-C2 PCM/ECM (2.2L) was replaced, perform the following additional steps and/or routines:

1. PCM/ECM Replaced - if WIN equipped
2. Check PCM/ECM VIN - if NOT WIN equipped
3. IMA Rapid Calibration Test - Only on 06 PT AND up
4. Injector Quantity Adjustment - Only on 06 PT AND up

If an EDC16-CP31 (3.0L) was replaced, perform the following additional steps and/or routines:

1. PCM/ECM Replaced - if WIN equipped
2. Check PCM/ECM VIN - if NOT WIN equipped
3. Diesel Particulate Filter (Used) Learning
4. NOx Catalyst (New) Initialization
5. Injector Quantity Adjustment
6. IMA Rapid Calibration Test
7. Fuel Mean Value Adaptation Initialization
8. Exhaust Throttle Plate Adaptive Learn Position

If an EDC16-CP31-2 (2.8L) was replaced, perform the following additional steps and/or routines:

1. PCM/ECM Replaced - if WIN equipped
2. Check PCM/ECM VIN - if NOT WIN equipped
3. Injector Quantity Adjustment
4. Program Variant Code
5. ECU Replacement With Value Transfer - if the ECU to be replaced is still responsive
6. ECU Replacement Without Value Transfer - if the ECU to be replaced is NOT responsive
7. Fuel Mean Value Adaptation Initialization
8. IMA Rapid Calibration Test
9. Set Oil Dilution Mass Value

If a CM849 PCM/ECM (5.9L) was replaced, perform the following additional steps and/or routines:

1. PCM/ECM Replaced - if WIN equipped

2. Check PCM/ECM VIN - if NOT WIN equipped

If a CM2100 PCM/ECM (6.7l) was replaced, perform the following additional steps and/or routines:

1. PCM/ECM Replaced - if WIN equipped
2. Check PCM/ECM VIN - if NOT WIN equipped
3. Enable / Disable Vehicle Features - need to enable features
4. Injector Quantity Adjustment
5. Reset Regenerative Filter Timers
6. Mobile DeSoot - NO Minimum Required Soot Load

If an Aisin TCM was replaced, perform the following additional steps and/or routines:

If an EATX TCM was replaced, perform the following additional steps and/or routines:

If an NGC3 TCM ONLY was replaced, perform the following additional steps and/or routines:

If an NGC4 TCM ONLY was replaced, perform the following additional steps and/or routines:

1. Quicklearn

If an EGS TCM was replaced, perform the following additional steps and/or routines:

1. Initialize EGS

STEP-BY-STEP INSTRUCTIONS

Check PCM/ECM VIN

From the “Home” screen, select “ECU View”

- Select “PCM/ECM”
- Select “Misc. Functions”
- Select “Check PCM/ECM VIN” and follow the on screen instructions.
- When complete, select “Finish”

Diesel Particulate Filter (Used) Learning

From the “Home” screen, select “ECU View”

- Select “PCM/ECM”
- Select “Misc. Functions”
- Select “Diesel Particulate Filter (Used) Learning” and follow the on screen instructions.
- When complete, select “Finish”

ECU Replacement with Value Transfer

From the “Home” screen, select “ECU View”

- Select “PCM/ECM”
- Select “Misc. Functions”
- Select “ECU Replacement with Value Transfer” and follow the on screen instructions.
- When complete, select “Finish”

ECU Replacement without Value Transfer

From the “Home” screen, select “ECU View”

- Select “PCM/ECM”
- Select “Misc. Functions”
- Select “ECU Replacement without Value Transfer” and follow the on screen instructions.
- When complete, select “Finish”

Enable / Disable Vehicle Features

From the “Home” screen, select “ECU View”

- Select “PCM/ECM”
- Select “Misc. Functions”
- Select “Enable / Disable Vehicle Features” and follow the on screen instructions.
- When complete, select “Finish”

Exhaust Throttle Plate Adaptive Learn Position

From the “Home” screen, select “ECU View”
- Select “PCM/ECM”
- Select “Misc. Functions”
- Select “Exhaust Throttle Plate Adaptive Learn Position” and follow the on screen instructions.
- When complete, select “Finish”

Fuel Mean Value Adaptation Initialization

From the “Home” screen, select “ECU View”
- Select “PCM/ECM”
- Select “Misc. Functions”
- Select “Fuel Mean Value Adaptation Initialization” and follow the on screen instructions.
- When complete, select “Finish”

IMA Rapid Calibration

From the “Home” screen, select “ECU View”
- Select “PCM/ECM”
- Select “Misc. Functions”
- Select “IMA Rapid Calibration Test” and follow the on screen instructions.
- When complete, select “Finish”

Initialize EGS

From the “Home” screen, select “ECU View”
- Select “PCM/ECM”
- Select “Misc. Functions”
- Select “Initialize EGS” and follow the on screen instructions.
- When complete, select “Finish”

Injector Quantity Adjustment

From the “Home” screen, select “ECU View”
- Select “PCM/ECM”
- Select “Misc. Functions”
- Select “Injector Quantity Adjustment” and follow the on screen instructions.
- When complete, select “Finish”

Mobile DeSoot - NO Minimum Required Soot Load

From the “Home” screen, select “ECU View”
- Select “PCM/ECM”
- Select “Misc. Functions”
- Select “Mobile DeSoot - NO Minimum Required Soot Load” and follow the on screen instructions.
- When complete, select “Finish”

NOx Catalyst (New) Initialization

From the “Home” screen, select “ECU View”
- Select “PCM/ECM”
- Select “Misc. Functions”
- Select “NOx Catalyst (New) Initialization” and follow the on screen instructions.
- When complete, select “Finish”

PCM/ECM Replaced

The vehicle pin (Personal Identification Number) will be required to complete the routine. This information may be obtained in three ways:
1. The original selling invoice
2. DealerCONNECT > Parts > Key Codes
3. Contacting the District Manager.

From the “Home” screen, select “ECU View”

- Select “WIN”
- Select “Misc. Functions”
- Select “PCM/ECM Replaced” and follow the on screen instructions.
- When complete, select “Finish”

Program Variant Code

From the “Home” screen, select “ECU View”
- Select “PCM/ECM”
- Select “Misc. Functions”
- Select “Program Variant Code” and follow the on screen instructions.
- When complete, select “Finish”

Quicklearn

From the “Home” screen, select “ECU View”
- Select “PCM/ECM”
- Select “Misc. Functions”
- Select “Quicklearn” and follow the on screen instructions.
- When complete, select “Finish”

Reset Regenerative Filter Timers

From the “Home” screen, select “ECU View”
- Select “PCM/ECM”
- Select “Misc. Functions”
- Select “Reset Regenerative Filter Times” and follow the on screen instructions.
- When complete, select “Finish”

Set Oil Dilution Mass Value

From the “Home” screen, select “ECU View”
- Select “PCM/ECM”
- Select “Misc. Functions”
- Select “Set Oil Dilution Mass Value” and follow the on screen instructions.
- When complete, select “Finish”

SECTION 3 - AUTHORIZED MODIFCATION LABEL

NOTE: The following step is required by law when reprogramming a PCM/ECM and/or TCM.

Type the necessary information on the “Authorized Modification Label” and attach near the VECI label.

1. Powertrain Control / Transmission Control Module Part Numbers (Insert P/Ns) Used
2. Change Authority: TSB XX--XX
3. Dealer Code: XXXXX
4. Date: XX-XX-XX

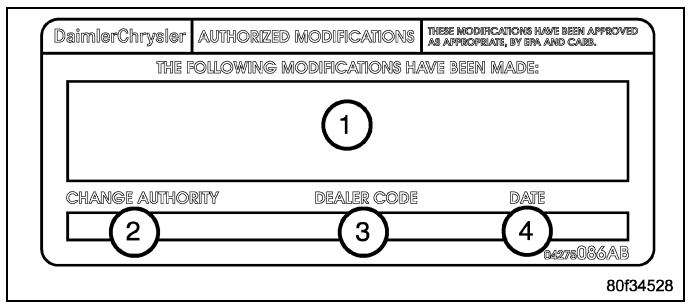

REQUIRED TOOLS/EQUIPMENT:

StarSCAN®	StarMOBILE®	wiTECH™
Battery Charger	Battery Charger	Battery Charger
StarSCAN® Tool Kit	StarMOBILE® Tool Kit	wiTECH™ Tool Kit
StarSCAN® Vehicle Cable	StarMOBILE® Vehicle Cable	wiTECH™ Vehicle Cable
	TechCONNECT PC or equivalent	TechCONNECT PC or equivalent
		wiTECH™ Diagnostic Application

TECH TIPS and INFORMATION:

CAUTION: Extreme care must be taken when programming a calibration into a generic PCM. Do not randomly select a calibration. Once a calibration is selected and programmed, the controller cannot be reprogrammed to a different calibration. The module can only be reprogrammed to a more recent version of that calibration.

1. The wiTECH™ Diagnostic Application is the preferred method for flashing any Chrysler vehicle ECU. For more information, training tutorials are available under the "HELP" tab in the wiTECH™ Diagnostic Application or at www.dcctools.com, under the 'Training Aids' link.
2. To use the StarMOBILE® in Pass-Through Mode requires that your StarMOBILE® is connected to the dealerships network via a wired or wireless connection. For more information on how to use the StarMOBILE in Pass-Through Mode see the StarMOBILE® training tutorials available on 'DealerCONNECT > Service > StarSCAN® and StarMOBILE® Tools > Training Aids' link or at www.dcctools.com, under the 'Training Aids' link.
3. If the flash process is interrupted or aborted, the flash should be restarted.
4. Due to the PCM/ECM / TCM programming procedure, a DTC may be set in other ECUs within the vehicle. Some DTCs may cause the MIL to illuminate. From the "Home" screen select "System View". Then select "All DTCs". Press "Clear All Stored DTCs" if there are any DTCs shown on the list.
5. Do not allow the battery charger to time out or the charging rate to climb above 13.5 Volts during the flash process.
6. The StarSCAN® and StarMOBILE® diagnostic tools fully support Internet connectivity and must be configured for your dealership's network. For help on setting up your StarSCAN® / StarMOBILE® for the dealership's network, refer to the StarSCAN® / StarMOBILE® Quick Start Networking Guide available on 'DealerCONNECT > Service > StarSCAN® and StarMOBILE® Tools > Online Documentation' or at www.dcctools.com, under the download center.
7. The operating software in the StarSCAN® and StarMOBILE® must be programmed with the latest software release level. The software level is visible in the blue header at the top of the StarSCAN® and StarMOBILE® Desktop Client screens. For instructions on how to update your scan tool, refer to the StarSCAN® / StarMOBILE® Software Update guide available on 'DealerCONNECT > Service > StarSCAN® and StarMOBILE® Tools > Online Documentation' or at www.dcctools.com, under the download center.

PARTS REQUIRED

Qty	Part Number	DESCRIPTION
1	04275086AB	Label, Authorized Modification

■ POWERTRAIN VERIFICATION TEST

For a complete wiring diagram, **refer to the Wiring Information**.

1. SELECTING THE PROPER VERIFICATION TEST

The following verification test are for different repairs. Select the appropriate Verification test for the repair that has been completed. If the battery was disconnected for any reason, you must perform the Battery Reconnection procedure in the 8F-Engine Systems section of the Service Information.

Speed Control repair

- Go To 2

Charging System repair

- Go To 3

Evap System repair

- Go To 4

All other repairs

- Go To 5

2. SPEED CONTROL VERIFICATION TEST

NOTE: If this vehicle is equipped with an Electronic Throttle Control system and the APP Sensors, PCM or Throttle Body Assembly have been replaced, use the scan tool to perform the ETC RELEARN function.

NOTE: After completing the Powertrain Verification Test the Transmission Verification Test must be performed.

NOTE: If the PCM has been replaced and the correct VIN and mileage have not been programmed, a DTC will set in the ABS Module, Airbag Module and the Wireless Control Module (WCM) or Wireless Ignition Node (WIN).

NOTE: If the vehicle is equipped with a Sentry Key Remote Entry, Secret Key data must be updated. Refer to the Service Information for the PCM, WCM/WIN and the Transponder (ignition key) for programming information. Using the scan tool, program the Secret Key information into the PCM using the PCM replaced function under the WCM menu.

1. Inspect the vehicle to make sure that all engine components are properly installed and connected.
2. Connect the scan tool to the data link connector and erase all codes.
3. Turn the speed control ON (if equipped, cruise light will be on).
4. Depress and release the SET Switch when the vehicle speed is greater than 56 km/h (35 mph). The speed control should engage and hold the selected speed.
5. Press and hold the RESUME/ACCEL Switch. The vehicle speed should increase by at least 3 km/h (2 mph).
6. Press and hold the COAST switch. The vehicle speed should decrease.
7. Using caution, press and release the brake pedal. The speed control should disengage.
8. Bring the vehicle speed back up to 56 km/h (35 mph).
9. Press the RESUME/ACCEL switch. The speed control should resume the previously set speed.
10. Hold down the SET switch. The vehicle should decelerate.
11. Make sure vehicle speed is greater than 56 km/h (35 mph) and release the SET Switch. The vehicle should adjust and set a new vehicle speed.
12. Press and release the CANCEL switch. The speed control should disengage.
13. Bring the vehicle speed back up above 56 km/h (35 mph) and engage speed control.
14. Turn the Speed Control Off. (Cruise light will be off). The speed control should disengage.

Did the Speed Control pass the above test?

Yes

- Repair is complete.

No

- Check for any related Technical Service Bulletins and/or (Refer to 28 - DTC-Based Diagnostics/MODULE, Powertrain Control (PCM) - Diagnosis and Testing) and perform the appropriate diagnostic procedure.

3. CHARGING SYSTEM VERIFICATION TEST

NOTE: If this vehicle is equipped with an Electronic Throttle Control system and the APP Sensors, PCM or Throttle Body Assembly have been replaced, use the scan tool to perform the ETC RELEARN function.

NOTE: After completing the Powertrain Verification Test the Transmission Verification Test must be performed.

NOTE: If the PCM has been replaced and the correct VIN and mileage have not been programmed, a DTC will set in the ABS Module, Airbag Module and the Wireless Control Module (WCM) or Wireless Ignition Node (WIN).

NOTE: If the vehicle is equipped with a Sentry Key Remote Entry, Secret Key data must be updated. Refer to the Service Information for the PCM, WCM/WIN and the Transponder (ignition key) for programming information. Using the scan tool, program the Secret Key information into the PCM using the PCM replaced function under the WCM menu.

1. Inspect the vehicle to make sure that all components related to the repair are properly installed and connected.
2. With the scan tool, clear DTCs.
3. Perform generator output test. Refer to the appropriate Service Information as necessary.
4. Start the engine and set engine speed to 2000 RPM for at least thirty seconds.
5. Cycle the ignition key off and on.
6. With the scan tool, read the DTCs.

Are any DTCs or symptoms remaining?

Yes

- Check for any Technical Service Bulletins and/or (Refer to 28 - DTC-Based Diagnostics/MODULE, Powertrain Control (PCM) - Diagnosis and Testing) and perform the appropriate diagnostic procedure.

No

- Repair is complete.

4. EVAPORATIVE EMISSION VERIFICATION TEST

NOTE: If this vehicle is equipped with an Electronic Throttle Control system and the APP Sensors, PCM or Throttle Body Assembly have been replaced, use the scan tool to perform the ETC RELEARN function.

1. Install the Evaporative Emission Leak Detector (EELD) 8404B according to the instructions in the previous DTC table.
2. Set the smoke/air control switch to AIR.
3. Insert the tester's AIR supply tip (clear hose) into the appropriate calibration orifice on the tester's control panel (based on DTC leak size).
4. Press the remote smoke/air start button.
5. Position the red flag on the air flow meter so it is aligned with the indicator ball.
6. When the calibration is complete, release the remote button. The EELD flow meter is now calibrated in liters per minute to the size of leak indicated by the DTC set in the PCM.
7. Install the service port adapter 8404-14 on the vehicle's service port.
8. Connect the Air supply hose from the EELD to the vehicle.
9. Press the remote button to activate AIR flow.

NOTE: Larger volume fuel tanks, lower fuel levels or if the vehicle is equipped with a Flow Management Valve may indicate high flow and will require four to five minutes to fill.

10. Compare the flow meter indicator ball reading to the red flag.
11. ABOVE the red flag indicates a leak present.
12. BELOW the red flag indicates a sealed system.
13. If the indicator ball shows a leak present, perform the smoke test indicated in the previous test and identify the leak and repair. Perform this verification test when the repair is complete.

Did the indicator ball indicate the a leak is present?

Yes

- Repeat the DTC test to identify the leak and repair.

No

- Repair is complete.

5. POWERTRAIN VERIFICATION TEST

NOTE: After completing the Powertrain Verification Test the Transmission Verification Test must be performed.

NOTE: The Cam/Crank Variation Relearn must be performed anytime there has been a repair/replacement made to a powertrain system, for example: flywheel, valvetrain, camshaft and/or crankshaft sensors or components.

NOTE: If the PCM has been replaced and the correct VIN and mileage have not been programmed, a DTC will set in the ABS Module, Airbag Module and the Wireless Control Module (WCM) or Wireless Ignition Node (WIN).

NOTE: If the vehicle is equipped with a Sentry Key Remote Entry, Secret Key data must be updated. Refer to the Service Information for the PCM, WCM/WIN and the Transponder (ignition key) for programming information. Using the scan tool, program the Secret Key information into the PCM using the PCM replaced function under the WCM menu.

NOTE: If this vehicle is equipped with an Electronic Throttle Control system and the APP Sensors, PCM or Throttle Body Assembly have been replaced, use the scan tool to perform the ETC RELEARN function.

NOTE: When replacing an O2 Sensor, the PCM RAM memory must be cleared, either by disconnecting the PCM C1 connector or momentarily disconnecting the Battery negative terminal.

1. The NGC learns the characteristics of each O2 heater element and these old values should be cleared when installing a new O2 sensor. The customer may experience driveability issues if this is not performed.
2. Inspect the vehicle to make sure that all engine components are properly installed and connected. Reassemble and reconnect components as necessary.
3. Connect the scan tool to the data link connector.
4. Make sure the fuel tank has at least a quarter tank of fuel. Turn off all accessories.
5. If the Catalyst was replaced, with the scan tool select "Catalyst Replaced" under the Miscellaneous Menu Option.
6. If a repair/replacement was made to a powertrain system, with the scan tool select the "Cam Crank Relearn" procedure under PCM Miscellaneous Menu Option.
7. If a Comprehensive Component DTC was repaired, perform steps 9- 11. If a Major OBDII Monitor DTC was repaired skip those steps and continue verification.
8. After the ignition has been off for at least 10 seconds, restart the vehicle and run two minutes.
9. With the scan tool, monitor the appropriate pre-test enabling conditions until all conditions have been met. Once the conditions have been met, switch screen to the appropriate OBDII monitor, (Audible beeps when the monitor is running).
10. If the repaired OBDII trouble code has reset or was seen in the monitor while on the road test, the repair is not complete. Check for any related technical service bulletins or flash updates and (Refer to 28 - DTC-Based Diagnostics/MODULE, Powertrain Control (PCM) - Diagnosis and Testing) and perform the appropriate diagnostic procedure.
11. If the conditions cannot be duplicated, erase all DTCs with the scan tool.
12. If another DTC has set, (Refer to 28 - DTC-Based Diagnostics/MODULE, Powertrain Control (PCM) - Diagnosis and Testing) and follow the path specified for that DTC.

Did the OBDII Monitor run successfully and has the Good Trip Counter changed to one or more?

Yes

- Repair is complete.

No

- Check for any related Technical Service Bulletins and/or (Refer to 28 - DTC-Based Diagnostics/MODULE, Powertrain Control (PCM) - Diagnosis and Testing) and perform the appropriate diagnostic procedure.

MODULE, Totally Integrated Power (TIPM)

Diagnosis and Testing

■ B107C-A/C REFRIGERANT PRESSURE SENSOR CIRCUIT HIGH

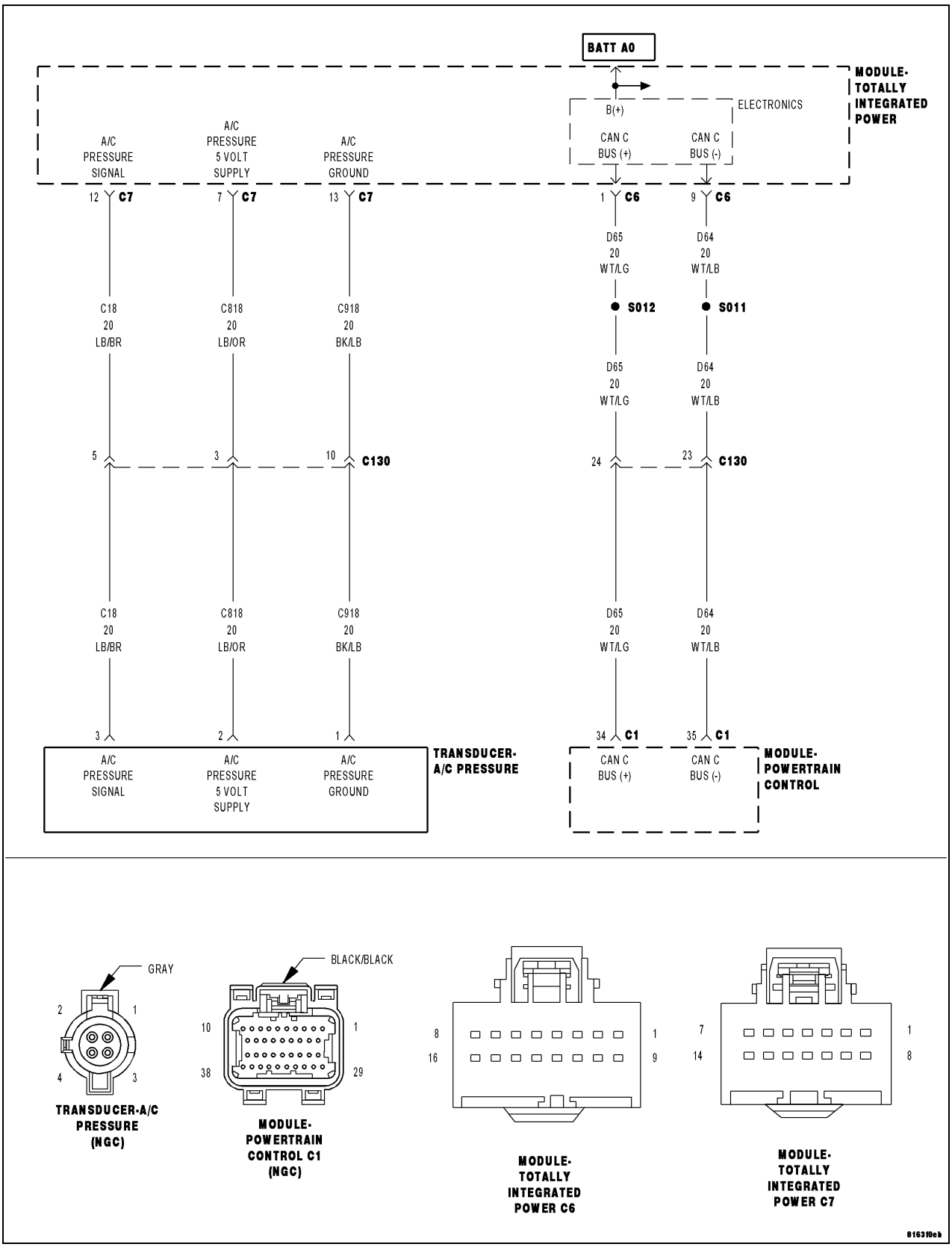

For a complete wiring diagram, **refer to the Wiring Information**.

- **When Monitored:**
  With the ignition on.
- **Set Condition:**
  If the A/C Heater Control receives a message over the BUS reporting that the A/C refrigerant pressure is high.

(Refer to 28 - DTC-Based Diagnostics/MODULE, Powertrain Control (PCM) - Diagnosis and Testing) and perform the diagnostic procedure for P0533.

B10E9-BLOWER MOTOR CONTROL CIRCUIT LOW

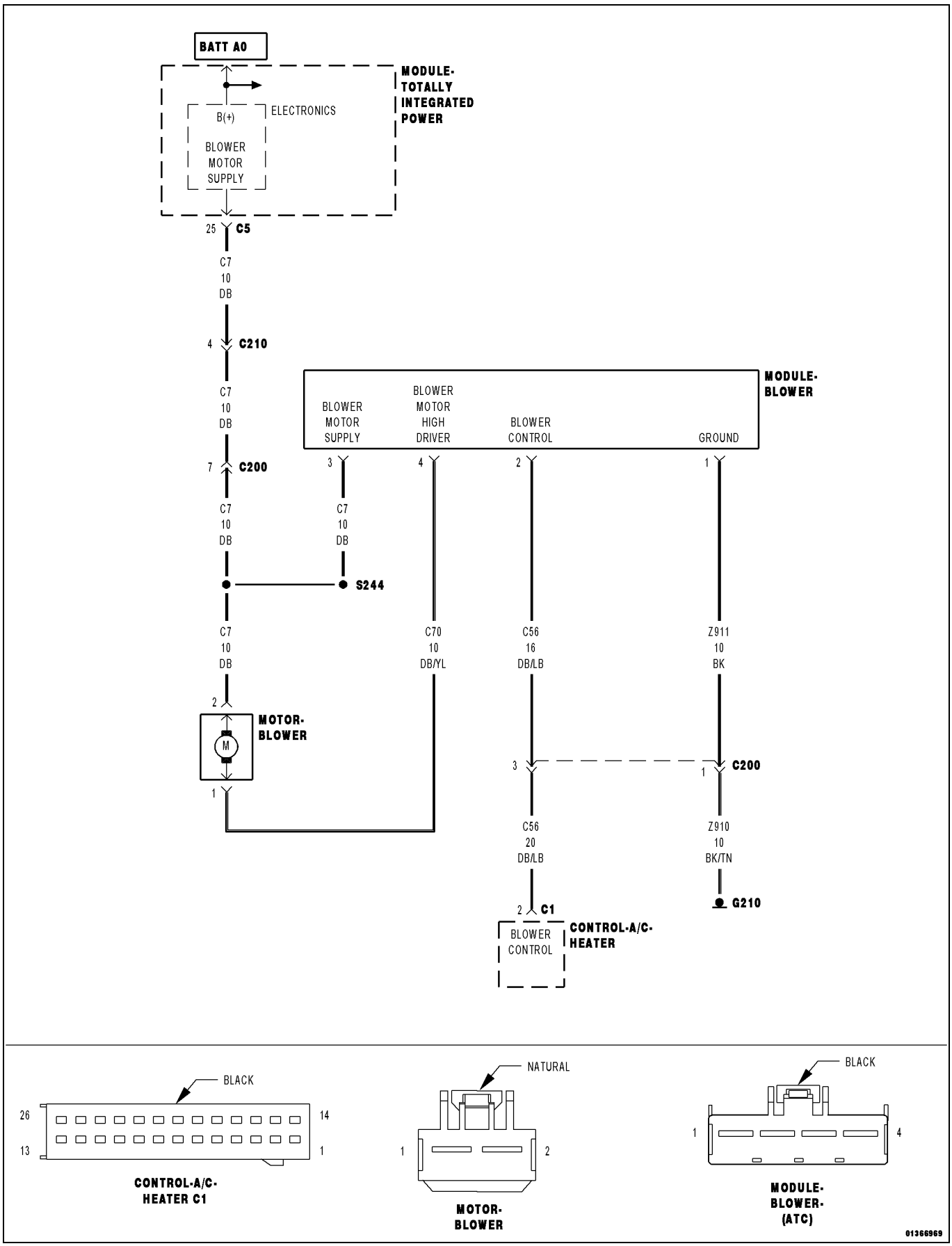

For a complete wiring diagram, **refer to the Wiring Information**.

Theory of Operation

The Totally Integrated Power Module (TIPM) monitors the (C7) Blower Motor Supply circuit to the Blower Motor for correct operation. The DTC sets when the current draw on the circuit is greater than the calibrated amount.

- **When Monitored:**
  With the ignition on.
- **Set Condition:**
  If the Totally Integrated Power Module (TIPM) detects a short to ground on the (C7) Blower Motor Supply circuit for greater than 10 seconds, when blower motor operation is being requested.

Possible Causes
(C7) BLOWER MOTOR SUPPLY CIRCUIT SHORTED TO GROUND
BLOWER MOTOR
TOTALLY INTEGRATED POWER MODULE (TIPM)

1. VERIFY THE DIAGNOSTIC TROUBLE CODE (DTC) IS ACTIVE

1. Turn the blower control switch to off.
2. With the scan tool, erase DTCs.
3. Cycle the ignition switch from off to on.
4. Turn the blower control switch to on and wait 10 seconds.
5. With the scan tool, read DTCs.

Does the scan tool display active DTC B10E9-BLOWER MOTOR CONTROL CIRCUIT LOW?

Yes

- Go To 2

No

- Test complete, the condition or conditions that originally set this DTC are not present at this time. Using the wiring diagrams as a guide, check all related splices and connectors for signs of water intrusion, corrosion, pushed out or bent terminals, and correct pin tension.
- Perform the BODY VERIFICATION TEST. (Refer to 28 - DTC-Based Diagnostics/MODULE, Totally Integrated Power (TIPM) - Standard Procedure).

2. CHECK FOR ACTIVE DTC B10E9-BLOWER MOTOR CONTROL CIRCUIT LOW WITH THE BLOWER MOTOR HARNESS CONNECTOR DISCONNECTED

1. Turn the blower control switch to off.
2. Turn the ignition off.
3. Disconnect the Blower Motor harness connector.
4. Turn the ignition on.
5. With the scan tool, erase DTCs.
6. Cycle the ignition switch from off to on.
7. Turn the blower control switch to on and wait 10 seconds.
8. With the scan tool, read DTCs.

Does the scan tool display active DTC B10E9-BLOWER MOTOR CONTROL CIRCUIT LOW?

Yes

- Go To 3

No

- Replace the Blower Motor in accordance with the Service Information.
- Perform the BODY VERIFICATION TEST. (Refer to 28 - DTC-Based Diagnostics/MODULE, Totally Integrated Power (TIPM) - Standard Procedure).

3. CHECK THE (C7) BLOWER MOTOR SUPPLY CIRCUIT FOR A SHORT TO GROUND

1. Turn the ignition off.
2. Disconnect the TIPM C5 harness connector.
3. Disconnect the Blower Module harness connector (if equipped).
4. Measure the resistance of the (C7) Blower Motor Supply circuit between ground and the Blower Motor harness connector.

Is the resistance greater than 10K Ohms?

Yes

- Replace the Totally Integrated Power Module (TIPM) in accordance with the Service Information.
- Perform the BODY VERIFICATION TEST. (Refer to 28 - DTC-Based Diagnostics/MODULE, Totally Integrated Power (TIPM) - Standard Procedure).

No

- Repair the short to ground in the (C7) Blower Motor Supply circuit.
- Perform the BODY VERIFICATION TEST. (Refer to 28 - DTC-Based Diagnostics/MODULE, Totally Integrated Power (TIPM) - Standard Procedure).

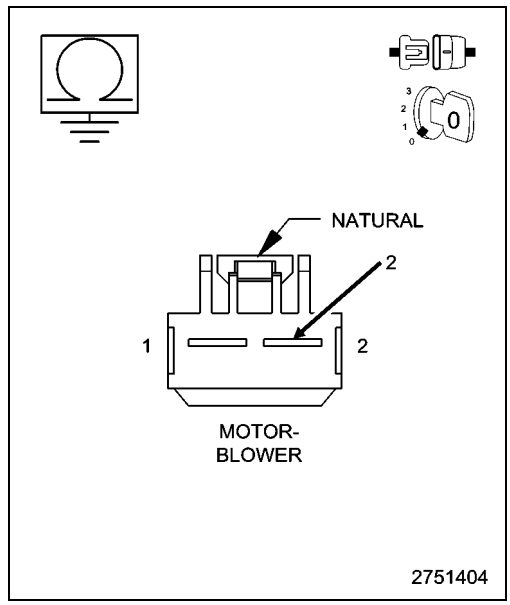

B10ED-REAR DEFROST CONTROL CIRCUIT OVERCURRENT

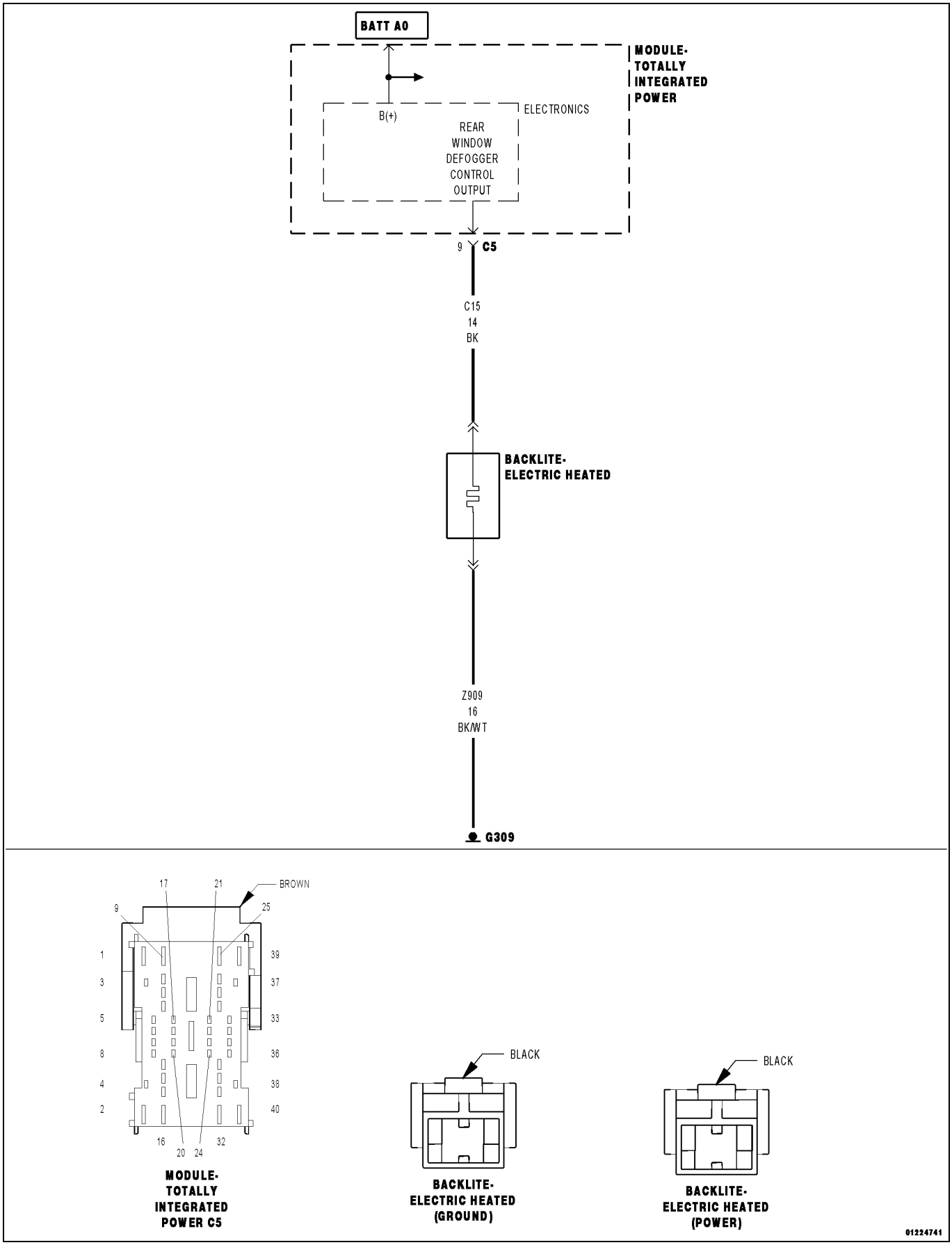

For a complete wiring diagram, **refer to the Wiring Information**.

- **When Monitored:**
  With the ignition on and battery voltage greater than 10.4 Volts.
- **Set Condition:**
  If the Totally Integrated Power Module (TIPM) detects an overcurrent condition on the (C15) Rear Window Defogger Control Output circuit.

Possible Causes
(C15) REAR WINDOW DEFOGGER CONTROL OUTPUT CIRCUIT SHORTED TO GROUND
DEFOGGER GRID
TOTALLY INTEGRATED POWER MODULE (TIPM)

1. TEST FOR INTERMITTENT CONDITION

NOTE: Look closely at the temperatures at which this Diagnostic Trouble Code (DTC) set. Low battery Voltage can also cause excessive current draw in very hot and very cold ambient temperatures. Make sure the battery can pass a load test before continuing.

1. Turn the ignition on.
2. Using a scan tool, record and erase DTCs.
3. Cycle the ignition from on to off.
4. Turn the ignition on.
5. Operate the Rear Defogger Switch several times.
6. Using a scan tool, read DTCs.

Is the DTC Active at this time?

Yes

- Go To 2

No

- The conditions that caused this code to set are not present at this time. Using the wiring diagram/schematic as a guide, inspect the wiring and connectors. Look for chafed, pierced, pinched, or partially broken wires and broken, bent, pushed out, spread, corroded, or contaminated terminals.
- Perform the BODY VERIFICATION TEST. (Refer to 28 - DTC-Based Diagnostics/MODULE, Totally Integrated Power (TIPM) - Standard Procedure).

2. CHECK (C15) REAR WINDOW DEFOGGER CONTROL OUTPUT CIRCUIT FOR A SHORT TO GROUND

1. Turn the ignition off.
2. Disconnect the TIPM C5 harness connector.
3. Disconnect the Electric Heated Backlite (Power) connector.

NOTE: Check connectors. Clean and repair as necessary.

4. Measure the resistance of the (C15) Rear Window Defogger Control Output circuit between ground and the Electric Heated Backlite (Power) connector.

Is the resistance below 10K Ohms?

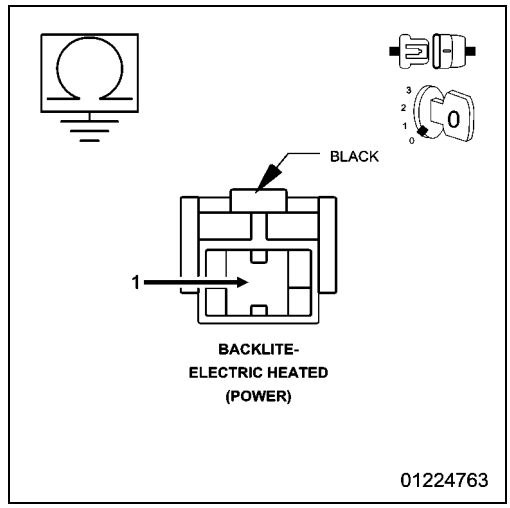

Yes

- Repair the (C15) Rear Window Defogger Control Output circuit for a short to ground.
- Perform the BODY VERIFICATION TEST. (Refer to 28 - DTC-Based Diagnostics/MODULE, Totally Integrated Power (TIPM) - Standard Procedure).

No

- Go To 3

3. CHECK TIPM REAR WINDOW DEFOGGER CONTROL OUTPUT FUNCTION

1. Reconnect the TIPM C5 harness connector.
2. Connect a 12-Volt test light between the (C15) Rear Window Defogger Control Output circuit at the Electric Heated Backlite (Power) connector and a good clean chassis ground.
3. Turn the ignition on.
4. Using a scan tool, erase DTCs.
5. Cycle the ignition from on to off.
6. Turn the ignition on.
7. Using a scan tool, actuate the Rear Window Defogger Control Output.

Does the test light illuminate brightly?

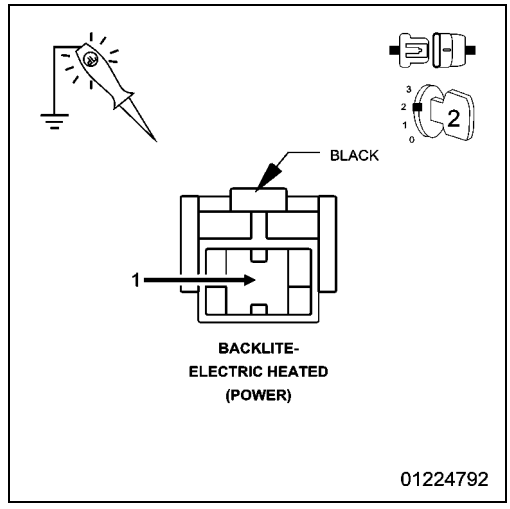

Yes

- Repair the Rear Defogger Grid in accordance with the Service Information.
- Perform the BODY VERIFICATION TEST. (Refer to 28 - DTC-Based Diagnostics/MODULE, Totally Integrated Power (TIPM) - Standard Procedure).

No

- Replace the Totally Integrated Power Module (TIPM) in accordance with the Service Information.
- Perform the BODY VERIFICATION TEST. (Refer to 28 - DTC-Based Diagnostics/MODULE, Totally Integrated Power (TIPM) - Standard Procedure).

B162B-LEFT LOW BEAM CONTROL CIRCUIT LOW

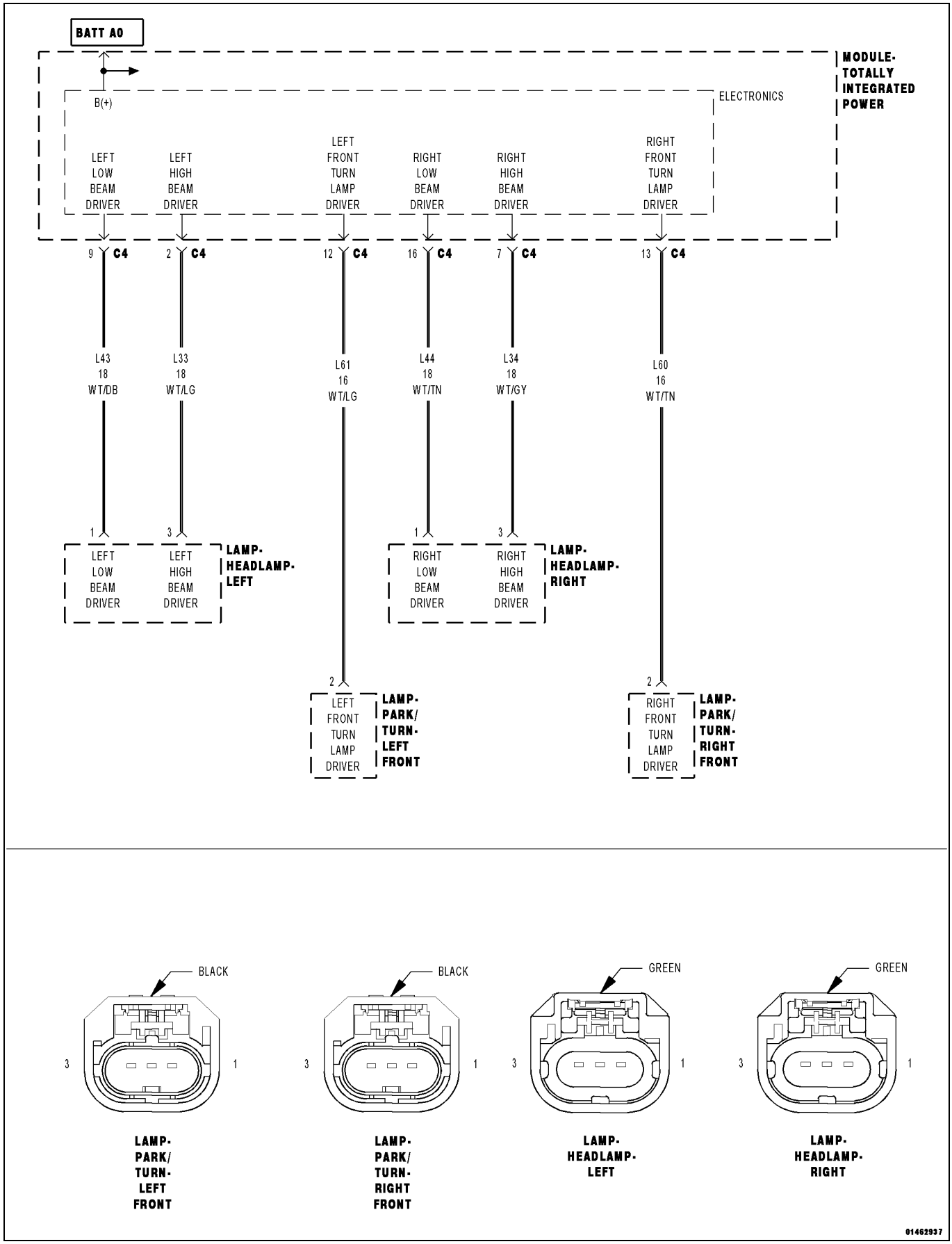

For a complete wiring diagram, **refer to the Wiring Information**.

- **When Monitored:**
  With the Headlamps active.
- **Set Condition:**
  When the Totally Integrated Power Module (TIPM) detects a low condition in the (L43) Left Low Beam Driver circuit.

Possible Causes
(L43) LEFT LOW BEAM DRIVER CIRCUIT SHORTED TO GROUND
TOTALLY INTEGRATED POWER MODULE (TIPM)

1. INTERMITTENT CONDITION

1. Turn the ignition on.
2. With the scan tool, clear all TIPM DTCs.
3. Turn the Headlamps on.
4. With the scan tool, read DTCs.

Does the scan tool display DTC B162B-LEFT LOW BEAM CONTROL CIRCUIT LOW?

Yes

- Go To 2

No

- The condition that caused the symptom is currently not present. Inspect the related wiring for a possible intermittent condition. Look for any chafed, pierced, pinched, or partially broken wires.
- Perform the BODY VERIFICATION TEST. (Refer to 28 - DTC-Based Diagnostics/MODULE, Totally Integrated Power (TIPM) - Standard Procedure).

2. (L43) LEFT LOW BEAM DRIVER CIRCUIT SHORTED TO GROUND

1. Turn the ignition off.
2. Disconnect the TIPM C4 harness connector.
3. Disconnect the Left Headlamp harness connector.
4. Measure the resistance between ground and the (L43) Left Low Beam Driver circuit.

Is the resistance below 5.0 Ohms?

Yes

- Repair the short to ground in the (L43) Left Low Beam Driver circuit.
- Perform the BODY VERIFICATION TEST. (Refer to 28 - DTC-Based Diagnostics/MODULE, Totally Integrated Power (TIPM) - Standard Procedure).

No

- Replace the Totally Integrated Power Module (TIPM) in accordance with the Service Information.
- Perform the BODY VERIFICATION TEST. (Refer to 28 - DTC-Based Diagnostics/MODULE, Totally Integrated Power (TIPM) - Standard Procedure).

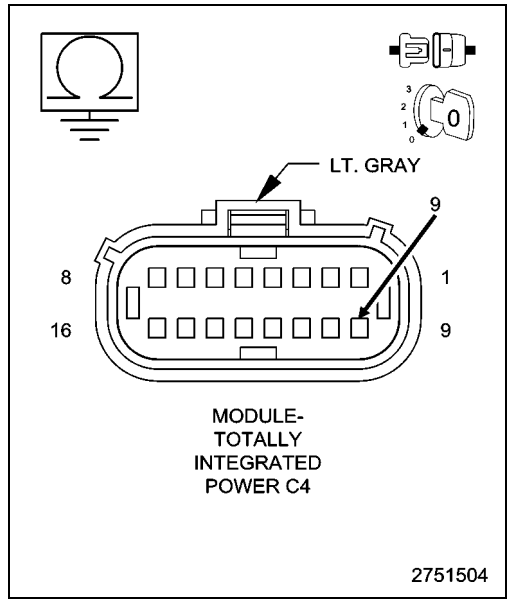

B162D-LEFT LOW BEAM CONTROL CIRCUIT OPEN

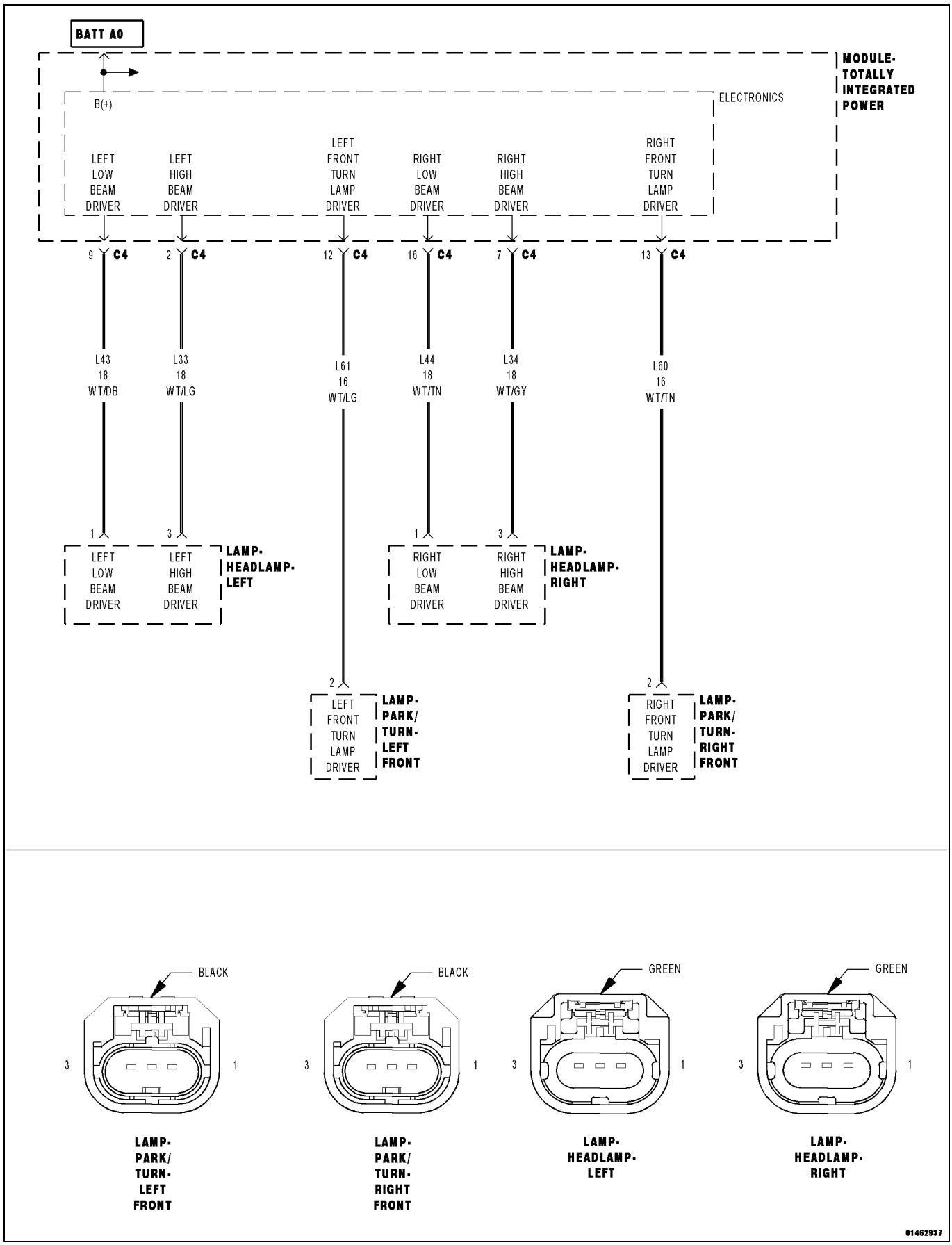

For a complete wiring diagram, **refer to the Wiring Information**.

- **When Monitored:**
  With the Headlamps active.
- **Set Condition:**
  When the Totally Integrated Power Module (TIPM) detects an open in the (L43) Left Low Beam Driver circuit.

Possible Causes
(L43) LEFT LOW BEAM DRIVER CIRCUIT OPEN
LEFT LOW BEAM BULB
TOTALLY INTEGRATED POWER MODULE (TIPM)

1. INTERMITTENT CONDITION

1. Turn the ignition on.
2. With the scan tool, clear all TIPM DTCs.
3. Turn the Headlamps on.
4. With the scan tool, read the DTCs.

Does the scan tool display DTC B162D-LEFT LOW BEAM CONTROL CIRCUIT OPEN?

Yes

- Go To 2

No

- The condition that caused the symptom is currently not present. Inspect the related wiring for a possible intermittent condition. Look for any chafed, pierced, pinched, or partially broken wires.
- Perform the BODY VERIFICATION TEST. (Refer to 28 - DTC-Based Diagnostics/MODULE, Totally Integrated Power (TIPM) - Standard Procedure).

2. LEFT LOW BEAM BULB

1. Turn the ignition off.
2. Inspect the Left Low Beam Bulb Assembly.

Is the inoperative bulb OK?

Yes

- Go To 3

No

- Replace the inoperative bulb in accordance with the Service Information.
- Perform the BODY VERIFICATION TEST. (Refer to 28 - DTC-Based Diagnostics/MODULE, Totally Integrated Power (TIPM) - Standard Procedure).

3. (L43) LEFT LOW BEAM DRIVER CIRCUIT OPEN

1. Disconnect the TIPM C4 harness connector.
2. Disconnect the Left Headlamp Lamp harness connector.
3. Measure the resistance of the (L43) Left Low Beam Driver circuit between the Left Headlamp Lamp harness connector and the TIPM C4 harness connector.

Is the resistance above 5.0 Ohms?

Yes

- Repair the open in the (L43) Left Low Beam Driver circuit.
- Perform the BODY VERIFICATION TEST. (Refer to 28 - DTC-Based Diagnostics/MODULE, Totally Integrated Power (TIPM) - Standard Procedure).

No

- Replace the Totally Integrated Power Module (TIPM) in accordance with the Service Information.
- Perform the BODY VERIFICATION TEST. (Refer to 28 - DTC-Based Diagnostics/MODULE, Totally Integrated Power (TIPM) - Standard Procedure).

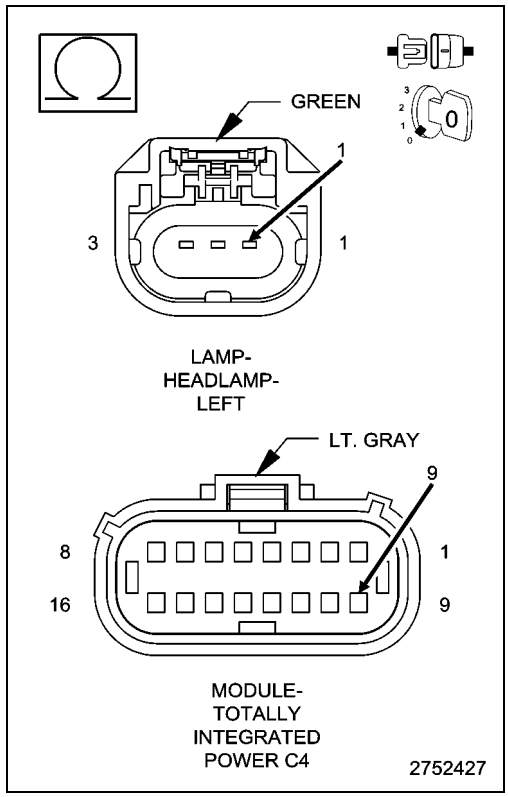

B162F-RIGHT LOW BEAM CONTROL CIRCUIT LOW

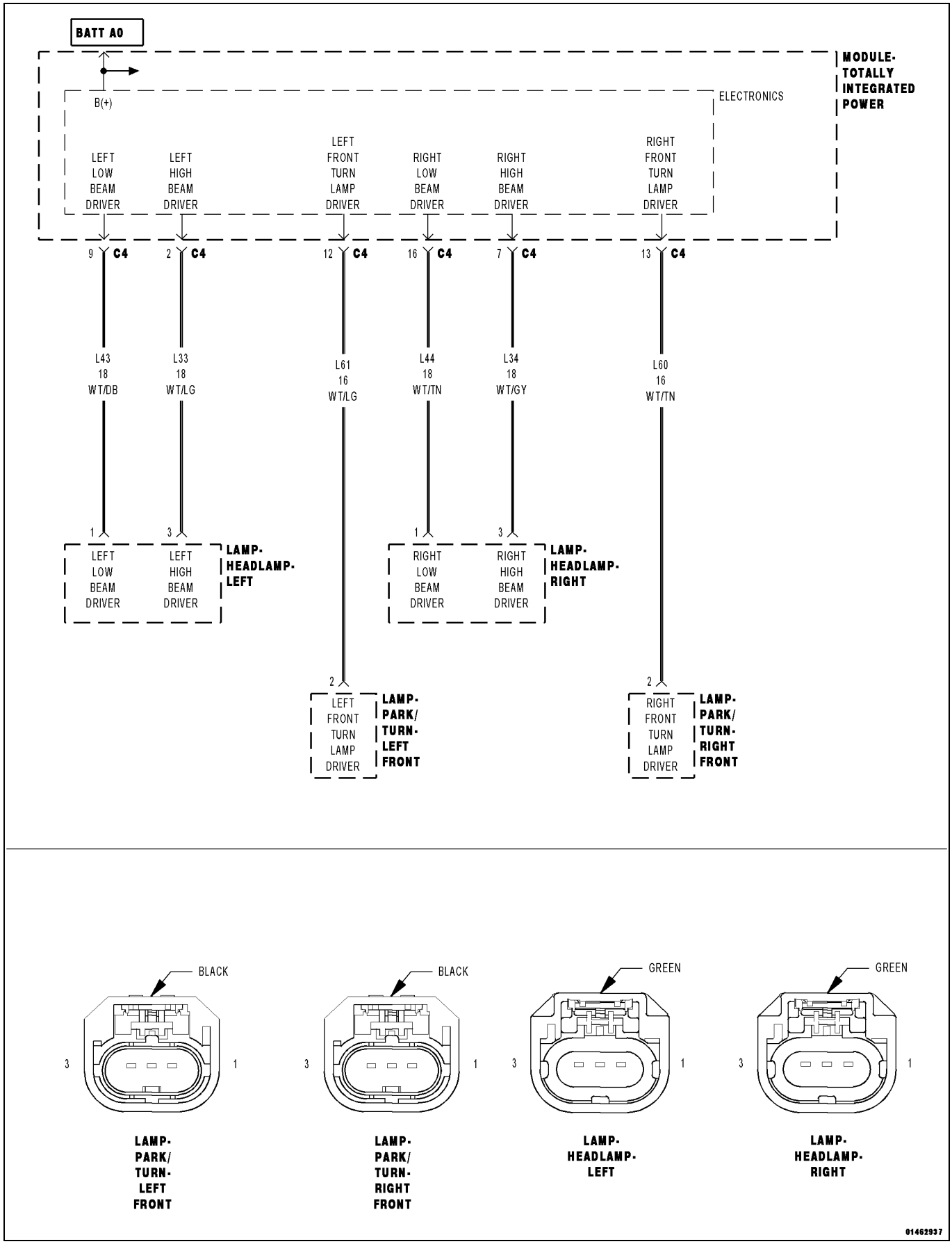

For a complete wiring diagram, **refer to the Wiring Information**.

- **When Monitored:**
  With the Headlamps active.
- **Set Condition:**
  When the Totally Integrated Power Module (TIPM) detects a low condition in the (L44) Right Low Beam Driver circuit.

Possible Causes
(L44) RIGHT LOW BEAM DRIVER CIRCUIT SHORTED TO GROUND
TOTALLY INTEGRATED POWER MODULE (TIPM)

1. INTERMITTENT CONDITION

1. Turn the ignition on.
2. With the scan tool, clear all TIPM DTCs.
3. Turn the Headlamps on.
4. With the scan tool, read DTCs.

Does the scan tool display DTC B162F-RIGHT LOW BEAM CONTROL CIRCUIT LOW?

Yes

- Go To 2

No

- The condition that caused the symptom is currently not present. Inspect the related wiring for a possible intermittent condition. Look for any chafed, pierced, pinched, or partially broken wires.
- Perform the BODY VERIFICATION TEST. (Refer to 28 - DTC-Based Diagnostics/MODULE, Totally Integrated Power (TIPM) - Standard Procedure).

2. (L44) RIGHT LOW BEAM DRIVER CIRCUIT

1. Turn the ignition off.
2. Disconnect the TIPM C4 harness connector.
3. Disconnect the Right Headlamp Lamp harness connector.
4. Measure the resistance between ground and the (L44) Right Low Beam Driver circuit.

Is the resistance below 5.0 Ohms?

Yes

- Repair the short to ground in the (L44) Right Low Beam Driver circuit.
- Perform the BODY VERIFICATION TEST. (Refer to 28 - DTC-Based Diagnostics/MODULE, Totally Integrated Power (TIPM) - Standard Procedure).

No

- Replace the Totally Integrated Power Module (TIPM) in accordance with the Service Information.
- Perform the BODY VERIFICATION TEST. (Refer to 28 - DTC-Based Diagnostics/MODULE, Totally Integrated Power (TIPM) - Standard Procedure).

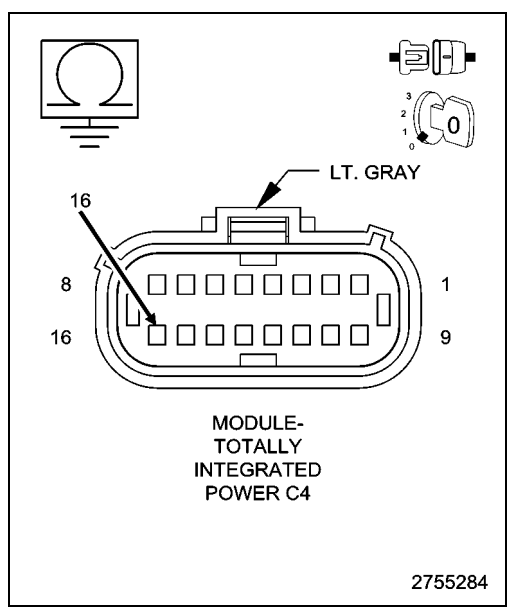

B1631-RIGHT LOW BEAM CONTROL CIRCUIT OPEN

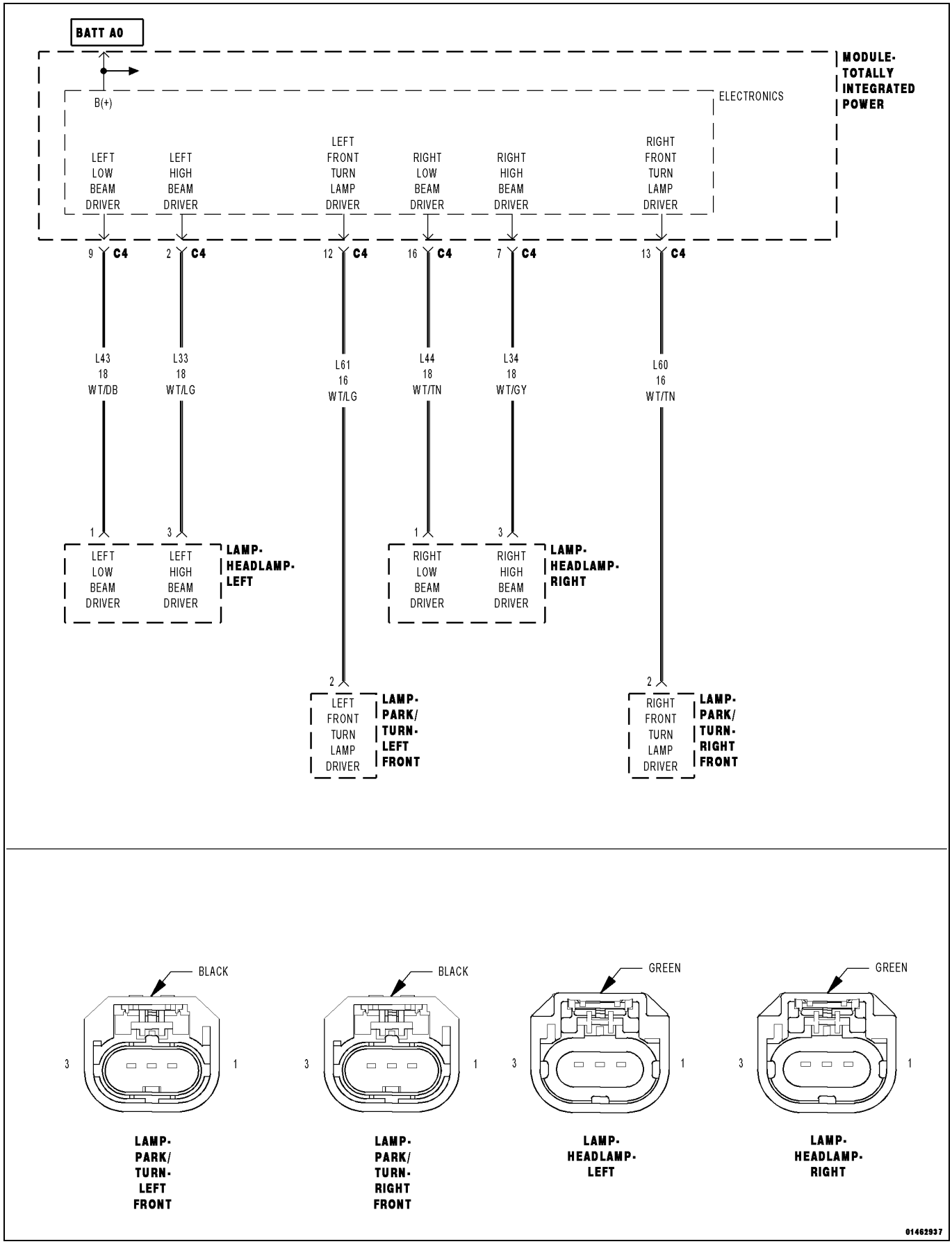

For a complete wiring diagram, **refer to the Wiring Information**.

- **When Monitored:**
  With the Headlamps active.
- **Set Condition:**
  When the Totally Integrated Power Module (TIPM) detects an open in the (L44) Right Low Beam Driver circuit.

Possible Causes
(L44) RIGHT LOW BEAM DRIVER CIRCUIT SHORTED TO VOLTAGE
RIGHT LOW BEAM BULB
TOTALLY INTEGRATED POWER MODULE (TIPM)

1. INTERMITTENT CONDITION

1. Turn the ignition on.
2. With the scan tool, clear all TIPM DTCs.
3. Turn the Headlamps on.
4. With the scan tool, read DTCs.

Does the scan tool display DTC B1631-RIGHT LOW BEAM CONTROL CIRCUIT OPEN?

Yes

- Go To 2

No

- The condition that caused the symptom is currently not present. Inspect the related wiring for a possible intermittent condition. Look for any chafed, pierced, pinched, or partially broken wires.
- Perform the BODY VERIFICATION TEST. (Refer to 28 - DTC-Based Diagnostics/MODULE, Totally Integrated Power (TIPM) - Standard Procedure).

2. RIGHT LOW BEAM BULB

1. Turn the ignition off.
2. Inspect the Right Low Beam Bulb Assembly.

Is the inoperative bulb OK?

Yes

- Go To 3

No

- Replace the inoperative bulb in accordance with the Service Information.
- Perform the BODY VERIFICATION TEST. (Refer to 28 - DTC-Based Diagnostics/MODULE, Totally Integrated Power (TIPM) - Standard Procedure).

3. (L44) RIGHT LOW BEAM DRIVER CIRCUIT OPEN

1. Disconnect the Right Headlamp Lamp harness connector.
2. Disconnect the TIPM C4 harness connector.
3. Measure the resistance of the (L44) Right Low Beam Driver circuit between the Right Headlamp Lamp harness connector and the TIPM C4 harness connector.

Is the resistance above 5.0 Ohms?

Yes

- Repair the open in the (L44) Right Low Beam Driver circuit.
- Perform the BODY VERIFICATION TEST. (Refer to 28 - DTC-Based Diagnostics/MODULE, Totally Integrated Power (TIPM) - Standard Procedure).

No

- Replace the Totally Integrated Power Module (TIPM) in accordance with the Service Information.
- Perform the BODY VERIFICATION TEST. (Refer to 28 - DTC-Based Diagnostics/MODULE, Totally Integrated Power (TIPM) - Standard Procedure).

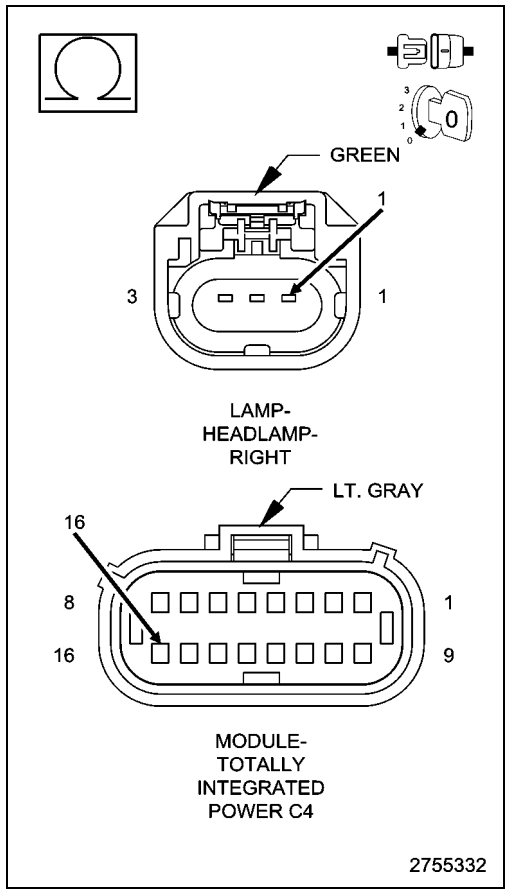

B1633-LEFT HI BEAM CONTROL CIRCUIT LOW

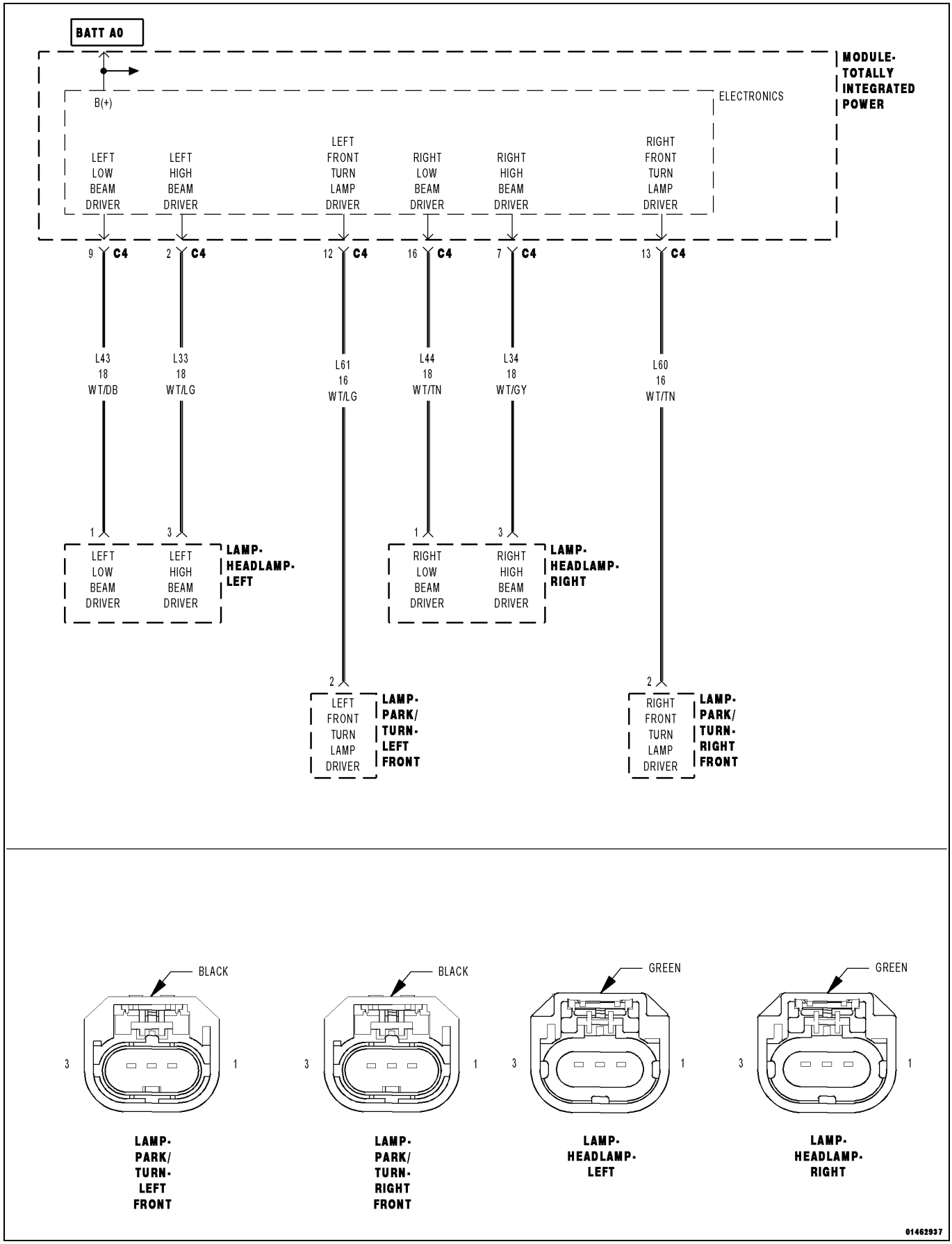

For a complete wiring diagram, **refer to the Wiring Information**.

- **When Monitored:**
  With the Headlamps active.
- **Set Condition:**
  When the Totally Integrated Power Module (TIPM) detects a low condition in the (L33) Left High Beam Driver circuit.

Possible Causes
(L33) LEFT HIGH BEAM DRIVER CIRCUIT SHORTED TO GROUND
TOTALLY INTEGRATED POWER MODULE (TIPM)

1. INTERMITTENT CONDITION

1. Turn the ignition on.
2. With the scan tool, clear all TIPM DTCs.
3. Turn the High Beam Lamps on.
4. With the scan tool, read DTCs.

Does the scan tool display DTC B1633-LEFT HI BEAM CONTROL CIRCUIT LOW?

Yes

- Go To 2

No

- The condition that caused the symptom is currently not present. Inspect the related wiring for a possible intermittent condition. Look for any chafed, pierced, pinched, or partially broken wires.
- Perform the BODY VERIFICATION TEST. (Refer to 28 - DTC-Based Diagnostics/MODULE, Totally Integrated Power (TIPM) - Standard Procedure).

2. (L33) LEFT HIGH BEAM DRIVER CIRCUIT SHORTED TO GROUND

1. Turn the ignition off.
2. Disconnect the TIPM C4 harness connector.
3. Disconnect the Left Headlamp Lamp harness connector.
4. Measure the resistance between ground and the (L33) Left High Beam Driver circuit.

Is the resistance below 5.0 Ohms?

Yes

- Repair the short to ground in the (L33) Left High Beam Driver circuit.
- Perform the BODY VERIFICATION TEST. (Refer to 28 - DTC-Based Diagnostics/MODULE, Totally Integrated Power (TIPM) - Standard Procedure).

No

- Replace the Totally Integrated Power Module (TIPM) in accordance with the Service Information.
- Perform the BODY VERIFICATION TEST. (Refer to 28 - DTC-Based Diagnostics/MODULE, Totally Integrated Power (TIPM) - Standard Procedure).

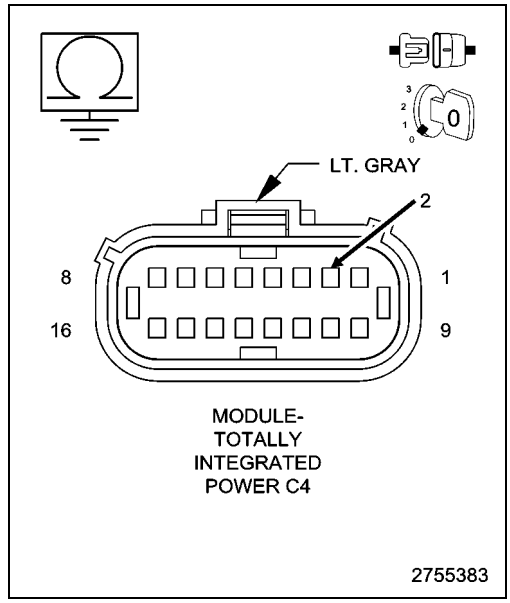

B1635-LEFT HI BEAM CONTROL CIRCUIT OPEN

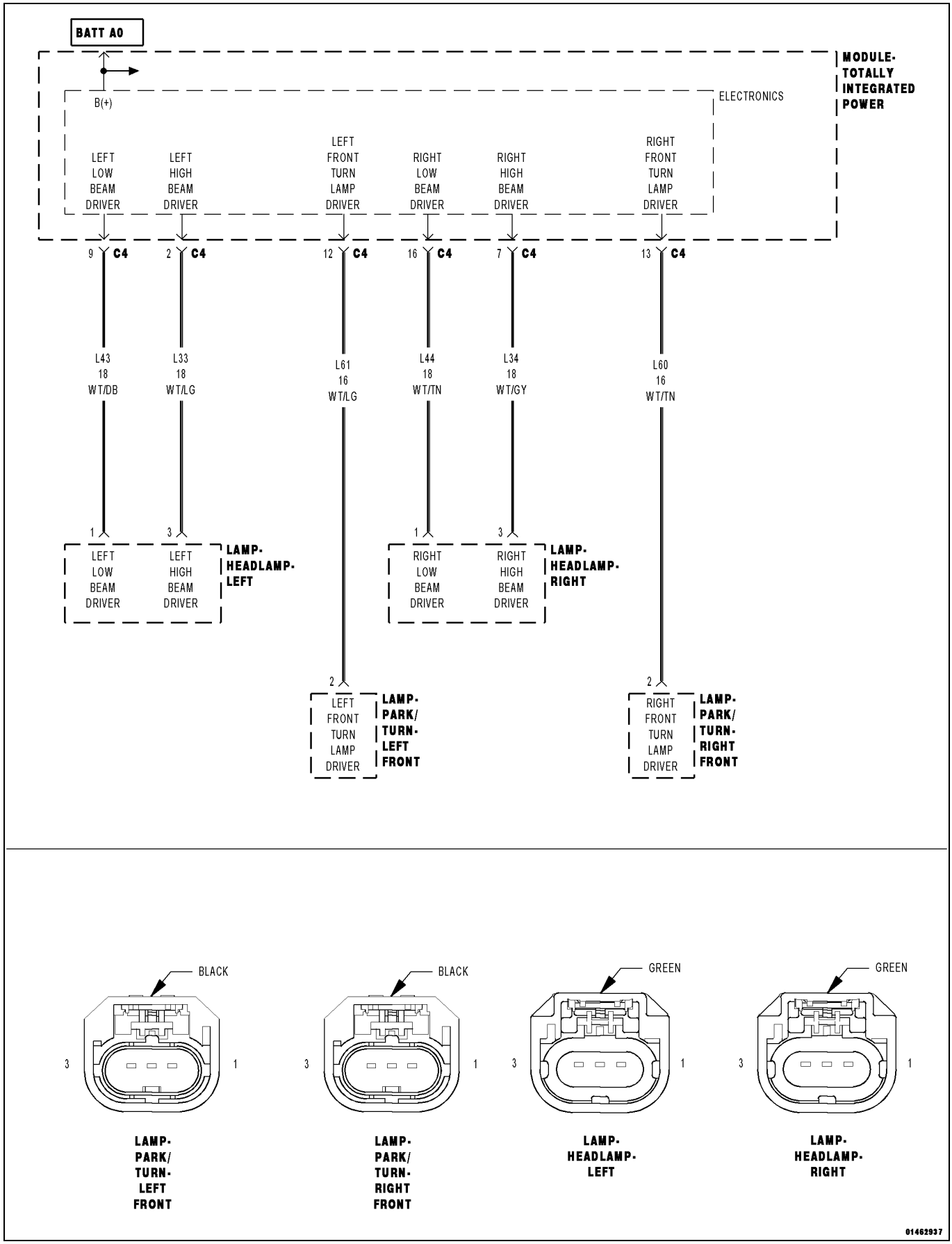

For a complete wiring diagram, **refer to the Wiring Information**.

- **When Monitored:**
  With the Headlamps active.
- **Set Condition:**
  When the Totally Integrated Power Module (TIPM) detects an open in the (L33) Left High Beam Driver circuit.

Possible Causes
(L33) LEFT HIGH BEAM DRIVER CIRCUIT OPEN
LEFT HIGH BEAM BULB
TOTALLY INTEGRATED POWER MODULE (TIPM)

1. INTERMITTENT CONDITION

1. Turn the ignition on.
2. With the scan tool, clear all TIPM DTCs.
3. Turn the High Beam Lamps on.
4. With the scan tool, read DTCs.

Does the scan tool display DTC B1635-LEFT HI BEAM CONTROL CIRCUIT OPEN?

Yes

- Go To 2

No

- The condition that caused the symptom is currently not present. Inspect the related wiring for a possible intermittent condition. Look for any chafed, pierced, pinched, or partially broken wires.
- Perform the BODY VERIFICATION TEST. (Refer to 28 - DTC-Based Diagnostics/MODULE, Totally Integrated Power (TIPM) - Standard Procedure).

2. LEFT HIGH BEAM BULB

1. Turn the ignition off.
2. Inspect the Left High Beam Bulb Assembly.

Is the inoperative bulb OK?

Yes

- Go To 3

No

- Replace the inoperative bulb in accordance with the Service Information.
- Perform the BODY VERIFICATION TEST. (Refer to 28 - DTC-Based Diagnostics/MODULE, Totally Integrated Power (TIPM) - Standard Procedure).

3. (L33) HIGH BEAM CONTROL CIRCUIT OPEN

1. Disconnect the Left Headlamp Lamp harness connector.
2. Disconnect the TIPM C4 harness connector.
3. Measure the resistance of the (L33) Left High Beam Driver circuit between the Left Headlamp Lamp harness connector and the TIPM C4 harness connector.

Is the resistance above 5.0 Ohms?

Yes

- Repair the open in the (L33) Left High Beam Driver circuit.
- Perform the BODY VERIFICATION TEST. (Refer to 28 - DTC-Based Diagnostics/MODULE, Totally Integrated Power (TIPM) - Standard Procedure).

No

- Replace the Totally Integrated Power Module (TIPM) in accordance with the Service Information.
- Perform the BODY VERIFICATION TEST. (Refer to 28 - DTC-Based Diagnostics/MODULE, Totally Integrated Power (TIPM) - Standard Procedure).

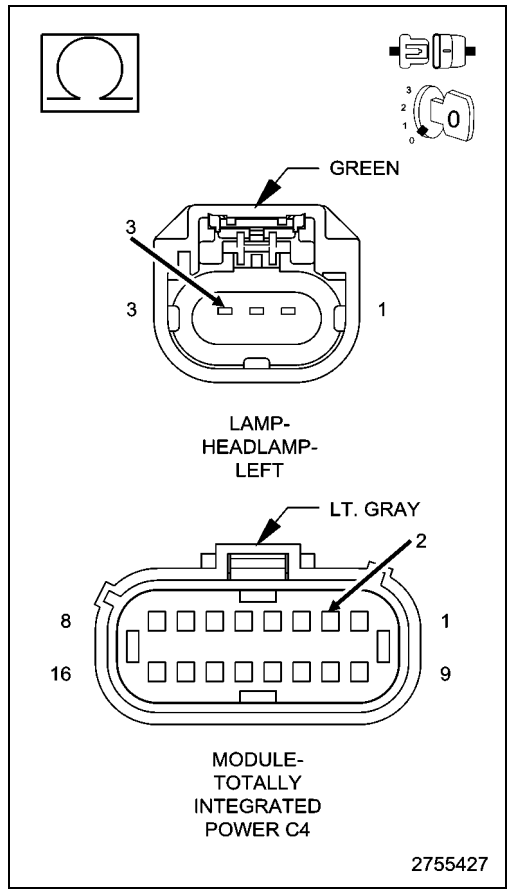

B1637-RIGHT HI BEAM CONTROL CIRCUIT LOW

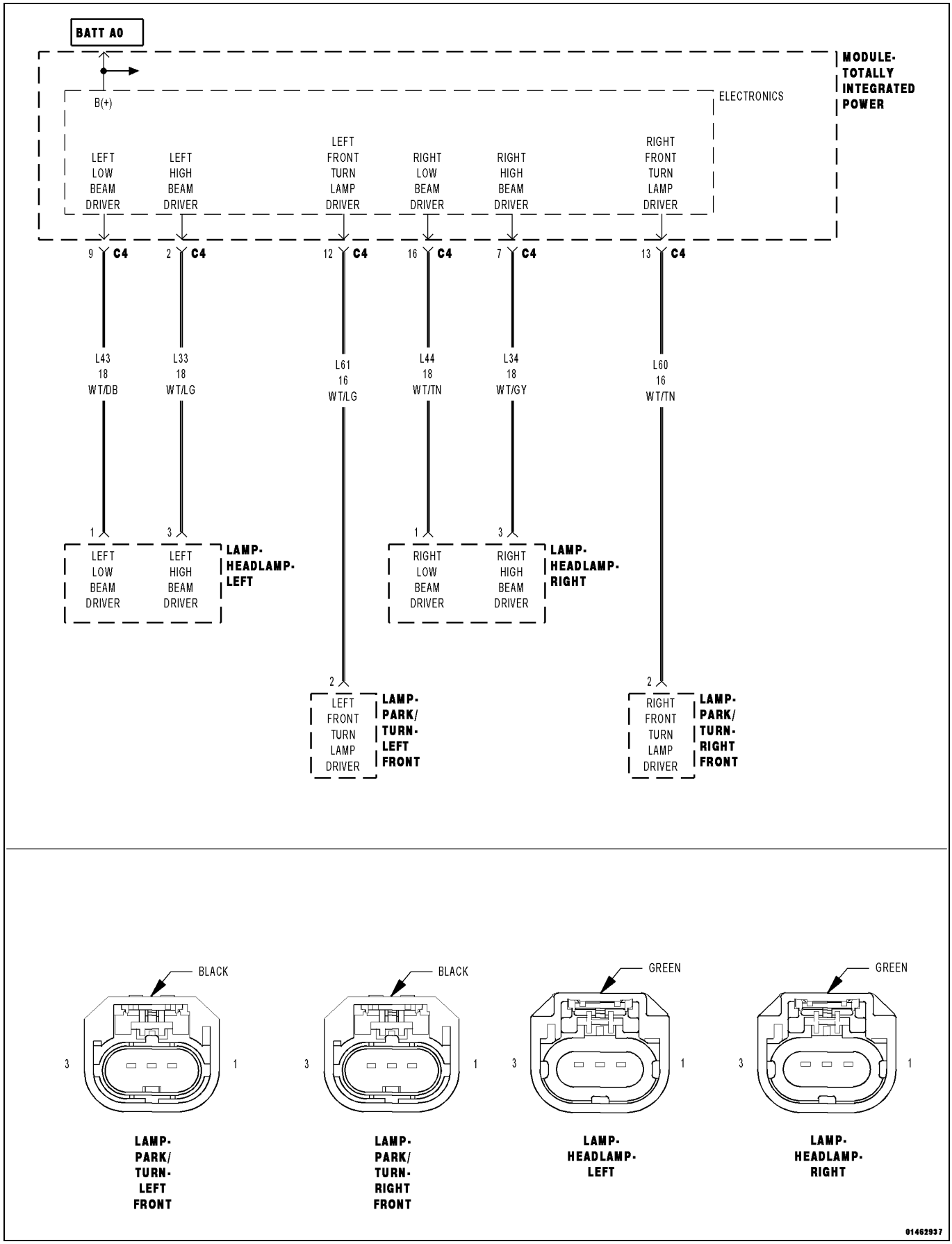

For a complete wiring diagram, **refer to the Wiring Information**.

- **When Monitored:**
  With the High Beam Headlamps active.
- **Set Condition:**
  When the Totally Integrated Power Module (TIPM) detects a low condition in the (L34) Right High Beam Driver circuit.

Possible Causes
(L34) RIGHT HIGH BEAM DRIVER CIRCUIT SHORTED TO GROUND
TOTALLY INTEGRATED POWER MODULE (TIPM)

1. INTERMITTENT CONDITION

1. Turn the ignition on.
2. With the scan tool, clear all TIPM DTCs.
3. Turn the High Beam Lamps on.
4. With the scan tool, read DTCs.

Does the scan tool display DTC B1637-RIGHT HI BEAM CONTROL CIRCUIT LOW?

Yes

- Go To 2

No

- The condition that caused the symptom is currently not present. Inspect the related wiring for a possible intermittent condition. Look for any chafed, pierced, pinched, or partially broken wires.
- Perform the BODY VERIFICATION TEST. (Refer to 28 - DTC-Based Diagnostics/MODULE, Totally Integrated Power (TIPM) - Standard Procedure).

2. (L34) RIGHT HIGH BEAM DRIVER CIRCUIT SHORTED TO GROUND

1. Turn the ignition off.
2. Disconnect the TIPM C4 harness connector.
3. Disconnect the Right Headlamp Lamp harness connector.
4. Measure the resistance between ground and the Right High Beam Driver circuit.

Is the resistance below 5.0 Ohms?

Yes

- Repair the short to ground in the (L34) Right High Beam Driver circuit.
- Perform the BODY VERIFICATION TEST. (Refer to 28 - DTC-Based Diagnostics/MODULE, Totally Integrated Power (TIPM) - Standard Procedure).

No

- Replace the Totally Integrated Power Module (TIPM) in accordance with the Service Information.
- Perform the BODY VERIFICATION TEST. (Refer to 28 - DTC-Based Diagnostics/MODULE, Totally Integrated Power (TIPM) - Standard Procedure).

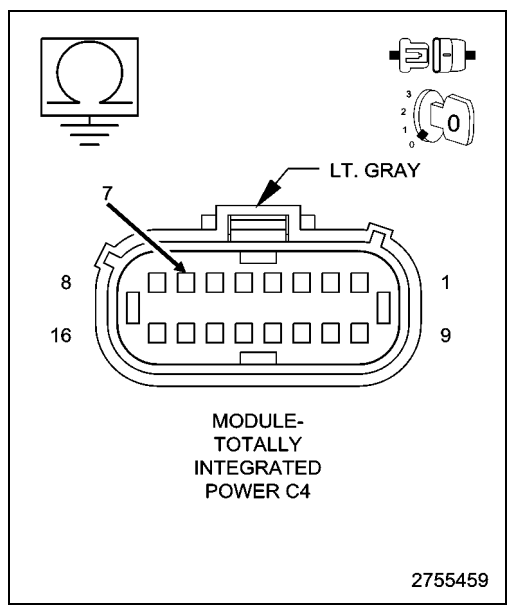

B1639-RIGHT HI BEAM CONTROL CIRCUIT OPEN

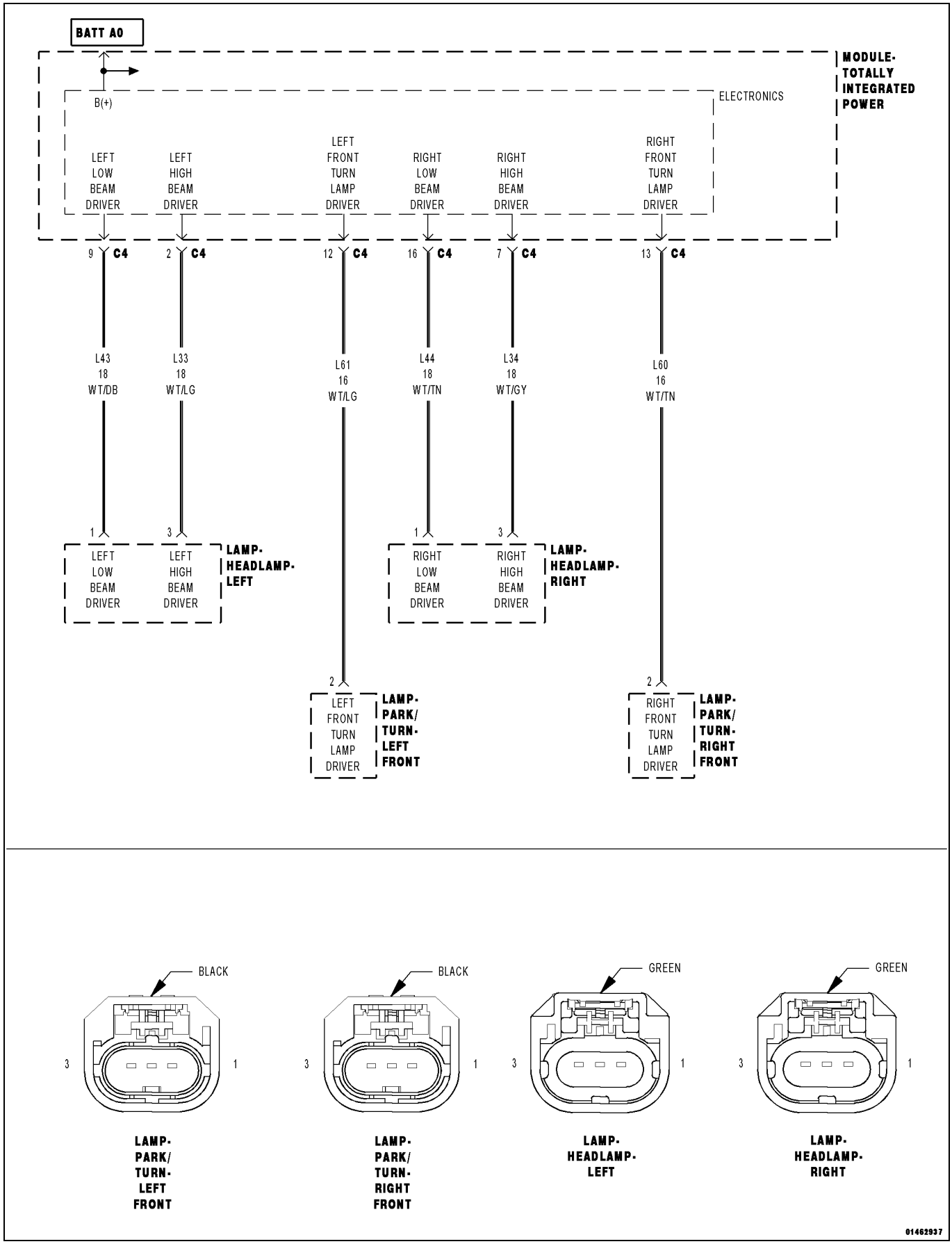

For a complete wiring diagram, **refer to the Wiring Information**.

- **When Monitored:**
  With the High Beam Headlamps active.
- **Set Condition:**
  When the Totally Integrated Power Module (TIPM) detects an open in the (L34) Right High Beam Driver circuit.

Possible Causes
(L34) RIGHT HIGH BEAM DRIVER CIRCUIT OPEN
RIGHT HIGH BEAM BULB
TOTALLY INTEGRATED POWER MODULE (TIPM)

1. INTERMITTENT CONDITION

1. Turn the ignition on.
2. With the scan tool, clear all TIPM DTCs.
3. Turn the High Beam Headlamps on.
4. With the scan tool, read DTCs.

Does the scan tool display DTC B1639-RIGHT HI BEAM CONTROL CIRCUIT OPEN?

Yes

- Go To 2

No

- The condition that caused the symptom is currently not present. Inspect the related wiring for a possible intermittent condition. Look for any chafed, pierced, pinched, or partially broken wires.
- Perform the BODY VERIFICATION TEST. (Refer to 28 - DTC-Based Diagnostics/MODULE, Totally Integrated Power (TIPM) - Standard Procedure).

2. RIGHT HIGH BEAM BULB

1. Turn the ignition off.
2. Inspect the Right High Beam Bulb Assembly.

Is the inoperative bulb OK?

Yes

- Go To 3

No

- Replace the inoperative bulb in accordance with the Service Information.
- Perform the BODY VERIFICATION TEST. (Refer to 28 - DTC-Based Diagnostics/MODULE, Totally Integrated Power (TIPM) - Standard Procedure).

3. (L34) RIGHT HIGH BEAM DRIVER CIRCUIT OPEN

1. Disconnect the TIPM C4 harness connector.
2. Disconnect the Right Headlamp Lamp harness connector.
3. Measure the resistance of the (L34) Right High Beam Driver circuit between the Right Headlamp Lamp harness connector and the TIPM C4 harness connector.

Is the resistance above 5.0 Ohms?

Yes

- Repair the open in the (L34) Right High Beam Driver circuit.
- Perform the BODY VERIFICATION TEST. (Refer to 28 - DTC-Based Diagnostics/MODULE, Totally Integrated Power (TIPM) - Standard Procedure).

No

- Replace the Totally Integrated Power Module (TIPM) in accordance with the Service Information.
- Perform the BODY VERIFICATION TEST. (Refer to 28 - DTC-Based Diagnostics/MODULE, Totally Integrated Power (TIPM) - Standard Procedure).

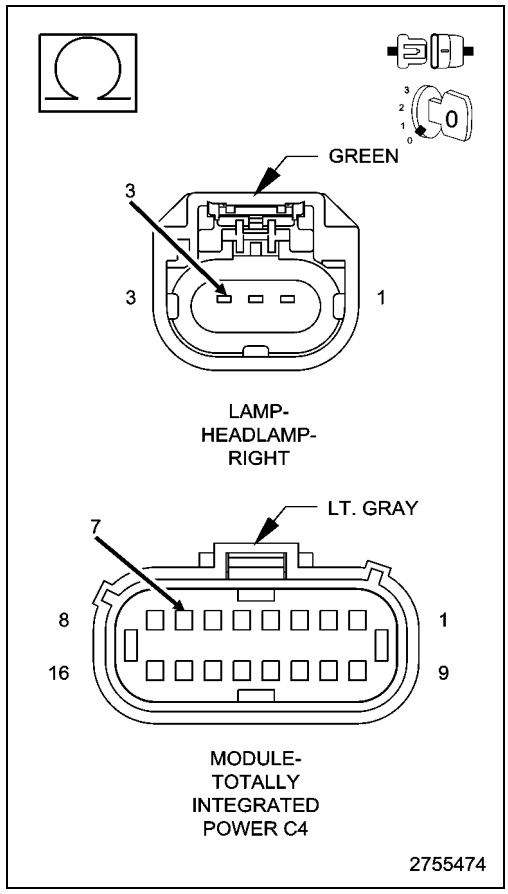

B163B-FRONT LEFT TURN LAMP CONTROL CIRCUIT LOW

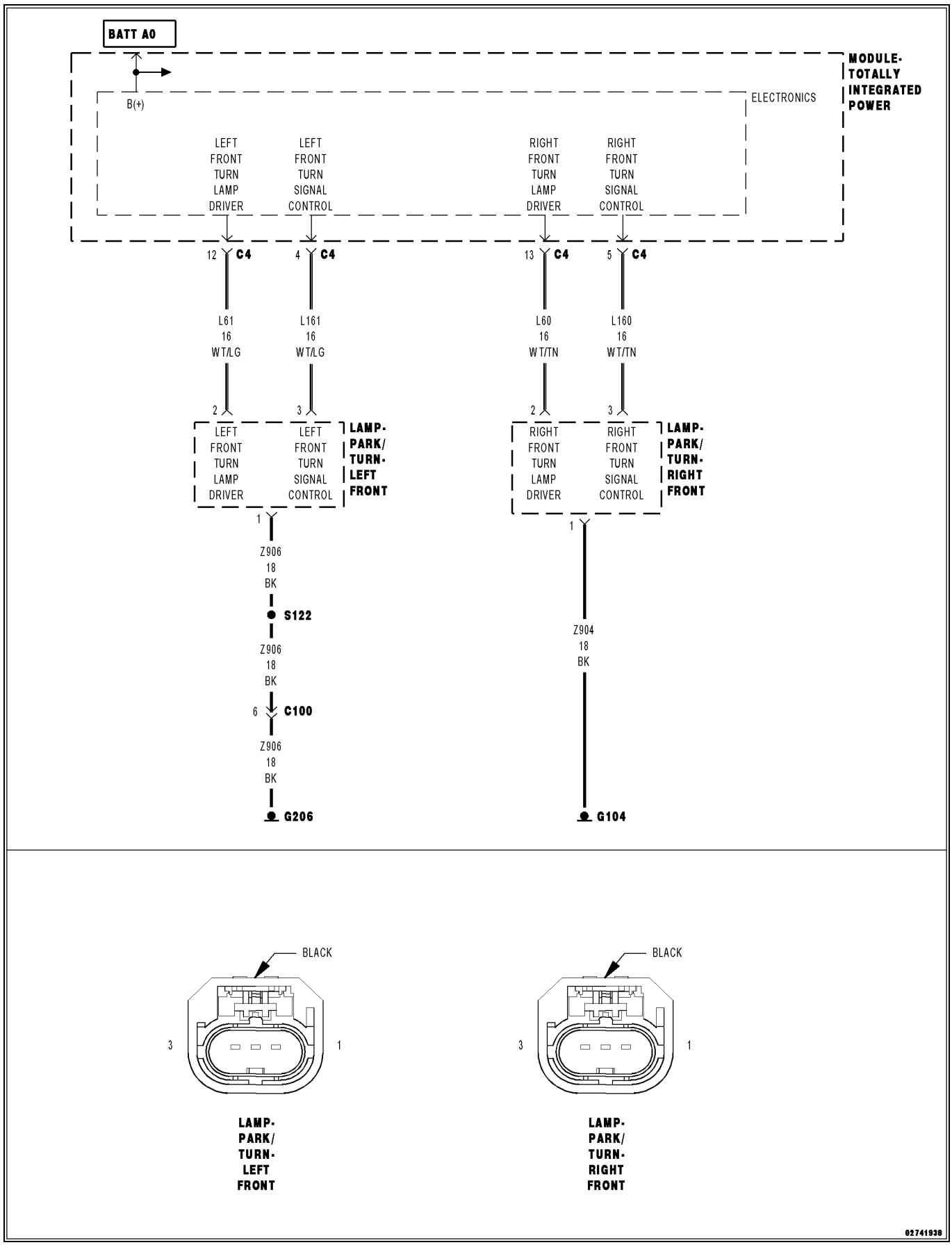

For a complete wiring diagram, **refer to the Wiring Information**.

- **When Monitored:**
  With the Turn Signals active.
- **Set Condition:**
  When the Totally Integrated Power Module (TIPM) detects a low condition in the (L161) Left Front Turn Signal Control circuit for more than 10 seconds.

Possible Causes
(L161) LEFT FRONT TURN SIGNAL CONTROL CIRCUIT SHORTED TO GROUND
TOTALLY INTEGRATED POWER MODULE (TIPM)

1. CHECK FOR AN INTERMITTENT CONDITION

1. Turn the ignition on.
2. With the scan tool, clear all TIPM DTCs.
3. Turn the Left Turn Signals on.
4. With the scan tool, read DTCs.

Does the scan tool display B163B-FRONT LEFT TURN LAMP CONTROL CIRCUIT LOW?

Yes

- Go To 2

No

- Test complete, the condition or conditions that originally set this DTC are not present at this time. Using the wiring diagrams as a guide, check all related splices and connectors for signs of water intrusion, corrosion, pushed out or bent terminals, and correct pin tension.
- Perform the BODY VERIFICATION TEST. (Refer to 28 - DTC-Based Diagnostics/MODULE, Totally Integrated Power (TIPM) - Standard Procedure).

2. CHECK THE (L161) LEFT FRONT TURN SIGNAL CONTROL CIRCUIT FOR A SHORT TO GROUND

1. Turn the ignition off.
2. Disconnect the TIPM C4 harness connector.
3. Disconnect the Left Front Park/Turn Lamp harness connector.
4. Measure the resistance between ground and the (L161) Left Front Turn Signal Control circuit.

Is the resistance below 10K Ohms?

Yes

- Repair the short to ground in the (L161) Left Front Turn Signal Control circuit.
- Perform the BODY VERIFICATION TEST. (Refer to 28 - DTC-Based Diagnostics/MODULE, Totally Integrated Power (TIPM) - Standard Procedure).

No

- Replace the Totally Integrated Power Module (TIPM) in accordance with the Service Information.
- Perform the BODY VERIFICATION TEST. (Refer to 28 - DTC-Based Diagnostics/MODULE, Totally Integrated Power (TIPM) - Standard Procedure).

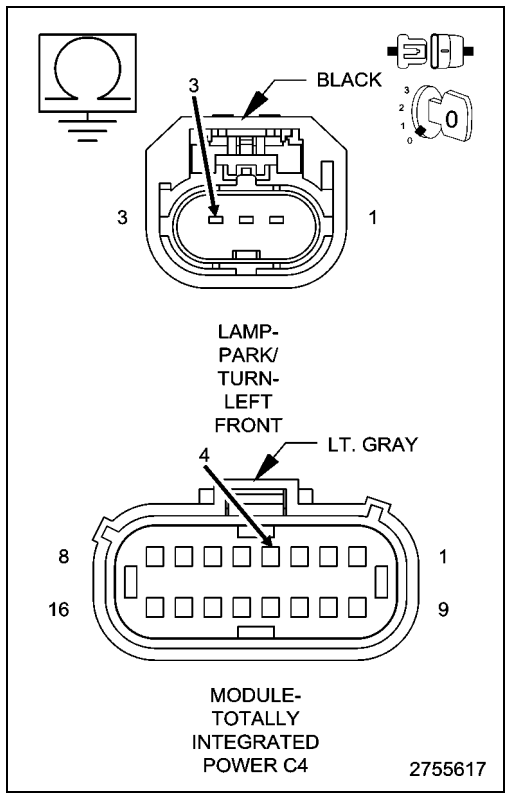

B163D-FRONT LEFT TURN LAMP CONTROL CIRCUIT OPEN

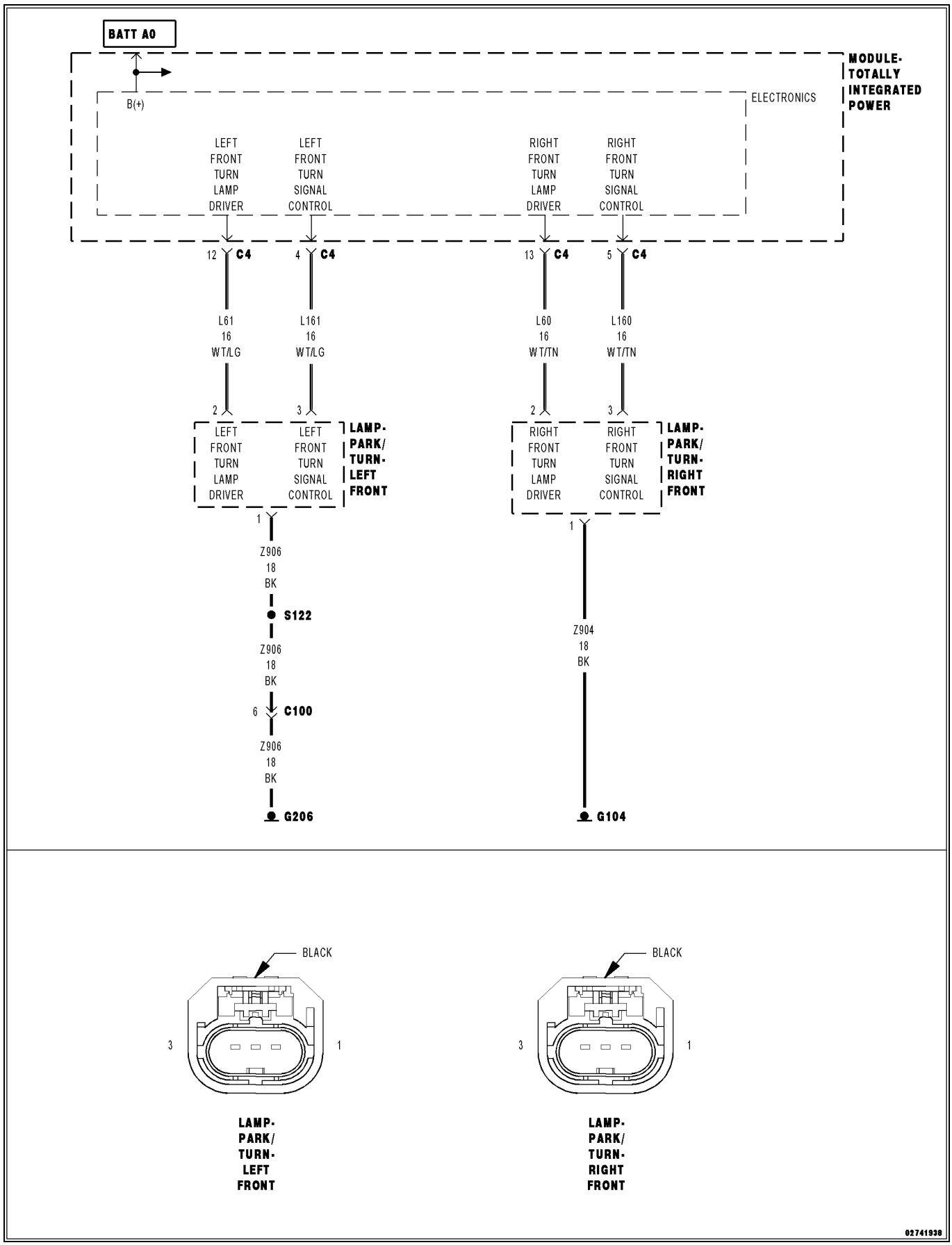

For a complete wiring diagram, **refer to the Wiring Information**.

- **When Monitored:**
  With the Turn Signals active.
- **Set Condition:**
  When the Totally Integrated Power Module (TIPM) detects an open condition in the (L161) Left Front Turn Signal Control circuit for more than five seconds.

Possible Causes
(L161) LEFT FRONT TURN SIGNAL CONTROL CIRCUIT OPEN
(Z906) GROUND CIRCUIT OPEN
LEFT FRONT PARK/TURN LAMP BULB
TOTALLY INTEGRATED POWER MODULE (TIPM)

1. CHECK FOR AN INTERMITTENT CONDITION

1. Turn the ignition on.
2. With the scan tool, clear all TIPM DTCs.
3. Turn the Left Turn Signals on.
4. With the scan tool, read DTCs.

Does the scan tool display B163D-FRONT LEFT TURN LAMP CONTROL CIRCUIT OPEN?

Yes

- Go To 2

No

- Test complete, the condition or conditions that originally set this DTC are not present at this time. Using the wiring diagrams as a guide, check all related splices and connectors for signs of water intrusion, corrosion, pushed out or bent terminals, and correct pin tension.
- Perform the BODY VERIFICATION TEST. (Refer to 28 - DTC-Based Diagnostics/MODULE, Totally Integrated Power (TIPM) - Standard Procedure).

2. CHECK THE LEFT FRONT PARK/TURN LAMP BULB

1. Turn the ignition off.
2. Inspect the Left Front Park/Turn Lamp Bulb Assembly.

Is the inoperative bulb OK?

Yes

- Go To 3

No

- Replace the inoperative bulb in accordance with the Service Information.
- Perform the BODY VERIFICATION TEST. (Refer to 28 - DTC-Based Diagnostics/MODULE, Totally Integrated Power (TIPM) - Standard Procedure).

3. CHECK THE (L161) LEFT FRONT TURN SIGNAL CONTROL CIRCUIT FOR AN OPEN

1. Disconnect the TIPM C4 connector.
2. Disconnect the Left Front Park/Turn Lamp harness connector.
3. Measure the resistance of the (L161) Left Front Turn Signal Control circuit between the TIPM C4 harness connector and the Left Front Park/ Turn Lamp harness connector.

Is the resistance below 5.0 Ohms?

Yes

- Go To 4

No

- Repair the open in the (L161) Left Front Turn Signal Control circuit.
- Perform the BODY VERIFICATION TEST. (Refer to 28 - DTC-Based Diagnostics/MODULE, Totally Integrated Power (TIPM) - Standard Procedure).

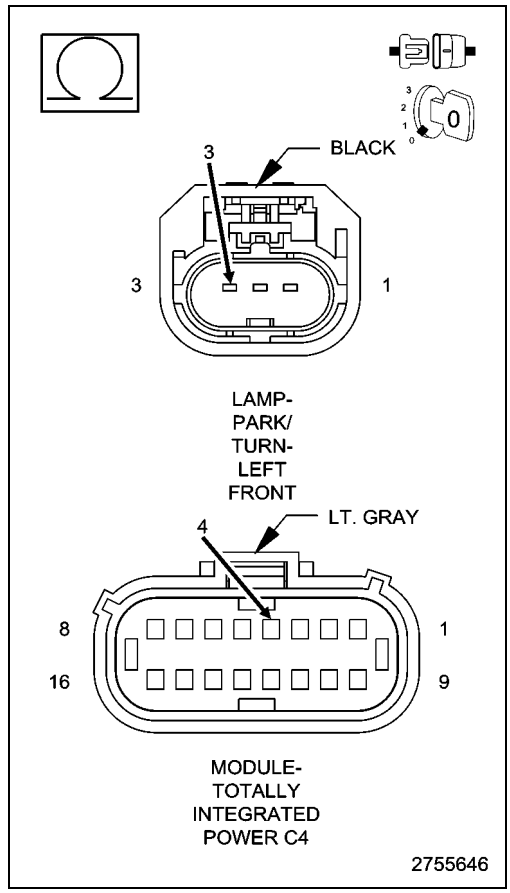

4. CHECK THE (Z906) GROUND CIRCUIT FOR AN OPEN

1. Using a 12-volt test light connected to 12-volts, check the (Z906) Ground circuit.

Does the test light illuminate brightly?

Yes

- Replace the Totally Integrated Power Module (TIPM) in accordance with the Service Information.
- Perform the BODY VERIFICATION TEST. (Refer to 28 - DTC-Based Diagnostics/MODULE, Totally Integrated Power (TIPM) - Standard Procedure).

No

- Repair the open in the (Z906) Ground circuit.
- Perform the BODY VERIFICATION TEST. (Refer to 28 - DTC-Based Diagnostics/MODULE, Totally Integrated Power (TIPM) - Standard Procedure).

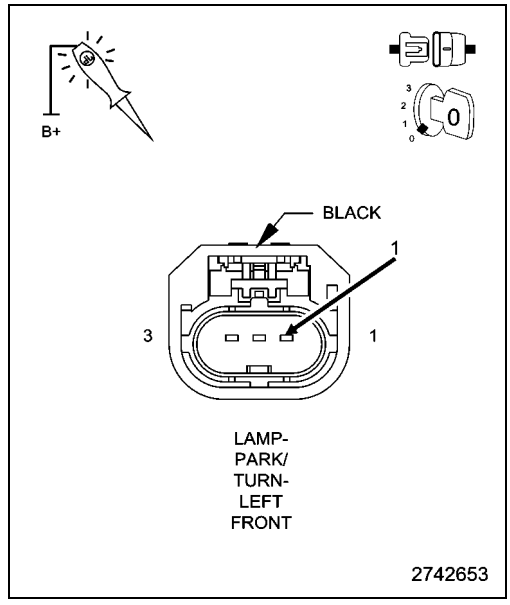

B163F-FRONT RIGHT TURN LAMP CONTROL CIRCUIT LOW

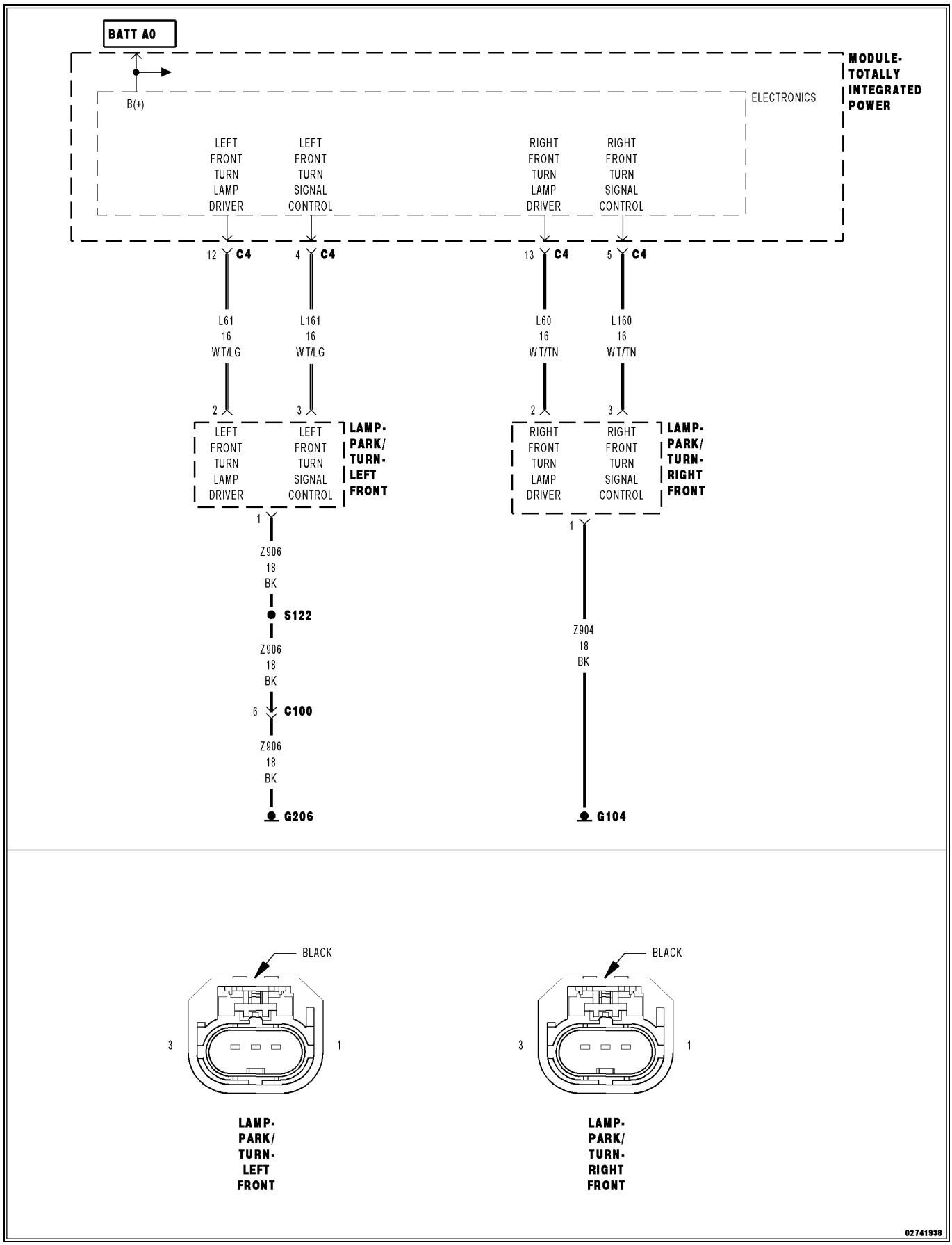

For a complete wiring diagram, **refer to the Wiring Information**.

- **When Monitored:**
  With the Turn Signals active.
- **Set Condition:**
  When the Totally Integrated Power Module (TIPM) detects a low condition in the (L160) Right Front Turn Signal Control circuit for more than 10 seconds.

Possible Causes
(L160) RIGHT FRONT TURN SIGNAL CONTROL CIRCUIT SHORTED TO GROUND
TOTALLY INTEGRATED POWER MODULE (TIPM)

1. CHECK FOR AN INTERMITTENT CONDITION

1. Turn the ignition on.
2. With the scan tool, clear all TIPM DTCs.
3. Turn the Right Turn Signals on.
4. With the scan tool, read DTCs.

Does the scan tool display B163F-FRONT RIGHT TURN LAMP CONTROL CIRCUIT LOW?

Yes

- Go To 2

No

- Test complete, the condition or conditions that originally set this DTC are not present at this time. Using the wiring diagrams as a guide, check all related splices and connectors for signs of water intrusion, corrosion, pushed out or bent terminals, and correct pin tension.
- Perform the BODY VERIFICATION TEST. (Refer to 28 - DTC-Based Diagnostics/MODULE, Totally Integrated Power (TIPM) - Standard Procedure).

2. CHECK THE (L160) RIGHT FRONT TURN SIGNAL CONTROL CIRCUIT FOR A SHORT TO GROUND

1. Turn the ignition off.
2. Disconnect the TIPM C4 harness connector.
3. Disconnect the Right Front Park/Turn Lamp harness connector.
4. Measure the resistance between ground and the (L160) Right Front Turn Signal Control circuit.

Is the resistance below 10K Ohms?

Yes

- Repair the short to ground in the (L160) Right Front Turn Signal Control circuit.
- Perform the BODY VERIFICATION TEST. (Refer to 28 - DTC-Based Diagnostics/MODULE, Totally Integrated Power (TIPM) - Standard Procedure).

No

- Replace the Totally Integrated Power Module (TIPM) in accordance with the Service Information.
- Perform the BODY VERIFICATION TEST. (Refer to 28 - DTC-Based Diagnostics/MODULE, Totally Integrated Power (TIPM) - Standard Procedure).

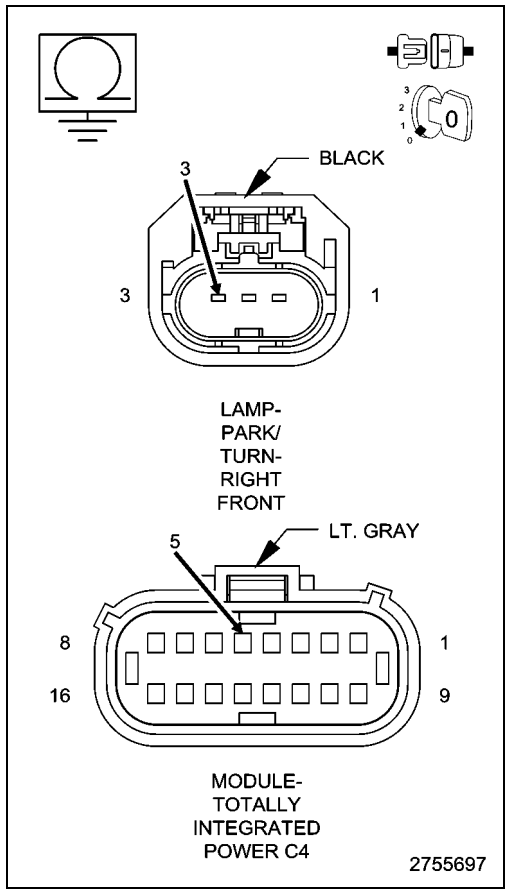

B1641-FRONT RIGHT TURN LAMP CONTROL CIRCUIT OPEN

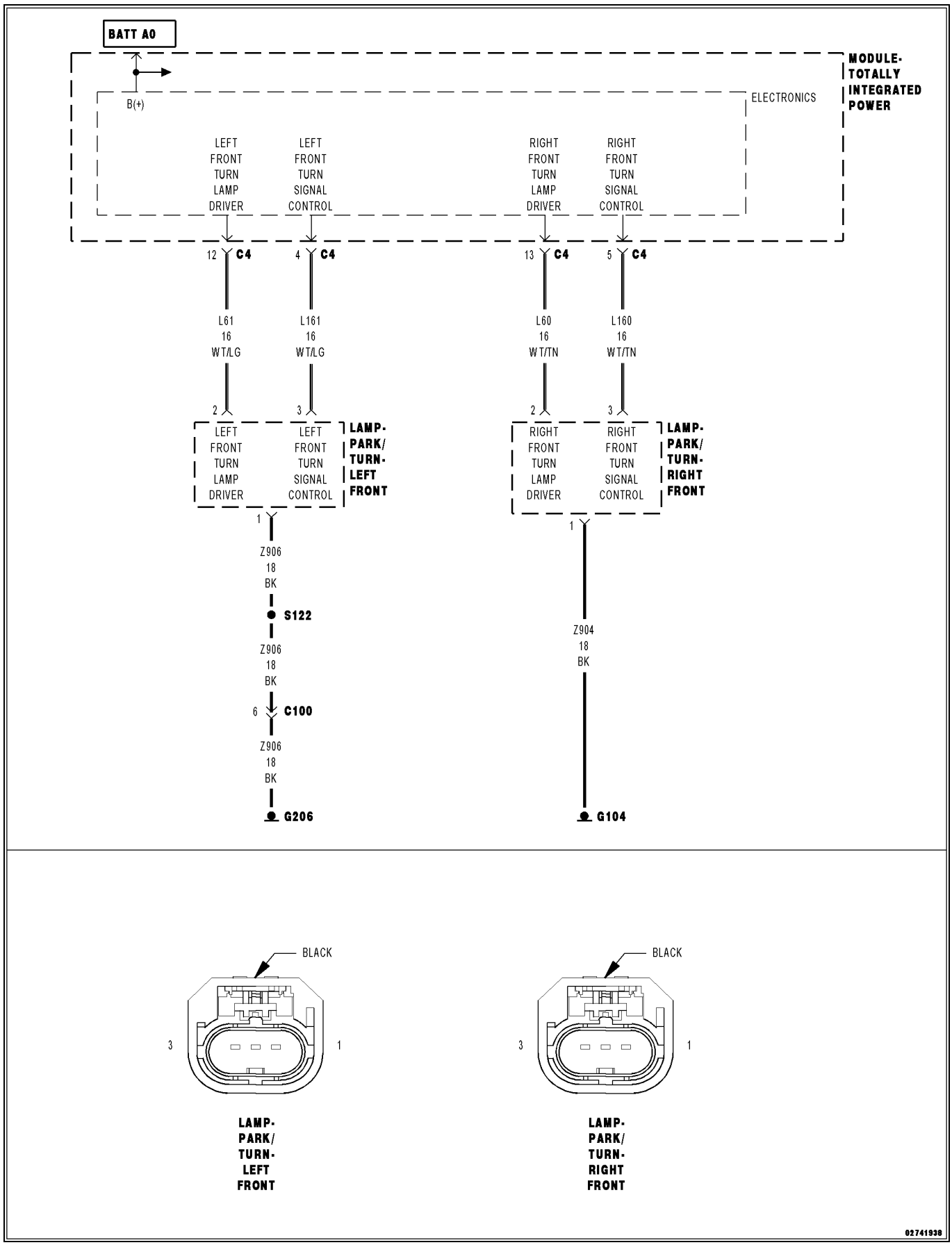

For a complete wiring diagram, **refer to the Wiring Information**.

- **When Monitored:**
  With the Turn Signals active.
- **Set Condition:**
  When the Totally Integrated Power Module (TIPM) detects an open condition in the (L160) Right Front Turn Signal Control circuit for more than five seconds.

Possible Causes
(L160) RIGHT FRONT TURN SIGNAL CONTROL CIRCUIT OPEN
(Z904) GROUND CIRCUIT OPEN
RIGHT FRONT PARK/TURN LAMP BULB
TOTALLY INTEGRATED POWER MODULE (TIPM)

1. CHECK FOR AN INTERMITTENT CONDITION

1. Turn the ignition on.
2. With the scan tool, clear all TIPM DTCs.
3. Turn the Right Turn Signals on.
4. With the scan tool, read DTCs.

Does the scan tool display B1641-FRONT RIGHT TURN LAMP CONTROL CIRCUIT OPEN?

Yes

- Go To 2

No

- Test complete, the condition or conditions that originally set this DTC are not present at this time. Using the wiring diagrams as a guide, check all related splices and connectors for signs of water intrusion, corrosion, pushed out or bent terminals, and correct pin tension.
- Perform the BODY VERIFICATION TEST. (Refer to 28 - DTC-Based Diagnostics/MODULE, Totally Integrated Power (TIPM) - Standard Procedure).

2. CHECK THE RIGHT FRONT PARK/TURN LAMP BULB

1. Turn the ignition off.
2. Inspect the Right Front Park/Turn Lamp Bulb Assembly.

Is the inoperative bulb OK?

Yes

- Go To 3

No

- Replace the inoperative bulb in accordance with the Service Information.
- Perform the BODY VERIFICATION TEST. (Refer to 28 - DTC-Based Diagnostics/MODULE, Totally Integrated Power (TIPM) - Standard Procedure).

3. CHECK THE (L160) RIGHT FRONT TURN SIGNAL CONTROL CIRCUIT FOR AN OPEN

1. Disconnect the TIPM C4 harness connector.
2. Disconnect the Right Front Park/Turn Lamp harness connector.
3. Measure the resistance of the (L160) Right Front Turn Signal Control circuit between the TIPM C4 harness connector and the Right Front Park/Turn Lamp harness connector.

Is the resistance below 5.0 Ohms?

Yes

- Go To 4

No

- Repair the open in the (L160) Right Front Turn Signal Control circuit.
- Perform the BODY VERIFICATION TEST. (Refer to 28 - DTC-Based Diagnostics/MODULE, Totally Integrated Power (TIPM) - Standard Procedure).

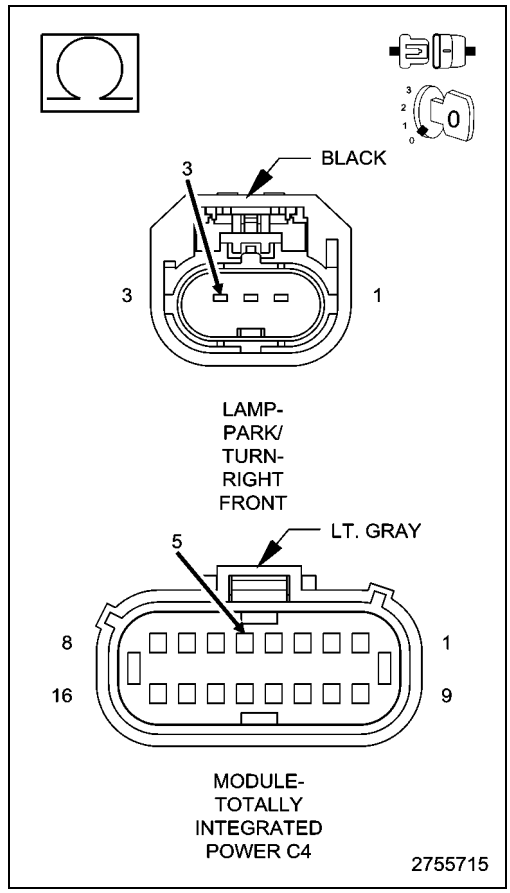

4. CHECK THE (Z904) GROUND CIRCUIT FOR AN OPEN

1. Using a 12-volt test light connected to 12-volts, check the (Z904) Ground circuit.

Does the test light illuminate brightly?

Yes

- Replace the Totally Integrated Power Module (TIPM) in accordance with the Service Information.
- Perform the BODY VERIFICATION TEST. (Refer to 28 - DTC-Based Diagnostics/MODULE, Totally Integrated Power (TIPM) - Standard Procedure).

No

- Repair the open in the (Z904) Ground circuit.
- Perform the BODY VERIFICATION TEST. (Refer to 28 - DTC-Based Diagnostics/MODULE, Totally Integrated Power (TIPM) - Standard Procedure).

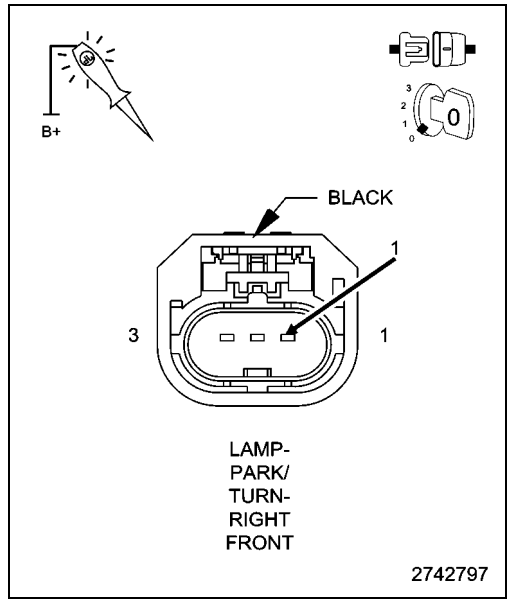

B1643-REAR LEFT TURN CONTROL CIRCUIT LOW

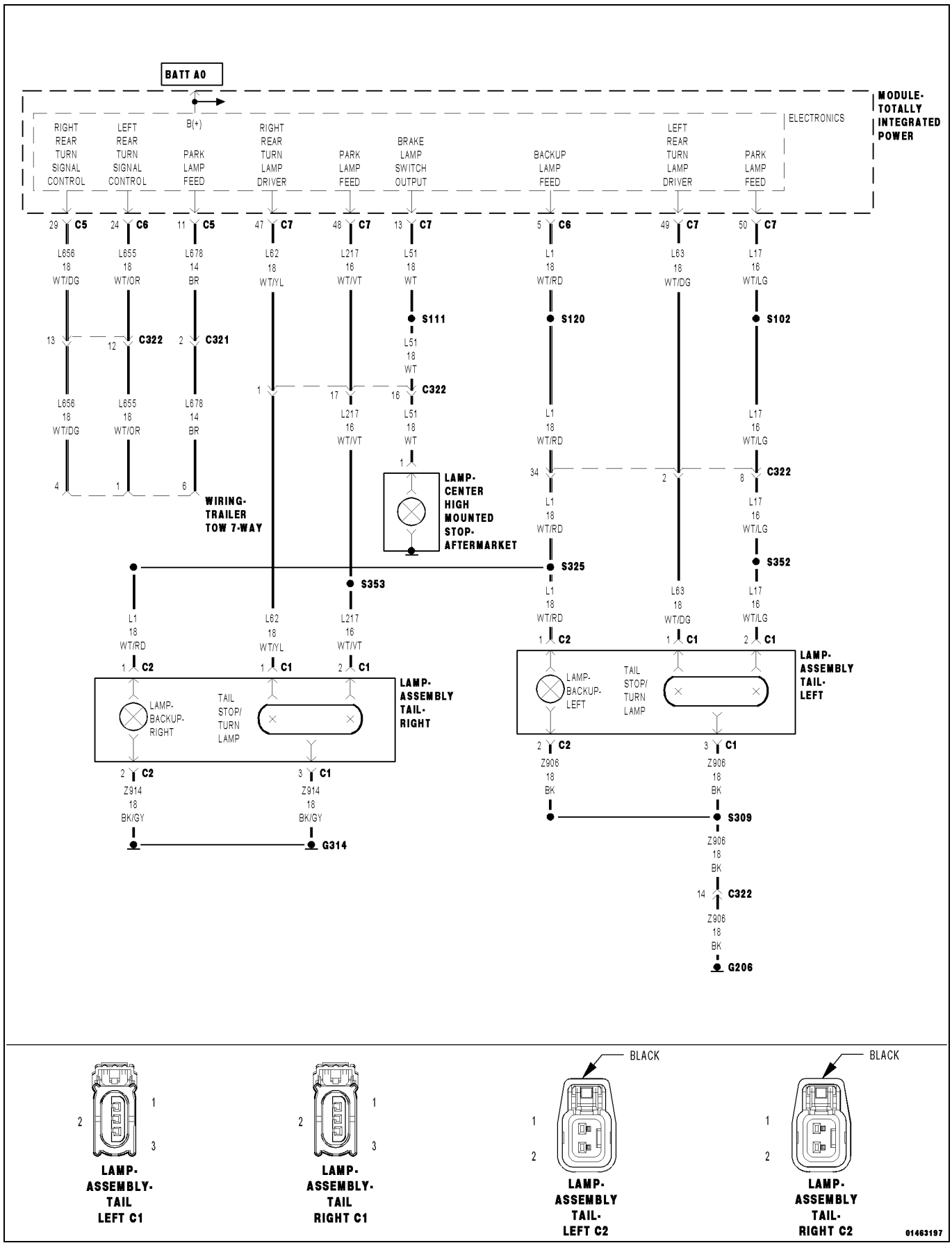

For a complete wiring diagram, **refer to the Wiring Information**.

- **When Monitored:**
  With the Turn Signal activated.
- **Set Condition:**
  When the Totally Integrated Power Module (TIPM) detects a low condition in the right left turn control circuit.

Possible Causes
(L63) LEFT REAR TURN LAMP DRIVER CIRCUIT SHORTED TO GROUND
TOTALLY INTEGRATED POWER MODULE (TIPM)

1. INTERMITTENT CONDITION

1. Turn the ignition on.
2. With the scan tool, clear all TIPM DTCs.
3. Turn the Left Turn Signals on.
4. With the scan tool read the DTC information.

Does the scan tool read: B1643-REAR LEFT TURN CONTROL CIRCUIT LOW?

Yes

- Go To 2

No

- The condition that caused the symptom is currently not present. Inspect the related wiring for a possible intermittent condition. Look for any chafed, pierced, pinched, or partially broken wires.
- Perform the BODY VERIFICATION TEST. (Refer to 28 - DTC-Based Diagnostics/MODULE, Totally Integrated Power (TIPM) - Standard Procedure).

2. (L63) LEFT REAR TURN LAMP DRIVER CIRCUIT SHORTED TO GROUND

1. Turn the ignition off.
2. Disconnect the TIPM C7 harness connector.
3. Disconnect the Left Rear Turn Lamp harness connector.
4. Measure the resistance between ground and the (L63) Left Rear Turn Lamp Driver circuit.

Is the resistance below 5.0 Ohms?

Yes

- Repair the (L63) Left Rear Turn Lamp Driver circuit for a short to ground.
- Perform the BODY VERIFICATION TEST. (Refer to 28 - DTC-Based Diagnostics/MODULE, Totally Integrated Power (TIPM) - Standard Procedure).

No

- Replace the Totally Integrated Power Module (TIPM) in accordance with the Service Information.
- Perform the BODY VERIFICATION TEST. (Refer to 28 - DTC-Based Diagnostics/MODULE, Totally Integrated Power (TIPM) - Standard Procedure).

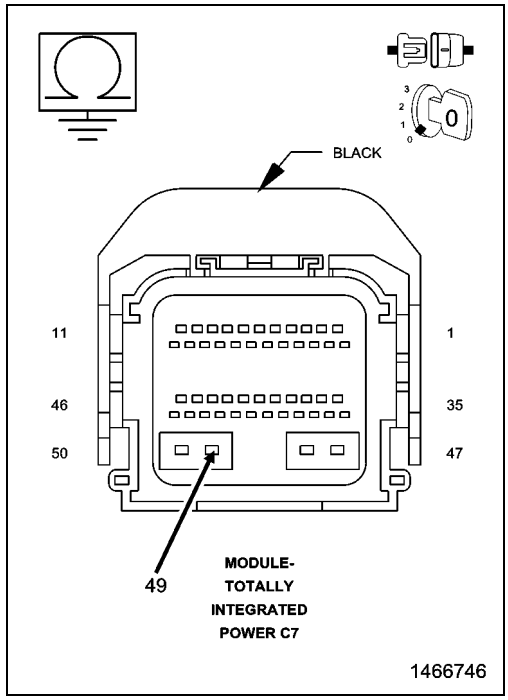

B1645-REAR LEFT TURN CONTROL CIRCUIT OPEN

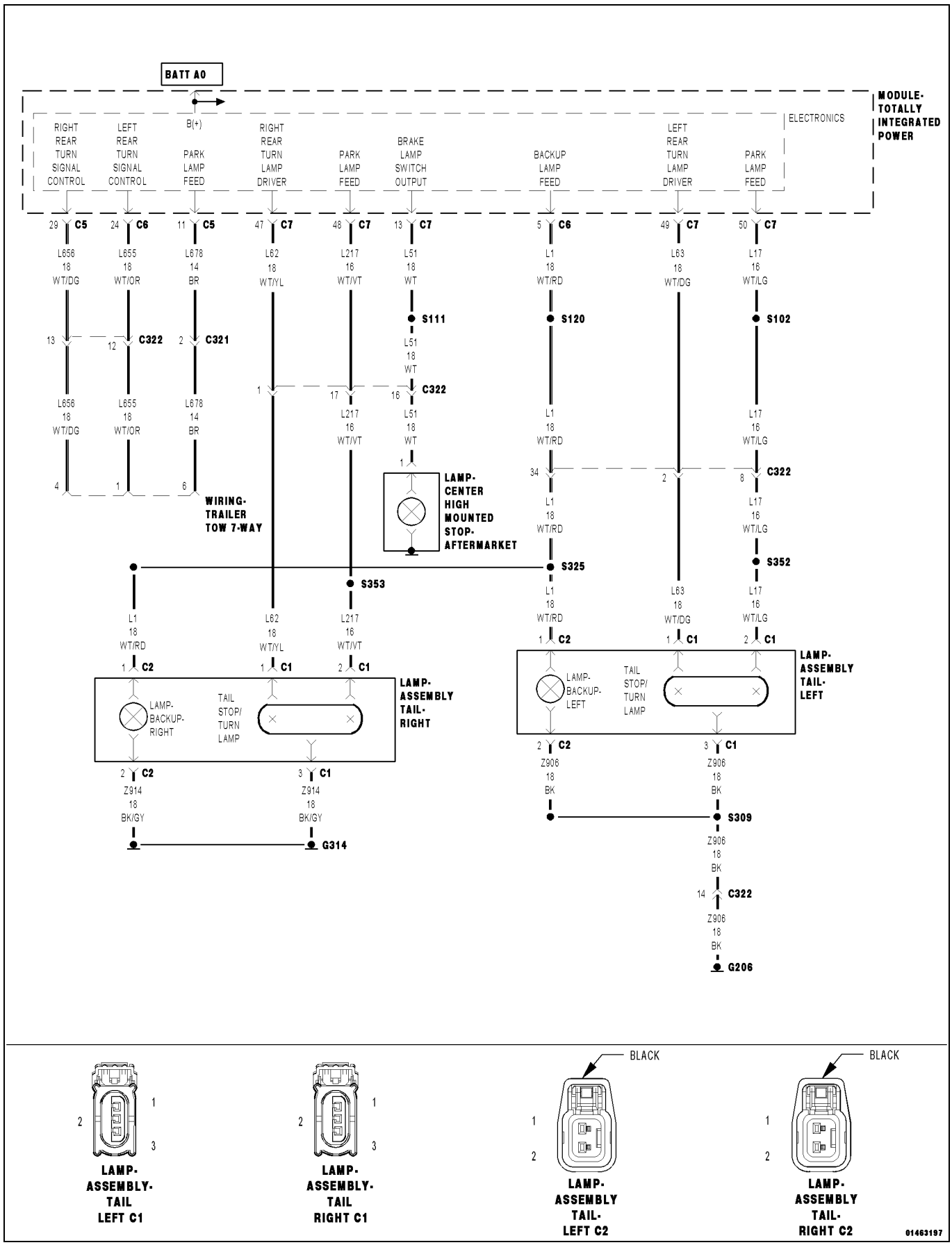

For a complete wiring diagram, **refer to the Wiring Information**.

- **When Monitored:**
  Continuously
- **Set Condition:**
  When the Totally Integrated Power Module (TIPM) detects a short to battery on the left rear turn signal driver circuit.

Possible Causes
(L63) LEFT REAR TURN SIGNAL DRIVER CIRCUIT
TOTALLY INTEGRATED POWER MODULE (TIPM)

1. TEST FOR INTERMITTENT CONDITION

1. Turn the ignition on.
2. Clear all TIPM DTCs
3. Turn the Left Turn Signal on.
4. With the scan tool, read DTCs.

Does the scan tool read: B1645-REAR LEFT TURN CONTROL CIRCUIT OPEN?

Yes

- Go To 2

No

- The conditions that caused this code to set are not present at this time. Using the wiring diagram/schematic as a guide, inspect the wiring and connectors.
- Perform the BODY VERIFICATION TEST. (Refer to 28 - DTC-Based Diagnostics/MODULE, Totally Integrated Power (TIPM) - Standard Procedure).

2. LEFT REAR TURN SIGNAL BULB

1. Turn the ignition off.
2. Inspect the Left Rear Turn Signal Bulb Assembly.

Is the inoperative bulb OK?

Yes

- Go To 3

No

- Replace the Inoperative bulb in accordance with the Service Information.
- Perform the BODY VERIFICATION TEST. (Refer to 28 - DTC-Based Diagnostics/MODULE, Totally Integrated Power (TIPM) - Standard Procedure).

3. (L63) LEFT REAR TURN SIGNAL DRIVER CIRCUIT

1. Turn the ignition off.
2. Disconnect the TIPM C7 harness connector.
3. Disconnect the Left Rear Tail Lamp assembly.
4. Measure the resistance of the (L63) Left Rear Turn Signal Driver circuit.

Is the resistance above 5.0 Ohms?

Yes

- Repair the (L63) Turn Signal Driver circuit for an open.
- Perform the BODY VERIFICATION TEST. (Refer to 28 - DTC-Based Diagnostics/MODULE, Totally Integrated Power (TIPM) - Standard Procedure)

No

- Go To 4

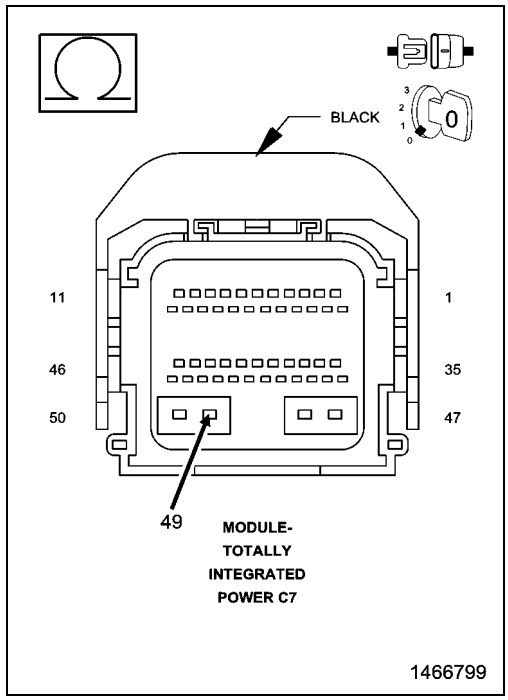

4. TOTALLY INTEGRATED POWER MODULE (TIPM)

1. Turn the ignition on.
2. Measure for voltage on the (L63) Left Rear Turn Signal Driver circuit.

Is there any voltage present?

Yes

- Repair short to voltage on the (L63) Left Rear Turn Lamp Driver circuit.
- Perform the BODY VERIFICATION TEST. (Refer to 28 - DTC-Based Diagnostics/MODULE, Totally Integrated Power (TIPM) - Standard Procedure).

No

- Replace the Totally Integrated Power Module (TIPM) in accordance with the Service Information.
- Perform the BODY VERIFICATION TEST. (Refer to 28 - DTC-Based Diagnostics/MODULE, Totally Integrated Power (TIPM) - Standard Procedure).

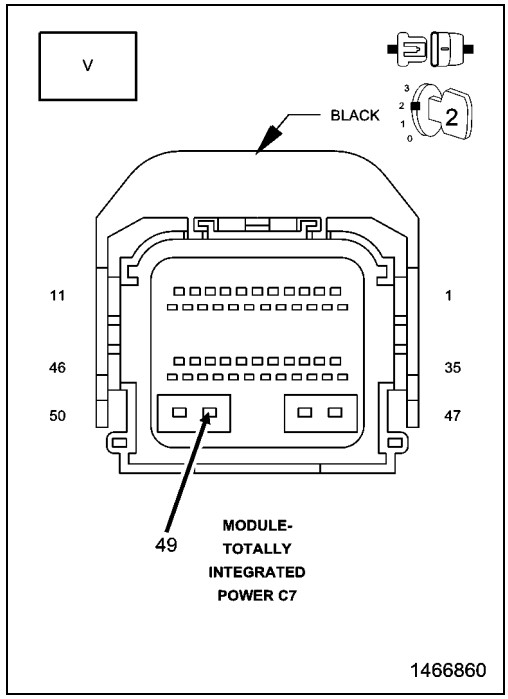

B1647-REAR RIGHT TURN CONTROL CIRCUIT LOW

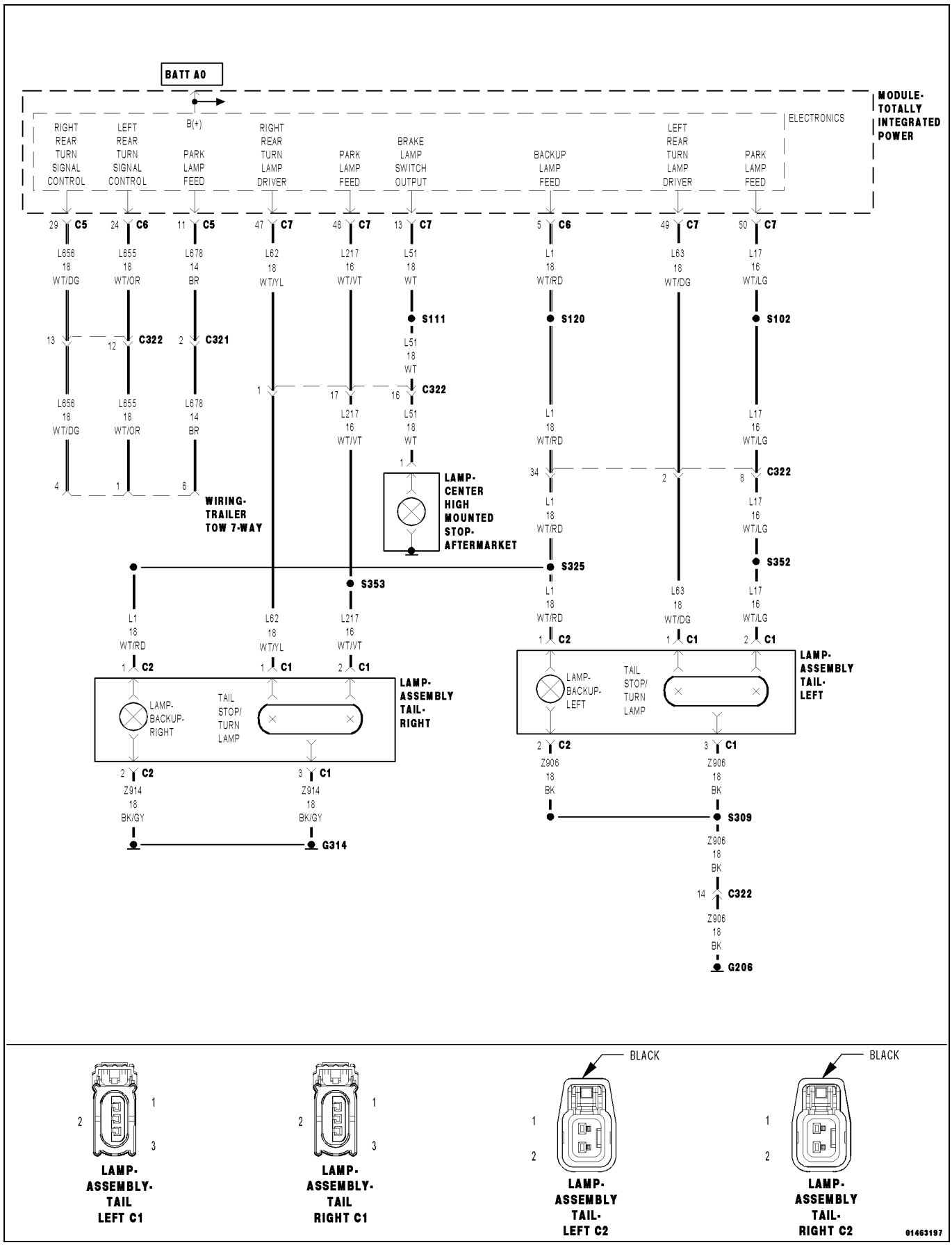

For a complete wiring diagram, **refer to the Wiring Information**.

- **When Monitored:**
  With the Turn Signal activated.
- **Set Condition:**
  When the Totally Integrated Power Module (TIPM) detects a low condition in the right rear turn control circuit.

Possible Causes
(L62) REAR RIGHT TURN LAMP DRIVER CIRCUIT SHORTED TO GROUND
TOTALLY INTEGRATED POWER MODULE (TIPM)

1. INTERMITTENT CONDITION

1. Turn the ignition on.
2. With the scan tool, clear all TIPM DTCs.
3. Turn the Right Turn Signals on.
4. With the scan tool read the DTC information.

Does the scan tool read: B1647-REAR RIGHT TURN CONTROL CIRCUIT LOW?

Yes

- Go To 2

No

- The condition that caused the symptom is currently not present. Inspect the related wiring for a possible intermittent condition. Look for any chafed, pierced, pinched, or partially broken wires.
- Perform the BODY VERIFICATION TEST. (Refer to 28 - DTC-Based Diagnostics/MODULE, Totally Integrated Power (TIPM) - Standard Procedure).

2. (L62) RIGHT REAR TURN LAMP DRIVER CIRCUIT SHORTED TO GROUND

1. Turn the ignition off.
2. Disconnect the TIPM C7 harness connector.
3. Disconnect the Right Rear Tail Lamp harness connector.
4. Measure the resistance between ground and the (L62) Rear Turn Signal Driver circuit.

Is the resistance below 5.0 Ohms?

Yes

- Repair the (L62) Right Rear Turn Lamp Driver circuit for a short to ground.
- Perform the BODY VERIFICATION TEST. (Refer to 28 - DTC-Based Diagnostics/MODULE, Totally Integrated Power (TIPM) - Standard Procedure).

No

- Replace the Totally Integrated Power Module (TIPM) in accordance with the Service Information.
- Perform the BODY VERIFICATION TEST. (Refer to 28 - DTC-Based Diagnostics/MODULE, Totally Integrated Power (TIPM) - Standard Procedure).

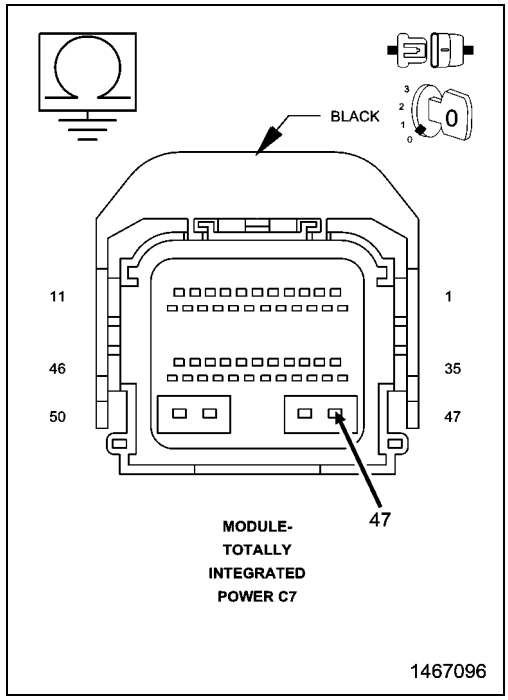

B1649-REAR RIGHT TURN CONTROL CIRCUIT OPEN

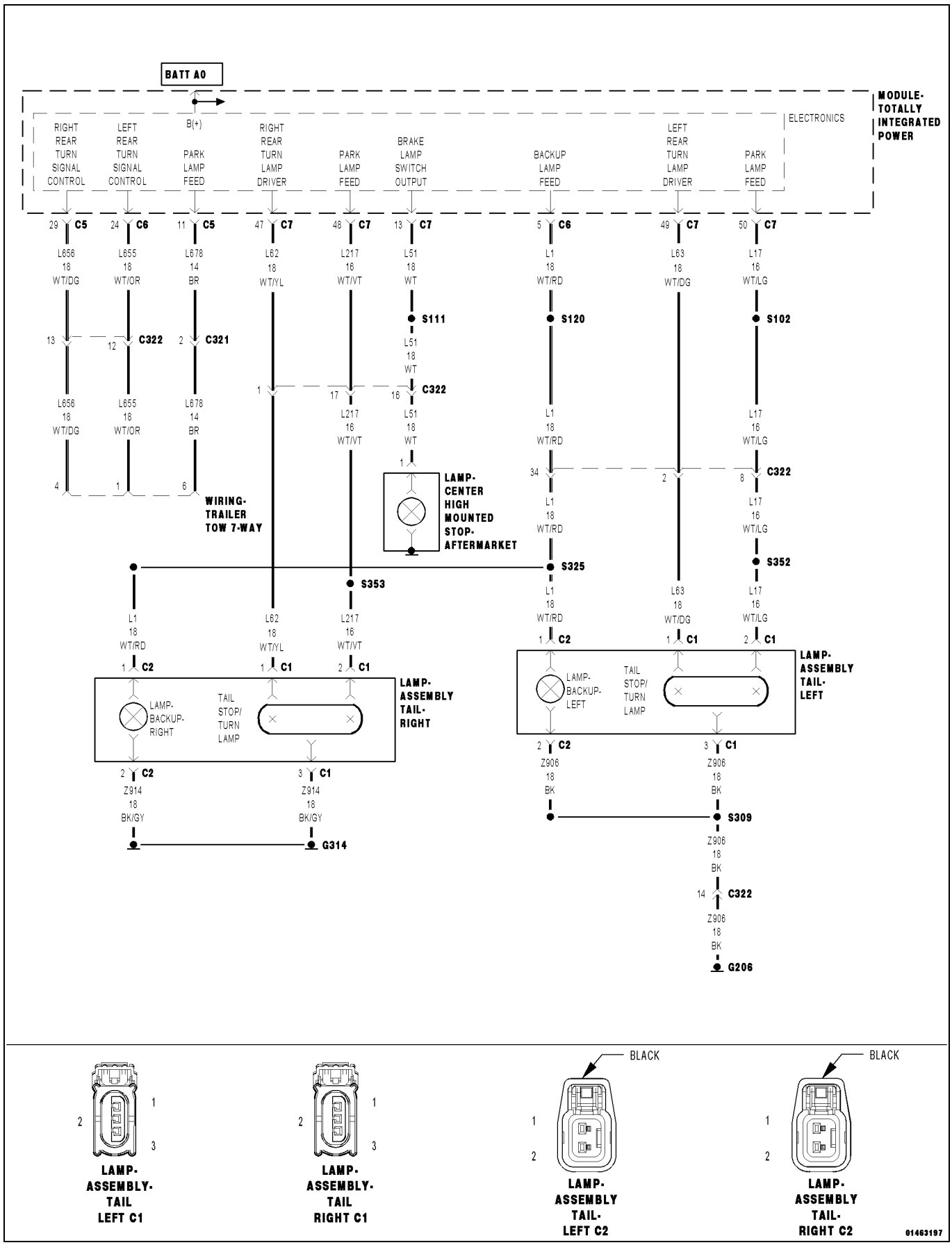

For a complete wiring diagram, **refer to the Wiring Information**.

- **When Monitored:**
  Continuously
- **Set Condition:**
  When the Totally Integrated Power Module detects an open condition on the right rear turn lamp driver circuit.

Possible Causes
(L62) RIGHT REAR TURN LAMP DRIVER CIRCUIT OPEN
TOTALLY INTEGRATED POWER MODULE (TIPM)

1. TEST FOR INTERMITTENT CONDITION

1. Turn the ignition on.
2. Clear all TIPM DTCs
3. Turn the Right Turn Signal on.
4. With the scan tool, read DTCs.

Does the scan tool read: B1649-REAR RIGHT TURN CONTROL CIRCUIT OPEN?

Yes

- Go To 2

No

- The conditions that caused this code to set are not present at this time. Using the wiring diagram/schematic as a guide, inspect the wiring and connectors.
- Perform the BODY VERIFICATION TEST. (Refer to 28 - DTC-Based Diagnostics/MODULE, Totally Integrated Power (TIPM) - Standard Procedure).

2. RIGHT REAR TURN SIGNAL BULB

1. Turn the ignition off.
2. Inspect the Right Rear Turn Signal Bulb Assembly.

Is the inoperative bulb OK?

Yes

- Go To 3

No

- Replace the Inoperative bulb in accordance with the Service Information.
- Perform the BODY VERIFICATION TEST. (Refer to 28 - DTC-Based Diagnostics/MODULE, Totally Integrated Power (TIPM) - Standard Procedure).

3. (L62) RIGHT REAR TURN SIGNAL DRIVER CIRCUIT OPEN

1. Turn the ignition off.
2. Disconnect the TIPM C7 harness connector.
3. Disconnect the Right Rear Turn Lamp harness connector.
4. Measure the resistance on the (L62) Right Rear Turn Lamp Driver circuit.

Is the resistance below 5.0 Ohms?

Yes

- Repair the (L62) Right Rear Turn Lamp Driver circuit for an open condition.
- Perform the BODY VERIFICATION TEST. (Refer to 28 - DTC-Based Diagnostics/MODULE, Totally Integrated Power (TIPM) - Standard Procedure).

No

- Replace the Totally Integrated Power Module (TIPM) in accordance with the Service Information.
- Perform the BODY VERIFICATION TEST. (Refer to 28 - DTC-Based Diagnostics/MODULE, Totally Integrated Power (TIPM) - Standard Procedure).

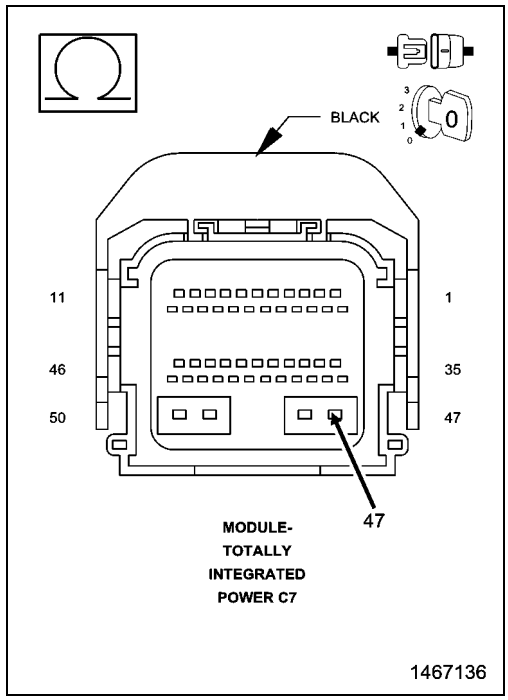

B165C-PARK LAMP CONTROL CIRCUIT LOW

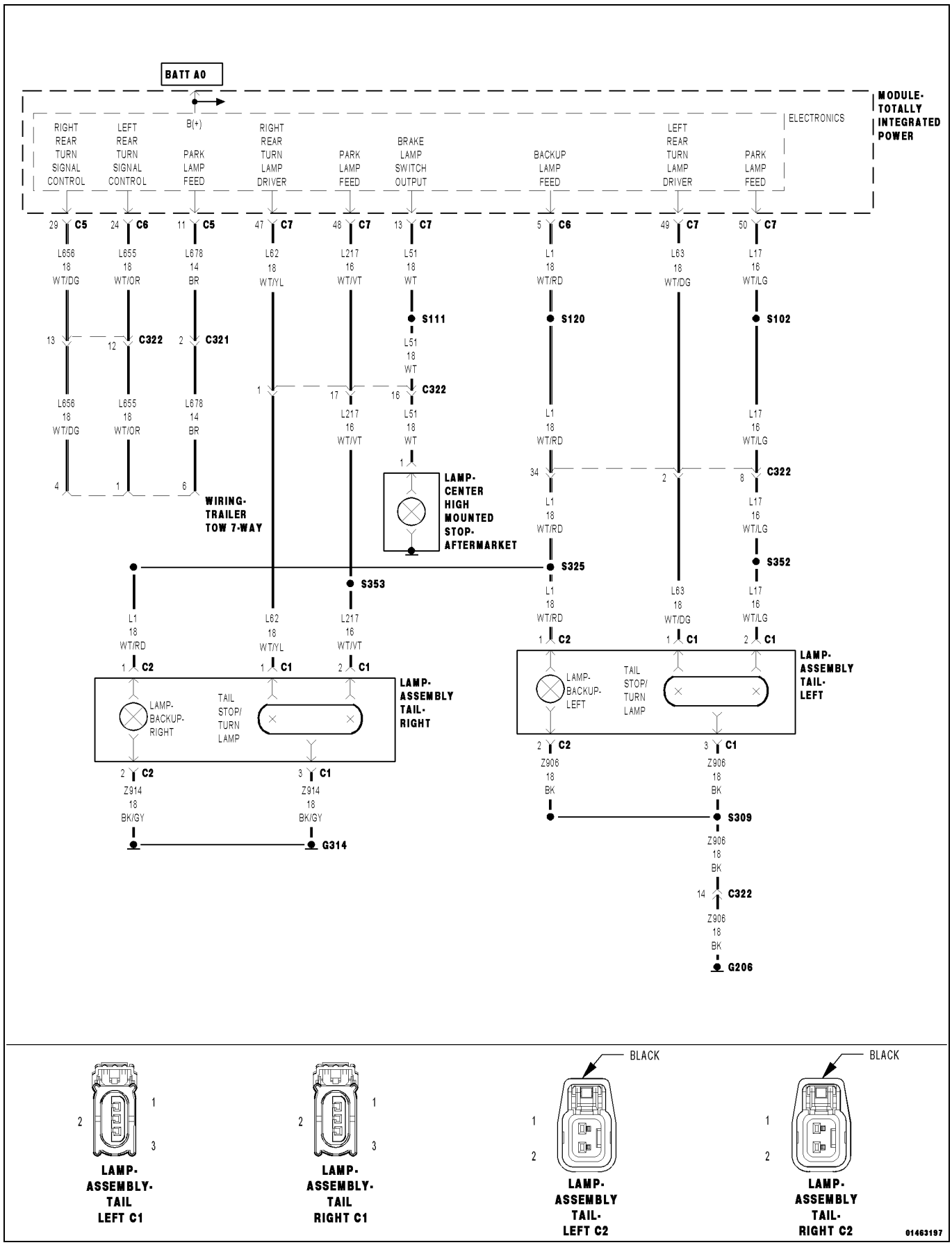

For a complete wiring diagram, **refer to the Wiring Information**.

- **When Monitored:**
  With the Park Lamps activated.
- **Set Condition:**
  When the Totally Integrated Power Module (TIPM) detects a low condition in the park lamp feed circuit.

Possible Causes
(L17) PARK LAMP FEED CIRCUIT SHORTED TO GROUND
TOTALLY INTEGRATED POWER MODULE (TIPIM)

1. INTERMITTENT CONDITION

1. Turn the ignition on.
2. With the scan tool, clear all TIPM DTCs.
3. Turn the Park Lamps on.
4. With the scan tool read the DTC information.

Does the scan tool read: B165C-PARK LAMP CONTROL CIRCUIT LOW?

Yes

- Go To 2

No

- The condition that caused the symptom is currently not present. Inspect the related wiring for a possible intermittent condition. Look for any chafed, pierced, pinched, or partially broken wires.
- Perform the BODY VERIFICATION TEST. (Refer to 28 - DTC-Based Diagnostics/MODULE, Totally Integrated Power (TIPM) - Standard Procedure).

2. (L17) PARK LAMP FEED CIRCUIT SHORTED TO GROUND

1. Turn the ignition off.
2. Disconnect the TIPM C7 harness connector.
3. Disconnect the Park Lamp harness connectors.
4. Measure the resistance between ground and the (L17) Park Lamp Feed circuit.

Is the resistance below 5.0 Ohms?

Yes

- Repair the (L17) Park Lamp Feed circuit for a short to ground.
- Perform the BODY VERIFICATION TEST. (Refer to 28 - DTC-Based Diagnostics/MODULE, Totally Integrated Power (TIPM) - Standard Procedure).

No

- Replace the Totally Integrated Power Module in accordance with the Service Information.
- Perform the BODY VERIFICATION TEST. (Refer to 28 - DTC-Based Diagnostics/MODULE, Totally Integrated Power (TIPM) - Standard Procedure).

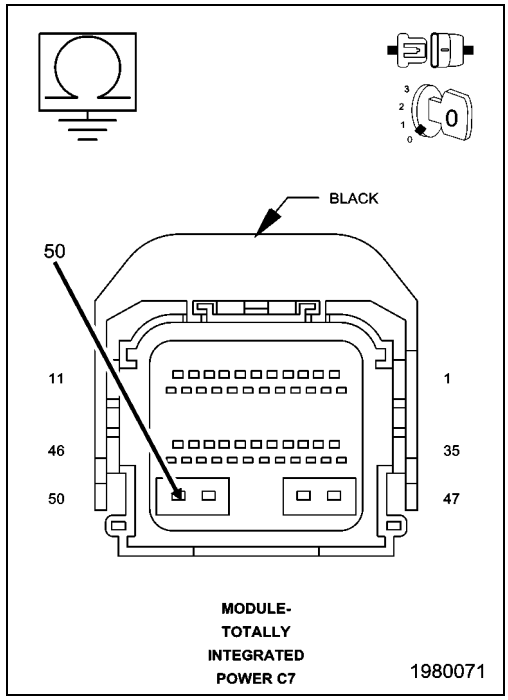

B165D-PARK LAMP CONTROL CIRCUIT HIGH

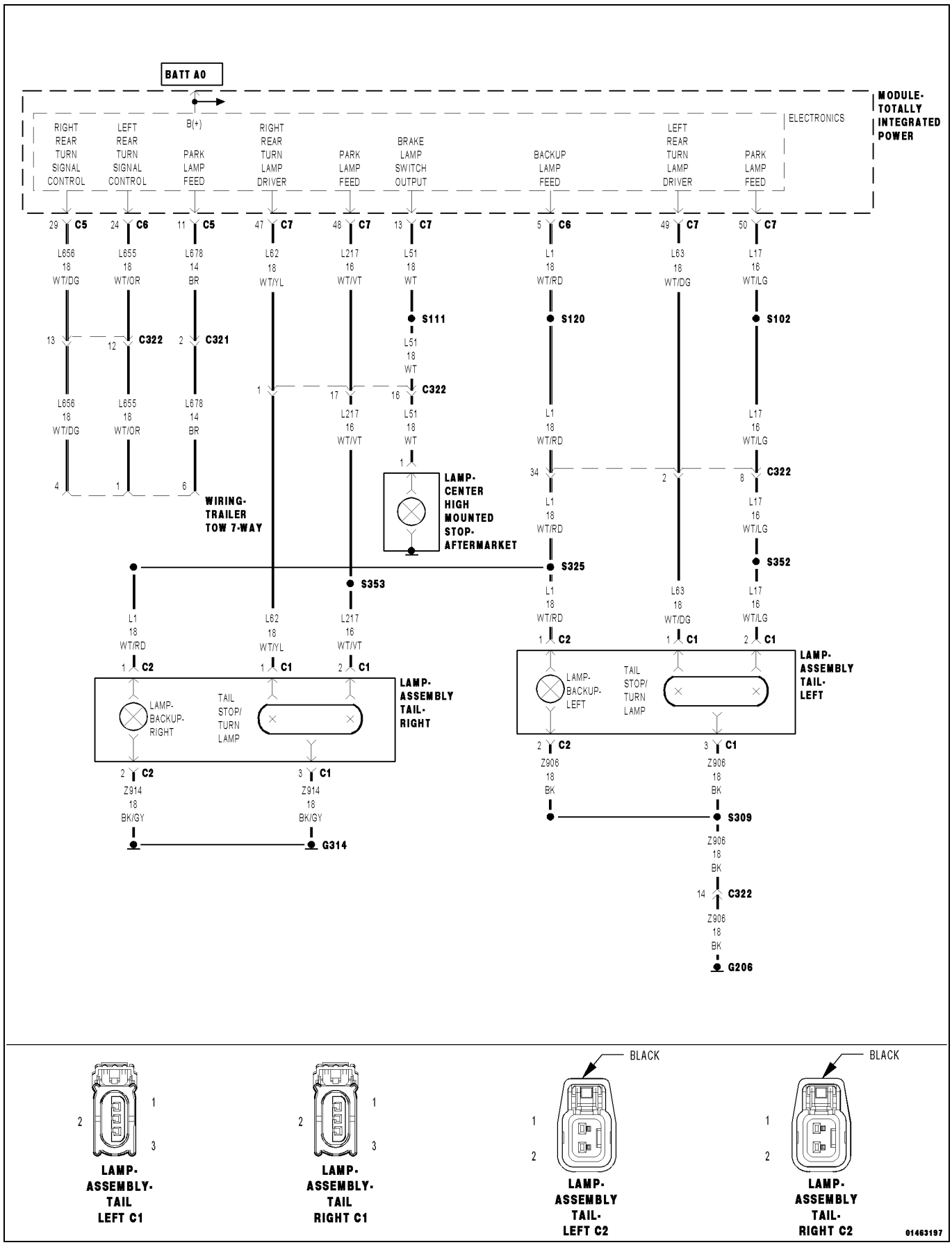

For a complete wiring diagram, **refer to the Wiring Information**.

- **When Monitored:**
  When the Park Lamps are activated
- **Set Condition:**
  When the Totally Integrated Power Module (TIPM) detects a short to battery on the park lamp control circuit.

Possible Causes
(L17) PARK LAMP FEED CIRCUIT SHORTED TO VOLTAGE
TOTALLY INTEGRATED POWER MODULE (TIPM)

1. TEST FOR INTERMITTENT CONDITION

1. Turn the ignition on.
2. Clear all TIPM DTCs.
3. Turn the Park Lamps on.
4. With the scan tool, read DTCs.

Does the scan tool read: B165D-PARK LAMP CONTROL CIRCUIT HIGH?

Yes

- Go To 2

No

- The conditions that caused this code to set are not present at this time. Using the wiring diagram/schematic as a guide, inspect the wiring and connectors.
- Perform the BODY VERIFICATION TEST. (Refer to 28 - DTC-Based Diagnostics/MODULE, Totally Integrated Power (TIPM) - Standard Procedure).

2. (L17) PARK LAMP FEED CIRCUIT SHORTED TO VOLTAGE

1. Turn the ignition off.
2. Disconnect the TIPM C7 harness connector.
3. Disconnect the Park Lamp harness connectors.
4. Turn the ignition on.
5. Measure for voltage on the (L17) Park Lamp Feed circuit.

Is the voltage above 10.0 volts?

Yes

- Repair the (L17) Park Lamp Feed circuit for a short to voltage.
- Perform the BODY VERIFICATION TEST. (Refer to 28 - DTC-Based Diagnostics/MODULE, Totally Integrated Power (TIPM) - Standard Procedure).

No

- Replace the Totally Integrated Power Module (TIPM) in accordance with the Service Information.
- Perform the BODY VERIFICATION TEST. (Refer to 28 - DTC-Based Diagnostics/MODULE, Totally Integrated Power (TIPM) - Standard Procedure).

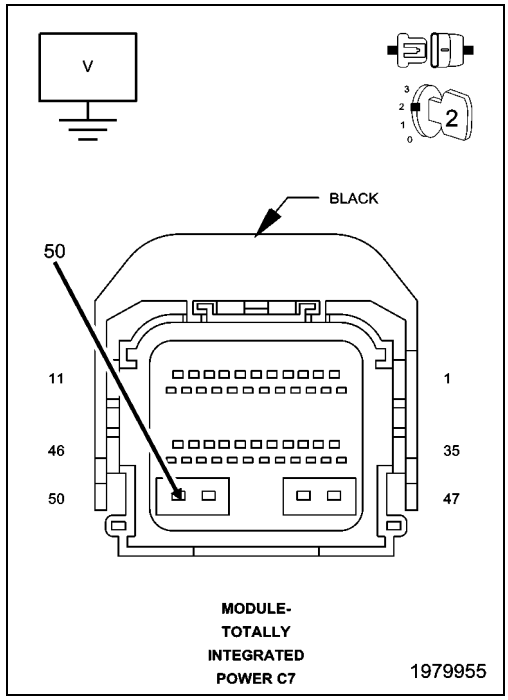

B165E-PARK LAMP CONTROL CIRCUIT OPEN

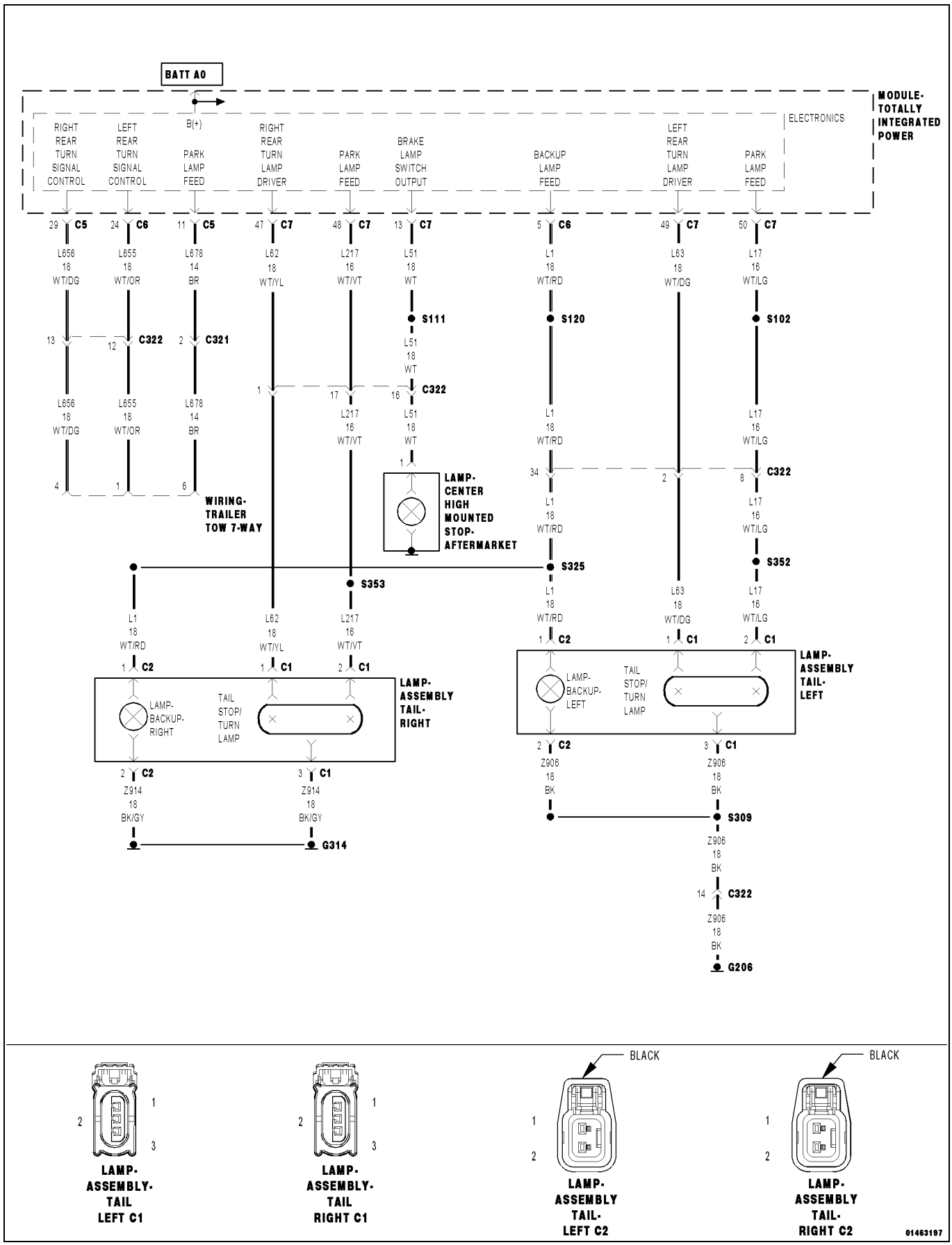

For a complete wiring diagram, **refer to the Wiring Information**.

- **When Monitored:**
  With the Park Lamps Activated.
- **Set Condition:**
  When the Totally Integrated Power Module (TIPM) detects a open condition in the park lamp control circuit.

Possible Causes
(L17) PARK LAMP FEED CIRCUIT OPEN
PARK LAMP BULBS
TOTALLY INTEGRATED POWER MODULE (TIPM)

1. INTERMITTENT CONDITION

1. Turn the ignition on.
2. With the scan tool, clear all TIPM DTCs.
3. Turn the Reverse Lamps on.
4. With the scan tool read the DTC information.

Does the scan tool read: B165E-PARK LAMP CONTROL CIRCUIT OPEN?

Yes

- Go To 2

No

- The condition that caused the symptom is currently not present. Inspect the related wiring for a possible intermittent condition. Look for any chafed, pierced, pinched, or partially broken wires.
- Perform the BODY VERIFICATION TEST. (Refer to 28 - DTC-Based Diagnostics/MODULE, Totally Integrated Power (TIPM) - Standard Procedure).

2. PARK LAMP BULBS

1. Turn the ignition off.
2. Inspect the Park Lamp Bulb Assemblies.

Are the inoperative bulbs OK?

Yes

- Go To 3

No

- Replace the Inoperative bulb or bulbs in accordance with the Service Information.
- Perform the BODY VERIFICATION TEST. (Refer to 28 - DTC-Based Diagnostics/MODULE, Totally Integrated Power (TIPM) - Standard Procedure).

3. (L17) PARK LAMP FEED CIRCUIT OPEN

1. Turn the ignition off.
2. Disconnect the TIPM C7 harness connector.
3. Disconnect the Left Tail Lamp Assembly C1 harness connector.
4. Disconnect the Center Bezel Lamp harness connector.
5. Measure the resistance of the (L17) Park Lamp Feed circuit.

Is the resistance above 5.0 Ohms?

Yes

- Repair the (L17) Park Lamp Feed circuit for an open condition.
- Perform the BODY VERIFICATION TEST. (Refer to 28 - DTC-Based Diagnostics/MODULE, Totally Integrated Power (TIPM) - Standard Procedure).

No

- Replace the Totally Integrated Power Module (TIPM) in accordance with the Service Information.
- Perform the BODY VERIFICATION TEST. (Refer to 28 - DTC-Based Diagnostics/MODULE, Totally Integrated Power (TIPM) - Standard Procedure).

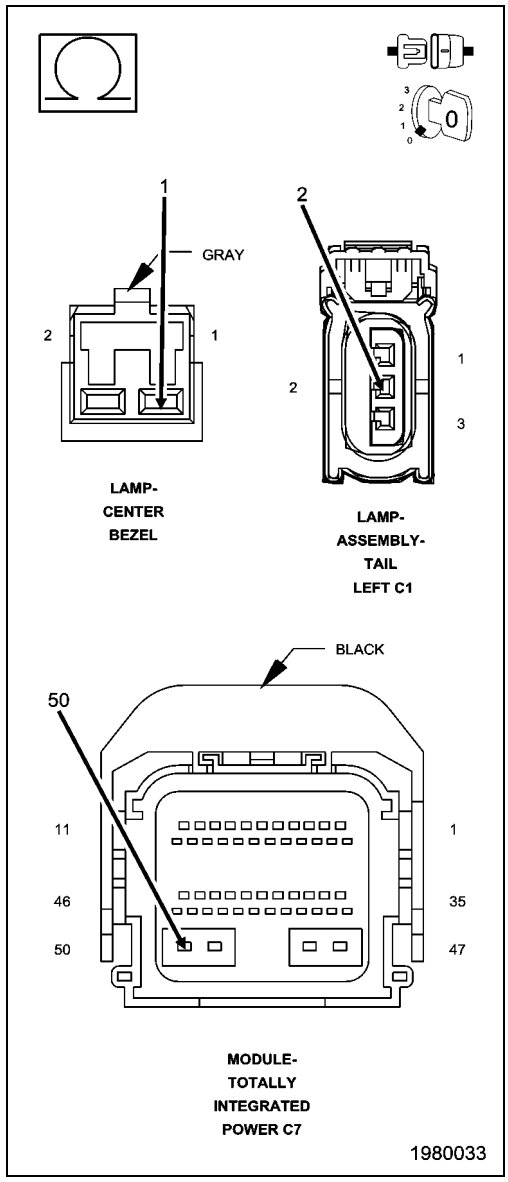

B1659-FRONT FOG LAMP CONTROL CIRCUIT LOW

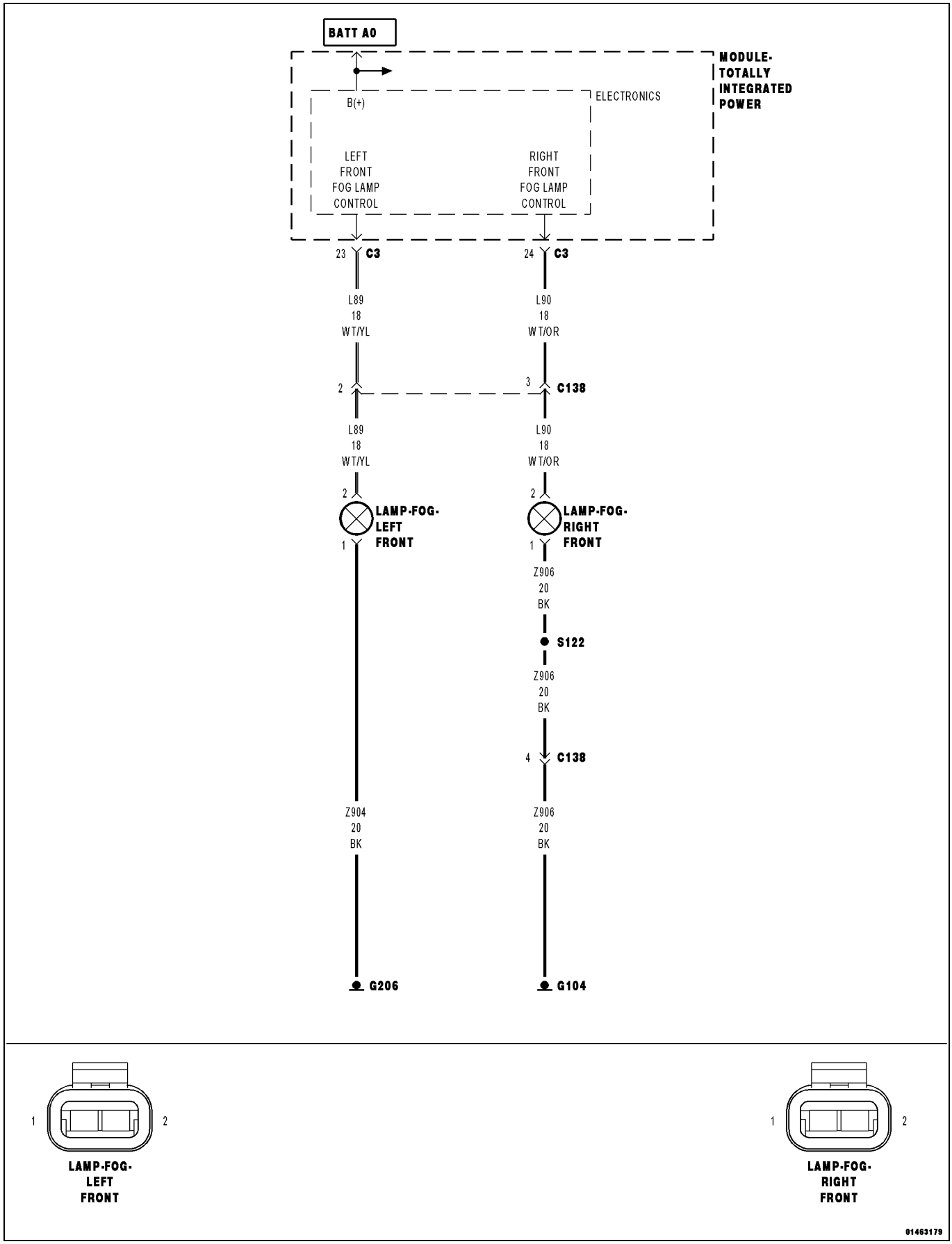

For a complete wiring diagram, **refer to the Wiring Information**.

- **When Monitored:**
  With the Fog Lamps activated.
- **Set Condition:**
  When the Totally Integrated Power Module (TIPM) detects a low condition in the front fog lamp control circuit.

Possible Causes
(L89) LEFT FRONT FOG LAMP CONTROL OUTPUT CIRCUIT SHORTED TO GROUND
(L90) RIGHT FRONT FOG LAMP CONTROL OUTPUT CIRCUIT SHORTED TO GROUND
TOTALLY INTEGRATED POWER MODULE (TIPM)

1. INTERMITTENT CONDITION

1. Turn the ignition on.
2. With the scan tool, clear all TIPM DTCs.
3. Turn the Fog Lamps on.
4. With the scan tool read the DTC information.

Does the scan tool read: B1659-FRONT FOG LAMP CONTROL CIRCUIT LOW?

Yes

- Go To 2

No

- The condition that caused the symptom is currently not present. Inspect the related wiring for a possible intermittent condition. Look for any chafed, pierced, pinched, or partially broken wires.
- Perform the BODY VERIFICATION TEST. (Refer to 28 - DTC-Based Diagnostics/MODULE, Totally Integrated Power (TIPM) - Standard Procedure).

2. (L89) LEFT FRONT FOG LAMP CONTROL OUTPUT CIRCUIT SHORTED TO GROUND

1. Turn the ignition off.
2. Disconnect the TIPM C3 harness connector.
3. Disconnect the Left and Right Front Fog Lamp harness connectors.
4. Measure the resistance between ground and the (L89) Front Fog Lamp Control Output circuit.

Is the resistance below 5.0 Ohms?

Yes

- Repair the (L89) Left Front Fog Lamp Control Output circuit for a short to ground.
- Perform the BODY VERIFICATION TEST. (Refer to 28 - DTC-Based Diagnostics/MODULE, Totally Integrated Power (TIPM) - Standard Procedure)

No

- Go To 3

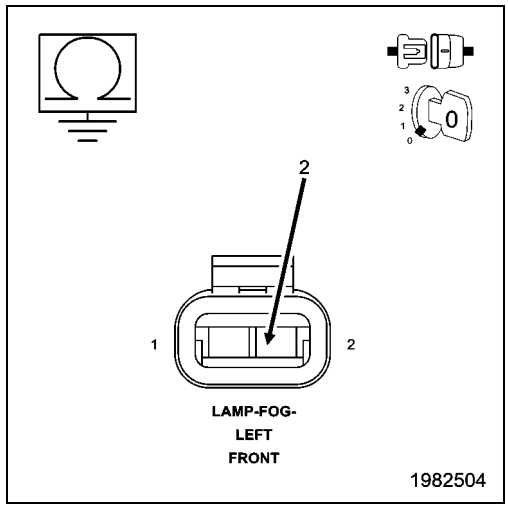

3. (L90) RIGHT FOG LAMP CONTROL OUTPUT CIRCUIT SHORTED TO GROUND

1. Measure the resistance between ground and the (L90) Right Front Fog Lamp Control Output circuit.

Is the resistance below 5.0 Ohms?

Yes

- Repair the (L90) Right Front Fog Lamp Control Output circuit for a short to ground.
- Perform the BODY VERIFICATION TEST. (Refer to 28 - DTC-Based Diagnostics/MODULE, Totally Integrated Power (TIPM) - Standard Procedure)

No

- Replace the Totally Integrated Power Module (TIPM) in accordance with the Service Information.
- Perform the BODY VERIFICATION TEST. (Refer to 28 - DTC-Based Diagnostics/MODULE, Totally Integrated Power (TIPM) - Standard Procedure)

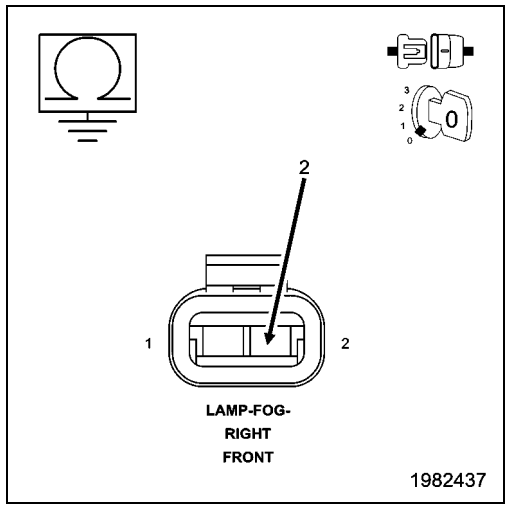

B1660-FRONT FOG LAMP CONTROL CIRCUIT HIGH

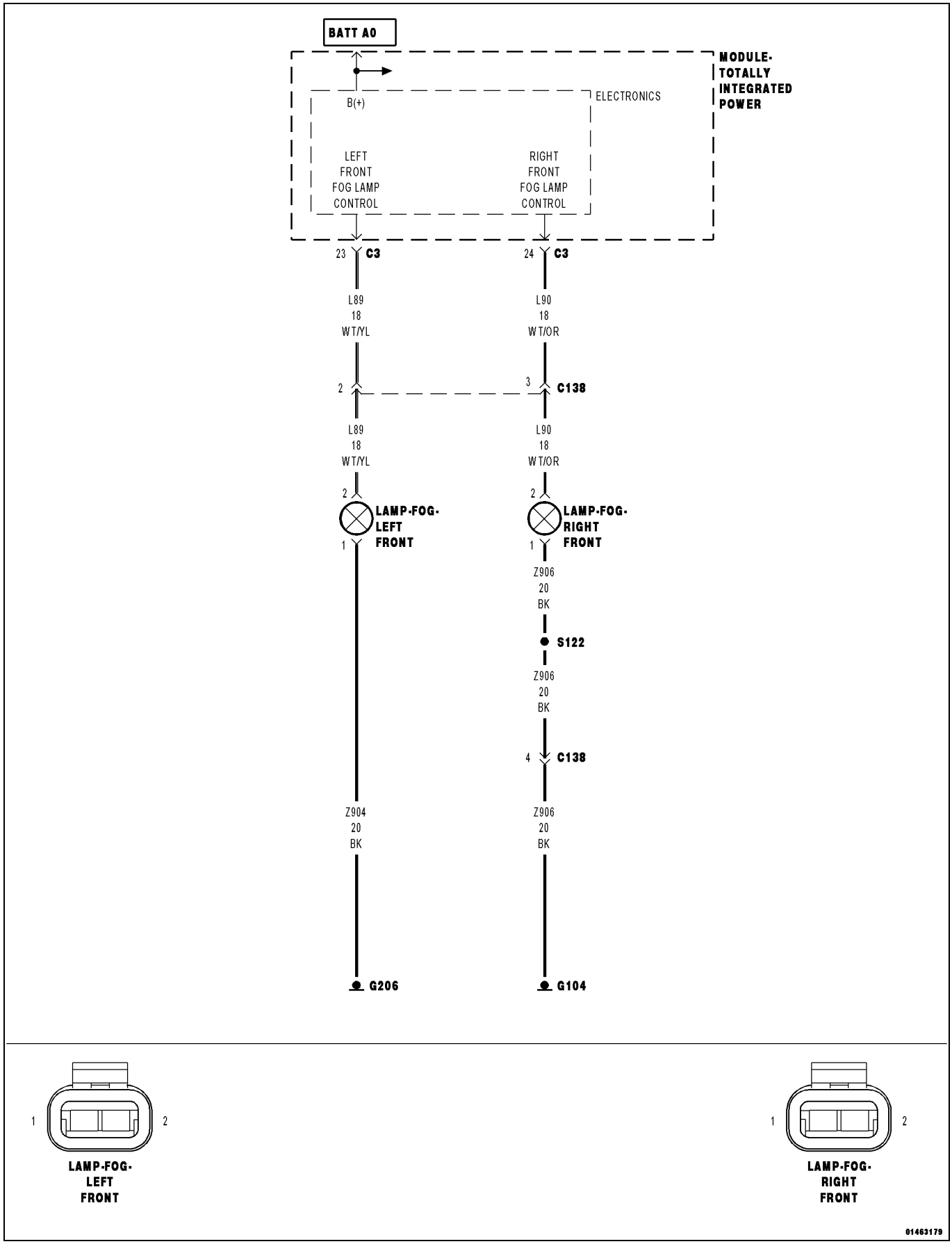

For a complete wiring diagram, **refer to the Wiring Information**.

- **When Monitored:**
  With the Front Fog Lamps activated.
- **Set Condition:**
  When the Totally Integrated Power Module (TIPM) detects a high condition in the front fog lamp control circuit.

Possible Causes
(L89) LEFT FRONT FOG LAMP CONTROL CIRCUIT OPEN
(L90) RIGHT FRONT FOG LAMP CONTROL CIRCUIT OPEN
(L89) LEFT FRONT FOG LAMP CONTROL CIRCUIT SHORTED TO VOLTAGE
(L90) RIGHT FRONT FOG LAMP CONTROL CIRCUIT SHORTED TO VOLTAGE
LEFT AND/OR RIGHT FRONT FOG LAMP BULBS
TOTALLY INTEGRATED POWER MODULE (TIPM)

1. INTERMITTENT CONDITION

1. Turn the ignition on.
2. With the scan tool, clear all TIPM DTCs.
3. Turn the Front Fog Lamps on.
4. With the scan tool read the DTC information.

Does the scan tool read: B1660-FRONT FOG LAMP CONTROL CIRCUIT HIGH?

Yes

- Go To 2

No

- The condition that caused the symptom is currently not present. Inspect the related wiring for a possible intermittent condition. Look for any chafed, pierced, pinched, or partially broken wires.
- Perform the BODY VERIFICATION TEST. (Refer to 28 - DTC-Based Diagnostics/MODULE, Totally Integrated Power (TIPM) - Standard Procedure).

2. LEFT AND RIGHT FRONT FOG LAMP BULBS

1. Turn the ignition off.
2. Inspect the Left and Right Front Fog Lamp Bulb Assemblies.

Are the inoperative bulbs OK?

Yes

- Go To 3

No

- Replace the Inoperative bulb(s) in accordance with the Service Information.
- Perform the BODY VERIFICATION TEST. (Refer to 28 - DTC-Based Diagnostics/MODULE, Totally Integrated Power (TIPM) - Standard Procedure).

3. (L89) FRONT FOG LAMP CONTROL CIRCUIT OPEN

1. Turn the ignition off.
2. Disconnect the TIPM C3 harness connector.
3. Disconnect the Left Front Fog Lamp harness connector.
4. Measure the resistance of the (L89) Front Fog Lamp Control Output circuit.

Is the resistance above 5.0 Ohms?

Yes

- Repair the (L89) Left Front Fog Lamp Control circuit for an open condition.
- Perform the BODY VERIFICATION TEST. (Refer to 28 - DTC-Based Diagnostics/MODULE, Totally Integrated Power (TIPM) - Standard Procedure).

No

- Go To 4

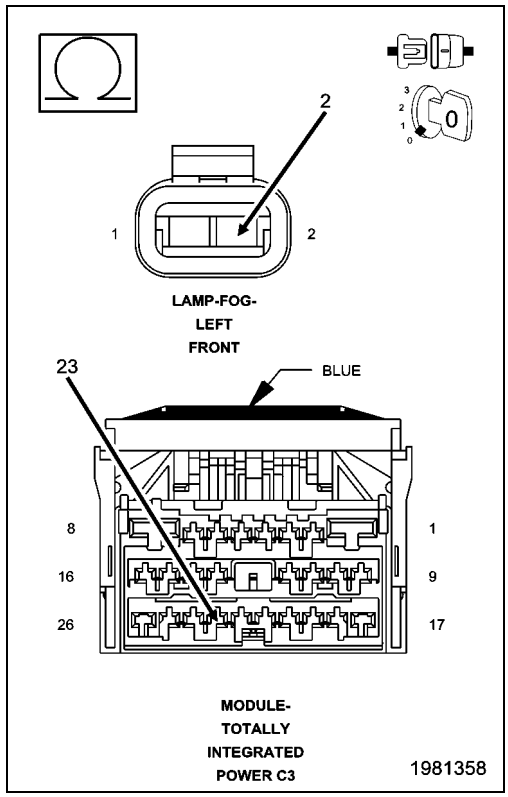

4. (L90) RIGHT FRONT FOG LAMP CONTROL CIRCUIT OPEN

1. Disconnect the Right Front Fog Lamp harness connector.
2. Measure the resistance of the (L90) Right Front Fog Lamp Control Output circuit.

Is the resistance above 5.0 Ohms

Yes

- Repair the (L90) Right Front Fog Lamp Control circuit for an open condition.
- Perform the BODY VERIFICATION TEST. (Refer to 28 - DTC-Based Diagnostics/MODULE, Totally Integrated Power (TIPM) - Standard Procedure).

No

- Go To 5

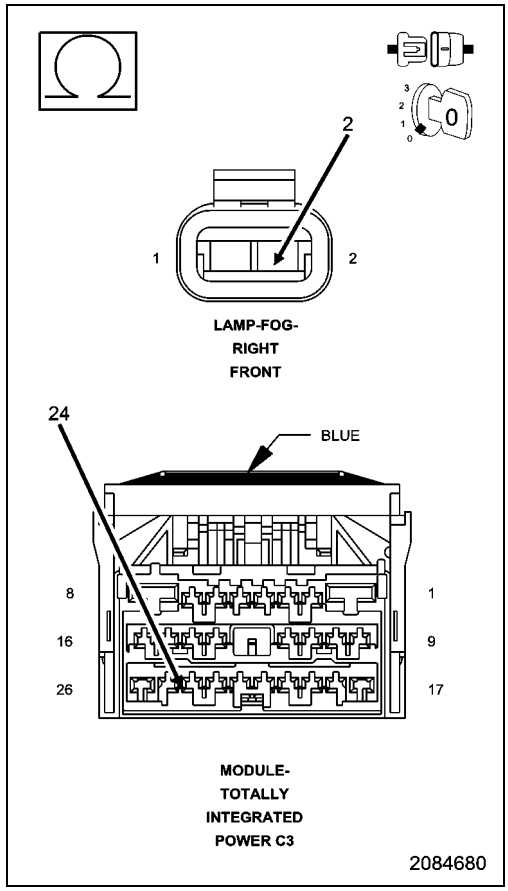

5. (L89) LEFT FRONT FOG LAMP CONTROL OUTPUT CIRCUIT SHORTED TO VOLTAGE

1. Turn the ignition on.
2. Measure for voltage on the (L89) Front Fog Lamp Control Output circuit.

Is the voltage above 10.0 volts?

Yes

- Repair the (L89) Front Fog Lamp Control Output circuit for a short to voltage condition.
- Perform the BODY VERIFICATION TEST. (Refer to 28 - DTC-Based Diagnostics/MODULE, Totally Integrated Power (TIPM) - Standard Procedure).

No

- Go To 6

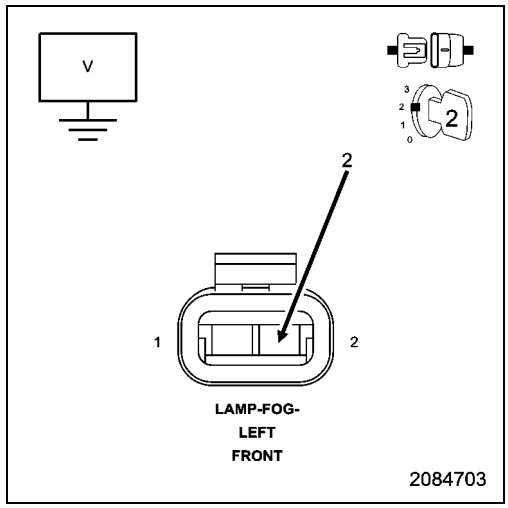

6. (L90) RIGHT FRONT FOG LAMP CONTROL OUTPUT CIRCUIT SHORTED TO VOLTAGE

1. Measure for voltage on the (L90) Right Front Fog Lamp Control Output circuit.

Is the voltage above 10.0 volts?

Yes

- Repair the (L90) Right Front Fog Lamp Control Output circuit for a short to voltage condition.
- Perform the BODY VERIFICATION TEST. (Refer to 28 - DTC-Based Diagnostics/MODULE, Totally Integrated Power (TIPM) - Standard Procedure).

No

- Replace the Totally Integrated Power Module (TIPM) in accordance with the Service Information.
- Perform the BODY VERIFICATION TEST. (Refer to 28 - DTC-Based Diagnostics/MODULE, Totally Integrated Power (TIPM) - Standard Procedure).

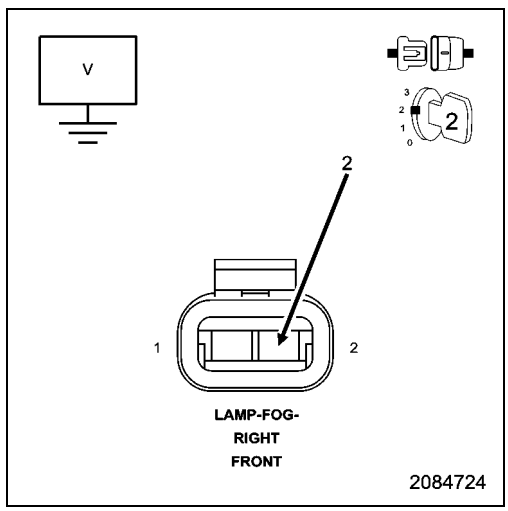

B1661-FRONT FOG LAMP CONTROL CIRCUIT OPEN

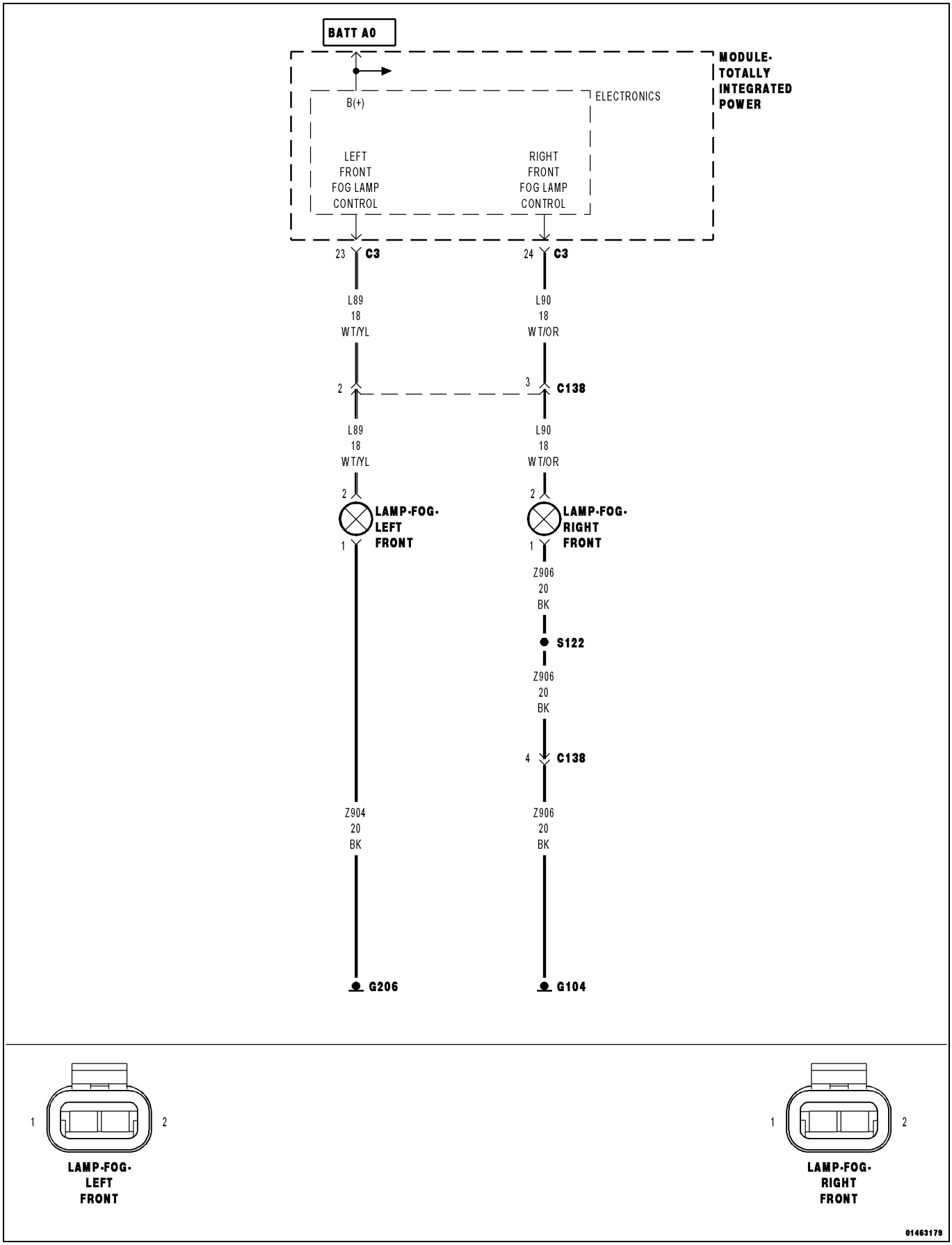

For a complete wiring diagram, **refer to the Wiring Information**.

- **When Monitored:**
  With the front fog lamps are on.
- **Set Condition:**
  When the Totally Integrated Power Module (TIPM) detects a open condition in the front fog lamp control circuit.

Possible Causes
(L89) LEFT FRONT FOG LAMP CONTROL CIRCUIT OPEN
(L90) RIGHT FRONT FOG LAMP CONTROL CIRCUIT OPEN
LEFT AND/OR RIGHT REVERSE LAMP BULBS
TOTALLY INTEGRATED POWER MODULE (TIPM)

1. INTERMITTENT CONDITION

1. Turn the ignition on.
2. With the scan tool, clear all TIPM DTCs.
3. Turn the Front Fog Lamps on.
4. With the scan tool read the DTC information.

Does the scan tool read: B1661-FRONT FOG LAMP CONTROL CIRCUIT OPEN?

Yes

- Go To 2

No

- The condition that caused the symptom is currently not present. Inspect the related wiring for a possible intermittent condition. Look for any chafed, pierced, pinched, or partially broken wires.
- Perform the BODY VERIFICATION TEST. (Refer to 28 - DTC-Based Diagnostics/MODULE, Totally Integrated Power (TIPM) - Standard Procedure).

2. FRONT FOG LAMP BULBS

1. Turn the ignition off.
2. Inspect the Left and Right Front Fog Lamp Bulb Assemblies.

Are the inoperative bulbs OK?

Yes

- Go To 3

No

- Replace the Inoperative bulb or bulbs in accordance with the Service Information.
- Perform the BODY VERIFICATION TEST. (Refer to 28 - DTC-Based Diagnostics/MODULE, Totally Integrated Power (TIPM) - Standard Procedure).

3. (L89) LEFT FRONT FOG LAMP CONTROL OUTPUT CIRCUIT OPEN

1. Turn the ignition off.
2. Disconnect the TIPM C3 harness connector.
3. Disconnect the Left and Right Front Fog Lamp harness connectors.
4. Measure the resistance of the Front Fog Lamp Control Output circuits.

Is the resistance above 5.0 Ohms?

Yes

- Repair the (L89) Left Front Fog Lamp Control Output circuit for an open condition.
- Perform the BODY VERIFICATION TEST. (Refer to 28 - DTC-Based Diagnostics/MODULE, Totally Integrated Power (TIPM) - Standard Procedure).

No

- Go To 4

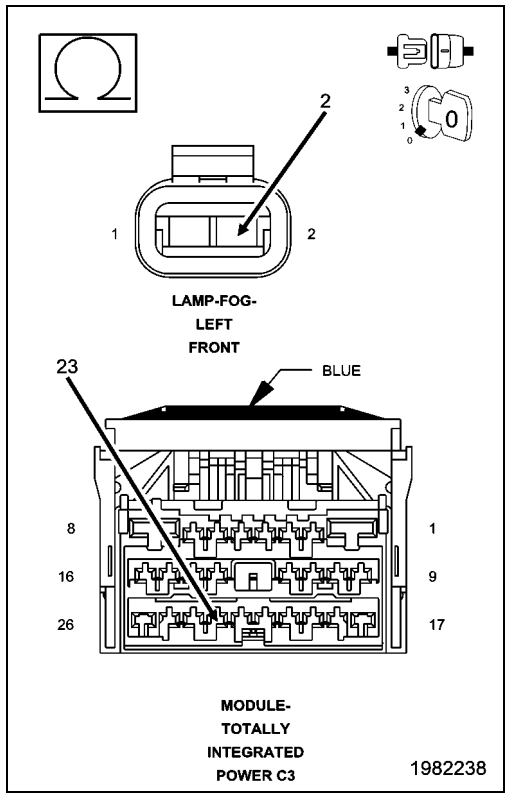

4. (L90) RIGHT FRONT FOG LAMP CONTROL OUTPUT CIRCUIT OPEN

1. Measure the resistance of the (L90) Right Front Fog Lamp Control Output circuit.

Is the resistance above 5.0 Ohms?

Yes

- Repair the (L90) Right Front Fog Lamp Control Output circuit for an open condition.
- Perform the BODY VERIFICATION TEST. (Refer to 28 - DTC-Based Diagnostics/MODULE, Totally Integrated Power (TIPM) - Standard Procedure).

No

- Replace the Totally Integrated Power Module (TIPM) in accordance with the Service Information.
- Perform the BODY VERIFICATION TEST. (Refer to 28 - DTC-Based Diagnostics/MODULE, Totally Integrated Power (TIPM) - Standard Procedure).

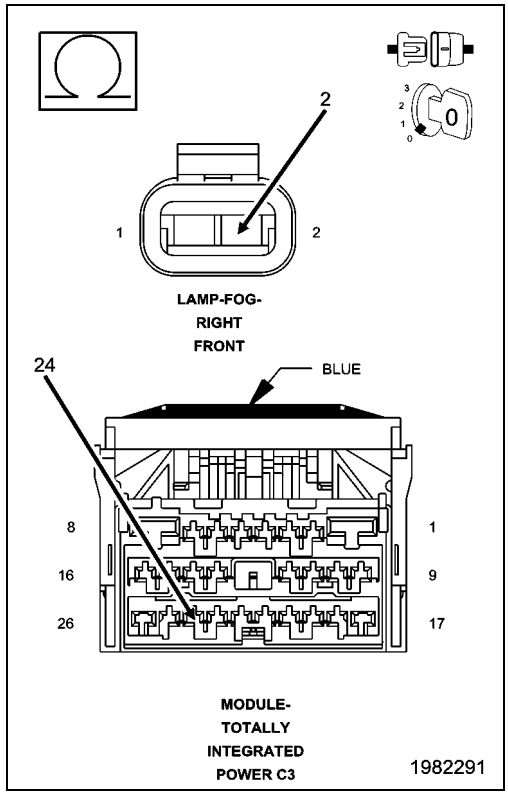

B1667-REVERSE LAMP CONTROL CIRCUIT LOW

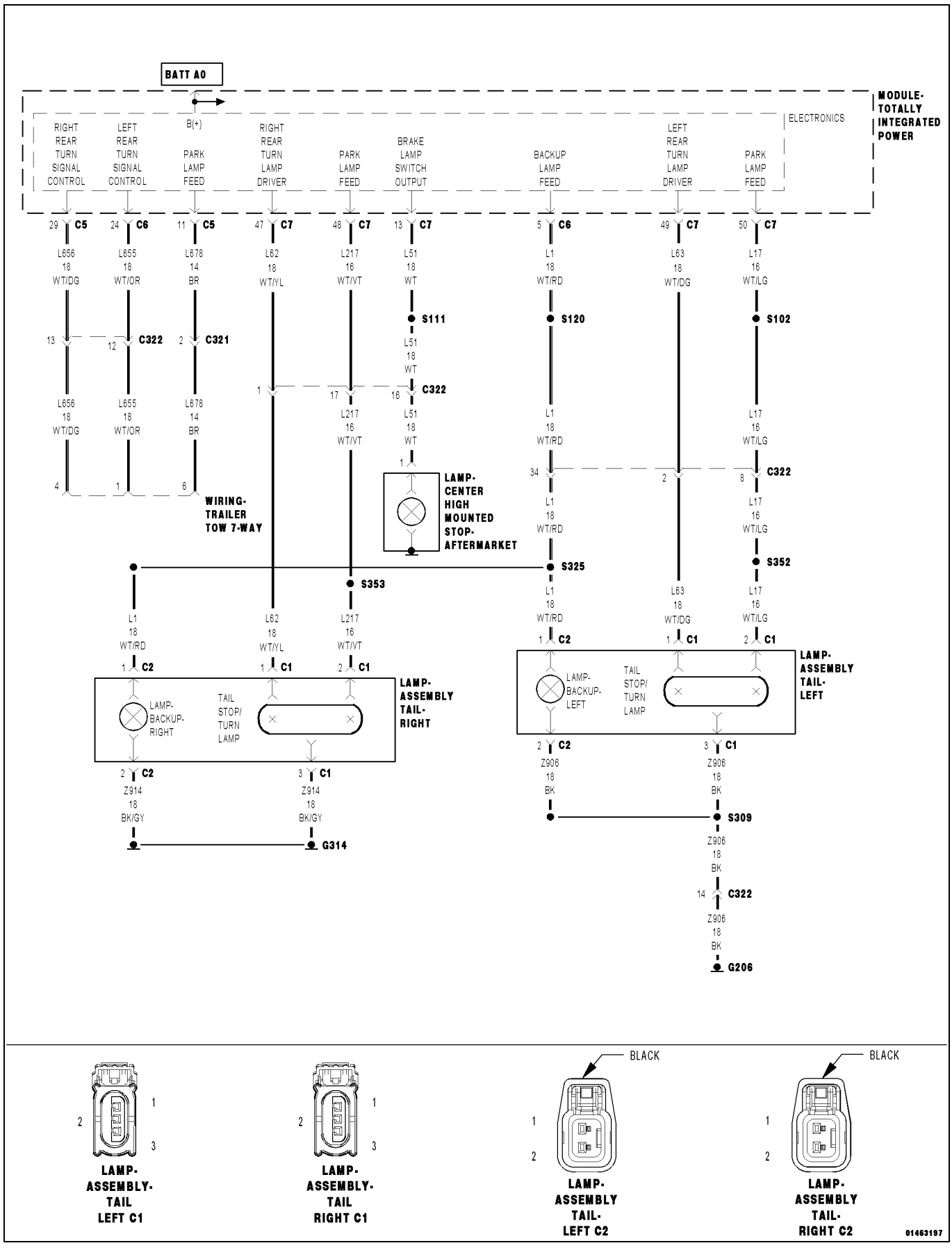

For a complete wiring diagram, **refer to the Wiring Information**.

- **When Monitored:**
  With the ignition on.
- **Set Condition:**
  The Totally Integrated Power Module (TIPM) detects a low condition in the back-up lamp feed circuit.

Possible Causes
(L1) BACK-UP LAMP FEED CIRCUIT SHORTED TO GROUND
TOTALLY INTEGRATED POWER MODULE (TIPM)

1. INTERMITTENT CONDITION

1. Turn the ignition on.
2. With the scan tool, clear all TIPM DTCs.
3. Shift the transmission into reverse.
4. With the scan tool read the DTC information.

Does the scan tool read: B1667-REVERSE LAMP CONTROL CIRCUIT LOW?

Yes

- Go To 2

No

- The condition that caused the symptom is currently not present. Inspect the related wiring for a possible intermittent condition. Look for any chafed, pierced, pinched, or partially broken wires.
- Perform the BODY VERIFICATION TEST. (Refer to 28 - DTC-Based Diagnostics/MODULE, Totally Integrated Power (TIPM) - Standard Procedure).

2. (L1) BACKUP LAMP FEED CIRCUIT

1. Turn the ignition off.
2. Disconnect the TIPM C6 connector.
3. Measure the resistance between ground and the (L1) Backup Lamp circuit.

Is the resistance below 5.0 Ohms?

Yes

- Repair the (L1) Backup Lamp circuit for a short to ground.
- Perform the BODY VERIFICATION TEST. (Refer to 28 - DTC-Based Diagnostics/MODULE, Totally Integrated Power (TIPM) - Standard Procedure).

No

- Replace the Totally Integrated Power Module (TIPM) in accordance with the Service Information.
- Perform the BODY VERIFICATION TEST. (Refer to 28 - DTC-Based Diagnostics/MODULE, Totally Integrated Power (TIPM) - Standard Procedure).

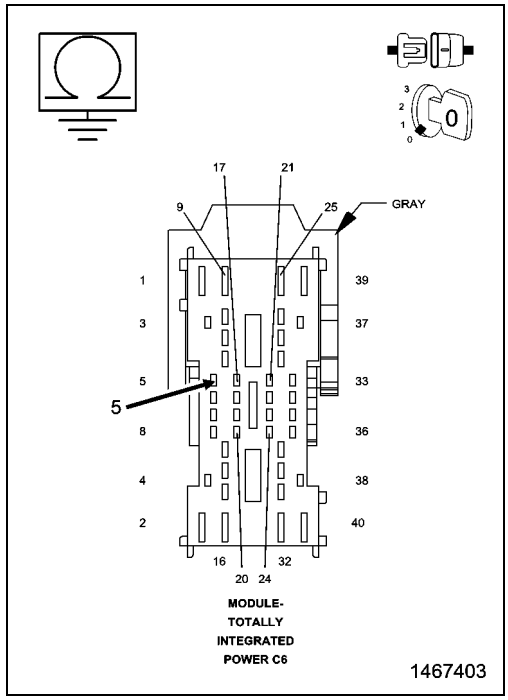

B1669-REVERSE LAMP CONTROL CIRCUIT OPEN

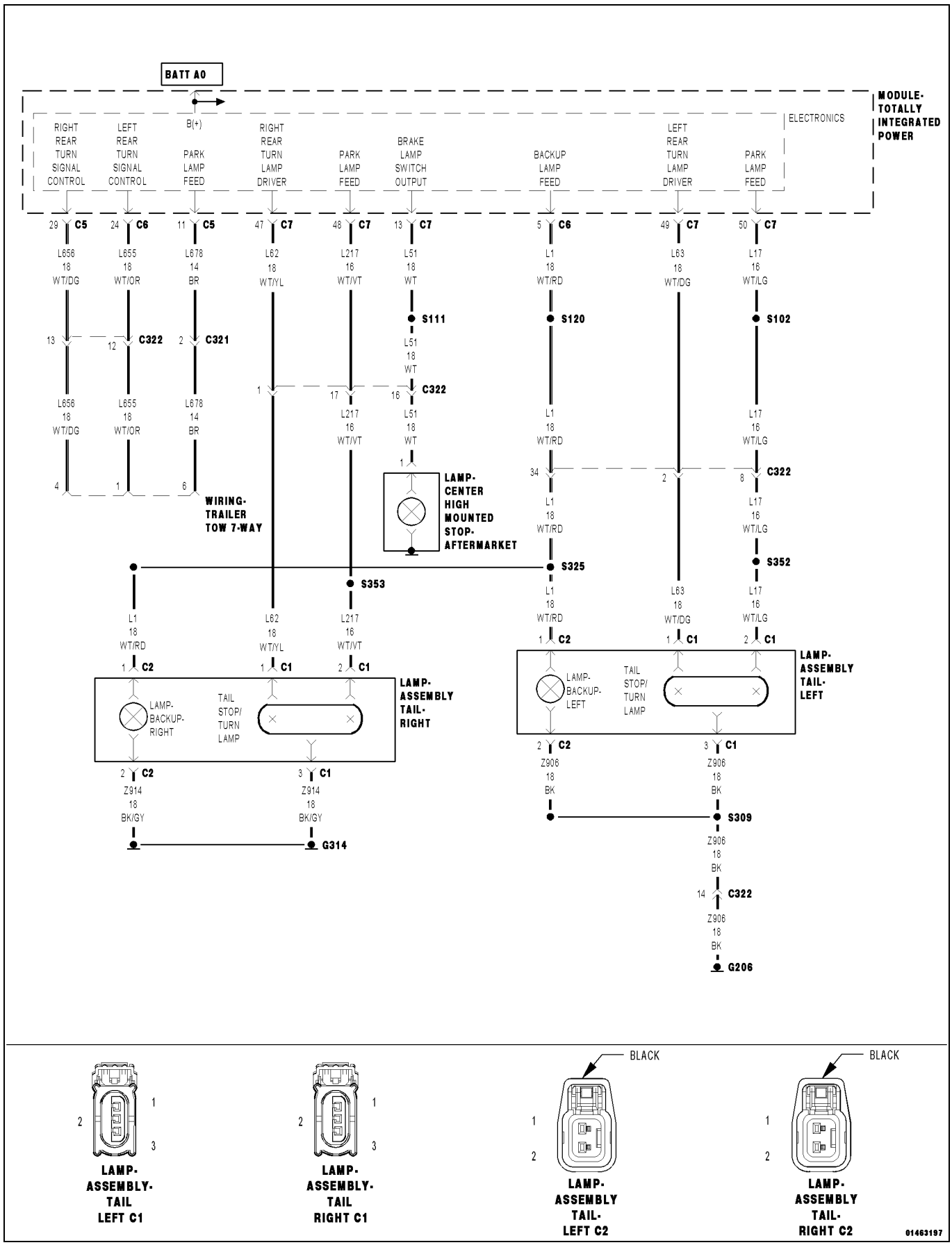

For a complete wiring diagram, **refer to the Wiring Information**.

- **When Monitored:**
  With the Reverse Lamps Activated.
- **Set Condition:**
  When the totally Integrated Power Module (TIPM) detects an open condition in the back-up lamp feed circuit.

Possible Causes
(L1) BACKUP LAMP FEED CIRCUIT OPEN
LEFT AND/OR RIGHT REVERSE LAMP BULBS
TOTALLY INTEGRATED POWER MODULE (TIPM)

1. INTERMITTENT CONDITION

1. Turn the ignition on.
2. With the scan tool, clear all TIPM DTCs.
3. Turn the Reverse Lamps on.
4. With the scan tool read the DTC information.

Does the scan tool read: B1669-REVERSE LAMP CONTROL CIRCUIT OPEN?

Yes

- Go To 2

No

- The condition that caused the symptom is currently not present. Inspect the related wiring for a possible intermittent condition. Look for any chafed, pierced, pinched, or partially broken wires.
- Perform the BODY VERIFICATION TEST. (Refer to 28 - DTC-Based Diagnostics/MODULE, Totally Integrated Power (TIPM) - Standard Procedure).

2. REVERSE LAMP BULBS

1. Turn the ignition off.
2. Inspect the Left and Right Reverse Lamp Bulb Assemblies.

Are the inoperative bulbs OK?

Yes

- Go To 3

No

- Replace the Inoperative bulb or bulbs in accordance with the Service Information.
- Perform the BODY VERIFICATION TEST. (Refer to 28 - DTC-Based Diagnostics/MODULE, Totally Integrated Power (TIPM) - Standard Procedure).

3. (L1) BACKUP LAMP FEED CIRCUIT OPEN

1. Turn the ignition off.
2. Disconnect the TIPM C6 harness connector.
3. Disconnect the Left and Right Reverse Lamp harness connectors.
4. Measure the resistance of the (L1) Backup Lamp Feed circuit.

Is the resistance above 5.0 Ohms?

Yes

- Repair the (L1) Backup Lamp Feed circuit for an open condition.
- Perform the BODY VERIFICATION TEST. (Refer to 28 - DTC-Based Diagnostics/MODULE, Totally Integrated Power (TIPM) - Standard Procedure)

No

- Replace the Totally Integrated Power Module (TIPM) in accordance with the Service Information.
- Perform the BODY VERIFICATION TEST. (Refer to 28 - DTC-Based Diagnostics/MODULE, Totally Integrated Power (TIPM) - Standard Procedure)

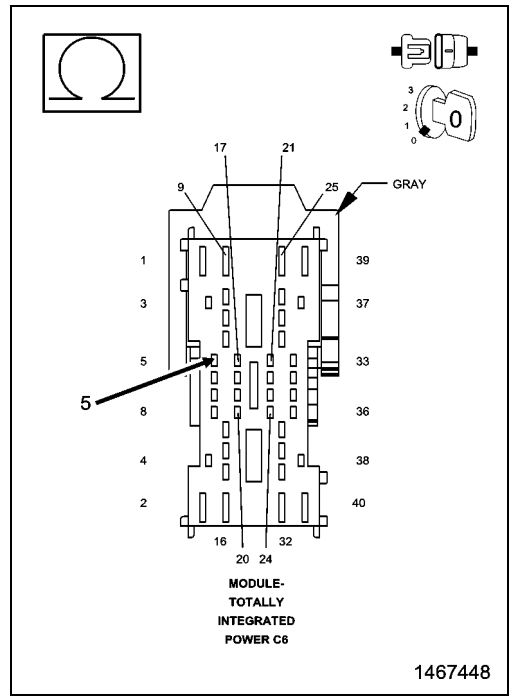

B17AE-LEFT TRAILER TOW LAMP CONTROL CIRCUIT LOW

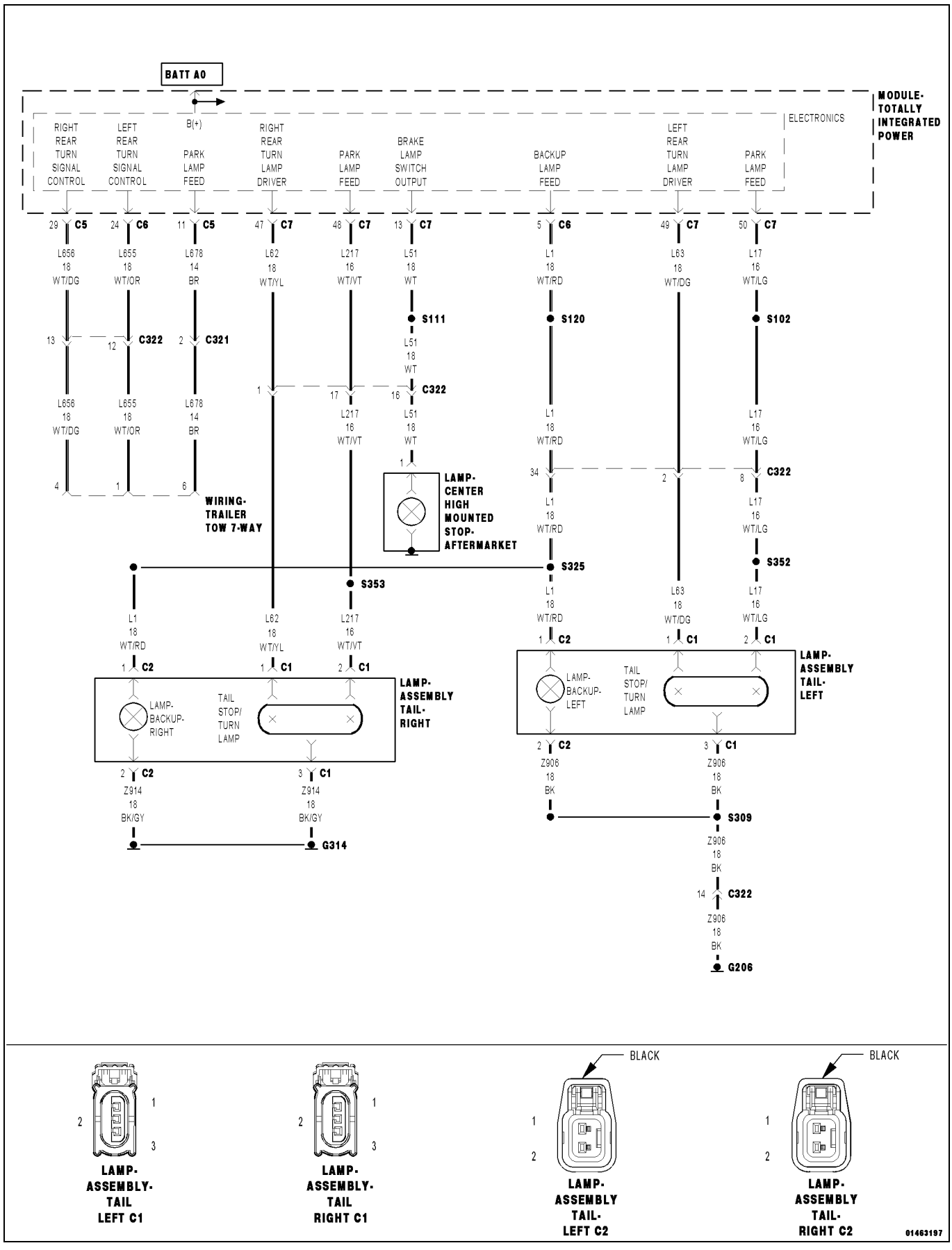

For a complete wiring diagram, **refer to the Wiring Information**.

- **When Monitored:**
  With the ignition on.
- **Set Condition:**
  The Totally Integrated Power Module (TIPM) detects a short to ground in the left rear turn signal control circuit.

Possible Causes
(L655) LEFT REAR TURN SIGNAL CONTROL CIRCUIT SHORTED TO GROUND
TOTALLY INTEGRATED POWER MODULE (TIPM)

1. INTERMITTENT CONDITION

1. Turn the ignition on.
2. With the scan tool, clear all TIPM DTCs.
3. Turn on the Left Turn Signal.
4. With the scan tool read the DTC information.

Does the scan tool read: B17AE-LEFT TRAILER TOW LAMP CONTROL CIRCUIT LOW?

Yes

- Go To 2

No

- The condition that caused the symptom is currently not present. Inspect the related wiring for a possible intermittent condition. Look for any chafed, pierced, pinched, or partially broken wires.
- Perform the BODY VERIFICATION TEST. (Refer to 28 - DTC-Based Diagnostics/MODULE, Totally Integrated Power (TIPM) - Standard Procedure).

2. (L655) LEFT REAR TURN SIGNAL CONTROL CIRCUIT SHORTED TO GROUND

1. Turn the ignition off.
2. Disconnect the TIPM C6 harness connector.
3. Measure the resistance between ground and the (L655) Left Rear Turn Signal Control circuit.

Is the resistance below 5.0 Ohms?

Yes

- Repair the (L655) Left Rear Turn Signal Control circuit for a short to ground.
- Perform the BODY VERIFICATION TEST. (Refer to 28 - DTC-Based Diagnostics/MODULE, Totally Integrated Power (TIPM) - Standard Procedure).

No

- Replace the Totally Integrated Power Module (TIPM) in accordance with the Service Information.
- Perform the BODY VERIFICATION TEST. (Refer to 28 - DTC-Based Diagnostics/MODULE, Totally Integrated Power (TIPM) - Standard Procedure).

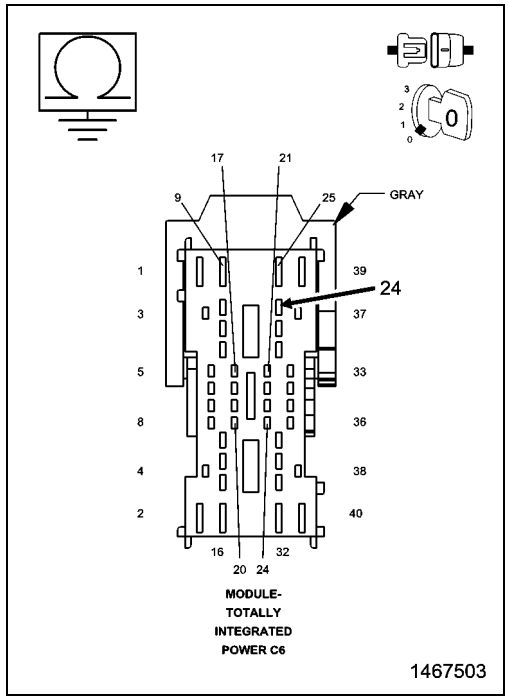

B17B2-RIGHT TRAILER TOW LAMP CONTROL CIRCUIT LOW

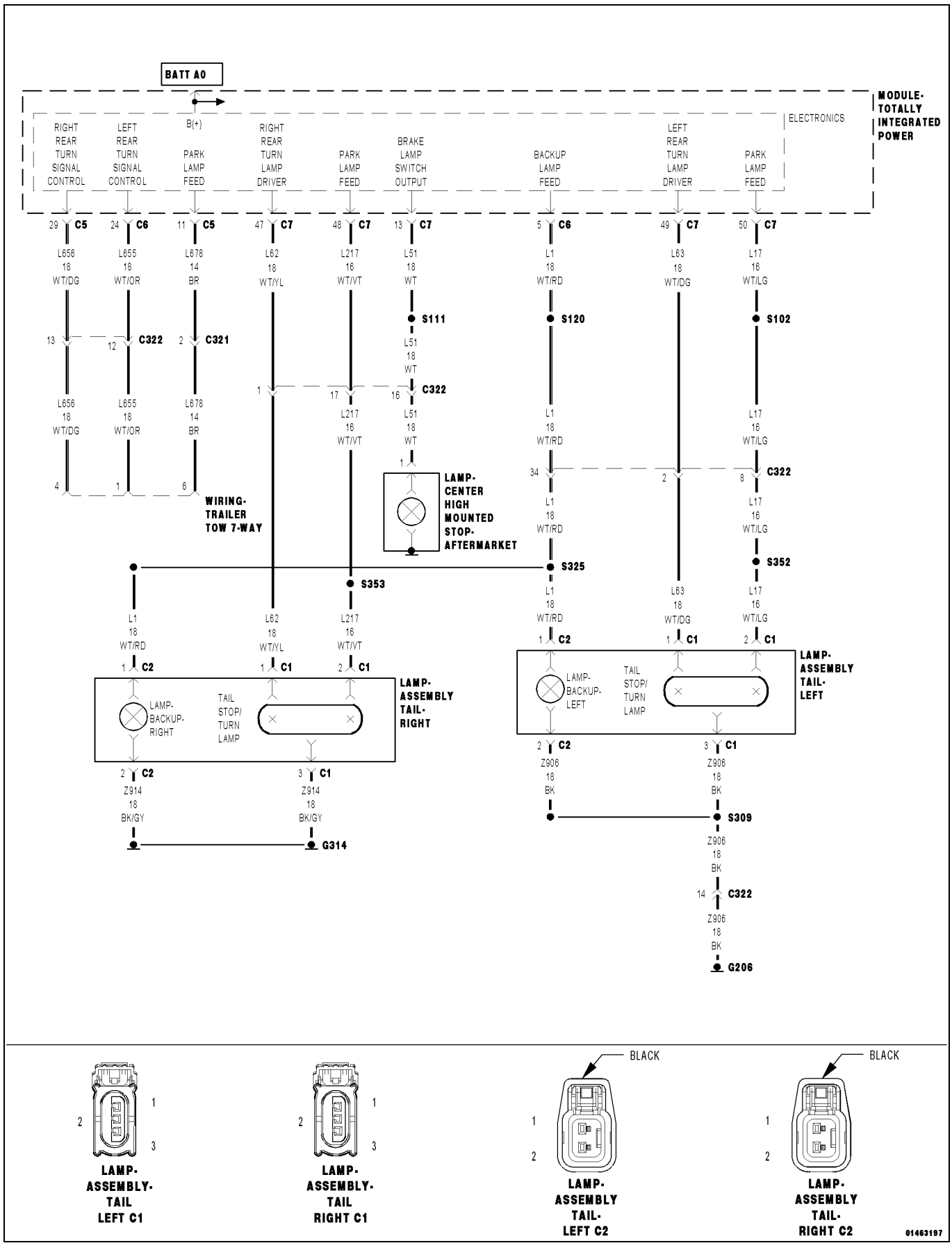

For a complete wiring diagram, **refer to the Wiring Information**.

- **When Monitored:**
  With the ignition on.
- **Set Condition:**
  The Totally Integrated Power Module (TIPM) detects a short to ground in the right rear turn signal control circuit.

Possible Causes
(L656) RIGHT REAR TURN SIGNAL CONTROL CIRCUIT SHORTED TO GROUND
TOTALLY INTEGRATED POWER MODULE (TIPM)

1. INTERMITTENT CONDITION

1. Turn the ignition on.
2. With the scan tool, clear all TIPM DTCs.
3. Turn on the Right Turn Signal.
4. With the scan tool read the DTC information.

Does the scan tool read: B17B2-RIGHT TRAILER TOW LAMP CONTROL CIRCUIT LOW?

Yes

- Go To 2

No

- The condition that caused the symptom is currently not present. Inspect the related wiring for a possible intermittent condition. Look for any chafed, pierced, pinched, or partially broken wires.
- Perform the BODY VERIFICATION TEST. (Refer to 28 - DTC-Based Diagnostics/MODULE, Totally Integrated Power (TIPM) - Standard Procedure).

2. (L656) RIGHT REAR TURN SIGNAL CONTROL CIRCUIT SHORTED TO GROUND

1. Turn the ignition off.
2. Disconnect the TIPM C5 harness connector.
3. Measure the resistance between ground and the (L656) Right Rear Turn Signal Control circuit.

Is the resistance below 5.0 Ohms?

Yes

- Repair the (L656) Right Rear Turn Signal Control circuit for a short to ground.
- Perform the BODY VERIFICATION TEST. (Refer to 28 - DTC-Based Diagnostics/MODULE, Totally Integrated Power (TIPM) - Standard Procedure).

No

- Replace the Totally Integrated Power Module (TIPM) in accordance with the Service Information.
- Perform the BODY VERIFICATION TEST. (Refer to 28 - DTC-Based Diagnostics/MODULE, Totally Integrated Power (TIPM) - Standard Procedure).

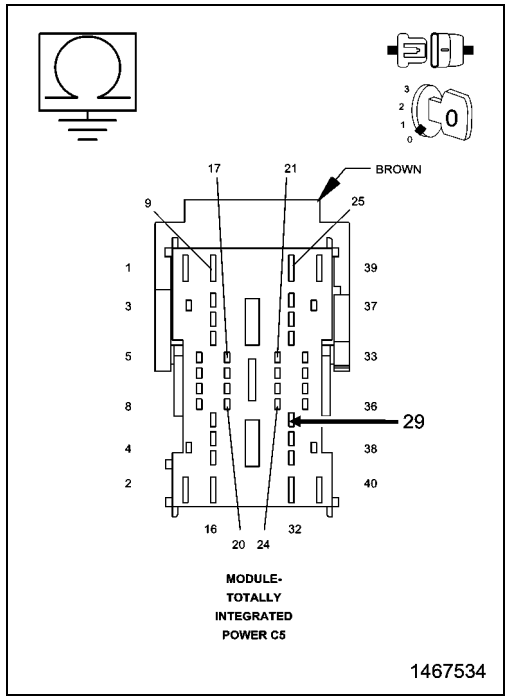

B16B0-LEFT STOP LAMP CONTROL CIRCUIT LOW

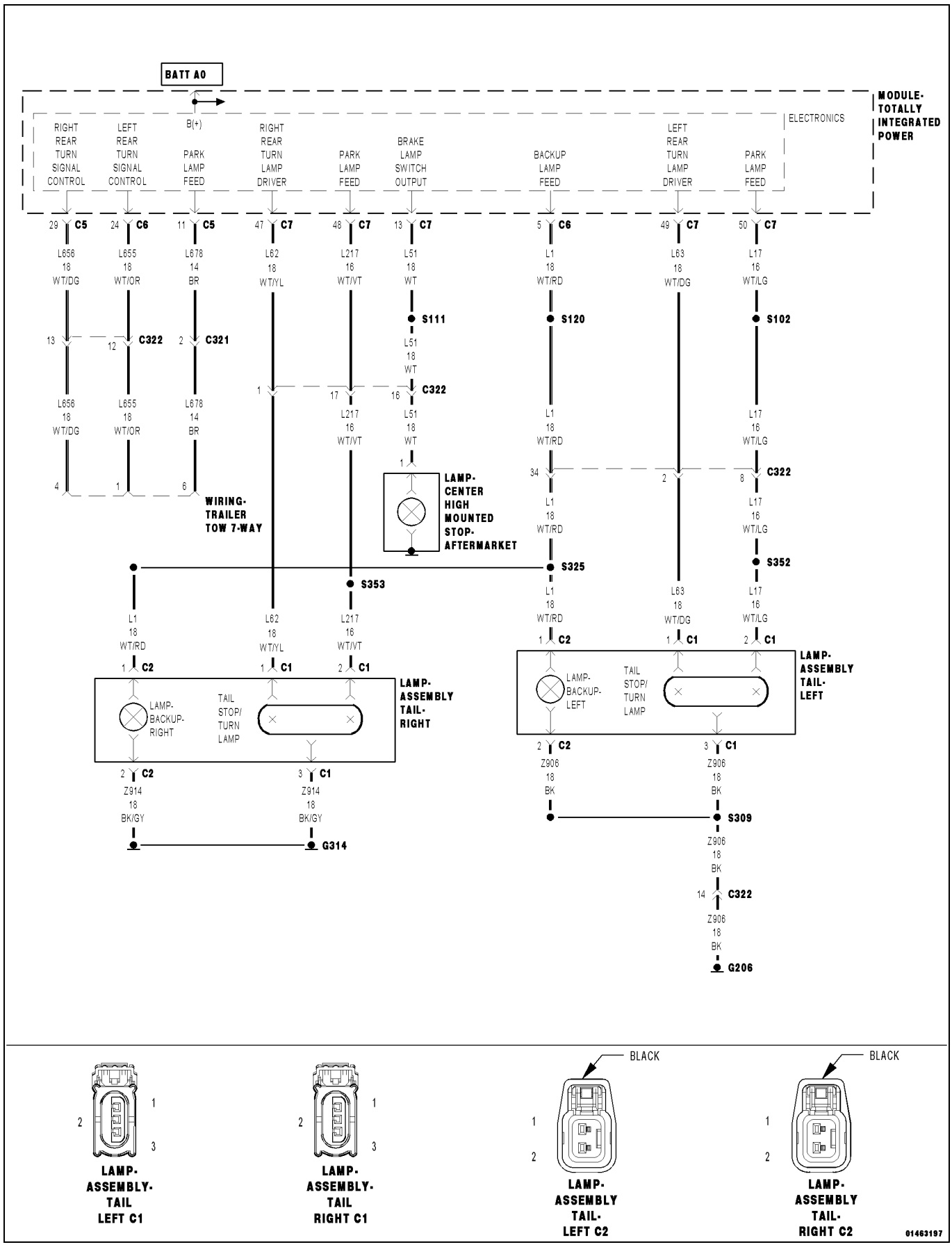

For a complete wiring diagram, **refer to the Wiring Information**.

- **When Monitored:**
  With the Stop Lamps activated.
- **Set Condition:**
  When the Totally Integrated Power Module (TIPM) detects a low condition in the park lamp feed circuit.

Possible Causes
(L17) PARK LAMP FEED CIRCUIT SHORTED TO GROUND
TOTALLY INTEGRATED POWER MODULE (TIPM)

1. INTERMITTENT CONDITION

1. Turn the ignition on.
2. With the scan tool, clear all TIPM DTCs.
3. Turn the Stop Lamps on.
4. With the scan tool read the DTC information.

Does the scan tool read: B16B0-LEFT STOP LAMP CONTROL CIRCUIT LOW?

Yes

- Go To 2

No

- The condition that caused the symptom is currently not present. Inspect the related wiring for a possible intermittent condition. Look for any chafed, pierced, pinched, or partially broken wires.
- Perform the BODY VERIFICATION TEST. (Refer to 28 - DTC-Based Diagnostics/MODULE, Totally Integrated Power (TIPM) - Standard Procedure).

2. (L17) PARK LAMP FEED CIRCUIT SHORTED TO GROUND

1. Turn the ignition off.
2. Disconnect the TIPM C7 harness connector.
3. Disconnect the Left Rear Tail Lamp harness connectors.
4. Measure the resistance between ground and the (L17) Park Lamp Feed circuit.

Is the resistance below 5.0 Ohms?

Yes

- Repair the (L17) Park Lamp Feed circuit for a short to ground.
- Perform the BODY VERIFICATION TEST. (Refer to 28 - DTC-Based Diagnostics/MODULE, Totally Integrated Power (TIPM) - Standard Procedure).

No

- Replace the Totally Integrated Power Module (TIPM) in accordance with the Service Information.
- Perform the BODY VERIFICATION TEST. (Refer to 28 - DTC-Based Diagnostics/MODULE, Totally Integrated Power (TIPM) - Standard Procedure).

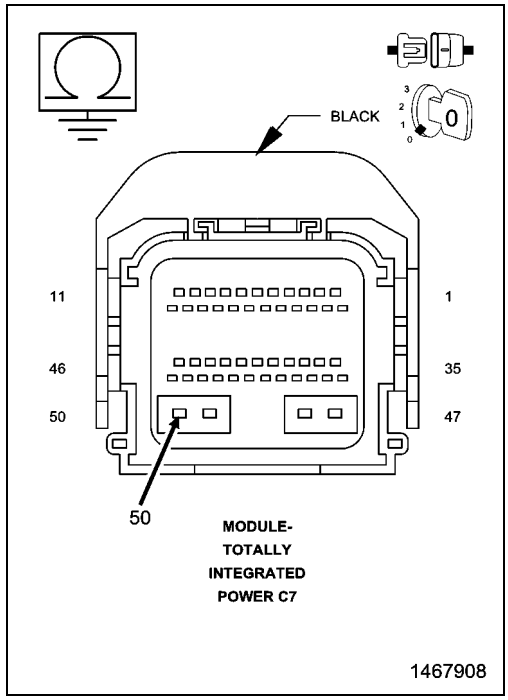

B16B2-LEFT STOP LAMP CONTROL CIRCUIT OPEN

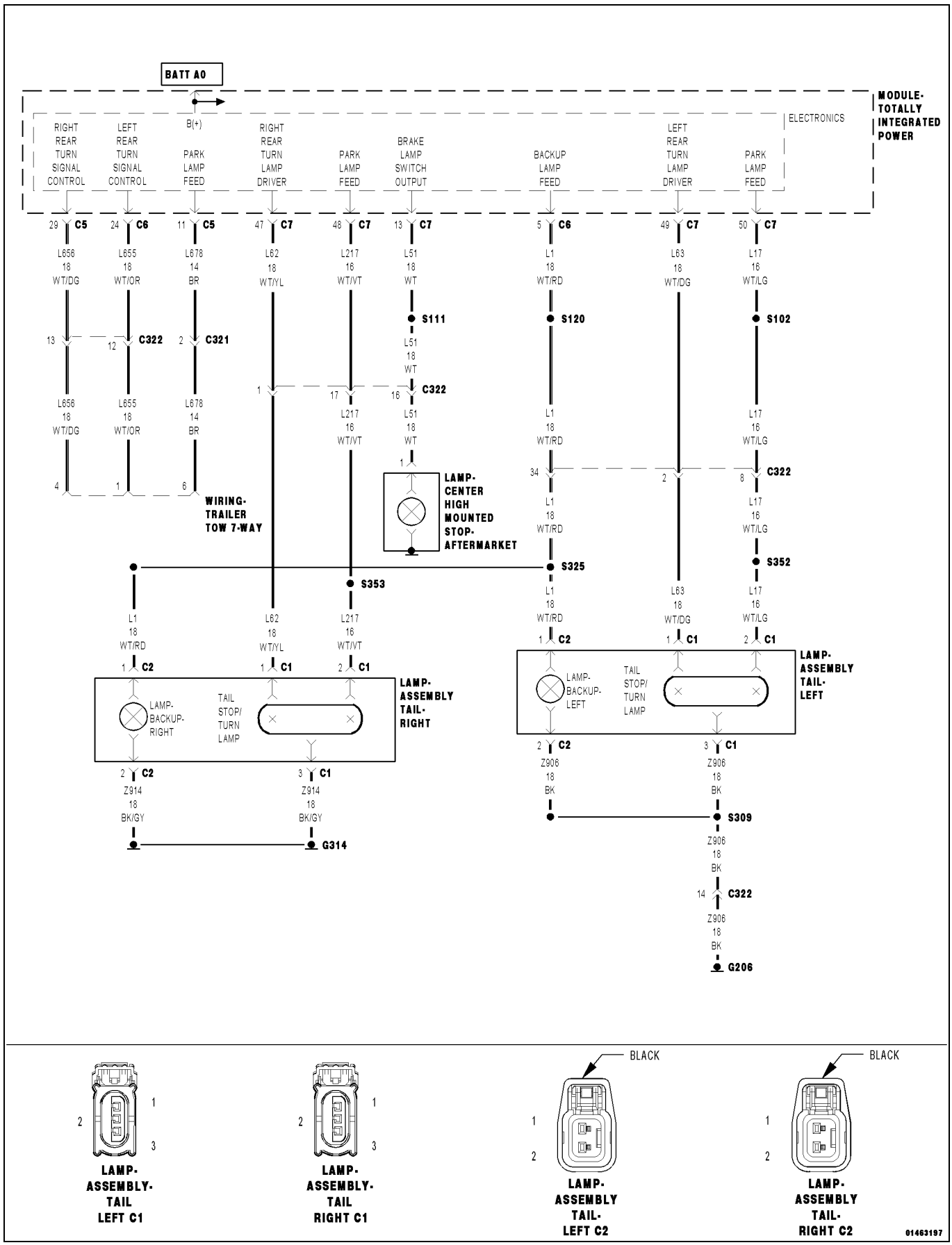

For a complete wiring diagram, **refer to the Wiring Information**.

- **When Monitored:**
  With the Stop Lamps Activated.
- **Set Condition:**
  When the Totally Integrated Power Module (TIPM) detects an open in the park lamp feed circuit.

Possible Causes
(L17) PARK LAMP FEED CIRCUIT OPEN
LEFT AND/OR RIGHT STOP LAMP BULBS
TOTALLY INTEGRATED POWER MODULE (TIPM)

1. INTERMITTENT CONDITION

1. Turn the ignition on.
2. With the scan tool, clear all TIPM DTCs.
3. Turn the Stop Lamps on.
4. With the scan tool read the DTC information.

Does the scan tool read: B16B2-LEFT STOP LAMP CONTROL CIRCUIT OPEN?

Yes

- Go To 2

No

- The condition that caused the symptom is currently not present. Inspect the related wiring for a possible intermittent condition. Look for any chafed, pierced, pinched, or partially broken wires.
- Perform the BODY VERIFICATION TEST. (Refer to 28 - DTC-Based Diagnostics/MODULE, Totally Integrated Power (TIPM) - Standard Procedure).

2. STOP LAMP BULBS

1. Turn the ignition off.
2. Inspect the Left and Right Stop Lamp Bulb Assemblies.

Are the inoperative bulbs OK?

Yes

- Go To 3

No

- Replace the Inoperative bulb or bulbs in accordance with the Service Information.
- Perform the BODY VERIFICATION TEST. (Refer to 28 - DTC-Based Diagnostics/MODULE, Totally Integrated Power (TIPM) - Standard Procedure).

3. (L17) PARK LAMP FEED CIRCUIT OPEN

1. Turn the ignition off.
2. Disconnect the TIPM C7 harness connector.
3. Disconnect the Left Stop Lamp harness connectors.
4. Measure the resistance of the (L17) Park Lamp Feed circuit.

Is the resistance above 5.0 Ohms?

Yes

- Repair the (L17) Park Lamp Feed circuit for an open condition.
- Perform the BODY VERIFICATION TEST. (Refer to 28 - DTC-Based Diagnostics/MODULE, Totally Integrated Power (TIPM) - Standard Procedure).

No

- Replace the Totally Integrated Power Module (TIPM) in accordance with the Service Information.
- Perform the BODY VERIFICATION TEST. (Refer to 28 - DTC-Based Diagnostics/MODULE, Totally Integrated Power (TIPM) - Standard Procedure).

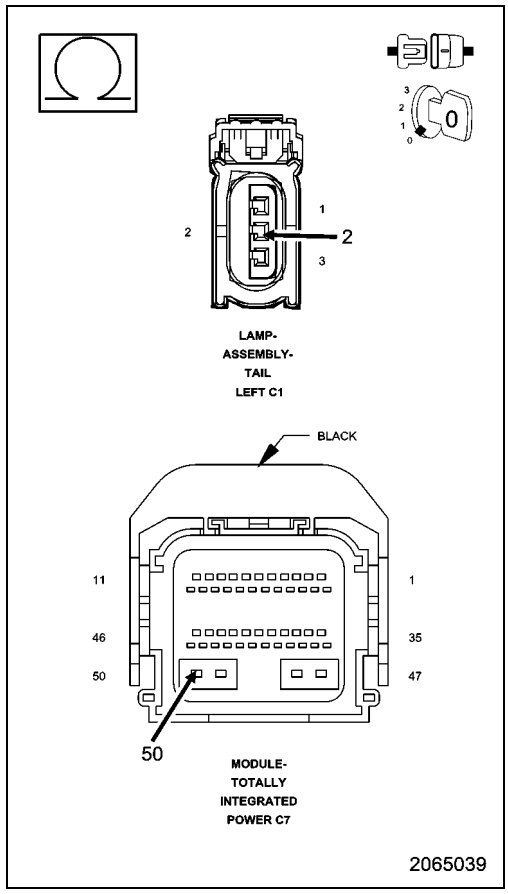

B16B4-RIGHT STOP LAMP CONTROL CIRCUIT LOW

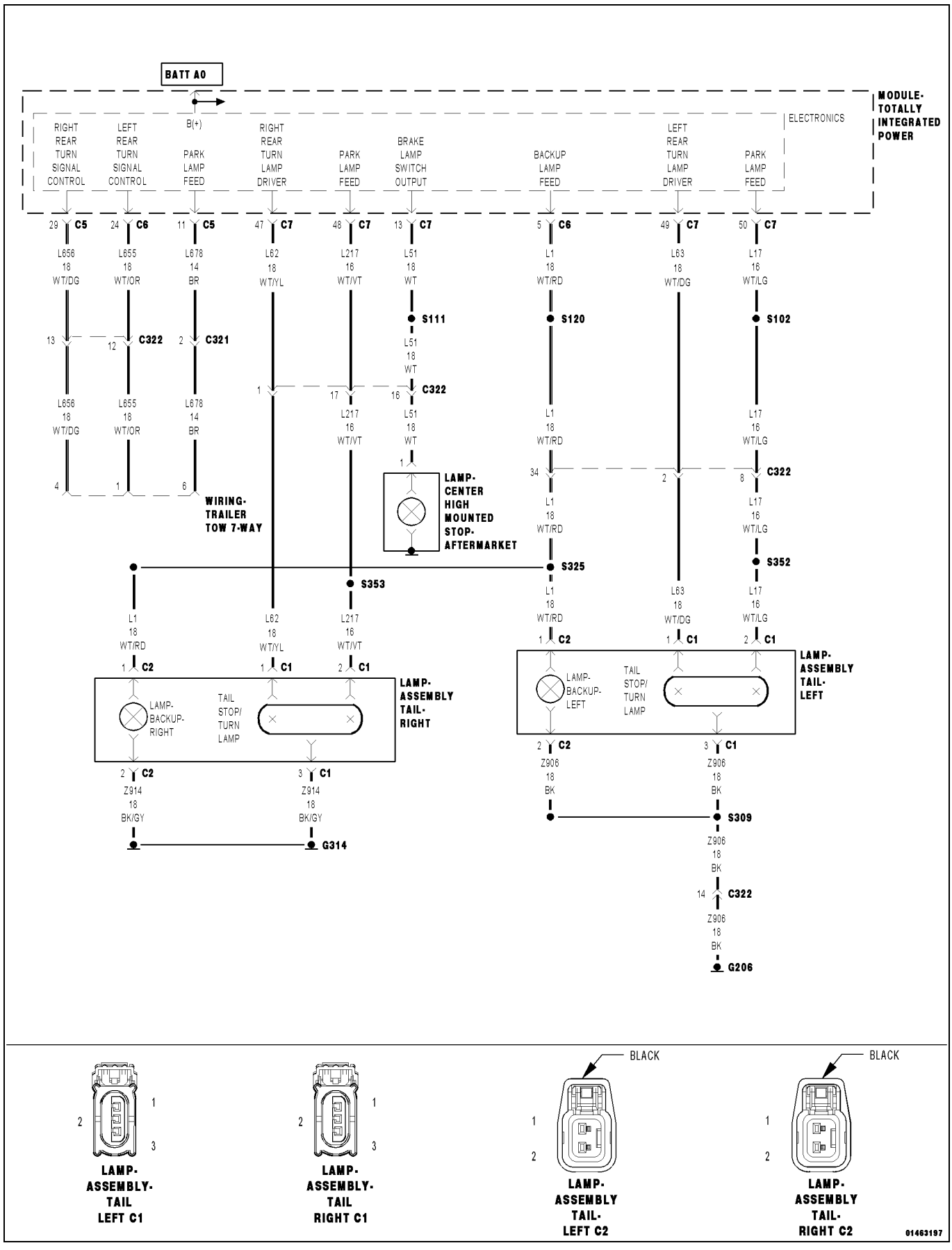

For a complete wiring diagram, **refer to the Wiring Information**.

- **When Monitored:**
  With the Stop Lamps activated.
- **Set Condition:**
  When the Totally Integrated Power Module (TIPM) detects a low condition in the park lamp feed circuit.

Possible Causes
(L217) PARK LAMP FEED CIRCUIT SHORTED TO GROUND
TOTALLY INTEGRATED POWER MODULE (TIPM)

1. INTERMITTENT CONDITION

1. Turn the ignition on.
2. With the scan tool, clear all TIPM DTCs.
3. Turn the Stop Lamps on.
4. With the scan tool read the DTC information.

Does the scan tool read: B16B4-RIGHT STOP LAMP CONTROL CIRCUIT LOW?

Yes

- Go To 2

No

- The condition that caused the symptom is currently not present. Inspect the related wiring for a possible intermittent condition. Look for any chafed, pierced, pinched, or partially broken wires.
- Perform the BODY VERIFICATION TEST. (Refer to 28 - DTC-Based Diagnostics/MODULE, Totally Integrated Power (TIPM) - Standard Procedure).

2. (L217) PARK LAMP FEED CIRCUIT SHORTED TO GROUND

1. Turn the ignition off.
2. Disconnect the TIPM C7 harness connector.
3. Disconnect the Left and Right Rear Tail Lamp harness connectors.
4. Measure the resistance between ground and the (L217) Park Lamp Feed circuit.

Is the resistance below 5.0 Ohms?

Yes

- Repair the (L217) Park Lamp Feed circuit for a short to ground.
- Perform the BODY VERIFICATION TEST. (Refer to 28 - DTC-Based Diagnostics/MODULE, Totally Integrated Power (TIPM) - Standard Procedure).

No

- Replace the Totally Integrated Power Module (TIPM) in accordance with the Service Information.
- Perform the BODY VERIFICATION TEST. (Refer to 28 - DTC-Based Diagnostics/MODULE, Totally Integrated Power (TIPM) - Standard Procedure).

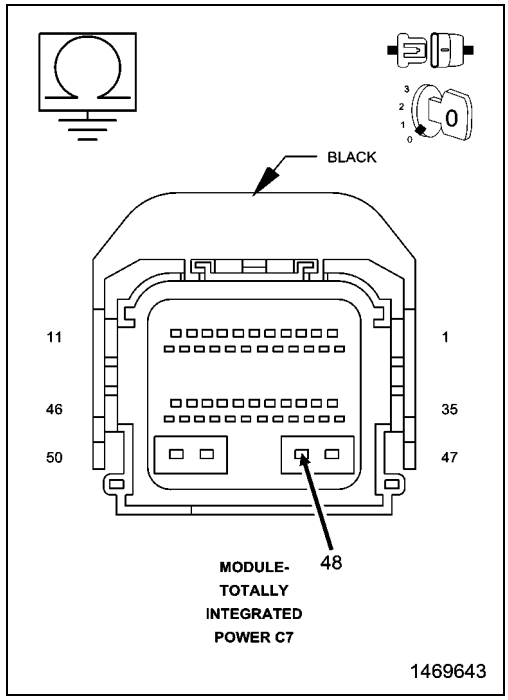

B16B6-RIGHT STOP LAMP CONTROL CIRCUIT OPEN

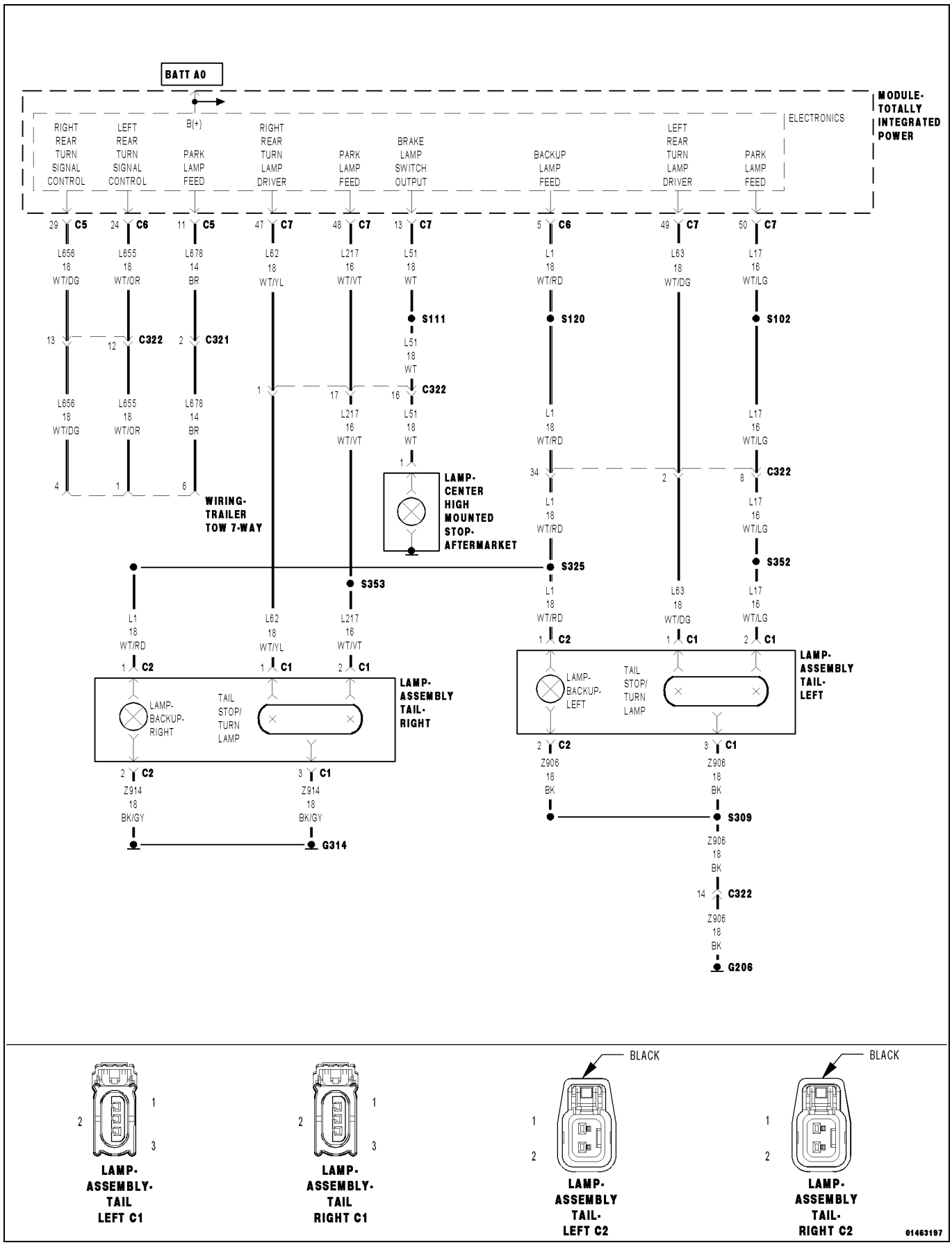

For a complete wiring diagram, **refer to the Wiring Information**.

- **When Monitored:**
  With the Stop Lamps Activated.
- **Set Condition:**
  When the Totally Integrated Power Module (TIPM) detects an open in the park lamp feed circuit.

Possible Causes
(L217) PARK LAMP FEED CIRCUIT OPEN
LEFT AND/OR RIGHT STOP LAMP BULBS
TOTALLY INTEGRATED POWER MODULE (TIPM)

1. INTERMITTENT CONDITION

1. Turn the ignition on.
2. With the scan tool, clear all TIPM DTCs.
3. Turn the Stop Lamps on.
4. With the scan tool read the DTC information.

Does the scan tool read: B16B6-RIGHT STOP LAMP CONTROL CIRCUIT OPEN?

Yes

- Go To 2

No

- The condition that caused the symptom is currently not present. Inspect the related wiring for a possible intermittent condition. Look for any chafed, pierced, pinched, or partially broken wires.
- Perform the BODY VERIFICATION TEST. (Refer to 28 - DTC-Based Diagnostics/MODULE, Totally Integrated Power (TIPM) - Standard Procedure).

2. STOP LAMP BULBS

1. Turn the ignition off.
2. Inspect the Left and Right Stop Lamp Bulb Assemblies.

Are the inoperative bulbs OK?

Yes

- Go To 3

No

- Replace the Inoperative bulb or bulbs in accordance with the Service Information.
- Perform the BODY VERIFICATION TEST. (Refer to 28 - DTC-Based Diagnostics/MODULE, Totally Integrated Power (TIPM) - Standard Procedure).

3. (L217) PARK LAMP FEED CIRCUIT OPEN

1. Turn the ignition off.
2. Disconnect the TIPM C7 harness connector.
3. Disconnect the Right Stop Lamp harness connectors.
4. Measure the resistance of the (L217) Park Lamp Feed circuit.

Is the resistance above 5.0 Ohms?

Yes

- Repair the (L217) Park Lamp Feed circuit for an open condition.
- Perform the BODY VERIFICATION TEST. (Refer to 28 - DTC-Based Diagnostics/MODULE, Totally Integrated Power (TIPM) - Standard Procedure).

No

- Replace the Totally Integrated Power Module (TIPM) in accordance with the Service Information.
- Perform the BODY VERIFICATION TEST. (Refer to 28 - DTC-Based Diagnostics/MODULE, Totally Integrated Power (TIPM) - Standard Procedure).

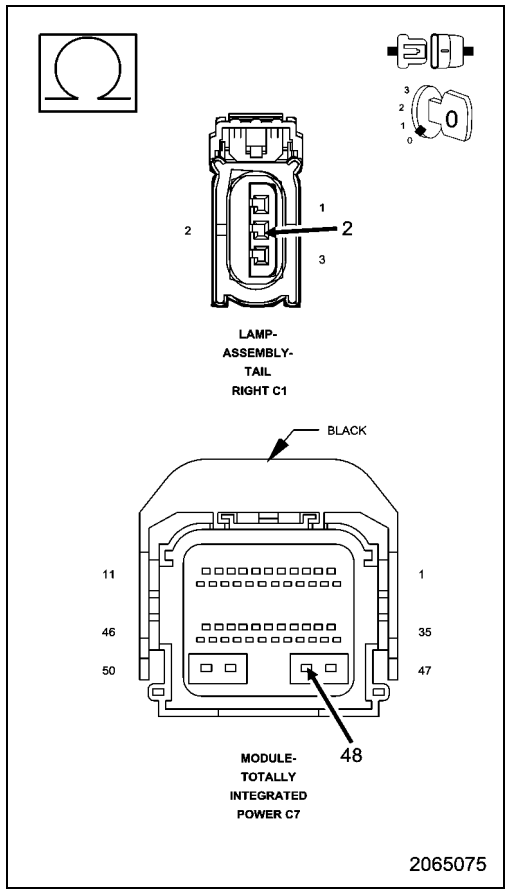

B1820-HOOD AJAR INPUT CIRCUIT HIGH

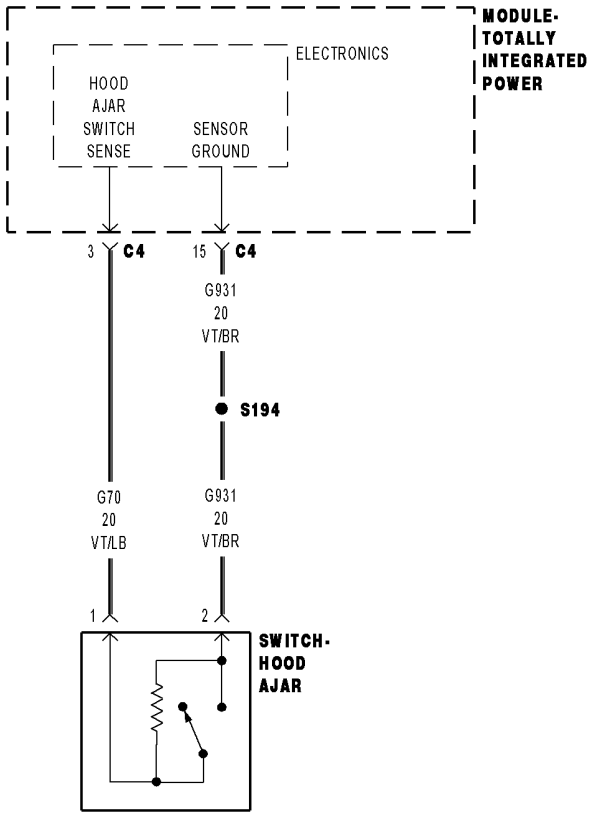

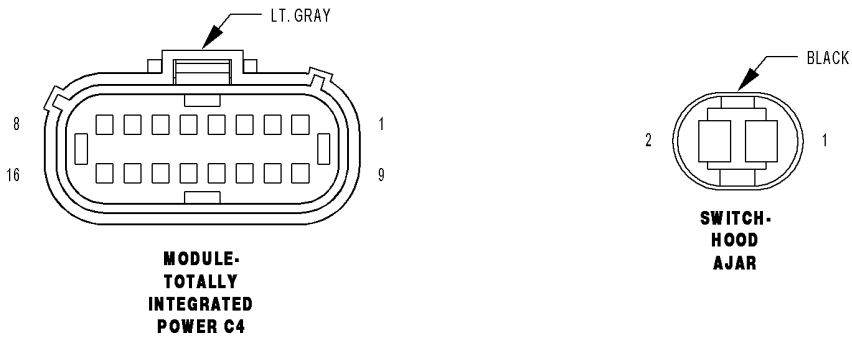

02756103

For a complete wiring diagram, **refer to the Wiring Information**.

- **When Monitored:**
  With the ignition on.
- **Set Condition:**
  When the Totally Integrated Power Module (TIPM) senses 12 volts on the Hood Ajar Switch Sense circuit for over 10 seconds, this code will set.

Possible Causes
INCORRECT HOOD AJAR SWITCH INSTALLED
HOOD AJAR SWITCH OPEN
(G931) SENSOR GROUND CIRCUIT OPEN
(G70) HOOD AJAR SWITCH SENSE CIRCUIT SHORT TO VOLTAGE
(G70) HOOD AJAR SWITCH SENSE CIRCUIT OPEN
TOTALLY INTEGRATED POWER MODULE (TIPM)

1. TEST FOR INTERMITTENT CONDITION

NOTE: Open the hood and make sure the Hood Ajar Switch is connected before proceeding.

1. With the scan tool, record and erase DTCs
2. Close the hood.
3. Cycle the ignition from on to off.
4. Turn the ignition on.
5. Open then close the hood.
6. With the scan tool, read DTCs.

Does the scan tool display this DTC as active?

Yes

- Go To 2

No

- Test complete, the condition or conditions that originally set this DTC are not present at this time. Using the wiring diagrams as a guide, check all related splices and connectors for signs of water intrusion, corrosion, pushed out or bent terminals, and correct pin tension.
- Perform the BODY VERIFICATION TEST. (Refer to 28 - DTC-Based Diagnostics/MODULE, Totally Integrated Power (TIPM) - Standard Procedure).

2. INCORRECT HOOD AJAR SWITCH INSTALLED

1. Inspect the retainer ring on the hood ajar switch.
2. A dark brown retainer ring identifies the switch used for certain export applications, while a white retainer ring identifies the remote starter system application.

Is the correct switch installed?

Yes

- Go To 3

No

- Replace the Hood Ajar Switch in accordance with the Service Information. (Refer to 08 - Electrical/8Q - Vehicle Theft Security/SWITCH, Hood Ajar - Removal).
- Perform the BODY VERIFICATION TEST. (Refer to 28 - DTC-Based Diagnostics/MODULE, Totally Integrated Power (TIPM) - Standard Procedure).

3. HOOD AJAR SWITCH OPEN

1. Disconnect and remove the Hood Ajar Switch.
2. Depress the switch plunger and measure the resistance between the two terminals of the switch.

Is the resistance approximately 1,000 Ohms?

Yes

- Go To 4

No

- Replace the Hood Ajar Switch in accordance with the Service Information. (Refer to 08 - Electrical/8Q - Vehicle Theft Security/SWITCH, Hood Ajar - Removal).
- Perform the BODY VERIFICATION TEST. (Refer to 28 - DTC-Based Diagnostics/MODULE, Totally Integrated Power (TIPM) - Standard Procedure).

4. (G931) SENSOR GROUND CIRCUIT OPEN

1. Using a 12-volt test light connected to 12-volts, check the (G931) Sensor Ground circuit.

Does the test light illuminate?

Yes

- Go To 5

No

- Repair the open in the (G931) Sensor Ground circuit.
- Perform the BODY VERIFICATION TEST. (Refer to 28 - DTC-Based Diagnostics/MODULE, Totally Integrated Power (TIPM) - Standard Procedure).

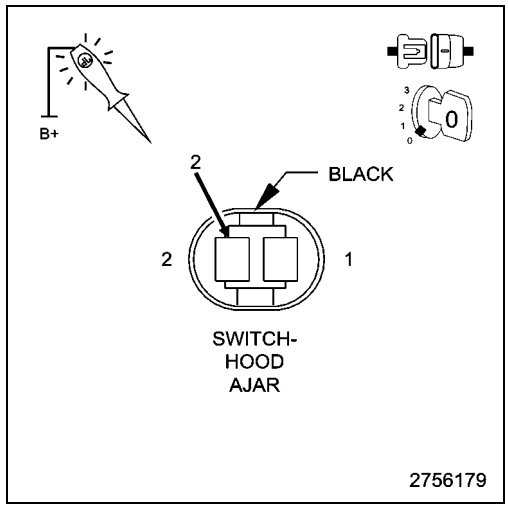

5. (G70) HOOD AJAR SWITCH SENSE CIRCUIT SHORT TO VOLTAGE

1. Disconnect the TIPM C4 harness connector.
2. Turn the ignition on.
3. Measure the voltage between ground and the (G70) Hood Ajar Switch Sense circuit.

Is there any voltage present?

Yes

- Repair the short to voltage in the (G70) Hood Ajar Switch Sense circuit.
- Perform the BODY VERIFICATION TEST. (Refer to 28 - DTC-Based Diagnostics/MODULE, Totally Integrated Power (TIPM) - Standard Procedure).

No

- Go To 6

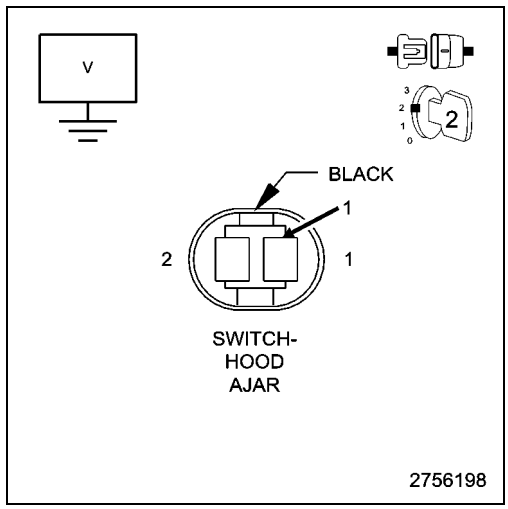

6. (G70) HOOD AJAR SWITCH SENSE CIRCUIT OPEN

1. Turn the ignition off.
2. Measure the resistance of the (G70) Hood Ajar Switch Sense circuit between the TIPM C4 harness connector and the Hood Ajar Switch harness connector.

Is the resistance below 5.0 Ohms?

Yes

- Replace the Totally Integrated Power Module (TIPM) in accordance with the Service Information. (Refer to 08 - Electrical/8W - Wiring/Power Distribution/MODULE, Totally Integrated Power (TIPM) - Removal).
- Perform the BODY VERIFICATION TEST. (Refer to 28 - DTC-Based Diagnostics/MODULE, Totally Integrated Power (TIPM) - Standard Procedure).

No

- Repair the open in the (G70) Hood Ajar Switch Sense circuit.
- Perform the BODY VERIFICATION TEST. (Refer to 28 - DTC-Based Diagnostics/MODULE, Totally Integrated Power (TIPM) - Standard Procedure).

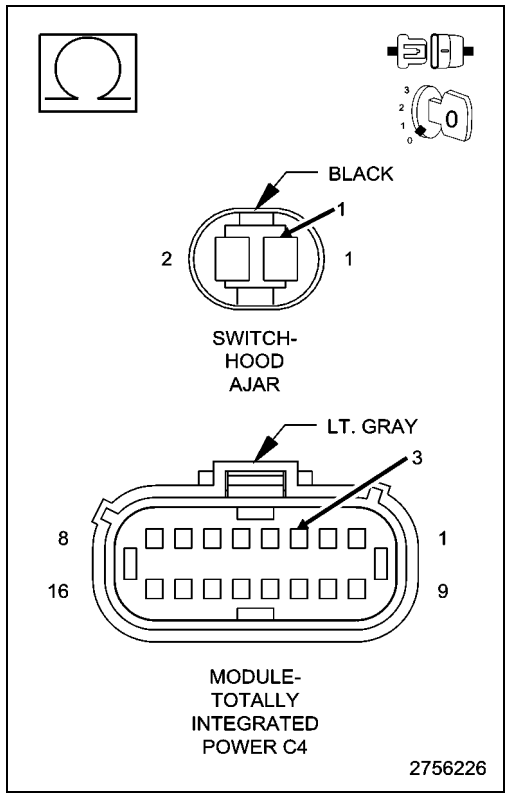

B1D68-ADJUSTABLE PEDAL CONTROL CIRCUIT LOW

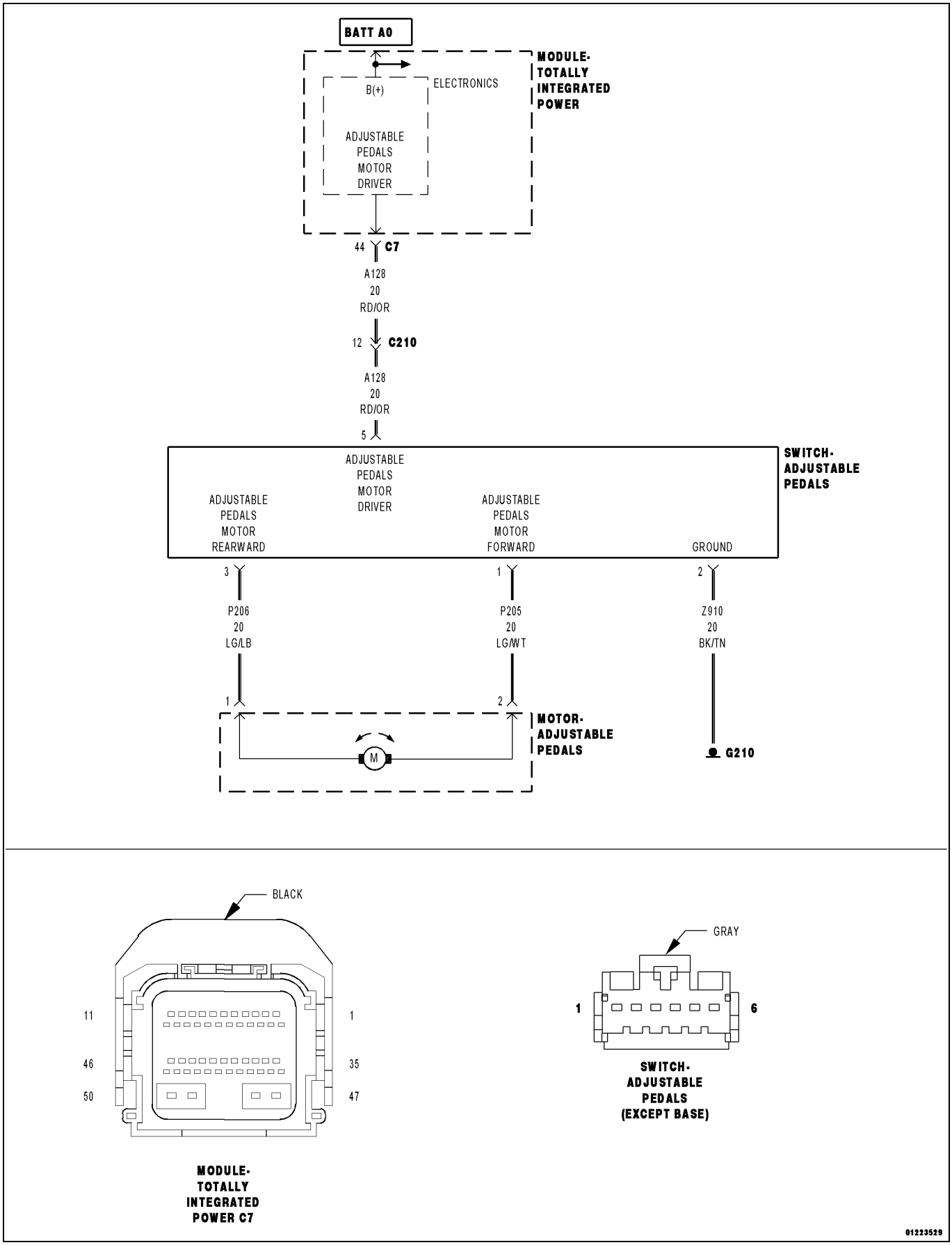

For a complete wiring diagram, **refer to the Wiring Information**.

- **When Monitored:**

  With the ignition on and battery voltage greater than 10.4 Volts.
- **Set Condition:**

  If the Totally Integrated Power Module (TIPM) detects an overcurrent condition on the (A128) Adjustable Pedals Motor Driver circuit.

Possible Causes
(A128) ADJUSTABLE PEDALS MOTOR DRIVER CIRCUIT SHORTED TO GROUND
(A128) ADJUSTABLE PEDALS MOTOR DRIVER CIRCUIT SHORTED TO THE (P205) ADJUSTABLE PEDALS MOTOR FORWARD CIRCUIT
(A128) ADJUSTABLE PEDALS MOTOR DRIVER CIRCUIT SHORTED TO THE (Z910) GROUND CIRCUIT
(A128) ADJUSTABLE PEDALS MOTOR DRIVER CIRCUIT SHORTED TO THE (P206) ADJUSTABLE PEDALS MOTOR REARWARD CIRCUIT
TOTALLY INTEGRATED POWER MODULE (TIPM)

1. TEST FOR INTERMITTENT CONDITION

NOTE: Look closely at the temperatures at which this Diagnostic Trouble Code (DTC) set. Low battery Voltage can also cause excessive current draw in very hot and very cold ambient temperatures. Make sure the battery can pass a load test before continuing.

1. Turn the ignition on.
2. Using a scan tool, record and erase Diagnostic Trouble Codes (DTCs).
3. Cycle the ignition from on to off.
4. Turn the ignition on.
5. Operate the Adjustable Pedals switch in both positions.
6. With the scan tool, read the TIPM DTCs.

Is the DTC Active at this time?

Yes

- Go To 2

No

- The conditions that caused this code to set are not present at this time. Using the wiring diagram/schematic as a guide, inspect the wiring and connectors. While monitoring the scan tool data relative to this circuit, wiggle test the wiring and connectors. Look for the data to change or for the code to reset during the wiggle test.
- Perform the BODY VERIFICATION TEST. (Refer to 28 - DTC-Based Diagnostics/MODULE, Totally Integrated Power (TIPM) - Standard Procedure).

2. CHECK FOR A SHORTED ADJUSTABLE PEDALS SWITCH

1. Turn the ignition off.
2. Disconnect the Adjustable Pedals switch connector.

NOTE: Check connectors. Clean and repair as necessary.

3. Remove the Adjustable Pedals switch in accordance with the Service Information.

NOTE: Adjustable Pedals Switch harness connector shown. Mirror image for Adjustable Pedals Switch component connector.

4. Measure the resistance between the (A128) Adjustable Pedals Motor Driver circuit and the (P205) Adjustable Pedals Motor Forward circuit at the Adjustable Pedals Switch (component) connector.
5. Measure the resistance between the (A128) Adjustable Pedals Motor Driver circuit and the (Z910) Ground circuit at the Adjustable Pedals Switch (component) connector.

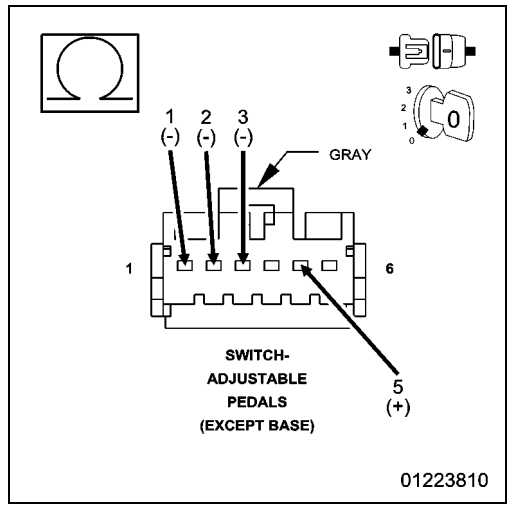

6. Measure the resistance between the (A128) Adjustable Pedals Motor Driver circuit and the (P206) Adjustable Pedals Motor Rearward circuit at the Adjustable Pedals Switch (component) connector.

Is the resistance below 10K Ohms for any measurement?

Yes

- Replace the Adjustable Pedals Switch in accordance with the Service Information.
- Perform the BODY VERIFICATION TEST. (Refer to 28 - DTC-Based Diagnostics/MODULE, Totally Integrated Power (TIPM) - Standard Procedure).

No

- Go To 3

3. CHECK (A128) ADJUSTABLE PEDALS MOTOR DRIVER CIRCUIT FOR A SHORT TO GROUND

1. Disconnect the TIPM C7 connector.

NOTE: Check connectors. Clean and repair as necessary.

2. Measure the resistance of the (A128) Adjustable Pedals Motor Driver circuit between ground and the Adjustable Pedal Switch (harness) connector.

Is the resistance below 10K Ohms?

Yes

- Repair the (A128) Adjustable Pedals Motor Driver circuit for a short to ground.
- Perform the BODY VERIFICATION TEST. (Refer to 28 - DTC-Based Diagnostics/MODULE, Totally Integrated Power (TIPM) - Standard Procedure).

No

- Go To 4

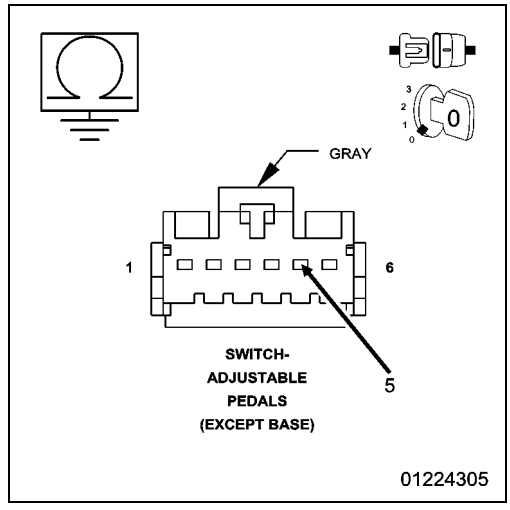

4. CHECK (A128) ADJUSTABLE PEDALS MOTOR DRIVER CIRCUIT FOR A SHORT TO (P205) ADJUSTABLE PEDALS MOTOR FORWARD CIRCUIT, (Z910) GROUND CIRCUIT, OR TO (P206) ADJUSTABLE PEDALS MOTOR REARWARD CIRCUIT

1. Measure the resistance between the (A128) Adjustable Pedals Motor Driver circuit and the (P205) Adjustable Pedals Motor Forward circuit at the Adjustable Pedals Switch (harness) connector.
2. Measure the resistance between the (A128) Adjustable Pedals Motor Driver circuit and the (Z910) Ground circuit at the Adjustable Pedals Switch (harness) connector.
3. Measure the resistance between the (A128) Adjustable Pedals Motor Driver circuit and the (P206) Adjustable Pedals Motor Rearward circuit at the Adjustable Pedals Switch (harness) connector.

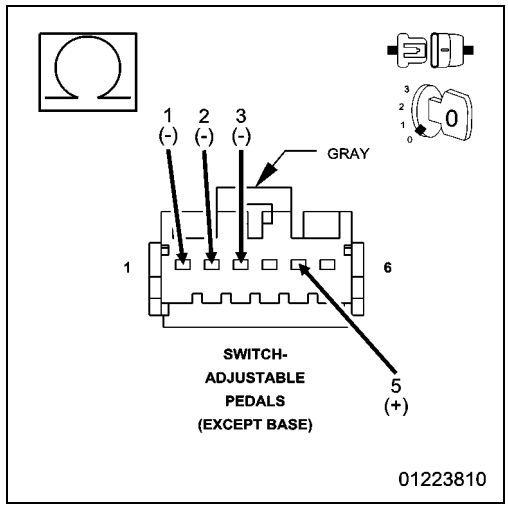

Is the resistance below 10K Ohms for any measurement?

Yes

- Repair all circuits with a resistance below 10K Ohms for a short to the (A128) Adjustable Pedals Motor Driver circuit.
- Perform the BODY VERIFICATION TEST. (Refer to 28 - DTC-Based Diagnostics/MODULE, Totally Integrated Power (TIPM) - Standard Procedure).

No

- Replace the Totally Integrated Power Module (TIPM) in accordance with the Service Information.
- Perform the BODY VERIFICATION TEST. (Refer to 28 - DTC-Based Diagnostics/MODULE, Totally Integrated Power (TIPM) - Standard Procedure).

B2104-IGNITION RUN/START CONTROL CIRCUIT LOW

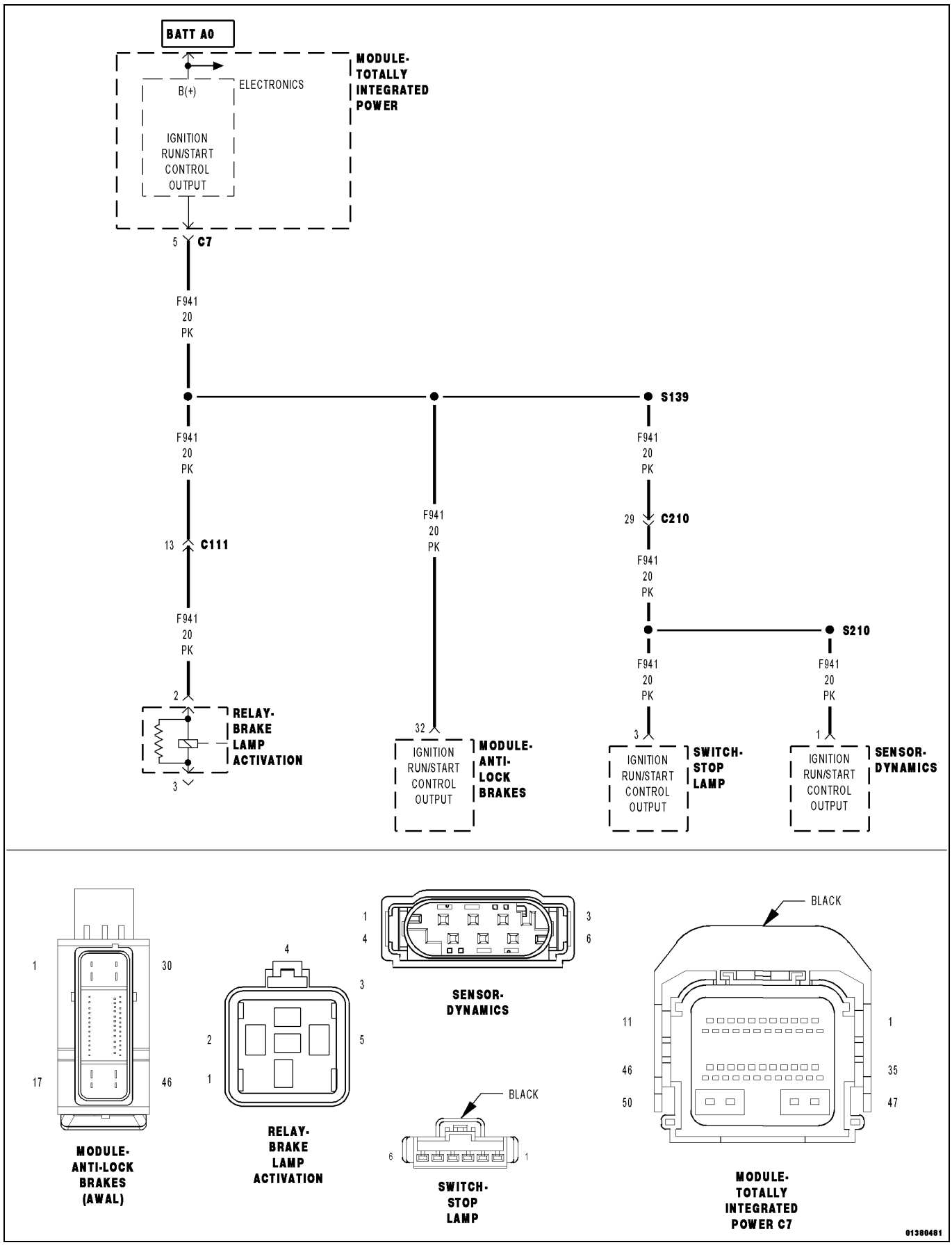

For a complete wiring diagram, **refer to the Wiring Information**.

- **When Monitored:**
  With the ignition on.
- **Set Condition:**
  The Totally Integrated Power Module (TIPM) will set this DTC within 500ms if the Ignition Run/Start Control Output Circuit voltage is less than the expected value.

Possible Causes
(F941) IGNITION RUN/START CONTROL OUTPUT CIRCUIT SHORTED TO GROUND
ANTI-LOCK BRAKES MODULE
BRAKE LAMP ACTIVATION RELAY
DYNAMICS SENSOR
STOP LAMP SWITCH
TOTALLY INTEGRATED POWER MODULE (TIPM)

1. CHECK FOR ACTIVE DTC

1. With the scan tool, read the DTCs.
2. Cycle the ignition switch from off to on, leaving the ignition off for a minimum of 30 seconds.
3. With the scan tool, read the DTCs.

Does the scan tool display this DTC as active?

Yes

- Go To 2

No

- If the DTC is stored, check for an intermittent condition. Using the wiring diagram/schematic as a guide, visually inspect the related wiring harness connectors. Look for broken, bent, pushed out, or corroded terminals.
- Perform the BODY VERIFICATION TEST. (Refer to 28 - DTC-Based Diagnostics/MODULE, Totally Integrated Power (TIPM) - Standard Procedure).

2. STOP LAMP SWITCH

1. Disconnect the Stop Lamp Switch harness connector.
2. With the scan tool, read DTCs.

Does the scan tool display this DTC as active?

Yes

- Go To 3

No

- Replace the Stop Lamp Switch in accordance with the Service Information.
- Perform the BODY VERIFICATION TEST. (Refer to 28 - DTC-Based Diagnostics/MODULE, Totally Integrated Power (TIPM) - Standard Procedure).

3. DYNAMICS SENSOR

1. Disconnect the Dynamics Sensor harness connector.
2. With the scan tool, read DTCs.

Does the scan tool display this DTC as active?

Yes

- Go To 4

No

- Replace the Dynamics Sensor in accordance with the Service Information.
- Perform the BODY VERIFICATION TEST. (Refer to 28 - DTC-Based Diagnostics/MODULE, Totally Integrated Power (TIPM) - Standard Procedure).

4. BRAKE LAMP ACTIVATION RELAY (IF EQUIPPED)

1. Disconnect the Brake Lamp Activation Relay harness connector.
2. With the scan tool, read DTCs.

Does the scan tool display this DTC as active?

Yes

- Go To 5

No

- Replace the Brake Lamp Activation Relay in accordance with the Service Information.
- Perform the BODY VERIFICATION TEST. (Refer to 28 - DTC-Based Diagnostics/MODULE, Totally Integrated Power (TIPM) - Standard Procedure).

5. ANTI-LOCK BRAKES MODULE

1. Turn the ignition off.
2. Disconnect the Anti-lock Brakes Module harness connector.
3. Turn the ignition on.
4. With the scan tool, read DTCs.

Does the scan tool display this DTC as active?

Yes

- Go To 6

No

- Replace the Anti-lock Brakes Module in accordance with the Service Information.
- Perform the ABS VERIFICATION TEST. (Refer to 28 - DTC-Based Diagnostics/MODULE, Antilock Brake (ABS) - Standard Procedure).

6. (F941) IGNITION RUN/START CONTROL OUTPUT CIRCUIT SHORTED TO GROUND

NOTE: Perform this test step with above connectors disconnected.

1. Turn the ignition off.
2. Disconnect the TIPM C7 harness connector.
3. Measure the resistance between ground and the (F941) Ignition Run/ Start Control Output circuit.

Is the resistance below 10K Ohms?

Yes

- Repair the (F941) Ignition Run/Start Control Output circuit for a short to ground.
- Perform the BODY VERIFICATION TEST. (Refer to 28 - DTC-Based Diagnostics/MODULE, Totally Integrated Power (TIPM) - Standard Procedure).

No

- Replace the TIPM in accordance with the Service Information.
- Perform the BODY VERIFICATION TEST. (Refer to 28 - DTC-Based Diagnostics/MODULE, Totally Integrated Power (TIPM) - Standard Procedure).

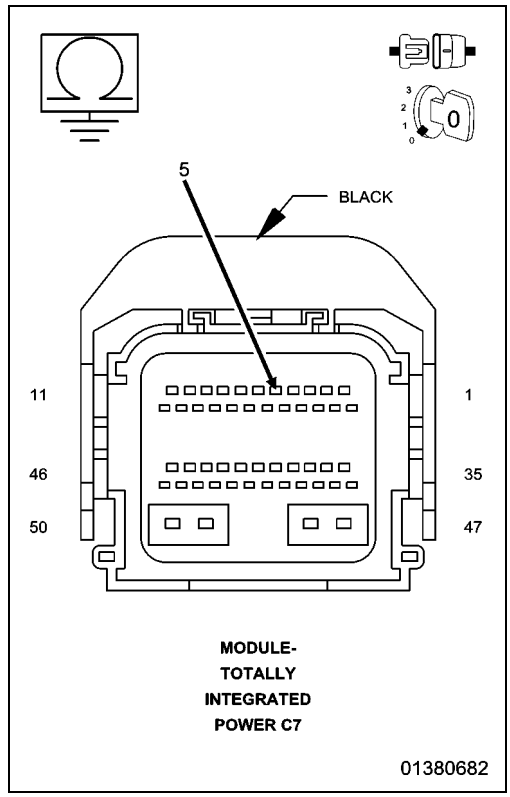

B210D-BATTERY VOLTAGE LOW

For a complete wiring diagram, **refer to the Wiring Information**.

- **When Monitored:**
  With the ignition on.
- **Set Condition:**
  Battery voltage less than 9 volts for more than 15 seconds.

Possible Causes
RESISTANCE IN THE (A1) BATTERY POSITIVE CIRCUIT
RESISTANCE IN THE GENERATOR CASE GROUND
GENERATOR OPERATION
GENERATOR FIELD CONTROL CIRCUIT OPEN
GENERATOR FIELD CONTROL CIRCUIT SHORTED TO GROUND
GROUND CIRCUIT OPEN
POWERTRAIN CONTROL MODULE (PCM)

1. CHECK FOR ANY POWERTRAIN/ENGINE CONTROL MODULES DIAGNOSTIC TROUBLE CODES (DTCS)

NOTE: Make sure the battery is in good condition. Using the Midtronics Battery Tester, test the battery before continuing.

NOTE: Inspect the vehicle for after market accessories that may exceed the Generator System output.

NOTE: Make sure the generator drive belt is in good operating condition.

NOTE: Inspect the fuses in the Totally Integrated Power Module (TIPM). If an open fuse is found, use the wire diagram/schematic as a guide, inspect the wiring and connectors for damage.

1. Turn the ignition on.
2. With the scan tool, read active PCM DTCs.

Does the scan tool display any active DTCs?

Yes

- Perform the appropriate diagnostic procedure. (Refer to 28 - DTC-Based Diagnostics/MODULE, Powertrain Control (PCM) - Diagnosis and Testing).

No

- Check the above conditions that can cause a low voltage condition. Repair as necessary.

B210E-BATTERY VOLTAGE HIGH

For a complete wiring diagram, **refer to the Wiring Information**.

- **When Monitored:**
  With the ignition on.
- **Set Condition:**
  Battery voltage greater than 16 volts for more than 15 seconds.

Possible Causes
GENERATOR FIELD CONTROL CIRCUIT SHORTED TO BATTERY VOLTAGE
GENERATOR
POWERTRAIN CONTROL MODULE (PCM)

1. CHECK FOR ANY POWERTRAIN CONTROL MODULES DIAGNOSTIC TROUBLE CODES (DTCS)

NOTE: Make sure the battery is in good condition. Using the Midtronics Battery Tester, test the battery before continuing.

NOTE: Inspect the vehicle for after market accessories that may exceed the Generator System output.

NOTE: Make sure the generator drive belt is in good operating condition.

NOTE: Inspect the fuses in the Totally Integrated Power Module (TIPM). If an open fuse is found, use the wire diagram/schematic as a guide, inspect the wiring and connectors for damage.

1. Turn the ignition on.
2. With the scan tool, read active PCM DTCs.

Does the scan tool display any active DTCs?

Yes

- Perform the appropriate diagnostic procedure. (Refer to 28 - DTC-Based Diagnostics/MODULE, Powertrain Control (PCM) - Diagnosis and Testing).

No

- Check the above conditions that can cause a high voltage condition. Repair as necessary.

B2112-5-VOLT SUPPLY CIRCUIT LOW

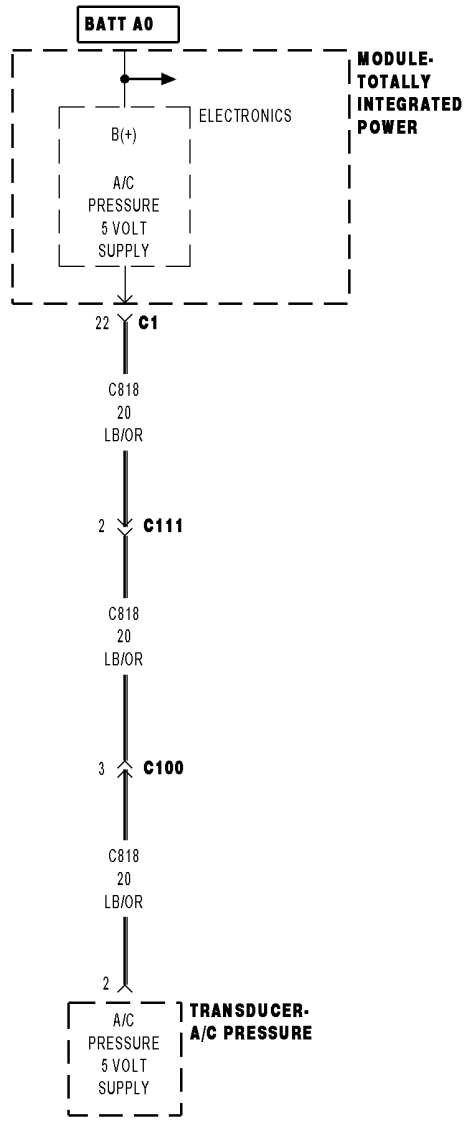

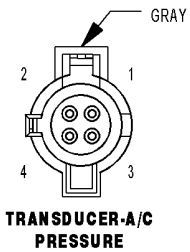

TRANSDUCER-A/C PRESSURE

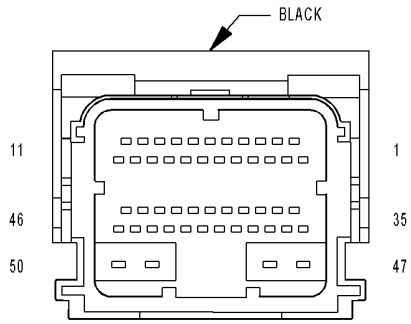

MODULE-
TOTALLY
INTEGRATED
POWER C1

01381038

For a complete wiring diagram, **refer to the Wiring Information**.

- **When Monitored:**
  With the ignition on.
- **Set Condition:**
  The Totally Integrated Power Module (TIPM) detects a voltage below 4 volts on the (C818) A/C Pressure 5-volt Supply Circuit.

Possible Causes
(C818) A/C PRESSURE 5-VOLT SUPPLY CIRCUIT SHORT TO GROUND
A/C PRESSURE TRANSDUCER
TOTALLY INTEGRATED POWER MODULE (TIPM)

1. CHECK FOR ACTIVE DTC

1. With the scan tool, read the active DTCs.
2. Cycle the ignition switch from off to on, leaving the ignition on for a minimum of 30 seconds.
3. With the scan tool, read the active DTCs.

Does the scan tool display this DTC as active?

Yes

- Go To 2

No

- If the DTC is stored, check for an intermittent condition. Visually inspect the related wiring harness connectors. Look for broken, bent, pushed out, or corroded terminals.

2. A/C PRESSURE TRANSDUCER

1. Turn the ignition off.
2. Disconnect the A/C Pressure Transducer harness connector.
3. Turn the ignition on.
4. With the scan tool, read the active DTCs.

Does the scan tool display this DTC as active?

Yes

- Go To 3

No

- Replace the A/C Pressure Transducer in accordance with the Service Information.
- Perform the BODY VERIFICATION TEST. (Refer to 28 - DTC-Based Diagnostics/MODULE, Totally Integrated Power (TIPM) - Standard Procedure).

3. (C818) A/C PRESSURE 5-VOLT SUPPLY CIRCUIT SHORT TO GROUND

1. Turn the ignition off.
2. Disconnect the TIPM C1 harness connector.
3. Measure the resistance between ground and the (C818) A/C Pressure 5-volt Supply Circuit at the TIPM C1 harness connector.

Is the resistance below 10K Ohms?

Yes

- Repair the (C818) A/C Pressure 5-volt Supply Circuit for a short to ground.
- Perform the BODY VERIFICATION TEST. (Refer to 28 - DTC-Based Diagnostics/MODULE, Totally Integrated Power (TIPM) - Standard Procedure).

No

- Replace the Totally Integrated Power Module (TIPM) in accordance with the Service Information.
- Perform the BODY VERIFICATION TEST. (Refer to 28 - DTC-Based Diagnostics/MODULE, Totally Integrated Power (TIPM) - Standard Procedure).

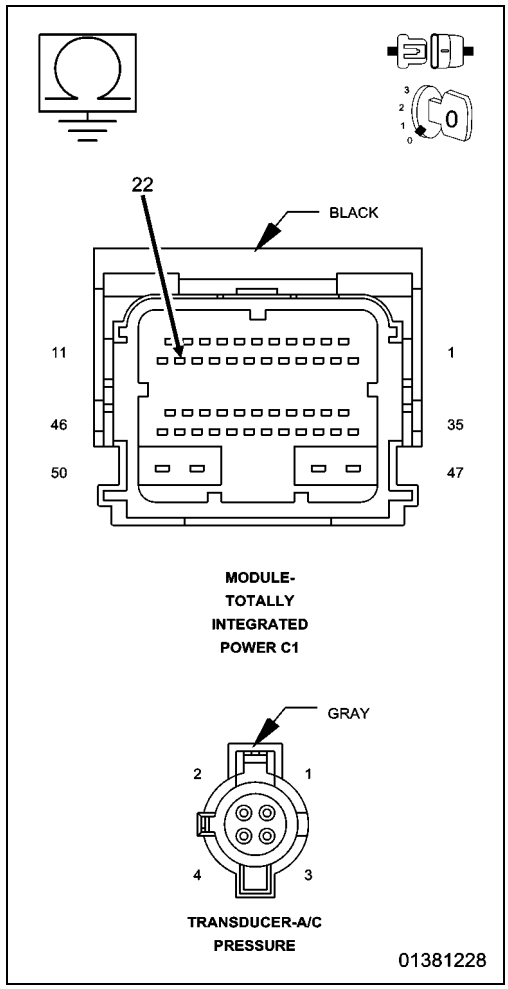

B2113-5 VOLT SUPPLY CIRCUIT HIGH

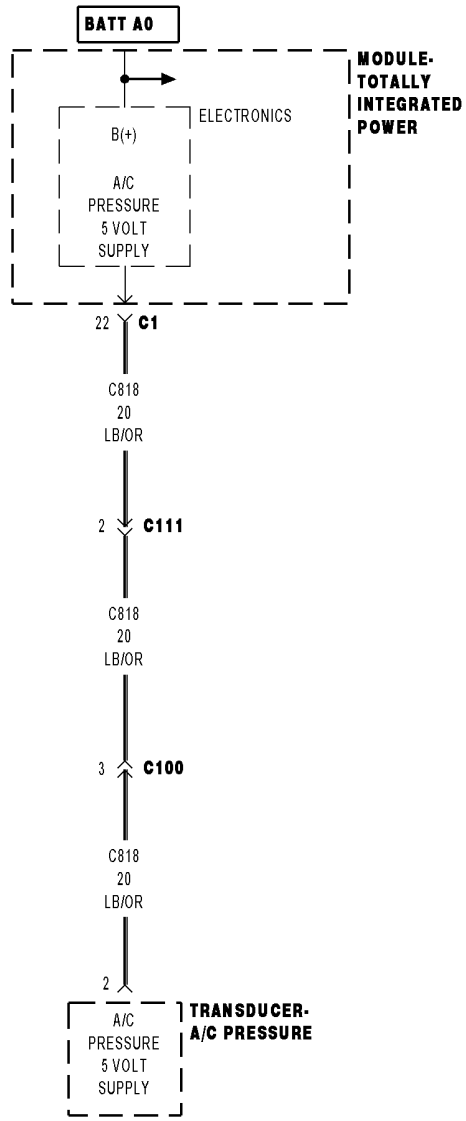

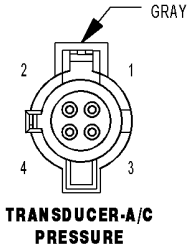

TRANSDUCER-A/C PRESSURE

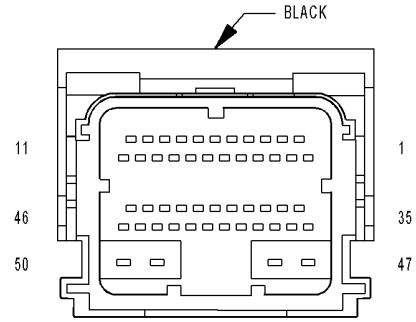

MODULE-
TOTALLY
INTEGRATED
POWER C1

01381038

For a complete wiring diagram, **refer to the Wiring Information**.

- **When Monitored:**
  With the ignition on.
- **Set Condition:**
  The Totally Integrated Power Module (TIPM) detects an open or a short to voltage on the (C818) A/C Pressure 5-volt Supply circuit.

Possible Causes
(C818) A/C PRESSURE 5-VOLT SUPPLY CIRCUIT SHORT TO VOLTAGE
(C818) A/C PRESSURE 5-VOLT SUPPLY CIRCUIT OPEN
A/C PRESSURE TRANSDUCER
TOTALLY INTEGRATED POWER MODULE (TIPM)

1. CHECK FOR ACTIVE DTC

1. With the scan tool, read the active DTCs.
2. Cycle the ignition switch from off to on, leaving the ignition on for a minimum of 30 seconds.
3. With the scan tool, read the active DTCs.

Does the scan tool display this DTC as active?

Yes

- Go To 2

No

- If the DTC is stored, check for an intermittent condition. Visually inspect the related wiring harness connectors. Look for broken, bent, pushed out, or corroded terminals.

2. A/C PRESSURE TRANSDUCER

1. Turn the ignition off.
2. Disconnect the A/C Pressure Transducer harness connector.
3. Turn the ignition on.
4. With the scan tool, read the active DTCs.

Does the scan tool display this DTC as active?

Yes

- Go To 3

No

- Replace the A/C Pressure Transducer in accordance with the service information.
- Perform the BODY VERIFICATION TEST. (Refer to 28 - DTC-Based Diagnostics/MODULE, Totally Integrated Power (TIPM) - Standard Procedure).

3. (C818) A/C PRESSURE 5-VOLT SUPPLY CIRCUIT SHORT TO VOLTAGE

1. Turn the ignition off.
2. Disconnect the TIPM C1 harness connector.
3. Turn the ignition on.
4. Measure the voltage of the (C818) A/C Pressure 5-volt Supply Circuit at the TIPM C1 harness connector.

Is the voltage above 10.0 volts?

Yes

- Repair the (C818) A/C Pressure 5-volt Supply Circuit for a short to voltage.
- Perform the BODY VERIFICATION TEST. (Refer to 28 - DTC-Based Diagnostics/MODULE, Totally Integrated Power (TIPM) - Standard Procedure).

No

- Go To 4

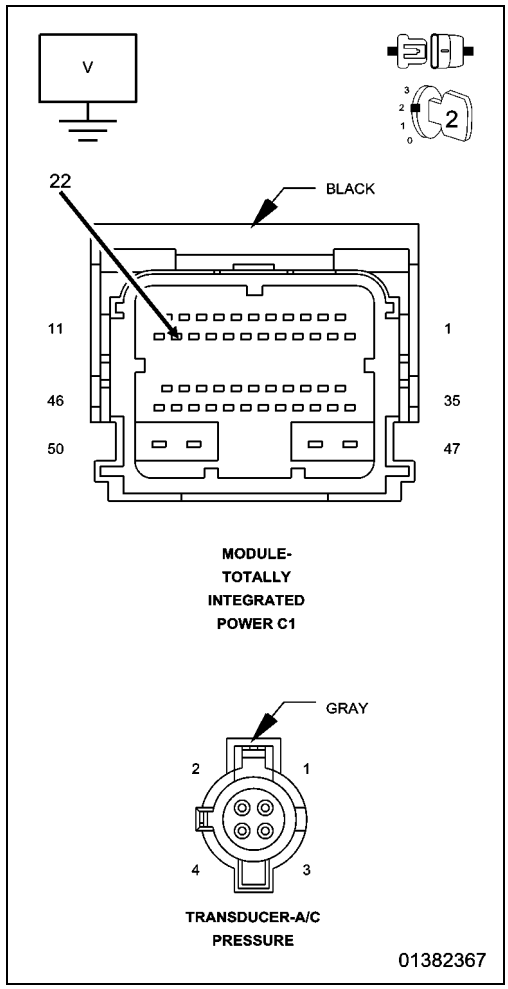

4. (C818) A/C PRESSURE 5-VOLT SUPPLY CIRCUIT OPEN

1. Turn the ignition off.
2. Measure the resistance of the (C818) A/C Pressure 5-volt Supply Circuit.

Is the resistance below 5.0 Ohms?

Yes

- Replace the Totally Integrated Power Module (TIPM) in accordance with the Service Information.
- Perform the BODY VERIFICATION TEST. (Refer to 28 - DTC-Based Diagnostics/MODULE, Totally Integrated Power (TIPM) - Standard Procedure).

No

- Repair the (C818) A/C Pressure 5-volt Supply Circuit for an open.
- Perform the BODY VERIFICATION TEST. (Refer to 28 - DTC-Based Diagnostics/MODULE, Totally Integrated Power (TIPM) - Standard Procedure).

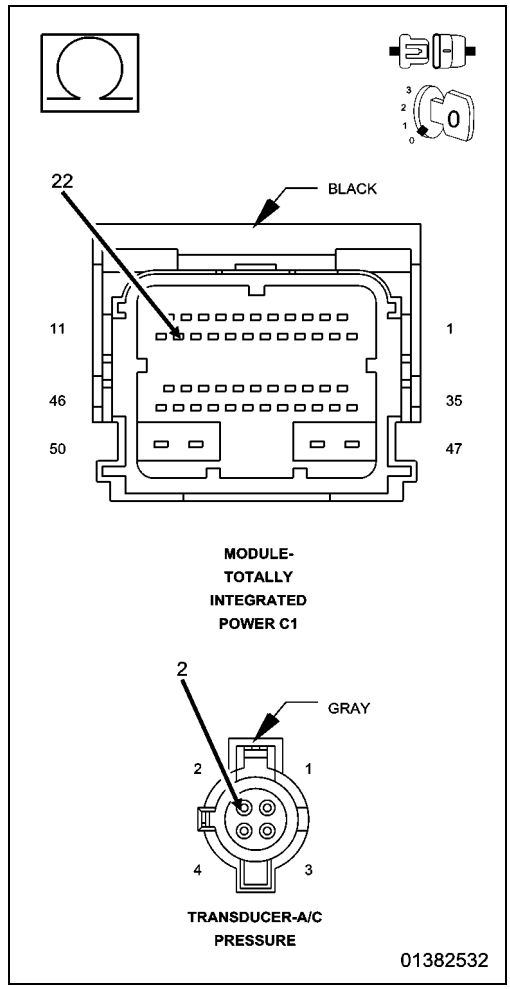

B2122-IGNITION RUN CONTROL 1 CIRCUIT LOW

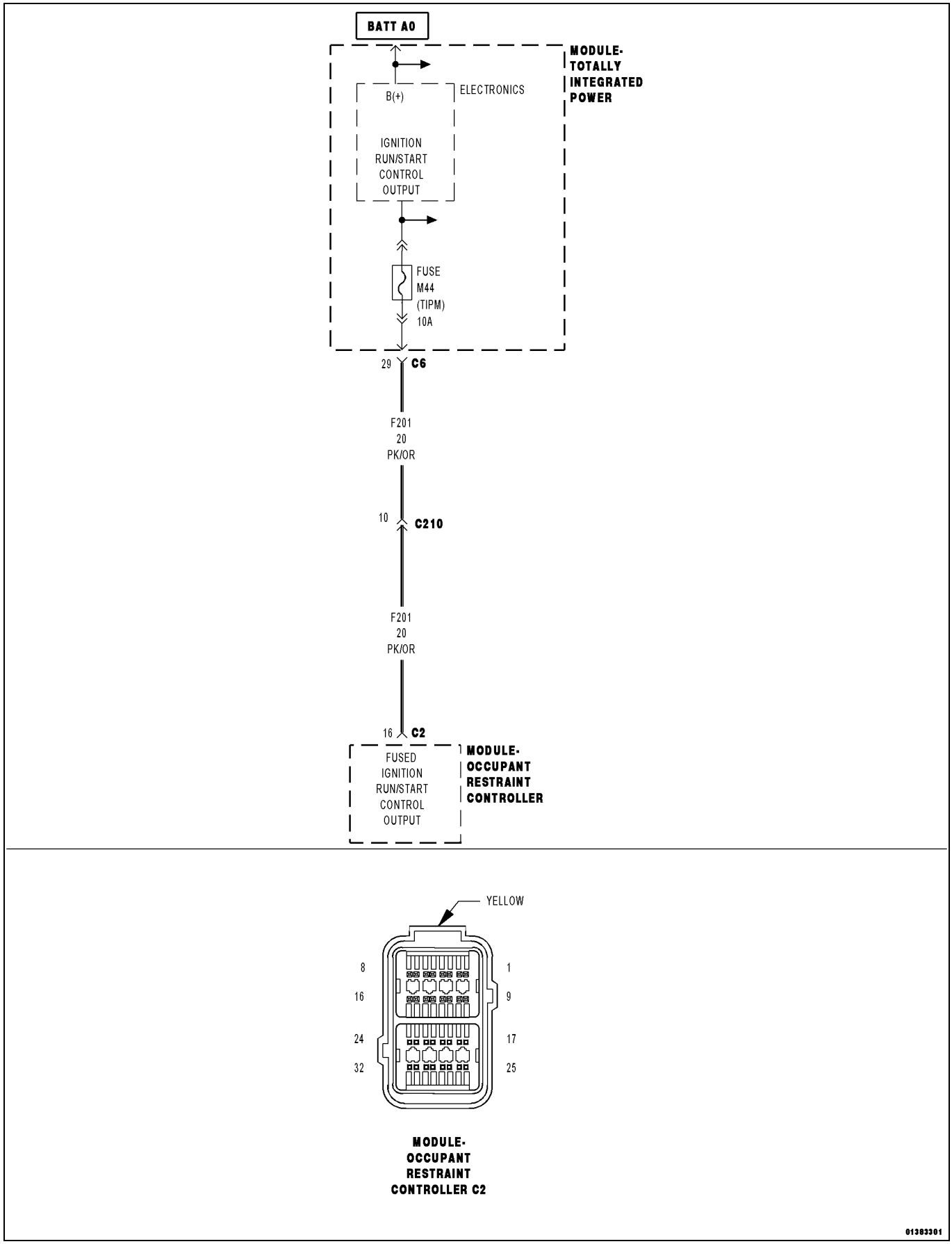

For a complete wiring diagram, **refer to the Wiring Information**.

- **When Monitored:**
  With the ignition on.
- **Set Condition:**
  The Totally Integrated Power Module (TIPM) will set this code when a short to ground condition is detected on the (F201) Fused Ignition Run/Start Control Output circuit.

Possible Causes
(F201) FUSED IGNITION RUN/START CONTROL OUTPUT CIRCUIT SHORTED TO GROUND
OCCUPANT RESTRAINT CONTROLLER
TOTALLY INTEGRATED POWER MODULE (TIPM)

1. CHECK FOR ACTIVE DTC

1. With the scan tool, read the active DTC.
2. Cycle the ignition switch from off to on, leaving the ignition off for a minimum of 30 seconds.
3. With the scan tool, read the active DTC.

Does the scan tool display this DTC as active?

Yes

- Go To 2

No

- If the DTC is stored, check for an intermittent condition. Using the wiring diagram/schematic as a guide, visually inspect the related wiring harness connectors. Look for broken, bent, pushed out, or corroded terminals.
- Perform the BODY VERIFICATION TEST. (Refer to 28 - DTC-Based Diagnostics/MODULE, Totally Integrated Power (TIPM) - Standard Procedure).

2. OCCUPANT RESTRAINT CONTROLLER

WARNING: To avoid possible serious or fatal injury, turn the ignition off, disconnect the battery and wait two minutes before proceeding.

1. Disconnect the ORC C2 harness connector
2. Turn the ignition on.
3. Reconnect the battery.
4. With the scan tool, read DTCs.

Does the scan tool display this DTC as active?

Yes

- Go To 3

No

- Replace the ORC in accordance with the Service Information.
- Perform the RESTRAINTS SYSTEM VERIFICATION TEST. (Refer to 28 - DTC-Based Diagnostics/CONTROLLER, Occupant Restraint (ORC) - Standard Procedure).

3. (F201) FUSED IGNITION RUN/START CONTROL OUTPUT CIRCUIT SHORTED TO GROUND

1. Turn the ignition off.
2. Disconnect the TIPM C6 harness connector.
3. Measure the resistance between ground and the (F201) Fused Ignition Run/Start Control Output circuit.

Is the resistance below 10K Ohms?

Yes

- Repair the (F201) Fused Ignition Run/Start Control Output circuit for a short to ground.
- Perform the BODY VERIFICATION TEST. (Refer to 28 - DTC-Based Diagnostics/MODULE, Totally Integrated Power (TIPM) - Standard Procedure).

No

- Replace the Totally Integrated Power Module (TIPM) in accordance with the Service Information.
- Perform the BODY VERIFICATION TEST. (Refer to 28 - DTC-Based Diagnostics/MODULE, Totally Integrated Power (TIPM) - Standard Procedure).

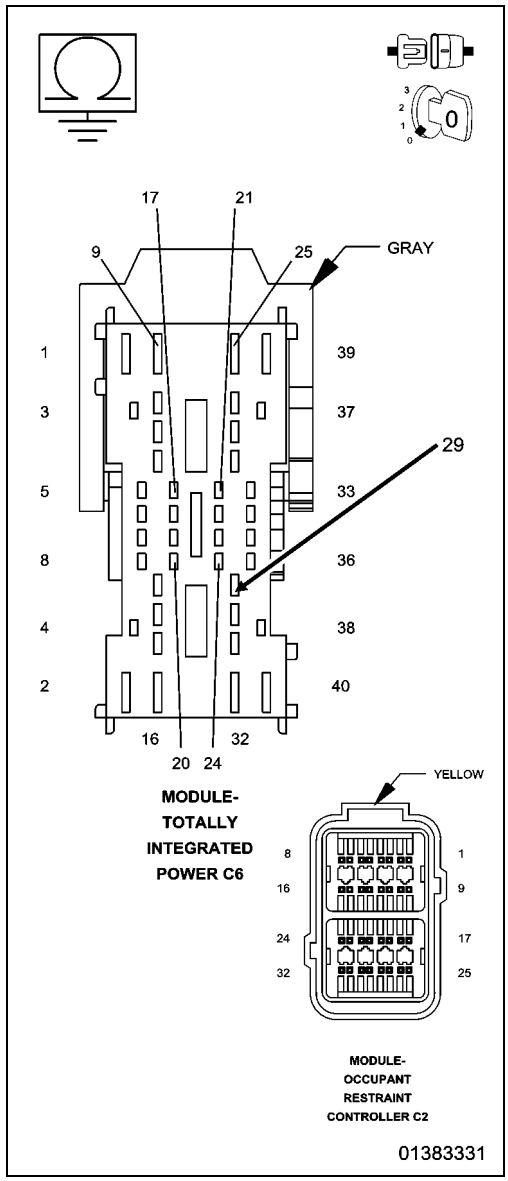

B2142-IGNITION OFF DRAW (IOD) FUSE NOT PRESENT

For a complete wiring diagram, **refer to the Wiring Information**.

- **When Monitored:**
  With the ignition on.
- **Set Condition:**
  Ignition Off Draw (IOD) Fuse not installed

Possible Causes
IOD FUSE NOT INSTALLED

1. CHECK FOR ACTIVE DTC

1. With the scan tool, read the active DTC.
2. Cycle the ignition switch from off to on, leaving the ignition off for a minimum of 30 seconds.
3. With the scan tool, read the active DTC.

Does the scan tool display this DTC as active?

Yes

- Install the IOD Fuse.
- Perform the BODY VERIFICATION TEST. (Refer to 28 - DTC-Based Diagnostics/MODULE, Totally Integrated Power (TIPM) - Standard Procedure).

No

- Test complete.

B2148-IGNITION RUN CONTROL 2 CIRCUIT LOW

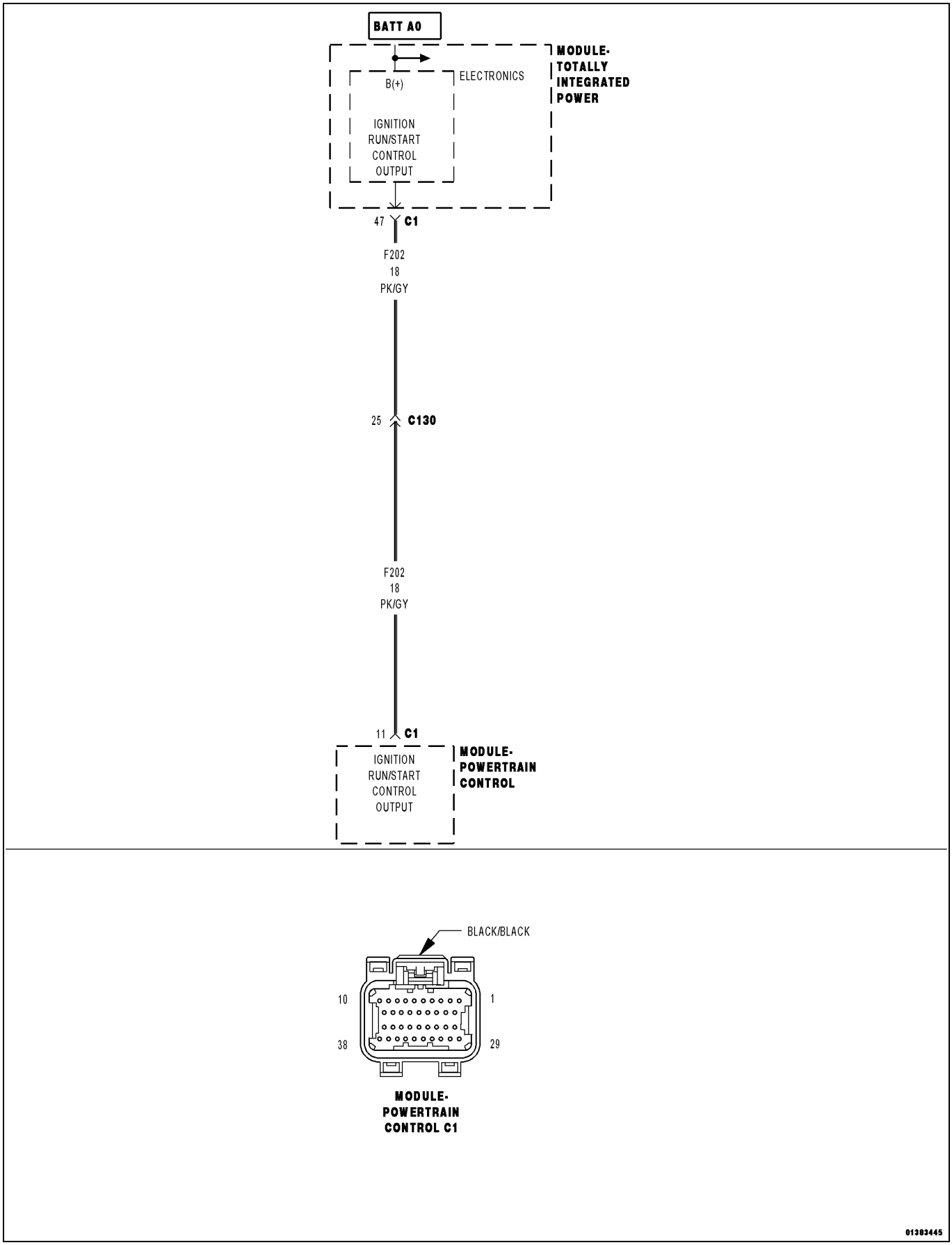

For a complete wiring diagram, **refer to the Wiring Information**.

- **When Monitored:**
  With the ignition on.
- **Set Condition:**
  The Totally Integrated Power Module (TIPM) will set this code when a short to ground condition is detected on the (F202) Ignition Run-Start Control Output circuit.

Possible Causes
(F202) IGNITION RUN-START CONTROL OUTPUT CIRCUIT SHORTED TO GROUND
POWERTRAIN CONTROL MODULE (PCM)
TOTALLY INTEGRATED POWER MODULE (TIPM)

1. CHECK FOR ACTIVE DTC

1. With the scan tool, read the active DTC.
2. Cycle the ignition switch from off to on, leaving the ignition off for a minimum of 30 seconds.
3. With the scan tool, read the active DTC.

Does the scan tool display this DTC as active?

Yes

- Go To 2

No

- If the DTC is stored, check for an intermittent condition. Using the wiring diagram/schematic as a guide, visually inspect the related wiring harness connectors. Look for broken, bent, pushed out, or corroded terminals.
- Perform the BODY VERIFICATION TEST. (Refer to 28 - DTC-Based Diagnostics/MODULE, Totally Integrated Power (TIPM) - Standard Procedure).

2. POWERTRAIN CONTROL MODULE (PCM)

1. Turn the ignition off.
2. Disconnect the PCM C1 harness connector.
3. Turn the ignition on.
4. With the scan tool, read DTCs.

Does the scan tool display this DTC as active?

Yes

- Go To 3

No

- Replace the PCM in accordance with the Service Information.
- Perform the POWERTRAIN VERIFICATION TEST. (Refer to 28 - DTC-Based Diagnostics/MODULE, Powertrain Control (PCM) - Standard Procedure).

3. (F202) IGNITION RUN-START CONTROL OUTPUT CIRCUIT SHORTED TO GROUND

1. Turn the ignition off.
2. Disconnect the TIPM C1 harness connector.
3. Measure the resistance between ground and the (F202) Ignition Run-Start Control Output circuit.

Is the resistance below 10K Ohms?

Yes

- Repair the (F202) Ignition Run-Start Control Output circuit for a short to ground.
- Perform the BODY VERIFICATION TEST. (Refer to 28 - DTC-Based Diagnostics/MODULE, Totally Integrated Power (TIPM) - Standard Procedure).

No

- Replace the Totally Integrated Power Module (TIPM) in accordance with the Service Information.
- Perform the BODY VERIFICATION TEST. (Refer to 28 - DTC-Based Diagnostics/MODULE, Totally Integrated Power (TIPM) - Standard Procedure).

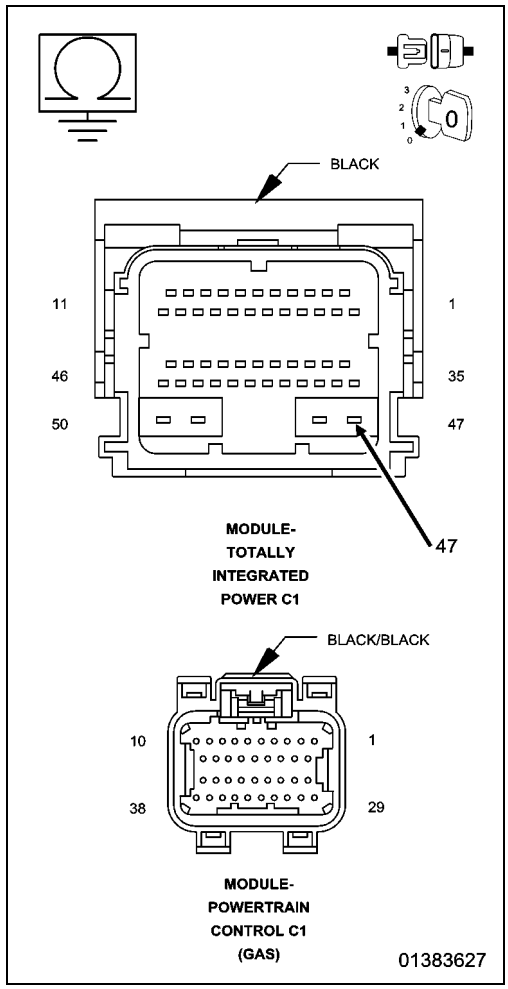

B2184-IGNITION UNLOCK/RUN/START CONTROL CIRCUIT LOW

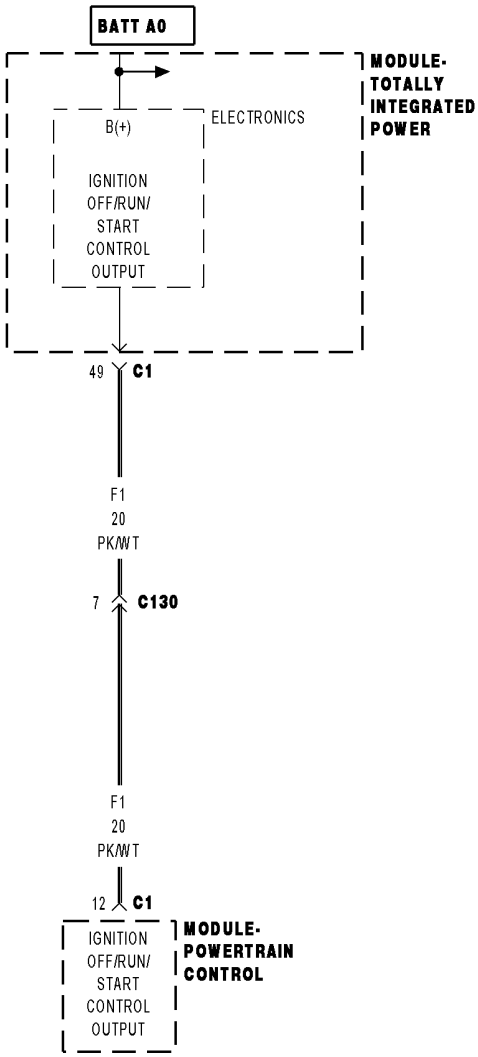

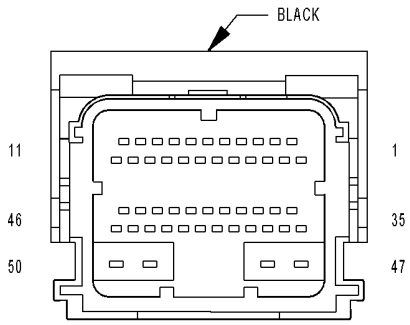

MODULE-
TOTALLY
INTEGRATED
POWER C1

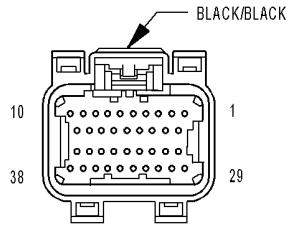

MODULE-
POWERTRAIN
CONTROL C1

01383909

For a complete wiring diagram, **refer to the Wiring Information**.

Theory of Operation

The family of B2100 DTCs typically describes ignition performance related faults. These are often caused by a contradiction of switch status information. For example, if an ECU receives a bussed message indicating ignition switch position but the state of a hardwired ignition circuit indicates another switch position a B2100 series DTC would likely result.

These DTCs can be caused by a number of conditions including:

- loose connections
- missing or blown fuses
- faulty component
- vehicle no start or long crank time

Verify the proper operation of the starting system and verify that this DTC is active before proceeding with the diagnostic test.

- **When Monitored:**
  With the ignition on.
- **Set Condition:**
  The Totally Integrated Power Module (TIPM) will set this code when a short to ground condition is detected on the (F1) Ignition Off/Run/Start Control Output circuit.

Possible Causes
(F1) IGNITION OFF/RUN/START CONTROL OUTPUT CIRCUIT SHORTED TO GROUND
POWERTRAIN CONTROL MODULE (PCM)
TOTALLY INTEGRATED POWER MODULE (TIPM)

1. CHECK FOR ACTIVE DTC

1. With the scan tool, read the active DTC.
2. Cycle the ignition switch from off to on, leaving the ignition off for a minimum of 30 seconds.
3. With the scan tool, read the active DTC.

Does the scan tool display this DTC as active?

Yes

- Go To 2

No

- If the DTC is stored, check for an intermittent condition. Using the wiring diagram/schematic as a guide, visually inspect the related wiring harness connectors. Look for broken, bent, pushed out, or corroded terminals.
- Perform the BODY VERIFICATION TEST. (Refer to 28 - DTC-Based Diagnostics/MODULE, Totally Integrated Power (TIPM) - Standard Procedure).

2. POWERTRAIN CONTROL MODULE (PCM)

1. Turn the ignition off.
2. Disconnect the PCM C1 harness connector.
3. Turn the ignition on.
4. With the scan tool, read DTCs.

Does the scan tool display this DTC as active?

Yes

- Go To 3

No

- Replace the PCM in accordance with the Service Information.
- Perform the POWERTRAIN VERIFICATION TEST. (Refer to 28 - DTC-Based Diagnostics/MODULE, Powertrain Control (PCM) - Standard Procedure).

3. (F1) IGNITION OFF/RUN/START CONTROL OUTPUT CIRCUIT SHORTED TO GROUND

1. Turn the ignition off.
2. Disconnect the TIPM C1 harness connector.
3. Measure the resistance between ground and the (F1) Ignition Off/Run/Start Control Output circuit.

Is the resistance below 10K Ohms?

Yes

- Repair the (F1) Ignition Off/Run/Start Control Output circuit for a short to ground.
- Perform the BODY VERIFICATION TEST. (Refer to 28 - DTC-Based Diagnostics/MODULE, Totally Integrated Power (TIPM) - Standard Procedure).

No

- Replace the Totally Integrated Power Module (TIPM) in accordance with the Service Information.
- Perform the BODY VERIFICATION TEST. (Refer to 28 - DTC-Based Diagnostics/MODULE, Totally Integrated Power (TIPM) - Standard Procedure).

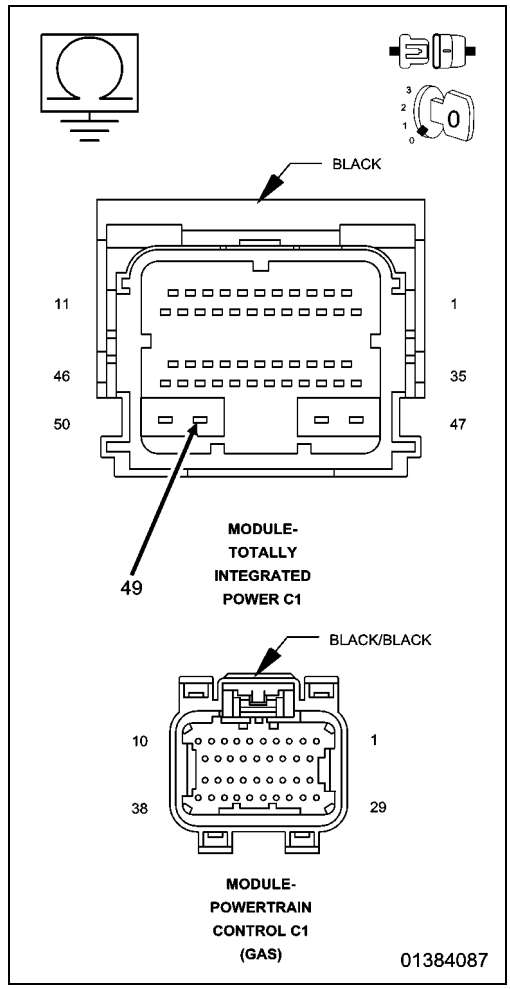

■ B21A1-ECU RESET/RECOVERY OCCURRED

For a complete wiring diagram, **refer to the Wiring Information**.

- **When Monitored:**
  With the ignition on.
- **Set Condition:**
  The Totally Integrated Power Module (TIPM) sets this code whenever a non-normal (internal watchdog) reset occurs.

Possible Causes
TOTALLY INTEGRATED POWER MODULE (TIPM)

1. CHECK FOR ACTIVE DIAGNOSTIC TROUBLE CODE (DTC)

1. Using the scan tool, read the active DTCs.
2. Cycle the ignition switch from off to on at least 5 times, leaving the ignition on for a minimum of 90 seconds per cycle.
3. Using the scan tool, read the active DTCs.

Does the scan tool display this DTC as active?

Yes

- Inspect the wiring and connectors for damage or shorted circuits. If ok, replace and program the Totally Integrated Power Module in accordance with the Service Information.
- Perform the BODY VERIFICATION TEST (Refer to 28 - DTC-Based Diagnostics/MODULE, Totally Integrated Power (TIPM) - Standard Procedure).

No

- If the DTC is stored, check for an intermittent condition. Visually inspect the related wiring harness connectors. Look for broken, bent, pushed out, or corroded terminals.
- Perform the BODY VERIFICATION TEST. (Refer to 28 - DTC-Based Diagnostics/MODULE, Totally Integrated Power (TIPM) - Standard Procedure).

B2202-EEPROM CHECKSUM PERFORMANCE

For a complete wiring diagram, **refer to the Wiring Information**.

- **When Monitored:**
  With the ignition on.
- **Set Condition:**
  The Totally Integrated Power Module (TIPM) detects any EEPROM block failure.

Possible Causes
TOTALLY INTEGRATED POWER MODULE (TIPM)

1. CHECK FOR ACTIVE DIAGNOSTIC TROUBLE CODE (DTC)

1. Using the scan tool, read the active DTCs.
2. Cycle the ignition switch from off to on at least 5 times, leaving the ignition on for a minimum of 90 seconds per cycle.
3. Using the scan tool, read the active DTCs.

Does the scan tool display this DTC as active?

Yes

- Replace the Totally Integrated Power Module in accordance with the Service Information.
- Perform the BODY VERIFICATION TEST. (Refer to 28 - DTC-Based Diagnostics/MODULE, Totally Integrated Power (TIPM) - Standard Procedure).

No

- Clear stored codes and check to see if the code resets. If not repair complete.
- Perform the BODY VERIFICATION TEST. (Refer to 28 - DTC-Based Diagnostics/MODULE, Totally Integrated Power (TIPM) - Standard Procedure).

B2206-CURRENT VIN MISSING/MISMATCH

For a complete wiring diagram, **refer to the Wiring Information**.

- **When Monitored:**
  With the ignition on.
- **Set Condition:**
  The Totally Integrated Power Module (TIPM) will receive and monitor the Vehicle Identification Number (VIN) message from the Powertrain Control Module (PCM) and record the VIN if different from the last VIN.

Possible Causes
INCORRECT VIN PROGRAMMED IN PCM
TOTALLY INTEGRATED POWER MODULE (TIPM)

1. CHECK FOR ACTIVE DIAGNOSTIC TROUBLE CODE (DTC)

1. Using the scan tool, read the active DTCs.
2. Cycle the ignition switch from off to on at least 5 times, leaving the ignition on for a minimum of 90 seconds per cycle.
3. Using the scan tool, read the active DTCs.

Does the scan tool display this DTC as active?

Yes
- Go To 2

No
- If the DTC is stored, check for an intermittent condition. Visually inspect the related wiring harness connectors. Look for broken, bent, pushed out, or corroded terminals.
- Perform the BODY VERIFICATION TEST. (Refer to 28 - DTC-Based Diagnostics/MODULE, Totally Integrated Power (TIPM) - Standard Procedure).

2. CHECK VIN IN PCM

1. With the scan tool compare the VIN that is programmed into the PCM to the VIN on the vehicle.

Does the VIN programmed into the PCM match the vehicles VIN?

Yes
- Inspect the wiring and connectors for damage or shorted circuits. If ok, replace and program the Totally Integrated Power Module in accordance with the Service Information.
- Perform the BODY VERIFICATION TEST. (Refer to 28 - DTC-Based Diagnostics/MODULE, Totally Integrated Power (TIPM) - Standard Procedure).

No
- Program the correct VIN in the PCM and retest.
- Perform the BODY VERIFICATION TEST. (Refer to 28 - DTC-Based Diagnostics/MODULE, Totally Integrated Power (TIPM) - Standard Procedure).

■ B2215-FRONT CONTROL MODULE INTERNAL (TOTALLY INTEGRATED POWER MODULE)

For a complete wiring diagram, **refer to the Wiring Information**.

- **When Monitored:**
  Continuously.
- **Set Condition:**
  The Totally Integrated Power Module (TIPM) detects an internal fault.

Possible Causes
TOTALLY INTEGRATED POWER MODULE (TIPM)

1. REPLACE THE TIPM IF THE DIAGNOSTIC TROUBLE CODE (DTC) IS ACTIVE

1. Using the scan tool, read the active DTCs.

Does the scan tool display this DTC as active?

Yes

- Replace and program the Totally Integrated Power Module in accordance with the Service Information.
- Perform the BODY VERIFICATION TEST. (Refer to 28 - DTC-Based Diagnostics/MODULE, Totally Integrated Power (TIPM) - Standard Procedure).

No

- If the DTC is stored, check for an intermittent condition. Visually inspect the related wiring harness connectors. Look for broken, bent, pushed out, or corroded terminals.

B222C-VEHICLE CONFIGURATION NOT PROGRAMMED

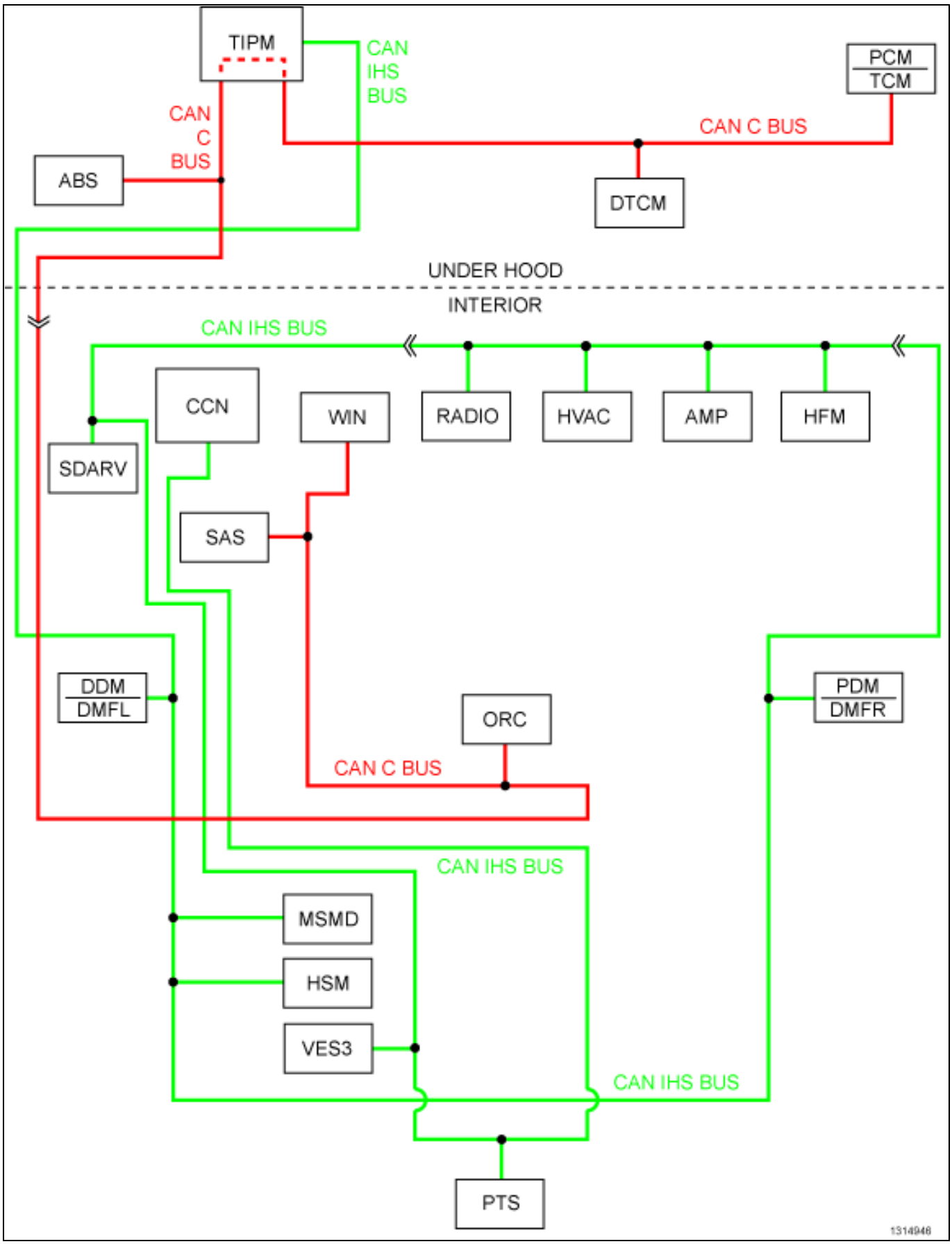

For a complete wiring diagram, **refer to the Wiring Information**.

- **When Monitored:**
  With the ignition on.
- **Set Condition:**
  The Totally Integrated Power Module (TIPM) is not configured correctly to the vehicle.

Possible Causes
TOTALLY INTEGRATED POWER MODULE NOT CONFIGURED CORRECTLY
TOTALLY INTEGRATED POWER MODULE

1. CHECK FOR ACTIVE DIAGNOSTIC TROUBLE CODE (DTC)

1. Using the scan tool, read the active DTCs.
2. Cycle the ignition switch from off to on at least 5 times, leaving the ignition on for a minimum of 90 seconds per cycle.
3. Using the scan tool, read the active DTCs.

Does the scan tool display this DTC as active?

Yes

- Go To 2

No

- If the DTC is stored, check for an intermittent condition. Visually inspect the related wiring harness connectors. Look for broken, bent, pushed out, or corroded terminals.

2. CONFIGURE THE TIPM TO THE VEHICLE

1. Using the scan tool enter program network configuration and program the TIPM to the vehicle configuration.
2. Using the scan tool, erase TIPM DTCs.
3. Cycle the ignition switch from off to on at least 5 times, leaving the ignition on for a minimum of 90 seconds per cycle.
4. Using the scan tool, read the active DTCs.

Does the scan tool display this DTC as active?

Yes

- Inspect the wiring and connectors for damage or shorted circuits. If ok, replace and program the Totally Integrated Power Module in accordance with the Service Information.
- Perform the BODY VERIFICATION TEST. (Refer to 28 - DTC-Based Diagnostics/MODULE, Totally Integrated Power (TIPM) - Standard Procedure).

No

- Repair is complete.
- Perform the BODY VERIFICATION TEST. (Refer to 28 - DTC-Based Diagnostics/MODULE, Totally Integrated Power (TIPM) - Standard Procedure).

B2304-WIPER PARK SWITCH INPUT CIRCUIT LOW

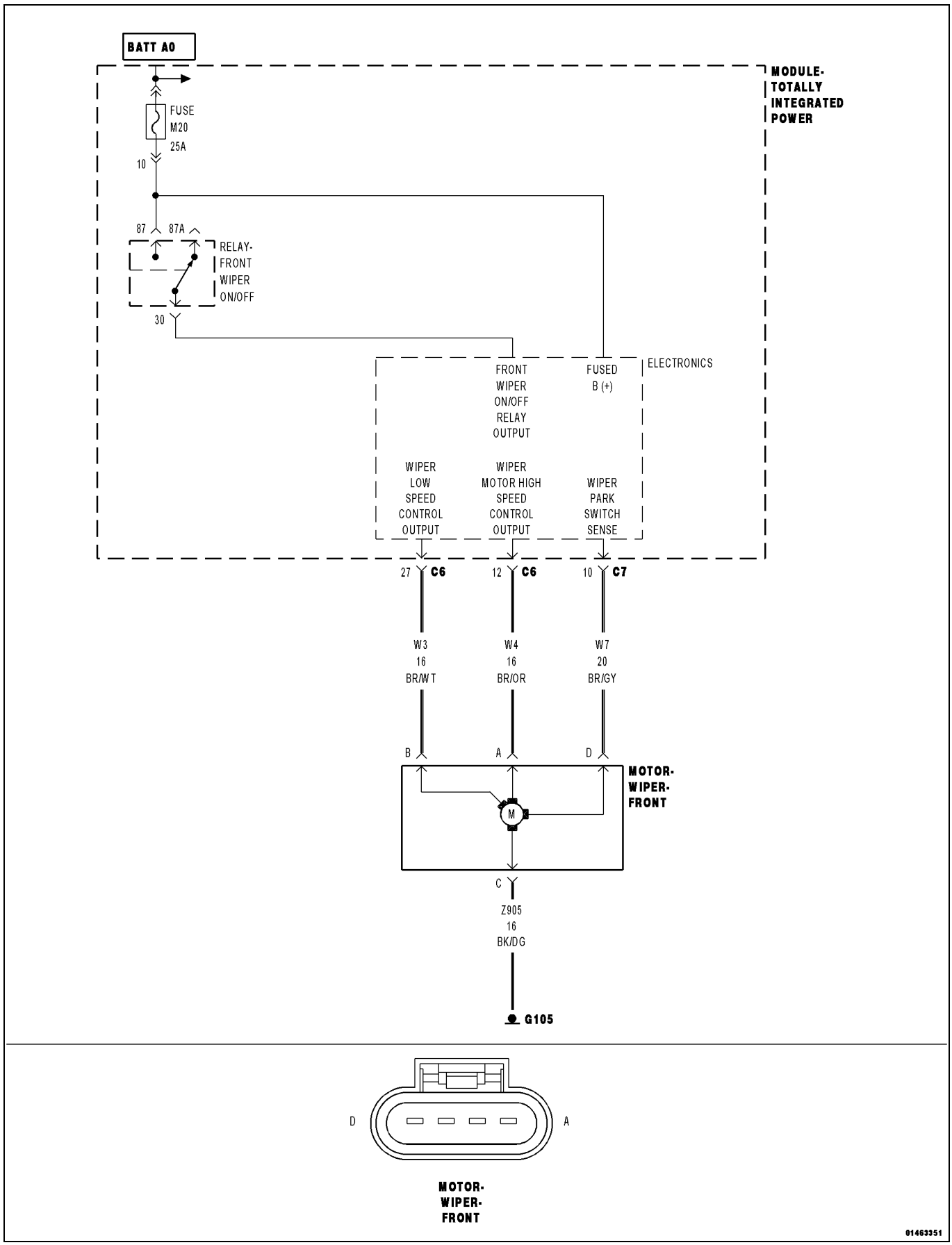

For a complete wiring diagram, **refer to the Wiring Information**.

- **When Monitored:**
  With the ignition on.
- **Set Condition:**
  The Totally Integrated Power Module (TIPM) detects a short to ground in the wiper park switch sense circuit.

Possible Causes
FRONT WIPER MOTOR
(W7) WIPER PARK SWITCH SENSE CIRCUIT SHORTED TO GROUND
TOTALLY INTEGRATED POWER MODULE (TIPM)

1. INTERMITTENT CONDITION

1. Turn the ignition on.
2. With the scan tool, record and erase DTCs.
3. Turn the Front Wipers on.
4. With the scan tool, read the Front Wiper DTCs.

Does the scan tool display this DTC as active?

Yes

- Go To 2

No

- The condition or conditions that originally set this DTC are not present at this time. Using the wiring diagrams as a guide, check all related splices and connectors for signs of water intrusion, corrosion, pushed out or bent terminals and correct pin tension.
- Perform the BODY VERIFICATION TEST. (Refer to 28 - DTC-Based Diagnostics/MODULE, Totally Integrated Power (TIPM) - Standard Procedure).

2. (W7) WIPER PARK SWITCH SENSE CIRCUIT SHORT TO GROUND

1. Turn the ignition off.
2. Disconnect the Front Wiper Motor harness connector.
3. Disconnect the TIPM C7 harness connector.
4. Measure the resistance between ground and the (W7) Wiper Park Switch Sense circuit.

Is the resistance below 5.0 Ohms?

Yes

- Repair the (W7) Wiper Park Switch Sense circuit for a short to ground condition.
- Perform the BODY VERIFICATION TEST. (Refer to 28 - DTC-Based Diagnostics/MODULE, Totally Integrated Power (TIPM) - Standard Procedure).

No

- Go To 3

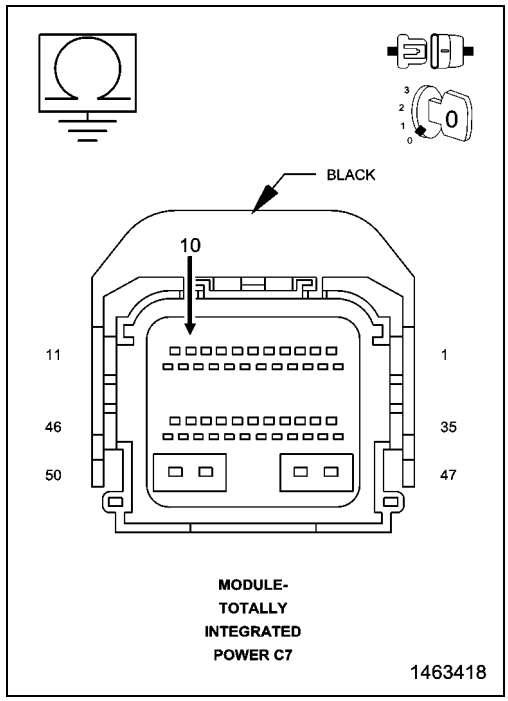

3. WIPER MOTOR

1. Reconnect the TIPM C7 harness connector.
2. Turn the ignition on.
3. With the scan tool, record and erase DTCs.
4. Wait 30 seconds.
5. With the scan tool, read DTCs.

Does the scan tool read: B2304-WIPER PARK SWITCH INPUT CIRCUIT LOW?

Yes

- Replace the Totally Integrated Power Module in accordance with the Service Information.
- Perform the BODY VERIFICATION TEST. (Refer to 28 - DTC-Based Diagnostics/MODULE, Totally Integrated Power (TIPM) - Standard Procedure).

No

- Replace the Front Wiper Motor in accordance with the Service Information.
- Perform the BODY VERIFICATION TEST. (Refer to 28 - DTC-Based Diagnostics/MODULE, Totally Integrated Power (TIPM) - Standard Procedure).

B2305-WIPER PARK SWITCH INPUT CIRCUIT HIGH

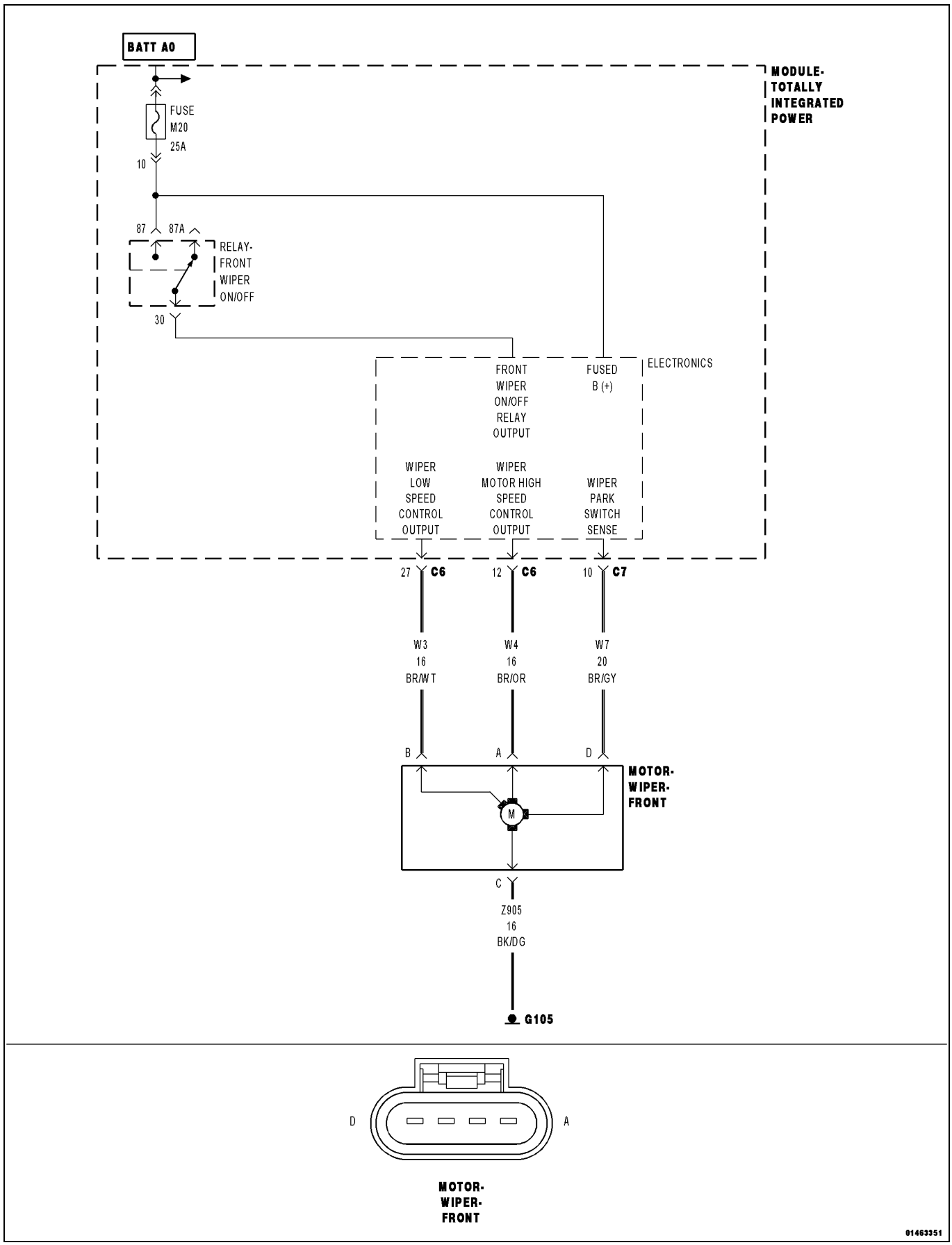

For a complete wiring diagram, **refer to the Wiring Information**.

- **When Monitored:**
  With the ignition on.
- **Set Condition:**
  The Totally Integrated Power Module (TIPM) detects an open condition in the wiper park switch sense circuit.

Possible Causes
(W7) WIPER PARK SWITCH SENSE CIRCUIT OPEN
(W7) WIPER PARK SWITCH SENSE CIRCUIT SHORTED TO VOLTAGE
FRONT WIPER MOTOR
TOTALLY INTEGRATED POWER MODULE (TIPM)

1. ACTIVE DTC

1. Turn the ignition on.
2. With the scan tool, record and erase DTCs.
3. Turn the Front Wipers on.
4. With the scan tool, read the Front Wiper DTCs.

Does the scan tool display this DTC as active?

Yes

- Go To 2

No

- The condition or conditions that originally set this DTC are not present at this time. Using the wiring diagrams as a guide, check all related splices and connectors for signs of water intrusion, corrosion, pushed out or bent terminals, and correct pin tension.
- Perform the BODY VERIFICATION TEST. (Refer to 28 - DTC-Based Diagnostics/MODULE, Totally Integrated Power (TIPM) - Standard Procedure).

2. (W7) WIPER PARK SWITCH SENSE CIRCUIT SHORT TO VOLTAGE

1. Turn the ignition off.
2. Disconnect the Front Wiper Motor harness connector.
3. Disconnect the TIPM C7 harness connector.
4. Turn the ignition on.
5. Using a 12-volt test light connected to ground, check the (W7) Wiper Park Switch Sense circuit.

Does the test light illuminate brightly?

Yes

- Repair the (W7) Wiper Park Switch Sense circuit for a short to voltage.
- Perform the BODY VERIFICATION TEST. (Refer to 28 - DTC-Based Diagnostics/MODULE, Totally Integrated Power (TIPM) - Standard Procedure).

No

- Go To 3

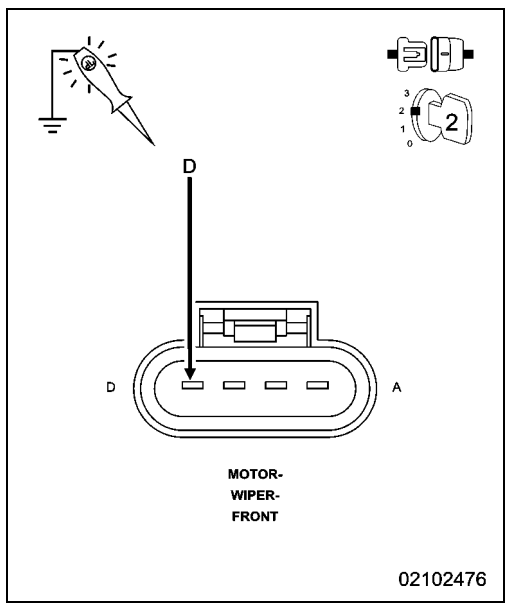

3. (W7) WIPER PARK SWITCH SENSE CIRCUIT OPEN

1. Turn the ignition off.
2. Measure the resistance of the (W7) Wiper Park Switch Sense circuit between the Front Wiper Motor harness connector and the TIPM C7 harness connector.

Is the resistance above 5.0 Ohms?

Yes

- Repair the (W7) Wiper Park Switch Sense circuit for an open.
- Perform the BODY VERIFICATION TEST. (Refer to 28 - DTC-Based Diagnostics/MODULE, Totally Integrated Power (TIPM) - Standard Procedure).

No

- Go To 4

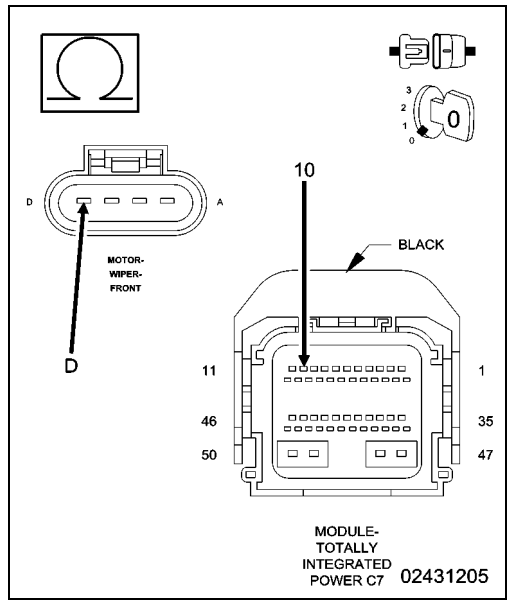

4. WIPER MOTOR

1. Connect a jumper wire between the (W7) Wiper Park Switch Sense circuit and ground.
2. Reconnect the TIPM C7 harness connector.
3. Turn the ignition on.
4. With the scan tool, read the Front Wiper Park Switch Sense.

Does the Front Wiper Park Switch Sense display: True?

Yes

- Replace the Wiper Motor in accordance with the Service Information.
- Perform the BODY VERIFICATION TEST. (Refer to 28 - DTC-Based Diagnostics/MODULE, Totally Integrated Power (TIPM) - Standard Procedure).

No

- Replace the Totally Integrated Power Module (TIPM) in accordance with the Service Information.
- Perform the BODY VERIFICATION TEST. (Refer to 28 - DTC-Based Diagnostics/MODULE, Totally Integrated Power (TIPM) - Standard Procedure).

B2313-WIPER ON/OFF CONTROL CIRCUIT LOW

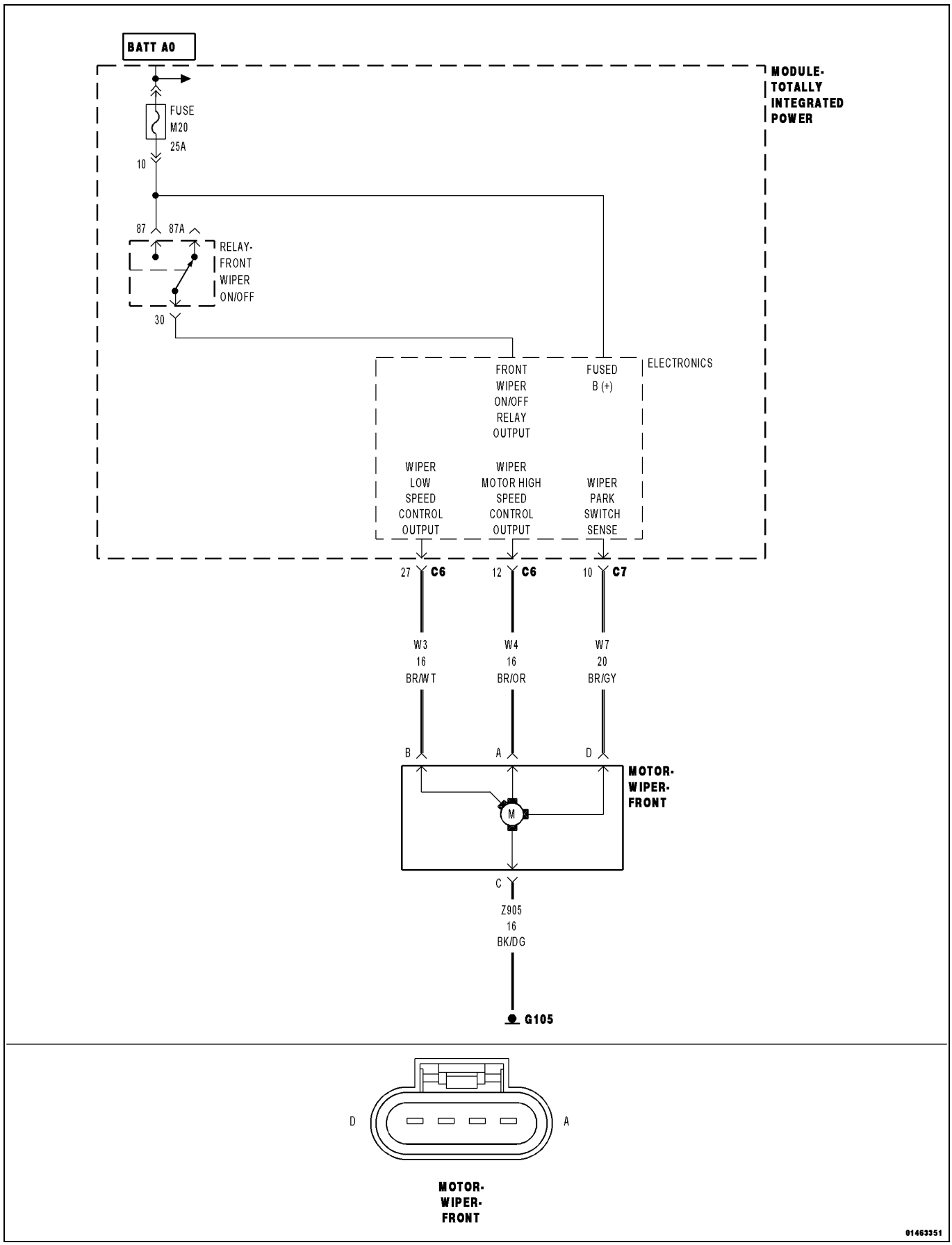

For a complete wiring diagram, **refer to the Wiring Information**.

- **When Monitored:**
  With the Windshield Wipers activated.
- **Set Condition:**
  When the Totally Integrated Power Module (TIPM) detects a low condition in the wiper low speed control output circuit.

Possible Causes
(W3) WIPER LOW SPEED CONTROL OUTPUT CIRCUIT SHORTED TO GROUND
WIPER MOTOR
TOTALLY INTEGRATED POWER MODULE (TIPM)

1. INTERMITTENT CONDITION

1. Turn the ignition on.
2. With the scan tool, clear all TIPM DTCs.
3. Turn the Windshield Wipers on.
4. With the scan tool read the DTC information.

Does the scan tool read: B2313-WIPER ON/OFF CONTROL CIRCUIT LOW?

Yes

- Go To 2

No

- The condition that caused the symptom is currently not present. Inspect the related wiring for a possible intermittent condition. Look for any chafed, pierced, pinched, or partially broken wires.
- Perform the BODY VERIFICATION TEST. (Refer to 28 - DTC-Based Diagnostics/MODULE, Totally Integrated Power (TIPM) - Standard Procedure).

2. (W3) WIPER LOW SPEED CONTROL OUTPUT CONTROL CIRCUIT SHORTED TO GROUND

1. Turn the ignition off.
2. Disconnect the TIPM C6 harness connector.
3. Disconnect the Wiper Motor harness connector.
4. Measure the resistance between ground and the (W3) Wiper Low Speed Control Output circuit.

Is the resistance below 5.0 Ohms?

Yes

- Repair the (W3) Wiper Low Speed Control Output circuit for a short to ground.
- Perform the BODY VERIFICATION TEST. (Refer to 28 - DTC-Based Diagnostics/MODULE, Totally Integrated Power (TIPM) - Standard Procedure).

No

- Go To 3

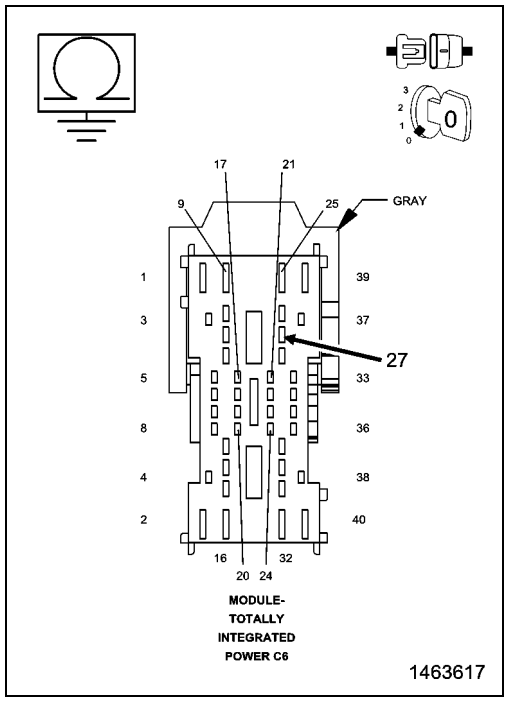

3. WIPER MOTOR

1. Reconnect the TIPM C6 harness connector.
2. Turn the ignition on.
3. With the scan tool, clear all TIPM DTCs.
4. Turn the Front Wipers on.
5. With the scan tool read the DTC information.

Does the scan tool read: B2313-WIPER ON/OFF CONTROL CIRCUIT LOW?

Yes

- Replace the Totally Integrated Power Module (TIPM) in accordance with the Service Information.
- Perform the BODY VERIFICATION TEST. (Refer to 28 - DTC-Based Diagnostics/MODULE, Totally Integrated Power (TIPM) - Standard Procedure).

No

- Replace the Wiper Motor in accordance with the Service Information.
- Perform the BODY VERIFICATION TEST. (Refer to 28 - DTC-Based Diagnostics/MODULE, Totally Integrated Power (TIPM) - Standard Procedure).

B2315-WIPER ON/OFF CONTROL CIRCUIT OPEN

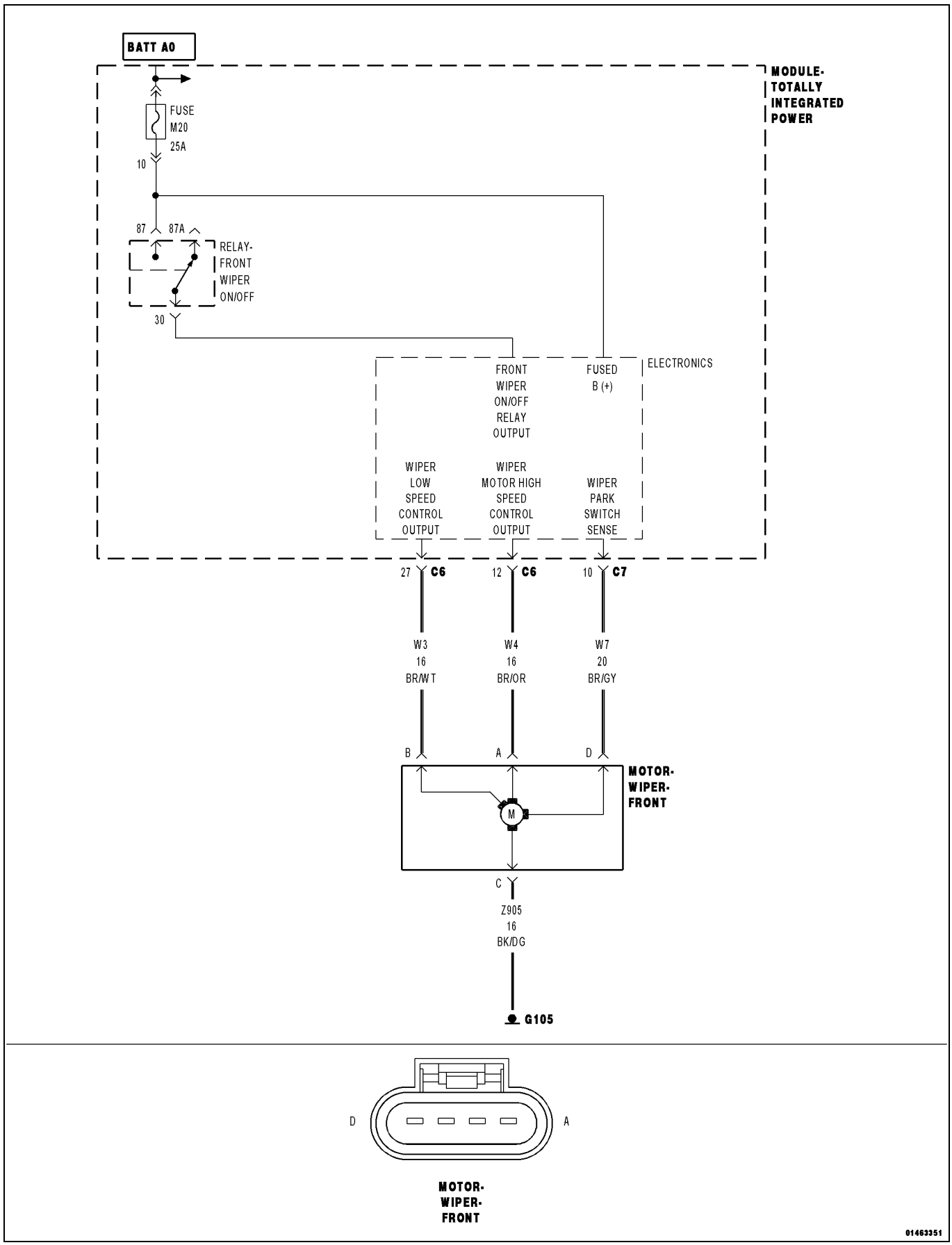

For a complete wiring diagram, **refer to the Wiring Information**.

- **When Monitored:**
  With the Windshield Wipers are turned on.
- **Set Condition:**
  When the Totally Integrated Power Module (TIPM) detects an open in the wiper low speed control circuit.

Possible Causes
(W3) WIPER LOW SPEED CONTROL OUTPUT CIRCUIT OPEN
TOTALLY INTEGRATED POWER MODULE (TIPM)

1. INTERMITTENT CONDITION

1. Turn the ignition on.
2. With the scan tool, clear all TIPM DTCs.
3. Turn the Windshield Wipers on.
4. With the scan tool read the DTC information.

Does the scan tool read: B2315-WIPER ON/OFF CONTROL CIRCUIT OPEN?

Yes

- Go To 2

No

- The condition that caused the symptom is currently not present. Inspect the related wiring for a possible intermittent condition. Look for any chafed, pierced, pinched, or partially broken wires.
- Perform the BODY VERIFICATION TEST. (Refer to 28 - DTC-Based Diagnostics/MODULE, Totally Integrated Power (TIPM) - Standard Procedure).

2. (W3) WIPER LOW SPEED CONTROL OUTPUT CIRCUIT OPEN

1. Turn the ignition off.
2. Disconnect the TIPM C6 harness connector.
3. Disconnect the Wiper harness connector.
4. Measure the resistance of the (W3) Wiper Low Speed Control Output circuit.

Is the resistance above 5.0 Ohms?

Yes

- Repair the (W3) Wiper Low Speed Control Output circuit for an open condition.
- Perform the BODY VERIFICATION TEST. (Refer to 28 - DTC-Based Diagnostics/MODULE, Totally Integrated Power (TIPM) - Standard Procedure).

No

- Replace the Totally Integrated Power Module (TIPM) in accordance with the Service Information.
- Perform the BODY VERIFICATION TEST. (Refer to 28 - DTC-Based Diagnostics/MODULE, Totally Integrated Power (TIPM) - Standard Procedure).

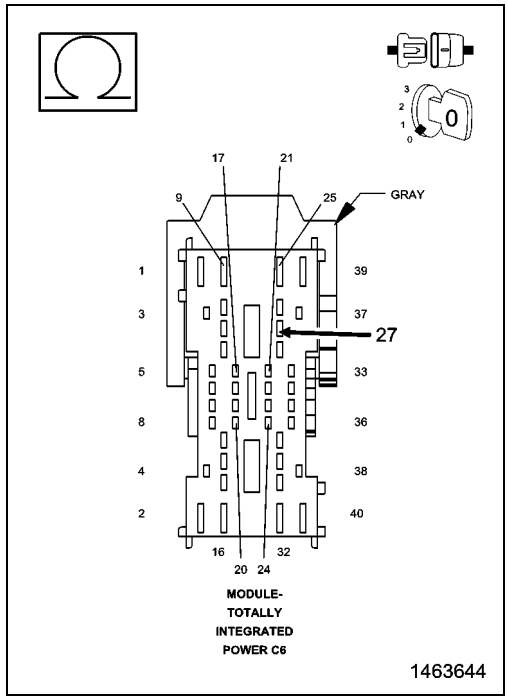

B2318-WIPER HIGH/LOW CONTROL CIRCUIT HIGH

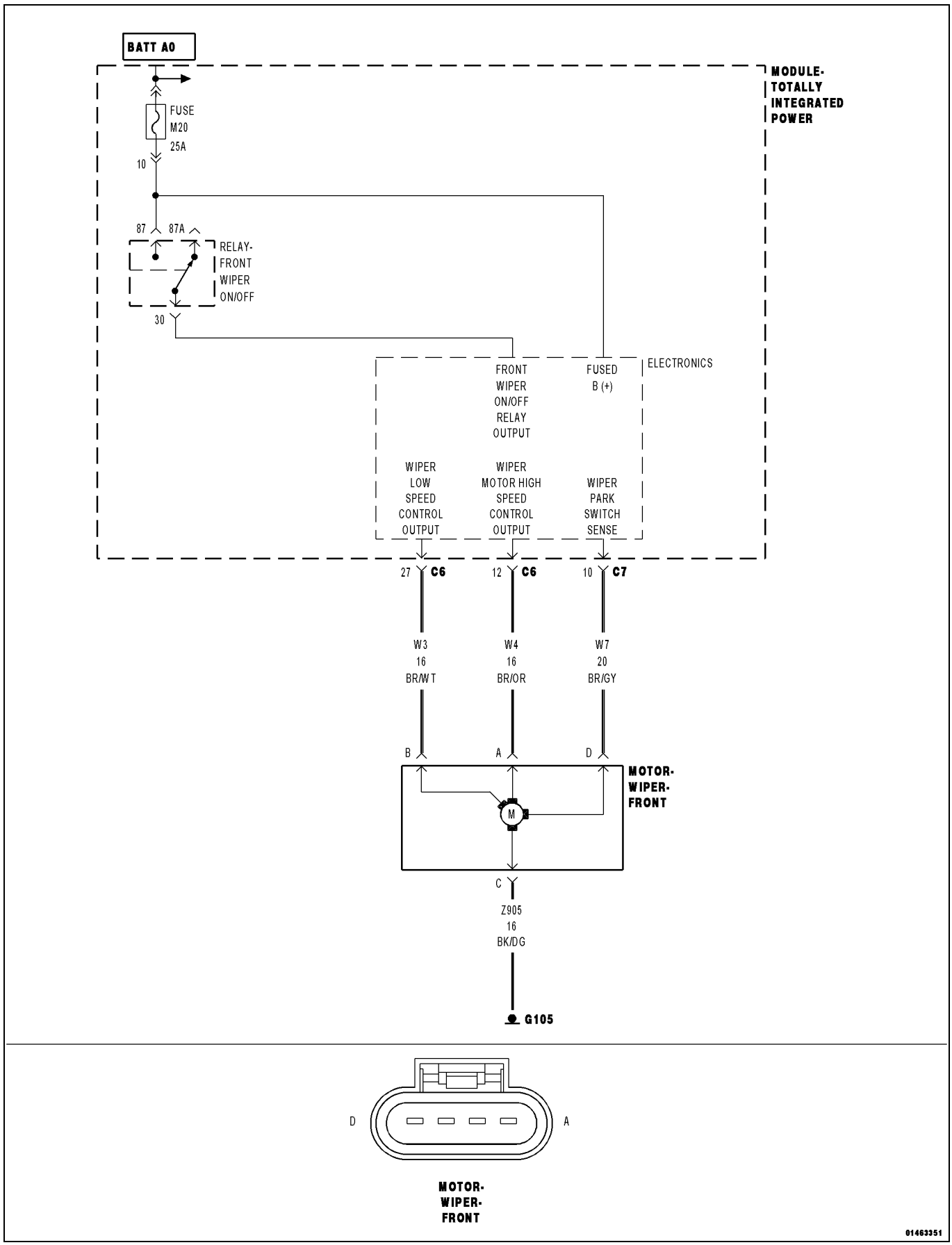

For a complete wiring diagram, **refer to the Wiring Information**.

- **When Monitored:**
  With the Windshield Wipers on.
- **Set Condition:**
  When the Totally Integrated Power Module (TIPM) detects a high condition in the wiper motor high speed control circuit.

Possible Causes
(W4) WIPER MOTOR HIGH SPEED CONTROL OUTPUT OPEN
(W4) WIPER MOTOR HIGH SPEED CONTROL OUTPUT SHORTED TO VOLTAGE
TOTALLY INTEGRATED POWER MODULE (TIPM)

1. INTERMITTENT CONDITION

1. Turn the ignition on.
2. With the scan tool, clear all TIPM DTCs.
3. Turn the Windshield Wipers on.
4. With the scan tool read the DTC information.

Does the scan tool read: B2318-WIPER HIGH/LOW CONTROL CIRCUIT HIGH?

Yes

- Go To 2

No

- The condition that caused the symptom is currently not present. Inspect the related wiring for a possible intermittent condition. Look for any chafed, pierced, pinched, or partially broken wires.
- Perform the BODY VERIFICATION TEST. (Refer to 28 - DTC-Based Diagnostics/MODULE, Totally Integrated Power (TIPM) - Standard Procedure).

2. (W4) WIPER MOTOR HIGH SPEED CONTROL OUTPUT CIRCUIT OPEN

1. Turn the ignition off.
2. Disconnect the TIPM C6 harness connector.
3. Disconnect the Wiper Motor harness connector.
4. Measure the resistance of the (W4) Wiper Motor High Speed Control Output circuit.

Is the resistance above 5.0 Ohms?

Yes

- Repair the (W4) Wiper Motor High Speed Control Output circuit for an open condition.
- Perform the BODY VERIFICATION TEST. (Refer to 28 - DTC-Based Diagnostics/MODULE, Totally Integrated Power (TIPM) - Standard Procedure).

No

- Go To 3

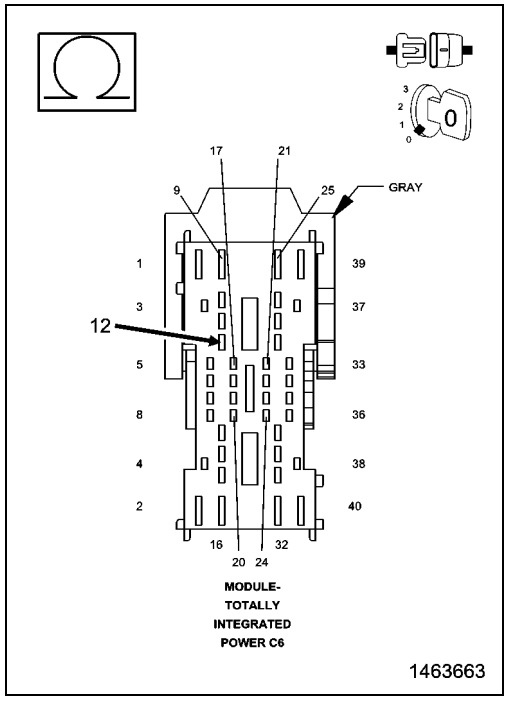

3. (W4) WIPER MOTOR HIGH SPEED CONTROL OUTPUT CIRCUIT SHORTED TO VOLTAGE

1. Turn the ignition off.
2. Disconnect the TIPM C6 harness connector.
3. Disconnect the Wiper Motor harness connector.
4. Turn the ignition on.
5. Measure for voltage on the (W4) Wiper Motor High Speed Control Output circuit.

Is the voltage above 10.0 volts?

Yes

- Repair the (W4) Wiper Motor High Speed Control Output circuit for a short to voltage condition.
- Perform the BODY VERIFICATION TEST. (Refer to 28 - DTC-Based Diagnostics/MODULE, Totally Integrated Power (TIPM) - Standard Procedure).

No

- Replace the Totally Integrated Power Module (TIPM) in accordance with the Service Information.
- Perform the BODY VERIFICATION TEST. (Refer to 28 - DTC-Based Diagnostics/MODULE, Totally Integrated Power (TIPM) - Standard Procedure).

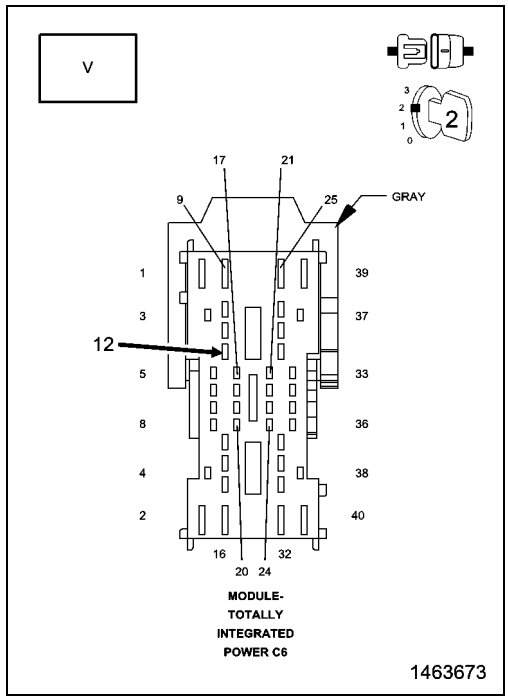

C1000-BRAKE PEDAL SWITCH 1 CIRCUIT PERFORMANCE

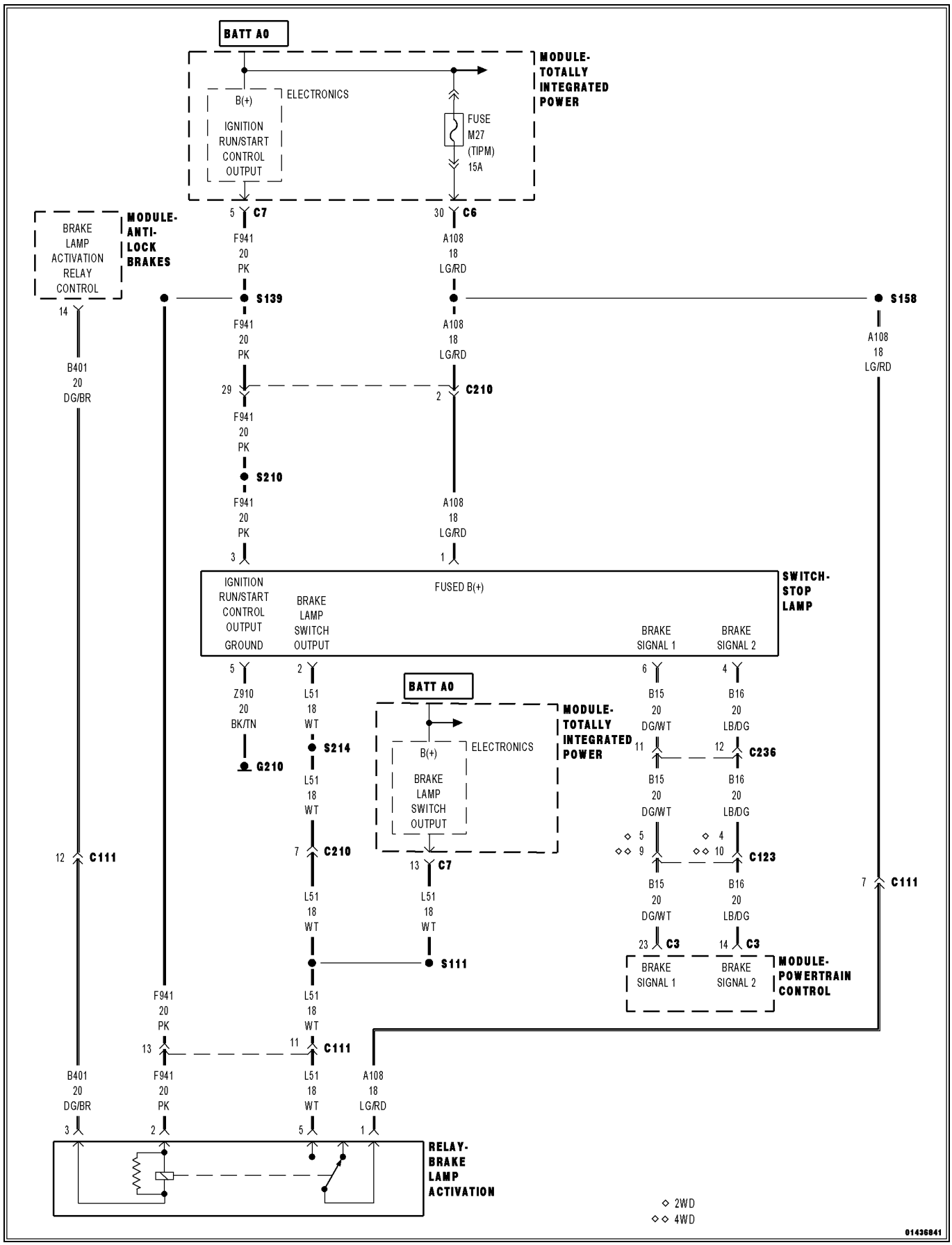

For a complete wiring diagram, **refer to the Wiring Information**.

Theory of Operation

The ABS Module detects an invalid signal between the master cylinder pressure applied and the Brake Lamp Switch Output Circuit for two minutes. If the Brake Lamp Switch Output circuit is still active with no pressure applied, code C1000 is set.

- **When Monitored:**
  Ignition Switch ON.

When Set:

When the set conditions have been met and the brake switch input has been active for more than two consecutive minutes.

Possible Causes
(B15) BRAKE SIGNAL 1 CIRCUIT SHORTED TO VOLTAGE
BRAKE LAMP SWITCH OPERATION
ANTI-LOCK BRAKE SYSTEM (ABS) MODULE
TOTALLY INTEGRATED POWER MODULE (TIPM)

1. ACTIVE DTC

NOTE: Diagnose and repair all PCM and any communication faults that are present before continuing with this test procedure.

NOTE: If applicable make sure the Stop Lamp Switch is properly adjusted in accordance with Service Information before continuing.

1. Ignition on, engine not running.
2. With a scan tool, record and erase the DTCs.
3. Cycle the ignition from off to on.
4. Press the brake pedal.
5. With a scan tool, read the DTCs.

Is the DTC Active at this time?

Yes

- Go To 2

No

- Perform the ABS INTERMITTENT CONDITION diagnostic procedure. (Refer to 28 - DTC-Based Diagnostics/MODULE, Antilock Brake (ABS) - Standard Procedure).

2. (B15) BRAKE SIGNAL 1 CIRCUIT SHORTED TO VOLTAGE

1. Ignition on, engine not running.
2. Using a 12-volt test light connected to ground, back probe the (B15) Brake Signal 1 circuit.

Does the test light illuminate brightly?

Yes

- Go To 3

No

- Perform the ABS-INTERMITTENT CONDITION TEST. (Refer to 28 - DTC-Based Diagnostics/MODULE, Antilock Brake (ABS) - Standard Procedure).

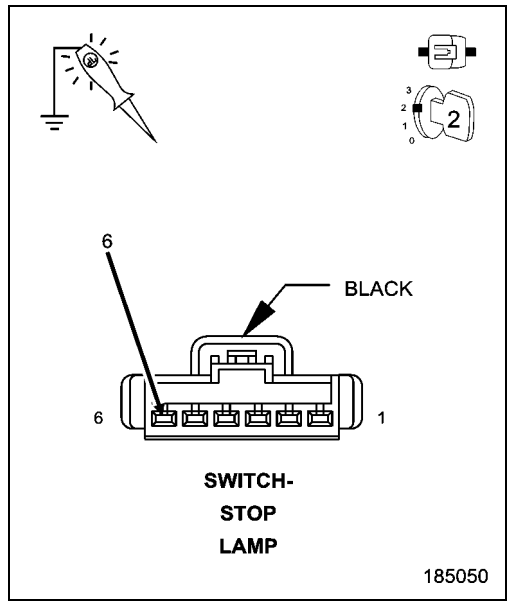

3. STOP LAMP BRAKE PEDAL SWITCH SHORTED

1. Turn the ignition off to the lock position.
2. Disconnect the Stop Lamp Switch harness connector.
3. Measure the resistance of the Stop Lamp Switch between (B15) Brake Signal 1 circuit and (A108) Fused B(+) circuit at the Stop Lamp Switch harness connector.

Is there continuity?

Yes

- Replace the Stop Lamp Switch in accordance with the Service Information
- Go To 4

No

- Go To 5

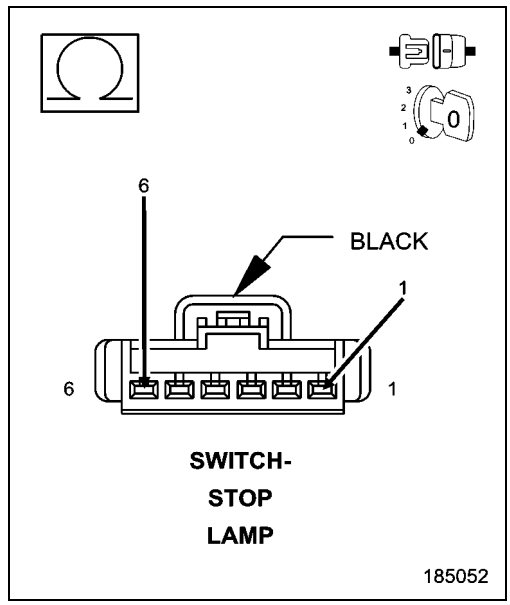

4. CHECK (B15) BRAKE SIGNAL 1 CIRCUIT SHORTED TO VOLTAGE

1. Connect the Stop Lamp Switch harness connector.
2. Ignition on, engine not running.
3. Using a 12-volt test light connected to ground, back probe the (B15) Brake Signal 1 circuit at the Stop Lamp Switch harness connector.

Does the test light illuminate?

Yes

- Go To 5

No

- Repair the short to voltage in the (B15) Brake Signal 1 circuit.
- Perform the ABS VERIFICATION TEST. (Refer to 28 - DTC-Based Diagnostics/MODULE, Antilock Brake (ABS) - Standard Procedure).

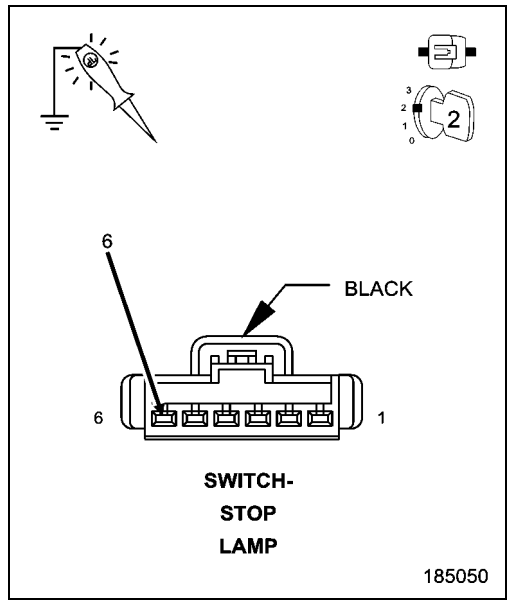

5. CHECK ABS MODULE BACKFEEDING VOLTAGE TO (B15) BRAKE SIGNAL 1 CIRCUIT

1. Turn ignition off to the lock position.
2. Disconnect the ABS Module harness connector.
3. Ignition on, engine not running.
4. Using a 12-volt test light connected to ground, test the (B15) Brake Signal 1 circuit at the Stop Lamp Switch harness connector.

Does the test light illuminate?

Yes

- Go To 6

No

- Replace the Anti-lock Brake System (ABS) Module in accordance with Service Information
- Perform the ABS VERIFICATION TEST. (Refer to 28 - DTC-Based Diagnostics/MODULE, Antilock Brake (ABS) - Standard Procedure).

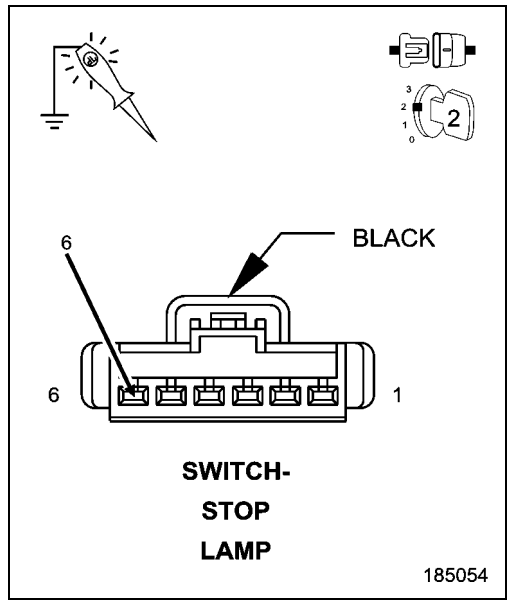

6. CHECK TIPM MODULE BACKFEEDING VOLTAGE TO (B15) BRAKE SIGNAL 1 CIRCUIT

1. Turn the ignition off.
2. Disconnect the TIPM harness connector.
3. Ignition on, engine not running.
4. Using a 12-volt test light connected to ground, test the (B15) Brake Signal 1 circuit.

Does the test light illuminate?

Yes

- Repair the short to voltage in the (B15) Brake Signal 1 circuit.
- Perform the ABS VERIFICATION TEST. (Refer to 28 - DTC-Based Diagnostics/MODULE, Antilock Brake (ABS) - Standard Procedure).

No

- Replace and program the Totally Integrated Power Module (TIPM) in accordance with the Service Information.
- Perform the BODY VERIFICATION TEST. (Refer to 28 - DTC-Based Diagnostics/MODULE, Totally Integrated Power (TIPM) - Standard Procedure).

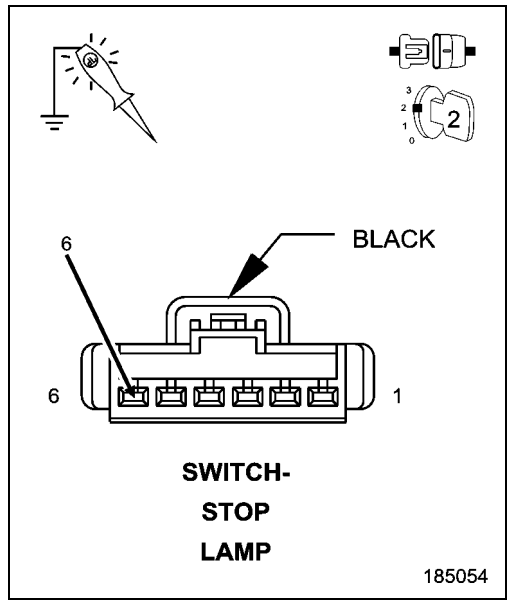

C1008-BRAKE FLUID LEVEL CIRCUIT HIGH

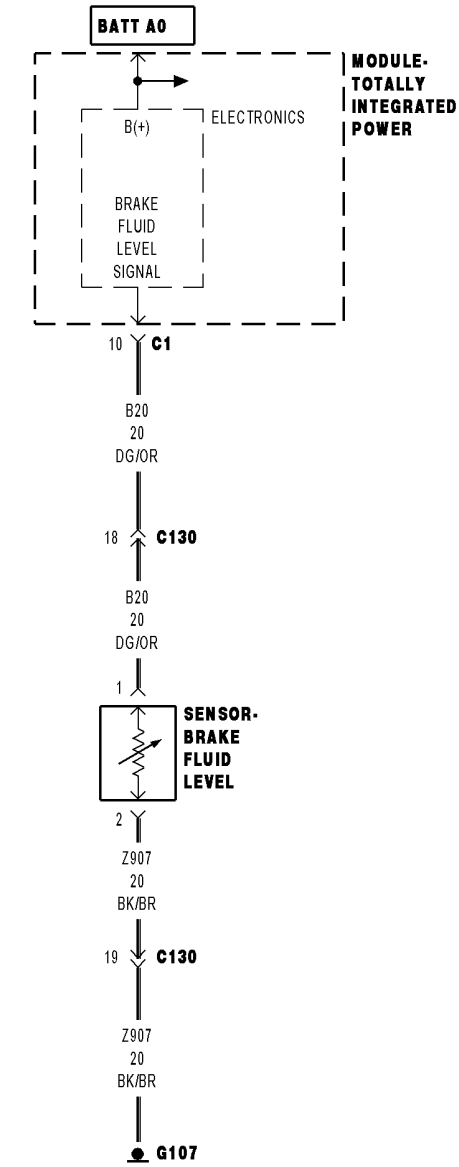

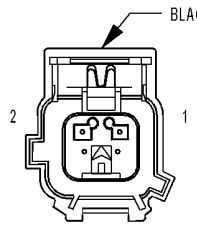

SENSOR-
BRAKE
FLUID
LEVEL

01440697

For a complete wiring diagram, **refer to the Wiring Information**.

- **When Monitored:**
  With the ignition on.
- **Set Condition:**
  When the Totally Integrated Power Module (TIPM) detects the Brake Fluid Level Circuit voltage is greater than expected for more than five seconds.

Possible Causes
(B20) BRAKE FLUID LEVEL SIGNAL CIRCUIT OPEN
(B20) BRAKE FLUID LEVEL SIGNAL CIRCUIT SHORTED TO BATTERY VOLTAGE
BRAKE FLUID LEVEL SWITCH INTERNAL FAILURE
(Z907) GROUND CIRCUIT OPEN
TOTALLY INTEGRATED POWER MODULE (TIPM)

1. CHECK FOR ACTIVE DIAGNOSTIC TROUBLE CODE (DTC)

1. Turn the ignition on.
2. With the scan tool, read the TIPM DTCs.

Does the scan tool display this DTC as active?

Yes

- Go To 2

No

- Test complete, the condition or conditions that originally set this DTC are not present at this time. Using the wiring diagrams as a guide, check all related splices and connectors for signs of water intrusion, corrosion, pushed out or bent terminals, and correct pin tension.
- Perform the BODY VERIFICATION TEST. (Refer to 28 - DTC-Based Diagnostics/MODULE, Totally Integrated Power (TIPM) - Standard Procedure).

2. CHECK THE (B20) BRAKE FLUID LEVEL SIGNAL CIRCUIT FOR A SHORT TO VOLTAGE

1. Turn the ignition off.
2. Disconnect the Brake Fluid Level Sensor harness connector.
3. Disconnect the TIPM C1 harness connector.
4. Turn the ignition on.
5. Measure the voltage between ground and the (B20) Brake Fluid Level Signal circuit.

Is there any voltage present?

Yes

- Repair the short to voltage in the (B20) Brake Fluid Level Signal circuit.
- Perform the BODY VERIFICATION TEST. (Refer to 28 - DTC-Based Diagnostics/MODULE, Totally Integrated Power (TIPM) - Standard Procedure).

No

- Go To 3

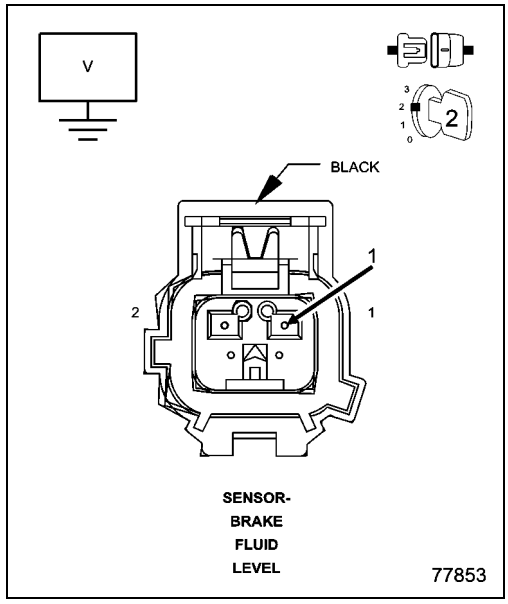

3. CHECK THE (B20) BRAKE FLUID LEVEL SIGNAL CIRCUIT FOR AN OPEN

1. Turn the ignition off.
2. Measure the resistance of the (B20) Brake Fluid Level Signal circuit between the Brake Fluid Level Sensor harness connector and the TIPM C1 harness connector.

Is the resistance below 5.0 Ohms?

Yes

- Go To 4

No

- Repair the open in the (B20) Brake Fluid Level Signal circuit.
- Perform the BODY VERIFICATION TEST. (Refer to 28 - DTC-Based Diagnostics/MODULE, Totally Integrated Power (TIPM) - Standard Procedure).

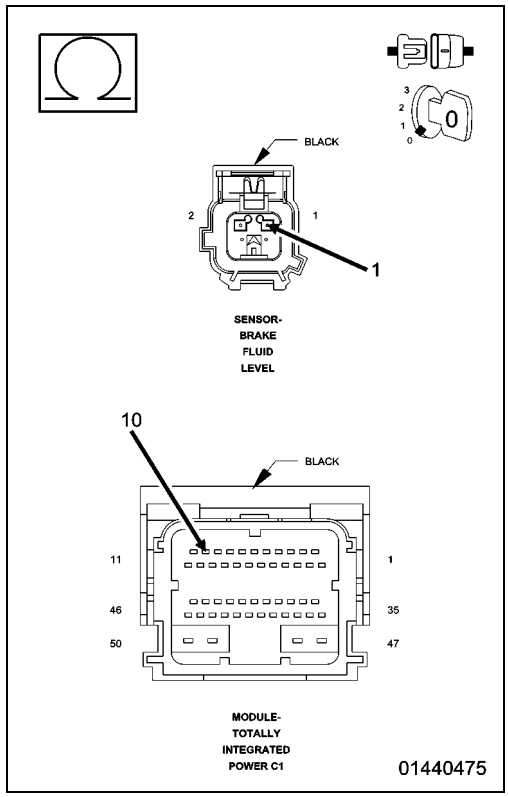

4. CHECK THE (Z907) GROUND CIRCUIT FOR AN OPEN

1. Measure the resistance between ground and the (Z907) Ground circuit.

Is the resistance below 5.0 Ohms?

Yes

- Go To 5

No

- Repair the open in the (Z907) Ground circuit.
- Perform the BODY VERIFICATION TEST. (Refer to 28 - DTC-Based Diagnostics/MODULE, Totally Integrated Power (TIPM) - Standard Procedure).

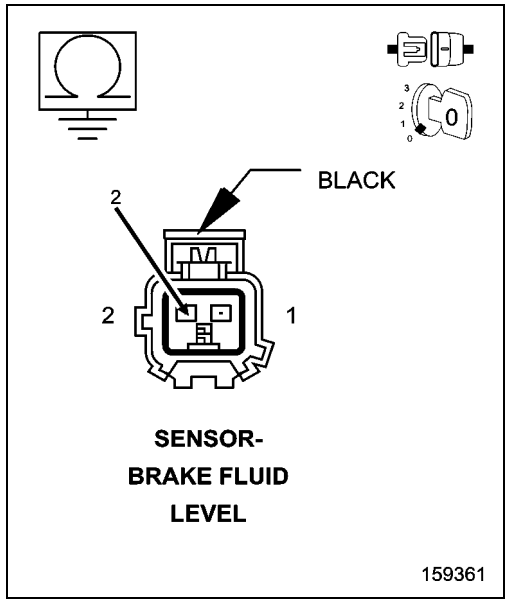

5. BRAKE FLUID LEVEL SWITCH INTERNAL FAILURE

1. Reconnect the TIPM C1 harness connector.
2. Connect a jumper wire between the (B20) Brake Fluid Level Signal circuit and the (Z907) Ground circuit in the Brake Fluid Level Sensor harness connector.
3. Turn the ignition on.
4. With the scan tool, read the Brake Fluid Level.

Does the scan tool display Low?

Yes

- Replace the Brake Fluid Level Sensor in accordance with the Service Information.
- Perform the BODY VERIFICATION TEST. (Refer to 28 - DTC-Based Diagnostics/MODULE, Totally Integrated Power (TIPM) - Standard Procedure).

No

- Replace the TIPM in accordance with the Service Information.
- Perform the BODY VERIFICATION TEST. (Refer to 28 - DTC-Based Diagnostics/MODULE, Totally Integrated Power (TIPM) - Standard Procedure).

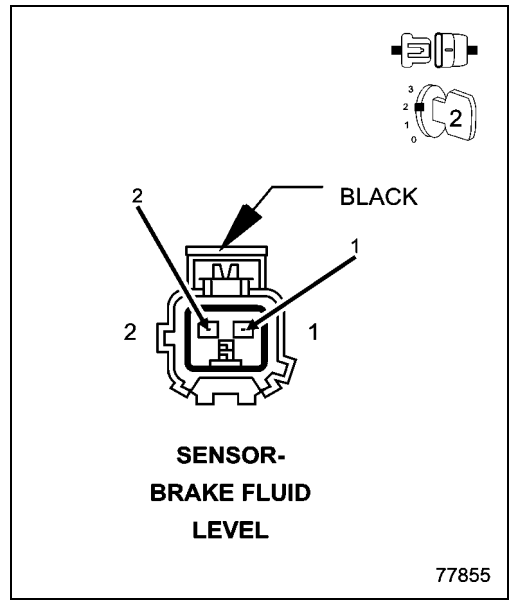

P0072-AMBIENT AIR TEMPERATURE SENSOR CIRCUIT LOW

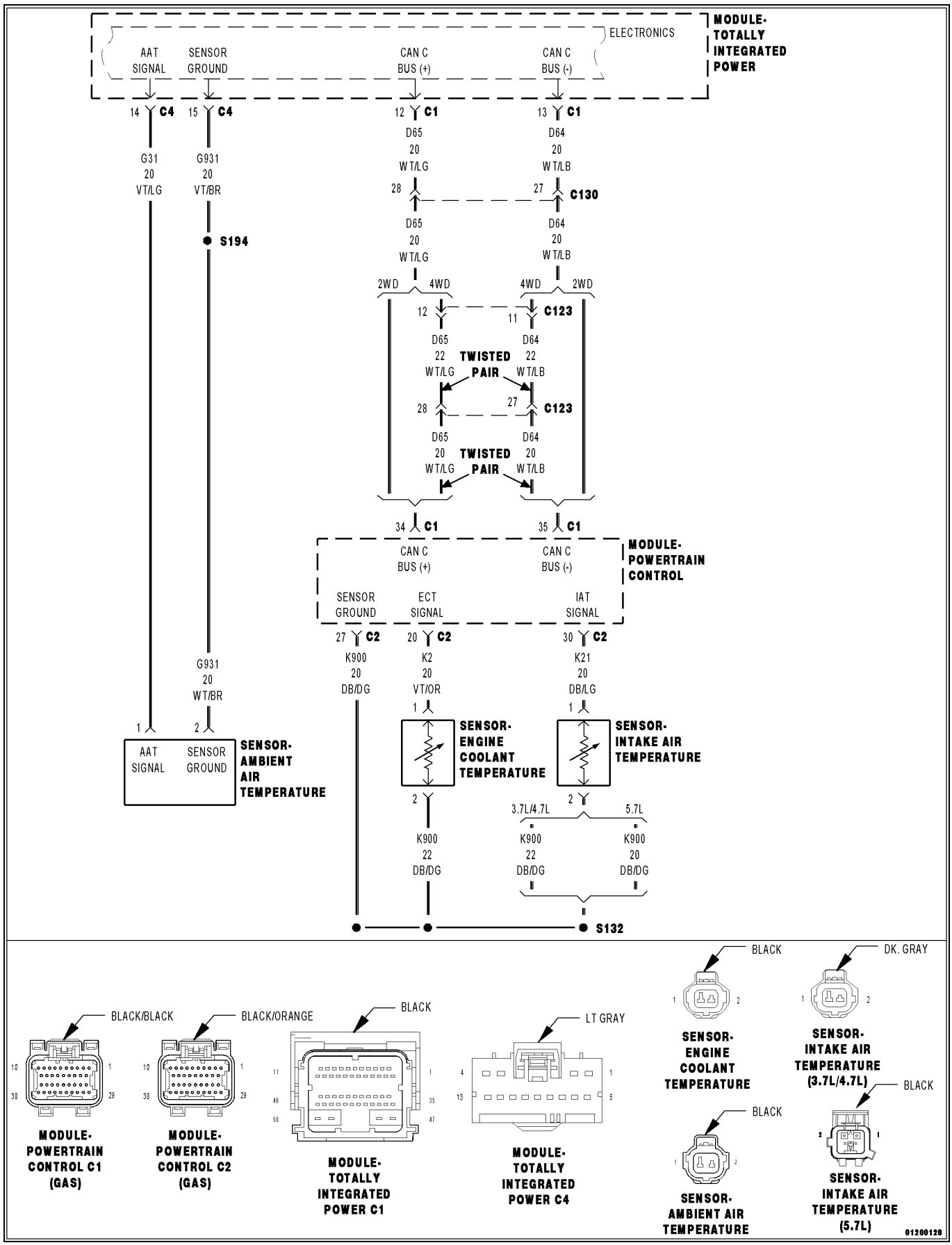

For a complete wiring diagram, **refer to the Wiring Information**.

- **When Monitored:**
  The ignition key on.
- **Set Condition:**
  The Totally Integrated Power Moduel (TIPM) receives an Ambient Air Temperature (AAT) Sensor signal which is less than the minimum acceptable value. One Trip Fault. Three good trips to turn off the MIL.

Possible Causes
(G31) AAT SIGNAL CIRCUIT SHORTED TO GROUND
(G31) AAT SIGNAL CIRCUIT SHORTED TO THE (G931) SENSOR GROUND CIRCUIT
EXCESSIVE RESISTANCE IN THE (G31) AAT SIGNAL CIRCUIT
AMBIENT AIR TEMPERATURE (AAT) SENSOR
TOTALLY INTEGRATED POWER MODULE (TIPM)

Always perform the Pre-Diagnostic Troubleshooting procedure before proceeding. (Refer to 28 - DTC-Based Diagnostics/MODULE, Powertrain Control (PCM) - Standard Procedure).

1. DTC IS ACTIVE

1. Start the engine and allow it to reach normal operating temperature.

WARNING: When the engine is operating, do not stand in direct line with the fan. Do not put your hands near the pulleys, belts or fan. Do not wear loose clothing. Failure to follow these instructions may result in possible serious or fatal injury.

2. With the scan tool, select View DTCs.

NOTE: If any communication or system voltage DTCs are present diagnose those DTCs before continuing with this test

Is the DTC Active at this time?

Yes

- Go To 2

No

- Perform the INTERMITTENT CONDITION diagnostic procedure. (Refer to 28 - DTC-Based Diagnostics/MODULE, Powertrain Control (PCM) - Standard Procedure).

2. CHECKING AAT SENSOR

1. Turn the ignition off.
2. Disconnect the Ambient Air Temperature Sensor harness connector.
3. Ignition on, engine not running.
4. With a scan tool, read the AAT Sensor voltage.

NOTE: The sensor voltage should be approximately 5.0 volts (plus or minus .1 of a volt) with the connector disconnected.

Does the scan tool display the voltage as described above?

Yes

- Verify that there is good pin to terminal contact in the Sensor and Control Module connectors. Replace the Ambient Air Temperature Sensor if no problems were found with the connectors.
- Perform the BODY VERIFICATION TEST. (Refer to 28 - DTC-Based Diagnostics/MODULE, Totally Integrated Power (TIPM) - Standard Procedure).

No

- Go To 3

3. (G31) AAT SIGNAL CIRCUIT SHORTED TO GROUND

1. Turn the ignition off.
2. Disconnect the C4 Totally Integrated Power Module (TIPM) harness connector.
3. Measure the resistance between ground and the (G31) AAT Signal circuit in the AAT Sensor harness connector.

Is the resistance below 100 Ohms?

Yes

- Repair the short to ground in the (G31) AAT Signal circuit.
- Perform the BODY VERIFICATION TEST. (Refer to 28 - DTC-Based Diagnostics/MODULE, Totally Integrated Power (TIPM) - Standard Procedure).

No

- Go To 4

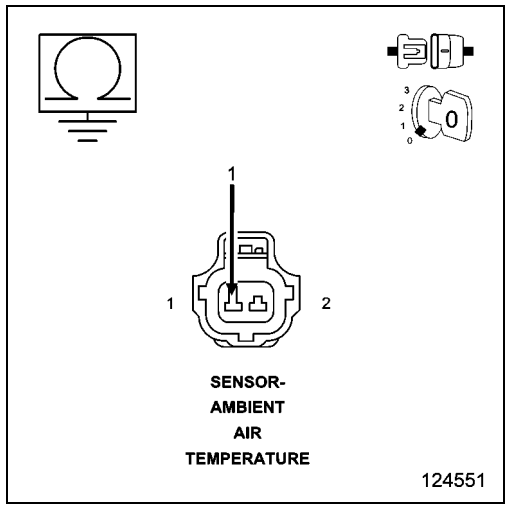

4. (G31) AAT SIGNAL CIRCUIT SHORTED TO THE (G931) SENSOR GROUND CIRCUIT

1. Measure the resistance between the (G931) Sensor Ground circuit and the (G31) AAT Signal circuit in the AAT Sensor harness connector.

Is the resistance below 5.0 Ohms?

Yes

- Repair the short between the (G931) Sensor Ground circuit and the (G31) AAT Signal circuit.
- Perform the BODY VERIFICATION TEST. (Refer to 28 - DTC-Based Diagnostics/MODULE, Totally Integrated Power (TIPM) - Standard Procedure).

No

- Go To 5

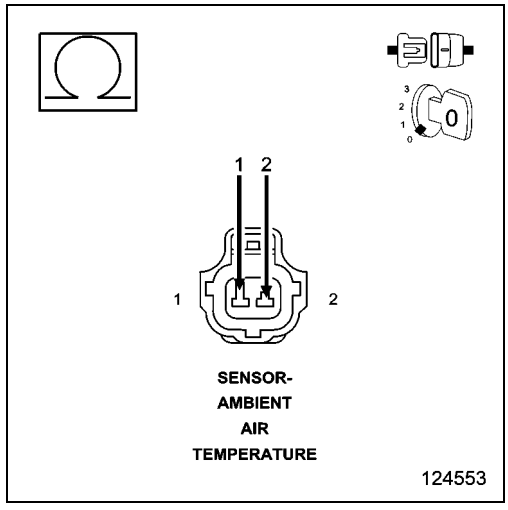

5. EXCESSIVE RESISTANCE IN THE (G31) AAT SIGNAL CIRCUIT

1. Measure the resistance of the (G31) AAT Signal circuit between the Ambient Air Temperature Sensor harness connector and the C4 TIPM harness connector.

Is the resistance below 5.0 Ohms?

Yes

- Go To 6

No

- Repair the excessive resistance in the (G31) AAT Signal circuit.
- Perform the BODY VERIFICATION TEST. (Refer to 28 - DTC-Based Diagnostics/MODULE, Totally Integrated Power (TIPM) - Standard Procedure).

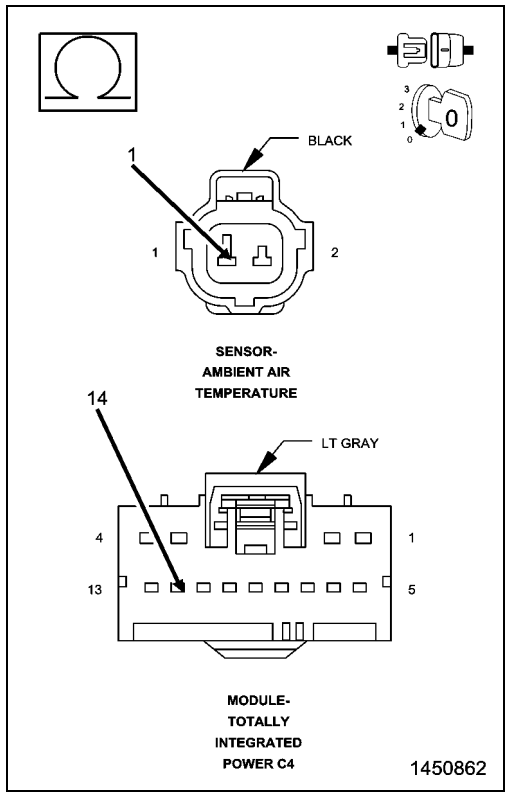

6. TOTALLY INTEGRATED POWER MODULE (TIPM)

1. Using the wiring diagram/schematic as a guide, inspect the wiring and connectors between the AAT Sensor and the Totally Integrated Power Module (TIPM).
2. Look for any chafed, pierced, pinched, or partially broken wires.
3. Look for broken, bent, pushed out or corroded terminals. Verify that there is good pin to terminal contact in the Sensor and Control Module connectors.
4. Refer to any Technical Service Bulletins that may apply.

Were there any problems found?

Yes

- Repair as necessary.
- Perform the BODY VERIFICATION TEST. (Refer to 28 - DTC-Based Diagnostics/MODULE, Totally Integrated Power (TIPM) - Standard Procedure).

No

- Replace and program the Totally Integrated Power Module (TIPM) in accordance with the Service Information.
- Perform the BODY VERIFICATION TEST. (Refer to 28 - DTC-Based Diagnostics/MODULE, Totally Integrated Power (TIPM) - Standard Procedure).

P0073-AMBIENT AIR TEMPERATURE SENSOR CIRCUIT HIGH

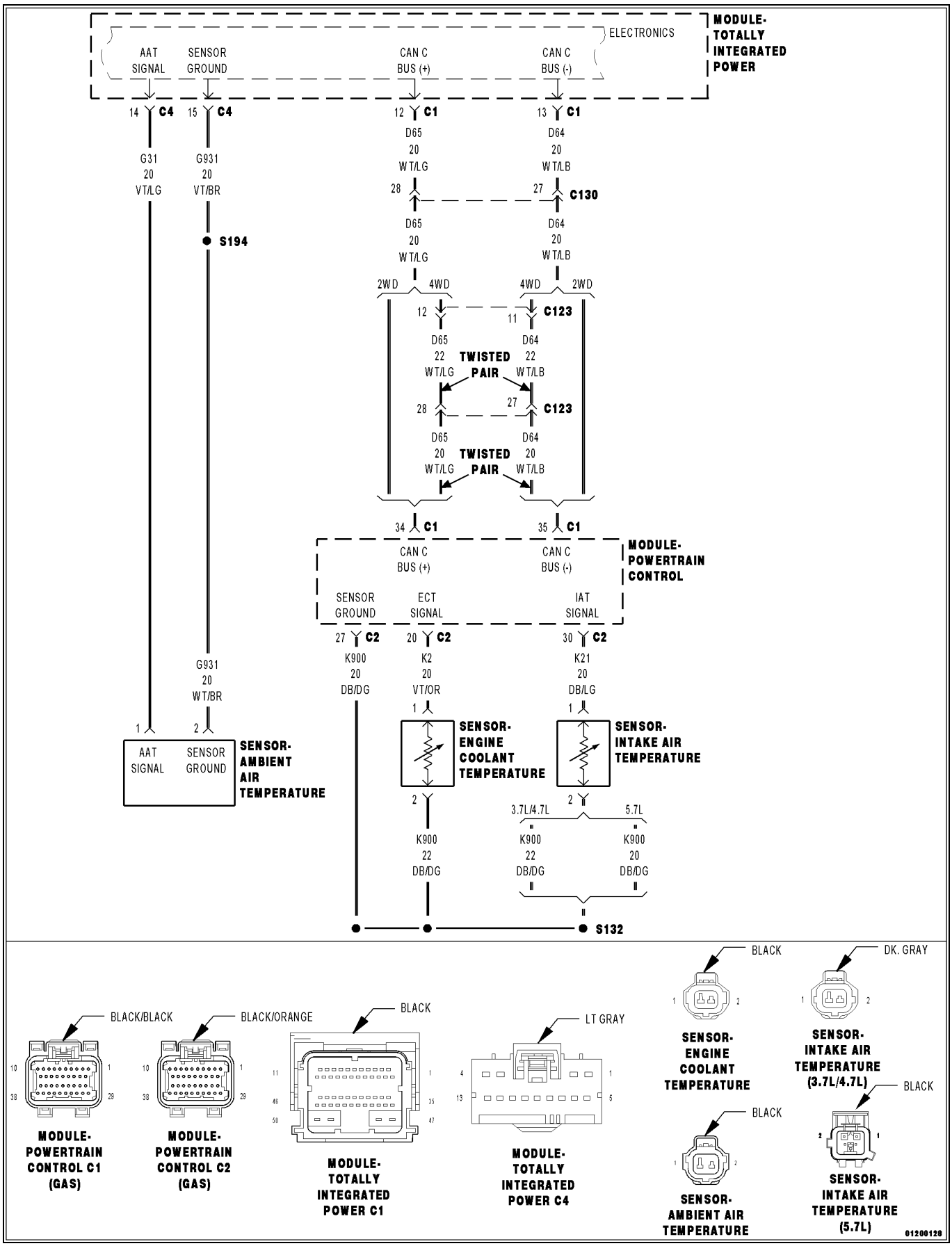

For a complete wiring diagram, **refer to the Wiring Information**.

- **When Monitored:**
  With the ignition on. Battery voltage greater than 10 volts.
- **Set Condition:**
  The Totally Integrated Power Module (TIPM) receives an Ambient Air Temperature (AAT) Sensor signal that is greater than the maximum acceptable value. One Trip Fault. Three good trips to turn off the MIL.

Possible Causes
(G31) AAT SIGNAL CIRCUIT SHORTED TO VOLTAGE
(G31) AAT SIGNAL CIRCUIT OPEN
(G931) SENSOR GROUND CIRCUIT OPEN
AMBIENT AIR TEMPERATURE SENSOR
TOTALLY INTEGRATED POWER MODULE (TIPM)

Always perform the Pre-Diagnostic Troubleshooting procedure before proceeding. (Refer to 28 - DTC-Based Diagnostics/MODULE, Powertrain Control (PCM) - Standard Procedure).

1. ACTIVE DTC

NOTE: Diagnose any CAN - C Communication DTCs before continuing.

1. Start the engine and allow it to reach normal operating temperature.

WARNING: When the engine is operating, do not stand in direct line with the fan. Do not put your hands near the pulleys, belts or fan. Do not wear loose clothing. Failure to follow these instructions may result in possible serious or fatal injury.

NOTE: Diagnose and repair any system voltage DTCs before continuing with this test.

2. With the scan tool, select View DTCs.

Is the DTC Active at this time?

Yes

- Go To 2

No

- Perform the INTERMITTENT CONDITION diagnostic procedure. (Refer to 28 - DTC-Based Diagnostics/MODULE, Powertrain Control (PCM) - Standard Procedure).

2. AAT SENSOR

1. Turn the ignition off.
2. Disconnect the Ambient Air Temperature Sensor harness connector.
3. Ignition on, engine not running.
4. With a scan tool, read AAT Sensor voltage.
5. Connect a jumper wire between the (G31) AAT Signal circuit and the (G931) Sensor Ground circuit in the AAT Sensor harness connector.

NOTE: The sensor voltage should be approximately 0.0 volts (plus or minus .1 of a volt) with the jumper wire in place.

Does the scan tool display the voltage as described above?

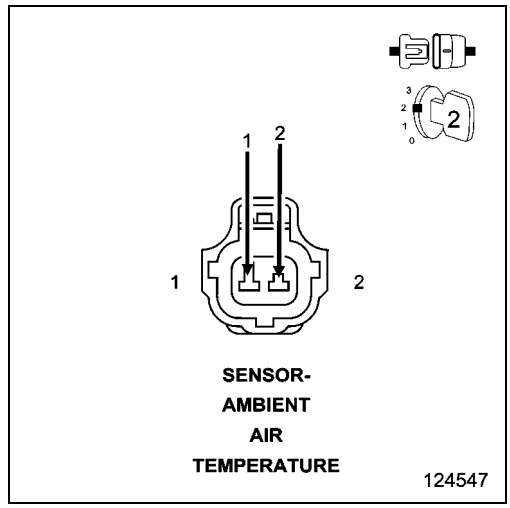

Yes

- Verify that there is good pin to terminal contact in the Sensor and Control Module connectors. Replace the Ambient Air Temperature Sensor if no problems were found with the connectors.
- Perform the BODY VERIFICATION TEST. (Refer to 28 - DTC-Based Diagnostics/MODULE, Totally Integrated Power (TIPM) - Standard Procedure).

No

- Go To 3

NOTE: Remove the jumper wire before continuing.

3. (G31) AAT SIGNAL CIRCUIT SHORTED TO VOLTAGE

1. Turn the ignition off.
2. Disconnect the TIPM C4 harness connector.
3. Ignition on, engine not running.
4. Measure the voltage on the (G31) AAT Signal circuit in the AAT Sensor harness connector.

Is there any voltage present?

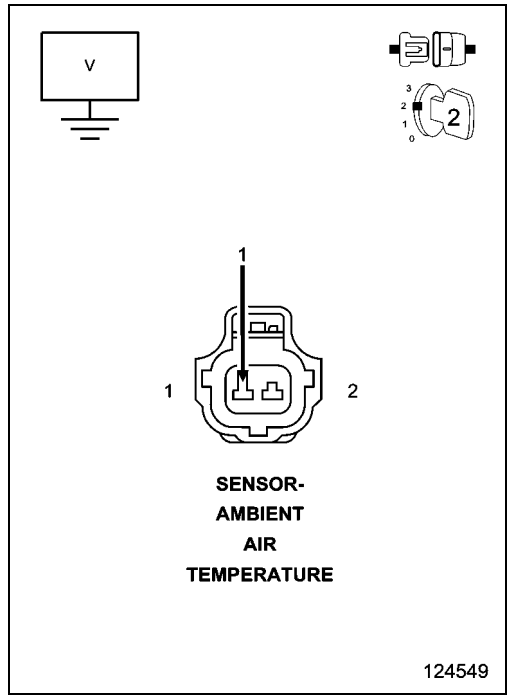

Yes

- Repair the short to voltage in the (G31) AAT Signal circuit.
- Perform the BODY VERIFICATION TEST. (Refer to 28 - DTC-Based Diagnostics/MODULE, Totally Integrated Power (TIPM) - Standard Procedure).

No

- Go To 4

4. (G31) AAT SIGNAL CIRCUIT OPEN

1. Turn the ignition off.
2. Measure the resistance of the (G31) AAT Signal circuit from the AAT Sensor harness connector to the TIPM C4 harness connector.

Is the resistance below 5.0 Ohms?

Yes

- Go To 5

No

- Repair the open in the (G31) AAT Signal circuit.
- Perform the BODY VERIFICATION TEST. (Refer to 28 - DTC-Based Diagnostics/MODULE, Totally Integrated Power (TIPM) - Standard Procedure).

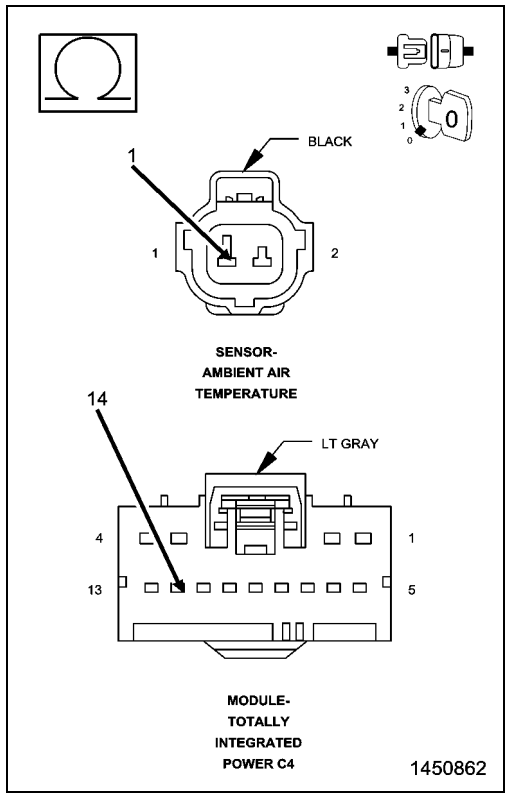

5. (G931) SENSOR GROUND CIRCUIT OPEN

1. Measure the resistance of the (G931) Sensor Ground circuit from the AAT Sensor harness connector to the TIPM C4 harness connector.

Is the resistance below 5.0 Ohms?

Yes

- Go To 6

No

- Repair the open in the (G931) Sensor Ground circuit.
- Perform the BODY VERIFICATION TEST. (Refer to 28 - DTC-Based Diagnostics/MODULE, Totally Integrated Power (TIPM) - Standard Procedure).

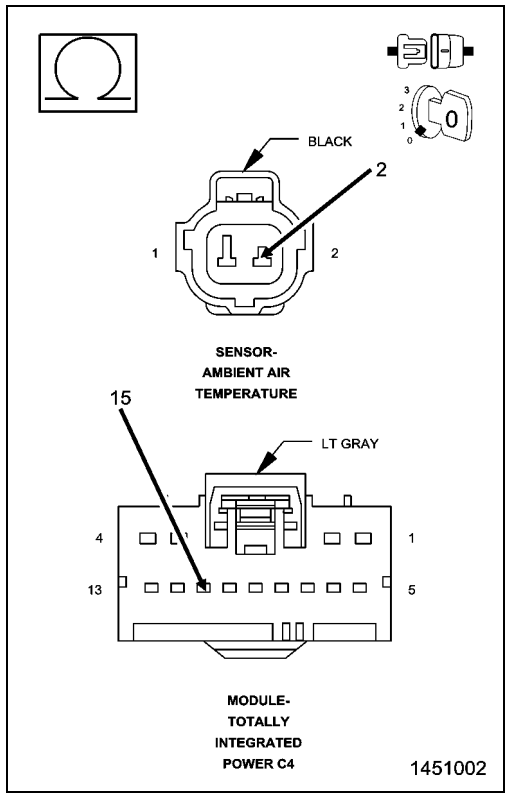

6. TOTALLY INTEGRATED POWER MODULE (TIPM)

1. Using the wiring diagram/schematic as a guide, inspect the wiring and connectors between the AAT Sensor and the Totally Integrated Power Module (TIPM).
2. Look for any chafed, pierced, pinched, or partially broken wires.
3. Look for broken, bent, pushed out or corroded terminals. Verify that there is good pin to terminal contact in the Sensor and Control Module connectors.
4. Refer to any Technical Service Bulletins that may apply.

Were there any problems found?

Yes

- Repair as necessary.
- Perform the BODY VERIFICATION TEST. (Refer to 28 - DTC-Based Diagnostics/MODULE, Totally Integrated Power (TIPM) - Standard Procedure).

No

- Replace the Totally Integrated Module (TIPM) in accordance with the Service Information.
- Perform the BODY VERIFICATION TEST. (Refer to 28 - DTC-Based Diagnostics/MODULE, Totally Integrated Power (TIPM) - Standard Procedure).

P0462-FUEL LEVEL SENSOR 1 CIRCUIT LOW

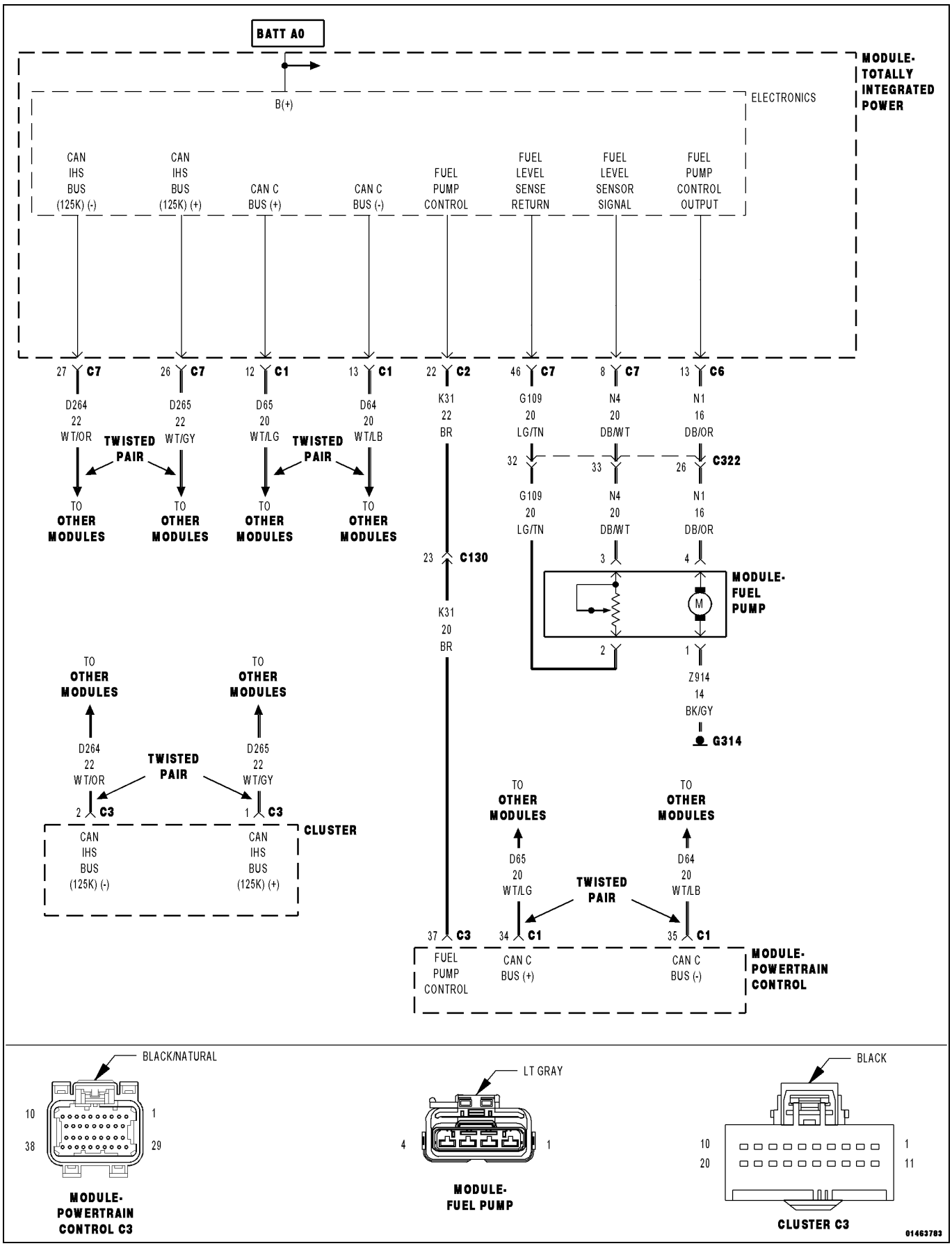

For a complete wiring diagram, **refer to the Wiring Information**.

Theory of Operation

The fuel level rationality will set a fault for a fuel level reading that does not change over an accumulated mileage threshold to keep stuck high or stuck low fuel levels from disabling OBD monitors. If the vehicle is fitted with a saddle tank fuel system this feature includes diagnostics for both of the sending units and diagnostics for a siphon tube that has become disconnected or plugged. The power up test looks to see a large enough fuel level voltage change from the last key-off to the following engine run. The engine run test looks to see a fuel level voltage change over an accumulated mileage.

- **When Monitored:**

  Ignition on and battery voltage above 10.4 Volts.
- **Set Condition:**

  The Fuel Level Sensor 1 input voltage is below the minimum acceptable value. One Trip Fault. Three good trips to turn off the MIL.

Possible Causes
(N4) FUEL LEVEL SIGNAL CIRCUIT SHORTED TO GROUND
EXCESSIVE RESISTANCE IN THE (N4) FUEL LEVEL SIGNAL CIRCUIT
FUEL LEVEL SENSOR
TOTALLY INTEGRATED POWER MODULE (TIMP)

Always perform the Pre-Diagnostic Troubleshooting procedure before proceeding. (Refer to 28 - DTC-Based Diagnostics/MODULE, Powertrain Control (PCM) - Standard Procedure).

1. ACTIVE DTC

NOTE: Diagnose and repair any system voltage DTCs before continuing with this test.

NOTE: Diagnose and repair any communication DTCs before continuing with this test.

1. Start the engine and allow it to reach operating temperature.

WARNING: When the engine is operating, do not stand in direct line with the fan. Do not put your hands near the pulleys, belts or fan. Do not wear loose clothing. Failure to follow these instructions may result in possible serious or fatal injury.

2. With the scan tool, select View DTCs.

Is the DTC Active at this time?

Yes

- Go To 2

No

- Perform the INTERMITTENT CONDITION Diagnostic Procedure. (Refer to 28 - DTC-Based Diagnostics/MODULE, Powertrain Control (PCM) - Standard Procedure).

2. FUEL LEVEL SENSOR

1. Turn the ignition off.
2. Disconnect the Fuel Pump Module harness connector.
3. Ignition on, engine not running.
4. With the scan tool, read the Fuel Level Sensor voltage.

Did the Fuel Level Sensor voltage change from below 0.4 of a volt to above 4.0 Volts?

Yes

- Verify that there is good pin to terminal contact at the Fuel Pump Module and the Powertrain Control Module connectors. Replace the Fuel Level Sensor if no problems were found at the connectors.
- Perform the POWERTRAIN VERIFICATION TEST. (Refer to 28 - DTC-Based Diagnostics/MODULE, Powertrain Control (PCM) - Standard Procedure).

No

- Go To 3

3. (N4) FUEL LEVEL SIGNAL CIRCUIT SHORTED TO GROUND

1. Turn the ignition off.
2. Disconnect the C7 TIPM harness connector.
3. Measure the resistance between ground and the (N4) Fuel Level Signal circuit in the Fuel Pump Module harness connector.

Is the resistance below 100 Ohms?

Yes

- Repair the short to ground in the (N4) Fuel Level Signal circuit.
- Perform the POWERTRAIN VERIFICATION TEST. (Refer to 28 - DTC-Based Diagnostics/MODULE, Powertrain Control (PCM) - Standard Procedure).

No

- Go To 4

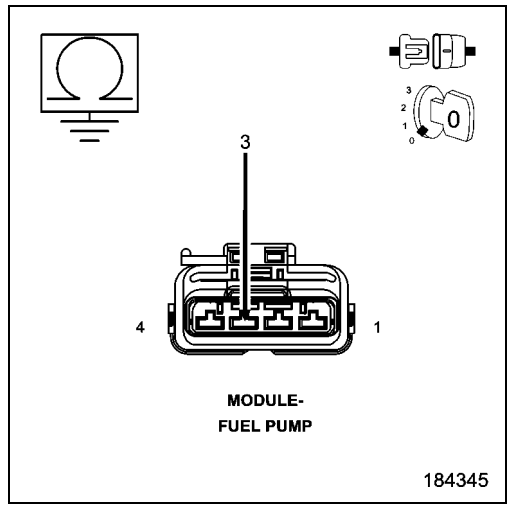

4. EXCESSIVE RESISTANCE IN THE (N4) FUEL LEVEL SIGNAL CIRCUIT

1. Measure the resistance of the (N4) Fuel Level Signal circuit from the Fuel Pump Module harness connector to the C7 TIPM harness connector.

Is the resistance below 5.0 Ohms?

Yes

- Go To 5

No

- Repair the excessive resistance in the (N4) Fuel Level Signal circuit.
- Perform the POWERTRAIN VERIFICATION TEST. (Refer to 28 - DTC-Based Diagnostics/MODULE, Powertrain Control (PCM) - Standard Procedure).

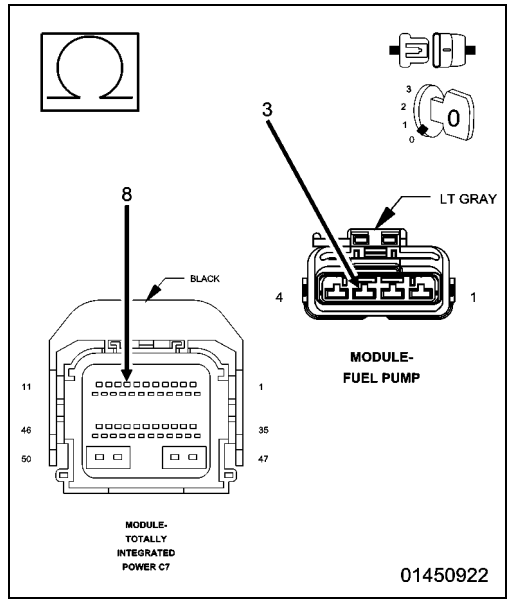

5. TOTALLY INTEGRATED POWER MODULE

1. Using the wiring diagram/schematic as a guide, inspect the wiring and connectors between the Fuel Pump Module and the TIPM.
2. Look for any chafed, pierced, pinched or partially broken wires.
3. Look for broken, bent, pushed out or corroded terminals. Verify that there is good pin to terminal contact in the Fuel Pump Module and the TIPM connectors.
4. Refer to any Technical Service Bulletins that may apply.

Were there any problems found?

Yes

- Repair as necessary.
- Perform the BODY VERIFICATION TEST. (Refer to 28 - DTC-Based Diagnostics/MODULE, Totally Integrated Power (TIPM) - Standard Procedure).

No

- Replace and program the TIPM in accordance with the Service Information.
- Perform the BODY VERIFICATION TEST. (Refer to 28 - DTC-Based Diagnostics/MODULE, Totally Integrated Power (TIPM) - Standard Procedure).

P0463-FUEL LEVEL SENSOR 1 CIRCUIT HIGH

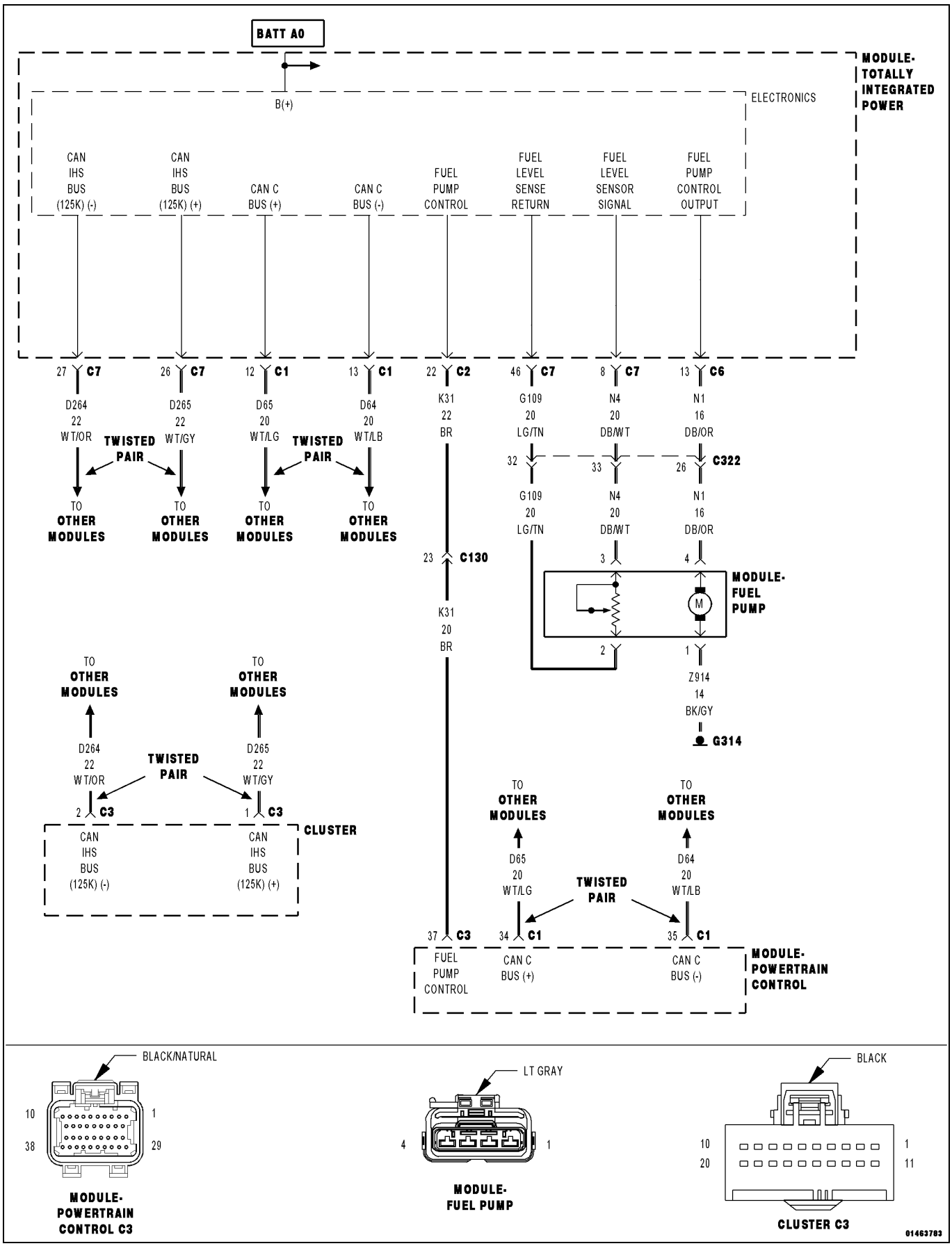

For a complete wiring diagram, **refer to the Wiring Information**.

- **When Monitored:**
  Ignition on and battery voltage above 10.4 Volts.
- **Set Condition:**
  The fuel level sensor signal voltage is greater than the maximum acceptable value. One Trip Fault. Three good trips to turn off the MIL.

Possible Causes
(N4) FUEL LEVEL SIGNAL CIRCUIT SHORTED TO VOLTAGE
(N4) FUEL LEVEL SIGNAL CIRCUIT OPEN
(G109) GROUND CIRCUIT OPEN
FUEL LEVEL SENSOR
TOTALLY INTEGRATED POWER MODULE (TIPM)
POWERTRAIN CONTROL MODULE (PCM)

Always perform the Pre-Diagnostic Troubleshooting procedure before proceeding. (Refer to 28 - DTC-Based Diagnostics/MODULE, Powertrain Control (PCM) - Standard Procedure).

1. ACTIVE DTC

NOTE: Diagnose and repair any system voltage DTCs before continuing with this test.

NOTE: Diagnose and repair any communication DTCs before continuing with this test.

1. Start the engine and allow it to reach operating temperature.

WARNING: When the engine is operating, do not stand in direct line with the fan. Do not put your hands near the pulleys, belts or fan. Do not wear loose clothing. Failure to follow these instructions may result in possible serious or fatal injury.

2. With the scan tool, select View DTCs.

Is the DTC Active at this time?

Yes

- Go To 2

No

- Perform the INTERMITTENT CONDITION Diagnostic Procedure. (Refer to 28 - DTC-Based Diagnostics/MODULE, Powertrain Control (PCM) - Standard Procedure)

2. FUEL LEVEL SENSOR

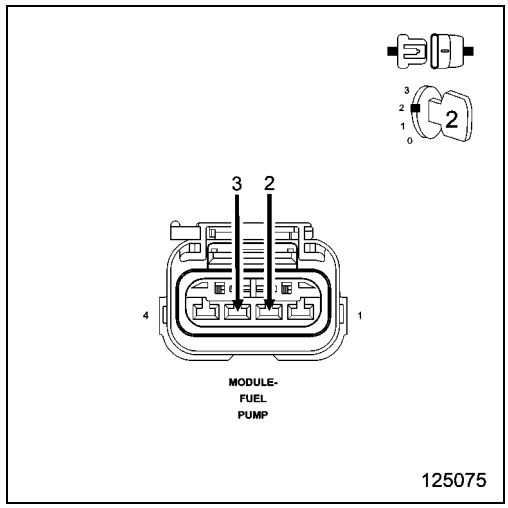

1. Turn the ignition off.
2. Disconnect the Fuel Pump Module electrical harness connector.
3. Ignition on, engine not running.
4. Connect a jumper wire between the (N4) Fuel Level Signal circuit and the (G109) Ground circuit in the Fuel Pump Module harness connector.
5. With the scan tool, read the Fuel Level Sensor voltage.

Did the Fuel Level Sensor voltage change from above 4.8 Volts to below 0.4 of a volt with the jumper wire installed?

Yes

- Verify that there is good pin to terminal contact at the Fuel Pump Module and the Totally Integrated Power Module (TIPM) connectors. Replace the Fuel Level Sensor if no problems were found at the connectors.
- Perform the POWERTRAIN VERIFICATION TEST. (Refer to 28 - DTC-Based Diagnostics/MODULE, Powertrain Control (PCM) - Standard Procedure)

No

- Go To 3

NOTE: Remove the jumper wire before continuing.

3. (N4) FUEL LEVEL SIGNAL CIRCUIT SHORTED TO VOLTAGE

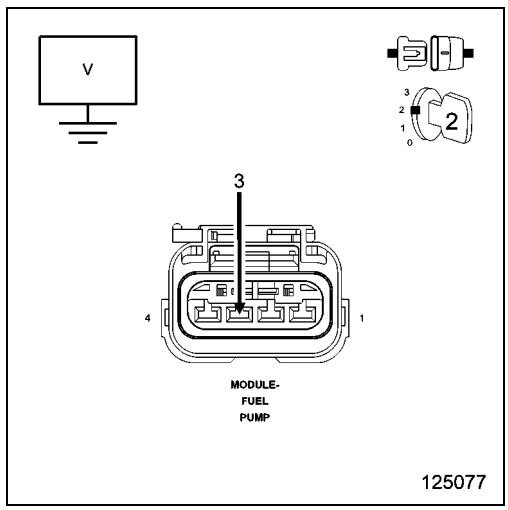

1. Turn the ignition off.
2. Disconnect the C7 TIPM harness connector.
3. Ignition on, engine not running.
4. Measure the voltage on the (N4) Fuel Level Signal circuit in the Fuel Pump Module harness connector.

Is there any voltage present?

Yes

- Repair the short to voltage in the (N4) Fuel Level Signal circuit.
- Perform the POWERTRAIN VERIFICATION TEST. (Refer to 28 - DTC-Based Diagnostics/MODULE, Powertrain Control (PCM) - Standard Procedure)

No

- Go To 4

4. (N4) FUEL LEVEL SIGNAL CIRCUIT OPEN

1. Turn the ignition off.
2. Disconnect the C7 TIPM harness connector.
3. Measure the resistance of the (N4) Fuel Level Signal circuit from the Fuel Pump Module harness connector to the C7 TIPM harness connector.

Is the resistance below 5.0 Ohms?

Yes

- Go To 5

No

- Repair the open in the (N4) Fuel Level Signal circuit.
- Perform the POWERTRAIN VERIFICATION TEST. (Refer to 28 - DTC-Based Diagnostics/MODULE, Powertrain Control (PCM) - Standard Procedure)

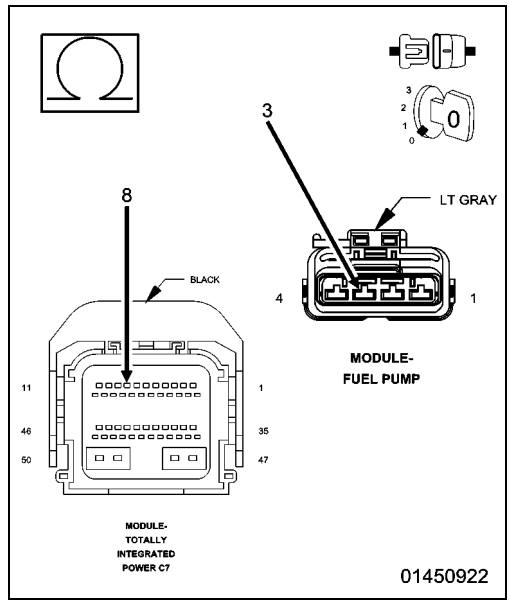

5. (G109) GROUND CIRCUIT OPEN

1. Disconnect the C7 TIPM harness connector.
2. Measure the resistance of the (G109) Ground circuit from the Fuel Pump Module harness connector to the C7 TIPM harness connector.

Is the resistance below 5.0 Ohms?

Yes

- Go To 6

No

- Repair the open in the (G109) Ground circuit.
- Perform the POWERTRAIN VERIFICATION TEST. (Refer to 28 - DTC-Based Diagnostics/MODULE, Powertrain Control (PCM) - Standard Procedure)

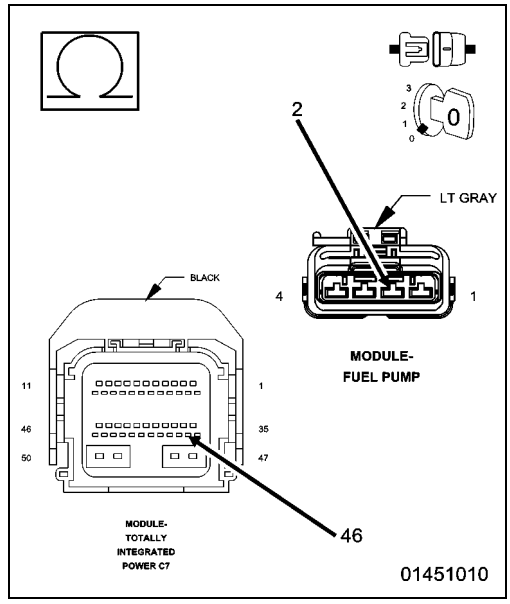

6. TOTALLY INTEGRATED POWER MODULE

1. Using the wiring diagram/schematic as a guide, inspect the wiring and connectors between the Fuel Pump Module and the Totally Integrated Power Module.
2. Look for any chafed, pierced, pinched or partially broken wires.
3. Look for broken, bent, pushed out or corroded terminals. Verify that there is good pin to terminal contact in the Fuel Pump Module and the Totally Integrated Power Module connectors.
4. Refer to any Technical Service Bulletins that may apply.

Were there any problems found?

Yes

- Repair as necessary.
- Perform the BODY VERIFICATION TEST, (Refer to 28 - DTC-Based Diagnostics/MODULE, Totally Integrated Power (TIPM) - Standard Procedure).

No

- Replace and program the Totally Integrated Power Module in accordance with the Service Information.
- Perform the BODY VERIFICATION TEST (Refer to 28 - DTC-Based Diagnostics/MODULE, Totally Integrated Power (TIPM) - Standard Procedure)

P0606-INTERNAL CONTROL PROCESSOR

For a complete wiring diagram, **refer to the Wiring Information**.

- **When Monitored:**
  Engine running.
- **Set Condition:**
  When the Totally Integrated Power Module (TIPM) recognizes an internal failure

Possible Causes
TOTALLY INTEGRATED POWER MODULE (TIPM)

Always perform the Pre-Diagnostic Troubleshooting procedure before proceeding. (Refer to 28 - DTC-Based Diagnostics/MODULE, Powertrain Control (PCM) - Standard Procedure).

1. TOTALLY INTEGRATED POWER MODULE (TIPM)

The Totally Integrated Power Module is reporting internal errors, view repair to continue.

Repair

- Replace and program the Totally Integrated Power Module (TIPM) in accordance with the Service Information.
- Perform the BODY VERIFICATION TEST. (Refer to 28 - DTC-Based Diagnostics/MODULE, Totally Integrated Power (TIPM) - Standard Procedure).

P0615-STARTER RELAY CONTROL CIRCUIT OPEN - NGC

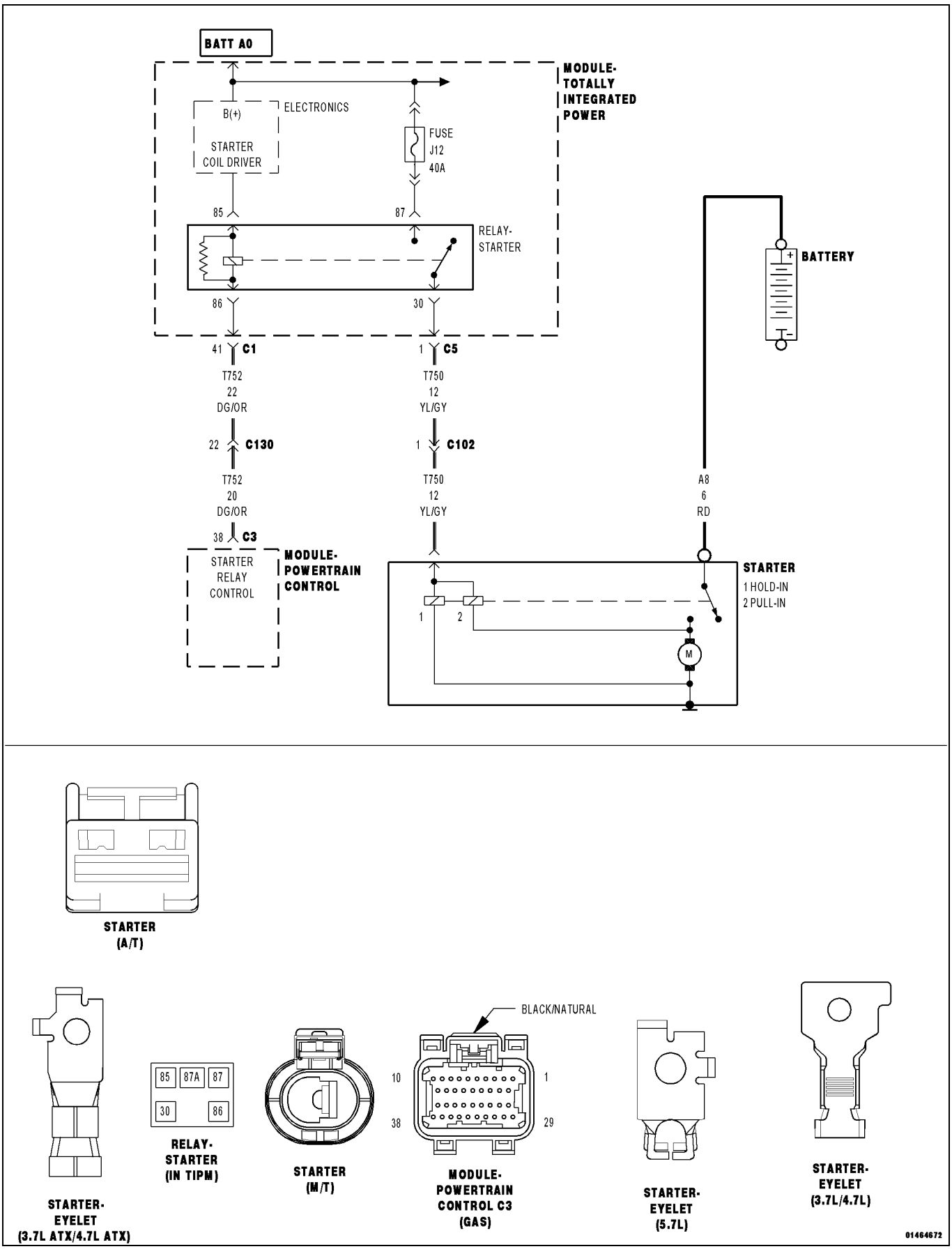

For a complete wiring diagram, **refer to the Wiring Information**.

- **When Monitored:**
  With the ignition on. Battery voltage greater than 10.4 Volts and the ASD sense switch is on.
- **Set Condition:**
  The Totally Integrated Power Module (TIPM) detects an open in the starter relay control circuit. One Trip Fault. Three good trips to turn off the MIL.

Possible Causes
(T752) STARTER RELAY CONTROL CIRCUIT OPEN
(T752) STARTER RELAY CONTROL CIRCUIT SHORTED TO GROUND
STARTER RELAY
TOTALLY INTEGRATED POWER MODULE (TIPM)

Always perform the Pre-Diagnostic Troubleshooting procedure before proceeding. (Refer to 28 - DTC-Based Diagnostics/MODULE, Powertrain Control (PCM) - Standard Procedure).

1. ACTIVE DTC

1. Attempt to start the engine.
2. Ignition on, engine not running.
3. With the scan tool, select View DTCs.

Is the DTC Active at this time?

Yes

- Go To 2

No

- Perform the INTERMITTENT CONDITION diagnostic procedure. (Refer to 28 - DTC-Based Diagnostics/MODULE, Powertrain Control (PCM) - Standard Procedure).

2. STARTER RELAY

1. Install a known good relay in place of the existing Starter Relay.
2. Attempt to start the engine.

Does the enine start?

Yes

- Replace the Starter Relay.
- Perform the POWERTRAIN VERIFICATION TEST. (Refer to 28 - DTC-Based Diagnostics/MODULE, Powertrain Control (PCM) - Standard Procedure).

No

- Go To 3

3. (T752) STARTER RELAY CONTROL CIRCUIT OPEN

1. Turn the ignition off.
2. Disconnect the C3 PCM harness connector.
3. Disconnect the C1 TIPM harness connector.

CAUTION: Do not probe the PCM harness connectors. Probing the PCM harness connectors will damage the PCM terminals resulting in poor terminal to pin connection. Install the PCM Pinout Box Kit, NGC, 38 Position 8815A to perform diagnosis.

4. Measure the resistance of the (T752) Starter Override circuit between the C1 TIPM harness connector and the appropriate terminal of the PCM Pinout Box 8815A.

Is the resistance below 5.0 Ohms?

Yes

- Go To 4

No

- Repair the open in the (T752) Starter Relay Control circuit.
- Perform the POWERTRAIN VERIFICATION TEST. (Refer to 28 - DTC-Based Diagnostics/MODULE, Powertrain Control (PCM) - Standard Procedure).

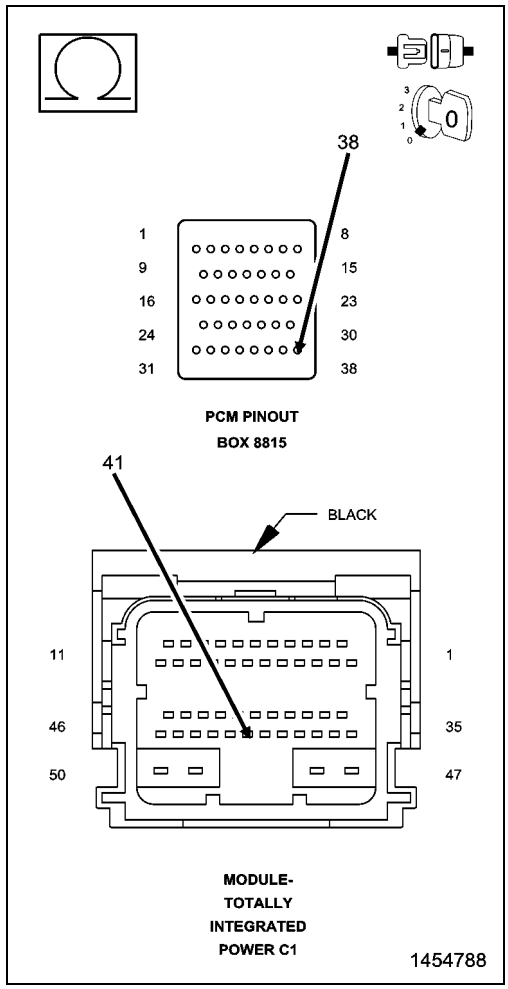

4. (T752) STARTER RELAY CONTROL CIRCUIT SHORTED TO GROUND

1. Measure the resistance between ground and the of the (T752) Starter Relay Control circuit between at the appropriate terminal of the PCM Pinout Box 8815A.

Is the resistance below 10k Ohms?

Yes

- Repair the short to ground in the (T752 Starter Relay Control circuit.
- Perform the POWERTRAIN VERIFICATION TEST. (Refer to 28 - DTC-Based Diagnostics/MODULE, Powertrain Control (PCM) - Standard Procedure).

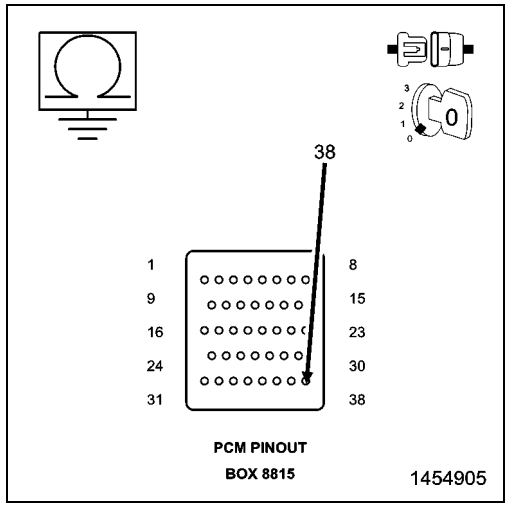

No

- Go To 5

5. TOTALLY INTEGRATED POWER MODULE (TIPM)

1. Using the wiring diagram/schematic as a guide, inspect the wiring and connectors between the Starter, TIPM and the Powertrain Control Module (PCM).
2. Look for any chafed, pierced, pinched or partially broken wires.
3. Look for broken, bent, pushed out or corroded terminals. Verify that there is good pin to terminal contact in the Starter, TIPM and Powertrain Control Module connectors.
4. Refer to any Technical Service Bulletins that may apply.

Were there any problems found?

Yes

- Repair as necessary.
- Perform the POWERTRAIN VERIFICATION TEST. (Refer to 28 - DTC-Based Diagnostics/MODULE, Powertrain Control (PCM) - Standard Procedure).

No

- Replace the Totally Integrated Power Module in accordance with the Service Information.
- Perform the BODY VERIFICATION TEST. (Refer to 28 - DTC-Based Diagnostics/MODULE, Totally Integrated Power (TIPM) - Standard Procedure).

P0627-FUEL PUMP CONTROL CIRCUIT

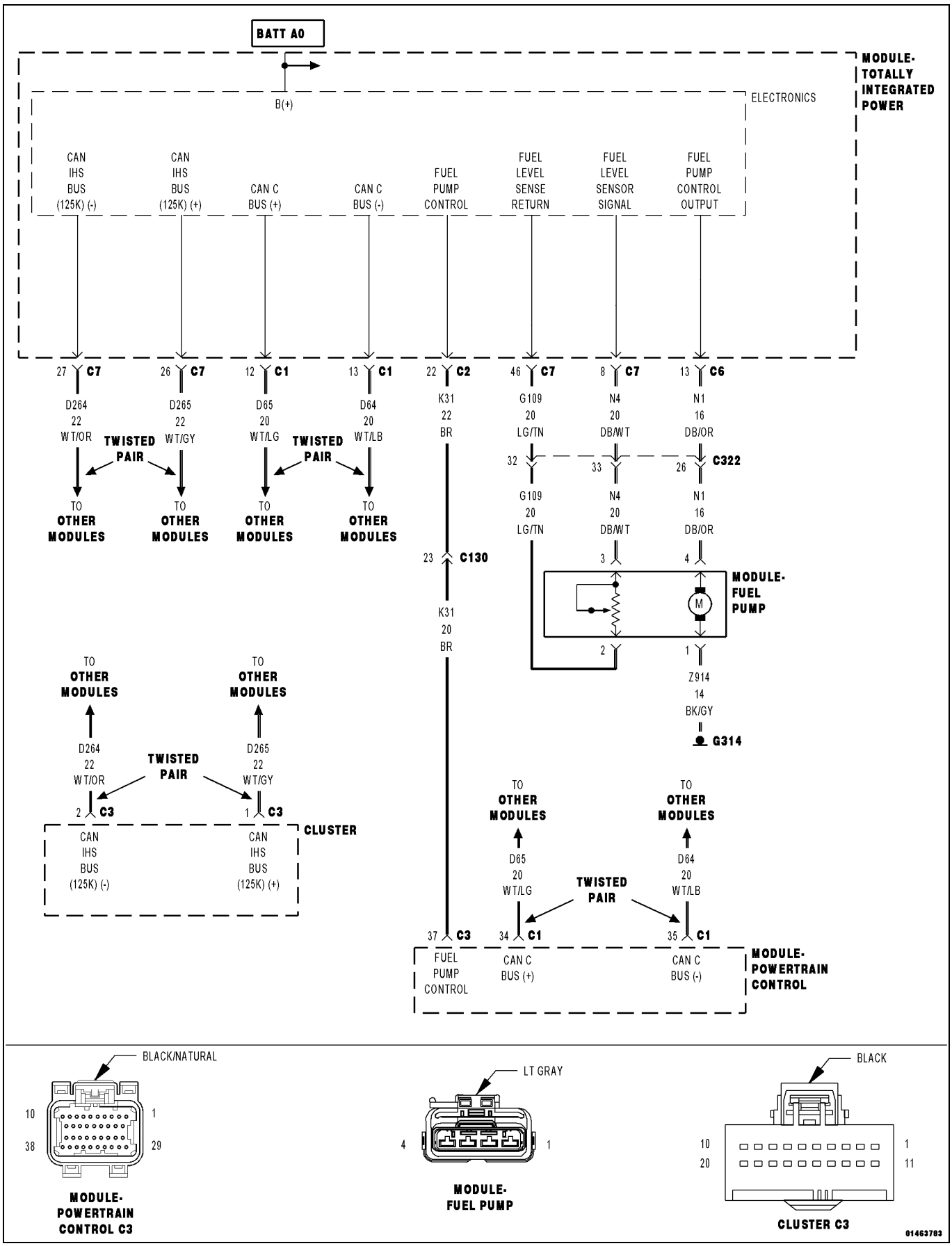

For a complete wiring diagram, **refer to the Wiring Information**.

- **When Monitored:**
  With the ignition on. Battery voltage greater than 10.4 Volts and the ASD sense switch is on.
- **Set Condition:**
  Actual Fuel Pump state is not equal to desired state. One Trip Fault. Three good trips to turn off the MIL.

Possible Causes
(K31) FUEL PUMP CONTROL CIRCUIT SHORTED TO VOLTAGE
(K31) FUEL PUMP CONTROL CIRCUIT SHORTED TO GROUND
(K31) FUEL PUMP CONTROL CIRCUIT OPEN
TOTALLY INTEGRATED POWER MODULE (TIPM)
POWERTRAIN CONTROL MODULE (PCM)

Always perform the Pre-Diagnostic Troubleshooting procedure before proceeding. (Refer to 28 - DTC-Based Diagnostics/MODULE, Powertrain Control (PCM) - Standard Procedure).

1. ACTIVE DTC

1. Ignition on, engine not running.
2. With the scan tool, select View DTCs.

Is the DTC Active at this time?

Yes

- Go To 2

No

- Perform the INTERMITTENT CONDITION Diagnostic Procedure. (Refer to 28 - DTC-Based Diagnostics/MODULE, Powertrain Control (PCM) - Standard Procedure).

2. (K31) FUEL PUMP CONTROL CIRCUIT SHORTED TO VOLTAGE

1. Turn the ignition off.
2. Disconnect the C3 PCM harness connector.
3. Disconnect the C2 TIPM harness connector.
4. Ignition on, engine not running.
5. Measure the voltage on the (K31) Fuel Pump Control circuit at the C2 TIPM harness connector.

Does the voltmeter indicate voltage present?

Yes

- Repair the short to voltage in the (K31) Fuel Pump Control circuit.
- Perform the POWERTRAIN VERIFICATION TEST. (Refer to 28 - DTC-Based Diagnostics/MODULE, Powertrain Control (PCM) - Standard Procedure)

No

- Go To 3

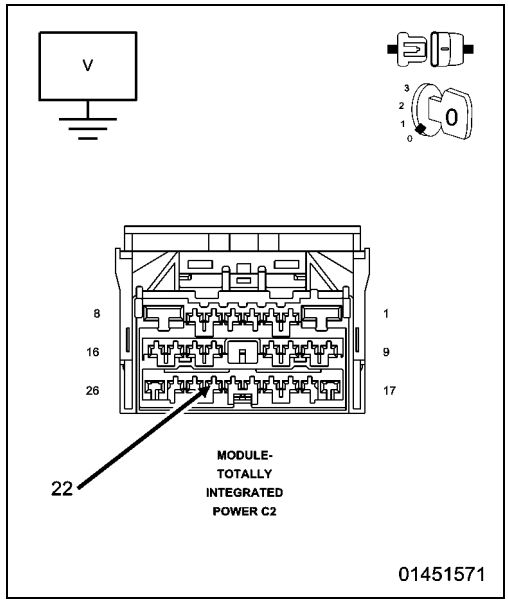

3. (K31) FUEL PUMP CONTROL CIRCUIT OPEN

1. Turn the ignition off.

CAUTION: Do not probe the PCM harness connectors. Probing the PCM harness connectors will damage the PCM terminals resulting in poor terminal to pin connection. Install the PCM Pinout Box Kit, NGC, 38 Position 8815A to perform diagnosis.

2. Measure the resistance of the (K31) Fuel Pump Control circuit from the C2 TIPM harness connector to the appropriate terminal of PCM Pinout Box 8815A.

Is the resistance below 5.0 Ohms?

Yes

- Go To 4

No

- Repair the open in the (K31) Fuel Pump Control circuit.
- Perform the POWERTRAIN VERIFICATION TEST. (Refer to 28 - DTC-Based Diagnostics/MODULE, Powertrain Control (PCM) - Standard Procedure)

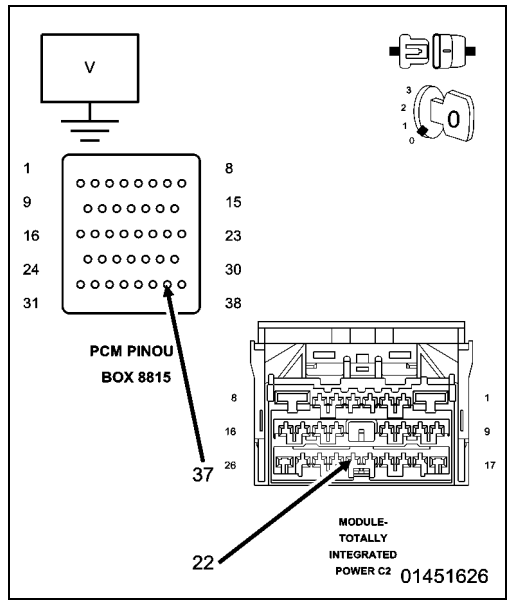

4. (K31) FUEL PUMP CONTROL CIRCUIT SHORTED TO GROUND

1. Measure the resistance between ground and the (K31) Fuel Pump Control circuit in the TIPM C2 harness connector.

Is the resistance below 100 Ohms?

Yes

- Repair the short to ground in the (K31) Fuel Pump Control circuit.
- Perform the POWERTRAIN VERIFICATION TEST. (Refer to 28 - DTC-Based Diagnostics/MODULE, Powertrain Control (PCM) - Standard Procedure)

No

- Go To 5

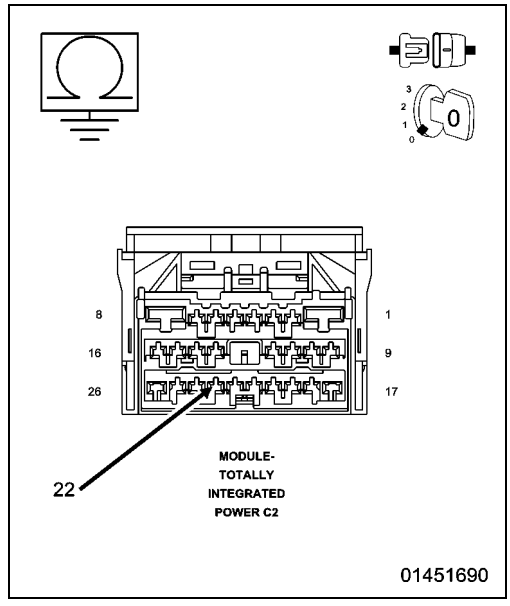

5. FUEL PUMP CONTROL OPERATION FROM THE PCM

1. Turn the ignition off.
2. Connect the C3 PCM harness connector.
3. Ignition on, engine not running.
4. With a 12-volt test light connected to ground, probe the (K31) Fuel Pump Control circuit in the TIPM C2 harness connector.
5. Using the scan tool in the PCM, actuate the Fuel Pump.

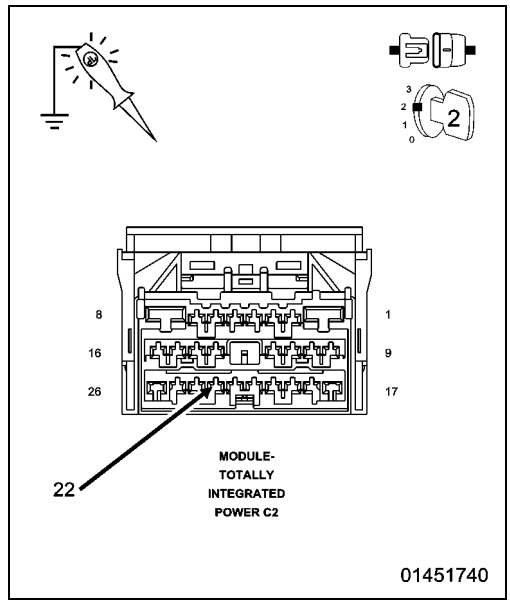

NOTE: The test light should be illuminated and bright proportional to the maximum duty cycle allowed by the scan tool. For example, if the scan tool allows 100% actuation, the brightness should be as bright as a direct connection to the battery. If the scan tool allows a maximum 25% actuation, the brightness should be 25% as bright as a direct connection to the battery.

Does the test light illuminate accordingly during the actuation?

Yes

•

NOTE: Before continuing, check the TIPM harness connector terminals for corrosion, damage or terminal push out. Repair as necessary.

If OK, replace the TIPM in accordance with the Service Information.

- Perform the POWERTRAIN VERIFICATION TEST. (Refer to 28 - DTC-Based Diagnostics/MODULE, Powertrain Control (PCM) - Standard Procedure)

No

- Go To 6

6. POWERTRAIN CONTROL MODULE (PCM)

1. Using the wiring diagram/schematic as a guide, inspect the wiring and connectors between the Fuel Pump Module and the Powertrain Control Module (PCM).
2. Look for any chafed, pierced, pinched or partially broken wires.
3. Look for broken, bent, pushed out or corroded terminals. Verify that there is good pin to terminal contact in the Fuel Pump and Control Module connectors.
4. Refer to any Technical Service Bulletins that may apply.

Were there any problems found?

Yes

- Repair as necessary.
- Perform the POWERTRAIN VERIFICATION TEST. (Refer to 28 - DTC-Based Diagnostics/MODULE, Powertrain Control (PCM) - Standard Procedure)

No

- Replace and program the Powertrain Control Module in accordance with the Service Information.
- Perform the POWERTRAIN VERIFICATION TEST. (Refer to 28 - DTC-Based Diagnostics/MODULE, Powertrain Control (PCM) - Standard Procedure)

P0691-COOLING FAN 1 CONTROL CIRCUIT LOW

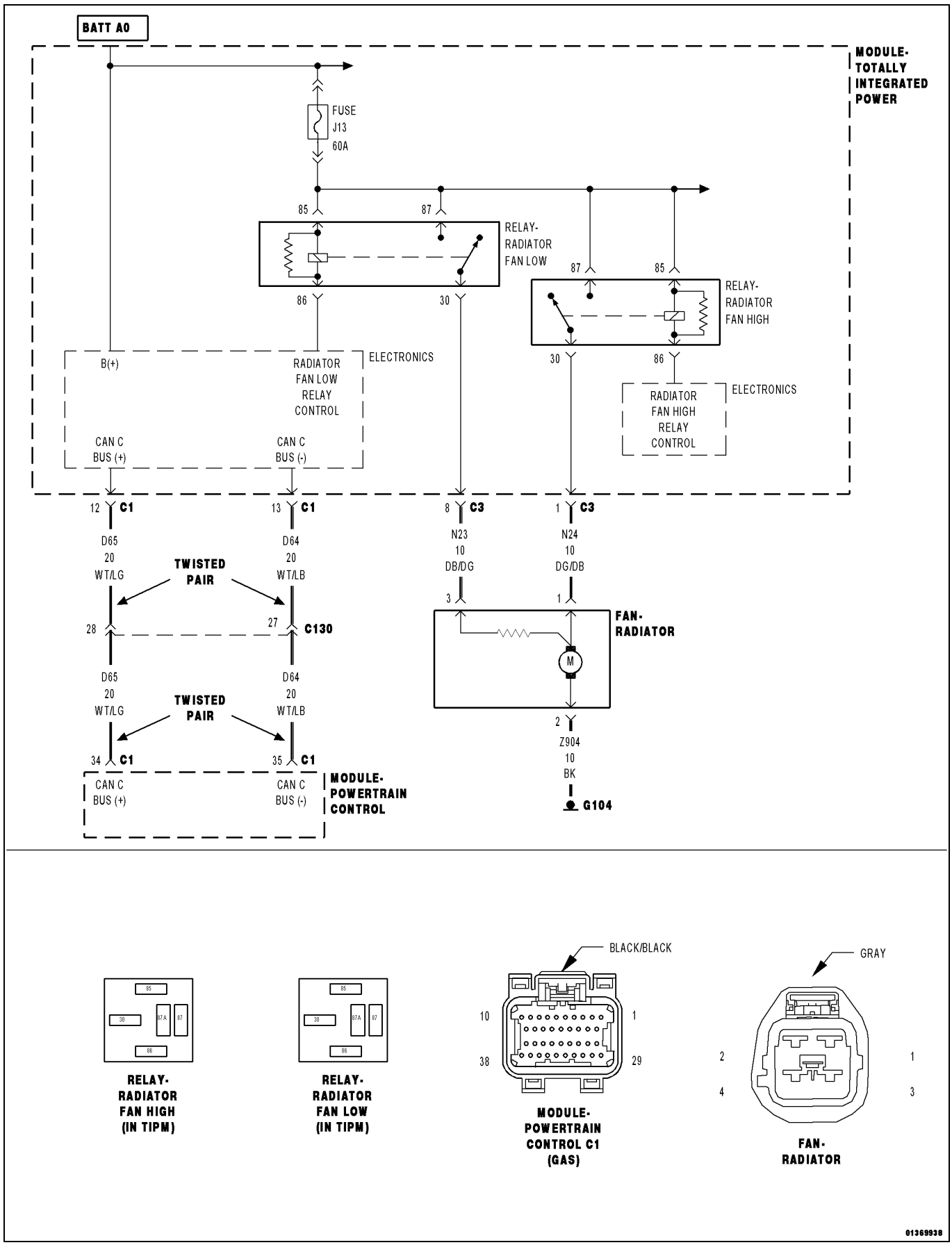

For a complete wiring diagram, **refer to the Wiring Information**.

- **When Monitored:**
  With the ignition on. Battery voltage greater than 10 Volts.
- **Set Condition:**
  The PCM is requesting the TIPM to turn on the Cooling Fan On and it is not operating. The TIPM detects an open in the Relay Coil Control circuit. One Trip Fault. Three good trips to turn off the MIL.

Possible Causes
RADIATOR FAN CONTROL (LOW) RELAY
TOTALLY INTEGRATED POWER MODULE (TIPM)

Always perform the Pre-Diagnostic Troubleshooting procedure before proceeding. (Refer to 28 - DTC-Based Diagnostics/MODULE, Powertrain Control (PCM) - Standard Procedure).

1. ACTIVE DTC

1. Start the engine and allow it to reach normal operating temperature.

WARNING: When the engine is operating, do not stand in direct line with the fan. Do not put your hands near the pulleys, belts, or fan. Do not wear loose clothing. Failure to follow these instructions can result in possible serious or fatal injury.

NOTE: It may be necessary to test drive the vehicle in order for this DTC to set.

2. With the scan tool, select View DTCs.

Is the DTC Active at this time?

Yes

- Go To 2

No

- Perform the INTERMITTENT CONDITION Diagnostic Procedure. (Refer to 28 - DTC-Based Diagnostics/MODULE, Powertrain Control (PCM) - Standard Procedure).

2. RADIATOR FAN CONTROL (LOW) RELAY

NOTE: Inspect the related Fuse.

1. Turn the ignition off.
2. Verify the Radiator Fan Control (Low) Relay is installed properly and that the terminals are making a tight fit.
3. Remove the Radiator Fan Control (Low) Relay Relay and substitute it with a known good Relay.
4. Start the engine.
5. With the scan tool, actuate the Radiator Fan Control Relay.

Is the Cooling Fan operating?

Yes

- Replace the Radiator Fan Control (Low) Relay.
- Perform the POWERTRAIN VERIFICATION TEST. (Refer to 28 - DTC-Based Diagnostics/MODULE, Powertrain Control (PCM) - Standard Procedure).

No

- Go To 3

3. TOTALLY INTEGRATED POWER MODULE (TIPM)

1. Using the wiring diagram/schematic as a guide, inspect the wiring and connectors between the Cooling Fan Module, TIPM and the Powertrain Control Module (PCM).
2. Look for any chafed, pierced, pinched or partially broken wires.
3. Look for broken, bent, pushed out or corroded terminals. Verify that there is good pin to terminal contact in the Cooling Fan Module, TIPM and Powertrain Control Module connectors.
4. Refer to any Technical Service Bulletins that may apply.

Were any problems found?

Yes

- Repair as necessary.
- Perform the POWERTRAIN VERIFICATION TEST. (Refer to 28 - DTC-Based Diagnostics/MODULE, Powertrain Control (PCM) - Standard Procedure).

No

- Replace the Totally Integrated Power Module in accordance with the Service Information.
- Perform the BODY VERIFICATION TEST. (Refer to 28 - DTC-Based Diagnostics/MODULE, Totally Integrated Power (TIPM) - Standard Procedure).

P0692-COOLING FAN 1 CONTROL CIRCUIT HIGH

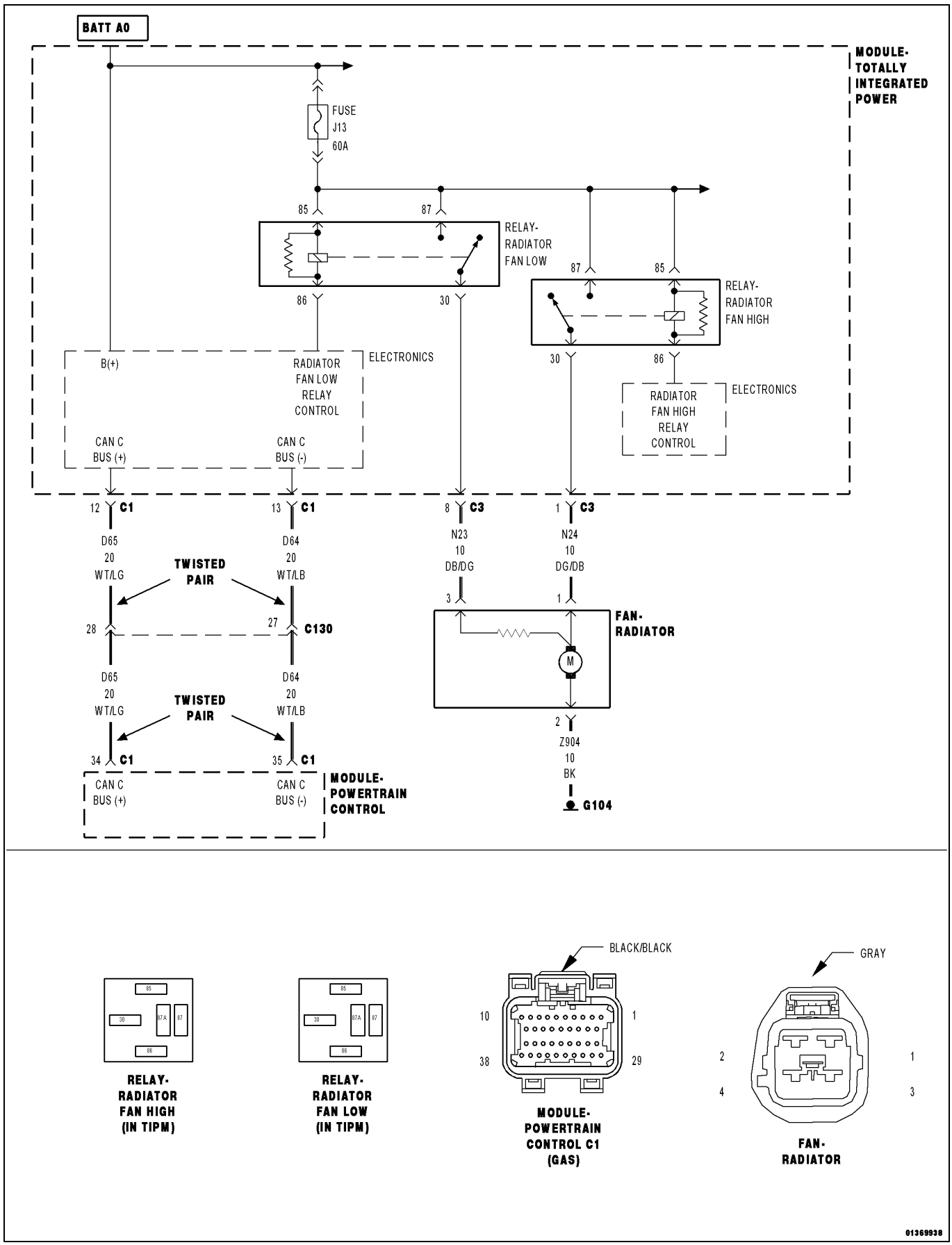

For a complete wiring diagram, **refer to the Wiring Information**.

- **When Monitored:**
  With the ignition on. Battery voltage greater than 10 Volts.
- **Set Condition:**
  The PCM is requesting the TIPM to turn on the Cooling Fan On and it is not operating. The TIPM detects a shorted condition in the Relay Coil Control circuit. One Trip Fault. Three good trips to turn off the MIL.

Possible Causes
RADIATOR FAN CONTROL (LOW) RELAY
TOTALLY INTEGRATED POWER MODULE (TIPM)

Always perform the Pre-Diagnostic Troubleshooting procedure before proceeding. (Refer to 28 - DTC-Based Diagnostics/MODULE, Powertrain Control (PCM) - Standard Procedure).

1. ACTIVE DTC

1. Start the engine and allow it to reach normal operating temperature.

WARNING: When the engine is operating, do not stand in direct line with the fan. Do not put your hands near the pulleys, belts, or fan. Do not wear loose clothing. Failure to follow these instructions can result in possible serious or fatal injury.

NOTE: It may be necessary to test drive the vehicle in order for this DTC to set.

2. With the scan tool, select View DTCs.

Is the DTC Active at this time?

Yes

- Go To 2

No

- Perform the INTERMITTENT CONDITION Diagnostic Procedure. (Refer to 28 - DTC-Based Diagnostics/MODULE, Powertrain Control (PCM) - Standard Procedure).

2. RADIATOR FAN CONTROL (LOW) RELAY

NOTE: Inspect the related Fuse.

1. Turn the ignition off.
2. Verify the Radiator Fan Control (Low) Relay is installed properly and that the terminals are making a tight fit.
3. Remove the Radiator Fan Control (Low) Relay and substitute it with a known good Relay.
4. Start the engine.
5. With the scan tool, actuate the Radiator Fan Control (Low) Relay.

Is the Cooling Fan operating?

Yes

- Replace the Radiator Fan Control (Low) Relay.
- Perform the POWERTRAIN VERIFICATION TEST. (Refer to 28 - DTC-Based Diagnostics/MODULE, Powertrain Control (PCM) - Standard Procedure).

No

- Go To 3

3. TOTALLY INTEGRATED POWER MODULE (TIPM)

1. Using the wiring diagram/schematic as a guide, inspect the wiring and connectors between the Cooling Fan Module, TIPM and the Powertrain Control Module (PCM).
2. Look for any chafed, pierced, pinched or partially broken wires.
3. Look for broken, bent, pushed out or corroded terminals. Verify that there is good pin to terminal contact in the Cooling Fan Module, TIPM and Powertrain Control Module connectors.
4. Refer to any Technical Service Bulletins that may apply.

Were any problems found?

Yes

- Repair as necessary.
- Perform the POWERTRAIN VERIFICATION TEST. (Refer to 28 - DTC-Based Diagnostics/MODULE, Powertrain Control (PCM) - Standard Procedure).

No

- Replace the Totally Integrated Power Module in accordance with the Service Information.
- Perform the BODY VERIFICATION TEST. (Refer to 28 - DTC-Based Diagnostics/MODULE, Totally Integrated Power (TIPM) - Standard Procedure).

P0693-COOLING FAN 2 CONTROL CIRCUIT LOW

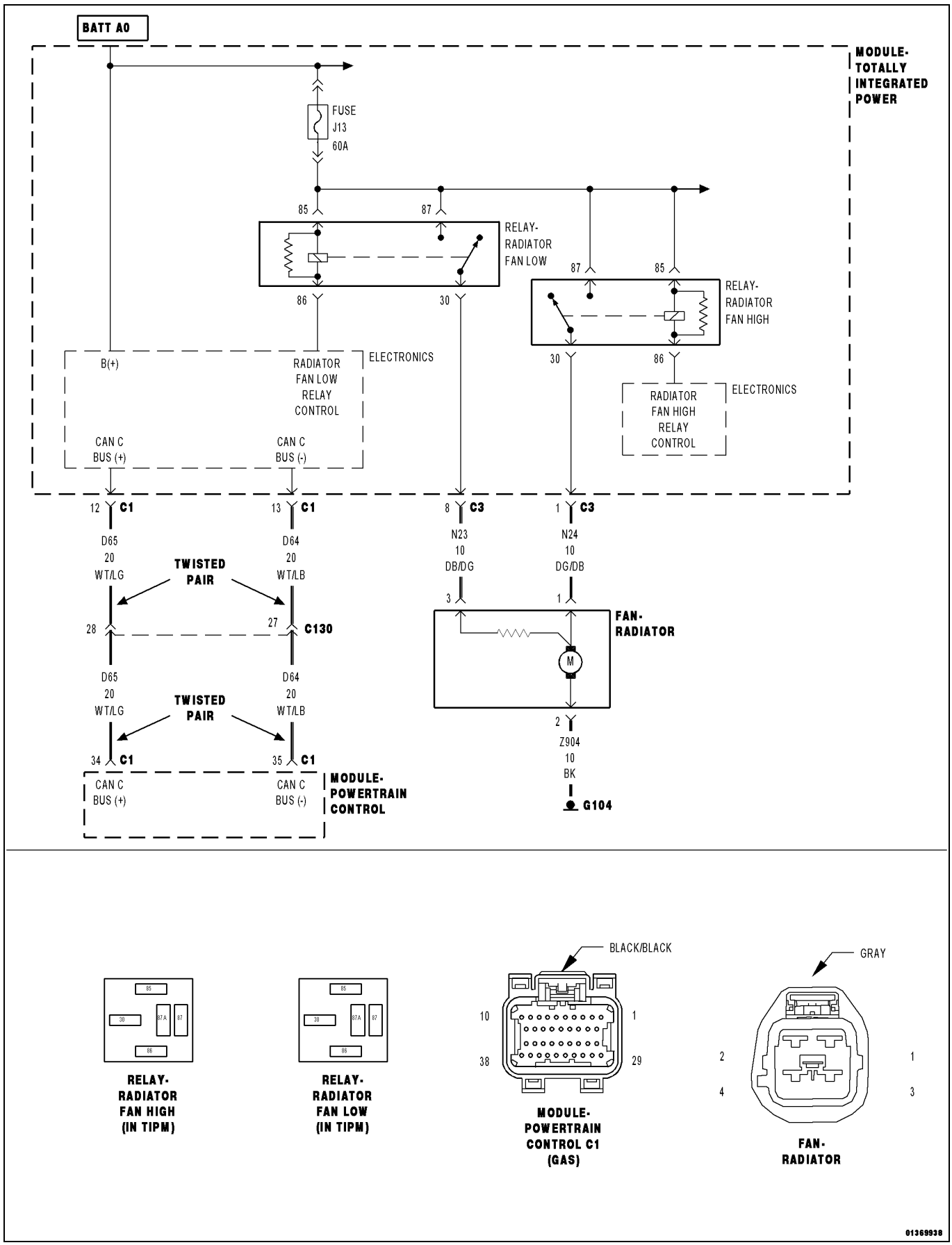

For a complete wiring diagram, **refer to the Wiring Information**.

- **When Monitored:**
  With the ignition on. Battery voltage greater than 10 Volts.
- **Set Condition:**
  The PCM is requesting the TIPM to turn on the Cooling Fan On and it is not operating. The TIPM detects an open or short to ground in the Relay Coil Control circuit. One Trip Fault. Three good trips to turn off the MIL.

Possible Causes
RADIATOR FAN HIGH RELAY
TOTALLY INTEGRATED POWER MODULE (TIPM)

Always perform the Pre-Diagnostic Troubleshooting procedure before proceeding. (Refer to 28 - DTC-Based Diagnostics/MODULE, Powertrain Control (PCM) - Standard Procedure).

1. ACTIVE DTC

1. Start the engine and allow it to reach normal operating temperature.

WARNING: When the engine is operating, do not stand in direct line with the fan. Do not put your hands near the pulleys, belts, or fan. Do not wear loose clothing. Failure to follow these instructions can result in possible serious or fatal injury.

NOTE: It may be necessary to test drive the vehicle in order for this DTC to set.

2. With the scan tool, select View DTCs.

Is the DTC Active at this time?

Yes

- Go To 2

No

- Perform the INTERMITTENT CONDITION Diagnostic Procedure. (Refer to 28 - DTC-Based Diagnostics/MODULE, Powertrain Control (PCM) - Standard Procedure).

2. RADIATOR FAN HIGH RELAY

NOTE: Inspect the related Fuse.

1. Turn the ignition off.
2. Verify the Radiator Fan High Relay is installed properly and that the terminals are making a tight fit.
3. Remove the Radiator Fan High Relay and substitute it with a known good Relay.
4. Start the engine.
5. With the scan tool, actuate the High Speed Cooling Fan Relay.

Is the Cooling Fan operating?

Yes

- Replace the Radiator Fan High Relay.
- Perform the POWERTRAIN VERIFICATION TEST. (Refer to 28 - DTC-Based Diagnostics/MODULE, Powertrain Control (PCM) - Standard Procedure).

No

- Go To 3

3. TOTALLY INTEGRATED POWER MODULE (TIPM)

1. Using the wiring diagram/schematic as a guide, inspect the wiring and connectors between the Cooling Fan Module, TIPM and the Powertrain Control Module (PCM).
2. Look for any chafed, pierced, pinched or partially broken wires.
3. Look for broken, bent, pushed out or corroded terminals. Verify that there is good pin to terminal contact in the Cooling Fan Module, TIPM and Powertrain Control Module connectors.
4. Refer to any Technical Service Bulletins that may apply.

Were any problems found?

Yes

- Repair as necessary.
- Perform the POWERTRAIN VERIFICATION TEST. (Refer to 28 - DTC-Based Diagnostics/MODULE, Powertrain Control (PCM) - Standard Procedure).

No

- Replace the Totally Integrated Power Module in accordance with the Service Information.
- Perform the BODY VERIFICATION TEST. (Refer to 28 - DTC-Based Diagnostics/MODULE, Totally Integrated Power (TIPM) - Standard Procedure).

P0694-COOLING FAN 2 CONTROL CIRCUIT HIGH

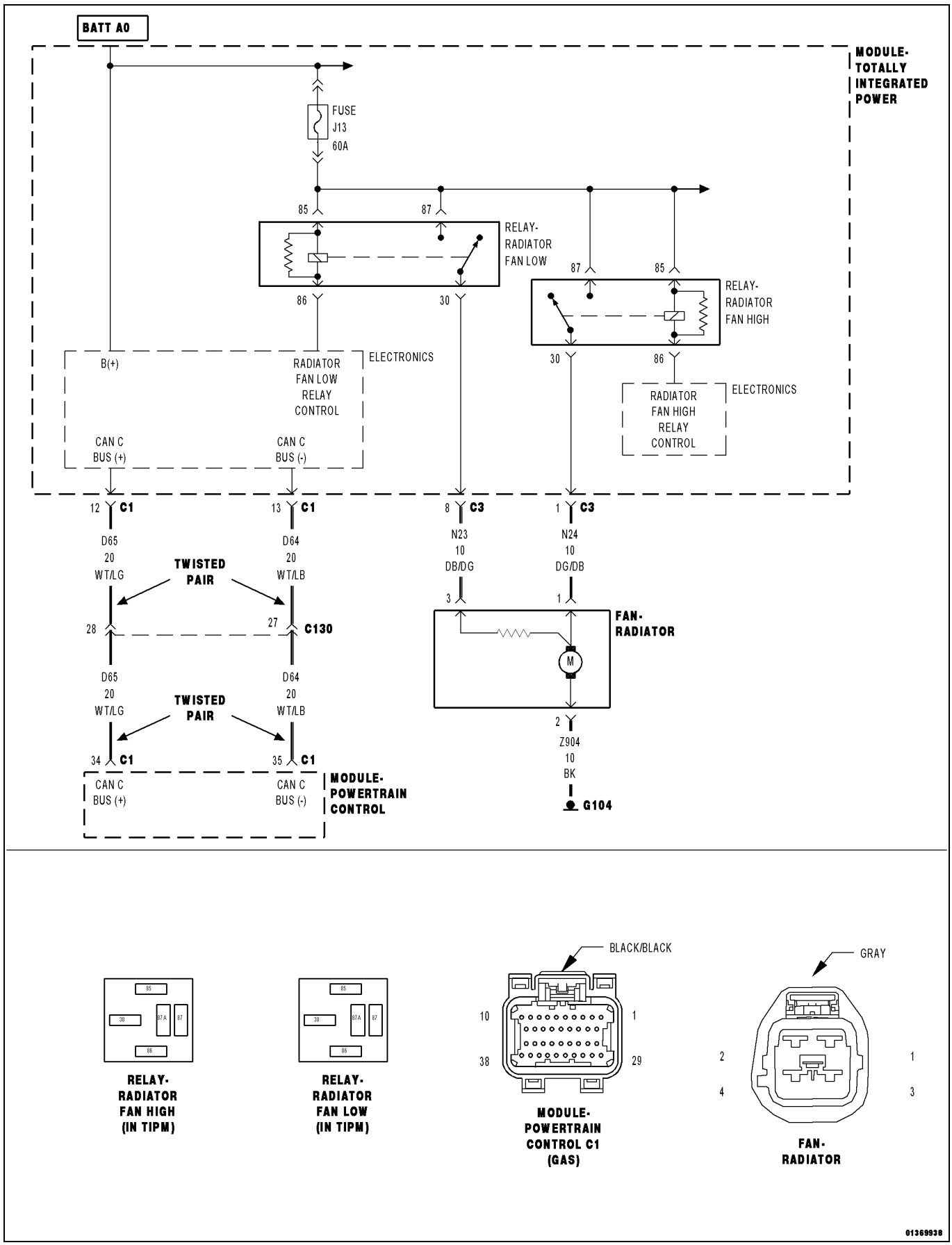

For a complete wiring diagram, **refer to the Wiring Information**.

- **When Monitored:**
  With the ignition on. Battery voltage greater than 10 Volts.
- **Set Condition:**
  The PCM is requesting the TIPM to turn on the Cooling Fan On and it is not operating. The TIPM detects a short to voltage in the Relay Coil Control circuit. One Trip Fault. Three good trips to turn off the MIL.

Possible Causes
RADIATOR FAN HIGH RELAY
TOTALLY INTEGRATED POWER MODULE (TIPM)

Always perform the Pre-Diagnostic Troubleshooting procedure before proceeding. (Refer to 28 - DTC-Based Diagnostics/MODULE, Powertrain Control (PCM) - Standard Procedure).

1. ACTIVE DTC

1. Start the engine and allow it to reach normal operating temperature.

WARNING: When the engine is operating, do not stand in direct line with the fan. Do not put your hands near the pulleys, belts, or fan. Do not wear loose clothing. Failure to follow these instructions can result in possible serious or fatal injury.

NOTE: It may be necessary to test drive the vehicle in order for this DTC to set.

2. With the scan tool, select View DTCs.

Is the DTC Active at this time?

Yes

- Go To 2

No

- Perform the INTERMITTENT CONDITION Diagnostic Procedure. (Refer to 28 - DTC-Based Diagnostics/MODULE, Powertrain Control (PCM) - Standard Procedure).

2. RADIATOR FAN HIGH RELAY

NOTE: Inspect the related Fuse.

1. Turn the ignition off.
2. Verify the Radiator Fan High Relay is installed properly and that the terminals are making a tight fit.
3. Remove the Radiator Fan High Relay and substitute it with a known good Relay.
4. Start the engine.
5. With the scan tool, actuate the Radiator Fan High Relay.

Is the Cooling Fan operating?

Yes

- Replace the Radiator Fan High Relay.
- Perform the POWERTRAIN VERIFICATION TEST. (Refer to 28 - DTC-Based Diagnostics/MODULE, Powertrain Control (PCM) - Standard Procedure).

No

- Go To 3

3. TOTALLY INTEGRATED POWER MODULE (TIPM)

1. Using the wiring diagram/schematic as a guide, inspect the wiring and connectors between the Cooling Fan Module, TIPM and the Powertrain Control Module (PCM).
2. Look for any chafed, pierced, pinched or partially broken wires.
3. Look for broken, bent, pushed out or corroded terminals. Verify that there is good pin to terminal contact in the Cooling Fan Module, TIPM and Powertrain Control Module connectors.
4. Refer to any Technical Service Bulletins that may apply.

Were any problems found?

Yes

- Repair as necessary.
- Perform the POWERTRAIN VERIFICATION TEST. (Refer to 28 - DTC-Based Diagnostics/MODULE, Powertrain Control (PCM) - Standard Procedure).

No

- Replace the Totally Integrated Power Module in accordance with the Service Information.
- Perform the BODY VERIFICATION TEST.(Refer to 28 - DTC-Based Diagnostics/MODULE, Totally Integrated Power (TIPM) - Standard Procedure).

P1272-A/C CLUTCH CONTROL CIRCUIT 2 LOW

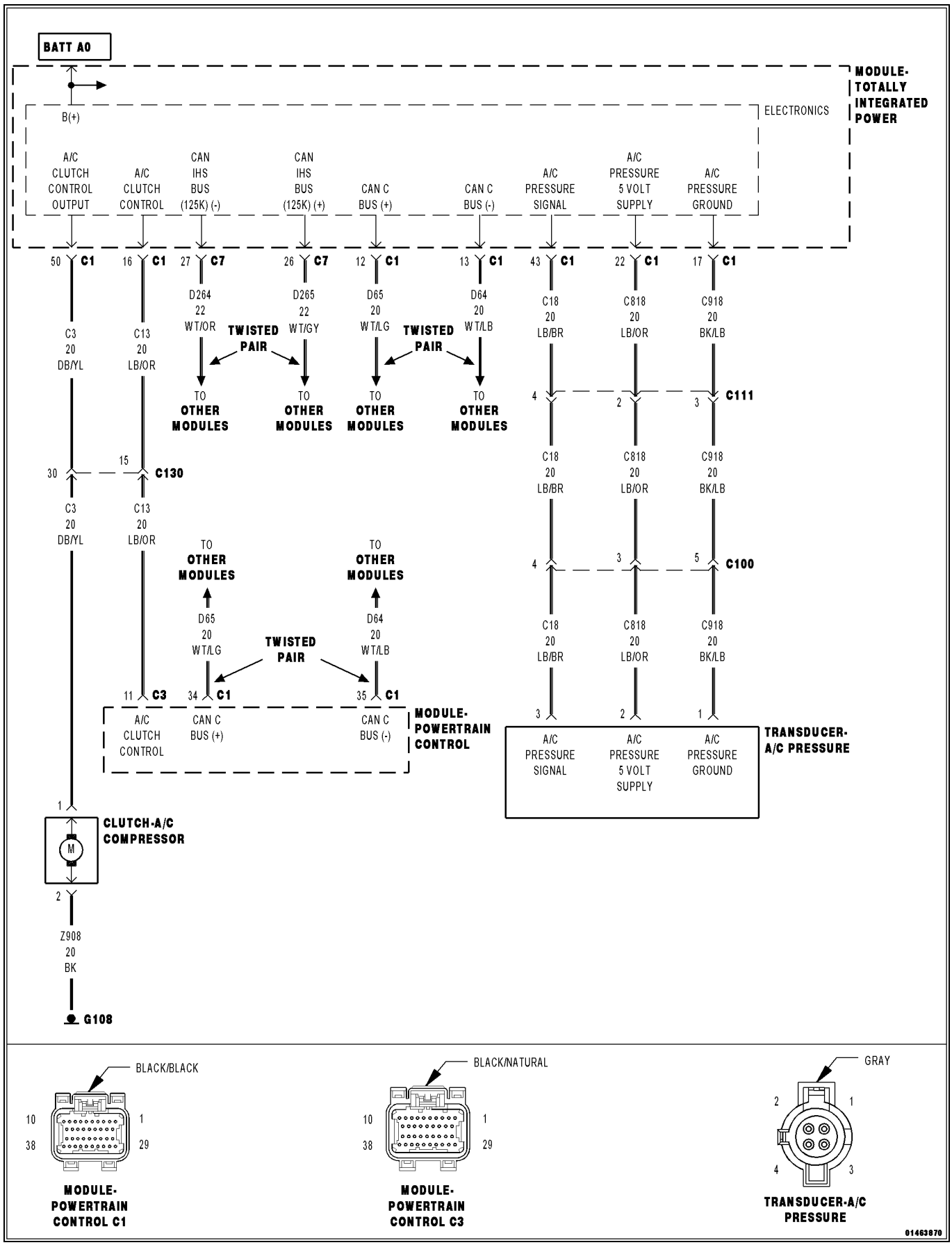

For a complete wiring diagram, **refer to the Wiring Information**.

- **When Monitored:**
  With the ignition on. Battery voltage greater than 10 Volts. A/C Switch on.
- **Set Condition:**
  A shorted condition is detected in the A/C clutch control circuit. One Trip Fault. Three good trips to turn off the MIL.

Possible Causes
(C3) A/C COMPRESSOR CLUTCH CONTROL CIRCUIT SHORTED TO GROUND
A/C COMPRESSOR CLUTCH
TOTALLY INTEGRATED POWER MODULE (TIPM)

Always perform the Pre-Diagnostic Troubleshooting procedure before proceeding. (Refer to 28 - DTC-Based Diagnostics/MODULE, Powertrain Control (PCM) - Standard Procedure).

1. ACTIVE DTC

1. Start the engine.
2. Allow the engine to reach normal operating temperature.
3. Turn the A/C on.
4. With the scan tool, select View DTCs.

Is the DTC Active at this time?

Yes

- Go To 2

No

- Perform the INTERMITTENT CONDITION Diagnostic Procedure. (Refer to 28 - DTC-Based Diagnostics/MODULE, Powertrain Control (PCM) - Standard Procedure).

2. A/C CLUTCH CONTROL OPERATION FROM THE PCM

1. Turn the ignition off.
2. Disconnect the C1 TIPM harness connector.
3. Ignition on, engine not running.
4. With a 12-volt test light connected to B+, probe the (C13) A/C Clutch Control circuit in the C1 TIPM harness connector.
5. Using the scan tool under the PCM Actuators, actuate the A/C Clutch.

Does the test light illuminate brightly and flash on an off?

Yes

- Go To 3

No

- Perform the Diagnostic Procedure for P0645-A/C CLUTCH CONTROL CIRCUIT(Refer to 28 - DTC-Based Diagnostics/MODULE, Powertrain Control (PCM) - Diagnosis and Testing).

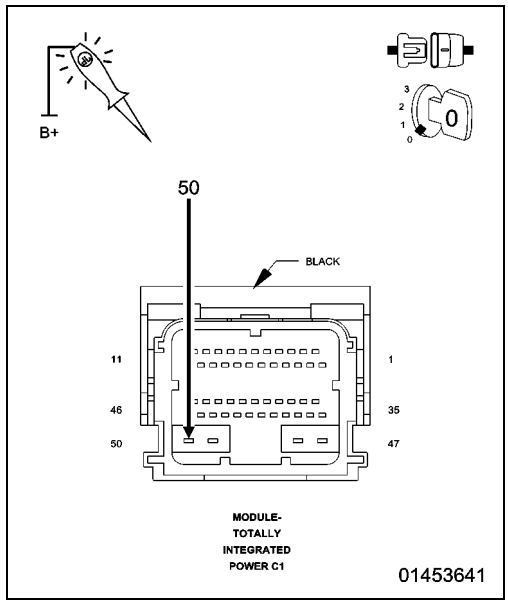

3. (C3) A/C CLUTCH CONTROL OUTPUT CIRCUIT SHORTED TO GROUND

1. Turn the ignition off
2. Measure the resistance between ground and the (C3) A/C Clutch Control Output circuit at the A/C Compressor Clutch harness connector.

Is the resistance below 100 Ohms?

Yes

- Repair the short to ground in the (C3) A/C Clutch Control Output circuit.
- Perform the POWERTRAIN VERIFICATION TEST. (Refer to 28 - DTC-Based Diagnostics/MODULE, Powertrain Control (PCM) - Standard Procedure).

No

- Go To 4

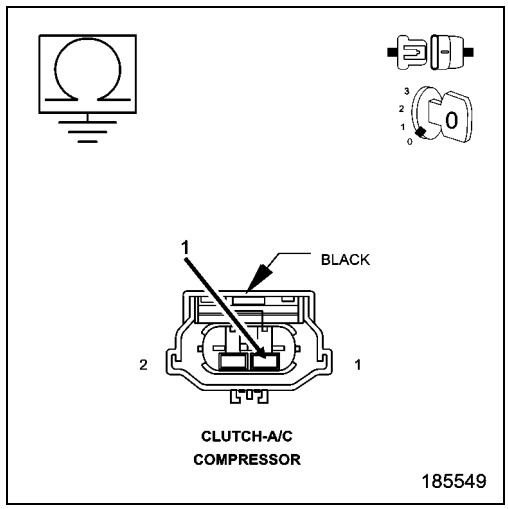

4. A/C COMPRESSOR CLUTCH

1. Connect the C1 TIPM harness connectors.
2. Ignition on, engine not running.
3. With a 12-volt test light connected to ground, probe the (C3) A/C Clutch Control Output circuit at the A/C Compressor Clutch harness connector.
4. Using the scan tool under the TIPM Actuators, actuate the A/C Clutch.

Does the test light illuminate brightly and flash on and off?

Yes

- Replace the A/C Compressor Clutch in accordance with the Service Information.
- Perform the POWERTRAIN VERIFICATION TEST. (Refer to 28 - DTC-Based Diagnostics/MODULE, Powertrain Control (PCM) - Standard Procedure).

No

- Go To 5

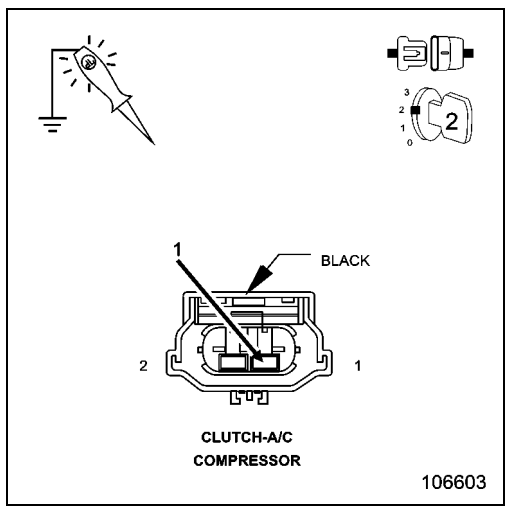

5. TOTALLY INTEGRATED POWER MODULE (TIPM)

1. Using the wiring diagram/schematic as a guide, inspect the wiring and connectors between the A/C Clutch, TIPM and the Powertrain Control Module (PCM).
2. Look for any chafed, pierced, pinched or partially broken wires.
3. Look for broken, bent, pushed out or corroded terminals. Verify that there is good pin to terminal contact in the A/C Clutch, TIPM and Powertrain Control Module connectors.
4. Refer to any Technical Service Bulletins that may apply.

Were there any problems found?

Yes

- Repair as necessary.
- Perform the POWERTRAIN VERIFICATION TEST. (Refer to 28 - DTC-Based Diagnostics/MODULE, Powertrain Control (PCM) - Standard Procedure).

No

- Replace the Totally Integrated Power Module in accordance with the Service Information.
- Perform the BODY VERIFICATION TEST. (Refer to 28 - DTC-Based Diagnostics/MODULE, Totally Integrated Power (TIPM) - Standard Procedure).

P1273-A/C CLUTCH CONTROL CIRCUIT 2 HIGH

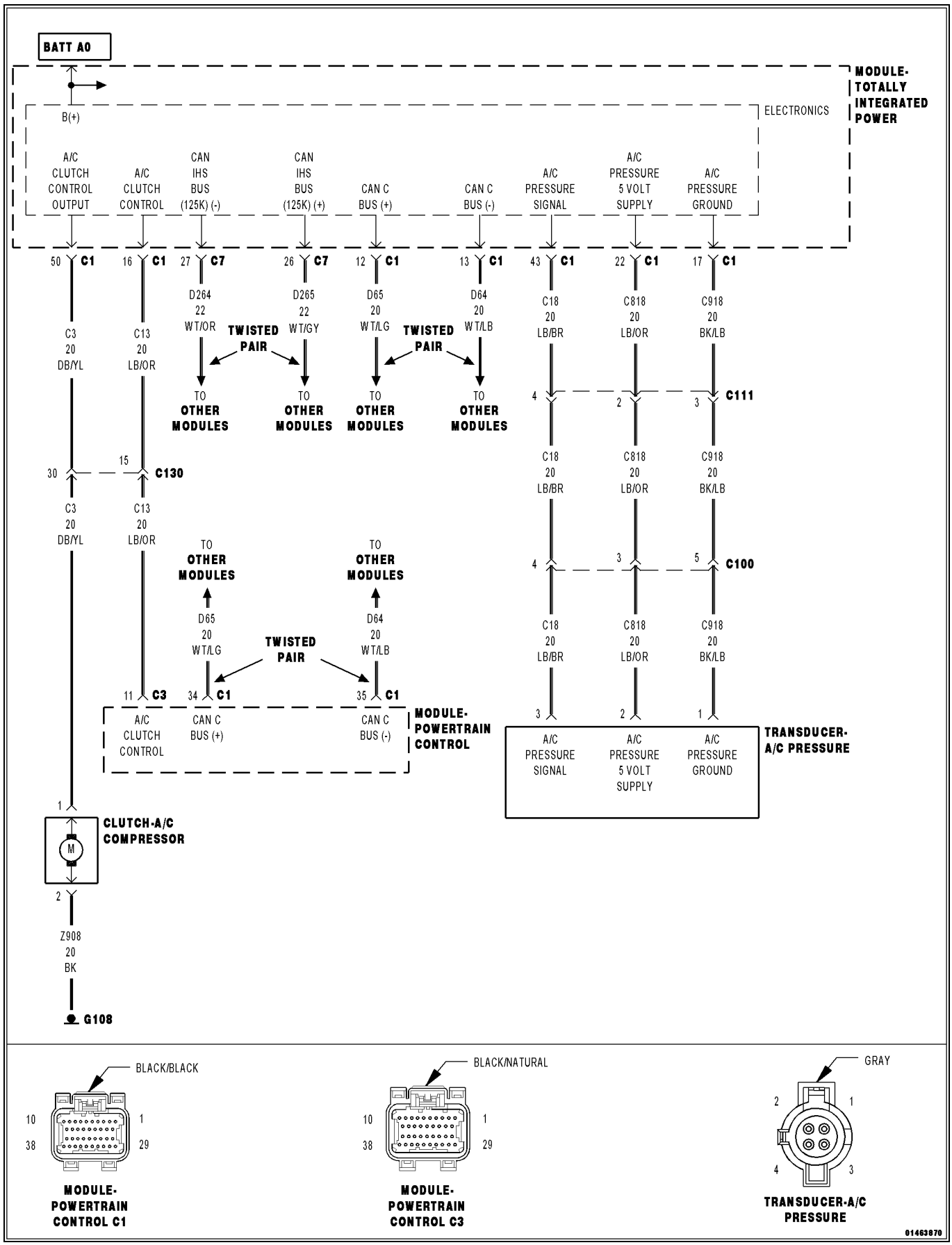

For a complete wiring diagram, **refer to the Wiring Information**.

- **When Monitored:**
  With the ignition on. Battery voltage greater than 10 Volts. A/C Switch on.
- **Set Condition:**
  A shorted high condition has been detected in the A/C Clutch Control output circuit by the TIPM. One Trip Fault. Three good trips to turn off the MIL.

Possible Causes
(C3) A/C CLUTCH CONTROL OUTPUT CIRCUIT SHORTED TO VOLTAGE
EXCESSIVE RESISTANCE IN THE (Z908) A/C CLUTCH GROUND CIRCUIT
A/C COMPRESSOR CLUTCH
TOTALLY INTEGRATED POWER MODULE (TIPM)

Always perform the Pre-Diagnostic Troubleshooting procedure before proceeding. (Refer to 28 - DTC-Based Diagnostics/MODULE, Powertrain Control (PCM) - Standard Procedure).

1. ACTIVE DTC

1. Start the engine.
2. Allow the engine to reach normal operating temperature.
3. Turn the A/C on.
4. With the scan tool, select View DTCs.

Is the DTC Active at this time?

Yes

- Go To 2

No

- Perform the INTERMITTENT CONDITION Diagnostic Procedure. (Refer to 28 - DTC-Based Diagnostics/MODULE, Powertrain Control (PCM) - Standard Procedure).

2. A/C CLUTCH CONTROL OPERATION FROM THE PCM

1. Turn the ignition off.
2. Disconnect the C1 TIPM harness connector.
3. Ignition on, engine not running.
4. Using the scan tool under the PCM Actuators, actuate the A/C Clutch.
5. With a 12-volt test light connected to B+, probe the (C13) A/C Clutch Control circuit in the TIPM C1 harness connector.

Does the test light illuminate brightly and flash on an off?

Yes

- Go To 3

No

- Perform the Diagnostic Procedure for P0645-A/C CLUTCH CONTROL CIRCUIT (Refer to 28 - DTC-Based Diagnostics/MODULE, Powertrain Control (PCM) - Diagnosis and Testing).

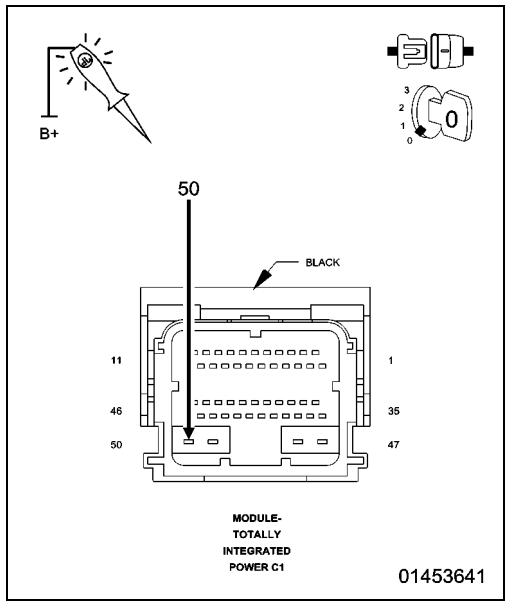

3. (C3) A/C CLUTCH CONTROL OUTPUT CIRCUIT SHORTED TO VOLTAGE

1. Turn the ignition off.
2. Disconnect the C1 TIPM harness connector.
3. Disconnect the A/C Compressor Clutch harness connector.
4. Ignition on, engine not running.
5. Measure the voltage on the (C3) A/C Clutch Control Output circuit at the A/C Compressor Clutch harness connector.

Is there any voltage present?

Yes

- Repair the short to battery voltage in the (C3) A/C Clutch Control Output circuit.
- Perform the POWERTRAIN VERIFICATION TEST. (Refer to 28 - DTC-Based Diagnostics/MODULE, Powertrain Control (PCM) - Standard Procedure).

No

- Go To 4

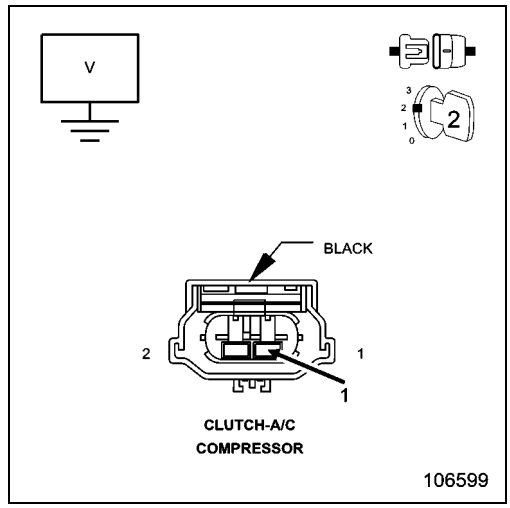

4. A/C CLUTCH GROUND CIRCUIT OPEN

1. Turn the ignition off.
2. Connect the C1 and C1 TIPM harness connectors.
3. Using a 12-volt test light connected to 12-volts, probe the (Z908) A/C Clutch ground circuit at the A/C Compressor Clutch harness connector.

Does the test light illuminate brightly?

Yes

- Go To 5

No

- Repair the excessive resistance in the (Z908) A/C Clutch ground circuit.
- Perform the POWERTRAIN VERIFICATION TEST. (Refer to 28 - DTC-Based Diagnostics/MODULE, Powertrain Control (PCM) - Standard Procedure).

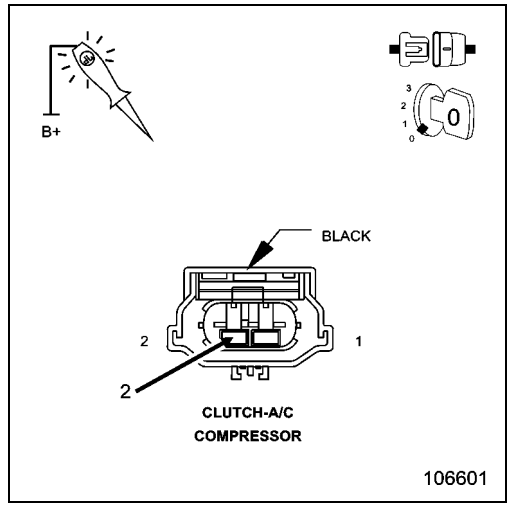

5. A/C COMPRESSOR CLUTCH

1. Ignition on, engine not running.
2. With a 12-volt test light connected to ground, probe the (C3) A/C Clutch Control Output circuit at the A/C Compressor Clutch harness connector.
3. Using the scan tool under the TIPM Actuators, actuate the A/C Clutch.

Does the test light illuminate brightly and flash on and off?

Yes

- Replace the A/C Compressor Clutch in accordance with the Service Information.
- Perform the POWERTRAIN VERIFICATION TEST. (Refer to 28 - DTC-Based Diagnostics/MODULE, Powertrain Control (PCM) - Standard Procedure).

No

- Go To 6

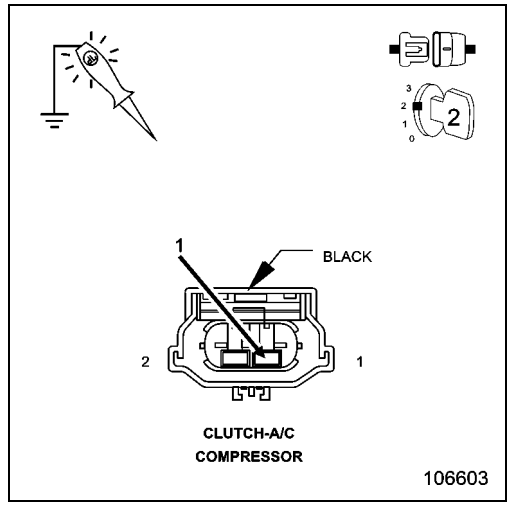

6. TOTALLY INTEGRATED POWER MODULE (TIPM)

1. Using the wiring diagram/schematic as a guide, inspect the wiring and connectors between the A/C Clutch, TIPM and the Powertrain Control Module (PCM).
2. Look for any chafed, pierced, pinched or partially broken wires.
3. Look for broken, bent, pushed out or corroded terminals. Verify that there is good pin to terminal contact in the A/C Clutch, TIPM and Powertrain Control Module connectors.
4. Refer to any Technical Service Bulletins that may apply.

Were there any problems found?

Yes

- Repair as necessary.
- Perform the POWERTRAIN VERIFICATION TEST. (Refer to 28 - DTC-Based Diagnostics/MODULE, Powertrain Control (PCM) - Standard Procedure).

No

- Replace the Totally Integrated Power Module in accordance with the Service Information.
- Perform the BODY VERIFICATION TEST. (Refer to 28 - DTC-Based Diagnostics/MODULE, Totally Integrated Power (TIPM) - Standard Procedure).

P127C-FUEL PUMP CONTROL CIRCUIT 2 LOW - NGC

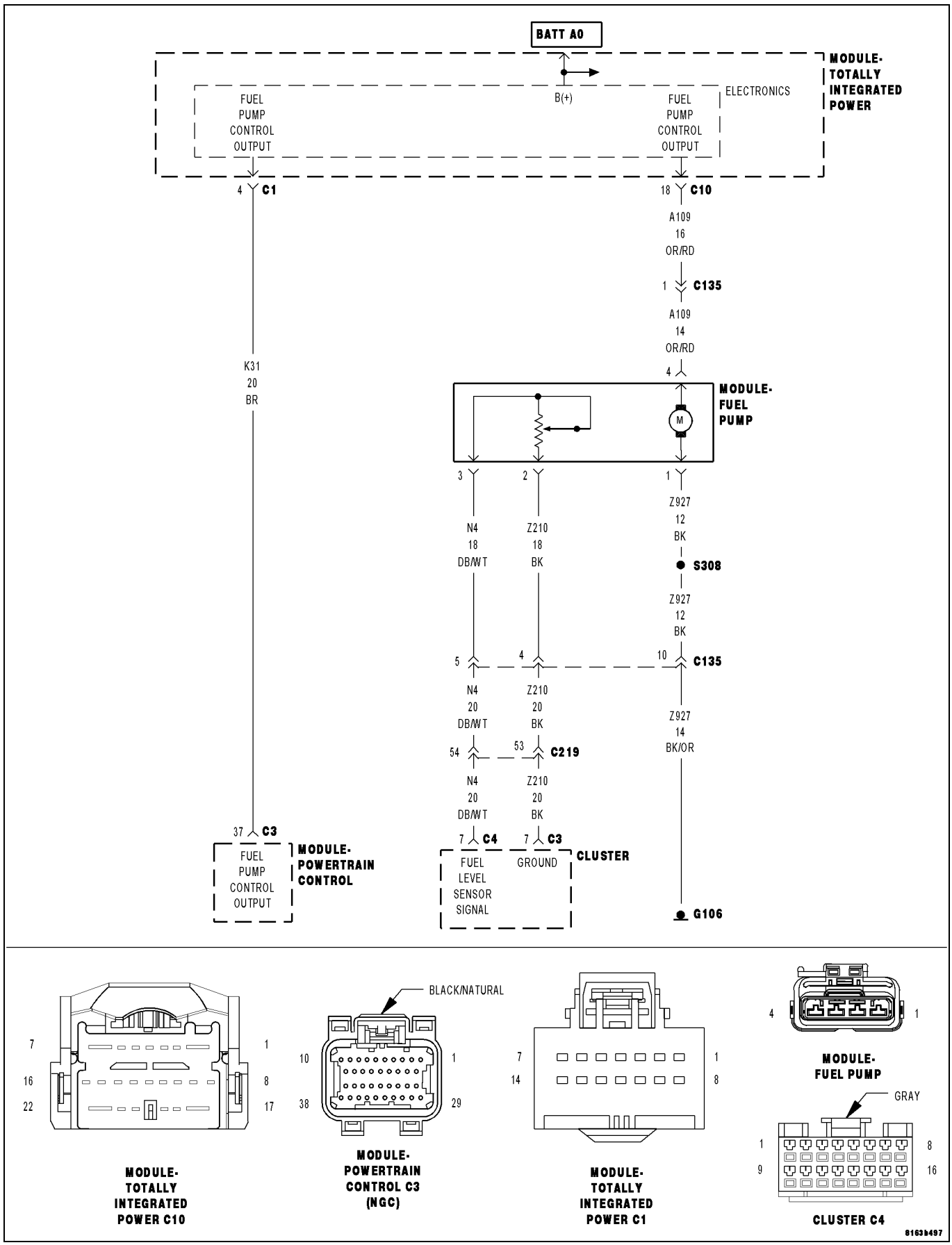

For a complete wiring diagram, **refer to the Wiring Information**.

- **When Monitored:**
  With the ignition on. Battery voltage greater than 10.4 volts.
- **Set Condition:**
  A shorted low condition in the Fuel Pump Control circuit has been detected by the Totally Integrated Power Module (TIPM). One Trip Fault. Three good trips to turn off the MIL.

Possible Causes
(K31) FUEL PUMP CONTROL CIRCUIT SHORTED TO GROUND
FUEL PUMP
TOTALLY INTEGRATED POWER MODULE (TIPM)

Always perform the Pre-Diagnostic Troubleshooting procedure before proceeding. (Refer to 28 - DTC-Based Diagnostics/MODULE, Powertrain Control (PCM) - Standard Procedure).

1. ACTIVE DTC

1. Ignition on, engine not running.
2. With a scan tool, select View DTCs.

Is the DTC Active at this time?

Yes

- Go To 2

No

- Perform the INTERMITTENT CONDITION diagnostic procedure. (Refer to 28 - DTC-Based Diagnostics/MODULE, Powertrain Control (PCM) - Standard Procedure).

2. FUEL PUMP CONTROL OPERATION FROM THE PCM

1. Turn the ignition off.
2. Disconnect the C1 TIPM harness connector.
3. Ignition on, engine not running.
4. With a 12-volt test light connected to 12-volts, probe the (K31) Fuel Pump Control circuit in the C1 TIPM harness connector.
5. Using the scan tool under the PCM Actuators, actuate the Fuel Pump.

Does the test light illuminate brightly and flash on an off?

Yes

- Go To 3

No

- Perform the diagnostic procedure for P0627-FUEL PUMP CONTROL CIRCUIT. (Refer to 28 - DTC-Based Diagnostics/MODULE, Powertrain Control (PCM) - Diagnosis and Testing).

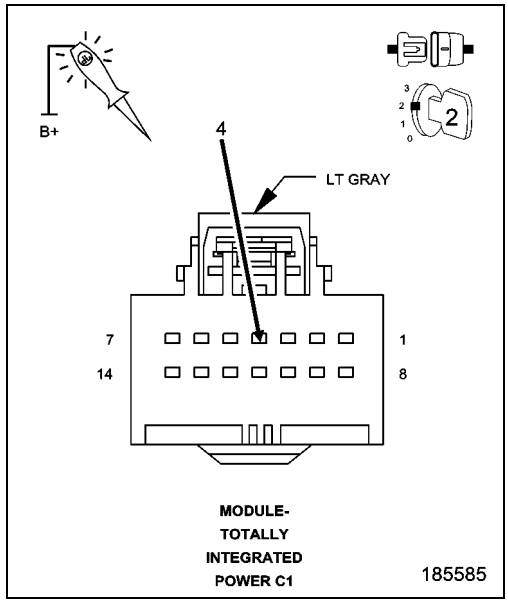

3. (A109) FUEL PUMP CONTROL OUTPUT CIRCUIT SHORTED TO GROUND

1. Turn the ignition off
2. Disconnect the C10 TIPM harness connector.
3. Disconnect the Fuel Pump Module harness connector.
4. Measure the resistance between ground and the (A109) Fuel Pump Control Output circuit at the Fuel Pump Module harness connector.

Is the resistance below 100 Ohms?

Yes

- Repair the short to ground in the (A109) Fuel Pump Control Output circuit.
- Perform the POWERTRAIN VERIFICATION TEST. (Refer to 28 - DTC-Based Diagnostics/MODULE, Powertrain Control (PCM) - Standard Procedure).

No

- Go To 4

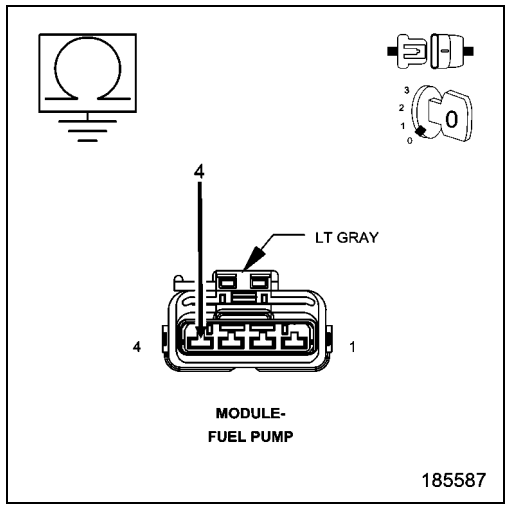

4. FUEL PUMP MODULE

1. Connect the C1 and C10 TIPM harness connectors.
2. Ignition on, engine not running.
3. Using the scan tool under the TIPM Actuators, actuate the Fuel Pump.
4. With a 12-volt test light connected to ground, probe the (A109) Fuel Pump Control Output circuit at the Fuel Pump Module harness connector.

Does the test light illuminate brightly and flash on and off?

Yes

- Replace the Fuel Pump Module in accordance with the Service Information.
- Perform the POWERTRAIN VERIFICATION TEST. (Refer to 28 - DTC-Based Diagnostics/MODULE, Powertrain Control (PCM) - Standard Procedure).

No

- Go To 5

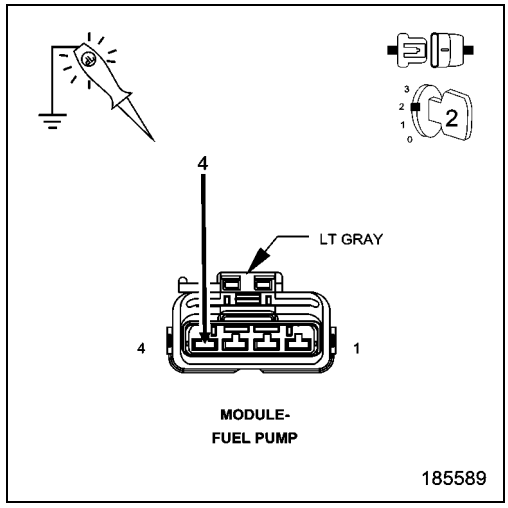

5. TOTALLY INTEGRATED POWER MODULE (TIPM)

1. Using the wiring diagram/schematic as a guide, inspect the wiring and connectors between the Fuel Pump Module, TIPM, and the Powertrain Control Module (PCM).
2. Look for any chafed, pierced, pinched, or partially broken wires.
3. Look for broken, bent, pushed out or corroded terminals. Verify that there is good pin to terminal contact in the Fuel Pump Module, TIPM, and Powertrain Control Module connectors.
4. Refer to any Technical Service Bulletins that may apply.

Were there any problems found?

Yes

- Repair as necessary.
- Perform the BODY VERIFICATION TEST. (Refer to 28 - DTC-Based Diagnostics/MODULE, Totally Integrated Power (TIPM) - Standard Procedure).

No

- Replace the Totally Integrated Power Module in accordance with the Service Information.
- Perform the BODY VERIFICATION TEST. (Refer to 28 - DTC-Based Diagnostics/MODULE, Totally Integrated Power (TIPM) - Standard Procedure).

P127E-FUEL PUMP CONTROL CIRCUIT 2 OPEN - NGC

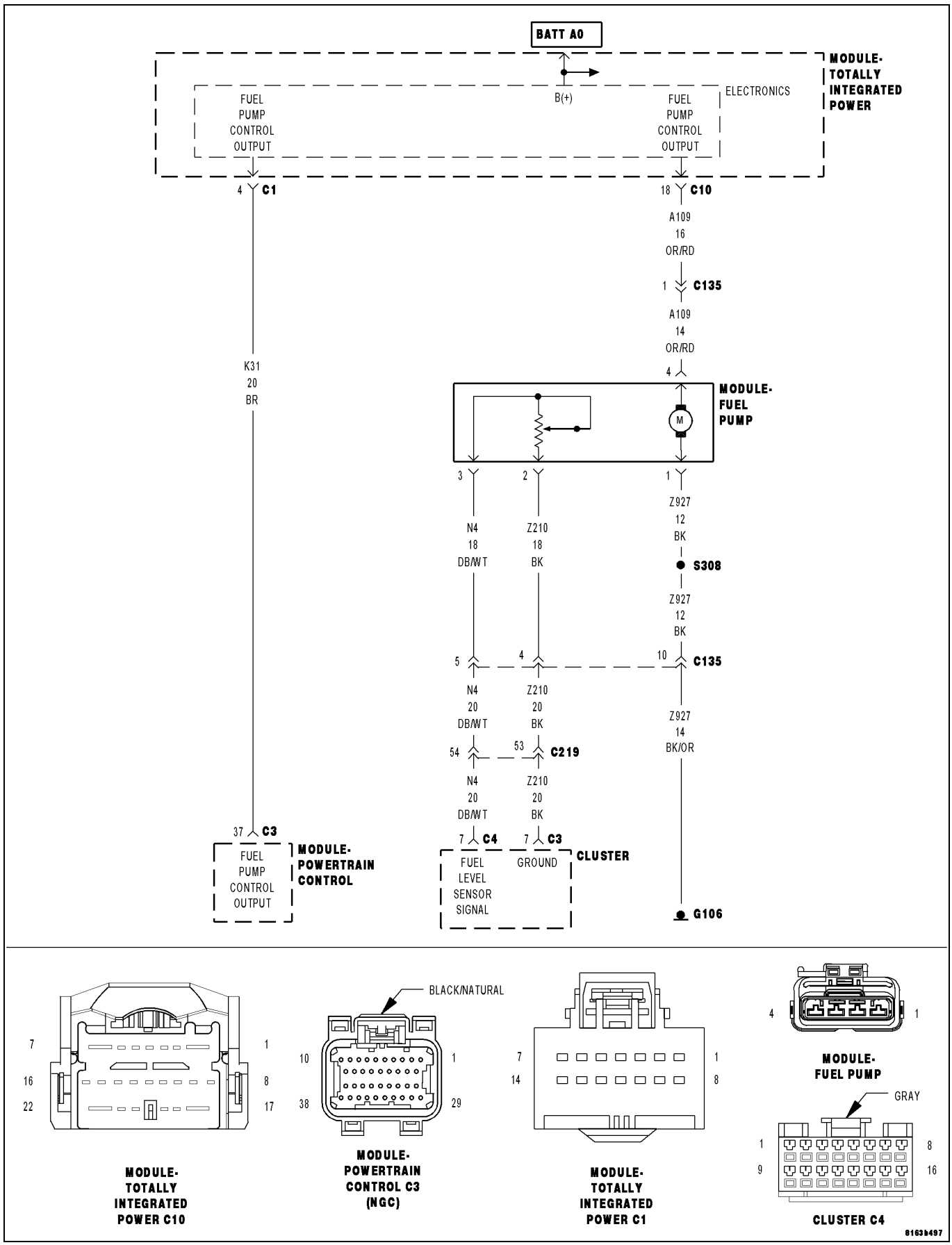

For a complete wiring diagram, **refer to the Wiring Information**.

- **When Monitored:**

  With the ignition on. Battery voltage greater than 10.4 volts. Totally Integrated Power Module (TIPM) requesting Fuel Pump operation.

- **Set Condition:**

  An open condition has been detected in the Fuel Pump Control circuit by the Totally Integrated Power Module (TIPM). One Trip Fault. Three good trips to turn off the MIL.

Possible Causes
(A109) FUEL PUMP CONTROL OUTPUT CIRCUIT OPEN
FUEL PUMP
TOTALLY INTEGRATED POWER MODULE (TIPM)

Always perform the Pre-Diagnostic Troubleshooting procedure before proceeding. (Refer to 28 - DTC-Based Diagnostics/MODULE, Powertrain Control (PCM) - Standard Procedure).

1. ACTIVE DTC

1. Ignition on, engine not running.
2. With a scan tool, select View DTCs.

Is the DTC Active at this time?

Yes

- Go To 2

No

- Perform the INTERMITTENT CONDITION diagnostic procedure. (Refer to 28 - DTC-Based Diagnostics/MODULE, Powertrain Control (PCM) - Standard Procedure).

2. FUEL PUMP CONTROL OPERATION FROM THE PCM

1. Turn the ignition off.
2. Disconnect the C1 TIPM harness connector.
3. Ignition on, engine not running.
4. With a 12-volt test light connected to 12-volts, probe the (K31) Fuel Pump Control circuit in the C1 TIPM harness connector.
5. Using the scan tool under the PCM Actuators, actuate the Fuel Pump.

Does the test light illuminate brightly and flash on an off?

Yes

- Go To 3

No

- Perform the diagnostic procedure for P0627-FUEL PUMP CONTROL CIRCUIT. (Refer to 28 - DTC-Based Diagnostics/MODULE, Powertrain Control (PCM) - Diagnosis and Testing).

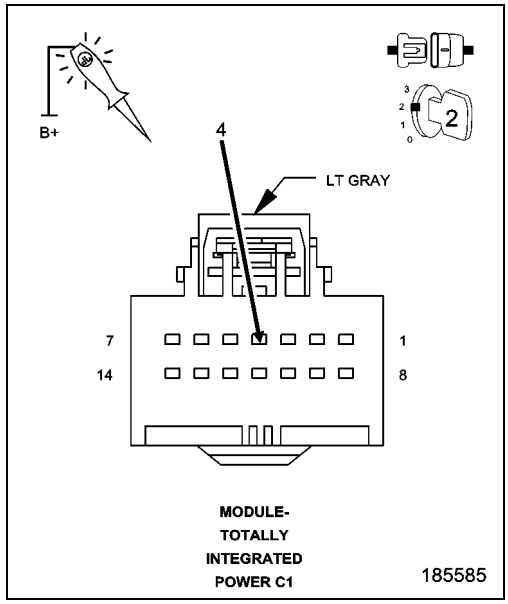

3. (A109) FUEL PUMP CONTROL OUTPUT CIRCUIT OPEN

1. Turn the ignition off
2. Disconnect the C10 TIPM harness connector.
3. Disconnect the Fuel Pump Module harness connector.
4. Measure the resistance of the (A109) Fuel Pump Control Output circuit between the C10 TIPM harness connector and the Fuel Pump Module harness connector.

Is the resistance below 5.0 Ohms?

Yes

- Go To 4

No

- Repair the open in the (A109) Fuel Pump Control Output circuit.
- Perform the POWERTRAIN VERIFICATION TEST. (Refer to 28 - DTC-Based Diagnostics/MODULE, Powertrain Control (PCM) - Standard Procedure).

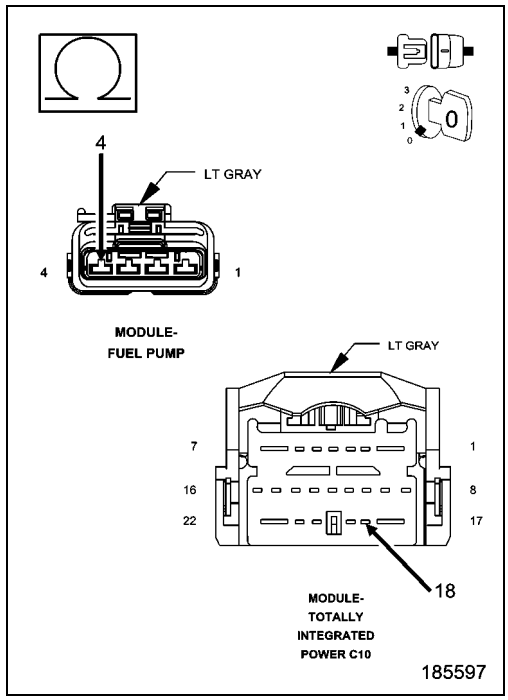

4. FUEL PUMP MODULE

1. Connect the C1 and C10 TIPM harness connectors.
2. Ignition on, engine not running.
3. Using the scan tool under the TIPM Actuators, actuate the Fuel Pump.
4. With a 12-volt test light connected to ground, probe the (A109) Fuel Pump Control Output circuit at the Fuel Pump Module harness connector.

Does the test light illuminate brightly and flash on and off?

Yes

- Replace the Fuel Pump Module in accordance with the Service Information.
- Perform the POWERTRAIN VERIFICATION TEST. (Refer to 28 - DTC-Based Diagnostics/MODULE, Powertrain Control (PCM) - Standard Procedure).

No

- Go To 5

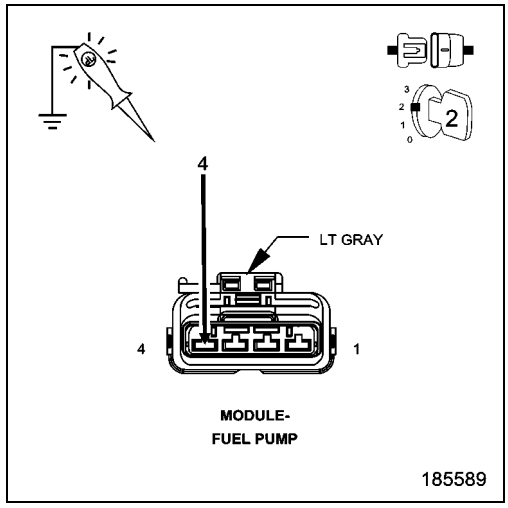

5. TOTALLY INTEGRATED POWER MODULE (TIPM)

1. Using the wiring diagram/schematic as a guide, inspect the wiring and connectors between the Fuel Pump Module, TIPM, and the Powertrain Control Module (PCM).
2. Look for any chafed, pierced, pinched or partially broken wires.
3. Look for broken, bent, pushed out or corroded terminals. Verify that there is good pin to terminal contact in the Fuel Pump Module, TIPM, and Powertrain Control Module connectors.
4. Refer to any Technical Service Bulletins that may apply.

Were there any problems found?

Yes

- Repair as necessary.
- Perform the POWERTRAIN VERIFICATION TEST. (Refer to 28 - DTC-Based Diagnostics/MODULE, Powertrain Control (PCM) - Standard Procedure).

No

- Replace the Totally Integrated Power Module (TIPM) in accordance with the Service Information.
- Perform the BODY VERIFICATION TEST. (Refer to 28 - DTC-Based Diagnostics/MODULE, Totally Integrated Power (TIPM) - Standard Procedure).

P128B-TCM POWER CONTROL CIRCUIT 2 LOW - 42RLE

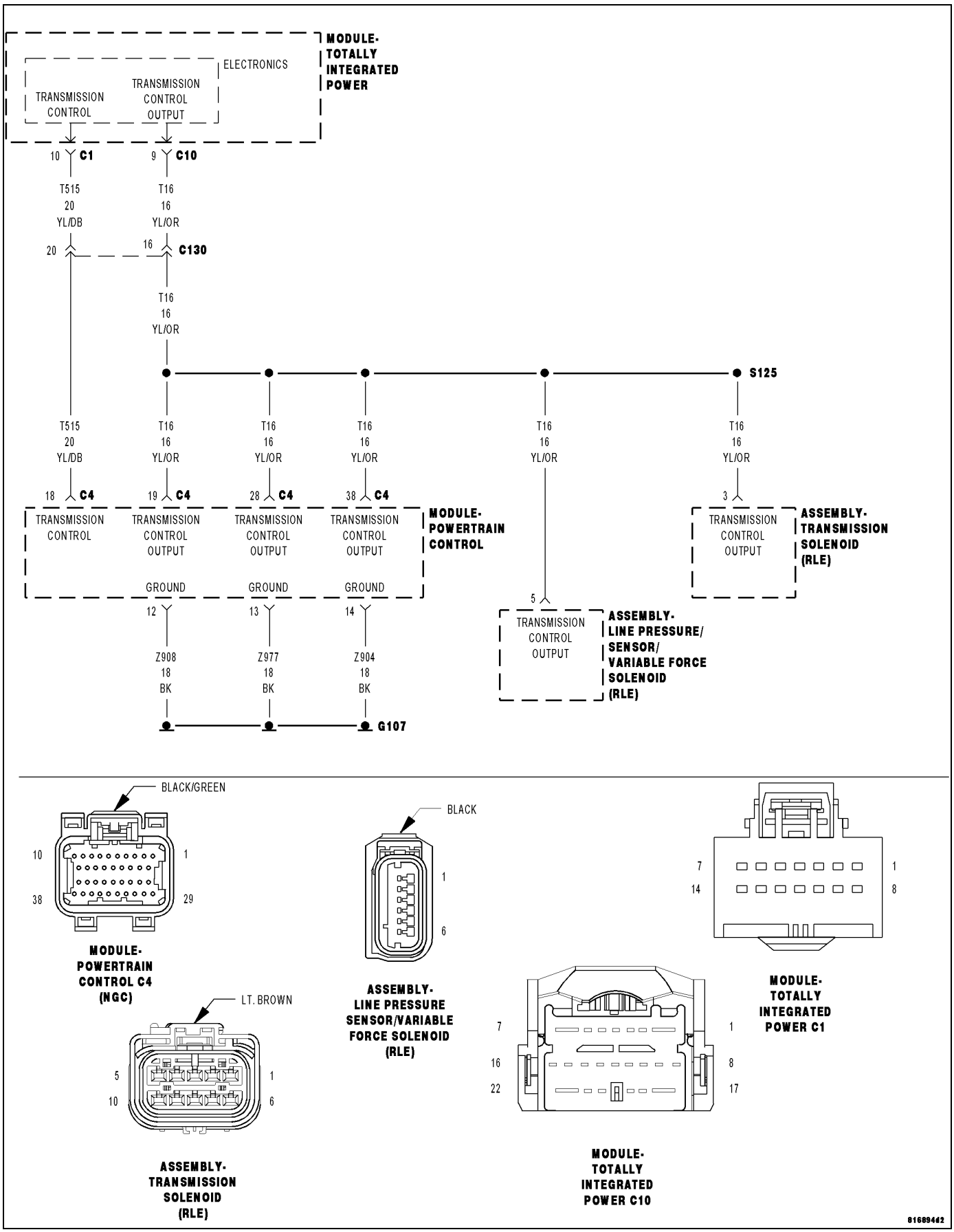

For a complete wiring diagram, **refer to the Wiring Information**.

- **When Monitored:**
  With the ignition on with battery voltage greater than 10.0 volts.
- **Set Condition:**
  A shorted condition is detected in the Transmission Control Output circuit.

Possible Causes
(T16) TRANSMISSION CONTROL OUTPUT CIRCUIT SHORT TO GROUND
(T16) TRANSMISSION CONTROL OUTPUT CIRCUIT FOR AN OPEN
TOTALLY INTEGRATED POWER MODULE (TIPM)

1. CHECK IF THE DTC IS ACTIVE

1. Ignition on, engine not running.
2. With the scan tool, check TIPM DTCs.

Is the status Active for this DTC?

Yes

- Go to 2

No

- Go to 5

2. CHECK THE (T16) TRANSMISSION CONTROL OUTPUT CIRCUIT SHORT TO GROUND

1. Turn the ignition off
2. Disconnect the TIPM C10 harness connector.
3. Disconnect the PCM C4 harness connector and install Miller tool #8815A.

CAUTION: Do not probe the PCM harness connectors. Probing the PCM harness connectors will damage the PCM terminals resulting in poor terminal to pin connection. Install the Kit, NGC, 38 Position 8815A to perform diagnosis.

4. Measure the resistance between ground and the (T16) Transmission Control Output circuit.

Is the resistance below 5.0 ohms?

Yes

- Repair the (T16) Transmission Control Output circuit for a short to ground.
- Perform 42RLE TRANSMISSION VERIFICATION TEST. (Refer to 28 - DTC-Based Diagnostics/MODULE, Powertrain Control (PCM) - Standard Procedure)

No

- Go to 3

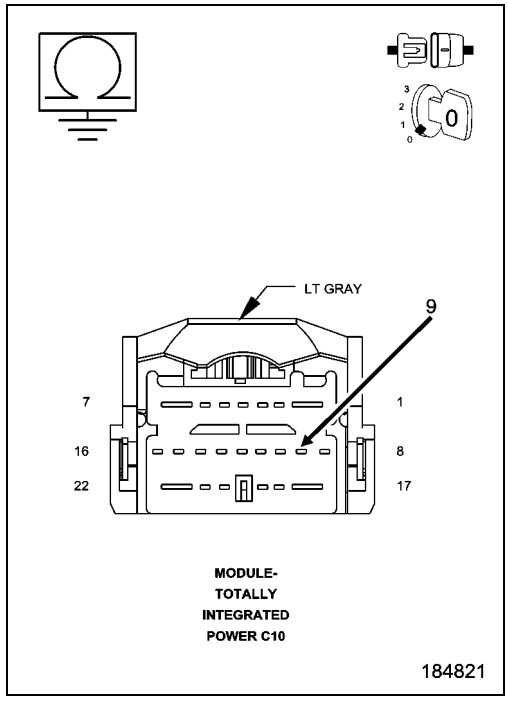

3. CHECK THE (T16) TRANSMISSION CONTROL OUTPUT CIRCUIT FOR AN OPEN

1. Turn the ignition off to the lock position.
2. Reconnect the TIPM C10 harness connector.
3. Disconnect the Transmission Solenoid/Pressure Switch harness connector.
4. Disconnect the Line Pressure Sensor/Variable Force Solenoid harness connector (if equipped).
5. Ignition on, engine not running.
6. Using the scan tool under the TIPM Actuators, actuate the Transmission.
7. Using a 12-volt test light connected to ground, check the (T16) Transmission Control Output circuits.

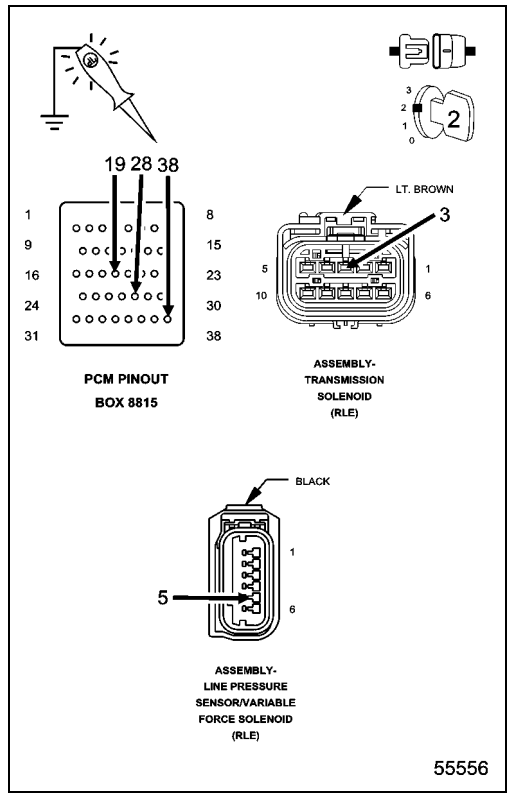

NOTE: The test light must illuminate brightly. Compare the brightness to that of a direct connection to the battery.

Does the test light illuminate brightly at all the (T16) Transmission Control Output circuits?

Yes

- Go to 4

No

- Repair the (T16) Transmission Control Output circuit for an open.
- Perform 42RLE TRANSMISSION VERIFICATION TEST. (Refer to 28 - DTC-Based Diagnostics/MODULE, Powertrain Control (PCM) - Standard Procedure)

4. TOTALLY INTEGRATED POWER MODULE

1. Using the schematics as a guide, inspect the wire harness and connectors.
2. Check the TIPM harness connector terminals for corrosion, damage, or terminal push out.
3. Pay particular attention to all power and ground circuits.

Were any problems found?

Yes

- Repair as necessary.
- Perform 42RLE TRANSMISSION VERIFICATION TEST. (Refer to 28 - DTC-Based Diagnostics/MODULE, Powertrain Control (PCM) - Standard Procedure)

No

- Replace and program the Totally Integrated Power Module per Service Information.
- Perform BODY VERIFICATION TEST. (Refer to 28 - DTC-Based Diagnostics/MODULE, Totally Integrated Power (TIPM) - Standard Procedure)

5. CHECK THE WIRING AND CONNECTORS

1. The conditions necessary to set this DTC are not present at this time.
2. Using the wiring diagram/schematic as a guide, inspect the wiring and connectors.
3. While monitoring the scan tool data relative to this circuit, wiggle test the wiring and connectors.
4. Look for the data to change or for the DTC to reset during the wiggle test.

Were any problems found?

Yes

- Repair as necessary.
- Perform 42RLE TRANSMISSION VERIFICATION TEST. (Refer to 28 - DTC-Based Diagnostics/MODULE, Powertrain Control (PCM) - Standard Procedure)

No

- Test complete.

P128B-TCM POWER CONTROL CIRCUIT 2 LOW - 45/545RFE

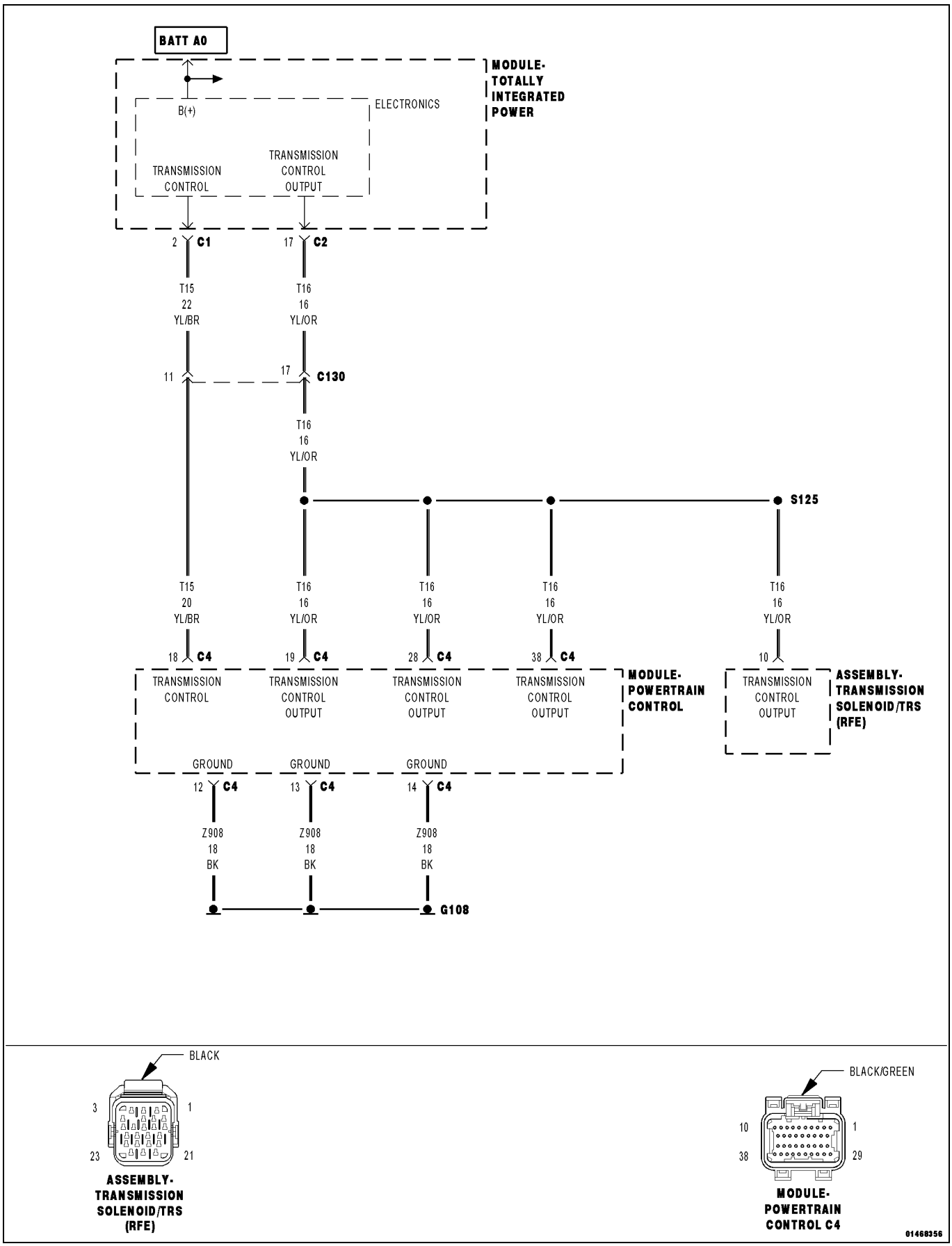

For a complete wiring diagram, **refer to the Wiring Information**.

- **When Monitored:**
  With the ignition on. Battery voltage greater than 10 volts.
- **Set Condition:**
  A shorted condition is detected in the Transmission Control Output circuit.

Possible Causes
(T16) TRANSMISSION CONTROL OUTPUT CIRCUIT SHORT TO GROUND
(T16) TRANSMISSION CONTROL OUTPUT CIRCUIT FOR AN OPEN
TOTALLY INTEGRATED POWER MODULE (TIPM)

1. CHECK IF THE DTC IS ACTIVE

1. Ignition on, engine not running.
2. With the scan tool, check TIPM DTCs.

Is the status Active for this DTC?

Yes

- Go to 2

No

- Go to 4

2. CHECK THE (T16) TRANSMISSION CONTROL OUTPUT CIRCUIT SHORT TO GROUND

1. Turn the ignition off
2. Disconnect the TIPM C2 harness connector.
3. Disconnect the PCM C4 harness connector and install the PCM Pinout Box 8815A.

CAUTION: Do not probe the PCM harness connectors. Probing the PCM harness connectors will damage the PCM terminals resulting in poor terminal to pin connection. Install the Kit, NGC, 38 Position 8815A to perform diagnosis.

4. Measure the resistance between ground and the (T16) Transmission Control Output circuit.

Is the resistance below 5.0Ohms?

Yes

- Repair the (T16) Transmission Control Output circuit for a short to ground.
- Perform 545RFE TRANSMISSION VERIFICATION TEST. (Refer to 28 - DTC-Based Diagnostics/MODULE, Powertrain Control (PCM) - Standard Procedure),

No

- Go to 3

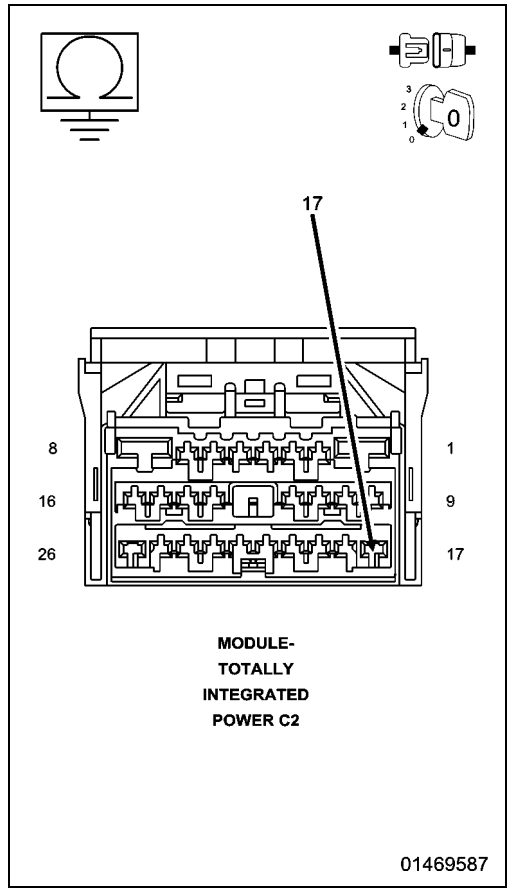

3. CHECK THE (T16) TRANSMISSION CONTROL OUTPUT CIRCUIT FOR AN OPEN

1. Turn the ignition off to the lock position.
2. Reconnect the TIPM C2 harness connector.
3. Disconnect the Transmission Solenoid/Pressure Switch harness connector.
4. Disconnect the Line Pressure Sensor/Variable Force Solenoid harness connector (if equipped).
5. Ignition on, engine not running.
6. Using the scan tool under the TIPM Actuators, actuate the Transmission.
7. Using a 12-volt test light connected to ground, check the (T16) Transmission Control Output circuits.

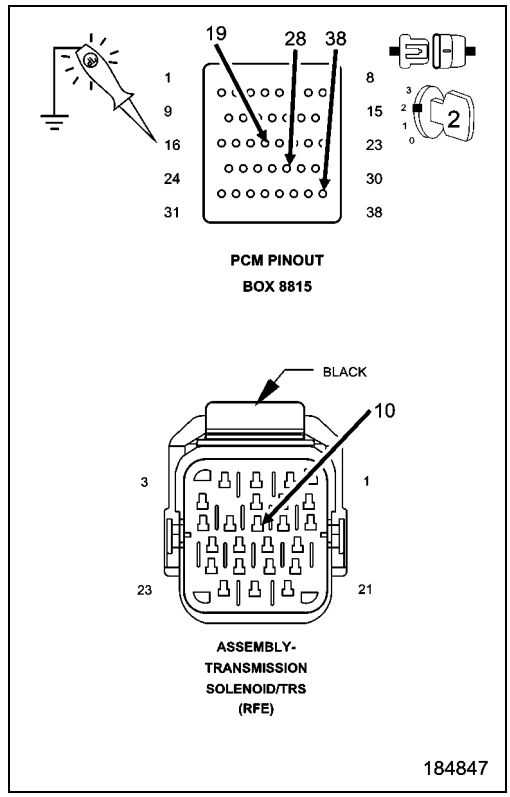

NOTE: The test light must illuminate brightly. Compare the brightness to that of a direct connection to the battery.

Does the test light illuminate brightly at all the (T16) Transmission Control Output circuits?

Yes

- Using the schematics as a guide, inspect the wire Totally Integrated Power Module (TIPM) harness and connector terminals for corrosion, damage, or terminal push out. If no problems are found, replace and program the TIPM per Service Information.
- Perform 545RFE TRANSMISSION VERIFICATION TEST. (Refer to 28 - DTC-Based Diagnostics/MODULE, Powertrain Control (PCM) - Standard Procedure).

No

- Repair the (T16) Transmission Control Output circuit for an open.
- Perform 545RFE TRANSMISSION VERIFICATION TEST. (Refer to 28 - DTC-Based Diagnostics/MODULE, Powertrain Control (PCM) - Standard Procedure).

4. CHECK THE WIRING AND CONNECTORS

1. The conditions necessary to set this DTC are not present at this time.
2. Using the wiring diagram/schematic as a guide, inspect the wiring and connectors.
3. While monitoring the scan tool data relative to this circuit, wiggle test the wiring and connectors.
4. Look for the data to change or for the DTC to reset during the wiggle test.

Were any problems found?

Yes

- Repair as necessary.
- Perform 545RFE TRANSMISSION VERIFICATION TEST. (Refer to 28 - DTC-Based Diagnostics/MODULE, Powertrain Control (PCM) - Standard Procedure).

No

- Test complete.

P128C-TCM POWER CONTROL CIRCUIT 2 HIGH - 42RLE

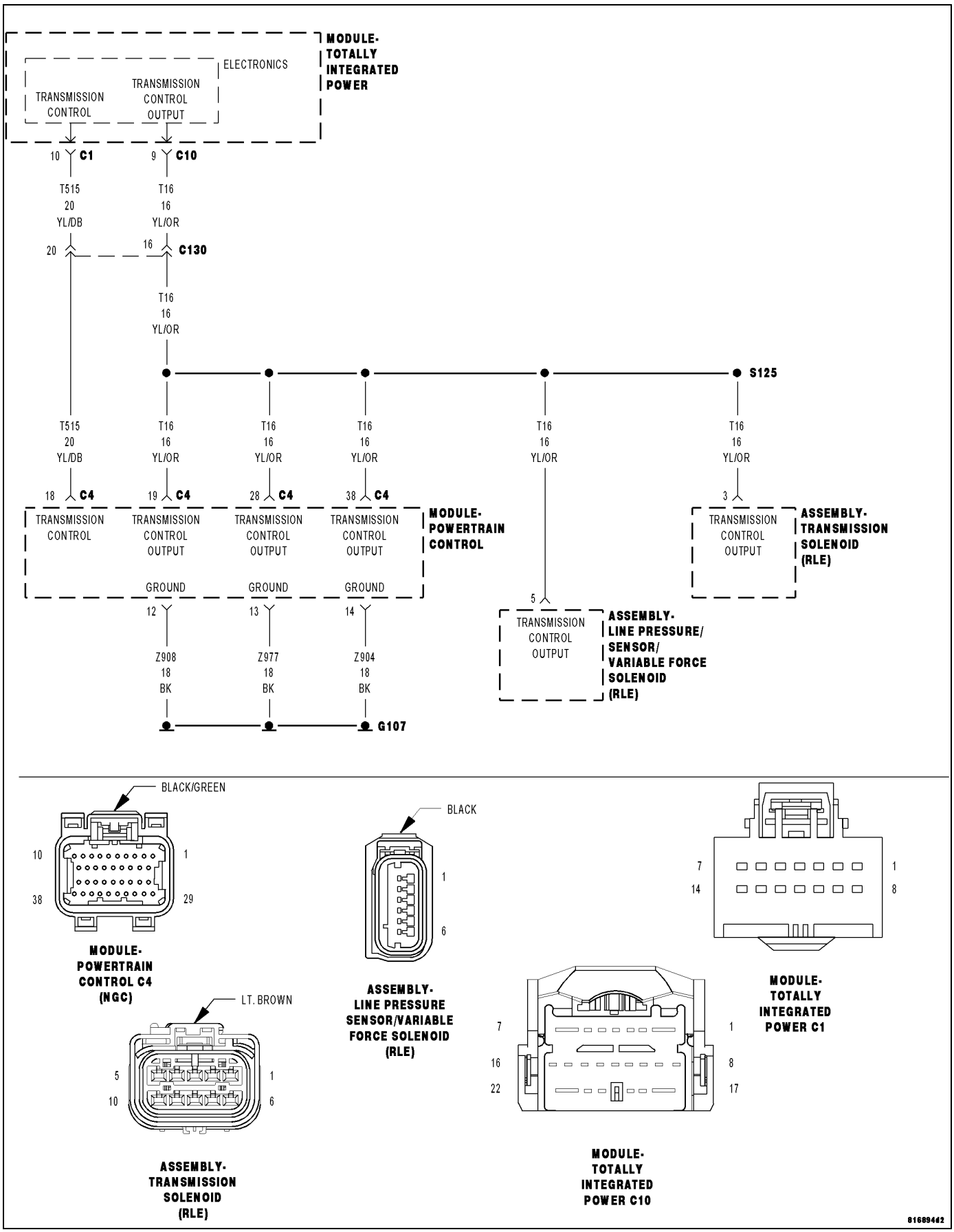

For a complete wiring diagram, **refer to the Wiring Information**.

- **When Monitored:**
  With the ignition on with battery voltage greater than 10.0 volts.
- **Set Condition:**
  A shorted condition is detected in the TIPM TCM Power control circuit.

Possible Causes
(T16) TRANSMISSION CONTROL OUTPUT CIRCUIT SHORT TO VOLTAGE
TOTALLY INTEGRATED POWER MODULE (TIPM)

1. CHECK IF THE DTC IS ACTIVE

1. Ignition on, engine not running.
2. With the scan tool, read TIPM DTCs.

Is the status Active for this DTC?

Yes

- Go to 2

No

- Go to 4

2. (T16) TRANSMISSION CONTROL OUTPUT CIRCUIT SHORT TO VOLTAGE

1. Turn the ignition off
2. Disconnect the TIPM C10 harness connector.
3. Disconnect the PCM C4 harness connector.
4. Measure the voltage of the (T16) Transmission Control Output circuit.

Is the voltage above 10.0 v?

Yes

- Repair the (T16) Transmission Control Output circuit for a short to voltage.
- Perform 42RLE TRANSMISSION VERIFICATION TEST. (Refer to 28 - DTC-Based Diagnostics/MODULE, Powertrain Control (PCM) - Standard Procedure)

No

- Go to 3

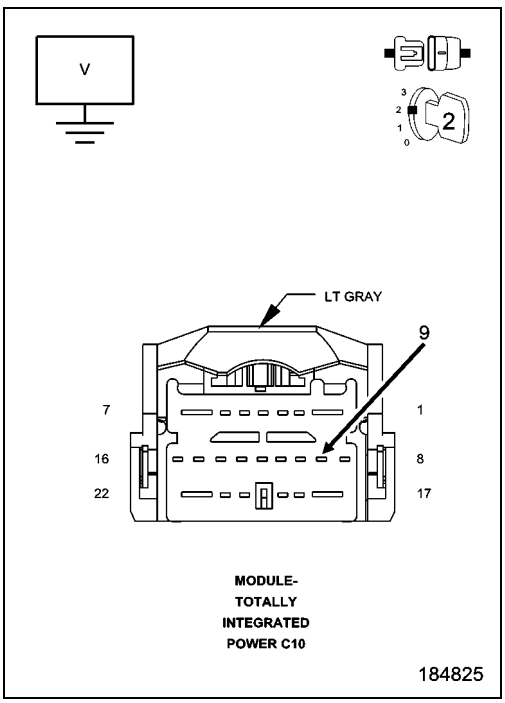

3. TOTALLY INTEGRATED POWER MODULE

1. Using the schematics as a guide, inspect the wire harness and connectors.
2. Check the TIPM harness connector terminals for corrosion, damage, or terminal push out
3. Pay particular attention to all power and ground circuits.

Were any problems found?

Yes

- Repair as necessary.
- Perform 42RLE TRANSMISSION VERIFICATION TEST. (Refer to 28 - DTC-Based Diagnostics/MODULE, Powertrain Control (PCM) - Standard Procedure)

No

- Replace the Totally Integrated Power Module per Service Information.
- Perform BODY VERIFICATION TEST. (Refer to 28 - DTC-Based Diagnostics/MODULE, Totally Integrated Power (TIPM) - Standard Procedure)

4. CHECK THE WIRING AND CONNECTORS

1. The conditions necessary to set this DTC are not present at this time.
2. Using the wiring diagram/schematic as a guide, inspect the wiring and connectors.
3. While monitoring the scan tool data relative to this circuit, wiggle test the wiring and connectors.
4. Look for the data to change or for the DTC to reset during the wiggle test.

Were any problems found?

Yes

- Repair as necessary.
- Perform 42RLE TRANSMISSION VERIFICATION TEST. (Refer to 28 - DTC-Based Diagnostics/MODULE, Powertrain Control (PCM) - Standard Procedure)

No

- Test complete.

P128C-TCM POWER CONTROL CIRCUIT 2 HIGH - 45/545RFE

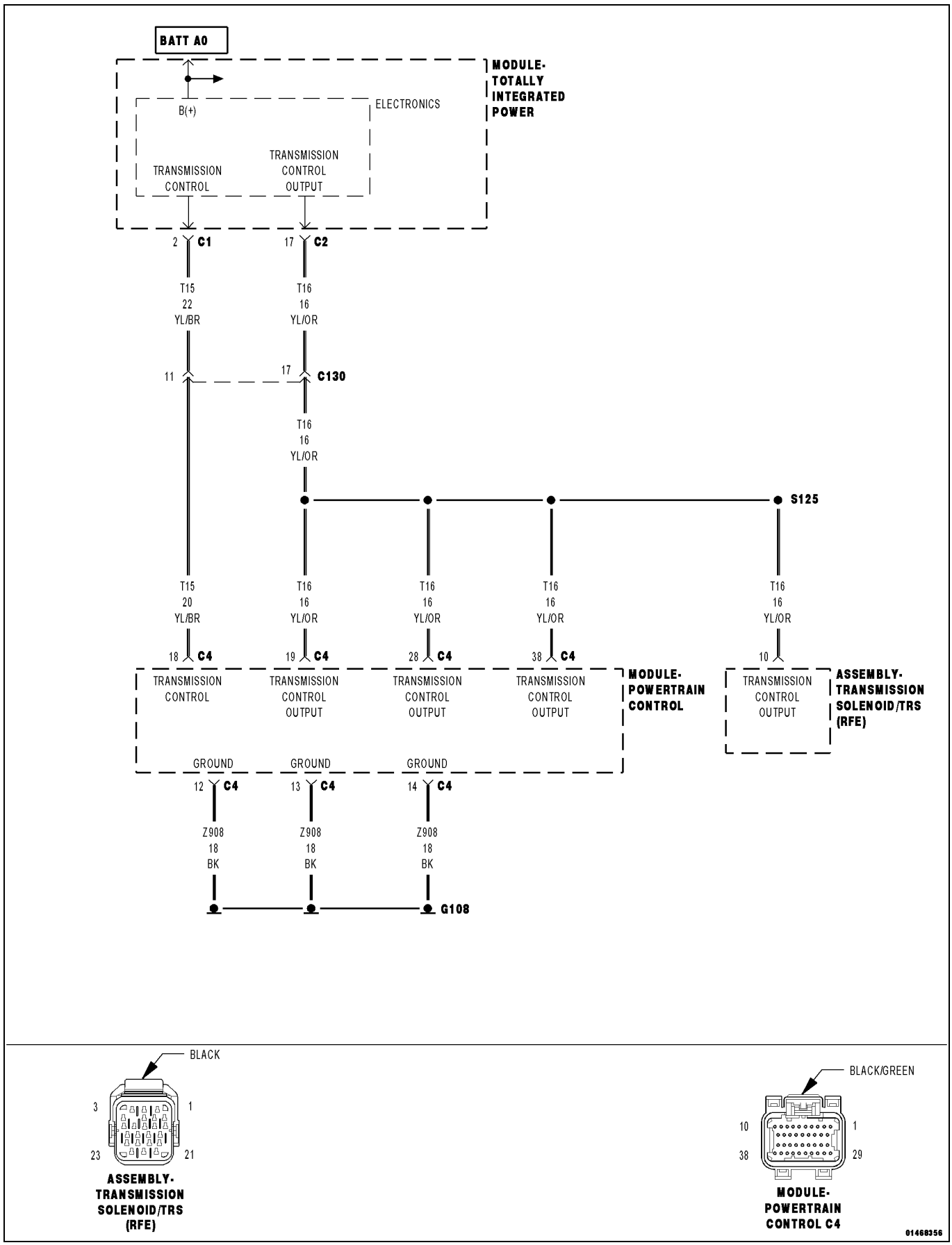

For a complete wiring diagram, **refer to the Wiring Information**.

- **When Monitored:**
  With the ignition on. Battery voltage greater than 10 volts.
- **Set Condition:**
  A shorted condition is detected in the Totally Integrated Power Module (TIPM) Transmission Control Output circuit.

Possible Causes
(T16) TRANSMISSION CONTROL OUTPUT CIRCUIT SHORT TO VOLTAGE
TOTALLY INTEGRATED POWER MODULE (TIPM)

1. CHECK IF THE DTC IS ACTIVE

1. Ignition on, engine not running.
2. With the scan tool, read TIPM DTCs.

Is the status Active for this DTC?

Yes

- Go To 2

No

- Go To 3

2. (T16) TRANSMISSION CONTROL OUTPUT CIRCUIT SHORT TO VOLTAGE

1. Turn the ignition off to the lock position.
2. Disconnect the TIPM C2 harness connector.
3. Disconnect the PCM C4 harness connector.
4. Connect the PCM Pinout Box to the PCM C4 harness connector.
5. Ignition on, engine not running.
6. Measure the voltage of the (T16) Transmission Control Output circuit.

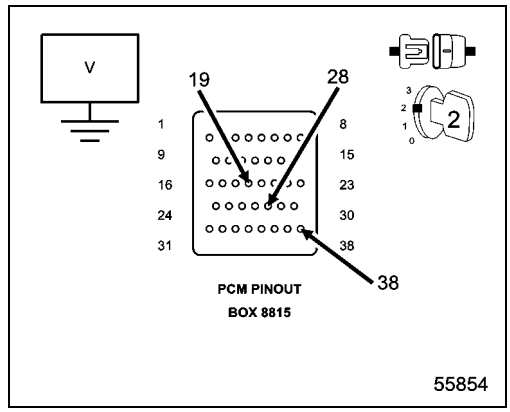

Is the voltage above 10.0 volts?

Yes

- Repair the (T16) Transmission Control Output circuit for a short to voltage.
- Perform 545RFE TRANSMISSION VERIFICATION TEST. (Refer to 28 - DTC-Based Diagnostics/MODULE, Powertrain Control (PCM) - Standard Procedure).

No

- Using the schematics as a guide, inspect the wire Totally Integrated Power Module (TIPM) harness and connector terminals for corrosion, damage, or terminal push out. If no problems are found, replace and program the TIPM per Service Information.
- Perform 545RFE TRANSMISSION VERIFICATION TEST. (Refer to 28 - DTC-Based Diagnostics/MODULE, Powertrain Control (PCM) - Standard Procedure).

3. CHECK THE WIRING AND CONNECTORS

1. The conditions necessary to set this DTC are not present at this time.
2. Using the wiring diagram/schematic as a guide, inspect the wiring and connectors.
3. While monitoring the scan tool data relative to this circuit, wiggle test the wiring and connectors.
4. Look for the data to change or for the DTC to reset during the wiggle test.

Were any problems found?

Yes

- Repair as necessary.
- Perform 545RFE TRANSMISSION VERIFICATION TEST. (Refer to 28 - DTC-Based Diagnostics/MODULE, Powertrain Control (PCM) - Standard Procedure).

No

- Test complete.

P128D-TCM POWER CONTROL CIRCUIT 2 OPEN - 42RLE

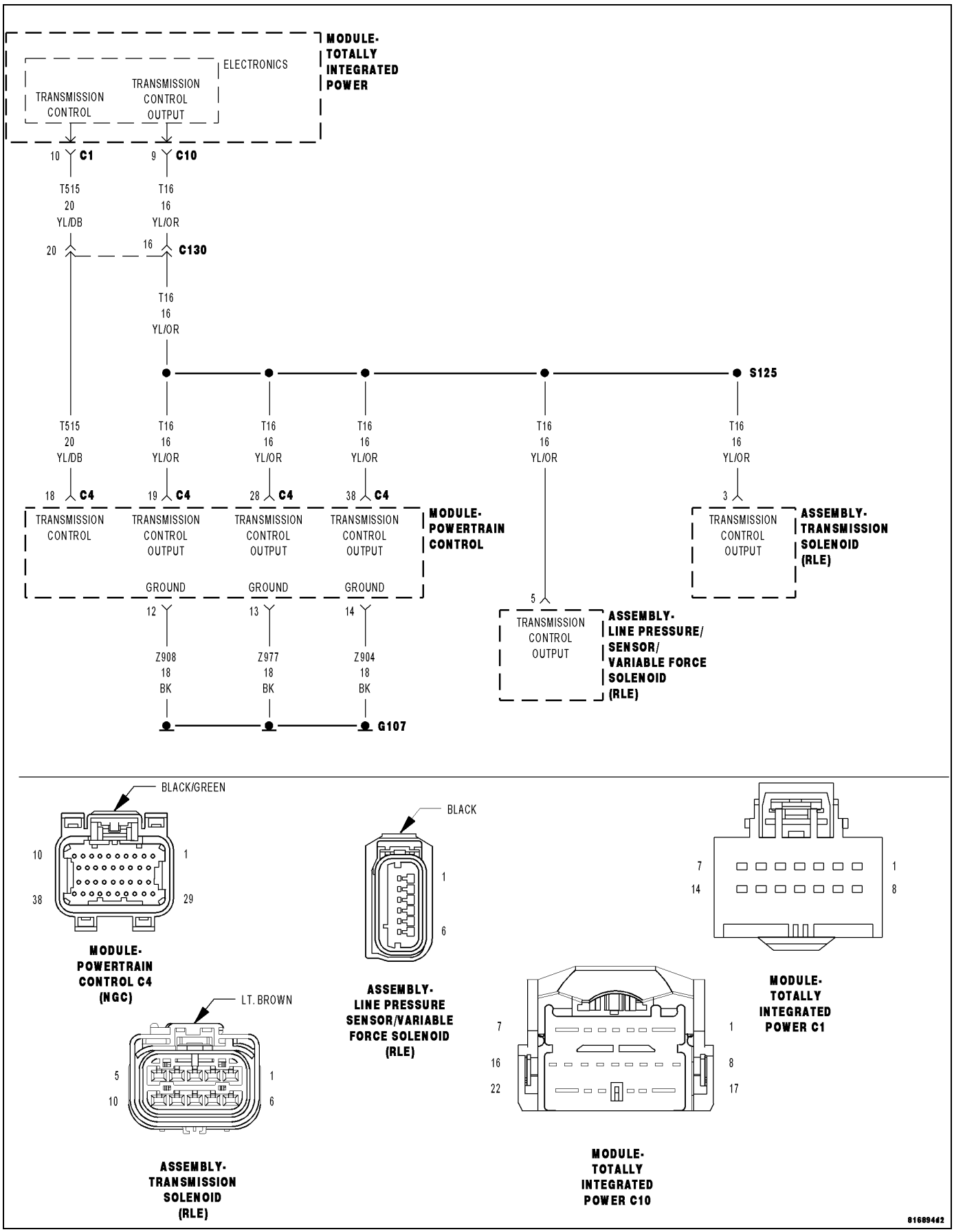

For a complete wiring diagram, **refer to the Wiring Information**.

- **When Monitored:**
  With the ignition on. Battery voltage greater than 10 volts.
- **Set Condition:**
  An open condition of the Transmission Control Output circuit is detected by the Totally Integrated Power Module (TIPM).

Possible Causes
(T16) TRANSMISSION CONTROL OUTPUT CIRCUIT OPEN
TOTALLY INTEGRATED POWER MODULE (TIPM)

1. CHECK IF THE DTC IS ACTIVE

1. Ignition on, engine not running.
2. With the scan tool, select View DTCs.

Is the status Active for this DTC?

Yes

- Go to 2

No

- Go to 4

2. CHECK THE (T16) TRANSMISSION CONTROL OUTPUT CIRCUIT FOR AN OPEN

1. Turn the ignition off to the lock position.
2. Disconnect the PCM C4 harness connector and install Miller tool #8815A.
3. Disconnect the Transmission Solenoid harness connector.
4. Disconnect the Line Pressure Sensor/Variable Force Solenoid harness connector (if equipped).

CAUTION: Do not probe the PCM harness connectors. Probing the PCM harness connectors will damage the PCM terminals resulting in poor terminal to pin connection. Install the Kit, NGC, 38 Position 8815A to perform diagnosis.

5. Ignition on, engine not running.
6. Using the scan tool under the TIPM Actuators, actuate the Transmission.
7. Using a 12-volt test light connected to ground, check the (T16) Transmission Control Output circuits.

NOTE: The test light must illuminate brightly. Compare the brightness to that of a direct connection to the battery.

Does the test light illuminate brightly?

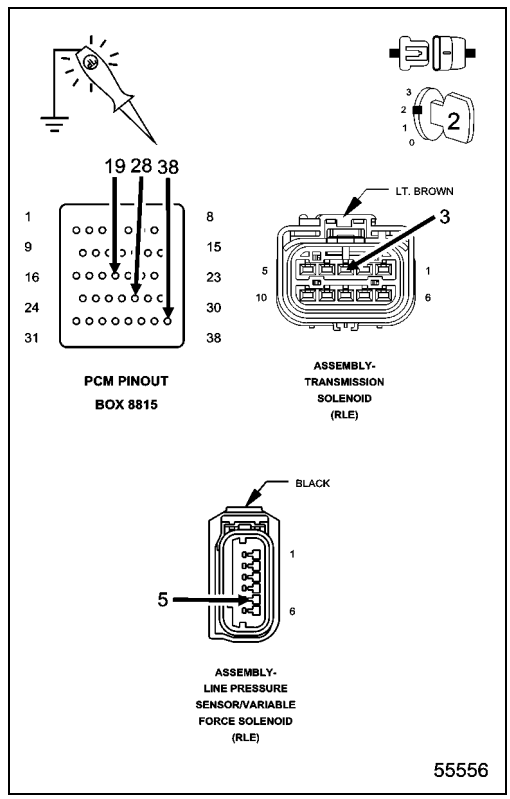

Yes

- Go to 3

No

- Repair the (T16) Transmission Control Output circuit for an open.
- Perform 42RLE TRANSMISSION VERIFICATION TEST. (Refer to 28 - DTC-Based Diagnostics/MODULE, Powertrain Control (PCM) - Standard Procedure)

3. TOTALLY INTEGRATED POWER MODULE

1. Using the schematics as a guide, inspect the wire harness and connectors.
2. Check the TIPM harness connector terminals for corrosion, damage, or terminal push out.
3. Pay particular attention to all power and ground circuits.

Were any problems found?

Yes

- Repair as necessary.
- Perform 42RLE TRANSMISSION VERIFICATION TEST. (Refer to 28 - DTC-Based Diagnostics/MODULE, Powertrain Control (PCM) - Standard Procedure)

No

- Replace the Totally Integrated Power Module per Service Information.
- Perform BODY VERIFICATION TEST. (Refer to 28 - DTC-Based Diagnostics/MODULE, Totally Integrated Power (TIPM) - Standard Procedure)

4. CHECK THE WIRING AND CONNECTORS

1. The conditions necessary to set this DTC are not present at this time.
2. Using the wiring diagram/schematic as a guide, inspect the wiring and connectors.
3. While monitoring the scan tool data relative to this circuit, wiggle test the wiring and connectors.
4. Look for the data to change or for the DTC to reset during the wiggle test.

Were any problems found?

Yes

- Repair as necessary.
- Perform 42RLE TRANSMISSION VERIFICATION TEST. (Refer to 28 - DTC-Based Diagnostics/MODULE, Powertrain Control (PCM) - Standard Procedure)

No

- Test complete.

P128D-TCM POWER CONTROL CIRCUIT 2 OPEN - 45/545RFE

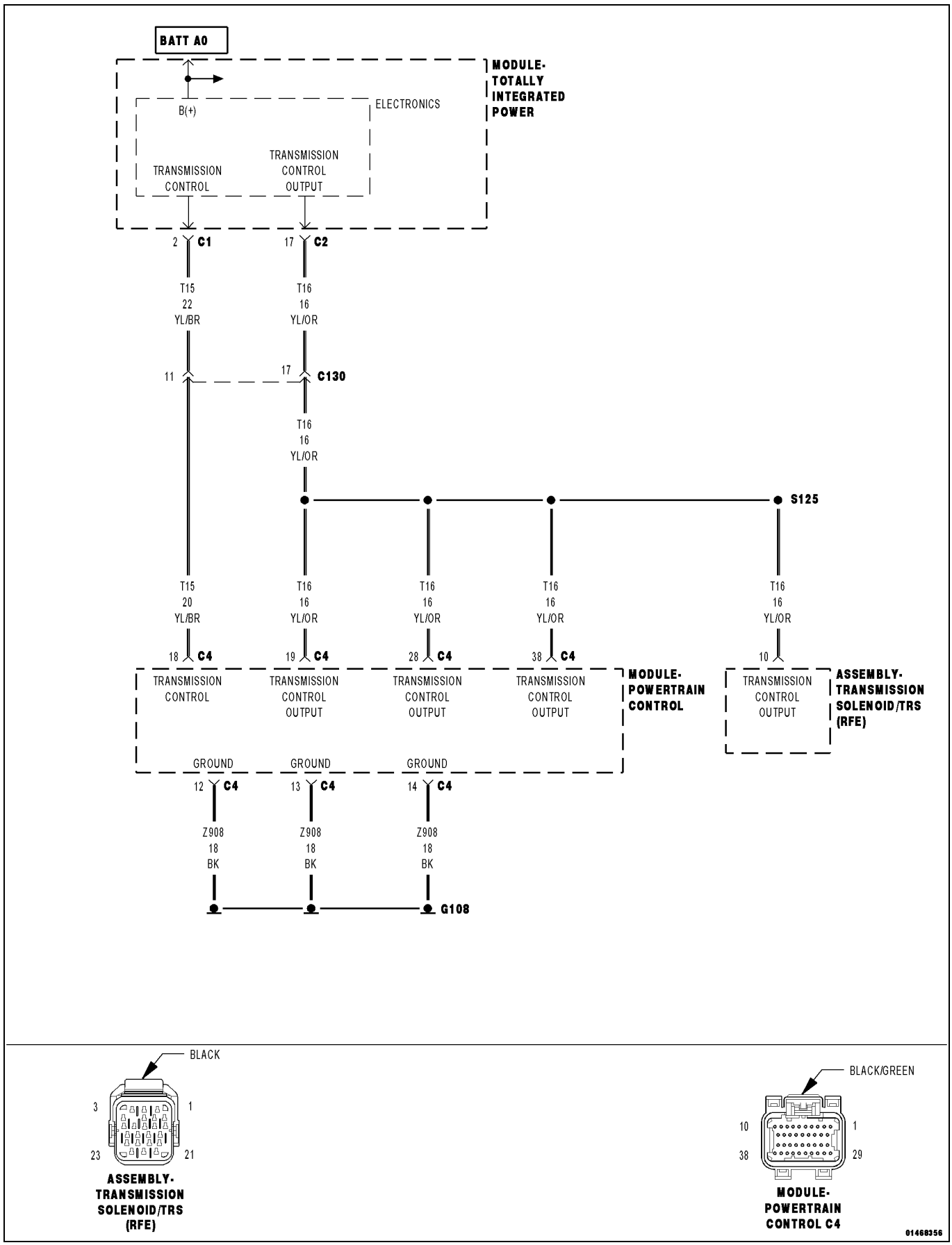

For a complete wiring diagram, **refer to the Wiring Information**.

- **When Monitored:**
  With the ignition on. Battery voltage greater than 10 volts.
- **Set Condition:**
  An open condition of the Transmission Control Output circuit is detected by the Totally Integrated Power Module (TIPM).

Possible Causes
(T16) TRANSMISSION CONTROL OUTPUT CIRCUIT OPEN
TOTALLY INTEGRATED POWER MODULE (TIPM)

1. CHECK IF THE DTC IS ACTIVE

1. Ignition on, engine not running.
2. With the scan tool, select View DTCs.

Is the status Active for this DTC?

Yes

- Go To 2

No

- Go To 3

2. CHECK THE (T16) TRANSMISSION CONTROL OUTPUT CIRCUIT FOR AN OPEN

1. Turn the ignition off to the lock position.
2. Disconnect the PCM C4 harness connector and install the PCM Pinout Box 8815A.
3. Disconnect the Transmission Solenoid harness connector.
4. Disconnect the Line Pressure Sensor/Variable Force Solenoid harness connector (if equipped).

CAUTION: Do not probe the PCM harness connectors. Probing the PCM harness connectors will damage the PCM terminals resulting in poor terminal to pin connection. Install the Kit, NGC, 38 Position 8815A to perform diagnosis.

5. Ignition on, engine not running.
6. Using the scan tool under the TIPM Actuators, actuate the Transmission.
7. Using a 12-volt test light connected to ground, check the (T16) Transmission Control Output circuits.

NOTE: The test light must illuminate brightly. Compare the brightness to that of a direct connection to the battery.

Does the test light illuminate brightly?

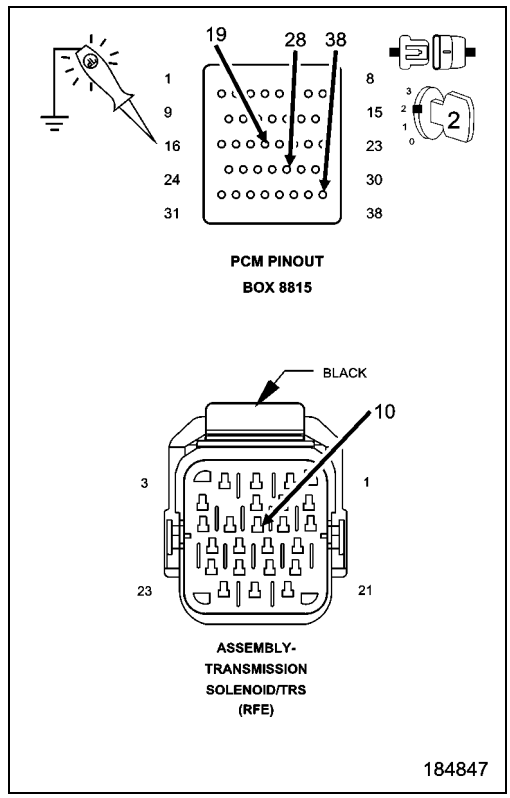

Yes

- Using the schematics as a guide, inspect the wire Totally Integrated Power Module (TIPM) harness and connector terminals for corrosion, damage, or terminal push out. If no problems are found, replace and program the TIPM per Service Information.
- Perform 545RFE TRANSMISSION VERIFICATION TEST. (Refer to 28 - DTC-Based Diagnostics/MODULE, Powertrain Control (PCM) - Standard Procedure).

No

- Repair the (T16) Transmission Control Output circuit for an open.
- Perform 545RFE TRANSMISSION VERIFICATION TEST. (Refer to 28 - DTC-Based Diagnostics/MODULE, Powertrain Control (PCM) - Standard Procedure).

3. CHECK THE WIRING AND CONNECTORS

1. The conditions necessary to set this DTC are not present at this time.
2. Using the wiring diagram/schematic as a guide, inspect the wiring and connectors.
3. While monitoring the scan tool data relative to this circuit, wiggle test the wiring and connectors.
4. Look for the data to change or for the DTC to reset during the wiggle test.

Were any problems found?

Yes

- Repair as necessary.
- Perform 545RFE TRANSMISSION VERIFICATION TEST. (Refer to 28 - DTC-Based Diagnostics/MODULE, Powertrain Control (PCM) - Standard Procedure).

No

- Test complete.

P128E-TCM POWER CONTROL CIRCUIT 2 OVERCURRENT - 42RLE

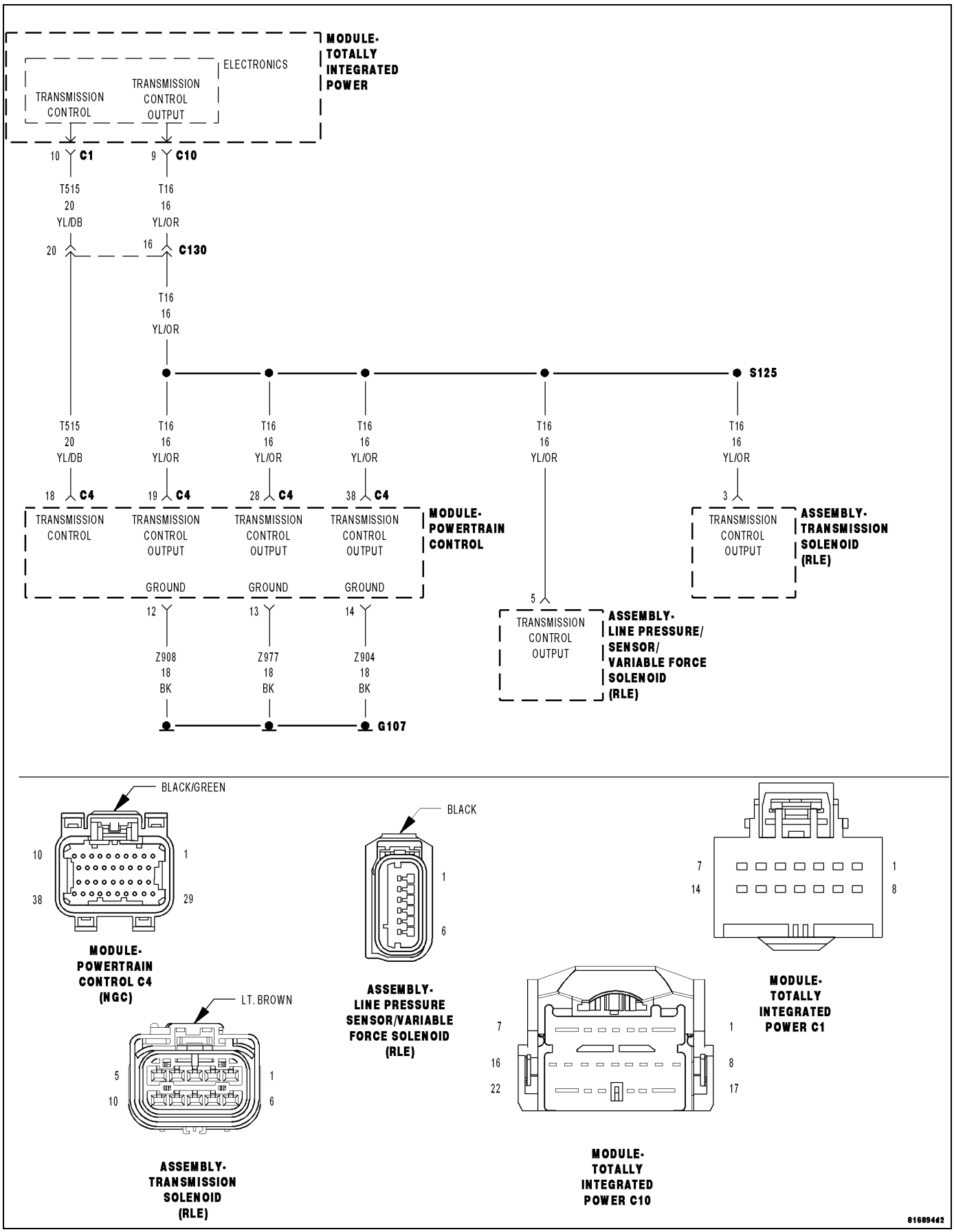

For a complete wiring diagram **Refer to the Wiring Information**.

- **When Monitored:**
  With the ignition on. Battery voltage greater than 10 volts.
- **Set Condition:**
  An overcurrent condition is detected in the TCM Power Control circuit. One Trip Fault. Three good trips to turn off the MIL.

Possible Causes
LINE PRESSURE SENSOR VARIABLE FORCE SOLENOID
SOLENOID/PRESSURE SWITCH ASSEMBLY
POWERTRAIN CONTROL MODULE (PCM)
TOTALLY INTEGRATED POWER MODULE (TIPM)

1. CHECK IF THE DTC IS ACTIVE

1. Ignition on, engine not running.
2. With a scan tool, read TIPM DTCs.

Is the DTC active at this time?

Yes

- Go to 2

No

- Go to 5

2. CHECK THE (T16) TRANSMISSION CONTROL OUTPUT

1. Turn the ignition off.
2. Disconnect the TIPM C10 harness connector.
3. Connect the positive probe of an ammeter to battery positive and connect the negative probe to the (T16) Transmission Control Output circuit in the TIPM C10 harness connector.
4. Read the amperage on the ammeter.

Does the amperage read below 2.0 amps?

Yes

- Go to 4

No

- Go to 3

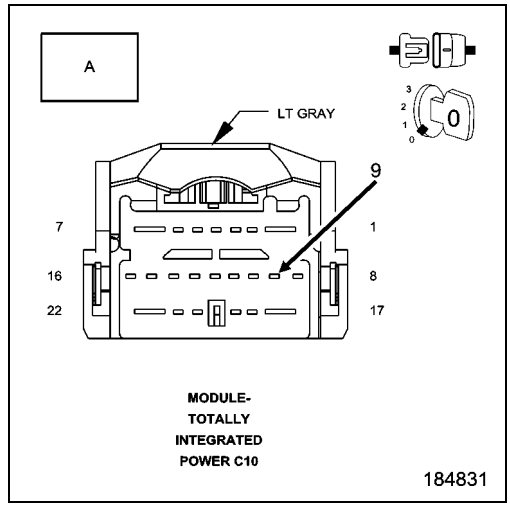

3. CHECK THE PCM

1. Disconnect the amp meter from the TIPM C10 harness connector and battery positive.
2. Disconnect the PCM C4 harness connector.
3. Reconnect the positive probe of an ammeter to battery positive and connect the negative probe to the (T16) Transmission Control Output circuit in the TIPM C10 harness connector.
4. Read the amperage on the ammeter.

Does the amperage read below 2.0 amps?

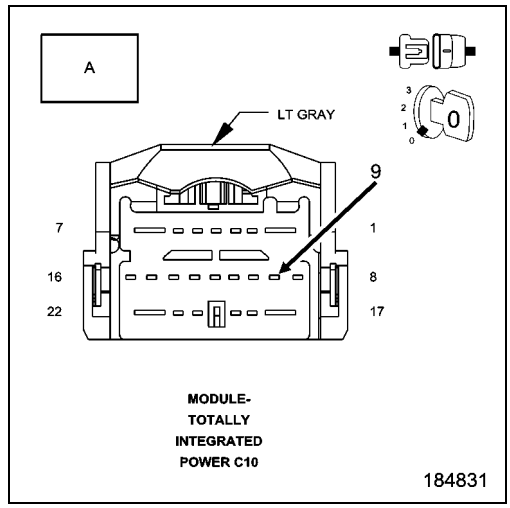

Yes

- Using the schematics as a guide, check the Powertrain Control Module (PCM) terminals for corrosion, damage, or terminal push out. Pay particular attention to all power and ground circuits. If no problems are found, replace and program the PCM per the Service Information. With the scan tool, perform Quick Learn
- Perform 42RLE TRANSMISSION VERIFICATION TEST. (Refer to 28 - DTC-Based Diagnostics/MODULE, Powertrain Control (PCM) - Standard Procedure)

No

- Go to 4

4. CHECK THE TRANSMISSION SOLENOIDS

1. Disconnect the amp meter from the TIPM C10 harness connector.
2. Disconnect the PCM C4 harness connector and install Miller tool #8815A.
3. Connect the positive probe of an ammeter to battery positive and connect the negative probe to the (T16) Transmission Control Output circuit in the TIPM C10 harness connector.
4. While monitoring the amperage reading of the ammeter and using a jumper wire, jump each solenoid control circuit to ground one at a time in the appropriate terminals of Miller tool #8815A.

NOTE: The amperage draw should be approximately .02 milliampere on each solenoid circuit with the PCM C4 harness connector disconnected.

Does the amperage read between .05 and .015 milliampere ± .005 milliampere on each solenoid tested?

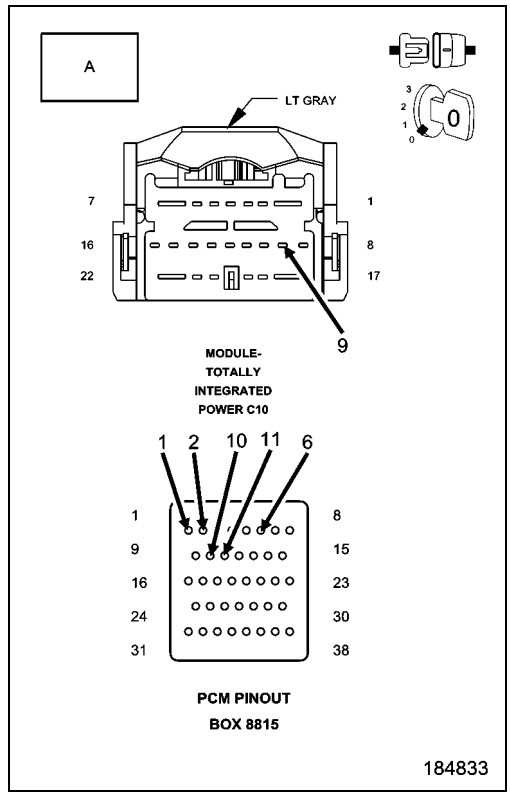

Yes

- Replace the Totally Integrated Control Module per the Service Information.
- Perform 42RLE TRANSMISSION VERIFICATION TEST. (Refer to 28 - DTC-Based Diagnostics/MODULE, Powertrain Control (PCM) - Standard Procedure)

No

- Depending on the identified circuit in the test, replace either Transmission Solenoid/Pressure Switch Assembly or the Line Pressure Solenoid (if equipped) per the Service Information.
- Perform 42RLE TRANSMISSION VERIFICATION TEST. (Refer to 28 - DTC-Based Diagnostics/MODULE, Powertrain Control (PCM) - Standard Procedure)

5. CHECK THE WIRING AND CONNECTORS

1. The conditions necessary to set the DTC are not present at this time.
2. Using the schematics as a guide, inspect the wiring and connectors specific to this circuit.
3. Wiggle the wires while checking for shorted and open circuits.
4. With the scan tool, check the Event Data to help identify the conditions in which the DTC was set.

Were there any problems found?

Yes

- Repair as necessary.
- Perform 42RLE TRANSMISSION VERIFICATION TEST. (Refer to 28 - DTC-Based Diagnostics/MODULE, Powertrain Control (PCM) - Standard Procedure)

No

- Test Complete.

P128E-TCM POWER CONTROL CIRCUIT 2 OVERCURRENT - 45/545RFE

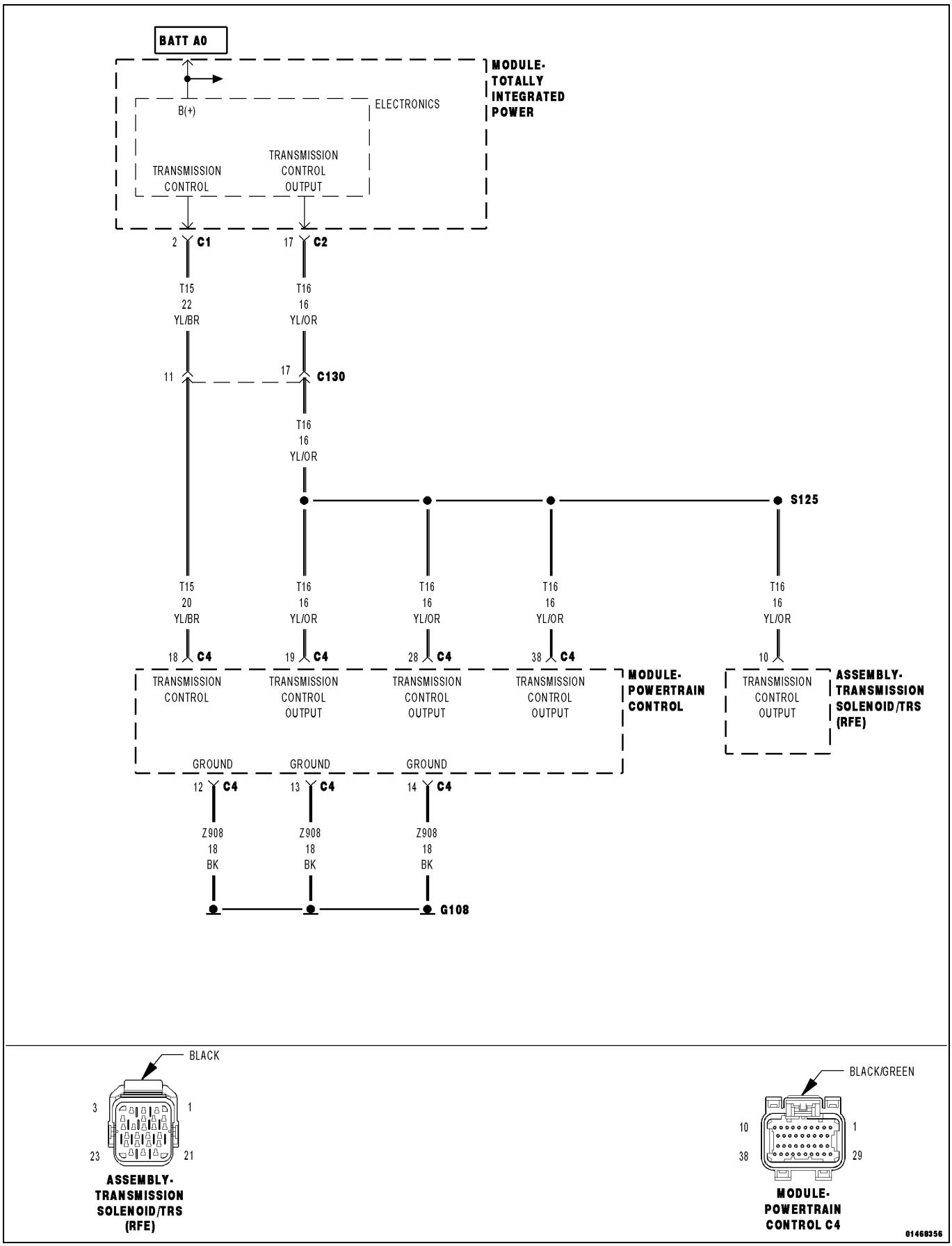

For a complete wiring diagram, **refer to the Wiring Information**.

- **When Monitored:**
  With the ignition on. Battery voltage greater than 10 volts.
- **Set Condition:**
  An overcurrent condition is detected in the Transmission Control Moduel (TCM) Power Control circuit. One Trip Fault. Three good trips to turn off the MIL.

Possible Causes
LINE PRESSURE SENSOR VARIABLE FORCE SOLENOID
SOLENOID/PRESSURE SWITCH ASSEMBLY
POWERTRAIN CONTROL MODULE (PCM)
TOTALLY INTEGRATED POWER MODULE (TIPM)

1. CHECK IF THE DTC IS ACTIVE

1. Ignition on, engine not running.
2. With a scan tool, read TIPM DTCs.

Is the DTC active at this time?

Yes

- Go To 2

No

- Go To 5

2. CHECK THE (T16) TRANSMISSION CONTROL OUTPUT

1. Turn the ignition off.
2. Disconnect the TIPM C2 harness connector.
3. Connect the positive probe of an ammeter to battery positive and connect the negative probe to the (T16) Transmission Control Output circuit in the TIPM C2 harness connector.
4. Read the amperage on the ammeter.

Does the amperage read below 2.0 amps?

Yes

- Go To 4

No

- Go To 3

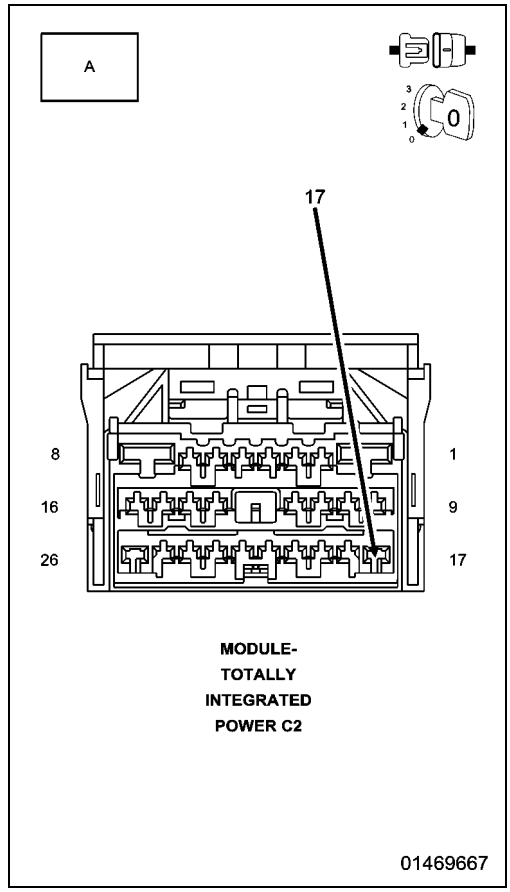

3. CHECK THE PCM

1. Disconnect the amp meter from the TIPM C2 harness connector and battery positive.
2. Disconnect the PCM C4 harness connector.
3. Reconnect the positive probe of an ammeter to battery positive and connect the negative probe to the (T16) Transmission Control Output circuit in the TIPM C2 harness connector.
4. Read the amperage on the ammeter.

Does the amperage read below 2.0 amps?

Yes

- Using the schematics as a guide, check the Powertrain Control Module (PCM) terminals for corrosion, damage, or terminal push out. Pay particular attention to all power and ground circuits. If no problems are found, replace the PCM per the Service Information. With the scan tool, perform Quick Learn
- Perform 545RFE TRANSMISSION VERIFICATION TEST. (Refer to 28 - DTC-Based Diagnostics/MODULE, Powertrain Control (PCM) - Standard Procedure).

No

- Go To 4

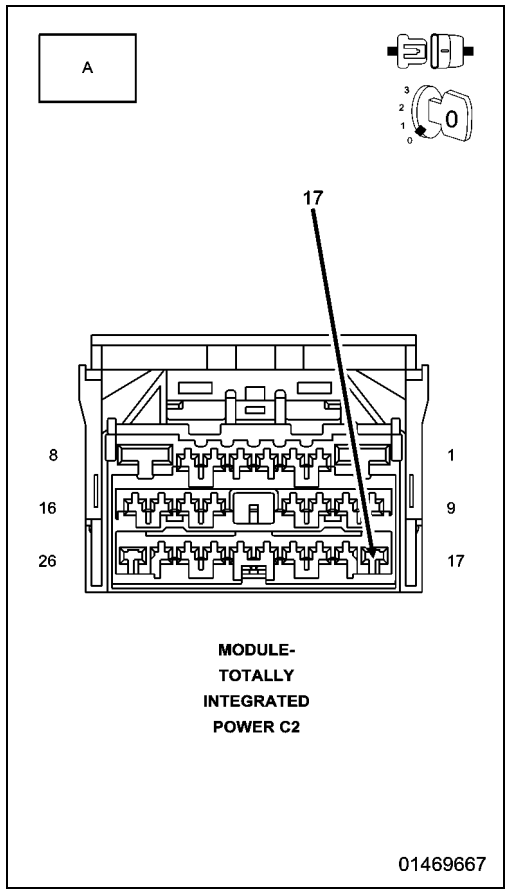

4. CHECK THE TRANSMISSION SOLENOIDS

1. Disconnect the amp meter from the TIPM C2 harness connector.
2. Disconnect the PCM C4 harness connector and install the PCM Pinout Box 8815A.
3. Connect the positive probe of an ammeter to battery positive and connect the negative probe to the (T16) Transmission Control Output circuit in the TIPM C2 harness connector.
4. While monitoring the amperage reading of the ammeter and using a jumper wire, jump each solenoid control circuit to ground one at a time in the appropriate terminals of the PCM Pinout Box 8815A.

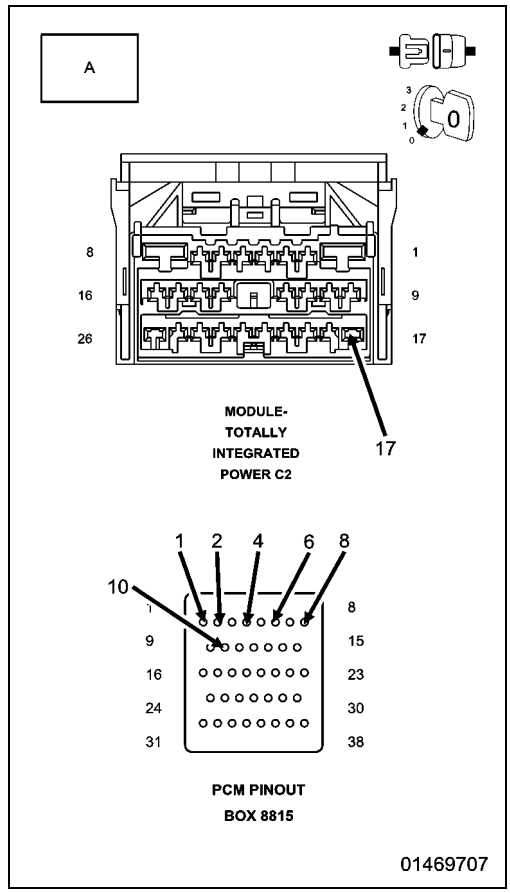

NOTE: The amperage draw should be approximately .02 milliampere on each solenoid circuit with the PCM C4 harness connector disconnected.

Does the amperage read between .05 and .015 milliampere (± .005 milliampere) on each solenoid tested?

Yes

- Replace the Totally Integrated Control Module per the Service Information.
- Perform 545RFE TRANSMISSION VERIFICATION TEST. (Refer to 28 - DTC-Based Diagnostics/MODULE, Powertrain Control (PCM) - Standard Procedure).

No

- Depending on the identified circuit in the test, replace either Transmission Solenoid/Pressure Switch Assembly or the Line Pressure Solenoid (if equipped) per the Service Information.
- Perform 545RFE TRANSMISSION VERIFICATION TEST. (Refer to 28 - DTC-Based Diagnostics/MODULE, Powertrain Control (PCM) - Standard Procedure).

5. CHECK THE WIRING AND CONNECTORS

1. The conditions necessary to set the DTC are not present at this time.
2. Using the schematics as a guide, inspect the wiring and connectors specific to this circuit.
3. Wiggle the wires while checking for shorted and open circuits.
4. With the scan tool, check the Event Data to help identify the conditions in which the DTC was set.

Were there any problems found?

Yes

- Repair as necessary.
- Perform 545RFE TRANSMISSION VERIFICATION TEST. (Refer to 28 - DTC-Based Diagnostics/MODULE, Powertrain Control (PCM) - Standard Procedure).

No

- Test Complete.

P129C-INVERTER CONTROL CIRCUIT HIGH

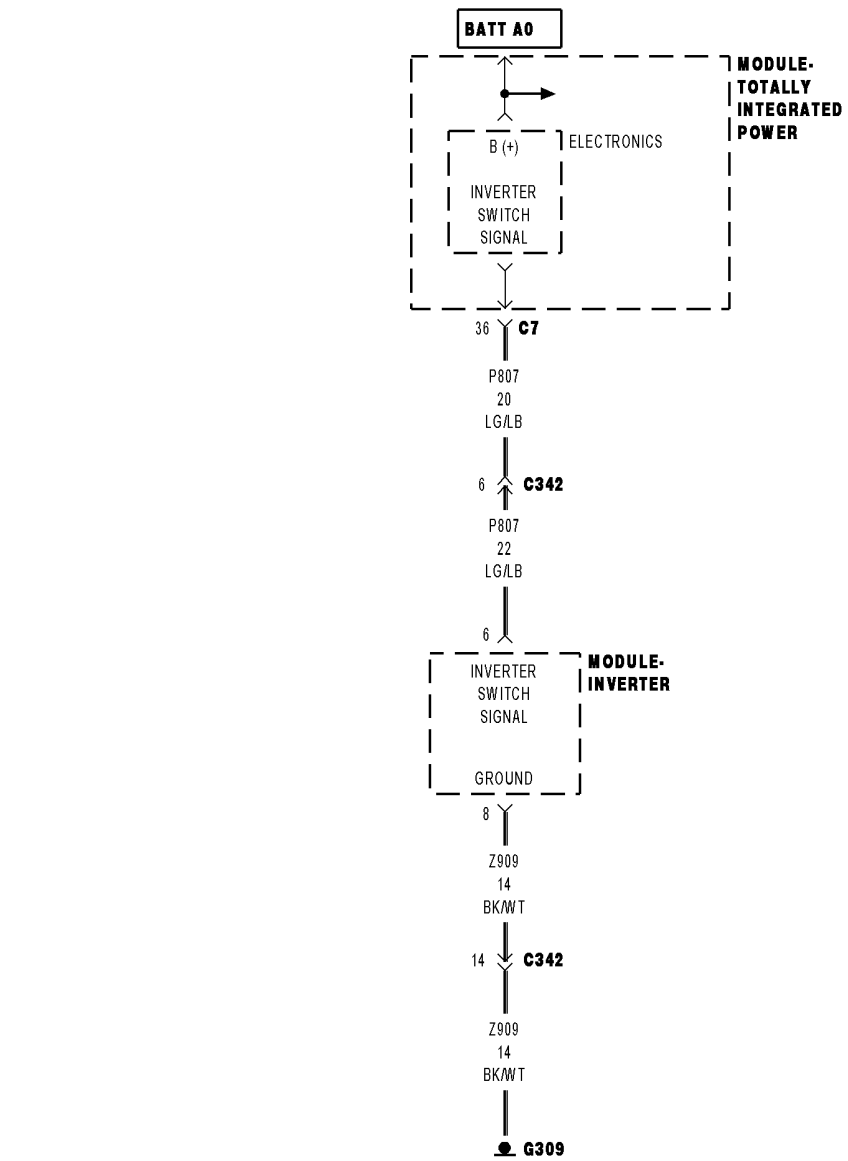

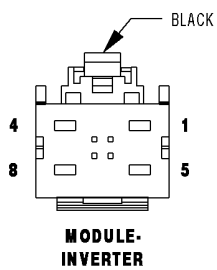

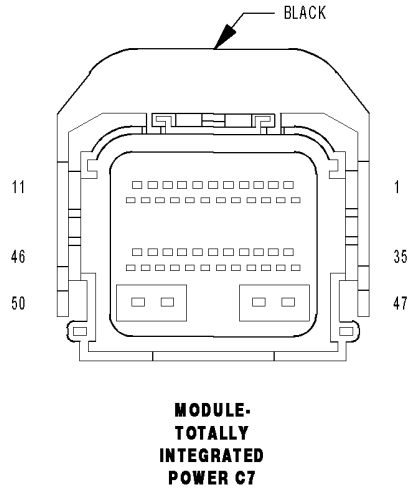

01224919

For a complete wiring diagram, **refer to the Wiring Information**.

- **When Monitored:**

  With the ignition on and battery Voltage greater than 10 volts. Once the inverter switch is turned on, the Cluster (CCN) sends a request to the Totally Integrated Power Module (TIPM) to turn on the Inverter.
- **Set Condition:**

  If the TIPM detects an open or short high condition on the (P807) Inverter Switch Signal circuit.

Possible Causes
(P807) INVERTER SWITCH SIGNAL CIRCUIT SHORTED TO VOLTAGE
(P807) INVERTER SWITCH SIGNAL CIRCUIT OPEN
INVERTER MODULE
TOTALLY INTEGRATED POWER MODULE (TIPM)

1. TEST FOR INTERMITTENT CONDITION

1. Turn the ignition on.
2. Using a scan tool, record and erase Diagnostic Trouble Codes (DTCs).
3. Operate the Inverter switch several times.
4. Using a scan tool, read DTCs.

Is the DTC active at this time?

Yes

- Go To 2

No

- The conditions that caused this code to set are not present at this time. Using the wiring diagram/schematic as a guide, inspect the wiring and connectors. Look for chafed, pierced, pinched, or partially broken wires and broken, bent, pushed out, spread, corroded, or contaminated terminals.
- Perform the BODY VERIFICATION TEST. (Refer to 28 - DTC-Based Diagnostics/MODULE, Totally Integrated Power (TIPM) - Standard Procedure).

2. CHECK (P807) INVERTER SWITCH SIGNAL CIRCUIT FOR A SHORT TO VOLTAGE

1. Turn the ignition off.
2. Disconnect the Inverter Module harness connector.
3. Disconnect the TIPM C7 harness connector.
4. Turn the ignition on.
5. Using a 12-volt test light connected to ground, check the (P807) Inverter Switch Signal circuit at the Inverter Module harness connector.

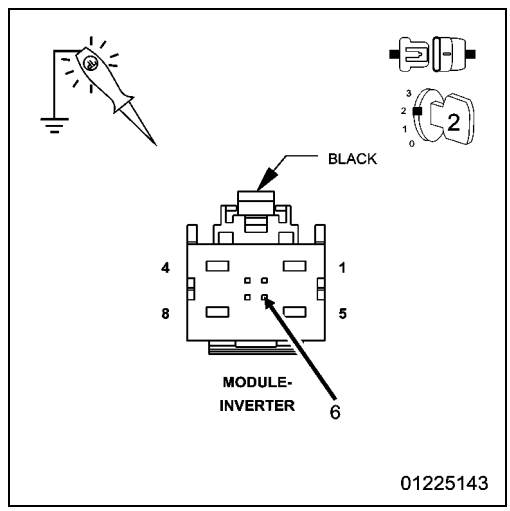

Does the test light illuminate?

Yes

- Repair the (P807) Inverter Switch Signal circuit for a short to voltage.
- Perform the BODY VERIFICATION TEST. (Refer to 28 - DTC-Based Diagnostics/MODULE, Totally Integrated Power (TIPM) - Standard Procedure).

No

- Go To 3

3. CHECK (P807) INVERTER SWITCH SIGNAL CIRCUIT FUNCTION

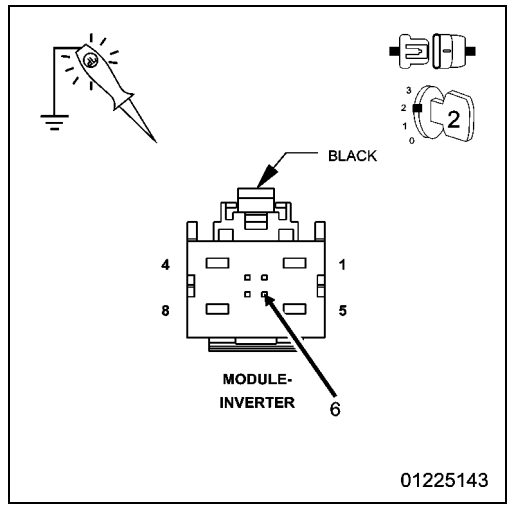

1. Turn the ignition off.
2. Reconnect the C7 TIPM harness connector.
3. Using a 12-Volt test light connected to ground, probe the (P807) Inverter Switch Signal circuit at the Inverter Module harness connector.
4. Turn the ignition on.
5. Using a scan tool, actuate the Inverter Enable control.

NOTE: The test light should be illuminated and brightly. Compare the brightness to that of a direct connection to the battery.

Does the test light illuminate brightly?

Yes

- Replace the Inverter Module in accordance with the Service Information.
- Perform the BODY VERIFICATION TEST. (Refer to 28 - DTC-Based Diagnostics/MODULE, Totally Integrated Power (TIPM) - Standard Procedure).

No

- Go To 4

4. CHECK (P807) INVERTER SWITCH SIGNAL CIRCUIT FOR AN OPEN

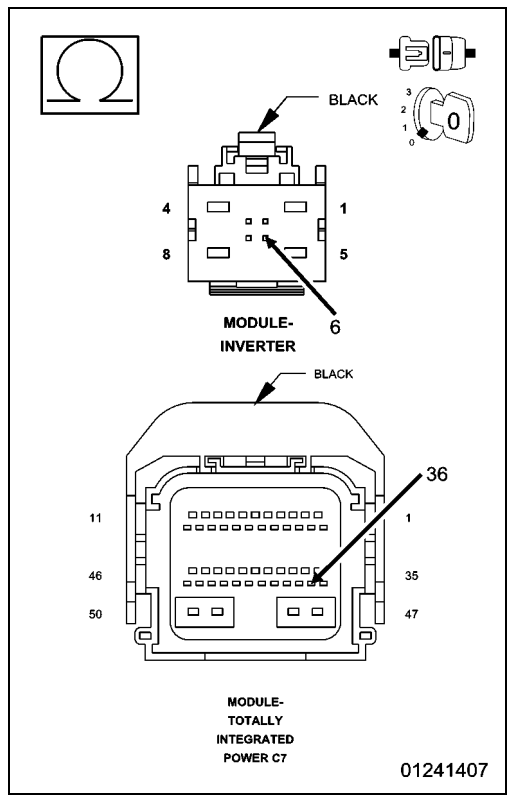

1. Turn the ignition off.
2. Disconnect the C7 TIPM harness connector.
3. Measure the resistance of the (P807) Inverter Switch Signal circuit between the TIPM C7 harness connector and the Inverter Module harness connector.

Is the resistance below 5.0 Ohms?

Yes

- Replace the Totally Integrated Power Module (TIPM) in accordance with the Service Information.
- Perform the BODY VERIFICATION TEST. (Refer to 28 - DTC-Based Diagnostics/MODULE, Totally Integrated Power (TIPM) - Standard Procedure).

No

- Repair the (P807) Inverter Switch Signal circuit for an open.
- Perform the BODY VERIFICATION TEST. (Refer to 28 - DTC-Based Diagnostics/MODULE, Totally Integrated Power (TIPM) - Standard Procedure).

P129E-INVERTER CONTROL CIRCUIT OVERCURRENT

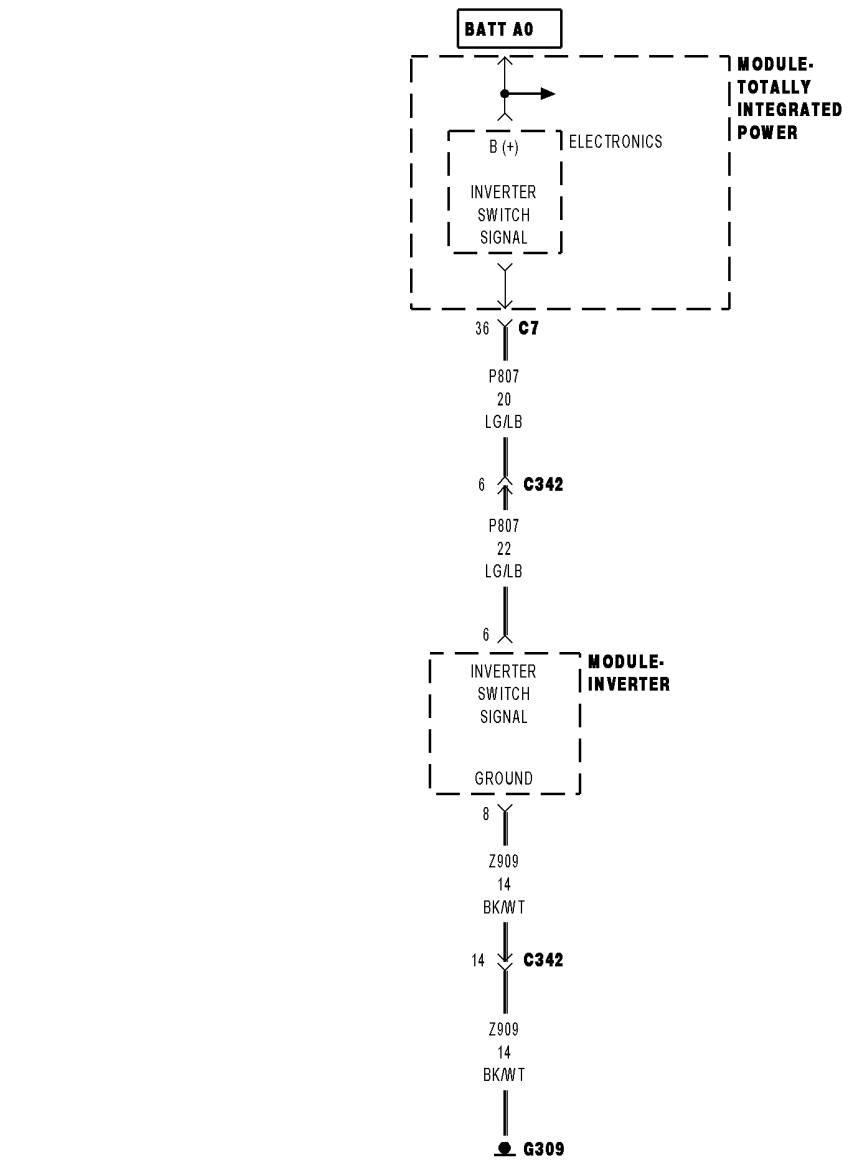

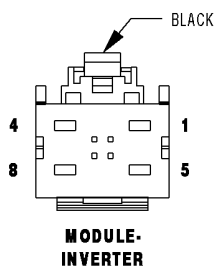

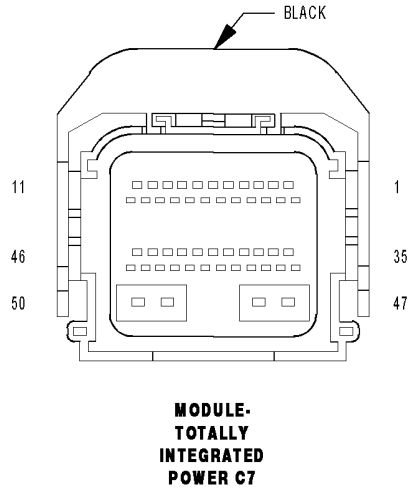

01224919

For a complete wiring diagram, **refer to the Wiring Information**.

- **When Monitored:**

  With the ignition on and battery voltage greater than 10 volts. Once the inverter switch is turned on, the Cluster (CCN) sends a request to the Totally Integrated Power Module (TIPM) to turn on the Inverter.
- **Set Condition:**

  If the Totally Integrated Power Module (TIPM) detects an overcurrent condition on the (P807) Inverter Switch Signal circuit.

Possible Causes
(P807) INVERTER SWITCH SIGNAL CIRCUIT SHORTED TO GROUND
(P807) INVERTER SWITCH SIGNAL CIRCUIT SHORTED TO (Z909) GROUND CIRCUIT
INVERTER MODULE
TOTALLY INTEGRATED POWER MODULE (TIPM)

1. TEST FOR INTERMITTENT CONDITION

NOTE: Look closely at the temperatures at which this Diagnostic Trouble Code (DTC) set. Low battery Voltage can also cause excessive current draw in very hot and very cold ambient temperatures. Make sure the battery can pass a load test before continuing.

1. Turn the ignition on.
2. Using a scan tool, record and erase DTCs.
3. Operate the Inverter switch several times.
4. Using a scan tool, read DTCs.

Is the DTC Active at this time?

Yes

- Go To 2

No

- The conditions that caused this code to set are not present at this time. Using the wiring diagram/schematic as a guide, inspect the wiring and connectors. Look for chafed, pierced, pinched, or partially broken wires and broken, bent, pushed out, spread, corroded, or contaminated terminals.
- Perform the BODY VERIFICATION TEST. (Refer to 28 - DTC-Based Diagnostics/MODULE, Totally Integrated Power (TIPM) - Standard Procedure).

2. CHECK (P807) INVERTER SWITCH SIGNAL CIRCUIT FOR A SHORT TO GROUND

1. Turn the ignition off.
2. Disconnect the C7 TIPM harness connector.
3. Disconnect the Inverter Module harness connector.
4. Inspect the wiring connections for corrosion and repair as necessary.
5. Measure the resistance of the (P807) Inverter Switch Signal circuit between ground and the Inverter Module harness connector.

Is the resistance below 10K Ohms?

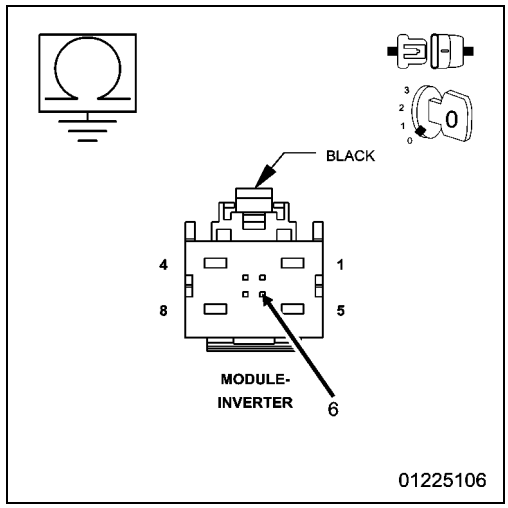

Yes

- Repair the (P807) Inverter Switch Signal circuit for a short to ground.
- Perform the BODY VERIFICATION TEST. (Refer to 28 - DTC-Based Diagnostics/MODULE, Totally Integrated Power (TIPM) - Standard Procedure).

No

- Go To 3

3. CHECK (P807) INVERTER SWITCH SIGNAL CIRCUIT FOR A SHORT TO (Z909) GROUND CIRCUIT

1. Measure the resistance between the (P807) Inverter Switch Signal circuit and the (Z909) Ground circuit at the Inverter Module harness connector.

Is the resistance below 10K Ohms?

Yes

- Repair the (P807) Inverter Switch Signal circuit for a short to the (Z909) Ground circuit.
- Perform the BODY VERIFICATION TEST. (Refer to 28 - DTC-Based Diagnostics/MODULE, Totally Integrated Power (TIPM) - Standard Procedure).

No

- Go To 4

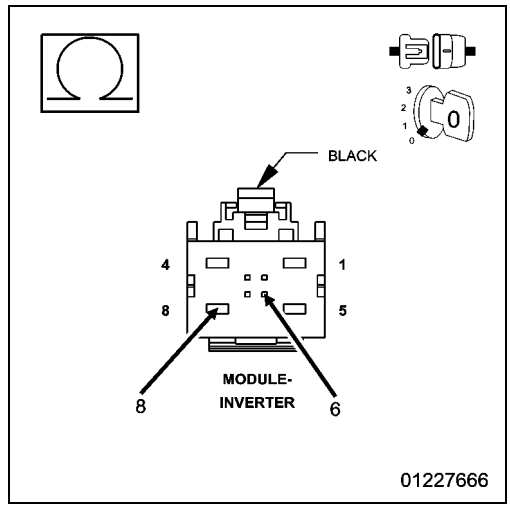

4. CHECK (P807) INVERTER SWITCH SIGNAL CIRCUIT FUNCTION

1. Reconnect the C7 TIPM harness connector.
2. Using a 12-Volt test light connected to ground, probe the (P807) Inverter Switch Signal circuit at the Inverter Module harness connector.
3. Turn the ignition on.
4. Using a scan tool, actuate the Inverter Enable control.

NOTE: The test light should be illuminated and bright. Compare the brightness to that of a direct connection to the battery.

Does the test light illuminate brightly?

Yes

- Replace the Inverter Module in accordance with the Service Information.
- Perform the BODY VERIFICATION TEST. (Refer to 28 - DTC-Based Diagnostics/MODULE, Totally Integrated Power (TIPM) - Standard Procedure).

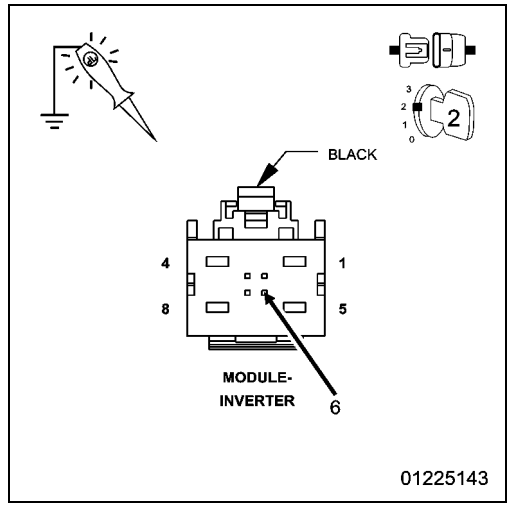

No

- Replace the Totally Integrated Power Module (TIPM) in accordance with the Service Information.
- Perform the BODY VERIFICATION TEST. (Refer to 28 - DTC-Based Diagnostics/MODULE, Totally Integrated Power (TIPM) - Standard Procedure).

U0001-CAN C BUS CIRCUIT

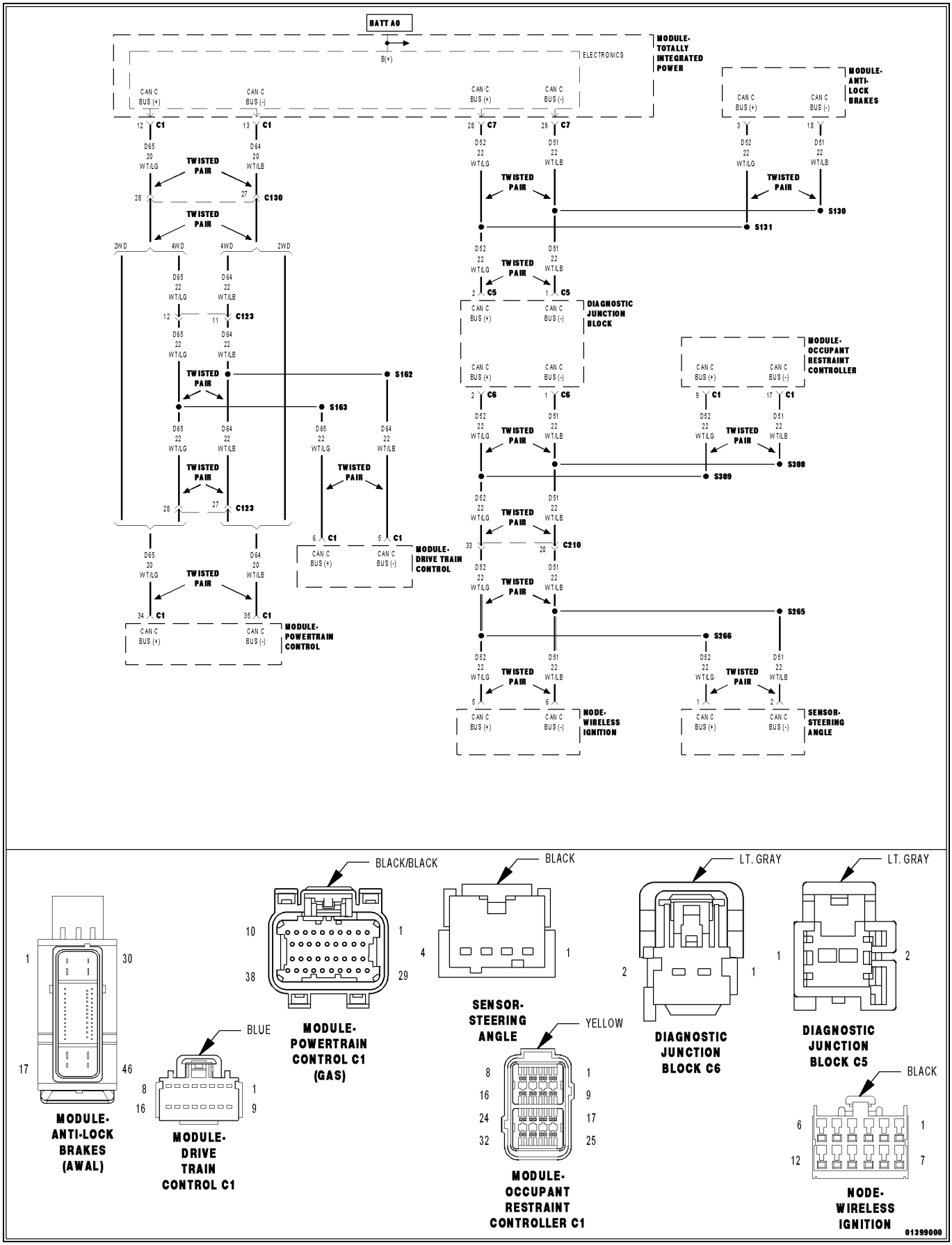

For a complete wiring diagram, **refer to the Wiring Information**.

Theory of Operation

The primary communication network between electronic control modules on this vehicle is the Controller Area Network (CAN) data bus system. The Controller Area Network (CAN) data bus allows all electronic modules connected to the bus to share information with each other. Regardless of whether a message originates from a module on the higher speed CAN C (500K) Bus or on the lower speed CAN Interior High Speed (IHS) (125K) Bus the message structure and layout is similar, which allows the Totally Integrated Power Module/Central GateWay (TIPM or TIPMCGW) to process and transfer messages between the CAN buses. The TIPM also stores Diagnostic Trouble Codes (DTCs) for certain bus network faults.

All modules transmit and receive messages over one of these buses. Data exchange between the modules is achieved by serial transmission of encoded data messages (a form of transmission in which data bits are sent sequentially, one at a time, over a single line). Each module can both send and receive serial data simultaneously. Each data bit of a CAN Bus message is carried over the bus as a voltage differential between the two bus circuits which, when strung together, form a message. Each module uses arbitration to sort the message priority if two competing messages are attempting to be broadcast at the same time. Corruption of a single bit within a message will corrupt the entire message. Each message contains a Cyclic Redundancy Check (CRC) which specifies the message size exactly. If the message detected conflicts with the CRC the ECU receiving it will determine the message to be an error and consider that communication has not been possible. Diagnosis of this condition using a lab scope may reveal activity that appears to be Bus data messages even if no actual communication is possible. Communication problems that affect the whole bus, as a result of opens and terminal push outs are more likely to occur on data busses that operate at a high speed than a data bus that operates at a lower speed.

When an open circuit or terminal push out occurs one or more modules can become isolated from the remainder of the bus. The isolated module will attempt to communicate. Since each module contains it own termination a module that is isolated may receive its own messages correctly but will not be able to receive messages or determine arbitration from other modules. Each time the isolated module attempts to communicate it alters the bus voltage on the intact bus circuit. Without functioning arbitration the isolated module alters the bus voltage while other bus messages are being sent thereby corrupting the messages on the remainder of the bus.

The CAN bus modules are connected in parallel to the two-wire bus using a twisted pair, where the wires are wrapped around each other to provide shielding from unwanted electromagnetic induction, thus preventing interference with the relatively low voltage signals being carried through them. While the CAN bus is operating (active), one of the bus wires will carry a higher voltage and is referred to as the CAN High or CAN bus (+) wire, while the other bus wire will carry a lower voltage and is referred to as the CAN Low or CAN bus (–) wire.

- **When Monitored:**
  With the ignition on.
- **Set Condition:**
  The Totally Integrated Power Module (TIPM) detects a fault on any of the CAN C Bus circuits.

Possible Causes
(D65) OR (D52) CAN C BUS (+) CIRCUIT SHORTED TO GROUND
(D64) OR (D51) CAN C BUS (-) CIRCUIT SHORTED TO GROUND
(D65) OR (D52) CAN C BUS (+) CIRCUIT SHORTED TO VOLTAGE
(D64) OR (D51) CAN C BUS (-) CIRCUIT SHORTED TO VOLTAGE
(D65) OR (D52) CAN C BUS (+) CIRCUIT SHORTED TO (D64) OR (D51) CAN C BUS (-) CIRCUIT
ANTI-LOCK BRAKE MODULE
POWERTRAIN CONTROL MODULE (PCM)
OCCUPANT RESTRAINT CONTROLLER (ORC)
DRIVETRAIN CONTROL MODULE (DTCM)
WIRELESS IGNITION NODE (WIN)
STEERING ANGLE SENSOR (SAS)
TOTALLY INTEGRATED POWER MODULE (TIPM)

1. TEST FOR INTERMITTENT CONDITION

1. Turn the ignition on.
2. Using the scan tool, record and erase TIPM DTCs.
3. Cycle the ignition from on to off three times.
4. Turn the ignition on.
5. Using the scan tool, read active TIPM DTCs.

Does the scan tool display this DTC as active?

Yes

- Go To 2

No

- The conditions that caused this code to set are not present at this time. Using the wiring diagram/schematic as a guide, inspect the wiring and connectors.

2. ANTILOCK BRAKE MODULE - INTERNAL SHORT

1. Turn the ignition off.
2. Disconnect the Antilock Brake Module harness connector.
3. Turn the ignition on.
4. Using the scan tool, record and erase TIPM DTCs.
5. Cycle the ignition from on to off three times.
6. Turn the ignition on.
7. Using the scan tool, read active TIPM DTCs.

Does the scan tool display this DTC as active?

Yes

- Go To 3

No

- Inspect the wiring and connectors for damage or shorted circuits. If ok, replace the Antilock Brake Module in accordance with the Service Information.
- Perform the ABS VERIFICATION TEST. (Refer to 28 - DTC-Based Diagnostics/MODULE, Antilock Brake (ABS) - Standard Procedure).

3. POWERTRAIN CONTROL MODULE - INTERNAL SHORT

1. Turn the ignition off.
2. Disconnect the Powertrain Control Module C1 harness connector.
3. Turn the ignition on.
4. Using the scan tool, record and erase TIPM DTCs.
5. Cycle the ignition from on to off 3 times.
6. Turn the ignition on.
7. Using the scan tool, read active TIPM DTCs.

Does the scan tool display this DTC as active?

Yes

- Go To 4

No

- Inspect the wiring and connectors for damage or shorted circuits. If ok, replace and program the Powertrain Control Module in accordance with the Service Information.
- Perform the POWERTRAIN VERIFICATION TEST. (Refer to 28 - DTC-Based Diagnostics/MODULE, Powertrain Control (PCM) - Standard Procedure).

4. OCCUPANT RESTRAINT CONTROLLER - INTERNAL SHORT

1. Turn the ignition off.
2. Disconnect the Occupant Restraint Controller C1 harness connector.
3. Turn the ignition on.
4. Using the scan tool, record and erase TIPM DTCs.
5. Cycle the ignition from on to off three times.
6. Turn the ignition on.
7. Using the scan tool, read active TIPM DTCs.

Does the scan tool display this DTC as active?

Yes

- Go To 5

No

- Inspect the wiring and connectors for damage or shorted circuits. If ok, replace and program the Occupaint Restraint Controller in accordance with the Service Information.
- Perform the RESTRAINTS SYSTEM VERIFICATION TEST. (Refer to 28 - DTC-Based Diagnostics/CONTROLLER, Occupant Restraint (ORC) - Standard Procedure).

5. DRIVETRAIN CONTROL MODULE - INTERNAL SHORT

1. Turn the ignition off.

NOTE: If vehicle is not equipped with this module, answer yes to the question.

2. Disconnect the Drivetrain Control Module C1 harness connector.
3. Turn the ignition on.
4. Using the scan tool, record and erase TIPM DTCs.
5. Cycle the ignition from on to off three times.
6. Turn the ignition on.
7. Using the scan tool, read active TIPM DTCs.

Does the scan tool display this DTC as active?

Yes

- Go To 6

No

- Inspect the wiring and connectors for damage or shorted circuits. If ok, replace and program the Drivetrain Control Module in accordance with the Service Information.
- Perform the DTCM VERIFICATION TEST. (Refer to 28 - DTC-Based Diagnostics/MODULE, Drivetrain Control (DTCM) - Standard Procedure).

6. WIRELESS IGNITION NODE - INTERNAL SHORT

1. Turn the ignition off.

NOTE: If vehicle is not equipped with this module, answer yes to the question.

2. Disconnect the Wireless Ignition Node harness connector.
3. Turn the ignition on.
4. Using the scan tool, record and erase TIPM DTCs.
5. Cycle the ignition from on to off three times.
6. Turn the ignition on.
7. Using the scan tool, read active TIPM DTCs.

Does the scan tool display this DTC as active?

Yes

- Go To 7

No

- Inspect the wiring and connectors for damage or shorted circuits. If ok, replace and program the Wireless Ignition Node in accordance with the Service Information.
- Perform the WIN VERIFICATION TEST. (Refer to 28 - DTC-Based Diagnostics/NODE, Wireless Ignition (WIN) - Standard Procedure).

7. STEERING ANGLE SENSOR - INTERNAL SHORT

1. Turn the ignition off.

NOTE: If vehicle is not equipped with this module, answer yes to the question.

2. Disconnect the Steering Angle Sensor harness connector.
3. Turn the ignition on.
4. Using the scan tool, record and erase TIPM DTCs.
5. Cycle the ignition from on to off three times.
6. Turn the ignition on.
7. Using the scan tool, read active TIPM DTCs.

Does the scan tool display this DTC as active?

Yes

- Go To 8

No

- Inspect the wiring and connectors for damage or shorted circuits. If ok, replace and program the Steering Angle Sensor in accordance with the Service Information.
- Perform the BODY VERIFICATION TEST. (Refer to 28 - DTC-Based Diagnostics/MODULE, Totally Integrated Power (TIPM) - Standard Procedure).

8. (D52) OR (D65) CAN C BUS (+) CIRCUITS SHORTED TO VOLTAGE

1. Turn the ignition off.
2. Disconnect the Totally Integrated Power Module C1 and C7 harness connector.
3. Turn the ignition on.
4. Measure the voltage between the (D52) and (D65) CAN C Bus (+) circuits and ground.

Is there any voltage present?

Yes

- Repair the (D52) or (D65) CAN C Bus (+) circuit for a short to voltage.
- Perform the BODY VERIFICATION TEST. (Refer to 28 - DTC-Based Diagnostics/MODULE, Totally Integrated Power (TIPM) - Standard Procedure).

No

- Go To 9

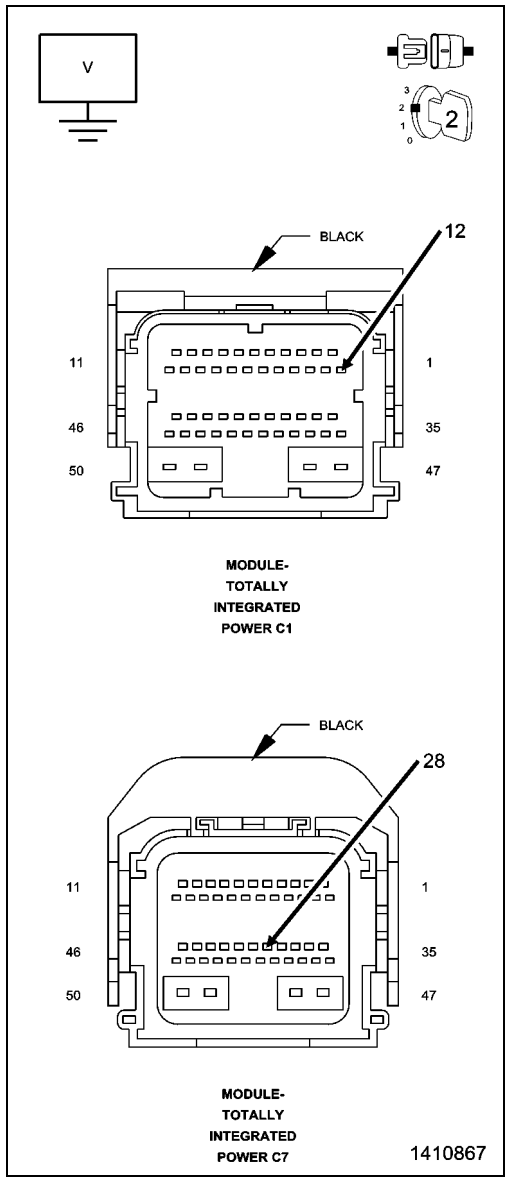

9. (D51) OR (D64) CAN C BUS (-) CIRCUITS SHORTED TO VOLTAGE

1. Measure the voltage between the (D51) and (D64) CAN C Bus (-) circuits and ground.

Is there any voltage present?

Yes

- Repair the (D51) or (D64) CAN C Bus (-) circuit for a short to voltage.
- Perform the BODY VERIFICATION TEST. (Refer to 28 - DTC-Based Diagnostics/MODULE, Totally Integrated Power (TIPM) - Standard Procedure).

No

- Go To 10

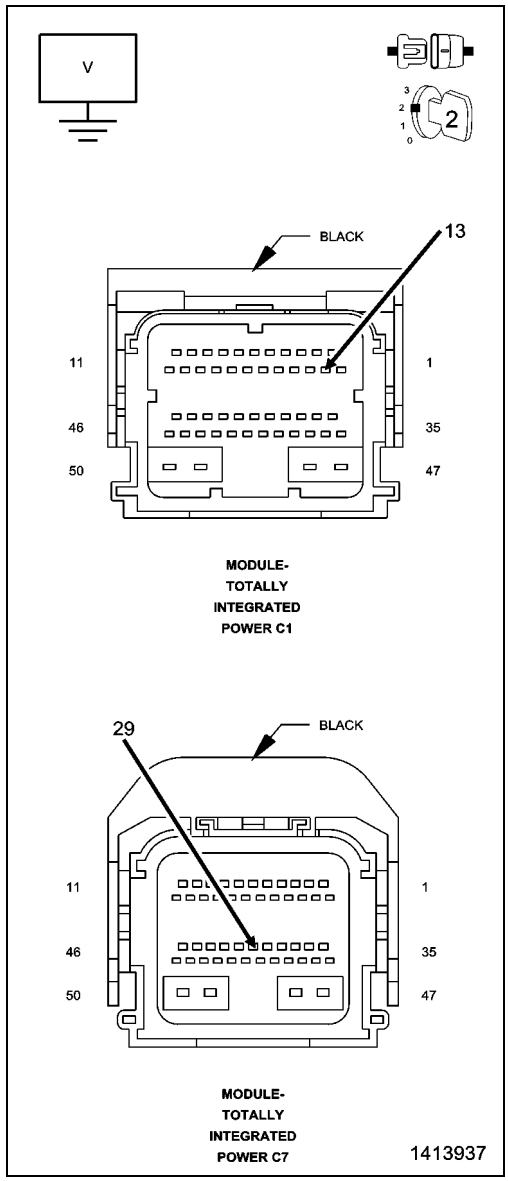

10. (D52) OR (D65) CAN C BUS (+) CIRCUITS SHORTED TO GROUND

1. Turn the ignition off.
2. Measure the resistance between ground and the (D52) and (D65) CAN C Bus (+) circuits.

Is any resistance present?

Yes

- Repair the (D52) or (D65) CAN C Bus (+) circuit for a short to ground.
- Perform the BODY VERIFICATION TEST. (Refer to 28 - DTC-Based Diagnostics/MODULE, Totally Integrated Power (TIPM) - Standard Procedure).

No

- Go To 11

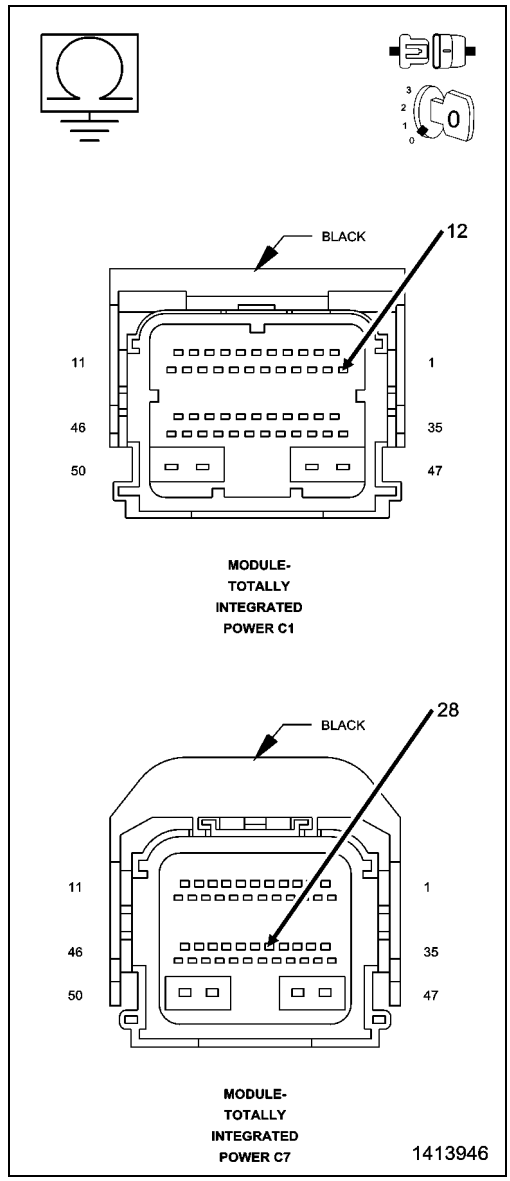

11. (D51) OR (D64) CAN C BUS (-) CIRCUITS SHORTED TO GROUND

1. Measure the resistance between ground and the (D51) and (D64) CAN C Bus (-) circuits.

Is any resistance present?

Yes

- Repair the (D51) or (D64) CAN C Bus (-) circuit for a short to ground.
- Perform the BODY VERIFICATION TEST. (Refer to 28 - DTC-Based Diagnostics/MODULE, Totally Integrated Power (TIPM) - Standard Procedure).

No

- Go To 12

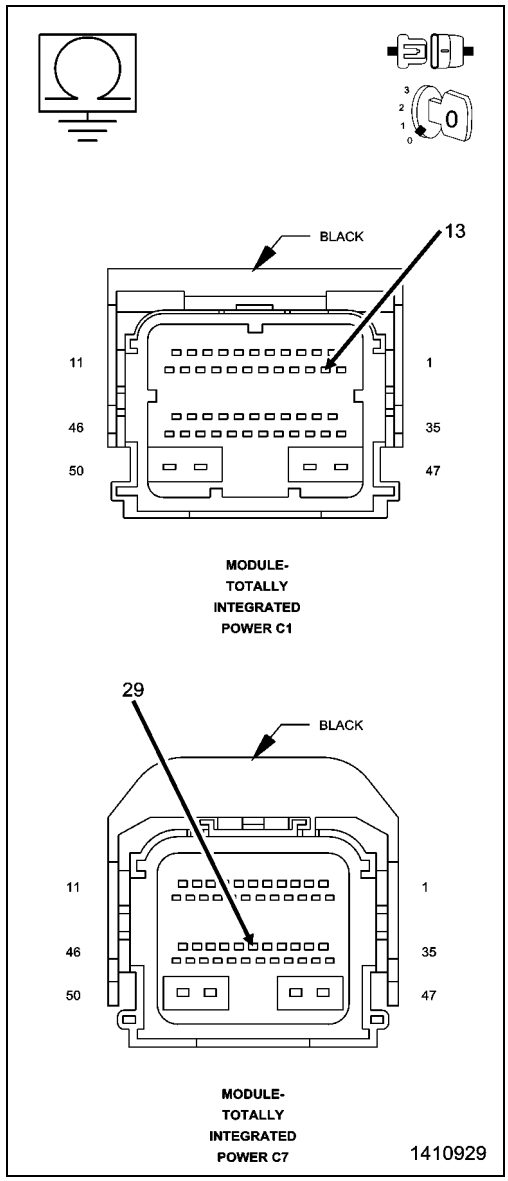

12. (D52) OR (D65) CAN C BUS (+) CIRCUIT SHORTED TO (D51) OR (D64) CAN C BUS (-) CIRCUIT

1. Measure the resistance between the (D52) or (D65) CAN C Bus (+) circuits and the (D51) or (D64) CAN C Bus (-) circuits.

Is any resistance present?

Yes

- Repair the (D52) or (D65) CAN C Bus (+) circuits for a short to the (D51) or (D64) CAN C Bus (-) circuits.
- Perform the BODY VERIFICATION TEST. (Refer to 28 - DTC-Based Diagnostics/MODULE, Totally Integrated Power (TIPM) - Standard Procedure).

No

- Inspect the wiring and connectors for damage or shorted circuits. If ok, replace and program the Totally Integrated Power Module in accordance with the Service Information.
- Perform the BODY VERIFICATION TEST. (Refer to 28 - DTC-Based Diagnostics/MODULE, Totally Integrated Power (TIPM) - Standard Procedure).

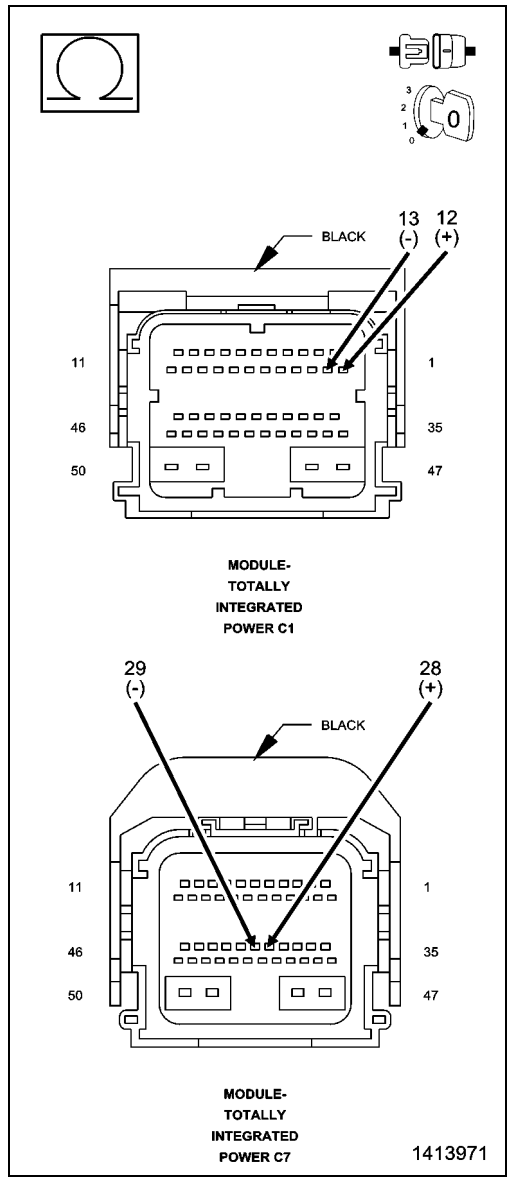

U0010-CAN INTERIOR BUS

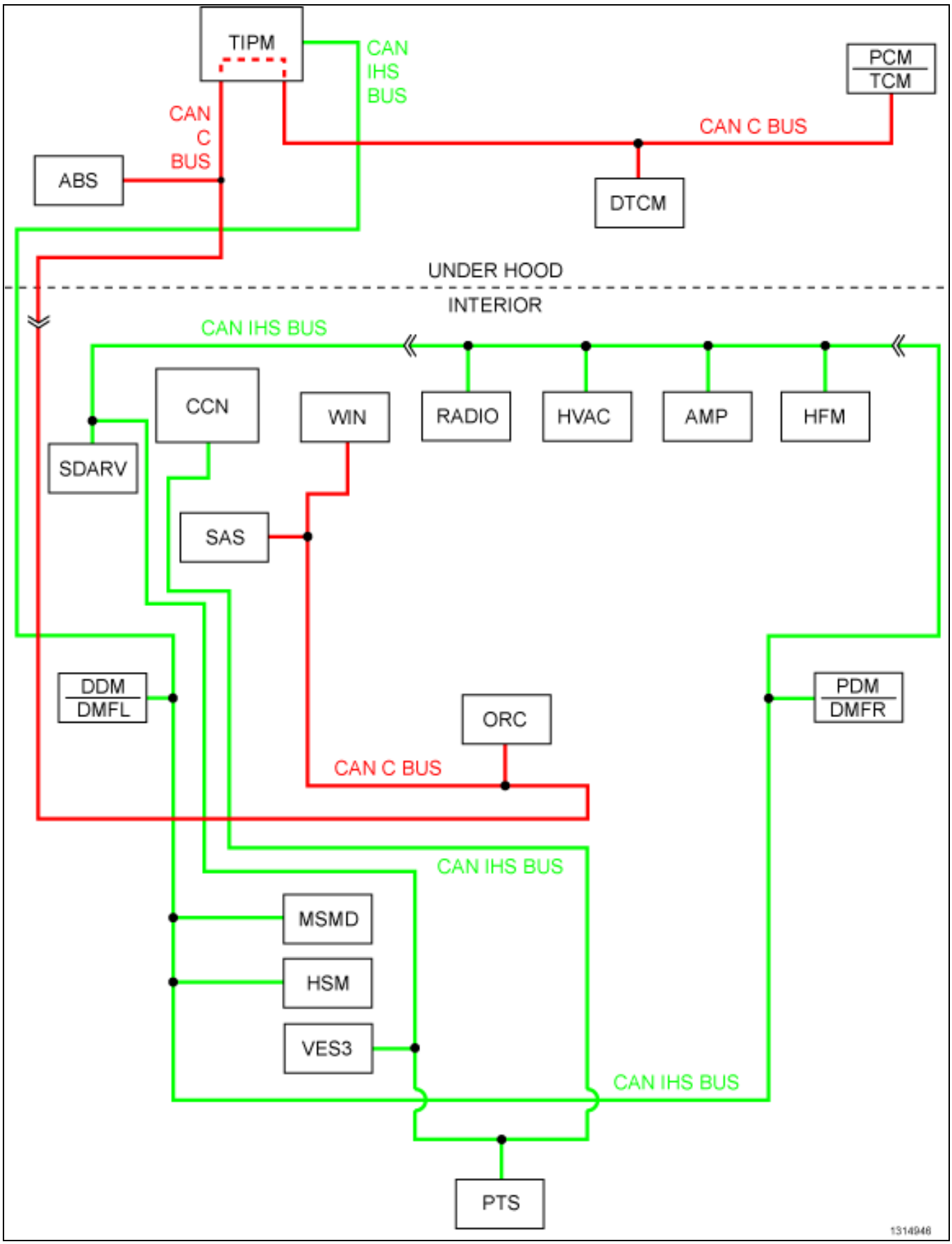

For a complete wiring diagram, **refer to the Wiring Information**.

Theory of Operation

The primary communication network between electronic control modules on this vehicle is the Controller Area Network (CAN) data bus system. The Controller Area Network (CAN) data bus allows all electronic modules connected to the bus to share information with each other. Regardless of whether a message originates from a module on the higher speed CAN C (500K) Bus or on the lower speed CAN Interior High Speed (IHS) (125K) Bus the message structure and layout is similar, which allows the Totally Integrated Power Module/Central GateWay (TIPM or TIPMCGW) to process and transfer messages between the CAN buses. The TIPM also stores Diagnostic Trouble Codes (DTCs) for certain bus network faults.

All modules transmit and receive messages over one of these buses. Data exchange between the modules is achieved by serial transmission of encoded data messages (a form of transmission in which data bits are sent sequentially, one at a time, over a single line). Each module can both send and receive serial data simultaneously. Each data bit of a CAN Bus message is carried over the bus as a voltage differential between the two bus circuits which, when strung together, form a message. Each module uses arbitration to sort the message priority if two competing messages are attempting to be broadcast at the same time. Corruption of a single bit within a message will corrupt the entire message. Each message contains a Cyclic Redundancy Check (CRC) which specifies the message size exactly. If the message detected conflicts with the CRC the ECU receiving it will determine the message to be an error and consider that communication has not been possible. Diagnosis of this condition using a lab scope may reveal activity that appears to be Bus data messages even if no actual communication is possible. Communication problems that affect the whole bus, as a result of opens and terminal push outs are more likely to occur on data busses that operate at a high speed than a data bus that operates at a lower speed.

When an open circuit or terminal push out occurs one or more modules can become isolated from the remainder of the bus. The isolated module will attempt to communicate. Since each module contains it own termination a module that is isolated may receive its own messages correctly but will not be able to receive messages or determine arbitration from other modules. Each time the isolated module attempts to communicate it alters the bus voltage on the intact bus circuit. Without functioning arbitration the isolated module alters the bus voltage while other bus messages are being sent thereby corrupting the messages on the remainder of the bus.

The CAN bus modules are connected in parallel to the two-wire bus using a twisted pair, where the wires are wrapped around each other to provide shielding from unwanted electromagnetic induction, thus preventing interference with the relatively low voltage signals being carried through them. While the CAN bus is operating (active), one of the bus wires will carry a higher voltage and is referred to as the CAN High or CAN bus (+) wire, while the other bus wire will carry a lower voltage and is referred to as the CAN Low or CAN bus (–) wire.

- **When Monitored:**

  With the ignition on.
- **Set Condition:**

  The Totally Integrated Power Module (TIPM) detects a short to ground on the CAN Interior Bus (125K)(+) circuit or a short to voltage on the CAN Interior Bus (125K)(-) circuit.

Possible Causes
(D265) CAN INTERIOR BUS (125K)(+) CIRCUIT SHORTED TO GROUND
(D264) CAN INTERIOR BUS (125K)(-) CIRCUIT SHORTED TO VOLTAGE
ANY CAN INTERIOR BUS MODULE
TOTALLY INTEGRATED POWER MODULE (TIPM)

1. TEST FOR INTERMITTENT CONDITION

1. Turn the ignition on.
2. Using the scan tool, record and erase TIPM DTCs.
3. Cycle the ignition from on to off three times.
4. Turn the ignition on.
5. Using the scan tool, read active TIPM DTCs.

Does the scan tool display this DTC as active?

Yes

- Go To 2

No

- The conditions that caused this code to set are not present at this time. Using the wiring diagram/schematic as a guide, inspect the wiring and connectors.

2. ANY CAN INTERIOR BUS (125K) MODULE-INTERNAL SHORT

NOTE: When performing this step, turn the ignition off (wait one minute) before disconnecting any module. When the module is disconnected turn the ignition on.

NOTE: This step is to determine if the fault is internal within a module.

1. While monitoring the scan tool, disconnect each CAN Interior Bus (125K) module (except for the TIPM itself), one at a time.
2. Check for this DTC to become active after disconnecting each CAN Interior Bus (125K) module the vehicle is equipped with.

NOTE: If the DTC becomes stored when a particular module is disconnected, that module is causing the DTC to set.

With all the CAN Interior Bus modules disconnected does the scan tool display this DTC as active?

Yes

- Go To 3

No

- Replace the module that when disconnected caused this DTC to become stored in accordance with the Service Information.
- Perform the appropriate verification test.

3. (D265) CAN INTERIOR BUS (125K)(+) CIRCUIT SHORTED TO GROUND

1. Turn the ignition off.
2. Measure the resistance between ground and the (D265) CAN Interior Bus (125K)(+) circuit at the TIPM C7 harness connector.

Is any resistance present?

Yes

- Repair the (D265) CAN Interior Bus (125K)(+) circuit for a short to ground.
- Perform the BODY VERIFICATION TEST. (Refer to 28 - DTC-Based Diagnostics/MODULE, Totally Integrated Power (TIPM) - Standard Procedure).

No

- Go To 4

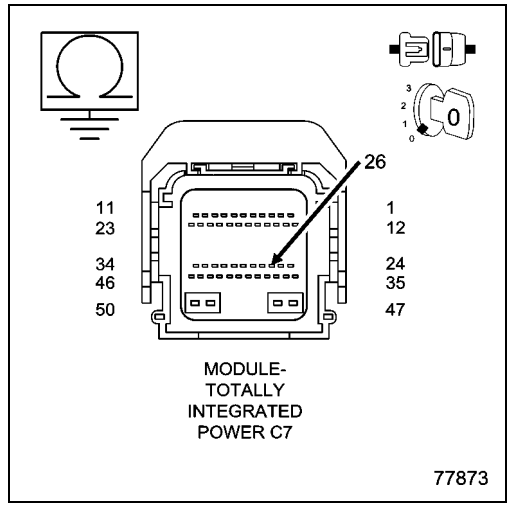

4. (D264) CAN INTERIOR BUS (125K)(-) CIRCUIT SHORTED TO VOLTAGE

1. Turn the ignition on.
2. Measure the voltage at the (D264) CAN Interior Bus (125K)(-) circuit at the TIPM C7 harness connector.

Is the voltage above 6 volts?

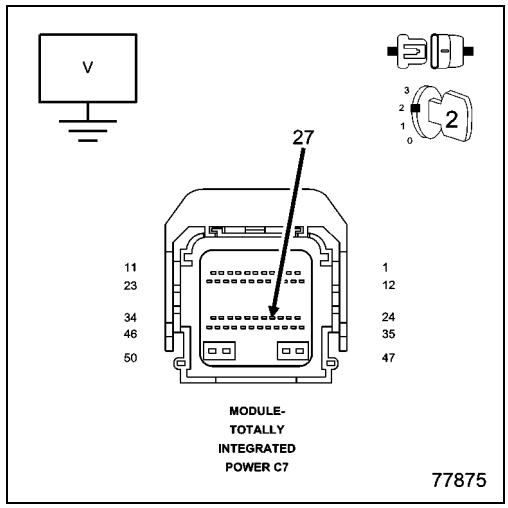

Yes

- Repair the (D264) CAN Interior Bus (125K)(-) circuit for a short to voltage.
- Perform the BODY VERIFICATION TEST. (Refer to 28 - DTC-Based Diagnostics/MODULE, Totally Integrated Power (TIPM) - Standard Procedure).

No

- Inspect the wiring and connectors for damage or shorted circuits. If ok, replace and program the Totally Integrated Power Module in accordance with the Service Information.
- Perform the BODY VERIFICATION TEST. (Refer to 28 - DTC-Based Diagnostics/MODULE, Totally Integrated Power (TIPM) - Standard Procedure).

U0100-LOST COMMUNICATION WITH ECM/PCM

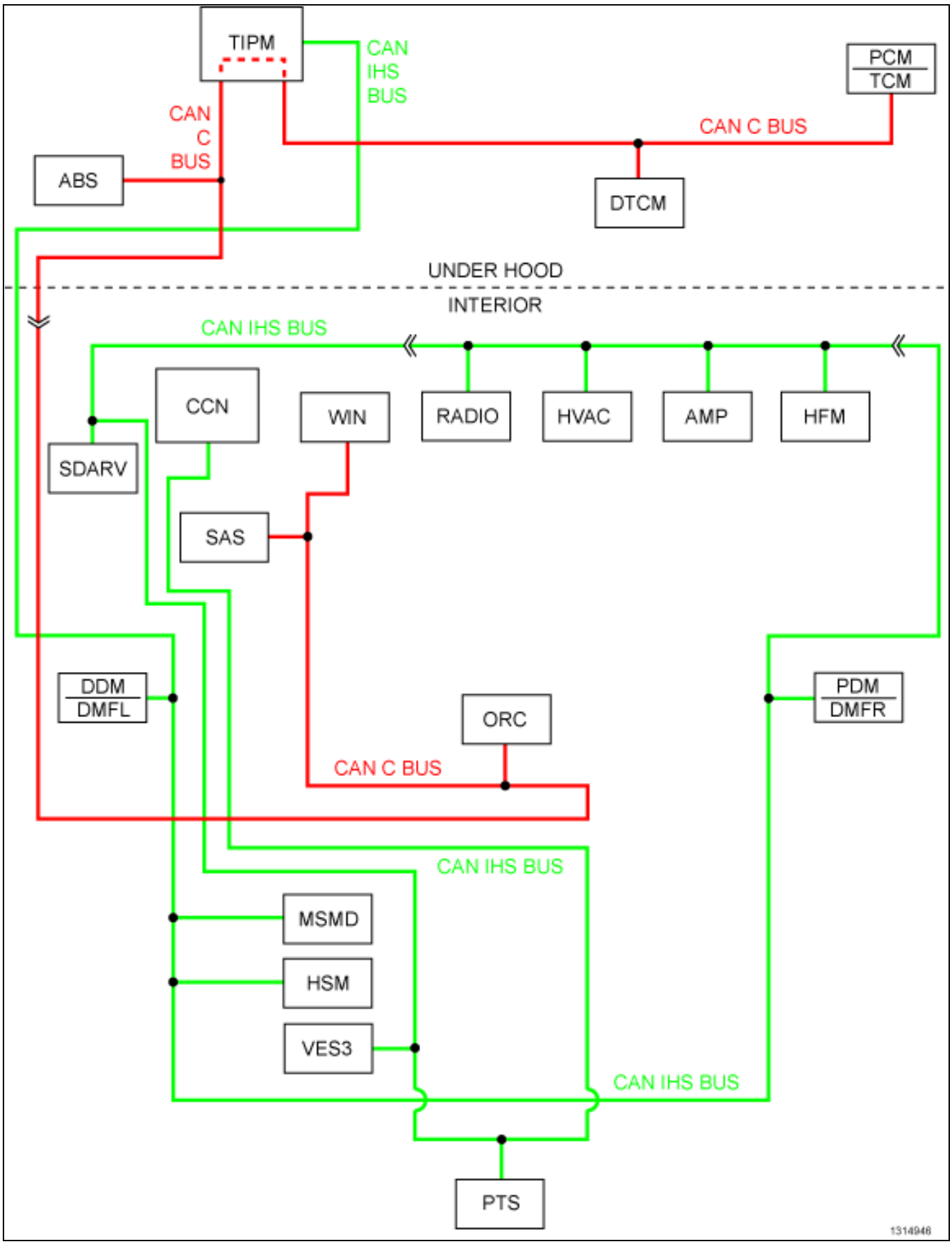

For a complete wiring diagram, **refer to the Wiring Information**.

Theory of Operation

The primary communication network between electronic control modules on this vehicle is the Controller Area Network (CAN) data bus system. The Controller Area Network (CAN) data bus allows all electronic modules connected to the bus to share information with each other. Regardless of whether a message originates from a module on the higher speed CAN C (500K) Bus or on the lower speed CAN Interior High Speed (IHS) (125K) Bus the message structure and layout is similar, which allows the Totally Integrated Power Module/Central GateWay (TIPM or TIPMCGW) to process and transfer messages between the CAN buses. The TIPM also stores Diagnostic Trouble Codes (DTCs) for certain bus network faults.

All modules transmit and receive messages over one of these buses. Data exchange between the modules is achieved by serial transmission of encoded data messages (a form of transmission in which data bits are sent sequentially, one at a time, over a single line). Each module can both send and receive serial data simultaneously. Each data bit of a CAN Bus message is carried over the bus as a voltage differential between the two bus circuits which, when strung together, form a message. Each module uses arbitration to sort the message priority if two competing messages are attempting to be broadcast at the same time. Corruption of a single bit within a message will corrupt the entire message. Each message contains a Cyclic Redundancy Check (CRC) which specifies the message size exactly. If the message detected conflicts with the CRC the ECU receiving it will determine the message to be an error and consider that communication has not been possible. Diagnosis of this condition using a lab scope may reveal activity that appears to be Bus data messages even if no actual communication is possible. Communication problems that affect the whole bus, as a result of opens and terminal push outs are more likely to occur on data busses that operate at a high speed than a data bus that operates at a lower speed.

When an open circuit or terminal push out occurs one or more modules can become isolated from the remainder of the bus. The isolated module will attempt to communicate. Since each module contains it own termination a module that is isolated may receive its own messages correctly but will not be able to receive messages or determine arbitration from other modules. Each time the isolated module attempts to communicate it alters the bus voltage on the intact bus circuit. Without functioning arbitration the isolated module alters the bus voltage while other bus messages are being sent thereby corrupting the messages on the remainder of the bus.

The CAN bus modules are connected in parallel to the two-wire bus using a twisted pair, where the wires are wrapped around each other to provide shielding from unwanted electromagnetic induction, thus preventing interference with the relatively low voltage signals being carried through them. While the CAN bus is operating (active), one of the bus wires will carry a higher voltage and is referred to as the CAN High or CAN bus (+) wire, while the other bus wire will carry a lower voltage and is referred to as the CAN Low or CAN bus (-) wire.

- **When Monitored:**
  With the ignition on.
  Battery voltage between 10 and 16 volts.
  Ignition Off Draw (IOD) fuse installed.
  Totally Integrated Power Module (TIPM) is configured correctly.
- **Set Condition:**
  Bus messages not received from the Powertrain Control Module (PCM) for approximately two to five seconds.

Possible Causes
CAN C BUS(+) CIRCUIT SHORTED TO VOLTAGE
CAN C BUS(-) CIRCUIT SHORTED TO GROUND
DTCS RELATED TO BATTERY VOLTAGE, IGNITION, OR VIN MESSAGES
TIPM NOT CONFIGURED CORRECTLY
PCM POWER AND GROUND
POWERTRAIN CONTROL MODULE (PCM)
MODULE THAT SET THIS DTC

1. VERIFY THE DIAGNOSTIC TROUBLE CODE (DTC) IS ACTIVE

NOTE: Make sure the IOD fuse is installed and battery voltage is between 10 and 16 volts before proceeding.

1. Using the scan tool, read active DTCs.

Is this DTC active?

Yes

- Go To 2

No

- (Refer to 29 - Non-DTC Diagnostics/Communication - Diagnosis and Testing) and perform the Stored Lost Communication diagnostic procedure.

2. CHECK FOR ANY OF THE FOLLOWING ACTIVE DTCS

1. Using the scan tool, read all active DTCs from all modules.

NOTE: Check for TIPM configuration, CAN C hardware electrical, VIN Missing/Mismatch, battery or ignition related DTCs.

Does the scan tool display any active DTCs to the conditions listed above?

Yes

- Perform the appropriate diagnostic procedure.

No

- Go To 3

3. VERIFY THAT THE PCM IS ACTIVE ON THE BUS

1. Turn the ignition on.
2. Using the scan tool, select Network Diagnostics.
3. Verify that the PCM is active on the bus.

Is the PCM active on the bus?

Yes

- Go To 4

No

- Perform the appropriate No Response diagnostic procedure. (Refer to 29 - Non-DTC Diagnostics/Communication - Diagnosis and Testing)

4. CHECK FOR ADDITIONAL COMMUNICATION RELATED DTCS

1. Using the scan tool, select Network Diagnostics.

Is there more than one module with active DTCs “Logged Against” the PCM?

Yes

- Replace/update the Powertrain Control Module in accordance with the Service Information.
- Perform the POWERTRAIN VERIFICATION TEST. (Refer to 28 - DTC-Based Diagnostics/MODULE, Powertrain Control (PCM) - Standard Procedure).

No

- Go To 5

5. CLEAR DTC IN MODULE SETTING FAULT

1. Using the scan tool, select the module setting the DTC against the PCM.
2. Clear active DTCs.

Is this DTC still active?

Yes

- Replace/update the module that set this DTC in accordance with the Service Information.
- Perform the appropriate verification test.

No

- Go To 6

6. CYCLE IGNITION

1. Cycle the ignition from RUN to OFF three times ending with the key in the RUN position.

Does this DTC become active?

Yes

- Go To 7

No

- The condition is not present at this time. Using the wiring diagram/schematic as a guide, inspect the wiring for chafed, pierced, pinched and partially broken wires and the wiring harness connectors for broken, bent, pushed out and corroded terminals.
- Perform the BODY VERIFICATION TEST. (Refer to 28 - DTC-Based Diagnostics/MODULE, Totally Integrated Power (TIPM) - Standard Procedure).

7. CHECK FOR ADDITIONAL LOST COMMUNICATION FAULTS

1. Using the scan tool, select Network Diagnostics.

Does the TIPM and other CAN C BUS modules show Lost Communication with the remaining CAN C BUS modules?

Yes

- Go To 8

No

- Replace/update the module that set this DTC in accordance with the Service Information.
- Perform the appropriate verification test.

8. (D52) OR (D65) CAN C BUS (+) CIRCUIT SHORTED TO VOLTAGE

1. Measure the voltage between the (D52) CAN C Bus (+) circuit and ground.
2. Measure the voltage between the (D65) CAN C Bus (+) circuit and ground.

Is the voltage above 5 volts?

Yes

- Repair the (D52) or (D65) CAN C Bus (+) circuit for a short to voltage.
- Perform the BODY VERIFICATION TEST. (Refer to 28 - DTC-Based Diagnostics/MODULE, Totally Integrated Power (TIPM) - Standard Procedure).

No

- Go To 9

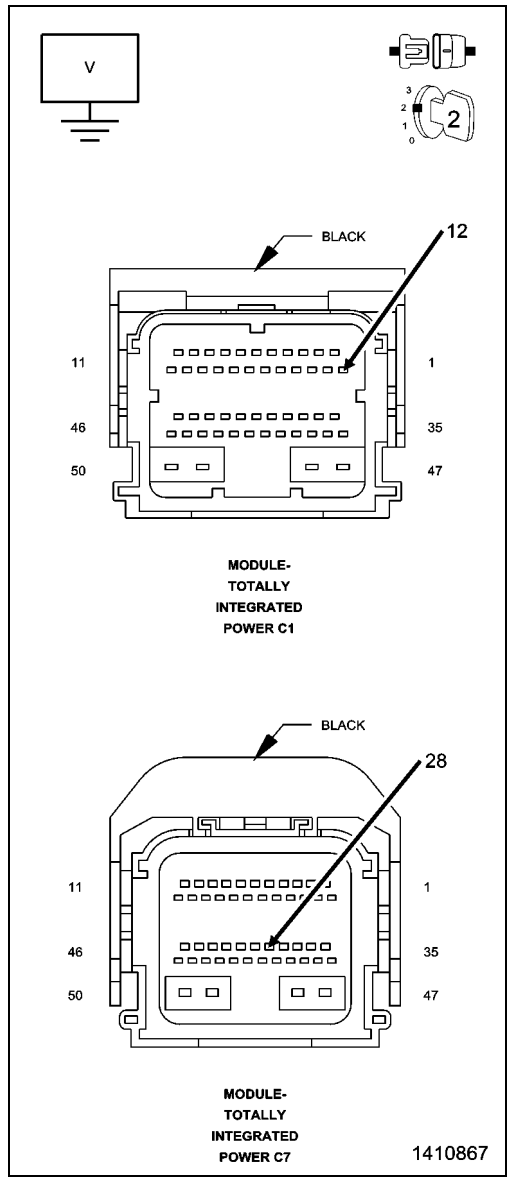

9. (D51) OR (D64) CAN C BUS (-) CIRCUIT SHORTED TO GROUND

1. Turn the ignition off.
2. Measure the resistance between ground and the (D51) CAN C Bus (-) circuit.
3. Measure the resistance between ground and the (D64) CAN C Bus (-) circuit.

Is the resistance below 10K Ohms?

Yes

- Repair the (D51) or (D64) CAN C Bus (-) circuit for a short to ground.
- Perform the BODY VERIFICATION TEST. (Refer to 28 - DTC-Based Diagnostics/MODULE, Totally Integrated Power (TIPM) - Standard Procedure).

No

- Replace/update the module that set this DTC in accordance with the Service Information.
- Perform the appropriate verification test.

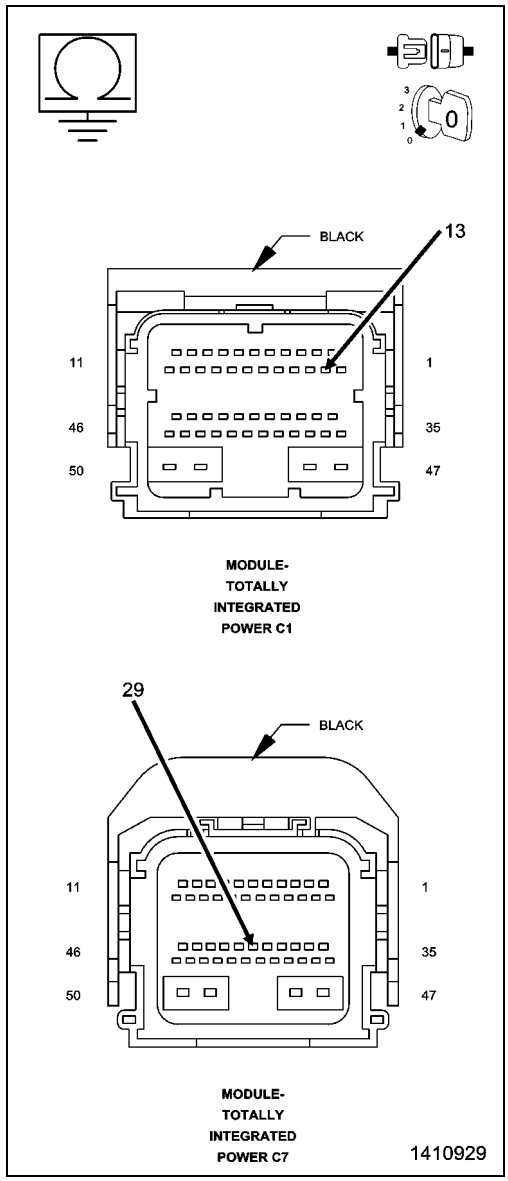

U0101-LOST COMMUNICATION WITH TCM

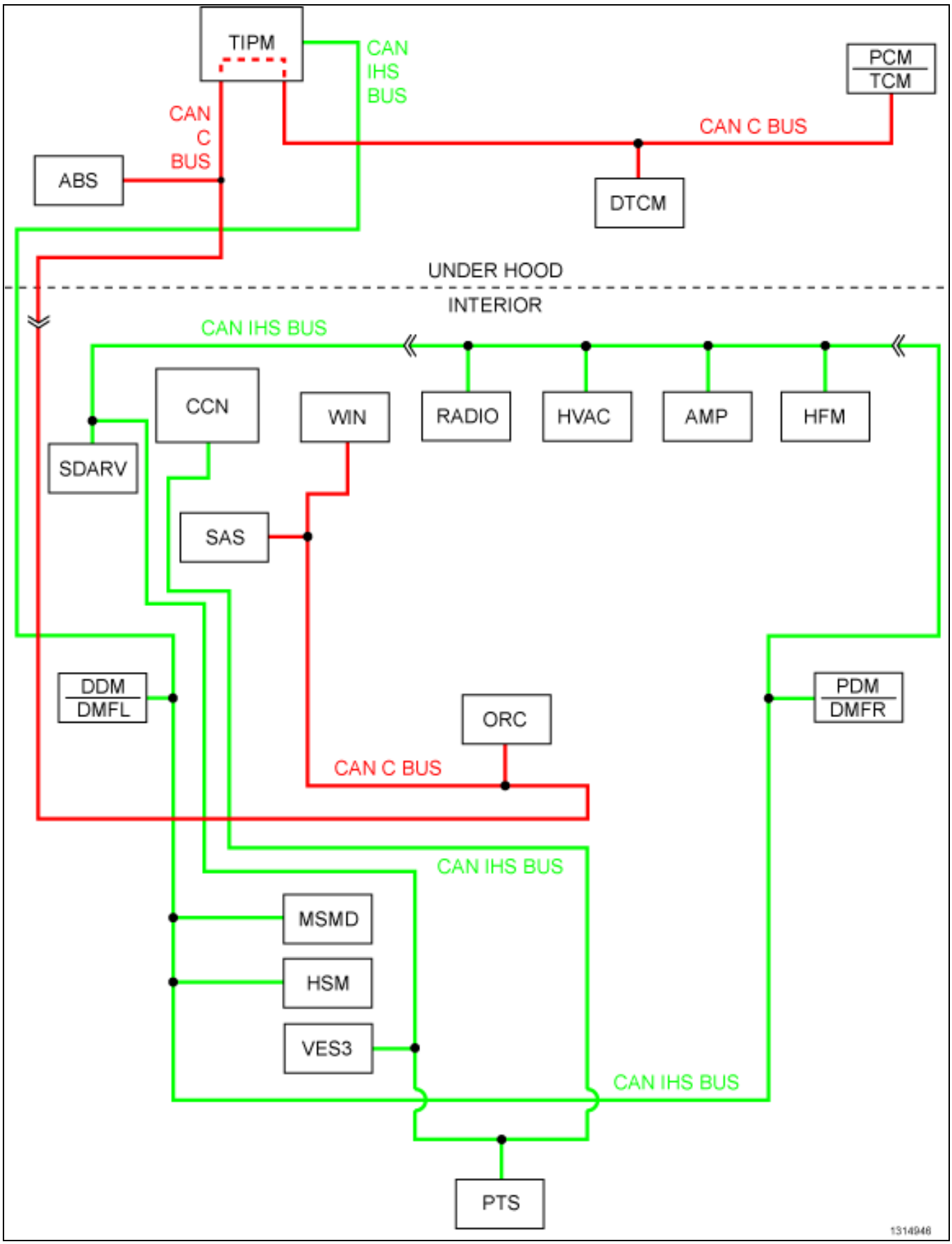

For a complete wiring diagram, **refer to the Wiring Information**.

Theory of Operation

The primary communication network between electronic control modules on this vehicle is the Controller Area Network (CAN) data bus system. The Controller Area Network (CAN) data bus allows all electronic modules connected to the bus to share information with each other. Regardless of whether a message originates from a module on the higher speed CAN C (500K) Bus or on the lower speed CAN Interior High Speed (IHS) (125K) Bus the message structure and layout is similar, which allows the Totally Integrated Power Module/Central GateWay (TIPM or TIPMCGW) to process and transfer messages between the CAN buses. The TIPM also stores Diagnostic Trouble Codes (DTCs) for certain bus network faults.

All modules transmit and receive messages over one of these buses. Data exchange between the modules is achieved by serial transmission of encoded data messages (a form of transmission in which data bits are sent sequentially, one at a time, over a single line). Each module can both send and receive serial data simultaneously. Each data bit of a CAN Bus message is carried over the bus as a voltage differential between the two bus circuits which, when strung together, form a message. Each module uses arbitration to sort the message priority if two competing messages are attempting to be broadcast at the same time. Corruption of a single bit within a message will corrupt the entire message. Each message contains a Cyclic Redundancy Check (CRC) which specifies the message size exactly. If the message detected conflicts with the CRC the ECU receiving it will determine the message to be an error and consider that communication has not been possible. Diagnosis of this condition using a lab scope may reveal activity that appears to be Bus data messages even if no actual communication is possible. Communication problems that affect the whole bus, as a result of opens and terminal push outs are more likely to occur on data busses that operate at a high speed than a data bus that operates at a lower speed.

When an open circuit or terminal push out occurs one or more modules can become isolated from the remainder of the bus. The isolated module will attempt to communicate. Since each module contains it own termination a module that is isolated may receive its own messages correctly but will not be able to receive messages or determine arbitration from other modules. Each time the isolated module attempts to communicate it alters the bus voltage on the intact bus circuit. Without functioning arbitration the isolated module alters the bus voltage while other bus messages are being sent thereby corrupting the messages on the remainder of the bus.

The CAN bus modules are connected in parallel to the two-wire bus using a twisted pair, where the wires are wrapped around each other to provide shielding from unwanted electromagnetic induction, thus preventing interference with the relatively low voltage signals being carried through them. While the CAN bus is operating (active), one of the bus wires will carry a higher voltage and is referred to as the CAN High or CAN bus (+) wire, while the other bus wire will carry a lower voltage and is referred to as the CAN Low or CAN bus (–) wire.

- **When Monitored:**
  With the ignition on.
  Battery voltage between 10 and 16 volts.
  Ignition Off Draw (IOD) fuse installed.
  Totally Integrated Power Module (TIPM) is configured correctly.
- **Set Condition:**
  Bus messages not received from the Transmission Control Module (TCM) for approximately two to five seconds.

Possible Causes
CAN C BUS(+) CIRCUIT SHORTED TO VOLTAGE
CAN C BUS(-) CIRCUIT SHORTED TO GROUND
DTCS RELATED TO BATTERY VOLTAGE, IGNITION, OR VIN MESSAGES
TIPM NOT CONFIGURED CORRECTLY
TCM POWER AND GROUND
TRANSMISSION CONTROL MODULE (TCM)
MODULE THAT SET THIS DTC

1. VERIFY THE DIAGNOSTIC TROUBLE CODE (DTC) IS ACTIVE

NOTE: Make sure the IOD fuse is installed and battery voltage is between 10 and 16 volts before proceeding.

1. Using the scan tool, read active DTCs.

Is this DTC active?

Yes

- Go To 2

No

- (Refer to 29 - Non-DTC Diagnostics/Communication - Diagnosis and Testing) and perform the Stored Lost Communication DTCs diagnostic procedure.

2. CHECK FOR ANY OF THE FOLLOWING ACTIVE DTCS

1. Using the scan tool, read all active DTCs from all modules.

NOTE: Check for TIPM configuration, CAN C hardware electrical, VIN Missing/Mismatch, battery or ignition related DTCs.

Does the scan tool display any active DTCs to the conditions listed above?

Yes

- Perform the appropriate diagnostic procedure.

No

- Go To 3

3. VERIFY THAT THE TCM IS ACTIVE ON THE BUS

1. Turn the ignition on.
2. Using the scan tool, select Network Diagnostics.
3. Verify that the TCM is active on the bus.

Is the TCM active on the bus?

Yes

- Go To 4

No

- (Refer to 29 - Non-DTC Diagnostics/Communication - Diagnosis and Testing) and perform the No Response TCM diagnostic procedure.

4. CHECK FOR ADDITIONAL COMMUNICATION RELATED DTCS

1. Using the scan tool, select Network Diagnostics.

Is there more than one module with active DTCs “Logged Against” the TCM?

Yes

- Replace/update the Transmission Control Module in accordance with the Service Information.
- Perform the POWERTRAIN VERIFICATION TEST. (Refer to 28 - DTC-Based Diagnostics/MODULE, Powertrain Control (PCM) - Standard Procedure)

No

- Go To 5

5. CLEAR DTC IN MODULE SETTING FAULT

1. Using the scan tool, select the module setting the DTC against the TCM.
2. Clear active DTCs.

Is this DTC still active?

Yes

- Replace/update the module that set this DTC in accordance with the Service Information.
- Perform the appropriate verification test.

No

- Go To 6

6. CYCLE IGNITION

1. Cycle the ignition from RUN to OFF three times ending with the key in the RUN position.

Does this DTC become active?

Yes

- Go To 7

No

- The condition is not present at this time. Using the wiring diagram/schematic as a guide, inspect the wiring for chafed, pierced, pinched, and partially broken wires and the wiring harness connectors for broken, bent, pushed out, and corroded terminals.
- Perform the appropriate VERIFICATION TEST.

7. CHECK FOR ADDITIONAL LOST COMMUNICATION FAULTS

1. Using the scan tool, select Network Diagnostics.

Does the TIPM and other CAN C BUS modules show Lost Communication with the remaining CAN C BUS modules?

Yes

- Go To 8

No

- Replace/update the module that set this DTC in accordance with the Service Information.
- Perform the appropriate verification test.

8. (D52) OR (D65) CAN C BUS (+) CIRCUIT SHORTED TO VOLTAGE

1. Measure the voltage between the (D52) CAN C Bus (+) circuit and ground.
2. Measure the voltage between the (D65) CAN C Bus (+) circuit and ground.

Is the voltage above 5 volts?

Yes

- Repair the (D52) or (D65) CAN C Bus (+) circuit for a short to voltage.
- Perform the BODY VERIFICATION TEST. (Refer to 28 - DTC-Based Diagnostics/MODULE, Totally Integrated Power (TIPM) - Standard Procedure).

No

- Go To 9

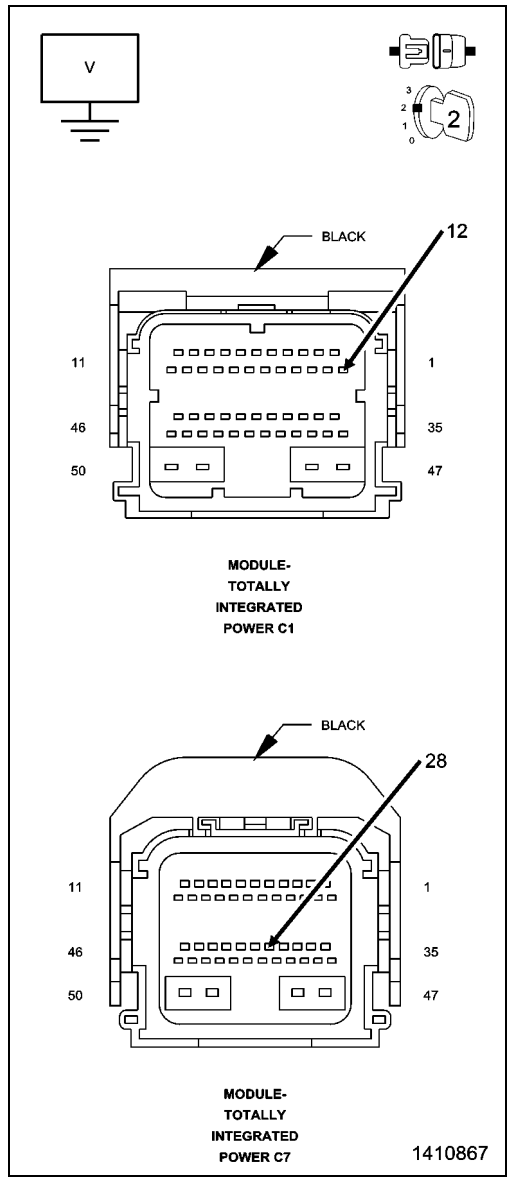

9. (D51) OR (D64) CAN C BUS (-) CIRCUIT SHORTED TO GROUND

1. Turn the ignition off.
2. Measure the resistance between ground and the (D51) CAN C Bus (-) circuit.
3. Measure the resistance between ground and the (D64) CAN C Bus (-) circuit.

Is the resistance below 10K Ohms?

Yes

- Repair the (D51) or (D64) CAN C Bus (-) circuit for a short to ground.
- Perform the BODY VERIFICATION TEST. (Refer to 28 - DTC-Based Diagnostics/MODULE, Totally Integrated Power (TIPM) - Standard Procedure).

No

- Replace/update the module that set this DTC in accordance with the Service Information.
- Perform the appropriate verification test.

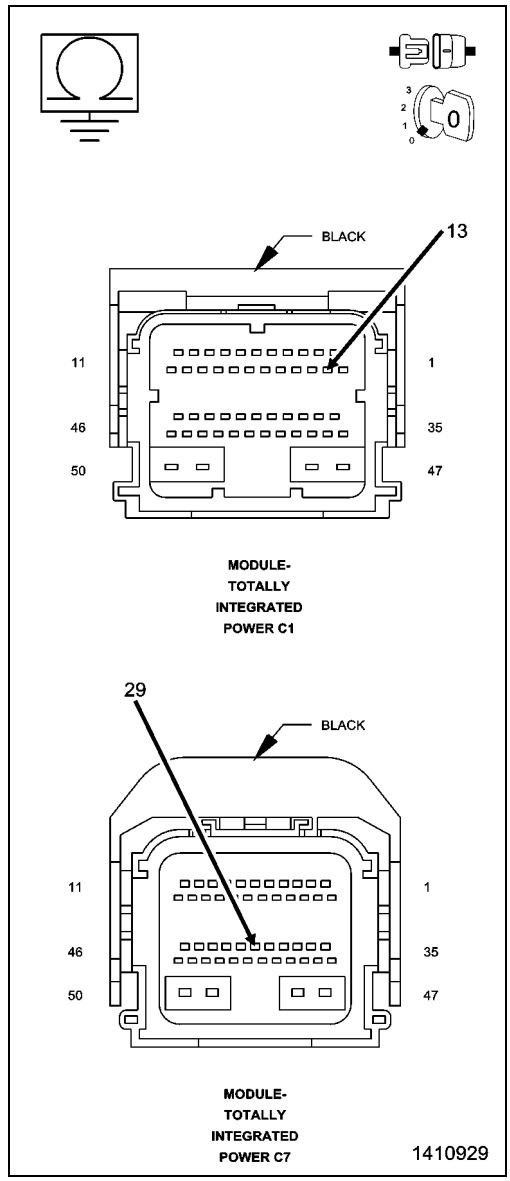

U0102-LOST COMMUNICATION WITH TRANSFER CASE CONTROL MODULE / AWD

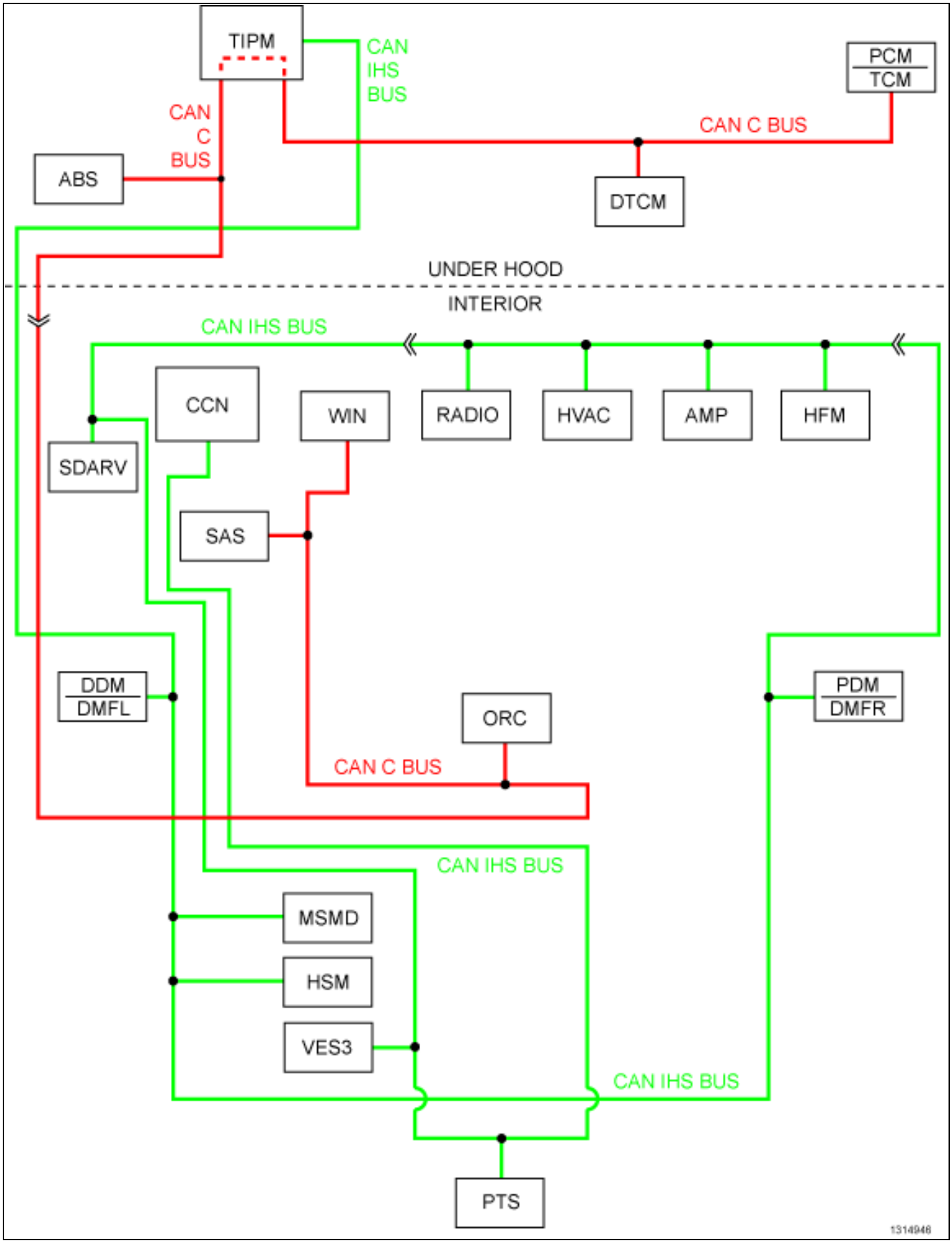

For a complete wiring diagram, **refer to the Wiring Information**.

Theory of Operation

The primary communication network between electronic control modules on this vehicle is the Controller Area Network (CAN) data bus system. The Controller Area Network (CAN) data bus allows all electronic modules connected to the bus to share information with each other. Regardless of whether a message originates from a module on the higher speed CAN C (500K) Bus or on the lower speed CAN Interior High Speed (IHS) (125K) Bus the message structure and layout is similar, which allows the Totally Integrated Power Module/Central GateWay (TIPM or TIPMCGW) to process and transfer messages between the CAN buses. The TIPM also stores Diagnostic Trouble Codes (DTCs) for certain bus network faults.

All modules transmit and receive messages over one of these buses. Data exchange between the modules is achieved by serial transmission of encoded data messages (a form of transmission in which data bits are sent sequentially, one at a time, over a single line). Each module can both send and receive serial data simultaneously. Each data bit of a CAN Bus message is carried over the bus as a voltage differential between the two bus circuits which, when strung together, form a message. Each module uses arbitration to sort the message priority if two competing messages are attempting to be broadcast at the same time. Corruption of a single bit within a message will corrupt the entire message. Each message contains a Cyclic Redundancy Check (CRC) which specifies the message size exactly. If the message detected conflicts with the CRC the ECU receiving it will determine the message to be an error and consider that communication has not been possible. Diagnosis of this condition using a lab scope may reveal activity that appears to be Bus data messages even if no actual communication is possible. Communication problems that affect the whole bus, as a result of opens and terminal push outs are more likely to occur on data busses that operate at a high speed than a data bus that operates at a lower speed.

When an open circuit or terminal push out occurs one or more modules can become isolated from the remainder of the bus. The isolated module will attempt to communicate. Since each module contains it own termination a module that is isolated may receive its own messages correctly but will not be able to receive messages or determine arbitration from other modules. Each time the isolated module attempts to communicate it alters the bus voltage on the intact bus circuit. Without functioning arbitration the isolated module alters the bus voltage while other bus messages are being sent thereby corrupting the messages on the remainder of the bus.

The CAN bus modules are connected in parallel to the two-wire bus using a twisted pair, where the wires are wrapped around each other to provide shielding from unwanted electromagnetic induction, thus preventing interference with the relatively low voltage signals being carried through them. While the CAN bus is operating (active), one of the bus wires will carry a higher voltage and is referred to as the CAN High or CAN bus (+) wire, while the other bus wire will carry a lower voltage and is referred to as the CAN Low or CAN bus (–) wire.

- **When Monitored:**
  With the ignition on.
  Battery voltage between 10 and 16 volts.
  Ignition Off Draw (IOD) fuse installed.
  Totally Integrated Power Module (TIPM) is configured correctly.
- **Set Condition:**
  Bus messages not received from the Drivetrain Control Module (DTCM) for approximately two to five seconds.

Possible Causes
CAN C BUS(+) CIRCUIT SHORTED TO VOLTAGE
CAN C BUS(-) CIRCUIT SHORTED TO GROUND
DTCS RELATED TO BATTERY VOLTAGE, IGNITION, OR VIN MESSAGES
TIPM NOT CONFIGURED CORRECTLY
DTCM POWER AND GROUND
DRIVETRAIN CONTROL MODULE (DTCM)
MODULE THAT SET THIS DTC

1. VERIFY THE DIAGNOSTIC TROUBLE CODE (DTC) IS ACTIVE

NOTE: Make sure the IOD fuse is installed and battery voltage is between 10 and 16 volts before proceeding.

1. With the scan tool, read active DTCs.

Is this DTC active?

Yes

- Go To 2

No

- (Refer to 29 - Non-DTC Diagnostics/Communication - Diagnosis and Testing) and perform the Stored Lost Communication DTCs diagnostic procedure.

2. CHECK FOR ANY OF THE FOLLOWING ACTIVE DTCS

1. With the scan tool, read all active DTCs from all modules.

NOTE: Check for TIPM configuration, CAN C hardware electrical, VIN Missing/Mismatch, battery or ignition related DTCs.

Does the scan tool display any active DTCs to the conditions listed above?

Yes

- Perform the appropriate diagnostic procedure.

No

- Go To 3

3. VERIFY THAT THE DTCM IS ACTIVE ON THE BUS

1. Turn the ignition on.
2. With the scan tool, select Network Diagnostics.
3. Verify that the DTCM is active on the bus.

Is the DTCM active on the bus?

Yes

- Go To 4

No

- (Refer to 29 - Non-DTC Diagnostics/Communication - Diagnosis and Testing) and perform the No Response from DTCM diagnostic procedure.

4. CHECK FOR ADDITIONAL COMMUNICATION RELATED DTCS

1. With the scan tool, select Network Diagnostics.

Is there more than one module with active DTCs “Logged Against” the DTCM?

Yes

- Replace/update the Drivetrain Control Module in accordance with the Service Information.
- Perform the DTCM VERIFICATION TEST. (Refer to 28 - DTC-Based Diagnostics/MODULE, Drivetrain Control (DTCM) - Standard Procedure)

No

- Go To 5

5. CLEAR DTC IN MODULE SETTING FAULT

1. With the scan tool, select the module setting the DTC against the DTCM.
2. Clear active DTCs.

Is this DTC still active?

Yes

- Replace/update the module that set this DTC in accordance with the Service Information.
- Perform the appropriate verification test.

No

- Go To 6

6. CYCLE IGNITION

1. Cycle the ignition from RUN to OFF three times ending with the key in the RUN position.

Does this DTC become active?

Yes

- Go To 7

No

- The condition is not present at this time. Using the wiring diagram/schematic as a guide, inspect the wiring for chafed, pierced, pinched, and partially broken wires and the wiring harness connectors for broken, bent, pushed out, and corroded terminals.
- Perform the BODY VERIFICATION TEST. (Refer to 28 - DTC-Based Diagnostics/MODULE, Totally Integrated Power (TIPM) - Standard Procedure).

7. CHECK FOR ADDITIONAL LOST COMMUNICATION FAULTS

1. With the scan tool, select Network Diagnostics.

Does the TIPM and other CAN C BUS modules show Lost Communication with the remaining CAN C BUS modules?

Yes

- Go To 8

No

- Replace/update the module that set this DTC in accordance with the Service Information.
- Perform the appropriate verification test.

8. (D52) OR (D65) CAN C BUS (+) CIRCUIT SHORTED TO VOLTAGE

1. Measure the voltage between the (D52) CAN C Bus (+) circuit and ground.
2. Measure the voltage between the (D65) CAN C Bus (+) circuit and ground.

Is the voltage above 5 volts?

Yes

- Repair the (D52) or (D65) CAN C Bus (+) circuit for a short to voltage.
- Perform the BODY VERIFICATION TEST. (Refer to 28 - DTC-Based Diagnostics/MODULE, Totally Integrated Power (TIPM) - Standard Procedure).

No

- Go To 9

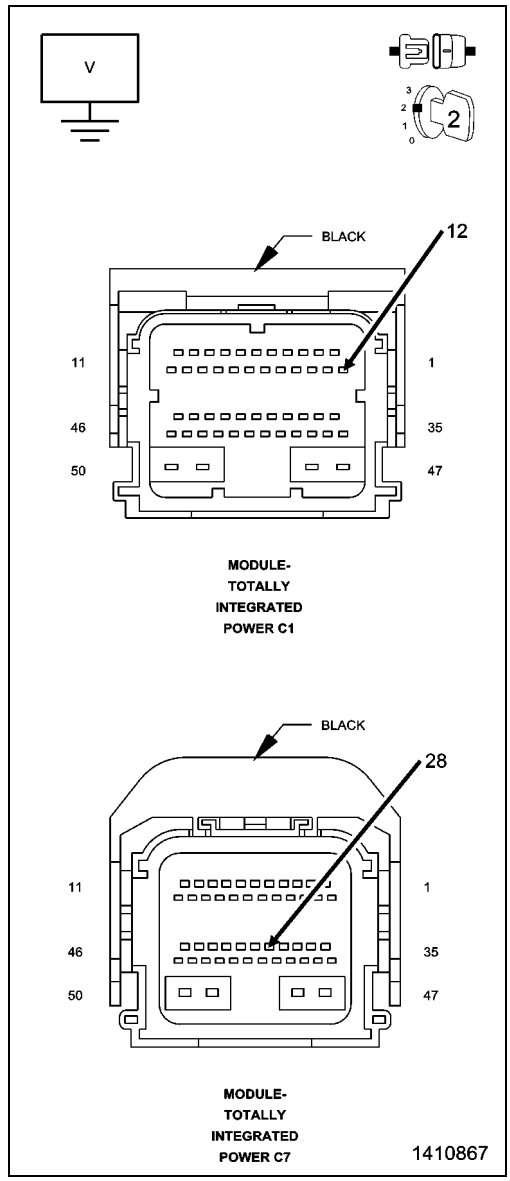

9. (D51) OR (D64) CAN C BUS (-) CIRCUIT SHORTED TO GROUND

1. Turn the ignition off.
2. Measure the resistance between ground and the (D51) CAN C Bus (-) circuit.
3. Measure the resistance between ground and the (D64) CAN C Bus (-) circuit.

Is the resistance below 10K Ohms?

Yes

- Repair the (D51) or (D64) CAN C Bus (-) circuit for a short to ground.
- Perform the BODY VERIFICATION TEST. (Refer to 28 - DTC-Based Diagnostics/MODULE, Totally Integrated Power (TIPM) - Standard Procedure).

No

- Replace/update the module that set this DTC in accordance with the Service Information.
- Perform the appropriate verification test.

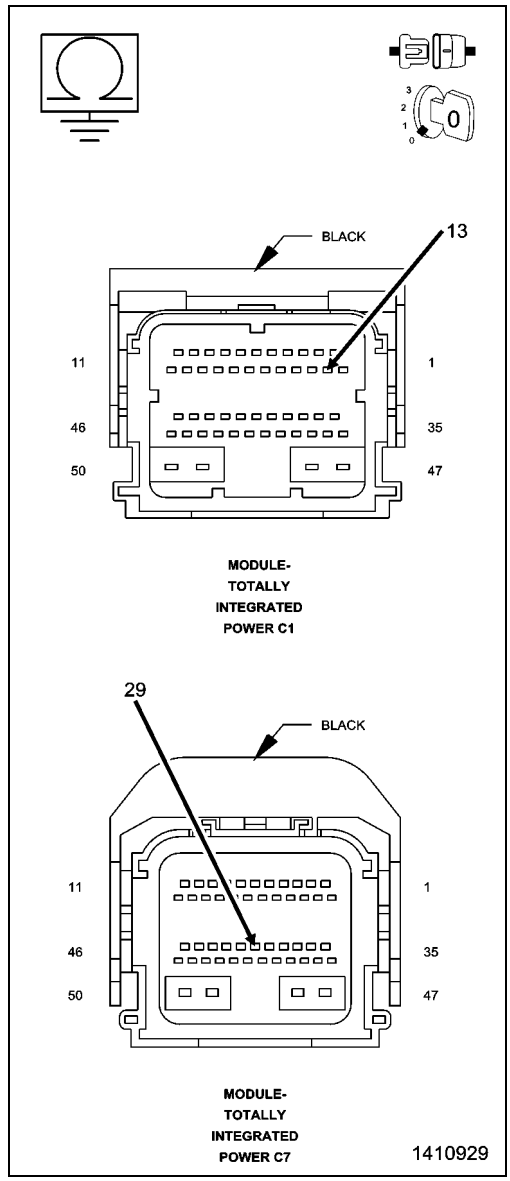

■ U0114-LOST COMMUNICATION WITH FINAL DRIVE CONTROL MODULE (DRIVETRAIN CONTROL MODULE)

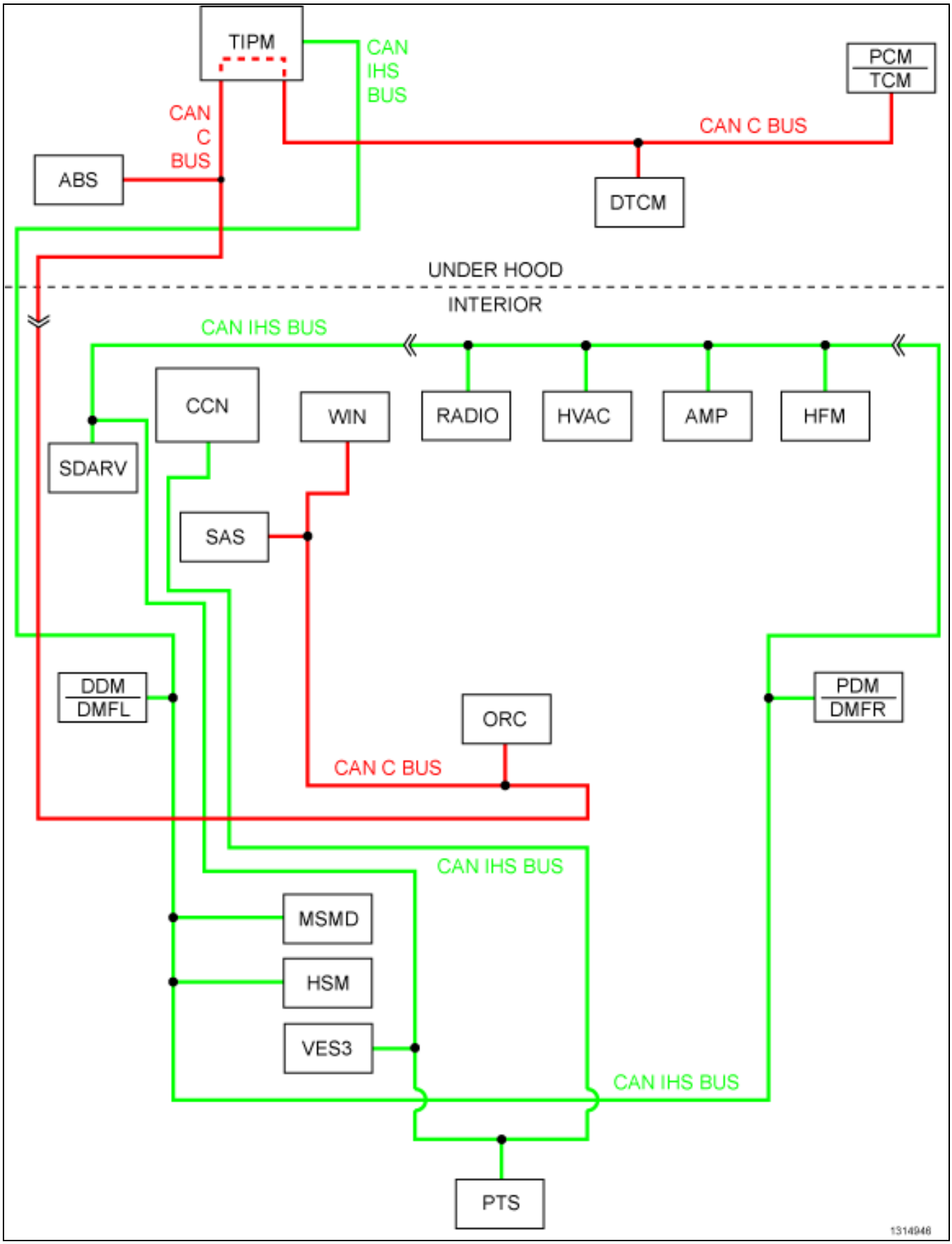

For a complete wiring diagram, **refer to the Wiring Information**.

Theory of Operation

The primary communication network between electronic control modules on this vehicle is the Controller Area Network (CAN) data bus system. The Controller Area Network (CAN) data bus allows all electronic modules connected to the bus to share information with each other. Regardless of whether a message originates from a module on the higher speed CAN C (500K) Bus or on the lower speed CAN Interior High Speed (IHS) (125K) Bus the message structure and layout is similar, which allows the Totally Integrated Power Module/Central GateWay (TIPM or TIPMCGW) to process and transfer messages between the CAN buses. The TIPM also stores Diagnostic Trouble Codes (DTCs) for certain bus network faults.

All modules transmit and receive messages over one of these buses. Data exchange between the modules is achieved by serial transmission of encoded data messages (a form of transmission in which data bits are sent sequentially, one at a time, over a single line). Each module can both send and receive serial data simultaneously. Each data bit of a CAN Bus message is carried over the bus as a voltage differential between the two bus circuits which, when strung together, form a message. Each module uses arbitration to sort the message priority if two competing messages are attempting to be broadcast at the same time. Corruption of a single bit within a message will corrupt the entire message. Each message contains a Cyclic Redundancy Check (CRC) which specifies the message size exactly. If the message detected conflicts with the CRC the ECU receiving it will determine the message to be an error and consider that communication has not been possible. Diagnosis of this condition using a lab scope may reveal activity that appears to be Bus data messages even if no actual communication is possible. Communication problems that affect the whole bus, as a result of opens and terminal push outs are more likely to occur on data busses that operate at a high speed than a data bus that operates at a lower speed.

When an open circuit or terminal push out occurs one or more modules can become isolated from the remainder of the bus. The isolated module will attempt to communicate. Since each module contains it own termination a module that is isolated may receive its own messages correctly but will not be able to receive messages or determine arbitration from other modules. Each time the isolated module attempts to communicate it alters the bus voltage on the intact bus circuit. Without functioning arbitration the isolated module alters the bus voltage while other bus messages are being sent thereby corrupting the messages on the remainder of the bus.

The CAN bus modules are connected in parallel to the two-wire bus using a twisted pair, where the wires are wrapped around each other to provide shielding from unwanted electromagnetic induction, thus preventing interference with the relatively low voltage signals being carried through them. While the CAN bus is operating (active), one of the bus wires will carry a higher voltage and is referred to as the CAN High or CAN bus (+) wire, while the other bus wire will carry a lower voltage and is referred to as the CAN Low or CAN bus (–) wire.

- **When Monitored:**
  With the ignition on.
  Battery voltage between 10 and 16 volts.
  Ignition Off Draw (IOD) fuse installed.
  Totally Integrated Power Module (TIPM) is configured correctly.
- **Set Condition:**
  Bus messages not received from the Final Drive Control Module (DTCM) for approximately two to five seconds.

Possible Causes
CAN C BUS(+) CIRCUIT SHORTED TO VOLTAGE
CAN C BUS(-) CIRCUIT SHORTED TO GROUND
DTCS RELATED TO BATTERY VOLTAGE, IGNITION, OR VIN MESSAGES
TIPM NOT CONFIGURED CORRECTLY
DTCM POWER AND GROUND
DRIVETRAIN CONTROL MODULE
MODULE THAT SET THIS DTC

1. VERIFY THE DIAGNOSTIC TROUBLE CODE (DTC) IS ACTIVE

NOTE: Make sure the IOD fuse is installed and battery voltage is between 10 and 16 volts before proceeding.

1. Using the scan tool, read active DTCs.

Is this DTC active?

Yes

- Go To 2

No

- (Refer to 29 - Non-DTC Diagnostics/Communication - Diagnosis and Testing) and perform the Stored Lost Communication DTCs diagnostic procedure.

2. CHECK FOR ANY OF THE FOLLOWING ACTIVE DTCS

1. Using the scan tool, read all active DTCs from all modules.

NOTE: Check for TIPM configuration, CAN C hardware electrical, VIN Missing/Mismatch, battery or ignition related DTCs.

Does the scan tool display any active DTCs to the conditions listed above?

Yes

- Perform the appropriate diagnostic procedure.

No

- Go To 3

3. VERIFY THAT THE DTCM IS ACTIVE ON THE BUS

1. Turn the ignition on.
2. Using the scan tool, select Network Diagnostics.
3. Verify that the DTCM is active on the bus.

Is the DTCM active on the bus?

Yes

- Go To 4

No

- (Refer to 29 - Non-DTC Diagnostics/Communication - Diagnosis and Testing) and perform the No Response from FDCM diagnostic procedure.

4. CHECK FOR ADDITIONAL COMMUNICATION RELATED DTCS

1. Using the scan tool, select Network Diagnostics.

Is there more than one module with active DTCs “Logged Against” the DTCM?

Yes

- Replace/update the Drivetrain Control Module in accordance with the Service Information.
- Perform the DTCM VERIFICATION TEST. (Refer to 28 - DTC-Based Diagnostics/MODULE, Drivetrain Control (DTCM) - Standard Procedure)

No

- Go To 5

5. CLEAR DTC IN MODULE SETTING FAULT

1. Using the scan tool, select the module setting the DTC against the DTCM.
2. Clear active DTCs.

Is this DTC still active?

Yes

- Replace/update the module that set this DTC in accordance with the Service Information.
- Perform the appropriate verification test.

No

- Go To 6

6. CYCLE IGNITION

1. Cycle the ignition from RUN to OFF three times ending with the key in the RUN position.

Does this DTC become active?

Yes

- Go To 7

No

- The condition is not present at this time. Using the wiring diagram/schematic as a guide, inspect the wiring for chafed, pierced, pinched, and partially broken wires and the wiring harness connectors for broken, bent, pushed out, and corroded terminals.
- Perform the BODY VERIFICATION TEST. (Refer to 28 - DTC-Based Diagnostics/MODULE, Totally Integrated Power (TIPM) - Standard Procedure).

7. CHECK FOR ADDITIONAL LOST COMMUNICATION FAULTS

1. Using the scan tool, select Network Diagnostics.

Does the TIPM and other CAN C BUS modules show Lost Communication with the remaining CAN C BUS modules?

Yes

- Go To 8

No

- Replace/update the module that set this DTC in accordance with the Service Information.
- Perform the appropriate verification test.

8. (D52) OR (D65) CAN C BUS (+) CIRCUIT SHORTED TO VOLTAGE

1. Measure the voltage between the (D52) CAN C Bus (+) circuit and ground.
2. Measure the voltage between the (D65) CAN C Bus (+) circuit and ground.

Is the voltage above 5 volts?

Yes

- Repair the (D52) or (D65) CAN C Bus (+) circuit for a short to voltage.
- Perform the BODY VERIFICATION TEST. (Refer to 28 - DTC-Based Diagnostics/MODULE, Totally Integrated Power (TIPM) - Standard Procedure).

No

- Go To 9

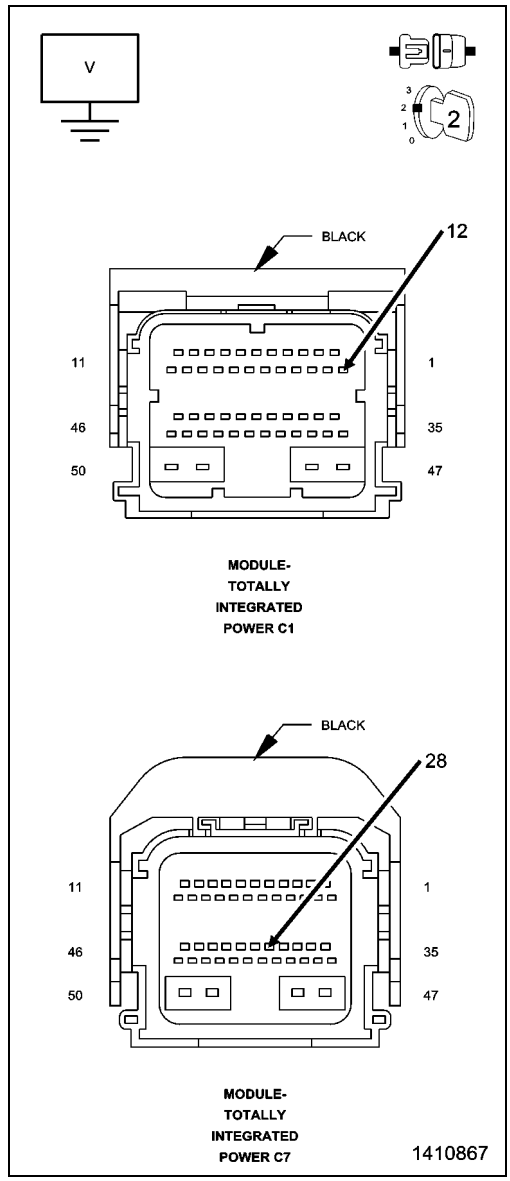

9. (D51) OR (D64) CAN C BUS (-) CIRCUIT SHORTED TO GROUND

1. Turn the ignition off.
2. Measure the resistance between ground and the (D51) CAN C Bus (-) circuit.
3. Measure the resistance between ground and the (D64) CAN C Bus (-) circuit.

Is the resistance below 10K Ohms?

Yes

- Repair the (D51) or (D64) CAN C Bus (-) circuit for a short to ground.
- Perform the BODY VERIFICATION TEST. (Refer to 28 - DTC-Based Diagnostics/MODULE, Totally Integrated Power (TIPM) - Standard Procedure).

No

- Replace/update the module that set this DTC in accordance with the Service Information.
- Perform the appropriate verification test.

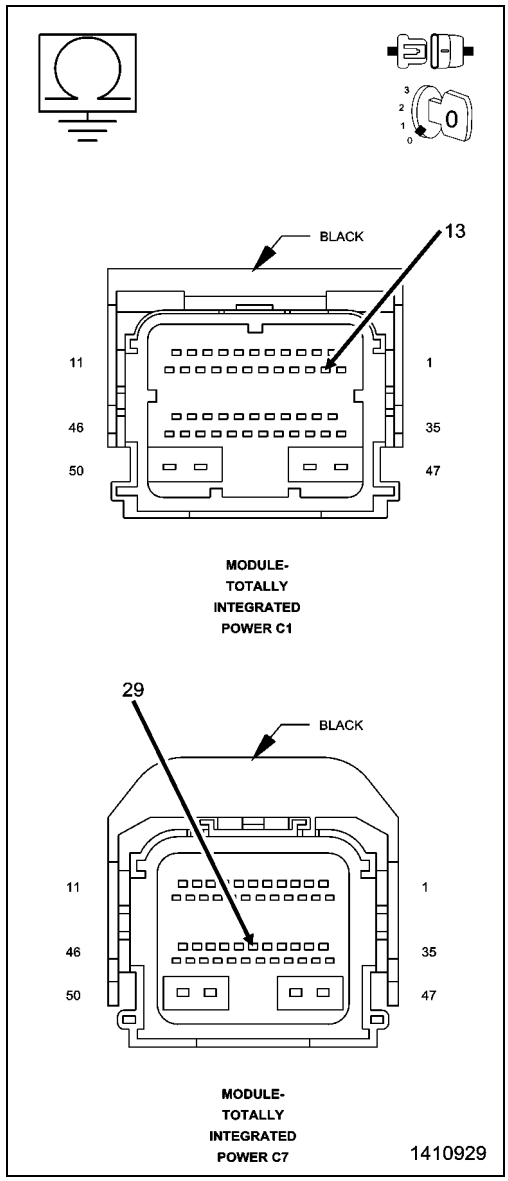

U0121-LOST COMMUNICATION WITH ABS

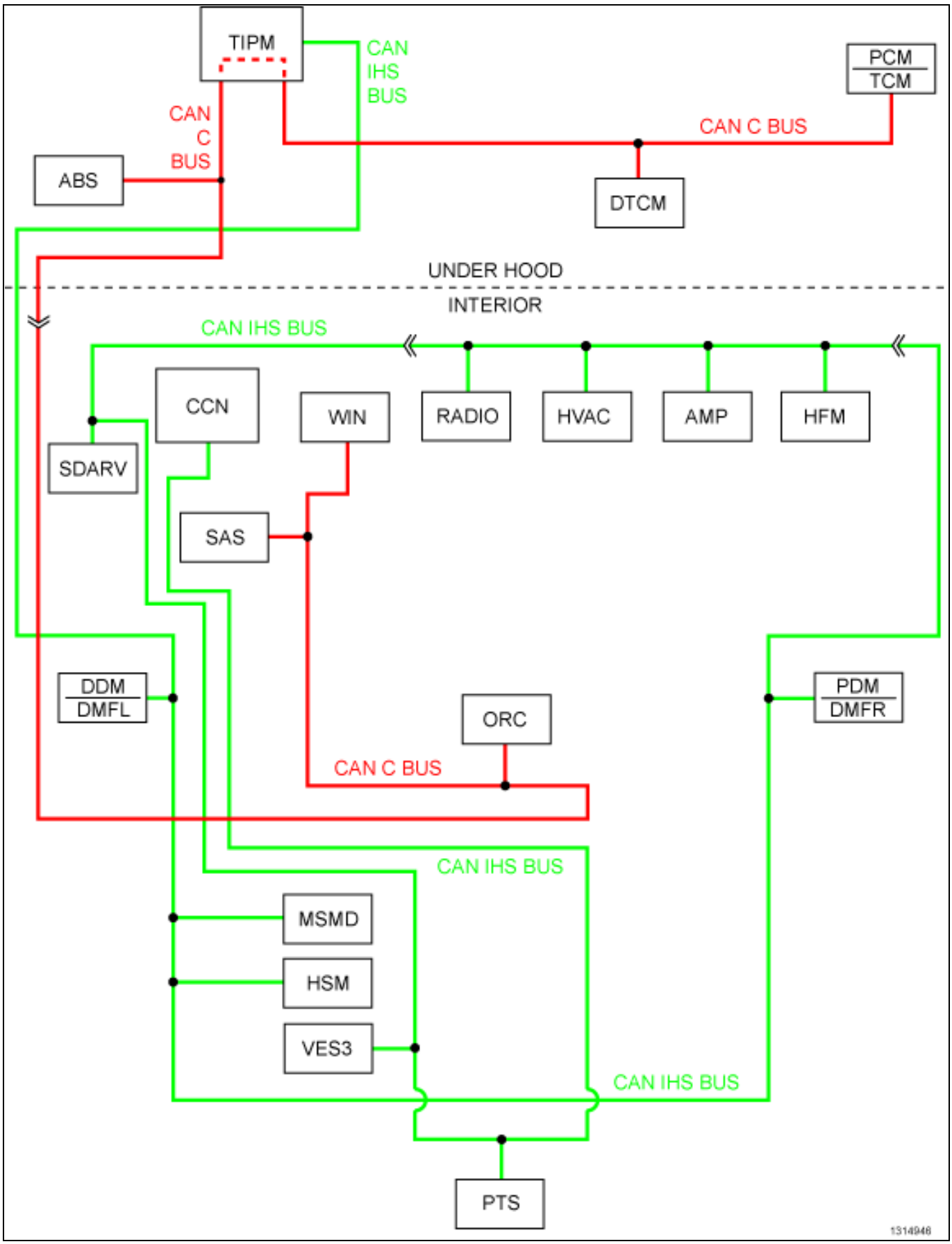

For a complete wiring diagram, **refer to the Wiring Information**.

Theory of Operation

The primary communication network between electronic control modules on this vehicle is the Controller Area Network (CAN) data bus system. The Controller Area Network (CAN) data bus allows all electronic modules connected to the bus to share information with each other. Regardless of whether a message originates from a module on the higher speed CAN C (500K) Bus or on the lower speed CAN Interior High Speed (IHS) (125K) Bus the message structure and layout is similar, which allows the Totally Integrated Power Module/Central GateWay (TIPM or TIPMCGW) to process and transfer messages between the CAN buses. The TIPM also stores Diagnostic Trouble Codes (DTCs) for certain bus network faults.

All modules transmit and receive messages over one of these buses. Data exchange between the modules is achieved by serial transmission of encoded data messages (a form of transmission in which data bits are sent sequentially, one at a time, over a single line). Each module can both send and receive serial data simultaneously. Each data bit of a CAN Bus message is carried over the bus as a voltage differential between the two bus circuits which, when strung together, form a message. Each module uses arbitration to sort the message priority if two competing messages are attempting to be broadcast at the same time. Corruption of a single bit within a message will corrupt the entire message. Each message contains a Cyclic Redundancy Check (CRC) which specifies the message size exactly. If the message detected conflicts with the CRC the ECU receiving it will determine the message to be an error and consider that communication has not been possible. Diagnosis of this condition using a lab scope may reveal activity that appears to be Bus data messages even if no actual communication is possible. Communication problems that affect the whole bus, as a result of opens and terminal push outs are more likely to occur on data busses that operate at a high speed than a data bus that operates at a lower speed.

When an open circuit or terminal push out occurs one or more modules can become isolated from the remainder of the bus. The isolated module will attempt to communicate. Since each module contains it own termination a module that is isolated may receive its own messages correctly but will not be able to receive messages or determine arbitration from other modules. Each time the isolated module attempts to communicate it alters the bus voltage on the intact bus circuit. Without functioning arbitration the isolated module alters the bus voltage while other bus messages are being sent thereby corrupting the messages on the remainder of the bus.

The CAN bus modules are connected in parallel to the two-wire bus using a twisted pair, where the wires are wrapped around each other to provide shielding from unwanted electromagnetic induction, thus preventing interference with the relatively low voltage signals being carried through them. While the CAN bus is operating (active), one of the bus wires will carry a higher voltage and is referred to as the CAN High or CAN bus (+) wire, while the other bus wire will carry a lower voltage and is referred to as the CAN Low or CAN bus (–) wire.

- **When Monitored:**
  With the ignition on.
  Battery voltage between 10 and 16 volts.
  Ignition Off Draw (IOD) fuse installed.
  Totally Integrated Power Module (TIPM) is configured correctly.
- **Set Condition:**
  Bus messages not received from the Anti-Lock Brake Module (ABS) for approximately two to five seconds.

Possible Causes
CAN C BUS(+) CIRCUIT SHORTED TO VOLTAGE
CAN C BUS(-) CIRCUIT SHORTED TO GROUND
DTCS RELATED TO BATTERY VOLTAGE, IGNITION, OR VIN MESSAGES
TIPM NOT CONFIGURED CORRECTLY
ABS POWER AND GROUND
ANTI-LOCK BRAKE MODULE
MODULE THAT SET THIS DTC

1. VERIFY THE DIAGNOSTIC TROUBLE CODE (DTC) IS ACTIVE

NOTE: Make sure the IOD fuse is installed and battery voltage is between 10 and 16 volts before proceeding.

1. Using the scan tool, read active DTCs.

Is this DTC active?

Yes

- Go To 2

No

- (Refer to 29 - Non-DTC Diagnostics/Communication - Diagnosis and Testing) and perform the Stored Lost Communication DTCs diagnostic procedure.

2. CHECK FOR ANY OF THE FOLLOWING ACTIVE DTCS

1. Using the scan tool, read all active DTCs from all modules.

NOTE: Check for TIPM configuration, CAN C hardware electrical, VIN Missing/Mismatch, battery or ignition related DTCs.

Does the scan tool display any active DTCs to the conditions listed above?

Yes

- Perform the appropriate diagnostic procedure.

No

- Go To 3

3. VERIFY THAT THE ABS IS ACTIVE ON THE BUS

1. Turn the ignition on.
2. Using the scan tool, select Network Diagnostics.
3. Verify that the ABS is active on the bus.

Is the ABS active on the bus?

Yes

- Go To 4

No

- (Refer to 29 - Non-DTC Diagnostics/Communication - Diagnosis and Testing) and perform the appropriate No Response from ABS diagnostic procedure.

4. CHECK FOR ADDITIONAL COMMUNICATION RELATED DTCS

1. Using the scan tool, select Network Diagnostics.

Is there more than one module with active DTCs “Logged Against” the ABS?

Yes

- Replace/update the Anti-Lock Brake Module in accordance with the Service Information.
- Perform the ABS VERIFICATION TEST. (Refer to 28 - DTC-Based Diagnostics/MODULE, Antilock Brake (ABS) - Standard Procedure)

No

- Go To 5

5. CLEAR DTC IN MODULE SETTING FAULT

1. Using the scan tool, select the module setting the DTC against the ABS.
2. Clear active DTCs.

Is this DTC still active?

Yes

- Replace/update the module that set this DTC in accordance with the Service Information.
- Perform the appropriate verification test.

No

- Go To 6

6. CYCLE IGNITION

1. Cycle the ignition from RUN to OFF three times ending with the key in the RUN position.

Does this DTC become active?

Yes

- Go To 7

No

- The condition is not present at this time. Using the wiring diagram/schematic as a guide, inspect the wiring for chafed, pierced, pinched, and partially broken wires and the wiring harness connectors for broken, bent, pushed out, and corroded terminals.
- Perform the ABS VERIFICATION TEST. (Refer to 28 - DTC-Based Diagnostics/MODULE, Antilock Brake (ABS) - Standard Procedure)

7. CHECK FOR ADDITIONAL LOST COMMUNICATION FAULTS

1. Using the scan tool, select Network Diagnostics.

Does the TIPM and other CAN C BUS modules show Lost Communication with the remaining CAN C BUS modules?

Yes

- Go To 8

No

- Replace/update the module that set this DTC in accordance with the Service Information.
- Perform the appropriate verification test.

8. (D52) OR (D65) CAN C BUS (+) CIRCUIT SHORTED TO VOLTAGE

1. Measure the voltage between the (D52) CAN C Bus (+) circuit and ground.
2. Measure the voltage between the (D65) CAN C Bus (+) circuit and ground.

Is the voltage above 5 volts?

Yes

- Repair the (D52) or (D65) CAN C Bus (+) circuit for a short to voltage.
- Perform the ABS VERIFICATION TEST. (Refer to 28 - DTC-Based Diagnostics/MODULE, Antilock Brake (ABS) - Standard Procedure)

No

- Go To 9

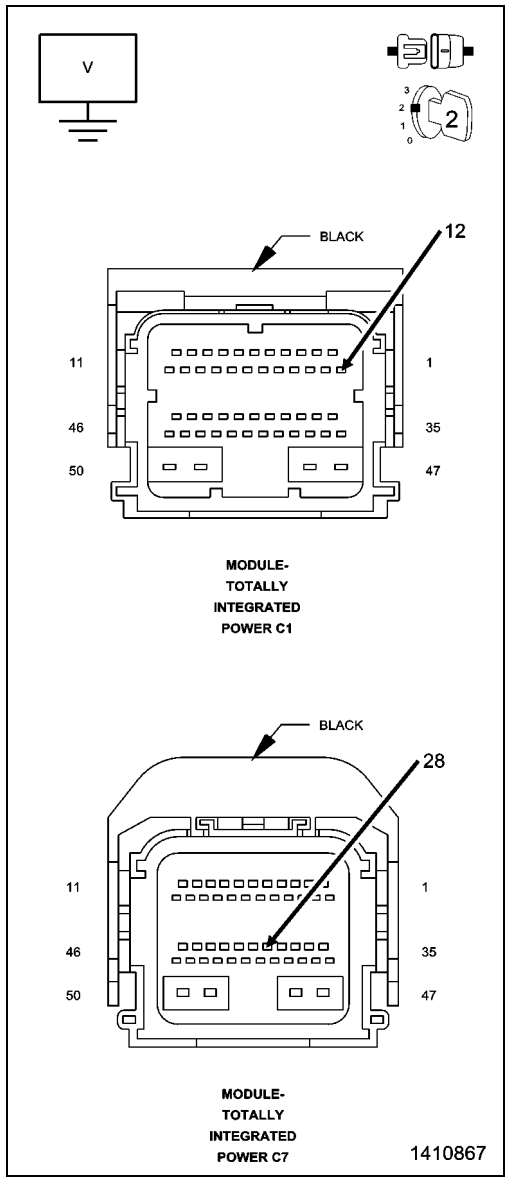

9. (D51) OR (D64) CAN C BUS (-) CIRCUIT SHORTED TO GROUND

1. Turn the ignition off.
2. Measure the resistance between ground and the (D51) CAN C Bus (-) circuit.
3. Measure the resistance between ground and the (D64) CAN C Bus (-) circuit.

Is the resistance below 10K Ohms?

Yes

- Repair the (D51) or (D64) CAN C Bus (-) circuit for a short to ground.
- Perform the ABS VERIFICATION TEST. (Refer to 28 - DTC-Based Diagnostics/MODULE, Antilock Brake (ABS) - Standard Procedure)

No

- Replace/update the module that set this DTC in accordance with the Service Information.
- Perform the appropriate verification test.

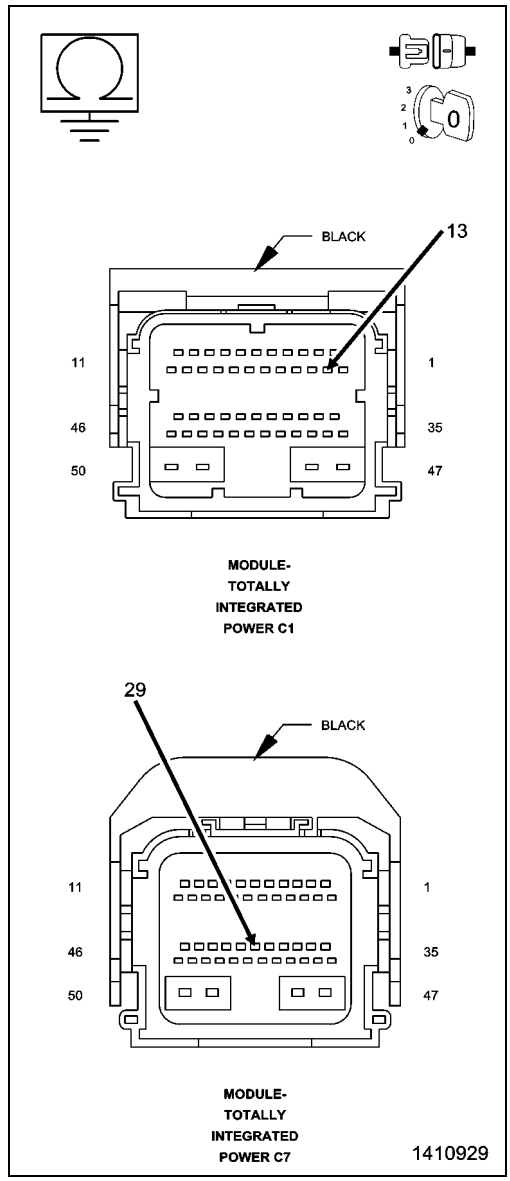

U0126-LOST COMMUNICATION WITH SAS

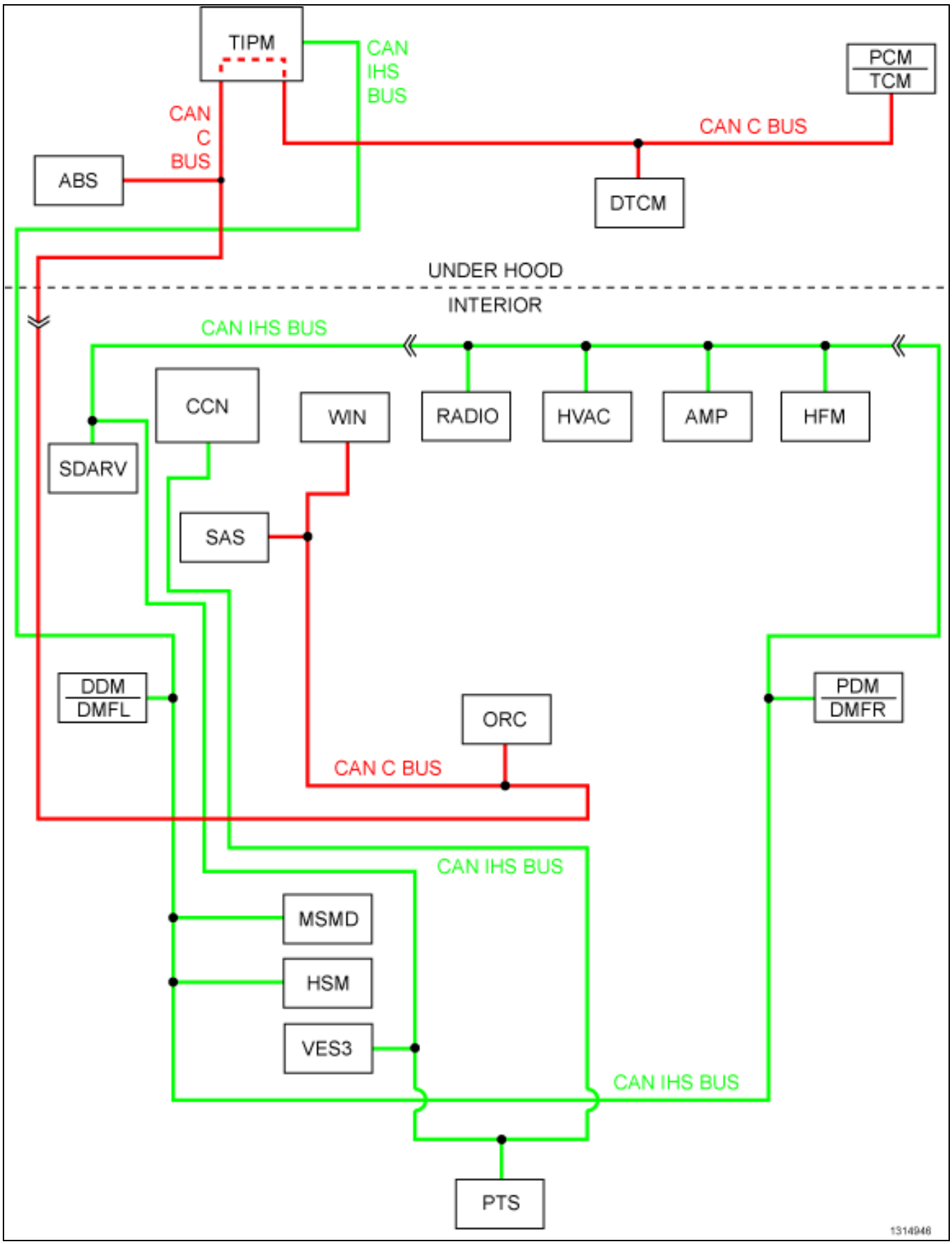

For a complete wiring diagram, **refer to the Wiring Information**.

Theory of Operation

The primary communication network between electronic control modules on this vehicle is the Controller Area Network (CAN) data bus system. The Controller Area Network (CAN) data bus allows all electronic modules connected to the bus to share information with each other. Regardless of whether a message originates from a module on the higher speed CAN C (500K) Bus or on the lower speed CAN Interior High Speed (IHS) (125K) Bus the message structure and layout is similar, which allows the Totally Integrated Power Module/Central GateWay (TIPM or TIPMCGW) to process and transfer messages between the CAN buses. The TIPM also stores Diagnostic Trouble Codes (DTCs) for certain bus network faults.

All modules transmit and receive messages over one of these buses. Data exchange between the modules is achieved by serial transmission of encoded data messages (a form of transmission in which data bits are sent sequentially, one at a time, over a single line). Each module can both send and receive serial data simultaneously. Each data bit of a CAN Bus message is carried over the bus as a voltage differential between the two bus circuits which, when strung together, form a message. Each module uses arbitration to sort the message priority if two competing messages are attempting to be broadcast at the same time. Corruption of a single bit within a message will corrupt the entire message. Each message contains a Cyclic Redundancy Check (CRC) which specifies the message size exactly. If the message detected conflicts with the CRC the ECU receiving it will determine the message to be an error and consider that communication has not been possible. Diagnosis of this condition using a lab scope may reveal activity that appears to be Bus data messages even if no actual communication is possible. Communication problems that affect the whole bus, as a result of opens and terminal push outs are more likely to occur on data busses that operate at a high speed than a data bus that operates at a lower speed.

When an open circuit or terminal push out occurs one or more modules can become isolated from the remainder of the bus. The isolated module will attempt to communicate. Since each module contains it own termination a module that is isolated may receive its own messages correctly but will not be able to receive messages or determine arbitration from other modules. Each time the isolated module attempts to communicate it alters the bus voltage on the intact bus circuit. Without functioning arbitration the isolated module alters the bus voltage while other bus messages are being sent thereby corrupting the messages on the remainder of the bus.

The CAN bus modules are connected in parallel to the two-wire bus using a twisted pair, where the wires are wrapped around each other to provide shielding from unwanted electromagnetic induction, thus preventing interference with the relatively low voltage signals being carried through them. While the CAN bus is operating (active), one of the bus wires will carry a higher voltage and is referred to as the CAN High or CAN bus (+) wire, while the other bus wire will carry a lower voltage and is referred to as the CAN Low or CAN bus (–) wire.

- **When Monitored:**
  With the ignition on.
  Battery voltage between 10 and 16 volts.
  Ignition Off Draw (IOD) fuse installed.
  Totally Integrated Power Module (TIPM) is configured correctly.
- **Set Condition:**
  Bus messages not received from the Steering Angle Sensor (SAS) for approximately two to five seconds.

Possible Causes
CAN C BUS(+) CIRCUIT SHORTED TO VOLTAGE
CAN C BUS(-) CIRCUIT SHORTED TO GROUND
DTCS RELATED TO BATTERY VOLTAGE, IGNITION, OR VIN MESSAGES
TIPM NOT CONFIGURED CORRECTLY
SAS POWER AND GROUND
SAS
MODULE THAT SET THIS DTC

1. VERIFY THE DIAGNOSTIC TROUBLE CODE (DTC) IS ACTIVE

NOTE: Make sure the IOD fuse is installed and battery voltage is between 10 and 16 volts before proceeding.

1. Using the scan tool, read active DTCs.

Is this DTC active?

Yes

- Go To 2

No

- (Refer to 29 - Non-DTC Diagnostics/Communication - Diagnosis and Testing) and perform the Stored Lost Communication DTCs diagnostic procedure.

2. CHECK FOR ANY OF THE FOLLOWING ACTIVE DTCS

1. Using the scan tool, read all active DTCs from all modules.

NOTE: Check for TIPM configuration, CAN C hardware electrical, VIN Missing/Mismatch, battery or ignition related DTCs.

Does the scan tool display any active DTCs to the conditions listed above?

Yes

- Perform the appropriate diagnostic procedure.

No

- Go To 3

3. VERIFY THAT THE SAS IS ACTIVE ON THE BUS

1. Turn the ignition on.
2. Using the scan tool, select Network Diagnostics.
3. Verify that the SAS is active on the bus.

Is the SAS active on the bus?

Yes

- Go To 4

No

- (Refer to 29 - Non-DTC Diagnostics/Communication - Diagnosis and Testing) and perform the No Response from SAS (Steering Angle Sensor) diagnostic procedure.

4. CHECK FOR ADDITIONAL COMMUNICATION RELATED DTCS

1. Using the scan tool, select Network Diagnostics.

Is there more than one module with active DTCs “Logged Against” the SAS?

Yes

- Replace/update the Steering Angle Sensor in accordance with the Service Information.
- Perform the BODY VERIFICATION TEST. (Refer to 28 - DTC-Based Diagnostics/MODULE, Totally Integrated Power (TIPM) - Standard Procedure).

No

- Go To 5

5. CLEAR DTC IN MODULE SETTING FAULT

1. Using the scan tool, select the module setting the DTC against the SAS.
2. Clear active DTCs.

Is this DTC still active?

Yes

- Replace/update the module that set this DTC in accordance with the Service Information.
- Perform the appropriate verification test.

No

- Go To 6

6. CYCLE IGNITION

1. Cycle the ignition from RUN to OFF three times ending with the key in the RUN position.

Does this DTC become active?

Yes

- Go To 7

No

- The condition is not present at this time. Using the wiring diagram/schematic as a guide, inspect the wiring for chafed, pierced, pinched and partially broken wires and the wiring harness connectors for broken, bent, pushed out and corroded terminals.
- Perform the appropriate VERIFICATION TEST.

7. CHECK FOR ADDITIONAL LOST COMMUNICATION FAULTS

1. Using the scan tool, select Network Diagnostics.

Does the TIPM and other CAN C BUS modules show Lost Communication with the remaining CAN C BUS modules?

Yes

- Go To 8

No

- Replace/update the module that set this DTC in accordance with the Service Information.
- Perform the appropriate verification test.

8. (D52) OR (D65) CAN C BUS (+) CIRCUIT SHORTED TO VOLTAGE

1. Measure the voltage between the (D52) CAN C Bus (+) circuit and ground.
2. Measure the voltage between the (D65) CAN C Bus (+) circuit and ground.

Is the voltage above 5 volts?

Yes

- Repair the (D52) or (D65) CAN C Bus (+) circuit for a short to voltage.
- Perform the BODY VERIFICATION TEST. (Refer to 28 - DTC-Based Diagnostics/MODULE, Totally Integrated Power (TIPM) - Standard Procedure).

No

- Go To 9

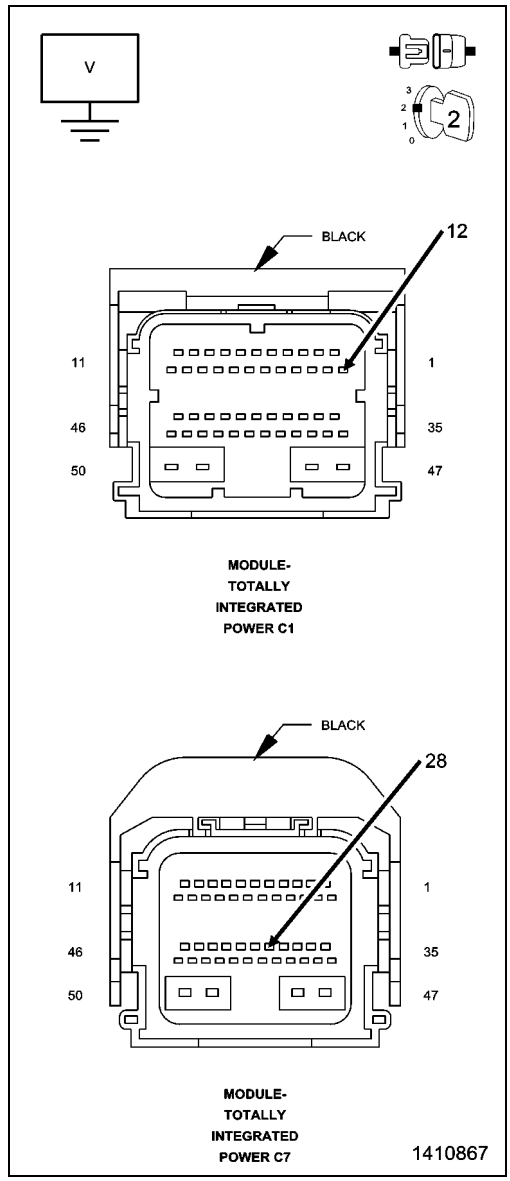

9. (D51) OR (D64) CAN C BUS (-) CIRCUIT SHORTED TO GROUND

1. Turn the ignition off.
2. Measure the resistance between ground and the (D51) CAN C Bus (-) circuit.
3. Measure the resistance between ground and the (D64) CAN C Bus (-) circuit.

Is the resistance below 10K Ohms?

Yes

- Repair the (D51) or (D64) CAN C Bus (-) circuit for a short to ground.
- Perform the BODY VERIFICATION TEST. (Refer to 28 - DTC-Based Diagnostics/MODULE, Totally Integrated Power (TIPM) - Standard Procedure).

No

- Replace/update the module that set this DTC in accordance with the Service Information.
- Perform the appropriate verification test.

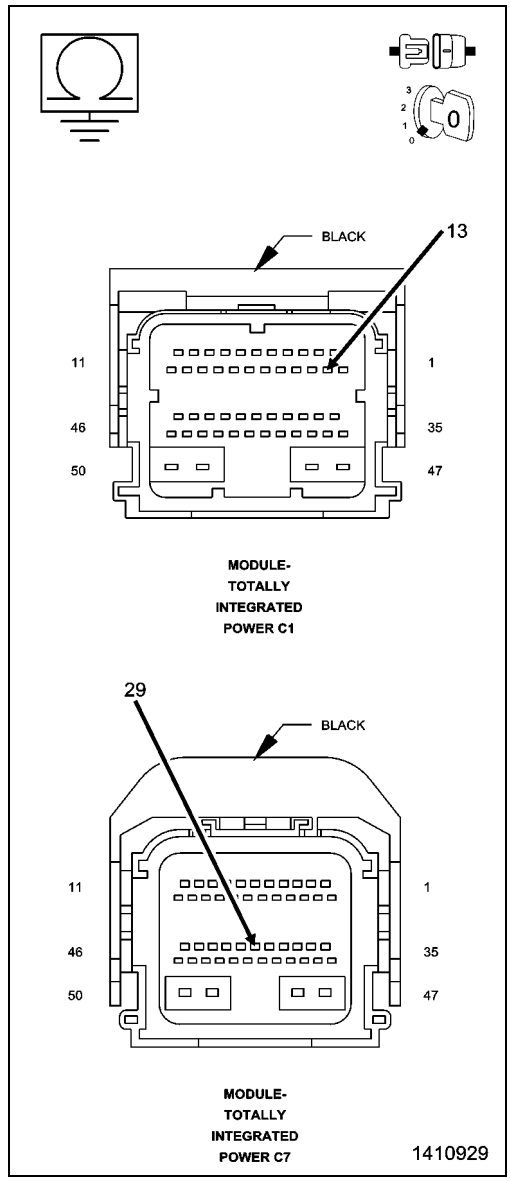

U0141-LOST COMMUNICATION WITH IPM (FCM/TIPM)

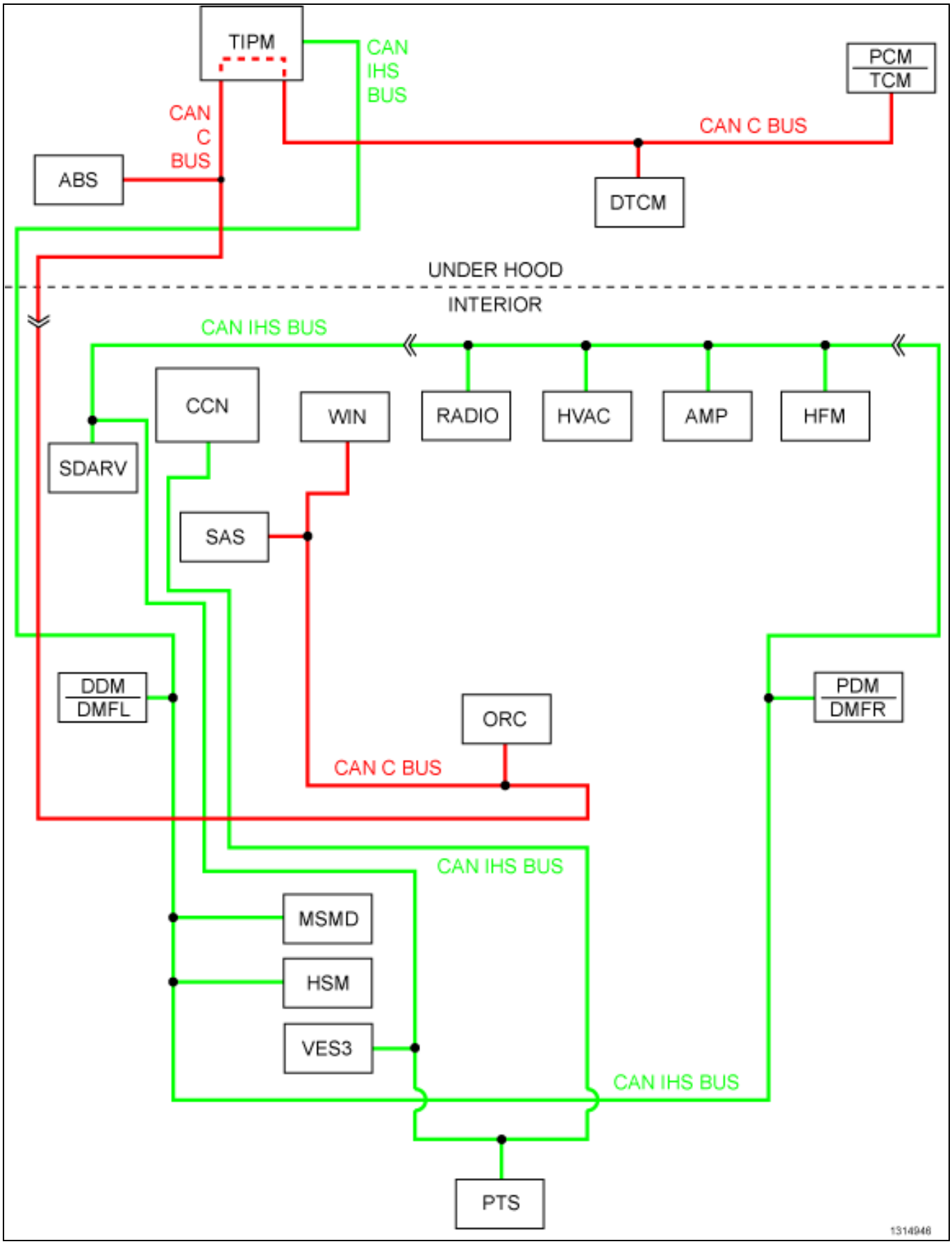

For a complete wiring diagram, **refer to the Wiring Information**.

Theory of Operation

The primary communication network between electronic control modules on this vehicle is the Controller Area Network (CAN) data bus system. The Controller Area Network (CAN) data bus allows all electronic modules connected to the bus to share information with each other. Regardless of whether a message originates from a module on the higher speed CAN C (500K) Bus or on the lower speed CAN Interior High Speed (IHS) (125K) Bus the message structure and layout is similar, which allows the Totally Integrated Power Module/Central GateWay (TIPM or TIPMCGW) to process and transfer messages between the CAN buses. The TIPM also stores Diagnostic Trouble Codes (DTCs) for certain bus network faults.

All modules transmit and receive messages over one of these buses. Data exchange between the modules is achieved by serial transmission of encoded data messages (a form of transmission in which data bits are sent sequentially, one at a time, over a single line). Each module can both send and receive serial data simultaneously. Each data bit of a CAN Bus message is carried over the bus as a voltage differential between the two bus circuits which, when strung together, form a message. Each module uses arbitration to sort the message priority if two competing messages are attempting to be broadcast at the same time. Corruption of a single bit within a message will corrupt the entire message. Each message contains a Cyclic Redundancy Check (CRC) which specifies the message size exactly. If the message detected conflicts with the CRC the ECU receiving it will determine the message to be an error and consider that communication has not been possible. Diagnosis of this condition using a lab scope may reveal activity that appears to be Bus data messages even if no actual communication is possible. Communication problems that affect the whole bus, as a result of opens and terminal push outs are more likely to occur on data busses that operate at a high speed than a data bus that operates at a lower speed.

When an open circuit or terminal push out occurs one or more modules can become isolated from the remainder of the bus. The isolated module will attempt to communicate. Since each module contains it own termination a module that is isolated may receive its own messages correctly but will not be able to receive messages or determine arbitration from other modules. Each time the isolated module attempts to communicate it alters the bus voltage on the intact bus circuit. Without functioning arbitration the isolated module alters the bus voltage while other bus messages are being sent thereby corrupting the messages on the remainder of the bus.

The CAN bus modules are connected in parallel to the two-wire bus using a twisted pair, where the wires are wrapped around each other to provide shielding from unwanted electromagnetic induction, thus preventing interference with the relatively low voltage signals being carried through them. While the CAN bus is operating (active), one of the bus wires will carry a higher voltage and is referred to as the CAN High or CAN bus (+) wire, while the other bus wire will carry a lower voltage and is referred to as the CAN Low or CAN bus (–) wire.

- **When Monitored:**
  With the ignition on.
  Battery voltage between 10 and 16 volts.
  Ignition Off Draw (IOD) fuse installed.
  Totally Integrated Power Module (TIPM) is configured correctly.
- **Set Condition:**
  Bus messages not received from the Totally Integrated Power Module (TIPM) for approximately two to five seconds.

Possible Causes
DIAGNOSTIC CAN C BUS CIRCUITS OPEN OR SHORTED
DTCS RELATED TO BATTERY VOLTAGE, IGNITION, OR VIN MESSAGES
TIPM NOT CONFIGURED CORRECTLY
TOTALLY INTEGRATED POWER MODULE POWER AND GROUND
TOTALLY INTEGRATED POWER MODULE (TIPM)
MODULE THAT SET THIS DTC

1. VERIFY THE DIAGNOSTIC TROUBLE CODE (DTC) IS ACTIVE

NOTE: Make sure the IOD fuse is installed and battery voltage is between 10 and 16 volts before proceeding.

1. Using the scan tool, read active DTCs.

Is this DTC active?

Yes

- Go To 2

No

- (Refer to 29 - Non-DTC Diagnostics/Communication - Diagnosis and Testing) and perform the Stored Lost Communication DTCs diagnostic procedure.

2. CHECK FOR ANY OF THE FOLLOWING ACTIVE DTCS

1. Using the scan tool, read all active DTCs from all modules.

NOTE: Check for TIPM configuration, CAN C hardware electrical, VIN Missing/Mismatch, battery or ignition related DTCs.

Does the scan tool display any active DTCs to the conditions listed above?

Yes

- Perform the appropriate diagnostic procedure.

No

- Go To 3

3. VERIFY THAT THE TIPM IS ACTIVE ON THE BUS

1. Turn the ignition on.
2. Using the scan tool, select Network Diagnostics.
3. Verify that the TIPM is active on the bus.

Is the TIPM active on the bus?

Yes

- Go To 4

No

- (Refer to 29 - Non-DTC Diagnostics/Communication - Diagnosis and Testing) and perform the No Response from TIPM diagnostic procedure.

4. CHECK FOR ADDITIONAL COMMUNICATION RELATED DTCS

1. Using the scan tool, select Network Diagnostics.

Is there more than one module with active DTCs “Logged Against” the TIPM?

Yes

- Replace/update the Totally Integrated Power Module (TIPM) in accordance with the Service Information.
- Perform the BODY VERIFICATION TEST. (Refer to 28 - DTC-Based Diagnostics/MODULE, Totally Integrated Power (TIPM) - Standard Procedure).

No

- Replace/update the module that set this DTC in accordance with the Service Information
- Perform the appropriate verification test.

U0151-LOST COMMUNICATION WITH ORC

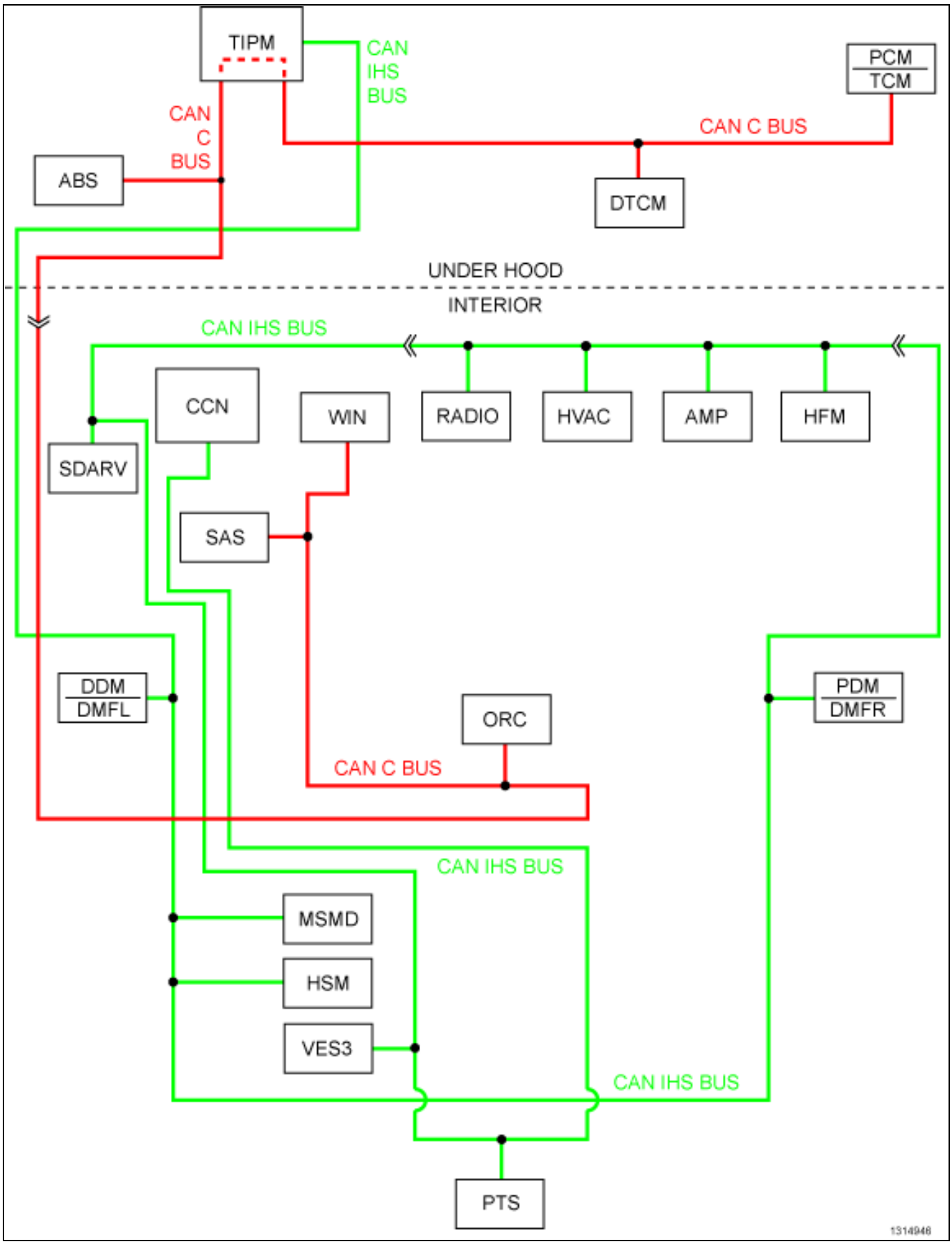

For a complete wiring diagram, **refer to the Wiring Information**.

Theory of Operation

The primary communication network between electronic control modules on this vehicle is the Controller Area Network (CAN) data bus system. The Controller Area Network (CAN) data bus allows all electronic modules connected to the bus to share information with each other. Regardless of whether a message originates from a module on the higher speed CAN C (500K) Bus or on the lower speed CAN Interior High Speed (IHS) (125K) Bus the message structure and layout is similar, which allows the Totally Integrated Power Module/Central GateWay (TIPM or TIPMCGW) to process and transfer messages between the CAN buses. The TIPM also stores Diagnostic Trouble Codes (DTCs) for certain bus network faults.

All modules transmit and receive messages over one of these buses. Data exchange between the modules is achieved by serial transmission of encoded data messages (a form of transmission in which data bits are sent sequentially, one at a time, over a single line). Each module can both send and receive serial data simultaneously. Each data bit of a CAN Bus message is carried over the bus as a voltage differential between the two bus circuits which, when strung together, form a message. Each module uses arbitration to sort the message priority if two competing messages are attempting to be broadcast at the same time. Corruption of a single bit within a message will corrupt the entire message. Each message contains a Cyclic Redundancy Check (CRC) which specifies the message size exactly. If the message detected conflicts with the CRC the ECU receiving it will determine the message to be an error and consider that communication has not been possible. Diagnosis of this condition using a lab scope may reveal activity that appears to be Bus data messages even if no actual communication is possible. Communication problems that affect the whole bus, as a result of opens and terminal push outs are more likely to occur on data busses that operate at a high speed than a data bus that operates at a lower speed.

When an open circuit or terminal push out occurs one or more modules can become isolated from the remainder of the bus. The isolated module will attempt to communicate. Since each module contains it own termination a module that is isolated may receive its own messages correctly but will not be able to receive messages or determine arbitration from other modules. Each time the isolated module attempts to communicate it alters the bus voltage on the intact bus circuit. Without functioning arbitration the isolated module alters the bus voltage while other bus messages are being sent thereby corrupting the messages on the remainder of the bus.

The CAN bus modules are connected in parallel to the two-wire bus using a twisted pair, where the wires are wrapped around each other to provide shielding from unwanted electromagnetic induction, thus preventing interference with the relatively low voltage signals being carried through them. While the CAN bus is operating (active), one of the bus wires will carry a higher voltage and is referred to as the CAN High or CAN bus (+) wire, while the other bus wire will carry a lower voltage and is referred to as the CAN Low or CAN bus (–) wire.

- **When Monitored:**
  With the ignition on.
  Battery voltage between 10 and 16 volts.
  Ignition Off Draw (IOD) fuse installed.
  Totally Integrated Power Module (TIPM) is configured correctly.
- **Set Condition:**
  Bus messages not received from the Occupant Restraint Controller (ORC) for approximately two to five seconds.

Possible Causes
CAN C BUS(+) CIRCUIT SHORTED TO VOLTAGE
CAN C BUS(-) CIRCUIT SHORTED TO GROUND
DTCS RELATED TO BATTERY VOLTAGE, IGNITION, OR VIN MESSAGES
TIPM NOT CONFIGURED CORRECTLY
ORC POWER AND GROUND
ORC
MODULE THAT SET THIS DTC

1. VERIFY THE DIAGNOSTIC TROUBLE CODE (DTC) IS ACTIVE

NOTE: Make sure the IOD fuse is installed and battery voltage is between 10 and 16 volts before proceeding.

1. Using the scan tool, read active DTCs.

Is this DTC active?

Yes

- Go To 2

No

- (Refer to 29 - Non-DTC Diagnostics/Communication - Diagnosis and Testing) and perform the Stored Lost Communication DTCs diagnostic procedure.

2. CHECK FOR ANY OF THE FOLLOWING ACTIVE DTCS

1. Using the scan tool, read all active DTCs from all modules.

NOTE: Check for TIPM configuration, CAN C hardware electrical, VIN Missing/Mismatch, battery or ignition related DTCs.

Does the scan tool display any active DTCs to the conditions listed above?

Yes

- Perform the appropriate diagnostic procedure.

No

- Go To 3

3. VERIFY THAT THE ORC IS ACTIVE ON THE BUS

1. Turn the ignition on.
2. Using the scan tool, select Network Diagnostics.
3. Verify that the ORC is active on the bus.

Is the ORC active on the bus?

Yes

- Go To 4

No

- (Refer to 29 - Non-DTC Diagnostics/Communication - Diagnosis and Testing) and perform the No Response from ORC diagnostic procedure.

4. CHECK FOR ADDITIONAL COMMUNICATION RELATED DTCS

1. Using the scan tool, select Network Diagnostics.

Is there more than one module with active DTCs “Logged Against” the ORC?

Yes

- Replace/update the Occupant Restraint Controller in accordance with the Service Information.
- Perform the RESTRAINTS SYSTEM VERIFICATION TEST. (Refer to 28 - DTC-Based Diagnostics/CONTROLLER, Occupant Restraint (ORC) - Standard Procedure)

No

- Go To 5

5. CLEAR DTC IN MODULE SETTING FAULT

1. Using the scan tool, select the module setting the DTC against the ORC.
2. Clear active DTCs.

Is this DTC still active?

Yes

- Replace/update the module that set this DTC in accordance with the Service Information.
- Perform the appropriate verification test.

No

- Go To 6

6. CYCLE IGNITION

1. Cycle the ignition from RUN to OFF three times ending with the key in the RUN position.

Does this DTC become active?

Yes

- Go To 7

No

- The condition is not present at this time. Using the wiring diagram/schematic as a guide, inspect the wiring for chafed, pierced, pinched, and partially broken wires and the wiring harness connectors for broken, bent, pushed out, and corroded terminals.
- Perform the appropriate VERIFICATION TEST.

7. CHECK FOR ADDITIONAL LOST COMMUNICATION FAULTS

1. Using the scan tool, select Network Diagnostics.

Does the TIPM and other CAN C BUS modules show Lost Communication with the remaining CAN C BUS modules?

Yes

- Go To 8

No

- Replace/update the module that set this DTC in accordance with the Service Information.
- Perform the appropriate verification test.

8. (D52) OR (D65) CAN C BUS (+) CIRCUIT SHORTED TO VOLTAGE

1. Measure the voltage between the (D52) CAN C Bus (+) circuit and ground.
2. Measure the voltage between the (D65) CAN C Bus (+) circuit and ground.

Is the voltage above 5 volts?

Yes

- Repair the (D52) or (D65) CAN C Bus (+) circuit for a short to voltage.
- Perform the BODY VERIFICATION TEST. (Refer to 28 - DTC-Based Diagnostics/MODULE, Totally Integrated Power (TIPM) - Standard Procedure).

No

- Go To 9

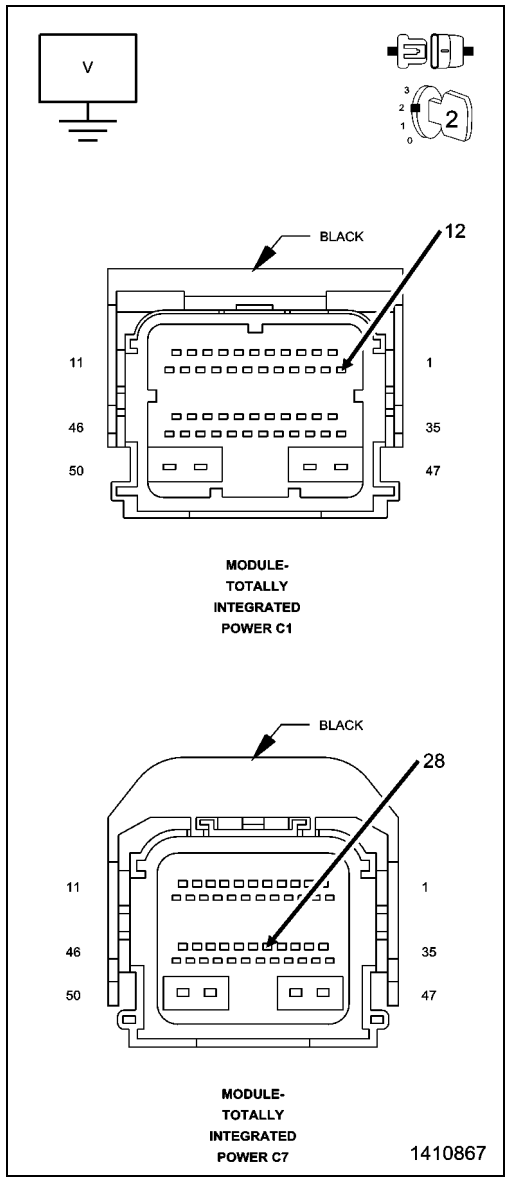

9. (D51) OR (D64) CAN C BUS (-) CIRCUIT SHORTED TO GROUND

1. Turn the ignition off.
2. Measure the resistance between ground and the (D51) CAN C Bus (-) circuit.
3. Measure the resistance between ground and the (D64) CAN C Bus (-) circuit.

Is the resistance below 10K Ohms?

Yes

- Repair the (D51) or (D64) CAN C Bus (-) circuit for a short to ground.
- Perform the BODY VERIFICATION TEST. (Refer to 28 - DTC-Based Diagnostics/MODULE, Totally Integrated Power (TIPM) - Standard Procedure).

No

- Replace/update the module that set this DTC in accordance with the Service Information.
- Perform the appropriate verification test.

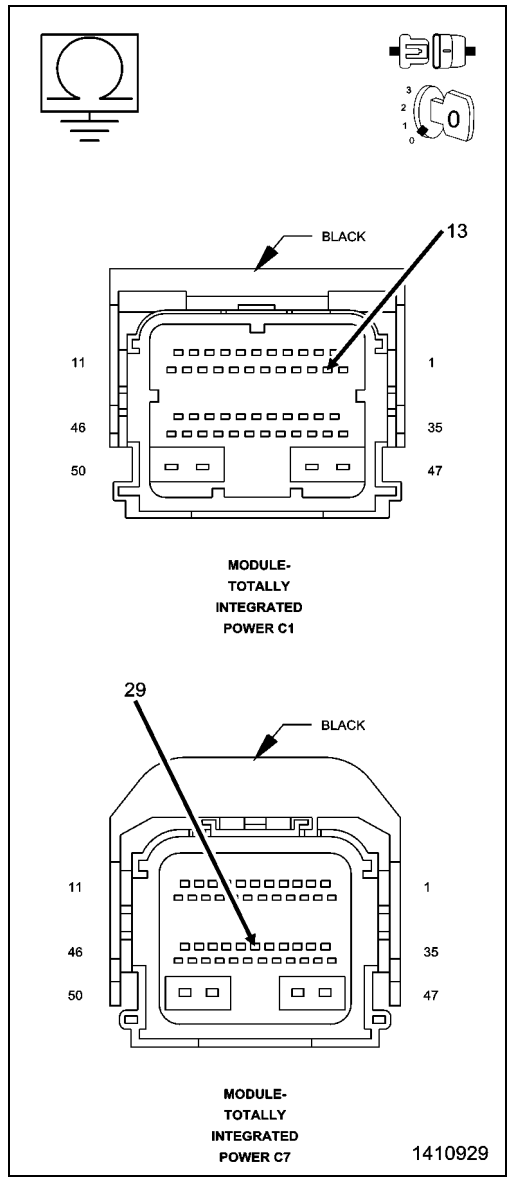

U0155-LOST COMMUNICATION WITH CLUSTER/CCN

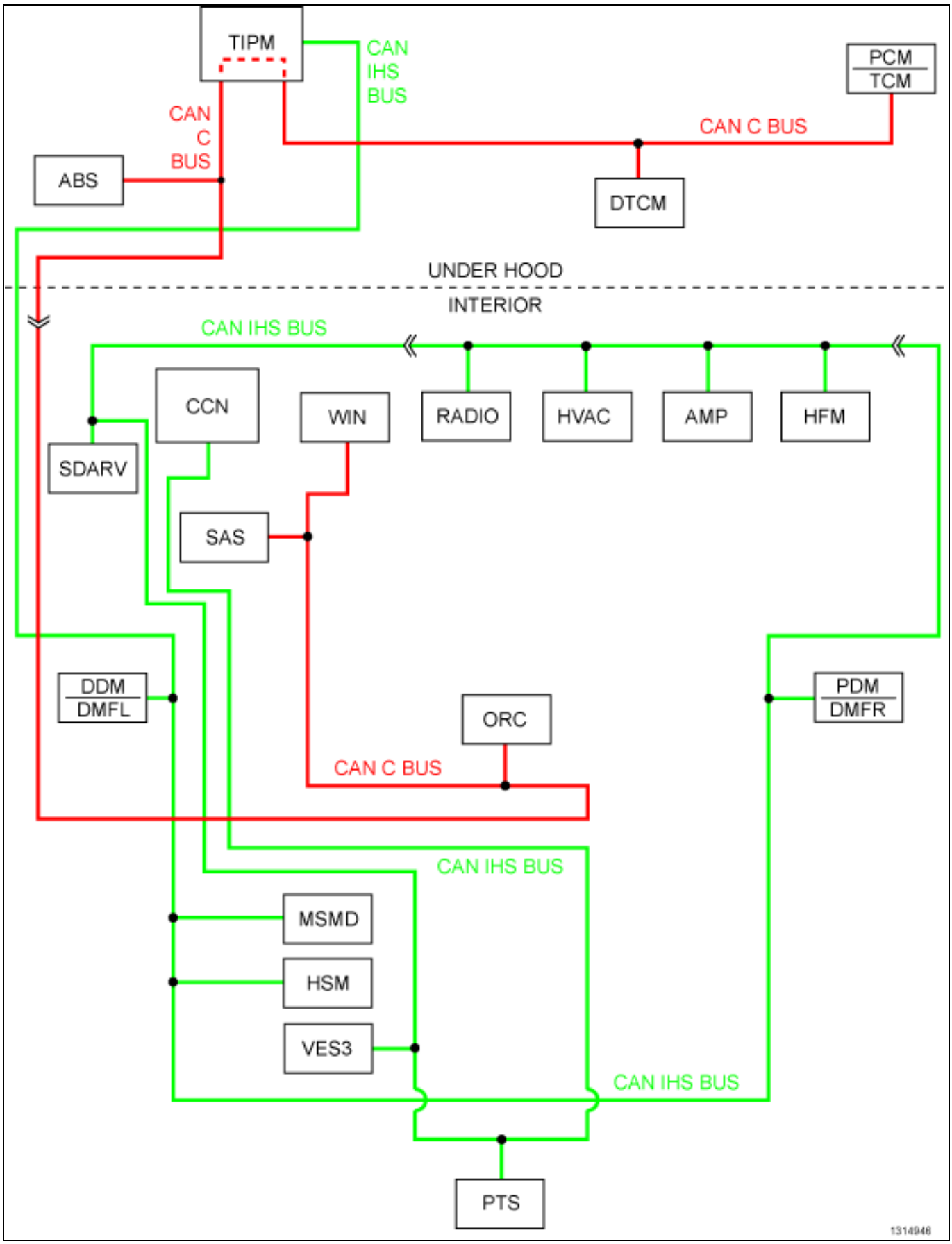

For a complete wiring diagram, **refer to the Wiring Information**.

Theory of Operation

The primary communication network between electronic control modules on this vehicle is the Controller Area Network (CAN) data bus system. The Controller Area Network (CAN) data bus allows all electronic modules connected to the bus to share information with each other. Regardless of whether a message originates from a module on the higher speed CAN C (500K) Bus or on the lower speed CAN Interior High Speed (IHS) (125K) Bus the message structure and layout is similar, which allows the Totally Integrated Power Module/Central GateWay (TIPM or TIPMCGW) to process and transfer messages between the CAN buses. The TIPM also stores Diagnostic Trouble Codes (DTCs) for certain bus network faults.

All modules transmit and receive messages over one of these buses. Data exchange between the modules is achieved by serial transmission of encoded data messages (a form of transmission in which data bits are sent sequentially, one at a time, over a single line). Each module can both send and receive serial data simultaneously. Each data bit of a CAN Bus message is carried over the bus as a voltage differential between the two bus circuits which, when strung together, form a message. Each module uses arbitration to sort the message priority if two competing messages are attempting to be broadcast at the same time. Corruption of a single bit within a message will corrupt the entire message. Each message contains a Cyclic Redundancy Check (CRC) which specifies the message size exactly. If the message detected conflicts with the CRC the ECU receiving it will determine the message to be an error and consider that communication has not been possible. Diagnosis of this condition using a lab scope may reveal activity that appears to be Bus data messages even if no actual communication is possible. Communication problems that affect the whole bus, as a result of opens and terminal push outs are more likely to occur on data busses that operate at a high speed than a data bus that operates at a lower speed.

When an open circuit or terminal push out occurs one or more modules can become isolated from the remainder of the bus. The isolated module will attempt to communicate. Since each module contains it own termination a module that is isolated may receive its own messages correctly but will not be able to receive messages or determine arbitration from other modules. Each time the isolated module attempts to communicate it alters the bus voltage on the intact bus circuit. Without functioning arbitration the isolated module alters the bus voltage while other bus messages are being sent thereby corrupting the messages on the remainder of the bus.

The CAN bus modules are connected in parallel to the two-wire bus using a twisted pair, where the wires are wrapped around each other to provide shielding from unwanted electromagnetic induction, thus preventing interference with the relatively low voltage signals being carried through them. While the CAN bus is operating (active), one of the bus wires will carry a higher voltage and is referred to as the CAN High or CAN bus (+) wire, while the other bus wire will carry a lower voltage and is referred to as the CAN Low or CAN bus (–) wire.

- **When Monitored:**
  With the ignition on.
  Battery voltage between 10 and 16 volts.
  Ignition Off Draw (IOD) fuse installed.
  Totally Integrated Power Module (TIPM) is configured correctly.
- **Set Condition:**
  Bus messages not received from the Cluster/CCN for approximately two to five seconds.

Possible Causes
(D265) CAN INTERIOR HIGH SPEED (IHS) BUS(+) (125k) CIRCUIT SHORTED TO VOLTAGE
(D264) CAN IHS BUS(-) (125k) CIRCUIT SHORTED TO GROUND
DTCS RELATED TO BATTERY VOLTAGE, IGNITION, OR VIN MESSAGES
TIPM NOT CONFIGURED CORRECTLY
CLUSTER/CCN POWER AND GROUND
CLUSTER/CCN
MODULE THAT SET THE DTC

1. VERIFY THE DIAGNOSTIC TROUBLE CODE (DTC) IS ACTIVE

NOTE: Make sure the IOD fuse is installed and battery voltage is between 10 and 16 volts before proceeding.

1. Using the scan tool, read active DTCs.

Is this DTC active?

Yes

- Go To 2

No

- (Refer to 29 - Non-DTC Diagnostics/Communication - Diagnosis and Testing) and perform the Stored Lost Communication diagnostic procedure.

2. CHECK FOR ANY OF THE FOLLOWING ACTIVE DTCS

1. Using the scan tool, read active DTCs from all modules.

NOTE: Check for TIPM configuration, CAN IHS Bus hardware electrical, VIN Missing/Mismatch, battery or ignition related DTCs.

Does the scan tool display any active DTCs to the conditions listed above?

Yes

- Perform the appropriate diagnostic procedure.

No

- Go To 3

3. VERIFY THAT THE CCN IS ACTIVE ON THE BUS

1. Turn the ignition on.
2. Using the scan tool, select Network Diagnostics.
3. Verify that the CCN is active on the bus.

Is the CCN active on the bus?

Yes

- Go To 4

No

- (Refer to 29 - Non-DTC Diagnostics/Communication - Diagnosis and Testing) and perform the No Response from CCN (Cluster) diagnostic procedure.

4. CHECK FOR ADDITIONAL COMMUNICATION RELATED DTCS

1. Using the scan tool, select Network Diagnostics.

Is there more than one module with active DTCs “Logged Against” the CCN?

Yes

- Replace/update the Cluster (CCN) in accordance with the Service Information.
- Perform the BODY VERIFICATION TEST. (Refer to 28 - DTC-Based Diagnostics/MODULE, Totally Integrated Power (TIPM) - Standard Procedure).

No

- Go To 5

5. CLEAR DTC IN MODULE SETTING FAULT

1. Using the scan tool, select the module setting the DTC against the Cluster/CCN.
2. Clear active DTCs.

Is this DTC still active?

Yes

- Replace/update the module that set this DTC in accordance with the Service Information.
- Perform the appropriate verification test.

No

- Go To 6

6. CYCLE IGNITION

1. Cycle the ignition from RUN to OFF three times ending with the key in the RUN position.

Does this DTC become active?

Yes

- Go To 7

No

- The condition is not present at this time. Using the wiring diagram/schematic as a guide, inspect the wiring for chafed, pierced, pinched, and partially broken wires and the wiring harness connectors for broken, bent, pushed out, and corroded terminals.
- Perform the BODY VERIFICATION TEST. (Refer to 28 - DTC-Based Diagnostics/MODULE, Totally Integrated Power (TIPM) - Standard Procedure).

7. CHECK FOR ADDITIONAL LOST COMMUNICATION FAULTS

1. Using the scan tool, select Network Diagnostics.

Does the TIPM and other CAN IHS Bus (125K) modules show Lost Communication with the remaining CAN IHS Bus (125K) modules?

Yes

- Go To 8

No

- Replace/update the module that set this DTC in accordance with the Service Information.
- Perform the appropriate verification test.

8. (D265) CAN IHS Bus(+) (125K) CIRCUIT SHORTED TO VOLTAGE

1. Measure the voltage between the (D265) CAN IHS Bus(+) (125K) circuit and ground.

Is the voltage above 5 volts?

Yes

- Repair the (D265) CAN IHS Bus(+) (125K) circuit for a short to voltage.
- Perform the BODY VERIFICATION TEST. (Refer to 28 - DTC-Based Diagnostics/MODULE, Totally Integrated Power (TIPM) - Standard Procedure).

No

- Go To 9

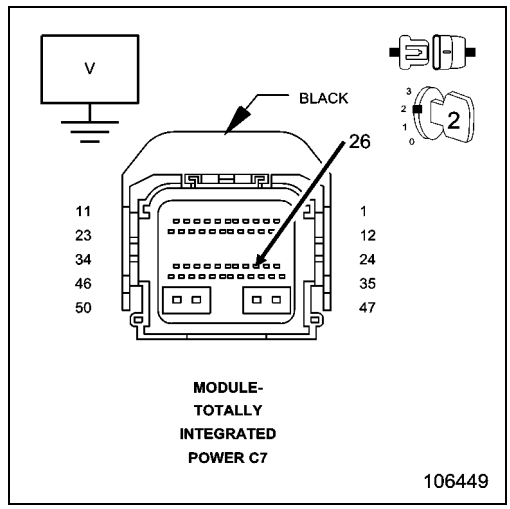

9. (D264) CAN IHS Bus(-) (125K) CIRCUIT SHORTED TO GROUND

1. Turn the ignition off.
2. Measure the resistance between ground and the (D264) CAN IHS Bus(-) (125K) circuit.

Is the resistance below 10K Ohms?

Yes

- Repair the (D264) CAN IHS Bus(-) (125K) circuit for a short to ground.
- Perform the BODY VERIFICATION TEST. (Refer to 28 - DTC-Based Diagnostics/MODULE, Totally Integrated Power (TIPM) - Standard Procedure).

No

- Replace/update the module that set this DTC in accordance with the Service Information.
- Perform the appropriate verification test.

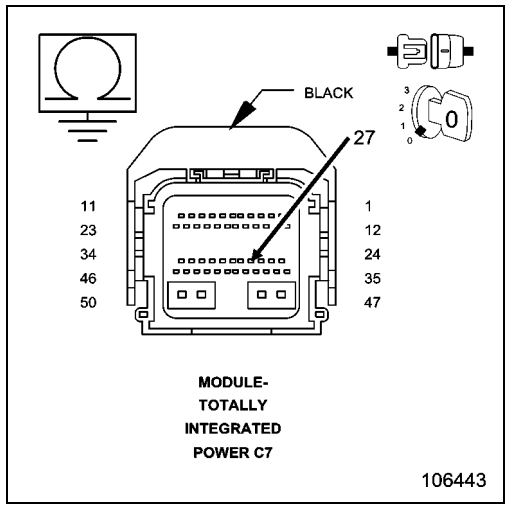

U0159-LOST COMMUNICATION WITH PARKING ASSIST CONTROL MODULE (PTS)

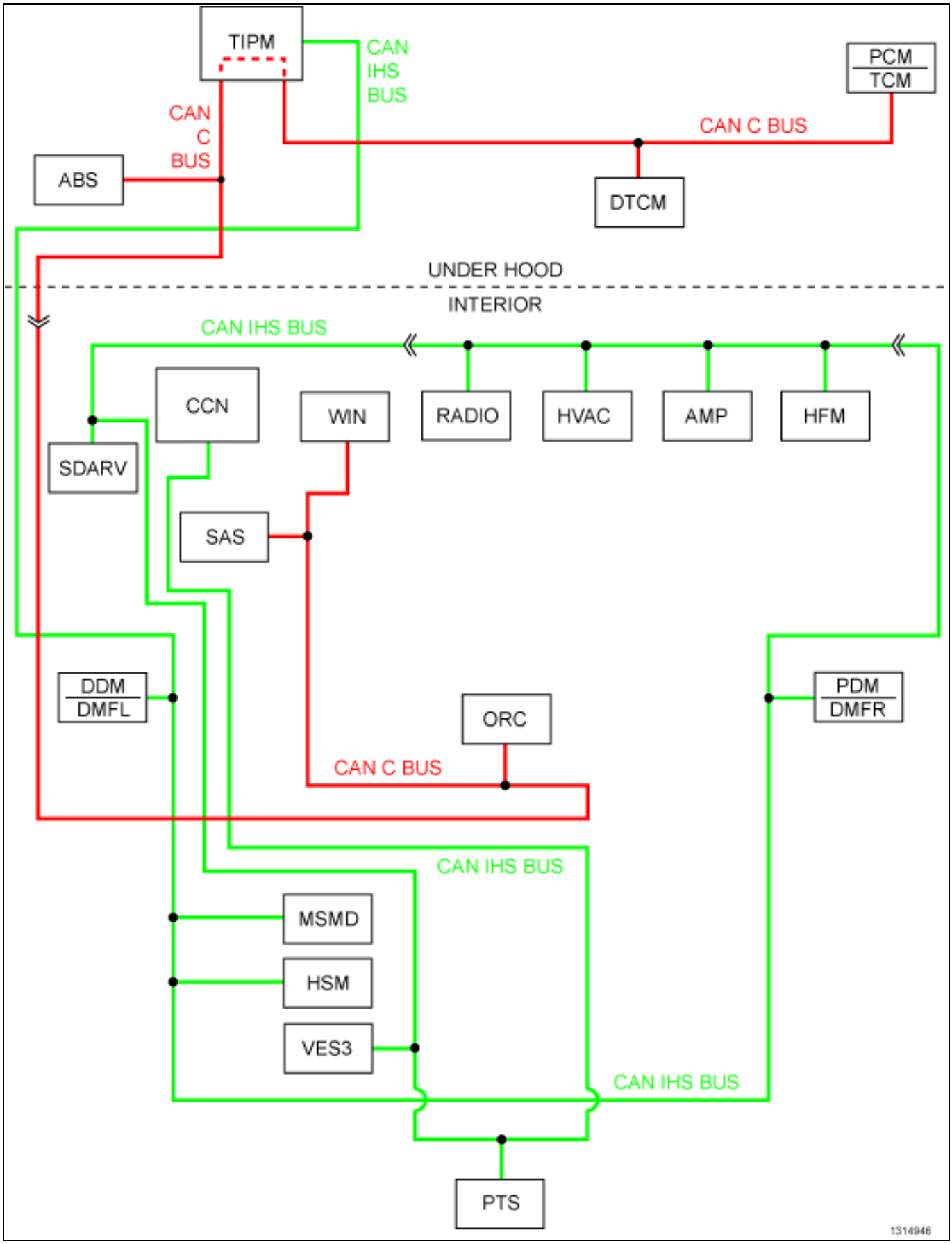

For a complete wiring diagram, **refer to the Wiring Information**.

Theory of Operation

The primary communication network between electronic control modules on this vehicle is the Controller Area Network (CAN) data bus system. The Controller Area Network (CAN) data bus allows all electronic modules connected to the bus to share information with each other. Regardless of whether a message originates from a module on the higher speed CAN C (500K) Bus or on the lower speed CAN Interior High Speed (IHS) (125K) Bus the message structure and layout is similar, which allows the Totally Integrated Power Module/Central GateWay (TIPM or TIPMCGW) to process and transfer messages between the CAN buses. The TIPM also stores Diagnostic Trouble Codes (DTCs) for certain bus network faults.

All modules transmit and receive messages over one of these buses. Data exchange between the modules is achieved by serial transmission of encoded data messages (a form of transmission in which data bits are sent sequentially, one at a time, over a single line). Each module can both send and receive serial data simultaneously. Each data bit of a CAN Bus message is carried over the bus as a voltage differential between the two bus circuits which, when strung together, form a message. Each module uses arbitration to sort the message priority if two competing messages are attempting to be broadcast at the same time. Corruption of a single bit within a message will corrupt the entire message. Each message contains a Cyclic Redundancy Check (CRC) which specifies the message size exactly. If the message detected conflicts with the CRC the ECU receiving it will determine the message to be an error and consider that communication has not been possible. Diagnosis of this condition using a lab scope may reveal activity that appears to be Bus data messages even if no actual communication is possible. Communication problems that affect the whole bus, as a result of opens and terminal push outs are more likely to occur on data busses that operate at a high speed than a data bus that operates at a lower speed.

When an open circuit or terminal push out occurs one or more modules can become isolated from the remainder of the bus. The isolated module will attempt to communicate. Since each module contains it own termination a module that is isolated may receive its own messages correctly but will not be able to receive messages or determine arbitration from other modules. Each time the isolated module attempts to communicate it alters the bus voltage on the intact bus circuit. Without functioning arbitration the isolated module alters the bus voltage while other bus messages are being sent thereby corrupting the messages on the remainder of the bus.

The CAN bus modules are connected in parallel to the two-wire bus using a twisted pair, where the wires are wrapped around each other to provide shielding from unwanted electromagnetic induction, thus preventing interference with the relatively low voltage signals being carried through them. While the CAN bus is operating (active), one of the bus wires will carry a higher voltage and is referred to as the CAN High or CAN bus (+) wire, while the other bus wire will carry a lower voltage and is referred to as the CAN Low or CAN bus (–) wire.

- **When Monitored:**
  With the ignition on.
  Battery voltage between 10 and 16 volts.
  Ignition Off Draw (IOD) fuse installed.
  Totally Integrated Power Module (TIPM) is configured correctly.
- **Set Condition:**
  Bus messages not received from the Parking Assist Control Module (PTS) for approximately two to five seconds.

Possible Causes
(D265) CAN INTERIOR HIGH SPEED (IHS) BUS(+) (125k) CIRCUIT SHORTED TO VOLTAGE
(D264) CAN IHS BUS(-) (125k) CIRCUIT SHORTED TO GROUND
DTCS RELATED TO BATTERY VOLTAGE, IGNITION, OR VIN MESSAGES
TIPM NOT CONFIGURED CORRECTLY
PTS POWER AND GROUND
PARKING ASSIST CONTROL MODULE
MODULE THAT SET THE DTC

1. VERIFY THE DIAGNOSTIC TROUBLE CODE (DTC) IS ACTIVE

NOTE: Make sure the IOD fuse is installed and battery voltage is between 10 and 16 volts before proceeding.

1. Using the scan tool, read active DTCs.

Is this DTC active?

Yes

- Go To 2

No

- (Refer to 29 - Non-DTC Diagnostics/Communication - Diagnosis and Testing) and perform the Stored Lost Communication DTCs diagnostic procedure.

2. CHECK FOR ANY OF THE FOLLOWING ACTIVE DTCS

1. Using the scan tool, read active DTCs from all modules.

NOTE: Check for TIPM configuration, CAN IHS BUS hardware electrical, VIN Missing/Mismatch, battery or ignition related DTCs.

Does the scan tool display any active DTCs to the conditions listed above?

Yes

- Perform the appropriate diagnostic procedure.

No

- Go To 3

3. VERIFY THAT THE PTS IS ACTIVE ON THE BUS

1. Turn the ignition on.
2. Using the scan tool, select Network Diagnostics.
3. Verify that the PTS is active on the bus.

Is the PTS active on the bus?

Yes

- Go To 4

No

- (Refer to 29 - Non-DTC Diagnostics/Communication - Diagnosis and Testing) and perform the No Response from PTS diagnostic procedure.

4. CHECK FOR ADDITIONAL COMMUNICATION RELATED DTCS

1. Using the scan tool, select Network Diagnostics.

Is there more than one module with active DTCs “Logged Against” the PTS?

Yes

- Replace/update the Parking Assist Control Module in accordance with the Service Information.
- Perform the BODY VERIFICATION TEST. (Refer to 28 - DTC-Based Diagnostics/MODULE, Totally Integrated Power (TIPM) - Standard Procedure).

No

- Go To 5

5. CLEAR DTC IN MODULE SETTING FAULT

1. Using the scan tool, select the module setting the DTC against the PTS.
2. Clear active DTCs.

Is this DTC still active?

Yes

- Replace/update the module that set this DTC in accordance with the Service Information.
- Perform the appropriate verification test.

No

- Go To 6

6. CYCLE IGNITION

1. Cycle the ignition from RUN to OFF three times ending with the key in the RUN position.

Does this DTC become active?

Yes

- Go To 7

No

- The condition is not present at this time. Using the wiring diagram/schematic as a guide, inspect the wiring for chafed, pierced, pinched, and partially broken wires and the wiring harness connectors for broken, bent, pushed out, and corroded terminals.
- Perform the BODY VERIFICATION TEST. (Refer to 28 - DTC-Based Diagnostics/MODULE, Totally Integrated Power (TIPM) - Standard Procedure).

7. CHECK FOR ADDITIONAL LOST COMMUNICATION FAULTS

1. Using the scan tool, select Network Diagnostics.

Does the TIPM and other CAN IHS BUS (125K) modules show Lost Communication with the remaining CAN IHS BUS (125K) modules?

Yes

- Go To 8

No

- Replace/update the module that set this DTC in accordance with the Service Information.
- Perform the appropriate verification test.

8. (D265) CAN IHS BUS(+) (125K) CIRCUIT SHORTED TO VOLTAGE

1. Measure the voltage between the (D265) CAN IHS BUS(+) (125K) circuit and ground.

Is the voltage above 5 volts?

Yes

- Repair the (D265) CAN IHS BUS(+) (125K) circuit for a short to voltage.
- Perform the BODY VERIFICATION TEST. (Refer to 28 - DTC-Based Diagnostics/MODULE, Totally Integrated Power (TIPM) - Standard Procedure).

No

- Go To 9

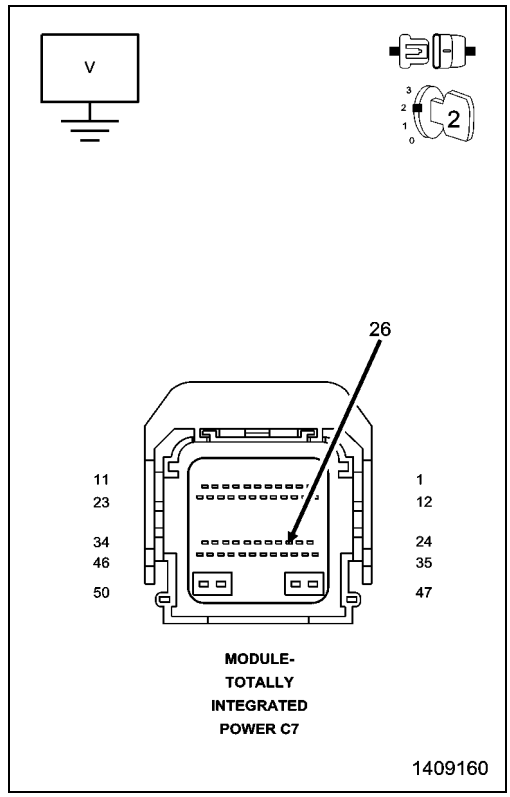

9. (D264) CAN IHS BUS(-) (125K) CIRCUIT SHORTED TO GROUND

1. Turn the ignition off.
2. Measure the resistance between ground and the (D264) CAN IHS BUS(-) (125K) circuit.

Is the resistance below 10K Ohms?

Yes

- Repair the (D264) CAN IHS BUS(-) (125K) circuit for a short to ground.
- Perform the BODY VERIFICATION TEST. (Refer to 28 - DTC-Based Diagnostics/MODULE, Totally Integrated Power (TIPM) - Standard Procedure).

No

- Replace/update the module that set this DTC in accordance with the Service Information.
- Perform the appropriate verification test.

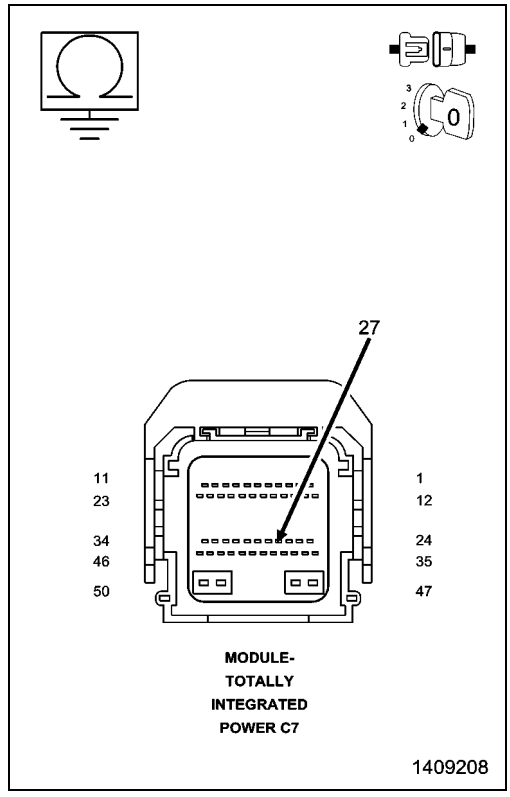

U0164-LOST COMMUNICATION WITH HVAC CONTROL MODULE

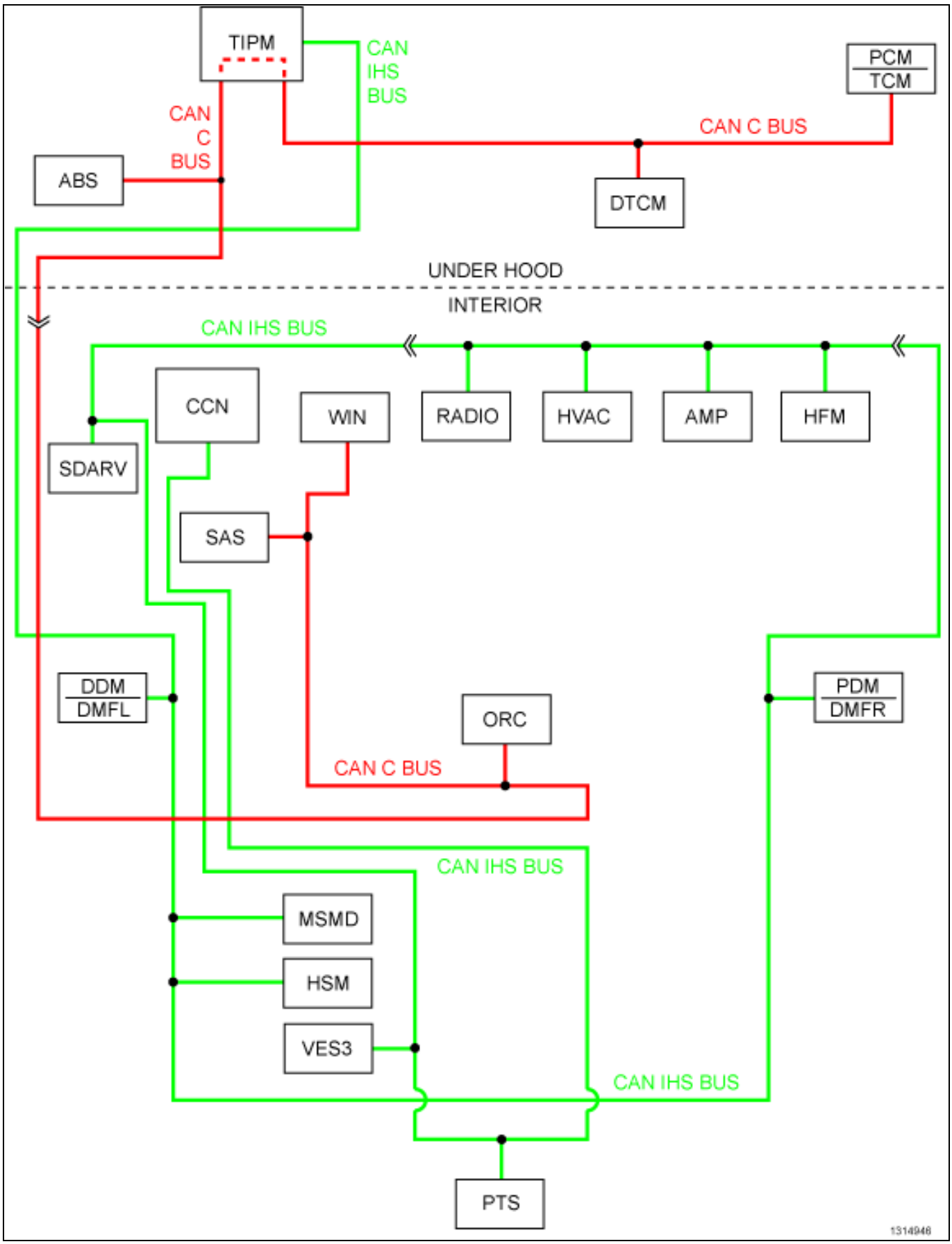

For a complete wiring diagram, **refer to the Wiring Information**.

Theory of Operation

The primary communication network between electronic control modules on this vehicle is the Controller Area Network (CAN) data bus system. The Controller Area Network (CAN) data bus allows all electronic modules connected to the bus to share information with each other. Regardless of whether a message originates from a module on the higher speed CAN C (500K) Bus or on the lower speed CAN Interior High Speed (IHS) (125K) Bus the message structure and layout is similar, which allows the Totally Integrated Power Module/Central GateWay (TIPM or TIPMCGW) to process and transfer messages between the CAN buses. The TIPM also stores Diagnostic Trouble Codes (DTCs) for certain bus network faults.

All modules transmit and receive messages over one of these buses. Data exchange between the modules is achieved by serial transmission of encoded data messages (a form of transmission in which data bits are sent sequentially, one at a time, over a single line). Each module can both send and receive serial data simultaneously. Each data bit of a CAN Bus message is carried over the bus as a voltage differential between the two bus circuits which, when strung together, form a message. Each module uses arbitration to sort the message priority if two competing messages are attempting to be broadcast at the same time. Corruption of a single bit within a message will corrupt the entire message. Each message contains a Cyclic Redundancy Check (CRC) which specifies the message size exactly. If the message detected conflicts with the CRC the ECU receiving it will determine the message to be an error and consider that communication has not been possible. Diagnosis of this condition using a lab scope may reveal activity that appears to be Bus data messages even if no actual communication is possible. Communication problems that affect the whole bus, as a result of opens and terminal push outs are more likely to occur on data busses that operate at a high speed than a data bus that operates at a lower speed.

When an open circuit or terminal push out occurs one or more modules can become isolated from the remainder of the bus. The isolated module will attempt to communicate. Since each module contains it own termination a module that is isolated may receive its own messages correctly but will not be able to receive messages or determine arbitration from other modules. Each time the isolated module attempts to communicate it alters the bus voltage on the intact bus circuit. Without functioning arbitration the isolated module alters the bus voltage while other bus messages are being sent thereby corrupting the messages on the remainder of the bus.

The CAN bus modules are connected in parallel to the two-wire bus using a twisted pair, where the wires are wrapped around each other to provide shielding from unwanted electromagnetic induction, thus preventing interference with the relatively low voltage signals being carried through them. While the CAN bus is operating (active), one of the bus wires will carry a higher voltage and is referred to as the CAN High or CAN bus (+) wire, while the other bus wire will carry a lower voltage and is referred to as the CAN Low or CAN bus (–) wire.

- **When Monitored:**
  With the ignition on.
  Battery voltage between 10 and 16 volts.
  Ignition Off Draw (IOD) fuse installed.
  Totally Integrated Power Module (TIPM) is configured correctly.
- **Set Condition:**
  Bus messages not received from the HVAC Control Module for approximately two to five seconds.

Possible Causes
(D265) CAN INTERIOR HIGH SPEED (IHS) BUS(+) (125k) CIRCUIT SHORTED TO VOLTAGE
(D264) CAN IHS BUS(-) (125k) CIRCUIT SHORTED TO GROUND
DTCS RELATED TO BATTERY VOLTAGE, IGNITION, OR VIN MESSAGES
TIPM NOT CONFIGURED CORRECTLY
HVAC POWER AND GROUND
HVAC CONTROL MODULE
MODULE THAT SET THE DTC

1. VERIFY THE DIAGNOSTIC TROUBLE CODE (DTC) IS ACTIVE

NOTE: Make sure the IOD fuse is installed and battery voltage is between 10 and 16 volts before proceeding.

1. Using the scan tool, read active DTCs.

Is this DTC active?

Yes

- Go To 2

No

- (Refer to 29 - Non-DTC Diagnostics/Communication - Diagnosis and Testing) and perform the Stored Lost Communication DTCs diagnostic procedure.

2. CHECK FOR ANY OF THE FOLLOWING ACTIVE DTCS

1. Using the scan tool, read active DTCs from all modules.

NOTE: Check for TIPM configuration, CAN IHS BUS hardware electrical, VIN Missing/Mismatch, battery or ignition related DTCs.

Does the scan tool display any active DTCs to the conditions listed above?

Yes

- Perform the appropriate diagnostic procedure.

No

- Go To 3

3. VERIFY THAT THE HVAC IS ACTIVE ON THE BUS

1. Turn the ignition on.
2. Using the scan tool, select Network Diagnostics.
3. Verify that the HVAC is active on the bus.

Is the HVAC active on the bus?

Yes

- Go To 4

No

- (Refer to 29 - Non-DTC Diagnostics/Communication - Diagnosis and Testing) and perform the No Response HVAC Control Module diagnostic procedure.

4. CHECK FOR ADDITIONAL COMMUNICATION RELATED DTCS

1. Using the scan tool, select Network Diagnostics.

Is there more than one module with active DTCs “Logged Against” the HVAC?

Yes

- Replace/update the HVAC Control Module in accordance with the Service Information.
- Perform the HVAC VERIFICATION TEST. (Refer to 28 - DTC-Based Diagnostics/HVAC - Standard Procedure).

No

- Go To 5

5. CLEAR DTC IN MODULE SETTING FAULT

1. Using the scan tool, select the module setting the DTC against the HVAC.
2. Clear active DTCs.

Is this DTC still active?

Yes

- Replace/update the module that set this DTC in accordance with the Service Information.
- Perform the appropriate verification test.

No

- Go To 6

6. CYCLE IGNITION

1. Cycle the ignition from RUN to OFF three times ending with the key in the RUN position.

Does this DTC become active?

Yes

- Go To 7

No

- The condition is not present at this time. Using the wiring diagram/schematic as a guide, inspect the wiring for chafed, pierced, pinched, and partially broken wires and the wiring harness connectors for broken, bent, pushed out, and corroded terminals.
- Perform the BODY VERIFICATION TEST. (Refer to 28 - DTC-Based Diagnostics/MODULE, Totally Integrated Power (TIPM) - Standard Procedure).

7. CHECK FOR ADDITIONAL LOST COMMUNICATION FAULTS

1. Using the scan tool, select Network Diagnostics.

Does the TIPM and other CAN IHS BUS (125K) modules show Lost Communication with the remaining CAN IHS BUS (125K) modules?

Yes

- Go To 8

No

- Replace/update the module that set this DTC in accordance with the Service Information.
- Perform the appropriate verification test.

8. (D265) CAN IHS BUS(+) (125K) CIRCUIT SHORTED TO VOLTAGE

1. Measure the voltage between the (D265) CAN IHS BUS(+) (125K) circuit and ground.

Is the voltage above 5 volts?

Yes

- Repair the (D265) CAN IHS BUS(+) (125K) circuit for a short to voltage.
- Perform the BODY VERIFICATION TEST. (Refer to 28 - DTC-Based Diagnostics/MODULE, Totally Integrated Power (TIPM) - Standard Procedure).

No

- Go To 9

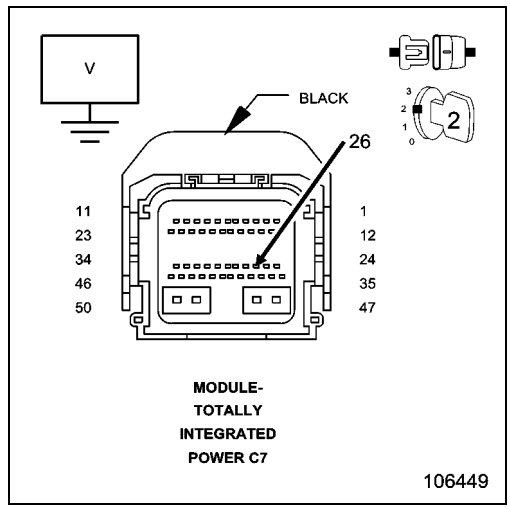

9. (D264) CAN IHS BUS(-) (125K) CIRCUIT SHORTED TO GROUND

1. Turn the ignition off.
2. Measure the resistance between ground and the (D264) CAN IHS BUS(-) (125K) circuit.

Is the resistance below 10K Ohms?

Yes

- Repair the (D264) CAN IHS BUS(-) (125K) circuit for a short to ground.
- Perform the BODY VERIFICATION TEST. (Refer to 28 - DTC-Based Diagnostics/MODULE, Totally Integrated Power (TIPM) - Standard Procedure).

No

- Replace/update the module that set this DTC in accordance with the Service Information.
- Perform the appropriate verification test.

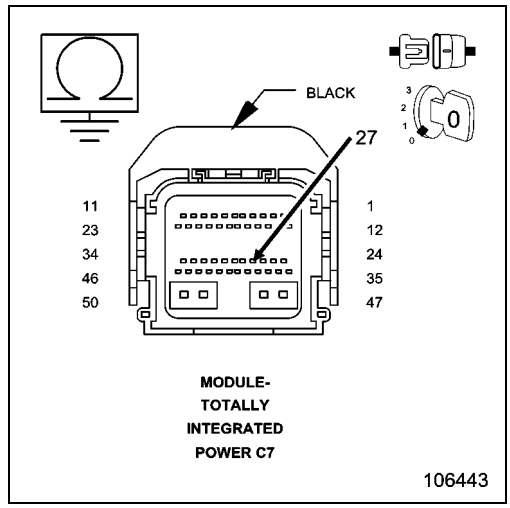

■ U0168-LOST COMMUNICATION WITH VEHICLE SECURITY CONTROL MODULE (WIRELESS IGNITION NODE OR WIN)

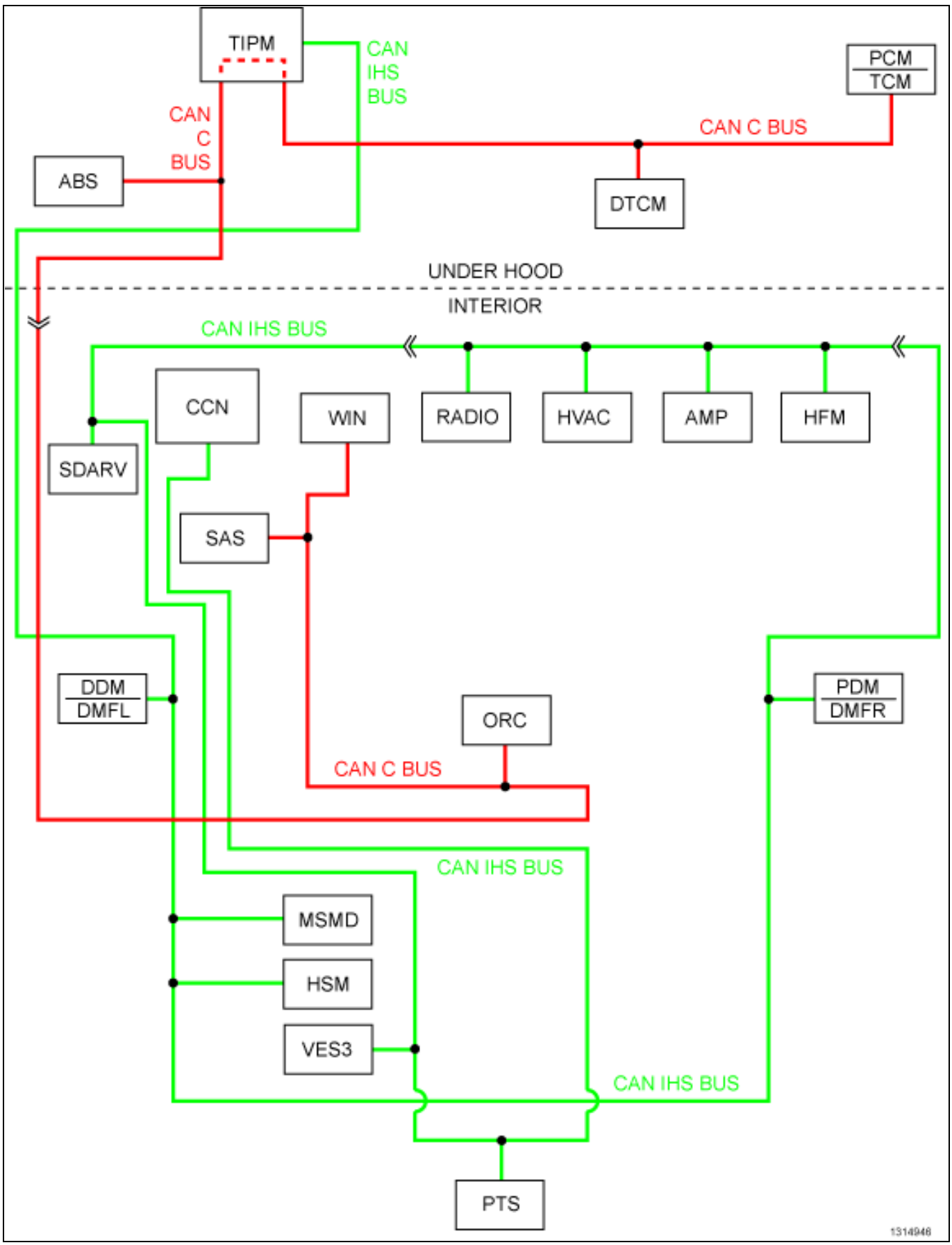

For a complete wiring diagram, **refer to the Wiring Information**.

Theory of Operation

The primary communication network between electronic control modules on this vehicle is the Controller Area Network (CAN) data bus system. The Controller Area Network (CAN) data bus allows all electronic modules connected to the bus to share information with each other. Regardless of whether a message originates from a module on the higher speed CAN C (500K) Bus or on the lower speed CAN Interior High Speed (IHS) (125K) Bus the message structure and layout is similar, which allows the Totally Integrated Power Module/Central GateWay (TIPM or TIPMCGW) to process and transfer messages between the CAN buses. The TIPM also stores Diagnostic Trouble Codes (DTCs) for certain bus network faults.

All modules transmit and receive messages over one of these buses. Data exchange between the modules is achieved by serial transmission of encoded data messages (a form of transmission in which data bits are sent sequentially, one at a time, over a single line). Each module can both send and receive serial data simultaneously. Each data bit of a CAN Bus message is carried over the bus as a voltage differential between the two bus circuits which, when strung together, form a message. Each module uses arbitration to sort the message priority if two competing messages are attempting to be broadcast at the same time. Corruption of a single bit within a message will corrupt the entire message. Each message contains a Cyclic Redundancy Check (CRC) which specifies the message size exactly. If the message detected conflicts with the CRC the ECU receiving it will determine the message to be an error and consider that communication has not been possible. Diagnosis of this condition using a lab scope may reveal activity that appears to be Bus data messages even if no actual communication is possible. Communication problems that affect the whole bus, as a result of opens and terminal push outs are more likely to occur on data busses that operate at a high speed than a data bus that operates at a lower speed.

When an open circuit or terminal push out occurs one or more modules can become isolated from the remainder of the bus. The isolated module will attempt to communicate. Since each module contains it own termination a module that is isolated may receive its own messages correctly but will not be able to receive messages or determine arbitration from other modules. Each time the isolated module attempts to communicate it alters the bus voltage on the intact bus circuit. Without functioning arbitration the isolated module alters the bus voltage while other bus messages are being sent thereby corrupting the messages on the remainder of the bus.

The CAN bus modules are connected in parallel to the two-wire bus using a twisted pair, where the wires are wrapped around each other to provide shielding from unwanted electromagnetic induction, thus preventing interference with the relatively low voltage signals being carried through them. While the CAN bus is operating (active), one of the bus wires will carry a higher voltage and is referred to as the CAN High or CAN bus (+) wire, while the other bus wire will carry a lower voltage and is referred to as the CAN Low or CAN bus (–) wire.

- **When Monitored:**

  With the ignition on.

  Battery voltage between 10 and 16 volts.

  Ignition Off Draw (IOD) fuse installed.

  Totally Integrated Power Module (TIPM) is configured correctly.
- **Set Condition:**

  Bus messages not received from the Vehicle Security Control Module (also known as the Wireless Ignition Node or WIN) for approximately two to five seconds.

Possible Causes
CAN C BUS(+) CIRCUIT SHORTED TO VOLTAGE
CAN C BUS(-) CIRCUIT SHORTED TO GROUND
DTCS RELATED TO BATTERY VOLTAGE, IGNITION, OR VIN MESSAGES
TIPM NOT CONFIGURED CORRECTLY
WIN POWER AND GROUND
WIRELESS IGNITION NODE (WIN)
MODULE THAT SET THIS DTC

1. VERIFY THE DIAGNOSTIC TROUBLE CODE (DTC) IS ACTIVE

NOTE: Make sure the IOD fuse is installed and battery voltage is between 10 and 16 volts before proceeding.

1. Using the scan tool, read active DTCs.

Is this DTC active?

Yes

- Go To 2

No

- (Refer to 29 - Non-DTC Diagnostics/Communication - Diagnosis and Testing) and perform the Stored Lost Communication DTCs diagnostic procedure.

2. CHECK FOR ANY OF THE FOLLOWING ACTIVE DTCS

1. Using the scan tool, read all active DTCs from all modules.

NOTE: Check for TIPM configuration, CAN C hardware electrical, VIN Missing/Mismatch, battery or ignition related DTCs.

Does the scan tool display any active DTCs to the conditions listed above?

Yes

- Perform the appropriate diagnostic procedure.

No

- Go To 3

3. VERIFY THAT THE WIN IS ACTIVE ON THE BUS

1. Turn the ignition on.
2. Using the scan tool, select Network Diagnostics.
3. Verify that the WIN is active on the bus.

Is the WIN active on the bus?

Yes

- Go To 4

No

- (Refer to 29 - Non-DTC Diagnostics/Communication - Diagnosis and Testing) and perform the No Response from WIN diagnostic procedure.

4. CHECK FOR ADDITIONAL COMMUNICATION RELATED DTCS

1. Using the scan tool, select Network Diagnostics.

Is there more than one module with active DTCs “Logged Against” the WIN?

Yes

- Replace/update the Wireless Ignition Node in accordance with the Service Information.
- Perform the WIN VERIFICATION TEST. (Refer to 28 - DTC-Based Diagnostics/NODE, Wireless Ignition (WIN) - Standard Procedure).

No

- Go To 5

5. CLEAR DTC IN MODULE SETTING FAULT

1. Using the scan tool, select the module setting the DTC against the WIN.
2. Clear active DTCs.

Is this DTC still active?

Yes

- Replace/update the module that set this DTC in accordance with the Service Information.
- Perform the appropriate verification test.

No

- Go To 6

6. CYCLE IGNITION

1. Cycle the ignition from RUN to OFF three times ending with the key in the RUN position.

Does this DTC become active?

Yes

- Go To 7

No

- The condition is not present at this time. Using the wiring diagram/schematic as a guide, inspect the wiring for chafed, pierced, pinched, and partially broken wires and the wiring harness connectors for broken, bent, pushed out, and corroded terminals.
- Perform the WIN VERIFICATION TEST. (Refer to 28 - DTC-Based Diagnostics/NODE, Wireless Ignition (WIN) - Standard Procedure)

7. CHECK FOR ADDITIONAL LOST COMMUNICATION FAULTS

1. Using the scan tool, select Network Diagnostics.

Does the TIPM and other CAN C BUS modules show Lost Communication with the remaining CAN C BUS modules?

Yes

- Go To 8

No

- Replace/update the module that set this DTC in accordance with the Service Information.
- Perform the appropriate verification test.

8. (D52) OR (D65) CAN C BUS (+) CIRCUIT SHORTED TO VOLTAGE

1. Measure the voltage between the (D52) CAN C Bus (+) circuit and ground.
2. Measure the voltage between the (D65) CAN C Bus (+) circuit and ground.

Is the voltage above 5 volts?

Yes

- Repair the (D52) or (D65) CAN C Bus (+) circuit for a short to voltage.
- Perform the BODY VERIFICATION TEST. (Refer to 28 - DTC-Based Diagnostics/MODULE, Totally Integrated Power (TIPM) - Standard Procedure).

No

- Go To 9

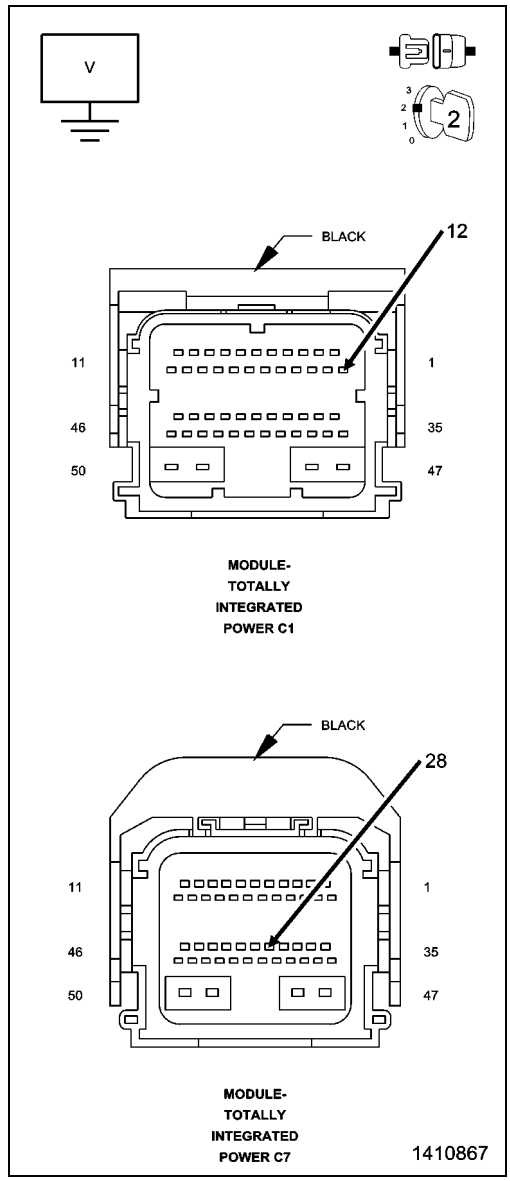

9. (D51) OR (D64) CAN C BUS (-) CIRCUIT SHORTED TO GROUND

1. Turn the ignition off.
2. Measure the resistance between ground and the (D51) CAN C Bus (-) circuit.
3. Measure the resistance between ground and the (D64) CAN C Bus (-) circuit.

Is the resistance below 10K Ohms?

Yes

- Repair the (D51) or (D64) CAN C Bus (-) circuit for a short to ground.
- Perform the BODY VERIFICATION TEST. (Refer to 28 - DTC-Based Diagnostics/MODULE, Totally Integrated Power (TIPM) - Standard Procedure).

No

- Replace/update the module that set this DTC in accordance with the Service Information.
- Perform the appropriate verification test.

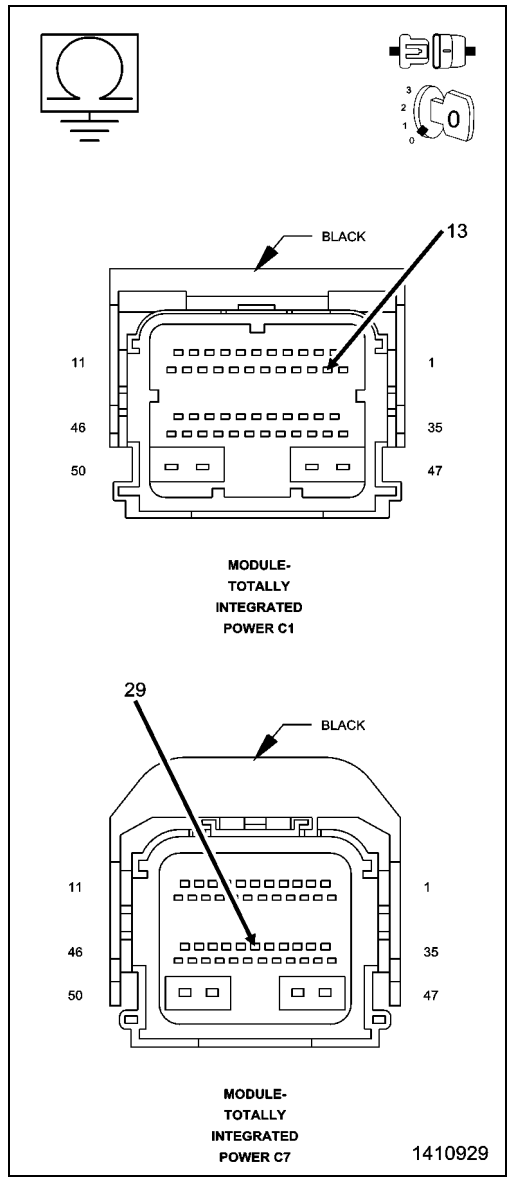

U0184-LOST COMMUNICATION WITH RADIO

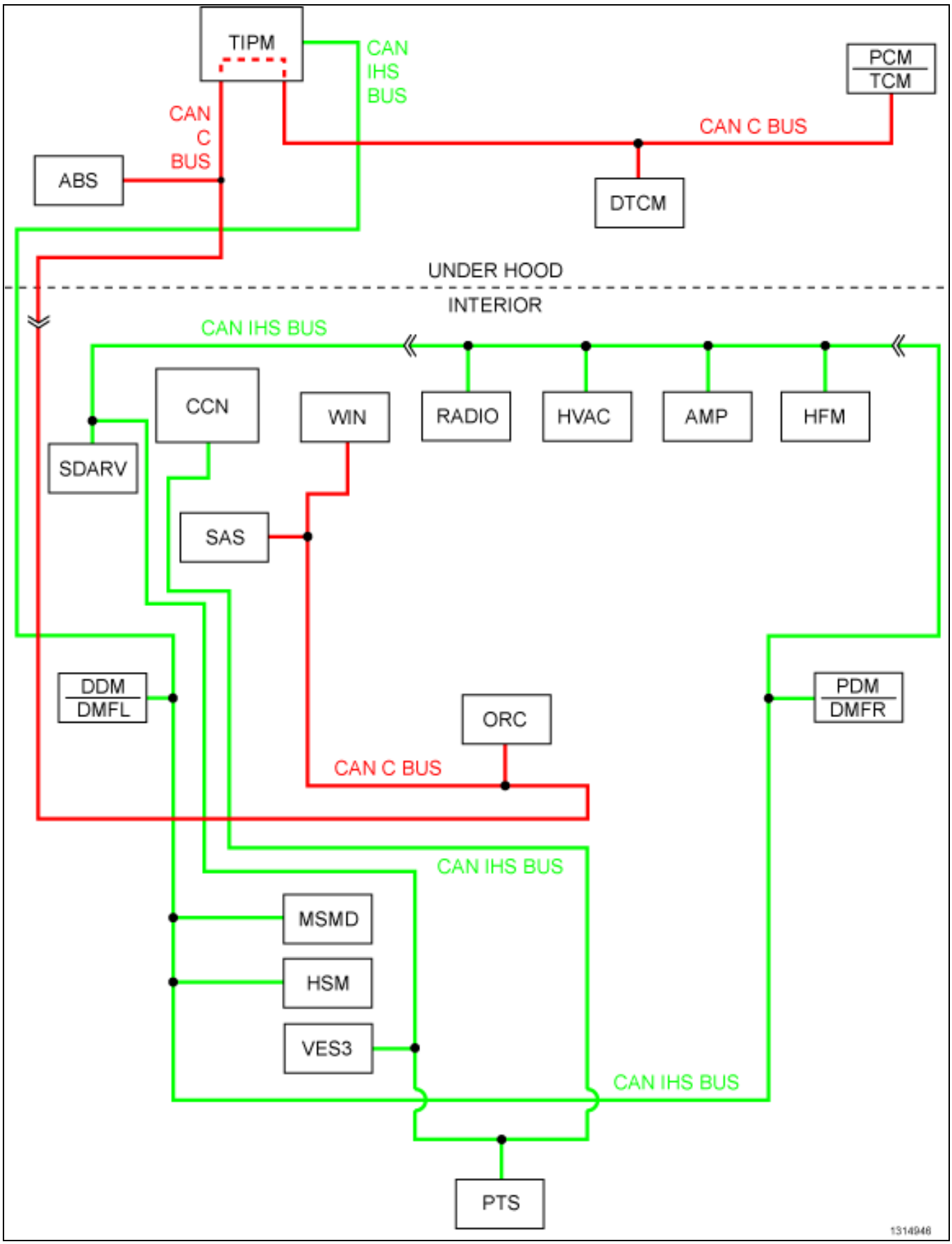

For a complete wiring diagram, **refer to the Wiring Information**.

Theory of Operation

The primary communication network between electronic control modules on this vehicle is the Controller Area Network (CAN) data bus system. The Controller Area Network (CAN) data bus allows all electronic modules connected to the bus to share information with each other. Regardless of whether a message originates from a module on the higher speed CAN C (500K) Bus or on the lower speed CAN Interior High Speed (IHS) (125K) Bus the message structure and layout is similar, which allows the Totally Integrated Power Module/Central GateWay (TIPM or TIPMCGW) to process and transfer messages between the CAN buses. The TIPM also stores Diagnostic Trouble Codes (DTCs) for certain bus network faults.

All modules transmit and receive messages over one of these buses. Data exchange between the modules is achieved by serial transmission of encoded data messages (a form of transmission in which data bits are sent sequentially, one at a time, over a single line). Each module can both send and receive serial data simultaneously. Each data bit of a CAN Bus message is carried over the bus as a voltage differential between the two bus circuits which, when strung together, form a message. Each module uses arbitration to sort the message priority if two competing messages are attempting to be broadcast at the same time. Corruption of a single bit within a message will corrupt the entire message. Each message contains a Cyclic Redundancy Check (CRC) which specifies the message size exactly. If the message detected conflicts with the CRC the ECU receiving it will determine the message to be an error and consider that communication has not been possible. Diagnosis of this condition using a lab scope may reveal activity that appears to be Bus data messages even if no actual communication is possible. Communication problems that affect the whole bus, as a result of opens and terminal push outs are more likely to occur on data busses that operate at a high speed than a data bus that operates at a lower speed.

When an open circuit or terminal push out occurs one or more modules can become isolated from the remainder of the bus. The isolated module will attempt to communicate. Since each module contains it own termination a module that is isolated may receive its own messages correctly but will not be able to receive messages or determine arbitration from other modules. Each time the isolated module attempts to communicate it alters the bus voltage on the intact bus circuit. Without functioning arbitration the isolated module alters the bus voltage while other bus messages are being sent thereby corrupting the messages on the remainder of the bus.

The CAN bus modules are connected in parallel to the two-wire bus using a twisted pair, where the wires are wrapped around each other to provide shielding from unwanted electromagnetic induction, thus preventing interference with the relatively low voltage signals being carried through them. While the CAN bus is operating (active), one of the bus wires will carry a higher voltage and is referred to as the CAN High or CAN bus (+) wire, while the other bus wire will carry a lower voltage and is referred to as the CAN Low or CAN bus (–) wire.

- **When Monitored:**
  With the ignition on.
  Battery voltage between 10 and 16 volts.
  Ignition Off Draw (IOD) fuse installed.
  Totally Integrated Power Module (TIPM) is configured correctly.
- **Set Condition:**
  Bus messages not received from the Radio for approximately two to five seconds.

Possible Causes
(D265) CAN INTERIOR HIGH SPEED (IHS) BUS(+) (125k) CIRCUIT SHORTED TO VOLTAGE
(D264) CAN IHS BUS(-) (125k) CIRCUIT SHORTED TO GROUND
DTCS RELATED TO BATTERY VOLTAGE, IGNITION, OR VIN MESSAGES
TIPM NOT CONFIGURED CORRECTLY
RADIO POWER AND GROUND
RADIO
MODULE THAT SET THE DTC

1. VERIFY THE DIAGNOSTIC TROUBLE CODE (DTC) IS ACTIVE

NOTE: Make sure the IOD fuse is installed and battery voltage is between 10 and 16 volts before proceeding.

1. Using the scan tool, read active DTCs.

Is this DTC active?

Yes

- Go To 2

No

- (Refer to 29 - Non-DTC Diagnostics/Communication - Diagnosis and Testing) and perform the Stored Lost Communication DTCs diagnostic procedure.

2. CHECK FOR ANY OF THE FOLLOWING ACTIVE DTCS

1. Using the scan tool, read active DTCs from all modules.

NOTE: Check for TIPM configuration, CAN IHS BUS hardware electrical, VIN Missing/Mismatch, battery or ignition related DTCs.

Does the scan tool display any active DTCs to the conditions listed above?

Yes

- Perform the appropriate diagnostic procedure.

No

- Go To 3

3. VERIFY THAT THE RADIO IS ACTIVE ON THE BUS

1. Turn the ignition on.
2. Using the scan tool, select Network Diagnostics.
3. Verify that the Radio is active on the bus.

Is the Radio active on the bus?

Yes

- Go To 4

No

- (Refer to 29 - Non-DTC Diagnostics/Communication - Diagnosis and Testing) and perform the No Response from Radio diagnostic procedure.

4. CHECK FOR ADDITIONAL COMMUNICATION RELATED DTCS

1. Using the scan tool, select Network Diagnostics.

Is there more than one module with active DTCs “Logged Against” the Radio?

Yes

- Replace/update the Radio in accordance with the Service Information.
- Perform the BODY VERIFICATION TEST. (Refer to 28 - DTC-Based Diagnostics/MODULE, Totally Integrated Power (TIPM) - Standard Procedure).

No

- Go To 5

5. CLEAR DTC IN MODULE SETTING FAULT

1. Using the scan tool, select the module setting the DTC against the Radio.
2. Clear active DTCs.

Is this DTC still active?

Yes

- Replace/update the module that set this DTC in accordance with the Service Information.
- Perform the appropriate verification test.

No

- Go To 6

6. CYCLE IGNITION

1. Cycle the ignition from RUN to OFF three times ending with the key in the RUN position.

Does this DTC become active?

Yes

- Go To 7

No

- The condition is not present at this time. Using the wiring diagram/schematic as a guide, inspect the wiring for chafed, pierced, pinched, and partially broken wires and the wiring harness connectors for broken, bent, pushed out, and corroded terminals.
- Perform the BODY VERIFICATION TEST. (Refer to 28 - DTC-Based Diagnostics/MODULE, Totally Integrated Power (TIPM) - Standard Procedure).

7. CHECK FOR ADDITIONAL LOST COMMUNICATION FAULTS

1. Using the scan tool, select Network Diagnostics.

Does the TIPM and other CAN IHS BUS (125K) modules show Lost Communication with the remaining CAN IHS BUS (125K) modules?

Yes

- Go To 8

No

- Replace/update the module that set this DTC in accordance with the Service Information.
- Perform the appropriate verification test.

8. (D265) CAN IHS BUS(+) (125K) CIRCUIT SHORTED TO VOLTAGE

1. Measure the voltage between the (D265) CAN IHS BUS(+) (125K) circuit and ground.

Is the voltage above 5 volts?

Yes

- Repair the (D265) CAN IHS BUS(+) (125K) circuit for a short to voltage.
- Perform the BODY VERIFICATION TEST. (Refer to 28 - DTC-Based Diagnostics/MODULE, Totally Integrated Power (TIPM) - Standard Procedure).

No

- Go To 9

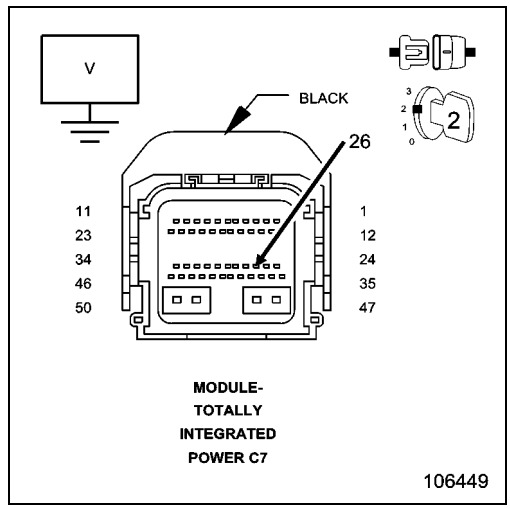

9. (D264) CAN IHS BUS(-) (125K) CIRCUIT SHORTED TO GROUND

1. Turn the ignition off.
2. Measure the resistance between ground and the (D264) CAN IHS BUS(-) (125K) circuit.

Is the resistance below 10K Ohms?

Yes

- Repair the (D264) CAN IHS BUS(-) (125K) circuit for a short to ground.
- Perform the BODY VERIFICATION TEST. (Refer to 28 - DTC-Based Diagnostics/MODULE, Totally Integrated Power (TIPM) - Standard Procedure).

No

- Replace/update the module that set this DTC in accordance with the Service Information.
- Perform the appropriate verification test.

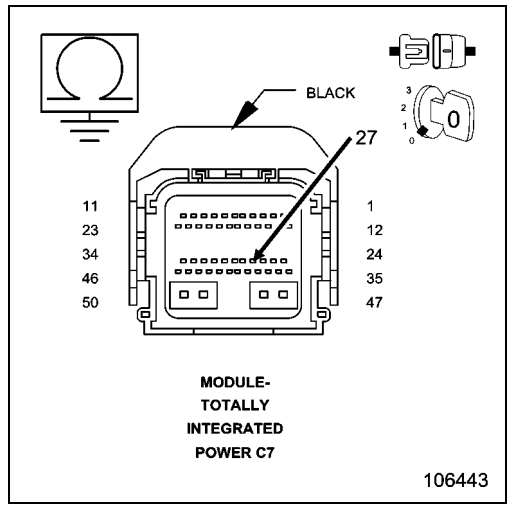

U0186-LOST COMMUNICATION WITH AUDIO AMPLIFIER (AMP)

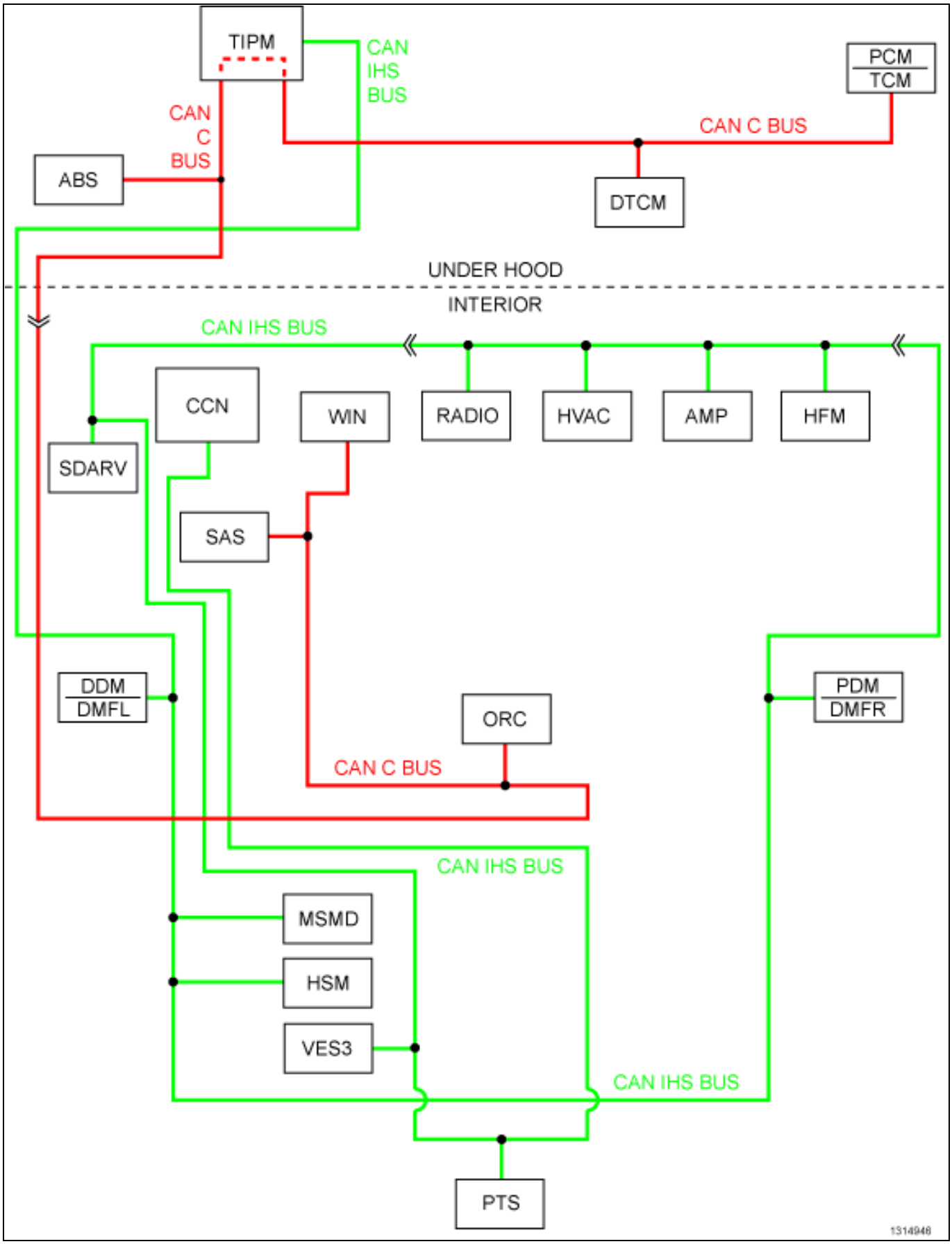

For a complete wiring diagram, **refer to the Wiring Information**.

Theory of Operation

The primary communication network between electronic control modules on this vehicle is the Controller Area Network (CAN) data bus system. The Controller Area Network (CAN) data bus allows all electronic modules connected to the bus to share information with each other. Regardless of whether a message originates from a module on the higher speed CAN C (500K) Bus or on the lower speed CAN Interior High Speed (IHS) (125K) Bus the message structure and layout is similar, which allows the Totally Integrated Power Module/Central GateWay (TIPM or TIPMCGW) to process and transfer messages between the CAN buses. The TIPM also stores Diagnostic Trouble Codes (DTCs) for certain bus network faults.

All modules transmit and receive messages over one of these buses. Data exchange between the modules is achieved by serial transmission of encoded data messages (a form of transmission in which data bits are sent sequentially, one at a time, over a single line). Each module can both send and receive serial data simultaneously. Each data bit of a CAN Bus message is carried over the bus as a voltage differential between the two bus circuits which, when strung together, form a message. Each module uses arbitration to sort the message priority if two competing messages are attempting to be broadcast at the same time. Corruption of a single bit within a message will corrupt the entire message. Each message contains a Cyclic Redundancy Check (CRC) which specifies the message size exactly. If the message detected conflicts with the CRC the ECU receiving it will determine the message to be an error and consider that communication has not been possible. Diagnosis of this condition using a lab scope may reveal activity that appears to be Bus data messages even if no actual communication is possible. Communication problems that affect the whole bus, as a result of opens and terminal push outs are more likely to occur on data busses that operate at a high speed than a data bus that operates at a lower speed.

When an open circuit or terminal push out occurs one or more modules can become isolated from the remainder of the bus. The isolated module will attempt to communicate. Since each module contains it own termination a module that is isolated may receive its own messages correctly but will not be able to receive messages or determine arbitration from other modules. Each time the isolated module attempts to communicate it alters the bus voltage on the intact bus circuit. Without functioning arbitration the isolated module alters the bus voltage while other bus messages are being sent thereby corrupting the messages on the remainder of the bus.

The CAN bus modules are connected in parallel to the two-wire bus using a twisted pair, where the wires are wrapped around each other to provide shielding from unwanted electromagnetic induction, thus preventing interference with the relatively low voltage signals being carried through them. While the CAN bus is operating (active), one of the bus wires will carry a higher voltage and is referred to as the CAN High or CAN bus (+) wire, while the other bus wire will carry a lower voltage and is referred to as the CAN Low or CAN bus (–) wire.

- **When Monitored:**
  With the ignition on.
  Battery voltage between 10 and 16 volts.
  Ignition Off Draw (IOD) fuse installed.
  Totally Integrated Power Module (TIPM) is configured correctly.
- **Set Condition:**
  Bus messages not received from the Audio Amplifier (AMP) for approximately two to five seconds.

Possible Causes
(D265) CAN INTERIOR HIGH SPEED (IHS) BUS(+) (125k) CIRCUIT SHORTED TO VOLTAGE
(D264) CAN IHS BUS(-) (125k) CIRCUIT SHORTED TO GROUND
DTCS RELATED TO BATTERY VOLTAGE, IGNITION, OR VIN MESSAGES
TIPM NOT CONFIGURED CORRECTLY
AMP POWER AND GROUND
AUDIO AMPLIFIER
MODULE THAT SET THE DTC

1. VERIFY THE DIAGNOSTIC TROUBLE CODE (DTC) IS ACTIVE

NOTE: Make sure the IOD fuse is installed and battery voltage is between 10 and 16 volts before proceeding.

1. Using the scan tool, read active DTCs.

Is this DTC active?

Yes

- Go To 2

No

- (Refer to 29 - Non-DTC Diagnostics/Communication - Diagnosis and Testing) and perform the Stored Lost Communication diagnostic procedure.

2. CHECK FOR ANY OF THE FOLLOWING ACTIVE DTCS

1. Using the scan tool, read active DTCs from all modules.

NOTE: Check for TIPM configuration, CAN IHS BUS hardware electrical, VIN Missing/Mismatch, battery or ignition related DTCs.

Does the scan tool display any active DTCs to the conditions listed above?

Yes

- Perform the appropriate diagnostic procedure.

No

- Go To 3

3. VERIFY THAT THE AMP IS ACTIVE ON THE BUS

1. Turn the ignition on.
2. Using the scan tool, select Network Diagnostics.
3. Verify that the AMP is active on the bus.

Is the AMP active on the bus?

Yes

- Go To 4

No

- (Refer to 29 - Non-DTC Diagnostics/Communication - Diagnosis and Testing) and perform the No Response from AMP (Amplifier) diagnostic procedure.

4. CHECK FOR ADDITIONAL COMMUNICATION RELATED DTCS

1. Using the scan tool, select Network Diagnostics.

Is there more than one module with active DTCs “Logged Against” the AMP?

Yes

- Replace/update the Audio Amplifier in accordance with the Service Information.
- Perform the BODY VERIFICATION TEST. (Refer to 28 - DTC-Based Diagnostics/MODULE, Totally Integrated Power (TIPM) - Standard Procedure).

No

- Go To 5

5. CLEAR DTC IN MODULE SETTING FAULT

1. Using the scan tool, select the module setting the DTC against the AMP.
2. Clear active DTCs.

Is this DTC still active?

Yes

- Replace/update the module that set this DTC in accordance with the Service Information.
- Perform the appropriate verification test.

No

- Go To 6

6. CYCLE IGNITION

1. Cycle the ignition from RUN to OFF three times ending with the key in the RUN position.

Does this DTC become active?

Yes

- Go To 7

No

- The condition is not present at this time. Using the wiring diagram/schematic as a guide, inspect the wiring for chafed, pierced, pinched, and partially broken wires and the wiring harness connectors for broken, bent, pushed out, and corroded terminals.
- Perform the BODY VERIFICATION TEST. (Refer to 28 - DTC-Based Diagnostics/MODULE, Totally Integrated Power (TIPM) - Standard Procedure).

7. CHECK FOR ADDITIONAL LOST COMMUNICATION FAULTS

1. Using the scan tool, select Network Diagnostics.

Does the TIPM and other CAN IHS BUS (125K) modules show Lost Communication with the remaining CAN IHS BUS (125K) modules?

Yes

- Go To 8

No

- Replace/update the module that set this DTC in accordance with the Service Information.
- Perform the appropriate verification test.

8. (D265) CAN IHS BUS(+) (125K) CIRCUIT SHORTED TO VOLTAGE

1. Measure the voltage between the (D265) CAN IHS BUS(+) (125K) circuit and ground.

Is the voltage above 5 volts?

Yes

- Repair the (D265) CAN IHS BUS(+) (125K) circuit for a short to voltage.
- Perform the BODY VERIFICATION TEST. (Refer to 28 - DTC-Based Diagnostics/MODULE, Totally Integrated Power (TIPM) - Standard Procedure).

No

- Go To 9

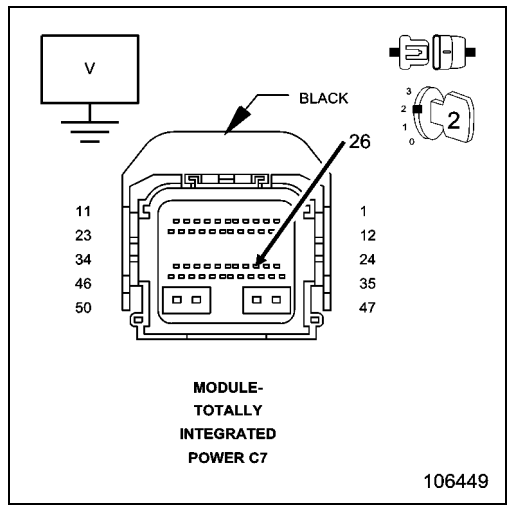

9. (D264) CAN IHS BUS(-) (125K) CIRCUIT SHORTED TO GROUND

1. Turn the ignition off.
2. Measure the resistance between ground and the (D264) CAN IHS BUS(-) (125K) circuit.

Is the resistance below 10K Ohms?

Yes

- Repair the (D264) CAN IHS BUS(-) (125K) circuit for a short to ground.
- Perform the BODY VERIFICATION TEST. (Refer to 28 - DTC-Based Diagnostics/MODULE, Totally Integrated Power (TIPM) - Standard Procedure).

No

- Replace/update the module that set this DTC in accordance with the Service Information.
- Perform the appropriate verification test.

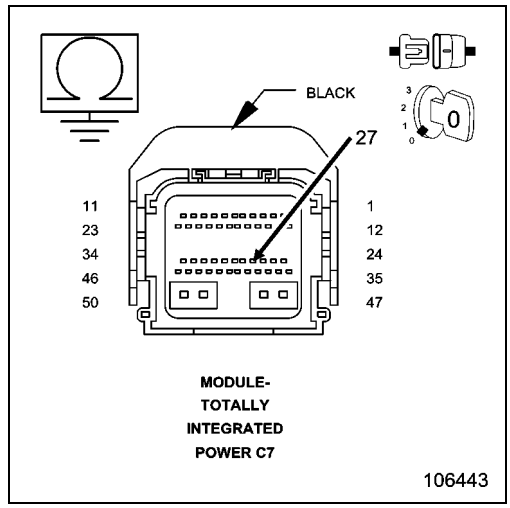

■ U0197-LOST COMMUNICATION WITH HANDS FREE PHONE MODULE (HFM)

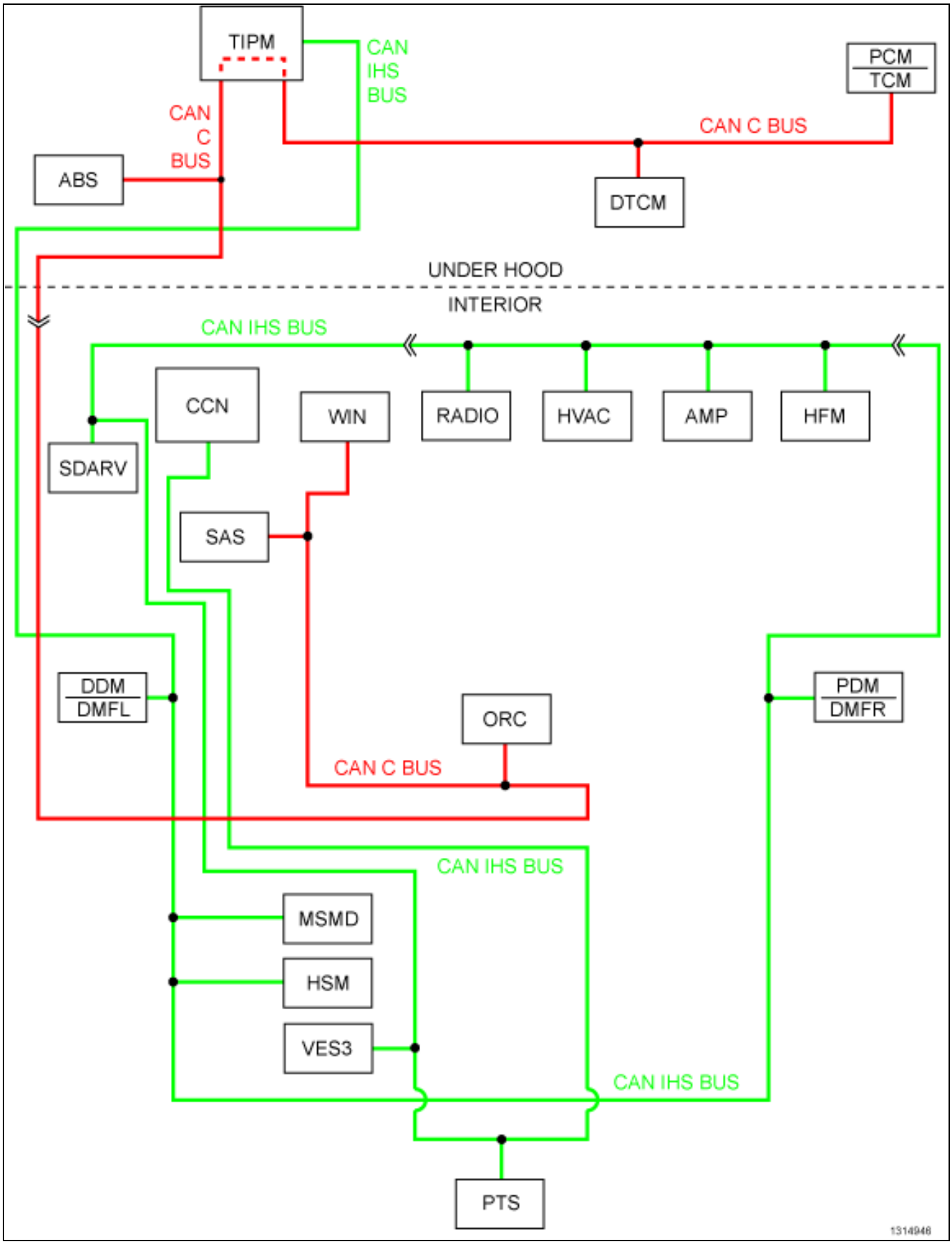

For a complete wiring diagram, **refer to the Wiring Information**.

Theory of Operation

The primary communication network between electronic control modules on this vehicle is the Controller Area Network (CAN) data bus system. The Controller Area Network (CAN) data bus allows all electronic modules connected to the bus to share information with each other. Regardless of whether a message originates from a module on the higher speed CAN C (500K) Bus or on the lower speed CAN Interior High Speed (IHS) (125K) Bus the message structure and layout is similar, which allows the Totally Integrated Power Module/Central GateWay (TIPM or TIPMCGW) to process and transfer messages between the CAN buses. The TIPM also stores Diagnostic Trouble Codes (DTCs) for certain bus network faults.

All modules transmit and receive messages over one of these buses. Data exchange between the modules is achieved by serial transmission of encoded data messages (a form of transmission in which data bits are sent sequentially, one at a time, over a single line). Each module can both send and receive serial data simultaneously. Each data bit of a CAN Bus message is carried over the bus as a voltage differential between the two bus circuits which, when strung together, form a message. Each module uses arbitration to sort the message priority if two competing messages are attempting to be broadcast at the same time. Corruption of a single bit within a message will corrupt the entire message. Each message contains a Cyclic Redundancy Check (CRC) which specifies the message size exactly. If the message detected conflicts with the CRC the ECU receiving it will determine the message to be an error and consider that communication has not been possible. Diagnosis of this condition using a lab scope may reveal activity that appears to be Bus data messages even if no actual communication is possible. Communication problems that affect the whole bus, as a result of opens and terminal push outs are more likely to occur on data busses that operate at a high speed than a data bus that operates at a lower speed.

When an open circuit or terminal push out occurs one or more modules can become isolated from the remainder of the bus. The isolated module will attempt to communicate. Since each module contains it own termination a module that is isolated may receive its own messages correctly but will not be able to receive messages or determine arbitration from other modules. Each time the isolated module attempts to communicate it alters the bus voltage on the intact bus circuit. Without functioning arbitration the isolated module alters the bus voltage while other bus messages are being sent thereby corrupting the messages on the remainder of the bus.

The CAN bus modules are connected in parallel to the two-wire bus using a twisted pair, where the wires are wrapped around each other to provide shielding from unwanted electromagnetic induction, thus preventing interference with the relatively low voltage signals being carried through them. While the CAN bus is operating (active), one of the bus wires will carry a higher voltage and is referred to as the CAN High or CAN bus (+) wire, while the other bus wire will carry a lower voltage and is referred to as the CAN Low or CAN bus (–) wire.

- **When Monitored:**
  With the ignition on.
  Battery voltage between 10 and 16 volts.
  Ignition Off Draw (IOD) fuse installed.
  Totally Integrated Power Module (TIPM) is configured correctly.
- **Set Condition:**
  Bus messages not received from the Hands Free Phone Module (HFM) for approximately two to five seconds.

Possible Causes
(D265) CAN INTERIOR HIGH SPEED (IHS) BUS(+) (125k) CIRCUIT SHORTED TO VOLTAGE
(D264) CAN IHS BUS(-) (125k) CIRCUIT SHORTED TO GROUND
DTCS RELATED TO BATTERY VOLTAGE, IGNITION, OR VIN MESSAGES
TIPM NOT CONFIGURED CORRECTLY
HFM POWER AND GROUND
HANDS FREE PHONE MODULE
MODULE THAT SET THE DTC

1. VERIFY THE DIAGNOSTIC TROUBLE CODE (DTC) IS ACTIVE

NOTE: Make sure the IOD fuse is installed and battery voltage is between 10 and 16 volts before proceeding.

1. Using the scan tool, read active DTCs.

Is this DTC active?

Yes

- Go To 2

No

- (Refer to 29 - Non-DTC Diagnostics/Communication - Diagnosis and Testing) and perform the Stored Lost Communication diagnostic procedure.

2. CHECK FOR ANY OF THE FOLLOWING ACTIVE DTCS

1. Using the scan tool, read active DTCs from all modules.

NOTE: Check for TIPM configuration, CAN IHS BUS hardware electrical, VIN Missing/Mismatch, battery or ignition related DTCs.

Does the scan tool display any active DTCs to the conditions listed above?

Yes

- Perform the appropriate diagnostic procedure.

No

- Go To 3

3. VERIFY THAT THE HFM IS ACTIVE ON THE BUS

1. Turn the ignition on.
2. Using the scan tool, select Network Diagnostics.
3. Verify that the HFM is active on the bus.

Is the HFM active on the bus?

Yes

- Go To 4

No

- (Refer to 29 - Non-DTC Diagnostics/Communication - Diagnosis and Testing) and perform the No Response from HFM diagnostic procedure.

4. CHECK FOR ADDITIONAL COMMUNICATION RELATED DTCS

1. Using the scan tool, select Network Diagnostics.

Is there more than one module with active DTCs “Logged Against” the HFM?

Yes

- Replace/update the Hands Free Phone Module in accordance with the Service Information.
- Perform the BODY VERIFICATION TEST. (Refer to 28 - DTC-Based Diagnostics/MODULE, Totally Integrated Power (TIPM) - Standard Procedure).

No

- Go To 5

5. CLEAR DTC IN MODULE SETTING FAULT

1. Using the scan tool, select the module setting the DTC against the HFM.
2. Clear active DTCs.

Is this DTC still active?

Yes

- Replace/update the module that set this DTC in accordance with the Service Information.
- Perform the appropriate verification test.

No

- Go To 6

6. CYCLE IGNITION

1. Cycle the ignition from RUN to OFF three times ending with the key in the RUN position.

Does this DTC become active?

Yes

- Go To 7

No

- The condition is not present at this time. Using the wiring diagram/schematic as a guide, inspect the wiring for chafed, pierced, pinched and partially broken wires and the wiring harness connectors for broken, bent, pushed out and corroded terminals.
- Perform the BODY VERIFICATION TEST. (Refer to 28 - DTC-Based Diagnostics/MODULE, Totally Integrated Power (TIPM) - Standard Procedure).

7. CHECK FOR ADDITIONAL LOST COMMUNICATION FAULTS

1. Using the scan tool, select Network Diagnostics.

Does the TIPM and other CAN IHS BUS (125K) modules show Lost Communication with the remaining CAN IHS BUS (125K) modules?

Yes

- Go To 8

No

- Replace/update the module that set this DTC in accordance with the Service Information.
- Perform the appropriate verification test.

8. (D265) CAN IHS BUS(+) (125K) CIRCUIT SHORTED TO VOLTAGE

1. Measure the voltage between the (D265) CAN IHS BUS(+) (125K) circuit and ground.

Is the voltage above 5 volts?

Yes

- Repair the (D265) CAN IHS BUS(+) (125K) circuit for a short to voltage.
- Perform the BODY VERIFICATION TEST. (Refer to 28 - DTC-Based Diagnostics/MODULE, Totally Integrated Power (TIPM) - Standard Procedure).

No

- Go To 9

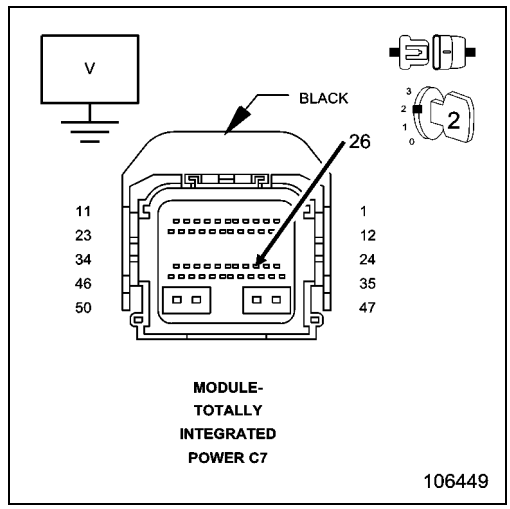

9. (D264) CAN IHS BUS(-) (125K) CIRCUIT SHORTED TO GROUND

1. Turn the ignition off.
2. Measure the resistance between ground and the (D264) CAN IHS BUS(-) (125K) circuit.

Is the resistance below 10K Ohms?

Yes

- Repair the (D264) CAN IHS BUS(-) (125K) circuit for a short to ground.
- Perform the BODY VERIFICATION TEST. (Refer to 28 - DTC-Based Diagnostics/MODULE, Totally Integrated Power (TIPM) - Standard Procedure).

No

- Replace/update the module that set this DTC in accordance with the Service Information.
- Perform the appropriate verification test.

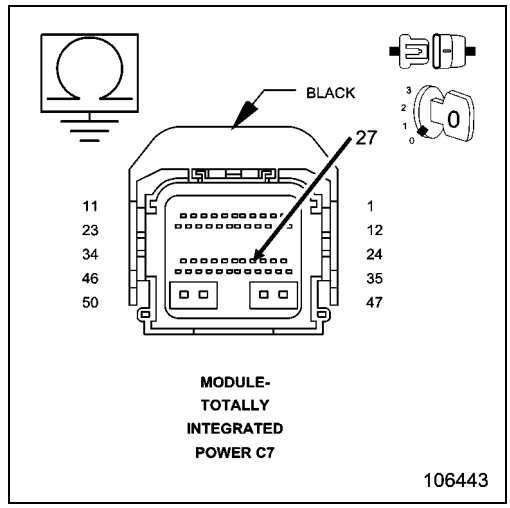

■ U0203-LOST COMMUNICATION WITH LEFT FRONT DOOR MODULE (DMFL) (DRIVER DOOR MODULE)

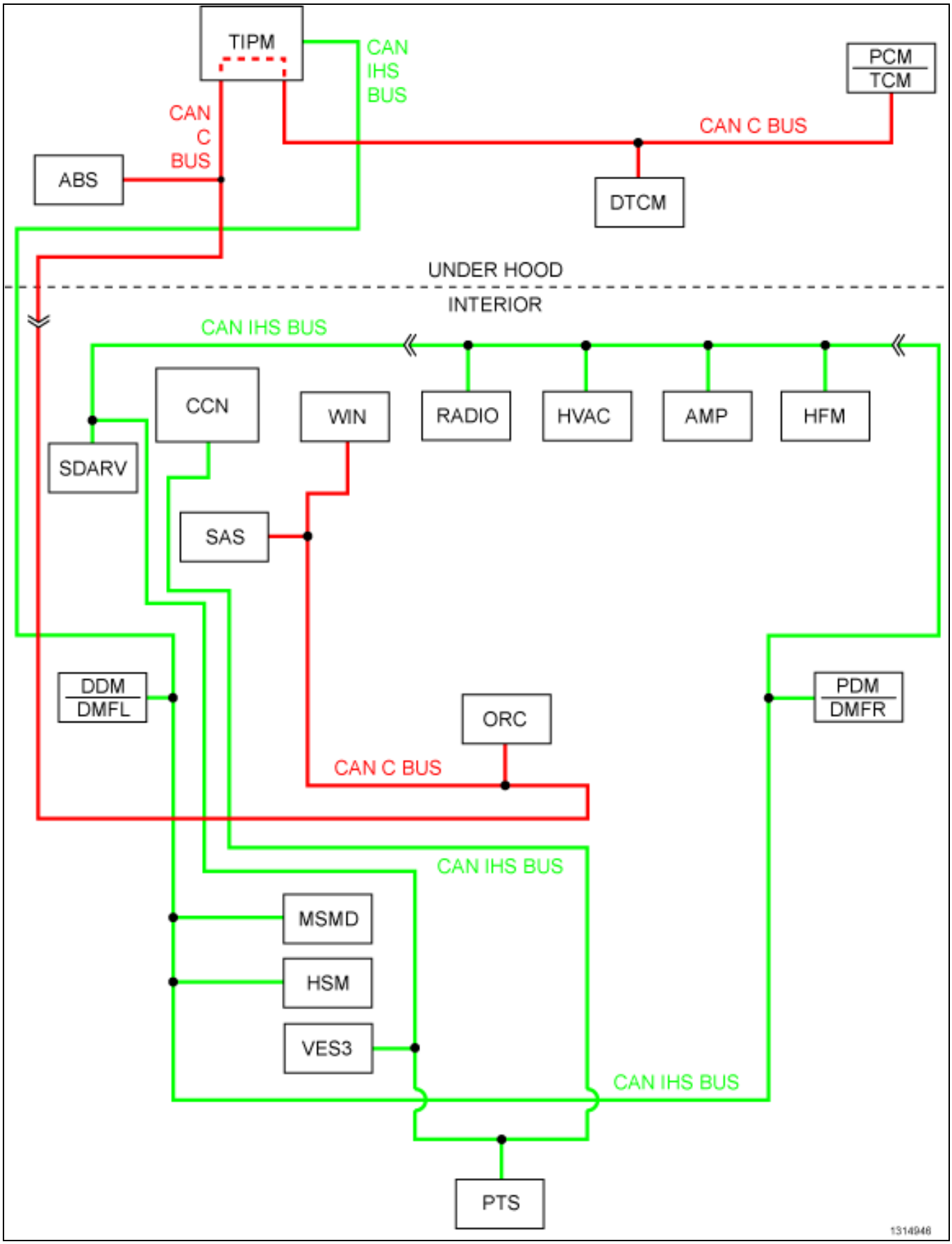

For a complete wiring diagram, **refer to the Wiring Information**.

Theory of Operation

The primary communication network between electronic control modules on this vehicle is the Controller Area Network (CAN) data bus system. The Controller Area Network (CAN) data bus allows all electronic modules connected to the bus to share information with each other. Regardless of whether a message originates from a module on the higher speed CAN C (500K) Bus or on the lower speed CAN Interior High Speed (IHS) (125K) Bus the message structure and layout is similar, which allows the Totally Integrated Power Module/Central GateWay (TIPM or TIPMCGW) to process and transfer messages between the CAN buses. The TIPM also stores Diagnostic Trouble Codes (DTCs) for certain bus network faults.

All modules transmit and receive messages over one of these buses. Data exchange between the modules is achieved by serial transmission of encoded data messages (a form of transmission in which data bits are sent sequentially, one at a time, over a single line). Each module can both send and receive serial data simultaneously. Each data bit of a CAN Bus message is carried over the bus as a voltage differential between the two bus circuits which, when strung together, form a message. Each module uses arbitration to sort the message priority if two competing messages are attempting to be broadcast at the same time. Corruption of a single bit within a message will corrupt the entire message. Each message contains a Cyclic Redundancy Check (CRC) which specifies the message size exactly. If the message detected conflicts with the CRC the ECU receiving it will determine the message to be an error and consider that communication has not been possible. Diagnosis of this condition using a lab scope may reveal activity that appears to be Bus data messages even if no actual communication is possible. Communication problems that affect the whole bus, as a result of opens and terminal push outs are more likely to occur on data busses that operate at a high speed than a data bus that operates at a lower speed.

When an open circuit or terminal push out occurs one or more modules can become isolated from the remainder of the bus. The isolated module will attempt to communicate. Since each module contains it own termination a module that is isolated may receive its own messages correctly but will not be able to receive messages or determine arbitration from other modules. Each time the isolated module attempts to communicate it alters the bus voltage on the intact bus circuit. Without functioning arbitration the isolated module alters the bus voltage while other bus messages are being sent thereby corrupting the messages on the remainder of the bus.

The CAN bus modules are connected in parallel to the two-wire bus using a twisted pair, where the wires are wrapped around each other to provide shielding from unwanted electromagnetic induction, thus preventing interference with the relatively low voltage signals being carried through them. While the CAN bus is operating (active), one of the bus wires will carry a higher voltage and is referred to as the CAN High or CAN bus (+) wire, while the other bus wire will carry a lower voltage and is referred to as the CAN Low or CAN bus (–) wire.

- **When Monitored:**

  With the ignition on.

  Battery voltage between 10 and 16 volts.

  Ignition Off Draw (IOD) fuse installed.

  Totally Integrated Power Module (TIPM) is configured correctly.
- **Set Condition:**

  Bus messages not received from the Left Front Door Module (DMFL) (Driver Door Module) for approximately two to five seconds.

Possible Causes
(D265) CAN INTERIOR HIGH SPEED (IHS) BUS(+) (125k) CIRCUIT SHORTED TO VOLTAGE
(D264) CAN IHS BUS(-) (125k) CIRCUIT SHORTED TO GROUND
DTCS RELATED TO BATTERY VOLTAGE, IGNITION, OR VIN MESSAGES
TIPM NOT CONFIGURED CORRECTLY
DMFL POWER AND GROUND
LEFT FRONT DOOR MODULE
MODULE THAT SET THE DTC

1. VERIFY THE DIAGNOSTIC TROUBLE CODE (DTC) IS ACTIVE

NOTE: Make sure the IOD fuse is installed and battery voltage is between 10 and 16 volts before proceeding.

1. Using the scan tool, read active DTCs.

Is this DTC active?

Yes

- Go To 2

No

- (Refer to 29 - Non-DTC Diagnostics/Communication - Diagnosis and Testing) and perform the Stored Lost Communication diagnostic procedure.

2. CHECK FOR ANY OF THE FOLLOWING ACTIVE DTCS

1. Using the scan tool, read active DTCs from all modules.

NOTE: Check for TIPM configuration, CAN IHS Bus hardware electrical, VIN Missing/Mismatch, battery or ignition related DTCs.

Does the scan tool display any active DTCs to the conditions listed above?

Yes

- Perform the appropriate diagnostic procedure.

No

- Go To 3

3. VERIFY THAT THE DMFL IS ACTIVE ON THE BUS

1. Turn the ignition on.
2. Using the scan tool, select Network Diagnostics.
3. Verify that the DMFL is active on the bus.

Is the DMFL active on the bus?

Yes

- Go To 4

No

- (Refer to 29 - Non-DTC Diagnostics/Communication - Diagnosis and Testing) and perform the appropriate No Response from DDM (DMFL) diagnostic procedure.

4. CHECK FOR ADDITIONAL COMMUNICATION RELATED DTCS

1. Using the scan tool, select Network Diagnostics.

Is there more than one module with active DTCs “Logged Against” the DMFL?

Yes

- Replace/update the Left Front Door Module (Driver Door Module) in accordance with the Service Information.
- Perform the BODY VERIFICATION TEST. (Refer to 28 - DTC-Based Diagnostics/MODULE, Totally Integrated Power (TIPM) - Standard Procedure).

No

- Go To 5

5. CLEAR DTC IN MODULE SETTING FAULT

1. Using the scan tool, select the module setting the DTC against the DMFL.
2. Clear active DTCs.

Is this DTC still active?

Yes

- Replace/update the module that set this DTC in accordance with the Service Information.
- Perform the appropriate verification test.

No

- Go To 6

6. CYCLE IGNITION

1. Cycle the ignition from RUN to OFF three times ending with the key in the RUN position.

Does this DTC become active?

Yes

- Go To 7

No

- The condition is not present at this time. Using the wiring diagram/schematic as a guide, inspect the wiring for chafed, pierced, pinched, and partially broken wires and the wiring harness connectors for broken, bent, pushed out, and corroded terminals.
- Perform the BODY VERIFICATION TEST. (Refer to 28 - DTC-Based Diagnostics/MODULE, Totally Integrated Power (TIPM) - Standard Procedure).

7. CHECK FOR ADDITIONAL LOST COMMUNICATION FAULTS

1. Using the scan tool, select Network Diagnostics.

Does the TIPM and other CAN IHS Bus (125K) modules show Lost Communication with the remaining CAN IHS Bus (125K) modules?

Yes

- Go To 8

No

- Replace/update the module that set this DTC in accordance with the Service Information.
- Perform the appropriate verification test.

8. (D265) CAN IHS Bus(+) (125K) CIRCUIT SHORTED TO VOLTAGE

1. Measure the voltage between the (D265) CAN IHS Bus(+) (125K) circuit and ground.

Is the voltage above 5 volts?

Yes

- Repair the (D265) CAN IHS Bus(+) (125K) circuit for a short to voltage.
- Perform the BODY VERIFICATION TEST. (Refer to 28 - DTC-Based Diagnostics/MODULE, Totally Integrated Power (TIPM) - Standard Procedure).

No

- Go To 9

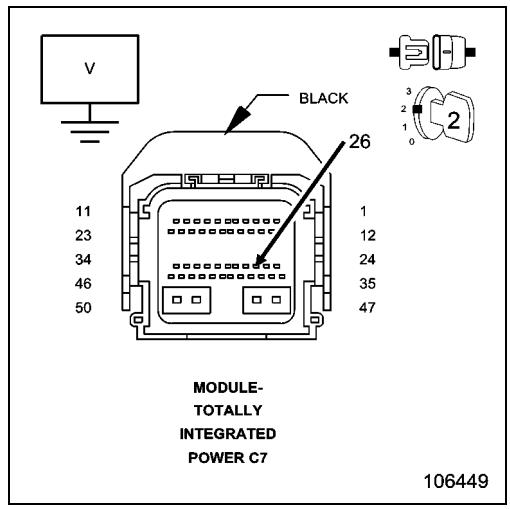

9. (D264) CAN IHS Bus(-) (125K) CIRCUIT SHORTED TO GROUND

1. Turn the ignition off.
2. Measure the resistance between ground and the (D264) CAN IHS Bus(-) (125K) circuit.

Is the resistance below 10K Ohms?

Yes

- Repair the (D264) CAN IHS Bus(-) (125K) circuit for a short to ground.
- Perform the BODY VERIFICATION TEST. (Refer to 28 - DTC-Based Diagnostics/MODULE, Totally Integrated Power (TIPM) - Standard Procedure).

No

- Replace/update the module that set this DTC in accordance with the Service Information.
- Perform the appropriate verification test.

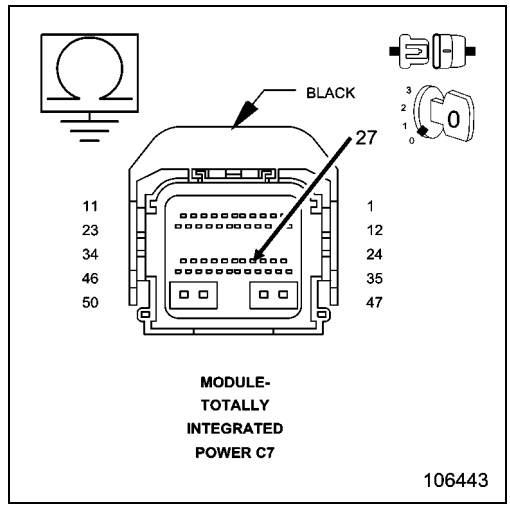

■ U0204-LOST COMMUNICATION WITH RIGHT FRONT DOOR MODULE (DMFR) (PASSENGER DOOR MODULE)

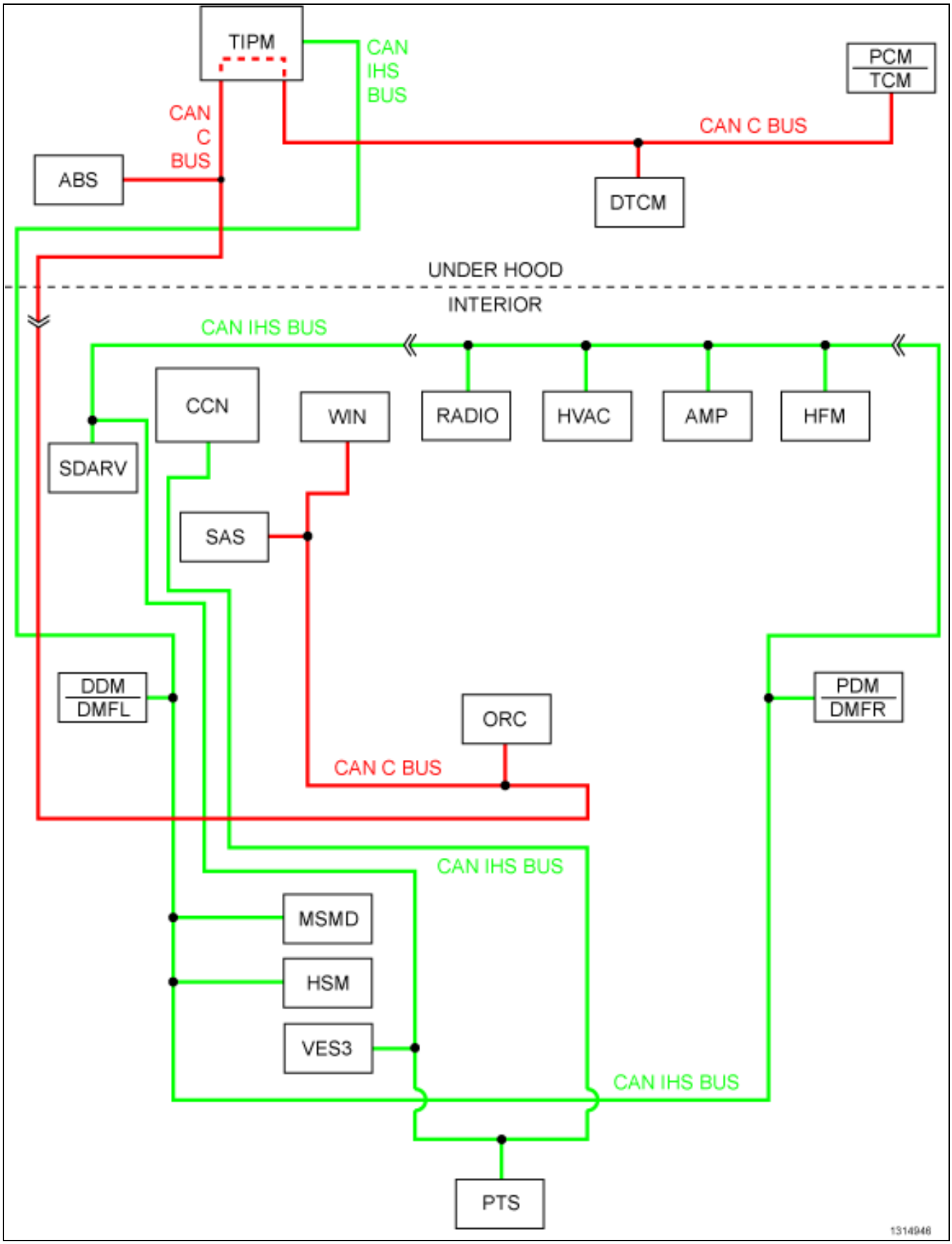

For a complete wiring diagram, **refer to the Wiring Information**.

Theory of Operation

The primary communication network between electronic control modules on this vehicle is the Controller Area Network (CAN) data bus system. The Controller Area Network (CAN) data bus allows all electronic modules connected to the bus to share information with each other. Regardless of whether a message originates from a module on the higher speed CAN C (500K) Bus or on the lower speed CAN Interior High Speed (IHS) (125K) Bus the message structure and layout is similar, which allows the Totally Integrated Power Module/Central GateWay (TIPM or TIPMCGW) to process and transfer messages between the CAN buses. The TIPM also stores Diagnostic Trouble Codes (DTCs) for certain bus network faults.

All modules transmit and receive messages over one of these buses. Data exchange between the modules is achieved by serial transmission of encoded data messages (a form of transmission in which data bits are sent sequentially, one at a time, over a single line). Each module can both send and receive serial data simultaneously. Each data bit of a CAN Bus message is carried over the bus as a voltage differential between the two bus circuits which, when strung together, form a message. Each module uses arbitration to sort the message priority if two competing messages are attempting to be broadcast at the same time. Corruption of a single bit within a message will corrupt the entire message. Each message contains a Cyclic Redundancy Check (CRC) which specifies the message size exactly. If the message detected conflicts with the CRC the ECU receiving it will determine the message to be an error and consider that communication has not been possible. Diagnosis of this condition using a lab scope may reveal activity that appears to be Bus data messages even if no actual communication is possible. Communication problems that affect the whole bus, as a result of opens and terminal push outs are more likely to occur on data busses that operate at a high speed than a data bus that operates at a lower speed.

When an open circuit or terminal push out occurs one or more modules can become isolated from the remainder of the bus. The isolated module will attempt to communicate. Since each module contains it own termination a module that is isolated may receive its own messages correctly but will not be able to receive messages or determine arbitration from other modules. Each time the isolated module attempts to communicate it alters the bus voltage on the intact bus circuit. Without functioning arbitration the isolated module alters the bus voltage while other bus messages are being sent thereby corrupting the messages on the remainder of the bus.

The CAN bus modules are connected in parallel to the two-wire bus using a twisted pair, where the wires are wrapped around each other to provide shielding from unwanted electromagnetic induction, thus preventing interference with the relatively low voltage signals being carried through them. While the CAN bus is operating (active), one of the bus wires will carry a higher voltage and is referred to as the CAN High or CAN bus (+) wire, while the other bus wire will carry a lower voltage and is referred to as the CAN Low or CAN bus (–) wire.

- **When Monitored:**

  With the ignition on.

  Battery voltage between 10 and 16 volts.

  Ignitio Off Draw (IOD) fuse installed.

  Totally Integrated Power Module (TIPM) is configured correctly.
- **Set Condition:**

  Bus messages not received from the Door Module Front Right (DMFR) (Passenger Door Module) for approximately two to five seconds.

Possible Causes
(D265) CAN INTERIOR HIGH SPEED (IHS) BUS(+) (125k) CIRCUIT SHORTED TO VOLTAGE
(D264) CAN IHS BUS(-) (125k) CIRCUIT SHORTED TO GROUND
DTCS RELATED TO BATTERY VOLTAGE, IGNITION, OR VIN MESSAGES
TIPM NOT CONFIGURED CORRECTLY
DMFR POWER AND GROUND
RIGHT FRONT DOOR MODULE (PASSENGER DOOR MODULE)
MODULE THAT SET THE DTC

1. VERIFY THE DIAGNOSTIC TROUBLE CODE (DTC) IS ACTIVE

NOTE: Make sure the IOD fuse is installed and battery voltage is between 10 and 16 volts before proceeding.

1. Using the scan tool, read active DTCs.

Is this DTC active?

Yes

- Go To 2

No

- (Refer to 29 - Non-DTC Diagnostics/Communication - Diagnosis and Testing) and perform the Stored Lost Communication diagnostic procedure.

2. CHECK FOR ANY OF THE FOLLOWING ACTIVE DTCS

1. Using the scan tool, read active DTCs from all modules.

NOTE: Check for TIPM configuration, CAN IHS Bus hardware electrical, VIN Missing/Mismatch, battery or ignition related DTCs.

Does the scan tool display any active DTCs to the conditions listed above?

Yes

- Perform the appropriate diagnostic procedure.

No

- Go To 3

3. VERIFY THAT THE DMFR IS ACTIVE ON THE BUS

1. Turn the ignition on.
2. Using the scan tool, select Network Diagnostics.
3. Verify that the DMFR is active on the bus.

Is the DMFR active on the bus?

Yes

- Go To 4

No

- (Refer to 29 - Non-DTC Diagnostics/Communication - Diagnosis and Testing) and perform the No Response from PDM (DMFR) diagnostic procedure.

4. CHECK FOR ADDITIONAL COMMUNICATION RELATED DTCS

1. Using the scan tool, select Network Diagnostics.

Is there more than one module with active DTCs “Logged Against” the DMFR?

Yes

- Replace/update the Right Front Door Module in accordance with the Service Information.
- Perform the BODY VERIFICATION TEST. (Refer to 28 - DTC-Based Diagnostics/MODULE, Totally Integrated Power (TIPM) - Standard Procedure).

No

- Go To 5

5. CLEAR DTC IN MODULE SETTING FAULT

1. Using the scan tool, select the module setting the DTC against the DMFR.
2. Clear active DTCs.

Is this DTC still active?

Yes

- Replace/update the module that set this DTC in accordance with the Service Information.
- Perform the appropriate verification test.

No

- Go To 6

6. CYCLE IGNITION

1. Cycle the ignition from RUN to OFF three times ending with the key in the RUN position.

Does this DTC become active?

Yes

- Go To 7

No

- The condition is not present at this time. Using the wiring diagram/schematic as a guide, inspect the wiring for chafed, pierced, pinched and partially broken wires and the wiring harness connectors for broken, bent, pushed out and corroded terminals.
- Perform the BODY VERIFICATION TEST. (Refer to 28 - DTC-Based Diagnostics/MODULE, Totally Integrated Power (TIPM) - Standard Procedure).

7. CHECK FOR ADDITIONAL LOST COMMUNICATION FAULTS

1. Using the scan tool, select Network Diagnostics.

Does the TIPM and other CAN IHS Bus (125K) modules show Lost Communication with the remaining CAN IHS Bus (125K) modules?

Yes

- Go To 8

No

- Replace/update the module that set this DTC in accordance with the Service Information.
- Perform the appropriate verification test.

8. (D265) CAN IHS Bus(+) (125K) CIRCUIT SHORTED TO VOLTAGE

1. Measure the voltage between the (D265) CAN IHS Bus(+) (125K) circuit and ground.

Is the voltage above 5 volts?

Yes

- Repair the (D265) CAN IHS Bus(+) (125K) circuit for a short to voltage.
- Perform the BODY VERIFICATION TEST. (Refer to 28 - DTC-Based Diagnostics/MODULE, Totally Integrated Power (TIPM) - Standard Procedure).

No

- Go To 9

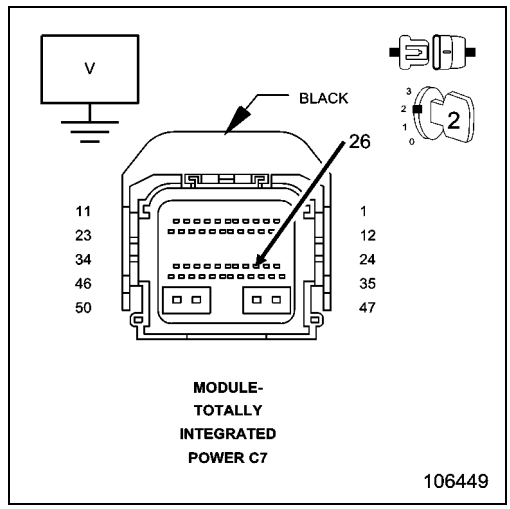

9. (D264) CAN IHS Bus(-) (125K) CIRCUIT SHORTED TO GROUND

1. Turn the ignition off.
2. Measure the resistance between ground and the (D264) CAN IHS Bus(-) (125K) circuit.

Is the resistance below 10K Ohms?

Yes

- Repair the (D264) CAN IHS Bus(-) (125K) circuit for a short to ground.
- Perform the BODY VERIFICATION TEST. (Refer to 28 - DTC-Based Diagnostics/MODULE, Totally Integrated Power (TIPM) - Standard Procedure).

No

- Replace/update the module that set this DTC in accordance with the Service Information.
- Perform the appropriate verification test.

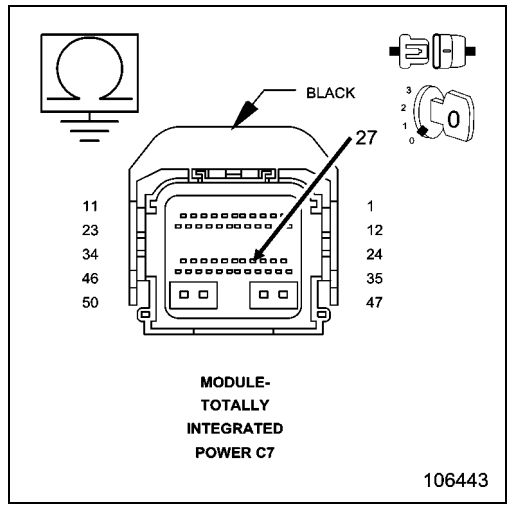

U0208-LOST COMMUNICATION WITH HEATED SEAT MODULE (HSM)

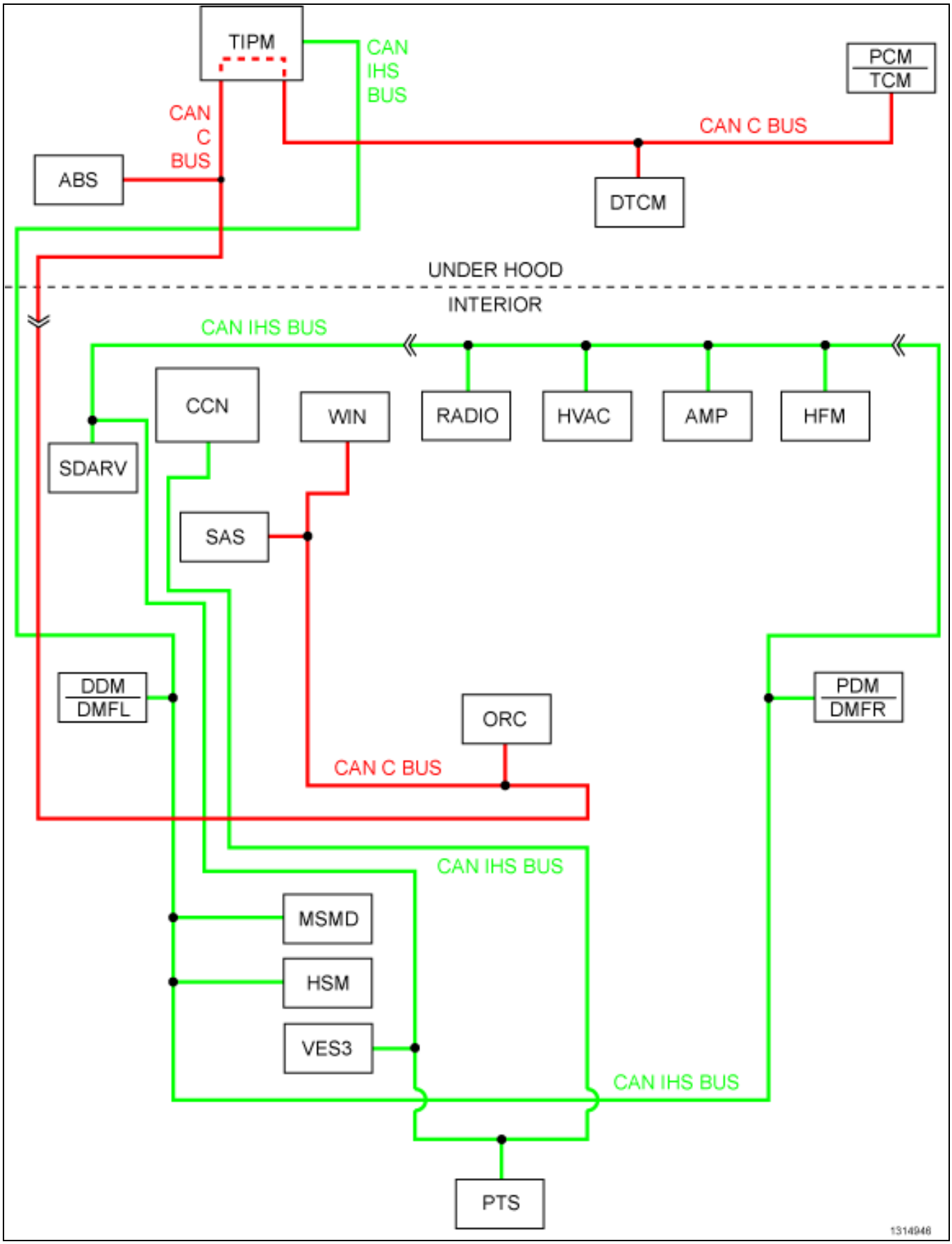

For a complete wiring diagram, **refer to the Wiring Information**.

Theory of Operation

The primary communication network between electronic control modules on this vehicle is the Controller Area Network (CAN) data bus system. The Controller Area Network (CAN) data bus allows all electronic modules connected to the bus to share information with each other. Regardless of whether a message originates from a module on the higher speed CAN C (500K) Bus or on the lower speed CAN Interior High Speed (IHS) (125K) Bus the message structure and layout is similar, which allows the Totally Integrated Power Module/Central GateWay (TIPM or TIPMCGW) to process and transfer messages between the CAN buses. The TIPM also stores Diagnostic Trouble Codes (DTCs) for certain bus network faults.

All modules transmit and receive messages over one of these buses. Data exchange between the modules is achieved by serial transmission of encoded data messages (a form of transmission in which data bits are sent sequentially, one at a time, over a single line). Each module can both send and receive serial data simultaneously. Each data bit of a CAN Bus message is carried over the bus as a voltage differential between the two bus circuits which, when strung together, form a message. Each module uses arbitration to sort the message priority if two competing messages are attempting to be broadcast at the same time. Corruption of a single bit within a message will corrupt the entire message. Each message contains a Cyclic Redundancy Check (CRC) which specifies the message size exactly. If the message detected conflicts with the CRC the ECU receiving it will determine the message to be an error and consider that communication has not been possible. Diagnosis of this condition using a lab scope may reveal activity that appears to be Bus data messages even if no actual communication is possible. Communication problems that affect the whole bus, as a result of opens and terminal push outs are more likely to occur on data busses that operate at a high speed than a data bus that operates at a lower speed.

When an open circuit or terminal push out occurs one or more modules can become isolated from the remainder of the bus. The isolated module will attempt to communicate. Since each module contains it own termination a module that is isolated may receive its own messages correctly but will not be able to receive messages or determine arbitration from other modules. Each time the isolated module attempts to communicate it alters the bus voltage on the intact bus circuit. Without functioning arbitration the isolated module alters the bus voltage while other bus messages are being sent thereby corrupting the messages on the remainder of the bus.

The CAN bus modules are connected in parallel to the two-wire bus using a twisted pair, where the wires are wrapped around each other to provide shielding from unwanted electromagnetic induction, thus preventing interference with the relatively low voltage signals being carried through them. While the CAN bus is operating (active), one of the bus wires will carry a higher voltage and is referred to as the CAN High or CAN bus (+) wire, while the other bus wire will carry a lower voltage and is referred to as the CAN Low or CAN bus (–) wire.

- **When Monitored:**
  With the ignition on.
  Battery voltage between 10 and 16 volts.
  Ignition Off Draw (IOD) fuse installed.
  Totally Integrated Power Module (TIPM) is configured correctly.
- **Set Condition:**
  Bus messages not received from the Heated Seat Module (HSM) for approximately two to five seconds.

Possible Causes
(D265) CAN INTERIOR HIGH SPEED (IHS) BUS(+) (125k) CIRCUIT SHORTED TO VOLTAGE
(D264) CAN IHS BUS(-) (125k) CIRCUIT SHORTED TO GROUND
DTCS RELATED TO BATTERY VOLTAGE, IGNITION, OR VIN MESSAGES
TIPM NOT CONFIGURED CORRECTLY
HSM POWER AND GROUND
HEATED SEAT MODULE
MODULE THAT SET THE DTC

1. VERIFY THE DIAGNOSTIC TROUBLE CODE (DTC) IS ACTIVE

NOTE: Make sure the IOD fuse is installed and battery voltage is between 10 and 16 volts before proceeding.

1. Using the scan tool, read active DTCs.

Is this DTC active?

Yes

- Go To 2

No

- (Refer to 29 - Non-DTC Diagnostics/Communication - Diagnosis and Testing) and perform the Stored Lost Communication DTC diagnostic procedure.

2. CHECK FOR ANY OF THE FOLLOWING ACTIVE DTCS

1. Using the scan tool, read active DTCs from all modules.

NOTE: Check for TIPM configuration, CAN IHS Bus hardware electrical, VIN Missing/Mismatch, battery or ignition related DTCs.

Does the scan tool display any active DTCs to the conditions listed above?

Yes

- Perform the appropriate diagnostic procedure.

No

- Go To 3

3. VERIFY THAT THE HSM IS ACTIVE ON THE BUS

1. Turn the ignition on.
2. Using the scan tool, select Network Diagnostics.
3. Verify that the HSM is active on the bus.

Is the HSM active on the bus?

Yes

- Go To 4

No

- (Refer to 29 - Non-DTC Diagnostics/Communication - Diagnosis and Testing) and perform the No Response from HSM diagnostic procedure.

4. CHECK FOR ADDITIONAL COMMUNICATION RELATED DTCS

1. Using the scan tool, select Network Diagnostics.

Is there more than one module with active DTCs “Logged Against” the HSM?

Yes

- Replace/update the Heated Seat Module in accordance with the Service Information.
- Perform the BODY VERIFICATION TEST. (Refer to 28 - DTC-Based Diagnostics/MODULE, Totally Integrated Power (TIPM) - Standard Procedure).

No

- Go To 5

5. CLEAR DTC IN MODULE SETTING FAULT

1. Using the scan tool, select the module setting the DTC against the HSM.
2. Clear active DTCs.

Is this DTC still active?

Yes

- Replace/update the module that set this DTC in accordance with the Service Information.
- Perform the appropriate verification test.

No

- Go To 6

6. CYCLE IGNITION

1. Cycle the ignition from RUN to OFF three times ending with the key in the RUN position.

Does this DTC become active?

Yes

- Go To 7

No

- The condition is not present at this time. Using the wiring diagram/schematic as a guide, inspect the wiring for chafed, pierced, pinched, and partially broken wires and the wiring harness connectors for broken, bent, pushed out, and corroded terminals.
- Perform the BODY VERIFICATION TEST. (Refer to 28 - DTC-Based Diagnostics/MODULE, Totally Integrated Power (TIPM) - Standard Procedure).

7. CHECK FOR ADDITIONAL LOST COMMUNICATION FAULTS

1. Using the scan tool, select Network Diagnostics.

Does the TIPM and other CAN IHS Bus (125K) modules show Lost Communication with the remaining CAN IHS Bus (125K) modules?

Yes

- Go To 8

No

- Replace/update the module that set this DTC in accordance with the Service Information.
- Perform the appropriate verification test.

8. (D265) CAN IHS Bus(+) (125K) CIRCUIT SHORTED TO VOLTAGE

1. Measure the voltage between the (D265) CAN IHS Bus(+) (125K) circuit and ground.

Is the voltage above 5 volts?

Yes

- Repair the (D265) CAN IHS Bus(+) (125K) circuit for a short to voltage.
- Perform the BODY VERIFICATION TEST. (Refer to 28 - DTC-Based Diagnostics/MODULE, Totally Integrated Power (TIPM) - Standard Procedure).

No

- Go To 9

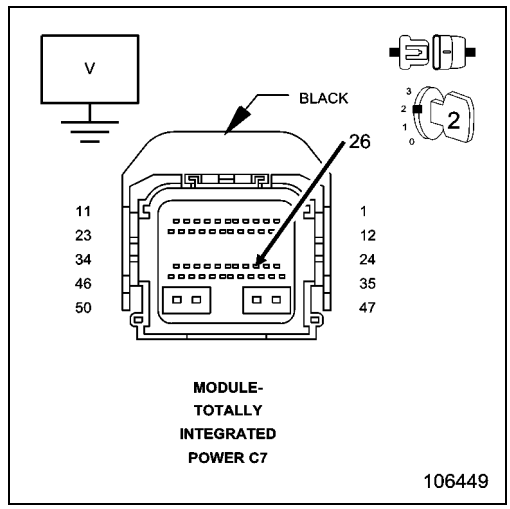

9. (D264) CAN IHS Bus(-) (125K) CIRCUIT SHORTED TO GROUND

1. Turn the ignition off.
2. Measure the resistance between ground and the (D264) CAN IHS Bus(-) (125K) circuit.

Is the resistance below 10K Ohms?

Yes

- Repair the (D264) CAN IHS Bus(-) (125K) circuit for a short to ground.
- Perform the BODY VERIFICATION TEST. (Refer to 28 - DTC-Based Diagnostics/MODULE, Totally Integrated Power (TIPM) - Standard Procedure).

No

- Replace/update the module that set this DTC in accordance with the Service Information.
- Perform the appropriate verification test.

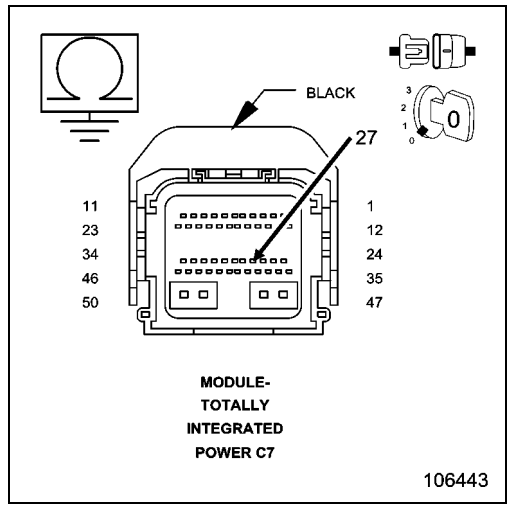

U0209-LOST COMMUNICATION WITH MEMORY SEAT CONTROL MODULE (MSMD)

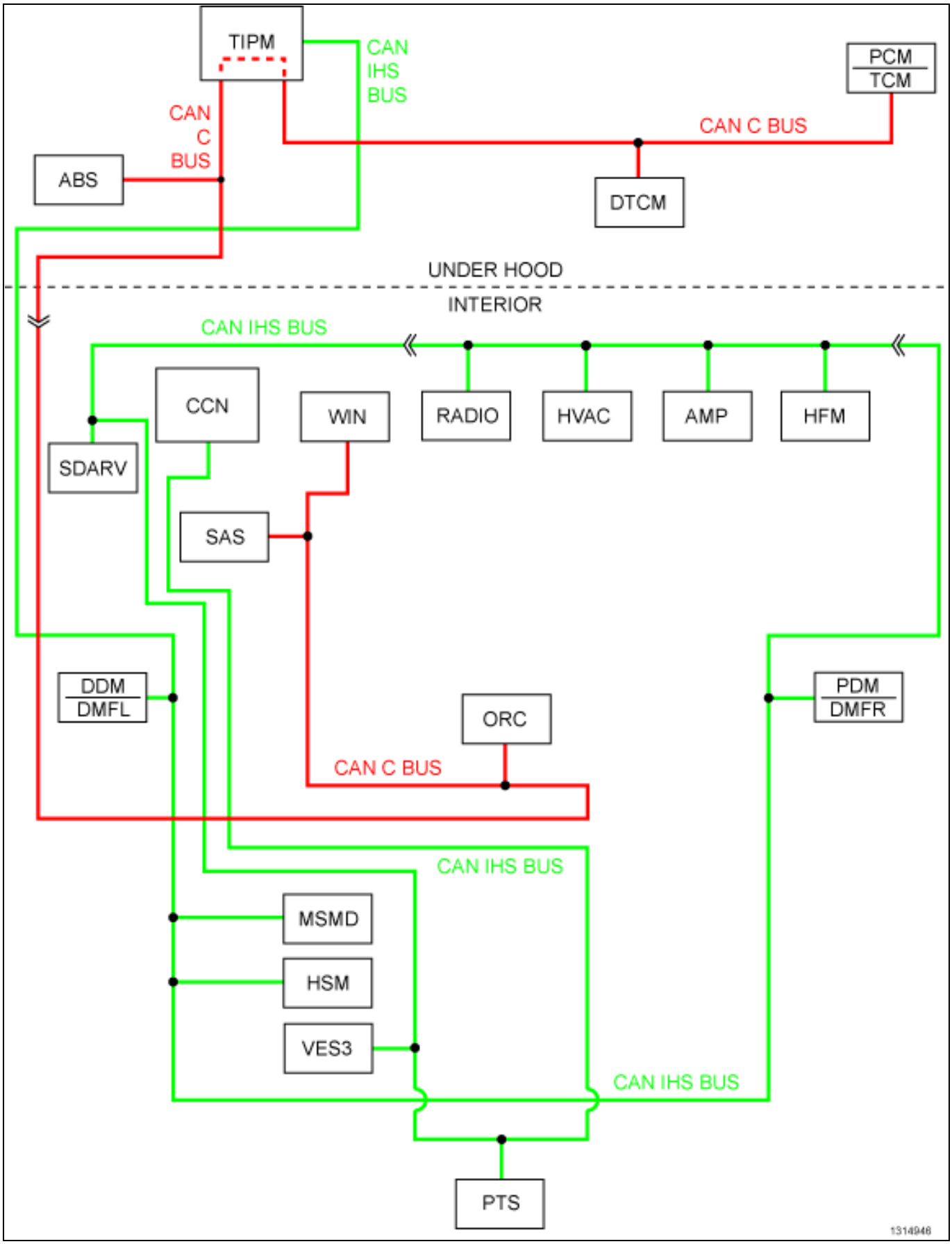

For a complete wiring diagram, **refer to the Wiring Information**.

Theory of Operation

The primary communication network between electronic control modules on this vehicle is the Controller Area Network (CAN) data bus system. The Controller Area Network (CAN) data bus allows all electronic modules connected to the bus to share information with each other. Regardless of whether a message originates from a module on the higher speed CAN C (500K) Bus or on the lower speed CAN Interior High Speed (IHS) (125K) Bus the message structure and layout is similar, which allows the Totally Integrated Power Module/Central GateWay (TIPM or TIPMCGW) to process and transfer messages between the CAN buses. The TIPM also stores Diagnostic Trouble Codes (DTCs) for certain bus network faults.

All modules transmit and receive messages over one of these buses. Data exchange between the modules is achieved by serial transmission of encoded data messages (a form of transmission in which data bits are sent sequentially, one at a time, over a single line). Each module can both send and receive serial data simultaneously. Each data bit of a CAN Bus message is carried over the bus as a voltage differential between the two bus circuits which, when strung together, form a message. Each module uses arbitration to sort the message priority if two competing messages are attempting to be broadcast at the same time. Corruption of a single bit within a message will corrupt the entire message. Each message contains a Cyclic Redundancy Check (CRC) which specifies the message size exactly. If the message detected conflicts with the CRC the ECU receiving it will determine the message to be an error and consider that communication has not been possible. Diagnosis of this condition using a lab scope may reveal activity that appears to be Bus data messages even if no actual communication is possible. Communication problems that affect the whole bus, as a result of opens and terminal push outs are more likely to occur on data busses that operate at a high speed than a data bus that operates at a lower speed.

When an open circuit or terminal push out occurs one or more modules can become isolated from the remainder of the bus. The isolated module will attempt to communicate. Since each module contains it own termination a module that is isolated may receive its own messages correctly but will not be able to receive messages or determine arbitration from other modules. Each time the isolated module attempts to communicate it alters the bus voltage on the intact bus circuit. Without functioning arbitration the isolated module alters the bus voltage while other bus messages are being sent thereby corrupting the messages on the remainder of the bus.

The CAN bus modules are connected in parallel to the two-wire bus using a twisted pair, where the wires are wrapped around each other to provide shielding from unwanted electromagnetic induction, thus preventing interference with the relatively low voltage signals being carried through them. While the CAN bus is operating (active), one of the bus wires will carry a higher voltage and is referred to as the CAN High or CAN bus (+) wire, while the other bus wire will carry a lower voltage and is referred to as the CAN Low or CAN bus (–) wire.

- **When Monitored:**
  With the ignition on.
  Battery voltage between 10 and 16 volts.
  Ignition Off Draw (IOD) fuse installed.
  Totally Integrated Power Module (TIPM) is configured correctly.
- **Set Condition:**
  Bus messages not received from the Memory Seat Control Module (MSMD) for approximately two to five seconds.

Possible Causes
(D265) CAN INTERIOR HIGH SPEED (IHS) BUS(+) (125k) CIRCUIT SHORTED TO VOLTAGE
(D264) CAN IHS BUS(-) (125k) CIRCUIT SHORTED TO GROUND
DTCS RELATED TO BATTERY VOLTAGE, IGNITION, OR VIN MESSAGES
TIPM NOT CONFIGURED CORRECTLY
MSMD POWER AND GROUND
MEMORY SEAT CONTROL MODULE
MODULE THAT SET THE DTC

1. VERIFY THE DIAGNOSTIC TROUBLE CODE (DTC) IS ACTIVE

NOTE: Make sure the IOD fuse is installed and battery voltage is between 10 and 16 volts before proceeding.

1. Using the scan tool, read active DTCs.

Is this DTC active?

Yes

- Go To 2

No

- (Refer to 29 - Non-DTC Diagnostics/Communication - Diagnosis and Testing) and perform the Stored Lost Communication DTC diagnostic procedure.

2. CHECK FOR ANY OF THE FOLLOWING ACTIVE DTCS

1. Using the scan tool, read active DTCs from all modules.

NOTE: Check for TIPM configuration, CAN IHS BUS hardware electrical, VIN Missing/Mismatch, battery or ignition related DTCs.

Does the scan tool display any active DTCs to the conditions listed above?

Yes

- Perform the appropriate diagnostic procedure.

No

- Go To 3

3. VERIFY THAT THE MSMD IS ACTIVE ON THE BUS

1. Turn the ignition on.
2. Using the scan tool, select Network Diagnostics.
3. Verify that the MSMD is active on the bus.

Is the MSMD active on the bus?

Yes

- Go To 4

No

- (Refer to 29 - Non-DTC Diagnostics/Communication - Diagnosis and Testing) and perform the No Response MSMD diagnostic procedure.

4. CHECK FOR ADDITIONAL COMMUNICATION RELATED DTCS

1. Using the scan tool, select Network Diagnostics.

Is there more than one module with active DTCs “Logged Against” the MSMD?

Yes

- Replace/update the Memory Seat Control Module in accordance with the Service Information.
- Perform the POWER SEAT SYSTEM VERIFICATION TEST. (Refer to 28 - DTC-Based Diagnostics/MODULE, Memory Seat (MSMD) - Standard Procedure).

No

- Go To 5

5. CLEAR DTC IN MODULE SETTING FAULT

1. Using the scan tool, select the module setting the DTC against the MSMD.
2. Clear active DTCs.

Is this DTC still active?

Yes

- Replace/update the module that set this DTC in accordance with the Service Information.
- Perform the appropriate verification test.

No

- Go To 6

6. CYCLE IGNITION

1. Cycle the ignition from RUN to OFF three times ending with the key in the RUN position.

Does this DTC become active?

Yes

- Go To 7

No

- The condition is not present at this time. Using the wiring diagram/schematic as a guide, inspect the wiring for chafed, pierced, pinched, and partially broken wires and the wiring harness connectors for broken, bent, pushed out, and corroded terminals.
- Perform the BODY VERIFICATION TEST. (Refer to 28 - DTC-Based Diagnostics/MODULE, Totally Integrated Power (TIPM) - Standard Procedure).

7. CHECK FOR ADDITIONAL LOST COMMUNICATION FAULTS

1. Using the scan tool, select Network Diagnostics.

Does the TIPM and other CAN IHS BUS (125K) modules show Lost Communication with the remaining CAN IHS BUS (125K) modules?

Yes

- Go To 8

No

- Replace/update the module that set this DTC in accordance with the Service Information.
- Perform the appropriate verification test.

8. (D265) CAN IHS BUS(+) (125K) CIRCUIT SHORTED TO VOLTAGE

1. Measure the voltage between the (D265) CAN IHS BUS(+) (125K) circuit and ground.

Is the voltage above 5 volts?

Yes

- Repair the (D265) CAN IHS BUS(+) (125K) circuit for a short to voltage.
- Perform the BODY VERIFICATION TEST. (Refer to 28 - DTC-Based Diagnostics/MODULE, Totally Integrated Power (TIPM) - Standard Procedure).

No

- Go To 9

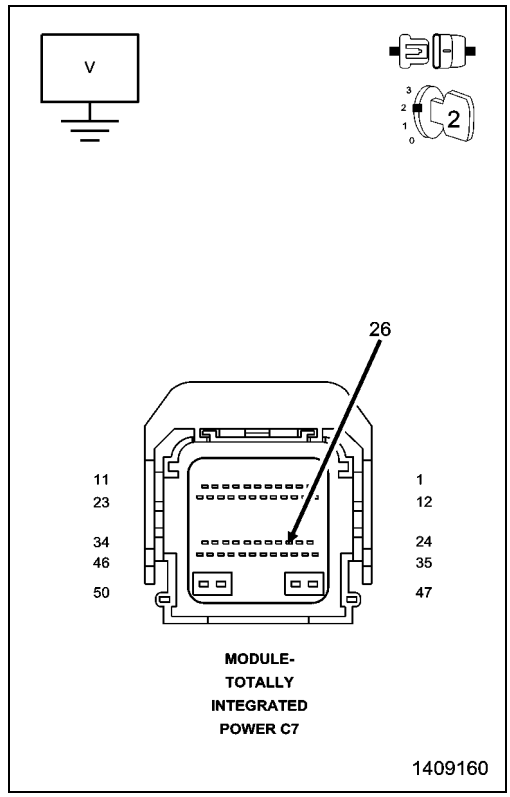

9. (D264) CAN IHS BUS(-) (125K) CIRCUIT SHORTED TO GROUND

1. Turn the ignition off.
2. Measure the resistance between ground and the (D264) CAN IHS BUS(-) (125K) circuit.

Is the resistance below 10K Ohms?

Yes

- Repair the (D264) CAN IHS BUS(-) (125K) circuit for a short to ground.
- Perform the BODY VERIFICATION TEST. (Refer to 28 - DTC-Based Diagnostics/MODULE, Totally Integrated Power (TIPM) - Standard Procedure).

No

- Replace/update the module that set this DTC in accordance with the Service Information.
- Perform the appropriate verification test.

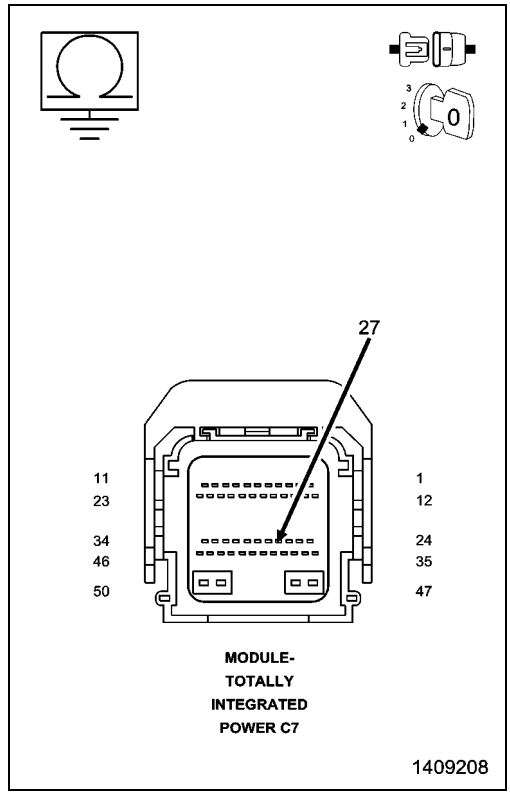

■ U0249-LOST COMMUNICATION WITH VEHICLE ENTERTAINMENT CONTROL MODULE - LAST ROW (VES3)

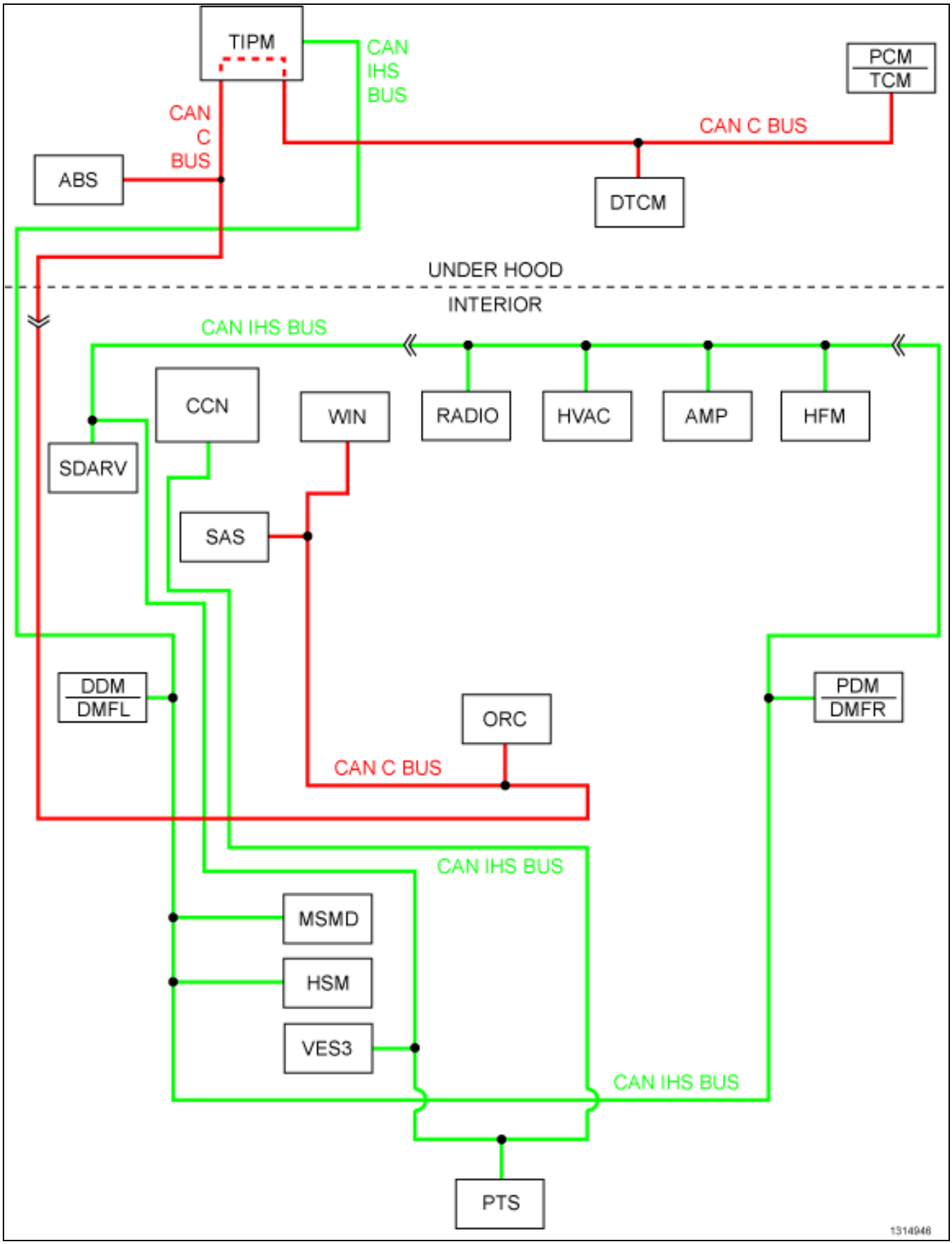

For a complete wiring diagram, **refer to the Wiring Information**.

Theory of Operation

The primary communication network between electronic control modules on this vehicle is the Controller Area Network (CAN) data bus system. The Controller Area Network (CAN) data bus allows all electronic modules connected to the bus to share information with each other. Regardless of whether a message originates from a module on the higher speed CAN C (500K) Bus or on the lower speed CAN Interior High Speed (IHS) (125K) Bus the message structure and layout is similar, which allows the Totally Integrated Power Module/Central GateWay (TIPM or TIPMCGW) to process and transfer messages between the CAN buses. The TIPM also stores Diagnostic Trouble Codes (DTCs) for certain bus network faults.

All modules transmit and receive messages over one of these buses. Data exchange between the modules is achieved by serial transmission of encoded data messages (a form of transmission in which data bits are sent sequentially, one at a time, over a single line). Each module can both send and receive serial data simultaneously. Each data bit of a CAN Bus message is carried over the bus as a voltage differential between the two bus circuits which, when strung together, form a message. Each module uses arbitration to sort the message priority if two competing messages are attempting to be broadcast at the same time. Corruption of a single bit within a message will corrupt the entire message. Each message contains a Cyclic Redundancy Check (CRC) which specifies the message size exactly. If the message detected conflicts with the CRC the ECU receiving it will determine the message to be an error and consider that communication has not been possible. Diagnosis of this condition using a lab scope may reveal activity that appears to be Bus data messages even if no actual communication is possible. Communication problems that affect the whole bus, as a result of opens and terminal push outs are more likely to occur on data busses that operate at a high speed than a data bus that operates at a lower speed.

When an open circuit or terminal push out occurs one or more modules can become isolated from the remainder of the bus. The isolated module will attempt to communicate. Since each module contains it own termination a module that is isolated may receive its own messages correctly but will not be able to receive messages or determine arbitration from other modules. Each time the isolated module attempts to communicate it alters the bus voltage on the intact bus circuit. Without functioning arbitration the isolated module alters the bus voltage while other bus messages are being sent thereby corrupting the messages on the remainder of the bus.

The CAN bus modules are connected in parallel to the two-wire bus using a twisted pair, where the wires are wrapped around each other to provide shielding from unwanted electromagnetic induction, thus preventing interference with the relatively low voltage signals being carried through them. While the CAN bus is operating (active), one of the bus wires will carry a higher voltage and is referred to as the CAN High or CAN bus (+) wire, while the other bus wire will carry a lower voltage and is referred to as the CAN Low or CAN bus (–) wire.

- **When Monitored:**

  With the ignition on.

  Battery voltage between 10 and 16 volts.

  Ignition Off Draw (IOD) fuse installed.

  Totally Integrated Power Module (TIPM) is configured correctly.
- **Set Condition:**

  Bus messages not received from the Vehicle Entertainment Control Module - Last Row (VES3) for approximately two to five seconds.

Possible Causes
(D265) CAN INTERIOR HIGH SPEED (IHS) BUS (+) (125k) CIRCUIT SHORTED TO VOLTAGE
(D264) CAN IHS BUS (-) (125k) CIRCUIT SHORTED TO GROUND
DTCS RELATED TO BATTERY VOLTAGE, IGNITION, OR VIN MESSAGES
TIPM NOT CONFIGURED CORRECTLY
VEHICLE ENTERTAINMENT CONTROL MODULE - LAST ROW POWER AND GROUND
VEHICLE ENTERTAINMENT CONTROL MODULE - LAST ROW
MODULE THAT SET THE DTC

1. VERIFY THE DIAGNOSTIC TROUBLE CODE (DTC) IS ACTIVE

NOTE: Make sure the IOD fuse is installed and battery voltage is between 10 and 16 volts before proceeding.

1. Using the scan tool, read active DTCs.

Is this DTC active?

Yes

- Go To 2

No

- (Refer to 29 - Non-DTC Diagnostics/Communication - Diagnosis and Testing) and perform the Stored Lost Communication DTC diagnostic procedure.

2. CHECK FOR ANY OF THE FOLLOWING ACTIVE DTCS

1. Using the scan tool, read active DTCs from all modules.

NOTE: Check for TIPM configuration, CAN IHS Bus hardware electrical, VIN Missing/Mismatch, battery or ignition related DTCs.

Does the scan tool display any active DTCs to the conditions listed above?

Yes

- Perform the appropriate diagnostic procedure.

No

- Go To 3

3. VERIFY THAT THE VES3 IS ACTIVE ON THE BUS

1. Turn the ignition on.
2. Using the scan tool, select Network Diagnostics.
3. Verify that the VES3 is active on the bus.

Is the VES3 active on the bus?

Yes

- Go To 4

No

- (Refer to 29 - Non-DTC Diagnostics/Communication - Diagnosis and Testing) and perform the No Response from VES diagnostic procedure.

4. CHECK FOR ADDITIONAL COMMUNICATION RELATED DTCS

1. Using the scan tool, select Network Diagnostics.

Is there more than one module with active DTCs “Logged Against” the VES3?

Yes

- Replace/update the Vehicle Entertainment Control Module - Last Row (VES3) in accordance with the Service Information.
- Perform the BODY VERIFICATION TEST. (Refer to 28 - DTC-Based Diagnostics/MODULE, Totally Integrated Power (TIPM) - Standard Procedure).

No

- Go To 5

5. CLEAR DTC IN MODULE SETTING FAULT

1. Using the scan tool, select the module setting the DTC against the VES3.
2. Clear active DTCs.

Is this DTC still active?

Yes

- Replace/update the module that set this DTC in accordance with the Service Information.
- Perform the appropriate verification test.

No

- Go To 6

6. CYCLE IGNITION

1. Cycle the ignition from RUN to OFF three times ending with the key in the RUN position.

Does this DTC become active?

Yes

- Go To 7

No

- The condition is not present at this time. Using the wiring diagram/schematic as a guide, inspect the wiring for chafed, pierced, pinched, and partially broken wires and the wiring harness connectors for broken, bent, pushed out, and corroded terminals.
- Perform the BODY VERIFICATION TEST. (Refer to 28 - DTC-Based Diagnostics/MODULE, Totally Integrated Power (TIPM) - Standard Procedure).

7. CHECK FOR ADDITIONAL LOST COMMUNICATION FAULTS

1. Using the scan tool, select Network Diagnostics.

Does the TIPM and other CAN IHS BUS (125K) modules show Lost Communication with the remaining CAN IHS BUS (125K) modules?

Yes

- Go To 8

No

- Replace/update the module that set this DTC in accordance with the Service Information.
- Perform the appropriate verification test.

8. (D265) CAN IHS BUS(+) (125K) CIRCUIT SHORTED TO VOLTAGE

1. Measure the voltage between the (D265) CAN IHS Bus(+) (125K) circuit and ground.

Is the voltage above 5 volts?

Yes

- Repair the (D265) CAN IHS Bus(+) (125K) circuit for a short to voltage.
- Perform the BODY VERIFICATION TEST. (Refer to 28 - DTC-Based Diagnostics/MODULE, Totally Integrated Power (TIPM) - Standard Procedure).

No

- Go To 9

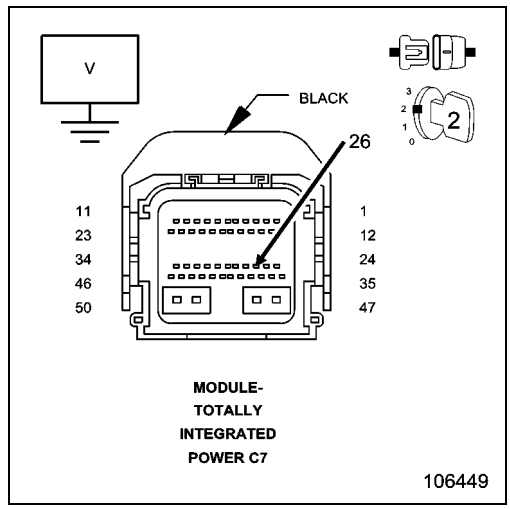

9. (D264) CAN IHS BUS(-) (125K) CIRCUIT SHORTED TO GROUND

1. Turn the ignition off.
2. Measure the resistance between ground and the (D264) CAN IHS Bus(-) (125K) circuit.

Is the resistance below 10K Ohms?

Yes

- Repair the (D264) CAN IHS Bus(-) (125K) circuit for a short to ground.
- Perform the BODY VERIFICATION TEST. (Refer to 28 - DTC-Based Diagnostics/MODULE, Totally Integrated Power (TIPM) - Standard Procedure).

No

- Replace/update the module that set this DTC in accordance with the Service Information.
- Perform the appropriate verification test.

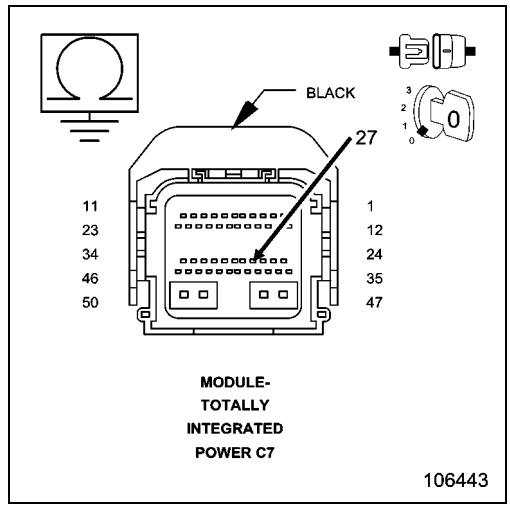

U1147-ADDITIONAL CAN INTERIOR BUS ECU DETECTED

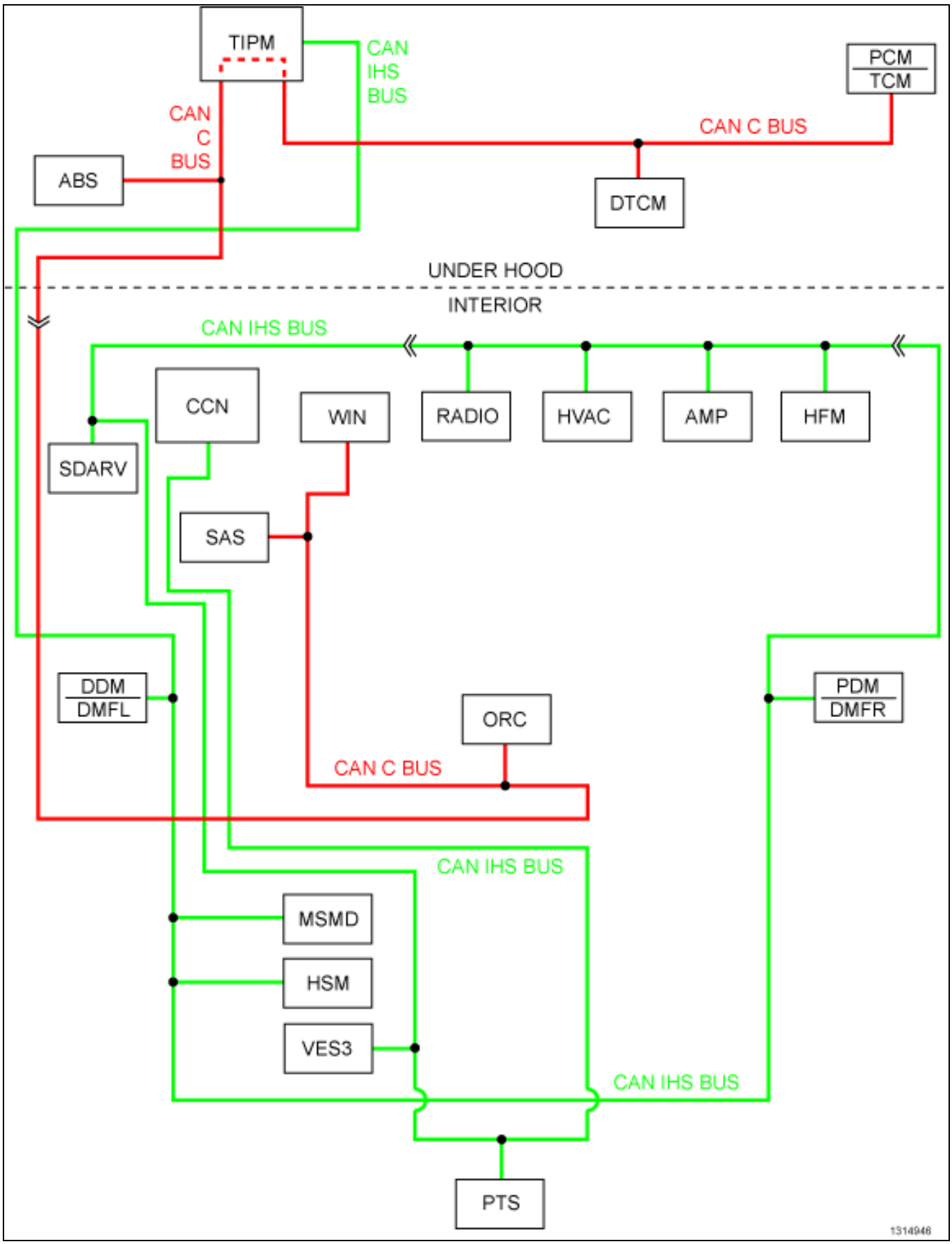

For a complete wiring diagram, **refer to the Wiring Information**.

- **When Monitored:**
  Continuously.
- **Set Condition:**
  The Totally Integrated Power Module (TIPM) detects an additional CAN Interior Bus module and requires reprogramming.

Possible Causes
ADDITIONAL MODULE ADDED/REMOVED FROM THE CAN INTERIOR BUS NETWORK

1. REPROGRAM THE TOTALLY INTEGRATED POWER MODULE (TIPM)

1. Turn the ignition on.
2. Using the scan tool, select network view and select the CAN Interior Bus. This will list the CAN Interior Bus modules on the vehicle. Read and record the listed modules.
3. Using the scan tool, select TIPM, miscellaneous functions then add/remove ECUs.
4. Using the scan tool, add or remove the module that was not configured in the TIPM.
5. Using the scan tool, erase DTCs.
6. Cycle the ignition from on to off three times and read the active TIPM DTCs.

Does the scan tool display this DTC as active?

Yes

- Retest system and attempt to reprogram the TIPM.
- Perform the BODY VERIFICATION TEST. (Refer to 28 - DTC-Based Diagnostics/MODULE, Totally Integrated Power (TIPM) - Standard Procedure).

No

- Repair is complete.
- Perform the BODY VERIFICATION TEST. (Refer to 28 - DTC-Based Diagnostics/MODULE, Totally Integrated Power (TIPM) - Standard Procedure).

U1148-ADDITIONAL CAN C BUS ECU DETECTED

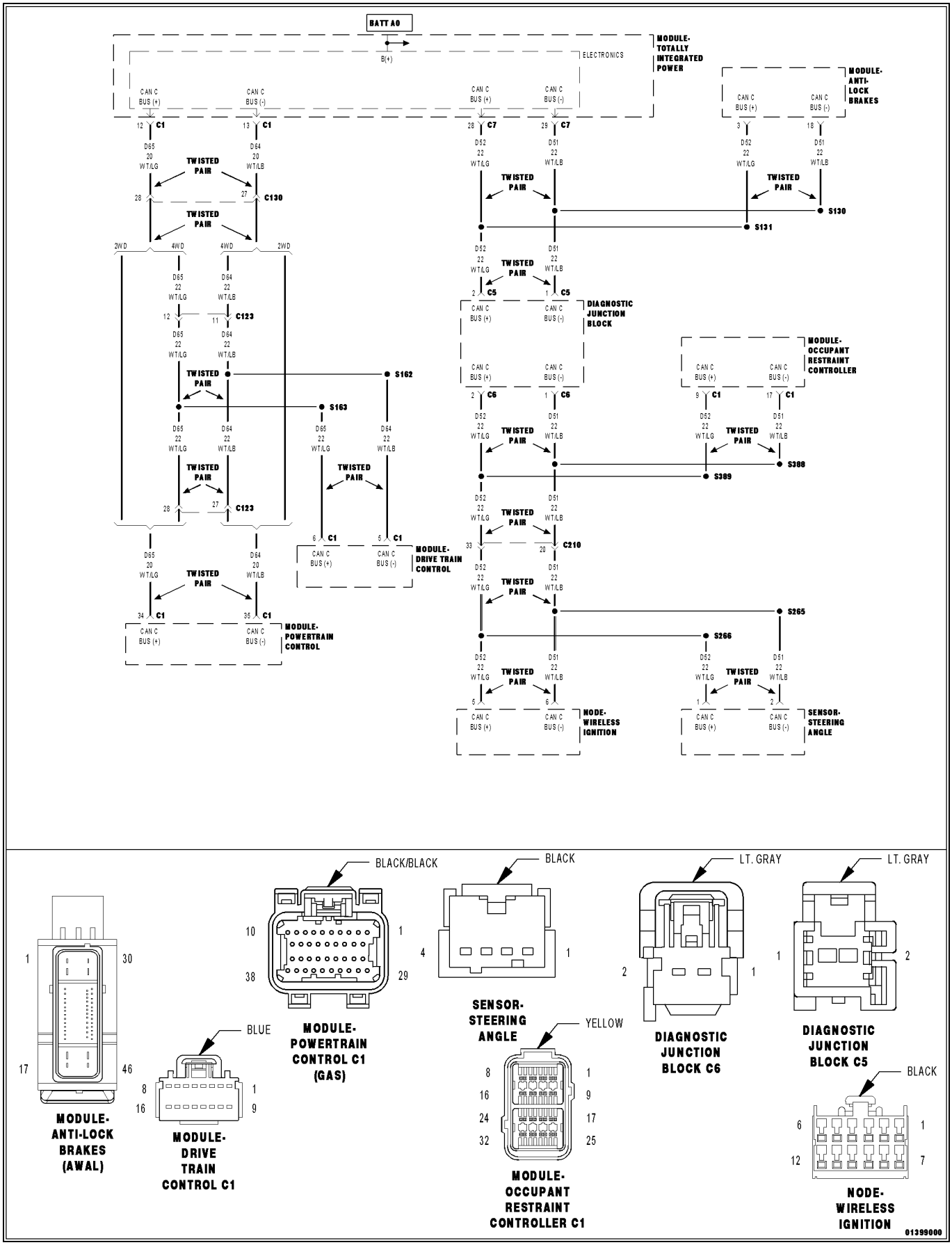

For a complete wiring diagram, **refer to the Wiring Information**.

- **When Monitored:**
  Continuously.
- **Set Condition:**
  The Totally Integrated Power Module (TIPM) detects an additional CAN C Bus module and requires reprogramming.

Possible Causes
ADDITIONAL MODULE ADDED/REMOVED FROM THE CAN C BUS NETWORK

1. REPROGRAM THE TIPM

1. Turn the ignition on.
2. Using the scan tool, select network view and select the CAN C Bus network. This will list the CAN C Bus modules on the vehicle. Read and record the listed modules.
3. Using the scan tool, select TIPM, miscellaneous functions then add/remove ECUs.
4. Using the scan tool, add or remove the module that was not configured in the TIPM.
5. Using the scan tool, erase Diagnostic Trouble Codes (DTCs).
6. Cycle the ignition from on to off three times and read the active TIPM DTCs.

Does the scan tool display this DTC as active?

Yes

- Retest system and attempt to reprogram the TIPM.
- Perform the BODY VERIFICATION TEST. (Refer to 28 - DTC-Based Diagnostics/MODULE, Totally Integrated Power (TIPM) - Standard Procedure).

No

- Repair is complete.
- Perform the BODY VERIFICATION TEST. (Refer to 28 - DTC-Based Diagnostics/MODULE, Totally Integrated Power (TIPM) - Standard Procedure).

U1158-LOST COMMUNICATION WITH SATELLITE VIDEO RECEIVER (SDARV)

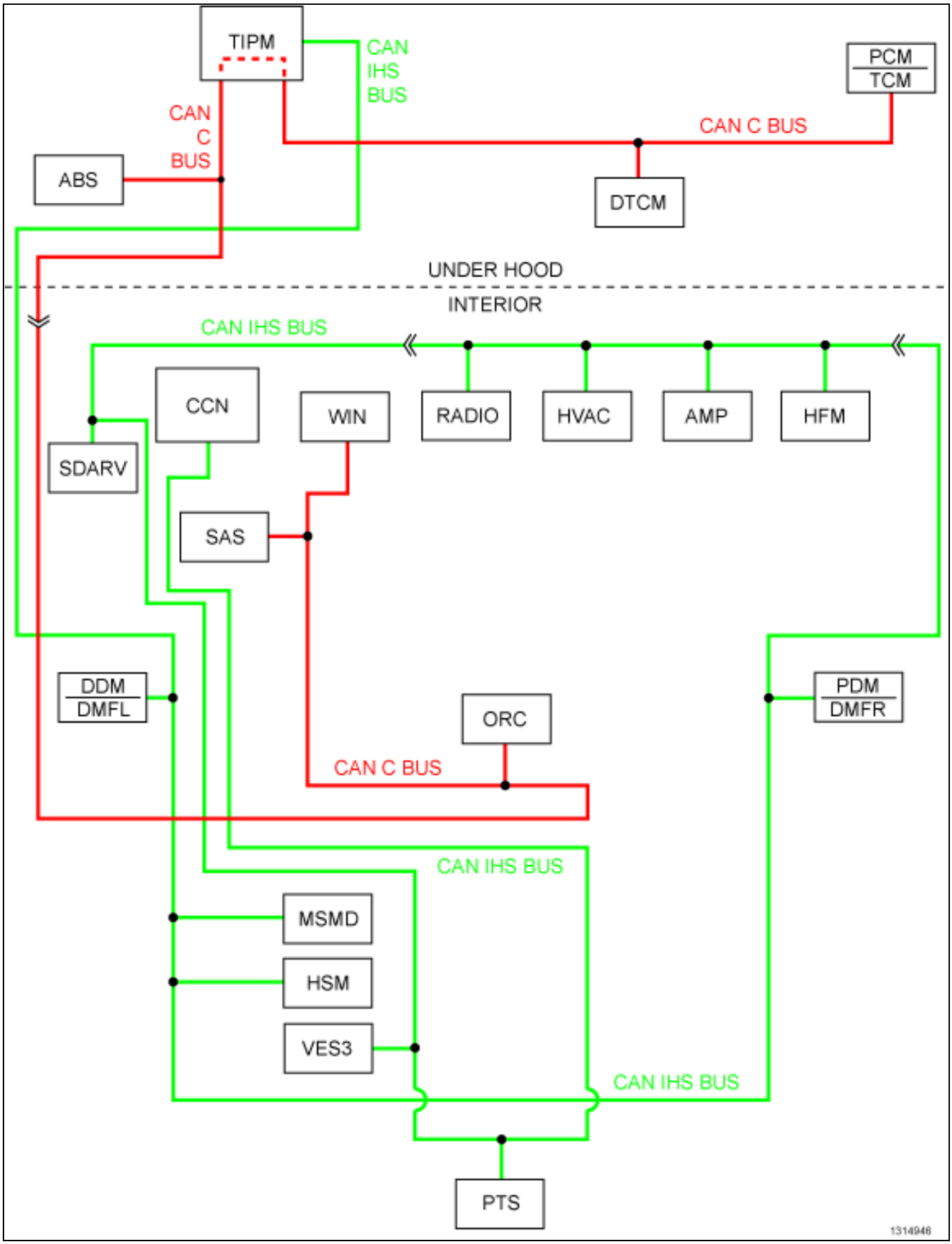

For a complete wiring diagram, **refer to the Wiring Information**.

Theory of Operation

The primary communication network between electronic control modules on this vehicle is the Controller Area Network (CAN) data bus system. The Controller Area Network (CAN) data bus allows all electronic modules connected to the bus to share information with each other. Regardless of whether a message originates from a module on the higher speed CAN C (500K) Bus or on the lower speed CAN Interior High Speed (IHS) (125K) Bus the message structure and layout is similar, which allows the Totally Integrated Power Module/Central GateWay (TIPM or TIPMCGW) to process and transfer messages between the CAN buses. The TIPM also stores Diagnostic Trouble Codes (DTCs) for certain bus network faults.

All modules transmit and receive messages over one of these buses. Data exchange between the modules is achieved by serial transmission of encoded data messages (a form of transmission in which data bits are sent sequentially, one at a time, over a single line). Each module can both send and receive serial data simultaneously. Each data bit of a CAN Bus message is carried over the bus as a voltage differential between the two bus circuits which, when strung together, form a message. Each module uses arbitration to sort the message priority if two competing messages are attempting to be broadcast at the same time. Corruption of a single bit within a message will corrupt the entire message. Each message contains a Cyclic Redundancy Check (CRC) which specifies the message size exactly. If the message detected conflicts with the CRC the ECU receiving it will determine the message to be an error and consider that communication has not been possible. Diagnosis of this condition using a lab scope may reveal activity that appears to be Bus data messages even if no actual communication is possible. Communication problems that affect the whole bus, as a result of opens and terminal push outs are more likely to occur on data busses that operate at a high speed than a data bus that operates at a lower speed.

When an open circuit or terminal push out occurs one or more modules can become isolated from the remainder of the bus. The isolated module will attempt to communicate. Since each module contains it own termination a module that is isolated may receive its own messages correctly but will not be able to receive messages or determine arbitration from other modules. Each time the isolated module attempts to communicate it alters the bus voltage on the intact bus circuit. Without functioning arbitration the isolated module alters the bus voltage while other bus messages are being sent thereby corrupting the messages on the remainder of the bus.

The CAN bus modules are connected in parallel to the two-wire bus using a twisted pair, where the wires are wrapped around each other to provide shielding from unwanted electromagnetic induction, thus preventing interference with the relatively low voltage signals being carried through them. While the CAN bus is operating (active), one of the bus wires will carry a higher voltage and is referred to as the CAN High or CAN bus (+) wire, while the other bus wire will carry a lower voltage and is referred to as the CAN Low or CAN bus (–) wire.

- **When Monitored:**
  With the ignition on.
  Battery voltage between 10 and 16 volts.
  Ignition Off Draw (IOD) fuse installed.
  Totally Integrated Power Module (TIPM) is configured correctly.
- **Set Condition:**
  Bus messages not received from the Satellite Video Receiver (SDARV) for approximately two to five seconds.

Possible Causes
(D265) CAN INTERIOR HIGH SPEED (IHS) BUS(+) (125k) CIRCUIT SHORTED TO VOLTAGE
(D264) CAN IHS BUS(-) (125k) CIRCUIT SHORTED TO GROUND
DTCS RELATED TO BATTERY VOLTAGE, IGNITION, OR VIN MESSAGES
TIPM NOT CONFIGURED CORRECTLY
SDARV POWER AND GROUND
SATELLITE VIDEO RECEIVER
MODULE THAT SET THE DTC

1. VERIFY THE DIAGNOSTIC TROUBLE CODE (DTC) IS ACTIVE

NOTE: Make sure the IOD fuse is installed and battery voltage is between 10 and 16 volts before proceeding.

1. Using the scan tool, read active DTCs.

Is this DTC active?

Yes

- Go To 2

No

- (Refer to 29 - Non-DTC Diagnostics/Communication - Diagnosis and Testing) and perform the Stored Lost Communication DTCs diagnostic procedure.

2. CHECK FOR ANY OF THE FOLLOWING ACTIVE DTCS

1. Using the scan tool, read active DTCs from all modules.

NOTE: Check for TIPM configuration, CAN IHS Bus hardware electrical, VIN Missing/Mismatch, battery or ignition related DTCs.

Does the scan tool display any active DTCs to the conditions listed above?

Yes

- Perform the appropriate diagnostic procedure.

No

- Go To 3

3. VERIFY THAT THE SDARV IS ACTIVE ON THE BUS

1. Turn the ignition on.
2. Using the scan tool, select Network Diagnostics.
3. Verify that the SDARV is active on the bus.

Is the SDARV active on the bus?

Yes

- Go To 4

No

- (Refer to 29 - Non-DTC Diagnostics/Communication - Diagnosis and Testing) and perform the No Response from SDARV diagnostic procedure.

4. CHECK FOR ADDITIONAL COMMUNICATION RELATED DTCS

1. Using the scan tool, select Network Diagnostics.

Is there more than one module with active DTCs “Logged Against” the SDARV?

Yes

- Replace/update the Satellite Video Receiver in accordance with the Service Information.
- Perform the BODY VERIFICATION TEST. (Refer to 28 - DTC-Based Diagnostics/MODULE, Totally Integrated Power (TIPM) - Standard Procedure).

No

- Go To 5

5. CLEAR DTC IN MODULE SETTING FAULT

1. Using the scan tool, select the module setting the DTC against the SDARV.
2. Clear active DTCs.

Is this DTC still active?

Yes

- Replace/update the module that set this DTC in accordance with the Service Information.
- Perform the appropriate verification test.

No

- Go To 6

6. CYCLE IGNITION

1. Cycle the ignition from RUN to OFF three times ending with the key in the RUN position.

Does this DTC become active?

Yes

- Go To 7

No

- The condition is not present at this time. Using the wiring diagram/schematic as a guide, inspect the wiring for chafed, pierced, pinched, and partially broken wires and the wiring harness connectors for broken, bent, pushed out, and corroded terminals.
- Perform the BODY VERIFICATION TEST. (Refer to 28 - DTC-Based Diagnostics/MODULE, Totally Integrated Power (TIPM) - Standard Procedure).

7. CHECK FOR ADDITIONAL LOST COMMUNICATION FAULTS

1. Using the scan tool, select Network Diagnostics.

Does the TIPM and other CAN IHS Bus (125K) modules show Lost Communication with the remaining CAN IHS Bus (125K) modules?

Yes

- Go To 8

No

- Replace/update the module that set this DTC in accordance with the Service Information.
- Perform the appropriate verification test.

8. (D265) CAN IHS Bus(+) (125K) CIRCUIT SHORTED TO VOLTAGE

1. Measure the voltage between the (D265) CAN IHS Bus(+) (125K) circuit and ground.

Is the voltage above 5 volts?

Yes

- Repair the (D265) CAN IHS Bus(+) (125K) circuit for a short to voltage.
- Perform the BODY VERIFICATION TEST. (Refer to 28 - DTC-Based Diagnostics/MODULE, Totally Integrated Power (TIPM) - Standard Procedure).

No

- Go To 9

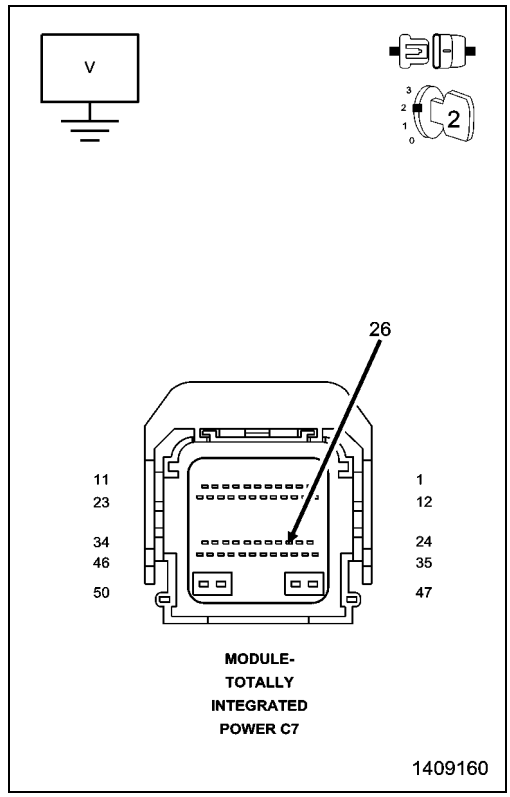

9. (D264) CAN IHS Bus(-) (125K) CIRCUIT SHORTED TO GROUND

1. Turn the ignition off.
2. Measure the resistance between ground and the (D264) CAN IHS Bus(-) (125K) circuit.

Is the resistance below 10K Ohms?

Yes

- Repair the (D264) CAN IHS Bus(-) (125K) circuit for a short to ground.
- Perform the BODY VERIFICATION TEST. (Refer to 28 - DTC-Based Diagnostics/MODULE, Totally Integrated Power (TIPM) - Standard Procedure).

No

- Replace/update the module that set this DTC in accordance with the Service Information.
- Perform the appropriate verification test.

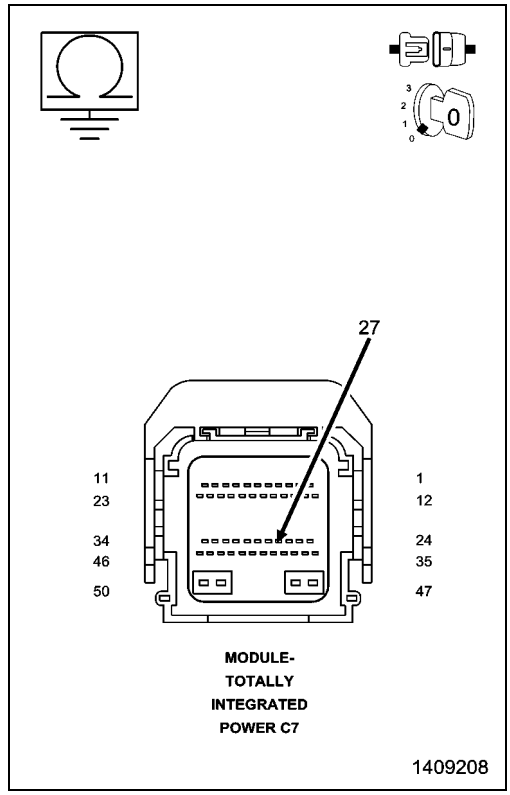

Standard Procedure

■ APS INTERMITTENT CONDITION TEST

For a complete wiring diagram, **refer to the Wiring Information**.

NOTE: The conditions that set the DTC are not present at this time. The following list may help in identifying the intermittent condition.

WARNING: When the engine is operating, do not stand in direct line with the fan. Do not put your hands near the pulleys, belts or fan. Do not wear loose clothing. Failure to follow these instructions may result in possible serious or fatal injury.

1. Perform any Technical Service Bulletins (TSBs) that may apply.
2. Review the scan tool information. If possible, try to duplicate the conditions under which the DTC set.
3. Turn the ignition off.
4. Visually inspect the related wire harness. Disconnect all the related harness connectors. Look for any chafed, pierced, pinched, partially broken wires and broken, bent, pushed out or corroded terminals.
5. Wiggle the wires while checking for shorts and open circuits.
6. Perform a voltage drop test on the related circuits between the suspected faulty component and the Memory Seat Module.
7. Inspect and clean all grounds that are related to the most current DTC.
8. If numerous trouble codes were set, use a wiring schematic and look for any common ground or supply circuits
9. Monitor with the scan tool and wiggle the related wire harness to try to interrupt the actuation.
10. Use the scan tool to perform a System Test if one applies to failing component.
11. A co-pilot, data recorder, and/or lab scope should be used to help diagnose intermittent conditions.

Were any problems found during the above inspections?

Yes

- Perform the necessary repairs.
- Perform the APS VERIFICATION TEST. (Refer to 28 - DTC-Based Diagnostics/MODULE, Totally Integrated Power (TIPM) - Standard Procedure).

No

- Test Complete.

APS VERIFICATION TEST

1. ADJUSTABLE PEDALS SYSTEM (APS) VERIFICATION TEST

1. Ensure all accessories are turned off and the battery is fully charged.
2. Connect all previously disconnected components and connectors.
3. If the Memory Seat Module was replaced (if equipped), reprogram the Adjustable Pedals hard stop.
4. Start with the Adjustable Pedals going forward.
5. When the Adjustable Pedals reach full travel, continue to apply the Adjustable Pedals Switch for 10 seconds to learn the hard stop.
6. Repeat this step in both travel directions.
7. Verify that the Adjustable Pedals System is disabled with the vehicle in reverse.
8. Verify that the Adjustable Pedals System is disabled when the speed control is activated.
9. Ensure that the ignition is on, and with the scan tool, erase all Diagnostic Trouble Codes (DTCs) from all modules.
10. Fully operate the Adjustable Pedals System.
11. Turn the ignition off and wait 5 seconds. Turn the ignition on and using the scan tool, read DTCs from all modules.
12. If any DTCs are present, go to and perform the appropriate diagnostic procedure.
13. Again, with the scan tool read DTCs. If any DTCs are present, go to and perform the appropriate diagnostic procedure.
14. If there are no DTCs present, and the customer's concern can no longer be duplicated, the repair is complete.

Are any DTCs present or is the original concern still present?

Yes

- Go to and perform the appropriate diagnostic procedure.

No

- Repair is complete.

■ INTERMITTENT CONDITION

1. PERFORM INTERMITTENT CONDITION TEST

NOTE: The conditions that set the DTC are not present at this time. The following list may help in identifying the intermittent condition.

WARNING: When the engine is operating, do not stand in direct line with the fan. Do not put your hands near the pulleys, belts, or fan. Do not wear loose clothing. Failure to follow these instructions may result in possible or serious injury.

1. Perform any Technical Service Bulletins (TSBs) that may apply.
2. Review the scan tool Environmental Data (EV Data). If possible, try to duplicate the conditions under which the DTC set.
3. Turn the ignition off.
4. Visually inspect the related wire harness. Disconnect all the related harness connectors. Look for any chafed, pierced, pinched, partially broken wires and broken, bent, pushed out, or corroded terminals.
5. Wiggle the wires while checking for shorts and open circuits.
6. Perform a voltage drop test on the related circuits between the suspected inoperative component and the Anti-Lock Brake Module.
7. Inspect and clean all PCM, ABS, TIPM, engine, and chassis grounds that are related to the most current DTC.
8. If numerous trouble codes were set, use a wire schematic and look for any common ground or supply circuits
9. For any Relay DTCs, actuate the Relay with the scan tool and wiggle the related wire harness to try to interrupt the actuation.
10. Use the scan tool to perform a System Test if one applies to failing component.
11. A co-pilot, data recorder, or lab scope should be used to help diagnose intermittent conditions.

Were any problems found during the above inspections?

Yes

- Perform the necessary repairs.
- Perform the BODY VERIFICATION TEST. (Refer to 28 - DTC-Based Diagnostics/MODULE, Totally Integrated Power (TIPM) - Standard Procedure).

No

- Test Complete.

■ BODY VERIFICATION TEST

1. PERFORM THE BODY VERIFICATION TEST

NOTE: If the WIN, PCM or TIPM was replaced, use the Service Information and perform the proper programming procedures.

1. Disconnect all jumper wires and reconnect all previously disconnected components and connectors.
2. Make sure that all accessories are turned off.
3. Make sure that the battery is fully charged.
4. If the Instrument Cluster was replaced, disconnect the negative battery cable for five seconds to power down the TIPM. Then, reconnect the battery negative cable and turn the ignition on for 15 seconds to allow the Instrument Cluster to learn the VIN.
5. If the Instrument Cluster was replaced and the vehicle is equipped with VTSS, cycle the key in the driver door cylinder lock switch to enable VTSS.
6. Program the tire size, the country code, the radio EQ setting, all of the RKE transmitters (if the WIN was replaced), and all other options as necessary.
7. With the scan tool, record and erase all DTCs from ALL modules.
8. Turn the ignition off, wait five seconds, then turn the ignition on.
9. If repairs were made to any of the HVAC door actuator circuits, with the scan tool in HVAC, select System Tests and then select Actuator DTC Detection. The test must pass before proceeding to the next step.
10. If repairs were made to any of the HVAC doors, linkage, door actuators, or door actuator circuits, with the scan tool in HVAC, select System Tests and then select Actuator Calibration Test. The test must pass before proceeding to the next step.
11. Start and run the engine for two minutes while operating all functions of the system that caused the original concern.
12. With the scan tool, select ECU View and check for DTCs in the modules.

Are DTCs present in any module or is the original condition still present?

Yes

- Go to and perform the appropriate diagnostic procedure.

No

- The repair is complete.

NODE, Cabin Compartment (CCN)

Diagnosis and Testing

■ B10BB-LEFT HEATED SEAT SWITCH INPUT CIRCUIT STUCK

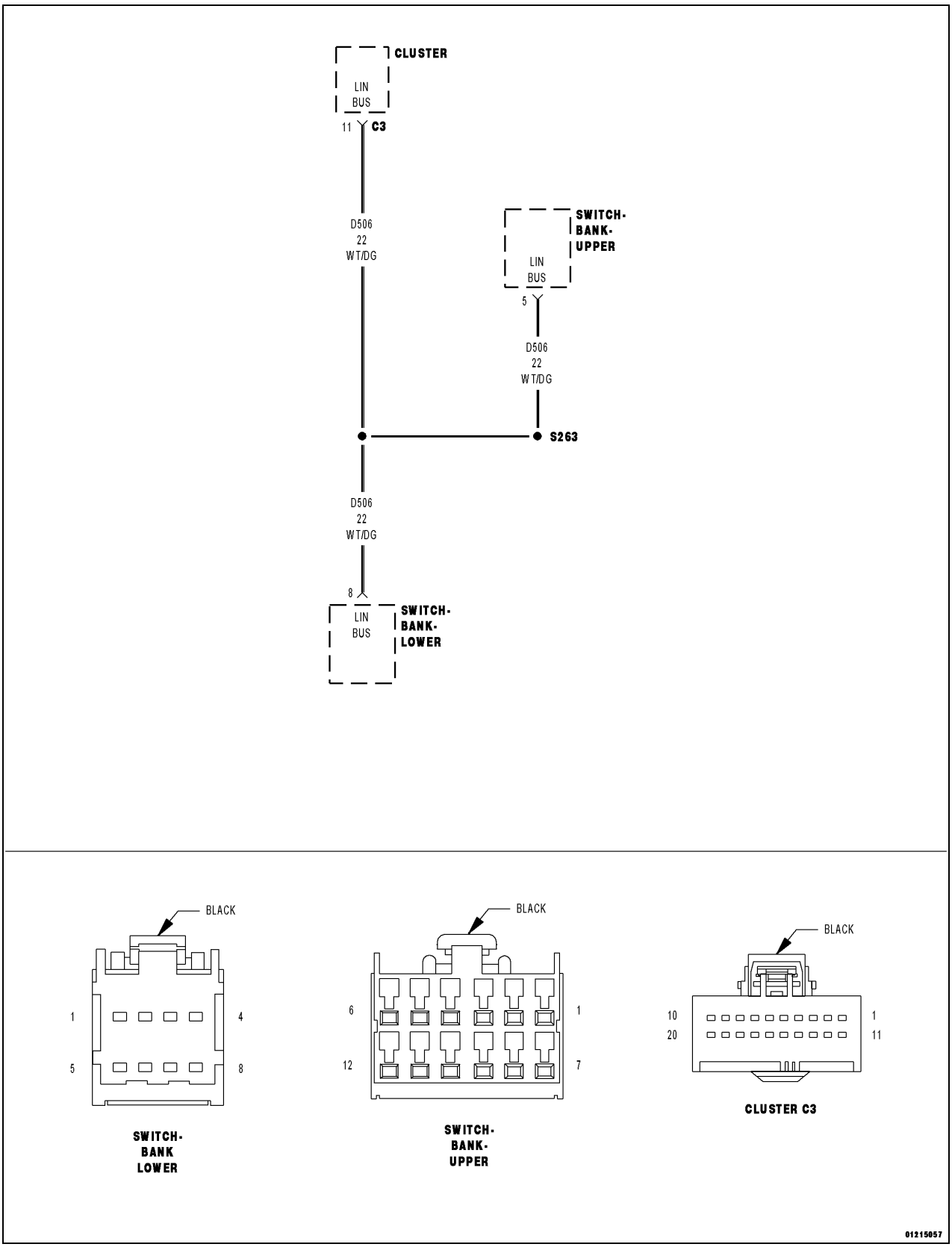

For a complete wiring diagram, **refer to the Wiring Information**.

- **When Monitored:**
  With the ignition on.
- **Set Condition:**
  If the Cluster (CCN) senses the Left Heated Seat switch input for more than 20 seconds.

Possible Causes
OBJECT HOLDING LEFT HEATED SEAT SWITCH IN A PUSHED POSITION
SUBSTANCE CAUSING LEFT HEATED SEAT SWITCH TO GET STUCK IN A PUSHED POSITION
SWITCH BANK

1. INSPECT SWITCH BANK FOR DAMAGE

NOTE: Diagnose and repair all LIN Bus related DTCs before performing this test procedure.

1. Turn the ignition off.
2. Inspect the Switch Bank for damage.

Is the Switch Bank damaged?

Yes

- Replace the Switch Bank in accordance with the Service Information.
- Perform the BODY VERIFICATION TEST. (Refer to 28 - DTC-Based Diagnostics/MODULE, Totally Integrated Power (TIPM) - Standard Procedure).

No

- Go To 2

2. INSPECT FOR OBJECT OR SUBSTANCE CAUSING LEFT HEATED SEAT SWITCH TO STAY OR STICK IN A PUSHED POSITION

1. Inspect the Left Heated Seat switch for anything that would cause it to stay or stick in a pushed position.

Is anything present that would cause the Left Heated Seat switch to stay or stick in a pushed position?

Yes

- Repair as necessary.
- Perform the BODY VERIFICATION TEST. (Refer to 28 - DTC-Based Diagnostics/MODULE, Totally Integrated Power (TIPM) - Standard Procedure).

No

- Go To 3

3. TEST FOR INTERMITTENT CONDITION

1. Turn the ignition on.
2. Using a scan tool, record and erase Diagnostic Trouble Codes (DTCs).
3. Press and release the Left Heated Seat switch several times and then wait 20 seconds.
4. Using a scan tool, read DTCs.

Does the scan tool display DTC B10BB-LEFT HEATED SEAT SWITCH INPUT CIRCUIT STUCK?

Yes

- Replace the Switch Bank in accordance with the Service Information.
- Perform the BODY VERIFICATION TEST. (Refer to 28 - DTC-Based Diagnostics/MODULE, Totally Integrated Power (TIPM) - Standard Procedure).

No

- The conditions that caused this code to set are not present at this time.
- Perform the BODY VERIFICATION TEST. (Refer to 28 - DTC-Based Diagnostics/MODULE, Totally Integrated Power (TIPM) - Standard Procedure).

B10BC-RIGHT HEATED SEAT SWITCH INPUT CIRCUIT STUCK

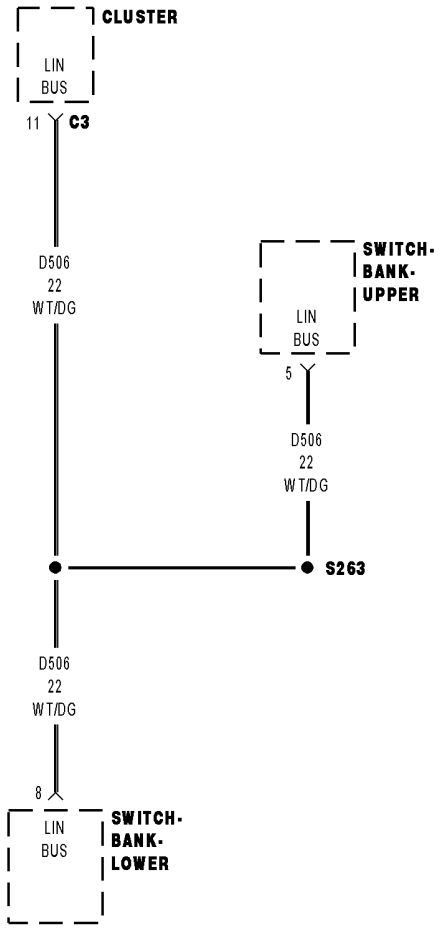

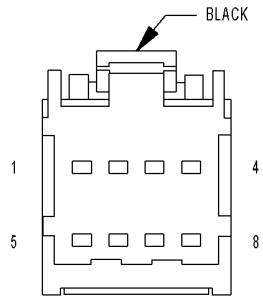

SWITCH-
BANK
LOWER

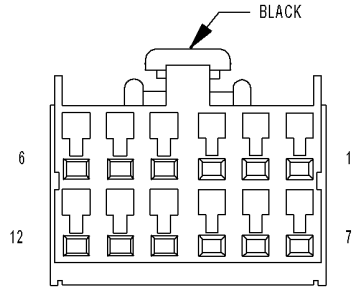

SWITCH-
BANK-
UPPER

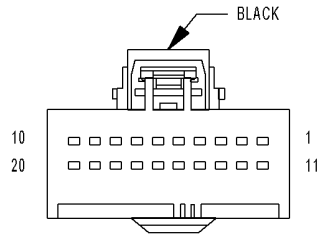

CLUSTER C3

01215057

For a complete wiring diagram, **refer to the Wiring Information**.

- **When Monitored:**
  With the ignition on.
- **Set Condition:**
  If the Cluster (CCN) senses the Right Heated Seat switch input for more than 20 seconds.

Possible Causes
OBJECT HOLDING RIGHT HEATED SEAT SWITCH IN A PUSHED POSITION
SUBSTANCE CAUSING RIGHT HEATED SEAT SWITCH TO GET STUCK IN A PUSHED POSITION
SWITCH BANK

1. INSPECT SWITCH BANK FOR DAMAGE

NOTE: Diagnose and repair all LIN Bus related DTCs before performing this test procedure.

1. Turn the ignition off.
2. Inspect the Switch Bank for damage.

Is the Switch Bank damaged?

Yes

- Replace the Switch Bank in accordance with the Service Information.
- Perform the BODY VERIFICATION TEST. (Refer to 28 - DTC-Based Diagnostics/MODULE, Totally Integrated Power (TIPM) - Standard Procedure).

No

- Go To 2

2. INSPECT FOR OBJECT OR SUBSTANCE CAUSING RIGHT HEATED SEAT SWITCH TO STAY OR STICK IN A PUSHED POSITION

1. Inspect the Right Heated Seat switch for anything that would cause it to stay or stick in a pushed position.

Is anything present that would cause the Right Heated Seat switch to stay or stick in a pushed position?

Yes

- Repair as necessary.
- Perform the BODY VERIFICATION TEST. (Refer to 28 - DTC-Based Diagnostics/MODULE, Totally Integrated Power (TIPM) - Standard Procedure).

No

- Go To 3

3. TEST FOR INTERMITTENT CONDITION

1. Turn the ignition on.
2. Using a scan tool, record and erase Diagnostic Trouble Codes (DTCs).
3. Press and release the Right Heated Seat switch several times and then wait 20 seconds.
4. Using a scan tool, read DTCs.

Does the scan tool display DTC B10BC-RIGHT HEATED SEAT SWITCH INPUT CIRCUIT STUCK?

Yes

- Replace the Switch Bank in accordance with the Service Information.
- Perform the BODY VERIFICATION TEST. (Refer to 28 - DTC-Based Diagnostics/MODULE, Totally Integrated Power (TIPM) - Standard Procedure).

No

- The conditions that caused this code to set are not present at this time.
- Perform the BODY VERIFICATION TEST. (Refer to 28 - DTC-Based Diagnostics/MODULE, Totally Integrated Power (TIPM) - Standard Procedure).

B114C-LEFT REAR HEATED SEAT SWITCH STUCK

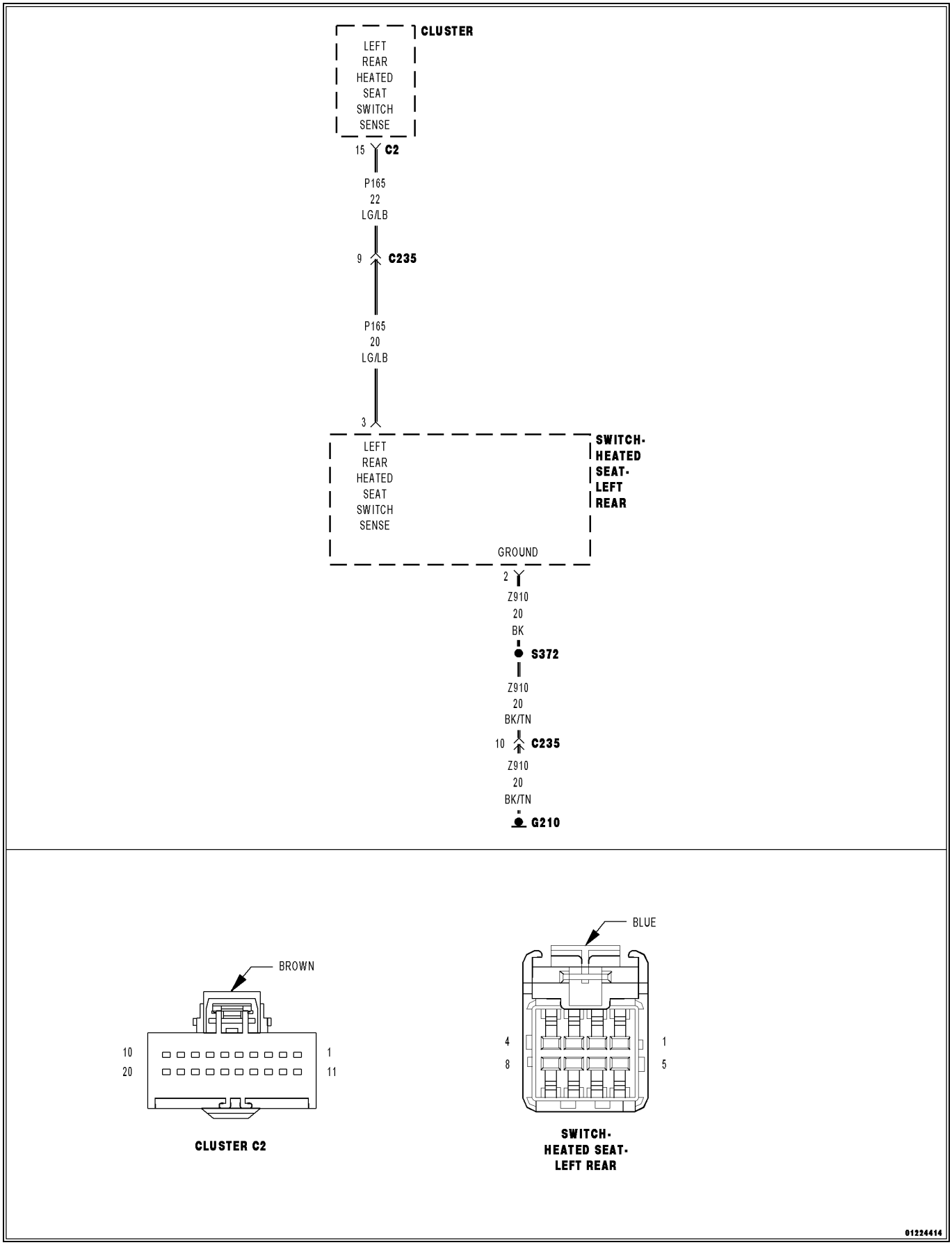

For a complete wiring diagram, **refer to the Wiring Information**.

- **When Monitored:**
  Ignition on, during the heated seat operation.
- **Set Condition:**
  If the Cluster (CCN) senses the (P165) Left Rear Heated Seat Switch Sense circuit is low for a predetermined amount of time.

Possible Causes
(P165) LEFT REAR HEATED SEAT SWITCH SENSE CIRCUIT SHORTED TO GROUND
(P165) LEFT REAR HEATED SEAT SWITCH SENSE CIRCUIT SHORTED TO (Z910) GROUND CIRCUIT
LEFT REAR HEATED SEAT SWITCH
CLUSTER (CCN)

1. TEST FOR INTERMITTENT CONDITION

1. Turn the ignition on.
2. Using a scan tool, record and erase Diagnostic Trouble Codes (DTCs).
3. Operate the Left Rear Heated Seat Switch in both positions several times.
4. Using a scan tool, read DTCs.

Does the scan tool display DTC B114C-LEFT REAR HEATED SEAT SWITCH STUCK?

Yes

- Go To 2

No

- The conditions that caused this code to set are not present at this time. Using the wiring diagram/schematic as a guide, inspect the wiring and connectors.
- Perform the BODY VERIFICATION TEST. (Refer to 28 - DTC-Based Diagnostics/MODULE, Totally Integrated Power (TIPM) - Standard Procedure).

2. CHECK FOR SHORTED LEFT REAR HEATED SEAT SWITCH

1. Turn the ignition off.
2. Disconnect the Left Rear Heated Seat Switch connector.

NOTE: Check connectors. Clean and repair as necessary.

3. Turn the ignition on.
4. With the scan tool in CCN, select Data Display and read the Left Rear Heated Seat state.

Does the switch state display Not Set?

Yes

- Replace the Left Rear Heated Seat Switch in accordance with the Service Information.
- Perform the BODY VERIFICATION TEST. (Refer to 28 - DTC-Based Diagnostics/MODULE, Totally Integrated Power (TIPM) - Standard Procedure).

No

- Go To 3

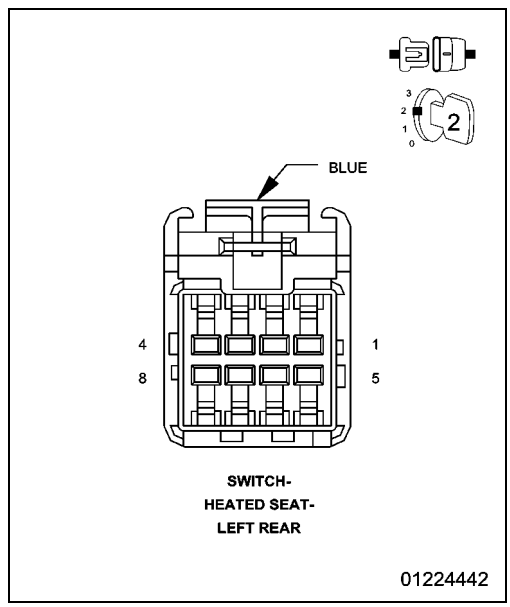

3. CHECK (P165) LEFT REAR HEATED SEAT SWITCH SENSE CIRCUIT FOR A SHORT TO GROUND

1. Turn the ignition off.
2. Disconnect the Cluster C2 connector.
3. Measure the resistance of the (P165) Left Rear Heated Seat Switch Sense circuit between ground and the Left Rear Heated Seat Switch connector.

Is the resistance below 10K Ohms?

Yes

- Repair the (P165) Left Rear Heated Seat Switch Sense circuit for a short to ground.
- Perform the BODY VERIFICATION TEST. (Refer to 28 - DTC-Based Diagnostics/MODULE, Totally Integrated Power (TIPM) - Standard Procedure).

No

- Go To 4

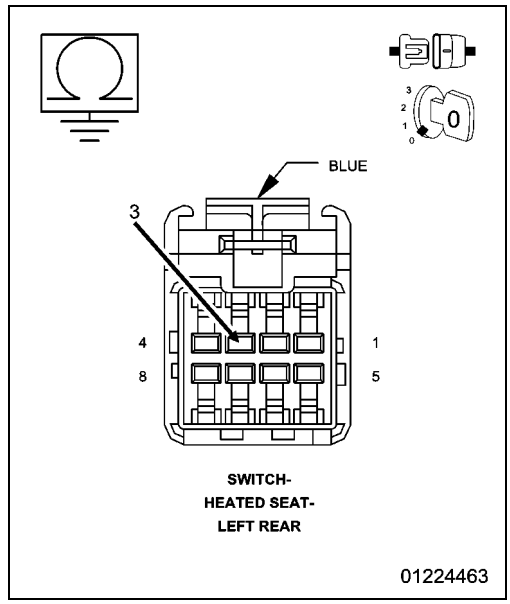

4. CHECK (P165) LEFT REAR HEATED SEAT SWITCH SENSE CIRCUIT FOR A SHORT TO (Z910) GROUND CIRCUIT

1. Measure the resistance between the (P165) Left Rear Heated Seat Switch Sense circuit and the (Z910) Ground circuit at the Left Rear Heated Seat Switch connector.

Is the resistance below 10K Ohms?

Yes

- Repair the (P165) Left Rear Heated Seat Switch Sense circuit for a short to the (Z910) Ground circuit.
- Perform the BODY VERIFICATION TEST. (Refer to 28 - DTC-Based Diagnostics/MODULE, Totally Integrated Power (TIPM) - Standard Procedure).

No

- Replace the Cluster (CCN) in accordance with the Service Information.
- Perform the BODY VERIFICATION TEST. (Refer to 28 - DTC-Based Diagnostics/MODULE, Totally Integrated Power (TIPM) - Standard Procedure).

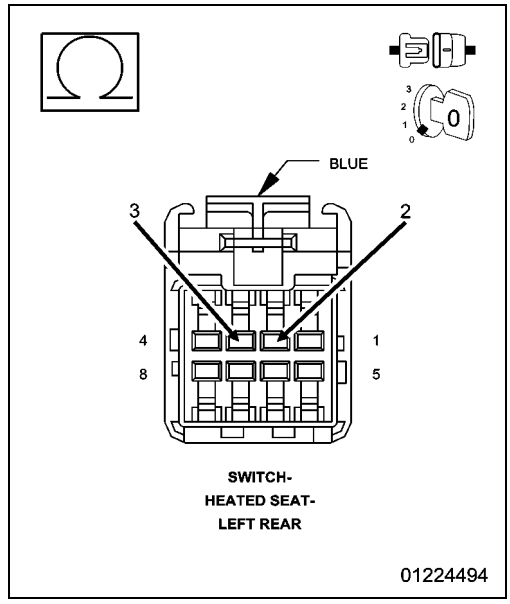

B1151-RIGHT REAR HEATED SEAT SWITCH STUCK

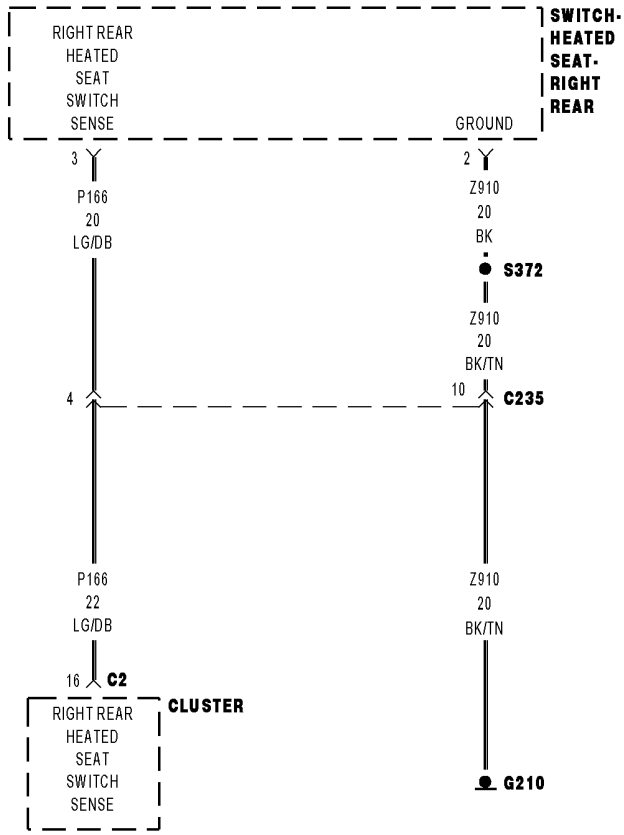

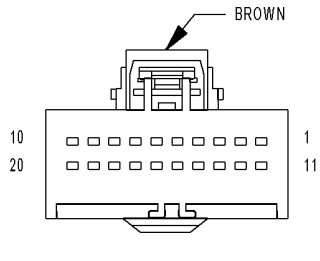

CLUSTER C2

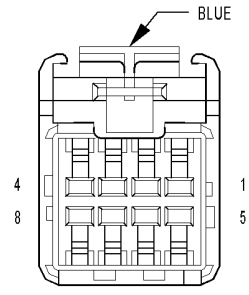

SWITCH-
HEATED SEAT-
RIGHT REAR

01217252

For a complete wiring diagram, **refer to the Wiring Information**.

- **When Monitored:**
  Ignition on, during the heated seat operation.
- **Set Condition:**
  If the Cluster (CCN) senses the (P166) Right Rear Heated Seat Switch Sense circuit is low for a predetermined amount of time.

Possible Causes
(P166) RIGHT REAR HEATED SEAT SWITCH SENSE CIRCUIT SHORTED TO GROUND
(P166) RIGHT REAR HEATED SEAT SWITCH SENSE CIRCUIT SHORTED TO (Z910) GROUND CIRCUIT
RIGHT REAR HEATED SEAT SWITCH
CLUSTER (CCN)

1. TEST FOR INTERMITTENT CONDITION

1. Turn the ignition on.
2. Using a scan tool, record and erase Diagnostic Trouble Codes (DTCs).
3. Operate the Right Rear Heated Seat Switch in both positions several times.
4. Using a scan tool, read DTCs.

Does the scan tool display DTC B1151-RIGHT REAR HEATED SEAT SWITCH STUCK?

Yes

- Go To 2

No

- The conditions that caused this code to set are not present at this time. Using the wiring diagram/schematic as a guide, inspect the wiring and connectors.
- Perform the BODY VERIFICATION TEST. (Refer to 28 - DTC-Based Diagnostics/MODULE, Totally Integrated Power (TIPM) - Standard Procedure).

2. CHECK FOR SHORTED RIGHT REAR HEATED SEAT SWITCH

1. Turn the ignition off.
2. Disconnect the Right Rear Heated Seat Switch connector.

NOTE: Check connectors. Clean and repair as necessary.

3. Turn the ignition on.
4. With the scan tool in CCN, select Data Display and read the Right Rear Heated Seat state.

Does the switch state display Not Set?

Yes

- Replace the Right Rear Heated Seat Switch in accordance with the Service Information.
- Perform the BODY VERIFICATION TEST. (Refer to 28 - DTC-Based Diagnostics/MODULE, Totally Integrated Power (TIPM) - Standard Procedure).

No

- Go To 3

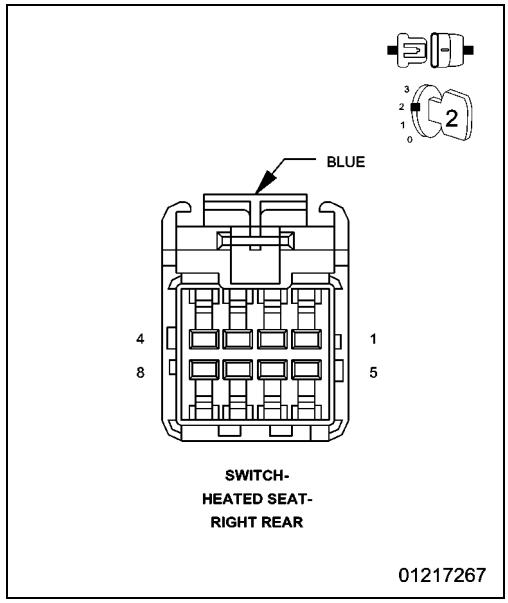

3. CHECK (P166) RIGHT REAR HEATED SEAT SWITCH SENSE CIRCUIT FOR A SHORT TO GROUND

1. Turn the ignition off.
2. Disconnect the Cluster C2 connector.
3. Measure the resistance of the (P166) Right Rear Heated Seat Switch Sense circuit between ground and the Right Rear Heated Seat Switch connector.

Is the resistance below 10K Ohms?

Yes

- Repair the (P166) Right Rear Heated Seat Switch Sense circuit for a short to ground.
- Perform the BODY VERIFICATION TEST. (Refer to 28 - DTC-Based Diagnostics/MODULE, Totally Integrated Power (TIPM) - Standard Procedure).

No

- Go To 4

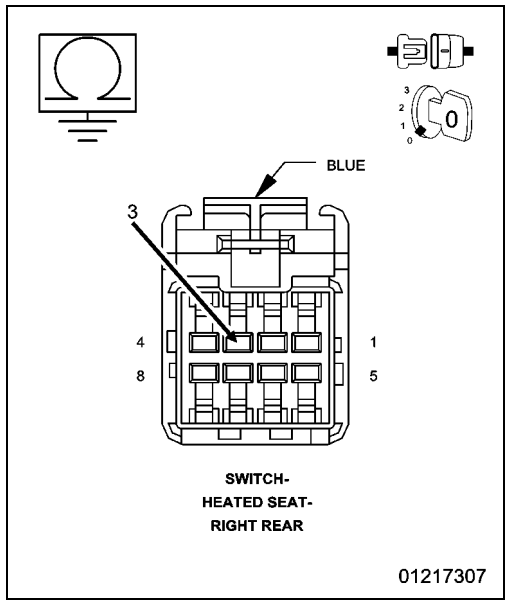

4. CHECK (P166) RIGHT REAR HEATED SEAT SWITCH SENSE CIRCUIT FOR A SHORT TO (Z910) GROUND CIRCUIT

1. Measure the resistance between the (P166) Right Rear Heated Seat Switch Sense circuit and the (Z910) Ground circuit at the Right Rear Heated Seat Switch connector.

Is the resistance below 10K Ohms?

Yes

- Repair the (P166) Right Rear Heated Seat Switch Sense circuit for a short to the (Z910) Ground circuit.
- Perform the BODY VERIFICATION TEST. (Refer to 28 - DTC-Based Diagnostics/MODULE, Totally Integrated Power (TIPM) - Standard Procedure).

No

- Replace the Cluster (CCN) in accordance with the Service Information.
- Perform the BODY VERIFICATION TEST. (Refer to 28 - DTC-Based Diagnostics/MODULE, Totally Integrated Power (TIPM) - Standard Procedure).

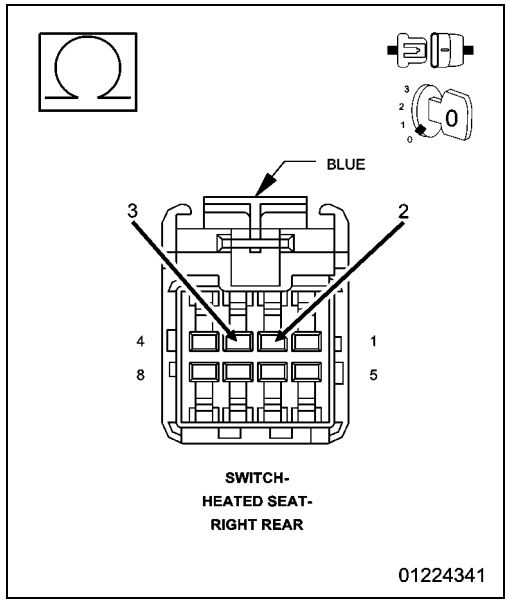

B123F-MENU SWITCH STUCK

For a complete wiring diagram, **refer to the Wiring Information**.

- **When Monitored:**
  With the ignition on.
- **Set Condition:**
  The Cluster detects the Menu Switch active for greater than 20 seconds.

Possible Causes
CLUSTER

1. CHECK FOR AN ACTIVE DTC

1. Turn the ignition on.
2. With the scan tool, record and erase DTCs.
3. Press the MENU switch three times.
4. With the scan tool, read DTCs.

Does the scan tool display: B123F-MENU SWITCH STUCK?

Yes

- Replace the Cluster in accordance with the Service Information.
- Perform the BODY VERIFICATION TEST. (Refer to 28 - DTC-Based Diagnostics/MODULE, Totally Integrated Power (TIPM) - Standard Procedure).

No

- Test complete.

B127A-COMPASS PERFORMACE

For a complete wiring diagram, **refer to the Wiring Information**.

- **When Monitored:**
  With the ignition on.
- **Set Condition:**
  Internal Compass Module failure detected.

Possible Causes
COMPASS MODULE

1. CHECK FOR AN ACTIVE DTC

1. Turn the ignition on.
2. With the scan tool, read DTCs.

Does the scan tool display this DTC as active?

Yes

- Replace the Compass Module in accordance with the Service Information.
- Perform the BODY VERIFICATION TEST. (Refer to 28 - DTC-Based Diagnostics/MODULE, Totally Integrated Power (TIPM) - Standard Procedure).

No

- Test complete.

B1285-PARK ASSIST DISABLE SWITCH PERFORMANCE

For a complete wiring diagram, **refer to the Wiring Information**.

- **When Monitored:**
  With the ignition on.
- **Set Condition:**
  The Cluster detects the Park Assist Disable Switch active for greater than 20 seconds.

Possible Causes
UPPER SWITCH BANK

1. CHECK FOR AN ACTIVE DTC

1. Turn the ignition on.
2. With the scan tool, read DTCs.

Does the scan tool display this DTC as active?

Yes

- Replace the Upper Switch Bank in accordance with the Service Information.
- Perform the BODY VERIFICATION TEST. (Refer to 28 - DTC-Based Diagnostics/MODULE, Totally Integrated Power (TIPM) - Standard Procedure).

No

- Test complete.

B1286-COMPASS / TEMP BUTTON PERFORMANCE

For a complete wiring diagram, **refer to the Wiring Information**.

- **When Monitored:**
  With the ignition on.
- **Set Condition:**
  The Cluster detects the Compass / Temp Button active for greater than 20 seconds.

Possible Causes
RIGHT STEERING WHEEL SWITCH

1. CHECK FOR AN ACTIVE DTC

NOTE: Before proceeding with this diagnostic procedure, verify the Left and Right Multifunction Switch and Clockspring harness connectors are properly seated and verify proper pin terminal tension. A loose connection at any of these connectors may cause this DTC to set.

1. Turn the ignition on.
2. With the scan tool, read DTCs.

Does the scan tool display this DTC as active?

Yes

- Replace the Right Steering Wheel Switch in accordance with the Service Information.
- Perform the BODY VERIFICATION TEST. (Refer to 28 - DTC-Based Diagnostics/MODULE, Totally Integrated Power (TIPM) - Standard Procedure).

No

- Test complete, the condition or conditions that originally set this DTC are not present at this time. Using the wiring diagrams as a guide, check all related splices and connectors for signs of water intrusion, corrosion, pushed out or bent terminals, and correct pin tension.

B1287-RESET SWITCH PERFORMANCE

For a complete wiring diagram, **refer to the Wiring Information**.

- **When Monitored:**
  With the ignition on.
- **Set Condition:**
  The Cluster detects the Reset Switch active for greater than 20 seconds.

Possible Causes
RIGHT STEERING WHEEL SWITCH

1. CHECK FOR AN ACTIVE DTC

NOTE: Before proceeding with this diagnostic procedure, verify the Left and Right Multifunction Switch and Clockspring harness connectors are properly seated and verify proper pin terminal tension. A loose connection at any of these connectors may cause this DTC to set.

1. Turn the ignition on.
2. With the scan tool, read DTCs.

Does the scan tool display this DTC as active?

Yes

- Replace the Right Steering Wheel Switch in accordance with the Service Information.
- Perform the BODY VERIFICATION TEST. (Refer to 28 - DTC-Based Diagnostics/MODULE, Totally Integrated Power (TIPM) - Standard Procedure).

No

- Test complete, the condition or conditions that originally set this DTC are not present at this time. Using the wiring diagrams as a guide, check all related splices and connectors for signs of water intrusion, corrosion, pushed out or bent terminals, and correct pin tension.

B1288-TRIP / TOGGLE SWITCH PERFORMANCE

For a complete wiring diagram, **refer to the Wiring Information**.

- **When Monitored:**
  With the ignition on.
- **Set Condition:**
  The Cluster detects the Trip / Toggle Switch active for greater than 20 seconds.

Possible Causes
CLUSTER

1. CHECK FOR AN ACTIVE DTC

1. Turn the ignition on.
2. With the scan tool, read DTCs.

Does the scan tool display this DTC as active?

Yes

- Replace the Cluster in accordance with the Service Information.
- Perform the BODY VERIFICATION TEST. (Refer to 28 - DTC-Based Diagnostics/MODULE, Totally Integrated Power (TIPM) - Standard Procedure).

No

- Test complete.

B1427-REMOTE RADIO SWITCH INPUT CIRCUIT HIGH - WITHOUT EVIC

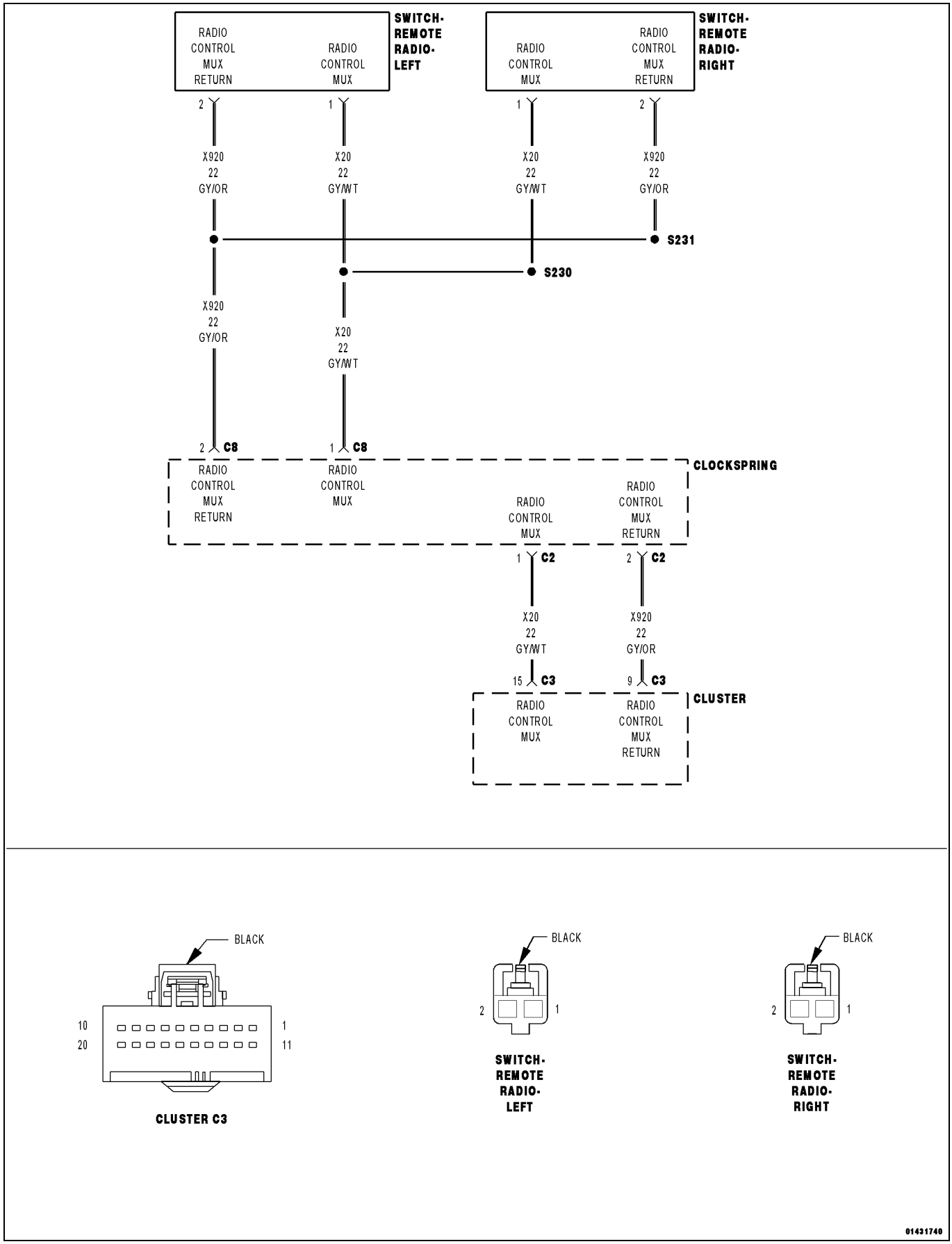

For a complete wiring diagram, **refer to the Wiring Information**.

- **When Monitored:**
  With the Radio on.
- **Set Condition:**
  The Cluster Detects the Radio Control MUX (multiplex) circuit is open or shorted to voltage.

Possible Causes
(X20) REMOTE CONTROL MUX CIRCUIT OPEN
(X20) REMOTE CONTROL MUX CIRCUIT SHORTED TO VOLTAGE
LEFT REMOTE RADIO SWITCH
RIGHT REMOTE RADIO SWITCH
CLUSTER

1. CHECK FOR ACTIVE DTC

NOTE: Before proceeding with this diagnostic procedure, verify the Left and Right Multifunction Switch and Clockspring harness connectors are properly seated and verify proper pin terminal tension. A loose connection at any of these connectors may cause this DTC to set.

1. With the scan tool, read the active DTCs.
2. Turn the ignition on.
3. With the scan tool, read the active DTCs.

Does the scan tool display this DTC as active?

Yes

- Go To 3

No

- Test complete, the condition or conditions that originally set this DTC are not present at this time. Using the wiring diagrams as a guide, check all related splices and connectors for signs of water intrusion, corrosion, pushed out or bent terminals, and correct pin tension.

2. (X20) RADIO CONTROL MUX CIRCUIT SHORTED TO VOLTAGE

1. Turn the ignition off.
2. Disconnect the Cluster C3 harness connector.
3. Turn the ignition on.
4. Measure the voltage on the (X20) Radio Control MUX circuit.

Is the voltage above 10.0 volts?

Yes

- Repair the (X20) Radio Control MUX circuit for a short to voltage.
- Perform the BODY VERIFICATION TEST. (Refer to 28 - DTC-Based Diagnostics/MODULE, Totally Integrated Power (TIPM) - Standard Procedure).

No

- Go To 3

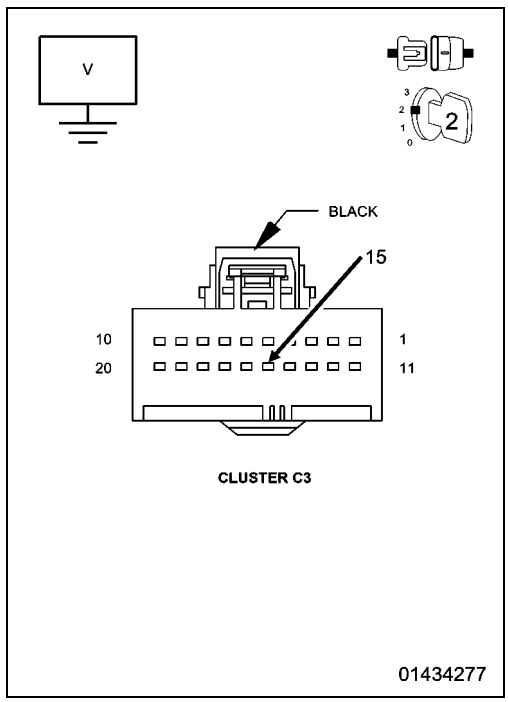

3. LEFT REMOTE RADIO SWITCH

1. Turn the ignition off.
2. Connect the Cluster C3 harness connector.
3. Disconnect the Left Remote Radio Switch harness connector.
4. Connect a 5 Amp fused jumper wire between cavity 1 and cavity 2 in the Left Remote Radio Switch harness connector.
5. Turn the ignition on.
6. With the scan tool monitor the Remote Radio Control Switch voltage.

Is the voltage below 1.0 volt?

Yes

- Replace the Left Remote Radio Switch in accordance with the Service Information.
- Perform the BODY VERIFICATION TEST. (Refer to 28 - DTC-Based Diagnostics/MODULE, Totally Integrated Power (TIPM) - Standard Procedure).

No

- Go To 4

4. RIGHT REMOTE RADIO SWITCH

1. Turn the ignition off.
2. Connect the Left Remote Radio Switch harness connector.
3. Disconnect the Right Remote Radio Switch harness connector.
4. Connect a 5 A fused jumper wire between cavity 1 and cavity 2 in the Right Remote Radio Switch harness connector.
5. Turn the ignition on.
6. With the scan tool monitor the Remote Radio Control Switch voltage.

Is the voltage below 1.0 volt?

Yes

- Replace the Right Remote Radio Switch in accordance with the Service Information.
- Perform the BODY VERIFICATION TEST. (Refer to 28 - DTC-Based Diagnostics/MODULE, Totally Integrated Power (TIPM) - Standard Procedure).

No

- Go To 5

5. (X20) RADIO CONTROL MUX CIRCUIT OPEN

1. Turn the ignition off.
2. Disconnect the Left Remote Radio Switch harness connector.
3. Disconnect the Cluster C3 harness connector.
4. Measure the resistance of the (X20) Radio Control MUX circuit.

Are the resistances above 5.0 Ohms?

Yes

- Go To 6

No

- Replace the Cluster in accordance with the Service Information.
- Perform the BODY VERIFICATION TEST. (Refer to 28 - DTC-Based Diagnostics/MODULE, Totally Integrated Power (TIPM) - Standard Procedure).

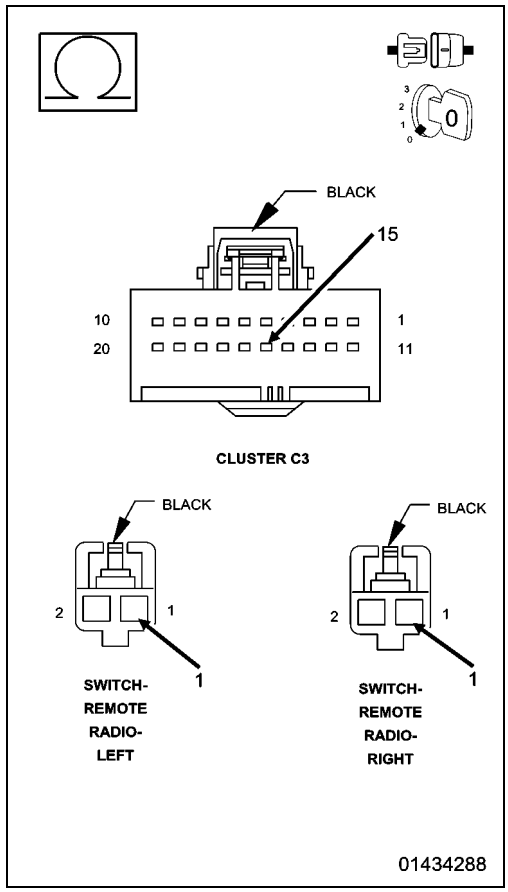

6. (X20) RADIO CONTROL MUX CIRCUIT OPEN BETWEEN REMOTE RADIO SWITCHES AND CLOCKSPRING

1. Turn the ignition off.
2. Disconnect the Clockspring C8 harness connector.
3. Measure the resistance of the (X20) Radio Control MUX circuit.

Are the resistances above 5.0 Ohms?

Yes

- Repair the (X20) Radio Control MUX circuit for a open.
- Perform the BODY VERIFICATION TEST. (Refer to 28 - DTC-Based Diagnostics/MODULE, Totally Integrated Power (TIPM) - Standard Procedure).

No

- Go To 7

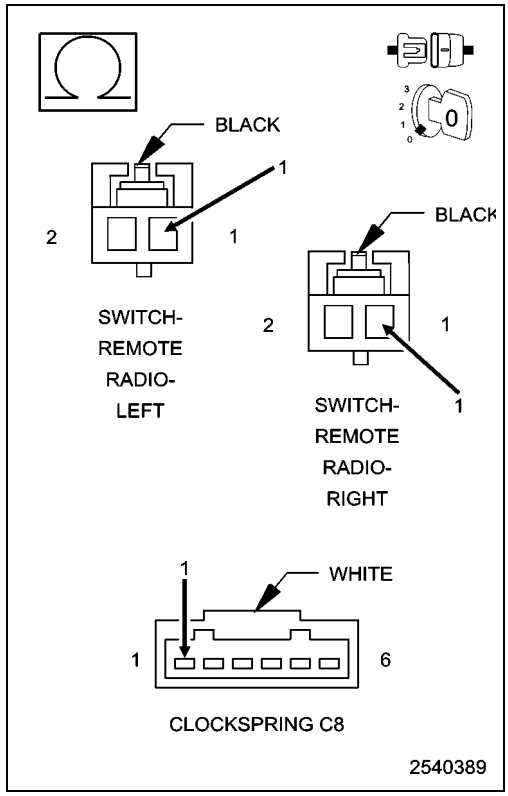

7. (X20) RADIO CONTROL MUX CIRCUIT OPEN BETWEEN CLOCKSPRING AND CLUSTER

1. Disconnect the Clockspring C2 harness connector.
2. Measure the resistance of the (X20) Radio Control MUX circuit.

Is the resistance above 5 Ohms?

Yes

- Repair the (X20) Radio Control MUX circuit for a open.
- Perform the BODY VERIFICATION TEST. (Refer to 28 - DTC-Based Diagnostics/MODULE, Totally Integrated Power (TIPM) - Standard Procedure).

No

- Replace the Clockspring in accordance with the Service Information.
- Perform the BODY VERIFICATION TEST. (Refer to 28 - DTC-Based Diagnostics/MODULE, Totally Integrated Power (TIPM) - Standard Procedure).

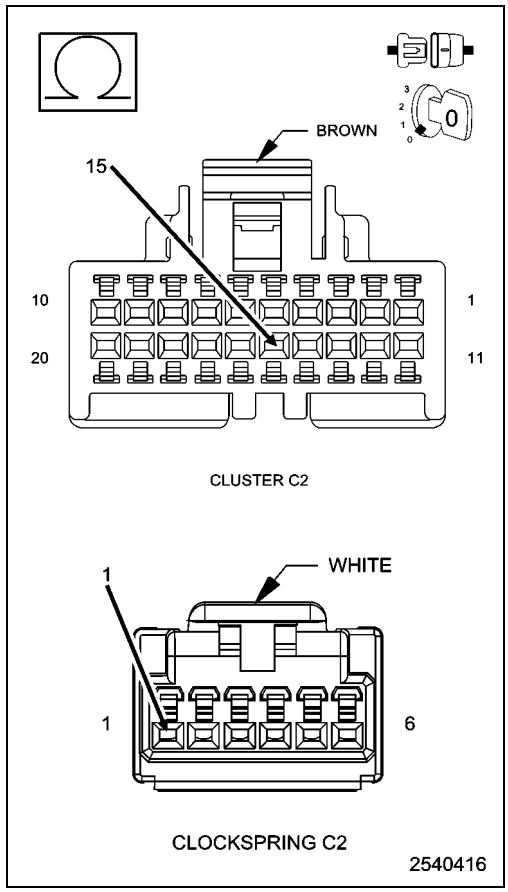

B1427-REMOTE RADIO SWITCH INPUT CIRCUIT HIGH - WITH EVIC

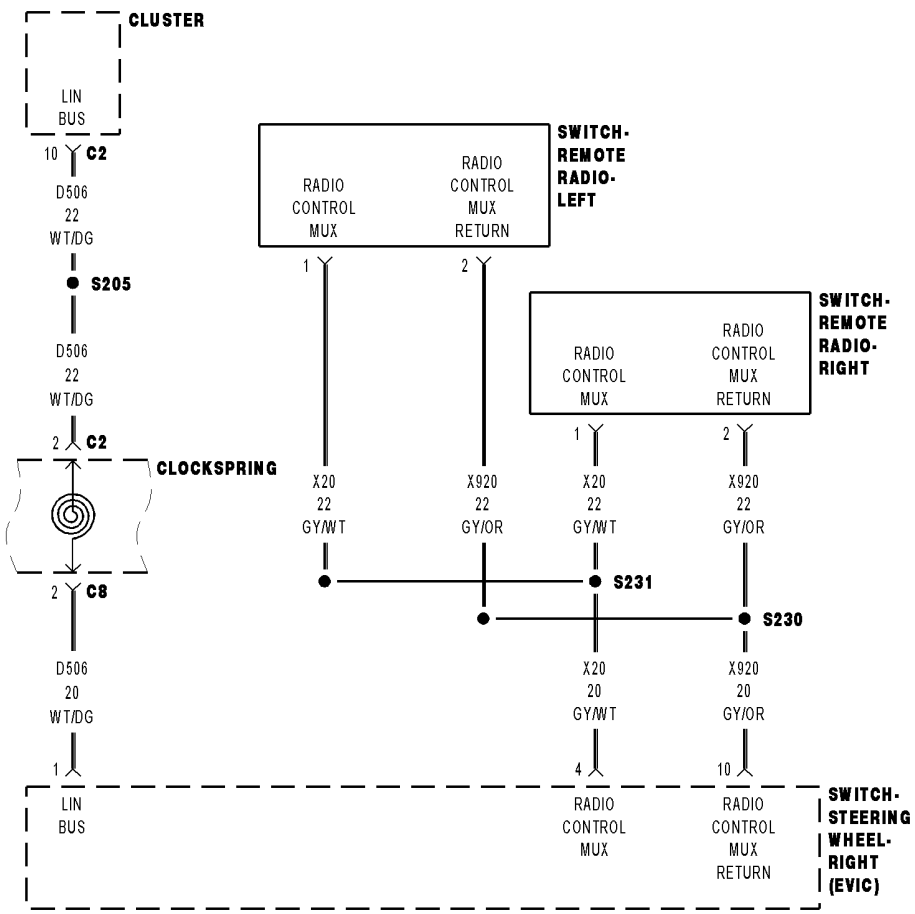

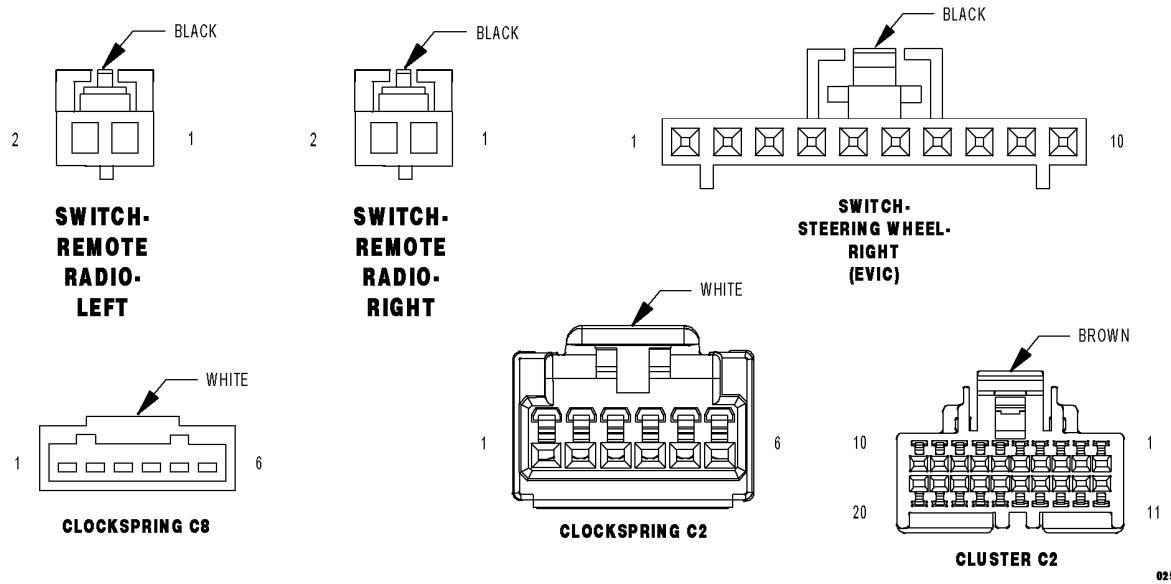

For a complete wiring diagram, **refer to the Wiring Information**.

- **When Monitored:**
  With the ignition on.
- **Set Condition:**
  The Cluster Detects the Radio Control MUX (multiplex) circuit is open or shorted to voltage.

Possible Causes
(X20) REMOTE CONTROL MUX CIRCUIT OPEN
(X20) REMOTE CONTROL MUX CIRCUIT SHORTED TO VOLTAGE
LEFT REMOTE RADIO SWITCH
RIGHT REMOTE RADIO SWITCH
RIGHT STEERING WHEEL SWITCH

1. CHECK FOR ACTIVE DTC

NOTE: Before proceeding with this diagnostic procedure, verify the Left and Right Multifunction Switch and Clockspring harness connectors are properly seated and verify proper pin terminal tension. A loose connection at any of these connectors may cause this DTC to set.

1. Turn the ignition on.
2. With the scan tool, read the active DTCs.

Does the scan tool display this DTC as active?

Yes

- Go To 2

No

- Test complete, the condition or conditions that originally set this DTC are not present at this time. Using the wiring diagrams as a guide, check all related splices and connectors for signs of water intrusion, corrosion, pushed out or bent terminals, and correct pin tension.

2. (X20) RADIO CONTROL MUX CIRCUIT SHORTED TO VOLTAGE

1. Turn the ignition off.
2. Disconnect the Right Steering Wheel Switch harness connector.
3. Turn the ignition on.
4. Measure the voltage on the (X20) Radio Control MUX circuit.

Is the voltage above 10.0 volts?

Yes

- Repair the (X20) Radio Control MUX circuit for a short to voltage.
- Perform the BODY VERIFICATION TEST. (Refer to 28 - DTC-Based Diagnostics/MODULE, Totally Integrated Power (TIPM) - Standard Procedure).

No

- Go To 3

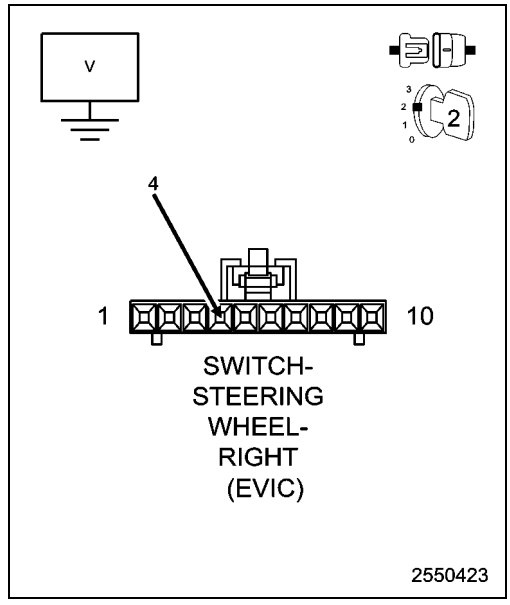

3. LEFT REMOTE RADIO SWITCH

1. Turn the ignition off.
2. Connect the Right Steering Wheel Switch harness connector.
3. Disconnect the Left Remote Radio Switch harness connector.
4. Connect a 5 Amp fused jumper wire between cavity 1 and cavity 2 in the Left Remote Radio Switch harness connector.
5. Turn the ignition on.
6. With the scan tool monitor the Remote Radio Control Switch voltage.

Is the voltage below 1.0 volt?

Yes

- Replace the Left Remote Radio Switch in accordance with the Service Information.
- Perform the BODY VERIFICATION TEST. (Refer to 28 - DTC-Based Diagnostics/MODULE, Totally Integrated Power (TIPM) - Standard Procedure).

No

- Go To 4

4. RIGHT REMOTE RADIO SWITCH

1. Turn the ignition off.
2. Connect the Left Remote Radio Switch harness connector.
3. Disconnect the Right Remote Radio Switch harness connector.
4. Connect a 5 Amp fused jumper wire between cavity 1 and cavity 2 in the Right Remote Radio Switch harness connector.
5. Turn the ignition on.
6. With the scan tool monitor the Remote Radio Control Switch voltage.

Is the voltage below 1.0 volt?

Yes

- Replace the Right Remote Radio Switch in accordance with the Service Information.
- Perform the BODY VERIFICATION TEST. (Refer to 28 - DTC-Based Diagnostics/MODULE, Totally Integrated Power (TIPM) - Standard Procedure).

No

- Go To 5

5. (X20) RADIO CONTROL MUX CIRCUIT OPEN

1. Turn the ignition off.
2. Disconnect the Right Steering Wheel Switch harness connector.
3. Measure the resistance of the (X20) Radio Control MUX circuit.

Are the resistances above 5.0 Ohms?

Yes

- Repair the (X20) Radio Control MUX circuit for a open.
- Perform the BODY VERIFICATION TEST. (Refer to 28 - DTC-Based Diagnostics/MODULE, Totally Integrated Power (TIPM) - Standard Procedure).

No

- Replace the Right Steering Wheel Switch in accordance with the Service Information.
- Perform the BODY VERIFICATION TEST. (Refer to 28 - DTC-Based Diagnostics/MODULE, Totally Integrated Power (TIPM) - Standard Procedure).

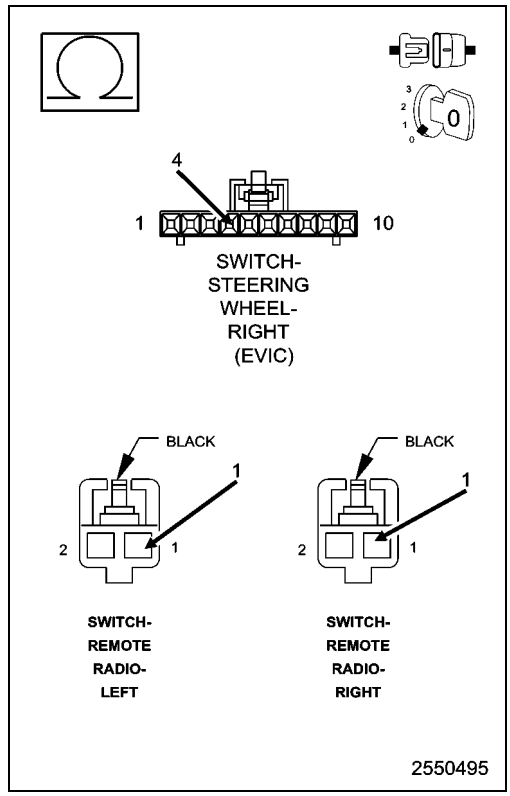

B1428-REMOTE RADIO SWITCH INPUT CIRCUIT STUCK - WITHOUT EVIC

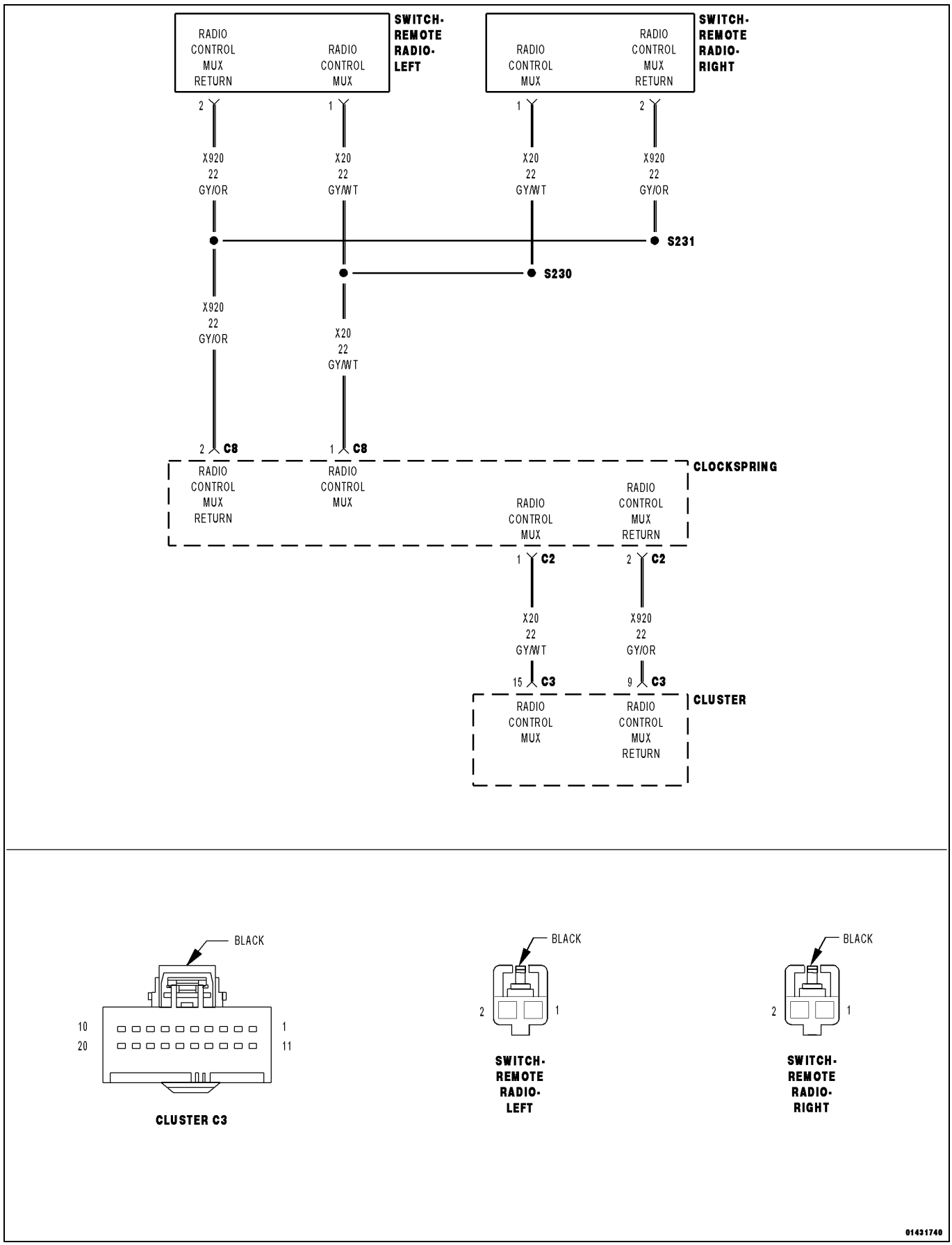

For a complete wiring diagram, **refer to the Wiring Information**.

- **When Monitored:**
  With the ignition in any position except off.
- **Set Condition:**
  The Cluster detects a stuck switch state on the (X20) Radio Control MUX (multiplex) circuit for more than 30 seconds.

Possible Causes
(X20) RADIO CONTROL MUX CIRCUIT SHORTED TO GROUND
LEFT REMOTE RADIO SWITCH
RIGHT REMOTE RADIO SWITCH
CLUSTER

1. CHECK FOR ACTIVE DTC

NOTE: Before proceeding with this diagnostic procedure, verify the Left and Right Multifunction Switch and Clockspring harness connectors are properly seated and verify proper pin terminal tension. A loose connection at any of these connectors may cause this DTC to set.

1. Turn the ignition on.
2. With the scan tool, read DTCs.

Does the scan tool display this DTC as active?

Yes

- Go To 2

No

- Test complete, the condition or conditions that originally set this DTC are not present at this time. Using the wiring diagrams as a guide, check all related splices and connectors for signs of water intrusion, corrosion, pushed out or bent terminals, and correct pin tension.

2. LEFT REMOTE RADIO SWITCH

1. Turn the ignition off.
2. Disconnect the Left Remote Radio Switch harness connector.
3. Turn the ignition on.
4. With the scan tool monitor the Remote Radio Control Switch voltage.

Is the voltage approximately 5.0 volts?

Yes

- Replace the Left Remote Radio Switch in accordance with the Service Information.
- Perform the BODY VERIFICATION TEST. (Refer to 28 - DTC-Based Diagnostics/MODULE, Totally Integrated Power (TIPM) - Standard Procedure).

No

- Go To 3

3. RIGHT REMOTE RADIO SWITCH

1. Turn the ignition off.
2. Disconnect the Right Remote Radio Switch harness connector.
3. Turn the ignition on.
4. With the scan tool monitor the Remote Radio Control Switch voltage.

Is the voltage approximately 5.0 volts?

Yes

- Replace the Right Remote Radio Switch in accordance with the Service Information.
- Perform the BODY VERIFICATION TEST. (Refer to 28 - DTC-Based Diagnostics/MODULE, Totally Integrated Power (TIPM) - Standard Procedure).

No

- Go To 4

4. (X20) RADIO CONTROL MUX CIRCUIT SHORTED TO GROUND

1. Turn the ignition off.
2. Disconnect the Cluster C3 harness connector.
3. Measure the resistance between ground and the (X20) Radio Control MUX circuit.

Is the resistance below 100.0 Ohms?

Yes

- Repair the (X20) Radio Control MUX circuit for a short to ground.
- Perform the BODY VERIFICATION TEST. (Refer to 28 - DTC-Based Diagnostics/MODULE, Totally Integrated Power (TIPM) - Standard Procedure).

No

- Replace the Cluster in accordance with the Service Information.
- Perform the BODY VERIFICATION TEST. (Refer to 28 - DTC-Based Diagnostics/MODULE, Totally Integrated Power (TIPM) - Standard Procedure).

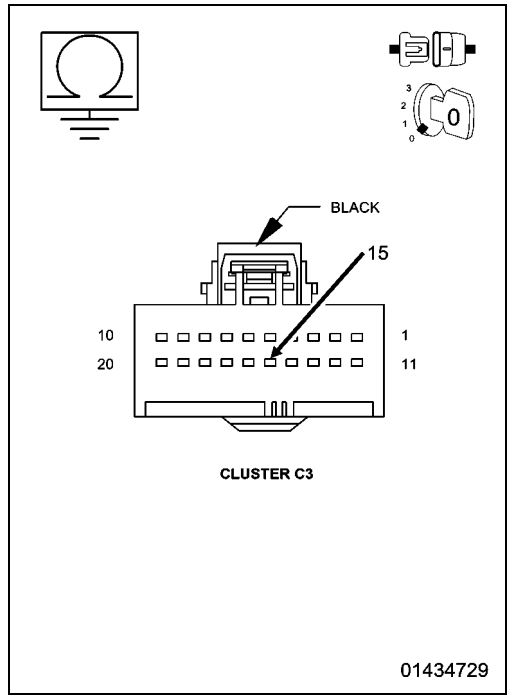

B1428-REMOTE RADIO SWITCH INPUT CIRCUIT STUCK - WITH EVIC

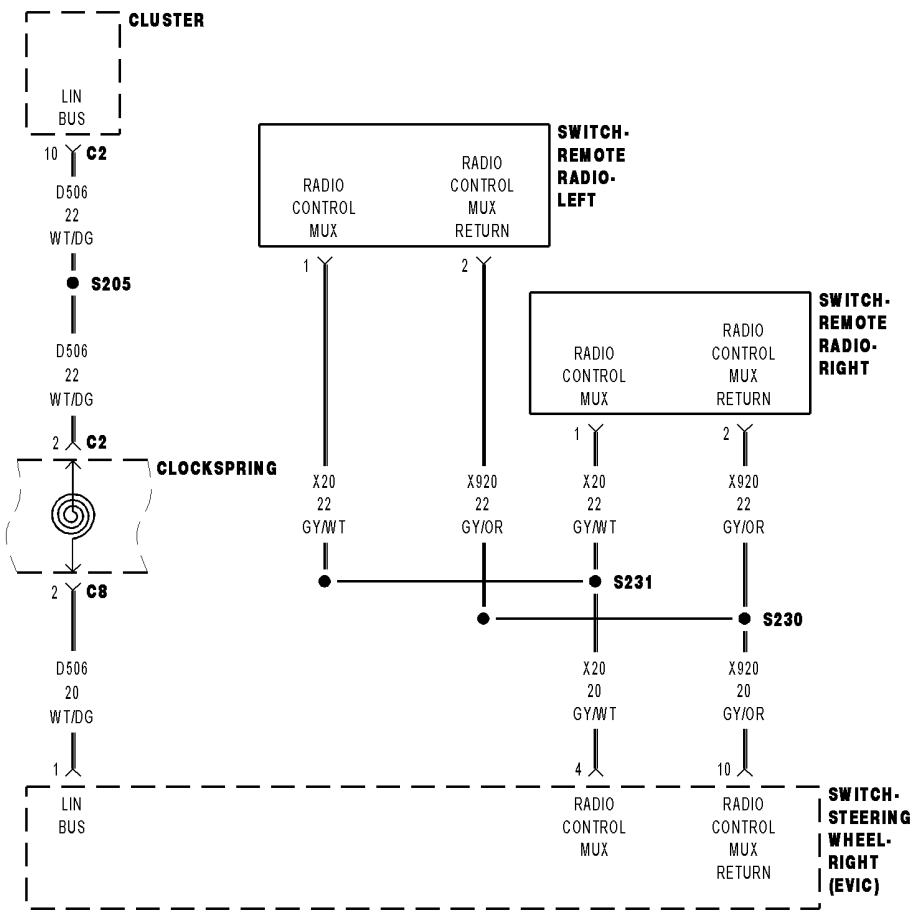

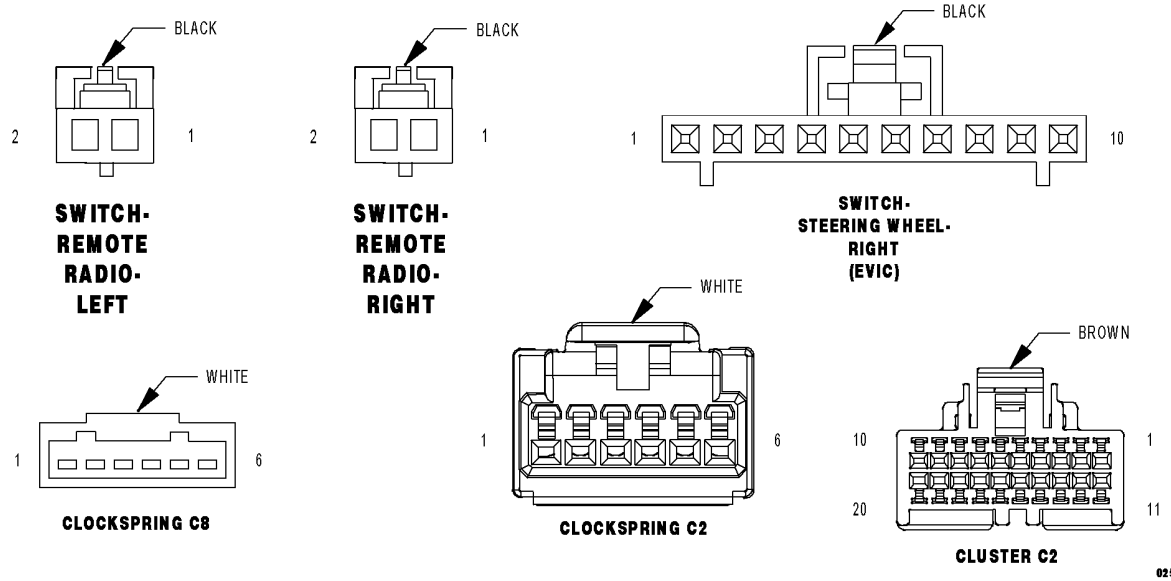

For a complete wiring diagram, **refer to the Wiring Information**.

- **When Monitored:**
  With the ignition on.
- **Set Condition:**
  The Cluster detects a stuck switch state on the (X20) Radio Control MUX (multiplex) circuit for more than 30 seconds.

Possible Causes
(X20) RADIO CONTROL MUX CIRCUIT SHORTED TO GROUND
LEFT REMOTE RADIO SWITCH
RIGHT REMOTE RADIO SWITCH
RIGHT STEERING WHEEL SWITCH

1. CHECK FOR ACTIVE DTC

NOTE: Before proceeding with this diagnostic procedure, verify the Left and Right Multifunction Switch and Clockspring harness connectors are properly seated and verify proper pin terminal tension. A loose connection at any of these connectors may cause this DTC to set.

1. Turn the ignition on.
2. With the scan tool, read the active DTCs.

Does the scan tool display this DTC as active?

Yes

- Go To 2

No

- Test complete, the condition or conditions that originally set this DTC are not present at this time. Using the wiring diagrams as a guide, check all related splices and connectors for signs of water intrusion, corrosion, pushed out or bent terminals, and correct pin tension.

2. LEFT REMOTE RADIO SWITCH

1. Turn the ignition off.
2. Disconnect the Left Remote Radio Switch harness connector.
3. Turn the ignition on.
4. With the scan tool, read the active DTCs.

Does the scan tool display this DTC as active?

Yes

- Go To 3

No

- Replace the Left Remote Radio Switch in accordance with the Service Information.
- Perform the BODY VERIFICATION TEST. (Refer to 28 - DTC-Based Diagnostics/MODULE, Totally Integrated Power (TIPM) - Standard Procedure).

3. RIGHT REMOTE RADIO SWITCH

1. Turn the ignition off.
2. Disconnect the Right Remote Radio Switch harness connector.
3. Turn the ignition on.
4. With the scan tool, read the active DTCs.

Does the scan tool display this DTC as active?

Yes

- Go To 4

No

- Replace the Right Remote Radio Switch in accordance with the Service Information.
- Perform the BODY VERIFICATION TEST. (Refer to 28 - DTC-Based Diagnostics/MODULE, Totally Integrated Power (TIPM) - Standard Procedure).

4. (X20) RADIO CONTROL MUX CIRCUIT SHORTED TO GROUND

1. Turn the ignition off.
2. Disconnect the Right Steering Wheel Switch harness connector.
3. Measure the resistance between ground and the (X20) Radio Control MUX circuit.

Is the resistance below 5.0 Ohms?

Yes

- Repair the (X20) Radio Control MUX circuit for a short to ground.
- Perform the BODY VERIFICATION TEST. (Refer to 28 - DTC-Based Diagnostics/MODULE, Totally Integrated Power (TIPM) - Standard Procedure).

No

- Replace the Right Steering Wheel Switch in accordance with the Service Information.
- Perform the BODY VERIFICATION TEST. (Refer to 28 - DTC-Based Diagnostics/MODULE, Totally Integrated Power (TIPM) - Standard Procedure).

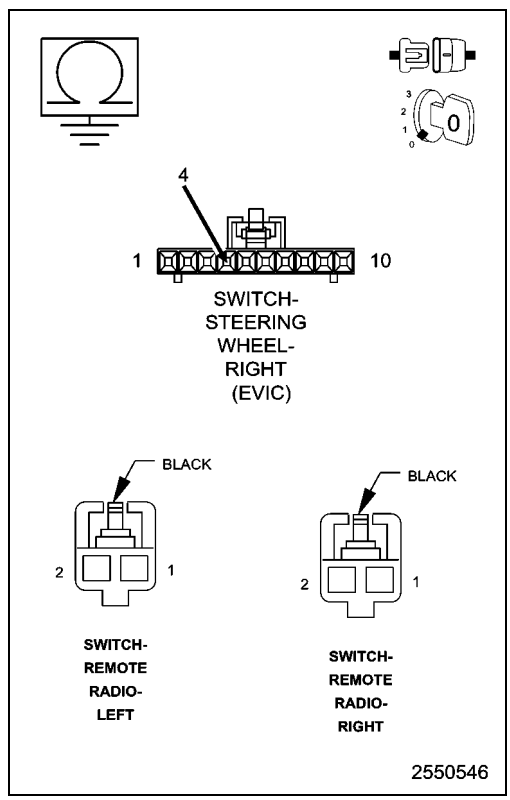

B1502-STEERING WHEEL CONTROL DOWN SWITCH PERFORMANCE

For a complete wiring diagram, **refer to the Wiring Information**.

- **When Monitored:**
  With the ignition on.
- **Set Condition:**
  The Cluster detects the Steering Wheel Control Down Switch active for greater than 20 seconds.

Possible Causes
LEFT STEERING WHEEL SWITCH

1. CHECK FOR AN ACTIVE DTC

NOTE: Before proceeding with this diagnostic procedure, verify the Left and Right Multifunction Switch and Clockspring harness connectors are properly seated and verify proper pin terminal tension. A loose connection at any of these connectors may cause this DTC to set.

1. Turn the ignition on.
2. With the scan tool, read DTCs.

Does the scan tool display this DTC as active?

Yes

- Replace the Left Steering Wheel Switch in accordance with the Service Information.
- Perform the BODY VERIFICATION TEST. (Refer to 28 - DTC-Based Diagnostics/MODULE, Totally Integrated Power (TIPM) - Standard Procedure).

No

- Test complete, the condition or conditions that originally set this DTC are not present at this time. Using the wiring diagrams as a guide, check all related splices and connectors for signs of water intrusion, corrosion, pushed out or bent terminals, and correct pin tension.

B1503-STEERING WHEEL CONTROL RIGHT SWITCH PERFORMANCE

For a complete wiring diagram, **refer to the Wiring Information**.

- **When Monitored:**
  With the ignition on.
- **Set Condition:**
  The Cluster detects the Steering Wheel Control Right Switch active for greater than 20 seconds.

Possible Causes
LEFT STEERING WHEEL SWITCH

1. CHECK FOR AN ACTIVE DTC

NOTE: Before proceeding with this diagnostic procedure, verify the Left and Right Multifunction Switch and Clockspring harness connectors are properly seated and verify proper pin terminal tension. A loose connection at any of these connectors may cause this DTC to set.

1. Turn the ignition on.
2. With the scan tool, read DTCs.

Does the scan tool display this DTC as active?

Yes

- Replace the Left Steering Wheel Switch in accordance with the Service Information.
- Perform the BODY VERIFICATION TEST. (Refer to 28 - DTC-Based Diagnostics/MODULE, Totally Integrated Power (TIPM) - Standard Procedure).

No

- Test complete, the condition or conditions that originally set this DTC are not present at this time. Using the wiring diagrams as a guide, check all related splices and connectors for signs of water intrusion, corrosion, pushed out or bent terminals, and correct pin tension.

B1607-HEADLAMP SWITCH INPUT CIRCUIT LOW

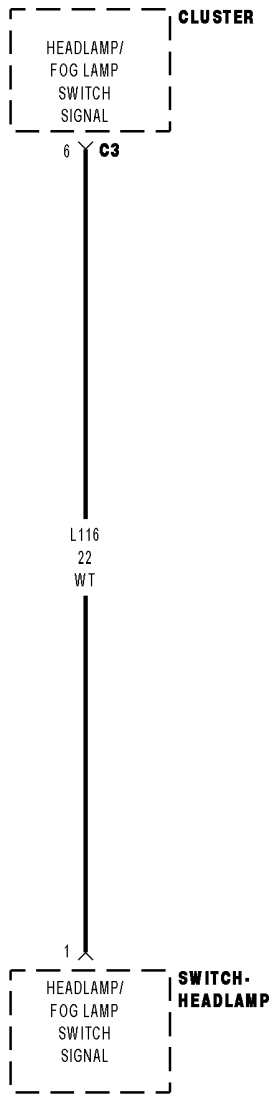

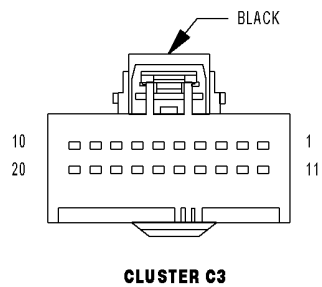

CLUSTER C3

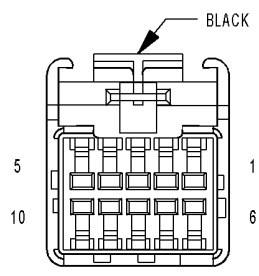

SWITCH-
HEADLAMP

01409144

For a complete wiring diagram, **refer to the Wiring Information**.

- **When Monitored:**
  With the ignition on.
- **Set Condition:**
  The Cluster detects a low condition in the Headlamp/fog lamp switch signal circuit.

Possible Causes
HEADLAMP SWITCH
(L116) HEADLAMP / FOG LAMP SWITCH SIGNAL CIRCUIT SHORTED TO GROUND
CLUSTER

1. CHECK FOR ACTIVE DTC

1. Turn the ignition on.
2. Turn the Headlamps on.
3. With the scan tool, read the DTCs.

Does the scan tool display this DTC as active?

Yes

- Go To 2

No

- The condition that caused the symptom is currently not present. Inspect the related wiring for a possible intermittent condition. Look for any chafed, pierced, pinched, or partially broken wires.
- Perform the BODY VERIFICATION TEST. (Refer to 28 - DTC-Based Diagnostics/MODULE, Totally Integrated Power (TIPM) - Standard Procedure).

2. HEADLAMP SWITCH

1. Disconnect the Headlamp Switch harness connector.
2. Turn the ignition on.
3. Measure the voltage of the (L116) Headlamp / Fog Lamp Switch Signal circuit.

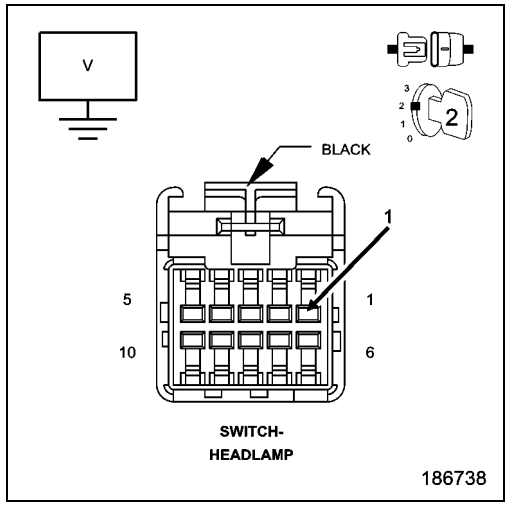

Does the voltage read 5.0 volts?

Yes

- Replace the Headlamp Switch in accordance with the Service Information.
- Perform the BODY VERIFICATION TEST. (Refer to 28 - DTC-Based Diagnostics/MODULE, Totally Integrated Power (TIPM) - Standard Procedure).

No

- Go To 3

3. (L116) HEADLAMP / FOG LAMP SWITCH SIGNAL CIRCUIT SHORTED TO GROUND

1. Turn the ignition off.
2. Disconnect the Headlamp Switch harness connector.
3. Disconnect the Instrument Cluster C3 harness connector.
4. Measure the resistance of the (L116) Headlamp Switch Signal circuit to ground.

Is the resistance below 5.0 Ohms?

Yes

- Repair short to ground on the (L116) Headlamp / Fog Lamp Switch Signal circuit.
- Perform the BODY VERIFICATION TEST. (Refer to 28 - DTC-Based Diagnostics/MODULE, Totally Integrated Power (TIPM) - Standard Procedure).

No

- Replace the Cluster in accordance with the Service Information.
- Perform the BODY VERIFICATION TEST. (Refer to 28 - DTC-Based Diagnostics/MODULE, Totally Integrated Power (TIPM) - Standard Procedure).

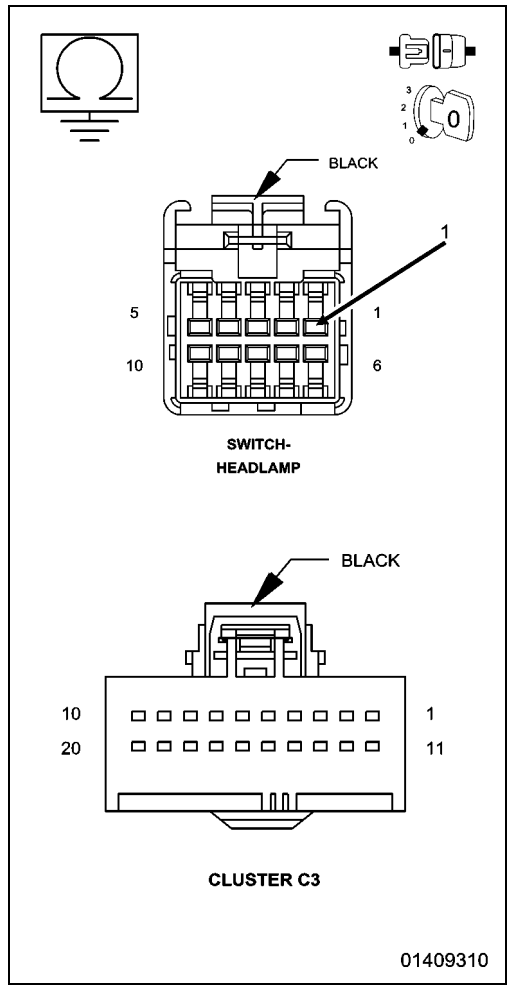

B1608-HEADLAMP SWITCH INPUT CIRCUIT HIGH

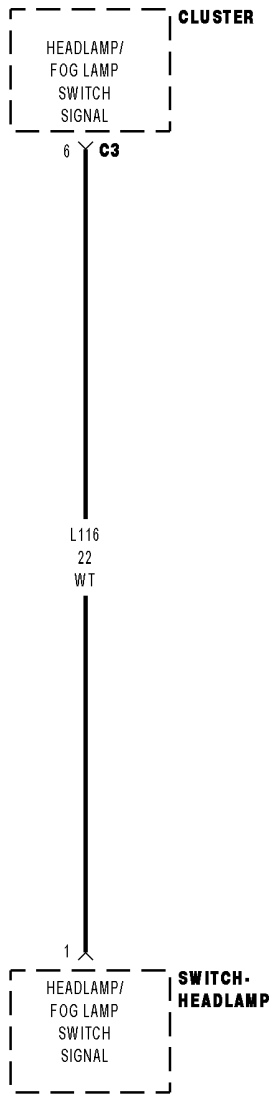

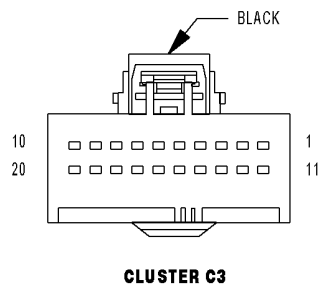

CLUSTER C3

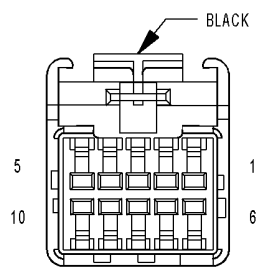

SWITCH-
HEADLAMP

01409144

For a complete wiring diagram, **refer to the Wiring Information**.

- **When Monitored:**
  With the ignition on.
- **Set Condition:**
  The Cluster detects a high condition in the Headlamp/fog lamp switch signal circuit.

Possible Causes
(L116) HEADLAMP / FOG LAMP SWITCH SIGNAL CIRCUIT OPEN OR SHORTED TO VOLTAGE
HEADLAMP SWITCH
CLUSTER

1. CHECK FOR ACTIVE DTC

1. Turn the ignition on.
2. Turn the Headlamps on.
3. With the scan tool, read the DTCs.

Does the scan tool display this DTC as active?

Yes

- Go To 2

No

- The condition that caused the symptom is currently not present. Inspect the related wiring for a possible intermittent condition. Look for any chafed, pierced, pinched, or partially broken wires.
- Perform the BODY VERIFICATION TEST. (Refer to 28 - DTC-Based Diagnostics/MODULE, Totally Integrated Power (TIPM) - Standard Procedure).

2. (L116) HEADLAMP / FOG LAMP SWITCH SIGNAL CIRCUIT SHORTED TO VOLTAGE

1. Turn the ignition off.
2. Disconnect the Headlamp Switch harness connector.
3. Turn the ignition on.
4. Measure the voltage of the (L116) Headlamp / Fog Lamp Switch Signal circuit.

Is the voltage above 10.0 volts?

Yes

- Repair the (L116) Headlamp / Fog Lamp Switch Signal circuit for a short to voltage.
- Perform the BODY VERIFICATION TEST. (Refer to 28 - DTC-Based Diagnostics/MODULE, Totally Integrated Power (TIPM) - Standard Procedure).

No

- Go To 3

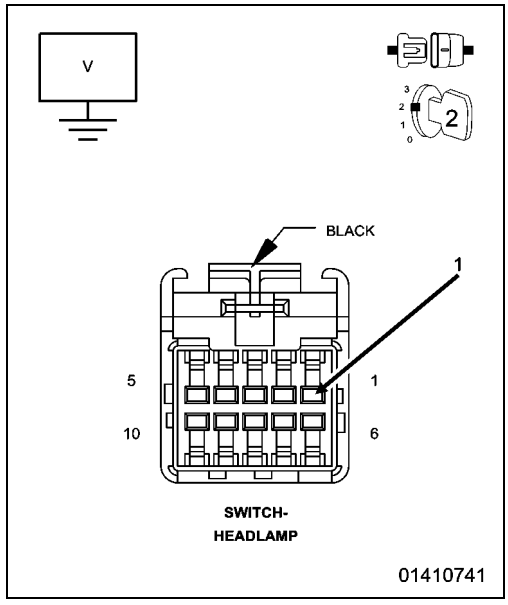

3. HEADLAMP SWITCH

1. Turn the ignition off.
2. Disconnect the Headlamp Switch harness connector.
3. Connect a jumper wire to the (L116) Headlamp / Fog Lamp Switch Signal circuit at the Headlamp Switch harness connector.
4. Turn the ignition on.
5. With the scan tool, read the DTCs.

Does the scan tool display DTC: B1607-HEADLAMP SWITCH INPUT CIRCUIT LOW?

Yes

- Replace the Headlamp Switch in accordance with the Service Information.
- Perform the BODY VERIFICATION TEST. (Refer to 28 - DTC-Based Diagnostics/MODULE, Totally Integrated Power (TIPM) - Standard Procedure).

No

- Go To 4

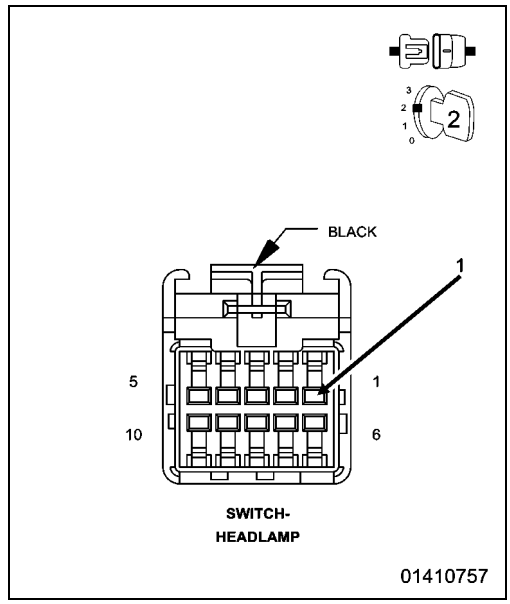

4. (L116) HEADLAMP / FOG LAMP SWITCH SIGNAL CIRCUIT OPEN

1. Turn the ignition off.
2. Disconnect the Headlamp Switch harness connector.
3. Disconnect the Cluster C3 harness connector.
4. Measure the resistance of the (L116) Headlamp / Fog Lamp Switch Signal circuit.

Is the resistance below 5.0 Ohms?

Yes

- Replace the Cluster in accordance with the Service Information.
- Perform the BODY VERIFICATION TEST. (Refer to 28 - DTC-Based Diagnostics/MODULE, Totally Integrated Power (TIPM) - Standard Procedure).

No

- Repair the (L116) Headlamp / Fog Lamp Switch Signal circuit for an open.
- Perform the BODY VERIFICATION TEST. (Refer to 28 - DTC-Based Diagnostics/MODULE, Totally Integrated Power (TIPM) - Standard Procedure).

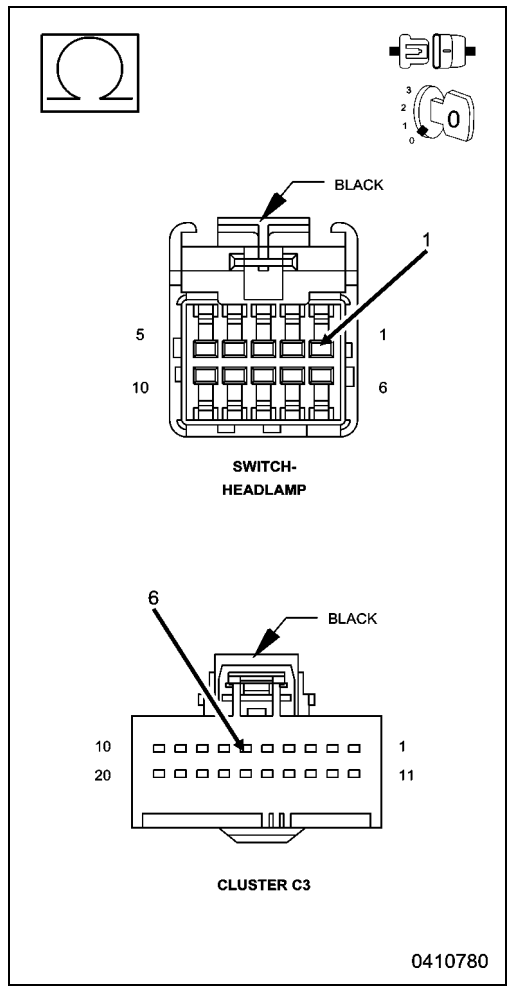

B160A-PANEL DIMMER INPUT CIRCUIT LOW

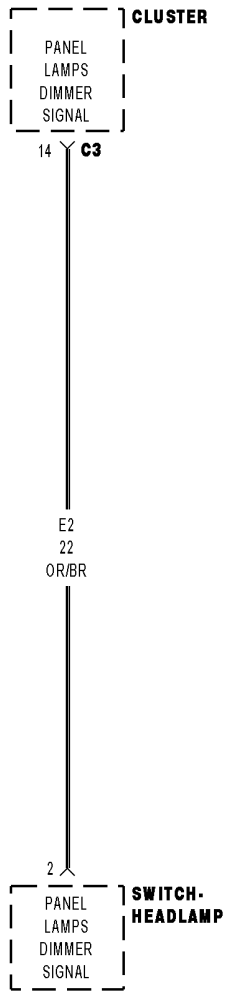

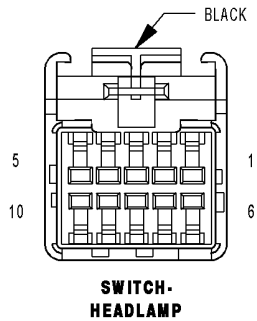

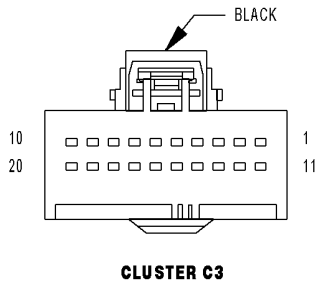

01410030

For a complete wiring diagram, **refer to the Wiring Information**.

- **When Monitored:**
  With the Cluster awake.
- **Set Condition:**
  Panel Dimmer Input less than 0.5 of a volt.

Possible Causes
(E2) PANEL LAMPS DIMMER SIGNAL CIRCUIT SHORTED TO GROUND
HEADLAMP SWITCH
CLUSTER

1. CHECK FOR AN ACTIVE DTC

1. Turn the ignition on.
2. With the scan tool, record and erase DTCs.
3. Activate the Panel Dimmer Switch.
4. Wait 30 seconds.
5. With the scan tool, read DTCs.

Is the DTC active?

Yes

- Go To 2

No

- The condition that caused this code to set is not present at this time. Check for an intermittent condition by inspecting the related wiring harness for chafed, pierced, pinched, and partially broken wires. Also inspect the related connectors for broken, bent, pushed out, spread, corroded, or contaminated terminals.
- Perform the BODY VERIFICATION TEST. (Refer to 28 - DTC-Based Diagnostics/MODULE, Totally Integrated Power (TIPM) - Standard Procedure).

2. CHECK OPERATION OF HEADLAMP SWITCH

1. Disconnect the Headlamp Switch harness connector.
2. With the scan tool, read Cluster DTCs.

Is the DTC active?

Yes

- Go To 3

No

- Replace the Headlamp Switch in accordance with the Service Information.
- Perform the BODY VERIFICATION TEST. (Refer to 28 - DTC-Based Diagnostics/MODULE, Totally Integrated Power (TIPM) - Standard Procedure).

3. CHECK THE (E2) PANEL LAMPS DIMMER SIGNAL CIRCUIT FOR A SHORT TO GROUND

1. Turn the ignition off.
2. Disconnect the Cluster C3 harness connector.
3. Measure the resistance between ground and the (E2) Panel Lamps Dimmer Signal circuit.

Is the resistance below 10K Ohms?

Yes

- Repair the (E2) Panel Lamps Dimmer Signal circuit for a short to ground.
- Perform the BODY VERIFICATION TEST. (Refer to 28 - DTC-Based Diagnostics/MODULE, Totally Integrated Power (TIPM) - Standard Procedure).

No

- Replace the Cluster in accordance with the Service Information.
- Perform the BODY VERIFICATION TEST. (Refer to 28 - DTC-Based Diagnostics/MODULE, Totally Integrated Power (TIPM) - Standard Procedure).

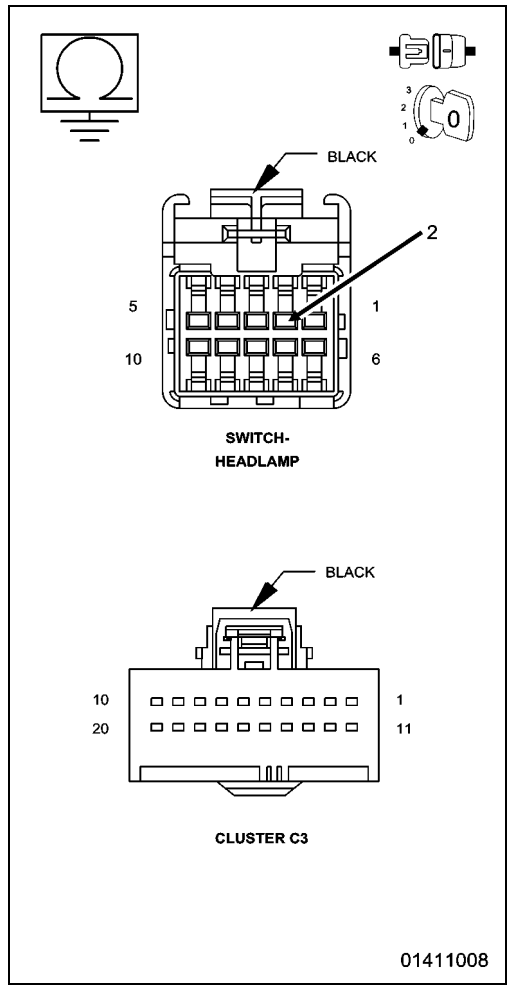

B160B-PANEL DIMMER INPUT CIRCUIT HIGH

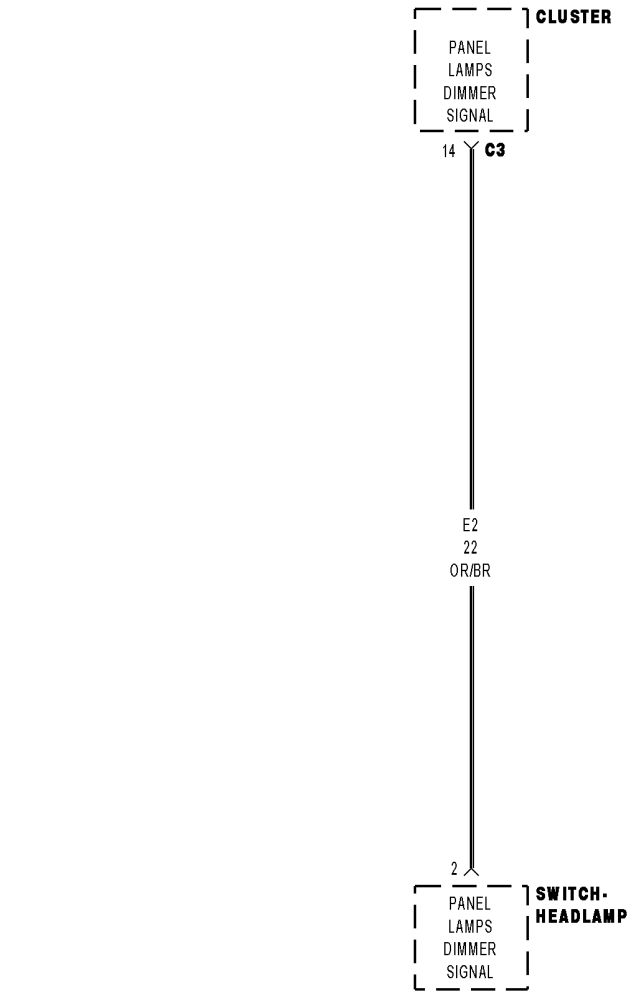

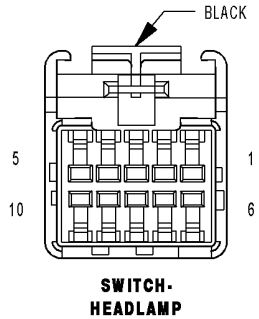

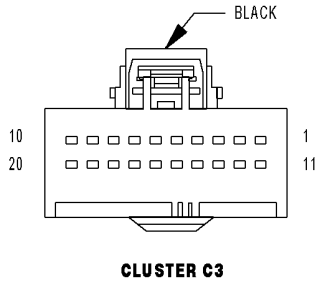

01410830

For a complete wiring diagram, **refer to the Wiring Information**.

- **When Monitored:**
  With the ignition on.
- **Set Condition:**
  Panel Dimmer signal is greater than 4.8 volts.

Possible Causes
(E2) PANEL LAMPS DIMMER SIGNAL CIRCUIT SHORTED TO VOLTAGE
(E2) PANEL LAMPS DIMMER SIGNAL CIRCUIT OPEN
HEADLAMP SWITCH

1. CHECK FOR AN ACTIVE DTC

1. Turn the ignition on.
2. With the scan tool, record and erase DTCs.
3. Activate the Panel Dimmer Switch.
4. Wait 30 seconds.
5. With the scan tool, read DTCs.

Is the DTC active?

Yes

- Go To 2

No

- The condition that caused this code to set is not present at this time. Check for an intermittent condition by inspecting the related wiring harness for chafed, pierced, pinched, and partially broken wires. Also inspect the related connectors for broken, bent, pushed out, spread, corroded, or contaminated terminals.
- Perform the BODY VERIFICATION TEST. (Refer to 28 - DTC-Based Diagnostics/MODULE, Totally Integrated Power (TIPM) - Standard Procedure).

2. CHECK THE (E2) PANEL LAMPS DIMMER SIGNAL CIRCUIT FOR A SHORT TO VOLTAGE

1. Turn the ignition off.
2. Disconnect the Headlamp Switch harness connectors.
3. Turn the ignition on.
4. Measure the voltage on the (E2) Panel Lamps Dimmer Signal circuit.

Is the voltage greater than 10.0 volts?

Yes

- Repair the (E2) Panel Lamps Dimmer Signal circuit for a short to voltage.
- Perform the BODY VERIFICATION TEST. (Refer to 28 - DTC-Based Diagnostics/MODULE, Totally Integrated Power (TIPM) - Standard Procedure).

No

- Go To 3

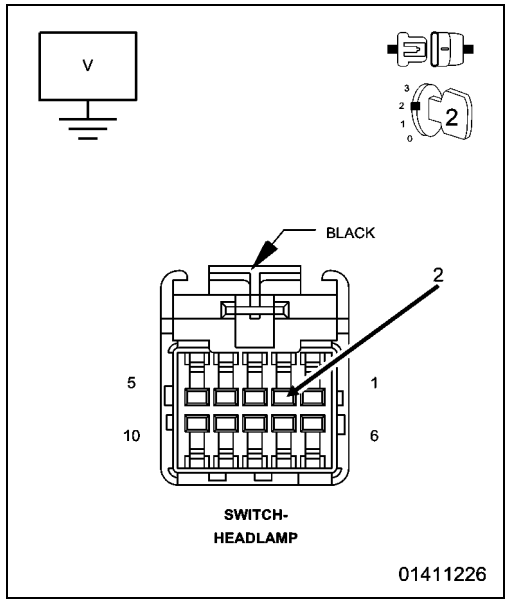

3. CHECK THE OPERATION OF THE PANEL LAMPS DIMMER SWITCH

1. Turn the ignition off.
2. Connect a jumper wire at the Headlamp Switch harness connector between the (E2) Panel Lamps Dimmer Signal circuit and ground.
3. Turn the ignition on.
4. With the scan tool, read DTCs.

Does the Scan tool display-B160A-PANEL DIMMER INPUT CIRCUIT LOW?

Yes

- Replace the Headlamp Switch in accordance with the Service Information.
- Perform the BODY VERIFICATION TEST. (Refer to 28 - DTC-Based Diagnostics/MODULE, Totally Integrated Power (TIPM) - Standard Procedure).

No

- Go To 4

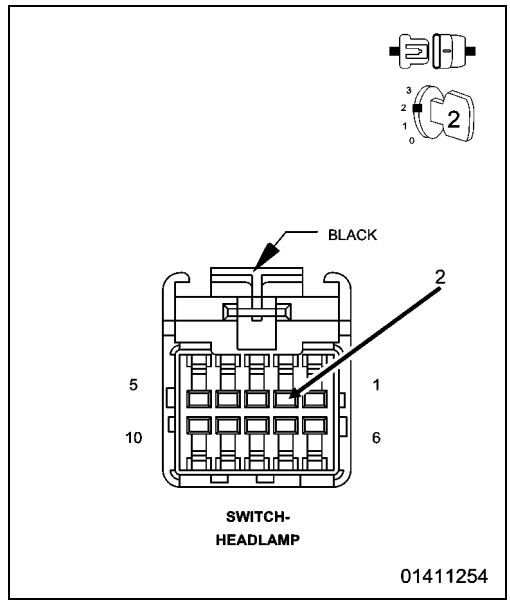

4. CHECK THE (E2) PANEL LAMPS DIMMER SIGNAL CIRCUIT FOR AN OPEN

1. Turn the ignition off.
2. Disconnect the Cluster C3 harness connector.
3. Measure the resistance of the (E2) Panel Lamps Dimmer Signal circuit between the Cluster C3 harness connector and the Headlamp Switch harness connector.

Is the resistance above 5.0 Ohms?

Yes

- Repair the (E2) Panel Lamps Dimmer Signal circuit for an open.
- Perform the BODY VERIFICATION TEST. (Refer to 28 - DTC-Based Diagnostics/MODULE, Totally Integrated Power (TIPM) - Standard Procedure).

No

- Replace the Cluster in accordance with the Service Information.
- Perform the BODY VERIFICATION TEST. (Refer to 28 - DTC-Based Diagnostics/MODULE, Totally Integrated Power (TIPM) - Standard Procedure).

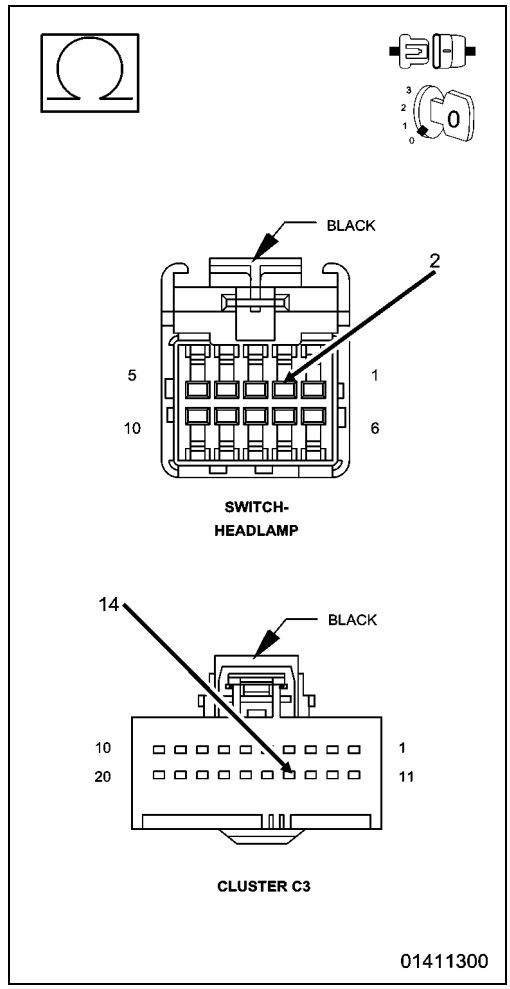

■ B168F-FRONT FOG LAMP SWITCH CIRCUIT STUCK

For a complete wiring diagram, **refer to the Wiring Information**.

- **When Monitored:**
  With the ignition on.
- **Set Condition:**
  When the Cluster detects a Fog Lamp Switch Stuck message.

Possible Causes
HEADLAMP SWITCH

1. TEST FOR INTERMITTENT CONDITION

1. Turn the ignition on.
2. Turn the Headlamps on.
3. Operate the Fog Lamp Switch several times.
4. Turn the ignition on and wait 30 seconds.
5. Using the scan tool, read DTCs.

Does the scan tool display: B168F-FRONT FOG LAMP SWITCH CIRCUIT STUCK?

Yes

- Replace the Headlamp Switch in accordance with the Service Information.
- Perform the BODY VERIFICATION TEST. (Refer to 28 - DTC-Based Diagnostics/MODULE, Totally Integrated Power (TIPM) - Standard Procedure).

No

- Test complete, the condition or conditions that originally set this DTC are not present at this time. Using the wiring diagrams as a guide, check all related splices and connectors for signs of water intrusion, corrosion, pushed out or bent terminals, and correct pin tension.

B169C-CARGO LAMP SWITCH STUCK

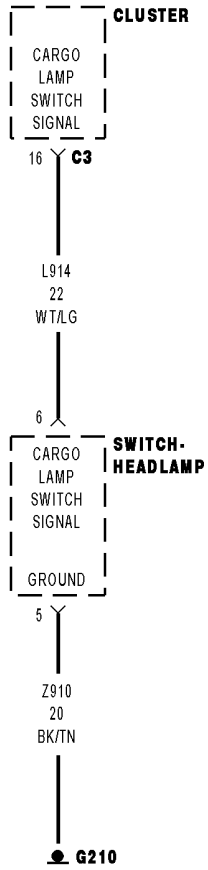

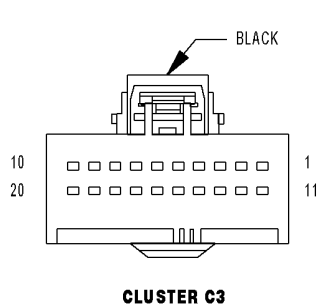

CLUSTER C3

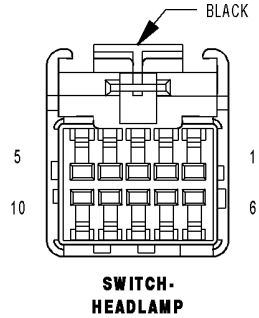

SWITCH-HEADLAMP

01440054

For a complete wiring diagram, **refer to the Wiring Information**.

- **When Monitored:**
  With the Cargo Lamps on.
- **Set Condition:**
  When the Cluster detects a low condition on the Cargo Lamp Return circuit.

Possible Causes
(L914) CARGO LAMP SWITCH SIGNAL CIRCUIT SHORTED TO GROUND
(L914) CARGO LAMP SWITCH SIGNAL CIRCUIT SHORTED TO THE (Z910) GROUND CIRCUIT
HEADLAMP SWITCH
CLUSTER

1. CHECK FOR AN ACTIVE DTC

1. Turn the ignition on.
2. Operate the Cargo Lamp Switch several times.
3. With the scan tool, read DTCs.

Does the scan tool display this DTC as active?

Yes

- Go To 2

No

- The conditions that caused this code to set are not present at this time. Using the wiring diagram/schematic as a guide, inspect the wiring and connectors.
- Perform the BODY VERIFICATION TEST. (Refer to 28 - DTC-Based Diagnostics/MODULE, Totally Integrated Power (TIPM) - Standard Procedure).

2. HEADLAMP SWITCH SHORTED

1. With the scan tool, erase DTCs.
2. Disconnect the Headlamp Switch connector.
3. With the scan tool, read DTCs.

Does the scan tool display this DTC as active?

Yes

- Go To 3

No

- Replace the Headlamp Switch in accordance with the Service Information.
- Perform the BODY VERIFICATION TEST. (Refer to 28 - DTC-Based Diagnostics/MODULE, Totally Integrated Power (TIPM) - Standard Procedure).

3. (L914) CARGO LAMP SWITCH RETURN CIRCUIT SHORTED TO GROUND

1. Turn the ignition off.
2. Disconnect the Cluster C3 harness connector.
3. Measure the resistance between ground and the (L914) Cargo Lamp Switch Return circuit.

Is the resistance below 5 Ohms?

Yes

- Repair the (L914) Cargo Lamp Switch Return circuit for a short to ground.
- Perform the BODY VERIFICATION TEST. (Refer to 28 - DTC-Based Diagnostics/MODULE, Totally Integrated Power (TIPM) - Standard Procedure).

No

- Go To 4

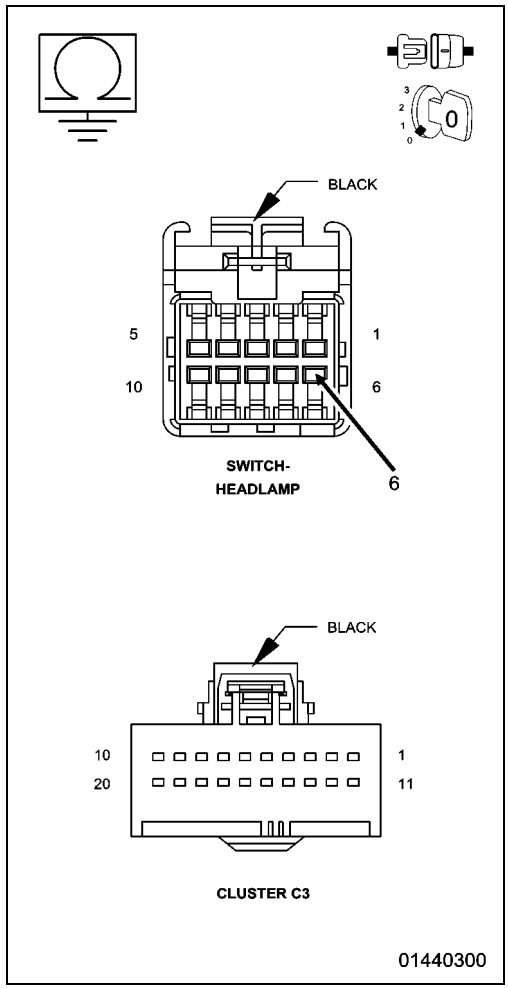

4. (L914) CARGO LAMP SWITCH RETURN CIRCUIT SHORT TO THE (Z910) GROUND CIRCUIT

1. Measure the resistance between the (L914) Cargo Lamp Switch Return circuit and the (Z407) Ground circuit.

Is the resistance below 5 Ohms?

Yes

- Repair the (L914) Cargo Lamp Switch Return circuit for a short to the (Z407) ground circuit.
- Perform the BODY VERIFICATION TEST. (Refer to 28 - DTC-Based Diagnostics/MODULE, Totally Integrated Power (TIPM) - Standard Procedure).

No

- Replace the Cluster in accordance with the Service Information.
- Perform the BODY VERIFICATION TEST. (Refer to 28 - DTC-Based Diagnostics/MODULE, Totally Integrated Power (TIPM) - Standard Procedure).

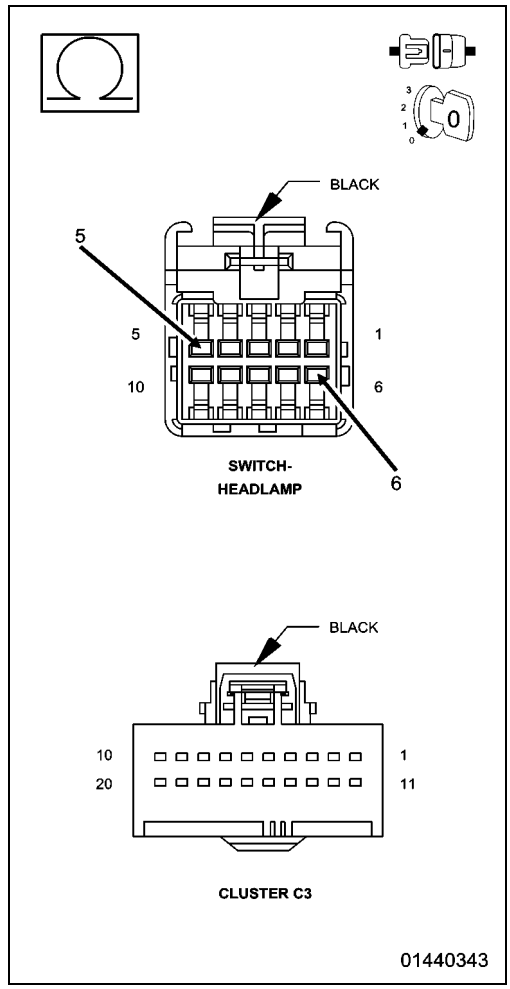

B17E3-TURN SIGNAL SWITCH PERFORMANCE

For a complete wiring diagram, **refer to the Wiring Information**.

- **When Monitored:**
  With the ignition on.
- **Set Condition:**
  The Cluster detects the Turn Signal function inoperative.

Possible Causes
MULTIFUNCTION SWITCH

1. CHECK FOR AN ACTIVE DTC

NOTE: Before proceeding with this diagnostic procedure, verify the Multifunction Switch and Clockspring harness connectors are properly seated and verify proper pin terminal tension. A loose connection at any of these connectors may cause this DTC to set.

1. Turn the ignition on.
2. Actuate the left and right turn signals with the Multifunction Switch.
3. With the scan tool, read DTCs.

Does the scan tool display this DTC as Active?

Yes

- Replace the Multifunction Switch in accordance with the Service Information.
- Perform the BODY VERIFICATION TEST. (Refer to 28 - DTC-Based Diagnostics/MODULE, Totally Integrated Power (TIPM) - Standard Procedure).

No

- Test complete, the condition or conditions that originally set this DTC are not present at this time. Using the wiring diagrams as a guide, check all related splices and connectors for signs of water intrusion, corrosion, pushed out or bent terminals, and correct pin tension.

■ B2301-WIPER MODE SWITCH INPUT CIRCUIT LOW

For a complete wiring diagram, **refer to the Wiring Information**.

- **When Monitored:**
  With the ignition on.
- **Set Condition:**
  The Cluster detects the Wiper Mode Switch Input circuit voltage is less than the expected value.

Possible Causes
MULTIFUNCTION SWITCH

1. CHECK FOR AN ACTIVE DIAGNOSTIC TROUBLE CODE (DTC)

NOTE: Before proceeding with this diagnostic procedure, verify the Multifunction Switch and Clockspring harness connectors are properly seated and verify proper pin terminal tension. A loose connection at any of these connectors may cause this DTC to set.

1. Turn the ignition on.
2. Turn the Wipers on and off three times.
3. Using the scan tool, read DTCs.

Does the scan tool display this DTC as active?

Yes

- Replace the Multifunction Switch in accordance with the Service Information. (Refer to 08 - Electrical/8L - Lamps and Lighting/Lamps/Lighting - Exterior/SWITCH, Multifunction - Removal).
- Perform the BODY VERIFICATION TEST. (Refer to 28 - DTC-Based Diagnostics/MODULE, Totally Integrated Power (TIPM) - Standard Procedure).

No

- Test complete, the condition or conditions that originally set this DTC are not present at this time. Using the wiring diagrams as a guide, check all related splices and connectors for signs of water intrusion, corrosion, pushed out or bent terminals, and correct pin tension.

■ B2307-WASHER SWITCH INPUT CIRCUIT LOW

For a complete wiring diagram, **refer to the Wiring Information**.

- **When Monitored:**
  With the ignition on.
- **Set Condition:**
  When the Cluster detects a low condition on the Washer Switch Input Circuit.

Possible Causes
MULTIFUNCTION SWITCH

1. CHECK FOR AN ACTIVE DIAGNOSTIC TROUBLE CODE (DTC)

NOTE: Before proceeding with this diagnostic procedure, verify the Multifunction Switch and Clockspring harness connectors are properly seated and verify proper pin terminal tension. A loose connection at any of these connectors may cause this DTC to set.

1. Turn the ignition on.
2. Actuate the Washer Switch.
3. Using the scan tool, read DTCs.

Does the scan tool display this DTC as active?

Yes

- Replace the Multifunction Switch in accordance with the Service Information. (Refer to 08 - Electrical/8L - Lamps and Lighting/Lamps/Lighting - Exterior/SWITCH, Multifunction - Removal).
- Perform the BODY VERIFICATION TEST. (Refer to 28 - DTC-Based Diagnostics/MODULE, Totally Integrated Power (TIPM) - Standard Procedure).

No

- Test complete, the condition or conditions that originally set this DTC are not present at this time. Using the wiring diagrams as a guide, check all related splices and connectors for signs of water intrusion, corrosion, pushed out or bent terminals, and correct pin tension.

B2339-HORN SWITCH STUCK - WITH EVIC

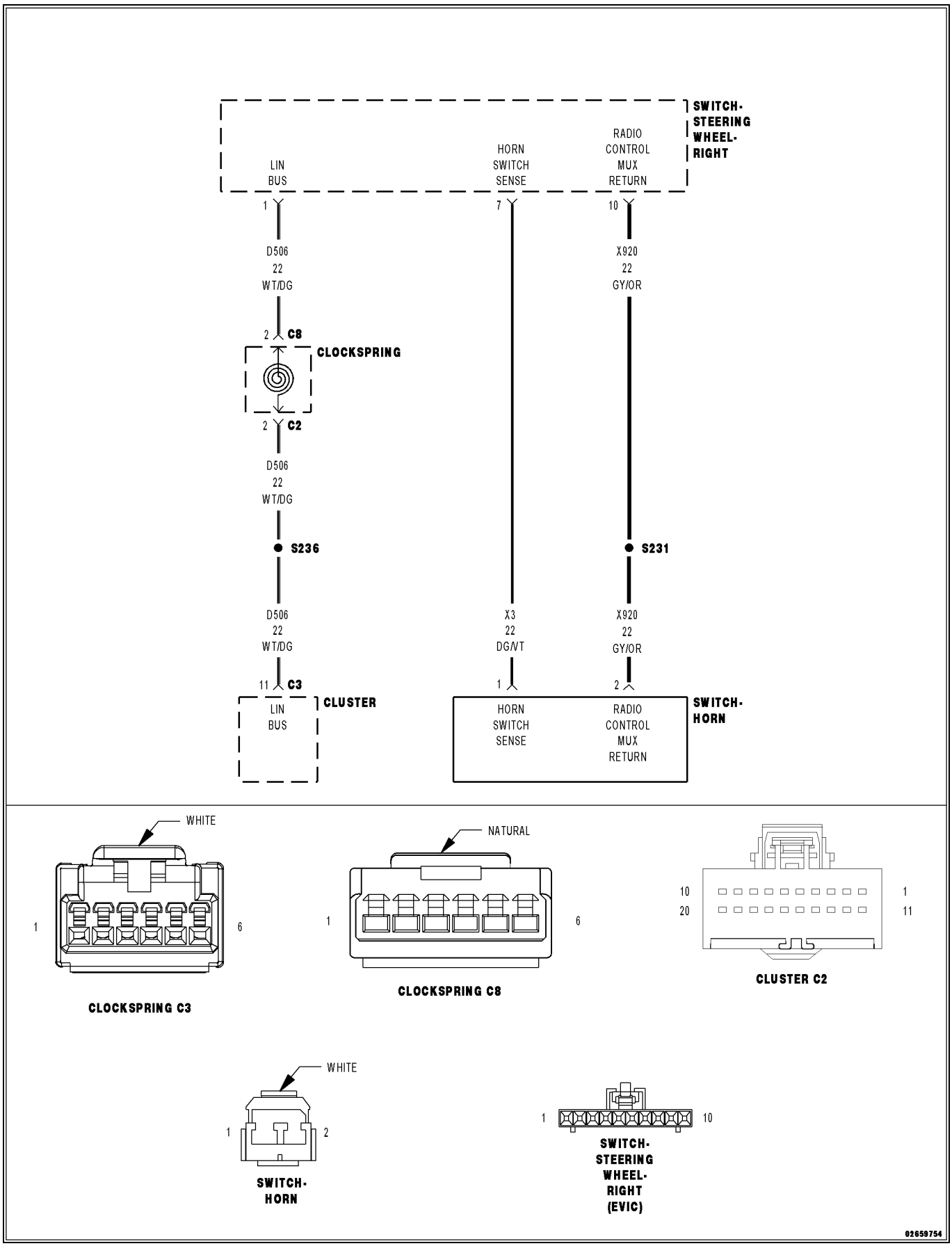

For a complete wiring diagram, **refer to the Wiring Information**.

Theory of Operation

The Horn Switch is connected to the Right Steering Switch. The switching status is transferred from the Right Steering Switch to the Cluster (CCN) by way of the LIN bus, a serial sub-bus.

- **When Monitored:**
  Continuously.
- **Set Condition:**
  When the Cluster senses the Horn Switch input for more than 50 seconds.

Possible Causes
(X3) HORN SWITCH SENSE CIRCUIT SHORTED TO GROUND
RIGHT STEERING WHEEL SWITCH
HORN SWITCH

1. TEST FOR INTERMITTENT CONDITION

NOTE: Before proceeding with this diagnostic procedure, verify the Left and Right Multifunction Switch and Clockspring harness connectors are properly seated and verify proper pin terminal tension. A loose connection at any of these connectors may cause this DTC to set.

1. Turn the ignition on.
2. With the scan tool, read DTCs.

Does the scan tool display this DTC as active?

Yes

- Go To 2

No

- Test complete, the condition or conditions that originally set this DTC are not present at this time. Using the wiring diagrams as a guide, check all related splices and connectors for signs of water intrusion, corrosion, pushed out or bent terminals, and correct pin tension.

2. CHECK FOR A SHORTED HORN SWITCH

WARNING: To avoid possible serious or fatal injury, turn the ignition off, disconnect the battery and wait two minutes before proceeding.

1. Remove the Driver Airbag in accordance with the Service Information.
2. Disconnect the Horn switch connector.

NOTE: Before proceeding, thoroughly inspect the wiring harness and connectors between the Horn Switch and the Right Steering Wheel Switch. Look for chafed, pierced, pinched, or partially broken wires and broken, bent, pushed out, spread, corroded, or contaminated terminals.

WARNING: Turn the ignition on, then reconnect the 12-volt battery and wait two minutes before proceeding. Failure to follow these instructions may result in possible serious or fatal injury.

3. With the scan tool, read DTCs.

Does the scan tool display this DTC as active?

Yes

- Go To 3

No

- Replace the Horn Switch in accordance with the Service Information.
- Perform the BODY VERIFICATION TEST. (Refer to 28 - DTC-Based Diagnostics/MODULE, Totally Integrated Power (TIPM) - Standard Procedure).

3. CHECK (X3) HORN SWITCH SENSE CIRCUIT FOR A SHORT TO GROUND

1. Turn the ignition off.
2. Disconnect the Right Steering Wheel Switch harness connector.
3. Measure the resistance of the (X3) Horn Switch Sense circuit between ground and the Right Steering Wheel Switch harness connector.

Is the resistance below 10k Ohms?

Yes

- Repair the short to ground in the (X3) Horn Switch Sense circuit.
- Perform the BODY VERIFICATION TEST. (Refer to 28 - DTC-Based Diagnostics/MODULE, Totally Integrated Power (TIPM) - Standard Procedure).

No

- Go To 4

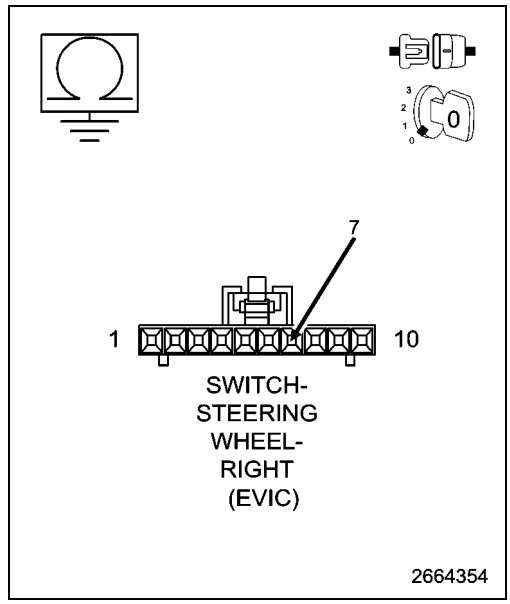

4. CHECK (X3) HORN SWITCH SENSE CIRCUIT FOR A SHORT TO THE (X920) RADIO CONTROL MUX RETURN CIRCUIT

1. Measure the resistance between the (X3) Horn Switch Sense circuit and the (X920) Radio Control MUX Return circuit at the Right Steering Wheel Switch harness connector.

Is the resistance below 10k Ohms between the (X3) Horn Switch Sense circuit and the (X920) Radio Control MUX Return circuit?

Yes

- Repair the short between the (X3) Horn Switch Sense circuit and the (X920) Radio Control MUX Return circuit.
- Perform the BODY VERIFICATION TEST. (Refer to 28 - DTC-Based Diagnostics/MODULE, Totally Integrated Power (TIPM) - Standard Procedure).

No

- Replace the Right Steering Wheel Switch in accordance with the Service Information.
- Perform the BODY VERIFICATION TEST. (Refer to 28 - DTC-Based Diagnostics/MODULE, Totally Integrated Power (TIPM) - Standard Procedure).

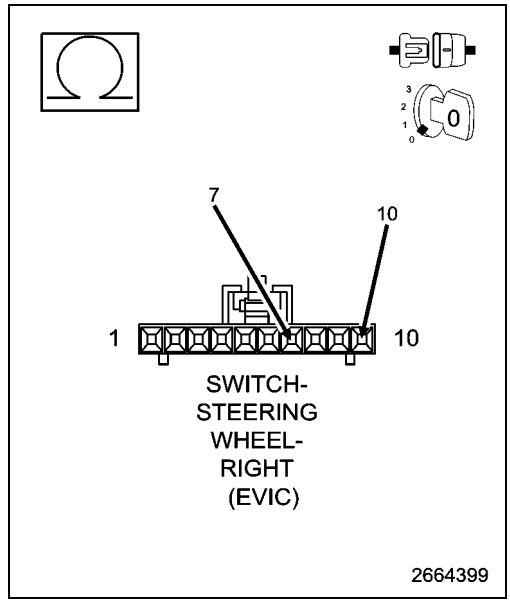

B2339-HORN SWITCH STUCK - WITHOUT EVIC

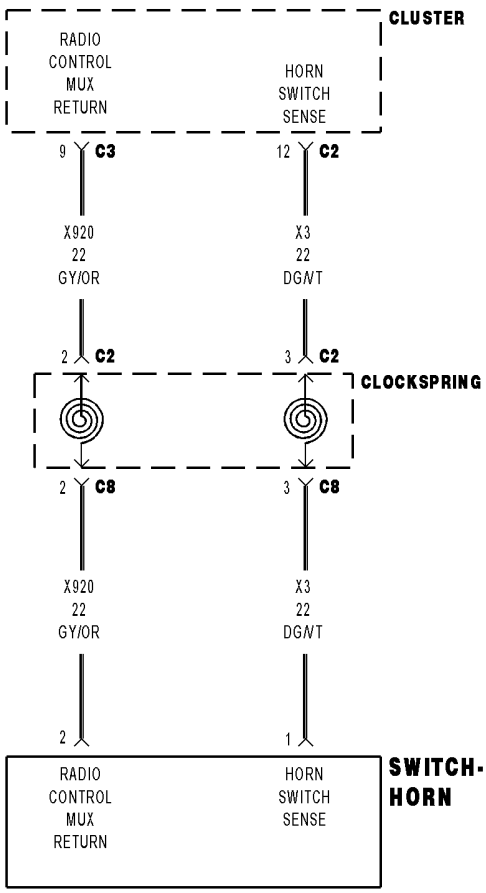

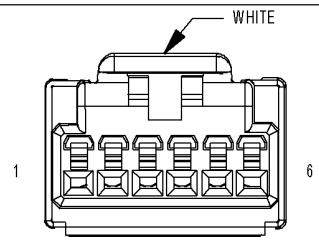

CLOCKSPRING C2

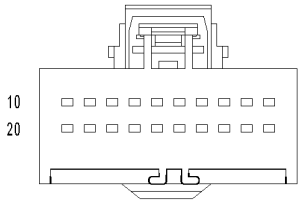

CLUSTER C2

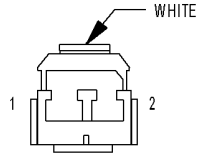

SWITCH-HORN

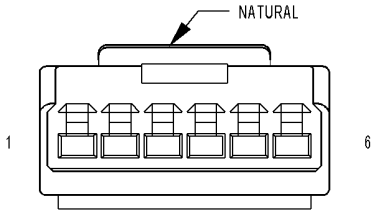

CLOCKSPRING C8

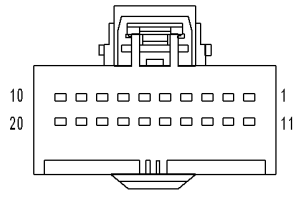

CLUSTER C3

02659791

For a complete wiring diagram, **refer to the Wiring Information**.

- **When Monitored:**
  Continuously.
- **Set Condition:**
  When the Cluster senses the Horn Switch input for more than 30 seconds.

Possible Causes
(X3) HORN SWITCH SENSE CIRCUIT SHORTED TO GROUND
HORN SWITCH
CLOCKSPRING
CLUSTER

1. CHECK FOR AN ACTIVE DTC

NOTE: Before proceeding with this diagnostic procedure, verify the Left and Right Multifunction Switch and Clockspring harness connectors are properly seated and verify proper pin terminal tension. A loose connection at any of these connectors may cause this DTC to set.

1. Turn the ignition on.
2. With the scan tool, read DTCs.

Does the scan tool display this DTC as active?

Yes

- Go To 2

No

- Test complete, the condition or conditions that originally set this DTC are not present at this time. Using the wiring diagrams as a guide, check all related splices and connectors for signs of water intrusion, corrosion, pushed out or bent terminals, and correct pin tension.

2. CHECK FOR A SHORTED HORN SWITCH

WARNING: To avoid possible serious or fatal injury, turn the ignition off, disconnect the battery and wait two minutes before proceeding.

1. Disconnect the Horn switch connector in accordance with the Service Information.

WARNING: Turn the ignition on, then reconnect the 12-volt battery and wait two minutes before proceeding. Failure to follow these instructions may result in possible serious or fatal injury.

2. With the scan tool, read DTCs.

Does the scan tool display this DTC as active?

Yes

- Go To 3

No

- Replace the Horn Switch in accordance with the Service Information.
- Perform the BODY VERIFICATION TEST. (Refer to 28 - DTC-Based Diagnostics/MODULE, Totally Integrated Power (TIPM) - Standard Procedure).

3. CHECK (X3) HORN SWITCH SENSE CIRCUIT FOR A SHORT TO GROUND BETWEEN HORN SWITCH AND CLOCKSPRING

1. Turn the ignition off.
2. Disconnect the Clockspring C8 harness connector.
3. Measure the resistance of the (X3) Horn Switch Sense circuit between ground and the Clockspring C8 harness connector.

Is the resistance below 10k Ohms?

Yes

- Repair the short to ground in the (X3) Horn Switch Sense circuit.
- Perform the BODY VERIFICATION TEST. (Refer to 28 - DTC-Based Diagnostics/MODULE, Totally Integrated Power (TIPM) - Standard Procedure).

No

- Go To 4

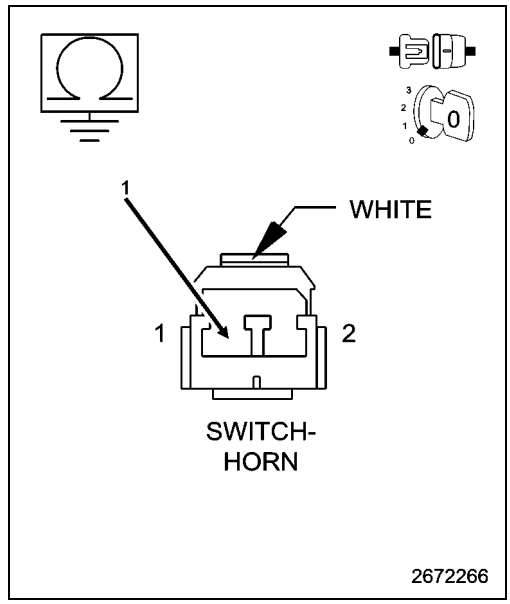

4. CHECK (X3) HORN SWITCH SENSE CIRCUIT FOR A SHORT TO GROUND BETWEEN CLOCKSPRING AND CLUSTER

1. Disconnect the Cluster C2 harness connector.
2. Disconnect the Clockspring C2 harness connector.
3. Measure the resistance of the (X3) Horn Switch Sense circuit between ground and the Clockspring C2 harness connector.

Is the resistance below 10k Ohms?

Yes

- Repair the short to ground in the (X3) Horn Switch Sense circuit.
- Perform the BODY VERIFICATION TEST. (Refer to 28 - DTC-Based Diagnostics/MODULE, Totally Integrated Power (TIPM) - Standard Procedure).

No

- Go To 5

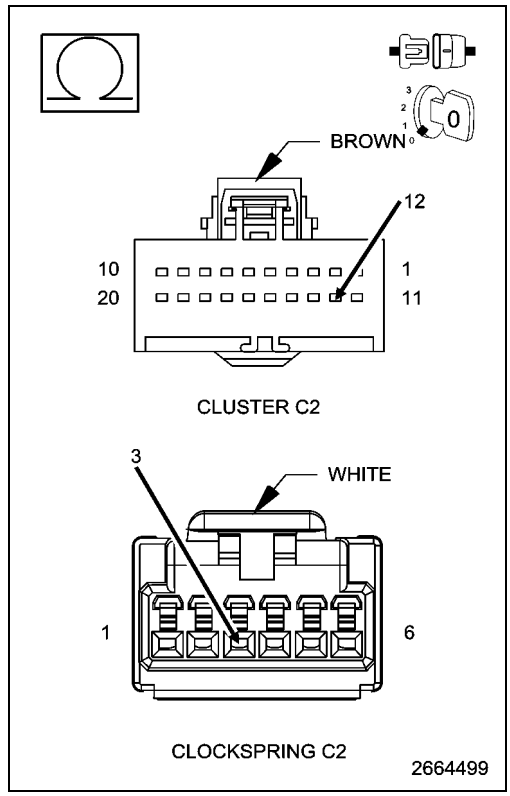

5. CHECK THE CLOCKSPRING FOR AN INTERNAL SHORT TO GROUND

1. Reconnect the Clockspring C2 harness connector.
2. Measure the resistance of the (X3) Horn Switch Sense circuit between ground and the Cluster C2 harness connector.

Is the resistance below 10k Ohms?

Yes

- Replace the Clockspring in accordance with the Service Information.
- Perform the BODY VERIFICATION TEST. (Refer to 28 - DTC-Based Diagnostics/MODULE, Totally Integrated Power (TIPM) - Standard Procedure).

No

- Replace the Cluster in accordance with the Service Information.
- Perform the BODY VERIFICATION TEST. (Refer to 28 - DTC-Based Diagnostics/MODULE, Totally Integrated Power (TIPM) - Standard Procedure).

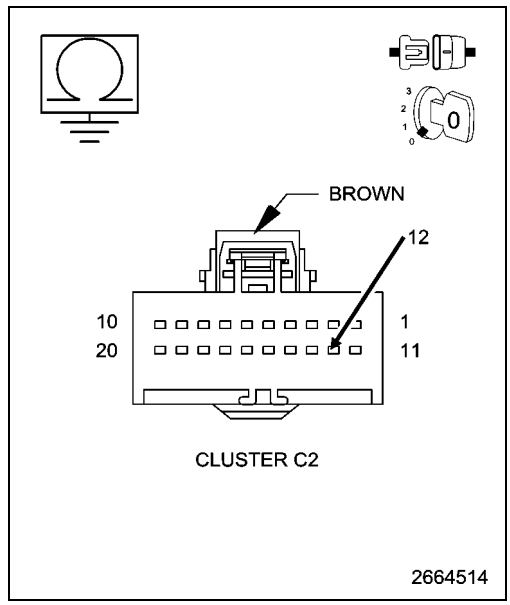

B238E-HI BEAM SWITCH CIRCUIT LOW

For a complete wiring diagram, **refer to the Wiring Information**.

- **When Monitored:**
  With the ignition on.
- **Set Condition:**
  The Cluster detects the High Beam function inoperative.

Possible Causes
MULTIFUNCTION SWITCH

1. CHECK FOR AN ACTIVE DTC

NOTE: Before proceeding with this diagnostic procedure, verify the Multifunction Switch and Clockspring harness connectors are properly seated and verify proper pin terminal tension. A loose connection at any of these connectors may cause this DTC to set.

1. Turn the ignition on.
2. Actuate the High Beams with the Multifunction Switch.
3. With the scan tool, read DTCs.

Does the scan tool display this DTC as Active?

Yes

- Replace the Multifunction Switch in accordance with the Service Information. (Refer to 08 - Electrical/8L - Lamps and Lighting/Lamps/Lighting - Exterior/SWITCH, Multifunction - Removal).
- Perform the BODY VERIFICATION TEST. (Refer to 28 - DTC-Based Diagnostics/MODULE, Totally Integrated Power (TIPM) - Standard Procedure).

No

- Test complete, the condition or conditions that originally set this DTC are not present at this time. Using the wiring diagrams as a guide, check all related splices and connectors for signs of water intrusion, corrosion, pushed out or bent terminals, and correct pin tension.

B2390-MIST SWITCH CIRCUIT LOW

For a complete wiring diagram, **refer to the Wiring Information**.

- **When Monitored:**
  With the ignition on.
- **Set Condition:**
  The Cluster detects the Mist function inoperative.

Possible Causes
MULTIFUNCTION SWITCH

1. CHECK FOR AN ACTIVE DTC

NOTE: Before proceeding with this diagnostic procedure, verify the Multifunction Switch and Clockspring harness connectors are properly seated and verify proper pin terminal tension. A loose connection at any of these connectors may cause this DTC to set.

1. Turn the ignition on.
2. Actuate the Mist function with the Multifunction Switch.
3. With the scan tool, read DTCs.

Does the scan tool display this DTC as Active?

Yes

- Replace the Multifunction Switch in accordance with the Service Information. (Refer to 08 - Electrical/8L - Lamps and Lighting/Lamps/Lighting - Exterior/SWITCH, Multifunction - Removal).
- Perform the BODY VERIFICATION TEST. (Refer to 28 - DTC-Based Diagnostics/MODULE, Totally Integrated Power (TIPM) - Standard Procedure).

No

- Test complete, the condition or conditions that originally set this DTC are not present at this time. Using the wiring diagrams as a guide, check all related splices and connectors for signs of water intrusion, corrosion, pushed out or bent terminals, and correct pin tension.

■ B2394-FLASH TO PASS / OPTICAL HORN SWITCH CIRCUIT STUCK

For a complete wiring diagram, **refer to the Wiring Information**.

- **When Monitored:**
  With the ignition on.
- **Set Condition:**
  The Cluster detects the Flash to Pass / Optical Horn function inoperative.

Possible Causes
MULTIFUNCTION SWITCH

1. CHECK FOR AN ACTIVE DTC

NOTE: Before proceeding with this diagnostic procedure, verify the Multifunction Switch and Clockspring harness connectors are properly seated and verify proper pin terminal tension. A loose connection at any of these connectors may cause this DTC to set.

1. Turn the ignition on.
2. Actuate the Optical Horn with the Multifunction Switch.
3. With the scan tool, read DTCs.

Does the scan tool display this DTC as Active?

Yes

- Replace the Multifunction Switch in accordance with the Service Information. (Refer to 08 - Electrical/8L - Lamps and Lighting/Lamps/Lighting - Exterior/SWITCH, Multifunction - Removal).
- Perform the BODY VERIFICATION TEST. (Refer to 28 - DTC-Based Diagnostics/MODULE, Totally Integrated Power (TIPM) - Standard Procedure).

No

- Test complete, the condition or conditions that originally set this DTC are not present at this time. Using the wiring diagrams as a guide, check all related splices and connectors for signs of water intrusion, corrosion, pushed out or bent terminals, and correct pin tension.

C1401-TRANSFER CASE RANGE SELECT SWITCH CIRCUIT LOW

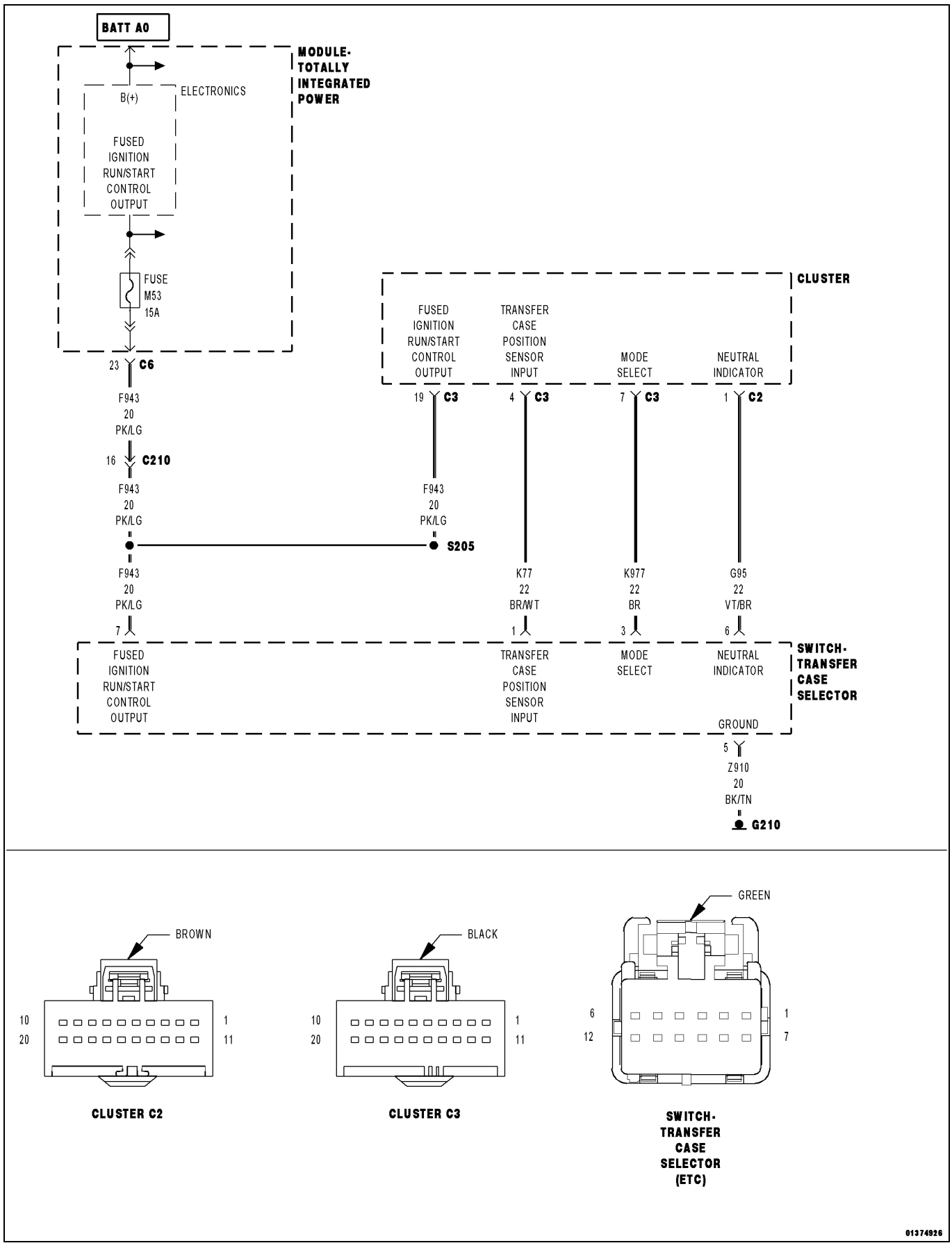

For a complete wiring diagram, **refer to the Wiring Information**.

- **When Monitored:**
  With the ignition on.
- **Set Condition:**
  Transfer Case Range Select Switch voltage less than 0.1568 volts for five seconds

Possible Causes
(K77) 5-VOLT SELECTOR SWITCH SUPPLY CIRCUIT OPEN
(K77) 5-VOLT SELECTOR SWITCH SUPPLY CIRCUIT SHORTED TO GROUND
(K977) MODE SELECT CIRCUIT OPEN
(K977) MODE SELECT CIRCUIT SHORT TO GROUND
TRANSFER CASE SELECTOR SWITCH
CLUSTER CABIN NODE (CCN)

1. TRANSFER CASE SWITCH VOLTAGE LESS THAN 0.2 VOLTS

1. Ignition on, engine not running.
2. With the scan tool under CCN, read the Transfer Case Switch voltage.

Is the voltage less than 0.2 of a volt?

Yes

- Go To 2

No

- Go To 8

2. (K77) 5-VOLT SELECTOR SWITCH SUPPLY CIRCUIT VOLTAGE LESS THAN 0.2 OF A VOLT

1. Turn the ignition off to the lock position.
2. Disconnect the Transfer Case Selector Switch harness connector.
3. Ignition on, engine not running.
4. Measure the voltage of the (K77) 5-volt Selector Switch Supply circuit.

Is the voltage less than 0.2 of a volt?

Yes

- Go To 3

No

- Go To 5

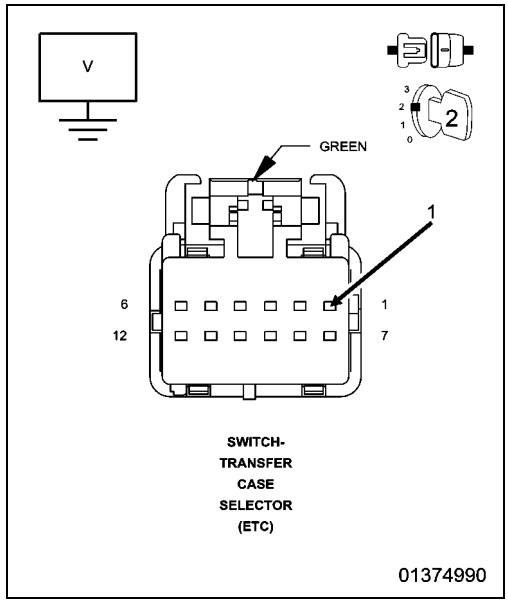

3. (K77) 5-VOLT SELECTOR SWITCH SUPPLY CIRCUIT OPEN

1. Turn the ignition off to the lock position.
2. Disconnect the Cluster C3 harness connector.
3. Measure the resistance of the (K77) 5-volt Selector Switch Supply circuit between the Instrument Cluster C3 harness connector and the Transfer Case Selector Switch harness connector.

Is the resistance greater than 5.0 Ohms?

Yes

- Repair the (K77) 5-volt Selector Switch Supply circuit for an open.
- Perform the TRANSFER CASE VERIFICATION TEST. (Refer to 28 - DTC-Based Diagnostics/MODULE, Drivetrain Control (DTCM) - Standard Procedure).

No

- Go To 4

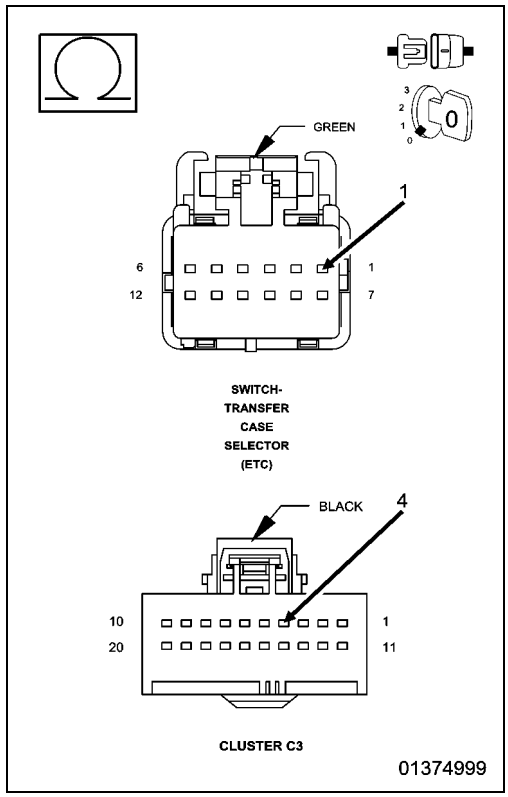

4. (K77) 5-VOLT SELECTOR SWITCH SUPPLY CIRCUIT SHORTED TO GROUND

1. Measure the resistance between ground and the (K77) 5-volt Selector Switch Supply circuit.

Is the resistance less than 5.0 Ohms?

Yes

- Repair the (K77) 5-volt Selector Switch Supply circuit for a short to ground.
- Perform the TRANSFER CASE VERIFICATION TEST. (Refer to 28 - DTC-Based Diagnostics/MODULE, Drivetrain Control (DTCM) - Standard Procedure).

No

- Replace the Cluster Cabin Node (CCN) in accordance with the Service Information.
- Perform the BODY VERIFICATION TEST. (Refer to 28 - DTC-Based Diagnostics/MODULE, Totally Integrated Power (TIPM) - Standard Procedure).

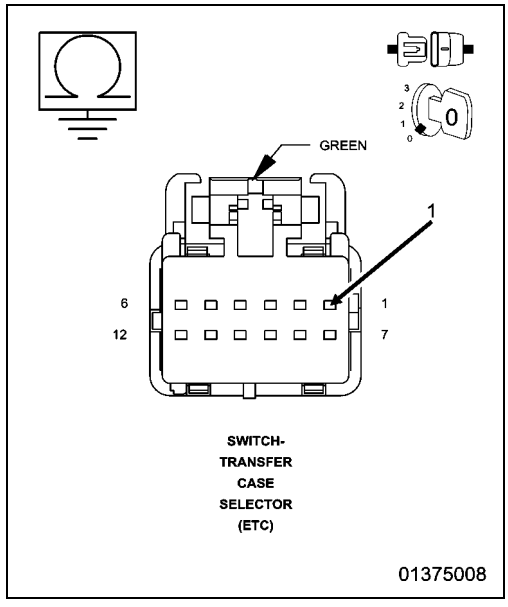

5. TRANSFER CASE SELECTOR SWITCH

1. Turn the ignition off to the lock position.
2. Connect a jumper wire between the (K77) 5-volt Selector Switch Supply circuit and the (K977) Mode Select circuit in the Transfer Case Selector Switch harness connector.
3. Ignition on, engine not running.
4. With the scan tool in Data Display, read the Range Switch voltage.

NOTE: The switch voltage should be approximately 5.0 volts (± .05 of a volt).

Does the voltage display as described?

Yes

- Replace the Transfer Case Selector Switch in accordance with the Service Information.
- Perform the TRANSFER CASE VERIFICATION TEST. (Refer to 28 - DTC-Based Diagnostics/MODULE, Drivetrain Control (DTCM) - Standard Procedure).

No

- Go To 6

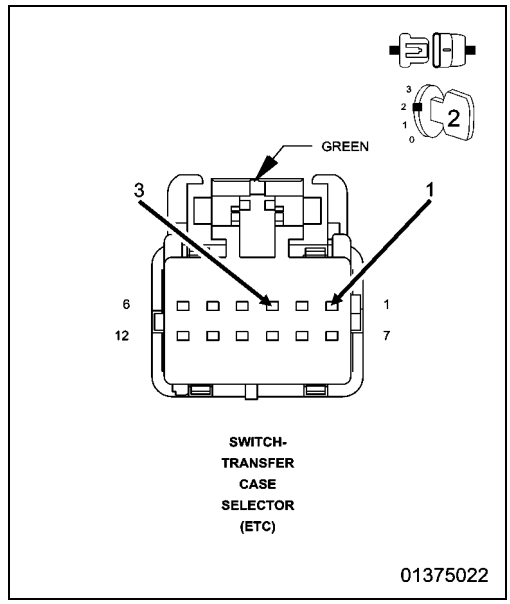

6. (K977) MODE SELECT CIRCUIT SHORTED TO GROUND

1. Disconnect the Cluster C3 connector.
2. Measure the resistance between ground and the (K977) Mode Select circuit.

Is the resistance less than 5.0 Ohms?

Yes

- Repair the (K977) Mode Select circuit for a short to ground.
- Perform the TRANSFER CASE VERIFICATION TEST. (Refer to 28 - DTC-Based Diagnostics/MODULE, Drivetrain Control (DTCM) - Standard Procedure).

No

- Go To 7

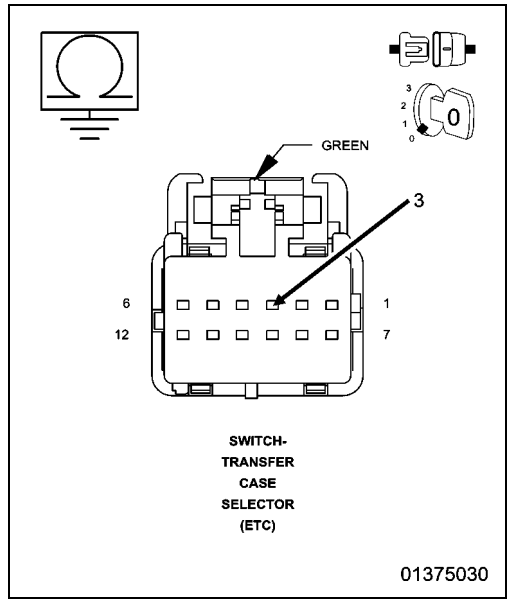

7. (K977) MODE SELECT CIRCUIT OPEN

1. Measure the resistance of the (K977) Mode Select circuit between the Cluster C3 harness connector and the Transfer Case Selector Switch harness connector.

Is the resistance above 5.0 Ohms?

Yes

- Repair the (K977) Mode Select circuit for an open.
- Perform the TRANSFER CASE VERIFICATION TEST. (Refer to 28 - DTC-Based Diagnostics/MODULE, Drivetrain Control (DTCM) - Standard Procedure).

No

- Replace the Instrument Cluster in accordance with the Service Information.
- Perform the BODY VERIFICATION TEST. (Refer to 28 - DTC-Based Diagnostics/MODULE, Totally Integrated Power (TIPM) - Standard Procedure).

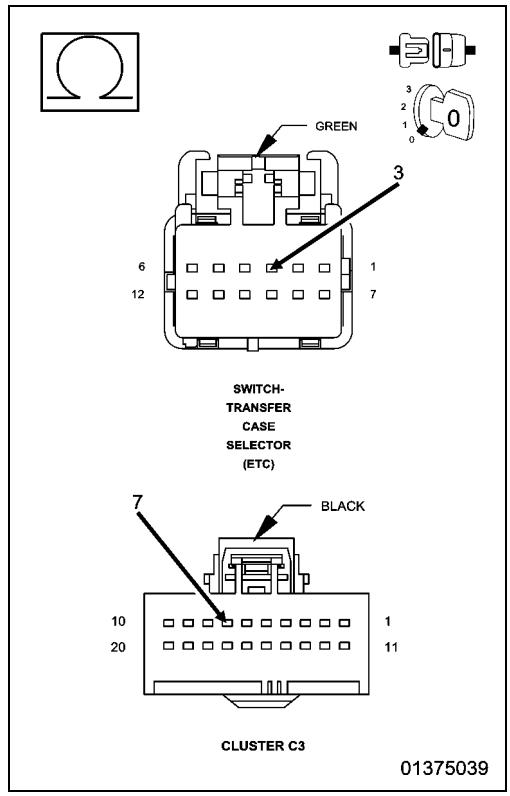

8. INTERMITTENT WIRING HARNESS AND CONNECTORS

1. The conditions necessary to set this DTC are not present at this time.
2. Using the wiring diagram/schematic as a guide, inspect the wiring harness and connectors.
3. Wiggle test the wiring harness and connectors while monitoring the scan tool data relative to this circuit.
4. Look for the data to change or for the DTC to reset during the wiggle test.
5. While monitoring the scan tool data relative to this circuit, move the selector switch to each position several times.
6. Look for the data to change other than as expected or for the DTC to reset.

Were any problems found?

Yes

- Repair as necessary.
- Perform the TRANSFER CASE VERIFICATION TEST. (Refer to 28 - DTC-Based Diagnostics/MODULE, Drivetrain Control (DTCM) - Standard Procedure).

No

- Test complete.

C1402- TRANSFER CASE RANGE SELECT SWITCH CIRCUIT HIGH

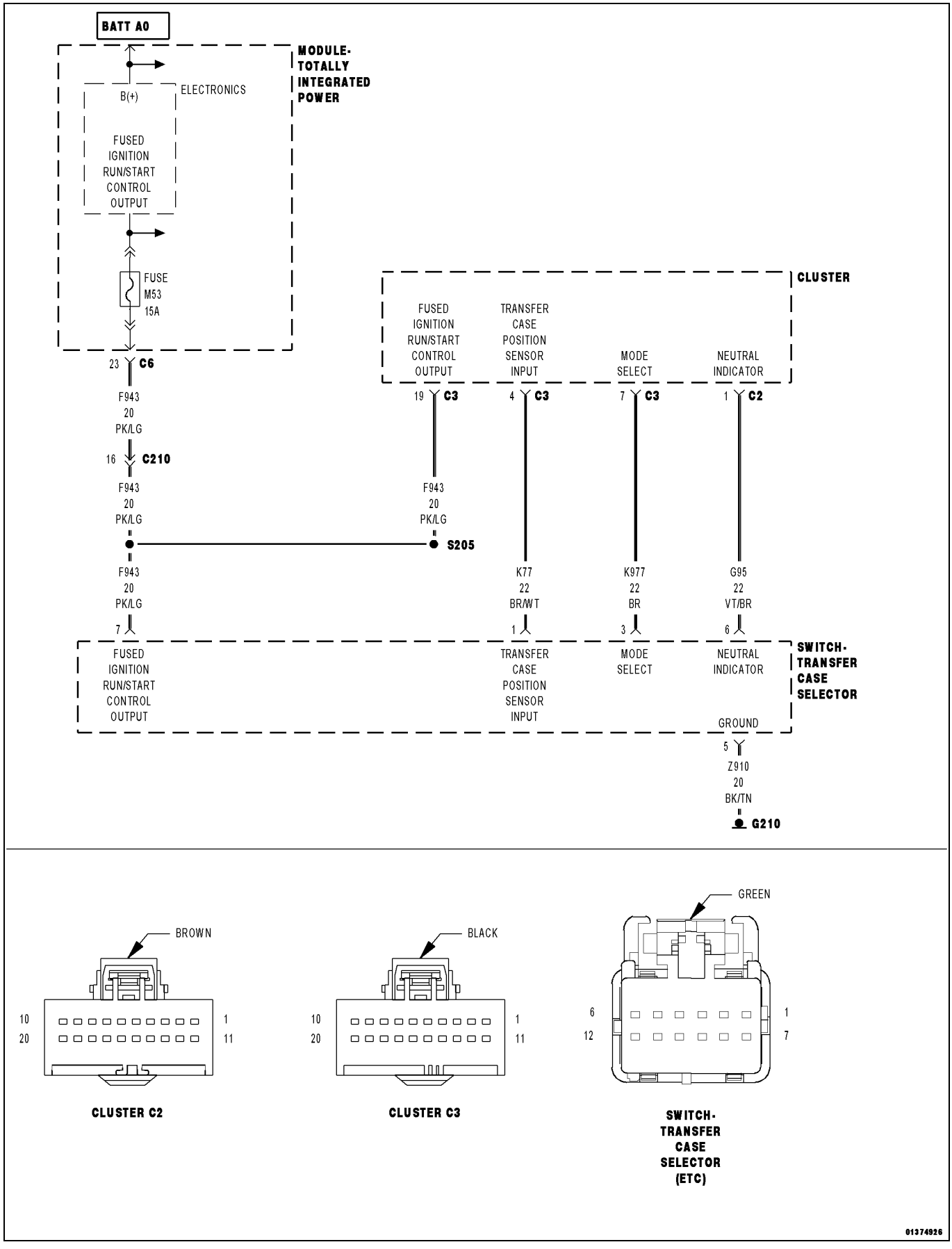

For a complete wiring diagram, **refer to the Wiring Information**.

- **When Monitored:**
  With the ignition on.
- **Set Condition:**
  Transfer Case Range Select Switch voltage greater than 4.86 volts for five seconds

Possible Causes
(K77) 5-VOLT SELECTOR SWITCH SUPPLY CIRCUIT SHORTED TO VOLTAGE
(K977) MODE SELECT CIRCUIT SHORTED TO VOLTAGE
(K977) MODE SELECT CIRCUIT OPEN
(Z910) TRANSFER CASE SELECTOR SWITCH GROUND CIRCUIT OPEN
TRANSFER CASE SELECTOR SWITCH
CLUSTER CABIN NODE (CCN)

1. TCASE SWITCH VOLTAGE ABOVE 4.8 VOLTS

1. Ignition on, engine not running.
2. With the scan tool under CCN, read the Transfer Case Switch voltage.

Is the volage above 4.8 volts?

Yes

- Go To 2

No

- Go To 7

2. (K77) 5-VOLT SELECTOR SWITCH SUPPLY CIRCUIT SHORTED TO VOLTAGE

1. Turn the ignition off to the lock position.
2. Disconnect the Transfer Case Selector Switch harness connector.
3. Disconnect the Cluster C3 harness connector.
4. Ignition on, engine not running.
5. Measure the voltage of the (K77) 5-volt Selector Switch Supply circuit.

Is there any voltage present?

Yes

- Repair the (K77) 5-volt Selector Switch Supply circuit for a short to voltage.
- Perform the TRANSFER CASE VERIFICATION TEST. (Refer to 28 - DTC-Based Diagnostics/MODULE, Drivetrain Control (DTCM) - Standard Procedure).

No

- Go To 3

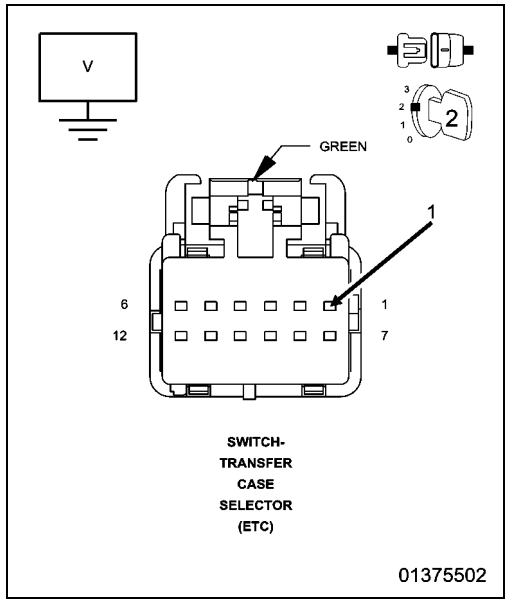

3. (K977) MODE SELECT CIRCUIT SHORTED TO VOLTAGE

1. Measure the voltage of the (K977) Mode Select circuit.

Is there any voltage present?

Yes

- Repair the (K977) Mode Select circuit for a short to voltage.
- Perform the TRANSFER CASE VERIFICATION TEST. (Refer to 28 - DTC-Based Diagnostics/MODULE, Drivetrain Control (DTCM) - Standard Procedure).

No

- Go To 4

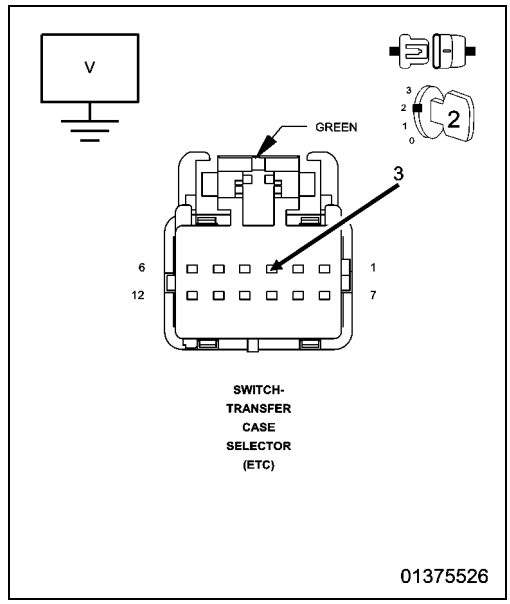

4. TRANSFER CASE SELECTOR SWITCH

1. Turn the ignition off to the lock position.
2. Connect the Cluster C3 harness connector.
3. Ignition on, engine not running.
4. With the scan tool under CCN, read the Transfer Case Switch voltage.

Is the voltage equal to 0.0 volts?

Yes

- Replace the Transfer Case Selector Switch.
- Perform the TRANSFER CASE VERIFICATION TEST. (Refer to 28 - DTC-Based Diagnostics/MODULE, Drivetrain Control (DTCM) - Standard Procedure).

No

- Go To 5

5. (K977) MODE SELECT CIRCUIT OPEN

1. Turn the ignition off to the lock position.
2. Measure the resistance of the (K977) Mode Select circuit between the Cluster C3 harness connector and the Transfer Case Selector Switch harness connector.

Is the resistance above 5.0 Ohms?

Yes

- Repair the (K977) Mode Select circuit for an open.
- Perform the TRANSFER CASE VERIFICATION TEST. (Refer to 28 - DTC-Based Diagnostics/MODULE, Drivetrain Control (DTCM) - Standard Procedure).

No

- Go To 6

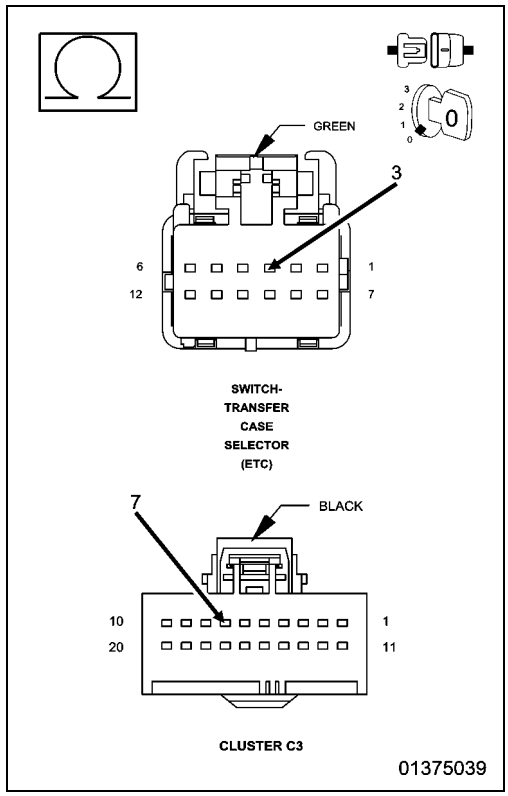

6. TRANSFER CASE SELECTOR SWITCH (Z910) GROUND CIRCUIT OPEN

1. Measure the resistance between ground and the (Z910) Transfer Case Selector Switch ground circuit.

Is the resistance above 5.0 Ohms?

Yes

- Repair the Transfer Case Selector Switch (Z910) ground circuit for an open.
- Perform the TRANSFER CASE VERIFICATION TEST. (Refer to 28 - DTC-Based Diagnostics/MODULE, Drivetrain Control (DTCM) - Standard Procedure).

No

- Replace the Cluster Cabin Node (CCN) in accordance with the Service Information.
- Perform the BODY VERIFICATION TEST. (Refer to 28 - DTC-Based Diagnostics/MODULE, Totally Integrated Power (TIPM) - Standard Procedure).

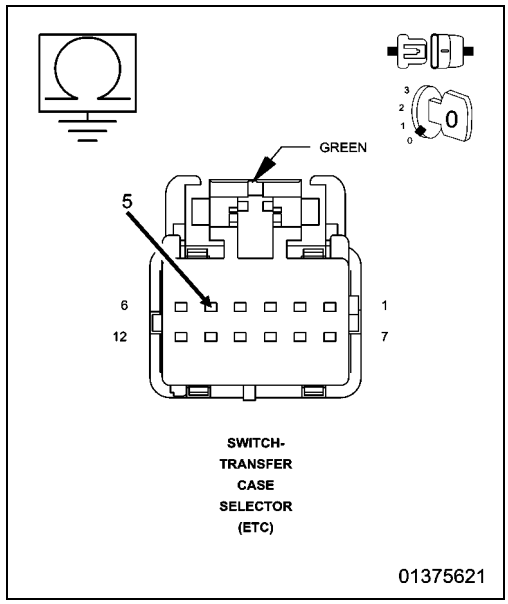

7. INTERMITTENT WIRING HARNESS AND CONNECTORS

1. The conditions necessary to set this DTC are not present at this time.
2. Using the wiring diagram/schematic as a guide, inspect the wiring harness and connectors.
3. Wiggle test the wiring harness and connectors while monitoring the scan tool data relative to this circuit.
4. Look for the data to change or for the DTC to reset during the wiggle test.
5. While monitoring the scan tool data relative to this circuit, move the selector switch to each position several times.
6. Look for the data to change other than as expected or for the DTC to reset.

Were any problems found?

Yes

- Repair as necessary.
- Perform the TRANSFER CASE VERIFICATION TEST. (Refer to 28 - DTC-Based Diagnostics/MODULE, Drivetrain Control (DTCM) - Standard Procedure).

No

- Test complete.

C230A-NEUTRAL INDICATOR CONTROL CIRCUIT LOW

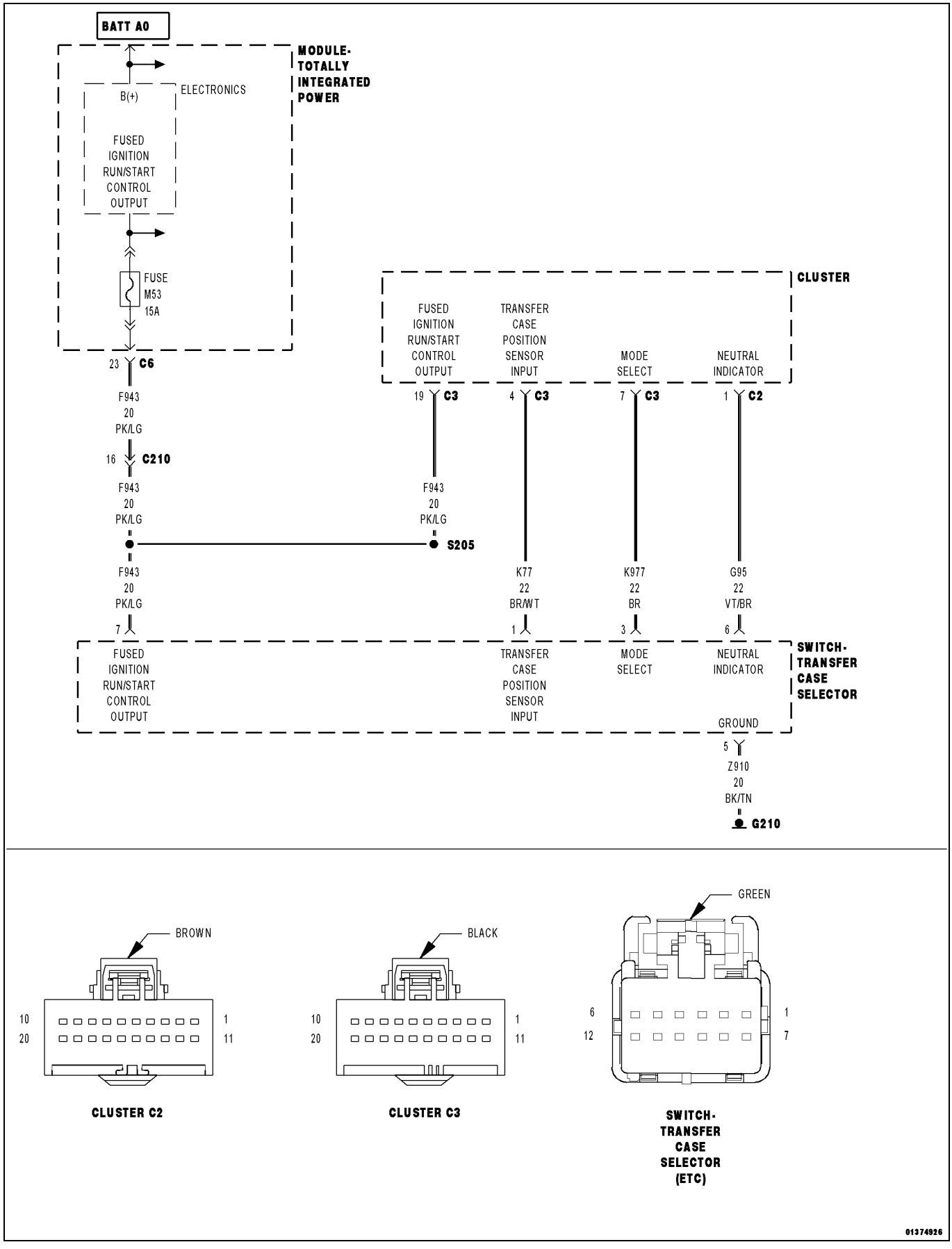

For a complete wiring diagram, **refer to the Wiring Information**.

- **When Monitored:**
  With the ignition on and no system undervoltage or overvoltage condition present.
- **Set Condition:**
  The Cluster detects low voltage on the (G95) Neutral Indicator Control Circuit when output is off.

Possible Causes
(G95) NEUTRAL INDICATOR CIRCUIT OPEN
(G95) NEUTRAL INDICATOR CIRCUIT SHORTED TO GROUND
TRANSFER CASE SWITCH
CLUSTER CABIN NODE (CCN)

1. DTC IS ACTIVE

1. Ignition on engine not running.
2. With the scan tool, record and erase DTCs.
3. Turn the ignition off, wait 30 seconds then turn the ignition on.
4. Shift the Transfer Case into neutral.
5. With the scan tool, read DTCs.

Is the DTC status Active at this time?

Yes

- Go To 2

No

- Go To 5

2. (G95) 4WD NEUTRAL INDICATOR CIRCUIT RESISTANCE TO GROUND

1. Turn the ignition off to lock position.
2. Disconnect the Cluster C2 connector.
3. Measure the resistance between ground and the (G95) Neutral Indicator circuit.

Is the resistance below 5.0 ohms?

Yes

- Go To 3

No

- Go To 4

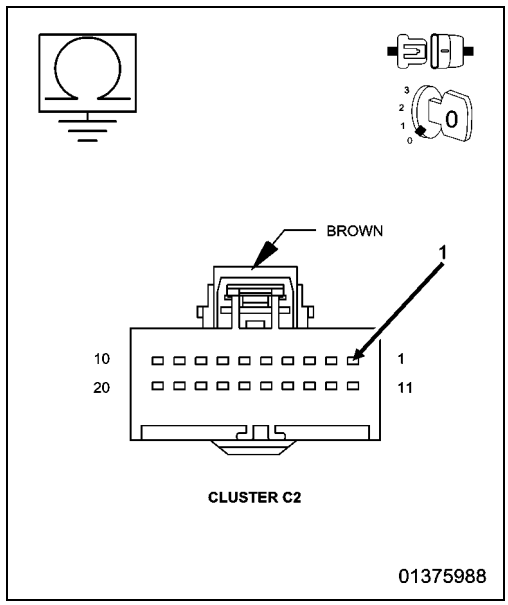

3. (G95) NEUTRAL INDICATOR CIRCUIT SHORTED TO GROUND

1. Disconnect the Transfer Case Switch harness connector.
2. Measure the resistance between ground and the (G95) Neutral Indicator circuit.

Is the resistance below 5.0 ohms?

Yes

- Repair the (G95) Neutral Indicator circuit for a short to ground.
- Perform the BODY VERIFICATION TEST. (Refer to 28 - DTC-Based Diagnostics/MODULE, Totally Integrated Power (TIPM) - Standard Procedure).

No

- Replace the Transfer Case Switch in accordance with the Service information.
- Perform the TRANSFER CASE VERIFICATION TEST. (Refer to 28 - DTC-Based Diagnostics/MODULE, Drivetrain Control (DTCM) - Standard Procedure).

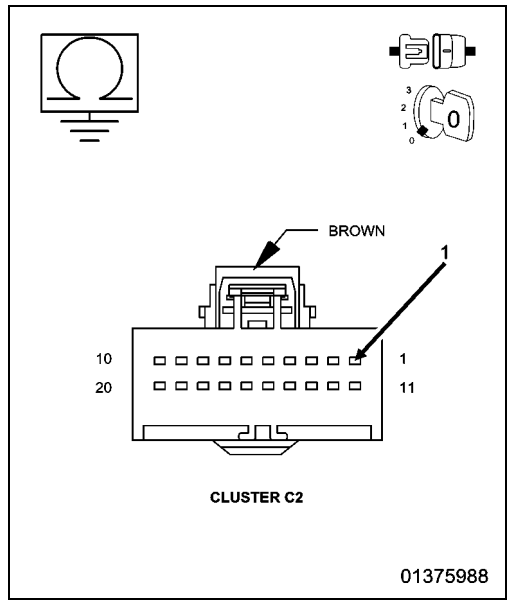

4. (G95) NEUTRAL INDICATOR CIRCUIT OPEN

1. Disconnect the Transfer Case Switch harness connector.
2. Measure the resistance of the (G95) Neutral Indicator circuit between the Transfer Case Switch harness connector and the Cluster C2 harness connector.

Is the resistance above 5.0 ohms?

Yes

- Repair the open (G95) Neutral Indicator circuit for an open.
- Perform the BODY VERIFICATION TEST. (Refer to 28 - DTC-Based Diagnostics/MODULE, Totally Integrated Power (TIPM) - Standard Procedure).

No

- Replace the Cluster Cabin Node (CCN) in accordance with the Service information.
- Perform the BODY VERIFICATION TEST. (Refer to 28 - DTC-Based Diagnostics/MODULE, Totally Integrated Power (TIPM) - Standard Procedure).

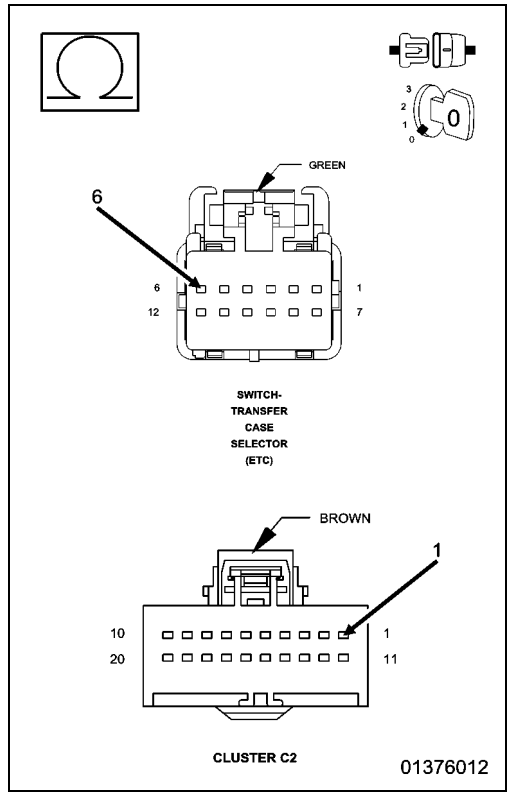

5. INTERMITTENT WIRING HARNESS AND CONNECTORS

1. The conditions necessary to set this DTC are not present at this time.
2. Using the wiring diagram/schematic as a guide, inspect the wiring and connectors.
3. Wiggle test the wiring harness and connectors while monitoring the scan tool data relative to this circuit.
4. Look for the data to change or for the DTC to reset during the wiggle test.
5. While monitoring the scan tool data relative to this circuit, move the selector switch to each position several times.
6. Look for the data to change other than as expected or for the DTC to reset.

Were any problems found?

Yes

- Repair as necessary.
- Perform the BODY VERIFICATION TEST. (Refer to 28 - DTC-Based Diagnostics/MODULE, Totally Integrated Power (TIPM) - Standard Procedure).

No

- Test complete.

C230B-NEUTRAL INDICATOR CONTROL CIRCUIT HIGH

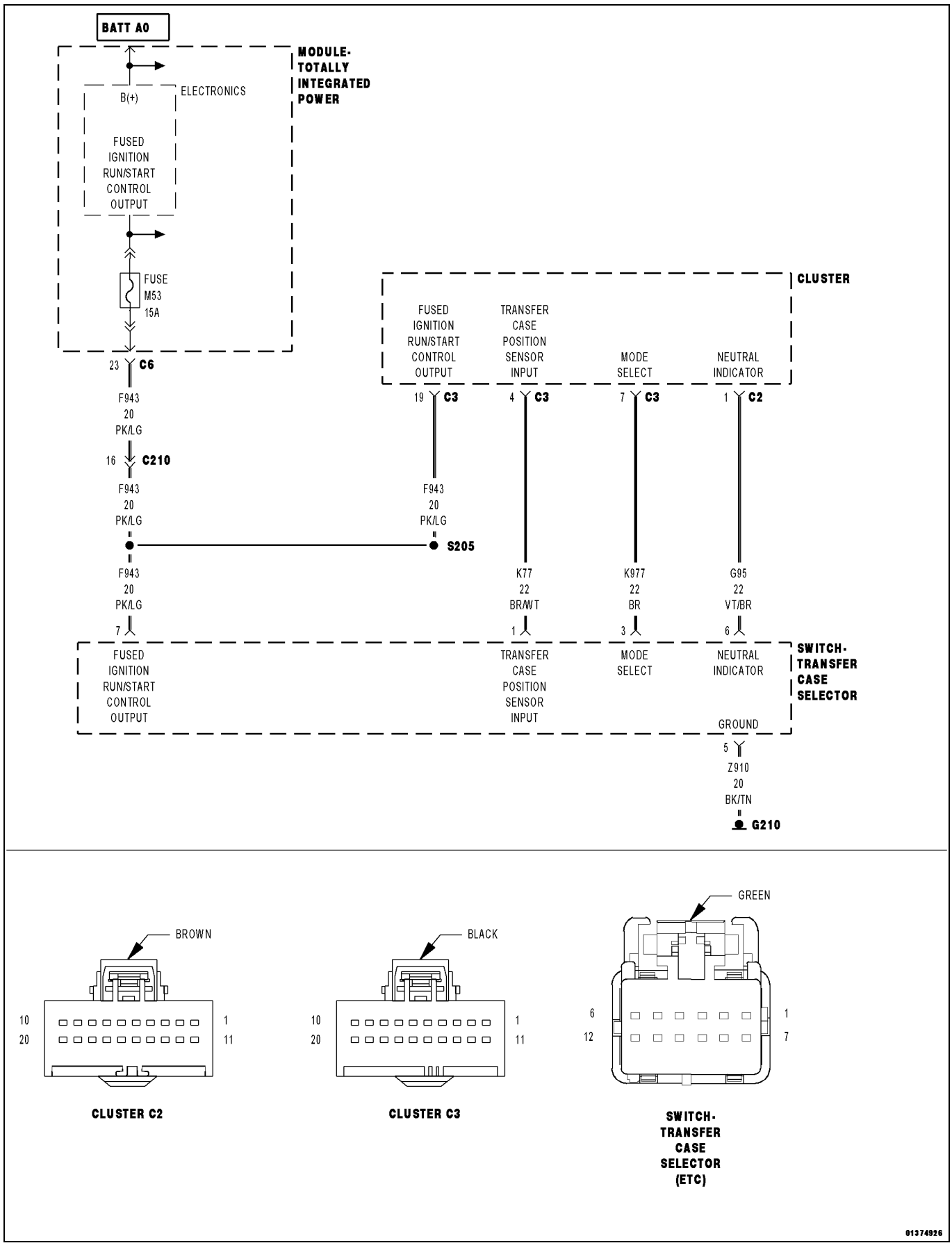

For a complete wiring diagram, **refer to the Wiring Information**.

- **When Monitored:**
  With the ignition on and no system undervoltage or overvoltage condition present.
- **Set Condition:**
  The Cluster detects high voltage on the Neutral Indicator Control Circuit when output is on.

Possible Causes
(G95) NEUTRAL INDICATOR CIRCUIT OPEN
(G95) NEUTRAL INDICATOR CIRCUIT SHORTED TO GROUND
(G95) NEUTRAL INDICATOR CIRCUIT SHORTED TO VOLTAGE
TRANSFER CASE SWITCH
CLUSTER CABIN NODE (CCN)

1. DTC IS ACTIVE

1. Ignition on engine not running.
2. With the scan tool, record and erase DTCs.
3. Turn the ignition off, wait 30 seconds then turn the ignition on.
4. Shift the Transfer Case into neutral.
5. With the scan tool, read DTCs.

Is the DTC status Active at this time?

Yes

- Go To 2

No

- Go To 5

2. (G95) NEUTRAL INDICATOR CIRCUIT VOLTAGE

1. Turn the ignition off to the lock postion.
2. Disconnect the Cluster C1 harness connector.
3. Ignition on engine not running.
4. Measure the voltage of the (G95) Neutral Indicator circuit.

Is there any voltage present?

Yes

- Replace the Cluster Cabin Node (CCN) in accordance with the service information.
- Perform the BODY VERIFICATION TEST. (Refer to 28 - DTC-Based Diagnostics/MODULE, Totally Integrated Power (TIPM) - Standard Procedure).

No

- Go To 3

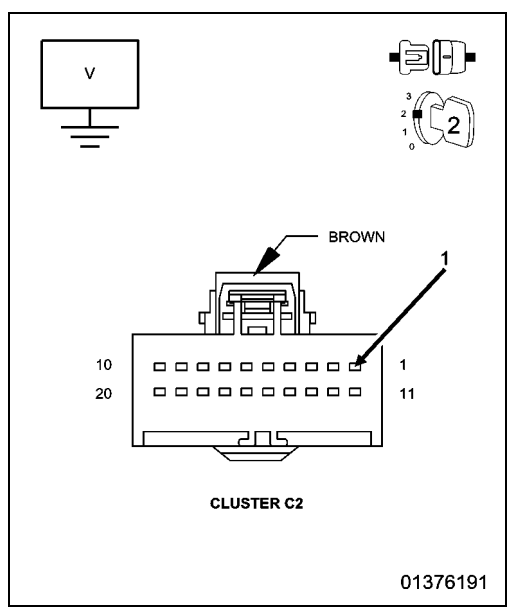

3. (G95) 4WD NEUTRAL INDICATOR CIRCUIT SHORTED TO GROUND

1. Turn the ignition off to the lock postion.
2. Disconnect the Transfer Case Switch harness connector.
3. Measure the resistance of the (G95) Neutral Indicator circuit to ground.

Is the resistance below 10K Ohms?

Yes

- Repair the (G95) Neutral Indicator circuit for a short to ground.
- Perform the BODY VERIFICATION TEST. (Refer to 28 - DTC-Based Diagnostics/MODULE, Totally Integrated Power (TIPM) - Standard Procedure).

No

- Go To 4

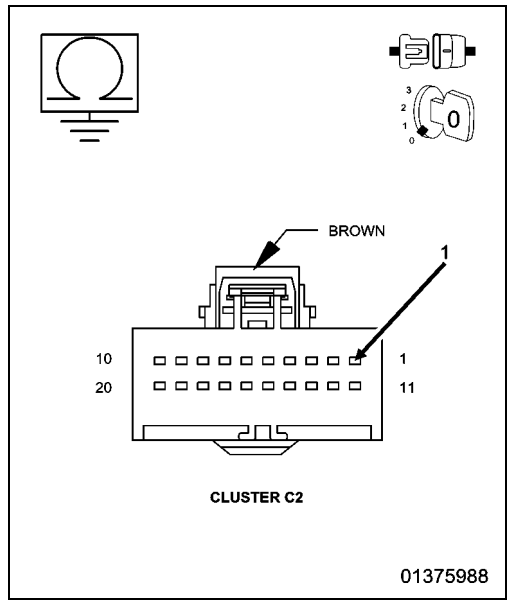

4. (G95) 4WD NEUTRAL INDICATOR CIRCUIT OPEN

1. Measure the resistance of the (G95) Neutral Indicator Control circuit between the Transfer Case Switch harness connector and the Cluster C1 harness connector.

Is the resistance above 5.0 Ohms?

Yes

- Repair the open (G95) Neutral Indicator circuit for an open.
- Perform the BODY VERIFICATION TEST. (Refer to 28 - DTC-Based Diagnostics/MODULE, Totally Integrated Power (TIPM) - Standard Procedure).

No

- Replace the Transfer Case Selector Switch in accordance with the Service information.
- Perform the TRANSFER CASE VERIFICATION TEST. (Refer to 28 - DTC-Based Diagnostics/MODULE, Drivetrain Control (DTCM) - Standard Procedure).

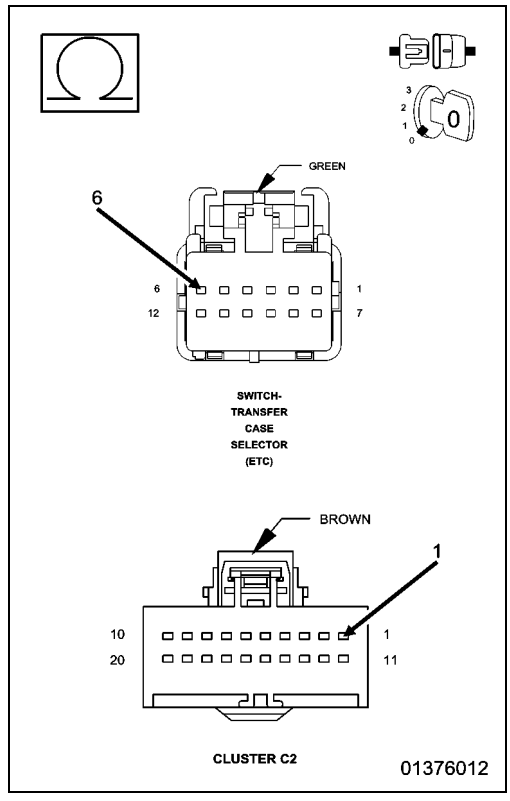

5. INTERMITTENT WIRING HARNESS AND CONNECTORS

1. The conditions necessary to set this DTC are not present at this time.
2. Using the wiring diagram/schematic as a guide, inspect the wiring and connectors.
3. Wiggle test the wiring harness and connectors while monitoring the scan tool data relative to this circuit.
4. Look for the data to change or for the DTC to reset during the wiggle test.
5. While monitoring the scan tool data relative to this circuit, move the selector switch to each position several times.
6. Look for the data to change other than as expected or for the DTC to reset.

Were any problems found?

Yes

- Repair as necessary.
- Perform the BODY VERIFICATION TEST. (Refer to 28 - DTC-Based Diagnostics/MODULE, Totally Integrated Power (TIPM) - Standard Procedure).

No

- Test complete.

C2312-TRAC/ESP OFF SWITCH STUCK

For a complete wiring diagram, **refer to the Wiring Information**.

- **When Monitored:**
  With the ignition on.
- **Set Condition:**
  The Cluster detects the TRAC/ESP Off Switch active for greater than 20 seconds.

Possible Causes
UPPER SWITCH BANK

1. CHECK FOR AN ACTIVE DTC

1. Turn the ignition on.
2. With the scan tool, read DTCs.

Does the scan tool display this DTC as active?

Yes

- Replace the Upper Switch Bank in accordance with the Service Information.
- Perform the BODY VERIFICATION TEST. (Refer to 28 - DTC-Based Diagnostics/MODULE, Totally Integrated Power (TIPM) - Standard Procedure).

No

- Test complete.

P0838-FOUR WHEEL DRIVE (4WD) SWITCH CIRCUIT LOW

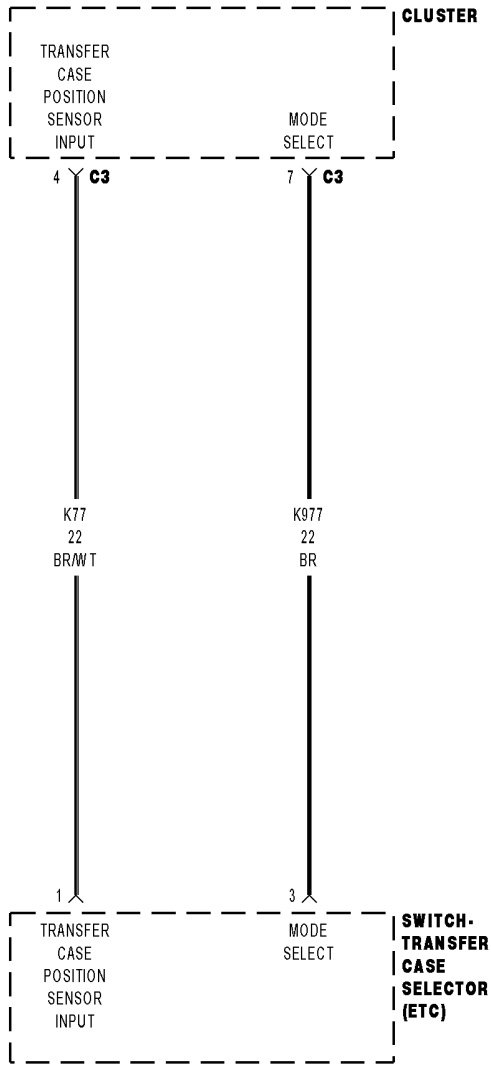

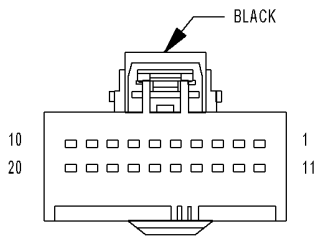

CLUSTER C3

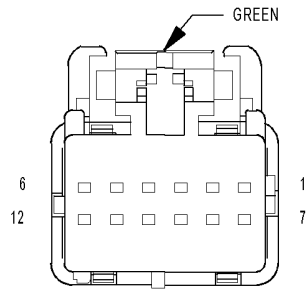

SWITCH-TRANSFER CASE SELECTOR (ETC)

01440900

For a complete wiring diagram, **refer to the Wiring Information**.

- **When Monitored:**
  With the ignition on.
- **Set Condition:**
  The (K77) Transfer Case Position Sensor Input circuit is shorted to ground.

Possible Causes
(K77) TRANSFER CASE POSITION SENSOR INPUT CIRCUIT SHORTED TO GROUND
TRANSFER CASE SELECTOR SWITCH
CLUSTER

1. CHECK FOR ACTIVE DTC

1. Turn the ignition on.
2. With the scan tool, read Cluster DTCs.

Does the scan tool display this DTC as active?

Yes

- Go To 2

No

- The condition that caused this code to set is not present at this time. Check for an intermittent condition by inspecting the related wiring harness for chafed, pierced, pinched, and partially broken wires. Also inspect the related connectors for broken, bent, pushed out, spread, corroded, or contaminated terminals.
- Perform the BODY VERIFICATION TEST. (Refer to 28 - DTC-Based Diagnostics/MODULE, Totally Integrated Power (TIPM) - Standard Procedure).

2. TRANSFER CASE SELECTOR SWITCH

1. Turn the ignition off.
2. Disconnect the Transfer Case Selector Switch harness connector.
3. Turn the ignition on.
4. With the scan tool, read Cluster DTCs.

Does the scan tool display DTC: P0838-FOUR WHEEL DRIVE (4WD) SWITCH CIRCUIT LOW as active?

Yes

- Go To 3

No

- Replace the Transfer Case Selector Switch in accordance with the Service Information.
- Perform the BODY VERIFICATION TEST. (Refer to 28 - DTC-Based Diagnostics/MODULE, Totally Integrated Power (TIPM) - Standard Procedure).

3. (K77) TRANSFER CASE POSITION SENSOR INPUT CIRCUIT SHORTED TO GROUND

1. Turn the ignition off.
2. Disconnect the Cluster C3 harness connector.
3. Measure the resistance between ground and the (K77) Transfer Case Position Sensor Input circuit.

Is the resistance less than 5.0 Ohms?

Yes

- Repair the (K77) Transfer Case Position Sensor Input circuit for a short to ground.
- Perform the BODY VERIFICATION TEST. (Refer to 28 - DTC-Based Diagnostics/MODULE, Totally Integrated Power (TIPM) - Standard Procedure).

No

- Replace the Cluster in accordance with the Service Information.
- Perform the BODY VERIFICATION TEST. (Refer to 28 - DTC-Based Diagnostics/MODULE, Totally Integrated Power (TIPM) - Standard Procedure).

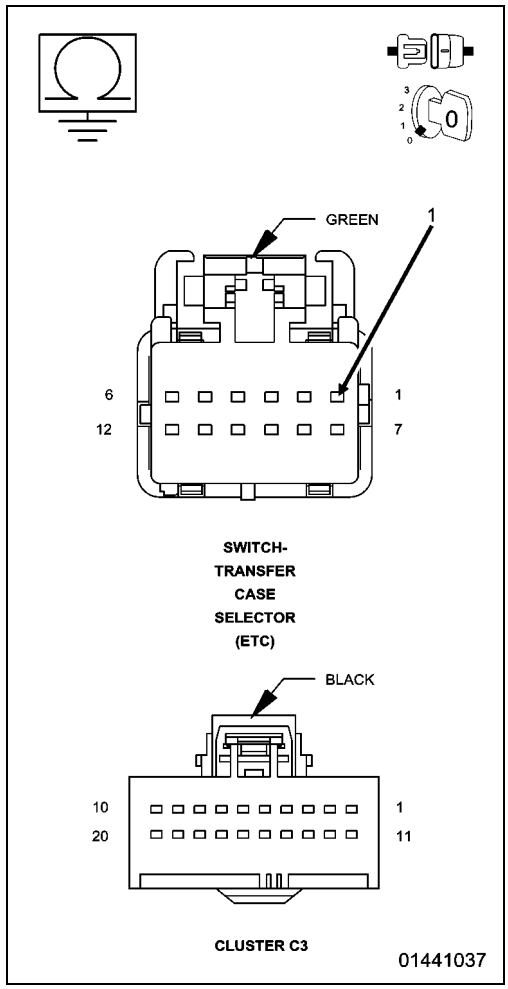

P0839-FOUR WHEEL DRIVE (4WD) SWITCH CIRCUIT HIGH

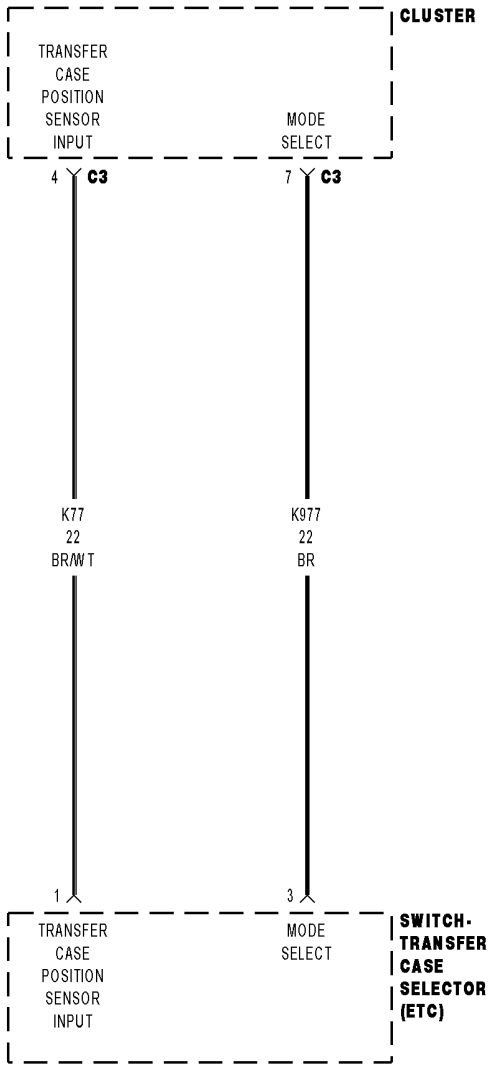

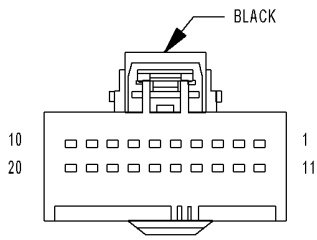

CLUSTER C3

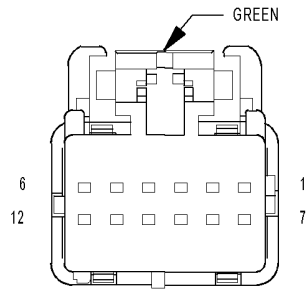

SWITCH-TRANSFER CASE SELECTOR (ETC)

01440900

For a complete wiring diagram, **refer to the Wiring Information**.

- **When Monitored:**
  With the ignition on.
- **Set Condition:**
  The (K77) Transfer Case Position Sensor Input circuit is shorted to voltage.

Possible Causes
(K77) TRANSFER CASE POSITION SENSOR INPUT CIRCUIT SHORTED TO VOLTAGE
TRANSFER CASE SELECTOR SWITCH
CLUSTER

1. CHECK FOR ACTIVE DTC

1. Turn the ignition on.
2. With the scan tool, read Cluster DTCs.

Does the scan tool display this DTC as active?

Yes

- Go To 2

No

- The condition that caused this code to set is not present at this time. Check for an intermittent condition by inspecting the related wiring harness for chafed, pierced, pinched, and partially broken wires. Also inspect the related connectors for broken, bent, pushed out, spread, corroded, or contaminated terminals.
- Perform the BODY VERIFICATION TEST. (Refer to 28 - DTC-Based Diagnostics/MODULE, Totally Integrated Power (TIPM) - Standard Procedure).

2. TRANSFER CASE SELECTOR SWITCH

1. Turn the ignition off.
2. Disconnect the Transfer Case Selector Switch harness connector.
3. Turn the ignition on.
4. Measure the voltage of the (K77) Transfer Case Position Sensor Input circuit.

Is the voltage above 5.5 volts?

Yes

- Go To 3

No

- Replace the Transfer Case Selector Switch in accordance with the Service Information.
- Perform the BODY VERIFICATION TEST. (Refer to 28 - DTC-Based Diagnostics/MODULE, Totally Integrated Power (TIPM) - Standard Procedure).

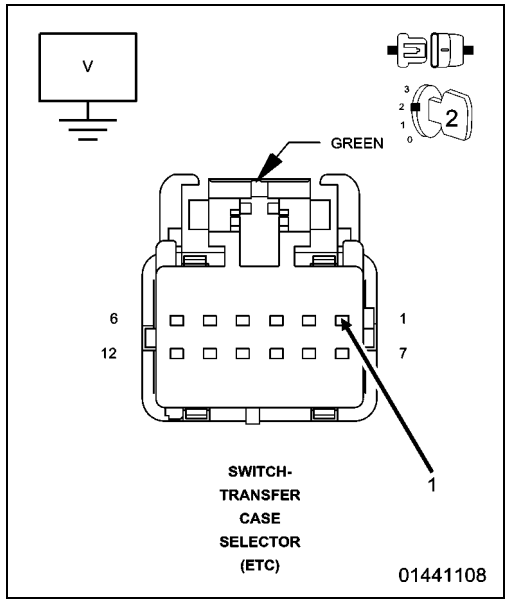

3. (K77) TRANSFER CASE POSITION SENSOR INPUT CIRCUIT SHORTED TO VOLTAGE

1. Turn the ignition off.
2. Disconnect the Cluster C3 harness connector.
3. Turn the ignition on.
4. Measure the voltage of the (K77) Transfer Case Position Sensor Input circuit at the Transfer Case Selector Switch harness connector.

Is the voltage above 0.2 of a volt?

Yes

- Repair the (K77) Transfer Case Position Sensor Input circuit for a short to voltage.
- Perform the BODY VERIFICATION TEST. (Refer to 28 - DTC-Based Diagnostics/MODULE, Totally Integrated Power (TIPM) - Standard Procedure).

No

- Replace the Cluster in accordance with the Service Information.
- Perform the BODY VERIFICATION TEST. (Refer to 28 - DTC-Based Diagnostics/MODULE, Totally Integrated Power (TIPM) - Standard Procedure).

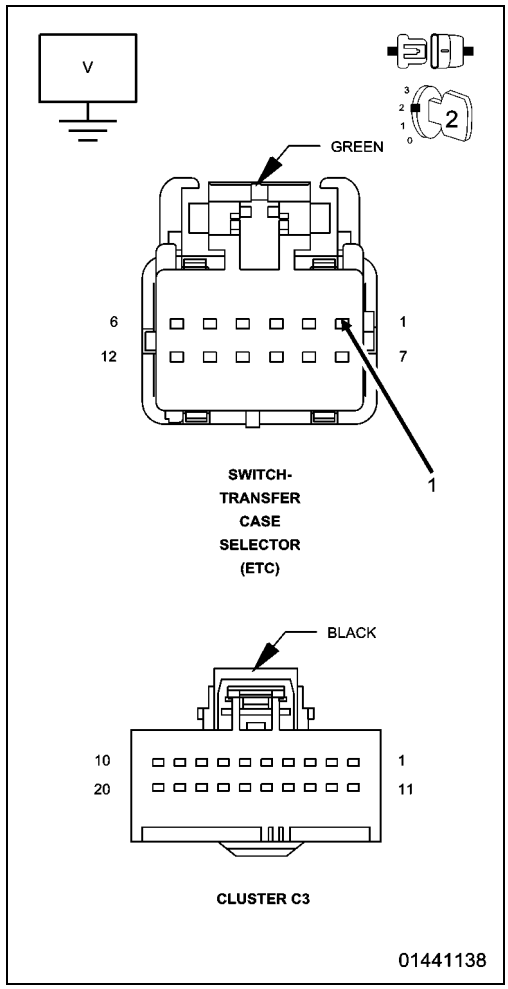

■ P0853-OVERDRIVE / TOW SWITCH INPUT CIRCUIT STUCK

For a complete wiring diagram, **refer to the Wiring Information**.

- **When Monitored:**
  With the ignition on.
- **Set Condition:**
  The Cluster detects the Overdrive / Tow Switch function inoperative.

Possible Causes
UPPER SWITCH BANK

1. CHECK FOR AN ACTIVE DTC

1. Turn the ignition on.
2. Actuate the Overdrive / Tow Switch.
3. With the scan tool, read DTCs.

Does the scan tool display this DTC as Active?

Yes

- Replace the Upper Switch Bank in accordance with the Service Information.
- Perform the BODY VERIFICATION TEST. (Refer to 28 - DTC-Based Diagnostics/MODULE, Totally Integrated Power (TIPM) - Standard Procedure).

No

- Test complete.

■ P1103-DC TO AC CONVERTER SWITCH STUCK

For a complete wiring diagram, **refer to the Wiring Information**.

- **When Monitored:**
  With the ignition on.
- **Set Condition:**
  If the Cluster senses the Inverter switch input for more than 20 seconds.

Possible Causes
OBJECT HOLDING INVERTER SWITCH IN A PUSHED POSITION
SUBSTANCE CAUSING INVERTER SWITCH TO GET STUCK IN A PUSHED POSITION
SWITCH BANK

1. INSPECT SWITCH BANK FOR DAMAGE

NOTE: Diagnose and repair all LIN Bus related DTCs before performing this test procedure.

1. Turn the ignition off.
2. Inspect the Switch Bank for damage.

Is the Switch Bank damaged?

Yes

- Replace the Switch Bank in accordance with the Service Information.
- Perform the BODY VERIFICATION TEST. (Refer to 28 - DTC-Based Diagnostics/MODULE, Totally Integrated Power (TIPM) - Standard Procedure).

No

- Go To 2

2. INSPECT FOR OBJECT OR SUBSTANCE CAUSING INVERTER SWITCH TO STAY OR STICK IN A PUSHED POSITION

1. Inspect the Inverter switch for anything that would cause it to stay or stick in a pushed position.

Is anything present that would cause the Inverter switch to stay or stick in a pushed position?

Yes

- Repair as necessary.
- Perform the BODY VERIFICATION TEST. (Refer to 28 - DTC-Based Diagnostics/MODULE, Totally Integrated Power (TIPM) - Standard Procedure).

No

- Go To 3

3. TEST FOR INTERMITTENT CONDITION

1. Turn the ignition on.
2. Using a scan tool, record and erase Diagnostic Trouble Codes (DTCs).
3. Press and release the Inverter switch several times and then wait 20 seconds.
4. Using a scan tool, read DTCs.

Does the scan tool display DTC P1103-DC TO AC CONVERTER SWITCH STUCK?

Yes

- Replace the Switch Bank in accordance with the Service Information.
- Perform the BODY VERIFICATION TEST. (Refer to 28 - DTC-Based Diagnostics/MODULE, Totally Integrated Power (TIPM) - Standard Procedure).

No

- Test complete, the condition or conditions that originally set this DTC are not present at this time. Using the wiring diagrams as a guide, check all related splices and connectors for signs of water intrusion, corrosion, pushed out or bent terminals, and correct pin tension.
- Perform the BODY VERIFICATION TEST. (Refer to 28 - DTC-Based Diagnostics/MODULE, Totally Integrated Power (TIPM) - Standard Procedure).

U0010-CAN INTERIOR BUS

For a complete wiring diagram, **refer to the Wiring Information**.

- **When Monitored:**

  Continuously when the ignition is on.

  Battery voltage between 10 and 16 volts.

  Ignition Off Draw (IOD) fuse installed.
- **Set Condition:**

  The controller detects a short to ground on the CAN Interior Bus (125K)(+) circuit or a short to voltage on the CAN Interior Bus (125K)(-) circuit.

Possible Causes
(D265) CAN INTERIOR BUS(+) (125k) CIRCUIT SHORTED TO VOLTAGE
(D264) CAN INTERIOR BUS(-) (125k) CIRCUIT SHORTED TO GROUND
(D264) CAN INTERIOR BUS(-) (125k) CIRCUIT SHORTED TO THE (D265) CAN INTERIOR BUS(+) (125k) CIRCUIT
TOTALLY INTEGRATED POWER MODULE (TIPM)
ANY CAN INTERIOR BUS MODULE

1. VERIFY DIAGNOSTIC TROUBLE CODE (DTC) IS ACTIVE

NOTE: Make sure the IOD fuse is installed and battery voltage is between 10 and 16 volts before proceeding.

1. Using the scan tool, read active DTCs.

Is this DTC active?

Yes

- **(Refer to 28 - DTC-Based Diagnostics/MODULE, Totally Integrated Power (TIPM) - Diagnosis and Testing)** and perform the U0010-CAN Interior Bus diagnostic procedure.

No

- **(Refer to 29 - Non-DTC Diagnostics/Communication - Diagnosis and Testing)** and perform the Stored Lost Communication DTCs diagnostic procedure.

U0141-LOST COMMUNICATION WITH IPM (FCM/TIPM)

For a complete wiring diagram, **refer to the Wiring Information**.

- **When Monitored:**
  Continuously when the ignition is on.
  Battery voltage between 10 and 16 volts.
  Ignition Off Draw (IOD) fuse installed.
  Totally Integrated Power Module (TIPM) is configured correctly.
- **Set Condition:**
  Bus messages not received from the TIPM for approximately two to five seconds.

Possible Causes
CAN BUS CIRCUITS OPEN OR SHORTED
DTCS RELATED TO BATTERY VOLTAGE, IGNITION, OR VIN MESSAGES
TIPM NOT CONFIGURED CORRECTLY
TOTALLY INTEGRATED POWER MODULE (TIPM)
TIPM POWER AND GROUND
MODULE THAT SET THIS DTC

1. VERIFY DIAGNOSTIC TROUBLE CODE (DTC) IS ACTIVE

NOTE: Make sure the IOD fuse is installed and battery voltage is between 10 and 16 volts before proceeding.

1. With the scan tool, read active Cluster DTCs.

Is this DTC active?

Yes

- (Refer to 28 - DTC-Based Diagnostics/MODULE, Totally Integrated Power (TIPM) - Diagnosis and Testing) and perform the U0141-Lost Communication with IPM (FCM/TIPM) diagnostic procedure.

No

- (Refer to 29 - Non-DTC Diagnostics/Communication - Diagnosis and Testing) and perform the Stored Lost Communication DTCs diagnostic procedure.

U0159-LOST COMMUNICATION WITH PARKING ASSIST CONTROL MODULE

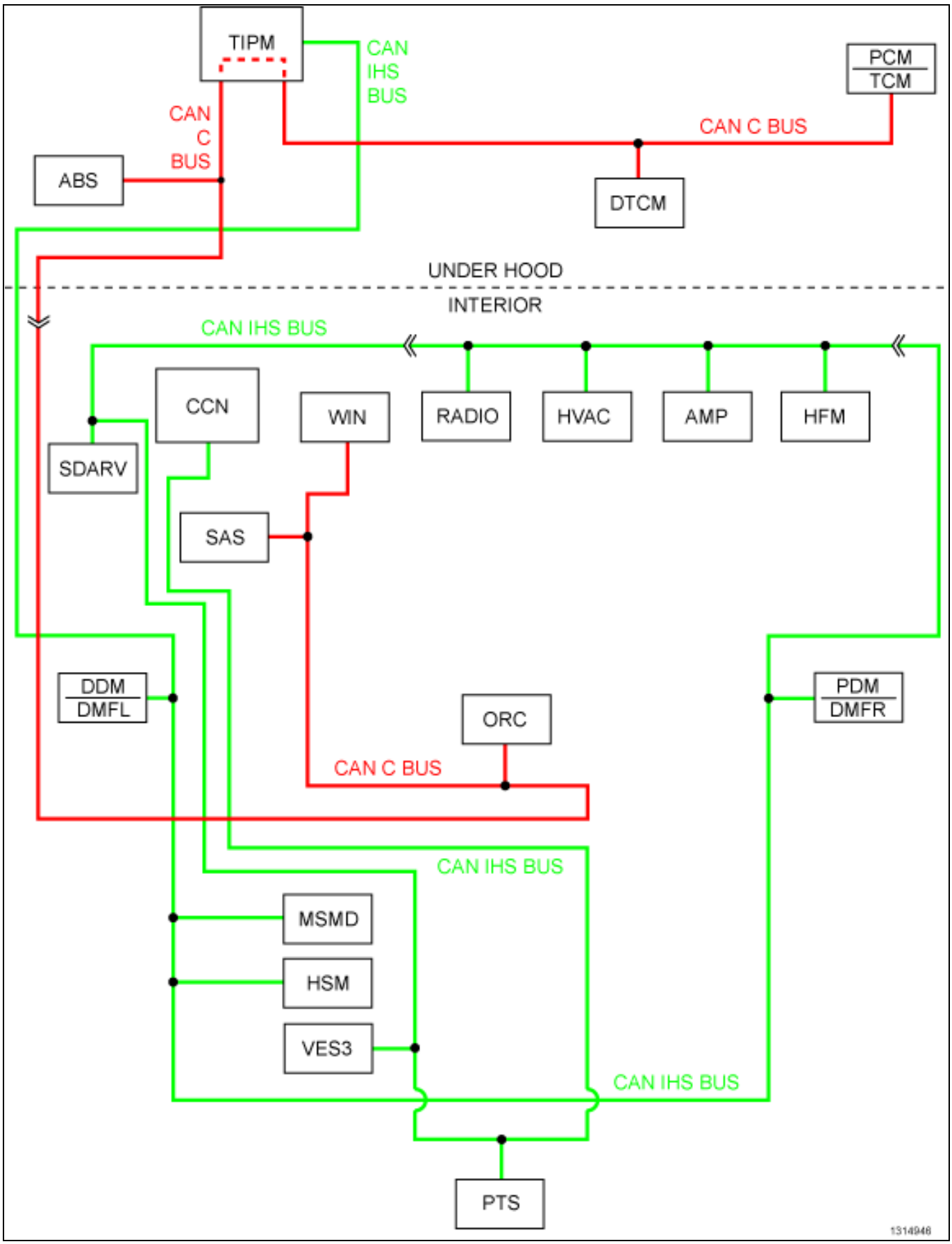

For a complete wiring diagram, **refer to the Wiring Information**.

- **When Monitored:**
  Continuously when the ignition is on.
  Battery voltage between 10 and 16 volts.
  Ignition Off Draw (IOD) fuse installed.
  Totally Integrated Power Module (TIPM) is configured correctly.
- **Set Condition:**
  Bus messages not received from the Park Assist Module for approximately two to five seconds.

Possible Causes
CAN B OR CAN C BUS CIRCUITS OPEN OR SHORTED
DTCS RELATED TO BATTERY VOLTAGE, IGNITION, OR VIN MESSAGES
TIPM NOT CONFIGURED CORRECTLY
PARK ASSIST CONTROL MODULE
PARK ASSIST CONTROL MODULE POWER AND GROUND
MODULE THAT SET THIS DTC

1. VERIFY DIAGNOSTIC TROUBLE CODE (DTC) IS ACTIVE

NOTE: Make sure the IOD fuse is installed and battery voltage is between 10 and 16 volts before proceeding.

1. With the scan tool, read active Cluster DTCs.

Is this DTC active?

Yes

- (Refer to 28 - DTC-Based Diagnostics/MODULE, Totally Integrated Power (TIPM) - Diagnosis and Testing) and perform the U0159-Lost Communication with Park Assist Control Module diagnostic procedure.

No

- (Refer to 29 - Non-DTC Diagnostics/Communication - Diagnosis and Testing) and perform the Stored Lost Communication DTC diagnostic procedure.

U0161-LOST COMMUNICATION WITH COMPASS MODULE

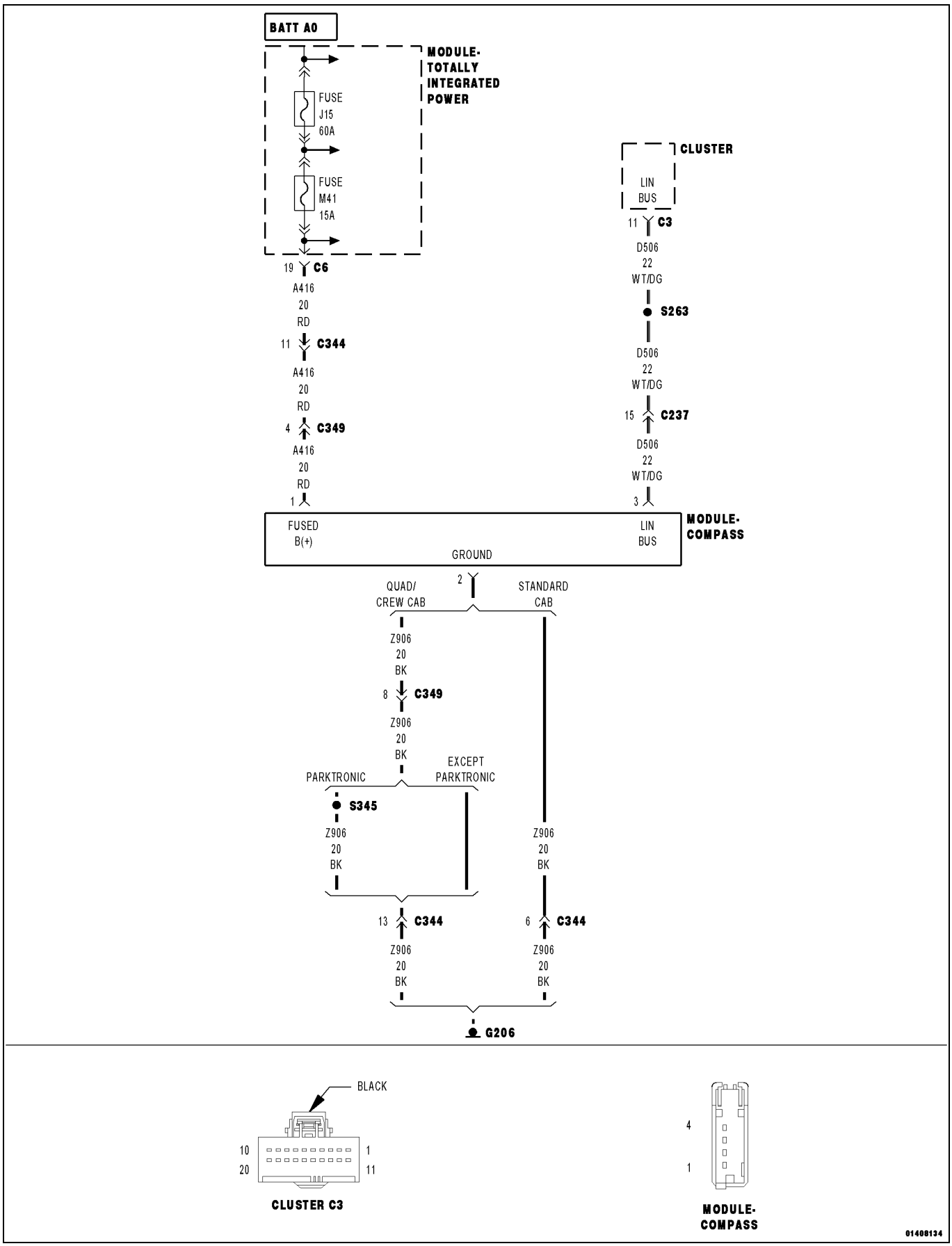

For a complete wiring diagram, **refer to the Wiring Information**.

- **When Monitored:**
  With the ignition on.
- **Set Condition:**
  The Cluster does not receive information from the Compass Module.

Possible Causes
(D506) LIN BUS CIRCUIT OPEN
(A416) FUSED B(+) CIRCUIT OPEN
(Z906) GROUND CIRCUIT OPEN
COMPASS MODULE
CLUSTER

1. CHECK FOR AN ACTIVE DTC

1. Turn the ignition on.
2. With the scan tool, record and erase DTCs.
3. Wait 30 seconds.
4. With the scan tool, read DTCs.

Does the scan tool display: U0161-LOST COMMUNICATION WITH COMPASS MODULE?

Yes

- Go To 2

No

- The condition that caused this code to set is not present at this time. Check for an intermittent condition by inspecting the related wiring harness for chaffed, pierced, pinched, and partially broken wires. Also inspect the related connectors for broken, bent, pushed out, spread, corroded, or contaminated terminals.
- Perform the BODY VERIFICATION TEST. (Refer to 28 - DTC-Based Diagnostics/MODULE, Totally Integrated Power (TIPM) - Standard Procedure).

2. (D506) LIN BUS CIRCUIT OPEN

1. Turn the ignition off.
2. Disconnect the Compass Module harness connector.
3. Turn the ignition on.
4. Measure the voltage of the (D506) LIN BUS circuit.

Is the voltage above 5 volts?

Yes

- Go To 4

No

- Go To 3

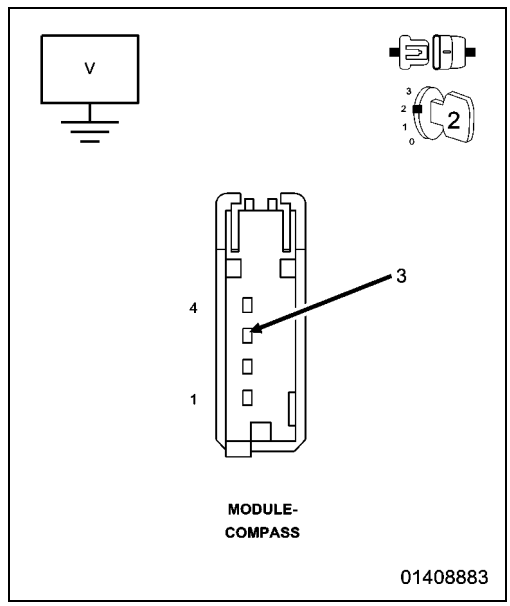

3. (D506) LIN BUS CIRCUIT OPEN

1. Turn the ignition off.
2. Disconnect the Cluster C3 harness connector.
3. Measure the resistance of the (D506) LIN BUS circuit.

Is the resistance below 10K Ohms?

Yes

- Replace the Cluster in accordance with the Service Information.
- Perform the BODY VERIFICATION TEST. (Refer to 28 - DTC-Based Diagnostics/MODULE, Totally Integrated Power (TIPM) - Standard Procedure).

No

- Repair the (D506) LIN BUS circuit for an open.
- Perform the BODY VERIFICATION TEST. (Refer to 28 - DTC-Based Diagnostics/MODULE, Totally Integrated Power (TIPM) - Standard Procedure).

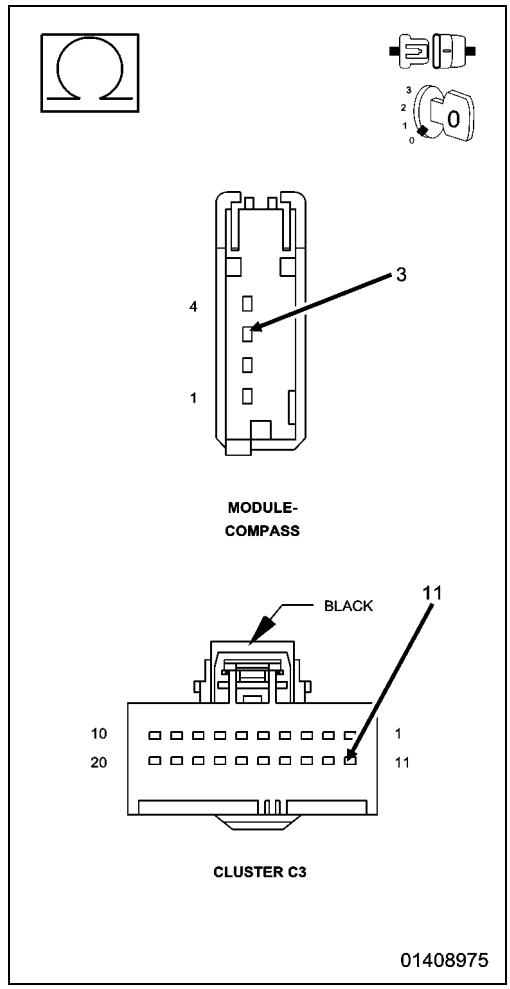

4. (A416) FUSED B(+) CIRCUIT OPEN

1. Turn the ignition on.
2. Measure the voltage of the (A416) Fused B(+) circuit.

Is the voltage above 10 volts?

Yes

- Go To 5

No

- Repair the (A416) Fused B(+) circuit for an open.
- Perform the BODY VERIFICATION TEST. (Refer to 28 - DTC-Based Diagnostics/MODULE, Totally Integrated Power (TIPM) - Standard Procedure).

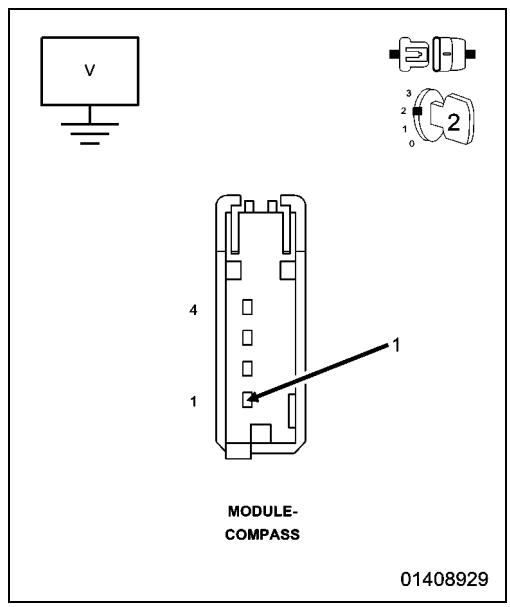

5. (Z906) GROUND CIRCUIT OPEN

1. Turn the ignition off.
2. Measure the resistance between ground and the (Z906) Ground circuit.

Is the resistance below 10K Ohms?

Yes

- Replace the Compass Module in accordance with the Service Information.
- Perform the BODY VERIFICATION TEST. (Refer to 28 - DTC-Based Diagnostics/MODULE, Totally Integrated Power (TIPM) - Standard Procedure).

No

- Repair the (Z906) ground circuit for an open.
- Perform the BODY VERIFICATION TEST. (Refer to 28 - DTC-Based Diagnostics/MODULE, Totally Integrated Power (TIPM) - Standard Procedure).

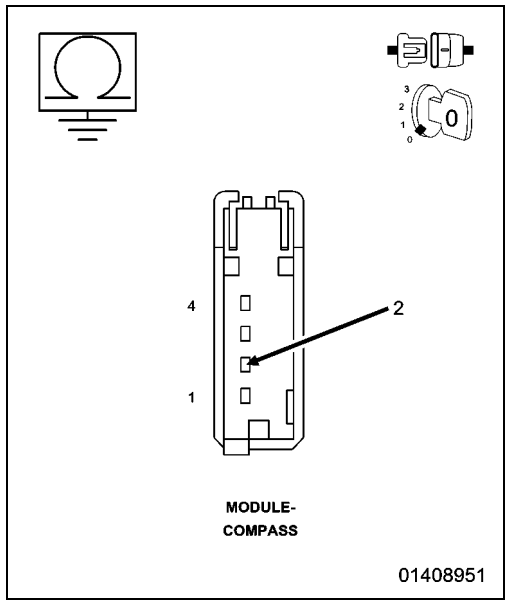

U0164-LOST COMMUNICATION WITH HVAC CONTROL MODULE

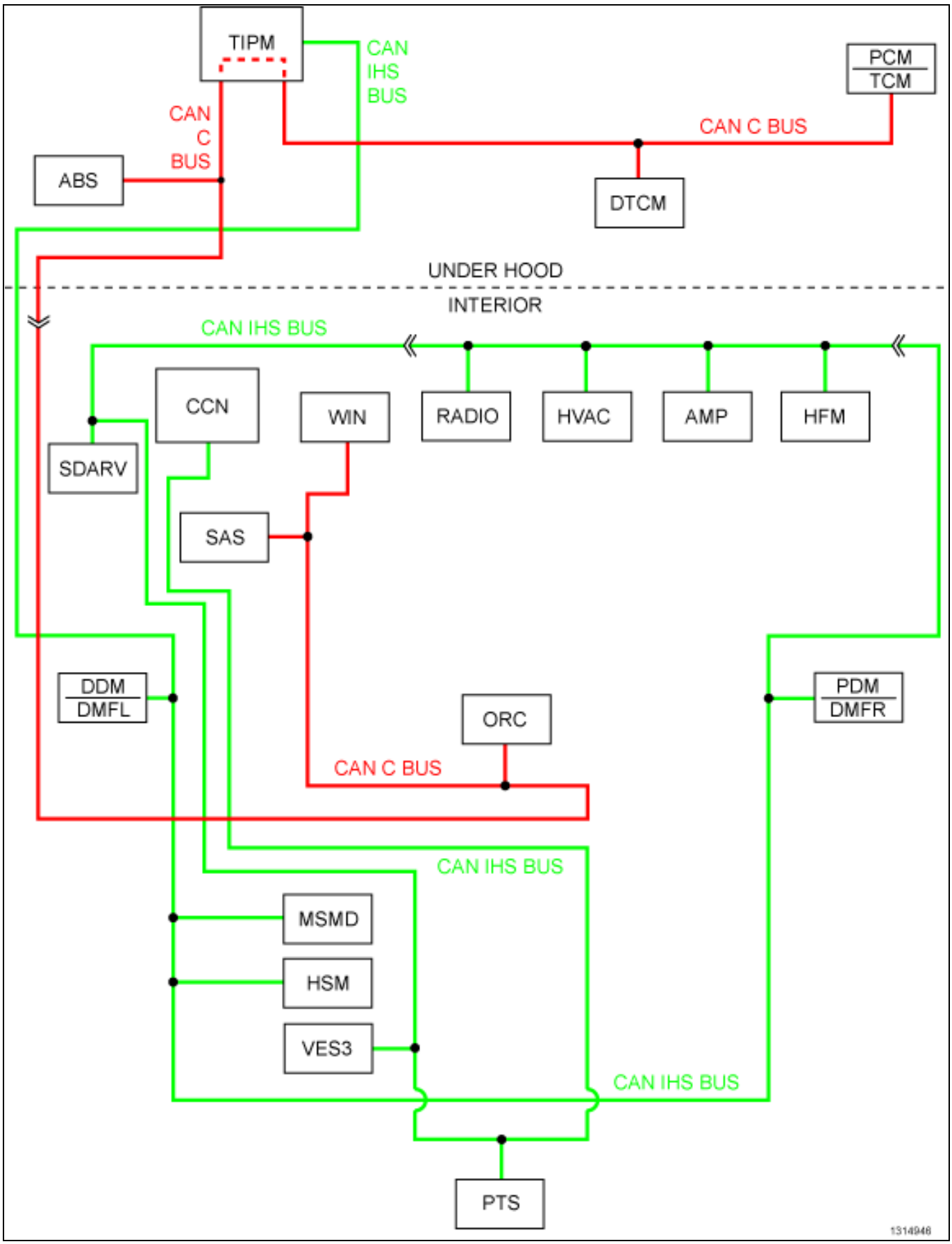

For a complete wiring diagram, **refer to the Wiring Information**.

- **When Monitored:**
  Continuously when the ignition is on.
  Battery voltage between 10 and 16 volts.
  Ignition Off Draw (IOD) fuse installed.
  Totally Integrated Power Module (TIPM) is configured correctly.
- **Set Condition:**
  Bus messages not received from the HVAC Control Module for approximately two to five seconds.

Possible Causes
CAN B OR CAN C BUS CIRCUITS OPEN OR SHORTED
DTCS RELATED TO BATTERY VOLTAGE, IGNITION, OR VIN MESSAGES
TIPM NOT CONFIGURED CORRECTLY
HVAC CONTROL MODULE
HVAC CONTROL MODULE POWER AND GROUND
MODULE THAT SET THIS DTC

1. VERIFY DIAGNOSTIC TROUBLE CODE (DTC) IS ACTIVE

NOTE: Make sure the IOD fuse is installed and battery voltage is between 10 and 16 volts before proceeding.

1. With the scan tool, read active Cluster DTCs.

Is this DTC active?

Yes

- (Refer to 28 - DTC-Based Diagnostics/MODULE, Totally Integrated Power (TIPM) - Diagnosis and Testing) and perform the U0164-Lost Communication with HVAC Control Module diagnostic procedure.

No

- (Refer to 29 - Non-DTC Diagnostics/Communication - Diagnosis and Testing) and perform the Stored Lost Communication DTCs diagnostic procedure.

U0184-LOST COMMUNICATION WITH RADIO

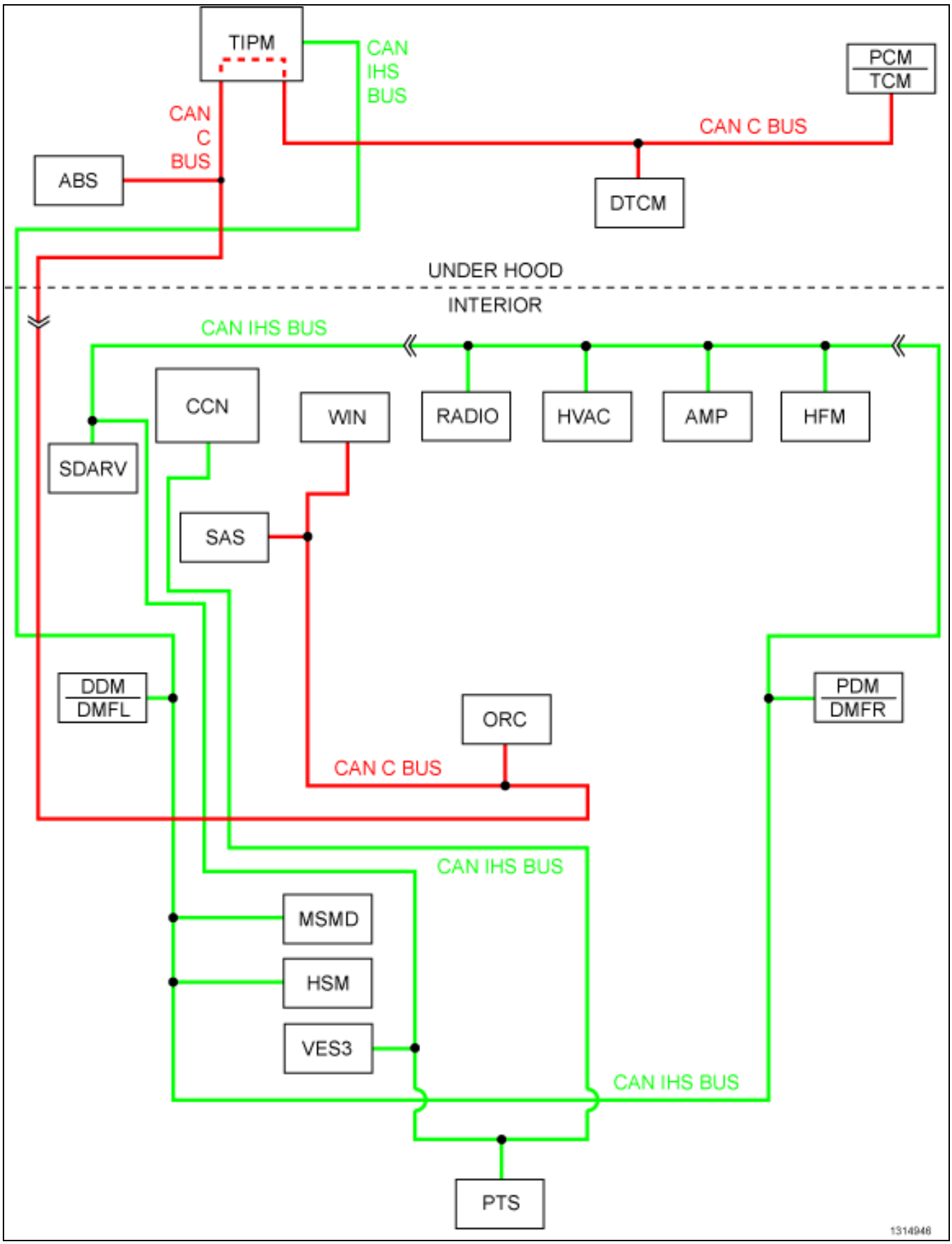

For a complete wiring diagram, **refer to the Wiring Information**.

- **When Monitored:**
  Continuously when the ignition is on.
  Battery voltage between 10 and 16 volts.
  Ignition Off Draw (IOD) fuse installed.
  Totally Integrated Power Module (TIPM) is configured correctly.
- **Set Condition:**
  Bus messages not received from the Radio for approximately two to five seconds.

Possible Causes
CAN B OR CAN C BUS CIRCUITS OPEN OR SHORTED
DTCS RELATED TO BATTERY VOLTAGE, IGNITION, OR VIN MESSAGES
TIPM NOT CONFIGURED CORRECTLY
RADIO
RADIO POWER AND GROUND
MODULE THAT SET THIS DTC

1. VERIFY DIAGNOSTIC TROUBLE CODE (DTC) IS ACTIVE

NOTE: Make sure the IOD fuse is installed and battery voltage is between 10 and 16 volts before proceeding.

1. With the scan tool, read active Cluster DTCs.

Is this DTC active?

Yes

- (Refer to 28 - DTC-Based Diagnostics/MODULE, Totally Integrated Power (TIPM) - Diagnosis and Testing) and perform the U0184-Lost Communication with Radio diagnostic procedure.

No

- (Refer to 29 - Non-DTC Diagnostics/Communication - Diagnosis and Testing) and perform the Stored Lost Communication DTCs diagnostic procedure.

U0197-LOST COMMUNICATION WITH HANDS FREE PHONE MODULE

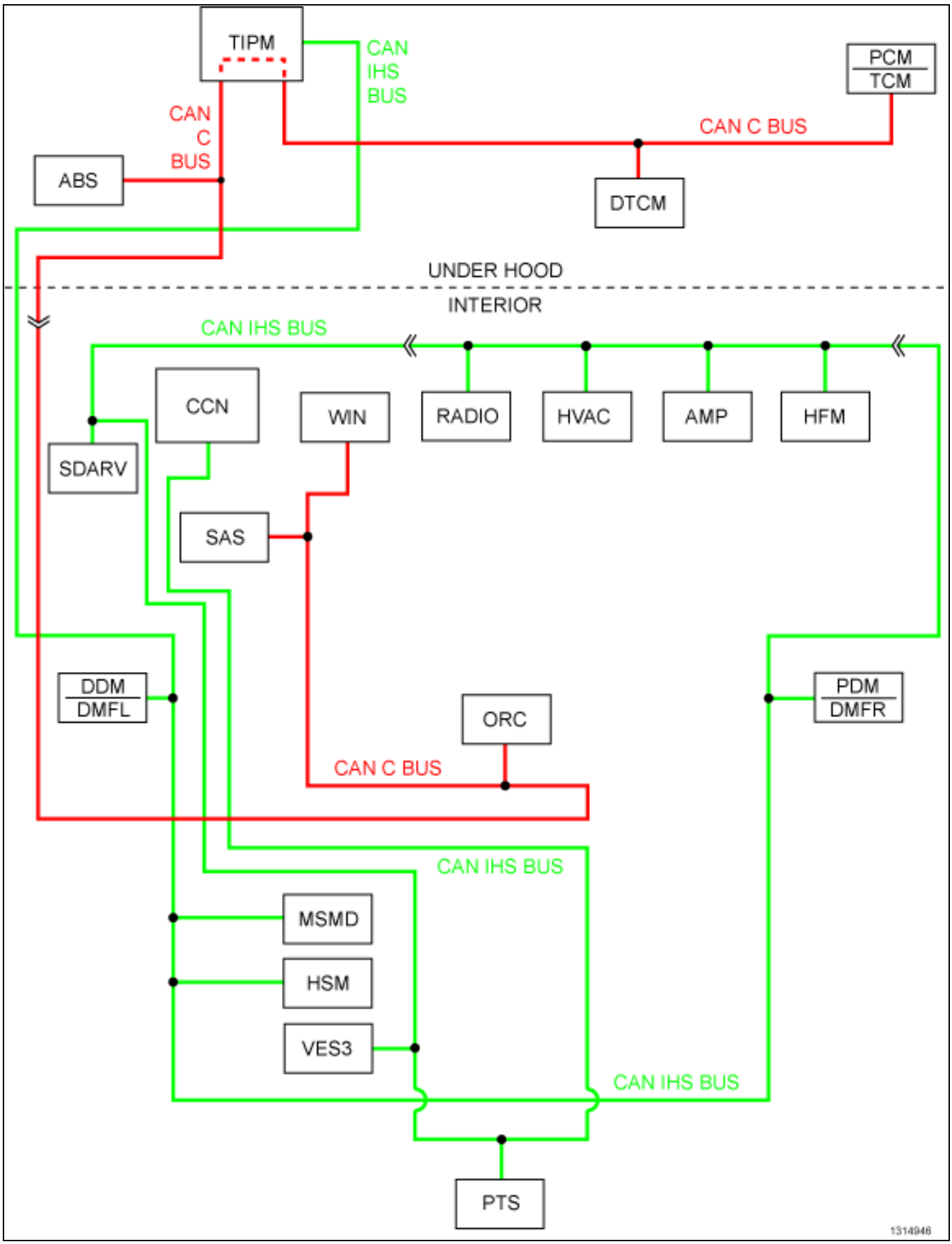

For a complete wiring diagram,**refer to the Wiring Information**.

- **When Monitored:**
  Continuously when the ignition is on.
  Battery voltage between 10 and 16 volts.
  Ignition Off Draw (IOD) fuse installed.
  Totally Integrated Power Module (TIPM) is configured correctly.
- **Set Condition:**
  Bus messages not received from the Hands Free Phone Module (HFM) for approximately two to five seconds.

Possible Causes
CAN B OR CAN C BUS CIRCUITS OPEN OR SHORTED
DTCS RELATED TO BATTERY VOLTAGE, IGNITION, OR VIN MESSAGES
TIPM NOT CONFIGURED CORRECTLY
HANDS FREE PHONE MODULE (HFM)
HFM POWER AND GROUND
MODULE THAT SET THIS DTC

1. VERIFY DIAGNOSTIC TROUBLE CODE (DTC) IS ACTIVE

NOTE: Make sure the IOD fuse is installed and battery voltage is between 10 and 16 volts before proceeding.

1. With the scan tool, read active Cluster DTCs.

Is this DTC active?

Yes

- (Refer to 28 - DTC-Based Diagnostics/MODULE, Totally Integrated Power (TIPM) - Diagnosis and Testing) and perform the U0197-Lost Communication with Hands Free Module diagnostic procedure.

No

- (Refer to 29 - Non-DTC Diagnostics/Communication - Diagnosis and Testing) and perform the Stored Lost Communication DTCs diagnostic procedure.

U0208-LOST COMMUNICATION WITH HEATED SEAT CONTROL MODULE

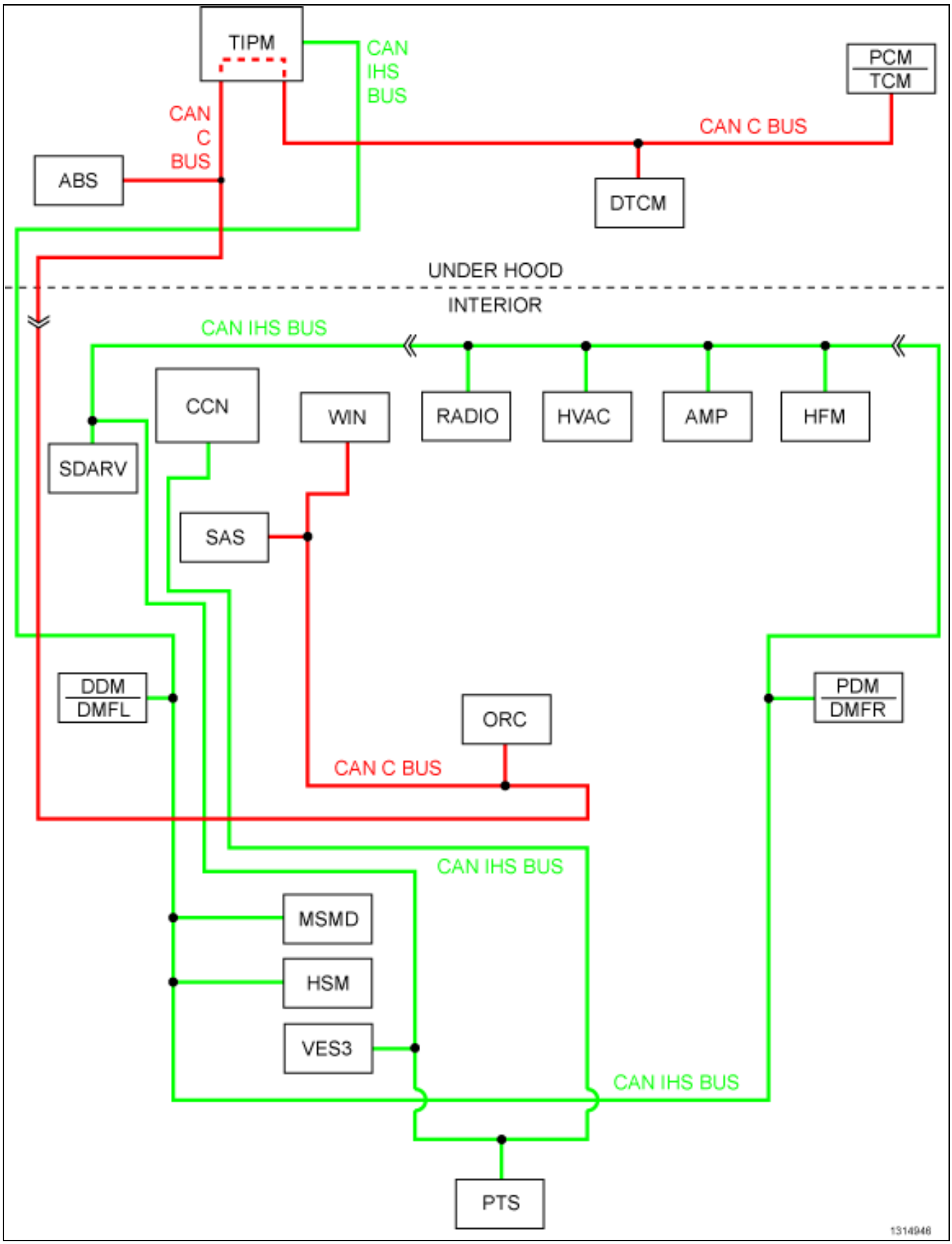

For a complete wiring diagram,**refer to the Wiring Information**.

- **When Monitored:**
  Continuously when the ignition is on.
  Battery voltage between 10 and 16 volts.
  Ignition Off Draw (IOD) fuse installed.
  Totally Integrated Power Module (TIPM) is configured correctly.
- **Set Condition:**
  Bus messages not received from the Heated Seat Control Module (HSM) for approximately two to five seconds.

Possible Causes
CAN B OR CAN C BUS CIRCUITS OPEN OR SHORTED
DTCS RELATED TO BATTERY VOLTAGE, IGNITION, OR VIN MESSAGES
TIPM NOT CONFIGURED CORRECTLY
HEATED SEAT CONTROL MODULE
HEATED SEAT CONTROL MODULE POWER AND GROUND
MODULE THAT SET THIS DTC

1. VERIFY DIAGNOSTIC TROUBLE CODE (DTC) IS ACTIVE

NOTE: Make sure the IOD fuse is installed and battery voltage is between 10 and 16 volts before proceeding.

1. With the scan tool, read active Cluster DTCs.

Is this DTC active?

Yes

- (Refer to 28 - DTC-Based Diagnostics/MODULE, Totally Integrated Power (TIPM) - Diagnosis and Testing) and perform the U0208-Lost Communication with Heated Seat Control Module diagnostic procedure.

No

- (Refer to 29 - Non-DTC Diagnostics/Communication - Diagnosis and Testing) and perform the Stored Lost Communication DTCs diagnostic procedure.

U0209-LOST COMMUNICATION WITH MEMORY SEAT CONTROL MODULE

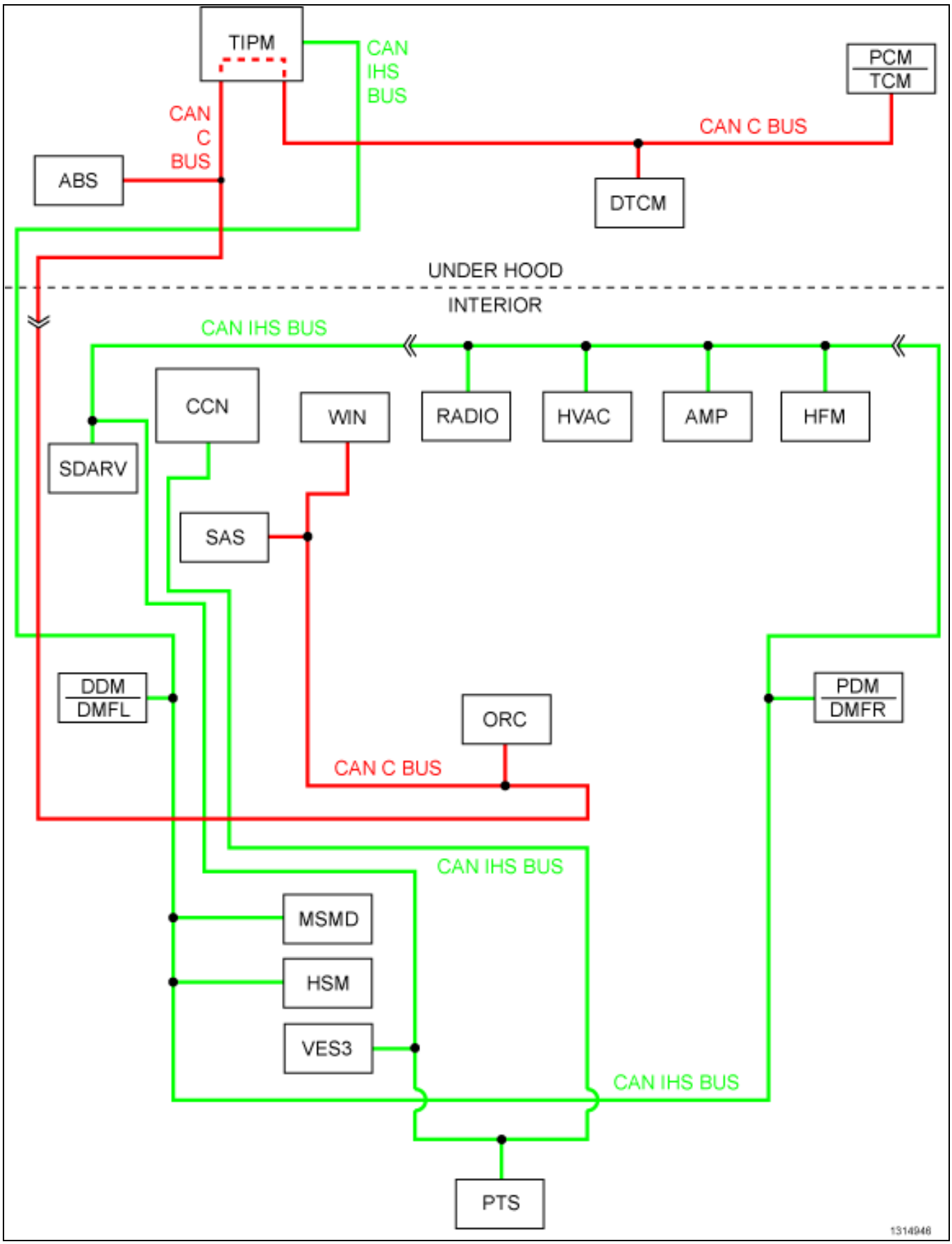

For a complete wiring diagram,**refer to the Wiring Information**.

- **When Monitored:**
  Continuously when the ignition is on.
  Battery voltage between 10 and 16 volts.
  Ignition Off Draw (IOD) fuse installed.
  Totally Integrated Power Module (TIPM) is configured correctly.
- **Set Condition:**
  Bus messages not received from the Memory Seat Control Module for approximately two to five seconds.

Possible Causes
CAN B OR CAN C BUS CIRCUITS OPEN OR SHORTED
DTCS RELATED TO BATTERY VOLTAGE, IGNITION, OR VIN MESSAGES
TIPM NOT CONFIGURED CORRECTLY
MEMORY SEAT CONTROL MODULE
MEMORY SEAT CONTROL MODULE POWER AND GROUND
MODULE THAT SET THIS DTC

1. VERIFY DIAGNOSTIC TROUBLE CODE (DTC) IS ACTIVE

NOTE: Make sure the IOD fuse is installed and battery voltage is between 10 and 16 volts before proceeding.

1. With the scan tool, read active Cluster DTCs.

Is this DTC active?

Yes

- (Refer to 28 - DTC-Based Diagnostics/MODULE, Totally Integrated Power (TIPM) - Diagnosis and Testing) and perform the U0209-Lost Communication with Memory Seat Control Module diagnostic procedure.

No

- (Refer to 29 - Non-DTC Diagnostics/Communication - Diagnosis and Testing) and perform the Stored Lost Communication DTCs diagnostic procedure.

U1008-LIN 1 BUS

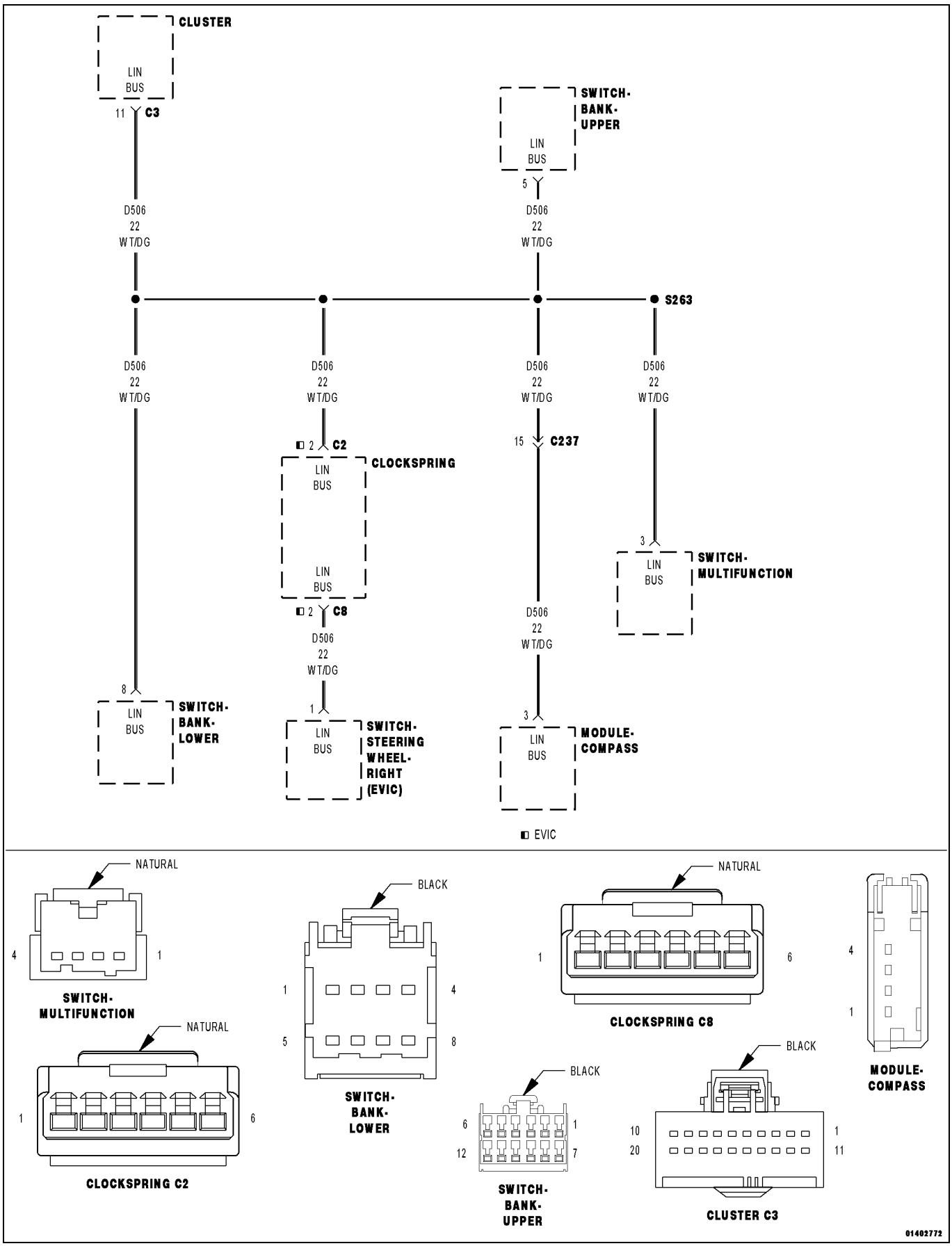

For a complete wiring diagram, **refer to the Wiring Information**.

- **When Monitored:**
  With the ignition on.
- **Set Condition:**
  LIN 1 Bus Performance.

Possible Causes
(D506) LIN BUS CIRCUIT OPEN
(D506) LIN BUS CIRCUIT SHORTED TO GROUND
SHORTED LIN BUS COMPONENT
CLUSTER

1. CHECK FOR AN ACTIVE DTC

NOTE: Before proceeding with this diagnostic procedure, verify the Left and Right Multifunction Switch and Clockspring harness connectors are properly seated and verify proper pin terminal tension. A loose connection at any of these connectors may cause this DTC to set.

1. Turn the ignition on.
2. With the scan tool, read DTCs.

Does the scan tool display this DTC as active?

Yes

- Go To 2

No

- Test complete, the condition or conditions that originally set this DTC are not present at this time. Using the wiring diagrams as a guide, check all related splices and connectors for signs of water intrusion, corrosion, pushed out or bent terminals, and correct pin tension.

2. SHORTED COMPONENT

NOTE: After disconnecting each component, check DTCs with the scan tool.

1. Turn the ignition on.
2. Disconnect the Upper Switch Bank harness connector.
3. Disconnect the Lower Switch Bank harness connector.
4. Disconnect the Compass Module harness connector.
5. Disconnect the Multifunction Switch harness connector.
6. Disconnect the Right Steering Wheel Switch harness connector.

With each component disconnected, did the DTC U1008-LIN 1 BUS change from active to stored?

Yes

- Replace the component that caused the DTC U1008-LIN 1 BUS change from active to stored.
- Perform the BODY VERIFICATION TEST. (Refer to 28 - DTC-Based Diagnostics/MODULE, Totally Integrated Power (TIPM) - Standard Procedure).

No

- Go To 3

3. (D506) LIN BUS CIRCUIT OPEN

1. Turn the ignition off.
2. Disconnect the Cluster C3 harness connector.
3. Disconnect the Upper Switch Bank harness connector.
4. Measure the resistance of the (D506) LIN Bus circuit.

Is the resistance above 10K Ohms?

Yes

- Repair the (D506) LIN Bus circuit for an open.
- Perform the BODY VERIFICATION TEST. (Refer to 28 - DTC-Based Diagnostics/MODULE, Totally Integrated Power (TIPM) - Standard Procedure).

No

- Go To 4

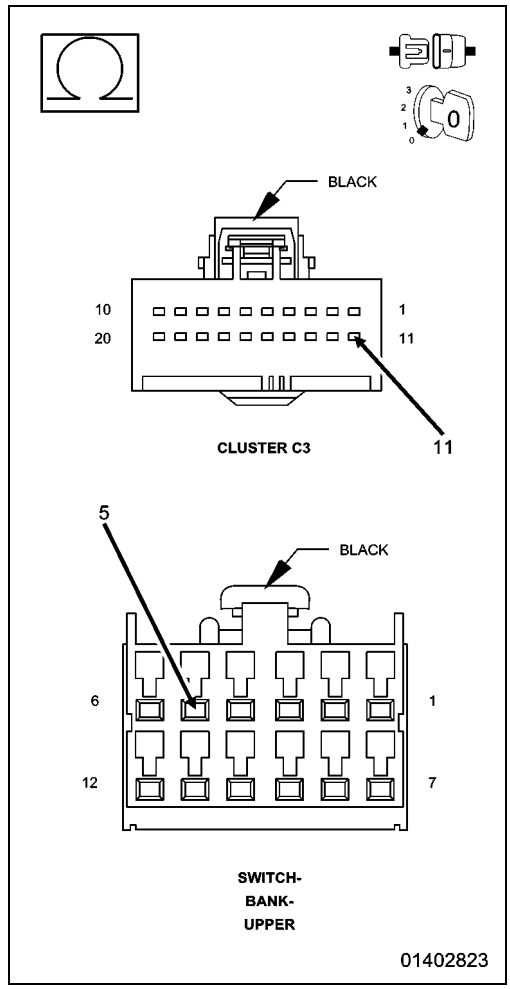

4. (D506) LIN BUS CIRCUIT SHORTED TO GROUND

1. Turn the ignition off.
2. Measure the resistance to ground on the (D506) LIN Bus circuit.

Is the resistance below 10K Ohms?

Yes

- Repair the (D506) LIN Bus circuit for a short to ground.
- Perform the BODY VERIFICATION TEST. (Refer to 28 - DTC-Based Diagnostics/MODULE, Totally Integrated Power (TIPM) - Standard Procedure).

No

- Replace the Cluster in accordance with the Service Information.
- Perform the BODY VERIFICATION TEST. (Refer to 28 - DTC-Based Diagnostics/MODULE, Totally Integrated Power (TIPM) - Standard Procedure).

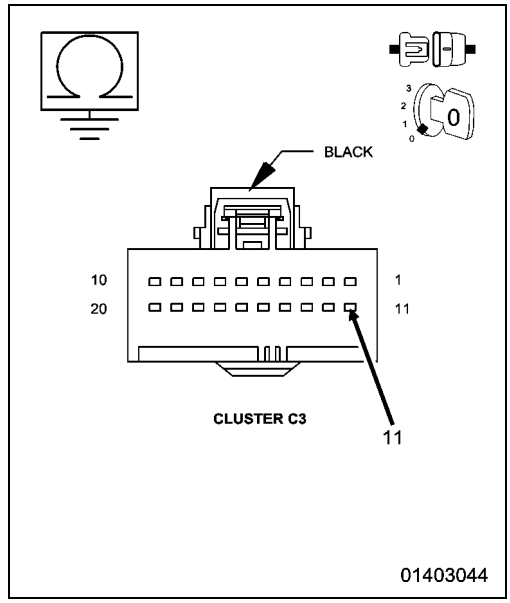

U1109-LOST COMMUNICATION WITH LIN STEERING WHEEL CONTROLS

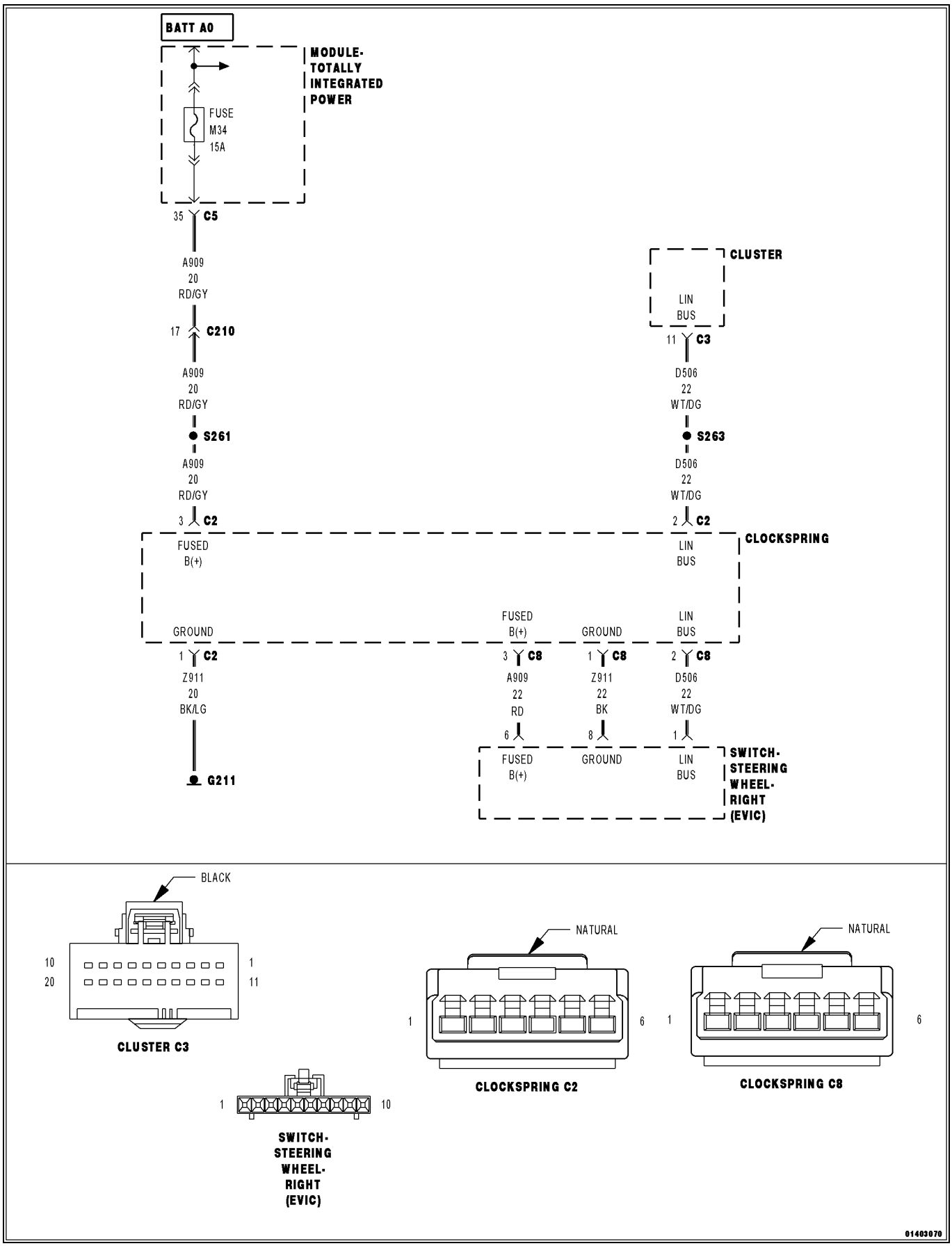

For a complete wiring diagram, **refer to the Wiring Information**.

- **When Monitored:**
  With the ignition on.
- **Set Condition:**
  The Cluster does not receive information from the Steering Wheel Controls.

Possible Causes
(A909) FUSED B (+) CIRCUIT OPEN
(Z911) GROUND CIRCUIT OPEN
(D506) LIN BUS CIRCUIT OPEN
RIGHT STEERING WHEEL SWITCH
CLOCKSPRING
CLUSTER

1. CHECK FOR AN ACTIVE DTC

NOTE: Before proceeding with this diagnostic procedure, verify the Left and Right Multifunction Switch and Clockspring harness connectors are properly seated and verify proper pin terminal tension. A loose connection at any of these connectors may cause this DTC to set.

1. Turn the ignition on.
2. With the scan tool, read DTCs.

Does the scan tool display this DTC as active?

Yes

- Go To 2

No

- Test complete, the condition or conditions that originally set this DTC are not present at this time. Using the wiring diagrams as a guide, check all related splices and connectors for signs of water intrusion, corrosion, pushed out or bent terminals, and correct pin tension.

2. (A909) FUSED B (+) CIRCUIT OPEN

1. Turn the ignition off.
2. Disconnect the Right Steering Wheel Switch harness connector.
3. Turn the ignition on.
4. Measure the voltage of the (A909) Fused B (+) circuit.

Is the voltage above 10.0 volts?

Yes

- Go To 3

No

- Using the Wiring Information as a guide, repair the (A909) Fused B (+) circuit for an open.
- Perform the BODY VERIFICATION TEST. (Refer to 28 - DTC-Based Diagnostics/MODULE, Totally Integrated Power (TIPM) - Standard Procedure).

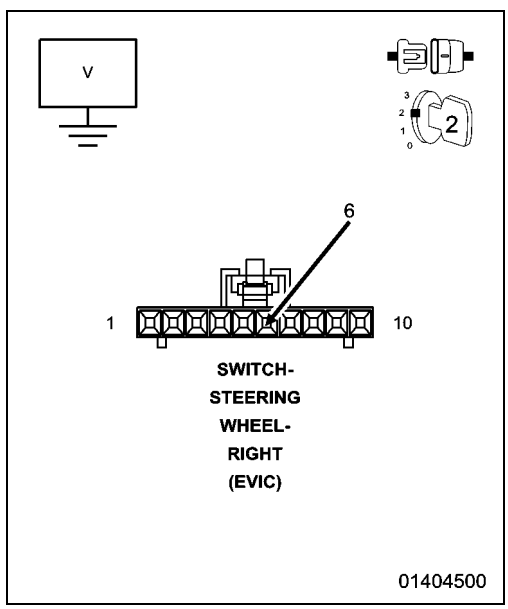

3. (Z911) GROUND CIRCUIT OPEN

1. Turn the ignition off.
2. Measure the resistance between ground and the (Z911) Ground circuit at the Right Steering Wheel Switch harness connector.

Is the resistance below 10K Ohms?

Yes

- Go To 4

No

- Using the Wiring Information as a guide, repair the (Z911) Ground circuit for an open.
- Perform the BODY VERIFICATION TEST. (Refer to 28 - DTC-Based Diagnostics/MODULE, Totally Integrated Power (TIPM) - Standard Procedure).

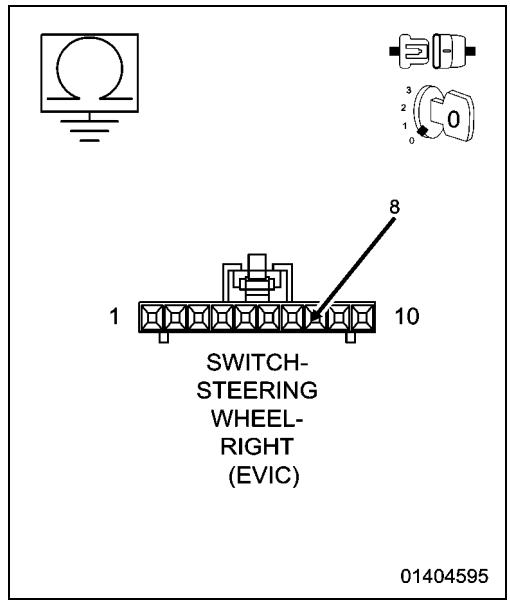

4. RIGHT STEERING WHEEL SWITCH

1. Turn the ignition on.
2. Measure the voltage of the (D506) LIN BUS circuit at the Right Steering Wheel Switch harness connector.

Is the voltage above 5 volts?

Yes

- Replace the Right Steering Wheel Switch in accordance with the Service Information.
- Perform the BODY VERIFICATION TEST. (Refer to 28 - DTC-Based Diagnostics/MODULE, Totally Integrated Power (TIPM) - Standard Procedure).

No

- Go To 5

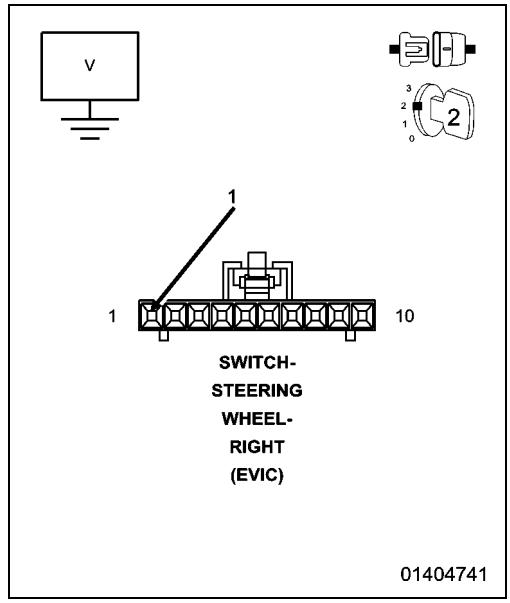

5. (D506) LIN BUS CIRCUIT OPEN BETWEEN THE CLOCKSPRING AND RIGHT STEERING WHEEL SWITCH

1. Turn the ignition off.
2. Disconnect the Clockspring C8 harness connector.
3. Measure the resistance of the (D506) LIN BUS circuit between the Clockspring C8 and Right Steering Wheel Switch harness connectors.

Is the resistance below 10K Ohms?

Yes

- Go To 6

No

- Repair the (D506) LIN BUS circuit for an open.
- Perform the BODY VERIFICATION TEST. (Refer to 28 - DTC-Based Diagnostics/MODULE, Totally Integrated Power (TIPM) - Standard Procedure).

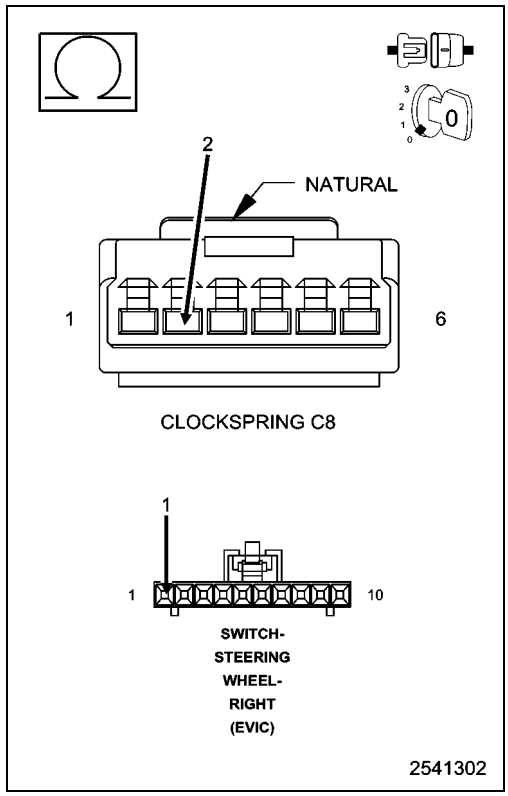

6. CLOCKSPRING

1. Disconnect the Clockspring C2 harness connector.
2. Turn the ignition on.
3. Measure the voltage of the (D506) LIN BUS circuit at the Clockspring C2 harness connector.

Is the voltage above 5 volts?

Yes

- Replace the Clockspring in accordance with the Service Information.
- Perform the BODY VERIFICATION TEST. (Refer to 28 - DTC-Based Diagnostics/MODULE, Totally Integrated Power (TIPM) - Standard Procedure).

No

- Go To 7

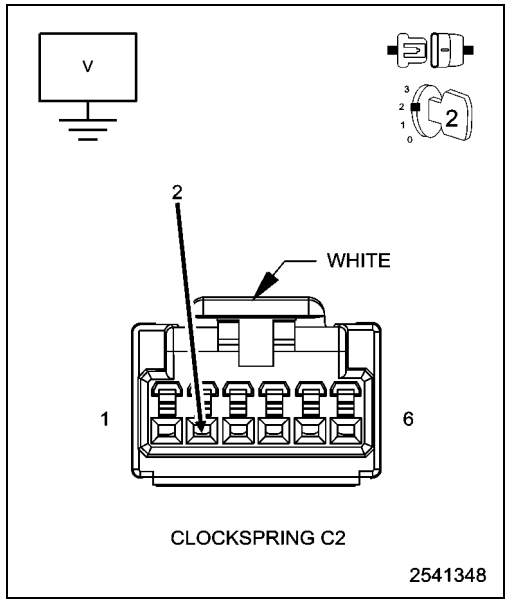

7. (D506) LIN BUS CIRCUIT OPEN BETWEEN THE CLUSTER AND THE CLOCKSPRING

1. Turn the ignition off.
2. Disconnect the Cluster C3 harness connector.
3. Measure the resistance of the (D506) LIN BUS circuit between the Clockspring C2 and Cluster C3 harness connectors.

Is the resistance below 10K Ohms?

Yes

- Replace the Cluster in accordance with the Service Information.
- Perform the BODY VERIFICATION TEST. (Refer to 28 - DTC-Based Diagnostics/MODULE, Totally Integrated Power (TIPM) - Standard Procedure).

No

- Repair the (D506) LIN BUS circuit for an open.
- Perform the BODY VERIFICATION TEST. (Refer to 28 - DTC-Based Diagnostics/MODULE, Totally Integrated Power (TIPM) - Standard Procedure).

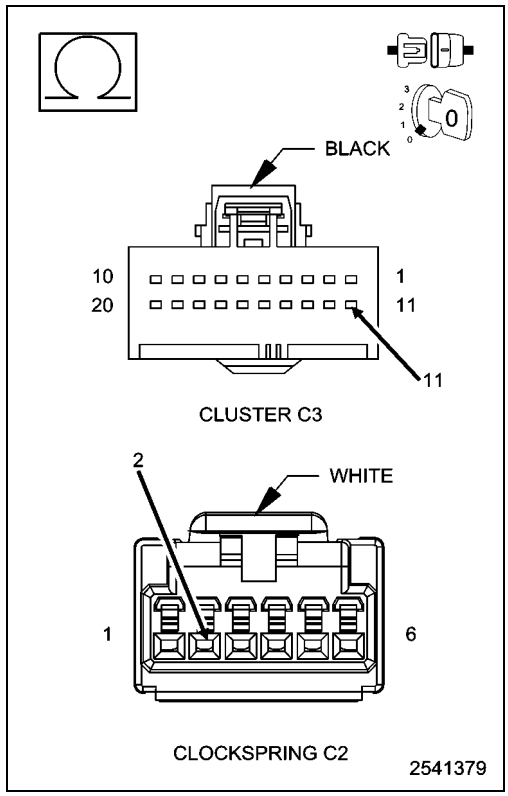

U1149-LOST COMMUNICATION WITH MULTI-FUNCTION SWITCH

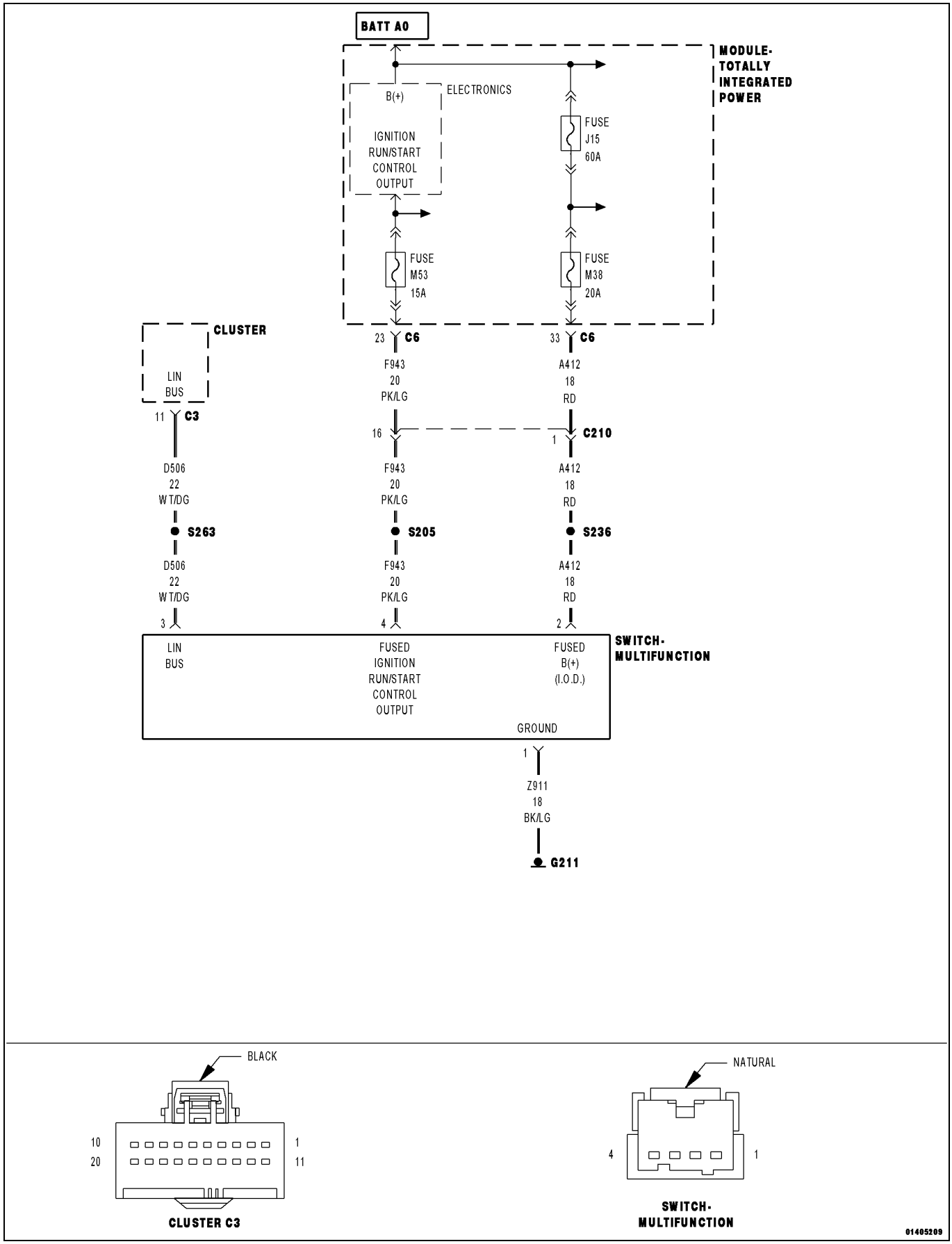

For a complete wiring diagram, **refer to the Wiring Information**.

- **When Monitored:**
  With the ignition on.
- **Set Condition:**
  The Cluster does not receive any LIN Bus messages from the Multifunction Switch.

Possible Causes
(D506) LIN BUS CIRCUIT OPEN
(F943) FUSED IGNITION RUN/START CONTROL OUTPUT CIRCUIT OPEN
(A412) FUSED B(+) (I.O.D.) CIRCUIT OPEN
(Z911) GROUND CIRCUIT OPEN
MULTIFUNCTION SWITCH

1. CHECK FOR AN ACTIVE DTC

NOTE: Before proceeding with this diagnostic process, verify the proper connection of the Multifunction Switch harness connector. A loose connection at this connector will cause this DTC to set.

1. Turn the ignition off.
2. Gently pull the Multifunction Switch connector harness to verify the locking tab is fully engaged. If the connector locking tab is not fully engaged, push to seat the connector locking tab.
3. Turn the ignition on.
4. Wait 30 seconds.
5. With the scan tool, read DTCs.

Does the scan tool display this DTC as active?

Yes

- Go To 2

No

- The condition that caused this code to set is not present at this time. Check for an intermittent condition by inspecting the related wiring harness for chafed, pierced, pinched, and partially broken wires. Also inspect the related connectors for broken, bent, pushed out, spread, corroded, or contaminated terminals.
- Perform the BODY VERIFICATION TEST. (Refer to 28 - DTC-Based Diagnostics/MODULE, Totally Integrated Power (TIPM) - Standard Procedure).

2. (D506) LIN BUS CIRCUIT OPEN

1. Turn the ignition off.
2. Disconnect the Multifunction Switch harness connector.
3. Turn the ignition on.
4. Measure the voltage of the (D506) LIN BUS circuit.

Is the voltage above 5 volts?

Yes

- Go To 3

No

- Repair the (D506) LIN BUS circuit for an open
- Perform the BODY VERIFICATION TEST. (Refer to 28 - DTC-Based Diagnostics/MODULE, Totally Integrated Power (TIPM) - Standard Procedure).

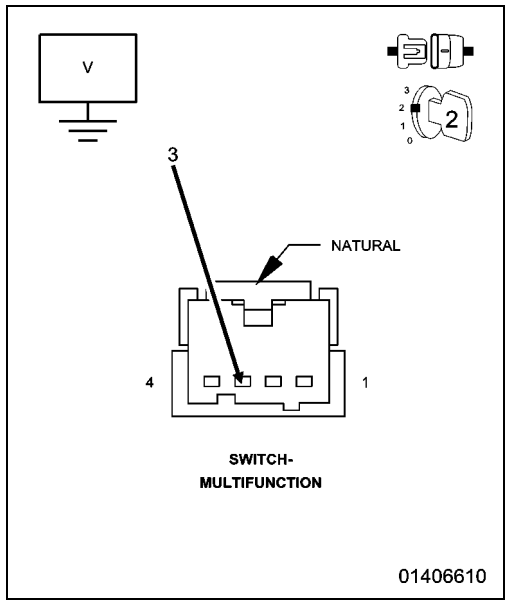

3. (F943) FUSED IGNITION RUN/START CONTROL OUTPUT CIRCUIT OPEN

1. Measure the voltage of the (F943) Fused Ignition Run/Start Control Output circuit.

Is the voltage above 10 volts?

Yes

- Go To 4

No

- Repair the (F943) Fused Ignition Run/Start Control Output circuit for an open.
- Perform the BODY VERIFICATION TEST. (Refer to 28 - DTC-Based Diagnostics/MODULE, Totally Integrated Power (TIPM) - Standard Procedure).

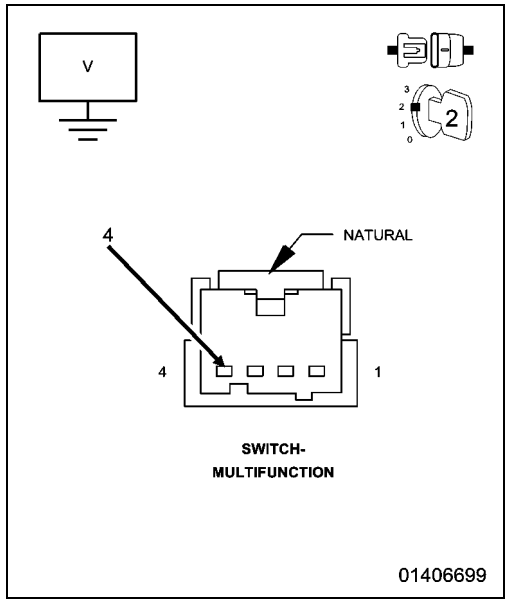

4. (A412) FUSED B(+) (I.O.D.) CIRCUIT OPEN

1. Measure the voltage of the (A412) Fused B(+) (I.O.D.) circuit.

Is the voltage above 10 volts?

Yes

- Go To 5

No

- Repair the (A412) Fused B(+) (I.O.D.) circuit for an open.
- Perform the BODY VERIFICATION TEST. (Refer to 28 - DTC-Based Diagnostics/MODULE, Totally Integrated Power (TIPM) - Standard Procedure).

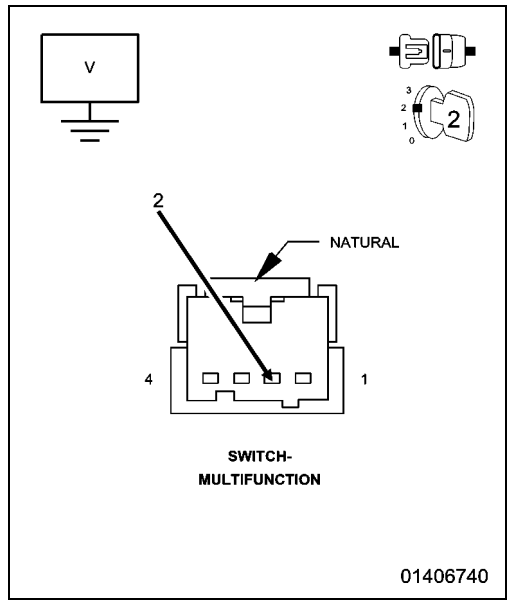

5. (Z911) GROUND CIRCUIT OPEN

1. Turn the ignition off.
2. Measure the resistance between ground and the (Z911) Ground circuit.

Is the resistance below 10K Ohms?

Yes

- Replace the Multifunction Switch in accordance with the Service Information.
- Perform the BODY VERIFICATION TEST. (Refer to 28 - DTC-Based Diagnostics/MODULE, Totally Integrated Power (TIPM) - Standard Procedure).

No

- Repair the (Z911) Ground circuit for an open.
- Perform the BODY VERIFICATION TEST. (Refer to 28 - DTC-Based Diagnostics/MODULE, Totally Integrated Power (TIPM) - Standard Procedure).

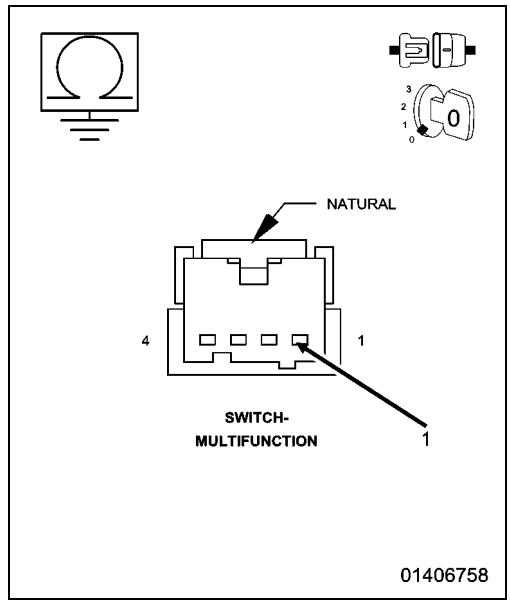

U1191-LOST COMMUNICATION WITH UPPER SWITCH BANK

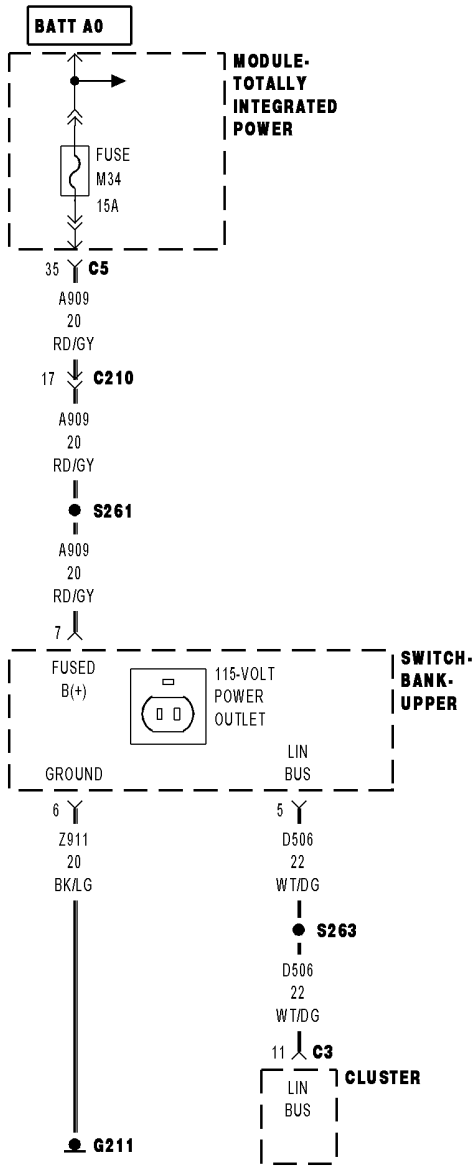

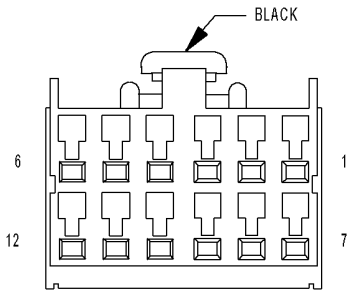

SWITCH-
BANK-
UPPER

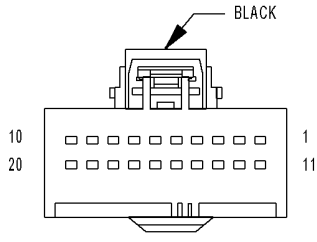

CLUSTER C3

01406828

For a complete wiring diagram, **refer to the Wiring Information**.

- **When Monitored:**
  With the ignition on.
- **Set Condition:**
  The Cluster does not receive information from the Upper Switch Bank.

Possible Causes
(D506) LIN BUS CIRCUIT OPEN
(A909) FUSED B+
(Z911) GROUND CIRCUIT OPEN
UPPER SWITCH BANK
CLUSTER

1. CHECK FOR AN ACTIVE DTC

1. Turn the ignition on.
2. With the scan tool, record and erase DTCs.
3. Wait 30 seconds.
4. With the scan tool, read DTCs.

Does the scan tool display this DTC as active?

Yes

- Go To 2

No

- The condition that caused this code to set is not present at this time. Check for an intermittent condition by inspecting the related wiring harness for chafed, pierced, pinched, and partially broken wires. Also inspect the related connectors for broken, bent, pushed out, spread, corroded, or contaminated terminals.
- Perform the BODY VERIFICATION TEST. (Refer to 28 - DTC-Based Diagnostics/MODULE, Totally Integrated Power (TIPM) - Standard Procedure).

2. (D506) LIN BUS CIRCUIT OPEN

1. Turn the ignition off.
2. Disconnect the Upper Switch Bank harness connector.
3. Turn the ignition on.
4. Measure the voltage of the (D506) LIN BUS circuit.

Is the voltage above 5 volts?

Yes

- Go To 4

No

- Go To 3

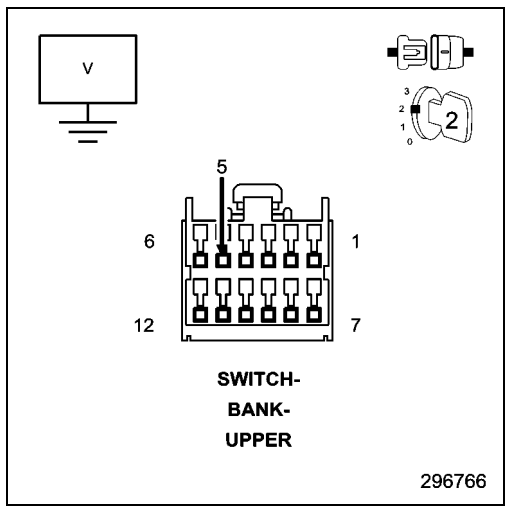

3. (D506) LIN BUS CIRCUIT OPEN

1. Turn the ignition off.
2. Disconnect the Instrument Cluster C3 harness connector.
3. Measure the resistance of the (D506) LIN BUS circuit between the Cluster C3 and the Upper Switch Bank harness connectors.

Is the resistance below 10K Ohms?

Yes

- Replace the Cluster in accordance with the Service Information.
- Perform the BODY VERIFICATION TEST. (Refer to 28 - DTC-Based Diagnostics/MODULE, Totally Integrated Power (TIPM) - Standard Procedure).

No

- Repair the (D506) LIN BUS circuit for an open.
- Perform the BODY VERIFICATION TEST. (Refer to 28 - DTC-Based Diagnostics/MODULE, Totally Integrated Power (TIPM) - Standard Procedure).

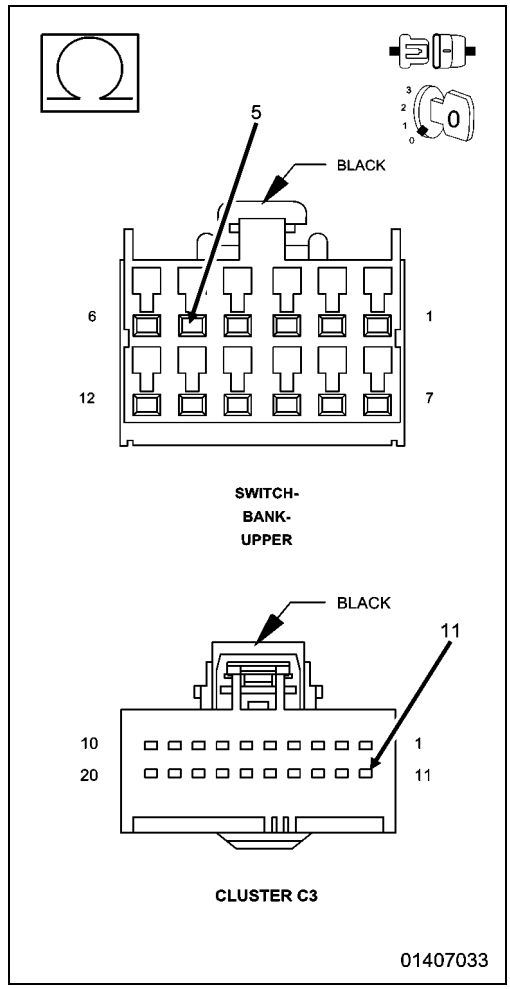

4. (A909) FUSED B+ CIRCUIT OPEN

1. Turn the ignition on.
2. Using a 12-volt test light connected to ground, check the (A909) Fused B+ circuit at the Upper Switch Bank harness connector.

Does the test light illuminate brightly?

Yes

- Go To 5

No

- Repair the (A909) Fused B+ circuit for an open.
- Perform the BODY VERIFICATION TEST. (Refer to 28 - DTC-Based Diagnostics/MODULE, Totally Integrated Power (TIPM) - Standard Procedure).

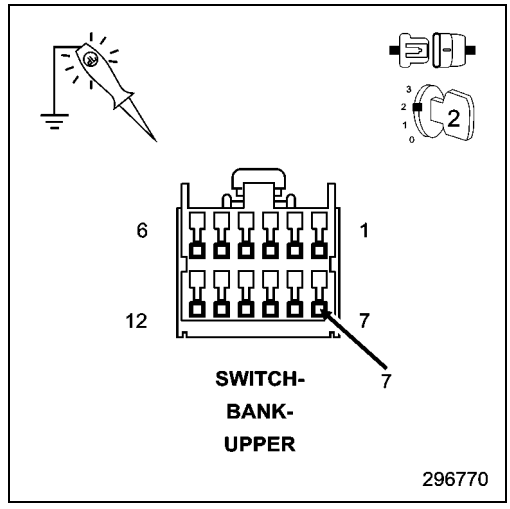

5. (Z911) GROUND CIRCUIT OPEN

1. Turn the ignition off.
2. Using a 12-volt test light connected to 12-volts, check the (Z911) Ground circuit at the Upper Switch Bank harness connector.

Does the test light illuminate brightly?

Yes

- Replace the Upper Switch Bank in accordance with the Service Information.
- Perform the BODY VERIFICATION TEST. (Refer to 28 - DTC-Based Diagnostics/MODULE, Totally Integrated Power (TIPM) - Standard Procedure)

No

- Repair the (Z911) ground circuit for an open.
- Perform the BODY VERIFICATION TEST. (Refer to 28 - DTC-Based Diagnostics/MODULE, Totally Integrated Power (TIPM) - Standard Procedure).

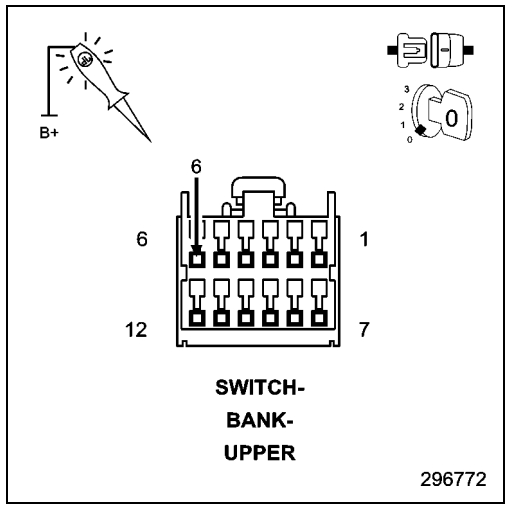

U1192-LOST COMMUNICATION WITH LOWER SWITCH BANK

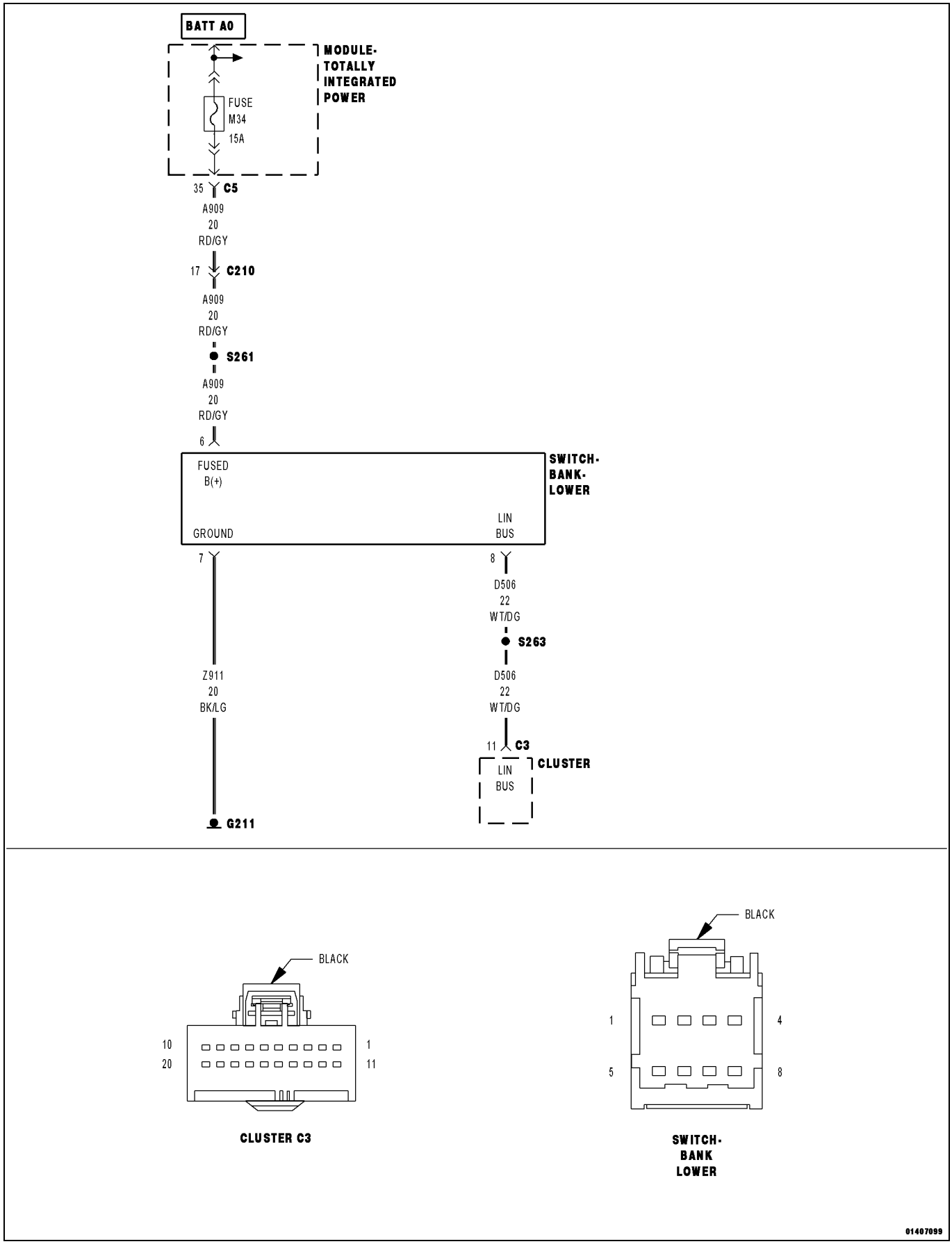

For a complete wiring diagram, **refer to the Wiring Information**.

- **When Monitored:**
  With the ignition on.
- **Set Condition:**
  The Cluster does not receive information from the Lower Switch Bank.

Possible Causes
(D506) LIN BUS CIRCUIT OPEN
(A909) FUSED B+
(Z911) GROUND CIRCUIT OPEN
LOWER SWITCH BANK
CLUSTER

1. CHECK FOR AN ACTIVE DTC

1. Turn the ignition on.
2. With the scan tool, record and erase DTCs.
3. Wait 30 seconds.
4. With the scan tool, read DTCs.

Does the scan tool display this DTC as active?

Yes

- Go To 2

No

- The condition that caused this code to set is not present at this time. Check for an intermittent condition by inspecting the related wiring harness for chafed, pierced, pinched, and partially broken wires. Also inspect the related connectors for broken, bent, pushed out, spread, corroded, or contaminated terminals.
- Perform the BODY VERIFICATION TEST. (Refer to 28 - DTC-Based Diagnostics/MODULE, Totally Integrated Power (TIPM) - Standard Procedure).

2. (D506) LIN BUS CIRCUIT OPEN

1. Turn the ignition off.
2. Disconnect the Lower Switch Bank harness connector.
3. Turn the ignition on.
4. Measure the voltage of the (D506) LIN BUS circuit.

Is the voltage above 5 volts?

Yes

- Go To 4

No

- Go To 3

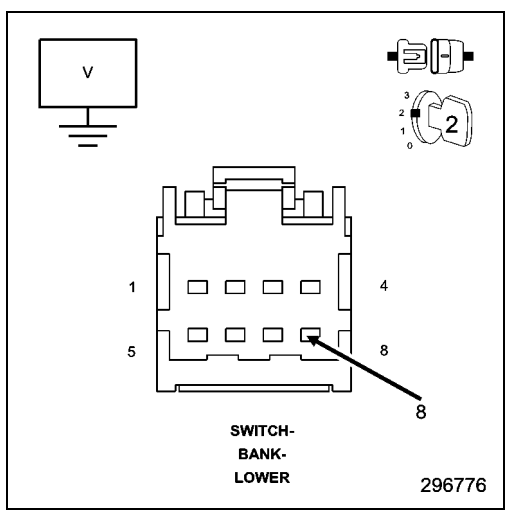

3. (D506) LIN BUS CIRCUIT OPEN

1. Turn the ignition off.
2. Disconnect the Instrument Cluster C3 harness connector.
3. Measure the resistance of the (D506) LIN BUS circuit between the Cluster C3 and the Lower Switch Bank harness connectors.

Is the resistance below 10K Ohms?

Yes

- Replace the Cluster in accordance with the Service Information.
- Perform the BODY VERIFICATION TEST. (Refer to 28 - DTC-Based Diagnostics/MODULE, Totally Integrated Power (TIPM) - Standard Procedure).

No

- Repair the (D506) LIN BUS circuit for an open.
- Perform the BODY VERIFICATION TEST. (Refer to 28 - DTC-Based Diagnostics/MODULE, Totally Integrated Power (TIPM) - Standard Procedure).

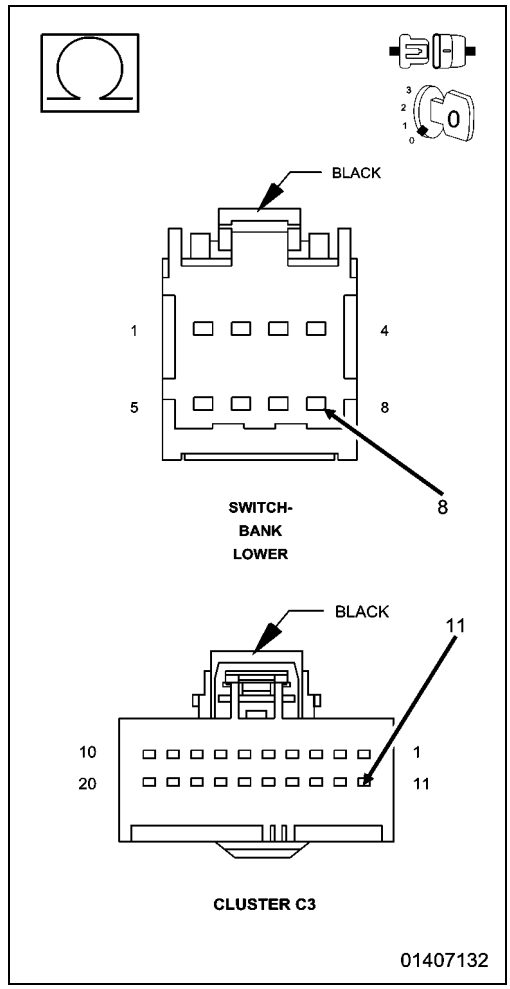

4. (A909) FUSED B+ CIRCUIT OPEN

1. Turn the ignition on.
2. Using a 12-volt test light connected to ground, check the (A909) Fused B+ circuit at the Lower Switch Bank harness connector.

Does the test light illuminate brightly?

Yes

- Go To 5

No

- Repair the (A909) Fused B+ circuit for an open.
- Perform the BODY VERIFICATION TEST. (Refer to 28 - DTC-Based Diagnostics/MODULE, Totally Integrated Power (TIPM) - Standard Procedure).

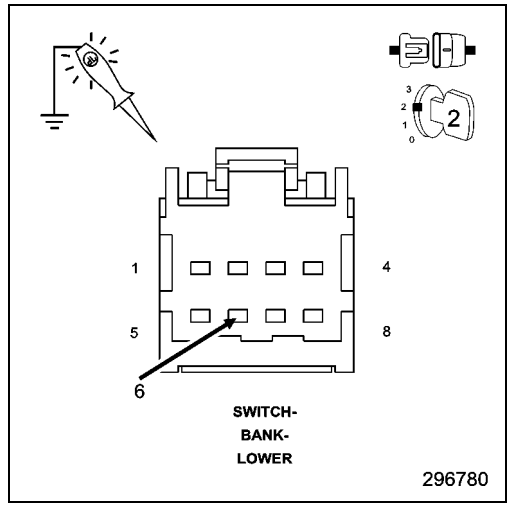

5. (Z911) GROUND CIRCUIT OPEN

1. Turn the ignition off.
2. Using a 12-volt test light connected to 12-volts, check the (Z911) Ground circuit at the Lower Switch Bank harness connector.

Does the test light illuminate brightly?

Yes

- Replace the Lower Switch Bank in accordance with the Service Information.
- Perform the BODY VERIFICATION TEST. (Refer to 28 - DTC-Based Diagnostics/MODULE, Totally Integrated Power (TIPM) - Standard Procedure).

No

- Repair the (Z911) ground circuit for an open.
- Perform the BODY VERIFICATION TEST. (Refer to 28 - DTC-Based Diagnostics/MODULE, Totally Integrated Power (TIPM) - Standard Procedure).

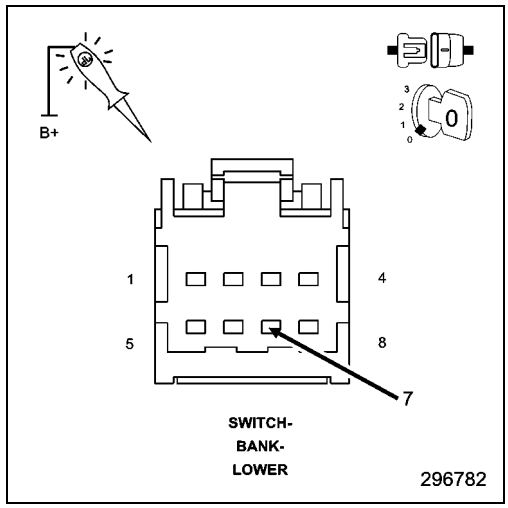

NODE, Wireless Ignition (WIN)

Diagnosis and Testing

■ B1A10-RKE FOB 1 BATTERY LOW

For a complete wiring diagram, **refer to the Wiring Information**.

- **When Monitored:**
  Instantaneously during key interrogation.
- **Set Condition:**
  If the battery in the Fob-Integrated-Key (FOBIK) is low during key interrogation with a valid key this code will set.

Possible Causes
LOW BATTERY
RKE TRANSMITTER

1. TEST FOR INTERMITTENT CONDITION

1. Turn the ignition on.
2. Using the scan tool, record and erase DTCs
3. Operate the RKE transmitter in all positions several times.
4. Using the scan tool, read DTCs.

Does the scan tool display this DTC as active?

Yes

- Replace the RKE transmitter battery and retry the system. If the DTC returns, replace and program the RKE transmitter in accordance with the Service Information.
- Perform the WIN VERIFICATION TEST. (Refer to 28 - DTC-Based Diagnostics/NODE, Wireless Ignition (WIN) - Standard Procedure).

No

- The conditions that caused this code to set are not present at this time.
- Perform the WIN VERIFICATION TEST. (Refer to 28 - DTC-Based Diagnostics/NODE, Wireless Ignition (WIN) - Standard Procedure).

■ B1A11-RKE FOB 2 BATTERY LOW

For a complete wiring diagram, **refer to the Wiring Information**.

- **When Monitored:**
  Instantaneously during key interrogation.
- **Set Condition:**
  If the battery in the Fob-Integrated-Key (FOBIK) is low during key interrogation with a valid key this code will set.

Possible Causes
LOW BATTERY
RKE TRANSMITTER

1. TEST FOR INTERMITTENT CONDITION

1. Turn the ignition on.
2. Using the scan tool, record and erase DTCs
3. Operate the RKE transmitter in all positions several times.
4. Using the scan tool, read DTCs.

Does the scan tool display this DTC as active?

Yes

- Replace the RKE transmitter battery and retry the system. If the DTC returns, replace and program the RKE transmitter in accordance with the Service Information.
- Perform the WIN VERIFICATION TEST. (Refer to 28 - DTC-Based Diagnostics/NODE, Wireless Ignition (WIN) - Standard Procedure).

No

- The conditions that caused this code to set are not present at this time.
- Perform the WIN VERIFICATION TEST. (Refer to 28 - DTC-Based Diagnostics/NODE, Wireless Ignition (WIN) - Standard Procedure).

■ B1A12-RKE FOB 3 BATTERY LOW

For a complete wiring diagram, **refer to the Wiring Information**.

- **When Monitored:**
  Instantaneously during key interrogation.
- **Set Condition:**
  If the battery in the Fob-Integrated-Key (FOBIK) is low during key interrogation with a valid key this code will set.

Possible Causes
LOW BATTERY
RKE TRANSMITTER

1. TEST FOR INTERMITTENT CONDITION

1. Turn the ignition on.
2. Using the scan tool, record and erase DTCs
3. Operate the RKE transmitter in all positions several times.
4. Using the scan tool, read DTCs.

Does the scan tool display this DTC as active?

Yes

- Replace the RKE transmitter battery and retry the system. If the DTC returns, replace and program the RKE transmitter in accordance with the Service Information.
- Perform the WIN VERIFICATION TEST. (Refer to 28 - DTC-Based Diagnostics/NODE, Wireless Ignition (WIN) - Standard Procedure).

No

- The conditions that caused this code to set are not present at this time.
- Perform the WIN VERIFICATION TEST. (Refer to 28 - DTC-Based Diagnostics/NODE, Wireless Ignition (WIN) - Standard Procedure).

B1A13-RKE FOB 4 BATTERY LOW

For a complete wiring diagram, **refer to the Wiring Information**.

- **When Monitored:**
  Instantaneously during key interrogation.
- **Set Condition:**
  If the battery in the Fob-Integrated-Key (FOBIK) is low during key interrogation with a valid key this code will set.

Possible Causes
LOW BATTERY
RKE TRANSMITTER

1. TEST FOR INTERMITTENT CONDITION

1. Turn the ignition on.
2. Using the scan tool, record and erase DTCs
3. Operate the RKE transmitter in all positions several times.
4. Using the scan tool, read DTCs.

Does the scan tool display this DTC as active?

Yes

- Replace the RKE transmitter battery and retry the system. If the DTC returns, replace and program the RKE transmitter in accordance with the Service Information.
- Perform the WIN VERIFICATION TEST. (Refer to 28 - DTC-Based Diagnostics/NODE, Wireless Ignition (WIN) - Standard Procedure).

No

- The conditions that caused this code to set are not present at this time.
- Perform the WIN VERIFICATION TEST. (Refer to 28 - DTC-Based Diagnostics/NODE, Wireless Ignition (WIN) - Standard Procedure).

B1A14-RKE FOB 5 BATTERY LOW

For a complete wiring diagram, **refer to the Wiring Information**.

- **When Monitored:**
  Instantaneously during key interrogation.
- **Set Condition:**
  If the battery in the Fob-Integrated-Key (FOBIK) is low during key interrogation with a valid key this code will set.

Possible Causes
LOW BATTERY
RKE TRANSMITTER

1. TEST FOR INTERMITTENT CONDITION

1. Turn the ignition on.
2. Using the scan tool, record and erase DTCs
3. Operate the RKE transmitter in all positions several times.
4. Using the scan tool, read DTCs.

Does the scan tool display this DTC as active?

Yes

- Replace the RKE transmitter battery and retry the system. If the DTC returns, replace and program the RKE transmitter in accordance with the Service Information.
- Perform the WIN VERIFICATION TEST. (Refer to 28 - DTC-Based Diagnostics/NODE, Wireless Ignition (WIN) - Standard Procedure).

No

- The conditions that caused this code to set are not present at this time.
- Perform the WIN VERIFICATION TEST. (Refer to 28 - DTC-Based Diagnostics/NODE, Wireless Ignition (WIN) - Standard Procedure).

B1A15-RKE FOB 6 BATTERY LOW

For a complete wiring diagram, **refer to the Wiring Information**.

- **When Monitored:**
  Instantaneously during key interrogation.
- **Set Condition:**
  If the battery in the Fob-Integrated-Key (FOBIK) is low during key interrogation with a valid key this code will set.

Possible Causes
LOW BATTERY
RKE TRANSMITTER

1. TEST FOR INTERMITTENT CONDITION

1. Turn the ignition on.
2. Using the scan tool, record and erase DTCs
3. Operate the RKE transmitter in all positions several times.
4. Using the scan tool, read DTCs.

Does the scan tool display this DTC as active?

Yes

- Replace the RKE transmitter battery and retry the system. If the DTC returns, replace and program the RKE transmitter in accordance with the Service Information.
- Perform the WIN VERIFICATION TEST. (Refer to 28 - DTC-Based Diagnostics/NODE, Wireless Ignition (WIN) - Standard Procedure).

No

- The conditions that caused this code to set are not present at this time.
- Perform the WIN VERIFICATION TEST. (Refer to 28 - DTC-Based Diagnostics/NODE, Wireless Ignition (WIN) - Standard Procedure).

B1A16-RKE FOB 7 BATTERY LOW

For a complete wiring diagram, **refer to the Wiring Information**.

- **When Monitored:**
  Instantaneously during key interrogation.
- **Set Condition:**
  If the battery in the Fob-Integrated-Key (FOBIK) is low during key interrogation with a valid key this code will set.

Possible Causes
LOW BATTERY
RKE TRANSMITTER

1. TEST FOR INTERMITTENT CONDITION

1. Turn the ignition on.
2. Using the scan tool, record and erase DTCs
3. Operate the RKE transmitter in all positions several times.
4. Using the scan tool, read DTCs.

Does the scan tool display this DTC as active?

Yes

- Replace the RKE transmitter battery and retry the system. If the DTC returns, replace and program the RKE transmitter in accordance with the Service Information.
- Perform the WIN VERIFICATION TEST. (Refer to 28 - DTC-Based Diagnostics/NODE, Wireless Ignition (WIN) - Standard Procedure).

No

- The conditions that caused this code to set are not present at this time.
- Perform the WIN VERIFICATION TEST. (Refer to 28 - DTC-Based Diagnostics/NODE, Wireless Ignition (WIN) - Standard Procedure).

B1A17-RKE FOB 8 BATTERY LOW

For a complete wiring diagram, **refer to the Wiring Information**.

- **When Monitored:**
  Instantaneously during key interrogation.
- **Set Condition:**
  If the battery in the Fob-Integrated-Key (FOBIK) is low during key interrogation with a valid key this code will set.

Possible Causes
LOW BATTERY
RKE TRANSMITTER

1. TEST FOR INTERMITTENT CONDITION

1. Turn the ignition on.
2. Using the scan tool, record and erase DTCs
3. Operate the RKE transmitter in all positions several times.
4. Using the scan tool, read DTCs.

Does the scan tool display this DTC as active?

Yes

- Replace the RKE transmitter battery and retry the system. If the DTC returns, replace and program the RKE transmitter in accordance with the Service Information.
- Perform the WIN VERIFICATION TEST. (Refer to 28 - DTC-Based Diagnostics/NODE, Wireless Ignition (WIN) - Standard Procedure).

No

- The conditions that caused this code to set are not present at this time.
- Perform the WIN VERIFICATION TEST. (Refer to 28 - DTC-Based Diagnostics/NODE, Wireless Ignition (WIN) - Standard Procedure).

B1A24-KEY NOT PROGRAMMED

For a complete wiring diagram, **refer to the Wiring Information**.

Theory of Operation

Whenever a Fob-Integrated-Key (FOBIK) is inserted in the Wireless Ignition Node (WIN) basestation, the WIN performs a self test and resynchronization routine. During the routine, the WIN interrogates the FOBIK, performing various validity and performance tests. The repair of this fault condition relies on the programmed status of the FOBIK.

- **When Monitored:**
  During interrogation, the FOBIK sends an LF signal to the WIN that includes the FOBIK programmed status.
- **Set Condition:**
  This DTC sets if the WIN receives the default, blank key status from a FOBIK. Once set, this DTC will remain active until a valid, programmed FOBIK is inserted in the basestation and rotated through the ON position.

Possible Causes
FOBIK
WIRELESS IGNITION NODE

Always perform the Pre-Diagnostic Troubleshooting procedure before proceeding. (Refer to 28 - DTC-Based Diagnostics/NODE, Wireless Ignition (WIN) - Standard Procedure).

1. DETERMINE ACTIVE OR STORED DIAGNOSTIC TROUBLE CODE (DTC)

Is the DTC active or stored?

WIN - ACTIVE DTC

- Go To 2

WIN - STORED DTC

- Perform the WIN INTERMITTENT TEST. (Refer to 28 - DTC-Based Diagnostics/NODE, Wireless Ignition (WIN) - Standard Procedure).

2. VERIFY THE WIN HAS BEEN PROPERLY INITIALIZED

NOTE: When diagnosing any WIN system concern, all FOBIKS must be present

1. Using the scan tool, read the Number of Key/Fobs Programmed under Data Display.

Does the scan tool show 2 or more Key/Fobs Programmed?

Yes

- Go To 3

No

- Using the scan tool, program 2 FOBIKS.
- Perform the WIN VERIFICATION TEST. (Refer to 28 - DTC-Based Diagnostics/NODE, Wireless Ignition (WIN) - Standard Procedure).

3. CHECK OPERATION OF THE FOBIK IN USE

NOTE: Verify the FOBIK in use is the FOBIK causing the DTC to set.

1. Using the scan tool, program the FOBIK to the WIN.
2. Use the scan tool and erase all codes in the WIN.
3. Turn the Ignition Off, and wait 15 seconds before turning the Ignition On.
4. Wait one minute, and read active codes.

Does the scan tool display this DTC as acvtive?

Yes

- Replace and program the Fob-Integrated-Key in accordance with the Service Information.
- Perform the WIN VERIFICATION TEST. (Refer to 28 - DTC-Based Diagnostics/NODE, Wireless Ignition (WIN) - Standard Procedure).

No

- Repair is complete.
- Perform the WIN VERIFICATION TEST. (Refer to 28 - DTC-Based Diagnostics/NODE, Wireless Ignition (WIN) - Standard Procedure).

■ B1A25-INVALID KEY

For a complete wiring diagram, **refer to the Wiring Information**.

Theory of Operation

Whenever a Fob-Integrated-Key (FOBIK) is inserted in the Wireless Ignition Node (WIN) basestation, the WIN performs a self test and resynchronization routine. During the routine, the WIN interrogates the FOBIK, performing various validity and performance tests. The repair of this fault condition relies on whether the ID of the FOBIK is recognized as valid in the WIN.

- **When Monitored:**
  During interrogation, the FOBIK sends an LF signal to the WIN that includes the programmed FOBIK ID.
- **Set Condition:**
  This DTC sets if the WIN receives an ID from the FOBIK that does not match any of the eight possible FOBIK IDs programmed in the WIN. This DTC will remain active until a valid, programmed FOBIK is inserted in the basestation and rotated through the ON position.

Possible Causes
FOBIK
WIRELESS IGNITION NODE

Always perform the Pre-Diagnostic Troubleshooting procedure before proceeding. (Refer to 28 - DTC-Based Diagnostics/NODE, Wireless Ignition (WIN) - Standard Procedure).

1. DETERMINE ACTIVE OR STORED DIAGNOSTIC TROUBLE CODE (DTC)

Is the DTC active or stored?

WIN - ACTIVE DTC

- Go To 2

WIN - STORED DTC

- Perform the WIN INTERMITTENT TEST. (Refer to 28 - DTC-Based Diagnostics/NODE, Wireless Ignition (WIN) - Standard Procedure).

2. VERIFY THE WIN HAS BEEN PROPERLY INITIALIZED

NOTE: When diagnosing any WIN system concern, all FOBIKS must be present

1. Using the scan tool, read the Number of Key/Fobs Programmed under Data Display.

Does the scan tool show 2 or more Key/Fobs Programmed?

Yes

- Go To 3

No

- Program 2 FOBIKS
- Perform the WIN VERIFICATION TEST. (Refer to 28 - DTC-Based Diagnostics/NODE, Wireless Ignition (WIN) - Standard Procedure).

3. CHECK OPERATION OF THE FOBIK IN USE

NOTE: Verify the FOBIK in use is the FOBIK causing the DTC to set.

1. Using the scan tool, program the FOBIK to the WIN.
2. Use the scan tool and erase all codes in the WIN.
3. Turn the Ignition Off, and wait 15 seconds before turning the Ignition On.
4. Wait one minute, and read active codes.

Does the scan tool display this DTC as active?

Yes

- Replace and program the FOBIK in accordance with the Service Information.
- Perform the WIN VERIFICATION TEST. (Refer to 28 - DTC-Based Diagnostics/NODE, Wireless Ignition (WIN) - Standard Procedure).

No

- Repair is complete.
- Perform the WIN VERIFICATION TEST. (Refer to 28 - DTC-Based Diagnostics/NODE, Wireless Ignition (WIN) - Standard Procedure).

■ B1A26-MAXIMUM NUMBER OF KEYS PROGRAMMED

For a complete wiring diagram, **refer to the Wiring Information**.

Theory of Operation

The Wireless Ignition Node (WIN) is preprogrammed from the factory with 2 Fob-Integrated-Keys (FOBIKS), with the capability to have a maximum of 8 FOBIKS programmed in total. Additional programmed FOBIKS are automatically learned to the next available FOBIK position in the WIN software and do not overwrite any previous positions. The repair of this fault condition relies on the current number of FOBIKS programmed into the WIN and the number of available positions in the WIN software.

- **When Monitored:**

  When the WIN is placed into FOBIK programming mode, the module references the number of unique FOBIK identifications stored in its memory.
- **Set Condition:**

  In the event the WIN detects the user is attempting to program a 9th FOBIK, this DTC will be set as active.

Possible Causes
MAXIMUM NUMBER OF FOBIKS (8) HAVE BEEN PROGRAMMED
WIRELESS IGNITION NODE

Always perform the Pre-Diagnostic Troubleshooting procedure before proceeding. (Refer to 28 - DTC-Based Diagnostics/NODE, Wireless Ignition (WIN) - Standard Procedure).

1. DETERMINE ACTIVE OR STORED DTC

Is the DTC active or stored?

WIN - ACTIVE DTC

- Go To 2

WIN - STORED DTC

- Perform the WIN INTERMITTENT TEST.(Refer to 28 - DTC-Based Diagnostics/NODE, Wireless Ignition (WIN) - Standard Procedure).

2. CLEAR FOBIKS PROGRAMMED INTO WIRELESS IGNITION NODE (WIN) AND REPROGRAM FOBIKS

NOTE: The below procedure clears all FOBIKS currently programmed in the WIN software. It is important to obtain all the customer FOBIKS so they may be reprogrammed to the module. Any FOBIKS not present for the following procedure will be inoperable and require additional programming to function.

1. Using the scan tool, use the Erase All Ignition Keys feature under Miscellaneous Functions.
2. Using the scan tool, use the Program Ignition Keys or Key Fobs feature under Miscellaneous Functions.
3. Program all the customer key(s) into the WIN (up to eight)
4. Use the scan tool and erase all codes in the WIN.
5. Turn the Ignition Off, and wait 15 seconds before turning the Ignition On.
6. Wait one minute, and read active codes.

Does the scan tool display this DTC as active?

Yes

- Replace the Wireless Ignition Node in accordance with the Service Information.

NOTE: Technicians must use the scan tool to perform the WIN Programming procedure after a module replacement.

- Perform the WIN VERIFICATION TEST.(Refer to 28 - DTC-Based Diagnostics/NODE, Wireless Ignition (WIN) - Standard Procedure).

No

- Repair is complete.
- Perform the WIN VERIFICATION TEST.(Refer to 28 - DTC-Based Diagnostics/NODE, Wireless Ignition (WIN) - Standard Procedure).

■ B1A27-SKREEM PROGRAMMING PERFORMANCE

For a complete wiring diagram, **refer to the Wiring Information**.

Theory of Operation

Sentry Key Remote Entry Module (SKREEM) is one of the many functions that is a subset of the Wireless Ignition Node (WIN). SKREEM programming takes place during the Fob-Integrated-Key (FOBIK) programming procedure. The repair of this fault condition is dependant on the programmed status of the FOBIK attempting to be programmed.

- **When Monitored:**

  When in FOBIK programming mode and programming is in process, the WIN receives the programmed status of the FOBIK.
- **Set Condition:**

  In the event the user attempts to program a FOBIK that is not valid or has already been programmed to a different vehicle, this Diagnostic Trouble Code (DTC) will be set as active.

Possible Causes
FOBIK
WIRELESS IGNITION NODE (WIN)

Always perform the Pre-Diagnostic Troubleshooting procedure before proceeding. (Refer to 28 - DTC-Based Diagnostics/NODE, Wireless Ignition (WIN) - Standard Procedure).

1. ENTER PROGRAMMING MODE AND DETERMINE ACTIVE OR STORED DTC

1. Using the scan tool, use the Program Ignition Keys or Key Fobs feature under Miscellaneous Functions.
2. Attempt to program the suspect FOBIK.
3. Wait one minute, and read active codes.

Is the DTC active or stored?

WIN - ACTIVE DTC

- Go To 2

WIN - STORED DTC

- Perform the WIN INTERMITTENT TEST. (Refer to 28 - DTC-Based Diagnostics/NODE, Wireless Ignition (WIN) - Standard Procedure).

2. VERIFY THE WIN HAS BEEN PROPERLY INITIALIZED

NOTE: When diagnosing any WIN system concern, all FOBIKS must be present

1. Using the scan tool, read the Number of Key/Fobs Programmed under Data Display.

Does the scan tool show 2 or more Key/Fobs Programmed?

Yes

- Go To 3

No

- Program 2 FOBIKS, then perform the WIN VERIFICATION TEST. (Refer to 28 - DTC-Based Diagnostics/NODE, Wireless Ignition (WIN) - Standard Procedure).

3. CHECK OPERATION OF THE FOBIK IN USE

NOTE: Verify the FOBIK in use is the FOBIK causing the DTC to set.

1. Replace the FOBIK currently in use.
2. Using the scan tool, program a new FOBIK to the WIN.
3. Use the scan tool and erase all codes in the WIN.
4. Turn the Ignition Off, and wait 15 seconds before turning the Ignition On.
5. Wait one minute, and read active codes.

Does the scan tool display this DTC as active?

Yes

- Replace the Wireless Ignition Node in accordance with the Service Information.

NOTE: Technicians must use the scan tool to perform the WIN Programming procedure after a module replacement.

- Perform the WIN VERIFICATION TEST. (Refer to 28 - DTC-Based Diagnostics/NODE, Wireless Ignition (WIN) - Standard Procedure)

No

- Repair is complete.
- Perform the WIN VERIFICATION TEST. (Refer to 28 - DTC-Based Diagnostics/NODE, Wireless Ignition (WIN) - Standard Procedure).

■ B1A28-ECM MISMATCH WITH SKIM

For a complete wiring diagram, **refer to the Wiring Information**.

Theory of Operation

For the engine to start, the Sentry Key Immobilizer (SKIM) feature of the Wireless Ignition Node (WIN) and the Powertrain Control Module (PCM) must successfully communicate data over the data bus. Once the WIN sends the message that a valid Fob-Integrated-Key (FOBIK) is being used, the PCM and WIN perform a “handshake” routine to validate this information, and a match allows the engine to run when the ignition state transitions to START. The repair of this fault is determined by the ability of the WIN and PCM/ECM to complete a successful handshake routine over the bus.

- **When Monitored:**

  Whenever a valid FOBIK is inserted in the basestation and turned to the ON position, the WIN/PCM handshake takes place. The WIN validates that the message is sent to, and received by the PCM.
- **Set Condition:**

  When a valid FOBIK is used and the WIN receives a mismatching cryptology code from the PCM as part of the routine, the WIN will send the command to flash the Security warning lamp and set this DTC as active. The engine will not start and the DTC will remain active until the WIN and PCM complete a successful handshake.

Possible Causes
WIRELESS IGNITION NODE (WIN)
POWERTRAIN CONTROL MODULE (PCM)

Always perform the Pre-Diagnostic Troubleshooting procedure before proceeding. (Refer to 28 - DTC-Based Diagnostics/NODE, Wireless Ignition (WIN) - Standard Procedure).

1. DETERMINE ACTIVE OR STORED DIAGNOSTIC TROUBLE CODE (DTC)

Is the DTC active or stored?

WIN - ACTIVE DTC

- Go To 2

WIN - STORED DTC

- Perform the WIN INTERMITTENT TEST. (Refer to 28 - DTC-Based Diagnostics/NODE, Wireless Ignition (WIN) - Standard Procedure).

2. VERIFY THE VEHICLE IDENTIFICATION NUMBER (VIN) STORED IN THE POWERTRAIN CONTROL MODULE (PCM).

1. Using the scan tool, access the VIN number stored in the PCM.

NOTE: Make sure that a VIN has been programmed into the PCM. If a VIN is not displayed, attempt to program the PCM with the correct VIN before continuing.

2. Compare the VIN displayed, with the VIN of the vehicle.

Does the VIN recorded in the PCM match the VIN of the vehicle?

Yes

- Using the scan tool verify the VIN in the WIN matches the VIN of the vehicle. If it does not match replace the Wireless Ignition Node in accordance with the Service Information.

NOTE: Prior to replacing the WIN, the RUN circuits must be checked at the PCM. A missing run circuit at the PCM can cause this fault to set.

NOTE: Technicians must use the scan tool to perform the WIN Programming procedure after a module replacement.

- Perform the WIN VERIFICATION TEST. (Refer to 28 - DTC-Based Diagnostics/NODE, Wireless Ignition (WIN) - Standard Procedure).

No

- Using the scan tool, perform the PCM Replaced Procedure to update the VIN in the PCM. Then, Go To 3

3. VERIFY PCM PROGRAMMING

1. Use the scan tool and erase all codes in the WIN and PCM.
2. Turn the Ignition Off, and wait 15 seconds before turning the Ignition On.
3. Wait one minute, and read active WIN codes.

Does the scan tool display this DTC as active?

Yes

- Replace and program the Powertrain Control Module in accordance with the Service Information.
- Perform the WIN VERIFICATION TEST. (Refer to 28 - DTC-Based Diagnostics/NODE, Wireless Ignition (WIN) - Standard Procedure).

No

- Repair is complete.
- Perform the WIN VERIFICATION TEST. (Refer to 28 - DTC-Based Diagnostics/NODE, Wireless Ignition (WIN) - Standard Procedure).

■ B1A29-SKIM BASESTATION MISMATCH

For a complete wiring diagram, **refer to the Wiring Information**.

Theory of Operation

For the engine to start, the Sentry Key Immobilizer (SKIM) feature of the Wireless Ignition Node (WIN) must successfully receive a message that a valid Fob-Integrated-Key (FOBIK) is being used, the FOBIK and WIN perform a “handshake” routine to validate this information, and a match allows the engine to run when the ignition state transitions to START.

- **When Monitored:**
  Whenever a FOBIK is inserted in the basestation, the WIN determines its validity status.
- **Set Condition:**
  When an invalid FOBIK is used and the WIN receives mismatching data from the SKIM, the WIN will send the command to illuminate the Security warning lamp and set this DTC as active. The engine will not start and the DTC will remain active until a valid FOBIK is used.

Possible Causes
WIRELESS IGNITION NODE (WIN)

Always perform the Pre-Diagnostic Troubleshooting procedure before proceeding. (Refer to 28 - DTC-Based Diagnostics/NODE, Wireless Ignition (WIN) - Standard Procedure).

1. DETERMINE ACTIVE OR STORED DIAGNOSTIC TROUBLE CODE (DTC)

Is the DTC active or stored?

WIN - ACTIVE DTC

- Go To 2

WIN - STORED DTC

- Perform the WIN INTERMITTENT TEST. (Refer to 28 - DTC-Based Diagnostics/NODE, Wireless Ignition (WIN) - Standard Procedure).

2. VERIFY THE WIN HAS BEEN PROPERLY INITIALIZED

NOTE: When diagnosing any WIN system concern, all FOBIKS must be present

1. Using the scan tool, read the Number of Key/Fobs Programmed under Data Display.

Does the scan tool show 2 or more Key/Fobs Programmed?

Yes

- Go To 3

No

- Program 2 FOBIKS.
- perform the WIN VERIFICATION TEST. (Refer to 28 - DTC-Based Diagnostics/NODE, Wireless Ignition (WIN) - Standard Procedure).

3. VERIFY THE VIN STORED IN THE POWERTRAIN CONTROL MODULE (PCM).

NOTE: Make sure that a VIN has been programmed into the PCM. If a VIN is not displayed, attempt to program the PCM with the correct VIN before continuing.

1. Using the scan tool, access the VIN number stored in the PCM.
2. Compare the VIN displayed, with the VIN of the vehicle.

Does the VIN recorded in the PCM match the VIN of the vehicle?

Yes

- Replace the Wireless Ignition Node in accordance with the Service Information.

NOTE: Technicians must use the scan tool to perform the WIN Programming procedure after a module replacement.

- Perform the WIN VERIFICATION TEST. (Refer to 28 - DTC-Based Diagnostics/NODE, Wireless Ignition (WIN) - Standard Procedure).

No

- Using the scan tool, perform the PCM Replaced Procedure to update the VIN in the PCM. Then, Go To 4

4. VERIFY PCM PROGRAMMING

1. Use the scan tool and erase all codes in the WIN and PCM.
2. Turn the Ignition Off, and wait 15 seconds before turning the Ignition On.
3. Wait one minute, and read active WIN codes.

Does the scan tool display this DTC as active?

Yes

- Replace and program the Powertrain Control Module in accordance with the Service Information.
- Perform the WIN VERIFICATION TEST. (Refer to 28 - DTC-Based Diagnostics/NODE, Wireless Ignition (WIN) - Standard Procedure).

No

- Repair is complete.
- Perform the WIN VERIFICATION TEST. (Refer to 28 - DTC-Based Diagnostics/NODE, Wireless Ignition (WIN) - Standard Procedure).

■ B1A35-UNIDENTIFIED KEY COMMUNICATION ERROR

For a complete wiring diagram, **refer to the Wiring Information**.

Theory of Operation

Whenever a Fob-Integrated-Key (FOBIK) is inserted in the Wireless Ignition Node (WIN) basestation, the WIN performs a self test and resynchronization routine. During the routine, the WIN interrogates the FOBIK, performing various validity and performance tests. The repair of this fault condition relies on whether the FOBIK ID is received by the WIN.

- **When Monitored:**

  During interrogation, the FOBIK sends an LRF signal to the WIN that includes the programmed FOBIK ID.

- **Set Condition:**

  This Diagnostic Trouble Code (DTC) sets if a FOBIK is inserted in the WIN basestation but the WIN does not receive or is unable to read an ID from the FOBIK. This DTC will remain active until a valid, programmed FOBIK is inserted in the basestation and rotated through the ON position.

Possible Causes
FOBIK
WIRELESS IGNITION NODE (WIN)

Always perform the Pre-Diagnostic Troubleshooting procedure before proceeding. (Refer to 28 - DTC-Based Diagnostics/NODE, Wireless Ignition (WIN) - Standard Procedure).

1. DETERMINE ACTIVE OR STORED DTC

Is the DTC active or stored?

WIN - ACTIVE DTC

- Go To 2

WIN - STORED DTC

- Perform the WIN INTERMITTENT TEST. (Refer to 28 - DTC-Based Diagnostics/NODE, Wireless Ignition (WIN) - Standard Procedure).

2. VERIFY THE WIN HAS BEEN PROPERLY INITIALIZED

NOTE: When diagnosing any WIN system concern, all FOBIKS must be present

1. Using the scan tool, read the Number of Key/Fobs Programmed under Data Display.

Does the scan tool show 2 or more Key/Fobs Programmed?

Yes

- Go To 3

No

- Program 2 FOBIKS, then perform the WIN VERIFICATION TEST.(Refer to 28 - DTC-Based Diagnostics/NODE, Wireless Ignition (WIN) - Standard Procedure).

3. CHECK OPERATION OF THE FOBIK IN USE

NOTE: Verify the FOBIK in use is the FOBIK causing the DTC to set.

1. Replace the FOBIK currently in use.
2. Using the scan tool, program a new FOBIK to the WIN.
3. Use the scan tool and erase all codes in the WIN.
4. Turn the Ignition Off, and wait 15 seconds before turning the Ignition On.
5. Wait one minute, and read active codes.

Does the scan tool display this DTC as active?

Yes

- Replace the Wireless Ignition Node in accordance with the Service Information.

NOTE: Technicians must use the scan tool to perform the WIN Programming procedure after a module replacement.

- Perform the WIN VERIFICATION TEST.(Refer to 28 - DTC-Based Diagnostics/NODE, Wireless Ignition (WIN) - Standard Procedure).

No

- Repair is complete.
- Perform the WIN VERIFICATION TEST.(Refer to 28 - DTC-Based Diagnostics/NODE, Wireless Ignition (WIN) - Standard Procedure).

■ B1A6C-SECRET KEY MISMATCH

For a complete wiring diagram, **refer to the Wiring Information**.

Theory of Operation

Whenever a Fob-Integrated-Key (FOBIK) is inserted in the Wireless Ignition Node (WIN) basestation, the WIN performs a self test and resynchronization routine. During the routine, the WIN interrogates the FOBIK for the secret key information and start the vehicle. The repair of this fault condition relies on whether the current secret key in the FOBIK is recognized by the WIN.

- **When Monitored:**

  During interrogation, the FOBIK sends an LF signal to the WIN that includes the current secret key.
- **Set Condition:**

  This Diagnostic Trouble Code (DTC) sets if the WIN receives a secret key ID from the FOBIK that is not the correct secret key value stored in the WIN. This DTC will remain active until a valid, programmed FOBIK, with the correct secret key is inserted in the basestation and rotated through the ON position.

Possible Causes
FOBIK
WIRELESS IGNITION NODE (WIN)

Always perform the Pre-Diagnostic Troubleshooting procedure before proceeding. (Refer to 28 - DTC-Based Diagnostics/NODE, Wireless Ignition (WIN) - Standard Procedure).

1. DETERMINE ACTIVE OR STORED DTC

Is the DTC active or stored?

WIN - ACTIVE DTC

- Go To 2

WIN - STORED DTC

- Perform the WIN INTERMITTENT TEST. (Refer to 28 - DTC-Based Diagnostics/NODE, Wireless Ignition (WIN) - Standard Procedure).

2. VERIFY THE WIN HAS BEEN PROPERLY INITIALIZED

NOTE: When diagnosing any WIN system concern, all FOBIKS must be present

1. Using the scan tool, read the Number of Key/Fobs Programmed under Data Display.

Does the scan tool show 2 or more Key/Fobs Programmed?

Yes

- Go To 3

No

- Program 2 FOBIKS.
- Perform the WIN VERIFICATION TEST. (Refer to 28 - DTC-Based Diagnostics/NODE, Wireless Ignition (WIN) - Standard Procedure).

3. CHECK OPERATION OF THE FOBIK IN USE

NOTE: Verify the FOBIK in use is the FOBIK causing the DTC to set.

1. Replace the FOBIK currently in use.
2. Using the scan tool, program a new FOBIK to the WIN.
3. Use the scan tool and erase all codes in the WIN.
4. Turn the Ignition Off, and wait 15 seconds before turning the Ignition On.
5. Wait one minute, and read active codes.

Does the scan tool display this DTC as active?

Yes

- Replace the Fob-Integrated-Key in accordance with the Service Information.

NOTE: Technicians must use the scan tool to perform the WIN Programming procedure after a module replacement.

- Perform the WIN VERIFICATION TEST. (Refer to 28 - DTC-Based Diagnostics/NODE, Wireless Ignition (WIN) - Standard Procedure).

No

- Repair is complete.
- Perform the WIN VERIFICATION TEST. (Refer to 28 - DTC-Based Diagnostics/NODE, Wireless Ignition (WIN) - Standard Procedure).

■ B1A77- REMOTE START ANTENNA CIRCUIT LOW

For a complete wiring diagram, **refer to the Wiring Information**.

- **When Monitored:**
  With the ignition on. Remote start present and configured.
- **Set Condition:**
  Short to ground detected on the Remote Start Antenna.

Possible Causes
REMOTE START ANTENNA

Always perform the Pre-Diagnostic Troubleshooting procedure before proceeding. (Refer to 28 - DTC-Based Diagnostics/NODE, Wireless Ignition (WIN) - Standard Procedure)

1. DETERMINE ACTIVE OR STORED DIAGNOSTIC TROUBLE CODE (DTC)

Is the DTC active or stored?

WIN - ACTIVE DTC

- Replace the Remote Start Antenna in accordance with the Service Information.
- Perform the WIRELESS IGNITION NODE (WIN) VERIFICATION. (Refer to 28 - DTC-Based Diagnostics/NODE, Wireless Ignition (WIN) - Standard Procedure).

WIN - STORED DTC

- The condition that caused this code to set is not present at this time. Check for an intermittent condition by inspecting the related wiring harness for chafed, pierced, pinched, and partially broken wires. Also inspect the related connectors for broken, bent, pushed out, spread, corroded, or contaminated terminals.
- Perform the WIRELESS IGNITION NODE (WIN) VERIFICATION. (Refer to 28 - DTC-Based Diagnostics/NODE, Wireless Ignition (WIN) - Standard Procedure).

■ B1A79- REMOTE START ANTENNA CIRCUIT OPEN OR NOT CONNECTED

For a complete wiring diagram, **refer to the Wiring Information**.

- **When Monitored:**
  With the ignition on. Remote start present and configured.
- **Set Condition:**
  No Remote Start Antenna detected by the Wireless Ignition Node (WIN).

Possible Causes
REMOTE START ANTENNA NOT CONNECTED
REMOTE START ANTENNA

Always perform the Pre-Diagnostic Troubleshooting procedure before proceeding. (Refer to 28 - DTC-Based Diagnostics/NODE, Wireless Ignition (WIN) - Standard Procedure).

1. REMOTE START ANTENNA NOT CONNECTED

1. Verify that the Remote Start Antenna is connected to the WIN.

Is the Remote Start Antenna connected to the WIN?

Yes

- Replace the Remote Start Antenna in accordance with the Service Information.
- Perform the WIRELESS IGNITION NODE (WIN) VERIFICATION. (Refer to 28 - DTC-Based Diagnostics/NODE, Wireless Ignition (WIN) - Standard Procedure).

No

- Reconnect the Remote Start Antenna and verify operation.
- Perform the WIRELESS IGNITION NODE (WIN) VERIFICATION. (Refer to 28 - DTC-Based Diagnostics/NODE, Wireless Ignition (WIN) - Standard Procedure).

B210D-BATTERY VOLTAGE LOW

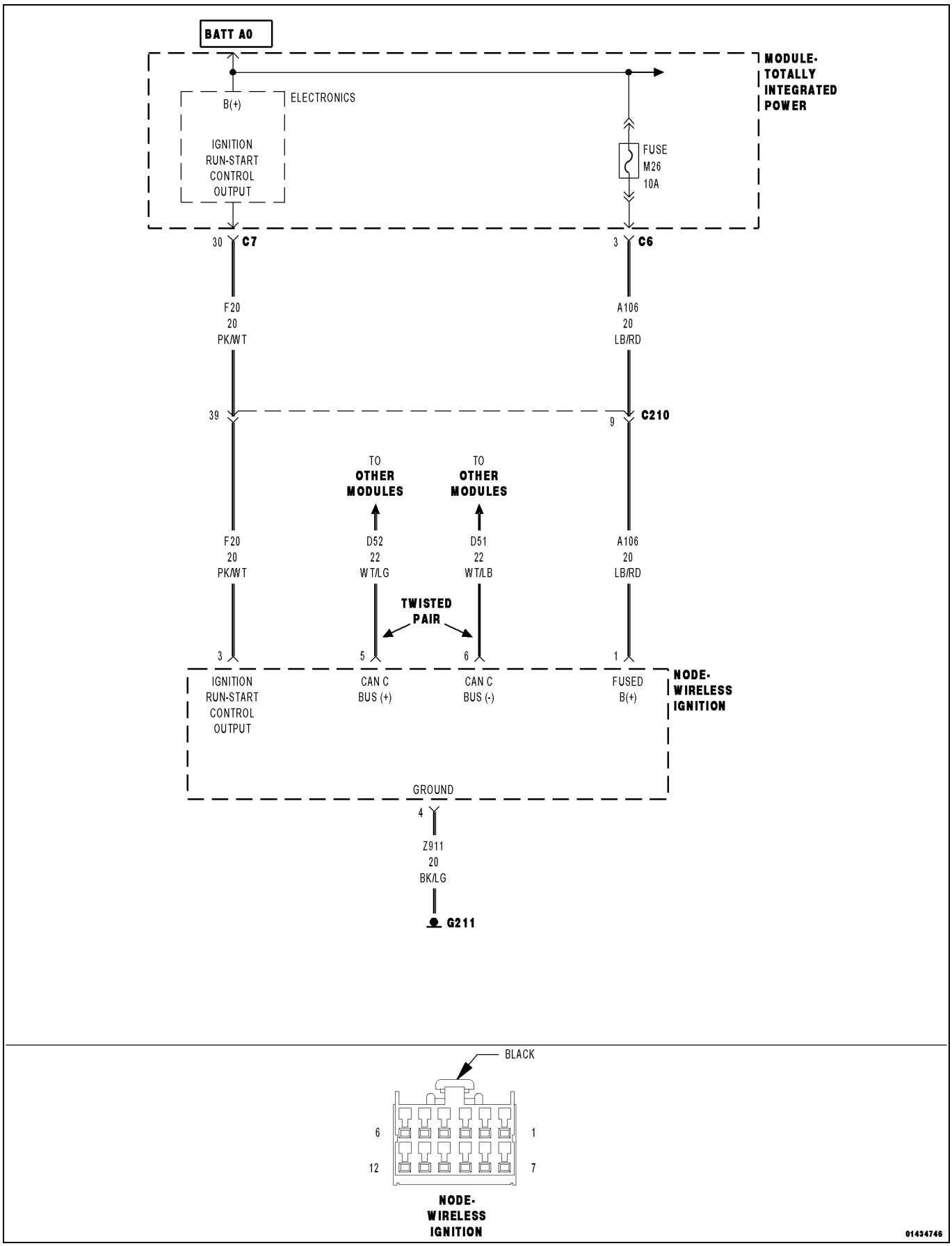

For a complete wiring diagram, **refer to the Wiring Information**.

- **When Monitored:**
  With the ignition switch on.
- **Set Condition:**
  The Wireless Ignition Node (WIN) has detected the Fused (B+) input voltage below a calibrated value.

Possible Causes
RESISTANCE IN THE BATTERY POSITIVE CIRCUIT
RESISTANCE IN THE GENERATOR CASE GROUND
GENERATOR OPERATION
(K20) GENERATOR FIELD CONTROL CIRCUIT OPEN
(K20) GENERATOR FIELD CONTROL CIRCUIT SHORTED TO GROUND
GROUND CIRCUIT OPEN
PCM
(A106) FUSED (B+) CIRCUIT OPEN
WIRELESS IGNITION NODE (WIN)

1. DETERMINING IF DIAGNOSTIC TROUBLE CODE (DTC) IS CURRENT

NOTE: Diagnose any related Powertrain DTCs before continuing.

1. With a scan tool, read and record DTCs.
2. Using the scan tool, clear DTCs.
3. Perform 5 ignition cycles, leaving the ignition switch on for a minimum of 90 seconds per cycle.
4. Using the scan tool, read DTCs.

Does the DTC reset?

Yes
- Go To 3

No
- Go To 2

2. INTERMITTENT CONDITION

NOTE: Check for any of the follow conditions:
- **Poor wire to terminal connection**
- **Corroded terminals**
- **Backed out or loose terminals**
- **Broken wire internal to the insulation**
- **Dirty (partial) module ground**

1. With the ignition on, wiggle the related wires.
2. Using a scan tool, read DTCs.

Does the DTC reset?

Yes
- Repair the wiring as necessary.
- Perform the WIN VERIFICATION TEST. (Refer to 28 - DTC-Based Diagnostics/NODE, Wireless Ignition (WIN) - Standard Procedure).

No
DTC is not active at this time. Test complete.

3. (A106) FUSED (B+) CIRCUIT OPEN

NOTE: Check the related fuses to the Fused (B+) circuit. If the fuse is found to be open repair the circuit for a shorted condition.

1. Turn the ignition off.
2. Disconnect the WIN harness connector.
3. Turn the ignition on.
4. Using a 12-volt test light connected to ground, probe the Fused (B+) circuit in the WIN harness connector.

Does the test light illuminate brightly?

Yes

- Go To 4

No

- Repair the Fused (B+) circuit for an open.
- Perform the WIN VERIFICATION TEST. (Refer to 28 - DTC-Based Diagnostics/NODE, Wireless Ignition (WIN) - Standard Procedure).

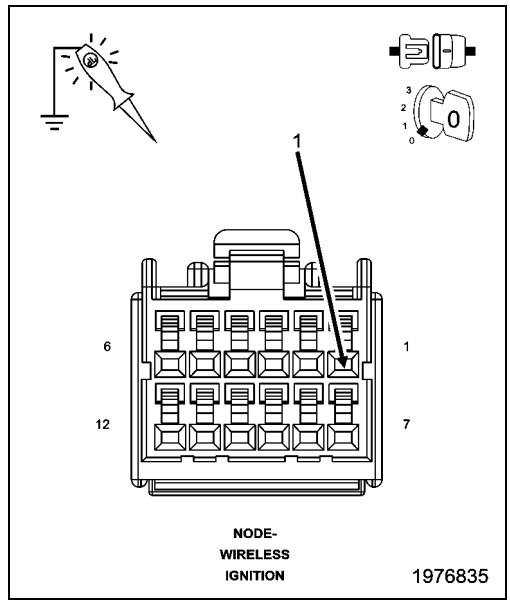

4. CHECK FOR MULTIPLE BATTERY VOLTAGE LOW DTCS

1. With a scan tool, read and record DTCs.
2. Using the scan tool, clear DTCs.
3. Perform 5 ignition cycles, leaving the ignition switch on for a minimum of 90 seconds per cycle.
4. Using the scan tool, read DTCs.

Are multiple other modules reporting this DTC?

Yes

- Check the possible causes table above for conditions that can cause a system low voltage condition. Repair as necessary.
- Perform the WIN VERIFICATION TEST. (Refer to 28 - DTC-Based Diagnostics/NODE, Wireless Ignition (WIN) - Standard Procedure).

No

- Go To 5

5. CHECK SYSTEM VOLTAGE AT THE WIN

NOTE: A dirty (partial) ground can cause abnormal conditions within a system. Make sure the module has a good ground before continuing.

1. Turn the ignition off.
2. Reconnect the WIN connector
3. Start the engine.
4. Back probe the Fused (B+) circuit.
5. Using the scan tool, view battery voltage under Data Display in the Engine category.
6. Compare the voltage on the scan tool to the voltage reading on the voltmeter.

NOTE: If charging system voltage readings are acceptable on both the scan tool and at the (A106) Fused (B+) circuit at the Wireless Ignition Node and no other modules are reporting this DTC then replacing the Wireless Ignition Node is the most likely course of action.

Is the voltage on the scan tool equal to the voltmeter reading +/- .5 of a volt?

Yes

- Replace and program the Wireless Ignition Node in accordance with the Service Information.
- Perform the WIN VERIFICATION TEST. (Refer to 28 - DTC-Based Diagnostics/NODE, Wireless Ignition (WIN) - Standard Procedure).

No

- Repair the Fused (B+) circuit for high resistances.
- Perform the WIN VERIFICATION TEST. (Refer to 28 - DTC-Based Diagnostics/NODE, Wireless Ignition (WIN) - Standard Procedure).

B210E-BATTERY VOLTAGE HIGH

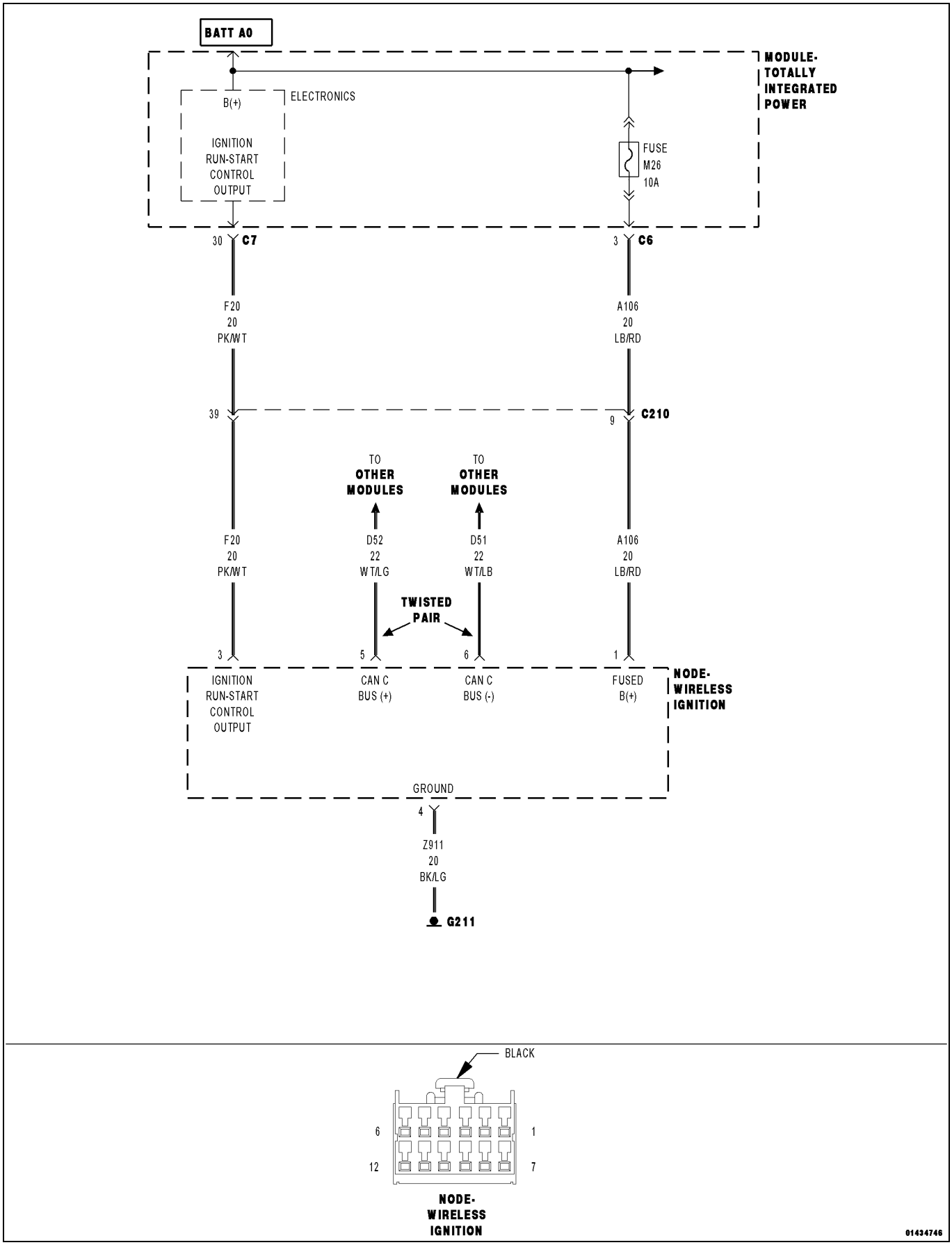

For a complete wiring diagram, **refer to the Wiring Information**.

- **When Monitored:**
  With the ignition switch on.
- **Set Condition:**
  The Wireless Ignition Node (WIN) has detected the Fused (B+) input voltage above a calibrated value.

Possible Causes
(K20) GENERATOR FIELD CONTROL CIRCUIT SHORTED TO BATTERY VOLTAGE
GENERATOR
POWERTRAIN CONTROL MODULE (PCM)
WIRELESS IGNITION NODE (WIN)

1. DETERMINING IF DIAGNOSTIC TROUBLE CODE (DTC) IS CURRENT

NOTE: Make sure the Battery is in good condition. Using the Midtronics Battery Tester, test the Battery before continuing.

NOTE: Inspect the vehicle for after market accessories that may exceed the Generator System output.

NOTE: Make sure the generator drive belt is in good operating condition.

NOTE: Inspect the fuses in the Totallly Integrated Power Module (TIPM). If an open fuse is found, use the wire diagram/schematic as a guide, inspect the wiring and connectors for damage.

NOTE: Diagnose any related Powertrain DTCs before continuing.

1. Using the scan tool, read and record DTCs.
2. Using the scan tool, clear DTCs.
3. Perform five ignition cycles, leaving the ignition switch on for a minimum of 90 seconds per cycle.
4. Using the scan tool, read DTCs.

Does the DTC reset?

Yes

- Go To 3

No

- Go To 2

2. INTERMITTENT CONDITION

NOTE: Check for any of the follow conditions:

- **Poor wire to terminal connection**
- **Corroded terminals**
- **Backed out or loose terminals**
- **Broken wire internal to the insulation**
- **Dirty (partial) module ground**

1. With the ignition on, wiggle the related wires.
2. Using a scan tool, read DTCs.

Does the DTC reset?

Yes

- Repair the wiring as necessary.
- Perform the WIN VERIFICATION TEST. (Refer to 28 - DTC-Based Diagnostics/NODE, Wireless Ignition (WIN) - Standard Procedure).

No

DTC is not active at this time. Test complete.

3. CHECK FOR MULTIPLE BATTERY VOLTAGE HIGH DTCS

1. With a scan tool, read and record DTCs.
2. Using the scan tool, clear DTCs.
3. Perform five ignition cycles, leaving the ignition switch on for a minimum of 90 seconds per cycle.
4. Using the scan tool, read DTCs.

Are multiple other modules reporting this DTC?

Yes

- Check the possible causes table above for conditions that can cause a system high voltage condition. Repair as necessary.
- Perform the WIN VERIFICATION TEST. (Refer to 28 - DTC-Based Diagnostics/NODE, Wireless Ignition (WIN) - Standard Procedure).

No

- Go To 4

4. CHECK SYSTEM VOLTAGE AT THE WIN

NOTE: A dirty (partial) ground can cause abnormal conditions within a system. Make sure the module has a good ground before continuing.

1. Turn the ignition off.
2. Reconnect the WIN connector
3. Start the engine.
4. Back probe the Fused (B+) circuit.
5. Using the scan tool, view battery voltage under Data Display in the Engine category.
6. Compare the voltage on the scan tool to the voltage reading on the voltmeter.

NOTE: If charging system voltage readings are acceptable on both the scan tool and at the (A106) Fused (B+) circuit at the Wireless Ignition Node and no other modules are reporting this DTC then replacing the Wireless Ignition Node is the most likely course of action.

Is the voltage on the scan tool equal to the voltmeter reading +/- .5 of a volt?

Yes

- Replace and program the Wireless Ignition Node in accordance with the Service Information.
- Perform the WIN VERIFICATION TEST. (Refer to 28 - DTC-Based Diagnostics/NODE, Wireless Ignition (WIN) - Standard Procedure).

No

- Repair the Fused (B+) circuit for high resistance.
- Perform the WIN VERIFICATION TEST. (Refer to 28 - DTC-Based Diagnostics/NODE, Wireless Ignition (WIN) - Standard Procedure).

■ B2204-ECU CONFIGURATION MISMATCH

For a complete wiring diagram, **refer to the Wiring Information**.

Theory of Operation

The Wireless Ignition Node (WIN) must be configured for various parameters such as model year and vehicle line, after a service replacement. The WIN checks for the proper configuration by comparing the values stored to those sent out on the serial data bus. The repair of this fault does not involve any external circuitry and centers on verifying the module is configured correctly.

- **When Monitored:**

  The WIN checks the feature configuration at power up during the initialization process, and continuously through the ignition cycle.
- **Set Condition:**

  This DTC sets when the WIN detects a mismatch between the current configuration of the module and information sent out on the serial data bus. Once set, this DTC is latched for the entire ignition cycle.

Possible Causes
WIRELESS IGNITION NODE

Always perform the Pre-Diagnostic Troubleshooting procedure before proceeding. (Refer to 28 - DTC-Based Diagnostics/NODE, Wireless Ignition (WIN) - Standard Procedure).

1. DETERMINE ACTIVE OR STORED DTC

Is the DTC active or stored?

WIN - ACTIVE DTC

- Go To 2

WIN - STORED DTC

- Perform the WIN VERIFICATION TEST. (Refer to 28 - DTC-Based Diagnostics/NODE, Wireless Ignition (WIN) - Standard Procedure).

2. RESET/RECONFIGURE THE TOTALLY INTEGRATED POWER MODULE (TIPM)

1. Turn the ignition on.
2. Using the scan tool, select ECU View. This will list the modules on the vehicle. Read and record the listed modules.

NOTE: A Scan Report will list all the modules on the vehicle.

3. Using the scan tool, select the the Totally Integrated Power Module (TIPM) and then press Miscellaneous Functions.
4. Press Reset ECU.
5. Cycle the ignition from on to off three times and read the active WIN DTCs.

Does the scan tool display this DTC as active?

Yes

- Go To 3

No

- Repair is complete.
- Perform the WIN VERIFICATION TEST. (Refer to 28 - DTC-Based Diagnostics/NODE, Wireless Ignition (WIN) - Standard Procedure).

3. RESET/RECONFIGURE THE WIN

1. Using the scan tool, select the the WIN and then press Miscellaneous Functions.
2. Press Reset ECU.
3. Cycle the ignition from on to off three times and read the active WIN DTCs.

Does the scan tool display this DTC as active?

Yes

- Replace the Wireless Ignition Node in accordance with the Service Information.

NOTE: Technicians must use the scan tool to perform the WIN Programming procedure after a module replacement.

- Perform the WIN VERIFICATION TEST. (Refer to 28 - DTC-Based Diagnostics/NODE, Wireless Ignition (WIN) - Standard Procedure).

No

- Repair is complete.
- Perform the WIN VERIFICATION TEST. (Refer to 28 - DTC-Based Diagnostics/NODE, Wireless Ignition (WIN) - Standard Procedure).

■ B2205-ORIGINAL VIN MISSING/MISMATCH

For a complete wiring diagram, **refer to the Wiring Information**.

Theory of Operation

When a valid Fob-Integrated-Key (FOBIK) is used and the ignition is rotated to the RUN position, the Wireless Ignition Node (WIN) “listens” to the CAN C bus for the broadcast of the Vehicle Identification Number (VIN) by the Powertrain Control Module (PCM).

- **When Monitored:**

  The WIN monitors the VIN broadcast on the CAN C bus three times, when the ignition is turned to the RUN position. When the full VIN has been received by the WIN, all further broadcasts of the VIN are ignored for that ignition cycle.
- **Set Condition:**

  When the VIN received from the CAN C bus does not match the VIN stored in the memory of the Wireless Ignition Node, the WIN will send the command to flash the Security warning lamp and set this DTC as active and the vehicle will immobilize. The DTC will remain active until a VIN matching the one stored in WIN memory is received by the module from the bus.

Possible Causes
WIRELESS IGNITION NODE (WIN)
POWERTRAIN CONTROL MODULE (PCM)

Always perform the Pre-Diagnostic Troubleshooting procedure before proceeding. (Refer to 28 - DTC-Based Diagnostics/NODE, Wireless Ignition (WIN) - Standard Procedure)

1. DETERMINE ACTIVE OR STORED DIAGNOSTIC TROUBLE CODE (DTC)

Is the DTC active or stored?

WIN - ACTIVE DTC

- Go To 2

WIN - STORED DTC

- Perform the WIN VERIFICATION TEST. (Refer to 28 - DTC-Based Diagnostics/NODE, Wireless Ignition (WIN) - Standard Procedure).

2. CHECK THE VIN STORED IN THE PCM

1. Using the scan tool, compare the VIN that is stored in the PCM to the VIN of the vehicle's VIN plate.

Does the VIN stored in the PCM match the vehicle's VIN?

Yes

- Replace the Wireless Ignition Node in accordance with the Service Information.

NOTE: Technicians must use the scan tool to perform the WIN Programming procedure after a module replacement.

- Perform the WIN VERIFICATION TEST. (Refer to 28 - DTC-Based Diagnostics/NODE, Wireless Ignition (WIN) - Standard Procedure).

No

- Replace and configure the Powertrain Control Module in accordance with the Service Information.
- Perform the POWERTRAIN VERIFICATION TEST. (Refer to 28 - DTC-Based Diagnostics/MODULE, Powertrain Control (PCM) - Standard Procedure).

C0077-LOW TIRE PRESSURE

For a complete wiring diagram, **refer to the Wiring Information**.

- **When Monitored:**

  Continuously.
- **Set Condition:**

  A low pressure condition will exist when the tire pressure falls below or is equal to the low pressure threshold value as specified for the vehicle.

Possible Causes
INCORRECT TIRE PRESSURE
INCORRECT PLACARD VALUES
TIRE PRESSURE MONITORING (TPM) SENSOR
WIRELESS IGNITION NODE (WIN)

1. DTC STATUS

NOTE: If the incorrect Placard Values were programmed into the WIN, a DTC could be set. Before continuing with any TPM diagnostic test, using the scan tool, check that the correct Placard Values have been programmed in to the module.

NOTE: If any the following conditions are present repair them first before continuing with this test.

- **Individual Low Tire Pressure Sensor DTCs**
- **Tire Pressure Monitoring (TPM) Sensor Internal fault**
- **Spare Tire is not equipped with a TPM Sensor and is currently on the vehicle**

NOTE: Seasonal temperature changes will affect tire pressure, and may have caused the tire pressure to fall below the low pressure warning threshold. Tire pressure should always be set based on cold inflation tire pressure (placard). This is defined as the tire pressure after a vehicle has not been driven for more then three hours, and in outside ambient temperatures.

1. Correct all tire pressures to the recommended cold inflation tire pressure specifications and wait two minutes for the system to update.
2. Ignition on engine not running.
3. With the scan tool, record and erase DTCs.
4. Test drive the vehicle at speeds greater than 15 mph (24 km/h) for minimum of 10 minutes.
5. With the scan tool, read DTCs.

Is the DTC status Active at this time?

Yes

- Go To 2

No

- Go To 8

2. LOW TIRE PRESSURE

NOTE: This DTC can be caused by many different factors and might not be a TPM Sensor or a WIN fault. Interference from other elements can over power the sensor/transmitter RF frequency to the WIN making erratic operation to the TPM system. Check the vehicle for aftermarket accessories that could compromise the RF frequency signal before diagnosing the TPM system.

1. Correct all tire pressures to the recommended cold inflation tire pressure specifications and wait two minutes for the system to update.
2. With the scan tool, erase DTCs.
3. With the scan tool, read DTCs.

Does the DTC reset or is the status Active for this DTC?

Yes

- Go To 3

No

- Go To 8

3. TIRE PRESSURE MONITORING (TPM) SENSOR

NOTE: The following tests are used to locate the Tire Pressure Sensor/Transmitter that is setting the low pressure fault. If the tires have been rotated, the Tire Pressure Sensor/Transmitter is no longer in sequence from the factory. Faults are linked to the sensor/transmitter IDs. You MUST locate the correct Tire Pressure Sensor/Transmitter that set the fault before.

NOTE: Before continuing with any TPM diagnostic test, using the scan tool and read first set of the Tire Placard Pressure Front and Tire Placard Pressure Rear under Data Display in the WIN. (under the Left Rear Transponder Status) Confirm that the values match the Tire Inflation Pressure (Placard) label located on the Drivers Side B-Pillar. If the incorrect Placard Values have been programmed in the WIN, go to Update Pressure Thresholds under Miscellaneous Functions for the WIN and follow the procedure.
If the vehicle is equipped with a WIN Module, go into the Totally Integrated Power Module (TIPM), select Data Display and read "Tire Placard Pressure - Front" and "Tire Placard Pressure - Rear" to confirm the values were programmed correctly. If the Placard values are incorrect in the TIPM, select the Totally Integrated Power Module (TIPM) then under "Miscellaneous" select "Update Pressure Threshold" and enter the placard pressure value as seen on the Tire Inflation Pressure (Placard) label. Repeat step #2 for Diagnostics.

1. With the scan tool, select View Data Display in the WIN and find the compensated tire pressure values located under each of the Sensor Identification locations.

Are any of the compensated tire pressure values are below the Placard Value?

Yes

- Replace the Tire Pressure Monitoring (TPM) Sensor in accordance with the service information. (Refer to 22 - Tires and Wheels/Tire Pressure Monitoring/SENSOR, Tire Pressure Monitoring (TPM) - Removal).
- Perform the TPM VERIFICATION TEST. (Refer to 28 - DTC-Based Diagnostics/NODE, Wireless Ignition (WIN) - Standard Procedure).

No

- Go To 4

4. TPM/RKE ANALYZER CH9936

Is their a TPM/RKE Analyzer CH9936 available?

Yes

- Go To 5

No

- Go To 7

5. TIRE PRESSURE MONITORING (TPM) SENSOR NON-RESPONSIVE

1. With the TPM-RKE Analyzer CH9936, check to see if the any of the TPM Sensors do not respond after repeated attempts or display the following:
   - "Damaged Accel"
   - "Damaged Temp"
   - "Damaged Temp"
   - "Damaged Press"

Are any of the TPM Sensors not responding or displaying the information listed above?

Yes

- Replace the Tire Pressure Monitoring (TPM) Sensor in accordance with the service information. (Refer to 22 - Tires and Wheels/Tire Pressure Monitoring/SENSOR, Tire Pressure Monitoring (TPM) - Removal).
- Perform the TPM VERIFICATION TEST. (Refer to 28 - DTC-Based Diagnostics/NODE, Wireless Ignition (WIN) - Standard Procedure).

No

- Go To 6

6. TPM SENSOR INTERNAL FAULT SET USING TPM/RKE ANALYZER CH9936

NOTE: The following procedure is used to locate the TPM Sensor that is setting the sensor internal fault. If the tires have been rotated, the Tire Pressure Sensor is no longer in sequence from the factory. Faults are linked to the sensor/transmitter IDs. You MUST locate the correct Tire Pressure Sensor that set the fault before continuing. Use the following method below at every tire location.

NOTE: If the sensor IDs do not match, it may be necessary to move the vehicle to a location away from other TPM sensors and repeat this step.

1. With the scan tool, select Data Display for the WIN.
2. Check to see if the Sensor IDs match what is programmed into the WIN.

Has the Tire Pressure Sensor been located?

Yes

- Replace the Tire Pressure Monitoring (TPM) Sensor in accordance with the service information. (Refer to 22 - Tires and Wheels/Tire Pressure Monitoring/SENSOR, Tire Pressure Monitoring (TPM) - Removal).
- Perform the TPM VERIFICATION TEST. (Refer to 28 - DTC-Based Diagnostics/NODE, Wireless Ignition (WIN) - Standard Procedure).

No

- Replace the Wireless Ignition Node (WIN) in accordance with the Service Information. (Refer to 08 - Electrical/8E - Electronic Control Modules/RECEIVER, Wireless Ignition Node - Removal).
- Perform the TPM VERIFICATION TEST. (Refer to 28 - DTC-Based Diagnostics/NODE, Wireless Ignition (WIN) - Standard Procedure).

7. TIRE PRESSURE SENSOR INTERNAL FAULT SET

NOTE: Some vehicles will not receive TPM Sensor data when the vehicle is stationary. The vehicle may need to be driven at speeds greater than 15 mph (24 km/h) for about a minute in order to receive TPM Sensor data.

1. Starting with the left front wheel, deflate the tire to 20 PSI, wait two minutes, and check the scan tool for changes to any compensated tire pressure values
2. Look for a tire location whose sensor ID that is not responding.
3. Repeat this test on each wheel on the vehicle until the sensor in question has been identified

Has the Tire Pressure Sensor been located?

Yes

- Replace the Tire Pressure Monitoring (TPM) Sensor in accordance with the service information. (Refer to 22 - Tires and Wheels/Tire Pressure Monitoring/SENSOR, Tire Pressure Monitoring (TPM) - Removal).
- Perform the TPM VERIFICATION TEST. (Refer to 28 - DTC-Based Diagnostics/NODE, Wireless Ignition (WIN) - Standard Procedure).

No

- Replace the Wireless Ignition Node (WIN) in accordance with the Service Information. (Refer to 08 - Electrical/8E - Electronic Control Modules/RECEIVER, Wireless Ignition Node - Removal).
- Perform the TPM VERIFICATION TEST. (Refer to 28 - DTC-Based Diagnostics/NODE, Wireless Ignition (WIN) - Standard Procedure).

8. INTERMITTENT TIRE PRESSURE MONITORING (TPM) SENSOR DTC

1. The conditions necessary to set this DTC are not present at this time.
2. Perform any Technical Service Bulletins that may apply to this condition.
3. With the scan tool, erase DTCs.
4. Test drive the vehicle for a minimum of 10 minutes with vehicle speed greater than 24 km/h (15 mph).
5. With the scan tool, read DTCs.

Does the DTC reset or is the status Active for this DTC?

Yes

- Repair as necessary.
- Perform the TPM VERIFICATION TEST. (Refer to 28 - DTC-Based Diagnostics/NODE, Wireless Ignition (WIN) - Standard Procedure).

No

- Test complete, the condition or conditions that originally set this DTC are not present at this time. Using the wiring diagrams as a guide, check all related splices and connectors for signs of water intrusion, corrosion, pushed out or bent terminals, and correct pin tension.

C1501-TIRE PRESSURE SENSOR 1 INTERNAL

For a complete wiring diagram, **refer to the Wiring Information**.

Theory of Operation

The tire pressure sensor actively monitors the air pressure and air temperature inside the tire, the sensor internal battery status, and the radial acceleration of the wheel. Each sensor has a unique ID code.

- **When Monitored:**

  With vehicle speed greater than 24 km/h (15 mph).
- **Set Condition:**

  The Wireless Ignition Node (WIN) will monitor the signals from the four active road tire sensors. A loss of signal error is detected when eight consecutive blocks of data are not received or cannot be accurately decoded. An internal sensor hardware error condition will be set when an error in the accelerometer, pressure sensor, or temperature sensor is detected.

Possible Causes
INCORRECT SENSORS
TIRE PRESSURE MONITORING (TPM) SENSOR
WIRELESS IGNITION NODE (WIN)

1. DTC STATUS IS ACTIVE

NOTE: Seasonal temperature changes will affect tire pressure, and may have caused the tire pressure to fall below the low pressure warning threshold. Tire pressure should always be set based on cold inflation tire pressure (placard). This is defined as the tire pressure after a vehicle has not been driven for more then three hours, and in outside ambient temperatures.

1. Correct all tire pressures to the recommended cold inflation tire pressure specifications and wait two minutes for the system to update.
2. Ignition on engine not running.
3. With the scan tool, record and erase DTCs.
4. Test drive the vehicle at a speed greater than 24 km/h (15 mph) for a minimum of 10 minutes in order to receive TPM Sensor data and allow for the system to update.
5. With the scan tool, read the DTCs.

Is the DTC status Active at this time?

Yes

- Go To 2

No

- Go To 9

2. TPM-RKE ANALYZER CH9936

Is there a TPM-RKE Analyzer CH9936 available?

Yes

- Go To 3

No

- Go To 8

3. TIRE PRESSURE MONITORING (TPM) SENSOR INTERNAL DTC

NOTE:

This fault can be set if the incorrect or no TPM Sensor is installed on the vehicle. If the spare tire is currently installed on the vehicle, and it is not equipped with a TPM Sensor, this DTC can be set. Replace the spare with a TPM Sensor equipped wheel and tire assembly. Test drive the vehicle. If the DTC resets, continue with the diagnostic procedure.

1. Perform a visual inspection to verify that all road wheels are equipped with a TPM Sensor.
2. With the TPM-RKE Analyzer CH9936 verify the correct TPM Sensor is on the vehicle.

Is the correct TPM Sensor installed on the vehicle?

Yes

- Go To 4

No

- Replace the Tire Pressure Monitoring (TPM) Sensor in accordance with the service information. (Refer to 22 - Tires and Wheels/Tire Pressure Monitoring/SENSOR, Tire Pressure Monitoring (TPM) - Removal).
- Perform the TPM VERIFICATION TEST. (Refer to 28 - DTC-Based Diagnostics/NODE, Wireless Ignition (WIN) - Standard Procedure).

4. TIRE PRESSURE MONITORING (TPM) SENSOR INTERNAL FAULT SET USING TPM-RKE ANALYZER

NOTE: The following procedure is used to locate the TPM Sensor that is setting the internal fault. If the tires have been rotated, the TPM Sensor is no longer in sequence from the factory. Faults are linked to the TPM Sensor IDs. You MUST locate the TPM Sensor that set the fault before continuing. Use the following method below at every tire location.

1. Use a TPM-RKE Analyzer CH9936 to scan each TPM Sensor for a response, and store in the proper location in the TPM-RKE Analyzer CH9936. If you receive no response from any of the TPM Sensors, check to make sure that the TPM-RKE Analyzer is set correctly and repeat the process on each non-responsive wheel.

Has the faulty TPM Sensor been located?

Yes

- Replace the Tire Pressure Monitoring (TPM) Sensor in accordance with the service information. (Refer to 22 - Tires and Wheels/Tire Pressure Monitoring/SENSOR, Tire Pressure Monitoring (TPM) - Removal).
- Perform the TPM VERIFICATION TEST. (Refer to 28 - DTC-Based Diagnostics/NODE, Wireless Ignition (WIN) - Standard Procedure).

No

- Go To 5

5. TIRE PRESSURE MONITORING (TPM) SENSOR INTERNAL FAULT - MISMATCHED ID

NOTE: If the TPM Sensor IDs do not match, it may be necessary to move the vehicle to a location away from other TPM Sensors and repeat this step.

1. Use a TPM-RKE Analyzer CH9936 to verify the TPM Sensor IDs match what is programmed into the WIN. The TPM Sensor Identifications are located under “Data Display” for the WIN.

Do the TPM Sensor IDs match what is stored in the WIN?

Yes

- Replace the Wireless Ignition Node (WIN) in accordance with the Service Information.
- Perform the TPM VERIFICATION TEST. (Refer to 28 - DTC-Based Diagnostics/NODE, Wireless Ignition (WIN) - Standard Procedure).

No

- Go To 6

6. TIRE PRESSURE MONITORING (TPM) SENSOR INTERNAL FAULT

1. Using the data taken by the TPM-RKE Analyzer CH9936, program the current sensor ID's into the WIN module in the corresponding locations.
2. With the scan tool, erase the DTCs.
3. Drive the vehicle for a minimum of 20 minutes with the vehicle speed greater than 24 km/h (15 mph) to verify that the DTC does not return in an active state.
4. With the scan tool, read the active DTCs.

Does the scan tool display: C1501-TIRE PRESSURE SENSOR 1 INTERNAL

Yes

- Replace the Wireless Ignition Node (WIN) in accordance with the Service Information. (Refer to 08 - Electrical/8E - Electronic Control Modules/RECEIVER, Wireless Ignition Node - Removal).
- Perform the TPM VERIFICATION TEST. (Refer to 28 - DTC-Based Diagnostics/NODE, Wireless Ignition (WIN) - Standard Procedure).

No

- Go To 7

7. TIRE PRESSURE MONITORING (TPM) SENSOR INTERNAL FAULT - MISMATCHED ID

1. With the TPM-RKE Analyzer, read the sensor ID's.

Do the sensor ID's match the ID's just learned in the previous step?

Yes

- Test complete.
- Perform the TPM VERIFICATION TEST. (Refer to 28 - DTC-Based Diagnostics/NODE, Wireless Ignition (WIN) - Standard Procedure).

No

- Replace the Wireless Ignition Node (WIN) in accordance with the Service Information. (Refer to 08 - Electrical/8E - Electronic Control Modules/RECEIVER, Wireless Ignition Node - Removal).
- Perform the TPM VERIFICATION TEST. (Refer to 28 - DTC-Based Diagnostics/NODE, Wireless Ignition (WIN) - Standard Procedure).

8. TIRE PRESSURE MONITORING (TPM) SENSOR INTERNAL FAULT SET

NOTE: Some vehicles will not receive the TPM Sensor data when the vehicle is stationary. The vehicle may need to be driven at speeds greater than 24 km/h (15 mph) for about a minute in order to receive TPM Sensor data.

1. Starting with the left front wheel, deflate the tire to 20 PSI, wait two minutes, and check the scan tool for changes to any compensated tire pressure values.
2. Look for a tire location with a non-responsive TPM Sensor ID.
3. Repeat this test on each wheel on the vehicle until the TPM Sensor in question has been identified.

Has the faulty TPM Sensor been located?

Yes

- Replace the Tire Pressure Monitoring (TPM) Sensor in accordance with the service information. (Refer to 22 - Tires and Wheels/Tire Pressure Monitoring/SENSOR, Tire Pressure Monitoring (TPM) - Removal).
- Perform the TPM VERIFICATION TEST. (Refer to 28 - DTC-Based Diagnostics/NODE, Wireless Ignition (WIN) - Standard Procedure).

No

- Replace the Wireless Ignition Node (WIN) in accordance with the Service Information. (Refer to 08 - Electrical/8E - Electronic Control Modules/RECEIVER, Wireless Ignition Node - Removal).
- Perform the TPM VERIFICATION TEST. (Refer to 28 - DTC-Based Diagnostics/NODE, Wireless Ignition (WIN) - Standard Procedure).

9. INTERMITTENT TIRE PRESSURE MONITORING (TPM) SENSOR DTC

1. The conditions necessary to set this DTC are not present at this time.
2. Perform any Technical Service Bulletins that may apply to this condition.
3. With the scan tool, clear DTCs in the Wireless Ignition Node (WIN) Module.
4. Test drive the vehicle for a minimum of 10 minutes with vehicle speed greater than 24 km/h (15 mph).
5. With the scan tool, select View DTCs in the Wireless Ignition Node (WIN) Module.

Does the DTC reset or is the status Active for this DTC?

Yes

- Return to the beginning of this test and perform the diagnostic procedure as necessary.

No

- Test complete, the condition or conditions that originally set this DTC are not present at this time. Using the wiring diagrams as a guide, check all related splices and connectors for signs of water intrusion, corrosion, pushed out or bent terminals, and correct pin tension.

■ C1502-TIRE PRESSURE SENSOR 2 INTERNAL

For a complete wiring diagram, **refer to the Wiring Information**.

Theory of Operation

The tire pressure sensor actively monitors the air pressure and air temperature inside the tire, the sensor internal battery status, and the radial acceleration of the wheel. Each sensor has a unique ID code. The sensor transmits the data at regular intervals via an encoded signal to a receiver circuit located in the Wireless Ignition Node (WIN).

- **When Monitored:**
  With vehicle speed greater than 24 km/h (15 mph).
- **Set Condition:**
  The Wireless Ignition Node (WIN) will monitor the signals from the four active road tire sensors. A loss of signal error is detected when eight consecutive blocks of data are not received or cannot be accurately decoded. An internal sensor hardware error condition will be set when an error in the accelerometer, pressure sensor, or temperature sensor is detected.

Possible Causes
INCORRECT SENSORS
TIRE PRESSURE MONITORING (TPM) SENSOR
WIRELESS IGNITION NODE (WIN)

1. DTC STATUS IS ACTIVE

NOTE: Seasonal temperature changes will affect tire pressure, and may have caused the tire pressure to fall below the low pressure warning threshold. Tire pressure should always be set based on cold inflation tire pressure (placard). This is defined as the tire pressure after a vehicle has not been driven for more then three hours, and in outside ambient temperatures.

1. Correct all tire pressures to the recommended cold inflation tire pressure specifications and wait two minutes for the system to update.
2. Ignition on engine not running.
3. With the scan tool, record and erase DTCs.
4. Test drive the vehicle at a speed greater than 24 km/h (15 mph) for a minimum of 10 minutes in order to receive TPM Sensor data and allow for the system to update.
5. With the scan tool, read DTCs.

Is the DTC status Active at this time?

Yes

- Go To 2

No

- Go To 9

2. TPM-RKE ANALYZER CH9936

Is there a TPM-RKE Analyzer CH9936 available?

Yes

- Go To 3

No

- Go To 8

3. TIRE PRESSURE MONITORING (TPM) SENSOR INTERNAL DTC

NOTE:

This fault can be set if the incorrect or no TPM Sensor is installed on the vehicle. If the spare tire is currently installed on the vehicle, and it is not equipped with a TPM Sensor, this DTC can be set. Replace the spare with a TPM Sensor equipped wheel and tire assembly. Test drive the vehicle. If the DTC resets, continue with the diagnostic procedure.

1. Perform a visual inspection to verify that all road wheels are equipped with a TPM Sensor.
2. With the TPM-RKE Analyzer CH9936 verify the correct TPM Sensor is on the vehicle.

Is the correct TPM Sensor installed on the vehicle?

Yes

- Go To 4

No

- Replace the Tire Pressure Monitoring (TPM) Sensor in accordance with the service information. (Refer to 22 - Tires and Wheels/Tire Pressure Monitoring/SENSOR, Tire Pressure Monitoring (TPM) - Removal).
- Perform the TPM VERIFICATION TEST. (Refer to 28 - DTC-Based Diagnostics/NODE, Wireless Ignition (WIN) - Standard Procedure).

4. TIRE PRESSURE MONITORING (TPM) SENSOR INTERNAL FAULT SET USING TPM-RKE ANALYZER

NOTE: The following procedure is used to locate the TPM Sensor that is setting the internal fault. If the tires have been rotated, the TPM Sensor is no longer in sequence from the factory. Faults are linked to the TPM Sensor IDs. You MUST locate the TPM Sensor that set the fault before continuing. Use the following method below at every tire location.

1. Use a TPM-RKE Analyzer CH9936 to scan each TPM Sensor for a response, and store in the proper location in the TPM-RKE Analyzer CH9936. If you receive no response from any of the TPM Sensors, check to make sure that the TPM-RKE Analyzer is set correctly and repeat the process on each non-responsive wheel.

Has the faulty TPM Sensor been located?

Yes

- Replace the Tire Pressure Monitoring (TPM) Sensor in accordance with the service information. (Refer to 22 - Tires and Wheels/Tire Pressure Monitoring/SENSOR, Tire Pressure Monitoring (TPM) - Removal).
- Perform the TPM VERIFICATION TEST. (Refer to 28 - DTC-Based Diagnostics/NODE, Wireless Ignition (WIN) - Standard Procedure).

No

- Go To 5

5. TIRE PRESSURE MONITORING (TPM) SENSOR INTERNAL FAULT - MISMATCHED ID

NOTE: If the TPM Sensor IDs do not match, it may be necessary to move the vehicle to a location away from other TPM Sensors and repeat this step.

1. Use a TPM-RKE Analyzer CH9936 to verify the TPM Sensor IDs match what is programmed into the WIN. The TPM Sensor Identifications are located under “Data Display” for the WIN.

Do the TPM Sensor IDs match what is stored in the WIN?

Yes

- Replace the Wireless Ignition Node (WIN) in accordance with the Service Information. (Refer to 08 - Electrical/8E - Electronic Control Modules/RECEIVER, Wireless Ignition Node - Removal).
- Perform the TPM VERIFICATION TEST. (Refer to 28 - DTC-Based Diagnostics/NODE, Wireless Ignition (WIN) - Standard Procedure).

No

- Go To 6

6. TIRE PRESSURE MONITORING (TPM) SENSOR INTERNAL FAULT

1. Using the data taken by the TPM-RKE Analyzer CH9936, program the current sensor ID's into the WIN module in the corresponding locations.
2. With the scan tool, erase the DTCs.
3. Drive the vehicle for a minimum of 20 minutes with the vehicle speed greater than 24 km/h (15 mph) to verify that the DTC does not return in an active state.
4. With the scan tool, read the active DTCs.

Does the scan tool display: C1502-TIRE PRESSURE SENSOR 2 INTERNAL

Yes

- Replace the Wireless Ignition Node (WIN) in accordance with the Service Information. (Refer to 08 - Electrical/8E - Electronic Control Modules/RECEIVER, Wireless Ignition Node - Removal).
- Perform the TPM VERIFICATION TEST. (Refer to 28 - DTC-Based Diagnostics/NODE, Wireless Ignition (WIN) - Standard Procedure).

No

- Go To 7

7. TIRE PRESSURE MONITORING (TPM) SENSOR INTERNAL FAULT - MISMATCHED ID

1. With the TPM-RKE Analyzer, read the sensor ID's.

Do the sensor ID's match the ID's just learned in the previous step?

Yes

- Test complete.
- Perform the TPM VERIFICATION TEST. (Refer to 28 - DTC-Based Diagnostics/NODE, Wireless Ignition (WIN) - Standard Procedure).

No

- Replace the Wireless Ignition Node (WIN) in accordance with the Service Information. (Refer to 08 - Electrical/8E - Electronic Control Modules/RECEIVER, Wireless Ignition Node - Removal).
- Perform the TPM VERIFICATION TEST. (Refer to 28 - DTC-Based Diagnostics/NODE, Wireless Ignition (WIN) - Standard Procedure).

8. TIRE PRESSURE MONITORING (TPM) SENSOR INTERNAL FAULT SET

NOTE: Some vehicles will not receive the TPM Sensor data when the vehicle is stationary. The vehicle may need to be driven at speeds greater than 24 km/h (15 mph) for about a minute in order to receive TPM Sensor data.

1. Starting with the left front wheel, deflate the tire to 20 PSI, wait two minutes, and check the scan tool for changes to any compensated tire pressure values.
2. Look for a tire location with a non-responsive TPM Sensor ID.
3. Repeat this test on each wheel on the vehicle until the TPM Sensor in question has been identified.

Has the faulty TPM Sensor been located?

Yes

- Replace the Tire Pressure Monitoring (TPM) Sensor in accordance with the service information. (Refer to 22 - Tires and Wheels/Tire Pressure Monitoring/SENSOR, Tire Pressure Monitoring (TPM) - Removal).
- Perform the TPM VERIFICATION TEST. (Refer to 28 - DTC-Based Diagnostics/NODE, Wireless Ignition (WIN) - Standard Procedure).

No

- Replace the WIN module in accordance with the Service Information. (Refer to 08 - Electrical/8E - Electronic Control Modules/RECEIVER, Wireless Ignition Node - Removal).
- Perform the TPM VERIFICATION TEST. (Refer to 28 - DTC-Based Diagnostics/NODE, Wireless Ignition (WIN) - Standard Procedure).

9. INTERMITTENT TIRE PRESSURE MONITORING (TPM) SENSOR DTC

1. The conditions necessary to set this DTC are not present at this time.
2. Perform any Technical Service Bulletins that may apply to this condition.
3. With the scan tool, clear DTCs in the Wireless Ignition Node (WIN) Module.
4. Test drive the vehicle for a minimum of 10 minutes with vehicle speed greater than 24 km/h (15 mph).
5. With the scan tool, select View DTCs in the Wireless Ignition Node (WIN) Module.

Does the DTC reset or is the status Active for this DTC?

Yes

- Return to the beginning of this test and perform the diagnostic procedure as necessary.

No

- Test complete, the condition or conditions that originally set this DTC are not present at this time. Using the wiring diagrams as a guide, check all related splices and connectors for signs of water intrusion, corrosion, pushed out or bent terminals, and correct pin tension.

■ C1503-TIRE PRESSURE SENSOR 3 INTERNAL

For a complete wiring diagram, **refer to the Wiring Information**.

Theory of Operation

The tire pressure sensor actively monitors the air pressure and air temperature inside the tire, the sensor internal battery status, and the radial acceleration of the wheel. Each sensor has a unique ID code. The sensor transmits the data at regular intervals via an encoded signal to a receiver circuit located in the Wireless Ignition Node (WIN).

- **When Monitored:**

  With vehicle speed greater than 24 km/h (15 mph).
- **Set Condition:**

  The Wireless Ignition Node (WIN) will monitor the signals from the four active road tire sensors. A loss of signal error is detected when eight consecutive blocks of data are not received or cannot be accurately decoded. An internal sensor hardware error condition will be set when an error in the accelerometer, pressure sensor, or temperature sensor is detected.

Possible Causes
INCORRECT SENSORS
TIRE PRESSURE MONITORING (TPM) SENSOR
WIRELESS IGNITION NODE (WIN)

1. DTC STATUS IS ACTIVE

NOTE: Seasonal temperature changes will affect tire pressure, and may have caused the tire pressure to fall below the low pressure warning threshold. Tire pressure should always be set based on cold inflation tire pressure (placard). This is defined as the tire pressure after a vehicle has not been driven for more then three hours, and in outside ambient temperatures.

1. Correct all tire pressures to the recommended cold inflation tire pressure specifications and wait two minutes for the system to update.
2. Ignition on engine not running.
3. Using the scan tool, record and erase DTCs.
4. Test drive the vehicle at a speed greater than 24 km/h (15 mph) for a minimum of 10 minutes in order to receive TPM Sensor data and allow for the system to update.
5. Using the scan tool, read DTCs.

Is the DTC status Active at this time?

Yes

- Go To 2

No

- Go To 9

2. TPM-RKE ANALYZER CH9936

Is there a TPM-RKE Analyzer CH9936 available?

Yes

- Go To 3

No

- Go To 8

3. TIRE PRESSURE MONITORING (TPM) SENSOR INTERNAL DTC

NOTE:

This fault can be set if the incorrect or no TPM Sensor is installed on the vehicle. If the spare tire is currently installed on the vehicle, and it is not equipped with a TPM Sensor, this DTC can be set. Replace the spare with a TPM Sensor equipped wheel and tire assembly. Test drive the vehicle. If the DTC resets, continue with the diagnostic procedure.

1. Perform a visual inspection to verify that all road wheels are equipped with a TPM Sensor.
2. With the TPM-RKE Analyzer CH9936 verify the correct TPM Sensor is on the vehicle.

Is the correct TPM Sensor installed on the vehicle?

Yes

- Go To 4

No

- Replace the Tire Pressure Monitoring (TPM) Sensor in accordance with the service information. (Refer to 22 - Tires and Wheels/Tire Pressure Monitoring/SENSOR, Tire Pressure Monitoring (TPM) - Removal).
- Perform the TPM VERIFICATION TEST. (Refer to 28 - DTC-Based Diagnostics/NODE, Wireless Ignition (WIN) - Standard Procedure).

4. TIRE PRESSURE MONITORING (TPM) SENSOR INTERNAL FAULT SET USING TPM-RKE ANALYZER

NOTE: The following procedure is used to locate the TPM Sensor that is setting the internal fault. If the tires have been rotated, the TPM Sensor is no longer in sequence from the factory. Faults are linked to the TPM Sensor IDs. You MUST locate the TPM Sensor that set the fault before continuing. Use the following method below at every tire location.

1. Use a TPM-RKE Analyzer CH9936 to scan each TPM Sensor for a response, and store in the proper location in the TPM-RKE Analyzer CH9936. If you receive no response from any of the TPM Sensors, check to make sure that the TPM-RKE Analyzer is set correctly and repeat the process on each non-responsive wheel.

Has the faulty TPM Sensor been located?

Yes

- Replace the Tire Pressure Monitoring (TPM) Sensor in accordance with the service information. (Refer to 22 - Tires and Wheels/Tire Pressure Monitoring/SENSOR, Tire Pressure Monitoring (TPM) - Removal).
- Perform the TPM VERIFICATION TEST. (Refer to 28 - DTC-Based Diagnostics/NODE, Wireless Ignition (WIN) - Standard Procedure).

No

- Go To 5

5. TIRE PRESSURE MONITORING (TPM) SENSOR INTERNAL FAULT - MISMATCHED ID

NOTE: If the TPM Sensor IDs do not match, it may be necessary to move the vehicle to a location away from other TPM Sensors and repeat this step.

1. Use a TPM-RKE Analyzer CH9936 to verify the TPM Sensor IDs match what is programmed into the WIN. The TPM Sensor Identifications are located under “Data Display” for the WIN.

Do the TPM Sensor IDs match what is stored in the WIN?

Yes

- Replace the Wireless Ignition Node (WIN) in accordance with the Service Information. (Refer to 08 - Electrical/8E - Electronic Control Modules/RECEIVER, Wireless Ignition Node - Removal).
- Perform the TPM VERIFICATION TEST. (Refer to 28 - DTC-Based Diagnostics/NODE, Wireless Ignition (WIN) - Standard Procedure).

No

- Go To 6

6. TIRE PRESSURE MONITORING (TPM) SENSOR INTERNAL FAULT

1. Using the data taken by the TPM-RKE Analyzer CH9936, program the current sensor ID's into the WIN module in the corresponding locations.
2. With the scan tool, erase the DTCs.
3. Drive the vehicle for a minimum of 20 minutes with the vehicle speed greater than 24 km/h (15 mph) to verify that the DTC does not return in an active state.
4. With the scan tool, read the active DTCs.

Does the scan tool display: C1503-TIRE PRESSURE SENSOR 3 INTERNAL

Yes

- Replace the Wireless Ignition Node (WIN) in accordance with the Service Information. (Refer to 08 - Electrical/8E - Electronic Control Modules/RECEIVER, Wireless Ignition Node - Removal).
- Perform the TPM VERIFICATION TEST. (Refer to 28 - DTC-Based Diagnostics/NODE, Wireless Ignition (WIN) - Standard Procedure).

No

- Go To 7

7. TIRE PRESSURE MONITORING (TPM) SENSOR INTERNAL FAULT - MISMATCHED ID

1. With the TPM-RKE Analyzer, read the sensor ID's.

Do the sensor ID's match the ID's just learned in the previous step?

Yes

- Test complete.
- Perform the TPM VERIFICATION TEST. (Refer to 28 - DTC-Based Diagnostics/NODE, Wireless Ignition (WIN) - Standard Procedure).

No

- Replace the Wireless Ignition Node (WIN) in accordance with the Service Information. (Refer to 08 - Electrical/8E - Electronic Control Modules/RECEIVER, Wireless Ignition Node - Removal).
- Perform the TPM VERIFICATION TEST. (Refer to 28 - DTC-Based Diagnostics/NODE, Wireless Ignition (WIN) - Standard Procedure).

8. TIRE PRESSURE MONITORING (TPM) SENSOR INTERNAL FAULT SET

NOTE: Some vehicles will not receive the TPM Sensor data when the vehicle is stationary. The vehicle may need to be driven at speeds greater than 24 km/h (15 mph) for about a minute in order to receive TPM Sensor data.

1. Starting with the left front wheel, deflate the tire to 20 PSI, wait two minutes, and check the scan tool for changes to any compensated tire pressure values.
2. Look for a tire location with a non-responsive TPM Sensor ID.
3. Repeat this test on each wheel on the vehicle until the TPM Sensor in question has been identified.

Has the faulty TPM Sensor been located?

Yes

- Replace the Tire Pressure Monitoring (TPM) Sensor in accordance with the service information. (Refer to 22 - Tires and Wheels/Tire Pressure Monitoring/SENSOR, Tire Pressure Monitoring (TPM) - Removal).
- Perform the TPM VERIFICATION TEST. (Refer to 28 - DTC-Based Diagnostics/NODE, Wireless Ignition (WIN) - Standard Procedure).

No

- Replace the Wireless Ignition Node (WIN) in accordance with the Service Information. (Refer to 08 - Electrical/8E - Electronic Control Modules/RECEIVER, Wireless Ignition Node - Removal).
- Perform the TPM VERIFICATION TEST. (Refer to 28 - DTC-Based Diagnostics/NODE, Wireless Ignition (WIN) - Standard Procedure).

9. INTERMITTENT TIRE PRESSURE MONITORING (TPM) SENSOR DTC

1. The conditions necessary to set this DTC are not present at this time.
2. Perform any Technical Service Bulletins that may apply to this condition.
3. Using the scan tool, clear DTCs in the Wireless Ignition Node (WIN) Module.
4. Test drive the vehicle for a minimum of 10 minutes with vehicle speed greater than 24 km/h (15 mph).
5. Using the scan tool, select View DTCs in the Wireless Ignition Node (WIN) Module.

Does the DTC reset or is the status Active for this DTC?

Yes

- Return to the beginning of this test and perform the diagnostic procedure as necessary.

No

- Test complete, the condition or conditions that originally set this DTC are not present at this time. Using the wiring diagrams as a guide, check all related splices and connectors for signs of water intrusion, corrosion, pushed out or bent terminals, and correct pin tension.

C1504-TIRE PRESSURE SENSOR 4 INTERNAL

For a complete wiring diagram, **refer to the Wiring Information**.

Theory of Operation

The tire pressure sensor actively monitors the air pressure and air temperature inside the tire, the sensor internal battery status, and the radial acceleration of the wheel. Each sensor has a unique ID code. The sensor transmits the data at regular intervals via an encoded signal to a receiver circuit located in the Wireless Ignition Node (WIN).

- **When Monitored:**

  With vehicle speed greater than 15 m.p.h. (24 km/h).
- **Set Condition:**

  The Wireless Ignition Node (WIN) will monitor the signals from the four active road tire sensors. A loss of signal error is detected when eight consecutive blocks of data are not received or cannot be accurately decoded. An internal sensor hardware error condition will be set when an error in the accelerometer, pressure sensor, or temperature sensor is detected.

Possible Causes
INCORRECT SENSORS
TIRE PRESSURE MONITORING (TPM) SENSOR
WIRELESS IGNITION NODE (WIN)

1. DTC STATUS IS ACTIVE

NOTE: Seasonal temperature changes will affect tire pressure, and may have caused the tire pressure to fall below the low pressure warning threshold. Tire pressure should always be set based on cold inflation tire pressure (placard). This is defined as the tire pressure after a vehicle has not been driven for more then three hours, and in outside ambient temperatures.

1. Correct all tire pressures to the recommended cold inflation tire pressure specifications and wait two minutes for the system to update.
2. Ignition on engine not running.
3. Using the scan tool, record and erase DTCs.
4. Test drive the vehicle at a speed greater than 24 km/h (15 mph) for a minimum of 10 minutes in order to receive TPM Sensor data and allow for the system to update.
5. Using the scan tool, read DTCs.

Is the DTC status Active at this time?

Yes

- Go To 2

No

- Go To 9

2. TPM-RKE ANALYZER CH9936

Is there a TPM-RKE Analyzer CH9936 available?

Yes

- Go To 3

No

- Go To 8

3. TIRE PRESSURE MONITORING (TPM) SENSOR INTERNAL DTC

NOTE:

This fault can be set if the incorrect or no TPM Sensor is installed on the vehicle. If the spare tire is currently installed on the vehicle, and it is not equipped with a TPM Sensor, this DTC can be set. Replace the spare with a TPM Sensor equipped wheel and tire assembly. Test drive the vehicle. If the DTC resets, continue with the diagnostic procedure.

1. Perform a visual inspection to verify that all road wheels are equipped with a TPM Sensor.
2. With the TPM-RKE Analyzer CH9936 verify the correct TPM Sensor is on the vehicle.

Is the correct TPM Sensor installed on the vehicle?

Yes

- Go To 4

No

- Replace the Tire Pressure Monitoring (TPM) Sensor in accordance with the service information. (Refer to 22 - Tires and Wheels/Tire Pressure Monitoring/SENSOR, Tire Pressure Monitoring (TPM) - Removal).
- Perform the TPM VERIFICATION TEST. (Refer to 28 - DTC-Based Diagnostics/NODE, Wireless Ignition (WIN) - Standard Procedure).

4. TIRE PRESSURE MONITORING (TPM) SENSOR INTERNAL FAULT SET USING TPM-RKE ANALYZER

NOTE: The following procedure is used to locate the TPM Sensor that is setting the internal fault. If the tires have been rotated, the TPM Sensor is no longer in sequence from the factory. Faults are linked to the TPM Sensor IDs. You MUST locate the TPM Sensor that set the fault before continuing. Use the following method below at every tire location.

1. Use a TPM-RKE Analyzer CH9936 to scan each TPM Sensor for a response, and store in the proper location in the TPM-RKE Analyzer CH9936. If you receive no response from any of the TPM Sensors, check to make sure that the TPM-RKE Analyzer is set correctly and repeat the process on each non-responsive wheel.

Has the faulty TPM Sensor been located?

Yes

- Replace the Tire Pressure Monitoring (TPM) Sensor in accordance with the service information. (Refer to 22 - Tires and Wheels/Tire Pressure Monitoring/SENSOR, Tire Pressure Monitoring (TPM) - Removal).
- Perform the TPM VERIFICATION TEST. (Refer to 28 - DTC-Based Diagnostics/NODE, Wireless Ignition (WIN) - Standard Procedure).

No

- Go To 5

5. TIRE PRESSURE MONITORING (TPM) SENSOR INTERNAL FAULT - MISMATCHED ID

NOTE: If the TPM Sensor IDs do not match, it may be necessary to move the vehicle to a location away from other TPM Sensors and repeat this step.

1. Use a TPM-RKE Analyzer CH9936 to verify the TPM Sensor IDs match what is programmed into the WIN. The TPM Sensor Identifications are located under “Data Display” for the WIN.

Do the TPM Sensor IDs match what is stored in the WIN?

Yes

- Replace the Wireless Ignition Node (WIN) in accordance with the Service Information. (Refer to 08 - Electrical/8E - Electronic Control Modules/RECEIVER, Wireless Ignition Node - Removal).
- Perform the TPM VERIFICATION TEST. (Refer to 28 - DTC-Based Diagnostics/NODE, Wireless Ignition (WIN) - Standard Procedure).

No

- Go To 6

6. TIRE PRESSURE MONITORING (TPM) SENSOR INTERNAL FAULT

1. Using the data taken by the TPM-RKE Analyzer CH9936, program the current sensor ID's into the WIN module in the corresponding locations.
2. With the scan tool, erase the DTCs.
3. Drive the vehicle for a minimum of 20 minutes with the vehicle speed greater than 24 km/h (15 mph) to verify that the DTC does not return in an active state.
4. With the scan tool, read the active DTCs.

Does the scan tool display: C1504-TIRE PRESSURE SENSOR 4 INTERNAL

Yes

- Replace the Wireless Ignition Node (WIN) in accordance with the Service Information. (Refer to 08 - Electrical/8E - Electronic Control Modules/RECEIVER, Wireless Ignition Node - Removal).
- Perform the TPM VERIFICATION TEST. (Refer to 28 - DTC-Based Diagnostics/NODE, Wireless Ignition (WIN) - Standard Procedure).

No

- Go To 7

7. TIRE PRESSURE MONITORING (TPM) SENSOR INTERNAL FAULT - MISMATCHED ID

1. With the TPM-RKE Analyzer, read the sensor ID's.

Do the sensor ID's match the ID's just learned in the previous step?

Yes

- Test complete.
- Perform the TPM VERIFICATION TEST. (Refer to 28 - DTC-Based Diagnostics/NODE, Wireless Ignition (WIN) - Standard Procedure).

No

- Replace the Wireless Ignition Node (WIN) in accordance with the Service Information. (Refer to 08 - Electrical/8E - Electronic Control Modules/RECEIVER, Wireless Ignition Node - Removal).
- Perform the TPM VERIFICATION TEST. (Refer to 28 - DTC-Based Diagnostics/NODE, Wireless Ignition (WIN) - Standard Procedure).

8. TIRE PRESSURE MONITORING (TPM) SENSOR INTERNAL FAULT SET

NOTE: Some vehicles will not receive the TPM Sensor data when the vehicle is stationary. The vehicle may need to be driven at speeds greater than 24 km/h (15 mph) for about a minute in order to receive TPM Sensor data.

1. Starting with the left front wheel, deflate the tire to 20 PSI, wait two minutes, and check the scan tool for changes to any compensated tire pressure values.
2. Look for a tire location with a non-responsive TPM Sensor ID.
3. Repeat this test on each wheel on the vehicle until the TPM Sensor in question has been identified.

Has the TPM Sensor been located?

Yes

- Replace the Tire Pressure Monitoring (TPM) Sensor in accordance with the service information. (Refer to 22 - Tires and Wheels/Tire Pressure Monitoring/SENSOR, Tire Pressure Monitoring (TPM) - Removal).
- Perform the TPM VERIFICATION TEST. (Refer to 28 - DTC-Based Diagnostics/NODE, Wireless Ignition (WIN) - Standard Procedure).

No

- Replace the Wireless Ignition Node (WIN) in accordance with the Service Information. (Refer to 08 - Electrical/8E - Electronic Control Modules/RECEIVER, Wireless Ignition Node - Removal).
- Perform the TPM VERIFICATION TEST. (Refer to 28 - DTC-Based Diagnostics/NODE, Wireless Ignition (WIN) - Standard Procedure).

9. INTERMITTENT TIRE PRESSURE MONITORING (TPM) SENSOR DTC

1. The conditions necessary to set this DTC are not present at this time.
2. Perform any Technical Service Bulletins that may apply to this condition.
3. Using the scan tool, clear DTCs in the Wireless Ignition Node (WIN) Module.
4. Test drive the vehicle for a minimum of 10 minutes with vehicle speed greater than 24 km/h (15 mph).
5. Using the scan tool, select View DTCs in the Wireless Ignition Node (WIN) Module.

Does the DTC reset or is the status Active for this DTC?

Yes

- Return to the beginning of this test and perform the diagnostic procedure as necessary.

No

- Test complete, the condition or conditions that originally set this DTC are not present at this time. Using the wiring diagrams as a guide, check all related splices and connectors for signs of water intrusion, corrosion, pushed out or bent terminals, and correct pin tension.

■ C151C-TIRE PRESSURE MONITORING (TPM) SENSORS MISSING

For a complete wiring diagram, **refer to the Wiring Information**.

Theory of Operation

When installing a new Wireless Ignition Node (WIN), the module is programed with universal IDs for the Tire Pressure Monitoring (TPM) Sensors. The WIN must be programmed with the correct TPM Sensor IDs.

- **When Monitored:**
  During vehicle TPM Sensor ID locate process.
- **Set Condition:**
  When installing a new Wireless Ignition Node (WIN).

Possible Causes
INCORRECT TIRE PRESSURE MONITORING (TPM) SENSOR ID(S)
TIRE PRESSURE MONITORING (TPM) SENSOR
WIRELESS IGNITION NODE (WIN)

1. VERIFY DIAGNOSTIC TROUBLE CODE (DTC) IS ACTIVE

NOTE: The DTC can be caused by many different factors and might not be a sensor/transmitter or a WIN fault. Interference from other elements will over power the sensor/transmitter RF frequency making erratic operation to the TPM system. Check the vehicle for aftermarket accessories that could compromise the RF frequency signal before diagnosing the TPM system.

1. Correct all tire pressures to the recommended cold inflation tire pressure specifications and wait two minutes for the system to update.
2. Ignition on, engine not running.
3. Using the scan tool, record and erase DTCs.
4. Test drive the vehicle at a speed greater than 24 km/h (15 mph) for a minimum of 10 minutes in order to receive TPM data and allow for the system to update.
5. Using the scan tool, read DTCs.

Is the DTC status Active at this time?

Yes

- Go To 2

No

- Go To 5

2. TPM-RKE ANALYZER CH9936

Is there a TPM-RKE Analyzer CH9936 available?

Yes

- Go To 3

No

- Go To 4

3. WITH TPM-RKE TOOL CHECK TIRE PRESSURE MONITORING (TPM) SENSOR ID(S)

NOTE: Always be certain to select the proper vehicle line and model year when using this tool, as the tool will automatically use the correct protocol to attempt to read the Sensor. If the incorrect vehicle line and/or model year is selected, the Sensor will not respond to the tool.

NOTE: If you receive no response from any of the tire pressure sensors, check to make sure that the TPM-RKE Analyzer is set correctly, and repeat the process on each of the non-responsive wheel(s)

1. Use a TPM-RKE Analyzer CH9936 to scan each TPM Sensor for an ID, store in the proper location in the TPM-RKE Analyzer.
2. Use a TPM-RKE Analyzer CH9936 to upload the correct IDs and proper locations in the scan tool.
3. Using the scan tool, select the TIPM Module under "Miscellaneous Functions", follow the procedure for uploading TPM Sensor IDs.
4. Using the scan tool, erase DTCs.
5. Test drive the vehicle at a speed greater than 24 km/h (15 mph) for a minimum of 10 minutes in order to receive TPM data and allow for the system to update.
6. Using the scan tool, check to see if the TPM Module IDs match what is programmed into the WIN.

Do the TPM IDs match?

Yes

- Test complete.
- Perform the TPM VERIFICATION TEST. (Refer to 28 - DTC-Based Diagnostics/NODE, Wireless Ignition (WIN) - Standard Procedure).

No

- Replace the Wireless Ignition Node (WIN) in accordance with the Service Information. (Refer to 08 - Electrical/8E - Electronic Control Modules/RECEIVER, Wireless Ignition Node - Removal).
- Perform the TPM VERIFICATION TEST. (Refer to 28 - DTC-Based Diagnostics/NODE, Wireless Ignition (WIN) - Standard Procedure).

4. WITHOUT TPM-RKE ANALYZER CHECK TIRE PRESSURE MONITORING (TPM) SENSOR ID(S)

1. Starting with the left front wheel, deflate the tire to 20 PSI, wait two minutes, and check the scan tool for changes to any compensated tire pressure values.
2. Repeat the above step on each wheel of the vehicle.
3. Using the scan tool, erase DTCs.
4. Test drive the vehicle at a speed greater than 24 km/h (15 mph) for a minimum of 10 minutes in order to receive TPM data and allow for the system to update.
5. Using the scan tool, check to see if the TPM IDs are programmed into the WIN.

Are the TPM Sensor IDs in the WIN?

Yes

- Test complete.
- Perform the VERIFICATION TEST. (Refer to 28 - DTC-Based Diagnostics/NODE, Wireless Ignition (WIN) - Standard Procedure).

No

- Replace the Wireless Ignition Node (WIN) in accordance with the Service Information. (Refer to 08 - Electrical/8E - Electronic Control Modules/RECEIVER, Wireless Ignition Node - Removal).
- Perform the TPM VERIFICATION TEST. (Refer to 28 - DTC-Based Diagnostics/NODE, Wireless Ignition (WIN) - Standard Procedure).

5. INTERMITTENT TIRE PRESSURE SENSOR DTC

NOTE: The DTC can be caused by many different factors and might not be a sensor/transmitter or a WIN fault. Interference from other elements will over power the sensor/transmitter RF frequency making erratic operation to the TPM system. Check the vehicle for aftermarket accessories that could compromise the RF frequency signal before diagnosing the TPM system.

1. Perform any Technical Service Bulletins that may apply to this condition.
2. Using the scan tool, erase DTCs.
3. Test drive the vehicle at a speed greater than 24 km/h (15 mph) for a minimum of 10 minutes in order to receive TPM data and allow for the system to update.
4. Using the scan tool, read DTCs.

Does the DTC reset or is the status Active for this DTC?

Yes

- Go To 2

No

- Test complete, the condition or conditions that originally set this DTC are not present at this time. Using the wiring diagrams as a guide, check all related splices and connectors for signs of water intrusion, corrosion, pushed out or bent terminals, and correct pin tension.

P0928-BTSI CONTROL CIRCUIT

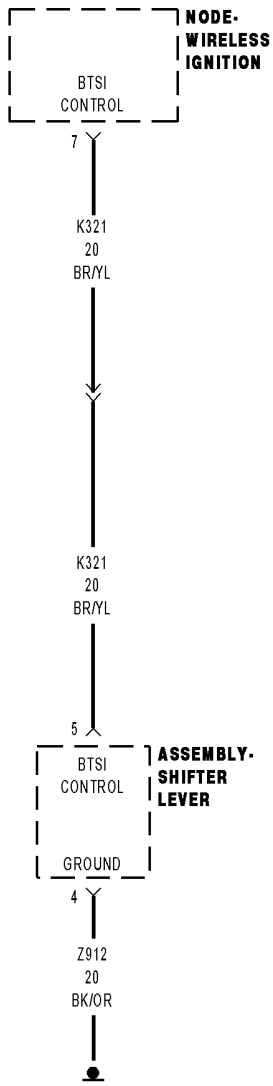

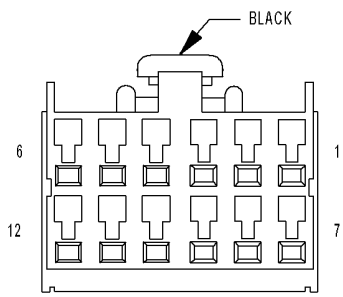

NODE-
WIRELESS
IGNITION

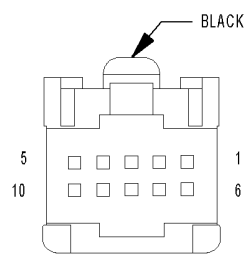

ASSEMBLY-
SHIFTER
LEVER

02971591

For a complete wiring diagram, **refer to the Wiring Information**.

Theory of Operation

The brake switch signal must be active before the shift lever can be moved out of the park position. The Shifter Lever Assembly (SLA) Electronic Shift Module (ESM) receives two brake switch signals. The first signal is a CAN C Bus message sent to the shifter lever assembly. The second signal is a hard wired brake switch signal to the shifter lever assembly from the Wireless Ignition Node (WIN). The CAN C Bus message is the primary brake switch signal and the hard wired signal serves as the backup brake switch signal. These two brake switch signals are compared against each other to verify proper brake switch operation.

- **When Monitored:**
  Continuously with the ignition on.
- **Set Condition:**
  The Diagnostic Trouble Code (DTC) will set if the high side driver detects a short to ground for 10 seconds.

Possible Causes
ENGINE BRAKE DTCS PRESENT
(K321) BRAKE TRANSMISSION SHIFT INTERLOCK (BTSI) CONTROL CIRCUIT SHORT TO GROUND
(K321) BTSI CONTROL CIRCUIT OPEN
(K321) BTSI CONTROL CIRCUIT SHORTED TO VOLTAGE
SHIFTER ASSEMBLY
WIRELESS IGNITION NODE (WIN)

1. ENGINE DTCS PRESENT

1. With the scan tool, read PCM DTCs.

Are there any Powertrain Control Module (PCM) brake switch related DTCs present?

Yes

- (Refer to 28 - DTC-Based Diagnostics/MODULE, Powertrain Control (PCM) - Diagnosis and Testing) and perform the appropriate diagnostic procedure.

No

- Go To 2

2. CHECK THE (K321) BTSI CONTROL CIRCUIT

1. Turn the ignition off to the lock position.
2. Disconnect the Shift Lever Assembly harness connector.

NOTE: Check connectors - Clean/repair as necessary.

3. Using a 12-volt test light, connect one end to the (Z911) Ground circuit and the other to the (K321) BTSI Control circuit in the Shifter connector.
4. Turn the Ignition on, engine not running.
5. With the scan tool under WIN, select Actuators and actuate the BTSI.

Does the test light illuminate brightly while the actuator is cycling the (K321) BTSI Control circuit on and off?

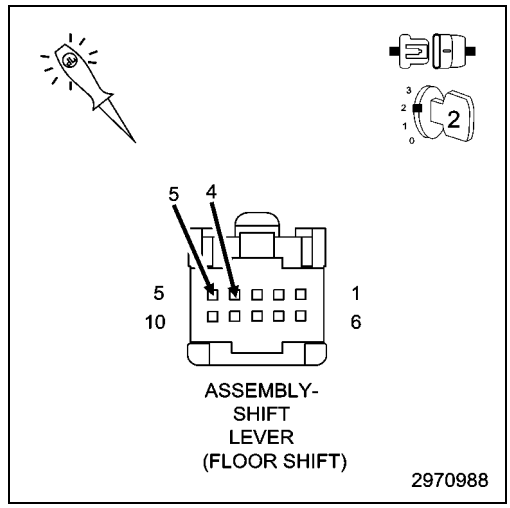

Yes

- Replace the Shift Lever Assembly in accordance with the Service Information.
- Perform the BODY VERIFICATION TEST. (Refer to 28 - DTC-Based Diagnostics/MODULE, Totally Integrated Power (TIPM) - Standard Procedure).

No

- With the scan tool, stop the actuation.
- Go To 3

3. CHECK THE (Z911) GROUND CIRCUIT

1. Using a 12-volt test light connected to 12-volts, check the (Z911) Ground circuit in the Shifter connector.

Does the test light illuminate brightly?

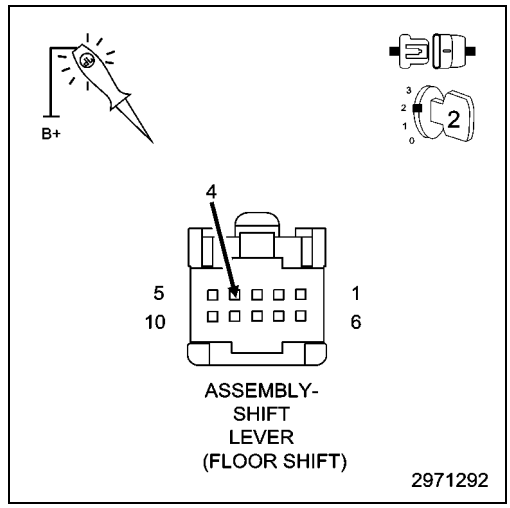

Yes

- Go To 4

No

- Repair the open in the (Z911) Ground circuit.
- Perform the BODY VERIFICATION TEST. (Refer to 28 - DTC-Based Diagnostics/MODULE, Totally Integrated Power (TIPM) - Standard Procedure).

4. (K321) BTSI CONTROL CIRCUIT SHORT TO GROUND

1. Turn the ignition off.
2. Disconnect the WIN harness connector.

NOTE: Check connectors - Clean/repair as necessary.

3. Measure the resistance between ground and the (K321) BTSI Control circuit in the WIN and the Shift Lever connectors.

Is the resistance below 10k Ohms at either connector?

Yes

- Repair the short to ground in the (K321) BTSI Control circuit.
- Perform the BODY VERIFICATION TEST. (Refer to 28 - DTC-Based Diagnostics/MODULE, Totally Integrated Power (TIPM) - Standard Procedure).

No

- Go To 5

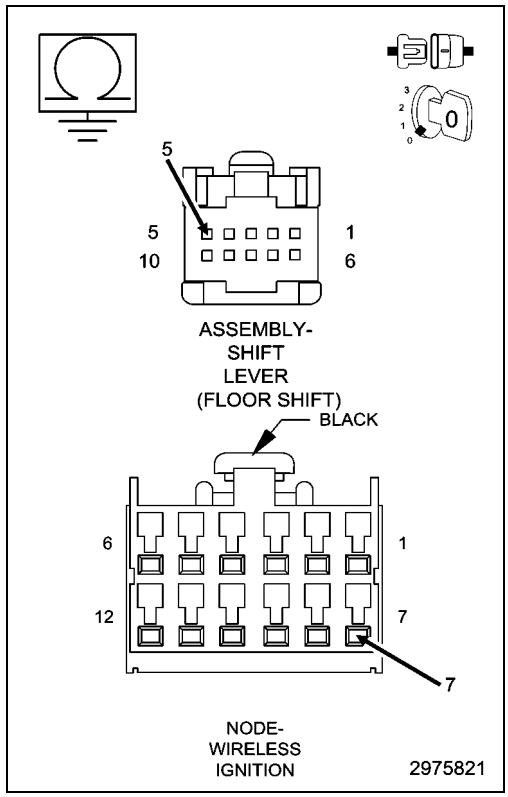

5. (K321) BTSI CONTROL CIRCUIT OPEN

1. Measure the resistance of the (K321) BTSI Control circuit between the Shift Lever harness connector and the WIN harness connector.

Is the resistance above 5.0 Ohms?

Yes

- Repair the open in the (K321) BTSI Control circuit.
- Perform the BODY VERIFICATION TEST. (Refer to 28 - DTC-Based Diagnostics/MODULE, Totally Integrated Power (TIPM) - Standard Procedure).

No

- Go To 6

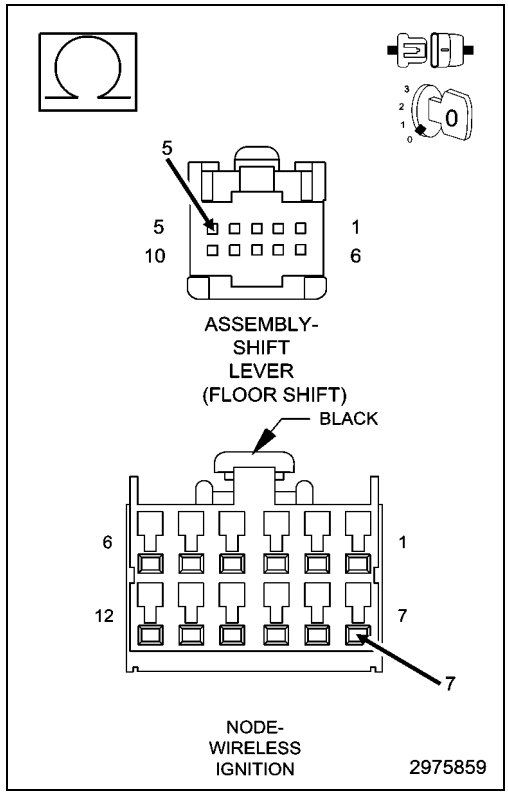

6. (K321) BTSI CONTROL CIRCUIT SHORTED TO VOLTAGE

1. Turn the ignition on.
2. Measure the voltage between ground and the (K321) BTSI Control circuit in the Shift Lever harness connector and the WIN harness connector.

Is there any voltage present at either connector?

Yes

- Repair the short to voltage in the (K321) BTSI Control circuit.
- Perform the BODY VERIFICATION TEST. (Refer to 28 - DTC-Based Diagnostics/MODULE, Totally Integrated Power (TIPM) - Standard Procedure).

No

- Replace the Wireless Ignition Node in accordance with the Service Information.
- Perform the BODY VERIFICATION TEST. (Refer to 28 - DTC-Based Diagnostics/MODULE, Totally Integrated Power (TIPM) - Standard Procedure).

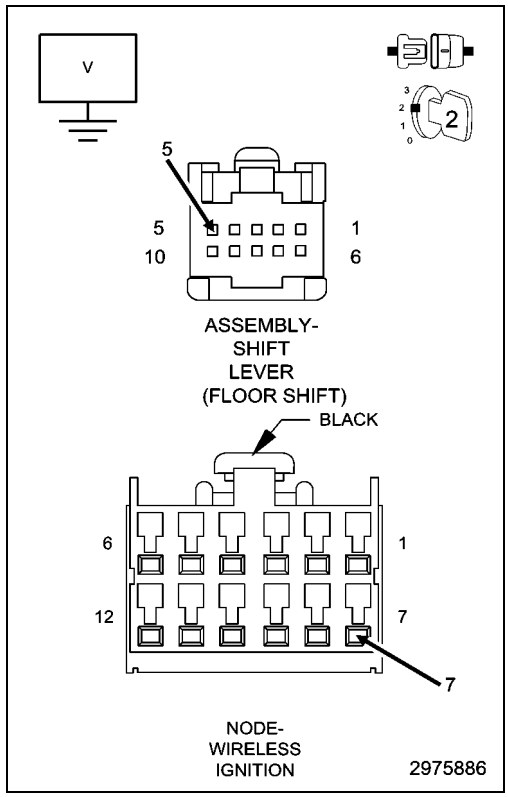

U0100-LOST COMMUNICATION WITH ECM/PCM

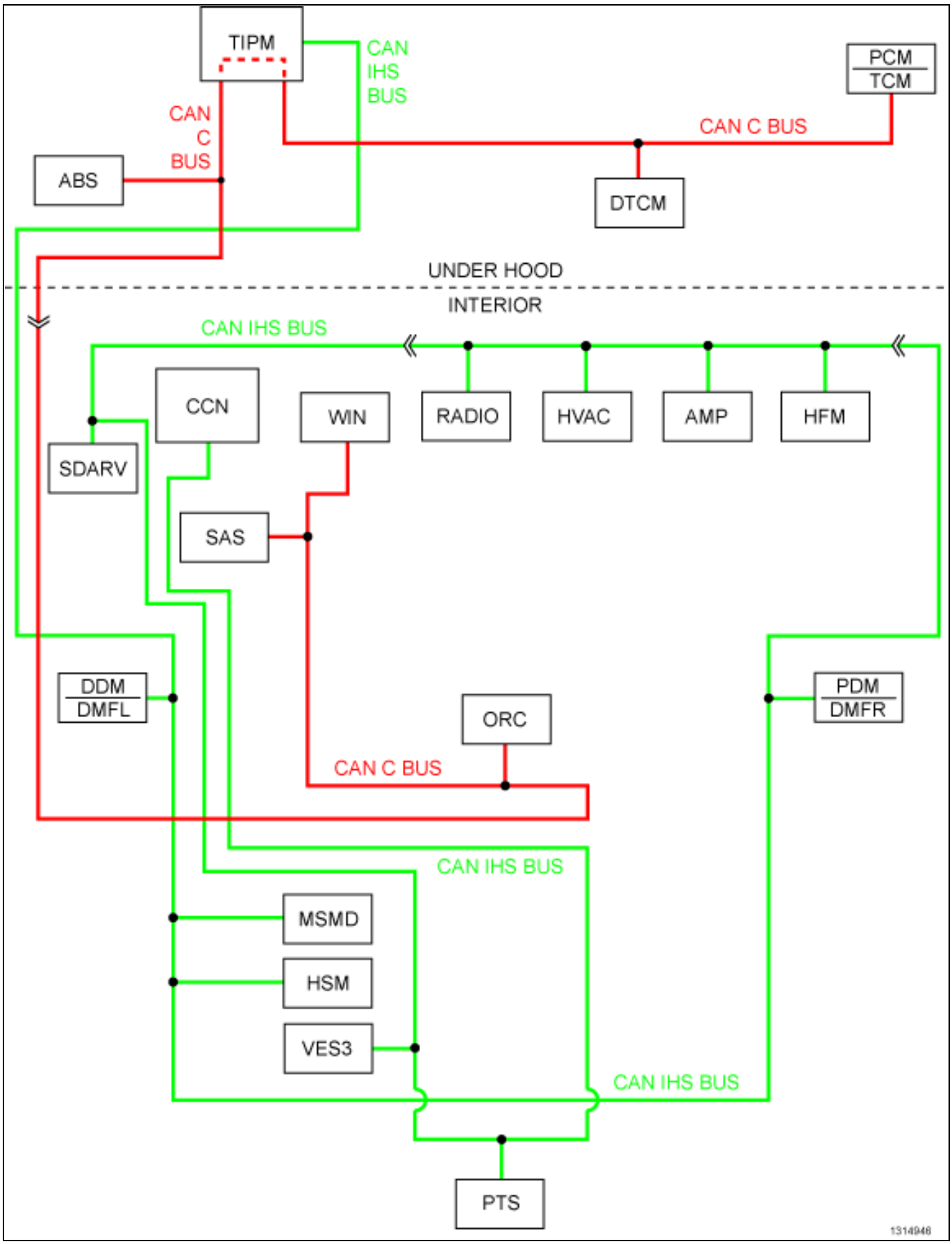

For a complete wiring diagram, **refer to the Wiring Information**.

- **When Monitored:**
  Continuously when the ignition is on.
  Battery voltage between 10 and 16 volts.
  Ignition Off Draw (IOD) fuse installed.
  Totally Integrated Power Module (TIPM) is configured correctly.
- **Set Condition:**
  Bus messages not received from the ECM/PCM for approximately two to five seconds.

Possible Causes
CAN IHS OR CAN C BUS CIRCUITS OPEN OR SHORTED
DTCS RELATED TO BATTERY VOLTAGE, IGNITION, OR VIN MESSAGES
TIPM NOT CONFIGURED CORRECTLY
ECM/PCM
ECM/PCM POWER AND GROUND
MODULE THAT SET THIS DTC

1. VERIFY THE DIAGNOSTIC TROUBLE CODE (DTC) IS ACTIVE

NOTE: Make sure the IOD fuse is installed and battery voltage is between 10 and 16 volts before proceeding.

1. Using the scan tool, read active Wireless Ignition Node (WIN) DTCs.

Is this DTC active?

Yes

- (Refer to 28 - DTC-Based Diagnostics/MODULE, Totally Integrated Power (TIPM) - Diagnosis and Testing) and perform the diagnostic procedure for this DTC.

No

- (Refer to 29 - Non-DTC Diagnostics/Communication - Diagnosis and Testing) and perform the Stored Lost Communication DTCs diagnostic procedure.

U0121-LOST COMMUNICATION WITH ANTI-LOCK BRAKE MODULE

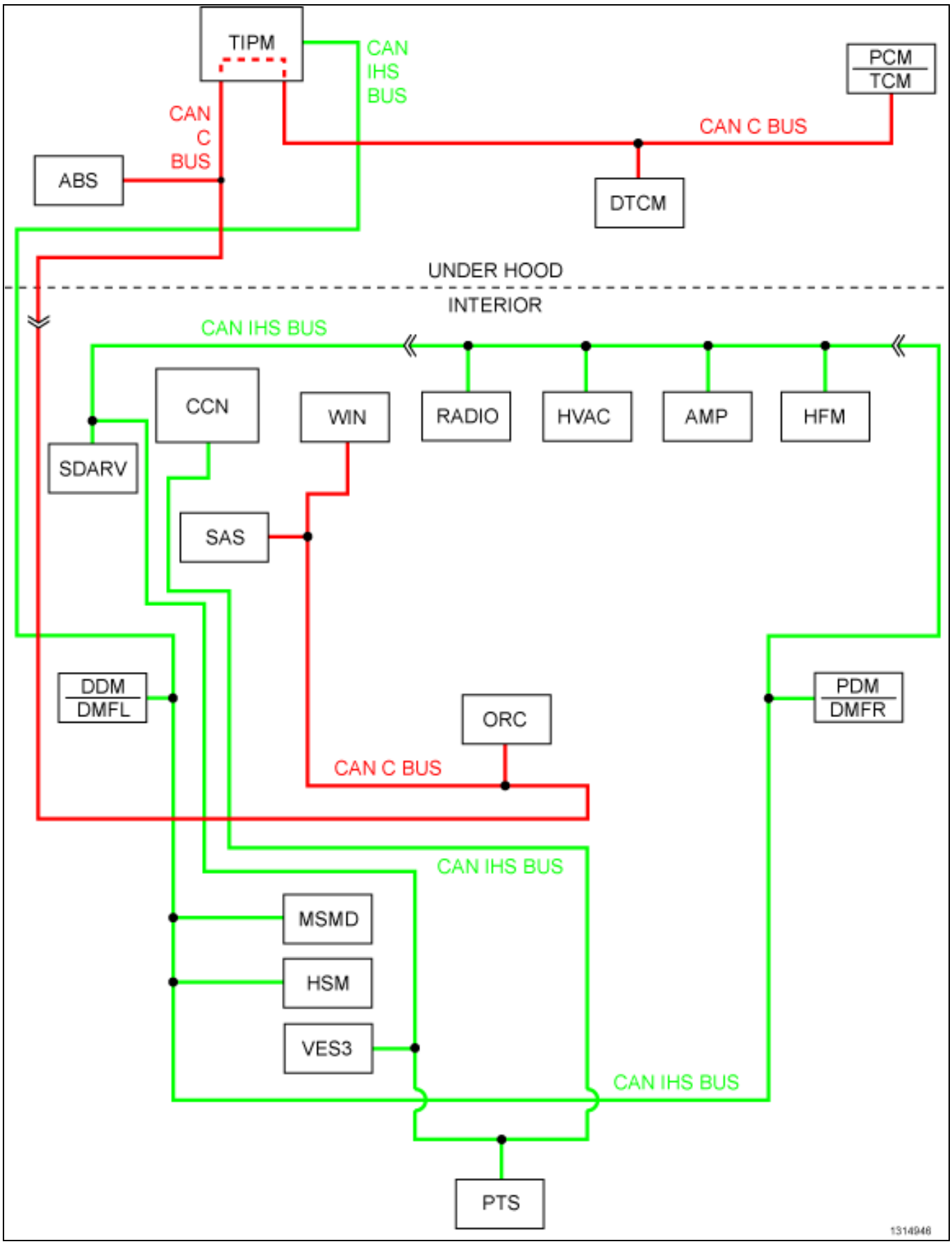

For a complete wiring diagram, **refer to the Wiring Information**.

- **When Monitored:**
  Continuously when the ignition is on.
  Battery voltage between 10 and 16 volts.
  Ignition Off Draw (IOD) fuse installed.
  Totally Integrated Power Module (TIPM) is configured correctly.
- **Set Condition:**
  Bus messages not received from the ABS module for approximately two to five seconds.

Possible Causes
CAN IHS OR CAN C BUS CIRCUITS OPEN OR SHORTED
DTCS RELATED TO BATTERY VOLTAGE, IGNITION, OR VIN MESSAGES
TIPM NOT CONFIGURED CORRECTLY
ABS MODULE
ABS MODULE POWER AND GROUND
MODULE THAT SET THIS DTC

1. VERIFY THE DIAGNOSTIC TROUBLE CODE (DTC) IS ACTIVE

NOTE: Make sure the IOD fuse is installed and battery voltage is between 10 and 16 volts before proceeding.

1. Using the scan tool, read active Wireless Ignition Node (WIN) DTCs.

Is this DTC active?

Yes

- (Refer to 28 - DTC-Based Diagnostics/MODULE, Totally Integrated Power (TIPM) - Diagnosis and Testing) and perform the U0121-Lost Communication with Anti-lock Brake Module diagnostic procedure.

No

- (Refer to 29 - Non-DTC Diagnostics/Communication - Diagnosis and Testing) and perform the Stored Lost Communication DTCs diagnostic procedure.

U0141-LOST COMMUNICATION WITH IPM (FCM/TIPM)

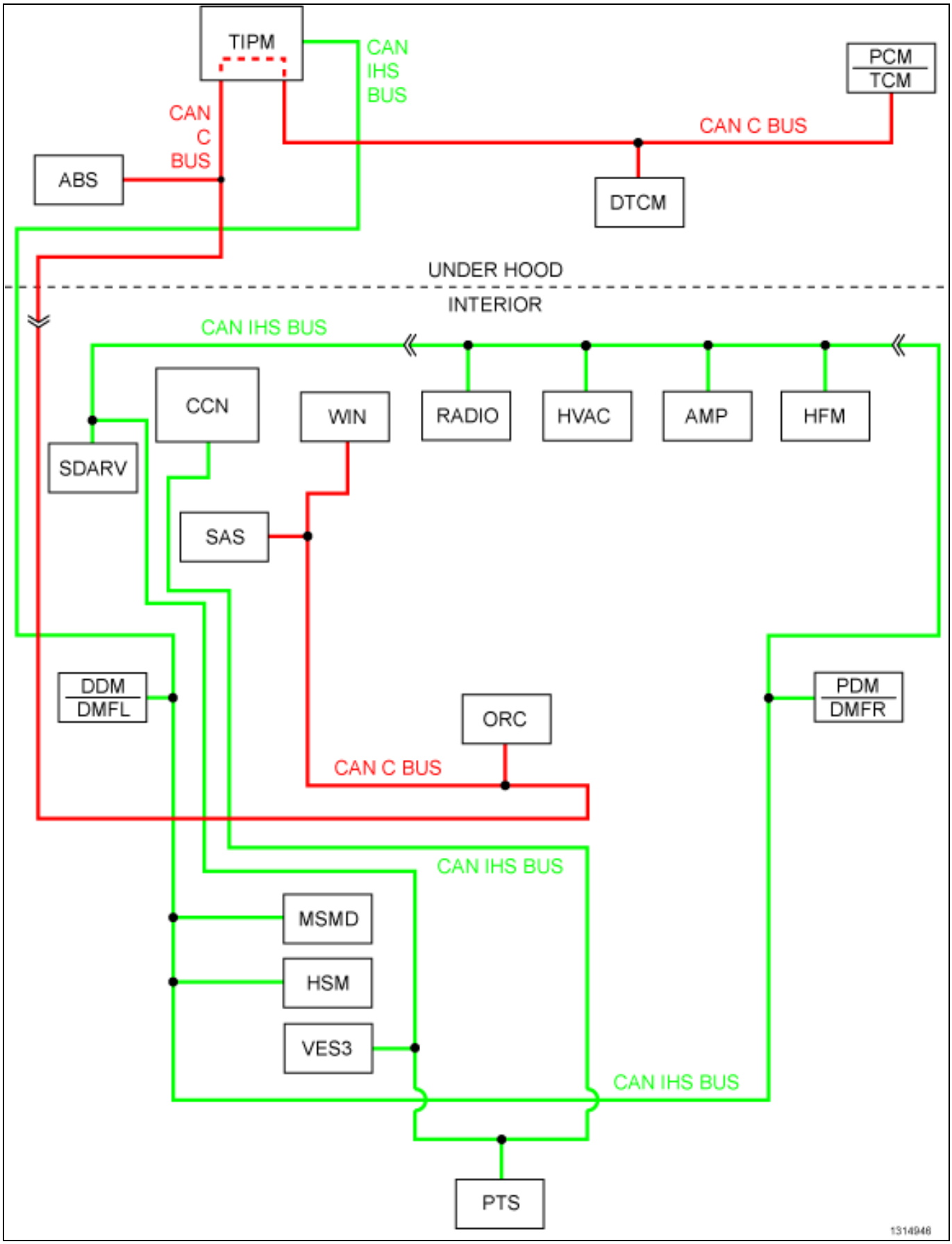

For a complete wiring diagram, **refer to the Wiring Information**.

- **When Monitored:**
  Continuously when the ignition is on.
  Battery voltage between 10 and 16 volts.
  Ignition Off Draw (IOD) fuse installed.
  Totally Integrated Power Module (TIPM) is configured correctly.
- **Set Condition:**
  Bus messages not received from the Totally Integrated Power Module (TIPM) for approximately two to five seconds.

Possible Causes
CAN IHS OR CAN C BUS CIRCUITS OPEN OR SHORTED
DTCS RELATED TO BATTERY VOLTAGE, IGNITION, OR VIN MESSAGES
TIPM NOT CONFIGURED CORRECTLY
TOTALLY INTEGRATED POWER MODULE (TIPM)
TIPM POWER AND GROUND
MODULE THAT SET THIS DTC

1. VERIFY THE DIAGNOSTIC TROUBLE CODE (DTC) IS ACTIVE

NOTE: Make sure the IOD fuse is installed and battery voltage is between 10 and 16 volts before proceeding.

1. Using the scan tool, read active Wireless Ignition Node (WIN) DTCs.

Is this DTC active?

Yes

- (Refer to 28 - DTC-Based Diagnostics/MODULE, Totally Integrated Power (TIPM) - Diagnosis and Testing) and perform the U0141-Lost Communication with IPM (FCM/TIPM) diagnostic procedure.

No

- (Refer to 29 - Non-DTC Diagnostics/Communication - Diagnosis and Testing) and perform the Stored Lost Communication DTCs diagnostic procedure.

■ U1197-SECURITY SEED RESPONSE NOT RECEIVED FROM ECM/PCM

For a complete wiring diagram, **refer to the Wiring Information**.

Theory of Operation

Whenever a Fob Integrated Key (FOBIK) is inserted in the Wireless Ignition Node (WIN), the WIN performs a self test and resynchronization routine. During the routine, the WIN interrogates the FOBIK for the secret key information and performs a CAN Bus message handshake with the Powertrain Control Module (PCM) to start the vehicle. The PCM must reply to the WIN that the secret key information matches to initiate the start sequence or this code will set on the 20th attempt.

- **When Monitored:**
  Whenever a FOBIK is rotated to the Run position.
- **Set Condition:**
  This DTC sets if the WIN does not receive a CAN Bus message from the ECM/PCM. This code will set on the 20th start attempt.

One of the most probable causes for this code to set is a blown fuse or bent pins on the PCM RUN/START circuits. The result is the PCM does not know the ignition has been turned to the RUN position and does not know to respond to the seed request. Check the PCM RUN/START circuits to the PCM before proceeding with this procedure.

Possible Causes
PCM PROGRAMMING

1. VERIFY PCM PROGRAMMING

1. Using the scan tool, erase all codes in the ECM/PCM.
2. Turn the Ignition Off, and wait fifteen seconds before turning the Ignition On.
3. Wait one minute, and read active ECM/PCM codes.

Does the scan tool display this DTC as active?

Yes

- Program the Powertrain Control Module in accordance with the Service Information.
- Perform the WIN VERIFICATION TEST. (Refer to 28 - DTC-Based Diagnostics/NODE, Wireless Ignition (WIN) - Standard Procedure).

No

- Repair is complete.
- Perform the WIN VERIFICATION TEST. (Refer to 28 - DTC-Based Diagnostics/NODE, Wireless Ignition (WIN) - Standard Procedure).

Standard Procedure

■ WIRELESS IGNITION NODE (WIN) INTERMITTENT TEST

For a complete wiring diagram, **refer to the Wiring Information**.

1. RECORD AND ERASE ALL WIN DIAGNOSTIC TROUBLE CODES (DTCS)

Using the scan tool, record and erase all DTCs from the WIN. Monitor for any active codes as you work through the following steps.

- Review the code monitor and set conditions for any DTCs that are stored and attempt to reproduce the conditions listed.
- Wiggle the wiring harness and connectors of the related circuit, sensor or component.
- Turn the ignition off. Refer to any Technical Service Bulletins (TSBs) that may apply.

Was the source of the customer complaint found or did any DTCs appear and stay active?

Yes

- Make the appropriate repairs and perform the WIN VERIFICATION TEST, (Refer to 28 - DTC-Based Diagnostics/NODE, Wireless Ignition (WIN) - Standard Procedure) or (Refer to 28 - DTC-Based Diagnostics/NODE, Wireless Ignition (WIN) - Diagnosis and Testing) and perform the appropriate diagnostic procedure.

No

- Go To 2

2. ATTEMPT TO REPRODUCE THE CONDITION

In the event the customer complaint cannot be duplicated due to an intermittent condition in the theft/security system, the following may aid in attempting to reproduce the condition.

- Using the wiring diagram/schematic as a guide, inspect the wiring and connectors related to the stored code or component in question.
- Look for chafed, pierced, pinched, or partially broken wires and broken, bent, pushed out, spread, corroded, or contaminated terminals.
- If the customer concern was related to a specific Fob-Integrated-Key (FOBIK), ensure the FOBIK in question is used while attempting reproduce the condition.
- Reconnect any disconnected components and harness connectors and ensure they are properly seated.
- If numerous trouble codes were set, use a schematic and inspect any common ground or supply circuits.

Was the source of the intermittent condition located?

Yes

- Make the appropriate repairs and perform the WIN VERIFICATION TEST (Refer to 28 - DTC-Based Diagnostics/ NODE, Wireless Ignition (WIN) - Standard Procedure).

No

- The problem cannot be found at this time. If repeated intermittent failures are encountered that cannot be reproduced and the condition has prompted multiple customer visits to the dealership, document any findings on the repair order.

■ WIRELESS IGNITION NODE (WIN) PRE-DIAGNOSTIC PROCEDURE

Before attempting to repair any WIN system, technicians should be familiar with and fully understand the system operation. (Refer to 08 - Electrical/8Q - Vehicle Theft Security - Operation) for complete details. The following should be used as a checklist to be completed in its entirety prior to referencing specific WIN diagnostic procedures.

1. FOLLOW THE BASIC OUTLINE SET FORTH IN THE SIX-STEP TROUBLESHOOTING PROCEDURE

1. Verification of complaint.
2. Verification of any related symptoms.
3. Symptom analysis.
4. Problem isolation.
5. Repair of isolated problem.
6. Verification of proper operation.

2. TAKE INTO ACCOUNT CURRENT VEHICLE CONDITION, REPAIR HISTORY, AND TECHNICAL SERVICE BULLETINS (TSBs)

- Verify there are no outward signs of vehicle damage that could impact the proper operation of the theft or security system. Check for aftermarket vehicle accessories that may have been installed improperly or could interfere with the system
- Check the vehicle repair history for repairs that may relate to the current condition.
- Perform a check of current Technical Service Bulletins (TSB) for the WIN system related to the customer concern. If a TSB applies, follow the procedure outlined in the TSB.

3. DIAGNOSE ONLY THOSE FAILURES THAT ARE ACTIVE AND CAN BE REPRODUCED

- Check the control module central to the subsystem that is exhibiting the condition for active DTCs
- For an intermittent failure that is not current at the time of vehicle inspection, (Refer to 28 - DTC-Based Diagnostics/ NODE, Wireless Ignition (WIN) - Standard Procedure) and perform the WIN INTERMITTENT TEST and document the event on the repair order.

4. ADDRESS ACTIVE DIAGNOSTIC TROUBLE CODES (DTCS) IN THE CORRECT ORDER

As a general rule, for any WIN module that exhibits more than one active DTC, address the codes in the order indicated:

1. Low/High Voltage and Serial Data Loss of Communication Codes
2. Module Internal Failure and Configuration Mismatch Codes
3. Circuit specific DTC failures

Should the malfunction still be present after conducting this Pre-diagnostic Procedure, technicians should continue to the appropriate DTC procedure or symptom diagnostic.

■ WIRELESS IGNITION NODE (WIN) VERIFICATION

For a complete wiring diagram, **refer to the Wiring Information**.

Perform the following after completion of a diagnostic repair:

NOTE: When entering the Personal Identification Number (PIN), care should be taken because the WIN will only allow three consecutive attempts to enter the correct PIN. If three consecutive incorrect PIN's are entered the WIN will Lock Out the scan tool. To exit Lock Mode, the ignition key must remain in the Run position for one hour. All accessories must be off. A battery charger connected to the battery during this time period is recommended.

NOTE: On vehicles equipped with a premium Tire Pressure Monitoring (TPM) system, when the WIN and/or the spare tire pressure sensor is replaced with a new unit, a diagnostic scan tool MUST be used to run a routine that allows the WIN to be programmed with the ID number and location of the spare tire pressure sensor mounted in the wheel of the spare tire. Follow the programming steps outlined in the diagnostic scan tool for "Learn Spare Tire Sensor ID" under "Miscellaneous Functions" for the "WIN" menu item as appropriate. In addition, if the WIN is replaced, the spare tire must be dismounted from its wheel to access and note the ID number on the spare tire pressure sensor so that the ID code for that sensor can be programmed into the new WIN.

1. Reconnect the previously disconnected components and connectors.
2. Obtain the vehicle's unique Personal Identification Number (PIN) assigned to it's original WIN. This number can be obtained from the original vehicle invoice or from your Service Manager or Parts Manager.

NOTE: If the Powertrain Control Module (PCM) and the WIN are replaced at the same time, program the PCM VIN into the PCM first.

NOTE: The PCM stores the secret key information. If the WIN ever needs to be replaced, the secret key information can be retrieved from the PCM and then transferred to the WIN for security use.

During PCM/ECM replacement, use the following steps to verify the transfer of the secret key information from the WIN to the new PCM:

1. First replace the PCM/ECM with the original WIN still connected to the vehicle.
2. Using the appropriate Service Information to program the new PCM/ECM. (This will verify the Secret Key Transfer from the original WIN into the new PCM/ECM).
3. Now replace and program the WIN (if necessary). This will retain the Secret Key from the PCM/ECM back into the new WIN.

NOTE: If this vehicle is equipped with a Steering Column Lock Module, it must be replaced along with the WIN.

4. Using the scan tool, select Miscellaneous Functions, WIN. Then select the desired procedure and follow the display on the scan tool.
5. If the vehicle is equipped with Tire Pressure Monitoring System program the Placard Pressure Values into the WIN.
6. Make sure all the customer's keys have been programmed into the new module if necessary.
7. Using the scan tool, erase all DTCs. Perform 5 ignition key cycles, leaving the key on for at least 90 seconds per cycle.
8. Using the scan tool, read WIN DTCs.

Are there any WIN DTCs present?

Yes

- Repair not complete, go to and perform the appropriate diagnostic procedure.

No

- Repair is complete.

■ TPM VERIFICATION

For a complete wiring diagram, **refer to the Wiring Information**.

1. TIRE PRESSURE MONITORING (TPM)

Was the Wireless Ignition Node (WIN) replaced during the test procedure?

Yes

- Go To 2

No

- Go To 3

2. WIRELESS IGNITION NODE (WIN)

NOTE: When entering the PIN, care should be taken because the WIN will only allow three consecutive attempts to enter the correct PIN. If three consecutive incorrect PIN's are entered the WIN will Lock Out the scan tool. To exit Lock Mode, the ignition key must remain in the Run position for one hour. All accessories must be off. A battery charger connected to the battery during this time period is recommended.

1. Reconnect the previously removed and/or disconnected components and connectors.
2. Obtain the vehicle's unique Personal Identification Number (PIN) assigned to its original WIN. This number can be obtained from the vehicle invoice or from the Chrysler Customer Center (Phone 1-800-992-1997).
3. With the scan tool, select Miscellaneous Functions, Wireless Ignition Node (WIN). Then select the desired procedure and follow the display on the scan tool.
4. If the WIN was replaced, all the customer's keys must be programmed to the new module. Use the scan tool and the Program Key procedure
5. With the scan tool, erase all DTCs. Perform five ignition key cycles, leaving the key on for at least 90 seconds per cycle.
6. Drive the vehicle for a minimum of 10 minutes while maintaining a continuous speed above 15 mph (24 km/h). During this time the system will learn the new sensor ID code and will clear any DTC(s) automatically.
7. With the scan tool, read DTCs.

Are there any DTCs present?

Yes

- Repair not complete, perform the appropriate diagnostic procedure.

No

- Repair is complete.

3. TIRE PRESSURE SENSOR REPLACE

1. Reconnect the previously removed and/or disconnected components and harness connectors.
2. If available, use a TPM-RKE Analyzer tool with the scan tool to program the WIN with the tire pressure sensors ID's on the vehicle.
3. Drive the vehicle for a minimum of 10 minutes while maintaining a continuous speed above 15 mph (24 km/h). During this time the system will learn the new sensor IDs.
4. With the scan tool, read DTCs.

Are there any DTCs present?

Yes

- Repair not complete, perform the appropriate diagnostic procedure.

No

- Repair is complete.

RADIO

Diagnosis and Testing

■ B1401-FRONT LEFT AUDIO SPEAKER OUTPUT CIRCUIT LOW

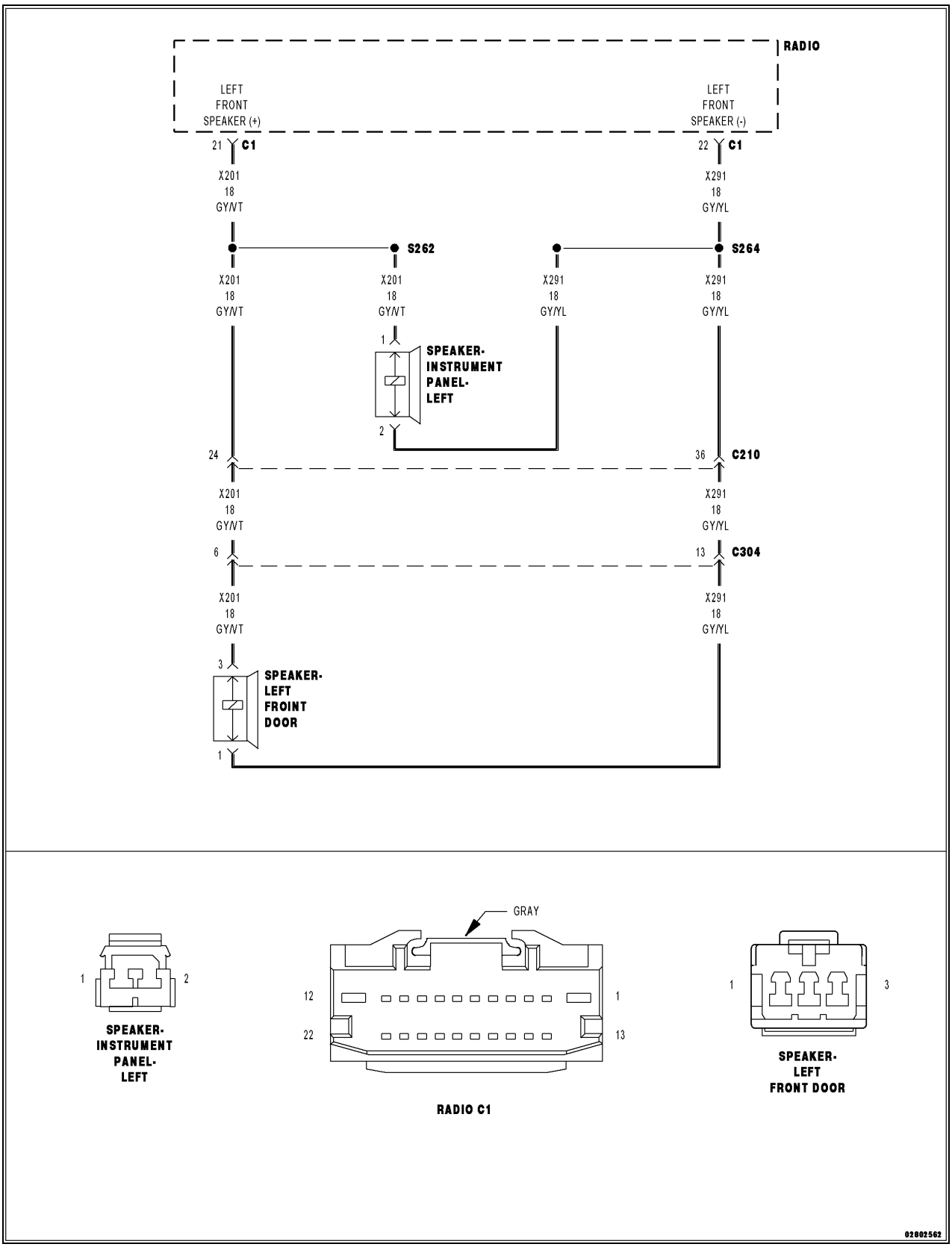

For a complete wiring diagram, **refer to the Wiring Information**.

Theory of Operation

The (X201) Left Front Speaker (+) circuit and the (X291) Left Front Speaker (-) circuit are outputs of the Radio. The Radio controls and monitors these circuits for a concern.

For a detailed description of the Audio System. (Refer to 08 - Electrical/8A - Audio and Video - Description).

For additional information regarding the operation of the Audio System. (Refer to 08 - Electrical/8A - Audio and Video - Operation).

- **When Monitored:**
  With the Radio on.
- **Set Condition:**
  The Radio detects a short to ground condition on the speaker output circuit.

Possible Causes
(X201) LEFT FRONT SPEAKER (+) CIRCUIT SHORTED TO GROUND
(X291) LEFT FRONT SPEAKER (-) CIRCUIT SHORTED TO GROUND
LEFT FRONT SPEAKER
LEFT FRONT INSTRUMENT PANEL (I/P) SPEAKER
RADIO

1. CHECK FOR AN INTERMITTENT CONDITION

NOTE: This vehicle has a Front I/P Speaker wired in parallel with the Front Door Speaker.

1. Turn the ignition on and open one of the front doors.

NOTE: A front door must remain open whenever checking or erasing Radio DTCs.

2. Using the scan tool, record and erase the Radio DTCs.
3. Turn the Radio on.
4. Adjust the speakers to the front and center.
5. Using the scan tool, read the active Radio DTCs.

Does the scan tool read: B1401-FRONT LEFT AUDIO SPEAKER OUTPUT CIRCUIT LOW?

Yes

- Go To 2

No

- Test complete, the condition or conditions that originally set this DTC are not present at this time. Using the wiring diagrams as a guide, check all related splices and connectors for signs of water intrusion, corrosion, pushed out or bent terminals and correct pin tension.
- Perform the BODY VERIFICATION TEST. (Refer to 28 - DTC-Based Diagnostics/MODULE, Totally Integrated Power (TIPM) - Standard Procedure).

2. CHECK THE LEFT FRONT SPEAKERS

1. Make sure one of the front doors is still open.
2. Using the scan tool, erase the DTCs.
3. Turn the ignition off.
4. Disconnect the Left Front Speaker harness connector from the Left Front Speaker.
5. Disconnect the Left Front I/P Speaker harness connector from the Left Front I/P Speaker.
6. Turn the ignition on.
7. Turn the radio on.
8. Using the scan tool, read the active Radio DTCs.

Does the scan tool read: B1401-FRONT LEFT AUDIO SPEAKER OUTPUT CIRCUIT LOW?

Yes

- Go To 4

No

- Go To 3

3. CHECK THE LEFT FRONT I/P SPEAKER

1. Make sure one of the front doors is still open.
2. Using the scan tool, erase the DTCs.
3. Turn the ignition off.
4. Re-connect the Left Front Speaker harness connector to the Left Front Speaker.
5. Turn the ignition on.
6. Turn the radio on.
7. Using the scan tool, read the active Radio DTCs.

Does the scan tool read: B1401-FRONT LEFT AUDIO SPEAKER OUTPUT CIRCUIT LOW?

Yes

- Replace the Left Front Speaker in accordance with the Service Information.
- Perform the BODY VERIFICATION TEST. (Refer to 28 - DTC-Based Diagnostics/MODULE, Totally Integrated Power (TIPM) - Standard Procedure).

No

- Replace the Left Front I/P Speaker in accordance with the Service Information.
- Perform the BODY VERIFICATION TEST. (Refer to 28 - DTC-Based Diagnostics/MODULE, Totally Integrated Power (TIPM) - Standard Procedure).

4. CHECK THE (X201) LEFT FRONT SPEAKER (+) CIRCUIT FOR A SHORT TO GROUND

1. Turn the ignition off.
2. Disconnect the Radio C1 harness connector.
3. Measure the resistance between ground and the (X201) Left Front Speaker (+) circuit.

Is the resistance below 5.0 Ohms?

Yes

- Repair the (X201) Left Front Speaker (+) circuit for a short to ground.
- Perform the BODY VERIFICATION TEST. (Refer to 28 - DTC-Based Diagnostics/MODULE, Totally Integrated Power (TIPM) - Standard Procedure).

No

- Go To 5

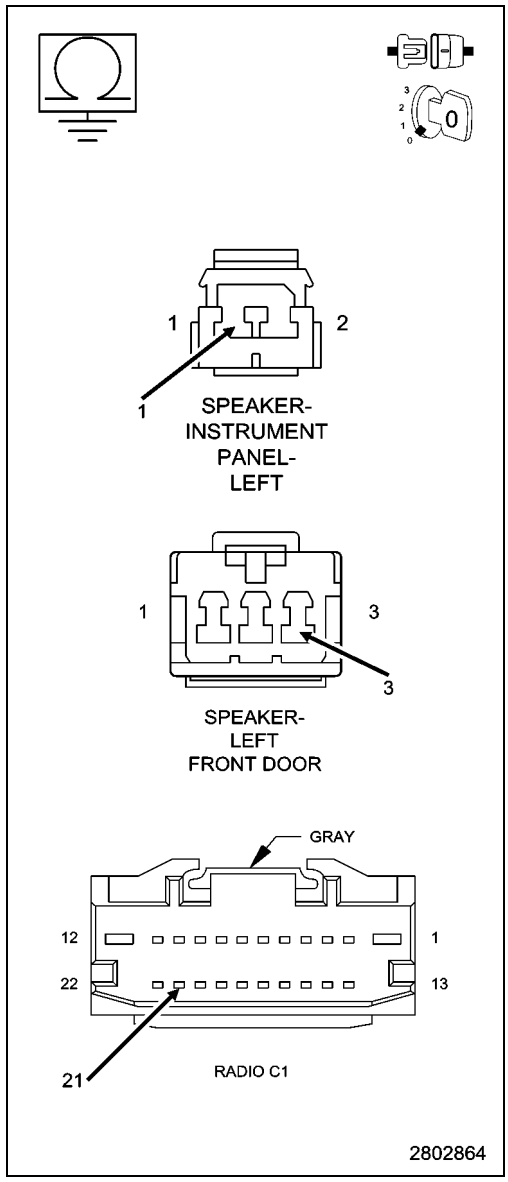

5. CHECK THE (X291) LEFT FRONT SPEAKER (-) CIRCUIT FOR A SHORT TO GROUND

1. Measure the resistance between ground and the (X291) Left Rear Speaker (-) circuit.

Is the resistance below 5.0 Ohms?

Yes

- Repair the (X291) Left Rear Speaker (-) circuit for a short to ground.
- Perform the BODY VERIFICATION TEST. (Refer to 28 - DTC-Based Diagnostics/MODULE, Totally Integrated Power (TIPM) - Standard Procedure).

No

- Replace the Radio in accordance with the Service Information.
- Perform the BODY VERIFICATION TEST. (Refer to 28 - DTC-Based Diagnostics/MODULE, Totally Integrated Power (TIPM) - Standard Procedure).

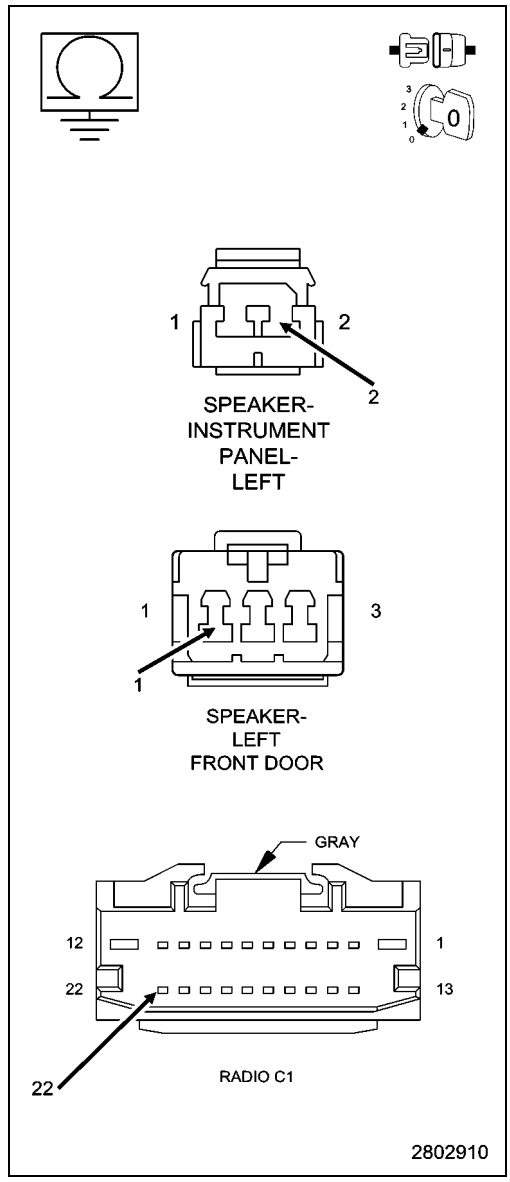

B1402-FRONT LEFT AUDIO SPEAKER OUTPUT CIRCUIT HIGH

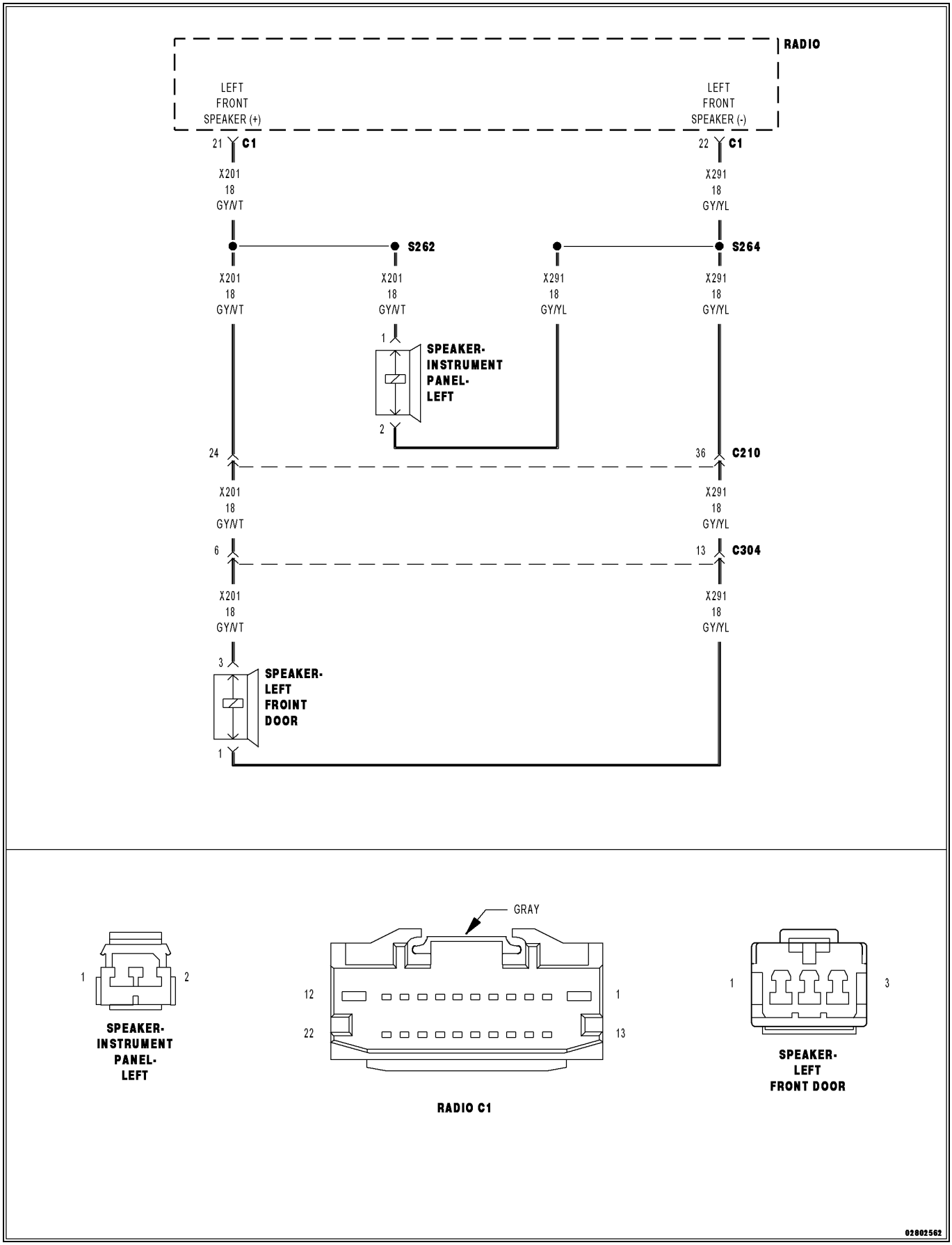

For a complete wiring diagram, **refer to the Wiring Information**.

Theory of Operation

The (X201) Left Front Speaker (+) circuit and the (X291) Left Front Speaker (-) circuit are outputs of the Radio. The Radio controls and monitors these circuits for a concern.

For a detailed description of the Audio System. (Refer to 08 - Electrical/8A - Audio and Video - Description).

For additional information regarding the operation of the Audio System. (Refer to 08 - Electrical/8A - Audio and Video - Operation).

- **When Monitored:**
  With the Radio on.
- **Set Condition:**
  The Radio detects a short to battery condition on the speaker output circuit.

Possible Causes
(X201) LEFT FRONT SPEAKER (+) CIRCUIT SHORTED TO VOLTAGE
(X291) LEFT FRONT SPEAKER (-) CIRCUIT SHORTED TO VOLTAGE
RADIO

1. CHECK FOR AN INTERMITTENT CONDITION

NOTE: This vehicle has a Front I/P Speaker wired in parallel with the Front Door Speaker.

1. Turn the ignition on and open one of the front doors.

NOTE: A front door must remain open whenever checking or erasing Radio DTCs.

2. Using the scan tool, record and erase the Radio DTCs.
3. Turn the Radio on.
4. Adjust the speakers to the front and center.
5. Using the scan tool, read the active Radio DTCs.

Does the scan tool read: B1402-FRONT LEFT AUDIO SPEAKER OUTPUT CIRCUIT HIGH?

Yes

- Go To 2

No

- Test complete, the condition or conditions that originally set this DTC are not present at this time. Using the wiring diagrams as a guide, check all related splices and connectors for signs of water intrusion, corrosion, pushed out or bent terminals and correct pin tension.
- Perform the BODY VERIFICATION TEST. (Refer to 28 - DTC-Based Diagnostics/MODULE, Totally Integrated Power (TIPM) - Standard Procedure).

2. CHECK FOR VOLTAGE ON THE (X201) LEFT FRONT SPEAKER (+) CIRCUIT

1. Turn the ignition off.
2. Disconnect the Radio C1 harness connector.
3. Disconnect the Left Front Door Speaker harness connector.
4. Disconnect the Left Front I/P Speaker harness connector.
5. Turn the ignition on.
6. Measure the voltage between ground and the (X201) Left Front Speaker (+) circuit.

Is there any voltage present?

Yes

- Repair the (X201) Left Front Speaker (+) circuit for a short to voltage.
- Perform the BODY VERIFICATION TEST. (Refer to 28 - DTC-Based Diagnostics/MODULE, Totally Integrated Power (TIPM) - Standard Procedure).

No

- Go To 3

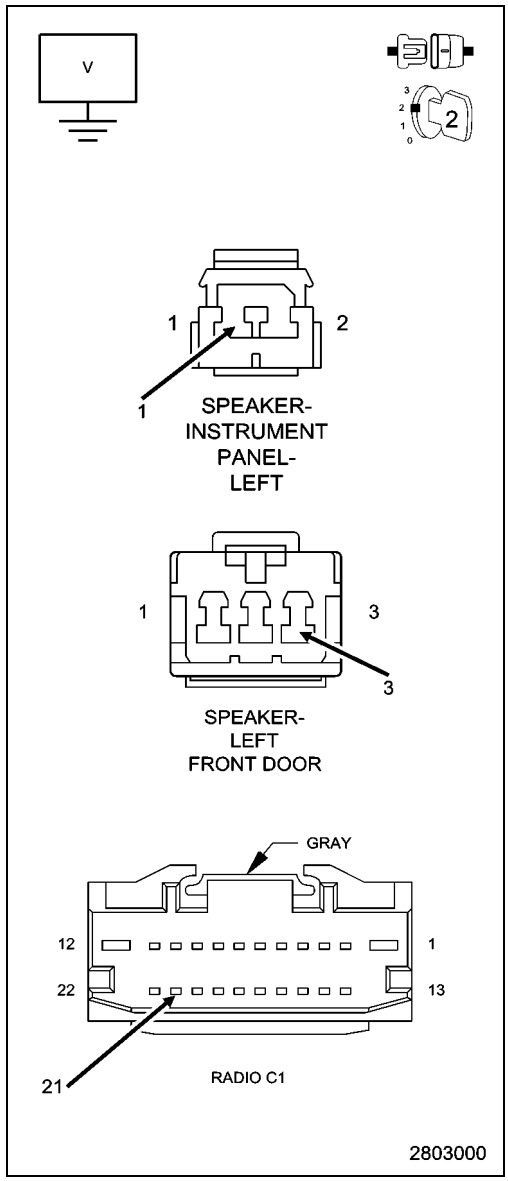

3. CHECK FOR VOLTAGE ON THE (X291) LEFT FRONT SPEAKER (-) CIRCUIT

1. Measure the voltage between ground and the (X291) Left Front Speaker (-) circuit.

Is there any voltage present?

Yes

- Repair the (X291) Left Front Speaker (-) circuit for a short to voltage.
- Perform the BODY VERIFICATION TEST. (Refer to 28 - DTC-Based Diagnostics/MODULE, Totally Integrated Power (TIPM) - Standard Procedure).

No

- Replace the Radio in accordance with the Service Information.
- Perform the BODY VERIFICATION TEST. (Refer to 28 - DTC-Based Diagnostics/MODULE, Totally Integrated Power (TIPM) - Standard Procedure).

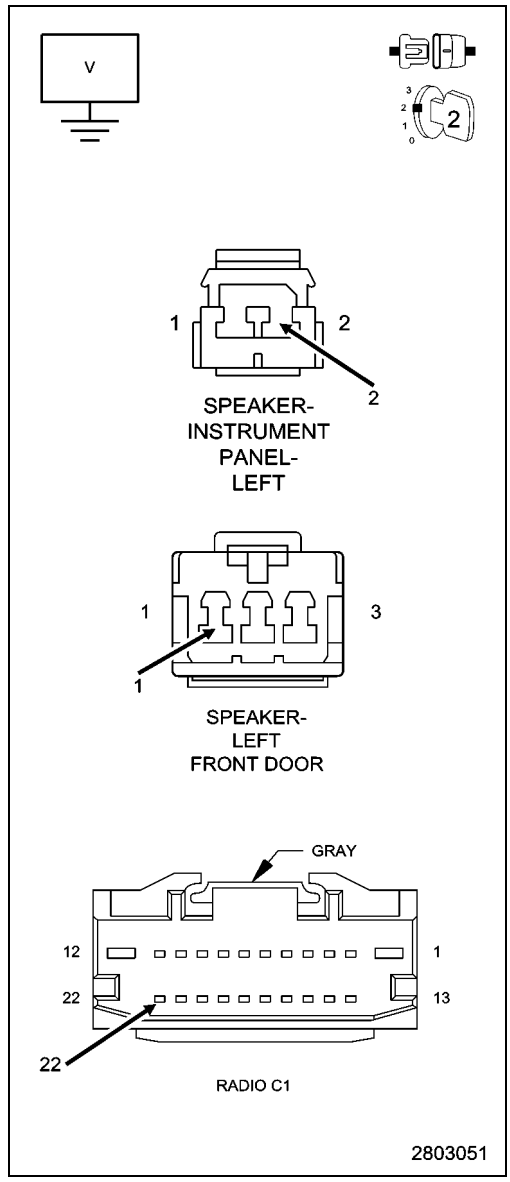

B1403-FRONT LEFT AUDIO SPEAKER OUTPUT CIRCUIT OPEN

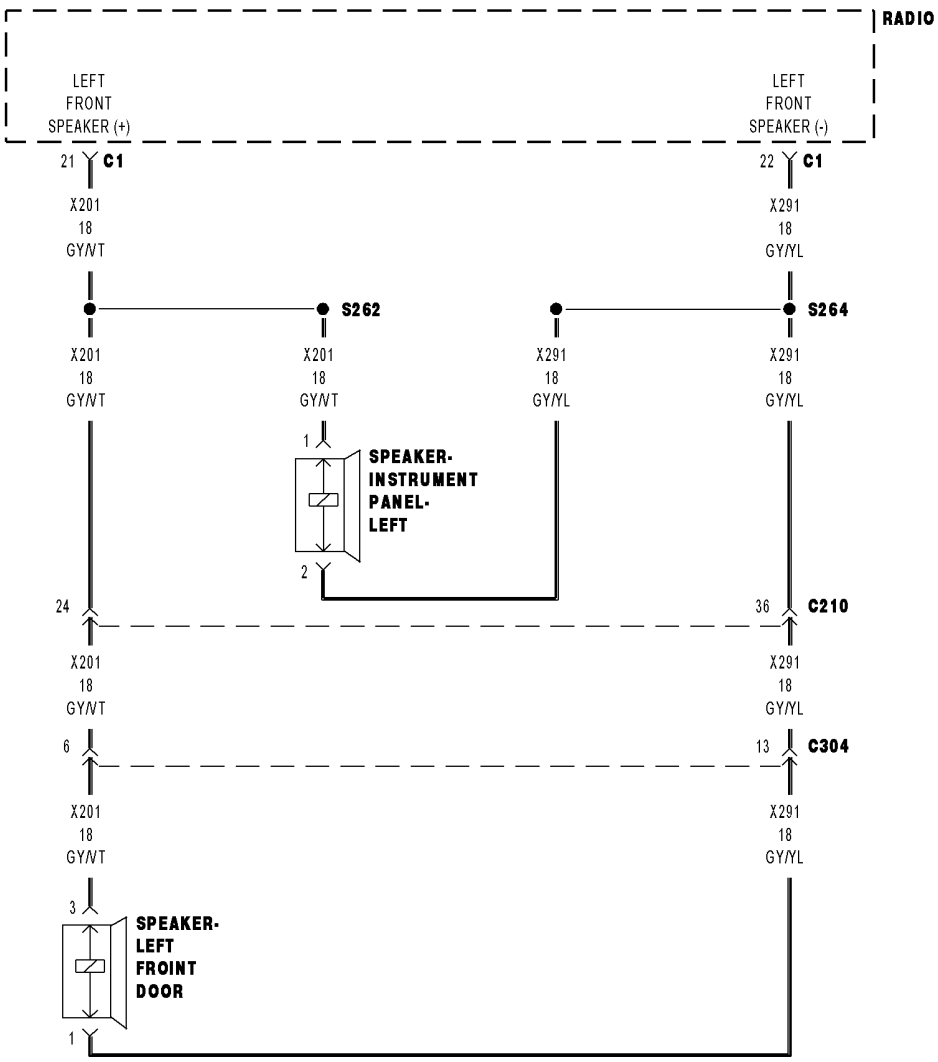

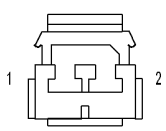

SPEAKER- INSTRUMENT PANEL- LEFT

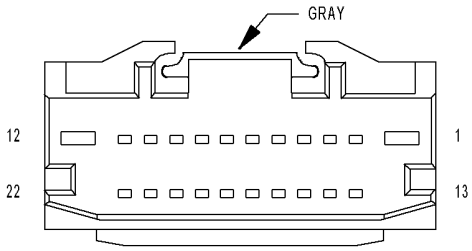

RADIO C1

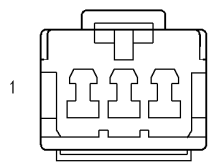

SPEAKER- LEFT FRONT DOOR

02802562

For a complete wiring diagram, **refer to the Wiring Information**.

Theory of Operation

The (X201) Left Front Speaker (+) circuit and the (X291) Left Front Speaker (-) circuit are outputs of the Radio. The Radio controls and monitors these circuits for a concern.

For a detailed description of the Audio System. (Refer to 08 - Electrical/8A - Audio and Video - Description).

For additional information regarding the operation of the Audio System. (Refer to 08 - Electrical/8A - Audio and Video - Operation).

- **When Monitored:**
  With the Radio on.
- **Set Condition:**
  The Radio detects an open condition on the speaker output circuit.

Possible Causes
(X201) LEFT FRONT SPEAKER (+) CIRCUIT OPEN
(X291) LEFT FRONT SPEAKER (-) CIRCUIT OPEN
LEFT FRONT SPEAKER
LEFT FRONT INSTRUMENT PANEL (I/P) SPEAKER
RADIO

1. CHECK FOR AN INTERMITTENT CONDITION

NOTE: This vehicle has a Front I/P Speaker wired in parallel with the Front Door Speaker.

1. Turn the ignition on and open one of the front doors.

NOTE: A front door must remain open whenever checking or erasing Radio DTCs.

2. Using the scan tool, record and erase the Radio DTCs.
3. Turn the Radio on.
4. Adjust the speakers to the front and center.
5. Using the scan tool, read the active Radio DTCs.

Does the scan tool read: B1403-FRONT LEFT AUDIO SPEAKER OUTPUT CIRCUIT OPEN?

Yes

- Go To 2

No

- Test complete, the condition or conditions that originally set this DTC are not present at this time. Using the wiring diagrams as a guide, check all related splices and connectors for signs of water intrusion, corrosion, pushed out or bent terminals and correct pin tension.
- Perform the BODY VERIFICATION TEST. (Refer to 28 - DTC-Based Diagnostics/MODULE, Totally Integrated Power (TIPM) - Standard Procedure).

2. CHECK THE LEFT FRONT SPEAKER

1. Turn the ignition off.
2. Disconnect the Left Front Speaker.
3. Measure the resistance of the speaker between the two terminals.

NOTE: The graphic shows the connector for reference only. Measure between the speaker terminals.

Is the resistance above 5.0 Ohms?

Yes

- Replace the Left Front Speaker in accordance with the Service Information.
- Perform the BODY VERIFICATION TEST. (Refer to 28 - DTC-Based Diagnostics/MODULE, Totally Integrated Power (TIPM) - Standard Procedure).

No

- Go To 3

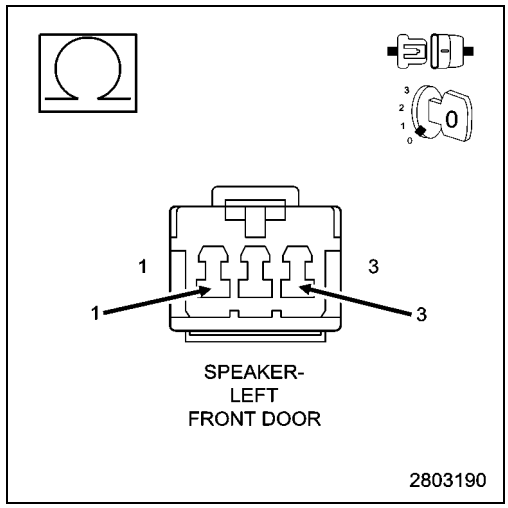

3. CHECK THE LEFT FRONT I/P SPEAKER

1. Turn the ignition off.
2. Disconnect the Left Front I/P Speaker.
3. Measure the resistance of the speaker between the two terminals.

NOTE: The graphic shows the connector for reference only. Measure between the speaker terminals.

Is the resistance above 5.0 Ohms?

Yes

- Replace the Left Front I/P Speaker in accordance with the Service Information.
- Perform the BODY VERIFICATION TEST. (Refer to 28 - DTC-Based Diagnostics/MODULE, Totally Integrated Power (TIPM) - Standard Procedure).

No

- Go To 4

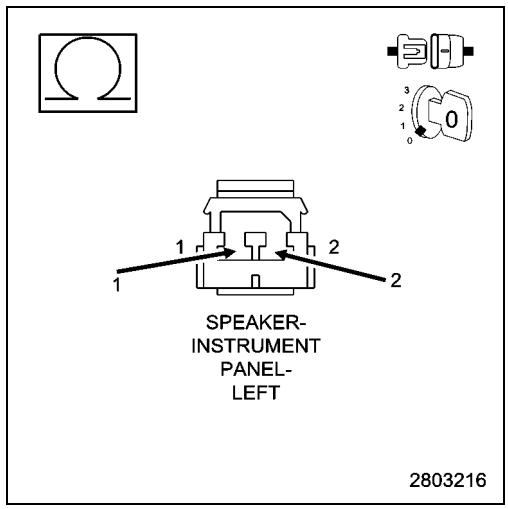

4. CHECK THE (X201) LEFT FRONT SPEAKER (+) CIRCUIT FOR AN OPEN

1. Turn the ignition off.
2. Disconnect the Radio C1 harness connector.
3. Measure the resistance of the (X201) Left Front Speaker (+) circuit between the Radio C1 connector, and the Left Front Speaker harness connector and the Left Front I/P Speaker harness.

Is the resistance below 5.0 Ohms?

Yes

- Go To 5

No

- Repair an open in the (X201) Left Front Speaker (+) circuit.
- Perform the BODY VERIFICATION TEST. (Refer to 28 - DTC-Based Diagnostics/MODULE, Totally Integrated Power (TIPM) - Standard Procedure).

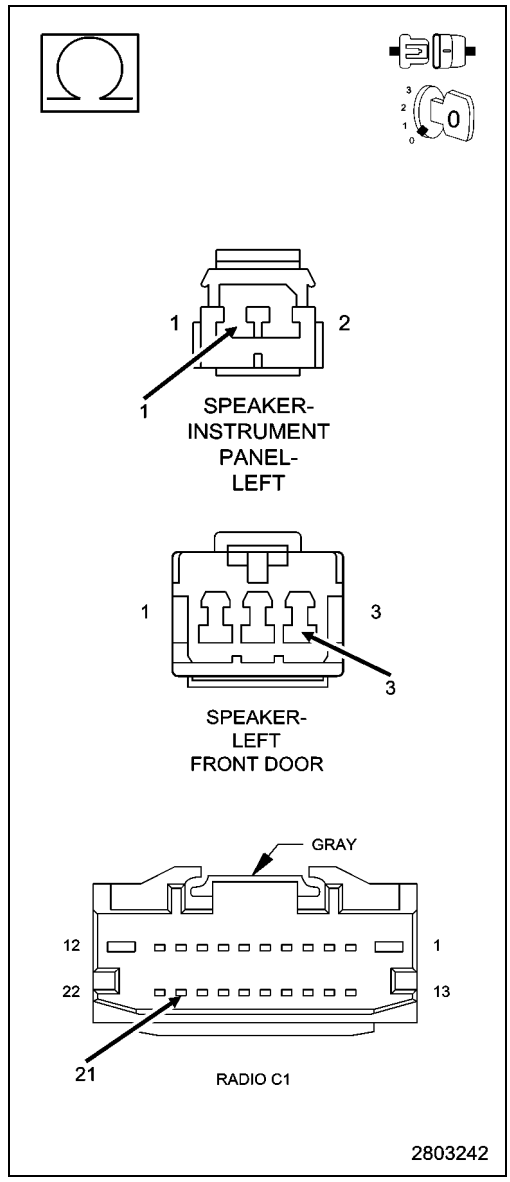

5. CHECK THE (X291) LEFT FRONT SPEAKER (-) CIRCUIT FOR AN OPEN

1. Measure the resistance of the (X291) Left Front Speaker (-) circuit between the Radio C1 connector, and the Left Front Speaker harness connector and the Left Front I/P Speaker harness.

Is the resistance below 5.0 Ohms?

Yes

- Replace the Radio in accordance with the Service Information.
- Perform the BODY VERIFICATION TEST. (Refer to 28 - DTC-Based Diagnostics/MODULE, Totally Integrated Power (TIPM) - Standard Procedure).

No

- Repair an open in the (X291) Left Front Speaker (-) circuit.
- Perform the BODY VERIFICATION TEST. (Refer to 28 - DTC-Based Diagnostics/MODULE, Totally Integrated Power (TIPM) - Standard Procedure).

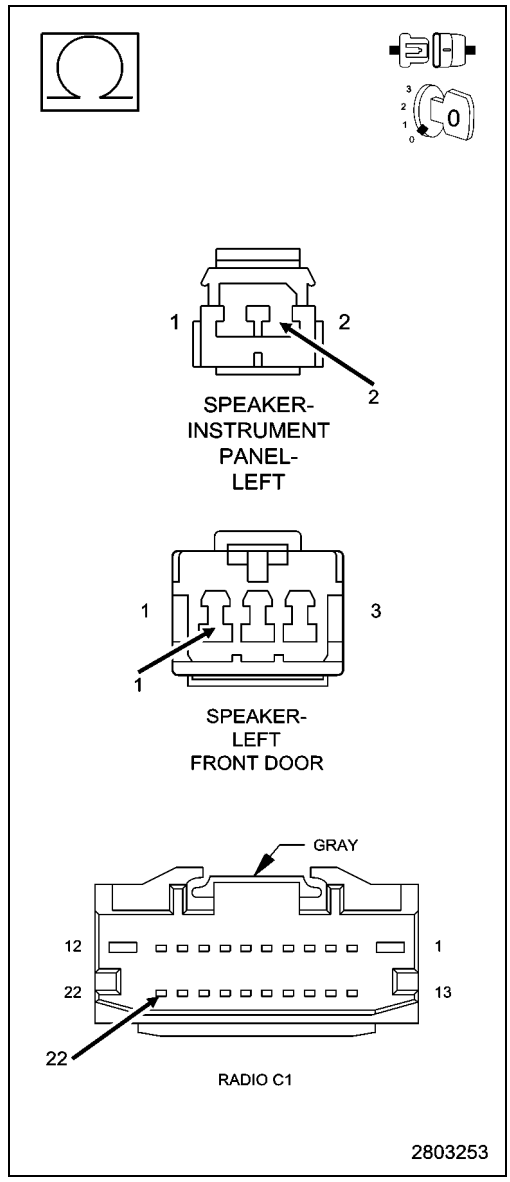

B1405-FRONT RIGHT AUDIO SPEAKER OUTPUT CIRCUIT LOW

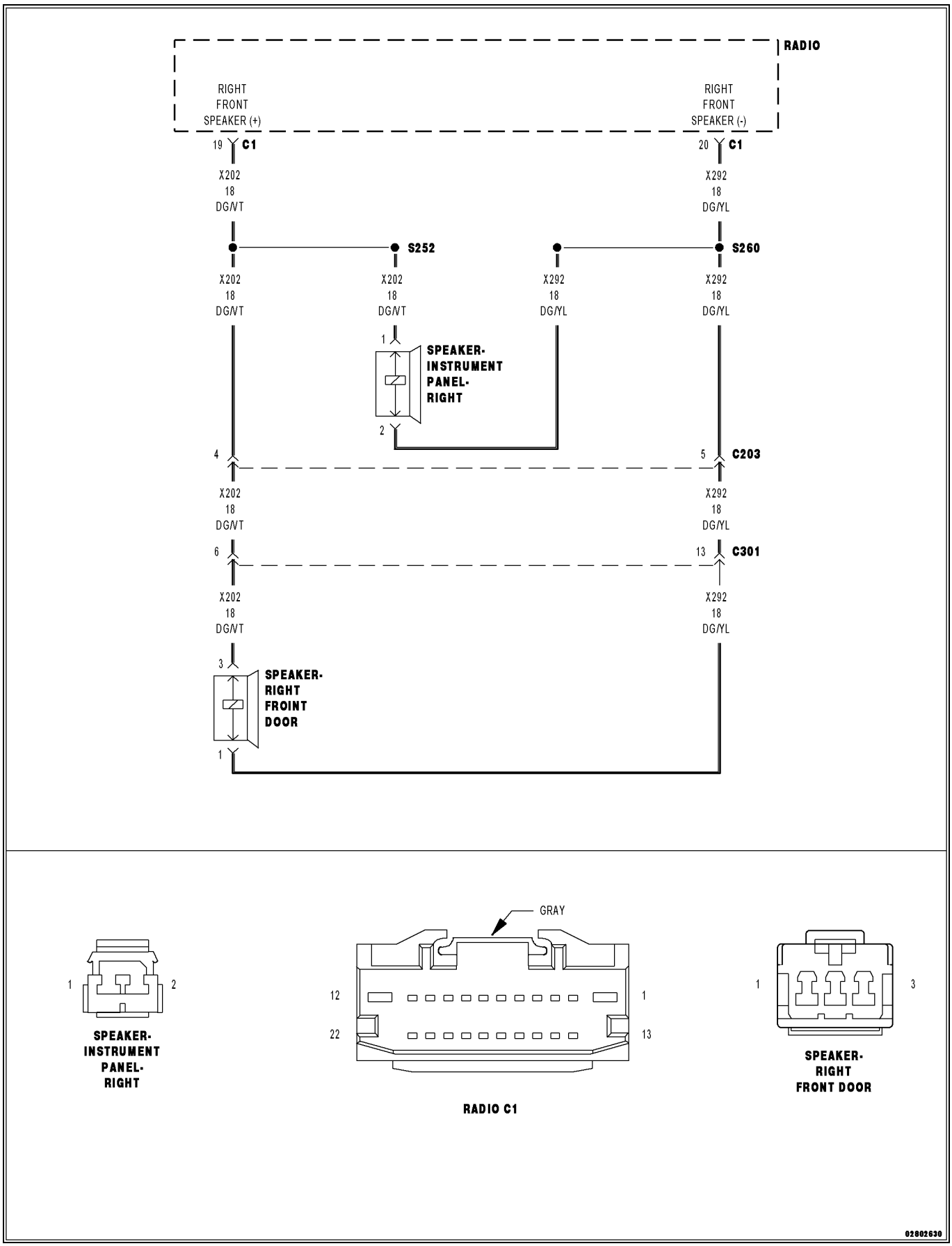

For a complete wiring diagram, **refer to the Wiring Information**.

Theory of Operation

The (X202) Right Front Speaker (+) circuit and the (X292) Right Front Speaker (-) circuit are outputs of the Radio. The Radio controls and monitors these circuits for a concern.

For a detailed description of the Audio System. (Refer to 08 - Electrical/8A - Audio and Video - Description).

For additional information regarding the operation of the Audio System. (Refer to 08 - Electrical/8A - Audio and Video - Operation).

- **When Monitored:**
  With the Radio on.
- **Set Condition:**
  The Radio detects a short to ground condition on the speaker output circuit.

Possible Causes
(X202) RIGHT FRONT DOOR SPEAKER (+) CIRCUIT SHORTED TO GROUND
(X292) RIGHT FRONT DOOR SPEAKER (-) CIRCUIT SHORTED TO GROUND
RIGHT FRONT SPEAKER
RIGHT FRONT INSTRUMENT PANEL (I/P) SPEAKER
RADIO

1. CHECK FOR AN INTERMITTENT CONDITION

NOTE: This vehicle has a Front I/P Speaker wired in parallel with the Front Door Speaker.

1. Turn the ignition on and open one of the front doors.

NOTE: A front door must remain open whenever checking or erasing Radio DTCs.

2. Using the scan tool, record and erase the Radio DTCs.
3. Turn the Radio on.
4. Adjust the speakers to the front and center.
5. Using the scan tool, read the active Radio DTCs.

Does the scan tool read: B1405-FRONT RIGHT AUDIO SPEAKER OUTPUT CIRCUIT LOW?

Yes

- Go To 2

No

- Test complete, the condition or conditions that originally set this DTC are not present at this time. Using the wiring diagrams as a guide, check all related splices and connectors for signs of water intrusion, corrosion, pushed out or bent terminals and correct pin tension.
- Perform the BODY VERIFICATION TEST. (Refer to 28 - DTC-Based Diagnostics/MODULE, Totally Integrated Power (TIPM) - Standard Procedure).

2. CHECK THE RIGHT FRONT SPEAKERS

1. Make sure one of the front doors is still open.
2. Using the scan tool, erase the DTCs.
3. Turn the ignition off.
4. Disconnect the Right Front Speaker harness connector from the Right Front Speaker.
5. Disconnect the Right Front I/P Speaker harness connector from the Right Front I/P Speaker.
6. Turn the ignition on.
7. Turn the radio on.
8. Using the scan tool, read the active Radio DTCs.

Does the scan tool read: B1405-FRONT RIGHT AUDIO SPEAKER OUTPUT CIRCUIT LOW?

Yes

- Go To 4

No

- Go To 3

3. CHECK THE RIGHT FRONT I/P SPEAKER

1. Make sure one of the front doors is still open.
2. Using the scan tool, erase the DTCs.
3. Turn the ignition off.
4. Re-connect the Right Front Speaker harness connector to the Right Front Speaker.
5. Turn the ignition on.
6. Turn the radio on.
7. Using the scan tool, read the active Radio DTCs.

Does the scan tool read: B1405-FRONT RIGHT AUDIO SPEAKER OUTPUT CIRCUIT LOW?

Yes

- Replace the Right Front Speaker in accordance with the Service Information.
- Perform the BODY VERIFICATION TEST. (Refer to 28 - DTC-Based Diagnostics/MODULE, Totally Integrated Power (TIPM) - Standard Procedure).

No

- Replace the Right Front I/P Speaker in accordance with the Service Information.
- Perform the BODY VERIFICATION TEST. (Refer to 28 - DTC-Based Diagnostics/MODULE, Totally Integrated Power (TIPM) - Standard Procedure).

4. CHECK THE (X202) RIGHT FRONT DOOR SPEAKER (+) CIRCUIT FOR A SHORT TO GROUND

1. Turn the ignition off.
2. Disconnect the Radio C1 harness connector.
3. Measure the resistance between ground and the (X202) Right Front Door Speaker (+) circuit

Is the resistance below 5.0 Ohms?

Yes

- Repair the (X202) Right Front Door Speaker (+) circuit for a short to ground. .
- Perform the BODY VERIFICATION TEST. (Refer to 28 - DTC-Based Diagnostics/MODULE, Totally Integrated Power (TIPM) - Standard Procedure).

No

- Go To 5

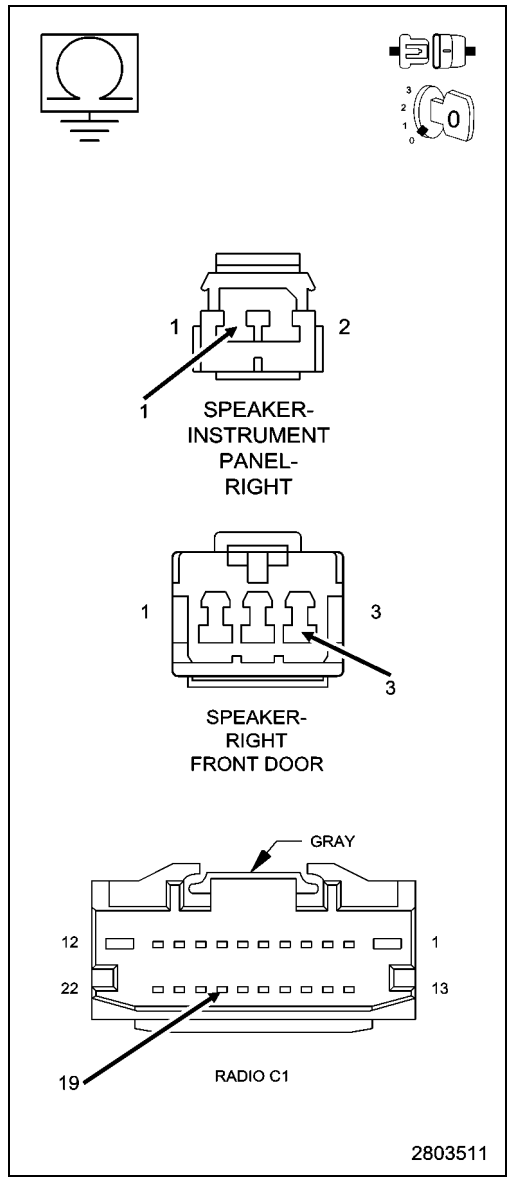

5. CHECK THE (X292) RIGHT FRONT DOOR SPEAKER (-) CIRCUIT FOR A SHORT TO GROUND

1. Measure the resistance between ground and the (X292) Right Front Door Speaker (-) circuit.

Is the resistance below 5.0 Ohms?

Yes

- Repair the (X292) Right Front Door Speaker (-) circuit for a short to ground.
- Perform the BODY VERIFICATION TEST. (Refer to 28 - DTC-Based Diagnostics/MODULE, Totally Integrated Power (TIPM) - Standard Procedure).

No

- Replace the Radio in accordance with the Service Information.
- Perform the BODY VERIFICATION TEST. (Refer to 28 - DTC-Based Diagnostics/MODULE, Totally Integrated Power (TIPM) - Standard Procedure).

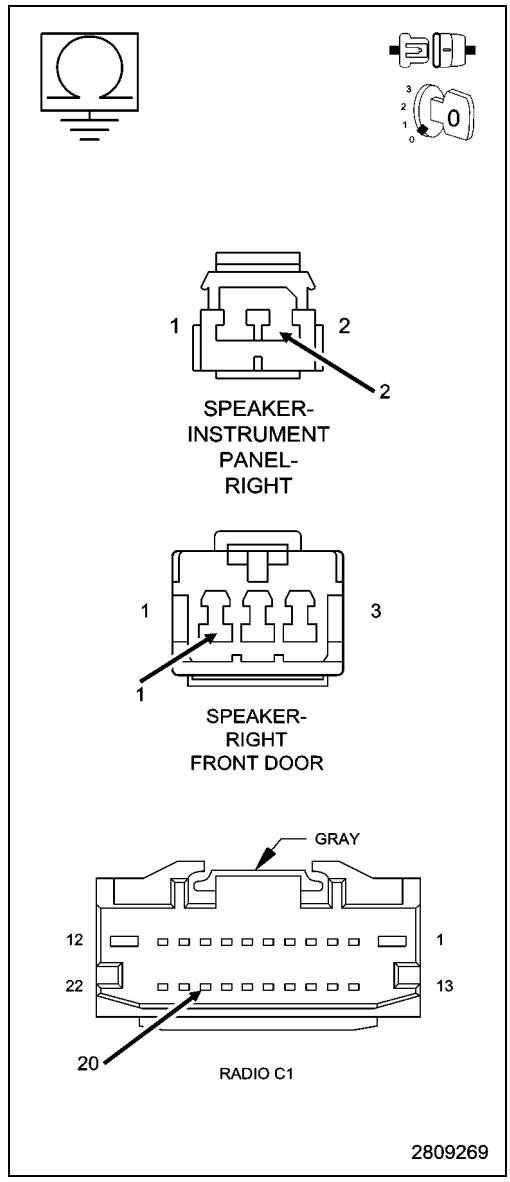

B1406-FRONT RIGHT AUDIO SPEAKER OUTPUT CIRCUIT HIGH

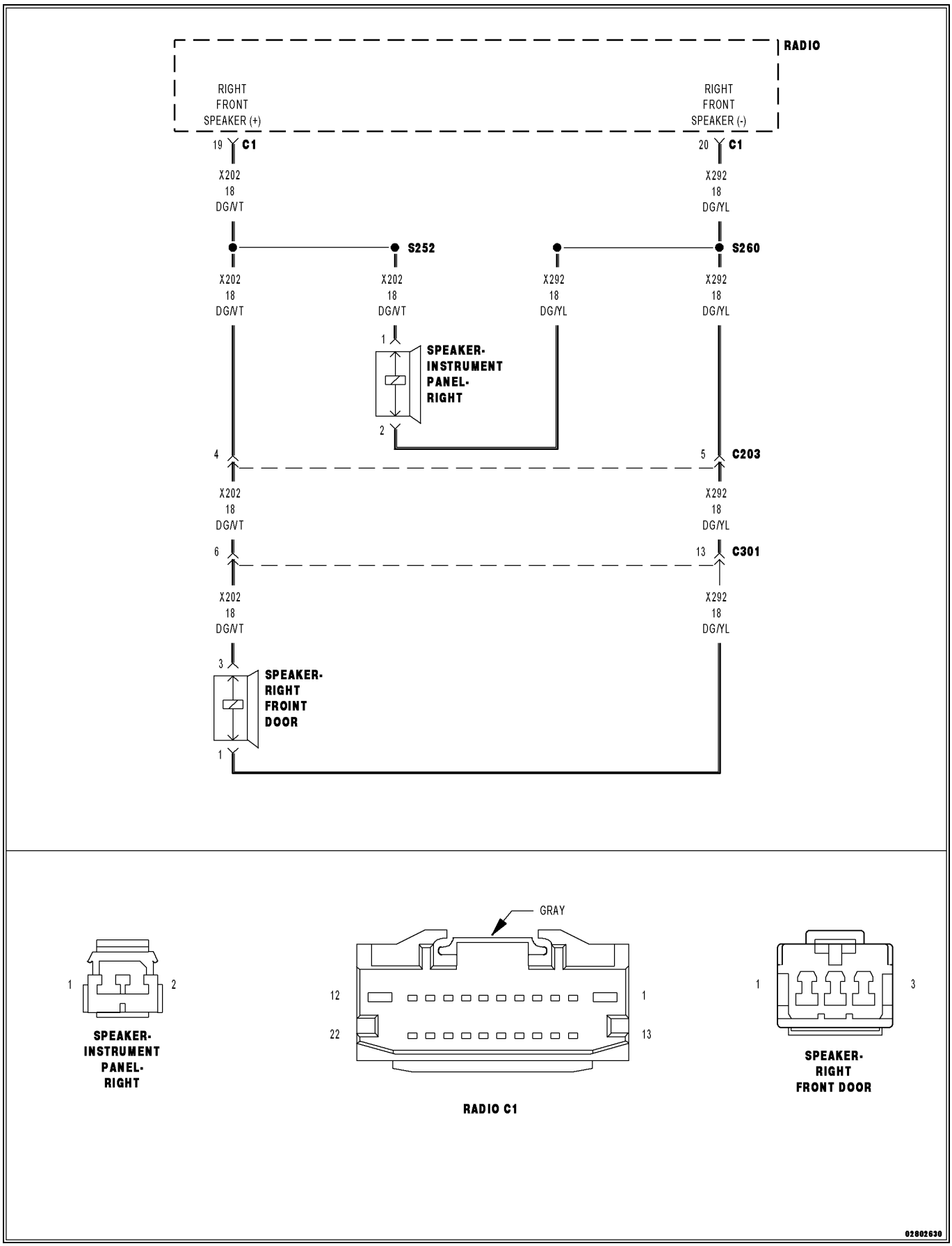

For a complete wiring diagram, **refer to the Wiring Information**.

Theory of Operation

The (X202) Right Front Speaker (+) circuit and the (X292) Right Front Speaker (-) circuit are outputs of the Radio. The Radio controls and monitors these circuits for a concern.

For a detailed description of the Audio System. (Refer to 08 - Electrical/8A - Audio and Video - Description).

For additional information regarding the operation of the Audio System. (Refer to 08 - Electrical/8A - Audio and Video - Operation).

- **When Monitored:**
  With the Radio on.
- **Set Condition:**
  The Radio detects a short to battery condition on the speaker output circuit.

Possible Causes
(X202) RIGHT FRONT DOOR SPEAKER (+) SHORTED TO VOLTAGE
(X292) RIGHT FRONT DOOR SPEAKER (-) SHORTED TO VOLTAGE
RADIO

1. CHECK FOR AN INTERMITTENT CONDITION

NOTE: This vehicle has a Front I/P Speaker wired in parallel with the Front Door Speaker.

1. Turn the ignition on and open one of the front doors.

NOTE: A front door must remain open whenever checking or erasing Radio DTCs.

2. Using the scan tool, record and erase the Radio DTCs.
3. Turn the Radio on.
4. Adjust the speakers to the front and center.
5. Using the scan tool, read the active Radio DTCs.

Does the scan tool display active: B1406-FRONT RIGHT AUDIO SPEAKER OUTPUT CIRCUIT HIGH?

Yes

- Go To 2

No

- Test complete, the condition or conditions that originally set this DTC are not present at this time. Using the wiring diagrams as a guide, check all related splices and connectors for signs of water intrusion, corrosion, pushed out or bent terminals and correct pin tension.
- Perform the BODY VERIFICATION TEST. (Refer to 28 - DTC-Based Diagnostics/MODULE, Totally Integrated Power (TIPM) - Standard Procedure).

2. CHECK FOR VOLTAGE ON THE (X202) RIGHT FRONT DOOR SPEAKER (+) CIRCUIT

1. Turn the ignition off.
2. Disconnect the Radio C1 harness connector.
3. Disconnect the Right Front Door Speaker harness connector.
4. Disconnect the Right Front I/P Speaker harness connector.
5. Turn the ignition on.
6. Measure the voltage between ground and the (X202) Right Front Door Speaker (+) circuit.

Is there any voltage present?

Yes

- Repair the (X202) Right Front Door Speaker (+) circuit for a short to voltage.
- Perform the BODY VERIFICATION TEST. (Refer to 28 - DTC-Based Diagnostics/MODULE, Totally Integrated Power (TIPM) - Standard Procedure).

No

- Go To 3

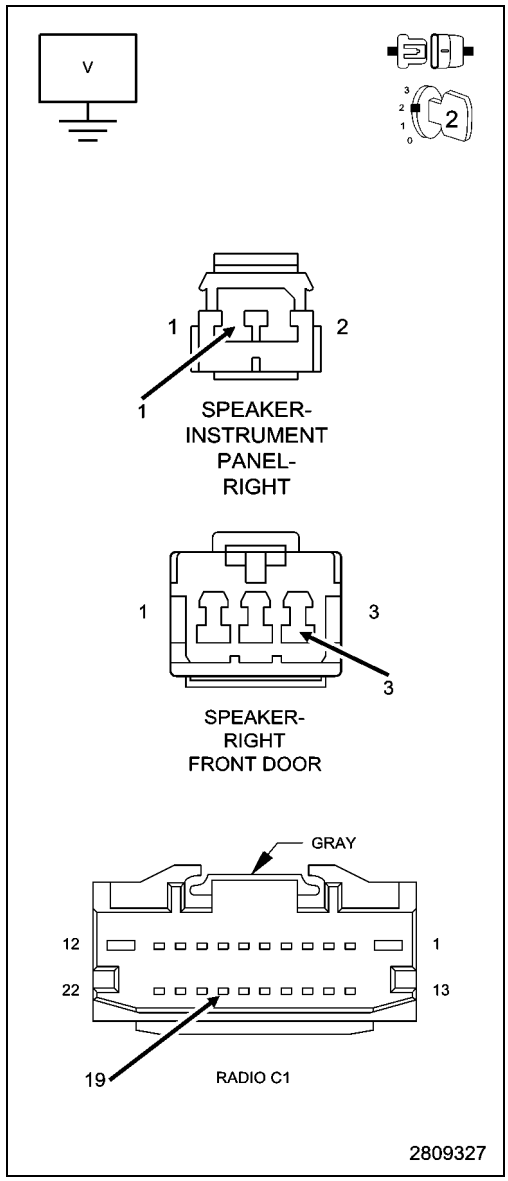

3. CHECK FOR VOLTAGE ON THE (X292) RIGHT FRONT DOOR SPEAKER (-) CIRCUIT

1. Measure the voltage between ground and the (X292) Right Front Door Speaker (-) circuit.

Is there any voltage present?

Yes

- Repair the (X292) Right Front Door Speaker (-) circuit for a short to voltage.
- Perform the BODY VERIFICATION TEST. (Refer to 28 - DTC-Based Diagnostics/MODULE, Totally Integrated Power (TIPM) - Standard Procedure).

No

- Replace the Radio in accordance with the Service Information.
- Perform the BODY VERIFICATION TEST. (Refer to 28 - DTC-Based Diagnostics/MODULE, Totally Integrated Power (TIPM) - Standard Procedure).

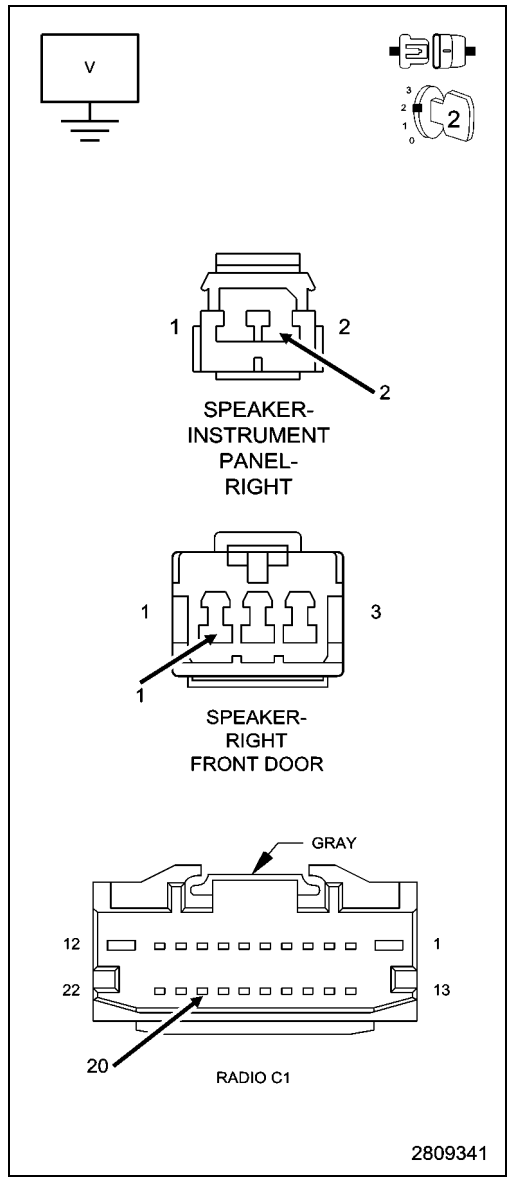

B1407-FRONT RIGHT AUDIO SPEAKER OUTPUT CIRCUIT OPEN

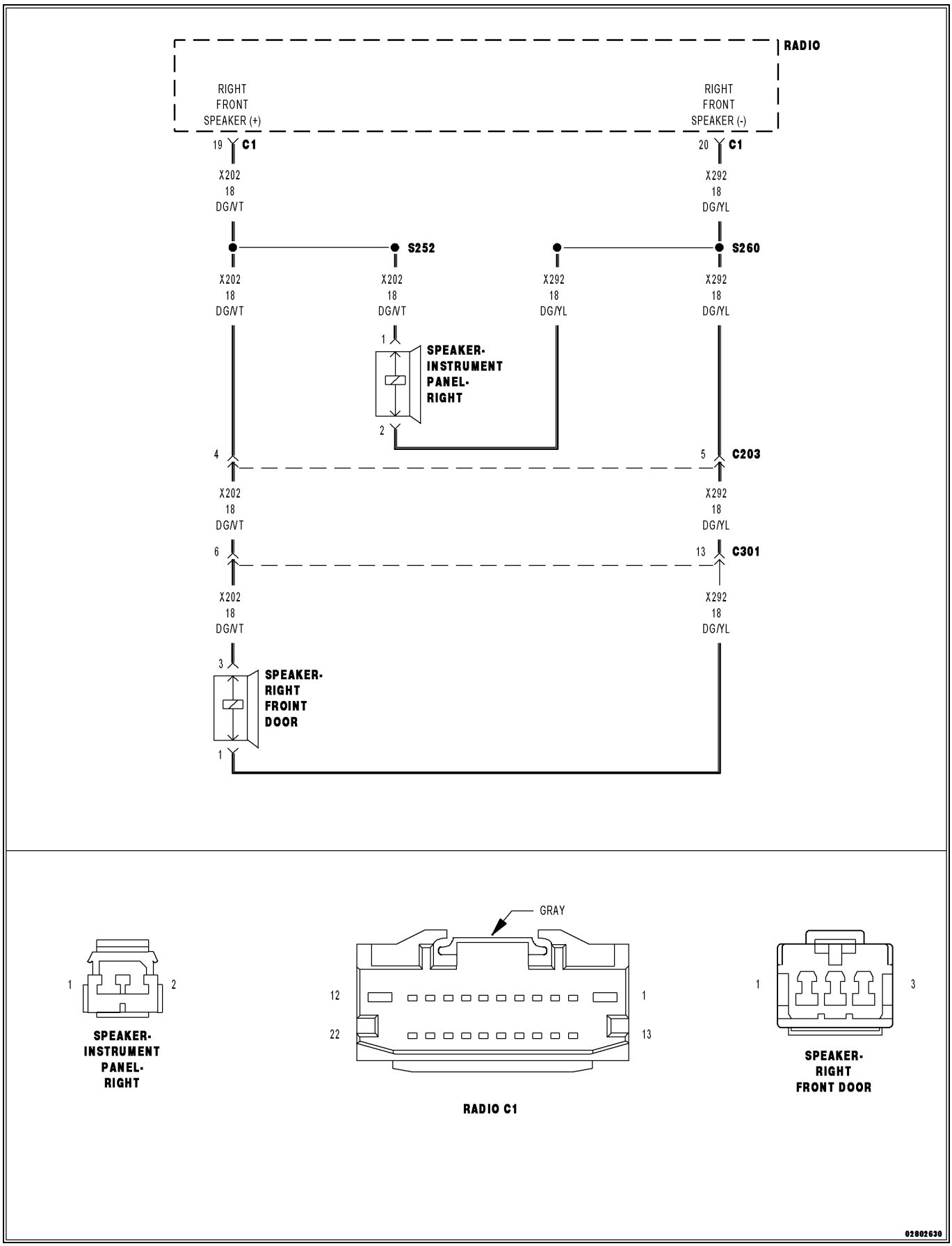

For a complete wiring diagram, **refer to the Wiring Information**.

Theory of Operation

The (X202) Right Front Speaker (+) circuit and the (X292) Right Front Speaker (-) circuit are outputs of the Radio. The Radio controls and monitors these circuits for a concern.

For a detailed description of the Audio System. (Refer to 08 - Electrical/8A - Audio and Video - Description).

For additional information regarding the operation of the Audio System. (Refer to 08 - Electrical/8A - Audio and Video - Operation).

- **When Monitored:**
  With the Radio on.
- **Set Condition:**
  The Radio detects an open condition on the speaker output circuit.

Possible Causes
(X202) RIGHT FRONT DOOR SPEAKER (+) CIRCUIT OPEN
(X292) RIGHT FRONT DOOR SPEAKER (-) CIRCUIT OPEN
RIGHT FRONT SPEAKER
RIGHT FRONT INSTRUMENT PANEL (I/P) SPEAKER
RADIO

1. CHECK FOR AN INTERMITTENT CONDITION

NOTE: This vehicle has a Front I/P Speaker wired in parallel with the Front Door Speaker.

1. Turn the ignition on and open one of the front doors.

NOTE: A front door must remain open whenever checking or erasing Radio DTCs.

2. Using the scan tool, record and erase the Radio DTCs.
3. Turn the Radio on.
4. Adjust the speakers to the front and center.
5. Using the scan tool, read the active Radio DTCs.

Does the scan tool read: B1407-FRONT RIGHT AUDIO SPEAKER OUTPUT CIRCUIT OPEN?

Yes

- Go To 2

No

- Test complete, the condition or conditions that originally set this DTC are not present at this time. Using the wiring diagrams as a guide, check all related splices and connectors for signs of water intrusion, corrosion, pushed out or bent terminals and correct pin tension.
- Perform the BODY VERIFICATION TEST. (Refer to 28 - DTC-Based Diagnostics/MODULE, Totally Integrated Power (TIPM) - Standard Procedure).

2. CHECK THE RIGHT FRONT SPEAKER

1. Turn the ignition off.
2. Disconnect the Right Front Speaker.
3. Measure the resistance of the speaker between the two terminals.

NOTE: The graphic shows the connector for reference only. Measure between the speaker terminals.

Is the resistance above 5.0 Ohms?

Yes

- Replace the Right Front Speaker in accordance with the Service Information.
- Perform the BODY VERIFICATION TEST. (Refer to 28 - DTC-Based Diagnostics/MODULE, Totally Integrated Power (TIPM) - Standard Procedure).

No

- Go To 3

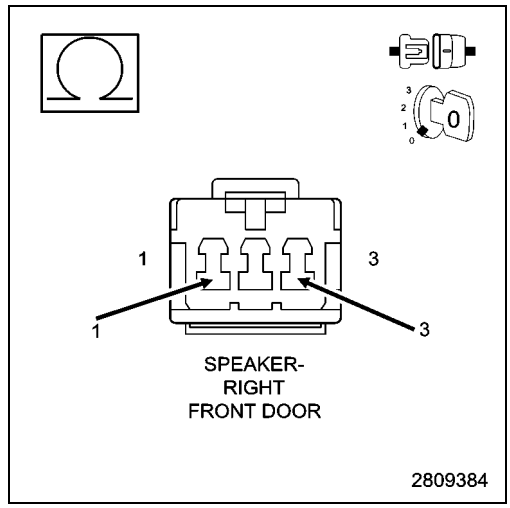

3. CHECK THE RIGHT FRONT I/P SPEAKER

1. Turn the ignition off.
2. Disconnect the Right Front I/P Speaker.
3. Measure the resistance of the speaker between the two terminals.

NOTE: The graphic shows the connector for reference only. Measure between the speaker terminals.

Is the resistance above 5.0 Ohms?

Yes

- Replace the Right Front I/P Speaker in accordance with the Service Information.
- Perform the BODY VERIFICATION TEST. (Refer to 28 - DTC-Based Diagnostics/MODULE, Totally Integrated Power (TIPM) - Standard Procedure).

No

- Go To 4

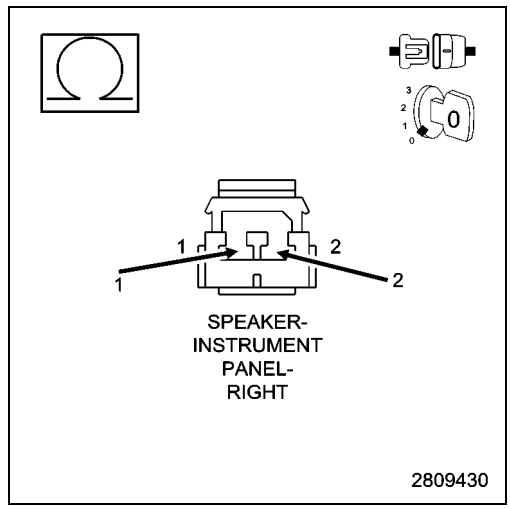

4. CHECK THE (X202) RIGHT FRONT DOOR SPEAKER (+) FOR AN OPEN

1. Turn the ignition off.
2. Disconnect the Radio C1 harness connector.
3. Measure the resistance of the (X202) Right Front Door Speaker (+) circuit between the Radio C1 connector and the Right Front Door Speaker harness connector and the Right Front I/P Speaker harness connector.

Is the resistance below 5.0 Ohms?

Yes

- Go To 5

No

- Repair an open in the (X202) Right Front Door Speaker (+) circuit.
- Perform the BODY VERIFICATION TEST. (Refer to 28 - DTC-Based Diagnostics/MODULE, Totally Integrated Power (TIPM) - Standard Procedure).

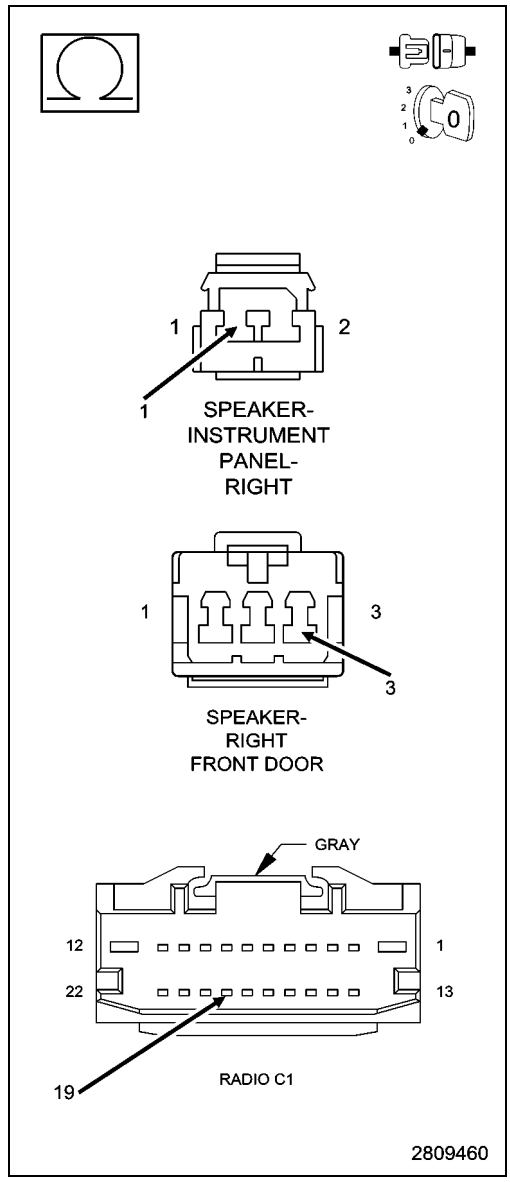

5. CHECK THE (X292) RIGHT FRONT DOOR SPEAKER (-) CIRCUIT FOR AN OPEN

1. Measure the resistance of the (X292) Right Front Door Speaker (-) circuit between the Radio C1 connector and the Right Front Door Speaker harness connector and the Right Front I/P Speaker harness connector.

Is the resistance below 5.0 Ohms?

Yes

- Replace the Radio in accordance with the Service Information.
- Perform the BODY VERIFICATION TEST. (Refer to 28 - DTC-Based Diagnostics/MODULE, Totally Integrated Power (TIPM) - Standard Procedure).

No

- Repair an open in the (X292) Right Front Door Speaker (-) circuit.
- Perform the BODY VERIFICATION TEST. (Refer to 28 - DTC-Based Diagnostics/MODULE, Totally Integrated Power (TIPM) - Standard Procedure).

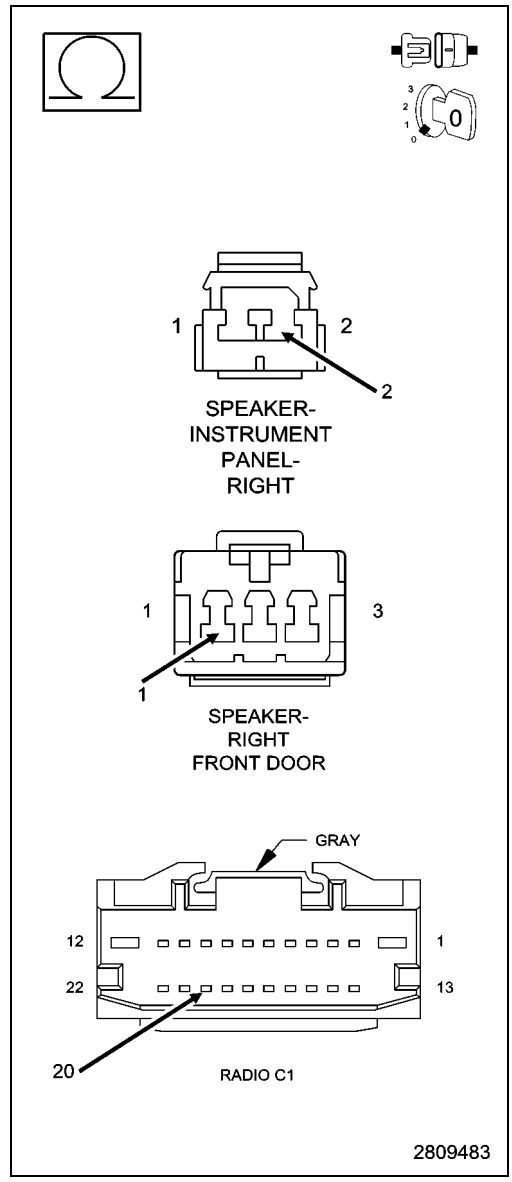

B1409-REAR LEFT AUDIO SPEAKER OUTPUT CIRCUIT LOW - BASE

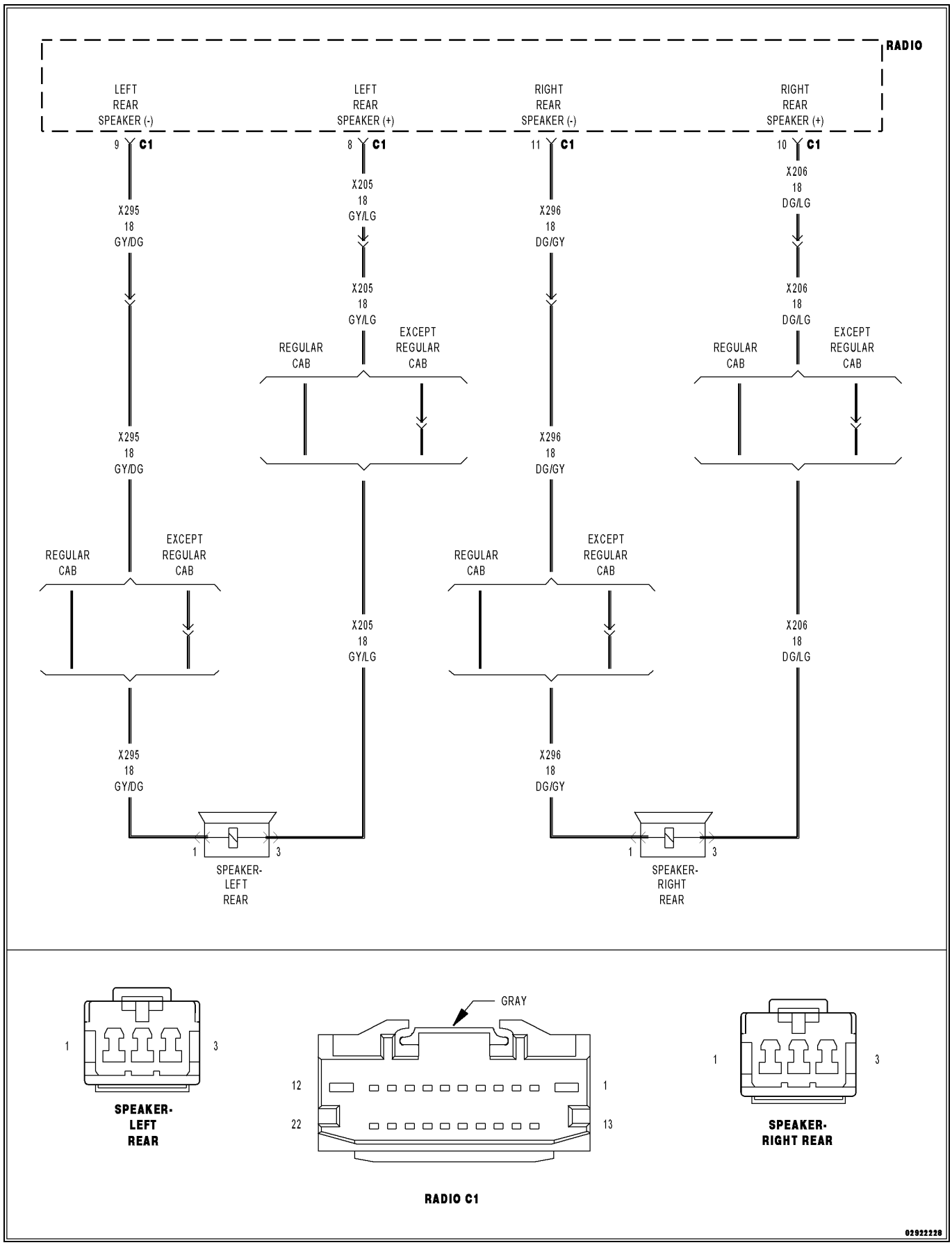

For a complete wiring diagram, **refer to the Wiring Information**.

NOTE: There are two versions of the B1409 DTC test. In order to select the proper test you must know if the vehicle is equipped with an Amplifier. If the vehicle is equipped with an Amplifier use the B1409-PREMIUM test. If the vehicle is not equipped with an Amplifier use the B1409-BASE test.

Theory of Operation

The (X205) Left Rear Speaker (+) circuit and the (X295) Left Rear Speaker (-) circuit are outputs of the Radio. The Radio controls and monitors these circuits for a concern.

For a detailed description of the Audio System. (Refer to 08 - Electrical/8A - Audio and Video - Description).

For additional information regarding the operation of the Audio System. (Refer to 08 - Electrical/8A - Audio and Video - Operation).

- **When Monitored:**
  With the Radio on.
- **Set Condition:**
  The Radio detects a short to ground condition on the speaker output circuit.

Possible Causes
(X205) LEFT REAR SPEAKER (+) CIRCUIT SHORTED TO GROUND
(X295) LEFT REAR SPEAKER (-) CIRCUIT SHORTED TO GROUND
LEFT REAR SPEAKER
RADIO

1. CHECK FOR AN INTERMITTENT CONDITION

1. Turn the ignition on and open one of the front doors.

NOTE: A front door must remain open whenever checking or erasing Radio DTCs.

2. Using the scan tool, record and erase the Radio DTCs.
3. Turn the Radio on.
4. Adjust the speakers to the rear and center.
5. Using the scan tool, read the active Radio DTCs.

Does the scan tool read: B1409-REAR LEFT AUDIO SPEAKER OUTPUT CIRCUIT LOW?

Yes

- Go To 2

No

- Test complete, the condition or conditions that originally set this DTC are not present at this time. Using the wiring diagrams as a guide, check all related splices and connectors for signs of water intrusion, corrosion, pushed out or bent terminals and correct pin tension.
- Perform the BODY VERIFICATION TEST. (Refer to 28 - DTC-Based Diagnostics/MODULE, Totally Integrated Power (TIPM) - Standard Procedure).

2. CHECK LEFT REAR SPEAKER

1. Make sure one of the front doors is still open.
2. Using the scan tool, erase the DTCs.
3. Turn the ignition off.
4. Disconnect the Left Rear Speaker harness connector from the Left Rear Speaker.
5. Turn the ignition on.
6. Turn the radio on.
7. Using the scan tool, read the active Radio DTCs.

Does the scan tool read: B1401-FRONT LEFT AUDIO SPEAKER OUTPUT CIRCUIT LOW?

Yes

- Go To 3

No

- Replace the Left Rear Speaker in accordance with the Service Information. (Refer to 08 - Electrical/8A - Audio and Video/SPEAKER - Removal).
- Perform the BODY VERIFICATION TEST. (Refer to 28 - DTC-Based Diagnostics/MODULE, Totally Integrated Power (TIPM) - Standard Procedure).

3. CHECK THE (X205) LEFT REAR SPEAKER (+) CIRCUIT FOR A SHORT TO GROUND

1. Turn the ignition off.
2. Disconnect the Radio C1 harness connector.
3. Measure the resistance between ground and the (X205) Left Rear Speaker (+) circuit.

Is the resistance below 5.0 Ohms?

Yes

- Repair the (X205) Left Rear Speaker (+) circuit for a short to ground.
- Perform the BODY VERIFICATION TEST. (Refer to 28 - DTC-Based Diagnostics/MODULE, Totally Integrated Power (TIPM) - Standard Procedure).

No

- Go To 4

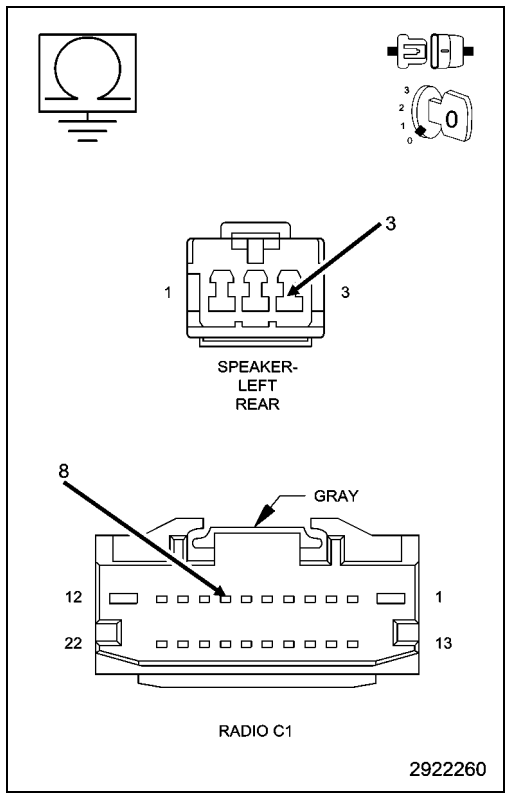

4. CHECK THE (X295) LEFT REAR SPEAKER (-) CIRCUIT FOR A SHORT TO GROUND

1. Measure the resistance between ground and the (X295) Left Rear Speaker (-) circuit.

Is the resistance below 5.0 Ohms?

Yes

- Repair the (X295) Left Rear Speaker (-) circuit for a short to ground.
- Perform the BODY VERIFICATION TEST. (Refer to 28 - DTC-Based Diagnostics/MODULE, Totally Integrated Power (TIPM) - Standard Procedure).

No

- Replace the Radio in accordance with the Service Information.
- Perform the BODY VERIFICATION TEST. (Refer to 28 - DTC-Based Diagnostics/MODULE, Totally Integrated Power (TIPM) - Standard Procedure).

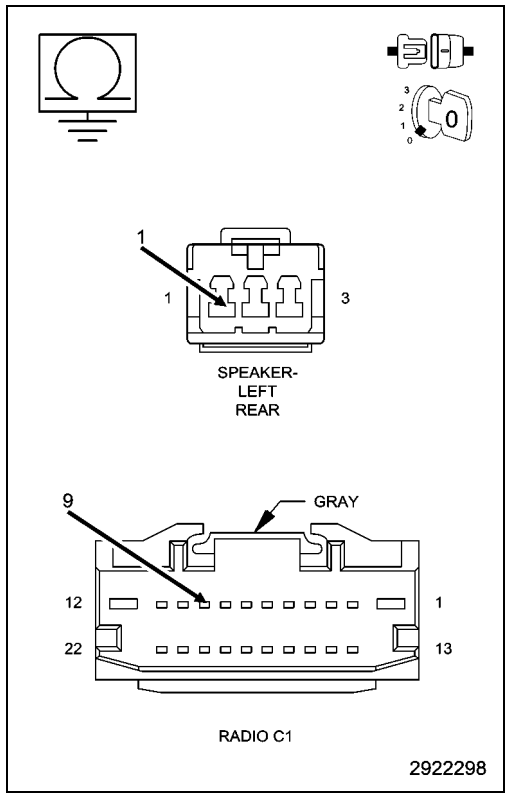

B1409-REAR LEFT AUDIO SPEAKER OUTPUT CIRCUIT LOW - PREMIUM

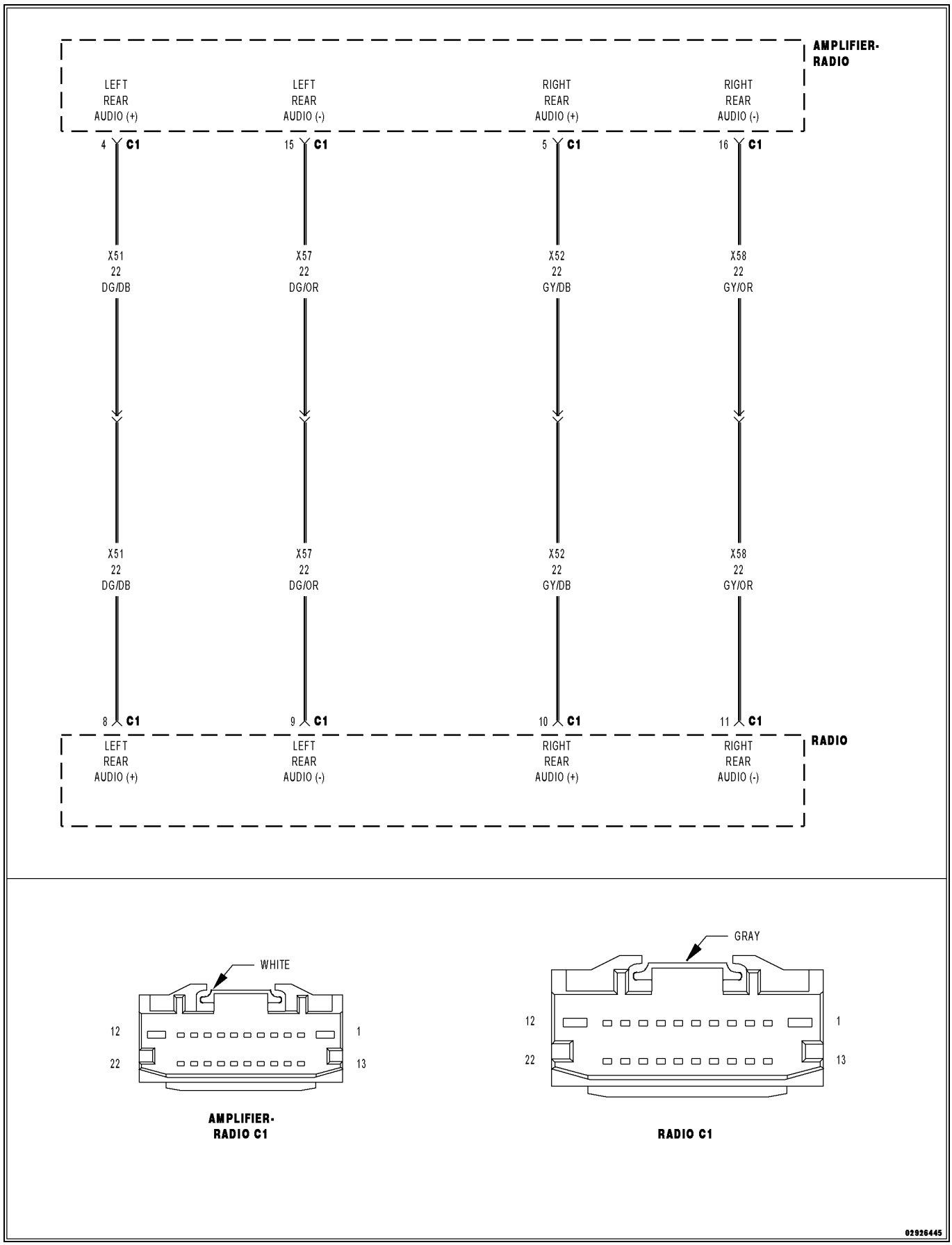

For a complete wiring diagram, **refer to the Wiring Information**.

NOTE: There are two versions of the B1409 DTC test. In order to select the proper test you must know if the vehicle is equipped with an Amplifier. If the vehicle is equipped with an Amplifier use the B1409-PREMIUM test. If the vehicle is not equipped with an Amplifier use the B1409-BASE test.

Theory of Operation

The (X51) Left Rear Audio (+) circuit and the (X57) Left Rear Audio (-) circuit are outputs of the Radio. The Radio controls and monitors these circuits for a concern.

For a detailed description of the Audio System. (Refer to 08 - Electrical/8A - Audio and Video - Description).

For additional information regarding the operation of the Audio System. (Refer to 08 - Electrical/8A - Audio and Video - Operation).

- **When Monitored:**
  With the Radio on.
- **Set Condition:**
  The Radio detects a short to ground condition on the audio output circuit.

Possible Causes
(X51) LEFT REAR AUDIO (+) CIRCUIT SHORTED TO GROUND
(X57) LEFT REAR AUDIO (-) CIRCUIT SHORTED TO GROUND
AMPLIFER
RADIO

1. CHECK FOR AN INTERMITTENT CONDITION

1. Turn the ignition on and open one of the front doors.

NOTE: A front door must remain open whenever checking or erasing Radio DTCs.

2. Using the scan tool, record and erase the Radio DTCs.
3. Turn the Radio on.
4. Adjust the speakers to the rear and center.
5. Using the scan tool, read the active Radio DTCs.

Does the scan tool read: B1409-REAR LEFT AUDIO SPEAKER OUTPUT CIRCUIT LOW?

Yes

- Go To 2

No

- Test complete, the condition or conditions that originally set this DTC are not present at this time. Using the wiring diagrams as a guide, check all related splices and connectors for signs of water intrusion, corrosion, pushed out or bent terminals and correct pin tension.
- Perform the BODY VERIFICATION TEST. (Refer to 28 - DTC-Based Diagnostics/MODULE, Totally Integrated Power (TIPM) - Standard Procedure).

2. CHECK THE AMPLIFIER

1. Make sure one of the front doors is still open.
2. Using the scan tool, erase the DTCs.
3. Turn the ignition off.
4. Disconnect the Amplifier C1 harness connector from the Amplifier.
5. Turn the ignition on.
6. Turn the radio on.
7. Using the scan tool, read the active Radio DTCs.

Does the scan tool read: B1409-REAR LEFT AUDIO SPEAKER OUTPUT CIRCUIT LOW?

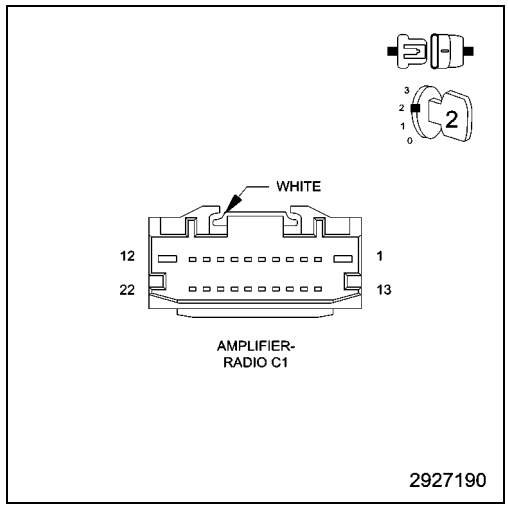

Yes

- Go To 3

No

- Replace the Amplifier in accordance with the Service Information.
- Perform the BODY VERIFICATION TEST. (Refer to 28 - DTC-Based Diagnostics/MODULE, Totally Integrated Power (TIPM) - Standard Procedure).

3. CHECK THE (X51) LEFT REAR AUDIO (+) CIRCUIT FOR A SHORT TO GROUND

1. Turn the ignition off.
2. Disconnect the Radio C1 harness connector.
3. Measure the resistance between ground and the (X51) Left Rear Audio (+) circuit.

Is the resistance below 5.0 Ohms?

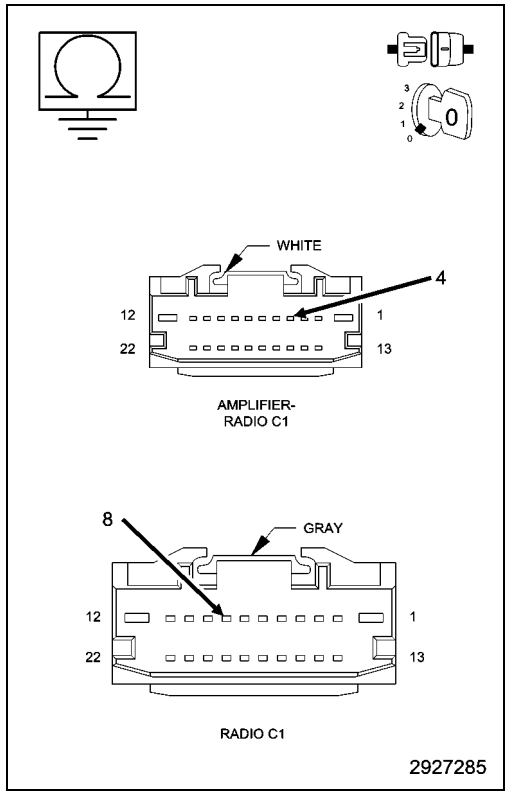

Yes

- Repair the (X51) Left Rear Audio (+) circuit for a short to ground.
- Perform the BODY VERIFICATION TEST. (Refer to 28 - DTC-Based Diagnostics/MODULE, Totally Integrated Power (TIPM) - Standard Procedure).

No

- Go To 4

4. CHECK THE (X57) LEFT REAR AUDIO (-) CIRCUIT FOR A SHORT TO GROUND

1. Measure the resistance between ground and the (X57) Left Rear Audio (-) circuit.

Is the resistance below 5.0 Ohms?

Yes

- Repair the (X57) Left Rear Audio (-) circuit for a short to ground.
- Perform the BODY VERIFICATION TEST. (Refer to 28 - DTC-Based Diagnostics/MODULE, Totally Integrated Power (TIPM) - Standard Procedure).

No

- Replace the Radio in accordance with the Service Information.
- Perform the BODY VERIFICATION TEST. (Refer to 28 - DTC-Based Diagnostics/MODULE, Totally Integrated Power (TIPM) - Standard Procedure).

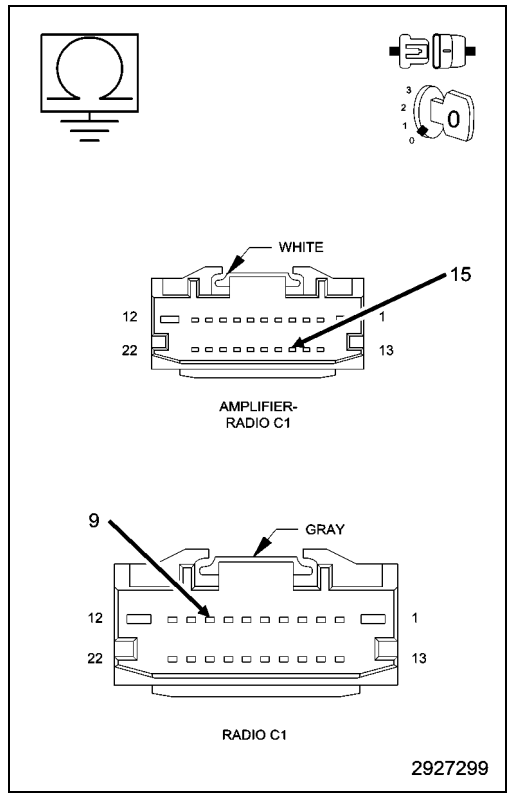

B140A-REAR LEFT AUDIO SPEAKER OUTPUT CIRCUIT HIGH - BASE

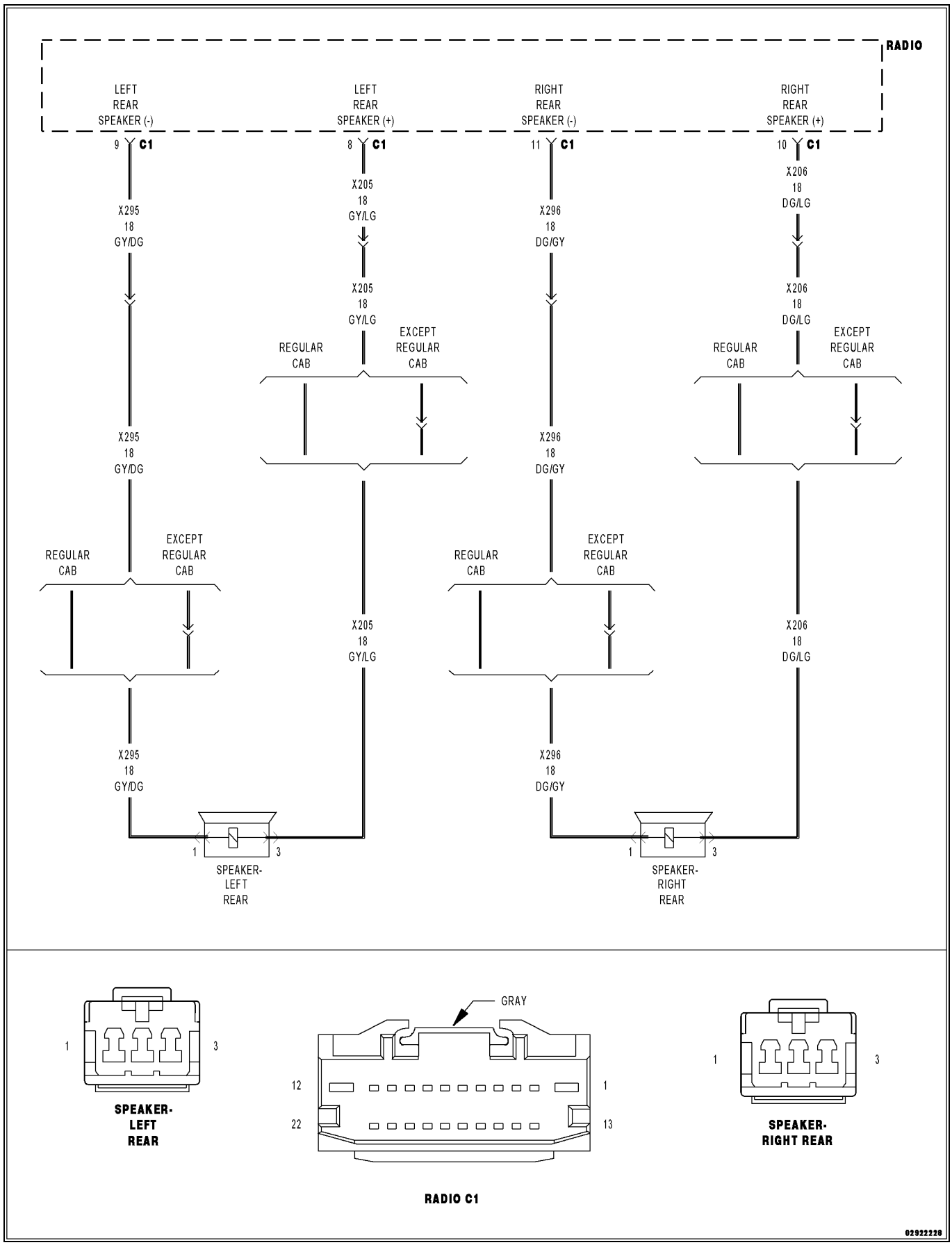

For a complete wiring diagram, **refer to the Wiring Information**.

NOTE: There are two versions of the B140A DTC test. In order to select the proper test you must know if the vehicle is equipped with an Amplifier. If the vehicle is equipped with an Amplifier use the B140A-PREMIUM test. If the vehicle is not equipped with an Amplifier use the B140A-BASE test.

Theory of Operation

The (X205) Left Rear Speaker (+) circuit and the (X295) Left Rear Speaker (-) circuit are outputs of the Radio. The Radio controls and monitors these circuits for a concern.

For a detailed description of the Audio System. (Refer to 08 - Electrical/8A - Audio and Video - Description).

For additional information regarding the operation of the Audio System. (Refer to 08 - Electrical/8A - Audio and Video - Operation).

- **When Monitored:**
  With the Radio on.
- **Set Condition:**
  The Radio detects a short to battery condition on the speaker output circuit.

Possible Causes
(X205) LEFT REAR SPEAKER (+) CIRCUIT SHORTED TO VOLTAGE
(X295) LEFT REAR SPEAKER (-) CIRCUIT SHORTED TO VOLTAGE
RADIO

1. CHECK FOR AN INTERMITTENT CONDITION

1. Turn the ignition on and open one of the front doors.

NOTE: A front door must remain open whenever checking or erasing Radio DTCs.

2. Using the scan tool, record and erase the Radio DTCs.
3. Turn the Radio on.
4. Adjust the speakers to the rear and center.
5. Using the scan tool, read the active Radio DTCs.

Does the scan tool read: B140A-REAR LEFT AUDIO SPEAKER OUTPUT CIRCUIT HIGH?

Yes

- Go To 2

No

- Test complete, the condition or conditions that originally set this DTC are not present at this time. Using the wiring diagrams as a guide, check all related splices and connectors for signs of water intrusion, corrosion, pushed out or bent terminals and correct pin tension.
- Perform the BODY VERIFICATION TEST. (Refer to 28 - DTC-Based Diagnostics/MODULE, Totally Integrated Power (TIPM) - Standard Procedure).

2. CHECK FOR VOLTAGE ON THE (X205) LEFT REAR SPEAKER (+) CIRCUIT

1. Turn the ignition off.
2. Disconnect the Radio C1 harness connector.
3. Disconnect the Left Rear Speaker harness connector.
4. Turn the ignition on.
5. Measure the voltage between ground and the (X205) Left Rear Speaker (+) circuit.

Is there any voltage present?

Yes

- Repair the (X205) Left Rear Speaker (+) circuit for a short to voltage.
- Perform the BODY VERIFICATION TEST. (Refer to 28 - DTC-Based Diagnostics/MODULE, Totally Integrated Power (TIPM) - Standard Procedure).

No

- Go To 3

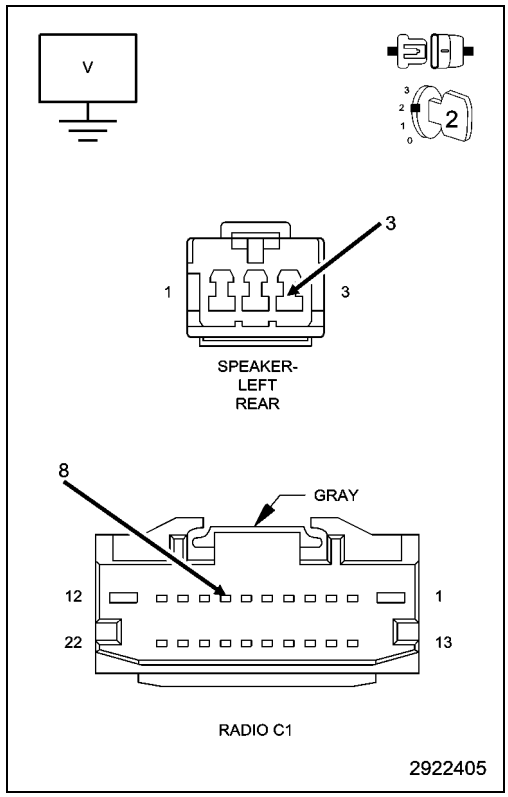

3. CHECK FOR VOLTAGE ON THE (X295) LEFT REAR SPEAKER (-) CIRCUIT

1. Measure the voltage between ground and the (X295) Left Rear Speaker (-) circuit.

Is there any voltage present?

Yes

- Repair the (X295) Left Rear Speaker (-) circuit for a short to voltage.
- Perform the BODY VERIFICATION TEST. (Refer to 28 - DTC-Based Diagnostics/MODULE, Totally Integrated Power (TIPM) - Standard Procedure).

No

- Replace the Radio in accordance with the Service Information.
- Perform the BODY VERIFICATION TEST. (Refer to 28 - DTC-Based Diagnostics/MODULE, Totally Integrated Power (TIPM) - Standard Procedure).

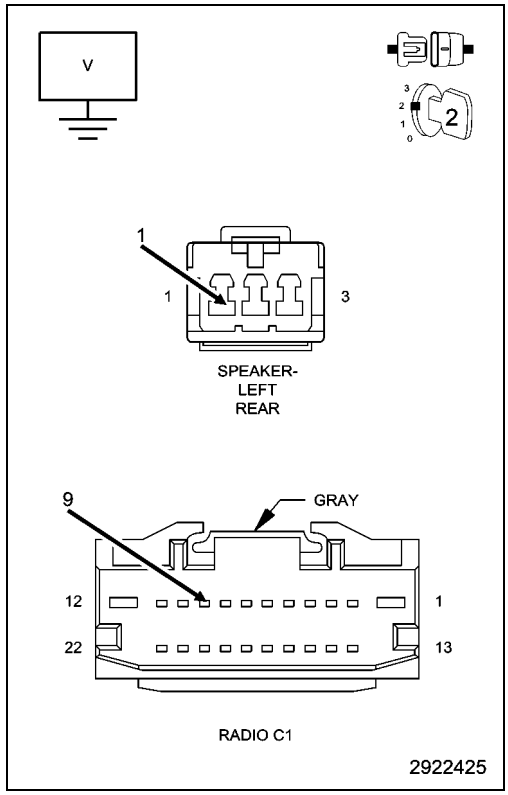

B140A-REAR LEFT AUDIO SPEAKER OUTPUT CIRCUIT HIGH - PREMIUM

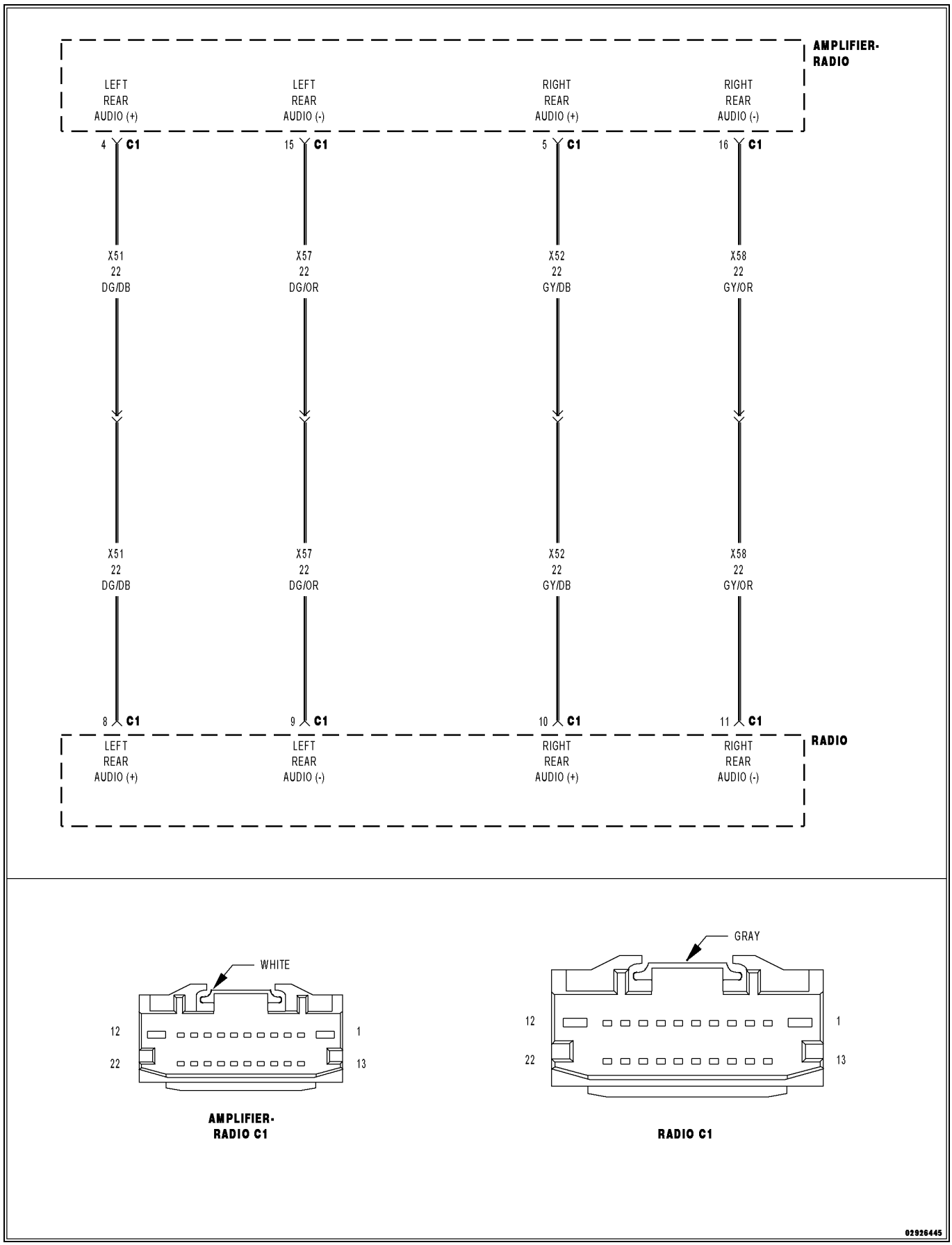

For a complete wiring diagram, **refer to the Wiring Information**.

NOTE: There are two versions of the B140A DTC test. In order to select the proper test you must know if the vehicle is equipped with an Amplifier. If the vehicle is equipped with an Amplifier use the B140A-PREMIUM test. If the vehicle is not equipped with an Amplifier use the B140A-BASE test.

Theory of Operation

The (X51) Left Rear Audio (+) circuit and the (X57) Left Rear Audio (-) circuit are outputs of the Radio. The Radio controls and monitors these circuits for a concern.

For a detailed description of the Audio System. (Refer to 08 - Electrical/8A - Audio and Video - Description).

For additional information regarding the operation of the Audio System. (Refer to 08 - Electrical/8A - Audio and Video - Operation).

- **When Monitored:**
  With the Radio on.
- **Set Condition:**
  The Radio detects a short to battery condition on the audio output circuit.

Possible Causes
(X51) LEFT REAR AUDIO (+) CIRCUIT SHORTED TO VOLTAGE
(X57) LEFT REAR AUDIO (-) CIRCUIT SHORTED TO VOLTAGE
RADIO

1. CHECK FOR AN INTERMITTENT CONDITION

1. Turn the ignition on and open one of the front doors.

NOTE: A front door must remain open whenever checking or erasing Radio DTCs.

2. Using the scan tool, record and erase the Radio DTCs.
3. Turn the Radio on.
4. Adjust the speakers to the rear and center.
5. Using the scan tool, read the active Radio DTCs.

Does the scan tool read: B140A-REAR LEFT AUDIO SPEAKER OUTPUT CIRCUIT HIGH?

Yes

- Go To 2

No

- Test complete, the condition or conditions that originally set this DTC are not present at this time. Using the wiring diagrams as a guide, check all related splices and connectors for signs of water intrusion, corrosion, pushed out or bent terminals and correct pin tension.
- Perform the BODY VERIFICATION TEST. (Refer to 28 - DTC-Based Diagnostics/MODULE, Totally Integrated Power (TIPM) - Standard Procedure).

2. CHECK THE AMPLIFIER

1. Make sure one of the front doors is still open.
2. Using the scan tool, erase the DTCs.
3. Turn the ignition off.
4. Disconnect the Amplifier C1 harness connector from the Amplifier.
5. Turn the ignition on.
6. Turn the radio on.
7. Using the scan tool, read the active Radio DTCs.

Does the scan tool read: B140A-REAR LEFT AUDIO SPEAKER OUTPUT CIRCUIT HIGH?

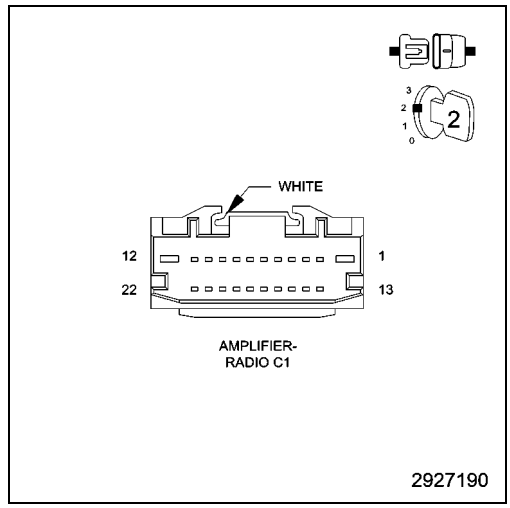

Yes

- Go To 3

No

- Replace the Amplifier in accordance with the Service Information.
- Perform the BODY VERIFICATION TEST. (Refer to 28 - DTC-Based Diagnostics/MODULE, Totally Integrated Power (TIPM) - Standard Procedure).

3. CHECK FOR VOLTAGE ON THE (X51) LEFT REAR AUDIO (+) CIRCUIT

1. Turn the ignition off.
2. Disconnect the Radio C1 harness connector.
3. Turn the ignition on.
4. Measure the voltage between ground and the (X51) Left Rear Audio (+) circuit.

Is there any voltage present?

Yes

- Repair the (X51) Left Rear Audio (+) circuit for a short to voltage.
- Perform the BODY VERIFICATION TEST. (Refer to 28 - DTC-Based Diagnostics/MODULE, Totally Integrated Power (TIPM) - Standard Procedure).

No

- Go To 4

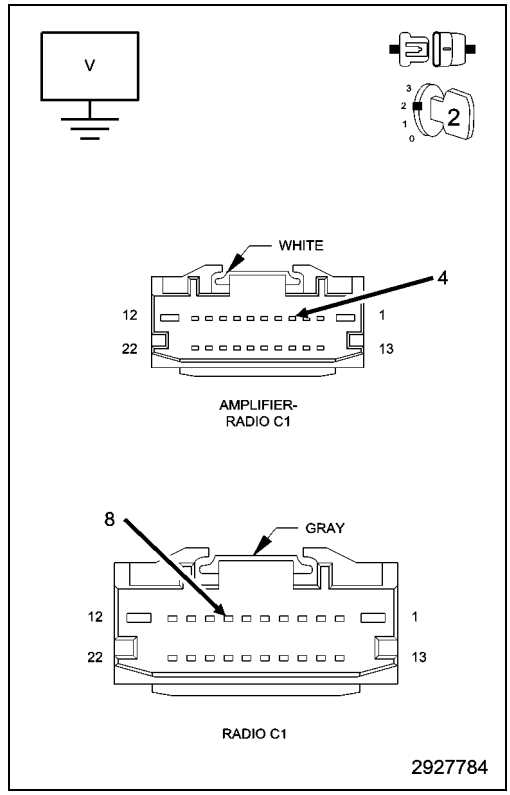

4. CHECK FOR VOLTAGE ON THE (X57) LEFT REAR AUDIO (-) CIRCUIT

1. Measure the voltage between ground and the (X57) Left Rear Audio (-) circuit.

Is there any voltage present?

Yes

- Repair the (X57) Left Rear Audio (-) circuit for a short to voltage.
- Perform the BODY VERIFICATION TEST. (Refer to 28 - DTC-Based Diagnostics/MODULE, Totally Integrated Power (TIPM) - Standard Procedure).

No

- Replace the Radio in accordance with the Service Information.
- Perform the BODY VERIFICATION TEST. (Refer to 28 - DTC-Based Diagnostics/MODULE, Totally Integrated Power (TIPM) - Standard Procedure).

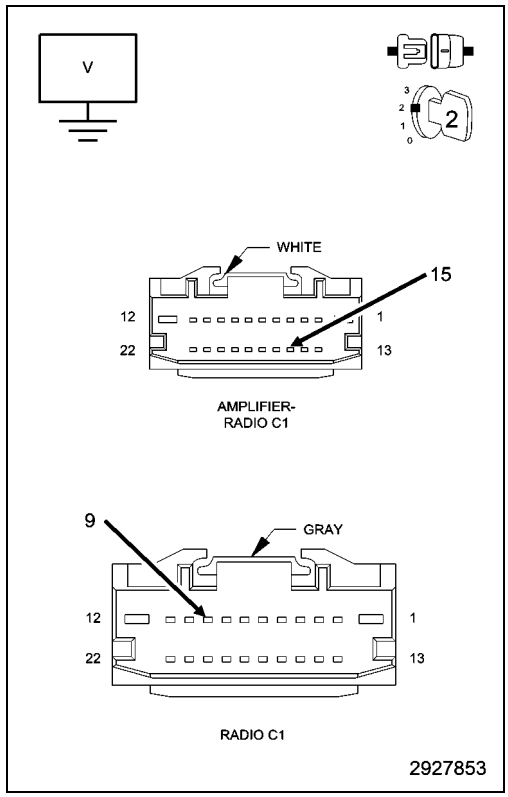

B140B-REAR LEFT AUDIO SPEAKER OUTPUT CIRCUIT OPEN - BASE

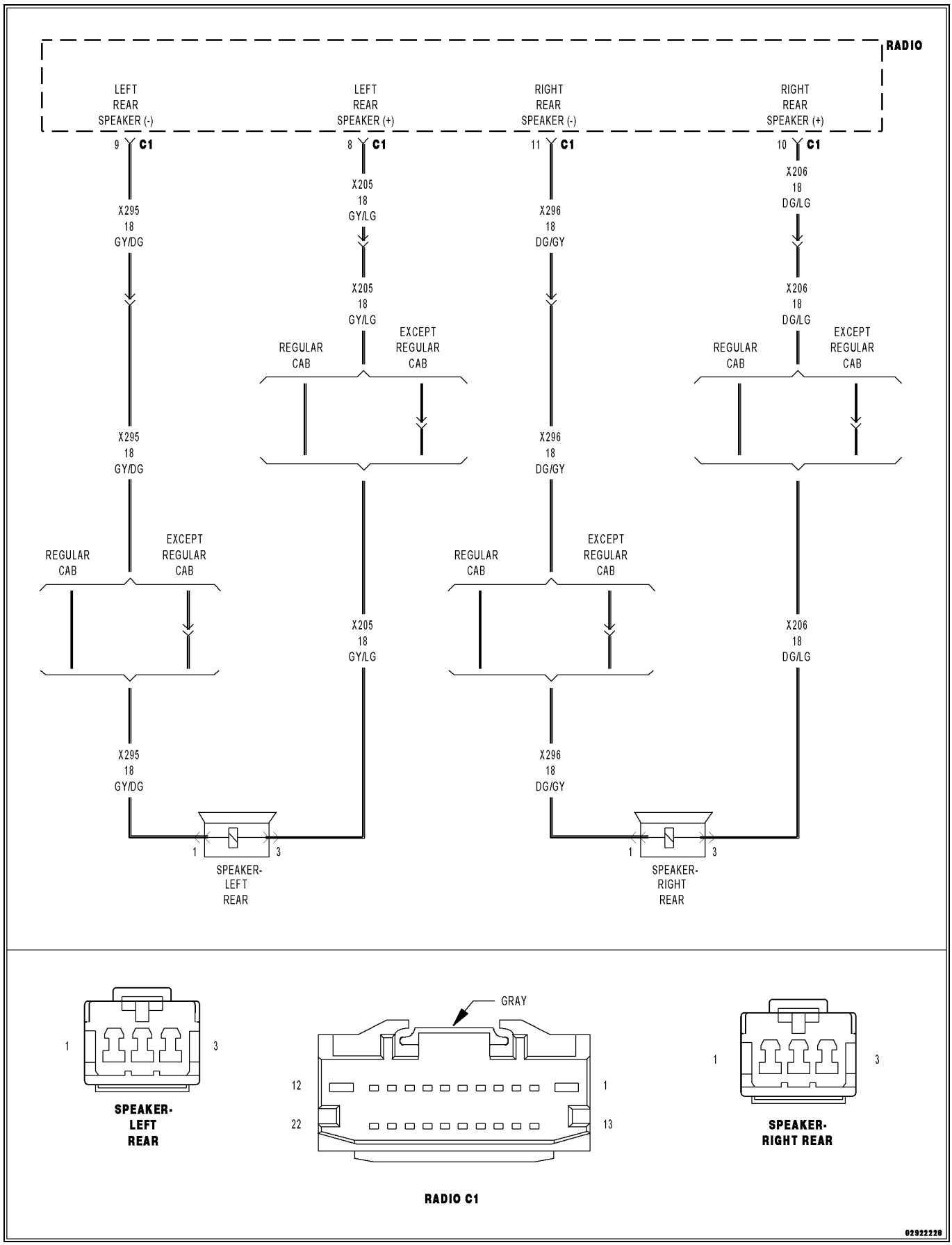

For a complete wiring diagram, **refer to the Wiring Information**.

NOTE: There are two versions of the B140B DTC test. In order to select the proper test you must know if the vehicle is equipped with an Amplifier. If the vehicle is equipped with an Amplifier use the B140B-PREMIUM test. If the vehicle is not equipped with an Amplifier use the B140B-BASE test.

Theory of Operation

The (X205) Left Rear Speaker (+) circuit and the (X295) Left Rear Speaker (-) circuit are outputs of the Radio. The Radio controls and monitors these circuits for a concern.

For a detailed description of the Audio System. (Refer to 08 - Electrical/8A - Audio and Video - Description).

For additional information regarding the operation of the Audio System. (Refer to 08 - Electrical/8A - Audio and Video - Operation).

- **When Monitored:**
  With the Radio on.
- **Set Condition:**
  The Radio detects an open condition on the speaker output circuit.

Possible Causes
(X205) LEFT REAR SPEAKER (+) CIRCUIT OPEN
(X295) LEFT REAR SPEAKER (-) CIRCUIT OPEN
LEFT REAR SPEAKER
RADIO

1. CHECK FOR AN INTERMITTENT CONDITION

1. Turn the ignition on and open one of the front doors.

NOTE: A front door must remain open whenever checking or erasing Radio DTCs.

2. Using the scan tool, record and erase the Radio DTCs.
3. Turn the Radio on.
4. Adjust the speakers to the rear and center.
5. Using the scan tool, read the active Radio DTCs.

Does the scan tool read: B140B-REAR LEFT AUDIO SPEAKER OUTPUT CIRCUIT OPEN?

Yes

- Go To 2

No

- Test complete, the condition or conditions that originally set this DTC are not present at this time. Using the wiring diagrams as a guide, check all related splices and connectors for signs of water intrusion, corrosion, pushed out or bent terminals and correct pin tension.
- Perform the BODY VERIFICATION TEST. (Refer to 28 - DTC-Based Diagnostics/MODULE, Totally Integrated Power (TIPM) - Standard Procedure).

2. CHECK THE LEFT REAR SPEAKER

1. Turn the ignition off.
2. Disconnect the Left Rear Speaker.
3. Measure the resistance of the speaker between the two terminals.

NOTE: The graphic shows the connector for reference only. Measure between the speaker terminals.

Is the resistance above 5.0 Ohms?

Yes

- Replace the Left Rear Speaker in accordance with the Service Information. .
- Perform the BODY VERIFICATION TEST. (Refer to 28 - DTC-Based Diagnostics/MODULE, Totally Integrated Power (TIPM) - Standard Procedure).

No

- Go To 3

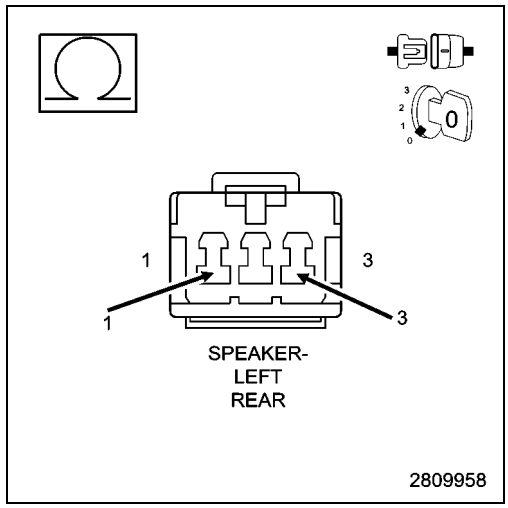

3. CHECK THE (X205) LEFT REAR SPEAKER (+) CIRCUIT FOR AN OPEN

1. Disconnect the Radio C1 harness connector.
2. Measure the resistance of (X205) Left Rear Speaker (+) circuit between the Radio C1 connector, and the Left Rear Speaker harness connector.

Is the resistance below 5.0 Ohms?

Yes

- Go To 4

No

- Repair an open in the (X205) Left Rear Speaker (+) circuit.
- Perform the BODY VERIFICATION TEST. (Refer to 28 - DTC-Based Diagnostics/MODULE, Totally Integrated Power (TIPM) - Standard Procedure).

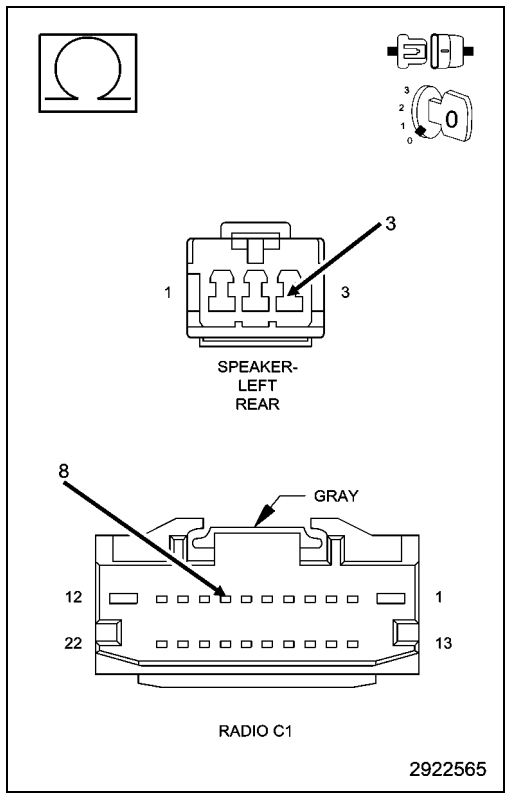

4. CHECK THE (X295) LEFT REAR SPEAKER (-) CIRCUIT FOR AN OPEN

1. Measure the resistance of (X295) Left Rear Speaker (-) circuit between the Radio C1 connector, and the Left Rear Speaker harness connector.

Is the resistance below 5.0 Ohms?

Yes

- Replace the Radio in accordance with the Service Information.
- Perform the BODY VERIFICATION TEST. (Refer to 28 - DTC-Based Diagnostics/MODULE, Totally Integrated Power (TIPM) - Standard Procedure).

No

- Repair an open in the (X295) Left Rear Speaker (-) circuit.
- Perform the BODY VERIFICATION TEST. (Refer to 28 - DTC-Based Diagnostics/MODULE, Totally Integrated Power (TIPM) - Standard Procedure).

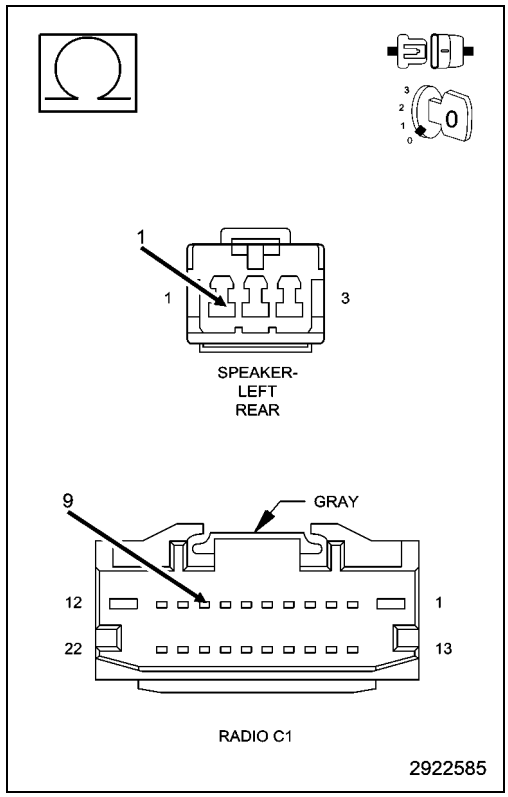

B140B-REAR LEFT AUDIO SPEAKER OUTPUT CIRCUIT OPEN - PREMIUM

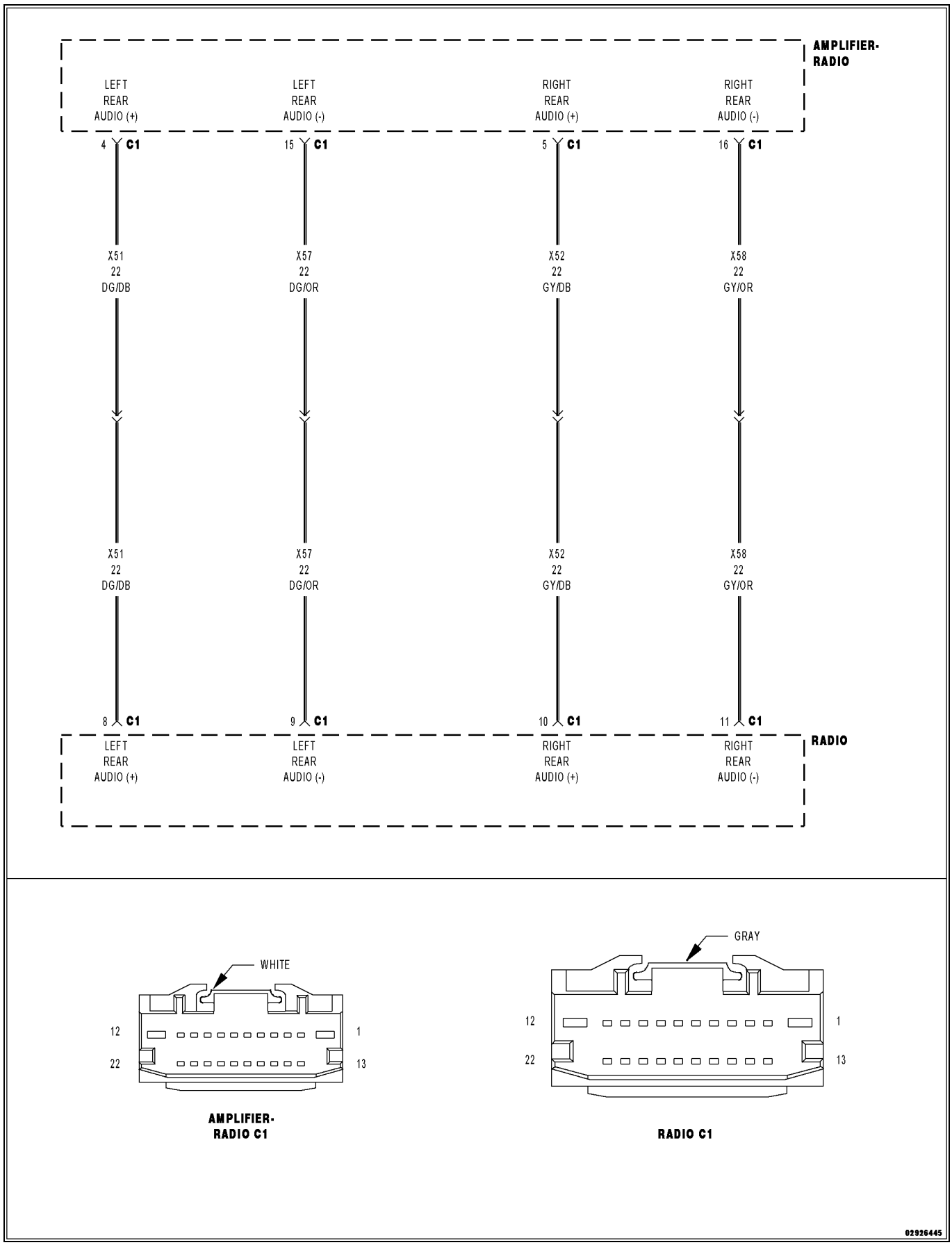

For a complete wiring diagram, **refer to the Wiring Information**.

NOTE: There are two versions of the B140B DTC test. In order to select the proper test you must know if the vehicle is equipped with an Amplifier. If the vehicle is equipped with an Amplifier use the B140B-PREMIUM test. If the vehicle is not equipped with an Amplifier use the B140B-BASE test.

Theory of Operation

The (X51) Left Rear Audio (+) circuit and the (X57) Left Rear Audio (-) circuit are outputs of the Radio. The Radio controls and monitors these circuits for a concern.

For a detailed description of the Audio System. (Refer to 08 - Electrical/8A - Audio and Video - Description).

For additional information regarding the operation of the Audio System. (Refer to 08 - Electrical/8A - Audio and Video - Operation).

- **When Monitored:**
  With the Radio on.
- **Set Condition:**
  The Radio detects an open condition on the audio output circuit.

Possible Causes
(X51) LEFT REAR AUDIO (+) CIRCUIT OPEN
(X57) LEFT REAR AUDIO (-) CIRCUIT OPEN
AMPLIFIER
RADIO

1. CHECK FOR AN INTERMITTENT CONDITION

1. Turn the ignition on and open one of the front doors.

NOTE: A front door must remain open whenever checking or erasing Radio DTCs.

2. Using the scan tool, record and erase the Radio DTCs.
3. Turn the Radio on.
4. Adjust the speakers to the rear and center.
5. Using the scan tool, read the active Radio DTCs.

Does the scan tool read: B140B-REAR LEFT AUDIO SPEAKER OUTPUT CIRCUIT OPEN?

Yes

- Go To 2

No

- Test complete, the condition or conditions that originally set this DTC are not present at this time. Using the wiring diagrams as a guide, check all related splices and connectors for signs of water intrusion, corrosion, pushed out or bent terminals and correct pin tension.
- Perform the BODY VERIFICATION TEST. (Refer to 28 - DTC-Based Diagnostics/MODULE, Totally Integrated Power (TIPM) - Standard Procedure).

2. CHECK THE AMPLIFIER

1. Turn the ignition off.
2. Disconnect the Amplifier C1 harness connector.
3. Connect a jumper wire between the (X51) Left Rear Audio (+) circuit and the (X57) Left Rear Audio (-) circuits.
4. Turn the ignition on.
5. Turn the Radio on.
6. Adjust the speakers to the rear and center.
7. Using the scan tool, read the active Radio DTCs.

Does the scan tool read: B140B-REAR LEFT AUDIO SPEAKER OUTPUT CIRCUIT OPEN?

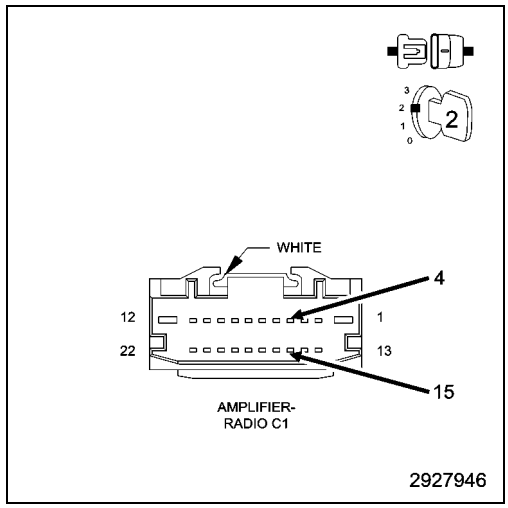

Yes

- Go To 3

No

- Replace the Amplifier in accordance with the Service Information.
- Perform the BODY VERIFICATION TEST. (Refer to 28 - DTC-Based Diagnostics/MODULE, Totally Integrated Power (TIPM) - Standard Procedure).

3. CHECK THE (X51) LEFT REAR AUDIO (+) CIRCUIT FOR AN OPEN

1. Turn the ignition off.
2. Disconnect the Radio C1 harness connector.
3. Measure the resistance of (X51) Left Rear Audio (+) circuit between the Radio C1 connector and the Amplifier C1 harness connector.

Is the resistance below 5.0 Ohms?

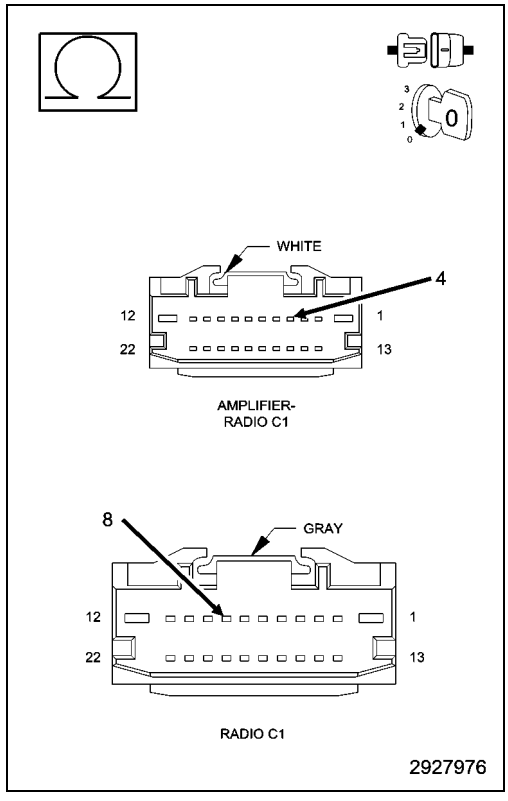

Yes

- Go To 4

No

- Repair open in the (X51) Left Rear Audio (+) circuit.
- Perform the BODY VERIFICATION TEST. (Refer to 28 - DTC-Based Diagnostics/MODULE, Totally Integrated Power (TIPM) - Standard Procedure).

4. CHECK THE (X57) LEFT REAR AUDIO (-) CIRCUIT FOR AN OPEN

1. Measure the resistance of (X57) Left Rear Audio (-) circuit between the Radio C1 connector, and the Amplifier C1 harness connector.

Is the resistance below 5.0 Ohms?

Yes

- Replace the Radio in accordance with the Service Information.
- Perform the BODY VERIFICATION TEST. (Refer to 28 - DTC-Based Diagnostics/MODULE, Totally Integrated Power (TIPM) - Standard Procedure).

No

- Repair open in the (X57) Left Rear Audio (-) circuit.
- Perform the BODY VERIFICATION TEST. (Refer to 28 - DTC-Based Diagnostics/MODULE, Totally Integrated Power (TIPM) - Standard Procedure).

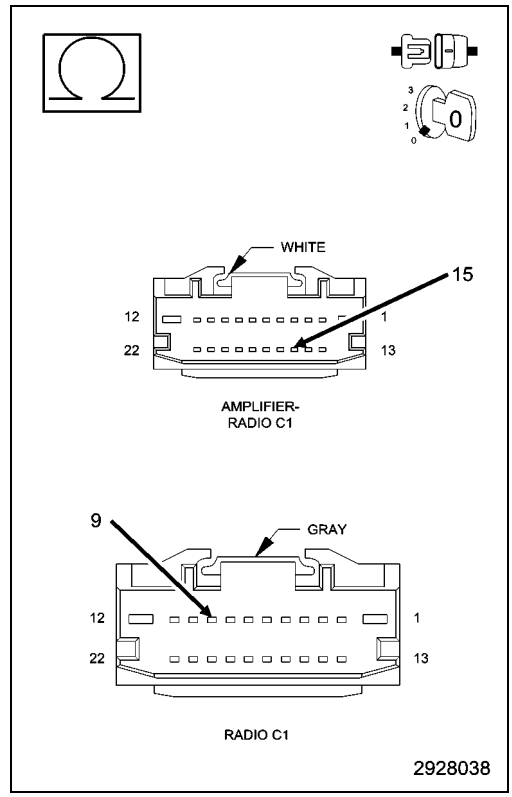

B140D-REAR RIGHT AUDIO SPEAKER OUTPUT CIRCUIT LOW - BASE

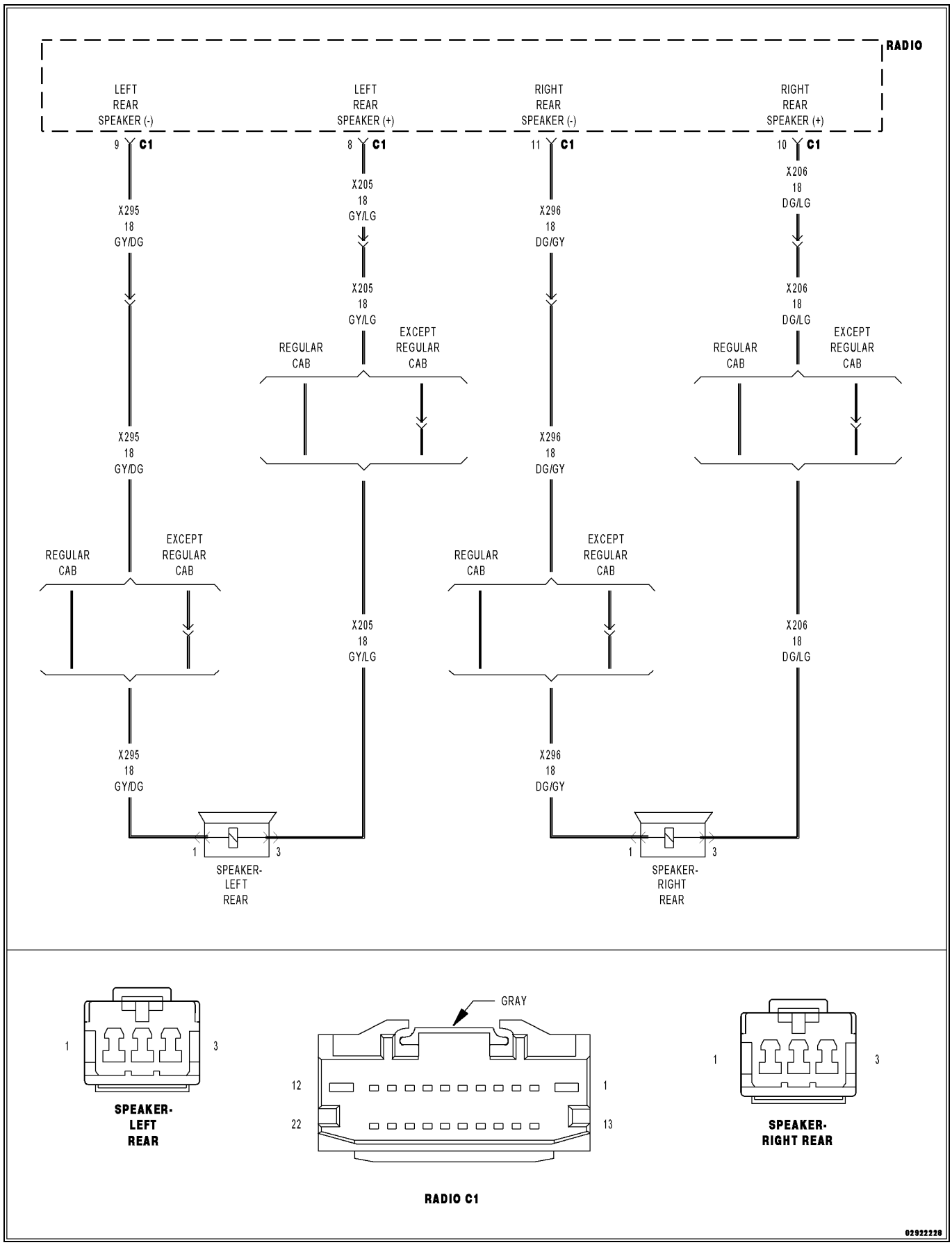

For a complete wiring diagram, **refer to the Wiring Information**.

NOTE: There are two versions of the B140D DTC test. In order to select the proper test you must know if the vehicle is equipped with an Amplifier. If the vehicle is equipped with an Amplifier use the B140D-PREMIUM test. If the vehicle is not equipped with an Amplifier use the B140D-BASE test.

Theory of Operation

The (X206) Right Rear Speaker (+) circuit and the (X296) Right Rear Speaker (-) circuit are outputs of the Radio. The Radio controls and monitors these circuits for a concern.

For a detailed description of the Audio System. (Refer to 08 - Electrical/8A - Audio and Video - Description).

For additional information regarding the operation of the Audio System. (Refer to 08 - Electrical/8A - Audio and Video - Operation).

- **When Monitored:**
  With the Radio on.
- **Set Condition:**
  The Radio detects a short to ground condition on the speaker output circuit.

Possible Causes
(X206) RIGHT REAR SPEAKER (+) CIRCUIT SHORTED TO GROUND
(X296) RIGHT REAR SPEAKER (-) CIRCUIT SHORTED TO GROUND
RIGHT REAR SPEAKER
RADIO

1. CHECK FOR AN INTERMITTENT CONDITION

1. Turn the ignition on and open one of the front doors.

NOTE: A front door must remain open whenever checking or erasing Radio DTCs.

2. Using the scan tool, record and erase the Radio DTCs.
3. Turn the Radio on.
4. Adjust the speakers to the rear and center.
5. Using the scan tool, read the active Radio DTCs.

Does the scan tool read: B140D-REAR RIGHT AUDIO SPEAKER OUTPUT CIRCUIT LOW?

Yes

- Go To 2

No

- Test complete, the condition or conditions that originally set this DTC are not present at this time. Using the wiring diagrams as a guide, check all related splices and connectors for signs of water intrusion, corrosion, pushed out or bent terminals and correct pin tension.
- Perform the BODY VERIFICATION TEST. (Refer to 28 - DTC-Based Diagnostics/MODULE, Totally Integrated Power (TIPM) - Standard Procedure).

2. CHECK RIGHT REAR SPEAKER

1. Make sure one of the front doors is still open.
2. Using the scan tool, erase the DTCs.
3. Turn the ignition off.
4. Disconnect the Right Rear Speaker harness connector from the Right Rear Speaker.
5. Turn the ignition on.
6. Turn the radio on.
7. Using the scan tool, read the active Radio DTCs.

Does the scan tool read: B140D-FRONT RIGHT AUDIO SPEAKER OUTPUT CIRCUIT LOW?

Yes

- Go To 3

No

- Replace the Right Rear Speaker in accordance with the Service Information. .
- Perform the BODY VERIFICATION TEST. (Refer to 28 - DTC-Based Diagnostics/MODULE, Totally Integrated Power (TIPM) - Standard Procedure).

3. CHECK THE (X206) RIGHT REAR SPEAKER (+) CIRCUIT FOR A SHORT TO GROUND

1. Turn the ignition off.
2. Disconnect the Radio C1 harness connector.
3. Measure the resistance between ground and the (X206) Right Rear Speaker (+) circuit.

Is the resistance below 5.0 Ohms?

Yes

- Repair the (X206) Right Rear Speaker (+) circuit for a short to ground.
- Perform the BODY VERIFICATION TEST. (Refer to 28 - DTC-Based Diagnostics/MODULE, Totally Integrated Power (TIPM) - Standard Procedure).

No

- Go To 4

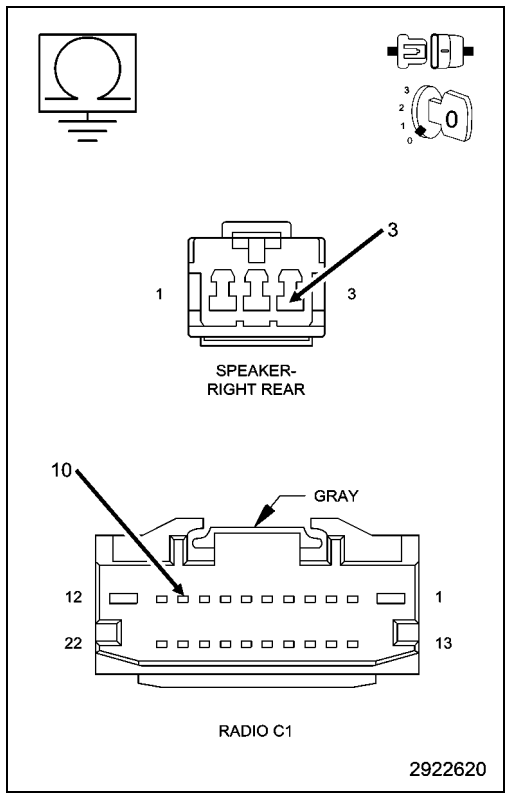

4. CHECK THE (X296) RIGHT REAR SPEAKER (-) CIRCUIT FOR A SHORT TO GROUND

1. Measure the resistance between ground and the (X296) Right Rear Speaker (-) circuit.

Is the resistance below 5.0 Ohms?

Yes

- Repair the (X296) Right Rear Speaker (-) circuit for a short to ground.
- Perform the BODY VERIFICATION TEST. (Refer to 28 - DTC-Based Diagnostics/MODULE, Totally Integrated Power (TIPM) - Standard Procedure).

No

- Replace the Radio in accordance with the Service Information.
- Perform the BODY VERIFICATION TEST. (Refer to 28 - DTC-Based Diagnostics/MODULE, Totally Integrated Power (TIPM) - Standard Procedure).

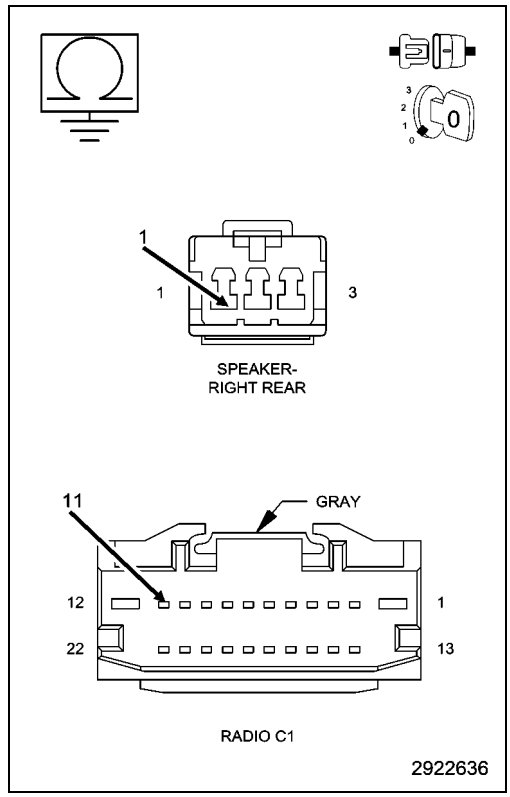

B140D-REAR RIGHT AUDIO SPEAKER OUTPUT CIRCUIT LOW - PREMIUM

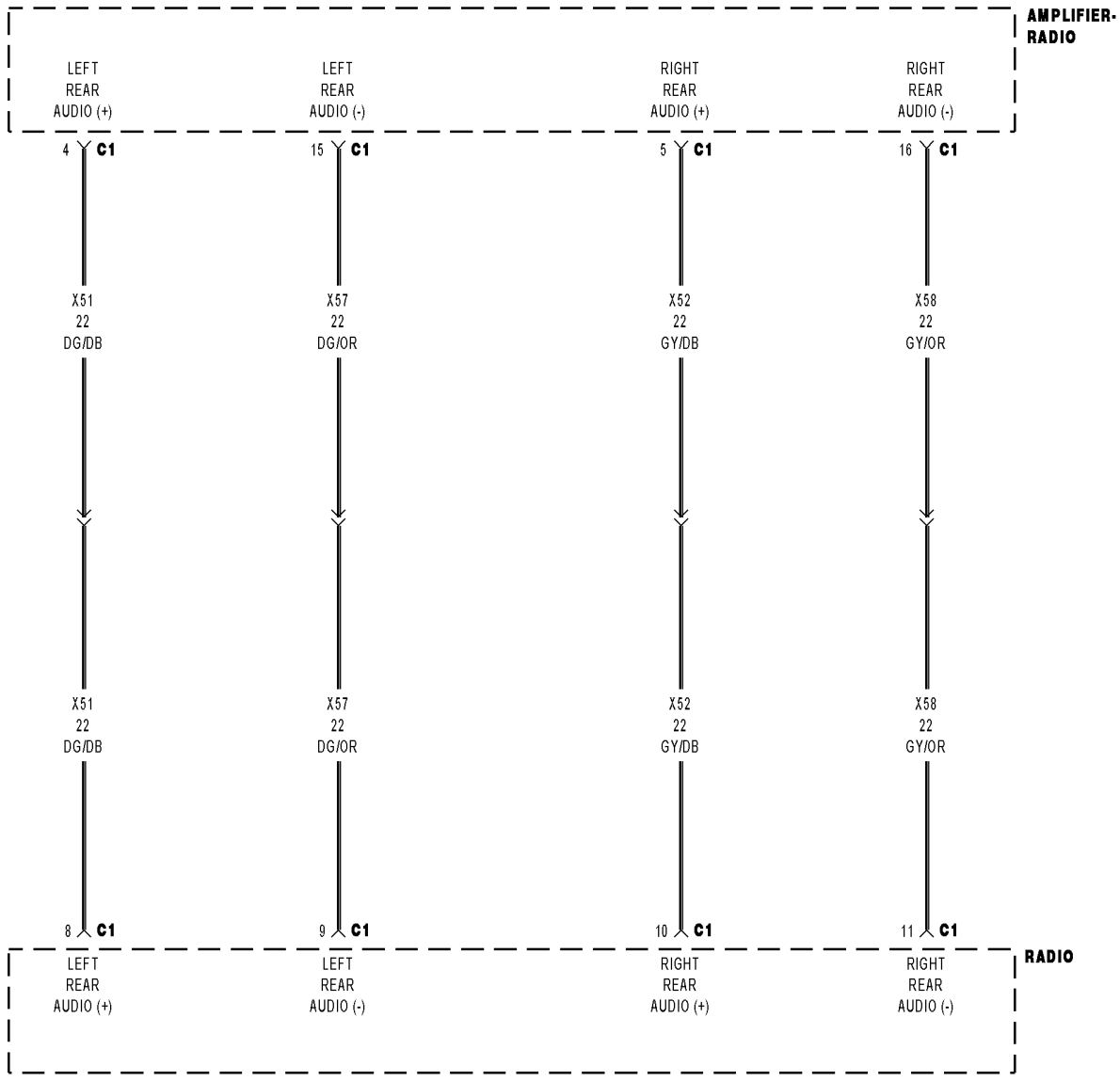

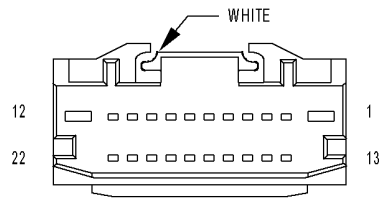

AMPLIFIER-
RADIO C1

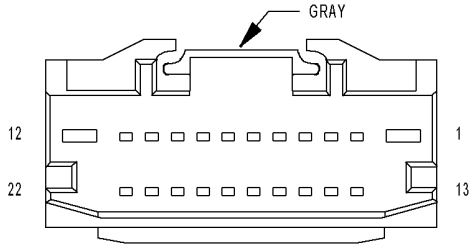

RADIO C1

02926445

NOTE: There are two versions of the B140D DTC test. In order to select the proper test you must know if the vehicle is equipped with an Amplifier. If the vehicle is equipped with an Amplifier use the B140D-PREMIUM test. If the vehicle is not equipped with an Amplifier use the B140D-BASE test.

For a complete wiring diagram, **refer to the Wiring Information**.

Theory of Operation

The (X52) Right Rear Audio (+) circuit and the (X58) Right Rear Audio (-) circuit are outputs of the Radio. The Radio controls and monitors these circuits for a concern.

For a detailed description of the Audio System. (Refer to 08 - Electrical/8A - Audio and Video - Description).

For additional information regarding the operation of the Audio System. (Refer to 08 - Electrical/8A - Audio and Video - Operation).

- **When Monitored:**
  With the Radio on.
- **Set Condition:**
  The Radio detects a short to ground condition on the audio output circuit.

Possible Causes
(X52) RIGHT REAR AUDIO(+) CIRCUIT SHORTED TO GROUND
(X58) RIGHT REAR AUDIO(-) CIRCUIT SHORTED TO GROUND
AMPLIFER
RADIO

1. CHECK FOR AN INTERMITTENT CONDITION

1. Turn the ignition on and open one of the front doors.

NOTE: A front door must remain open whenever checking or erasing Radio DTCs.

2. Using the scan tool, record and erase the Radio DTCs.
3. Turn the Radio on.
4. Adjust the speakers to the rear and center.
5. Using the scan tool, read the active Radio DTCs.

Does the scan tool read: B140D-REAR RIGHT AUDIO SPEAKER OUTPUT CIRCUIT LOW?

Yes

- Go To 2

No

- Test complete, the condition or conditions that originally set this DTC are not present at this time. Using the wiring diagrams as a guide, check all related splices and connectors for signs of water intrusion, corrosion, pushed out or bent terminals and correct pin tension.
- Perform the BODY VERIFICATION TEST. (Refer to 28 - DTC-Based Diagnostics/MODULE, Totally Integrated Power (TIPM) - Standard Procedure).

2. CHECK THE AMPLIFIER

1. Make sure one of the front doors is still open.
2. Using the scan tool, erase the DTCs.
3. Turn the ignition off.
4. Disconnect the Amplifier C1 harness connector.
5. Turn the ignition on.
6. Turn the radio on.
7. Using the scan tool, read the active Radio DTCs.

Does the scan tool read: B140D-FRONT RIGHT AUDIO SPEAKER OUTPUT CIRCUIT LOW?

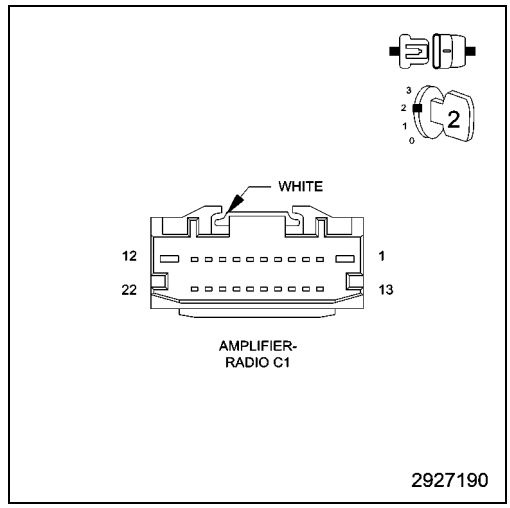

Yes

- Go To 3

No

- Replace the Amplifier in accordance with the Service Information.
- Perform the BODY VERIFICATION TEST. (Refer to 28 - DTC-Based Diagnostics/MODULE, Totally Integrated Power (TIPM) - Standard Procedure).

3. CHECK THE (X52) RIGHT REAR AUDIO (+) CIRCUIT FOR A SHORT TO GROUND

1. Turn the ignition off.
2. Disconnect the Radio C1 harness connector.
3. Measure the resistance between ground and the (X52) Right Rear Speaker (+) circuit.

Is the resistance below 5.0 Ohms?

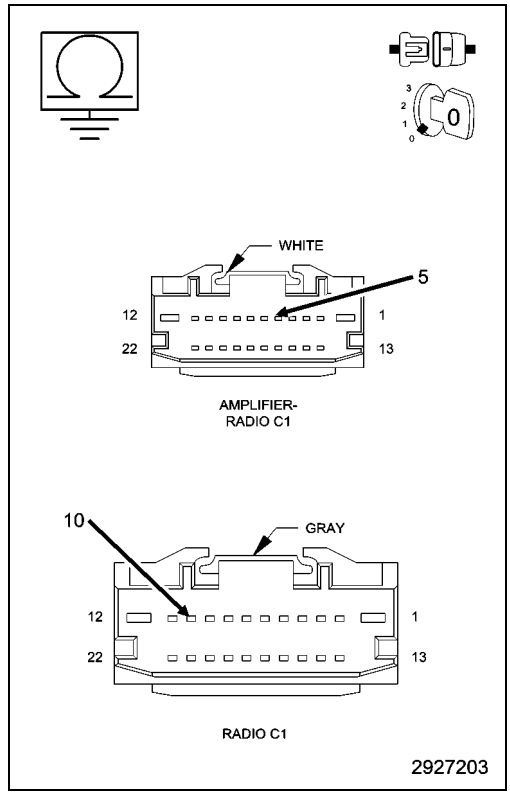

Yes

- Repair the (X52) Right Rear Audio (+) circuit for a short to ground.
- Perform the BODY VERIFICATION TEST. (Refer to 28 - DTC-Based Diagnostics/MODULE, Totally Integrated Power (TIPM) - Standard Procedure).

No

- Go To 4

4. CHECK THE (X58) RIGHT REAR AUDIO (-) CIRCUIT FOR A SHORT TO GROUND

1. Measure the resistance between ground and the (X58) Right Rear Audio (-) circuit.

Is the resistance below 5.0 Ohms?

Yes

- Repair the (X58) Right Rear Audio (-) circuit for a short to ground.
- Perform the BODY VERIFICATION TEST. (Refer to 28 - DTC-Based Diagnostics/MODULE, Totally Integrated Power (TIPM) - Standard Procedure).

No

- Replace the Radio in accordance with the Service Information.
- Perform the BODY VERIFICATION TEST. (Refer to 28 - DTC-Based Diagnostics/MODULE, Totally Integrated Power (TIPM) - Standard Procedure).

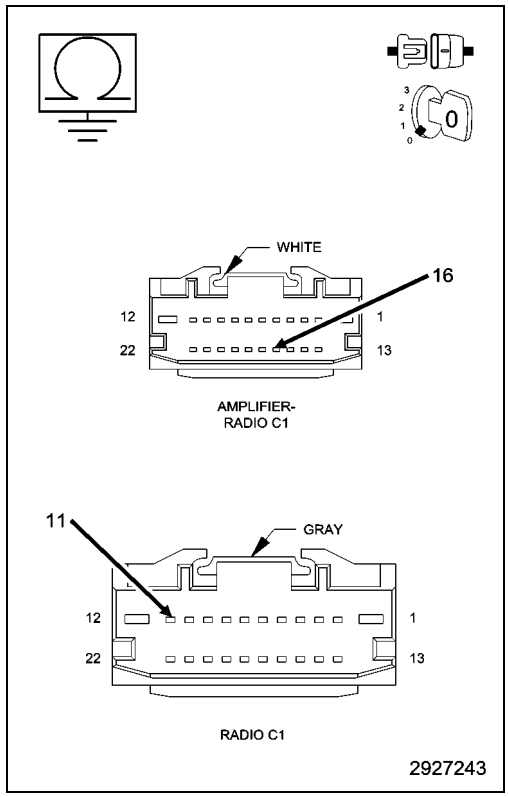

B140E-REAR RIGHT AUDIO SPEAKER OUTPUT CIRCUIT HIGH - BASE

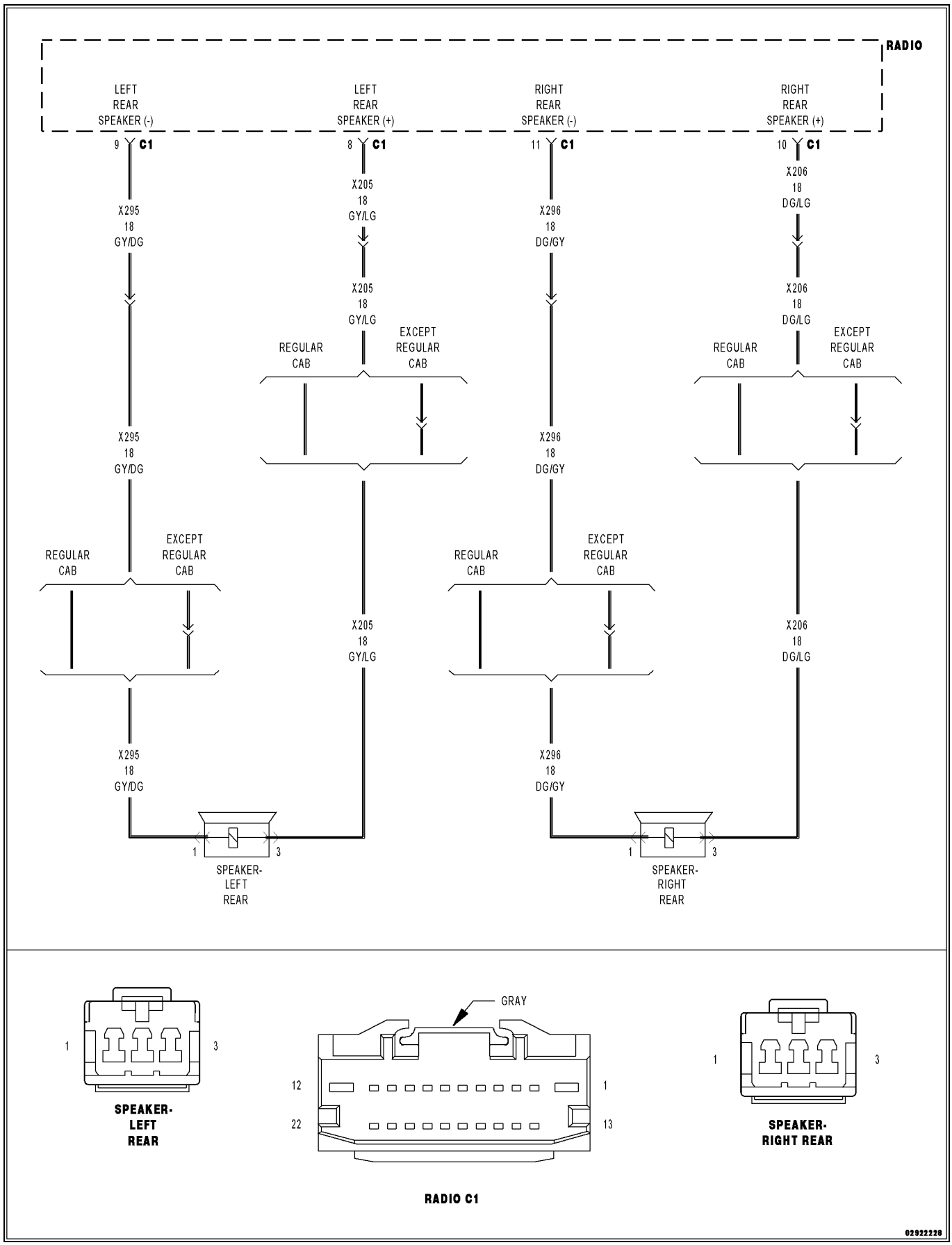

For a complete wiring diagram, **refer to the Wiring Information**.

NOTE: There are two versions of the B140E DTC test. In order to select the proper test you must know if the vehicle is equipped with an Amplifier. If the vehicle is equipped an with Amplifier use the B140E-PREMIUM test. If the vehicle is not equipped with an Amplifier use the B140E-BASE test.

Theory of Operation

The (X206) Right Rear Speaker (+) circuit and the (X296) Right Rear Speaker (-) circuit are outputs of the Radio. The Radio controls and monitors these circuits for a concern.

For a detailed description of the Audio System. (Refer to 08 - Electrical/8A - Audio and Video - Description).

For additional information regarding the operation of the Audio System. (Refer to 08 - Electrical/8A - Audio and Video - Operation).

- **When Monitored:**
  With the Radio on.
- **Set Condition:**
  The Radio detects a short to battery condition on the speaker output circuit.

Possible Causes
(X206) RIGHT REAR SPEAKER (+) CIRCUIT SHORTED TO VOLTAGE
(X296) RIGHT REAR SPEAKER (-) CIRCUIT SHORTED TO VOLTAGE
RADIO

1. CHECK FOR AN INTERMITTENT CONDITION

1. Turn the ignition on and open one of the front doors.

NOTE: A front door must remain open whenever checking or erasing Radio DTCs.

2. Using the scan tool, record and erase the Radio DTCs.
3. Turn the Radio on.
4. Adjust the speakers to the rear and center.
5. Using the scan tool, read the active Radio DTCs.

Does the scan tool read: B140E-REAR RIGHT AUDIO SPEAKER OUTPUT CIRCUIT HIGH?

Yes

- Go To 2

No

- Test complete, the condition or conditions that originally set this DTC are not present at this time. Using the wiring diagrams as a guide, check all related splices and connectors for signs of water intrusion, corrosion, pushed out or bent terminals and correct pin tension.
- Perform the BODY VERIFICATION TEST. (Refer to 28 - DTC-Based Diagnostics/MODULE, Totally Integrated Power (TIPM) - Standard Procedure).

2. CHECK FOR VOLTAGE ON THE (X206) RIGHT REAR SPEAKER (+) CIRCUIT

1. Turn the ignition off.
2. Disconnect the Radio C1 harness connector.
3. Turn the ignition on.
4. Measure the voltage between ground and the (X206) Right Rear Speaker (+) circuit.

Is there any voltage present?

Yes

- Repair the (X206) Right Rear Speaker (+) circuit for a short to voltage.
- Perform the BODY VERIFICATION TEST. (Refer to 28 - DTC-Based Diagnostics/MODULE, Totally Integrated Power (TIPM) - Standard Procedure).

No

- Go To 3

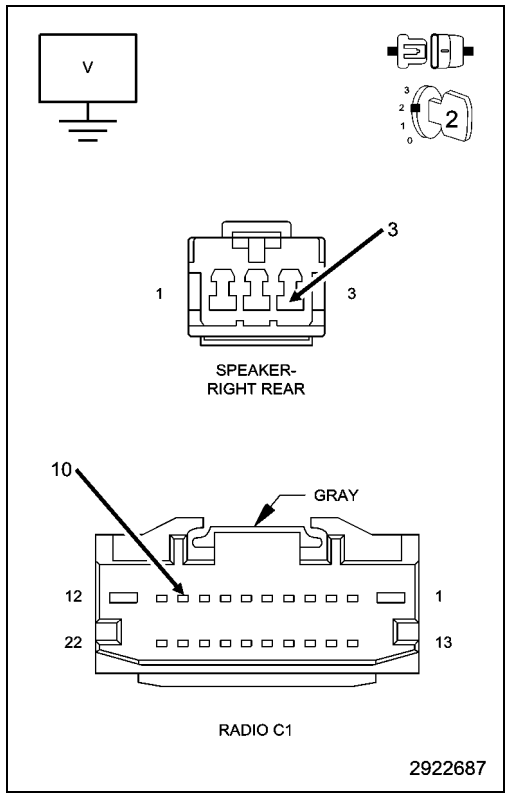

3. CHECK FOR VOLTAGE ON THE (X296) RIGHT REAR SPEAKER (-) CIRCUIT

1. Measure the voltage between ground and the (X296) Right Rear Speaker (-) circuit.

Is there any voltage present?

Yes

- Repair the (X296) Right Rear Speaker (-) circuit for a short to voltage.
- Perform the BODY VERIFICATION TEST. (Refer to 28 - DTC-Based Diagnostics/MODULE, Totally Integrated Power (TIPM) - Standard Procedure).

No

- Replace the Radio in accordance with the Service Information.
- Perform the BODY VERIFICATION TEST. (Refer to 28 - DTC-Based Diagnostics/MODULE, Totally Integrated Power (TIPM) - Standard Procedure).

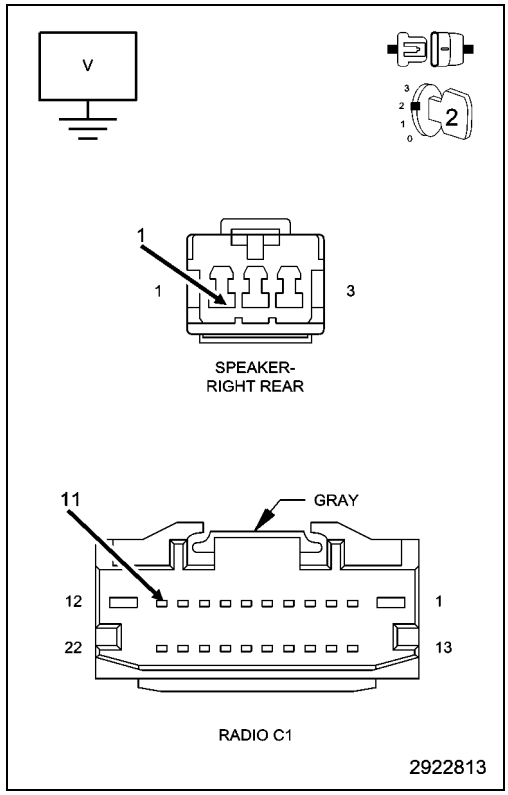

B140E-REAR RIGHT AUDIO SPEAKER OUTPUT CIRCUIT HIGH - PREMIUM

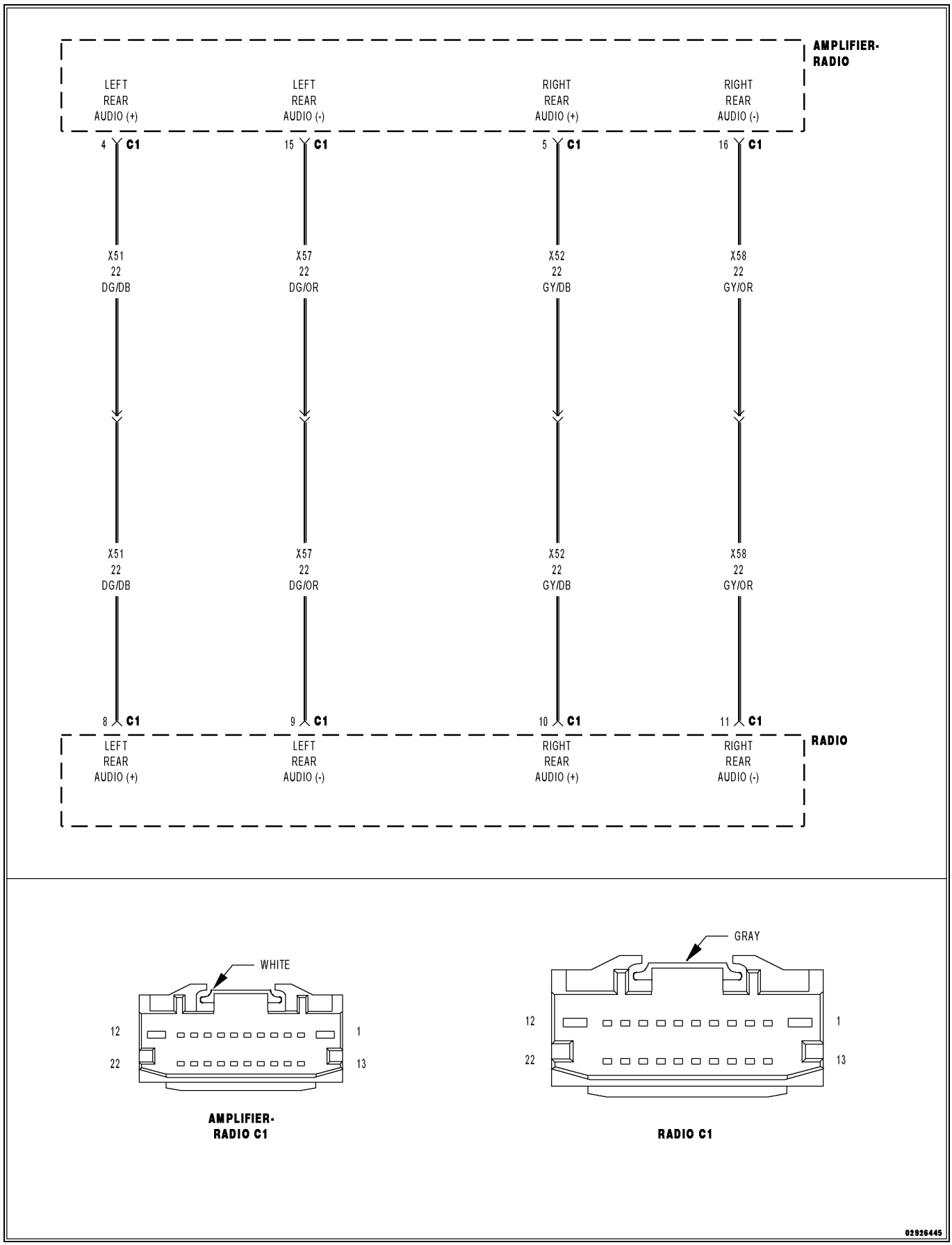

For a complete wiring diagram, **refer to the Wiring Information**.

NOTE: There are two versions of the B140E DTC test. In order to select the proper test you must know if the vehicle is equipped with an Amplifier. If the vehicle is equipped with an Amplifier use the B140E-PREMIUM test. If the vehicle is not equipped with an Amplifier use the B140E-BASE test.

Theory of Operation

The (X52) Right Rear Audio (+) circuit and the (X58) Right Rear Audio (-) circuit are outputs of the Radio. The Radio controls and monitors these circuits for a concern.

For a detailed description of the Audio System. (Refer to 08 - Electrical/8A - Audio and Video - Description).

For additional information regarding the operation of the Audio System. (Refer to 08 - Electrical/8A - Audio and Video - Operation).

- **When Monitored:**
  With the Radio on.
- **Set Condition:**
  The Radio detects a short to battery condition on the audio output circuit.

Possible Causes
(X52) RIGHT REAR AUDIO (+) CIRCUIT SHORTED TO VOLTAGE
(X58) RIGHT REAR AUDIO (-) CIRCUIT SHORTED TO VOLTAGE
RADIO

1. CHECK FOR AN INTERMITTENT CONDITION

1. Turn the ignition on and open one of the front doors.

NOTE: A front door must remain open whenever checking or erasing Radio DTCs.

2. Using the scan tool, record and erase the Radio DTCs.
3. Turn the Radio on.
4. Adjust the speakers to the rear and center.
5. Using the scan tool, read the active Radio DTCs.

Does the scan tool read: B140E-REAR RIGHT AUDIO SPEAKER OUTPUT CIRCUIT HIGH?

Yes

- Go To 3

No

- Test complete, the condition or conditions that originally set this DTC are not present at this time. Using the wiring diagrams as a guide, check all related splices and connectors for signs of water intrusion, corrosion, pushed out or bent terminals and correct pin tension.
- Perform the BODY VERIFICATION TEST. (Refer to 28 - DTC-Based Diagnostics/MODULE, Totally Integrated Power (TIPM) - Standard Procedure).

2. CHECK THE AMPLIFIER

1. Make sure one of the front doors is still open.
2. Using the scan tool, erase the DTCs.
3. Turn the ignition off.
4. Disconnect the Amplifier C1 harness connector from the Amplifier.
5. Turn the ignition on.
6. Turn the radio on.
7. Using the scan tool, read the active Radio DTCs.

Does the scan tool read: B140E-REAR RIGHT AUDIO SPEAKER OUTPUT CIRCUIT HIGH?

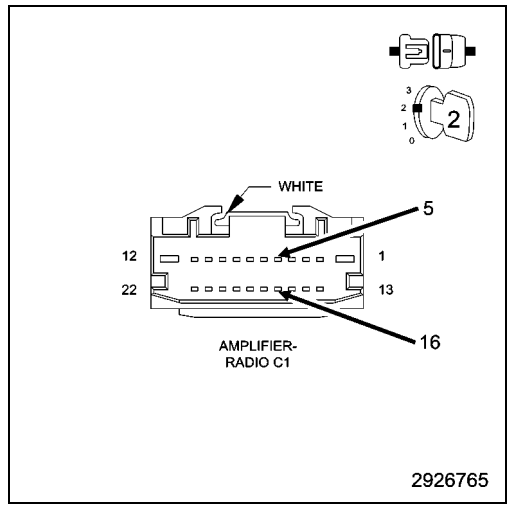

Yes

- Go To 3

No

- Replace the Amplifier in accordance with the Service Information.
- Perform the BODY VERIFICATION TEST. (Refer to 28 - DTC-Based Diagnostics/MODULE, Totally Integrated Power (TIPM) - Standard Procedure).

3. CHECK FOR VOLTAGE ON THE (X52) RIGHT REAR AUDIO (+) CIRCUIT

1. Turn the ignition off.
2. Disconnect the Radio C1 harness connector.
3. Turn the ignition on.
4. Measure the voltage between ground and the (X52) Right Rear Audio (+) circuit.

Is there any voltage present?

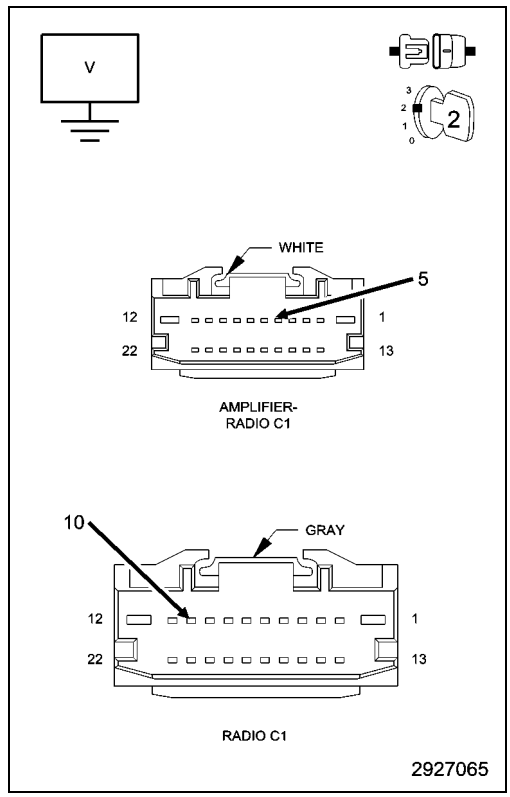

Yes

- Repair the (X52) Right Rear Audio (+) circuit for a short to voltage.
- Perform the BODY VERIFICATION TEST. (Refer to 28 - DTC-Based Diagnostics/MODULE, Totally Integrated Power (TIPM) - Standard Procedure).

No

- Go To 4

4. CHECK FOR VOLTAGE ON THE (X58) RIGHT REAR AUDIO (-) CIRCUIT

1. Measure the voltage between ground and the (X58) Right Rear Audio (-) circuit.

Is there any voltage present?

Yes

- Repair the (X58) Right Rear Audio (-) circuit for a short to voltage.
- Perform the BODY VERIFICATION TEST. (Refer to 28 - DTC-Based Diagnostics/MODULE, Totally Integrated Power (TIPM) - Standard Procedure).

No

- Replace the Radio in accordance with the Service Information.
- Perform the BODY VERIFICATION TEST. (Refer to 28 - DTC-Based Diagnostics/MODULE, Totally Integrated Power (TIPM) - Standard Procedure).

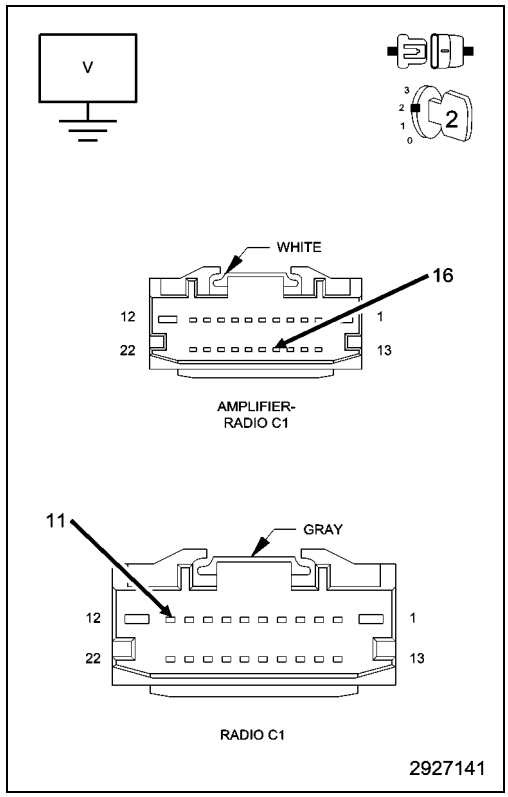

B140F-REAR RIGHT AUDIO SPEAKER OUTPUT CIRCUIT OPEN - BASE

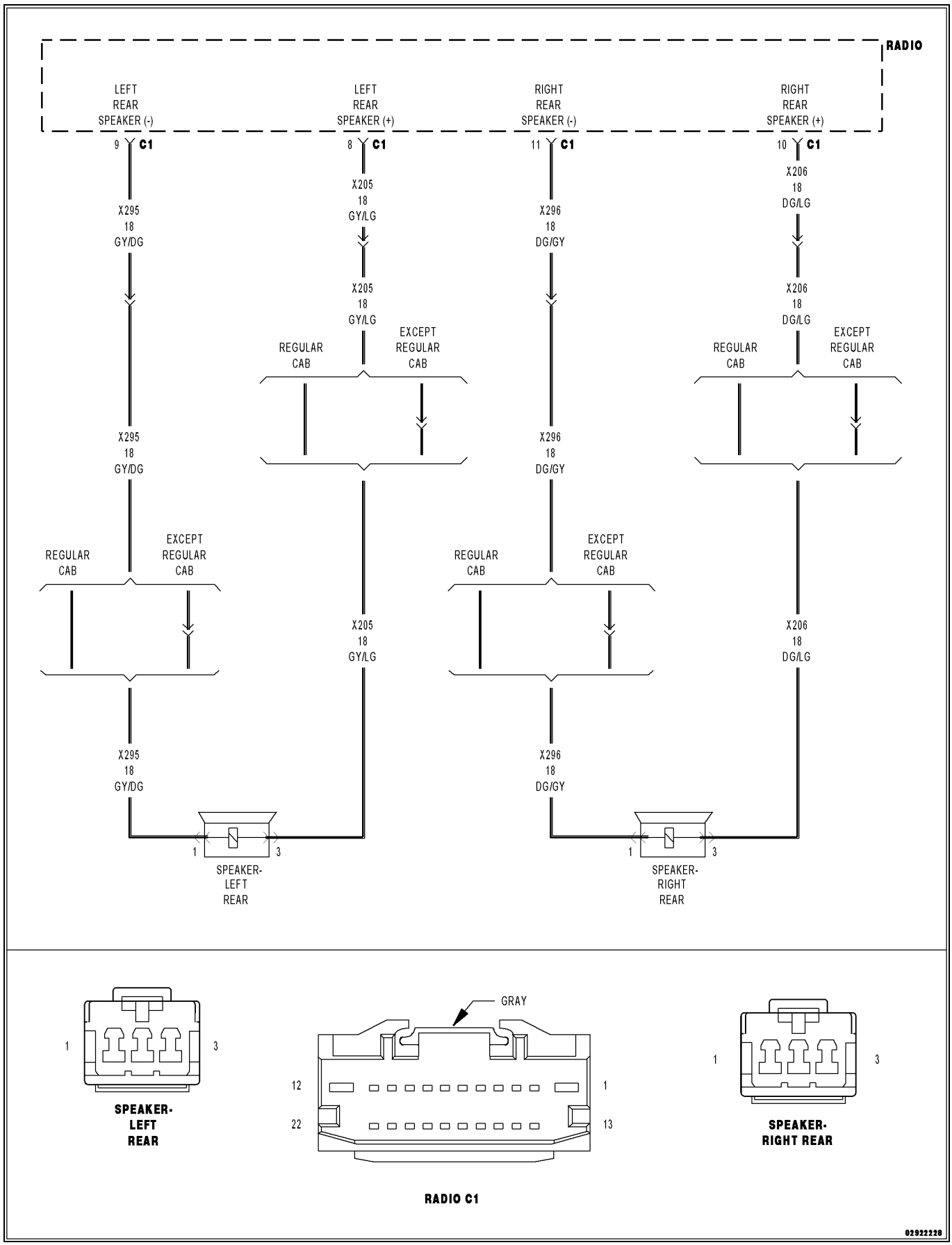

For a complete wiring diagram, **refer to the Wiring Information**.

NOTE: There are two versions of the B140F DTC test. In order to select the proper test you must know if the vehicle is equipped with an Amplifier. If the vehicle is equipped with an Amplifier use the B140F-PREMIUM test. If the vehicle is not equipped with an Amplifier use the B140F-BASE test.

Theory of Operation

The (X206) Right Rear Speaker (+) circuit and the (X296) Right Rear Speaker (-) circuit are outputs of the Radio. The Radio controls and monitors these circuits for a concern.

For a detailed description of the Audio System. (Refer to 08 - Electrical/8A - Audio and Video - Description).

For additional information regarding the operation of the Audio System. (Refer to 08 - Electrical/8A - Audio and Video - Operation).

- **When Monitored:**
  With the Radio on.
- **Set Condition:**
  The Radio detects an open condition on the speaker output circuit.

Possible Causes
(X206) RIGHT REAR SPEAKER (+) CIRCUIT OPEN
(X296) RIGHT REAR SPEAKER (-) CIRCUIT OPEN
RIGHT REAR SPEAKER

1. CHECK FOR AN INTERMITTENT CONDITION

1. Turn the ignition on and open one of the front doors.

NOTE: A front door must remain open whenever checking or erasing Radio DTCs.

2. Using the scan tool, record and erase the Radio DTCs.
3. Turn the Radio on.
4. Adjust the speakers to the rear and center.
5. Using the scan tool, read the active Radio DTCs.

Does the scan tool read: B140F-REAR RIGHT AUDIO SPEAKER OUTPUT CIRCUIT LOW?

Yes

- Go To 2

No

- Test complete, the condition or conditions that originally set this DTC are not present at this time. Using the wiring diagrams as a guide, check all related splices and connectors for signs of water intrusion, corrosion, pushed out or bent terminals and correct pin tension.
- Perform the BODY VERIFICATION TEST. (Refer to 28 - DTC-Based Diagnostics/MODULE, Totally Integrated Power (TIPM) - Standard Procedure).

2. CHECK THE RIGHT REAR SPEAKER

1. Turn the ignition off.
2. Disconnect the Right Rear Speaker.
3. Measure the resistance of the speaker between the two terminals.

NOTE: The graphic shows the connector for reference only. Measure between the speaker terminals.

Is the resistance above 5.0 Ohms?

Yes

- Replace the Right Rear Speaker in accordance with the Service Information.
- Perform the BODY VERIFICATION TEST. (Refer to 28 - DTC-Based Diagnostics/MODULE, Totally Integrated Power (TIPM) - Standard Procedure).

No

- Go To 3

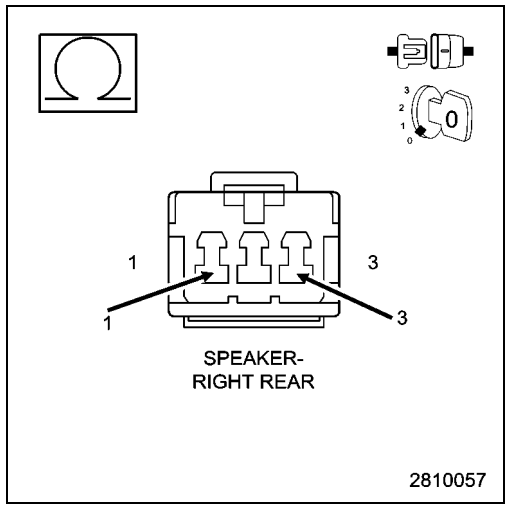

3. CHECK THE (X206) RIGHT REAR SPEAKER (+) CIRCUIT FOR AN OPEN

1. Disconnect the Radio C1 harness connector.
2. Measure the resistance of the (X206) Right Rear Speaker (+) circuit between the Radio C1 connector and the Right Rear Speaker harness connector.

Is the resistance below 5.0 Ohms?

Yes

- Go To 4

No

- Repair an open in the (X206) Right Rear Speaker (+) circuit.
- Perform the BODY VERIFICATION TEST. (Refer to 28 - DTC-Based Diagnostics/MODULE, Totally Integrated Power (TIPM) - Standard Procedure).

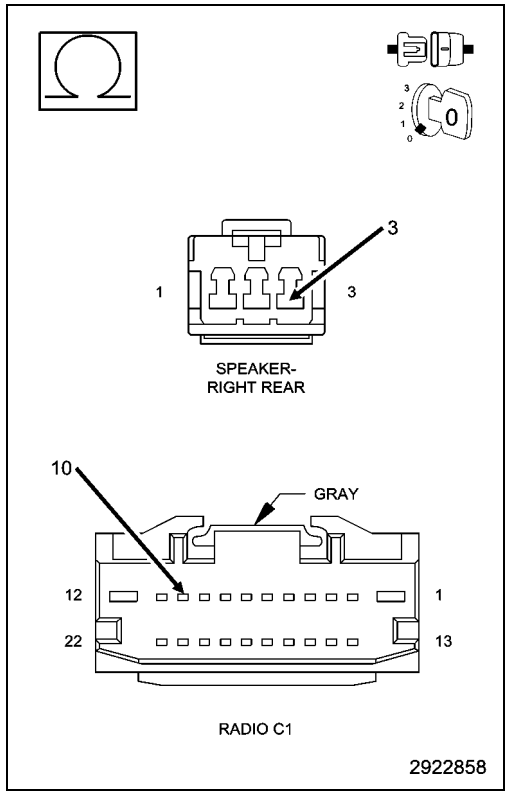

4. CHECK THE (X296) RIGHT REAR SPEAKER (-) CIRCUIT FOR AN OPEN

1. Measure the resistance of the (X296) Right Rear Speaker (-) circuit between the Radio C1 connector, and the Right Rear Speaker harness connector.

Is the resistance below 5.0 Ohms?

Yes

- Replace the Radio in accordance with the Service Information.
- Perform the BODY VERIFICATION TEST. (Refer to 28 - DTC-Based Diagnostics/MODULE, Totally Integrated Power (TIPM) - Standard Procedure).

No

- Repair an open in the (X296) Right Rear Speaker (-) circuit.
- Perform the BODY VERIFICATION TEST. (Refer to 28 - DTC-Based Diagnostics/MODULE, Totally Integrated Power (TIPM) - Standard Procedure).

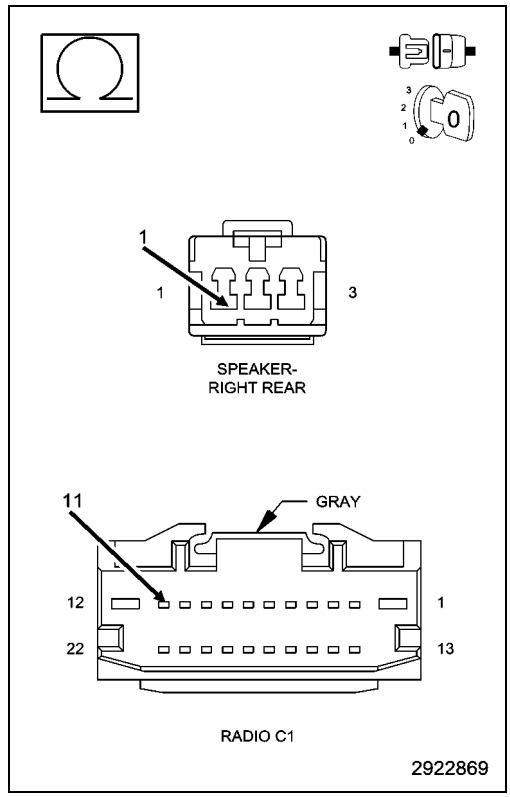

B140F-REAR RIGHT AUDIO SPEAKER OUTPUT CIRCUIT OPEN - PREMIUM

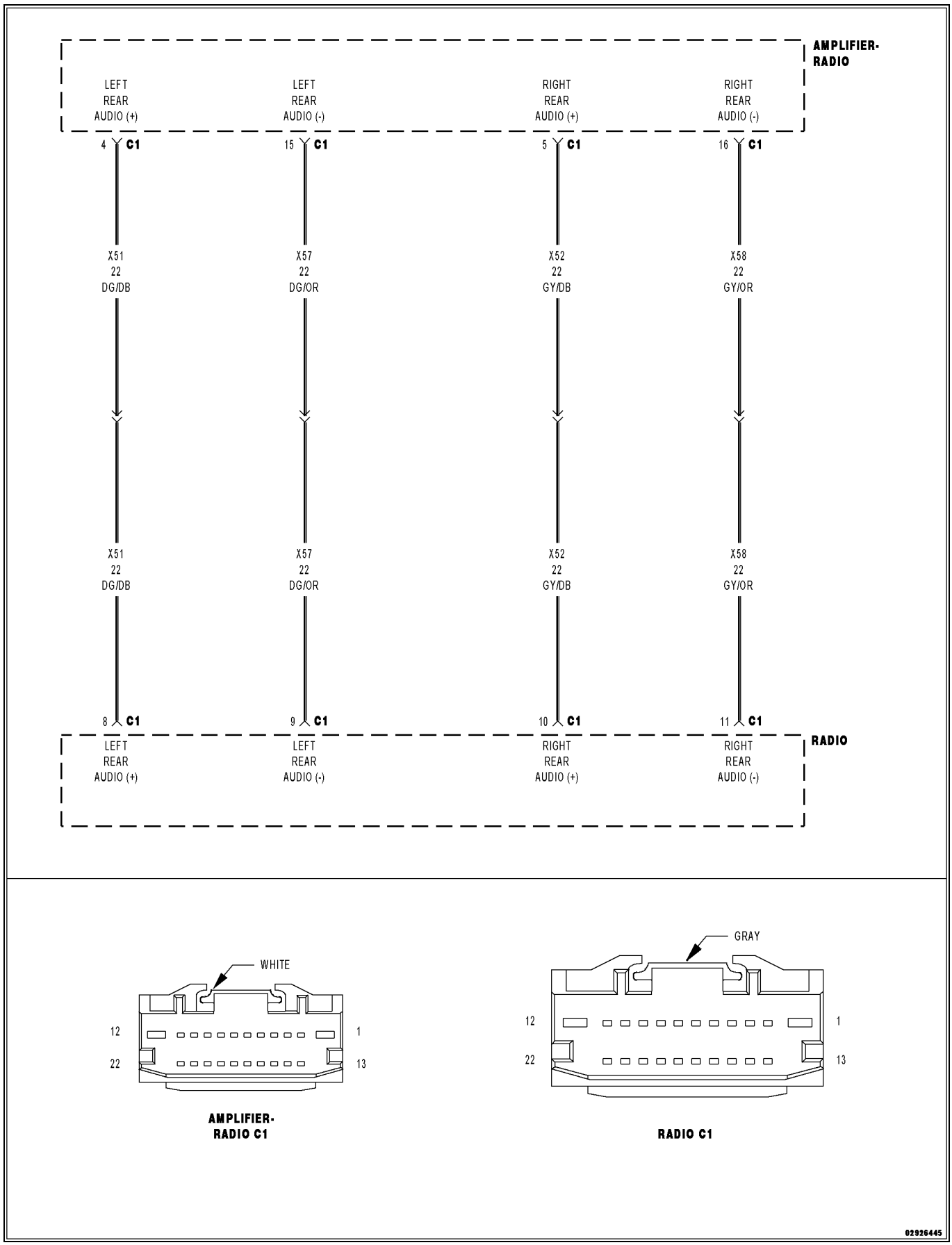

For a complete wiring diagram, **refer to the Wiring Information**.

NOTE: There are two versions of the B140F DTC test. In order to select the proper test you must know if the vehicle is equipped with an Amplifier. If the vehicle is equipped with an Amplifier use the B140F-PREMIUM test. If the vehicle is not equipped with an Amplifier use the B140F-BASE test.

Theory of Operation

The (X52) Right Rear Audio (+) circuit and the (X58) Right Rear Audio (-) circuit are outputs of the Radio. The Radio controls and monitors these circuits for a concern.

For a detailed description of the Audio System. (Refer to 08 - Electrical/8A - Audio and Video - Description).

For additional information regarding the operation of the Audio System. (Refer to 08 - Electrical/8A - Audio and Video - Operation).

- **When Monitored:**
  With the Radio on.
- **Set Condition:**
  The Radio detects an open condition on the audio output circuit.

Possible Causes
(X52) RIGHT REAR AUDIO (+) CIRCUIT OPEN
(X58) RIGHT REAR AUDIO (-) CIRCUIT OPEN
AMPLIFIER
RADIO

1. CHECK FOR AN INTERMITTENT CONDITION

1. Turn the ignition on and open one of the front doors.

NOTE: A front door must remain open whenever checking or erasing Radio DTCs.

2. Using the scan tool, record and erase the Radio DTCs.
3. Turn the Radio on.
4. Adjust the speakers to the rear and center.
5. Using the scan tool, read the active Radio DTCs.

Does the scan tool read: B140F-REAR RIGHT AUDIO SPEAKER OUTPUT CIRCUIT LOW?

Yes

- Go To 2

No

- Test complete, the condition or conditions that originally set this DTC are not present at this time. Using the wiring diagrams as a guide, check all related splices and connectors for signs of water intrusion, corrosion, pushed out or bent terminals and correct pin tension.
- Perform the BODY VERIFICATION TEST. (Refer to 28 - DTC-Based Diagnostics/MODULE, Totally Integrated Power (TIPM) - Standard Procedure).

2. CHECK THE AMPLIFIER

1. Turn the ignition off.
2. Disconnect the Amplifier C1 harness connector.
3. Connect a jumper wire between the (X52) Left Rear Audio (+) circuit and the (X58) Left Rear Audio (-) circuits.
4. Turn the ignition on.
5. Turn the Radio on.
6. Adjust the speakers to the rear and center.
7. Using the scan tool, read the active Radio DTCs.

Does the scan tool read: B140F-REAR RIGHT AUDIO SPEAKER OUTPUT CIRCUIT OPEN?

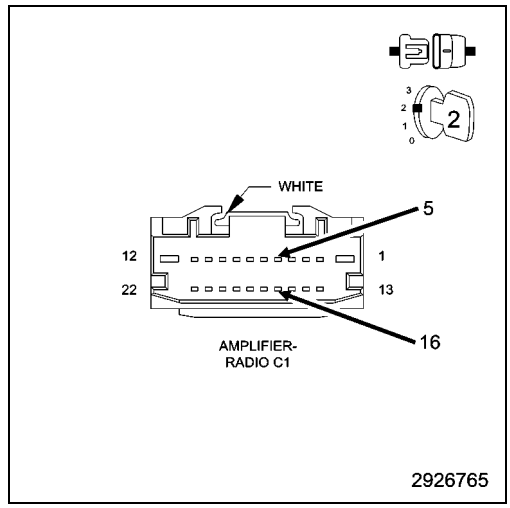

Yes

- Go To 3

No

- Replace the Amplifier in accordance with the Service Information.
- Perform the BODY VERIFICATION TEST. (Refer to 28 - DTC-Based Diagnostics/MODULE, Totally Integrated Power (TIPM) - Standard Procedure).

3. CHECK THE (X52) RIGHT REAR AUDIO (+) CIRCUIT FOR AN OPEN

1. Turn the ignition off.
2. Disconnect the Radio C1 harness connector.
3. Measure the resistance of the (X52) Right Rear Audio (+) circuit between the Radio C1 connector and the Amplifier C1 harness connector.

Is the resistance below 5.0 Ohms?

Yes

- Go To 4

No

- Repair an open in the (X52) Right Rear Audio (+) circuit.
- Perform the BODY VERIFICATION TEST. (Refer to 28 - DTC-Based Diagnostics/MODULE, Totally Integrated Power (TIPM) - Standard Procedure).

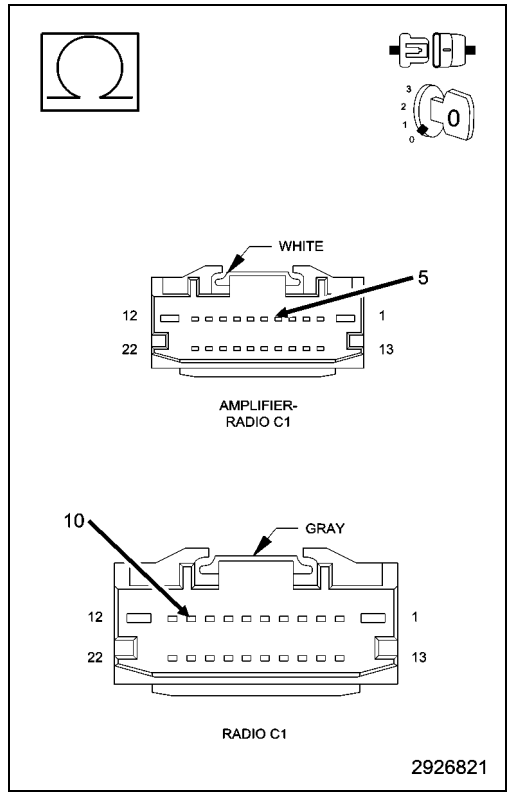

4. CHECK THE (X58) RIGHT REAR AUDIO (-) CIRCUIT FOR AN OPEN

1. Measure the resistance of the (X58) Right Rear Audio (-) circuit between the Radio C1 harness connector, and the Amplifier C1 harness connector.

Is the resistance below 5.0 Ohms?

Yes

- Replace the Radio in accordance with the Service Information.
- Perform the BODY VERIFICATION TEST. (Refer to 28 - DTC-Based Diagnostics/MODULE, Totally Integrated Power (TIPM) - Standard Procedure).

No

- Repair an open in the (X58) Right Rear Audio (-) circuit.
- Perform the BODY VERIFICATION TEST. (Refer to 28 - DTC-Based Diagnostics/MODULE, Totally Integrated Power (TIPM) - Standard Procedure).

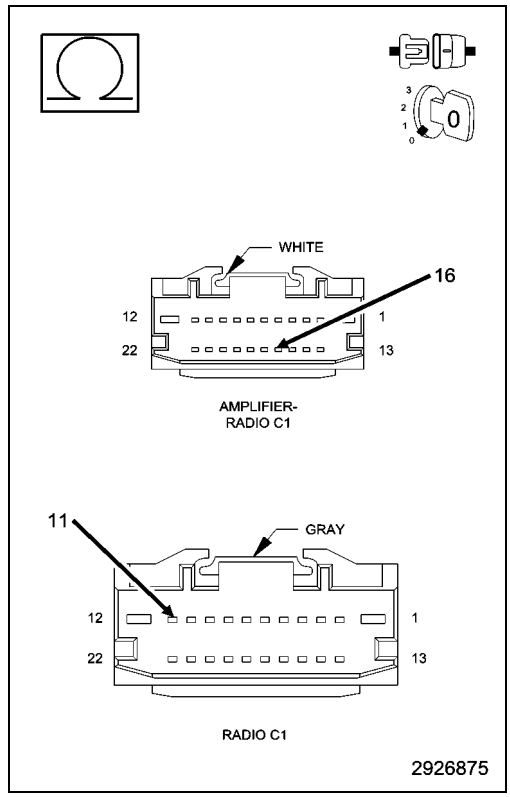

B1420-AUDIO CASSETTE ERROR/INOPERABLE CASSETTE

For a complete wiring diagram, **refer to the Wiring Information**.

- **When Monitored:**
  Continuously with the ignition on and the radio Cassette player turned on.
- **Set Condition:**
  The code will set when a damaged Cassette is placed in the Cassette Player.

Possible Causes
CASSETTE READ FAILURE

1. RADIO

1. Replace the problem Cassette with a good, clean, undamaged, cassette.
2. Turn the radio cassette player on.
3. With the scan tool, read DTCs.

Does the scan tool display: B1420: AUDIO CASSETTE ERROR/INOPERABLE CASSETTE?

Yes

- Eject the inoperative cassette and replace the Radio/Cassette Player in accordance with the service information. (Refer to 08 - Electrical/8A - Audio and Video/RADIO - Removal).
- Perform the BODY VERIFICATION TEST. (Refer to 28 - DTC-Based Diagnostics/MODULE, Totally Integrated Power (TIPM) - Standard Procedure).

No

- Test Complete.

B1421-AUDIO CD READ ERROR/INOPERABLE DISC

For a complete wiring diagram, **refer to the Wiring Information**.

- **When Monitored:**
  Continuously with the ignition on and the radio CD player turned on.
- **Set Condition:**
  The code will set if a CD is scratched, damaged, or contains corrupt data.

Possible Causes
CD READ FAILURE

1. RADIO

1. Replace the problem CD with a good, clean, unscratched, music CD.
2. Turn the Radio on.
3. With the scan tool, read DTCs.

Does the scan tool display: B1421 Audio CD Read Error/Inoperable Disc?

Yes

- Eject the inoperative CD and replace the Radio in accordance with the Service Information. (Refer to 08 - Electrical/8A - Audio and Video/RADIO - Removal).
- Perform the BODY VERIFICATION TEST. (Refer to 28 - DTC-Based Diagnostics/MODULE, Totally Integrated Power (TIPM) - Standard Procedure).

No

- Test Complete.

B1422-AUDIO DVD READ ERROR/INOPERABLE DISC

For a complete wiring diagram, **refer to the Wiring Information**.

- **When Monitored:**
  Continuously with the ignition on and the Radio/DVD player turned on.
- **Set Condition:**
  The code will set if a DVD is scratched, damaged, or contains corrupt data.

Possible Causes
DVD READ FAILURE

1. RADIO/DVD PLAYER

1. Replace the problem DVD with a good, clean, unscratched DVD.
2. Turn the Radio/DVD player on.
3. With the scan tool, read DTCs.

Does the scan tool display active: B1422-AUDIO DVD READ ERROR/INOPERABLE DISC?

Yes

- Eject the inoperative DVD and replace the Radio/DVD player in accordance with the Service Information. (Refer to 08 - Electrical/8A - Audio and Video/RADIO - Removal).
- Perform the BODY VERIFICATION TEST. (Refer to 28 - DTC-Based Diagnostics/MODULE, Totally Integrated Power (TIPM) - Standard Procedure).

No

- Test Complete.

B1424-IMPROPER DVD-WRONG REGION

For a complete wiring diagram, **refer to the Wiring Information**.

- **When Monitored:**
  Continuously with the ignition on and the Radio/DVD player turned on.
- **Set Condition:**
  The code will set if a DVD is not formatted for the proper region or the Radio/DVD player is programmed for the incorrect region.

Possible Causes
DVD READ FAILURE

1. CHECK THE DVD

1. Replace the problem DVD with a DVD formatted for the proper region.
2. Turn the Radio/DVD player on.
3. With the scan tool, read DTCs.

Does the scan tool display active: B1424-IMPROPER DVD-WRONG REGION?

Yes
- Go To 2

No
- Test Complete.

2. RADIO/DVD PLAYER

1. With the scan tool, verify the Radio/DVD player is programmed for the proper region.
2. With the scan tool, read DTCs.

Does the scan tool display active: B1424-IMPROPER DVD-WRONG REGION?

Yes
- Eject the inoperative DVD and replace the Radio/DVD player in accordance with the Service Information. (Refer to 08 - Electrical/8A - Audio and Video/RADIO - Removal).
- Perform the BODY VERIFICATION TEST. (Refer to 28 - DTC-Based Diagnostics/MODULE, Totally Integrated Power (TIPM) - Standard Procedure)

No
- Test Complete.

■ B1429-RADIO DISPLAY HIGH TEMPERATURE

For a complete wiring diagram, **refer to the Wiring Information**.

- **When Monitored:**
  Continuously with the ignition and Navigation Radio on.
- **Set Condition:**
  The code will set if the temperature inside the display exceeds 70°C (158°F)

Possible Causes
HIGH TEMPERATURE FAILURE

1. VERIFY THAT DTC B1429-RADIO DISPLAY HIGH TEMPERATURE IS ACTIVE

1. With the scan tool, erase the Audio DTCs.
2. Start the engine and allow the engine to reach normal operating temperature.
3. If the vehicle has been in the hot sunlight or extreme cold, move the vehicle indoors and open the doors to allow the inside temperature to stabilize.
4. The radio display should operate to 70°C (158°F).
5. With the scan tool, read the DTCs.

Does the scan tool display, B1429-Radio Display High Temperature?

Yes

- Replace the Radio in accordance with the Service Information.
- Perform the BODY VERIFICATION TEST. (Refer to 28 - DTC-Based Diagnostics/MODULE, Totally Integrated Power (TIPM) - Standard Procedure).

No

- Test Complete.

■ B142A-RADIO UNIT HIGH TEMPERATURE

For a complete wiring diagram, **refer to the Wiring Information**.

- **When Monitored:**
  Continuously with the ignition and Radio on.
- **Set Condition:**
  The code will set if the temperature inside the radio is above 65°C (149°F).

Possible Causes
HIGH TEMPERATURE FAILURE

1. VERIFY THAT DTC B142A-RADIO UNIT HIGH TEMPERATURE IS ACTIVE.

1. With the scan tool, erase the Audio DTCs.
2. Start the engine and allow the engine to reach normal operating temperature.
3. If the vehicle has been in the hot sunlight or extreme cold, move the vehicle indoors and open the doors to allow the inside temperature to stabilize.
4. The Radio should operate between -23°C and 65°C (-10°F and 149°F).
5. With the scan tool, read the DTCs.

Does the scan tool display, B142A-Radio Unit High Temperature?

Yes

- Replace the Radio in accordance with the Service Information.
- Perform the BODY VERIFICATION TEST. (Refer to 28 - DTC-Based Diagnostics/MODULE, Totally Integrated Power (TIPM) - Standard Procedure).

No

- Test Complete.

■ B142D-AUDIO ANTENNA NOT CONNECTED

For a complete wiring diagram, **refer to the Wiring Information**.

- **When Monitored:**
  With the ignition on and the Radio in seek mode.
- **Set Condition:**
  With the Radio in seek mode for two minutes and the Radio does not detect an Antenna connection or does not receive a Radio station signal.

Possible Causes
BAD ANTENNA CONNECTION
OPEN ANTENNA CABLE
RADIO

1. CHECK THE ANTENNA CONNECTIONS

1. Turn the ignition off.
2. Disconnect the Radio Antenna connector.
3. Inspect the Radio Antenna connection.

Was the Antenna connection clean and secure?

Yes
- Go To 2

No
- Repair the Antenna connection as needed.
- Perform the BODY VERIFICATION TEST. (Refer to 28 - DTC-Based Diagnostics/MODULE, Totally Integrated Power (TIPM) - Standard Procedure).

2. CHECK THE ANTENNA AND CABLE

1. Connect the Radio Diagnostic Tool 9977-6-FM to the Antenna connection on the back of the Radio.
2. Make sure one of the front doors is still open.
3. Using the scan tool, erase the DTCs.
4. Turn the ignition on.
5. Turn the Radio on.
6. Using the scan tool, read the active Radio DTCs.

Does this DTC display as active?

Yes
- Go To 3

No
- Repair or replace the Radio in accordance with the Service Information.
- Perform the BODY VERIFICATION TEST. (Refer to 28 - DTC-Based Diagnostics/MODULE, Totally Integrated Power (TIPM) - Standard Procedure).

3. TEST THE ANTENNA CABLE

1. Turn the ignition off.
2. Disconnect the Antenna cable at the base.
3. Connect the appropriate Radio Diagnostic Tool 9977-6-1 or 9977-6-3 to the Antenna cable at the back of the Radio.
4. Connect the appropriate Radio Diagnostic Tool 9977-6-4 or 9977-6-2 to the Antenna cable at the Antenna base.
5. Measure the Resistance across the tool terminals.

Is the resistance above 52.5 Ohms?

Yes

- Use the Radio Diagnostic Tool 9977-6 to locate the open circuit, repair or replace the Antenna cable as necessary.
- Perform the BODY VERIFICATION TEST. (Refer to 28 - DTC-Based Diagnostics/MODULE, Totally Integrated Power (TIPM) - Standard Procedure).

No

- Replace the Antenna base in accordance with the Service Information.
- Perform the BODY VERIFICATION TEST. (Refer to 28 - DTC-Based Diagnostics/MODULE, Totally Integrated Power (TIPM) - Standard Procedure).

B142E-GPS ANTENNA NOT CONNECTED

For a complete wiring diagram, **refer to the Wiring Information**.

- **When Monitored:**
  With the ignition on and the Radio in navigation mode.
- **Set Condition:**
  The Radio does not detect a Global Positioning System (GPS) Antenna connection.

Possible Causes
BAD ANTENNA CONNECTION
RADIO

1. TEST ANTENNA

1. Turn the ignition off.
2. Disconnect the GPS Antenna connector.
3. Inspect the GPS Antenna connection.

Was the Antenna connection clean and secure?

Yes

- Go To 2

No

- Repair the Antenna connection as needed.
- Perform the BODY VERIFICATION TEST. (Refer to 28 - DTC-Based Diagnostics/MODULE, Totally Integrated Power (TIPM) - Standard Procedure).

2. ANTENNA

1. Refer to the Audio System in the service information and test the Antenna in accordance with the service procedure.

Is the Antenna OK?

Yes

- Go To 3

No

- Repair or replace the Antenna assembly as necessary.
- Perform the BODY VERIFICATION TEST. (Refer to 28 - DTC-Based Diagnostics/MODULE, Totally Integrated Power (TIPM) - Standard Procedure).

3. RADIO

NOTE: Reconnect all previously disconnected components.

NOTE: Move vehicle outside approximately 9.14 m (30 ft.) from any structure.

1. Turn the ignition and Radio on.
2. With the scan tool, erase the audio DTCs and operate the navigation system.
3. With the scan tool, read the audio DTCs.

Did this DTC reset?

Yes

- Replace the Radio in accordance with the Service Information.
- Perform the BODY VERIFICATION TEST. (Refer to 28 - DTC-Based Diagnostics/MODULE, Totally Integrated Power (TIPM) - Standard Procedure).

No

- Test Complete.

■ B142F-SATELLITE RADIO ANTENNA NOT CONNECTED

For a complete wiring diagram, **refer to the Wiring Information**.

- **When Monitored:**
  With the ignition on and the Radio in satellite mode.
- **Set Condition:**
  This DTC sets when the Radio does not detect a Satellite Antenna connection.

Possible Causes
BAD ANTENNA CONNECTION
OPEN SATELLITE RADIO ANTENNA CABLE
OPEN SATELLITE RADIO ANTENNA
SATELLITE RADIO RECEIVER

1. CHECK THE ANTENNA CONNECTION

1. Turn the ignition off.
2. Disconnect the Satellite Radio Antenna connector at the rear of the Radio.
3. Inspect the Satellite Radio Antenna connection.

Was the antenna connection clean and secure?

Yes

- Go To 2

No

- Clean and secure the antenna connection as necessary.
- Perform the BODY VERIFICATION TEST. (Refer to 28 - DTC-Based Diagnostics/MODULE, Totally Integrated Power (TIPM) - Standard Procedure).

2. CHECK THE ANTENNA AND CABLE

1. Connect the Radio Diagnostic Tool 9977-6-SAT to the Satellite Antenna connection on the back of the Radio.
2. Make sure one of the front doors is still open.
3. Using the scan tool, erase the DTCs.
4. Turn the ignition on.
5. Turn the Radio on.
6. Using the scan tool, read the active Radio DTCs.

Does the scan tool display: B142F Satellite Radio Antenna Not Connected as Active?

Yes

- Replace the Satellite Radio in accordance with the Service Information.
- Perform the BODY VERIFICATION TEST. (Refer to 28 - DTC-Based Diagnostics/MODULE, Totally Integrated Power (TIPM) - Standard Procedure).

No

- Go To 3

3. TEST THE SATELLITE ANTENNA CABLE

1. Disconnect the Satellite Antenna cable at the Satellie Antenna.
2. Connect the appropriate Radio Diagnostic Tool 9977-6-1 or 9977-6-3 to the Satellite Antenna cable at the back of the Radio.
3. Connect the appropriate Radio Diagnostic Tool 9977-6-4 or 9977-6-2 to the Satellite Antenna cable at the Satellite Antenna.
4. Measure the Resistance across the terminals on the tool.

Is the resistance above 52.5 Ohms?

No

- Use the Radio Diagnostic Tool 9977-6 to locate the open circuit, repair or replace the Satellite Antenna cable as necessary.
- Perform the BODY VERIFICATION TEST. (Refer to 28 - DTC-Based Diagnostics/MODULE, Totally Integrated Power (TIPM) - Standard Procedure).

Yes

- Replace the Satellite Antenna in accordance with the Service Information.
- Perform the BODY VERIFICATION TEST. (Refer to 28 - DTC-Based Diagnostics/MODULE, Totally Integrated Power (TIPM) - Standard Procedure).

■ B1430(2.5)-SATELLITE RADIO ANTENNA INTERNAL PERFORMANCE

For a complete wiring diagram, **refer to the Wiring Information**.

NOTE: There are two versions of the B1430 DTC tests. In order to select the proper test you must know the Sales (model) Code of the radio. The Sales Code is on the face of the radio or if necessary use the scan tool and select Radio, More options and ECU Details.

NOTE: This version of the B1430 test is only applicable for the GEN 2.5 radios (2007/2008 RES, REQ, and 2007 and later RER, REU and REN). For the GEN 4.0 radios (2009 and later RES, REQ and RBZ) see the other version of the B1430 test.

- **When Monitored:**
  With the ignition on and the radio in Satellite mode.
- **Set Condition:**
  When the Satellite Radio does not detect a proper antenna signal, this code will set

Possible Causes
SHORTED ANTENNA CABLE
SHORTED ANTENNA
SATELLITE RADIO RECEIVER

1. TEST ANTENNA

1. With the scan tool, record the DTCs.
2. Erase the DTCs.
3. Turn the ignition off.
4. Disconnect the Satellite Radio Antenna connector at the back of the Radio.
5. Turn the ignition on and the radio in Satellite mode.
6. With the scan tool, erase the DTCs again.
7. Put the satellite radio in seek up mode for two loops around the band cycle.
8. With the scan tool, read the active DTCs.

What Active DTC(s) are displayed?

B142F-Satellite Radio Antenna Not Connected and B1430-Satellite Radio Antenna Internal Performance.

- Replace the Satellite Radio in accordance with the Service Information.
- Perform the BODY VERIFICATION TEST. (Refer to 28 - DTC-Based Diagnostics/MODULE, Totally Integrated Power (TIPM) - Standard Procedure).

B142F-Satellite Radio Antenna Not Connected only.

- Go To 2

B1430-Satellite Radio Antenna Internal Performance only.

- Replace the Satellite Radio in accordance with the Service Information.
- Perform the BODY VERIFICATION TEST. (Refer to 28 - DTC-Based Diagnostics/MODULE, Totally Integrated Power (TIPM) - Standard Procedure).

2. CHECK CONNECTOR

1. Turn the ignition off.
2. Inspect the Satellite Radio Antenna connection at the Radio.

Was the antenna connection clean and secure?

Yes

- Go To 3

No

- Clean and secure the antenna connection as necessary.
- Perform the BODY VERIFICATION TEST. (Refer to 28 - DTC-Based Diagnostics/MODULE, Totally Integrated Power (TIPM) - Standard Procedure).

3. SATELLITE RADIO

1. Re-connect the antenna cable to the Radio.
2. Disconnect the Satellite Radio Antenna connector at the Antenna.
3. Turn the ignition on.
4. With the scan tool, record, then erase the radio DTCs.
5. Turn the radio on and put the Satellite Radio in Satellite Mode.
6. Put the satellite radio in seek up mode for two loops around the band cycle.
7. With the scan tool, read the active DTCs.

What Active DTC(s) are displayed?

B142F-Satellite Radio Antenna Not Connected

- Replace the Satellite Radio Antenna in accordance with the Service Information.
- Perform the BODY VERIFICATION TEST. (Refer to 28 - DTC-Based Diagnostics/MODULE, Totally Integrated Power (TIPM) - Standard Procedure).

B1430-Satellite Radio Antenna Internal Performance

- Go To 4

4. SATELLITE RADIO ANTENNA CABLE

1. Turn the ignition off.
2. Locate the intermediate Satellite Radio Antenna connector.
3. Disconnect and inspect the intermediate Satellite Radio Antenna connector.

Was the connector clean and secure?

No

- Clean and secure the Satellite Radio Antenna intermediate connector.
- Perform the BODY VERIFICATION TEST. (Refer to 28 - DTC-Based Diagnostics/MODULE, Totally Integrated Power (TIPM) - Standard Procedure).

Yes

- Replace the Satellite Radio Antenna Cable as necessary.
- Perform the BODY VERIFICATION TEST. (Refer to 28 - DTC-Based Diagnostics/MODULE, Totally Integrated Power (TIPM) - Standard Procedure).

■ B1430(4.0)-SATELLITE RADIO ANTENNA INTERNAL PERFORMANCE

For a complete wiring diagram, **refer to the Wiring Information**.

NOTE: There are two versions of the B1430 DTC tests. In order to select the proper test you must know the Sales (model) Code of the radio. The Sales Code is on the face of the radio or if necessary use the scan tool and select Radio, More options and ECU Details.

NOTE: This version of the B1430 test is only applicable for the GEN 4.0 radios (2009 and later RES, REQ and RBZ). For the GEN 2.5 radios (2007/2008 RES, REQ, and 2007 and later RER, REU and REN) see the other version of the B1430 test.

- **When Monitored:**
  With the ignition on and the radio in Satellite mode.
- **Set Condition:**
  When the Satellite Radio does not detect a proper antenna signal, this code will set

Possible Causes
SATELLITE RADIO RECEIVER

1. TEST RADIO

1. With the scan tool, record the DTCs.
2. Erase the DTCs.
3. Turn the ignition off.
4. Turn the ignition on and the radio in Satellite mode.
5. With the scan tool, erase the DTCs again.
6. Put the satellite radio in seek up mode for two loops around the band cycle.
7. With the scan tool, read the active DTCs.

Does the scan display: B1430-Satellite Radio Antenna Internal Performance as Active?

Yes

- Replace the Satellite Radio in accordance with the Service Information.
- Perform the BODY VERIFICATION TEST. (Refer to 28 - DTC-Based Diagnostics/MODULE, Totally Integrated Power (TIPM) - Standard Procedure).

No

- Test complete, the condition or conditions that originally set this DTC are not present at this time. Using the wiring diagrams as a guide check all related splices and connectors for signs of water intrusion, corrosion, pushed out or bent terminals and poor fit.
- Perform the BODY VERIFICATION TEST. (Refer to 28 - DTC-Based Diagnostics/MODULE, Totally Integrated Power (TIPM) - Standard Procedure).

B143A- MICROPHONE 1 CIRCUIT PERFORMANCE

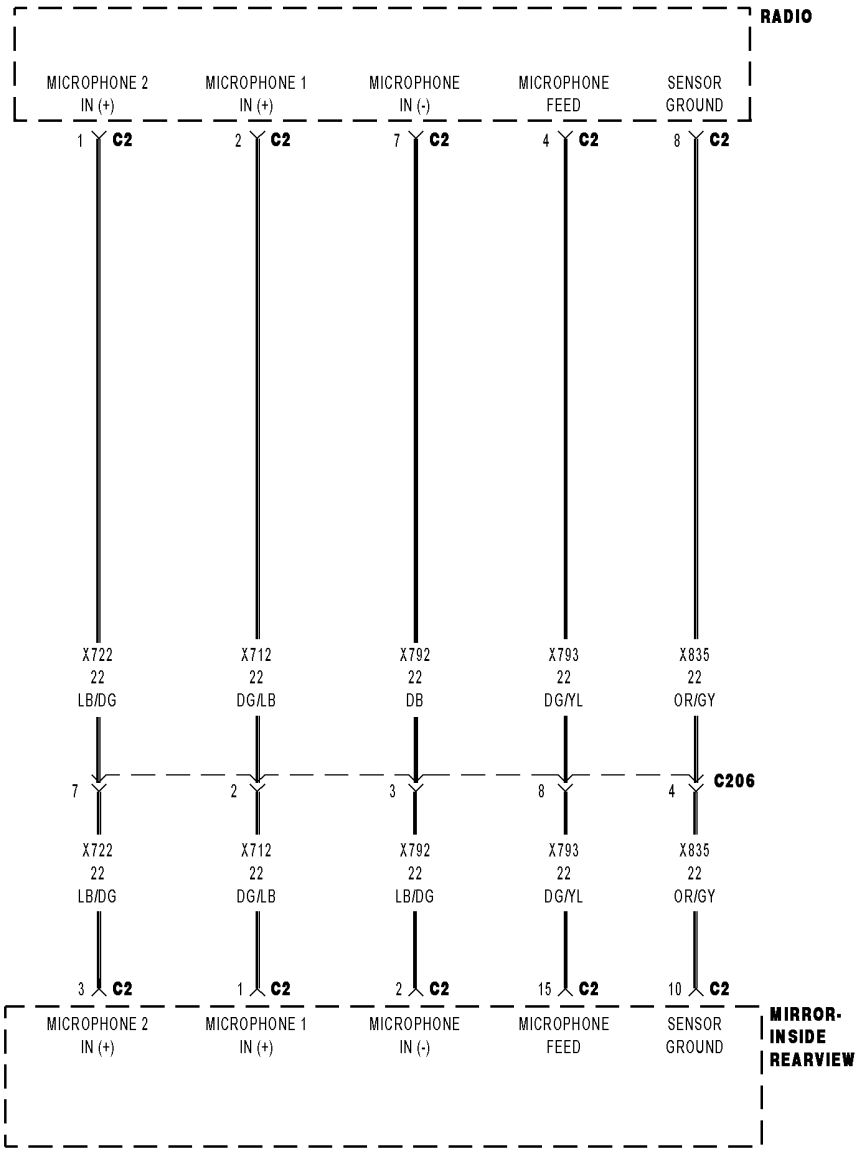

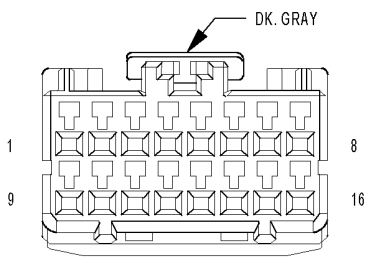

MIRROR- INSIDE REARVIEW C2 (HANDS FREE)

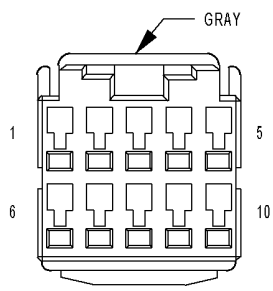

RADIO C2

01430956

For a complete wiring diagram, **refer to the Wiring Information**.

- **When Monitored:**
  With the ignition on.
- **Set Condition:**
  The Radio detects a fault in any of the microphone circuits.

Possible Causes
(X712) MICROPHONE 1 IN (+) CIRCUIT SHORTED TO GROUND
(X712) MICROPHONE 1 IN (+) CIRCUIT OPEN
(X712) MICROPHONE 1 IN (+) CIRCUITS SHORTED TO VOLTAGE
INSIDE REARVIEW MIRROR
RADIO

1. CHECK FOR ACTIVE DTC

1. Turn the ignition on.
2. With the scan tool, read the active DTCs.

Does the scan tool display this DTC as active?

Yes

- Go To 2

No

- If the DTC is stored, check for an intermittent condition. Visually inspect the related wiring harness connectors. Look for broken, bent, pushed out, or corroded terminals.
- Perform the BODY VERIFICATION TEST. (Refer to 28 - DTC-Based Diagnostics/MODULE, Totally Integrated Power (TIPM) - Standard Procedure).

2. INSIDE REARVIEW MIRROR

1. Turn the ignition off.
2. Disconnect the Rearview Mirror C2 harness connector.
3. Turn the ignition on.
4. With the scan tool, read the active DTCs.

Does the scan tool display this DTC as active?

Yes

- Go To 3

No

- Replace the Rearview Mirror in accordance with the Service Information.
- Perform the BODY VERIFICATION TEST. (Refer to 28 - DTC-Based Diagnostics/MODULE, Totally Integrated Power (TIPM) - Standard Procedure).

3. (X712) MICROPHONE 1 IN (+) CIRCUIT SHORTED TO GROUND

1. Turn the ignition off.
2. Disconnect the Radio C2 harness connector.
3. Measure the resistance between ground and the (X712) Microphone 1 (+) circuit.

Is the resistance below 10K Ohms?

Yes

- Repair the (X712) Microphone 1 circuit for short to ground.
- Perform the BODY VERIFICATION TEST. (Refer to 28 - DTC-Based Diagnostics/MODULE, Totally Integrated Power (TIPM) - Standard Procedure).

No

- Go To 4

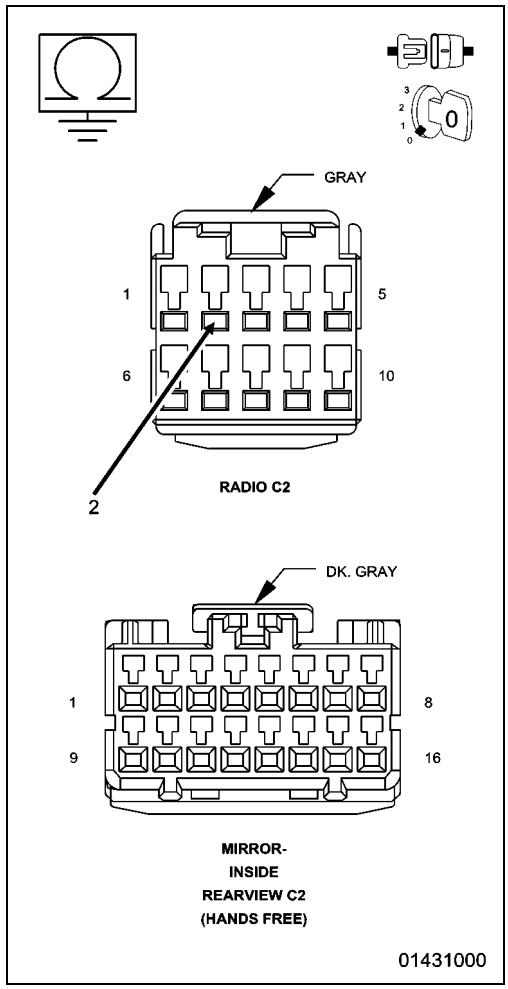

4. (X712) MICROPHONE 1 IN (+) CIRCUIT SHORTED TO VOLTAGE

1. Turn the ignition off.
2. Disconnect the Radio C2 harness connector.
3. Turn the ignition on.
4. Measure the voltage of the (X712) Microphone circuit.

Is the voltage above 1.0 volt?

Yes

- Repair the (X712) Microphone circuit for a short to voltage.
- Perform the BODY VERIFICATION TEST. (Refer to 28 - DTC-Based Diagnostics/MODULE, Totally Integrated Power (TIPM) - Standard Procedure).

No

- Go To 5

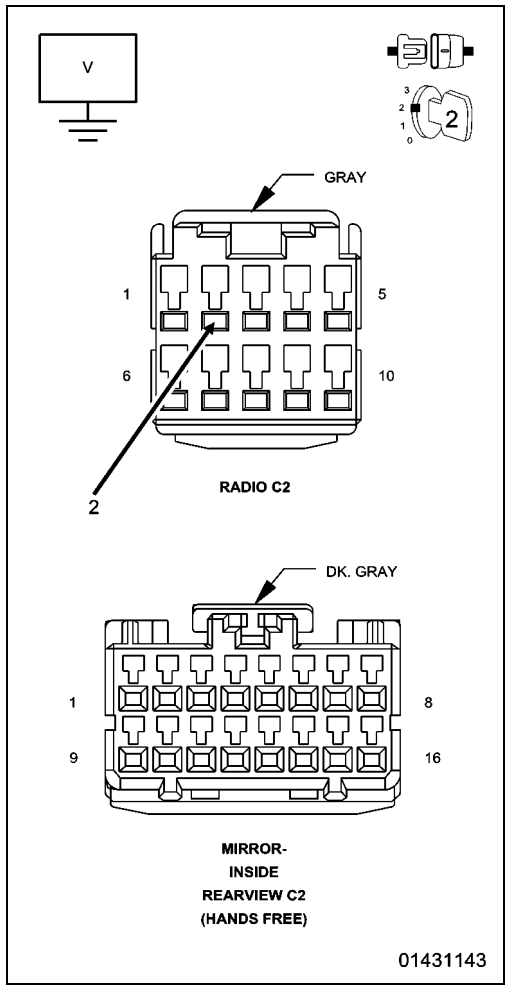

5. (X712) MICROPHONE 1 IN (+) CIRCUIT OPEN

1. Turn the ignition off.
2. Measure the resistance of the (X712) Microphone 1 IN (+) circuit.

Is the resistance below 5.0 Ohms?

Yes

- Replace the Radio in accordance with the Service Information.
- Perform the BODY VERIFICATION TEST. (Refer to 28 - DTC-Based Diagnostics/MODULE, Totally Integrated Power (TIPM) - Standard Procedure).

No

- Repair the (X712) Microphone 1 IN (+) circuit for an open.
- Perform the BODY VERIFICATION TEST. (Refer to 28 - DTC-Based Diagnostics/MODULE, Totally Integrated Power (TIPM) - Standard Procedure).

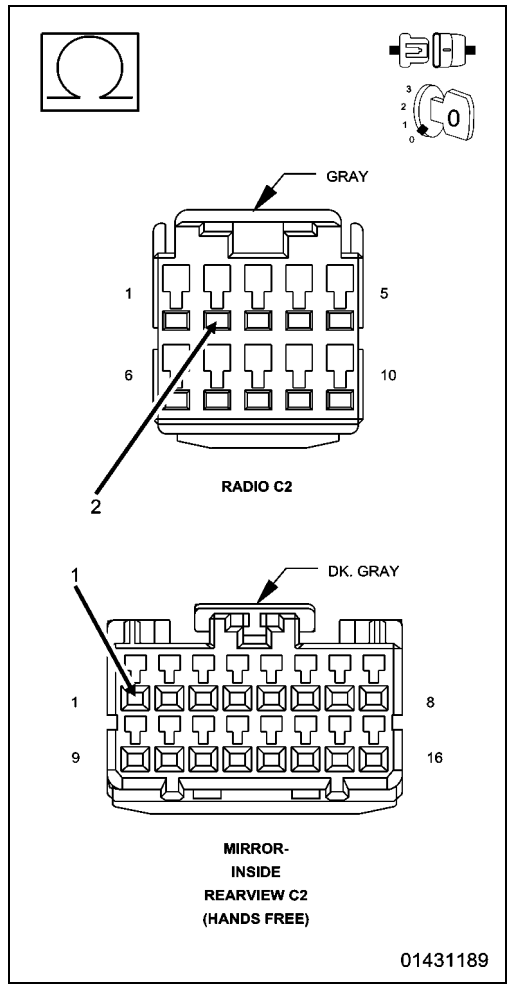

B143B-MICROPHONE 1 CIRCUIT LOW

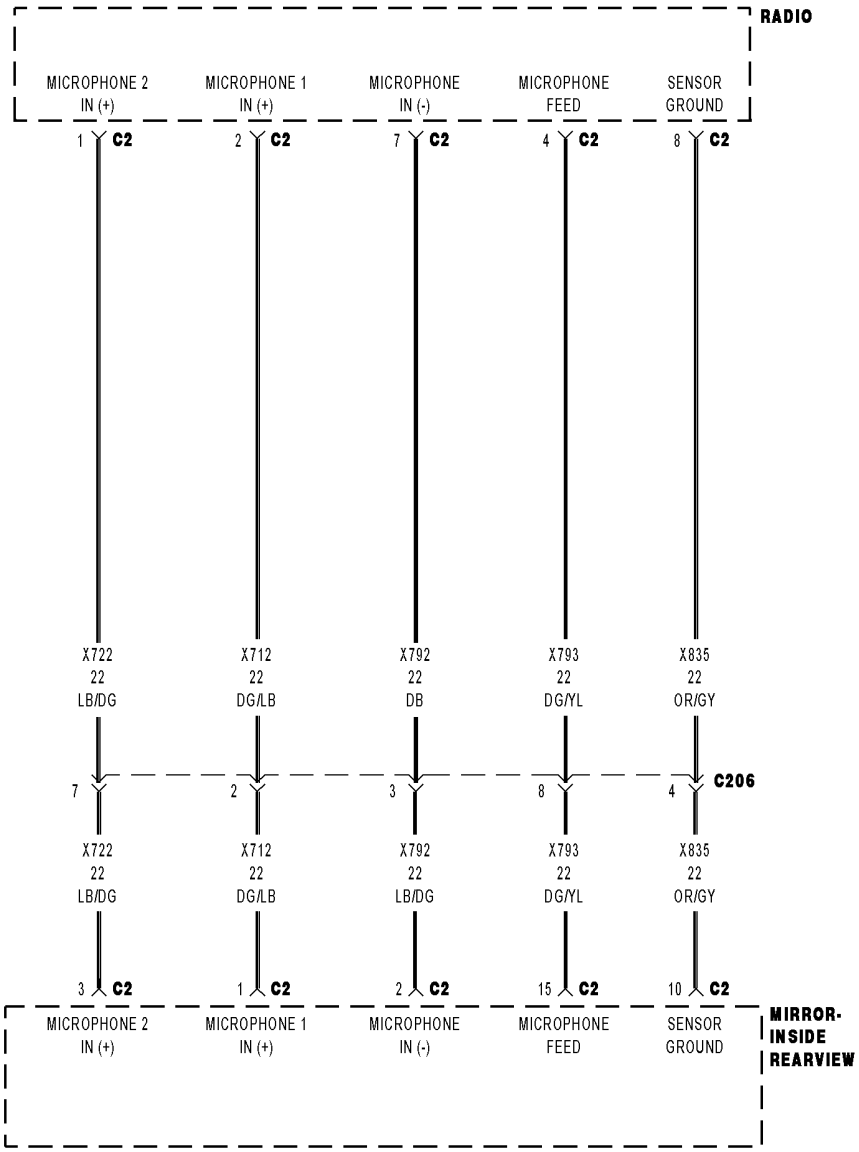

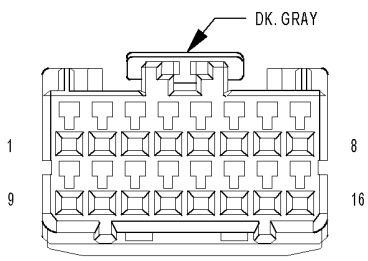

MIRROR-INSIDE REARVIEW C2 (HANDS FREE)

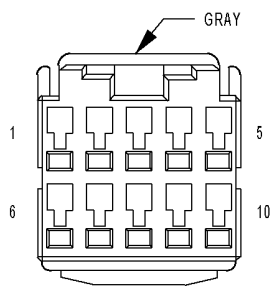

RADIO C2

01430956

For a complete wiring diagram, **refer to the Wiring Information**.

- **When Monitored:**
  With the ignition on.
- **Set Condition:**
  The Radio detects a short to ground or open on the (X712) Microphone 1 IN (+) circuit.

Possible Causes
(X712) MICROPHONE 1 IN (+) CIRCUIT OPEN
(X712) MICROPHONE 1 IN (+) CIRCUIT SHORTED TO GROUND
(X793) MICROPHONE FEED CIRCUIT OPEN
INSIDE REARVIEW MIRROR
RADIO

1. CHECK FOR ACTIVE DTC

NOTE: Verify the connection of the Inside Rearview Mirror harness connector.

1. Turn the ignition on.
2. With the scan tool, read the active DTCs.

Does the scan tool display B143B-MICROPHONE 1 CIRCUIT LOW as active?

Yes

- Go To 2

No

- Test complete, the condition or conditions that originally set this DTC are not present at this time. Using the wiring diagrams as a guide, check all related splices and connectors for signs of water intrusion, corrosion, pushed out or bent terminals and correct pin tension.
- Perform the BODY VERIFICATION TEST. (Refer to 28 - DTC-Based Diagnostics/MODULE, Totally Integrated Power (TIPM) - Standard Procedure).

2. CHECK FOR ACTIVE DTC B143E

1. With the scan tool, read the active DTCs.

Does the scan tool display B143E-MICROPHONE 2 CIRCUIT LOW also as active?

Yes

- Go To 3

No

- Go To 6

3. CHECK FOR VOLTAGE AT THE INSIDE REARVIEW MIRROR

1. Turn the ignition off.
2. Disconnect the Inside Rearview Mirror harness connector.
3. Turn the ignition on.
4. Measure the voltage between the (X793) Microphone Feed circuit and ground.

Is the voltage above 10.0 volts?

Yes

- Go To 6

No

- Go To 4

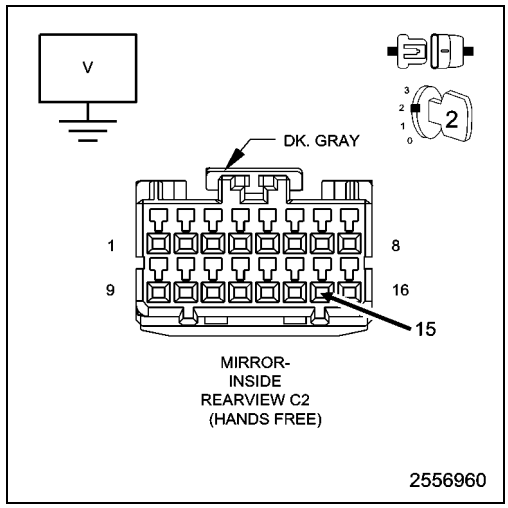

4. CHECK FOR VOLTAGE AT THE RADIO

1. While back probing, measure the voltage between the (X793) Microphone Feed circuit and ground at the Radio C2 harness connector.

NOTE: The graphic shows the connector for reference only. Back probe the harness connector.

Is the voltage above 10.0 volts?

Yes

- Repair the (X793) Microphone Feed circuit for an open.
- Perform the BODY VERIFICATION TEST. (Refer to 28 - DTC-Based Diagnostics/MODULE, Totally Integrated Power (TIPM) - Standard Procedure).

No

- Go To 5

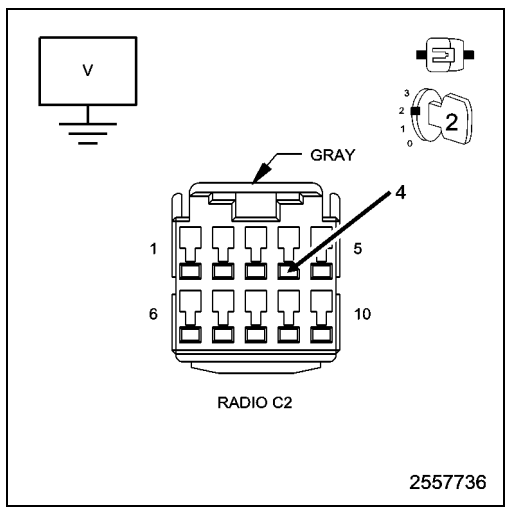

5. RESTORE THE VEHICLE CONFIGURATION

1. With the scan tool, restore the vehicle configuration.
2. Turn the ignition off, then back on.
3. With the scan tool, read the active DTCs.

Does the scan tool display B143B-MICROPHONE 1 CIRCUIT LOW as active?

Yes

- Replace the Radio in accordance with the Service Information.
- Perform the BODY VERIFICATION TEST. (Refer to 28 - DTC-Based Diagnostics/MODULE, Totally Integrated Power (TIPM) - Standard Procedure).

No

- Test complete, the condition or conditions that originally set this DTC are not present at this time. Using the wiring diagrams as a guide, check all related splices and connectors for signs of water intrusion, corrosion, pushed out or bent terminals and correct pin tension.
- Perform the BODY VERIFICATION TEST. (Refer to 28 - DTC-Based Diagnostics/MODULE, Totally Integrated Power (TIPM) - Standard Procedure).

6. CHECK THE INSIDE REARVIEW MIRROR

1. Turn the ignition off.
2. Disconnect the Inside Rearview Mirror C2 harness connector.
3. Connect a jumper wire between the (X793) Microphone Feed and the (X712) Microphone 1 IN (+) circuits.
4. Turn the ignition on.
5. With the scan tool, read the DTCs.

NOTE: DTC B143C-MICROPHONE 1 CIRCUIT HIGH should display as active as a result of this test.

Does the scan tool display B143B-MICROPHONE 1 CIRCUIT LOW as active?

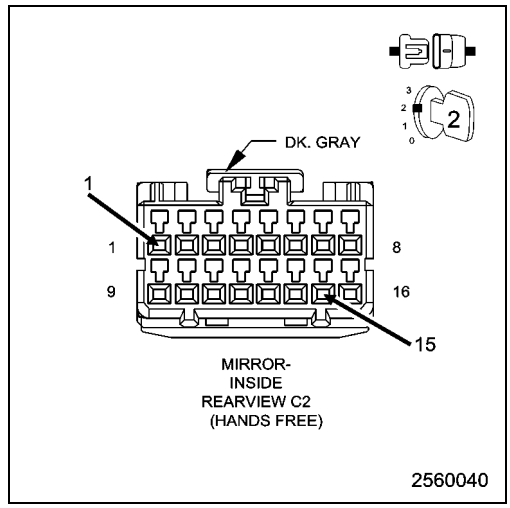

Yes

- Go To 7

No

- Replace the Inside Rearview Mirror in accordance with the Service Information.
- Perform the BODY VERIFICATION TEST. (Refer to 28 - DTC-Based Diagnostics/MODULE, Totally Integrated Power (TIPM) - Standard Procedure).

7. CHECK FOR THE (X712) MICROPHONE 1 IN (+) CIRCUIT OPEN

1. Turn the ignition off.
2. Disconnect the Radio C2 harness connector.
3. Measure the resistance of the (X712) Microphone 1 IN (+) circuit between the Inside Rearview Mirror and Radio C2 harness connectors.

Is the resistance above 10K Ohms?

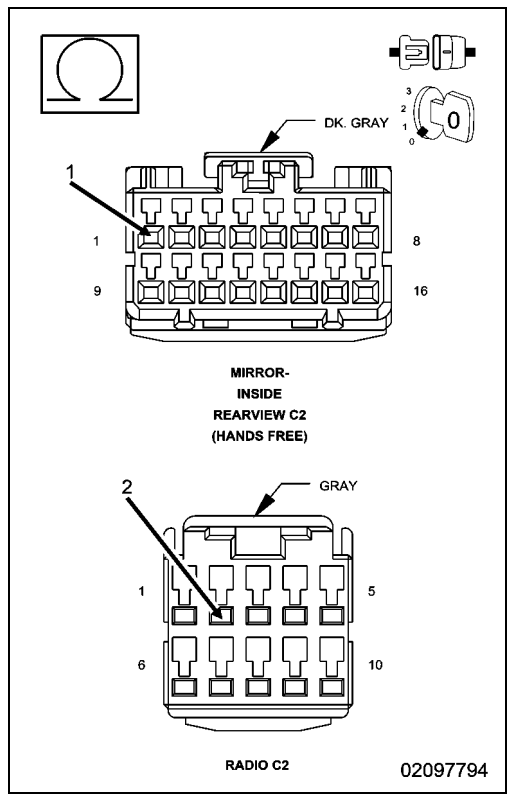

Yes

- Repair the (X712) Microphone 1 IN (+) circuit for an open.
- Perform the BODY VERIFICATION TEST. (Refer to 28 - DTC-Based Diagnostics/MODULE, Totally Integrated Power (TIPM) - Standard Procedure).

No

- Go To 8

8. CHECK FOR THE (X712) MICROPHONE 1 IN (+) CIRCUIT SHORTED TO GROUND

1. Measure the resistance between ground and the (X712) Microphone 1 IN (+) circuit.

Is the resistance below 10K Ohms?

Yes

- Repair the (X712) Microphone 1 IN (+) circuit for short to ground.
- Perform the BODY VERIFICATION TEST. (Refer to 28 - DTC-Based Diagnostics/MODULE, Totally Integrated Power (TIPM) - Standard Procedure).

No

- Replace the Radio in accordance with the Service Information.
- Perform the BODY VERIFICATION TEST. (Refer to 28 - DTC-Based Diagnostics/MODULE, Totally Integrated Power (TIPM) - Standard Procedure).

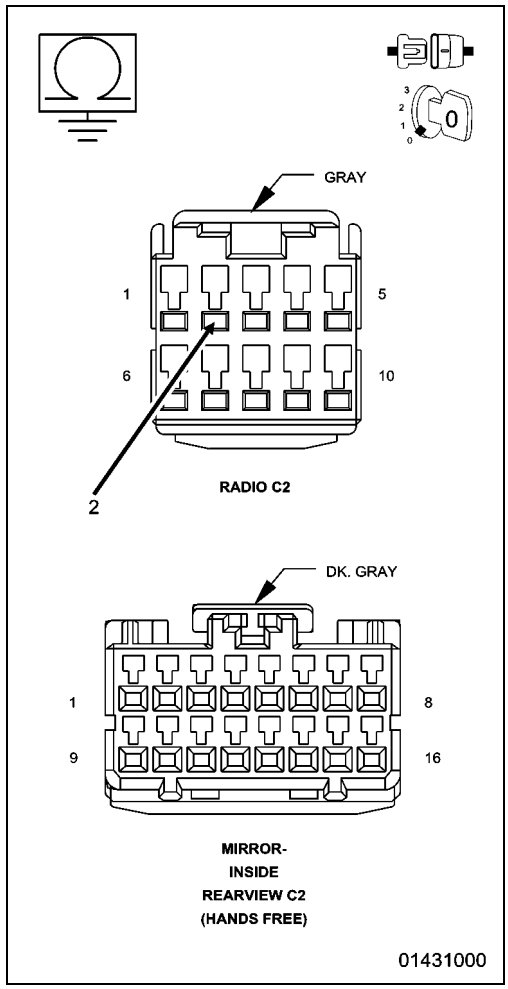

B143C-MICROPHONE 1 CIRCUIT HIGH

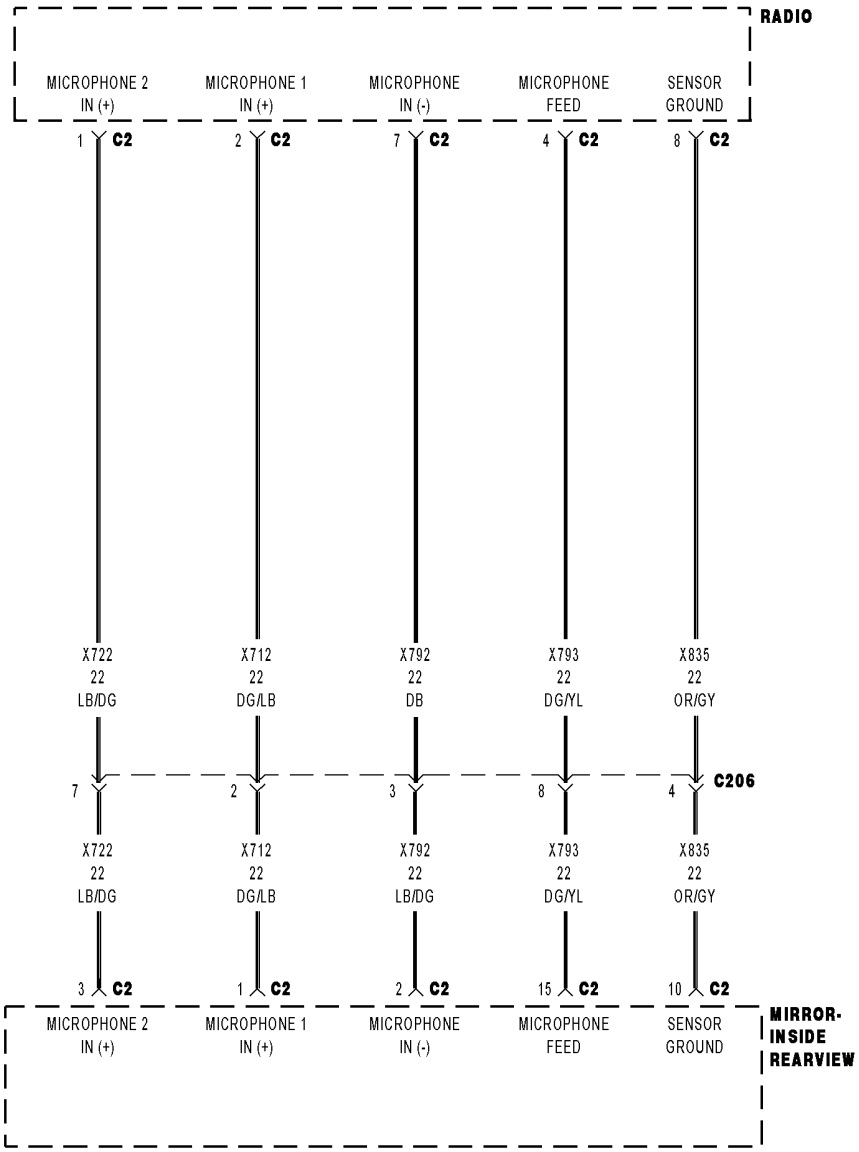

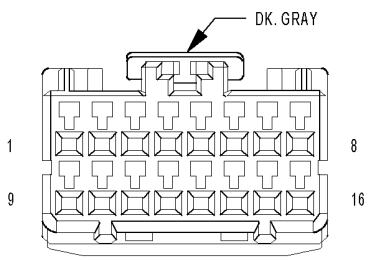

MIRROR-INSIDE REARVIEW C2 (HANDS FREE)

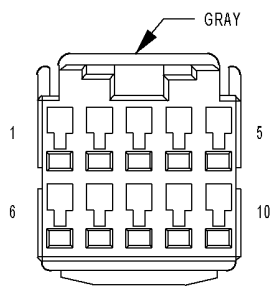

RADIO C2

01430956

For a complete wiring diagram, **refer to the Wiring Information**.

- **When Monitored:**
  With the ignition on.
- **Set Condition:**
  The Radio detects a short to voltage on the (X712) Microphone 1 IN (+) circuit.

Possible Causes
(X712) MICROPHONE 1 IN (+) CIRCUITS SHORTED TO VOLTAGE
INSIDE REARVIEW MIRROR
RADIO

1. CHECK FOR ACTIVE DTC

NOTE: Verify the connection of the Rearview Mirror harness connector.

1. Turn the ignition on.
2. With the scan tool, read the active DTCs.

Does the scan tool display this DTC as active?

Yes

- Go To 2

No

- If the DTC is stored, check for an intermittent condition. Visually inspect the related wiring harness connectors. Look for broken, bent, pushed out, or corroded terminals.
- Perform the BODY VERIFICATION TEST. (Refer to 28 - DTC-Based Diagnostics/MODULE, Totally Integrated Power (TIPM) - Standard Procedure).

2. INSIDE REARVIEW MIRROR

1. Turn the ignition off.
2. Disconnect the Rearview Mirror C2 harness connector.
3. Turn the ignition on.
4. With the scan tool, read the active DTCs.

Does the scan tool display this DTC as active?

Yes

- Go To 3

No

- Replace the Rearview Mirror in accordance with the Service Information.
- Perform the BODY VERIFICATION TEST. (Refer to 28 - DTC-Based Diagnostics/MODULE, Totally Integrated Power (TIPM) - Standard Procedure).

3. (X712) MICROPHONE 1 IN (+) CIRCUIT SHORTED TO VOLTAGE

1. Turn the ignition off.
2. Disconnect the Radio C2 harness connector.
3. Turn the ignition on.
4. Measure the voltage of the (X712) Microphone 1 IN (+) circuit.

Is the voltage above 1.0 volt?

Yes

- Repair the (X712) Microphone 1 IN (+) circuit for a short to voltage.
- Perform the BODY VERIFICATION TEST. (Refer to 28 - DTC-Based Diagnostics/MODULE, Totally Integrated Power (TIPM) - Standard Procedure).

No

- Replace the Radio in accordance with the Service Information.
- Perform the BODY VERIFICATION TEST. (Refer to 28 - DTC-Based Diagnostics/MODULE, Totally Integrated Power (TIPM) - Standard Procedure).

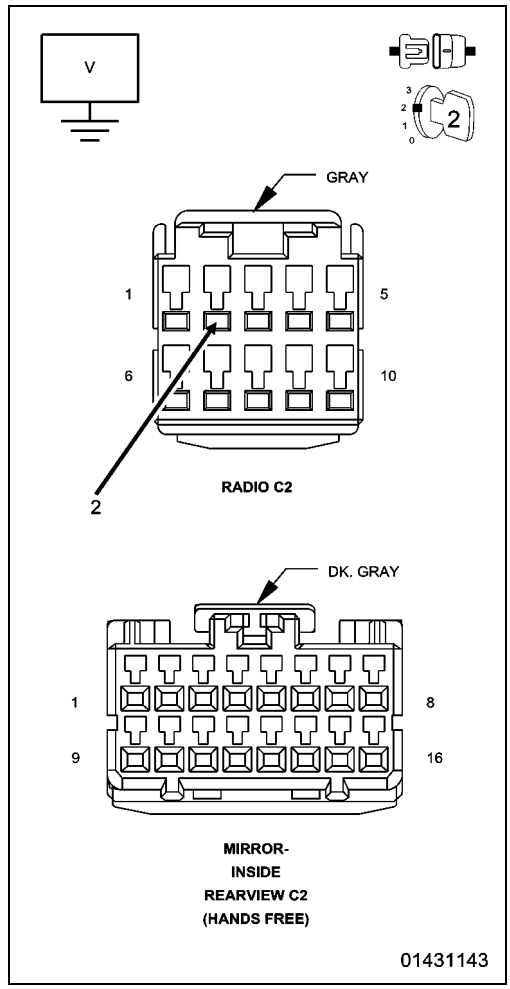

B143D-MICROPHONE 2 CIRCUIT PERFORMANCE

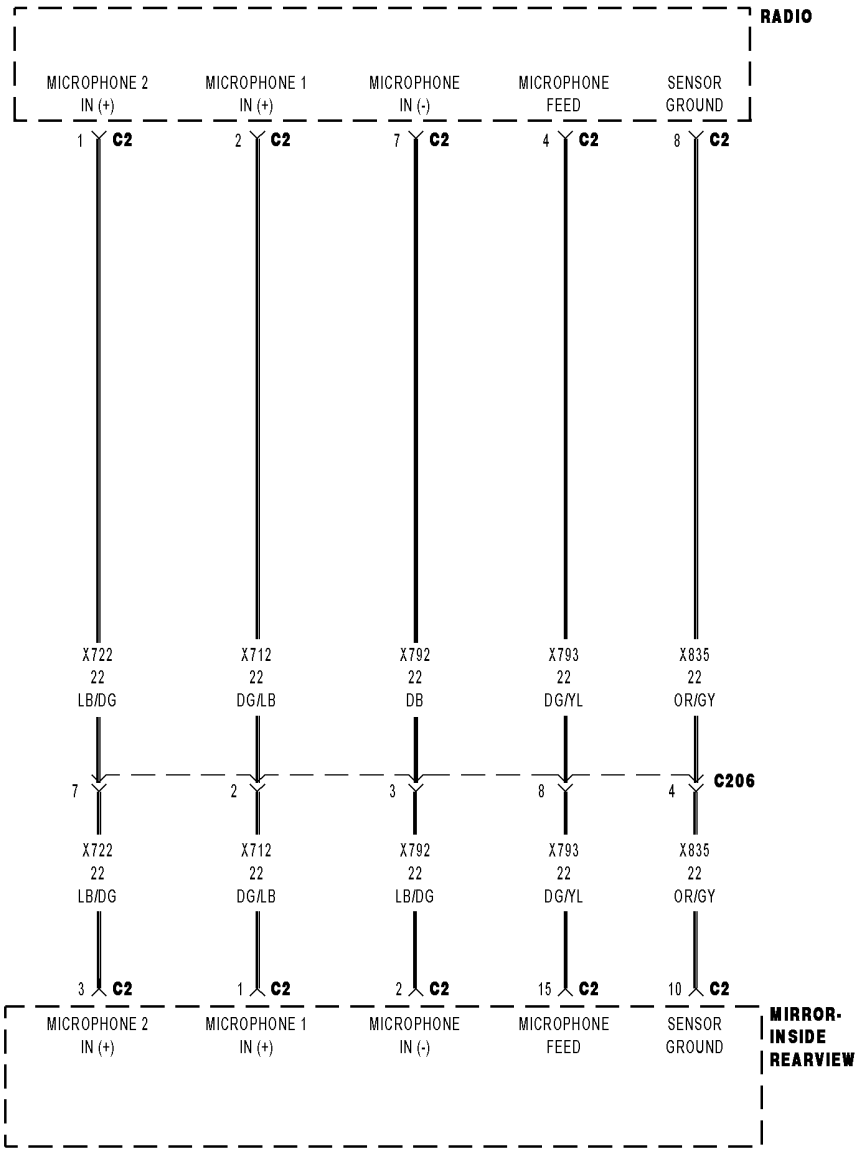

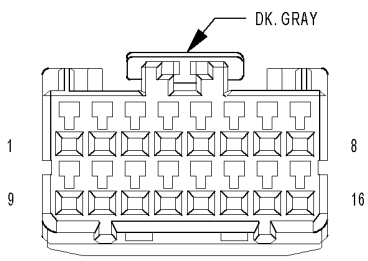

MIRROR-INSIDE REARVIEW C2 (HANDS FREE)

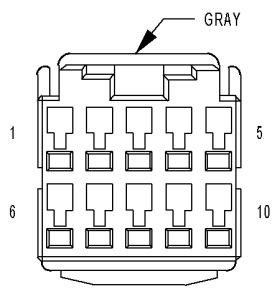

RADIO C2

01430956

For a complete wiring diagram, **refer to the Wiring Information**.

- **When Monitored:**
  With the ignition on.
- **Set Condition:**
  The Radio detects a fault in any of the microphone circuits.

Possible Causes
(X722) MICROPHONE 2 IN (+) CIRCUIT SHORTED TO GROUND
(X722) MICROPHONE 2 IN (+) CIRCUIT OPEN
(X722) MICROPHONE 2 IN (+) CIRCUITS SHORTED TO VOLTAGE
INSIDE REARVIEW MIRROR
RADIO

1. CHECK FOR ACTIVE DTC

1. Turn the ignition on.
2. With the scan tool, read the active DTCs.

Does the scan tool display this DTC as active?

Yes

- Go To 2

No

- If the DTC is stored, check for an intermittent condition. Visually inspect the related wiring harness connectors. Look for broken, bent, pushed out, or corroded terminals.
- Perform the BODY VERIFICATION TEST. (Refer to 28 - DTC-Based Diagnostics/MODULE, Totally Integrated Power (TIPM) - Standard Procedure).

2. INSIDE REARVIEW MIRROR

1. Turn the ignition off.
2. Disconnect the Inside Rearview Mirror C2 harness connector.
3. Turn the ignition on.
4. With the scan tool, read the active DTCs.

Does the scan tool display this DTC as active?

Yes

- Go To 3

No

- Replace the Rearview Mirror in accordance with the Service Information.
- Perform the BODY VERIFICATION TEST. (Refer to 28 - DTC-Based Diagnostics/MODULE, Totally Integrated Power (TIPM) - Standard Procedure).

3. (X722) MICROPHONE 2 IN (+) CIRCUIT SHORTED TO GROUND

1. Turn the ignition off.
2. Disconnect the Radio C2 harness connector.
3. Measure the resistance between ground and the (X722) Microphone 2 IN (+) circuit.

Is the resistance below 10K Ohms?

Yes

- Repair the (X722) Microphone 2 IN (+) circuit for short to ground.
- Perform the BODY VERIFICATION TEST. (Refer to 28 - DTC-Based Diagnostics/MODULE, Totally Integrated Power (TIPM) - Standard Procedure).

No

- Go To 4

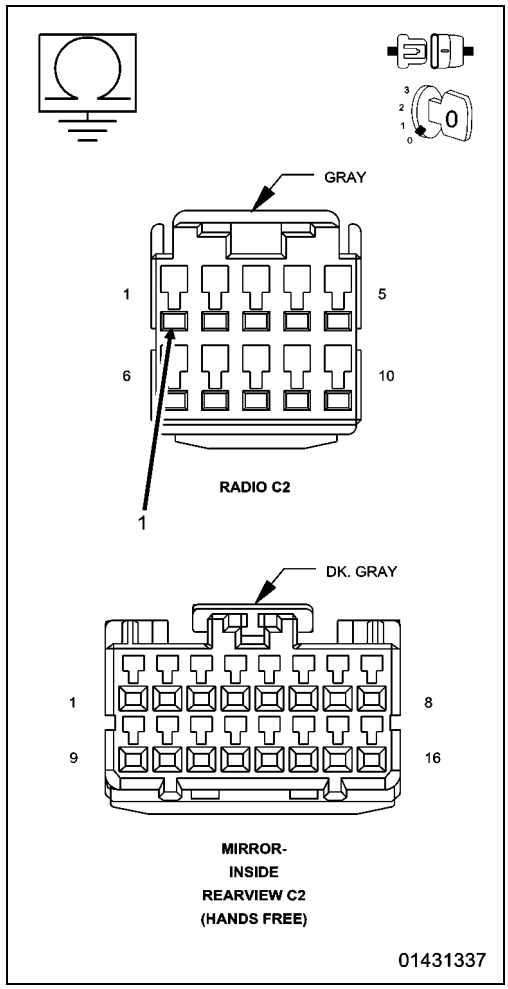

4. (X722) MICROPHONE CIRCUITS SHORTED TO VOLTAGE

1. Turn the ignition off.
2. Disconnect the Radio C2 harness connector.
3. Turn the ignition on.
4. Measure the voltage of the (X722) Microphone circuit.

Is the voltage above 1.0 volt?

Yes

- Repair the (X722) Microphone circuit for a short to voltage.
- Perform the BODY VERIFICATION TEST. (Refer to 28 - DTC-Based Diagnostics/MODULE, Totally Integrated Power (TIPM) - Standard Procedure).

No

- Go To 5

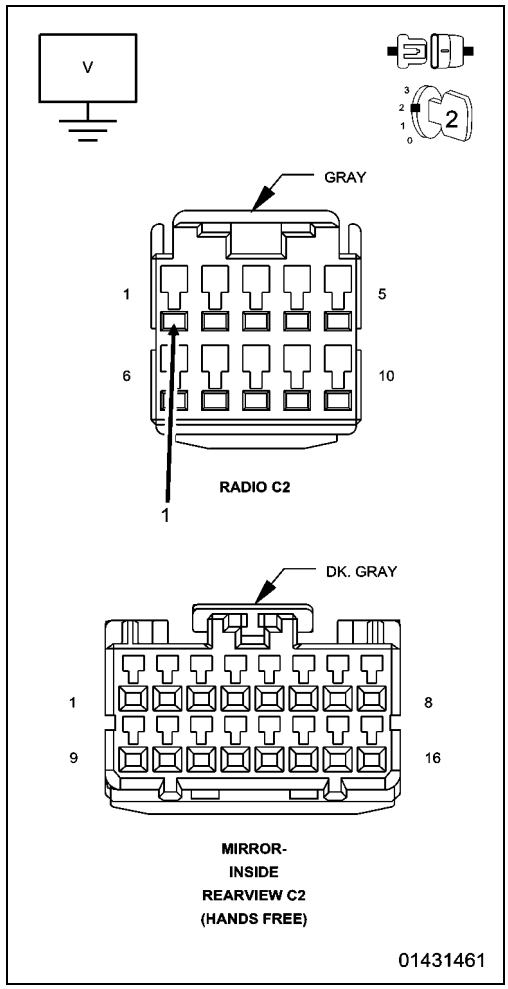

5. (X722) MICROPHONE 2 IN (+) CIRCUIT OPEN

1. Turn the ignition off.
2. Measure the resistance of the (X722) Microphone 2 IN (+) circuit.

Is the resistance below 5.0 Ohms?

Yes

- Replace the Radio in accordance with the Service Information.
- Perform the BODY VERIFICATION TEST. (Refer to 28 - DTC-Based Diagnostics/MODULE, Totally Integrated Power (TIPM) - Standard Procedure).

No

- Repair the (X722) Microphone 2 IN (+) circuit for an open.
- Perform the BODY VERIFICATION TEST. (Refer to 28 - DTC-Based Diagnostics/MODULE, Totally Integrated Power (TIPM) - Standard Procedure).

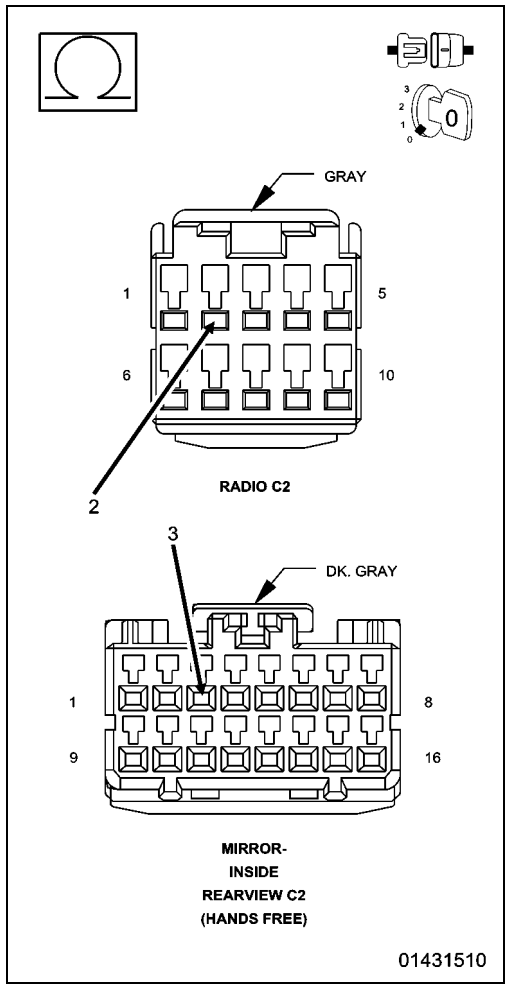

B143E-MICROPHONE 2 CIRCUIT LOW

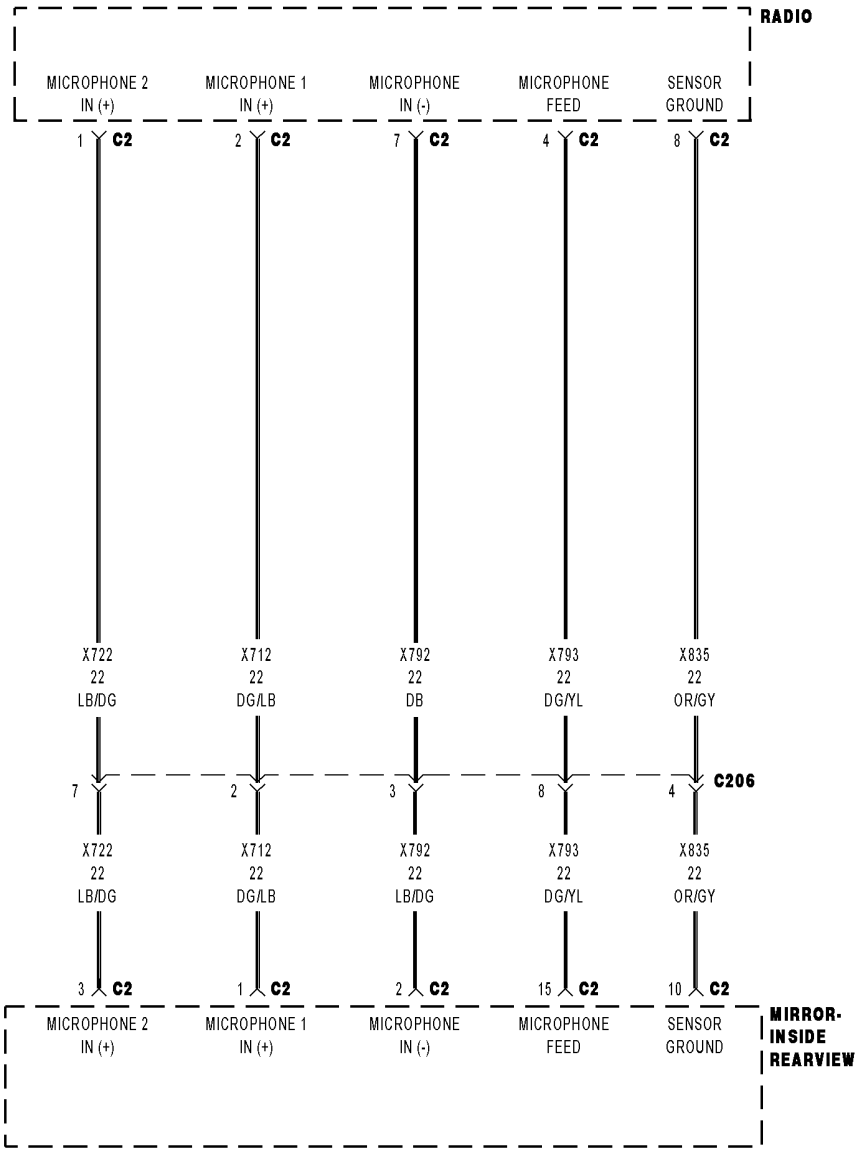

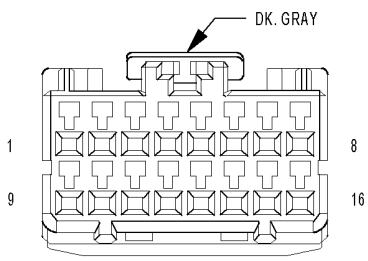

MIRROR- INSIDE REARVIEW C2 (HANDS FREE)

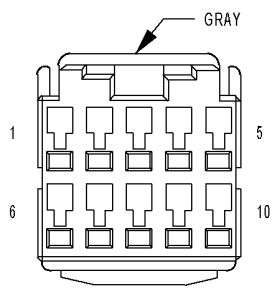

RADIO C2

01430956

For a complete wiring diagram, **refer to the Wiring Information**.

- **When Monitored:**
  With the ignition on.
- **Set Condition:**
  The Radio detects a short to ground or an open on the (X722) Microphone 2 IN (+) circuit.

Possible Causes
(X722) MICROPHONE 2 IN (+) CIRCUIT OPEN
(X722) MICROPHONE 2 IN (+) CIRCUIT SHORTED TO GROUND
(X793) MICROPHONE FEED CIRCUIT OPEN
INSIDE REARVIEW MIRROR
RADIO

1. CHECK FOR ACTIVE DTC

NOTE: Verify the connection of the Inside Rearview Mirror harness connector.

1. Turn the ignition on.
2. With the scan tool, read the active DTCs.

Does the scan tool display B143E-MICROPHONE 2 CIRCUIT LOW as active?

Yes

- Go To 2

No

- Test complete, the condition or conditions that originally set this DTC are not present at this time. Using the wiring diagrams as a guide, check all related splices and connectors for signs of water intrusion, corrosion, pushed out or bent terminals and correct pin tension.
- Perform the BODY VERIFICATION TEST. (Refer to 28 - DTC-Based Diagnostics/MODULE, Totally Integrated Power (TIPM) - Standard Procedure).

2. CHECK FOR ACTIVE DTC B143B

1. With the scan tool, read the active DTCs.

Does the scan tool display B143B-MICROPHONE 1 CIRCUIT LOW also as active?

Yes

- Go To 3

No

- Go To 6

3. CHECK FOR VOLTAGE AT THE INSIDE REARVIEW MIRROR

1. Turn the ignition off.
2. Disconnect the Inside Rearview Mirror harness connector.
3. Turn the ignition on.
4. Measure the voltage between the (X793) Microphone Feed circuit and ground.

Is the voltage above 10.0 volts?

Yes

- Go To 6

No

- Go To 4

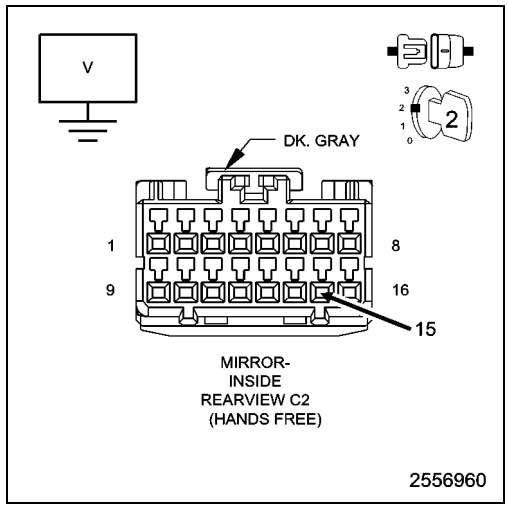

4. CHECK FOR VOLTAGE AT THE RADIO

1. While back probing, measure the voltage between the (X793) Microphone Feed circuit and ground at the Radio C2 harness connector.

NOTE: The graphic shows the connector for reference only. Back probe the harness connector.

Is the voltage above 10.0 volts?

Yes

- Repair the (X793) Microphone Feed circuit for an open.
- Perform the BODY VERIFICATION TEST. (Refer to 28 - DTC-Based Diagnostics/MODULE, Totally Integrated Power (TIPM) - Standard Procedure).

No

- Go To 5

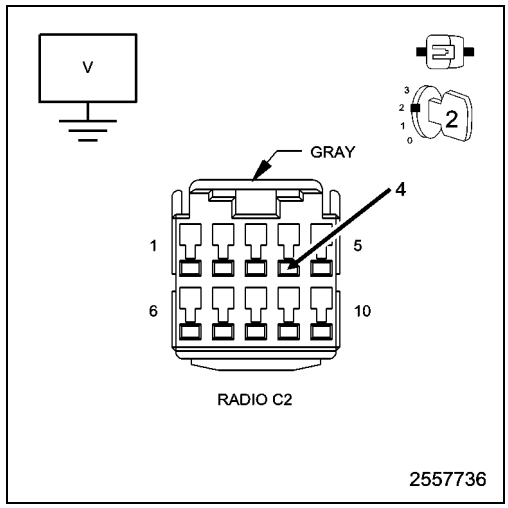

5. RESTORE THE VEHICLE CONFIGURATION

1. With the scan tool, restore the vehicle configuration.
2. Turn the ignition off, then back on.
3. With the scan tool, read the active DTCs.

Does the scan tool display B143E-MICROPHONE 2 CIRCUIT LOW as active?

Yes

- Replace the Radio in accordance with the Service Information.
- Perform the BODY VERIFICATION TEST. (Refer to 28 - DTC-Based Diagnostics/MODULE, Totally Integrated Power (TIPM) - Standard Procedure).

No

- Test complete, the condition or conditions that originally set this DTC are not present at this time. Using the wiring diagrams as a guide, check all related splices and connectors for signs of water intrusion, corrosion, pushed out or bent terminals and correct pin tension.
- Perform the BODY VERIFICATION TEST. (Refer to 28 - DTC-Based Diagnostics/MODULE, Totally Integrated Power (TIPM) - Standard Procedure).

6. CHECK THE INSIDE REARVIEW MIRROR

1. Turn the ignition off.
2. Disconnect the Inside Rearview Mirror harness connector.
3. Connect a jumper wire between the (X793) Microphone Feed and the (X722) Microphone 2 IN (+) circuits.
4. Turn the ignition on.
5. With the scan tool, read the DTCs.

NOTE: DTC B143F-MICROPHONE 2 CIRCUIT HIGH should display as active as a result of this test.

Does the scan tool display B143E-MICROPHONE 2 CIRCUIT LOW as active?

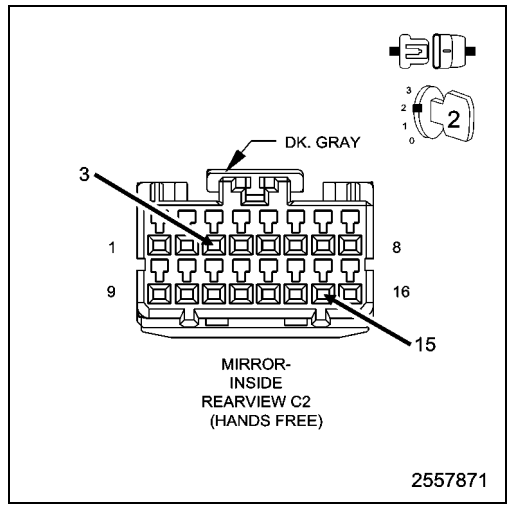

Yes

- Go To 7

No

- Replace the Inside Rearview Mirror in accordance with the Service Information.
- Perform the BODY VERIFICATION TEST. (Refer to 28 - DTC-Based Diagnostics/MODULE, Totally Integrated Power (TIPM) - Standard Procedure).

7. CHECK FOR THE (X722) MICROPHONE 2 IN (+) CIRCUIT OPEN

1. Turn the ignition off.
2. Disconnect the Radio C2 harness connector.
3. Measure the resistance of the (X722) Microphone 2 IN (+) circuit between the Inside Rearview Mirror and Radio C2 harness connectors.

Is the resistance above 10K Ohms?

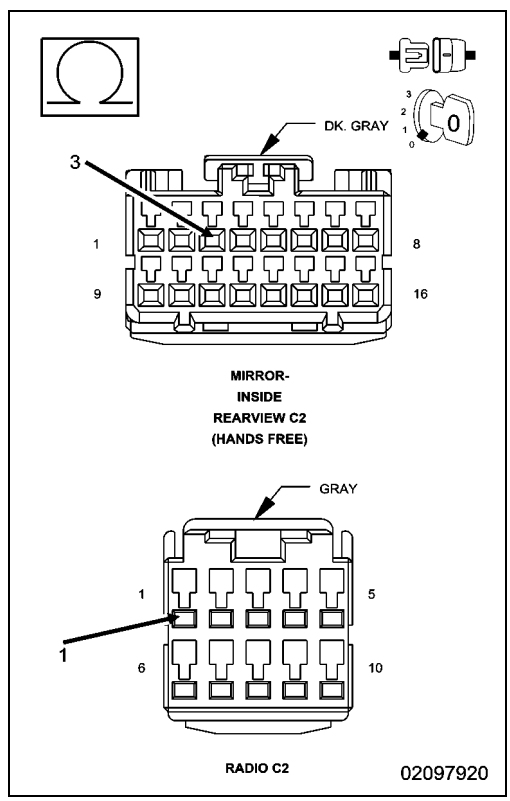

Yes

- Repair the (X722) Microphone 2 IN (+) circuit for an open.
- Perform the BODY VERIFICATION TEST. (Refer to 28 - DTC-Based Diagnostics/MODULE, Totally Integrated Power (TIPM) - Standard Procedure).

No

- Go To 8

8. CHECK FOR THE (X722) MICROPHONE 2 IN (+) CIRCUIT SHORTED TO GROUND

1. Measure the resistance between ground and the (X722) Microphone 2 IN (+) circuit.

Is the resistance below 10K Ohms?

Yes

- Repair the (X722) Microphone 2 IN (+) circuit for short to ground.
- Perform the BODY VERIFICATION TEST. (Refer to 28 - DTC-Based Diagnostics/MODULE, Totally Integrated Power (TIPM) - Standard Procedure).

No

- Replace the Radio in accordance with the Service Information.
- Perform the BODY VERIFICATION TEST. (Refer to 28 - DTC-Based Diagnostics/MODULE, Totally Integrated Power (TIPM) - Standard Procedure).

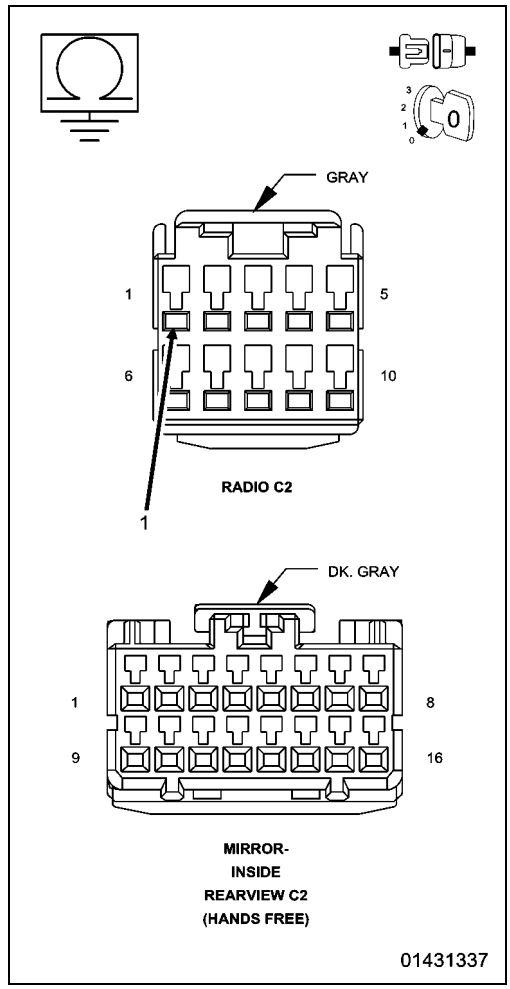

B143F-MICROPHONE 2 CIRCUIT HIGH

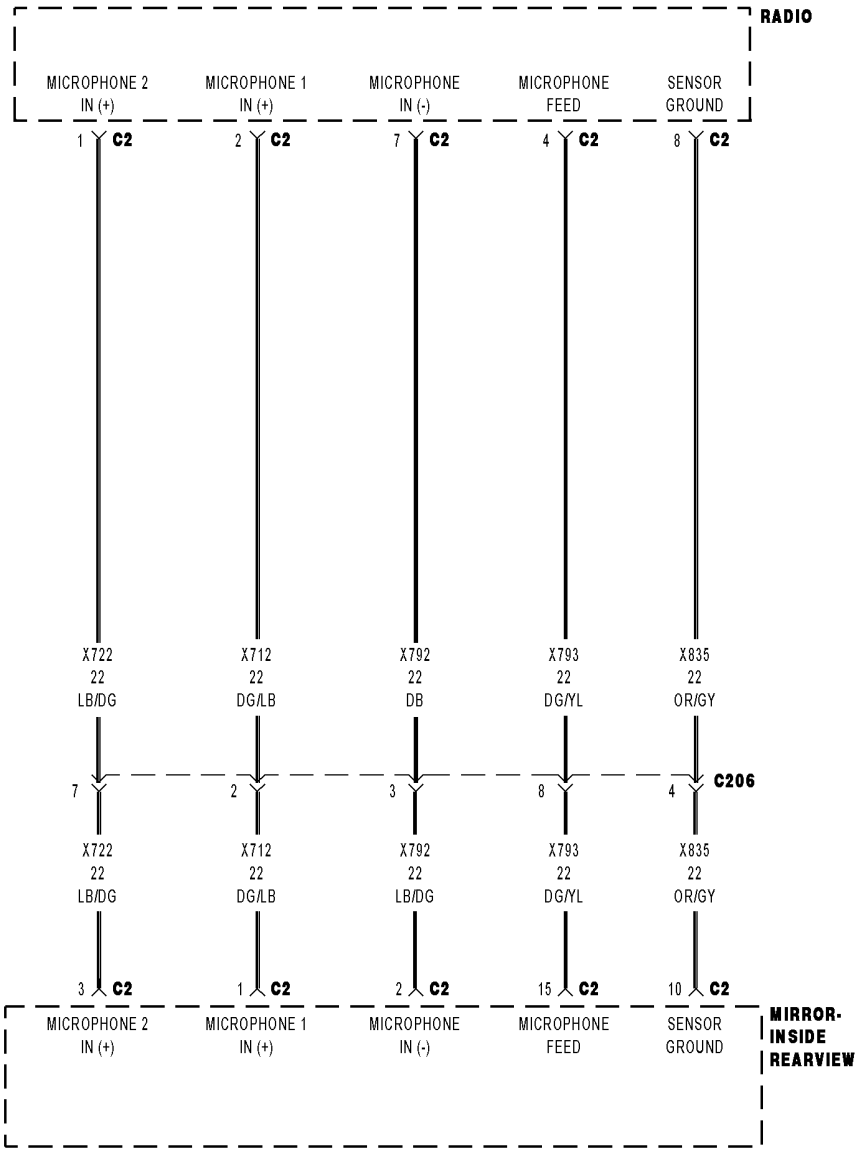

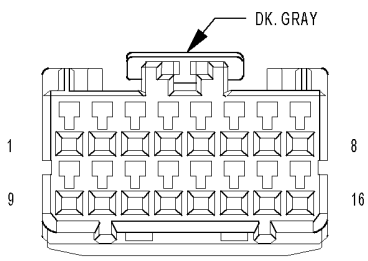

MIRROR-INSIDE REARVIEW C2 (HANDS FREE)

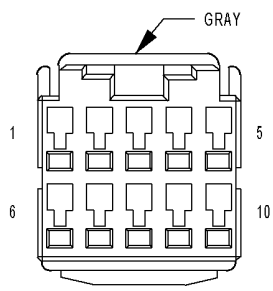

RADIO C2

01430956

For a complete wiring diagram, **refer to the Wiring Information**.

- **When Monitored:**
  With the ignition on.
- **Set Condition:**
  The Radio detects a short to voltage on the (X722) Microphone 2 IN (+) circuit.

Possible Causes
(X722) MICROPHONE 2 IN (+) CIRCUITS SHORTED TO VOLTAGE
INSIDE REARVIEW MIRROR
RADIO

1. CHECK FOR ACTIVE DTC

NOTE: Verify the connection of the Rearview Mirror harness connector.

1. Turn the ignition on.
2. With the scan tool, read the active DTCs.

Does the scan tool display this DTC as active?

Yes

- Go To 2

No

- If the DTC is stored, check for an intermittent condition. Visually inspect the related wiring harness connectors. Look for broken, bent, pushed out, or corroded terminals.
- Perform the BODY VERIFICATION TEST. (Refer to 28 - DTC-Based Diagnostics/MODULE, Totally Integrated Power (TIPM) - Standard Procedure).

2. INSIDE REARVIEW MIRROR

1. Turn the ignition off.
2. Disconnect the Rearview Mirror C2 harness connector.
3. Turn the ignition on.
4. With the scan tool, read the active DTCs.

Does the scan tool display this DTC as active?

Yes

- Go To 3

No

- Replace the Rearview Mirror in accordance with the Service Information.
- Perform the BODY VERIFICATION TEST. (Refer to 28 - DTC-Based Diagnostics/MODULE, Totally Integrated Power (TIPM) - Standard Procedure).

3. (X722) MICROPHONE CIRCUITS SHORTED TO VOLTAGE

1. Turn the ignition off.
2. Disconnect the Radio C2 harness connector.
3. Turn the ignition on.
4. Measure the voltage of the (X722) Microphone circuit.

Is the voltage above 1.0 volt?

Yes

- Repair the (X722) Microphone circuit for a short to voltage.
- Perform the BODY VERIFICATION TEST. (Refer to 28 - DTC-Based Diagnostics/MODULE, Totally Integrated Power (TIPM) - Standard Procedure).

No

- Replace the Radio in accordance with the Service Information.
- Perform the BODY VERIFICATION TEST. (Refer to 28 - DTC-Based Diagnostics/MODULE, Totally Integrated Power (TIPM) - Standard Procedure).

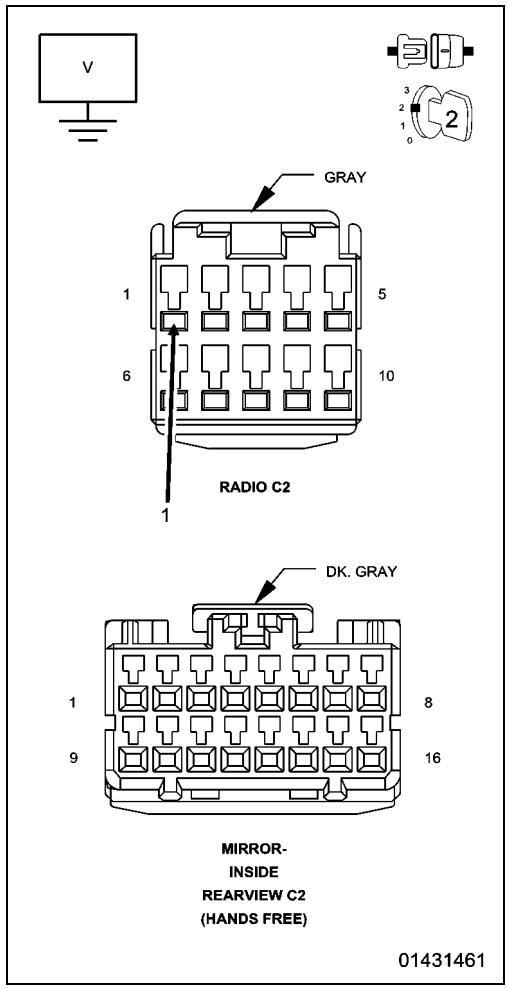

B156B-SATELLITE RADIO ANTENNA CIRCUIT

For a complete wiring diagram, **refer to the Wiring Information**.

- **When Monitored:**
  With the ignition on and the Satellite Radio in seek mode.
- **Set Condition:**
  This DTC sets when the radio is in satellite mode and detects a shorted or open antenna circuit for more than five milliseconds.

Possible Causes
SHORTED OR OPEN ANTENNA CABLE
SHORTED OR OPEN ANTENNA
SATELLITE RADIO RECEIVER

1. TEST FOR INTERMITTENT CONDITION

1. Turn the ignition on.
2. With the scan tool, erase all Satellite Radio DTCs.
3. Turn the ignition and radio on.
4. Put the satellite radio in seek up mode for two loops around the band cycle.
5. With the scan tool, read the DTCs.

Does the scan tool display active: B156B-Satellite Radio Antenna Circuit?

Yes

- Go To 2

No

- Test complete, the condition or conditions that originally set this DTC are not present at this time. Using the wiring diagrams as a guide, check all related splices and connectors for signs of water intrusion, corrosion, pushed out or bent terminals and correct pin tension. Repair as necessary.
- Perform the BODY VERIFICATION TEST. (Refer to 28 - DTC-Based Diagnostics/MODULE, Totally Integrated Power (TIPM) - Standard Procedure).

2. CHECK THE ANTENNA AND CABLE

1. Disconnect the Satellite Radio Antenna connector at the rear of the Radio.
2. Connect the Radio Diagnostic Tool 9977-6-SAT to the Satellite Antenna connection on the back of the Radio.
3. Make sure one of the front doors is still open.
4. Using the scan tool, erase the DTCs.
5. Turn the ignition on.
6. Turn the Radio on.
7. Using the scan tool, read the active Radio DTCs.

Does the scan tool display active: B156B-Satellite Radio Antenna Circuit?

Yes

- Replace the Satellite Radio in accordance with the Service Information.
- Perform the BODY VERIFICATION TEST. (Refer to 28 - DTC-Based Diagnostics/MODULE, Totally Integrated Power (TIPM) - Standard Procedure).

No

- Go To 3

3. TEST THE SATELLITE ANTENNA CABLE

1. Disconnect the Satellite Antenna cable at the Satellie Antenna.
2. Connect the appropriate Radio Diagnostic Tool 9977-6-1 or 9977-6-3 to the Satellite Antenna cable at the back of the Radio.
3. Connect the appropriate Radio Diagnostic Tool 9977-6-4 or 9977-6-2 to the Satellite Antenna cable at the Satellite Antenna.
4. Measure the Resistance across the terminals on the tool.

Is the resistance above 52.5 Ohms or below 47.5 Ohms?

No

- Use the Radio Diagnostic Tool 9977-6 to locate the open or short circuit, repair or replace the Satellite Antenna cable as necessary.
- Perform the BODY VERIFICATION TEST. (Refer to 28 - DTC-Based Diagnostics/MODULE, Totally Integrated Power (TIPM) - Standard Procedure).

Yes

- Replace the Satellite Antenna in accordance with the Service Information.
- Perform the BODY VERIFICATION TEST. (Refer to 28 - DTC-Based Diagnostics/MODULE, Totally Integrated Power (TIPM) - Standard Procedure).

B210D-BATTERY VOLTAGE LOW

For a complete wiring diagram, **refer to the Wiring Information**.

- **When Monitored:**
  With the ignition on.
- **Set Condition:**
  If the module detects that the battery voltage is less than 9.0 volts for one second.

Possible Causes
VEHICLE CHARGING SYSTEM
RADIO

1. CHECK FOR AN INTERMITTENT CONDITION

1. Turn the ignition on, then off, and then on again.
2. With the scan tool, read the Radio DTCs.

Does the scan tool display active: B210D-BATTERY VOLTAGE LOW?

Yes

- Go To 2

No

- The conditions that caused this code to set are not present at this time. Using the wiring diagram/schematic as a guide, inspect the wiring and connectors.
- Perform the BODY VERIFICATION TEST. (Refer to 28 - DTC-Based Diagnostics/MODULE, Totally Integrated Power (TIPM) - Standard Procedure).

2. CHECK THE BATTERY VOLTAGE TO THE RADIO

1. With the scan tool in Data Display, read the Radio battery voltage.

Is the battery voltage less than 9.0 volts?

Yes

- Go To 3

No

- Replace the Radio in accordance with the Service Information.
- Perform the BODY VERIFICATION TEST. (Refer to 28 - DTC-Based Diagnostics/MODULE, Totally Integrated Power (TIPM) - Standard Procedure).

3. CHECK FOR CHARGING SYSTEM RELATED DTCS IN THE POWERTRAIN CONTROL MODULE (PCM)

1. With the scan tool in ECU View, select PCM and check for any Charging System related DTCs.

Does the scan tool display any Charging System related DTCs?

Yes

- (Refer to 28 - DTC-Based Diagnostics/MODULE, Powertrain Control (PCM) - Diagnosis and Testing) and perform the appropriate charging system or battery DTC diagnostic procedure.

No

- Replace the Radio in accordance with the Service Information.
- Perform the BODY VERIFICATION TEST. (Refer to 28 - DTC-Based Diagnostics/MODULE, Totally Integrated Power (TIPM) - Standard Procedure).

■ B210E-BATTERY VOLTAGE HIGH

For a complete wiring diagram, **refer to the Wiring Information**.

- **When Monitored:**
  With the ignition on.
- **Set Condition:**
  If the module detects that the battery voltage is greater 16.5 volts for one second.

Possible Causes
VEHICLE CHARGING SYSTEM
RADIO

1. CHECK FOR AN INTERMITTENT CONDITION

1. Turn the ignition on, then off, and then on again.
2. With the scan tool, read the Radio DTCs.

Does the scan tool display active: B210E-BATTERY VOLTAGE HIGH?

Yes

- Go To 2

No

- The conditions that caused this code to set are not present at this time. Using the wiring diagram/schematic as a guide, inspect the wiring and connectors.
- Perform the BODY VERIFICATION TEST. (Refer to 28 - DTC-Based Diagnostics/MODULE, Totally Integrated Power (TIPM) - Standard Procedure).

2. CHECK THE BATTERY VOLTAGE TO THE RADIO

1. With the scan tool in Data Display, read the Radio battery voltage.

Is the battery voltage greater than 16.5 volts?

Yes

- Go To 3

No

- Replace the Radio in accordance with the Service Information.
- Perform the BODY VERIFICATION TEST. (Refer to 28 - DTC-Based Diagnostics/MODULE, Totally Integrated Power (TIPM) - Standard Procedure).

3. CHECK FOR CHARGING SYSTEM RELATED DTCS IN THE POWERTRAIN CONTROL MODULE (PCM)

1. With the scan tool in ECU View, select PCM and check for any Charging System related DTCs.

Does the scan tool display any Charging System related DTCs?

Yes

- (Refer to 28 - DTC-Based Diagnostics/MODULE, Powertrain Control (PCM) - Diagnosis and Testing) and perform the appropriate charging system or battery DTC diagnostic procedure.

No

- Replace the Radio in accordance with the Service Information.
- Perform the BODY VERIFICATION TEST. (Refer to 28 - DTC-Based Diagnostics/MODULE, Totally Integrated Power (TIPM) - Standard Procedure).

■ B221E-RADIO INTERNAL

For a complete wiring diagram, **refer to the Wiring Information**.

- **When Monitored:**
  Continuously with the ignition on and Radio turned on.
- **Set Condition:**
  The code will set if the Radio detects a Radio internal failure.

Possible Causes
RADIO INTERNAL FAILURE

1. REPLACE THE RADIO

1. When this DTC is active, replace the Radio.

Repair

- Replace the Radio in accordance with the Service Information. (Refer to 08 - Electrical/8A - Audio and Video/RADIO - Removal).
- Perform the BODY VERIFICATION TEST. (Refer to 28 - DTC-Based Diagnostics/MODULE, Totally Integrated Power (TIPM) - Standard Procedure).

■ B222C-VEHICLE CONFIGURATION NOT PROGRAMMED

For a complete wiring diagram, **refer to the Wiring Information**.

- **When Monitored:**
  With the ignition on.
- **Set Condition:**
  Vehicle configuration information not programmed into the TIPM.

POSSIBLE CAUSES
NO COMMUNICATION WITH TOTALLY INTEGRATED POWER MODULE (TIPM)
ACTIVE TIPM DTCS
TOTALLY INTEGRATED POWER MODULE (TIPM)

1. TEST FOR AN INTERMITTENT CONDITION

1. Turn the ignition on.
2. Turn the ignition off, wait ten seconds then turn the ignition on.
3. With the scan tool, read DTCs.

Does the scan tool display: B222C-VEHICLE CONFIGURATION NOT PROGRAMMED?

Yes

- Go To 2

No

- Test complete, the condition or conditions that originally set this DTC are not present at this time. Using the wiring diagrams as a guide, check all related splices and connectors for signs of water intrusion, corrosion, pushed out or bent terminals and correct pin tension.
- Perform the BODY VERIFICATION TEST. (Refer to 28 - DTC-Based Diagnostics/MODULE, Totally Integrated Power (TIPM) - Standard Procedure).

2. VERIFY COMMUNICATION WITH TIPM

1. With the scan tool, read the active modules on the bus.

Does the scan tool show the TIPM active on the bus?

Yes

- Go To 3

No

- (Refer to 29 - Non-DTC Diagnostics/Communication - Diagnosis and Testing) and perform the No Response From TIPM diagnostic procedure.

3. CHECK TIPM FOR ACTIVE DTCS

1. With the scan tool, erase TIPM DTCs.
2. Turn the ignition off. Wait approximately ten seconds.
3. Turn the ignition on.
4. With the scan tool, read TIPM DTCs.

Are any active DTCs present?

Yes

- (Refer to 28 - DTC-Based Diagnostics/MODULE, Totally Integrated Power (TIPM) - Diagnosis and Testing) and perform the appropriate diagnostic procedure.

No

- Go To 4

4. CHECK THE VEHICLE CONFIGURATION INFORMATION WITH SCAN TOOL

1. With the scan tool run an ECU Details Report, read the Original and Current VINs, and the Body Style of the vehicle.

Does the information displayed match the vehicle?

Yes

- Replace the Totally Integrated Power Module (TIPM) in accordance with the Service Information.
- Perform the BODY VERIFICATION TEST. (Refer to 28 - DTC-Based Diagnostics/MODULE, Totally Integrated Power (TIPM) - Standard Procedure).

No

- Go To 5

5. RESTORE THE VEHICLE CONFIGURATION

1. With the scan tool, restore the vehicle configuration.
2. Turn the ignition off, then back on.
3. With the scan tool, read the active DTCs.

Does the scan tool display B222C-VEHICLE CONFIGURATION NOT PROGRAMMED as active?

Yes

- Replace the Totally Integrated Power Module (TIPM) in accordance with the Service Information.
- Perform the BODY VERIFICATION TEST. (Refer to 28 - DTC-Based Diagnostics/MODULE, Totally Integrated Power (TIPM) - Standard Procedure).

No

- Test complete, the condition or conditions that originally set this DTC are not present at this time. Using the wiring diagrams as a guide, check all related splices and connectors for signs of water intrusion, corrosion, pushed out or bent terminals and correct pin tension.
- Perform the BODY VERIFICATION TEST. (Refer to 28 - DTC-Based Diagnostics/MODULE, Totally Integrated Power (TIPM) - Standard Procedure).

U0141-LOST COMMUNICATION WITH IPM (FCM/TIPM)

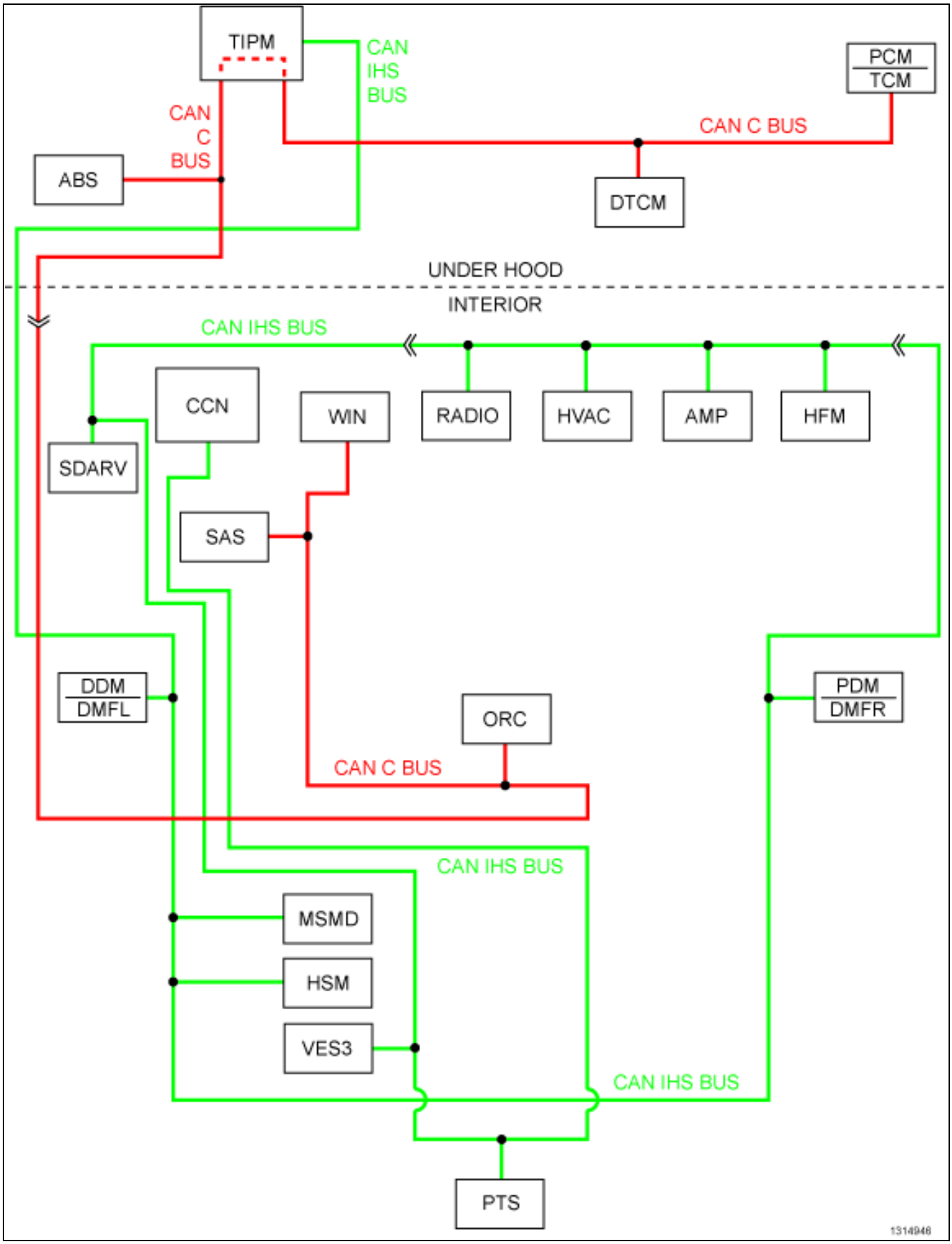

For a complete wiring diagram, **refer to the Wiring Information**.

- **When Monitored:**
  Continuously when the ignition is on.
  Battery voltage between 10 and 16 volts.
  Ignition Off Draw (IOD) fuse installed.
  Totally Integrated Power Module (TIPM) is configured correctly.
- **Set Condition:**
  Bus messages not received from the Totally Integrated Power Module for approximately two to five seconds.

Possible Causes
CAN IHS OR CAN C BUS CIRCUITS OPEN OR SHORTED
DTCS RELATED TO BATTERY VOLTAGE, IGNITION, OR VIN MESSAGES
TIPM NOT CONFIGURED CORRECTLY
TOTALLY INTEGRATED POWER MODULE
TOTALLY INTEGRATED POWER MODULE POWER AND GROUND
MODULE THAT SET THIS DTC

1. VERIFY DIAGNOSTIC TROUBLE CODE (DTC) IS ACTIVE

NOTE: Make sure the IOD fuse is installed and battery voltage is between 10 and 16 volts before proceeding.

1. Using the scan tool, read active Radio DTCs.

Is this DTC active?

Yes

- (Refer to 28 - DTC-Based Diagnostics/MODULE, Totally Integrated Power (TIPM) - Diagnosis and Testing) and perform the U0141-Lost Communication with Totally Integrated Power Module diagnostic procedure.

No

- (Refer to 29 - Non-DTC Diagnostics/Communication - Diagnosis and Testing) and perform the Stored Lost Communication DTCs diagnostic procedure.

U0155-LOST COMMUNICATION WITH CLUSTER/CCN

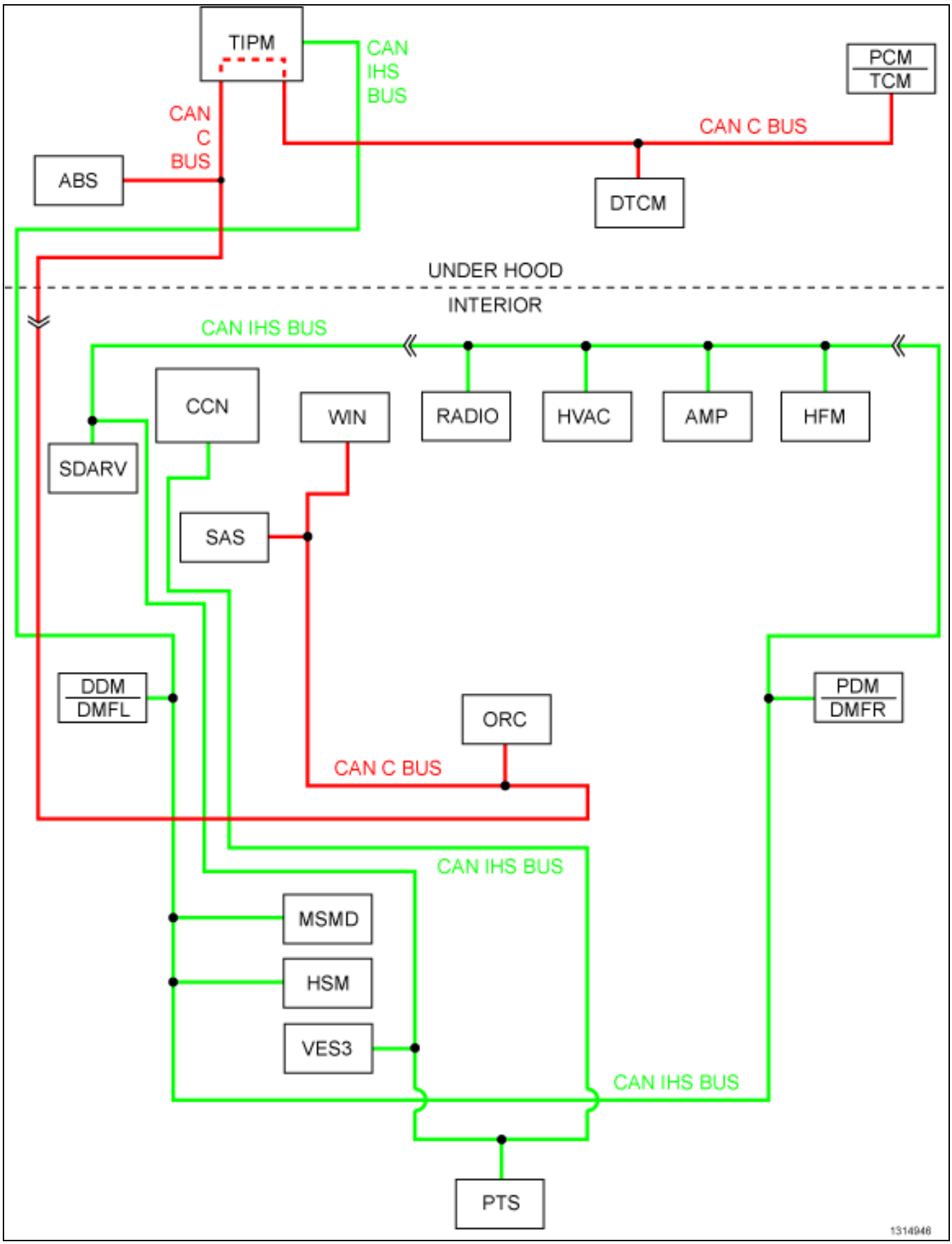

For a complete wiring diagram, **refer to the Wiring Information**.

- **When Monitored:**
  Continuously when the ignition is on.
  Battery voltage between 10 and 16 volts.
  Ignition Off Draw (IOD) fuse installed.
  Totally Integrated Power Module (TIPM) is configured correctly.
- **Set Condition:**
  Bus messages not received from the Cluster/CCN for approximately two to five seconds.

Possible Causes
CAN IHS OR CAN C BUS CIRCUITS OPEN OR SHORTED
DTCS RELATED TO BATTERY VOLTAGE, IGNITION, OR VIN MESSAGES
TIPM NOT CONFIGURED CORRECTLY
CLUSTER/CCN
CLUSTER/CCN POWER AND GROUND
MODULE THAT SET THIS DTC

1. VERIFY DIAGNOSTIC TROUBLE CODE (DTC) IS ACTIVE

NOTE: Make sure the IOD fuse is installed and battery voltage is between 10 and 16 volts before proceeding.

1. Using the scan tool, read active Radio DTCs.

Is this DTC active?

Yes

- (Refer to 28 - DTC-Based Diagnostics/MODULE, Totally Integrated Power (TIPM) - Diagnosis and Testing) and perform the U0155-Lost Communication with Cluster/CCN diagnostic procedure.

No

- (Refer to 29 - Non-DTC Diagnostics/Communication - Diagnosis and Testing) and perform the Stored Lost Communication DTCs diagnostic procedure.

U0159-LOST COMMUNICATION WITH PARKING ASSIST CONTROL MODULE

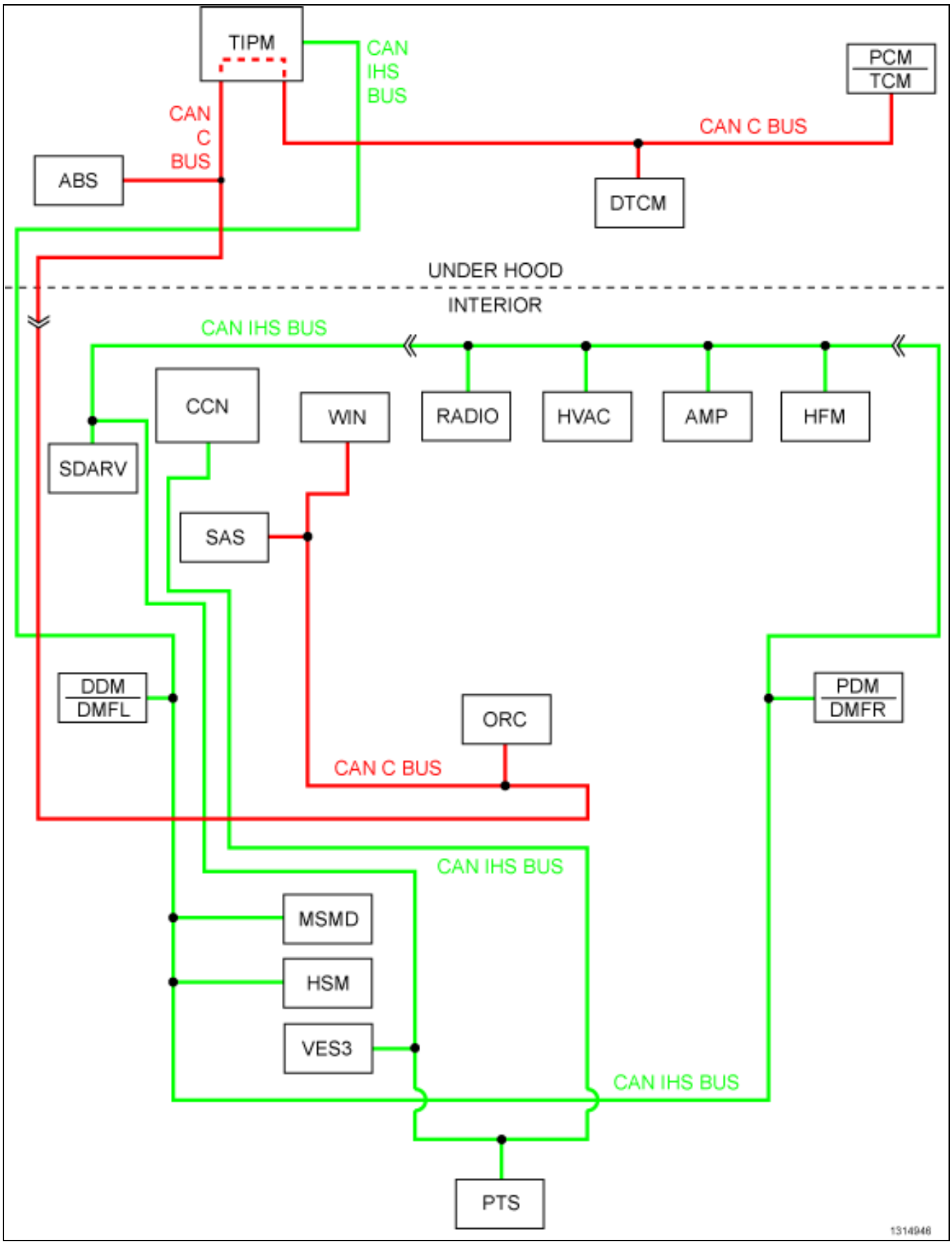

For a complete wiring diagram, **refer to the Wiring Information**.

- **When Monitored:**
  Continuously when the ignition is on.
  Battery voltage between 10 and 16 volts.
  Ignition Off Draw (IOD) fuse installed.
  Totally Integrated Power Module (TIPM) is configured correctly.
- **Set Condition:**
  Bus messages not received from the Park Assist Module for approximately two to five seconds.

Possible Causes
CAN IHS OR CAN C BUS CIRCUITS OPEN OR SHORTED
DTCS RELATED TO BATTERY VOLTAGE, IGNITION, OR VIN MESSAGES
TIPM NOT CONFIGURED CORRECTLY
PARK ASSIST CONTROL MODULE
PARK ASSIST CONTROL MODULE POWER AND GROUND
MODULE THAT SET THIS DTC

1. VERIFY DIAGNOSTIC TROUBLE CODE (DTC) IS ACTIVE

NOTE: Make sure the IOD fuse is installed and battery voltage is between 10 and 16 volts before proceeding.

1. Using the scan tool, read active Radio DTCs.

Is this DTC active?

Yes

- (Refer to 28 - DTC-Based Diagnostics/MODULE, Totally Integrated Power (TIPM) - Diagnosis and Testing) and perform the U0159-Lost Communication with Park Assist Control Module diagnostic procedure.

No

- (Refer to 29 - Non-DTC Diagnostics/Communication - Diagnosis and Testing) and perform the Stored Lost Communication DTCs diagnostic procedure.

■ U0168-LOST COMMUNICATION WITH VEHICLE SECURITY CONTROL MODULE (WIRELESS IGNITION NODE OR WIN)

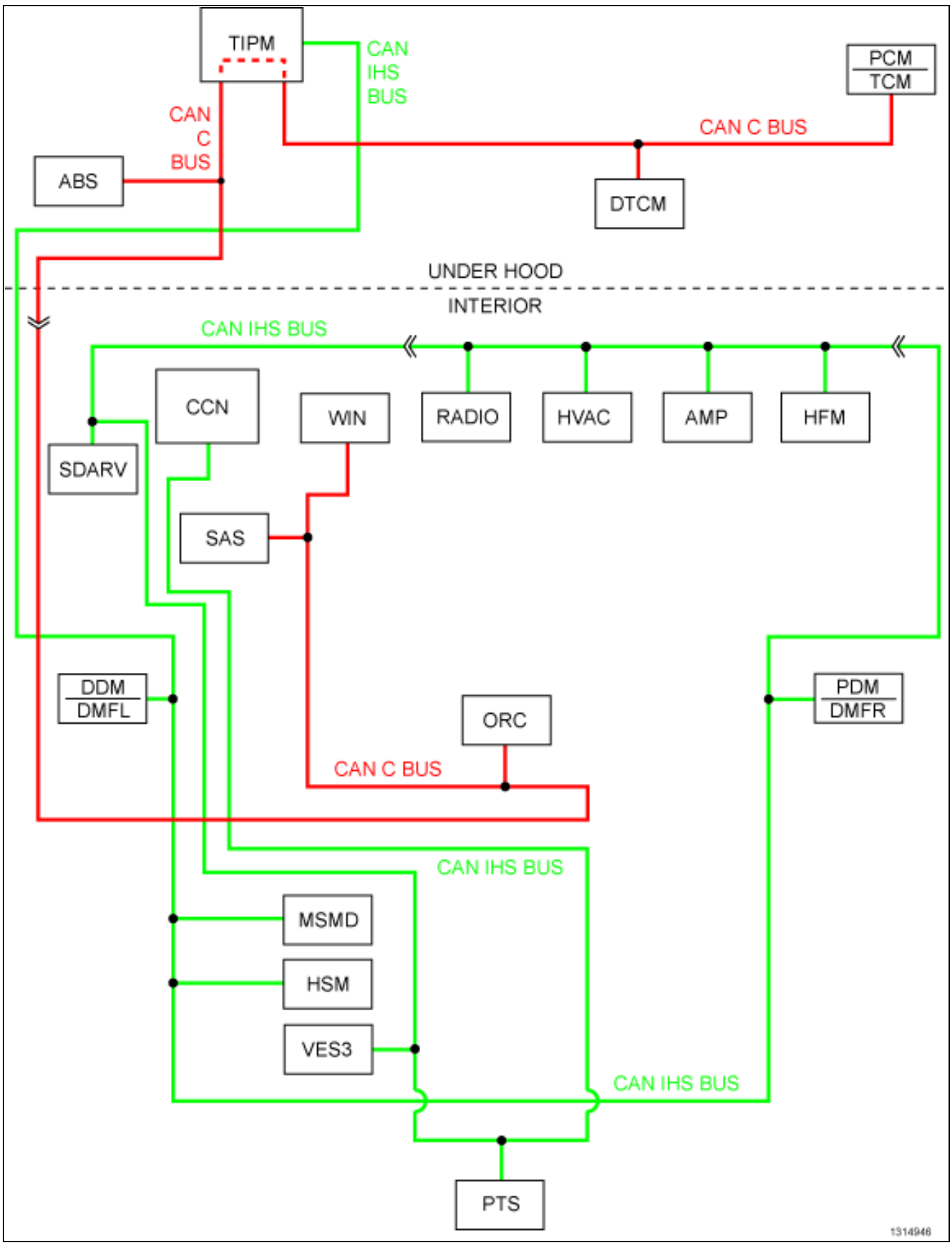

For a complete wiring diagram, **refer to the Wiring Information**.

- **When Monitored:**
  Continuously when the ignition is on.
  Battery voltage between 10 and 16 volts.
  Ignition Off Draw (IOD) fuse installed.
  Totally Integrated Power Module (TIPM) is configured correctly.
- **Set Condition:**
  Bus messages not received from the Wireless Ignition Node (WIN) for approximately two to five seconds.

Possible Causes
CAN IHS OR CAN C BUS CIRCUITS OPEN OR SHORTED
DTCS RELATED TO BATTERY VOLTAGE, IGNITION, OR VIN MESSAGES
TIPM NOT CONFIGURED CORRECTLY
WIRELESS IGNITION NODE
WIRELESS IGNITION NODE POWER AND GROUND
MODULE THAT SET THIS DTC

1. VERIFY DIAGNOSTIC TROUBLE CODE (DTC) IS ACTIVE

NOTE: Make sure the IOD fuse is installed and battery voltage is between 10 and 16 volts before proceeding.

1. Using the scan tool, read active Radio DTCs.

Is this DTC active?

Yes

- (Refer to 28 - DTC-Based Diagnostics/MODULE, Totally Integrated Power (TIPM) - Diagnosis and Testing) and perform the U0168-Lost Communication with Vehicle Security Control Module diagnostic procedure.

No

- (Refer to 29 - Non-DTC Diagnostics/Communication - Diagnosis and Testing) and perform the Stored Lost Communication DTCs diagnostic procedure.

U0186-LOST COMMUNICATION WITH AUDIO AMPLIFIER (AMP)

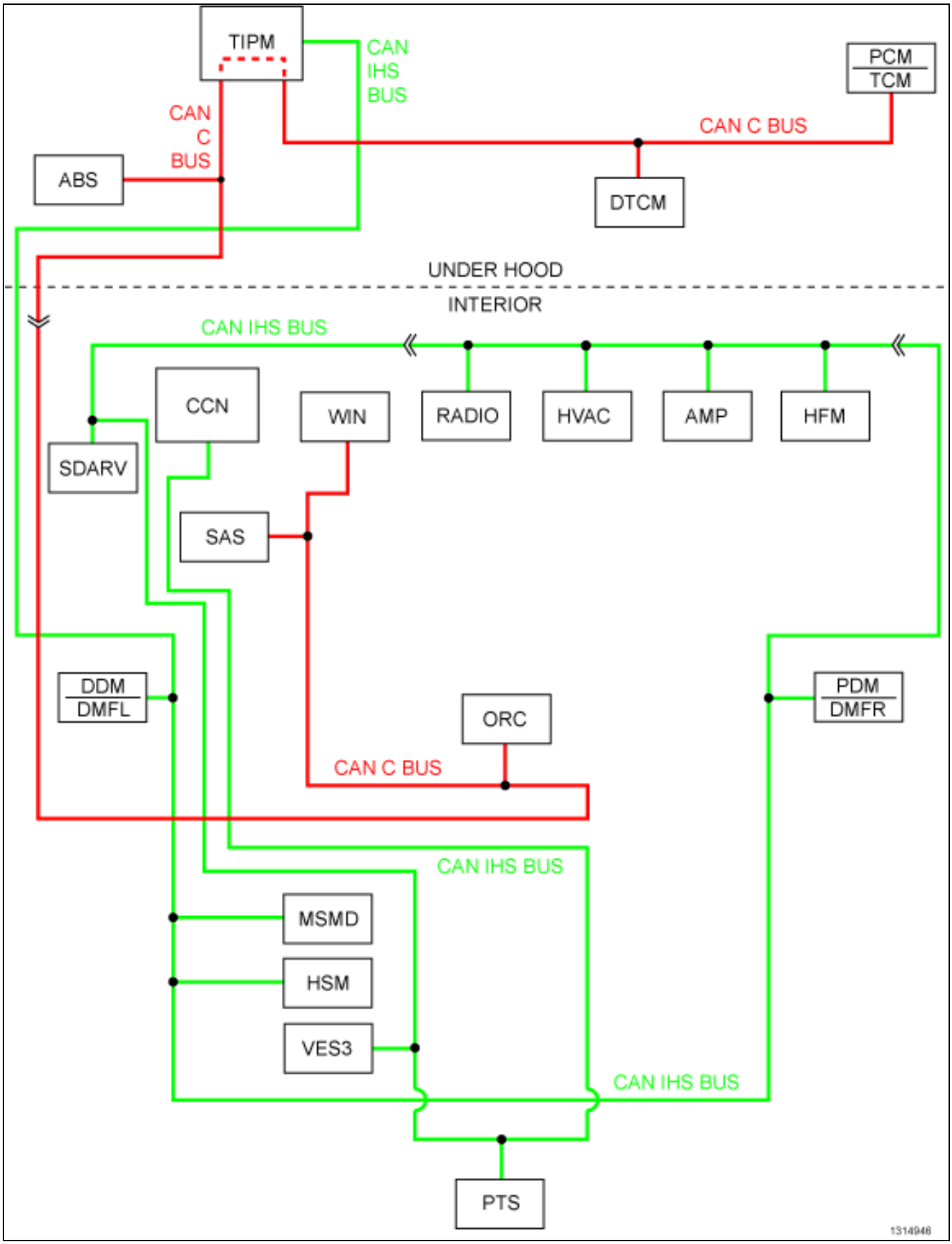

For a complete wiring diagram, **refer to the Wiring Information**.

- **When Monitored:**
  Continuously when the ignition is on.
  Battery voltage between 10 and 16 volts.
  Ignition Off Draw (IOD) fuse installed.
  Totally Integrated Power Module (TIPM) is configured correctly.
- **Set Condition:**
  Bus messages not received from the Audio Amplifier for approximately two to five seconds.

Possible Causes
CAN IHS OR CAN C BUS CIRCUITS OPEN OR SHORTED
DTCS RELATED TO BATTERY VOLTAGE, IGNITION, OR VIN MESSAGES
TIPM NOT CONFIGURED CORRECTLY
AUDIO AMPLIFIER
AUDIO AMPLIFIER POWER AND GROUND
MODULE THAT SET THIS DTC

1. VERIFY DIAGNOSTIC TROUBLE CODE (DTC) IS ACTIVE

NOTE: Make sure the IOD fuse is installed and battery voltage is between 10 and 16 volts before proceeding.

1. Using the scan tool, read active Radio DTCs.

Is this DTC active?

Yes

- (Refer to 28 - DTC-Based Diagnostics/MODULE, Totally Integrated Power (TIPM) - Diagnosis and Testing) and perform the U0186-Lost Communication with Audio Amplifier diagnostic procedure.

No

- (Refer to 29 - Non-DTC Diagnostics/Communication - Diagnosis and Testing) and perform the Stored Lost Communication DTCs diagnostic procedure.

U0197-LOST COMMUNICATION WITH HANDS FREE PHONE MODULE (HFM)

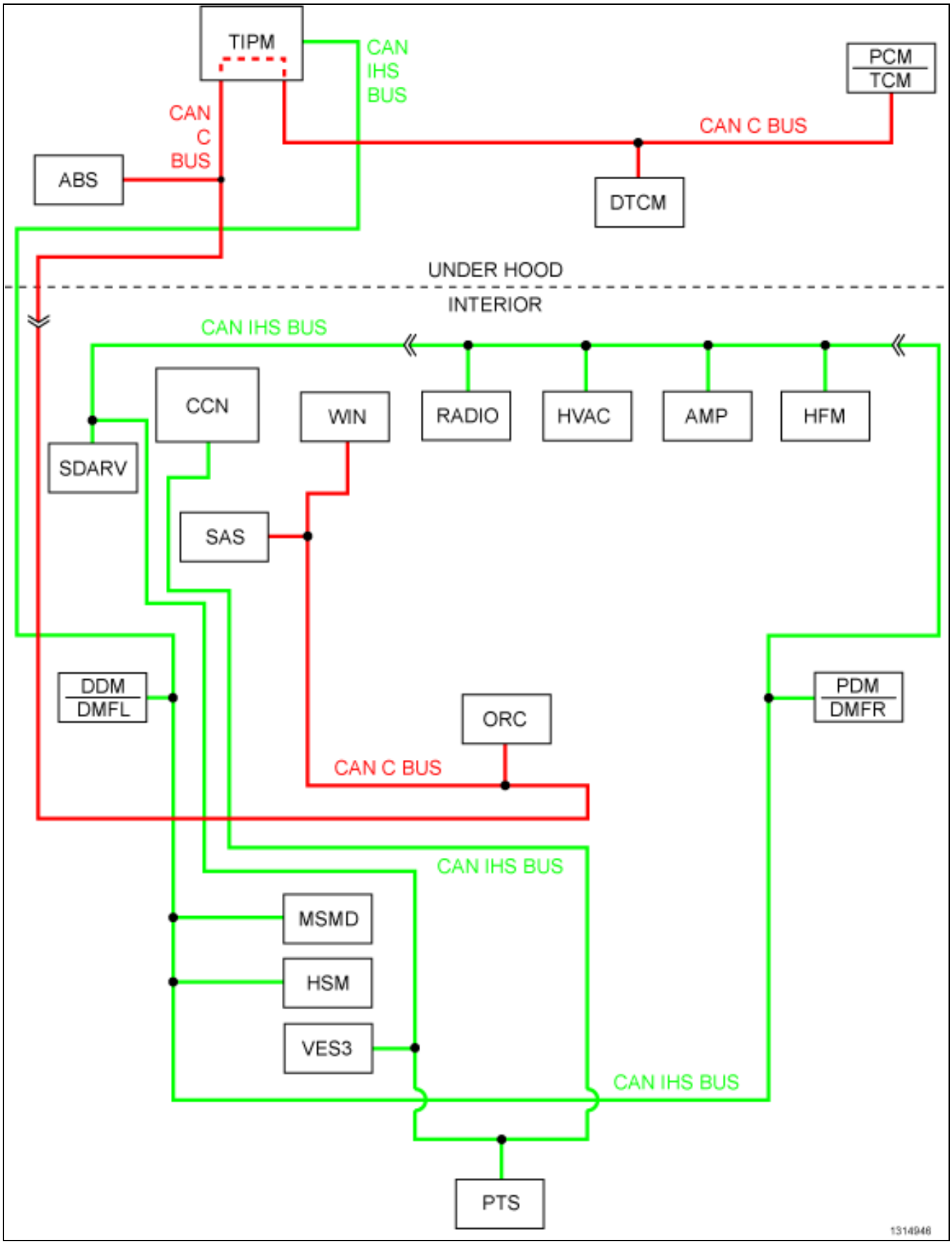

For a complete wiring diagram, **refer to the Wiring Information**.

- **When Monitored:**
  Continuously when the ignition is on.
  Battery voltage between 10 and 16 volts.
  Ignition Off Draw (IOD) fuse installed.
  Totally Integrated Power Module (TIPM) is configured correctly.
- **Set Condition:**
  Bus messages not received from the Hands Free Phone Module (HFM) for approximately two to five seconds.

Possible Causes
CAN IHS OR CAN C BUS CIRCUITS OPEN OR SHORTED
DTCS RELATED TO BATTERY VOLTAGE, IGNITION, OR VIN MESSAGES
TIPM NOT CONFIGURED CORRECTLY
HANDS FREE PHONE MODULE
HANDS FREE PHONE MODULE POWER AND GROUND
MODULE THAT SET THIS DTC

1. VERIFY DIAGNOSTIC TROUBLE CODE (DTC) IS ACTIVE

NOTE: Make sure the IOD fuse is installed and battery voltage is between 10 and 16 volts before proceeding.

1. Using the scan tool, read active Radio DTCs.

Is this DTC active?

Yes

- (Refer to 28 - DTC-Based Diagnostics/MODULE, Totally Integrated Power (TIPM) - Diagnosis and Testing) and perform the U0197-Lost Communication with Hands Free Phone Module diagnostic procedure.

No

- (Refer to 29 - Non-DTC Diagnostics/Communication - Diagnosis and Testing) and perform the Stored Lost Communication DTCs diagnostic procedure.

■ U0249-LOST COMMUNICATION WITH VEHICLE ENTERTAINMENT CONTROL MODULE - LAST ROW (VES3)

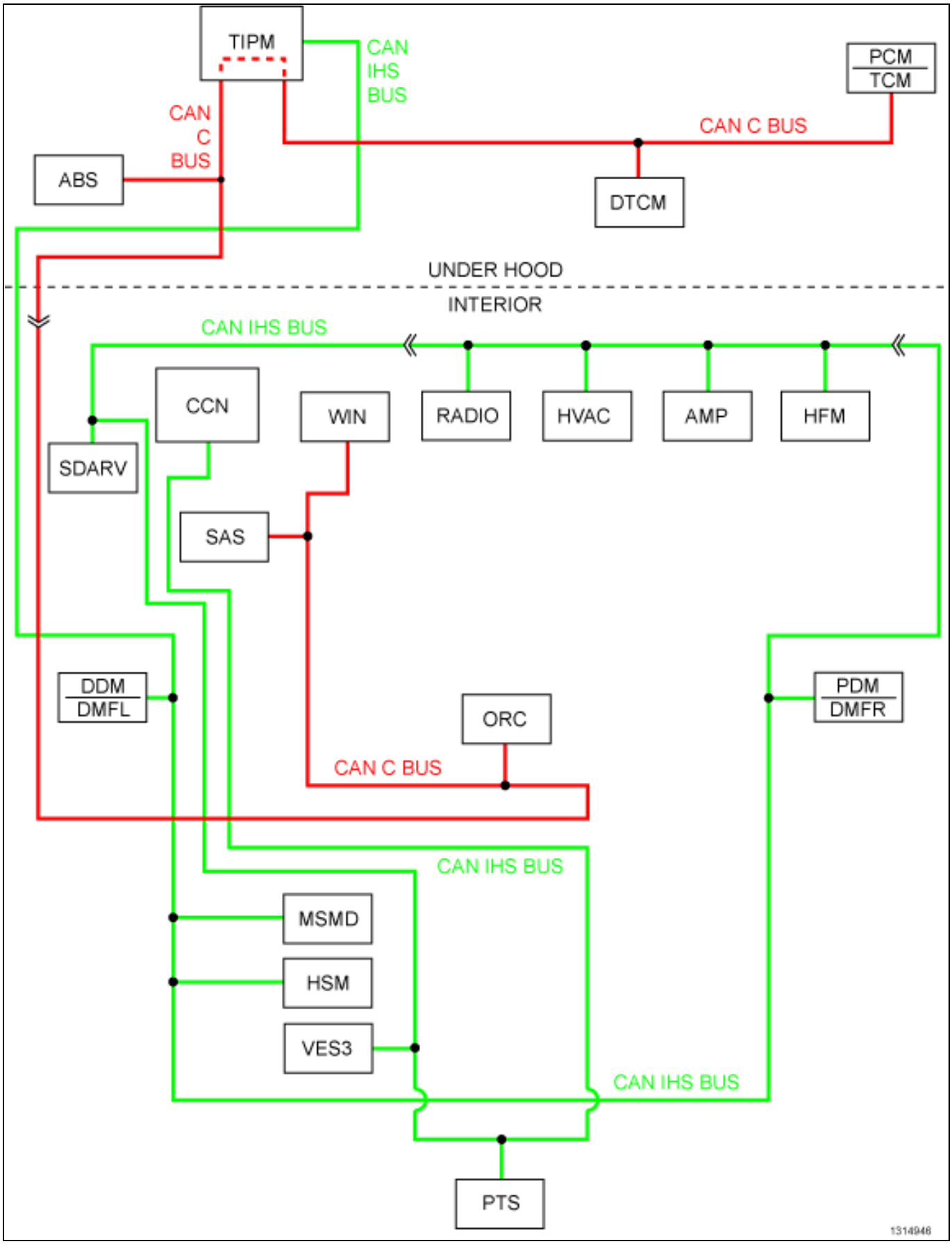

For a complete wiring diagram, **refer to the Wiring Information**.

- **When Monitored:**
  Continuously when the ignition is on.
  Battery voltage between 10 and 16 volts.
  Ignition Off Draw (IOD) fuse installed.
  Totally Integrated Power Module (TIPM) is configured correctly.
- **Set Condition:**
  Bus messages not received from the Vehicle Entertainment Control Module - Last Row (VES3) for approximately two to five seconds.

Possible Causes
CAN IHS OR CAN C BUS CIRCUITS OPEN OR SHORTED
DTCS RELATED TO BATTERY VOLTAGE, IGNITION, OR VIN MESSAGES
TIPM NOT CONFIGURED CORRECTLY
VEHICLE ENTERTAINMENT CONTROL MODULE - LAST ROW
VEHICLE ENTERTAINMENT CONTROL MODULE - LAST ROW POWER AND GROUND
MODULE THAT SET THIS DTC

1. VERIFY DIAGNOSTIC TROUBLE CODE (DTC) IS ACTIVE

NOTE: Make sure the IOD fuse is installed and battery voltage is between 10 and 16 volts before proceeding.

1. Using the scan tool, read active Radio DTCs.

Is this DTC active?

Yes

- (Refer to 28 - DTC-Based Diagnostics/MODULE, Totally Integrated Power (TIPM) - Diagnosis and Testing) and perform the U0249-Lost Communication with Vehicle Entertainment Control Module - Last Row (VES3) diagnostic procedure.

No

- (Refer to 29 - Non-DTC Diagnostics/Communication - Diagnosis and Testing) and perform the Stored Lost Communication DTCs diagnostic procedure.

U1158-LOST COMMUNICATION WITH SATELLITE VIDEO RECEIVER (SDARV)

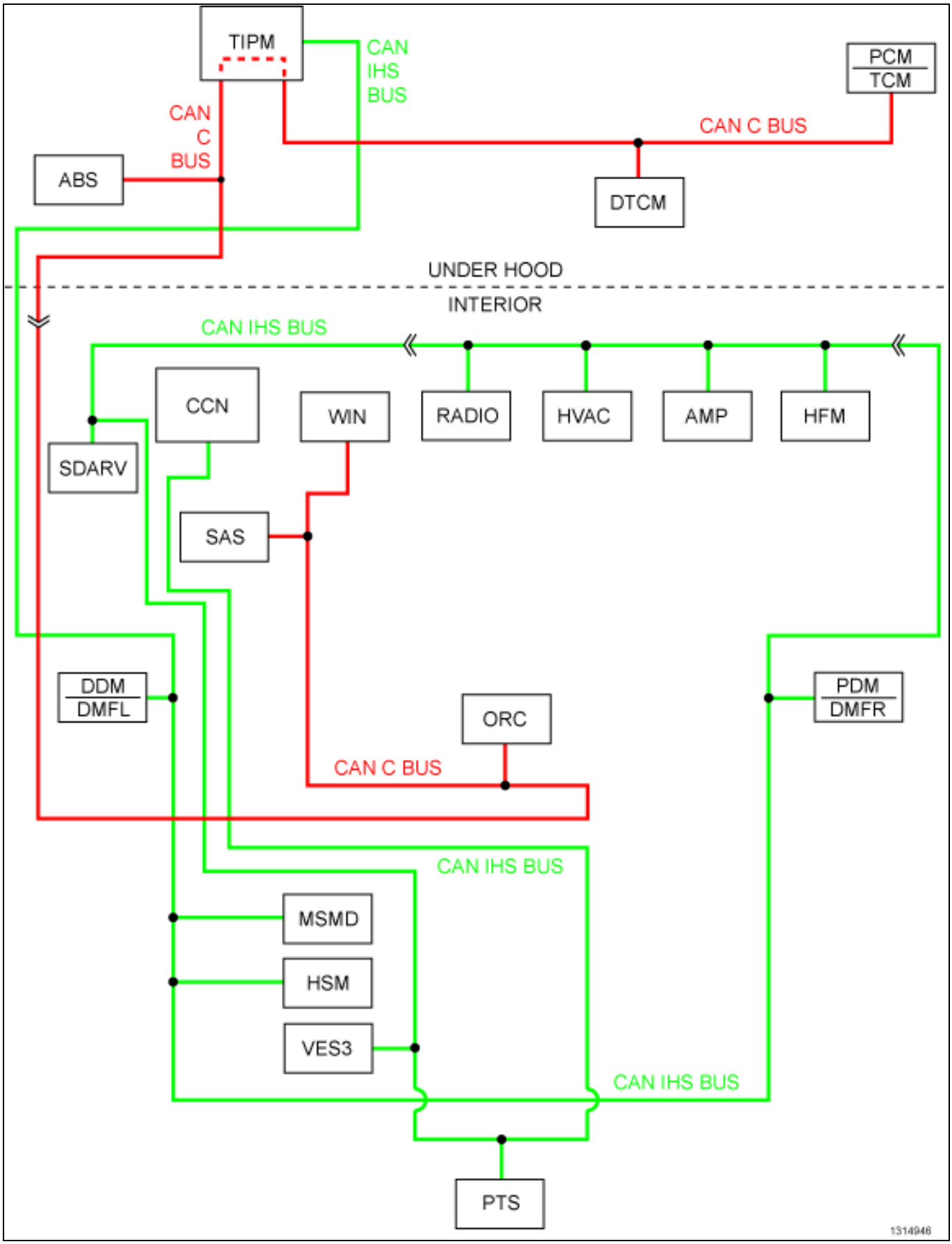

For a complete wiring diagram, **refer to the Wiring Information**.

- **When Monitored:**
  Continuously when the ignition is on.
  Battery voltage between 10 and 16 volts.
  Ignition Off Draw (IOD) fuse installed.
  Totally Integrated Power Module (TIPM) is configured correctly.
- **Set Condition:**
  Bus messages not received from the Satellite Video Receiver (SDARV) for approximately two to five seconds.

Possible Causes
CAN IHS OR CAN C BUS CIRCUITS OPEN OR SHORTED
DTCS RELATED TO BATTERY VOLTAGE, IGNITION, OR VIN MESSAGES
TIPM NOT CONFIGURED CORRECTLY
SATELLITE VIDEO RECEIVER
SATELLITE VIDEO RECEIVER POWER AND GROUND
MODULE THAT SET THIS DTC

1. VERIFY DIAGNOSTIC TROUBLE CODE (DTC) IS ACTIVE

NOTE: Make sure the IOD fuse is installed and battery voltage is between 10 and 16 volts before proceeding.

1. Using the scan tool, read active Radio DTCs.

Is this DTC active?

Yes

- (Refer to 28 - DTC-Based Diagnostics/MODULE, Totally Integrated Power (TIPM) - Diagnosis and Testing) and perform the U1158-Lost Communication with Satellite Video Receiver (SDARV) diagnostic procedure.

No

- (Refer to 29 - Non-DTC Diagnostics/Communication - Diagnosis and Testing) and perform the Stored Lost Communication DTCs diagnostic procedure.

SYSTEM, Video Entertainment, Three (VES3)

Diagnosis and Testing

■ B142B-VES UNIT HIGH TEMPERATURE

For a complete wiring diagram, **refer to the Wiring Information**.

- **When Monitored:**
  With the ignition on. VES active.
- **Set Condition:**
  The Video Screen Module temperature is above 90°C (194°F).

Possible Causes
VIDEO SCREEN MODULE HIGH TEMPERATURE

1. VIDEO SCREEN MODULE HIGH TEMPERATURE

1. Turn the ignition on.
2. With the scan tool, clear all VES DTCs.
3. Turn the VES on.
4. With the scan tool, read the DTC information.

Does the scan tool read: B142B-VES UNIT HIGH TEMPERATURE?

Yes

- Turn the Video Screen Module off and allow the unit to cool.
- Perform the BODY VERIFICATION TEST. (Refer to 28 - DTC-Based Diagnostics/MODULE, Totally Integrated Power (TIPM) - Standard Procedure).

No

- Test Complete.

B14CE-VES BRIGHTNESS UP INPUT BUTTON STUCK

For a complete wiring diagram, **refer to the Wiring Information**.

- **When Monitored:**
  With the ignition on. VES active.
- **Set Condition:**
  The Video Screen Module detects a closed switch for 60 seconds.

Possible Causes
VIDEO SCREEN MODULE

1. VERIFY OPERATION OF THE BUTTON

1. With the scan tool, erase DTCs.
2. Press and release the button three times.
3. Wait 30 seconds.
4. With the scan tool, read DTCs.

Is DTC B14CE-VES BRIGHTNESS UP INPUT BUTTON STUCK active?

Yes

- Replace the Video Screen Module in accordance with the Service Information.
- Perform the BODY VERIFICATION TEST. (Refer to 28 - DTC-Based Diagnostics/MODULE, Totally Integrated Power (TIPM) - Standard Procedure).

No

- Test complete.
- Perform the BODY VERIFICATION TEST. (Refer to 28 - DTC-Based Diagnostics/MODULE, Totally Integrated Power (TIPM) - Standard Procedure).

B14CF-VES BRIGHTNESS DOWN INPUT BUTTON STUCK

For a complete wiring diagram, **refer to the Wiring Information**.

- **When Monitored:**
  With the ignition on. VES active.
- **Set Condition:**
  The Video Screen Module detects a closed switch for 60 seconds.

Possible Causes
VIDEO SCREEN MODULE

1. VERIFY OPERATION OF THE BUTTON

1. With the scan tool, erase DTCs.
2. Press and release the button three times.
3. Wait 30 seconds.
4. With the scan tool, read DTCs.

Is DTC: active?

Yes

- Replace the Video Screen Module in accordance with the Service Information.
- Perform the BODY VERIFICATION TEST. (Refer to 28 - DTC-Based Diagnostics/MODULE, Totally Integrated Power (TIPM) - Standard Procedure).

No

- Test complete.
- Perform the BODY VERIFICATION TEST. (Refer to 28 - DTC-Based Diagnostics/MODULE, Totally Integrated Power (TIPM) - Standard Procedure).

B210A-SYSTEM VOLTAGE LOW

For a complete wiring diagram, **refer to the Wiring Information**.

- **When Monitored:**
  With the ignition on.
- **Set Condition:**
  This is a CAN message that the battery voltage was below 10 volts for over 20 seconds.

Possible Causes
LOW SYSTEM VOLTAGE
BATTERY OR CHARGING SYSTEM

1. CHECK ENGINE DTCs

1. With the scan tool, read Engine DTCs.

Are there any ENGINE Charging or Battery DTCs present?

Yes

- Perform the appropriate diagnostic procedure. (Refer to 28 - DTC-Based Diagnostics/MODULE, Powertrain Control (PCM) - Standard Procedure).

No

- This code is for information only. At some time there was a low battery system voltage. Check the battery and charging system in accordance with the Service Information.

B210B-SYSTEM VOLTAGE HIGH

For a complete wiring diagram, **refer to the Wiring Information**.

- **When Monitored:**
  With the ignition on.
- **Set Condition:**
  This is a CAN message that the battery voltage was above 16 volts for over 20 seconds..

Possible Causes
HIGH SYSTEM VOLTAGE
BATTERY OR CHARGING SYSTEM

1. CHECK ENGINE DTCs

1. With the scan tool, read Engine DTCs.

Are there any ENGINE Charging or Battery DTCs present?

Yes

- Perform the appropriate diagnostic procedure. (Refer to 28 - DTC-Based Diagnostics/MODULE, Powertrain Control (PCM) - Standard Procedure).

No

- This code is for information only. At some time there was a low battery system voltage. Check the battery and charging system in accordance with the Service Information.

■ B210D-BATTERY VOLTAGE LOW

For a complete wiring diagram, **refer to the Wiring Information**.

- **When Monitored:**
  With the ignition on.
- **Set Condition:**
  Battery voltage less than 10 volts for more than 20 seconds.

Possible Causes
RESISTANCE IN THE (A1) BATTERY POSITIVE CIRCUIT
RESISTANCE IN THE GENERATOR CASE GROUND
(K125) GENERATOR FIELD CONTROL CIRCUIT OPEN
(K125) GENERATOR FIELD CONTROL CIRCUIT SHORTED TO GROUND
(Z20) GROUND CIRCUIT OPEN
BATTERY
GENERATOR
POWERTRAIN CONTROL MODULE (PCM)

1. CHECK FOR ANY POWERTRAIN CONTROL MODULES DTCS

NOTE: Make sure the Battery is in good condition. Using the Midtronics Battery Tester, test the Battery before continuing.

NOTE: Inspect the vehicle for after market accessories that may exceed the Generator System output.

NOTE: Make sure the generator drive belt is in good operating condition.

NOTE: Inspect the fuses in the IPM. If an open fuse is found, use the wire diagram/schematic as a guide, inspect the wiring and connectors for damage.

1. Turn the ignition on.
2. With the scan tool, read active PCM DTCs.

Does the scan tool display any active battery or charging DTCs?

Yes

- (Refer to 28 - DTC-Based Diagnostics/MODULE, Powertrain Control (PCM) - Standard Procedure) and perform the appropriate charging system diagnostic procedure.

No

- Check the above conditions that can cause a low voltage condition. Repair as necessary.
- Perform the BODY VERIFICATION TEST. (Refer to 28 - DTC-Based Diagnostics/MODULE, Totally Integrated Power (TIPM) - Standard Procedure).

■ B210E-BATTERY VOLTAGE HIGH

For a complete wiring diagram, **refer to the Wiring Information**.

- **When Monitored:**
  With the ignition on.
- **Set Condition:**
  Battery voltage greater than 16 volts for more than 20 seconds.

Possible Causes
(K125) GENERATOR FIELD CONTROL CIRCUIT SHORTED TO BATTERY VOLTAGE
BATTERY
GENERATOR
POWERTRAIN CONTROL MODULE (PCM)

1. CHECK FOR ANY POWERTRAIN CONTROL MODULES DTCS

NOTE: Make sure the Battery is in good condition. Using the Midtronics Battery Tester, test the Battery before continuing.

NOTE: Inspect the vehicle for after market accessories that may exceed the Generator System output.

NOTE: Make sure the generator drive belt is in good operating condition.

NOTE: Inspect the fuses in the IPM. If an open fuse is found, use the wire diagram/schematic as a guide, inspect the wiring and connectors for damage.

1. Turn the ignition on.
2. With the scan tool, read active PCM DTCs.

Does the scan tool display any active battery or charging system DTCs?

Yes

- (Refer to 28 - DTC-Based Diagnostics/MODULE, Powertrain Control (PCM) - Standard Procedure) and perform the appropriate charging system diagnostic procedure.

No

- Check the above conditions that can cause a high voltage condition. Repair as necessary.
- Perform the BODY VERIFICATION TEST. (Refer to 28 - DTC-Based Diagnostics/MODULE, Totally Integrated Power (TIPM) - Standard Procedure).

■ B21A1-ECU RESET/RECOVERY OCCURRED

For a complete wiring diagram, **refer to the Wiring Information**.

- **When Monitored:**
  Ignition on.
- **Set Condition:**
  Video Screen Module experiences a reset event.

Possible Causes
LOW BATTERY VOLTAGE

1. LOW BATTERY VOLTAGE

1. Turn the ignition on.
2. With the scan tool, clear all VES DTCs.
3. Turn the ignition off, then on again.
4. With the scan tool read VES DTCs.

Does the scan tool display: B21A1-ECU RESET/RECOVERY OCCURRED?

Yes

- Check for intermittent condition by inspecting the wiring harness and cables for chafed, pierced, pinched, and partially broken wires.
- Repair as necessary.
- Perform the BODY VERIFICATION TEST. (Refer to 28 - DTC-Based Diagnostics/MODULE, Totally Integrated Power (TIPM) - Standard Procedure).

No

- Test Complete.

B222B-VEHICLE ENTERTAINMENT SYSTEM INTERNAL

For a complete wiring diagram, **refer to the Wiring Information**.

- **When Monitored:**
  With the ignition on.
- **Set Condition:**
  The Video Screen Module detects an internal failure.

Possible Causes
VIDEO SCREEN MODULE

1. REPLACE THE VIDEO SCREEN MODULE

1. When this DTC is active, replace the Video Screen Module.

Repair

- Replace the Video Screen Module in accordance with the Service Information.
- Perform the BODY VERIFICATION TEST. (Refer to 28 - DTC-Based Diagnostics/MODULE, Totally Integrated Power (TIPM) - Standard Procedure).

B222C-VEHICLE CONFIGURATION NOT PROGRAMMED

For a complete wiring diagram, **refer to the Wiring Information**.

- **When Monitored:**
  With the ignition on.
- **Set Condition:**
  Vehicle configuration information not programmed into the TIPM.

POSSIBLE CAUSES
NO COMMUNICATION WITH TOTALLY INTEGRATED CONTROL MODULE
ACTIVE TIPM DTCs
TOTALLY INTEGRATED CONTROL MODULE (TIPM)

1. TEST FOR AN INTERMITTENT CONDITION

1. Turn the ignition on.
2. Turn the ignition off, wait ten seconds then turn the ignition on.
3. With the scan tool, read DTCs.

Does the scan tool display: B222C-VEHICLE CONFIGURATION NOT PROGRAMMED?

Yes

- Go To 2

No

- Test complete, the condition or conditions that originally set this DTC are not present at this time. Using the wiring diagrams as a guide, check all related splices and connectors for signs of water intrusion, corrosion, pushed out or bent terminals and correct pin tension.
- Perform the BODY VERIFICATION TEST. (Refer to 28 - DTC-Based Diagnostics/MODULE, Totally Integrated Power (TIPM) - Standard Procedure).

2. VERIFY COMMUNICATION WITH TIPM

1. With the scan tool, read the active modules on the bus.

Does the scan tool show the TIPM active on the bus?

Yes

- Go To 3

No

- (Refer to 29 - Non-DTC Diagnostics/Communication - Diagnosis and Testing) and perform the No Response from TIPM diagnostic procedure.

3. CHECK TIPM FOR ACTIVE DTCS

1. With the scan tool, erase TIPM DTCs.
2. Turn the ignition off. Wait approximately ten seconds.
3. Turn the ignition on.
4. With the scan tool, read TIPM DTCs.

Are any active DTCs present?

Yes

- (Refer to 28 - DTC-Based Diagnostics/MODULE, Totally Integrated Power (TIPM) - Diagnosis and Testing) and perform the appropriate diagnostic procedure.

No

- Go To 4

4. CHECK THE VEHICLE CONFIGURATION INFORMATION WITH SCAN TOOL

1. With the scan tool run an ECU Details Report, read the Original and Current VINs, and the Body Style of the vehicle.

Does the information displayed match the vehicle?

Yes

- Replace the Totally Integrated Power Module (TIPM) in accordance with the Service Information.
- Perform the BODY VERIFICATION TEST. (Refer to 28 - DTC-Based Diagnostics/MODULE, Totally Integrated Power (TIPM) - Standard Procedure).

No

- Go To 5

5. RESTORE THE VEHICLE CONFIGURATION

1. With the scan tool, restore the vehicle configuration.
2. Turn the ignition off, then back on.
3. With the scan tool, read the active DTCs.

Does the scan tool display B222C-VEHICLE CONFIGURATION NOT PROGRAMMED as active?

Yes

- Replace the Totally Integrated Power Module (TIPM) in accordance with the Service Information.
- Perform the BODY VERIFICATION TEST. (Refer to 28 - DTC-Based Diagnostics/MODULE, Totally Integrated Power (TIPM) - Standard Procedure).

No

- Test complete, the condition or conditions that originally set this DTC are not present at this time. Using the wiring diagrams as a guide, check all related splices and connectors for signs of water intrusion, corrosion, pushed out or bent terminals and correct pin tension.
- Perform the BODY VERIFICATION TEST. (Refer to 28 - DTC-Based Diagnostics/MODULE, Totally Integrated Power (TIPM) - Standard Procedure).

U0010-CAN INTERIOR BUS

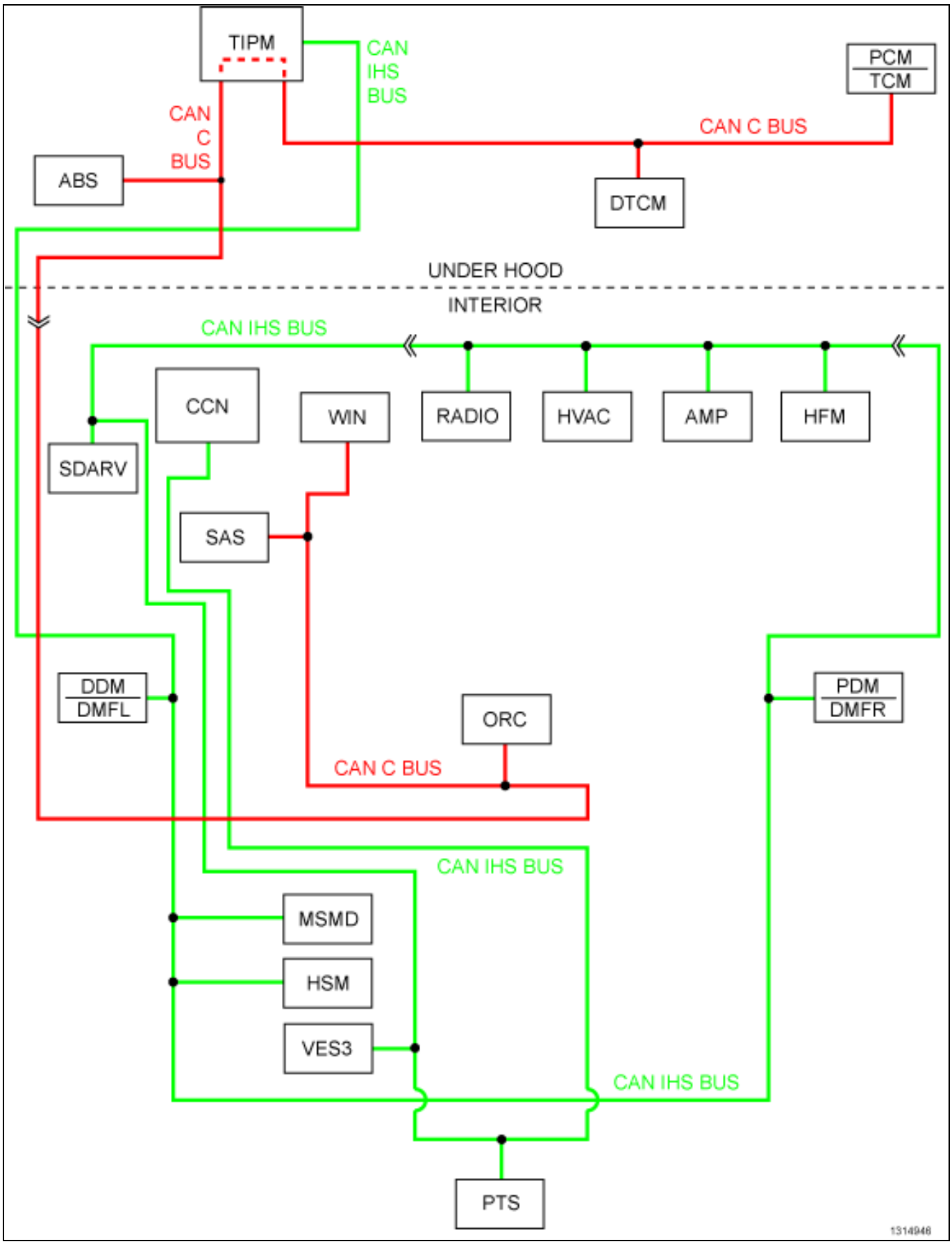

For a complete wiring diagram, **refer to the Wiring Information**.

- **When Monitored:**
  Continuously when the ignition is on.
  Battery voltage between 10 and 16 volts.
  Ignition Off Draw (IOD) fuse installed.
  Totally Integrated Power Module (TIPM) is configured correctly.
- **Set Condition:**
  The Cluster detects a short to ground on the CAN Interior Bus (125K) (+) circuit or a short to voltage on the CAN Interior Bus (125K) (-) circuit.

Possible Causes
BUS CIRCUITS SHORTED TO GROUND OR VOLTAGE
DTCS RELATED TO BATTERY VOLTAGE, IGNITION, OR VIN MESSAGES
TIPM NOT CONFIGURED CORRECTLY
TOTALLY INTEGRATED POWER MODULE (TIPM)
TIPM POWER AND GROUND
MODULE THAT SET THIS DTC

1. VERIFY DIAGNOSTIC TROUBLE CODE (DTC) IS ACTIVE

NOTE: Make sure the IOD fuse is installed and battery voltage is between 10 and 16 volts before proceeding.

1. With the scan tool, read active Cluster DTCs.

Is this DTC active?

Yes

- (Refer to 28 - DTC-Based Diagnostics/MODULE, Totally Integrated Power (TIPM) - Diagnosis and Testing) and perform the U0141-Lost Communication with IPM (FCM/TIPM) diagnostic procedure.

No

- (Refer to 29 - Non-DTC Diagnostics/Communication - Diagnosis and Testing) and perform the Stored Lost Communication DTCs diagnostic procedure.

U0141-LOST COMMUNICATION WITH IPM (FCM/TIPM)

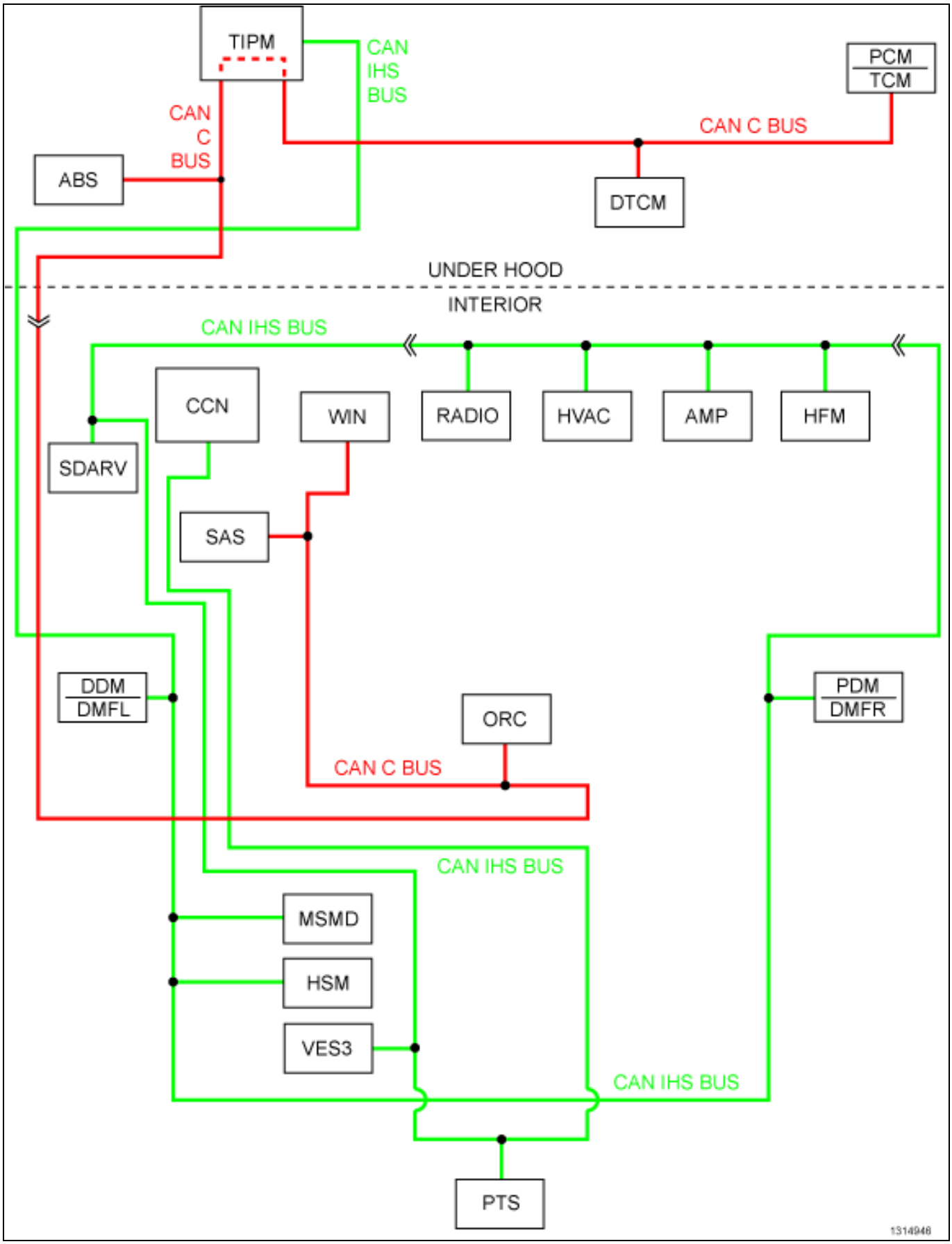

For a complete wiring diagram, **refer to the Wiring Information**.

- **When Monitored:**
  Continuously when the ignition is on.
  Battery voltage between 10 and 16 volts.
  Ignition Off Draw (IOD) fuse installed.
  Totally Integrated Power Module (TIPM) is configured correctly.
- **Set Condition:**
  Bus messages not received from the Totally Integrated Power Module (TIPM) for approximately two to five seconds.

Possible Causes
CAN B OR CAN C BUS CIRCUITS OPEN OR SHORTED
DTCS RELATED TO BATTERY VOLTAGE, IGNITION, OR VIN MESSAGES
TIPM NOT CONFIGURED CORRECTLY
TOTALLY INTEGRATED POWER MODULE (TIPM)
TIPM POWER AND GROUND
MODULE THAT SET THIS DTC

1. VERIFY DIAGNOSTIC TROUBLE CODE (DTC) IS ACTIVE

NOTE: Make sure the IOD fuse is installed and battery voltage is between 10 and 16 volts before proceeding.

1. With the scan tool, read active VES DTCs.

Is this DTC active?

Yes

- (Refer to 28 - DTC-Based Diagnostics/MODULE, Totally Integrated Power (TIPM) - Diagnosis and Testing) and perform the U0141-Lost Communication with IPM (FCM/TIPM) diagnostic procedure.

No

- (Refer to 29 - Non-DTC Diagnostics/Communication - Diagnosis and Testing) and perform the Stored Lost Communication DTC diagnostic procedure.

U0155-LOST COMMUNICATION WITH CLUSTER/CCN

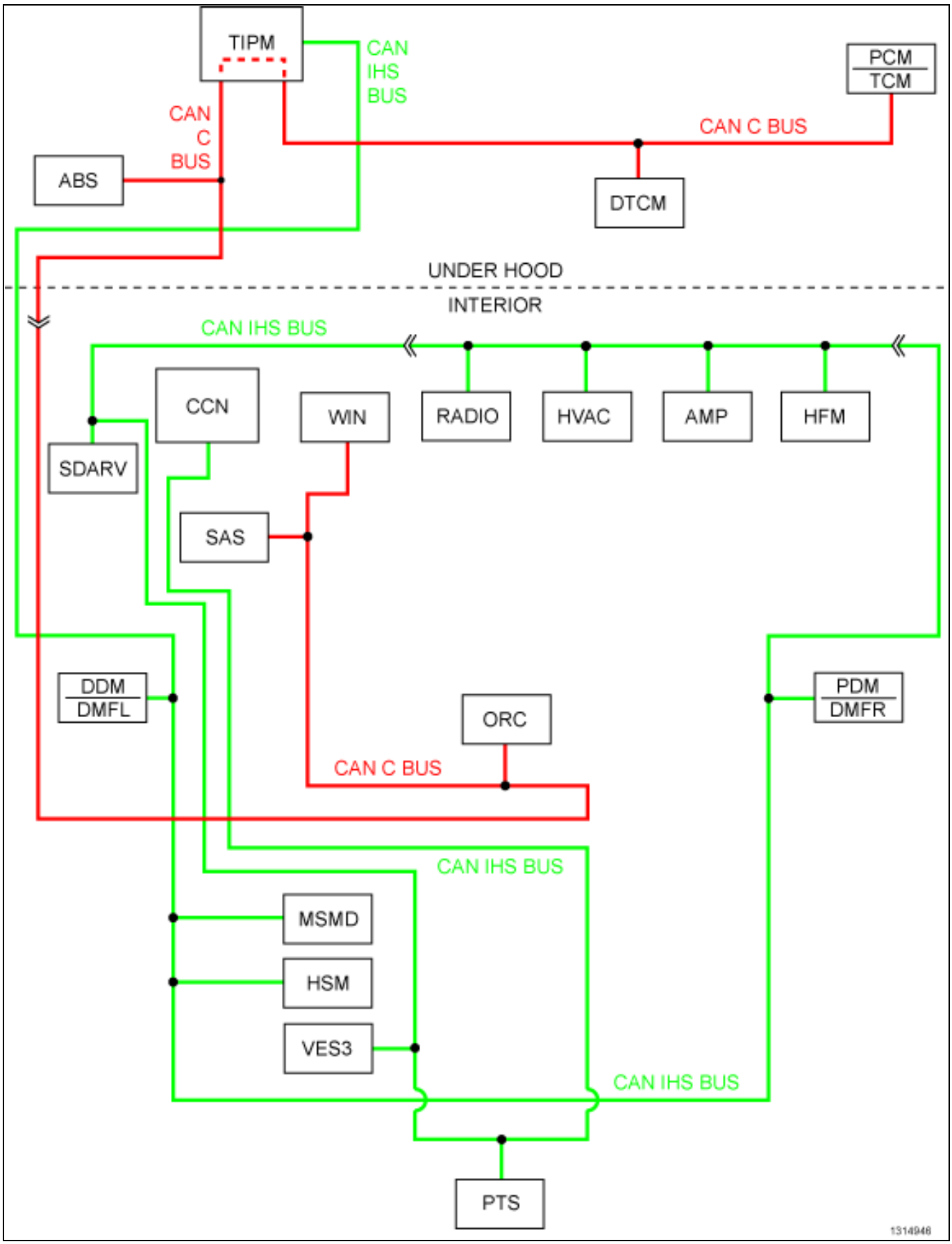

For a complete wiring diagram, **refer to the Wiring Information**.

- **When Monitored:**
  Continuously when the ignition is on.
  Battery voltage between 10 and 16 volts.
  Ignition Off Draw (IOD) fuse installed.
  Totally Integrated Power Module (TIPM) is configured correctly.
- **Set Condition:**
  Bus messages not received from the Cluster for approximately two to five seconds.

Possible Causes
BUS CIRCUITS OPEN OR SHORTED
DTCS RELATED TO BATTERY VOLTAGE, IGNITION, OR VIN MESSAGES
TIPM NOT CONFIGURED CORRECTLY
TIPM
TIPM POWER AND GROUND
MODULE THAT SET THIS DTC

1. VERIFY DIAGNOSTIC TROUBLE CODE (DTC) IS ACTIVE

NOTE: Make sure the IOD fuse is installed and battery voltage is between 10 and 16 volts before proceeding.

1. With the scan tool, read active VES DTCs.

Is this DTC active?

Yes

- (Refer to 28 - DTC-Based Diagnostics/MODULE, Totally Integrated Power (TIPM) - Diagnosis and Testing) and perform the U0155-Lost Communication With Cluster/CCN diagnostic procedure.

No

- (Refer to 29 - Non-DTC Diagnostics/Communication - Diagnosis and Testing) and perform the Stored Lost Communication DTC diagnostic procedure.

■ U0168-LOST COMMUNICATION WITH VEHICLE SECURITY CONTROL MODULE (WIRELESS IGNITION NODE OR WIN)

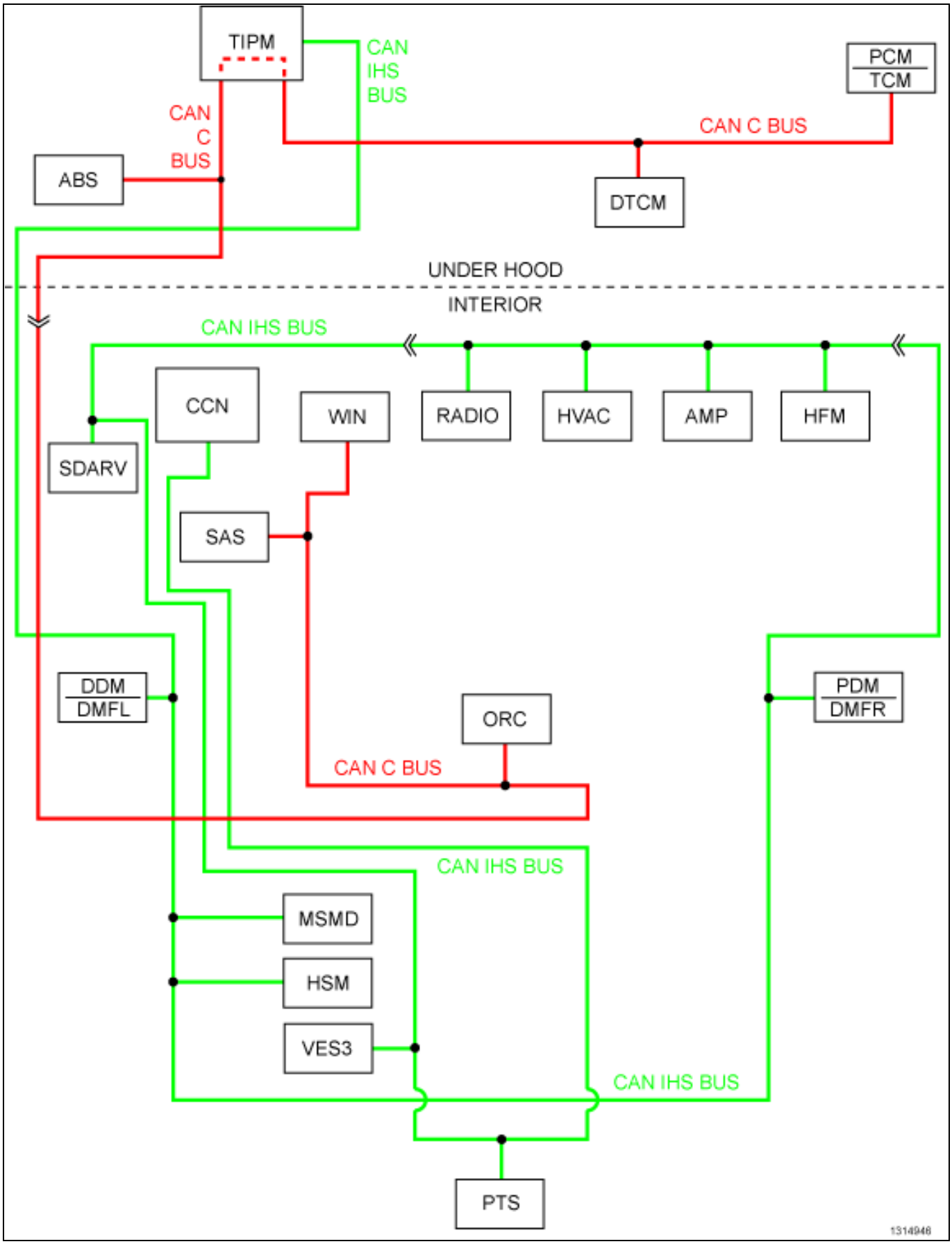

For a complete wiring diagram, **refer to the Wiring Information**.

- **When Monitored:**
  Continuously when the ignition is on.
  Battery voltage between 10 and 16 volts.
  Ignition Off Draw (IOD) fuse installed.
  Totally Integrated Power Module (TIPM) is configured correctly.
- **Set Condition:**
  Bus messages not received from the WIN for approximately two to five seconds.

Possible Causes
BUS CIRCUITS OPEN OR SHORTED
DTCS RELATED TO BATTERY VOLTAGE, IGNITION, OR VIN MESSAGES
TIPM NOT CONFIGURED CORRECTLY
WIN
WIN POWER AND GROUND
MODULE THAT SET THIS DTC

1. VERIFY DIAGNOSTIC TROUBLE CODE (DTC) IS ACTIVE

NOTE: Make sure the IOD fuse is installed and battery voltage is between 10 and 16 volts before proceeding.

1. With the scan tool, read active VES DTCs.

Is this DTC active?

Yes

- (Refer to 28 - DTC-Based Diagnostics/MODULE, Totally Integrated Power (TIPM) - Diagnosis and Testing) and perform the U0168-Lost Communication With Vehicle Security Control Module (Wireless Ignition Node or WIN) diagnostic procedure.

No

- (Refer to 29 - Non-DTC Diagnostics/Communication - Diagnosis and Testing) and perform the Stored Lost Communication DTC diagnostic procedure.

U0184-LOST COMMUNICATION WITH RADIO

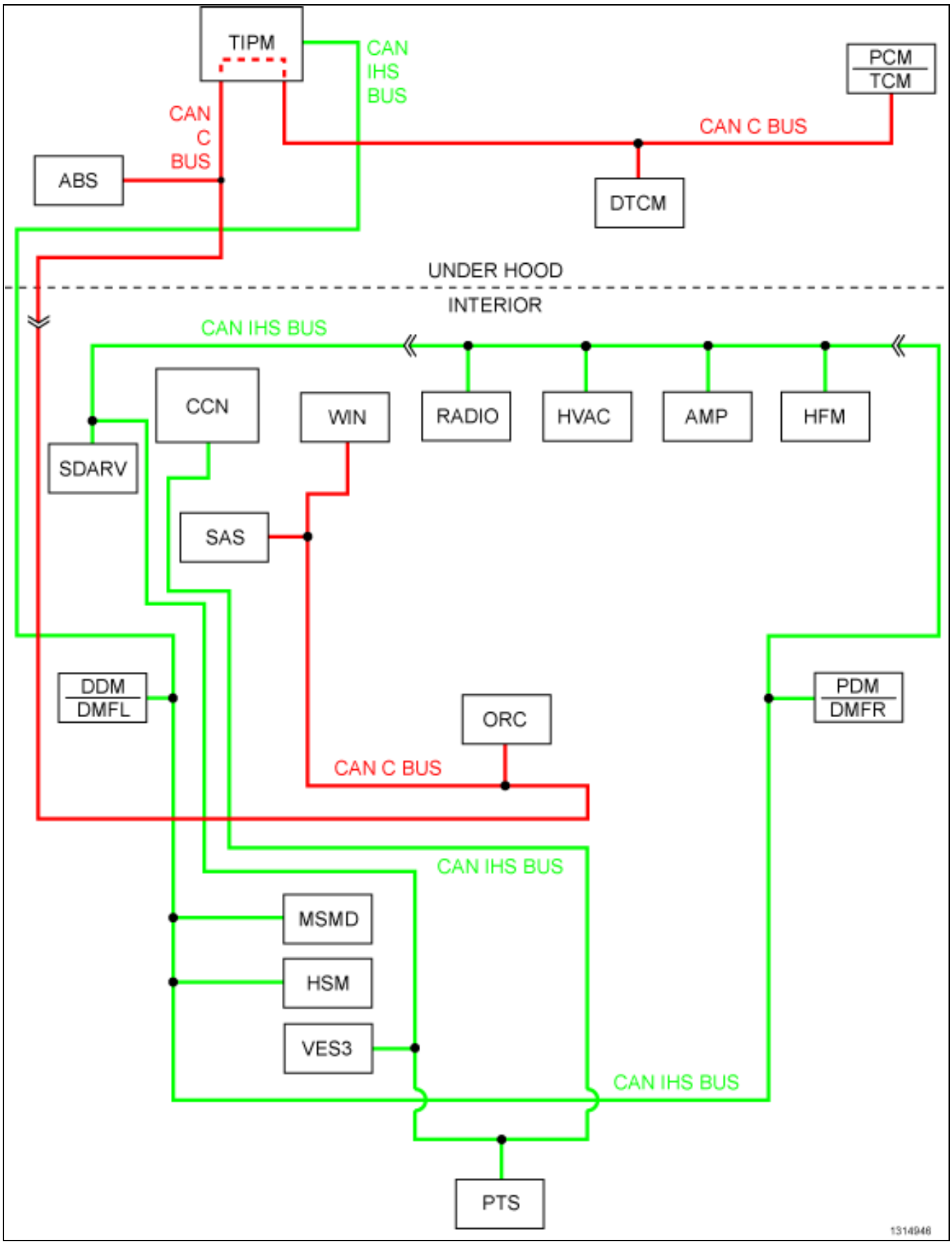

For a complete wiring diagram, **refer to the Wiring Information**.

- **When Monitored:**
  Continuously when the ignition is on.
  Battery voltage between 10 and 16 volts.
  Ignition Off Draw (IOD) fuse installed.
  Totally Integrated Power Module (TIPM) is configured correctly.
- **Set Condition:**
  Bus messages not received from the Radio for approximately two to five seconds.

Possible Causes
CAN B OR CAN C BUS CIRCUITS OPEN OR SHORTED
DTCS RELATED TO BATTERY VOLTAGE, IGNITION, OR VIN MESSAGES
TIPM NOT CONFIGURED CORRECTLY
RADIO
RADIO POWER AND GROUND
MODULE THAT SET THIS DTC

1. VERIFY DIAGNOSTIC TROUBLE CODE (DTC) IS ACTIVE

NOTE: Make sure the IOD fuse is installed and battery voltage is between 10 and 16 volts before proceeding.

1. With the scan tool, read active VES DTCs.

Is this DTC active?

Yes

- (Refer to 28 - DTC-Based Diagnostics/MODULE, Totally Integrated Power (TIPM) - Diagnosis and Testing) and perform the U0184-Lost Communication with Radio diagnostic procedure.

No

- (Refer to 29 - Non-DTC Diagnostics/Communication - Diagnosis and Testing) and perform the Stored Lost Communication DTC diagnostic procedure.

U1158-LOST COMMUNICATION WITH SATELLITE VIDEO RECEIVER (SDARV)

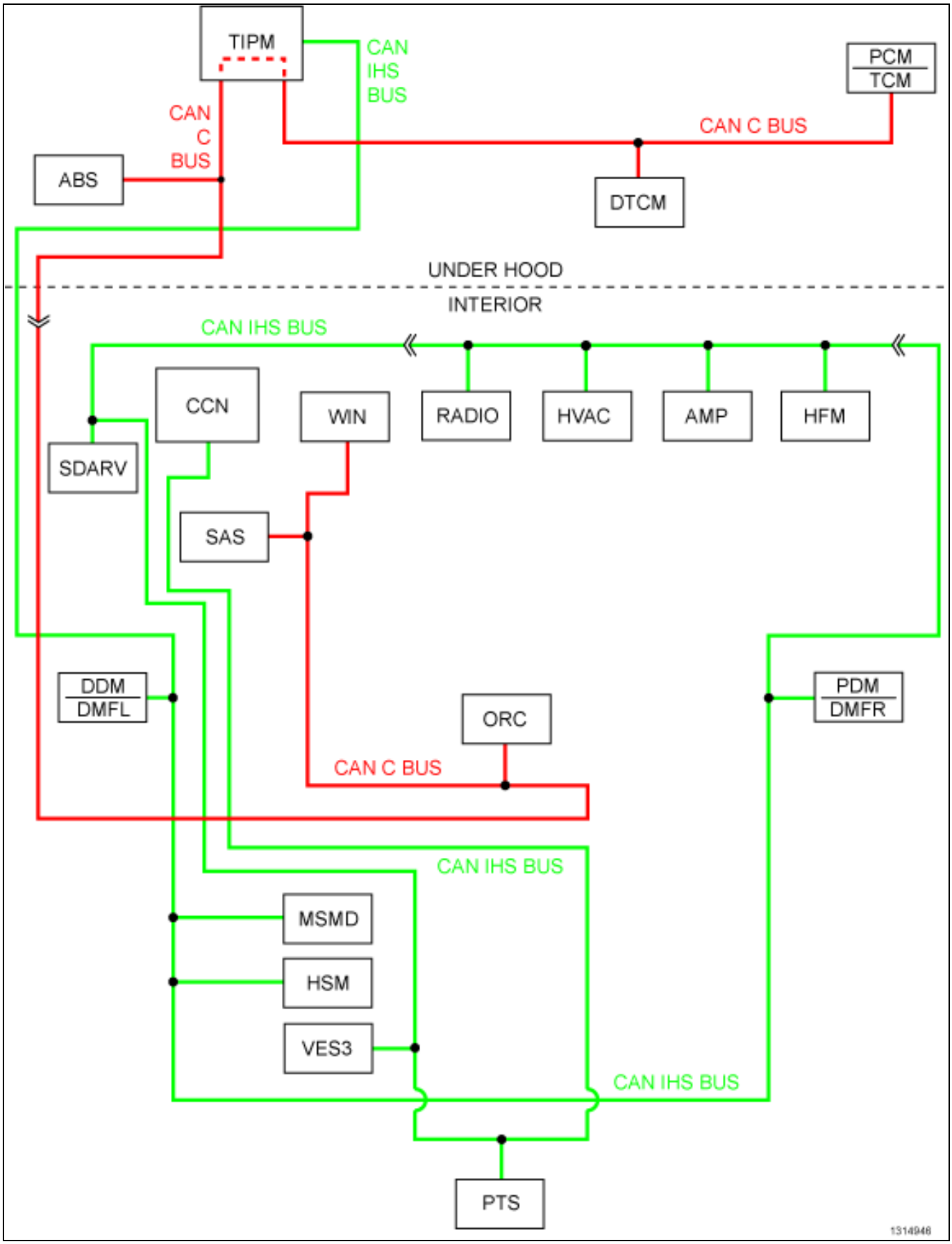

For a complete wiring diagram, **refer to the Wiring Information**.

- **When Monitored:**
  Continuously when the ignition is on.
  Battery voltage between 10 and 16 volts.
  Ignition Off Draw (IOD) fuse installed.
  Totally Integrated Power Module (TIPM) is configured correctly.
- **Set Condition:**
  Bus messages not received from the SDARV for approximately two to five seconds.

Possible Causes
CAN B OR CAN C BUS CIRCUITS OPEN OR SHORTED
DTCS RELATED TO BATTERY VOLTAGE, IGNITION, OR VIN MESSAGES
TIPM NOT CONFIGURED CORRECTLY
SDARV
SDARV POWER AND GROUND
MODULE THAT SET THIS DTC

1. VERIFY DIAGNOSTIC TROUBLE CODE (DTC) IS ACTIVE

NOTE: Make sure the IOD fuse is installed and battery voltage is between 10 and 16 volts before proceeding.

1. With the scan tool, read active VES DTCs.

Is this DTC active?

Yes

- (Refer to 28 - DTC-Based Diagnostics/MODULE, Totally Integrated Power (TIPM) - Diagnosis and Testing) and perform the U1158-Lost Communication with Satellite Video Receiver (SDARV) diagnostic procedure.

No

- (Refer to 29 - Non-DTC Diagnostics/Communication - Diagnosis and Testing) and perform the Stored Lost Communication DTCs diagnostic procedure.

VIDEO, Satellite (SDARV)

Diagnosis and Testing

■ B1539-SATELLITE VIDEO ANTENNA PERFORMANCE (NOT CONNECTED)

For a complete wiring diagram, **refer to the Wiring Information**.

- **When Monitored:**
  With the ignition on and the Radio in Satellite Video Mode.
- **Set Condition:**
  If the Satellite Video Module does not detect an Antenna connection, this DTC will set.

Possible Causes
BAD SATELLITE VIDEO ANTENNA CONNECTION
OPEN SATELLITE VIDEO ANTENNA CABLE
OPEN SATELLITE VIDEO ANTENNA
SATELLITE VIDEO MODULE

1. CHECK THE ANTENNA CONNECTION

1. Turn the ignition off.
2. Disconnect the Satellite Video Antenna Cable connector at the Satellite Video Module.
3. Inspect the Satellite Video Antenna connection.

Was the Antenna connection clean and secure?

Yes

- Go To 2

No

- Repair the Antenna connection as needed.
- Perform the BODY VERIFICATION TEST. (Refer to 28 - DTC-Based Diagnostics/MODULE, Totally Integrated Power (TIPM) - Standard Procedure).

2. TEST THE SATELLITE VIDEO MODULE

NOTE: Move vehicle outside approximately 9.14 m (30 ft.) from any structure.

1. Turn the ignition on.
2. With the scan tool, record, then erase the Satellite Video Module DTCs.
3. Turn the ignition off.
4. Connect the Radio Diagnostic Tool 9977-6-SAT to the Satellite Video Antenna connection at the Satellite Video Module.
5. Turn the ignition and the Radio on.
6. Put the Radio in Satellite Video Mode.
7. With the scan tool, read the active Satellite Video Module DTCs.

Does the scan tool display: B1539 Satellite Video Antenna Performance (Not Connected) as Active?

Yes

- Replace the Satellite Video Module in accordance with the Service Information.
- Perform the BODY VERIFICATION TEST. (Refer to 28 - DTC-Based Diagnostics/MODULE, Totally Integrated Power (TIPM) - Standard Procedure).

No

- Go To 3

3. TEST THE SATELLITE VIDEO ANTENNA

1. Turn the ignition off.
2. Disconnect the Satellite Video Antenna cable connector at the Satellite Video Antenna.
3. Connect the appropriate Radio Diagnostic Tool 9977-6-1 or 9977-6-3 to the Satellite Video Antenna cable at the Satellite Video Module.
4. Connect the appropriate Radio Diagnostic Tool 9977-6-4 or 9977-6-2 to the Satellite Video Antenna cable at the Satellite Video Antenna.
5. Measure the Resistance across the terminals on the tool.

Is the resistance above 52.5 Ohms?

Yes

- Use the Radio Diagnostic Tool 9977-6 to locate the open circuit, repair or replace the Satellite Video Antenna cable as necessary.
- Perform the BODY VERIFICATION TEST. (Refer to 28 - DTC-Based Diagnostics/MODULE, Totally Integrated Power (TIPM) - Standard Procedure).

No

- Replace the Satellite Video Antenna in accordance with the Service Information.
- Perform the BODY VERIFICATION TEST. (Refer to 28 - DTC-Based Diagnostics/MODULE, Totally Integrated Power (TIPM) - Standard Procedure).

B210D-BATTERY VOLTAGE LOW

For a complete wiring diagram, **refer to the Wiring Information**.

- **When Monitored:**
  With the ignition on.
- **Set Condition:**
  Battery voltage less than 9 volts for more than 15 seconds.

Possible Causes
BATTERY
GENERATOR
POWERTRAIN CONTROL MODULE (PCM)

1. CHECK FOR ANY POWERTRAIN CONTROL MODULES DTCS

NOTE: Make sure the Battery is in good condition. Using the Midtronics Battery Tester, test the Battery before continuing.

NOTE: Inspect the vehicle for after market accessories that may exceed the Generator System output.

NOTE: Make sure the generator drive belt is in good operating condition.

NOTE: Inspect the fuses in the IPM. If an open fuse is found, use the wire diagram/schematic as a guide, inspect the wiring and connectors for damage.

1. Turn the ignition on.
2. With the scan tool, read active PCM DTCs.

Does the scan tool display any active battery or charging DTCs?

Yes

- (Refer to 28 - DTC-Based Diagnostics/MODULE, Powertrain Control (PCM) - Standard Procedure) and perform the appropriate battery or charging system diagnostic procedure.

No

- Check the above conditions that can cause a low voltage condition. Repair as necessary.
- Perform the BODY VERIFICATION TEST. (Refer to 28 - DTC-Based Diagnostics/MODULE, Totally Integrated Power (TIPM) - Standard Procedure).

■ B210E-BATTERY VOLTAGE HIGH

For a complete wiring diagram, **refer to the Wiring Information**.

- **When Monitored:**
  With the ignition on.
- **Set Condition:**
  Battery voltage greater than 16 volts for more than 15 seconds.

Possible Causes
BATTERY
GENERATOR
POWERTRAIN CONTROL MODULE (PCM)

1. CHECK FOR ANY POWERTRAIN CONTROL MODULES DTCS

NOTE: Make sure the Battery is in good condition. Using the Midtronics Battery Tester, test the Battery before continuing.

NOTE: Inspect the vehicle for after market accessories that may exceed the Generator System output.

NOTE: Make sure the generator drive belt is in good operating condition.

NOTE: Inspect the fuses in the IPM. If an open fuse is found, use the wire diagram/schematic as a guide, inspect the wiring and connectors for damage.

1. Turn the ignition on.
2. With the scan tool, read active PCM DTCs.

Does the scan tool display any active battery or charging system DTCs?

Yes

- (Refer to 28 - DTC-Based Diagnostics/MODULE, Powertrain Control (PCM) - Standard Procedure) and perform the appropriate battery or charging system diagnostic procedure.

No

- Check the above conditions that can cause a high voltage condition. Repair as necessary.
- Perform the BODY VERIFICATION TEST. (Refer to 28 - DTC-Based Diagnostics/MODULE, Totally Integrated Power (TIPM) - Standard Procedure).

■ B2287-SATELLITE VIDEO RECEIVER INTERNAL

For a complete wiring diagram, **refer to the Wiring Information**.

- **When Monitored:**
  With the ignition on.
- **Set Condition:**
  The Satellite Video Receiver detects an internal failure.

Possible Causes
SATELLITE VIDEO RECEIVER

1. REPLACE THE SATELLITE VIDEO RECEIVER

1. When this DTC is active, replace the Satellite Video Receiver.

Repair

- Replace the Satellite Video Receiver in accordance with the Service Information.
- Perform the BODY VERIFICATION TEST. (Refer to 28 - DTC-Based Diagnostics/MODULE, Totally Integrated Power (TIPM) - Standard Procedure).

U0010-CAN INTERIOR BUS

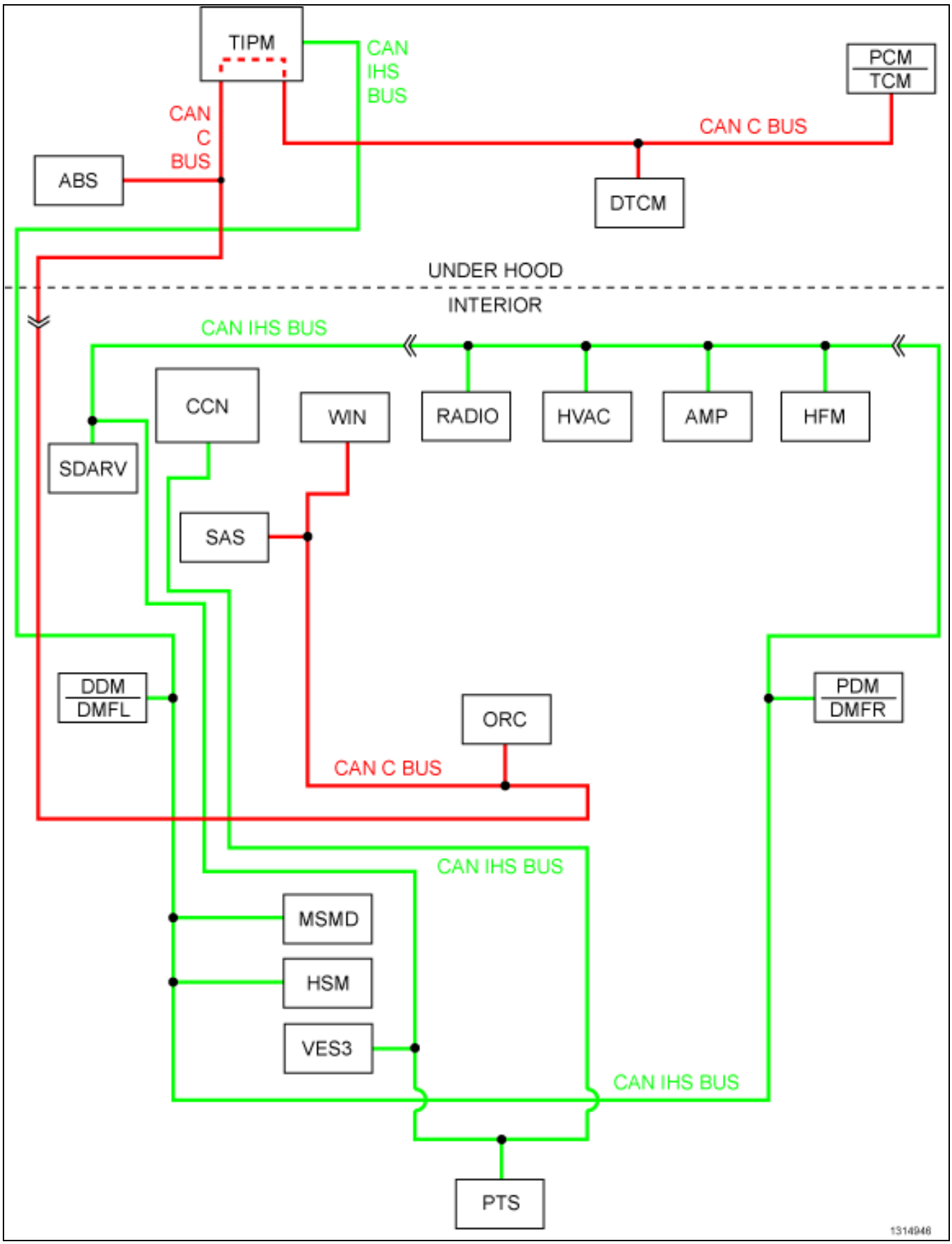

For a complete wiring diagram, **refer to the Wiring Information**.

- **When Monitored:**
  Continuously when the ignition is on.
  Battery voltage between 10 and 16 volts.
  IOD fuse installed.
- **Set Condition:**
  The Totally Integrated Power Module (TIPM) detects a short to ground on the CAN Interior Bus (125K)(+) circuit or a short to voltage on the CAN Interior Bus (125K)(-) circuit.

Possible Causes
(D265) CAN INTERIOR BUS (125K)(+) CIRCUIT SHORTED TO GROUND
(D264) CAN INTERIOR BUS (125K)(-) CIRCUIT SHORTED TO VOLTAGE
ANY CAN INTERIOR BUS MODULE
TOTALLY INTEGRATED POWER MODULE

1. VERIFY DTC IS ACTIVE

NOTE: Ensure the IOD fuse is installed and the battery is fully charged before proceeding.

NOTE: This module will not be able to communicate when this fault is active and therefore will only display this DTC as stored. To diagnose this DTC, use a scan tool and check for DTCs in the TIPM. If DTCs are active, (Refer to 28 - DTC-Based Diagnostics/MODULE, Totally Integrated Power (TIPM) - Diagnosis and Testing) and perform the appropriate diagnostic procedure. If no DTCs are active, but there are stored Lost Communication DTCs, (Refer to 29 - Non-DTC Diagnostics/Communication - Diagnosis and Testing) and perform the appropriate No Response diagnostic procedure. If no DTCs are set, perform the BODY VERIFICATION TEST. (Refer to 28 - DTC-Based Diagnostics/MODULE, Totally Integrated Power (TIPM) - Standard Procedure).

1. Turn the ignition on.
2. With the scan tool, read active Satellite Video Receiver DTCs.

Is this DTC active?

Yes

- (Refer to 28 - DTC-Based Diagnostics/MODULE, Totally Integrated Power (TIPM) - Diagnosis and Testing)and perform the diagnostic procedure for this DTC.

No

- (Refer to 29 - Non-DTC Diagnostics/Communication - Diagnosis and Testing) and perform the Stored Lost Communication DTCs diagnostic procedure.

U0141-LOST COMMUNICATION WITH IPM (FCM/TIPM)

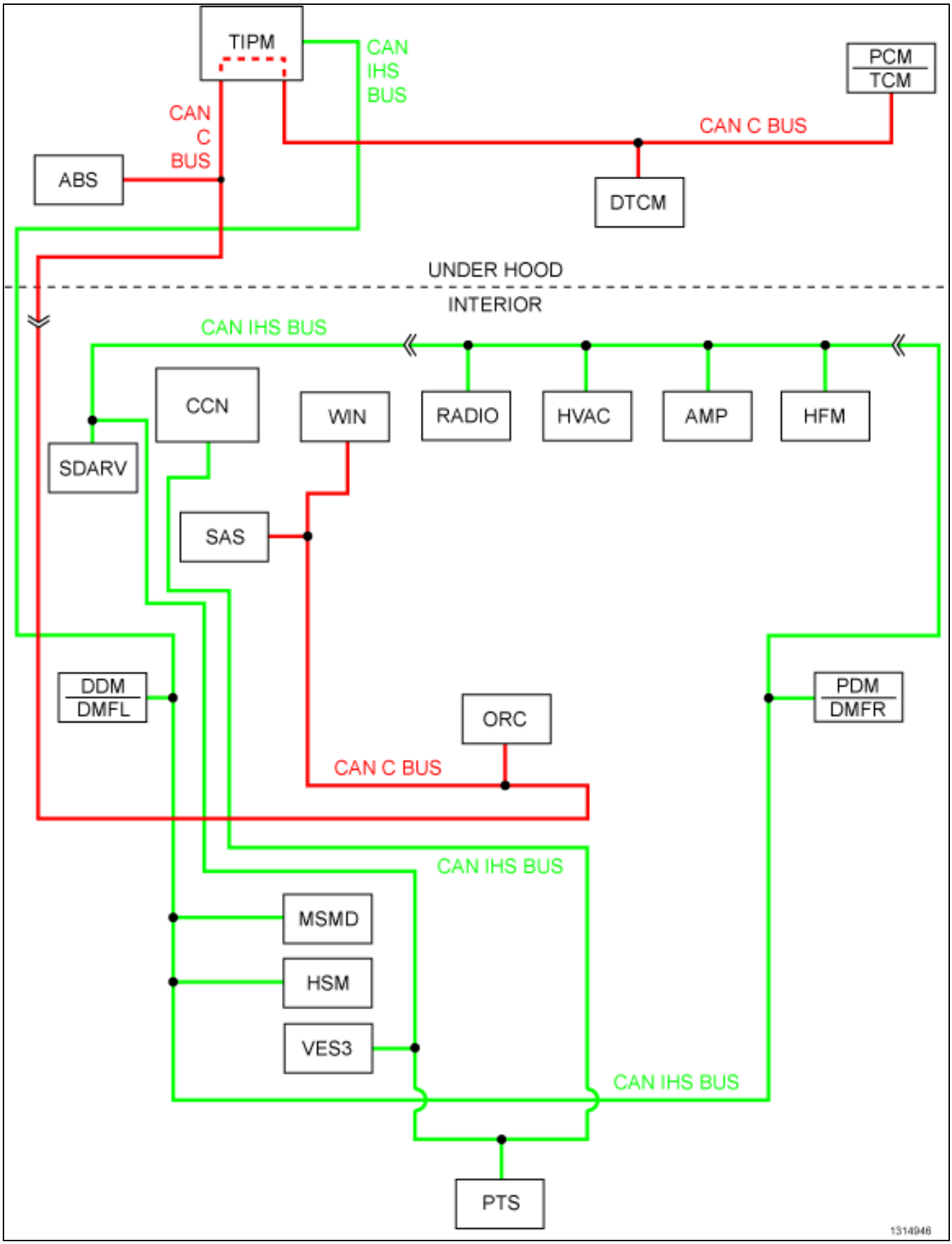

For a complete wiring diagram, **refer to the Wiring Information**.

- **When Monitored:**
  Continuously when the ignition is on.
  Battery voltage between 10 and 16 volts.
  Ignition Off Draw (IOD) fuse installed.
  Totally Integrated Power Module (TIPM) is configured correctly.
- **Set Condition:**
  Bus messages not received from the Totally Integrated Power Module (TIPM) for approximately two to five seconds.

Possible Causes
CAN B OR CAN C BUS CIRCUITS OPEN OR SHORTED
DTCS RELATED TO BATTERY VOLTAGE, IGNITION, OR VIN MESSAGES
TIPM NOT CONFIGURED CORRECTLY
TOTALLY INTEGRATED POWER MODULE (TIPM)
TIPM POWER AND GROUND
MODULE THAT SET THIS DTC

1. VERIFY DIAGNOSTIC TROUBLE CODE (DTC) IS ACTIVE

NOTE: Make sure the IOD fuse is installed and battery voltage is between 10 and 16 volts before proceeding.

1. With the scan tool, read active SDARV DTCs.

Is this DTC active?

Yes

- (Refer to 28 - DTC-Based Diagnostics/MODULE, Totally Integrated Power (TIPM) - Diagnosis and Testing) and perform the U0141-Lost Communication with IPM (FCM/TIPM) diagnostic procedure.

No

- (Refer to 29 - Non-DTC Diagnostics/Communication - Diagnosis and Testing) and perform the Stored Lost Communication DTC diagnostic procedure.

U0184-LOST COMMUNICATION WITH RADIO

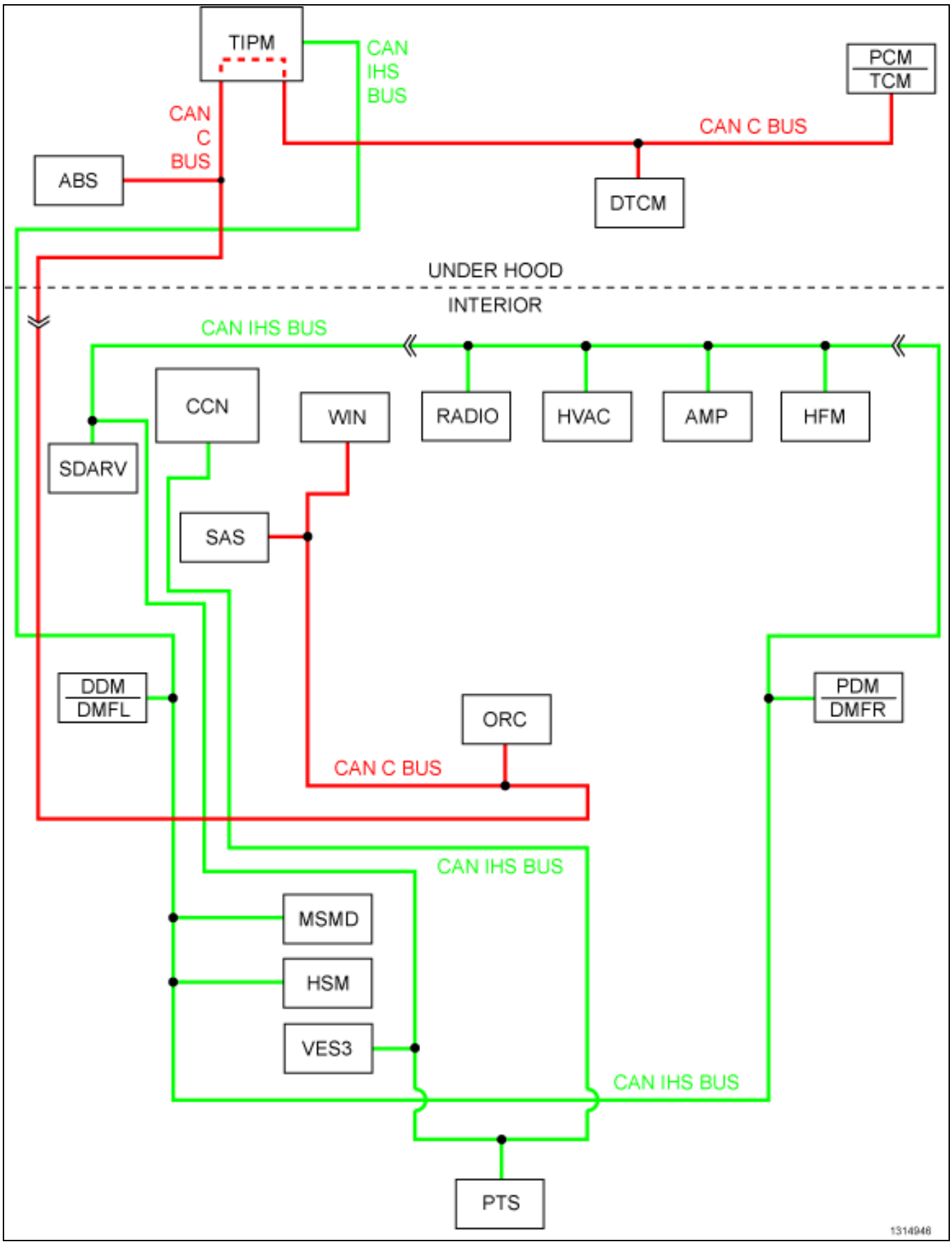

For a complete wiring diagram, **refer to the Wiring Information**.

- **When Monitored:**
  Continuously when the ignition is on.
  Battery voltage between 10 and 16 volts.
  Ignition Off Draw (IOD) fuse installed.
  Totally Integrated Power Module (TIPM) is configured correctly.
- **Set Condition:**
  Bus messages not received from the Radio for approximately two to five seconds.

Possible Causes
CAN B OR CAN C BUS CIRCUITS OPEN OR SHORTED
DTCS RELATED TO BATTERY VOLTAGE, IGNITION, OR VIN MESSAGES
TIPM NOT CONFIGURED CORRECTLY
RADIO
RADIO POWER AND GROUND
SDARV

1. VERIFY DIAGNOSTIC TROUBLE CODE (DTC) IS ACTIVE

NOTE: Make sure the IOD fuse is installed and battery voltage is between 10 and 16 volts before proceeding.

1. With the scan tool, read active SDARV DTCs.

Is this DTC active?

Yes

- (Refer to 28 - DTC-Based Diagnostics/MODULE, Totally Integrated Power (TIPM) - Diagnosis and Testing) and perform the U0184-Lost Communication with Radio diagnostic procedure.

No

- (Refer to 29 - Non-DTC Diagnostics/Communication - Diagnosis and Testing) and perform the Stored Lost Communication DTC diagnostic procedure.

■ U0196-LOST COMMUNICATION WITH VEHICLE ENTERTAINMENT CONTROL MODULE

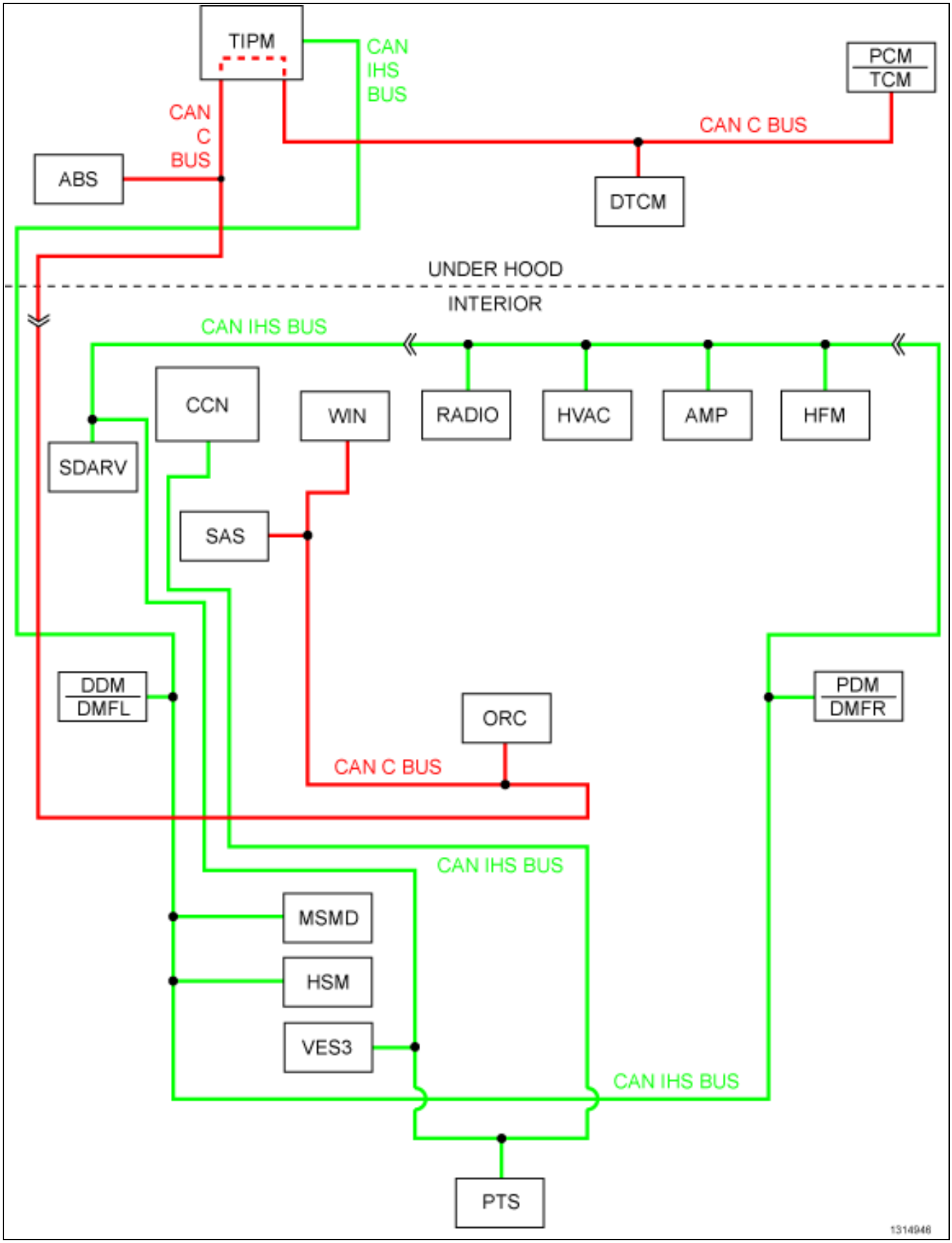

For a complete wiring diagram, **refer to the Wiring Information**.

- **When Monitored:**
  Continuously when the ignition is on.
  Battery voltage between 10 and 16 volts.
  Ignition Off Draw (IOD) fuse installed.
  Totally Integrated Power Module (TIPM) is configured correctly.
- **Set Condition:**
  Bus messages not received from the Vehicle Entertainment Control Module for approximately two to five seconds.

Possible Causes
CAN B OR CAN C BUS CIRCUITS OPEN OR SHORTED
DTCS RELATED TO BATTERY VOLTAGE, IGNITION, OR VIN MESSAGES
TIPM NOT CONFIGURED CORRECTLY
VEHICLE ENTERTAINMENT CONTROL MODULE
VEHICLE ENTERTAINMENT CONTROL MODULE POWER AND GROUND
SDARV

1. VERIFY DIAGNOSTIC TROUBLE CODE (DTC) IS ACTIVE

NOTE: Make sure the IOD fuse is installed and battery voltage is between 10 and 16 volts before proceeding.

1. With the scan tool, read active SDARV DTCs.

Is this DTC active?

Yes

- (Refer to 28 - DTC-Based Diagnostics/MODULE, Totally Integrated Power (TIPM) - Diagnosis and Testing) and perform the U0196-Lost Communication with Vehicle Entertainment Control Module diagnostic procedure.

No

- (Refer to 29 - Non-DTC Diagnostics/Communication - Diagnosis and Testing) and perform the Stored Lost Communication DTC diagnostic procedure.

NON-DTC DIAGNOSTICS

TABLE OF CONTENTS

page

NON-DTC DIAGNOSTICS
SPECIAL TOOLS 2
AUDIO/VIDEO 3
BRAKES. 9
COMMUNICATION 13
DRIVABILITY - GAS 107
HVAC 155
INTERIOR LIGHTING 163
INSTRUMENT CLUSTER 185
POWER DOORS 189
STARTING 199
TELECOMMUNICATION. 205

Special Tools

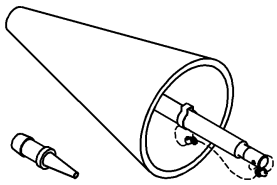

8404-EC - Exhaust Cone

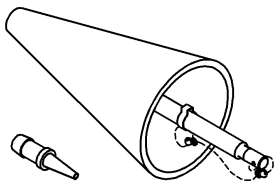

8404-ECT - Exhaust Cone, Truck

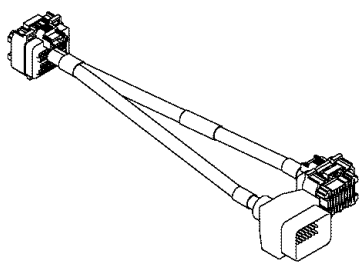

8815-1 - PCM Pinout Box Adapter

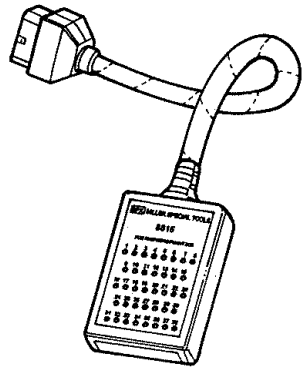

8815A - Kit, NGC, 38 Position

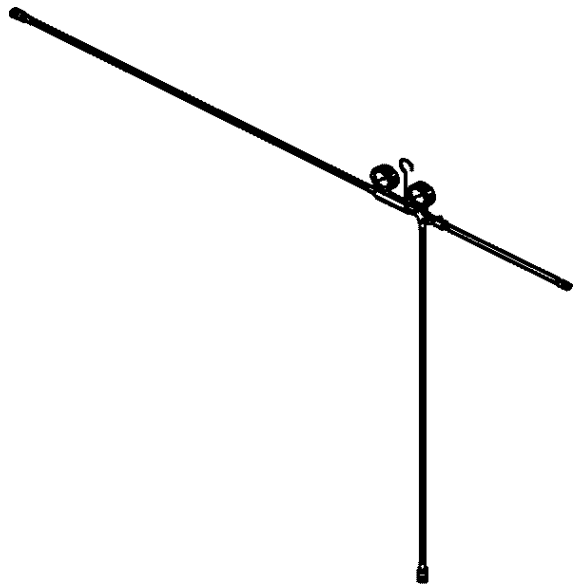

8978-1 - Gauge, Fuel Pressure Assembly

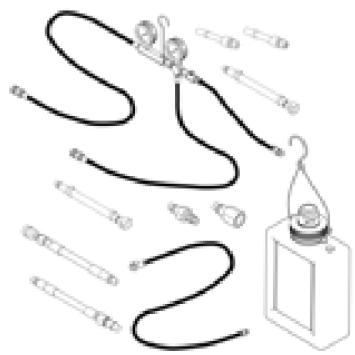

8978A - Decay Tool, Fuel

AUDIO/VIDEO

TABLE OF CONTENTS

page

AUDIO/VIDEO
DIAGNOSIS AND TESTING
DIAGNOSIS AND TESTING - REAR
CAMERA INOPERATIVE 4

Audio/Video

Diagnosis and Testing

DIAGNOSIS AND TESTING - REAR CAMERA INOPERATIVE

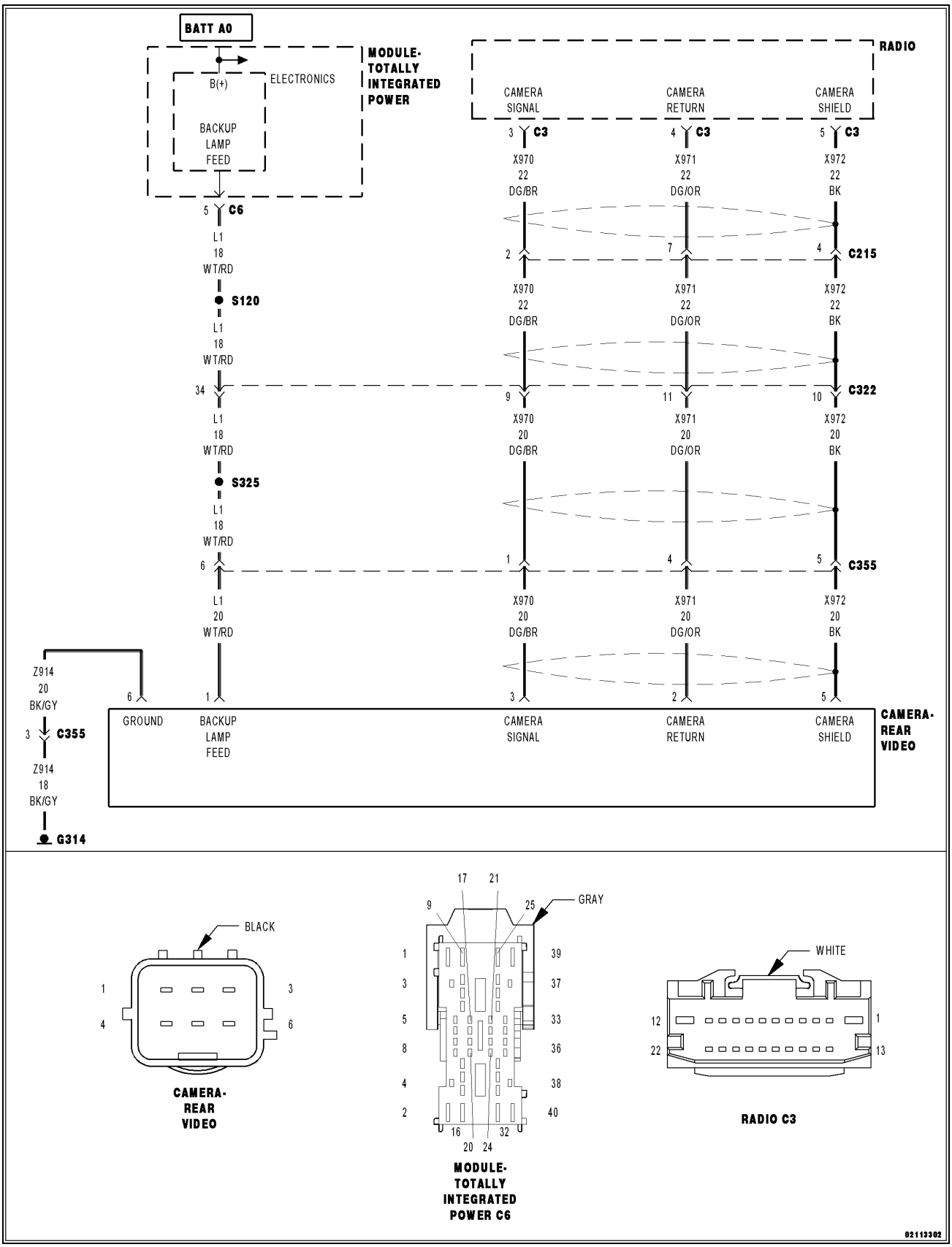

For a complete wiring diagram, **refer to the Wiring Information**.

- **When Monitored:**
  Ignition on, vehicle in reverse.
- **Set Condition:**
  No rear picture is displayed on radio with the vehicle in reverse.

Possible Causes
(L1) BACKUP LAMP FEED CIRCUIT
(Z911) GROUND CIRCUIT
(X970) CAMERA SIGNAL CIRCUIT
(X971) CAMERA RETURN CIRCUIT
CAMERA SHIELD
REAR VIDEO CAMERA

1. VERIFY OPERATION OF THE RADIO AND BACKUP LAMPS

1. Verify the operation of the Radio and Backup Lamps.

Do the Radio and Backup Lamps operate correctly?

Yes

- Go To 2

No

- Diagnose any problems with the Radio and Backup Lamps.
- Perform the BODY VERIFICATION TEST. (Refer to 28 - DTC-Based Diagnostics/MODULE, Totally Integrated Power (TIPM) - Standard Procedure).

2. (L1) BACKUP LAMP FEED CIRCUIT

1. Turn the ignition off.
2. Apply the parking brake.
3. Disconnect the Rear Video Camera harness connector.
4. Turn the ignition on.
5. Shift the vehicle into reverse.
6. Measure the voltage of the (L1) Backup Lamp Feed circuit.

Is battery voltage present?

Yes

- Go To 3

No

- Using the wiring diagrams as a guide, repair the (L1) Backup Lamp Feed circuit for an open.
- Perform the BODY VERIFICATION TEST. (Refer to 28 - DTC-Based Diagnostics/MODULE, Totally Integrated Power (TIPM) - Standard Procedure).

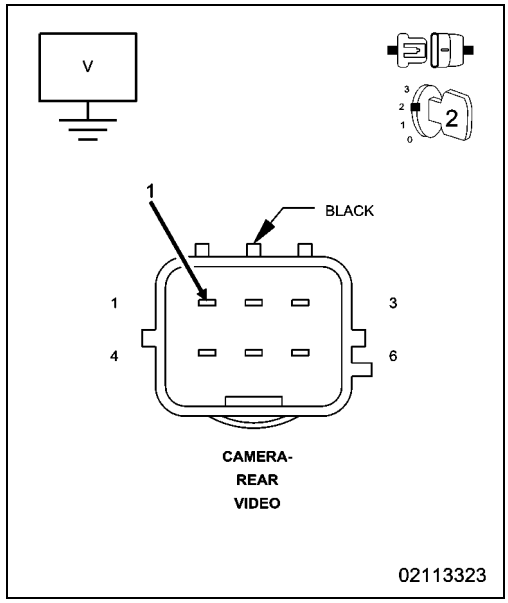

3. (Z911) GROUND CIRCUIT

1. Turn the ignition off.
2. Measure the resistance between ground and the (Z911) Ground Circuit.

Is the resistance below 10.0 Ohms?

Yes

- Go To 4

No

- Using the wiring diagrams as a guide, repair the (Z911) Ground circuit for an open.
- Perform the BODY VERIFICATION TEST. (Refer to 28 - DTC-Based Diagnostics/MODULE, Totally Integrated Power (TIPM) - Standard Procedure).

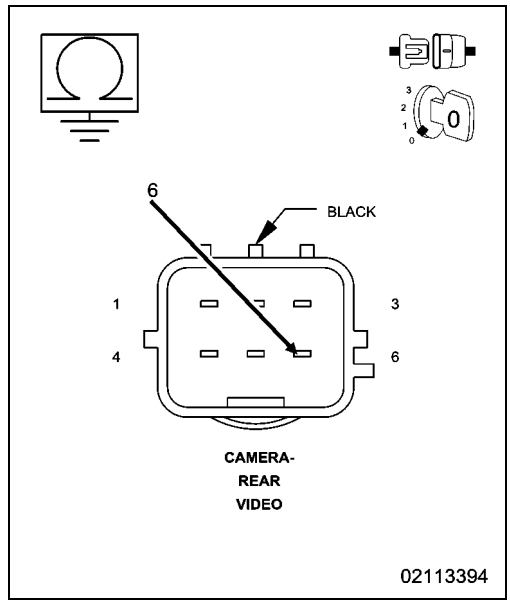

4. CAMERA SIGNAL, RETURN, AND SHIELD CIRCUITS OPEN

1. Disconnect the Radio C3 harness connector.
2. Measure the resistance of the (X970) (X971) and (X972) circuits.

Is the resistance below 10.0 Ohms on the (X970) (X971) or (X972) circuits?

Yes

- Go To 5

No

- Using the wiring diagrams as a guide, repair the appropriate circuit for an open.
- Perform the BODY VERIFICATION TEST. (Refer to 28 - DTC-Based Diagnostics/MODULE, Totally Integrated Power (TIPM) - Standard Procedure).

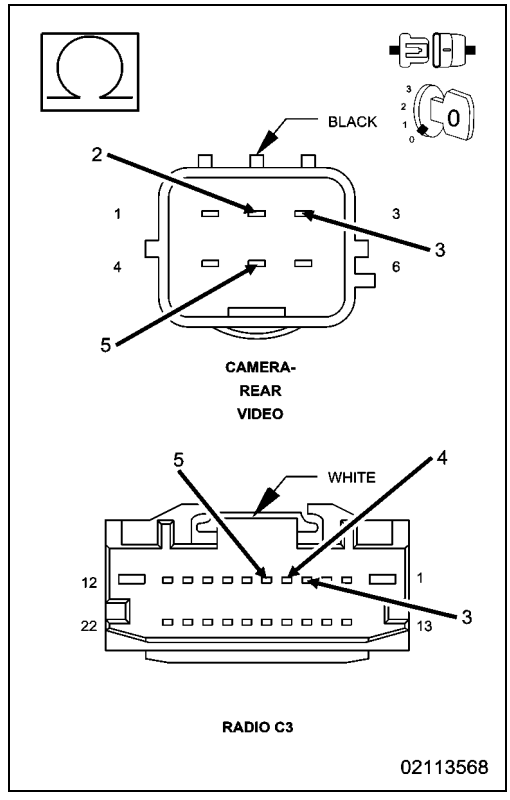

5. CAMERA SIGNAL, RETURN, AND SHIELD CIRCUITS SHORTED TO GROUND

1. Measure the resistance between ground and the (X970) (X971) and (X972) circuits.

   Is the resistance below 10.0 Ohms on the (X970) (X971) or (X972) circuits?

Yes

- Using the wiring diagrams as a guide, repair the appropriate circuit for a short to ground.
- Perform the BODY VERIFICATION TEST. (Refer to 28 - DTC-Based Diagnostics/MODULE, Totally Integrated Power (TIPM) - Standard Procedure).

No

- Replace the Rear Video Camera in accordance with the Service Information.
- Perform the BODY VERIFICATION TEST. (Refer to 28 - DTC-Based Diagnostics/MODULE, Totally Integrated Power (TIPM) - Standard Procedure).

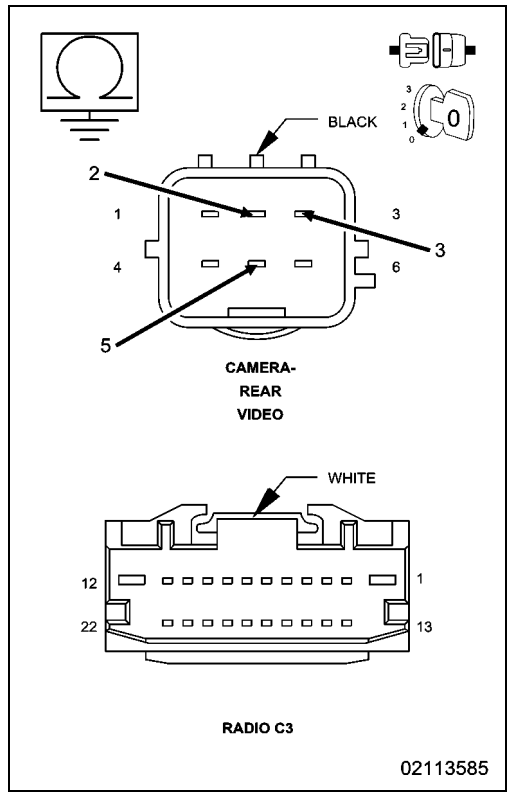

BRAKES

TABLE OF CONTENTS

page

BRAKES
DIAGNOSIS AND TESTING
ABS WARNING INDICATOR 10
REPLACING THE ANTILOCK BRAKE MODULE 10
VEHICLE SPEED SIGNAL OUTPUT 11

Brakes

Diagnosis and Testing

■ ABS WARNING INDICATOR

Possible Causes
ANTI-LOCK BRAKE SYSTEM DTC PRESENT
INSTRUMENT CLUSTER

1. INSTRUMENT CLUSTER ABS INDICATOR

1. Turn the ignition off.
2. Observe the ABS indicator lamp.
3. Turn the ignition on.

Select the appropriate condition for the ABS indicator lamp:

Illuminates for several seconds and turns off

- Go To 2

Illuminates continuously

- With the scan tool, read DTCs. Perform the appropriate diagnostic procedure.
- Perform ABS VERIFICATION TEST. (Refer to 28 - DTC-Based Diagnostics/MODULE, Antilock Brake (ABS) - Standard Procedure)

Does not illuminate

- Replace the Instrument Cluster in accordance with the Service Information.
- Perform ABS VERIFICATION TEST. (Refer to 28 - DTC-Based Diagnostics/MODULE, Antilock Brake (ABS) - Standard Procedure)

2. ANTI-LOCK BRAKE SYSTEM DTC PRESENT

1. Turn the ignition on.
2. With the scan tool, select View DTCs in the Anti-lock Brake Module.

Are there any DTCs present?

Yes

- Refer to the appropriate diagnostic procedure.
- Perform ABS VERIFICATION TEST. (Refer to 28 - DTC-Based Diagnostics/MODULE, Antilock Brake (ABS) - Standard Procedure)

No

- Inspect the related wiring harness and connector terminals. Monitor the scan tool parameters while wiggle testing the related harness and connectors. Refer to any Technical Service Bulletins (TSB) that may apply. If no problems are found, test is complete.
- Perform ABS VERIFICATION TEST. (Refer to 28 - DTC-Based Diagnostics/MODULE, Antilock Brake (ABS) - Standard Procedure)

■ REPLACING THE ANTILOCK BRAKE MODULE

Possible Causes
REPLACING THE ANTI-LOCK BRAKE MODULE

1. REPLACING THE ANTILOCK BRAKE MODULE

NOTE: It may be necessary to call STAR to order a new ABS module.

NOTE: Failure to properly program the ABS module will result in an illuminated or blinking ABS indicator.

1. Turn the ignition off.
2. Replace the Anti-lock Brake Module in accordance with the Service Information.
3. With the scan tool, perform the module configuration procedures as necessary in accordance with the Service Information.
4. Road test the vehicle above 40 m.p.h. for at least two minutes.
5. With the scan tool, select View DTCs in the Anti-Lock Brake Module.

Are there any DTCs present?

Yes

- Perform the appropriate diagnostic procedure(s).

No

- Test Complete
- Perform ABS VERIFICATION TEST. (Refer to 28 - DTC-Based Diagnostics/MODULE, Antilock Brake (ABS) - Standard Procedure)

■ VEHICLE SPEED SIGNAL OUTPUT

Possible Causes
INTERMITTENT VEHICLE SPEED SIGNAL
VEHICLE SPEED SIGNAL DTC SET IN POWERTRAIN CONTROL MODULE
ANTI-LOCK BRAKE MODULE DTCS PRESENT

1. VEHICLE SPEED SIGNAL DTC SET IN PCM

1. Turn the ignition on.
2. With the scan tool, select view DTCs in the Powertrain Control Module or Engine Control Module.

Is the status Active for P0500?

Yes

- (Refer to 28 - DTC-Based Diagnostics/MODULE, Powertrain Control (PCM) - Diagnosis and Testing) and perform the appropriate diagnostic procedure.

No

- Go To 2

2. ANTI-LOCK BRAKE MODULE DTCS PRESENT

1. With the scan tool, select view DTCs in the Anti-Lock Brake Module.

Are there any DTCs present in the Anti-lock Brake Module?

Yes

- (Refer to 28 - DTC-Based Diagnostics/MODULE, Antilock Brake (ABS) - Diagnosis and Testing) and perform the appropriate diagnostic procedure.

No

- Go To 3

3. INTERMITTENT VEHICLE SPEED SIGNAL

1. At this time, no DTCs are present.
2. Inspect the related wiring harness. Look for any chafed, pierced, pinched, or partially broken wires.
3. Inspect the related wire harness connectors. Look for broken, bent, pushed out, or corroded terminals.
4. Using the schematics as a guide, wiggle test the related circuit(s) while monitoring the scan tool data relative to the vehicle speed sensor circuit(s). Look for the data to change or for a DTC to set.
5. Perform any technical service bulletins that may apply.

Were any problems found?

Yes

- Repair as necessary.
- Perform the ABS VERIFICATION TEST. (Refer to 28 - DTC-Based Diagnostics/MODULE, Antilock Brake (ABS) - Standard Procedure).

No

- Test Complete.

COMMUNICATION

TABLE OF CONTENTS

page

COMMUNICATION
DIAGNOSIS AND TESTING
BOTH DIAGNOSTIC CAN C (+) AND DIAGNOSTIC CAN C (-) CIRCUITS OPEN 14
DIAGNOSTIC CAN C (+) AND/OR DIAGNOSTIC CAN C (-) CIRCUITS HIGH . . 18
DIAGNOSTIC CAN C (+) SHORTED TO DIAGNOSTIC CAN C (-) 20
DIAGNOSTIC CAN C (+) CIRCUIT LOW 22
DIAGNOSTIC CAN C (-) CIRCUIT LOW. 24
DIAGNOSTIC CAN C (+) CIRCUIT OPEN. . . . 26
DIAGNOSTIC CAN C (-) CIRCUIT OPEN 29
NO RESPONSE FROM ABS (ANTILOCK BRAKE MODULE) 32
NO RESPONSE FROM AMP (AMPLIFIER). . . 37
NO RESPONSE FROM CCN (CLUSTER) . . . 40
NO RESPONSE FROM DDM (DMLF)(DRIVER DOOR MODULE). 44
NO RESPONSE FROM DTCM (DRIVETRAIN CONTROL MODULE). 47
NO RESPONSE FROM HFM (HANDS FREE MODULE) 52
NO RESPONSE FROM HSM (HEATED SEAT MODULE) 55

page

NO RESPONSE FROM HVAC (A/C HEATER CONTROL) 58
NO RESPONSE FROM MSMD (MEMORY SEAT MODULE) 62
NO RESPONSE FROM ORC (OCCUPANT RESTRAINT CONTROLLER) 65
NO RESPONSE FROM PCM (POWERTRAIN CONTROL MODULE) (NGC) 70
NO RESPONSE FROM PDM (DMRF)(PASSENGER DOOR MODULE) . . 75
NO RESPONSE FROM PTS (PARK ASSIST MODULE) 78
NO RESPONSE FROM RADIO 81
NO RESPONSE FROM SDARV (SATELLITE VIDEO RECEIVER). 85
NO RESPONSE FROM THE STEERING ANGLE SENSOR (SAS) 89
NO RESPONSE FROM TIPM (TOTALLY INTEGRATED POWER MODULE) 92
NO RESPONSE FROM VES3 (VIDEO SCREEN MODULE) 97
NO RESPONSE FROM WIN (WIRELESS IGNITION NODE). 100
STORED LOST COMMUNICATION DTCS . . .104

Communication

Diagnosis and Testing

■ BOTH DIAGNOSTIC CAN C (+) AND DIAGNOSTIC CAN C (-) CIRCUITS OPEN

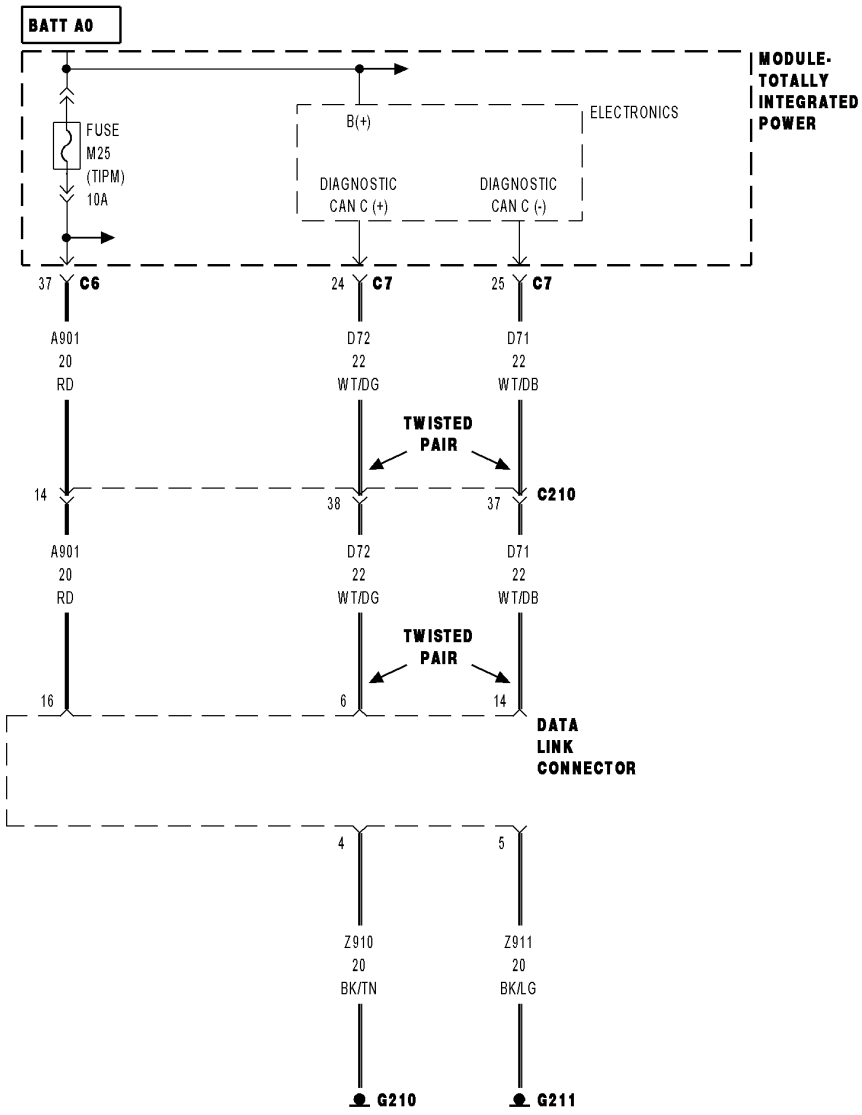

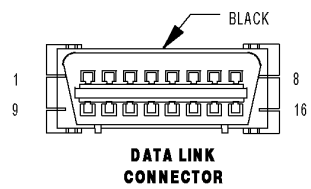

01430586

For a complete wiring diagram, **refer to the Wiring Information**.

- **When Monitored:**
  When the scan tool queries the Totally Integrated Power Module (TIPM).
- **Set Condition:**
  The scan tool has detected an open condition on both Diagnostic CAN C circuits.

Possible Causes
(D72) DIAGNOSTIC CAN C (+) CIRCUIT OPEN
(D71) DIAGNOSTIC CAN C (-) CIRCUIT OPEN
TOTALLY INTEGRATED POWER MODULE (TIPM)

1. CHECK THE STATUS OF THE ERROR MESSAGE

NOTE: Make sure the vehicle being tested is a CAN BUS VEHICLE. If not, false error messages may be displayed.

NOTE: Make sure the scan tool is updated to the latest software.

1. Using the scan tool, record the error message.
2. Disconnect the scan tool from the Data Link Connector (DLC).
3. Cycle the ignition from on to off three times.
4. Turn the ignition on.

Does the scan tool display this same error message?

Yes

- Go To 2

No

- The conditions that caused this error message to set are not present at this time. Using the wiring diagram/schematic as a guide, inspect the wiring and connectors.

2. (D72) DIAGNOSTIC CAN C (+) CIRCUIT OPEN

1. Turn the ignition off.
2. Disconnect the Totally Integrated Power Module C7 harness connector.
3. Disconnect the scan tool from the DLC.

NOTE: Check the connectors at both the DLC and the TIPM.

4. Measure the resistance of the (D72) Diagnostic CAN C (+) circuit between the TIPM C7 harness connector and the DLC.

Is the resistance below 5.0 ohms?

Yes

- Go To 3

No

- Repair the (D72) Diagnostic CAN C (+) circuit for an open.
- Perform the BODY VERIFICATION TEST. (Refer to 28 - DTC-Based Diagnostics/MODULE, Totally Integrated Power (TIPM) - Standard Procedure).

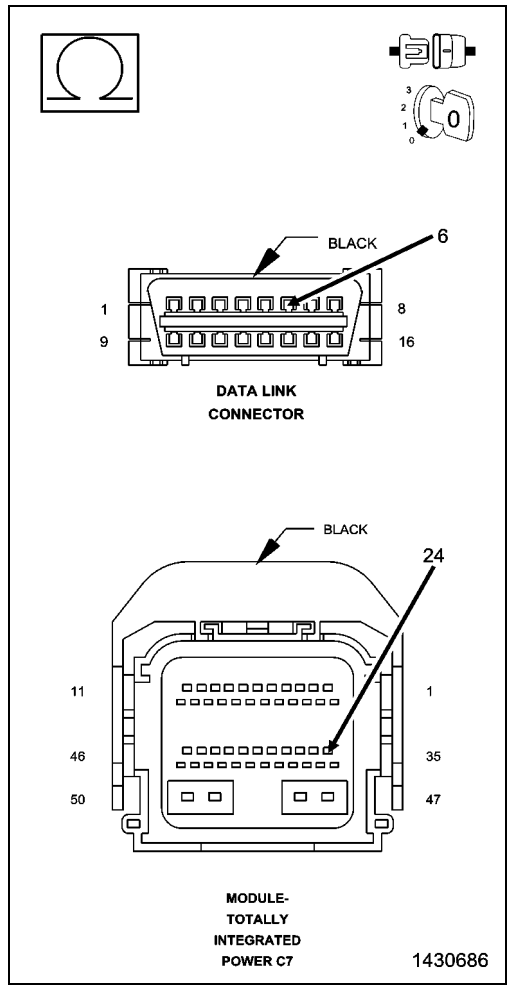

3. (D71) DIAGNOSTIC CAN C (-) CIRCUIT OPEN

1. Measure the resistance of the (D71) Diagnostic CAN C (-) circuit between the TIPM connector and the DLC.

Is the resistance below 5.0 ohms?

Yes

- Inspect the wiring and connectors for damage or shorted circuits. If ok, replace the Totally Integrated Power Module in accordance with the Service Information.
- Perform the BODY VERIFICATION TEST. (Refer to 28 - DTC-Based Diagnostics/MODULE, Totally Integrated Power (TIPM) - Standard Procedure).

No

- Repair the (D71) Diagnostic CAN C (-) circuit for an open.
- Perform the BODY VERIFICATION TEST. (Refer to 28 - DTC-Based Diagnostics/MODULE, Totally Integrated Power (TIPM) - Standard Procedure).

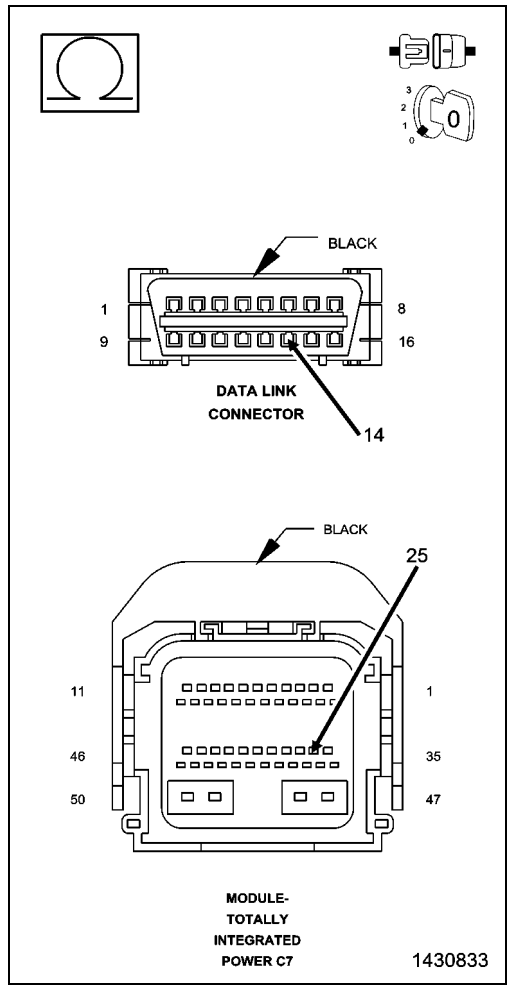

DIAGNOSTIC CAN C (+) AND/OR DIAGNOSTIC CAN C (-) CIRCUITS HIGH

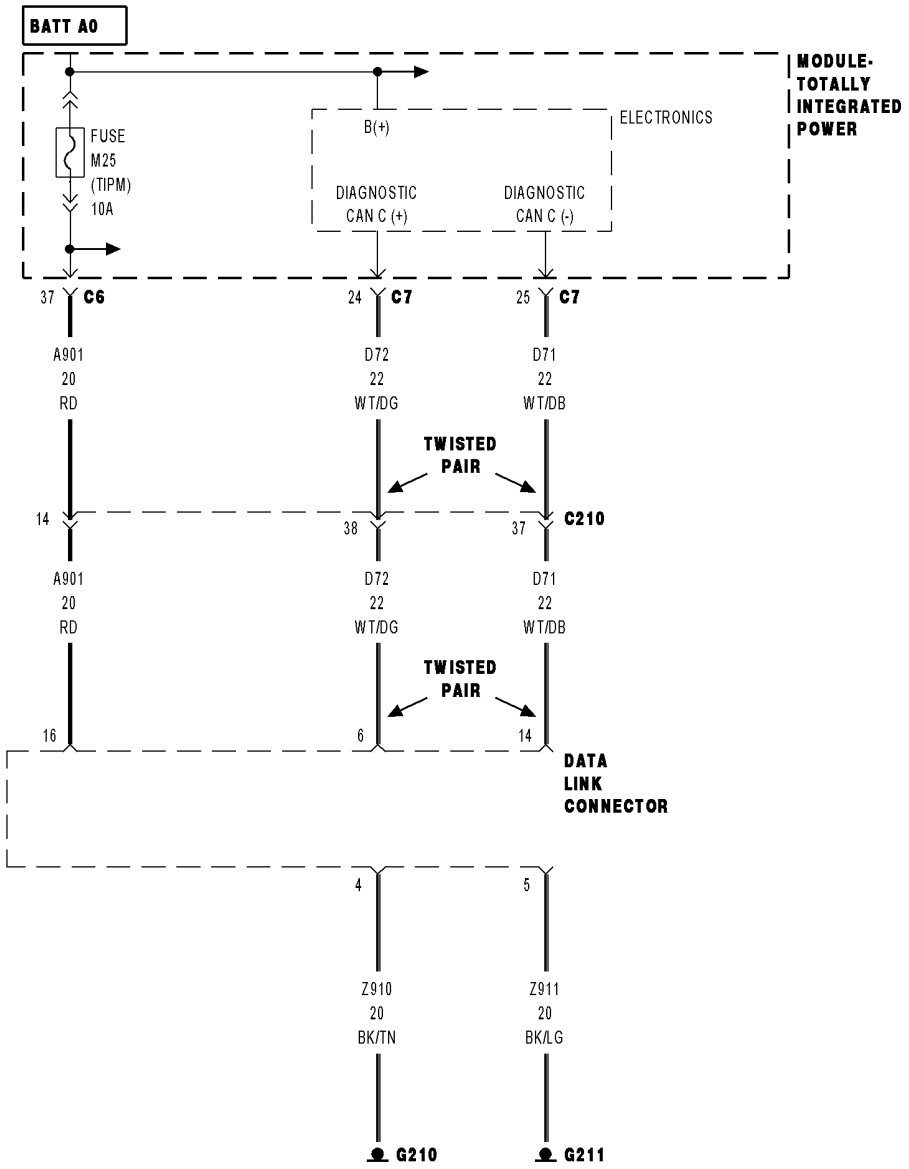

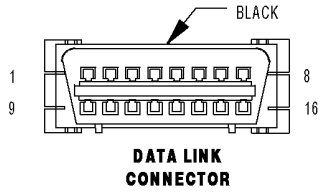

01430586

For a complete wiring diagram, **refer to the Wiring Information**.

- **When Monitored:**
  When the scan tool queries the Totally Integrated Power Module (TIPM).
- **Set Condition:**
  The scan tool has detected a shorted high condition on either or both Diagnostic CAN C circuits.

Possible Causes
(D72) DIAGNOSTIC CAN C (+) CIRCUIT SHORTED TO VOLTAGE
(D71) DIAGNOSTIC CAN C (-) CIRCUIT SHORTED TO VOLTAGE
TOTALLY INTEGRATED POWER MODULE (TIPM)

1. CHECK THE STATUS OF THE ERROR MESSAGE

NOTE: Make sure the vehicle being tested is a CAN BUS VEHICLE. If not, false error messages may be displayed.

NOTE: Make sure the scan tool is updated to the latest software.

1. Using the scan tool, record the error message.
2. Disconnect the scan tool from the Data Link Connector (DLC).
3. Cycle the ignition from on to off three times.
4. Turn the ignition on.

Does the scan tool display this same error message?

Yes

- Go To 2

No

- The conditions that caused this error message to set are not present at this time. Using the wiring diagram/schematic as a guide, inspect the wiring and connectors.

2. DIAGNOSTIC CAN C CIRCUITS SHORTED TO VOLTAGE

1. Turn the ignition off.
2. Disconnect the Totally Integrated Power Module C7 harness connector.
3. Disconnect the scan tool from the DLC.
4. Turn the ignition on.
5. Measure the voltage of the Diagnostic CAN C circuits.

Is the voltage above 6.0 volts for either circuit?

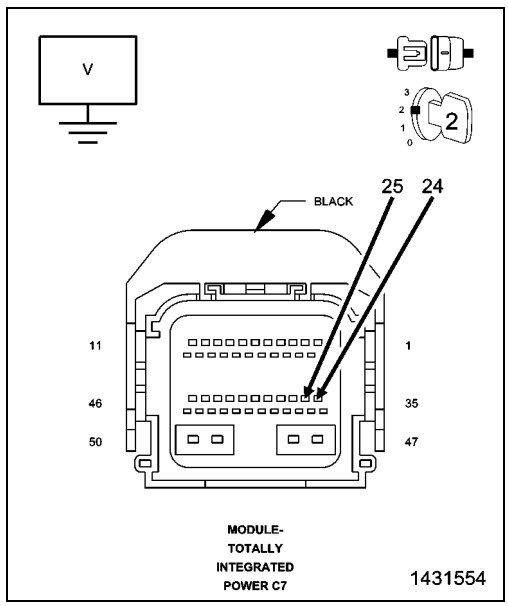

Yes

- Repair the Diagnostic CAN C circuits for a short to voltage.
- Perform the BODY VERIFICATION TEST. (Refer to 28 - DTC-Based Diagnostics/MODULE, Totally Integrated Power (TIPM) - Standard Procedure).

No

- Inspect the wiring and connectors for damage or shorted circuits. If ok, replace the Totally Integrated Power Module in accordance with the Service Information.
- Perform the BODY VERIFICATION TEST. (Refer to 28 - DTC-Based Diagnostics/MODULE, Totally Integrated Power (TIPM) - Standard Procedure).

DIAGNOSTIC CAN C (+) SHORTED TO DIAGNOSTIC CAN C (-)

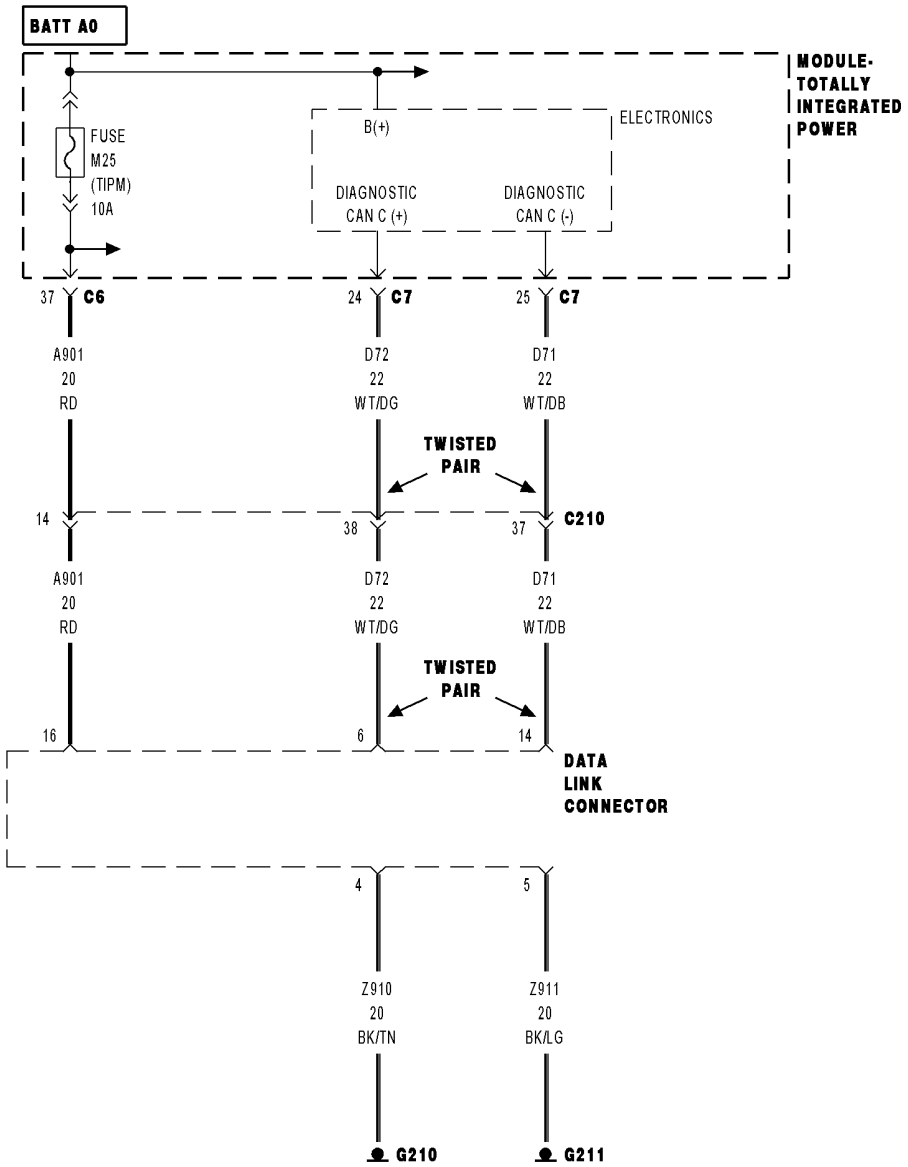

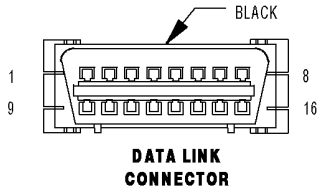

01430586

For a complete wiring diagram, **refer to the Wiring Information**.

- **When Monitored:**
  When the scan tool queries the Totally Integrated Power Module (TIPM).
- **Set Condition:**
  The scan tool has detected a shorted together condition on the Diagnostic CAN C circuits.

Possible Causes
(D72) DIAGNOSTIC CAN C (+) CIRCUIT SHORTED TO (D71) DIAGNOSTIC CAN C (-) CIRCUIT
TOTALLY INTEGRATED POWER MODULE (TIPM)

1. CHECK THE STATUS OF THE ERROR MESSAGE

NOTE: Make sure the vehicle being tested is a CAN BUS VEHICLE. If not, false error messages may be displayed.

NOTE: Make sure the scan tool is updated to the latest software.

1. Using the scan tool, record the error message.
2. Disconnect the scan tool from the Data Link Connector (DLC).
3. Cycle the ignition from on to off three times.
4. Turn the ignition on.

Does the scan tool display this same error message?

Yes

- Go To 2

No

- The conditions that caused this error message to set are not present at this time. Using the wiring diagram/schematic as a guide, inspect the wiring and connectors.

2. (D72) DIAGNOSTIC CAN C (+) CIRCUIT SHORTED TO (D71) DIAGNOSTIC CAN C (-) CIRCUIT

1. Turn the ignition off.
2. Disconnect the Totally Integrated Power Module C7 harness connector.
3. Disconnect the scan tool from the DLC.
4. Measure the resistance between the (D72) Diagnostic CAN C (+) circuit and the (D71) Diagnostic CAN C (-) circuit.

Is the resistance below 100.0 Ohms?

Yes

- Repair the (D72) Diagnostic CAN C (+) circuit for a short to the (D71) Diagnostic CAN C (-) circuit.
- Perform the BODY VERIFICATION TEST. (Refer to 28 - DTC-Based Diagnostics/MODULE, Totally Integrated Power (TIPM) - Standard Procedure).

No

- Inspect the wiring and connectors for damage or shorted circuits. If ok, replace the Totally Integrated Power Module in accordance with the Service Information.
- Perform the BODY VERIFICATION TEST. (Refer to 28 - DTC-Based Diagnostics/MODULE, Totally Integrated Power (TIPM) - Standard Procedure).

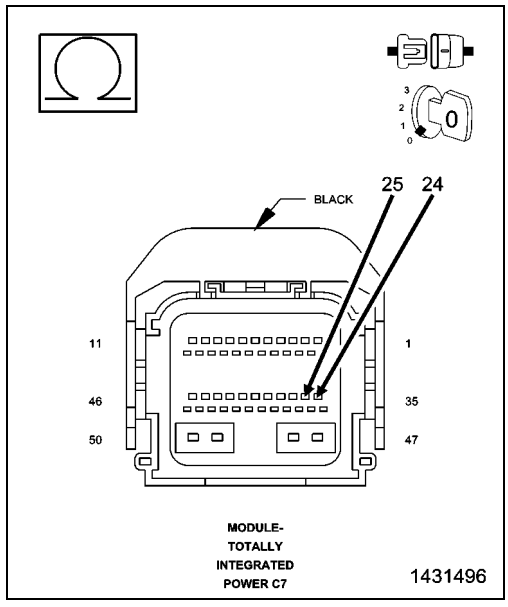

DIAGNOSTIC CAN C (+) CIRCUIT LOW

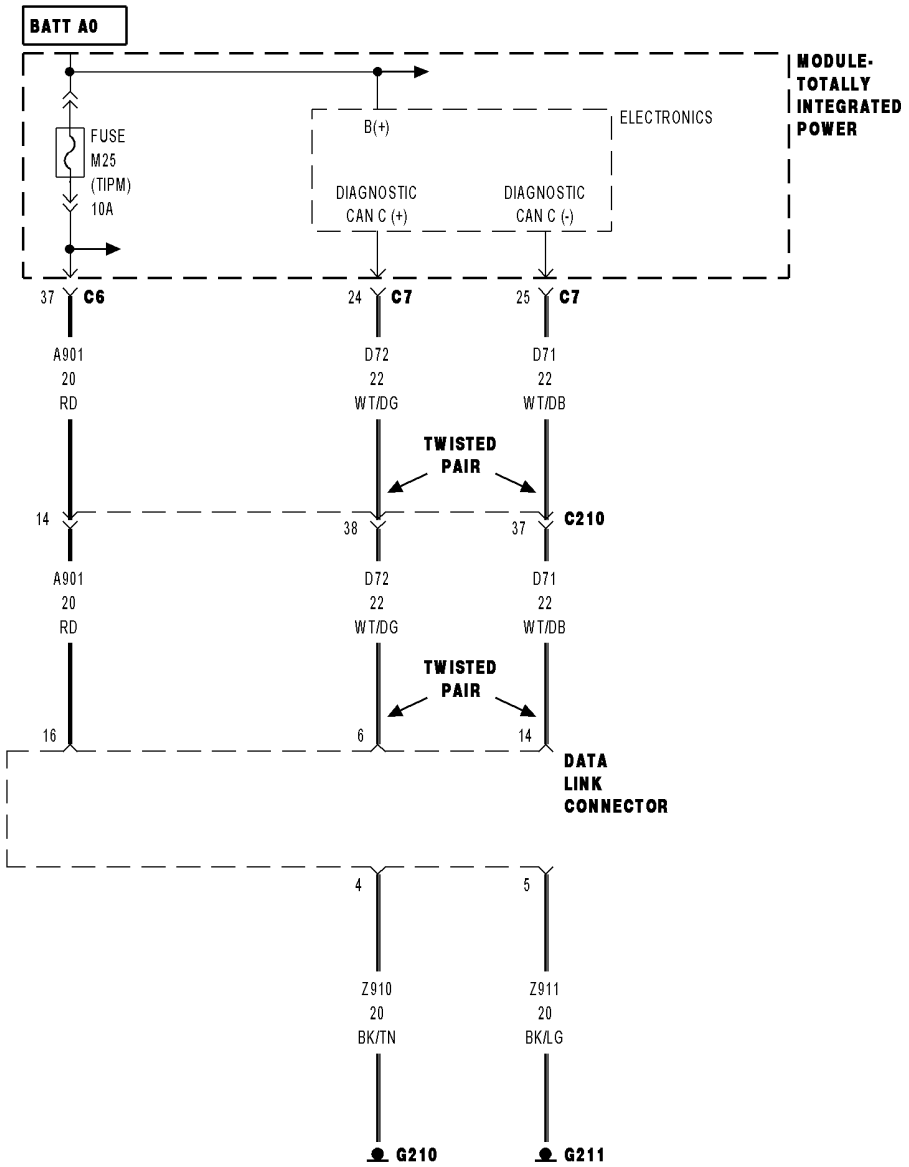

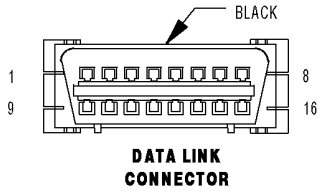

01430586

For a complete wiring diagram, **refer to the Wiring Information**.

- **When Monitored:**
  When the scan tool queries the Totally Integrated Power Module (TIPM).
- **Set Condition:**
  The scan tool has detected a shorted low condition on the (D72) Diagnostic CAN C (+) circuit.

Possible Causes
(D72) DIAGNOSTIC CAN C (+) CIRCUIT SHORTED TO GROUND
TOTALLY INTEGRATED POWER MODULE (TIPM)

1. CHECK THE STATUS OF THE ERROR MESSAGE

NOTE: Make sure the vehicle being tested is a CAN BUS VEHICLE. If not, false error messages may be displayed.

NOTE: Make sure the scan tool is updated to the latest software.

1. Using the scan tool, record the error message.
2. Disconnect the scan tool from the Data Link Connector (DLC).
3. Cycle the ignition from on to off three times.
4. Turn the ignition on.

Does the scan tool display this same error message?

Yes

- Go To 2

No

- The conditions that caused this error message to set are not present at this time. Using the wiring diagram/schematic as a guide, inspect the wiring and connectors.

2. (D72) DIAGNOSTIC CAN C (+) CIRCUIT SHORTED TO GROUND

1. Turn the ignition off.
2. Disconnect the Totally Integrated Power Module C7 harness connector.
3. Disconnect the scan tool from the DLC.
4. Measure the resistance between ground and the (D72) Diagnostic CAN C (+) circuit.

Is the resistance below 100.0 Ohms?

Yes

- Repair the (D72) Diagnostic CAN C (+) circuit for a short to ground.
- Perform the BODY VERIFICATION TEST. (Refer to 28 - DTC-Based Diagnostics/MODULE, Totally Integrated Power (TIPM) - Standard Procedure).

No

- Inspect the wiring and connectors for damage or shorted circuits. If okay, replace the Totally Integrated Power Module in accordance with the Service Information.
- Perform the BODY VERIFICATION TEST. (Refer to 28 - DTC-Based Diagnostics/MODULE, Totally Integrated Power (TIPM) - Standard Procedure).

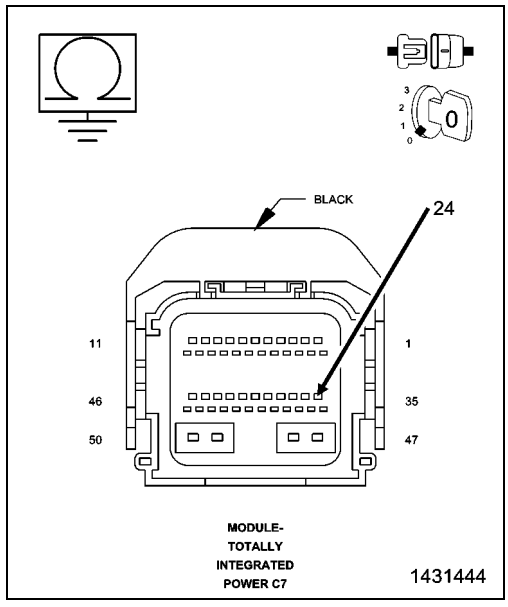

DIAGNOSTIC CAN C (-) CIRCUIT LOW

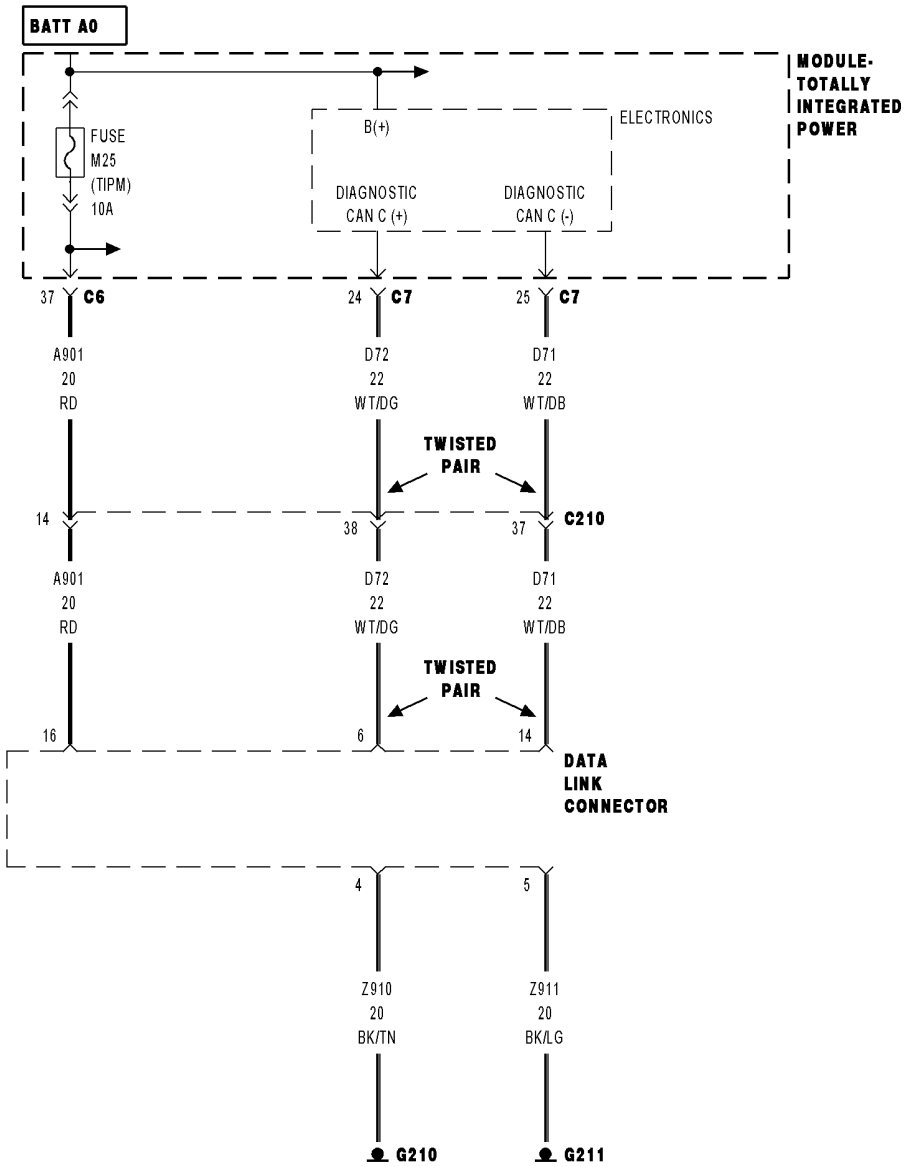

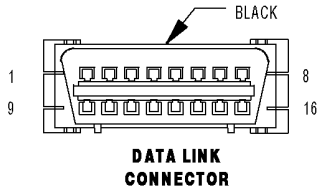

01430586

For a complete wiring diagram, **refer to the Wiring Information**.

- **When Monitored:**
  When the scan tool queries the Totally Integrated Power Module (TIPM).
- **Set Condition:**
  The scan tool has detected a shorted low condition on the (D71) Diagnostic CAN C (-) circuit.

Possible Causes
(D71) DIAGNOSTIC CAN C (-) CIRCUIT SHORTED TO GROUND
TOTALLY INTEGRATED POWER MODULE (TIPM)

1. CHECK THE STATUS OF THE ERROR MESSAGE

NOTE: Make sure the vehicle being tested is a CAN BUS VEHICLE. If not, false error messages may be displayed.

NOTE: Make sure the scan tool is updated to the latest software.

1. Using the scan tool, record the error message.
2. Disconnect the scan tool from the Data Link Connector (DLC).
3. Cycle the ignition from on to off three times.
4. Turn the ignition on.

Does the scan tool display this same error message?

Yes

- Go To 2

No

- The conditions that caused this error message to set are not present at this time. Using the wiring diagram/schematic as a guide, inspect the wiring and connectors.

2. (D71) DIAGNOSTIC CAN C (-) CIRCUIT SHORTED TO GROUND

1. Turn the ignition off.
2. Disconnect the Totally Integrated Power Module C7 harness connector.
3. Disconnect the scan tool from the DLC.
4. Measure the resistance between ground and the (D71) Diagnostic CAN C (-) circuit.

Is the resistance below 100.0 Ohms?

Yes

- Repair the (D71) Diagnostic CAN C (-) circuit for a short to ground.
- Perform the BODY VERIFICATION TEST. (Refer to 28 - DTC-Based Diagnostics/MODULE, Totally Integrated Power (TIPM) - Standard Procedure).

No

- Inspect the wiring and connectors for damage or shorted circuits. If ok, replace the Totally Integrated Power Module in accordance with the Service Information.
- Perform the BODY VERIFICATION TEST. (Refer to 28 - DTC-Based Diagnostics/MODULE, Totally Integrated Power (TIPM) - Standard Procedure).

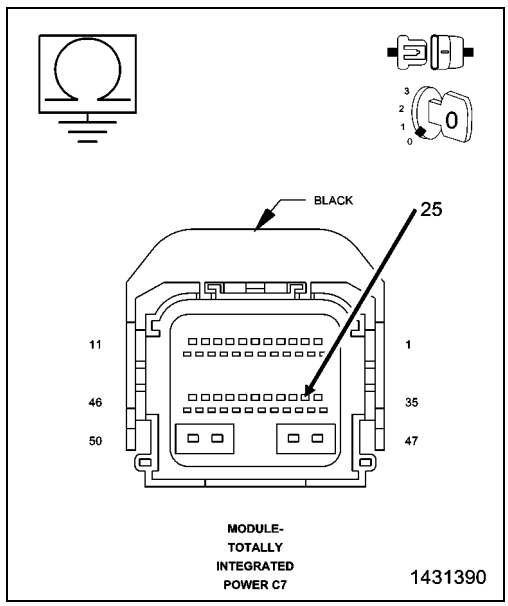

DIAGNOSTIC CAN C (+) CIRCUIT OPEN

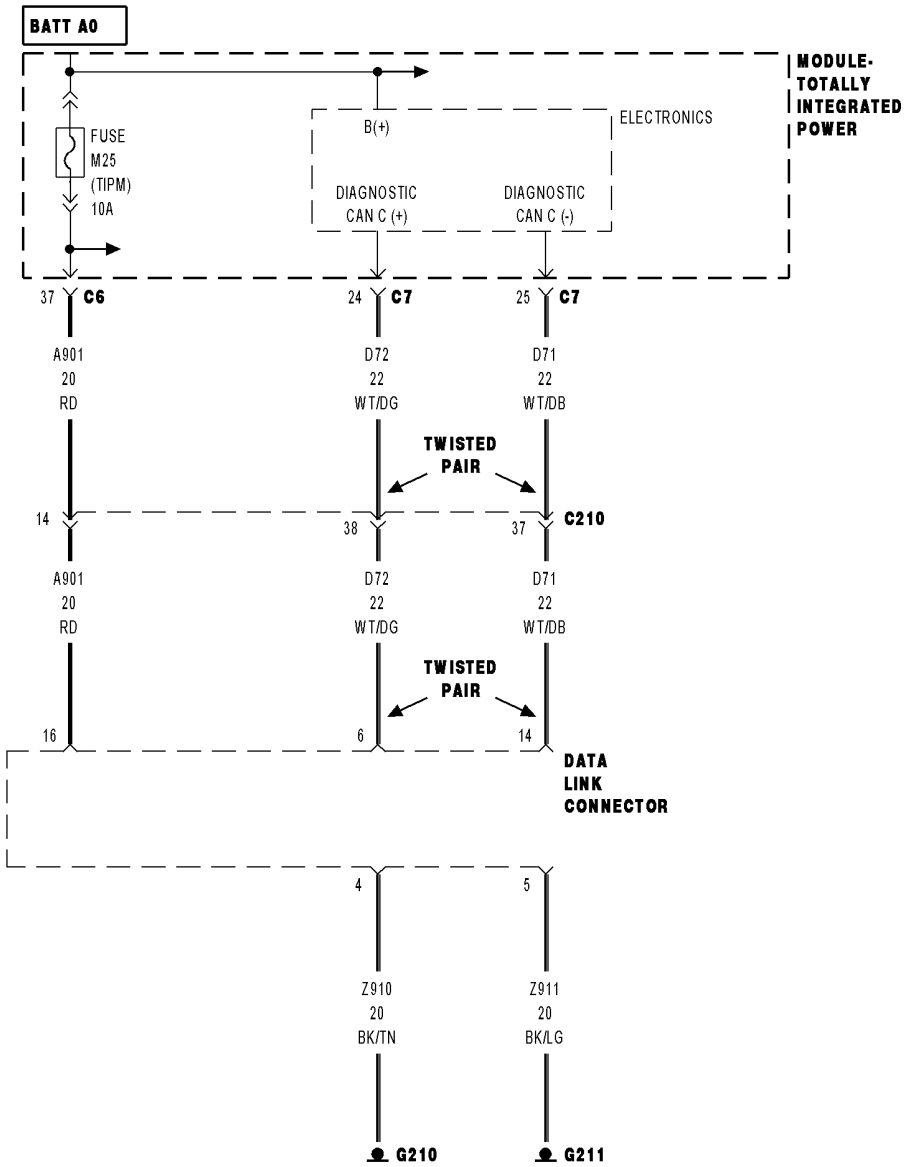

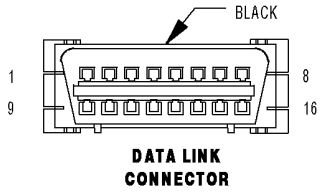

01430586

For a complete wiring diagram, **refer to the Wiring Information**.

- **When Monitored:**
  When the scan tool queries the Totally Integrated Power Module (TIPM).
- **Set Condition:**
  The scan tool has detected an open condition on the (D72) Diagnostic CAN C (+) circuit.

Possible Causes
(D72) DIAGNOSTIC CAN C (+) CIRCUIT OPEN
TOTALLY INTEGRATED POWER MODULE (TIPM)

1. CHECK THE STATUS OF THE ERROR MESSAGE

NOTE: Make sure the vehicle being tested is a CAN BUS VEHICLE. If not, false error messages may be displayed.

NOTE: Make sure the scan tool is updated to the latest software.

1. Using the scan tool, record the error message.
2. Disconnect the scan tool from the Data Link Connector (DLC).
3. Cycle the ignition from on to off three times.
4. Turn the ignition on.

Does the scan tool display this same error message?

Yes

- Go To 2

No

- The conditions that caused this error message to set are not present at this time. Using the wiring diagram/schematic as a guide, inspect the wiring and connectors.

2. (D72) DIAGNOSTIC CAN C (+) CIRCUIT OPEN

1. Turn the ignition off.
2. Disconnect the Totally Integrated Power Module C7 harness connector.
3. Disconnect the scan tool from the DLC.
4. Measure the resistance of the (D72) Diagnostic CAN C (+) circuit between the TIPM connector and the DLC.

Is the resistance below 5.0 Ohms?

Yes

- Inspect the wiring and connectors for damage or shorted circuits. If ok, replace the Totally Integrated Power Module in accordance with the Service Information.
- Perform the BODY VERIFICATION TEST. (Refer to 28 - DTC-Based Diagnostics/MODULE, Totally Integrated Power (TIPM) - Standard Procedure).

No

- Repair the (D72) Diagnostic CAN C (+) circuit for an open.
- Perform the BODY VERIFICATION TEST. (Refer to 28 - DTC-Based Diagnostics/MODULE, Totally Integrated Power (TIPM) - Standard Procedure).

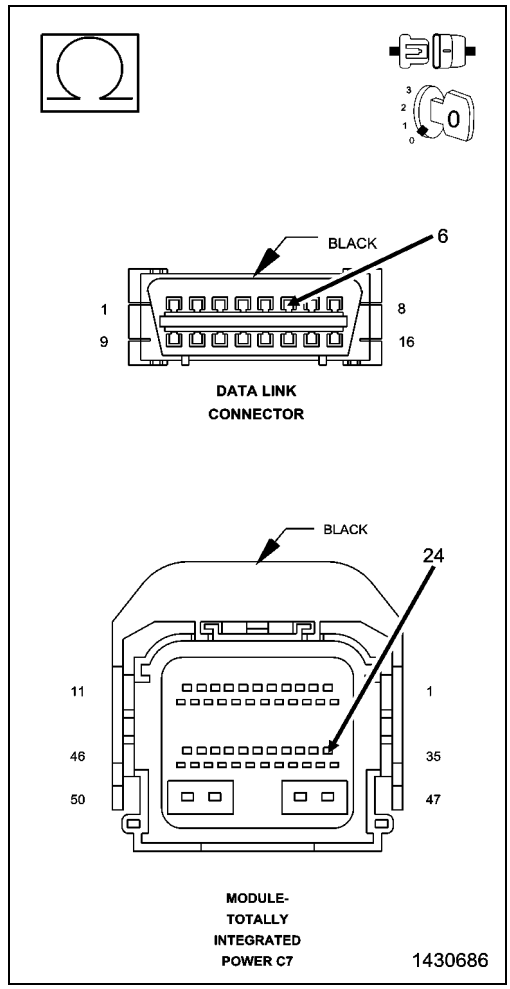

■ DIAGNOSTIC CAN C (-) CIRCUIT OPEN

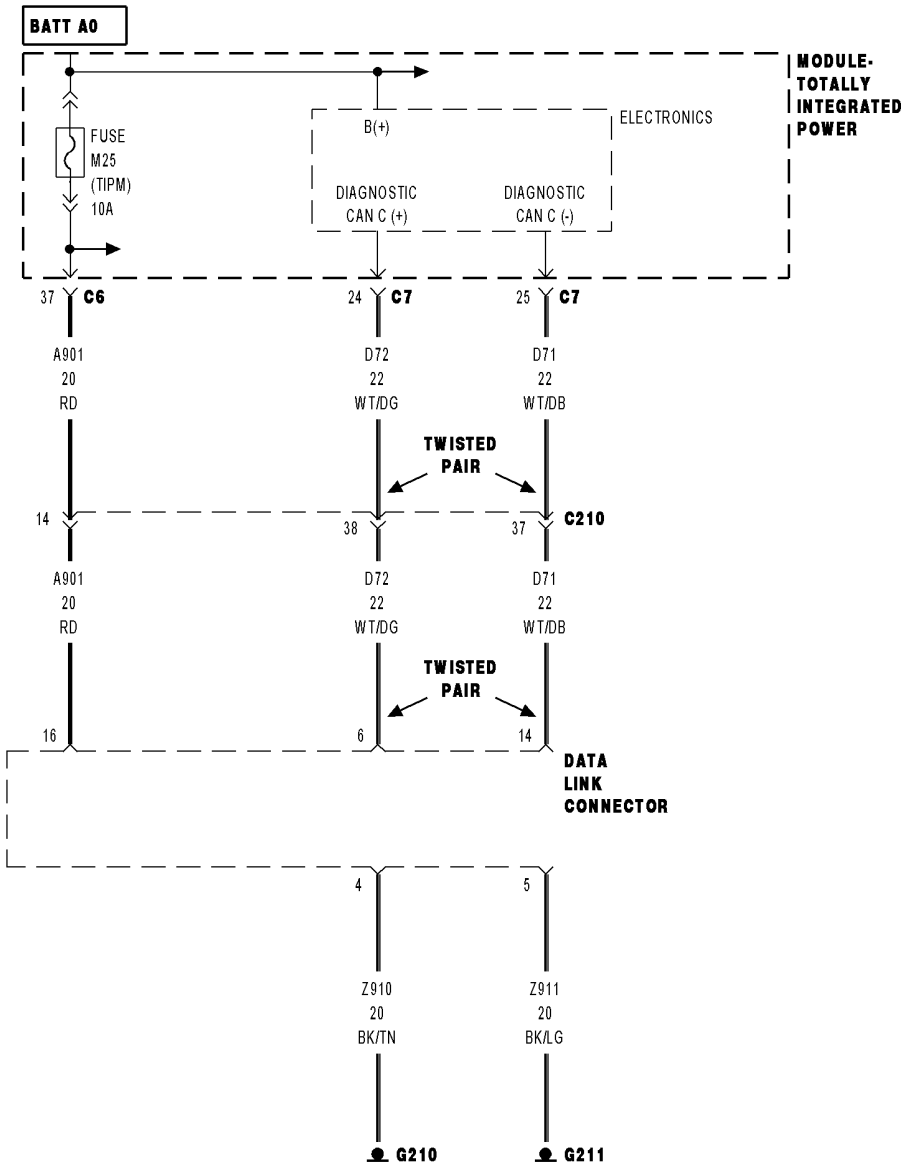

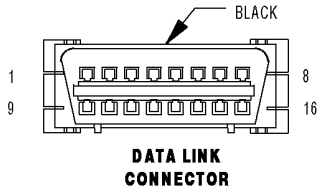

01430586

For a complete wiring diagram, **refer to the Wiring Information**.

- **When Monitored:**
  When the scan tool queries the Totally Integrated Power Module (TIPM).
- **Set Condition:**
  The scan tool has detected an open condition on the (D71) Diagnostic CAN C (-) circuit.

Possible Causes
(D71) DIAGNOSTIC CAN C (-) CIRCUIT OPEN
TOTALLY INTEGRATED POWER MODULE (TIPM)

1. CHECK THE STATUS OF THE ERROR MESSAGE

NOTE: Make sure the vehicle being tested is a CAN BUS VEHICLE. If not, false error messages may be displayed.

NOTE: Make sure the scan tool is updated to the latest software.

1. Using the scan tool, record the error message.
2. Disconnect the scan tool from the Data Link Connector (DLC).
3. Cycle the ignition from on to off three times.
4. Turn the ignition on.

Does the scan tool display this same error message?

Yes

- Go To 2

No

- The conditions that caused this error message to set are not present at this time. Using the wiring diagram/schematic as a guide, inspect the wiring and connectors.

2. (D71) DIAGNOSTIC CAN C (-) CIRCUIT OPEN

1. Turn the ignition off.
2. Disconnect the Totally Integrated Power Module C7 harness connector.
3. Disconnect the scan tool from the DLC.
4. Measure the resistance of the (D71) Diagnostic CAN C (-) circuit between the TIPM connector and the DLC.

Is the resistance below 5.0 Ohms?

Yes

- Inspect the wiring and connectors for damage or shorted circuits. If okay, replace the Totally Integrated Power Module in accordance with the Service Information.
- Perform the BODY VERIFICATION TEST. (Refer to 28 - DTC-Based Diagnostics/MODULE, Totally Integrated Power (TIPM) - Standard Procedure).

No

- Repair the (D71) Diagnostic CAN C (-) circuit for an open.
- Perform the BODY VERIFICATION TEST. (Refer to 28 - DTC-Based Diagnostics/MODULE, Totally Integrated Power (TIPM) - Standard Procedure).

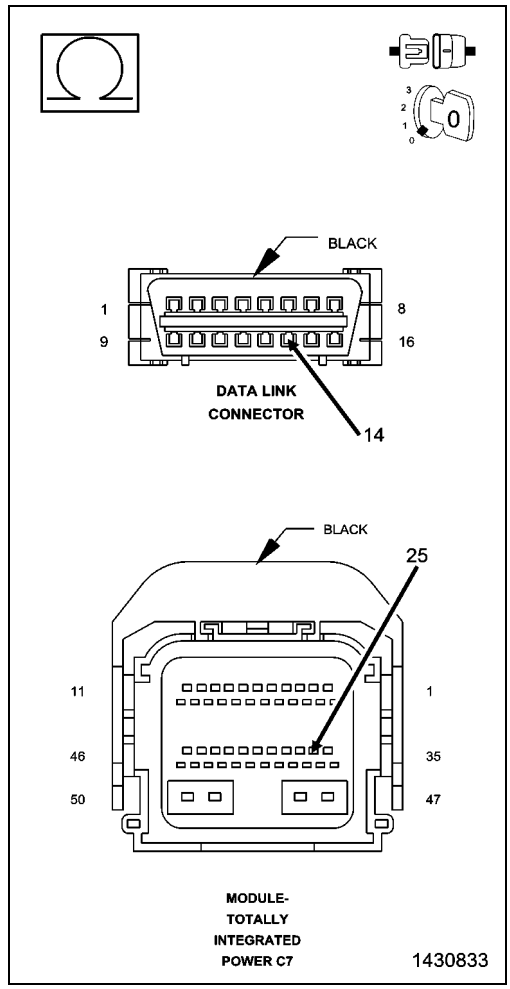

NO RESPONSE FROM ABS (ANTILOCK BRAKE MODULE)

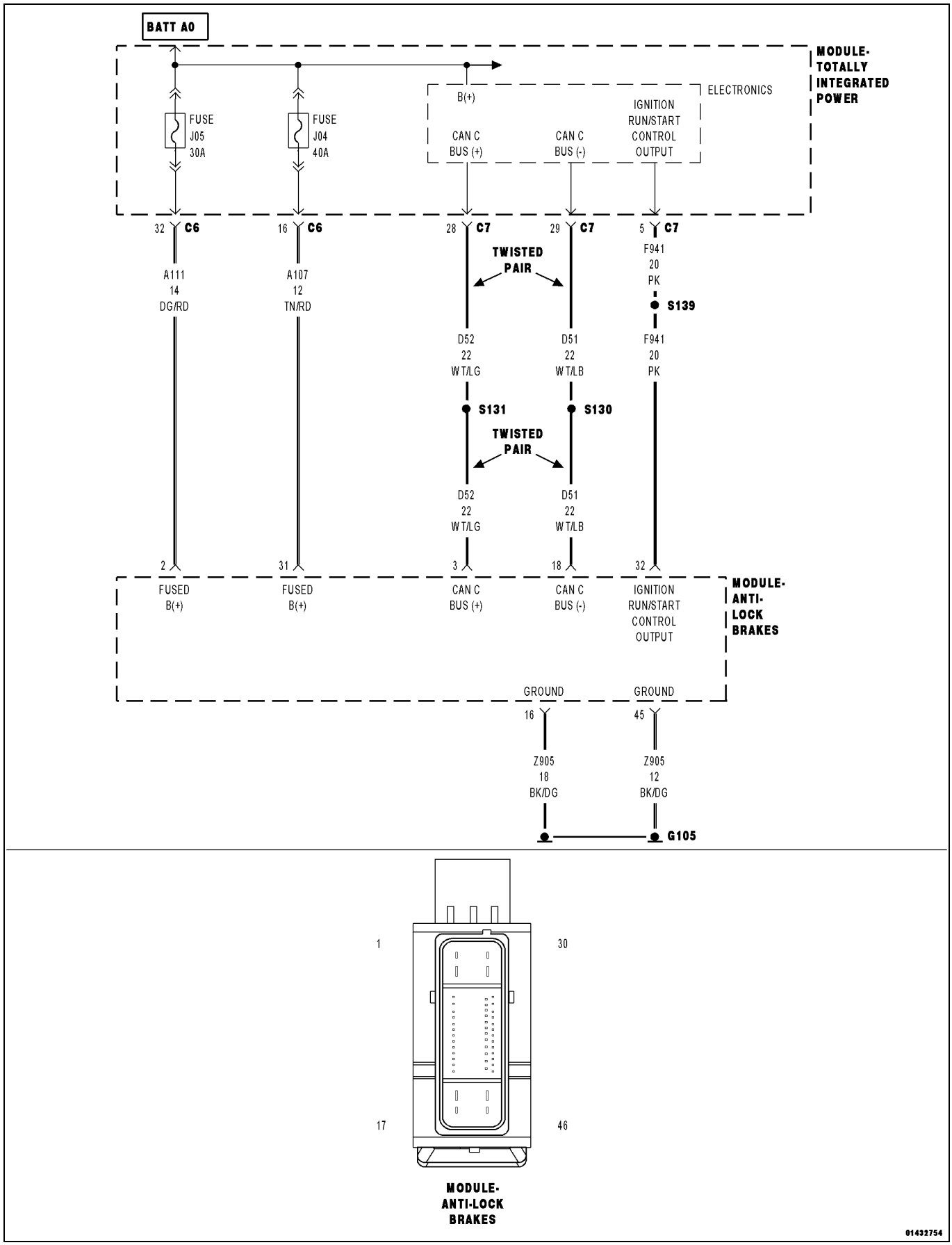

For a complete wiring diagram, **refer to the Wiring Information**.

Possible Causes
(A107) (A111) FUSED B(+) CIRCUIT OPEN OR SHORTED
(Z905) GROUND CIRCUIT OPEN
(F941) IGNITION RUN/START CONTROL OUTPUT CIRCUIT OPEN OR SHORTED
(D52) CAN C BUS (+) CIRCUIT OPEN
(D51) CAN C BUS (-) CIRCUIT OPEN
ANTILOCK BRAKE MODULE

1. TEST FOR INTERMITTENT CONDITION

1. Turn the ignition on.

NOTE: Make sure the IOD fuse is installed and battery voltage is between 10.0 and 16.0 volts.

2. With the scan tool, select ECU view.

NOTE: A red "X" will be next to the module that is not communicating, indicating that the module is not active on the Bus network. A green check indicates that the module is active on the Bus network.

NOTE: Check the TIPM for any active CAN C hardware DTCs, perform DTC before proceeding.

Does the scan tool display a red "X" next to the module?

Yes

- Go To 2

No

- The no response condition is not present at this time. Using the wiring diagram/schematic as a guide, inspect the wiring for chafed, pierced, pinched, and partially broken wires and the wiring harness connectors for broken, bent, pushed out, and corroded terminals.

2. (A107) (A111) FUSED B(+) CIRCUIT OPEN OR SHORTED

1. Turn the ignition off.
2. Disconnect the Antilock Brake Module harness connector.
3. Using a 12-volt test light connected to ground, check each (A107) and (A111) Fused B(+) circuit.

Does the test light illuminate brightly for each circuit?

Yes

- Go To 3

No

- Repair the (A107) or (A111) Fused B(+) circuit for an open or short.
- Perform the ABS VERIFICATION TEST. (Refer to 28 - DTC-Based Diagnostics/MODULE, Antilock Brake (ABS) - Standard Procedure).

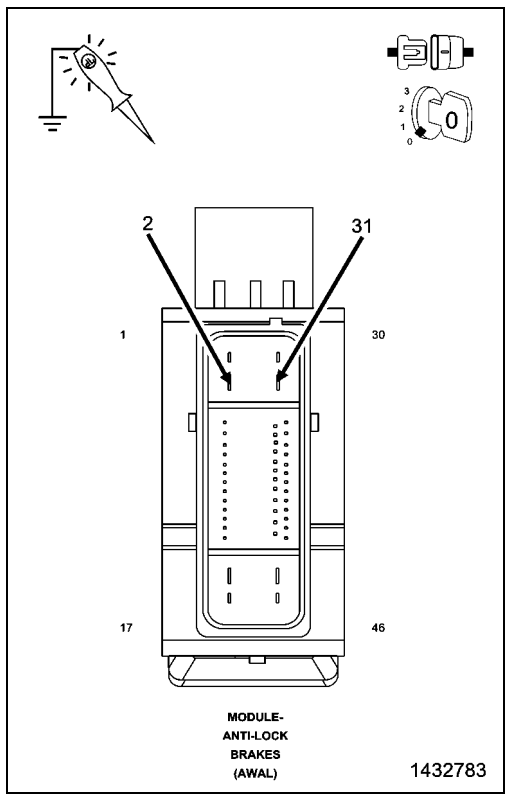

3. (Z905) GROUND CIRCUIT OPEN

1. Using a 12-volt test light connected to 12-volts, check each (Z905) ground circuit.

Does the test light illuminate brightly for each circuit?

Yes

- Go To 4

No

- Repair the (Z905) ground circuit for an open.
- Perform the ABS VERIFICATION TEST. (Refer to 28 - DTC-Based Diagnostics/MODULE, Antilock Brake (ABS) - Standard Procedure).

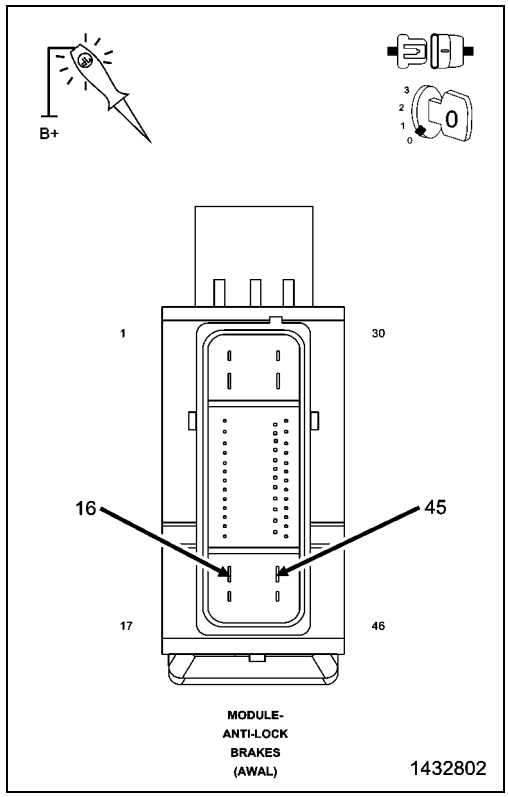

4. (F941) IGNITION RUN/START CONTROL OUTPUT CIRCUIT OPEN OR SHORTED

1. Turn the ignition on.
2. Using a 12-volt test light connected to ground, check the (F941) Ignition Run/Start Control Output circuit.

Does the test light illuminate brightly?

Yes

- Go To 5

No

- Repair the (F941) Ignition Run/Start Control Output circuit for an open or short.
- Perform the ABS VERIFICATION TEST. (Refer to 28 - DTC-Based Diagnostics/MODULE, Antilock Brake (ABS) - Standard Procedure).

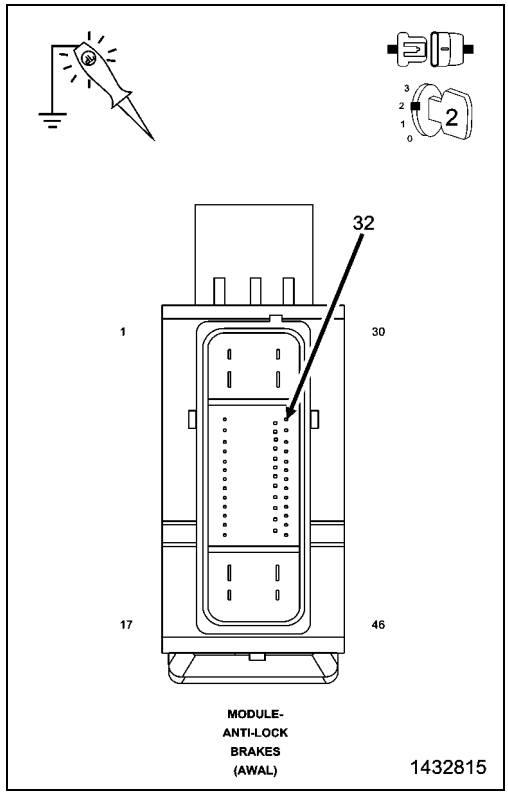

5. (D52) CAN C BUS (+) CIRCUIT OPEN

1. Turn the ignition off.
2. Disconnect the TIPM C7 harness connector.
3. Measure the resistance of the (D52) CAN C Bus (+) circuit between the TIPM connector and the Antilock Brake Module connector.

Is resistance below 5.0 Ohms?

Yes

- Go To 6

No

- Repair the (D52) CAN C Bus (+) circuit for an open.
- Perform the ABS VERIFICATION TEST. (Refer to 28 - DTC-Based Diagnostics/MODULE, Antilock Brake (ABS) - Standard Procedure).

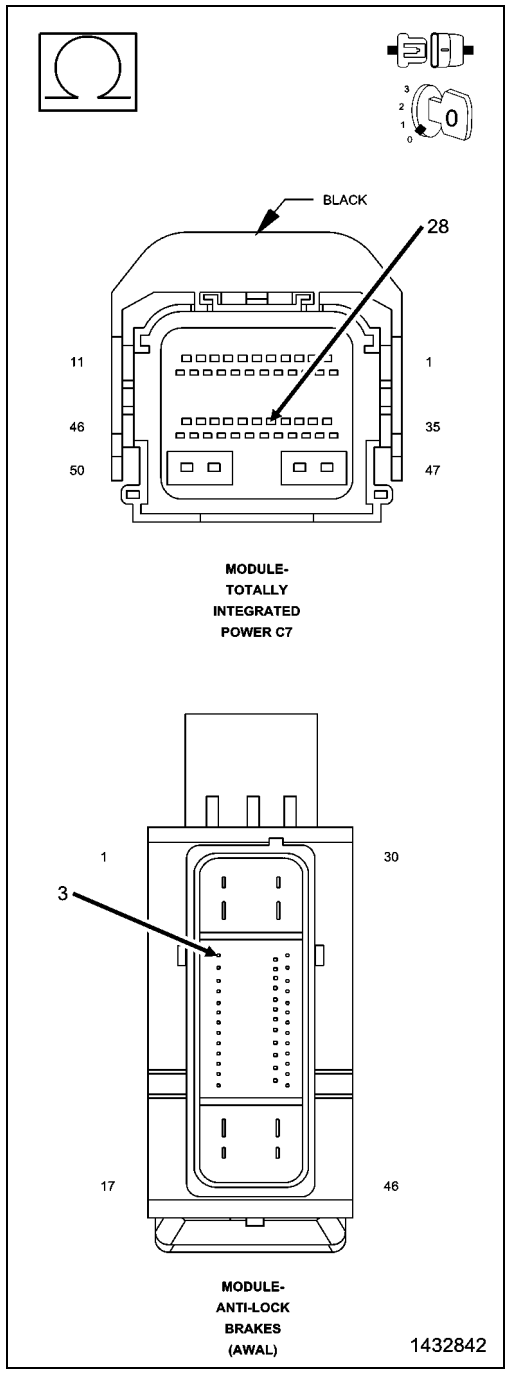

6. (D51) CAN C BUS (-) CIRCUIT OPEN

1. Measure the resistance of the (D51) CAN C Bus (-) circuit between the TIPM connector and the Antilock Brake Module connector.

Is resistance below 5.0 Ohms?

Yes

- Replace the Antilock Brake Module in accordance with the Service Information.
- Perform the ABS VERIFICATION TEST. (Refer to 28 - DTC-Based Diagnostics/MODULE, Antilock Brake (ABS) - Standard Procedure).

No

- Repair the (D51) CAN C Bus (-) circuit for an open.
- Perform the ABS VERIFICATION TEST. (Refer to 28 - DTC-Based Diagnostics/MODULE, Antilock Brake (ABS) - Standard Procedure).

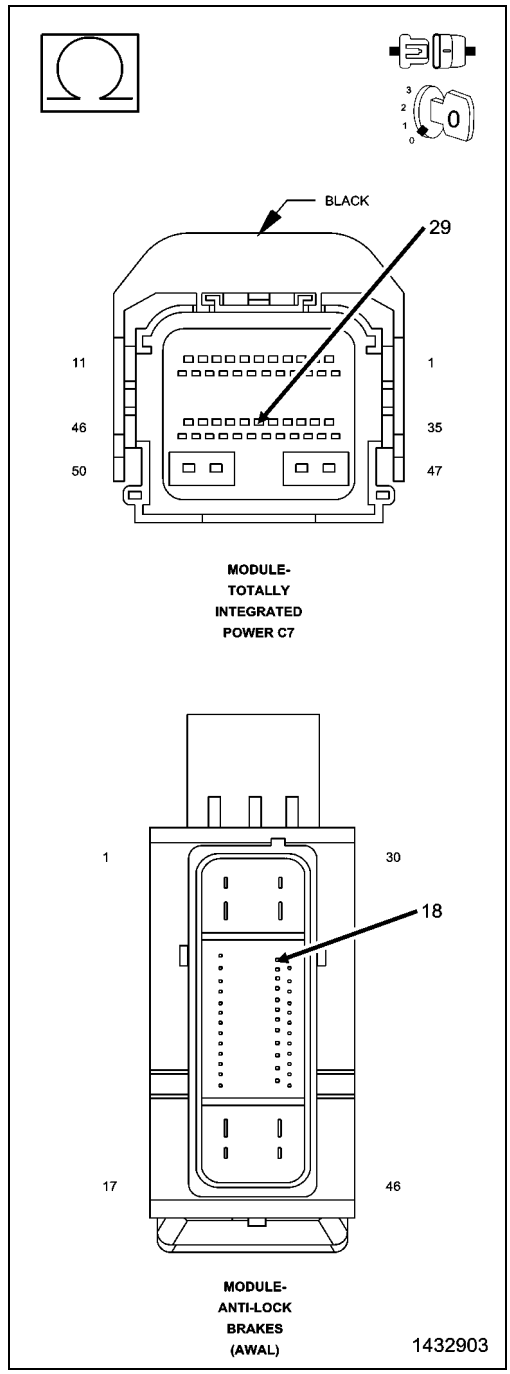

NO RESPONSE FROM AMP (AMPLIFIER)

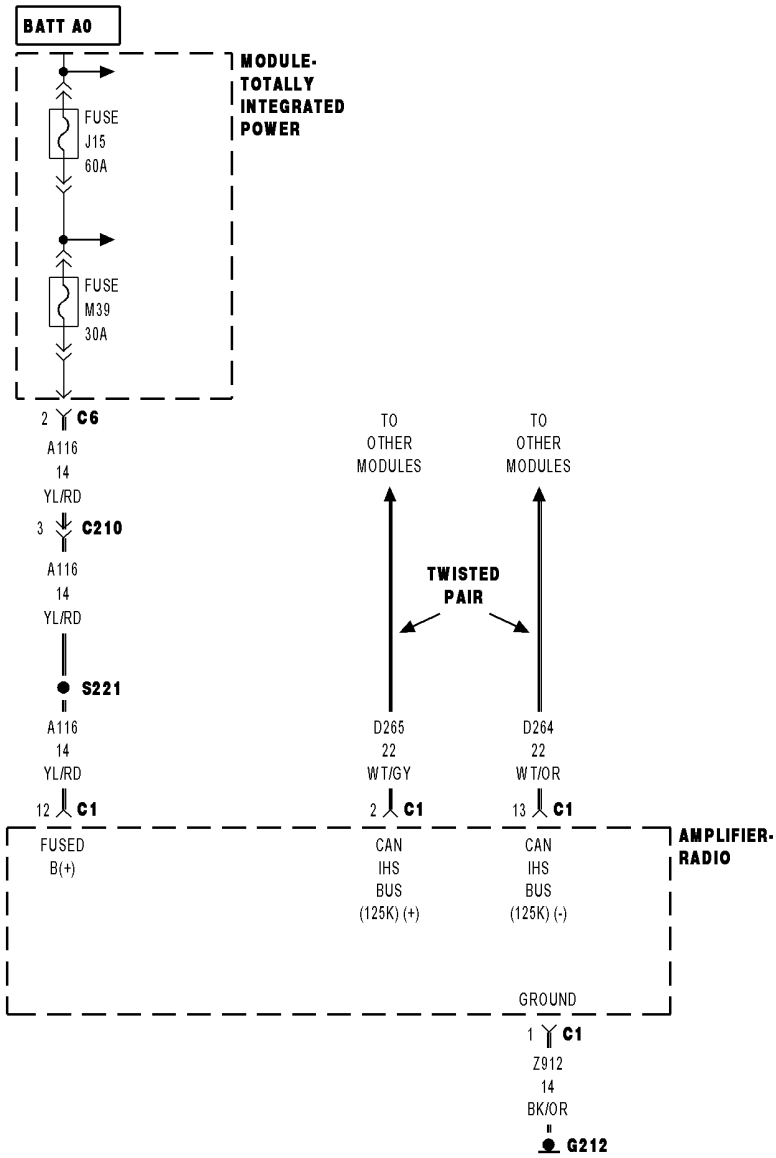

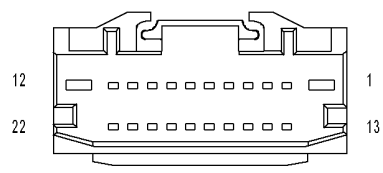

AMPLIFIER-
RADIO C1

01433078

For a complete wiring diagram, **refer to the Wiring Information**.

Possible Causes
(A116) FUSED B (+) CIRCUIT OPEN OR SHORTED
(Z912) GROUND CIRCUIT OPEN
(D264) AND (D265) CAN INTERIOR (IHS) BUS (125K) CIRCUITS OPEN
AMPLIFIER

1. TEST FOR INTERMITTENT CONDITION

1. Turn the ignition on.

NOTE: Make sure the IOD fuse is installed and battery voltage is between 10.0 and 16.0 volts.

2. Using the scan tool, select ECU View.

NOTE: A red "X" will be next to the module that is not communicating, indicating that the module is not active on the Bus network. A green check indicates that the module is active on the Bus network.

Does the scan tool display a red "X" next to the module?

Yes

- Go To 2

No

- The no response condition is not present at this time. Using the wiring diagram/schematic as a guide, inspect the wiring for chafed, pierced, pinched and partially broken wires and the wiring harness connectors for broken, bent, pushed out and corroded terminals.

2. (A116) FUSED B(+) CIRCUIT OPEN OR SHORTED

1. Turn the ignition off.
2. Disconnect the Radio Amplifier C1 harness connector.
3. Using a 12-volt test light connected to ground, check the (A116) Fused B(+) circuit.

Does the test light illuminate brightly?

Yes

- Go To 3

No

- Repair the (A116) Fused B(+) circuit for an open or short.
- Perform the BODY VERIFICATION TEST. (Refer to 28 - DTC-Based Diagnostics/MODULE, Totally Integrated Power (TIPM) - Standard Procedure).

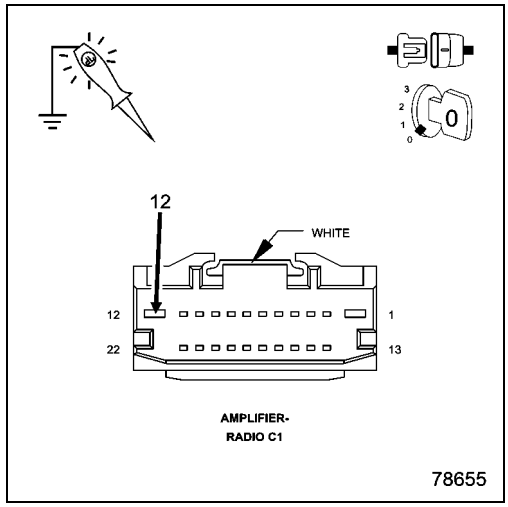

3. (Z912) GROUND CIRCUIT OPEN

1. Using a 12-volt test light connected to 12-volts, check the (Z912) ground circuit.

Does the test light illuminate brightly for each circuit?

Yes

- Go To 4

No

- Repair the (Z912) ground circuit for an open.
- Perform the BODY VERIFICATION TEST. (Refer to 28 - DTC-Based Diagnostics/MODULE, Totally Integrated Power (TIPM) - Standard Procedure).

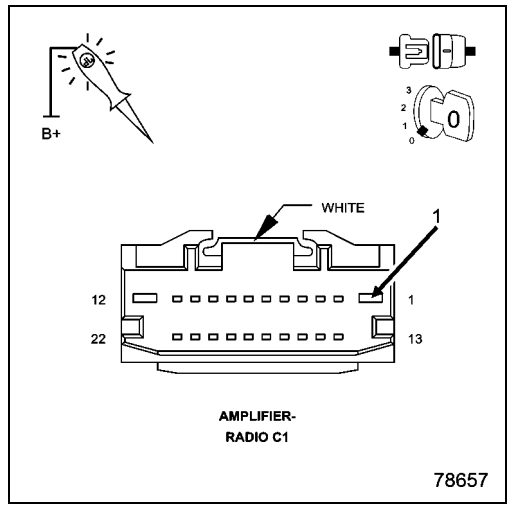

4. (D265) OR (D264) CAN IHS BUS (125K) CIRCUIT OPEN

1. Measure the resistance of the (D264) CAN IHS Bus (-) (125K) circuit between the TIPM C7 harness connector and the Radio Amplifier C1 harness connector.
2. Measure the resistance of the (D265) CAN IHS Bus (+) (125K) circuit between the TIPM C7 harness connector and the Radio Amplifier C1 harness connector.

Is resistance below 5.0 ohms on both circuits?

Yes

- Replace the Radio Amplifier in accordance with the Service Information.
- Perform the BODY VERIFICATION TEST. (Refer to 28 - DTC-Based Diagnostics/MODULE, Totally Integrated Power (TIPM) - Standard Procedure).

No

- Repair the (D265) or (D264) CAN IHS Bus (125K) circuit for an open. Inspect the connector for damage.
- Perform the BODY VERIFICATION TEST. (Refer to 28 - DTC-Based Diagnostics/MODULE, Totally Integrated Power (TIPM) - Standard Procedure).

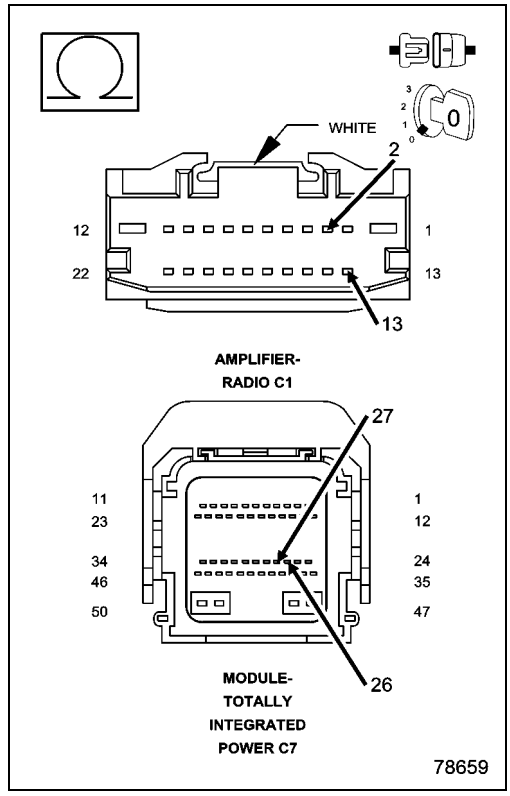

NO RESPONSE FROM CCN (CLUSTER)

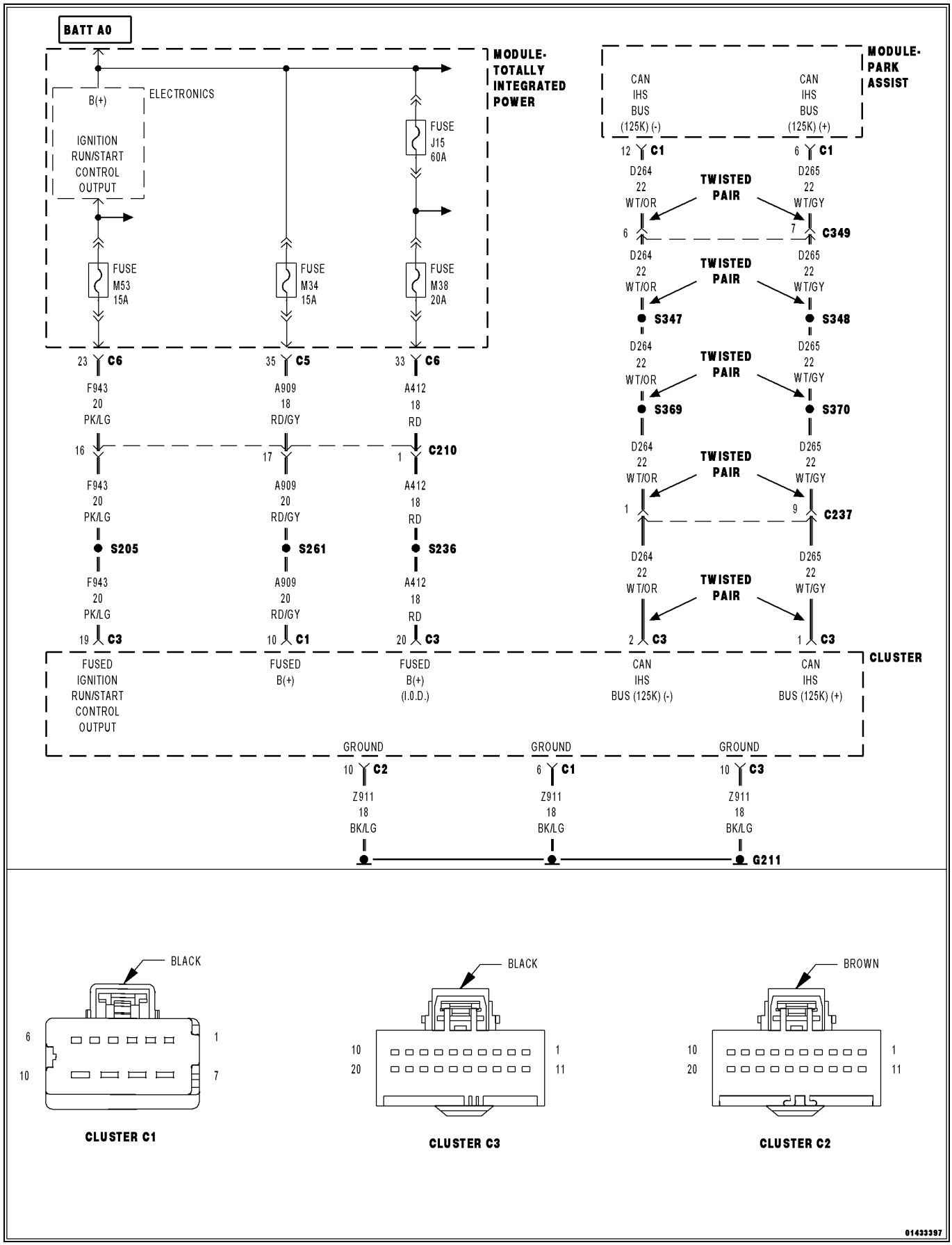

For a complete wiring diagram, **refer to the Wiring Information**.

Possible Causes
(A909) (A412) FUSED B(+) CIRCUITS OPEN OR SHORTED
(Z911) GROUND CIRCUITS OPEN
(F943) FUSED IGNITION SWITCH OUTPUT (RUN/START) CIRCUIT OPEN OR SHORTED
(D264) AND (D265) CAN INTERIOR (IHS) BUS (125K) CIRCUITS OPEN
CLUSTER (CCN)

1. TEST FOR INTERMITTENT CONDITION

1. Turn the ignition on.

NOTE: Make sure the IOD fuse is installed and battery Voltage is between 10.0 and 16.0 Volts.

2. Using the scan tool, select ECU View.

NOTE: A red "X" will be next to the module that is not communicating, indicating that the module is not active on the Bus network. A green check indicates that the module is active on the Bus network.

Does the scan tool display a red "X" next to the module?

Yes

- Go To 2

No

- The no response condition is not present at this time. Using the wiring diagram/schematic as a guide, inspect the wiring for chafed, pierced, pinched and partially broken wires and the wiring harness connectors for broken, bent, pushed out and corroded terminals.

2. (A909) (A412) FUSED B(+) CIRCUIT OPEN OR SHORTED

1. Turn the ignition off.
2. Disconnect the Cluster C1 and C3 harness connectors.
3. Using a 12-volt test light connected to ground, check each (A909) and (A412) Fused B(+) circuit.

Does the test light illuminate brightly for each circuit?

Yes

- Go To 3

No

- Repair the Fused B(+) circuit for an open or short.
- Perform the BODY VERIFICATION TEST. (Refer to 28 - DTC-Based Diagnostics/MODULE, Totally Integrated Power (TIPM) - Standard Procedure).

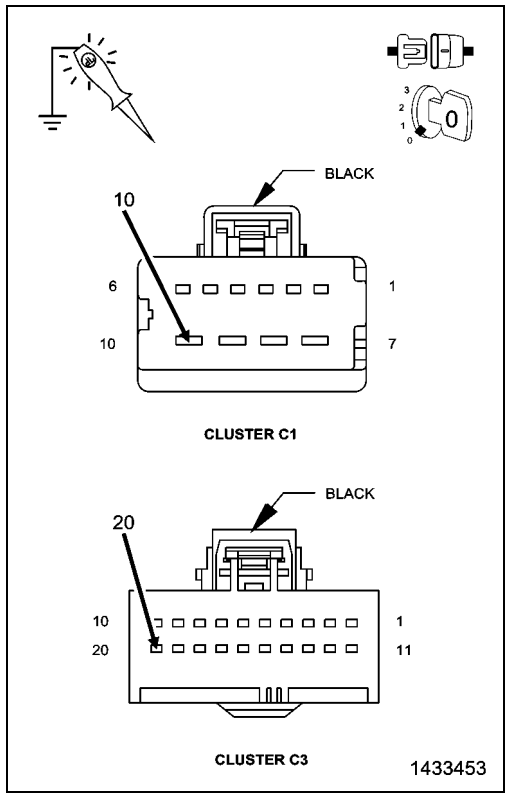

3. (Z911) GROUND CIRCUIT OPEN

1. Using a 12-volt test light connected to 12-volts, check each (Z911) ground circuit.

Does the test light illuminate brightly for each circuit?

Yes

- Go To 4

No

- Repair the (Z911) ground circuit for an open.
- Perform the BODY VERIFICATION TEST. (Refer to 28 - DTC-Based Diagnostics/MODULE, Totally Integrated Power (TIPM) - Standard Procedure).

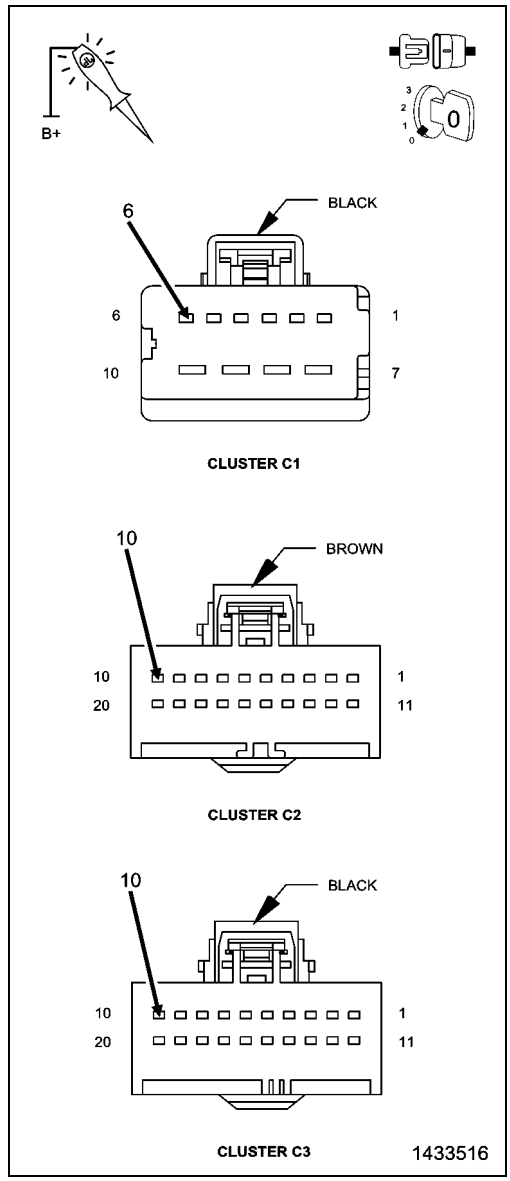

4. (F943) FUSED IGNITION RUN/START CONTROL OUTPUT CIRCUIT OPEN OR SHORTED

1. Turn the ignition on.
2. Using a 12-volt test light connected to ground, check the (F943) Fused Ignition Run/Start Control Output circuit.

Does the test light illuminate brightly?

Yes

- Go To 5

No

- Repair the (F943) Fused Ignition Run/Start Control Output circuit for an open or short.
- Perform the BODY VERIFICATION TEST. (Refer to 28 - DTC-Based Diagnostics/MODULE, Totally Integrated Power (TIPM) - Standard Procedure).

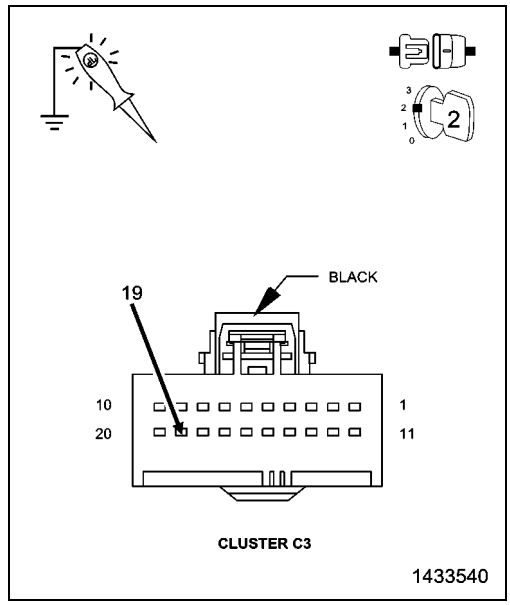

5. (D265) OR (D264) CAN IHS BUS (125K) CIRCUIT OPEN

1. Measure the resistance of the (D264) CAN IHS Bus (-) (125K) circuit between the TIPM C7 harness connector and the Cluster C3 harness connector.
2. Measure the resistance of the (D265) CAN IHS Bus (+) (125K) circuit between the TIPM C7 harness connector and the Cluster C3 harness connector.

Is resistance below 5.0 Ohms on both circuits?

Yes

- Replace the Cluster in accordance with the Service Information.
- Perform the BODY VERIFICATION TEST. (Refer to 28 - DTC-Based Diagnostics/MODULE, Totally Integrated Power (TIPM) - Standard Procedure).

No

- Repair the (D265) or (D264) CAN IHS Bus (125K) circuit for an open. Inspect the connector for damage.
- Perform the BODY VERIFICATION TEST. (Refer to 28 - DTC-Based Diagnostics/MODULE, Totally Integrated Power (TIPM) - Standard Procedure).

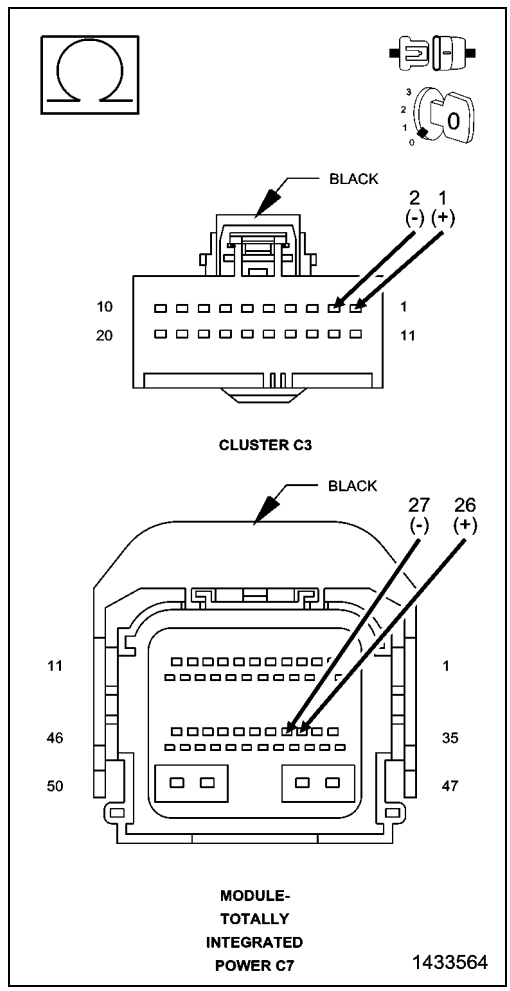

NO RESPONSE FROM DDM (DMLF)(DRIVER DOOR MODULE)

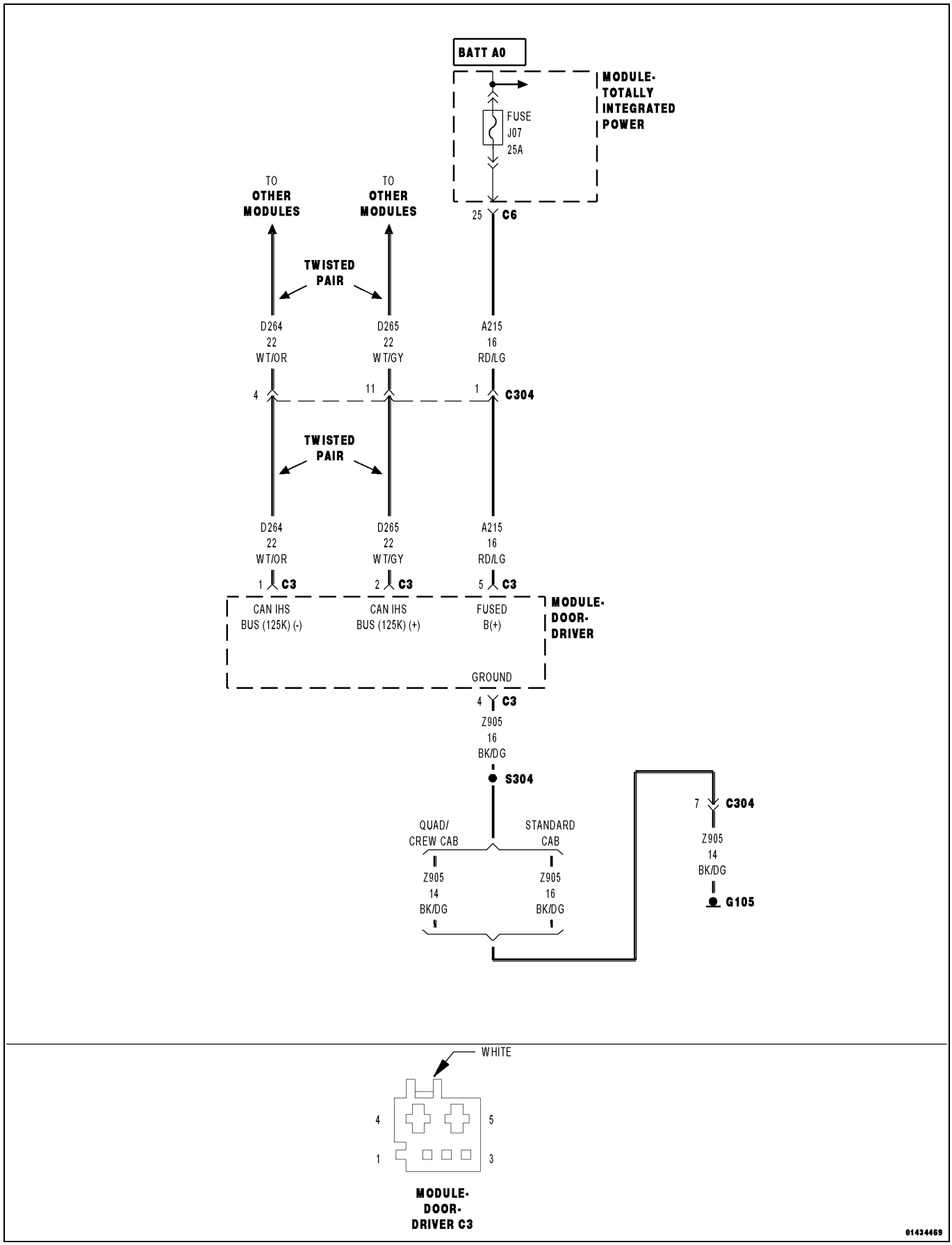

For a complete wiring diagram, **refer to the Wiring Information**.

Possible Causes
(A215) FUSED B (+) CIRCUIT OPEN OR SHORTED
(Z905) GROUND CIRCUIT OPEN
(D264) AND (D265) CAN INTERIOR (IHS) BUS (125K) CIRCUITS OPEN
DRIVER DOOR MODULE

1. TEST FOR INTERMITTENT CONDITION

1. Turn the ignition on.

NOTE: Make sure the IOD fuse is installed and battery voltage is between 10.0 and 16.0 volts.

2. With the scan tool, select ECU View.

NOTE: A red "X" will be next to the module that is not communicating, indicating that the module is not active on the Bus network. A green check indicates that the module is active on the Bus network.

Does the scan tool display a red "X" next to the module?

Yes

- Go To 2

No

- The no response condition is not present at this time. Using the wiring diagram/schematic as a guide, inspect the wiring for chafed, pierced, pinched and partially broken wires and the wiring harness connectors for broken, bent, pushed out and corroded terminals.

2. (A215) FUSED B(+) CIRCUIT OPEN OR SHORTED

1. Turn the ignition off.
2. Disconnect the Driver Door Module C3 harness connector.
3. Using a 12-volt test light connected to ground, check the (A215) Fused B(+) circuit.

Does the test light illuminate brightly?

Yes

- Go To 3

No

- Repair the (A215) Fused B(+) circuit for an open or short.
- Perform the BODY VERIFICATION TEST. (Refer to 28 - DTC-Based Diagnostics/MODULE, Totally Integrated Power (TIPM) - Standard Procedure).

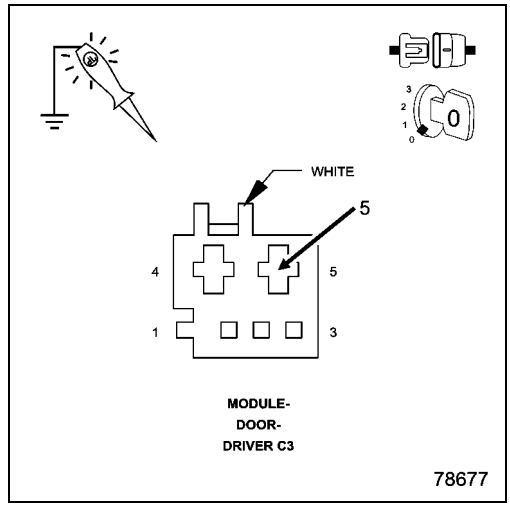

3. (Z905) GROUND CIRCUIT OPEN

1. Using a 12-volt test light connected to 12-volts, check the (Z905) ground circuit.

Does the test light illuminate brightly for each circuit?

Yes

- Go To 4

No

- Repair the (Z905) ground circuit for an open.
- Perform the BODY VERIFICATION TEST. (Refer to 28 - DTC-Based Diagnostics/MODULE, Totally Integrated Power (TIPM) - Standard Procedure).

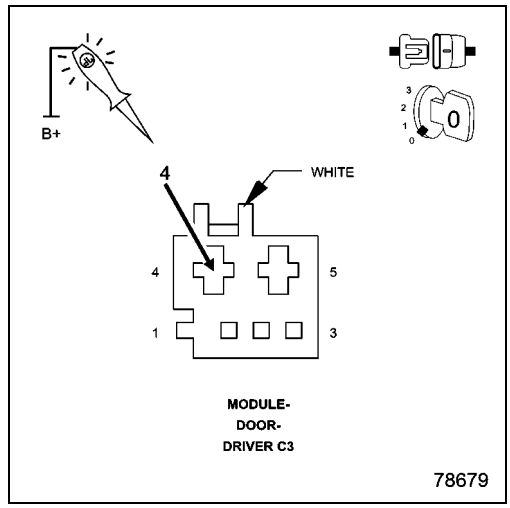

4. (D265) OR (D264) CAN INTERIOR BUS (125K) CIRCUIT OPEN

1. Measure the resistance of the (D264) CAN IHS Bus (-) (125K) circuit between the TIPM C7 harness connector and the Driver Door Module C3 harness connector.
2. Measure the resistance of the (D265) CAN IHS Bus (+) (125K) circuit between the TIPM C7 harness connector and the Driver Door Module C3 harness connector.

Is resistance below 5.0 Ohms on both circuits?

Yes

- Replace the Driver Door Module in accordance with the service information.
- Perform the BODY VERIFICATION TEST. (Refer to 28 - DTC-Based Diagnostics/MODULE, Totally Integrated Power (TIPM) - Standard Procedure).

No

- Repair the (D265) or (D264) CAN IHS Bus (125K) circuit for an open. Inspect the connector for damage.
- Perform the BODY VERIFICATION TEST. (Refer to 28 - DTC-Based Diagnostics/MODULE, Totally Integrated Power (TIPM) - Standard Procedure).

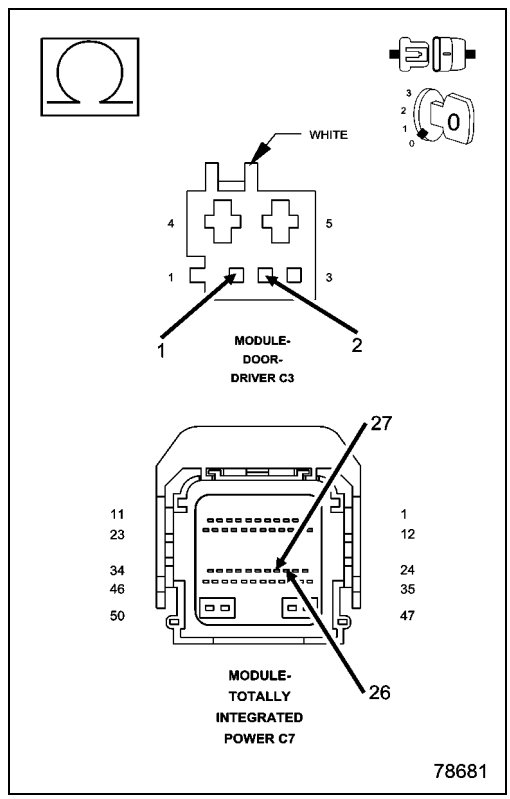

NO RESPONSE FROM DTCM (DRIVETRAIN CONTROL MODULE)

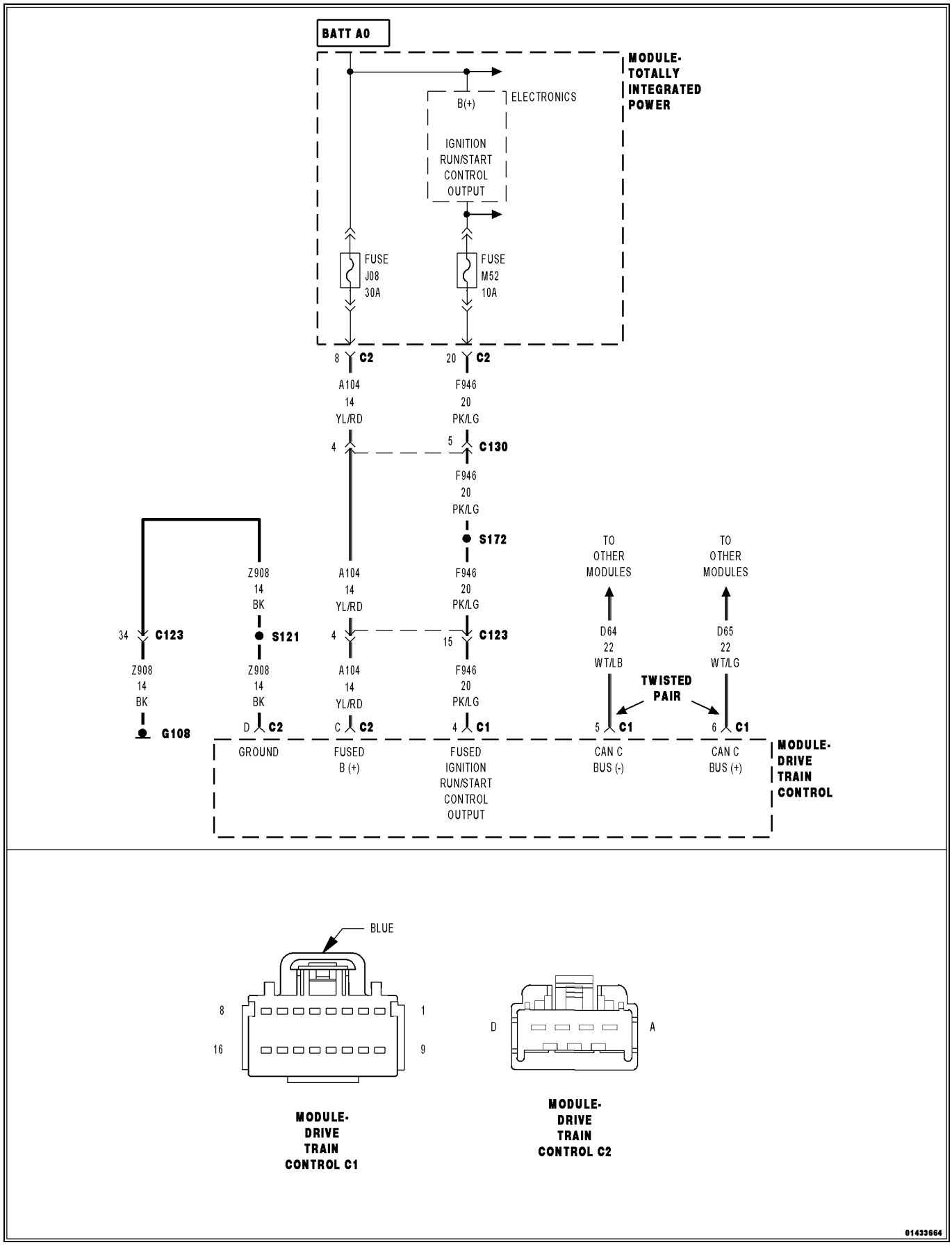

For a complete wiring diagram, **refer to the Wiring Information**.

Possible Causes
(A104) FUSED B(+) CIRCUIT OPEN OR SHORTED
(Z908) GROUND CIRCUIT OPEN
(F946) FUSED IGNITION RUN/START CONTROL OUTPUT CIRCUIT OPEN OR SHORTED
(D65) CAN C BUS (+) CIRCUIT OPEN
(D64) CAN C BUS (-) CIRCUIT OPEN
DRIVETRAIN CONTROL MODULE

1. TEST FOR INTERMITTENT CONDITION

1. Turn the ignition on.

NOTE: Make sure the IOD fuse is installed and battery voltage is between 10.0 and 16.0 volts.

2. Using the scan tool, select ECU view.

NOTE: A red "X" will be next to the module that is not communicating, indicating that the module is not active on the Bus network. A green check indicates that the module is active on the Bus network.

NOTE: Check the TIPM for any active CAN C hardware DTCs, perform DTC before proceeding.

Does the scan tool display a red "X" next to the module?

Yes

- Go To 2

No

- The no response condition is not present at this time. Using the wiring diagram/schematic as a guide, inspect the wiring for chafed, pierced, pinched and partially broken wires and the wiring harness connectors for broken, bent, pushed out and corroded terminals.

2. (A104) FUSED B(+) CIRCUIT OPEN OR SHORTED

1. Turn the ignition off.
2. Disconnect the Drivetrain Control Module C1 and C2 harness connectors.
3. Using a 12-volt test light connected to ground, check the (A104) Fused B(+) circuit.

Does the test light illuminate brightly?

Yes

- Go To 3

No

- Repair the (A104) Fused B(+) circuit for an open or short.
- Perform the DTCM VERIFICATION TEST. (Refer to 28 - DTC-Based Diagnostics/MODULE, Drivetrain Control (DTCM) - Standard Procedure).

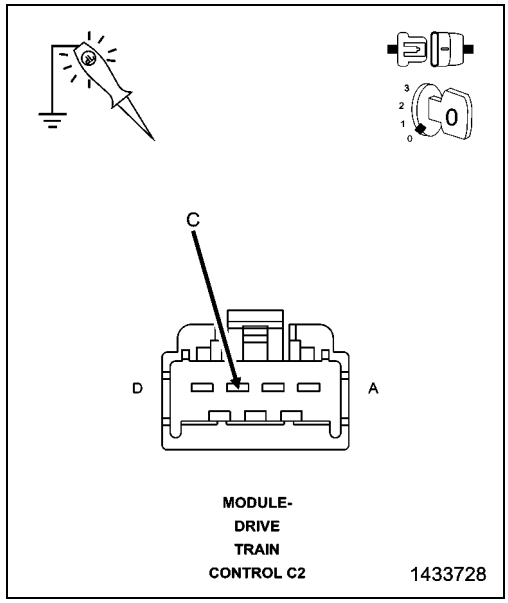

3. (Z908) GROUND CIRCUIT OPEN

1. Using a 12-volt test light connected to 12-volts, check the (Z908) Ground circuit.

Does the test light illuminate brightly for each circuit?

Yes

- Go To 4

No

- Repair the (Z908) ground circuit for an open.
- Perform the DTCM VERIFICATION TEST. (Refer to 28 - DTC-Based Diagnostics/MODULE, Drivetrain Control (DTCM) - Standard Procedure).

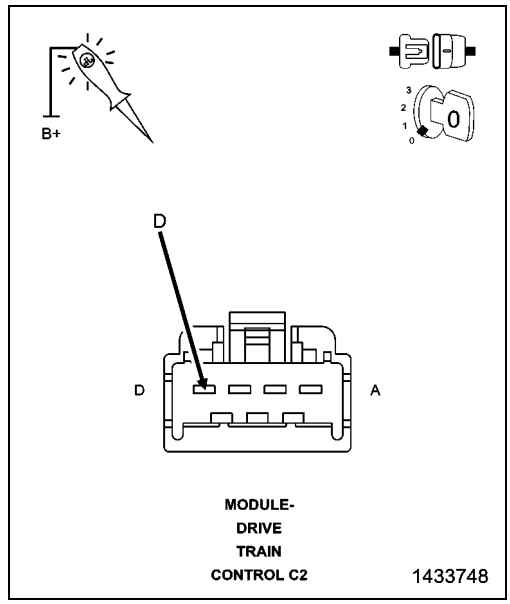

4. (F946) FUSED IGNITION RUN/START CONTROL OUTPUT CIRCUIT OPEN OR SHORTED

1. Turn the ignition on.
2. Using a 12-volt test light connected to ground, check the (F946) Fused Ignition Run/Start Control Output circuit.

Does the test light illuminate brightly?

Yes

- Go To 5

No

- Repair the (F946) Fused Ignition Run/Start Control Output circuit for an open or short.
- Perform the DTCM VERIFICATION TEST. (Refer to 28 - DTC-Based Diagnostics/MODULE, Drivetrain Control (DTCM) - Standard Procedure).

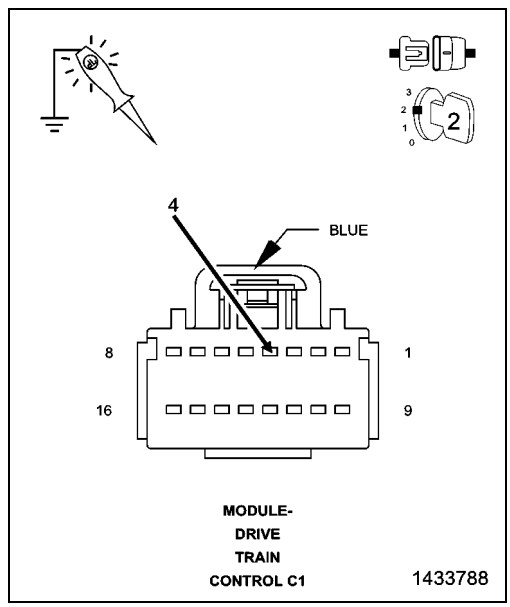

5. (D65) CAN C BUS (+) CIRCUIT OPEN

1. Turn the ignition off.
2. Disconnect the TIPM C1 harness connector.
3. Measure the resistance of the (D65) CAN C Bus (+) circuit between the TIPM C1 connector and the DTCM C1 connector.

Is resistance below 5.0 Ohms?

Yes

- Go To 6

No

- Repair the (D65) CAN C Bus (+) circuit for an open.
- Perform the DTCM VERIFICATION TEST. (Refer to 28 - DTC-Based Diagnostics/MODULE, Drivetrain Control (DTCM) - Standard Procedure).

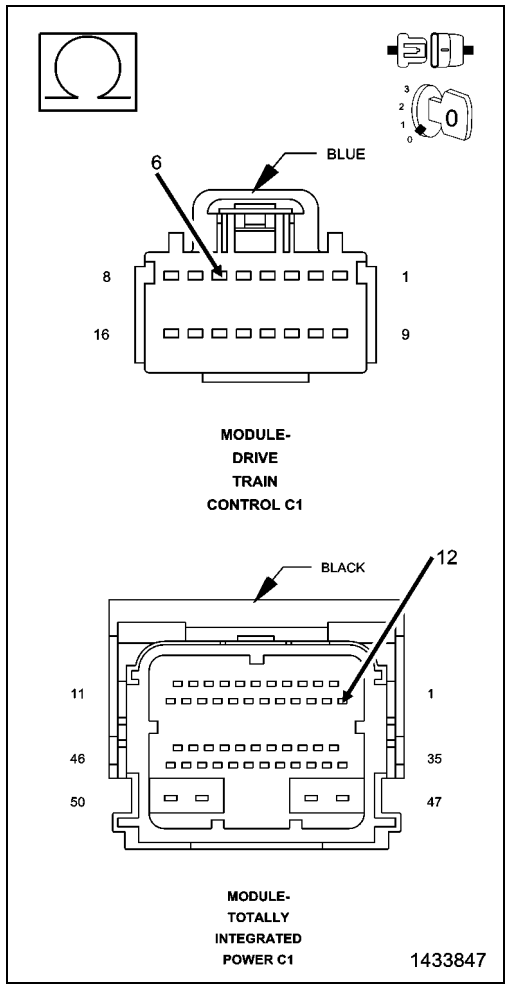

6. (D64) CAN C BUS (-) CIRCUIT OPEN

1. Measure the resistance of the (D64) CAN C Bus (-) circuit between the TIPM C1 connector and the DTCM C1 connector.

Is resistance below 5.0 Ohms?

Yes

- Replace the Drivetrain Control Module in accordance with the Service Information.
- Perform the DTCM VERIFICATION TEST. (Refer to 28 - DTC-Based Diagnostics/MODULE, Drivetrain Control (DTCM) - Standard Procedure).

No

- Repair the (D64) CAN C Bus (-) circuit for an open.
- Perform the DTCM VERIFICATION TEST. (Refer to 28 - DTC-Based Diagnostics/MODULE, Drivetrain Control (DTCM) - Standard Procedure).

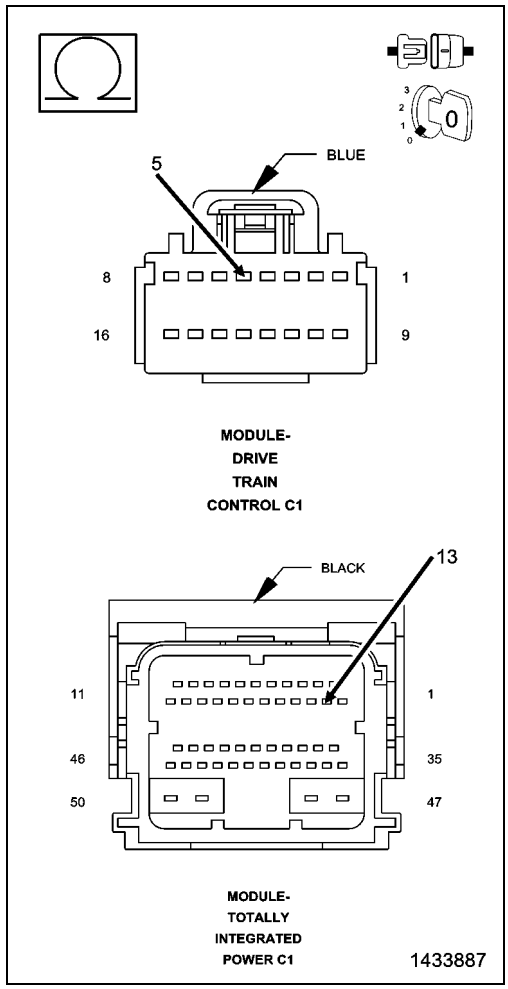

NO RESPONSE FROM HFM (HANDS FREE MODULE)

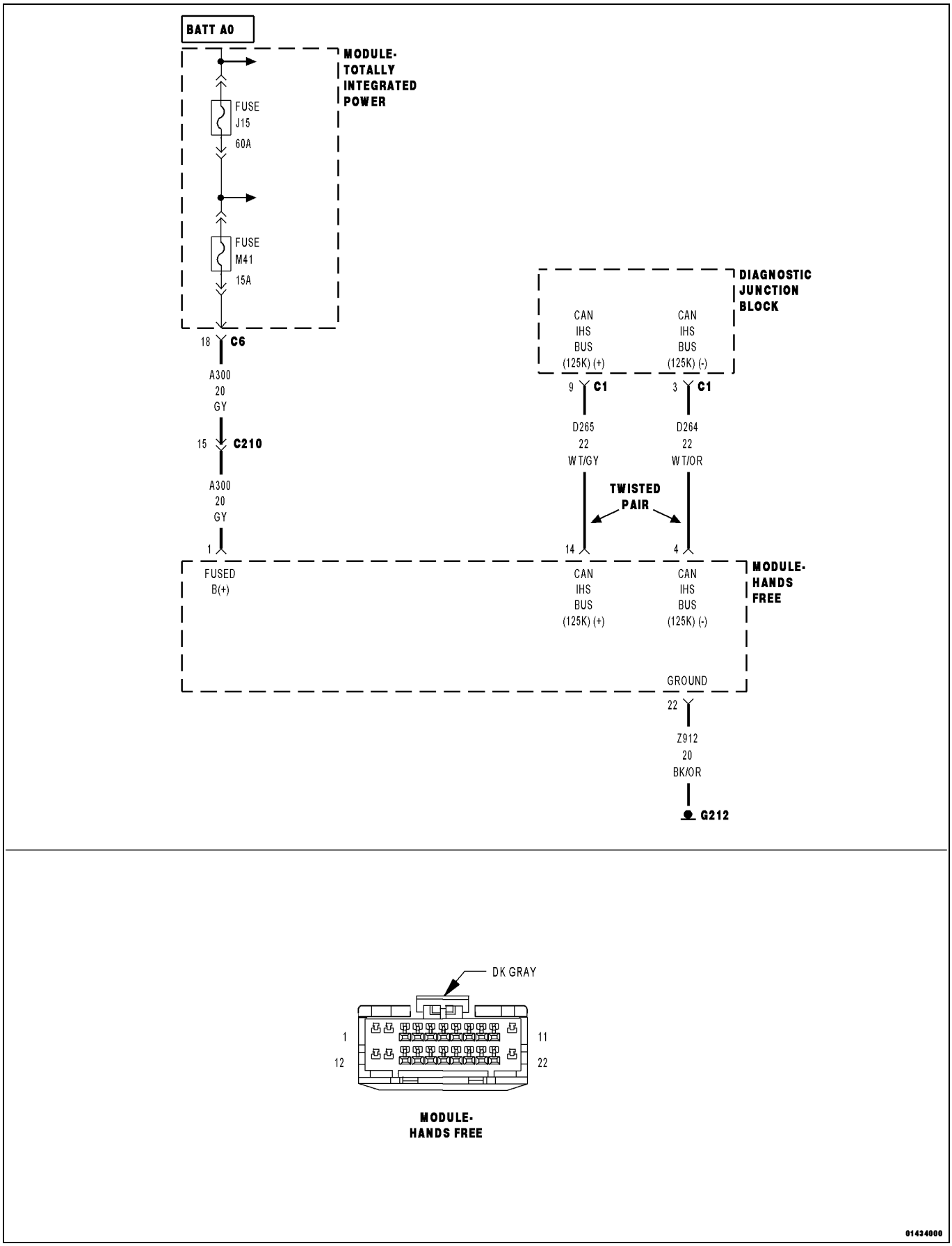

For a complete wiring diagram, **refer to the Wiring Information**.

Possible Causes
(A300) FUSED B (+) CIRCUIT OPEN OR SHORTED
(Z912) GROUND CIRCUIT OPEN
(D264) AND (D265) CAN INTERIOR (IHS) BUS (125K) CIRCUITS OPEN
HANDS FREE MODULE

1. TEST FOR INTERMITTENT CONDITION

1. Turn the ignition on.

NOTE: Make sure the IOD fuse is installed and battery voltage is between 10.0 and 16.0 volts.

2. Using the scan tool, select ECU View.

NOTE: A red "X" will be next to the module that is not communicating, indicating that the module is not active on the Bus network. A green check indicates that the module is active on the Bus network.

Does the scan tool display a red "X" next to the module?

Yes

- Go To 2

No

- The no response condition is not present at this time. Using the wiring diagram or schematic as a guide, inspect the wiring for chafed, pierced, pinched and partially broken wires and the wiring harness connectors for broken, bent, pushed out and corroded terminals.

2. (A300) FUSED B(+) CIRCUIT OPEN OR SHORTED

1. Turn the ignition off.
2. Disconnect the Hands Free Module harness connector.
3. Using a 12-volt test light connected to ground, check the (A300) Fused B(+) circuit.

Does the test light illuminate brightly?

Yes

- Go To 3

No

- Repair the (A300) Fused B(+) circuit for an open or short.
- Perform the BODY VERIFICATION TEST. (Refer to 28 - DTC-Based Diagnostics/MODULE, Totally Integrated Power (TIPM) - Standard Procedure).

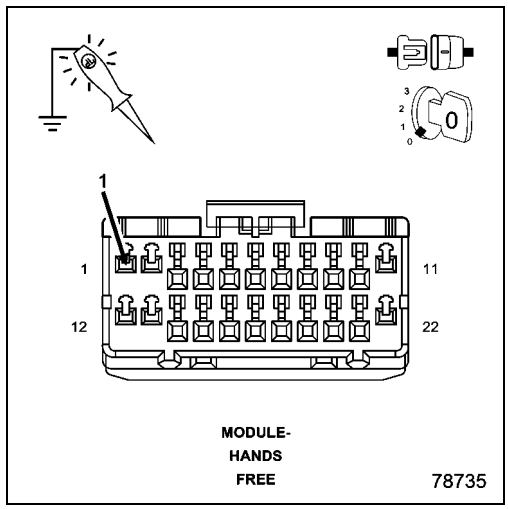

3. (Z912) GROUND CIRCUIT OPEN

1. Using a 12-volt test light connected to 12-volts, check the (Z912) ground circuit.

Does the test light illuminate brightly for each circuit?

Yes

- Go To 4

No

- Repair the (Z912) ground circuit for an open.
- Perform the BODY VERIFICATION TEST. (Refer to 28 - DTC-Based Diagnostics/MODULE, Totally Integrated Power (TIPM) - Standard Procedure).

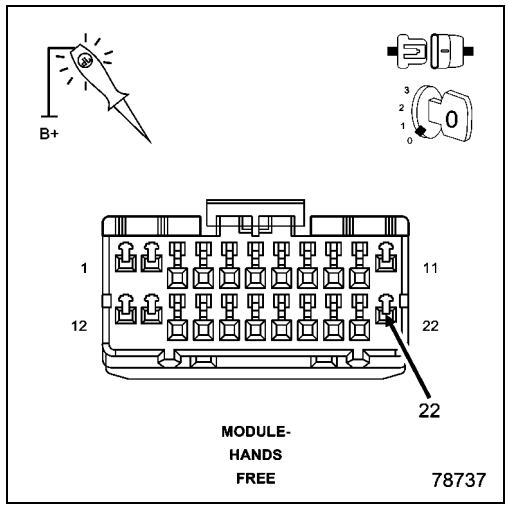

4. (D265) OR (D264) CAN IHS BUS (125K) CIRCUIT OPEN

1. Measure the resistance of the (D264) CAN IHS Bus (-) (125K) circuit between the TIPM C7 harness connector and the Hands Free Module harness connector.
2. Measure the resistance of the (D265) CAN IHS Bus (+) (125K) circuit between the TIPM C7 harness connector and the Hands Free Module harness connector.

Is resistance below 5.0 Ohms on both circuits?

Yes

- Replace the Hands Free Module in accordance with the Service Information.
- Perform the BODY VERIFICATION TEST. (Refer to 28 - DTC-Based Diagnostics/MODULE, Totally Integrated Power (TIPM) - Standard Procedure).

No

- Repair the (D265) or (D264) CAN IHS Bus (125K) circuit for an open. Inspect the connector for damage.
- Perform the BODY VERIFICATION TEST. (Refer to 28 - DTC-Based Diagnostics/MODULE, Totally Integrated Power (TIPM) - Standard Procedure).

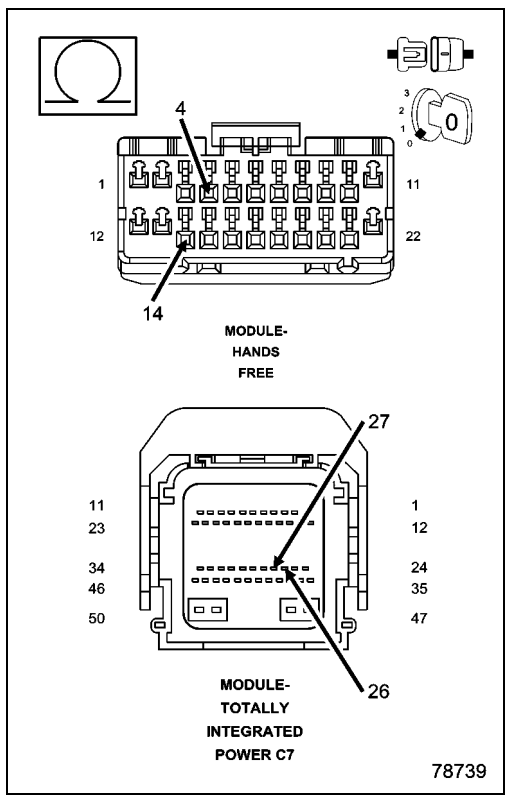

NO RESPONSE FROM HSM (HEATED SEAT MODULE)

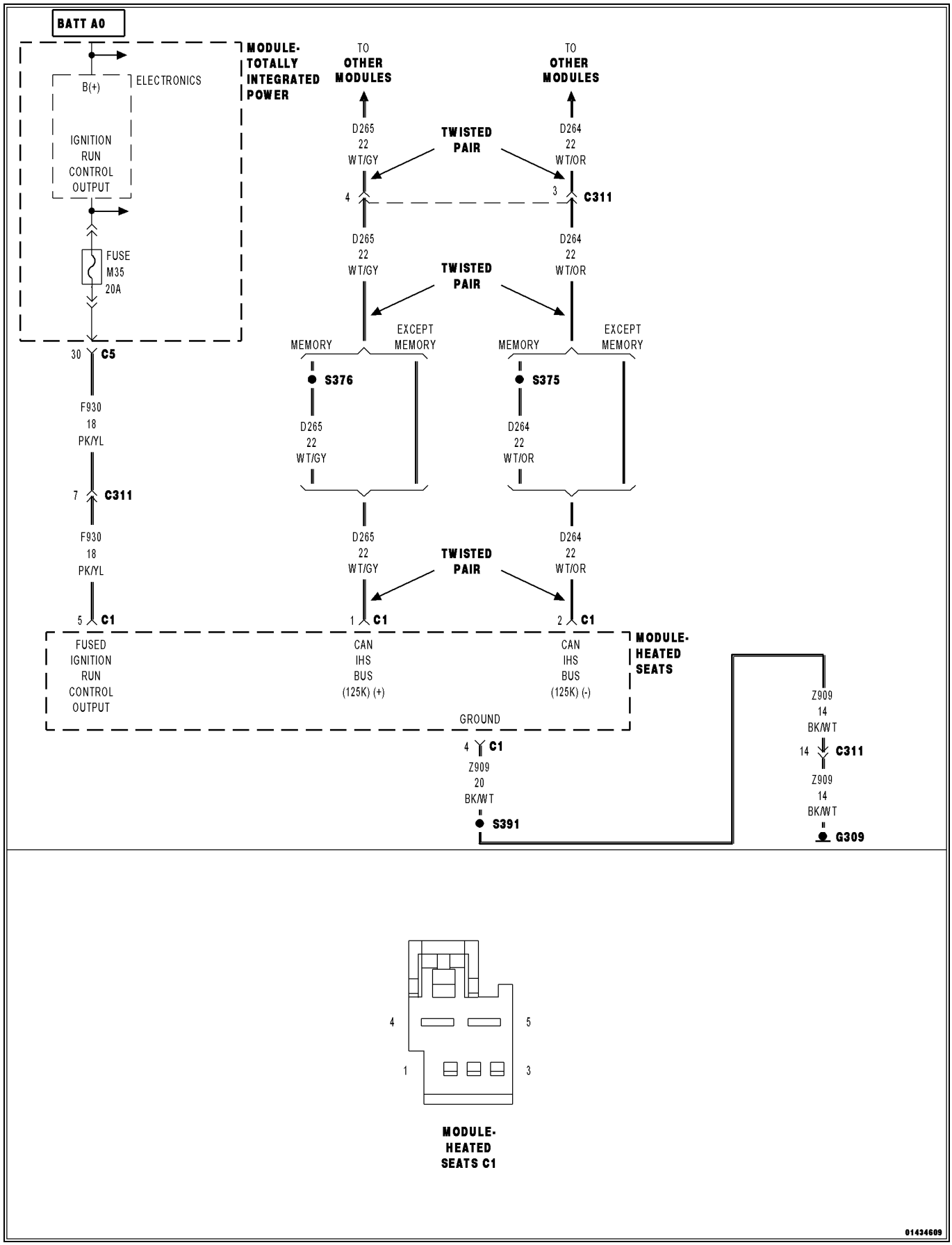

For a complete wiring diagram, **refer to the Wiring Information**.

Possible Causes
(F930) FUSED IGNITION RUN CONTROL OUTPUT CIRCUIT OPEN OR SHORTED
(Z909) GROUND CIRCUIT OPEN
(D264) AND (D265) CAN INTERIOR BUS (125K) CIRCUITS OPEN
HEATED SEAT MODULE

1. TEST FOR INTERMITTENT CONDITION

1. Turn the ignition on.

NOTE: Make sure the IOD fuse is installed and battery voltage is between 10.0 and 16.0 volts.

2. Using the scan tool, select ECU View.

NOTE: A red "X" will be next to the module that is not communicating, indicating that the module is not active on the Bus network. A green check indicates that the module is active on the Bus network.

Does the scan tool display a red "X" next to the module?

Yes

- Go To 2

No

- The no response condition is not present at this time. Using the wiring diagram/schematic as a guide, inspect the wiring for chafed, pierced, pinched and partially broken wires and the wiring harness connectors for broken, bent, pushed out and corroded terminals.

2. (F930) FUSED IGNITION RUN CONTROL OUTPUT CIRCUIT OPEN OR SHORTED

1. Turn the ignition off.
2. Disconnect the Heated Seat Module C1 harness connector.
3. Turn the ignition on.
4. Using a 12-volt test light connected to ground, check the (F930) Fused Ignition Run Control Output circuit.

Does the test light illuminate brightly?

Yes

- Go To 3

No

- Repair the (F930) Fused Ignition Run Control Output circuit for an open or short.
- Perform the BODY VERIFICATION TEST. (Refer to 28 - DTC-Based Diagnostics/MODULE, Totally Integrated Power (TIPM) - Standard Procedure).

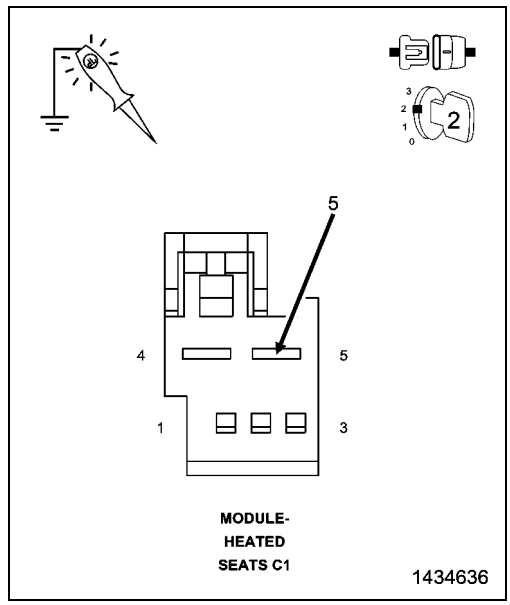

3. (Z909) GROUND CIRCUIT OPEN

1. Turn the ignition off.
2. Using a 12-volt test light connected to 12-volts, check the (Z909) ground circuit.

Does the test light illuminate brightly for each circuit?

Yes

- Go To 4

No

- Repair the (Z909) ground circuit for an open.
- Perform the BODY VERIFICATION TEST. (Refer to 28 - DTC-Based Diagnostics/MODULE, Totally Integrated Power (TIPM) - Standard Procedure).

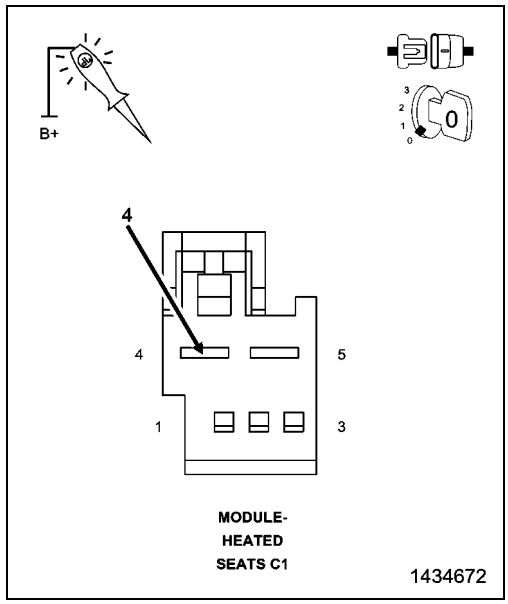

4. (D265) OR (D264) CAN INTERIOR BUS (125K) CIRCUIT OPEN

1. Measure the resistance of the (D264) CAN Interior Bus (-) (125K) circuit between the TIPM C7 harness connector and the Heated Seat Module C1 harness connector.
2. Measure the resistance of the (D265) CAN Interior Bus (+) (125K) circuit between the TIPM C7 harness connector and the Heated Seat Module C1 harness connector.

Is resistance below 5.0 Ohms on both circuits?

Yes

- Replace the Heated Seat Module in accordance with the Service Information.
- Perform the BODY VERIFICATION TEST. (Refer to 28 - DTC-Based Diagnostics/MODULE, Totally Integrated Power (TIPM) - Standard Procedure).

No

- Repair the (D265) or (D264) CAN Interior Bus (125K) circuit for an open. Inspect the connector for damage.
- Perform the BODY VERIFICATION TEST. (Refer to 28 - DTC-Based Diagnostics/MODULE, Totally Integrated Power (TIPM) - Standard Procedure).

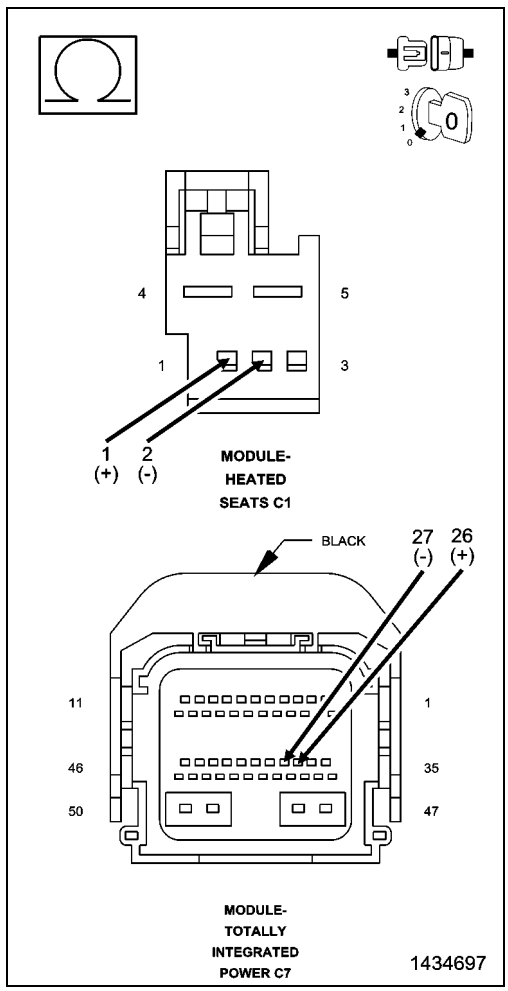

NO RESPONSE FROM HVAC (A/C HEATER CONTROL)

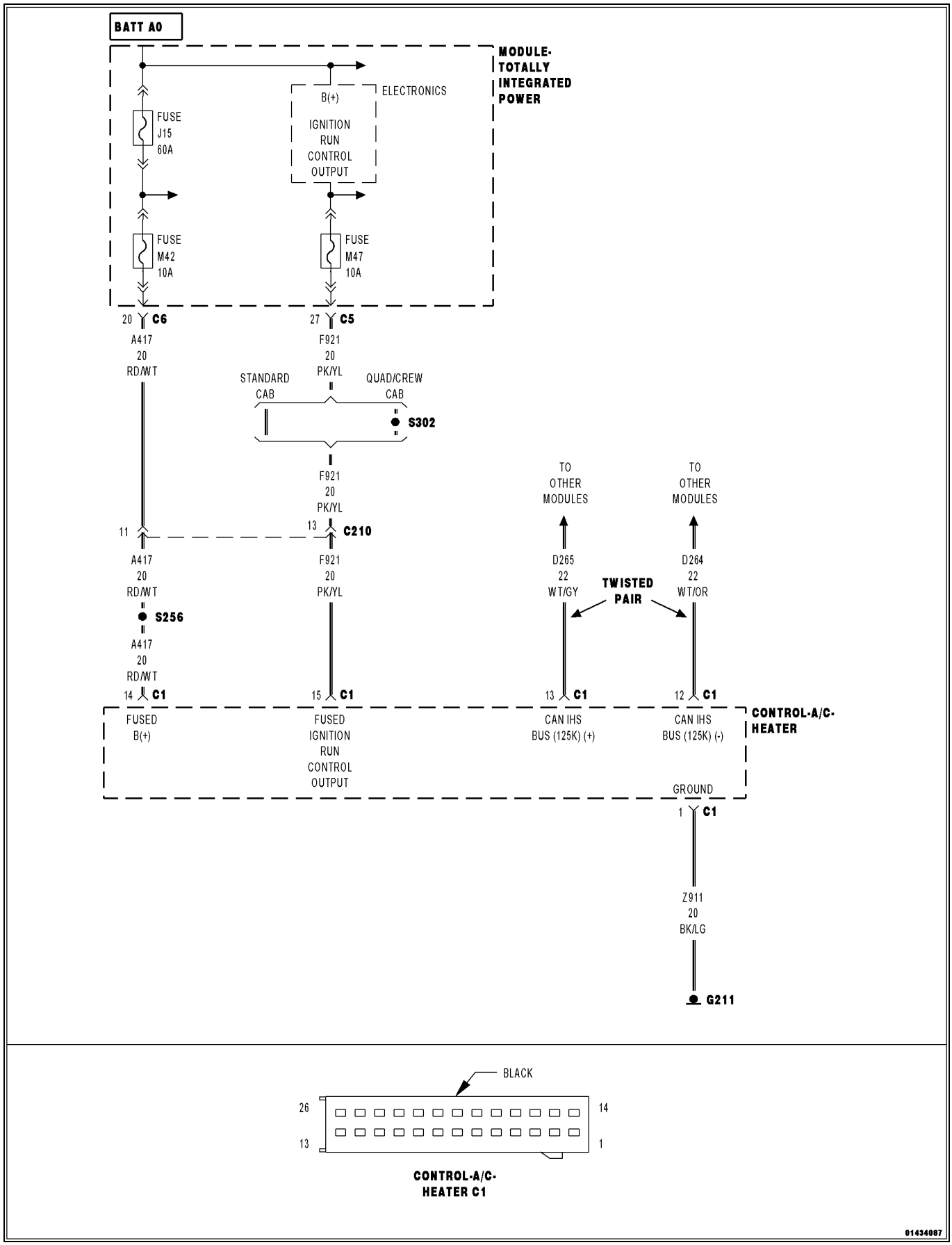

For a complete wiring diagram, **refer to the Wiring Information**.

Possible Causes
(A417) FUSED B(+) CIRCUIT OPEN OR SHORTED
(Z911) GROUND CIRCUITS OPEN
(F921) FUSED IGNITION RUN CONTROL OUTPUT CIRCUIT OPEN OR SHORTED
(D264) AND (D265) CAN INTERIOR (IHS) BUS (125K) CIRCUITS OPEN
A/C HEATER CONTROL MODULE

1. TEST FOR INTERMITTENT CONDITION

1. Turn the ignition on.

NOTE: Make sure the IOD fuse is installed and battery voltage is between 10.0 and 16.0 volts.

2. Using the scan tool, select ECU View.

NOTE: A red "X" will be next to the module that is not communicating, indicating that the module is not active on the Bus network. A green check indicates that the module is active on the Bus network.

Does the scan tool display a red "X" next to the module?

Yes

- Go To 2

No

- The no response condition is not present at this time. Using the wiring diagram/schematic as a guide, inspect the wiring for chafed, pierced, pinched and partially broken wires and the wiring harness connectors for broken, bent, pushed out and corroded terminals.

2. (A417) FUSED B(+) CIRCUIT OPEN OR SHORTED

1. Turn the ignition off.
2. Disconnect the HVAC C1 harness connectors.
3. Using a 12-volt test light connected to ground, check the (A417) Fused B(+) circuit.

Does the test light illuminate brightly for each circuit?

Yes

- Go To 3

No

- Repair the (A417) Fused B(+) circuit for an open or short.
- Perform the BODY VERIFICATION TEST. (Refer to 28 - DTC-Based Diagnostics/MODULE, Totally Integrated Power (TIPM) - Standard Procedure).

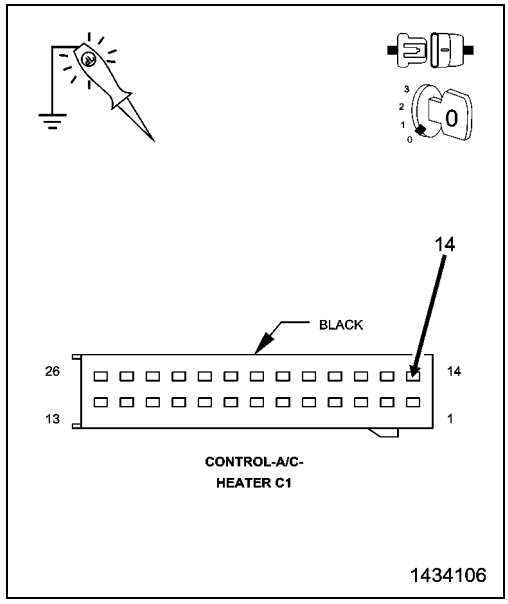

3. (Z911) GROUND CIRCUIT OPEN

1. Using a 12-volt test light connected to 12-volts, check the (Z911) ground circuit.

Does the test light illuminate brightly for each circuit?

Yes

- Go To 4

No

- Repair the (Z911) ground circuit for an open.
- Perform the BODY VERIFICATION TEST. (Refer to 28 - DTC-Based Diagnostics/MODULE, Totally Integrated Power (TIPM) - Standard Procedure).

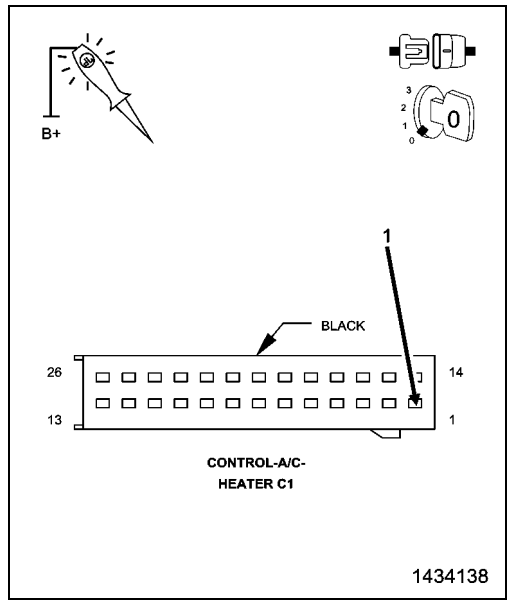

4. (F921) FUSED IGNITION RUN CONTROL OUTPUT CIRCUIT OPEN OR SHORTED

1. Turn the ignition on.
2. Using a 12-volt test light connected to ground, check the (F921) Fused Run Relay Output circuit.

Does the test light illuminate brightly?

Yes

- Go To 5

No

- Repair the (F921) Fused Run Relay Output circuit for an open or short.
- Perform the BODY VERIFICATION TEST. (Refer to 28 - DTC-Based Diagnostics/MODULE, Totally Integrated Power (TIPM) - Standard Procedure).

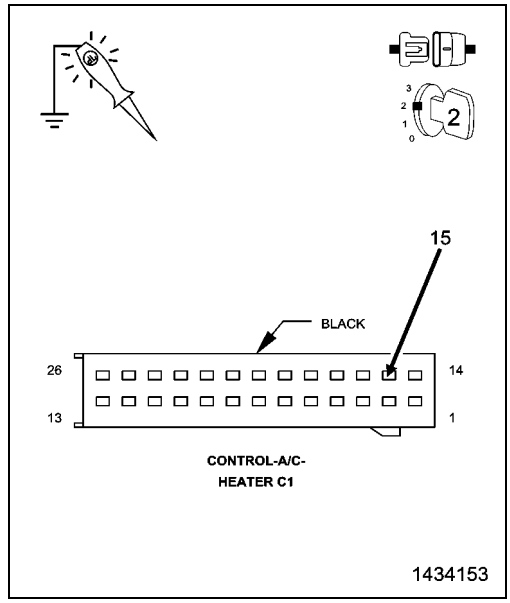

5. (D265) OR (D264) CAN IHS BUS (125K) CIRCUIT OPEN

1. Measure the resistance of the (D264) CAN IHS Bus (-) (125K) circuit between the TIPM C7 harness connector and the HVAC C1 harness connector.
2. Measure the resistance of the (D265) CAN IHS Bus (+) (125K) circuit between the TIPM C7 harness connector and the HVAC C1 harness connector.

Is resistance below 5.0 Ohms on both circuits?

Yes

- Replace the A/C Heater Control Module in accordance with the Service Information.
- Perform the BODY VERIFICATION TEST. (Refer to 28 - DTC-Based Diagnostics/MODULE, Totally Integrated Power (TIPM) - Standard Procedure).

No

- Repair the (D265) or (D264) CAN IHS Bus (125K) circuit for an open. Inspect the connector for damage.
- Perform the BODY VERIFICATION TEST. (Refer to 28 - DTC-Based Diagnostics/MODULE, Totally Integrated Power (TIPM) - Standard Procedure).

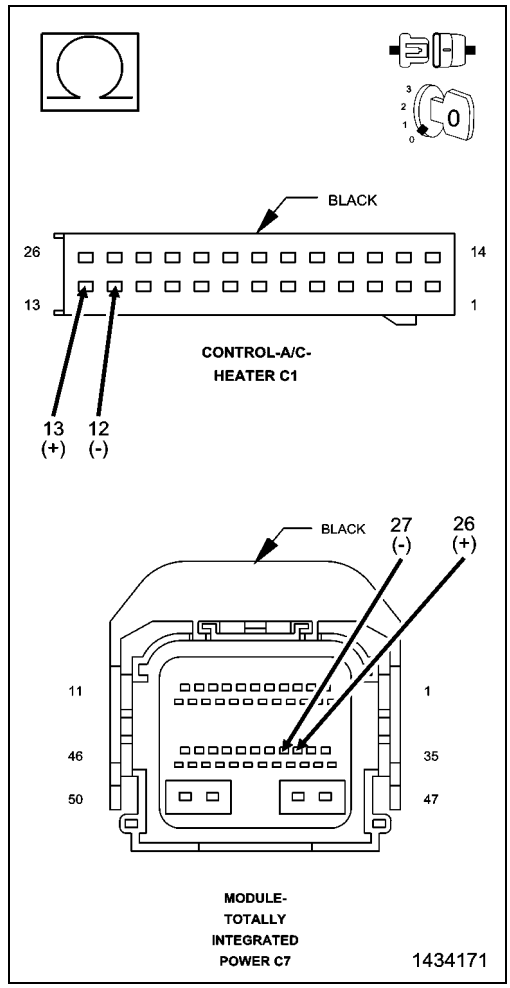

NO RESPONSE FROM MSMD (MEMORY SEAT MODULE)

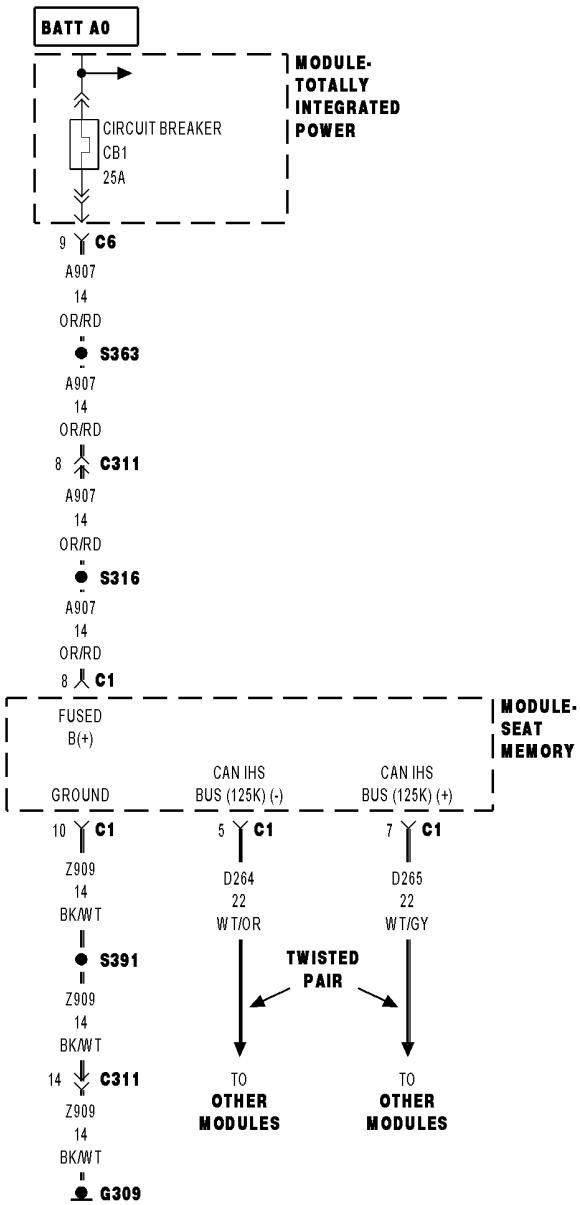

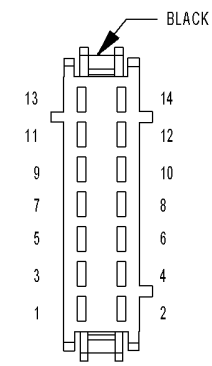

MODULE-
SEAT
MEMORY C1

01434586

For a complete wiring diagram, **refer to the Wiring Information**.

Possible Causes
(A907) FUSED B (+) CIRCUIT OPEN OR SHORTED
(Z909) GROUND CIRCUIT OPEN
(D264) AND (D265) CAN INTERIOR (IHS) BUS (125K) CIRCUITS OPEN
MEMORY SEAT MODULE

1. TEST FOR INTERMITTENT CONDITION

1. Turn the ignition on.

NOTE: Make sure the IOD fuse is installed and battery voltage is between 10.0 and 16.0 volts.

2. Using the scan tool, select ECU View.

NOTE: A red "X" will be next to the module that is not communicating, indicating that the module is not active on the Bus network. A green check indicates that the module is active on the Bus network.

Does the scan tool display a red "X" next to the module?

Yes

- Go To 2

No

- The no response condition is not present at this time. Using the wiring diagram/schematic as a guide, inspect the wiring for chafed, pierced, pinched and partially broken wires and the wiring harness connectors for broken, bent, pushed out and corroded terminals.

2. (A907) FUSED B(+) CIRCUIT OPEN OR SHORTED

1. Turn the ignition off.
2. Disconnect the Memory Seat Module C1 harness connector.
3. Using a 12-volt test light connected to ground, check the (A907) Fused B(+) circuit.

Does the test light illuminate brightly?

Yes

- Go To 3

No

- Repair the (A907) Fused B(+) circuit for an open or short.
- Perform the BODY VERIFICATION TEST. (Refer to 28 - DTC-Based Diagnostics/MODULE, Totally Integrated Power (TIPM) - Standard Procedure).

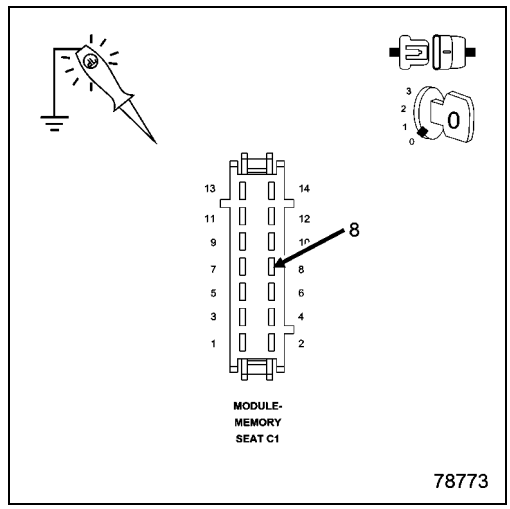

3. (Z909) GROUND CIRCUIT OPEN

1. Using a 12-volt test light connected to 12-volts, check the (Z909) ground circuit.

Does the test light illuminate brightly for each circuit?

Yes

- Go To 4

No

- Repair the (Z909) ground circuit for an open.
- Perform the BODY VERIFICATION TEST. (Refer to 28 - DTC-Based Diagnostics/MODULE, Totally Integrated Power (TIPM) - Standard Procedure).

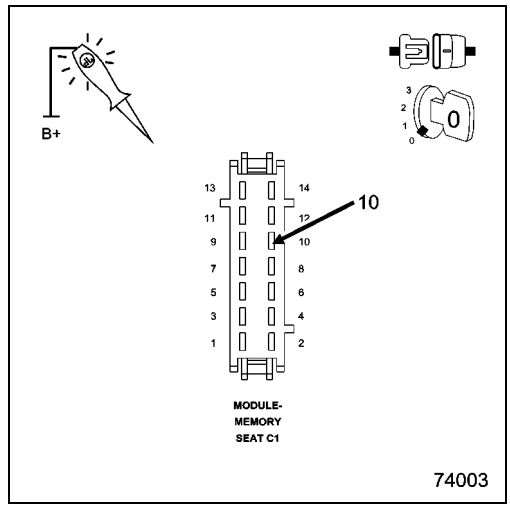

4. (D265) OR (D264) CAN IHS BUS (125K) CIRCUIT OPEN

1. Measure the resistance of the (D264) CAN IHS Bus (-) (125K) circuit between the TIPM C7 harness connector and the Memory Seat Module C1 harness connector.
2. Measure the resistance of the (D265) CAN IHS Bus (+) (125K) circuit between the TIPM C7 harness connector and the Memory Seat Module C1 harness connector.

Is resistance below 5.0 Ohms on both circuits?

Yes

- Replace the Memory Seat Module in accordance with the Service Information.
- Perform the BODY VERIFICATION TEST. (Refer to 28 - DTC-Based Diagnostics/MODULE, Totally Integrated Power (TIPM) - Standard Procedure).

No

- Repair the (D265) or (D264) CAN IHS Bus (125K) circuit for an open. Inspect the connector for damage.
- Perform the BODY VERIFICATION TEST. (Refer to 28 - DTC-Based Diagnostics/MODULE, Totally Integrated Power (TIPM) - Standard Procedure).

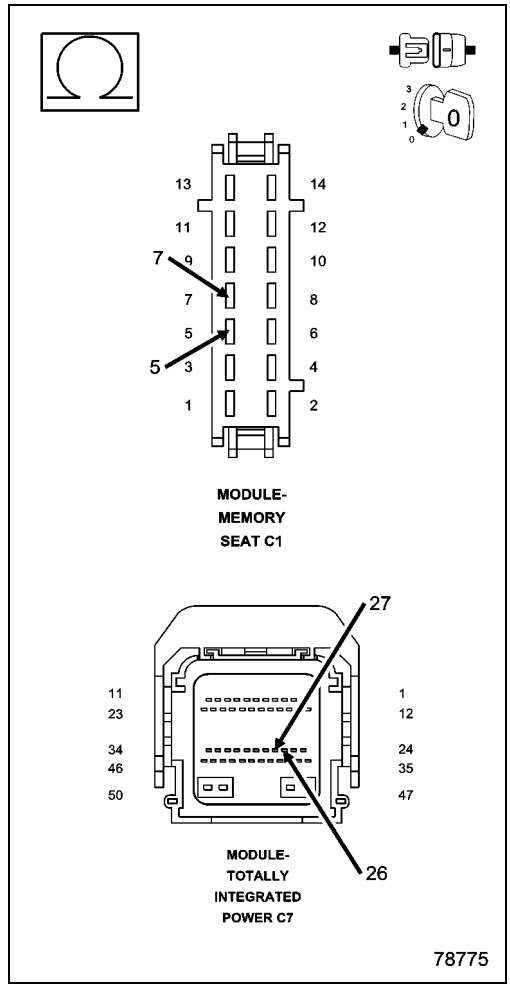

NO RESPONSE FROM ORC (OCCUPANT RESTRAINT CONTROLLER)

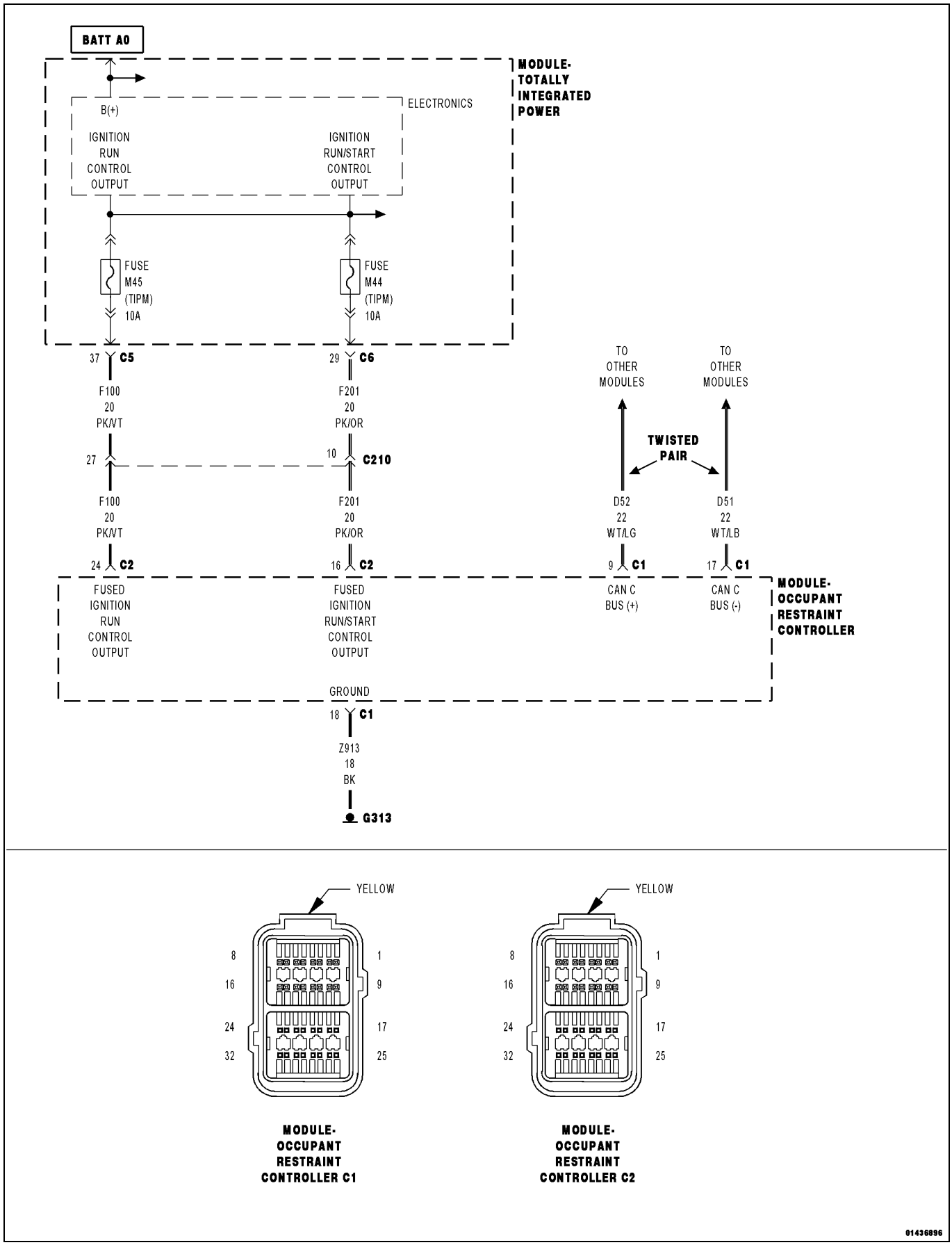

For a complete wiring diagram, **refer to the Wiring Information**.

Possible Causes
(Z913) GROUND CIRCUIT OPEN
(F100) FUSED IGNITION RUN CONTROL OUTPUT CIRCUIT OPEN OR SHORTED
(F201) FUSED IGNITION RUN/START CONTROL OUTPUT CIRCUIT OPEN OR SHORTED
(D51) CAN C BUS(+) CIRCUIT OPEN
(D52) CAN C BUS(-) CIRCUIT OPEN
OCCUPANT RESTRAINT CONTROLLER (ORC)

1. TEST FOR INTERMITTENT CONDITION

NOTE: Check for any Technical Service Bulletins (TSBs) related to the condition. If a TSB applies, perform the procedure outlined in the TSB before continuing.

1. Turn the ignition on.

NOTE: Make sure the IOD fuse is installed and battery voltage is between 10.0 and 16.0 volts.

2. Using the scan tool, select ECU View.

NOTE: A red "X" will be next to the module that is not communicating, indicating that the module is not active on the Bus network. A green check indicates that the module is active on the Bus network.

Does the scan tool display a red "X" next to the module?

Yes

- Go To 2

No

- The no response condition is not present at this time. Using the wiring diagram/schematic as a guide, inspect the wiring for chafed, pierced, pinched and partially broken wires and the wiring harness connectors for broken, bent, pushed out and corroded terminals.

2. (Z913) GROUND CIRCUIT OPEN

WARNING: To avoid possible serious or fatal injury, turn the ignition off, disconnect the battery and wait two minutes before proceeding.

1. Disconnect the Occupant Restraint Controller Module harness connectors.
2. Connect the appropriate Load Tool ACM Adaptor to the ORC connectors.
3. Measure the resistance between ground and the (Z913) ground circuit.

Is the resistance below 10k Ohms?

Yes

- Go To 3

No

- Repair the (Z913) ground circuit for an open.
- Perform the RESTRAINTS SYSTEM VERIFICATION TEST. (Refer to 28 - DTC-Based Diagnostics/CONTROLLER, Occupant Restraint (ORC) - Standard Procedure).

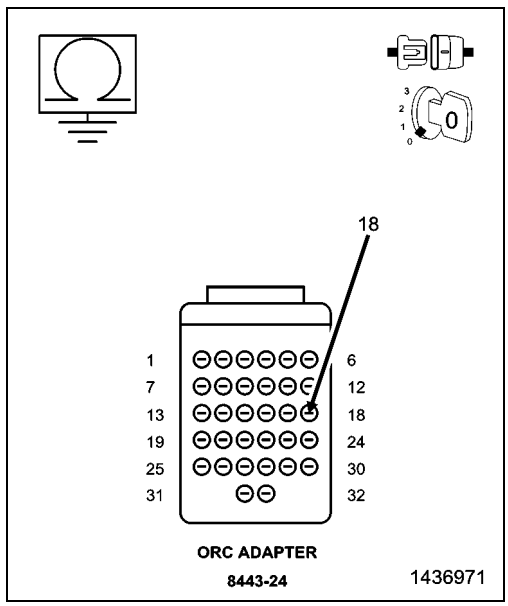

3. (F100) FUSED IGNITION RUN CONTROL OUTPUT CIRCUIT OPEN OR SHORTED

NOTE: Check the TIPM for any ignition related DTCs before proceeding. If set (Refer to 28 - DTC-Based Diagnostics/MODULE, Totally Integrated Power (TIPM) - Diagnosis and Testing).

WARNING: Turn the ignition on, then reconnect the 12-volt battery and wait two minutes before proceeding. Failure to follow these instructions may result in possible serious or fatal injury.

1. Using a 12-volt test light connected to ground, check the (F100) Fused Ignition Run/Start Control Output circuit.

   Does the test light illuminate brightly?

Yes

- Go To 4

No

- Repair the (F100) Fused Ignition Run/Start Control Output circuit t for an open or short.
- Perform the RESTRAINTS SYSTEM VERIFICATION TEST. (Refer to 28 - DTC-Based Diagnostics/CONTROLLER, Occupant Restraint (ORC) - Standard Procedure).

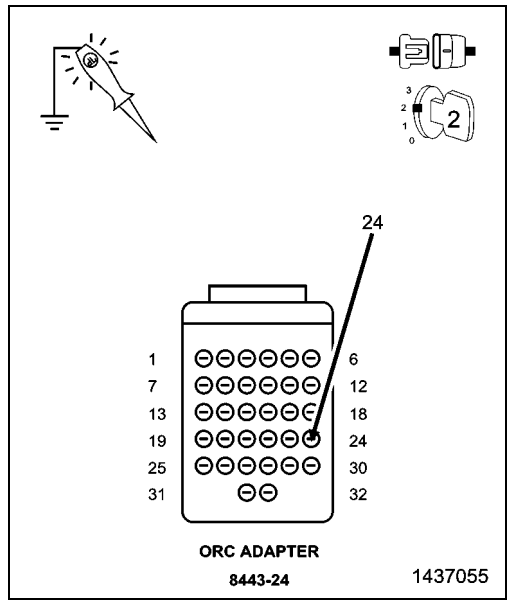

4. (F201) FUSED IGNITION RUN/START CONTROL OUTPUT CIRCUIT OPEN OR SHORTED

1. Using a 12-volt test light connected to ground, check the (F201) Fused Ignition Run/Start Control Output circuit.

   Does the test light illuminate brightly?

Yes

- Go To 5

No

- Repair the (F201) Fused Ignition Run/Start Control Output circuit for an open or short.
- Perform the RESTRAINTS SYSTEM VERIFICATION TEST. (Refer to 28 - DTC-Based Diagnostics/CONTROLLER, Occupant Restraint (ORC) - Standard Procedure).

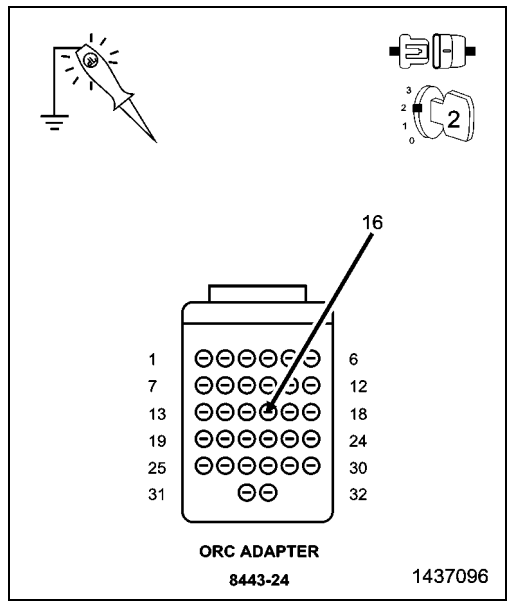

5. (D52) CAN C BUS (+) CIRCUIT OPEN

1. Turn the ignition off.
2. Disconnect the TIPM C7 harness connector.
3. Measure the resistance of the (D52) CAN C Bus (+) circuit between the TIPM C7 harness connector and the Occupant Restraint Controller C2-A connector.

Is resistance below 5.0 Ohms?

Yes

- Go To 6

No

- Repair the (D52) CAN C Bus (+) circuit for an open.
- Perform the RESTRAINTS SYSTEM VERIFICATION TEST. (Refer to 28 - DTC-Based Diagnostics/CONTROLLER, Occupant Restraint (ORC) - Standard Procedure).

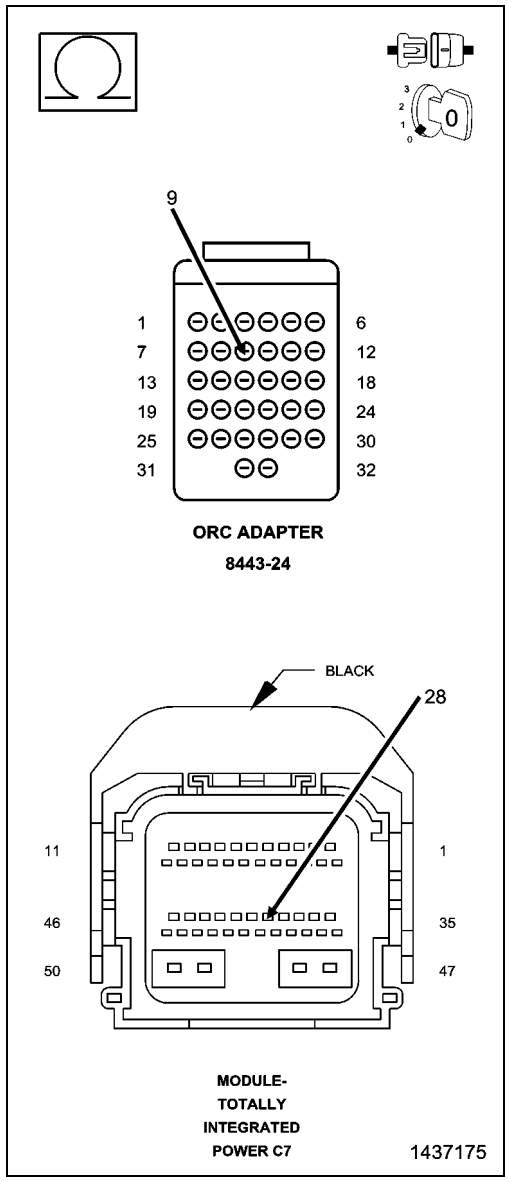

6. (D51) CAN C BUS (-) CIRCUIT OPEN

1. Measure the resistance of the (D51) CAN C Bus (-) circuit between the TIPM C7 harness connector and the Occupant Restraint Controller C2-A connector.

Is resistance below 5.0 Ohms?

Yes

- Replace the Occupant Restraint Controller in accordance with the Service Information.
- Perform the RESTRAINTS SYSTEM VERIFICATION TEST. (Refer to 28 - DTC-Based Diagnostics/CONTROLLER, Occupant Restraint (ORC) - Standard Procedure).

No

- Repair the (D51) CAN C Bus (-) circuit for an open.
- Perform the RESTRAINTS SYSTEM VERIFICATION TEST. (Refer to 28 - DTC-Based Diagnostics/CONTROLLER, Occupant Restraint (ORC) - Standard Procedure).

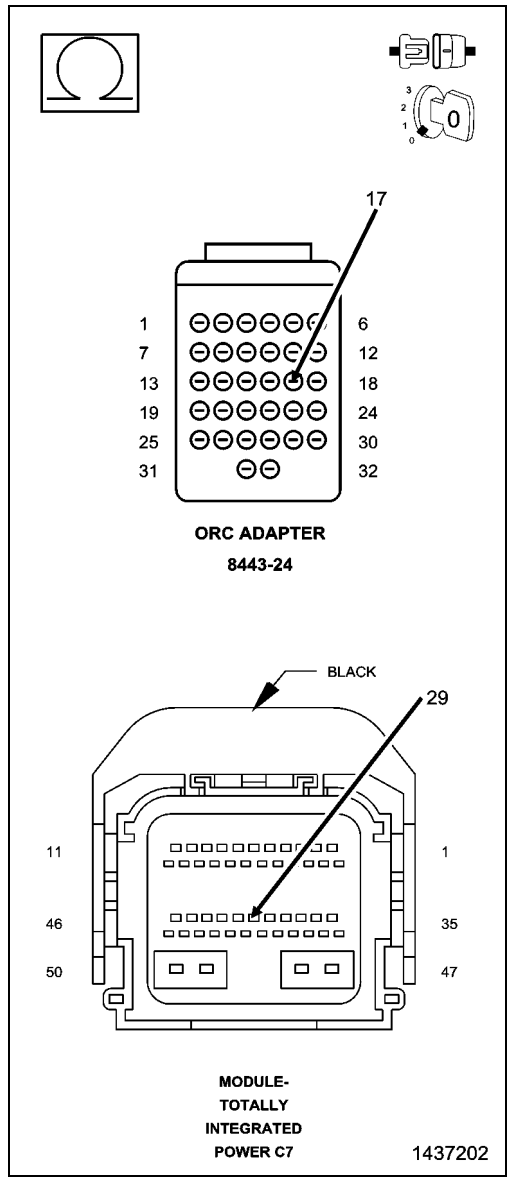

NO RESPONSE FROM PCM (POWERTRAIN CONTROL MODULE) (NGC)

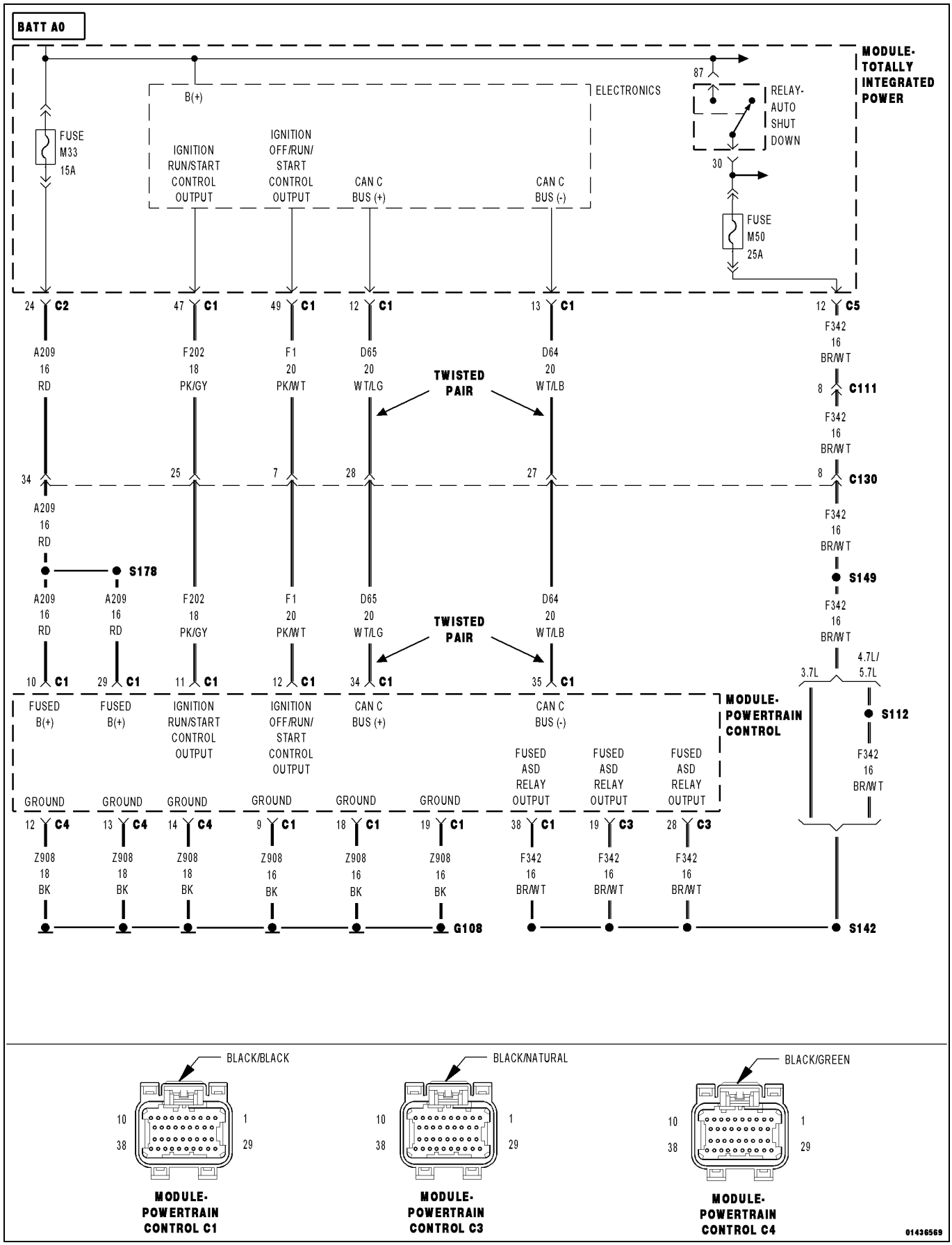

For a complete wiring diagram, **refer to the Wiring Information**.

Possible Causes
(A209) FUSED B(+) CIRCUITS OPEN OR SHORTED
(Z908) GROUND CIRCUITS OPEN
(F202) IGNITION RUN/START CONTROL OUTPUT CIRCUIT OPEN OR SHORTED
(F1) IGNITION OFF/RUN/START CONTROL OUTPUT CIRCUIT OPEN OR SHORTED
(F342) FUSED ASD RELAY OUTPUT CIRCUIT OPEN OR SHORTED
(D65) CAN C BUS(+) CIRCUIT OPEN
(D64) CAN C BUS(-) CIRCUIT OPEN
POWERTRAIN CONTROL MODULE (PCM)

1. TEST FOR INTERMITTENT CONDITION

NOTE: Check for any TSB(s) related to the condition. If a TSB applies, perform the procedure outlined in the TSB before continuing.

1. Turn the ignition on.

NOTE: Make sure the IOD fuse is installed and battery voltage is between 10.0 and 16.0 volts.

2. Using the scan tool, select ECU View.

NOTE: A red "X" will be next to the module that is not communicating, indicating that the module is not active on the Bus network. A green check indicates that the module is active on the Bus network.

NOTE: Check the TIPM for any active CAN C hardware DTCs, perform DTC before proceeding.

Does the scan tool display a red "X" next to the module?

Yes

- Go To 2

No

- The no response condition is not present at this time. Using the wiring diagram/schematic as a guide, inspect the wiring for chafed, pierced, pinched and partially broken wires and the wiring harness connectors for broken, bent, pushed out and corroded terminals.

2. (A209) FUSED B(+) CIRCUITS OPEN OR SHORTED

1. Turn the ignition off.
2. Disconnect the PCM C1 harness connector.

CAUTION: Do not probe the PCM harness connectors. Probing the PCM harness connectors will damage the PCM terminals resulting in poor terminal to pin connection. Install the PCM Pinout Box Kit, NGC, 38 Position 8815A to perform diagnosis.

3. Using a 12-volt test light connected to ground, check the (A209) Fused B(+) circuit.

Does the test light illuminate brightly?

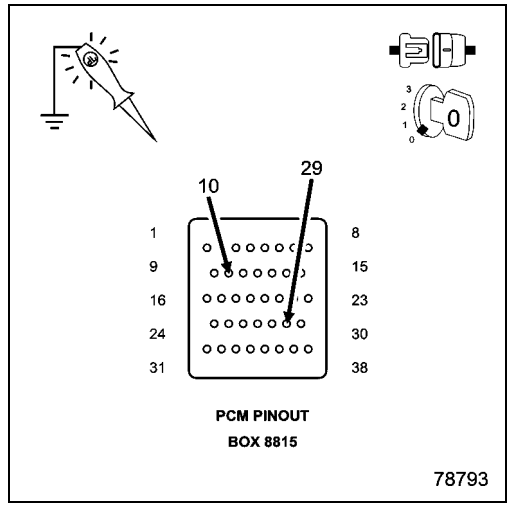

Yes

- Go To 3

No

- Repair the (A209) Fused B(+) circuit for an open or short.
- Perform the POWERTRAIN VERIFICATION TEST. (Refer to 28 - DTC-Based Diagnostics/MODULE, Powertrain Control (PCM) - Standard Procedure).

3. (Z908) GROUND CIRCUITS OPEN

1. Using a 12-volt test light connected to 12-volts, check each (Z908) ground circuits.

Does the test light illuminate brightly for each circuit?

Yes

- Go To 4

No

- Repair the (Z908) ground circuit for an open.
- Perform the POWERTRAIN VERIFICATION TEST. (Refer to 28 - DTC-Based Diagnostics/MODULE, Powertrain Control (PCM) - Standard Procedure).

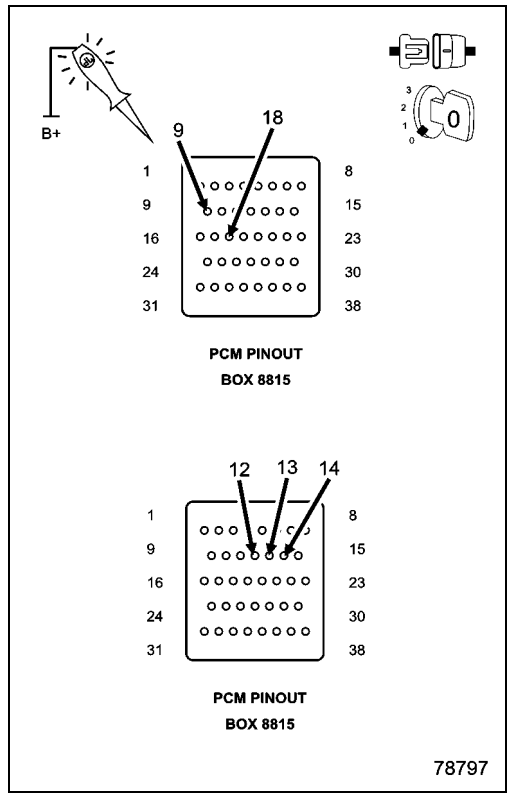

4. (F202) IGNITION RUN/START CONTROL OUTPUT CIRCUIT OPEN OR SHORTED

1. Turn the ignition on.
2. Using a 12-volt test light connected to ground, check the (F202) Ignition Run/Start Control Output circuit.

Does the test light illuminate brightly?

Yes

- Go To 5

No

- Repair the (F202) Ignition Run/Start Control Output circuit for an open or short.
- Perform the POWERTRAIN VERIFICATION TEST. (Refer to 28 - DTC-Based Diagnostics/MODULE, Powertrain Control (PCM) - Standard Procedure).

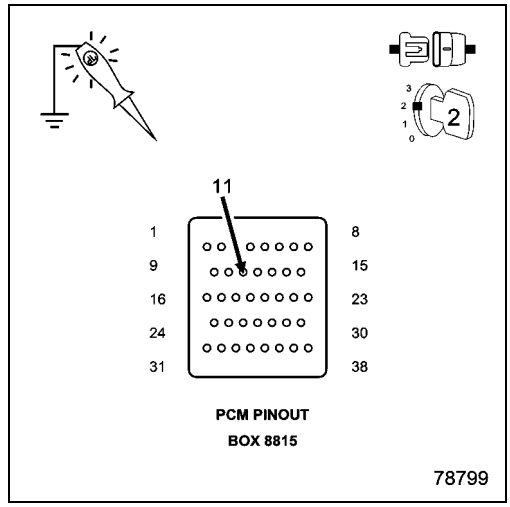

5. (F1) IGNITION OFF/RUN/START CONTROL OUTPUT CIRCUIT OPEN OR SHORTED

1. Turn the ignition on.
2. Using a 12-volt test light connected to ground, check the (F1) Ignition Off/Run/Start Control Output circuit.

Does the test light illuminate brightly?

Yes

- Go To 6

No

- Repair the (F1) Ignition Off/Run/Start Control Output circuit for an open or short.
- Perform the POWERTRAIN VERIFICATION TEST. (Refer to 28 - DTC-Based Diagnostics/MODULE, Powertrain Control (PCM) - Standard Procedure).

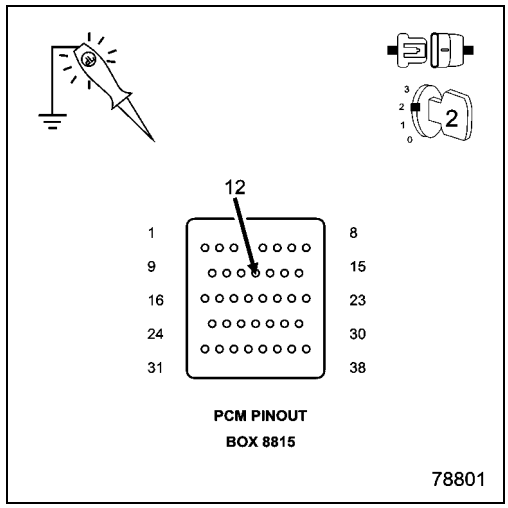

6. (F342) FUSED ASD RELAY OUTPUT CIRCUIT OPEN OR SHORTED

1. Turn the ignition on.
2. Using a 12-volt test light connected to ground, check the (F342) Fused ASD Relay Output circuit.

Does the test light illuminate brightly?

Yes

- Go To 7

No

- Repair the (F342) Fused ASD Relay Output circuit for an open or short.
- Perform the POWERTRAIN VERIFICATION TEST. (Refer to 28 - DTC-Based Diagnostics/MODULE, Powertrain Control (PCM) - Standard Procedure).

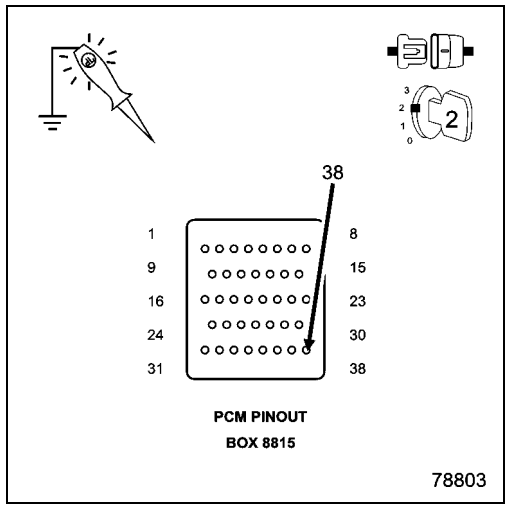

7. (D65) CAN C BUS (+) CIRCUIT OPEN

1. Turn the ignition off.
2. Disconnect the TIPM C1 harness connector.
3. Measure the resistance of the (D65) CAN C Bus (+) circuit between the TIPM C1 harness connector and the PCM C1 connector.

Is resistance below 5.0 Ohms?

Yes

- Go To 8

No

- Repair the (D65) CAN C Bus (+) circuit for an open.
- Perform the POWERTRAIN VERIFICATION TEST. (Refer to 28 - DTC-Based Diagnostics/MODULE, Powertrain Control (PCM) - Standard Procedure).

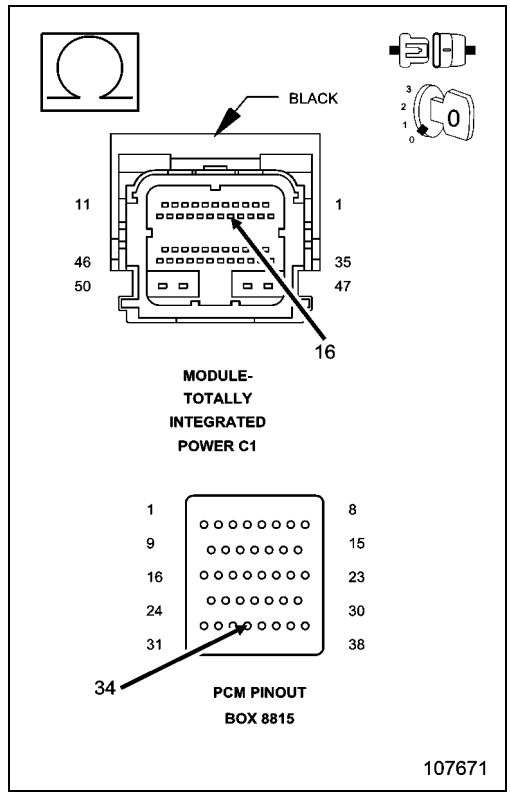

8. (D64) CAN C BUS (-) CIRCUIT OPEN

1. Measure the resistance of the (D64) CAN C Bus (-) circuit between the TIPM C1 harness connector and the PCM C1 connector.

Is resistance below 5.0 Ohms?

Yes

- Replace the Powertrain Control Module in accordance with the Service Information.
- Perform the POWERTRAIN VERIFICATION TEST. (Refer to 28 - DTC-Based Diagnostics/MODULE, Powertrain Control (PCM) - Standard Procedure).

No

- Repair the (D64) CAN C Bus (-) circuit for an open.
- Perform the POWERTRAIN VERIFICATION TEST. (Refer to 28 - DTC-Based Diagnostics/MODULE, Powertrain Control (PCM) - Standard Procedure).

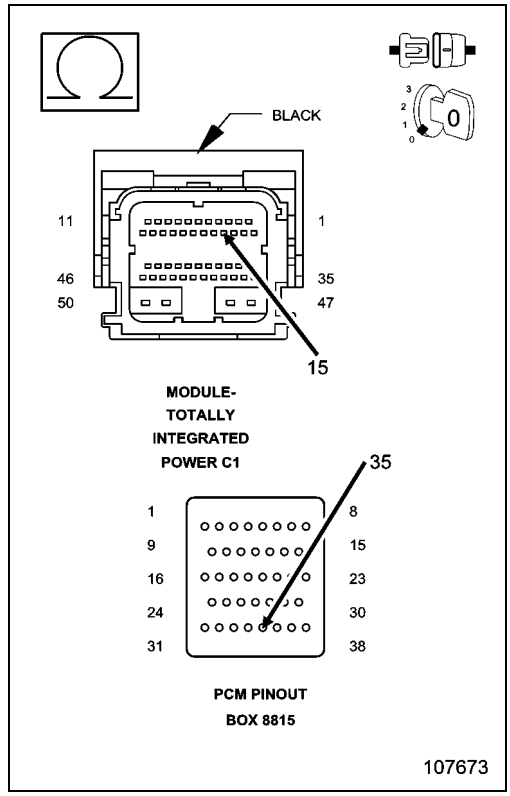

NO RESPONSE FROM PDM (DMRF)(PASSENGER DOOR MODULE)

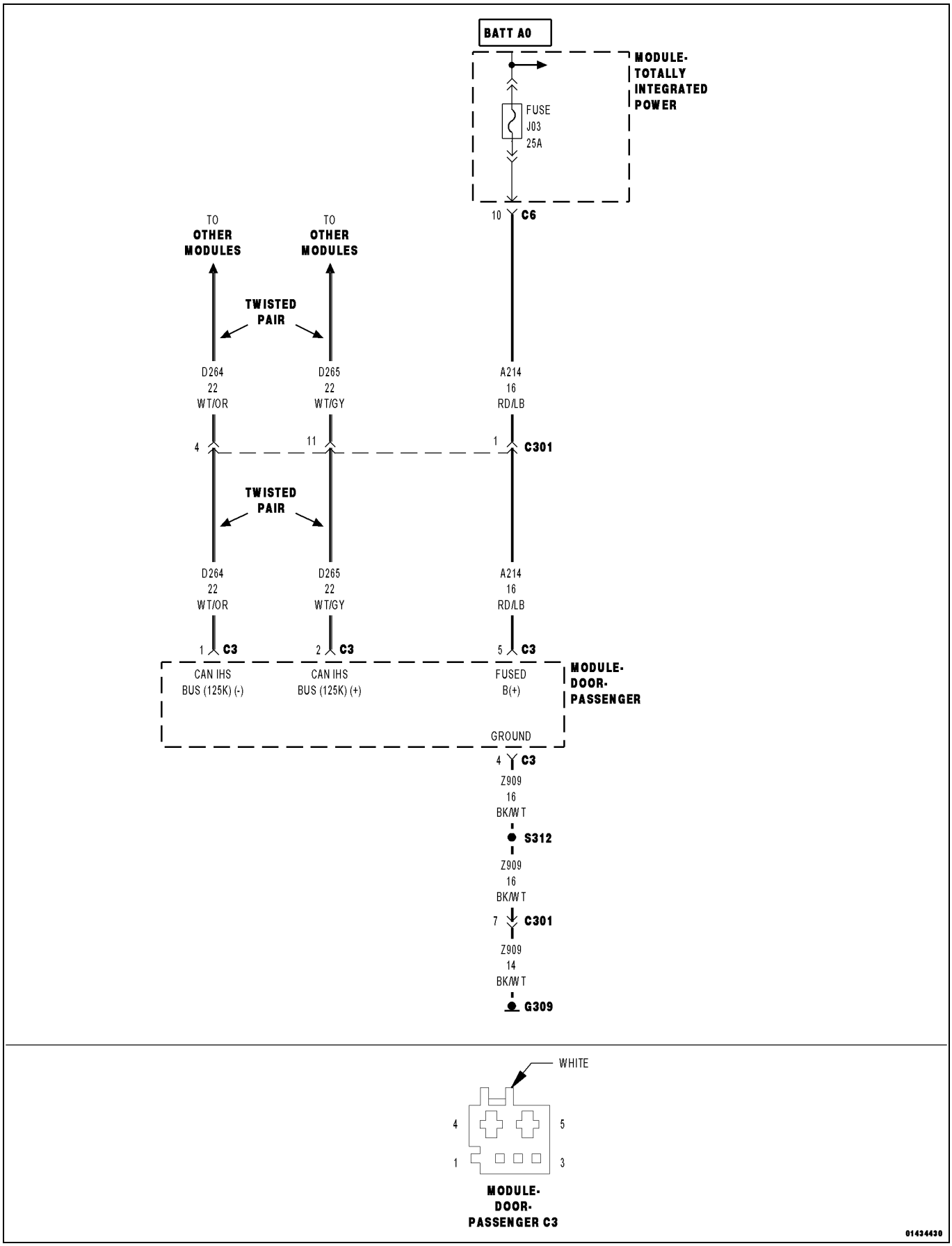

For a complete wiring diagram, **refer to the Wiring Information**.

Possible Causes
(A214) FUSED B (+) CIRCUIT OPEN OR SHORTED
(Z909) GROUND CIRCUIT OPEN
(D264) AND (D265) CAN INTERIOR (IHS) BUS (125K) CIRCUITS OPEN
PASSENGER DOOR MODULE

1. TEST FOR INTERMITTENT CONDITION

1. Turn the ignition on.

NOTE: Make sure the IOD fuse is installed and battery voltage is between 10.0 and 16.0 volts.

2. Using the scan tool, select ECU View.

NOTE: A red "X" will be next to the module that is not communicating, indicating that the module is not active on the Bus network. A green check indicates that the module is active on the Bus network.

Does the scan tool display a red "X" next to the module?

Yes

- Go To 2

No

- The no response condition is not present at this time. Using the wiring diagram/schematic as a guide, inspect the wiring for chafed, pierced, pinched and partially broken wires and the wiring harness connectors for broken, bent, pushed out and corroded terminals.

2. (A214) FUSED B(+) CIRCUIT OPEN OR SHORTED

1. Turn the ignition off.
2. Disconnect the Passenger Door Module C3 harness connector.
3. Using a 12-volt test light connected to ground, check the (A214) Fused B(+) circuit.

Does the test light illuminate brightly?

Yes

- Go To 3

No

- Repair the (A214) Fused B(+) circuit for an open or short.
- Perform the BODY VERIFICATION TEST. (Refer to 28 - DTC-Based Diagnostics/MODULE, Totally Integrated Power (TIPM) - Standard Procedure).

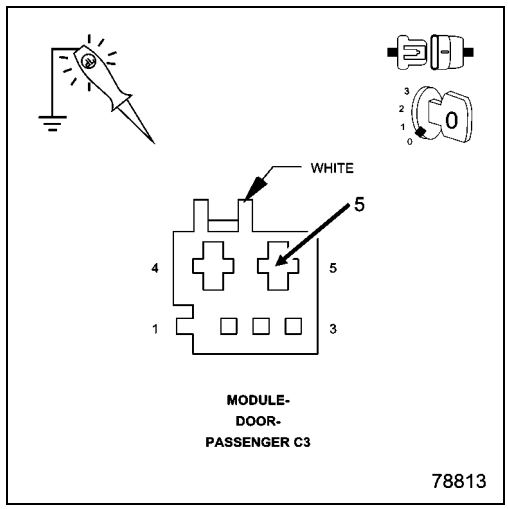

3. (Z909) GROUND CIRCUIT OPEN

1. Using a 12-volt test light connected to 12-volts, check the (Z909) ground circuit.

Does the test light illuminate brightly for each circuit?

Yes

- Go To 4

No

- Repair the (Z909) ground circuit for an open.
- Perform the BODY VERIFICATION TEST. (Refer to 28 - DTC-Based Diagnostics/MODULE, Totally Integrated Power (TIPM) - Standard Procedure).

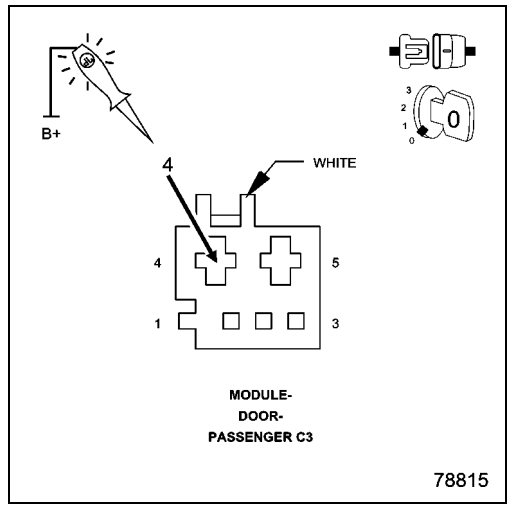

4. (D265) OR (D264) CAN IHS BUS (125K) CIRCUIT OPEN

1. Measure the resistance of the (D264) CAN IHS Bus (-) (125K) circuit between the TIPM C7 harness connector and the Passenger Door Module C3 harness connector.
2. Measure the resistance of the (D265) CAN IHS Bus (+) (125K) circuit between the TIPM C7 harness connector and the Passenger Door Module C3 harness connector.

Is resistance below 5.0 Ohms on both circuits?

Yes

- Replace the Passenger Door Module in accordance with the Service Information.
- Perform the BODY VERIFICATION TEST. (Refer to 28 - DTC-Based Diagnostics/MODULE, Totally Integrated Power (TIPM) - Standard Procedure).

No

- Repair the (D265) or (D264) CAN IHS Bus (125K) circuit for an open. Inspect the connector for damage.
- Perform the BODY VERIFICATION TEST. (Refer to 28 - DTC-Based Diagnostics/MODULE, Totally Integrated Power (TIPM) - Standard Procedure).

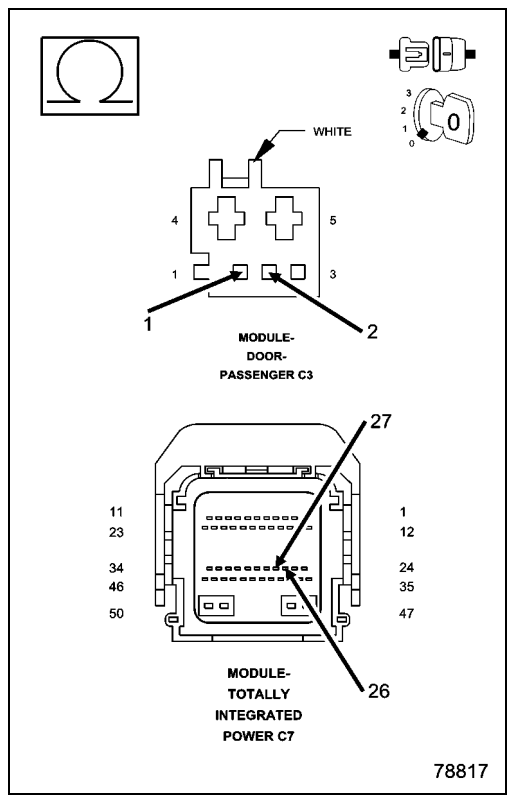

NO RESPONSE FROM PTS (PARK ASSIST MODULE)

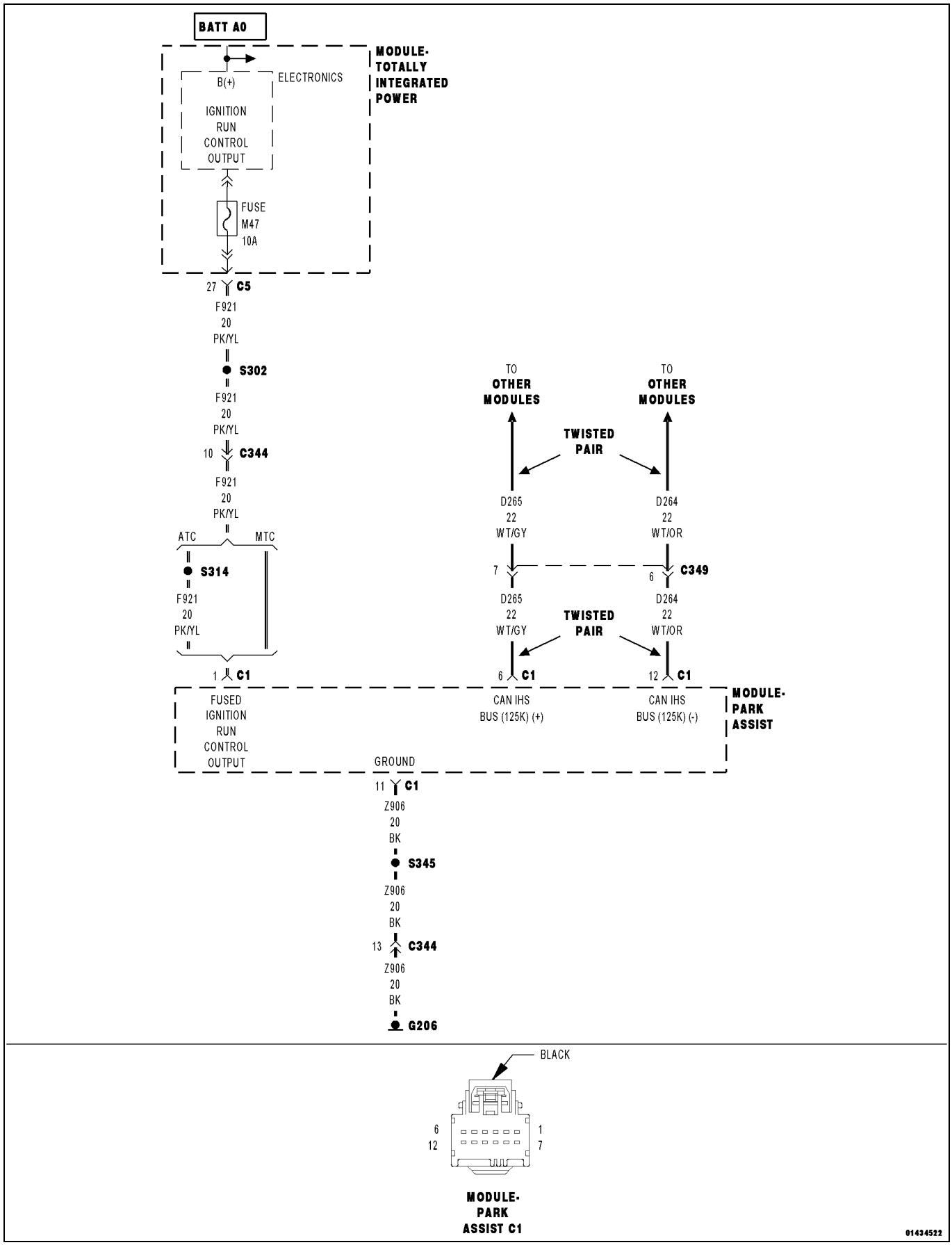

For a complete wiring diagram, **refer to the Wiring Information**.

Possible Causes
(F921) FUSED IGNITION RUN CONTROL OUTPUT CIRCUIT OPEN OR SHORTED
(Z906) GROUND CIRCUIT OPEN
(D264) AND (D265) CAN INTERIOR (IHS) BUS (125K) CIRCUITS OPEN
PARK ASSIST MODULE

1. TEST FOR INTERMITTENT CONDITION

1. Turn the ignition on.

NOTE: Make sure the IOD fuse is installed and battery voltage is between 10.0 and 16.0 volts.

2. With the scan tool, select ECU View.

NOTE: A red "X" will be next to the module that is not communicating, indicating that the module is not active on the Bus network. A green check indicates that the module is active on the Bus network.

Does the scan tool display a red "X" next to the module?

Yes

- Go To 2

No

- The no response condition is not present at this time. Using the wiring diagram/schematic as a guide, inspect the wiring for chafed, pierced, pinched and partially broken wires and the wiring harness connectors for broken, bent, pushed out and corroded terminals.

2. (F921) FUSED IGNITION RUN CONTROL OUTPUT CIRCUIT OPEN OR SHORTED

1. Disconnect the Park Assist Module C1 harness connector.
2. Using a 12-volt test light connected to ground, check the (F921) Fused Ignition Run Control Output circuit.

Does the test light illuminate brightly?

Yes

- Go To 3

No

- Repair the (F921) Fused Ignition Run Control Output circuit for an open or short.
- Perform the BODY VERIFICATION TEST. (Refer to 28 - DTC-Based Diagnostics/MODULE, Totally Integrated Power (TIPM) - Standard Procedure).

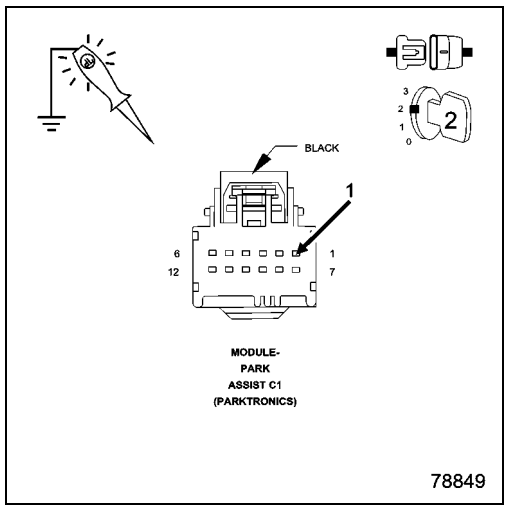

3. (Z9060) GROUND CIRCUIT OPEN

1. Turn the ignition off.
2. Using a 12-volt test light connected to 12-volts, check the (Z906) ground circuit.

Does the test light illuminate brightly for each circuit?

Yes

- Go To 4

No

- Repair the (Z906) ground circuit for an open.
- Perform the BODY VERIFICATION TEST. (Refer to 28 - DTC-Based Diagnostics/MODULE, Totally Integrated Power (TIPM) - Standard Procedure).

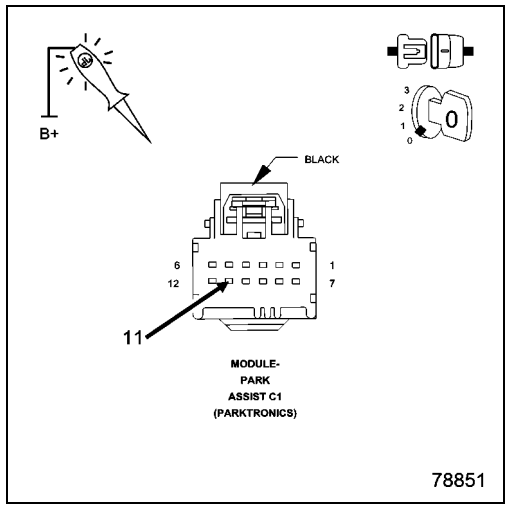

4. (D265) OR (D264) CAN IHS BUS (125K) CIRCUIT OPEN

1. Measure the resistance of the (D264) CAN IHS Bus (-) (125K) circuit between the TIPM C7 harness connector and the Park Assist Module C1 harness connector.
2. Measure the resistance of the (D265) CAN IHS Bus (+) (125K) circuit between the TIPM C7 harness connector and the Park Assist Module C1 harness connector.

Is resistance below 5.0 Ohms on both circuits?

Yes

- Replace the Park Assist Module in accordance with the Service Information.
- Perform the BODY VERIFICATION TEST. (Refer to 28 - DTC-Based Diagnostics/MODULE, Totally Integrated Power (TIPM) - Standard Procedure).

No

- Repair the (D265) or (D264) CAN IHS Bus (125K) circuit for an open. Inspect the connector for damage.
- Perform the BODY VERIFICATION TEST. (Refer to 28 - DTC-Based Diagnostics/MODULE, Totally Integrated Power (TIPM) - Standard Procedure).

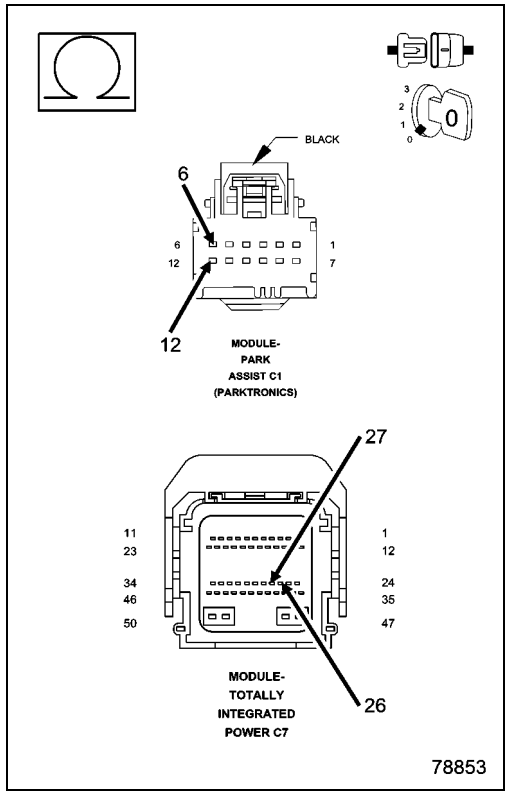

NO RESPONSE FROM RADIO

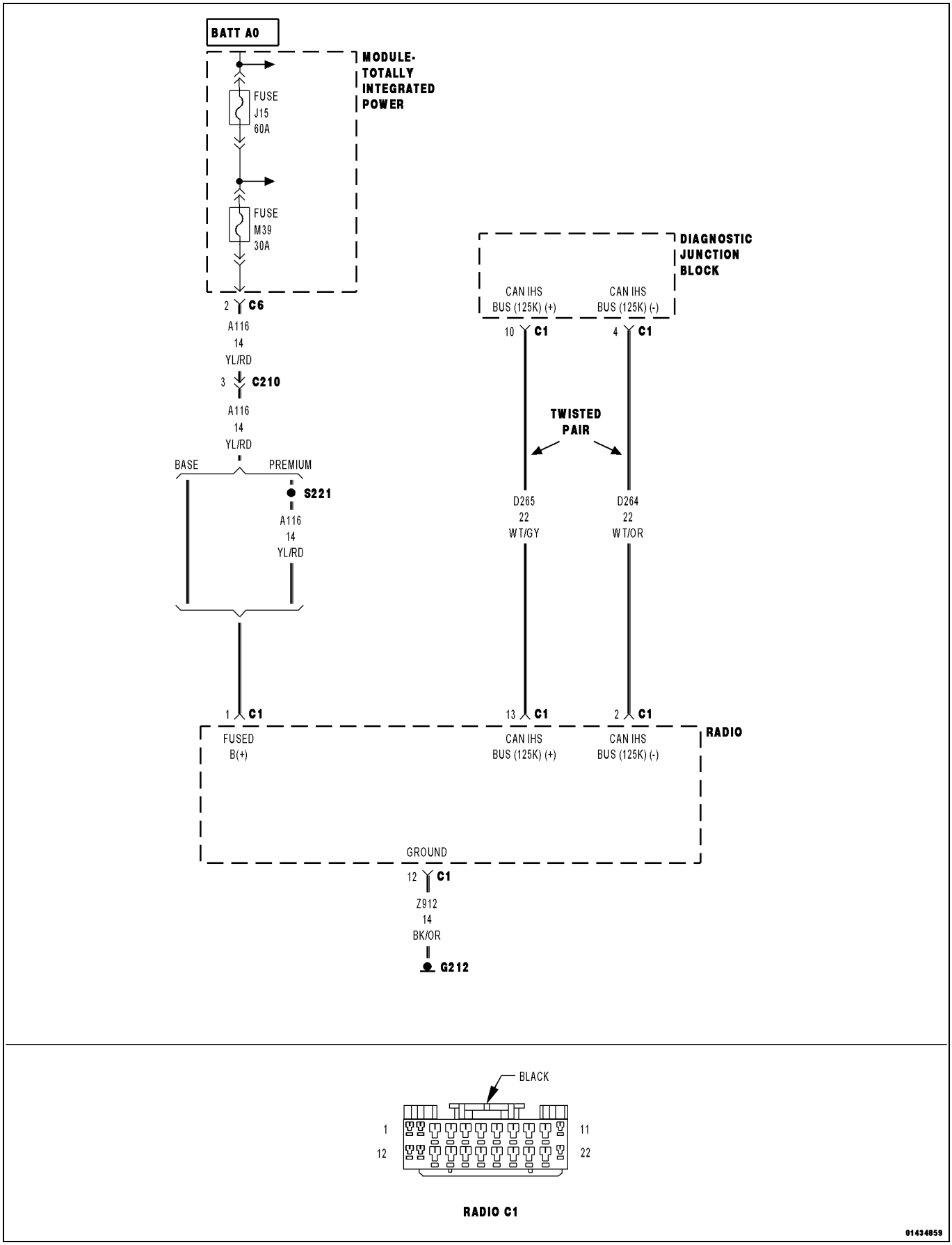

For a complete wiring diagram, **refer to the Wiring Information**.

Possible Causes
(A116) FUSED B (+) CIRCUIT OPEN OR SHORTED
(Z912) GROUND CIRCUIT OPEN
(D264) AND (D265) CAN INTERIOR BUS (125K) CIRCUITS OPEN
RADIO

1. TEST FOR INTERMITTENT CONDITION

1. Turn the ignition on.

NOTE: Make sure the IOD fuse is installed and battery voltage is between 10.0 and 16.0 volts.

2. Using the scan tool, select ECU View.

NOTE: A red "X" will be next to the module that is not communicating, indicating that the module is not active on the Bus network. A green check indicates that the module is active on the Bus network.

Does the scan tool display a red "X" next to the module?

Yes

- Go To 2

No

- The no response condition is not present at this time. Using the wiring diagram/schematic as a guide, inspect the wiring for chafed, pierced, pinched and partially broken wires and the wiring harness connectors for broken, bent, pushed out and corroded terminals.

2. (A116) FUSED B(+) CIRCUIT OPEN OR SHORTED

1. Turn the ignition off.
2. Disconnect the Radio C1 harness connector.
3. Using a 12-volt test light connected to ground, check the (A116) Fused B(+) circuit.

Does the test light illuminate brightly?

Yes

- Go To 3

No

- Repair the (A116) Fused B(+) circuit for an open or short.
- Perform the BODY VERIFICATION TEST. (Refer to 28 - DTC-Based Diagnostics/MODULE, Totally Integrated Power (TIPM) - Standard Procedure).

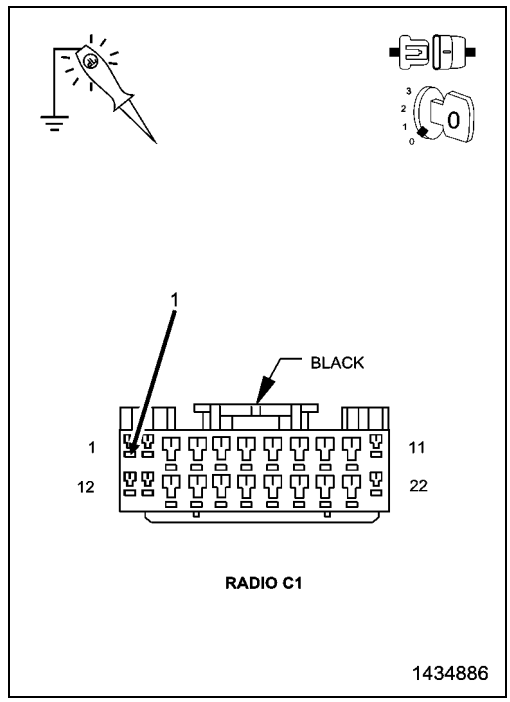

3. (Z912) GROUND CIRCUIT OPEN

1. Using a 12-volt test light connected to 12-volts, check the (Z912) ground circuit.

Does the test light illuminate brightly for each circuit?

Yes

- Go To 4

No

- Repair the (Z912) ground circuit for an open.
- Perform the BODY VERIFICATION TEST. (Refer to 28 - DTC-Based Diagnostics/MODULE, Totally Integrated Power (TIPM) - Standard Procedure).

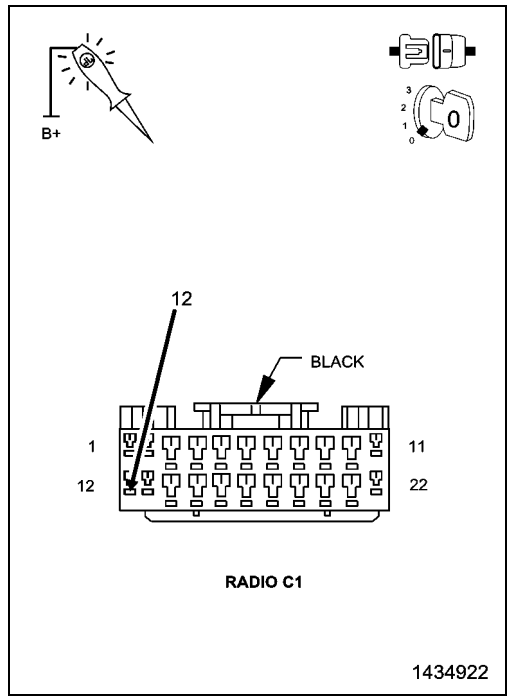

4. (D265) OR (D264) CAN INTERIOR BUS (125K) CIRCUIT OPEN

1. Measure the resistance of the (D264) CAN Interior Bus (-) (125K) circuit between the TIPM C7 harness connector and the Radio C1 harness connector.
2. Measure the resistance of the (D265) CAN Interior Bus (+) (125K) circuit between the TIPM C7 harness connector and the Radio C1 harness connector.

Is resistance below 5.0 ohms on both circuits?

Yes

- Replace the Radio in accordance with the Service Information.
- Perform the BODY VERIFICATION TEST. (Refer to 28 - DTC-Based Diagnostics/MODULE, Totally Integrated Power (TIPM) - Standard Procedure).

No

- Repair the (D265) or (D264) CAN Interior Bus (125K) circuit for an open. Inspect the connector for damage.
- Perform the BODY VERIFICATION TEST. (Refer to 28 - DTC-Based Diagnostics/MODULE, Totally Integrated Power (TIPM) - Standard Procedure).

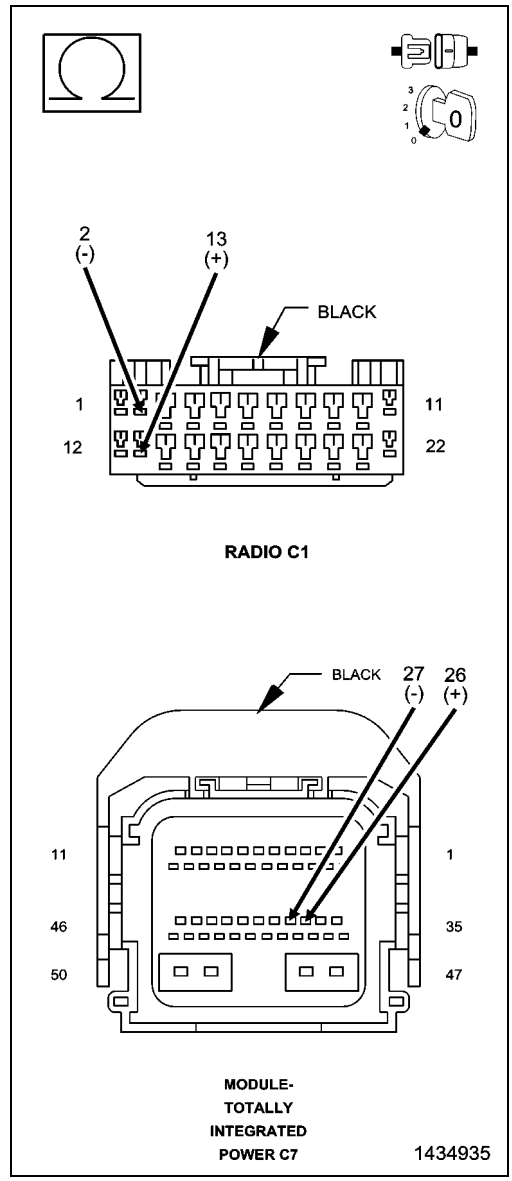

NO RESPONSE FROM SDARV (SATELLITE VIDEO RECEIVER)

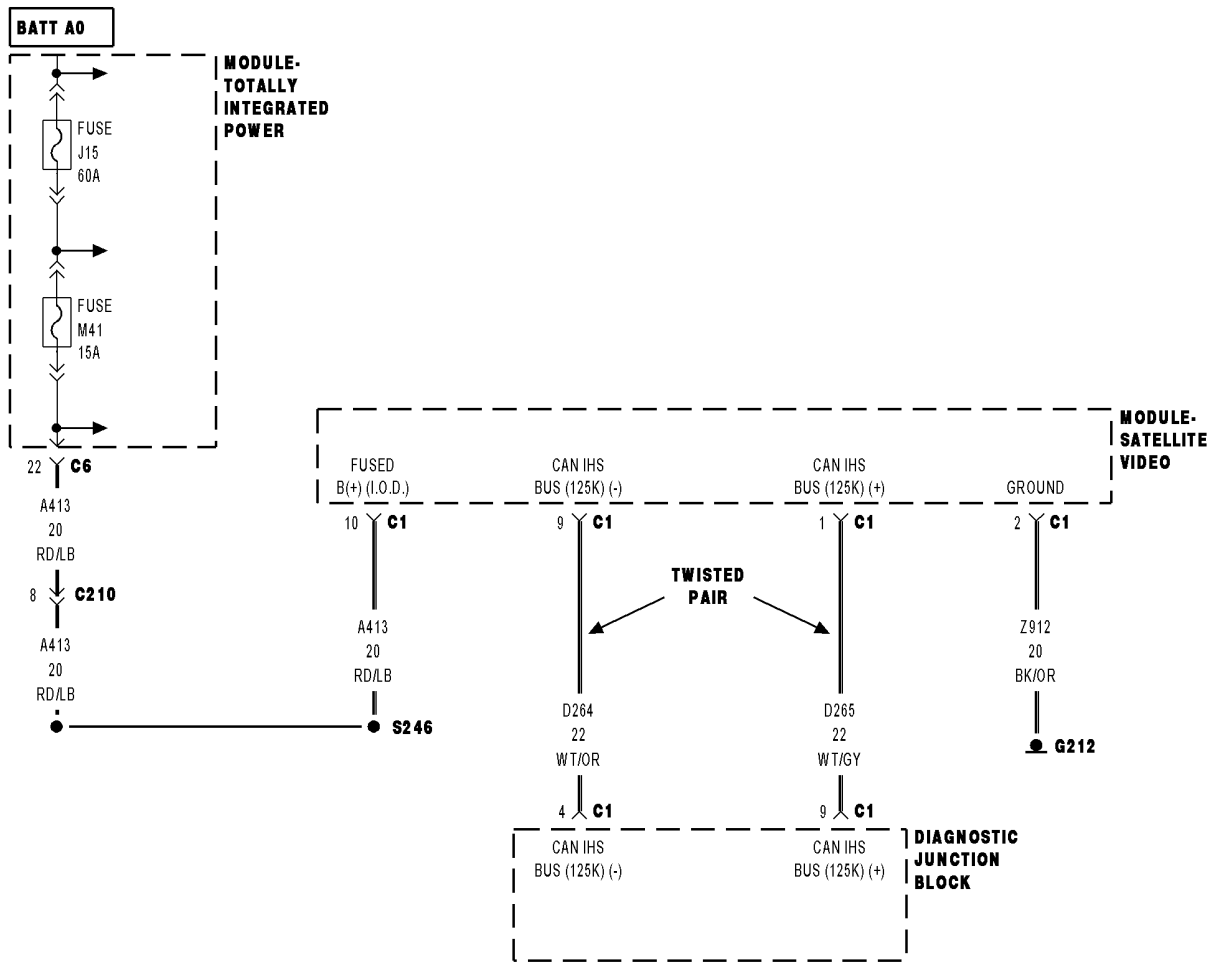

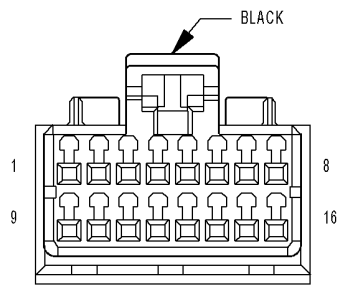

MODULE-
SATELLITE
VIDEO C1

01435201

For a complete wiring diagram, **refer to the Wiring Information**.

Possible Causes
(A413) FUSED B(+) CIRCUIT OPEN OR SHORTED
(Z912) GROUND CIRCUIT OPEN
(D264) AND (D265) CAN INTERIOR (IHS) BUS (125K) CIRCUITS OPEN
SATELLITE VIDEO MODULE

1. TEST FOR INTERMITTENT CONDITION

1. Turn the ignition on.

NOTE: Make sure the IOD fuse is installed and battery voltage is between 10.0 and 16.0 volts.

2. Using the scan tool, select ECU view.

NOTE: A red "X" will be next to the module that is not communicating, indicating that the module is not active on the Bus network. A green check indicates that the module is active on the Bus network.

Does the scan tool display a red "X" next to the module?

Yes

- Go To 2

No

- The no response condition is not present at this time. Using the wiring diagram/schematic as a guide, inspect the wiring for chafed, pierced, pinched and partially broken wires and the wiring harness connectors for broken, bent, pushed out and corroded terminals.

2. (A413) FUSED B(+) CIRCUIT OPEN OR SHORTED

1. Turn the ignition off.
2. Disconnect the Satellite Video Module C1 harness connector.
3. Using a 12-volt test light connected to ground, check the (A413) Fused B(+) circuit.

Does the test light illuminate brightly?

Yes

- Go To 3

No

- Repair the (A413) Fused B(+) circuit for an open or short.
- Perform the BODY VERIFICATION TEST. (Refer to 28 - DTC-Based Diagnostics/MODULE, Totally Integrated Power (TIPM) - Standard Procedure).

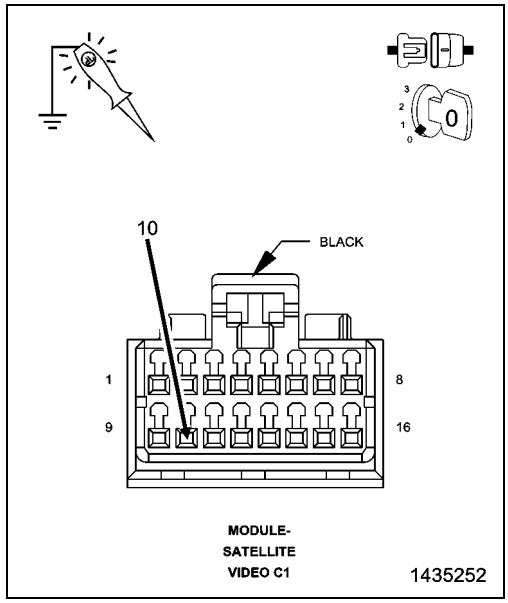

3. (Z912) GROUND CIRCUIT OPEN

1. Using a 12-volt test light connected to 12-volts, check the (Z912) ground circuit.

Does the test light illuminate brightly?

Yes

- Go To 4

No

- Repair the (Z912) ground circuit for an open.
- Perform the BODY VERIFICATION TEST. (Refer to 28 - DTC-Based Diagnostics/MODULE, Totally Integrated Power (TIPM) - Standard Procedure).

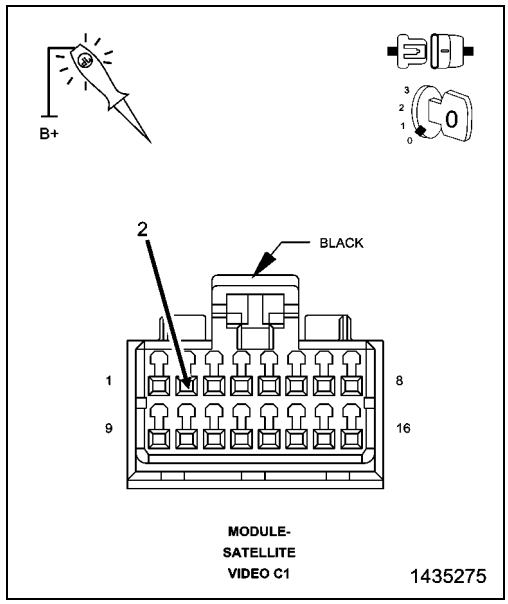

4. (D265) OR (D264) CAN IHS BUS (125K) CIRCUIT OPEN

1. Measure the resistance of the (D264) CAN IHS Bus (-) (125K) circuit between the TIPM C7 harness connector and the Satellite Video Module C1 harness connector.
2. Measure the resistance of the (D265) CAN IHS Bus (+) (125K) circuit between the TIPM C7 harness connector and the Satellite Video Module C1 harness connector.

Is resistance below 5.0 Ohms on both circuits?

Yes

- Replace the Satellite Video Module in accordance with the Service Information.
- Perform the BODY VERIFICATION TEST. (Refer to 28 - DTC-Based Diagnostics/MODULE, Totally Integrated Power (TIPM) - Standard Procedure).

No

- Repair the (D265) or (D264) CAN IHS Bus (125K) circuit for an open. Inspect the connector for damage.
- Perform the BODY VERIFICATION TEST. (Refer to 28 - DTC-Based Diagnostics/MODULE, Totally Integrated Power (TIPM) - Standard Procedure).

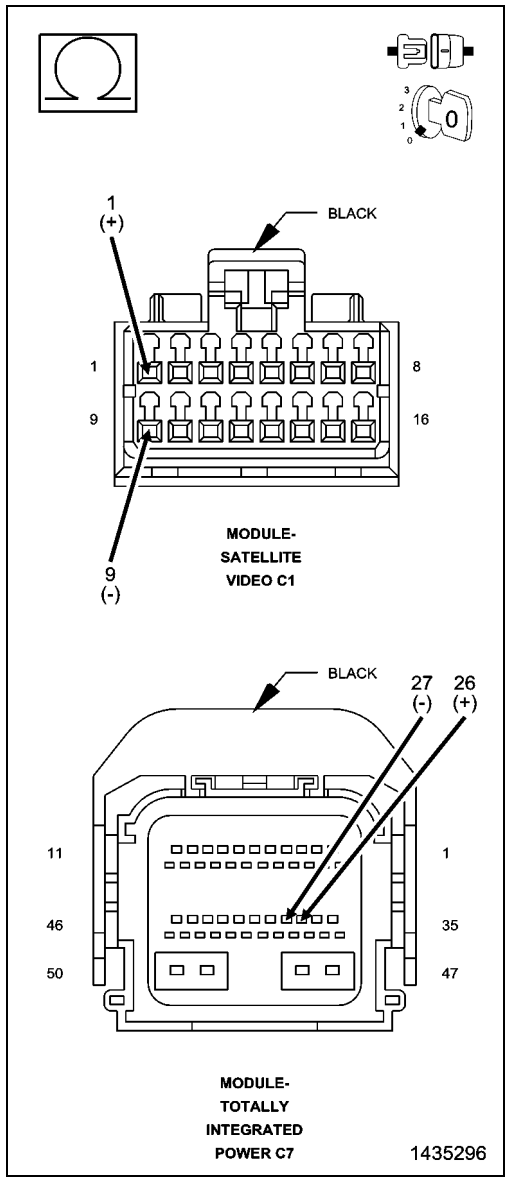

NO RESPONSE FROM THE STEERING ANGLE SENSOR (SAS)

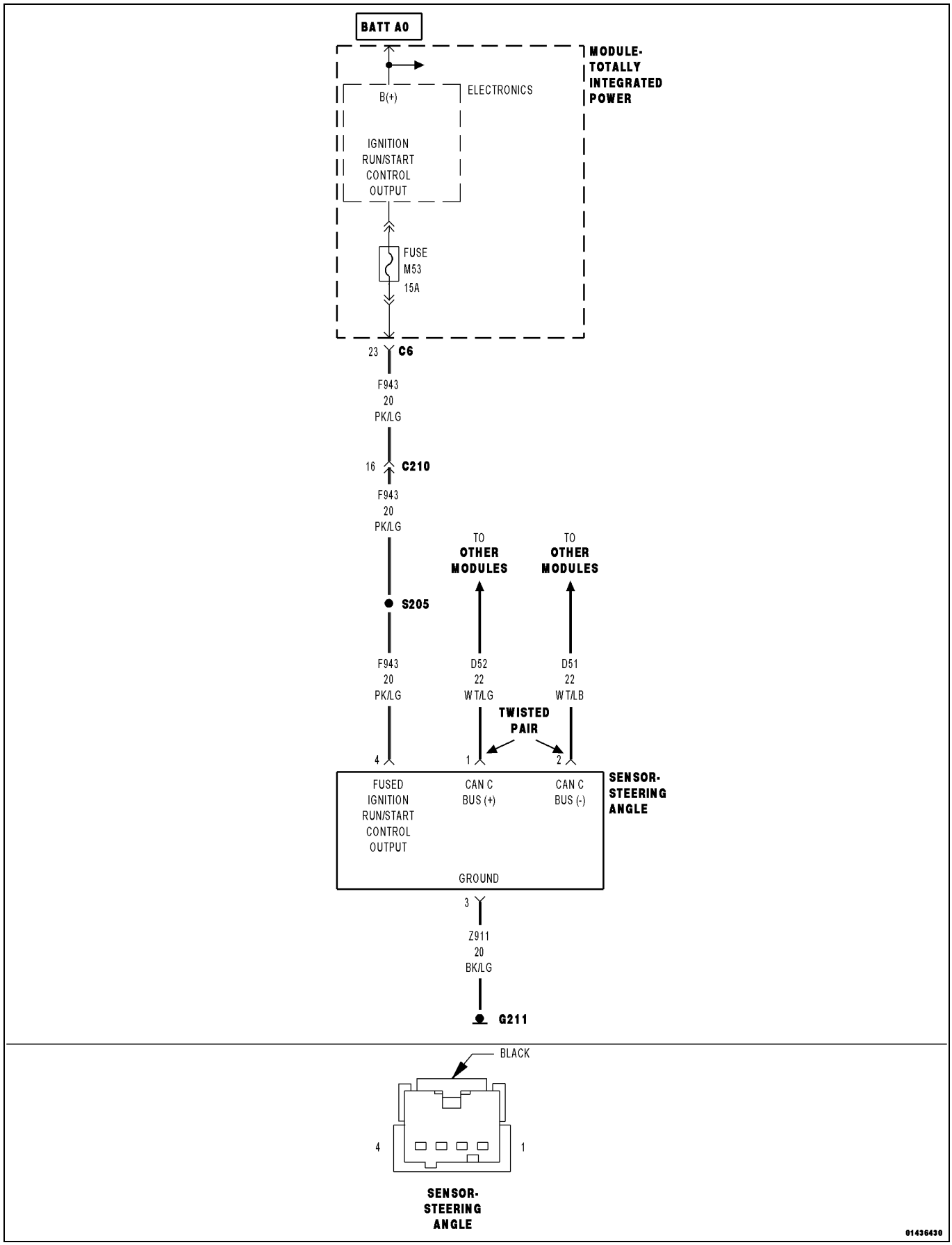

For a complete wiring diagram, **refer to the Wiring Information**.

Possible Causes
(F943) FUSED IGNITION RUN/START CONTROL OUTPUT CIRCUIT OPEN OR SHORTED
(Z911) GROUND CIRCUIT OPEN
(D51) CAN C BUS(+) CIRCUIT OPEN AT SAS
(D52) CAN C BUS(-) CIRCUIT OPEN AT SAS
STEERING ANGLE SENSOR

1. TEST FOR INTERMITTENT CONDITION

NOTE: Check for any TSB(s) related to the condition. If a TSB applies, perform the procedure outlined in the TSB before continuing.

1. Turn the ignition on.

NOTE: Make sure the IOD fuse is installed and battery voltage is between 10.0 and 16.0 volts.

2. With the scan tool, select ECU View.

NOTE: A red "X" will be next to the module that is not communicating, indicating that the module is not active on the Bus network. A green check indicates that the module is active on the Bus network.

Does the scan tool display a red "X" next to the sensor?

Yes

- Go To 2

No

- The no response condition is not present at this time. Using the wiring diagram/schematic as a guide, inspect the wiring for chafed, pierced, pinched, and partially broken wires and the wiring harness connectors for broken, bent, pushed out, and corroded terminals.

2. (F943) FUSED IGNITION RUN/START CONTROL OUTPUT CIRCUIT OPEN OR SHORTED

1. Turn the ignition off.
2. Disconnect the Steering Angle Sensor harness connector.
3. Turn the ignition on.
4. Using a 12-volt test light connected to ground, check the (F943) Fused Ignition Run/Start Control Output circuit.

Does the test light illuminate brightly?

Yes

- Go To 3

No

- Repair the (F943) Fused Ignition Run/Start Control Output circuit for an open or short.
- Perform the BODY VERIFICATION TEST. (Refer to 28 - DTC-Based Diagnostics/MODULE, Totally Integrated Power (TIPM) - Standard Procedure).

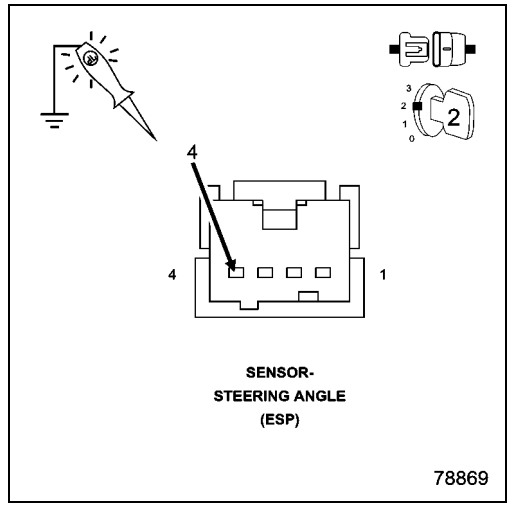

3. (Z911) GROUND CIRCUIT OPEN

1. Turn the ignition off.
2. Using a 12-volt test light connected to 12-volts, check the (Z911) ground circuit.

Does the test light illuminate brightly?

Yes

- Go To 4

No

- Repair the (Z911) ground circuit for an open.
- Perform the BODY VERIFICATION TEST. (Refer to 28 - DTC-Based Diagnostics/MODULE, Totally Integrated Power (TIPM) - Standard Procedure).

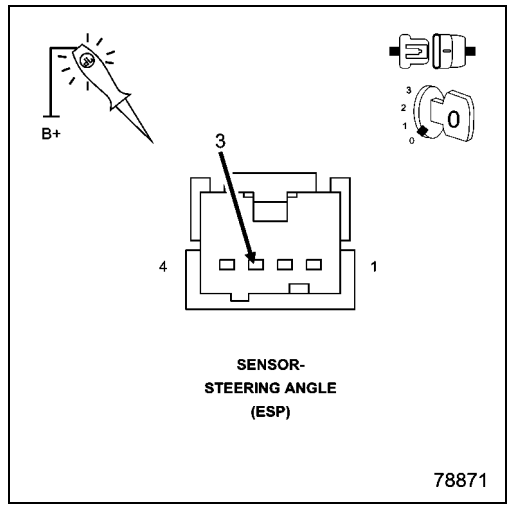

4. (D52) CAN C BUS (+) CIRCUIT OPEN

1. Turn the ignition off.
2. Disconnect the TIPM C7 harness connector.
3. Measure the resistance of the (D52) CAN C Bus (+) circuit between the TIPM C7 harness connector and the Steering Angle Sensor connector.

Is resistance below 5.0 Ohms?

Yes

- Go To 5

No

- Repair the (D52) CAN C Bus (+) circuit for an open.
- Perform the BODY VERIFICATION TEST. (Refer to 28 - DTC-Based Diagnostics/MODULE, Totally Integrated Power (TIPM) - Standard Procedure).

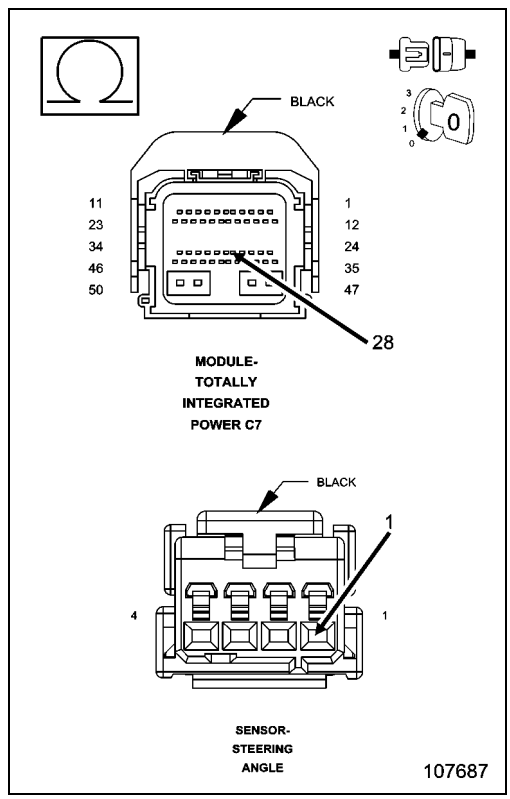

5. (D51) CAN C BUS (-) CIRCUIT OPEN

1. Measure the resistance of the (D51) CAN C Bus (-) circuit between the TIPM C7 harness connector and the Steering Angle Sensor connector.

Is resistance below 5.0 Ohms?

Yes

- Replace the Steering Angle Sensor in accordance with the Service Information.
- Perform the BODY VERIFICATION TEST. (Refer to 28 - DTC-Based Diagnostics/MODULE, Totally Integrated Power (TIPM) - Standard Procedure).

No

- Repair the (D51) CAN C Bus (-) circuit for an open.
- Perform the BODY VERIFICATION TEST. (Refer to 28 - DTC-Based Diagnostics/MODULE, Totally Integrated Power (TIPM) - Standard Procedure).

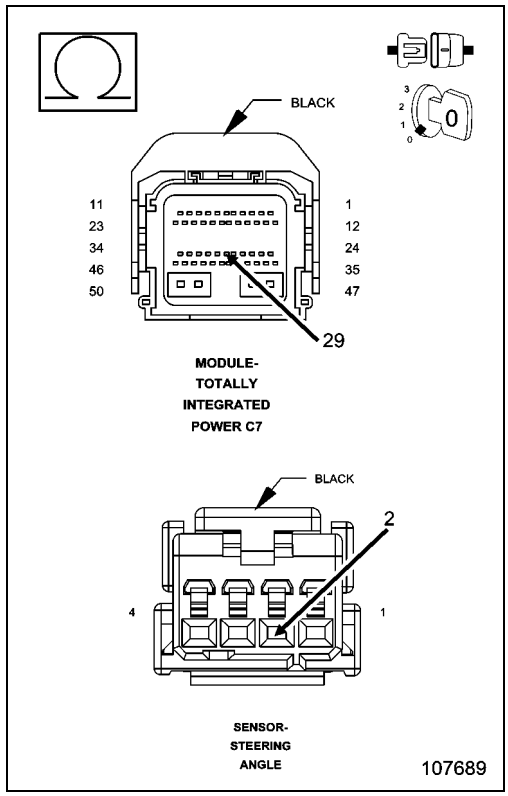

■ NO RESPONSE FROM TIPM (TOTALLY INTEGRATED POWER MODULE)

For a complete wiring diagram, **refer to the Wiring Information**.

Possible Causes
FUSED B (+) CIRCUITS OPEN
FUSED IGNITION SWITCH OUTPUT CIRCUITS OPEN
GROUND CIRCUITS OPEN
CAN C DIAGNOSTIC CIRCUITS OPEN
CAN C DIAGNOSTIC CIRCUITS SHORTED TO GROUND
CAN C DIAGNOSTIC CIRCUITS SHORTED TOGETHER
TOTALLY INTEGRATED POWER MODULE

1. TEST FOR INTERMITTENT CONDITION

1. Turn the ignition on.

NOTE: Make sure the IOD fuse is installed and battery voltage is between 10.0 and 16.0 volts.

NOTE: Make sure the scan tool is updated to the latest software.

NOTE: If the scan tool displays any error messages involving the CAN C Diagnostic circuits, diagnose and repair the error message before proceeding.

NOTE: A loss of communication with the Totally Integrated Power Module (TIPM) can cause the ECU View button on the scan tool to be inoperative (not highlighted).

2. Using the scan tool, attempt to select ECU view.

Can the scan tool communicate with the TIPM?

Yes

- The no response condition is not present at this time. Using the wiring diagram/schematic as a guide, inspect the wiring for chafed, pierced, pinched and partially broken wires and the wiring harness connectors for broken, bent, pushed out and corroded terminals.

No

- Go To 2

2. FUSED B (+) CIRCUITS OPEN AT TIPM

1. Disconnect the scan tool from the DLC.
2. Using a 12-volt test light connected to ground, and using the wiring diagram as a guide, check all Fused B (+) circuits at the TIPM harness connectors.

Does the test light illuminate brightly for each circuit?

Yes

- Go To 3

No

- Repair the Fused B(+) circuit that did not light the test light for an open or short.
- Perform the BODY VERIFICATION TEST. (Refer to 28 - DTC-Based Diagnostics/MODULE, Totally Integrated Power (TIPM) - Standard Procedure)

3. FUSED IGNITION SWITCH OUTPUT CIRCUITS OPEN AT TIPM

1. Turn the ignition on.
2. Using a 12-volt test light connected to ground, and using the wiring diagram as a guide, check each Fused Ignition Switch Output circuit.

Does the test light illuminate brightly for each circuit?

Yes

- Go To 4

No

- Repair the Fused Ignition Switch Output circuit that did not light the test light for an open.
- Perform the BODY VERIFICATION TEST. (Refer to 28 - DTC-Based Diagnostics/MODULE, Totally Integrated Power (TIPM) - Standard Procedure)

4. GROUND CIRCUITS OPEN AT TIPM

1. Turn the ignition off.
2. Using a 12-volt test light connected to 12-volts, and using the wiring diagram as a guide, check all ground circuits.

Does the test light illuminate brightly on each circuit?

Yes

- Go To 5

No

- Repair the ground circuit that did not light the test light for an open.
- Perform the BODY VERIFICATION TEST. (Refer to 28 - DTC-Based Diagnostics/MODULE, Totally Integrated Power (TIPM) - Standard Procedure)

5. CHECK FOR (D72) CAN C DIAGNOSTIC (+) CIRCUIT OPEN AT DATA LINK CONNECTOR (DLC)

1. Disconnect the TIPM C7 harness connector.
2. Measure the resistance on the D72 CAN C Diagnostic (+) circuit between the TIPM C7 harness connector and the DLC

Is the resistance above 10 ohms?

Yes

- Repair the D72 CAN C Diagnostic (+) circuit for an open.
- Perform the BODY VERIFICATION TEST. (Refer to 28 - DTC-Based Diagnostics/MODULE, Totally Integrated Power (TIPM) - Standard Procedure)

No

- Go To 6

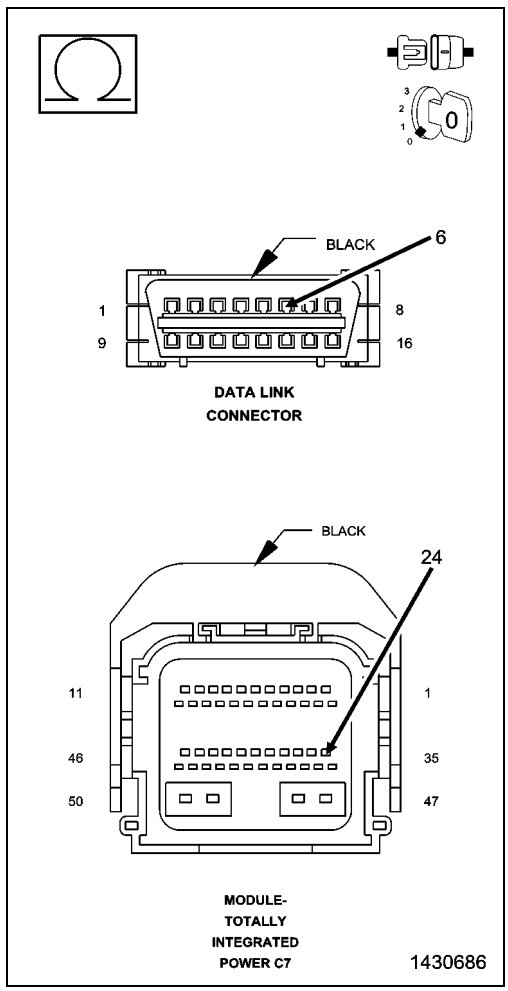

6. CHECK FOR (D71) CAN C DIAGNOSTIC (-) CIRCUIT OPEN AT DLC

1. Measure the resistance on the D71 CAN C Diagnostic (-) circuit between the TIPM C7 harness connector and the DLC

Is the resistance above 10 ohms?

Yes

- Repair the D71 CAN C Diagnostic (-) circuit for an open.
- Perform the BODY VERIFICATION TEST. (Refer to 28 - DTC-Based Diagnostics/MODULE, Totally Integrated Power (TIPM) - Standard Procedure)

No

- Go To 7

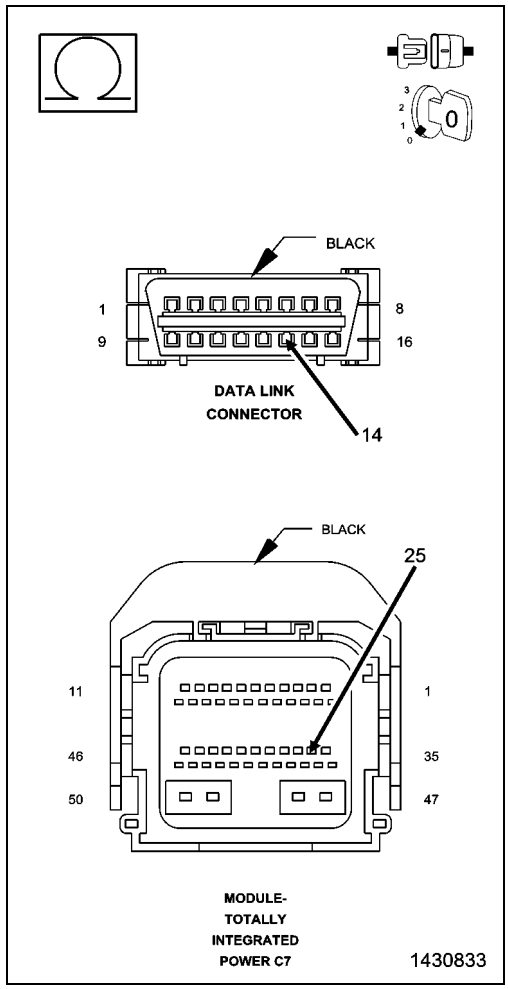

7. CHECK FOR CAN C DIAGNOSTIC CIRCUITS SHORTED TOGETHER

1. Measure the resistance between the (D72) CAN C Diagnostic (+) circuit and the (D71) CAN C Diagnostic (-) circuit at the TIPM C7 harness connector.

Is the resistance below 100.0 ohms?

Yes

- Repair the (D72) CAN C Diagnostic (+) circuit for a short to the (D71) CAN C Diagnostic (-) circuit.
- Perform the BODY VERIFICATION TEST. (Refer to 28 - DTC-Based Diagnostics/MODULE, Totally Integrated Power (TIPM) - Standard Procedure).

No

- Replace the Totally Integrated Power Module in accordance with the Service Information.
- Perform the BODY VERIFICATION TEST. (Refer to 28 - DTC-Based Diagnostics/MODULE, Totally Integrated Power (TIPM) - Standard Procedure).

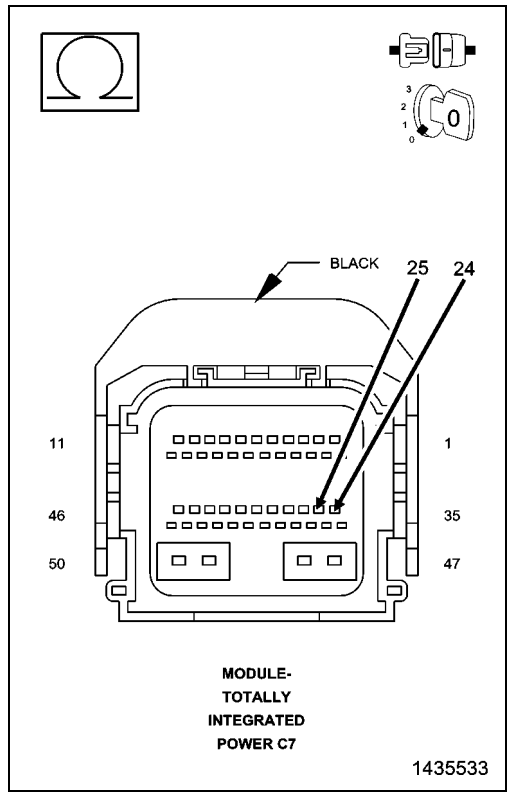

NO RESPONSE FROM VES3 (VIDEO SCREEN MODULE)

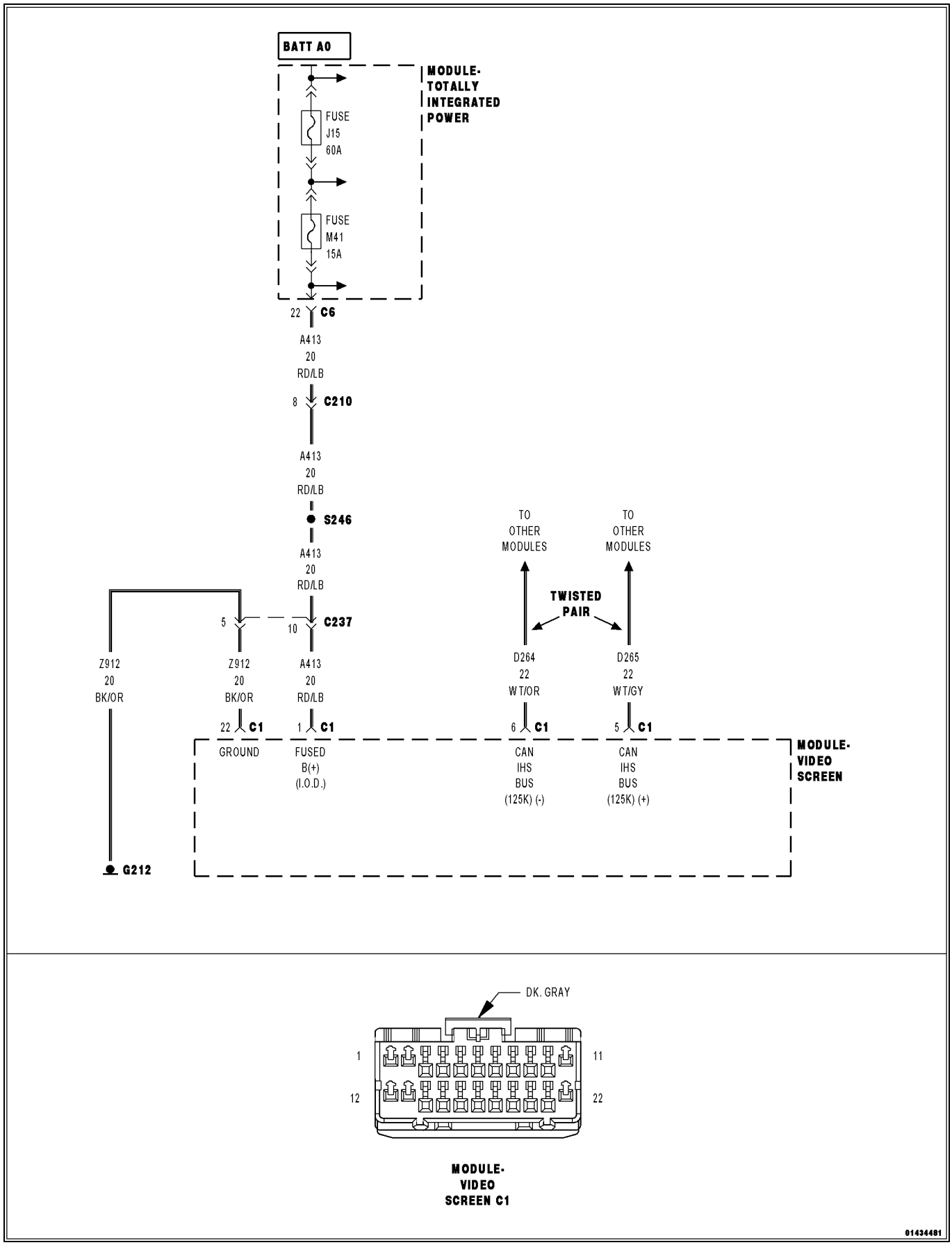

For a complete wiring diagram, **refer to the Wiring Information**.

Possible Causes
(A413) FUSED B (+) CIRCUIT OPEN OR SHORTED
(Z912) GROUND CIRCUIT OPEN
(D264) AND (D265) CAN INTERIOR BUS (125K) CIRCUITS OPEN
VIDEO SCREEN MODULE

1. TEST FOR INTERMITTENT CONDITION

1. Turn the ignition on.

NOTE: Make sure the IOD fuse is installed and battery voltage is between 10.0 and 16.0 volts.

2. Using the scan tool, select ECU View.

NOTE: A red "X" will be next to the module that is not communicating, indicating that the module is not active on the Bus network. A green check indicates that the module is active on the Bus network.

Does the scan tool display a red "X" next to the module?

Yes

- Go To 2

No

- The no response condition is not present at this time. Using the wiring diagram/schematic as a guide, inspect the wiring for chafed, pierced, pinched and partially broken wires and the wiring harness connectors for broken, bent, pushed out and corroded terminals.

2. (A413) FUSED B(+) CIRCUIT OPEN OR SHORTED

1. Turn the ignition off.
2. Disconnect the Video Screen Module C1 harness connector.
3. Using a 12-volt test light connected to ground, check the (A413) Fused B(+) circuit.

Does the test light illuminate brightly?

Yes

- Go To 3

No

- Repair the (A413) Fused B(+) circuit for an open or short.
- Perform the BODY VERIFICATION TEST. (Refer to 28 - DTC-Based Diagnostics/MODULE, Totally Integrated Power (TIPM) - Standard Procedure).

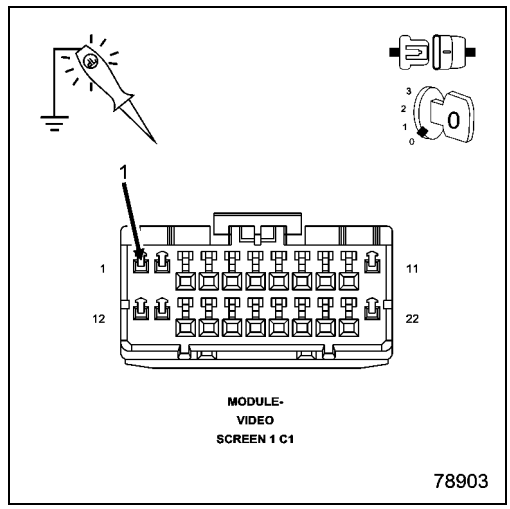

3. (Z907) GROUND CIRCUIT OPEN

1. Using a 12-volt test light connected to 12-volts, check the (Z907) ground circuit.

Does the test light illuminate brightly for each circuit?

Yes

- Go To 4

No

- Repair the (Z907) ground circuit for an open.
- Perform the BODY VERIFICATION TEST. (Refer to 28 - DTC-Based Diagnostics/MODULE, Totally Integrated Power (TIPM) - Standard Procedure).

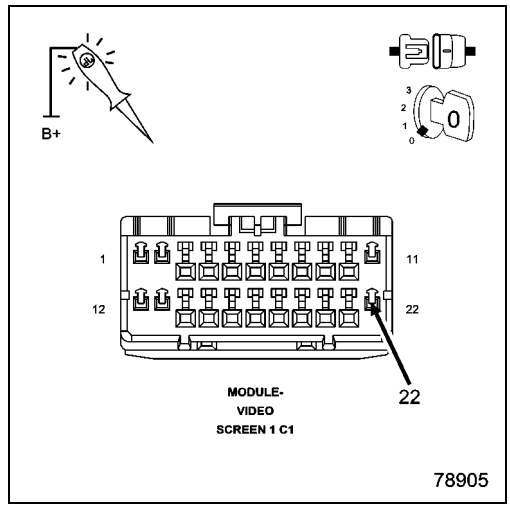

4. (D265) OR (D264) CAN INTERIOR BUS (125K) CIRCUIT OPEN

1. Measure the resistance of the (D264) CAN Interior Bus (-) (125K) circuit between the TIPM C7 harness connector and the Video Screen Module C1 harness connector.
2. Measure the resistance of the (D265) CAN Interior Bus (+) (125K) circuit between the TIPM C7 harness connector and the Video Screen Module C1 harness connector.

Is resistance below 5.0 Ohms on both circuits?

Yes

- Replace the Video Screen Module in accordance with the Service Information.
- Perform the BODY VERIFICATION TEST. (Refer to 28 - DTC-Based Diagnostics/MODULE, Totally Integrated Power (TIPM) - Standard Procedure).

No

- Repair the (D265) or (D264) CAN Interior Bus (125K) circuit for an open. Inspect the connector for damage.
- Perform the BODY VERIFICATION TEST. (Refer to 28 - DTC-Based Diagnostics/MODULE, Totally Integrated Power (TIPM) - Standard Procedure).

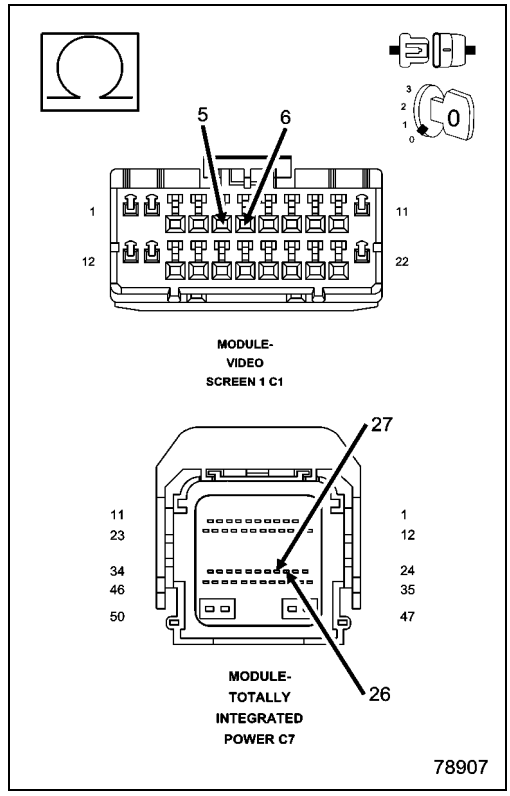

NO RESPONSE FROM WIN (WIRELESS IGNITION NODE)

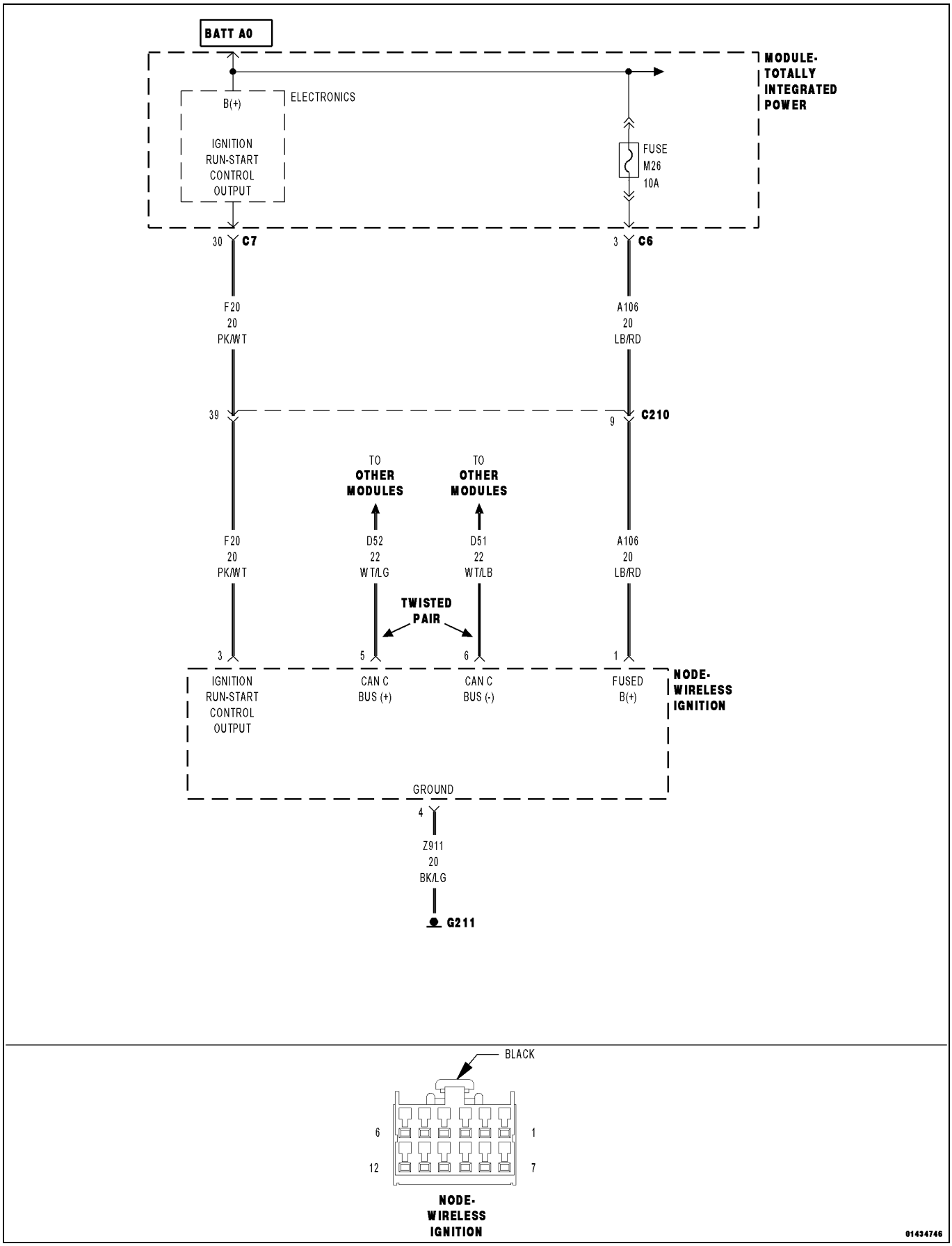

For a complete wiring diagram, **refer to the Wiring Information**.

Possible Causes
(A106) FUSED B(+) CIRCUIT OPEN OR SHORTED
(Z911) GROUND CIRCUIT OPEN
(F20) IGNITION RUN/START CONTROL OUTPUT CIRCUIT OPEN OR SHORTED
(D51) CAN C BUS(+) CIRCUIT OPEN
(D52) CAN C BUS(-) CIRCUIT OPEN
WIRELESS IGNITION NODE

1. TEST FOR INTERMITTENT CONDITION

1. Turn the ignition on.

NOTE: Make sure the IOD fuse is installed and battery voltage is between 10.0 and 16.0 volts.

2. Using the scan tool, select ECU View.

NOTE: A red "X" will be next to the module that is not communicating, indicating that the module is not active on the Bus network. A green check indicates that the module is active on the Bus network.

Does the scan tool display a red "X" next to the module?

Yes

- Go To 2

No

- The no response condition is not present at this time. Using the wiring diagram/schematic as a guide, inspect the wiring for chafed, pierced, pinched and partially broken wires and the wiring harness connectors for broken, bent, pushed out and corroded terminals.

2. (106) FUSED B(+) CIRCUIT OPEN OR SHORTED

1. Turn the ignition off.
2. Disconnect the Wireless Ignition Node harness connector.
3. Using a 12-volt test light connected to ground, check the (106) Fused B(+) circuit.

Does the test light illuminate brightly?

Yes

- Go To 3

No

- Repair the (106) Fused B(+) circuit for an open or short.
- Perform the WIN VERIFICATION TEST. (Refer to 28 - DTC-Based Diagnostics/NODE, Wireless Ignition (WIN) - Standard Procedure).

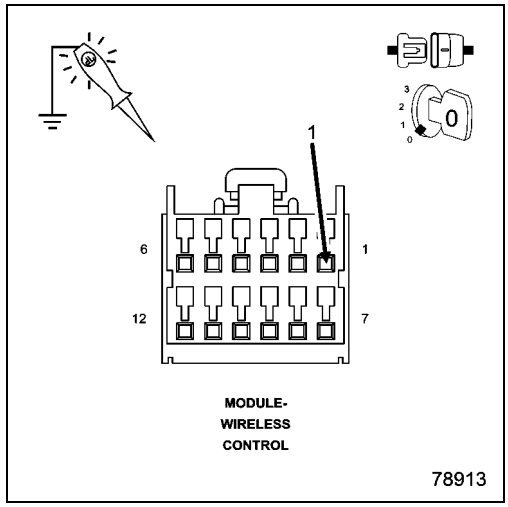

3. (Z911) GROUND CIRCUIT OPEN

1. Using a 12-volt test light connected to 12-volts, check the (Z911) ground circuit.

Does the test light illuminate brightly?

Yes

- Go To 4

No

- Repair the (Z911) ground circuit for an open.
- Perform the WIN VERIFICATION TEST. (Refer to 28 - DTC-Based Diagnostics/NODE, Wireless Ignition (WIN) - Standard Procedure).

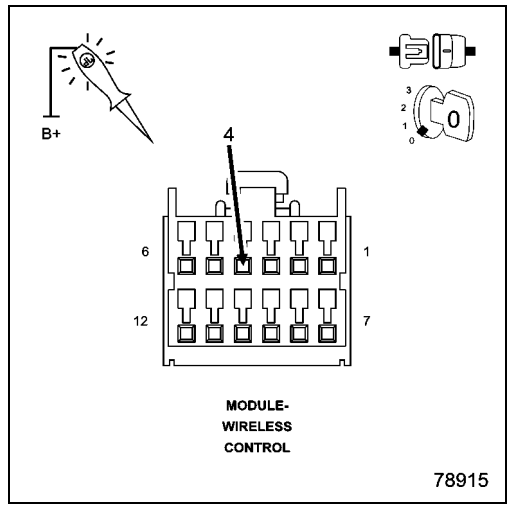

4. (F20) IGNITION RUN/START CONTROL OUTPUT CIRCUIT OPEN OR SHORTED

1. Turn the ignition on.
2. Using a 12-volt test light connected to ground, check the (F20) Ignition Run/Start Control Output circuit.

Does the test light illuminate brightly?

Yes

- Go To 5

No

- Repair the (F20) Ignition Run/Start Control Output circuit for an open or short.
- Perform the WIN VERIFICATION TEST. (Refer to 28 - DTC-Based Diagnostics/NODE, Wireless Ignition (WIN) - Standard Procedure).

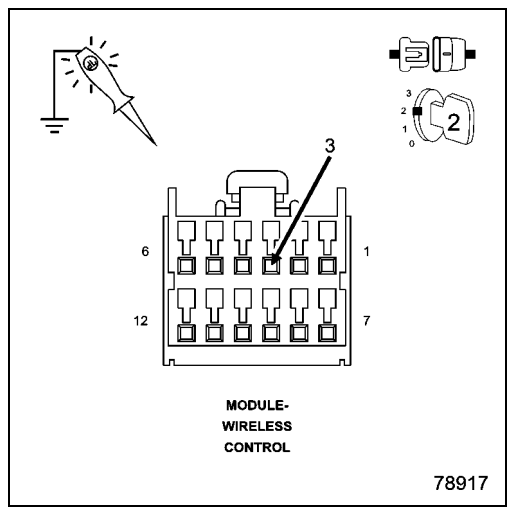

5. (D52) CAN C BUS (+) CIRCUIT OPEN

1. Turn the ignition off.
2. Disconnect the TIPM C7 harness connector.
3. Measure the resistance of the (D52) CAN C Bus (+) circuit between the TIPM C7 harness connector and the Wireless Ignition Node connector.

Is resistance below 5.0 Ohms?

Yes

- Go To 6

No

- Repair the (D52) CAN C Bus (+) circuit for an open.
- Perform the BODY VERIFICATION TEST. (Refer to 28 - DTC-Based Diagnostics/MODULE, Totally Integrated Power (TIPM) - Standard Procedure)

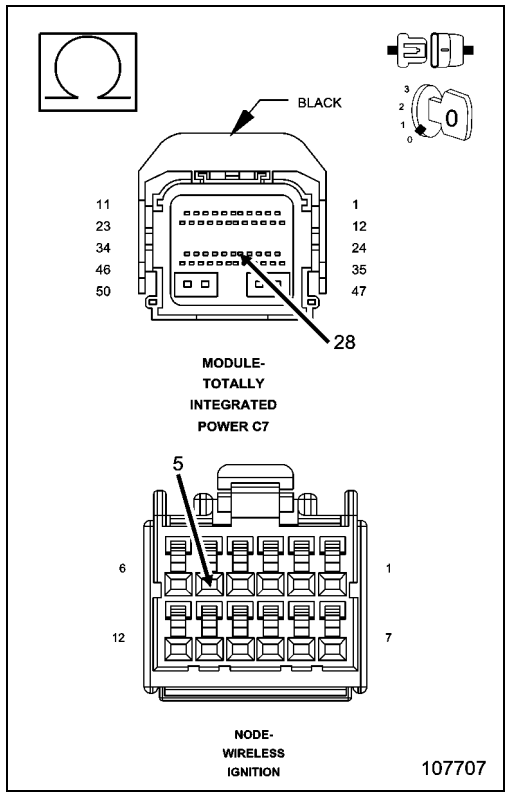

6. (D51) CAN C BUS (-) CIRCUIT OPEN

1. Measure the resistance of the (D51) CAN C Bus (-) circuit between the TIPM C7 harness connector and the Wireless Ignition Node connector.

Is resistance below 5.0 Ohms?

Yes

- Replace the Wireless Ignition Node in accordance with the Service Information.
- Perform the BODY VERIFICATION TEST. (Refer to 28 - DTC-Based Diagnostics/MODULE, Totally Integrated Power (TIPM) - Standard Procedure)

No

- Repair the (D51) CAN C Bus (-) circuit for an open.
- Perform the BODY VERIFICATION TEST. (Refer to 28 - DTC-Based Diagnostics/MODULE, Totally Integrated Power (TIPM) - Standard Procedure)

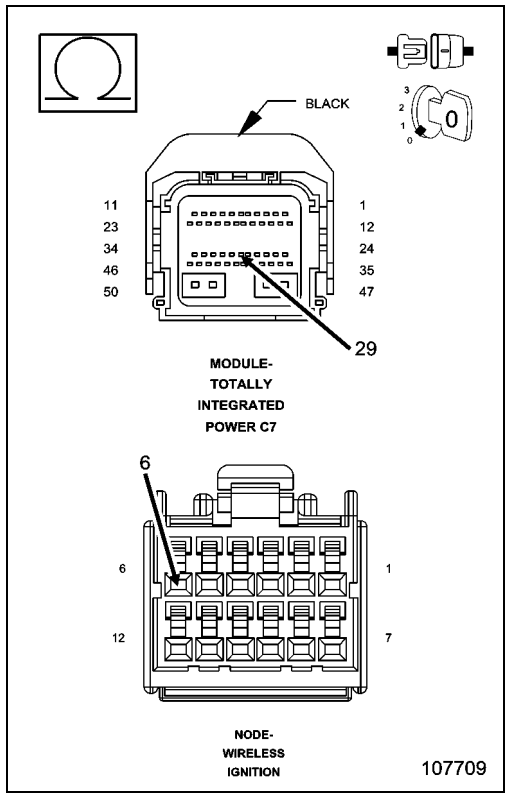

STORED LOST COMMUNICATION DTCS

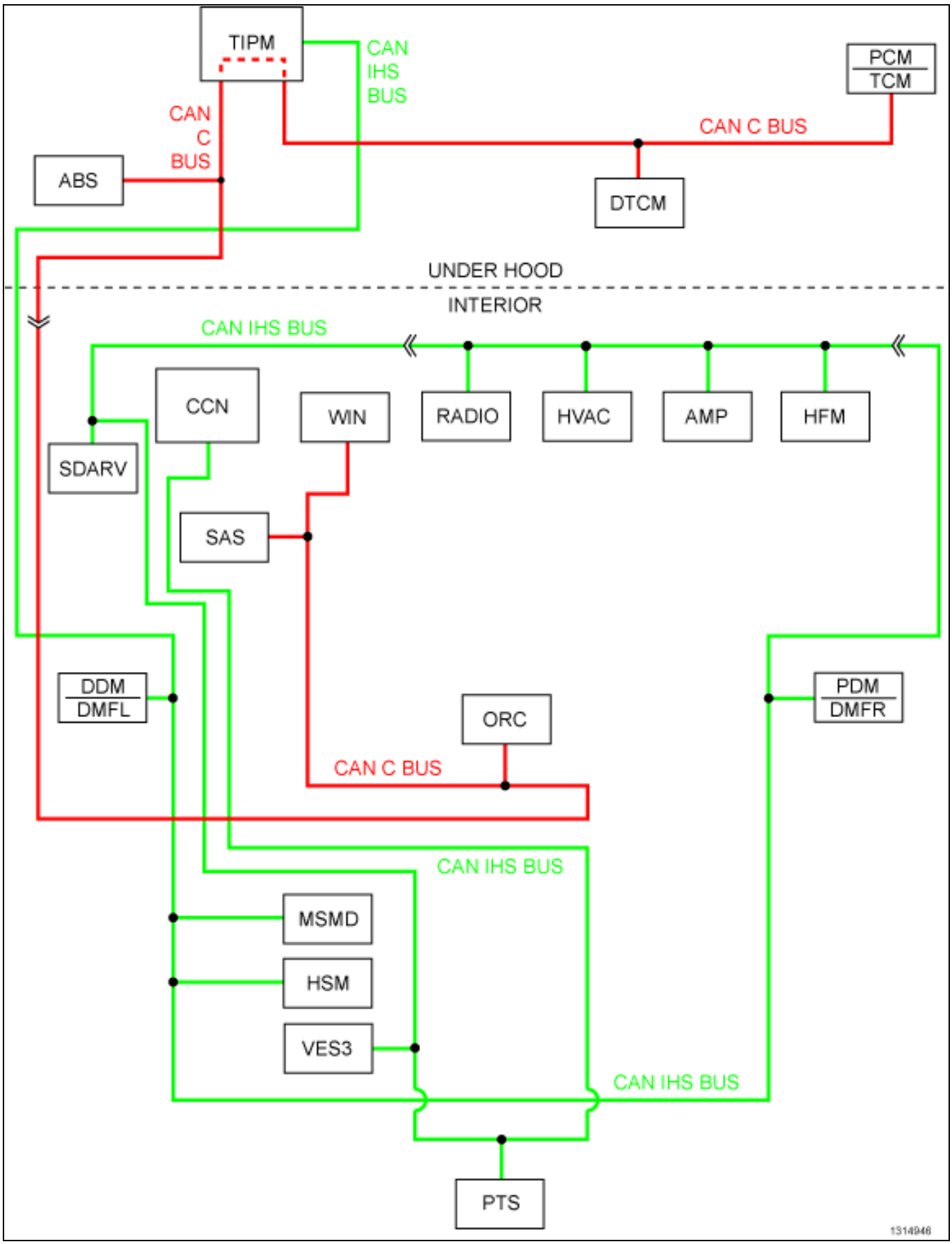

For a complete wiring diagram, **refer to the Wiring Information**.

- **When Monitored:**
  With the ignition on.
  Battery voltage between 10 and 16 volts.
  Ignition Off Draw (IOD) fuse installed.
  Totally Integrated Power Module (TPIM) is configured correctly.
- **Set Condition:**
  Bus messages not received for approximately two to five seconds.

Possible Causes
CAN B BUS CIRCUITS OPEN OR SHORTED
DTCS RELATED TO BATTERY VOLTAGE, IGNITION, OR VIN MESSAGES
TIPM NOT CONFIGURED CORRECTLY
POWER OR GROUND FROM THE REPORTING MODULE
MODULE THAT SET THIS DTC
PREVIOUS SERVICE PERFORMED WITHIN THE LAST 100 KEY CYCLES (FUSE/RELAYS REMOVED, WIRING SERVICE, BATTERY DISCONNECT)
LOW BATTERY/JUMP START CONDITION
IOD FUSE WAS REMOVED DURING SHIPPING
CHECK FOR RELATED TSBS

1. VERIFY DIAGNOSTIC TROUBLE CODE (DTC) IS STORED

NOTE: Stored faults may indicate a customer perceived intermittent condition.

NOTE: Make sure the IOD fuse is installed and battery voltage is between 10 and 16 volts before proceeding.

1. Using the scan tool, read stored DTCs.

   Is this DTC stored?

Yes

- Go To 2

No

- Perform the appropriate diagnostic procedure.

2. CHECK THE ENVIRONMENTAL DATA

1. Using the scan tool, read the loss of communication environmental data.

   Does the loss of communication environmental odometer data match up to any of the previous service procedures listed in the possible causes or are their any stored CAN B or C hardware electrical, battery, ignition voltage, VIN missing/mismatch, TIPM configuration DTCs present with matching environmental data?

Yes

- These DTCs may have been the result of other service procedures performed. Clear DTCs.

No

- Go To 3

3. VERIFY INTERMITTENT LOST COMMUNICATION DTC - WIRING CONCERNS

1. Turn the ignition on.
2. Using the scan tool, select Network Diagnostics.

Is there more than one ECU with stored DTCs "Logged Against" the module and one or more lost communication DTCs stored in the offending module?

Yes

- Verify if the vehicle was recently in for this type of service. Otherwise, visually inspect the related wiring harness for chafed, pierced, pinched and partially broken wires and the wiring harness connectors for broken, bent, pushed out and corroded terminals. Repair as necessary.

No

- Go To 4

4. VERIFY INTERMITTENT LOST COMMUNICATION DTC - OFFENDING MODULE

1. Turn the ignition on.
2. Using the scan tool, select Network Diagnostics.

Is there more than one ECU with stored DTCs "Logged Against" the module and NO lost communication DTCs stored in the offending module?

Yes

- Check for Technical Service Bulletins (TSBs) related to this offending module.

No

- Go To 5

5. VERIFY INTERMITTENT LOST COMMUNICATION DTC - REPORTING MODULE

1. Turn the ignition on.
2. Using the scan tool, select Network Diagnostics.

Is there ONLY ONE ECU with stored DTCs "Logged Against" the module?

Yes

- Check for TSB related to the module that set this DTC.

No

- Verify if the vehicle was recently in for this type of service. Otherwise, visually inspect the related wiring harness for chafed, pierced, pinched, and partially broken wires and the wiring harness connectors for broken, bent, pushed out, and corroded terminals. Repair as necessary.

DRIVABILITY - GAS

TABLE OF CONTENTS

page

DRIVABILITY - GAS
DIAGNOSIS AND TESTING
CHECKING THE EXHAUST SYSTEM FOR LEAKS 108
CHECKING THE FUEL DELIVERY SYSTEM. 109
CHECKING THE OXYGEN SENSOR OPERATION 111
CHECKING THE PCM POWER AND GROUND CIRCUITS 114
ENGINE CRANKS BUT DOES NOT START . .116
ETC INTERMITTENT NO CRANK CONDITION. 120
FUEL DELIVERY SYSTEM OUTPUT - FLOW TEST. 120
FUEL PRESSURE LEAK DOWN. 123
HARD START FUEL SYSTEM 126
NO CRANK CONDITION 131
NO RESPONSE WITH A NO START CONDITION. 137
START AND STALL CONDITION 141

Drivability - Gas

Diagnosis and Testing

■ CHECKING THE EXHAUST SYSTEM FOR LEAKS

1. CHECKING THE EXHAUST SYSTEM FOR LEAKS

1. Turn the ignition off.
2. Raise the vehicle in accordance with the Service Information.

WARNING: The normal operating temperature of the exhaust system is very high. Never work around or attempt to service any part of the exhaust system until it has cooled. Special care should be taken when working near the catalytic converter. The temperature of the converter rises to a high level after a short period of engine operating time.

3. Connect Exhaust Cone 8404-EC or 8404-EC to Air Pressure Regulator (with hose) W-18-MIL-1146AS.

CAUTION: The air pressure must not exceed 27.6 kPa (4 psi), otherwise engine damage can occur.

4. Attach shop air to the air pressure regulator.
5. Adjust the Air Pressure Regulator to 27.6 kPa (4 psi)
6. Insert the exhaust cone into the vehicle tail pipe.
7. If the vehicle is equipped with dual exhaust. Use the 8404-ECT with equipped attached plug, plug one side of the dual exhaust pipe. Pressurize the other as described above.
8. Apply Mopar® Air Leak Detector PN 05191804AA (or an equivalent leak finder liquid) to the following areas:
   - All welded joints from the exhaust manifold to 152.4 mm (6 inches) behind the downstream O2 sensor
   - O2 sensor seal points
   - O2 sensor boss welds
   - Flange/joint connection(s)
   - Exhaust manifold to cylinder head connection(s)
   - EGR solenoid gasket base and tube seal points (if equipped)
9. Watch for the Mopar® Air Leak Detector PN 05191804AA (or the equivalent leak finder liquid) to bubble.
10. Use the following definitions to help determine if system or component repair/replacement is necessary:

- **Type 1 Leak** is defined as a leak where very small foam like bubbles 1 mm (0.04 of an inch) or less appear. Any Type 1 or greater leaks found in welded joints, O2 sensor seal points or O2 sensor boss welds must be repaired or the component must be replaced.
- **Type 2 Leak** is defined as a leak where larger bubbles pea size, 8 mm (0.3 of an inch) or greater appear. Any Type 2 or greater leaks found in flange or joint connections, exhaust manifold to cylinder head connections, or EGR gasket and tube seal points must be repaired or the components must be replaced.

Leak Location	Repair required if results at 27.6 kPa (4 psi) reveal bubble size:
Welded joints	Type 1, 1 mm (0.04 of an inch) or greater
O2 Sensor seal points	Type 1, 1 mm (0.04 of an inch) or greater
O2 Sensor boss welds	Type 1, 1 mm (0.04 of an inch) or greater
Flange / joint connections	Type 2, 8 mm (0.3 of an inch) or greater
Exhaust Manifold to cylinder head connections	Type 2, 8 mm (0.3 of an inch) or greater
EGR gasket and tube seal points	Type 2, 8 mm (0.3 of an inch) or greater

11. If a leak is found that matches the above definition, repair or replace the component as necessary.
12. Once the repair is complete, repeat the procedure to verify that all leaks have been repaired.

Were any exhaust leaks found?

Yes

- Repair or replace the leaking exhaust parts as necessary.
- Perform the POWERTRAIN VERIFICATION TEST. (Refer to 28 - DTC-Based Diagnostics/MODULE, Powertrain Control (PCM) - Standard Procedure).

No

- Test complete.

CHECKING THE FUEL DELIVERY SYSTEM

For a complete wiring diagram, **refer to the Wiring Information**.

Possible Causes
RESTRICTED FUEL SUPPLY LINE
FUEL PUMP INLET STRAINER PLUGGED
(N1) FUEL PUMP CONTROL OUTPUT CIRCUIT OPEN
TOTALLY INTEGRATED POWER MODULE (TIPM)
FUEL PUMP

1. FUEL PUMP OPERATION

1. Ignition on, engine not running.
2. With a scan tool, actuate the Fuel System test.

NOTE: It may be necessary to use a mechanics stethoscope in the next step.

3. Listen for fuel pump operation at the fuel tank.

Does the Fuel Pump operate?

Yes

- Go To 2

No

- Go To 5

CAUTION: Stop All Actuations.

2. FUEL PRESSURE

WARNING: The fuel system is under a constant pressure (even with the engine off). Before testing or servicing any fuel system hose, fitting or line, the fuel system pressure must be released. Failure to follow these instructions can result in possible serious or fatal injury.

1. Turn the ignition off.
2. Install Fuel Pressure Decay Tester 8978A at the engine.
3. Ignition on, engine not running.
4. With the scan tool, actuate the ASD Fuel System test and observe the fuel pressure gauge.

NOTE: Fuel pressure specification is 407 KPa +/- 34 KPa (59 psi +/- 5 psi).

Choose a conclusion that best matches your fuel pressure reading.

Below Specification

- Go To 3

Within Specification

- Test Complete.

Above Specification

- Replace the fuel filter/fuel pressure regulator.
- Perform the POWERTRAIN VERIFICATION TEST. (Refer to 28 - DTC-Based Diagnostics/MODULE, Powertrain Control (PCM) - Standard Procedure).

CAUTION: Stop All Actuations.

3. RESTRICTED FUEL SUPPLY LINE

WARNING: The fuel system is under a constant pressure even with the engine off. Before testing or servicing any fuel system hose, fitting or line, the fuel system pressure must be released.

1. Turn the ignition off.
2. Disconnect the Fuel Pressure Decay Tester 8978A.
3. Raise the ehicle on a hoist, and disconnect the fuel pressure line at the fuel pump module.
4. Install the Fuel Pressure Decay Tester 8978A between the fuel supply line and the fuel pump module.
5. Ignition on, engine not running.
6. With the scan tool, actuate the ASD Fuel System test and observe the fuel pressure gauge.

NOTE: Fuel pressure specification is 407 KPa +/- 34 KPa (59 psi +/- 5 psi).

Is the fuel pressure within specification now?

Yes

- Repair/replace fuel supply line as necessary.
- Perform the POWERTRAIN VERIFICATION TEST. (Refer to 28 - DTC-Based Diagnostics/MODULE, Powertrain Control (PCM) - Standard Procedure).

No

- Go To 4

CAUTION: Stop All Actuations.

4. CHECKING FUEL INLET STRAINER

WARNING: The fuel system is under a constant pressure (even with the engine off). Before testing or servicing any fuel system hose, fitting or line, the fuel system pressure must be released. Failure to follow these instructions can result in possible serious or fatal injury.

1. Turn the ignition off.
2. Remove the Fuel Pump Module and inspect the Fuel Inlet Strainer.

Is the Fuel Inlet Strainer plugged?

Yes

- Replace the Fuel Pump Inlet Strainer.
- Perform the POWERTRAIN VERIFICATION TEST. (Refer to 28 - DTC-Based Diagnostics/MODULE, Powertrain Control (PCM) - Standard Procedure).

No

- Replace the Fuel Pump Module.
- Perform the POWERTRAIN VERIFICATION TEST. (Refer to 28 - DTC-Based Diagnostics/MODULE, Powertrain Control (PCM) - Standard Procedure).

5. (N1) FUEL PUMP RELAY OUTPUT CIRCUIT

1. Turn the ignition off.
2. Disconnect the TIPM C6 harness connector.
3. Disconnect the Fuel Pump Module harness connector.
4. Using a 12-volt test light connected to ground, probe the (N1) Fuel Pump Control Output circuit at the Fuel Pump harness connector.

NOTE: Make sure the test light is probing the circuit before actuating the Fuel Pump or a DTC may set and not allow the actuation.

5. With a scan tool, actuate the Fuel Pump Module.

Does the test light illuminate brightly during the actuation?

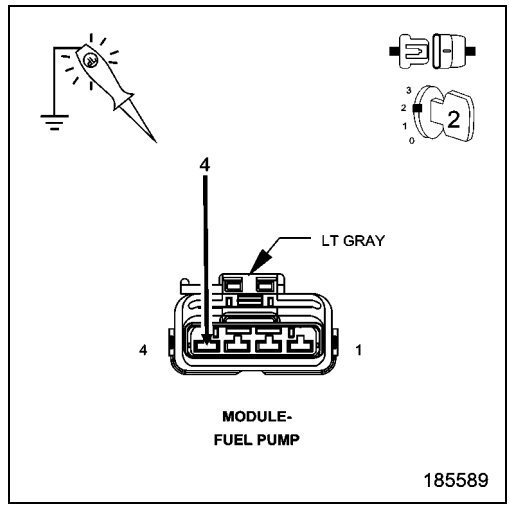

Yes

- Replace the Fuel Pump Module.
- Perform the POWERTRAIN VERIFICATION TEST. (Refer to 28 - DTC-Based Diagnostics/MODULE, Powertrain Control (PCM) - Standard Procedure).

No

- Repair the open or short to ground in the (N1 Fuel Pump Control Output circuit.
- Perform the POWERTRAIN VERIFICATION TEST. (Refer to 28 - DTC-Based Diagnostics/MODULE, Powertrain Control (PCM) - Standard Procedure).

■ CHECKING THE OXYGEN SENSOR OPERATION

For a complete wiring diagram **Refer to the Wiring Information**.

1. OXYGEN SENSOR, WIRING, OR CONNECTORS

NOTE: Diagnose and repair any O2 sensor or rationality DTCs before proceeding with this test.

NOTE: When performing this procedure as part of another diagnostic process, it may be necessary to repeat this test for all of the oxygen sensors on the vehicle.

1. Turn the ignition off.
2. Using the wiring diagram/schematic as a guide, inspect the wiring and connectors between the Oxygen sensor and the PCM.
3. Look for any chafed, pierced, pinched, or partially broken wires.
4. Look for broken, bent, pushed out or corroded terminals.
5. Turn the ignition on.
6. Monitor the scan tool data relative to the sensor and wiggle test the wiring and connectors.
7. Look for the data to change or for a DTC to set during the wiggle test. If necessary, check each sensor circuit for high resistance or a shorted condition.

Were any problems found?

Yes

- Repair as necessary.
- Perform the POWERTRAIN VERIFICATION TEST. (Refer to 28 - DTC-Based Diagnostics/MODULE, Powertrain Control (PCM) - Standard Procedure)

No

- Go to 2

2. OXYGEN SENSOR VOLTAGE

1. Start the engine and allow it to reach normal operating temperature.

WARNING: When the engine is operating, do not stand in direct line with the fan. Do not put your hands near the pulleys, belts or fan. Do not wear loose clothing. Failure to follow these instructions may result in possible serious or fatal injury.

2. With a scan tool, monitor all O2 Sensor voltage readings.

Is the voltage switching between 2.5 and 3.4 volts for all O2 sensors?

Yes

- Go to 3
- Perform the POWERTRAIN VERIFICATION TEST. (Refer to 28 - DTC-Based Diagnostics/MODULE, Powertrain Control (PCM) - Standard Procedure)

No

- Go to 4

3. O2 SENSOR HEATER OPERATION

1. Turn the ignition off.

NOTE: Wait a minimum of 10 minutes to allow the O2 Sensor to cool down before continuing the test. Allow the O2 Sensor voltage to stabilize at 5.0 volts.

2. Turn the ignition on.
3. With a scan tool, actuate the O2 Sensor heater.
4. With the scan tool, monitor O2 Sensor voltage for at least 2 minutes.

Does the voltage stay above 4.5 volts?

Yes

- Go to 4
- Perform the POWERTRAIN VERIFICATION TEST. (Refer to 28 - DTC-Based Diagnostics/MODULE, Powertrain Control (PCM) - Standard Procedure)

No

- Test complete.

4. O2 SENSOR

1. Turn the ignition off.

NOTE: Check for contaminants that may cause improper O2 Sensor operation, such as contaminated fuel, unapproved silicone, or evidence of oil or coolant.

2. Disconnect the O2 Sensor harness connector.
3. Turn the ignition on.
4. With a scan tool, monitor the O2 Sensor voltage.

NOTE: The voltage should be approximately 5.0 volts with the connector disconnected.

5. Connect a jumper wire between the signal circuit and the return circuit in the O2 Sensor harness connector.

NOTE: The voltage should drop from 5.0 volts to 2.5 volts with the jumper wire in place.

Is the O2 Sensor voltage displayed on the scan tool as described?

Yes

- Replace the O2 Sensor.
- Perform the POWERTRAIN VERIFICATION TEST. (Refer to 28 - DTC-Based Diagnostics/MODULE, Powertrain Control (PCM) - Standard Procedure)

No

- Go to 5

5. O2 SENSOR SIGNAL CIRCUIT

1. Using the wiring diagram/schematic as a guide, inspect the O2 Sensor Signal circuit and connectors between the O2 sensor and the PCM.
2. Check the O2 Sensor signal circuit for a short to ground, open circuit, short to voltage, or high resistance.

Were any problems found?

Yes

- Repair as necessary.
- Perform the POWERTRAIN VERIFICATION TEST. (Refer to 28 - DTC-Based Diagnostics/MODULE, Powertrain Control (PCM) - Standard Procedure)

No

- Go to 6

6. O2 SENSOR RETURN CIRCUIT

1. Using the wiring diagram/schematic as a guide, inspect the O2 Sensor Return circuit and connectors between the O2 sensor and the PCM.
2. Check the O2 Sensor return circuit for a short to ground, open circuit, short to voltage or high resistance.

Were any problems found?

Yes

- Repair as necessary.
- Perform the POWERTRAIN VERIFICATION TEST. (Refer to 28 - DTC-Based Diagnostics/MODULE, Powertrain Control (PCM) - Standard Procedure)

No

- Go to 7

7. POWERTRAIN CONTROL MODULE (PCM)

1. Using the wiring diagram/schematic as a guide, inspect the wiring and connectors between the O2 sensor and the PCM.
2. Look for any chafed, pierced, pinched, or partially broken wires.
3. Look for broken, bent, pushed out or corroded terminals.
4. Monitor the scan tool data relative to the components tested in this procedure and wiggle test the wiring and connectors.
5. Look for the data to change or for a DTC to set during the wiggle test.
6. Refer to any Technical Service Bulletins that may apply.

Were any problems found?

Yes

- Repair as necessary.
- Perform the POWERTRAIN VERIFICATION TEST. (Refer to 28 - DTC-Based Diagnostics/MODULE, Powertrain Control (PCM) - Standard Procedure)

No

- Replace and program the Powertrain Control Module (PCM) in accordance with the Service Information.
- Perform the POWERTRAIN VERIFICATION TEST. (Refer to 28 - DTC-Based Diagnostics/MODULE, Powertrain Control (PCM) - Standard Procedure)

CHECKING THE PCM POWER AND GROUND CIRCUITS

For a complete wiring diagram **Refer to the Wiring Information**.

1. PCM WIRING OR CONNECTORS

1. Turn the ignition off.
2. Using the wiring diagram/schematic as a guide, inspect the wiring and each connector at the PCM.
3. Look for any chafed, pierced, pinched, or partially broken wires.
4. Look for broken, bent, pushed out or corroded terminals.

Were any problems found?

Yes

- Repair as necessary.
- Perform the POWERTRAIN VERIFICATION TEST. (Refer to 28 - DTC-Based Diagnostics/MODULE, Powertrain Control (PCM) - Standard Procedure).

No

- Go To 2

2. CHECKING THE PCM GROUND CIRCUITS

1. Turn the ignition off.

CAUTION: Do not probe the PCM harness connectors. Probing the PCM harness connectors will damage the PCM terminals resulting in poor terminal to pin connection. Install the PCM Pinout Box Kit, NGC, 38 Position 8815A to perform diagnosis.

2. Using a 12 volt test light connected to 12 volts, check the PCM ground circuits.
3. Wiggle test each circuit during the test to check for an intermittent open in the circuit.

NOTE: The test light should be illuminated and bright. Compare the brightness to that of a direct connection to the battery.

Is the test light illuminated and bright?

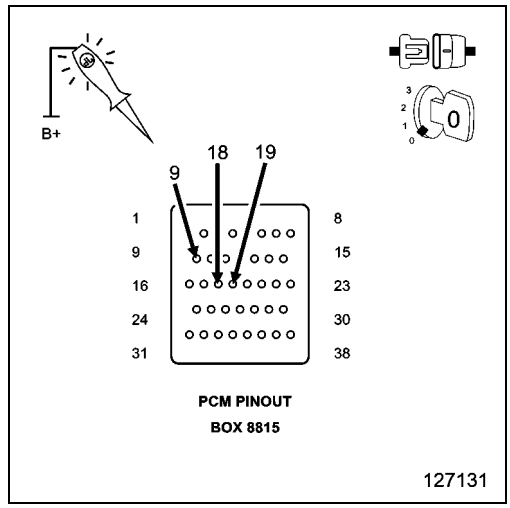

Yes

- Go To 3.

No

- Repair the PCM ground circuit(s) for an open circuit or high resistance.
- Perform the POWERTRAIN VERIFICATION TEST. (Refer to 28 - DTC-Based Diagnostics/MODULE, Powertrain Control (PCM) - Standard Procedure).

3. CHECKING THE PCM FUSED IGNITION CIRCUITS

CAUTION: Do not probe the PCM harness connectors. Probing the PCM harness connectors will damage the PCM terminals resulting in poor terminal to pin connection. Install the PCM Pinout Box Kit, NGC, 38 Position 8815A to perform diagnosis.

1. Turn the ignition on.
2. Using a 12 volt test light connected to ground, check the PCM Fused Ignition circuits.
3. Check each circuit with the ignition on, engine running position, and during cranking.
4. Wiggle test each circuit during the test to check for an intermittent open in the circuit.

NOTE: The test light should be illuminated and bright. Compare the brightness to that of a direct connection to the battery.

Is the test light illuminated and bright?

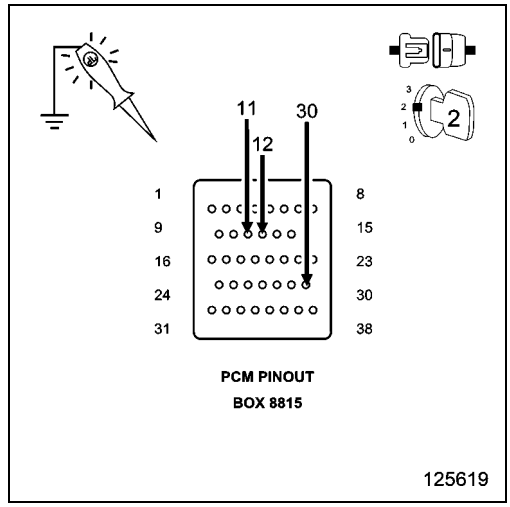

Yes

- Go To 4.

No

- Repair the open or short to ground in the PCM Fused Ignition circuits.
- Perform the POWERTRAIN VERIFICATION TEST. (Refer to 28 - DTC-Based Diagnostics/MODULE, Powertrain Control (PCM) - Standard Procedure).

4. CHECKING THE PCM FUSED B+ CIRCUITS

1. Turn the ignition off.

CAUTION: Do not probe the PCM harness connectors. Probing the PCM harness connectors will damage the PCM terminals resulting in poor terminal to pin connection. Install the PCM Pinout Box Kit, NGC, 38 Position 8815A to perform diagnosis.

2. Using a 12 volt test light connected to Ground, check the PCM Fused B+ circuits.
3. Wiggle test each circuit during the test to check for an intermittent open in the circuit.

NOTE: The test light should be illuminated and bright with the ignition on and not illuminated with the ignition off. Compare the brightness to that of a direct connection to the battery.

Is the test light illuminated as described above?

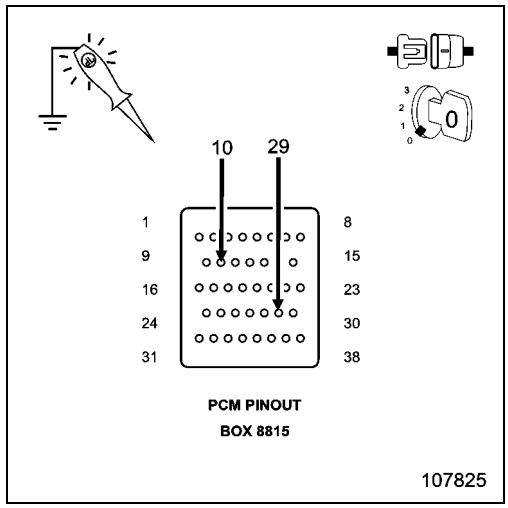

Yes

- Test complete.

No

- Repair the open or short to ground in the PCM Fused B+ circuit(s) for as necessary.
- Perform the POWERTRAIN VERIFICATION TEST. (Refer to 28 - DTC-Based Diagnostics/MODULE, Powertrain Control (PCM) - Standard Procedure).

■ ENGINE CRANKS BUT DOES NOT START

For a complete wiring diagram, **refer to the Wiring Information**.

Possible Causes
POWERTRAIN FUSES OPEN
CRANKSHAFT POSITION SENSOR
CAMSHAFT POSITION SENSOR
ASD RELAY
FUSED B+ CIRCUIT OPEN OR SHORTED TO GROUND
(F342) FUSED ASD RELAY OUTPUT CIRCUIT OPEN
FUEL CONTAMINATION
ENGINE MECHANICAL
PCM

1. NO START PRE-TEST

NOTE: Verify no codes are set in the Occupant Restraint Controller. If codes are present, they may be the cause of a No Start condition.

NOTE: The following list of items must be checked before continuing with any no start tests.

1. The battery must be fully charged and in good condition. A low charged battery may produce invalid test results. If the battery is low, charge the battery and then attempt to start the vehicle by cranking the engine for 15 seconds, three consecutive times. This will allow any DTCs to set that may have been erased due to a dead battery.
2. Try to communicate with PCM using a scan tool. If communication between the scan tool and PCM is not allowed inspect fuses. If the fuses appear ok, (Refer to 29 - Non-DTC Diagnostics/Communication - Diagnosis and Testing) for the No Response from PCM diagnostic procedure.
3. Read the PCM DTCs with the scan tool. If any DTCs are present, they must be repaired before continuing with any other No Start diagnostic tests. (Refer to 28 - DTC-Based Diagnostics/MODULE, Powertrain Control (PCM) - Diagnosis and Testing) for the related P-code that is reported by the PCM.
4. Make sure that the Bus is functional. Attempt to communicate with the Instrument Cluster and Wireless Ignition Node. If you are unable to establish communication with any modules, (Refer to 29 - Non-DTC Diagnostics/Communication - Diagnosis and Testing) for the Diagnostic CAN C diagnostic procedures.
5. The Wireless Ignition Node must be operating properly. Check for communication with the scan tool and check for DTCs that may be stored in the Wireless Ignition Node (Refer to 28 - DTC-Based Diagnostics/NODE, Wireless Ignition (WIN) - Diagnosis and Testing). Repair the DTCs before continuing.
6. If no DTCs are found, using the scan tool, select Clear PCM (BATT Disconnect).
7. Crank the engine several times. Using the scan tool, View DTCs. If a DTC is present go to and perform the appropriate diagnostic procedure before continuing.

Were any problems found?

Yes

- Repair as necessary.
- Perform the POWERTRAIN VERIFICATION TEST. (Refer to 28 - DTC-Based Diagnostics/MODULE, Powertrain Control (PCM) - Standard Procedure)

No

- Go To 2

2. OPEN FUSE

1. Check for any open fuses in the TIPM or Junction Block that may be related to the No Start condition.

Are any of the fuses open?

Yes

- Check the related circuit(s) for a short to ground and replace the open fuse.
- Perform the POWERTRAIN VERIFICATION TEST. (Refer to 28 - DTC-Based Diagnostics/MODULE, Powertrain Control (PCM) - Standard Procedure)

No

- Go To 3

3. CRANKSHAFT POSITION SENSOR (CKP)

1. Turn the ignition off.
2. Disconnect the CKP Sensor.
3. Attempt to start the engine.

Does the engine start?

Yes

- Replace the Crankshaft Position Sensor in accordance with the Service Information.
- Perform the POWERTRAIN VERIFICATION TEST. (Refer to 28 - DTC-Based Diagnostics/MODULE, Powertrain Control (PCM) - Standard Procedure)

No

- Go To 4

4. CAMSHAFT POSITION SENSOR (CMP)

1. Turn the ignition off.
2. Connect the CKP Sensor.
3. Disconnect the CMP Sensor.
4. Attempt to start the engine.

Does the engine start?

Yes

- Replace the Camshaft Position Sensor in accordance with the Service Information.
- Perform the POWERTRAIN VERIFICATION TEST. (Refer to 28 - DTC-Based Diagnostics/MODULE, Powertrain Control (PCM) - Standard Procedure)

No

- Go To 5

5. FUSED B+ CIRCUIT CHECK

1. Turn the ignition off.
2. Disconnect the C1 PCM harness connector.

CAUTION: Do not probe the PCM harness connectors. Probing the PCM harness connectors will damage the PCM terminals resulting in poor terminal to pin connection. Install the PCM Pinout Box Kit, NGC, 38 Position 8815A to perform diagnosis.

3. Using a 12-volt test light connected to ground probe the Fused B+ circuits.

Does the test light illuminate brightly?

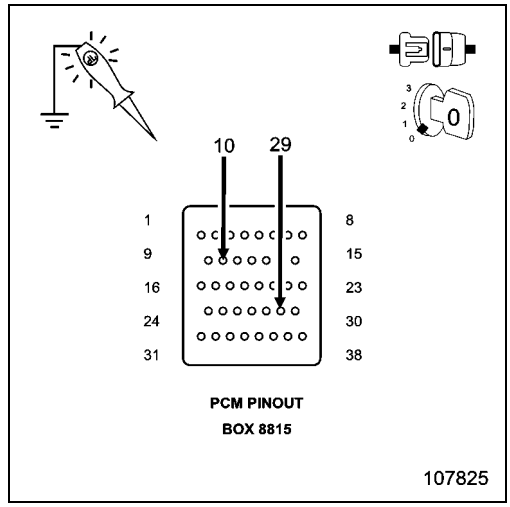

Yes

- Go To 6

No

- Repair the open or short to ground in the Fused B+ circuit.
- Perform the POWERTRAIN VERIFICATION TEST. (Refer to 28 - DTC-Based Diagnostics/MODULE, Powertrain Control (PCM) - Standard Procedure)

6. (F342) ASD CONTROL OUTPUT CIRCUIT OPEN

1. Turn the ignition off.
2. Disconnect the C5 TIPM harness connector.
3. Disconnect the C1 and C3 PCM harness connectors.
4. Measure the resistance of the ASD Control Output circuit from the C5 TIPM harness connector to the appropriate terminals of the PCM Pinout Box 8815A, Ignition coil, and the fuel injectors.

Is the resistance below 5.0 Ohms?

Yes

- Go To 7

No

- Repair the open in the (K342) ASD Relay Output circuits.
- Perform the POWERTRAIN VERIFICATION TEST. (Refer to 28 - DTC-Based Diagnostics/MODULE, Powertrain Control (PCM) - Standard Procedure)

7. FUEL PUMP DELIVERY

1. Verify that the Fuel tank is not empty before continuing.
2. Follow the diagnostics for Checking the Fuel Delivery System in the Driveability section of this manual.

Was the No Start condition solved after following the Checking the Fuel Delivery System diagnostic procedure?

Yes

- Test Complete.

No

- Go To 8

8. ENGINE MECHANICAL

Check for any of the following conditions/mechanical problems:

- ENGINE COMPRESSION - must be within specifications.
- ENGINE EXHAUST SYSTEM - must be free of any restrictions or leaks.
- ENGINE VALVE TIMING - must be within specifications, check for broken timing components

Are there any engine mechanical problems?

Yes

- Repair as necessary.
- Perform the POWERTRAIN VERIFICATION TEST. (Refer to 28 - DTC-Based Diagnostics/MODULE, Powertrain Control (PCM) - Standard Procedure)

No

- Go To 9

9. POWERTRAIN CONTROL MODULE (PCM)

1. Using the wiring diagram/schematic as a guide, inspect the wiring and connectors between the related Sensors and the Powertrain Control Module (PCM).
2. Look for any chafed, pierced, pinched or partially broken wires.
3. Look for broken, bent, pushed out or corroded terminals. Verify that there is good pin to terminal contact in the related Sensors and the Powertrain Control Module connectors.
4. Refer to any Technical Service Bulletins (TSBs) that may apply.

Were there any problems found?

Yes

- Repair as necessary.
- Perform the POWERTRAIN VERIFICATION TEST. (Refer to 28 - DTC-Based Diagnostics/MODULE, Powertrain Control (PCM) - Standard Procedure)

No

- Replace and program the Powertrain Control Module per Service Information.
- Perform the POWERTRAIN VERIFICATION TEST. (Refer to 28 - DTC-Based Diagnostics/MODULE, Powertrain Control (PCM) - Standard Procedure)

ETC INTERMITTENT NO CRANK CONDITION

For a complete wiring diagram **Refer to the Wiring Information**.

Possible Causes
ETC STARTER INHIBIT

1. ETC STARTER INHIBIT

NOTE: This ETC equipped engine will try to relearn ETC position when the key is left in the on position for an extended period of time and will not allow the starter to crank during this procedure. This procedure can take up to 2.5 seconds.

1. To verify the cause of the no crank condition or delayed crank use the scan tool, and read the ETC Starter Inhibit mileage.
2. The controller will store the mileage at which the no start condition occurred because of the ETC testing procedure.
3. This is considered normal operation for a vehicle equipped with an Electronic Throttle Control System and no repairs are necessary.

Is a mileage stored under the ETC Starter Inhibit?

Yes

- Test Complete.

No

- Refer to the appropriate diagnostic procedure for further assistance if any other DTC's are set.
- Perform the POWERTRAIN VERIFICATION TEST. (Refer to 28 - DTC-Based Diagnostics/MODULE, Powertrain Control (PCM) - Standard Procedure)

FUEL DELIVERY SYSTEM OUTPUT - FLOW TEST

For a complete wiring diagram, **refer to the Wiring Information**.

WARNING: Follow these safety precautions to reduce the risk of fire and possible serious or fatal injury when performing this test procedure.

- **Fuel or fuel vapors are highly flammable. A fire could occur if an ignition source is present. Do not expose the fuel or the test equipment used in this procedure to open flames or sparks.**
- **Inhalation of fuel vapors could lead to disorientation and personal injury. Keep the service area well ventilated, or perform this test procedure in an area where there is a building exhaust removal system.**
- **Relieve fuel system pressure before servicing fuel system components.**
- **Use extreme caution when connecting and disconnecting fuel lines.**
- **Considerable fuel leakage may occur when servicing the fuel system. Wear protective eyewear and clothing to protect from fuel splash, and take suitable fuel containment measures.**
- **Wrap a shop towel around the fuel pressure gauge connection to absorb fuel leakage that occurs when connecting the test equipment. Place the towel in an approved container when complete.**
- **Never store fuel in an open container due to the possibility of fire or explosion. Have a dry chemical (Class B) fire extinguisher nearby.**

1. CHECK FUEL DELIVERY SYSTEM FOR LEAKS AND DAMAGE

WARNING: The fuel system is under a constant pressure (even with the engine off). Before testing or servicing any fuel system hose, fitting, or line, the fuel system pressure must be released. Failure to follow these instructions can result in possible serious or fatal injury.

1. Visually and physically inspect the fuel delivery system for external leaks and damage.

Is the system leaking or damaged?

Yes

- Repair or replace as necessary.
- Perform the PCM VERIFICATION TEST. (Refer to 28 - DTC-Based Diagnostics/MODULE, Powertrain Control (PCM) - Standard Procedure).

No

- Go To 2

2. INSTALL APPROPRIATE FUEL LINE ADAPTERS / FITTING FROM THE GAS AND DIESEL FUEL PRESSURE/DECAY TESTER 8978A

1. Turn the ignition off.

WARNING: The fuel system is under a constant pressure (even with the engine off). Before testing or servicing any fuel system hose, fitting, or line, the fuel system pressure must be released. Failure to follow these instructions can result in possible serious or fatal injury.

2. Disconnect the frame rail fuel supply line connector between the fuel supply line and the fuel rail.
3. Install the appropriate Fuel Line Adapters / Fitting from the Gas and Diesel Fuel Pressure/Decay Tester 8978A.

Proceed

- Go To 3

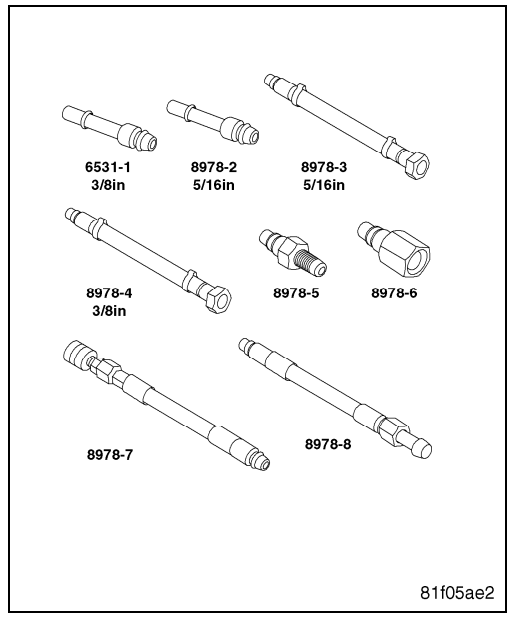

3. INSTALL FUEL PRESSURE GAUGE ASSEMBLY

WARNING: The fuel system is under a constant pressure (even with the engine off). Before testing or servicing any fuel system hose, fitting, or line, the fuel system pressure must be released. Failure to follow these instructions can result in possible serious or fatal injury.

1. Connect the Gas and Diesel Fuel Pressure/Decay Tester 8978A, Fuel Inlet Hose (1) and Fuel Outlet Hose (2) to the Fuel Line Adapters / Fitting.
2. Connect special tool Drain Extension Hose 535680 (3) to the Fuel Pressure Gauge Assembly Drain Hose (5).
3. Connect Reservoir Assembly 534960 (4) to Drain Extension Hose 535680 (3).

WARNING: To reduce the risk of fire and possible serious or fatal injury, place Reservoir Assembly 534960 (4) on the floor and out of the way so that it is not a trip hazard.

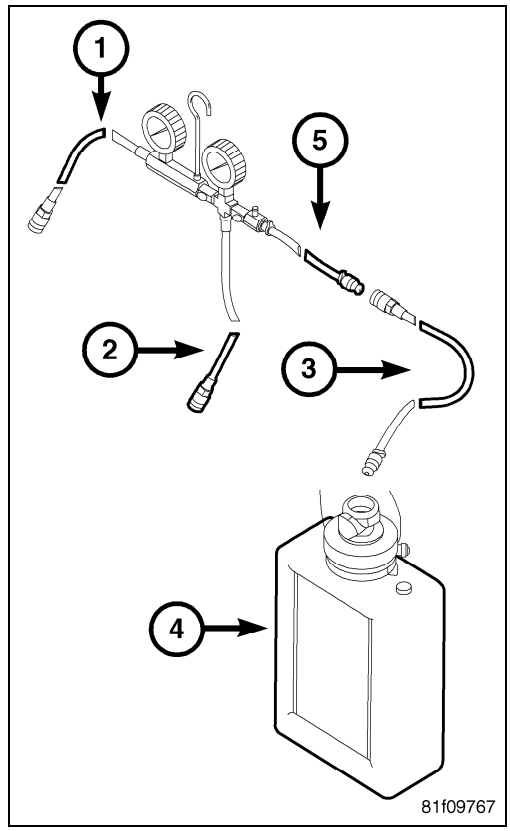

Proceed

- Go To 4

4. CHECK FUEL PRESSURE

WARNING: The fuel system is under a constant pressure (even with the engine off). Before testing or servicing any fuel system hose, fitting, or line, the fuel system pressure must be released. Failure to follow these instructions can result in possible serious or fatal injury.

Perform the following procedure to purge air from the system:

- Open the Fuel System Isolation Valve (1).
- Close the Flow Test Valve (2).
- Ignition on, engine not running.
- With the scan tool, actuate the fuel pump.
- Open the Flow Test Valve (1) for 10 seconds, then close the Valve.
- **CAUTION: Stop All Actuations.**
- Turn the ignition off.
- Disconnect, empty and then reconnect the Reservoir Assembly.

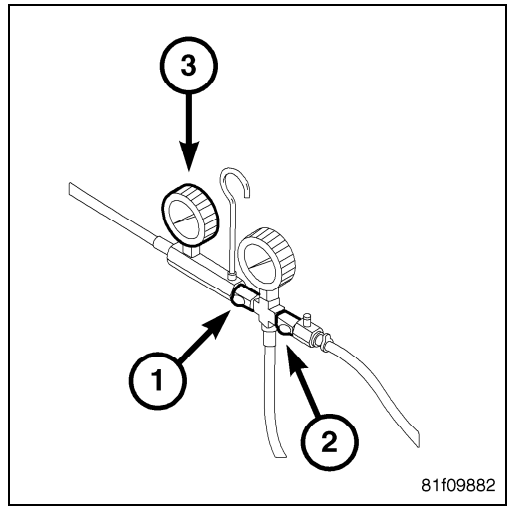

1. Turn the ignition on, wait five seconds, turn the ignition off and then wait one minute before proceeding.
2. Read the Fuel Pressure Gauge (3) and record the reading. **Non SRT-4** fuel pressure specification is 407 kPa +/- 34 kPa (59 psi +/- 5 psi). **SRT-4** fuel pressure specification is 552 kPa +/- 34 kPa (80 psi +/- 5 psi).

Is the fuel pressure within specifications?

Yes

- Go To 5

No

- (Refer to 29 - Non-DTC Diagnostics/Drivability - Gas - Diagnosis and Testing) and perform the CHECKING THE FUEL DELIVERY SYSTEM diagnostic procedure.

5. CHECK FUEL DELIVERY SYSTEM OUTPUT

WARNING: The fuel system is under a constant pressure (even with the engine off). Before testing or servicing any fuel system hose, fitting, or line, the fuel system pressure must be released. Failure to follow these instructions can result in possible serious or fatal injury.

1. Ignition on, engine not running.
2. With the scan tool, actuate the fuel pump.
3. Open the Flow Test Valve (1) for 20 seconds, then close the Valve.

CAUTION: Stop All Actuations.

4. Turn the ignition off.
5. Measure the amount of fuel in the Reservoir Assembly (2). The fuel output specification is ml/s × 20 seconds = fuel flow in ml.

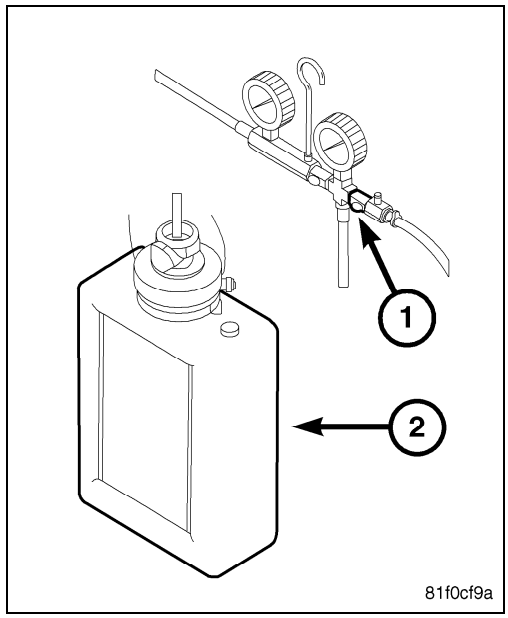

FUEL FLOW		
ENGINE	ml/s	ml per 20 Seconds
4 Cylinder and 6 Cylinder	20.8333A	417
8 Cylinder	38.88889	778
SRT-4	50	1000

Does the amount of fuel in the reservoir meet or exceed the specification?

Yes

- Test complete.

No

- (Refer to 29 - Non-DTC Diagnostics/Drivability - Gas - Diagnosis and Testing) and perform the CHECKING THE FUEL DELIVERY SYSTEM diagnostic procedure.

■ FUEL PRESSURE LEAK DOWN

For a complete wiring diagram, **refer to the Wiring Information**.

Possible Causes
FUEL DELIVERY SYSTEM LEAKING OR DAMAGED
FUEL PUMP MODULE
FUEL INJECTOR(S)

WARNING: Follow these safety precautions to reduce the risk of fire and serious possible serious or fatal injury when performing this test procedure.

- **Fuel or fuel vapors are highly flammable. A fire could occur if an ignition source is present. Do not expose the fuel or the test equipment used in this procedure to open flames or sparks.**
- **Inhalation of fuel vapors could lead to disorientation and personal injury. Keep the service area well ventilated, or perform this test procedure in an area where there is a building exhaust removal system.**
- **Relieve fuel system pressure before servicing fuel system components.**
- **Use extreme caution when connecting and disconnecting fuel lines.**
- **Considerable fuel leakage may occur when servicing the fuel system. Wear protective eye wear and clothing to protect from fuel splash, and take suitable fuel containment measures.**
- **Wrap a shop towel around the fuel pressure gauge connection to absorb fuel leakage that occurs when connecting the test equipment. Place the towel in an approved container when complete.**
- **Never store fuel in an open container due to the possibility of fire or explosion. Have a dry chemical (Class B) fire extinguisher nearby.**

1. CHECK FUEL DELIVERY SYSTEM FOR LEAKS AND DAMAGE

WARNING: The fuel system is under a constant pressure (even with the engine off). Before testing or servicing any fuel system hose, fitting, or line, the fuel system pressure must be released. Failure to follow these instructions can result in possible serious or fatal injury.

1. Visually and physically inspect the fuel delivery system for external leaks and damage.

Is the system leaking or damaged?

Yes

- Repair / replace as necessary.
- Perform the PCM VERIFICATION TEST. (Refer to 28 - DTC-Based Diagnostics/MODULE, Powertrain Control (PCM) - Standard Procedure).

No

- Go To 2

2. INSTALL APPROPRIATE FUEL LINE ADAPTERS / FITTING FROM GAS AND DIESEL FUEL PRESSURE/ DECAY TESTER 8978A

1. Turn the ignition off.

WARNING: The fuel system is under a constant pressure (even with the engine off). Before testing or servicing any fuel system hose, fitting, or line, the fuel system pressure must be released. Failure to follow these instructions can result in possible serious or fatal injury.

2. Disconnect the frame rail fuel supply line connector between the fuel supply line and the fuel rail.
3. Install the appropriate Fuel Line Adapters / Fitting from Gas and Diesel Fuel Pressure/Decay Tester 8978A.

Proceed

- Go To 3

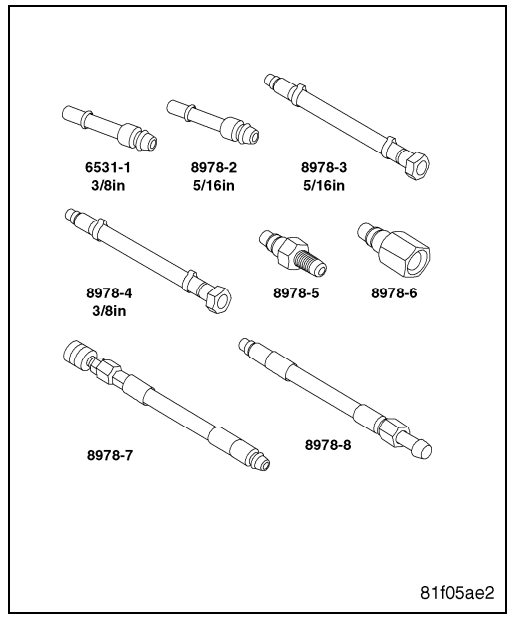

3. INSTALL FUEL PRESSURE GAUGE ASSEMBLY

WARNING: The fuel system is under a constant pressure (even with the engine off). Before testing or servicing any fuel system hose, fitting, or line, the fuel system pressure must be released. Failure to follow these instructions can result in possible serious or fatal injury.

1. Connect Fuel Pressure Gauge Assembly Fuel Inlet Hose 8978-1 (1) and Fuel Outlet Hose (2) to the Fuel Line Adapters / Fitting.
2. Connect Drain Extension Hose 535680 (3) to the Fuel Pressure Gauge Assembly Drain Hose (5).
3. Connect the Reservoir Assembly 534960 (4) to the Drain Extension Hose 535680 (3).

WARNING: To reduce the risk of fire and serious possible serious or fatal injury, place Reservoir Assembly 534960 (4) on the floor and out of the way so that it is not a trip hazard.

Proceed

- Go To 4

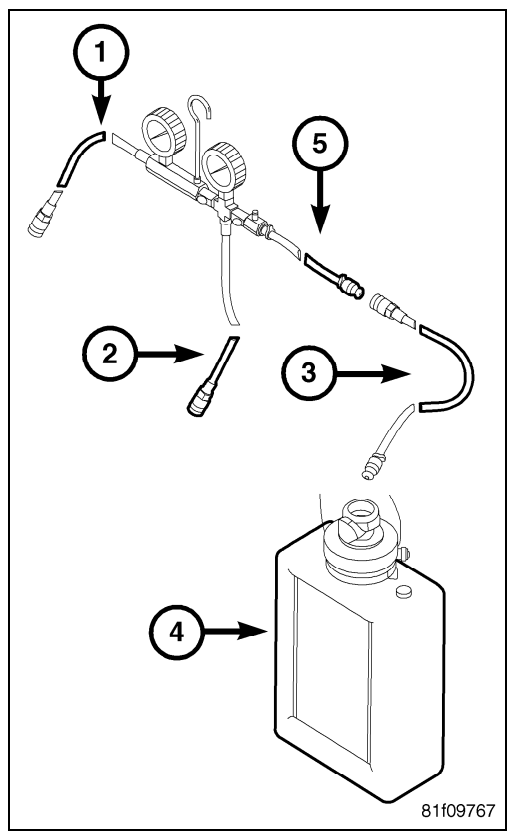

4. CHECK FUEL PRESSURE

WARNING: The fuel system is under a constant pressure (even with the engine off). Before testing or servicing any fuel system hose, fitting, or line, the fuel system pressure must be released. Failure to follow these instructions can result in possible serious or fatal injury.

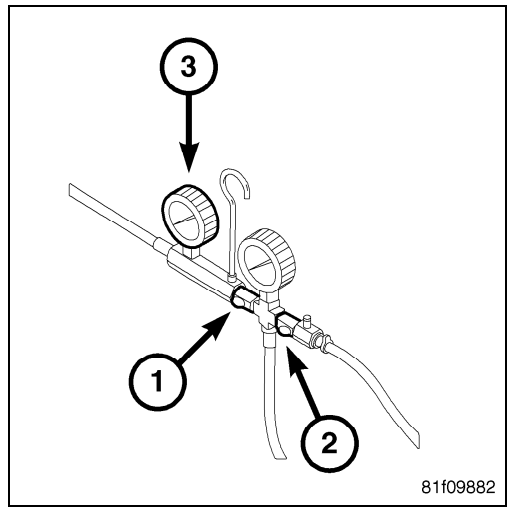

1. Perform the following procedure to purge air from the system:
   - Open the Fuel System Isolation Valve (1).
   - Close the Flow Test Valve (2).
   - Ignition on, engine not running.
   - With the scan tool, actuate the fuel pump.
   - Open the Flow Test Valve (1) for 10 seconds, then close the Valve.
   - **CAUTION: Stop All Actuations.**
   - Turn the ignition off.
   - Disconnect, empty and then reconnect the Reservoir Assembly.
2. Turn the ignition on, wait five seconds, turn the ignition off and then wait 1 minute before proceeding.
3. Read the Fuel Pressure Gauge (3) and record the reading. **Non SRT-4** fuel pressure specification is 407 KPa +/- 34 KPa (59 psi +/- 5 psi). **SRT-4** fuel pressure specification is 552 KPa +/- 34 KPa (80 psi +/- 5 psi).

Is the fuel pressure within specifications?

Yes

- Go To 5

No

- Perform the Checking The Fuel Delivery System diagnostic procedure as directed.

5. CHECK FUEL DELIVERY SYSTEM FOR LEAK DOWN

WARNING: The fuel system is under a constant pressure (even with the engine off). Before testing or servicing any fuel system hose, fitting, or line, the fuel system pressure must be released. Failure to follow these instructions can result in possible serious or fatal injury.

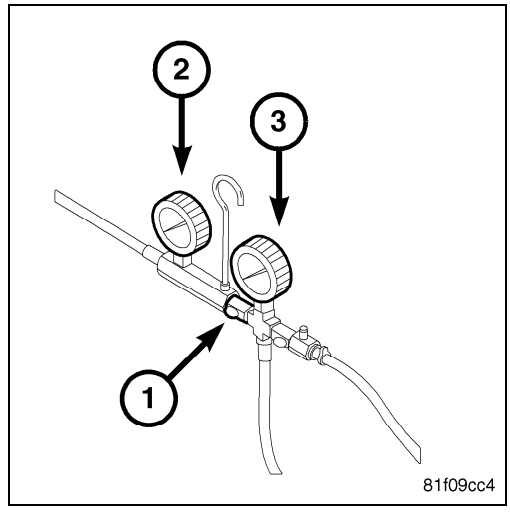

1. Close the Fuel System Isolation Valve (1) and then wait five minutes before proceeding.
2. Read the Fuel Inlet (2) and Fuel Outlet (3) Pressure Gauges. The pressure should not drop more than 10 psi on either gauge.

Does the fuel pressure drop more than 10 psi?

Yes - On Fuel Inlet Gauge (1)

- Replace the fuel pump module.
- Perform the PCM VERIFICATION TEST. (Refer to 28 - DTC-Based Diagnostics/MODULE, Powertrain Control (PCM) - Standard Procedure).

Yes - On Fuel Outlet Gauge (2)

- Replace the leaking fuel injector(s).
- Perform the PCM VERIFICATION TEST. (Refer to 28 - DTC-Based Diagnostics/MODULE, Powertrain Control (PCM) - Standard Procedure).

No

- If directed here by another test, return to that test. Otherwise, test complete.

HARD START FUEL SYSTEM

For a complete wiring diagram, **refer to the Wiring Information**.

Possible Causes
FUEL CONTAMINATION
RESTRICTED FUEL SUPPLY LINE
FUEL PUMP INLET STRAINER PLUGGED
FUEL PUMP MODULE
FUEL INJECTOR(S)

WARNING: Follow these safety precautions to reduce the risk of fire and serious possible serious or fatal injury when performing this test procedure.

- **Fuel or fuel vapors are highly flammable. A fire could occur if an ignition source is present. Do not expose the fuel or the test equipment used in this procedure to open flames or sparks.**
- **Inhalation of fuel vapors could lead to disorientation and personal injury. Keep the service area well ventilated, or perform this test procedure in an area where there is a building exhaust removal system.**
- **Relieve fuel system pressure before servicing fuel system components.**
- **Use extreme caution when connecting and disconnecting fuel lines.**
- **Considerable fuel leakage may occur when servicing the fuel system. Wear protective eye wear and clothing to protect from fuel splash, and take suitable fuel containment measures.**
- **Wrap a shop towel around the fuel pressure gauge connection to absorb fuel leakage that occurs when connecting the test equipment. Place the towel in an approved container when complete.**
- **Never store fuel in an open container due to the possibility of fire or explosion. Have a dry chemical (Class B) fire extinguisher nearby.**

1. CHECK FUEL DELIVERY SYSTEM FOR LEAKS AND DAMAGE

WARNING: The fuel system is under a constant pressure (even with the engine off). Before testing or servicing any fuel system hose, fitting, or line, the fuel system pressure must be released. Failure to follow these instructions can result in possible serious or fatal injury.

1. Visually and physically inspect the fuel delivery system for external leaks and damage.

Is the system leaking or damaged?

Yes

- Repair / replace as necessary.
- Perform the POWERTRAIN VERIFICATION TEST. (Refer to 28 - DTC-Based Diagnostics/MODULE, Powertrain Control (PCM) - Standard Procedure).

No

- Go To 2

2. INSTALL APPROPRIATE FUEL LINE ADAPTERS / FITTING FROM GAS AND DIESEL FUEL PRESSURE/ DECAY TESTER 8978A

WARNING: The fuel system is under a constant pressure (even with the engine off). Before testing or servicing any fuel system hose, fitting, or line, the fuel system pressure must be released. Failure to follow these instructions can result in possible serious or fatal injury.

1. Turn the ignition off.
2. Disconnect the frame rail fuel supply line connector between the fuel supply line and the fuel rail.
3. Install the appropriate Fuel Line Adapters / Fitting from Gas and Diesel Fuel Pressure/Decay Tester 8978A.

Proceed

- Go To 3

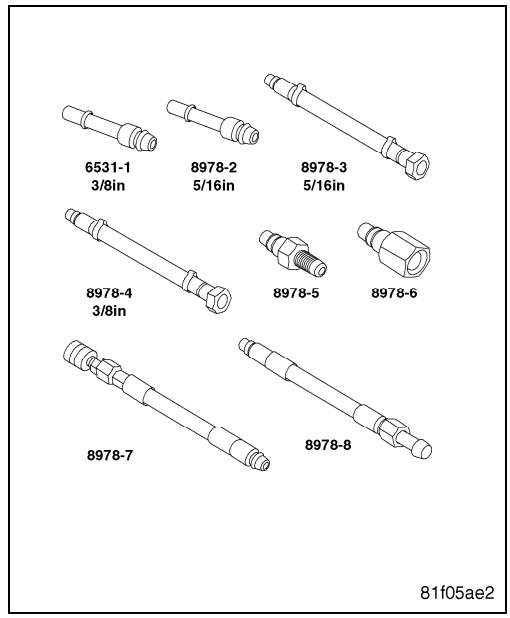

3. INSTALL FUEL PRESSURE GAUGE ASSEMBLY

WARNING: The fuel system is under a constant pressure (even with the engine off). Before testing or servicing any fuel system hose, fitting, or line, the fuel system pressure must be released. Failure to follow these instructions can result in possible serious or fatal injury.

1. Connect Gas and Diesel Fuel Pressure/Decay Tester 8978A, Fuel Inlet Hose(1), and Fuel Outlet Hose (2) to the Fuel Line Adapters / Fitting.
2. Connect Drain Extension Hose 535680 (3) to the Fuel Pressure Gauge Assembly Drain Hose (5).
3. Connect the Reservoir Assembly 534960 (4) to the Drain Extension Hose 535680 (3).

WARNING: To reduce the risk of fire and serious possible serious or fatal injury, place Reservoir Assembly 534960 (4) on the floor and out of the way so that it is not a trip hazard.

Proceed

- Go To 4

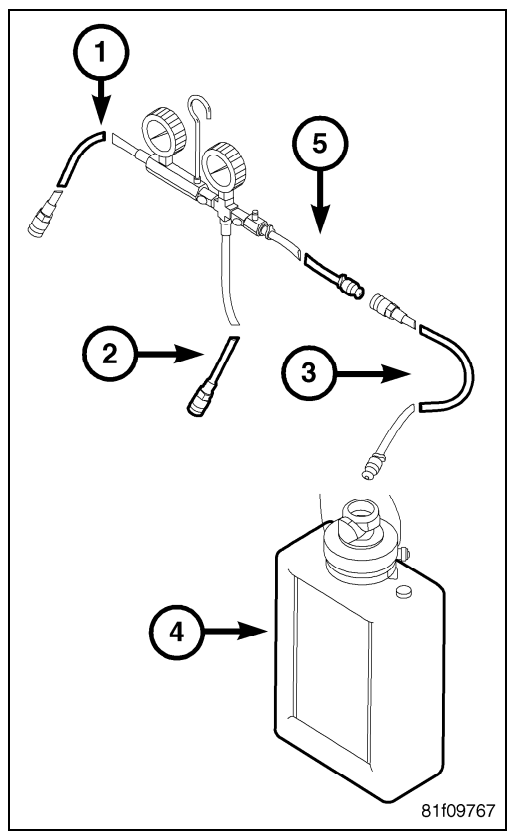

4. CHECKING FUEL PRESSURE

WARNING: The fuel system is under a constant pressure (even with the engine off). Before testing or servicing any fuel system hose, fitting, or line, the fuel system pressure must be released. Failure to follow these instructions can result in possible serious or fatal injury.

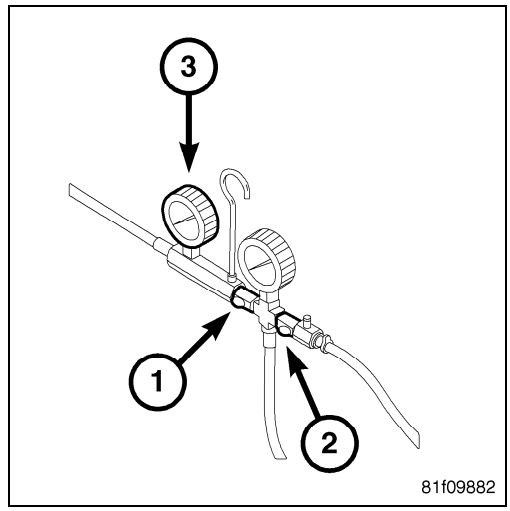

1. Turn the ignition off.
2. Install the Fuel Pressure Decay Tester 8978A on the fuel line near the intake manifold
3. Perform the following procedure to purge air from the system:
   - Open the Fuel System Isolation Valve (1).
   - Close the Flow Test Valve (2).
   - Ignition on, engine not running.
   - With the scan tool, actuate the fuel pump.
   - Open the Flow Test Valve (1) for 10 seconds, then close the Valve.
   - **CAUTION: Stop All Actuations.**
   - Turn the ignition off.
   - Disconnect, empty and then reconnect the Reservoir Assembly.
4. Ignition on, engine not running.
5. With the scan tool, actuate the ASD Fuel System test and observe the fuel pressure gauge.

NOTE: Fuel pressure specification is 407 KPa +/- 34 KPa (59 psi +/- 5 psi).

Choose a conclusion that best matches your fuel pressure reading.

Below Specification

- Go To 5

Within Specification

- Go To 7

5. RESTRICTED FUEL SUPPLY LINE

WARNING: The fuel system is under a constant pressure (even with the engine off). Before testing or servicing any fuel system hose, fitting or line, the fuel system pressure must be released. Failure to follow these instructions can result in possible serious or fatal injury.

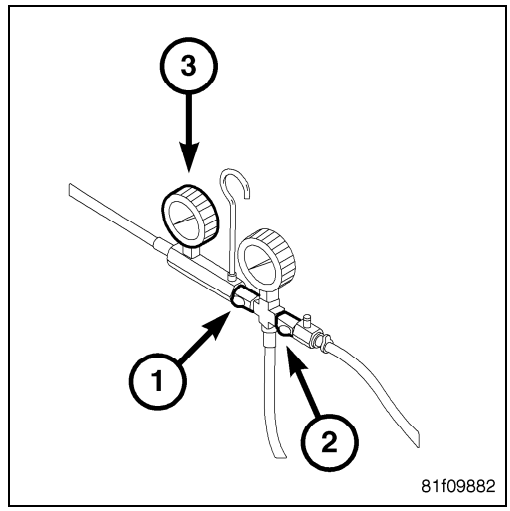

1. Turn the ignition off.
2. Remove the Fuel Pressure Decay Tester 8978A.
3. Raise the vehicle on a hoist and disconnect the fuel supply line at the fuel pump module.
4. Install the Fuel Pressure Decay Tester 8978A at the fuel pump.
5. Perform the following procedure to purge air from the system:
   - Open the Fuel System Isolation Valve (1).
   - Close the Flow Test Valve (2).
   - Ignition on, engine not running.
   - With the scan tool, actuate the fuel pump.
   - Open the Flow Test Valve (1) for 10 seconds, then close the Valve.
   - **CAUTION: Stop All Actuations.**
   - Turn the ignition off.
   - Disconnect, empty and then reconnect the Reservoir Assembly.
6. Ignition on, engine not running.
7. With the scan tool, actuate the ASD Fuel System test and observe the fuel pressure gauge.

NOTE: Fuel pressure specification is 407 KPa +/- 34 KPa (59 psi +/- 5 psi).

Is the fuel pressure within specification?

Yes

- Visually and physically inspect the fuel supply lines between the fuel tank and the fuel rail. Repair/replace as necessary.
- Perform the POWERTRAIN VERIFICATION TEST. (Refer to 28 - DTC-Based Diagnostics/MODULE, Powertrain Control (PCM) - Standard Procedure).

No

- Go To 6

6. CHECKING THE FUEL INLET STRAINER

WARNING: The fuel system is under a constant pressure (even with the engine off). Before testing or servicing any fuel system hose, fitting or line, the fuel system pressure must be released. Failure to follow these instructions can result in possible serious or fatal injury.

1. Turn the ignition off.
2. Remove the Fuel Pump Module and inspect the Fuel Inlet Strainer.

Is the Fuel Inlet Strainer plugged?

Yes

- Replace the Fuel Pump Inlet Strainer.
- Perform the POWERTRAIN VERIFICATION TEST. (Refer to 28 - DTC-Based Diagnostics/MODULE, Powertrain Control (PCM) - Standard Procedure).

No

- Replace the Fuel Pump Module.
- Perform the POWERTRAIN VERIFICATION TEST. (Refer to 28 - DTC-Based Diagnostics/MODULE, Powertrain Control (PCM) - Standard Procedure).

7. FUEL PUMP MODULE

NOTE: Before continuing visually and physically inspect the fuel delivery system for external leaks or damage. Repair / replace as necessary.

WARNING: The fuel system is under a constant pressure (even with the engine off). Before testing or servicing any fuel system hose, fitting or line, the fuel system pressure must be released. Failure to follow these instructions can result in possible serious or fatal injury.

1. Turn the ignition off.
2. Install the Fuel Pressure Decay Tester 8978A at the intake manifold.
3. Start the engine and allow the fuel system to reach maximum pressure.
4. Turn the ignition off.
5. Close the Fuel System Isolation Valve and then wait five minutes before proceeding.

NOTE: Fuel specification is 407 KPa +/- 34 KPa (59 psi +/- 5 psi).

6. Read the Fuel Inlet and Fuel Outlet Pressure Gauges. The pressure should not drop more than 10 psi on either gauge.
7. Monitor the fuel pressure gauge for a minimum of five minutes.

Does the fuel pressure drop more than 10 psi?

Yes - On Fuel Inlet Gauge

- Replace Fuel Pump Module.
- Perform the POWERTRAIN VERIFICATION TEST. (Refer to 28 - DTC-Based Diagnostics/MODULE, Powertrain Control (PCM) - Standard Procedure).

Yes - On Fuel Outlet Gauge

- Replace the leaking fuel injector(s).
- Perform the POWERTRAIN VERIFICATION TEST. (Refer to 28 - DTC-Based Diagnostics/MODULE, Powertrain Control (PCM) - Standard Procedure).

No

- If directed here by another test, return to that test. Otherwise, test complete.

NO CRANK CONDITION

For a complete wiring diagram, **refer to the Wiring Information**.

Possible Causes
MECHANICAL CONDITION
BATTERY CIRCUIT RESISTANCE TOO HIGH
FUSED B+ CIRCUIT OPEN
(T752) STARTER RELAY OUTPUT CIRCUIT OPEN
(T750) STARTER RELAY CONTROL CIRCUIT OPEN
TRANSMISSION RANGE SENSOR
REMOTE START ANTENNA (IF EQUIPPED)
TOTALLY INTEGRATED POWER MODULE (TIPM)
STARTER

1. MECHANICAL CONDITION

NOTE: Install a known good Starter relay and see if the vehicle will start.

NOTE: Verify the battery is fully charged and capable of passing a load test before continuing.

WARNING: Make sure the battery is disconnected, then wait two minutes before proceeding. Failure to do so may result in possible serious or fatal injury.

1. Turn the engine over by hand to make sure the engine is not seized.

Is the engine able to turn over?

Yes

- Go To 2

No

- Repair the mechanical condition preventing the starter motor from cranking.
- Perform the POWERTRAIN VERIFICATION TEST. (Refer to 28 - DTC-Based Diagnostics/MODULE, Powertrain Control (PCM) - Standard Procedure).

2. REMOTE START ANTENNA

NOTE: If the vehicle is not equipped with Remote Start, proceed to the next test step.

1. Reconect the battery.
2. Turn the ignition on.
3. Using the scan tool, erase DTCs.
4. Turn the ignition off.
5. Disconnect the Remote Start Antenna from the Wireless Control Module (WCM).
6. Using the ignition key, start the vehicle.

Did the vehicle start?

Yes

- Replace the Remote Start Antenna in accordance with the Service Information.
- Perform the BODY VERIFICATION TEST. (Refer to 28 - DTC-Based Diagnostics/MODULE, Totally Integrated Power (TIPM) - Standard Procedure).

No

- Go To 3

3. PCM FUSED B+ CIRCUITS

1. Turn the ignition off.
2. Disconnect the C1 PCM harness connector.

CAUTION: Do not probe the PCM harness connectors. Probing the PCM harness connectors will damage the PCM terminals resulting in poor terminal to pin connection. Install the PCM Pinout Box Kit, NGC, 38 Position 8815A to perform diagnosis.

3. Using a 12-volt test light connected to ground, probe the Fused B+ circuits at the appropriate terminals of the PCM Pinout Box 8815A.

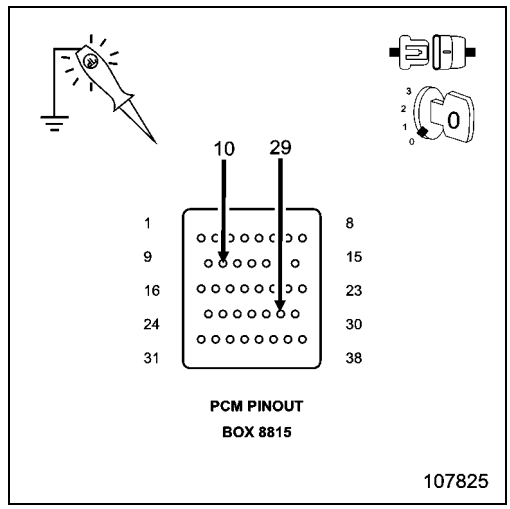

Does the test light illuminate brightly?

Yes

- Go To 4

No

- Repair the open or short to ground in the PCM Fused B+ circuits.
- Perform the POWERTRAIN VERIFICATION TEST. (Refer to 28 - DTC-Based Diagnostics/MODULE, Powertrain Control (PCM) - Standard Procedure).

4. TRANSMISSION RANGE SENSOR

1. Turn the ignition off.
2. Disconnect the TRS harness connectors.
3. Move the Gear selector through all gear positions, from Park to 1st and back.
4. While moving the gear selector through each gear, measure the resistance between ground and the TRS (T41) Sense (P/N Position Switch Sense) circuit at the TRS connector.

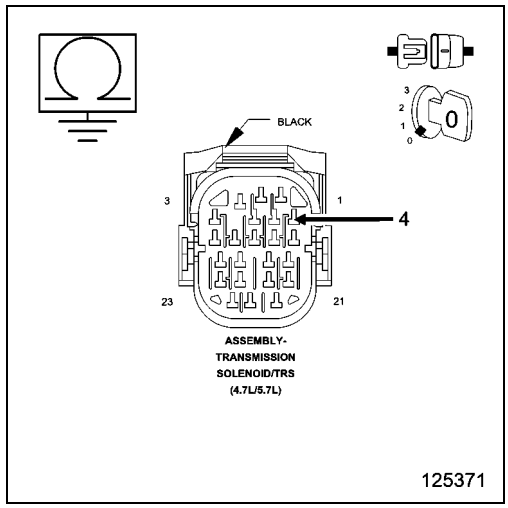

NOTE: The circuit is grounded in Park and Neutral and open in the other positions.

Did the resistance change from above 100 kohms (open) to below 10.0 ohms (grounded) ?

Yes

- Go To 5

No

- Replace the Transmission Range Sensor.
- Perform the POWERTRAIN VERIFICATION TEST. (Refer to 28 - DTC-Based Diagnostics/MODULE, Powertrain Control (PCM) - Standard Procedure).

5. EXCESSIVE RESISTANCE IN THE BATTERY CIRCUIT

1. Turn the ignition off.
2. Check the Battery Cables for excessive resistance using the service information procedure.

Did either Battery Cable have a voltage drop greater than 0.2 of a volt?

Yes

- Repair the excessive resistance in the Battery circuit.
- Perform the POWERTRAIN VERIFICATION TEST. (Refer to 28 - DTC-Based Diagnostics/MODULE, Powertrain Control (PCM) - Standard Procedure).

No

- Go To 6

6. STARTER

CAUTION: The Parking Brake must be on and the Transmission must be in park for a vehicle equipped with an automatic transmission.

WARNING: When the engine is operating, do not stand in direct line with the fan. Do not put your hands near the pulleys, belts or fan. Do not wear loose clothing. Failure to follow these instructions may result in possible serious or fatal injury.

1. Turn ignition off.
2. Disconnect the Starter Solenoid harness connector.

NOTE: The Stater Solenoid harness connector must remain disconnected at this time.

3. Have an assistant turn the ignition key to the CRANK position.
4. Using a 12-volt test light connected ground, probe the (T750) Stater Relay Output circuit in the Starter Solenoid harness connector while the ignition key is in the CRANK position.

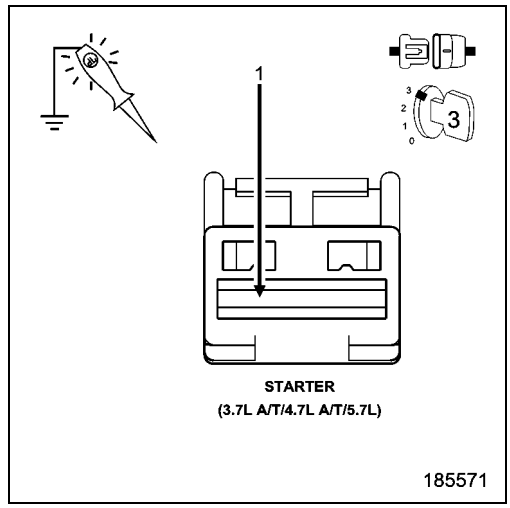

Does the test light illuminate brightly?

Yes

- Replace the Starter per Service Information.
- Perform the POWERTRAIN VERIFICATION TEST. (Refer to 28 - DTC-Based Diagnostics/MODULE, Powertrain Control (PCM) - Standard Procedure).

No

- Go To 7

7. (T752) STARTER OVERRIDE CIRCUIT CHECK

NOTE: Inspect fuses related to the Starter Relay.

1. Turn the ignition off.
2. Disconnect the C1 TIPM harness connector.
3. Disconnect the C3 PCM harness connector.

CAUTION: Do not probe the PCM harness connectors. Probing the PCM harness connectors will damage the PCM terminals resulting in poor terminal to pin connection. Install the PCM Pinout Box Kit, NGC, 38 Position 8815A to perform diagnosis.

4. Check the T752 Starter Relay Control circuit for and open or short to ground.

   Were any problems found in the T750 Startrer Relay Control circuit between the TIPM and PCM?

Yes

- Repair as necessary.
- Perform the POWERTRAIN VERIFICATION TEST. (Refer to 28 - DTC-Based Diagnostics/MODULE, Powertrain Control (PCM) - Standard Procedure).

No

- Go To 8

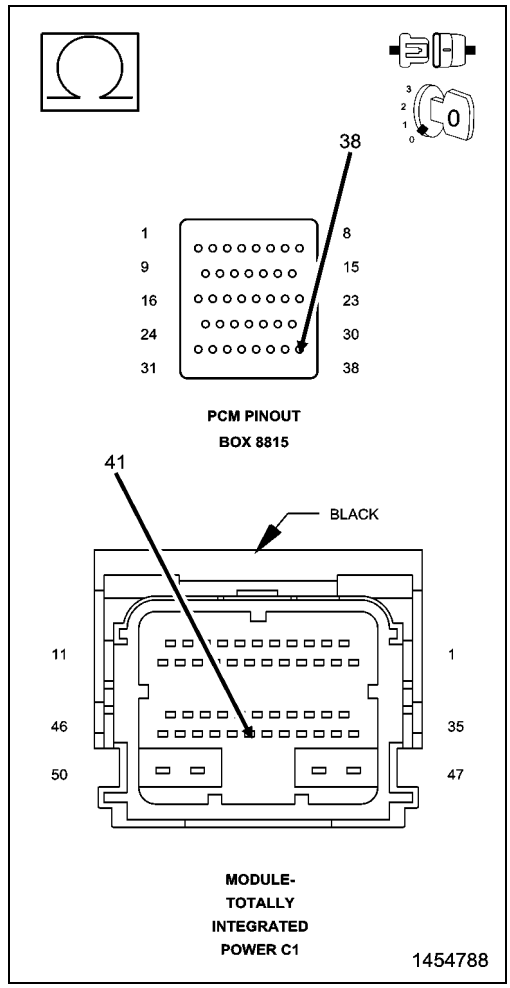

8. (T750) STARTER CONTROL OUTPUT CIRCUIT OPEN

1. Disconnect the C5 TIPM harness connector.
2. Disconnect the Starter Solenoid connector.
3. Measure the resistance of the (T750) Starter Control Output circuit between the Starter Solenoid harness connector and the C5 TIPM harness connector.

Is the resistance below 5.0 Ohms?

Yes

- Go To 9

No

- Repair the open in the (T750) Starter Control Output circuit.
- Perform the POWERTRAIN VERIFICATION TEST. (Refer to 28 - DTC-Based Diagnostics/MODULE, Powertrain Control (PCM) - Standard Procedure).

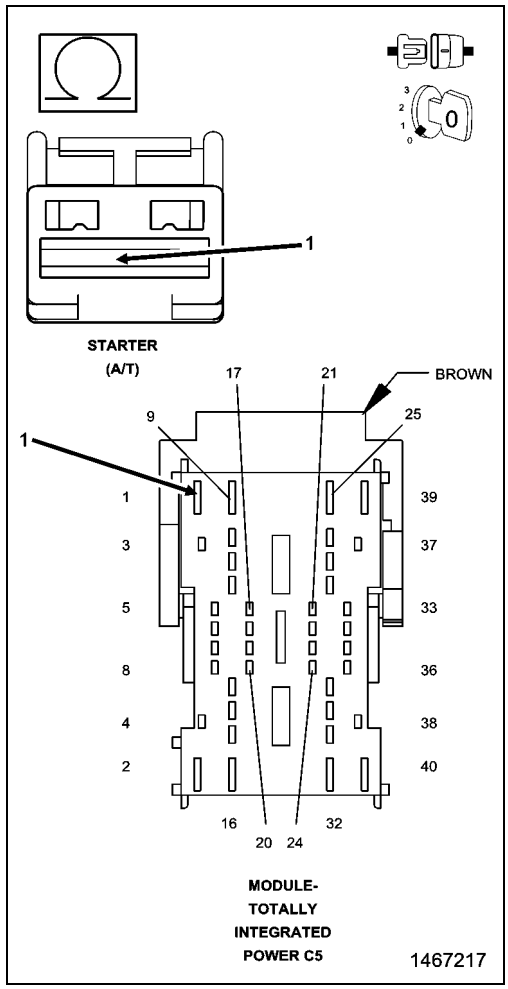

9. (T750) STARTER CONTROL OUTPUT CIRCUIT SHORTED TO GROUND

1. Measure the resistance between ground and the (T750) Starter Control Output circuit in the Starter Solenoid harness connector.

Is the resistance below 100 Ohms?

Yes

- Repair the short to ground in the (T750) Starter Control Output circuit.
- Perform the POWERTRAIN VERIFICATION TEST. (Refer to 28 - DTC-Based Diagnostics/MODULE, Powertrain Control (PCM) - Standard Procedure).

No

- Go To 10

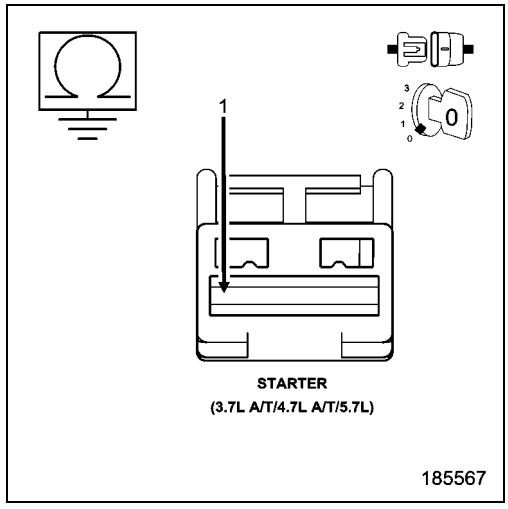

10. TOTALLY INTEGRATED POWER MODULE

NOTE: Before continuing, check the TIPM harness connector terminals for corrosion, damage, or terminal push out. Repair as necessary.

1. Using the schematics as a guide, inspect the wire harness and connectors.
2. Pay particular attention to all Power and Ground circuits.

Were any problems found?

Yes

- Repair as necessary.
- Perform the BODY VERIFICATION TEST. (Refer to 28 - DTC-Based Diagnostics/MODULE, Totally Integrated Power (TIPM) - Standard Procedure).

No

- Replace the Totally Integrated Power Module in accordance with the Service Information.
- Perform the BODY VERIFICATION TEST. (Refer to 28 - DTC-Based Diagnostics/MODULE, Totally Integrated Power (TIPM) - Standard Procedure).

NO RESPONSE WITH A NO START CONDITION

For a complete wiring diagram **Refer to the Wiring Information**.

Possible Causes
(A919) (A918) PCM FUSED B+ CIRCUITS
PCM NO RESPONSE
(F202) (F1) (T751) PCM FUSED IGNITION SWITCH OUTPUT CIRCUITS
(Z130) (Z131) (Z951) PCM GROUND CIRCUITS
CRANKSHAFT POSITION SENSOR
(F855) 5-VOLT SENSOR OPEN/SHORTED
(F855) 5-VOLT SUPPLY CIRCUIT SHORTED TO GROUND
(F856) 5-VOLT SUPPLY CIRCUIT SHORTED TO GROUND
PCM

1. (A919) (A918) PCM FUSED B+ CIRCUITS

NOTE: The scan tool and cable must be operating properly for the results of this test to be valid.

NOTE: Make sure the ignition switch was on while trying to communicate with the PCM.

1. Turn the ignition off.
2. Disconnect the PCM harness connectors.

CAUTION: Do not probe the PCM harness connectors. Probing the PCM harness connectors will damage the PCM terminals resulting in poor terminal to pin connection. Install the PCM Pinout Box Kit, NGC, 38 Position 8815A to perform diagnosis.

3. Using a 12-volt test light connected to ground probe the appropriate terminal of special tool #8815A.

Does the test light illuminate brightly?

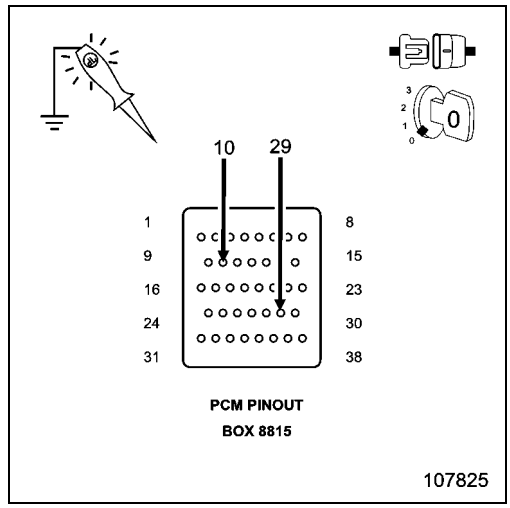

Yes

- Go To 2

No

- Repair the open or short to ground in the (A919) Fused B+ circuit. Inspect and replace fuses as necessary.
- Perform the POWERTRAIN VERIFICATION TEST. (Refer to 28 - DTC-Based Diagnostics/MODULE, Powertrain Control (PCM) - Standard Procedure)

2. (F202), (F1), (T751) PCM FUSED IGNITION SWITCH CIRCUITS

1. Using a 12-volt test light connected to ground, probe the PCM Fused Ignition Switch Output circuits in the appropriate terminals of special tool #8815A.

Does the test light illuminate brightly?

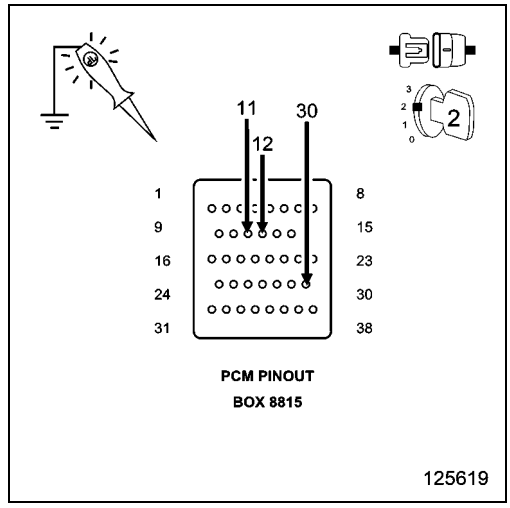

Yes

- Go To 3

No

- Repair the (F202) (F1) (T751) Ignition Switch Output circuits. Inspect and replace fuses as necessary.
- Perform the POWERTRAIN VERIFICATION TEST. (Refer to 28 - DTC-Based Diagnostics/MODULE, Powertrain Control (PCM) - Standard Procedure)

3. (Z130), (Z131), AND (Z951) PCM GROUND CIRCUITS

1. Using a 12-volt test light connected to battery voltage, probe the (Z130) (Z131) PCM ground circuits in the appropriate terminals of special tool #8815A.

Does the test light illuminate brightly?

Yes

- Go To 4

No

- Repair the PCM ground circuits.
- Perform the POWERTRAIN VERIFICATION TEST. (Refer to 28 - DTC-Based Diagnostics/MODULE, Powertrain Control (PCM) - Standard Procedure)

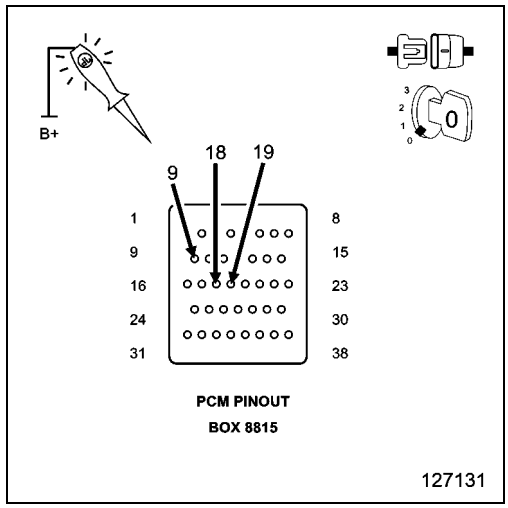

4. (F855) 5-VOLT SUPPLY CIRCUIT

1. Turn the ignition off.
2. Connect the PCM harness connectors.
3. Disconnect the Crankshaft Position Sensor harness connector.
4. Ignition on, engine not running.
5. Measure the voltage on the (F855) 5-volt Supply circuit.

Is the voltage between 4.5 and 5.2 volts?

Yes

- Go To 5

No

- Go To 6

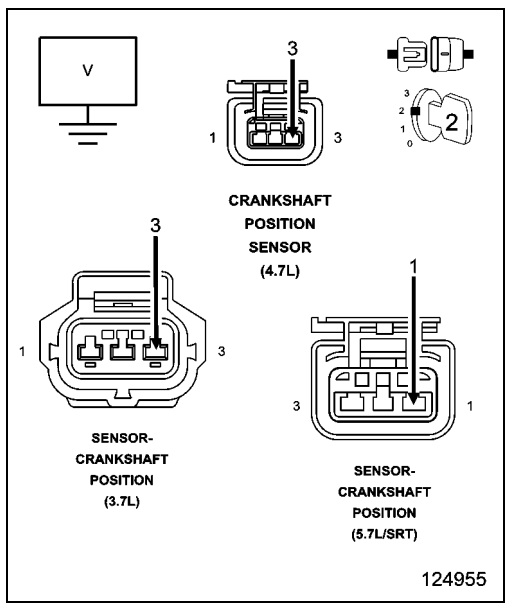

5. CKP SENSOR

1. Turn the ignition off.
2. Disconnect the Throttle Body Harness connector.
3. Ignition on, engine not running.
4. Measure the voltage on the (F855) 5-volt Supply circuit in the Throttle Body harness connector.

Is the voltage between 4.5 and 5.2 volts?

Yes

- If communication is available with a PCM on a like vehicle, replace and program the Powertrain Control Module per Service Information.
- Perform the POWERTRAIN VERIFICATION TEST. (Refer to 28 - DTC-Based Diagnostics/MODULE, Powertrain Control (PCM) - Standard Procedure)

No

- Replace the Crankshaft Position Sensor.
- Perform the POWERTRAIN VERIFICATION TEST. (Refer to 28 - DTC-Based Diagnostics/MODULE, Powertrain Control (PCM) - Standard Procedure)

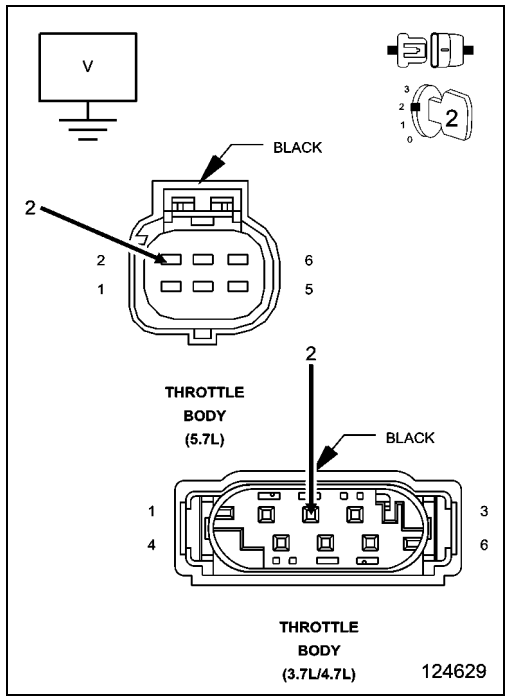

6. (F855) 5-VOLT SENSOR OPEN/SHORTED

1. Turn the ignition off.
2. Disconnect the Throttle Body harness connector.
3. Ignition on, engine not running.
4. Measure the voltage on the (F855) 5-volt Supply circuit.
5. Disconnect all the sensors that use the (F855) 5-volt Supply circuit.

Did the voltage return to 4.5 to 5.2 volts when disconnecting any of the sensors.

Yes

- Replace the sensor that is pulling down the (F855) 5-volt supply.
- Perform the POWERTRAIN VERIFICATION TEST. (Refer to 28 - DTC-Based Diagnostics/MODULE, Powertrain Control (PCM) - Standard Procedure)

No

- Go To 7

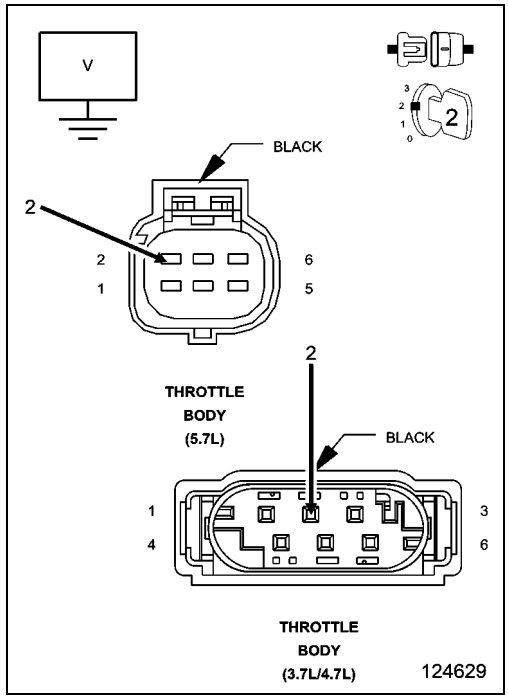

7. (F855) 5-VOLT SUPPLY CIRCUIT SHORTED TO GROUND

1. Turn the ignition off.
2. Disconnect C2 PCM harness connector.
3. Disconnect all the sensors that share the (F855) 5-volt Supply circuit.
4. Measure the resistance between ground and the (F855) 5-volt Supply circuit at one of the sensor harness connectors.

Is the resistance below 100 ohms?

Yes

- Repair the short to ground in the (F855) 5-volt Supply circuit.
- Perform the POWERTRAIN VERIFICATION TEST. (Refer to 28 - DTC-Based Diagnostics/MODULE, Powertrain Control (PCM) - Standard Procedure)

No

- Go To 8

8. (F856) 5-VOLT SUPPLY CIRCUIT SHORTED TO GROUND

1. Disconnect all the sensors that share the (F856) 5-volt Supply circuit.
2. Measure the resistance between ground and the (F856) 5-volt Supply circuit at one of the sensor harness connectors.

Is the resistance below 100 ohms?

Yes

- Repair the short to ground in the (F856) 5-volt Supply circuit.
- Perform the POWERTRAIN VERIFICATION TEST. (Refer to 28 - DTC-Based Diagnostics/MODULE, Powertrain Control (PCM) - Standard Procedure)

No

- Go To 9

9. POWERTRAIN CONTROL MODULE (PCM)

1. Using the wiring diagram/schematic as a guide, inspect the wiring and connectors between the related Sensors and the Powertrain Control Module (PCM).
2. Look for any chafed, pierced, pinched, or partially broken wires.
3. Look for broken, bent, pushed out or corroded terminals. Verify that there is good pin to terminal contact in the related Sensors and the Powertrain Control Module connectors.
4. Refer to any Technical Service Bulletins that may apply.

Were there any problems found?

Yes

- Repair as necessary.
- Perform the POWERTRAIN VERIFICATION TEST. (Refer to 28 - DTC-Based Diagnostics/MODULE, Powertrain Control (PCM) - Standard Procedure)

No

- Replace and program the Powertrain Control Module per Service Information.
- Perform the POWERTRAIN VERIFICATION TEST. (Refer to 28 - DTC-Based Diagnostics/MODULE, Powertrain Control (PCM) - Standard Procedure)

START AND STALL CONDITION

For a complete wiring diagram, **refer to the Wiring Information**.

Possible Causes
CURRENT PCM DTCS
CURRENT WIN DTCS
RESTRICTED EXHAUST
ENGINE MECHANICAL
VACUUM LEAKS
CRACKED SPARK PLUG(S), CARBON TRACKING SPARK PLUG AND COIL
CARBON BUILDUP ON THROTTLE BODY
FUEL CONTAMINATION
FUEL DELIVERY
VALVE TIME OUT OF SPECIFICATION
5 VOLT SUPPLY CIRCUIT
SENSOR GROUND CIRCUIT
CMP SIGNAL CIRCUIT
CAMSHAFT POSITION SENSOR
CKP SIGNAL CIRCUIT
CRANKSHAFT POSITION SENSOR
FLEX PLATE (TARGET WHEEL)
CMP AIRGAP
CKP AIRGAP
POWERTRAIN CONTROL MODULE (PCM)

Always perform the Pre-Diagnostic Troubleshooting procedure before proceeding. (Refer to 28 - DTC-Based Diagnostics/MODULE, Powertrain Control (PCM) - Standard Procedure).

1. CHECKING DIAGNOSTIC TROUBLE CODES (DTCS)

NOTE: Before continuing with this procedure, review the Technical Service Bulletins (TSBs) that may be related to a start and stall condition.

NOTE: It may be helpful to review Secondary Indicators, if a two trip DTC is present, drive the vehicle to try and mature the DTC to Active.

1. Ignition on, engine not running.
2. Using a scan tool, read DTCs.

Are any DTCs present?

Yes

- Perform the appropriate diagnostic procedure.
- Perform the POWERTRAIN VERIFICATION TEST. (Refer to 28 - DTC-Based Diagnostics/MODULE, Powertrain Control (PCM) - Standard Procedure).

No

- Go To 2

2. CHECKING WIRELESS IGNITION NODE (WIN) DTCS

NOTE: If you are unable to communicate with the Wireless Ignition Node (WIN), (Refer to 29 - Non-DTC Diagnostics/Communication - Diagnosis and Testing) and peform the No Response from WIN diagnostic procedure.

1. Using the scan tool, read the WIN codes.

Are there any active DTCs in the WIN?

Yes

- (Refer to 28 - DTC-Based Diagnostics/NODE, Wireless Ignition (WIN) - Diagnosis and Testing) and perform the appropriate diagnostic procedure.

No

- Go To 3

3. CAM/CRANK VERIFICATION

1. Using a scan tool, under OBDII Monitors, read and record the Cam Crank Synchronization Event Monitors.

CAM EVENT STATUS						
CM1ULTRH	CM1ULTLH	CM1TOL1	CM1LOW	CM1ULZERO	CM1MFS	CM1MFR
CM1IF	CM1ONLY	CM2ULTRH	CM2ULTLH	CM2TOL1	CM2LOW	CM2ULZERO
CM2MFS	CM2MFR	CM2IF	CM2ONLY	CM3ULTRH	CM3ULTLH	CM3TOL1
CM3LOW	CM3ULZERO	CM3MFS	CM3MFR	CM3IF	CM3ONLY	CM4ULTRH
CM4ULTLH	CM4TOL1	CM4LOW	CM4ULZERO	CM4MFS	CM4MFR	CM4IF
CM4ONLY	SYULCAM	-	-	-	-	-
CRANK EVENT STATUS						
CKULTRH	CKULTLH	CKLOW	CKUL60M2	CKMFS	CKMFR	CK1IF
CKULGTRH	CKULGTLH	CKULGTVR	CKULGTVL	CKUL220	CKUL40	SYULCRK
SYNOCLCK	-	-	-	-	-	-
SYNC EVENT STATUS						
SYULTOL	SYTOLF	-	-	-	-	-

Use the table above and determine if any of the values are present in the Cam Crank Synchronization Event Monitor display.

CAM EVENT STATUS ONLY

- Go To 7

CRANK EVENT STATUS ONLY

- Go To 14

CAM, CKP and/or SYNC EVENT STATUS

- Go To 21

None Present

- Go To 4

4. SPARK PLUG(S)

NOTE: Inspect the ignition coil for damage, carbon tracking on the coil or a damaged spark plug insulator boot. If a problem is found, replace the ignition coil.

1. Turn the ignition off.
2. Remove the spark plug.
3. Inspect the spark plug for any of the following conditions:
   - Cracks or damage
   - Carbon tracking
   - Foreign material
   - Gap not within specification
   - Loose or broken electrode

NOTE: Lightly tap the bottom of the spark plug on a solid surface. The electrode in the spark plug should not move.

Were any problems found?

Yes

- Replace the spark plug.
- Perform the POWERTRAIN VERIFICATION TEST. (Refer to 28 - DTC-Based Diagnostics/MODULE, Powertrain Control (PCM) - Standard Procedure).

No

- Go To 5

5. POSSIBLE CAUSES OF START AND STALL CONDITION

The following items should be checked as a possible cause for a start and stall condition:

- Perform any Technical Service Bulletins (TSBs) that may apply to the symptom.
- The exhaust system must be free of any restrictions.
- The engine compression must be within specifications.
- The engine valve timing must be within specifications.
- The engine must be free from vacuum leaks.
- The throttle body must be free of carbon buildup and dirt.
- Cracked spark plugs, carbon track on spark plugs, spark plug wires if applicable, coil and coil boot.

Do any of the above conditions exist?

Yes

- Repair as necessary.
- Perform the POWERTRAIN VERIFICATION TEST. (Refer to 28 - DTC-Based Diagnostics/MODULE, Powertrain Control (PCM) - Standard Procedure).

No

- Go To 6

6. FUEL PUMP DELIVERY

1. Verify that the Fuel tank is not empty before continuing.
2. (Refer to 29 - Non-DTC Diagnostics/Drivability - Gas - Diagnosis and Testing) and perform the Checking the Fuel Delivery System diagnostic procedure.

Was the No Start condition solved after following the above diagnostic test?

Yes

- Test Complete.

No

- Check for contamination/water in the fuel. Make sure the fuel being used in this vehicle meets OEM Fuel Requirement, perform the appropriate service procedure.
- Perform the POWERTRAIN VERIFICATION TEST. (Refer to 28 - DTC-Based Diagnostics/MODULE, Powertrain Control (PCM) - Standard Procedure).

7. 5 VOLT SUPPLY CIRCUIT VOLTAGE (CMP)

1. Turn the ignition off.
2. Disconnect the Camshaft Position Sensor connector.
3. Turn the ignition on.
4. Measure the voltage of the 5 Volt Supply circuit in the Camshaft Position Sensor harness connector.

Is the voltage 5.0 Volts?

Yes

- Go To 8

No

- Repair the 5 Volt Supply.

NOTE: A battery disconnect must be performed to clear the Cam Crank Synchronization Events.

- Perform the POWERTRAIN VERIFICATION TEST. (Refer to 28 - DTC-Based Diagnostics/MODULE, Powertrain Control (PCM) - Standard Procedure).

8. SENSOR GROUND CIRCUIT TEST

1. Turn the ignition off.
2. Using a 12-volt test light connected to 12 Volts, probe the Sensor Ground circuit in the Camshaft Position Sensor harness connector.

NOTE: The test light should be illuminated and bright. Compare the brightness to that of a direct connection to the battery.

Is the test light illuminated and bright?

Yes

- Go To 9

No

- Repair the Ground Circuit.

NOTE: A battery disconnect must be performed to clear the Cam Crank Synchronization Events.

- Perform the POWERTRAIN VERIFICATION TEST. (Refer to 28 - DTC-Based Diagnostics/MODULE, Powertrain Control (PCM) - Standard Procedure).

9. CMP SIGNAL

1. Turn the ignition on.
2. Measure the voltage of the CMP Signal circuit in the Camshaft Position Sensor harness connector.

Is the voltage between 4.7 and 5.0 Volts?

Yes

- Go To 13

No

- Go To 10

10. CMP SIGNAL CIRCUIT SHORTED TO VOLTAGE

1. Turn the ignition off.
2. Disconnect the Powertrain Control Module harness connector.
3. Turn the ignition on.
4. Measure the voltage of the CMP Signal circuit in the Camshaft Position Sensor harness connector.

Is there any voltage present?

Yes

- Repair the CMP Signal circuit for a short to voltage.

NOTE: A battery disconnect must be performed to clear the Cam Crank Synchronization Events.

- Perform the POWERTRAIN VERIFICATION TEST. (Refer to 28 - DTC-Based Diagnostics/MODULE, Powertrain Control (PCM) - Standard Procedure).

No

- Go To 11

11. CMP SIGNAL CIRCUIT SHORTED TO GROUND

1. Turn the ignition off.
2. Measure the resistance between ground and the CMP Signal circuit in the Camshaft Position Sensor harness connector.

Is the resistance above 100 Ohms?

Yes

- Go To 12

No

- Repair the CMP Signal circuit for a short to ground.

NOTE: A battery disconnect must be performed to clear the Cam Crank Synchronization Events.

- Perform the POWERTRAIN VERIFICATION TEST. (Refer to 28 - DTC-Based Diagnostics/MODULE, Powertrain Control (PCM) - Standard Procedure).

12. CMP SIGNAL CIRCUIT OPEN OR HIGH RESISTANCE

CAUTION: Do not probe the PCM harness connectors. Probing the PCM harness connectors will damage the PCM terminals, resulting in poor terminal to pin connection. Install the PCM Pinout Box Kit, NGC, 38 Position 8815A to perform diagnosis.

1. Measure the resistance of the CMP Signal circuit between the Camshaft Position Sensor harness connector and the appropriate terminal of the PCM Pinout Box 8815A.

Is the resistance below 5.0 Ohms?

Yes

- Go To 24

No

- Repair the CMP Signal circuit for an open circuit or excessive resistance.

NOTE: A battery disconnect must be performed to clear the Cam Crank Synchronization Events.

- Perform the POWERTRAIN VERIFICATION TEST. (Refer to 28 - DTC-Based Diagnostics/MODULE, Powertrain Control (PCM) - Standard Procedure).

13. CAMSHAFT POSITION SENSOR SIGNAL

1. Turn the ignition off.
2. **Figure 1 is a depiction of typical scope patterns of the Cam (1) and Crank (2) sensors for 4, 6 and 8 cylinder engines. The square wave patterns are uniform and are identical to one another. The patterns must be evenly spread apart and at the same height. The larger gap pattern (signature) after the shorter wave forms are used for cylinder identification (Crank signal) and the distance between the series of slots (trigger) on the camshaft pulley (cam signal). Any variation of the pattern will indicate an issue with the sensor, wiring or trigger (target) wheel.**

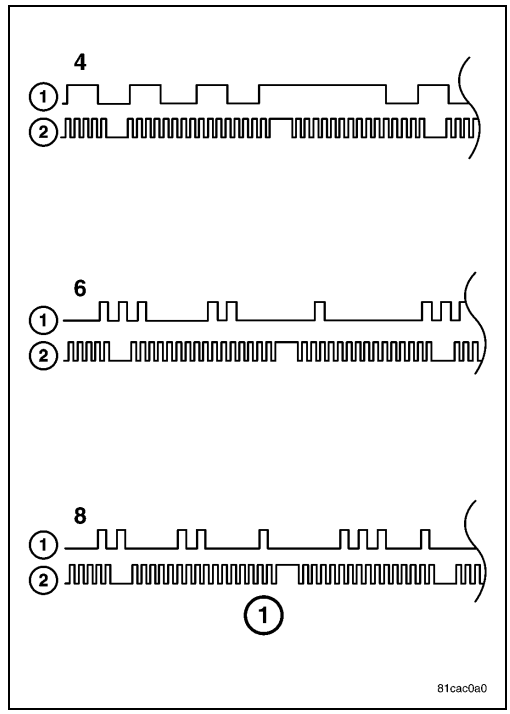

CAUTION: Do not probe the PCM harness connectors. Probing the PCM harness connectors will damage the PCM terminals resulting in poor terminal to pin connection. Install the PCM Pinout Box Kit, NGC, 38 Position 8815A along with the Adapter PCM Pinout Box Adapter 8815-1to perform the diagnosis.

3. With a lab scope, probe the CMP Signal circuit in the appropriate terminal of the PCM Pinout Box 8815A.

WARNING: When the engine is operating, do not stand in direct line with the fan. Do not put your hands near the pulleys, belts or fan. Do not wear loose clothing. Failure to follow these instructions may result in possible serious or fatal injury.

4. Start and allow the engine to run.
5. Observe the lab scope screen.
6. Compare the scope pattern with the ones in Figure 2.

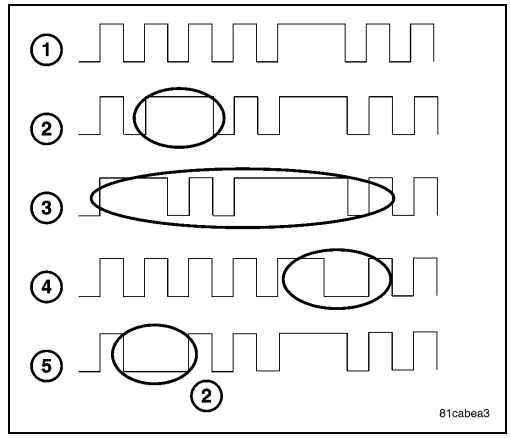

1. Pattern indicates a clean (good) square wave form that is identical to what the cam and crank should be. The square wave patterns are uniformed and are identical to one another.

2. Two pulses joined together in the same spot on target. Indicates damage to the target (trigger) on the flexplate or broke tooth, runout in the target or large airgap between the sensor and the target wheel.

3. Wide airgap or intermittent connection.

4. Early signature, predominately at high speed. Large airgap between the sensor and the target wheel.

5. Missed pulse. Possible burr or light damage to target or incorrect lateral position of the crank sensor to target (trigger).

NOTE: If any of the above (except pattern 1) is displayed on the lab scope repair as necessary.

Was the square wave found to match any of the above except pattern 1?

Yes

- Repair as necessary.
- Perform the POWERTRAIN VERIFICATION TEST. (Refer to 28 - DTC-Based Diagnostics/MODULE, Powertrain Control (PCM) - Standard Procedure).

No

- Replace the Camshaft Position Sensor in accordance with the Service Information.

NOTE: A battery disconnect must be performed to clear the Cam Crank Synchronization Events.

- Perform the POWERTRAIN VERIFICATION TEST. (Refer to 28 - DTC-Based Diagnostics/MODULE, Powertrain Control (PCM) - Standard Procedure).

14. 5 VOLT SUPPLY CIRCUIT VOLTAGE (CKP)

1. Turn the ignition off.
2. Disconnect the Crankshaft Position Sensor connector.
3. Turn the ignition on.
4. Measure the voltage of the 5 Volt Supply circuit in the Crankshaft Position Sensor harness connector.

Is the voltage 5.0 Volts?

Yes

- Go To 15

No

- Repair the 5 Volt Supply for an open circuit or excessive resistance.

NOTE: A battery disconnect must be performed to clear the Cam Crank Synchronization Events.

- Perform the POWERTRAIN VERIFICATION TEST. (Refer to 28 - DTC-Based Diagnostics/MODULE, Powertrain Control (PCM) - Standard Procedure).

15. SENSOR GROUND CIRCUIT TEST

1. Turn the ignition off.
2. Using a 12-volt test light connected to 12 Volts, check the Sensor Ground circuit in the Crankshaft Position Sensor harness connector.

NOTE: The test light should be illuminated and bright. Compare the brightness to that of a direct connection to the battery.

Is the test light illuminated and bright?

Yes

- Go To 16

No

- Repair the Ground Circuit for an open circuit or excessive resistance.

NOTE: A battery disconnect must be performed to clear the Cam Crank Synchronization Events.

- Perform the POWERTRAIN VERIFICATION TEST. (Refer to 28 - DTC-Based Diagnostics/MODULE, Powertrain Control (PCM) - Standard Procedure).

16. CKP SIGNAL

1. Turn the ignition on.
2. Measure the voltage of the CKP Signal circuit in the Crankshaft Position Sensor harness connector.

Is the voltage between 4.7 and 5.0 Volts?

Yes

- Go To 20

No

- Go To 17

17. CKP SIGNAL CIRCUIT SHORTED TO VOLTAGE

1. Turn the ignition off.
2. Disconnect the Powertrain Control Module (PCM) harness connector.
3. Turn the ignition on.
4. Measure the voltage of the CKP Signal circuit in the Crankshaft Position Sensor harness connector.

Is there any voltage present?

Yes

- Repair the CKP Signal circuit for a short to voltage.

NOTE: A battery disconnect must be performed to clear the Cam Crank Synchronization Events.

- Perform the POWERTRAIN VERIFICATION TEST. (Refer to 28 - DTC-Based Diagnostics/MODULE, Powertrain Control (PCM) - Standard Procedure).

No

- Go To 18

18. CKP SIGNAL CIRCUIT SHORTED TO GROUND

1. Turn the ignition off.
2. Measure the resistance between ground and the CKP Signal circuit in the Crankshaft Position Sensor harness connector.

Is the resistance above 100 Ohms?

Yes

- Go To 19

No

- Repair the CMP Signal circuit for a short to ground.

NOTE: A battery disconnect must be performed to clear the Cam Crank Synchronization Events.

- Perform the POWERTRAIN VERIFICATION TEST. (Refer to 28 - DTC-Based Diagnostics/MODULE, Powertrain Control (PCM) - Standard Procedure).

19. CKP SIGNAL CIRCUIT OPEN OR HIGH RESISTANCE

CAUTION: Do not probe the PCM harness connectors. Probing the PCM harness connectors will damage the PCM terminals, resulting in poor terminal to pin connection. Install the PCM Pinout Box Kit, NGC, 38 Position 8815A to perform diagnosis.

1. Measure the resistance of the CKP Signal circuit between the Camshaft Position Sensor harness connector and the appropriate terminal of the PCM Pinout Box 8815A.

Is the resistance below 5.0 Ohms?

Yes

- Go To 24

No

- Repair the CMP Signal circuit for an open circuit or high resistance.

NOTE: A battery disconnect must be performed to clear the Cam Crank Synchronization Events.

- Perform the POWERTRAIN VERIFICATION TEST. (Refer to 28 - DTC-Based Diagnostics/MODULE, Powertrain Control (PCM) - Standard Procedure).

20. CRANKSHAFT POSITION SENSOR SIGNAL

1. Turn the ignition off.
2. **Figure 1 is a depiction of typical scope patterns of the Cam (1) and Crank (2) sensors for 4, 6 and 8 cylinder engines. The square wave patterns are uniform and are identical to one another. The patterns must be evenly spread apart and at the same height. The larger gap pattern (signature) after the shorter wave forms are used for cylinder identification (Crank signal) and the distance between the series of slots (trigger) on the camshaft pulley (cam signal). Any variation of the pattern will indicate an issue with the sensor, wiring and trigger (target) wheel.**

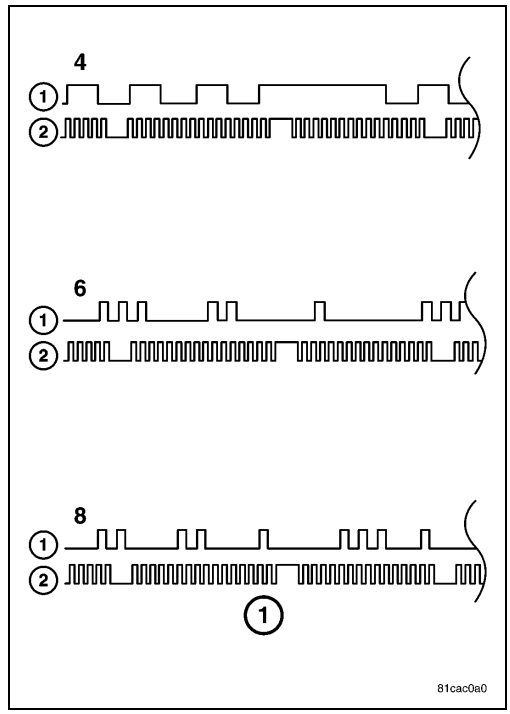

CAUTION: Do not probe the PCM harness connectors. Probing the PCM harness connectors will damage the PCM terminals resulting in poor terminal to pin connection. Install the PCM Pinout Box Kit, NGC, 38 Position 8815A along with the Adapter PCM Pinout Box Adapter 8815-1to perform the diagnosis.

3. With a lab scope, probe the CKP Signal circuit in the appropriate terminal of the PCM Pinout Box 8815A.

WARNING: When the engine is operating, do not stand in direct line with the fan. Do not put your hands near the pulleys, belts or fan. Do not wear loose clothing. Failure to follow these instructions may result in possible serious or fatal injury.

4. Start and allow the engine to run.
5. Observe the lab scope screen.
6. Compare the scope pattern with the ones in Figure 2.

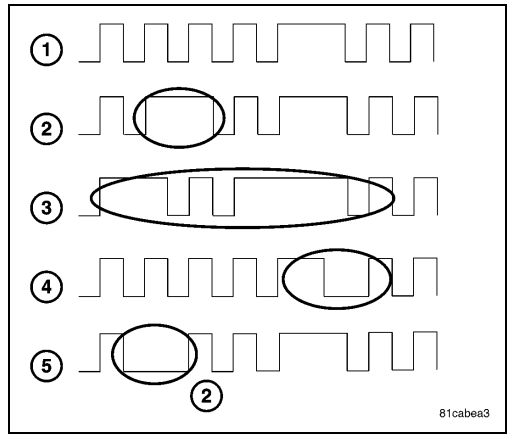

1. Pattern indicates a clean (good) square wave form that is identical to what the cam and crank should be. The square wave patterns are uniformed and are identical to one another.

2. Two pulses joined together in the same spot on target. Indicates damage to the target (trigger) on the flexplate or broke tooth, runout in the target or large airgap between the sensor and the target wheel.

3. Wide airgap or intermittent connection.

4. Early signature, predominately at high speed. Large airgap between the sensor and the target wheel.

5. Missed pulse. Possible burr or light damage to target or incorrect lateral position of the crank sensor to target (trigger).

NOTE: If any of the above (except pattern 1) is displayed on the lab scope repair as necessary.

Was the square wave found to match any of the above except pattern 1?

Yes

- Repair as necessary.

NOTE: A battery disconnect must be performed to clear the Cam Crank Synchronization Events.

- Perform the POWERTRAIN VERIFICATION TEST. (Refer to 28 - DTC-Based Diagnostics/MODULE, Powertrain Control (PCM) - Standard Procedure).

No

- Replace the Crankshaft Position Sensor.

NOTE: A battery disconnect must be performed to clear the Cam Crank Synchronization Events.

- Perform the POWERTRAIN VERIFICATION TEST. (Refer to 28 - DTC-Based Diagnostics/MODULE, Powertrain Control (PCM) - Standard Procedure).

21. VALVE TIMING

1. Make sure the valve timing is within specification. Go to section 9 - ENGINE - SERVICE INFORMATION, VALVE TIMING of the appropriate engine being diagnosed.

Was the valve timing within specification?

Yes

- Go To 22

No

- Repair as necessary.
- Perform the POWERTRAIN VERIFICATION TEST. (Refer to 28 - DTC-Based Diagnostics/MODULE, Powertrain Control (PCM) - Standard Procedure).

22. 5 VOLT SUPPLY CIRCUIT VOLTAGE (CMP/CKP)

NOTE: The 5 Volt Supply circuit must be present at both CMP and CKP Sensors.

1. Turn the ignition off.
2. Disconnect the Camshaft Position Sensor connector.
3. Turn the ignition on.
4. Measure the voltage of the 5 Volt Supply circuit in the Camshaft Position Sensor harness connector.
5. **Repeat the above test at the Crankshaft Position Sensor (Crankshaft Position Sensor harness connector measure).**

Is the voltage 5.0 Volts at each sensor?

Yes

- Go To 23

No

- Repair the 5 Volt Supply circuit(s) as necessary.

NOTE: A battery disconnect must be performed to clear the Cam Crank Synchronization Events.

- Perform the POWERTRAIN VERIFICATION TEST. (Refer to 28 - DTC-Based Diagnostics/MODULE, Powertrain Control (PCM) - Standard Procedure).

23. SENSOR GROUND CIRCUIT

NOTE: The Ground circuit must be present at both CMP and CKP Sensors.

1. Turn the ignition off.
2. Using a 12-volt test light connected to 12 Volts, probe the Sensor Ground circuit in the Camshaft Position Sensor harness connector.
3. **Repeat the above test at the Crankshaft Position Sensor (Crankshaft Position Sensor harness connector measure).**

NOTE: The test light should be illuminated and bright. Compare the brightness to that of a direct connection to the battery.

Is the test light illuminated and bright?

Yes

- Replace both the Camshaft Position Sensor and Crankshaft Position Sensor in accordance with the Service Information.

NOTE: A battery disconnect must be performed to clear the Cam Crank Synchronization Events.

- Perform the POWERTRAIN VERIFICATION TEST. (Refer to 28 - DTC-Based Diagnostics/MODULE, Powertrain Control (PCM) - Standard Procedure).

No

- Repair the Ground Circuit(s) as necessary.

NOTE: A battery disconnect must be performed to clear the Cam Crank Synchronization Events.

- Perform the POWERTRAIN VERIFICATION TEST. (Refer to 28 - DTC-Based Diagnostics/MODULE, Powertrain Control (PCM) - Standard Procedure).

24. POWERTRAIN CONTROL MODULE (PCM)

1. Using the wiring diagram/schematic as a guide, inspect the wiring and connectors between the Camshaft Position Sensor and the Powertrain Control Module (PCM).
2. Look for any chafed, pierced, pinched or partially broken wires.
3. Look for broken, bent, pushed out or corroded terminals.
4. Monitor the scan tool data relative to this circuit and wiggle test the wiring and connectors.
5. Look for the data to change or for the DTC to reset during the wiggle test.
6. Perform any Technical Service Bulletins (TSBs) that may apply.

Were any problems found?

Yes

- Repair as necessary.

NOTE: A battery disconnect must be performed to clear the Cam Crank Synchronization Events.

- Perform the POWERTRAIN VERIFICATION TEST. (Refer to 28 - DTC-Based Diagnostics/MODULE, Powertrain Control (PCM) - Standard Procedure).

No

- Replace and program the Powertrain Control Module (PCM) in accordance with the Service Information.
- Perform the POWERTRAIN VERIFICATION TEST. (Refer to 28 - DTC-Based Diagnostics/MODULE, Powertrain Control (PCM) - Standard Procedure).

HVAC

TABLE OF CONTENTS

page

HVAC
DIAGNOSIS AND TESTING
HVAC SYSTEM TEST 156
BLOWER MOTOR INOPERATIVE 158

HVAC

Diagnosis and Testing

■ HVAC SYSTEM TEST

For a complete wiring diagram, **refer to the Wiring Information**.

Theory of Operation

The HVAC System Test provides a starting point in the diagnostic process by identifying the appropriate diagnostic procedure or system test to perform when diagnosing a given symptom, condition, or Diagnostic Trouble Code (DTC). It also provides a means for testing the entire HVAC system by utilizing the A/C Heater Control's On-Board System Tests. The HVAC System Tests can also assist in diagnosing stored DTCs.

1. HVAC SYSTEM TEST

NOTE: Diagnose and repair all active DTCs before diagnosing and repairing stored DTCs. If active DTCs are present (Refer to 28 - DTC-Based Diagnostics/HVAC - Diagnosis and Testing) and perform the appropriate diagnostic procedure.

Make a selection based on the symptom, condition, or DTC that you want to diagnose.

Scan Tool Indicates HVAC Not Active On Bus

- (Refer to 29 - Non-DTC Diagnostics/Communication - Diagnosis and Testing) and perform the No Response from HVAC diagnostic procedure.

Blower Motor Inoperative

- (Refer to 29 - Non-DTC Diagnostics/HVAC - Diagnosis and Testing) for Blower Motor diagnostic procedures.

Actuator Calibration Test

- Go To 4

A/C System Performance Test

- Go To 2

2. A/C COOLDOWN TEST

The following are prerequisites of the A/C Cooldown Test. Verify that the:

- Refrigerant system has an adequate charge. Check and repair as necessary before proceeding in accordance with the Service Information (Refer to 24 - Heating and Air Conditioning - Diagnosis and Testing).
- Blower motor operates correctly in all speeds. Diagnose and repair all blower related faults before proceeding.
- Work area ambient temperature is above 16° C (60° F) before proceeding. Move the vehicle to a warmer work area if necessary.
- Evaporator temperature is above 13° C (55° F) before proceeding.
- A/C compressor is not running. If the compressor is running, turn the A/C off and allow the evaporator to warm up before proceeding.

NOTE: Running the AC Cooldown test will cause the A/C status indicator to flash. One or more status messages will display on the scan tool after running the Cooldown Test. These messages will clear after paging back out of this test function. Therefore, it is important to note all messages before doing so.

1. Start the engine.
2. Turn the Blower control to the high speed position.
3. With the scan tool in HVAC, select System Tests and then select Cooldown test. Allow the test to run to completion.

Does the scan tool display a status message that indicates a fault has occurred?

Yes

- (Refer to 28 - DTC-Based Diagnostics/HVAC - Diagnosis and Testing) and perform the appropriate diagnostic procedure.

No

- Go To 3

3. MODE SWITCH AND DOOR ACTUATOR CIRCUIT TEST

NOTE: If at anytime a DTC becomes active during this test, proceed to the conclusion question. If multiple DTCs are active, diagnose those that relate to a short circuit first.

1. Start the engine and turn the Blower control to the low speed position.
2. Set the Blend control (single-zone) or Driver and Passenger Blend control (dual-zone) to the full cold position.
3. Monitor the scan tool for active HVAC DTCs while performing the following test steps.

- If equipped, press the A/C mode switch on, wait 30 seconds, and then press it off.
- On Dual-Zone systems, press the Recirculation mode switch on, wait 30 seconds, and then press it off.
- If equipped, press the EBL mode switch on, wait 30 seconds, and then press it off.
- Move the Blend control (single-zone) or Driver Blend control (dual-zone) from full cold to full hot, wait 30 seconds, and then move it back to full cold.
- If equipped, move the Passenger Blend control from full cold to full hot, wait 30 seconds, and then moved it back to full cold.
- Turn the Mode select control to the defrost position, wait 30 seconds, and then turn it to the panel position (dual-zone) or panel / recirculation position (single-zone). Wait 30 seconds before proceeding.

Does the scan tool display any active DTCs?

Yes

- (Refer to 28 - DTC-Based Diagnostics/HVAC - Diagnosis and Testing) and perform the appropriate diagnostic procedure.

No

- Go To 4

4. ACTUATOR CALIBRATION TEST

1. Ignition on, engine not running.
2. With the scan tool, select Actuator Calibration Test. When the test is complete, read HVAC DTCs.

Does the scan tool display any DTCs?

Yes

- (Refer to 28 - DTC-Based Diagnostics/HVAC - Diagnosis and Testing) and perform the appropriate diagnostic procedure.

No

- Test Complete.

BLOWER MOTOR INOPERATIVE

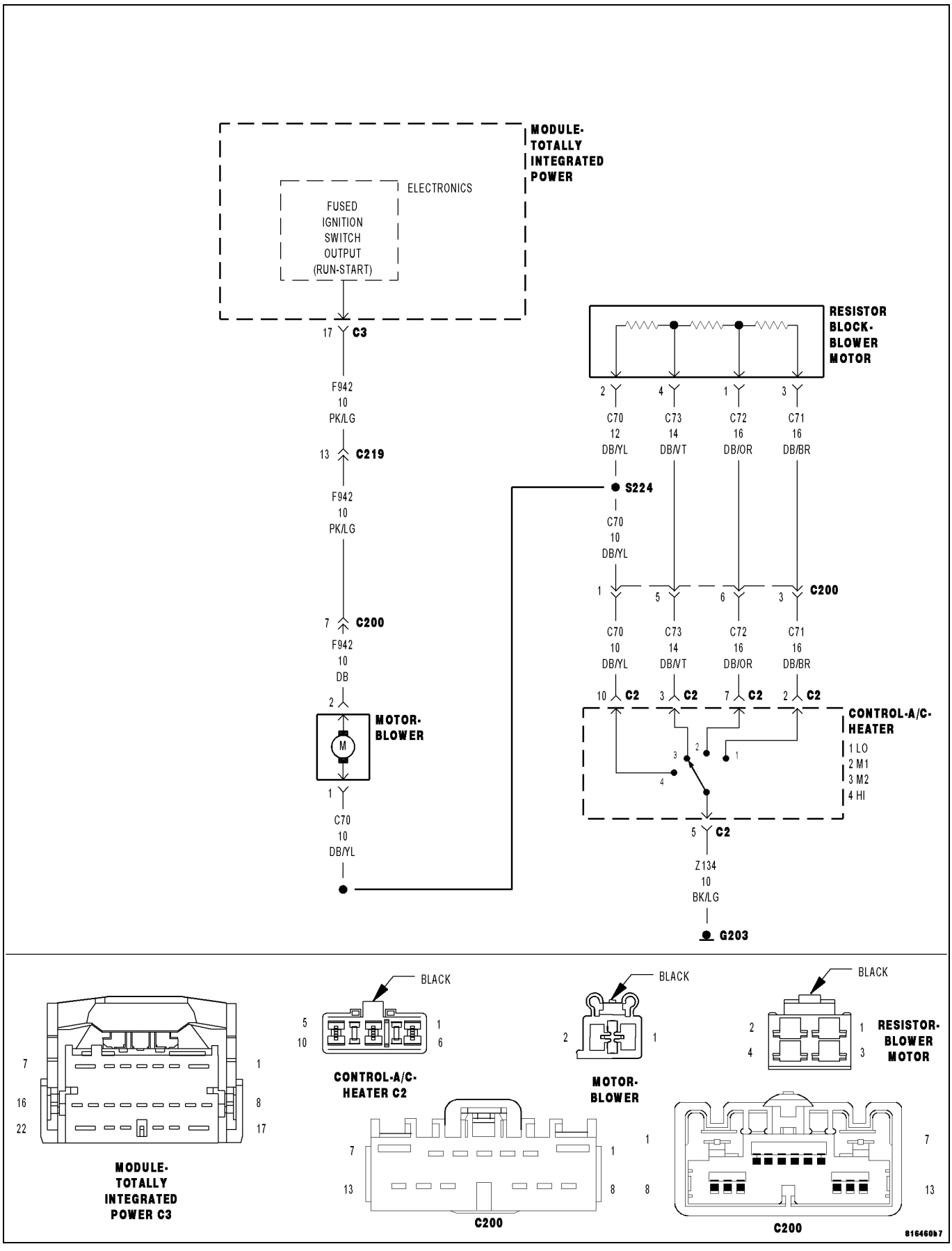

For a complete wiring diagram, **refer to the Wiring Information**.

Possible Causes
(F942) FUSED IGNITION SWITCH OUTPUT (RUN-START) CIRCUIT OPEN
(C70) BLOWER MOTOR HIGH DRIVER CIRCUIT OPEN
(Z134) GROUND CIRCUIT OPEN
BLOWER MOTOR
A/C HEATER CONTROL
TOTALLY INTEGRATED POWER MODULE (TIPM)

1. CHECK FOR DTCs IN THE TIPM

1. Turn the ignition on.
2. Using the scan tool, read TIPM DTCs.

Does the scan tool display any DTCs?

Yes

- Diagnose and repair the DTCs. Refer to the Table of Contents in the applicable section for the diagnostic procedure.

No

- Go To 2

2. CHECK OUTPUT FROM THE TIPM ON THE (F942) FUSED IGNITION SWITCH OUTPUT (RUN-START) CIRCUIT

1. Turn the ignition off.
2. Disconnect the Blower Motor harness connector.
3. Turn the ignition on.
4. With a scan tool in TIPM, select Actuators, and actuate the Blower Motor.
5. Using the 12-volt test light connected to ground, probe the (F942) Fused Ignition Switch Output (Run-Start) circuit in the Blower Motor harness connector.

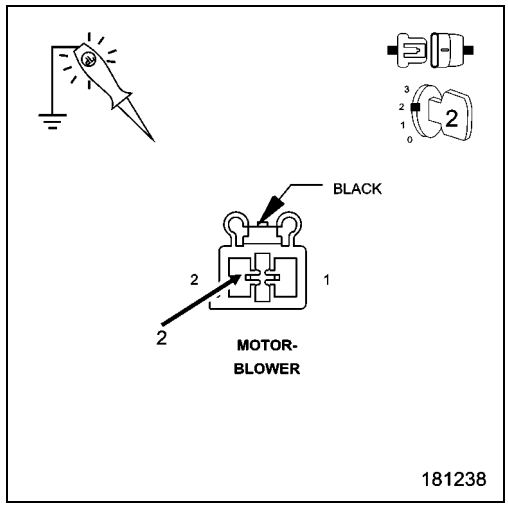

Does the test light illuminate brightly?

Yes

- Go To 3

No

- Go To 4

3. CHECK (C70) BLOWER MOTOR HIGH DRIVER CIRCUIT AND (Z134) GROUND CIRCUIT FUNCTION

1. Turn the ignition off.
2. Turn the blower control on.

NOTE: The test light should be illuminated and bright. Compared the brightness to that of a direct connection to the battery.

3. Using a 12-volt test light connected to 12 Volts, probe the (C70) Blower Motor High Driver circuit in the Blower Motor harness connector.

Does the test light illuminate brightly?

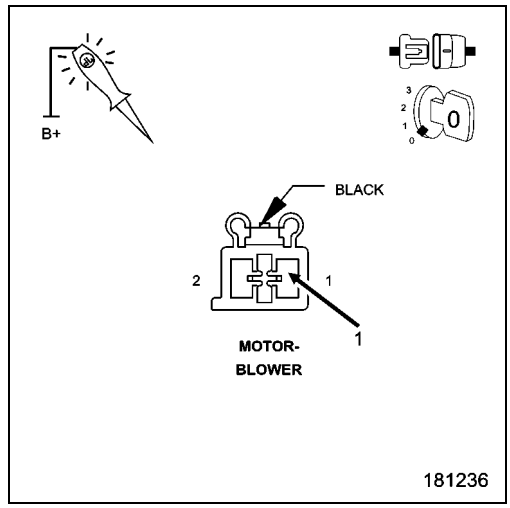

Yes

- Replace the Blower Motor in accordance with the Service Information.
- Perform the BODY VERIFICATION TEST. (Refer to 28 - DTC-Based Diagnostics/MODULE, Totally Integrated Power (TIPM) - Standard Procedure).

No

- Go To 5

4. CHECK THE (F942) FUSED IGNITION SWITCH OUTPUT (RUN-START) CIRCUIT FOR AN OPEN

1. Turn the ignition off.
2. Disconnect the TIPM C3 harness connector.
3. Measure the resistance of the (F942) Fused Ignition Switch Output (Run-Start) circuit between the TIPM C3 harness connector and the Blower Motor harness connector.

Is the resistance below 5.0 Ohms?

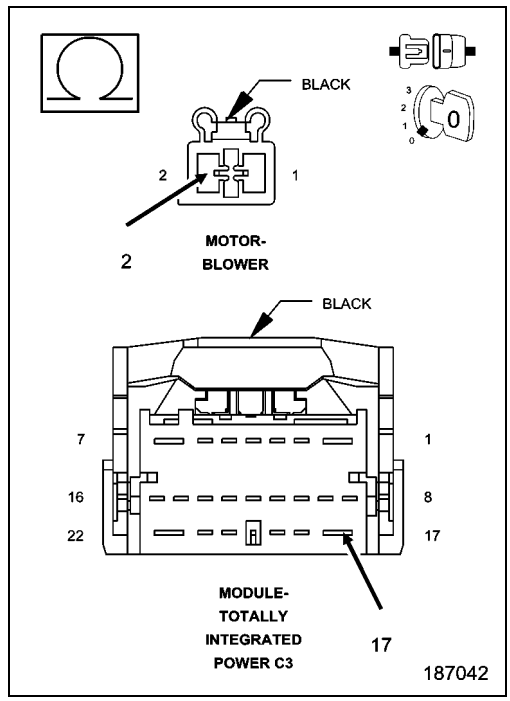

Yes

- Replace the TIPM in accordance with the Service Information.
- Perform the BODY VERIFICATION TEST. (Refer to 28 - DTC-Based Diagnostics/MODULE, Totally Integrated Power (TIPM) - Standard Procedure).

No

- Repair the (F942) Fused Ignition Switch Output (Run-Start) circuit for an open.
- Perform the BODY VERIFICATION TEST. (Refer to 28 - DTC-Based Diagnostics/MODULE, Totally Integrated Power (TIPM) - Standard Procedure).

5. CHECK THE (C70) BLOWER MOTOR HIGH DRIVER CIRCUIT FOR AN OPEN

1. Disconnect the A/C Heater Control C2 harness connector.
2. Measure the resistance of the (C70) Blower Motor High Driver circuit between the A/C Heater Control C2 harness connector and the Blower Motor harness connector.

Is the resistance below 5.0 Ohms?

Yes

- Go To 6

No

- Repair the (C70) Blower Motor High Driver circuit for an open.
- Perform the BODY VERIFICATION TEST. (Refer to 28 - DTC-Based Diagnostics/MODULE, Totally Integrated Power (TIPM) - Standard Procedure).

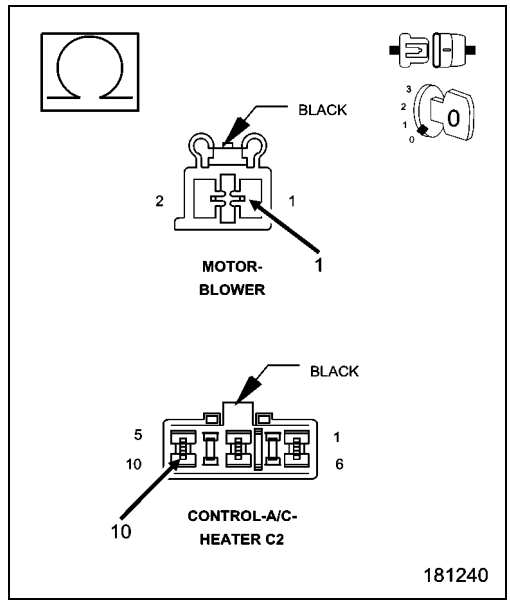

6. CHECK THE (Z134) GROUND CIRCUIT FOR AN OPEN

1. Measure the resistance of the (Z134) Ground circuit between ground and the A/C Heater Control C2 harness connector.

Is the resistance below 5.0 Ohms?

Yes

- Replace the A/C Heater Control in accordance with the Service Information.

No

- Repair the (Z134) Ground circuit for an open.
- Perform the BODY VERIFICATION TEST. (Refer to 28 - DTC-Based Diagnostics/MODULE, Totally Integrated Power (TIPM) - Standard Procedure).

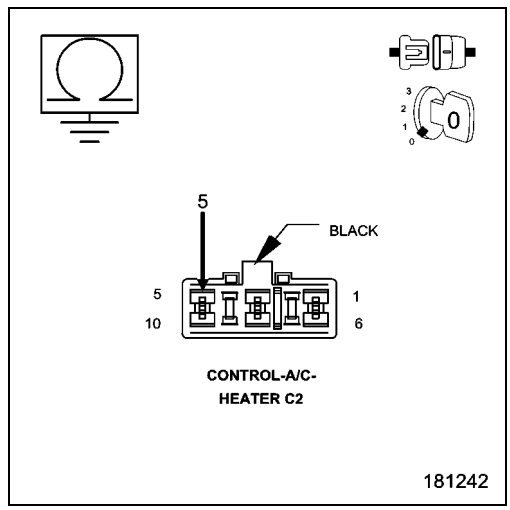

INTERIOR LIGHTING

TABLE OF CONTENTS

page

INTERIOR LIGHTING
DIAGNOSIS AND TESTING
DRIVER DOOR AJAR CIRCUIT OPEN 164
DRIVER DOOR AJAR CIRCUIT SHORTED TO GROUND 167
LEFT REAR DOOR AJAR CIRCUIT OPEN . . .169
LEFT REAR DOOR AJAR CIRCUIT SHORTED TO GROUND 172
PASSENGER DOOR AJAR CIRCUIT OPEN 174
PASSENGER DOOR AJAR CIRCUIT SHORTED TO GROUND 177
RIGHT REAR DOOR AJAR CIRCUIT OPEN 179
RIGHT REAR DOOR AJAR CIRCUIT SHORTED TO GROUND 182

Interior Lighting

Diagnosis and Testing

■ DRIVER DOOR AJAR CIRCUIT OPEN

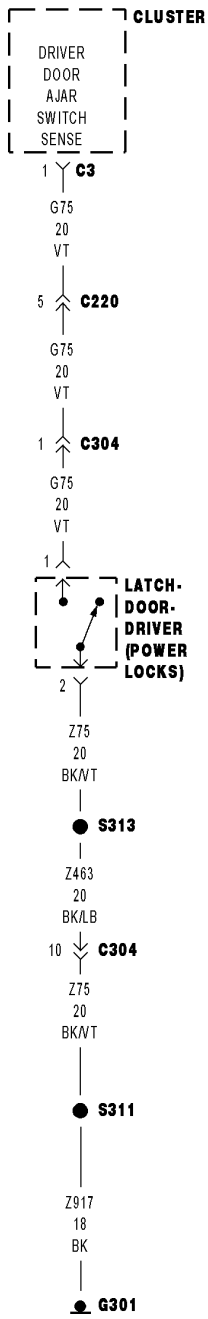

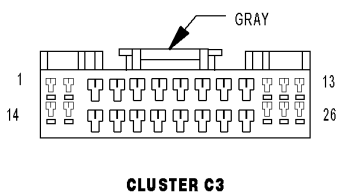

CLUSTER C3

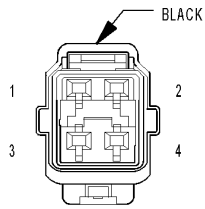

LATCH-DOOR-DRIVER (POWER LOCKS)

8134e728

For a complete wiring diagram, **refer to the Wiring Information**.

Possible Causes
OPEN (Z75/Z917) DRIVER DOOR AJAR SWITCH GROUND CIRCUIT
OPEN (G75) DRIVER DOOR AJAR SWITCH SENSE CIRCUIT
OPEN DRIVER DOOR AJAR SWITCH
INSTRUMENT CLUSTER

1. OPEN DRIVER DOOR AJAR SWITCH

1. Disconnect the Driver Door Latch connector.
2. Connect a jumper wire between the (G75) Sense circuit and the (Z75/Z917) Ground circuit.
3. With the scan tool in Inputs/Outputs, read the DRV DOOR AJAR SW state.

Does the scan tool display CLOSED?

Yes

- Replace the Driver Door Latch.
- Perform the BODY VERIFICATION TEST. (Refer to 28 - DTC-Based Diagnostics/MODULE, Totally Integrated Power (TIPM) - Standard Procedure).

No

- Go To 2

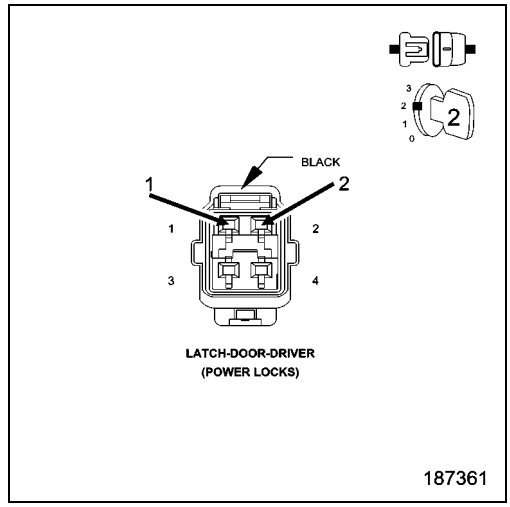

2. OPEN (Z75/Z917) DRIVER DOOR AJAR SWITCH GROUND CIRCUIT

1. Using a 12-volt Test Light connected to 12-volts, test the (Z75/Z917) Ground circuit in the Door Latch connector.

Does the test light illuminate brightly?

Yes

- Go To 3

No

- Repair the (Z75/Z917) Driver Door Ajar Switch Ground circuit for an open.
- Perform the BODY VERIFICATION TEST. (Refer to 28 - DTC-Based Diagnostics/MODULE, Totally Integrated Power (TIPM) - Standard Procedure).

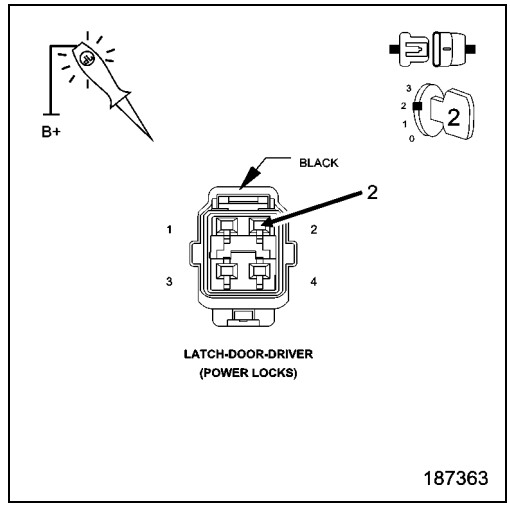

3. OPEN (G75) DRIVER DOOR AJAR SWITCH SENSE CIRCUIT

1. Turn the ignition off.
2. Disconnect the Instrument Cluster C3 harness connector.
3. Measure the resistance of the (G75) Driver Door Ajar Switch Sense circuit between the Instrument Cluster connector and the Door Latch connector.

Is the resistance below 5.0 Ohms?

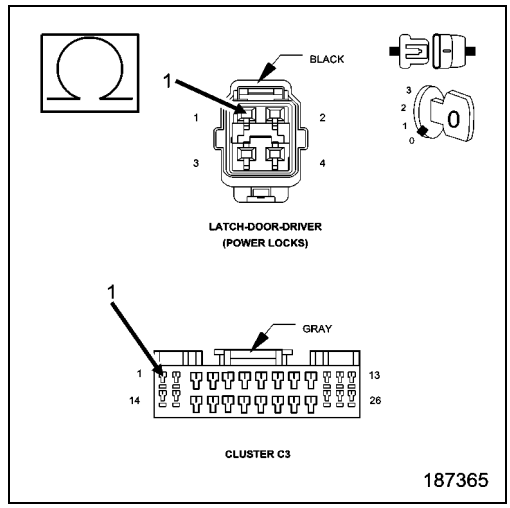

Yes

- Replace the Instrument Cluster.
- Perform the BODY VERIFICATION TEST. (Refer to 28 - DTC-Based Diagnostics/MODULE, Totally Integrated Power (TIPM) - Standard Procedure).

No

- Repair the (G75) Driver Door Ajar Switch Sense circuit for an open.
- Perform the BODY VERIFICATION TEST. (Refer to 28 - DTC-Based Diagnostics/MODULE, Totally Integrated Power (TIPM) - Standard Procedure).

DRIVER DOOR AJAR CIRCUIT SHORTED TO GROUND

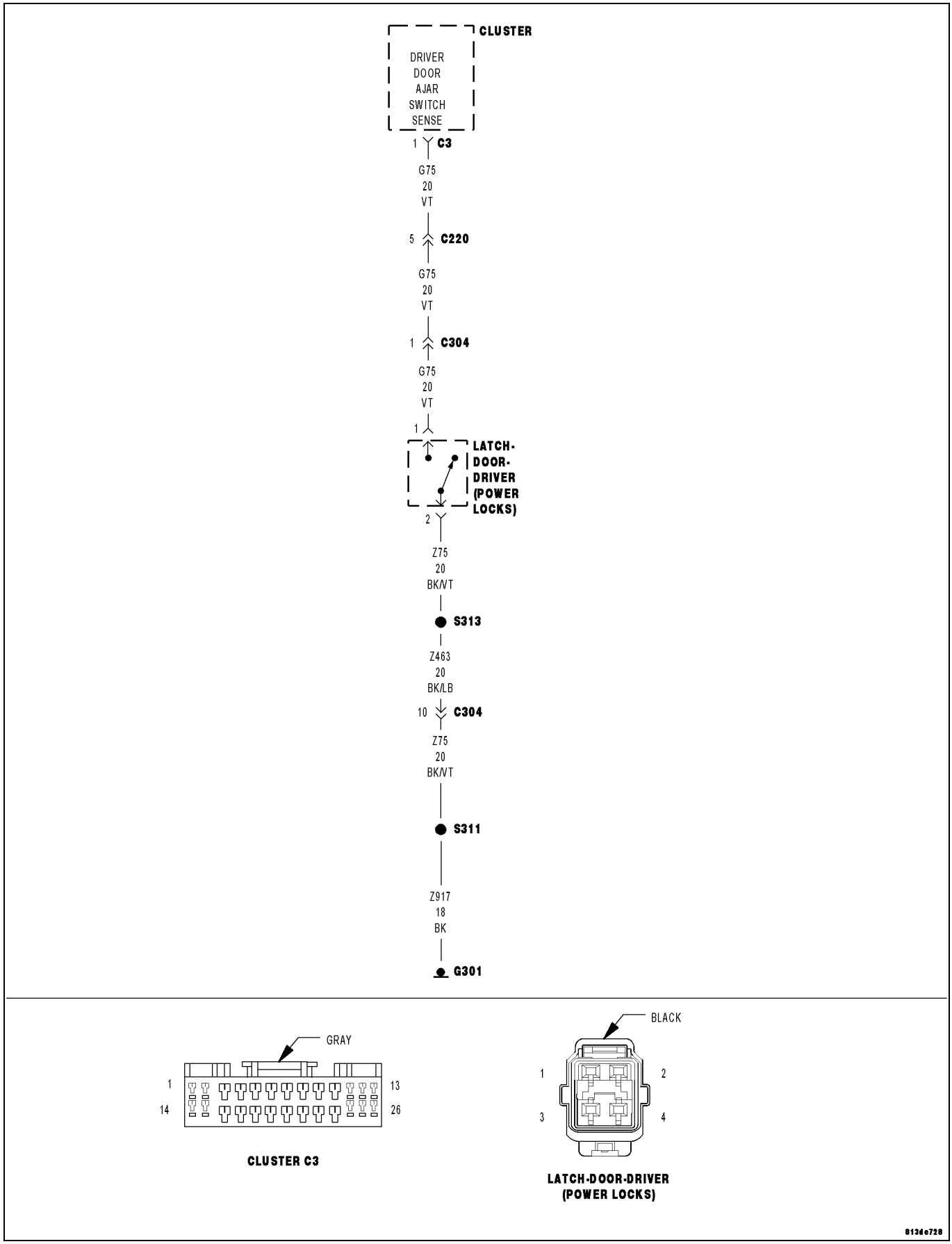

For a complete wiring diagram, **refer to the Wiring Information**.

Possible Causes
(G75) DRIVER DOOR AJAR SWITCH SENSE CIRCUIT SHORTED TO GROUND
DRIVER DOOR AJAR SWITCH
INSTRUMENT CLUSTER

1. DRIVER DOOR AJAR SWITCH SHORT TO GROUND

1. With the scan tool in Inputs/Outputs, read the DRV DOOR AJAR SW state.
2. While monitoring the scan tool, disconnect the Driver Door Latch connector.

Did the Switch State change from CLOSED to OPEN?

Yes

- Replace the Driver Door Latch.
- Perform the BODY VERIFICATION TEST. (Refer to 28 - DTC-Based Diagnostics/MODULE, Totally Integrated Power (TIPM) - Standard Procedure).

No

- Go To 2

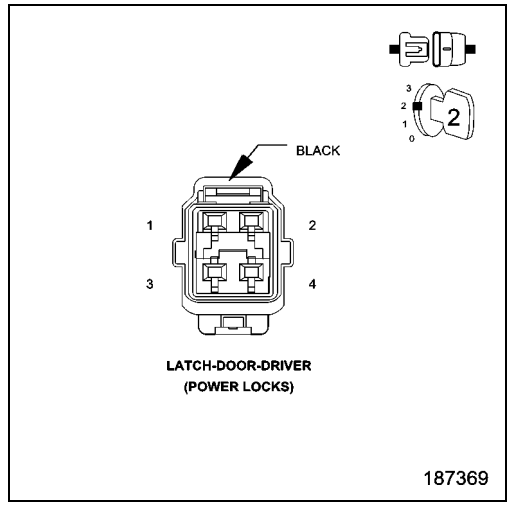

2. (G75) DRIVER DOOR AJAR SWITCH SENSE CIRCUIT SHORT TO GROUND

1. Turn the ignition off.
2. Disconnect the Instrument Cluster C3 harness connector.
3. Using a 12-volt test light connected to 12-volts, probe the (G75) Driver Door Ajar Switch Sense circuit and test for a short to ground.
4. Turn the ignition on.

Does the test light illuminate brightly?

Yes

- Repair the (G75) Driver Door Ajar Switch Sense circuit for a short to ground.
- Perform the BODY VERIFICATION TEST. (Refer to 28 - DTC-Based Diagnostics/MODULE, Totally Integrated Power (TIPM) - Standard Procedure).

No

- Replace the Instrument Cluster.
- Perform the BODY VERIFICATION TEST. (Refer to 28 - DTC-Based Diagnostics/MODULE, Totally Integrated Power (TIPM) - Standard Procedure).

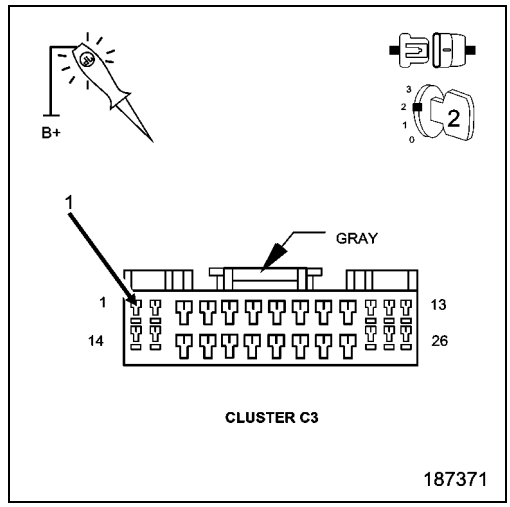

LEFT REAR DOOR AJAR CIRCUIT OPEN

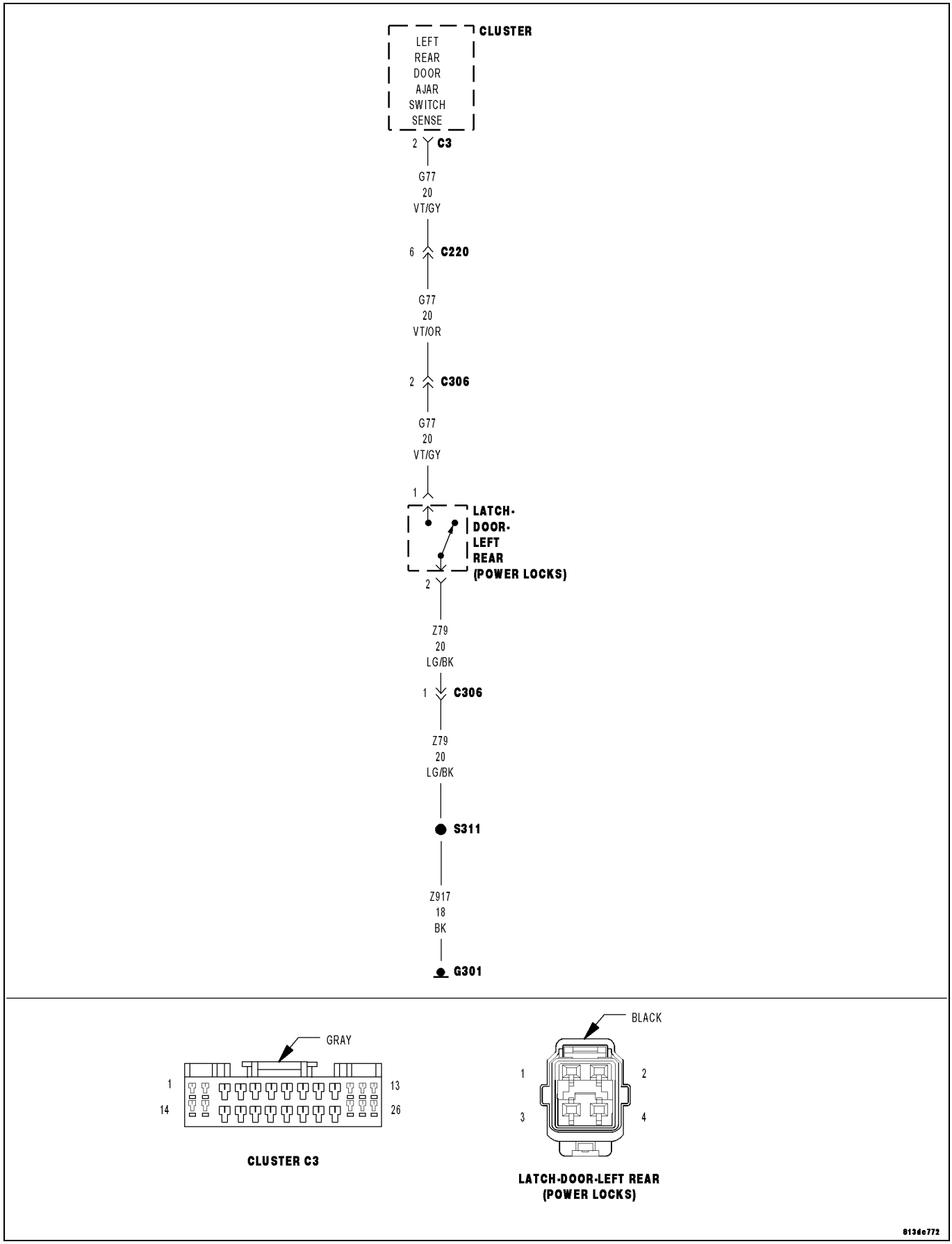

For a complete wiring diagram, **refer to the Wiring Information**.

Possible Causes
OPEN (Z79/917) LEFT REAR DOOR AJAR SWITCH GROUND CIRCUIT
OPEN (G77) LEFT REAR DOOR AJAR SWITCH SENSE CIRCUIT
OPEN LEFT REAR DOOR AJAR SWITCH
INSTRUMENT CLUSTER

1. OPEN LEFT REAR DOOR AJAR SWITCH

1. Disconnect the Left Rear Door Latch connector.
2. Connect a jumper wire between the (G77) Sense circuit and the Ground circuit.
3. With the scan tool in Inputs/Outputs, read the L R DOOR AJAR SW state.

Does the scan tool display CLOSED?

Yes

- Replace the Left Rear Door Latch.
- Perform the BODY VERIFICATION TEST. (Refer to 28 - DTC-Based Diagnostics/MODULE, Totally Integrated Power (TIPM) - Standard Procedure).

No

- Go To 2

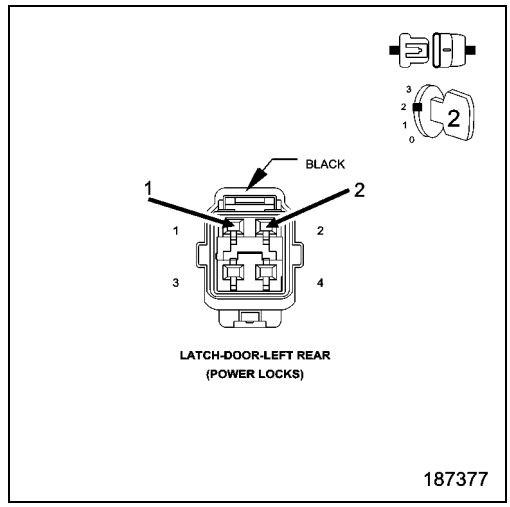

2. OPEN (Z79/Z917) LEFT REAR DOOR AJAR SWITCH GROUND CIRCUIT

1. Using a 12-volt Test Light connected to 12-volts, test the (Z79/Z917) Ground circuit in the Door Latch connector.

Does the test light illuminate brightly?

Yes

- Go To 3

No

- Repair the (Z79/Z917) Left Rear Door Ajar Switch Ground circuit for an open.
- Perform the BODY VERIFICATION TEST. (Refer to 28 - DTC-Based Diagnostics/MODULE, Totally Integrated Power (TIPM) - Standard Procedure).

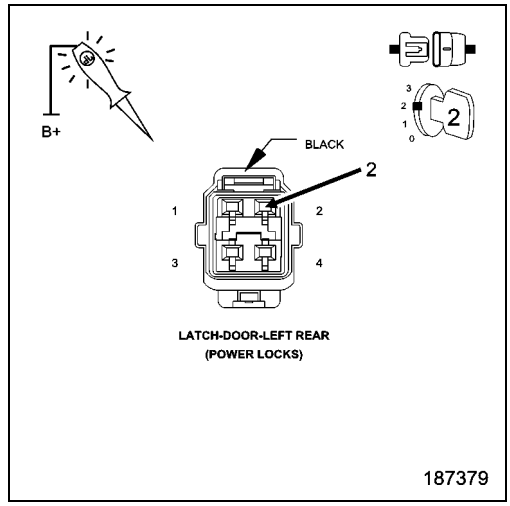

3. OPEN (G77) LEFT REAR DOOR AJAR SWITCH SENSE CIRCUIT

1. Turn the ignition off.
2. Disconnect the Instrument Cluster C3 harness connector.
3. Measure the resistance of the (G77) Left Rear Door Ajar Switch Sense circuit between the Instrument Cluster connector and the Door Latch connector.

Is the resistance below 5.0 Ohms?

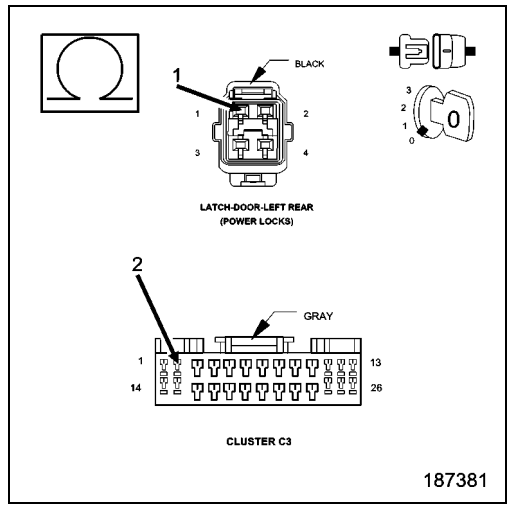

Yes

- Replace the Instrument Cluster.
- Perform the BODY VERIFICATION TEST. (Refer to 28 - DTC-Based Diagnostics/MODULE, Totally Integrated Power (TIPM) - Standard Procedure).

No

- Repair the (G77) Left Rear Door Ajar Switch Sense circuit for an open.
- Perform the BODY VERIFICATION TEST. (Refer to 28 - DTC-Based Diagnostics/MODULE, Totally Integrated Power (TIPM) - Standard Procedure).

LEFT REAR DOOR AJAR CIRCUIT SHORTED TO GROUND

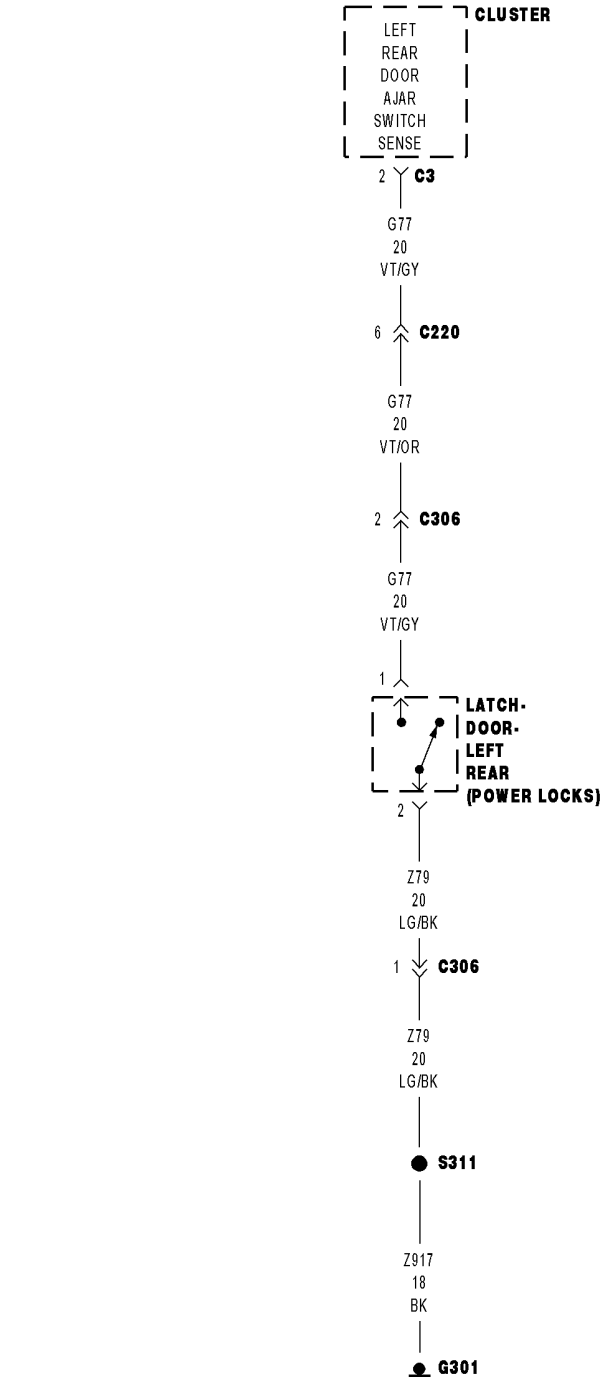

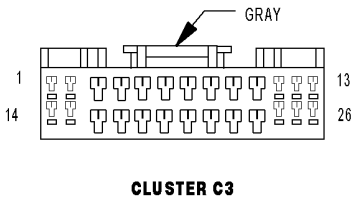

CLUSTER C3

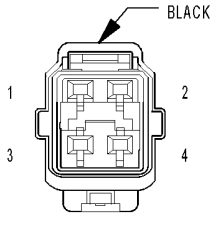

LATCH-DOOR-LEFT REAR (POWER LOCKS)

813de772

For a complete wiring diagram, **refer to the Wiring Information**.

Possible Causes
(G77) LEFT REAR DOOR AJAR SWITCH SENSE CIRCUIT SHORTED TO GROUND
LEFT REAR DOOR AJAR SWITCH
INSTRUMENT CLUSTER

1. LEFT REAR DOOR AJAR SWITCH SHORT TO GROUND

1. With the scan tool in Inputs/Outputs, read the L R DOOR AJAR SW state.
2. While monitoring the scan tool, disconnect the Left Rear Door Latch connector.

Did the Switch State change from CLOSED to OPEN?

Yes

- Replace the Left Rear Door Latch.
- Perform the BODY VERIFICATION TEST. (Refer to 28 - DTC-Based Diagnostics/MODULE, Totally Integrated Power (TIPM) - Standard Procedure).

No

- Go To 2

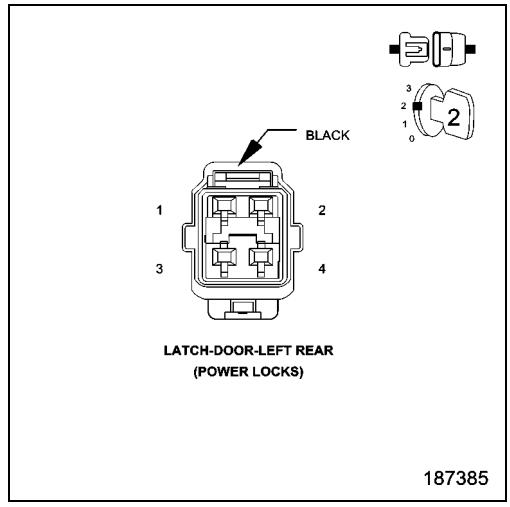

2. (G77) LEFT REAR DOOR AJAR SWITCH SENSE CIRCUIT SHORT TO GROUND

1. Turn the ignition off.
2. Disconnect the Instrument Cluster C3 harness connector.
3. Using a 12-volt test light connected to 12-volts, probe the (G77) Left Rear Door Ajar Switch Sense circuit and test for a short to ground.
4. Turn the ignition on.

Does the test light illuminate brightly?

Yes

- Repair the (G77) Left Rear Door Ajar Switch Sense circuit for a short to ground.
- Perform the BODY VERIFICATION TEST. (Refer to 28 - DTC-Based Diagnostics/MODULE, Totally Integrated Power (TIPM) - Standard Procedure).

No

- Replace the Instrument Cluster.
- Perform the BODY VERIFICATION TEST. (Refer to 28 - DTC-Based Diagnostics/MODULE, Totally Integrated Power (TIPM) - Standard Procedure).

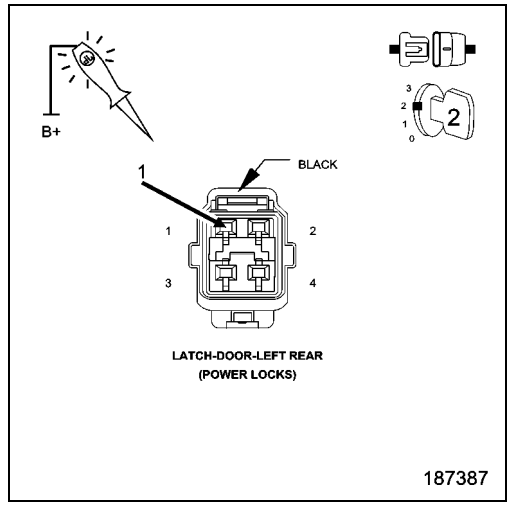

PASSENGER DOOR AJAR CIRCUIT OPEN

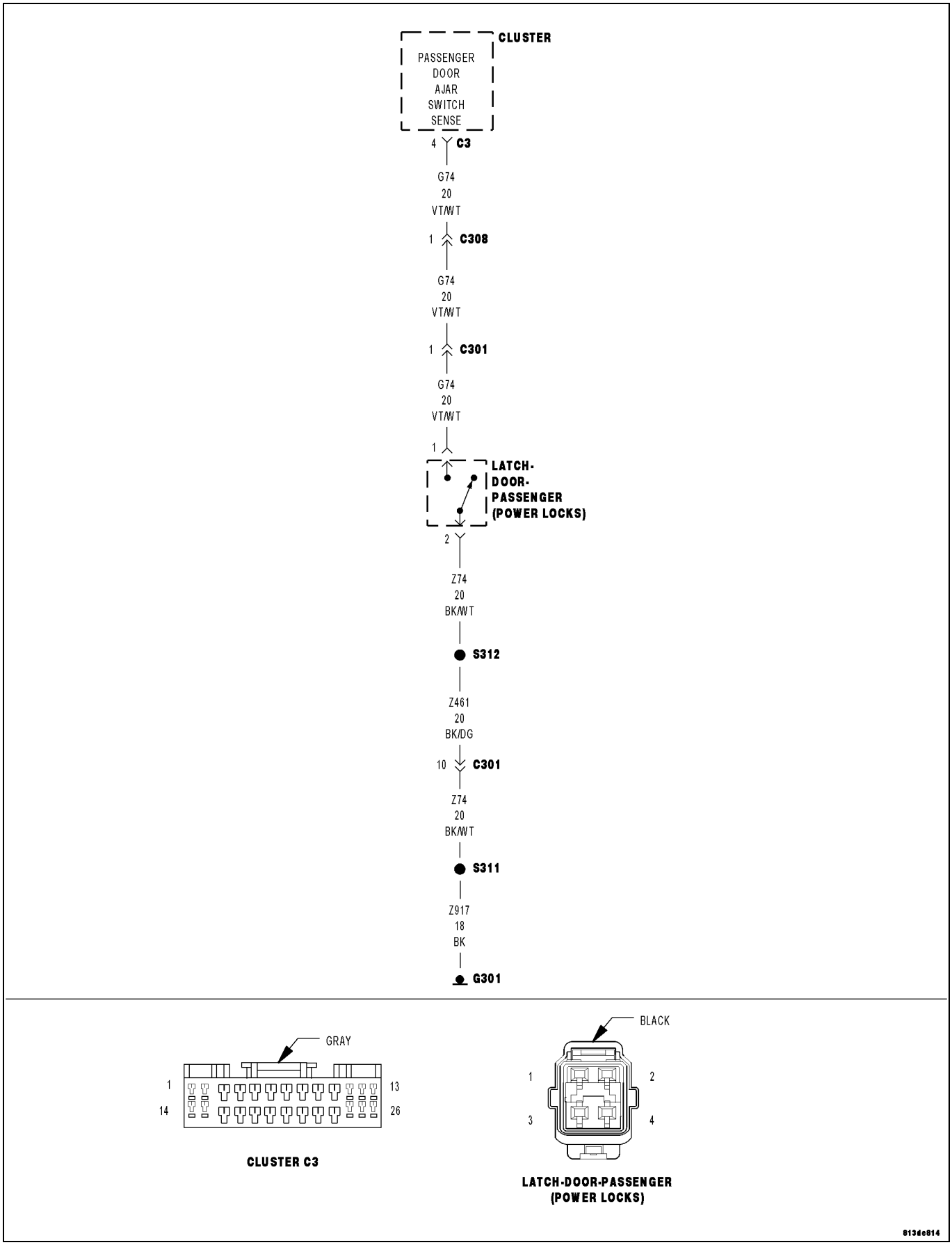

For a complete wiring diagram, **refer to the Wiring Information**.

Possible Causes
OPEN (Z74/Z917) PASSENGER DOOR AJAR SWITCH GROUND CIRCUIT
OPEN (G74) PASSENGER DOOR AJAR SWITCH SENSE CIRCUIT
OPEN PASSENGER DOOR AJAR SWITCH
INSTRUMENT CLUSTER

1. OPEN PASSENGER DOOR AJAR SWITCH

1. Disconnect the Passenger Door Latch connector.
2. Connect a jumper wire between the (G74) Sense circuit and the (Z74/Z917) Ground circuit.
3. With the scan tool in Inputs/Outputs, read the PASS DOOR AJAR SW state.

Does the scan tool display CLOSED?

Yes

- Replace the Passenger Door Latch.
- Perform the BODY VERIFICATION TEST. (Refer to 28 - DTC-Based Diagnostics/MODULE, Totally Integrated Power (TIPM) - Standard Procedure).

No

- Go To 2

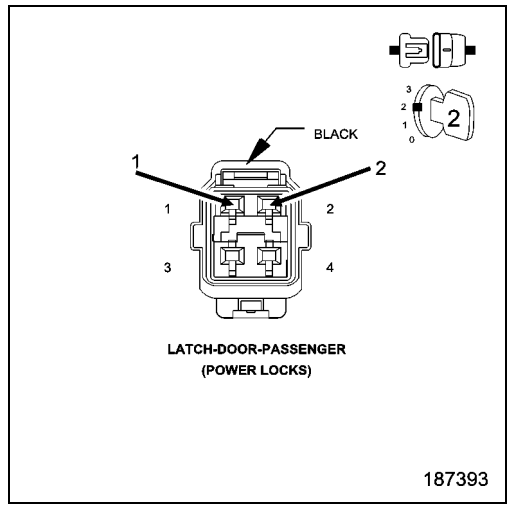

2. OPEN (Z74/Z917) PASSENGER DOOR AJAR SWITCH GROUND CIRCUIT

1. Using a 12-volt Test Light connected to 12-volts, test the (Z74/Z917) Ground circuit in the Door Latch connector.

Does the test light illuminate brightly?

Yes

- Go To 3

No

- Repair the (Z74/Z917) Passenger Door Ajar Switch Ground circuit for an open.
- Perform the BODY VERIFICATION TEST. (Refer to 28 - DTC-Based Diagnostics/MODULE, Totally Integrated Power (TIPM) - Standard Procedure).

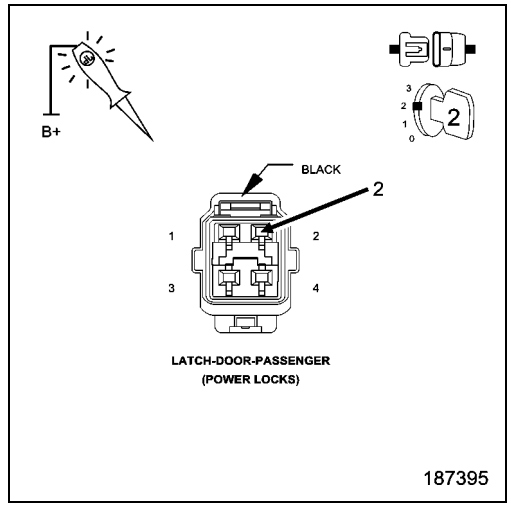

3. OPEN (G74) PASSENGER DOOR AJAR SWITCH SENSE CIRCUIT

1. Turn the ignition off.
2. Disconnect the Instrument Cluster C3 harness connector.
3. Measure the resistance of the (G74) Passenger Door Ajar Switch Sense circuit between the Instrument Cluster connector and the Door Latch connector.

Is the resistance below 5.0 Ohms?

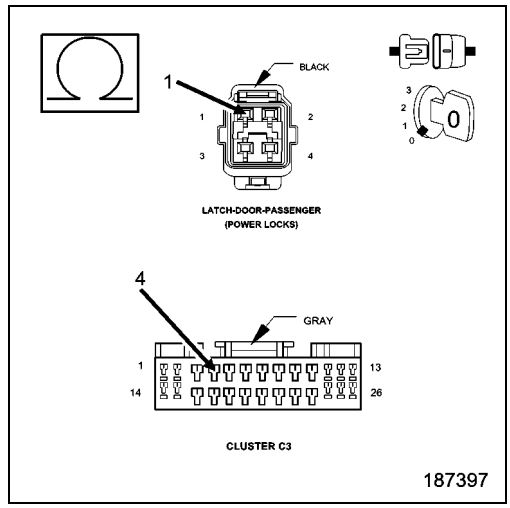

Yes

- Replace the Instrument Cluster.
- Perform the BODY VERIFICATION TEST. (Refer to 28 - DTC-Based Diagnostics/MODULE, Totally Integrated Power (TIPM) - Standard Procedure).

No

- Repair the (G74) Passenger Door Ajar Switch Sense circuit for an open.
- Perform the BODY VERIFICATION TEST. (Refer to 28 - DTC-Based Diagnostics/MODULE, Totally Integrated Power (TIPM) - Standard Procedure).

■ PASSENGER DOOR AJAR CIRCUIT SHORTED TO GROUND

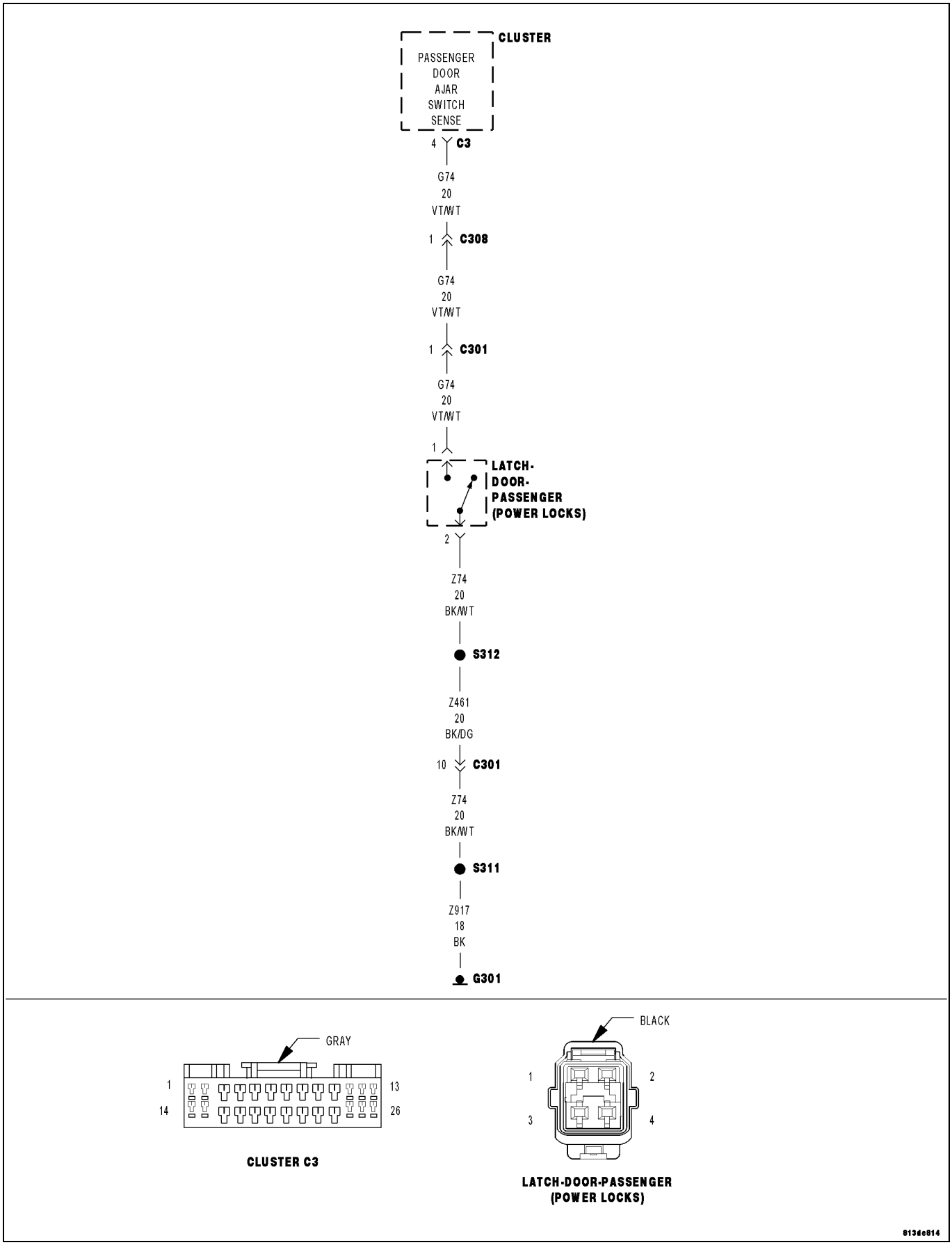

For a complete wiring diagram, **refer to the Wiring Information**.

Possible Causes
(G74) PASSENGER DOOR AJAR SWITCH SENSE CIRCUIT SHORTED TO GROUND
PASSENGER DOOR AJAR SWITCH
INSTRUMENT CLUSTER

1. PASSENGER DOOR AJAR SWITCH SHORT TO GROUND

1. With the scan tool in Inputs/Outputs, read the PASS DOOR AJAR SW state.
2. While monitoring the scan tool, disconnect the Passenger Door Latch connector.

Did the Switch State change from CLOSED to OPEN?

Yes

- Replace the Passenger Door Latch.
- Perform the BODY VERIFICATION TEST. (Refer to 28 - DTC-Based Diagnostics/MODULE, Totally Integrated Power (TIPM) - Standard Procedure).

No

- Go To 2

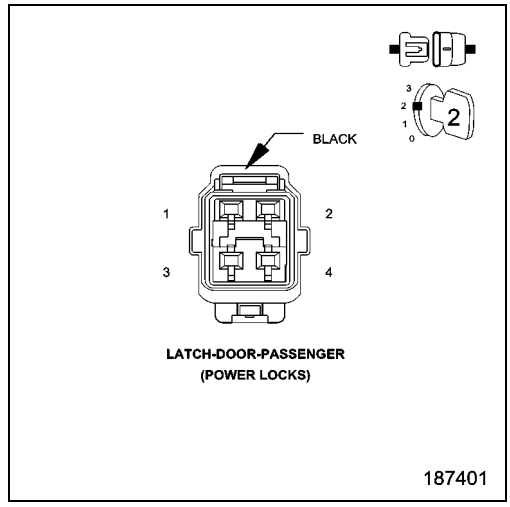

2. (G74) PASSENGER DOOR AJAR SWITCH SENSE CIRCUIT SHORT TO GROUND

1. Turn the ignition off.
2. Disconnect the Instrument Cluster C3 harness connector.
3. Using a 12-volt test light connected to 12-volts, probe the (G74) Passenger Door Ajar Switch Sense circuit and test for a short to ground.
4. Turn the ignition on.

Does the test light illuminate brightly?

Yes

- Repair the (G74) Passenger Door Ajar Switch Sense circuit for a short to ground.
- Perform the BODY VERIFICATION TEST. (Refer to 28 - DTC-Based Diagnostics/MODULE, Totally Integrated Power (TIPM) - Standard Procedure).

No

- Replace the Instrument Cluster.
- Perform the BODY VERIFICATION TEST. (Refer to 28 - DTC-Based Diagnostics/MODULE, Totally Integrated Power (TIPM) - Standard Procedure).

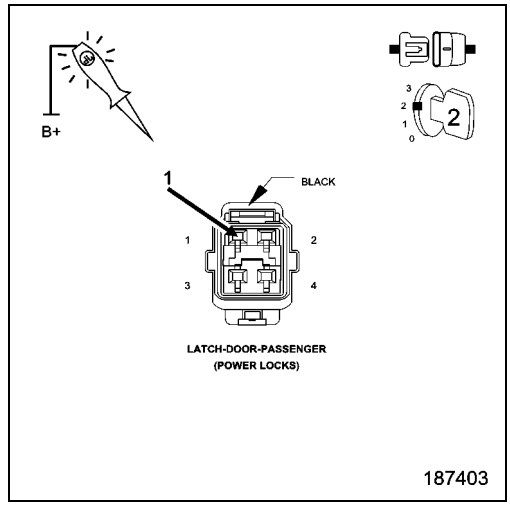

■ RIGHT REAR DOOR AJAR CIRCUIT OPEN

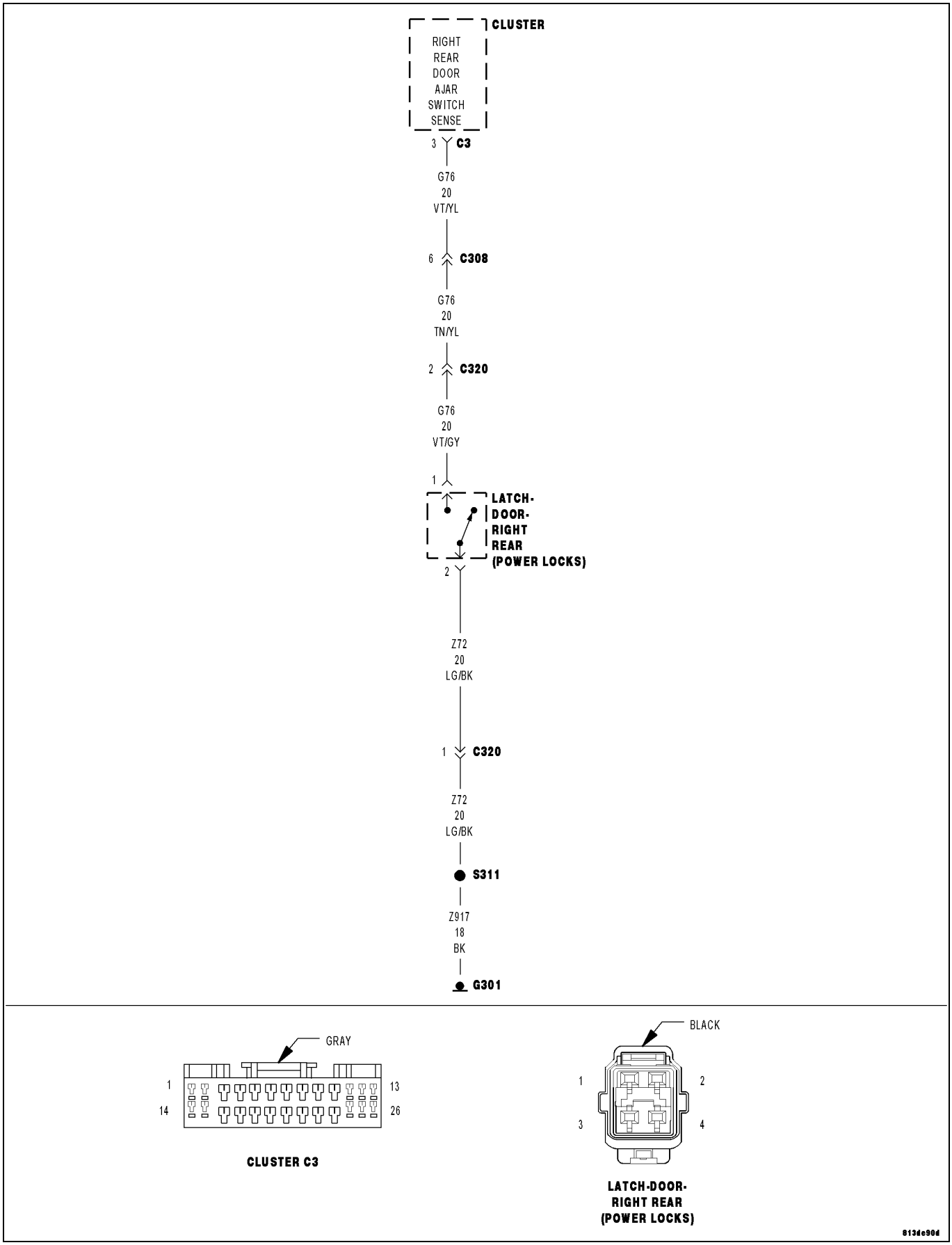

For a complete wiring diagram, **refer to the Wiring Information**.

Possible Causes
OPEN (Z72) RIGHT REAR DOOR AJAR SWITCH GROUND CIRCUIT
OPEN (G76) RIGHT REAR DOOR AJAR SWITCH SENSE CIRCUIT
OPEN RIGHT REAR DOOR AJAR SWITCH
INSTRUMENT CLUSTER

1. OPEN RIGHT REAR DOOR AJAR SWITCH

1. Disconnect the Right Rear Door Latch connector.
2. Connect a jumper wire between the (G76) Sense circuit and the (Z72) Ground circuit.
3. With the scan tool in Inputs/Outputs, read the R R DOOR AJAR SW state.

Does the scan tool display CLOSED?

Yes

- Replace the Right Rear Door Latch.
- Perform the BODY VERIFICATION TEST. (Refer to 28 - DTC-Based Diagnostics/MODULE, Totally Integrated Power (TIPM) - Standard Procedure).

No

- Go To 2

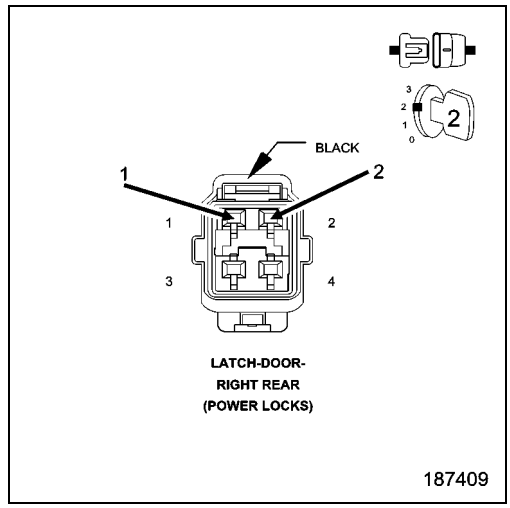

2. OPEN (Z72) RIGHT REAR DOOR AJAR SWITCH GROUND CIRCUIT

1. Using a 12-volt Test Light connected to 12-volts, test the (Z72) Ground circuit in the Door Latch connector.

Does the test light illuminate brightly?

Yes

- Go To 3

No

- Repair the (Z72) Right Rear Door Ajar Switch Ground circuit for an open.
- Perform the BODY VERIFICATION TEST. (Refer to 28 - DTC-Based Diagnostics/MODULE, Totally Integrated Power (TIPM) - Standard Procedure).

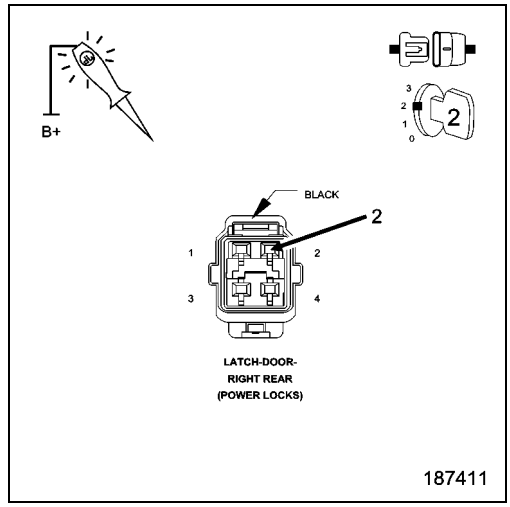

3. OPEN (G76) RIGHT REAR DOOR AJAR SWITCH SENSE CIRCUIT

1. Disconnect the Instrument Cluster C3 harness connector.
2. Measure the resistance of the (G76) Right Rear Door Ajar Switch Sense circuit between the Instrument Cluster connector and the Door Latch connector.

Is the resistance below 5.0 Ohms?

Yes

- Replace the Instrument Cluster.
- Perform the BODY VERIFICATION TEST. (Refer to 28 - DTC-Based Diagnostics/MODULE, Totally Integrated Power (TIPM) - Standard Procedure).

No

- Repair the (G76) Right Rear Door Ajar Switch Sense circuit for an open.
- Perform the BODY VERIFICATION TEST. (Refer to 28 - DTC-Based Diagnostics/MODULE, Totally Integrated Power (TIPM) - Standard Procedure).

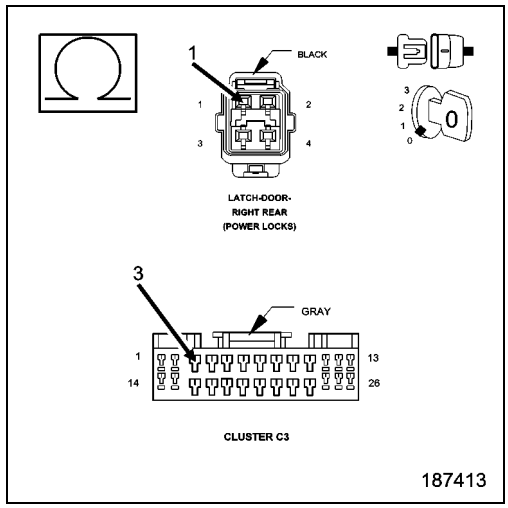

RIGHT REAR DOOR AJAR CIRCUIT SHORTED TO GROUND

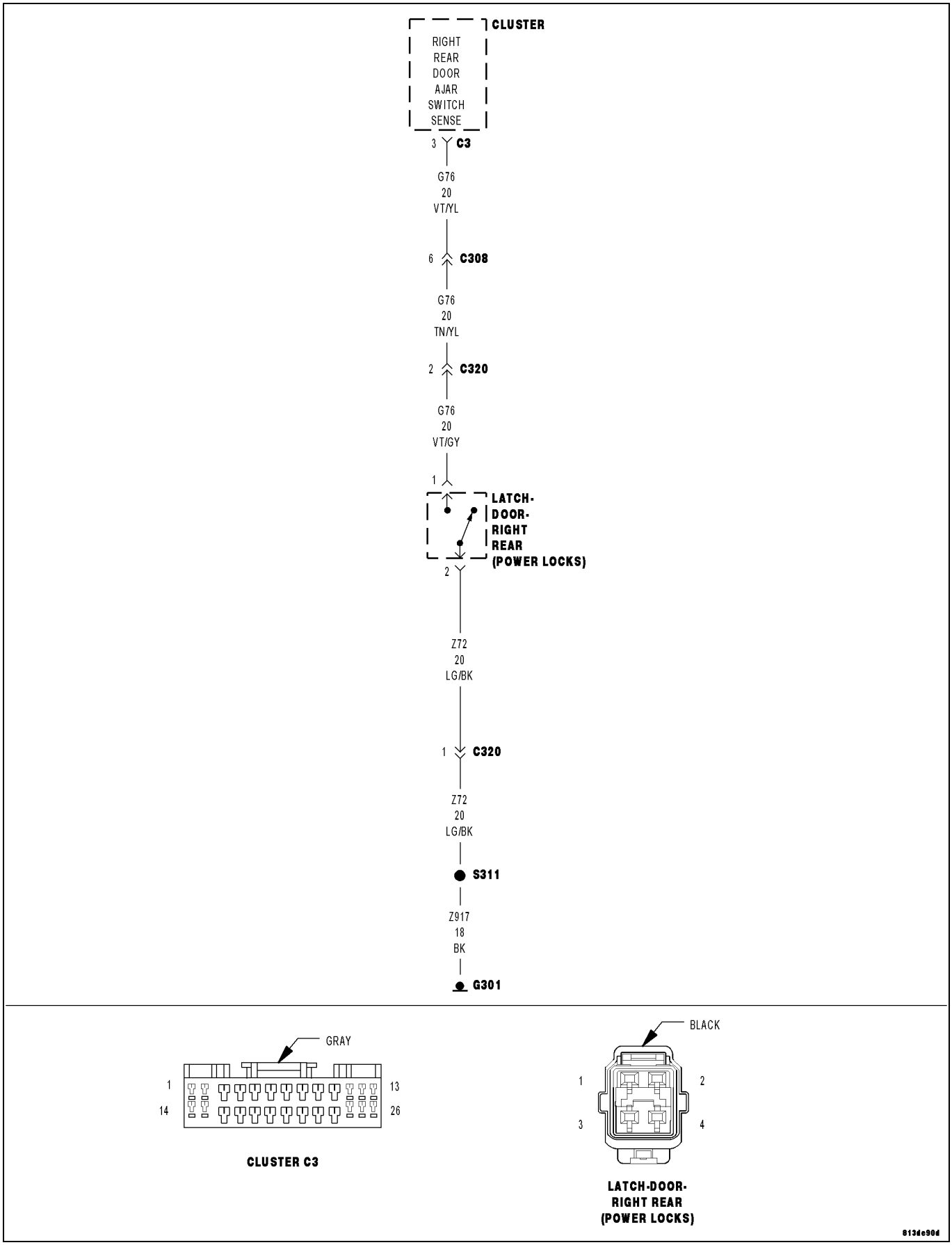

For a complete wiring diagram, **refer to the Wiring Information**.

Possible Causes
(G76) RIGHT REAR DOOR AJAR SWITCH SENSE CIRCUIT SHORTED TO GROUND
RIGHT REAR DOOR AJAR SWITCH
INSTRUMENT CLUSTER

1. RIGHT REAR DOOR AJAR SWITCH SHORT TO GROUND

1. With the scan tool in Inputs/Outputs, read the R R DOOR AJAR SW state.
2. While monitoring the scan tool, disconnect the Right Rear Door Latch connector.

Did the Switch State change from CLOSED to OPEN?

Yes

- Replace the Right Rear Door Ajar Switch.
- Perform the BODY VERIFICATION TEST. (Refer to 28 - DTC-Based Diagnostics/MODULE, Totally Integrated Power (TIPM) - Standard Procedure).

No

- Go To 2

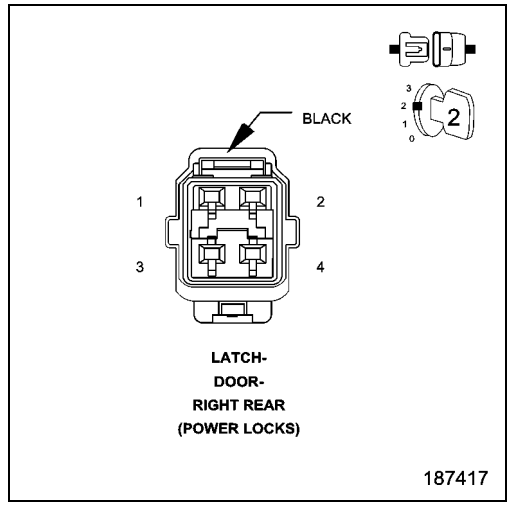

2. (G76) RIGHT REAR DOOR AJAR SWITCH SENSE CIRCUIT SHORT TO GROUND

1. Disconnect the Instrument Cluster C3 harness connector.
2. Using a 12-volt test light connected to 12-volts, probe the (G76) Right Rear Door Ajar Switch Sense circuit and test for a short to ground.

Does the test light illuminate brightly?

Yes

- Repair the (G76) Right Rear Door Ajar Switch Sense circuit for a short to ground.
- Perform the BODY VERIFICATION TEST. (Refer to 28 - DTC-Based Diagnostics/MODULE, Totally Integrated Power (TIPM) - Standard Procedure).

No

- Replace the Instrument Cluster.
- Perform the BODY VERIFICATION TEST. (Refer to 28 - DTC-Based Diagnostics/MODULE, Totally Integrated Power (TIPM) - Standard Procedure).

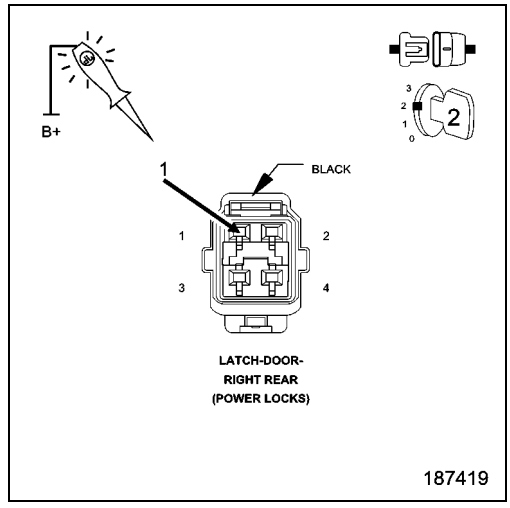

INSTRUMENT CLUSTER

TABLE OF CONTENTS

page

INSTRUMENT CLUSTER
DIAGNOSIS AND TESTING
PRNDL NOT DISPLAYING CORRECT POSITION (EATX VEHICLES). 186
ONE GAUGE INOPERATIVE - GAS ENGINES 186

Instrument Cluster

Diagnosis and Testing

■ PRNDL NOT DISPLAYING CORRECT POSITION (EATX VEHICLES)

For a complete wiring diagram, **refer to the Wiring Information**.

Possible Causes
DTC PRESENT
CLUSTER

1. DTC PRESENT

NOTE: Make sure that the correct Cluster is installed and is correctly configured for the vehicle.

NOTE: Make sure that there is communication between the Cluster and PCM before proceeding with this test.

NOTE: Diagnose and repair any DTCs before proceeding with this test.

NOTE: Make sure that the PCM passes the Shift Lever Test with the scan tool before proceeding with this test.

1. Turn the ignition on.
2. With the scan tool, read DTCs.

Does the scan tool display any Cluster or PCM DTCs?

Yes

- Cluster DTCs. (Refer to 28 - DTC-Based Diagnostics/NODE, Cabin Compartment (CCN) - Diagnosis and Testing)
- PCM DTCs. (Refer to 28 - DTC-Based Diagnostics/MODULE, Powertrain Control (PCM) - Diagnosis and Testing)

No

- Go To 2

2. CLUSTER

1. Perform the Instrument Cluster Self Test.
2. Turn the ignition off.
3. Press and hold the Trip/Reset button.
4. Turn the ignition on.
5. Observe the PRNDL display during the Self Test.

Did any part of the VF display fail to illuminate?

Yes

- Replace and program the Cluster in accordance with the Service Information.
- Perform the BODY VERIFICATION TEST. (Refer to 28 - DTC-Based Diagnostics/MODULE, Totally Integrated Power (TIPM) - Standard Procedure).

No

- The condition is not present at this time. Monitor scan tool parameters while wiggling the related wiring harness. Refer to any Technical Service Bulletins (TSB) that may apply. Visually inspect the related wiring harness and connector terminals.
- Perform the BODY VERIFICATION TEST. (Refer to 28 - DTC-Based Diagnostics/MODULE, Totally Integrated Power (TIPM) - Standard Procedure).

■ ONE GAUGE INOPERATIVE - GAS ENGINES

For a complete wiring diagram, **refer to the Wiring Information**.

Possible Causes
POWERTRAIN CONTROL MODULE
CLUSTER

1. POWERTRAIN CONTROL MODULE

1. Turn the ignition on.
2. With the scan tool, read DTCs.

Does the scan tool display any PCM DTCs?

Yes

- (Refer to 28 - DTC-Based Diagnostics/MODULE, Powertrain Control (PCM) - Diagnosis and Testing) and perform the appropriate diagnostic procedure.

No

- Go To 2

2. CLUSTER

1. Turn the ignition off.
2. Perform the Cluster Self Test.

NOTE: The Self Test can be initiated manually by depressing and holding the Trip Reset button while turning the ignition on, or by using the scan tool.

3. Observe the gauge in question while the Cluster performs the Self Test.
4. The gauges should position at the following calibrations points:
5. Speedometer MPH: 0, 20, 60, 90
6. Tachometer Gas: 0, 1000, 3000, 6000
7. Fuel: E, 1/4, 1/2, 3/4, F
8. Coolant: Cold, 1/4, 1/2, 3/4, HI
9. Volts: 6, 9, 12, 15, 17

Did the gauge in question operate properly?

Yes

- The condition is not present at this time. Monitor scan tool parameters while wiggling the related wire harness. Refer to any Technical Service Bulletins (TSB) that may apply. Visually inspect the related wiring harness and connector terminals.
- Perform the BODY VERIFICATION TEST. (Refer to 28 - DTC-Based Diagnostics/MODULE, Totally Integrated Power (TIPM) - Standard Procedure).

No

- Replace and configure the Cluster in accordance with the Service Information.
- Perform the BODY VERIFICATION TEST. (Refer to 28 - DTC-Based Diagnostics/MODULE, Totally Integrated Power (TIPM) - Standard Procedure).

POWER DOORS

TABLE OF CONTENTS

page

POWER DOORS
DIAGNOSIS AND TESTING
DRIVER DOOR LOCK INOPERATIVE. 190
ONE PASSENGER DOOR LOCK
INOPERATIVE 194

Power Doors

Diagnosis and Testing

■ DRIVER DOOR LOCK INOPERATIVE

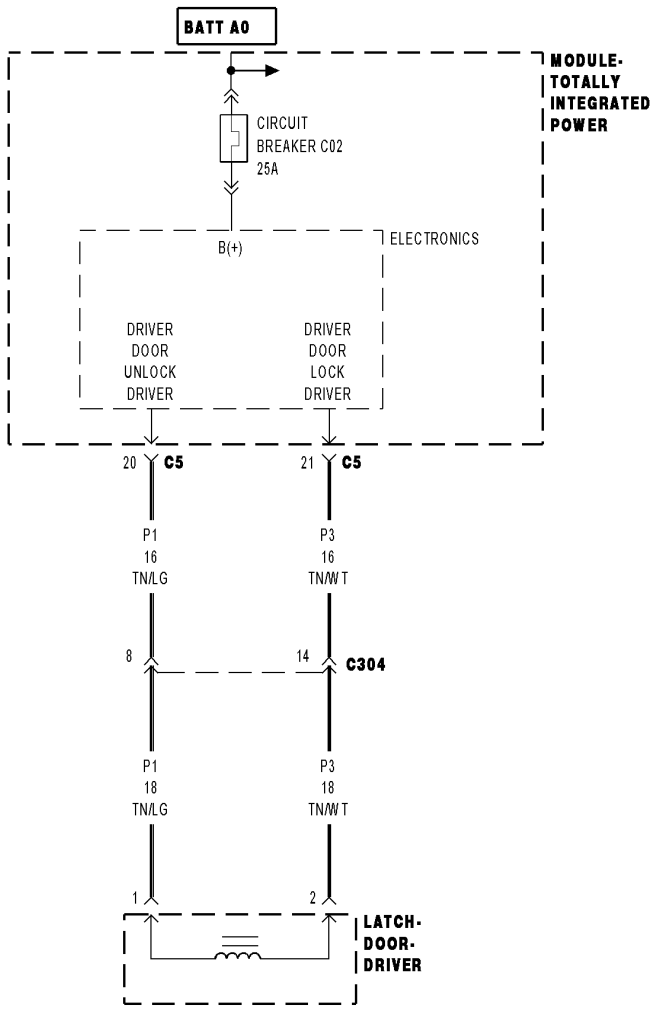

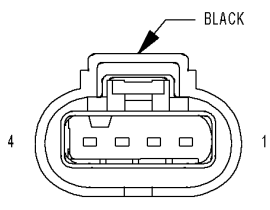

LATCH-
DOOR-
DRIVER

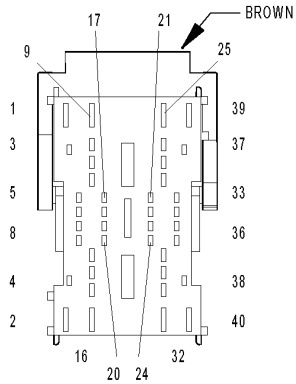

MODULE-
TOTALLY
INTEGRATED
POWER C5

01218036

For a complete wiring diagram, **refer to the Wiring Information**.

Possible Causes
(P3) DRIVER DOOR LOCK DRIVER CIRCUIT OPEN
(P3) DRIVER DOOR LOCK DRIVER CIRCUIT SHORTED TO GROUND
(P1) DRIVER DOOR UNLOCK DRIVER CIRCUIT OPEN
(P1) DRIVER DOOR UNLOCK DRIVER CIRCUIT SHORTED TO GROUND
DRIVER DOOR LATCH
TOTALLY INTEGRATED POWER MODULE (TIPM)

1. DRIVER DOOR LATCH INOPERATIVE

1. Disconnect the Driver Door Latch connector.
2. Connect a test light between the (P3) Driver Door Lock Driver circuit and the (P1) Driver Door Unlock Driver circuit.
3. Close the front doors or trip the door latches to the closed position.
4. Operate the door locks in both positions and observe the test light.

Does the test light illuminate brightly for approximately 300 ms. when the door locks are actuated?

Yes

- Replace the Driver Door Latch.
- Perform the BODY VERIFICATION TEST. (Refer to 28 - DTC-Based Diagnostics/MODULE, Totally Integrated Power (TIPM) - Standard Procedure).

No

- Go To 2

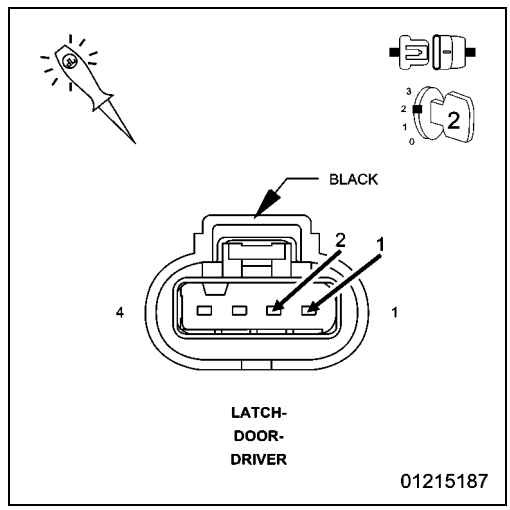

2. CHECK (P1) DRIVER DOOR UNLOCK DRIVER CIRCUIT OPEN

1. Turn the ignition off.
2. Disconnect the TIPM C5 harness connector.
3. Measure the resistance of the (P1) Driver Door Unlock Driver circuit between the Latch connector and the TIPM C5 connector.

Is the resistance below 2.0 Ohms?

Yes

- Go To 3

No

- Repair the (P1) Driver Door Unlock Driver circuit for an open.
- Perform the BODY VERIFICATION TEST. (Refer to 28 - DTC-Based Diagnostics/MODULE, Totally Integrated Power (TIPM) - Standard Procedure).

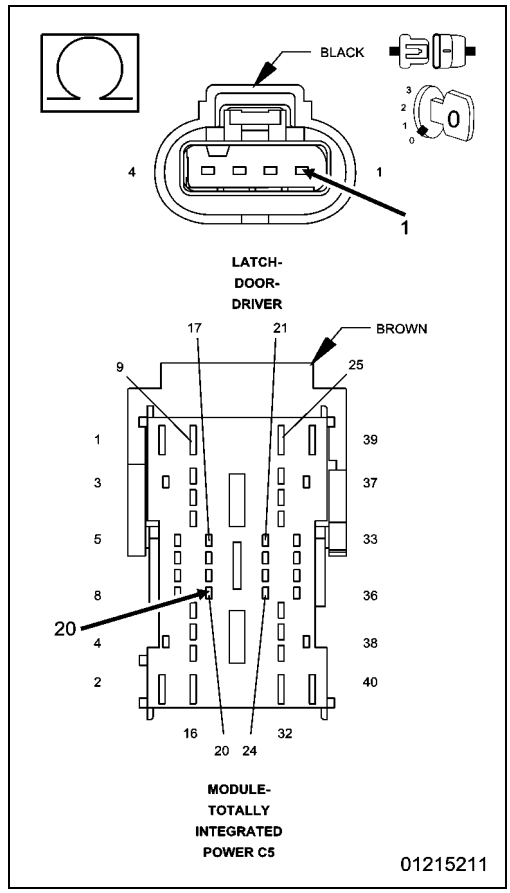

3. CHECK (P1) DRIVER DOOR UNLOCK DRIVER CIRCUIT SHORT TO GROUND

1. Measure the resistance between Ground and the (P910) Driver Door Unlock Driver circuit.

Is the resistance below 1,000 Ohms?

Yes

- Repair the (P1) Driver Door Unlock Driver circuit for a short to ground.
- Perform the BODY VERIFICATION TEST. (Refer to 28 - DTC-Based Diagnostics/MODULE, Totally Integrated Power (TIPM) - Standard Procedure).

No

- Go To 4

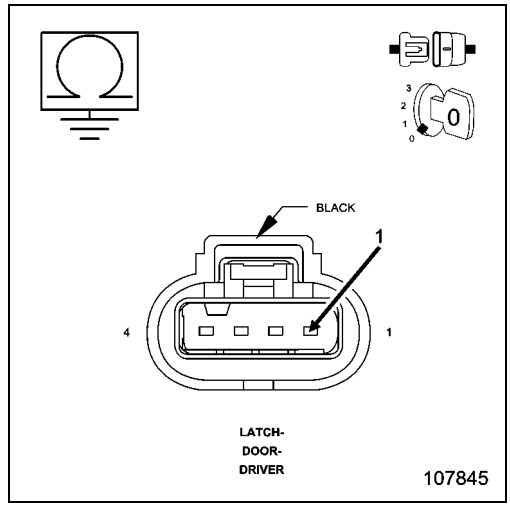

4. CHECK (P3) DRIVER DOOR LOCK DRIVER CIRCUIT OPEN

1. Measure the resistance of the (P3) Driver Door Lock Driver circuit between the TIPM C5 connector and the Driver Door Latch connector.

Is the resistance below 2.0 Ohms?

Yes

- Go To 5

No

- Repair the (P3) Driver Door Lock Driver circuit for an open.
- Perform the BODY VERIFICATION TEST. (Refer to 28 - DTC-Based Diagnostics/MODULE, Totally Integrated Power (TIPM) - Standard Procedure).

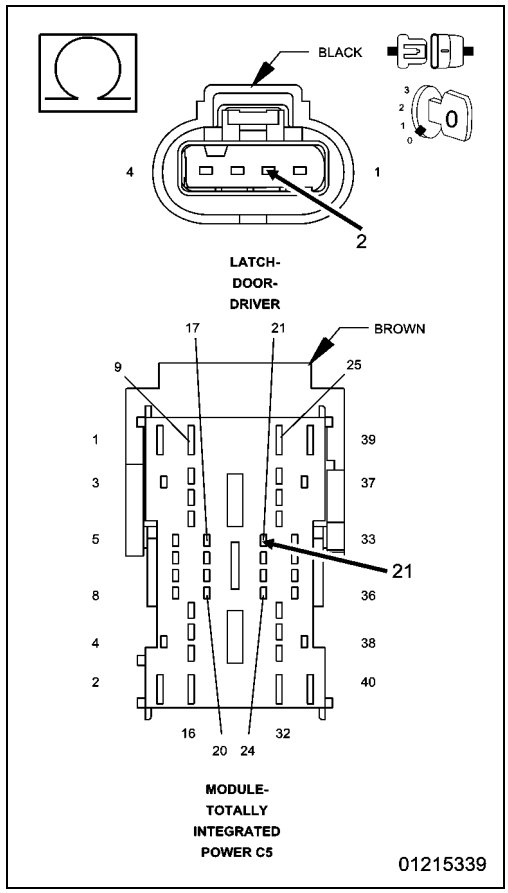

5. CHECK (P3) DRIVER DOOR LOCK DRIVER CIRCUIT SHORT TO GROUND

1. Measure the resistance between Ground and the (P3) Driver Door Lock Driver circuit.

Is the resistance below 1,000 Ohms?

Yes

- Repair the (P3) Driver Door Lock Driver circuit for a short to ground.
- Perform the BODY VERIFICATION TEST. (Refer to 28 - DTC-Based Diagnostics/MODULE, Totally Integrated Power (TIPM) - Standard Procedure).

No

- Replace the Totally Integrated Power Module in accordance with the Service Information.
- Perform the BODY VERIFICATION TEST. (Refer to 28 - DTC-Based Diagnostics/MODULE, Totally Integrated Power (TIPM) - Standard Procedure).

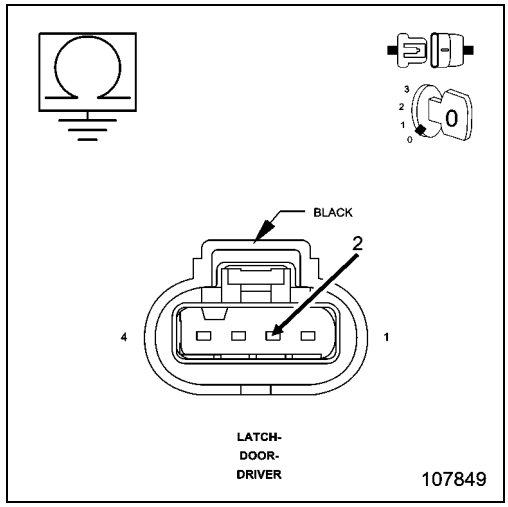

ONE PASSENGER DOOR LOCK INOPERATIVE

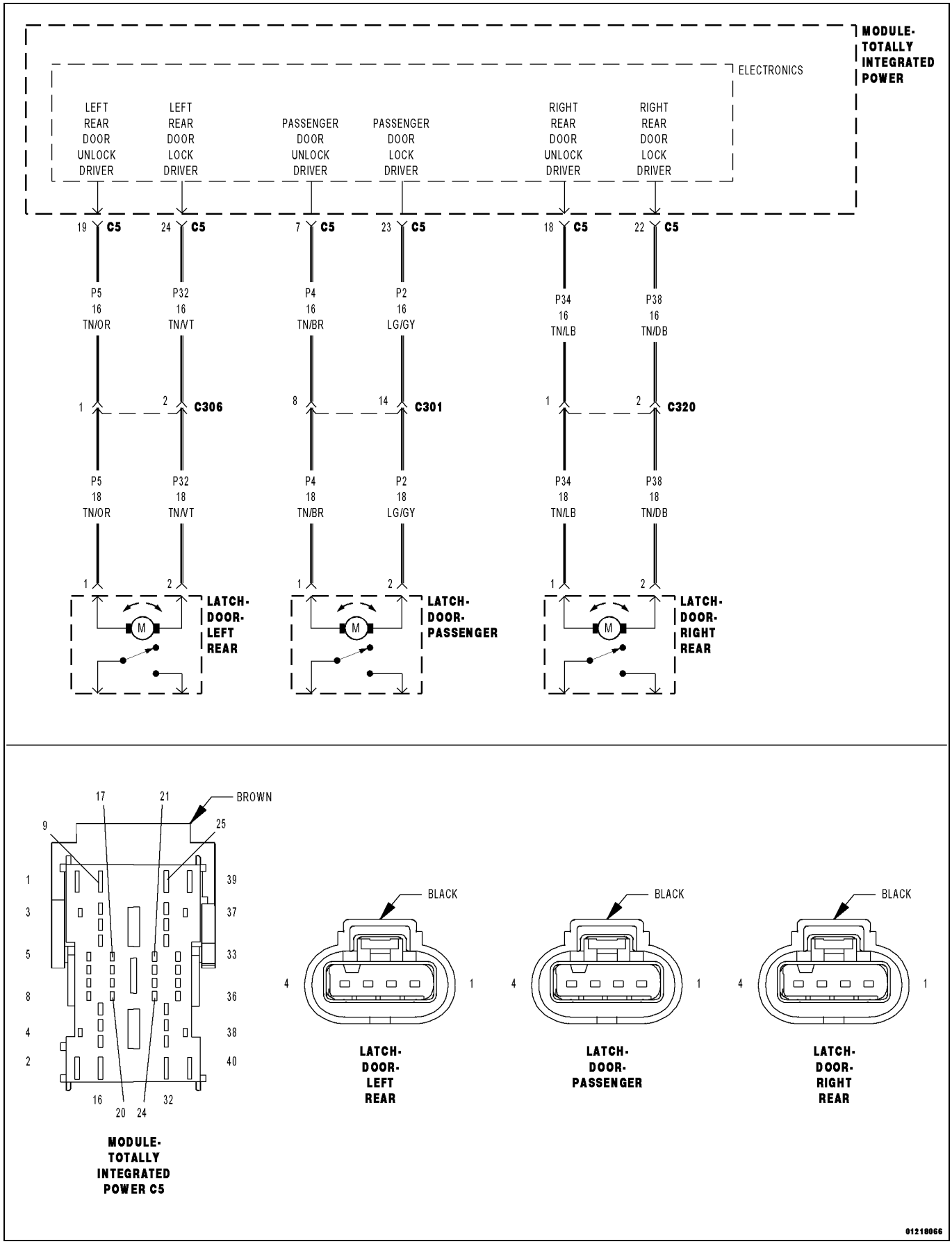

MODULE-
TOTALLY
INTEGRATED
POWER C5

LATCH-
DOOR-
LEFT
REAR

LATCH-
DOOR-
PASSENGER

LATCH-
DOOR-
RIGHT
REAR

01218066

For a complete wiring diagram, **refer to the Wiring Information**.

Possible Causes
(P32), (P38) OR (P2) DOOR LOCK DRIVER CIRCUIT OPEN
(P32, (P38) OR (P2) DOOR LOCK DRIVER CIRCUIT SHORTED TO GROUND
(P5), (P34) OR (P4) DOOR UNLOCK DRIVER CIRCUIT OPEN
(P5), (P34) OR (P4) DOOR UNLOCK DRIVER CIRCUIT SHORTED TO GROUND
TOTALLY INTEGRATED POWER MODULE (TIPM)
DOOR LATCH

Diagnostic Test

1. PASSENGER DOOR LATCH INOPERATIVE

NOTE: Graphics in this test show the Front Passenger Latch. The 2 rear passenger latches (if applicable) are similar. See the schematic for the connector cavity numbers.

1. Turn the ignition off.
2. Disconnect the inoperative Passenger Door latch connector.
3. Connect a test light between the Door Lock Driver circuit and the Door Unlock Driver circuit.
4. Turn the ignition on.
5. Operate the door locks in both positions and observe the test light.

Does the test light illuminate brightly for approximately 300 ms. when the door locks are actuated?

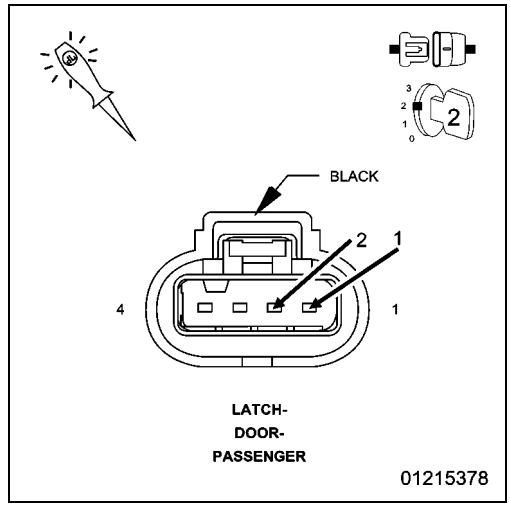

Yes

- Replace the Passenger Door Latch Assembly.
- Perform the BODY VERIFICATION TEST. (Refer to 28 - DTC-Based Diagnostics/MODULE, Totally Integrated Power (TIPM) - Standard Procedure).

No

- Go To 2

2. PASSENGER DOOR UNLOCK DRIVER CIRCUIT OPEN

1. Turn the ignition off.
2. Disconnect the TIPM C5 connector.
3. Measure the resistance of the appropriate Door Unlock Driver circuit between the Latch connector and the TIPM C5 connector.

Is the resistance below 2.0 Ohms?

Yes

- Go To 3

No

- Using the wiring diagram/schematic as a guide, measure the circuit from the in-line door harness connector to the latch connector to determine if the wire is open in the door harness or the instrument panel harness. Repair the appropriate Door Unlock Driver circuit for an open.
- Perform the BODY VERIFICATION TEST. (Refer to 28 - DTC-Based Diagnostics/MODULE, Totally Integrated Power (TIPM) - Standard Procedure).

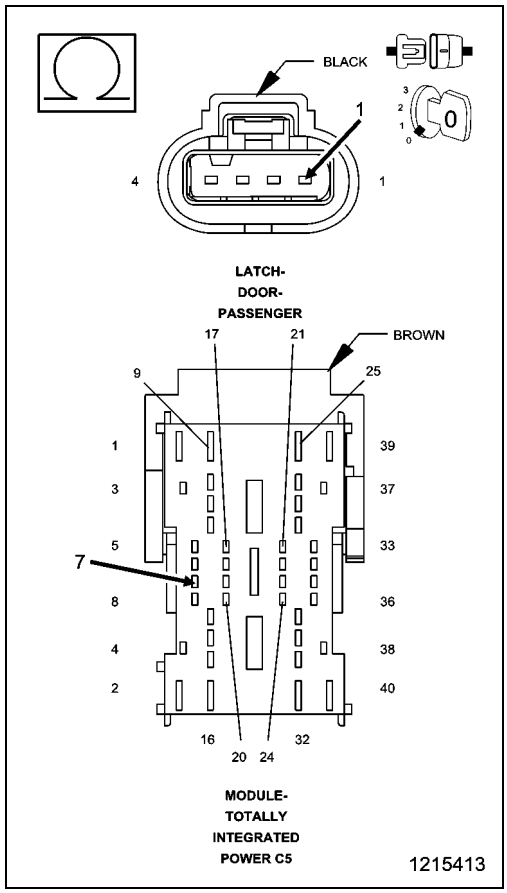

3. PASSENGER DOOR UNLOCK DRIVER CIRCUIT SHORT TO GROUND

1. Measure the resistance between Ground and the appropriate Door Unlock Driver circuit.

Is the resistance below 1,000 Ohms?

Yes

- Using the wiring diagram/schematic as a guide, measure the circuit from the in-line door harness connector to ground to determine if the wire is shorted in the door harness or the instrument panel harness. Repair the appropriate Door Unlock Driver circuit for a short to ground.
- Perform the BODY VERIFICATION TEST. (Refer to 28 - DTC-Based Diagnostics/MODULE, Totally Integrated Power (TIPM) - Standard Procedure).

No

- Go To 4

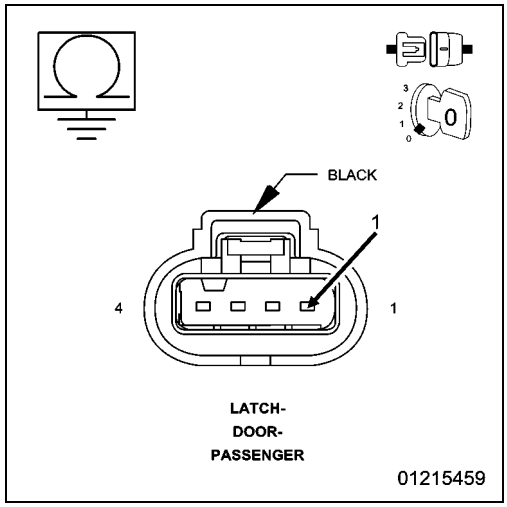

4. PASSENGER DOOR LOCK DRIVER CIRCUIT OPEN

1. Measure the resistance of the appropriate Door Lock Driver circuit between the TIPM C5 connector and the appropriate Door Latch connector.

Is the resistance below 2.0 Ohms?

Yes

- Go To 5

No

- Using the wiring diagram/schematic as a guide, measure the circuit from the in-line door harness connector to the latch connector to determine if the wire is open in the door harness or the instrument panel harness. Repair the appropriate Door Lock Driver circuit for an open.
- Perform the BODY VERIFICATION TEST. (Refer to 28 - DTC-Based Diagnostics/MODULE, Totally Integrated Power (TIPM) - Standard Procedure).

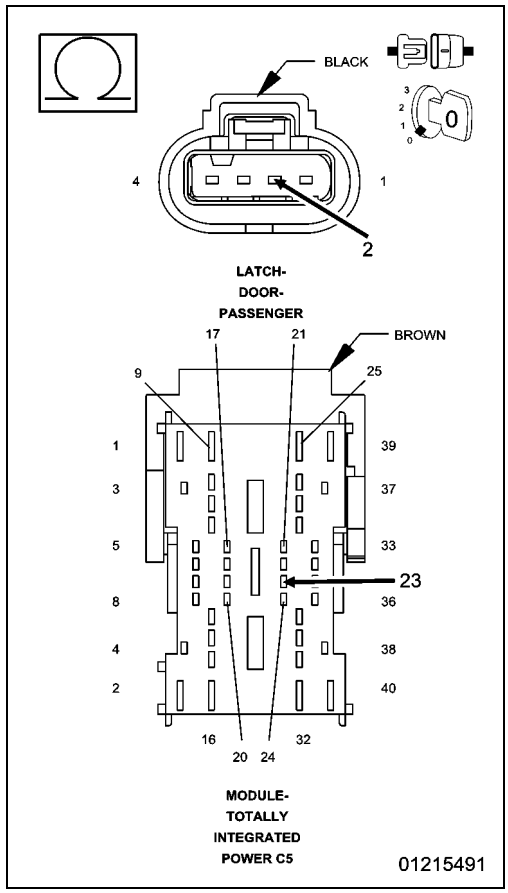

5. PASSENGER DOOR LOCK DRIVER CIRCUIT SHORT TO GROUND

1. Measure the resistance between Ground and the appropriate Door Lock Driver circuit.

Is the resistance below 1,000 Ohms?

Yes

- Using the wiring diagram/schematic as a guide, measure the circuit from the in-line door harness connector to ground to determine if the wire is shorted in the door harness or the instrument panel harness. Repair the appropriate Door Lock Driver circuit for a short to ground.
- Perform the BODY VERIFICATION TEST. (Refer to 28 - DTC-Based Diagnostics/MODULE, Totally Integrated Power (TIPM) - Standard Procedure).

No

- Replace the Totally Integrated Power Module in accordance with the Service Information.
- Perform the BODY VERIFICATION TEST. (Refer to 28 - DTC-Based Diagnostics/MODULE, Totally Integrated Power (TIPM) - Standard Procedure).

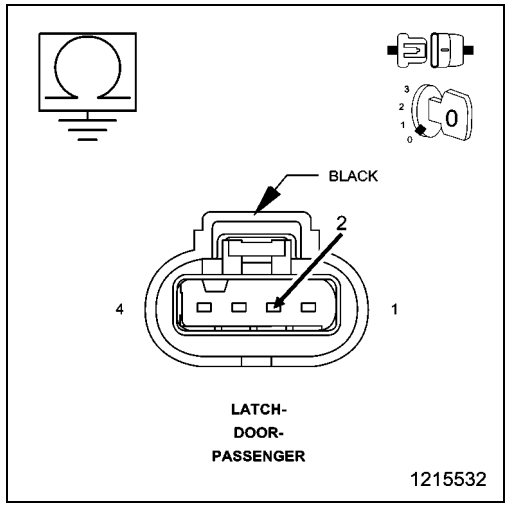

STARTING

TABLE OF CONTENTS

page

STARTING
DIAGNOSIS AND TESTING
REMOTE START INHIBITORS 200
REMOTE START POOR PERFORMANCE . . .201

Starting

Diagnosis and Testing

■ REMOTE START INHIBITORS

1. Using the scan tool, select ECU VIEW.
2. Select the TIPM or FCM section.
3. Select MORE OPTIONS
4. Select SYSTEM TESTS
5. Select REMOTE START INHIBIT DATA.

The following table below is a list of possible causes for the inoperative Remote Start System. If any of the following conditions exist, the Remote Start System will not work. Use this information as a guide to the diagnosis of the Remote Start System.

- ABORT
- BATTERY VOLTAGE HIGH
- BATTERY VOLTAGE LOW
- BRAKE PRESSED
- COOLANT TEMPERATURE HIGH
- CRANK NO START
- DRIVER DOOR AJAR
- PASSENGER DOOR AJAR
- LEFT REAR DOOR AJAR
- RIGHT REAR DOOR AJAR
- TRUNK/LIFTGATE AJAR
- HOOD AJAR
- NO HOOD SWITCH (INOPERATIVE)
- EXCESSIVE GLOW PLUG TIME (DIESEL ONLY)
- FAILED COUNTER REACHED (START)
- HAZARD LAMPS (SWITCH PRESSED)
- IGNITION IN RUN/START
- IGNITION NOT IN LOCK
- IGNITION SNA (SIGNAL NOT AVAILABLE FROM OTHER MODULE)
- INVALID KEY
- KEY IN IGNITION
- LOW RPM SHUTDOWN
- MIL ON
- NO AUTOMATIC TRANSMISSION
- NORMAL TIME OUT CUSTOMER ACCESS
- NORMAL TIME OUT RUN MODE (15 MINUTES)
- NOT CONFIGURED
- NOT ENABLED
- NOT IN PARK OR NEUTRAL
- NOT PROGRAMMED
- OIL PRESSURE LOW
- PANIC MODE (ACTIVATED)
- POWER LOSS
- RKE OFF MESSAGE
- RPM TOO HIGH (EXCEEDS 2500)
- START COUNTER REACHED
- VEHICLE SPEED HIGH
- VTA ALARMING

If all of the previous items checked OK, and the remote starting system will not operate, refer to the REMOTE START POOR PERFORMANCE diagnostic procedure. (Refer to 29 - Non-DTC Diagnostics/Starting - Diagnosis and Testing).

■ REMOTE START POOR PERFORMANCE

For a complete wiring diagram, **refer to the Wiring Information**.

Theory of Operation

The customer may notice that the signal range of the Remote Keyless Entry (RKE) system is reduced. The RKE key fob may need to be closer than 3 meters (10 feet) before the functions available on the key fob will operate. This condition may be due to the RKE antenna. The diagnostic flow chart is provide as a diagnostic aid for dealer technician.

1. LOCK/UNLOCK FUNCTION

NOTE: For all RKE tests, the key must be out of the ignition.

Does the Lock/Unlock function with the interior door switches?

Yes

- Go To 2

No

- Perform Power Lock/Unlock System diagnosis.

2. RKE FUNCTION AT 20 FEET

Does the RKE Function at 20 feet?

Yes

- Go To 3

No

- Go To 4

3. RKE FUNCTION AT 100 FEET

Does the RKE Function at 100 feet?

Yes

- Test complete.

No

- Replace the antenna in accordance with the Service Information.

4. WCM/WIN DTCS

Does the WCM/WIN display any DTCs?

Yes

- Perform WCM/WIN diagnosis.

No

- Go To 5

5. RKE FUNCTION INSIDE VEHICLE

1. Sit inside the vehicle.
2. Push the Key Fob RKE Lock/Unlock buttons.

Does the RKE Lock/Unlock work?

Yes
- Go To 6

No
- Go To 9

6. ANTENNA COAX CABLE NOT PROPERLY CONNECTED

1. Pull on the Antenna COAX cable connector at the WCM/WIN.

Did the connector come off without releasing the lock tab (not properly seated)?

Yes
- Connect Antenna
- Go To 2

No
- Go To 7

7. VERIFY COAX CONNECTION AT WCM/WIN

1. Pull Antenna connector off WCM/WIN. Verify no bent pins.

Are there any bent pins?

Yes
- Replace antenna.
- Go To 2

No
- Go To 8

8. PINCHED WIRE

1. Inspect the ANTENNA Lead COAX Cable for a pinched wire.

Has the COAX cable been pinched or damaged?

Yes
- Replace antenna.
- Go To 2

No
- Perform WCM/WIN diagnostics.

9. RKE FUNCTION INSIDE VEHICLE

1. Disconnect the Antenna COAX Cable lead connector to WCM/WIN.
2. Sit inside the vehicle. Push the RKE Key Fob Lock/Unlock buttons.

Does the RKE Lock/Unlock work?

Yes
- Replace the antenna.

No
- Go To 10

10. CHECK FOR 12 VOLTS AT WCM/WIN

1. Connect the Antenna Lead to WCM/WIN.
2. Disconnect the WCM/WIN harness connector.
3. Using the appropriate wiring diagrams, check for Fused B+ at the WCM/WIN harness connector.

Is Fused B+ present?

Yes

- Perform WCM/WIN diagnostics.

No

- Repair the appropriate circuits.

TELECOMMUNICATION

TABLE OF CONTENTS

page

TELECOMMUNICATION
DIAGNOSIS AND TESTING
DIAGNOSIS AND TESTING - UCI SERVICE
DIAGNOSTICS 206

Telecommunication

Diagnosis and Testing

■ DIAGNOSIS AND TESTING - UCI SERVICE DIAGNOSTICS

CONDITION	POSSIBLE CAUSES	CORRECTION
RADIO DOES NOT ENTER UCI / iPOD MODE	1. iPOD not connected	1. Check and connect device.
	2. iPOD faulty	2. Check device, use known good device to check connection.
	3. iPOD battery completely discharged.	3. When unplugged, Check if the iPOD works, if not iPOD may be in deep battery discharge. Charge it on UCI or seperately. If the iPOD does not work at all (or does not charge at all), see iPOD dealer/service.
	4. Vehicle not equipped with UConnect	4. Notify customer vehicle not equipped. Check if Mopar kit available for this vehicle.
	5. iPOD works, but when connected to UCI, it does not.	5. Ask customer to update the iPOD firmware to the latest from the iPOD manufactures website (www.apple.com).
	6. iPOD harness wiring faulty	6a. Use scan tool to determine "UCI Connection State", if shows no harness connected with iPOD plugged in, then wiring is suspect / faulty. 6b. Check wiring and repair if needed.
	7. Radio Faulty	7. Refer to Radio Diagnostic Service Information.
	8. UConnect module Faulty	8. Replace the Hands Free Module in accordance with the Service Information.
iPOD DOES NOT SHOW "OK TO DISCONNECT" SCREEN	1. iPOD faulty	1. Check device, use known good device to check connection
	2. iPOD harness wiring faulty	2. Check wiring and repair if needed.
	3. UConnect module Faulty	4. Replace the Hands Free Module in accordance with the Service Information.
iPOD DOES NOT CHARGE	1. iPOD not connected	1. Check and connect device
	2. iPOD faulty / iPOD battery faulty	2. Check device, use known good device to check connection
	3. iPOD harness wiring faulty	3. Check wiring and repair if needed.
	4. UConnect module Faulty	4. Replace the Hands Free Module in accordance with the Service Information.
iPOD DOES NOT PLAY AUDIO	1. iPOD not connected	1. Check and connect device

CONDITION	POSSIBLE CAUSES	CORRECTION
	2. iPOD faulty	2. Check device, use known good device to check connection
	3. iPOD harness wiring faulty	3. Check wiring and repair if needed.
	4. Radio Faulty	4. Check that radio audio is audible in other modes
	5. UConnect module Faulty	5. Replace the Hands Free Module in accordance with the Service Information.
CANNOT GET RADIO TO ENTER UCI MODE	1. iPOD not plugged into UCI port	1. Make sure cable is available to customer (usually in glovebox of new vehicles) and show customer how to plug in device.
	2. iPOD plugged into audio jack on radio	2. iPOD must be plugged into UCI port using provided cable in glovebox. Connecting via audio jack or USB port to radio will not provide UCI mode access.
	3. iPOD plugged into USB jack on radio	3. iPOD must be plugged into UCI port using provided cable in glovebox. Connecting via audio jack or USB port to radio will not provide UCI mode access.
	4. No cable provided to customer	4. Cable not provided from factory. Mopar cable P/N is 82210787
ALPHA SORT BUTTON ON REN / REZ RADIO DOES NOT STAY ON DURING BROWSE MODE	1. Customer iPOD is using version of iTunes software with known software bug (Version 7.0)	1. Ask customer to update the iPOD firmware to the latest from the iPOD manufactures website (www.apple.com)
	2. Customer has entries stored on their device which begin with non-standard English lanaguage characters	2. The system may not recognize entries which begin with characters from certain non-English langauges such as Russian, Japanese, Chinese, Hebrew, etc.. This could casue the alpha-sort function to fail and the button to turn off.
ALPHA SORT BUTTON ON REN / REZ RADIO IS GRAYED OUT FOR A WHILE BEFORE IT CAN BE SELECTED	1. This is Normal Behavior, the button is grayed out while the song / artist / album / etc. data is being alphabetized by the UCI system.	1. Not an issue, The time the button is grayed out is directly proportional to the number of entries to be alphabetized.
ERROR MESSAGE DISPLAYED ON RADIO WHEN ATTEMPTING TO ENTER UCI MODE.	1. Error message: Comm Error	1a. Use the scan tool to determine UCI Connection state, if shows no harness connected wiring is suspect / faulty. 1b. Check wiring and repair if needed. 1c. Unplug and reconnect iPOD.
	2. Error Message:Not Supported	2. Ask customer to update the iPOD firmware to the latest from the iPOD manufactures website (www.apple.com)
	3. Error Message: No Files Found on iPOD	3. iPOD has no audio files on it, have the customer put some audio files on the iPOD and try to reconnect the device.
	4. Error Message: Unknown Error. iPOD unavailable	4a. Unplug and reconnect iPOD. 4b. Check wiring and repair if needed.

CONDITION	POSSIBLE CAUSES	CORRECTION
CUSTOMER IS UNABLE TO COPY FILES FROM iPOD TO RADIO HARD DRIVE	1. This feature is only available by connecting the iPOD to the USB port on the radio AND using the iPOD as a storage device. It is not possible to download audio tracks you play on the iPOD to the radio Hard Drive	1a. Ensure customer is connecting iPOD to USB port on radio. 1b. Feature not available by plugging iPOD into the UCI port.
iPOD DOES NOT TURN OFF WHEN THE VEHICLE IS TURNED OFF AND THE iPOD IS LEFT PLUGGED IN	1. This is normal iPOD behavior. The iPOD has a default setting where it will stay on for X minutes after the vehicle is turned off.	1. Not an issue.

Description	Group-Page
ACCUMULATOR	21-90
ACTUATOR, Axle Locker	03-77
ACTUATOR, Blend Door	24-12
ACTUATOR, Mode Door	24-16
ACTUATOR, Recirculation Door	24-20
ADAPTER, Disc Brake Caliper	05-18
ADJUSTER, Seat Belt Turning Loop	10-15
ADJUSTMENTS	05-78
AIR BAG, Driver	10-17
AIR BAG, Passenger	10-25
AIR BAG, Side Curtain	10-29
AIR CLEANER	09-34, 09-174, 09-334
AMPLIFIER	8A-6
AMPLIFIER (AMP)	28-30
ANCHOR, Child Seat	10-32
ANTENNA, Navigation	8T-4
ANTENNA, Remote Start	8F-49
ANTENNA, Satellite, Audio	8A-9
ANTENNA, Satellite, Video	8A-10
ARM, Lower Control	02-18, 17-3
ARM, Upper Control	02-27, 17-5
ARM, Wiper	8R-8
ASSEMBLY, Input Clutch	21-91, 21-261
ASSEMBLY, Transmission Solenoid and Pressure Switch	21-115
ASSEMBLY, Transmission Solenoid and TRS	21-271
ASSEMBLY, Variable Valve Timing, 5.7L	09-375
BACKLITE	23-350
BACKLITE, Sliding	23-353
BALL JOINT, Suspension, Lower	02-28
BALL JOINT, Suspension, Upper	02-30
Basecoat/Clearcoat Finish	23-256
BATTERY	8F-7
BEARING	21-117
BEARING, Axle Shaft	03-80, 03-166
BEARING, Differential Side	03-82, 03-167
BEARING, Drive Shaft Center, Light Duty	03-11
BEARING(S), Connecting Rod	09-216
BEARING(S), Crankshaft, Main	09-72, 09-218, 09-377
BELT, Serpentine	07-16
BEZEL, Center Console	23-212
BEZEL, Instrument Cluster	23-164
BEZEL, Instrument Panel, Center	23-165
BEZEL, Instrument Panel, Driver Side	23-171
BIN, Instrument Panel	23-172
BIN, Storage	23-214
BLADE, Wiper	8R-10
BODY AND CABLE, Antenna	8A-11
BODY, Air Cleaner	09-35, 09-175, 09-336
BOOSTER, Power Brake	05-22
BOTTLE, Coolant Recovery	07-26
BOX, Pickup	23-118
BRACKET, Caliper Mounting	05-24
BRACKET, Rear Seat Back Mounting	23-260
BUCKLE, Seat Belt	10-36
BUMPER, Front	13-4
BUMPER, Jounce	17-6
BUMPER, Rear	13-7
BUSHING, Steering Gear	19-36
CABLE, Antenna, Instrument Panel	8A-14
CABLE, Antenna, Satellite	8A-15
CABLE, Hood Release	23-152
CABLE, Parking Brake	05-64
CABLE, Shift	21-118, 21-273
CABLE, Tailgate	23-28
CABLES, Battery	8F-15
CALIPER, Disc Brake	05-25
CAM, Turn Signal Cancel	8L-19
CAMERA, Rear	8A-18
CAMSHAFT, Engine	09-43, 09-59, 09-191, 09-379
CANISTER, Vapor	25-4
CAP, Fuel Filler	25-8
CAP, Radiator	07-28
Capacities and Recommended Fluids	04-2
CAPACITOR, Ignition	8I-6
CARPET, Floor	23-216
CASE ASSEMBLY, Differential	03-83, 03-168
CASE ASSEMBLY, Differential, Trac-Lok	03-172
CENTER, Electronic Vehicle Information	8M-2
CHAIN and SPROCKETS, Timing	09-135, 09-277, 09-466
CHANNEL, Sunroof Drain	23-368
CLOCKSPRING	10-41
CLUTCH	21-438
CLUTCH, Low and Reverse	21-277
COIL, Ignition	8I-7
COMMUNICATION	8E-4
COMPONENTS, Radio Noise Suppression	8A-23
COMPRESSOR, A/C	24-82
CONDENSER, A/C	24-95
CONNECTOR, Data Link	8E-7
CONNECTOR, Trailer Tow	8L-19
CONSOLE, Floor	23-218
CONTROL VALVE, Oil Intake	09-433
CONTROL, A/C and Heater	24-22
CONTROLLER, Occupant Restraint	10-46
CONTROLLER, Occupant Restraint (ORC)	28-182
CONVERTER, Catalytic	11-8
COOLANT	07-30
COOLER, Power Steering	19-50
COOLER, Transmission Oil	07-60
CORE, Heater	24-99
CORE, Service Port Valve	24-101
COUPLING, Steering Column, Lower	19-19
COUPLING, Steering Column, Upper	19-21
COVER, Cowl Panel	23-125
COVER, Differential	03-89, 03-178
COVER, Engine	09-325
COVER, Instrument Panel	23-174
COVER, Oil Pump	21-281
COVER, Seat Cushion, Front	23-261
COVER, Seat Cushion, Rear	23-280
COVER, Steering Column Opening	23-186
COVER, Structural Dust	09-73, 09-220, 09-388
COVER, Sunroof Mechanism	23-370
COVER, Tailgate	23-30
COVER(S), Cylinder Head	09-46, 09-64, 09-204, 09-350
COVER(S), Engine Timing	09-141, 09-288, 09-475
CRANKSHAFT	09-75, 09-221, 09-391
CROSSMEMBER, Front	13-29
CROSSMEMBER, Transmission	13-31
CUPHOLDER, Instrument Panel	23-189
CYLINDER, Door Lock	23-44
CYLINDER, Lock	23-32
DAMPER, Vibration	09-79, 09-227, 09-399
DECOUPLER, Generator	8F-28
DEFLECTOR, Wind	23-372
DESCRIPTION	05-78, 24-2
DISPLAY, Park Assist	8B-8
DOOR	23-44
DOOR, Fuel Fill	23-126
DOOR, Rear	23-82
DRIER, A/C Receiver	24-103
DRIVING CLUTCHES	21-121
DUCT, Defroster	24-38
DUCT, Floor Console	24-39
DUCT, Floor Distribution, Rear	24-41
DUCT, Instrument Panel	24-41
DUCT, Instrument Panel Demister	24-48
END, Tie Rod	19-38
EVAPORATOR, A/C	24-104
EXHAUSTER	23-224
FAN, Cooling, Electric	07-31
FAN, Cooling, Viscous	07-33
FASCIA, Front	13-10
Fastener Identification	00-4
Fastener Usage	00-7
FENDER, Front	23-127
FILTER, Engine Oil	09-108, 09-251, 09-435
Finesse Sanding, Buffing, and Polishing	23-256
FITTING, Quick Connect	14-9
FLAG, Mirror	23-51
FLEXPLATE	09-82, 09-230, 09-403
FLUID	05-33, 19-51, 21-385, 21-447
FLUID and FILTER	21-122, 21-282
Fuse Locations and Types	04-11
FUSE, IOD	8W-2
Gap and Flush	23-410
GAUGE, Engine Temperature	8J-15
GAUGE, Fuel	8J-16
GAUGE, Oil Pressure	8J-17
GAUGE, Voltage	8J-18
GEAR, Ring and Pinion	03-90, 03-179
GEARTRAIN, Planetary	21-125, 21-287
GENERATOR	8F-35
GLASS, Door	23-52, 23-88
GLASS, Sunroof	23-374
GLOVE BOX, Instrument Panel	23-192
GRID, Defogger, Rear	8G-3
GRILLE	23-132
GUIDE, Sunroof, Glass	23-377
HANDLE, Exterior	23-56, 23-92
HANDLE, Interior	23-55, 23-91
HANDLE, Latch Release	23-33
HANDLE, Parking Brake Release	05-69
HEADLINER	23-225
HEATER PERFORMANCE	24-8
HEATER, Engine Block	07-36
HINGE, Door	23-59, 23-95
HINGE, Hood	23-155
HITCH, Trailer	13-34
Hoisting	04-13
HOLDING CLUTCHES	21-125, 21-291
HOOD	23-156
HOOK(S), Tow, Front	13-35
HORN	8H-3
HOSE, Power Steering, Independent Front Suspension	19-52
HOSES AND TUBES, Washer	8R-12
HOUSING, HVAC	24-50
HUB AND BEARING	02-31
HVAC, ATC	28-532
HVAC, MTC	28-448
HYDRAULIC CONTROL UNIT (HCU)	05-88
INDICATOR, ABS	8J-19
INDICATOR, Air Bag	8J-20
INDICATOR, Brake\Parking Brake	8J-21
INDICATOR, Cargo Lamp	8J-22
INDICATOR, Charging	8J-23
INDICATOR, Check Gauges	8J-24
INDICATOR, Cruise	8J-25
INDICATOR, Door Ajar Warning	8J-26
INDICATOR, ESP, with BAS	8J-26
INDICATOR, ETC	8J-27
INDICATOR, Fog Lamp	8J-28
INDICATOR, Fuel Saver	8J-29
INDICATOR, Gas Cap	8J-29
INDICATOR, High Beam	8J-30
INDICATOR, Low Fuel	8J-31
INDICATOR, Low Oil Pressure	8J-32
INDICATOR, Low Tire Pressure	8J-32
INDICATOR, Malfunction	8J-33
INDICATOR, No BUS	8J-34
INDICATOR, No Fuse	8J-35
INDICATOR, Oil Change	8J-35
INDICATOR, Seatbelt Warning	8J-36
INDICATOR, Security System	8J-37
INDICATOR, Service 4WD	8J-38
INDICATOR, Shift (Transfer Case)	8J-39
INDICATOR, Tow/Haul	8J-41
INDICATOR, Traction Control	8J-42
INDICATOR, Transmission Range	8J-43
INDICATOR, Transmission Temperature	8J-44
INDICATOR, Washer Fluid	8J-45
INDICATORS, Turn Signal	8J-46
INJECTOR(S), Fuel	14-38
INSULATOR, Engine Mount, Front	09-98, 09-242, 09-429
INSULATOR, Engine Mount, Rear	09-98, 09-242, 09-428
International Vehicle Control and Display Symbols	00-7
ISOLATOR, Body	23-135
JOINT, Drive Shaft, Inner	03-40
JOINT, Drive Shaft, Outer	03-42
Jump Starting	04-15

Description	Group-Page
JUNCTION BLOCK, Brake Tube	05-34
KEY, Transponder	8Q-8
KNOB, Tilt Lever Release	19-22
KNUCKLE, Steering	02-34
LABEL, Vehicle Emission Certification Information (VECI)	00-13
LAMP, Bezel, Center	8L-75
LAMP, Cargo	8L-77
LAMP, Center High Mounted Stop	8L-21
LAMP, Dome	8L-78
LAMP, Fog	8L-23
LAMP, Glove Box	8L-80
LAMP, License Plate	8L-27
LAMP, Mirror	8L-30
LAMP, Reading	8L-82
LAMP, Storage Box	8L-84
LAMP, Tail Stop Turn	8L-32
LAMP, Underhood	8L-34
LAMP, Vanity	8L-89
LATCH	23-36
LATCH, Door	23-61, 23-97
LATCH, Hood	23-157
LEVER, Gearshift	19-26
LIFTER(S), Hydraulic, Roller	09-404
LINE, A/C Discharge	24-108
LINE, A/C Liquid	24-113
LINE, A/C Suction	24-116
LINK, Stabilizer Bar	02-36, 17-7
LINKAGE, Wiper Arm	8R-13
Maintenance Schedules	04-16
MANIFOLD, Exhaust	09-120, 09-262, 09-450
MANIFOLD, Intake	09-122, 09-267, 09-457
MASTER CYLINDER, Brake	05-36
MDS SYSTEM	09-330
MECHANISM, Brake Transmission Shift Interlock	21-126, 21-293
Metric System	00-14
MIRROR, Automatic Day and Night	8N-12
MIRROR, Outside Rearview	23-137
MIRROR, Outside Rearview, Glass	23-139
MIRROR, Rearview	23-236
MODULE, Anti-Lock Brake System	8E-7
MODULE, Antilock Brake (ABS)	28-664
MODULE, Balance Shaft	09-83
MODULE, Door	8E-8
MODULE, Driver Door (DDM), (DMFL)	28-873
MODULE, Drivetrain Control	8E-10
MODULE, Drivetrain Control (DTCM)	28-1006
MODULE, Fuel Pump	14-17
MODULE, Fuel Pump, Electric	14-16
MODULE, Hands Free (HFM)	8T-5, 28-1104
MODULE, Heated Seat	8E-13
MODULE, Heated Seat (HSM)	28-1152
MODULE, Memory	8E-16
MODULE, Memory Seat (MSMD)	28-1327
MODULE, Park Assist	8B-11
MODULE, Park Assist (PAM)	28-1458
MODULE, Passenger Door (PDM), (DMFR)	28-1542
MODULE, Power Inverter	8W-3
MODULE, Power, Blower Motor	24-25
MODULE, Powertrain Control	8E-19
MODULE, Powertrain Control (PCM), 42RLE	28-1662
MODULE, Powertrain Control (PCM), 545RFE	28-1844
MODULE, Powertrain Control (PCM), NGC	28-2134
MODULE, Steering Column	8E-26
MODULE, Totally Integrated Power (TIPM)	8W-7, 28-3345
MODULE, Transmission Control	8E-28
MOLDING, Door Belt, Inner	23-63, 23-98
MOLDING, Door Belt, Outer	23-65, 23-100
MOLDING, Front Wheel Opening	23-141
MOLDING, Rear Wheel Opening	23-142
MONITOR, Media System	8A-27
MOTOR, Adjustable Pedals	05-10
MOTOR, Blower	24-67
MOTOR, Door Lock	8N-4
MOTOR, Lumbar	8N-20
MOTOR, Seat Adjuster	8N-21
MOTOR, Shift	21-386, 21-448
MOTOR, Shift, with Mode Sensor	21-387
MOTOR, Sunroof	8N-46
MOTOR, Vented Seat	8G-21
MOTOR, Window Regulator	8N-54
MOTOR, Window Regulator, Rear Sliding Window	8N-54
MOTOR, Wiper	8R-15
MUFFLER, Exhaust	11-10
NAMEPLATE	23-145
NODE, Cabin Compartment (CCN)	28-3708
NODE, Wireless Ignition (WIN)	28-3827
NOZZLE, Washer	8R-17
ODOMETER	8J-47
OIL	09-109, 09-252, 09-435
OIL, Refrigerant	24-120
Onboard Refuel Vapor Recovery (ORVR)	25-8
Opening Dimensions	23-421
OPERATION	05-78, 24-4
OUTLET, Air	24-69
OUTLET, Power, 115 V	8W-13
OUTLET, Power, 12 V	8W-10
OUTLET, Power, Console	8W-14
OUTPUT SHAFT ASSEMBLY, Front Axle	03-98
PAD, Heater	8G-11
PAD, Vented Seat	8G-23
PADS, Brake	05-39
Paint Code	23-257
Paint Touch-Up	23-257
PAN, Oil	09-110, 09-253, 09-437
PANEL, A-Pillar Trim, With Grab Handle	23-238
PANEL, B-Pillar Trim, Lower	23-239
PANEL, B-Pillar Trim, Upper	23-241
PANEL, C-Pillar Trim, Lower	23-243
PANEL, C-Pillar Trim, Upper	23-245
PANEL, Cab Back Trim	23-247
PANEL, Cowl Trim	23-250
PANEL, Door Trim	23-66
PANEL, Instrument	23-193
PANEL, Rear Door Trim	23-101
PEDAL, Accelerator	14-41
PEDAL, Parking Brake	05-70
PEDAL(S), Brake and/or Accelerator	05-48
PIPE, Exhaust	11-12
PLATE, Brake Backing	05-52
PLATE, Carrier	23-68, 23-104
PLATE, Scuff, Rear Door Sill	23-251
PLATE, Skid, Front	13-36
PLATE, Skid, Transfer Case	13-37
PLUG, Core	09-231
POD, Switch	8J-48
PROP, Gas	23-159
PULLEY, Idler	07-21
PULLEY, Power Steering Pump	19-54
PUMP, Engine Oil	09-113, 09-254, 09-441
PUMP, Transmission Oil	21-128, 21-295
PUMP, Water	07-39
PUMP, Windshield Washer	8R-20
RADIATOR, Engine Cooling	07-45
RADIO	8A-28, 28-3891
RAIL, Fuel	14-19
RECEIVER, Satellite	8A-31
RECEIVER, Wireless Ignition Node	8E-34
RECLINER	8N-24
REFRIGERANT	24-121
REGULATOR, Backlite Glass	23-354
REGULATOR, Fuel Pressure	14-30
REGULATOR, Voltage	8F-39
REGULATOR, Window, Manual	23-76, 23-113
REGULATOR, Window, Power	23-77, 23-114
RELAY, Fuel Pump	14-43
RELAY, Starter	8F-53
RELAY, Stop Lamp Inhibit	8L-37
RELAY, Transmission Control	21-130
Replacement Bulbs	04-22
RESERVOIR, Brake Master Cylinder	05-53
RESERVOIR, Power Steering Pump	19-54
RESERVOIR, Windshield Washer	8R-22
RESISTOR, Blower Motor	24-27
RETAINER, Battery	8F-21
RETAINER, Crankshaft Rear Oil Seal	09-408
RETAINER, Transmission 2nd and 4th Clutch Piston	21-303
RETRACTOR, Seat Belt	10-51
RING(S), Piston	09-85, 09-231, 09-410
ROCKER ARM, Valve	09-47, 09-65, 09-206, 09-355
ROD, Piston and Connecting	09-87, 09-234, 09-412
ROTOR, Brake	05-53
SEAL, A-Pillar	23-392
SEAL, Adapter Housing	21-310
SEAL, Axle Drive Shaft	03-111, 03-187
SEAL, Axle Drive Shaft, Output Shaft	03-107
SEAL, B-Pillar, Lower	23-394
SEAL, Crankshaft Oil, Front	09-93, 09-237, 09-422
SEAL, Crankshaft Oil, Rear	09-94, 09-238, 09-423
SEAL, Door Opening	23-396
SEAL, Drive Pinion	03-113, 03-188
SEAL, Extension Housing	21-131
SEAL, Oil Pump	21-131
SEAL, Output Shaft, Front	21-388
SEAL, Output Shaft, NV246 Front	21-451
SEAL, Output Shaft, Rear	21-389, 21-453
SEAL(S), Valve Guide	09-48, 09-66, 09-207, 09-361
Sealer Locations	23-428
SEAT BACK, Front	23-323
SEAT BACK, Rear	23-338
SEAT BELT	10-66
SEAT, Front	23-281
SEAT, Front Center	23-293
SEAT, Rear	23-300
SENDING UNIT and SENSOR, Fuel Level	14-30
SENSOR, Accelerator Pedal Position	14-43
SENSOR, Air Temperature, Intake	14-45
SENSOR, Ambient Temperature	8M-10
SENSOR, Camshaft Position	8I-14
SENSOR, Coolant Temperature	07-51
SENSOR, Crankshaft Position	14-51
SENSOR, Dynamics	05-82
SENSOR, Evaporator Temperature	24-29
SENSOR, Impact	10-68
SENSOR, Infrared Temperature	24-31
SENSOR, Knock	8I-20
SENSOR, Manifold Air Pressure (MAP)	14-57
SENSOR, Mode	21-390, 21-453
SENSOR, Oil Pressure	09-443
SENSOR, Oil Temperature	09-445
SENSOR, Oxygen	14-61
SENSOR, Park Assist	8B-13
SENSOR, Speed, Front Output	21-455
SENSOR, Speed, Input	21-132, 21-311
SENSOR, Speed, Output	21-133, 21-312
SENSOR, Speed, Rear Output	21-456
SENSOR, Sun	24-33
SENSOR, Tire Pressure Monitoring (TPM)	22-25
SENSOR, Transmission Oil Temperature	21-135, 21-313
SENSOR, Transmission Range	21-136, 21-314
SENSOR, Variable Line Pressure	21-139, 21-314
SENSOR, Wheel Speed, Front	05-83
SENSOR, Wheel Speed, Rear	05-84
SHAFT, Axle	03-116, 03-190
SHAFT, Axle Intermediate	03-117
SHAFT, Drive, Front Light Duty	03-14
SHAFT, Drive, Rear Light Duty	03-16
SHAFT, Idler	09-143, 09-289
SHIELD, Heat	11-13
SHIELD, Splash, Front Wheelhouse	23-147
SHIELD, Splash, Rear Wheelhouse	23-149
SHIFTER, Transmission	21-140, 21-315
SHOCK ABSORBER, Suspension	02-38, 17-8

Description	Group-Page
SHOES, Parking Brake	05-71
SHROUD, Steering Column	19-29
SOLENOID, Evaporative Emissions Purge	25-9
SOLENOID, Multiple Displacement	09-423
SOLENOID, Pressure Control	21-154
SPARK PLUG	8I-25
SPEAKER	8A-32
SPECIFICATIONS	24-2
SPEEDOMETER	8J-50
SPOILER	23-38
SPRING, Front Coil	02-43
SPRING(S)	17-9
SPRING(S), Valve	09-48, 09-66, 09-207, 09-362
STABILIZER BAR, Front	02-49
STABILIZER BAR, Rear Suspension	17-11
STANDARD PROCEDURE - ABS BRAKE BLEEDING	05-79
STANDARD PROCEDURE - TRANSMISSION COOLER LINE QUICK CONNECT FITTING DISASSEMBLY/ ASSEMBLY	Transmission-2
STARTER	8F-53
STRIKER, Door Latch	23-78, 23-115
STRIKER, Hood	23-161
STRIKER, Latch	23-39
Structural Adhesive Locations	23-439
STUD, Wheel	22-17
SUNROOF	23-381
SUNSHADE, Sunroof	23-384
SUPPORT, Visor	23-252
SWITCH, Adjustable Pedals	05-14
SWITCH, Backup Lamp	8L-38
SWITCH, Defogger, Rear	8G-4
SWITCH, Door Ajar	8L-91
SWITCH, Electronic Stability Program (ESP)	05-85
SWITCH, Evaporative Emissions System Monitor	25-11
SWITCH, Hazard Warning	8L-39
SWITCH, Headlamp	8L-40
SWITCH, Heated Seat	8G-14
SWITCH, Heated Steering Wheel	8G-27
SWITCH, Hood Ajar	8Q-8
SWITCH, Horn	8H-3
SWITCH, Ignition	8I-29
SWITCH, Lock, with Window Switches	8N-4
SWITCH, Lumbar Control	8N-25
SWITCH, Memory	8N-30
SWITCH, Mirror	8N-13
SWITCH, Multifunction	8L-44
SWITCH, Oil Pressure	09-116, 09-258
SWITCH, Overdrive Lockout, Tow and Haul	21-156, 21-330
SWITCH, Parking Brake	8L-48
SWITCH, Power Window	8N-56
SWITCH, Remote Radio	8A-43
SWITCH, Seat Belt, Driver	10-76
SWITCH, Seat, Power	8N-34
SWITCH, Speed Control	8P-2
SWITCH, Stop Lamp	8L-50
SWITCH, Sunroof	8N-48
SWITCH, Transfer Case	21-391, 21-456
SWITCH, Vented Seat	8G-28
SWITCH, Washer Fluid Level	8R-25
SYSTEM, Video Entertainment, Three (VES3)	28-4022
TACHOMETER	8J-51
TAILGATE	23-40
TAILPIPE, Exhaust	11-14
TANK, Fuel	14-30
TASK MANAGER	25-39
TENSIONER, Belt	07-22
TENSIONER, Engine Timing	09-477
TENSIONER, Parking Brake Cable	05-75
TENSIONER, Seat Belt	10-77
THERMOSTAT	07-55
Threaded Hole Repair	00-15
THROTTLE BODY	14-63
TIE DOWN, Pickup Box	23-150
TIP START	8F-57
TORQUE CONVERTER	21-158, 21-331
Torque References	00-16
Towing	04-23
TRACK BAR, Rear	17-12
TRANSDUCER, A/C Pressure	24-35
TRANSMITTER, Integrated Key FOB	8N-7
TRAY, Battery	8F-22
TRIM RING, Sunroof	23-386
TUBE, Bearing Axle	03-128
TUBE, Sunroof Drain	23-387
TUBE(S), Fuel	14-36
TUBES AND HOSES, Brake	05-56
TUBES AND HOSES, Transmission Oil Cooler	07-63
U-JOINT, Double Cardan	03-20
U-JOINT, Single Cardan	03-26
UNIT, Front Lamp	8L-56
VALVE BODY	21-166, 21-339
VALVE, A/C Expansion	24-122
VALVE, Exhaust Gas Recirculation (EGR), 3.7L	25-24
VALVE, Exhaust Gas Recirculation (EGR), 4.7L	25-28
VALVE, Exhaust Gas Recirculation (EGR), 5.7L	25-32
VALVE, Positive Crankcase Ventilation (PCV), 3.7L	25-17
VALVE, Positive Crankcase Ventilation (PCV), 4.7L	25-20
VALVE, Positive Crankcase Ventilation (PCV), 5.7L	25-21
VALVE, Short Runner	14-69
VALVE, Solenoid Switch	21-351
VALVES, Intake and Exhaust	09-49, 09-209, 09-370
Vehicle Certification Label	00-17
Vehicle Identification Number	00-17
VIDEO, Satellite (SDARV)	28-4041
VISOR	23-253
WEATHERSTRIP, Door	23-400
WEATHERSTRIP, Glass Run	23-402
WEATHERSTRIP, Header, Roof	23-404
WEATHERSTRIP, Windshield, A-pillar	23-406
Weld Locations	23-460
WHEEL, Heated Steering	8G-29
WHEEL, Steering	19-32
WINCH, Spare Tire Carrier	22-14
WINDSHIELD	23-356
WIRING, Trailer Tow	8L-66

Description	Group-Page
42RLE - PRE-DIAGNOSTIC TROUBLESHOOTING PROCEDURE	28-1843
42RLE TRANSMISSION VERIFICATION TEST	28-1842
545RFE PRE-DIAGNOSTIC TROUBLESHOOTING PROCEDURE	28-2132
545RFE TRANSMISSION VERIFICATION TEST	28-2131
ABS INTERMITTENT CONDITION	28-871
ABS VERIFICATION TEST	28-871
ABS WARNING INDICATOR	29-10
APS INTERMITTENT CONDITION TEST	28-1455, 28-3704
APS VERIFICATION TEST	28-1456, 28-3705
B0001-11-DRIVER FRONTAL SQUIB 1 CONTROL - CIRCUIT SHORT TO GROUND	28-182
B0001-12-DRIVER FRONTAL SQUIB 1 CONTROL - CIRCUIT SHORT TO BATTERY	28-187
B0001-13-DRIVER FRONTAL SQUIB 1 CONTROL - CIRCUIT OPEN	28-192
B0001-2B-DRIVER FRONTAL SQUIB 1 CONTROL - WIRES SHORTED TOGETHER	28-197
B0002-11-DRIVER FRONTAL SQUIB 2 CONTROL - CIRCUIT SHORT TO GROUND	28-202
B0002-12-DRIVER FRONTAL SQUIB 2 CONTROL - CIRCUIT SHORT TO BATTERY	28-207
B0002-13-DRIVER FRONTAL SQUIB 2 CONTROL - CIRCUIT OPEN	28-212
B0002-2B-DRIVER FRONTAL SQUIB 2 CONTROL - WIRES SHORTED TOGETHER	28-217
B0010-11-PASSENGER FRONTAL SQUIB 1 CONTROL - CIRCUIT SHORT TO GROUND	28-221
B0010-12-PASSENGER FRONTAL SQUIB 1 CONTROL - CIRCUIT SHORT TO BATTERY	28-225
B0010-13-PASSENGER FRONTAL SQUIB 1 CONTROL - CIRCUIT OPEN	28-229
B0010-2B-PASSENGER FRONTAL SQUIB 1 CONTROL - WIRES SHORTED TOGETHER	28-233
B0011-11-PASSENGER FRONTAL SQUIB 2 CONTROL - CIRCUIT SHORT TO GROUND	28-237
B0011-12-PASSENGER FRONTAL SQUIB 2 CONTROL - CIRCUIT SHORT TO BATTERY	28-241
B0011-13-PASSENGER FRONTAL SQUIB 2 CONTROL - CIRCUIT OPEN	28-245
B0011-2B-PASSENGER FRONTAL SQUIB 2 CONTROL - WIRES SHORTED TOGETHER	28-249
B0021-11-LEFT CURTAIN DEPLOYMENT SQUIB 1 - CIRCUIT SHORT TO GROUND	28-253
B0021-12-LEFT CURTAIN DEPLOYMENT SQUIB 1 - CIRCUIT SHORT TO BATTERY	28-257
B0021-13-LEFT CURTAIN DEPLOYMENT SQUIB 1 - CIRCUIT OPEN	28-261
B0021-2B-LEFT CURTAIN DEPLOYMENT SQUIB 1 - WIRES SHORTED TOGETHER	28-265
B0029-11-RIGHT CURTAIN DEPLOYMENT SQUIB 1 - CIRCUIT SHORT TO GROUND	28-269
B0029-12-RIGHT CURTAIN DEPLOYMENT SQUIB 1 - CIRCUIT SHORT TO BATTERY	28-273
B0029-13-RIGHT CURTAIN DEPLOYMENT SQUIB 1 - CIRCUIT OPEN	28-277
B0029-2B-RIGHT CURTAIN DEPLOYMENT SQUIB 1 - WIRES SHORTED TOGETHER	28-281
B0050-11-DRIVER SEATBELT SENSOR - CIRCUIT SHORT TO GROUND	28-285
B0050-12-DRIVER SEATBELT SENSOR - CIRCUIT SHORT TO BATTERY	28-289
B0050-13-DRIVER SEATBELT SENSOR - CIRCUIT OPEN	28-293
B007E-11-DRIVER SEATBELT RETRACTOR PRETENSIONER DEPLOYMENT CONTROL - CIRCUIT SHORT TO GROUND	28-326
B007E-12-DRIVER SEATBELT RETRACTOR PRETENSIONER DEPLOYMENT CONTROL - CIRCUIT SHORT TO BATTERY	28-330
B007E-13-DRIVER SEATBELT RETRACTOR PRETENSIONER DEPLOYMENT CONTROL - CIRCUIT OPEN	28-334
B007E-2B-DRIVER SEATBELT RETRACTOR PRETENSIONER DEPLOYMENT CONTROL - WIRES SHORTED TOGETHER	28-338
B007F-11-PASSENGER SEATBELT RETRACTOR PRETENSIONER DEPLOYMENT CONTROL - CIRCUIT SHORT TO GROUND	28-342
B007F-12-PASSENGER SEATBELT RETRACTOR PRETENSIONER DEPLOYMENT CONTROL - CIRCUIT SHORT TO BATTERY	28-346
B007F-13-PASSENGER SEATBELT RETRACTOR PRETENSIONER DEPLOYMENT CONTROL - CIRCUIT OPEN	28-350
B007F-2B-PASSENGER SEATBELT RETRACTOR PRETENSIONER DEPLOYMENT CONTROL - WIRES SHORTED TOGETHER	28-354
B0090-49-LEFT FRONTAL RESTRAINTS SENSOR - INTERNAL ELECTRONIC FAILURE	28-297
B0091-49-LEFT SIDE ACCELERATION SENSOR 1 - INTERNAL ELECTRONIC FAILURE	28-301
B0092-49-LEFT SIDE ACCELERATION SENSOR 2 - INTERNAL ELECTRONIC FAILURE	28-303
B0095-49-RIGHT FRONTAL ACCELERATION SENSOR - INTERNAL ELECTRONIC FAILURE	28-299
B0096-49-RIGHT SIDE ACCELERATION SENSOR 1 - INTERNAL ELECTRONIC FAILURE	28-307
B0097-49-RIGHT SIDE ACCELERATION SENSOR 2 - INTERNAL ELECTRONIC FAILURE	28-309
B009A-49-LEFT SIDE SATELLITE SENSOR 4 - INTERNAL ELECTRONIC FAILURE	28-305
B009D-49-RIGHT SIDE SATELLITE SENSOR 4 - INTERNAL ELECTRONIC FAILURE	28-311
B00B5-11-DRIVER SEAT TRACK POSITION RESTRAINTS SENSOR - CIRCUIT SHORT TO GROUND	28-313
B00B5-12-DRIVER SEAT TRACK POSITION RESTRAINTS SENSOR - CIRCUIT SHORT TO BATTERY	28-316
B00B5-13-DRIVER SEAT TRACK POSITION RESTRAINTS SENSOR - CIRCUIT OPEN	28-320
B1000-92-A/C SWITCH REQUEST INPUT - PERFORMANCE OR INCORRECT OPERATION	28-448
B1000-A/C SWITCH REQUEST INPUT CIRCUIT/PERFORMANCE	28-532
B1009-92-RECIRCULATION SWITCH REQUEST INPUT - PERFORMANCE OR INCORRECT OPERATION	28-449
B1009-RECIRCULATION SWITCH REQUEST INPUT CIRCUIT/PERFORMANCE	28-533
B1015-12-REAR DEFROST SWITCH REQUEST INPUT CIRCUIT/PERFORMANCE	28-450
B1015-REAR DEFROST SWITCH REQUEST INPUT CIRCUIT/PERFORMANCE	28-534
B1030-11-EVAPORATOR TEMPERATURE SENSOR - CIRCUIT SHORT TO GROUND	28-452
B1030-12-EVAPORATOR TEMPERATURE SENSOR - CIRCUIT SHORT TO BATTERY	28-456
B1031-EVAPORATOR TEMPERATURE SENSOR CIRCUIT LOW	28-536
B1032-EVAPORATOR TEMPERATURE SENSOR CIRCUIT HIGH	28-539
B1034-INFRARED TEMPERATURE SENSOR CIRCUIT LOW	28-543
B1035-INFRARED TEMPERATURE SENSOR CIRCUIT HIGH	28-547
B1040-PANEL MODE DOOR 1 CONTROL CIRCUIT/ PERFORMANCE	28-551
B1043-PANEL MODE DOOR 1 CONTROL CIRCUIT OPEN	28-556
B1044-PANEL MODE DOOR 1 TRAVEL RANGE TOO SMALL	28-559
B1045-PANEL MODE DOOR 1 TRAVEL RANGE TOO LARGE	28-561
B1058-13-RECIRCULATION DOOR CONTROL - CIRCUIT OPEN	28-461
B1058-92-RECIRCULATION DOOR CONTROL - PERFORMANCE OR INCORRECT OPERATION	28-465
B1058-RECIRCULATION DOOR CONTROL CIRCUIT/ PERFORMANCE	28-564
B105B-RECIRCULATION DOOR CONTROL CIRCUIT OPEN	28-569
B105C-00-RECIRCULATION DOOR TRAVEL RANGE TOO SMALL	28-469
B105C-RECIRCULATION DOOR TRAVEL RANGE TOO SMALL	28-572
B105D-00-RECIRCULATION DOOR TRAVEL RANGE TOO LARGE	28-471
B105D-RECIRCULATION DOOR TRAVEL RANGE TOO LARGE	28-574
B107C-A/C REFRIGERANT PRESSURE SENSOR CIRCUIT HIGH	28-3345
B109B-PANEL MODE DOOR 2 CONTROL CIRCUIT/ PERFORMANCE	28-577
B109E-PANEL MODE DOOR 2 CONTROL CIRCUIT OPEN	28-582
B109F-PANEL MODE DOOR 2 TRAVEL RANGE TOO SMALL	28-585
B10A0-PANEL MODE DOOR 2 TRAVEL RANGE TOO LARGE	28-587

Description	Group-Page
B10A5-LEFT BLEND DOOR 1 CONTROL CIRCUIT OPEN	28-590
B10A6-LEFT BLEND DOOR 1 TRAVEL TOO SMALL	28-593
B10A7-LEFT BLEND DOOR 1 TRAVEL TOO LARGE	28-595
B10A8-LEFT BLEND DOOR ACTUATOR PERFORMANCE	28-598
B10AC-RIGHT BLEND DOOR CONTROL CIRCUIT OPEN	28-603
B10AD-RIGHT BLEND DOOR TRAVEL TOO SMALL	28-606
B10AE-RIGHT BLEND DOOR TRAVEL TOO LARGE	28-608
B10AF-RIGHT BLEND DOOR ACTUATOR PERFORMANCE	28-611
B10B2-00-A/C COOL DOWN TEST PERFORMANCE	28-473
B10B2-A/C COOL DOWN TEST PERFORMANCE	28-615
B10BB-LEFT HEATED SEAT SWITCH INPUT CIRCUIT STUCK	28-3708
B10BC-RIGHT HEATED SEAT SWITCH INPUT CIRCUIT STUCK	28-3710
B10C4-11-HEATED STEERING WHEEL CONTROL - CIRCUIT SHORT TO GROUND	28-1152
B10C4-12-HEATED STEERING WHEEL CONTROL - CIRCUIT SHORT TO BATTERY	28-1156
B10C4-13-HEATED STEERING WHEEL CONTROL - CIRCUIT OPEN	28-1160
B10C4-1E-HEATED STEERING WHEEL CONTROL - CIRCUIT RESISTANCE OUT OF RANGE	28-1165
B10E9-BLOWER MOTOR CONTROL CIRCUIT LOW	28-617, 28-3347
B10EA-BLOWER MOTOR CONTROL CIRCUIT HIGH	28-621
B10ED-REAR DEFROST CONTROL CIRCUIT OVERCURRENT	28-3350
B1141-CLIMATE SYNC SWITCH PERFORMANCE	28-624
B114C-LEFT REAR HEATED SEAT SWITCH STUCK	28-3712
B1151-RIGHT REAR HEATED SEAT SWITCH STUCK	28-3715
B1184-LEFT TEMP UP SWITCH REQUEST INPUT CIRCUIT/PERFORMANCE	28-625
B1185-LEFT TEMP DOWN SWITCH REQUEST INPUT CIRCUIT/PERFORMANCE	28-626
B1186-RIGHT TEMP UP SWITCH REQUEST INPUT CIRCUIT/PERFORMANCE	28-627
B1187-RIGHT TEMP DOWN SWITCH REQUEST INPUT CIRCUIT/PERFORMANCE	28-628
B11C1-13-STEERING WHEEL HEATER POWER SUPPLY - CIRCUIT OPEN	28-1170
B11C2-13-FRONT MODE DOOR 1 CONTROL - CIRCUIT OPEN	28-475
B11C2-92-FRONT MODE DOOR 1 CONTROL - PERFORMANCE OR INCORRECT OPERATION	28-479
B11C3-00-FRONT MODE DOOR 1 TRAVEL RANGE TOO SMALL	28-483
B11C4-00-FRONT MODE DOOR 1 TRAVEL RANGE TOO LARGE	28-485
B11CB-13-MAIN/LEFT TEMPERATURE DOOR 1 CONTROL - CIRCUIT OPEN	28-488
B11CB-92-MAIN/LEFT TEMPERATURE DOOR 1 CONTROL - PERFORMANCE OR INCORRECT OPERATION	28-492
B11CC-00-MAIN/LEFT TEMPERATURE DOOR 1 TRAVEL TOO SMALL	28-496
B11CD-00-MAIN/LEFT TEMPERATURE DOOR 1 TRAVEL TOO LARGE	28-498
B11DC-13-REAR HEATED SEATS POWER SUPPLY - CIRCUIT OPEN	28-1172
B123F-MENU SWITCH STUCK	28-3717
B127A-COMPASS PERFORMACE	28-3718
B1285-PARK ASSIST DISABLE SWITCH PERFORMANCE	28-3718
B1286-COMPASS / TEMP BUTTON PERFORMANCE	28-3719
B1287-RESET SWITCH PERFORMANCE	28-3719
B1288-TRIP / TOGGLE SWITCH PERFORMANCE	28-3720
B1295-11-PTS SENSOR 8 - CIRCUIT SHORT TO GROUND	28-1458
B1295-12-PTS SENSOR 8 - CIRCUIT SHORT TO BATTERY	28-1464
B1295-25-PTS SENSOR 8 - SIGNAL SHAPE / WAVEFORM FAILURE	28-1467
B1295-92-PTS SENSOR 8 - PERFORMANCE OR INCORRECT OPERATION	28-1469
B1296-11-PTS SENSOR 9 - CIRCUIT SHORT TO GROUND	28-1473
B1296-12-PTS SENSOR 9 - CIRCUIT SHORT TO BATTERY	28-1479
B1296-25-PTS SENSOR 9 - SIGNAL SHAPE / WAVEFORM FAILURE	28-1482
B1296-92-PTS SENSOR 9 - PERFORMANCE OR INCORRECT OPERATION	28-1484
B1297-11-PTS SENSOR 10 - CIRCUIT SHORT TO GROUND	28-1488
B1297-12-PTS SENSOR 10 - CIRCUIT SHORT TO BATTERY	28-1494
B1297-25-PTS SENSOR 10 - SIGNAL SHAPE / WAVEFORM FAILURE	28-1497
B1297-92-PTS SENSOR 10 - PERFORMANCE OR INCORRECT OPERATION	28-1499
B1298-11-PTS SENSOR 11 - CIRCUIT SHORT TO GROUND	28-1503
B1298-12-PTS SENSOR 11 - CIRCUIT SHORT TO BATTERY	28-1509
B1298-25-PTS SENSOR 11 - SIGNAL SHAPE / WAVEFORM FAILURE	28-1512
B1298-92-PTS SENSOR 11 - PERFORMANCE OR INCORRECT OPERATION	28-1514
B1401-FRONT LEFT AUDIO SPEAKER OUTPUT CIRCUIT LOW	28-3891
B1402-FRONT LEFT AUDIO SPEAKER OUTPUT CIRCUIT HIGH	28-3896
B1403-FRONT LEFT AUDIO SPEAKER OUTPUT CIRCUIT OPEN	28-3900
B1405-FRONT RIGHT AUDIO SPEAKER OUTPUT CIRCUIT LOW	28-3905
B1406-FRONT RIGHT AUDIO SPEAKER OUTPUT CIRCUIT HIGH	28-3910
B1407-FRONT RIGHT AUDIO SPEAKER OUTPUT CIRCUIT OPEN	28-3914
B1409-REAR LEFT AUDIO SPEAKER OUTPUT CIRCUIT LOW - BASE	28-3919
B1409-REAR LEFT AUDIO SPEAKER OUTPUT CIRCUIT LOW - PREMIUM	28-3923
B140A-REAR LEFT AUDIO SPEAKER OUTPUT CIRCUIT HIGH - BASE	28-3927
B140A-REAR LEFT AUDIO SPEAKER OUTPUT CIRCUIT HIGH - PREMIUM	28-3930
B140B-REAR LEFT AUDIO SPEAKER OUTPUT CIRCUIT OPEN - BASE	28-3934
B140B-REAR LEFT AUDIO SPEAKER OUTPUT CIRCUIT OPEN - PREMIUM	28-3938
B140D-REAR RIGHT AUDIO SPEAKER OUTPUT CIRCUIT LOW - BASE	28-3942
B140D-REAR RIGHT AUDIO SPEAKER OUTPUT CIRCUIT LOW - PREMIUM	28-3946
B140E-REAR RIGHT AUDIO SPEAKER OUTPUT CIRCUIT HIGH - BASE	28-3950
B140E-REAR RIGHT AUDIO SPEAKER OUTPUT CIRCUIT HIGH - PREMIUM	28-3953
B140F-REAR RIGHT AUDIO SPEAKER OUTPUT CIRCUIT OPEN - BASE	28-3957
B140F-REAR RIGHT AUDIO SPEAKER OUTPUT CIRCUIT OPEN - PREMIUM	28-3961
B1420-AUDIO CASSETTE ERROR/INOPERABLE CASSETTE	28-3964
B1421-AUDIO CD READ ERROR/INOPERABLE DISC	28-3964
B1422-AUDIO DVD READ ERROR/INOPERABLE DISC	28-3965
B1424-IMPROPER DVD-WRONG REGION	28-3965
B1427-REMOTE RADIO SWITCH INPUT CIRCUIT HIGH - WITH EVIC	28-3726
B1427-REMOTE RADIO SWITCH INPUT CIRCUIT HIGH - WITHOUT EVIC	28-3721
B1428-REMOTE RADIO SWITCH INPUT CIRCUIT STUCK - WITH EVIC	28-3733
B1428-REMOTE RADIO SWITCH INPUT CIRCUIT STUCK - WITHOUT EVIC	28-3730
B1429-RADIO DISPLAY HIGH TEMPERATURE	28-3966
B142A-RADIO UNIT HIGH TEMPERATURE	28-3967
B142B-VES UNIT HIGH TEMPERATURE	28-4022
B142D-AUDIO ANTENNA NOT CONNECTED	28-3967
B142E-GPS ANTENNA NOT CONNECTED	28-3969
B142F-SATELLITE RADIO ANTENNA NOT CONNECTED	28-3970
B1430(2.5)-SATELLITE RADIO ANTENNA INTERNAL PERFORMANCE	28-3972
B1430(4.0)-SATELLITE RADIO ANTENNA INTERNAL PERFORMANCE	28-3973
B1438-VOICE RECOGNITION SWITCH STUCK	28-1104
B1439-PHONE SWITCH STUCK	28-1105

Description	Group-Page
B143A- MICROPHONE 1 CIRCUIT PERFORMANCE	28-3975
B143B-MICROPHONE 1 CIRCUIT LOW	28-1106, 28-3980
B143C-MICROPHONE 1 CIRCUIT HIGH	28-1109, 28-3985
B143D-MICROPHONE 2 CIRCUIT PERFORMANCE	28-3988
B143E-MICROPHONE 2 CIRCUIT LOW	28-1112, 28-3993
B143F-MICROPHONE 2 CIRCUIT HIGH	28-1115, 28-3998
B1459-TELEMATICS MIRROR CONTROL CIRCUIT LOW	28-1118
B1460-CHANNEL 1 AUDIO SPEAKER OUTPUT CIRCUIT PERFORMANCE	28-30
B1461-CHANNEL 1 AUDIO SPEAKER OUTPUT CIRCUIT LOW	28-31
B1462-CHANNEL 1 AUDIO SPEAKER OUTPUT CIRCUIT HIGH	28-34
B1463-CHANNEL 1 AUDIO SPEAKER OUTPUT CIRCUIT OPEN	28-37
B1464-CHANNEL 1 AUDIO SPEAKER OUTPUT CIRCUIT SHORTED TOGETHER	28-40
B1465-CHANNEL 2 AUDIO SPEAKER OUTPUT CIRCUIT PERFORMANCE	28-42
B1466-CHANNEL 2 AUDIO SPEAKER OUTPUT CIRCUIT LOW	28-43
B1467-CHANNEL 2 AUDIO SPEAKER OUTPUT CIRCUIT HIGH	28-46
B1468-CHANNEL 2 AUDIO SPEAKER OUTPUT CIRCUIT OPEN	28-49
B1469-CHANNEL 2 AUDIO SPEAKER OUTPUT CIRCUIT SHORTED TOGETHER	28-52
B146A-CHANNEL 3 AUDIO SPEAKER OUTPUT CIRCUIT PERFORMANCE	28-54
B146B-CHANNEL 3 AUDIO SPEAKER OUTPUT CIRCUIT LOW	28-55
B146C-CHANNEL 3 AUDIO SPEAKER OUTPUT CIRCUIT HIGH	28-58
B146D-CHANNEL 3 AUDIO SPEAKER OUTPUT CIRCUIT OPEN	28-61
B146E-CHANNEL 3 AUDIO SPEAKER OUTPUT CIRCUIT SHORTED TOGETHER	28-64
B146F-CHANNEL 4 AUDIO SPEAKER OUTPUT CIRCUIT PERFORMANCE	28-66
B1470-CHANNEL 4 AUDIO SPEAKER OUTPUT CIRCUIT LOW	28-68
B1471-CHANNEL 4 AUDIO SPEAKER OUTPUT CIRCUIT HIGH	28-71
B1472-CHANNEL 4 AUDIO SPEAKER OUTPUT CIRCUIT OPEN	28-74
B1473-CHANNEL 4 AUDIO SPEAKER OUTPUT CIRCUIT SHORTED TOGETHER	28-77
B1474-CHANNEL 5 AUDIO SPEAKER OUTPUT CIRCUIT PERFORMANCE	28-79
B1475-CHANNEL 5 AUDIO SPEAKER OUTPUT CIRCUIT LOW	28-81
B1476-CHANNEL 5 AUDIO SPEAKER OUTPUT CIRCUIT HIGH	28-84
B1477-CHANNEL 5 AUDIO SPEAKER OUTPUT CIRCUIT OPEN	28-87
B1478-CHANNEL 5 AUDIO SPEAKER OUTPUT CIRCUIT SHORTED TOGETHER	28-90
B1479-CHANNEL 6 AUDIO SPEAKER OUTPUT CIRCUIT PERFORMANCE	28-92
B147A-CHANNEL 6 AUDIO SPEAKER OUTPUT CIRCUIT LOW	28-94
B147B-CHANNEL 6 AUDIO SPEAKER OUTPUT CIRCUIT HIGH	28-97
B147C-CHANNEL 6 AUDIO SPEAKER OUTPUT CIRCUIT OPEN	28-100
B147D-CHANNEL 6 AUDIO SPEAKER OUTPUT CIRCUIT SHORTED TOGETHER	28-103
B147E-CHANNEL 7 AUDIO SPEAKER OUTPUT CIRCUIT PERFORMANCE	28-105
B147F-CHANNEL 7 AUDIO SPEAKER OUTPUT CIRCUIT LOW	28-107
B1480-CHANNEL 7 AUDIO SPEAKER OUTPUT CIRCUIT HIGH	28-110
B1481-CHANNEL 7 AUDIO SPEAKER OUTPUT CIRCUIT OPEN	28-113
B1482-CHANNEL 7 AUDIO SPEAKER OUTPUT CIRCUIT SHORTED TOGETHER	28-116
B1483-CHANNEL 8 AUDIO SPEAKER OUTPUT CIRCUIT/ PERFORMANCE	28-118
B1484-CHANNEL 8 AUDIO SPEAKER OUTPUT CIRCUIT LOW	28-120
B1485-CHANNEL 8 AUDIO SPEAKER OUTPUT CIRCUIT HIGH	28-123
B1486-CHANNEL 8 AUDIO SPEAKER OUTPUT CIRCUIT OPEN	28-126
B1487-CHANNEL 8 AUDIO SPEAKER OUTPUT CIRCUIT SHORTED TOGETHER	28-129
B1488-CABIN EQ MISMATCH PERFORMANCE	28-131
B14B9-CHANNEL 9 AUDIO SPEAKER OUTPUT CIRCUIT PERFORMANCE	28-133
B14BA-CHANNEL 9 AUDIO SPEAKER OUTPUT CIRCUIT LOW	28-134
B14BB-CHANNEL 9 AUDIO SPEAKER OUTPUT CIRCUIT HIGH	28-137
B14BC-CHANNEL 9 AUDIO SPEAKER OUTPUT CIRCUIT OPEN	28-140
B14BD-CHANNEL 9 AUDIO SPEAKER OUTPUT CIRCUIT SHORTED TOGETHER	28-143
B14BE-CHANNEL 10 AUDIO SPEAKER OUTPUT CIRCUIT PERFORMANCE	28-145
B14BF-CHANNEL 10 AUDIO SPEAKER OUTPUT CIRCUIT LOW	28-147
B14C0-CHANNEL 10 AUDIO SPEAKER OUTPUT CIRCUIT HIGH	28-150
B14C1-CHANNEL 10 AUDIO SPEAKER OUTPUT CIRCUIT OPEN	28-153
B14C2-CHANNEL 10 AUDIO SPEAKER OUTPUT CIRCUIT SHORTED TOGETHER	28-156
B14C3-CHANNEL 11 AUDIO SPEAKER OUTPUT CIRCUIT PERFORMANCE	28-158
B14C4-CHANNEL 11 AUDIO SPEAKER OUTPUT CIRCUIT LOW	28-160
B14C5-CHANNEL 11 AUDIO SPEAKER OUTPUT CIRCUIT HIGH	28-166
B14C6-CHANNEL 11 AUDIO SPEAKER OUTPUT CIRCUIT OPEN	28-163
B14C7-CHANNEL 11 AUDIO SPEAKER OUTPUT CIRCUIT SHORTED TOGETHER	28-169
B14CE-VES BRIGHTNESS UP INPUT BUTTON STUCK	28-4023
B14CF-VES BRIGHTNESS DOWN INPUT BUTTON STUCK	28-4023
B1502-STEERING WHEEL CONTROL DOWN SWITCH PERFORMANCE	28-3735
B1503-STEERING WHEEL CONTROL RIGHT SWITCH PERFORMANCE	28-3736
B1539-SATELLITE VIDEO ANTENNA PERFORMANCE (NOT CONNECTED)	28-4041
B156B-SATELLITE RADIO ANTENNA CIRCUIT	28-4000
B1601-LEFT SOLAR SENSOR CIRCUIT LOW	28-630
B1602-LEFT SOLAR SENSOR CIRCUIT HIGH	28-633
B1604-RIGHT SOLAR SENSOR CIRCUIT LOW	28-637
B1605-RIGHT SOLAR SENSOR CIRCUIT HIGH	28-640
B1607-HEADLAMP SWITCH INPUT CIRCUIT LOW	28-3737
B1608-HEADLAMP SWITCH INPUT CIRCUIT HIGH	28-3740
B160A-PANEL DIMMER INPUT CIRCUIT LOW	28-3743
B160B-PANEL DIMMER INPUT CIRCUIT HIGH	28-3746
B160F-11-TWILIGHT/AMBIENT LIGHT SENSOR INPUT - CIRCUIT SHORT TO GROUND	28-501
B160F-12-TWILIGHT/AMBIENT LIGHT SENSOR INPUT - CIRCUIT SHORT TO BATTERY	28-504
B1610-AMBIENT LIGHT SENSOR 1 INPUT CIRCUIT LOW	28-644
B1611-AMBIENT LIGHT SENSOR 1 INPUT CIRCUIT HIGH	28-647
B162B-LEFT LOW BEAM CONTROL CIRCUIT LOW	28-3353
B162D-LEFT LOW BEAM CONTROL CIRCUIT OPEN	28-3355
B162F-RIGHT LOW BEAM CONTROL CIRCUIT LOW	28-3358
B1631-RIGHT LOW BEAM CONTROL CIRCUIT OPEN	28-3360
B1633-LEFT HI BEAM CONTROL CIRCUIT LOW	28-3363

Description	Group-Page
B1635-LEFT HI BEAM CONTROL CIRCUIT OPEN	28-3365
B1637-RIGHT HI BEAM CONTROL CIRCUIT LOW	28-3368
B1639-RIGHT HI BEAM CONTROL CIRCUIT OPEN	28-3370
B163B-FRONT LEFT TURN LAMP CONTROL CIRCUIT LOW	28-3373
B163D-FRONT LEFT TURN LAMP CONTROL CIRCUIT OPEN	28-3375
B163F-FRONT RIGHT TURN LAMP CONTROL CIRCUIT LOW	28-3378
B1641-FRONT RIGHT TURN LAMP CONTROL CIRCUIT OPEN	28-3381
B1643-REAR LEFT TURN CONTROL CIRCUIT LOW	28-3384
B1645-REAR LEFT TURN CONTROL CIRCUIT OPEN	28-3386
B1647-REAR RIGHT TURN CONTROL CIRCUIT LOW	28-3389
B1649-REAR RIGHT TURN CONTROL CIRCUIT OPEN	28-3391
B164A-11-DRIVER MIRROR SIGNAL LAMP CONTROL - CIRCUIT SHORT TO GROUND	28-873
B164A-15-DRIVER MIRROR SIGNAL LAMP CONTROL - CIRCUIT SHORT TO BATTERY OR OPEN	28-879
B164E-11-PASSENGER MIRROR SIGNAL LAMP CONTROL - CIRCUIT SHORT TO GROUND	28-1542
B164E-15-PASSENGER MIRROR SIGNAL LAMP CONTROL - CIRCUIT SHORT TO BATTERY OR OPEN	28-1548
B1659-FRONT FOG LAMP CONTROL CIRCUIT LOW	28-3401
B165C-PARK LAMP CONTROL CIRCUIT LOW	28-3394
B165D-PARK LAMP CONTROL CIRCUIT HIGH	28-3396
B165E-PARK LAMP CONTROL CIRCUIT OPEN	28-3398
B1660-FRONT FOG LAMP CONTROL CIRCUIT HIGH	28-3404
B1661-FRONT FOG LAMP CONTROL CIRCUIT OPEN	28-3408
B1667-REVERSE LAMP CONTROL CIRCUIT LOW	28-3411
B1669-REVERSE LAMP CONTROL CIRCUIT OPEN	28-3413
B168F-FRONT FOG LAMP SWITCH CIRCUIT STUCK	28-3748
B169C-CARGO LAMP SWITCH STUCK	28-3750
B16A3-11-PASSENGER WINDOW SWITCH BACKLIGHTING - CIRCUIT SHORT TO GROUND	28-1553
B16A3-15-PASSENGER WINDOW SWITCH BACKLIGHTING - CIRCUIT SHORT TO BATTERY OR OPEN	28-1557
B16B0-LEFT STOP LAMP CONTROL CIRCUIT LOW	28-3420
B16B2-LEFT STOP LAMP CONTROL CIRCUIT OPEN	28-3422
B16B4-RIGHT STOP LAMP CONTROL CIRCUIT LOW	28-3425
B16B6-RIGHT STOP LAMP CONTROL CIRCUIT OPEN	28-3427
B17AE-LEFT TRAILER TOW LAMP CONTROL CIRCUIT LOW	28-3416
B17B2-RIGHT TRAILER TOW LAMP CONTROL CIRCUIT LOW	28-3418
B17E3-TURN SIGNAL SWITCH PERFORMANCE	28-3753
B1800-2A-DRIVER DOOR LOCK/UNLOCK SWITCH - SIGNAL STUCK IN RANGE	28-883
B1805-2A-PASSENGER DOOR LOCK/UNLOCK SWITCH - SIGNAL STUCK IN RANGE	28-1560
B1820-HOOD AJAR INPUT CIRCUIT HIGH	28-3430
B1853-11-DRIVER WINDOW CONTROL - CIRCUIT SHORT TO GROUND	28-885
B1853-13-DRIVER WINDOW CONTROL - CIRCUIT OPEN	28-888
B1857-11-DRIVER WINDOW POSITION SENSOR POWER SUPPLY - CIRCUIT SHORT TO GROUND	28-891
B1857-15-DRIVER WINDOW POSITION SENSOR POWER SUPPLY - CIRCUIT SHORT TO BATTERY OR OPEN - EXPRESS MOTOR ONLY	28-894
B185A-31-DRIVER WINDOW POSITION SENSOR - NO SIGNAL	28-898
B185E-11-PASSENGER WINDOW CONTROL - CIRCUIT SHORT TO GROUND	28-1562
B185E-13-PASSENGER WINDOW CONTROL - CIRCUIT OPEN	28-1565
B1862-11-PASSENGER WINDOW POSITION SENSOR POWER SUPPLY - CIRCUIT SHORT TO GROUND	28-1568
B1862-15-PASSENGER WINDOW POSITION SENSOR POWER SUPPLY - CIRCUIT SHORT TO BATTERY OR OPEN - EXPRESS MOTOR ONLY	28-1571
B1865-31-PASSENGER WINDOW POSITION SENSOR - NO SIGNAL	28-1575
B18B5-00-MASTER SWITCH - FRONT LEFT WINDOW SWITCH	28-901
B1910-2A-PASSENGER WINDOW SWITCH - SIGNAL STUCK IN RANGE	28-1578
B1A10-RKE FOB 1 BATTERY LOW	28-3827
B1A11-RKE FOB 2 BATTERY LOW	28-3828
B1A12-RKE FOB 3 BATTERY LOW	28-3828
B1A13-RKE FOB 4 BATTERY LOW	28-3829
B1A14-RKE FOB 5 BATTERY LOW	28-3829
B1A15-RKE FOB 6 BATTERY LOW	28-3830
B1A16-RKE FOB 7 BATTERY LOW	28-3831
B1A17-RKE FOB 8 BATTERY LOW	28-3831
B1A24-KEY NOT PROGRAMMED	28-3832
B1A25-INVALID KEY	28-3833
B1A26-MAXIMUM NUMBER OF KEYS PROGRAMMED	28-3835
B1A27-SKREEM PROGRAMMING PERFORMANCE	28-3836
B1A28-ECM MISMATCH WITH SKIM	28-3837
B1A29-SKIM BASESTATION MISMATCH	28-3839
B1A35-UNIDENTIFIED KEY COMMUNICATION ERROR	28-3840
B1A6C-SECRET KEY MISMATCH	28-3842
B1A77- REMOTE START ANTENNA CIRCUIT LOW	28-3843
B1A79- REMOTE START ANTENNA CIRCUIT OPEN OR NOT CONNECTED	28-3844
B1BA5-00-AIRBAG SQUIB CONFIGURATION MISMATCH -	28-323
B1BC7-00-DEPLOYMENT DATA RECORD FULL -	28-325
B1D04-2A-MIRROR ADJUST SWITCH INPUT - SIGNAL STUCK IN RANGE	28-903
B1D08-11-DRIVER MIRROR POSITION SENSOR POWER SUPPLY - CIRCUIT SHORT TO GROUND	28-906
B1D0B-11-DRIVER MIRROR VERTICAL POSITION SENSOR INPUT - CIRCUIT SHORT TO GROUND	28-911
B1D0B-12-DRIVER MIRROR VERTICAL POSITION SENSOR INPUT - CIRCUIT SHORT TO BATTERY	28-916
B1D0E-11-DRIVER MIRROR HORIZONTAL POSITION SENSOR INPUT - CIRCUIT SHORT TO GROUND	28-924
B1D0E-12-DRIVER MIRROR HORIZONTAL POSITION SENSOR INPUT - CIRCUIT SHORT TO BATTERY	28-929
B1D11-11-PASSENGER MIRROR POSITION SENSOR POWER SUPPLY - CIRCUIT SHORT TO GROUND	28-1580
B1D14-11-PASSENGER MIRROR VERTICAL POSITION SENSOR INPUT - CIRCUIT SHORT TO GROUND	28-1585
B1D14-12-PASSENGER MIRROR VERTICAL POSITION SENSOR INPUT - CIRCUIT SHORT TO BATTERY	28-1590
B1D17-11-PASSENGER MIRROR HORIZONTAL POSITION SENSOR INPUT - CIRCUIT SHORT TO GROUND	28-1598
B1D17-12-PASSENGER MIRROR HORIZONTAL POSITION SENSOR INPUT - CIRCUIT SHORT TO BATTERY	28-1603
B1D1E-11-DRIVER MIRROR VERTICAL MOTOR CONTROL - CIRCUIT SHORT TO GROUND	28-937
B1D22-11-DRIVER MIRROR HORIZONTAL MOTOR CONTROL - CIRCUIT SHORT TO GROUND	28-942
B1D2A-11-PASSENGER MIRROR VERTICAL MOTOR CONTROL - CIRCUIT SHORT TO GROUND	28-1611
B1D2E-11-PASSENGER MIRROR HORIZONTAL MOTOR CONTROL - CIRCUIT SHORT TO GROUND	28-1616
B1D32-11-DRIVER MIRROR HEATER CONTROL - CIRCUIT SHORT TO GROUND	28-947
B1D32-15-DRIVER MIRROR HEATER CONTROL - CIRCUIT SHORT TO BATTERY OR OPEN	28-953
B1D36-11-PASSENGER MIRROR HEATER CONTROL - CIRCUIT SHORT TO GROUND	28-1621
B1D36-15-PASSENGER MIRROR HEATER CONTROL - CIRCUIT SHORT TO BATTERY OR OPEN	28-1627
B1D4A-2A-MEMORY SWITCH INPUT - SIGNAL STUCK IN RANGE	28-958
B1D56-ADJUSTABLE PEDAL SENSOR CIRCUIT LOW	28-1327

Description	Group-Page
B1D57-ADJUSTABLE PEDAL SENSOR CIRCUIT HIGH	28-1331
B1D5B-ADJUSTABLE PEDAL SWITCH CIRCUIT PERFORMANCE	28-1337
B1D5C-ADJUSTABLE PEDAL SWITCH CIRCUIT STUCK FORWARD	28-1340
B1D5D-ADJUSTABLE PEDAL SWITCH CIRCUIT STUCK REARWARD	28-1344
B1D62-POWER SEAT SWITCH STUCK	28-1347
B1D63-POWER SEAT SWITCH OPEN	28-1349
B1D67-ADJUSTABLE PEDAL CONTROL CIRCUIT PERFORMANCE	28-1353
B1D68-ADJUSTABLE PEDAL CONTROL CIRCUIT LOW	28-3434
B1D6D-SEAT HORIZONTAL POSITION SENSOR CIRCUIT LOW	28-1360
B1D6E-SEAT HORIZONTAL POSITION SENSOR CIRCUIT HIGH	28-1364
B1D71-SEAT FRONT VERTICAL POSITION SENSOR CIRCUIT LOW	28-1369
B1D72-SEAT FRONT VERTICAL POSITION SENSOR CIRCUIT HIGH	28-1373
B1D75-SEAT REAR VERTICAL POSITION SENSOR CIRCUIT LOW	28-1378
B1D76-SEAT REAR VERTICAL POSITION SENSOR CIRCUIT HIGH	28-1382
B1D79-SEAT RECLINER POSITION SENSOR CIRCUIT LOW	28-1387
B1D7A-SEAT RECLINER POSITION SENSOR CIRCUIT HIGH	28-1391
B1D7B-SEAT HORIZONTAL MOTOR CONTROL CIRCUIT PERFORMANCE	28-1395
B1D7F-SEAT FRONT VERTICAL MOTOR CONTROL CIRCUIT PERFORMANCE	28-1405
B1D83-SEAT REAR VERTICAL MOTOR CONTROL CIRCUIT PERFORMANCE	28-1415
B1D87-SEAT BACKREST MOTOR CONTROL CIRCUIT PERFORMANCE	28-1425
B1D9B-SEAT HORIZONTAL FRONT STOP NOT LEARNED	28-1434
B1E64-00-LEFT MIRROR SELECT SWITCH STUCK	28-962
B1E65-00-RIGHT MIRROR SELECT SWITCH STUCK	28-965
B1E99-11-FRONT LEFT HEATER CONTROL CIRCUIT - CIRCUIT SHORT TO GROUND	28-1178
B1E99-12-FRONT LEFT HEATER CONTROL CIRCUIT - CIRCUIT SHORT TO BATTERY	28-1182
B1E99-13-FRONT LEFT HEATER CONTROL CIRCUIT - CIRCUIT OPEN	28-1186
B1E99-1E-FRONT LEFT HEATER CONTROL CIRCUIT - CIRCUIT RESISTANCE OUT OF RANGE	28-1191
B1E9A-11-FRONT RIGHT HEATER CONTROL CIRCUIT - CIRCUIT SHORT TO GROUND	28-1196
B1E9A-12-FRONT RIGHT HEATER CONTROL CIRCUIT - CIRCUIT SHORT TO BATTERY	28-1200
B1E9A-13-FRONT RIGHT HEATER CONTROL CIRCUIT - CIRCUIT OPEN	28-1204
B1E9A-1E-FRONT RIGHT HEATER CONTROL CIRCUIT - CIRCUIT RESISTANCE OUT OF RANGE	28-1209
B1E9B-11-REAR LEFT HEATER CONTROL CIRCUIT - CIRCUIT SHORT TO GROUND	28-1214
B1E9B-12-REAR LEFT HEATER CONTROL CIRCUIT - CIRCUIT SHORT TO BATTERY	28-1218
B1E9B-13-REAR LEFT HEATER CONTROL CIRCUIT - CIRCUIT OPEN	28-1222
B1E9B-1E-REAR LEFT HEATER CONTROL CIRCUIT - CIRCUIT RESISTANCE OUT OF RANGE	28-1226
B1E9C-11-REAR RIGHT HEATER CONTROL CIRCUIT - CIRCUIT SHORT TO GROUND	28-1230
B1E9C-12-REAR RIGHT HEATER CONTROL CIRCUIT - CIRCUIT SHORT TO BATTERY	28-1234
B1E9C-13-REAR RIGHT HEATER CONTROL CIRCUIT - CIRCUIT OPEN	28-1238
B1E9C-1E-REAR RIGHT HEATER CONTROL CIRCUIT - CIRCUIT RESISTANCE OUT OF RANGE	28-1242
B1E9D-11-FRONT LEFT VENT CONTROL CIRCUIT - CIRCUIT SHORT TO GROUND	28-1246
B1E9D-12-FRONT LEFT VENT CONTROL CIRCUIT - CIRCUIT SHORT TO BATTERY	28-1250
B1E9D-13-FRONT LEFT VENT CONTROL CIRCUIT - CIRCUIT OPEN	28-1253
B1E9E-11-FRONT RIGHT VENT CONTROL CIRCUIT - CIRCUIT SHORT TO GROUND	28-1257
B1E9E-12-FRONT RIGHT VENT CONTROL CIRCUIT - CIRCUIT SHORT TO BATTERY	28-1261
B1E9E-13-FRONT RIGHT VENT CONTROL CIRCUIT - CIRCUIT OPEN	28-1264
B1EB1-1A-FRONT LEFT SEAT HEATER SENSOR - CIRCUIT RESISTANCE BELOW THRESHOLD	28-1268
B1EB1-1B-FRONT LEFT SEAT HEATER SENSOR - CIRCUIT RESISTANCE ABOVE THRESHOLD	28-1272
B1EB2-1A-FRONT RIGHT SEAT HEATER SENSOR - CIRCUIT RESISTANCE BELOW THRESHOLD	28-1278
B1EB2-1B-FRONT RIGHT SEAT HEATER SENSOR - CIRCUIT RESISTANCE ABOVE THRESHOLD	28-1282
B1EB3-1A-REAR LEFT SEAT HEATER SENSOR - CIRCUIT RESISTANCE BELOW THRESHOLD	28-1288
B1EB3-1B-REAR LEFT SEAT HEATER SENSOR - CIRCUIT RESISTANCE ABOVE THRESHOLD	28-1292
B1EB4-1A-REAR RIGHT SEAT HEATER SENSOR - CIRCUIT RESISTANCE BELOW THRESHOLD	28-1298
B1EB4-1B-REAR RIGHT SEAT HEATER SENSOR - CIRCUIT RESISTANCE ABOVE THRESHOLD	28-1302
B2104-IGNITION RUN/START CONTROL CIRCUIT LOW	28-3438
B210A-84-SYSTEM VOLTAGE LOW - SIGNAL BELOW ALLOWABLE RANGE	28-507
B210A-SYSTEM VOLTAGE LOW	28-4024
B210B-85-SYSTEM VOLTAGE HIGH - SIGNAL ABOVE ALLOWABLE RANGE	28-509
B210B-SYSTEM VOLTAGE HIGH	28-4024
B210C-16-BATTERY VOLTAGE INPUT - CIRCUIT VOLTAGE BELOW THRESHOLD	28-968, 28-1632
B210C-16-BATTERY VOLTAGE INPUT-CIRCUIT VOLTAGE BELOW THRESHOLD	28-1517
B210C-17-BATTERY VOLTAGE INPUT - CIRCUIT VOLTAGE ABOVE THRESHOLD	28-971, 28-1308, 28-1635
B210C-17-BATTERY VOLTAGE INPUT-CIRCUIT VOLTAGE ABOVE THRESHOLD	28-1518
B210C-18-BATTERY VOLTAGE INPUT - CIRCUIT BELOW THRESHOLD	28-1311
B210D-84-BATTERY VOLTAGE LOW - SIGNAL BELOW ALLOWABLE RANGE	28-512
B210D-BATTERY VOLTAGE LOW	28-171, 28-1436, 28-3441, 28-3845, 28-4002, 28-4025, 28-4043
B210E-85-BATTERY VOLTAGE HIGH - SIGNAL ABOVE ALLOWABLE RANGE	28-516
B210E-BATTERY VOLTAGE HIGH	28-172, 28-1439, 28-3442, 28-3849, 28-4003, 28-4026, 28-4044
B210F-00-LOSS OF BATTERY VOLTAGE	28-374
B2112-5-VOLT SUPPLY CIRCUIT LOW	28-3443
B2113-5 VOLT SUPPLY CIRCUIT HIGH	28-3446
B2122-IGNITION RUN CONTROL 1 CIRCUIT LOW	28-3450
B2128-16-SENSOR SUPPLY VOLTAGE-CIRCUIT VOLTAGE BELOW THRESHOLD	28-1520
B2128-17-SENSOR SUPPLY VOLTAGE-CIRCUIT VOLTAGE ABOVE THRESHOLD	28-1525
B2129-16-PTS DISPLAY SUPPLY VOLTAGE-CIRCUIT VOLTAGE BELOW THRESHOLD	28-1527
B212C-13-IGNITION RUN/START INPUT - CIRCUIT OPEN	28-363
B212D-13-IGNITION RUN ONLY INPUT-CIRCUIT OPEN	28-369
B2142-IGNITION OFF DRAW (IOD) FUSE NOT PRESENT	28-3452
B2148-IGNITION RUN CONTROL 2 CIRCUIT LOW	28-3454
B2184-IGNITION UNLOCK/RUN/START CONTROL CIRCUIT LOW	28-3457
B2199-16-BATTERY VOLTAGE - CIRCUIT VOLTAGE BELOW THRESHOLD	28-358
B2199-17-BATTERY VOLTAGE - CIRCUIT VOLTAGE ABOVE THRESHOLD	28-361
B21A1-00-ECU RESET/RECOVERY OCCURRED	28-972, 28-1636
B21A1-ECU RESET/RECOVERY OCCURRED	28-3459, 28-4026

Description	Group-Page
B21DD-84-SYSTEM VOLTAGE - SIGNAL BELOW ALLOWABLE RANGE	28-973, 28-1313, 28-1637
B21DD-85-SYSTEM VOLTAGE - SIGNAL ABOVE ALLOWABLE RANGE	28-973, 28-1314, 28-1637
B2202-EEPROM CHECKSUM PERFORMANCE	28-3460
B2204-ECU CONFIGURATION MISMATCH	28-3851
B2205-ORIGINAL VIN MISSING/ MISMATCH	28-3853
B2206-CURRENT VIN MISSING/MISMATCH	28-3460
B2207-00-OCCUPANT RESTRAINT CONTROLLER INTERNAL 1	28-377
B2208-00-OCCUPANT RESTRAINT CONTROLLER INTERNAL 2	28-378
B2209-00-OCCUPANT RESTRAINT CONTROLLER INTERNAL 3	28-379
B220A-00-OCCUPANT RESTRAINT CONTROLLER INTERNAL 4	28-379
B220B-00-OCCUPANT RESTRAINT CONTROLLER FIRING STORED ENERGY	28-380
B2214-00-(HVAC) CLIMATE CONTROL INTERNAL	28-519, 28-650
B2215-FRONT CONTROL MODULE INTERNAL (TOTALLY INTEGRATED POWER MODULE)	28-3461
B221A-00-(HSM) HEATED SEAT MODULE INTERNAL	28-1316
B221C-MEMORY SEAT MODULE INTERNAL	28-1441
B221E-RADIO INTERNAL	28-4004
B221F-AMPLIFIER INTERNAL	28-173
B222A-00-VEHICLE LINE MISMATCH	28-519, 28-1529
B222A-00-VEHICLE LINE MISMATCH -	28-384
B222A-VEHICLE LINE MISMATCH	28-650
B222B-VEHICLE ENTERTAINMENT SYSTEM INTERNAL	28-4027
B222C-VEHICLE CONFIGURATION NOT PROGRAMMED	28-173, 28-3463, 28-4004, 28-4027
B2232-00-(PTS) PARKTRONICS INTERNAL	28-1529
B2234-00-(PTS) PARKTRONICS REAR DISPLAY INTERNAL	28-1530
B223B-00-VEHICLE CONFIGURATION MISMATCH -	28-381
B2287-SATELLITE VIDEO RECEIVER INTERNAL	28-4045
B2301-WIPER MODE SWITCH INPUT CIRCUIT LOW	28-3754
B2304-WIPER PARK SWITCH INPUT CIRCUIT LOW	28-3465
B2305-WIPER PARK SWITCH INPUT CIRCUIT HIGH	28-3468
B2307-WASHER SWITCH INPUT CIRCUIT LOW	28-3754
B2313-WIPER ON/OFF CONTROL CIRCUIT LOW	28-3471
B2315-WIPER ON/OFF CONTROL CIRCUIT OPEN	28-3474
B2318-WIPER HIGH/LOW CONTROL CIRCUIT HIGH	28-3476
B2339-HORN SWITCH STUCK - WITH EVIC	28-3756
B2339-HORN SWITCH STUCK - WITHOUT EVIC	28-3759
B238E-HI BEAM SWITCH CIRCUIT LOW	28-3762
B2390-MIST SWITCH CIRCUIT LOW	28-3762
B2394-FLASH TO PASS / OPTICAL HORN SWITCH CIRCUIT STUCK	28-3763
B2598-54-DOOR MODULE FRONT LEFT - MISSING CALIBRATION - QUAD/CREW CAB ONLY	28-973
B2598-96-DOOR MODULE FRONT LEFT - COMPONENT INTERNAL FAILURE	28-975
B2599-54-DOOR MODULE FRONT RIGHT - MISSING CALIBRATION - QUAD/CREW CAB ONLY	28-1637
B2599-96-DOOR MODULE FRONT RIGHT - COMPONENT INTERNAL FAILURE	28-1639
B282E-11-DRIVER PUDDLE LAMP CONTROL - CIRCUIT SHORT TO GROUND	28-976
B282E-15-DRIVER PUDDLE LAMP CONTROL - CIRCUIT SHORT TO BATTERY OR OPEN	28-981
B282F-11-PASSENGER PUDDLE LAMP CONTROL - CIRCUIT SHORT TO GROUND	28-1640
B282F-15-PASSENGER PUDDLE LAMP CONTROL - CIRCUIT SHORT TO BATTERY OR OPEN	28-1646
BLOWER MOTOR INOPERATIVE	29-158
BODY VERIFICATION TEST	28-3707
BOTH DIAGNOSTIC CAN C (+) AND DIAGNOSTIC CAN C (-) CIRCUITS OPEN	29-14
C0077-LOW TIRE PRESSURE	28-3854
C1000-BRAKE PEDAL SWITCH 1 CIRCUIT PERFORMANCE	28-664, 28-3479
C1008-BRAKE FLUID LEVEL CIRCUIT HIGH	28-669, 28-3484
C1009-BRAKE FLUID LEVEL LOW	28-673
C100A-LEFT FRONT WHEEL SPEED SENSOR CIRCUIT	28-676
C1011-LEFT FRONT WHEEL SPEED SENSOR SIGNAL ERRATIC PERFORMANCE	28-683
C1014-LEFT FRONT WHEEL SPEED COMPARATIVE PERFORMANCE	28-690
C1015-RIGHT FRONT WHEEL SPEED SENSOR CIRCUIT	28-697
C101C-RIGHT FRONT WHEEL SPEED SENSOR SIGNAL ERRATIC PERFORMANCE	28-704
C101F-RIGHT FRONT WHEEL SPEED COMPARATIVE PERFORMANCE	28-711
C1020-LEFT REAR WHEEL SPEED SENSOR CIRCUIT	28-718
C1027-LEFT REAR WHEEL SPEED SENSOR SIGNAL ERRATIC PERFORMANCE	28-725
C102A-LEFT REAR WHEEL SPEED COMPARATIVE PERFORMANCE	28-732
C102B-RIGHT REAR WHEEL SPEED SENSOR CIRCUIT	28-739
C1032-RIGHT REAR WHEEL SPEED SENSOR SIGNAL ERRATIC PERFORMANCE	28-746
C1035-RIGHT REAR WHEEL SPEED COMPARATIVE PERFORMANCE	28-753
C104C-LEFT FRONT INLET VALVE CONTROL CIRCUIT LOW	28-759
C1050-RIGHT FRONT INLET VALVE CONTROL CIRCUIT LOW	28-760
C1054-LEFT REAR INLET VALVE CONTROL CIRCUIT LOW	28-761
C1058-RIGHT REAR INLET VALVE CONTROL CIRCUIT LOW	28-761
C1060-LEFT FRONT OUTLET VALVE CONTROL CIRCUIT LOW	28-762
C1064-RIGHT FRONT OUTLET VALVE CONTROL CIRCUIT LOW	28-763
C1068-LEFT REAR OUTLET VALVE CONTROL CIRCUIT LOW	28-763
C106C-RIGHT REAR OUTLET VALVE CONTROL CIRCUIT LOW	28-764
C1073-ABS MOTOR CONTROL CIRCUIT	28-766
C1078-TIRE REVOLUTIONS RANGE PERFORMANCE	28-769
C1079-TONE WHEEL TEETH COUNT RANGE PERFORMANCE	28-772
C107B-WHEEL SPEED COMPARATIVE PERFORMANCE	28-772
C107D-BRAKE PEDAL SWITCH 1/2 CORRELATION	28-776
C1086-ABS SYSTEM CONTROL TOO LONG	28-780
C1090-ABS BRAKE LAMP CONTROL CIRCUIT LOW	28-782
C1091-ABS BRAKE LAMP CONTROL CIRCUIT HIGH	28-786
C1201-FRONT TRACTION CONTROL INLET VALVE CONTROL CIRCUIT LOW	28-789
C1205-REAR TRACTION CONTROL INLET VALVE CONTROL CIRCUIT LOW	28-792
C1209-FRONT TRACTION CONTROL PRIME VALVE CONTROL CIRCUIT LOW	28-795
C120D-REAR TRACTION CONTROL PRIME VALVE CONTROL CIRCUIT LOW	28-798
C1213-G SENSOR INPUT SIGNAL STUCK	28-801
C1219-STEERING ANGLE SENSOR ERRATIC PERFORMANCE	28-808
C121C-TORQUE REQUEST SIGNAL DENIED	28-811
C121D-BRAKE PRESSURE SENSOR CIRCUIT	28-812
C121E-BRAKE PRESSURE SENSOR COMPARATIVE PERFORMANCE	28-813
C1231-DRIVE TEST: STEERING ANGLE SENSOR	28-816
C1232-DRIVE TEST: PRESSURE SENSOR	28-818
C1234-DRIVE TEST: SENSOR CLUSTER INSTALLATION	28-819
C1235 DRIVE TEST: TEST ACTIVE	28-821
C1238-DRIVE TEST: UNSUCCESSFUL	28-822
C1239-EMISSION ROLLS TEST ACTIVE	28-822
C123A-ESP SYSTEM SENSORS CALIBRATION	28-823
C123B-ESP SYSTEM CONTROL TOO LONG	28-824
C123F-STEERING ANGLE SENSOR COMPARATIVE PERFORMANCE	28-825
C1240-STEERING ANGLE SENSOR OVERTRAVEL PERFORMANCE	28-828
C1242-G SENSOR INPUT SIGNAL PERFORMANCE	28-830
C1243-G SENSOR NOT INITIALIZED	28-831
C1401-TRANSFER CASE RANGE SELECT SWITCH CIRCUIT LOW	28-3765

Description	Group-Page
C1402- TRANSFER CASE RANGE SELECT SWITCH CIRCUIT HIGH	28-3770
C1403-TRANSFER CASE RANGE POSITION SENSOR PERFORMANCE	28-1006
C1404-TRANSFER CASE RANGE POSITION SENSOR CIRCUIT LOW	28-1010
C1405-TRANSFER CASE RANGE POSITION SENSOR CIRCUIT HIGH	28-1015
C1406-TRANSFER CASE BRAKE PERFORMANCE	28-1019
C1407-TRANSFER CASE BRAKE CONTROL CIRCUIT LOW	28-1022
C1408-TRANSFER CASE BRAKE CONTROL CIRCUIT HIGH	28-1025
C140A-TRANSFER CASE MOTOR PERFORMANCE	28-1029
C140D-TRANSFER CASE MOTOR CONTROL CIRCUIT OPEN	28-1033
C140E-TRANSFER CASE MOTOR BLOCKED	28-1037
C140F-TRANSFER CASE RANGE POSITION SENSOR ERRATIC PERFORMANCE	28-1040
C1415-TRANSFER CASE MOTOR CURRENT PERFORMANCE	28-1048
C1438-TRANSFER CASE DIFFERENTIAL CLUTCH WORN	28-1051
C1444-TRANSFER CASE MOTOR OVERUSE	28-1055
C1464-FRONT AXLE DISCONNECT CONTROL CIRCUIT LOW	28-1058
C1465-FRONT AXLE DISCONNECT CONTROL CIRCUIT HIGH	28-1062
C1472-TRANSFER CASE CLUTCH CONTROL CIRCUIT PERFORMANCE	28-1065
C1477-TRANSFER CASE CLUTCH OVER TEMPERATURE	28-1068
C147B-FRONT AXLE DISCONNECT SENSOR CIRCUIT PERFORMANCE	28-1071
C1501-TIRE PRESSURE SENSOR 1 INTERNAL	28-3858
C1502-TIRE PRESSURE SENSOR 2 INTERNAL	28-3862
C1503-TIRE PRESSURE SENSOR 3 INTERNAL	28-3865
C1504-TIRE PRESSURE SENSOR 4 INTERNAL	28-3869
C151C-TIRE PRESSURE MONITORING (TPM) SENSORS MISSING	28-3872
C2100-BATTERY VOLTAGE LOW	28-833, 28-1077
C2101-BATTERY VOLTAGE HIGH	28-836, 28-1080
C2105-ABS VALVE SUPPLY VOLTAGE CIRCUIT LOW	28-837
C2111-SENSOR SUPPLY 1 VOLTAGE CIRCUIT LOW	28-1082
C2112-SENSOR SUPPLY 1 VOLTAGE CIRCUIT HIGH	28-1085
C2200-ANTI-LOCK BRAKE MODULE INTERNAL	28-838
C2201-FDCM/DTCM INTERNAL	28-1087
C2202-ORIGINAL VIN MISMATCH / MISSING	28-838
C2204-DYNAMICS SENSOR INTERNAL	28-840
C2205-STEERING ANGLE SENSOR INTERNAL	28-842
C2206-VEHICLE CONFIGURATION MISMATCH	28-844
C230A-NEUTRAL INDICATOR CONTROL CIRCUIT LOW	28-3775
C230B-NEUTRAL INDICATOR CONTROL CIRCUIT HIGH	28-3779
C2312-TRAC/ESP OFF SWITCH STUCK	28-3782
CHECKING THE EXHAUST SYSTEM FOR LEAKS	29-108
CHECKING THE FUEL DELIVERY SYSTEM	29-109
CHECKING THE OXYGEN SENSOR OPERATION	29-111
CHECKING THE PCM POWER AND GROUND CIRCUITS	29-114
DIAGNOSIS AND TESTING - REAR CAMERA INOPERATIVE	29-4
DIAGNOSIS AND TESTING - UCI SERVICE DIAGNOSTICS	29-206
DIAGNOSTIC CAN C (+) AND/OR DIAGNOSTIC CAN C (-) CIRCUITS HIGH	29-18
DIAGNOSTIC CAN C (+) CIRCUIT LOW	29-22
DIAGNOSTIC CAN C (-) CIRCUIT LOW	29-24
DIAGNOSTIC CAN C (+) CIRCUIT OPEN	29-26
DIAGNOSTIC CAN C (-) CIRCUIT OPEN	29-29
DIAGNOSTIC CAN C (+) SHORTED TO DIAGNOSTIC CAN C (-)	29-20
DRIVER DOOR AJAR CIRCUIT OPEN	29-164
DRIVER DOOR AJAR CIRCUIT SHORTED TO GROUND	29-167
DRIVER DOOR LOCK INOPERATIVE	29-190
DTCM VERIFICATION TEST	28-1103
ENGINE CRANKS BUT DOES NOT START	29-116
ETC INTERMITTENT NO CRANK CONDITION	29-120
FUEL DELIVERY SYSTEM OUTPUT - FLOW TEST	29-120
FUEL PRESSURE LEAK DOWN	29-123
HARD START FUEL SYSTEM	29-126
HVAC PRE-DIAGNOSTIC TROUBLESHOOTING PROCEDURE	28-531, 28-662
HVAC SYSTEM TEST	29-156
HVAC VERIFICATION TEST	28-532, 28-663
INTERMITTENT CONDITION	28-3332, 28-3706
LEFT REAR DOOR AJAR CIRCUIT OPEN	29-169
LEFT REAR DOOR AJAR CIRCUIT SHORTED TO GROUND	29-172
NO CRANK CONDITION	29-131
NO RESPONSE FROM ABS (ANTILOCK BRAKE MODULE)	29-32
NO RESPONSE FROM AMP (AMPLIFIER)	29-37
NO RESPONSE FROM CCN (CLUSTER)	29-40
NO RESPONSE FROM DDM (DMLF)(DRIVER DOOR MODULE)	29-44
NO RESPONSE FROM DTCM (DRIVETRAIN CONTROL MODULE)	29-47
NO RESPONSE FROM HFM (HANDS FREE MODULE)	29-52
NO RESPONSE FROM HSM (HEATED SEAT MODULE)	29-55
NO RESPONSE FROM HVAC (A/C HEATER CONTROL)	29-58
NO RESPONSE FROM MSMD (MEMORY SEAT MODULE)	29-62
NO RESPONSE FROM ORC (OCCUPANT RESTRAINT CONTROLLER)	29-65
NO RESPONSE FROM PCM (POWERTRAIN CONTROL MODULE) (NGC)	29-70
NO RESPONSE FROM PDM (DMRF)(PASSENGER DOOR MODULE)	29-75
NO RESPONSE FROM PTS (PARK ASSIST MODULE)	29-78
NO RESPONSE FROM RADIO	29-81
NO RESPONSE FROM SDARV (SATELLITE VIDEO RECEIVER)	29-85
NO RESPONSE FROM THE STEERING ANGLE SENSOR (SAS)	29-89
NO RESPONSE FROM TIPM (TOTALLY INTEGRATED POWER MODULE)	29-92
NO RESPONSE FROM VES3 (VIDEO SCREEN MODULE)	29-97
NO RESPONSE FROM WIN (WIRELESS IGNITION NODE)	29-100
NO RESPONSE WITH A NO START CONDITION	29-137
ONE GAUGE INOPERATIVE - GAS ENGINES	29-186
ONE PASSENGER DOOR LOCK INOPERATIVE	29-194
P000B-BANK 1 CAMSHAFT 2 POSITION SLOW RESPONSE	28-2134
P0013-BANK 1 CAMSHAFT 2 POSITION ACTUATOR CIRCUIT OPEN	28-2141
P0014-EXHAUST TARGET ERROR BANK 1	28-2146
P0016-CRANKSHAFT/CAMSHAFT TIMING MISALIGNMENT	28-2152
P0031-O2 SENSOR 1/1 HEATER CIRCUIT LOW	28-2158
P0032-O2 SENSOR 1/1 HEATER CIRCUIT HIGH	28-2162
P0037-O2 SENSOR 1/2 HEATER CIRCUIT LOW	28-2167
P0038-O2 SENSOR 1/2 HEATER CIRCUIT HIGH	28-2171
P0051-O2 SENSOR 2/1 HEATER CIRCUIT LOW	28-2176
P0052-O2 SENSOR 2/1 HEATER CIRCUIT HIGH	28-2180
P0057-O2 SENSOR 2/2 HEATER CIRCUIT LOW	28-2185
P0058-O2 SENSOR 2/2 HEATER CIRCUIT HIGH	28-2189
P0071-AMBIENT AIR TEMPERATURE SENSOR PERFORMANCE	28-2194
P0072-AMBIENT AIR TEMPERATURE SENSOR CIRCUIT LOW	28-2200, 28-3488
P0073-AMBIENT AIR TEMPERATURE SENSOR CIRCUIT HIGH	28-2204, 28-3492
P0107-MANIFOLD ABSOLUTE PRESSURE SENSOR CIRCUIT LOW	28-2209
P0108-MANIFOLD ABSOLUTE PRESSURE SENSOR CIRCUIT HIGH	28-2215
P0111-INTAKE AIR TEMPERATURE SENSOR RATIONALITY	28-2220

Description	Group-Page
P0112-INTAKE AIR TEMPERATURE SENSOR CIRCUIT LOW	28-2226
P0113-INTAKE AIR TEMPERATURE SENSOR CIRCUIT HIGH	28-2230
P0116-ENGINE COOLANT TEMPERATURE SENSOR CIRCUIT PERFORMANCE	28-2235
P0117-ENGINE COOLANT TEMPERATURE SENSOR CIRCUIT LOW	28-2241
P0118-ENGINE COOLANT TEMPERATURE SENSOR CIRCUIT HIGH	28-2245
P0121-THROTTLE POSITION SENSOR 1 PERFORMANCE	28-2250
P0122-THROTTLE POSITION SENSOR 1 CIRCUIT LOW	28-2256
P0122-TPS/APP CIRCUIT LOW	28-1662, 28-1844
P0123-THROTTLE POSITION SENSOR 1 CIRCUIT HIGH	28-2263
P0123-TPS/APP CIRCUIT HIGH	28-1664, 28-1846
P0124-TPS/APP INTERMITTENT	28-1665, 28-1847
P0125-INSUFFICIENT COOLANT TEMP FOR CLOSED-LOOP FUEL CONTROL	28-2269
P0128-THERMOSTAT RATIONALITY	28-2272
P0129-BAROMETRIC PRESSURE OUT-OF-RANGE LOW	28-2283
P0131-O2 SENSOR 1/1 CIRCUIT LOW	28-2289
P0132-O2 SENSOR 1/1 CIRCUIT HIGH	28-2293
P0133-O2 SENSOR 1/1 SLOW RESPONSE	28-2298
P0135-O2 SENSOR 1/1 HEATER PERFORMANCE	28-2303
P0137-O2 SENSOR 1/2 CIRCUIT LOW	28-2307
P0138-O2 SENSOR 1/2 CIRCUIT HIGH	28-2311
P0139-O2 SENSOR 1/2 SLOW RESPONSE	28-2316
P013A-O2 SENSOR 1/2 SLOW RESPONSE - RICH TO LEAN	28-2321
P013C-O2 SENSOR 2/2 SLOW RESPONSE - RICH TO LEAN	28-2326
P0141-O2 SENSOR 1/2 HEATER PERFORMANCE	28-2331
P0151-O2 SENSOR 2/1 CIRCUIT LOW	28-2335
P0152-O2 SENSOR 2/1 CIRCUIT HIGH	28-2339
P0153-O2 SENSOR 2/1 SLOW RESPONSE	28-2344
P0155-O2 SENSOR 2/1 HEATER PERFORMANCE	28-2349
P0157-O2 SENSOR 2/2 CIRCUIT LOW	28-2353
P0158-O2 SENSOR 2/2 CIRCUIT HIGH	28-2357
P0159-O2 SENSOR 2/2 SLOW RESPONSE	28-2362
P0161-O2 SENSOR 2/2 HEATER PERFORMANCE	28-2367
P0171-FUEL SYSTEM 1/1 LEAN	28-2371
P0172-FUEL SYSTEM 1/1 RICH	28-2382
P0174-FUEL SYSTEM 2/1 LEAN	28-2390
P0175-FUEL SYSTEM 2/1 RICH	28-2401
P0196-ENGINE OIL TEMPERATURE SENSOR PERFORMANCE	28-2408
P0197-ENGINE OIL TEMPERATURE SENSOR CIRCUIT LOW	28-2414
P0198-ENGINE OIL TEMPERATURE SENSOR CIRCUIT HIGH	28-2418
P0201-FUEL INJECTOR 1 CIRCUIT	28-2423
P0202-FUEL INJECTOR 2 CIRCUIT	28-2429
P0203-FUEL INJECTOR 3 CIRCUIT	28-2435
P0204-FUEL INJECTOR 4 CIRCUIT	28-2441
P0205-FUEL INJECTOR 5 CIRCUIT	28-2447
P0206-FUEL INJECTOR 6 CIRCUIT	28-2453
P0207-FUEL INJECTOR 7 CIRCUIT	28-2459
P0208-FUEL INJECTOR 8 CIRCUIT	28-2465
P0218-HIGH TEMPERATURE OPERATION ACTIVATED	28-1667, 28-1849
P0221-THROTTLE POSITION SENSOR 2 PERFORMANCE	28-2471
P0222-THROTTLE POSITION SENSOR 2 CIRCUIT LOW	28-2477
P0223-THROTTLE POSITION SENSOR 2 CIRCUIT HIGH	28-2484
P0298-ENGINE OIL TEMPERATURE TOO HIGH	28-2489
P0300-MULTIPLE CYLINDER MISFIRE	28-2493
P0301-CYLINDER 1 MISFIRE	28-2502
P0302-CYLINDER 2 MISFIRE	28-2511
P0303-CYLINDER 3 MISFIRE	28-2521
P0304-CYLINDER 4 MISFIRE	28-2531
P0305-CYLINDER 5 MISFIRE	28-2541
P0306-CYLINDER 6 MISFIRE	28-2551
P0307-CYLINDER 7 MISFIRE	28-2561
P0308-CYLINDER 8 MISFIRE	28-2571
P0315-NO CRANK SENSOR LEARNED	28-2583
P0325-KNOCK SENSOR 1 CIRCUIT	28-2586
P0330-KNOCK SENSOR 2 CIRCUIT	28-2592
P0335-CRANKSHAFT POSITION SENSOR CIRCUIT	28-2598
P0339-CRANKSHAFT POSITION SENSOR INTERMITTENT	28-2607
P0340-CAMSHAFT POSITION SENSOR CIRCUIT	28-2614
P0344-CAMSHAFT POSITION SENSOR INTERMITTENT	28-2622
P0401-EGR SYSTEM PERFORMANCE	28-2629
P0403-EGR SOLENOID CIRCUIT	28-2635
P0404-EGR POSITION SENSOR PERFORMANCE	28-2640
P0405-EGR POSITION SENSOR CIRCUIT LOW	28-2645
P0406-EGR POSITION SENSOR CIRCUIT HIGH	28-2651
P0420-CATALYST EFFICIENCY (BANK 1)	28-2656
P0430-CATALYST EFFICIENCY (BANK 2)	28-2663
P0440-GENERAL EVAP SYSTEM FAILURE	28-2670
P0441-EVAP PURGE SYSTEM PERFORMANCE	28-2679
P0443-EVAP PURGE SOLENOID CIRCUIT	28-2684
P0452-EVAP PRESSURE SWITCH STUCK CLOSED	28-2689
P0455-EVAP PURGE SYSTEM LARGE LEAK	28-2694
P0456-EVAP PURGE SYSTEM SMALL LEAK	28-2701
P0457-LOOSE FUEL CAP	28-2708
P0461-FUEL LEVEL SENSOR 1 PERFORMANCE	28-2711
P0462-FUEL LEVEL SENSOR 1 CIRCUIT LOW	28-2715, 28-3497
P0463-FUEL LEVEL SENSOR 1 CIRCUIT HIGH	28-2719, 28-3501
P0480-COOLING FAN 1 CONTROL CIRCUIT	28-2724
P0501-VEHICLE SPEED SENSOR 1 PERFORMANCE	28-2727
P0503-VEHICLE SPEED SENSOR 1 ERRATIC	28-2730
P0506-IDLE SPEED PERFORMANCE LOWER THAN EXCEPTED	28-2732
P0507-IDLE SPEED PERFORMANCE HIGHER THAN EXCEPTED	28-2734
P050B-COLD START IGNITION TIMING PERFORMANCE	28-2738
P050D-COLD START ROUGH IDLE	28-2742
P0513-INVALID SKIM KEY	28-2748
P0520-ENGINE OIL PRESSURE SENSOR CIRCUIT	28-2752
P0521-ENGINE OIL PRESSURE SENSOR PERFORMANCE	28-2758
P0522-ENGINE OIL PRESSURE SENSOR CIRCUIT LOW 5.7L	28-2763
P0522-OIL PRESSURE TOO LOW 3.7L, 4.7L	28-2768
P0523-ENGINE OIL PRESSURE SENSOR CIRCUIT HIGH	28-2773
P0524-ENGINE OIL PRESSURE TOO LOW	28-2778
P0532-A/C PRESSURE SENSOR CIRCUIT LOW	28-2784
P0533-A/C PRESSURE SENSOR CIRCUIT HIGH	28-2790
P0562-BATTERY VOLTAGE LOW	28-1669, 28-1851, 28-2795
P0563-BATTERY VOLTAGE HIGH	28-2800
P0571-BRAKE SWITCH 1 PERFORMANCE	28-2804
P0572-BRAKE SWITCH 1 STUCK ON	28-2808
P0573-BRAKE SWITCH 1 STUCK OFF	28-2812
P0579-SPEED CONTROL SWITCH 1 PERFORMANCE	28-2816
P0580-SPEED CONTROL SWITCH 1 CIRCUIT LOW	28-2824
P0581-SPEED CONTROL SWITCH 1 CIRCUIT HIGH	28-2830
P0585-SPEED CONTROL SWITCH 1/2 CORRELATION	28-2837
P0591-SPEED CONTROL SWITCH 2 PERFORMANCE	28-2847
P0592-SPEED CONTROL SWITCH 2 CIRCUIT LOW	28-2855
P0593-SPEED CONTROL SWITCH 2 CIRCUIT HIGH	28-2861
P0600-SERIAL COMMUNICATION LINK	28-2867
P0601-INTERNAL MEMORY CHECKSUM INVALID	28-2867
P0602-CONTROL MODULE PROGRAMMING ERROR/NOT PROGRAMMED	28-1672, 28-1855
P0604-INTERNAL CONTROL MODULE RAM	28-1673, 28-1855
P0605-INTERNAL CONTROL MODULE ROM	28-1674, 28-1856

Description	Group-Page
P0606-INTERNAL CONTROL PROCESSOR	28-3505
P0606-INTERNAL ECM PROCESSOR	28-2867
P060B-ETC A/D GROUND PERFORMANCE	28-2868
P060D-ETC LEVEL 2 APP PERFORMANCE	28-2869
P060E-ETC LEVEL 2 TPS PERFORMANCE	28-2870
P060F-ETC LEVEL 2 ECT PERFORMANCE	28-2871
P0613-INTERNAL TRANSMISSION PROCESSOR	28-1674, 28-1857
P0615-STARTER RELAY CONTROL CIRCUIT OPEN - NGC	28-3506
P061A-ETC LEVEL 2 TORQUE PERFORMANCE	28-2872
P061C-ETC LEVEL 2 RPM PERFORMANCE	28-2873
P0622-GENERATOR FIELD CONTROL CIRCUIT	28-2876
P0627-FUEL PUMP CONTROL CIRCUIT	28-2881, 28-3510
P062C-ETC LEVEL 2 MPH PERFORMANCE	28-2874
P0630-VIN NOT PROGRAMMED IN PCM	28-2884
P0632-ODOMETER NOT PROGRAMMED IN PCM	28-2885
P0633-SKIM KEY NOT PROGRAMMED IN PCM	28-2886
P063A-GENERATOR VOLTAGE SENSE CIRCUIT	28-2888
P0642-SENSOR REFERENCE VOLTAGE 1 CIRCUIT LOW	28-2892
P0643-PRIMARY 5-VOLT SUPPLY CIRCUIT HIGH	28-2896
P0645-A/C CLUTCH CONTROL CIRCUIT	28-2899
P0652-SENSOR REFERENCE VOLTAGE 2 CIRCUIT LOW	28-2903
P0653-SENSOR REFERENCE VOLTAGE 2 CIRCUIT HIGH	28-2907
P0685-AUTO SHUTDOWN CONTROL CIRCUIT	28-2910
P0688-AUTO SHUTDOWN SENSE CIRCUIT LOW	28-2914
P0691-COOLING FAN 1 CONTROL CIRCUIT LOW	28-3514
P0692-COOLING FAN 1 CONTROL CIRCUIT HIGH	28-3517
P0693-COOLING FAN 2 CONTROL CIRCUIT LOW	28-3520
P0694-COOLING FAN 2 CONTROL CIRCUIT HIGH	28-3523
P0700-TRANSMISSION CONTROL SYSTEM (MIL REQUEST)	28-2917
P0703-BRAKE SWITCH 2 PERFORMANCE	28-2918
P0706-TRANSMISSION RANGE SENSOR RATIONALITY	28-1676, 28-1859
P0711-TRANSMISSION TEMPERATURE SENSOR PERFORMANCE	28-1681, 28-1864
P0712-TRANSMISSION TEMPERATURE SENSOR LOW	28-1684, 28-1867
P0713-TRANSMISSION TEMPERATURE SENSOR HIGH	28-1688, 28-1871
P0714-TRANSMISSION TEMPERATURE SENSOR INTERMITTENT	28-1693, 28-1875
P0716-INPUT SPEED SENSOR 1 CIRCUIT PERFORMANCE	28-1696, 28-1878
P0721-OUTPUT SPEED SENSOR CIRCUIT PERFORMANCE	28-1702, 28-1886
P0726-ENGINE SPEED INPUT CIRCUIT RANGE/ PERFORMANCE	28-1706, 28-1893
P0731-GEAR RATIO ERROR IN 1ST	28-1708, 28-1895
P0732-GEAR RATIO ERROR IN 2ND	28-1709, 28-1899
P0733-GEAR RATIO ERROR IN 3RD	28-1711, 28-1906
P0734-GEAR RATIO ERROR IN 4TH	28-1713, 28-1914
P0735-GEAR RATIO ERROR IN 5TH	28-1918
P0736-GEAR RATIO ERROR IN REVERSE	28-1715, 28-1922
P0740-TCC OUT OF RANGE	28-1717, 28-1926
P0750-LR SOLENOID CIRCUIT	28-1720, 28-1929
P0755-2/4 SOLENOID CIRCUIT	28-1725
P0755-2C SOLENOID CIRCUIT	28-1934
P0760-OD SOLENOID CIRCUIT	28-1730, 28-1939
P0765-UD SOLENOID CIRCUIT	28-1735, 28-1944
P0770-4C SOLENOID CIRCUIT	28-1949
P0838-FOUR WHEEL DRIVE (4WD) SWITCH CIRCUIT LOW	28-3783
P0839-FOUR WHEEL DRIVE (4WD) SWITCH CIRCUIT HIGH	28-3786
P0841-LR PRESSURE SWITCH RATIONALITY	28-1740, 28-1954
P0845-2/4 HYDRAULIC PRESSURE TEST	28-1745
P0845-2C HYDRAULIC PRESSURE TEST	28-1963
P0846-2/4 PRESSURE SWITCH RATIONALITY	28-1751
P0846-2C PRESSURE SWITCH RATIONALITY	28-1972
P0850-PARK/NEUTRAL SWITCH PERFORMANCE	28-2923
P0853-OVERDRIVE / TOW SWITCH INPUT CIRCUIT STUCK	28-3788
P0868-LINE PRESSURE LOW	28-1756, 28-1980
P0869-LINE PRESSURE HIGH	28-1762, 28-1987
P0870-OD HYDRAULIC PRESSURE TEST	28-1768, 28-1994
P0871-OD PRESSURE SWITCH RATIONALITY	28-1774, 28-2003
P0875-UD HYDRAULIC PRESSURE TEST	28-2013
P0876-UD PRESSURE SWITCH RATIONALITY	28-2023
P0882-TCM POWER INPUT LOW	28-1779, 28-2031
P0883-TCM POWER INPUT HIGH	28-1783, 28-2035
P0884-POWER UP AT SPEED	28-1786, 28-2039
P0890-SWITCHED BATTERY	28-1788, 28-2041
P0897-TRANSMISSION FLUID DETERIORATED	28-1791
P0928-BTSI CONTROL CIRCUIT	28-3876
P0933-HYDRAULIC PRESSURE SENSOR RANGE/PERFORMANCE	28-1793, 28-2045
P0934-LINE PRESSURE SENSOR CIRCUIT LOW	28-1797, 28-2049
P0935-LINE PRESSURE SENSOR CIRCUIT HIGH	28-1802, 28-2055
P0944-LOSS OF HYDRAULIC PUMP PRIME	28-1806, 28-2059
P0957-AUTOSTICK CIRCUIT LOW (ERS)	28-1809, 28-2062
P0958-AUTOSTICK CIRCUIT HIGH (ERS)	28-1813, 28-2066
P0987-4C HYDRAULIC PRESSURE TEST	28-2071
P0988-4C PRESSURE SWITCH RATIONALITY	28-2081
P0992-2/4/OD HYDRAULIC PRESSURE TEST	28-1817
P1004-SHORT RUNNER VALVE CONTROL PERFORMANCE	28-2927
P1103-DC TO AC CONVERTER SWITCH STUCK	28-3789
P1115-GENERAL TEMPERATURE RATIONALITY	28-2933
P1128-CLOSED LOOP FUELING NOT ACHIEVED - BANK 1	28-2942
P1129-CLOSED LOOP FUELING NOT ACHIEVED - BANK 2	28-2948
P1239-ENGINE OIL TEMPERATURE TOO LOW	28-2956
P1272-A/C CLUTCH CONTROL CIRCUIT 2 LOW	28-3526
P1273-A/C CLUTCH CONTROL CIRCUIT 2 HIGH	28-3529
P127C-FUEL PUMP CONTROL CIRCUIT 2 LOW - NGC	28-3533
P127E-FUEL PUMP CONTROL CIRCUIT 2 OPEN - NGC	28-3537
P128B-TCM POWER CONTROL CIRCUIT 2 LOW - 42RLE	28-3541
P128B-TCM POWER CONTROL CIRCUIT 2 LOW - 45/545RFE	28-3545
P128C-TCM POWER CONTROL CIRCUIT 2 HIGH - 42RLE	28-3548
P128C-TCM POWER CONTROL CIRCUIT 2 HIGH - 45/545RFE	28-3551
P128D-TCM POWER CONTROL CIRCUIT 2 OPEN - 42RLE	28-3554
P128D-TCM POWER CONTROL CIRCUIT 2 OPEN - 45/545RFE	28-3557
P128E-TCM POWER CONTROL CIRCUIT 2 OVERCURRENT - 42RLE	28-3560
P128E-TCM POWER CONTROL CIRCUIT 2 OVERCURRENT - 45/545RFE	28-3564
P129C-INVERTER CONTROL CIRCUIT HIGH	28-3568
P129E-INVERTER CONTROL CIRCUIT OVERCURRENT	28-3571
P1404-EGR POSITION SENSOR RATIONALITY CLOSED	28-2961
P1411-CYLINDER 1 REACTIVATION CONTROL PERFORMANCE	28-2967
P1414-CYLINDER 4 REACTIVATION CONTROL PERFORMANCE	28-2973
P1416-CYLINDER 6 REACTIVATION CONTROL PERFORMANCE	28-2979
P1417-CYLINDER 7 REACTIVATION CONTROL PERFORMANCE	28-2985
P1521-INCORRECT ENGINE OIL TYPE	28-2990
P1524-OIL PRESSURE OUT OF RANGE - CAMSHAFT ADVANCE/RETARD DISABLED	28-2992
P1572-BRAKE PEDAL STUCK ON	28-2998

Description	Group-Page
P1573-BRAKE PEDAL STUCK OFF	28-3002
P1593-SPEED CONTROL SWITCH 1 STUCK	28-3006
P1607-PCM INTERNAL SHUTDOWN TIMER SLOW RATIONALITY	28-3015
P1618-SENSOR REFERENCE VOLTAGE 1 CIRCUIT ERRATIC	28-3018
P1628-SENSOR REFERENCE VOLTAGE 2 CIRCUIT ERRATIC	28-3023
P1684-BATTERY WAS DISCONNECTED	28-1819, 28-2088
P1696-EEPROM MEMORY WRITE DENIED/INVALID	28-3027
P1697-EMR (SRI) MILEAGE NOT STORED	28-3029
P1713-RESTRICTED MANUAL VALVE IN T2 RANGE	28-1822
P1715-RESTRICTED MANUAL VALVE IN T3 RANGE	28-2089
P1736-GEAR RATIO ERROR IN 2ND PRIME	28-2090
P1745-TRANSMISSION LINE PRESSURE TOO HIGH FOR TOO LONG	28-1823
P1775-SOLENOID SWITCH VALVE LATCHED IN TCC POSITION	28-1824, 28-2097
P1776-SOLENOID SWITCH VALVE LATCHED IN LR POSITION	28-1829, 28-2101
P1790-FAULT IMMEDIATELY AFTER SHIFT	28-1834
P1794-SPEED SENSOR GROUND ERROR	28-1835, 28-2106
P1797-MANUAL SHIFT OVERHEAT	28-1837
P2008-SHORT RUNNER VALVE (SRV) CONTROL CIRCUIT	28-3030
P2016-SHORT RUNNER VALVE (SRV) POSITION SENSOR CIRCUIT LOW	28-3036
P2017-SHORT RUNNER VALVE (SRV) POSITION SENSOR CIRCUIT HIGH	28-3040
P2072-ELECTRONIC THROTTLE CONTROL SYSTEM - ICE BLOCKAGE	28-3044
P2096-DOWNSTREAM FUEL TRIM SYSTEM 1 LEAN	28-3046
P2097-DOWNSTREAM FUEL TRIM SYSTEM 1 RICH	28-3051
P2098-DOWNSTREAM FUEL TRIM SYSTEM 2 LEAN	28-3056
P2099-DOWNSTREAM FUEL TRIM SYSTEM 2 RICH	28-3061
P2100-ELECTRONIC THROTTLE CONTROL MOTOR CIRCUIT	28-3066
P2101-ELECTRONIC THROTTLE CONTROL MOTOR PERFORMANCE	28-3072
P2107-ELECTRONIC THROTTLE CONTROL MODULE PROCESSOR	28-3073
P2110-ELECTRONIC THROTTLE CONTROL - FORCED LIMITED RPM	28-3075
P2111-ELECTRONIC THROTTLE CONTROL - UNABLE TO CLOSE	28-3081
P2112-ELECTRONIC THROTTLE CONTROL - UNABLE TO OPEN	28-3087
P2115-ACCELERATOR PEDAL POSITION SENSOR 1 MINIMUM STOP PERFORMANCE	28-3092
P2116-ACCELERATOR PEDAL POSITION SENSOR 2 MINIMUM STOP PERFORMANCE	28-3093
P2118-ELECTRONIC THROTTLE CONTROL MOTOR CIRCUIT	28-3095
P2122-ACCELERATOR PEDAL POSITION SENSOR 1 CIRCUIT LOW	28-3102
P2123-ACCELERATOR PEDAL POSITION SENSOR 1 CIRCUIT HIGH	28-3109
P2127-ACCELERATOR PEDAL POSITION SENSOR 2 CIRCUIT LOW	28-3114
P2128-ACCELERATOR PEDAL POSITION SENSOR 2 CIRCUIT HIGH	28-3121
P2135-THROTTLE POSITION SENSOR 1/2 CORRELATION	28-3126
P2138-ACCELERATOR PEDAL POSITION SENSOR 1/2 CORRELATION	28-3131
P2161-VEHICLE SPEED SENSOR 2 ERRATIC	28-3137
P2166-ACCELERATOR PEDAL POSITION SENSOR 1 MAXIMUM STOP PERFORMANCE	28-3140
P2167-ACCELERATOR PEDAL POSITION SENSOR 2 MAXIMUM STOP PERFORMANCE	28-3141
P2172-HIGH AIRFLOW/VACUUM LEAK DETECTED (INSTANTANEOUS ACCUMULATION)	28-3142
P2173-HIGH AIRFLOW/VACUUM LEAK DETECTED (SLOW ACCUMULATION)	28-3152
P2174-LOW AIRFLOW/RESTRICTION DETECTED (INSTANTANEOUS ACCUMULATION)	28-3161
P2175-LOW AIRFLOW/ RESTRICTION DETECTED (SLOW ACCUMULATION)	28-3171
P2181-COOLING SYSTEM PERFORMANCE	28-3181
P2271-O2 SENSOR 1/2 SIGNAL STUCK RICH	28-3187
P2273-O2 SENSOR 2/2 SIGNAL STUCK RICH	28-3190
P2299-BRAKE PEDAL POSITION/ACCELERATOR PEDAL POSITION INCOMPATIBLE	28-3193
P2302-IGNITION COIL 1 SECONDARY CIRCUIT-INSUFFICIENT IONIZATION	28-3196
P2305-IGNITION COIL 2 SECONDARY CIRCUIT-INSUFFICIENT IONIZATION	28-3201
P2308-IGNITION COIL 3 SECONDARY CIRCUIT-INSUFFICIENT IONIZATION	28-3206
P2311-IGNITION COIL 4 SECONDARY CIRCUIT-INSUFFICIENT IONIZATION	28-3211
P2314-IGNITION COIL 5 SECONDARY CIRCUIT-INSUFFICIENT IONIZATION	28-3216
P2317-IGNITION COIL 6 SECONDARY CIRCUIT-INSUFFICIENT IONIZATION	28-3221
P2320-IGNITION COIL 7 SECONDARY CIRCUIT-INSUFFICIENT IONIZATION	28-3226
P2323-IGNITION COIL 8 SECONDARY CIRCUIT-INSUFFICIENT IONIZATION	28-3231
P2503-CHARGING SYSTEM OUTPUT LOW	28-3236
P2504-CHARGING SYSTEM OUTPUT HIGH	28-3240
P2610-PCM INTERNAL SHUTDOWN TIMER FAST RATIONALITY	28-3242
P2700-INADEQUATE ELEMENT VOLUME LR	28-2110
P2701-INADEQUATE ELEMENT VOLUME 2C	28-2113
P2702-INADEQUATE ELEMENT VOLUME OD	28-2115
P2703-INADEQUATE ELEMENT VOLUME UD	28-2118
P2704-INADEQUATE ELEMENT VOLUME 4C	28-2120
P2706-MS SOLENOID CIRCUIT	28-2123
P3400-MDS RATIONALITY BANK 1	28-3245
P3401-MDS SOLENOID 1 CIRCUIT	28-3248
P3402-CYLINDER 1 DEACTIVATION CONTROL PERFORMANCE	28-3253
P3425-MDS SOLENOID 4 CIRCUIT	28-3260
P3426-CYLINDER 4 DEACTIVATION CONTROL PERFORMANCE	28-3265
P3441-MDS SOLENOID 6 CIRCUIT	28-3272
P3442-CYLINDER 6 DEACTIVATION CONTROL PERFORMANCE	28-3277
P3449-MDS SOLENOID 7 CIRCUIT	28-3284
P3450-CYLINDER 7 DEACTIVATION CONTROL PERFORMANCE	28-3289
P3497-MDS RATIONALITY BANK 2	28-3296
PASSENGER DOOR AJAR CIRCUIT OPEN	29-174
PASSENGER DOOR AJAR CIRCUIT SHORTED TO GROUND	29-177
PCM / TCM PROGRAMMING	28-3334
POWER SEAT SYSTEM VERIFICATION TEST	28-1457
POWERTRAIN VERIFICATION TEST	28-3340
PRE-DIAGNOSTIC TROUBLESHOOTING PROCEDURE	28-3333
PRNDL FAULT CLEARING PROCEDURE	28-1842
PRNDL NOT DISPLAYING CORRECT POSITION (EATX VEHICLES)	29-186
REMOTE START INHIBITORS	29-200
REMOTE START POOR PERFORMANCE	29-201
REPLACING THE ANTILOCK BRAKE MODULE	29-10
RESTRAINTS SYSTEM INTERMITTENT TEST	28-445
RESTRAINTS SYSTEM PRE-DIAGNOSTIC PROCEDURE	28-447
RESTRAINTS SYSTEM VERIFICATION TEST	28-448
RIGHT REAR DOOR AJAR CIRCUIT OPEN	29-179
RIGHT REAR DOOR AJAR CIRCUIT SHORTED TO GROUND	29-182
STANDARD PROCEDURE - HVAC SYSTEM TEST	28-529, 28-660
START AND STALL CONDITION	29-141
STORED LOST COMMUNICATION DTCS	29-104
TPM VERIFICATION	28-3890
TRANSFER CASE VERIFICATION TEST	28-1104
U0001-00-CAN C BUS	28-386

Description	Group-Page
U0001-CAN C BUS	28-1088, 28-3300
U0001-CAN C BUS CIRCUIT	28-3574
U0002-00-CAN C BUS OFF PERFORMANCE	28-388
U0002-CAN C BUS OFF PERFORMANCE	28-846, 28-1838, 28-2127
U0010-00-CAN INTERIOR BUS	28-521, 28-1531
U0010-CAN INTERIOR BUS	28-176, 28-652, 28-3585, 28-3790, 28-4030, 28-4046
U0011-00-CAN B BUS PERFORMANCE	28-1317
U0011-CAN INTERIOR BUS OFF PERFORMANCE	28-1442
U0014-CAN INTERIOR BUS (+) CIRCUIT HIGH	28-1444
U0016-CAN INTERIOR BUS (-) CIRCUIT LOW	28-1446
U0019-CAN B BUS	28-1122
U0037-11-LIN BUS - CIRCUIT SHORT TO GROUND	28-986
U0100-LOST COMMUNICATION WITH ECM/PCM	28-849, 28-1090, 28-3589, 28-3881
U0100-LOST COMMUNICATION WITH THE ECM/PCM	28-1839, 28-2128
U0101-LOST COMMUNICATION WITH TCM	28-849, 28-1092, 28-3302, 28-3595
U0102-00-LOST COMMUNICATION WITH TRANSFER CASE CONTROL MODULE / AWD	28-851
U0102-LOST COMMUNICATION WITH TRANSFER CASE CONTROL MODULE / AWD	28-3601
U0114-LOST COMMUNICATION WITH FINAL DRIVE CONTROL MODULE (DRIVETRAIN CONTROL MODULE)	28-3607
U0121-LOST COMMUNICATION WITH ABS	28-1094, 28-1839, 28-2128, 28-3613
U0121-LOST COMMUNICATION WITH ANTI-LOCK BRAKE MODULE	28-3304, 28-3883
U0125-LOST COMMUNICATION WITH DYNAMICS SENSOR	28-853
U0126-LOST COMMUNICATION WITH SAS	28-3619
U0126-LOST COMMUNICATION WITH STEERING ANGLE SENSOR	28-859
U0141-00-LOST COMMUNICATION WITH IPM (FCM/TIPM)	28-390, 28-526, 28-989, 28-1318, 28-1538, 28-1651
U0141-LOST COMMUNICATION WITH FRONT CONTROL MODULE	28-860
U0141-LOST COMMUNICATION WITH IPM (FCM/TIPM)	28-178, 28-656, 28-1126, 28-1448, 28-1841, 28-2130, 28-3306, 28-3625, 28-3791, 28-3885, 28-4007, 28-4032, 28-4048
U0151-LOST COMMUNICATION WITH OCCUPANT RESTRAINT CONTROLLER (ORC)	28-1128
U0151-LOST COMMUNICATION WITH ORC	28-3628
U0155-00-LOST COMMUNICATION WITH CLUSTER/CCN	28-528, 28-991, 28-1320, 28-1540, 28-1653
U0155-LOST COMMUNICATION WITH CLUSTER/CCN	28-659, 28-1130, 28-1450, 28-3634, 28-4009, 28-4034
U0159-LOST COMMUNICATION WITH PARKING ASSIST CONTROL MODULE	28-3792, 28-4011
U0159-LOST COMMUNICATION WITH PARKING ASSIST CONTROL MODULE (PTS)	28-3639
U0161-LOST COMMUNICATION WITH COMPASS MODULE	28-3794
U0164-00-LOST COMMUNICATION WITH HVAC CONTROL MODULE	28-993, 28-1655
U0164-LOST COMMUNICATION WITH HVAC CONTROL MODULE	28-1132, 28-3644, 28-3798
U0168-LOST COMMUNICATION WITH VEHICLE SECURITY CONTROL MODULE (WIN)	28-3308
U0168-LOST COMMUNICATION WITH VEHICLE SECURITY CONTROL MODULE (WIRELESS IGNITION NODE OR WIN)	28-3649, 28-4013, 28-4036
U0168-LOST COMMUNICATION WITH VEHICLE SECURITY CONTROL MODULE (WIRELESS IGNITION NODE)	28-1134
U0170-00-LOST COMMUNICATION W/ UP-FRONT LEFT SATELLITE SENSOR	28-392
U0171-00-LOST COMMUNICATION W/ UP-FRONT RIGHT SATELLITE SENSOR	28-398
U0172-00-LOST COMMUNICATION W/ LEFT SIDE SATELLITE SENSOR 1	28-404
U0173-00-LOST COMMUNICATION W/ LEFT SIDE SATELLITE SENSOR 2	28-410
U0175-00-LOST COMMUNICATION W/ RIGHT SIDE SATELLITE SENSOR 1	28-416
U0176-00-LOST COMMUNICATION W/ RIGHT SIDE SATELLITE SENSOR 2	28-422
U0184-LOST COMMUNICATION WITH RADIO	28-180, 28-1136, 28-3655, 28-3800, 28-4038, 28-4050
U0186-LOST COMMUNICATION WITH AUDIO AMPLIFIER (AMP)	28-1138, 28-3660, 28-4015
U0196-LOST COMMUNICATION WITH VEHICLE ENTERTAINMENT CONTROL MODULE	28-1140, 28-4052
U0197-LOST COMMUNICATION WITH HANDS FREE PHONE MODULE	28-3802
U0197-LOST COMMUNICATION WITH HANDS FREE PHONE MODULE (HFM)	28-3665, 28-4017
U0203-00-LOST COMMUNICATION WITH DOOR MODULE FRONT LEFT	28-995, 28-1657
U0203-LOST COMMUNICATION WITH DOOR MODULE FRONT LEFT	28-1452
U0203-LOST COMMUNICATION WITH LEFT FRONT DOOR MODULE (DMFL) (DRIVER DOOR MODULE)	28-3670
U0203-LOST COMMUNICATION WITH LEFT FRONT DOOR MODULE (DMLF) (DRIVER DOOR MODULE)	28-1142
U0204-00-LOST COMMUNICATION WITH DOOR MODULE FRONT RIGHT	28-997, 28-1659
U0204-LOST COMMUNICATION WITH DOOR MODULE FRONT RIGHT	28-1454
U0204-LOST COMMUNICATION WITH RIGHT FRONT DOOR MODULE (DMFR) (PASSENGER DOOR MODULE)	28-3675
U0204-LOST COMMUNICATION WITH RIGHT FRONT DOOR MODULE (DMRF) (PASSENGER DOOR MODULE)	28-1144
U0208-LOST COMMUNICATION WITH HEATED SEAT CONTROL MODULE	28-1146, 28-3804
U0208-LOST COMMUNICATION WITH HEATED SEAT MODULE (HSM)	28-3680
U0209-00-LOST COMMUNICATION WITH MEMORY SEAT CONTROL MODULE	28-999, 28-1661
U0209-LOST COMMUNICATION WITH MEMORY SEAT CONTROL MODULE	28-1148, 28-3806
U0209-LOST COMMUNICATION WITH MEMORY SEAT CONTROL MODULE (MSMD)	28-3685
U0212-LOST COMMUNICATION WITH SCM (SAS)	28-1096
U0249-LOST COMMUNICATION WITH VEHICLE ENTERTAINMENT CONTROL MODULE - LAST ROW (VES3)	28-3690, 28-4019
U0401-IMPLAUSIBLE DATA RECEIVED FROM ECM	28-1097
U0401-IMPLAUSIBLE DATA RECEIVED FROM ECM/PCM	28-860
U0402-IMPLAUSIBLE DATA RECEIVED FROM TCM	28-1099
U0415-IMPLAUSIBLE DATA RECEIVED FROM ABS	28-1100
U0423-00-IMPLAUSIBLE DATA RECEIVED FROM CLUSTER/CCN	28-1532
U0429-IMPLAUSIBLE DATA RECEIVED FROM SCM (SAS)	28-1101
U0429-IMPLAUSIBLE DATA RECEIVED FROM STEERING CONTROL MODULE	28-861
U1003-ESP CAN C BUS PERFORMANCE	28-863
U1004-CAN C BUS TRANSMIT PERFORMANCE	28-867
U1008-LIN 1 BUS	28-3808
U1101-00-LOST COMMUNICATION WITH PTS DISPLAY-REAR 1	28-1534
U1109-LOST COMMUNICATION WITH LIN STEERING WHEEL CONTROLS	28-3811
U110C-NO FUEL LEVEL BUS MESSAGE RECEIVED	28-3310
U110E-LOST AMBIENT TEMPERATURE MESSAGE	28-3312
U1110-LOST VEHICLE SPEED MESSAGE	28-3314
U1113-LOST A/C PRESSURE MESSAGE	28-3316
U1120-LOST WHEEL DISTANCE MESSAGE	28-3318
U113D-LOST COMMUNICATION WITH MASTER POWER WINDOW SWITCH	28-1001
U1147-ADDITIONAL CAN INTERIOR BUS ECU DETECTED	28-3695
U1148-ADDITIONAL CAN C BUS ECU DETECTED	28-3697
U1149-LOST COMMUNICATION WITH MULTI-FUNCTION SWITCH	28-3816

Description	Group-Page
U1158-LOST COMMUNICATION WITH SATELLITE VIDEO RECEIVER (SDARV)	28-1150, 28-3699, 28-4021, 28-4040
U1191-LOST COMMUNICATION WITH UPPER SWITCH BANK	28-3820
U1192-LOST COMMUNICATION WITH LOWER SWITCH BANK	28-3824
U1197-SECURITY SEED RESPONSE NOT RECEIVED FROM ECM/PCM	28-3886
U11AD-00-LOST COMMUNICATION W/ LEFT SIDE SATELLITE SENSOR 4	28-428
U11B0-00-LOST COMMUNICATION W/ RIGHT SIDE SATELLITE SENSOR 4	28-435
U1403-IMPLAUSIBLE FUEL LEVEL SIGNAL RECEIVED	28-3320
U1412-IMPLAUSIBLE VEHICLE SPEED SIGNAL RECEIVED	28-3324
U1414-00-IMPLAUSIBLE/MISSING ECU NETWORK CONFIGURATION DATA -	28-442
U1415-00-IMPLAUSIBLE/MISSING VEHICLE CONFIGURATION DATA -	28-444
U1417-IMPLAUSIBLE LEFT WHEEL DISTANCE SIGNAL RECEIVED	28-3327
U1418-IMPLAUSIBLE RIGHT WHEEL DISTANCE SIGNAL RECEIVED	28-3330
U1446-00-IMPLAUSIBLE HEATED STEERING WHEEL TEMPERATURE MESSAGE RECEIVED (CCN)	28-1322
VEHICLE SPEED SIGNAL OUTPUT	29-11
WIRELESS IGNITION NODE (WIN) INTERMITTENT TEST	28-3887
WIRELESS IGNITION NODE (WIN) PRE-DIAGNOSTIC PROCEDURE	28-3888
WIRELESS IGNITION NODE (WIN) VERIFICATION	28-3889

SERVICE MANUAL COMMENTS

What errors(s) have you found?

_____

_____

_____

_____

In order for us to assist you, please include as much details as possible when reporting an error

Comments / Suggestions

_____

_____

_____

_____

☐ **Dealership Technician**
Dealer Code: _____

Retail Customer ☐

Manual Title, Year, Number and Page: _____

_____

Your Name: _____

Address: _____

_____

_____

All comments become property of Chrysler and may be used without compensation.

(FOLD HERE)

NO POSTAGE
NECESSARY
IF MAILED
IN THE
UNITED
STATES

BUSINESS REPLY MAIL

FIRST CLASS MAIL PERMIT NO. 124 CENTER LINE, MI

POSTAGE WILL BE PAID BY ADDRESSEE

Chrysler Corporation
Service Operations
800 Chrysler Drive
CIMS 486-02-76
Auburn Hills, MI 48326-2757

(FOLD HERE)

EA11-003

CHRYSLER

12-9-2011

Enclosure 10

Dealer-Field Communication

Vehicle Labels

2007 – 2008 Dodge Ram Diesel Labels

Instrument Cluster Diesel Fuel Message



Green Fuel Cap with Diesel Fuel Message





Fender Emblem
Indicating Diesel Vehicle

2009 – 2012 Dodge Ram Diesel Labels

Instrument Cluster Diesel Fuel Message



Green Fuel Cap with Diesel Fuel Message





Fender Emblem
Indicating Diesel Vehicle

EA11-003

CHRYSLER

12-9-2011

Enclosure 10

Dealer-Field Communication

Warranty Booklets

BASIC LIMITED WARRANTY ONLY

DODGE SERVICE

STICK WITH THE SPECIALISTS®

Chrysler Motors LLC
81-016-9011

Third Edition

Printed in U.S.A.

2009

WARRANTY INFORMATION

DODGE

RAM TRUCK

DIESEL

IMPORTANT

This booklet contains Chrysler Motors LLC limited warranties. It should be kept in your vehicle and presented to your Dealer if any warranty service is needed. The warranty text begins on page 4 of this booklet.

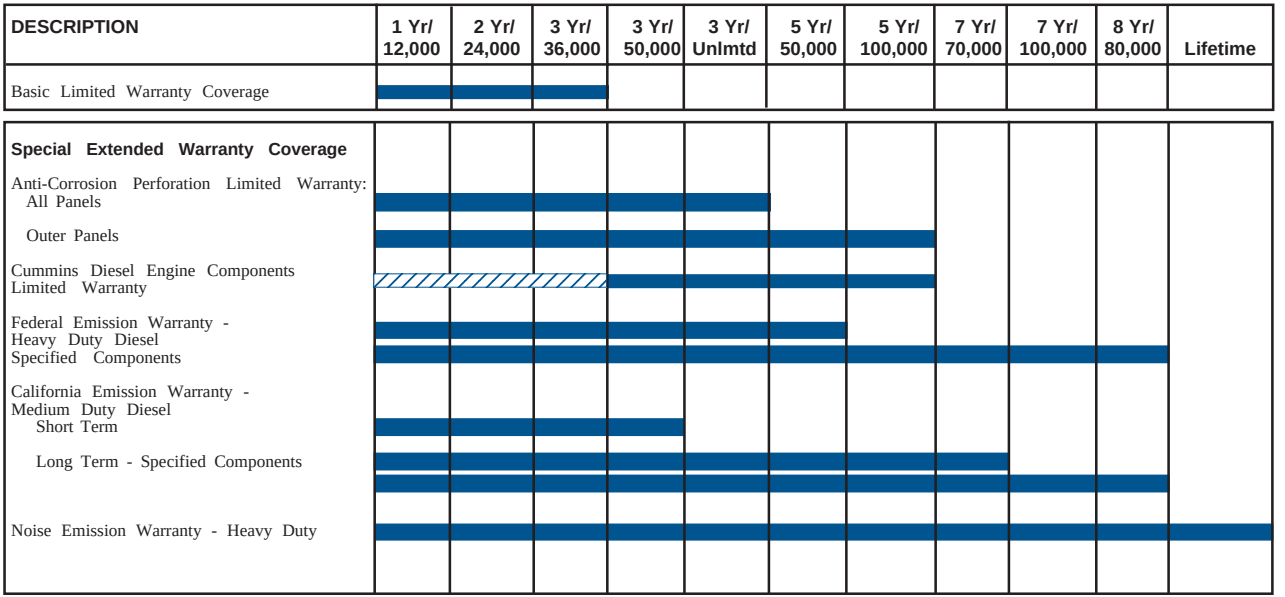

© 2008 Chrysler Motors LLC

TABLE OF CONTENTS

1. Your Legal Rights Under These Limited Warranties 4

2. What's Covered Under Chrysler Motors LLC's Warranties
   - 2.1 Basic Limited Warranty 5
   - 2.2 Cummins 6.7L Diesel Engine Limited Warranty 8
   - 2.3 Corrosion Warranty 9
   - 2.4 Restraint System Limited Warranty 10

3. What's Not Covered
   - 3.1 Modifications Not Covered. 11
   - 3.2 Environmental Factors Not Covered 12
   - 3.3 Maintenance Costs Not Covered. 12
   - 3.4 Racing Not Covered 13
   - 3.5 Certain Kinds of Corrosion Not Covered 13
   - 3.6 Other Exclusions 14
   - 3.7 Total Loss, Salvage, Junk, or Scrap Trucks Not Covered. 15
   - 3.8 Restricted Warranty 15

4. Other Terms of Your Warranties
   - 4.1 Exchanged Parts May Be Used in Warranty Repairs 16
   - 4.2 Pre-Delivery Service. 17
   - 4.3 Production Changes 17

5. Emission Warranties Required by Law
5.1 Federal Engine Emission Warranty - 6.7L Diesel Heavy Duty Truck 18
5.2 California Emission Warranty - 6.7L Diesel Engine Medium Duty Truck 19
5.3 Noise Emission Warranty 24

6. How to Get Warranty Service
6.1 Where to Take Your Truck 27
6.2 How To Get Tow Service - U.S. or Canada Only . . .29
6.3 Emergency Warranty Repairs 30
6.4 Getting Service Under the Federal Emission Performance Warranties 30
6.5 Getting Service Under the California Emission Warranties 31

7. How to Deal with Warranty Problems
7.1 Steps to Take 34
7.2 Helpful Addresses and Telephone Numbers 38

8. Optional Service Contract 39

9. Maintenance
9.1 General Maintenance 40
9.2 Where to Go For Maintenance 40

1. Your Legal Rights Under These Limited Warranties

The warranties contained in this booklet are the only express warranties that Chrysler Motors LLC ("Chrysler") makes for your vehicle. **These warranties give you specific legal rights. You may also have other rights that vary from state to state.** For example, you may have some implied warranties, depending on the state where your vehicle was sold or is registered.

These implied warranties are limited, to the extent allowed by law, to the time periods covered by the express written warranties contained in this booklet.

If you use your vehicle primarily for business or commercial purposes, then these implied warranties do not apply and Chrysler completely disclaims them to the extent allowed by law. And the implied warranty of fitness for a particular purpose does not apply if your vehicle is used for racing, even if the vehicle is equipped for racing.

Some states do not allow limitations on how long an implied warranty lasts, so the above limitations may not apply to you.

1.1 Incidental and Consequential Damages Not Covered

Your warranties don't cover any incidental or consequential damages connected with your vehicle's failure, either while under warranty or afterward. Examples of such damages include:

- lost time;
- inconvenience;
- the loss of the use of your vehicle;
- the cost of rental vehicles, gasoline, telephone, travel, or lodging;
- the loss of personal or commercial property; and
- the loss of revenue.

Some states don't allow incidental or consequential damages to be excluded or limited, so this exclusion may not apply to you.

2. What's Covered Under Chrysler's Warranties

2.1 Basic Limited Warranty

A. Who Is Covered?

You are covered by the Basic Limited Warranty if you are a purchaser for use of the vehicle.

B. What's Covered

The Basic Limited Warranty covers the cost of all parts and labor needed to repair any item on your truck when it left the manufacturing plant that is defective in material, workmanship or factory preparation. There is no list of covered parts since the only exception is tires. You pay nothing for these repairs. These warranty repairs or adjustments — including all parts and labor connected with them — will be made by your dealer at no charge, using new or remanufactured parts.

C. Items Covered by Other Warranties

The following are covered by separate warranties offered by their makers. They are **not covered** by the Basic Limited Warranty:

- tires; or
- items added or changed after the truck left the manufacturing plant, such as accessories or protection products, or items changed because of customization or van conversion.

Be sure you get a copy of any warranty that applies to these items from your dealer, or from the maker of the product. You can find the tire warranty statements in your Owner's Literature Package.

D. Towing Costs Are Covered Under Certain Circumstances

The Basic Limited Warranty covers the cost of towing your truck to the nearest Chrysler, Dodge or Jeep dealer if your truck can't be driven because a covered part has failed. If you choose to go to another dealership, you will be responsible for the cost if the extra distance exceeds 10 miles. See Section 6.2 for information on how to get towing service in the United States and Canada.

E. When It Begins

The Basic Limited Warranty begins on either of the following dates, whichever is earlier:

- the date you take delivery of the truck; or
- the date when the truck was first put into service — for example, as a dealer "demo" or as a Chrysler company truck.

F. When It Ends

The Basic Limited Warranty lasts for 36 months from the date it begins or for 36,000 miles on the odometer, whichever occurs first. But the following items are covered only for 12 months or for 12,000 miles on the odometer, whichever occurs first:

- brakes (rotors, pads, linings, and drums);
- wiper blades;
- clutch discs or modular clutch assembly (as equipped);
- windshield and rear window; and
- wheel alignment and wheel balancing

G. Registration and Operation Requirements

The Basic Limited Warranty covers your truck only if:

- it was built for sale in the U.S.;
- it's registered in the U.S.;
- it's driven mainly in the U.S. or Canada; and
- it's operated and maintained in the manner described in your Owner's Manual.

H. If Your Truck Leaves the United States (We Include U.S. Possessions and Territories as Part of the United States for Warranty Purposes):

EXCEPT WHERE SPECIFICALLY REQUIRED BY LAW, THERE IS NO WARRANTY COVERAGE ON THIS TRUCK IF IT IS SOLD IN OR REGISTERED IN COUNTRIES OTHER THAN THE UNITED STATES.

This policy does not apply to trucks that have received authorization for export from Chrysler. Dealers may not give authorization for export. You should consult an authorized dealer to determine this truck's warranty coverage if you have any questions.

This policy does not apply to trucks registered to U.S. government officials or military personnel on assignment outside of the United States.

2.2 Cummins Diesel Engine Limited Warranty

A. Who Is Covered?

You are covered if your vehicle is equipped with a Cummins Diesel Engine.

B. What's Covered

The Cummins Diesel Engine Limited Warranty covers **ONLY** the following engine parts and components:

- cylinder block and all internal parts
- cylinder head assemblies
- core plugs
- fuel injection pump & injectors
- gaskets and seals for listed components
- intake and exhaust manifold
- oil pan
- oil pump
- timing gear drive belts and/or chains and cover
- turbocharger housing and internal parts
- valve covers
- water pump and housing

C. How Long It Lasts

The Cummins Diesel Engine Limited Warranty lasts for up to 5 years or 100,000 miles on the odometer, whichever occurs first, calculated from the start date of the Basic Limited Warranty, as set forth in Section 2.1(E).

D. Towing Costs Are Covered

The Cummins Diesel Engine Limited Warranty covers the cost of towing your truck to the nearest Dodge dealer if your vehicle cannot be driven because a covered part has failed. If you choose to go to another dealership, you will be responsible for the cost if the extra distance exceeds 10 miles. See Section 6.2 for information on how to get towing service in the United States and Canada.

2.3 Corrosion Warranty

A. Who Is Covered?

You are covered if you are a purchaser for use of the vehicle.

B. What's Covered

This warranty covers the cost of all parts and labor needed to repair or replace any sheet metal panels that get holes from rust or other corrosion. If a hole occurs because of something other than corrosion, this warranty does not apply. Cosmetic or surface corrosion — resulting, for example, from stone chips or scratches in the paint — is not covered. For more details on what isn't covered by this warranty, see 3.5.

C. How Long It Lasts

The Corrosion Warranty starts when your Basic Limited Warranty begins under 2.1(E). This warranty has two time-and-mileage limits:

- For sheet metal panels, the limit is 36 months, with no mileage limit.
- For an outer-body sheet metal panel — one that is finish-painted and that someone can see when walking around the truck — the limits are 5 years or 100,000 miles on the odometer, whichever occurs first.

2.4 Restraint System Limited Warranty (Vehicles sold and registered in the State of Kansas only)

For vehicles sold and registered in the State of Kansas, seatbelts and related seatbelt components are warranted against defects in workmanship and materials for 10 years, regardless of mileage. This warranty does not cover replacement of seatbelts and related components required as the result of collision.

3. What's Not Covered

3.1 Modifications Not Covered

A. Some Modifications Don't Void the Warranties But Aren't Covered

Certain changes that you might make to your truck do not, by themselves, void the warranties described in this booklet. Examples of some of these changes are:

- installing non-Chrysler Motors LLC ("Chrysler") parts, components, or equipment (such as a non-Chrysler radio or speed control); and
- using special non-Chrysler materials or additives.

But your warranties don't cover any part that was not on your truck when it left the manufacturing plant or is not certified for use on your truck. Nor do they cover the costs of any repairs or adjustments that might be caused or needed because of the installation or use of non-Chrysler parts, components, equipment, materials, or additives.

Performance or racing parts are considered to be non-Chrysler parts. Repairs or adjustments caused by their use are not covered under your warranties.

Examples of the types of alterations not covered are:

- installing accessories — except for genuine Chrysler / MOPAR accessories installed by an authorized Chrysler, Dodge or Jeep dealer;
- applying rustproofing or other protection products;

- changing the vehicle's configuration or dimensions, such as converting the vehicle into a limousine or food service vehicle; or
- using any refrigerant that Chrysler has not approved.

B. Modifications That WILL Void Your Warranties

These actions will void your warranties:

- disconnecting, tampering with, or altering the odometer will void your warranties, unless your repairing technician follows the legal requirements for repairing or replacing odometers; or
- attaching any device that disconnects the odometer will also void your warranties.

3.2 Environmental Factors Not Covered

Your warranties don't cover damage caused by environmental factors such as airborne fallout, bird droppings, insect damage, chemicals, tree sap, salt, ocean spray, acid rain, and road hazards. Nor do your warranties cover damage caused by hailstorms, windstorms, tornadoes, sandstorms, lightning, floods, and earthquakes.

Your warranties do not cover conditions resulting from anything impacting the truck. This includes cracks and chips in glass, scratches and chips in painted surfaces, or damage from collision.

3.3 Maintenance Costs Not Covered

Your warranties don't cover the costs of repairing damage caused by poor or improper maintenance. Nor do they cover damage caused by the use of contaminated fuels, or by the use of fuels, oils, lubricants, cleaners or fluids other than those recommended in your Owner's Manual.

The warranties don't cover the costs of your truck's normal or scheduled maintenance — the parts and services that all trucks routinely need. Some of these parts and services, which your warranties don't cover, include:

- lubrication;
- engine tune-ups;
- replacing filters, coolant, spark plugs, bulbs, or fuses (unless those costs result from a covered repair);
- cleaning and polishing; and
- replacing worn wiper blades, worn brake pads and linings, or clutch linings.

3.4 Racing Not Covered

Your warranties don't cover the costs of repairing damage or conditions caused by racing, nor do they cover the repair of any defects that are found as the result of participating in a racing event.

3.5 Certain Kinds of Corrosion Not Covered

Your warranties don't cover the following:

- corrosion caused by accident, damage, abuse, or truck alteration;
- surface corrosion caused by such things as industrial fallout, sand, salt, hail, and stones;
- corrosion caused by the extensive or abnormal transport of caustic materials like chemicals, acids, and fertilizers; and
- corrosion of special bodies, body conversions, or equipment that was not on your truck when it left the manufacturing plant or was not or supplied by Chrysler.

3.6 Other Exclusions

Your warranties don't cover the costs of repairing damage or conditions caused by any of the following:

- fire or accident;
- abuse or negligence;
- misuse — for example, driving over curbs or overloading;
- tampering with the emission systems, or with a part that could affect the emission systems;
- use of used parts, even if they were originally supplied by Chrysler (however, authorized Chrysler / MOPAR remanufactured parts are covered);
- windshield or rear window damage from external objects;

- any changes made to your truck that don't comply with Chrysler; or
- using any fluid that doesn't meet the minimum recommendations in your Owner's Manual.

3.7 Total Loss, Salvage, Junk, or Scrap Trucks Not Covered

A truck has no warranty coverage of any kind if:

- the truck is declared to be a total loss by an insurance company;
- the truck is rebuilt after being declared to be a total loss by an insurance company; or
- the truck is issued a certificate of title indicating that it is designated as "salvage," "junk," "rebuilt," "scrap," or some similar word.

Chrysler will deny warranty coverage without notice if it learns that a truck is ineligible for coverage for any of these reasons.

3.8 Restricted Warranty

Your warranties can also be restricted by Chrysler. Chrysler may restrict the warranty on your truck if the truck is not properly maintained, or if the truck is abused or neglected, and the abuse or neglect interferes with the proper functioning of the truck. If the warranty is restricted, coverage may be denied or subject to approval by Chrysler before covered repairs are performed.

4. Other Terms of Your Warranties

4.1 Exchanged Parts May Be Used in Warranty Repairs

In the interest of customer satisfaction, Chrysler Motors LLC ("Chrysler") may offer exchange service on some truck parts. This service is intended to reduce the amount of time your truck is not available for your use because of repairs. Parts used in exchange service may be new, remanufactured, reconditioned, or repaired, depending on the part involved.

All exchange parts that might be used meet Chrysler standards, and have the same warranties as new parts.

Examples of the kinds of parts that might be serviced in this way are:

- engine assemblies;
- transmission assemblies;
- instrument cluster assemblies;
- radios, tape, CD and DVD players;
- speedometers; and
- powertrain control modules.

To help control suspected ozone-depleting agents, the EPA requires the capture, purification, and reuse of automotive air-conditioning refrigerant gases. As

a result, a repair to the sealed portion of your air-conditioning system may involve the installation of purified reclaimed refrigerant.

4.2 Pre-Delivery Service

A defect in or damage to the mechanical, electrical, sheet-metal, paint, trim, and other components of your truck may have occurred at the factory or while it was being shipped to the dealer.

Such a defect or damage is usually detected and corrected at the factory. In addition, dealers must inspect each truck before delivery. They repair any defects or damage detected before the truck is delivered to you.

4.3 Production Changes

Changes may be made in trucks sold by Chrysler and its dealers at any time without incurring any obligation to make the same or similar changes on trucks previously built or sold.

5. Emission Warranties Required By Law

5.1 Federal Vehicle Emission Warranty - 6.7L Diesel Equipped Heavy Duty Truck

A. Parts Covered for 5 Years or 50,000 Miles, Whichever Occurs First

Diesel equipped heavy duty trucks are 2500 and 3500 models only.

Federal law requires Chrysler to warrant the following emissions parts for 5 years or 50,000 miles, whichever occurs first.

- Air system controls;
- exhaust system (includes catalysts);
- electronic fuel injection system, including injector;
- exhaust manifold;
- exhaust gas recirculation valve and control system (includes EGR cooler);
- exhaust pipes (between exhaust manifold and catalyst);
- fuel pump, fuel lines and fuel injectors;
- intake manifold;
- on-board diagnostic-system components;
- oxygen sensors and oxygen control module;
- positive crankcase-ventilation (PCV) valve or orifice;
- powertrain control module;
- transmission-control module;
- turbocharger.

B. Parts Covered for 8 Years or 80,000 Miles, Whichever Occurs First

If your truck has one of the following parts, this Federal Emission Warranty covers that part for a period of 8 years or 80,000 miles, whichever occurs first, calculated from the start date of the Basic Limited Warranty as set forth in Section 2.1(E). The covered parts are:

- all catalysts
- powertrain control module
- transmission control module

C. Additional Emission Warranties

If your truck is equipped with a California Certified Emission Control System and is registered in California, Massachusetts, Maine, Vermont, Connecticut, Rhode Island, or Oregon, the California Emission Warranty — described in Section 5.2 — also applies.

5.2 California Emission Warranty

6.7L Diesel Engine Medium Duty Trucks

Products Warranted

This Emission Control System Warranty applies to Diesel Engine Medium Duty Trucks certified with the California Air Resources Board beginning with the 2009 model year, marketed by Chrysler, and registered in California for use in Medium Duty Vehicle applications.

Your Warranty Rights and Obligations

The California Air Resources Board and Chrysler Motors LLC, are pleased to explain the emission control system warranty on your 2009 truck. In California, new motor vehicles, must be designed, built, and equipped to meet the State's stringent anti-smog standards.

Chrysler must warrant the emission control system on your truck for the periods of time listed below provided there has been no abuse, neglect or improper maintenance on your truck.

Your emission control system may include parts such as the fuel injection system and engine electronic control module. Also included may be hoses, connectors and other emission-related assemblies.

Where a warrantable condition exists, Chrysler will repair your truck at no cost to you including diagnosis, parts and labor.

MANUFACTURER'S WARRANTY COVERAGE

For 3 years or 50,000 miles, whichever first occurs:

1. If an emission-related part on your truck is defective, the part will be repaired or replaced by Chrysler.

This is your SHORT-TERM EMISSION CONTROL SYSTEM DEFECTS WARRANTY.

For 7 years or 70,000 miles, whichever first occurs:

1. Where a warrantable condition exists on a long-term emission-related part, Chrysler will repair your truck at no cost to you including diagnosis, parts and labor. This is your LONG-TERM EMISSION CONTROL SYSTEM DEFECTS WARRANTY.

OWNER'S WARRANTY RESPONSIBILITIES:

As the truck owner, you are responsible for the performance of the **required maintenance listed in your owner's manual.** Chrysler recommends that you retain all receipts covering maintenance on your truck, but

5.2 California Emission Warranty Contd.

Chrysler cannot deny warranty **solely** for the lack of receipts or for your failure to substantiate the performance of all scheduled maintenance.

You are responsible for presenting your truck to a Chrysler, Dodge or Jeep dealer as soon as a problem exists. The warranty repairs should be completed in a reasonable amount of time, not to exceed **30 days.**

As the truck owner, you should also be aware that Chrysler may deny you warranty coverage if your truck or a part has failed due to abuse, neglect, improper maintenance or unapproved modifications.

If you have any questions regarding your warranty rights, and responsibilities, you should contact the Chrysler National Customer Relations at (800) 992-1997 or the California Air Resources Board at 9480 Telstar Avenue, Suite 4, El Monte, CA 91731.

A warranted part which is scheduled for replacement as required maintenance is warranted up to the first scheduled replacement point.

Prior to the expiration of the applicable warranty, Owner must give notice of any warranted emission control failure to an authorized Chrysler, Dodge or Jeep dealer and deliver the truck to such facility for repair.

Owner is responsible for incidental costs such as: communication expenses, meals, lodging incurred by Owner or employee of Owner as a result of a Warrantable Condition.

Owner is responsible for "downtime" expenses, cargo damage, fines, all applicable taxes, all business costs, and other losses resulting from a warrantable condition.

5.2 California Emission Warranty Contd.

Coverage

LONG-TERM EMISSION-RELATED PARTS:

- Turbocharger
- Exhaust Manifold
- Fuel Injector
- EGR Valve
- EGR Cooler
- Electronic Turbo Actuator
- High Pressure Fuel Pump
- Plastic Fuel Tank
- EGR Bypass Valve
- Charge Air Cooler

Parts Covered for 8 Years or 80,000 Miles, Whichever Occurs First

(See Federal Emission Warranty 5.1.B).

- all catalysts
- powertrain control module
- transmission control module

SHORT-TERM EMISSION-RELATED PARTS:

A warranted part is any part which can affect emissions.

Replacement Parts

Chrysler recommends that any service parts used for maintenance, repair or replacement of emission control systems be new, genuine Chrysler / MOPAR or Chrysler / MOPAR approved rebuilt parts and assemblies, and that the truck be serviced by an authorized Chrysler, Dodge or Jeep dealer. The owner may elect to have maintenance, replacement or repair of the emission control parts performed by a facility other than an authorized Chrysler, Dodge or Jeep dealer and may elect to use parts other than new genuine Chrysler / MOPAR or Chrysler / MOPAR approved rebuilt parts and assemblies for such maintenance, replacement or repair; however, the cost of such service or parts and subsequent failures resulting from such

5.2 California Emission Warranty Contd.

service or parts will not be covered under this emission control system warranty, except for Emergency Repairs as described below.

Chrysler Motors LLC's Responsibilities

The warranty coverage begins when the truck is delivered to the ultimate purchaser.

Repairs and service will be performed by any authorized Chrysler, Dodge or Jeep dealer using new, genuine Chrysler / MOPAR or Chrysler / MOPAR approved rebuilt parts and assemblies. Chrysler will repair any of the emission control parts found by Chrysler to be defective without charge for parts or labor (including diagnosis which results in determination that there has been a failure of a warranted emission control part).

Emergency Repairs

In the case of an emergency where an authorized Chrysler, Dodge or Jeep dealer is not available, repairs may be performed by any available repair location or by any individual using any replacement parts. A part not being available within 30 days or a repair not being complete within 30 days constitutes an emergency. Chrysler will reimburse the owner for expenses (including diagnosis), not to exceed the manufacturer's suggested retail price for all warranted parts replaced and labor charges based on the manufacturer's recommended time allowance for the warranty repair and the geographically appropriate hourly labor rate. Replaced parts and paid invoices must be presented to the Chrysler Customer Center as a condition of reimbursement for emergency repairs not performed by a Chrysler, Dodge or Jeep authorized dealer.

5.2 California Emission Warranty Contd.

Warranty Limitations

Chrysler is not responsible for failures or damage resulting from what Chrysler determines to be abuse or neglect, including, but not limited to: operation without adequate coolants or lubricants; overfueling; overspeeding; lack of maintenance of cooling, lubricating or intake systems; improper storage, starting, warm-up, run-in or shut down practices; unauthorized modifications to the engine. Chrysler is also not responsible for failures caused by incorrect oil or fuel or by water, dirt or other contaminants in the fuel or oil.

Chrysler is not responsible for failures resulting from improper repair or the use of parts which are not genuine Chrysler / MOPAR or Chrysler / MOPAR approved parts.

Chrysler is not responsible for the material and labor costs of emission control parts and assemblies replaced during Scheduled Maintenance of the truck as specified in the Owner's Manual.

THIS WARRANTY, TOGETHER WITH THE EXPRESS COMMERCIAL WARRANTIES ARE THE SOLE AND EXCLUSIVE WARRANTIES MADE BY CHRYSLER. THERE ARE NO OTHER WARRANTIES, EXPRESS OR IMPLIED, OR OF MERCHANTABILITY OR FITNESS FOR A PARTICULAR PURPOSE.

5.3 Noise Emission Warranty - Heavy Duty Truck

A. Description of Coverage

Chrysler Motors LLC ("Chrysler") warrants that this vehicle as manufactured by Chrysler, was

designed, built and equipped to conform to all applicable U.S. EPA Noise Control Regulations at the time it left Chrysler's control.

This warranty covers this vehicle as designed, built and equipped by Chrysler, and is not limited to any particular part, component or system of the vehicle manufactured by Chrysler. Defects in design, assembly or in any part, component or system of the vehicle as manufactured by Chrysler, which, at the time it left Chrysler's control, caused noise emissions to exceed Federal standards, are covered by this warranty for the life of the vehicle.

B. Products Warranted

All vehicles built over 10,000 lbs. Gross Vehicle Weight Rating and manufactured for sale and use in the United States are required to comply with the Federal Government's Exterior Noise Regulations.

These vehicles can be identified by the Noise Emission Control Label located in the operator's compartment.

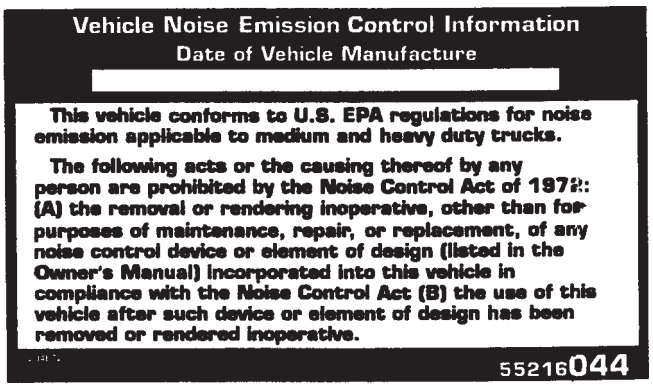

C. Tampering with Noise Control System Prohibited

Federal law prohibits the following acts or the causing thereof:

- the removal or rendering inoperative by any person, other than for purposes of maintenance, repair, or replacement, of any device or element of design incorporated into any new vehicle for the purpose of noise control prior to its sale or delivery to the ultimate purchaser or while it is in use; or
- the use of the vehicle after such device or element of design has been removed or rendered inoperative by any person.

Among those acts presumed to constitute tampering are the acts listed below:

AIR CLEANER

- removal of the air cleaner;
- removal of the air cleaner filter element from the air cleaner housing; or
- removal of the air ducting.

EXHAUST SYSTEM

- removal or rendering inoperative exhaust system components including the muffler or tailpipe.

ENGINE COOLING SYSTEM

- removal or rendering inoperative the fan clutch; or
- removal of the fan shroud.

6. How to Get Warranty Service

6.1 Where to Take Your Truck

A. In the United States (We Include U.S. Possessions and Territories as Part of the United States for Warranty Purposes):
Warranty service must be done by an authorized Chrysler, Dodge or Jeep dealer. We strongly recommend that you take your truck to your Selling Dealer. They know you and your truck best, and are most concerned that you get prompt and high quality service. If you move within the United States, warranty service may be requested from any authorized Chrysler, Dodge or Jeep dealer.

B. In Canada and Mexico:
If you are traveling temporarily in Canada or Mexico, and your truck remains registered in the United States, your Chrysler warranty still applies. Service may be requested at any authorized Chrysler, Dodge or Jeep dealership.

C. In a Foreign Country Outside of North America:
If you are traveling temporarily outside of North America, and your truck remains registered in the United States:

- You should take your truck to an authorized Chrysler, Dodge or Jeep dealer. They should give you the same warranty service you receive in the United States.

• If the authorized dealership charges you for repairs which you feel should be covered under your warranty, please get a detailed receipt for the work done. Make sure that this receipt lists all warranty repairs and parts that were involved. (This receipt will be similar to the one used by the dealer who normally services your truck.)
• When your truck returns to the United States, contact the Chrysler Customer Assistance Center (section 7.2) for reimbursement consideration. You will normally need to provide a copy of the receipt, your truck registration and any other relevant documents.
• Reimbursement will not be considered if the truck does not return to the United States.

D. If You Move:

If you move to another country, be sure to contact the Chrysler Customer Assistance Center (section 7.2) and the customs department of the destination country before you move. Vehicle importation rules vary considerably from country to country. You may be required to present documentation of your move to Chrysler in order to continue your warranty coverage. You may also be required to obtain documentation from Chrysler in order to register your truck in your new country.

E. Notice:

If your truck is registered outside of the United States, and you have not followed the procedure set out above, your truck will no longer be eligible for warranty coverage of any kind. (Trucks registered to

United States government officials or military personnel on assignment outside of the U.S. will continue to be covered.)

6.2 How To Get Tow Service - U.S. or Canada Only *

A. What To Do:

If your vehicle requires towing due to a defect covered under the Basic Limited Warranty or the Diesel Engine Limited Warranty, dial toll-free 1-800-521-2779. Provide your name, vehicle identification number, license plate number, and your location, including the telephone number from which you are calling. Briefly describe the nature of the problem and answer a few simple questions.

You will be given the name of the service provider and an estimated time of arrival. If you feel you are in an "unsafe situation", please let us know. With your consent, we will contact local police or safety authorities.

B. If Unable to Contact 24-Hour Towing Assistance:

If you are unable to contact 24-Hour Towing Assistance and you obtain towing services on your own, you may submit your original receipts from the licensed towing or service facility, for services rendered within 30 days of the occurrence. Be sure to

* Towing services provided through Cross Country Motor Club, Inc., Medford, MA 02155, except in AK, CA, HI, OR, WI, and WY, where services are provided by Cross Country Motor Club of California, Inc., Medford,, MA 02155.

include your vehicle identification number, odometer mileage at the time of service and current mailing address. We will process the claim based on vehicle and service eligibility. If eligible, we will reimburse you for the reasonable amounts you actually paid, based on the usual and customary charges for that service in the area where they were provided. Chrysler Motors LLC's determination relating to reimbursement are final.

Correspondence should be mailed to:

Chrysler Towing Assistance
P.O. Box 9145
Medford, MA 02155
Attention: Claims Department

6.3 Emergency Warranty Repairs

If you have an emergency and have to get a warranty repair made by someone other than an authorized Chrysler, Dodge or Jeep dealer, follow the reimbursement procedure in 6.1(C).

6.4 Getting Service Under the Federal Emission Warranties

A. Steps You Can Take, and How to Get More Information

To get warranty service -- even if you're traveling -- take your truck to any Chrysler, Dodge or Jeep dealer. (Chrysler recommends that you take your truck to a dealer who sells the same make of truck as yours.) That dealer will perform any warranty service without charging you for diagnosis, parts or labor.

If you think your dealer has wrongly denied you emission-warranty coverage, follow the steps described in 7.1. Chrysler will reply to you in writing within 30 days after receiving your complaint (or within the time limit required by local or state law). If the owner is not notified within 30 days that a performance warranty claim is denied, the manufacturer must repair the truck free of charge.

If you want more information about getting service under the Federal Emission Warranty or the Performance Warranty, or if you want to report what you think is a violation of these warranties, you can contact:

Manager, Certification and Compliance
Division, Warranty Claims
Environmental Protection Agency
1200 Pennsylvania Avenue, NW
Mail Code 6403J
Washington, D. C. 20460

6.5 Getting Service Under the California Emission Warranty

A. What to Do to Get Warranty Service

To get warranty service -- even if you're traveling -- take your truck to any Chrysler, Dodge or Jeep dealer. (Chrysler recommends that you take your truck to a dealer who sells the same make of truck as yours.) That dealer will perform any warranty service without charging you for diagnosis, parts or labor.

B. Emergency Emission Warranty Service

If you need emergency service under this warranty and a Chrysler, Dodge or Jeep dealer is not readily available, you may have your truck repaired by

anyone using any brand of repair parts. However, Chrysler recommends that you do the following before having repairs made:

- Contact the Chrysler Customer Assistance Center and ask for help with emission warranty service. (You'll find the address and telephone number of the Customer Assistance Center at 7.2.)
- The Customer Assistance Center will recommend an authorized servicing dealer or help you find a qualified independent servicing dealer.
- If you are going to have to use an independent servicing dealer, make arrangements during your first contact with the Customer Assistance Center for getting reimbursed for emergency repairs (including labor and diagnosis). You will need to get and keep the replaced parts, as well as the original invoice marked "paid".
- You should review with the Customer Assistance Center any questions you have about the emission warranty.

Reimbursement for parts will be based on Chrysler's suggested retail price. Reimbursement for labor will be based on Chrysler's recommended time allowance for the repair and on the appropriate hourly labor rate in the geographic area where you had the work done.

Before Chrysler will reimburse you for emergency repairs under this warranty, you will have to provide Chrysler with details on why the situation was an emergency and why dealer service was unavailable. Under this warranty, an emergency occurs if a part will not be available within 30 days or if a repair can't be completed within 30 days.

C. How to Get More Information

If you want more information about getting service under the California Emission Warranty, you can contact one of the following:

Chrysler Customer Assistance Center
(800) 992-1997

California Air Resources Board
9480 Telstar Avenue, Suite 4
El Monte, California 91731

7. How to Deal with Warranty Problems

7.1 Steps to Take

A. In General

Normally, warranty problems can be resolved by your dealer's sales or service departments. That's why you should always talk to your dealer's service manager or sales manager first. But if you're not satisfied with your dealer's response to your problem, Chrysler Motors LLC ("Chrysler") recommends that you do the following:

Step 1: Discuss your problem with the owner or general manager of the dealership.

Step 2: If your dealership still can't resolve the problem, contact the Chrysler Customer Assistance Center. You'll find the address in section 7.2.

B. What Chrysler Will Do

Once you have followed the two steps described in 7.1(A), a Chrysler representative at Chrysler headquarters will review your situation. If it's something that Chrysler can help you with, Chrysler will provide your dealer with all the information and assistance necessary to resolve the problem. Even if Chrysler can't help you, Chrysler will acknowledge your contact and explain Chrysler's position.

C. If Your Problem Still Isn't Resolved For Customers Residing in Arkansas, Idaho, Kentucky and Minnesota ONLY:

(**NOTE:** This Process is not available for residents of other states.)

If you can't resolve your warranty problem after following the two steps described in 7.1(A), and you live in Arkansas, Idaho, Kentucky or Minnesota ONLY, you can contact the Chrysler Motors LLC Customer Arbitration Process in your area.

You may obtain a brochure describing Chrysler Motors LLC's Customer Arbitration Process, including an application, by calling 1-800-992-1997. This service is strictly voluntary, and you may submit your dispute directly to the Customer Arbitration Process (CAP) at no cost. The CAP is administered by an independent dispute settlement organization and may be contacted in writing at the following address:

National Center for Dispute Settlement
Chrysler Motors LLC
Customer Arbitration Process
P.O. Box 560208
Dallas, TX 75356-0208

The CAP reviews only truck disputes involving Chrysler Motors LLC ("Chrysler") Limited Warranty or a Chrysler / Mopar Part Limited Warranty. The CAP does not review disputes involving the sale of a new or used truck, personal injury/ property damage claims, disputes relating to design of the truck or part, or disputes which are already the subject of litigation.

The CAP will need the following information from you: 1) Legible copies of all documents and repair orders relevant to your case, 2) Truck identification

number of your truck, 3) A brief description of your unresolved concern, 4) The identity of your servicing/selling dealer, 5) The date(s) of repair(s) and mileage at the time, 6) Current mileage, and 7) A description of the action you expect to resolve your concern.

Upon receipt of your request:

- The National Center for Dispute Settlement (NCDS) will acknowledge receipt of your request, by mail, within ten (10) days, and advise you whether or not your dispute is within the jurisdiction of the Process.
- When your request is within jurisdiction NCDS will request Chrysler and the dealer to present their side of the dispute. You will receive copies of their responses.
- While your dispute is pending NCDS or Chrysler may contact you to see if your case can be settled by agreement. If a settlement is offered to you, Chrysler will ask you to sign a form that contains that settlement. Your case will then be closed. There is no requirement for you to participate in this settlement process.
- If you requested an oral hearing, a decision-maker will contact you to arrange a convenient time and place for a hearing. Usually, this will be at a dealership near you.
- If you request a documents-only review, an NCDS panel will review and decide your case. Neither you, the dealer nor Chrysler need be present.
- NCDS will send you a written Statement of Decision. This statement will include the decision, any action to be taken by the dealer or Chrysler and the time by which the action must be taken. The decision will be binding on the dealer and Chrysler but not on you unless you accept the decision.

• If any action is required on the part of the dealer or Chrysler you will be contacted within ten (10) days after the date by which the dealer or Chrysler must act to determine whether performance has been rendered.
• The entire dispute settlement process will normally take no longer than 40 days.
• The CAP dispute settlement procedure does not take the place of any state or Federal legal remedies available to you. Whether or not you decide to submit your dispute to the Process, you are free to pursue other legal remedies.

D. Notice Under State Lemon Laws

Some states have laws allowing you to get a replacement truck or a refund of the truck's purchase price under certain circumstances. These laws vary from state to state. If your state law allows, Chrysler requires that you first notify us in writing of any service difficulty that you may have experienced so that we can have a chance to make any needed repairs before you are eligible for remedies provided by these laws.

In all other states, we ask that you give us written notice of any service difficulty. Send your written notice to the Chrysler Customer Assistance Center at the address in section 7.2.

7.2 Helpful Addresses and Telephone Numbers

Here are the addresses and telephone numbers of the Chrysler Customer Assistance Center that can help you wherever you happen to be. Contact the one that covers your area:

- **In the United States:**
  Chrysler Customer Assistance Center
  P.O. Box 21-8004
  Auburn Hills, Michigan 48321-8004
  Phone: (800) 992-1997

To contact Chrysler by email,
simply access the following website:
www.dodge.com (click on the "Contact Us" button)

- **In Canada:**
  Chrysler Canada, Inc.
  Customer Service
  Chrysler Centre
  P.O. Box 1621
  Windsor, Ontario N9A-4H6
  Phone: (800) 465-2001

- **In Mexico, contact the Customer Relations**

Office for Chrysler, Jeep and Dodge truck at:
1240 Prolongacion Paseo de la Reforma Av.
Santa Fe, C.P. 05109
Deleg. Cuajimalpa, Mexico
Phone (in Mexico): (015) 5081-7568
Phone (outside Mexico): (800) 505-1300

- **In Puerto Rico and U.S. Virgin Islands:**
  Customer Service
  Chrysler International Services, S.A.
  Box 191857
  San Juan, Puerto Rico 00919-1857
  Phone: (787) 782-5757
  Fax: (787) 782-3345

8. Optional Service Contract

Chrysler Motor LLC's or Chrysler Service Contract Company, LLC's optional service contracts offer valuable protection against repair costs when these warranties don’t apply. They complement but don’t replace the warranty coverages outlined in this booklet. Several plans are available, covering various time-and-mileage periods and various sets of components. (Service contracts aren’t available if you live in a U.S. possession or territory.) Ask your dealer for details.

9. Maintenance

9.1 General Information

It's your responsibility to properly maintain and operate your new truck. Follow the instructions contained in the General and Scheduled Maintenance Service guidelines in your Owner's Manual. Regular, scheduled maintenance is essential to trouble-free operation. If there is a dispute between you and Chrysler Motors LLC ("Chrysler") concerning your maintenance of your truck, Chrysler will require you to provide proof that your vehicle was properly maintained.

For your convenience, Chrysler has prepared a Maintenance Log which is included in your Owner's Manual. You should use this Maintenance Log to keep track of scheduled maintenance, either by routinely having the repairs entered in your Maintenance Log, or by keeping receipts or other documentation of work you've had done on your truck in your Maintenance Log.

9.2 Where to Go For Maintenance

Chrysler recommends that you return to the dealer from whom you bought your truck for all maintenance service both during and after the warranty periods. Although you can get warranty service from any dealer who sells your particular make, returning to your selling dealer will help ensure that all your service needs are met and that you're completely satisfied. The dealership technicians are specifically trained to proficiently perform maintenance and repair procedures on your Chrysler Motors LLC truck.

Authorized Chrysler, Jeep or Dodge dealers will help ensure that all your service needs are met and that you're completely satisfied.

Chrysler strongly recommends you use genuine Chrysler / MOPAR parts to maintain your truck.

Original Owner's Name

Street Address

City and State Zip Code

Vehicle Identification Number

Warranty Start Date (In-Service Date) Mileage at Delivery

Selling Dealer Code

City State

Second Owner's Name

Street Address

City and State Zip Code

Date of Second Purchase Mileage at Purchase

Third Owner's Name

Street Address

City and State Zip Code

Date of Third Purchase Mileage at Purchase

Warranty coverage applies to all vehicle owners. To protect you in the event of a recall or any questions concerning your warranty, please tell your dealer about any ownership or address change, and write the details here.

DODGE

2010 Ram Truck

WARRANTY INFORMATION

DIESEL

IMPORTANT

This booklet contains Chrysler Group LLC limited warranties. It should be kept in your vehicle and presented to your Dealer if any warranty service is needed. The warranty text begins on page 4 of this booklet.

[redacted]

WARRANTY COVERAGE AT A GLANCE

DESCRIPTION	1 Yr/ 12,000	2 Yr/ 24,000	3 Yr/ 36,000	3 Yr/ 50,000	3 Yr/ Unlmtd	5 Yr/ 50,000	5 Yr/ 100,000	7 Yr/ 70,000	7 Yr/ 100,000	8 Yr/ 80,000	Lifetime
Basic Limited Warranty Coverage	■	■	■								
Special Extended Warranty Coverage											
Anti-Corrosion Perforation Limited Warranty: All Panels	■	■	■	■	■						
Outer Panels	■	■	■	■	■	■	■				
Cummins Diesel Engine Components Limited Warranty	▨	▨	▨	■	■	■	■				
Federal Emission Warranty - Heavy Duty Diesel Specified Components	■	■	■	■	■	■					
Noise Emission Warranty - Heavy Duty	■	■	■	■	■	■	■	■	■	■	■

© 2009 Chrysler Group LLC

TABLE OF CONTENTS

1. Your Legal Rights Under These Limited Warranties 4

2. What's Covered Under Chrysler Group LLC's Warranties
   - 2.1 Basic Limited Warranty 5
   - 2.2 Cummins 6.7L Diesel Engine Limited Warranty 8
   - 2.3 Corrosion Warranty 10
   - 2.4 Restraint System Limited Warranty 11

3. What's Not Covered
   - 3.1 Modifications Not Covered. 12
   - 3.2 Environmental Factors Not Covered 14
   - 3.3 Maintenance Costs Not Covered. 14
   - 3.4 Racing Not Covered 15
   - 3.5 Certain Kinds of Corrosion Not Covered 15
   - 3.6 Other Exclusions 16
   - 3.7 Total Loss, Salvage, Junk, or Scrap Trucks Not Covered. 16
   - 3.8 Restricted Warranty 17

4. Other Terms of Your Warranties
   - 4.1 Exchanged Parts May Be Used in Warranty Repairs 18
   - 4.2 Pre-Delivery Service. 19
   - 4.3 Production Changes 19

5. Emission Warranties Required by Law
5.1 Federal Engine Emission Warranty - 6.7L Diesel Heavy Duty Truck 20
5.2 Noise Emission Warranty 21

6. How to Get Warranty Service
6.1 Where to Take Your Truck 25
6.2 How To Get Tow Service - U.S. or Canada Only ... 28
6.3 Emergency Warranty Repairs 30
6.4 Getting Service Under the Federal Emission Performance Warranties 30

7. How to Deal with Warranty Problems
7.1 Steps to Take 32
7.2 Helpful Addresses and Telephone Numbers 36

8. Optional Service Contract 38

9. Maintenance
9.1 General Maintenance 39
9.2 Where to Go For Maintenance 40

1. Your Legal Rights Under These Limited Warranties

The warranties contained in this booklet are the only express warranties that Chrysler Group LLC ("Chrysler") makes for your vehicle. **These warranties give you specific legal rights. You may also have other rights that vary from state to state.** For example, you may have some implied warranties, depending on the state where your vehicle was sold or is registered.

These implied warranties are limited, to the extent allowed by law, to the time periods covered by the express written warranties contained in this booklet.

If you use your vehicle primarily for business or commercial purposes, then these implied warranties do not apply and Chrysler completely disclaims them to the extent allowed by law. And the implied warranty of fitness for a particular purpose does not apply if your vehicle is used for racing, even if the vehicle is equipped for racing.

Some states do not allow limitations on how long an implied warranty lasts, so the above limitations may not apply to you.

1.1 Incidental and Consequential Damages Not Covered

Your warranties don't cover any incidental or consequential damages connected with your vehicle's failure, either while under warranty or afterward. Examples of such damages include:

- lost time;
- inconvenience;
- the loss of the use of your vehicle;
- the cost of rental vehicles, gasoline, telephone, travel, or lodging;
- the loss of personal or commercial property; and
- the loss of revenue.

Some states don't allow incidental or consequential damages to be excluded or limited, so this exclusion may not apply to you.

2. What's Covered Under Chrysler's Warranties

2.1 Basic Limited Warranty

A. Who Is Covered?

You are covered by the Basic Limited Warranty if you are a purchaser for use of the vehicle.

B. What's Covered

The Basic Limited Warranty covers the cost of all parts and labor needed to repair any item on your truck when it left the manufacturing plant that is defective in material, workmanship or factory preparation. There is no list of covered parts since the only exception are tires and Unwired headphones. You pay nothing for these repairs. These warranty repairs or adjustments — including all parts and labor connected with them — will be made by your dealer at no charge, using new or remanufactured parts.

C. Items Covered by Other Warranties

The following are covered by separate warranties offered by their makers. They are **not covered** by the Basic Limited Warranty:

- tires;
- Unwired headphones; or

- items added or changed after the truck left the manufacturing plant, such as accessories or protection products, or items changed because of customization or van conversion.

Be sure you get a copy of any warranty that applies to these items from your dealer, or from the maker of the product. You can find the tire and Unwired headphone warranty statements in your Owner's Literature Package.

D. Towing Costs Are Covered Under Certain Circumstances

The Basic Limited Warranty covers the cost of towing your truck to the nearest Chrysler, Dodge or Jeep dealer if your truck can't be driven because a covered part has failed. If you choose to go to another dealership, you will be responsible for the cost if the extra distance exceeds 10 miles. See Section 6.2 for information on how to get towing service in the United States and Canada.

E. When It Begins

The Basic Limited Warranty begins on either of the following dates, whichever is earlier:

- the date you take delivery of the truck; or
- the date when the truck was first put into service — for example, as a dealer "demo" or as a Chrysler company truck.

F. When It Ends

The Basic Limited Warranty lasts for 36 months from the date it begins or for 36,000 miles on the odometer, whichever occurs first. But the following items are covered only for 12 months or for 12,000 miles on the odometer, whichever occurs first:

- brakes (rotors, pads, linings, and drums);
- wiper blades;
- clutch discs or modular clutch assembly (as equipped);
- windshield and rear window; and
- wheel alignment and wheel balancing

G. Registration and Operation Requirements

The Basic Limited Warranty covers your truck only if:

- it was built for sale in the U.S.;
- it's registered in the U.S.;
- it's driven mainly in the U.S. or Canada; and
- it's operated and maintained in the manner described in your Owner's Manual.

H. If Your Truck Leaves the United States (We Include U.S. Possessions and Territories as Part of the United States for Warranty Purposes):

EXCEPT WHERE SPECIFICALLY REQUIRED BY LAW, THERE IS NO WARRANTY COVERAGE ON THIS TRUCK IF IT IS SOLD IN OR REGISTERED IN COUNTRIES OTHER THAN THE UNITED STATES.

This policy does not apply to trucks that have received authorization for export from Chrysler. Dealers may not give authorization for export. You should consult an authorized dealer to determine this truck's warranty coverage if you have any questions.

This policy does not apply to trucks registered to U.S. government officials or military personnel on assignment outside of the United States.

2.2 Cummins Diesel Engine Limited Warranty

A. Who Is Covered?

You are covered if your vehicle is equipped with a Cummins Diesel Engine.

B. What's Covered

The Cummins Diesel Engine Limited Warranty covers **ONLY** the following engine parts and components:

- cylinder block and all internal parts
- cylinder head assemblies
- core plugs

- fuel injection pump & injectors
- gaskets and seals for listed components
- intake and exhaust manifold
- oil pan
- oil pump
- timing gear drive belts and/or chains and cover
- turbocharger housing and internal parts
- valve covers
- water pump and housing

C. How Long It Lasts

The Cummins Diesel Engine Limited Warranty lasts for up to 5 years or 100,000 miles on the odometer, whichever occurs first, calculated from the start date of the Basic Limited Warranty, as set forth in Section 2.1(E).

D. Towing Costs Are Covered

The Cummins Diesel Engine Limited Warranty covers the cost of towing your truck to the nearest Dodge dealer if your vehicle cannot be driven because a covered part has failed. If you choose to go to another dealership, you will be responsible for the cost if the extra distance exceeds 10 miles. See Section 6.2 for information on how to get towing service in the United States and Canada.

2.3 Corrosion Warranty

A. Who Is Covered?

You are covered if you are a purchaser for use of the vehicle.

B. What's Covered

This warranty covers the cost of all parts and labor needed to repair or replace any sheet metal panels that get holes from rust or other corrosion. If a hole occurs because of something other than corrosion, this warranty does not apply. Cosmetic or surface corrosion — resulting, for example, from stone chips or scratches in the paint — is not covered.

For more details on what isn't covered by this warranty, see 3.5.

C. How Long It Lasts

The Corrosion Warranty starts when your Basic Limited Warranty begins under 2.1(E). This warranty has two time-and-mileage limits:

- For sheet metal panels, the limit is 36 months, with no mileage limit.
- For an outer-body sheet metal panel — one that is finish-painted and that someone can see when walking around the truck — the limits are 5 years or 100,000 miles on the odometer, whichever occurs first.

2.4 Restraint System Limited Warranty (Vehicles sold and registered in the State of Kansas only)

For vehicles sold and registered in the State of Kansas, seatbelts and related seatbelt components are warranted against defects in workmanship and materials for 10 years, regardless of mileage. This warranty does not cover replacement of seatbelts and related components required as the result of collision.

3. What's Not Covered

3.1 Modifications Not Covered

A. Some Modifications Don't Void the Warranties But Aren't Covered

Certain changes that you might make to your truck do not, by themselves, void the warranties described in this booklet. Examples of some of these changes are:

- installing non-Chrysler Group LLC ("Chrysler") parts, components, or equipment (such as a non-Chrysler radio or speed control); and
- using special non-Chrysler materials or additives.

But your warranties don't cover any part that was not on your truck when it left the manufacturing plant or is not certified for use on your truck. Nor do they cover the costs of any repairs or adjustments that might be caused or needed because of the installation or use of non-Chrysler parts, components, equipment, materials, or additives.

Performance or racing parts are considered to be non-Chrysler parts. Repairs or adjustments caused by their use are not covered under your warranties.

Examples of the types of alterations not covered are:

- installing accessories — except for genuine Chrysler / MOPAR accessories installed by an authorized Chrysler, Dodge or Jeep dealer;
- applying rustproofing or other protection products;
- changing the vehicle's configuration or dimensions, such as converting the vehicle into a limousine or food service vehicle; or
- using any refrigerant that Chrysler has not approved.

B. Modifications That WILL Void Your Warranties

These actions will void your warranties:

- disconnecting, tampering with, or altering the odometer will void your warranties, unless your repairing technician follows the legal requirements for repairing or replacing odometers; or
- attaching any device that disconnects the odometer will also void your warranties.

3.2 Environmental Factors Not Covered

Your warranties don't cover damage caused by environmental factors such as airborne fallout, bird droppings, insect damage, chemicals, tree sap, salt, ocean spray, acid rain, and road hazards. Nor do your warranties cover damage caused by hailstorms, windstorms, tornadoes, sandstorms, lightning, floods, and earthquakes.

Your warranties do not cover conditions resulting from anything impacting the truck. This includes cracks and chips in glass, scratches and chips in painted surfaces, or damage from collision.

3.3 Maintenance Costs Not Covered

Your warranties don't cover the costs of repairing damage caused by poor or improper maintenance. Nor do they cover damage caused by the use of contaminated fuels, or by the use of fuels, oils, lubricants, cleaners or fluids other than those recommended in your Owner's Manual.

The warranties don't cover the costs of your truck's normal or scheduled maintenance — the parts and services that all trucks routinely need. Some of these parts and services, which your warranties don't cover, include:

- lubrication;
- engine tune-ups;
- replacing filters, coolant, spark plugs, bulbs, or fuses (unless those costs result from a covered repair);
- cleaning and polishing; and
- replacing worn wiper blades, worn brake pads and linings, or clutch linings.

3.4 Racing Not Covered

Your warranties don't cover the costs of repairing damage or conditions caused by racing, nor do they cover the repair of any defects that are found as the result of participating in a racing event.

3.5 Certain Kinds of Corrosion Not Covered

Your warranties don't cover the following:

- corrosion caused by accident, damage, abuse, or truck alteration;
- surface corrosion caused by such things as industrial fallout, sand, salt, hail, and stones;
- corrosion caused by the extensive or abnormal transport of caustic materials like chemicals, acids, and fertilizers; and
- corrosion of special bodies, body conversions, or equipment that was not on your truck when it left the manufacturing plant or was not or supplied by Chrysler.

3.6 Other Exclusions

Your warranties don't cover the costs of repairing damage or conditions caused by any of the following:

- fire or accident;
- abuse or negligence;
- misuse — for example, driving over curbs or overloading;
- tampering with the emission systems, or with a part that could affect the emission systems;
- use of used parts, even if they were originally supplied by Chrysler (however, authorized Chrysler / MOPAR remanufactured parts are covered);
- windshield or rear window damage from external objects;
- any changes made to your truck that don't comply with Chrysler; or
- using any fluid that doesn't meet the minimum recommendations in your Owner's Manual.

3.7 Total Loss, Salvage, Junk, or Scrap Trucks Not Covered

A truck has no warranty coverage of any kind if:

- the truck is declared to be a total loss by an insurance company;

- the truck is rebuilt after being declared to be a total loss by an insurance company; or
- the truck is issued a certificate of title indicating that it is designated as "salvage," "junk," "rebuilt," "scrap," or some similar word.

Chrysler will deny warranty coverage without notice if it learns that a truck is ineligible for coverage for any of these reasons.

3.8 Restricted Warranty

Your warranties can also be restricted by Chrysler. Chrysler may restrict the warranty on your truck if the truck is not properly maintained, or if the truck is abused or neglected, and the abuse or neglect interferes with the proper functioning of the truck. If the warranty is restricted, coverage may be denied or subject to approval by Chrysler before covered repairs are performed.

4. Other Terms of Your Warranties

4.1 Exchanged Parts May Be Used in Warranty Repairs

In the interest of customer satisfaction, Chrysler Group LLC ("Chrysler") may offer exchange service on some truck parts. This service is intended to reduce the amount of time your truck is not available for your use because of repairs. Parts used in exchange service may be new, remanufactured, reconditioned, or repaired, depending on the part involved.

All exchange parts that might be used meet Chrysler standards, and have the same warranties as new parts.

Examples of the kinds of parts that might be serviced in this way are:

- engine assemblies;
- transmission assemblies;
- instrument cluster assemblies;
- radios, tape, CD and DVD players;
- speedometers; and
- powertrain control modules.

To help control suspected ozone-depleting agents, the EPA requires the capture, purification, and reuse of automotive air-conditioning refrigerant gases. As a result, a repair to the sealed portion of your air-conditioning system may involve the installation of purified reclaimed refrigerant.

4.2 Pre-Delivery Service

A defect in or damage to the mechanical, electrical, sheet-metal, paint, trim, and other components of your truck may have occurred at the factory or while it was being shipped to the dealer.

Such a defect or damage is usually detected and corrected at the factory. In addition, dealers must inspect each truck before delivery. They repair any defects or damage detected before the truck is delivered to you.

4.3 Production Changes

Changes may be made in trucks sold by Chrysler and its dealers at any time without incurring any obligation to make the same or similar changes on trucks previously built or sold.

5. Emission Warranties Required By Law

5.1 Federal Vehicle Emission Warranty - 6.7L Diesel Equipped Heavy Duty Truck

A. Parts Covered for 5 Years or 50,000 Miles, Whichever Occurs First

Diesel equipped heavy duty trucks are 2500 and 3500 models only.

Federal law requires Chrysler to warrant the following emissions parts for 5 years or 50,000 miles, whichever occurs first.

- Air system controls;
- exhaust system (includes catalysts);
- electronic fuel injection system, including injector;
- exhaust manifold;
- exhaust gas recirculation valve and control system (includes EGR cooler);
- exhaust pipes (between exhaust manifold and catalyst);
- fuel pump, fuel lines and fuel injectors;
- intake manifold;
- on-board diagnostic-system components;
- oxygen sensors and oxygen control module;

- positive crankcase-ventilation (PCV) valve or orifice;
- powertrain control module;
- transmission-control module;
- turbocharger.

B. Parts Covered for 8 Years or 80,000 Miles, Whichever Occurs First

If your truck has one of the following parts, this Federal Emission Warranty covers that part for a period of 8 years or 80,000 miles, whichever occurs first, calculated from the start date of the Basic Limited Warranty as set forth in Section 2.1(E). The covered parts are:

- all catalysts
- powertrain control module
- transmission control module

5.2 Noise Emission Warranty - Heavy Duty Truck

A. Description of Coverage

Chrysler Group LLC ("Chrysler") warrants that this vehicle as manufactured by Chrysler, was designed, built and equipped to conform to all applicable U.S. EPA Noise Control Regulations at the time it left Chrysler's control.

This warranty covers this vehicle as designed, built and equipped by Chrysler, and is not limited to any particular part, component or system of the vehicle manufactured by Chrysler. Defects in design, assembly or in any part, component or system of the vehicle as manufactured by Chrysler, which, at the time it left Chrysler's control, caused noise emissions to exceed Federal standards, are covered by this warranty for the life of the vehicle.

B. Products Warranted

All vehicles built over 10,000 lbs. Gross Vehicle Weight Rating and manufactured for sale and use in the United States are required to comply with the Federal Government's Exterior Noise Regulations. These vehicles can be identified by the Noise Emission Control Label located in the operator's compartment.

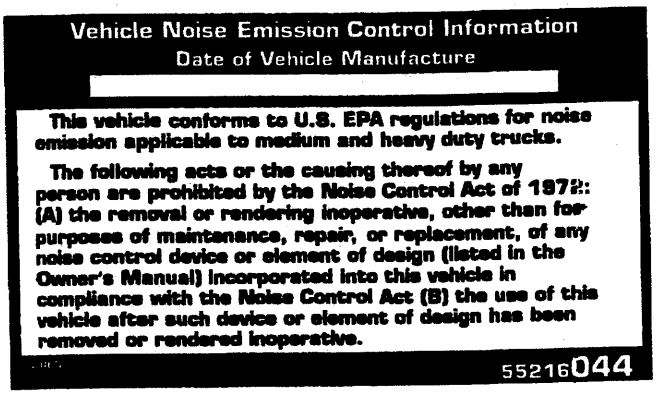

C. Tampering with Noise Control System Prohibited

Federal law prohibits the following acts or the causing thereof:

- the removal or rendering inoperative by any person, other than for purposes of maintenance, repair, or replacement, of any device or element of design incorporated into any new vehicle for the purpose of noise control prior to its sale or delivery to the ultimate purchaser or while it is in use; or
- the use of the vehicle after such device or element of design has been removed or rendered inoperative by any person.

Among those acts presumed to constitute tampering are the acts listed below:

AIR CLEANER

- removal of the air cleaner;
- removal of the air cleaner filter element from the air cleaner housing; or
- removal of the air ducting.

EXHAUST SYSTEM

- removal or rendering inoperative exhaust system components including the muffler or tailpipe.

ENGINE COOLING SYSTEM

- removal or rendering inoperative the fan clutch; or
- removal of the fan shroud.

6. How to Get Warranty Service

6.1 Where to Take Your Truck

A. In the United States (We Include U.S. Possessions and Territories as Part of the United States for Warranty Purposes):
Warranty service must be done by an authorized Chrysler, Dodge or Jeep dealer. We strongly recommend that you take your truck to your Selling Dealer. They know you and your truck best, and are most concerned that you get prompt and high quality service. If you move within the United States, warranty service may be requested from any authorized Chrysler, Dodge or Jeep dealer.

B. In Canada and Mexico:
If you are traveling temporarily in Canada or Mexico, and your truck remains registered in the United States, your Chrysler warranty still applies. Service may be requested at any authorized Chrysler, Dodge or Jeep dealership.

C. In a Foreign Country Outside of North America:

If you are traveling temporarily outside of North America, and your truck remains registered in the United States:

- You should take your truck to an authorized Chrysler, Dodge or Jeep dealer. They should give you the same warranty service you receive in the United States.
- If the authorized dealership charges you for repairs which you feel should be covered under your warranty, please get a detailed receipt for the work done. Make sure that this receipt lists all warranty repairs and parts that were involved. (This receipt will be similar to the one used by the dealer who normally services your truck.)
- When your truck returns to the United States, contact the Chrysler Customer Assistance Center (section 7.2) for reimbursement consideration. You will normally need to provide a copy of the receipt, your truck registration and any other relevant documents.
- Reimbursement will not be considered if the truck does not return to the United States.

D. If You Move:

If you move to another country, be sure to contact the Chrysler Customer Assistance Center (section 7.2) and the customs department of the destination country before you move. Vehicle importation rules vary considerably from country to country. You may be required to present documentation of your move to Chrysler in order to continue your warranty coverage. You may also be required to obtain documentation from Chrysler in order to register your truck in your new country.

E. Notice:

If your truck is registered outside of the United States, and you have not followed the procedure set out above, your truck will no longer be eligible for warranty coverage of any kind. (Trucks registered to United States government officials or military personnel on assignment outside of the U.S. will continue to be covered.)

6.2 How To Get Tow Service - U.S. or Canada Only *

A. What To Do:

If your vehicle requires towing due to a defect covered under the Basic Limited Warranty or the Diesel Engine Limited Warranty, dial toll-free 1-800-521-2779. Provide your name, vehicle identification number, license plate number, and your location, including the telephone number from which you are calling. Briefly describe the nature of the problem and answer a few simple questions.

You will be given the name of the service provider and an estimated time of arrival. If you feel you are in an "unsafe situation", please let us know. With your consent, we will contact local police or safety authorities.

* Towing services provided through Cross Country Motor Club, Inc., Medford, MA 02155, except in AK, CA, HI, OR, WI, and WY, where services are provided by Cross Country Motor Club of California, Inc., Medford,, MA 02155.

B. If Unable to Contact 24-Hour Towing Assistance:

If you are unable to contact 24-Hour Towing Assistance and you obtain towing services on your own, you may submit your original receipts from the licensed towing or service facility, for services rendered within 30 days of the occurrence. Be sure to include your vehicle identification number, odometer mileage at the time of service and current mailing address. We will process the claim based on vehicle and service eligibility. If eligible, we will reimburse you for the reasonable amounts you actually paid, based on the usual and customary charges for that service in the area where they were provided. Chrysler Group LLC's determination relating to reimbursement are final.

Correspondence should be mailed to:

Chrysler Towing Assistance
P.O. Box 9145
Medford, MA 02155
Attention: Claims Department

6.3 Emergency Warranty Repairs

If you have an emergency and have to get a warranty repair made by someone other than an authorized Chrysler, Dodge or Jeep dealer, follow the reimbursement procedure in 6.1(C).

6.4 Getting Service Under the Federal Emission Warranties

A. Steps You Can Take, and How to Get More Information

To get warranty service -- even if you're traveling -- take your truck to any Chrysler, Dodge or Jeep dealer. (Chrysler recommends that you take your truck to a dealer who sells the same make of truck as yours.) That dealer will perform any warranty service without charging you for diagnosis, parts or labor.

If you think your dealer has wrongly denied you emission-warranty coverage, follow the steps described in 7.1. Chrysler will reply to you in writing within 30 days after receiving your complaint (or within the time limit required by local or state law). If the owner is not notified within 30 days that a performance warranty claim is denied, the manufacturer must repair the truck free of charge.

If you want more information about getting service under the Federal Emission Warranty or the Performance Warranty, or if you want to report what you think is a violation of these warranties, you can contact:

Manager, Certification and Compliance
Division, Warranty Claims
Environmental Protection Agency
1200 Pennsylvania Avenue, NW
Mail Code 6403J
Washington, D. C. 20460

7. How to Deal with Warranty Problems

7.1 Steps to Take

A. In General

Normally, warranty problems can be resolved by your dealer's sales or service departments. That's why you should always talk to your dealer's service manager or sales manager first. But if you're not satisfied with your dealer's response to your problem, Chrysler Group LLC ("Chrysler") recommends that you do the following:

Step 1: Discuss your problem with the owner or general manager of the dealership.

Step 2: If your dealership still can't resolve the problem, contact the Chrysler Customer Assistance Center. You'll find the address in section 7.2.

B. What Chrysler Will Do

Once you have followed the two steps described in 7.1(A), a Chrysler representative at Chrysler headquarters will review your situation. If it's something that Chrysler can help you with, Chrysler will provide your dealer with all the information and assistance necessary to resolve

the problem. Even if Chrysler can't help you, Chrysler will acknowledge your contact and explain Chrysler's position.

C. If Your Problem Still Isn't Resolved For Customers Residing in Arkansas, Idaho, Kentucky and Minnesota ONLY:

(**NOTE:** This Process is not available for residents of other states.)

If you can't resolve your warranty problem after following the two steps described in 7.1(A), and you live in Arkansas, Idaho, Kentucky or Minnesota ONLY, you can contact the Chrysler Group LLC Customer Arbitration Process in your area.

You may obtain a brochure describing Chrysler Group LLC's Customer Arbitration Process, including an application, by calling 1-800-992-1997. This service is strictly voluntary, and you may submit your dispute directly to the Customer Arbitration Process (CAP) at no cost. The CAP is administered by an independent dispute settlement organization and may be contacted in writing at the following address:

National Center for Dispute Settlement
Chrysler Group LLC
Customer Arbitration Process
P.O. Box 727
Mt. Clemens, MI 48046

The CAP reviews only truck disputes involving Chrysler Group LLC ("Chrysler") Limited Warranty or a Chrysler / Mopar Part Limited Warranty. The CAP does not review disputes involving the sale of a new or used truck, personal injury/ property damage claims, disputes relating to design of the truck or part, or disputes which are already the subject of litigation.

The CAP will need the following information from you: 1) Legible copies of all documents and repair orders relevant to your case, 2) Truck identification number of your truck, 3) A brief description of your unresolved concern, 4) The identity of your servicing/selling dealer, 5) The date(s) of repair(s) and mileage at the time, 6) Current mileage, and 7) A description of the action you expect to resolve your concern.

Upon receipt of your request:

- The National Center for Dispute Settlement (NCDS) will acknowledge receipt of your request, by mail, within ten (10) days, and advise you whether or not your dispute is within the jurisdiction of the Process.
- When your request is within jurisdiction NCDS will request Chrysler and the dealer to present their side of the dispute. You will receive copies of their responses.

• While your dispute is pending NCDS or Chrysler may contact you to see if your case can be settled by agreement. If a settlement is offered to you, Chrysler will ask you to sign a form that contains that settlement. Your case will then be closed. There is no requirement for you to participate in this settlement process.
• If you requested an oral hearing, a decision-maker will contact you to arrange a convenient time and place for a hearing. Usually, this will be at a dealership near you.
• If you request a documents-only review, an NCDS panel will review and decide your case. Neither you, the dealer nor Chrysler need be present.
• NCDS will send you a written Statement of Decision. This statement will include the decision, any action to be taken by the dealer or Chrysler and the time by which the action must be taken. The decision will be binding on the dealer and Chrysler but not on you unless you accept the decision.
• If any action is required on the part of the dealer or Chrysler you will be contacted within ten (10) days after the date by which the dealer or Chrysler must act to determine whether performance has been rendered.
• The entire dispute settlement process will normally take no longer than 40 days.

• The CAP dispute settlement procedure does not take the place of any state or Federal legal remedies available to you. Whether or not you decide to submit your dispute to the Process, you are free to pursue other legal remedies.

D. Notice Under State Lemon Laws

Some states have laws allowing you to get a replacement truck or a refund of the truck's purchase price under certain circumstances. These laws vary from state to state. If your state law allows, Chrysler requires that you first notify us in writing of any service difficulty that you may have experienced so that we can have a chance to make any neededrepairs before you are eligible for remedies provided by these laws.

In all other states, we ask that you give us written notice of any service difficulty. Send your written notice to the Chrysler Customer Assistance Center at the address in section 7.2.

7.2 Helpful Addresses and Telephone Numbers

Here are the addresses and telephone numbers of the Chrysler Customer Assistance Center that can help you wherever you happen to be. Contact the one that covers your area:

- **In the United States:**
  Chrysler Customer Assistance Center
  P.O. Box 21-8004
  Auburn Hills, Michigan 48321-8004
  Phone: (800) 992-1997

To contact Chrysler by email,
simply access the following website:
www.dodge.com (click on the "Contact Us" button)

- **In Canada:**
  Chrysler Canada, Inc.
  Customer Service
  Chrysler Centre
  P.O. Box 1621
  Windsor, Ontario N9A-4H6
  Phone: (800) 465-2001

- **In Mexico, contact the Customer Relations Office for Chrysler, Jeep and Dodge truck at:**
  1240 Prolongacion Paseo de la Reforma Av.
  Santa Fe, C.P. 05109
  Deleg. Cuajimalpa, Mexico
  Phone (in Mexico): (015) 5081-7568
  Phone (outside Mexico): (800) 505-1300

- **In Puerto Rico and U.S. Virgin Islands:**
  Customer Service
  Chrysler International Services, S.A.
  Box 191857
  San Juan, Puerto Rico 00919-1857
  Phone: (787) 782-5757
  Fax: (787) 782-3345

8. Optional Service Contract

Chrysler Group LLC's or Chrysler Service Contract Company, LLC's optional service contracts offer valuable protection against repair costs when these warranties don't apply. They complement but don't replace the warranty coverages outlined in this booklet. Several plans are available, covering various time-and-mileage periods and various sets of components. (Service contracts aren't available if you live in a U.S. possession or territory.) Ask your dealer for details.

9. Maintenance

9.1 General Information

It's your responsibility to properly maintain and operate your new truck. Follow the instructions contained in the General and Scheduled Maintenance Service guidelines in your Owner's Manual. Regular, scheduled maintenance is essential to trouble-free operation. If there is a dispute between you and Chrysler Group LLC ("Chrysler") concerning your maintenance of your truck, Chrysler will require you to provide proof that your vehicle was properly maintained.

For your convenience, Chrysler has prepared a Maintenance Log which is included in your Owner's Manual. You should use this Maintenance Log to keep track of scheduled maintenance, either by routinely having the repairs entered in your Maintenance Log, or by keeping receipts or other documentation of work you've had done on your truck in your Maintenance Log.

9.2 Where to Go For Maintenance

Chrysler recommends that you return to the dealer from whom you bought your truck for all maintenance service both during and after the warranty periods. Although you can get warranty service from any dealer who sells your particular make, returning to your selling dealer will help ensure that all your service needs are met and that you're completely satisfied. The dealership technicians are specifically trained to proficiently perform maintenance and repair procedures on your Chrysler Group LLC truck.

Authorized Chrysler, Jeep or Dodge dealers will help ensure that all your service needs are met and that you're completely satisfied.

Chrysler strongly recommends you use genuine Chrysler / MOPAR parts to maintain your truck.

Original Owner's Name

Street Address

City and State Zip Code

Vehicle Identification Number

Warranty Start Date (In-Service Date) Mileage at Delivery

Selling Dealer Code

City State

Second Owner's Name

Street Address

City and State Zip Code

Date of Second Purchase Mileage at Purchase

Third Owner's Name

Street Address

City and State Zip Code

Date of Second Purchase Mileage at Purchase

Warranty coverage applies to all vehicle owners. To protect you in the event of a recall or any questions concerning your warranty, please tell your dealer about any ownership or address change, and write the details here.

DODGE

SERVICE

STICK WITH THE SPECIALISTS®





Chrysler Group LLC

10D241D-026-AB

First Edition

Printed in U.S.A.

RAM TRUCK

2011 Diesel

WARRANTY INFORMATION

IMPORTANT

This booklet contains Chrysler Group LLC limited warranties. It should be kept in your vehicle and presented to your Dealer if any warranty service is needed.
The warranty text begins on page 4 of this booklet.

WARRANTY COVERAGE AT A GLANCE

DESCRIPTION	1 Yr/ 12,000	2 Yr/ 24,000	3 Yr/ 36,000	3 Yr/ 50,000	3 Yr/ Unlmtd	5 Yr/ 50,000	5 Yr/ 100,000	7 Yr/ 70,000	7 Yr/ 100,000	8 Yr/ 80,000	Lifetime
Basic Limited Warranty Coverage	■	■	■								
Special Extended Warranty Coverage											
Anti-Corrosion Perforation Limited Warranty: All Panels				■	■						
Outer Panels	■	■	■	■	■	■	■				
Cummins Diesel Engine Components Limited Warranty	▨	▨	▨	■	■	■	■				
Powertrain Limited Warranty	■	■	■	■	■	■	■				
Federal Emission Warranty - Heavy Duty Diesel Specified Components	■	■	■	■	■	■					
Noise Emission Warranty - Heavy Duty	■	■	■	■	■	■	■	■	■	■	■

© 2010 Chrysler Group LLC

TABLE OF CONTENTS

1. Your Legal Rights Under These Limited Warranties 4

2. What's Covered Under Chrysler Group LLC's Warranties
   - 2.1 Basic Limited Warranty 5
   - 2.2 Cummins 6.7L Diesel Engine Limited Warranty 8
   - 2.3 Corrosion Warranty 9
   - 2.4 Powertrain Limited Warranty 10
   - 2.5 Restraint System Limited Warranty 13

3. What's Not Covered
   - 3.1 Modifications Not Covered. 14
   - 3.2 Environmental Factors Not Covered 15
   - 3.3 Maintenance Costs Not Covered. 16
   - 3.4 Racing Not Covered 16
   - 3.5 Certain Kinds of Corrosion Not Covered 17
   - 3.6 Other Exclusions 17
   - 3.7 Total Loss, Salvage, Junk, or Scrap Trucks Not Covered. 18
   - 3.8 Restricted Warranty 18

4. Other Terms of Your Warranties
   - 4.1 Exchanged Parts May Be Used in Warranty Repairs 19
   - 4.2 Pre-Delivery Service. 20
   - 4.3 Production Changes 20

5. Emission Warranties Required by Law
5.1 Federal Engine Emission Warranty - 6.7L Diesel Heavy Duty Truck 21
5.2 Noise Emission Warranty 22

6. How to Get Warranty Service
6.1 Where to Take Your Truck 25
6.2 How To Get Tow Service - U.S. or Canada Only ... 28
6.3 Emergency Warranty Repairs 30
6.4 Getting Service Under the Federal Emission Performance Warranties 30

7. How to Deal with Warranty Problems
7.1 Steps to Take ..... .32
7.2 Helpful Addresses and Telephone Numbers ..... .36

8. Optional Service Contract 38

9. Maintenance
9.1 General Maintenance 39
9.2 Where to Go For Maintenance 40

1. Your Legal Rights Under These Limited Warranties

The warranties contained in this booklet are the only express warranties that Chrysler Group LLC ("Chrysler") makes for your vehicle. **These warranties give you specific legal rights. You may also have other rights that vary from state to state.** For example, you may have some implied warranties, depending on the state where your vehicle was sold or is registered.

These implied warranties are limited, to the extent allowed by law, to the time periods covered by the express written warranties contained in this booklet.

If you use your vehicle primarily for business or commercial purposes, then these implied warranties do not apply and Chrysler completely disclaims them to the extent allowed by law. And the implied warranty of fitness for a particular purpose does not apply if your vehicle is used for racing, even if the vehicle is equipped for racing.

Some states do not allow limitations on how long an implied warranty lasts, so the above limitations may not apply to you.

1.1 Incidental and Consequential Damages Not Covered

Your warranties don't cover any incidental or consequential damages connected with your vehicle's failure, either while under warranty or afterward. Examples of such damages include:

- lost time;
- inconvenience;
- the loss of the use of your vehicle;
- the cost of rental vehicles, gasoline, telephone, travel, or lodging;
- the loss of personal or commercial property; and
- the loss of revenue.

Some states don't allow incidental or consequential damages to be excluded or limited, so this exclusion may not apply to you.

2. What's Covered Under Chrysler's Warranties

2.1 Basic Limited Warranty

A. Who Is Covered?

You are covered by the Basic Limited Warranty if you are a purchaser for use of the vehicle.

B. What's Covered

The Basic Limited Warranty covers the cost of all parts and labor needed to repair any item on your truck when it left the manufacturing plant that is defective in material, workmanship or factory preparation. There is no list of covered parts since the only exception are tires and Unwired headphones. You pay nothing for these repairs. These warranty repairs or adjustments — including all parts and labor connected with them — will be made by your dealer at no charge, using new or remanufactured parts.

C. Items Covered by Other Warranties

The following are covered by separate warranties offered by their makers. They are **not covered** by the Basic Limited Warranty:

- tires;
- Unwired headphones; or

- items added or changed after the truck left the manufacturing plant, such as accessories or protection products, or items changed because of customization or van conversion.

Be sure you get a copy of any warranty that applies to these items from your dealer, or from the maker of the product. You can find the tire and Unwired headphone warranty statements in your Owner's Literature Package.

D. Towing Costs Are Covered Under Certain Circumstances

The Basic Limited Warranty covers the cost of towing your truck to the nearest Chrysler, Dodge or Jeep dealer if your truck can't be driven because a covered part has failed. If you choose to go to another dealership, you will be responsible for the cost if the extra distance exceeds 10 miles. See Section 6.2 for information on how to get towing service in the United States and Canada.

E. When It Begins

The Basic Limited Warranty begins on either of the following dates, whichever is earlier:

- the date you take delivery of the truck; or
- the date when the truck was first put into service — for example, as a dealer "demo" or as a Chrysler company truck.

F. When It Ends

The Basic Limited Warranty lasts for 36 months from the date it begins or for 36,000 miles on the odometer, whichever occurs first. But the following items are covered only for 12 months or for 12,000 miles on the odometer, whichever occurs first:

- brakes (rotors, pads, linings, and drums);
- wiper blades;
- clutch discs or modular clutch assembly (as equipped);
- windshield and rear window; and
- wheel alignment and wheel balancing

G. Registration and Operation Requirements

The Basic Limited Warranty covers your truck only if:

- it was built for sale in the U.S.;
- it's registered in the U.S.;
- it's driven mainly in the U.S. or Canada; and
- it's operated and maintained in the manner described in your Owner's Manual.

H. If Your Truck Leaves the United States (We Include U.S. Possessions and Territories as Part of the United States for Warranty Purposes):

EXCEPT WHERE SPECIFICALLY REQUIRED BY LAW, THERE IS NO WARRANTY COVERAGE ON THIS TRUCK IF IT IS SOLD IN OR REGISTERED IN COUNTRIES OTHER THAN THE UNITED STATES.

This policy does not apply to trucks that have received authorization for export from Chrysler. Dealers may not give authorization for export. You should consult an authorized dealer to determine this truck's warranty coverage if you have any questions.

This policy does not apply to trucks registered to U.S. government officials or military personnel on assignment outside of the United States.

2.2 Cummins Diesel Engine Limited Warranty

A. Who Is Covered?

You are covered if your vehicle is equipped with a Cummins Diesel Engine.

B. What's Covered

The Cummins Diesel Engine Limited Warranty covers **ONLY** the following engine parts and components:

- cylinder block and all internal parts
- cylinder head assemblies
- core plugs

- fuel injection pump & injectors
- gaskets and seals for listed components
- intake and exhaust manifold
- oil pan
- oil pump
- timing gear drive belts and/or chains and cover
- turbocharger housing and internal parts
- valve covers
- water pump and housing

C. How Long It Lasts

The Cummins Diesel Engine Limited Warranty lasts for up to 5 years or 100,000 miles on the odometer, whichever occurs first, calculated from the start date of the Basic Limited Warranty, as set forth in Section 2.1(E).

D. Towing Costs Are Covered

The Cummins Diesel Engine Limited Warranty covers the cost of towing your truck to the nearest Dodge dealer if your vehicle cannot be driven because a covered part has failed. If you choose to go to another dealership, you will be responsible for the cost if the extra distance exceeds 10 miles. See Section 6.2 for information on how to get towing service in the United States and Canada.

2.3 Corrosion Warranty

A. Who Is Covered?

You are covered if you are a purchaser for use of the vehicle.

B. What's Covered

This warranty covers the cost of all parts and labor needed to repair or replace any sheet metal panels that get holes from rust or other corrosion. If a hole occurs because of something other than corrosion, this warranty does not apply. Cosmetic or surface corrosion — resulting, for example, from stone chips or scratches in the paint — is not covered. For more details on what isn't covered by this warranty, see 3.5.

C. How Long It Lasts

The Corrosion Warranty starts when your Basic Limited Warranty begins under 2.1(E). This warranty has two time-and-mileage limits:

- For sheet metal panels, the limit is 36 months, with no mileage limit.
- For an outer-body sheet metal panel — one that is finish-painted and that someone can see when walking around the truck — the limits are 5 years or 100,000 miles on the odometer, whichever occurs first.

2.4 Powertrain Limited Warranty
(EXCLUDES Ram Chassis Cab Vehicles)

A. Who Is Covered?

You are covered by the Powertrain Limited Warranty if you are a purchaser for use of the vehicle.

B. What's Covered

The Powertrain Limited Warranty covers the cost of all parts and labor needed to repair a powertrain component listed in section 2.4.F below that is defective in workmanship and materials.

C. How Long It Lasts

The Powertrain Limited Warranty lasts for up to 5 years or 100,000 miles on the odometer, whichever occurs first, calculated from the start date of the Basic Limited Warranty, as set forth in Section 2.1(E).

D. Towing Costs Are Covered

The Powertrain Limited Warranty covers the cost of towing your vehicle to the nearest authorized Chrysler, Dodge or Jeep dealer if your vehicle cannot be driven because a covered part has failed. If you choose to go to another dealership, you will be responsible for the cost if the extra distance exceeds 10 miles. See Section 6.2 for information on how to get towing service in the United States and Canada.

E. Excluded Vehicles

Ram Chassis Cab vehicles are not covered by the Powertrain Limited Warranty.

F. Parts Covered

The Powertrain Limited Warranty covers these parts and components of your vehicle's powertrain supplied by Chrysler Group LLC:

Transmission: transmission case and all internal parts; torque converter; drive/flex plate; transmission range switch; speed sensors; pressure sensors; transmission control module; bell housing; oil pan; seals and gaskets for listed components only.
NOTE: MANUAL TRANSMISSION CLUTCH PARTS ARE NOT COVERED AT ANY TIME.

Rear Wheel Drive: rear axle housing and all internal parts; axle shafts; axle shaft bearings; drive shaft assemblies; drive shaft center bearings; universal joints and yokes; seals and gaskets for listed components only.

Four-Wheel Drive (4X4): transfer case and all internal parts; transfer case control module and shift mode motor assembly; axle housing and all internal parts; axle shafts; axle shaft bearings; drive shafts assemblies (front and rear); drive shaft center bearings; universal joints and yokes; disconnect housing assembly; seals and gaskets for the listed components only.

G. Other Provisions of This Powertrain Limited Warranty

All other terms of the New Vehicle Limited Warranty including the Section 1 (Your Rights Under These Limited Warranties) and Section 3 (What's Not Covered) apply to this Powertrain Limited Warranty.

2.5 Restraint System Limited Warranty (Vehicles sold and registered in the State of Kansas only)

For vehicles sold and registered in the State of Kansas, seatbelts and related seatbelt components are warranted against defects in workmanship and materials for 10 years, regardless of mileage. This warranty does not cover replacement of seatbelts and related components required as the result of collision.

3. What's Not Covered

3.1 Modifications Not Covered

A. Some Modifications Don't Void the Warranties But Aren't Covered

Certain changes that you might make to your truck do not, by themselves, void the warranties described in this booklet. Examples of some of these changes are:

- installing non-Chrysler Group LLC ("Chrysler") parts, components, or equipment (such as a non-Chrysler radio or speed control); and
- using special non-Chrysler materials or additives.

But your warranties don't cover any part that was not on your truck when it left the manufacturing plant or is not certified for use on your truck. Nor do they cover the costs of any repairs or adjustments that might be caused or needed because of the installation or use of non-Chrysler parts, components, equipment, materials, or additives.

Performance or racing parts are considered to be non-Chrysler parts. Repairs or adjustments caused by their use are not covered under your warranties.

Examples of the types of alterations not covered are:

- installing accessories — except for genuine Chrysler / MOPAR accessories installed by an authorized Chrysler, Dodge or Jeep dealer;

- applying rustproofing or other protection products;
- changing the vehicle's configuration or dimensions, such as converting the vehicle into a limousine or food service vehicle; or
- using any refrigerant that Chrysler has not approved.

B. Modifications That WILL Void Your Warranties

These actions will void your warranties:

- disconnecting, tampering with, or altering the odometer will void your warranties, unless your repairing technician follows the legal requirements for repairing or replacing odometers; or
- attaching any device that disconnects the odometer will also void your warranties.

3.2 Environmental Factors Not Covered

Your warranties don't cover damage caused by environmental factors such as airborne fallout, bird droppings, insect damage, chemicals, tree sap, salt, ocean spray, acid rain, and road hazards. Nor do your warranties cover damage caused by hailstorms, windstorms, tornadoes, sandstorms, lightning, floods, and earthquakes.

Your warranties do not cover conditions resulting from anything impacting the truck. This includes cracks and chips in glass, scratches and chips in painted surfaces, or damage from collision.

3.3 Maintenance Costs Not Covered

Your warranties don't cover the costs of repairing damage caused by poor or improper maintenance. Nor do they cover damage caused by the use of contaminated fuels, or by the use of fuels, oils, lubricants, cleaners or fluids other than those recommended in your Owner's Manual.

The warranties don't cover the costs of your truck's normal or scheduled maintenance — the parts and services that all trucks routinely need. Some of these parts and services, which your warranties don't cover, include:

- lubrication;
- engine tune-ups;
- replacing filters, coolant, spark plugs, bulbs, or fuses (unless those costs result from a covered repair);
- cleaning and polishing; and
- replacing worn wiper blades, worn brake pads and linings, or clutch linings.

3.4 Racing Not Covered

Your warranties don't cover the costs of repairing damage or conditions caused by racing, nor do they cover the repair of any defects that are found as the result of participating in a racing event.

3.5 Certain Kinds of Corrosion Not Covered

Your warranties don't cover the following:

- corrosion caused by accident, damage, abuse, or truck alteration;
- surface corrosion caused by such things as industrial fallout, sand, salt, hail, and stones;
- corrosion caused by the extensive or abnormal transport of caustic materials like chemicals, acids, and fertilizers; and
- corrosion of special bodies, body conversions, or equipment that was not on your truck when it left the manufacturing plant or was not or supplied by Chrysler.

3.6 Other Exclusions

Your warranties don't cover the costs of repairing damage or conditions caused by any of the following:

- fire or accident;
- abuse or negligence;
- misuse — for example, driving over curbs or overloading;
- tampering with the emission systems, or with a part that could affect the emission systems;
- use of used parts, even if they were originally supplied by Chrysler (however, authorized Chrysler / MOPAR remanufactured parts are covered);
- windshield or rear window damage from external objects;

- any changes made to your truck that don't comply with Chrysler; or
- using any fluid that doesn't meet the minimum recommendations in your Owner's Manual.

3.7 Total Loss, Salvage, Junk, or Scrap Trucks Not Covered

A truck has no warranty coverage of any kind if:

- the truck is declared to be a total loss by an insurance company;
- the truck is rebuilt after being declared to be a total loss by an insurance company; or
- the truck is issued a certificate of title indicating that it is designated as "salvage," "junk," "rebuilt," "scrap," or some similar word.

Chrysler will deny warranty coverage without notice if it learns that a truck is ineligible for coverage for any of these reasons.

3.8 Restricted Warranty

Your warranties can also be restricted by Chrysler. Chrysler may restrict the warranty on your truck if the truck is not properly maintained, or if the truck is abused or neglected, and the abuse or neglect interferes with the proper functioning of the truck. If the warranty is restricted, coverage may be denied or subject to approval by Chrysler before covered repairs are performed.

4. Other Terms of Your Warranties

4.1 Exchanged Parts May Be Used in Warranty Repairs

In the interest of customer satisfaction, Chrysler Group LLC ("Chrysler") may offer exchange service on some truck parts. This service is intended to reduce the amount of time your truck is not available for your use because of repairs. Parts used in exchange service may be new, remanufactured, reconditioned, or repaired, depending on the part involved.

All exchange parts that might be used meet Chrysler standards, and have the same warranties as new parts.

Examples of the kinds of parts that might be serviced in this way are:

- engine assemblies;
- transmission assemblies;
- instrument cluster assemblies;
- radios, tape, CD and DVD players;
- speedometers; and
- powertrain control modules.

To help control suspected ozone-depleting agents, the EPA requires the capture, purification, and reuse of automotive air-conditioning refrigerant gases. As a result, a repair to the sealed portion of your air-conditioning system may involve the installation of purified reclaimed refrigerant.

4.2 Pre-Delivery Service

A defect in or damage to the mechanical, electrical, sheet-metal, paint, trim, and other components of your truck may have occurred at the factory or while it was being shipped to the dealer.

Such a defect or damage is usually detected and corrected at the factory. In addition, dealers must inspect each truck before delivery. They repair any defects or damage detected before the truck is delivered to you.

4.3 Production Changes

Changes may be made in trucks sold by Chrysler and its dealers at any time without incurring any obligation to make the same or similar changes on trucks previously built or sold.

5. Emission Warranties Required By Law

5.1 Federal Vehicle Emission Warranty - 6.7L Diesel Equipped Heavy Duty Truck

A. Parts Covered for 5 Years or 50,000 Miles, Whichever Occurs First

Diesel equipped heavy duty trucks are 2500 and 3500 models only.

Federal law requires Chrysler to warrant the following emissions parts for 5 years or 50,000 miles, whichever occurs first.

- Air system controls;
- exhaust system (includes catalysts);
- electronic fuel injection system, including injector;
- exhaust manifold;
- exhaust gas recirculation valve and control system (includes EGR cooler);
- exhaust pipes (between exhaust manifold and catalyst);
- fuel pump, fuel lines and fuel injectors;
- intake manifold;
- on-board diagnostic-system components;
- oxygen sensors and oxygen control module;

- positive crankcase-ventilation (PCV) valve or orifice;
- powertrain control module;
- transmission-control module;
- turbocharger.

B. Parts Covered for 8 Years or 80,000 Miles, Whichever Occurs First

If your truck has one of the following parts, this Federal Emission Warranty covers that part for a period of 8 years or 80,000 miles, whichever occurs first, calculated from the start date of the Basic Limited Warranty as set forth in Section 2.1(E). The covered parts are:

- all catalysts
- powertrain control module
- transmission control module

5.2 Noise Emission Warranty - Heavy Duty Truck

A. Description of Coverage

Chrysler Group LLC ("Chrysler") warrants that this vehicle as manufactured by Chrysler, was designed, built and equipped to conform to all applicable U.S. EPA Noise Control Regulations at the time it left Chrysler's control.

This warranty covers this vehicle as designed, built and equipped by Chrysler, and is not limited to any particular part, component or system of the vehicle manufactured by Chrysler. Defects in design, assembly or in any part, component or system of the vehicle as manufactured by Chrysler, which, at the

time it left Chrysler's control, caused noise emissions to exceed Federal standards, are covered by this warranty for the life of the vehicle.

B. Products Warranted

All vehicles built over 10,000 lbs. Gross Vehicle Weight Rating and manufactured for sale and use in the United States are required to comply with the Federal Government's Exterior Noise Regulations. These vehicles can be identified by the Noise Emission Control Label located in the operator's compartment.

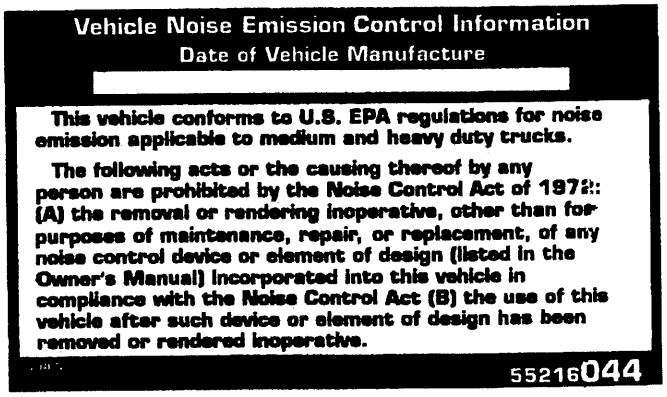

C. Tampering with Noise Control System Prohibited

Federal law prohibits the following acts or the causing thereof:

- the removal or rendering inoperative by any person, other than for purposes of maintenance, repair, or replacement, of any device or element of design incorporated into any new vehicle for the purpose of noise control prior to its sale or delivery to the ultimate purchaser or while it is in use; or
- the use of the vehicle after such device or element of design has been removed or rendered inoperative by any person.

Among those acts presumed to constitute tampering are the acts listed below:

AIR CLEANER

- removal of the air cleaner;
- removal of the air cleaner filter element from the air cleaner housing; or
- removal of the air ducting.

EXHAUST SYSTEM

- removal or rendering inoperative exhaust system components including the muffler or tailpipe.

ENGINE COOLING SYSTEM

- removal or rendering inoperative the fan clutch; or
- removal of the fan shroud.

6. How to Get Warranty Service

6.1 Where to Take Your Truck

A. In the United States (We Include U.S. Possessions and Territories as Part of the United States for Warranty Purposes):

Warranty service must be done by an authorized Chrysler, Dodge or Jeep dealer. We strongly recommend that you take your truck to your Selling Dealer. They know you and your truck best, and are most concerned that you get prompt and high quality service. If you move within the United States, warranty service may be requested from any authorized Chrysler, Dodge or Jeep dealer.

B. In Canada and Mexico:

If you are traveling temporarily in Canada or Mexico, and your truck remains registered in the United States, your Chrysler warranty still applies. Service may be requested at any authorized Chrysler, Dodge or Jeep dealership.

C. In a Foreign Country Outside of North America:

If you are traveling temporarily outside of North America, and your truck remains registered in the United States:

- You should take your truck to an authorized Chrysler, Dodge or Jeep dealer. They should give you the same warranty service you receive in the United States.
- If the authorized dealership charges you for repairs which you feel should be covered under your warranty, please get a detailed receipt for the work done. Make sure that this receipt lists all warranty repairs and parts that were involved. (This receipt will be similar to the one used by the dealer who normally services your truck.)
- When your truck returns to the United States, contact the Chrysler Customer Assistance Center (section 7.2) for reimbursement consideration. You will normally need to provide a copy of the receipt, your truck registration and any other relevant documents.
- Reimbursement will not be considered if the truck does not return to the United States.

D. If You Move:

If you move to another country, be sure to contact the Chrysler Customer Assistance Center (section 7.2) and the customs department of the destination country before you move. Vehicle importation rules vary considerably from country to country. You may be required to present documentation of your move to Chrysler in order to continue your warranty coverage. You may also be required to obtain documentation from Chrysler in order to register your truck in your new country.

E. Notice:

If your truck is registered outside of the United States, and you have not followed the procedure set out above, your truck will no longer be eligible for warranty coverage of any kind. (Trucks registered to United States government officials or military personnel on assignment outside of the U.S. will continue to be covered.)

6.2 How To Get Tow Service - U.S. or Canada Only *

A. What To Do:

If your vehicle requires towing due to a defect covered under the Basic Limited Warranty, Powertrain Limited Warranty or the Diesel Engine Limited Warranty, dial toll-free 1-800-521-2779. Provide your name, vehicle identification number, license plate number, and your location, including the telephone number from which you are calling. Briefly describe the nature of the problem and answer a few simple questions.

You will be given the name of the service provider and an estimated time of arrival. If you feel you are in an "unsafe situation", please let us know. With your consent, we will contact local police or safety authorities.

* Towing services provided through Cross Country Motor Club, Inc., Medford, MA 02155, except in AK, CA, HI, OR, WI, and WY, where services are provided by Cross Country Motor Club of California, Inc., Medford,, MA 02155.

B. If Unable to Contact 24-Hour Towing Assistance:

If you are unable to contact 24-Hour Towing Assistance and you obtain towing services on your own, you may submit your original receipts from the licensed towing or service facility, for services rendered within 30 days of the occurrence. Be sure to include your vehicle identification number, odometer mileage at the time of service and current mailing address. We will process the claim based on vehicle and service eligibility. If eligible, we will reimburse you for the reasonable amounts you actually paid, based on the usual and customary charges for that service in the area where they were provided. Chrysler Group LLC's determination relating to reimbursement are final.

Correspondence should be mailed to:

Chrysler Towing Assistance
P.O. Box 9145
Medford, MA 02155
Attention: Claims Department

6.3 Emergency Warranty Repairs

If you have an emergency and have to get a warranty repair made by someone other than an authorized Chrysler, Dodge or Jeep dealer, follow the reimbursement procedure in 6.1(C).

6.4 Getting Service Under the Federal Emission Warranties

A. Steps You Can Take, and How to Get More Information

To get warranty service -- even if you're traveling -- take your truck to any Chrysler, Dodge or Jeep dealer. (Chrysler recommends that you take your truck to a dealer who sells the same make of truck as yours.) That dealer will perform any warranty service without charging you for diagnosis, parts or labor.

If you think your dealer has wrongly denied you emission-warranty coverage, follow the steps described in 7.1. Chrysler will reply to you in writing within 30 days after receiving your complaint (or within the time limit required by local or state law). If the owner is not notified within 30 days that a performance warranty claim is denied, the manufacturer must repair the truck free of charge.

If you want more information about getting service under the Federal Emission Warranty or the Performance Warranty, or if you want to report what you think is a violation of these warranties, you can contact:

Manager, Certification and Compliance
Division, Warranty Claims
Environmental Protection Agency
1200 Pennsylvania Avenue, NW
Mail Code 6403J
Washington, D. C. 20460

7. How to Deal with Warranty Problems

7.1 Steps to Take

A. In General

Normally, warranty problems can be resolved by your dealer's sales or service departments. That's why you should always talk to your dealer's service manager or sales manager first. But if you're not satisfied with your dealer's response to your problem, Chrysler Group LLC ("Chrysler") recommends that you do the following:

Step 1: Discuss your problem with the owner or general manager of the dealership.

Step 2: If your dealership still can't resolve the problem, contact the Chrysler Customer Assistance Center. You'll find the address in section 7.2.

B. What Chrysler Will Do

Once you have followed the two steps described in 7.1(A), a Chrysler representative at Chrysler headquarters will review your situation. If it's something that Chrysler can help you with, Chrysler will provide your dealer with all the information and assistance necessary to resolve

the problem. Even if Chrysler can't help you, Chrysler will acknowledge your contact and explain Chrysler's position.

C. If Your Problem Still Isn't Resolved For Customers Residing in Arkansas, Idaho, Kentucky and Minnesota ONLY:

(**NOTE:** This Process is not available for residents of other states.)

If you can't resolve your warranty problem after following the two steps described in 7.1(A), and you live in Arkansas, Idaho, Kentucky or Minnesota ONLY, you can contact the Chrysler Group LLC Customer Arbitration Process in your area.

You may obtain a brochure describing Chrysler Group LLC's Customer Arbitration Process, including an application, by calling 1-866-726-4636. This service is strictly voluntary, and you may submit your dispute directly to the Customer Arbitration Process (CAP) at no cost. The CAP is administered by an independent dispute settlement organization and may be contacted in writing at the following address:

National Center for Dispute Settlement
Chrysler Group LLC
Customer Arbitration Process
P.O. Box 727
Mt. Clemens, MI 48046

The CAP reviews only truck disputes involving Chrysler Group LLC ("Chrysler") Limited Warranty or a Chrysler / Mopar Part Limited Warranty. The CAP does not review disputes involving the sale of a new or used truck, personal injury/property damage claims, disputes relating to design of the truck or part, or disputes which are already the subject of litigation.

The CAP will need the following information from you: 1) Legible copies of all documents and repair orders relevant to your case, 2) Truck identification number of your truck, 3) A brief description of your unresolved concern, 4) The identity of your servicing/selling dealer, 5) The date(s) of repair(s) and mileage at the time, 6) Current mileage, and 7) A description of the action you expect to resolve your concern.

Upon receipt of your request:

- The National Center for Dispute Settlement (NCDS) will acknowledge receipt of your request, by mail, within ten (10) days, and advise you whether or not your dispute is within the jurisdiction of the Process.
- When your request is within jurisdiction NCDS will request Chrysler and the dealer to present their side of the dispute. You will receive copies of their responses.

• While your dispute is pending NCDS or Chrysler may contact you to see if your case can be settled by agreement. If a settlement is offered to you, Chrysler will ask you to sign a form that contains that settlement. Your case will then be closed. There is no requirement for you to participate in this settlement process.
• If you requested an oral hearing, a decision-maker will contact you to arrange a convenient time and place for a hearing. Usually, this will be at a dealership near you.
• If you request a documents-only review, an NCDS panel will review and decide your case. Neither you, the dealer nor Chrysler need be present.
• NCDS will send you a written Statement of Decision. This statement will include the decision, any action to be taken by the dealer or Chrysler and the time by which the action must be taken. The decision will be binding on the dealer and Chrysler but not on you unless you accept the decision.
• If any action is required on the part of the dealer or Chrysler you will be contacted within ten (10) days after the date by which the dealer or Chrysler must act to determine whether performance has been rendered.
• The entire dispute settlement process will normally take no longer than 40 days.

• The CAP dispute settlement procedure does not take the place of any state or Federal legal remedies available to you. Whether or not you decide to submit your dispute to the Process, you are free to pursue other legal remedies.

D. Notice Under State Lemon Laws

Some states have laws allowing you to get a replacement truck or a refund of the truck's purchase price under certain circumstances. These laws vary from state to state. If your state law allows, Chrysler requires that you first notify us in writing of any service difficulty that you may have experienced so that we can have a chance to make any neededrepairs before you are eligible for remedies provided by these laws.

In all other states, we ask that you give us written notice of any service difficulty. Send your written notice to the Chrysler Customer Assistance Center at the address in section 7.2.

7.2 Helpful Addresses and Telephone Numbers

Here are the addresses and telephone numbers of the Chrysler Customer Assistance Center that can help you wherever you happen to be. Contact the one that covers your area:

- **In the United States:**
  Chrysler Customer Assistance Center
  P.O. Box 21-8004
  Auburn Hills, Michigan 48321-8004
  Phone: (866) 726-4636

To contact Chrysler by email,
simply access the following website:
www.ramtrucks.com
(click on the "Contact Us" button)

- **In Canada:**
  Chrysler Canada, Inc.
  Customer Service
  Chrysler Centre
  P.O. Box 1621
  Windsor, Ontario N9A-4H6
  Phone: (800) 465-2001

- **In Mexico, contact the Customer Relations Office for Chrysler, Jeep and Dodge truck at:**
  1240 Prolongacion Paseo de la Reforma Av.
  Santa Fe, C.P. 05109
  Deleg. Cuajimalpa, Mexico
  Phone (in Mexico): (015) 5081-7568
  Phone (outside Mexico): (800) 505-1300

- **In Puerto Rico and U.S. Virgin Islands:**
  Customer Service
  Chrysler International Services SA LLC
  Box 191857
  San Juan, Puerto Rico 00919-1857
  Phone: (787) 782-5757
  Fax: (787) 782-3345

8. Optional Service Contract

Chrysler Group LLC's or Chrysler Service Contract Company, LLC's optional service contracts offer valuable protection against repair costs when these warranties don't apply. They complement but don't replace the warranty coverages outlined in this booklet. Several plans are available, covering various time-and-mileage periods and various sets of components. (Service contracts aren't available if you live in a U.S. possession or territory.) Ask your dealer for details.

9. Maintenance

9.1 General Information

It's your responsibility to properly maintain and operate your new truck. Follow the instructions contained in the General and Scheduled Maintenance Service guidelines in your Owner's Manual. Regular, scheduled maintenance is essential to trouble-free operation. If there is a dispute between you and Chrysler Group LLC ("Chrysler") concerning your maintenance of your truck, Chrysler will require you to provide proof that your vehicle was properly maintained.

For your convenience, Chrysler has prepared a Maintenance Log which is included in your Owner's Manual. You should use this Maintenance Log to keep track of scheduled maintenance, either by routinely having the repairs entered in your Maintenance Log, or by keeping receipts or other documentation of work you've had done on your truck in your Maintenance Log.

9.2 Where to Go For Maintenance

Chrysler recommends that you return to the dealer from whom you bought your truck for all maintenance service both during and after the warranty periods. Although you can get warranty service from any dealer who sells your particular make, returning to your selling dealer will help ensure that all your service needs are met and that you're completely satisfied. The dealership technicians are specifically trained to proficiently perform maintenance and repair procedures on your Chrysler Group LLC truck.

Authorized Chrysler, Jeep or Dodge dealers will help ensure that all your service needs are met and that you're completely satisfied.

Chrysler strongly recommends you use genuine Chrysler / MOPAR parts to maintain your truck.

Original Owner's Name

Street Address

City and State Zip Code

Vehicle Identification Number

Warranty Start Date (In-Service Date) Mileage at Delivery

Selling Dealer Code

City State

Second Owner's Name

Street Address

City and State Zip Code

Date of Second Purchase Mileage at Purchase

Third Owner's Name

Street Address

City and State Zip Code

Date of Second Purchase Mileage at Purchase

Warranty coverage applies to all vehicle owners. To protect you in the event of a recall or any questions concerning your warranty, please tell your dealer about any ownership or address change, and write the details here.

DODGE

SERVICE

STICK WITH THE SPECIALISTS®

Chrysler Group LLC

11D241D-026-AA

First Edition

Printed in U.S.A.

IMPORTANT

This booklet contains Chrysler Group LLC limited warranties. It should be kept in your vehicle and presented to your Dealer if any warranty service is needed. The warranty text begins on page 4 of this booklet.

DESCRIPTION	1 Yr/ 12, 000	2 Yr/ 24,000	3 Yr/ 36,000	3 Yr/ 50,000	3 Yr/ Unlimited	5 Yr/ 50,000	5 Yr/ 100,000	7 Yr/ 70,000	8 Yr/ 80,000	Lifetime
Basic Limited Warranty Coverage	■	■	■							
Special Extended Warranty Coverage										
Anti-Corrosion Perforation Limited Warranty:										
All Panels	■	■	■	■	■					
Outer Panels	■	■	■	■	■	■	■			
Cummins Diesel Engine Components										
Limited Warranty				■	■	■	■			
Powertrain Limited Warranty	■	■	■	■	■	■	■			
Federal Emission Warranty -										
Heavy Duty And Diesel	■	■	■	■	■	■				
Specified Components	■	■	■	■	■	■	■	■	■	
Noise Emission Warranty - Heavy Duty	■	■	■	■	■	■	■	■	■	■

© 2011 Chrysler Group LLC

TABLE OF CONTENTS

1. Your Legal Rights Under These Limited Warranties
   - 1.1 Incidental and Consequential Damages Not Covered 4

2. What's Covered Under Chrysler Group LLC's Warranties
   - 2.1 Basic Limited Warranty 5
   - 2.2 Cummins Diesel Engine Limited Warranty . . . 8
   - 2.3 Corrosion Warranty 9
   - 2.4 Powertrain Limited Warranty 10
   - 2.5 Restraint System Limited Warranty (Vehicles sold and registered in the State of Kansas only) 12

3. What's Not Covered
   - 3.1 Modifications Not Covered 13
   - 3.2 Environmental Factors Not Covered 14
   - 3.3 Maintenance Costs Not Covered 15
   - 3.4 Racing Not Covered 15
   - 3.5 Certain Kinds of Corrosion Not Covered 16
   - 3.6 Other Exclusions 16
   - 3.7 Total Loss, Salvage, Junk, or Scrap Vehicles Not Covered 17
   - 3.8 Restricted Warranty 17

4. Other Terms of Your Warranties
   - 4.1 Exchanged Parts May Be Used in Warranty Repairs 18
   - 4.2 Pre-Delivery Service 19
   - 4.3 Production Changes 19

5. Emission Warranties Required By Law
- 5.1 Federal Vehicle Emission Warranty - 6.7L Diesel Equipped Heavy Duty Truck 20
- 5.2 Noise Emission Warranty - Heavy Duty Truck 21

6. How to Get Warranty Service
- 6.1 Where to Take Your Truck 24
- 6.2 How To Get Tow Service - U.S. or Canada Only * 26
- 6.3 Emergency Warranty Repairs 27
- 6.4 Getting Service Under the Federal Emission Warranties 28

7. How to Deal with Warranty Problems
- 7.1 Steps to Take 29
- 7.2 Helpful Addresses and Telephone Numbers . . 33

8. Optional Service Contract 35

9. Maintenance
- 9.1 General Information 36
- 9.2 Where To Go For Maintenance 36

1. Your Legal Rights Under These Limited Warranties

The warranties contained in this booklet are the only express warranties that Chrysler Group LLC ("Chrysler") makes for your vehicle. **These warranties give you specific legal rights. You may also have other rights that vary from state to state.** For example, you may have some implied warranties, depending on the state where your vehicle was sold or is registered.

These implied warranties are limited, to the extent allowed by law, to the time periods covered by the express written warranties contained in this booklet.

If you use your vehicle primarily for business or commercial purposes, then these implied warranties do not apply and Chrysler completely disclaims them to the extent allowed by law. And the implied warranty of fitness for a particular purpose does not apply if your vehicle is used for racing, even if the vehicle is equipped for racing.

Some states do not allow limitations on how long an implied warranty lasts, so the above limitations may not apply to you.

1.1 Incidental and Consequential Damages Not Covered

Your warranties don't cover any incidental or consequential damages connected with your vehicle's failure, either while under warranty or afterward.

Examples of such damages include:

- lost time;
- inconvenience;
- the loss of the use of your vehicle;
- the cost of rental vehicles, gasoline, telephone, travel, or lodging;
- the loss of personal or commercial property; and
- the loss of revenue.

Some states don't allow incidental or consequential damages to be excluded or limited, so this exclusion may not apply to you.

2. What's Covered Under Chrysler Group LLC's Warranties

2.1 Basic Limited Warranty

A. Who Is Covered?

You are covered by the Basic Limited Warranty if you are a purchaser for use of the vehicle.

B. What's Covered

The Basic Limited Warranty covers the cost of all parts and labor needed to repair any item on your truck when it left the manufacturing plant that is defective in material, workmanship or factory preparation. There is no list of covered parts since the only exceptions are tires and Unwired headphones. You pay nothing for these repairs. These warranty repairs or adjustments — including all parts and labor connected with them — will be made by your dealer at no charge, using new or remanufactured parts.

C. Items Covered by Other Warranties

The following are covered by separate warranties offered by their makers. They are **not covered** by the Basic Limited Warranty:

- tires;
- Unwired headphones; or
- items added or changed after the truck left the manufacturing plant, such as accessories or protection products, or items changed because of customization or van conversion.

Be sure you get a copy of any warranty that applies to these items from your dealer, or from the maker of the product. You can find the tire and Unwired headphones warranty statements in your Owner's Literature Package.

D. Towing Costs Are Covered Under Certain Circumstances

The Basic Limited Warranty covers the cost of towing your truck to the nearest Chrysler, Dodge, Jeep or Ram dealer if your truck can't be driven because a covered part has failed. If you choose to go to another dealership, you will be responsible for the cost if the extra distance exceeds 10 miles. See Section 6.2 for information on how to get towing service in the United States and Canada.

E. When It Begins

The Basic Limited Warranty begins on either of the following dates, whichever is earlier:

- the date you take delivery of the truck; or
- the date when the truck was first put into service — for example, as a dealer "demo" or as a Chrysler company truck.

F. When It Ends

The Basic Limited Warranty lasts for 36 months from the date it begins or for 36,000 miles on the odometer, whichever occurs first. But the following items are covered only for 12 months or for 12,000 miles on the odometer, whichever occurs first:

- brakes (rotors, pads, linings, and drums);
- wiper blades;

- clutch discs or modular clutch assembly (as equipped);
- windshield and rear window; and
- wheel alignment and wheel balancing

G. Registration and Operation Requirements

The Basic Limited Warranty covers your truck only if:

- it was built for sale in the U.S.;
- it's registered in the U.S.;
- it's driven mainly in the U.S. or Canada; and
- it's operated and maintained in the manner described in your Owner's Manual.

H. If Your Truck Leaves the United States (We Include U.S. Possessions and Territories as Part of the United States for Warranty Purposes):

EXCEPT WHERE SPECIFICALLY REQUIRED BY LAW, THERE IS NO WARRANTY COVERAGE ON THIS TRUCK IF IT IS SOLD IN OR REGISTERED IN COUNTRIES OTHER THAN THE UNITED STATES.

This policy does not apply to trucks that have received authorization for export from Chrysler. Dealers may not give authorization for export. You should consult an authorized dealer to determine this truck's warranty coverage if you have any questions.

This policy does not apply to trucks registered to U.S. government officials or military personnel on assignment outside of the United States.

2.2 Cummins Diesel Engine Limited Warranty

A. Who Is Covered?

You are covered if your vehicle is equipped with a Cummins Diesel Engine.

B. What's Covered

The Cummins Diesel Engine Limited Warranty, covers **ONLY** the following engine parts and components:

- cylinder block and all internal parts
- cylinder head assemblies
- core plugs
- fuel injection pump & injectors
- gaskets and seals for listed components
- intake and exhaust manifold
- oil pan
- oil pump
- timing gear drive and/or chains and cover
- turbocharger housing and internal parts
- valve covers
- water pump and housing

C. How Long It Lasts

The Cummins Diesel Engine Limited Warranty lasts for up to 5 years or 100,000 miles on the odometer, whichever occurs first, calculated from the start date of the Basic Limited Warranty, as set forth in Section 2.1(E).

D. Towing Costs Are Covered

The Cummins Diesel Engine Limited Warranty covers the cost of towing your truck to the nearest Chrysler, Dodge, Jeep or Ram dealer if your vehicle cannot be driven because a covered part

has failed. If you choose to go to another dealership, you will be responsible for the cost if the extra distance exceeds 10 miles. See Section 6.2 for information on how to get towing service in the United States and Canada.

2.3 Corrosion Warranty

A. Who Is Covered?

You are covered if you are a purchaser for use of the vehicle.

B. What's Covered

This warranty covers the cost of all parts and labor needed to repair or replace any sheet metal panels that get holes from rust or other corrosion. If a hole occurs because of something other than corrosion, this warranty does not apply. Cosmetic or surface corrosion — resulting, for example, from stone chips or scratches in the paint — is not covered. For more details on what isn't covered by this warranty, see 3.5.

C. How Long It Lasts

The Corrosion Warranty starts when your Basic Limited Warranty begins under 2.1(E). This warranty has two time-and-mileage limits:

- For sheet metal panels, the limit is 36 months, with no mileage limit.
- For an outer-body sheet metal panel — one that is finish-painted and that someone can see when walking around the truck — the limits are 5 years or 100,000 miles on the odometer, whichever occurs first.

2.4 Powertrain Limited Warranty

A. Who Is Covered?

You are covered by the Powertrain Limited Warranty if you are a purchaser for use of the vehicle.

B. What's Covered

The Powertrain Limited Warranty covers the cost of all parts and labor needed to repair a powertrain component listed in section 2.4.E below that is defective in workmanship and materials.

C. How Long It Lasts

The Powertrain Limited Warranty lasts for up to 5 years or 100,000 miles on the odometer, whichever occurs first, calculated from the start date of the Basic Limited Warranty, as set forth in Section 2.1(E).

D. Towing Costs Are Covered

The Powertrain Limited Warranty covers the cost of towing your vehicle to the nearest authorized Chrysler, Dodge, Jeep or Ram dealer if your vehicle cannot be driven because a covered part has failed. If you choose to go to another dealership, you will be responsible for the cost if the extra distance exceeds 10 miles. See Section 6.2 for information on how to get towing service in the United States and Canada.

E. Parts Covered

The Powertrain Limited Warranty covers these parts and components of your vehicle's powertrain supplied by Chrysler Group LLC:

Transmission:
transmission case and all internal parts; torque converter; drive/flex plate; transmission range switch; speed sensors; pressure sensors; transmission control module; bell housing; oil pan; seals and gaskets for listed components only.

NOTE: MANUAL TRANSMISSION CLUTCH PARTS ARE NOT COVERED AT ANY TIME.

Rear Wheel Drive:
rear axle housing and all internal parts; axle shafts; axle shaft bearings; drive shaft assemblies; drive shaft center bearings; universal joints and yokes; seals and gaskets for listed components only.

Four-Wheel Drive (4X4):
transfer case and all internal parts; transfer case control module and shift mode motor assembly; axle housing and all internal parts; axle shafts; axle shaft bearings; drive shafts assemblies (front and rear); drive shaft center bearings; universal joints and yokes; disconnect housing assembly; seals and gaskets for the listed components only.

F. Other Provisions of This Powertrain Limited Warranty

All other terms of the New Vehicle Limited Warranty including the Section 1 (Your Rights Under These Limited Warranties) and Section 3 (What's Not Covered) apply to this Powertrain Limited Warranty.

2.5 Restraint System Limited Warranty (Vehicles sold and registered in the State of Kansas only)

For vehicles sold and registered in the State of Kansas, seatbelts and related seatbelt components are warranted against defects in workmanship and materials for 10 years, regardless of mileage. This warranty does not cover replacement of seatbelts and related components required as the result of collision.

3. What's Not Covered

3.1 Modifications Not Covered

A. Some Modifications Don't Void the Warranties But Aren't Covered

Certain changes that you might make to your truck do not, by themselves, void the warranties described in this booklet. Examples of some of these changes are:

- installing non-Chrysler Group LLC ("Chrysler") parts, components, or equipment (such as a non- Chrysler radio or speed control); and
- using special non-Chrysler materials or additives.

But your warranties don't cover any part that was not on your truck when it left the manufacturing plant or is not certified for use on your truck. Nor do they cover the costs of any repairs or adjustments that might be caused or needed because of the installation or use of non-Chrysler parts, components, equipment, materials, or additives.

Performance or racing parts are considered to be non-Chrysler parts. Repairs or adjustments caused by their use are not covered under your warranties.

Examples of the types of alterations not covered are:

- installing accessories — except for genuine Chrysler / MOPAR accessories installed by an authorized Chrysler, Dodge, Jeep or Ram dealer;
- applying rustproofing or other protection products;

- changing the vehicle's configuration or dimensions, such as converting the vehicle into a limousine or food service vehicle; or
- using any refrigerant that Chrysler has not approved.

B. Modifications That WILL Void Your Warranties

These actions will void your warranties:

- disconnecting, tampering with, or altering the odometer will void your warranties, unless your repairing technician follows the legal requirements for repairing or replacing odometers; or
- attaching any device that disconnects the odometer will also void your warranties.

3.2 Environmental Factors Not Covered

Your warranties don't cover damage caused by environmental factors such as airborne fallout, bird droppings, insect damage, chemicals, tree sap, salt, ocean spray, acid rain, and road hazards. Nor do your warranties cover damage caused by hailstorms, windstorms, tornadoes, sandstorms, lightning, floods, and earthquakes.

Your warranties do not cover conditions resulting from anything impacting the truck. This includes cracks and chips in glass, scratches and chips in painted surfaces, or damage from collision.

3.3 Maintenance Costs Not Covered

Your warranties don't cover the costs of repairing damage caused by poor or improper maintenance. Nor do they cover damage caused by the use of contaminated fuels, or by the use of fuels, oils, lubricants, cleaners or fluids other than those recommended in your Owner's Manual.

The warranties don't cover the costs of your truck's normal or scheduled maintenance — the parts and services that all trucks routinely need. Some of these parts and services, which your warranties don't cover, include:

- lubrication;
- engine tune-ups;
- replacing filters, coolant, spark plugs, bulbs, or fuses (unless those costs result from a covered repair);
- cleaning and polishing; and
- replacing worn wiper blades, worn brake pads and linings, or clutch linings.

3.4 Racing Not Covered

Your warranties don't cover the costs of repairing damage or conditions caused by racing, nor do they cover the repair of any defects that are found as the result of participating in a racing event.

3.5 Certain Kinds of Corrosion Not Covered

Your warranties don't cover the following:

- corrosion caused by accident, damage, abuse, or truck alteration;
- surface corrosion caused by such things as industrial fallout, sand, salt, hail, ocean spray, and stones;
- corrosion caused by the extensive or abnormal transport of caustic materials like chemicals, acids, and fertilizers; and
- corrosion of special bodies, body conversions, or equipment that was not on your truck when it left the manufacturing plant or was not supplied by Chrysler.

3.6 Other Exclusions

Your warranties don't cover the costs of repairing damage or conditions caused by any of the following:

- fire or accident;
- abuse or negligence;
- misuse — for example, driving over curbs or overloading;
- tampering with the emission systems, or with a part that could affect the emission systems;
- use of used parts, even if they were originally supplied by Chrysler (however, authorized Chrysler / MOPAR remanufactured parts are covered);
- windshield or rear window damage from external objects;

- any changes made to your truck that don't comply with Chrysler; or
- using any fluid that doesn't meet the minimum recommendations in your Owner's Manual.

3.7 Total Loss, Salvage, Junk, or Scrap Vehicles Not Covered

A truck has no warranty coverage of any kind if:

- the truck is declared to be a total loss by an insurance company;
- the truck is rebuilt after being declared to be a total loss by an insurance company; or
- the truck is issued a certificate of title indicating that it is designated as "salvage," "junk," "rebuilt," "scrap," or some similar word.

Chrysler will deny warranty coverage without notice if it learns that a truck is ineligible for coverage for any of these reasons.

3.8 Restricted Warranty

Your warranties can also be restricted by Chrysler. Chrysler may restrict the warranty on your truck if the truck is not properly maintained, or if the truck is abused or neglected, and the abuse or neglect interferes with the proper functioning of the truck. If the warranty is restricted, coverage may be denied or subject to approval by Chrysler before covered repairs are performed.

4. Other Terms of Your Warranties

4.1 Exchanged Parts May Be Used in Warranty Repairs

In the interest of customer satisfaction, Chrysler Group LLC ("Chrysler") may offer exchange service on some truck parts. This service is intended to reduce the amount of time your truck is not available for your use because of repairs. Parts used in exchange service may be new, remanufactured, reconditioned, or repaired, depending on the part involved.

All exchange parts that might be used meet Chrysler standards, and have the same warranties as new parts.

Examples of the kinds of parts that might be serviced in this way are:

- engine assemblies;
- transmission assemblies;
- instrument cluster assemblies;
- radios, tape, CD and DVD players;
- speedometers; and
- powertrain control modules.

To help control suspected ozone-depleting agents, the EPA requires the capture, purification, and reuse of automotive air-conditioning refrigerant gases. As a result, a repair to the sealed portion of your air-conditioning system may involve the installation of purified reclaimed refrigerant.

4.2 Pre-Delivery Service

A defect in or damage to the mechanical, electrical, sheet-metal, paint, trim, and other components of your truck may have occurred at the factory or while it was being shipped to the dealer.

Such a defect or damage is usually detected and corrected at the factory. In addition, dealers must inspect each truck before delivery. They repair any defects or damage detected before the truck is delivered to you.

4.3 Production Changes

Changes may be made in trucks sold by Chrysler and its dealers at any time without incurring any obligation to make the same or similar changes on trucks previously built or sold.

5. Emission Warranties Required By Law

5.1 Federal Vehicle Emission Warranty - 6.7L Diesel Equipped Heavy Duty Truck

A. Parts Covered for 5 Years or 50,000 Miles, Whichever Occurs First

Diesel equipped heavy duty trucks are 2500 and 3500 models only.

Federal law requires Chrysler to warrant the following emissions parts for 5 years or 50,000 miles, whichever occurs first.

- Air system controls;
- exhaust system (includes catalysts);
- electronic fuel injection system, including injector;
- exhaust manifold;
- exhaust gas recirculation valve and control system (includes EGR cooler);
- exhaust pipes (between exhaust manifold and catalyst);
- fuel pump, fuel lines and fuel injectors;
- intake manifold;
- on-board diagnostic-system components;
- oxygen sensors and oxygen control module;
- positive crankcase-ventilation (PCV) valve or orifice;
- powertrain control module;
- transmission-control module;
- turbocharger.

B. Parts Covered for 8 Years or 80,000 Miles, Whichever Occurs First

If your truck has one of the following parts, this Federal Emission Warranty covers that part for a period of 8 years or 80,000 miles, whichever occurs first, calculated from the start date of the Basic Limited Warranty as set forth in Section 2.1(E). The covered parts are:

- all catalysts
- powertrain control module
- transmission control module

5.2 Noise Emission Warranty - Heavy Duty Truck

A. Description of Coverage

Chrysler Group LLC ("Chrysler") warrants that this vehicle as manufactured by Chrysler, was designed, built and equipped to conform to all applicable U.S. EPA Noise Control Regulations at the time it left Chrysler's control.

This warranty covers this vehicle as designed, built and equipped by Chrysler, and is not limited to any particular part, component or system of the vehicle manufactured by Chrysler. Defects in design, assembly or in any part, component or system of the vehicle as manufactured by Chrysler, which, at the time it left Chrysler's control, caused noise emissions to exceed Federal standards, are covered by this warranty for the life of the vehicle.

B. Products Warranted

All vehicles built over 10,000 lbs. Gross Vehicle Weight Rating and manufactured for sale and use in the United States are required to comply with the Federal Government's Exterior Noise Regulations. These vehicles can be identified by the Noise Emission Control Label located in the operator's compartment.

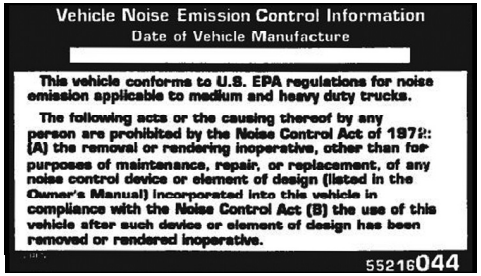

C. Tampering with Noise Control System Prohibited

Federal law prohibits the following acts or the causing thereof:

- the removal or rendering inoperative by any person, other than for purposes of maintenance, repair, or replacement, of any device or element of design incorporated into any new vehicle for the purpose of noise control prior to its sale or delivery to the ultimate purchaser or while it is in use; or
- the use of the vehicle after such device or element of design has been removed or rendered inoperative by any person.

Among those acts presumed to constitute tampering are the acts listed below:

AIR CLEANER

- removal of the air cleaner;
- removal of the air cleaner filter element from the air cleaner housing; or
- removal of the air ducting.

EXHAUST SYSTEM

- removal or rendering inoperative exhaust system components including the muffler or tailpipe.

ENGINE COOLING SYSTEM

- removal or rendering inoperative the fan clutch; or
- removal of the fan shroud.

6. How to Get Warranty Service

6.1 Where to Take Your Truck

A. In the United States (We Include U.S. Possessions and Territories as Part of the United States for Warranty Purposes):

Warranty service must be done by an authorized Chrysler, Dodge, Jeep or Ram dealer. We strongly recommend that you take your truck to your Selling Dealer. They know you and your truck best, and are most concerned that you get prompt and high quality service. If you move within the United States, warranty service may be requested from any authorized Chrysler, Dodge, Jeep or Ram dealer.

B. In Canada and Mexico:

If you are traveling temporarily in Canada or Mexico, and your truck remains registered in the United States, your Chrysler warranty still applies. Service may be requested at any authorized Chrysler, Dodge, Jeep or Ram dealership.

C. In a Foreign Country Outside of North America:

If you are traveling temporarily outside of North America, and your truck remains registered in the United States:

- You should take your truck to an authorized Chrysler, Dodge, Jeep or Ram dealer. They should give you the same warranty service you receive in the United States.

- If the authorized dealership charges you for repairs which you feel should be covered under your warranty, please get a detailed receipt for the work done. Make sure that this receipt lists all warranty repairs and parts that were involved. (This receipt will be similar to the one used by the dealer who normally services your truck.)
- When your truck returns to the United States, contact the Chrysler Customer Assistance Center (section 7.2) for reimbursement consideration. You will normally need to provide a copy of the receipt, your truck registration and any other relevant documents.
- Reimbursement will not be considered if the truck does not return to the United States.

D. If You Move:

If you move to another country, be sure to contact the Chrysler Customer Assistance Center (section 7.2) and the customs department of the destination country before you move. Vehicle importation rules vary considerably from country to country. You may be required to present documentation of your move to Chrysler in order to continue your warranty coverage. You may also be required to obtain documentation from Chrysler in order to register your truck in your new country.

E. Notice:

If your truck is registered outside of the United States, and you have not followed the procedure set out above, your truck will no longer be eligible for warranty coverage of any kind. (Trucks registered to United States government officials or military personnel on assignment outside of the U.S. will continue to be covered.)

6.2 How To Get Tow Service - U.S. or Canada Only *

A. What To Do:

If your vehicle requires towing due to a defect covered under the Basic Limited Warranty, Powertrain Limited Warranty or the Diesel Engine Limited Warranty, dial toll-free 1-800-521-2779.

Provide your name, vehicle identification number, license plate number, and your location, including the telephone number from which you are calling. Briefly describe the nature of the problem and answer a few simple questions.

You will be given the name of the service provider and an estimated time of arrival. If you feel you are in an ″unsafe situation″, please let us know. With your consent, we will contact local police or safety authorities.

* Towing services provided through Cross Country Motor Club, Inc., Medford, MA 02155, except in AK, CA, HI, OR, WI, and WY, where services are provided by Cross Country Motor Club of California, Inc., Medford,, MA 02155.

B. If Unable to Contact 24-Hour Towing Assistance:

If you are unable to contact 24-Hour Towing Assistance and you obtain towing services on your own, you may submit your original receipts from the licensed towing or service facility, for services rendered within 30 days of the occurrence. Be sure to include your vehicle identification number, odometer mileage at the time of service and current mailing address. We will process the claim based on vehicle and service eligibility. If eligible, we will reimburse you for the reasonable amounts you actually paid, based on the usual and customary charges for that service in the area where they were provided. Chrysler Group LLC's determination relating to reimbursement are final.

Correspondence should be mailed to:

Chrysler Towing Assistance
P.O. Box 9145
Medford, MA 02155
Attention: Claims Department

6.3 Emergency Warranty Repairs

If you have an emergency and have to get a warranty repair made by someone other than an authorized Chrysler, Dodge, Jeep or Ram dealer, follow the reimbursement procedure in 6.1(C).

6.4 Getting Service Under the Federal Emission Warranties

A. Steps You Can Take, and How to Get More Information

To get warranty service -- even if you're traveling -- take your truck to any Chrysler, Dodge, Jeep or Ram dealer. (Chrysler recommends that you take your truck to a dealer who sells the same make of truck as yours.) That dealer will perform any warranty service without charging you for diagnosis, parts or labor.

If you think your dealer has wrongly denied you emission-warranty coverage, follow the steps described in 7.1. Chrysler will reply to you in writing within 30 days after receiving your complaint (or within the time limit required by local or state law). If the owner is not notified within 30 days that a warranty claim is denied, the manufacturer must repair the truck free of charge.

If you want more information about getting service under the Federal Emission Warranty, or if you want to report what you think is a violation of these warranties, you can contact:

Manager, Certification and Compliance
Division, Warranty Claims
Environmental Protection Agency
1200 Pennsylvania Avenue, NW
Mail Code 6403J
Washington, D. C. 20460

7. How to Deal with Warranty Problems

7.1 Steps to Take

A. In General

Normally, warranty problems can be resolved by your dealer's sales or service departments. That's why you should always talk to your dealer's service manager or sales manager first. But if you're not satisfied with your dealer's response to your problem, Chrysler Group LLC ("Chrysler") recommends that you do the following:

Step 1:
Discuss your problem with the owner or general manager of the dealership.

Step 2:
If your dealership still can't resolve the problem, contact the Chrysler Customer Assistance Center. You'll find the address in section 7.2.

B. What Chrysler Will Do

Once you have followed the two steps described in 7.1(A), a Chrysler representative at Chrysler headquarters will review your situation. If it's something that Chrysler can help you with, Chrysler will provide your dealer with all the information and assistance necessary to resolve the problem. Even if Chrysler can't help you, Chrysler will acknowledge your contact and explain Chrysler's position.

C. If Your Problem Still Isn't Resolved For Customers Residing in Arkansas, Idaho, Kentucky and Minnesota ONLY:

(**NOTE:** This Process is not available for residents of other states.)
If you can't resolve your warranty problem after following the two steps described in 7.1(A), and you live in Arkansas, Idaho, Kentucky or Minnesota ONLY, you can contact the Chrysler Group LLC Customer Arbitration Process in your area.

You may obtain a brochure describing Chrysler Group LLC's Customer Arbitration Process, including an application, by calling 1-866-726-4636. This service is strictly voluntary, and you may submit your dispute directly to the Customer Arbitration Process (CAP) at no cost. The CAP is administered by an independent dispute settlement organization and may be contacted in writing at the following address:

National Center for Dispute Settlement
Chrysler Group LLC
Customer Arbitration Process
P.O. Box 727
Mt. Clemens, MI 48046

The CAP reviews only vehicle disputes involving Chrysler Group LLC ("Chrysler") Limited Warranty or a Chrysler / Mopar Part Limited Warranty. The CAP does not review disputes involving the sale of a new or used vehicle, personal injury/property damage claims, disputes relating to design of the vehicle or part, or disputes which are already the subject of litigation.

The CAP will need the following information from you: 1) Legible copies of all documents and repair orders relevant to your case, 2) Vehicle identification number of your vehicle, 3) A brief description of your unresolved concern, 4) The identity of your servicing / selling dealer, 5) The date(s) of repair(s) and mileage at the time, 6) Current mileage, and 7) A description of the action you expect to resolve your concern.

Upon receipt of your request:

- The National Center for Dispute Settlement (NCDS) will acknowledge receipt of your request, by mail, within ten (10) days, and advise you whether or not your dispute is within the jurisdiction of the Process.
- When your request is within jurisdiction NCDS will request Chrysler and the dealer to present their side of the dispute. You will receive copies of their responses.
- While your dispute is pending NCDS or Chrysler may contact you to see if your case can be settled by agreement. If a settlement is offered to you, Chrysler will ask you to sign a form that contains that settlement. Your case will then be closed. There is no requirement for you to participate in this settlement process.
- If you requested an oral hearing, a decision-maker will contact you to arrange a convenient time and place for a hearing. Usually, this will be at a dealership near you.

- If you request a documents-only review, an NCDS panel will review and decide your case. Neither you, the dealer nor Chrysler need be present.
- NCDS will send you a written Statement of Decision. This statement will include the decision, any action to be taken by the dealer or Chrysler and the time by which the action must be taken. The decision will be binding on the dealer and Chrysler but not on you unless you accept the decision.
- If any action is required on the part of the dealer or Chrysler you will be contacted within ten (10) days after the date by which the dealer or Chrysler must act to determine whether performance has been rendered.
- The entire dispute settlement process will normally take no longer than 40 days.
- The CAP dispute settlement procedure does not take the place of any state or Federal legal remedies available to you. Whether or not you decide to submit your dispute to the Process, you are free to pursue other legal remedies.

D. Notice Under State Lemon Laws

Some states have laws allowing you to get a replacement truck or a refund of the truck's purchase price under certain circumstances. These laws vary from state to state. If your state law allows, Chrysler requires that you first notify us in writing of any service difficulty that you may have experienced so that we can have a chance to make any needed repairs before you are eligible for remedies provided by these laws.

In all other states, we ask that you give us written notice of any service difficulty. Send your written notice to the Chrysler Customer Assistance Center at the address in 7.2.

7.2 Helpful Addresses and Telephone Numbers

Here are the addresses and telephone numbers of the Chrysler Customer Assistance Center that can help you wherever you happen to be. Contact the one that covers your area:

- **In the United States:**
  Chrysler Customer Assistance Center
  P.O. Box 21-8004
  Auburn Hills, Michigan 48321-8004
  Phone: (866) 726-4636

To contact Chrysler by email,

simply access the following website:
www.ramtrucks.com
(click on the ″Contact Us″ button)

- **In Canada:**
  Chrysler Canada, Inc.
  Customer Service
  Chrysler Centre
  P.O. Box 1621
  Windsor, Ontario N9A-4H6
  Phone: (800) 465-2001

- **In Mexico, contact the Customer Relations Office for Chrysler, Dodge, Jeep and Ram vehicles at:**
  1240 Prolongacion Paseo de la Reforma Av.
  Santa Fe, C.P. 05109
  Deleg. Cuajimalpa, Mexico
  Phone (in Mexico): (015) 5081-7568
  Phone (outside Mexico): (800) 505-1300

- **In Puerto Rico and U.S. Virgin Islands: Customer Service**
  Chrysler Group International Services LLC
  Box 191857
  San Juan, Puerto Rico 00919-1857
  Phone: (787) 782-5757
  Fax: (787) 782-3345

8. Optional Service Contract

Chrysler Group LLC's or Chrysler Service Contract Company LLC's optional service contracts offer valuable protection against repair costs when these warranties don't apply. They compliment but don't replace the warranty coverages outlined in this booklet. Several plans are available, covering various time-and-mileage periods and various sets of components. (Service contracts aren't available if you live in a U.S. possession or territory.) Ask your dealer for details.

9. Maintenance

9.1 General Information

It's your responsibility to properly maintain and operate your new truck. Follow the instructions contained in the General and Scheduled Maintenance Service guidelines in your Owner's Manual. Regular, scheduled maintenance is essential to trouble-free operation. If there is a dispute between you and Chrysler Group LLC ("Chrysler") concerning your maintenance of your truck, Chrysler will require you to provide proof that your truck was properly maintained.

For your convenience, Chrysler has prepared a Maintenance Log which is included in your Owner's Manual. You should use this Maintenance Log to keep track of scheduled maintenance, either by routinely having the repairs entered in your Maintenance Log, or by keeping receipts or other documentation of work you've had done on your truck in your Maintenance Log.

9.2 Where To Go For Maintenance

Chrysler recommends that you return to the dealer from whom you bought your truck for all maintenance service both during and after the warranty periods. Although you can get warranty service from any dealer who sells your particular make, returning to your selling dealer will help ensure that all your service needs are met and that you're completely satisfied. The dealership technicians are specifically trained to proficiently perform maintenance and repair procedures on your Chrysler Group LLC truck.

Authorized Chrysler, Dodge, Jeep or Ram dealers will help ensure that all your service needs are met and that you're completely satisfied.

Chrysler strongly recommends you use genuine Chrysler / MOPAR parts to maintain your truck.